GROUP TAB LOCATOR

	Introduction
0	Lubrication & Maintenance
2	Suspension
3	Differential & Driveline
5	Brakes
6	Clutch
7	Cooling
8A	Audio/Video
8B	Chime/Buzzer
8E	Electronic Control Modules
8F	Engine Systems
8G	Heated Systems
8H	Horn
8I	Ignition Control
8J	Instrument Cluster
8L	Lamps
8M	Message Systems
8N	Power Systems
8O	Restraints
8P	Speed Control
8Q	Vehicle Theft Security
8R	Wipers/Washers
8T	Navigation/Telecommunication
8W	Wiring
9	Engine
11	Exhaust System
13	Frame & Bumpers
14	Fuel System
19	Steering
21	Transmission and Transfer Case
22	Tires/Wheels
23	Body
24	Heating & Air Conditioning
25	Emissions Control
	Component and System Index
	DTC Index

Service Manual Comment Forms (Rear of Manual)

INTRODUCTION

TABLE OF CONTENTS

page

VEHICLE IDENTIFICATION NUMBER
DESCRIPTION – VIN CODING/LOCATIONS 1
VEHICLE EMISSION CONTROL INFORMATION (VECI)
DESCRIPTION 3
BODY CODE PLATE
DESCRIPTION 3
INTERNATIONAL VEHICLE CONTROL & DISPLAY SYMBOLS
DESCRIPTION - INTERNATIONAL SYMBOLS . . . 7
FASTENER IDENTIFICATION
DESCRIPTION 7

page

FASTENER USAGE
DESCRIPTION 10
THREADED HOLE REPAIR
DESCRIPTION 10
METRIC SYSTEM
DESCRIPTION 11
TORQUE REFERENCES
DESCRIPTION 13
VEHICLE CERTIFICATION LABEL
DESCRIPTION 14

VEHICLE IDENTIFICATION NUMBER

DESCRIPTION – VIN CODING/LOCATIONS

The Vehicle Identification Number (VIN) plate (2) is located on the lower windshield fence near the left a-pillar. The VIN contains 17 characters that provide data concerning the vehicle. Refer to the VIN decoding chart to determine the identification of a vehicle.

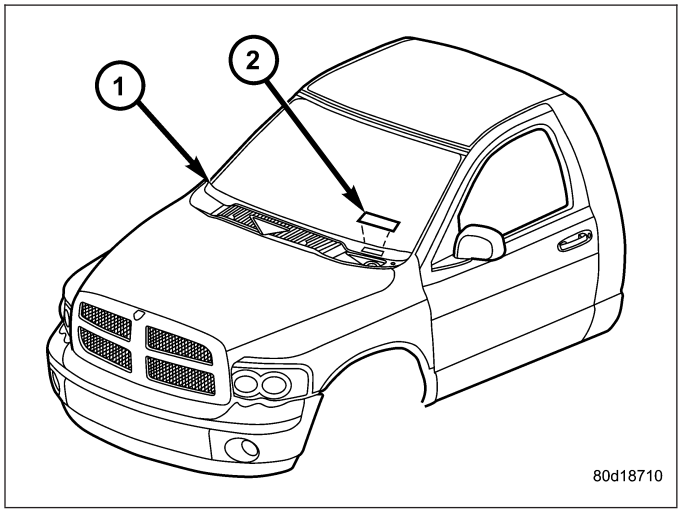

The VIN is also imprinted on the:

- Body Code Plate.
- Equipment Identification Plate.
- Vehicle Safety Certification Label.
- Frame rail.

To protect the consumer from theft and possible fraud the manufacturer is required to include a Check Digit at the ninth position of the VIN. The check digit is used by the manufacturer and government agencies to verify the authenticity of the vehicle and official documentation. The formula to use the check digit is not released to the general public.

POSITION	INTERPRETATION	CODE = DESCRIPTION
1	Country of Origin	1 = Manufactured By DaimlerChrysler Corporation 3 = Manufactured By DaimlerChrysler De Mexico
2	Make	D = Dodge

POSITION	INTERPRETATION	CODE = DESCRIPTION
3	Vehicle Type	2 = Incomplete with Side Airbag 3 = Truck with Side Airbag 6 = Incomplete Less Side Airbag 7 = Truck Less Side Airbag
4	Gross Vehicle Weight Rating	G = 5,001-6000 lbs. H = 6,001-7,000 lbs. J = 7,001-8,000 lbs. K = 8,001-9,000 lbs. L = 9,001-10,000 lbs. M = 10,001-14,000 lbs. W = Buses/Incomplete Vehicles with Hydraulic Brakes
5	Vehicle Line	A = Ram Pickup Light Duty 4X2 U = Ram Pickup Light Duty 4X4 R = Ram Pickup Heavy Duty 4X2 S = Ram Pickup Heavy Duty 4X4 N = Ram Cab Chassis 4X2 DX Family
6	Series	1 = 1500 2 = 2500 3 = 3500 Less Dual Rear Wheels 4 = 3500 With Dual Rear Wheels 5 = 4000 DX Family
7	Body Style	6 = Conventional Cab/Cab Chassis 8 = Quad Cab Full Rear Doors
8	Engine	K = 3.7L 6 cyl. MPI Gasoline N = 4.7L 8 cyl. MPI Gasoline P = 4.7L 8 cyl. Flex Fuel D = 5.7L 8 cyl. SMPI Gasoline C = 5.9L 6 cyl. Turbo Diesel High Output H = 8.3L 10 cyl. SFI Gasoline
9	Check Digit	0 through 9 or X
10	Model Year	5 = 2005
11	Plant Location	S = Dodge City G = Saltillo J = St. Louis (North)
12 thru 17	Vehicle Build Sequence	

VEHICLE EMISSION CONTROL INFORMATION (VECI)

DESCRIPTION

All models have a Vehicle Emission Control Information (VECI) Label (1). DaimlerChrysler permanently attaches the label in the engine compartment. The label cannot be removed without defacing label information and destroying label.

The label contains the vehicle's emission specifications and vacuum hose routings. All hoses must be connected and routed according to the label.

The label also contains an engine vacuum schematic. There are unique labels for vehicles built for sale in the state of California and the country of Canada. Canadian labels are written in both the English and French languages.

The VECI label contains the following:

- Engine family and displacement
- Evaporative family
- Emission control system schematic
- Certification application
- Engine timing specifications (if adjustable)
- Idle speeds (if adjustable)
- Spark plug and gap

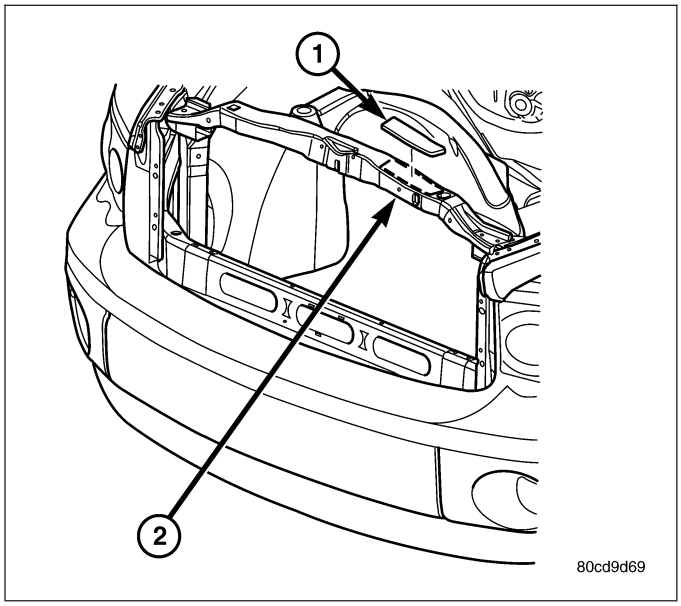

BODY CODE PLATE

DESCRIPTION

The Body Code Plate is located on the right front hydroform fender rail just behind the headlight assembly. There are seven lines of information on the body code plate. Lines 5, 6, and 7 are not used to define service information. Information reads from left to right, starting with line 4 in the center of the plate to line 1 at the bottom of the plate.

The last code imprinted on a vehicle code plate will be followed by the imprinted word END. When two vehicle code plates are required, the last available spaces on the first plate will be imprinted with the letters CTD (for continued).

When a second vehicle code plate is necessary, the first four spaces on each row will not be used because of the plate overlap.

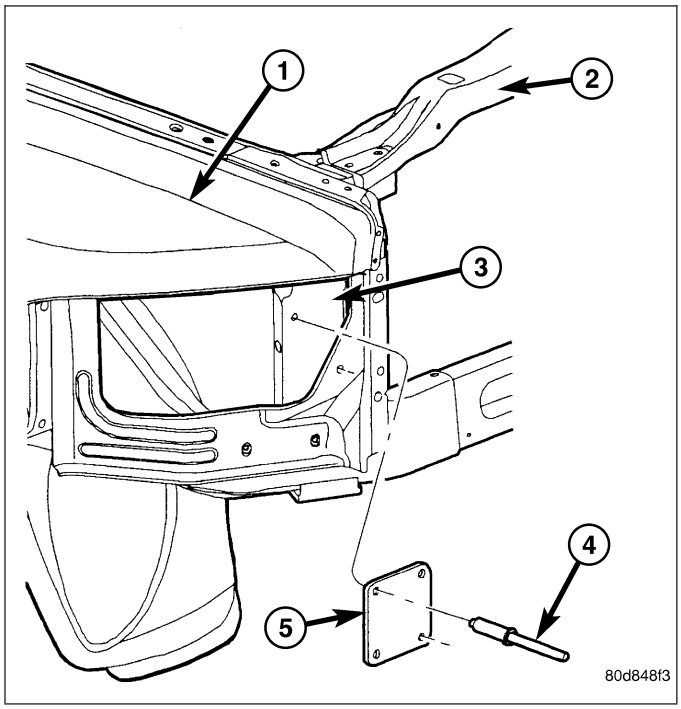

BODY CODE PLATE – LINE 4

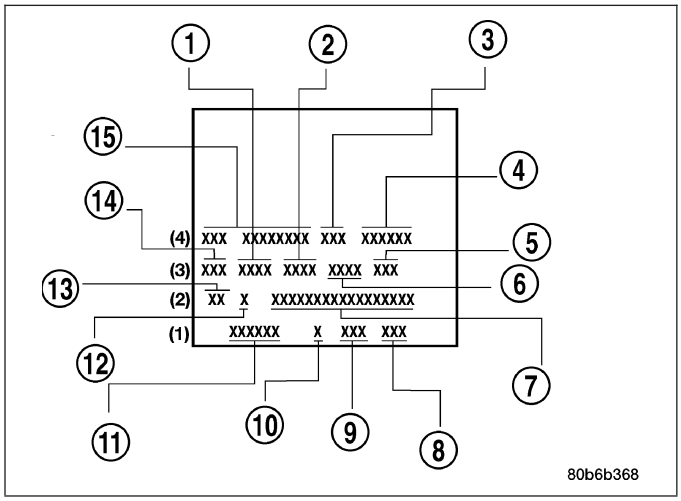

DIGITS 1 THROUGH 12

Vehicle Order Number (15)

DIGITS 13, 14, AND 15

Transmission Codes (3)

- DDP = 5–speed Manual (NV4500)
- DEC = 6–speed Manual (NV5600)
- DEE = 6–speed Manual Tremec (T-56)
- DEG = 6–speed Manual (G56)
- DEJ = 6–speed Manual (GETRAG 238)
- DG4 = 4–speed Automatic (45RFE)
- DG8 = 4–speed Automatic (48RE)
- DGQ = 4–speed Automatic (5-45RFE)

DIGITS 16, 17, AND 18

Car Line Shell (4)

- DR1 = 1500 4 X 2
- DR6 = 1500 4 X 4
- DR2 = 2500 4 X 2
- DR7 = 2500 4 X 4
- DR3 = 3500 4 X 2
- DR8 = 3500 4 X 4

DIGIT 19

Price Class (4)

- L = Low
- H = Highline

DIGITS 20 AND 21

Body Type (4)

- 41 = Ram Truck Quad Cab, Short Box
- 42 = Ram Truck Quad Cab, Long Box
- 61 = Ram Truck Standard Cab, Short Box
- 62 = Ram Truck Standard Cab, Long Box
- 64 = Ram Truck Cab Chassis

BODY CODE PLATE – LINE 3

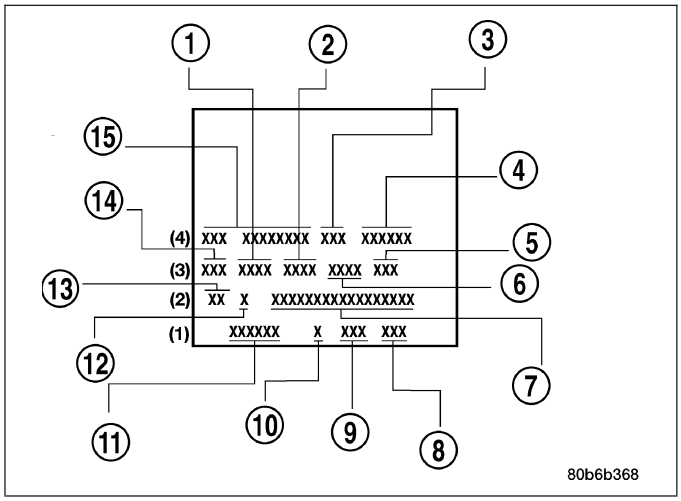

DIGITS 1,2, AND 3

Paint Procedure (14)

- APA = Monotone
- AP9 = Special
- APD = Two-tone (Lower break)

DIGIT 4

Open Space

DIGITS 5 THROUGH 8

Primary Paint (1)

(Refer to 23 - BODY/PAINT - SPECIFICATIONS) for color codes.

DIGIT 9

Open Space

DIGITS 10 THROUGH 13

Secondary Paint (2)

DIGIT 14

Open Space

DIGITS 15 THROUGH 18

Interior Trim Code (6)

DIGIT 19

Open Space

DIGITS 20, 21, AND 22

Engine Code (5)

- EKG = 3.7L 6 cyl. MPI Gasoline
- EVA = 4.7L 8 cyl. MPI Gasoline
- EVD = 4.7L 8 cyl. Flex Fuel
- EZA = 5.7L 8 cyl. SMPI Gasoline
- ETH = 5.9L 6 cyl. Cummins Turbo Diesel High Output
- EWC = 8.3L 19 cyl. SFI Gasoline

BODY CODE PLATE – LINE 2

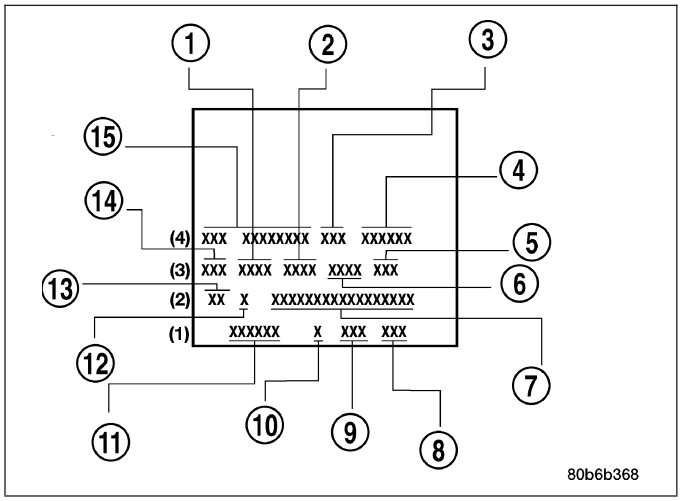

DIGIT 1 Open Space

DIGITS 2 AND 3 Species Code. (Used for Manufacturing) (13)

DIGIT 4

Open Space

DIGIT 5

Market Code (12)

- B = International
- C = Canada
- M = Mexico
- U = United States

DIGIT 6

Open Space

DIGITS 7 THROUGH 23

Vehicle Identification Number (VIN) (7)

(Refer to VEHICLE DATA/VEHICLE INFORMATION/VEHICLE IDENTIFICATION NUMBER - DESCRIPTION) for proper breakdown of VIN code.

BODY CODE PLATE – LINE 1

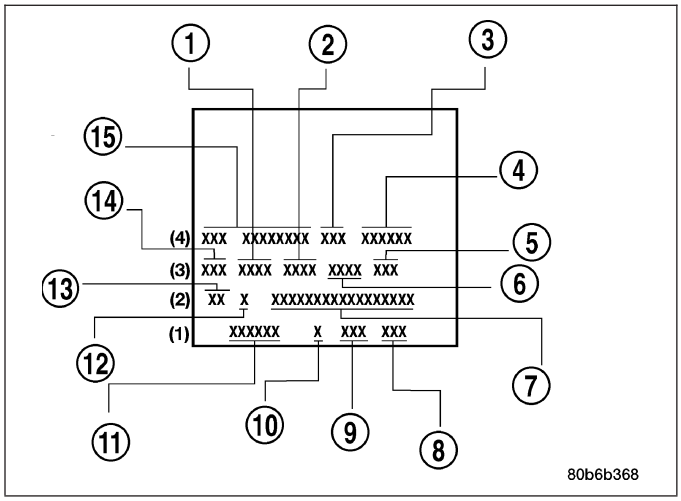

DIGITS 1 THROUGH 6 Body-in-white assembly sequence (11)

DIGIT 7

Open Space

DIGIT 8 Tailgate trim code (10)

DIGIT 9

Open Space

DIGITS 10 THROUGH 12 Cargo box code (9)

DIGIT 13

Open Space

DIGITS 14 THROUGH 16 Tailgate code (8)

INTERNATIONAL VEHICLE CONTROL & DISPLAY SYMBOLS

DESCRIPTION - INTERNATIONAL SYMBOLS

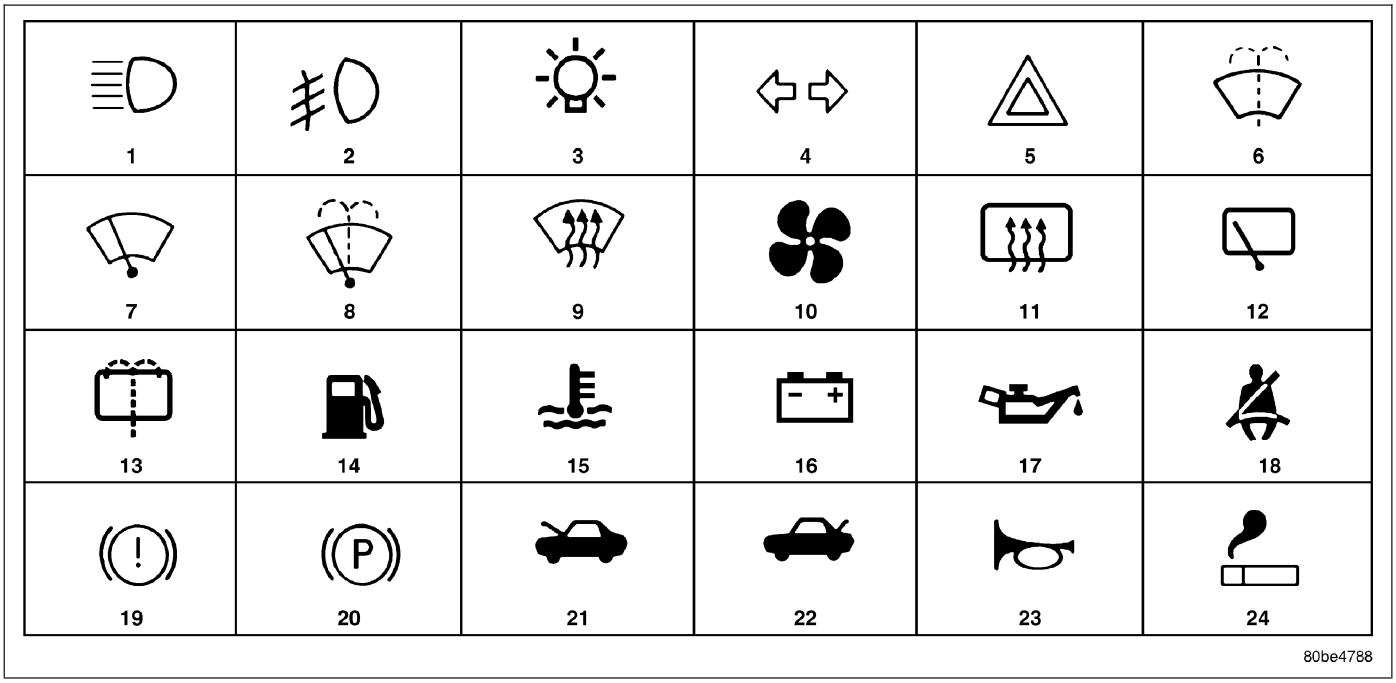

The graphic symbols illustrated in the following International Control and Display Symbols Chart are used to identify various instrument controls. The symbols correspond to the controls and displays that are located on the instrument panel.

FASTENER IDENTIFICATION

DESCRIPTION

The SAE bolt strength grades range from grade 2 to grade 8. The higher the grade number, the greater the bolt strength. Identification is determined by the line marks on the top of each bolt head. The actual bolt strength grade corresponds to the number of line marks plus 2. The most commonly used metric bolt strength classes are 9.8 and 10.9. The metric strength class identification number is imprinted on the head of the bolt. The higher the class number, the greater the bolt strength. Some metric nuts are imprinted with a single-digit strength class on the nut face. Refer to the Fastener Identification and Fastener Strength Charts.

Bolt Markings and Torques - Metric

Bolt Markings	8.8/8.9		10.9		12.9	
Bolt Dia.	N·m	Ft. Lbs.	N·m	Ft. Lbs.	N·m	Ft. Lbs.
6	12	105*	14	120*	16	12
8	25	250*	32	23	38	28
10	54	40	60	45	74	55
12	95	70	108	80	135	100
14	155	115	175	130	216	160
16	243	180	324	210	324	240
* Inch Lbs.						

Bolt Markings and Torques - U. S. Customary

Bolt Markings	Grade 5		Grade 8	
Bolt Dia.	N·m	Ft. Lbs	N·m	Ft. Lbs
1/4 - 20	10	95*	14	125*
1/4 - 28	10	95*	17	150*
5/16 - 18	22	200*	30	270*
5/16 - 24	26	240*	33	300*
3/8 - 16	40	30	55	40
3/8 - 24	47	35	60	45
7/16 - 14	68	50	88	65
7/16 - 20	74	55	95	70
1/2 - 13	101	75	135	100
1/2 -20	115	85	150	110
9/16 - 12	135	105	182	135
9/16 - 18	155	115	202	150
5/8 - 11	202	150	263	195
5/8 - 18	215	160	284	210
3/4 - 10	230	170	297	220
3/4 - 16	236	175	304	225
7/8 - 14	405	300	540	400
* Inch Lbs.				

HOW TO DETERMINE BOLT STRENGTH

	Mark	Class
Hexagon head bolt	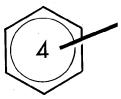 Bolt head No. 4 — 4T; 5 — 5T; 6 — 6T; 7 — 7T; 8 — 8T; 9 — 9T; 10 — 10T; 11 — 11T	
	 No mark	4T
Hexagon flange bolt w/washer hexagon bolt	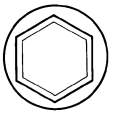 No mark	4T
Hexagon head bolt	 Two protruding lines	5T
Hexagon flange bolt w/washer hexagon bolt	 Two protruding lines	6T
Hexagon head bolt	 Three protruding lines	7T
Hexagon head bolt	 Four protruding lines	8T

	Mark	Class
Stud bolt	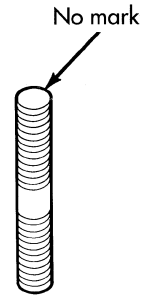	4T
	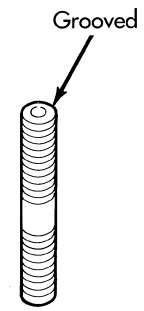	6T
Welded bolt	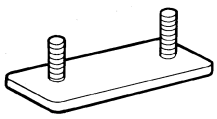	4T

95IN-4

FASTENER USAGE

DESCRIPTION

WARNING: Use of an incorrect fastener may result in component damage or personal injury.

Fasteners and torque specifications references in this Service Manual are identified in metric and SAE format.

During any maintenance or repair procedures, it is important to salvage all fasteners (nuts, bolts, etc.) for reassembly. If the fastener is not salvageable, a fastener of equivalent specification must be used.

THREADED HOLE REPAIR

DESCRIPTION

Most stripped threaded holes can be repaired using a Helicoil®. Follow the vehicle or Helicoil® recommendations for application and repair procedures.

METRIC SYSTEM

DESCRIPTION

in-lbs to N•m

in- lb	N•m	in-lb	N•m	in-lb	N•m	in-lb	N•m	in-lb	N•m
2	.2260	42	4.7453	82	9.2646	122	13.7839	162	18.3032
4	.4519	44	4.9713	84	9.4906	124	14.0099	164	18.5292
6	.6779	46	5.1972	86	9.7165	126	14.2359	166	18.7552
8	.9039	48	5.4232	88	9.9425	128	14.4618	168	18.9811
10	1.1298	50	5.6492	90	10.1685	130	14.6878	170	19.2071
12	1.3558	52	5.8751	92	10.3944	132	14.9138	172	19.4331
14	1.5818	54	6.1011	94	10.6204	134	15.1397	174	19.6590
16	1.8077	56	6.3270	96	10.8464	136	15.3657	176	19.8850
18	2.0337	58	6.5530	98	11.0723	138	15.5917	178	20.1110
20	2.2597	60	6.7790	100	11.2983	140	15.8176	180	20.3369
22	2.4856	62	7.0049	102	11.5243	142	16.0436	182	20.5629
24	2.7116	64	7.2309	104	11.7502	144	16.2696	184	20.7889
26	2.9376	66	7.4569	106	11.9762	146	16.4955	186	21.0148
28	3.1635	68	7.6828	108	12.2022	148	16.7215	188	21.2408
30	3.3895	70	7.9088	110	12.4281	150	16.9475	190	21.4668
32	3.6155	72	8.1348	112	12.6541	152	17.1734	192	21.6927
34	3.8414	74	8.3607	114	12.8801	154	17.3994	194	21.9187
36	4.0674	76	8.5867	116	13.1060	156	17.6253	196	22.1447
38	4.2934	78	8.8127	118	13.3320	158	17.8513	198	22.3706
40	4.5193	80	9.0386	120	13.5580	160	18.0773	200	22.5966

N•m to in-lbs

N•m	in-lb	N•m	in-lb	N•m	in-lb	N•m	in-lb	N•m	in-lb
.2	1.7702	4.2	37.1747	8.2	72.5792	12.2	107.9837	16.2	143.3882
.4	3.5404	4.4	38.9449	8.4	74.3494	12.4	109.7539	16.4	145.1584
.6	5.3107	4.6	40.7152	8.6	76.1197	12.6	111.5242	16.6	146.9287
.8	7.0809	4.8	42.4854	8.8	77.8899	12.8	113.2944	16.8	148.6989
1	8.8511	5	44.2556	9	79.6601	13	115.0646	17	150.4691
1.2	10.6213	5.2	46.0258	9.2	81.4303	13.2	116.8348	17.2	152.2393
1.4	12.3916	5.4	47.7961	9.4	83.2006	13.4	118.6051	17.4	154.0096
1.6	14.1618	5.6	49.5663	9.6	84.9708	13.6	120.3753	17.6	155.7798
1.8	15.9320	5.8	51.3365	9.8	86.7410	13.8	122.1455	17.8	157.5500
2	17.7022	6	53.1067	10	88.5112	14	123.9157	18	159.3202
2.2	19.4725	6.2	54.8770	10.2	90.2815	14.2	125.6860	18.5	163.7458
2.4	21.2427	6.4	56.6472	10.4	92.0517	14.4	127.4562	19	168.1714
2.6	23.0129	6.6	58.4174	10.6	93.8219	14.6	129.2264	19.5	172.5970
2.8	24.7831	6.8	60.1876	10.8	95.5921	14.8	130.9966	20	177.0225
3	26.5534	7	61.9579	11	97.3624	15	132.7669	20.5	181.4480
3.2	28.3236	7.2	63.7281	11.2	99.1326	15.2	134.5371	21	185.8736
3.4	30.0938	7.4	65.4983	11.4	100.9028	15.4	136.3073	22	194.7247
3.6	31.8640	7.6	67.2685	11.6	102.6730	15.6	138.0775	23	203.5759
3.8	33.6342	7.8	69,0388	11.8	104.4433	15.8	139.8478	24	212.4270
4	35.4045	8	70.8090	12	106.2135	16	141.6180	25	221.2781

ft-lbs to N•m

ft-lb	N•m	ft-lb	N•m	ft-lb	N•m	ft-lb	N•m	ft-lb	N•m
1	1.3558	21	28.4722	41	55.5885	61	82.7049	81	109.8212
2	2.7116	22	29.8280	42	56.9444	62	84.0607	82	111.1770
3	4.0675	23	31.1838	43	58.3002	63	85.4165	83	112.5328
4	5.4233	24	32.5396	44	59.6560	64	86.7723	84	113.8888
5	6.7791	25	33.8954	45	61.0118	65	88.1281	85	115.2446
6	8.1349	26	35.2513	46	62.3676	66	89.4840	86	116.6004
7	9.4907	27	36.6071	47	63.7234	67	90.8398	87	117.9562
8	10.8465	28	37.9629	48	65.0793	68	92.1956	88	119.3120
9	12.2024	29	39.3187	49	66.4351	69	93.5514	89	120.6678
10	13.5582	30	40.6745	50	67.7909	70	94.9073	90	122.0236
11	14.9140	31	42.0304	51	69.1467	71	96.2631	91	123.3794
12	16.2698	32	43.3862	52	70.5025	72	97.6189	92	124.7352
13	17.6256	33	44.7420	53	71.8583	73	98.9747	93	126.0910
14	18.9815	34	46.0978	54	73.2142	74	100.3316	94	127.4468
15	20.3373	35	47.4536	55	74.5700	75	101.6862	95	128.8026
16	21.6931	36	48.8094	56	75.9258	76	103.0422	96	130.1586
17	23.0489	37	50.1653	57	77.2816	77	104.3980	97	131.5144
18	24.4047	38	51.5211	58	78.6374	78	105.7538	98	132.8702
19	25.7605	39	52.8769	59	79.9933	79	107.1196	99	134.2260
20	27.1164	40	54.2327	60	81.3491	80	108.4654	100	135.5820

N•m to ft-lbs

N•m	ft-lb	N•m	ft-lb	N•m	ft-lb	N•m	ft-lb	N•m	ft-lb
1	.7376	21	15.9888	41	30.2400	61	44.9913	81	59.7425
2	1.4751	22	16.2264	42	30.9776	62	45.7289	82	60.4801
3	2.2127	23	16.9639	43	31.7152	63	46.4664	83	61.2177
4	2.9502	24	17.7015	44	32.4527	64	47.2040	84	61.9552
5	3.6878	25	18.4391	45	33.1903	65	47.9415	85	62.6928
6	4.4254	26	19.1766	46	33.9279	66	48.6791	86	63.4303
7	5.1629	27	19.9142	47	34.6654	67	49.4167	87	64.1679
8	5.9005	28	20.6517	48	35.4030	68	50.1542	88	64.9545
9	6.6381	29	21.3893	49	36.1405	69	50.8918	89	65.6430
10	7.3756	30	22.1269	50	36.8781	70	51.6293	90	66.3806
11	8.1132	31	22.8644	51	37.6157	71	52.3669	91	67.1181
12	8.8507	32	23.6020	52	38.3532	72	53.1045	92	67.8557
13	9.5883	33	24.3395	53	39.0908	73	53.8420	93	68.5933
14	10.3259	34	25.0771	54	39.8284	74	54.5720	94	69.3308
15	11.0634	35	25.8147	55	40.5659	75	55.3172	95	70.0684
16	11.8010	36	26.5522	56	41.3035	76	56.0547	96	70.8060
17	12.5386	37	27.2898	57	42.0410	77	56.7923	97	71.5435
18	13.2761	38	28.0274	58	42.7786	78	57.5298	98	72.2811
19	14.0137	39	28.7649	59	43.5162	79	58.2674	99	73.0187
20	14.7512	40	29.5025	60	44.2537	80	59.0050	100	73.7562

in. to mm

in.	mm	in.	mm	in.	mm	in.	mm	in.	mm
.01	.254	.21	5.334	.41	10.414	.61	15.494	.81	20.574
.02	.508	.22	5.588	.42	10.668	.62	15.748	.82	20.828
.03	.762	.23	5.842	.43	10.922	.63	16.002	.83	21.082
.04	1.016	.24	6.096	.44	11.176	.64	16.256	.84	21.336
.05	1.270	.25	6.350	.45	11.430	.65	16.510	.85	21.590
.06	1.524	.26	6.604	.46	11.684	.66	16.764	.86	21.844
.07	1.778	.27	6.858	.47	11.938	.67	17.018	.87	22.098
.08	2.032	.28	7.112	.48	12.192	.68	17.272	.88	22.352
.09	2.286	.29	7.366	.49	12.446	.69	17.526	.89	22.606
.10	2.540	.30	7.620	.50	12.700	.70	17.780	.90	22.860
.11	2.794	.31	7.874	.51	12.954	.71	18.034	.91	23.114
.12	3.048	.32	8.128	.52	13.208	.72	18.288	.92	23.368
.13	3.302	.33	8.382	.53	13.462	.73	18.542	.93	23.622
.14	3.556	.34	8.636	.54	13.716	.74	18.796	.94	23.876
.15	3.810	.35	8.890	.55	13.970	.75	19.050	.95	24.130
.16	4.064	.36	9.144	.56	14.224	.76	19.304	.96	24.384
.17	3.318	.37	9.398	.57	14.478	.77	19.558	.97	24.638
.18	4.572	.38	9.652	.58	14.732	.78	19.812	.98	24.892
.19	4.826	.39	9.906	.59	14.986	.79	20.066	.99	25.146
.20	5.080	.40	10.160	.60	15.240	.80	20.320	1.00	25.400

mm to in.

mm	in.	mm	in.	mm	in.	mm	in.	mm	in.
.01	.00039	.21	.00827	.41	.01614	.61	.02402	.81	.03189
.02	.00079	.22	.00866	.42	.01654	.62	.02441	.82	.03228
.03	.00118	.23	.00906	.43	.01693	.63	.02480	.83	.03268
.04	.00157	.24	.00945	.44	.01732	.64	.02520	.84	.03307
.05	.00197	.25	.00984	.45	.01772	.65	.02559	.85	.03346
.06	.00236	.26	.01024	.46	.01811	.66	.02598	.86	.03386
.07	.00276	.27	.01063	.47	.01850	.67	.02638	.87	.03425
.08	.00315	.28	.01102	.48	.01890	.68	.02677	.88	.03465
.09	.00354	.29	.01142	.49	.01929	.69	.02717	.89	.03504
.10	.00394	.30	.01181	.50	.01969	.70	.02756	.90	.03543
.11	.00433	.31	.01220	.51	.02008	.71	.02795	.91	.03583
.12	.00472	.32	.01260	.52	.02047	.72	.02835	.92	.03622
.13	.00512	.33	.01299	.53	.02087	.73	.02874	.93	.03661
.14	.00551	.34	.01339	.54	.02126	.74	.02913	.94	.03701
.15	.00591	.35	.01378	.55	.02165	.75	.02953	.95	.03740
.16	.00630	.36	.01417	.56	.02205	.76	.02992	.96	.03780
.17	.00669	.37	.01457	.57	.02244	.77	.03032	.97	.03819
.18	.00709	.38	.01496	.58	.02283	.78	.03071	.98	.03858
.19	.00748	.39	.01535	.59	.02323	.79	.03110	.99	.03898
.20	.00787	.40	.01575	.60	.02362	.80	.03150	1.00	.03937

J901N-10

The metric system is based on quantities of one, ten, one hundred, one thousand and one million.
The following chart will assist in converting metric units to equivalent English and SAE units, or vise versa.

CONVERSION FORMULAS AND EQUIVALENT VALUES

MULTIPLY	BY	TO GET	MULTIPLY	BY	TO GET
in-lbs	x 0.11298	= Newton Meters (N·m)	N·m	x 8.851	= in-lbs
ft-lbs	x 1.3558	= Newton Meters (N·m)	N·m	x 0.7376	= ft-lbs
Inches Hg (60° F)	x 3.377	= Kilopascals (kPa)	kPa	x 0.2961	= Inches Hg
psi	x 6.895	= Kilopascals (kPa)	kPa	x 0.145	= psi
Inches	x 25.4	= Millimeters (mm)	mm	x 0.03937	= Inches
Feet	x 0.3048	= Meters (M)	M	x 3.281	= Feet
Yards	x 0.9144	= Meters	M	x 1.0936	= Yards
mph	x 1.6093	= Kilometers/Hr. (Km/h)	Km/h	x 0.6214	= mph
Feet/Sec	x 0.3048	= Meters/Sec (M/S)	M/S	x 3.281	= Feet/Sec
mph	x 0.4470	= Meters/Sec (M/S)	M/S	x 2.237	= mph
Kilometers/Hr. (Km/h)	x 0.27778	= Meters/Sec (M/S)	M/S	x 3.600	Kilometers/Hr. (Km/h)

COMMON METRIC EQUIVALENTS

1 inch = 25 Millimeters	1 Cubic Inch = 16 Cubic Centimeters
1 Foot = 0.3 Meter	1 Cubic Foot = 0.03 Cubic Meter
1 Yard = 0.9 Meter	1 Cubic Yard = 0.8 Cubic Meter
1 Mile = 1.6 Kilometers	

Refer to the Metric Conversion Chart to convert torque values listed in metric Newton- meters (N·m). Also, use the chart to convert between millimeters (mm) and inches (in.).

TORQUE REFERENCES

DESCRIPTION

SPECIFIED TORQUE FOR STANDARD BOLTS

Class	Diameter mm	Pitch mm	Specified torque					
			Hexagon head bolt			Hexagon flange bolt		
			N•m	kgf-cm	ft-lbf	N•m	kgf-cm	ft-lbf
4T	6	1	5	55	48 in.-lbf	6	60	52 in.-lbf
	8	1.25	12.5	130	9	14	145	10
	10	1.25	26	260	19	29	290	21
	12	1.25	47	480	35	53	540	39
	14	1.5	74	760	55	84	850	61
	16	1.5	115	1,150	83	—	—	—
5T	6	1	6.5	65	56 in.-lbf	7.5	75	65 in.-lbf
	8	1.25	15.5	160	12	17.5	175	13
	10	1.25	32	330	24	36	360	26
	12	1.25	59	600	43	65	670	48
	14	1.5	91	930	67	100	1,050	76
	16	1.5	140	1,400	101	—	—	—
6T	6	1	8	80	69 in.-lbf	9	90	78 in.-lbf
	8	1.25	19	195	14	21	210	15
	10	1.25	39	400	29	44	440	32
	12	1.25	71	730	53	80	810	59
	14	1.5	110	1,100	80	125	1,250	90
	16	1.5	170	1,750	127	—	—	—
7T	6	1	10.5	110	8	12	120	9
	8	1.25	25	260	19	28	290	21
	10	1.25	52	530	38	58	590	43
	12	1.25	95	970	70	105	1,050	76
	14	1.5	145	1,500	108	165	1,700	123
	16	1.5	230	2,300	166	—	—	—
8T	8	1.25	29	300	22	33	330	24
	10	1.25	61	620	45	68	690	50
	12	1.25	110	1,100	80	120	1,250	90
9T	8	1.25	34	340	25	37	380	27
	10	1.25	70	710	51	78	790	57
	12	1.25	125	1,300	94	140	1,450	105
10T	8	1.25	38	390	28	42	430	31
	10	1.25	78	800	58	88	890	64
	12	1.25	140	1,450	105	155	1,600	116
11T	8	1.25	42	430	31	47	480	35
	10	1.25	87	890	64	97	990	72
	12	1.25	155	1,600	116	175	1,800	130

Individual Torque Charts appear within many or the Groups. Refer to the Standard Torque Specifications Chart for torque references not listed in the individual torque charts.

VEHICLE CERTIFICATION LABEL

DESCRIPTION

A vehicle certification label is attached to every DaimlerChrysler Corporation vehicle. The label certifies that the vehicle conforms to all applicable Federal Motor Vehicle Standards. The label also lists:

- Month and year of vehicle manufacture.
- Gross Vehicle Weight Rating (GVWR). The gross front and rear axle weight ratings (GAWR's) are based on a minimum rim size and maximum cold tire inflation pressure.
- Vehicle Identification Number (VIN).
- Type of vehicle.
- Type of rear wheels.
- Bar code.
- Month, Day and Hour (MDH) of final assembly.
- Paint and Trim codes.
- Country of origin.

The label is located on the driver-side door shut-face.

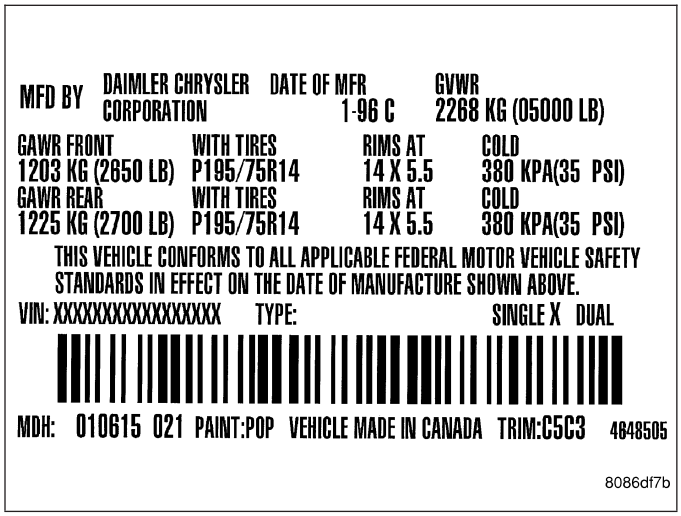

LUBRICATION & MAINTENANCE

TABLE OF CONTENTS

page

INTERNATIONAL SYMBOLS
DESCRIPTION 1
PARTS & LUBRICANT RECOMMENDATION
DESCRIPTION
LUBRICANT RECOMMENDATIONS 2
FLUID TYPES 2
FLUID TYPES
DESCRIPTION
ENGINE OIL 3
FUEL REQUIREMENTS - DIESEL ENGINE . . . 4
ENGINE OIL - DIESEL ENGINES 4
POWER STEERING FLUID 5
ENGINE COOLANT 5
TRANSFER CASE 6
AXLE 6
MANUAL TRANSMISSION 6
AUTOMATIC TRANSMISSION FLUID 6

page

OPERATION - AUTOMATIC TRANSMISSION FLUID 7
FLUID CAPACITIES
SPECIFICATIONS
FLUID CAPACITIES 7
MAINTENANCE SCHEDULES
DESCRIPTION
MAINTENANCE SCHEDULES 9
24-VALVE CUMMINS TURBO DIESEL MAINTENANCE SCHEDULES 17
MAINTENANCE SCHEDULES - SRT/10 24
JUMP STARTING
STANDARD PROCEDURE - JUMP STARTING . 31
HOISTING
STANDARD PROCEDURE - HOISTING 33
TOWING
STANDARD PROCEDURE 37

INTERNATIONAL SYMBOLS

DESCRIPTION

DaimlerChrysler Corporation uses international symbols to identify engine compartment lubricant and fluid inspection and fill locations.

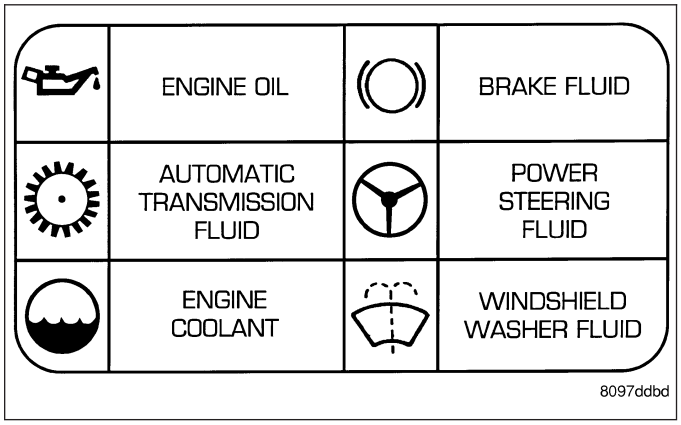

PARTS & LUBRICANT RECOMMENDATION

DESCRIPTION

LUBRICANT RECOMMENDATIONS

Chassis

Component	Fluid, Lubricant, or Genuine Part
Steering Gear & Linkage, Ball Joints, Prop Shafts & Yokes, Wheel Bearings	Mopar® Multi-Purpose Lubricant NLGI Grade 2 EP, GC-LB

Body

Component	Fluid, Lubricant, and Genuine Part
Hinges:	
Door & Hood	Mopar® Engine Oil
Swing Gate	Mopar® Multi-Purpose Lube NLGI Grade 2 EP, GC-LB
Latches: Door, Hood/Safety Catch, Swing Gate	Mopar® Multi-Purpose Lube NLGI Grade 2 EP, GC-LB
Seat Regulator & Track	Mopar® Multi-Purpose Lube NLGI Grade 2 EP, GC-LB
Lock Cylinders	Mopar® Lock Cylinder Lube

FLUID TYPES

When service is required, DaimlerChrysler Corporation recommends that only Mopar® brand parts, lubricants and chemicals be used. Mopar® provides the best engineered products for servicing DaimlerChrysler Corporation vehicles.

Only lubricants bearing designations defined by the following organization should be used to service a Chrysler Corporation vehicle.

- Society of Automotive Engineers (SAE)
- American Petroleum Institute (API)
- National Lubricating Grease Institute (NLGI)

API QUALITY CLASSIFICATION

This symbol on the front of an oil container means that the oil has been certified by the American Petroleum Institute (API) to meet all the lubrication requirements specified by DaimlerChrysler Corporation.



9400-9

GEAR LUBRICANTS

SAE ratings also apply to multigrade gear lubricants. In addition, API classification defines the lubricants usage. Such as API GL-5 and SAE 75W-90.

FLUID TYPES

DESCRIPTION

ENGINE OIL

WARNING: NEW OR USED ENGINE OIL CAN BE IRRITATING TO THE SKIN. AVOID PROLONGED OR REPEATED SKIN CONTACT WITH ENGINE OIL. CONTAMINANTS IN USED ENGINE OIL, CAUSED BY INTERNAL COMBUSTION, CAN BE HAZARDOUS TO YOUR HEALTH. THOROUGHLY WASH EXPOSED SKIN WITH SOAP AND WATER. DO NOT WASH SKIN WITH GASOLINE, DIESEL FUEL, THINNER, OR SOLVENTS, HEALTH PROBLEMS CAN RESULT. DO NOT POLLUTE, DISPOSE OF USED ENGINE OIL PROPERLY. CONTACT YOUR DEALER OR GOVERNMENT AGENCY FOR LOCATION OF COLLECTION CENTER IN YOUR AREA.

Only lubricants bearing designations defined by the following organization should be used.

- Society of Automotive Engineers (SAE)
- American Petroleum Institute (API)
- National Lubricating Grease Institute (NLGI)
- Association des Constructeurs Européens d' Automobiles (European Automobile Manufacturers Association) (ACEA)

API SERVICE GRADE CERTIFIED

Use an engine oil that is API Certified. MOPAR® provides engine oils, that meet or exceed this requirement.

SAE VISCOSITY

An SAE viscosity grade is used to specify the viscosity of engine oil. Use only engine oils with multiple viscosities such as 5W-30 or 10W-30. These are specified with a dual SAE viscosity grade which indicates the cold-to-hot temperature viscosity range. Select an engine oil that is best suited to your particular temperature range and variation. **For 3.7L/4.7L engines SAE 5W-30 engine oil is recommended for all operating temperatures. For 5.7L engines SAE 5W-20 engine oil is recommended for all operating temperatures-.These engine oils improve low temperature starting and vehicle fuel economy. Refer to your engine oil filler cap for the recommended engine oil viscosity for your vehicle.**

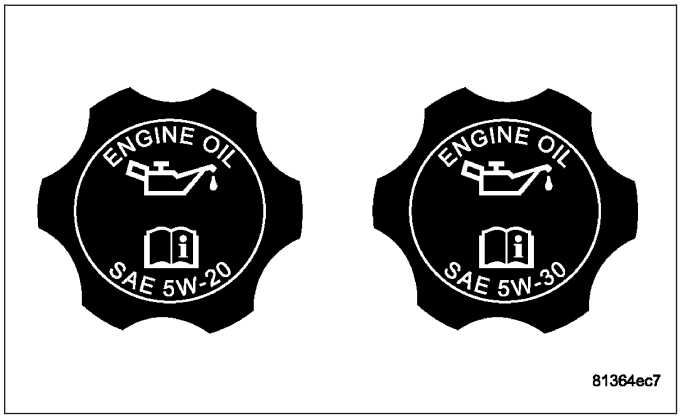

ACEA Categories

For countries that use the ACEA European Oil Categories for Service Fill Oils, use engine oils that meet the requirements of ACEA A1/B1, A2/B2, or A3/B3.

ENERGY CONSERVING OIL

An Energy Conserving type oil is recommended for gasoline engines. The designation of ENERGY CONSERVING is located on the label of an engine oil container.

CONTAINER IDENTIFICATION

Standard engine oil identification notations have been adopted to aid in the proper selection of engine oil. The identifying notations are located on the front label of engine oil plastic bottles and the top of engine oil cans.

This symbol means that the oil has been certified by the American Petroleum Institute (API). Diamler-Chrysler only recommend API Certified engine oils. Use Mopar® engine oil or equivalent.

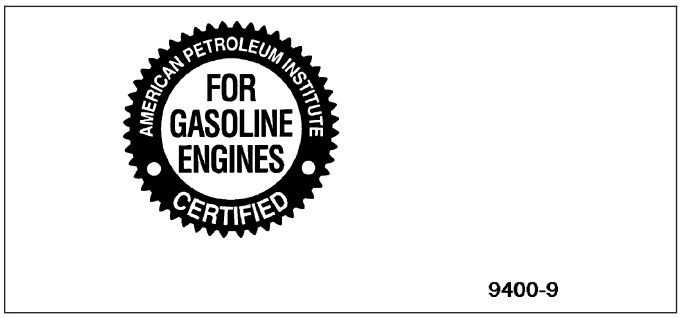

FUEL REQUIREMENTS - DIESEL ENGINE

WARNING: Do not use alcohol or gasoline as a fuel blending agent. They can be unstable under certain conditions and hazardous or explosive when mixed with diesel fuel.

Use good quality diesel fuel from a reputable supplier in your Dodge truck. For most year-round service, number 2 diesel fuel meeting ASTM specification D-975 will provide good performance. If the vehicle is exposed to extreme cold (below 0°F/-18°C), or is required to operate at colder-than-normal conditions for prolonged periods, use climatized No. 2 diesel fuel or dilute the No. 2 diesel fuel with 50% No. 1 diesel fuel. This will provide better protection from fuel gelling or wax-plugging of the fuel filters.

Diesel fuel is seldom completely free of water. To prevent fuel system trouble, including fuel line freezing in winter, drain the accumulated water from the fuel/water separator using the fuel/water separator drain provided. If you buy good-quality fuel and follow the cold-weather advice above, fuel conditioners should not be required in your vehicle. If available in your area, a high cetane “premium” diesel fuel may offer improved cold starting and warm-up performance.

ENGINE OIL - DIESEL ENGINES

Use only Diesel Engine Oil meeting standard **MIL-2104C** or API Classification **CD or higher** or **CCML D4, D5**.

SAE VISCOSITY GRADE

CAUTION: Low viscosity oils must have the proper API quality or the CCMC G5 designation.

To assure of properly formulated engine oils, it is recommended that SAE Grade 10W-40 engine oils that meet Chrysler material standard MS-6395, be used in accordance to ACEA B3, B4 specification. European Grade 10W-40 oils that meet Association des Constructeurs Européens d’ Automobiles (European Automobile Manufacturers Association) (ACEA) specifications, are also acceptable.

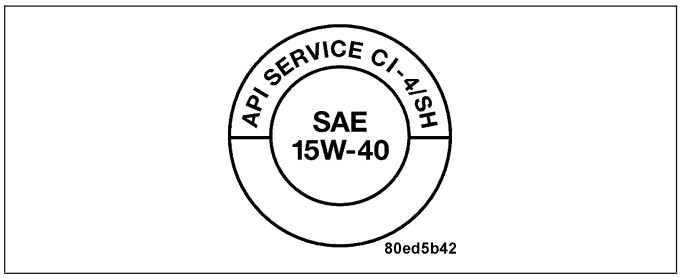

Oils of the SAE 5W-40 grade number are preferred when minimum temperatures consistently fall below -15°C.

ACEA Categories

For countries that use the ACEA European Oil Categories for Service Fill Oils, use engine oils that meet the requirements of ACEA A1/B1, A2/B2, or A3/B3.

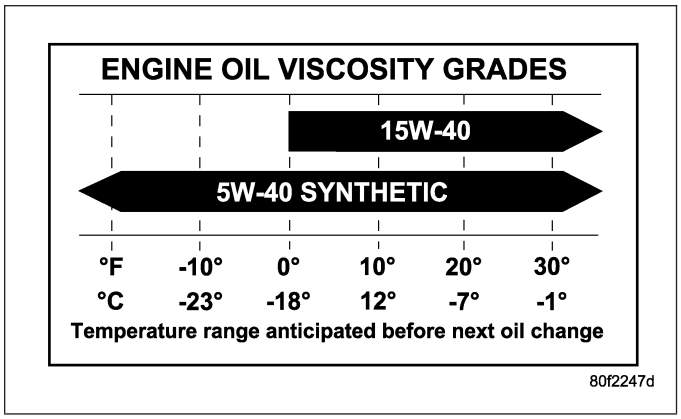

POWER STEERING FLUID

Mopar® ATF +4, Automatic Transmission Fluid is required in the power steering system. Substitute fluids can induce power steering system failure.

Mopar® ATF +4, Automatic Transmission Fluid when new is red in color. The ATF is dyed red so it can be identified from other fluids used in the vehicle such as engine oil or antifreeze. The red color is not permanent and is not an indicator of fluid condition. As the vehicle is driven, the ATF will begin to look darker in color and may eventually become brown. **This is normal.** ATF+4 also has a unique odor that may change with age. Consequently, odor and color cannot be used to indicate the fluid condition or the need for a fluid change.

ENGINE COOLANT

WARNING: ANTIFREEZE IS AN ETHYLENE GLYCOL BASE COOLANT AND IS HARMFUL IF SWALLOWED OR INHALED. IF SWALLOWED, DRINK TWO GLASSES OF WATER AND INDUCE VOMITING. IF INHALED, MOVE TO FRESH AIR AREA. SEEK MEDICAL ATTENTION IMMEDIATELY. DO NOT STORE IN OPEN OR UNMARKED CONTAINERS. WASH SKIN AND CLOTHING THOROUGHLY AFTER COMING IN CONTACT WITH ETHYLENE GLYCOL. KEEP OUT OF REACH OF CHILDREN. DISPOSE OF GLYCOL BASE COOLANT PROPERLY, CONTACT YOUR DEALER OR GOVERNMENT AGENCY FOR LOCATION OF COLLECTION CENTER IN YOUR AREA.

WARNING: DO NOT OPEN A COOLING SYSTEM WHEN THE ENGINE IS AT OPERATING TEMPERATURE OR HOT UNDER PRESSURE, PERSONAL INJURY CAN RESULT. AVOID RADIATOR COOLING FAN WHEN ENGINE COMPARTMENT RELATED SERVICE IS PERFORMED, PERSONAL INJURY CAN RESULT.

CAUTION: Use of Propylene Glycol based coolants is not recommended, as they provide less freeze protection and less corrosion protection.

The cooling system is designed around the coolant. The coolant must accept heat from engine metal, in the cylinder head area near the exhaust valves and engine block. Then coolant carries the heat to the radiator where the tube/fin radiator can transfer the heat to the air.

The use of aluminum cylinder blocks, cylinder heads, and water pumps requires special corrosion protection. Mopar® Antifreeze/Coolant, 5 Year/100,000 Mile Formula (MS-9769), or the equivalent ethylene glycol base coolant with organic corrosion inhibitors (called HOAT, for Hybrid Organic Additive Technology) is recommended. This coolant offers the best engine cooling without corrosion when mixed with 50% Ethylene Glycol and 50% distilled water to obtain a freeze point of -37°C (-35°F). If it loses color or becomes contaminated, drain, flush, and replace with fresh properly mixed coolant solution.

CAUTION: Do not use coolant additives that are claimed to improve engine cooling.

CAUTION: Mopar® Antifreeze/Coolant, 5 Year/100,000 Mile Formula (MS-9769) may not be mixed with any other type of antifreeze. Mixing of coolants other than specified non-HOAT or other HOAT coolant, may result in engine damage that may not be covered under the new vehicle warranty, and decreased corrosion protection.

COOLANT PERFORMANCE

The required ethylene-glycol (antifreeze) and distilled water mixture depends upon climate and vehicle operating conditions. The coolant performance of various mixtures follows:

Pure Distilled Water - Distilled water can absorb more heat than a mixture of water and ethylene-glycol. This is for purpose of heat transfer only. Water also freezes at a higher temperature and allows corrosion.

100 percent Ethylene-Glycol - The corrosion inhibiting additives in ethylene-glycol need the presence of distilled water to dissolve. Without water, additives form deposits in system. These act as insulation causing temperature to rise to as high as 149°C (300°F). This temperature is hot enough to melt plastic and soften solder. The increased temperature can result in engine detonation. In addition, 100 percent ethylene-glycol freezes at -22°C (-8°F).

50/50 Ethylene-Glycol and Distilled Water - Is the recommended mixture, it provides protection against freezing to -37°C (-34°F). The antifreeze concentration **must always** be a minimum of 44 percent, year-round in all climates. If percentage is lower, engine parts may be eroded by cavitation. Maximum protection against freezing is provided with a 68 percent antifreeze concentration, which prevents freezing down to -67.7°C (-90°F). A higher percentage will freeze at a warmer temperature. Also, a higher percentage of antifreeze can cause the engine to overheat because specific heat of antifreeze is lower than that of water.

CAUTION: Richer antifreeze mixtures cannot be measured with normal field equipment and can cause problems associated with 100 percent ethylene-glycol.

TRANSFER CASE

Recommended lubricant for the NV241 GENII, NV271, NV243, NV244 GENII, and NV273 transfer cases is Mopar® ATF +4, Automatic Transmission Fluid.

AXLE

NOTE: DaimlerChrysler recommends using Mopar® lubricants or lubricants of equal quality.

FRONT AXLE

- C205F - Mopar® Gear Lubricant 75W-90
- 9 1/4 AA - Mopar® Synthetic Gear Lubricant 75W-90
- 9 1/4 AA EL- Mopar® Synthetic Gear Lubricant 75W-90

REAR AXLE

- 9 1/4 - Mopar® Synthetic Gear Lubricant 75W-140
- 10 1/2 AA - Mopar® Synthetic Gear Lubricant 75W-90
- 10 1/2 AA EL- Mopar® Synthetic Gear Lubricant 75W-90
- 11 1/2 AA - Mopar® Synthetic Gear Lubricant 75W-90
- 248RBI - Mopar® Gear & Axle Lubricant SAE 90

NOTE: Trac-Lok® differentials require Limited Slip Additive in the lubricant. Trac-Rite™ / Trac-Rite EL™ differentials DO NOT require Limited Slip Additive.

MANUAL TRANSMISSION

NOTE: DaimlerChrysler recommends using Mopar® lubricants or lubricants of equal quality.

- NV5600 - Mopar® Manual Transmission Lubricant
- NV4500 - Mopar® Synthetic 75W-85 Manual Transmission Lubricant
- Getrag 238 - Mopar® ATF+4 Transmission Fluid
- G 56 - Mopar® ATF+4 Transmission Fluid
- T-56 - Mopar® Synthetic 75W-85 Manual Transmission Lubricant

AUTOMATIC TRANSMISSION FLUID

NOTE: Refer to Service Procedures in this group for fluid level checking procedures.

Mopar® ATF +4, Automatic Transmission Fluid is the recommended fluid for DaimlerChrysler automatic transmissions.

Dexron II fluid IS NOT recommended. Clutch chatter can result from the use of improper fluid.

Mopar® ATF +4, Automatic Transmission Fluid when new is red in color. The ATF is dyed red so it can be identified from other fluids used in the vehicle such as engine oil or antifreeze. The red color is not permanent and is not an indicator of fluid condition. As the vehicle is driven, the ATF will begin to look darker in color and may eventually become brown. **This is normal.** ATF+4 also has a unique odor that may change with age. Consequently, odor and color cannot be used to indicate the fluid condition or the need for a fluid change.

FLUID ADDITIVES

DaimlerChrysler strongly recommends against the addition of any fluids to the transmission, other than those automatic transmission fluids listed above. Exceptions to this policy are the use of special dyes to aid in detecting fluid leaks.

Various “special” additives and supplements exist that claim to improve shift feel and/or quality. These additives and others also claim to improve converter clutch operation and inhibit overheating, oxidation, varnish, and sludge. These claims have not been supported to the satisfaction of DaimlerChrysler and these additives **must not be used.** The use of transmission “sealers” should also be avoided, since they may adversely affect the integrity of transmission seals.

OPERATION - AUTOMATIC TRANSMISSION FLUID

The automatic transmission fluid is selected based upon several qualities. The fluid must provide a high level of protection for the internal components by providing a lubricating film between adjacent metal components. The fluid must also be thermally stable so that it can maintain a consistent viscosity through a large temperature range. If the viscosity stays constant through the temperature range of operation, transmission operation and shift feel will remain consistent. Transmission fluid must also be a good conductor of heat. The fluid must absorb heat from the internal transmission components and transfer that heat to the transmission case.

FLUID CAPACITIES

SPECIFICATIONS

FLUID CAPACITIES

DESCRIPTION	SPECIFICATION
FUEL TANK	
1500 Short Box	98 L (26 gal.)*
2500/3500 Short Box	128L (34 gal.)*
All Long Box	132 L (35 gal.)*
ENGINE OIL WITH FILTER	
3.7L	4.7 L (5.0 qts.)
4.7L	5.6 L (6.0 qts.)
5.7L	6.6 L (7.0 qts.)
5.9L DIESEL	11.4 L (12.0 qts.)
8.3L - Oil Service Quantity	8.2L (8.75 qts.)
8.3L - Engine Overhaul Quantity	9.4L (10.0 qts.)
COOLING SYSTEM	
3.7L	15.4 L (16.2 qts.)**
4.7L	15.4 L (16.2 qts.)**
5.7L	15.4L (16.2 qts.)**
5.9L Diesel Engine	28L (29.5 qts.)**

DESCRIPTION	SPECIFICATION
8.3L	15.1L (18 qts.)
POWER STEERING	
Power steering fluid capacities are dependent on engine/chassis options as well as steering gear/cooler options. Depending on type and size of internal cooler, length and inside diameter of cooler lines, or use of an auxiliary cooler, these capacities may vary. Refer to 19, Steering for proper fill and bleed procedures.	
AUTOMATIC TRANSMISSION	
Service Fill - 48RE	3.8 L (4.0 qts.)
Overhaul - 48RE	14-16L (29-33 pts.) ♢
Service Fill - 45RFE/545RFE	4X2 - 5.2 L (11.0 pts.)
	4X4 - 6.2 L (13.0 pts.)
Overhaul - 45RFE/545RFE	14-16 L (29-33 pts.) ♢
♢ Dry fill capacity. Depending on type and size of internal cooler, length and inside diameter of cooler lines, or use of an auxiliary cooler, these figures may vary. (Refer to 21 - TRANSMISSION/AUTOMATIC/FLUID - STANDARD PROCEDURE)	
MANUAL TRANSMISSION	
G56	5.67 L (12 pts.)
GETRAG 238	2.2 L (4.2 pts.)
NV5600	4.50 L (9.5 pts.)
NV4500	3.79 L (8.0 pts.)
TREMEC T-56	2.27 L (4.8 pts.)
TRANSFER CASE	
NV241 GENII	1.6 L (3.4 pts.)
NV243	1.6 L (3.4 pts.)
NV244 GENII	1.6 L (3.4 pts.)
NV271	1.89 L (4.0 pts.)
NV273	1.89 L (4.0 pts.)
FRONT AXLE ± .03 L (1 oz)	
C205F	1.6 L (56 oz.)
9 1/4 AA	2.2 L (76 oz.)
9 1/4 AA EL	2.2 L (76 oz.)
REAR AXLE ± .03 L (1 oz)	
9 1/4	2.1 L (72 oz.)***
10 1/2 AA	2.5 L (85 oz.)
10 1/2 AA EL	2.5 L (85 oz.)
11 1/2 AA	3.6 L (122 oz.)
248RBI (DANA 60)	2.8 L (46 oz.)****
**** Add 147 ml (5 oz.) of Limited Slip Additive	
*** With Trac-Lok add 118 ml (4 oz.) of Limited Slip Additive.	
** Includes 0.9L (1.0 qts.) for coolant reservoir.	
*Nominal refill capacities are shown. A variation may be observed from vehicle to vehicle due to manufacturing tolerance and refill procedure.	

MAINTENANCE SCHEDULES

DESCRIPTION

MAINTENANCE SCHEDULES

There are two maintenance schedules that show the **required** service for your vehicle.

First is Schedule **"B"**. It is for vehicles that are operated under the conditions that are listed below and at the beginning of the schedule.

- Day or night temperatures are below 32° F (0° C).
- Stop and go driving.
- Extensive engine idling.
- Driving in dusty conditions.
- Short trips of less than 10 miles (16 km).
- More than 50% of your driving is at sustained high speeds during hot weather, above 90° F C (32°).
- Trailer towing.
- Snowplowing.
- Heavy Loading.
- Taxi, police, or delivery service (commercial service).
- Off-road or desert operation.
- **If equipped for and operating with E-85 (ethanol) fuel.**

NOTE: If ANY of these apply to you then change your engine oil every 3,000 miles (5 000 km) or 3 months, whichever comes first and follow schedule "B" of the ″Maintenance Schedules″ section of this manual.

NOTE: If ANY of these apply to you then flush and replace your engine coolant every 102,000 miles (163 000 km) or 60 months, whichever comes first and follow schedule "B" of the ″Maintenance Schedules″ section of this manual.

NOTE: Most vehicles are operated under the conditions listed for Schedule ″B″.

Second is Schedule **"A"**. It is for vehicles that are not operated under any of the conditions listed under Schedule ″B″.

Use the schedule that best describes your driving conditions. Where time and mileage are listed, follow the interval that occurs first.

NOTE: Under no circumstances should oil change intervals exceed 6000 miles (10 000 km) or 6 months whichever comes first.

CAUTION: Failure to perform the required maintenance items may result in damage to the vehicle.

At Each Stop for Fuel

- Check the engine oil level about 5 minutes after a fully warmed engine is shut off. Checking the oil level while the vehicle is on level ground will improve the accuracy of the oil level reading. Add oil only when the level is at or below the ADD or MIN mark.
- Check the windshield washer solvent and add if required.

Once a Month

- Check tire pressure and look for unusual wear or damage.
- Inspect the battery and clean and tighten the terminals as required.
- Check the fluid levels of coolant bottle, brake master cylinder, and transmission and add as needed.
- Check all lights and all other electrical items for correct operation.

At Each Oil Change

- Change the engine oil filter.
- Drivetrain/Steering/Suspension Grease Fittings (if equipped)
- Inspect the exhaust system.
- Inspect the brake hoses.
- Inspect the CV joints (if equipped) and front suspension components.
- Check the automatic transmission fluid level.
- Check the manual transmission fluid level.
- Check the coolant level, hoses, and clamps.

Schedule “B”

Follow schedule “B” if you usually operate your vehicle under one or more of the following conditions.

- Day or night temperatures are below 32° F (0° C).
- Stop and go driving.
- Extensive engine idling.
- Driving in dusty conditions.
- Short trips of less than 10 miles (16 km).
- More than 50% of your driving is at sustained high speeds during hot weather, above 90° F C (32°).
- Trailer towing.
- Snowplowing.
- Heavy Loading.
- Taxi, police, or delivery service (commercial service).
- Off-road or desert operation.
- **If equipped for and operating with E-85 (ethanol) fuel.**

NOTE: If ANY of these apply to you then change your engine oil every 3,000 miles (5 000 km) or 3 months, whichever comes first and follow schedule “B” of the ″Maintenance Schedules″ section of this manual.

NOTE: If ANY of these apply to you then flush and replace your engine coolant every 102,000 miles (163 000 km) or 60 months, whichever comes first and follow schedule “B” of the ″Maintenance Schedules″ section of this manual.

If none of these apply to you, then change your engine oil at every interval shown on schedule ″A″ of the ″Maintenance Schedules″ section of this manual.

Miles **(Kilometers)**	**3,000** **(5 000)**	**6,000** **(10 000)**	**9,000** **(14 000)**	**12,000** **(19 000)**	**15,000** **(24 000)**
Change engine oil and engine oil filter at interval shown or 3 months, whichever comes first.	X	X	X	X	X
Rotate tires.		X		X	
Lubricate outer tie rod ends 2500/3500 (4X4) models only.		X		X	
Change rear axle fluid.					X
Change front axle fluid (4X4).					X
Inspect brake linings.				X	
Inspect engine air cleaner filter, replace if necessary.					X

Miles	**18,000**	**21,000**	**24,000**	**27,000**	**30,000**
(Kilometers)	**(29 000)**	**(34 000)**	**(38 000)**	**(43 000)**	**(48 000)**
Change engine oil and engine oil filter at interval shown or 3 months, whichever comes first.	X	X	X	X	X
Rotate tires.	X		X		X
Lubricate outer tie rod ends 2500/3500 (4X4) models only.	X		X		X
Change rear axle fluid.					X
Change front axle fluid (4X4).					X
Check transfer case fluid level (4X4).					X
Inspect brake linings.			X		
Inspect engine air cleaner filter, replace if necessary.					X
Replace spark plugs.					X
Inspect PCV valve, replace as necessary.					X

Miles	**33,000**	**36,000**	**39,000**	**42,000**	**45,000**
(Kilometers)	**(53 000)**	**(58 000)**	**(62 000)**	**(67 000)**	**(72 000)**
Change engine oil and engine oil filter at interval shown or 3 months, whichever comes first.	X	X	X	X	X
Rotate tires.		X		X	
Lubricate outer tie rod ends 2500/3500 (4X4) models only.		X		X	
Change rear axle fluid.					X
Change front axle fluid (4X4).					X
Inspect brake linings.		X			
Inspect engine air cleaner filter, replace if necessary.					X

Miles **(Kilometers)**	**48,000** **(77 000)**	**51,000** **(82 000)**	**54,000** **(86 000)**	**57,000** **(91 000)**	**60,000** **(96 000)**
Change engine oil and engine oil filter at interval shown or 3 months, whichever comes first.	X	X	X	X	X
Rotate tires.	X		X		X
Lubricate outer tie rod ends 2500/3500 (4X4) models only.	X		X		X
Flush and replace engine coolant at 60 months, regardless of mileage.					
Drain and refill transfer case fluid (4X4).					X
Change rear axle fluid.					X
Change front axle fluid (4X4).					X
Change 6-spd manual transmission fluid 2500/3500 models only.					X
Inspect brake linings.	X				X
Inspect engine air cleaner filter, replace if necessary.					X
Replace spark plugs.					X
Replace ignition cables.					X
Inspect PCV valve, replace as necessary.					X
Drain and refill automatic transmission fluid and change main sump filter*.					X

Miles **(Kilometers)**	**63,000** **(101 000)**	**66,000** **(106 000)**	**69,000** **(110 000)**	**72,000** **(115 000)**	**75,000** **(120 000)**
Change engine oil and engine oil filter at interval shown or 3 months, whichever comes first.	X	X	X	X	X
Rotate tires.		X		X	
Lubricate outer tie rod ends 2500/3500 (4X4) models only.		X		X	
Inspect engine air cleaner filter. Replace if necessary.					X
Change rear axle fluid.					X
Change front axle fluid (4X4).					X
Inspect brake linings.				X	
Inspect auto tension drive belt and replace if required. (3.7L/4.7L/5.7L).					X

Miles	**78,000**	**81,000**	**84,000**	**87,000**	**90,000**
(Kilometers)	**(125 000)**	**(130 000)**	**(134 000)**	**(139 000)**	**(144 000)**
Change engine oil and engine oil filter at interval shown or 3 months, whichever comes first.	X	X	X	X	X
Rotate tires.	X		X		X
Lubricate outer tie rod ends 2500/3500 (4X4) models only.	X		X		X
Change rear axle fluid.					X
Change front axle fluid (4X4).					X
Check transfer case fluid level (4X4).					X
Inspect brake linings.			X		
Inspect engine air cleaner filter, replace if necessary.					X
Replace spark plugs.					X
Inspect PCV valve, replace as necessary.					X
Inspect auto tension drive belt and replace if required (3.7L/4.7L/5.7L).					X‡

Miles	**93,000**	**96,000**	**99,000**	**100,000**	**102,000**
(Kilometers)	**(149 000)**	**(154 000)**	**(158 000)**	**(160 000)**	**(163 000)**
Change engine oil and engine oil filter at interval shown or 3 months, whichever comes first.	X	X	X		X
Rotate tires.		X			X
Lubricate outer tie rod ends 2500/3500 (4X4) models only.		X			X
Flush and replace engine coolant.					X
Flush and replace Power Steering Fluid.				X	
Inspect brake linings.		X			

Miles (Kilometers)	**105,000** (168 000)	**108,000** (173 000)	**111,000** (178 000)	**114,000** (182 000)	**117,000** (187 000)	**120,000** (192 000)
Change engine oil and engine oil filter at interval shown or 3 months, whichever comes first.	X	X	X	X	X	X
Rotate tires.		X		X		X
Lubricate outer tie rod ends 2500/3500 (4X4) models only.		X		X		X
Drain and refill transfer case fluid (4X4).						X
Change rear axle fluid.	X					X
Change front axle fluid (4X4).	X					X
Change 6-spd manual transmission fluid 2500/3500 models only.						X
Inspect brake linings.		X				X
Inspect engine air cleaner filter, replace if necessary.	X					X
Replace spark plugs.						X
Replace ignition cables.						X
Inspect PCV valve, replace as necessary.						X
Inspect auto tension drive belt and replace if required (3.7L/4.7L/5.7L).	X‡					X‡
Drain and refill automatic transmission fluid and change main sump and spin-on cooler return filter (if equipped)*.						X

* This applies only if the vehicle is used for frequent trailer towing, snowplowing, fleet vehicle or commercial service.

‡ This maintenance is not required if previously replaced.

Inspection and service should also be performed anytime a malfunction is observed or suspected. Retain all receipts.

Schedule "A"

Miles **(Kilometers)** **[Months]**	**6,000** **(10 000)** **[6]**	**12,000** **(19 000)** **[12]**	**18,000** **(29 000)** **[18]**	**24,000** **(38 000)** **[24]**	**30,000** **(48 000)** **[30]**
Change engine oil and engine oil filter.	X	X	X	X	X
Rotate tires.	X	X	X	X	X
Check transfer case fluid level (4X4).					X
Lubricate outer tie rod ends 2500/3500 (4X4) models only.	X	X	X	X	X
Inspect brake linings.			X		
Isnpect engine air cleaner filter. Replace if necessary.					X
Replace spark plugs.					X

Miles **(Kilometers)** **[Months]**	**36,000** **(58 000)** **[36]**	**42,000** **(67 000)** **[42]**	**48,000** **(77 000)** **[48]**	**54,000** **(84 000)** **[54]**	**60,000** **(96 000)** **[60]**	**66,000** **(106 000)** **[66]**
Change engine oil and engine oil filter.	X	X	X	X	X	X
Rotate tires.	X	X	X	X	X	X
Check transfer case fluid level (4X4).					X	
Lubricate outer tie rod ends 2500/3500 (4X4) models only.	X	X	X	X	X	X
Flush and replace engine coolant at 60 months, regardless of mileage.					X	
Inspect brake linings.	X			X		
Isnpect engine air cleaner filter. Replace if necessary.					X	
Replace spark plugs.					X	
Inspect PCV valve, replace as necessary.					X	
Replace ignition cables.					X	

Miles **(Kilometers)** **[Months]**	**72,000** **(115000)** **[72]**	**78,000** **(125 000)** **[78]**	**84,000** **(134 000)** **[84]**	**90,000** **(144 000)** **[90]**	**96,000** **(154 000)** **[96]**	**100,000** **160 000**
Change engine oil and engine oil filter.	X	X	X	X	X	
Rotate tires.	X	X	X	X	X	
Lubricate outer tie rod ends 2500/3500 (4X4) models only.	X	X	X	X	X	
Check transfer case fluid level (4X4).				X		
Flush and replace Power Steering Fluid.						X
Inspect brake linings.	X			X		
Isnpect engine air cleaner filter. Replace if necessary.				X		
Replace spark plugs.				X		
Inspect PCV valve, replace as necessary.				X		
Inspect auto tension drive belt and replace if required (3.7L/4.7L/5.7L).				X		

Miles **(Kilometers)** **[Months]**	**102,000** **(163 000)** **[102]**	**108,000** **(173 000)** **[108]**	**114,000** **(182 000)** **[114]**	**120,000** **(192 000)** **[120]**
Change engine oil and engine oil filter.	X	X	X	X
Rotate tires.	X	X	X	X
Drain and refill transfer case fluid (4X4).				X
Flush and replace engine coolant, if not done at 60 mos.	X			
Lubricate outer tie rod ends 2500/3500 (4X4) models only.	X	X	X	X
Inspect brake linings.		X		
Inspect auto tension drive belt and replace if required (3.7L/4.7L/5.7L).	X‡			X‡
Replace ignition cables.				X
Isnpect engine air cleaner filter. Replace if necessary.				X
Replace spark plugs.				X
Inspect PCV Valve, replace as necessary				X

‡ This maintenance is not required if previously replaced.

Inspection and service should also be performed anytime a malfunction is observed or suspected. Retain all receipts.

WARNING:
You can be badly injured working on or around a motor vehicle. Do only that service work for which you have the knowledge and the right equipment. If you have any doubt about your ability to perform a service job, take your vehicle to a competent mechanic.

24-VALVE CUMMINS TURBO DIESEL MAINTENANCE SCHEDULES

There are two maintenance schedules that show the **required** service for your vehicle.

First is Schedule **"B"**. It is for vehicles that are operated under the conditions that are listed below and at the beginning of the schedule.

- Frequent short trips where the engine does not achieve full operating temperature (operating temperature defined as 190° F (66° C) coolant temperature).
- Extensive engine idling (over 10 minutes per hour of operation) at ambient temperatures less than 32° F (0° C).
- Driving in dusty conditions.
- Frequent trailer towing.
- Taxi, police, or delivery service (commercial service).
- Off-road or desert operation.
- Extensive operation at high engine speeds (greater than 2900 rpm) and loads (greater than 70% throttle).

NOTE: Most vehicles are operated under the conditions listed for Schedule ″B″.

Second is Schedule **"A"**. It is for vehicles that are not operated under any of the conditions listed under Schedule ″B″.

Use the schedule that best describes your driving conditions. Where time and mileage are listed, follow the interval that occurs first.

CAUTION: Failure to perform the required maintenance items may result in damage to the vehicle.

At Each Stop for Fuel

- Check the engine oil level about 15 minutes after a fully warmed engine is shut off. Checking the oil level while the vehicle is on level ground will improve the accuracy of the oil level reading. Add oil only when the level is at or below the ADD or MIN mark.
- Check the windshield washer solvent and add if required.
- Drain water from the fuel filter.

Once a Month

- Check tire pressure and look for unusual wear or damage.
- Inspect the batteries and clean and tighten the terminals as required.
- Check the fluid levels of coolant reservoir, brake master cylinder, and transmission and transfer case (if equipped), add as needed.
- **Check Filter Minder™. Replace air cleaner filter element if necessary.**
- Check all lights and all other electrical items for correct operation.

At Each Oil Change

- Change the engine oil filter.
- Inspect the exhaust system.
- Inspect the brake hoses.
- Inspect the CV joints (if equipped) and front suspension components.
- Check the automatic transmission fluid level.
- Check the manual transmission fluid level.
- Check the coolant level, hoses, and clamps.

Schedule "B"

Follow schedule "B" if you usually operate your vehicle under one or more of the following conditions.

- Frequent short trips where the engine does not achieve full operating temperature (operating temperature defined as 190° F (66° C) coolant temperature).
- Extensive engine idling (over 10 minutes per hour of operation) at ambient temperatures less than 32° F (0° C).
- Driving in dusty conditions.
- Frequent trailer towing.
- Taxi, police, or delivery service (commercial service).
- Off-road or desert operation.
- Extensive operation at high engine speeds (greater than 2900 rpm) and loads (greater than 70% throttle).

Miles	**3,750**	**7,500**	**11,250**	**15,000**	**18,750**
(Kilometers)	**(6 000)**	**(12 000)**	**(18 000)**	**(24 000)**	**(30 000)**
Change engine oil and engine oil filter.		X		X	
Rotate tires.		X		X	
Lubricate outer tie rod ends 2500/3500 (4X4) models only.		X		X	
Inspect water pump weep hole for blockage.				X	
Replace fuel filter element. Clean the water in fuel sensor.				X	
Change rear axle fluid.				X	
Change front axle fluid (4X4).				X	
Inspect brake linings.				X	
Inspect and adjust parking brake if necessary.				X	

Miles	**22,500**	**26,250**	**30,000**	**33,750**	**37,500**
(Kilometers)	**(36 000)**	**(42 000)**	**(48 000)**	**(54 000)**	**(60 000)**
Change engine oil and engine oil filter.	X		X		X
Rotate tires.	X		X		X
Lubricate outer tie rod ends 2500/3500 (4X4) models only.	X		X		X
Inspect drive belt, replace as required.	X				
Inspect fan hub.			X		
Inspect damper.			X		
Inspect water pump weep hole for blockage.			X		
Replace fuel filter element. Clean the water in fuel sensor.			X		
Change rear axle fluid.			X		
Change front axle fluid (4X4).			X		
Check transfer case fluid level (4X4).			X		
Drain and refill automatic transmission fluid. Replace filter and adjust bands (48RE only).			X		

Miles (Kilometers)	41,250 (66 000)	45,000 (72 000)	48,750 (78 000)	52,500 (84 000)	56,250 (90 000)
Change engine oil and engine oil filter.		X		X	
Rotate tires.		X		X	
Lubricate outer tie rod ends 2500/3500 (4X4) models only.		X		X	
Inspect drive belt, replace as required.		X			
Inspect water pump weep hole for blockage.		X			
Replace fuel filter element. Clean the water in fuel sensor.		X			
Inspect brake linings.		X			
Inspect and adjust parking brake if necessary.		X			
Change rear axle fluid.		X			
Change front axle fluid (4X4).		X			

Miles (Kilometers)	60,000 (96 000)	63,750 (102 000)	67,500 (108 000)	71,250 (114 000)	75,000 (120 000)
Change engine oil and engine oil filter.	X		X		X
Rotate tires.	X		X		X
Lubricate outer tie rod ends 2500/3500 (4X4) models only.	X		X		X
Inspect drive belt, replace as required.			X		
Inspect fan hub.	X				
Inspect damper.	X				
Inspect water pump weep hole for blockage.	X				X
Replace fuel filter element. Clean the water in fuel sensor.	X				X
Inspect front wheel bearings.	X				
Change rear axle fluid.	X				X
Change front axle fluid (4X4).	X				X
Change 6-spd manual transmission (G-56) fluid 2500/3500 models only.					X
Inspect brake linings.	X				X
Inspect and adjust parking brake if necessary.	X				X
Drain and refill transfer case fluid (4X4).	X				
Drain and refill automatic transmission fluid and change main sump filter (545 RFE only).	X				
Drain and refill automatic transmission fluid. Replace filter and adjust bands (48RE only).	X				

Miles (Kilometers)	78,750 (126 000)	82,500 (132 000)	86,250 (138 000)	90,000 (144 000)	93,750 (150 000)
Change engine oil and engine oil filter.		X		X	
Rotate tires.		X		X	
Lubricate outer tie rod ends 2500/3500 (4X4) models only.		X		X	
Inspect drive belt, replace as required.				X	
Change rear axle fluid.				X	
Change front axle fluid (4X4).				X	
Check transfer case fluid level (4X4).				X	
Inspect fan hub.				X	
Inspect damper.				X	
Inspect water pump weep hole for blockage.				X	
Replace fuel filter element. Clean the water in fuel sensor.				X	
Inspect front wheel bearings.				X	
Inspect brake linings.				X	
Inspect and adjust parking brake if necessary.				X	
Drain and refill automatic transmission fluid. Replace filter and adjust bands (48RE only).				X	

Miles (Kilometers)	97,500 (156 000)	100,000 (160 000)	101,250 (162 000)	105,000 (168 000)	108,750 (174 000)	112,500 (180 000)
Change engine oil and engine oil filter.	X			X		X
Rotate tires.	X			X		X
Lubricate outer tie rod ends 2500/3500 (4X4) models only.	X			X		X
Flush and replace engine coolant.		X				
Inspect drive belt, replace as required.						X
Inspect water pump weep hole for blockage.				X		
Replace fuel filter element. Clean the water in fuel sensor.				X		
Change rear axle fluid.				X		
Change front axle fluid (4X4).				X		
Inspect brake linings.				X		
Inspect and adjust parking brake if necessary.				X		

Miles (Kilometers)	116,250 (186 000)	120,000 (192 000)	123,750 (198 000)	127,500 (204 000)	131,250 (210 000)	135,000 (216 000)
Change engine oil and engine oil filter.		X		X		X
Rotate tires.		X		X		X
Lubricate outer tie rod ends 2500/3500 (4X4) models only.		X		X		X
Clean engine air filter canister.						X
Adjust valve lash clearance.						X
Inspect drive belts, replace as required.						X
Drain and refill transfer case fluid (4X4).		X				
Inspect fan hub.		X				
Inspect damper.		X				
Inspect water pump weep hole for blockage.		X				X
Replace fuel filter element. Clean the water in fuel sensor.		X				X
Inspect front wheel bearings.		X				
Change rear axle fluid.		X				X
Change front axle fluid (4X4).		X				X
Change 6-spd manual transmission (G-56) fluid 2500/3500 models only.						X
Inspect brake linings.		X				X
Inspect and adjust parking brake if necessary.		X				X
Drain and refill automatic transmission fluid and change main sump and spin-on cooler return filter (if equipped) (545 RFE only).		X				
Drain and refill automatic transmission fluid. Replace filter and adjust bands (48RE only).		X				

Inspection and service should also be performed anytime a malfunction is observed or suspected. Retain all receipts.

Schedule "A"

Miles (Kilometers) [Months]	7,500 (12 000) [6]	15,000 (24 000) [12]	22,500 (36 000) [18]	30,000 (48 000) [24]	37,500 (60 000) [30]
Change engine oil and engine oil filter.		X		X	
Rotate tires.	X	X	X	X	X
Lubricate outer tie rod ends 2500/3500 (4X4) models only.	X	X	X	X	X
Check transfer case fluid level (4X4).				X	
Inspect water pump weep hole for blockage		X		X	
Replace fuel filter element. Clean the water in fuel sensor.		X		X	
Inspect drive belts, replace as necessary.			X		
Inspect brake linings.			X		
Inspect and adjust parking brake if necessary.			X		
Inspect fan hub.				X	
Inspect damper.				X	
Inspect front wheel bearings.				X	

Miles (Kilometers) [Months]	45,000 (72 000) [36]	52,500 (84 000) [42]	60,000 (96 000) [48]	67,500 (108 000) [54]	75,000 (120 000) [60]
Change engine oil and engine oil filter.	X		X		X
Rotate tires.	X	X	X	X	X
Lubricate outer tie rod ends 2500/3500 (4X4) models only.	X	X	X	X	X
Check transfer case fluid level.			X		
Flush and replace engine coolant at 60 months, regardless of mileage.					X
Inspect drive belts, replace as necessary.	X			X	
Inspect water pump weep hole for blockage	X		X		X
Replace fuel filter element. Clean the water in fuel sensor.	X		X		X
Inspect brake linings.	X			X	
Inspect and adjust parking brake if necessary.	X			X	
Inspect fan hub.			X		
Inspect damper.			X		
Inspect front wheel bearings.			X		
Replace fuel filter element. Clean the water in fuel sensor			X		

Miles **(Kilometers)** **[Months]**	**82,500** **(132 000)** **[66]**	**90,000** **(144 000)** **[72]**	**97,500** **(156 000)** **[78]**	**100,000** **(160 000)**	**105,000** **(168 000)** **[84]**
Change engine oil and engine oil filter.		X			X
Rotate tires.	X	X	X	X	X
Lubricate outer tie rod ends 2500/3500 (4X4) models only.	X	X	X	X	X
Flush and replace engine coolant, if not done at 60 mos.				X	
Check transfer case fluid level (4X4).		X			
Inspect drive belt, replace as required.		X			
Inspect fan hub.		X			
Inspect damper.		X			
Inspect water pump weep hole for blockage.		X			X
Replace fuel filter element. Clean the water in fuel sensor.		X			X
Inspect front wheel bearings.		X			
Inspect brake linings.		X			
Inspect and adjust parking brake if necessary.		X			
Drain and refill automatic transmission fluid. Replace filter and adjust bands (48 RE only).				X	

Miles (Kilometers) [Months]	112,500 (181 000) [90]	120,000 (193 000) [96]	127,500 (205 000) [102]	135,000 (217 000) [108]	142,500 (229 000) [114]	150,000 (241 000) [150]
Change engine oil and engine oil filter.		X		X		X
Rotate tires.	X	X	X	X	X	X
Lubricate outer tie rod ends 2500/3500 (4X4) models only.	X	X	X	X	X	X
Flush and replace engine coolant, if it has been 160 000 km (100, 000 miles) or 60 months since last change.					X	
Inspect drive belt, replace as required.	X			X		
Drain and refill transfer case fluid (4X4).		X				
Check tranfer case fluid level (4X4).						X
Inspect fan hub.		X			X	
Inspect damper.		X			X	
Inspect water pump weep hole for blockage.		X		X	X	
Replace fuel filter element. Clean the water in fuel sensor.		X		X		X
Inspect front wheel bearings.		X			X	
Inspect brake linings.	X			X		
Inspect and adjust parking brake if necessary.	X			X		
Adjust valve lash clearance.						X

Inspection and service should also be performed anytime a malfunction is observed or suspected. Retain all receipts.

WARNING:
You can be badly injured working on or around a motor vehicle. Do only that service work for which you have the knowledge and the right equipment. If you have any doubt about your ability to perform a service job, take your vehicle to a competent mechanic.

MAINTENANCE SCHEDULES - SRT/10

There are two maintenance schedules that show the **required** service for your vehicle.

First is Schedule **"B"**. It is for vehicles that are operated under the conditions that are listed below and at the beginning of the schedule.

- Day or night temperatures are below 32° F (0° C).
- Stop and go driving.
- Extensive engine idling.
- Driving in dusty conditions.
- Short trips of less than 10 miles (16 km).
- More than 50% of your driving is at sustained high speeds during hot weather, above 90° F C (32°).
- Drag Race Operation.
- Heavy Loading.
- Taxi, police, or delivery service (commercial service).
- Off-road or desert operation.

- **If equipped for and operating with E-85 (ethanol) fuel.**

NOTE: If ANY of these apply to you then change your engine oil every 3,000 miles (5 000 km) or 3 months, whichever comes first and follow schedule "B" of the ″Maintenance Schedules″ section of this manual.

NOTE: If ANY of these apply to you then flush and replace your engine coolant every 102,000 miles (163 000 km) or 60 months, whichever comes first and follow schedule "B" of the ″Maintenance Schedules″ section of this manual.

NOTE: Most vehicles are operated under the conditions listed for Schedule ″B″.

Second is Schedule **"A"**. It is for vehicles that are not operated under any of the conditions listed under Schedule ″B″.

Use the schedule that best describes your driving conditions. Where time and mileage are listed, follow the interval that occurs first.

NOTE: Under no circumstances should oil change intervals exceed 6000 miles (10 000 km) or 6 months whichever comes first.

CAUTION: Failure to perform the required maintenance items may result in damage to the vehicle.

At Each Stop for Fuel

- Check the engine oil level about 5 minutes after a fully warmed engine is shut off. Checking the oil level while the vehicle is on level ground will improve the accuracy of the oil level reading. Add oil only when the level is at or below the ADD or MIN mark.
- Check the windshield washer solvent and add if required.

Once a Month

- Check tire pressure and look for unusual wear or damage.
- Inspect the battery and clean and tighten the terminals as required.
- Check the fluid levels of coolant bottle, brake master cylinder, and transmission and add as needed.
- Check all lights and all other electrical items for correct operation.

At Each Oil Change

- Change the engine oil filter.
- Inspect the exhaust system.
- Inspect the brake hoses.
- Inspect the CV joints (if equipped) and front suspension components.
- Check the automatic transmission fluid level.
- Check the manual transmission fluid level.
- Check the coolant level, hoses, and clamps.

Schedule "B"

Follow schedule "B" if you usually operate your vehicle under one or more of the following conditions.

- Day or night temperatures are below 32° F (0° C).
- Stop and go driving.
- Extensive engine idling.
- Driving in dusty conditions.
- Short trips of less than 10 miles (16 km).
- More than 50% of your driving is at sustained high speeds during hot weather, above 90° F C (32°).
- Drag Race Operation.
- Heavy Loading.
- Taxi, police, or delivery service (commercial service).

- Off-road or desert operation.
- **If equipped for and operating with E-85 (ethanol) fuel.**

NOTE: If ANY of these apply to you then change your engine oil every 3,000 miles (5 000 km) or 3 months, whichever comes first and follow schedule "B" of the ″Maintenance Schedules″ section of this manual.

NOTE: If ANY of these apply to you then flush and replace your engine coolant every 102,000 miles (163 000 km) or 60 months, whichever comes first and follow schedule "B" of the ″Maintenance Schedules″ section of this manual.

If none of these apply to you, then change your engine oil at every interval shown on schedule ″A″ of the ″Maintenance Schedules″ section of this manual.

Miles (Kilometers)	**3,000 (5 000)**	**6,000 (10 000)**	**9,000 (14 000)**	**12,000 (19 000)**	**15,000 (24 000)**
Change engine oil and engine oil filter at interval shown or 3 months, whichever comes first.	X	X	X	X	X
Drain and refill automatic transmission fluid. Replace filter and adjust bands.*					X
Rotate tires.		X		X	
Change rear axle fluid.					X
Inspect brake linings.				X	
Inspect engine air cleaner filter, replace if necessary.					X

Miles (Kilometers)	**18,000 (29 000)**	**21,000 (34 000)**	**24,000 (38 000)**	**27,000 (43 000)**	**30,000 (48 000)**
Change engine oil and engine oil filter at interval shown or 3 months, whichever comes first.	X	X	X	X	X
Drain and refill automatic transmission fluid. Replace filter and adjust bands.					X
Rotate tires.	X		X		X
Change rear axle fluid.					X
Inspect brake linings.			X		
Inspect engine air cleaner filter, replace if necessary.					X
Replace spark plugs.					X
Inspect and replace, if necessary, the PCV valve.					X*

Miles	**33,000**	**36,000**	**39,000**	**42,000**	**45,000**
(Kilometers)	**(53 000)**	**(58 000)**	**(62 000)**	**(67 000)**	**(72 000)**
Change engine oil and engine oil filter at interval shown or 3 months, whichever comes first.	X	X	X	X	X
Drain and refill automatic transmission fluid. Replace filter and adjust bands.*					X
Rotate tires.		X		X	
Change rear axle fluid.					X
Inspect brake linings.		X			
Inspect engine air cleaner filter, replace if necessary.					X

Miles	**48,000**	**51,000**	**54,000**	**57,000**	**60,000**
(Kilometers)	**(77 000)**	**(82 000)**	**(86 000)**	**(91 000)**	**(96 000)**
Change engine oil and engine oil filter at interval shown or 3 months, whichever comes first.	X	X	X	X	X
Drain and refill automatic transmission fluid. Replace filter and adjust bands.					X
Rotate tires.	X		X		X
Change rear axle fluid.					X
Inspect brake linings.	X				X
Inspect engine air cleaner filter, replace if necessary.					X
Replace spark plugs.					X
Replace ignition cables.					X
Inspect and replace, if necessary, the PCV valve.					X*
Flush and replace engine coolant at 60 months , if not done at 102,000 miles (163 000 km)					X

Miles	**63,000**	**66,000**	**69,000**	**72,000**	**75,000**
(Kilometers)	**(101 000)**	**(106 000)**	**(110 000)**	**(115 000)**	**(120 000)**
Change engine oil and engine oil filter at interval shown or 3 months, whichever comes first.	X	X	X	X	X
Drain and refill automatic transmission fluid. Replace filter and adjust bands.*					X
Rotate tires.		X		X	
Inspect engine air cleaner filter.					X
Change rear axle fluid.					X
Inspect brake linings.				X	
Inspect auto tension drive belt and replace if required.					X

Miles	**78,000**	**81,000**	**84,000**	**87,000**	**90,000**
(Kilometers)	**(125 000)**	**(130 000)**	**(134 000)**	**(139 000)**	**(144 000)**
Change engine oil and engine oil filter at interval shown or 3 months, whichever comes first.	X	X	X	X	X
Drain and refill automatic transmission fluid. Replace filter and adjust bands.					X
Rotate tires.	X		X		X
Change rear axle fluid.					X
Inspect brake linings.			X		
Inspect engine air cleaner filter, replace if necessary.					X
Replace spark plugs.					X
Inspect PCV valve, replace as necessary.					X*
Inspect auto tension drive belt and replace if required.					X‡

Miles	**93,000**	**96,000**	**99,000**	**100,000**	**102,000**
(Kilometers)	**(149 000)**	**(154 000)**	**(158 000)**	**(160 000)**	**(163 000)**
Change engine oil and engine oil filter at interval shown or 3 months, whichever comes first.	X	X	X		X
Rotate tires.		X			X
Flush and replace engine coolant.					X
Flush and replace Power Steering Fluid.				X	
Inspect brake linings.		X			

Miles (Kilometers)	**105,000** (168 000)	**108,000** (173 000)	**111,000** (178 000)	**114,000** (182 000)	**117,000** (187 000)	**120,000** (192 000)
Change engine oil and engine oil filter at interval shown or 3 months, whichever comes first.	X	X	X	X	X	X
Drain and refill automatic transmission fluid. Replace filter and adjust bands.*	X					
Drain and refill automatic transmission fluid. Replace filter and adjust bands.						X
Rotate tires.		X		X		X
Change rear axle fluid.	X					X
Inspect brake linings.		X				X
Inspect engine air cleaner filter, replace if necessary.	X					X
Replace spark plugs.						X
Replace ignition cables.						X
Inspect and replace, if necessary, the PCV valve.						X*
Inspect auto tension drive belt and replace if required.	X‡					X‡

* Drain and refill automatic transmission fluid. Replace filter and adjust bands every 15, 000 miles if vehicle is used for frequent wide open throttle upshifts (For example Drag Racing).

‡ This maintenance is not required if previously replaced.

Inspection and service should also be performed anytime a malfunction is observed or suspected. Retain all receipts.

Schedule "A"

Miles	**6,000**	**12,000**	**18,000**	**24,000**	**30,000**
(Kilometers)	**(10 000)**	**(19 000)**	**(29 000)**	**(38 000)**	**(48 000)**
[Months]	**[6]**	**[12]**	**[18]**	**[24]**	**[30]**
Change engine oil and engine oil filter.	X	X	X	X	X
Rotate tires.	X	X	X	X	X
Inspect brake linings.			X		
Replace engine air cleaner filter.					X
Replace spark plugs.					X

Miles	**36,000**	**42,000**	**48,000**	**54,000**	**60,000**	**66,000**
(Kilometers)	**(58 000)**	**(67 000)**	**(77 000)**	**(84 000)**	**(96 000)**	**(106 000)**
[Months]	**[36]**	**[42]**	**[48]**	**[54]**	**[60]**	**[66]**
Change engine oil and engine oil filter.	X	X	X	X	X	X
Rotate tires.	X	X	X	X	X	X
Flush and replace engine coolant at 60 months, regardless of mileage.					X	
Inspect brake linings.	X			X		
Replace engine air cleaner filter.					X	
Replace spark plugs.					X	
Inspect and replace, if necessary, the PCV valve.					X*	
Replace ignition cables.					X	

Miles	**72,000**	**78,000**	**84,000**	**90,000**	**96,000**	**100,000**
(Kilometers)	**(115000)**	**(125 000)**	**(134 000)**	**(144 000)**	**(154 000)**	**160 000**
[Months]	**[72]**	**[78]**	**[84]**	**[90]**	**[96]**	
Change engine oil and engine oil filter.	X	X	X	X	X	
Drain and refill automatic transmission fluid. Replace filter and adjust bands.						X
Rotate tires.	X	X	X	X	X	
Flush and replace Power Steering Fluid.						X
Inspect brake linings.	X			X		
Replace engine air cleaner filter.				X		
Replace spark plugs.				X		
Inspect and replace, if necessary, the PCV valve.				X*		
Inspect auto tension drive belt and replace if required.				X		

Miles (Kilometers) [Months]	102,000 (163 000) [102]	108,000 (173 000) [108]	114,000 (182 000) [114]	120,000 (192 000) [120]
Change engine oil and engine oil filter.	X	X	X	X
Rotate tires.	X	X	X	X
Flush and replace engine coolant, if not done at 60 mos.	X			
Flush and replace engine coolant, if not done at 102, 000 miles.				X
Inspect brake linings.		X		
Inspect auto tension drive belt and replace if required.	X‡			X‡
Replace ignition cables.				X
Replace engine air cleaner filter.				X
Replace spark plugs.				X
Inspect and replace, if necessary, the PCV valve.				X*

* This maintenance is recommended by the manufacture to the owner, but is not required to maintain the emissions warranty.

‡ This maintenance is not required if previously replaced.

Inspection and service should also be performed anytime a malfunction is observed or suspected. Retain all receipts.

WARNING:
You can be badly injured working on or around a motor vehicle. Do only that service work for which you have the knowledge and the right equipment. If you have any doubt about your ability to perform a service job, take your vehicle to a competent mechanic.

JUMP STARTING

STANDARD PROCEDURE - JUMP STARTING

WARNING: REVIEW ALL SAFETY PRECAUTIONS AND WARNINGS IN THE BATTERY SYSTEM SECTION OF THE SERVICE MANUAL. (Refer to 8 - ELECTRICAL/BATTERY SYSTEM/BATTERY - STANDARD PROCEDURE)
- **DO NOT JUMP START A FROZEN BATTERY, PERSONAL INJURY CAN RESULT.**
- **IF EQUIPPED, DO NOT JUMP START WHEN MAINTENANCE FREE BATTERY INDICATOR DOT IS YELLOW OR BRIGHT COLOR.**
- **DO NOT JUMP START A VEHICLE WHEN THE BATTERY FLUID IS BELOW THE TOP OF LEAD PLATES.**
- **DO NOT ALLOW JUMPER CABLE CLAMPS TO TOUCH EACH OTHER WHEN CONNECTED TO A BOOSTER SOURCE.**
- **DO NOT USE OPEN FLAME NEAR BATTERY.**
- **REMOVE METALLIC JEWELRY WORN ON HANDS OR WRISTS TO AVOID INJURY BY ACCIDENTAL ARCING OF BATTERY CURRENT.**
- **WHEN USING A HIGH OUTPUT BOOSTING DEVICE, DO NOT ALLOW BATTERY VOLTAGE TO EXCEED 16 VOLTS. REFER TO INSTRUCTIONS PROVIDED WITH DEVICE BEING USED.**
  FAILURE TO FOLLOW THESE INSTRUCTIONS MAY RESULT IN PERSONAL INJURY.

CAUTION: When using another vehicle as a booster, do not allow vehicles to touch. Electrical systems can be damaged on either vehicle.

TO JUMP START A DISABLED VEHICLE:

1. Raise hood on disabled vehicle and visually inspect engine compartment for:
   - Battery cable clamp condition, clean if necessary.
   - Frozen battery.

- Yellow or bright color test indicator, if equipped.
- Low battery fluid level.
- Generator drive belt condition and tension.
- Fuel fumes or leakage, correct if necessary.

CAUTION: If the cause of starting problem on disabled vehicle is severe, damage to booster vehicle charging system can result.

2. When using another vehicle as a booster source, park the booster vehicle within cable reach. Turn off all accessories, set the parking brake, place the automatic transmission in PARK or the manual transmission in NEUTRAL and turn the ignition OFF.
3. On disabled vehicle, place gear selector in park or neutral and set park brake. Turn off all accessories.
4. Connect jumper cables to booster battery. RED clamp to positive terminal (+). BLACK clamp to negative terminal (-). DO NOT allow clamps at opposite end of cables to touch, electrical arc will result. Review all warnings in this procedure.
5. On disabled vehicle, connect RED jumper cable clamp to positive (+) terminal. Connect BLACK jumper cable clamp to engine ground as close to the ground cable attaching point as possible.
6. Start the engine in the vehicle which has the booster battery, let the engine idle a few minutes, then start the engine in the vehicle with the discharged battery.

CAUTION: Do not crank starter motor on disabled vehicle for more than 15 seconds, starter will overheat and could fail.

7. Allow battery in disabled vehicle to charge to at least 12.4 volts (75% charge) before attempting to start engine. If engine does not start within 15 seconds, stop cranking engine and allow starter to cool (15 min.), before cranking again.

DISCONNECT CABLE CLAMPS AS FOLLOWS:

- Disconnect BLACK cable clamp from engine ground on disabled vehicle.
- When using a Booster vehicle, disconnect BLACK cable clamp from battery negative terminal. Disconnect RED cable clamp from battery positive terminal.
- Disconnect RED cable clamp from battery positive terminal on disabled vehicle.

HOISTING

STANDARD PROCEDURE - HOISTING

Refer to the Owner's Manual for emergency vehicle lifting procedures.

WARNING: THE HOISTING AND JACK LIFTING POINTS PROVIDED ARE FOR A COMPLETE VEHICLE. WHEN A CHASSIS OR DRIVETRAIN COMPONENT IS REMOVED FROM A VEHICLE, THE CENTER OF GRAVITY IS ALTERED MAKING SOME HOISTING CONDITIONS UNSTABLE. PROPERLY SUPPORT OR SECURE VEHICLE TO HOISTING DEVICE WHEN THESE CONDITIONS EXIST.

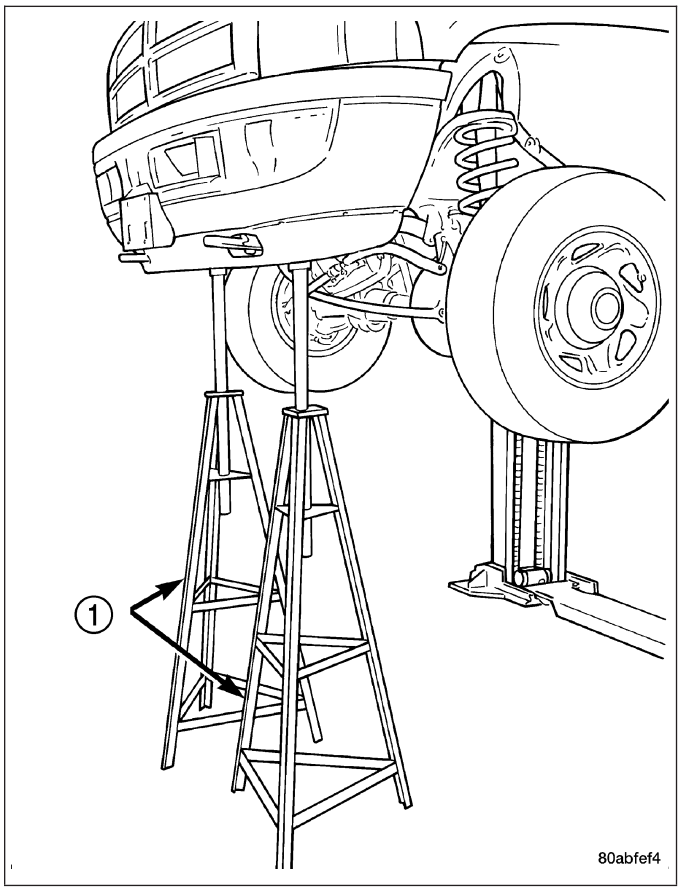

FLOOR JACK

When properly positioned, a floor jack can be used to lift a vehicle. Support the vehicle in the raised position with jack stands at the front and rear ends of the frame rails.

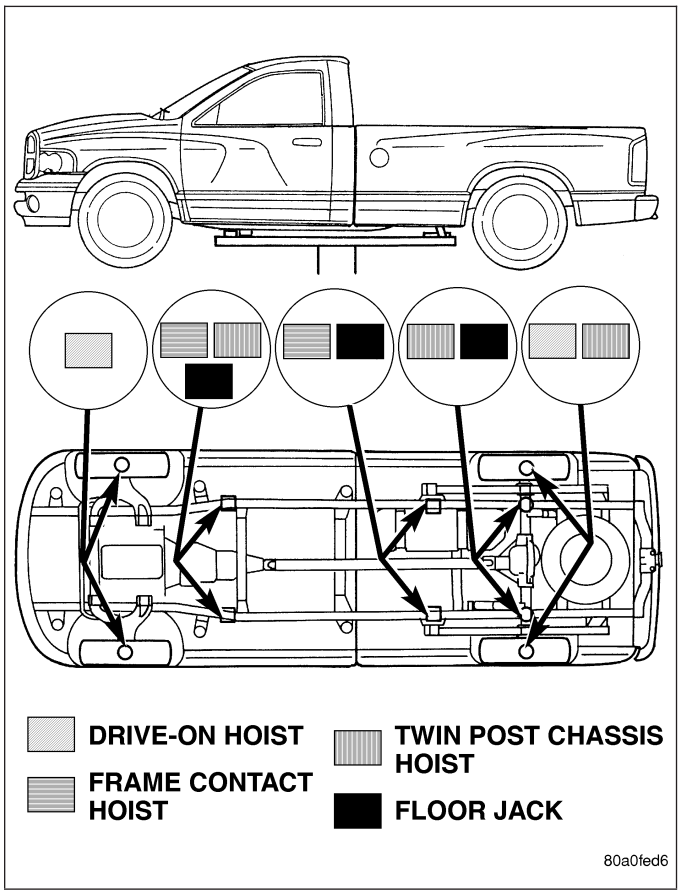

CAUTION: Do not lift vehicle with a floor jack positioned under:

- **An axle tube.**
- **A body side sill.**
- **A steering linkage component.**
- **A drive shaft.**
- **The engine or transmission oil pan.**
- **The fuel tank.**
- **A front suspension arm.**

NOTE: Use the correct front frame rail lifting locations only.

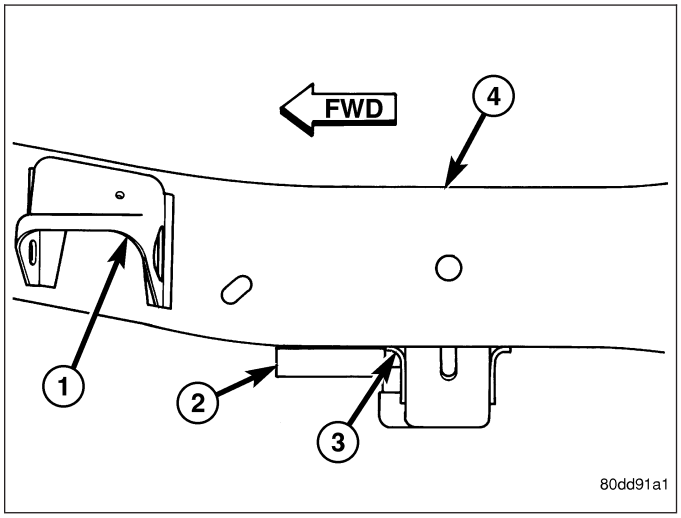

1 - BODY MOUNT BRACKET
2 - FRONT LIFT PAD
3 - TRANSMISSION CROSSMEMBER BRACKET
4 - FRAME RAIL

NOTE: Use the correct rear frame rail lifting locations only.

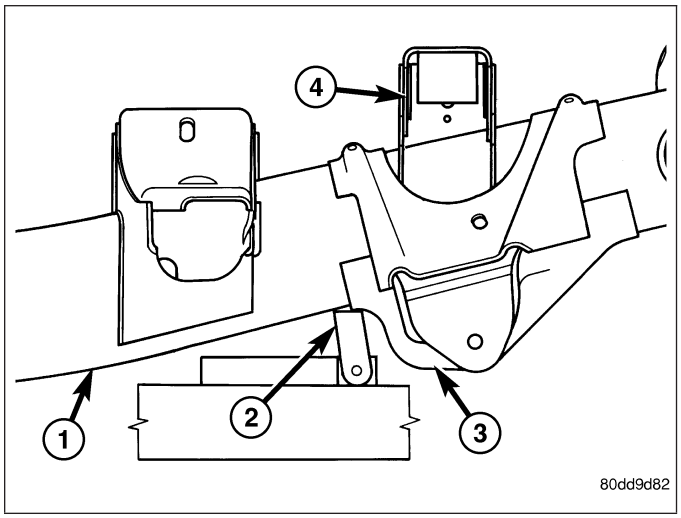

1 - FRAME RAIL
2 - REAR LIFT PAD
3 - LEAF SPRING MOUNTING BRACKET
4 - BOX MOUNTING BRACKET

HOIST

A vehicle can be lifted with:

- A single-post, frame-contact hoist.
- A twin-post, chassis hoist.
- A ramp-type, drive-on hoist.

NOTE: When a frame-contact type hoist is used, verify that the lifting pads are positioned properly.

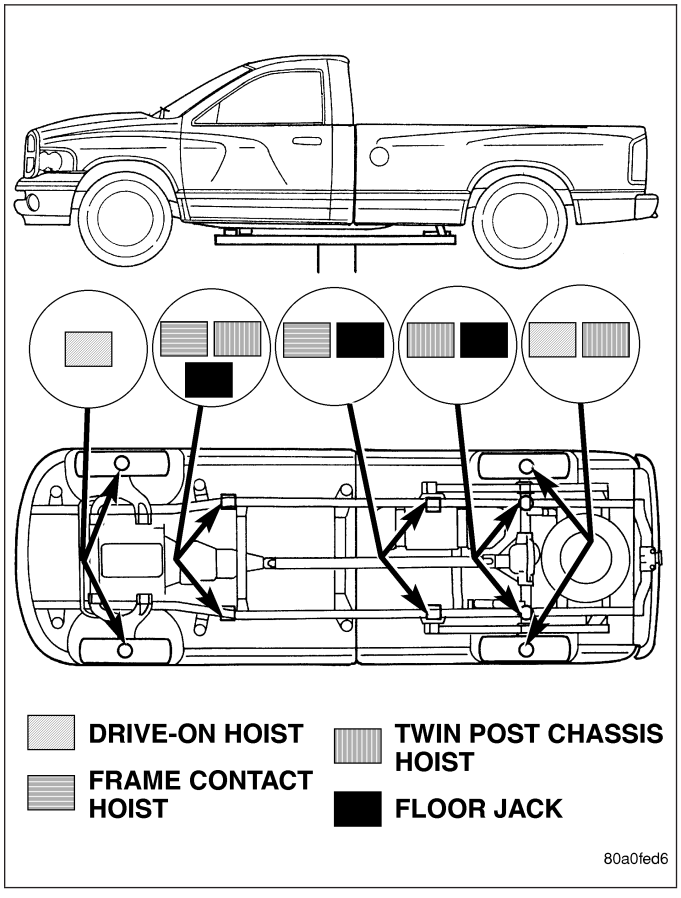

NOTE: The forward lifting pads should be positioned against the forward flange of the transmission crossmember brackets at the bottom of the frame rail.

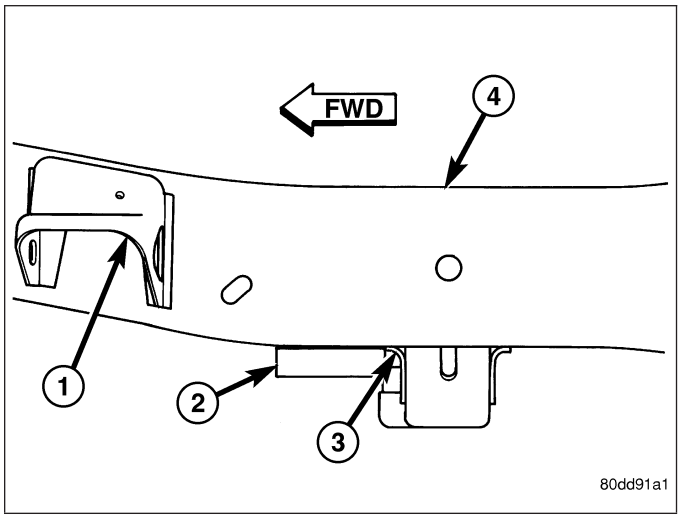

1 - BODY MOUNT BRACKET
2 - FRONT LIFT PAD
3 - TRANSMISSION CROSSMEMBER BRACKET
4 - FRAME RAIL

NOTE: The real lifting pads should be wedged between the forward flange of the leaf spring bracket and the frame rail. Safety stands should be placed under the frame rails at the front and rear ends.

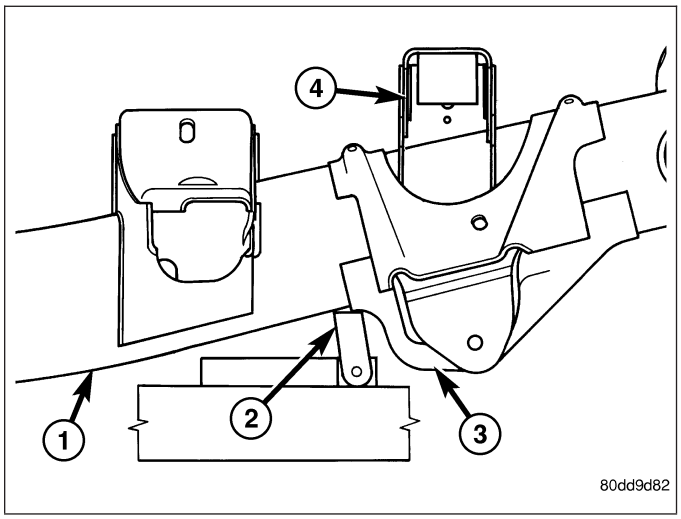

1 - FRAME RAIL
2 - REAR LIFT PAD
3 - LEAF SPRING MOUNTING BRACKET
4 - BOX MOUNTING BRACKET

TOWING

STANDARD PROCEDURE

A vehicle equipped with SAE approved sling-type towing equipment can be used to tow all vehicles. When towing a 4WD vehicle using a wheel-lift towing device, use tow dollies under the opposite end of the vehicle. A vehicle with flat-bed device can also be used to transport a disabled vehicle.

A wooden crossbeam may be required for proper connection when using the sling-type, front-end towing method.

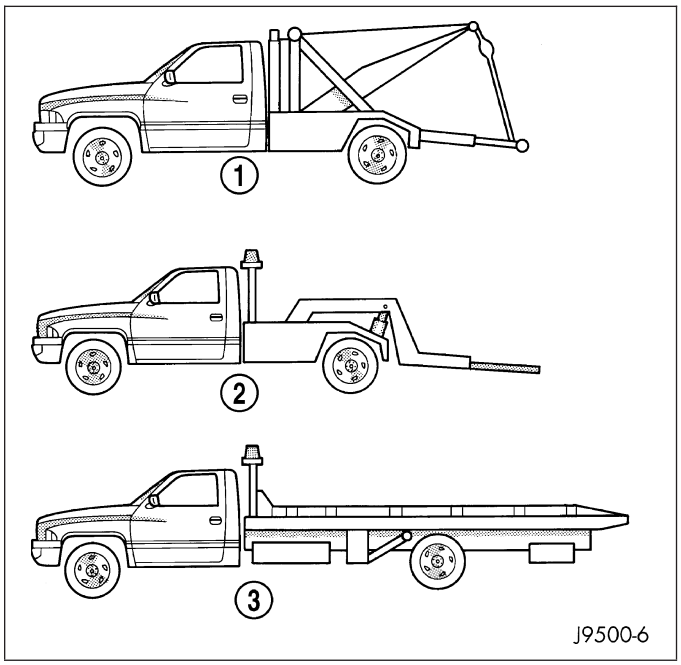

SAFETY PRECAUTIONS

CAUTION: The following safety precautions must be observed when towing a vehicle:

- Secure loose and protruding parts.
- Always use a safety chain system that is independent of the lifting and towing equipment.
- Do not allow towing equipment to contact the disabled vehicle's fuel tank.
- Do not allow anyone under the disabled vehicle while it is lifted by the towing device.
- Do not allow passengers to ride in a vehicle being towed.
- Always observe state and local laws regarding towing regulations.
- Do not tow a vehicle in a manner that could jeopardize the safety of the operator, pedestrians or other motorists.
- Do not attach tow chains, T-hooks, J-hooks, or a tow sling to a bumper, steering linkage, drive shafts or a non-reinforced frame hole.
- Do not tow a heavily loaded vehicle. Damage to the cab, cargo box or frame may result. Use a flatbed device to transport a loaded vehicle.

GROUND CLEARANCE

CAUTION: If vehicle is towed with wheels removed, install lug nuts to retain brake drums or rotors.

A towed vehicle should be raised until lifted wheels are a minimum 100 mm (4 in) from the ground. Be sure there is adequate ground clearance at the opposite end of the vehicle, especially when towing over rough terrain or steep rises in the road. If necessary, remove the wheels from the lifted end of the vehicle and lower the vehicle closer to the ground, to increase the ground clearance at the opposite end of the vehicle. Install lug nuts on wheel attaching studs to retain brake drums or rotors.

RAMP ANGLE

If a vehicle with flat-bed towing equipment is used, the approach ramp angle should not exceed 15 degrees.

TOWING WHEN KEYS ARE NOT AVAILABLE

When the vehicle is locked and keys are not available, use a flat bed hauler. A Wheel-lift or Sling-type device can be used on 4WD vehicles provided **all the wheels are lifted off the ground using tow dollies.**

FOUR-WHEEL-DRIVE VEHICLE TOWING

Chrysler Corporation recommends that a vehicle be transported on a flat-bed device. A Wheel-lift or Sling-type device can be used provided **all the wheels are lifted off the ground using tow dollies.**

WARNING: WHEN TOWING A DISABLED VEHICLE AND THE DRIVE WHEELS ARE SECURED IN A WHEEL LIFT OR TOW DOLLIES, ENSURE THE TRANSMISSION IS IN THE PARK POSITION (AUTOMATIC TRANSMISSION) OR A FORWARD DRIVE GEAR (MANUAL TRANSMISSION).

CAUTION: Many vehicles are equipped with air dams, spoilers, and/or ground effect panels. To avoid component damage, a wheel-lift towing vehicle or a flat-bed hauling vehicle is recommended.

SUSPENSION

TABLE OF CONTENTS

page

SUSPENSION - ELECTRICAL DIAGNOSTICS 1

page

SUSPENSION - SERVICE INFORMATION 27

SUSPENSION - ELECTRICAL DIAGNOSTICS

TABLE OF CONTENTS

page

ACTIVE CHASSIS - ELECTRICAL DIAGNOSTICS 2

ACTIVE CHASSIS - ELECTRICAL DIAGNOSTICS

TABLE OF CONTENTS

page

ACTIVE CHASSIS - ELECTRICAL DIAGNOSTICS
DIAGNOSIS AND TESTING
C143D-STABILIZER SELECT SWITCH PERFORMANCE 3
C143E - STABILIZER BAR SWITCH CIRCUIT LOW 7
C143F-STABILIZER SELECT SWITCH CIRCUIT HIGH 11
C2124-STABILIZER BAR INDICATOR CONTROL CIRCUIT 15
CHECKING STABILIZER SELECT SWITCH OPERATION 22
FDCM VERIFICATION TEST 26

ACTIVE CHASSIS - ELECTRICAL DIAGNOSTICS

DIAGNOSIS AND TESTING

C143D-STABILIZER SELECT SWITCH PERFORMANCE

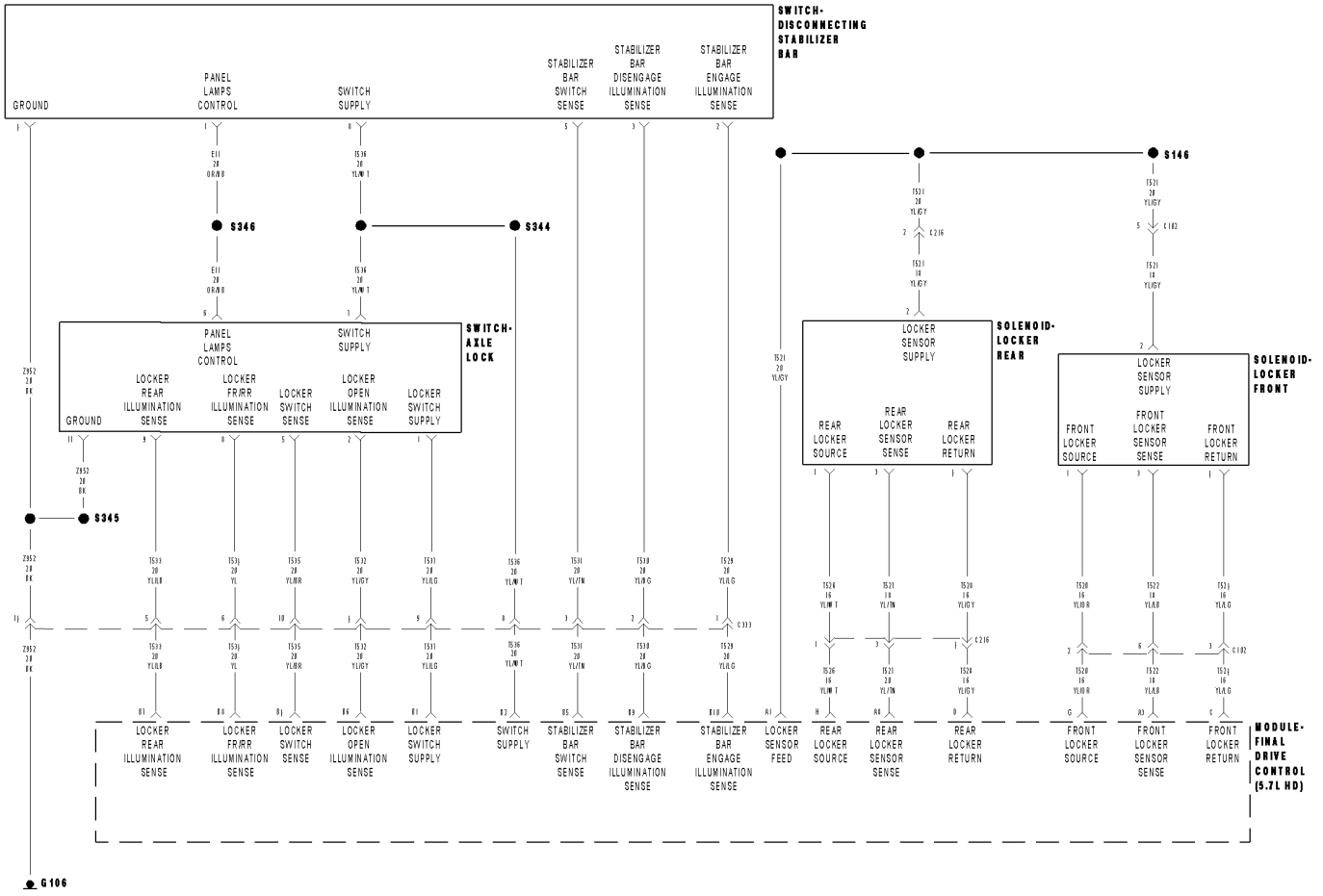

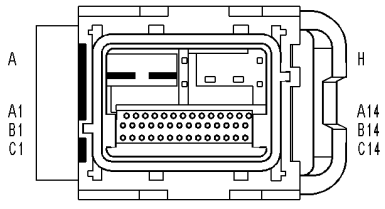

MODULE-FINAL DRIVE CONTROL (5.7L HD)

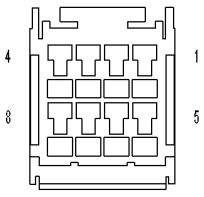

SWITCH-DISCONNECTING STABILZER BAR

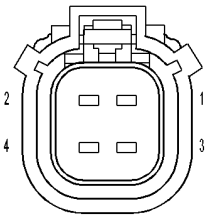

SOLENOID-LOCKER REAR

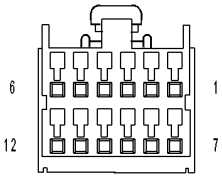

SWITCH-AXLE LOCK

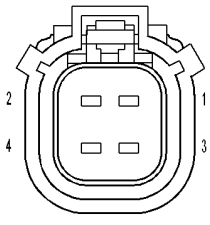

SOLENIOD-LOCKER FRONT

81459daf

C143D-STABILIZER SELECT SWITCH PERFORMANCE (CONTINUED)

For a complete wiring diagram **Refer to Section 8W**.

- **When Monitored:**
  Ignition on.
- **Set Condition:**
  During switch operation, the FDCM senses the Disconnecting Stabilizer Bar Switch resistance is out of specification.

Possible Causes
SWITCH INTERMITTENT
DISCONNECTING STABILIZER BAR SWITCH
(T531) STABILIZER BAR SWITCH SENSE CIRCUIT OPEN/HIGH RESISTANCE
(T536) SWITCH SUPPLY CIRCUIT
FDCM

1. DTC ACTIVE

CAUTION: Before removing the FDCM harness connector, clean the connector and locking cam area of dirt and debris. Failure to do so can result in the connector being jammed or damage to the locking cams on the harness connector or module. Do not force the assist arm when releasing or installing the harness connector.

Turn the ignition on, engine not running

With the DRBIII®, read FDCM DTC(s).

Is the DTC active at this time?

Yes >> Go To 2

No >> Go To 5

---

2. DISCONNECTING STABILIZER SWITCH OPERATION

NOTE: Before continuing with the below diagnostic test, ensure the FDCM harness connector seal is installed correctly. Inspect the terminals on both harness connector and the module for damage. Failure to do so can result in misdiagnoses of the system.

Turn the ignition off.

Disconnect the Disconnecting Stabilizer Bar Switch harness connector.

Remove the Disconnecting Stabilizer Bar Switch.

Measure the resistance on the Disconnecting Stabilizer Bar Switch between the Switch Supply terminal and the Stabilizer Bar Switch Sense terminal.

The resistance must read as follows for each position of the switch.

- **Off Road: 33 ohms +/- 5%**
- **On Road: 420 ohms +/- 5%**
- **Switch Not Applied: 2.2k ohms +/- 5%**

Does the ohmmeter read correctly for each position of the Disconnecting Stabilizer Bar Switch?

Yes >> Go To 3

No >> Replace the Axle Locker Switch.
Perform FDCM VERIFICATION TEST.

C143D-STABILIZER SELECT SWITCH PERFORMANCE (CONTINUED)

3. (T531) STABILIZER BAR SWITCH SENSE CIRCUIT OPEN

Disconnect the FDCM harness connector.

Measure the resistance of the (T531) Stabilizer Bar Switch Sense circuit between the Disconnecting Stabilizer Bar Switch and the FDCM harness connectors.

Is the resistance below 5.0 ohms?

Yes >> Go To 4

No >> Repair the open or high resistance in the (T531) Stabilizer Bar Switch Sense circuit.
Perform FDCM VERIFICATION TEST.

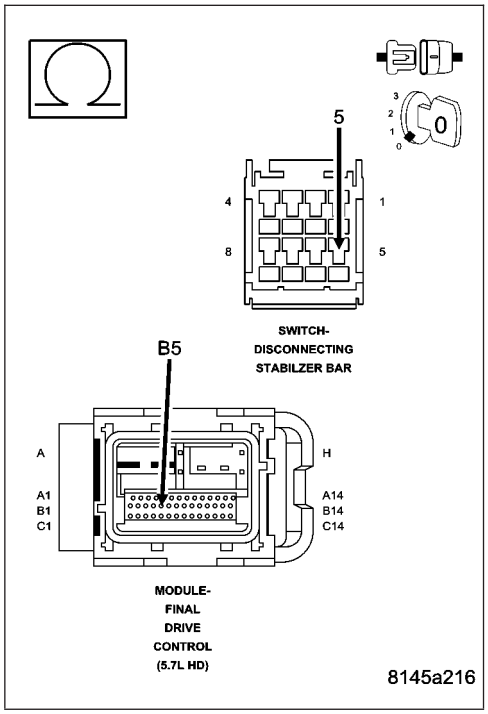

4. (T536) SWITCH SUPPLY CIRCUIT OPEN

Measure the resistance of the (T536) Switch Supply circuit between the Disconnecting Stabilizer Bar Switch and the FDCM harness connectors.

Is the resistance below 5.0 ohms?

Yes >> Replace the FDCM in accordance with the Service Information
Perform FDCM VERIFICATION TEST.

No >> Repair the open or high resistance in the (T536) Switch Supply circuit.
Perform FDCM VERIFICATION TEST.

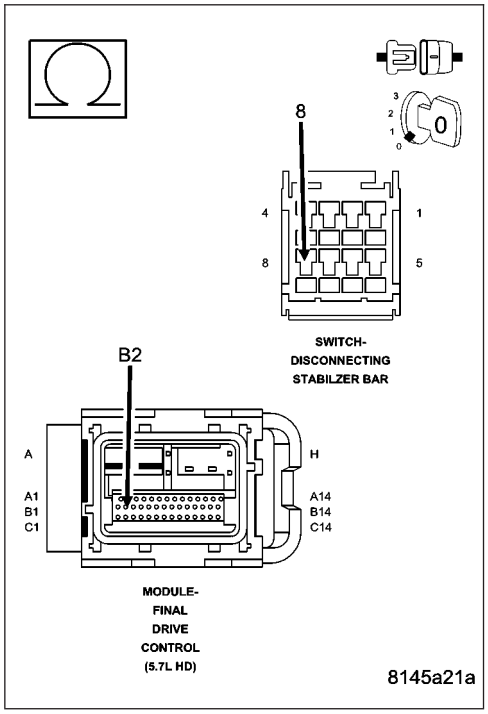

C143D-STABILIZER SELECT SWITCH PERFORMANCE (CONTINUED)

5. INTERMITTENT WIRING AND CONNECTORS

The conditions necessary to set this DTC are not present at this time.

Using the schematics as a guide, inspect the wiring and connectors specific to this circuit.

Wiggle test the wiring harness and connectors while checking for shorted and open circuits.

Using the DRBIII®, monitor the data related to this circuit while performing the wiggle test. Look for the data to change or for the DTC to reset.

While monitoring the Stabilizer Bar State on the DRBIII®, move the switch to each position. The DRBIII® display must match the position on the actual switch.

Were there any problems found?

Yes >> Repair as necessary.
Perform FDCM VERIFICATION TEST.

No >> Test Complete.

C143E - STABILIZER BAR SWITCH CIRCUIT LOW

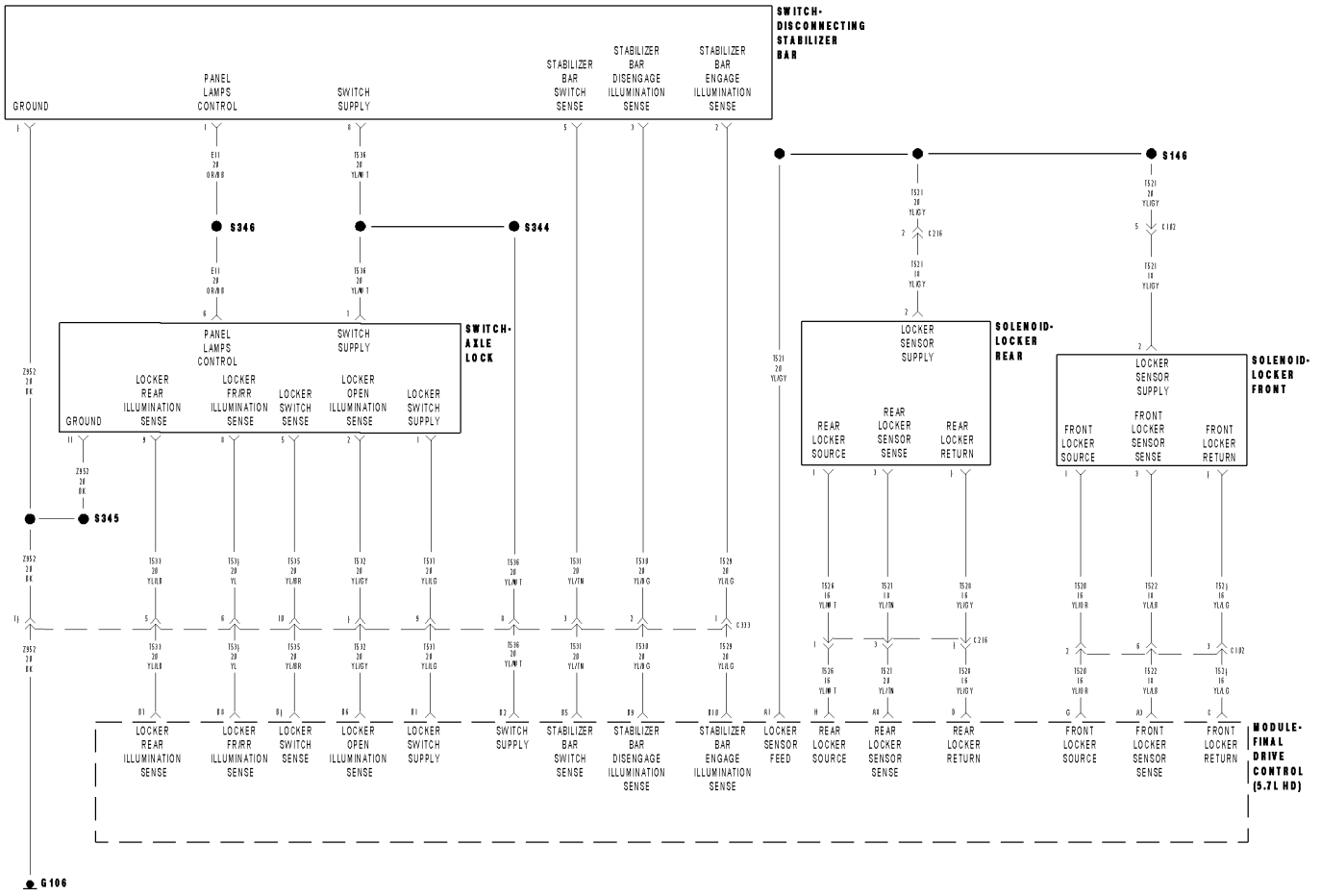

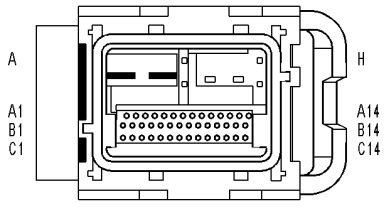

MODULE-FINAL DRIVE CONTROL (5.7L HD)

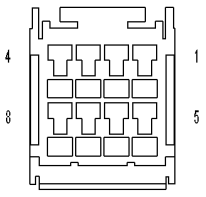

SWITCH-DISCONNECTING STABILZER BAR

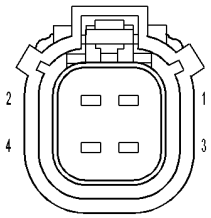

SOLENOID-LOCKER REAR

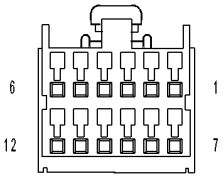

SWITCH-AXLE LOCK

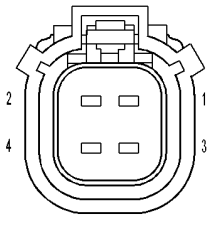

SOLENIOD-LOCKER FRONT

81459daf

C143E - STABILIZER BAR SWITCH CIRCUIT LOW (CONTINUED)

For a complete wiring diagram **Refer to Section 8W**.

- **When Monitored:**
  Ignition on.
- **Set Condition:**
  During switch operation, the FDCM senses the Disconnecting Stabilizer Bar Switch sense is below 0.25 volt.

Possible Causes
SWITCH INTERMITTENT
DISCONNECTING STABILILZER BAR SWITCH
(T536) SWITCH SUPPLY CIRCUIT SHORTED TO GROUND
(T531) STABILIZER BAR SWITCH SENSE CIRCUIT SHORT TO GROUND
FDCM

1. DTC ACTIVE

CAUTION: Before removing the FDCM harness connector, clean the connector and locking cam area of dirt and debris. Failure to do so can result in the connector being jammed or damage to the locking cams on the harness connector or module. Do not force the assist arm when releasing or installing the harness connector.

Turn the ignition on, engine not running

With the DRBIII®, read FDCM DTC(s).

Is the DTC active at this time?

Yes >> Go To 2

No >> Go To 5

---

2. DISCONNECTING STABILIZER BAR SWITCH OPERATION

NOTE: Before continuing with the below diagnostic test, ensure the FDCM harness connector seal is installed correctly. Inspect the terminals on both harness connector and the module for damage. Failure to do so can result in misdiagnoses of the system.

Turn the ignition off.

Disconnect the Disconnecting Stabilizer Switch harness connector.

Remove the Disconnecting Stabilizer Switch.

Measure the resistance on the Disconnecting Stabilizer Switch between the Switch Supply terminal and the Stabilizer Switch Sense terminal.

The resistance must read as follows for each position of the switch.

- **Off Road: 33 ohms +/- 5%**
- **On Road: 420 ohms +/- 5%**
- **Switch Not Applied: 2.2k ohms +/- 5%**

Does the ohmmeter read correctly for each position of the Stabilizer Bar Switch

Yes >> Go To 3

No >> Replace the Disconnecting Stabilizer Switch.
Perform FDCM VERIFICATION TEST.

C143E - STABILIZER BAR SWITCH CIRCUIT LOW (CONTINUED)

3. (T531) STABILIZER BAR SWITCH SENSE CIRCUIT SHORTED TO GROUND

Disconnect the FDCM harness connector.

Measure the resistance of the (T531) Stabilizer Bar Switch Sense circuit in the Disconnecting Stabilizer Switch harness connector to ground.

Is the resistance below 5.0 ohms?

Yes >> Repair the short to ground in the (T531) Disconnecting Stabilizer Switch Sense circuit.
Perform FDCM VERIFICATION TEST.

No >> Go To 4

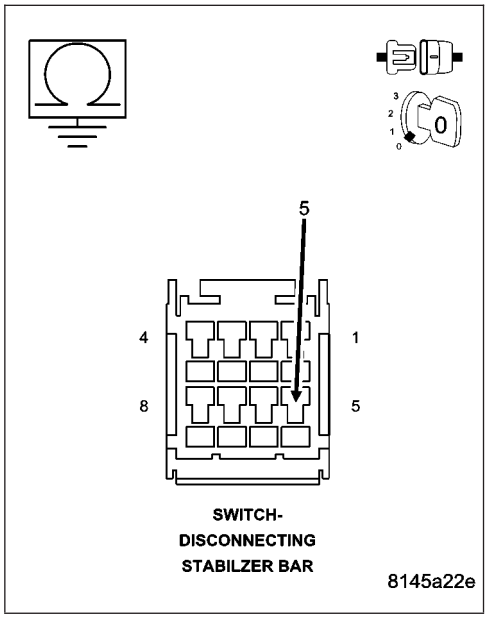

4. (T536) SWITCH SUPPLY CIRCUIT SHORT TO GROUND

Measure the resistance of the (T536) Switch Supply circuit in the Disconnecting Stabilizer Switch harness connector to ground.

Is the resistance below 5.0 ohms?

Yes >> Repair the short to ground in the (T536) Switch Supply circuit.
Perform FDCM VERIFICATION TEST.

No >> Replace the FDCM in accordance with the Service Information
Perform FDCM VERIFICATION TEST.

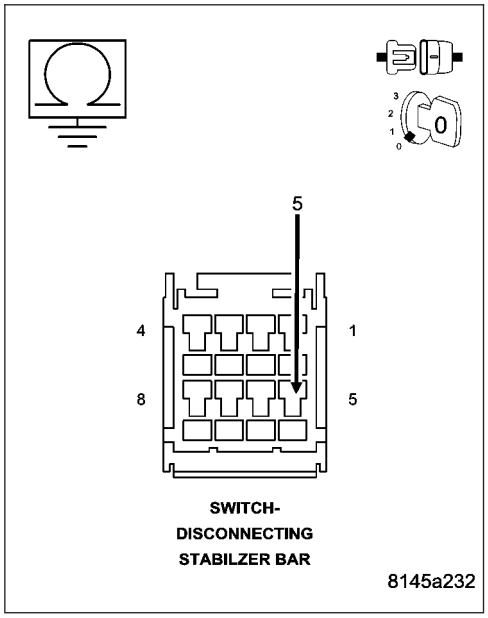

C143E - STABILIZER BAR SWITCH CIRCUIT LOW (CONTINUED)

5. INTERMITTENT WIRING AND CONNECTORS

The conditions necessary to set this DTC are not present at this time.

Using the schematics as a guide, inspect the wiring and connectors specific to this circuit.

Wiggle test the wiring harness and connectors while checking for shorted and open circuits.

Using the DRBIII®, monitor the data related to this circuit while performing the wiggle test. Look for the data to change or for the DTC to reset.

While monitoring the Stabilizer Bar State on the DRBIII®, move the switch to each position. The DRBIII® display must match the position on the actual switch.

Were there any problems found?

Yes >> Repair as necessary.
Perform TRANSFER CASE VERIFICATION TEST.

No >> Test Complete.

C143F-STABILIZER SELECT SWITCH CIRCUIT HIGH

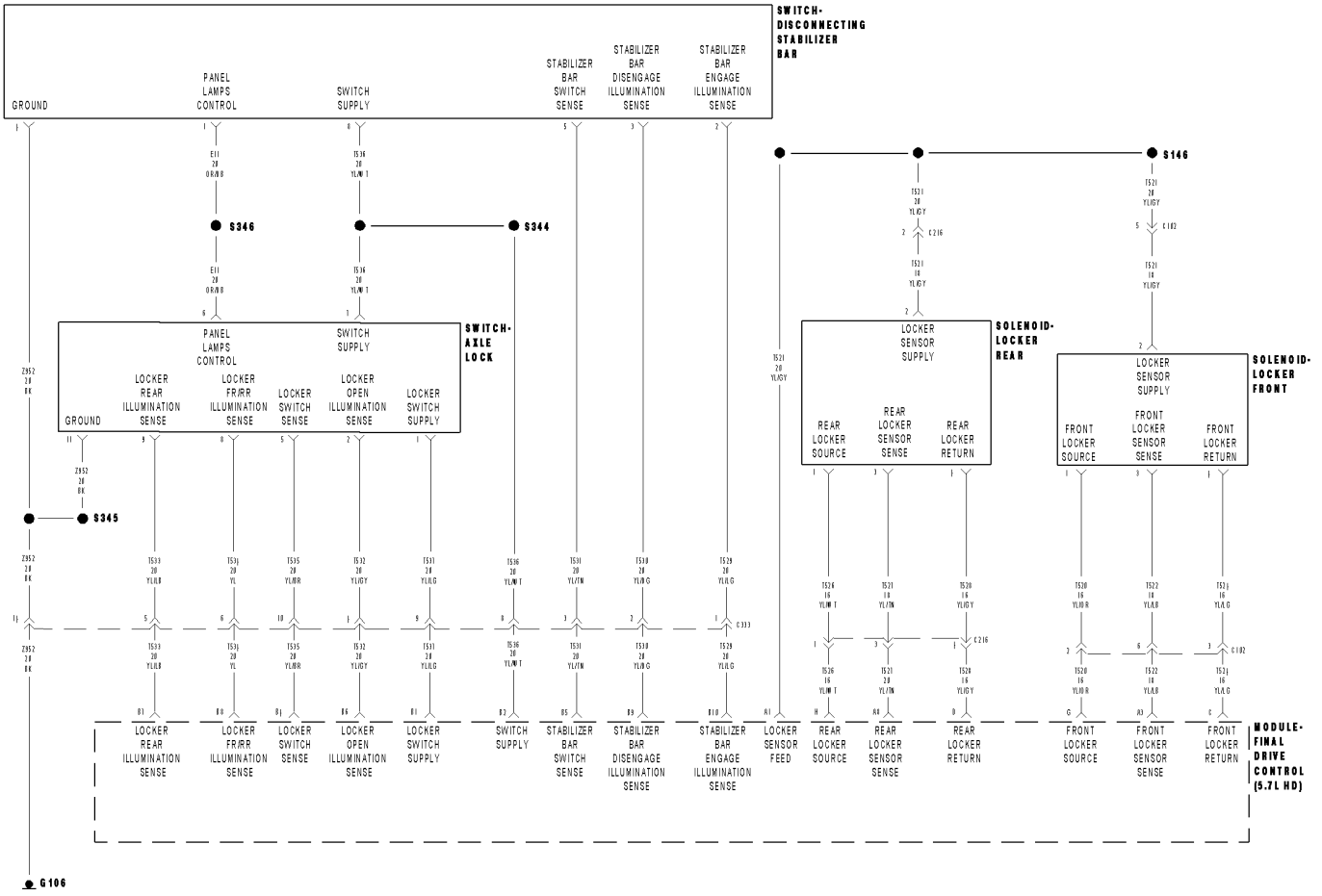

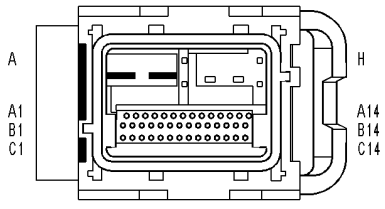

MODULE-FINAL DRIVE CONTROL (5.7L HD)

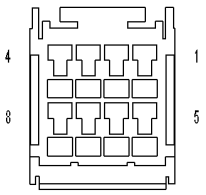

SWITCH-DISCONNECTING STABILZER BAR

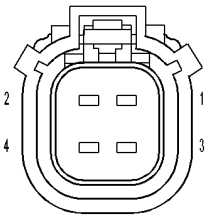

SOLENOID-LOCKER REAR

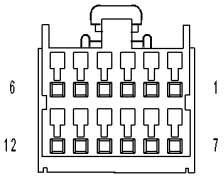

SWITCH-AXLE LOCK

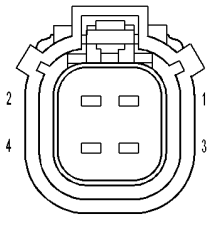

SOLENIOD-LOCKER FRONT

81459daf

C143F-STABILIZER SELECT SWITCH CIRCUIT HIGH (CONTINUED)

For a complete wiring diagram **Refer to Section 8W**.

- **When Monitored:**
  Ignition on.
- **Set Condition:**
  During switch operation, the FDCM senses the Stabilizer Bar Switch Sense circuit is above 4.0 volts.

Possible Causes
SWITCH INTERMITTENT
STABILIZER BAR SWITCH
(T531) STABILIZER BAR SWITCH SENSE CIRCUIT SHORT TO VOLTAGE
(T536) SWITCH SUPPLY CIRCUIT SHORTED TO (T531) STABILIZER BAR SWITCH SENSE CIRCUIT
(T536) STABILIZER BAR SWITCH SENSE CIRCUIT OPEN
FDCM

1. DTC ACTIVE

CAUTION: Before removing the FDCM harness connector, clean the connector and locking cam area of dirt and debris. Failure to do so can result in the connector being jammed or damage to the locking cams on the harness connector or module. Do not force the assist arm when releasing or installing the harness connector.

Turn the ignition on, engine not running

With the DRBIII®, read FDCM DTC(s).

Is the DTC active at this time?

Yes >> Go To 2

No >> Go To 6

---

2. DISCONNECTING STABILIZER BAR SWITCH OPERATION

NOTE: Before continuing with the below diagnostic test, ensure the FDCM harness connector seal is installed correctly. Inspect the terminals on both harness connector and the module for damage. Failure to do so can result in misdiagnoses of the system.

Turn the ignition off.

Disconnect the Disconnecting Stabilizer Bar Switch harness connector.

Remove the Disconnecting Stabilizer Bar Switch.

Measure the resistance on the Disconnecting Stabilizer Bar Switch between the Switch Supply terminal and the Stabilizer Bar Switch Sense terminal.

The resistance must read as follows for each position of the switch.

- **Off Road: 33 ohms +/- 5%**
- **On Road: 420 ohms +/- 5%**
- **Switch Not Applied: 420 ohms +/- 5%**

Does the ohmmeter read correctly for each position of the Disconnecting Stabilizer Bar Switch

Yes >> Go To 5

No >> Replace the Disconnecting Stabilizer Bar Switch.
Perform FDCM VERIFICATION TEST.

C143F-STABILIZER SELECT SWITCH CIRCUIT HIGH (CONTINUED)

3. (T531) STABILIZER BAR SWITCH SENSE CIRCUIT SHORTED TO VOLTAGE

Disconnect the FDCM harness connector.

Turn the ignition on.

Measure the voltage of the (T531) Stabilizer Bar Switch Sense circuit in the Disconnecting Stabilizer Bar Switch harness connector.

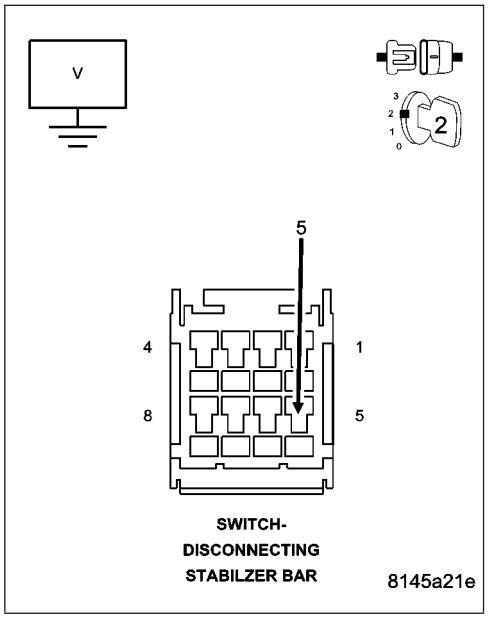

Does the voltmeter indicate voltage present?

Yes >> Repair the short to voltage in the (T531) Stabilizer Bar Switch Sense circuit.
Perform FDCM VERIFICATION TEST.

No >> Go To 4

4. (T536) SWITCH SUPPLY CIRCUIT SHORTED TO (T351) STABILIZER BAR SWITCH SENSE CIRCUIT

Measure the resistance between (T536) Switch Supply circuit and the (T531) Stabilizer Bar Switch Sense circuit in the Disconnecting Stabilizer Bar Switch harness connector.

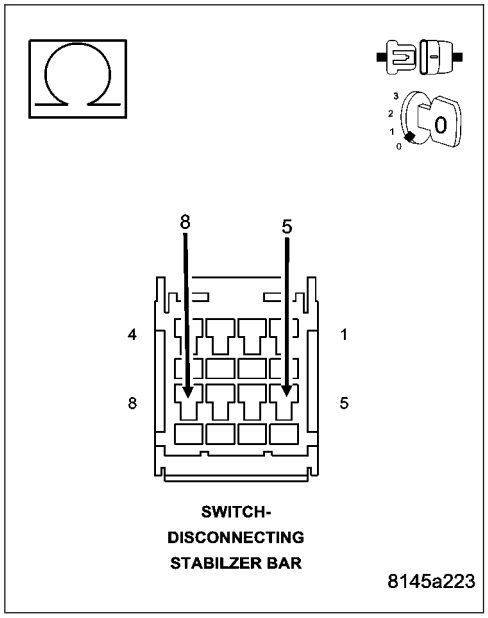

Is the resistance below 5.0 ohms?

Yes >> Repair the short between (T536) Switch Supply circuit and the (T531) Stabilizer Bar Switch Sense circuit.
Perform FDCM VERIFICATION TEST.

No >> Go To 5

C143F-STABILIZER SELECT SWITCH CIRCUIT HIGH (CONTINUED)

5. (T531) STABILIZER BAR SWITCH SENSE CIRCUIT OPEN

Measure the resistance of the (T531) Stabilizer Bar Switch Sense circuit between the Disconnecting Stabilizer Bar Switch and the FDCM harness connectors.

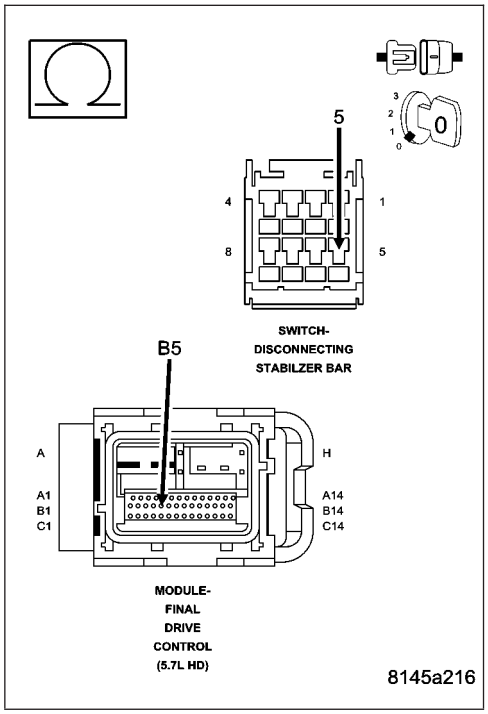

Is the resistance below 5.0 ohms?

Yes >> Replace the FDCM in accordance with the Service Information.
Perform FDCM VERIFICATION TEST.

No >> Repair the open in the (T531) Stabilizer Bar Switch Sense circuit.
Perform FDCM VERIFICATION TEST.

6. INTERMITTENT WIRING AND CONNECTORS

The conditions necessary to set this DTC are not present at this time.

Using the schematics as a guide, inspect the wiring and connectors specific to this circuit.

Wiggle test the wiring harness and connectors while checking for shorted and open circuits.

Using the DRBIII®, monitor the data related to this circuit while performing the wiggle test. Look for the data to change or for the DTC to reset.

While monitoring the Stabilizer Bar State on the DRBIII®, move the switch to each position. The DRBIII® display must match the position on the actual switch.

Were there any problems found?

Yes >> Repair as necessary.
Perform FDCM VERIFICATION TEST.

No >> Test Complete.

C2124-STABILIZER BAR INDICATOR CONTROL CIRCUIT

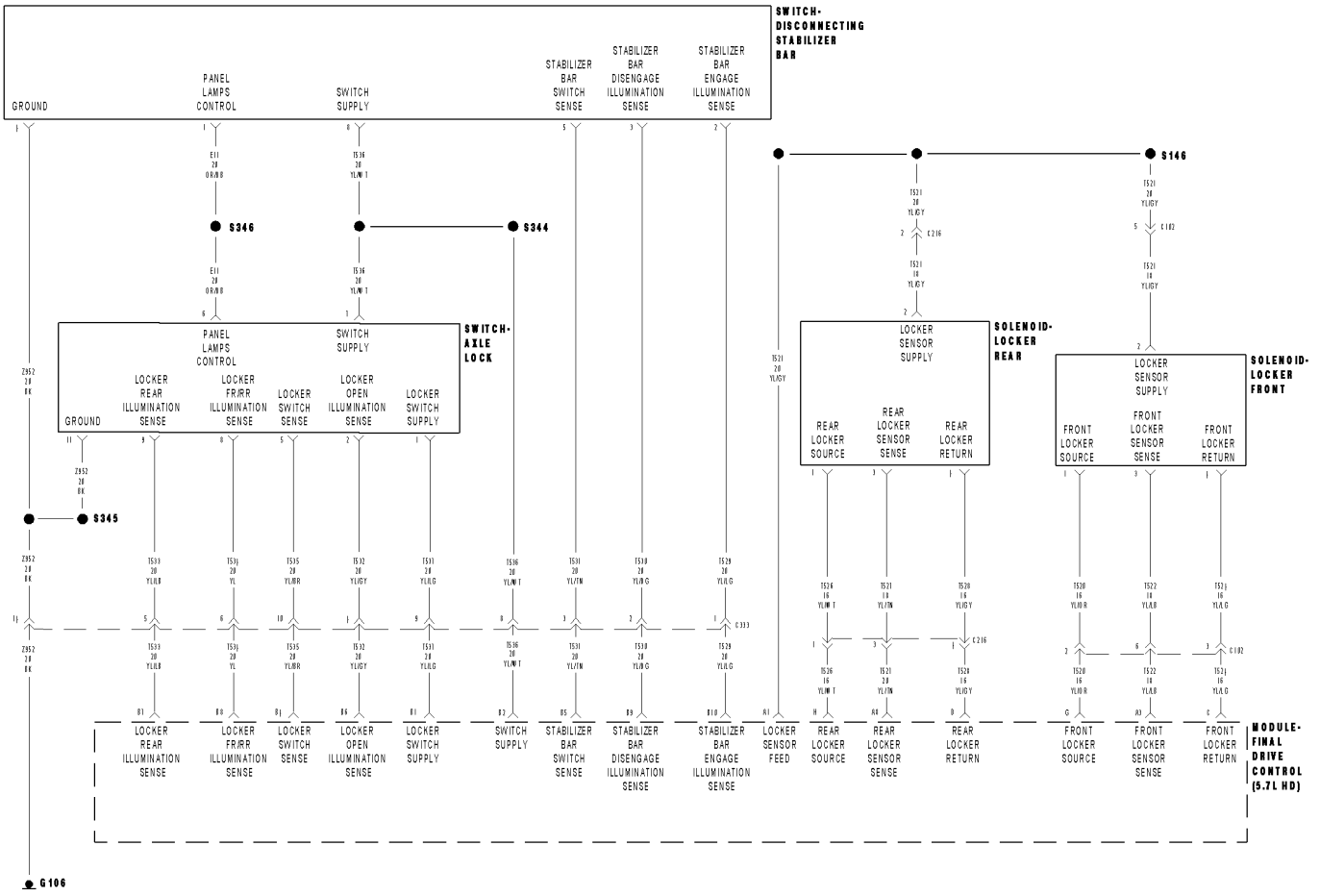

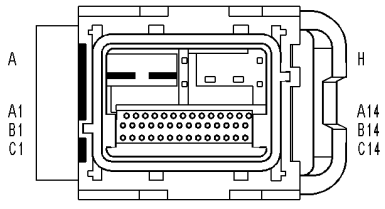

MODULE-FINAL DRIVE CONTROL (5.7L HD)

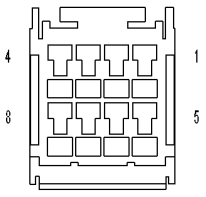

SWITCH-DISCONNECTING STABILZER BAR

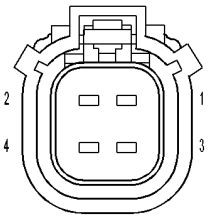

SOLENOID-LOCKER REAR

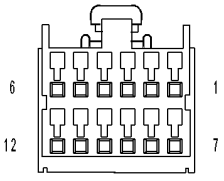

SWITCH-AXLE LOCK

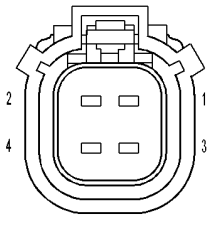

SOLENIOD-LOCKER FRONT

81459daf

C2124-STABILIZER BAR INDICATOR CONTROL CIRCUIT (CONTINUED)

For a complete wiring diagram **Refer to Section 8W**.

- **When Monitored:**
  Ignition on.
- **Set Condition:**
  The FDCM has detected a short to voltage, ground or an open in the Stabilizer Bar Disengage or Engage Illumination Sense circuits.

Possible Causes
DISCONNECTING STABILIZER SWITCH
(T539) STABILIZER BAR DISENGAGE ILLUMINATION SENSE SHORT TO VOLTAGE
(T539) STABILIZER BAR DISENGAGE ILLUMINATION SENSE SHORT TO GROUND
(T539) STABILIZER BAR DISENGAGE ILLUMINATION SENSE OPEN
(T529) STABILIZER BAR ENGAGE ILLUMINATION SENSE SHRORT VOLTAGE
(T529) STABILIZER BAR ENGAGE ILLUMINATION SENSE SHRORT GROUND
(T529) STABILIZER BAR ENGAGE ILLUMINATION SENSE OPEN
FDCM

1. DTC ACTIVE

CAUTION: Before removing the FDCM harness connector, clean the connector and locking cam area of dirt and debris. Failure to do so can result in the connector being jammed or damage to the locking cams on the harness connector or module. Do not force the assist arm when releasing or installing the harness connector.

NOTE: If set along with this DTC, diagnostic any Locker/Differential Indicator Control Circuit DTC(s) first before continuing.

Turn the ignition on, engine not running

With the DRBIII®, read FDCM DTC(s).

Is the DTC active at this time?

Yes >> Go To 2

No >> Go To 11

C2124-STABILIZER BAR INDICATOR CONTROL CIRCUIT (CONTINUED)

2. (T530) STABILIZER BAR DISENGAGE ILLUMINATION SENSE OPERATION

NOTE: Before continuing with the below diagnostic test, ensure the FDCM harness connector seal is installed correctly. Inspect the terminals on both harness connector and the module for damage. Failure to do so can result in misdiagnoses of the system.

Turn the ignition off.

Disconnect the Disconnecting Stabilizer Bar Switch harness connector.

Using a 12–volt test light connected to battery voltage, probe the (T530) Stabilizer Bar Disengage Illumination Sense circuit.

Turn the ignition on.

With the DRBIII®, actuate the Stabilizer Bar Disengage Illumination Sense circuit.

Does the test light illuminate and flash on and off?

Yes >> Go to 3

No >> Go To 4
Perform FDCM VERIFICATION TEST.

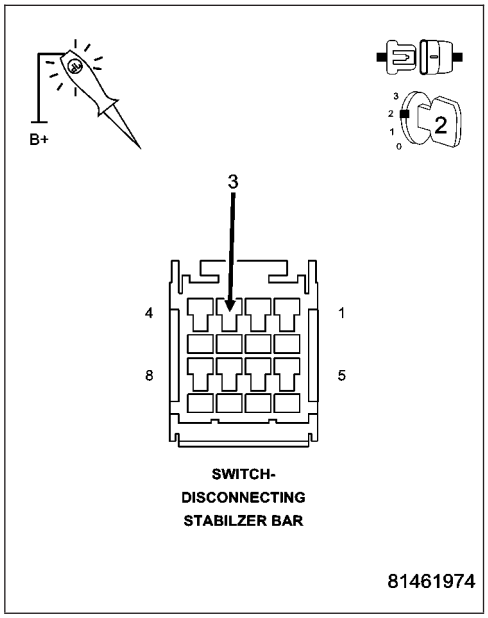

3. (T529) STABILIZER BAR ENGAGE ILLUMINATION SENSE OPERATION

Probe the Stabilizer Bar Disengage Illumination Sense circuit with the test light.

With the DRBIII®, actuate the (T529) Stabilizer Bar Engage Illumination Sense circuit.

Does the test light illuminate and flash on and off?

Yes >> Replace the Disconnecting Stabilizer Bar Switch.
Perform FDCM VERIFICATION TEST.

No >> Go to 7

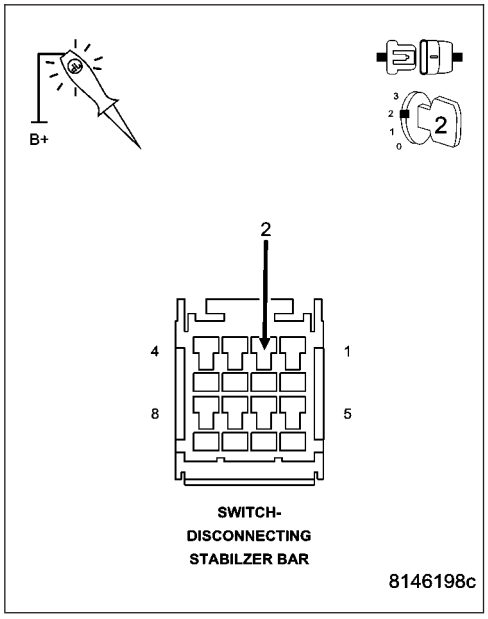

C2124-STABILIZER BAR INDICATOR CONTROL CIRCUIT (CONTINUED)

4. (T530) STABILIZER BAR DISENGAGE ILLUMINATION SENSE CIRCUIT SHORTED TO VOLTAGE

Turn the ignition off.

Disconnect the FDCM harness connector.

Turn the ignition on.

Measure the voltage on the (T530) Stabilizer Bar Disengage Illumination Sense circuit in the FDCM harness connector.

Does the voltmeter indicate voltage present?

Yes >> Repair the short to voltage in the (T530) Stabilizer Bar Disengage Illumination Sense circuit.
Perform FDCM VERIFICATION TEST.

No >> Go To 5

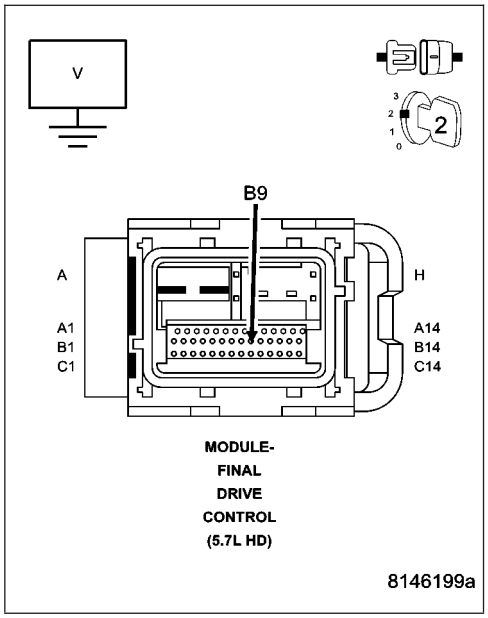

5. (T530) STABILIZER BAR DISENGAGE ILLUMINATION SENSE CIRCUIT SHORTED TO GROUND

Turn the ignition off.

Measure the resistance of the (T530) Stabilizer Bar Disengage Illumination Sense circuit between ground and the FDCM harness connector.

Is the resistance below 100 ohms?

Yes >> Repair the short to ground in the (T530) Stabilizer Bar Disengage Illumination Sense circuit.
Perform FDCM VERIFICATION TEST.

No >> Go To 6

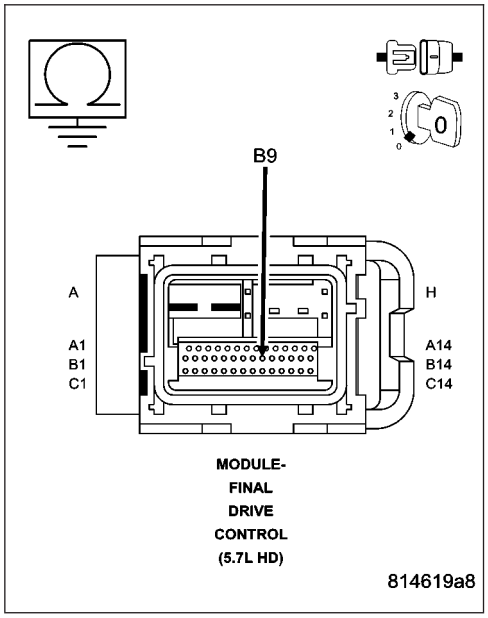

C2124-STABILIZER BAR INDICATOR CONTROL CIRCUIT (CONTINUED)

6. (T530) STABILIZER BAR DISENGAGE ILLUMINATION SENSE CIRCUIT OPEN

Measure the resistance of the (T530) Stabilizer Bar Disengage Illumination Sense circuit between the Disconnecting Stabilizer Bar Switch harness connector and the FDCM harness connector.

Is the resistance below 5.0 ohms?

Yes >> Go To 10

No >> Repair the open in the (T530) Stabilizer Bar Disengage Illumination Sense circuit.
Perform FDCM VERIFICATION TEST.

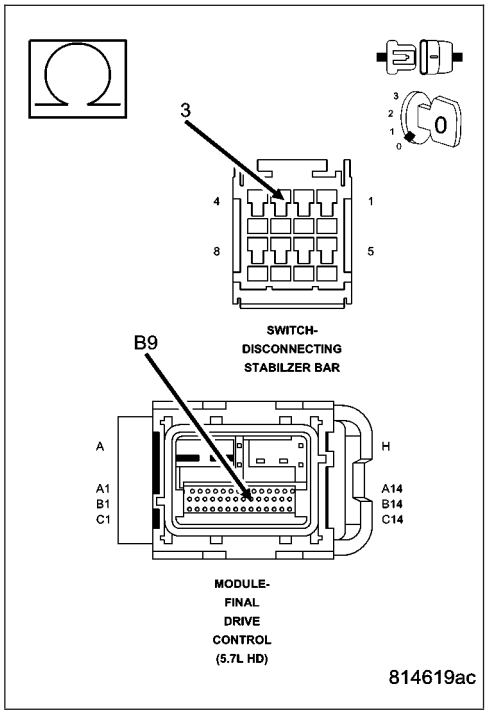

7. (T529) STABILIZER BAR ENGAGE ILLUMINATION SENSE CIRCUIT SHORTED TO VOLTAGE

Turn the ignition off.

Disconnect the FDCM harness connector.

Turn the ignition on.

Measure the voltage on the (T529) Stabilizer Bar Engage Illumination Sense circuit in the FDCM harness connector.

Does the voltmeter indicate voltage present?

Yes >> Repair the short to voltage in the (T529) Stabilizer Bar Engage Illumination Sense circuit.
Perform FDCM VERIFICATION TEST.

No >> Go To 8

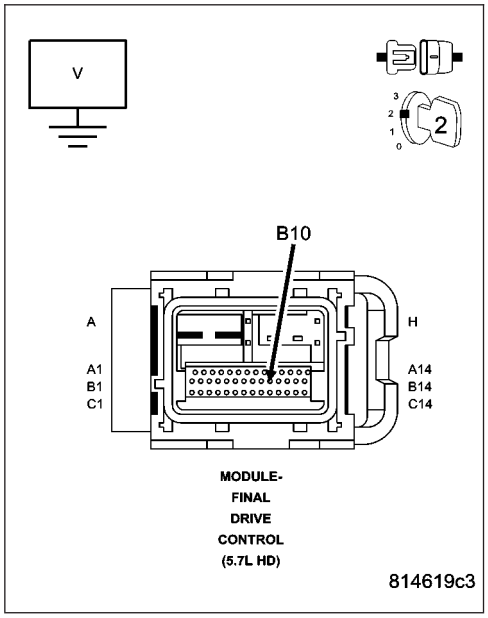

C2124-STABILIZER BAR INDICATOR CONTROL CIRCUIT (CONTINUED)

8. (T529) STABILIZER BAR ENGAGE ILLUMINATION SENSE CIRCUIT SHORTED TO GROUND

Turn the ignition off.

Measure the resistance of the (T529) Stabilizer Bar Engage Illumination Sense circuit between ground and the FDCM harness connector.

Is the resistance below 100 ohms?

Yes >> Repair the short to ground in the (T529) Stabilizer Bar Engage Illumination Sense circuit.
Perform FDCM VERIFICATION TEST.

No >> Go To 9

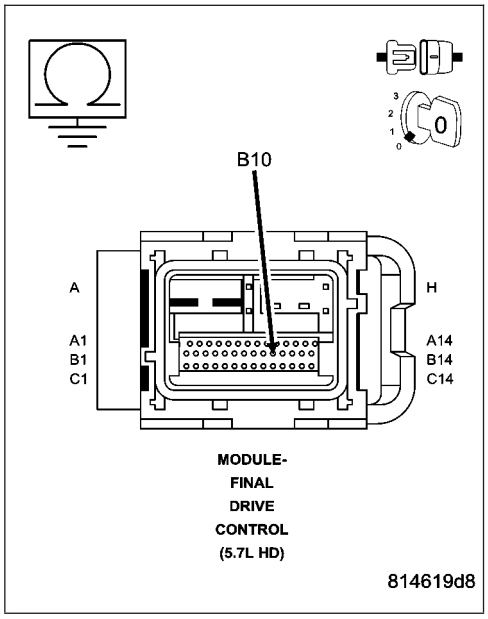

9. (T529) STABILIZER BAR ENGAGE ILLUMINATION SENSE CIRCUIT OPEN

Measure the resistance of the (T529) Stabilizer Bar Engage Illumination Sense circuit between the Disconnecting Stabilizer Bar Switch harness connector and the FDCM harness connector.

Is the resistance below 5.0 ohms?

Yes >> Go To 10

No >> Repair the open in the (T529) Stabilizer Bar Engage Illumination Sense circuit.
Perform FDCM VERIFICATION TEST.

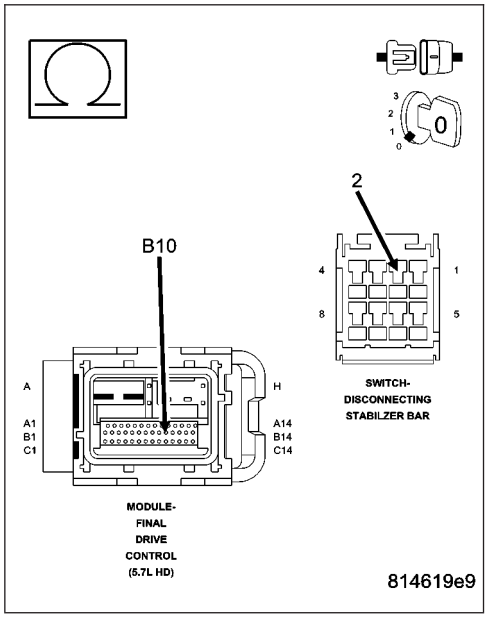

C2124-STABILIZER BAR INDICATOR CONTROL CIRCUIT (CONTINUED)

10. FDCM

NOTE: Before continuing, check the FDCM harness connector terminals for corrosion, damage, or terminal push out. Repair as necessary.

Using the schematics as a guide, inspect the wire harness and connectors. Pay particular attention to all Power and Ground circuits.

Were there any problems found?

Yes >> Repair as necessary.
Perform FDCM VERIFICATION TEST

No >> Replace and program the Final Drive Control Module in accordance with Service Information.
Perform FDCM VERIFICATION TEST.

---

11. INTERMITTENT WIRING AND CONNECTORS

The conditions necessary to set this DTC are not present at this time.

Using the schematics as a guide, inspect the wiring and connectors specific to this circuit.

Wiggle test the wiring harness and connectors while checking for shorted and open circuits.

Using the DRBIII®, monitor the data related to this circuit while performing the wiggle test. Look for the data to change or for the DTC to reset.

Were there any problems found?

Yes >> Repair as necessary.
Perform FDCM VERIFICATION TEST.

No >> Test Complete.

CHECKING STABILIZER SELECT SWITCH OPERATION

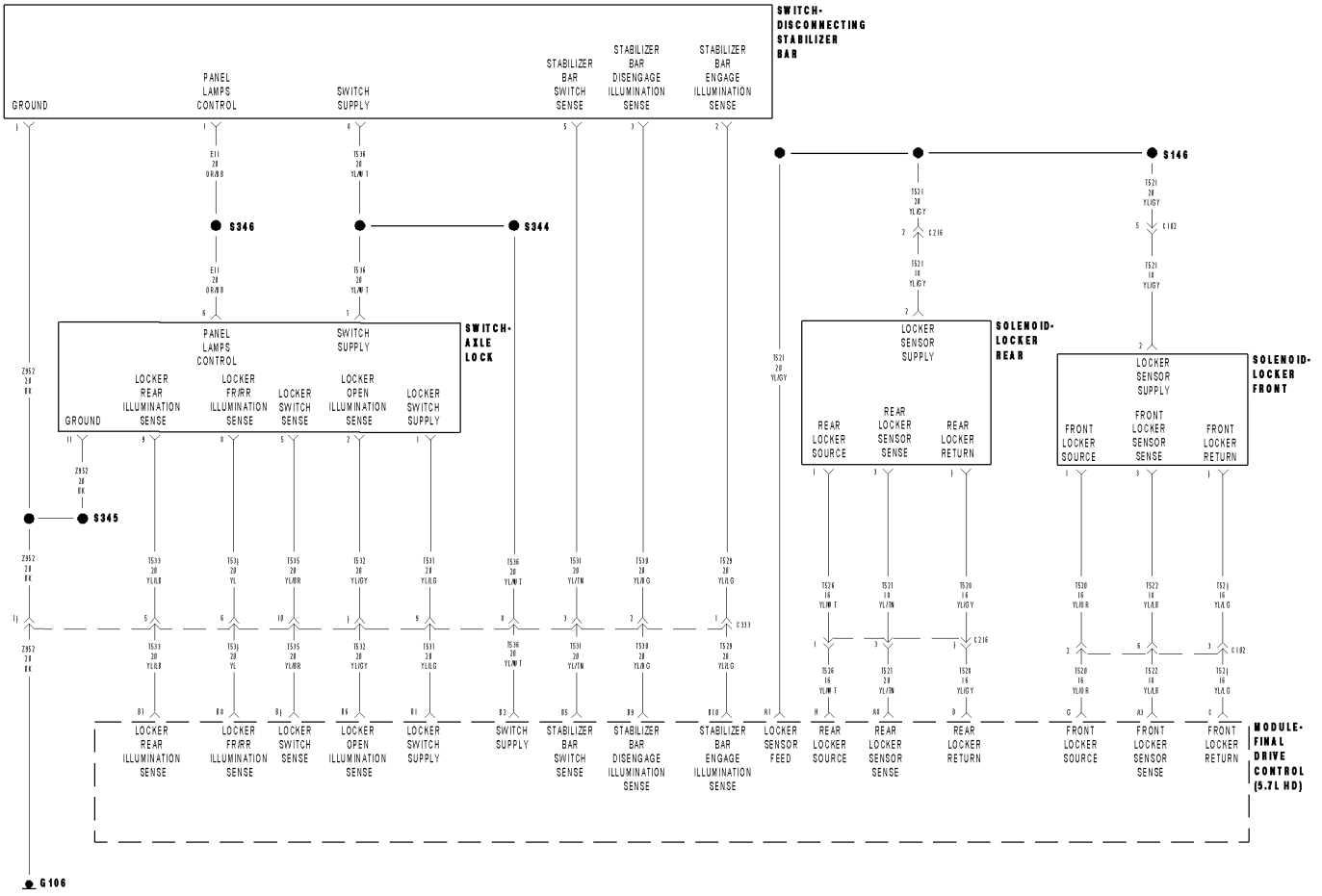

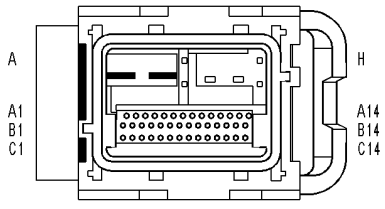

MODULE-FINAL DRIVE CONTROL (5.7L HD)

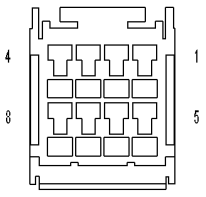

SWITCH-DISCONNECTING STABILZER BAR

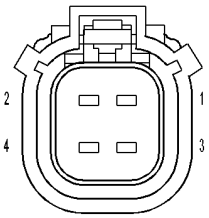

SOLENOID-LOCKER REAR

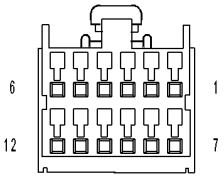

SWITCH-AXLE LOCK

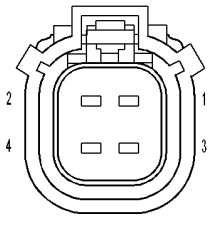

SOLENIOD-LOCKER FRONT

81459daf

CHECKING STABILIZER SELECT SWITCH OPERATION (CONTINUED)

For a complete wiring diagram **Refer to Section 8W**.

Possible Causes
STABILIZER BAR SWITCH
(T531) STABILIZER BAR SWITCH SENSE CIRCUIT SHORT TO VOLTAGE
(T536) SWITCH SUPPLY CIRCUIT SHORTED TO (T531) STABILIZER BAR SWITCH SENSE CIRCUIT
(T536) STABILIZER BAR SWITCH SENSE CIRCUIT OPEN
FDCM

Diagnostic Test

1. STABILIZER SELECT SWITCH OPERATION

CAUTION: Before removing the FDCM harness connector, clean the connector and locking cam area of dirt and debris. Failure to do so can result in the connector being jammed or damage to the locking cams on the harness connector or module. Do not force the assist arm when releasing or installing the harness connector.

Turn the ignition off.

Secure the vehicle by blocking the rear wheels from the front and back.

Disconnect the Stabilizer Bar Link on the passenger side.

Turn the ignition on, Stabilizer Select Switch in the ON ROAD position.

The Stabilizer Bar should not move up and down.

Using the Stabilizer Select Switch, select OFF ROAD.

Attempt to move the Stabilizer Bar up and down.

Does the Stabilizer Bar operate as described above?

Yes >> Stabilizer Select Switch is operating normally. Test complete.

No >> Go To 2

CHECKING STABILIZER SELECT SWITCH OPERATION (CONTINUED)

2. DISCONNECTING STABILIZER BAR SWITCH OPERATION

NOTE: Before continuing with the below diagnostic test, ensure the FDCM harness connector seal is installed correctly. Inspect the terminals on both harness connector and the module for damage. Failure to do so can result in misdiagnoses of the system.

Turn the ignition off.

Disconnect the Disconnecting Stabilizer Bar Switch harness connector.

Remove the Disconnecting Stabilizer Bar Switch.

Measure the resistance on the Disconnecting Stabilizer Bar Switch between the Switch Supply terminal and the Stabilizer Bar Switch Sense terminal.

The resistance must read as follows for each position of the switch.

- **Off Road: 33 ohms +/- 5%**
- **On Road: 420 ohms +/- 5%**
- **Switch Not Applied: 2.2k ohms +/- 5%**

Does the ohmmeter read correctly for each position of the Disconnecting Stabilizer Bar Switch

Yes >> Go To 3

No >> Replace the Disconnecting Stabilizer Bar Switch.
Perform FDCM VERIFICATION TEST.

---

3. (T531) STABILIZER BAR SWITCH SENSE CIRCUIT SHORTED TO VOLTAGE

Disconnect the FDCM harness connector.

Turn the ignition on.

Measure the voltage of the (T531) Stabilizer Bar Switch Sense circuit in the Disconnecting Stabilizer Bar Switch harness connector.

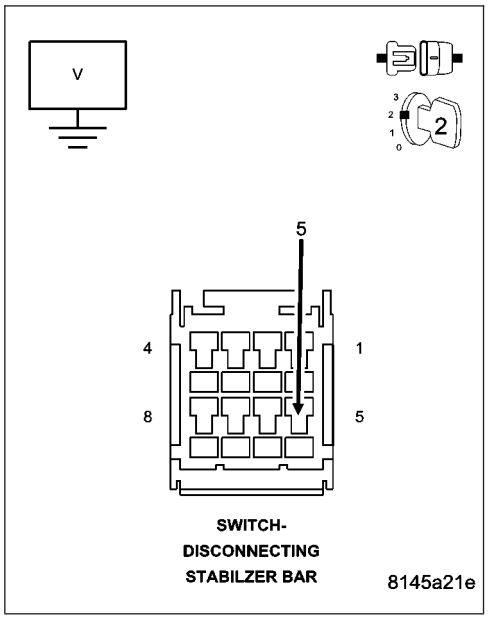

Does the voltmeter indicate voltage present?

Yes >> Repair the short to voltage in the (T531) Stabilizer Bar Switch Sense circuit.
Perform FDCM VERIFICATION TEST.

No >> Go To 4

CHECKING STABILIZER SELECT SWITCH OPERATION (CONTINUED)

4. (T536) SWITCH SUPPLY CIRCUIT SHORTED TO (T351) STABILIZER BAR SWITCH SENSE CIRCUIT

Measure the resistance between (T536) Switch Supply circuit and the (T531) Stabilizer Bar Switch Sense circuit in the Disconnecting Stabilizer Bar Switch harness connector.

Is the resistance below 5.0 ohms?

Yes >> Repair the short between (T536) Switch Supply circuit and the (T531) Stabilizer Bar Switch Sense circuit.
Perform FDCM VERIFICATION TEST.

No >> Go To 5

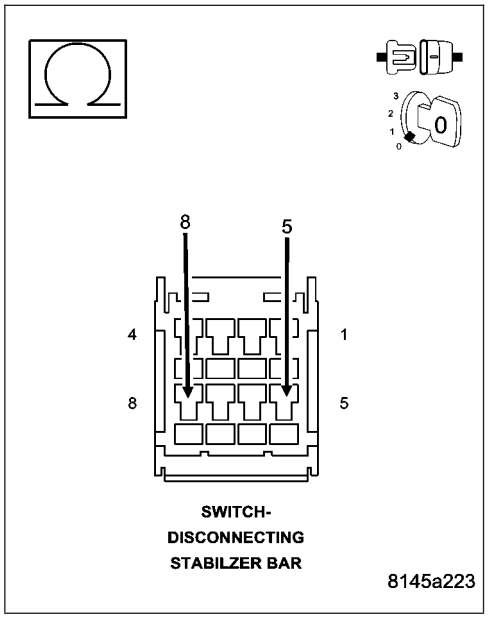

5. (T531) STABILIZER BAR SWITCH SENSE CIRCUIT OPEN

Measure the resistance of the (T531) Stabilizer Bar Switch Sense circuit between the Disconnecting Stabilizer Bar Switch and the FDCM harness connectors.

Is the resistance below 5.0 ohms?

Yes >> Replace the FDCM in accordance with the Service Information.
Perform FDCM VERIFICATION TEST.

No >> Repair the open in the (T531) Stabilizer Bar Switch Sense circuit.
Perform FDCM VERIFICATION TEST.

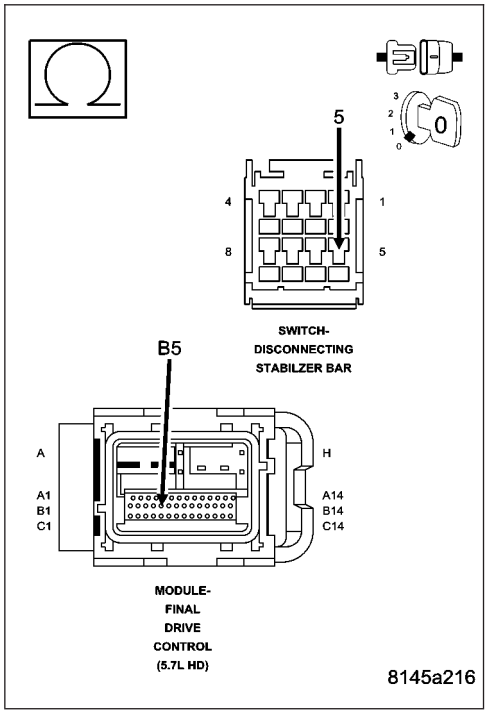

FDCM VERIFICATION TEST

Diagnostic Test

1. PERFORM FDCM VERIFICATION TEST

CAUTION: Before removing the FDCM harness connector, clean the connector and locking cam area of dirt and debris. Failure to do so can result in the connector being jammed or damage to the locking cams on the harness connector or module. Do not force the assist arm when releasing or installing the harness connector.

NOTE: If the SKIM, PCM or FCM was replaced, refer to the service information for proper programming procedures.

1. Disconnect all jumper wires and reconnect all previously disconnected components and connectors.
2. Ensure that all accessories are turned off.
3. Ensure that the battery is fully charged.
4. With the DRBIII®, record and erase all DTC(s) from the FDCM
5. Start and run the engine for 2 minutes while operating all functions of the system that caused the original concern.
6.

NOTE: When a Stabilizer System DTC diagnostic is complete and all repairs have been made, running the Stabilizer Motor System Test and/or LED System Test can also provide verification that the DTC has been repaired and the system is operating normally.

7. Turn the ignition off, wait 5 seconds, then turn the ignition on. Using the DRBIII®, read DTC(s) from the FDCM.

Are any FDCM DTC(s) present or is the original condition still present?

Yes >> The repair is not complete. Refer to the related category for the DTC or symptom that is still present.

No >> The repair is complete.

SUSPENSION - SERVICE INFORMATION

TABLE OF CONTENTS

	page		page
WHEEL ALIGNMENT	28	**FRONT - LINK/COIL**	68
FRONT - INDEPENDENT FRONT SUSPENSION	37	**REAR**	95

WHEEL ALIGNMENT

TABLE OF CONTENTS

page

WHEEL ALIGNMENT
DESCRIPTION 28
OPERATION 28
DIAGNOSIS AND TESTING
PRE-ALIGNMENT INSPECTION 29
STANDARD PROCEDURE
HEIGHT MEASUREMENT - 4WD (LD) 30
HEIGHT ADJUSTMENT - 4WD (LD) 30
CAMBER AND CASTER ADJUSTMENT 31
TOE ADJUSTMENT 31
CAMBER, CASTER AND TOE ADJUSTMENT . 32
ALIGNMENT LINK/COIL SUSPENSION 34
SPECIFICATIONS
ALIGNMENT 34
SPECIAL TOOLS
WHEEL ALIGNMENT 36

WHEEL ALIGNMENT

DESCRIPTION

NOTE: Suspension components with rubber/urethane bushings should be tightened with the vehicle at normal ride height. It is important to have the springs supporting the weight of the vehicle when the fasteners are torqued. If springs are not at their normal ride position, vehicle ride comfort could be affected and premature bushing wear may occur.

Wheel alignment involves the correct positioning of the wheels in relation to the vehicle. The positioning is accomplished through suspension and steering linkage adjustments. An alignment is considered essential for efficient steering, good directional stability and to minimize tire wear. The most important measurements of an alignment are caster, camber and toe.

CAUTION: Never attempt to modify suspension or steering components by heating or bending.

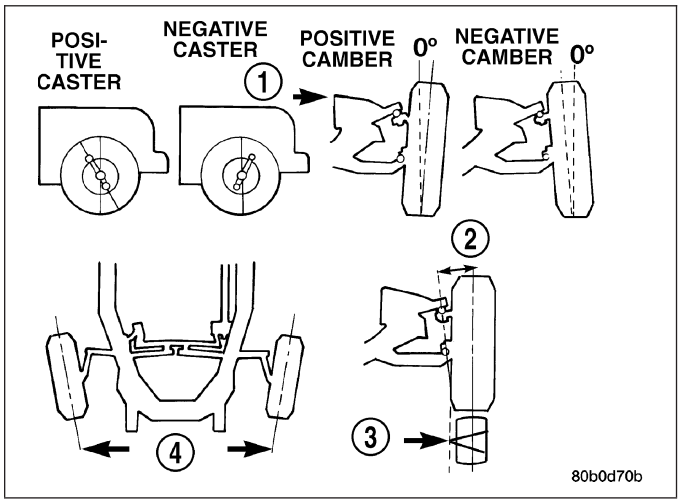

OPERATION

- **CASTER** is the forward or rearward tilt of the steering knuckle from vertical. Tilting the top of the knuckle forward provides less positive caster. Tilting the top of the knuckle rearward provides more positive caster. Positive caster promotes directional stability. This angle enables the front wheels to return to a straight ahead position after turns
- **CAMBER** is the inward or outward tilt of the wheel relative to the center of the vehicle. Tilting the top of the wheel inward provides negative camber. Tilting the top of the wheel outward provides positive camber. Incorrect camber will cause wear on the inside or outside edge of the tire
- **TOE** is the difference between the leading inside edges and trailing inside edges of the front tires. Wheel toe position out of specification cause's unstable steering, uneven tire wear and steering wheel off- center. The wheel toe position is the **final** front wheel alignment adjustment
- **THRUST ANGLE** is the angle of the rear axle relative to the centerline of the vehicle. Incorrect thrust angle can cause off-center steering and excessive tire wear. This angle is not adjustable, damaged component(s) must be replaced to correct the thrust angle

DIAGNOSIS AND TESTING

PRE-ALIGNMENT INSPECTION

Before starting wheel alignment, the following inspection and necessary corrections must be completed. Refer to Suspension and Steering System Diagnosis Chart below for additional information.

1. Inspect tires for size, air pressure and tread wear.
2. Inspect front wheel bearings for wear.
3. Inspect front wheels for excessive radial or lateral runout and balance.
4. Inspect ball studs, linkage pivot points and steering gear for looseness, roughness or binding.
5. Inspect suspension components for wear and noise.
6. On 4x4 vehicles check suspension height (LD only).
7. Road test the vehicle.

SUSPENSION AND STEERING SYSTEM DIAGNOSIS

CONDITION	POSSIBLE CAUSES	CORRECTION
FRONT END NOISE	1. Loose or worn wheel bearing.	1. Replace wheel bearing.
	2. Loose or worn steering or suspension components.	2. Tighten or replace components as necessary.
	3. Loose or worn steering or suspension components.	3. Tighten or replace components as necessary.
EXCESSIVE PLAY IN STEERING	1. Loose or worn wheel bearing.	1. Replace wheel bearing.
	2. Loose or worn steering or suspension components.	2. Tighten or replace components as necessary.
	3. Loose or worn steering gear.	3. Replace steering gear.
FRONT WHEELS SHIMMY	1. Loose or worn wheel bearing.	1. Replace wheel bearing.
	2. Loose or worn steering or suspension components.	2. Tighten or replace components as necessary.
	3. Tires worn or out of balance.	3. Replace or balance tires.
	4. Alignment.	4. Align vehicle to specifications.
VEHICLE INSTABILITY	1. Loose or worn wheel bearing.	1. Replace wheel bearing.
	2. Loose or worn steering or suspension components.	2. Tighten or replace components as necessary.
	3. Tire pressure.	3. Adjust tire pressure.
	4. Alignment.	4. Align vehicle to specifications.
EXCESSIVE STEERING EFFORT	1. Loose or worn steering gear.	1. Replace steering gear.
	2. Column coupler binding.	2. Replace coupler.
	3. Tire pressure.	3. Adjust tire pressure.
	4. Alignment.	4. Align vehicle to specifications.

CONDITION	POSSIBLE CAUSES	CORRECTION
VEHICLE PULLS TO ONE SIDE	1. Tire pressure. 2. Tire. 3. Alignment. 4. Loose or worn steering or suspension components. 5. Radial tire lead. 6. Brake pull. 7. Weak or broken spring. 8. Ride height (LD) 4WD only.	1. Adjust tire pressure. 2. Criss-Cross Front Tires. 3. Align vehicle to specifications. 4. Tighten or replace components as necessary. 5. Rotate or replace tire as necessary. 6. Repair brake as necessary. 7. Replace spring. 8. Measure and adjust ride height. (LD only)

STANDARD PROCEDURE

HEIGHT MEASUREMENT - 4WD (LD)

The vehicle suspension height MUST be measured and adjusted before performing wheel alignment procedure. Also when front suspension components have been replaced. This measure must be performed with the vehicle supporting it's own weight and taken on both sides of the vehicle.

1. Inspect tires and set to correct pressure.
2. Jounce the front of the vehicle.
3. Measure and record the height from the ground at the centerline of the rear lower control arm bolt front tip (2).
4. Measure and record the height from the ground at the front spindle centerline (Static Load Radius) (1).

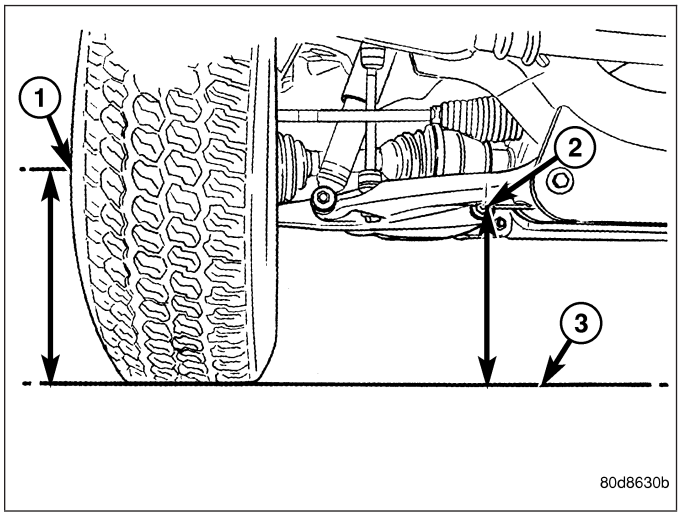

5. Subtract the first measurement from the second measurement. The difference between the two measurement should be 58 mm (2.3 inches) ± 3 mm (0.12 inches).
6. If value is greater than 61 mm (2.4 inches), tighten the torsion bar bolt until the specification is achieved (Refer to 2 - SUSPENSION/WHEEL ALIGNMENT - STANDARD PROCEDURE).
7. If value is less than 55 mm (2.1 inches), loosen the torsion bar bolt until the specification is achieved, (Refer to 2 - SUSPENSION/WHEEL ALIGNMENT - STANDARD PROCEDURE).
8. Repeat the previous steps until the ride height is within specifications.

HEIGHT ADJUSTMENT - 4WD (LD)

The vehicle suspension height MUST be measured and adjusted before performing wheel alignment procedure (Refer to 2 - SUSPENSION/WHEEL ALIGNMENT - STANDARD PROCEDURE). Also when front suspension components have been replaced. This measurement must be performed with the vehicle supporting it's own weight and taken on both sides of the vehicle.

To adjust the vehicle height turn the torsion bar adjustment bolt CLOCKWISE to raise the vehicle and COUNTER CLOCKWISE to lower the vehicle.

CAUTION: ALWAYS raise the vehicle to the correct suspension height, NEVER lower the vehicle to obtain the correct suspension height. If the vehicle suspension height is too high, lower the vehicle below the height specification. Then raise the vehicle to the correct suspension height specification. This will insure the vehicle maintains the proper suspension height.

NOTE: If a height adjustment has been made, perform height measurement again on both sides of the vehicle.

CAMBER AND CASTER ADJUSTMENT

NOTE: 4X4 (LD) SUSPENSION HEIGHT MEASUREMENT MUST BE PERFORMED BEFORE AN ALIGNMENT.

NOTE: When the upper control arm pivot bolts are loosened the upper control arm will normally go inwards toward the frame automatically with the weight of the vehicle.

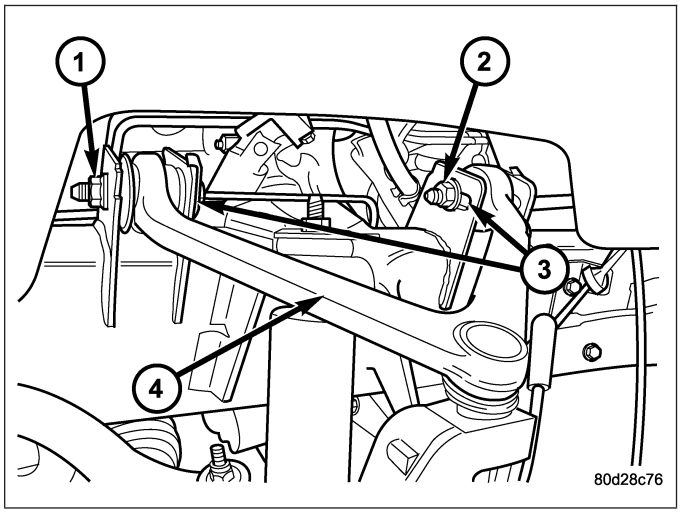

Camber and caster angle adjustments involve changing the position of the upper control arm (4) inconjunction with the slotted holes in the frame brackets, Install special tool 8876 between the top of the upper control arm bracket and the upper control arm (on 1500 series 4X2 & 4X4). Install special tool 8876 between the bottom of the upper control arm bracket pressing the tool against the frame and the upper control arm (on 2500/3500 series 4X2) in order to move the upper control arm outwards for proper adjustment with the vehicle at normal ride height.

TOE ADJUSTMENT

4X4 SUSPENSION HEIGHT MESUREMENT MUST BE PERFORMED BEFORE AN ALIGNMENT.

The wheel toe position adjustment is the final adjustment.

1. Start the engine and turn wheels both ways before straightening the wheels. Secure the steering wheel with the front wheels in the straight-ahead position.
2. Loosen the tie rod jam nuts (1).

NOTE: Each front wheel should be adjusted for one-half of the total toe position specification. This will ensure the steering wheel will be centered when the wheels are positioned straight-ahead.

3. Adjust the wheel toe position by turning the inner tie rod (2) as necessary.
4. Tighten the tie rod jam nut (1) to 75 N·m (55 ft. lbs.).
5. Verify the specifications
6. Turn off engine.

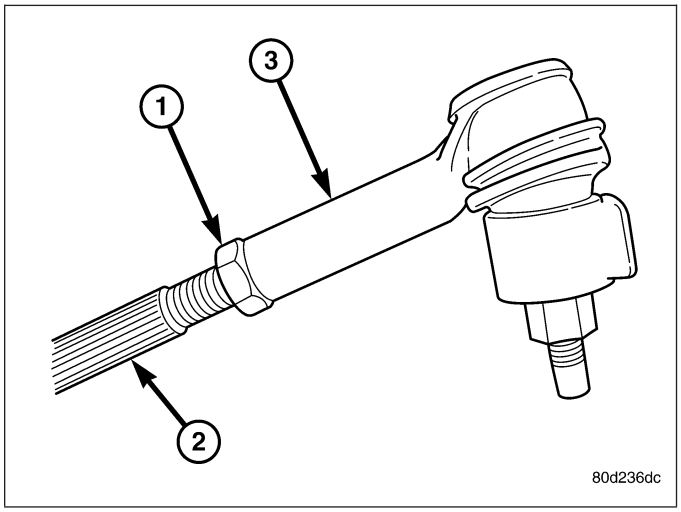

CAMBER, CASTER AND TOE ADJUSTMENT

NOTE: 4X4 (LD) SUSPENSION HEIGHT MEASUREMENT MUST BE PERFORMED BEFORE AN ALIGNMENT.

Camber and caster angle adjustments involve changing the position of the upper control arm (4) with the slots in the frame brackets using special tool 8876 to move the upper control arm outwards for proper adjustment.

NOTE: When the upper control arm pivot bolts are loosened the upper control arm will normally go inwards toward the frame automatically with the weight of the vehicle.

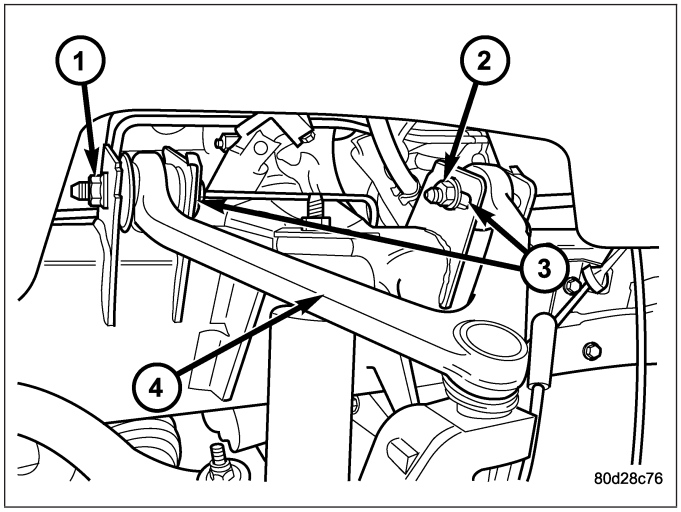

CASTER

Moving the front or rear position of the upper control arm (4) in or out, will change the caster angle and camber angle significantly. To maintain the camber angle while adjusting caster, move one pivot bolt of the upper control arm in or out. Then move the other pivot bolt of the upper control arm in the opposite direction. Install special tool 8876 between the top of the upper control arm bracket and the upper control arm (on 1500 series 4X2 & 4X4). Install special tool 8876 between the bottom of the upper control arm bracket pressing the tool against the frame and the upper control arm (on 2500/3500 series 4X2) in order to move the upper control arm outwards for proper adjustment with the vehicle at normal ride height.

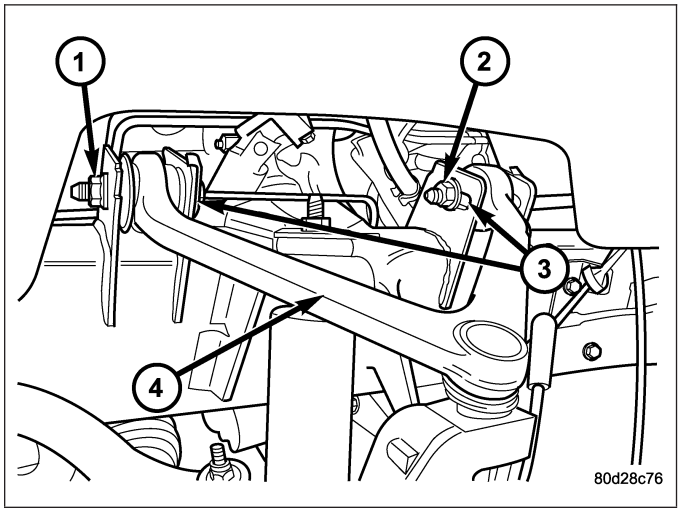

To increase positive caster angle, move the rear position (2) of the upper control arm inward (toward the engine). Move the front (1) of the upper control arm outward (away from the engine) slightly until the original camber angle is obtained using special tool 8876 to move the upper control arm for proper adjustment.

CAMBER

Move both pivot bolts of the upper control arm together in or out. This will change the camber angle significantly and little effect on the caster angle using special tool 8876 to move the upper control arm (4) for proper adjustment.

After adjustment is made tighten the upper control arm nuts to proper torque specification.

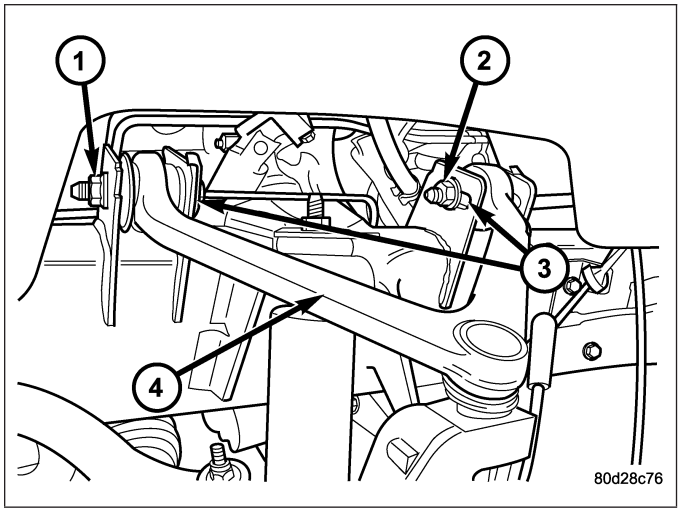

TOE ADJUSTMENT

The wheel toe position adjustment is the final adjustment.

1. Start the engine and turn wheels both ways before straightening the wheels. Secure the steering wheel with the front wheels in the straight-ahead position.
2. Loosen the tie rod jam nuts (1).

NOTE: Each front wheel should be adjusted for one-half of the total toe position specification. This will ensure the steering wheel will be centered when the wheels are positioned straight-ahead.

3. Adjust the wheel toe position by turning the inner tie rod (2) as necessary.
4. Tighten the tie rod jam nut (1) to 75 N·m (55 ft. lbs.).
5. Verify the specifications
6. Turn off engine.

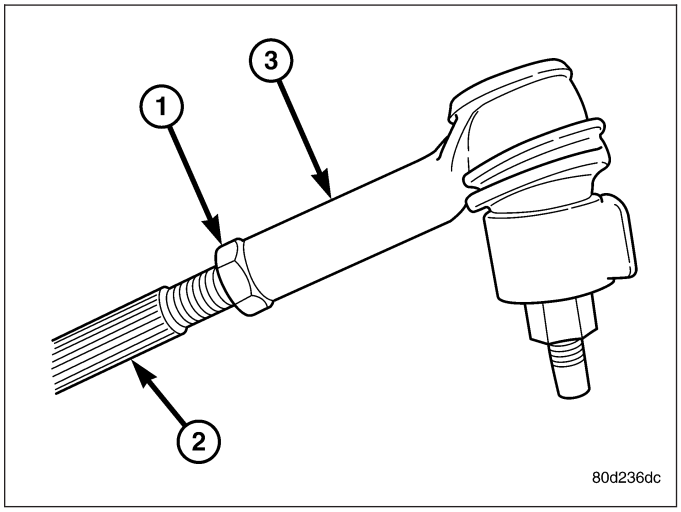

ALIGNMENT LINK/COIL SUSPENSION

Before each alignment reading the vehicle should be jounced (rear first, then front). Grasp each bumper at the center and jounce the vehicle up and down several times. Always release the bumper in the down position. **Set the front end alignment to specifications while the vehicle is in its NORMALLY LOADED CONDITION.**

CAMBER: The wheel camber angle is preset and is not adjustable.

CASTER: Check the caster of the front axle for correct angle. Be sure the axle is not bent or twisted. Road test the vehicle and make left and right turn. Observe the steering wheel return-to-center position. Low caster will cause poor steering wheel returnability.

Caster can be adjusted by rotating the cams (3) on the lower suspension arm.

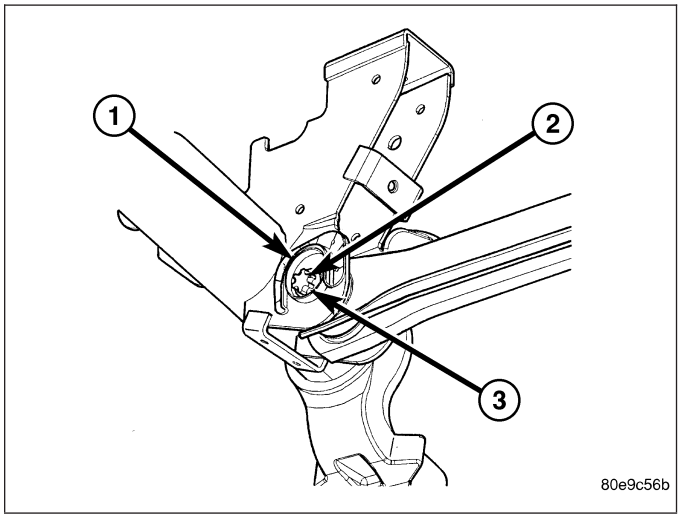

TOE POSITION: The wheel toe position adjustment should be the final adjustment.

1. Start the engine and turn wheels both ways before straightening the wheels. Center and Secure the steering wheel and turn off engine.
2. Loosen the adjustment sleeve clamp bolts.
3. Adjust the right wheel toe position with the drag link. Turn the sleeve until the right wheel is at the correct TOE-IN position. Position clamp bolts to their original position and tighten to specifications. **Make sure the toe setting does not change during clamp tightening.**
4. Adjust left wheel toe position with tie rod at left knuckle. Turn the sleeve until the left wheel is at the correct TOE-IN position. Position clamp bolts to their original position and tighten to specifications. **Make sure the toe setting does not change during clamp tightening.**

NOTE: Toe setting will change during tightening, Make sure to verify reading after tightening.

5. Verify the right toe setting and a straight steering wheel.
6. Road test the vehicle.

SPECIFICATIONS

ALIGNMENT

NOTE: All alignment specifications are in degrees.

SPECIFICATIONS

DESCRIPTION	SPECIFICATION			
VEHICLE 1500	WHEEL BASE	CASTER (4.0° Min, +.75° Max)	CAMBER (± .50°)	TOTAL TOE-IN (± .10°)
4X2	120.5 in	4.0°	.0°	.10°
4X2	140.5 in	4.2°	.0°	.10°
4X2	160.5 in	4.4°	.0°	.10°
VEHICLE	WHEELBASE	CASTER (±0.5°)	CAMBER (0.30°)	TOTAL TOE-IN (±0.16°)
SRT-10	120.5	5.75	.0°	0.24°

DESCRIPTION	SPECIFICATION			
VEHICLE 1500	WHEEL BASE	CASTER (4.0° Min, +.75° Max)	CAMBER (±.50°)	TOTAL TOE-IN (±.10°)
4X4	120.5 in	4.2°	.0°	.10°
4X4	140.5 in	4.4°	.0°	.10°
4X4	160.5 in	4.6°	.0°	.10°
MAX RT/LT DIFFERENCE 4X2 1500	—	.40°	.50°	0.06°
MAX RT/LT DIFFERENCE 4X4 1500	—	.40°	.60°	0.06°
VEHICLE 4X2 2500 & 3500	WHEEL BASE	CASTER (3.55° Min, +.75° Max)	CAMBER (±.50°)	TOTAL TOE-IN (0.20° ±.10°)
4X2 2500&3500	140	4.0°	0.0°	.10° ± .05°
4X2 2500&3500	160	4.3°	0.0°	.10° ± .05°
MAX RT/LT DIFFERENCE 4X2 2500&3500	—	±0.4°	±0.6°	0.1°
VEHICLE 4X4 2500&3500	WHEEL BASE	CASTER (4.0° Min, +.75° Max)	CAMBER (.25° ±.5°)	TOTAL TOE-IN (0.20° ±.10°)
4X4 2500&3500	140	4.5°	.25°	.10° ± .05°
4X4 2500&3500	160	4.7°	.25°	.10° ± .05°
MAX RT/LT DIFFERENCE 4X4 2500&3500	—	±.5°	±.5°	0.1°
DESCRIPTION	**REAR SPECIFICATION**			
CAMBER (-.10° ± 0.35°)	TOTAL TOE-IN (0.30° ± 0.35°)			
CAMBER SRT-10 (0.00° ± -0.25°	TOTAL TOE-IN SRT-10 (0.30° ± 0.16°)			
THRUST ANGLE 0° ± 0.4° 4X2 4X4 1500				
THRUST ANGLE -0.2° ± 0.2° 4X2 4X4 2500&3500				
THRUST ANGLE 0° ± 0.17° SRT-10				

SPECIAL TOOLS

WHEEL ALIGNMENT

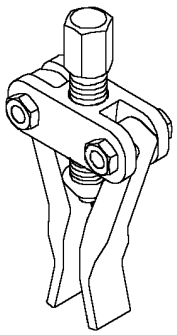

FRONT - INDEPENDENT FRONT SUSPENSION

TABLE OF CONTENTS

page

FRONT - INDEPENDENT FRONT SUSPENSION
DESCRIPTION
SUSPENSION 37
CONTROL ARMS 38
SPECIFICATIONS
TORQUE CHART 39
SPECIAL TOOLS
FRONT SUSPENSION 40
BUSHINGS
REMOVAL
LOWER CONTROL ARM BUSHINGS - 4WD (LD) 41
TORSION BAR CROSSMEMBER BUSHING . 42
LOWER CONTROL ARM BUSHINGS - 2WD (LD) 42
INSTALLATION
LOWER CONTROL ARM BUSHINGS - 4WD (LD) 43
TORSION BAR CROSS MEMBER BUSHING . 45
LOWER CONTROL ARM BUSHINGS - 2WD (LD) 46
HUB / BEARING
REMOVAL
HUB/BEARING - 4X4 47
HUB/BEARING - 4X2 47
INSTALLATION
HUB/BEARING - 4X4 48
HUB/BEARING - 4X2 49
KNUCKLE
DESCRIPTION 49
OPERATION 49
REMOVAL 49
INSTALLATION 50
LOWER BALL JOINT
DIAGNOSIS AND TESTING
LOWER BALL JOINT 51
REMOVAL 51
INSTALLATION 52
LOWER CONTROL ARM
REMOVAL
LOWER CONTROL ARM - 4X4 (LD) 53

page

LOWER CONTROL ARM - 4X2 53
INSTALLATION
LOWER CONTROL ARM - 4X4 (LD) 55
LOWER CONTROL ARM - 4X2 55
SPRING
REMOVAL 56
INSTALLATION 57
SHOCK
DIAGNOSIS AND TESTING
SHOCK 58
REMOVAL
SHOCK - 4X2 58
SHOCK - 4X4 59
INSTALLATION
SHOCK - 4X2 59
SHOCK - 4X4 60
STABILIZER BAR
DESCRIPTION 60
OPERATION 60
REMOVAL 61
INSTALLATION 61
STABILIZER LINK
REMOVAL
STABILIZER LINK - 4X4 62
STABILIZER LINK - 4X2 62
INSTALLATION
STABILIZER LINK - 4X4 62
STABILIZER LINK - 4X2 63
TORSION BAR
DESCRIPTION 63
OPERATION 63
REMOVAL 63
INSTALLATION 64
UPPER BALL JOINT
DIAGNOSIS AND TESTING
UPPER BALL JOINT 65
UPPER CONTROL ARM
REMOVAL 66
INSTALLATION 67

FRONT - INDEPENDENT FRONT SUSPENSION

DESCRIPTION

SUSPENSION

The front suspension is designed to allow each wheel to adapt to different road surfaces independently. The wheels are mounted to hub/bearings units bolted to the steering knuckle. The double-row hub bearings are sealed and lubricated for life. The steering knuckles turn (pivot) on ball joints.

The front suspension is comprised of :

- Shock absorbers (6&11)
- Torsion bar - 4X4 (LD only)
- Coil Spring - 4X2 (10)
- Control arms (2&8)
- Steering knuckles (3)
- Stabilizer bar (1)
- Stabilizer link (7)
- Tie Rod Ends (5,6&9)
- Hub/Bearing
- Rack & Pinion (9&10)
- Ball Joints

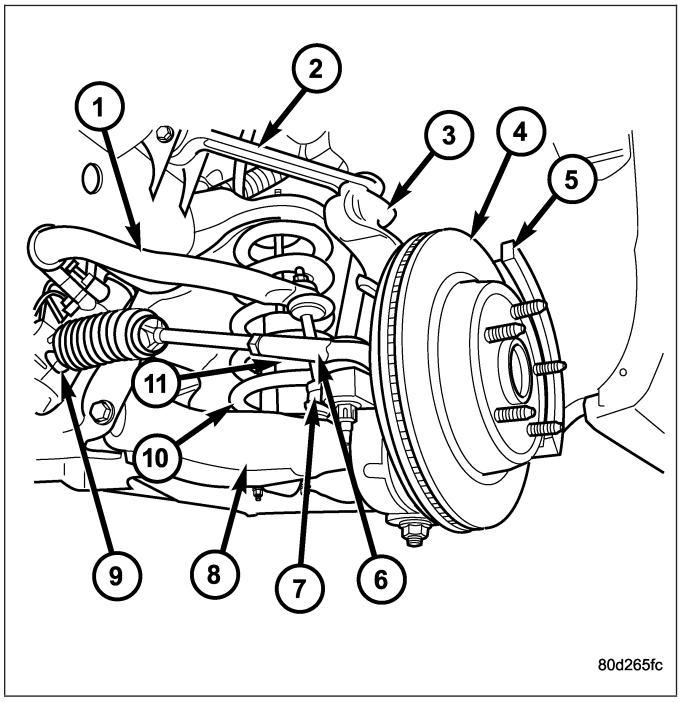

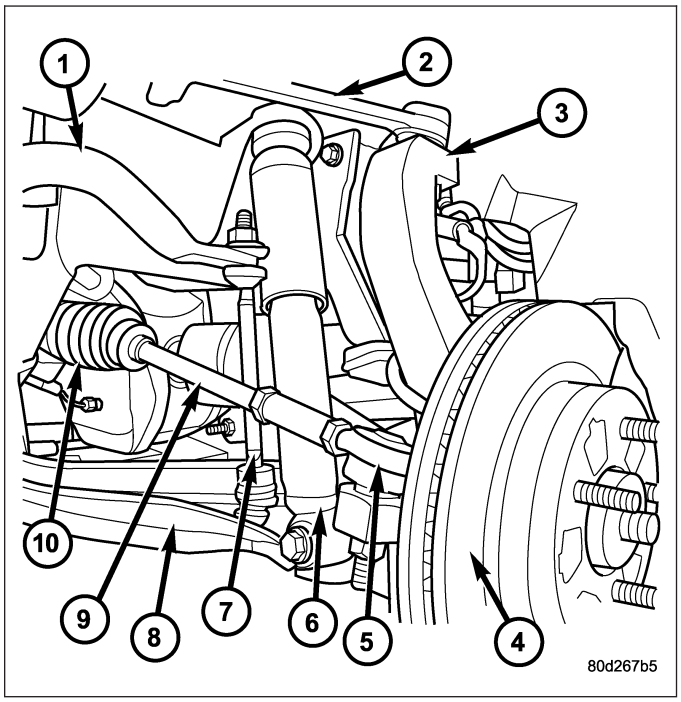

NOTE: The SRT-10 vehicle is not equipped with front brake dust shields.

NOTE: Components attached with a nut must be torqued to specification.

NOTE: Suspension components with rubber/urethane bushings should be tightened with the vehicle at normal ride height. It is important to have the springs supporting the weight of the vehicle when the fasteners are torqued. If springs are not at their normal ride position, vehicle ride comfort could be affected and premature bushing wear may occur.

CONTROL ARMS

The upper control arm bolts on frame brackets. The frame brackets have slotted holes which allow the arms to be adjusted for caster and camber.

The lower control arms bolt to the lower frame brackets and pivots through bushings.

The control arms have lube for life ball studs. The control arm travel (jounce) is limited through the use of rubber/urethane bumpers. Rebound travel is limited by the shock absorber.

Having the suspension at curb ride height when torquing bolts ensures good ride characteristics and longer bushing life by preventing excessive ″wind-up″ of the bushing.

SPECIFICATIONS

TORQUE CHART

TORQUE SPECIFICATIONS

DESCRIPTION	N·m	Ft. Lbs.	In. Lbs.
Shock Absorber Upper Nut 4X4	54	40	—
Shock Absorber Lower Bolt 4X4	135	100	—
Shock Absorber Upper Nut 4X2	54	40	—
Shock Absorber Lower Bolt 4X2	35	25	—
Lower Suspension Arm Frame Nuts LD 4X2 & 4X4	204	150	—
Lower Suspension Arm Frame Nuts HD 4X2	285	210	—
Lower Suspension Arm Ball Joint Nut 1500 series only	52 Then an additional 90°	38 Then an additional 90°	—
Lower Suspension Arm Ball Joint Nut (HD 4X2 only	135	100	—
Upper Suspension Arm Frame Nuts (LD)	132	97	—
Upper Suspension Arm Frame Nuts (HD 4X2 only)	170	125	—
Upper Suspension Arm Ball Joint Nut 1500 series only	54 Then an additional 90°	40 Then an additional 90°	—
Stabilizer Bar Frame Bolt	61	45	—
Stabilizer Link Lower Control Arm Nut	102	75	—
Stabilizer Link Stabilizer Bar Nut	27	20	—
Hub/Bearing Bolts (LD)	163	120	—
Hub/Bearing Bolts (HD 4X2)	176	130	—
Tie Rod End Nut	61 Then an additional 90°	45 Then an additional 90°	—

SPECIAL TOOLS

FRONT SUSPENSION

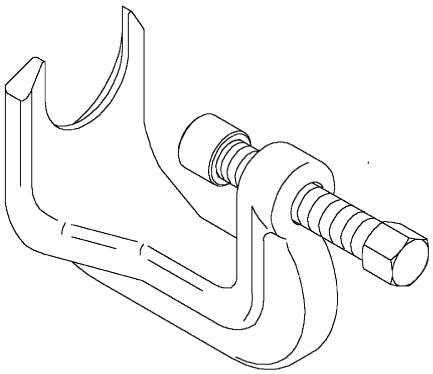

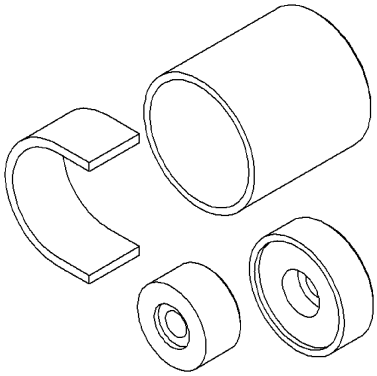

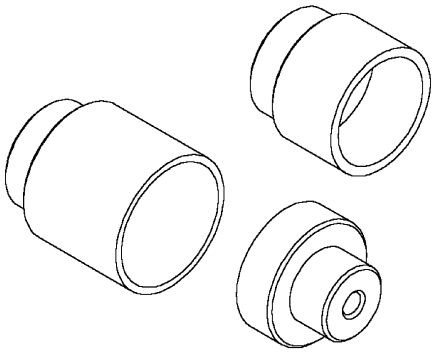

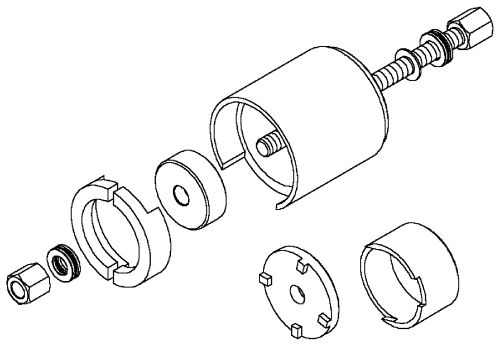

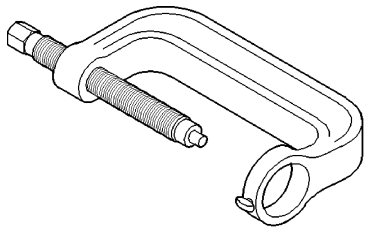

c-4212f-8011d4af

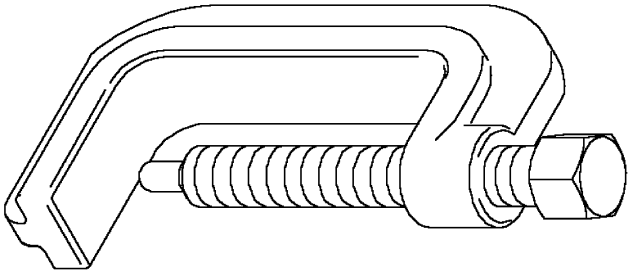

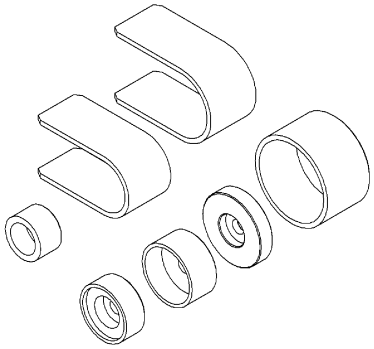

BUSHINGS

REMOVAL

LOWER CONTROL ARM BUSHINGS - 4WD (LD)

1. Remove the lower control arm (Refer to 2 - SUSPENSION/FRONT/LOWER CONTROL ARM - REMOVAL).
2. Secure the control arm in a vise.

NOTE: Extreme pressure lubrication must be used on the threaded portions of the tool. This will increase the longevity of the tool and insure proper operation during the removal and installation process.

FRAME MOUNTED BUSHING

1. Install the bushing tool 8682-3 (receiver) (3) and 8682-4 (driver) (5) with the threaded rod (1) and the two bearings (2) as shown for the replacement of the frame bushing (7)

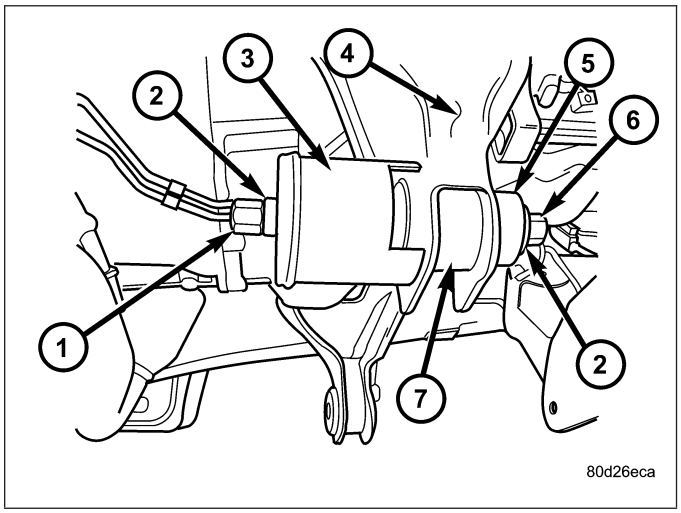

CONTROL ARM BUSHING

1. Install bushing remover tools 8682-2 (adapter) (4), 8682-3 (receiver) (5) and 8682-4 (driver) (1) with the threaded rod (7) and the two bearings (6) as shown

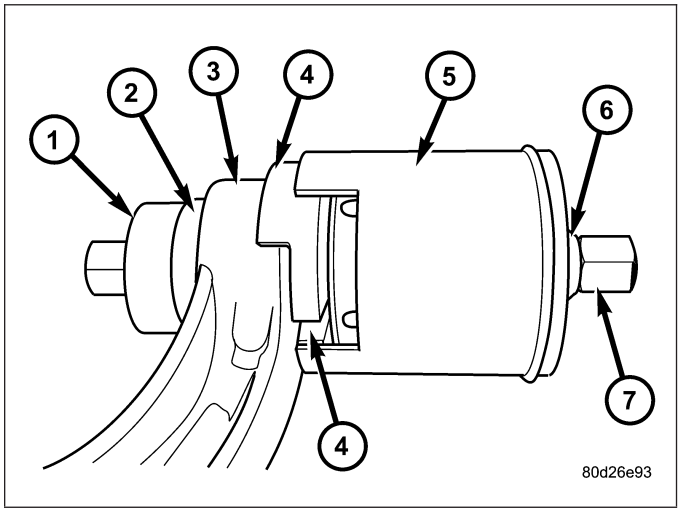

TORSION BAR CROSSMEMBER BUSHING

1. Remove the torsion bar cross member (Refer to 13 - FRAME & BUMPERS/FRAME/REAR CROSSMEMBER - REMOVAL).
2. Secure the cross member in a vise.

NOTE: Extreme pressure lubrication must be used on the threaded portions of the tool. This will increase the longevity of the tool and insure proper operation during the removal and installation process.

3. Install special tools 8838 threaded rod, 8835-1(2), 8835-4(3) and 8835-3(4) as shown in the graphic below.
4. Press out the bushing.

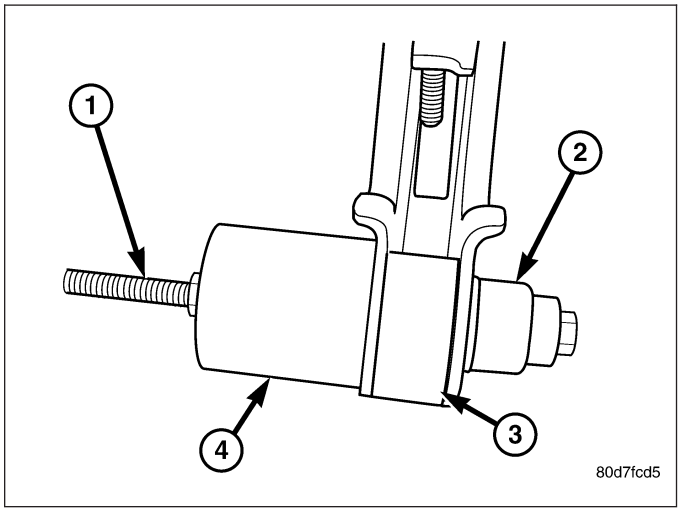

LOWER CONTROL ARM BUSHINGS - 2WD (LD)

NOTE: HD 4X2 bushings are not servicable.

1. Remove the lower control arm (Refer to 2 - SUSPENSION/FRONT/LOWER CONTROL ARM - REMOVAL).
2. Secure the control arm in a vise.

NOTE: Extreme pressure lubrication must be used on the threaded portions of the tool. This will increase the longevity of the tool and insure proper operation during the removal and installation process.

LARGE BUSHING

1. Install bushing remover tools 8836-2 (receiver) (4), 8836-4 (spacer) (1) and 8836-5 (driver) (2) with the threaded rod 8839 (3) and the bearing as shown for replacement of the large bushing.

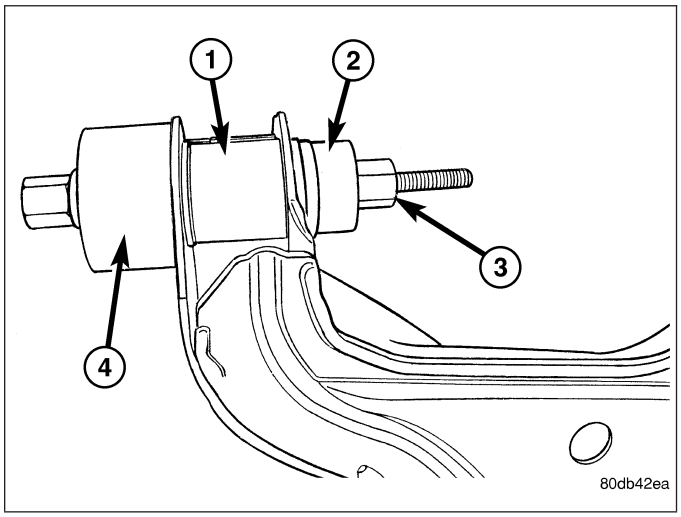

SMALL BUSHING

1. Install the bushing tool 8836-6 (driver) (2), 8836-3 (spacer) (3) and 8836-2 (receiver) (4) with the threaded rod 8839 (1) and the bearing as shown for the replacement of the small bushing

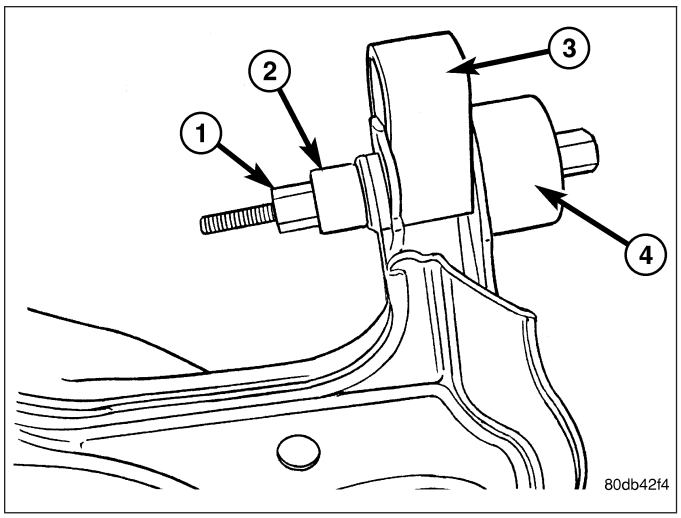

INSTALLATION

LOWER CONTROL ARM BUSHINGS - 4WD (LD)

NOTE: Be careful to properly orient the bushing voids in the correct position to within ± 10°. The correct position places the long narrow void outboard (3) of the bushing and the short wide void inboard (1) of the bushing.

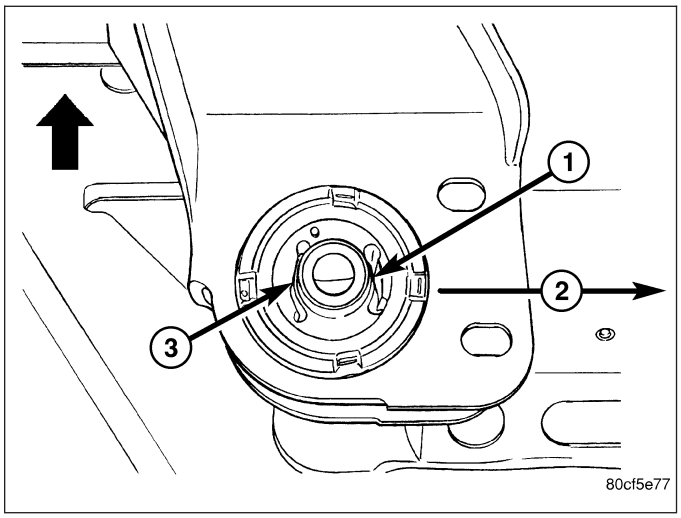

FRAME MOUNTED BUSHING

NOTE: Extreme pressure lubrication must be used on the threaded portions of the tool. This will increase the longevity of the tool and insure proper operation during the removal and installation process.

1. Install the new bushing into the frame using special tools 8682-3 (receiver) (3), 8682-1 (driver) (5) with the two bearings (2) and the threaded rod (1).

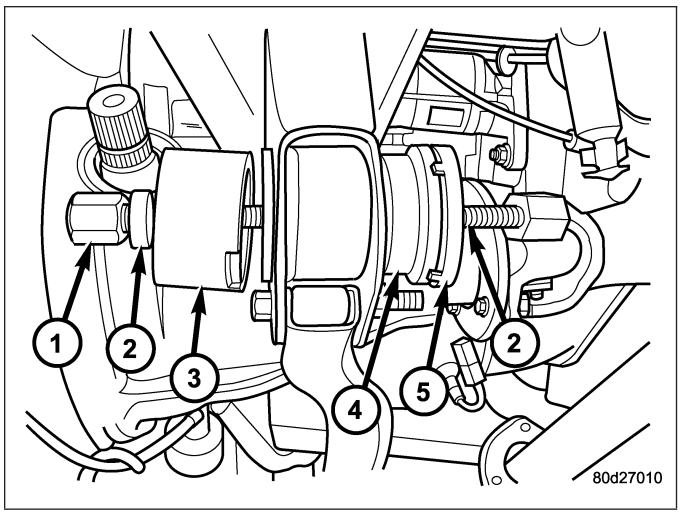

2. Make sure to properly orient the bushing with the voids (1&2) in the proper direction.

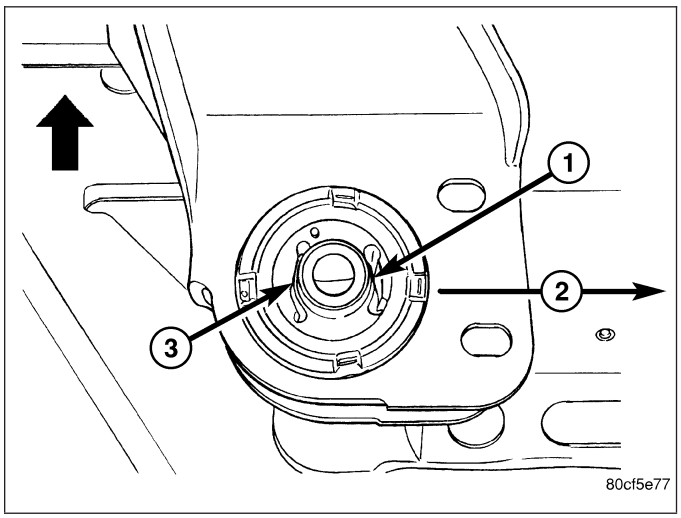

CONTROL ARM BUSHING

1. Install the new lower control arm bushings (4) into the lower control arm using tools 8682-1 (driver) (3), 8682-5 (receiver) (6) and the two bearings (2) with the threaded rod (1).

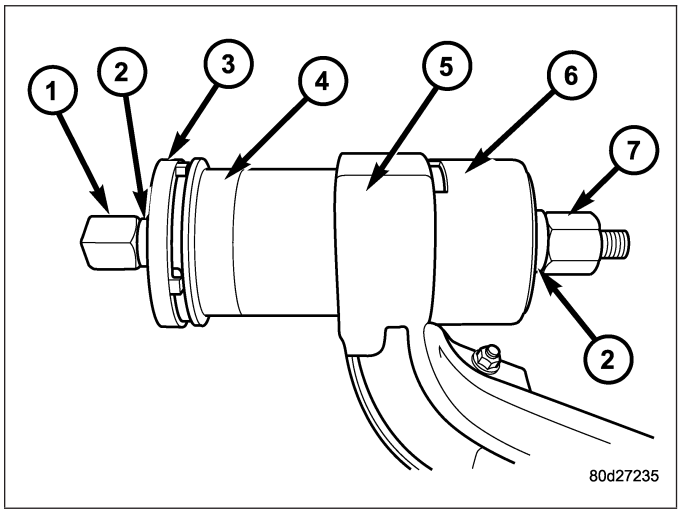

2. Make sure to properly orient the bushing with the voids (1&2) in the proper direction.

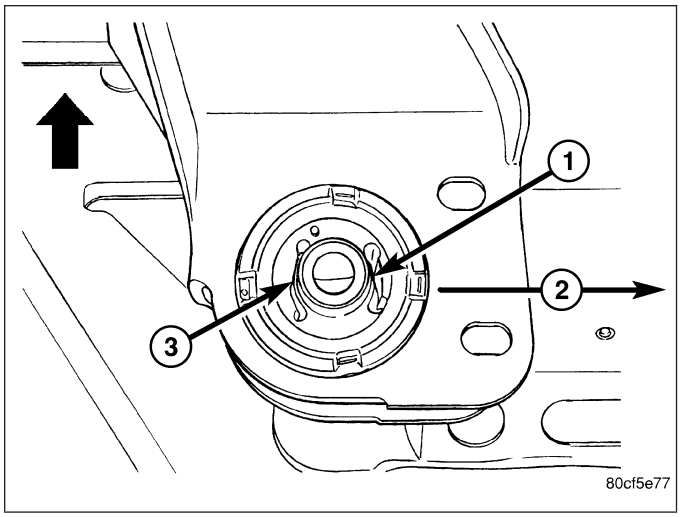

1. Remove the control arm from the vise.
2. Install the lower control arm (Refer to 2 - SUSPENSION/FRONT/LOWER CONTROL ARM - INSTALLATION).
3. Reset the vehicle ride height (Refer to 2 - SUSPENSION/WHEEL ALIGNMENT - STANDARD PROCEDURE).
4. Perform a wheel alignment (Refer to 2 - SUSPENSION/WHEEL ALIGNMENT - STANDARD PROCEDURE).

TORSION BAR CROSS MEMBER BUSHING

NOTE: Extreme pressure lubrication must be used on the threaded portions of the tool. This will increase the longevity of the tool and insure proper operation during the removal and installation process.

1. Install the new bushing into the cross member using special tools 8835-2(1), 8835-4(2) and 8835-3(3) with the bearing and the threaded rod 8838 (4).

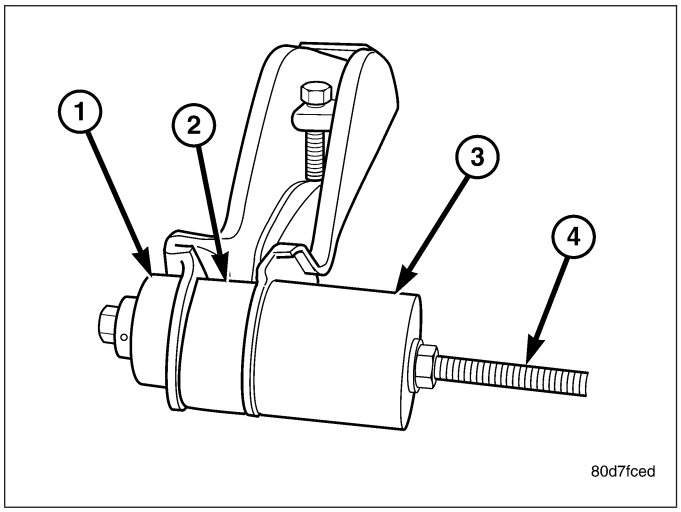

2. Remove the cross member from the vise.
3. Install the torsion bar cross member (Refer to 13 - FRAME & BUMPERS/FRAME/REAR CROSSMEMBER - INSTALLATION).
4. Reset the vehicle ride height (Refer to 2 - SUSPENSION/WHEEL ALIGNMENT - STANDARD PROCEDURE).
5. Perform a wheel alignment (Refer to 2 - SUSPENSION/WHEEL ALIGNMENT - STANDARD PROCEDURE).

LOWER CONTROL ARM BUSHINGS - 2WD (LD)

NOTE: HD 4X2 bushings are not servicable.

LARGE BUSHING

NOTE: Extreme pressure lubrication must be used on the threaded portions of the tool. This will increase the longevity of the tool and insure proper operation during the removal and installation process.

1. Install the new bushing into the lower control arm using special tools 8836-2 (receiver) (3) , 8836-1 (driver) (1) , 8836-4 (spacer) (4) with the bearing and the threaded rod (8839) (2).

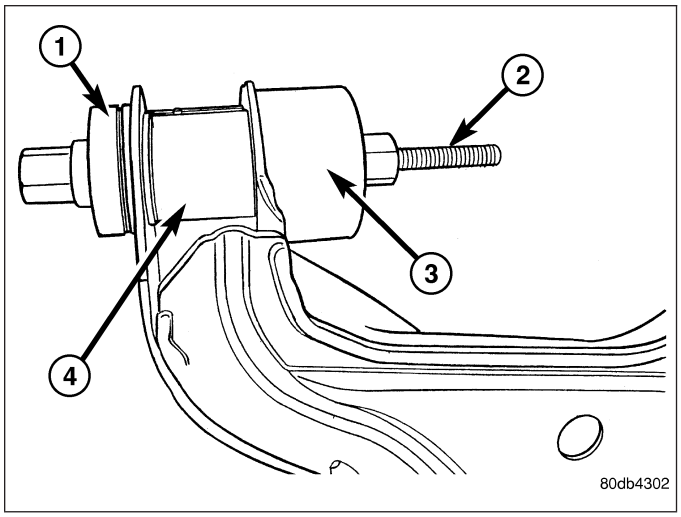

SMALL BUSHING

1. Install the small bushings into the lower control arm using tools 8836-7 (driver) (4), 8836-2 (receiver) (1), 8836–3 (spacer) (3) and the bearing with the threaded rod (8839) (2).

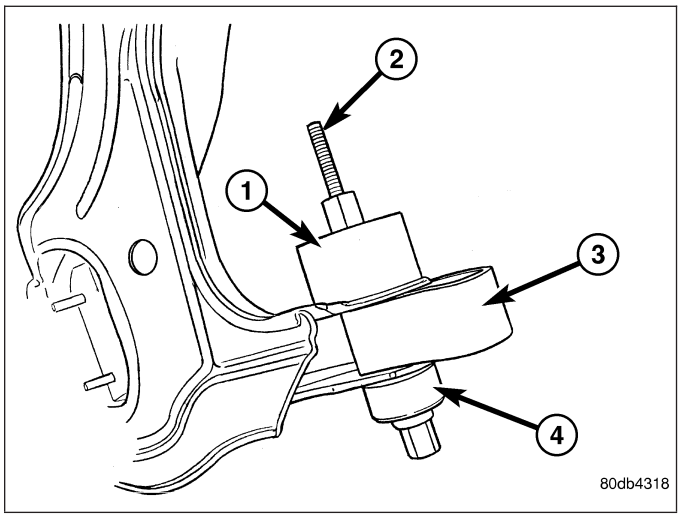

1. Remove the control arm from the vise.
2. Install the lower control arm (Refer to 2 - SUSPENSION/FRONT/LOWER CONTROL ARM - INSTALLATION).
3. Reset the vehicle ride height (Refer to 2 - SUSPENSION/WHEEL ALIGNMENT - STANDARD PROCEDURE).
4. Perform a wheel alignment (Refer to 2 - SUSPENSION/WHEEL ALIGNMENT - STANDARD PROCEDURE).

HUB / BEARING

REMOVAL

HUB/BEARING - 4X4

1. Raise and support the vehicle.
2. Remove the wheel and tire assembly.
3. Remove the brake caliper and rotor (Refer to 5 - BRAKES/HYDRAULIC/MECHANICAL/ROTORS - REMOVAL).
4. Remove the ABS wheel speed sensor if equipped, (Refer to 5 - BRAKES/ELECTRICAL/FRONT WHEEL SPEED SENSOR - REMOVAL).
5. Remove the halfshaft nut.

NOTE: Do not strike the knuckle with a hammer to remove the tie rod end or the ball joint. Damage to the steering knuckle will occur.

6. Remove the tie rod end nut and separate the tie rod from the knuckle using special tool 8677.
7. Remove the upper ball joint nut and separate the upper ball joint from the knuckle using special tool 8677.
8. Pull down on the steering knuckle to separate the halfshaft (2) from the hub/bearing.
9. Remove the three hub/bearing mounting bolts (1) from the steering knuckle.
10. Slide the hub/bearing out of the steering knuckle.
11. Remove the brake dust shield.

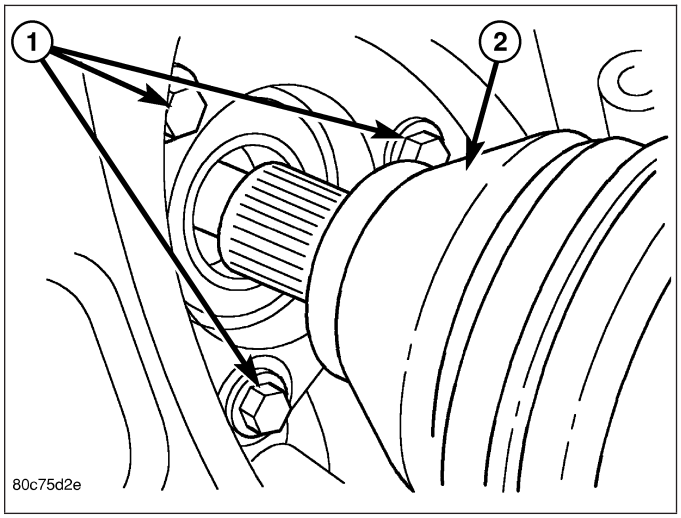

HUB/BEARING - 4X2

1. Raise and support the vehicle.
2. Remove the wheel and tire assembly.
3. Remove the brake caliper and rotor (Refer to 5 - BRAKES/HYDRAULIC/MECHANICAL/ROTORS - REMOVAL).

4. Remove the ABS wheel speed sensor if equipped (4), (Refer to 5 - BRAKES/ELECTRICAL/FRONT WHEEL SPEED SENSOR - REMOVAL)
5. Remove the three hub/bearing mounting bolts (5) from the steering knuckle (3).
6. Slide the hub/bearing (1) out of the steering knuckle (3).

NOTE: The next step excludes SRT-10. (SRT-10 does not have a dust shield)

7. Remove the brake dust shield (2).

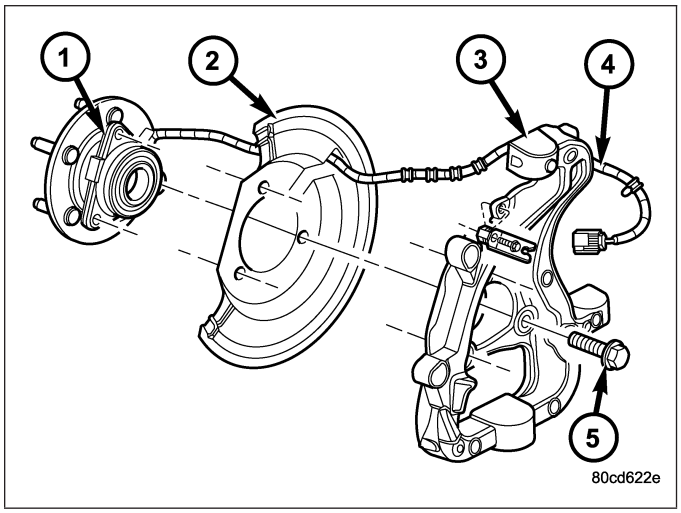

INSTALLATION

HUB/BEARING - 4X4

1. Install the brake dust shield (2).
2. Install the hub/bearing (1) into the steering knuckle (3) and tighten the bolts to 163 N·m (120 ft. lbs.).

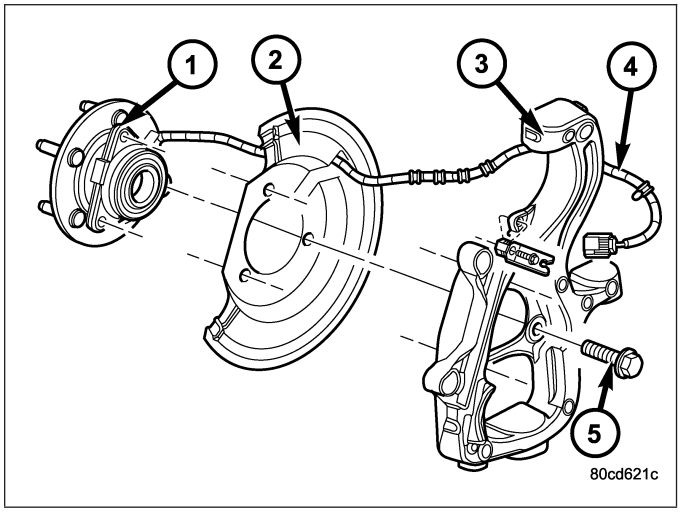

3. Install the brake rotor and caliper (Refer to 5 - BRAKES/HYDRAULIC/MECHANICAL/ROTORS - INSTALLATION).
4. Install the ABS wheel speed sensor if equipped (Refer to 5 - BRAKES/ELECTRICAL/FRONT WHEEL SPEED SENSOR - INSTALLATION).
5. Install the upper ball joint nut to the steering knuckle and tighten to 54 N·m (40 ft. lbs.) (on 1500 series only an additional 90° turn).
6. Install the tie rod end nut to the steering knuckle and tighten to 61 N·m (45 ft. lbs.) then an additional 90°.
7. Install the halfshaft nut and tighten to 251 N·m (185 ft. lbs.).
8. Install the wheel and tire assembly (Refer to 22 - TIRES/WHEELS/WHEELS - STANDARD PROCEDURE).
9. Remove the support and lower vehicle.

HUB/BEARING - 4X2

1. Install the brake dust shield (2).**SRT-10 Excluded in this step.**
2. Install the hub/bearing (1) into the steering knuckle (3) and tighten the bolts (5) to 163 N·m (120 ft. lbs.) **4X2 LD.** Or tighten the bolts (5) to 176 N·m (130 ft. lbs.) **4X2 HD.**.
3. Install the brake rotor and caliper (Refer to 5 - BRAKES/HYDRAULIC/MECHANICAL/ROTORS - INSTALLATION).
4. Install the ABS wheel speed sensor if equipped (4) (Refer to 5 - BRAKES/ELECTRICAL/FRONT WHEEL SPEED SENSOR - INSTALLATION).

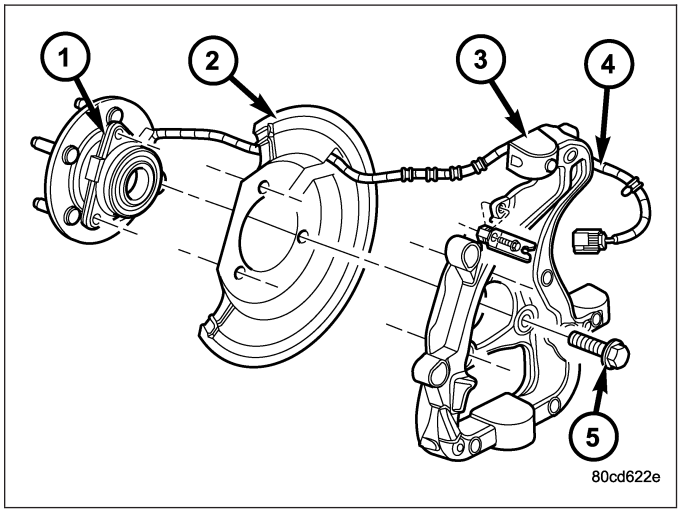

5. Install the wheel and tire assembly (Refer to 22 - TIRES/WHEELS/WHEELS - STANDARD PROCEDURE).
6. Remove the support and lower vehicle.

KNUCKLE

DESCRIPTION

The knuckle (1) is a single casting with legs machined for the upper and lower ball joints. The knuckle also has machined mounting locations for the front brake calipers (4) and hub bearing (5).

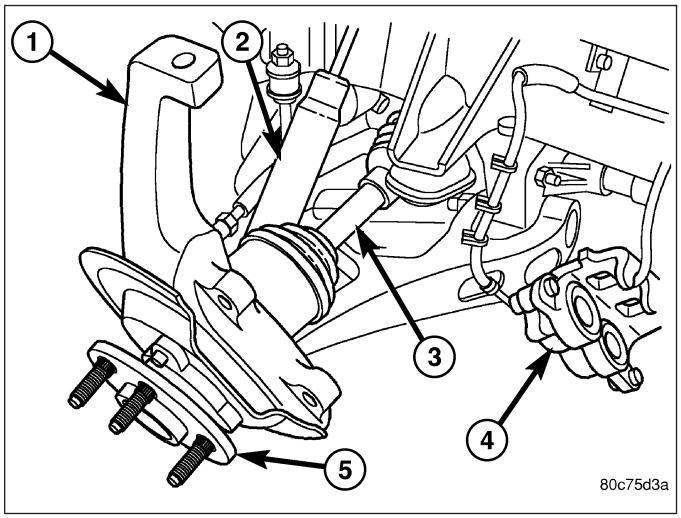

OPERATION

The steering knuckle pivot between the upper and lower ball joint. Steering linkage attached to the knuckle allows the vehicle to be steered.

REMOVAL

1. Raise and support the vehicle.
2. Remove the wheel and tire assembly.
3. Remove the brake caliper, rotor (Refer to 5 - BRAKES/HYDRAULIC/MECHANICAL/ROTORS - REMOVAL), shield and ABS wheel speed sensor if equipped (Refer to 5 - BRAKES/ELECTRICAL/FRONT WHEEL SPEED SENSOR - REMOVAL).
4. Remove the front halfshaft nut (if equipped).

5. Remove the tie rod end nut. Separate the tie rod from the knuckle with Remover 8677.

CAUTION: When installing Remover 8677 to separate the ball joint, be careful not to damage the ball joint seal.

6. Remove the lower ball joint nut. Separate the ball joint from the knuckle with Remover 8677 and remove the knuckle.

7. Remove the upper ball joint nut. Separate the ball joint from the knuckle (1) with Remover 8677 (2)

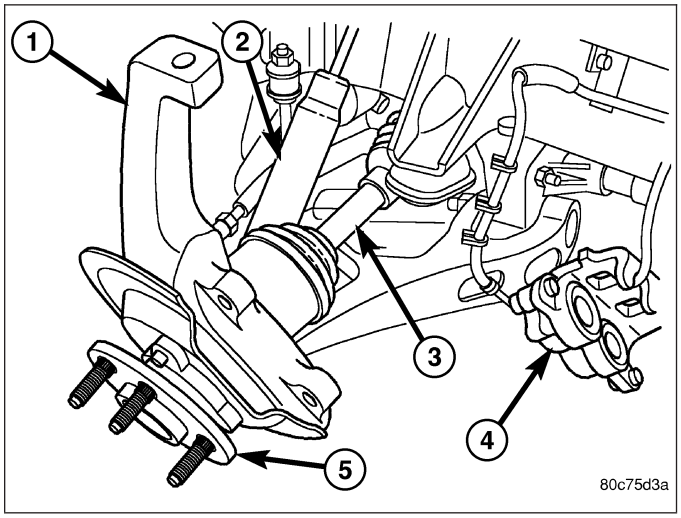

8. Remove the hub/bearing from the steering knuckle (Refer to 2 - SUSPENSION/FRONT/HUB / BEARING - REMOVAL).

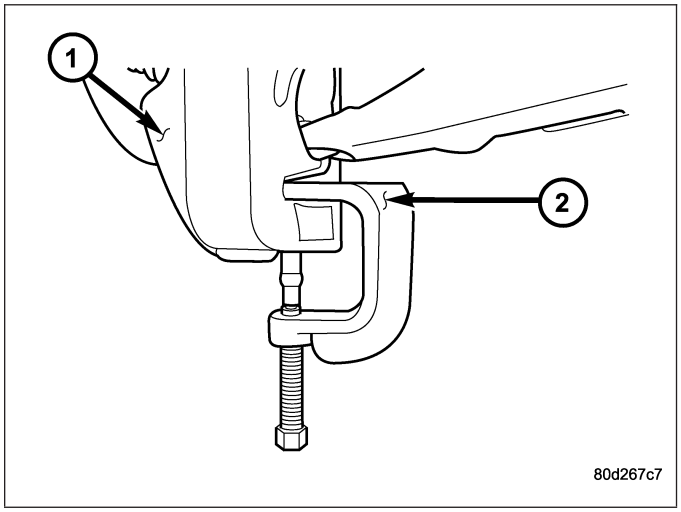

INSTALLATION

CAUTION: The ball joint stud tapers must be CLEAN and DRY before installing the knuckle. Clean the stud tapers with mineral spirits to remove dirt and grease.

NOTE: When installing hub/bearing with ABS brakes, position the speed sensor opening towards the front of the vehicle.

1. Install the hub/bearing to the steering knuckle (1) and tighten the bolts to 163 N·m (120 ft. lbs.)(LD) or 176 N·m (130 ft. lbs.)(HD 4X2).
2. Install the knuckle (1) onto the upper and lower ball joints.

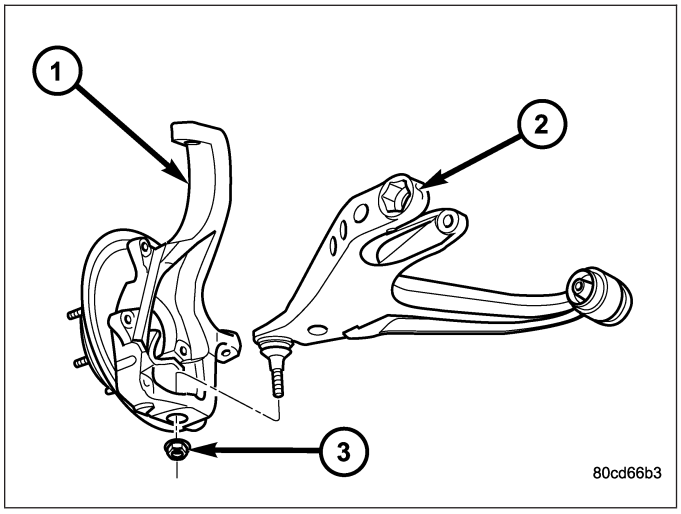

3. Install the upper and lower ball joint nuts (3). Tighten the upper ball joint nut to 54 N·m (40 ft. lbs.) (on 1500 series only an additional 90° turn is required) and the lower ball joint nut (3) to 52 N·m (38 ft. lbs.)(on 1500 series only an additional 90° turn is required)(LD) or 135 N·m (100 ft. lbs.)(HD 4X2).
4. Remove the hydraulic jack from the lower suspension arm.
5. Install the tie rod end and tighten the nut to 61 N·m (45 ft. lbs.).
6. Install the front halfshaft into the hub/bearing (if equipped).
7. Install the the halfshaft nut and tighten to 251 N·m (185 ft. lbs.) (if equipped).
8. Install the ABS wheel speed sensor if equipped (Refer to 5 - BRAKES/ELECTRICAL/FRONT WHEEL SPEED SENSOR - INSTALLATION) and brake shield, rotor and caliper (Refer to 5 - BRAKES/HYDRAULIC/MECHANICAL/ROTORS - INSTALLATION).
9. Install the wheel and tire assembly (Refer to 22 - TIRES/WHEELS/WHEELS - STANDARD PROCEDURE).
10. Remove the support and lower the vehicle.
11. Perform a wheel alignment (Refer to 2 - SUSPENSION/WHEEL ALIGNMENT - STANDARD PROCEDURE).

LOWER BALL JOINT

DIAGNOSIS AND TESTING

LOWER BALL JOINT

1. Raise the front of the vehicle. Place safety floor stands under both lower control arms as far outboard as possible. Lower the vehicle to allow the stands to support some or all of the vehicle weight.
2. Mount a dial indicator solidly to the topside of the lower control arm and then zero the dial indicator.
3. Position the indicator plunger against the bottom surface of the steering knuckle.

NOTE: The dial indicator plunger must be perpendicular to the machined surface of the steering knuckle.

4. Position a pry bar under the tire assembly. Pry upwards on the tire assembly.
5. If the travel exceeds 0.5 mm (0.020 in.), replace the lower ball joint (Refer to 2 - SUSPENSION/FRONT/LOWER BALL JOINT - REMOVAL).

REMOVAL

1. Remove the tire and wheel assembly.
2. Remove the brake caliper and rotor (Refer to 5 - BRAKES/HYDRAULIC/MECHANICAL/ROTORS - REMOVAL).
3. Disconnect the tie rod from the steering knuckle (Refer to 19 - STEERING/LINKAGE/TIE ROD END - REMOVAL).
4. Remove the lower ball joint nut and seperate the lower ball joint from the steering knuckle (1) using special tool 8677 (2) (Refer to 2 - SUSPENSION/FRONT/KNUCKLE - REMOVAL).

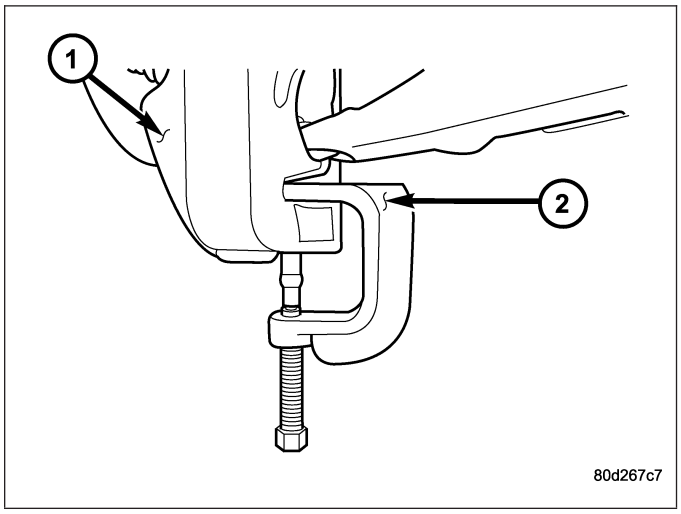

5. Move the halfshaft to the side and support the halfshaft out of the way (If Equipped).
6. Remove the snap ring, from the lower control arm (HD 4X2 only)

NOTE: Extreme pressure lubrication must be used on the threaded portions of the tool. This will increase the longevity of the tool and insure proper operation during the removal and installation process.

7. Press the ball joint (3) from the lower control arm using special tools C-4212–F (PRESS) (1), 8698-2 (RECEIVER) (4) and 8698-3 (DRIVER) (2).

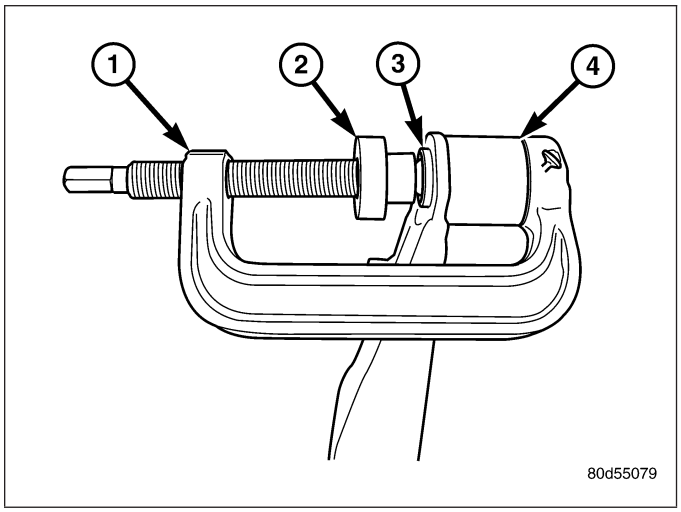

INSTALLATION

NOTE: Extreme pressure lubrication must be used on the threaded portions of the tool. This will increase the longevity of the tool and insure proper operation during the removal and installation process.

1. Install the ball joint (3) into the control arm (4) and press in using special tools C-4212–F (press) (1), 8698-1 (driver) (2) and 8698-3 (receiver) (5).
2. Install the ball joint boot.
3. Stake the ball joint flange in four evenly spaced places around the ball joint flange, using a chisel and hammer (LD only).
4. Replace the snap ring (HD 4X2 only)

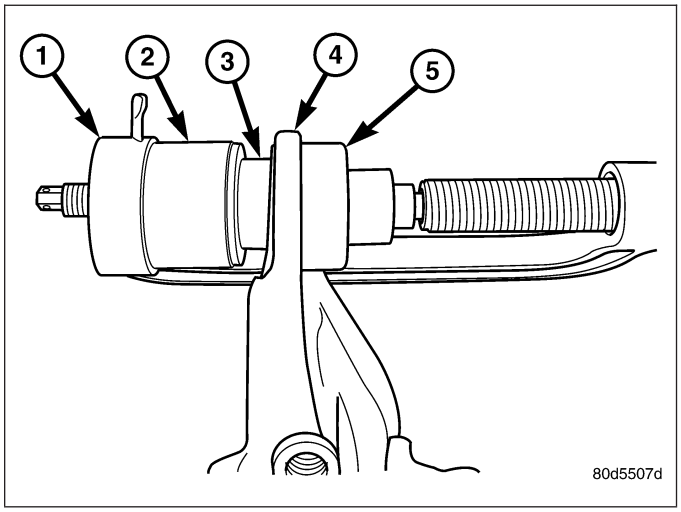

5. Remove the support for the halfshaft and install into position (If Equipped).
6. Install the steering knuckle (Refer to 2 - SUSPENSION/FRONT/KNUCKLE - INSTALLATION).
7. Install the tie rod end into the steering knuckle (Refer to 19 - STEERING/LINKAGE/TIE ROD END - INSTALLATION).
8. Install and tighten the halfshaft nut to 251 N·m (185 ft. lbs.). (If Equipped).
9. Install the brake caliper and rotor (Refer to 5 - BRAKES/HYDRAULIC/MECHANICAL/ROTORS - INSTALLATION).
10. Install the tire and wheel assembly (Refer to 22 - TIRES/WHEELS/WHEELS - STANDARD PROCEDURE).
11. Check the vehicle ride height (Refer to 2 - SUSPENSION/WHEEL ALIGNMENT - STANDARD PROCEDURE).
12. Perform a wheel alignment (Refer to 2 - SUSPENSION/WHEEL ALIGNMENT - STANDARD PROCEDURE).

LOWER CONTROL ARM

REMOVAL

LOWER CONTROL ARM - 4X4 (LD)

1. Raise and support the vehicle.
2. Remove the wheel and tire assembly.
3. Remove the upper ball joint nut. Separate ball joint from the steering knuckle with Remover 8677.
4. Remove the front halfshaft, (Refer to 3 - DIFFERENTIAL & DRIVELINE/HALF SHAFT - REMOVAL).
5. Remove the torsion bar, (Refer to 2 - SUSPENSION/FRONT/TRACK BAR - REMOVAL).
6. Remove the shock absorber lower bolt.
7. Remove the stabilizer bar link (Refer to 2 - SUSPENSION/FRONT/STABILIZER LINK - REMOVAL).
8. Remove the lower ball joint nut. Separate ball joint from the steering knuckle with Remover 8677 (2).

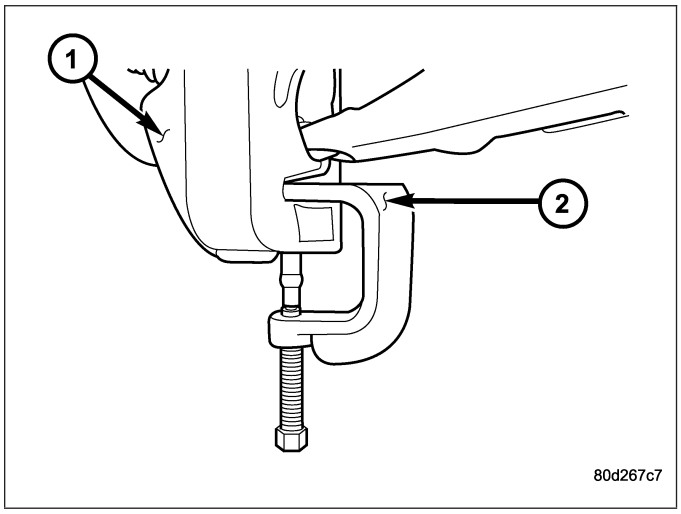

9. Remove the control arm pivot bolts (3&5) and suspension arm (1) from frame rail brackets.

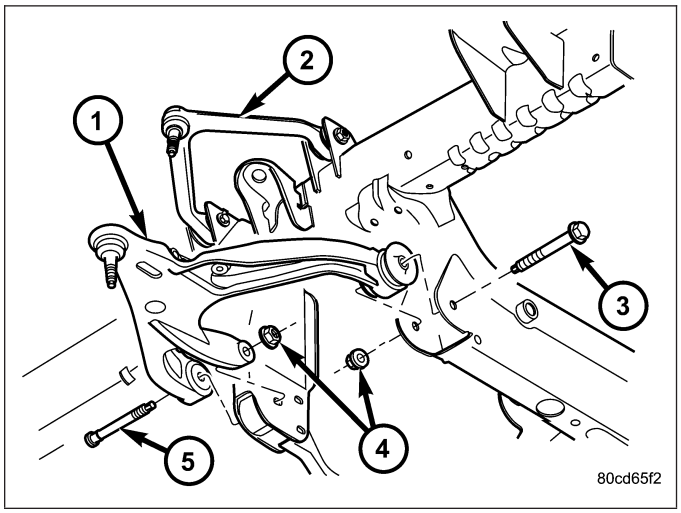

LOWER CONTROL ARM - 4X2

1. Raise and support the vehicle.
2. Remove the tire and wheel assembly.
3. Support the lower control arm at the outboard side of the lower control arm to support vehicle weight.

4. Remove the shock (Refer to 2 - SUSPENSION/FRONT/SHOCK - REMOVAL).
5. Install Spring Compressor DD-1278 up through the lower suspension arm, coil spring and shock hole in the frame. The bell-shaped adapter goes against the lower suspension arm. Install the nut on top of the tool at the shock hole.
6. Tighten the spring compressor nut against bell-shaped adapter finger tight then loosen 1/2 turn.

NOTE: This will hold the spring in place until the lower suspension arm is separated from the steering knuckle.

7. Remove the stabilizer link (Refer to 2 - SUSPENSION/FRONT/STABILIZER LINK - REMOVAL).

8. Remove the lower ball joint nut at the steering knuckle (1).
9. Install Ball Joint Remover tool 8677 (2)on the lower ball joint and separate the ball joint from the knuckle.

NOTE: Do not allow the upper control arm and steering knuckle to rebound downwards they must be supported.

10. Support the upper control arm and steering knuckle out of the way.
11. Remove the lower control arm support.
12. Tighten the spring compressor tool to allow clearance for the lower ball joint to be removed out of the knuckle.

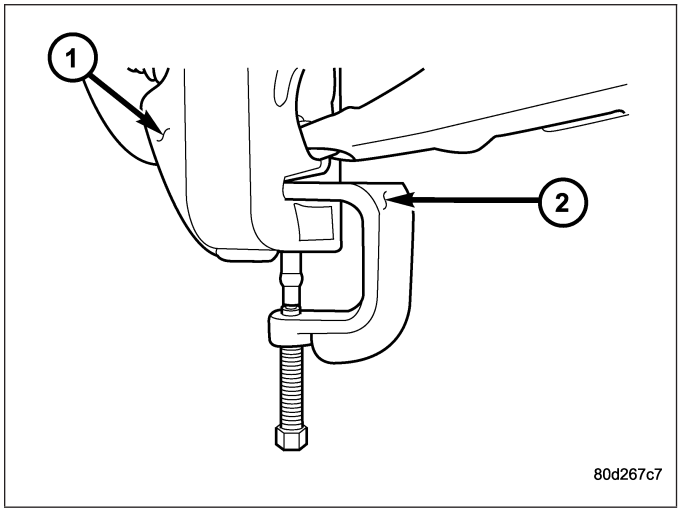

13. Loosen the tension on the spring compressor tool slowly allowing the lower suspension arm to pivot downward.
14. Remove the spring compressor tool.
15. Remove coil spring and isolator pad from the vehicle.

16. Remove the front and rear pivot bolts (1&2).
17. Remove the lower control arm (3).

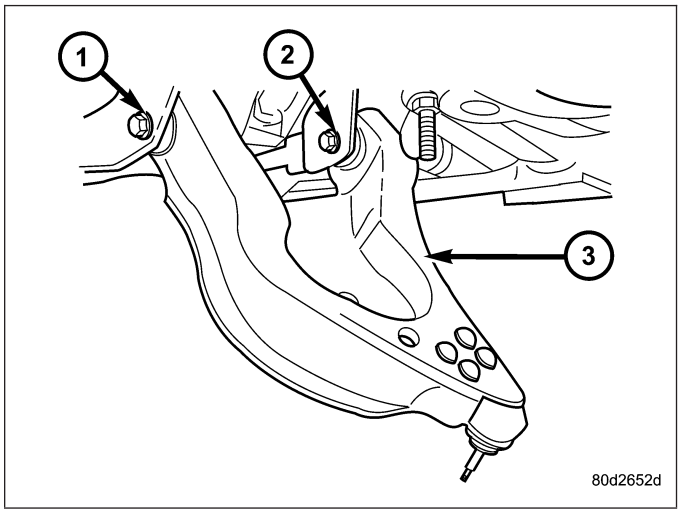

INSTALLATION

LOWER CONTROL ARM - 4X4 (LD)

1. Position the lower control arm (1) at the frame rail brackets. Install the pivot bolts (3&5) and nuts (4). Tighten the nuts finger-tight.

CAUTION: The ball joint stud taper must be CLEAN and DRY before installing the knuckle. Clean the stud taper with mineral spirits to remove dirt and grease.

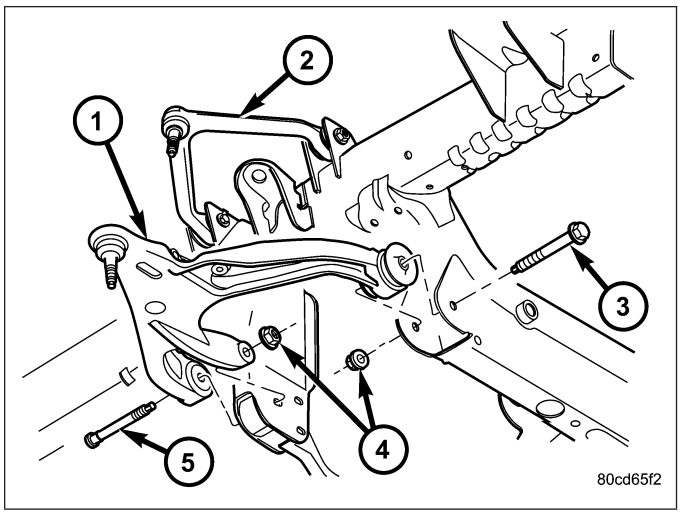

2. Insert the lower ball joint stud into the steering knuckle. Install and tighten the retaining nut to 52 N·m (38 ft. lbs.) (on 1500 series only an additional 90° turn is required).
3. Install the torsion bar, (Refer to 2 - SUSPENSION/FRONT/TRACK BAR - INSTALLATION).
4. Install shock absorber lower bolt and tighten to 135 N·m (100 ft. lbs.).
5. Install the front halfshaft, (Refer to 3 - DIFFERENTIAL & DRIVELINE/HALF SHAFT - INSTALLATION).
6. Insert the upper ball joint into the steering knuckle. Install and tighten the retaining nut to 54 N·m (40 ft. lbs.)(on 1500 series only an additional 90° turn is required).
7. Install the stabilizer bar link (Refer to 2 - SUSPENSION/FRONT/STABILIZER LINK - INSTALLATION).
8. Tighten the lower control arm front pivot nut to 204 N·m (150 ft. lbs.). Tighten rear pivot bolt to 204 N·m (150 ft. lbs.).
9. Install the wheel and tire assembly, (Refer to 22 - TIRES/WHEELS/WHEELS - STANDARD PROCEDURE).
10. Remove the support and lower the vehicle.
11. Adjust the front suspension height and perform a wheel alignment (Refer to 2 - SUSPENSION/WHEEL ALIGNMENT - STANDARD PROCEDURE).

LOWER CONTROL ARM - 4X2

1. Install the lower control arm (3) into place on the vehicle.
2. Install the front and rear control arm pivot bolts (1&2) finger tight.

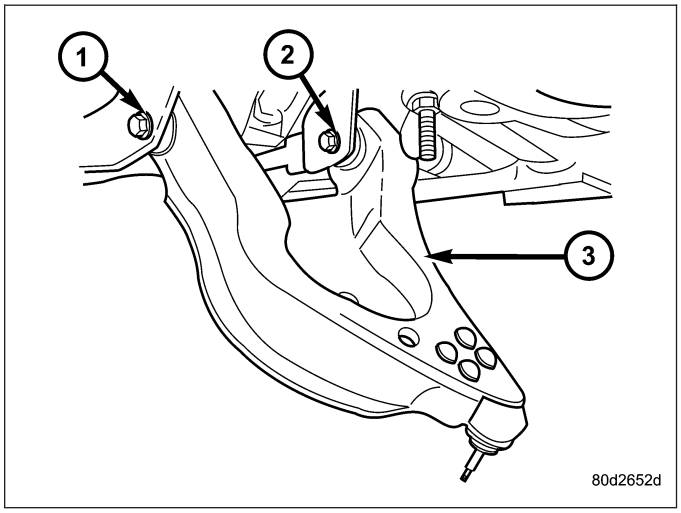

3. Install the coil spring into the frame pocket (Refer to 2 - SUSPENSION/FRONT/SPRING - INSTALLATION).
4. Install the Spring Compressor DD-1278 up through the lower suspension arm, coil spring and shock hole in the frame.
5. Tighten the tool nut to compress the coil spring.
6. Remove the support from the upper control arm and steering knuckle.
7. Position the lower ball joint into the steering knuckle.
8. Install the retaining nut on the lower ball joint and tighten to 52 N·m (38 ft. lbs.)(on 1500 series only an additional 90° turn is required) or 135 N·m (100 ft. lbs.)(HD 4X2 only).
9. Support the lower control arm at the outboard side of the lower control arm to support vehicle weight.
10. Remove the spring compressor tool.
11. Install the shock absorber. (Refer to 2 - SUSPENSION/FRONT/SHOCK - INSTALLATION).
12. Install the stabilizer link (Refer to 2 - SUSPENSION/FRONT/STABILIZER LINK - INSTALLATION).
13. Remove the lower control arm support.
14. Install the wheel and tire assembly and lower the vehicle. (Refer to 22 - TIRES/WHEELS/WHEELS - STANDARD PROCEDURE).
15. Lower the vehicle to the floor with vehicle weight and Tighten the front and rear control arm pivot bolts to 204 N·m (150 ft. lbs.)(LD) or 285 N·m (210 ft. lbs.)(HD 4X2 only).
16. Perform a wheel alignment (Refer to 2 - SUSPENSION/WHEEL ALIGNMENT - STANDARD PROCEDURE).

SPRING

REMOVAL

1. Raise and support vehicle.
2. Remove the front wheel and tire assembly.
3. Support the lower control arm at the outboard side of the lower control arm to support vehicle weight.
4. Remove the shock absorber (Refer to 2 - SUSPENSION/FRONT/SHOCK - REMOVAL).
5. Install Spring Compressor DD-1278 (1) up through the lower suspension arm, coil spring and shock hole in the frame. The bell-shaped adapter (2) goes against the lower suspension arm. Install the nut on top of the tool at the shock hole.
6. Tighten the spring compressor nut against bell-shaped adapter finger tight then loosen 1/2 turn.

NOTE: This will hold the spring in place until the lower suspension arm is separated from the steering knuckle.

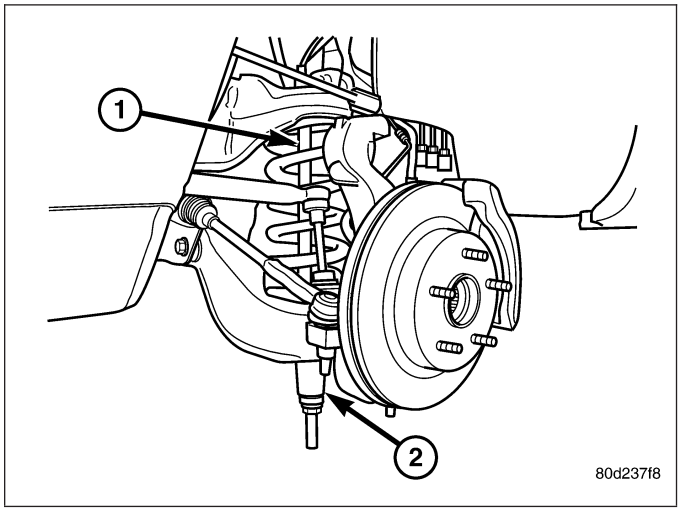

7. Remove the stabilizer link (Refer to 2 - SUSPENSION/FRONT/STABILIZER LINK - REMOVAL).
8. Remove the lower ball joint nut at the steering knuckle.
9. Install Ball Joint Remover tool 8677 on the lower ball joint and separate the ball joint from the knuckle.

NOTE: Do not allow the upper control arm and steering knuckle to rebound downwards they must be supported.

10. Support the upper control arm and steering knuckle out of the way.

11. Remove the lower control arm support.
12. Tighten the spring compressor tool to allow clearance for the lower ball joint to be removed out of the knuckle.

NOTE: It may necessary to loosen the control arm pivot bolt to allow downward swing.

13. Loosen the tension on the spring compressor tool slowly allowing the lower suspension arm to pivot downward.
14. Remove the spring compressor tool.
15. Remove coil spring and isolator pad from the vehicle.

INSTALLATION

1. Tape the isolator pad to the top of the coil spring. Position the spring in the lower suspension arm well. Be sure that the coil spring is seated in the well.
2. Install Spring Compressor DD-1278 (1) up through the lower suspension arm, coil spring and shock hole in the frame.

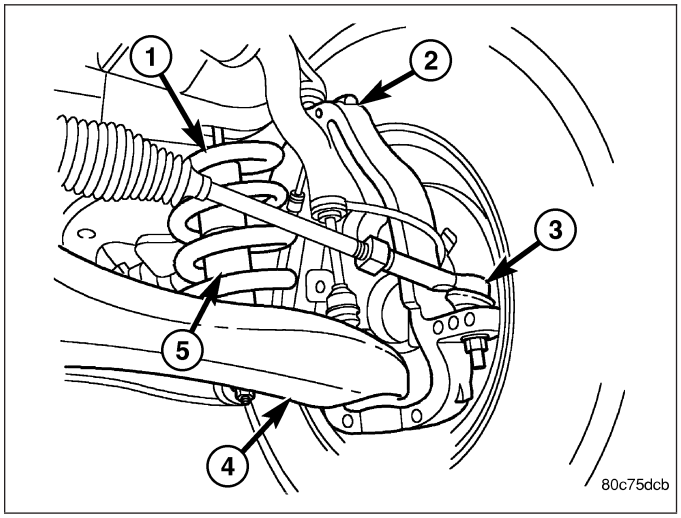

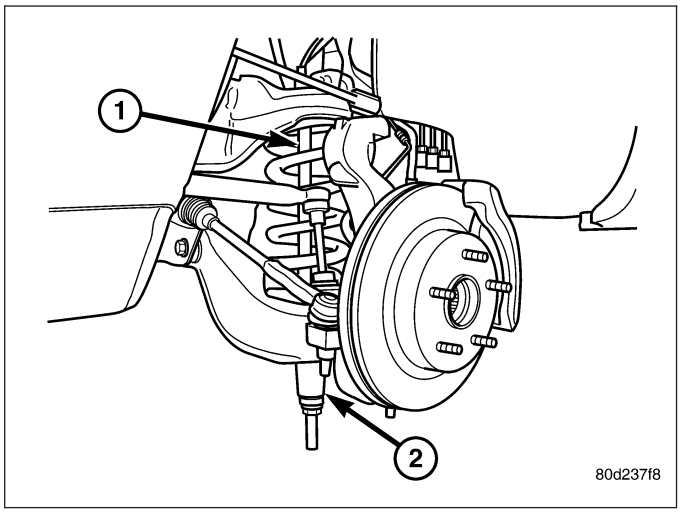

3. Tighten the tool nut to compress the coil spring.
4. Remove the support from the upper control arm and steering knuckle.
5. Position the lower ball joint into the steering knuckle.
6. Install the retaining nut on the lower ball joint and tighten to 52 N·m (38 ft. lbs.)(on 1500 series only an additional 90° turn is required) or 135 N·m (100 ft. lbs.)(HD 4X2 only).
7. Remove the spring compressor tool.
8. Support the lower control arm at the outboard side of the lower control arm to support vehicle weight.
9. Install the shock absorber. (Refer to 2 - SUSPENSION/FRONT/SHOCK - INSTALLATION).
10. Install the stabilizer link (Refer to 2 - SUSPENSION/FRONT/STABILIZER LINK - INSTALLATION).
11. Remove the lower control arm support.
12. Install the wheel and tire assembly and lower the vehicle. (Refer to 22 - TIRES/WHEELS/WHEELS - STANDARD PROCEDURE).
13. Lower the vehicle to the floor with vehicle weight and Tighten the front and rear control arm pivot bolts if loosened to 204 N·m (150 ft. lbs.)(LD) or 285 N·m (210 ft. lbs.)(HD 4X2 only).
14. Perform a wheel alignment (Refer to 2 - SUSPENSION/WHEEL ALIGNMENT - STANDARD PROCEDURE).

SHOCK

DIAGNOSIS AND TESTING

SHOCK

A knocking or rattling noise from a shock absorber may be caused by movement between mounting bushings and metal brackets or attaching components. These noises can usually be stopped by tightening the attaching nuts. If the noise persists, inspect for damaged and worn bushings, and attaching components. Repair as necessary if any of these conditions exist.

A squeaking noise from the shock absorber may be caused by the hydraulic valving and may be intermittent. This condition is not repairable and the shock absorber must be replaced.

The shock absorbers are not refillable or adjustable. If a malfunction occurs, the shock absorber must be replaced. To test a shock absorber, hold it in an upright position and force the piston in and out of the cylinder four or five times. The action throughout each stroke should be smooth and even.

The shock absorber bushings do not require any type of lubrication. Do not attempt to stop bushing noise by lubricating them. Grease and mineral oil-base lubricants will deteriorate the bushing.

REMOVAL

SHOCK - 4X2

1. Raise and support vehicle.
2. Support the lower control arm outboard end.
3. Remove the upper shock absorber nut (1), retainer (2) and grommet (3).
4. Remove the lower nuts and remove the shock absorber.

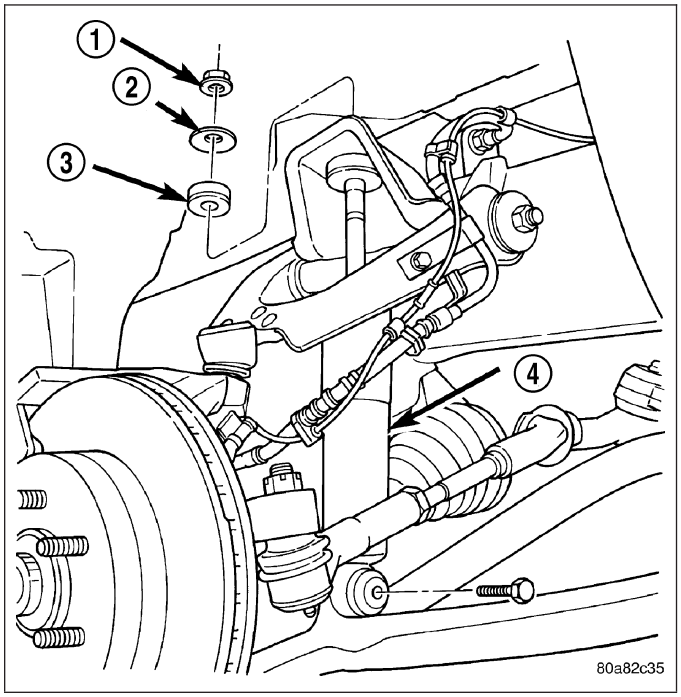

SHOCK - 4X4

1. Raise and support the vehicle.
2. Remove the tire and wheel assembly.
3. Support the lower control arm outboard end.
4. Remove the upper shock nut (2) and with the insulator and retainer (1).
5. Remove the lower shock bolt (4).
6. Remove the shock (3).

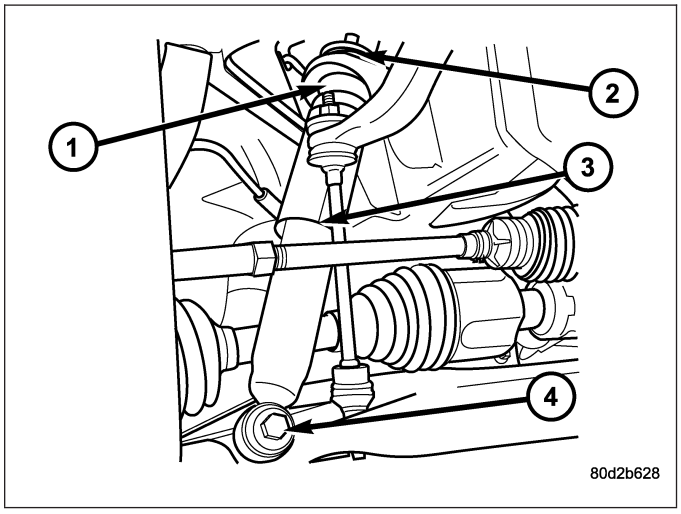

INSTALLATION

SHOCK - 4X2

NOTE: Upper shock nut must be replaced or use Mopar Lock 'N Seal or Loctite® 242 on existing nut.

1. Install the lower retainer and grommet on the shock absorber stud. Insert the shock absorber (4) through the frame bracket hole.
2. Install the lower nuts and tighten the nuts to 35 N·m (25 ft. lbs.).
3. Install the upper grommet (3), retainer (2) and new nut (1) or use Mopar Lock 'N Seal or Loctite® 242 on existing nut, on the shock absorber stud. Tighten nut to 54 N·m (40 ft. lbs.).
4. Remove the support from the lower control arm outboard end.
5. Lower the vehicle.

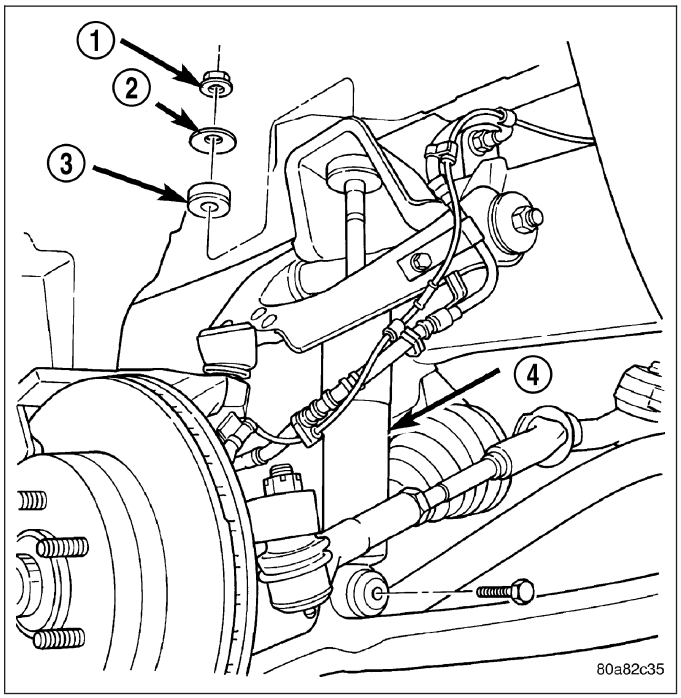

SHOCK - 4X4

1. Install the upper part of the shock (3) into the frame bracket with the insulators and retainers (1).
2. Install the nut (2) and Tighten to 54 N·m (40 ft. lbs.).
3. Install the lower part of the shock into the lower control arm and Tighten the bolt (4) to 135 N·m (100 ft. lbs.).
4. Remove the support from the lower control arm outboard end.
5. Install the tire and wheel assembly (Refer to 22 - TIRES/WHEELS/WHEELS - STANDARD PROCEDURE).

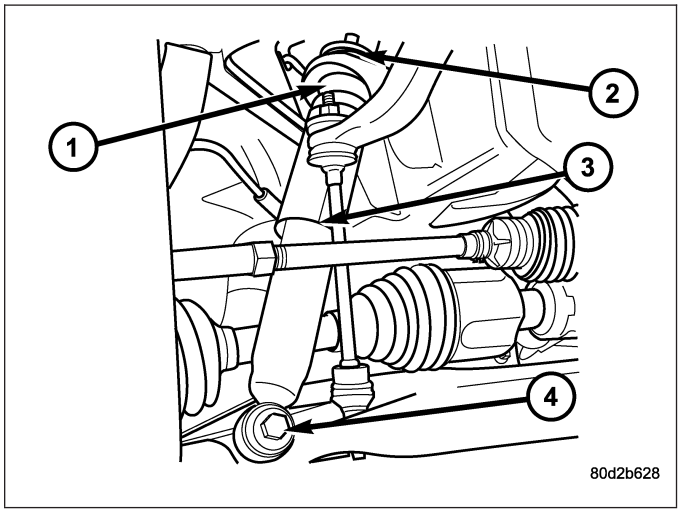

6. Remove the support and lower the vehicle.

STABILIZER BAR

DESCRIPTION

The bar extends across the front underside of the chassis and connects to the frame crossmember. The ends of the bar mount to the lower suspension arm. All mounting points of the stabilizer bar are isolated by bushings.

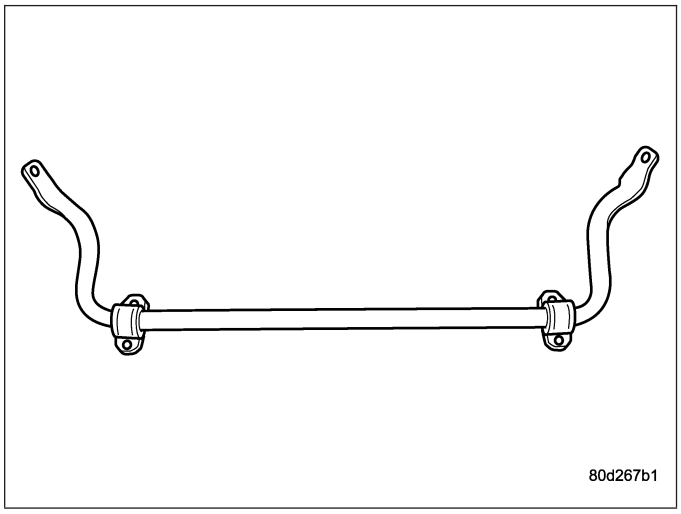

OPERATION

The stabilizer bar is used to minimize vehicle front sway during turns. The bar helps to maintain a flat attitude to the road surface.

REMOVAL

NOTE: To service the stabilizer bar the vehicle should be on a drive on hoist. The vehicle suspension must be at curb height for stabilizer bar installation.

1. Remove the stabilizer bar link (1) upper nuts and remove the retainers and grommets.
2. Remove the stabilizer bar retainer, bolts(2) and retainers from the frame crossmember and remove the bar.

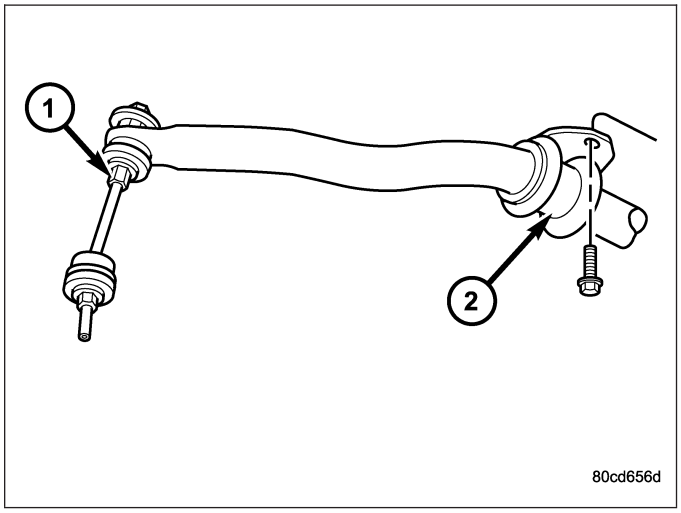

3. If necessary, remove the bushings from the stabilizer bar **Do not cut the old bushings off the stabilizer bar use a mixture of soapy water in order to aid in sliding the bushing off**.

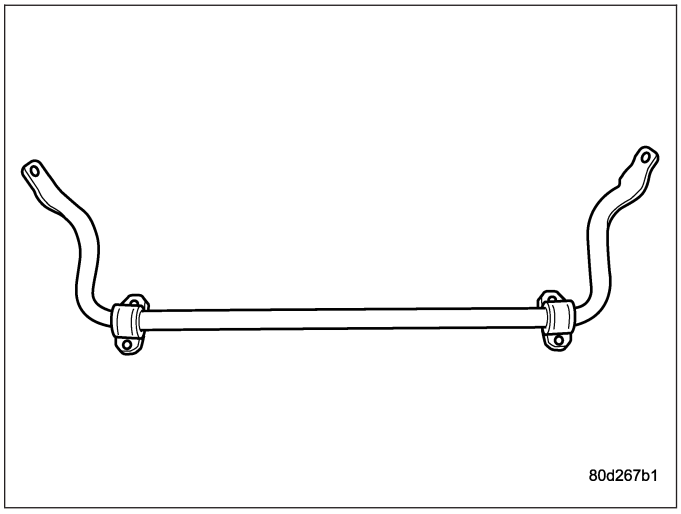

INSTALLATION

NOTE: To service the stabilizer bar the vehicle must be on a drive on hoist. The vehicle suspension must be at curb height for stabilizer bar installation.

1. If removed, Install the bushings on the stabilizer bar using a mixture of soapy water or equivalent in order to slide the bushing over the bar with ease

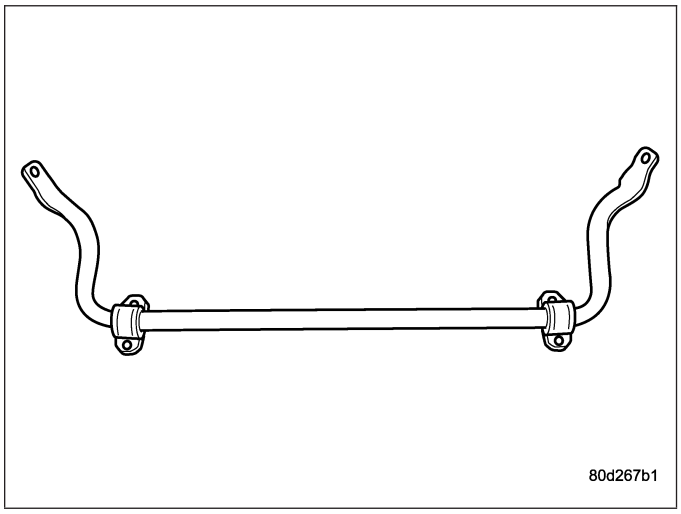

Do not cut the new bushing for installation .

2. Position the stabilizer bar on the frame crossmember brackets and install the bracket and bolts finger-tight (2).

NOTE: Check the alignment of the bar to ensure there is no interference with the either frame rail or chassis component. Spacing should be equal on both sides.

3. Install the stabilizer bar to the stabilizer link (1) and install the grommets and retainers.
4. Install the nuts to the stabilizer link and tighten to 27 N·m (20 ft. lbs.).
5. Tighten the brackets to the frame to 61 N·m (45 ft. lbs.).

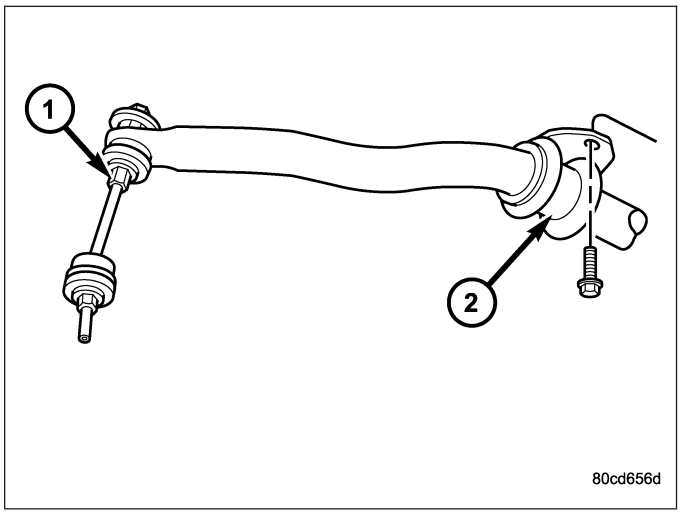

STABILIZER LINK

REMOVAL

STABILIZER LINK - 4X4

1. Raise and support the vehicle.
2. Remove the lower nut.
3. Remove the upper nut, retainers and grommets.
4. Remove the stabilizer link from the vehicle.

STABILIZER LINK - 4X2

1. Raise and support the vehicle.
2. Remove the lower nut.
3. Remove the upper nut, retainer and grommets.
4. Remove the stabilizer link (1) from the vehicle.

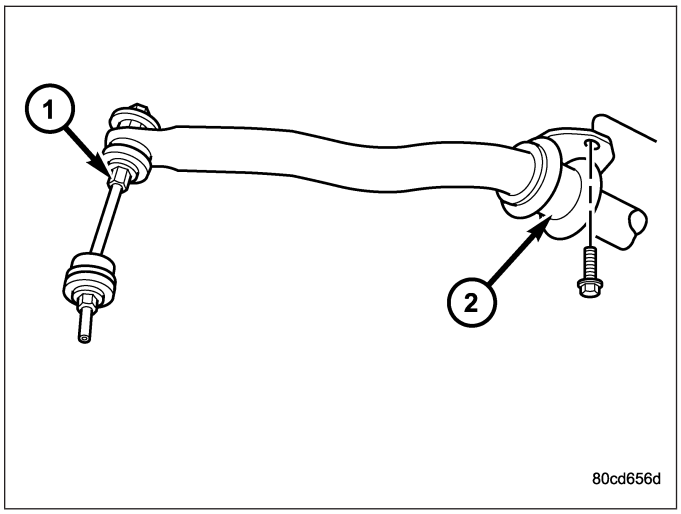

INSTALLATION

STABILIZER LINK - 4X4

1. Install the stabilizer link to the vehicle.
2. Install the lower nut and Tighten to 102 N·m (75 ft. lbs.).
3. Install the retainers, grommets and upper nut and Tighten to 27 N·m (20 ft. lbs.).

4. Remove the support and lower the vehicle.

STABILIZER LINK - 4X2

1. Install the stabilizer link (1) to the vehicle.
2. Install the lower nut and Tighten to 102 N·m (75 ft. lbs.).
3. Install the retainers, grommets and upper nut and Tighten to 27 N·m (20 ft. lbs.).
4. Remove the support and lower the vehicle.

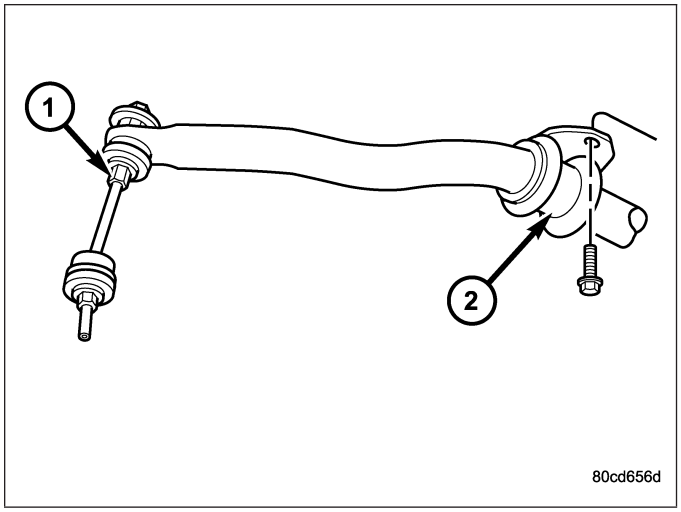

TORSION BAR

DESCRIPTION

The front of the bar (3) connects to the back side of the lower suspension arm (4). The rear end of the bar is mounted in a anchor (1) that rests in the frame crossmember.

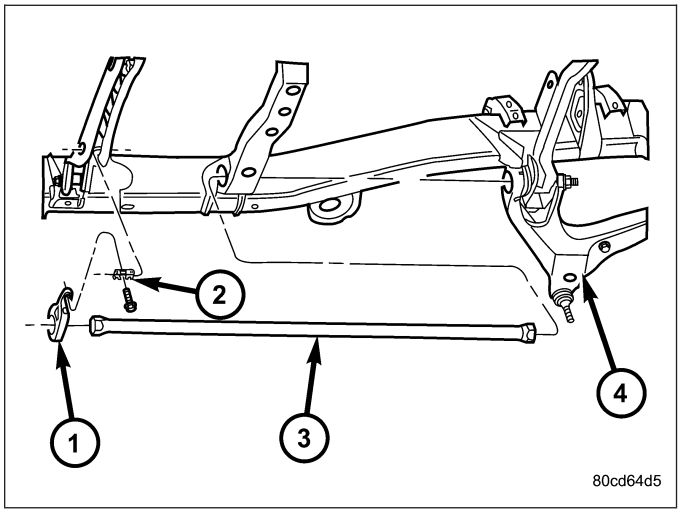

OPERATION

The torsion bars are used to control ride height and ride quality. The vehicle height is adjusted through an anchor adjustment bolt that increases or decreases the wind up of the torsion bar. Increasing or decreasing the bar angle changes the wind up of the suspension arms.

REMOVAL

CAUTION: The left and right side torsion bars are NOT interchangeable. The bars are identified and stamped R or L, for right or left. The bars do not have a front or rear end and can be installed with either end facing forward.

1. Raise and support the vehicle with the front suspension hanging.
2. Remove the transfer case skid plate (Refer to 13 - FRAME & BUMPERS/FRAME/TRANSFER CASE SKID PLATE - REMOVAL).

NOTE: Count and record the number of turns for installation reference.

3. Mark the adjustment bolt setting.
4. Install Special Tool - 8686 (1) to the anchor arm and the cross member (2).
5. Increase the tension on the anchor arm tool until the load is removed from the adjustment bolt and the adjuster nut.
6. Turn the adjustment bolt counterclockwise to remove the bolt and the adjuster nut..
7. Remove the Special Tool - 8686 (1), allowing the torsion bar to unload.

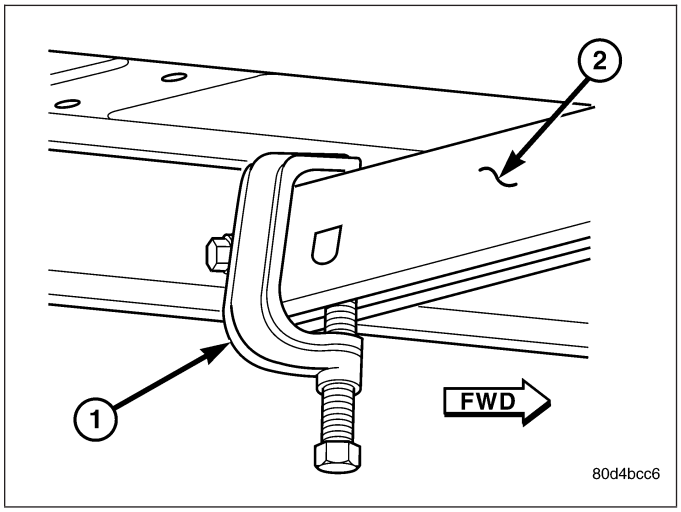

8. Remove torsion bar (3) and anchor (1). Remove anchor (1) from torsion bar (3).
9. Remove all foreign material from torsion bar mounting in anchor and suspension arm.
10. Inspect adjustment bolt, bearing and swivel for damage.

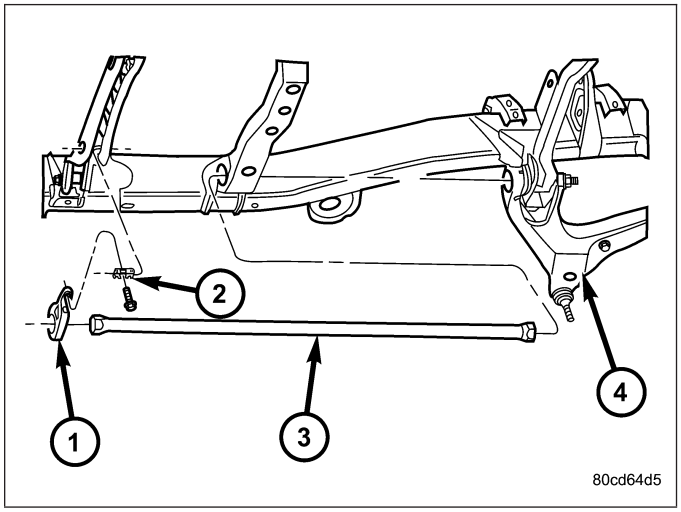

INSTALLATION

CAUTION: The left and right side torsion bars are NOT interchangeable. The bars are identified and stamped R or L, for right or left. The bars do not have a front or rear end and can be installed with either end facing forward.

1. Insert torsion bar ends (3) into anchor (1) and suspension arm (4).
2. Position the anchor (1) in the frame crossmember.

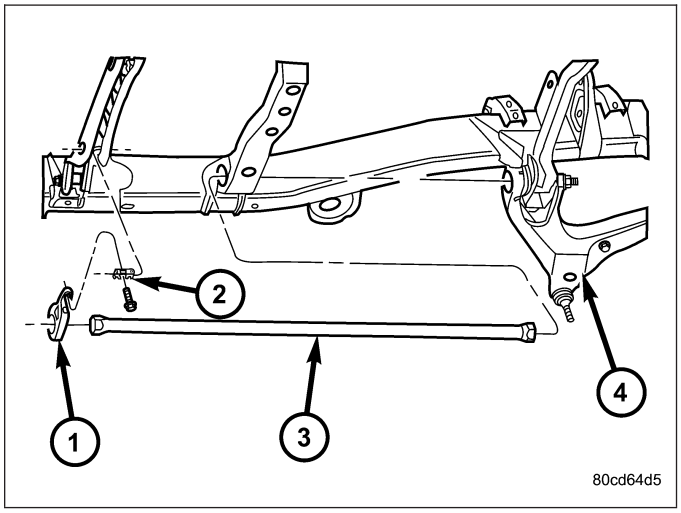

3. Install Special Tool - 8686 (1) to the anchor and the crossmember (2).
4. Increase the tension on the anchor in order to load the torsion bar.
5. Install the adjustment bolt and the adjuster nut.
6. Turn adjustment bolt clockwise the recorded amount of turns.
7. Remove tool - 8686 (1) from the torsion bar crossmember (2).

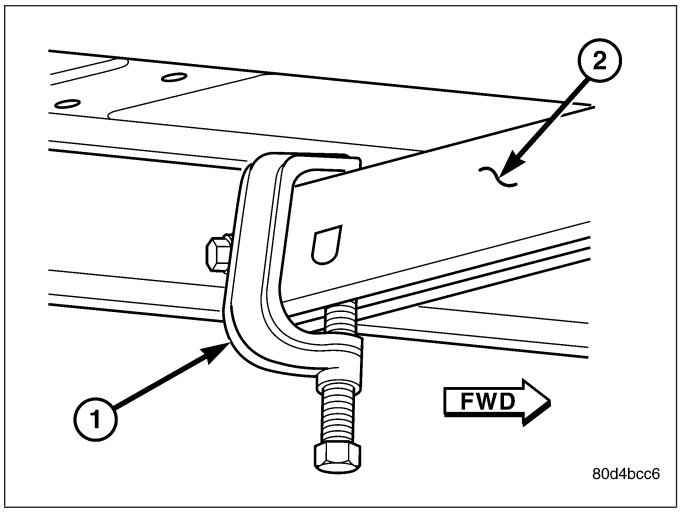

8. Install the transfer case skid plate (Refer to 13 - FRAME & BUMPERS/FRAME/TRANSFER CASE SKID PLATE - INSTALLATION).
9. Lower vehicle and adjust the front suspension height (Refer to 2 - SUSPENSION/WHEEL ALIGNMENT - STANDARD PROCEDURE).
10. Perform a wheel alignment (Refer to 2 - SUSPENSION/WHEEL ALIGNMENT - STANDARD PROCEDURE).

UPPER BALL JOINT

DIAGNOSIS AND TESTING

UPPER BALL JOINT

1. Raise the front of the vehicle. Place safety floor stands under both lower control arms as far outboard as possible. Lower the vehicle to allow the stands to support some or all of the vehicle weight.
2. Remove the front tires.
3. Mount a dial indicator (1) solidly to the frame and then zero the dial indicator (1).
4. Position dial indicator plunger (1) on the topside of the upper ball joint.

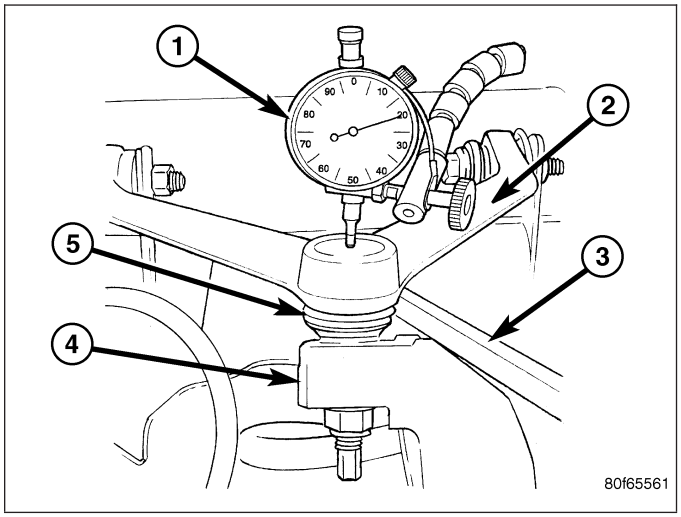

NOTE: The dial indicator plunger must be perpendicular to the machined surface of the ball joint.

NOTE: Use care not to pry or tear the ball joint boot (5), when checking the free play.

5. Position a pry bar (3) between the steering knuckle (4) and the upper control arm (2). Pry upwards on the upper control arm.
6. If the travel exceeds 0.5 mm (0.020 in.), replace the upper control arm since the upper ball joint is integral to the arm (Refer to 2 - SUSPENSION/FRONT/UPPER CONTROL ARM - REMOVAL).
7. If the upper ball joint is within specs reinstall the front tires (Refer to 22 - TIRES/WHEELS/WHEELS - STANDARD PROCEDURE).

UPPER CONTROL ARM

REMOVAL

1. Raise and support vehicle.
2. Remove wheel and tire assembly.
3. Remove the nut from upper ball joint.
4. Separate upper ball joint (1) from the steering knuckle (3) with Remover 8677 (2)

CAUTION: When installing Remover 8677 (2) to separate the ball joint, be careful not to damage the ball joint seal.

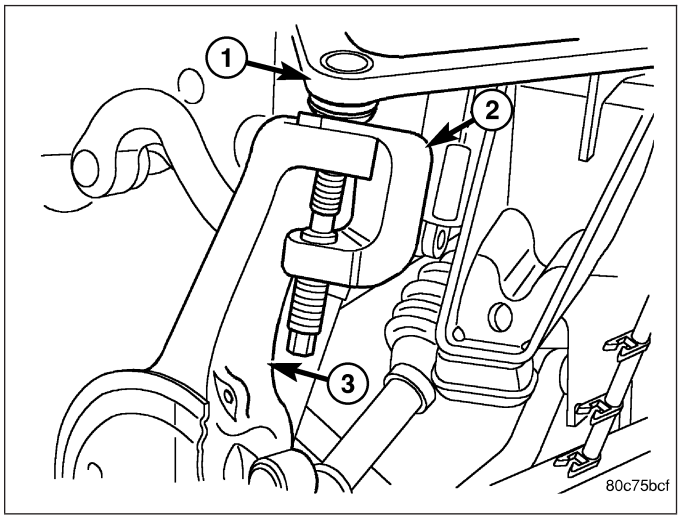

5. Remove the control arm pivot bolts (1&2) and remove control arm (3).

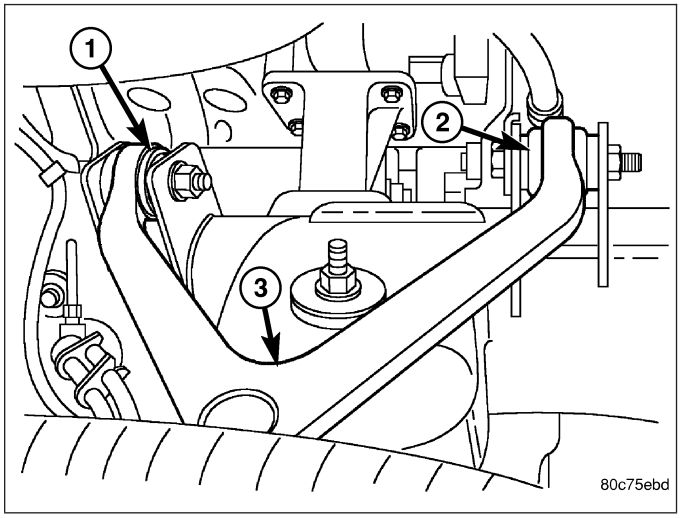

INSTALLATION

1. Position the control arm (3) into the frame brackets. Install bolts (1&2) and tighten to 132 N·m (97 ft. lbs.)(LD) or 170 N·m (125 ft. lbs.)(HD 4X2 only).
2. Insert the ball joint in steering knuckle and tighten the upper ball joint nut to 54 N·m (40 ft. lbs.)(on 1500 series only an additional 90° turn is required).
3. Install the wheel and tire assembly, (Refer to 22 - TIRES/WHEELS/WHEELS - STANDARD PROCEDURE).
4. Remove the support and lower vehicle.
5. Perform a wheel alignment, (Refer to 2 - SUSPENSION/WHEEL ALIGNMENT - STANDARD PROCEDURE).

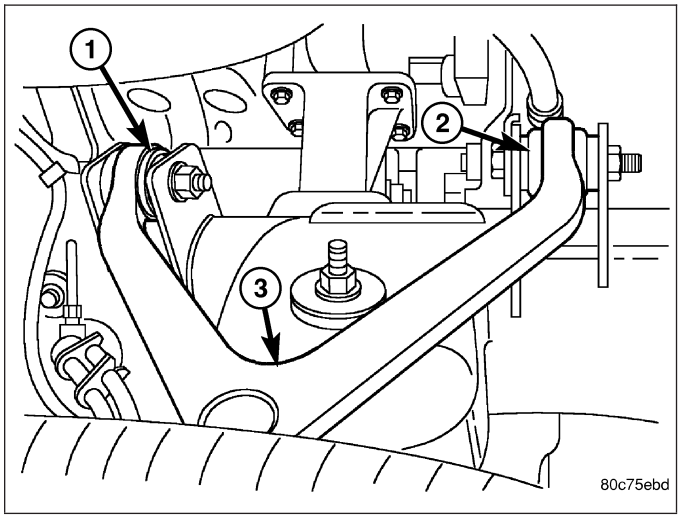

FRONT - LINK/COIL

TABLE OF CONTENTS

page

FRONT - LINK/COIL
SPECIFICATIONS
TORQUE CHART 68
SPECIAL TOOLS
9 1/4 AA 70
HUB / BEARING
REMOVAL 71
INSTALLATION 73
LOWER BALL JOINT
DIAGNOSIS AND TESTING
LOWER BALL JOINT 75
REMOVAL 76
INSTALLATION 77
UPPER BALL JOINT
DIAGNOSIS AND TESTING
UPPER BALL JOINT 77
REMOVAL 78
INSTALLATION 78
KNUCKLE
REMOVAL 79
INSTALLATION 79
UPPER SUSPENSION ARM
REMOVAL
LEFT 79
RIGHT 79
INSTALLATION
LEFT 80
RIGHT 81
LOWER SUSPENSION ARM
REMOVAL 81

page

INSTALLATION 82
SHOCK
DIAGNOSIS AND TESTING
SHOCK 82
REMOVAL 83
INSTALLATION 84
SPRING
REMOVAL 85
INSTALLATION 85
STABILIZER BAR
DESCRIPTION
STABILIZER BAR 86
DISCONNECTING STABILIZER BAR 86
OPERATION
STABILIZER BAR 86
OPERATION - DISCONNECTING
STABILIZER BAR 87
REMOVAL
STABILIZER BAR 87
DISCONNECTING STABILIZER BAR 88
INSTALLATION
STABILIZER BAR 90
DISCONNECTING STABILIZER BAR 90
STABILIZER LINK
REMOVAL
STABILIZER LINK 92
WITH DISCONNECTING STABILIZER BAR . . 93
INSTALLATION
STABILIZER LINK 94
INSTALLATION 94

FRONT - LINK/COIL

SPECIFICATIONS

TORQUE CHART

TORQUE SPECIFICATIONS

DESCRIPTION	N·m	Ft. Lbs.	In. Lbs.
Shock Absorber Upper Nut	54	40	—
Shock Absorber Lower Bolt	136	100	—
Lower Suspension Arm Frame Nuts	217	160	—
Lower Suspension Arm Axle Nut	217	160	—

DESCRIPTION	N·m	Ft. Lbs.	In. Lbs.
Upper Suspension Arm Frame Nuts	149	110	—
Upper Suspension Arm Axle Nut	149	110	—
Stabilizer Bar Frame Bolt	61	45	—
Stabilizer Link Lower Control Arm Nut	102	75	—
Stabilizer Link Axle Bracket	71	52	—
Stabilizer Link Stabilizer Bar Nut	38	27	—
Stabilizer Link Axle Bracket Power Wagon	71	52	—
Stabilizer Link Stabilizer Bar Nut Power Wagon	149	110	—
Hub/Bearing Bolts	202	149	—
Axle Nut	179 Beginning Torque, Then Rotate 5 to 10 Times With a Final Torque of 356	132 Beginning Torque, Then Rotate 5 to 10 Times With a Final Torque of 263	—
Tie Rod End Nut	75	55	—

NOTE: Suspension components with rubber/urethane bushings should be tightened with the vehicle at normal ride height. It is important to have the springs supporting the weight of the vehicle when the fasteners are torqued. If springs are not at their normal ride position, vehicle ride comfort could be affected and premature bushing wear may occur.

SPECIAL TOOLS

9 1/4 AA

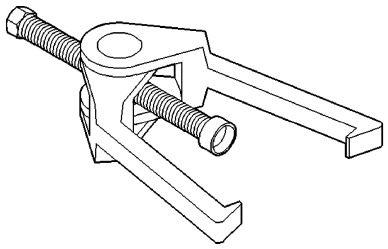

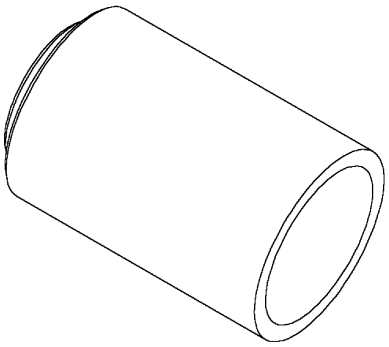

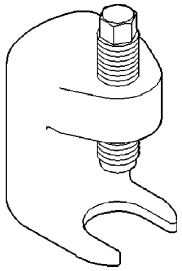

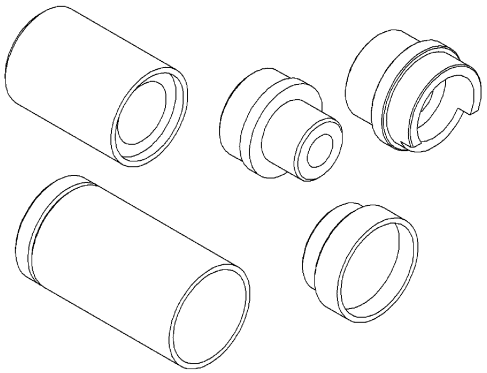

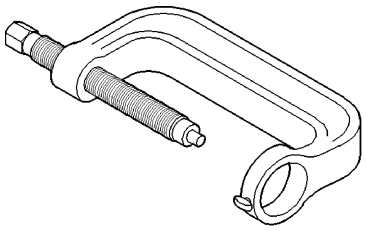

c-4212f-8011d4af

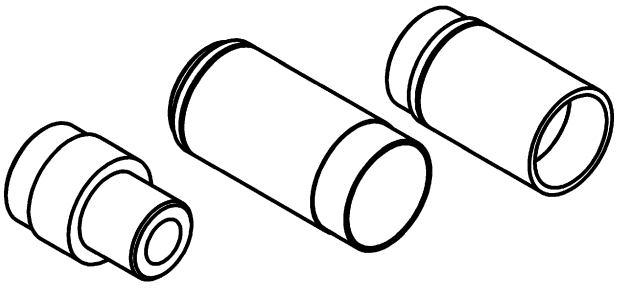

HUB / BEARING

REMOVAL

1. Raise and support the vehicle.
2. Remove the wheel and tire assembly.
3. Remove the hub extension (1) mounting nuts and remove the extension from the rotor if equipped.

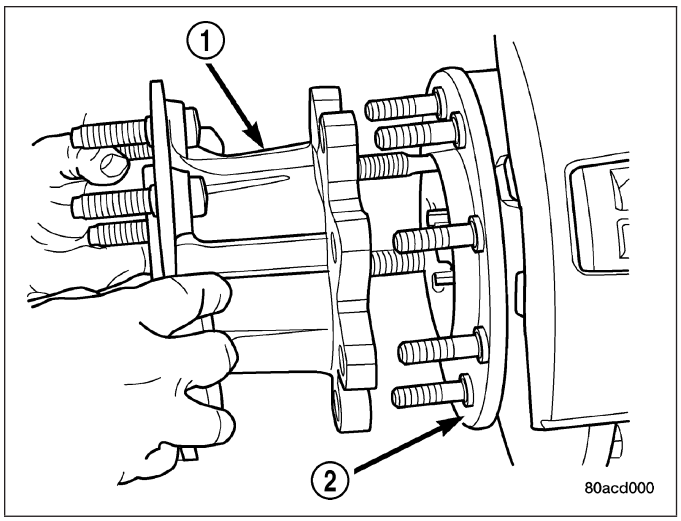

4. Remove the brake caliper, (Refer to 5 - BRAKES/ HYDRAULIC/MECHANICAL/DISC BRAKE CALIPERS - REMOVAL).
5. Remove the cotter pin (2) and the hub nut (1) from the axle shaft.

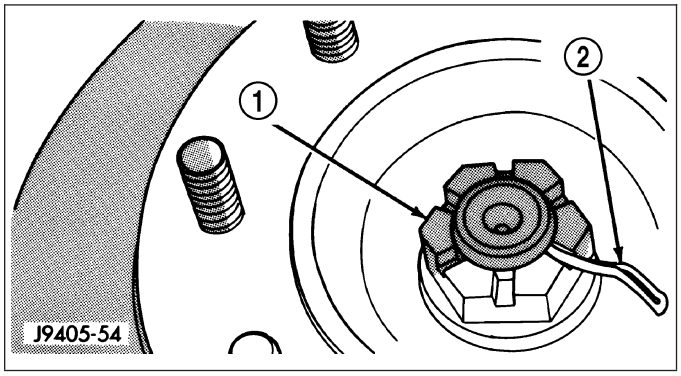

6. Disconnect the ABS wheel speed sensor wire from under the hood. Remove the sensor wire from the frame and steering knuckle if equipped.
7. Back off the hub/bearing mounting bolts (1) 1/4 inch each. Then tap the bolts with a hammer to loosen the hub/bearing from the steering knuckle (3).

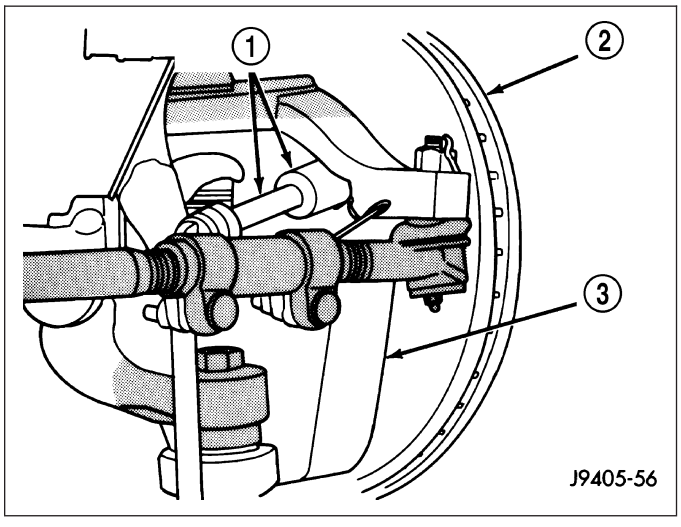

8. Remove the hub/bearing mounting bolts and remove the hub/bearing (2).

9. Remove the rotor assembly (1) , brake shield and spacer from the steering knuckle.

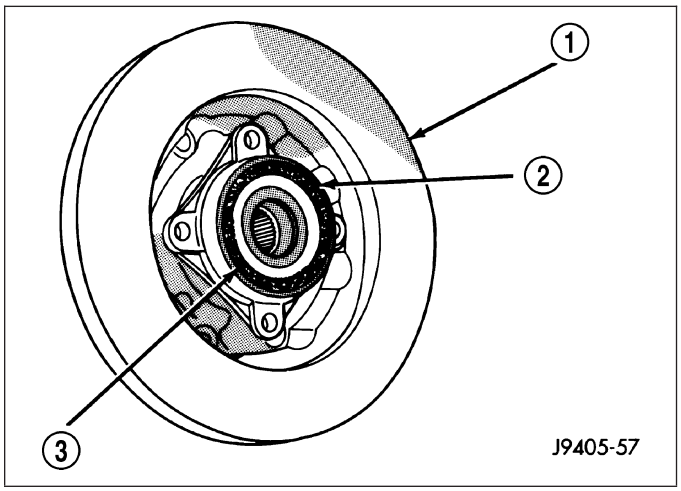

10. Remove the wheel speed sensor from the hub bearing if equipped.

11. Press out the wheel studs/hub extension studs and separate the rotor from the hub/bearing (1).

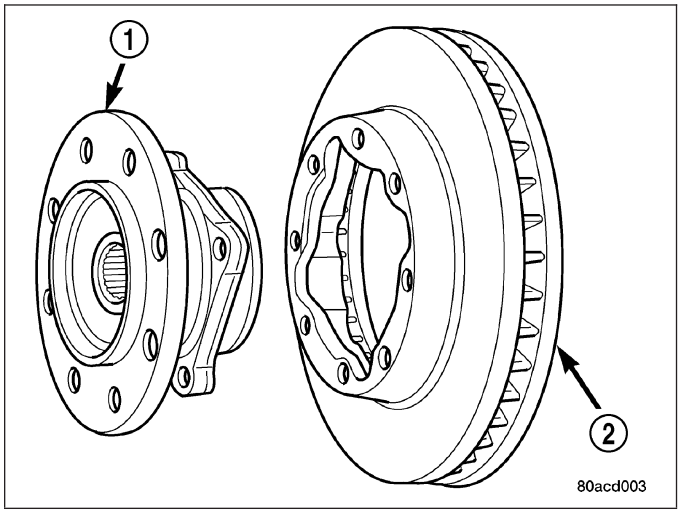

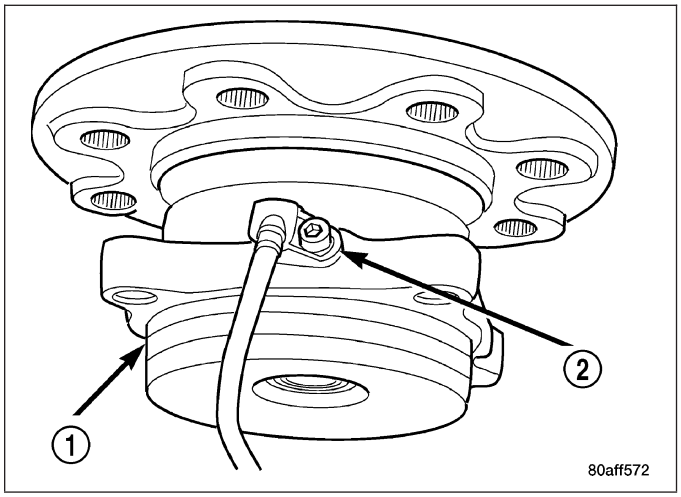

INSTALLATION

1. Install the wheel speed sensor in the hub bearing (1) if equipped.
2. Position the rotor (2) on the hub/bearing (1).
3. Press the wheel studs/hub extension studs (3) through the back side of the rotor (2) and through the hub bearing flange (1).

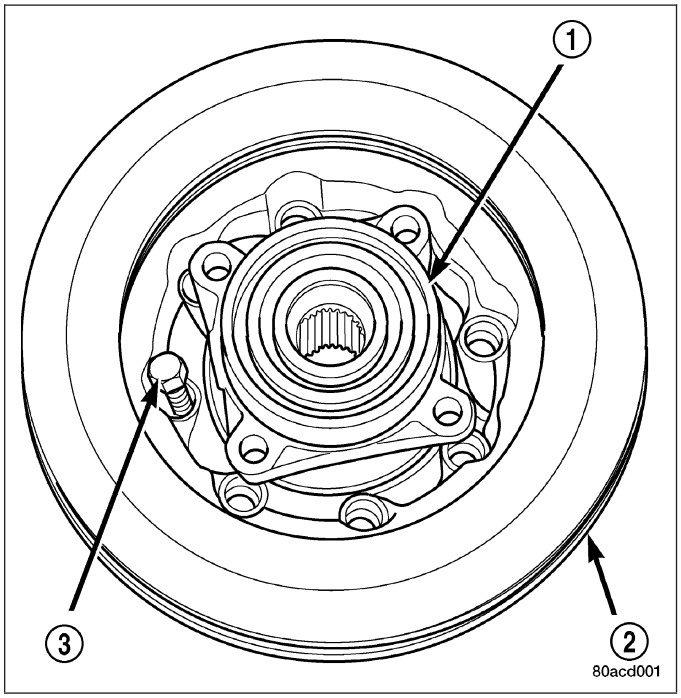

4. Apply a liberal quantity of anti-seize compound to the splines (3) of the front drive shaft.
5. Insert the two rearmost, top and bottom rotor hub bolts (1) in the steering knuckle. Insert the bolts through the back side of the knuckle so they extend out the front face as shown.
6. Position the hub spacer (2).

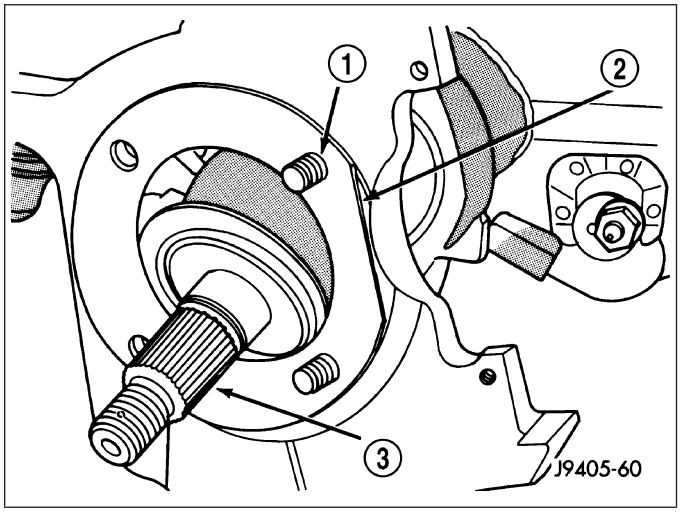

7. Position the brake shield (1) on bolts just installed in knuckle (2).

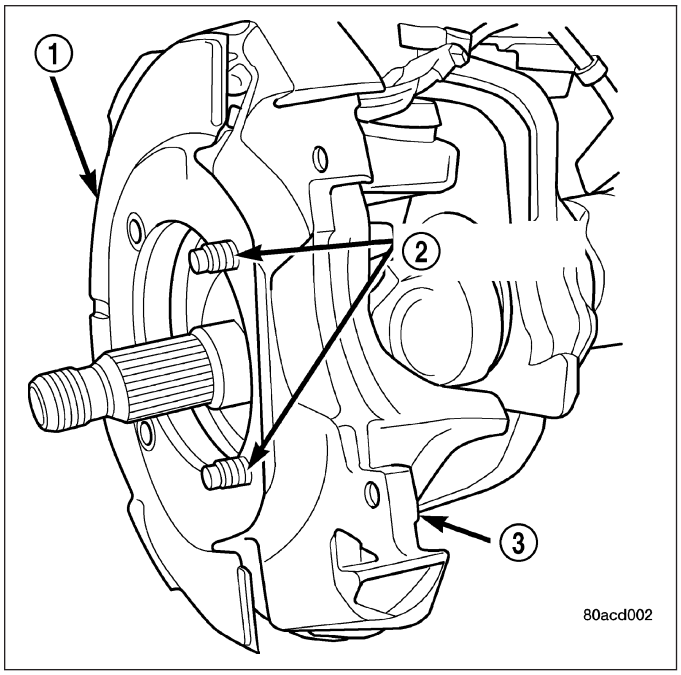

NOTE: If the vehicle is equipped with a wheel speed sensor (1) the brake shield must be positioned on the hub bearing (2).

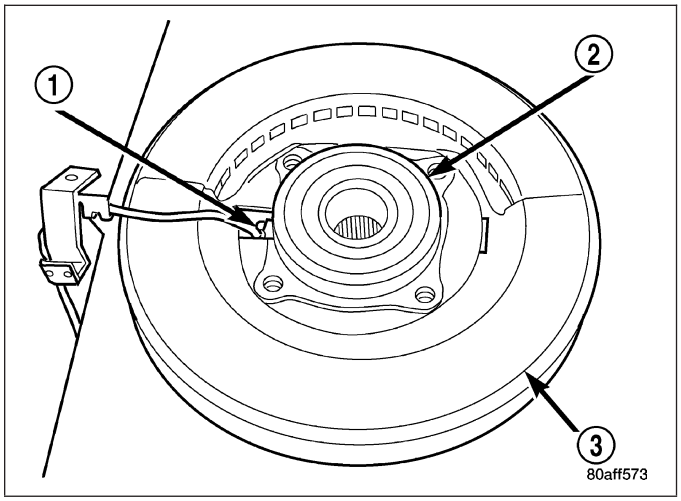

8. Align the rotor hub with the drive shaft and start the shaft into the rotor hub splines.

NOTE: Position wheel speed sensor wire at the top of the knuckle if equipped.

9. Align the bolt holes in the hub bearing flange with the bolts installed in the knuckle. Then thread the bolts into the bearing flange far enough to hold the assembly in place.
10. Install the remaining bolts. Tighten the hub/bearing bolts to 202 N·m (149 ft. lbs.
11. Install the washer and axle nut and tighten a beginning torque of 179 N·m (132 ft. lbs.).
12. Rotate the axle 5 to 10 times to seat the hub bearing.
13. Tighten to a final torque of 356 N·m (263 ft. lbs.).
14. Align the axle nut to the next forward cotter pin hole and install a new cotter pin in the axle nut.
15. Install the brake caliper, (Refer to 5 - BRAKES/HYDRAULIC/MECHANICAL/DISC BRAKE CALIPERS - INSTALLATION).
16. Install the sensor wire to the steering knuckle and frame and if equipped. Connect the wheel speed sensor wire under the hood.
17. Install the wheel and tire assemblies, (Refer to 22 - TIRES/WHEELS/WHEELS - STANDARD PROCEDURE).

18. Remove the support and lower the vehicle.
19. Apply the brakes several times to seat the brake shoes and caliper piston. Do not move the vehicle until a firm brake pedal is obtained.

LOWER BALL JOINT

DIAGNOSIS AND TESTING

LOWER BALL JOINT

To properly diagnose the lower ball joint two readings from the dial indicator are necessary, The two readings must be added together to find a total ball joint movement as identified in the steps below.

1. Raise and support the vehicle.
2. Attach a dial indicator (2) with the indicator resting on the flat part of the steering knuckle (1) by the lower ball stud.
3. Set the dial indicator (2) to zero.

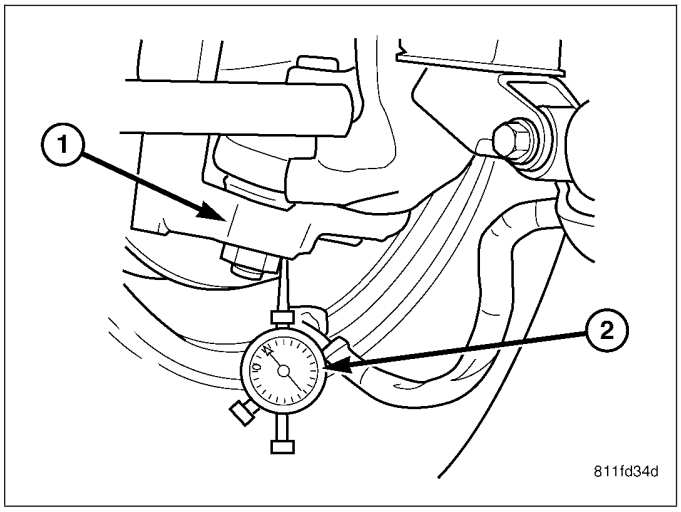

NOTE: Use care not to damage the upper ball joint grease seal (3).

4. Pry between the knuckle (4) and the axle tube yoke next to the upper ball joint (2), Record the reading on the dial indicator **This will be the first reading**.

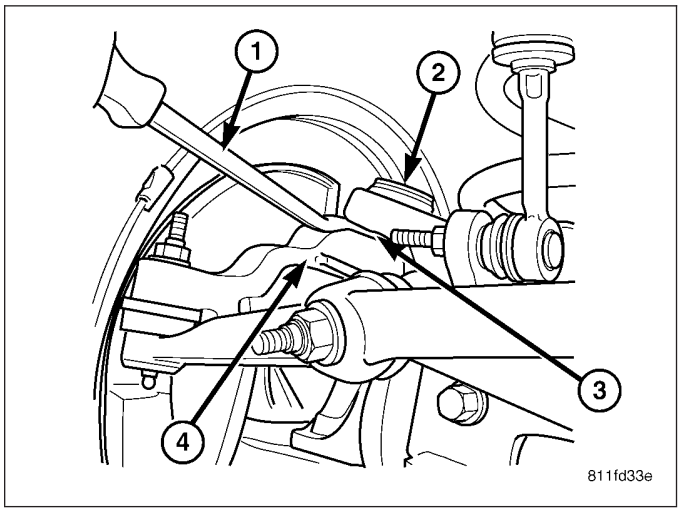

5. Set the dial indicator (2) back to zero.
6. Set up a jackstand (3) and use a long prybar (1) to lift the knuckle assembly

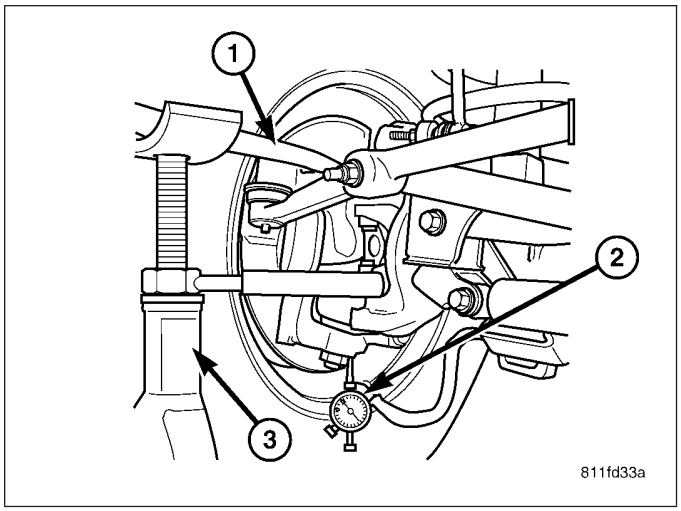

7. Pry upwards on the flat part of the steering knuckle (5) next to the ball joint stud and nut (2) using the jackstand as leverage. Record the reading on the dial indicator **This will be the second reading**.
8. Add the two reading together for a total lower ball joint movement, If this reading is above 2.29 mm (0.090 in) then replacement of the lower ball joint is necessary (Refer to 2 - SUSPENSION/FRONT/ LOWER BALL JOINT - REMOVAL).

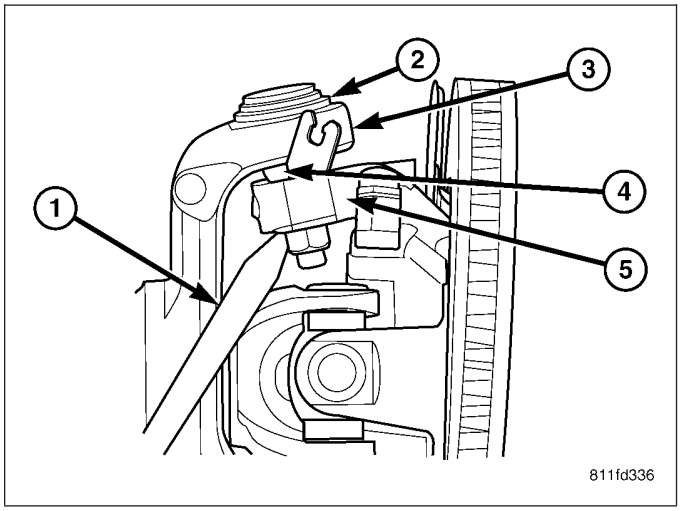

REMOVAL

1. Remove lower snap ring from the lower ball joint.

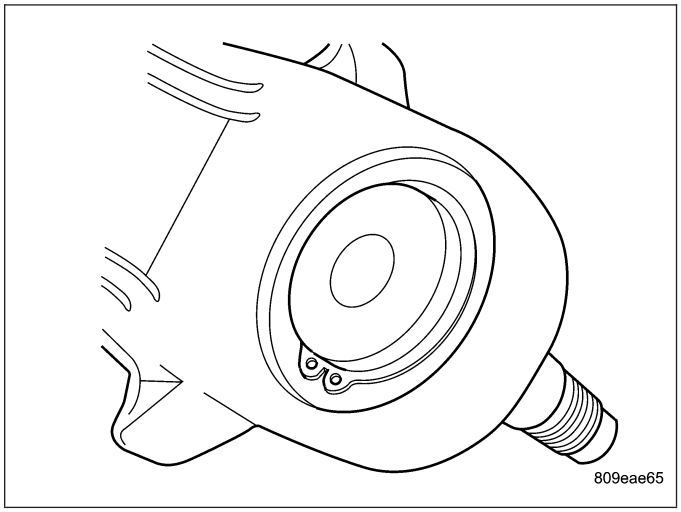

2. Position special tool 8975–2 (RECEIVER) (2) and 8975–4 (DRIVER) (4) with tool C4212–F (1) as shown to remove lower ball stud.

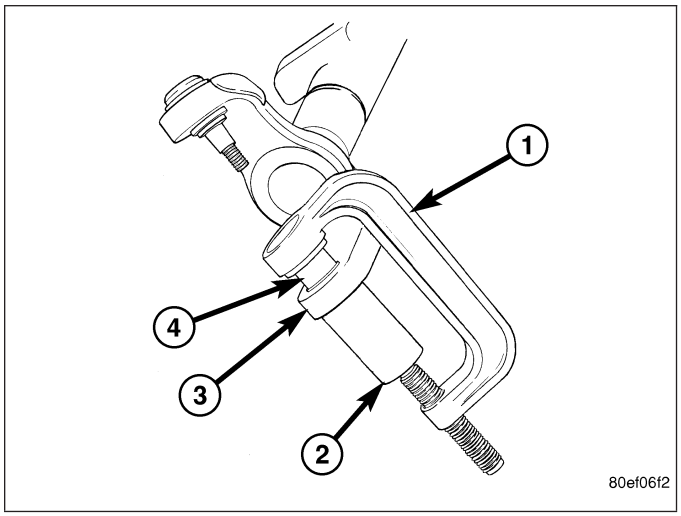

INSTALLATION

1. Position special tool 8975–1 (DRIVER) (2) and 8975–3 (RECEIVER) (5) with C4212–F (1) as shown to install lower ball stud (3).

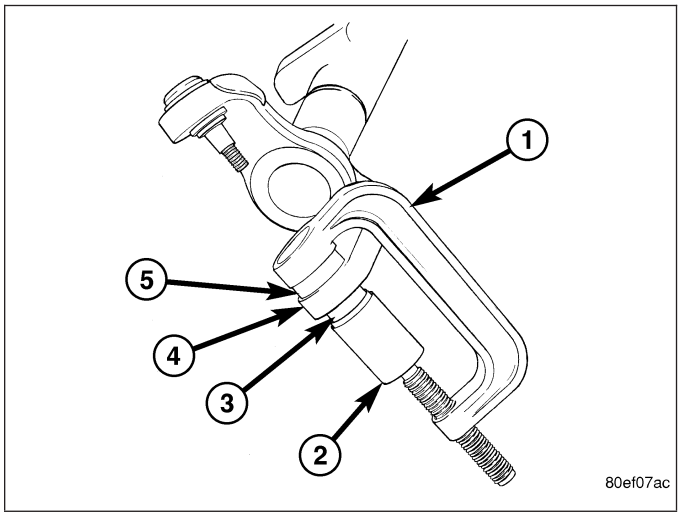

UPPER BALL JOINT

DIAGNOSIS AND TESTING

UPPER BALL JOINT

To properly diagnose the upper ball joint two readings from the dial indicator are necessary, The two readings must be added together to find a total ball joint movement as identified in the steps below.

1. Raise and support the vehicle.

2. Attach a dial indicator (3) with the indicator resting on either the front or back sides of the steering knuckle (4) as close to the upper ball joint (1) as possible.
3. Set the dial indicator(3) to zero.
4. Grab the tire by pushing in on the top of the tire and pulling out on the bottom of the tire. Record the reading on the dial indicator (3) **This will be the first reading**.
5. Set the dial indicator (3) back to zero.
6. Grab the tire by pulling in on the top of the tire and pushing out on the bottom of the tire. Record the reading on the dial indicator (3) **This will be the second reading**.
7. Add the two reading together for a total upper ball joint movement, If this reading is above 1.52 mm (0.060 in) then replacement of the upper ball joint is necessary (Refer to 2 - SUSPENSION/FRONT/UPPER BALL JOINT - REMOVAL).

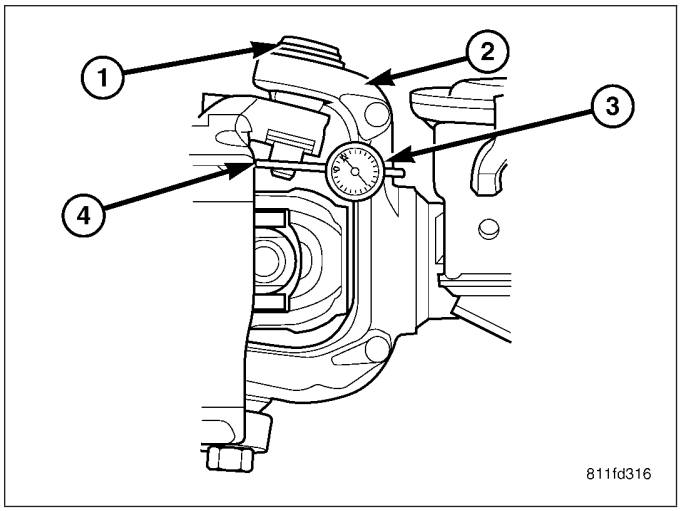

REMOVAL

1. Position special tool 6761 (RECEIVER) (2) and 8445–3 (DRIVER) (4) with C-4212–F (1) as shown to remove upper ball stud.

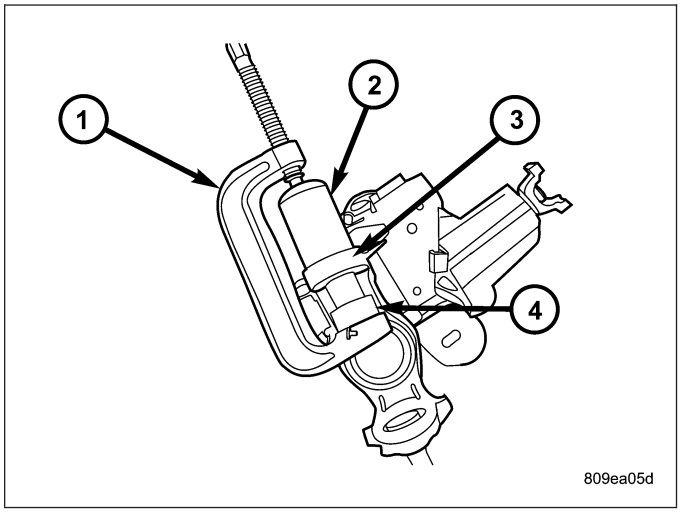

INSTALLATION

1. Position special tool 8445–2 (DRIVER) (2) and 8975–5 (RECEIVER) (5) with C-42121–F (1) as shown to install upper ball stud (3).

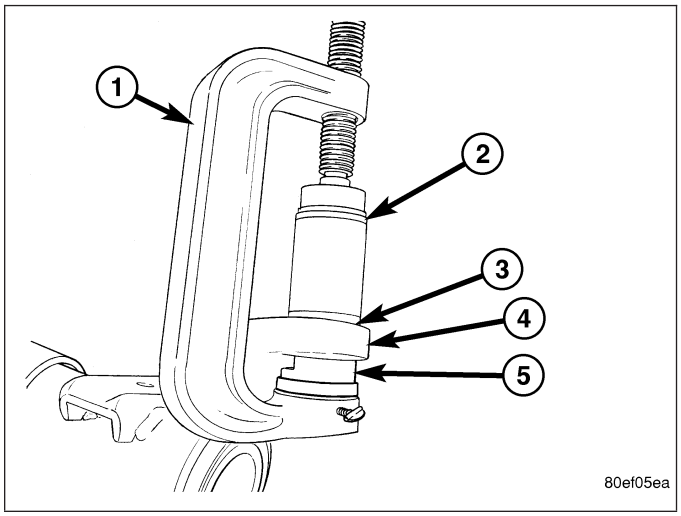

KNUCKLE

REMOVAL

1. Remove the hub bearing (Refer to 2 - SUSPENSION/FRONT/HUB / BEARING - REMOVAL).
2. Remove tie-rod or drag link end from the steering knuckle arm.
3. Remove the ABS sensor wire and bracket from knuckle. Refer to Brakes, for proper procedures.
4. Remove the cotter pin from the upper ball stud nut. Remove the upper and lower ball stud nuts.
5. Strike the steering knuckle with a brass hammer to loosen.
6. Remove knuckle from axle tube yokes.

INSTALLATION

1. Position the steering knuckle on the ball studs.
2. Install and tighten lower ball stud nut to 47 N·m (35 ft. lbs.) torque. Do not install cotter pin at this time.
3. Install and tighten upper ball stud nut to 94 N·m (70 ft. lbs.) torque. Advance nut to next slot to line up hole and install new cotter pin.
4. Retorque lower ball stud nut to 190–217 N·m (140–160 ft. lbs.) torque. Advance nut to next slot to line up hole and install new cotter pin.
5. Install the hub bearing (Refer to 2 - SUSPENSION/FRONT/HUB / BEARING - INSTALLATION).
6. Install tie-rod or drag link end onto the steering knuckle arm.
7. Install the ABS sensor wire and bracket to the knuckle. Refer to Brakes, for proper procedure.

UPPER SUSPENSION ARM

REMOVAL

LEFT

1. Raise and support the vehicle.

NOTE: Discard the nuts and bolts and do not reuse, New nuts and bolts should be used when replacing or servicing the suspension arms.

2. Remove the upper suspension arm (4) nut and bolt at the axle bracket.
3. Remove the nut and bolt at the frame rail and remove the upper suspension arm (4).

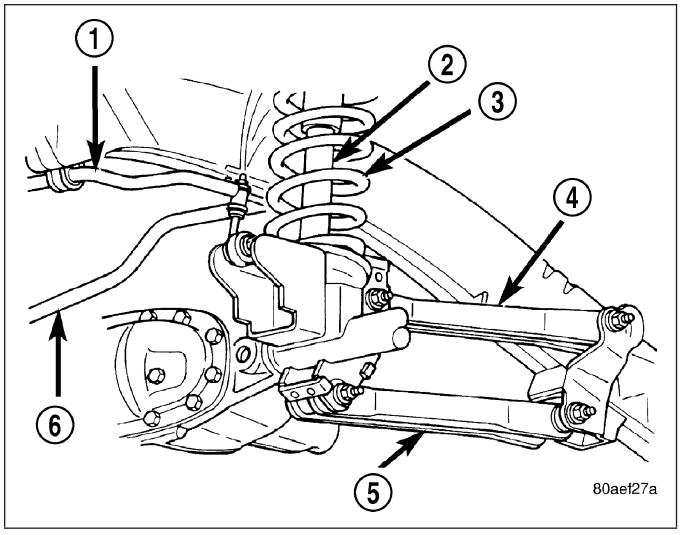

RIGHT

1. Raise and support the vehicle.
2. Disconnect the exhaust system at the manifolds.
3. Disconnect the rubber exhaust mounts at the muffler.
4. Support the transmission.
5. Remove the transmission cross member.

6. Lower the exhaust system down in order to gain access to the removal of the upper bolt.

NOTE: Discard the nuts and bolts and do not reuse, New nuts and bolts should be used when replacing or servicing the suspension arms.

7. Remove the nut and bolt at the frame rail and remove the upper suspension arm (4).
8. Remove the upper suspension arm nut and bolt at the axle bracket.
9. Remove the suspension arm (4) from the vehicle.

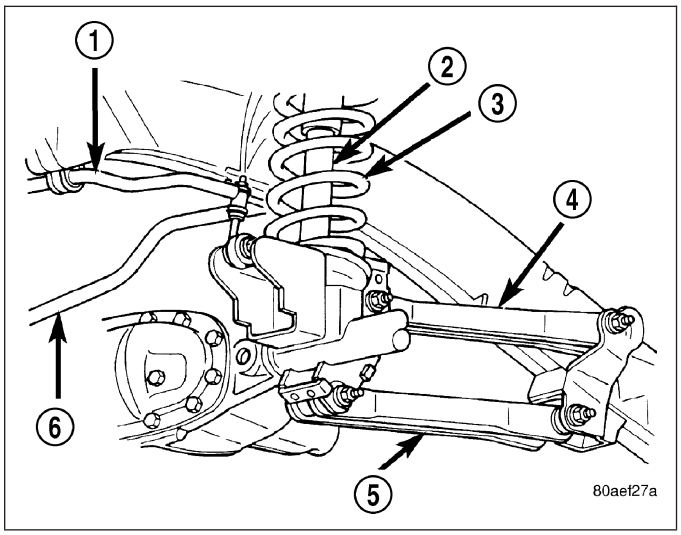

INSTALLATION

LEFT

NOTE: Discard the nuts and bolts and do not reuse, New nuts and bolts should be used when replacing or servicing the suspension arms.

1. Position the upper suspension arm (4) at the axle and frame rail.
2. Install the bolts and finger tighten the nuts.
3. Remove the supports and lower the vehicle.
4. Tighten nut at the axle bracket to 163 N·m (120 ft. lbs.). Tighten nut at frame bracket to 163 N·m (120 ft. lbs.).

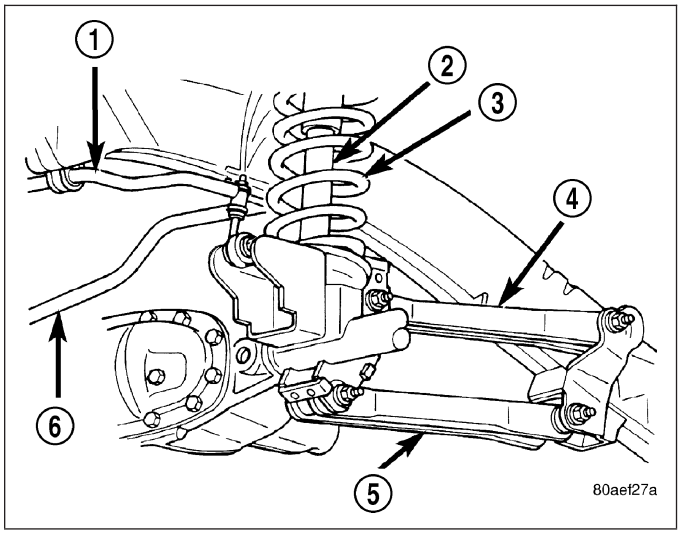

RIGHT

NOTE: Discard the nuts and bolts and do not reuse, New nuts and bolts should be used when replacing or servicing the suspension arms.

1. Position the upper suspension arm (4) at the axle and frame rail.
2. Install the bolts, then finger tighten the nuts.

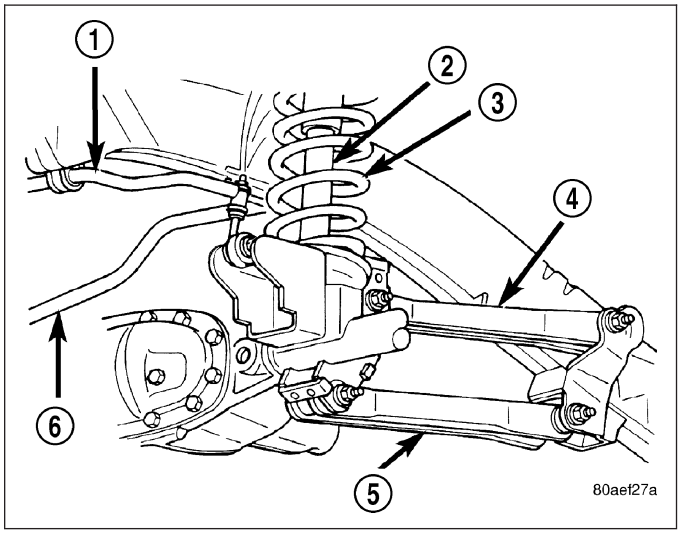

3. Reconnect the rubber exhaust mounts at the muffler.
4. Reconnect the exhaust at the manifolds.
5. Install the transmission crossmember.
6. Remove the supports and lower the vehicle.
7. Tighten nut at the axle bracket to 163 N·m (120 ft. lbs.). Tighten nut at frame bracket to 163 N·m (120 ft. lbs.).

LOWER SUSPENSION ARM

REMOVAL

1. Raise and support the vehicle.
2. Paint or scribe alignment marks on the cam adjusters (1) and suspension arm (4) for installation reference.

NOTE: Discard the nuts and bolts and do not reuse, New nuts and bolts should be used when replacing or servicing the suspension arms.

3. Remove the lower suspension arm nut, cam and cam bolt from the axle (2).
4. Remove the nut and bolt from the frame rail bracket (3) and remove the lower suspension arm (4).

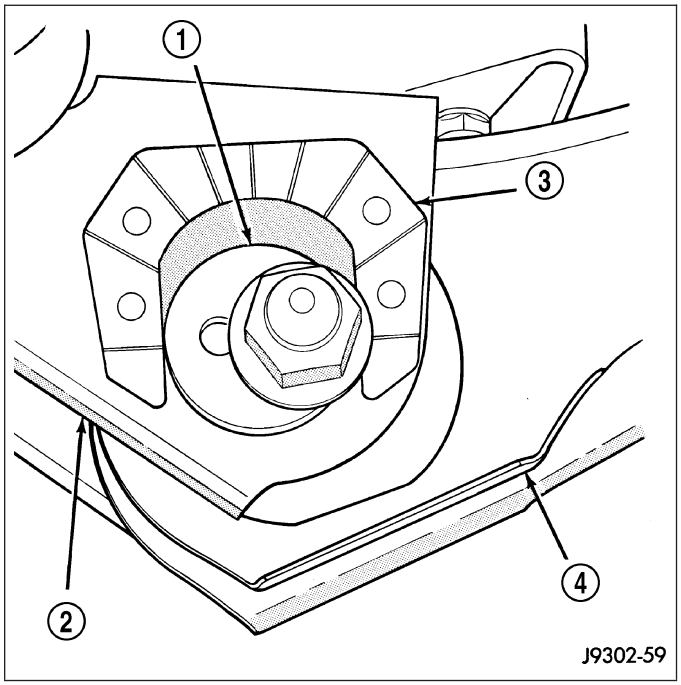

INSTALLATION

NOTE: Discard the nuts and bolts and do not reuse, New nuts and bolts should be used when replacing or servicing the suspension arms.

1. Position the lower suspension arm (4) at the axle bracket (2) and frame rail bracket.
2. Install the rear bolt and finger tighten the nut.
3. Install the cam bolt (1), cam and nut in the axle and align the reference marks.
4. Remove support and lower the vehicle.
5. Tighten cam nut at the axle bracket to 217 N·m (160 ft. lbs.). Tighten rear nut at the frame bracket to 217 N·m (160 ft. lbs.).

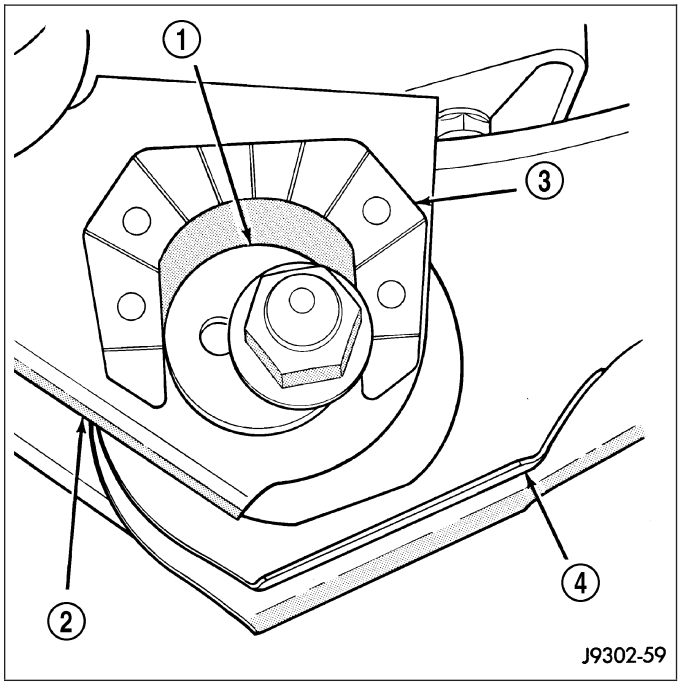

SHOCK

DIAGNOSIS AND TESTING

SHOCK

A knocking or rattling noise from a shock absorber (5) may be caused by movement between mounting grommets (1&6) and metal brackets (3) or attaching components. These noises can usually be stopped by tightening the attaching nuts. If the noise persists, inspect for damaged and worn bushings, and attaching components. Repair as necessary if any of these conditions exist.

A squeaking noise from the shock absorber may be caused by the hydraulic valving and may be intermittent. This condition is not repairable and the shock absorber must be replaced.

The shock absorbers are not refillable or adjustable. If a malfunction occurs, the shock absorber must be replaced. To test a shock absorber, hold it in an upright position and force the piston in and out of the cylinder four or five times. The action throughout each stroke should be smooth and even.

The shock absorber bushings do not require any type of lubrication. Do not attempt to stop bushing noise by lubricating them. Grease and mineral oil-base lubricants will deteriorate the bushing.

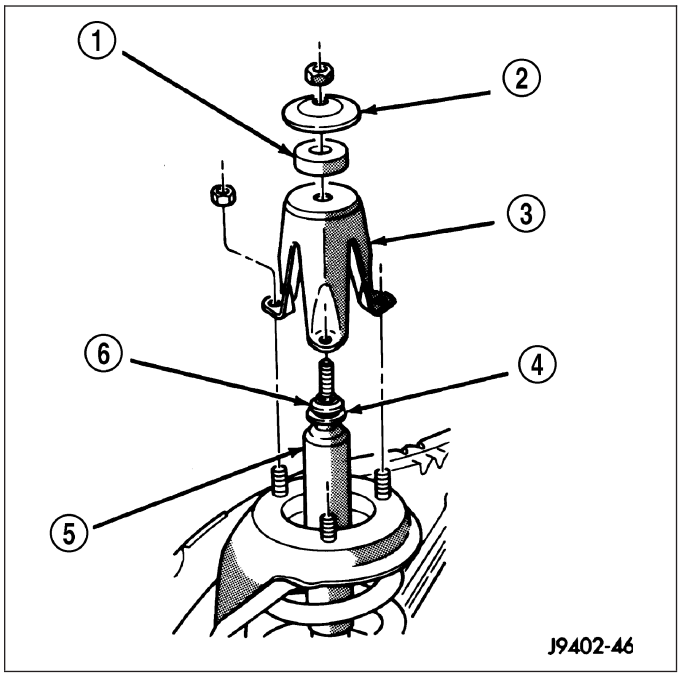

REMOVAL

1. Remove the nut, retainer (4) and grommet f(1) rom the upper stud in the engine compartment.
2. Remove three nuts from the upper shock bracket (3).

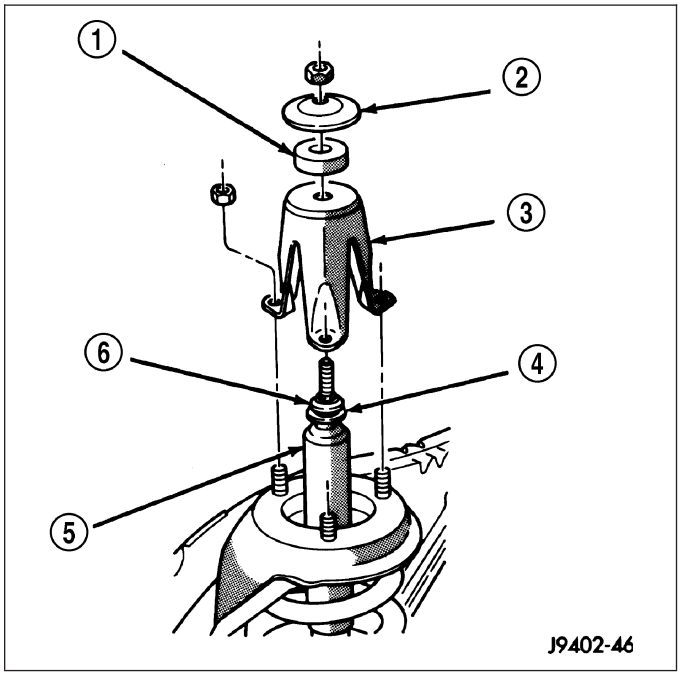

3. Remove the lower bolt (4) from the axle bracket. Remove the shock absorber (1) from engine compartment.

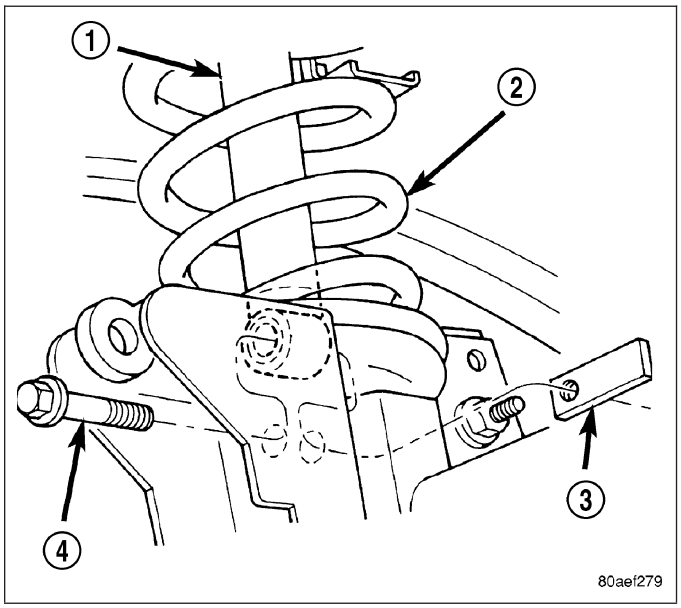

INSTALLATION

1. Position the lower retainer (4) and grommet (6) on the upper stud. Insert the shock absorber (5) through the spring from engine compartment.

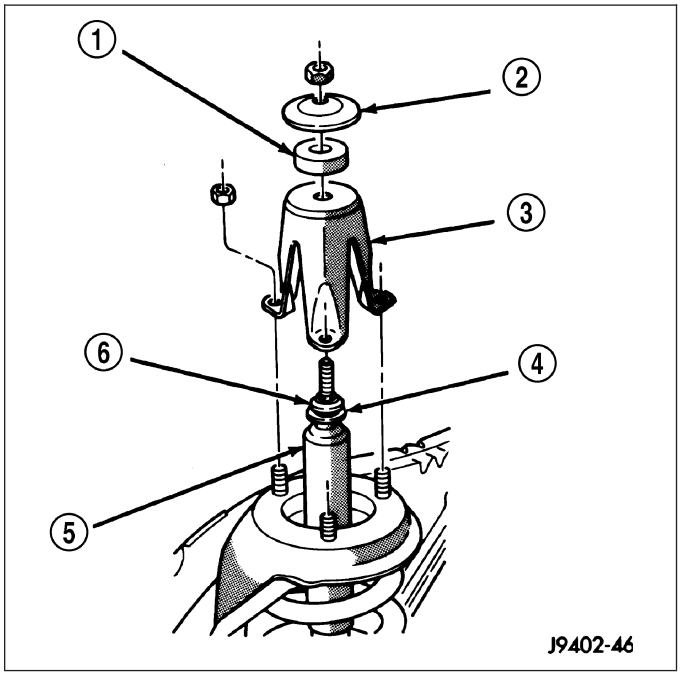

2. Install the lower bolt (4) and tighten to 135 N·m (100 ft. lbs.).

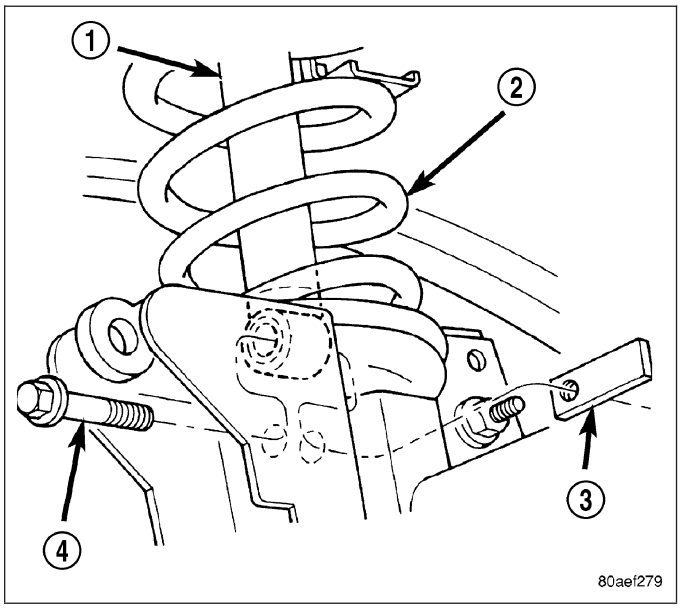

3. Install the upper shock bracket (3) and three nuts. Tighten nuts to 75 N·m (55 ft. lbs.).
4. Install upper grommet (1) and retainer (2). Install upper shock nut and tighten to 54 N·m (40 ft. lbs).

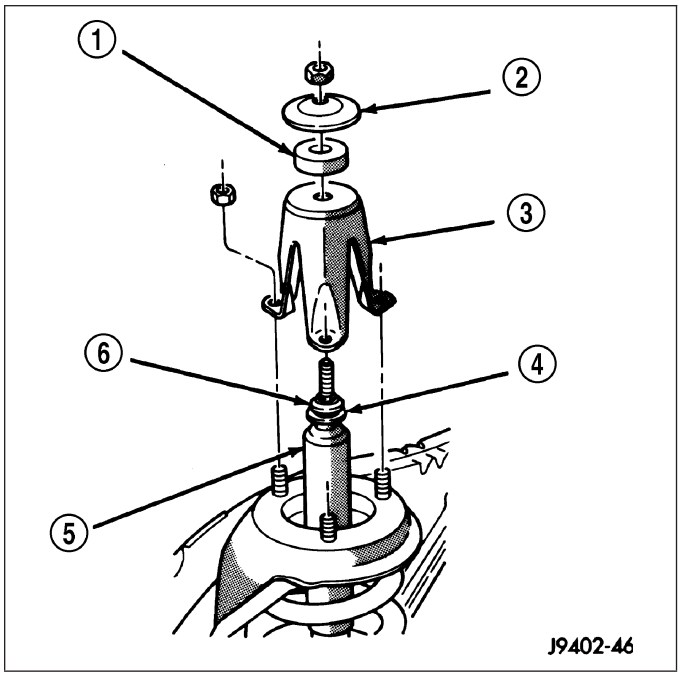

SPRING

REMOVAL

1. Raise and support the vehicle. Position a hydraulic jack under the axle to support it.
2. Paint or scribe alignment marks on lower suspension arm cam adjusters and axle bracket for installation reference.
3. Remove the upper suspension arm and loosen lower suspension arm bolts.
4. Mark and disconnect the front propeller shaft from the axle 4x4 models.
5. Disconnect the track bar from the frame rail bracket.
6. Disconnect the drag link from pitman arm.
7. Disconnect the stabilizer bar link and shock absorber from the axle.
8. Lower the axle until the spring is free from the upper mount. Remove the coil spring.

INSTALLATION

1. Position the coil spring on the axle pad.
2. Raise the axle into position until the spring seats in the upper mount.
3. Connect the stabilizer bar links and shock absorbers to the axle bracket. Connect the track bar to the frame rail bracket.
4. Install the upper suspension arm.
5. Install the front propeller shaft to the axle 4x4 model.
6. Install drag link to pitman arm and tighten nut to specifications. Install new cotter pin.
7. Remove the supports and lower the vehicle.
8. Tighten the following suspension components to specifications:
   - Link to stabilizer bar nut.
   - Lower shock bolt.
   - Track bar bolt at axle shaft tube bracket.
   - Upper suspension arm nut at axle bracket.
   - Upper suspension nut at frame bracket.
   - Align lower suspension arm reference marks and tighten cam nut.
   - Lower suspension nut at frame bracket.

STABILIZER BAR

DESCRIPTION

STABILIZER BAR

The bar extends across the front underside of the chassis and connects to the frame crossmember. The ends of the bar mount to the lower suspension arm. All mounting points of the stabilizer bar are isolated by bushings.

DISCONNECTING STABILIZER BAR

WARNING: The disconnecting stabilizer bar unit (2) is not serviced separately from the bar (4). Do not disassemble this unit (2) from the stabilizer bar (4).

NOTE: The stabilizer links (5), stabilizer bar retainers/ bushings (3) and the stabilizer bar as a complete unit (4) only are serviceable. The new bar (4) consists of the disconnecting unit (2) and electronic actuator (1) attached as an assembly to the bar (4).

This system allows greater front suspension travel in off-road situations. It consists of a disconnecting unit (2), electronic actuator (1), stabilizer bar (4), stabilizer bar mounting retainers (3), stabilizer links (5) and a anti-rotational bracket (6) connected to the stabilizer bar retainer (3).

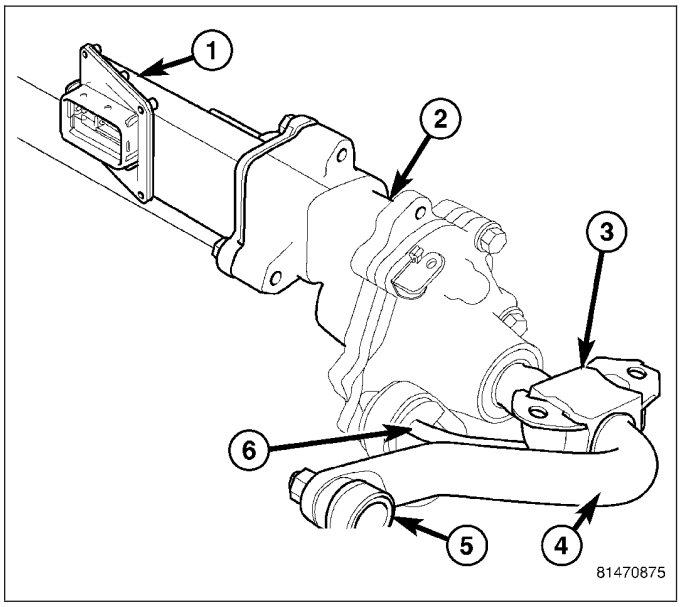

The electronic disconnecting stabilizer bar provides 2 mode positions operated by a switch on the dash: On-Road mode, and Off-Road mode. The electronic disconnecting stabilizer bar is designed to be driven in On-Road mode (indicated by a solid on-road mode light) for normal street and highway conditions (dry hard surfaced roads).

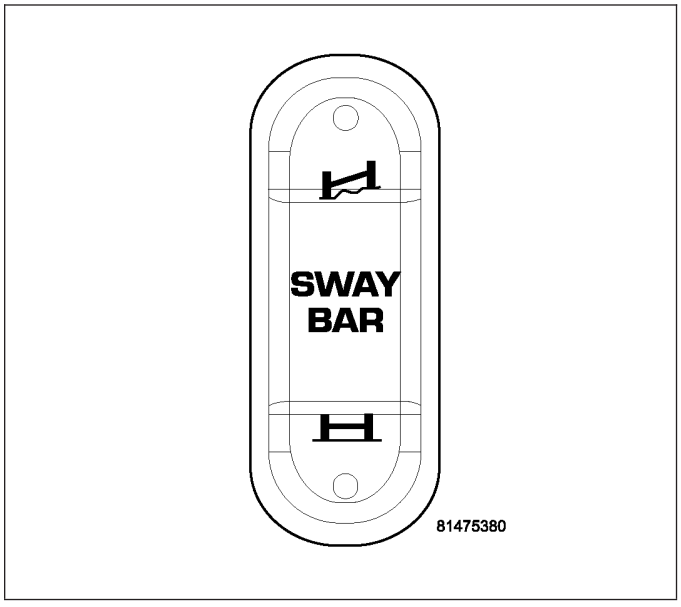

OPERATION

STABILIZER BAR

The stabilizer bar is used to minimize vehicle front sway during turns. The bar helps to maintain a flat attitude to the road surface.

OPERATION - DISCONNECTING STABILIZER BAR

NOTE: The off-road mode is intended for use at low speed only and is equipped with a vehicle speed sensor. When in off-road mode, if the vehicle speed exceeds 18 MPH, the system will return to on-road mode (indicated by a flashing off-road mode light). If vehicle speed is reduced to 14 MPH, the system will once again return to off-road mode (indicated by a solid off-road mode light).

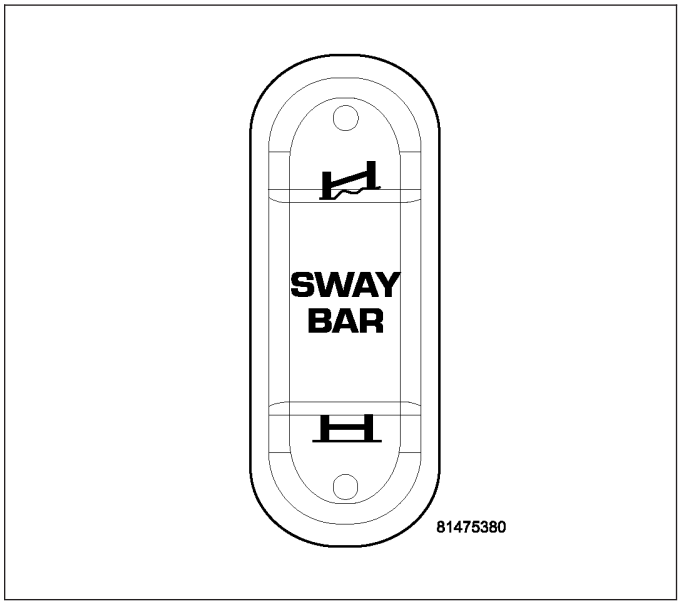

When in a severe off-road situation, the stabilizer bar may be placed into off-road mode to increase maneuverability. To engage the off-road mode, place the vehicle in 4WD HI or LO, and depress the Stabilizer Bar Control Switch for off-road mode. The off-road mode indicator light will flash until mode has been fully engaged, indicated by a solid light.

To disengage off-road mode, depress the Stabilizer Bar Control Switch for on-road mode. The on-road mode indicator light will flash until mode has been fully engaged, indicated by a solid light.

REMOVAL

STABILIZER BAR

1. Raise and support the vehicle.
2. Hold the stabilizer link (5) shafts with a wrench and remove the link nuts at the stabilizer bar (3).
3. Remove the retainers (1) and grommets (2) from the stabilizer bar links (5).
4. Remove the stabilizer bar clamps from the frame rails and remove the stabilizer bar.

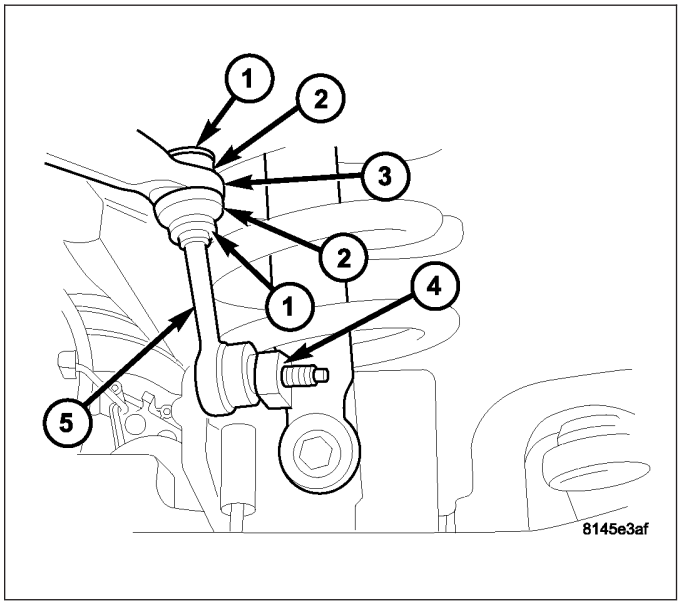

DISCONNECTING STABILIZER BAR

WARNING: The disconnecting stabilizer bar unit (2) is not serviced separately from the bar (4). Do not disassemble this unit (2) from the stabilizer bar (4).

NOTE: The stabilizer links (5), stabilizer bar retainers/ bushings (3) and the stabilizer bar as a complete unit (4) only are serviceable. The new bar (4) consists of the disconnecting unit (2) and electronic actuator (1) attached as an assembly to the bar (4).

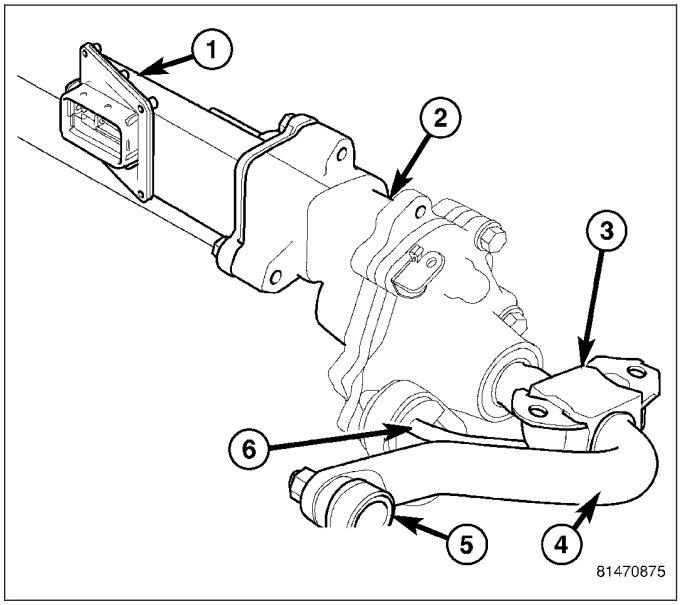

1. Raise and support the vehicle.
2. Hold the stabilizer link (1) shafts with a wrench and remove the link nuts (3) at the stabilizer bar (2).

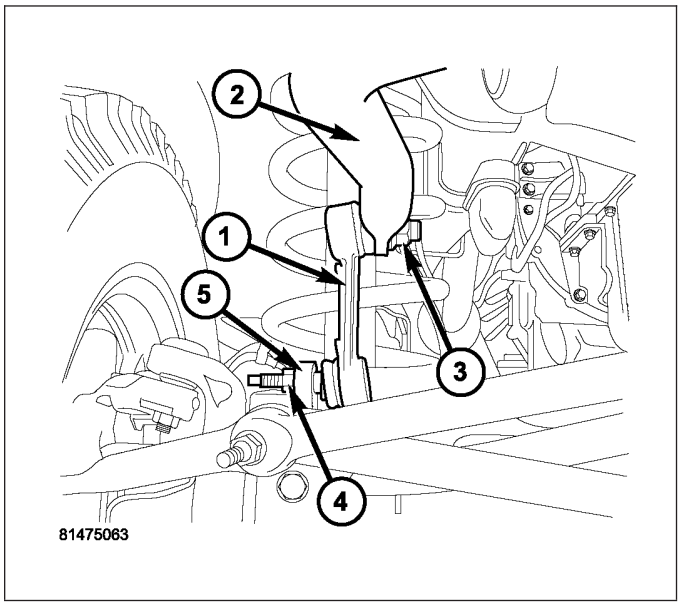

NOTE: Before removing the connector (4) from the actuator clean the outside of the connector with a cleaner and compressed air, to remove any dirt or debris.

3. Disconnect the electronic actuator electrical connector (4) for the disconnecting stabilizer bar (5).

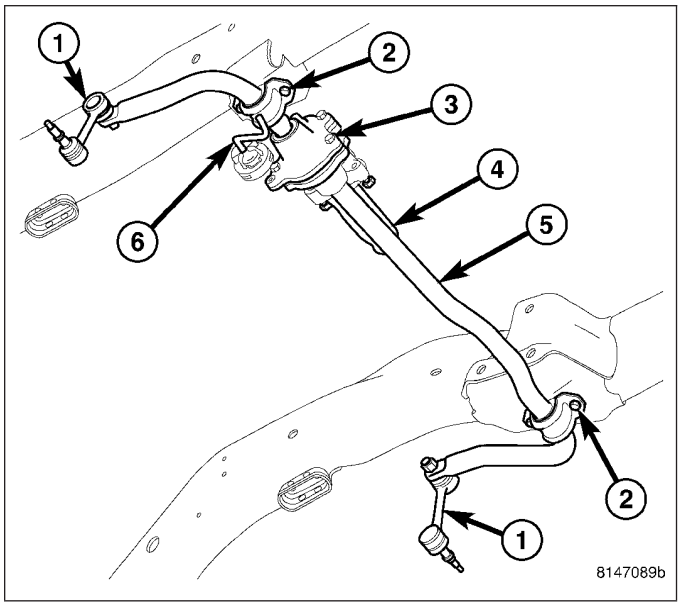

4. Remove the stabilizer bar retainers (1) from the frame rails and remove the stabilizer bar (4).

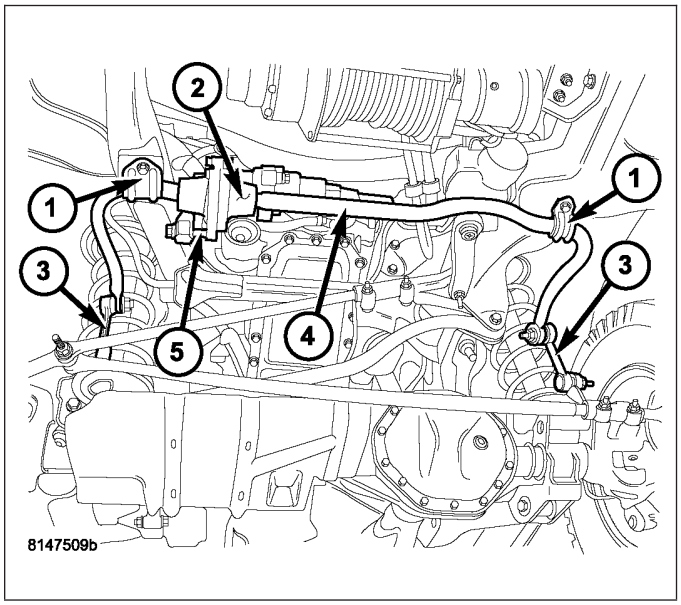

INSTALLATION

STABILIZER BAR

1. Position the stabilizer bar on the frame rail and install the clamps and bolts. Ensure the bar is centered with equal spacing on both sides.
2. Tighten the clamp bolts to 61 N·m (45 ft. lbs.).
3. Install links (5), retainers (1), grommets (2) and nuts to the stabilizer bar (3). Hold the link shaft with a wrench and tighten the nuts to 37 N·m (27 ft. lbs.).
4. Remove the supports and lower the vehicle.

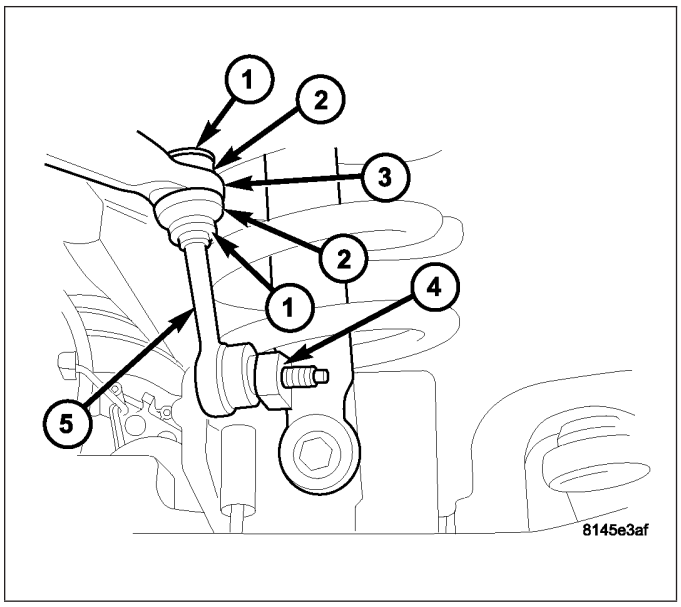

DISCONNECTING STABILIZER BAR

WARNING: The disconnecting stabilizer bar unit (2) is not serviced separately from the bar (4). Do not disassemble this unit (2) from the stabilizer bar (4).

NOTE: The stabilizer links (3), stabilizer bar retainers/ bushings (1) and the stabilizer bar as a complete unit only are serviceable. The new bar consists of the disconnecting unit (2) and electronic actuator attached as an assembly to the bar.

1. Position the stabilizer bar (4) on the frame rail and install the retainers with bushings and bolts (1). Ensure the bar is centered with equal spacing on both sides.
2. Tighten the retainer bolts (1) to 61 N·m (45 ft. lbs.).

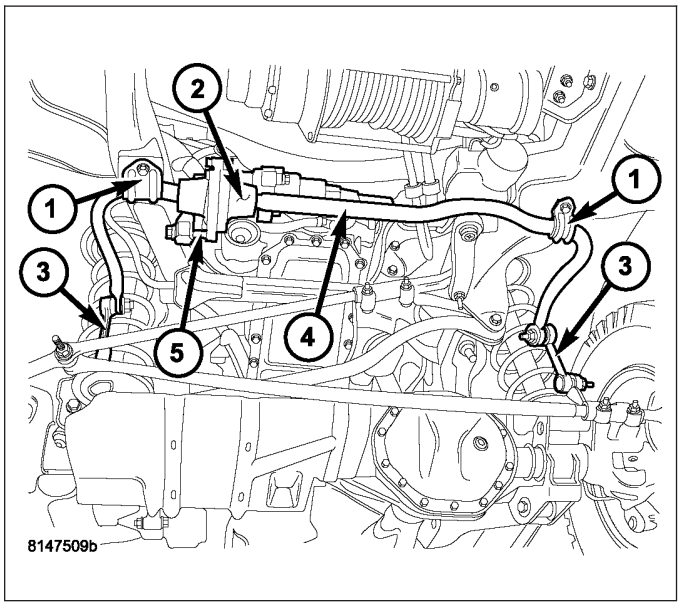

NOTE: The seal must be clean and intact in the electrical connector when reconnecting to the actuator.

3. Reconnect the electronic actuator electrical connector (4) for the disconnecting stabilizer bar (5).

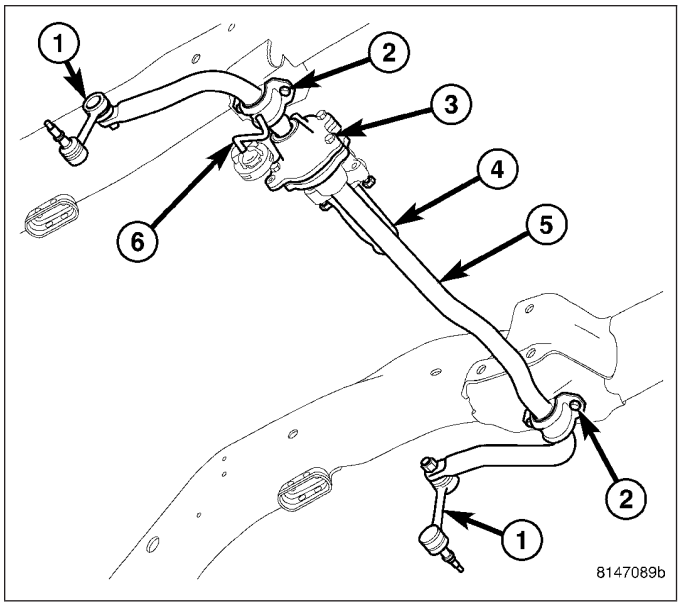

4. Install links (1) and nuts (3) to the stabilizer bar (2). Hold the link shaft with a wrench and tighten the nuts to 149 N·m (110 ft. lbs.).
5. Remove the supports and lower the vehicle.
6. Using a scan tool program the new stabilizer bar to the vechicle.

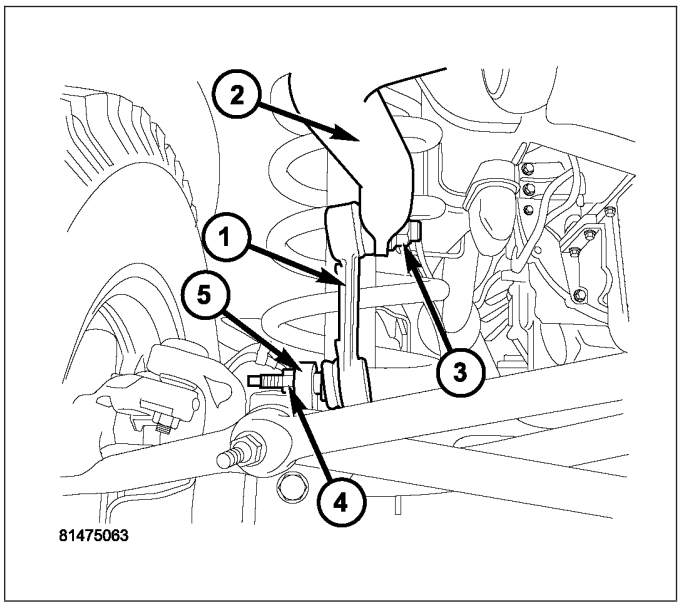

STABILIZER LINK

REMOVAL

STABILIZER LINK

1. Raise and support the vehicle.
2. Hold the stabilizer link (5) shafts with a wrench and remove the link nuts at the stabilizer bar (3).
3. Remove the retainers (1) and grommets (2) from the stabilizer bar links (5).

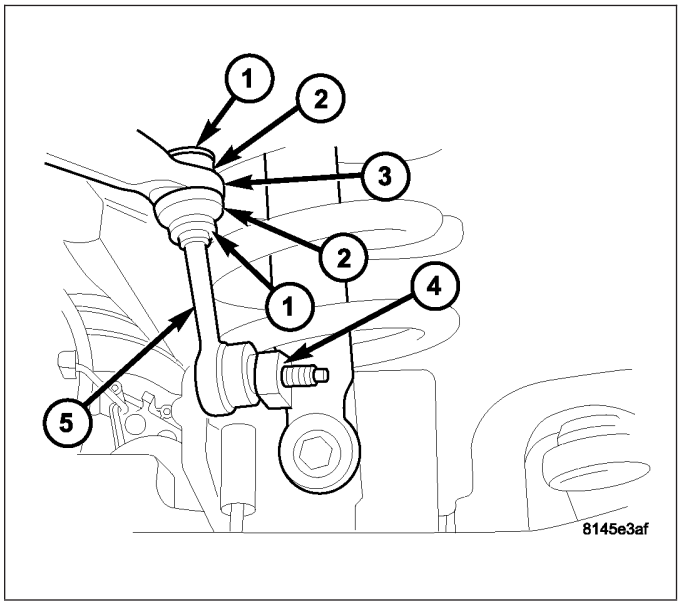

4. Remove the stabilizer bar link nuts from the axle brackets.
5. Remove the links (2) from the axle brackets with Puller C-3894-A (1).

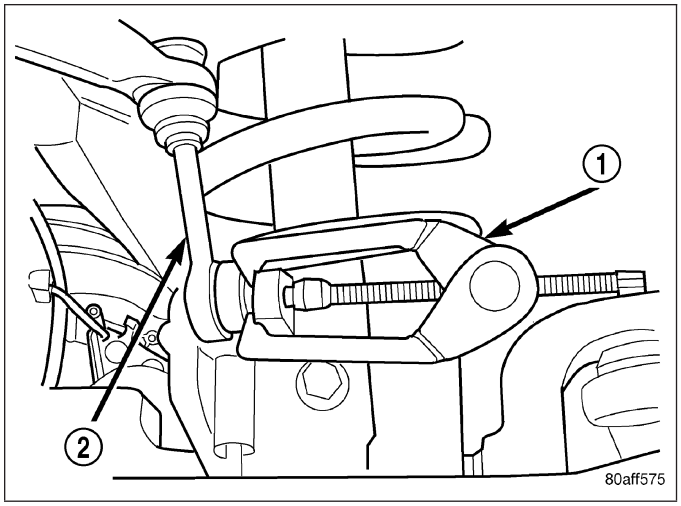

WITH DISCONNECTING STABILIZER BAR

1. Raise and support the vehicle.
2. Hold the stabilizer link (1) shafts with a wrench and remove the link nuts (3) at the stabilizer bar (2).

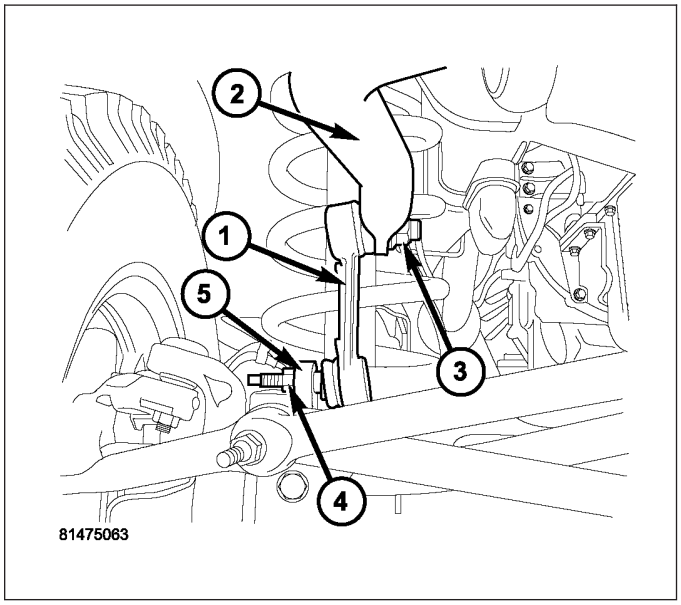

3. Remove the stabilizer bar link nuts from the axle brackets (3).
4. Remove the links (1) from the axle brackets (3) with Puller C-3894-A (2).

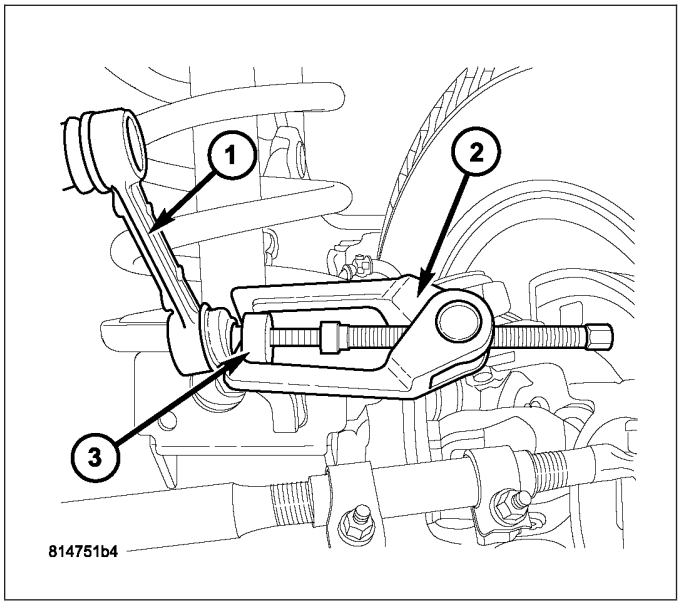

INSTALLATION

STABILIZER LINK

1. Install links (5) to the axle bracket (4) and tighten nut to 71 N·m (52 ft. lbs.).
2. Install links (5), retainers (1), grommets (2) and nuts to the stabilizer bar. Hold the link shaft with a wrench and tighten the nuts to 37 N·m (27 ft. lbs.).
3. Remove the supports and lower the vehicle.

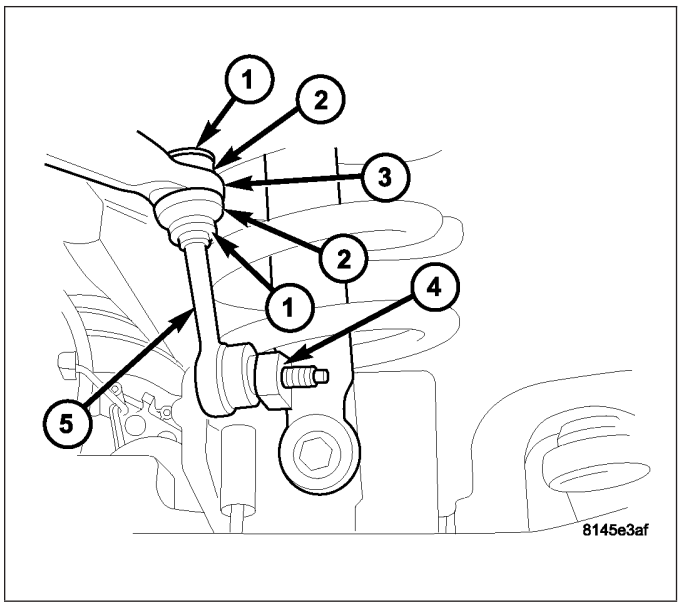

INSTALLATION

1. Install links (1) to the axle bracket (5) and tighten nut (4) to 71 N·m (52 ft. lbs.).
2. Install links (1) and nuts (3) to the stabilizer bar (2). Hold the link shaft with a wrench and tighten the nuts to 149 N·m (110 ft. lbs.).
3. Remove the supports and lower the vehicle.

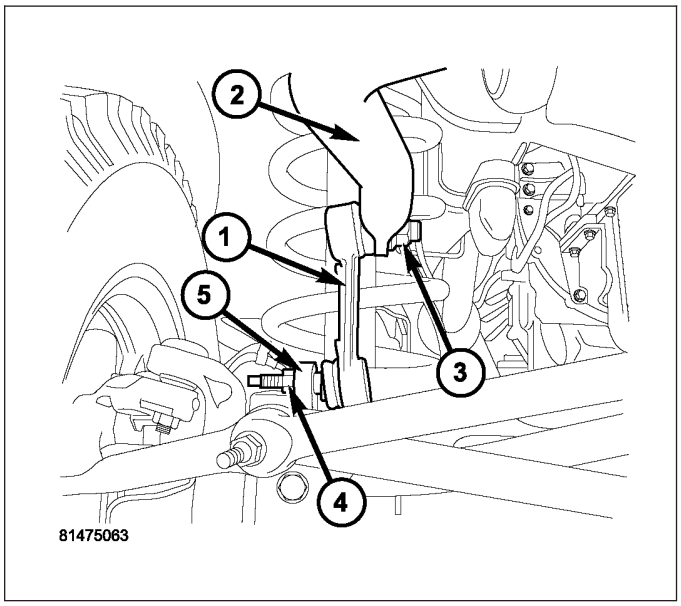

REAR

TABLE OF CONTENTS

page

REAR
DESCRIPTION 95
DIAGNOSIS AND TESTING
SPRING AND SHOCK 96
SPECIFICATIONS
TORQUE CHART 96
BUSHINGS
REMOVAL 97
INSTALLATION 97
JOUNCE BUMPER
REMOVAL 98
INSTALLATION 98
POWER HOP DAMPER - SRT-10 - STANDARD CAB
REMOVAL 99
INSTALLATION 100
STABILIZER BAR - SRT-10 - STANDARD CAB
DESCRIPTION 101
OPERATION 101
REMOVAL 102
INSTALLATION 103
STABILIZER LINK - SRT-10 - STANDARD CAB
REMOVAL 104
INSTALLATION 104
SHOCK
REMOVAL 105
INSTALLATION 105
SPRING
DESCRIPTION
LEAF SPRING 105
LEAF SPRING - SRT-10 106
OPERATION 106
REMOVAL
LEAF SPRING 106
LEAF SPRING - SRT-10 107
INSTALLATION
LEAF SPRING 108
LEAF SPRING - SRT-10 109
AUXILIARY SPRING BUMPERS (3500)
REMOVAL 111
INSTALLATION 111
SPRING TIP INSERTS
REMOVAL 112
INSTALLATION 113

REAR

DESCRIPTION

The rear suspension is comprised of:

- Shock Absorbers
- Jounce Bumpers
- Leaf Springs
- Auxiliary Leaf Spring (3500 series)
- Auxiliary Spring Bumpers (3500 series)
- Drive Axle

CAUTION: A vehicle should always be loaded so the vehicle weight center-line is located immediately forward of the rear axle. Correct vehicle loading provides proper front tire-to-road contact. This results in maximum vehicle handling stability and safety. Incorrect vehicle weight distribution can cause excessive tire tread wear, spring fatigue or failure, and erratic steering.

CAUTION: Suspension components with rubber/urethane bushings (except stabilizer bar) should be tightened with the vehicle at normal ride height. It is important to have the springs supporting the weight of the vehicle when the fasteners are torqued. If springs are not at their normal ride position, vehicle ride comfort could be affected and premature bushing wear may occur.

DIAGNOSIS AND TESTING

SPRING AND SHOCK

A knocking or rattling noise from a shock absorber may be caused by movement between mounting bushings and metal brackets or attaching components. These noises can usually be stopped by tightening the attaching nuts. If the noise persists, inspect for damaged and worn bushings, and attaching components. Repair as necessary if any of these conditions exist.

A squeaking noise from the shock absorber may be caused by the hydraulic valving and may be intermittent. This condition is not repairable and the shock absorber must be replaced.

The shock absorbers are not refillable or adjustable. If a malfunction occurs, the shock absorber must be replaced. To test a shock absorber, hold it in an upright position and force the piston in and out of the cylinder four or five times. The action throughout each stroke should be smooth and even.

The spring eye and shock absorber bushings do not require any type of lubrication. Do not attempt to stop spring bushing noise by lubricating them. Grease and mineral oil-base lubricants will deteriorate the bushing rubber.

If the vehicle is used for severe, off-road operation, the springs should be examined periodically. Check for broken and shifted leafs, loose and missing clips, and broken center bolts. Refer to Spring and Shock Absorber Diagnosis chart for additional information.

SPRING AND SHOCK ABSORBER

CONDITION	POSSIBLE CAUSES	CORRECTION
SPRING SAGS	1. Broken leaf.	1. Replace spring.
	2. Spring fatigue.	2. Replace spring.
SPRING NOISE	1. Loose spring clamp bolts.	1. Tighten to specification.
	2. Worn bushings.	2. Replace bushings.
	3. Worn or missing spring tip inserts.	3. Replace spring tip inserts.
SHOCK NOISE	1. Loose mounting fastener.	1. Tighten to specification.
	2. Worn bushings.	2. Replace shock.
	3. Leaking shock.	3. Replace shock.

SPECIFICATIONS

TORQUE CHART

TORQUE SPECIFICATIONS

DESCRIPTION	N·m	Ft. Lbs.	In. Lbs.
Shock Absorber Lower Nut	135	100	—
Shock Absorber Upper Nut	135	100	—
Power Hop Damper	102	75	—
Spring Clamp U-Bolts Nuts	149	110	—

DESCRIPTION	N·m	Ft. Lbs.	In. Lbs.
Spring Front & Rear Bolt & Nut LD & SRT-10	163	120	—
Spring Front & Rear Bolt & Nut HD	230	170	—
Spring Spring Rear Shackle Nuts LD & SRT-10	163	120	—
Spring Spring Rear Shackle Nuts HD	230	170	—
Stabilizer Bar Retainer to Axle SRT-10	75	55	—
Stabilizer Link to Frame SRT-10	102	75	—
Stabilizer Link to Stabilizer Bar SRT-10	111	82	—
Jounce Bumper Bolts LD & SRT-10	40	30	—
Jounce Bumper Bolts HD	61	45	—
Auxialiary Spring Bumpers	34	25	—

BUSHINGS

REMOVAL

NOTE: When removing the LD front eye bushing be sure to note the orientation of the ″voids″ or holes. The voids need to be in line with the main leaf when installing the new bushing or vehicle ride will degrade.

1. Remove the spring from the vehicle.
2. Make small relief cuts in the flared up end of the bushing metal being careful not to cut the spring. Use a punch to bend the flared bushing metal down for push out.
3. Position the spring eye in a press.
4. Press the bushing out with an appropriate size driver.

INSTALLATION

NOTE: When installing the LD front eye bushing be sure to note the orientation of the ″voids″ or holes. The voids need to be in line with the main leaf when installing the new bushing or vehicle ride will degrade.

1. Press new bushing into the spring eye with an appropriate size driver. The bushing should be centered in the spring eye.
2. Stake the outermetal of the bushing in a minimum of six points to retain the bushing.
3. Install the spring on the vehicle.

JOUNCE BUMPER

REMOVAL

1. Remove the two bolts (1) securing the jounce bumper (2) to the bracket.
2. Remove the jounce bumper (2).

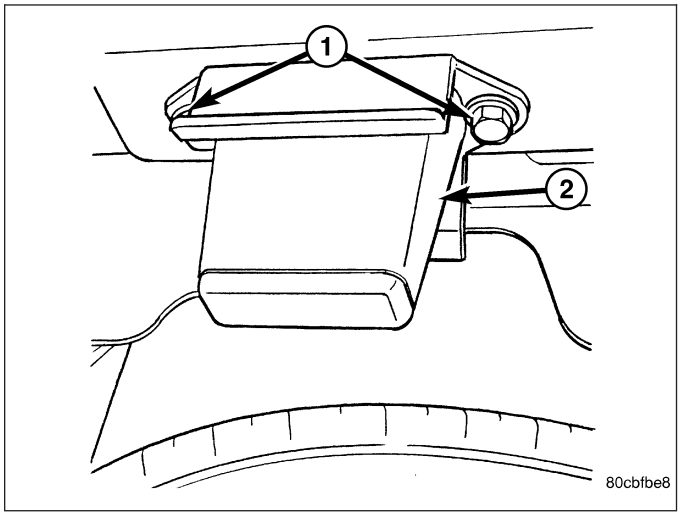

INSTALLATION

1. Install the jounce bumper (2).
2. Install the two bolts (1) securing the jounce bumper (2) to the bracket. Tighten the bolts to 40 N·m (30 ft. lbs.)(LD) or Tighten the bolts to 61 N·m (45 ft. lbs.)(HD).

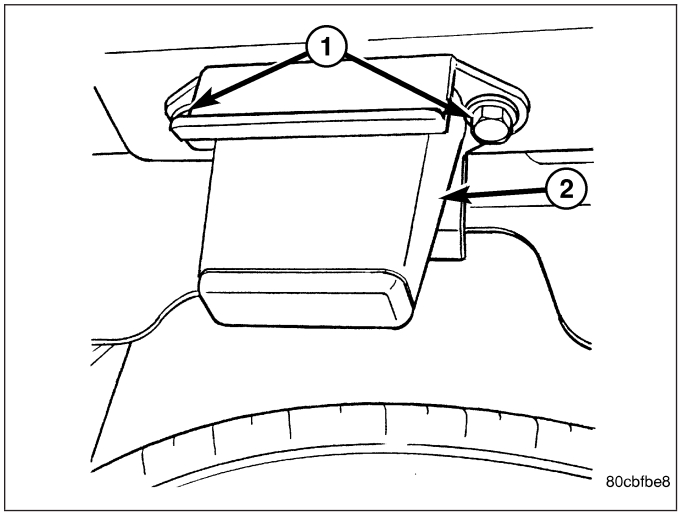

POWER HOP DAMPER - SRT-10 - STANDARD CAB

REMOVAL

1. Raise and support the vehicle.
2. Remove the damper nut and bolt (3) at the axle.

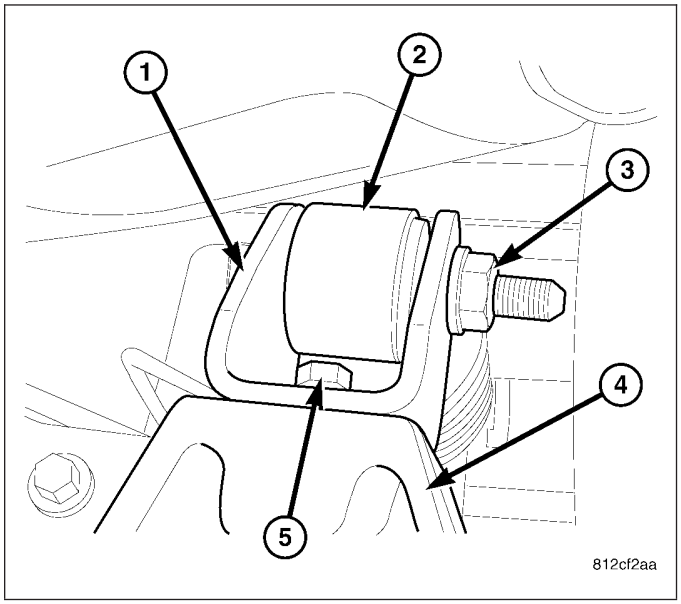

3. Remove the damper nut and bolt (2) at the axle.

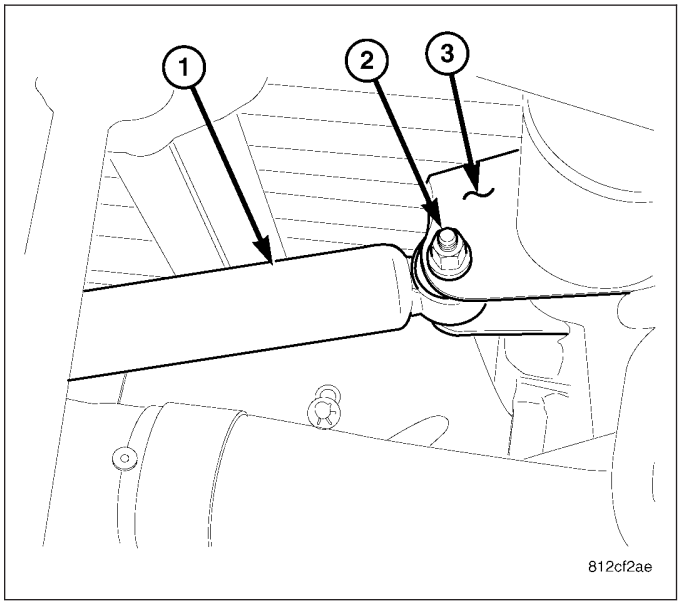

4. Remove the damper bracket (1) from the differential cover (4) if necessary.
5. Remove the from the vehicle.

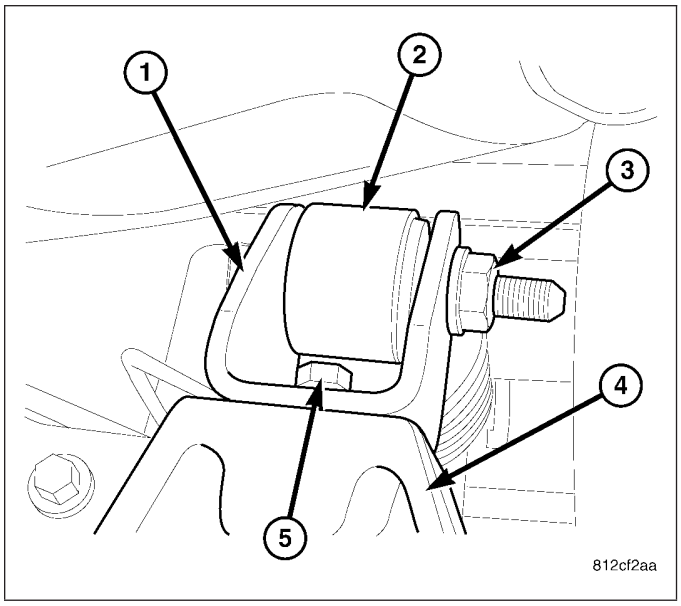

INSTALLATION

1. Install the damper bracket (1) to the rear differential cover (4) if removed. Tighten the bolts (5) to 41N·m (30 ft. lbs.).
2. Compress the damper for easier installation.
3. Install the damper to the mounting brackets (1).
4. Install the damper nut and bolt to the axle.Tighten the bolts to 102N·m (75 ft. lbs.).

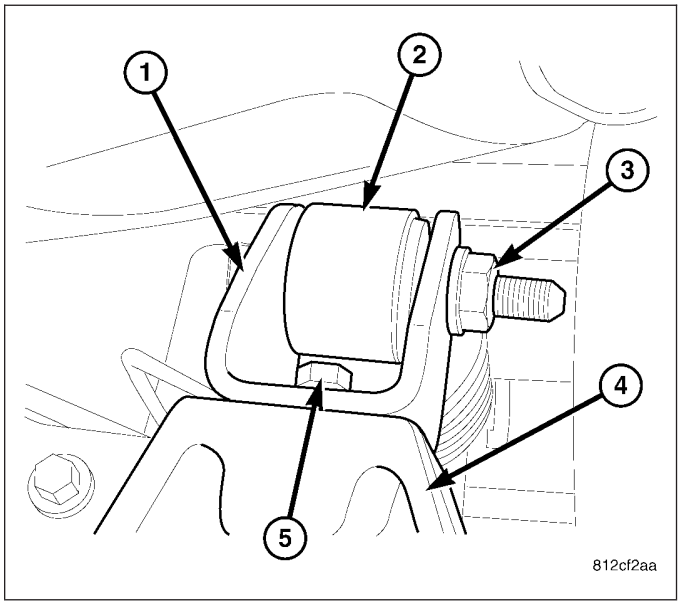

5. Decompress the damper (1).
6. Install the damper nut and bolt (2) to the frame (3). Tighten the bolts to 102N·m (75 ft. lbs.).
7. Lower the vehicle.

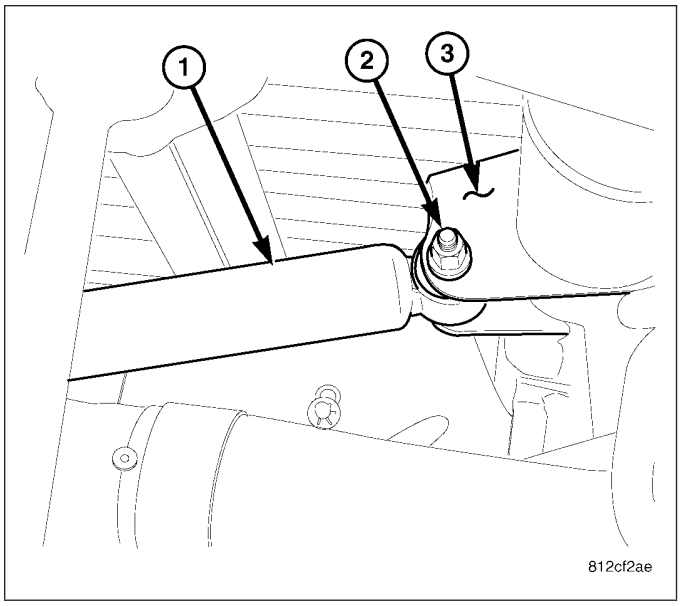

STABILIZER BAR - SRT-10 - STANDARD CAB

DESCRIPTION

The stabilizer bar (3) extends across the underside of the vehicle and is bolted to the top of the axle (2). Links (1) at the end of the bar are bolted to the frame.

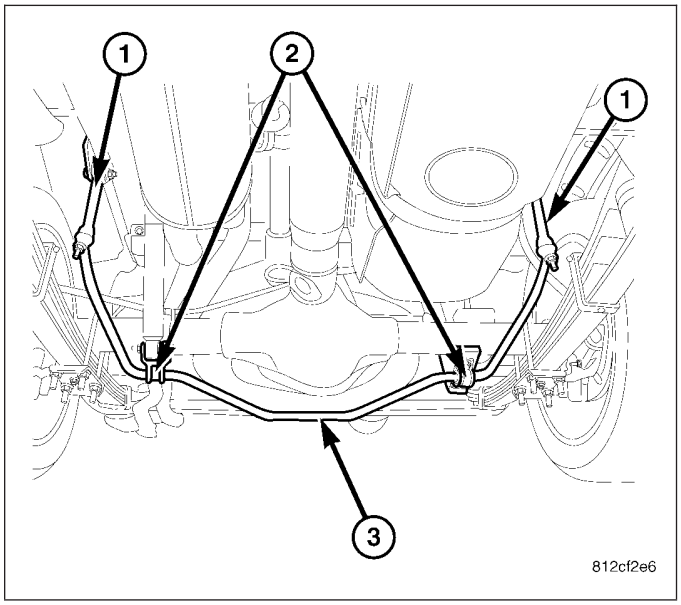

OPERATION

The stabilizer bar is used to minimize vehicle body roll. The spring steel bar helps to control the vehicle body in relationship to the suspension.

REMOVAL

1. Raise and support vehicle.
2. Remove lower links mounting nuts (4).

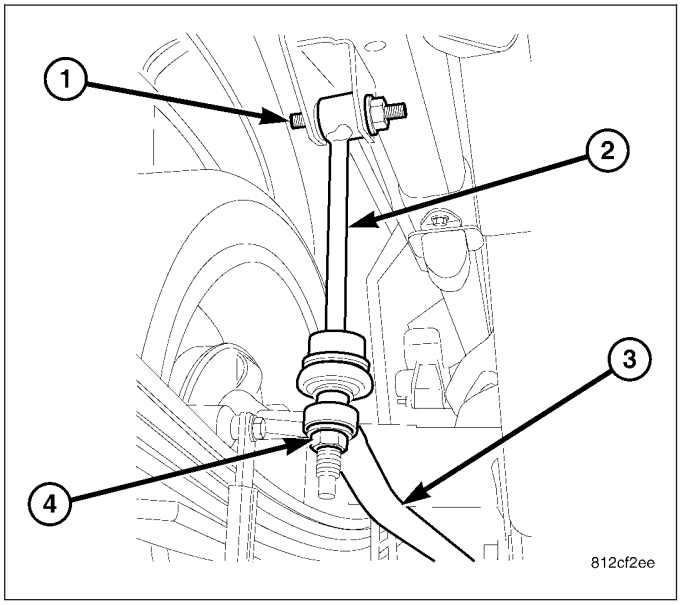

3. Remove stabilizer bar retainer bolts (2) and retainers (3) at the axle.
4. Remove stabilizer bar and remove bushings.

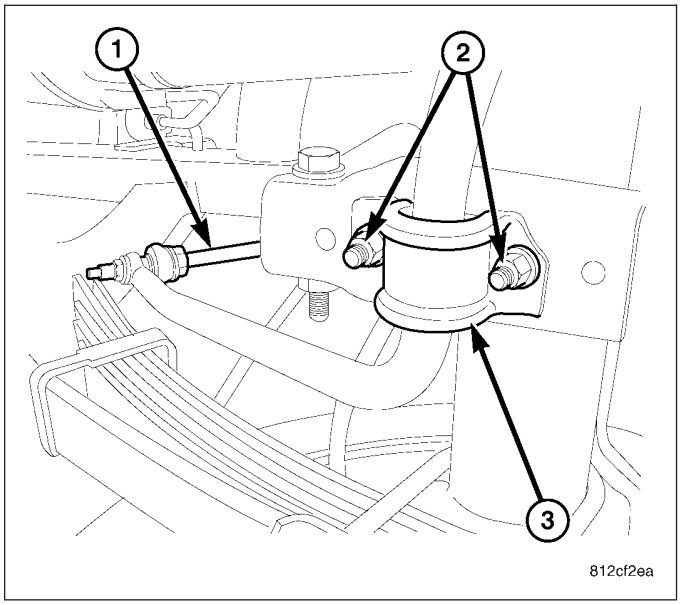

INSTALLATION

1. Install stabilizer bar bushings.
2. Install the stabilizer bar and center it with equal spacing on both sides.
3. Install stabilizer bar retainers (3). Tighten the bolts (2) to 75 N·m (55 ft. lbs.).
4. Install the park brake cable bracket to the retainers (3).

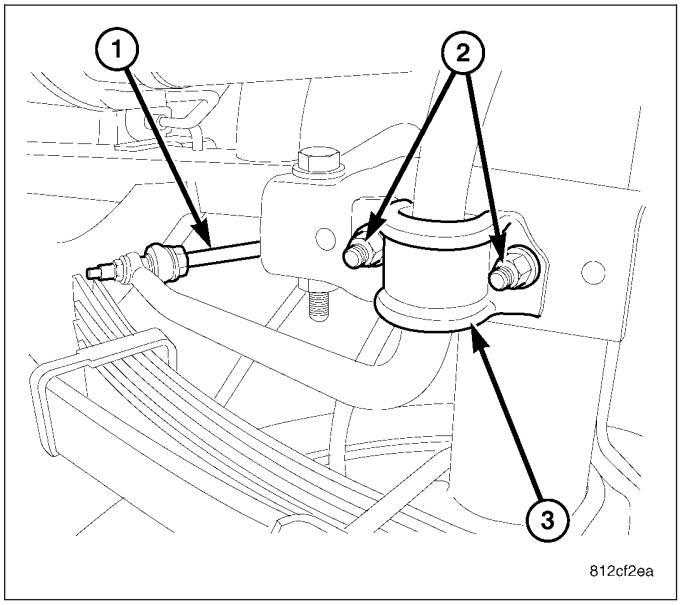

5. Install the links (2) on the stabilizer bar (3). Install mounting bolts and nuts (1&4).
6. Remove support and lower vehicle.
7. Tighten stabilizer link lower nuts (4) to 111 N·m (82 ft. lbs.).

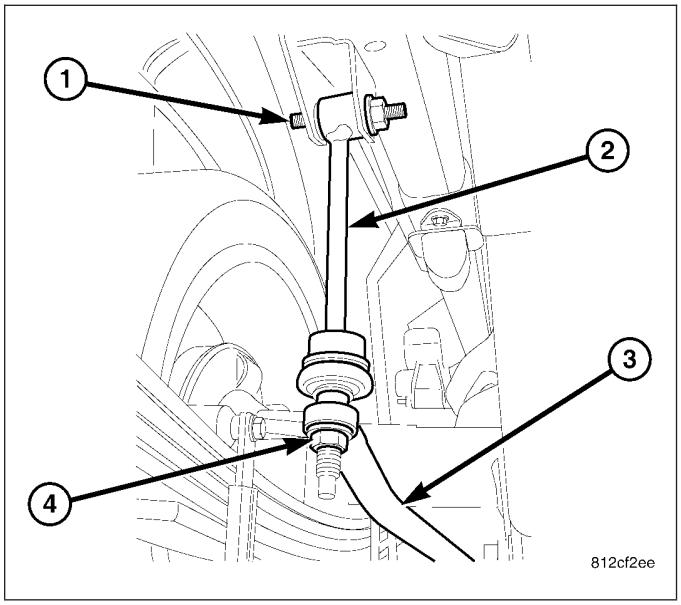

STABILIZER LINK - SRT-10 - STANDARD CAB

REMOVAL

1. Raise and support the vehicle.
2. Remove the rear tire.
3. Support the rear axle with a jack.
4. Remove the upper link nut and bolt (1) at the frame.
5. Remove the lower link nut (4) at the stabilizer bar (3).
6. Remove stabilizer link (2).

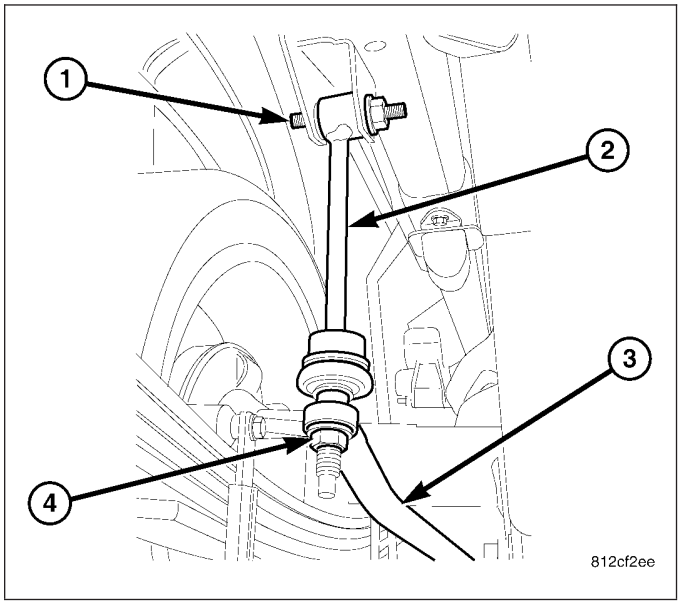

INSTALLATION

1. Install the upper bolt and nut (1) for the stabilizer link (2) to the frame.Tighten to 1021 N·m (75 ft. lbs.).
2. Install the stabilizer link (2) to the stabilizer bar (3).
3. Install the nut and tighten to 111 N·m (82 ft. lbs.).
4. Remove the jack and lower the vehicle.

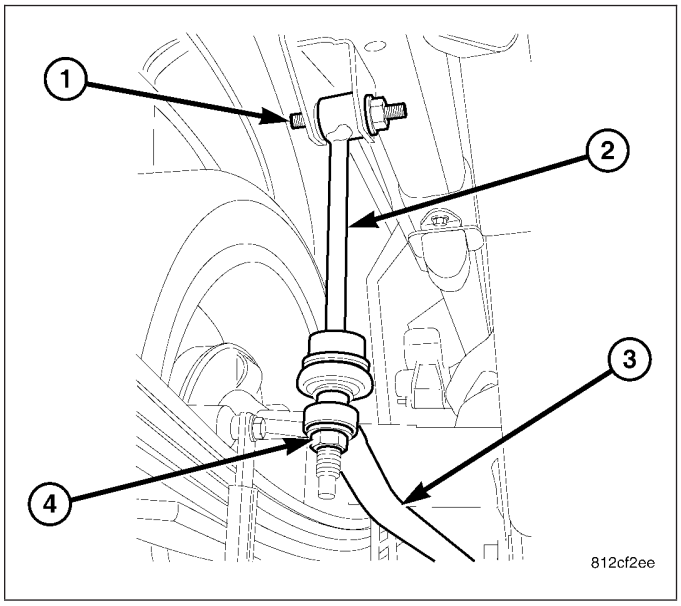

SHOCK

REMOVAL

1. Raise vehicle and support the axle.

NOTE: The rear upper shock attachment uses a flag nut. Do not use an air tool to remove the bolt, the flag may rotate into the bottom of the bed and cause damage. Use a wrench to hold the nut when loosening.

2. Remove the upper shock bolt and nut (1).
3. Remove the lower shock bolt and nut.
4. Remove the rear shock absorber (3) from the vehicle.

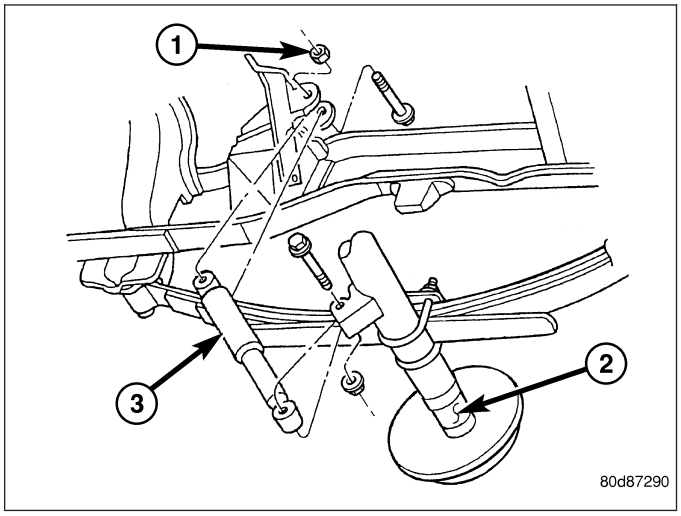

INSTALLATION

1. Position the shock absorber (3) in the brackets.
2. Install the bolts through the brackets and the shock. Install the flag nut (1) on the top bolt and nut on lower bolt.
3. Tighten the upper and lower bolt/nuts Tighten to 135 N.m (100 ft. lbs.)
4. Remove the support and lower the vehicle.

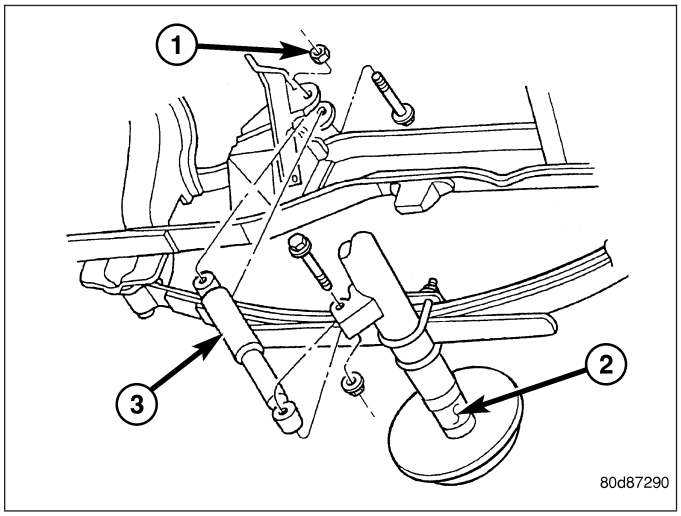

SPRING

DESCRIPTION

LEAF SPRING

The rear suspension system uses a multi-leaf springs and a solid drive axle. The forward end of the springs are mounted to the body rail hangers through rubber bushings. The rearward end of the springs are attached to the body by the use of shackles. The spring and shackles use rubber bushings.

LEAF SPRING - SRT-10

The rear suspension system uses multi-leaf springs with an added leaf spring (limiter Spring)(3) to act as a traction bar designed into the spring to limit the amount of travel in the spring on hard accelerations. The forward end of the springs are mounted to the body rail hangers through rubber bushings (2). The rearward end of the springs are attached to the body by the use of shackles. The spring and shackles use rubber bushings (1).

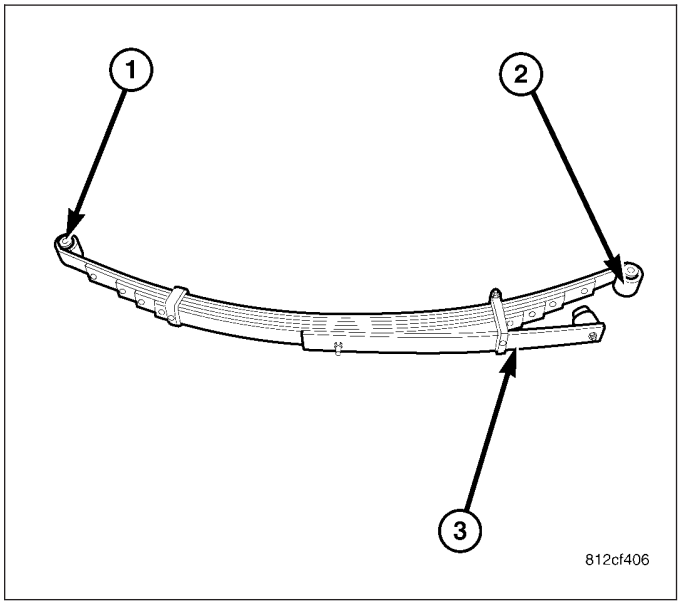

OPERATION

The springs control ride quality and maintain vehicle ride height. The shackles allow the springs to change their length as the vehicle moves over various road conditions.

REMOVAL

LEAF SPRING

1. Raise and support the vehicle.
2. Support the axle with a suitable holding fixture.
3. Remove the nuts, spring clamp bolts (5) and the plate that attach the spring (1) to the axle.
4. Remove the nuts and bolts from the spring front and rear shackle (6).
5. Remove the spring (1) from the vehicle.

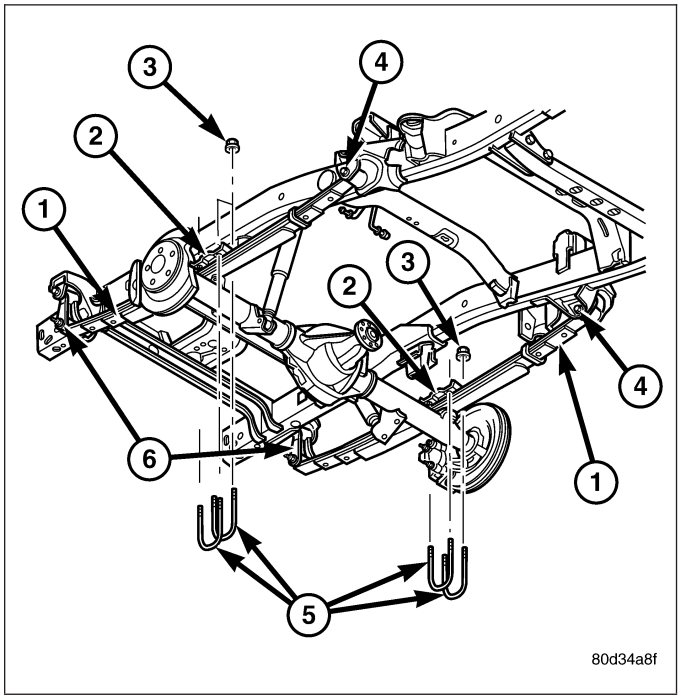

LEAF SPRING - SRT-10

1. Raise and support the vehicle.
2. Support the axle with a suitable holding fixture.
3. Remove the nuts (2), spring clamp bolts (1) and the plate that attach the spring to the axle.

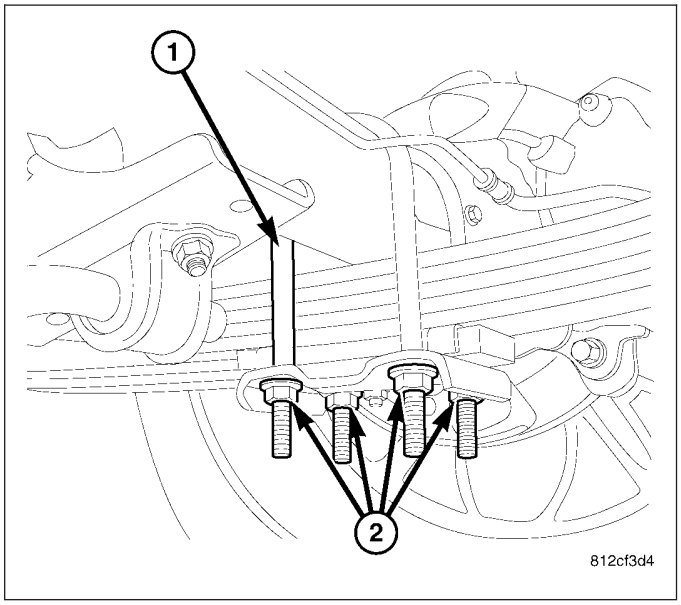

4. Remove the nuts and bolts from the spring front and rear shackle (1).
5. Remove the spring (2) from the vehicle.

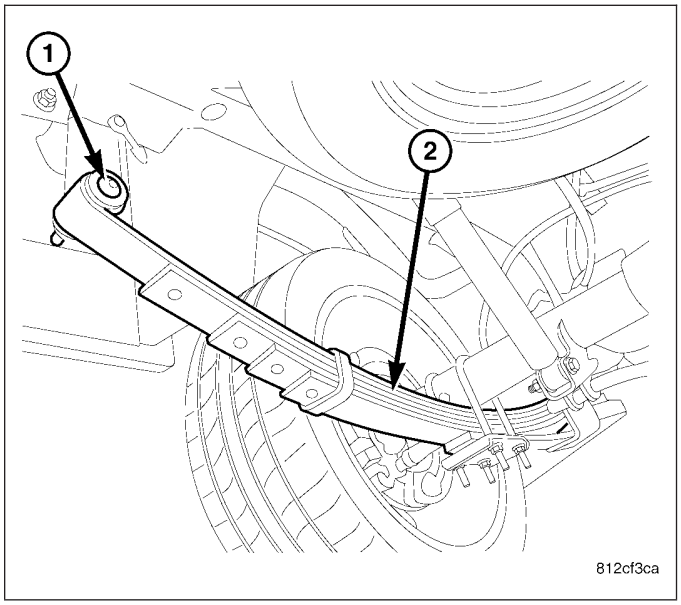

INSTALLATION

LEAF SPRING

1. Position spring (1) on axle shaft tube so spring center bolt is inserted into the locating hole in the axle tube.
2. Align the front of the spring with the bolt hole in the front bracket. Install the eye pivot bolt and nut (4).
3. Align the rear of the spring into the shackle (6) and install the bolt and nut.
4. Tighten the spring front and rear eye pivot bolt snug do not torque.

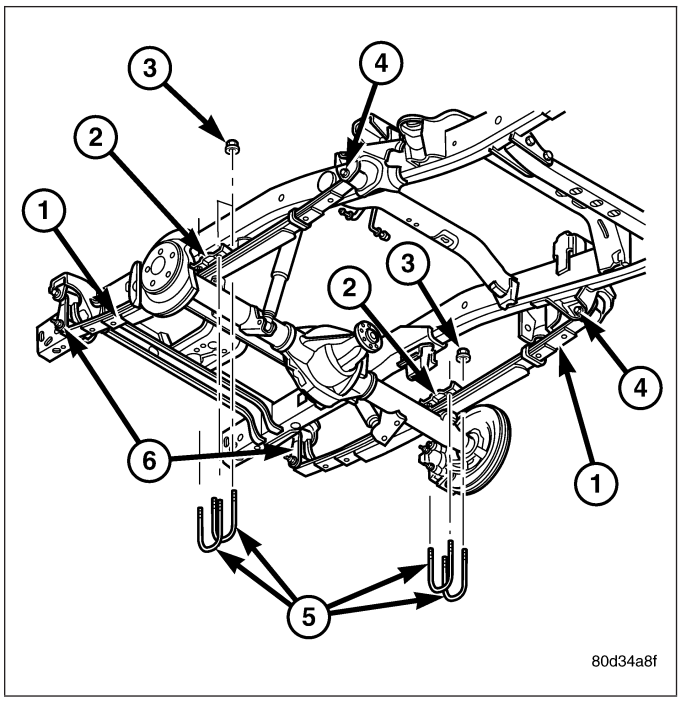

5. Install the spring clamp bolts (5), plate (2) and the retaining nuts (3).
6. Remove the holding fixture for the rear axle.
7. Remove the supports and lower the vehicle so that the weight is being supported by the tires.
8. Tighten the spring clamp retaining nuts (3) to 149 N·m (110 ft. lbs.).
9. Tighten the spring front and rear pivot bolt nuts to 163 N·m (120 ft. lbs.)(LD) or 230 N·m (170 ft. lbs.)(HD).

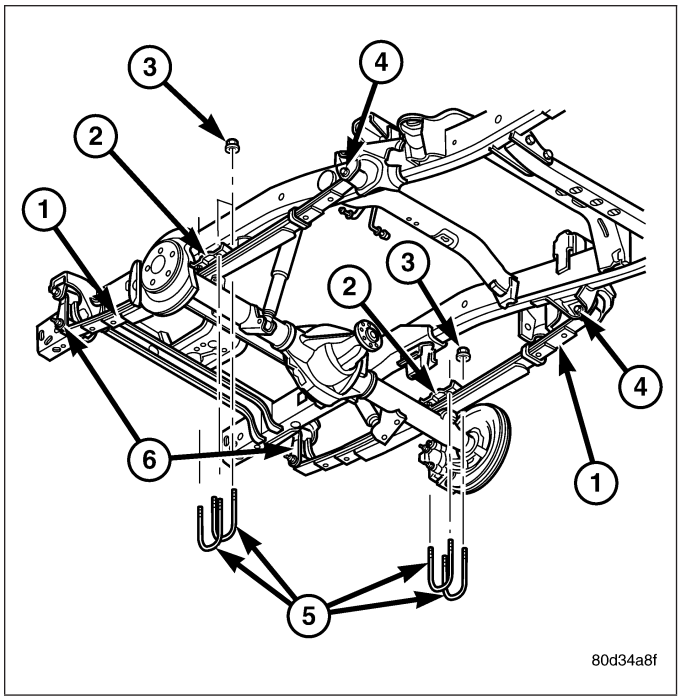

LEAF SPRING - SRT-10

1. Position spring on axle shaft tube so spring center bolt is inserted into the locating hole in the axle tube (2).

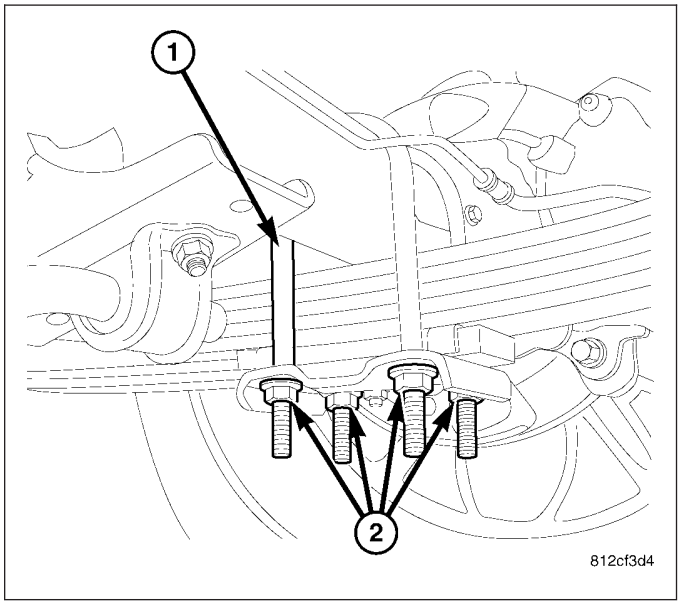

2. Align the front of the spring with the bolt hole in the front bracket. Install the eye pivot bolt and nut.
3. Align the rear of the spring into the shackle and install the bolt and nut (1).
4. Tighten the spring front and rear eye pivot bolt snug do not torque.

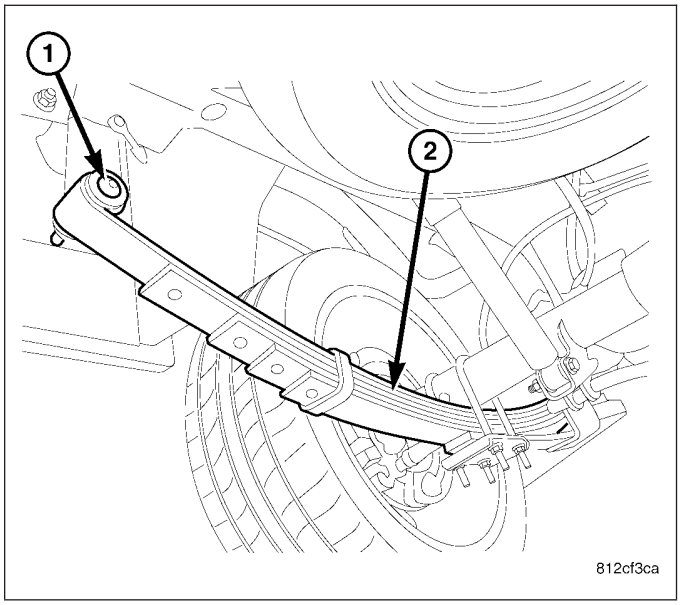

5. Install the spring clamp bolts (1), plate and the retaining nuts (2).
6. Remove the holding fixture for the rear axle.
7. Remove the supports and lower the vehicle so that the weight is being supported by the tires.
8. Tighten the spring clamp retaining nuts (2) to 149 N·m (110 ft. lbs.).

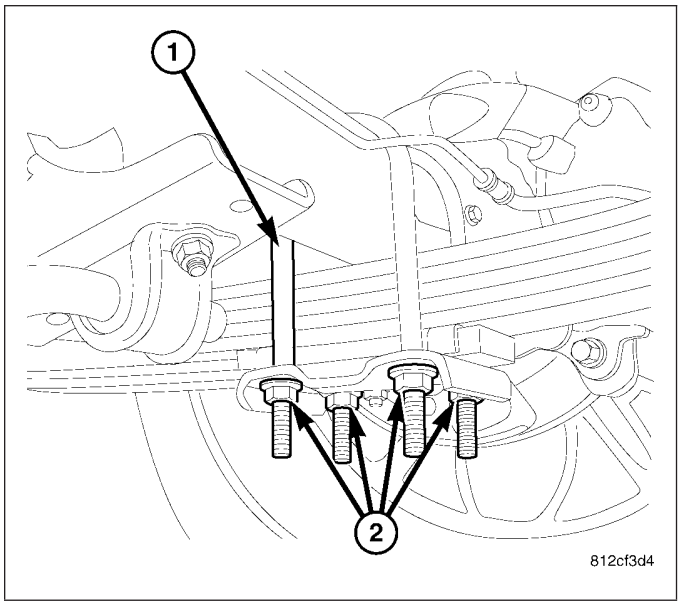

9. Tighten the spring front and rear pivot bolt nuts to 163 N·m (120 ft. lbs.) (1).

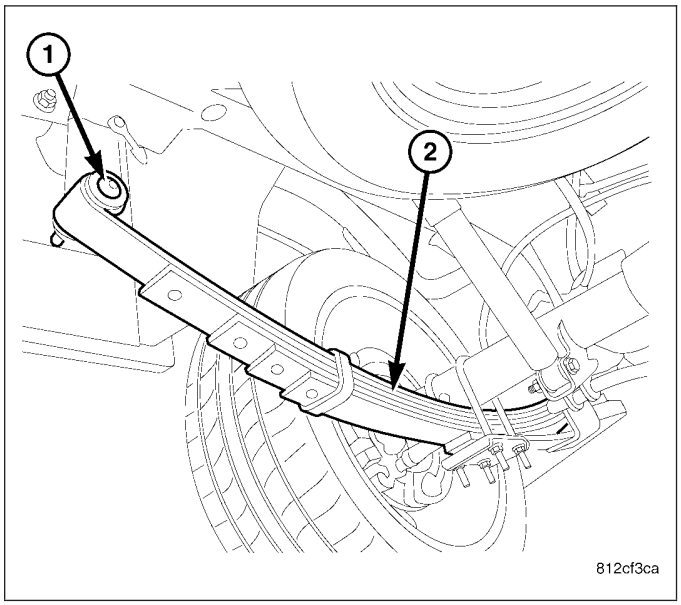

AUXILIARY SPRING BUMPERS (3500)

REMOVAL

1. Remove the nut (1) securing the auxiliary spring bumper (2) to the bracket.
2. Remove the auxiliary spring bumper (2).

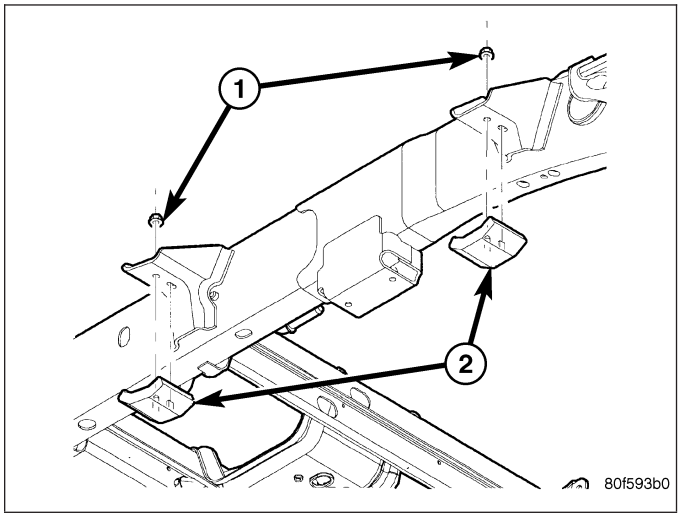

INSTALLATION

1. Install the auxiliary spring bumper (2).
2. Install the nut (1) securing the auxiliary spring bumper (2) to the bracket. Tighten the nut to 25 N·m (34 ft. lbs.).

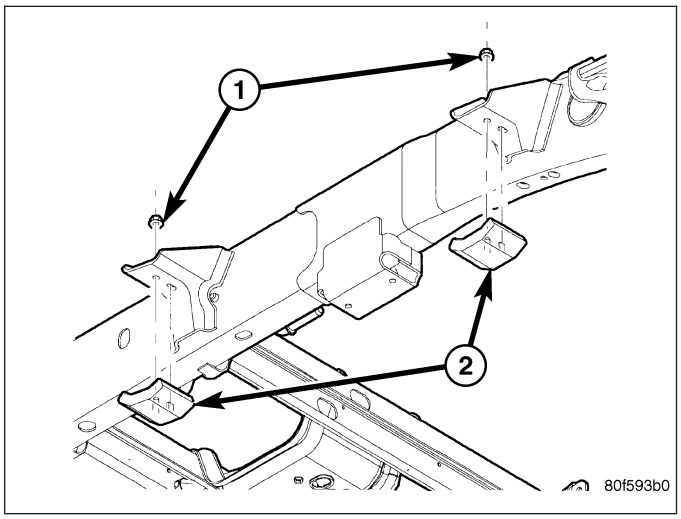

SPRING TIP INSERTS

REMOVAL

1. Raise and support the vehicle.
2. Remove both rear tireand wheel assemblies
3. Position a large C-Clamp (3) adjacent to the spring clinch clip (1) and clamp the leaves of the spring together

CAUTION: When working on the front leaf spring clinch clamps finish the front before starting on the rear to prevent personal injury.

4. Use an appropriate pry bar (2) to bend open the spring clinch clip (1). If necessary, remove the existing spring clinch clip isolators.

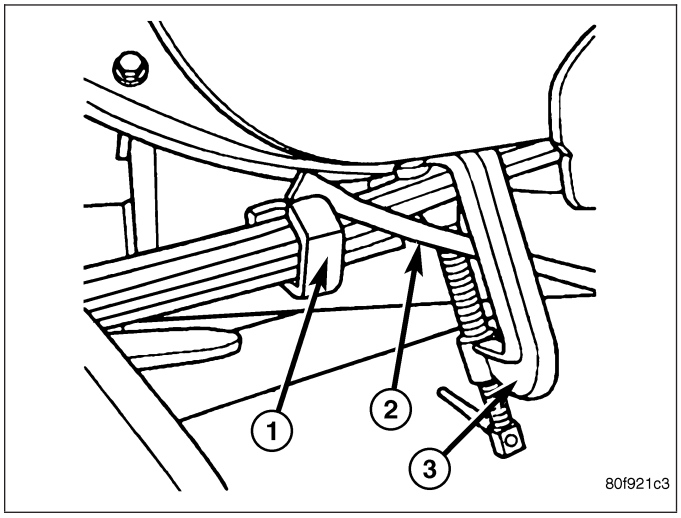

5. Use the pry bar (2) to spread apart the leaf (1). The clearance between the leaves should be enough to remove the old liner (if necessary) and install the replacement liner.

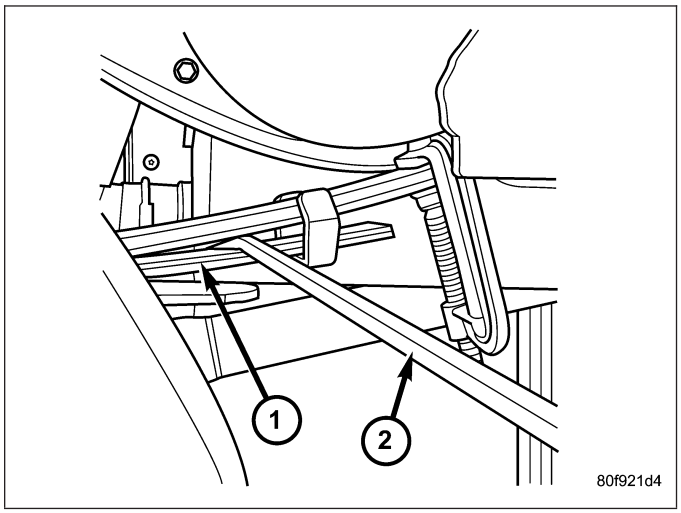

6. If necessary, remove the old spring tip liner (1).

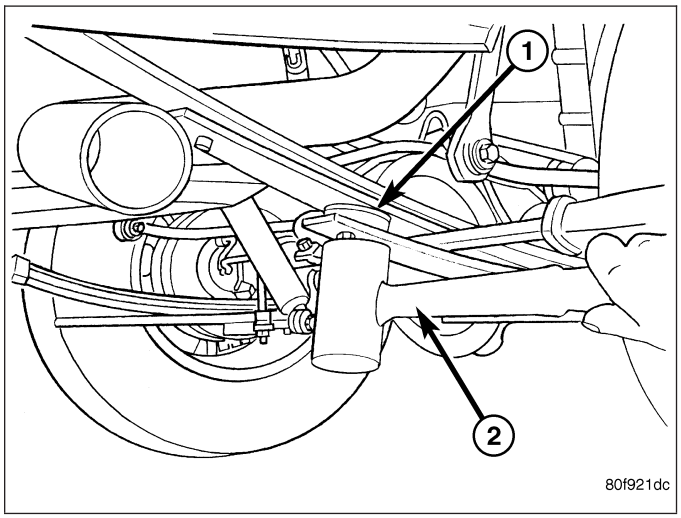

INSTALLATION

1. With the prybar still inserted between the leaves, install a new spring tip liner onto the leaf.
2. Firmly seat the spring tip liner onto the leaf. A C-Clamp (1) can be used to compress the adjacent leaves together which will seat the liner retaining pin into the hole.

NOTE: THE SPRING TIP LINER IS PROPERLY INSTALLED WHEN THE RETAINING PIN IS POINTING TOWARD THE PAVEMENT AND THE WEAR PAD IS CONTACTING THE LEAF SPRING.

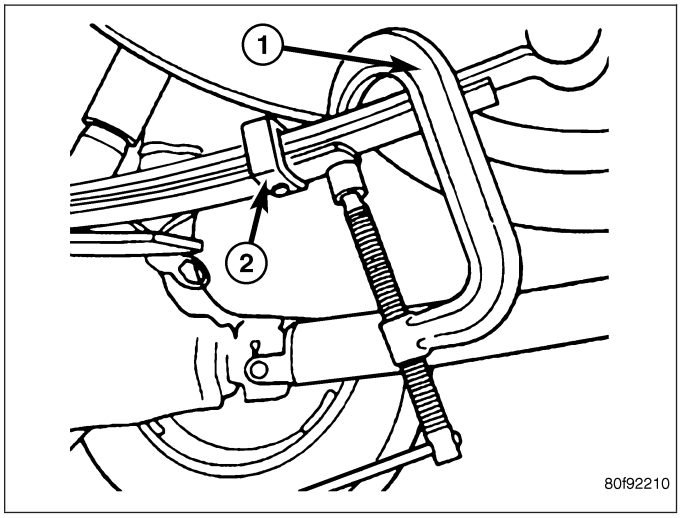

3. Apply a small amount of lubricant oil onto the tip liner wear pad.
4. Install all the spring tip liners.
5. Place one spring clinch clip isolator (1) onto the outboard side of the spring clinch clip and one isolator on the inboard side of the spring clinch clip.

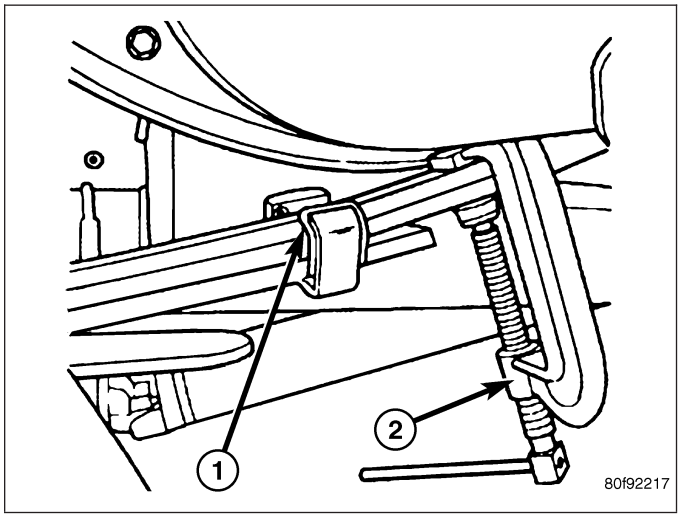

6. Using large adjustable pliers (2) , close the spring clinch clip (1) until the isolator contacts the leaf spring.

CAUTION: DO NOT USE A HAMMER TO CLOSE THE SPRING CLINCH CLIP. DAMAGE TO THE ISOLATOR MAY RESULT.

7. Use an appropriate pry bar to bend open the spring clinch clip. If necessary, remove the existing spring clinch clip isolators.
8. Repeat procedure for the other side of the vehicle.
9. Iinstall the tire wheel assemblies.
10. Lower the vehicle.

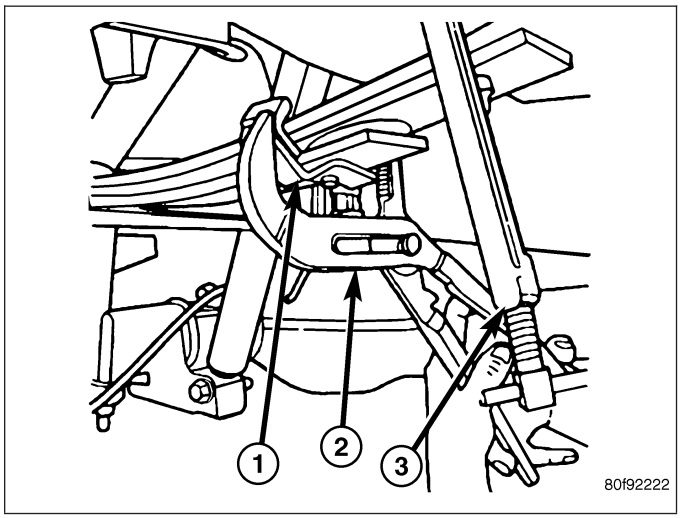

DIFFERENTIAL & DRIVELINE

TABLE OF CONTENTS

page

DIFFERENTIAL & DRIVELINE - ELECTRICAL DIAGNOSTICS 1

DIFFERENTIAL & DRIVELINE - SERVICE INFORMATION 98

DIFFERENTIAL & DRIVELINE - ELECTRICAL DIAGNOSTICS

TABLE OF CONTENTS

page

DIFFERENTIAL & DRIVELINE - ELECTRICAL DIAGNOSTICS
DIAGNOSIS AND TESTING
C143A - DIFFERENTIAL/LOCKER SELECT SWITCH PERFORMANCE 2
C143B-DIFFERENTIAL/LOCKER SELECT SWITCH CIRCUIT LOW 6
C143C-DIFFERENTIAL/LOCKER SELECT SWITCH CIRCUIT HIGH 10
C1418–FRONT DIFFERENTIAL CONTROL CIRCUIT HIGH 14
C1419–FRONT DIFFERENTIAL CONTROL CIRCUIT OPEN 18
C141E–REAR DIFFERENTIAL CONTROL CIRCUIT HIGH 21
C141F–REAR DIFFERENTIAL CONTROL CIRCUIT OPEN 25
C1446-FRONT DIFFERENTIAL RETURN CIRCUIT LOW 28
C1447-FRONT DIFFERENTIAL RETURN CIRCUIT HIGH 31
C144A-REAR DIFFERENTIAL RETURN CIRCUIT LOW 35
C144B-REAR DIFFERENTIAL RETURN CIRCUIT HIGH 38
C144E-FRONT DIFFERENTIAL POSITION SENSOR PERFORMANCE 42

page

C1450-FRONT DIFFERENTIAL POSITION SENSOR CIRCUIT HIGH 46
C144F-FRONT DIFFERENTIAL POSITION SENSOR LOW 50
C1452-REAR DIFFERENTIAL POSITION SENSOR PERFORMANCE 53
C1453-REAR DIFFERENTIAL POSITION SENSOR LOW 57
C1454-REAR DIFFERENTIAL POSITION SENSOR CIRCUIT HIGH 60
C2111- DIFFERENTIAL POSITION SENSOR SUPPLY VOLTAGE CIRCUIT LOW 64
C2112-DIFFERENTIAL POSITION SENSOR SUPPLY VOLTAGE CIRCUIT HIGH 68
C230F-LOCKER/DIFFERENTIAL INDICATOR SUPPLY CIRCUIT PREFORMANCE 72
C2310-STABILIZER/DIFFERENTIAL INDICATOR SUPPLY CIRCUIT LOW 76
C2311-STABILIZER/DIFFERENTIAL INDICATOR SUPPLY CIRCUIT HIGH 80
C2314-DIFFERENTIAL INDICATOR CONTROL CIRCUIT 85
CHECKING FRONT LOCKER SOLENOID OPERATION 89
CHECKING REAR LOCKER SOLENOID OPERATION 93
FDCM VERIFICATION TEST 97

DIFFERENTIAL & DRIVELINE - ELECTRICAL DIAGNOSTICS

DIAGNOSIS AND TESTING

C143A - DIFFERENTIAL/LOCKER SELECT SWITCH PERFORMANCE

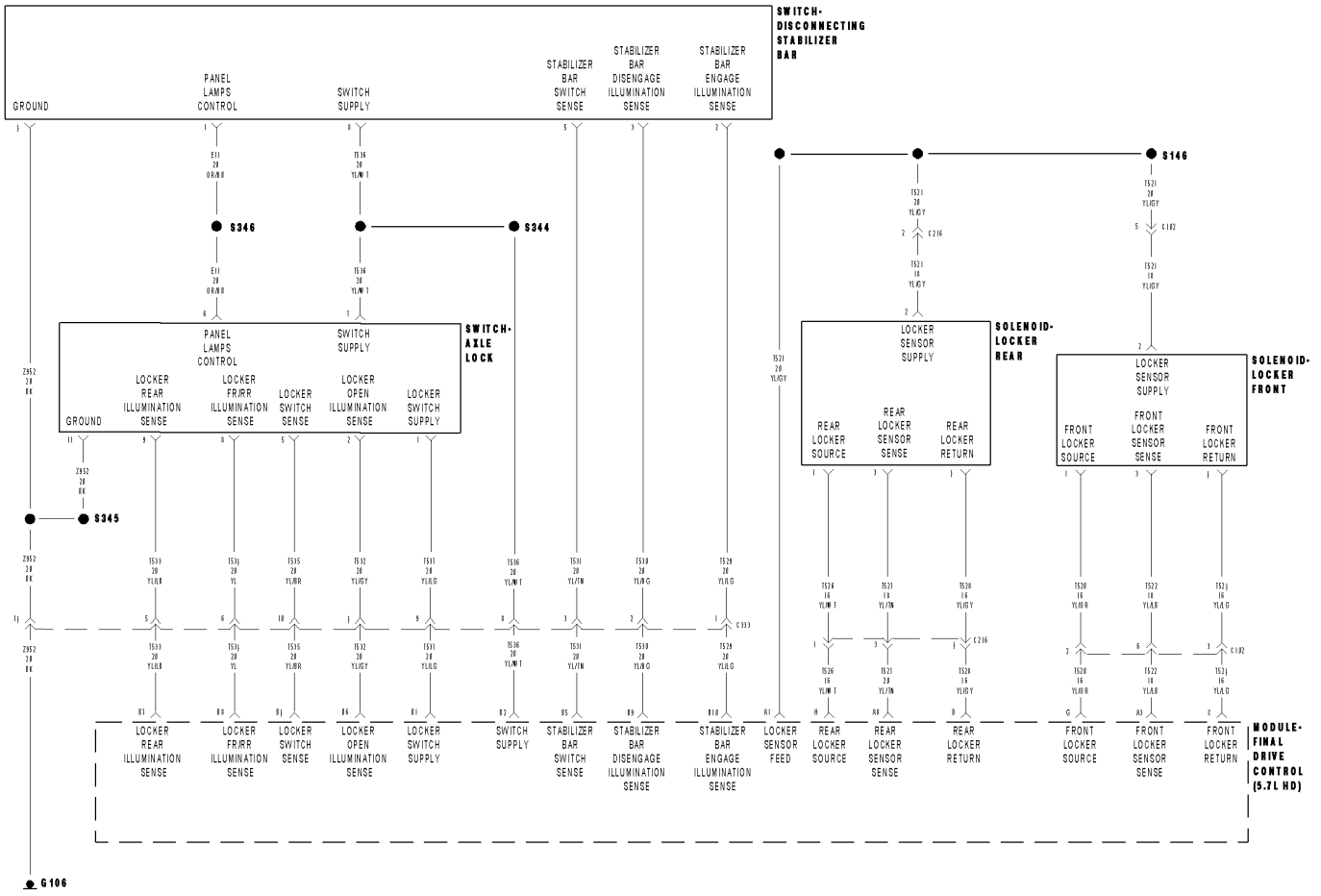

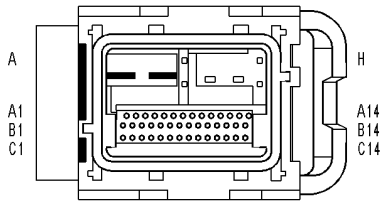

MODULE-FINAL DRIVE CONTROL (5.7L HD)

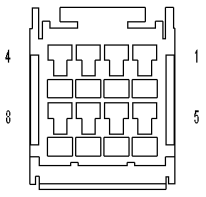

SWITCH-DISCONNECTING STABILZER BAR

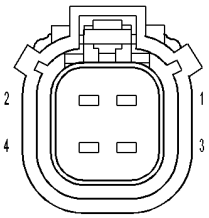

SOLENOID-LOCKER REAR

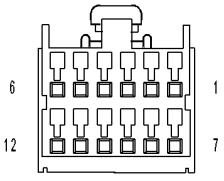

SWITCH-AXLE LOCK

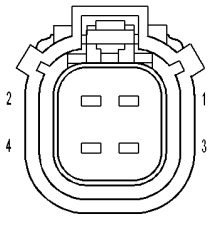

SOLENIOD-LOCKER FRONT

81459daf

C143A - DIFFERENTIAL/LOCKER SELECT SWITCH PERFORMANCE (CONTINUED)

For a complete wiring diagram **Refer to Section 8W**

- **When Monitored:**
  Ignition on.
- **Set Condition:**
  During switch operation, the FDCM senses the Axle Locker Switch resistance is out of specification.

Possible Causes
SWITCH INTERMITTENT
ALXE LOCKER SWITCH
(T537) LOCKER SWITCH SUPPLY CIRCUIT
(T535) LOCKER SWITCH SENSE CIRCUIT OPEN/HIGH RESISTANCE
FDCM

1. DTC ACTIVE

CAUTION: Before removing the FDCM harness connector, clean the connector and locking cam area of dirt and debris. Failure to do so can result in the connector being jammed or damage to the locking cams on the harness connector or module. Do not force the assist arm when releasing or installing the harness connector.

Turn the ignition on, engine not running

With the DRBIII®, read FDCM DTC(s).

Is the DTC active at this time?

Yes >> Go To 2

No >> Go To 5

---

2. AXLE LOCKER SWITCH OPERATION

NOTE: Before continuing with the below diagnostic test, ensure the FDCM harness connector seal is installed correctly. Inspect the terminals on both harness connector and the module for damage. Failure to do so can result in misdiagnoses of the system.

Turn the ignition off.

Disconnect the Axle Locker Switch harness connector.

Remove the Axle Locker Switch.

Measure the resistance on the Axle Locker Switch between the Locker Switch Supply terminal and the Locker Switch Sense terminal.

The resistance must read as follows for each position of the switch.

- **UNLOCK: 5454 ohms +/- 5%**
- **RR: 1940 ohms +/- 5%**
- **FR/RR: 1075 ohms +/- 5%**

Does the ohmmeter read correctly for each position of the Axle Locker Switch

Yes >> Go To 3

No >> Replace the Axle Locker Switch.
Perform FDCM VERIFICATION TEST.

C143A - DIFFERENTIAL/LOCKER SELECT SWITCH PERFORMANCE (CONTINUED)

3. (T535) LOCKER SWITCH SENSE CIRCUIT OPEN

Disconnect the FDCM harness connector.

Measure the resistance of the (T535) Locker Switch Sense circuit between the Axle Locker Switch and the FDCM harness connector.

Is the resistance below 5.0 ohms?

Yes >> Go To 4

No >> Repair the open or high resistance in the (T535) Locker Switch Sense circuit.
Perform FDCM VERIFICATION TEST.

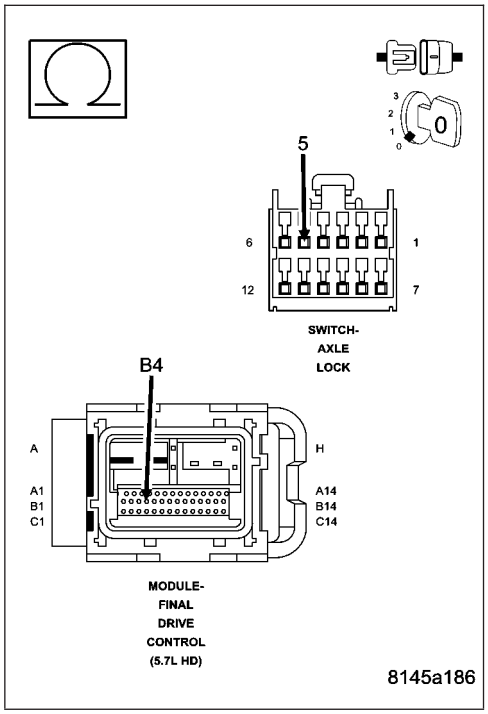

4. (537) LOCKER SWITCH SUPPLY CIRCUIT OPEN

Measure the resistance of the (T537) Locker Switch Supply circuit between the Axle Locker Switch and the FDCM harness connector.

Is the resistance below 5.0 ohms?

Yes >> Replace the FDCM in accordance with the Service Information
Perform FDCM VERIFICATION TEST.

No >> Repair the open or high resistance in the (T537) Locker Switch Supply circuit.
Perform FDCM VERIFICATION TEST.

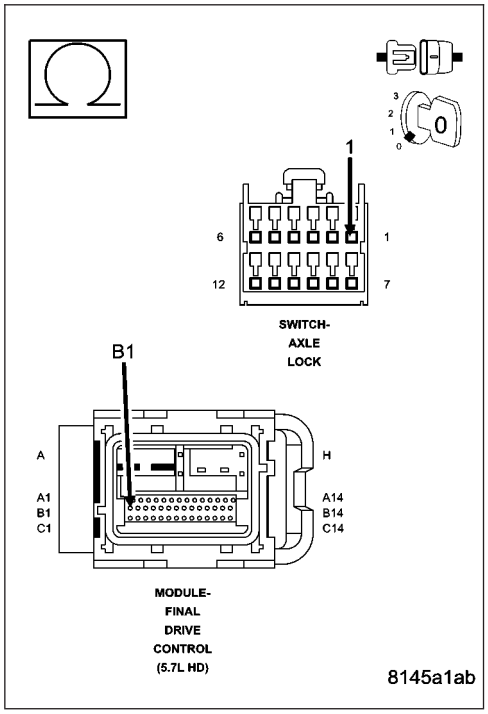

C143A - DIFFERENTIAL/LOCKER SELECT SWITCH PERFORMANCE (CONTINUED)

5. INTERMITTENT WIRING AND CONNECTORS

The conditions necessary to set this DTC are not present at this time.

Using the schematics as a guide, inspect the wiring and connectors specific to this circuit.

Wiggle test the wiring harness and connectors while checking for shorted and open circuits.

Using the DRBIII®, monitor the data related to this circuit while performing the wiggle test. Look for the data to change or for the DTC to reset.

While monitoring the TRAC State on the DRBIII®, move the switch to each position. The DRBIII® display must match the position on the actual switch.

Were there any problems found?

Yes >> Repair as necessary.
Perform TRANSFER CASE VERIFICATION TEST.

No >> Test Complete.

C143B-DIFFERENTIAL/LOCKER SELECT SWITCH CIRCUIT LOW

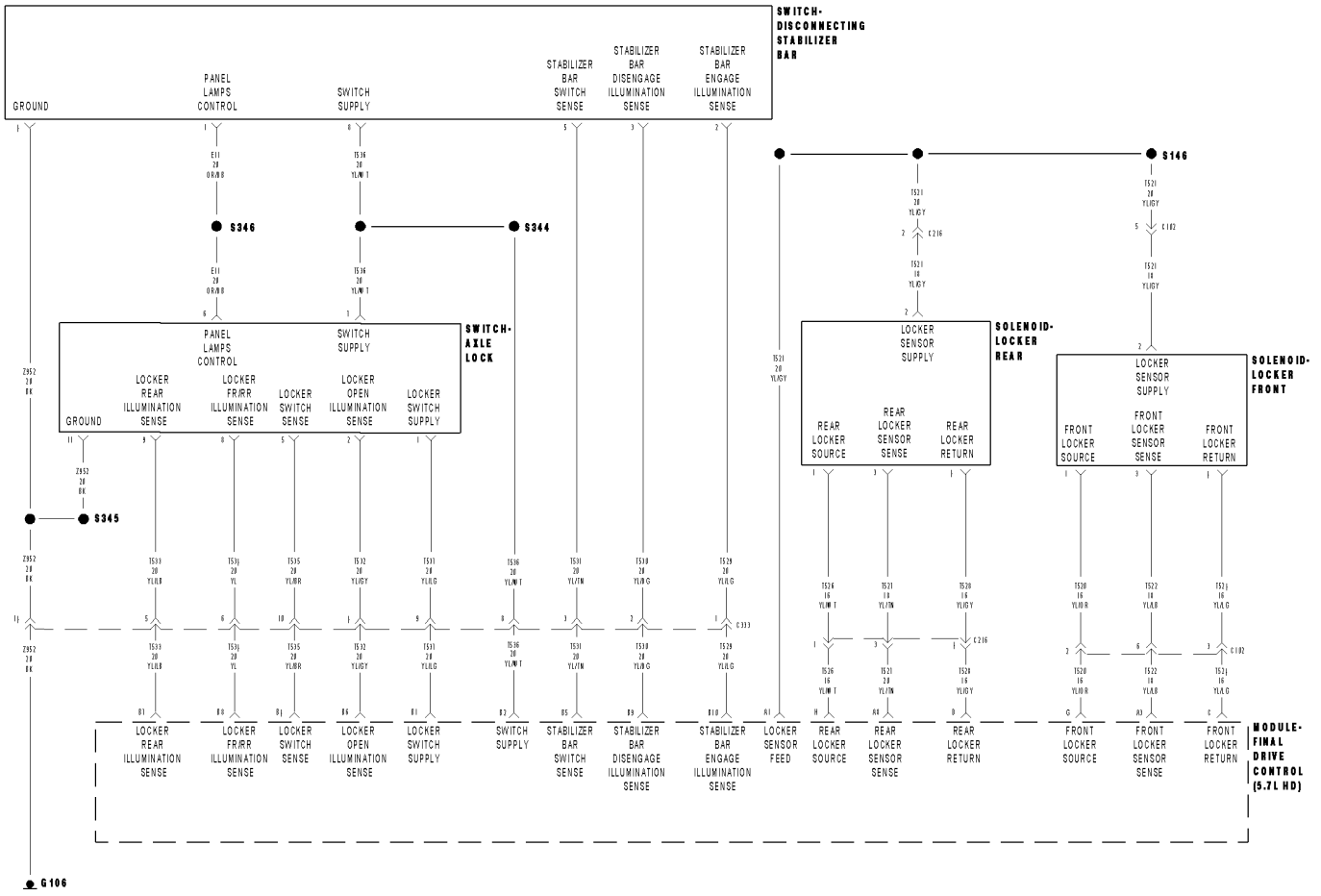

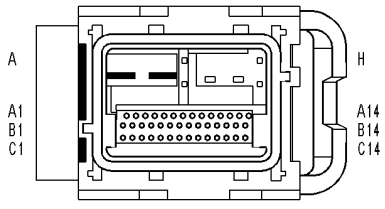

MODULE-FINAL DRIVE CONTROL (5.7L HD)

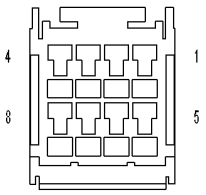

SWITCH-DISCONNECTING STABILZER BAR

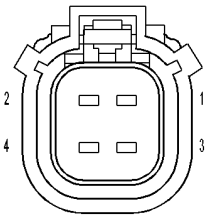

SOLENOID-LOCKER REAR

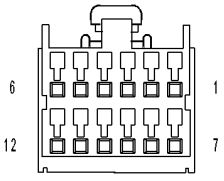

SWITCH-AXLE LOCK

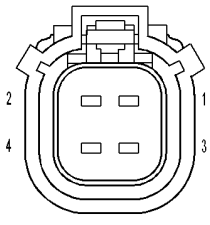

SOLENIOD-LOCKER FRONT

81459daf

C143B-DIFFERENTIAL/LOCKER SELECT SWITCH CIRCUIT LOW (CONTINUED)

For a complete wiring diagram **Refer to Section 8W**.

- **When Monitored:**
  Ignition on.
- **Set Condition:**
  During switch operation, the FDCM senses the Axle Locker Switch sense is below 0.25 volt.

Possible Causes
SWITCH INTERMITTENT
ALXE LOCKER SWITCH
(T537) LOCKER SWITCH SUPPLY CIRCUIT SHORTED TO GROUND
(T535) LOCKER SWITCH SENSE CIRCUIT SHORT TO GROUND
FDCM

1. DTC ACTIVE

CAUTION: Before removing the FDCM harness connector, clean the connector and locking cam area of dirt and debris. Failure to do so can result in the connector being jammed or damage to the locking cams on the harness connector or module. Do not force the assist arm when releasing or installing the harness connector.

Turn the ignition on, engine not running

With the DRBIII®, read FDCM DTC(s).

Is the DTC active at this time?

Yes >> Go To 2

No >> Go To 5

---

2. AXLE LOCKER SWITCH OPERATION

NOTE: Before continuing with the below diagnostic test, ensure the FDCM harness connector seal is installed correctly. Inspect the terminals on both harness connector and the module for damage. Failure to do so can result in misdiagnoses of the system.

Turn the ignition off.

Disconnect the Axle Locker Switch harness connector.

Remove the Axle Locker Switch.

Measure the resistance on the Axle Locker Switch between the Locker Switch Supply terminal and the Locker Switch Sense terminal.

The resistance must read as follows for each position of the switch.

- **UNLOCK: 5454 ohms +/- 5%**
- **RR: 1940 ohms +/- 5%**
- **FR/RR: 1075 ohms +/- 5%**

Does the ohmmeter read correctly for each position of the Axle Locker Switch

Yes >> Go To 3

No >> Replace the Axle Locker Switch.
Perform FDCM VERIFICATION TEST.

C143B-DIFFERENTIAL/LOCKER SELECT SWITCH CIRCUIT LOW (CONTINUED)

3. (T535) LOCKER SWITCH SENSE CIRCUIT SHORTED TO GROUND

Disconnect the FDCM harness connector.

Measure the resistance of the (T535) Locker Switch Sense circuit in the Axle Locker Switch harness connector to ground.

Is the resistance below 100 ohms?

Yes >> Repair the short to ground in the (T535) Locker Switch Sense circuit.
Perform FDCM VERIFICATION TEST.

No >> Go To 4

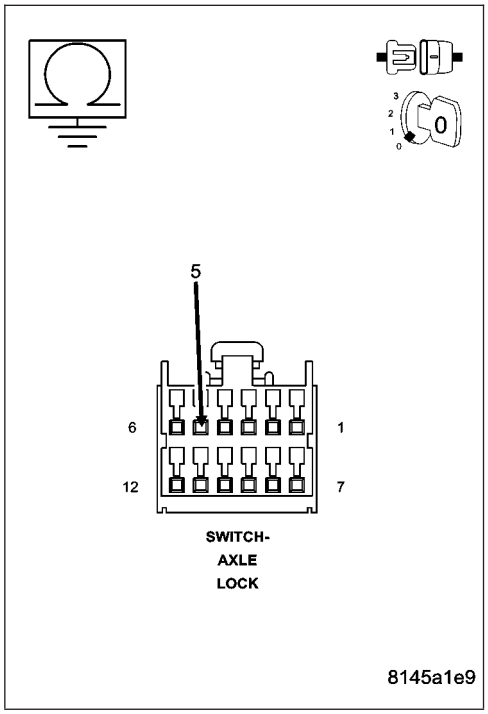

4. (T537) LOCKER SWITCH SUPPLY CIRCUIT SHORT TO GROUND

Measure the resistance of the (T537) Locker Switch Supply circuit in the Axle Locker Switch harness connector to ground.

Is the resistance below 100 ohms?

Yes >> Repair the short to ground in the (T537) Locker Switch Supply circuit.
Perform FDCM VERIFICATION TEST.

No >> Replace the FDCM in accordance with the Service Information
Perform FDCM VERIFICATION TEST.

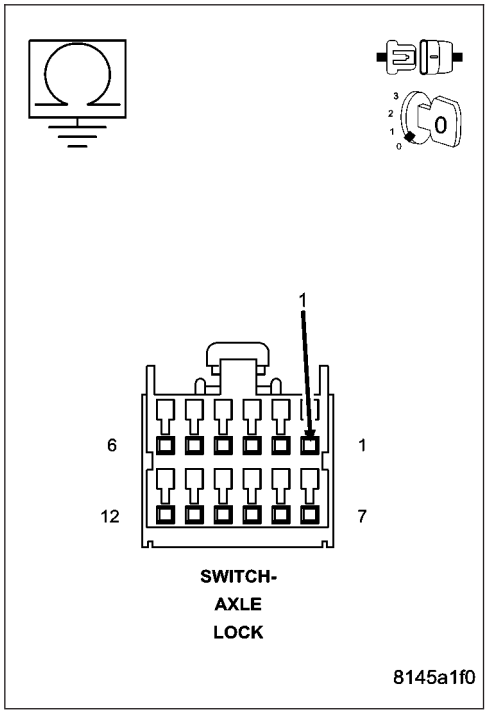

C143B-DIFFERENTIAL/LOCKER SELECT SWITCH CIRCUIT LOW (CONTINUED)

5. INTERMITTENT WIRING AND CONNECTORS

The conditions necessary to set this DTC are not present at this time.

Using the schematics as a guide, inspect the wiring and connectors specific to this circuit.

Wiggle test the wiring harness and connectors while checking for shorted and open circuits.

Using the DRBIII®, monitor the data related to this circuit while performing the wiggle test. Look for the data to change or for the DTC to reset.

While monitoring the TRAC State on the DRBIII®, move the switch to each position. The DRBIII® display must match the position on the actual switch.

Were there any problems found?

Yes >> Repair as necessary.
Perform TRANSFER CASE VERIFICATION TEST.

No >> Test Complete.

C143C-DIFFERENTIAL/LOCKER SELECT SWITCH CIRCUIT HIGH

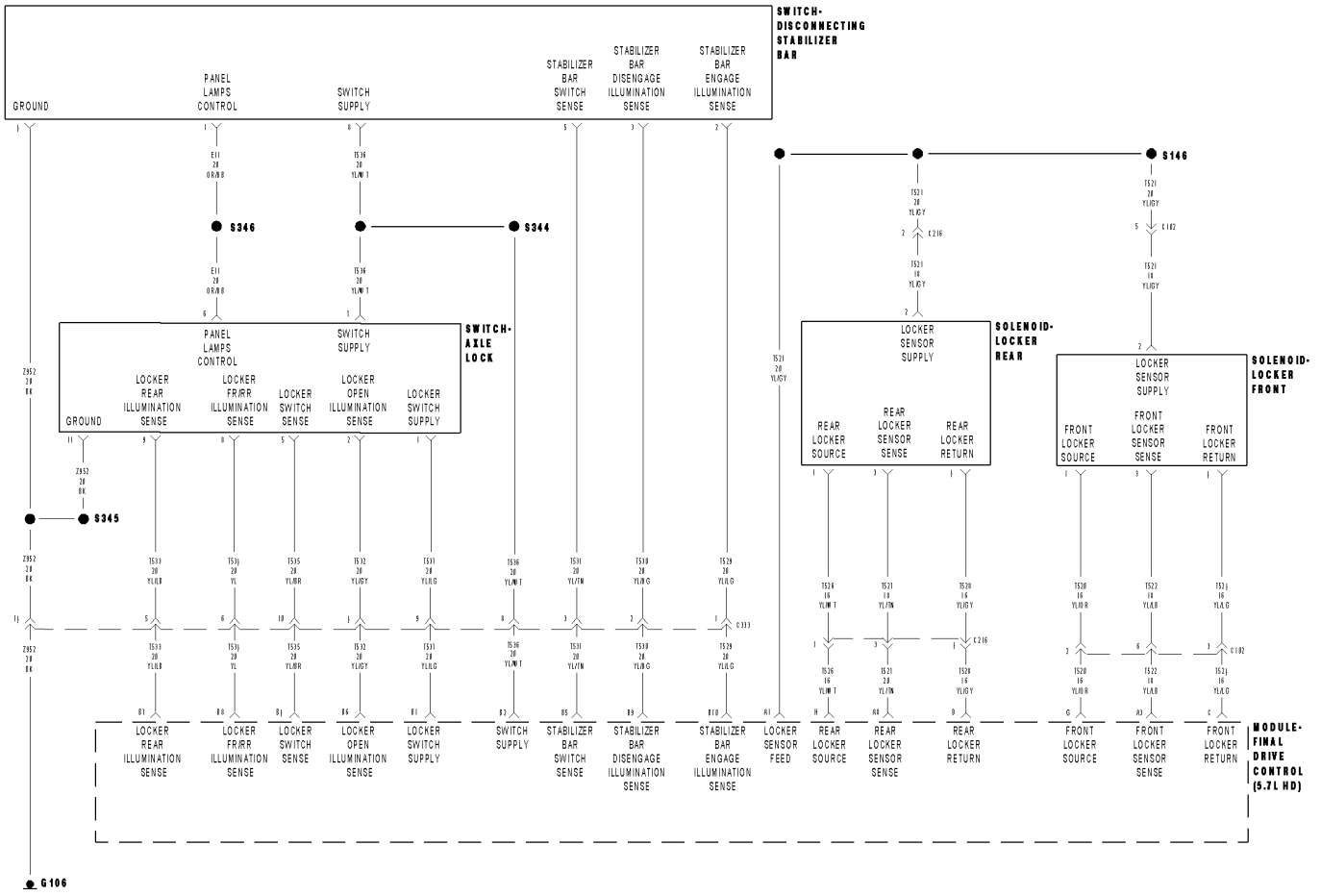

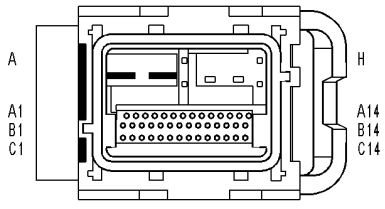

MODULE-FINAL DRIVE CONTROL (5.7L HD)

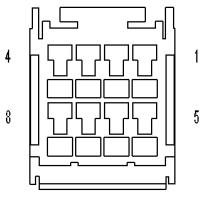

SWITCH-DISCONNECTING STABILZER BAR

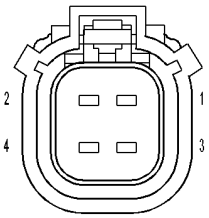

SOLENOID-LOCKER REAR

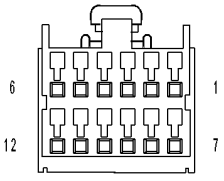

SWITCH-AXLE LOCK

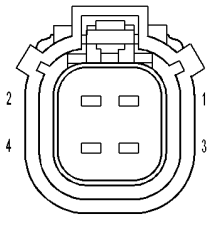

SOLENIOD-LOCKER FRONT

81459daf

C143C-DIFFERENTIAL/LOCKER SELECT SWITCH CIRCUIT HIGH (CONTINUED)

For a complete wiring diagram **Refer to Section 8W**.

- **When Monitored:**
  Ignition on.
- **Set Condition:**
  During switch operation, the FDCM senses the Axle Locker Switch Sense circuit is above 4.5 volts.

Possible Causes
SWITCH INTERMITTENT
ALXE LOCKER SWITCH
(T535) LOCKER SWITCH SENSE CIRCUIT SHORT TO VOLTAGE
(T537) LOCKER SWITCH SUPPLY CIRCUIT SHORTED TO (T535) LOCKER SWITCH SENSE CIRCUIT
(T535) LOCKER SWITCH SENSE CIRCUIT OPEN
FDCM

1. DTC ACTIVE

CAUTION: Before removing the FDCM harness connector, clean the connector and locking cam area of dirt and debris. Failure to do so can result in the connector being jammed or damage to the locking cams on the harness connector or module. Do not force the assist arm when releasing or installing the harness connector.

Turn the ignition on, engine not running

With the DRBIII®, read FDCM DTC(s).

Is the DTC active at this time?

Yes >> Go To 2

No >> Go To 6

---

2. AXLE LOCKER SWITCH OPERATION

NOTE: Before continuing with the below diagnostic test, ensure the FDCM harness connector seal is installed correctly. Inspect the terminals on both harness connector and the module for damage. Failure to do so can result in misdiagnoses of the system.

Turn the ignition off.

Disconnect the Axle Locker Switch harness connector.

Remove the Axle Locker Switch.

Measure the resistance on the Axle Locker Switch between the Locker Switch Supply terminal and the Locker Switch Sense terminal.

The resistance must read as follows for each position of the switch.

- **UNLOCK: 5454 ohms +/- 5%**
- **RR: 1940 ohms +/- 5%**
- **FR/RR: 1075 ohms +/- 5%**

Does the ohmmeter read correctly for each position of the Axle Locker Switch

Yes >> Go To 5

No >> Replace the Axle Locker Switch.
Perform FDCM VERIFICATION TEST.

C143C-DIFFERENTIAL/LOCKER SELECT SWITCH CIRCUIT HIGH (CONTINUED)

3. (T535) LOCKER SWITCH SENSE CIRCUIT SHORTED TO VOLTAGE

Disconnect the FDCM harness connector.

Turn the ignition on.

Measure the voltage of the (T535) Locker Switch Sense circuit in the Axle Locker Switch harness connector.

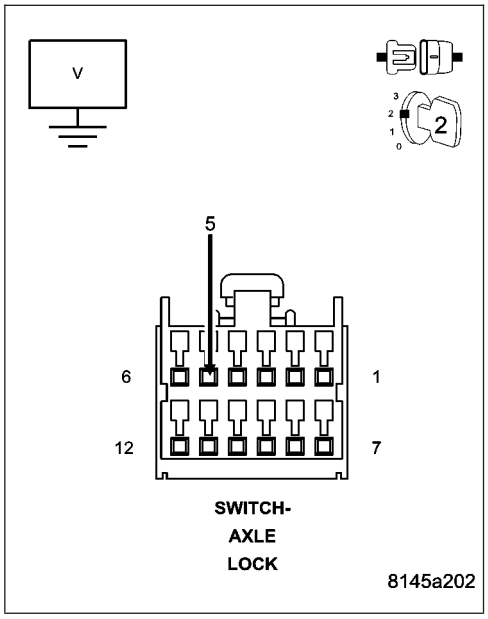

Does the voltmeter indicate voltage present?

Yes >> Repair the short to voltage in the (T535) Locker Switch Sense circuit.
Perform FDCM VERIFICATION TEST.

No >> Go To 4

4. (T537) LOCKER SWITCH SUPPLY CIRCUIT SHORTED TO (T535) LOCKER SWITCH SENSE CIRCUIT

Measure the resistance between (T537) Locker Switch Supply circuit and the (T535) Locker Switch Sense circuit in the Axle Locker Switch harness connector.

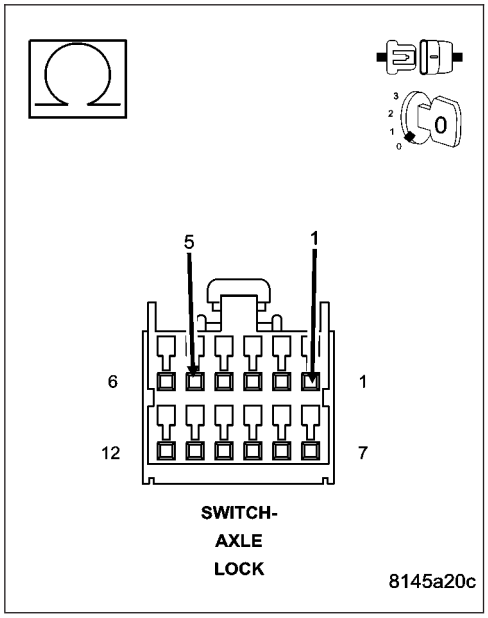

Is the resistance below 5.0 ohms?

Yes >> Repair the short between (T537) Locker Switch Supply circuit and the (T535) Locker Switch Sense circuit.
Perform FDCM VERIFICATION TEST.

No >> Go To 5

C143C-DIFFERENTIAL/LOCKER SELECT SWITCH CIRCUIT HIGH (CONTINUED)

5. (T535) LOCKER SWITCH SENSE CIRCUIT OPEN

Measure the resistance of the (T535) Locker Switch Sense circuit between the Axle Locker Switch and the FDCM harness connector.

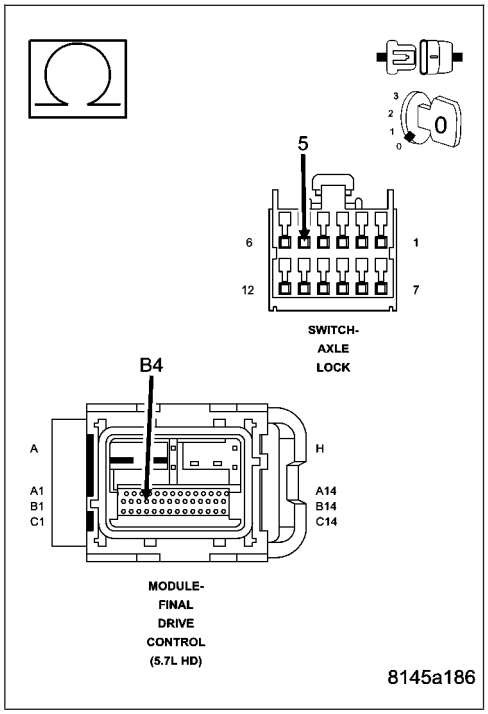

Is the resistance below 5.0 ohms?

Yes >> Replace the FDCM in accordance with the Service Information.
Perform FDCM VERIFICATION TEST.

No >> Repair the open in the (T535) Locker Switch Sense circuit.
Perform FDCM VERIFICATION TEST.

6. INTERMITTENT WIRING AND CONNECTORS

The conditions necessary to set this DTC are not present at this time.

Using the schematics as a guide, inspect the wiring and connectors specific to this circuit.

Wiggle test the wiring harness and connectors while checking for shorted and open circuits.

Using the DRBIII®, monitor the data related to this circuit while performing the wiggle test. Look for the data to change or for the DTC to reset.

While monitoring the TRAC State on the DRBIII®, move the switch to each position. The DRBIII® display must match the position on the actual switch.

Were there any problems found?

Yes >> Repair as necessary.
Perform TRANSFER CASE VERIFICATION TEST.

No >> Test Complete.

C1418–FRONT DIFFERENTIAL CONTROL CIRCUIT HIGH

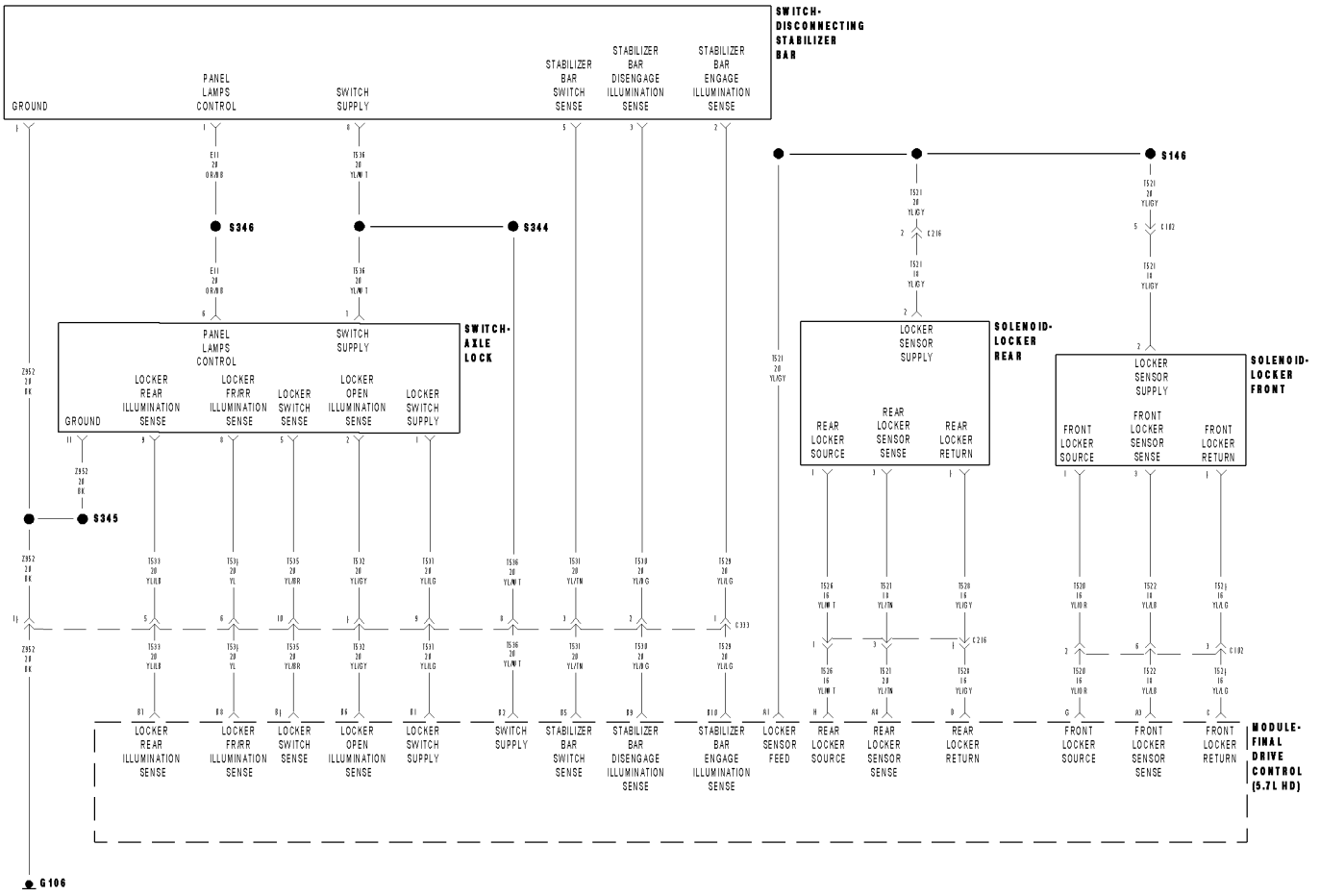

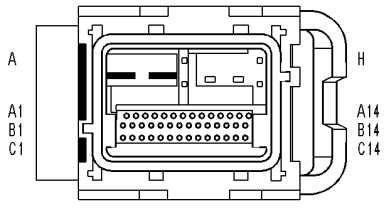

MODULE-FINAL DRIVE CONTROL (5.7L HD)

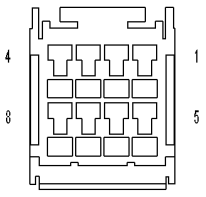

SWITCH-DISCONNECTING STABILZER BAR

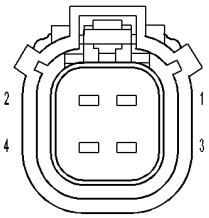

SOLENOID-LOCKER REAR

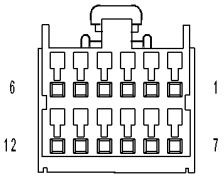

SWITCH-AXLE LOCK

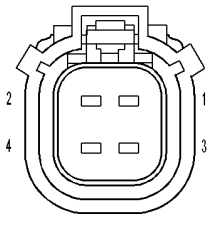

SOLENIOD-LOCKER FRONT

81459daf

C1418–FRONT DIFFERENTIAL CONTROL CIRCUIT HIGH (CONTINUED)

For a complete wiring diagram **Refer to Section 8W**.

- **When Monitored:**
  Ignition on. Axle Locker Switch in the FR/RR position.
- **Set Condition:**
  The FDCM detects the Front Locker Source circuit is shorted high.

Possible Causes
FRONT LOCKER SOLENOID
(T520) FRONT LOCKER SOURCE CIRCUIT SHORTED TO BATTERY VOLTAGE
(T524) FRONT LOCKER RETURN CIRCUIT OPEN
FDCM

Diagnostic Test

1. ACTIVE DTC

CAUTION: Before removing the FDCM harness connector, clean the connector and locking cam area of dirt and debris. Failure to do so can result in the connector being jammed or damage to the locking cams on the harness connector or module. Do not force the assist arm when releasing or installing the harness connector.

Ignition on, engine not running.

With the DRBIII®, read DTCs.

Is the DTC active at this time?

Yes >> Go To 2

No >> Go To 6

---

2. FRONT LOCKER SOLENOID OPERATION

NOTE: Before continuing with the below diagnostic test, ensure the FDCM harness connector seal is installed correctly. Inspect the terminals on both harness connector and the module for damage. Failure to do so can result in misdiagnoses of the system.

Turn the ignition off.

Disconnect the Front Locker Solenoid harness connector.

Ignition on, engine not running.

Using a 12-volt test light, jump across from the (T520) Front Locker Source circuit and the (T524) Front Locker Return circuit in the Front Locker harness connector.

With a DRBIII®, actuate the Front Locker Solenoid.

Does the test light flash on and off?

Yes >> Inspect the Front Locker Solenoid terminals and connectors for corrosion and/or dirty that may compromise the connection. If OK, replace the Front Locker Solenoid.
Perform FDCM VERIFICATION TEST.

No >> Go To 3

C1418–FRONT DIFFERENTIAL CONTROL CIRCUIT HIGH (CONTINUED)

3. (T520) FRONT LOCKER SOURCE CIRCUIT SHORTED TO BATTERY VOLTAGE

Turn the ignition off.

Disconnect the FDCM harness connector.

Turn the ignition on.

Measure the voltage on the (T520) Front Locker Source circuit at the FDCM harness connector.

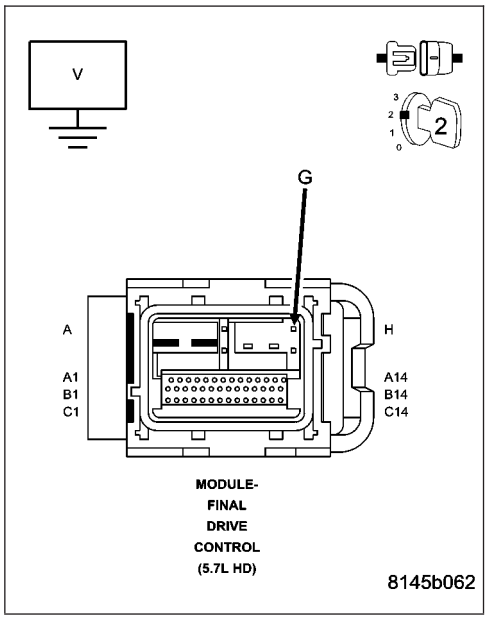

Does the voltmeter indicate voltage present?

Yes >> Repair the short to voltage in the (T520) Front Locker Source circuit.
Perform FDCM VERIFICATION TEST.

No >> Go To 4

4. (T524) FRONT LOCKER RETURN CIRCUIT OPEN

Measure the resistance of the (T524) Front Locker Return circuit form the in the Front Locker Solenoid harness connector and the FDCM harness connector.

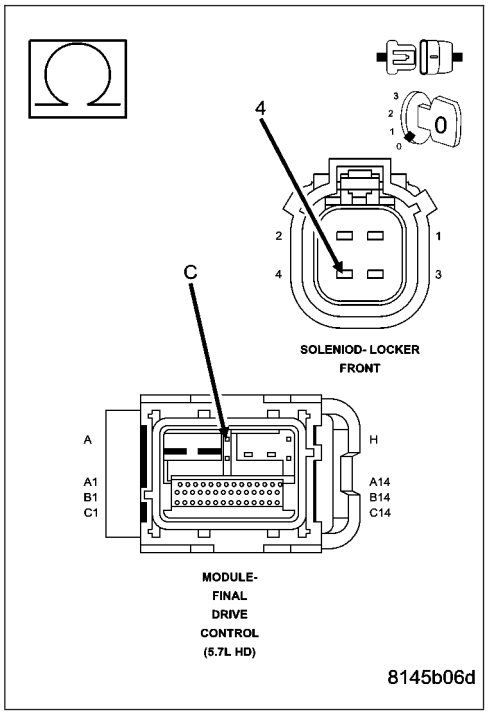

Is the resistance below 5.0 ohms?

Yes >> Go To 5

No >> Repair the open in the (T524) Front Locker Return circuit.
Perform FDCM VERIFICATION TEST

C1418–FRONT DIFFERENTIAL CONTROL CIRCUIT HIGH (CONTINUED)

5. FDCM

NOTE: Before continuing, check the FDCM harness connector terminals for corrosion, damage, or terminal push out. Repair as necessary.

Using the schematics as a guide, inspect the wire harness and connectors. Pay particular attention to all Power and Ground circuits.

Were there any problems found?

Yes >> Repair as necessary.
Perform FDCM VERIFICATION TEST

No >> Replace and program the Final Drive Control Module in accordance with Service Information.
Perform FDCM VERIFICATION TEST.

---

6. INTERMITTENT WIRING AND CONNECTORS

The conditions necessary to set this DTC are not present at this time.

Using the schematics as a guide, inspect the wiring and connectors specific to this circuit.

Wiggle test the wiring harness and connectors while checking for shorted and open circuits.

Using the DRBIII®, monitor the data related to this circuit while performing the wiggle test. Look for the data to change or for the DTC to reset.

Were there any problems found?

Yes >> Repair as necessary.
Perform FDCM VERIFICATION TEST.

No >> Test Complete.

C1419–FRONT DIFFERENTIAL CONTROL CIRCUIT OPEN

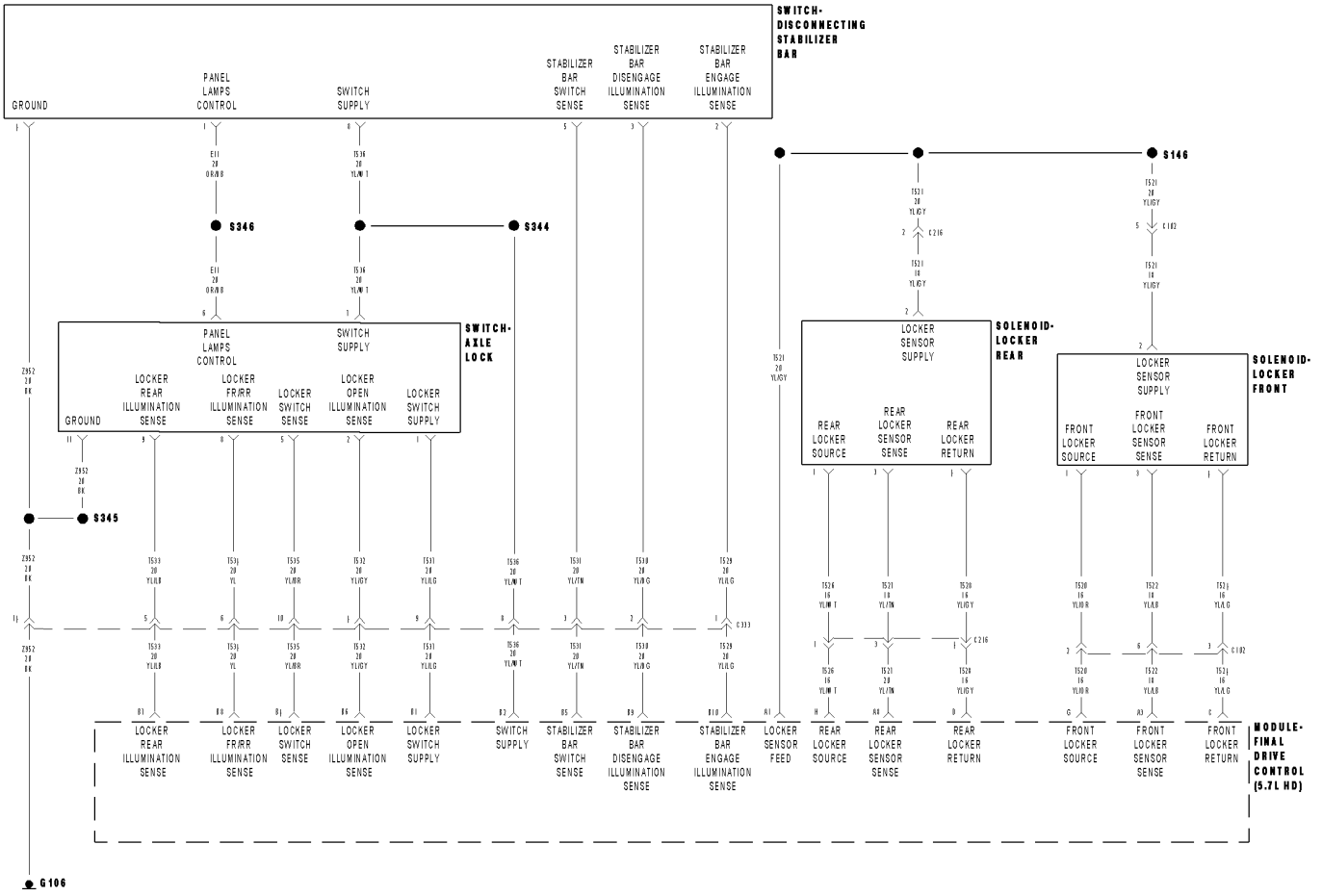

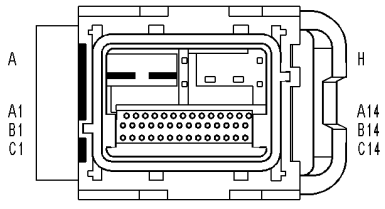

MODULE-FINAL DRIVE CONTROL (5.7L HD)

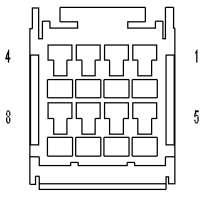

SWITCH-DISCONNECTING STABILZER BAR

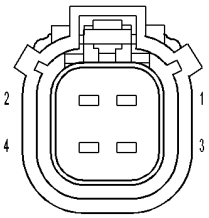

SOLENOID-LOCKER REAR

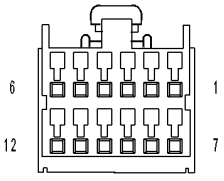

SWITCH-AXLE LOCK

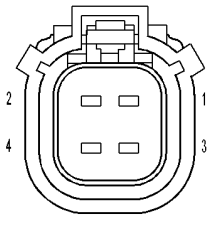

SOLENIOD-LOCKER FRONT

81459daf

C1419–FRONT DIFFERENTIAL CONTROL CIRCUIT OPEN (CONTINUED)

For a complete wiring diagram **Refer to Section 8W**.

- **When Monitored:**
  Ignition on. Axle Locker Switch in the FR/RR position.
- **Set Condition:**
  The FDCM detects the Front Locker Source circuit is open.

Possible Causes
FRONT LOCKER SOLENOID
(T520) FRONT LOCKER SOURCE CIRCUIT OPEN
FDCM

Diagnostic Test

1. ACTIVE DTC

CAUTION: Before removing the FDCM harness connector, clean the connector and locking cam area of dirt and debris. Failure to do so can result in the connector being jammed or damage to the locking cams on the harness connector or module. Do not force the assist arm when releasing or installing the harness connector.

Ignition on, engine not running.

With the DRBIII®, read DTCs.

Is the DTC active at this time?

Yes >> Go To 2

No >> Go To 5

---

2. FRONT LOCKER SOLENOID OPERATION

NOTE: Before continuing with the below diagnostic test, ensure the FDCM harness connector seal is installed correctly. Inspect the terminals on both harness connector and the module for damage. Failure to do so can result in misdiagnoses of the system.

Turn the ignition off.

Disconnect the Front Locker Solenoid harness connector.

Ignition on, engine not running.

Using a 12-volt test light, jump across from the (T520) Front Locker Source circuit and the (T524) Front Locker Return circuit in the Front Locker harness connector.

With a DRBIII®, actuate the Front Locker Solenoid.

Does the test light flash on and off?

Yes >> Inspect the Front Locker Solenoid terminals and connectors for corrosion and/or dirty that may compromise the connection. If OK, replace the Front Locker Solenoid.
Perform FDCM VERIFICATION TEST.

No >> Go To 3

C1419–FRONT DIFFERENTIAL CONTROL CIRCUIT OPEN (CONTINUED)

3. (T520) FRONT LOCKER SOURCE CIRCUIT OPEN

Turn the ignition off.

Disconnect the FDCM harness connector.

Turn the ignition on.

Measure the resistance of the (T520) Front Locker Source circuit from the FDCM harness connector and the Front Locker Solenoid harness connector.

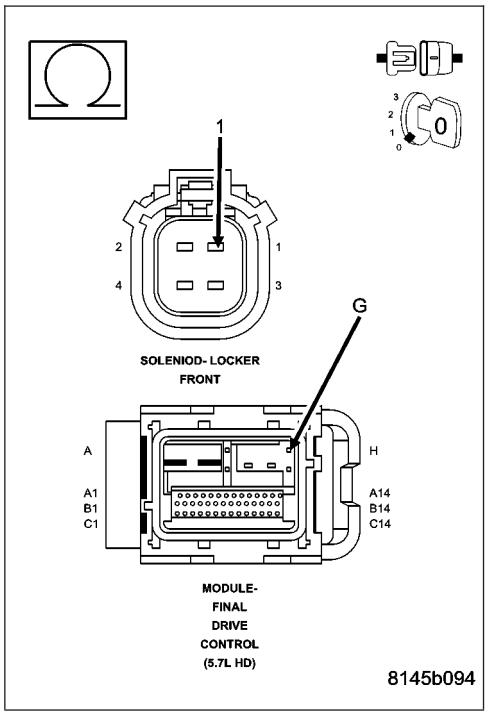

Is the resistances below 5.0 ohms?

Yes >> Go To 4

No >> Repair the open in the Front Locker Source circuit.
Perform FDCM VERIFICATION TEST.

---

4. FDCM

NOTE: Before continuing, check the FDCM harness connector terminals for corrosion, damage, or terminal push out. Repair as necessary.

Using the schematics as a guide, inspect the wire harness and connectors. Pay particular attention to all Power and Ground circuits.

Were there any problems found?

Yes >> Repair as necessary.
Perform FDCM VERIFICATION TEST

No >> Replace and program the Final Drive Control Module in accordance with Service Information.
Perform FDCM VERIFICATION TEST.

---

5. INTERMITTENT WIRING AND CONNECTORS

The conditions necessary to set this DTC are not present at this time.

Using the schematics as a guide, inspect the wiring and connectors specific to this circuit.

Wiggle test the wiring harness and connectors while checking for shorted and open circuits.

Using the DRBIII®, monitor the data related to this circuit while performing the wiggle test. Look for the data to change or for the DTC to reset.

Were there any problems found?

Yes >> Repair as necessary.
Perform FDCM VERIFICATION TEST.

No >> Test Complete.

C141E–REAR DIFFERENTIAL CONTROL CIRCUIT HIGH

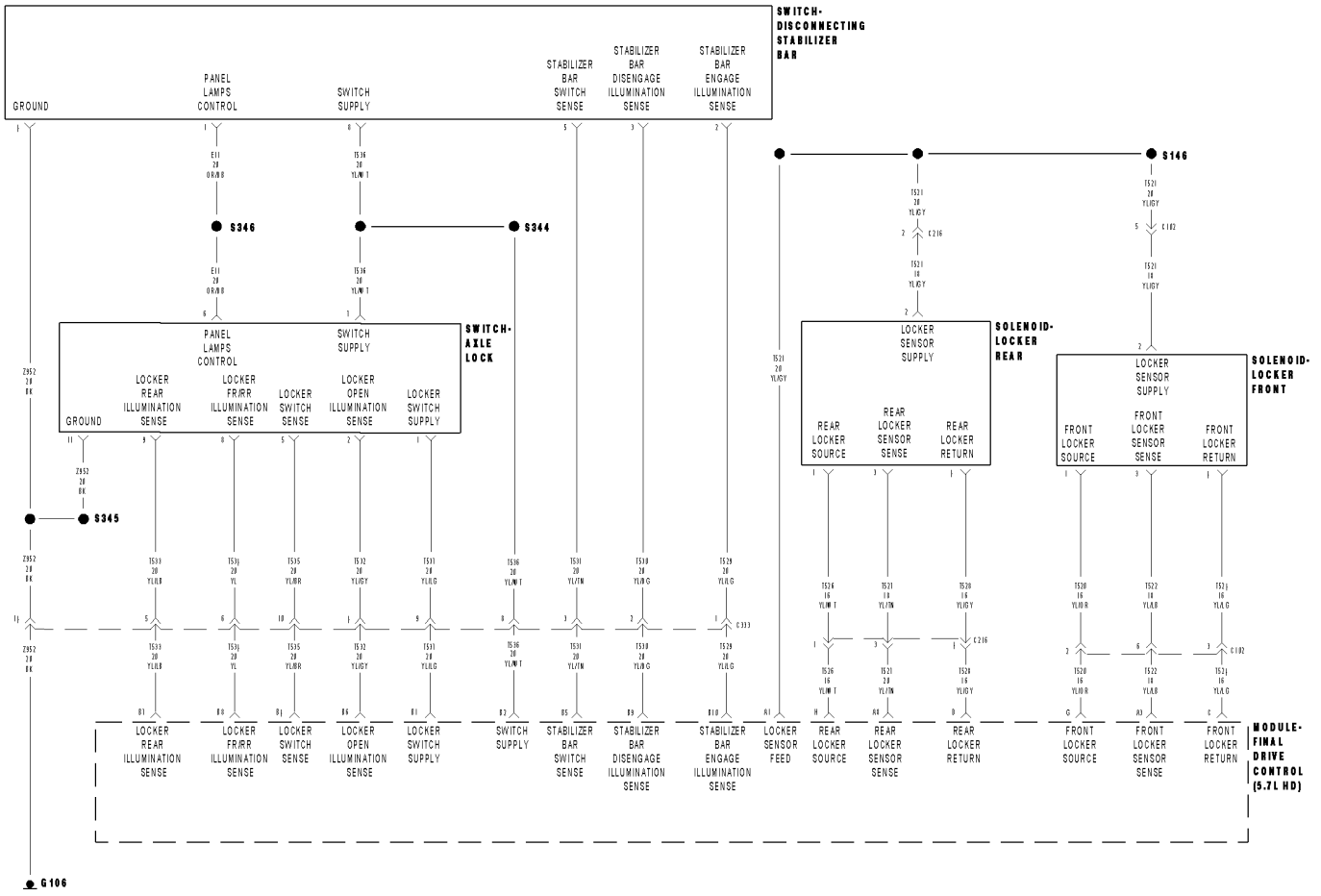

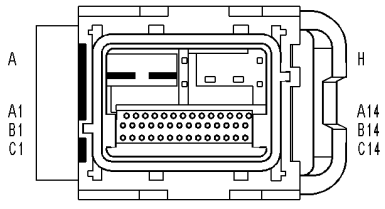

MODULE-FINAL DRIVE CONTROL (5.7L HD)

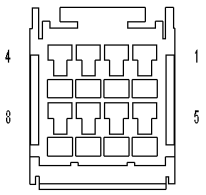

SWITCH-DISCONNECTING STABILZER BAR

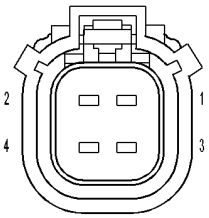

SOLENOID-LOCKER REAR

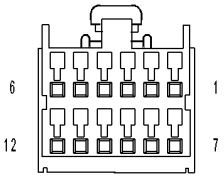

SWITCH-AXLE LOCK

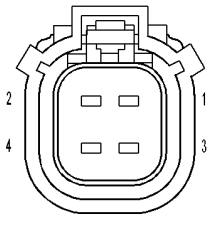

SOLENIOD-LOCKER FRONT

81459daf

C141E–REAR DIFFERENTIAL CONTROL CIRCUIT HIGH (CONTINUED)

For a complete wiring diagram **Refer to Section 8W**.

- **When Monitored:**
  Ignition on. Axle Locker Switch in the FR/RR position.
- **Set Condition:**
  The FDCM detects the Rear Locker Source circuit is shorted high.

Possible Causes
REAR LOCKER SOLENOID
(T526) REAR LOCKER SOURCE CIRCUIT SHORTED TO BATTERY VOLTAGE
(T528) REAR LOCKER RETURN CIRCUIT OPEN
FDCM

Diagnostic Test

1. ACTIVE DTC

CAUTION: Before removing the FDCM harness connector, clean the connector and locking cam area of dirt and debris. Failure to do so can result in the connector being jammed or damage to the locking cams on the harness connector or module. Do not force the assist arm when releasing or installing the harness connector.

Ignition on, engine not running.

With the DRBIII®, read DTCs.

Is the DTC active at this time?

Yes >> Go To 2

No >> Go To 6

---

2. REAR LOCKER SOLENOID OPERATION

NOTE: Before continuing with the below diagnostic test, ensure the FDCM harness connector seal is installed correctly. Inspect the terminals on both harness connector and the module for damage. Failure to do so can result in misdiagnoses of the system.

Turn the ignition off.

Disconnect the Rear Locker Solenoid harness connector.

Ignition on, engine not running.

Using a 12-volt test light, jump across from the (T526) Rear Locker Source circuit and the (T528) Rear Locker Return circuit in the Rear Locker harness connector.

With a DRBIII®, actuate the Rear Locker Solenoid.

Does the test light flash on and off?

Yes >> Inspect the Rear Locker Solenoid terminals and connectors for corrosion and/or dirty that may compromise the connection. If OK, replace the Rear Locker Solenoid.
Perform FDCM VERIFICATION TEST.

No >> Go To 3

C141E–REAR DIFFERENTIAL CONTROL CIRCUIT HIGH (CONTINUED)

3. (T526) REAR LOCKER SOURCE CIRCUIT SHORTED TO BATTERY VOLTAGE

Turn the ignition off.

Disconnect the FDCM harness connector.

Turn the ignition on.

Measure the voltage on the (T526) Rear Locker Source circuit at the FDCM harness connector.

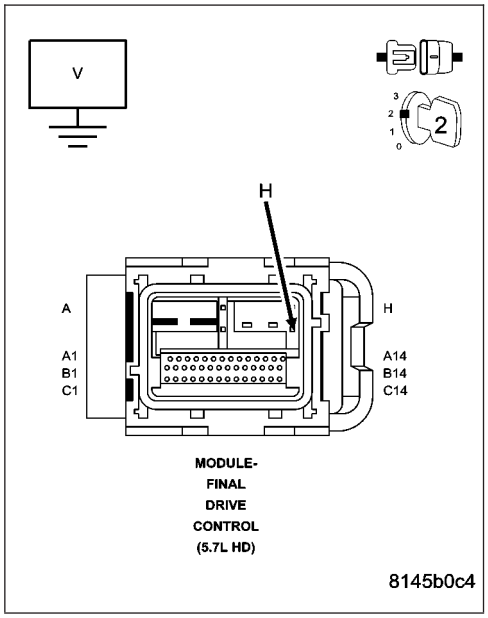

Does the voltmeter indicate voltage present?

Yes >> Repair the short to voltage in the Rear Locker Source circuit.
Perform FDCM VERIFICATION TEST.

No >> Go To 4

---

4. (T528) REAR LOCKER RETURN CIRCUIT OPEN

Measure the resistance of the (T528) Rear Locker Return circuit form the in the Rear Locker Solenoid harness connector and the FDCM harness connector.

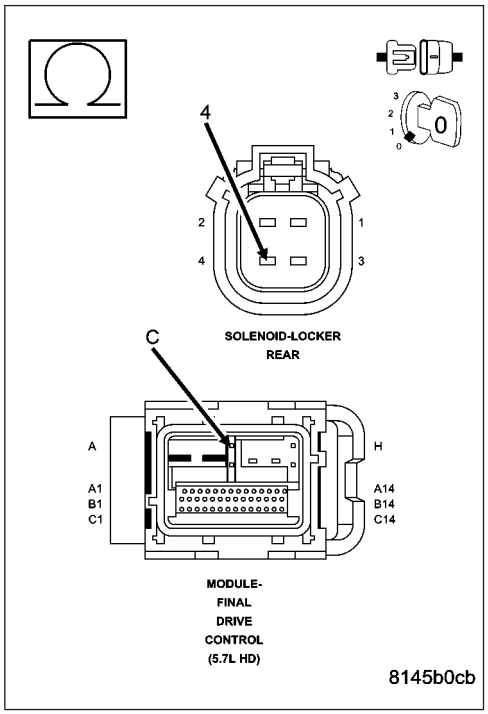

Is the resistance below 5.0 ohms?

Yes >> Go To 5

No >> Repair the open in the (T528) Rear Locker Return circuit.
Perform FDCM VERIFICATION TEST

C141E–REAR DIFFERENTIAL CONTROL CIRCUIT HIGH (CONTINUED)

5. FDCM

NOTE: Before continuing, check the FDCM harness connector terminals for corrosion, damage, or terminal push out. Repair as necessary.

Using the schematics as a guide, inspect the wire harness and connectors. Pay particular attention to all Power and Ground circuits.

Were there any problems found?

Yes >> Repair as necessary.
Perform FDCM VERIFICATION TEST

No >> Replace and program the Final Drive Control Module in accordance with Service Information.
Perform FDCM VERIFICATION TEST.

---

6. INTERMITTENT WIRING AND CONNECTORS

The conditions necessary to set this DTC are not present at this time.

Using the schematics as a guide, inspect the wiring and connectors specific to this circuit.

Wiggle test the wiring harness and connectors while checking for shorted and open circuits.

Using the DRBIII®, monitor the data related to this circuit while performing the wiggle test. Look for the data to change or for the DTC to reset.

Were there any problems found?

Yes >> Repair as necessary.
Perform FDCM VERIFICATION TEST.

No >> Test Complete.

C141F–REAR DIFFERENTIAL CONTROL CIRCUIT OPEN

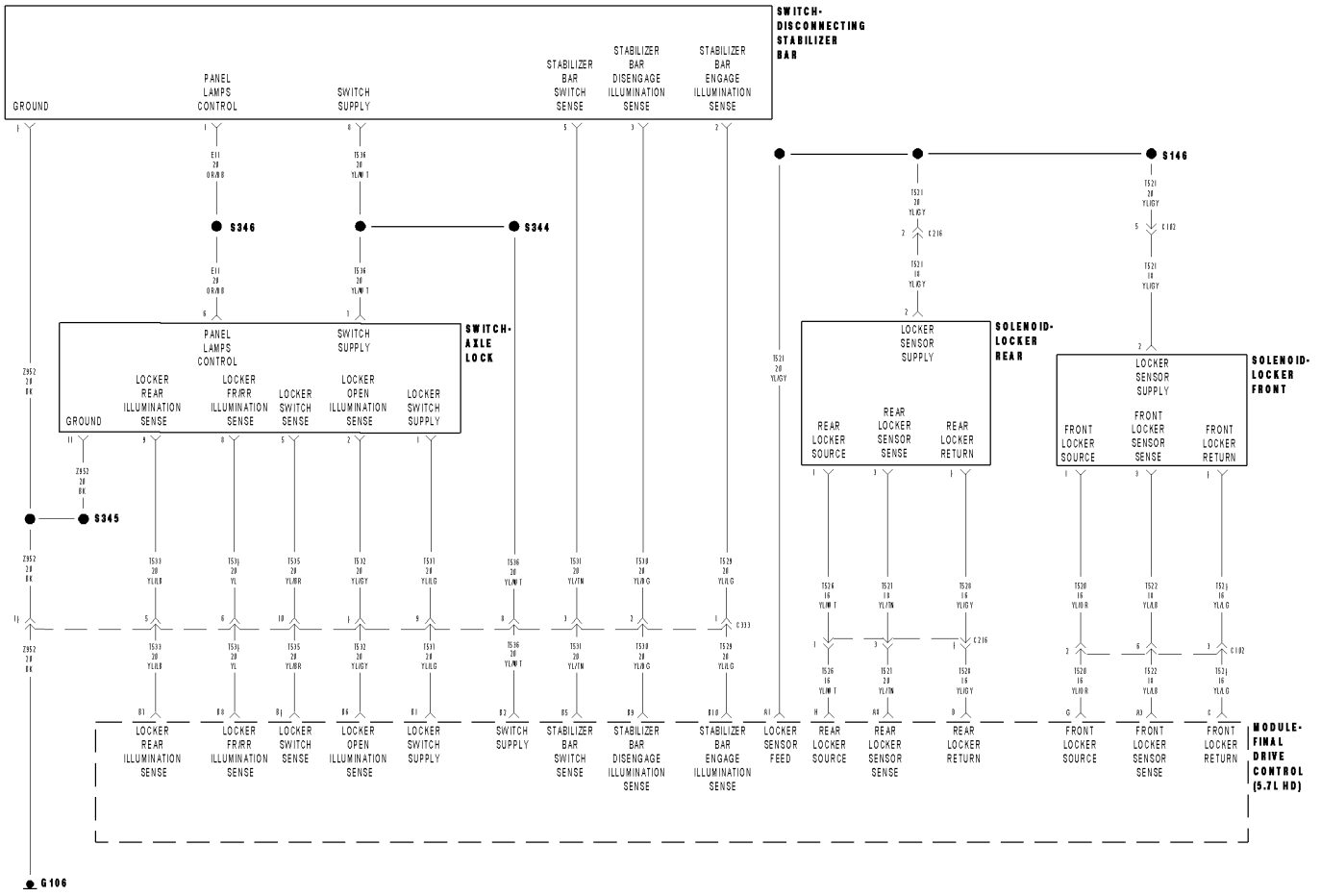

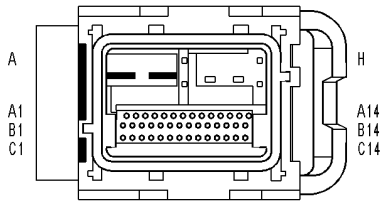

MODULE-FINAL DRIVE CONTROL (5.7L HD)

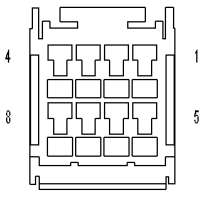

SWITCH-DISCONNECTING STABILZER BAR

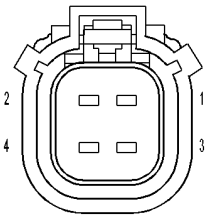

SOLENOID-LOCKER REAR

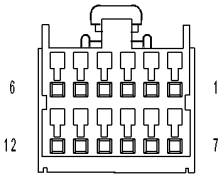

SWITCH-AXLE LOCK

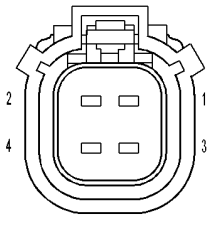

SOLENIOD-LOCKER FRONT

81459daf

C141F–REAR DIFFERENTIAL CONTROL CIRCUIT OPEN (CONTINUED)

For a complete wiring diagram **Refer to Section 8W**.

- **When Monitored:**
  Ignition on. Axle Locker Switch in the FR/RR position.
- **Set Condition:**
  The FDCM detects the Rear Locker Source circuit is open.

Possible Causes
REAR LOCKER SOLENOID
(T526) REAR LOCKER SOURCE CIRCUIT OPEN
FDCM

Diagnostic Test

1. ACTIVE DTC

CAUTION: Before removing the FDCM harness connector, clean the connector and locking cam area of dirt and debris. Failure to do so can result in the connector being jammed or damage to the locking cams on the harness connector or module. Do not force the assist arm when releasing or installing the harness connector.

Ignition on, engine not running.

With the DRBIII®, read DTCs.

Is the DTC active at this time?

Yes >> Go To 2

No >> Go To 5

---

2. REAR LOCKER SOLENOID OPERATION

NOTE: Before continuing with the below diagnostic test, ensure the FDCM harness connector seal is installed correctly. Inspect the terminals on both harness connector and the module for damage. Failure to do so can result in misdiagnoses of the system.

Turn the ignition off.

Disconnect the Rear Locker Solenoid harness connector.

Ignition on, engine not running.

Using a 12-volt test light, jump across from the (T526) Rear Locker Source circuit and the (T528) Rear Locker Return circuit in the Rear Locker harness connector.

With a DRBIII®, actuate the Rear Locker Solenoid.

Does the test light flash on and off?

Yes >> Inspect the Rear Locker Solenoid terminals and connectors for corrosion and/or dirty that may compromise the connection. If OK, replace the Rear Locker Solenoid.
Perform FDCM VERIFICATION TEST.

No >> Go To 3

C141F–REAR DIFFERENTIAL CONTROL CIRCUIT OPEN (CONTINUED)

3. (T526) REAR LOCKER SOURCE CIRCUIT OPEN

Turn the ignition off.

Disconnect the FDCM harness connector.

Turn the ignition on.

Measure the resistance of the (T526) Rear Locker Source circuit from the FDCM harness connector and the Rear Locker Solenoid harness connector.

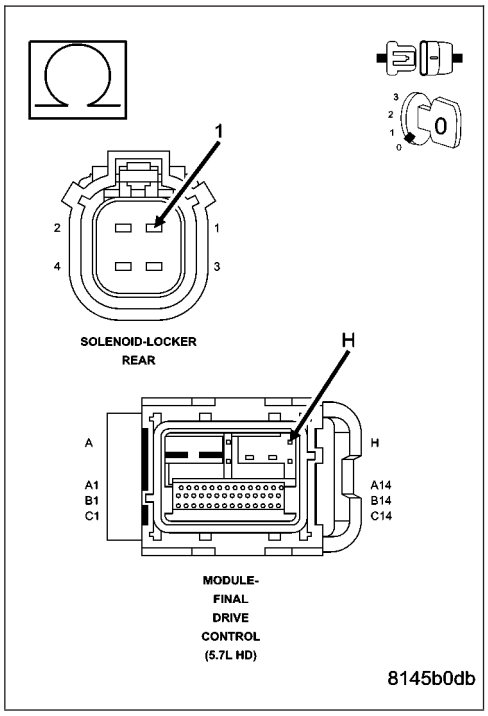

Is the resistances below 5.0 ohms?

Yes >> Go To 4

No >> Repair the open in the Rear Locker Source circuit.
Perform FDCM VERIFICATION TEST.

---

4. FDCM

NOTE: Before continuing, check the FDCM harness connector terminals for corrosion, damage, or terminal push out. Repair as necessary.

Using the schematics as a guide, inspect the wire harness and connectors. Pay particular attention to all Power and Ground circuits.

Were there any problems found?

Yes >> Repair as necessary.
Perform FDCM VERIFICATION TEST

No >> Replace and program the Final Drive Control Module in accordance with Service Information.
Perform FDCM VERIFICATION TEST.

---

5. INTERMITTENT WIRING AND CONNECTORS

The conditions necessary to set this DTC are not present at this time.

Using the schematics as a guide, inspect the wiring and connectors specific to this circuit.

Wiggle test the wiring harness and connectors while checking for shorted and open circuits.

Using the DRBIII®, monitor the data related to this circuit while performing the wiggle test. Look for the data to change or for the DTC to reset.

Were there any problems found?

Yes >> Repair as necessary.
Perform FDCM VERIFICATION TEST.

No >> Test Complete.

C1446-FRONT DIFFERENTIAL RETURN CIRCUIT LOW

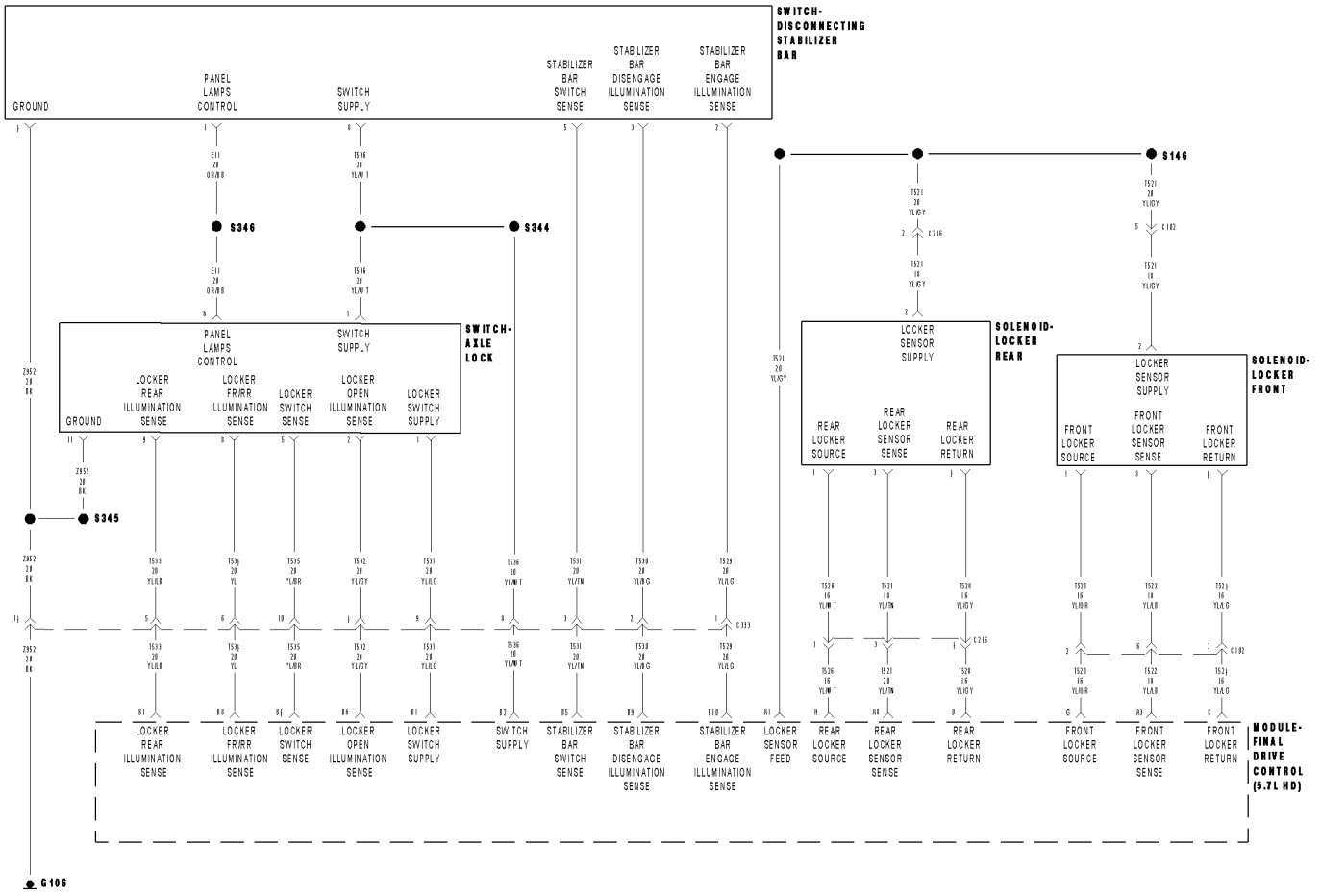

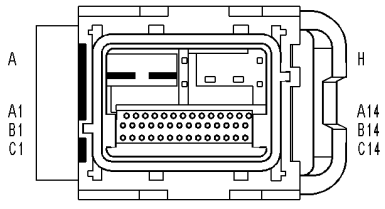

MODULE-FINAL DRIVE CONTROL (5.7L HD)

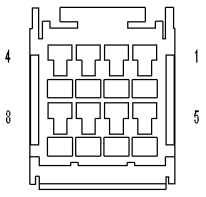

SWITCH-DISCONNECTING STABILZER BAR

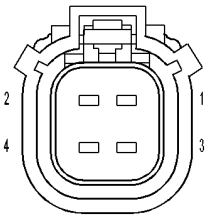

SOLENOID-LOCKER REAR

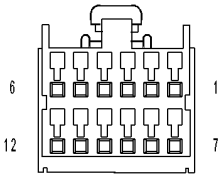

SWITCH-AXLE LOCK

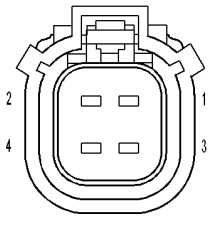

SOLENIOD-LOCKER FRONT

81459daf

C1446-FRONT DIFFERENTIAL RETURN CIRCUIT LOW (CONTINUED)

For a complete wiring diagram **Refer to Section 8W**.

- **When Monitored:**
  Ignition on. Axle Locker Switch in the FR/RR position.
- **Set Condition:**
  The FDCM detects the Front Locker Source circuit is shorted low.

Possible Causes
FRONT LOCKER SOLENOID
(T526) FRONT LOCKER RETURN CIRCUIT SHORTED TO GROUND
FDCM

Diagnostic Test

1. ACTIVE DTC

CAUTION: Before removing the FDCM harness connector, clean the connector and locking cam area of dirt and debris. Failure to do so can result in the connector being jammed or damage to the locking cams on the harness connector or module. Do not force the assist arm when releasing or installing the harness connector.

Ignition on, engine not running.

With the DRBIII®, read DTCs.

Is the DTC active at this time?

Yes >> Go To 2

No >> Go To 5

---

2. FRONT LOCKER SOLENOID OPERATION

NOTE: Before continuing with the below diagnostic test, ensure the FDCM harness connector seal is installed correctly. Inspect the terminals on both harness connector and the module for damage. Failure to do so can result in misdiagnoses of the system.

Turn the ignition off.

Disconnect the Front Locker Solenoid harness connector.

Ignition on, engine not running.

Using a 12-volt test light, jump across from the (T520) Front Locker Source circuit and the (T524) Front Locker Return circuit in the Front Locker harness connector.

With a DRBIII®, actuate the Front Locker Solenoid.

Does the test light flash on and off?

Yes >> Inspect the Front Locker Solenoid terminals and connectors for corrosion and/or dirty that may compromise the connection. If OK, replace the Front Locker Solenoid.
Perform FDCM VERIFICATION TEST.

No >> Go To 3

C1446-FRONT DIFFERENTIAL RETURN CIRCUIT LOW (CONTINUED)

3. (T524) FRONT LOCKER RETURN CIRCUIT SHORTED TO GROUND

Turn the ignition off.

Disconnect the FDCM harness connector.

Measure the resistance of the (T524) Front Locker Return circuit in the FDCM harness connector to ground.

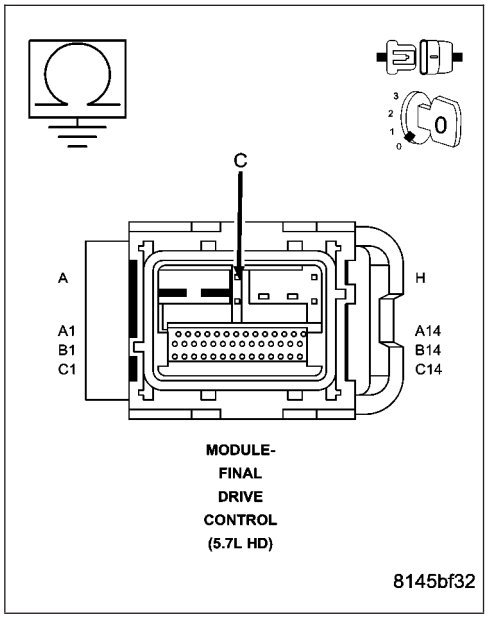

Is the resistance below 100 ohms?

Yes >> Repair the short to ground in (T524) Front Locker Return circuit.
Perform FDCM VERIFICATION TEST

No >> Go To 4

---

4. FDCM

NOTE: Before continuing, check the FDCM harness connector terminals for corrosion, damage, or terminal push out. Repair as necessary.

Using the schematics as a guide, inspect the wire harness and connectors. Pay particular attention to all Power and Ground circuits.

Were there any problems found?

Yes >> Repair as necessary.
Perform FDCM VERIFICATION TEST

No >> Replace and program the Final Drive Control Module in accordance with Service Information.
Perform FDCM VERIFICATION TEST.

---

5. INTERMITTENT WIRING AND CONNECTORS

The conditions necessary to set this DTC are not present at this time.

Using the schematics as a guide, inspect the wiring and connectors specific to this circuit.

Wiggle test the wiring harness and connectors while checking for shorted and open circuits.

Using the DRBIII®, monitor the data related to this circuit while performing the wiggle test. Look for the data to change or for the DTC to reset.

Were there any problems found?

Yes >> Repair as necessary.
Perform FDCM VERIFICATION TEST.

No >> Test Complete.

C1447-FRONT DIFFERENTIAL RETURN CIRCUIT HIGH

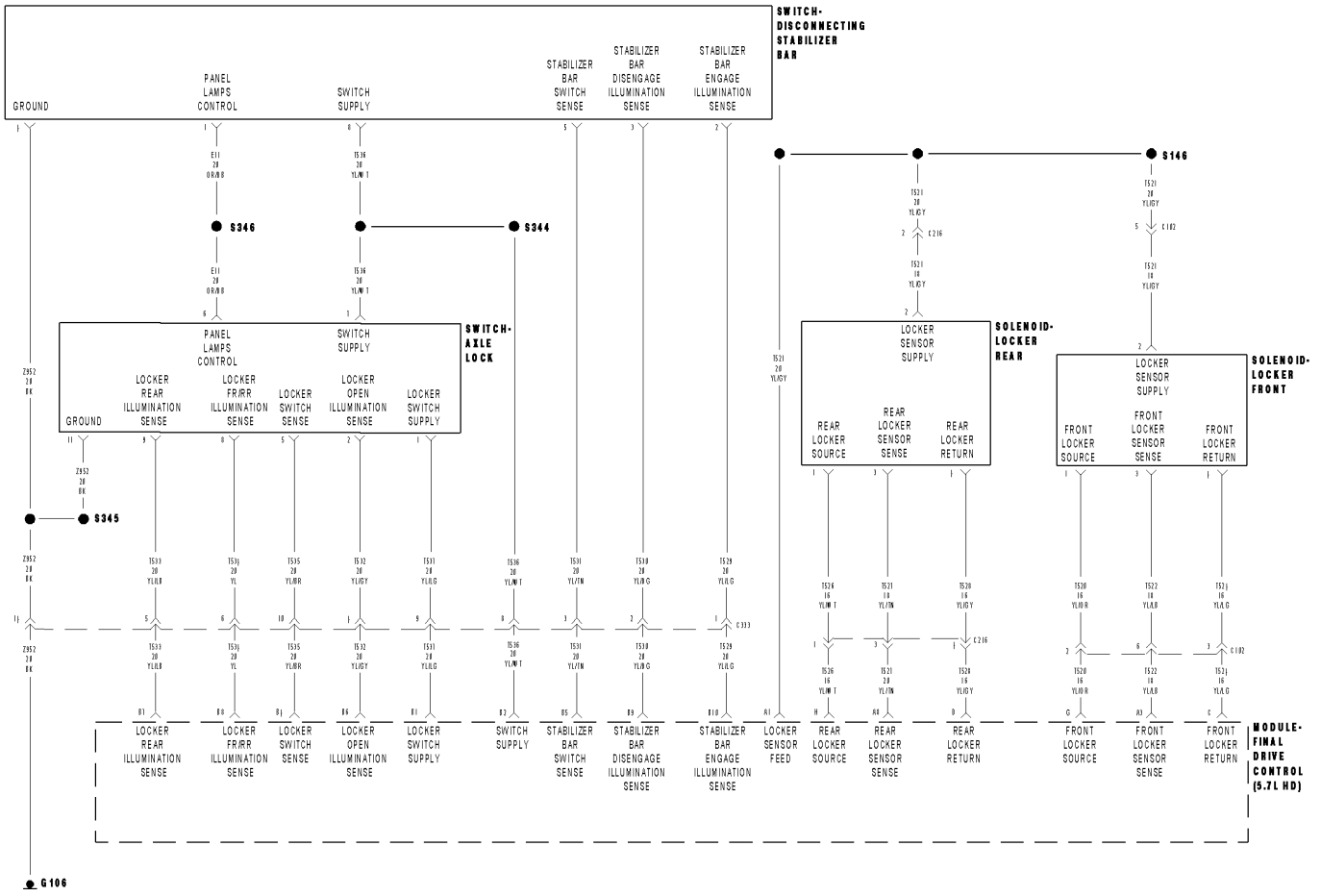

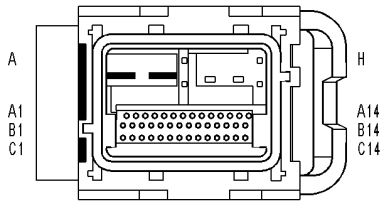

MODULE-FINAL DRIVE CONTROL (5.7L HD)

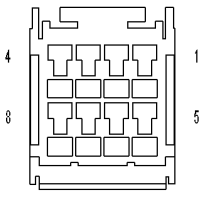

SWITCH-DISCONNECTING STABILZER BAR

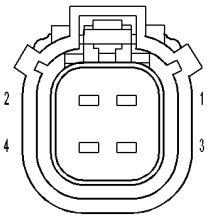

SOLENOID-LOCKER REAR

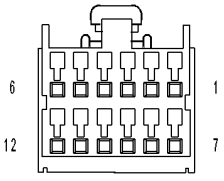

SWITCH-AXLE LOCK

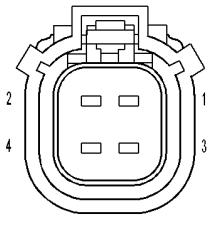

SOLENIOD-LOCKER FRONT

81459daf

C1447-FRONT DIFFERENTIAL RETURN CIRCUIT HIGH (CONTINUED)

For a complete wiring diagram **Refer to Section 8W**.

- **When Monitored:**
  Ignition on. Axle Locker Switch in the FR/RR position.
- **Set Condition:**
  The FDCM detects the Front Locker Source circuit is shorted low.

Possible Causes
FRONT LOCKER SOLENOID
(T520) FRONT LOCKER SOURCE CIRCUIT SHORTED TO GROUND
(T524) FRONT LOCKER RETURN CIRCUIT SHORTED TO (T520) FRONT LOCKER SOURCE CIRCUIT
FDCM

Diagnostic Test

1. ACTIVE DTC

CAUTION: Before removing the FDCM harness connector, clean the connector and locking cam area of dirt and debris. Failure to do so can result in the connector being jammed or damage to the locking cams on the harness connector or module. Do not force the assist arm when releasing or installing the harness connector.

Ignition on, engine not running.

With the DRBIII®, read DTCs.

Is the DTC active at this time?

Yes >> Go To 2

No >> Go To 6

---

2. FRONT LOCKER SOLENOID OPERATION

NOTE: Before continuing with the below diagnostic test, ensure the FDCM harness connector seal is installed correctly. Inspect the terminals on both harness connector and the module for damage. Failure to do so can result in misdiagnoses of the system.

Turn the ignition off.

Disconnect the Front Locker Solenoid harness connector.

Ignition on, engine not running.

Using a 12-volt test light, jump across from the (T520) Front Locker Source circuit and the (T524) Front Locker Return circuit in the Front Locker harness connector.

With a DRBIII®, actuate the Front Locker Solenoid.

Does the test light flash on and off?

Yes >> Inspect the Front Locker Solenoid terminals and connectors for corrosion and/or dirty that may compromise the connection. If OK, replace the Front Locker Solenoid.
Perform FDCM VERIFICATION TEST.

No >> Go To 3

C1447-FRONT DIFFERENTIAL RETURN CIRCUIT HIGH (CONTINUED)

3. (T524) FRONT LOCKER RETURN CIRCUIT SHORTED TO BATTERY VOLTAGE

Turn the ignition off.

Disconnect the FDCM harness connector.

Turn the ignition on.

Measure the voltage of the (T524) Front Locker Return circuit at the FDCM harness connector.

Does the voltmeter indicate voltage present?

Yes >> Repair the short to voltage in the (T524) Front Locker Return circuit.
Perform FDCM VERIFICATION TEST.

No >> Go To 4

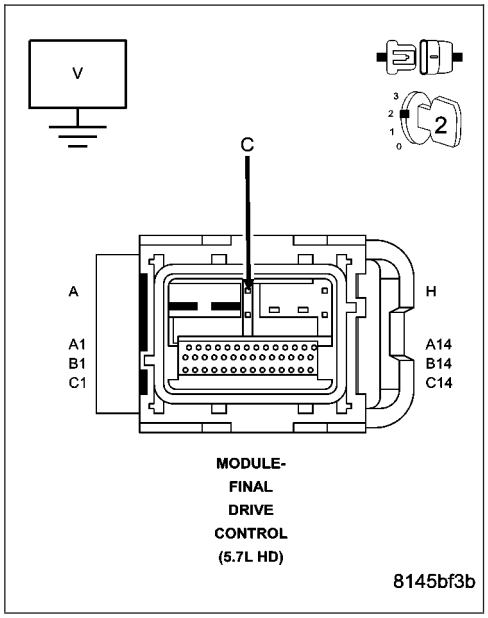

4. (T524) FRONT LOCKER RETURN CIRCUIT SHORTED TO (T520) FRONT LOCKER SOURCE CIRCUIT

Turn the ignition off.

Measure the resistance between the (T520) Front Locker Source circuit and the (T524) Front Locker Return circuit in the Front Locker Solenoid harness connector.

Is the resistance below 100 ohms?

Yes >> Repair the short between (T520) Front Locker Source circuit and the (T524) Front Locker Return circuit.
Perform FDCM VERIFICATION TEST

No >> Go To 5

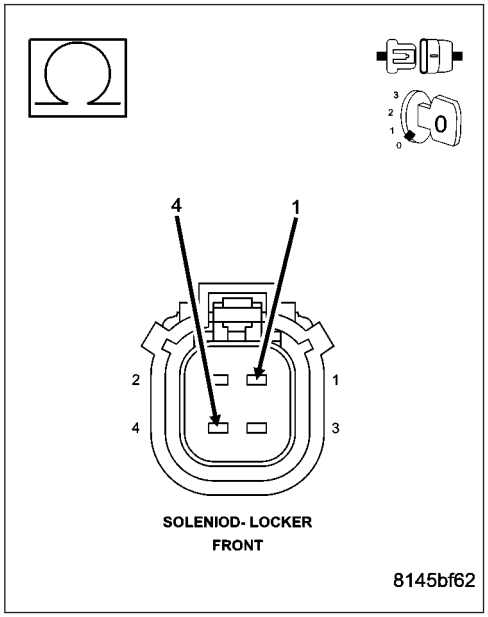

C1447-FRONT DIFFERENTIAL RETURN CIRCUIT HIGH (CONTINUED)

5. FDCM

NOTE: Before continuing, check the FDCM harness connector terminals for corrosion, damage, or terminal push out. Repair as necessary.

Using the schematics as a guide, inspect the wire harness and connectors. Pay particular attention to all Power and Ground circuits.

Were there any problems found?

Yes >> Repair as necessary.
Perform FDCM VERIFICATION TEST

No >> Replace and program the Final Drive Control Module in accordance with Service Information.
Perform FDCM VERIFICATION TEST.

---

6. INTERMITTENT WIRING AND CONNECTORS

The conditions necessary to set this DTC are not present at this time.

Using the schematics as a guide, inspect the wiring and connectors specific to this circuit.

Wiggle test the wiring harness and connectors while checking for shorted and open circuits.

Using the DRBIII®, monitor the data related to this circuit while performing the wiggle test. Look for the data to change or for the DTC to reset.

Were there any problems found?

Yes >> Repair as necessary.
Perform FDCM VERIFICATION TEST.

No >> Test Complete.

C144A-REAR DIFFERENTIAL RETURN CIRCUIT LOW

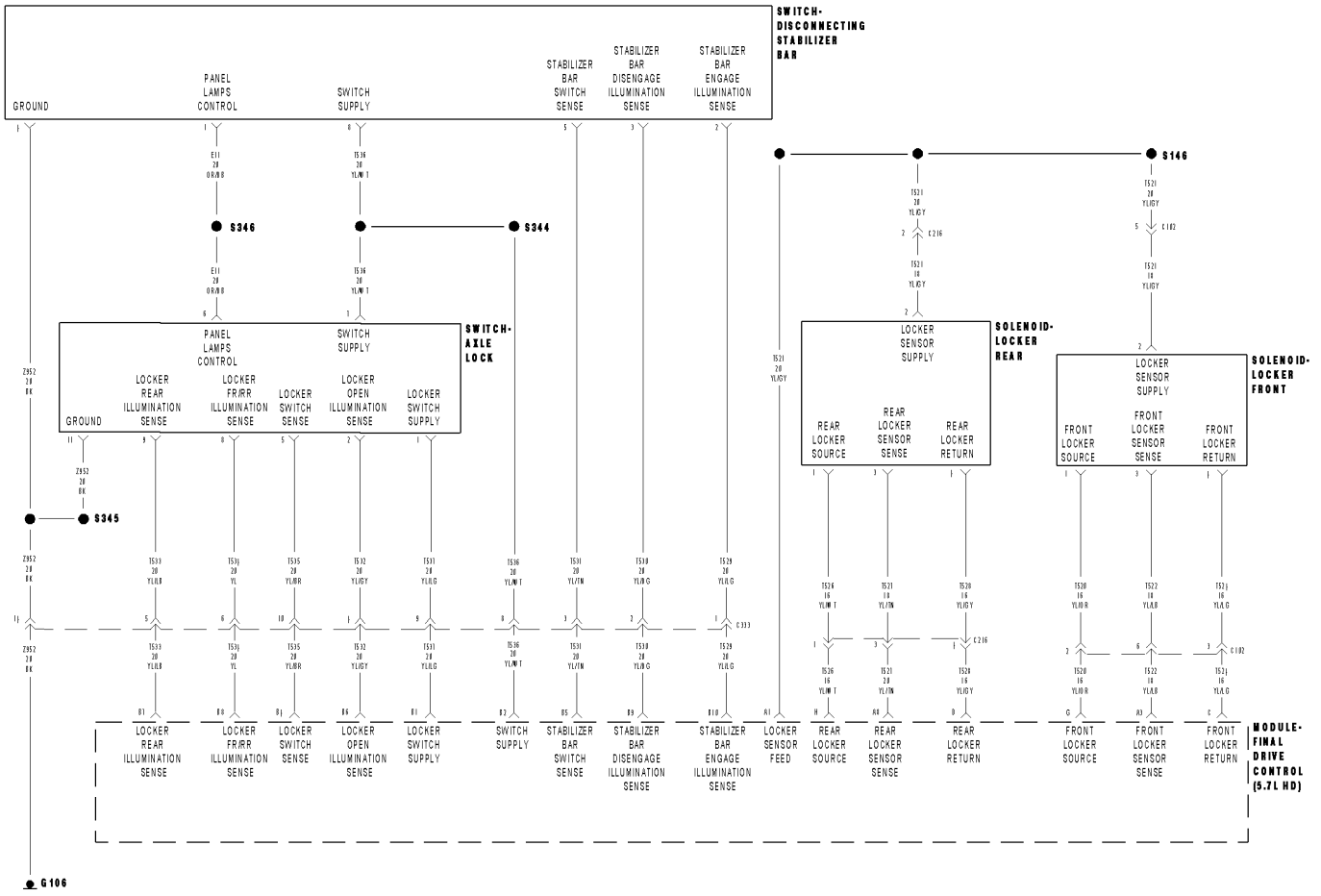

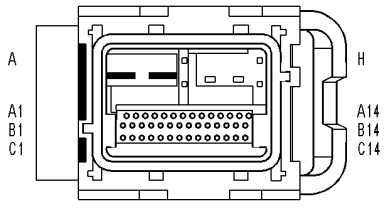

MODULE-FINAL DRIVE CONTROL (5.7L HD)

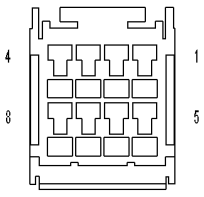

SWITCH-DISCONNECTING STABILZER BAR

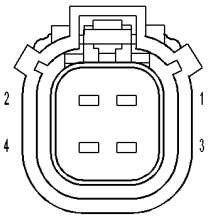

SOLENOID-LOCKER REAR

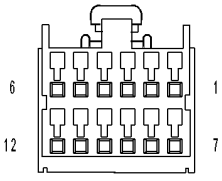

SWITCH-AXLE LOCK

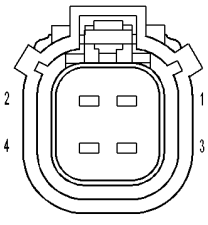

SOLENIOD-LOCKER FRONT

81459daf

C144A-REAR DIFFERENTIAL RETURN CIRCUIT LOW (CONTINUED)

For a complete wiring diagram **Refer to Section 8W**.

- **When Monitored:**
  Ignition on. Axle Locker Switch in the RR or FR/RR position.
- **Set Condition:**
  The FDCM detects the Rear Locker Source circuit is shorted low.

Possible Causes
REAR LOCKER SOLENOID
(T528) REAR LOCKER RETURN CIRCUIT SHORTED TO GROUND
FDCM

Diagnostic Test

1. ACTIVE DTC

CAUTION: Before removing the FDCM harness connector, clean the connector and locking cam area of dirt and debris. Failure to do so can result in the connector being jammed or damage to the locking cams on the harness connector or module. Do not force the assist arm when releasing or installing the harness connector.

Ignition on, engine not running.

With the DRBIII®, read DTCs.

Is the DTC active at this time?

Yes >> Go To 2

No >> Go To 5

---

2. REAR LOCKER SOLENOID OPERATION

NOTE: Before continuing with the below diagnostic test, ensure the FDCM harness connector seal is installed correctly. Inspect the terminals on both harness connector and the module for damage. Failure to do so can result in misdiagnoses of the system.

Turn the ignition off.

Disconnect the Rear Locker Solenoid harness connector.

Ignition on, engine not running.

Using a 12-volt test light, jump across from the (T526) Rear Locker Source circuit and the (T528) Rear Locker Return circuit in the Rear Locker harness connector.

With a DRBIII®, actuate the Rear Locker Solenoid.

Does the test light flash on and off?

Yes >> Inspect the Rear Locker Solenoid terminals and connectors for corrosion and/or dirty that may compromise the connection. If OK, replace the Rear Locker Solenoid.
Perform FDCM VERIFICATION TEST.

No >> Go To 3

C144A-REAR DIFFERENTIAL RETURN CIRCUIT LOW (CONTINUED)

3. (T528) REAR LOCKER RETURN CIRCUIT SHORTED TO GROUND

Turn the ignition off.

Disconnect the FDCM harness connector.

Measure the resistance of the (T528) Rear Locker Return circuit in the FDCM harness connector to ground.

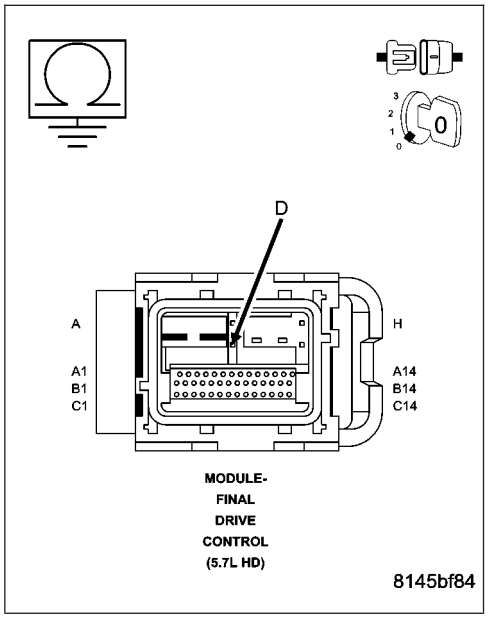

Is the resistance below 100 ohms?

Yes >> Repair the short to ground in (T528) Rear Locker Return circuit.
Perform FDCM VERIFICATION TEST

No >> Go To 4

---

4. FDCM

NOTE: Before continuing, check the FDCM harness connector terminals for corrosion, damage, or terminal push out. Repair as necessary.

Using the schematics as a guide, inspect the wire harness and connectors. Pay particular attention to all Power and Ground circuits.

Were there any problems found?

Yes >> Repair as necessary.
Perform FDCM VERIFICATION TEST

No >> Replace and program the Final Drive Control Module in accordance with Service Information.
Perform FDCM VERIFICATION TEST.

---

5. INTERMITTENT WIRING AND CONNECTORS

The conditions necessary to set this DTC are not present at this time.

Using the schematics as a guide, inspect the wiring and connectors specific to this circuit.

Wiggle test the wiring harness and connectors while checking for shorted and open circuits.

Using the DRBIII®, monitor the data related to this circuit while performing the wiggle test. Look for the data to change or for the DTC to reset.

Were there any problems found?

Yes >> Repair as necessary.
Perform FDCM VERIFICATION TEST.

No >> Test Complete.

C144B-REAR DIFFERENTIAL RETURN CIRCUIT HIGH

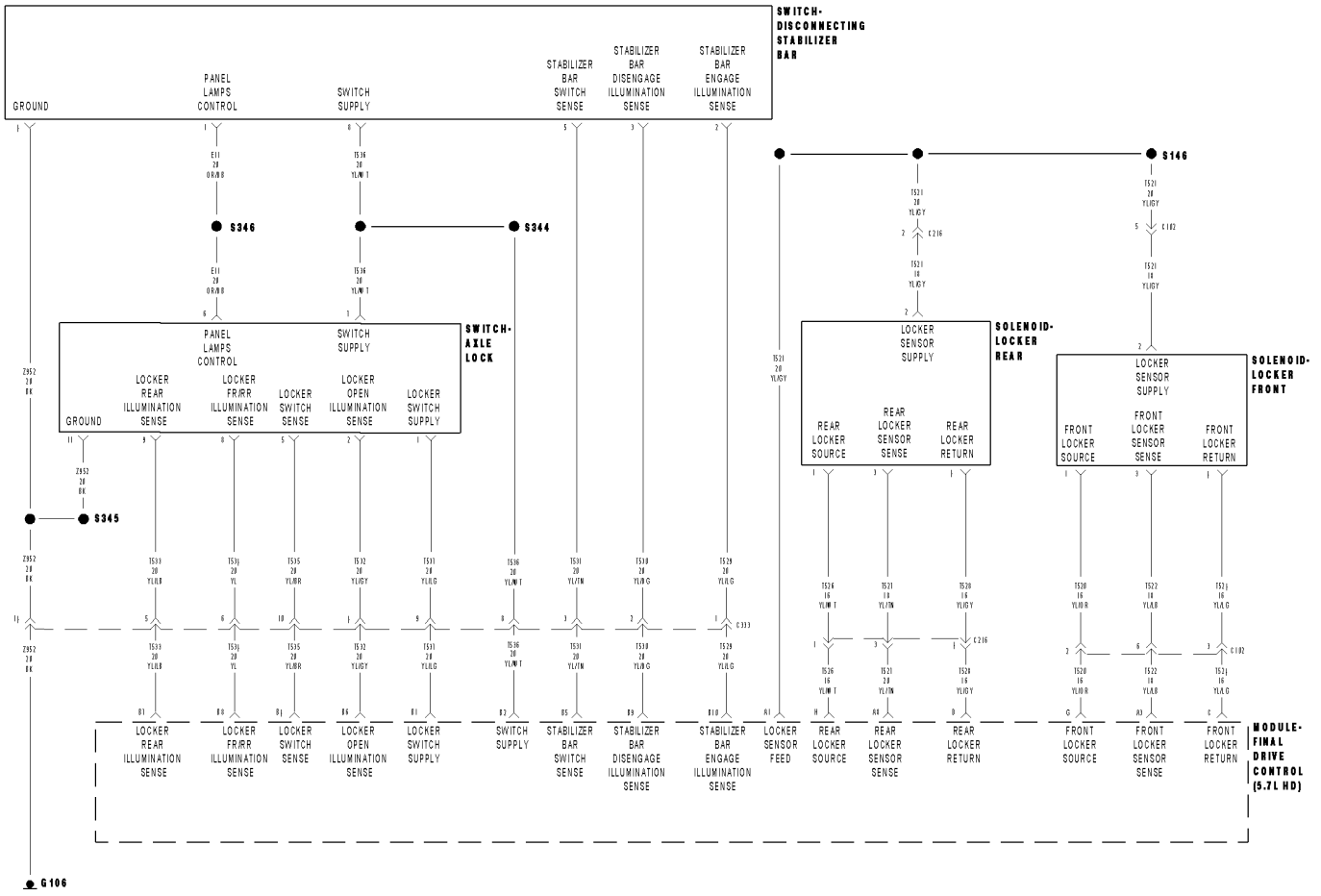

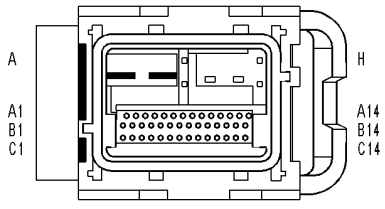

MODULE-FINAL DRIVE CONTROL (5.7L HD)

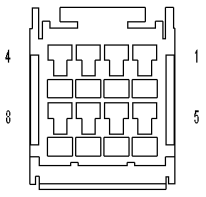

SWITCH-DISCONNECTING STABILZER BAR

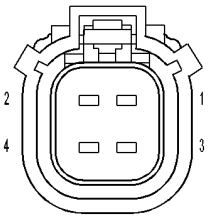

SOLENOID-LOCKER REAR

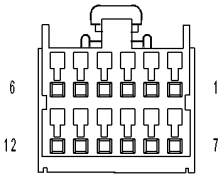

SWITCH-AXLE LOCK

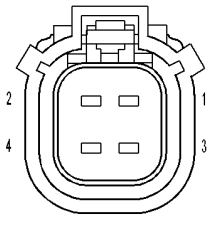

SOLENIOD-LOCKER FRONT

81459daf

C144B-REAR DIFFERENTIAL RETURN CIRCUIT HIGH (CONTINUED)

For a complete wiring diagram **Refer to Section 8W**.

- **When Monitored:**
  Ignition on. Axle Locker Switch in the RR or FR/RR position.
- **Set Condition:**
  The FDCM detects the Rear Locker Source circuit is shorted low.

Possible Causes
REAR LOCKER SOLENOID
(T526) REAR LOCKER SOURCE CIRCUIT SHORTED TO GROUND
(T528) REAR LOCKER RETURN CIRCUIT SHORTED TO (T526) REAR LOCKER SOURCE CIRCUIT
FDCM

Diagnostic Test

1. ACTIVE DTC

CAUTION: Before removing the FDCM harness connector, clean the connector and locking cam area of dirt and debris. Failure to do so can result in the connector being jammed or damage to the locking cams on the harness connector or module. Do not force the assist arm when releasing or installing the harness connector.

Ignition on, engine not running.

With the DRBIII®, read DTCs.

Is the DTC active at this time?

Yes >> Go To 2

No >> Go To 6

---

2. REAR LOCKER SOLENOID OPERATION

NOTE: Before continuing with the below diagnostic test, ensure the FDCM harness connector seal is installed correctly. Inspect the terminals on both harness connector and the module for damage. Failure to do so can result in misdiagnoses of the system.

Turn the ignition off.

Disconnect the Rear Locker Solenoid harness connector.

Ignition on, engine not running.

Using a 12-volt test light, jump across from the (T526) Rear Locker Source circuit and the (T528) Rear Locker Return circuit in the Rear Locker harness connector.

With a DRBIII®, actuate the Rear Locker Solenoid.

Does the test light flash on and off?

Yes >> Inspect the Rear Locker Solenoid terminals and connectors for corrosion and/or dirty that may compromise the connection. If OK, replace the Rear Locker Solenoid.
Perform FDCM VERIFICATION TEST.

No >> Go To 3

C144B-REAR DIFFERENTIAL RETURN CIRCUIT HIGH (CONTINUED)

3. (T528) REAR LOCKER RETURN CIRCUIT SHORTED TO BATTERY VOLTAGE

Turn the ignition off.

Disconnect the FDCM harness connector.

Turn the ignition on.

Measure the voltage of the (T528) Rear Locker Return circuit at the FDCM harness connector.

Does the voltmeter indicate voltage present?

Yes >> Repair the short to voltage in the (T528) Rear Locker Return circuit.
Perform FDCM VERIFICATION TEST.

No >> Go To 4

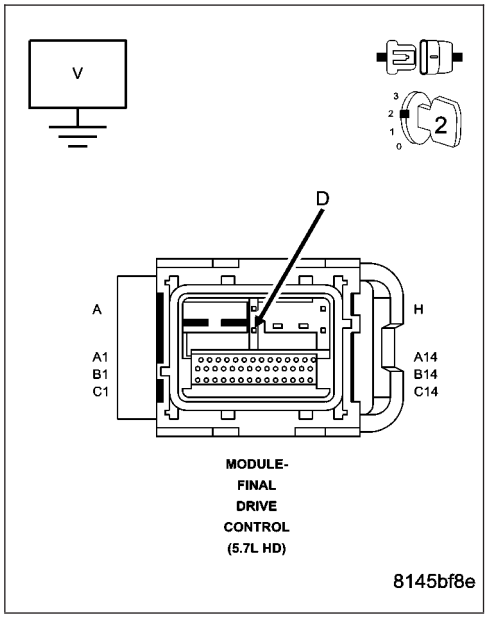

4. (T528) REAR LOCKER RETURN CIRCUIT SHORTED TO (T526) REAR LOCKER SOURCE CIRCUIT

Turn the ignition off.

Measure the resistance between the (T526) Rear Locker Source circuit and the (T528) Rear Locker Return circuit in the Rear Locker Solenoid harness connector.

Is the resistance below 100 ohms?

Yes >> Repair the short between (T526) Rear Locker Source circuit and the (T528) Rear Locker Return circuit.
Perform FDCM VERIFICATION TEST

No >> Go To 5

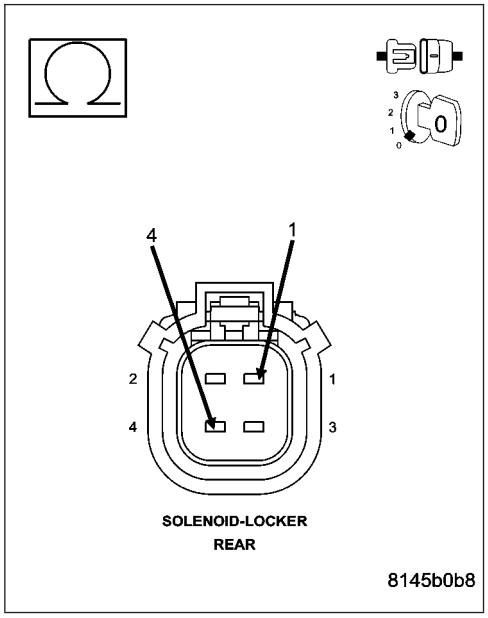

C144B-REAR DIFFERENTIAL RETURN CIRCUIT HIGH (CONTINUED)

5. FDCM

NOTE: Before continuing, check the FDCM harness connector terminals for corrosion, damage, or terminal push out. Repair as necessary.

Using the schematics as a guide, inspect the wire harness and connectors. Pay particular attention to all Power and Ground circuits.

Were there any problems found?

Yes >> Repair as necessary.
Perform FDCM VERIFICATION TEST

No >> Replace and program the Final Drive Control Module in accordance with Service Information.
Perform FDCM VERIFICATION TEST.

---

6. INTERMITTENT WIRING AND CONNECTORS

The conditions necessary to set this DTC are not present at this time.

Using the schematics as a guide, inspect the wiring and connectors specific to this circuit.

Wiggle test the wiring harness and connectors while checking for shorted and open circuits.

Using the DRBIII®, monitor the data related to this circuit while performing the wiggle test. Look for the data to change or for the DTC to reset.

Were there any problems found?

Yes >> Repair as necessary.
Perform FDCM VERIFICATION TEST.

No >> Test Complete.

C144E-FRONT DIFFERENTIAL POSITION SENSOR PERFORMANCE

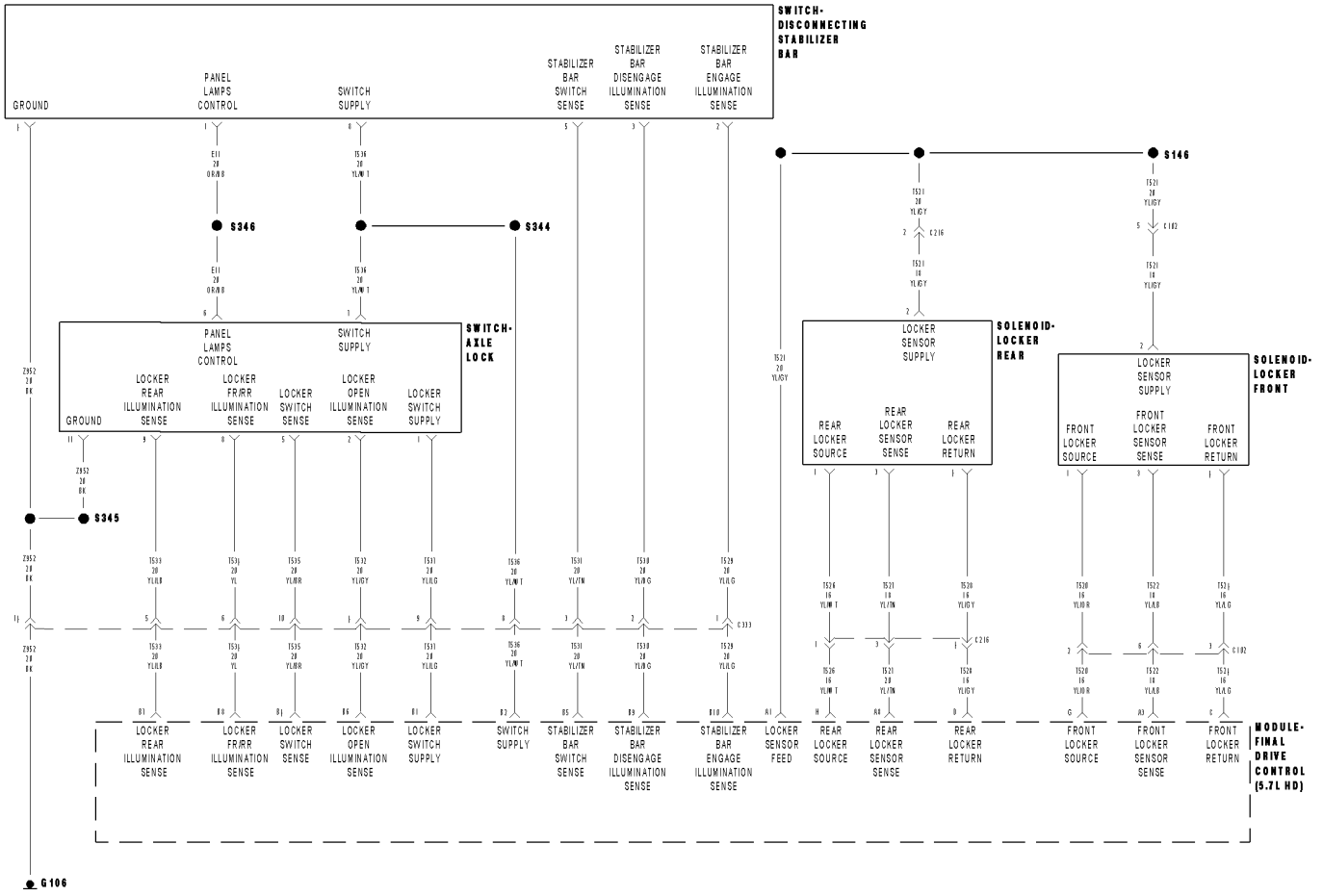

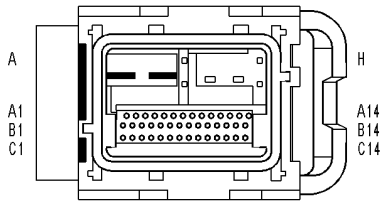

MODULE-FINAL DRIVE CONTROL (5.7L HD)

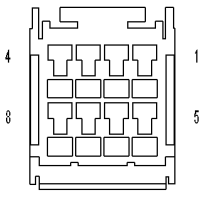

SWITCH-DISCONNECTING STABILZER BAR

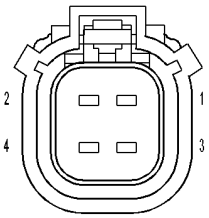

SOLENOID-LOCKER REAR

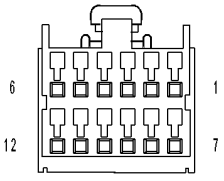

SWITCH-AXLE LOCK

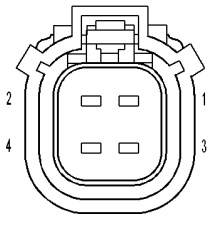

SOLENIOD-LOCKER FRONT

81459daf

C144E-FRONT DIFFERENTIAL POSITION SENSOR PERFORMANCE (CONTINUED)

For a complete wiring diagram **Refer to Section 8W**.

- **When Monitored:**
  The ignition on. Axle Locker Switch in the FR/RR position.
- **Set Condition:**
  The FDCM detects that the Front Differential Position Sensor is in an unexpected state.

Possible Causes
(T522) FRONT DIFFERENTIAL POSITION SENSOR (WIRING, CONNECTOR AND/OR TERMINAL CONDITION)
FRONT DIFFERENTIAL POSITION SENSOR
(T522) FRONT LOCKER SENSOR SENSE OPEN
FDCM

Diagnostic Test

1. ACTIVE DTC

CAUTION: Before removing the FDCM harness connector, clean the connector and locking cam area of dirt and debris. Failure to do so can result in the connector being jammed or damage to the locking cams on the harness connector or module. Do not force the assist arm when releasing or installing the harness connector.

Ignition on, engine not running.

With the DRBIII®, read DTCs.

Is the DTC active at this time?

Yes >> Go To 2

No >> Go To 6

---

2. FRONT DIFFERENTIAL POSITION SENSOR WIRING

NOTE: Before continuing with the below diagnostic test, ensure the FDCM harness connector seal is installed correctly. Inspect the terminals on both harness connector and the module for damage. Failure to do so can result in misdiagnoses of the system.

Using the DRBIII®, actuate the Front Locker Solenoid.

Monitor the Front Differential Position Sensor State.

Wiggle the related wiring harness from the FDCM to the Front Locker Solenoid connector at the axle.

With a DRBIII®, actuate the Front Locker Solenoid.

Does the state on the DRBIII® change while wiggling the wiring harness?

Yes >> Using the schematics as a guide, inspect the wiring and connectors specific to this circuit. Check the Locker Solenoid terminals and connectors for corrosion and/or dirty that may compromise the connection. Repair as necessary.

Perform FDCM VERIFICATION TEST.

No >> Go To 3

C144E-FRONT DIFFERENTIAL POSITION SENSOR PERFORMANCE (CONTINUED)

3. FRONT DIFFERENTIAL POSITION SENSOR OPERATION

Turn the ignition off.

Disconnect the Front Locker Solenoid harness connector.

Ignition on, engine not running.

Using a jumper wire, jumper across from the (T522) Front Locker Sensor Sense circuit and the (T521) Locker Sensor Supply circuit in the Front Locker Solenoid harness connector.

While monitoring the sensor state on the DRBIII®, tap the jumper wire on and off the (T522) Front Locker Sensor Sense circuit terminal. Hold the jumper wire on and off the terminal for a minimum of 3 seconds.

Does the state change on the DRBIII® while tapping the terminal?

Yes >> Replace the Front Locker Solenoid.
Perform FDCM VERIFICATION TEST.

No >> Go To 4

---

4. (T522) FRONT LOCKER SENSOR SENSE CIRCUIT OPEN

Turn the ignition off.

Disconnect the FDCM harness connector.

Measure the resistance of the (T522) Front Locker Sensor Sense circuit between the Front Locker Solenoid harness connector and the FDCM harness connector.

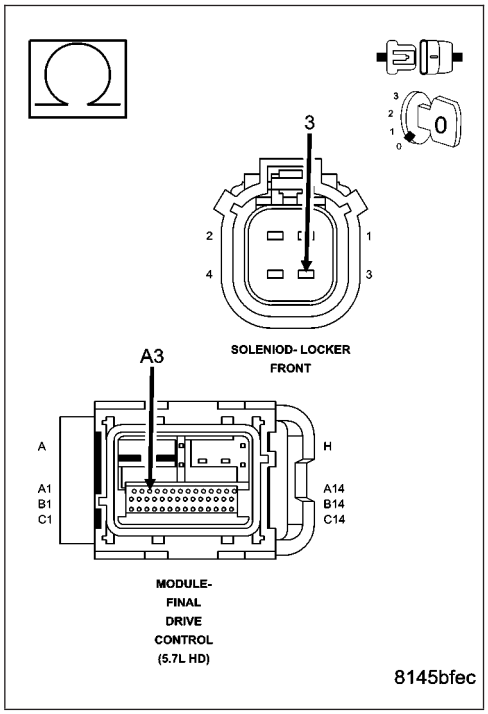

Is the resistance below 5.0 ohms?

Yes >> Go To 5

No >> Repair the open in the Front Locker Sensor Sense circuit.
Perform FDCM VERIFICATION TEST.

---

5. FDCM

NOTE: Before continuing, check the FDCM harness connector terminals for corrosion, damage, or terminal push out. Repair as necessary.

Using the schematics as a guide, inspect the wire harness and connectors. Pay particular attention to all Power and Ground circuits.

Were there any problems found?

Yes >> Repair as necessary.
Perform FDCM VERIFICATION TEST

No >> Replace and program the Final Drive Control Module in accordance with Service Information.
Perform FDCM VERIFICATION TEST.

C144E-FRONT DIFFERENTIAL POSITION SENSOR PERFORMANCE (CONTINUED)

6. INTERMITTENT WIRING AND CONNECTORS

The conditions necessary to set this DTC are not present at this time.

Using the schematics as a guide, inspect the wiring and connectors specific to this circuit.

Wiggle test the wiring harness and connectors while checking for shorted and open circuits.

Using the DRBIII®, monitor the data related to this circuit while performing the wiggle test. Look for the data to change or for the DTC to reset.

Were there any problems found?

Yes >> Repair as necessary.
Perform FDCM VERIFICATION TEST.

No >> Test Complete.

C1450-FRONT DIFFERENTIAL POSITION SENSOR CIRCUIT HIGH

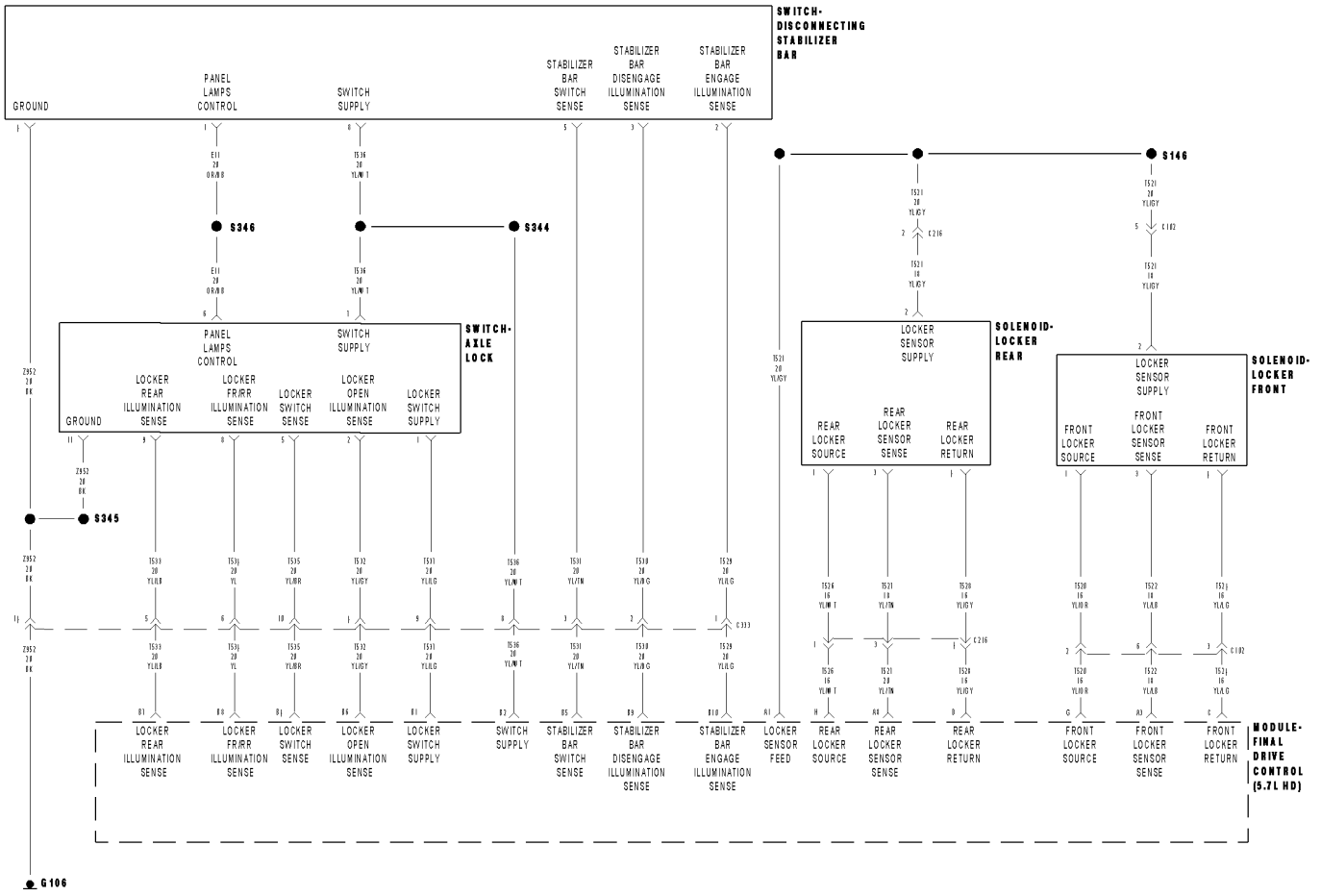

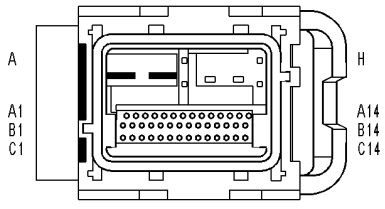

MODULE-FINAL DRIVE CONTROL (5.7L HD)

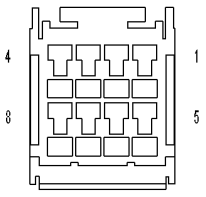

SWITCH-DISCONNECTING STABILZER BAR

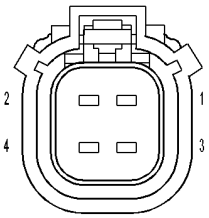

SOLENOID-LOCKER REAR

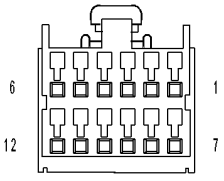

SWITCH-AXLE LOCK

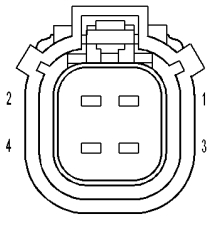

SOLENIOD-LOCKER FRONT

81459daf

C1450-FRONT DIFFERENTIAL POSITION SENSOR CIRCUIT HIGH (CONTINUED)
For a complete wiring diagram **Refer to Section 8W**.

- **When Monitored:**
  Ignition on. Axle Locker Switch in the FR/RR position.
- **Set Condition:**
  The FDCM detects that the Front Differential Position Sensor is shorted to voltage.

Possible Causes
(T522) FRONT LOCKER SENSOR SENSE SHORTED TO BATTERY VOLTAGE
FRONT DIFFERENTIAL POSITION SENSOR
(T522) FRONT LOCKER SENSOR SENSE OPEN
(T522) FRONT LOCKER SENSOR SENSE SHORTED TO (T521) LOCKER SENSOR SUPPLY
FDCM

Diagnostic Test

1. ACTIVE DTC

CAUTION: Before removing the FDCM harness connector, clean the connector and locking cam area of dirt and debris. Failure to do so can result in the connector being jammed or damage to the locking cams on the harness connector or module. Do not force the assist arm when releasing or installing the harness connector.
Ignition on, engine not running.
With the DRBIII®, read DTCs.

Is the DTC active at this time?

Yes >> Go To 2
No >> Go To 7

2. (T522) FRONT LOCKER SENSOR SENSE SHORTED TO BATTERY VOLTAGE

NOTE: Before continuing with the below diagnostic test, ensure the FDCM harness connector seal is installed correctly. Inspect the terminals on both harness connector and the module for damage. Failure to do so can result in misdiagnoses of the system.
Turn the ignition off.
Disconnect the Front Locker Solenoid harness connector.
Disconnect the FDCM harness connector.
Turn the ignition on.
Measure the voltage on the (T522) Front Locker Sensor Sense circuit in the FDCM harness connector.

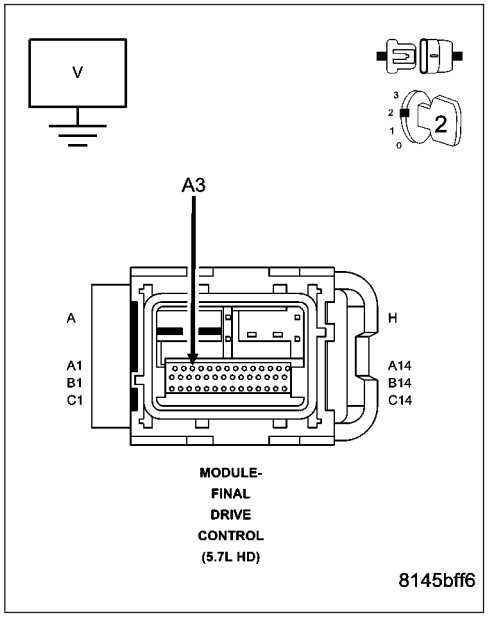

Does the voltmeter indicate voltage present?

Yes >> Repair the short to voltage in the (T522) Front Locker Sensor Sense circuit.
Perform FDCM VERIFICATION TEST.
No >> Go To 3

C1450-FRONT DIFFERENTIAL POSITION SENSOR CIRCUIT HIGH (CONTINUED)

3. FRONT DIFFERENTIAL POSITION SENSOR OPERATION

Turn the ignition off.

Connect the FDCM harness connector.

Ignition on, engine not running.

Using a jumper wire, jumper across from the (T522) Front Locker Sensor Sense circuit and the (T521) Locker Sensor Supply circuit in the Front Locker Solenoid harness connector.

While monitoring the sensor state on the DRBIII®, tap the jumper wire on and off the (T522) Front Locker Sensor Sense circuit terminal. Hold the jumper wire on and off the terminal for a minimum of 3 seconds.

Does the state change on the DRBIII® while tapping the terminal?

Yes >> Replace the Front Locker Solenoid.
Perform FDCM VERIFICATION TEST.

No >> Go To 4

---

4. (T522) FRONT LOCKER SENSOR SENSE CIRCUIT OPEN

Turn the ignition off.

Disconnect the FDCM harness connector.

Measure the resistance of the (T522) Front Locker Sensor Sense circuit between the Front Locker Solenoid harness connector and the FDCM harness connector.

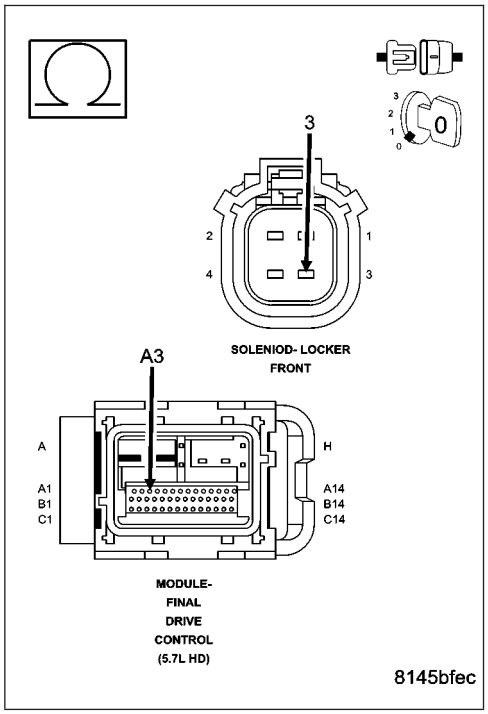

Is the resistance below 5.0 ohms?

Yes >> Go To 5

No >> Repair the open in the (T522) Front Locker Sensor Sense circuit.
Perform FDCM VERIFICATION TEST.

C1450-FRONT DIFFERENTIAL POSITION SENSOR CIRCUIT HIGH (CONTINUED)

5. (T522) FRONT LOCKER SENSOR SENSE CIRCUIT SHORTED TO (T521) LOCKER SENSOR SUPPLY

Measure the resistance between the (T522) Front Locker Sensor Sense circuit and the (T521) Locker Sensor Supply circuit in the FDCM harness connector.

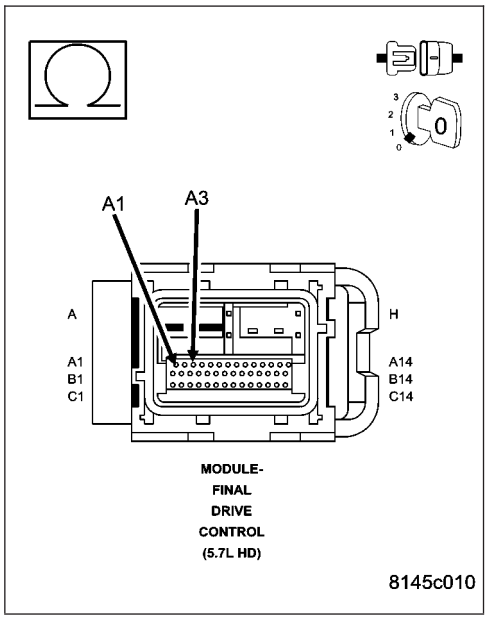

Is the resistance below 5.0 ohms?

Yes >> Repair the short between the Front Locker Sensor Sense circuit and the (T521) Locker Supply Sensor circuit.
Perform FDCM VERIFICATION TEST.

No >> Go To 6

---

6. FDCM

NOTE: Before continuing, check the FDCM harness connector terminals for corrosion, damage, or terminal push out. Repair as necessary.

Using the schematics as a guide, inspect the wire harness and connectors. Pay particular attention to all Power and Ground circuits.

Were there any problems found?

Yes >> Repair as necessary.
Perform FDCM VERIFICATION TEST

No >> Replace and program the Final Drive Control Module in accordance with Service Information.
Perform FDCM VERIFICATION TEST.

---

7. INTERMITTENT WIRING AND CONNECTORS

The conditions necessary to set this DTC are not present at this time.

Using the schematics as a guide, inspect the wiring and connectors specific to this circuit.

Wiggle test the wiring harness and connectors while checking for shorted and open circuits.

Using the DRBIII®, monitor the data related to this circuit while performing the wiggle test. Look for the data to change or for the DTC to reset.

Were there any problems found?

Yes >> Repair as necessary.
Perform FDCM VERIFICATION TEST.

No >> Test Complete.

C144F-FRONT DIFFERENTIAL POSITION SENSOR LOW

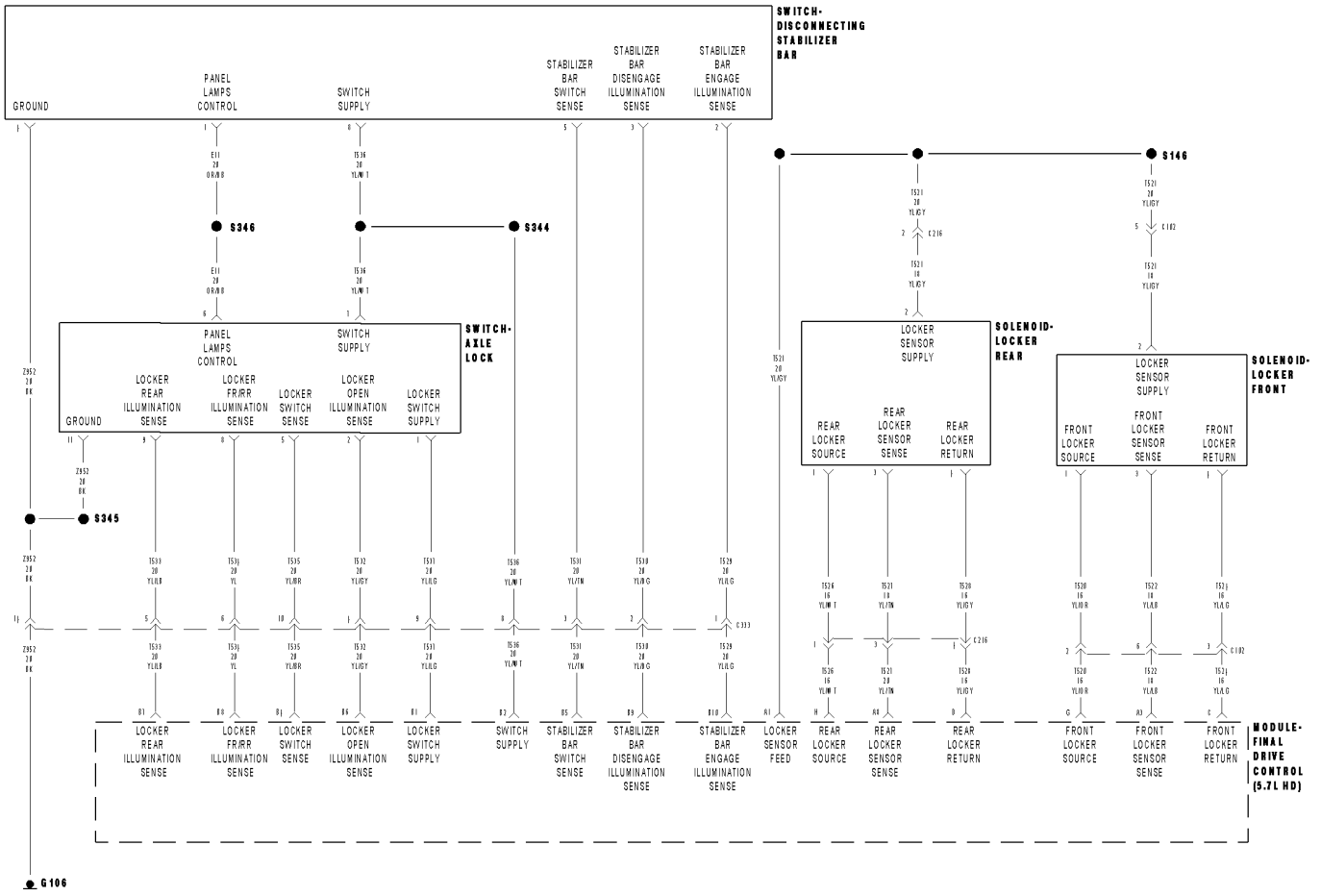

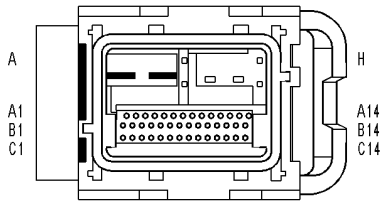

MODULE-FINAL DRIVE CONTROL (5.7L HD)

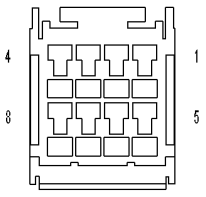

SWITCH-DISCONNECTING STABILZER BAR

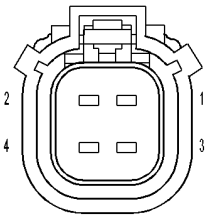

SOLENOID-LOCKER REAR

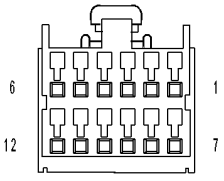

SWITCH-AXLE LOCK

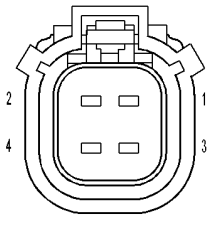

SOLENIOD-LOCKER FRONT

81459daf

C144F-FRONT DIFFERENTIAL POSITION SENSOR LOW (CONTINUED)

For a complete wiring diagram **Refer to Section 8W**.

- **When Monitored:**
  Ignition on. Axle Locker Switch in the FR/RR position.
- **Set Condition:**
  The FDCM detects that the Front Differential Position Sensor is short low.

Possible Causes
FRONT DIFFERENTIAL POSITION SENSOR
(T522) FRONT LOCKER SENSOR SENSE SHORTED TO GROUND
FDCM

Diagnostic Test

1. ACTIVE DTC

CAUTION: Before removing the FDCM harness connector, clean the connector and locking cam area of dirt and debris. Failure to do so can result in the connector being jammed or damage to the locking cams on the harness connector or module. Do not force the assist arm when releasing or installing the harness connector.

Ignition on, engine not running.

With the DRBIII®, read DTCs.

Is the DTC active at this time?

Yes >> Go To 2

No >> Go To 5

---

2. FRONT DIFFERENTIAL POSITION SENSOR OPERATION

NOTE: Before continuing with the below diagnostic test, ensure the FDCM harness connector seal is installed correctly. Inspect the terminals on both harness connector and the module for damage. Failure to do so can result in misdiagnoses of the system.

Using the DRBIII®, ignition on, monitor the Front Locker Sensor state.

Disconnect the Front Locker Solenoid harness connector.

Does the state change on the DRBIII® from Locked to Unlocked?

Yes >> Replace the Front Locker Solenoid.
Perform FDCM VERIFICATION TEST.

No >> Go To 3

C144F-FRONT DIFFERENTIAL POSITION SENSOR LOW (CONTINUED)

3. (T522) FRONT LOCKER SENSOR SENSE CIRCUIT SHORTED TO GROUND

Turn the ignition off.

Disconnect the FDCM harness connector.

Measure the resistance of the (T522) Front Locker Sensor Sense circuit in the FDCM harness connector.

Is the resistance below 5.0 ohms?

Yes >> Repair the short to ground in the (T522) Front Locker Sensor Sense circuit.
Perform FDCM VERIFICATION TEST.

No >> Go To 4

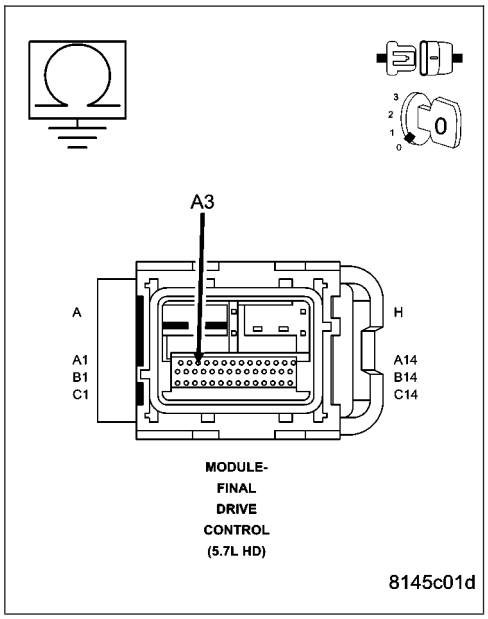

---

4. FDCM

NOTE: Before continuing, check the FDCM harness connector terminals for corrosion, damage, or terminal push out. Repair as necessary.

Using the schematics as a guide, inspect the wire harness and connectors. Pay particular attention to all Power and Ground circuits.

Were there any problems found?

Yes >> Repair as necessary.
Perform FDCM VERIFICATION TEST

No >> Replace and program the Final Drive Control Module in accordance with Service Information.
Perform FDCM VERIFICATION TEST.

---

5. INTERMITTENT WIRING AND CONNECTORS

The conditions necessary to set this DTC are not present at this time.

Using the schematics as a guide, inspect the wiring and connectors specific to this circuit.

Wiggle test the wiring harness and connectors while checking for shorted and open circuits.

Using the DRBIII®, monitor the data related to this circuit while performing the wiggle test. Look for the data to change or for the DTC to reset.

Were there any problems found?

Yes >> Repair as necessary.
Perform FDCM VERIFICATION TEST.

No >> Test Complete.

C1452-REAR DIFFERENTIAL POSITION SENSOR PERFORMANCE

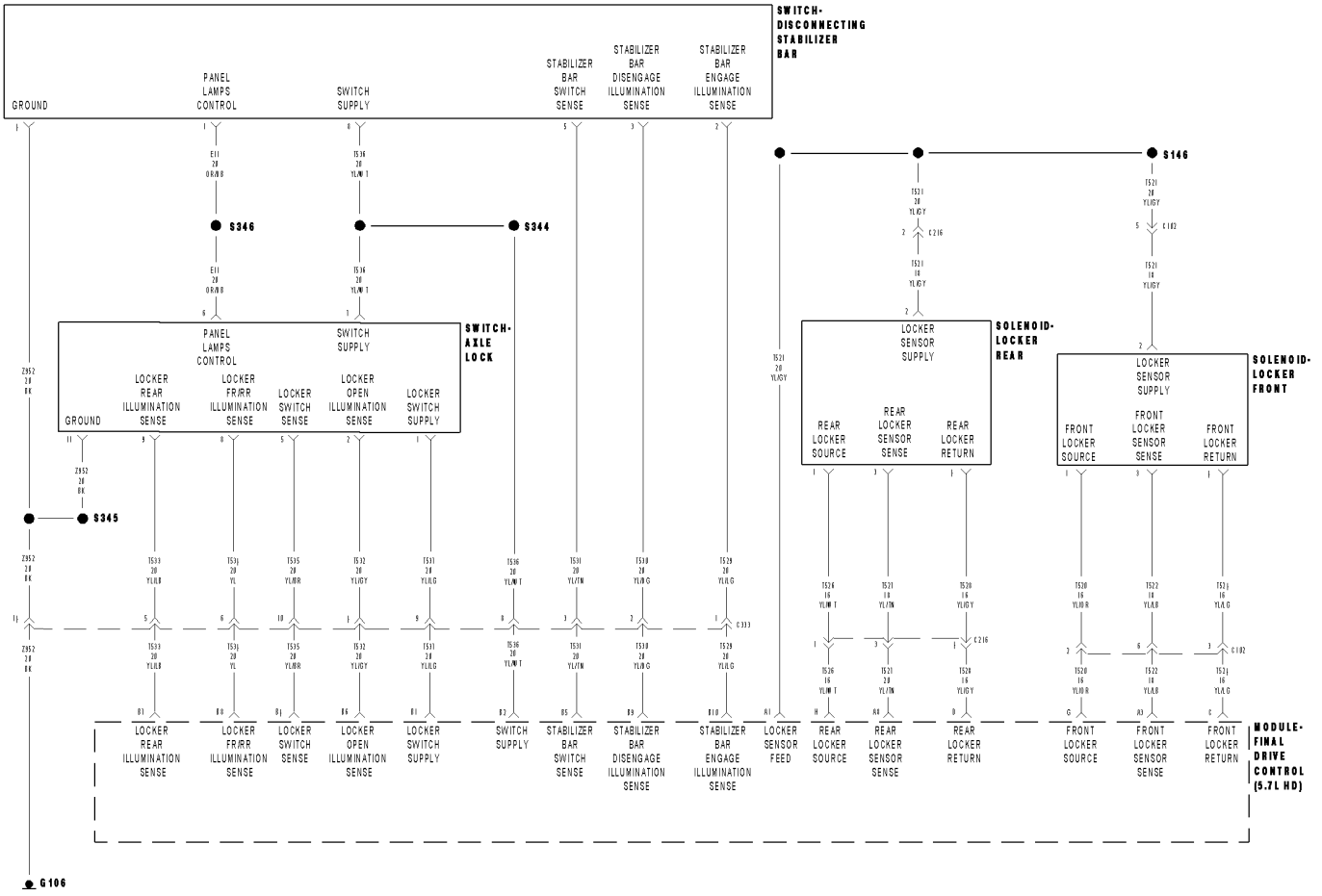

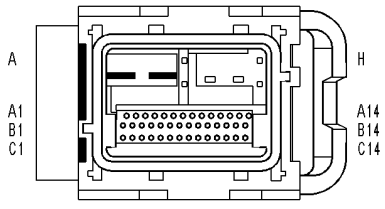

MODULE-FINAL DRIVE CONTROL (5.7L HD)

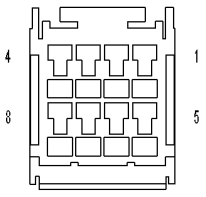

SWITCH-DISCONNECTING STABILZER BAR

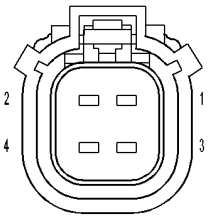

SOLENOID-LOCKER REAR

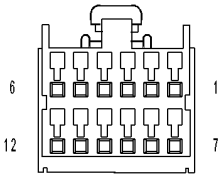

SWITCH-AXLE LOCK

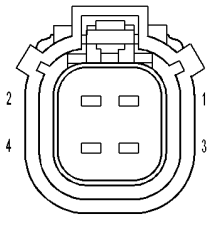

SOLENIOD-LOCKER FRONT

81459daf

C1452-REAR DIFFERENTIAL POSITION SENSOR PERFORMANCE (CONTINUED)

For a complete wiring diagram **Refer to Section 8W**.

- **When Monitored:**
  The ignition on. Axle Locker Switch in the RR or FR/RR position.
- **Set Condition:**
  The FDCM detects that the Rear Differential Position Sensor is in an unexpected state.

Possible Causes
REAR DIFFERENTIAL POSITION SENSOR (WIRING, CONNECTOR AND/OR TERMINAL CONDITION)
REAR DIFFERENTIAL POSITION SENSOR
REAR LOCKER SENSOR SENSE OPEN
FDCM

Diagnostic Test

1. ACTIVE DTC

CAUTION: Before removing the FDCM harness connector, clean the connector and locking cam area of dirt and debris. Failure to do so can result in the connector being jammed or damage to the locking cams on the harness connector or module. Do not force the assist arm when releasing or installing the harness connector.

Ignition on, engine not running.

With the DRBIII®, read DTCs.

Is the DTC active at this time?

Yes >> Go To 2

No >> Go To 6

---

2. REAR DIFFERENTIAL POSITION SENSOR WIRING

NOTE: Before continuing with the below diagnostic test, ensure the FDCM harness connector seal is installed correctly. Inspect the terminals on both harness connector and the module for damage. Failure to do so can result in misdiagnoses of the system.

Using the DRBIII®, actuate the Rear Locker Solenoid.

Monitor the Rear Differential Position Sensor State.

Wiggle the related wiring harness from the FDCM to the Rear Locker Solenoid connector at the axle.

With a DRBIII®, actuate the Rear Locker Solenoid.

Does the state on the DRBIII® change while wiggling the wiring harness?

Yes >> Using the schematics as a guide, inspect the wiring and connectors specific to this circuit. Check the Locker Solenoid terminals and connectors for corrosion and/or dirty that may compromise the connection. Repair as necessary.

Perform FDCM VERIFICATION TEST.

No >> Go To 3

C1452-REAR DIFFERENTIAL POSITION SENSOR PERFORMANCE (CONTINUED)

3. REAR DIFFERENTIAL POSITION SENSOR OPERATION

Turn the ignition off.

Disconnect the Rear Locker Solenoid harness connector.

Ignition on, engine not running.

Using a jumper wire, jumper across from the (T527) Rear Locker Sensor Sense circuit and the (T521) Locker Sensor Supply circuit in the Rear Locker Solenoid harness connector.

While monitoring the sensor state on the DRBIII®, tap the jumper wire on and off the (T527) Rear Locker Sensor Sense circuit terminal. Hold the jumper wire on and off the terminal for a minimum of 3 seconds.

Does the state change on the DRBIII® while tapping the terminal?

Yes >> Replace the Rear Locker Solenoid.
Perform FDCM VERIFICATION TEST.

No >> Go To 4

---

4. (T527) REAR LOCKER SENSOR SENSE CIRCUIT OPEN

Turn the ignition off.

Disconnect the FDCM harness connector.

Measure the resistance of the (T527) Rear Locker Sensor Sense circuit between the Rear Locker Solenoid harness connector and the FDCM harness connector.

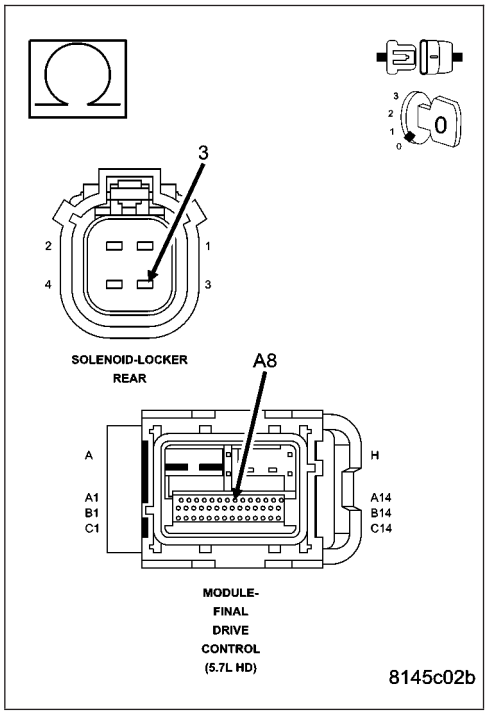

Is the resistance below 5.0 ohms?

Yes >> Go To 5

No >> Repair the open in the Rear Locker Sensor Sense circuit.
Perform FDCM VERIFICATION TEST.

---

5. FDCM

NOTE: Before continuing, check the FDCM harness connector terminals for corrosion, damage, or terminal push out. Repair as necessary.

Using the schematics as a guide, inspect the wire harness and connectors. Pay particular attention to all Power and Ground circuits.

Were there any problems found?

Yes >> Repair as necessary.
Perform FDCM VERIFICATION TEST

No >> Replace and program the Final Drive Control Module in accordance with Service Information.
Perform FDCM VERIFICATION TEST.

C1452-REAR DIFFERENTIAL POSITION SENSOR PERFORMANCE (CONTINUED)

6. INTERMITTENT WIRING AND CONNECTORS

The conditions necessary to set this DTC are not present at this time.

Using the schematics as a guide, inspect the wiring and connectors specific to this circuit.

Wiggle test the wiring harness and connectors while checking for shorted and open circuits.

Using the DRBIII®, monitor the data related to this circuit while performing the wiggle test. Look for the data to change or for the DTC to reset.

Were there any problems found?

Yes >> Repair as necessary.
Perform FDCM VERIFICATION TEST.

No >> Test Complete.

C1453-REAR DIFFERENTIAL POSITION SENSOR LOW

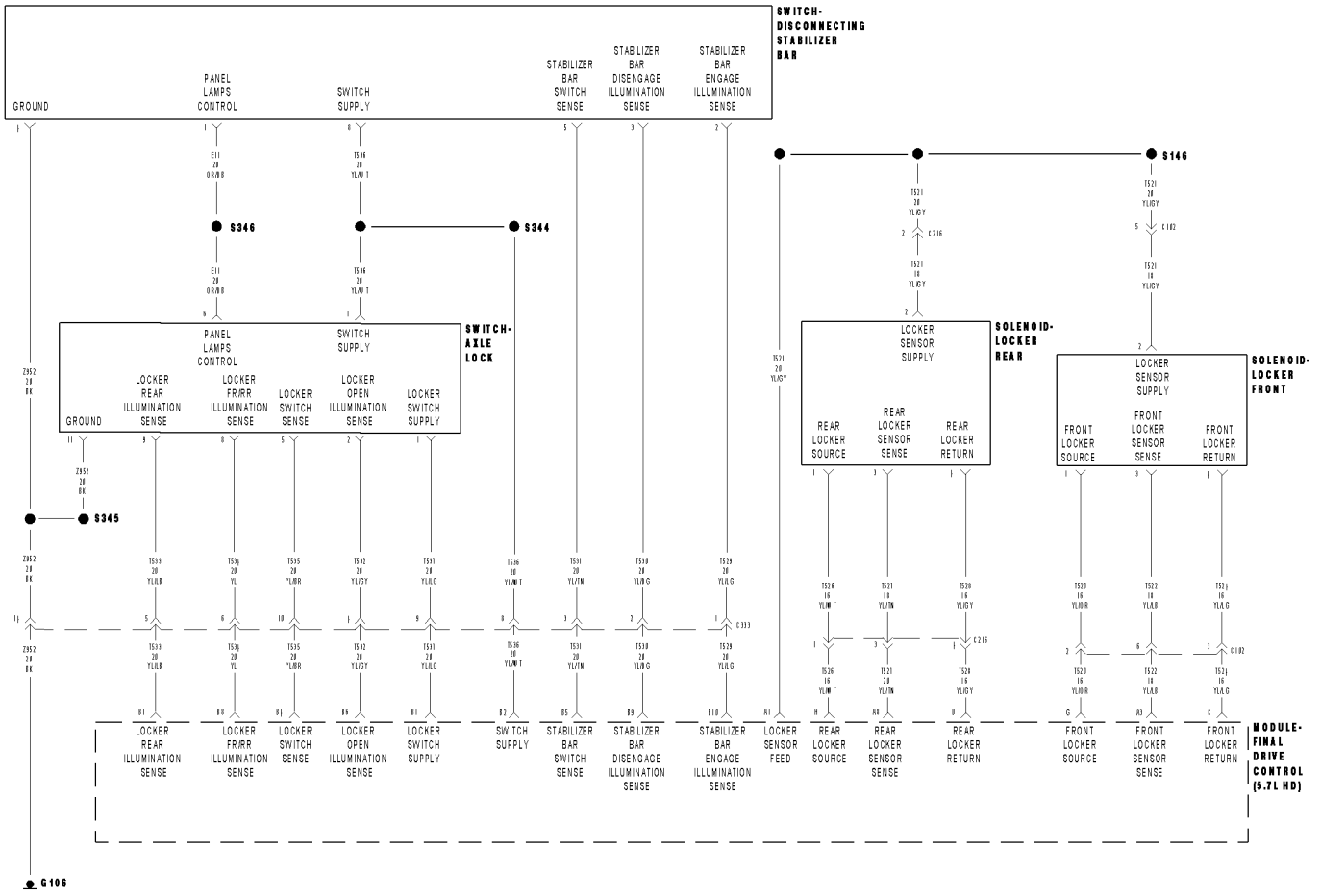

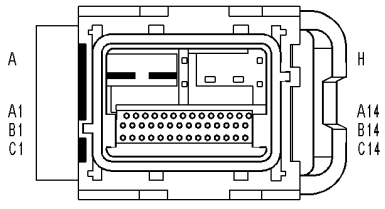

MODULE-FINAL DRIVE CONTROL (5.7L HD)

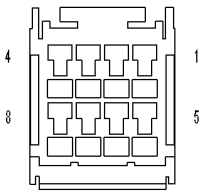

SWITCH-DISCONNECTING STABILZER BAR

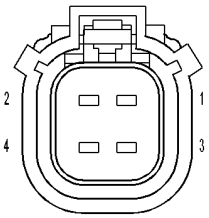

SOLENOID-LOCKER REAR

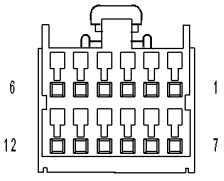

SWITCH-AXLE LOCK

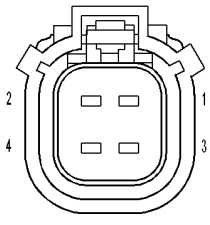

SOLENIOD-LOCKER FRONT

81459daf

C1453-REAR DIFFERENTIAL POSITION SENSOR LOW (CONTINUED)

For a complete wiring diagram **Refer to Section 8W**.

- **When Monitored:**
  The ignition on. Axle Locker Switch in the FR/RR position.
- **Set Condition:**
  The FDCM detects that the Rear Differential Position Sensor is short low.

Possible Causes
FRONT DIFFERENTIAL POSITION SENSOR
(522) FRONT LOCKER SENSOR SENSE SHORTED TO GROUND
FDCM

Diagnostic Test

1. ACTIVE DTC

CAUTION: Before removing the FDCM harness connector, clean the connector and locking cam area of dirt and debris. Failure to do so can result in the connector being jammed or damage to the locking cams on the harness connector or module. Do not force the assist arm when releasing or installing the harness connector.

Ignition on, engine not running.

With the DRBIII®, read DTCs.

Is the DTC active at this time?

Yes >> Go To 2

No >> Go To 5

---

2. REAR DIFFERENTIAL POSITION SENSOR OPERATION

NOTE: Before continuing with the below diagnostic test, ensure the FDCM harness connector seal is installed correctly. Inspect the terminals on both harness connector and the module for damage. Failure to do so can result in misdiagnoses of the system.

Using the DRBIII®, ignition on, monitor the Rear Locker Sensor state.

Disconnect the Rear Locker Solenoid harness connector.

Does the state change on the DRBIII® from Locked to Unlocked?

Yes >> Replace the Rear Locker Solenoid.
Perform FDCM VERIFICATION TEST.

No >> Go To 3

C1453-REAR DIFFERENTIAL POSITION SENSOR LOW (CONTINUED)

3. (T527) REAR LOCKER SENSOR SENSE CIRCUIT SHORTED TO GROUND

Turn the ignition off.

Disconnect the FDCM harness connector.

Measure the resistance of the (T527) Rear Locker Sensor Sense circuit in the FDCM harness connector.

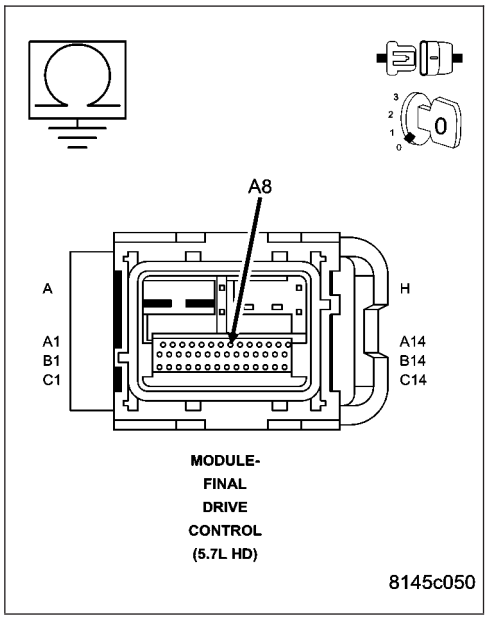

Is the resistance below 5.0 ohms?

Yes >> Repair the short to ground in the Rear Locker Sensor Sense circuit.
Perform FDCM VERIFICATION TEST.

No >> Go To 4

---

4. FDCM

NOTE: Before continuing, check the FDCM harness connector terminals for corrosion, damage, or terminal push out. Repair as necessary.

Using the schematics as a guide, inspect the wire harness and connectors. Pay particular attention to all Power and Ground circuits.

Were there any problems found?

Yes >> Repair as necessary.
Perform FDCM VERIFICATION TEST

No >> Replace and program the Final Drive Control Module in accordance with Service Information.
Perform FDCM VERIFICATION TEST.

---

5. INTERMITTENT WIRING AND CONNECTORS

The conditions necessary to set this DTC are not present at this time.

Using the schematics as a guide, inspect the wiring and connectors specific to this circuit.

Wiggle test the wiring harness and connectors while checking for shorted and open circuits.

Using the DRBIII®, monitor the data related to this circuit while performing the wiggle test. Look for the data to change or for the DTC to reset.

Were there any problems found?

Yes >> Repair as necessary.
Perform FDCM VERIFICATION TEST.

No >> Test Complete.

C1454-REAR DIFFERENTIAL POSITION SENSOR CIRCUIT HIGH

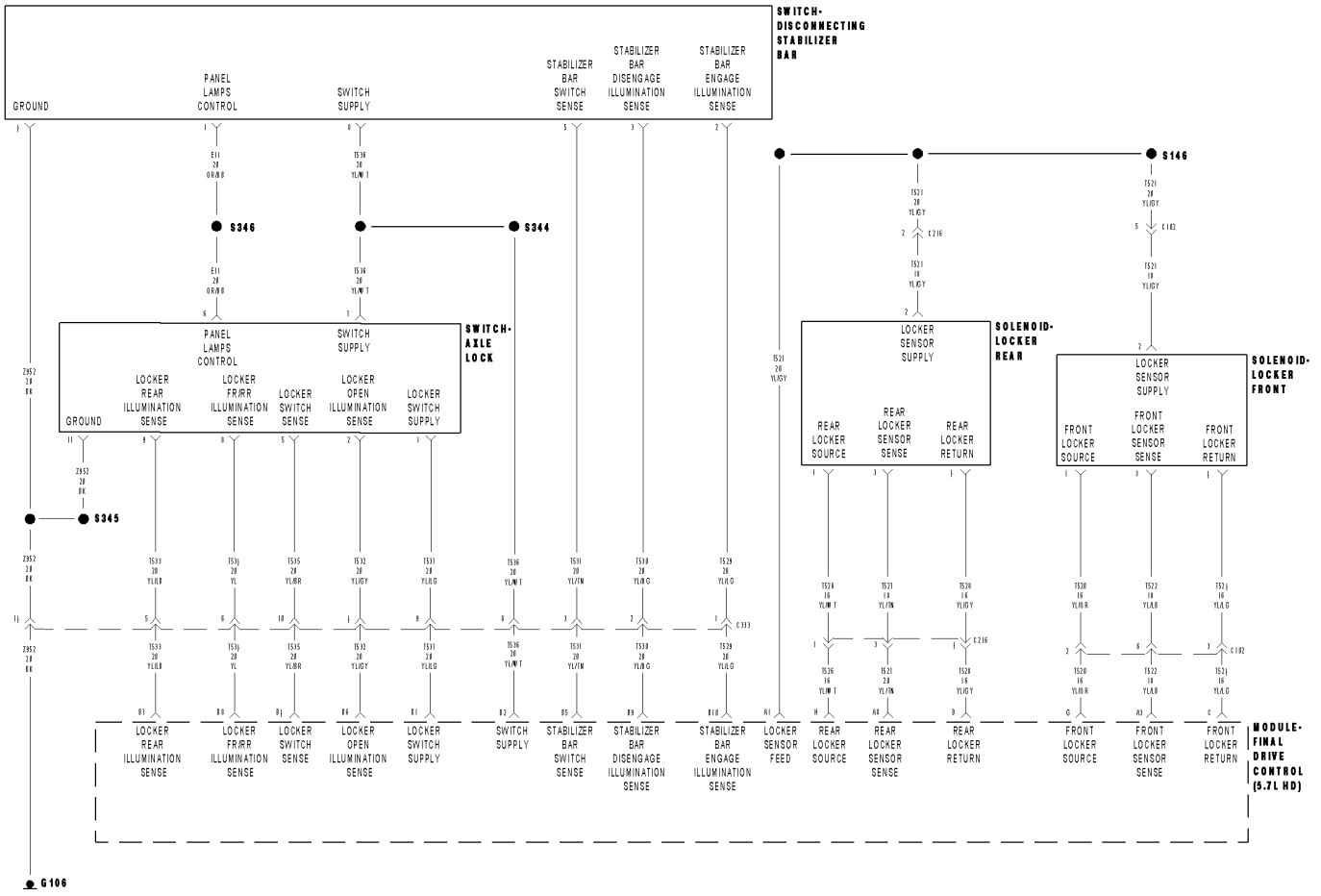

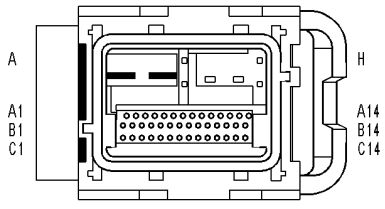

MODULE-FINAL DRIVE CONTROL (5.7L HD)

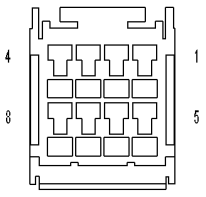

SWITCH-DISCONNECTING STABILZER BAR

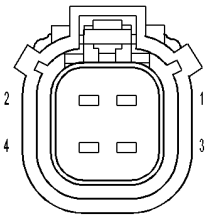

SOLENOID-LOCKER REAR

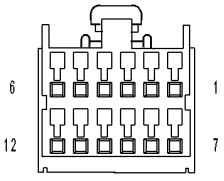

SWITCH-AXLE LOCK

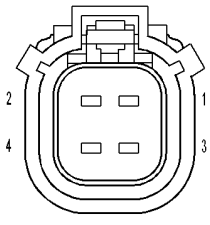

SOLENIOD-LOCKER FRONT

81459daf

C1454-REAR DIFFERENTIAL POSITION SENSOR CIRCUIT HIGH (CONTINUED)

For a complete wiring diagram **Refer to Section 8W**.

- **When Monitored:**
  The ignition on. Axle Locker Switch in the RR or FR/RR position.
- **Set Condition:**
  The FDCM detects that the Rear Differential Position Sensor is shorted to voltage.

Possible Causes
(T527) REAR LOCKER SENSOR SENSE SHORTED TO BATTERY VOLTAGE
REAR DIFFERENTIAL POSITION SENSOR
(T527) REAR LOCKER SENSOR SENSE OPEN
(T527) REAR LOCKER SENSOR SENSE SHORTED TO (T521) LOCKER SENSOR SUPPLY
FDCM

Diagnostic Test

1. ACTIVE DTC

CAUTION: Before removing the FDCM harness connector, clean the connector and locking cam area of dirt and debris. Failure to do so can result in the connector being jammed or damage to the locking cams on the harness connector or module. Do not force the assist arm when releasing or installing the harness connector.

Ignition on, engine not running.

With the DRBIII®, read DTCs.

Is the DTC active at this time?

Yes >> Go To 2

No >> Go To 7

---

2. (T527) REAR LOCKER SENSOR SENSE SHORTED TO BATTERY VOLTAGE

NOTE: Before continuing with the below diagnostic test, ensure the FDCM harness connector seal is installed correctly. Inspect the terminals on both harness connector and the module for damage. Failure to do so can result in misdiagnoses of the system.

Turn the ignition off.

Disconnect the Rear Locker Solenoid harness connector.

Disconnect the FDCM harness connector.

Turn the ignition on.

Measure the voltage on the (T527) Rear Locker Sensor Sense circuit in the FDCM harness connector.

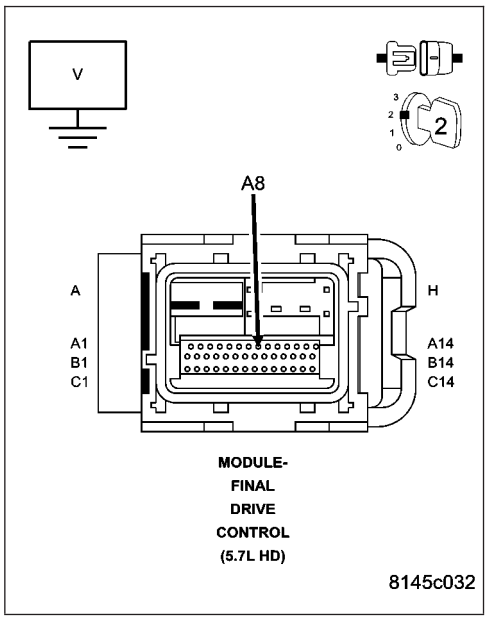

Does the voltmeter indicate voltage present?

Yes >> Repair the short to voltage in the (T527) Rear Locker Sensor Sense circuit.
Perform FDCM VERIFICATION TEST.

No >> Go To 3

C1454-REAR DIFFERENTIAL POSITION SENSOR CIRCUIT HIGH (CONTINUED)

3. REAR DIFFERENTIAL POSITION SENSOR OPERATION

Turn the ignition off.

Connect the FDCM harness connector.

Ignition on, engine not running.

Using a jumper wire, jumper across from the (T527) Rear Locker Sensor Sense circuit and the (T521) Locker Sensor Supply circuit in the Rear Locker Solenoid harness connector.

While monitoring the sensor state on the DRBIII®, tap the jumper wire on and off the (T527) Rear Locker Sensor Sense circuit terminal. Hold the jumper wire on and off the terminal for a minimum of 3 seconds.

Does the state change on the DRBIII® while tapping the terminal?

Yes >> Replace the Rear Locker Solenoid.
Perform FDCM VERIFICATION TEST.

No >> Go To 4

---

4. (T527) REAR LOCKER SENSOR SENSE CIRCUIT OPEN

Turn the ignition off.

Disconnect the FDCM harness connector.

Measure the resistance of the (T527) Rear Locker Sensor Sense circuit between the Rear Locker Solenoid harness connector and the FDCM harness connector.

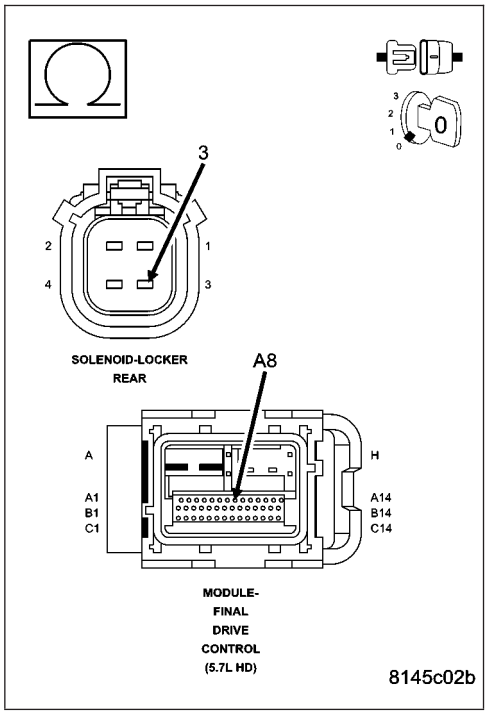

Is the resistance below 5.0 ohms?

Yes >> Go To 5

No >> Repair the open in the Rear Locker Sensor Sense circuit.
Perform FDCM VERIFICATION TEST.

C1454-REAR DIFFERENTIAL POSITION SENSOR CIRCUIT HIGH (CONTINUED)

5. (T527) REAR LOCKER SENSOR SENSE CIRCUIT SHORTED TO (T521) LOCKER SENSOR SUPPLY

Measure the resistance between the (T527) Rear Locker Sensor Sense circuit and the (T521) Locker Sensor Supply circuit in the FDCM harness connector.

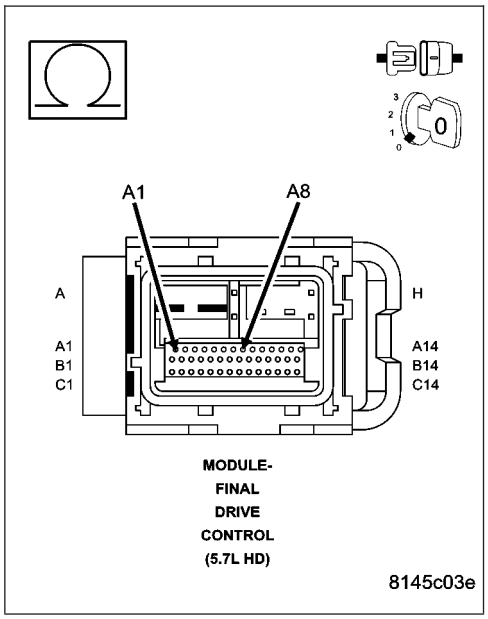

Is the resistance below 5.0 ohms?

Yes >> Repair the short between the (T527) Rear Locker Sensor Sense circuit and the Locker Supply Sensor circuit.
Perform FDCM VERIFICATION TEST.

No >> Go To 6

---

6. FDCM

NOTE: Before continuing, check the FDCM harness connector terminals for corrosion, damage, or terminal push out. Repair as necessary.

Using the schematics as a guide, inspect the wire harness and connectors. Pay particular attention to all Power and Ground circuits.

Were there any problems found?

Yes >> Repair as necessary.
Perform FDCM VERIFICATION TEST

No >> Replace and program the Final Drive Control Module in accordance with Service Information.
Perform FDCM VERIFICATION TEST.

---

7. INTERMITTENT WIRING AND CONNECTORS

The conditions necessary to set this DTC are not present at this time.

Using the schematics as a guide, inspect the wiring and connectors specific to this circuit.

Wiggle test the wiring harness and connectors while checking for shorted and open circuits.

Using the DRBIII®, monitor the data related to this circuit while performing the wiggle test. Look for the data to change or for the DTC to reset.

Were there any problems found?

Yes >> Repair as necessary.
Perform FDCM VERIFICATION TEST.

No >> Test Complete.

C2111- DIFFERENTIAL POSITION SENSOR SUPPLY VOLTAGE CIRCUIT LOW

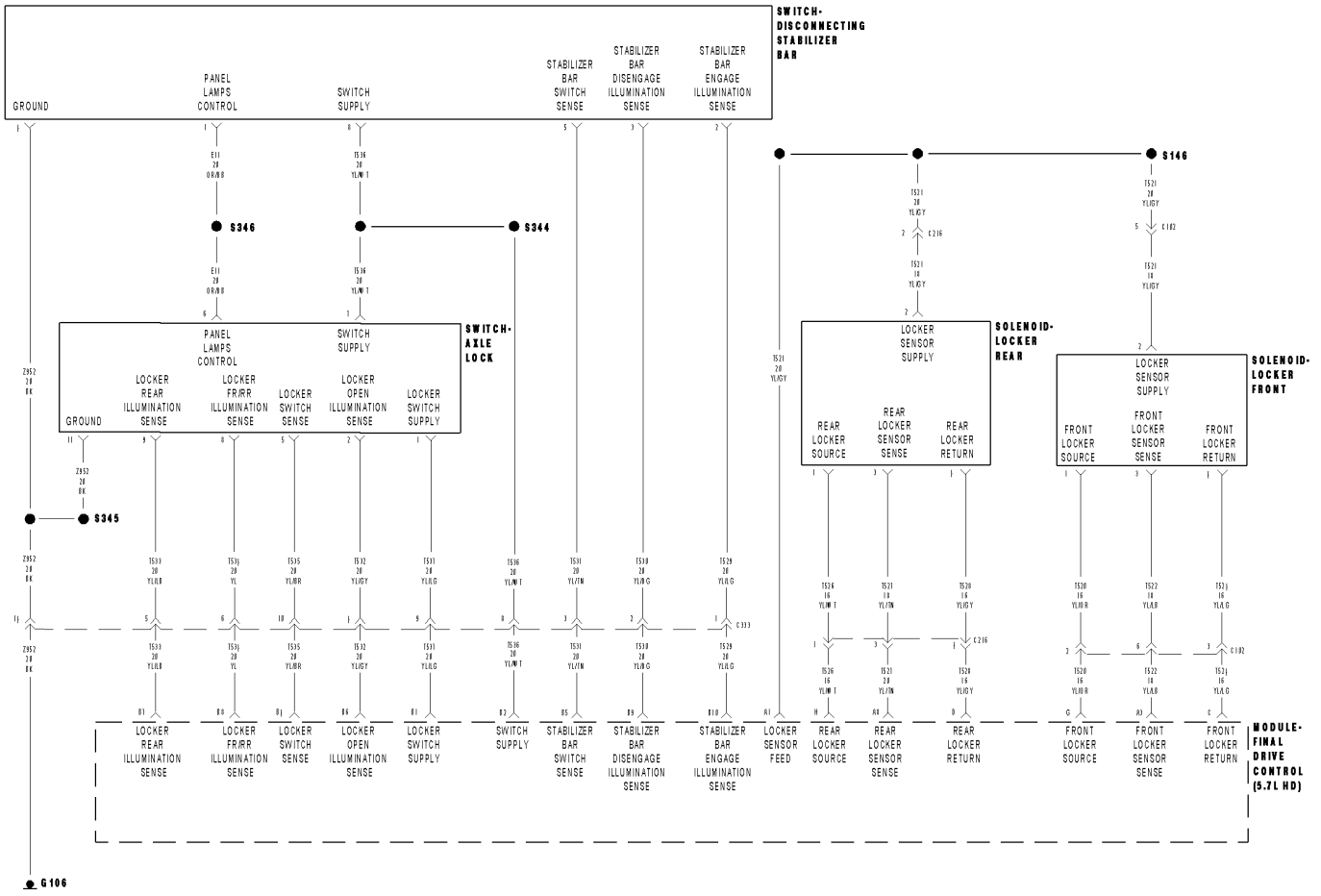

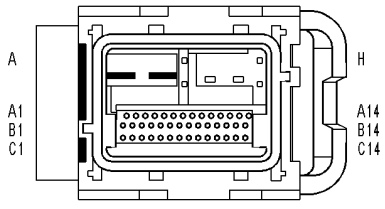

MODULE-FINAL DRIVE CONTROL (5.7L HD)

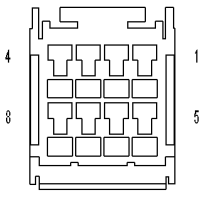

SWITCH-DISCONNECTING STABILZER BAR

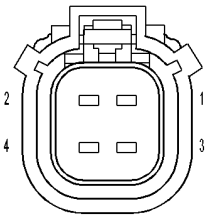

SOLENOID-LOCKER REAR

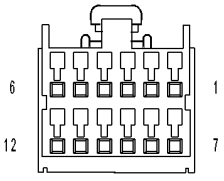

SWITCH-AXLE LOCK

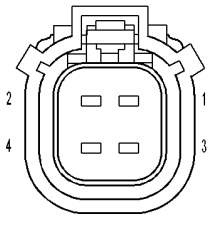

SOLENIOD-LOCKER FRONT

81459daf

C2111- DIFFERENTIAL POSITION SENSOR SUPPLY VOLTAGE CIRCUIT LOW (CONTINUED)

For a complete wiring diagram **Refer to Section 8W**.

- **When Monitored:**
  Ignition on.
- **Set Condition:**
  The FDCM recognizes the Locker Sensor Supply circuit voltage is too low.

Possible Causes
FRONT DIFFERENTIAL POSITION SENSOR
REAR DIFFERENTIAL POSITION SENSOR
(T521) LOCKER SENSOR SUPPLY CIRCUIT SHORTED TO GROUND
FDCM

Diagnostic Test

1. ACTIVE DTC

CAUTION: Before removing the FDCM harness connector, clean the connector and locking cam area of dirt and debris. Failure to do so can result in the connector being jammed or damage to the locking cams on the harness connector or module. Do not force the assist arm when releasing or installing the harness connector.

Ignition on, engine not running.

With a DRBIII®, read DTCs.

Is the DTC active at this time?

Yes >> Go To 2

No >> Go To 6

---

2. FRONT DIFFERENTIAL POSITION SENSOR

NOTE: Before continuing with the below diagnostic test, ensure the FDCM harness connector seal is installed correctly. Inspect the terminals on both harness connector and the module for damage. Failure to do so can result in misdiagnoses of the system.

Turn the ignition off.

Disconnect the Front Locker Solenoid harness connector.

Turn the ignition on.

Measure the voltage of the (T521) Locker Sensor Supply circuit in the Front Locker Solenoid harness connector.

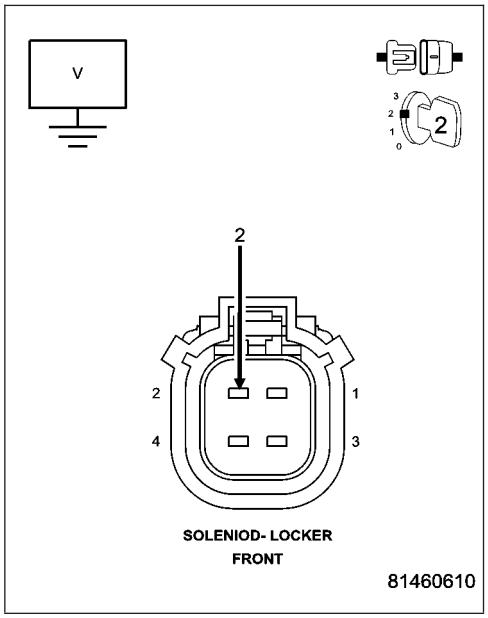

Is the voltage between 4.5 and 5.0 volts?

Yes >> Replace the Front Locker Solenoid.
Perform FDCM VERIFICATION TEST.

No >> Go To 3

C2111- DIFFERENTIAL POSITION SENSOR SUPPLY VOLTAGE CIRCUIT LOW (CONTINUED)

3. REAR DIFFERENTIAL POSITION SENSOR

With the voltmeter still connected to the (T521) Locker Sensor Supply circuit in the Front Locker Solenoid harness connector.

While monitoring the voltmeter, disconnect the Rear Locker Solenoid harness connector.

Is the voltage between 4.5 and 5.0 volts?

Yes >> Replace the Rear Locker Solenoid.
Perform FDCM VERIFICATION TEST.

No >> Go To 4

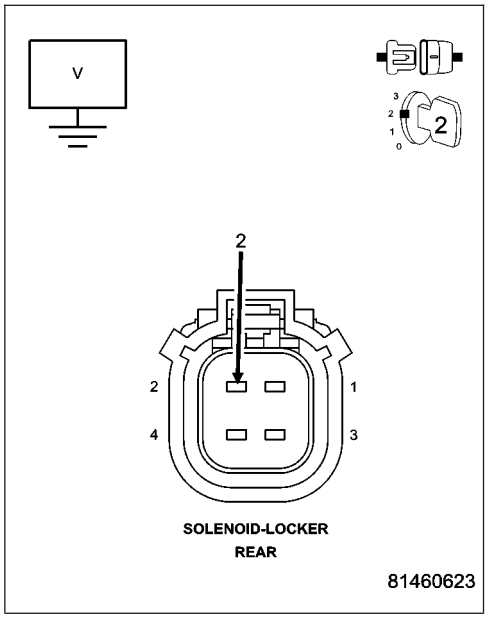

4. (T521) LOCKER SENSOR SUPPLY CIRCUIT SHORTED TO GROUND

Turn the ignition off.

Disconnect the FDCM harness connector.

Measure the resistance of the (T521) Locker Sensor Supply circuit at the FDCM harness connector.

Is the resistance below 100 ohms?

Yes >> Repair the short to ground in the (T521) Locker Sensor Supply circuit shorted to ground.
Perform FDCM VERIFICATION TEST.

No >> Go To 5

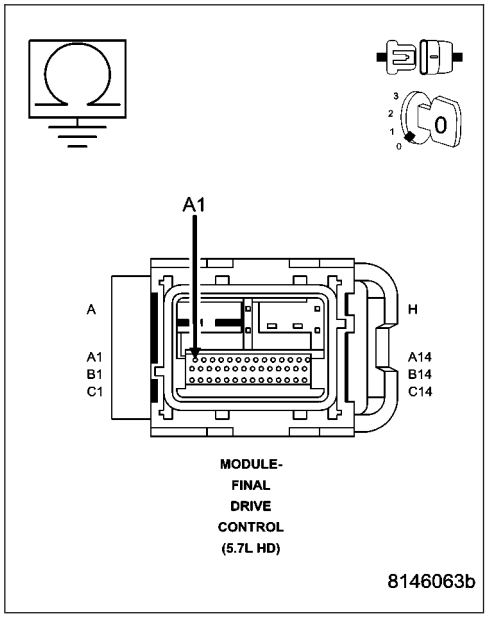

C2111- DIFFERENTIAL POSITION SENSOR SUPPLY VOLTAGE CIRCUIT LOW (CONTINUED)

5. FDCM

NOTE: Before continuing, check the FDCM harness connector terminals for corrosion, damage, or terminal push out. Repair as necessary.

Using the schematics as a guide, inspect the wire harness and connectors. Pay particular attention to all Power and Ground circuits.

Were there any problems found?

Yes >> Repair as necessary.
Perform FDCM VERIFICATION TEST

No >> Replace and program the Final Drive Control Module in accordance with Service Information.
Perform FDCM VERIFICATION TEST.

---

6. INTERMITTENT WIRING AND CONNECTORS

The conditions necessary to set this DTC are not present at this time.

Using the schematics as a guide, inspect the wiring and connectors specific to this circuit.

Wiggle test the wiring harness and connectors while checking for shorted and open circuits.

Using the DRBIII®, monitor the data related to this circuit while performing the wiggle test. Look for the data to change or for the DTC to reset.

Were there any problems found?

Yes >> Repair as necessary.
Perform FDCM VERIFICATION TEST.

No >> Test Complete.

C2112-DIFFERENTIAL POSITION SENSOR SUPPLY VOLTAGE CIRCUIT HIGH

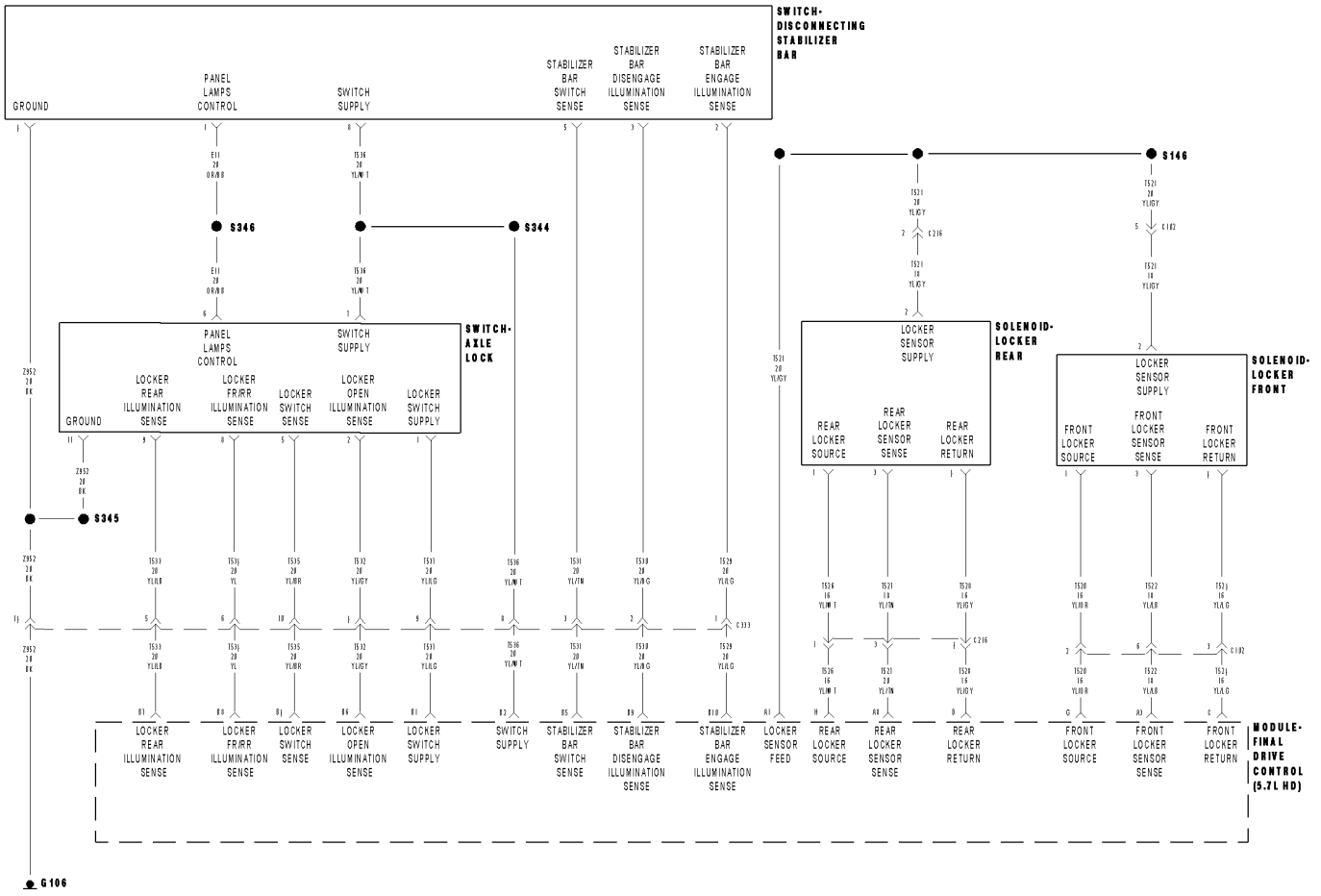

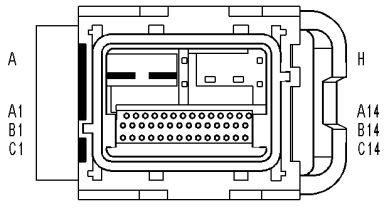

MODULE-FINAL DRIVE CONTROL (5.7L HD)

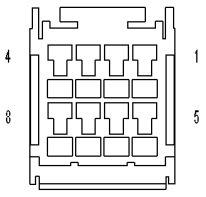

SWITCH-DISCONNECTING STABILZER BAR

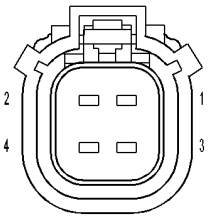

SOLENOID-LOCKER REAR

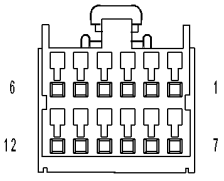

SWITCH-AXLE LOCK

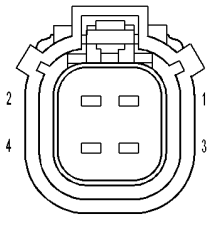

SOLENIOD-LOCKER FRONT

81459daf

C2112-DIFFERENTIAL POSITION SENSOR SUPPLY VOLTAGE CIRCUIT HIGH (CONTINUED)

For a complete wiring diagram **Refer to Section 8W**.

- **When Monitored:**
  Ignition on.
- **Set Condition:**
  The FDCM recognizes the Locker Sensor Supply circuit voltage is too high.

Possible Causes
FRONT DIFFERENTIAL POSITION SENSOR
REAR DIFFERENTIAL POSITION SENSOR
(T521) LOCKER SENSOR SUPPLY CIRCUIT SHORTED TO VOLTAGE
FDCM

Diagnostic Test

1. ACTIVE DTC

NOTE: Before continuing with the below diagnostic test, ensure the FDCM harness connector seal is installed correctly. Inspect the terminals on both harness connector and the module for damage. Failure to do so can result in misdiagnoses of the system.

Ignition on, engine not running.

With a DRBIII®, read DTCs.

Is the DTC active at this time?

Yes >> Go To 2

No >> Go To 6

---

2. FRONT DIFFERENTIAL POSITION SENSOR

CAUTION: Before removing the FDCM harness connector, clean the connector and locking cam area of dirt and debris. Failure to do so can result in the connector being jammed or damage to the locking cams on the harness connector or module. Do not force the assist arm when releasing or installing the harness connector.

Turn the ignition off.

Disconnect the Front Locker Solenoid harness connector.

Turn the ignition on.

Measure the voltage of the (T521) Locker Sensor Supply circuit in the Front Locker Solenoid harness connector.

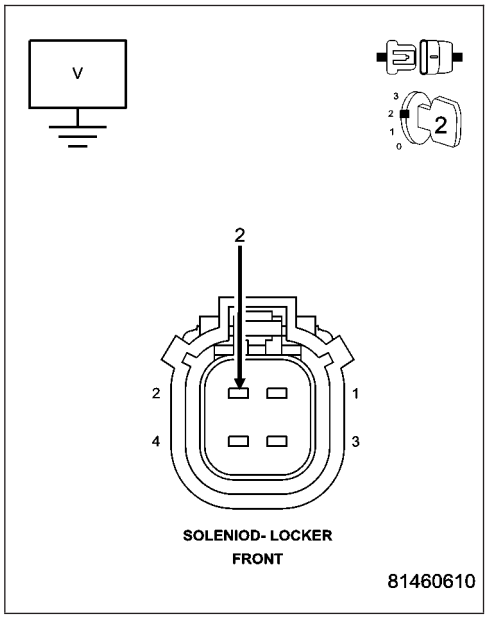

Is the voltage above 4.5 volts?

Yes >> Replace the Front Locker Solenoid.
Perform FDCM VERIFICATION TEST.

No >> Go To 3

C2112-DIFFERENTIAL POSITION SENSOR SUPPLY VOLTAGE CIRCUIT HIGH (CONTINUED)

3. REAR DIFFERENTIAL POSITION SENSOR

With the voltmeter still connected to the (T521) Locker Sensor Supply circuit in the Front Locker Solenoid harness connector.

While monitoring the voltmeter, disconnect the Rear Locker Solenoid harness connector.

Is the voltage above 4.5 volts?

Yes >> Replace the Rear Locker Solenoid.
Perform FDCM VERIFICATION TEST.

No >> Go To 4

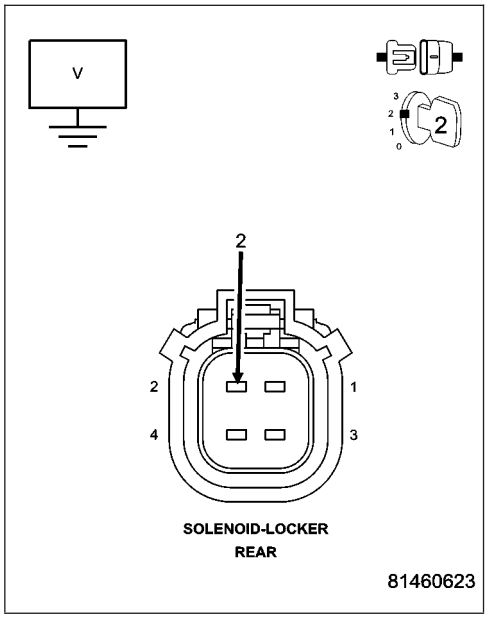

4. (T521) LOCKER SENSOR SUPPLY CIRCUIT SHORTED TO VOLTAGE

Turn the ignition off.

Disconnect the FDCM harness connector.

Turn the ignition on.

Measure the voltage of the (T521) Locker Sensor Supply circuit at the FDCM harness connector.

Does the voltameter indicate voltage present?

Yes >> Repair the short to voltage in the (T521) Locker Sensor Supply circuit shorted to ground.
Perform FDCM VERIFICATION TEST.

No >> Go To 5

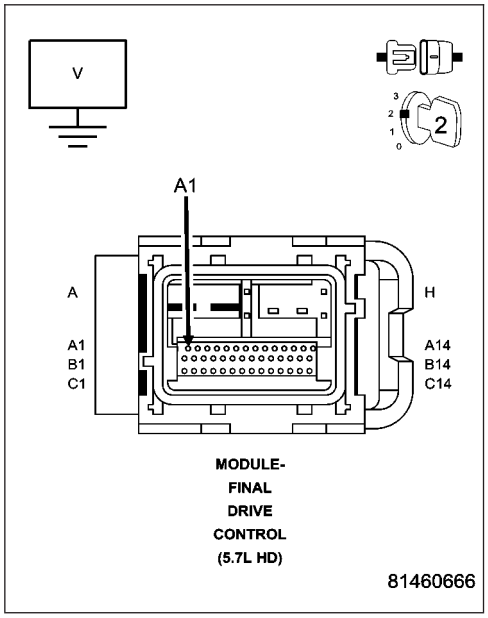

C2112-DIFFERENTIAL POSITION SENSOR SUPPLY VOLTAGE CIRCUIT HIGH (CONTINUED)

5. FDCM

NOTE: Before continuing, check the FDCM harness connector terminals for corrosion, damage, or terminal push out. Repair as necessary.

Using the schematics as a guide, inspect the wire harness and connectors. Pay particular attention to all Power and Ground circuits.

Were there any problems found?

Yes >> Repair as necessary.
Perform FDCM VERIFICATION TEST

No >> Replace and program the Final Drive Control Module in accordance with Service Information.
Perform FDCM VERIFICATION TEST.

---

6. INTERMITTENT WIRING AND CONNECTORS

The conditions necessary to set this DTC are not present at this time.

Using the schematics as a guide, inspect the wiring and connectors specific to this circuit.

Wiggle test the wiring harness and connectors while checking for shorted and open circuits.

Using the DRBIII®, monitor the data related to this circuit while performing the wiggle test. Look for the data to change or for the DTC to reset.

Were there any problems found?

Yes >> Repair as necessary.
Perform FDCM VERIFICATION TEST.

No >> Test Complete.

C230F-LOCKER/DIFFERENTIAL INDICATOR SUPPLY CIRCUIT PREFORMANCE

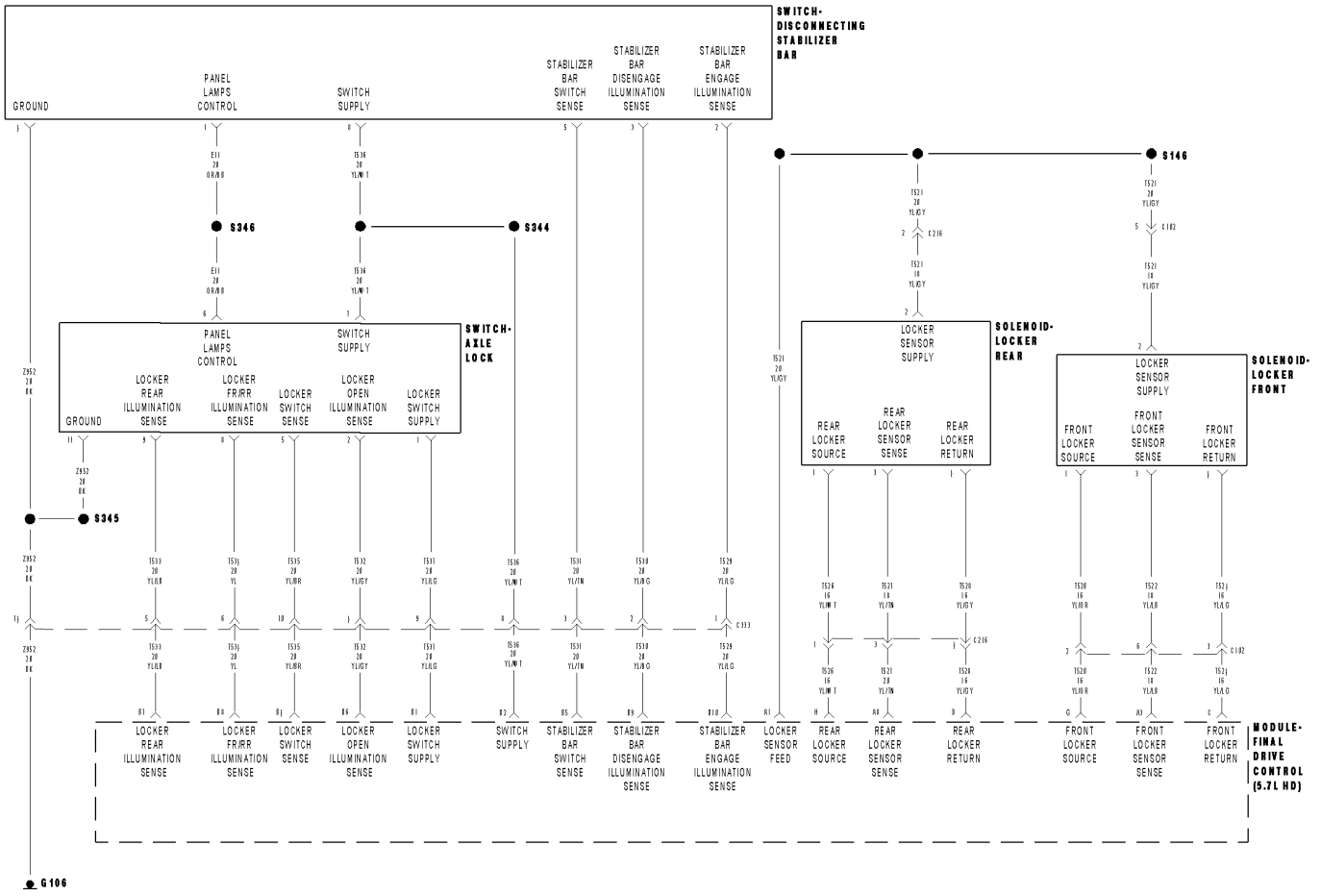

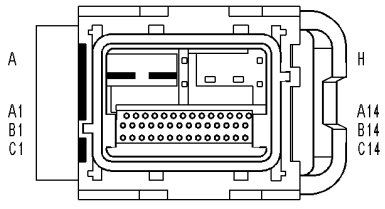

MODULE-FINAL DRIVE CONTROL (5.7L HD)

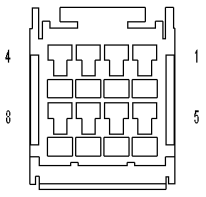

SWITCH-DISCONNECTING STABILZER BAR

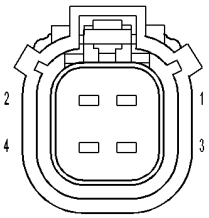

SOLENOID-LOCKER REAR

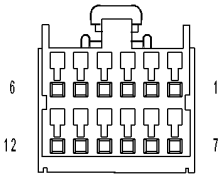

SWITCH-AXLE LOCK

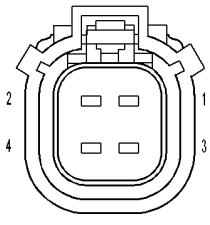

SOLENIOD-LOCKER FRONT

81459daf

C230F-LOCKER/DIFFERENTIAL INDICATOR SUPPLY CIRCUIT PREFORMANCE (CONTINUED)

For a complete wiring diagram **Refer to Section 8W**.

- **When Monitored:**
  Ignition on.
- **Set Condition:**
  The FDCM sense an incorrect voltage on the Switch Supply circuit other than 12 volts.

Possible Causes
DISCONNECTING STABILIZER SWITCH
ALXE LOCKER SWITCH
(T536) SWITCH SUPPLY CIRCUIT OPEN/HIGH RESISTANCE
(T532,T533 or T534) LOCKER ILLUMINATION SENSE CIRCUIT OPEN/HIGH RESISTANCE
FDCM

1. DTC ACTIVE

CAUTION: Before removing the FDCM harness connector, clean the connector and locking cam area of dirt and debris. Failure to do so can result in the connector being jammed or damage to the locking cams on the harness connector or module. Do not force the assist arm when releasing or installing the harness connector.

Turn the ignition on, engine not running

With the DRBIII®, read FDCM DTC(s).

Is the DTC active at this time?

Yes >> Go To 2

No >> Go To 6

2. AXLE LOCKER SWITCH OPERATION

NOTE: Before continuing with the below diagnostic test, ensure the FDCM harness connector seal is installed correctly. Inspect the terminals on both harness connector and the module for damage. Failure to do so can result in misdiagnoses of the system.

NOTE: If set along with this DTC, diagnose any Stabilizer Select Switch DTC(s) first before continuing.

Turn the ignition off.

Disconnect the Axle Locker Switch harness connector.

Turn the ignition on.

Measure the voltage on the (T536) Switch Supply circuit in the Axle Locker Switch harness connector.

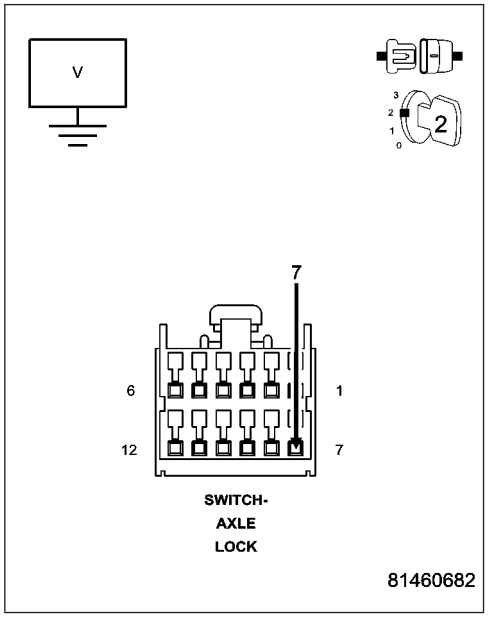

Is the voltage 12 volts?

Yes >> Go To 4

No >> Go To 3

C230F-LOCKER/DIFFERENTIAL INDICATOR SUPPLY CIRCUIT PREFORMANCE (CONTINUED)

3. DISCONNECTING STABILIZER SWITCH

With the voltmeter still on the Switch Supply terminal in the Axle Locker Switch, disconnect the Disconnecting Stabilizer Switch.

Monitor the voltage on the voltmeter.

Is the voltage 12 volts?

Yes >> Replace the Disconnecting Stabilizer Bar Switch
Perform FDCM VERIFICATION TEST.

No >> Repair the open or high resistance in the (T536) Switch Supply circuit.
Perform FDCM VERIFICATION TEST.

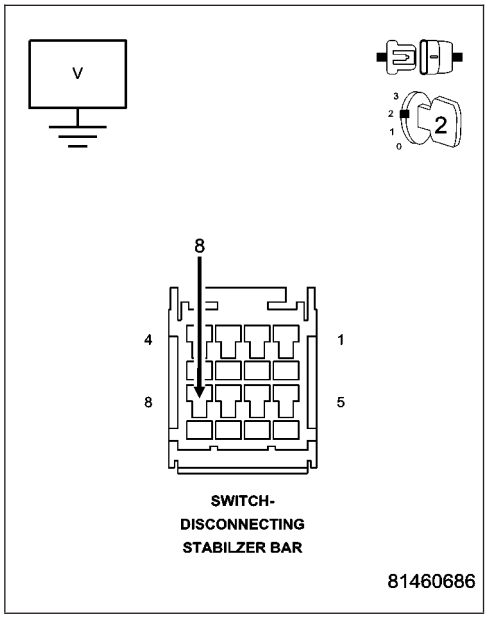

4. AXLE LOCKER SWITCH

Using a test light connected to battery voltage, probe the (T532) Locker Open Illumination Sense circuit in the Axle Locker Switch harness connector.

With the DRBIII®, select System Test and actuate the Locker Open Illumination LED. Select the blinking option.

NOTE: Repeat the above test for the (T533) Locker Rear Illumination Sense circuit terminal and (T534) Locker FR/RR Illumination Sense circuit one at a time.

Does the test light illuminate and flash on and off at each circuit?

Yes >> Replace the Axle Locker Switch.
Perform FDCM VERIFICATION TEST.

No >> Go to 5

C230F-LOCKER/DIFFERENTIAL INDICATOR SUPPLY CIRCUIT PREFORMANCE (CONTINUED)

5. (T532, T533 or T534) LOCKER ILLUMINATION SENSE CIRCUIT OPEN/HIGH RESISTANCE

Measure the resistance of each of the following circuits between the FDCM harness connector and the Axle Locker Switch harness connector.

- (T532) Locker Open Illumination Sense circuit
- (T533) Locker Rear Illumination Sense circuit
- (T534) Locker FR/RR Illumination Sense circuit

Does the ohmmeter indicate each measurement below 5.0 ohms?

Yes >> Replace the FDCM in accordance with the Service Information.
Perform FDCM VERIFICATION TEST.

No >> Repair the open or high resistance in the Illumination Sense circuit that indicated the incorrect resistance reading.
Perform FDCM VERIFICATION TEST.

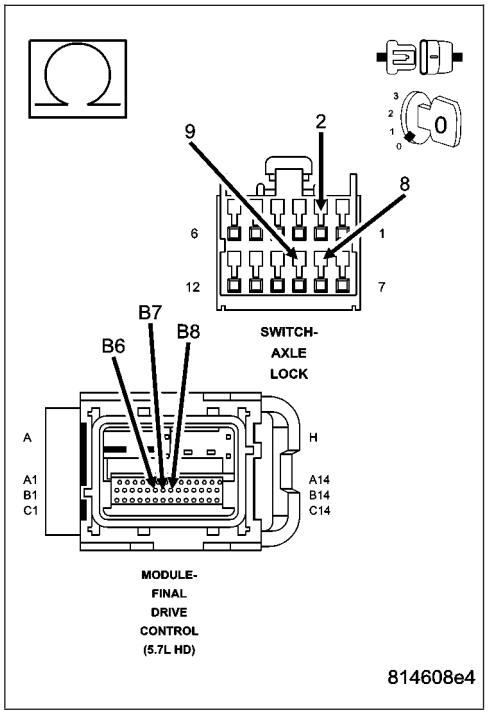

6. INTERMITTENT WIRING AND CONNECTORS

The conditions necessary to set this DTC are not present at this time.

Using the schematics as a guide, inspect the wiring and connectors specific to this circuit.

Wiggle test the wiring harness and connectors while checking for shorted and open circuits.

Using the DRBIII®, monitor the data related to this circuit while performing the wiggle test. Look for the data to change or for the DTC to reset.

Were there any problems found?

Yes >> Repair as necessary.
Perform TRANSFER CASE VERIFICATION TEST.

No >> Test Complete.

C2310-STABILIZER/DIFFERENTIAL INDICATOR SUPPLY CIRCUIT LOW

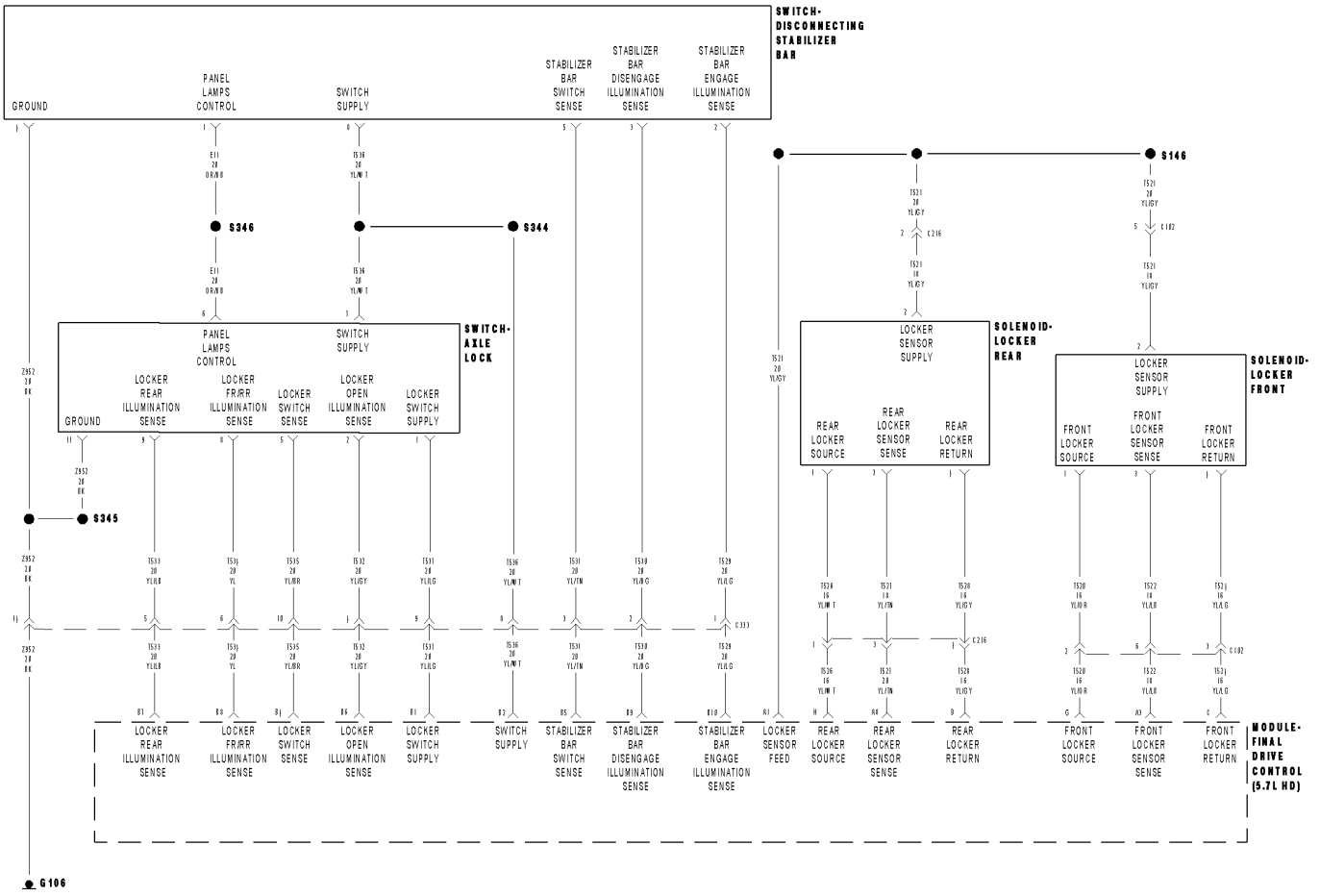

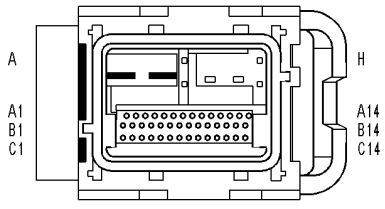

MODULE-FINAL DRIVE CONTROL (5.7L HD)

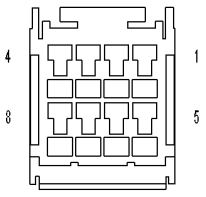

SWITCH-DISCONNECTING STABILZER BAR

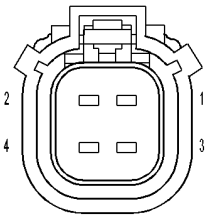

SOLENOID-LOCKER REAR

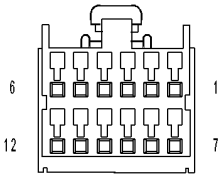

SWITCH-AXLE LOCK

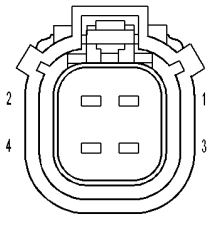

SOLENIOD-LOCKER FRONT

81459daf

C2310-STABILIZER/DIFFERENTIAL INDICATOR SUPPLY CIRCUIT LOW (CONTINUED)

For a complete wiring diagram **Refer to Section 8W**.

- **When Monitored:**
  Ignition on.
- **Set Condition:**
  The FDCM sense an the voltage on the Switch Supply circuit is low.

Possible Causes
DISCONNECTING STABILIZER SWITCH
ALXE LOCKER SWITCH
(T536) SWITCH SUPPLY CIRCUIT SHORTED TO GROUND
(T532,T533 or T534) LOCKER ILLUMINATION SENSE CIRCUIT SHORTED TO GROUND
FDCM

1. DTC ACTIVE

CAUTION: Before removing the FDCM harness connector, clean the connector and locking cam area of dirt and debris. Failure to do so can result in the connector being jammed or damage to the locking cams on the harness connector or module. Do not force the assist arm when releasing or installing the harness connector.

Turn the ignition on, engine not running

With the DRBIII®, read FDCM DTC(s).

Is the DTC active at this time?

Yes >> Go To 2

No >> Go To 6

2. AXLE LOCKER SWITCH OPERATION

NOTE: Before continuing with the below diagnostic test, ensure the FDCM harness connector seal is installed correctly. Inspect the terminals on both harness connector and the module for damage. Failure to do so can result in misdiagnoses of the system.

NOTE: If set along with this DTC, diagnostic any Stabilizer Select Switch DTC(s) first before continuing.

Turn the ignition off.

Disconnect the Axle Locker Switch harness connector.

Turn the ignition on.

Measure the voltage on the (T536) Switch Supply circuit in the Axle Locker Switch harness connector.

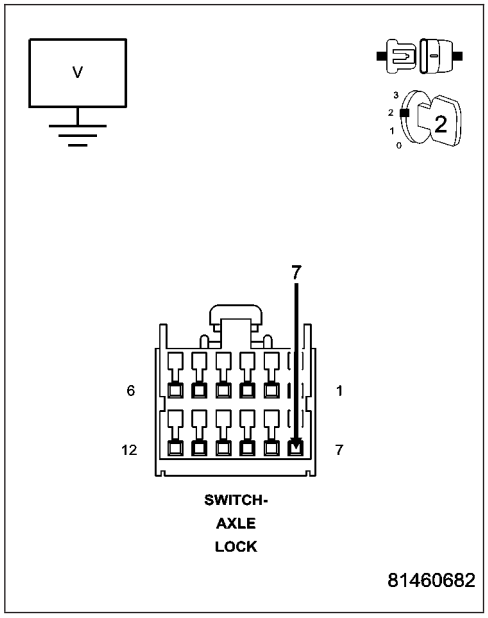

Is the voltage 12 volts?

Yes >> Go To 4

No >> Go To 3

C2310-STABILIZER/DIFFERENTIAL INDICATOR SUPPLY CIRCUIT LOW (CONTINUED)

3. DISCONNECTING STABILIZER SWITCH

With the voltmeter still on the Switch Supply terminal in the Axle Locker Switch, disconnect the Disconnecting Stabilizer Switch.

Monitor the voltage on the voltmeter.

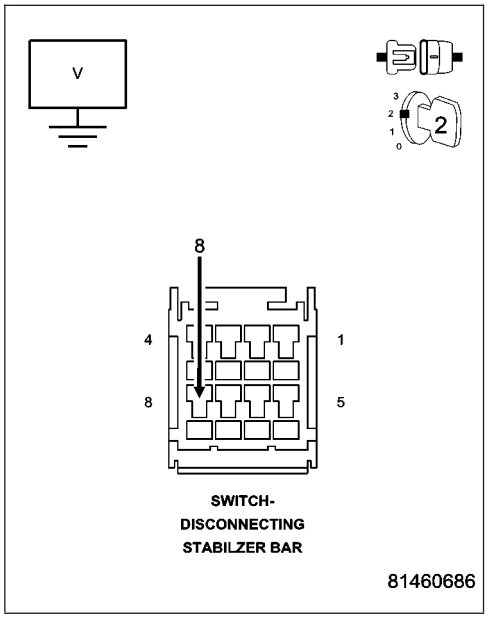

Is the voltage 12 volts?

Yes >> Replace the Disconnecting Stabilizer Bar Switch
Perform FDCM VERIFICATION TEST.

No >> Repair the short to ground in the (T536) Switch Supply circuit.
Perform FDCM VERIFICATION TEST.

---

4. AXLE LOCKER SWITCH

Using a test light connected to battery voltage, probe the (T532) Locker Open Illumination Sense circuit in the Axle Locker Switch harness connector.

With the DRBIII®, select System Test and actuate the Locker Open Illumination LED. Select the blinking option.

NOTE: Repeat the above test for the (T533) Locker Rear Illumination Sense circuit terminal and (T534) Locker FR/RR Illumination Sense circuit one at a time.

Does the test light illuminate and flash on and off at each circuit?

Yes >> Go to 5

No >> Replace the Axle Locker Switch.
Perform FDCM VERIFICATION TEST.

---

5. (T532, T533 or T534) LOCKER ILLUMINATION SENSE CIRCUIT SHORTED TO GROUND

Disconnect the Axle Locker Switch harness connector.

Measure the resistance of each of the following circuit at the FDCM harness connector to ground.

- (T532) Locker Open Illumination Sense circuit
- (T533) Locker Rear Illumination Sense circuit
- (T534) Locker FR/RR Illumination Sense circuit

Does the ohmmeter read below 100 ohms for any of the above circuit checks?

Yes >> Repair the short to ground in the Illumination Sense circuit that indicated the resistance reading below 100 ohms.
Perform FDCM VERIFICATION TEST.

No >> Replace the FDCM in accordance with the Service Information.Perform FDCM VERIFICATION TEST.

C2310-STABILIZER/DIFFERENTIAL INDICATOR SUPPLY CIRCUIT LOW (CONTINUED)

6. INTERMITTENT WIRING AND CONNECTORS

The conditions necessary to set this DTC are not present at this time.

Using the schematics as a guide, inspect the wiring and connectors specific to this circuit.

Wiggle test the wiring harness and connectors while checking for shorted and open circuits.

Using the DRBIII®, monitor the data related to this circuit while performing the wiggle test. Look for the data to change or for the DTC to reset.

Were there any problems found?

Yes >> Repair as necessary.
Perform TRANSFER CASE VERIFICATION TEST.

No >> Test Complete.

C2311-STABILIZER/DIFFERENTIAL INDICATOR SUPPLY CIRCUIT HIGH

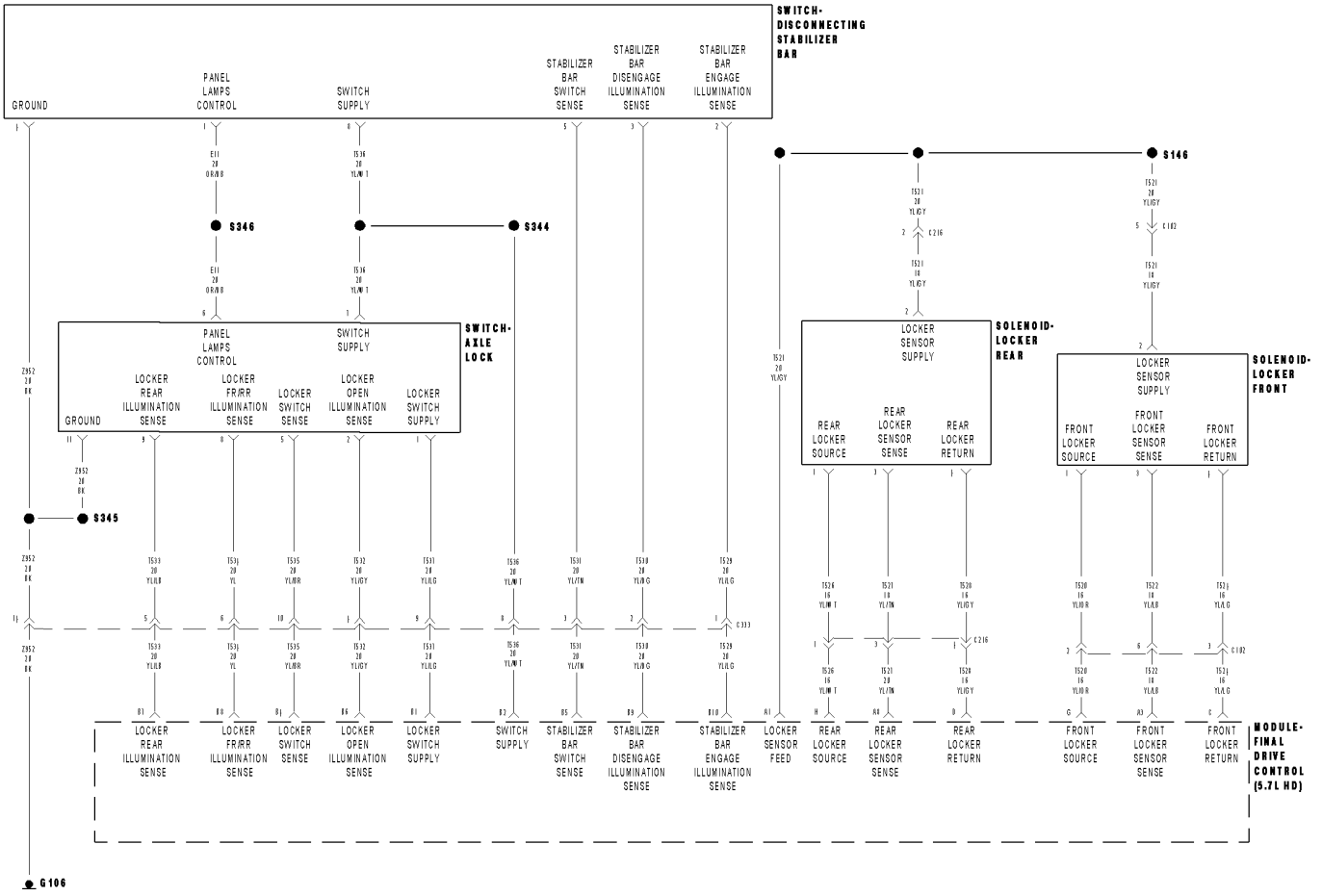

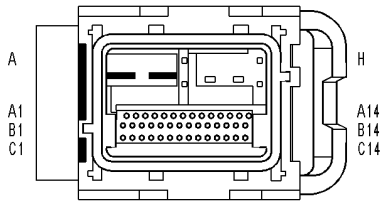

MODULE-FINAL DRIVE CONTROL (5.7L HD)

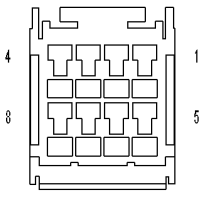

SWITCH-DISCONNECTING STABILZER BAR

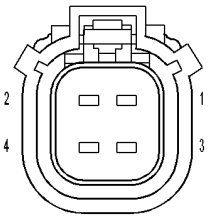

SOLENOID-LOCKER REAR

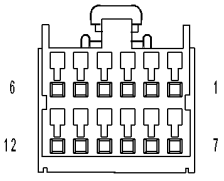

SWITCH-AXLE LOCK

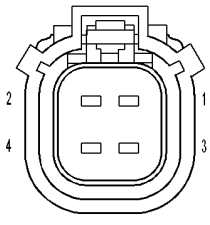

SOLENIOD-LOCKER FRONT

81459daf

C2311-STABILIZER/DIFFERENTIAL INDICATOR SUPPLY CIRCUIT HIGH (CONTINUED)

For a complete wiring diagram **Refer to Section 8W**.

- **When Monitored:**
  Ignition on.
- **Set Condition:**
  The FDCM sense an the voltage on the Switch Supply circuit is high.

Possible Causes
DISCONNECTING STABILIZER SWITCH
ALXE LOCKER SWITCH
(T536) SWITCH SUPPLY CIRCUIT SHORTED TO VOLTAGE
T536) SWITCH SUPPLY CIRCUIT OPEN
(T532,T533 or T534) LOCKER ILLUMINATION SENSE CIRCUIT SHORTED TO VOLTAGE
(T532,T533 or T534) LOCKER ILLUMINATION SENSE CIRCUIT OPEN
FDCM

1. DTC ACTIVE

CAUTION: Before removing the FDCM harness connector, clean the connector and locking cam area of dirt and debris. Failure to do so can result in the connector being jammed or damage to the locking cams on the harness connector or module. Do not force the assist arm when releasing or installing the harness connector.

NOTE: If set along with this DTC, diagnose any Stabilizer Select Switch DTC(s) first before continuing.

Turn the ignition on, engine not running

With the DRBIII®, read FDCM DTC(s).

Is the DTC active at this time?

Yes >> Go To 2

No >> Go To 9

---

2. AXLE LOCKER SWITCH

NOTE: Before continuing with the below diagnostic test, ensure the FDCM harness connector seal is installed correctly. Inspect the terminals on both harness connector and the module for damage. Failure to do so can result in misdiagnoses of the system.

Turn the ignition off.

Disconnect the Axle Locker Switch harness connector.

Turn the ignition on.

Using a test light connected to battery voltage, probe the (T532) Locker Open Illumination Sense circuit in the Axle Locker Switch harness connector.

With the DRBIII®, select System Test and actuate the Locker Open Illumination LED. Select the blinking option.

NOTE: Repeat the above test for the (T533) Locker Rear Illumination Sense circuit and (T534) Locker FR/RR Illumination Sense circuit one at a time.

Does the test light illuminate and flash on and off at each circuit?

Yes >> Replace the Axle Locker Switch.
Perform FDCM VERIFICATION TEST.

No >> Go to 3

C2311-STABILIZER/DIFFERENTIAL INDICATOR SUPPLY CIRCUIT HIGH (CONTINUED)

3. (T536) SWITCH SUPPLY CIRCUIT SHORTED TO VOLTAGE

Turn the ignition off.

Disconnect the Axle Locker Switch harness connector.

Disconnect the Disconnecting Stabilizer Bar Switch harness connector

Disconnect the FDCM harness connector.

Turn the ignition on.

Measure the voltage on the (T536) Switch Supply circuit in the Axle Locker Switch harness connector.

Does the voltmeter indicate voltage present?

Yes >> Repair the short to voltage in the Switch Supply circuit.

No >> Go To 4

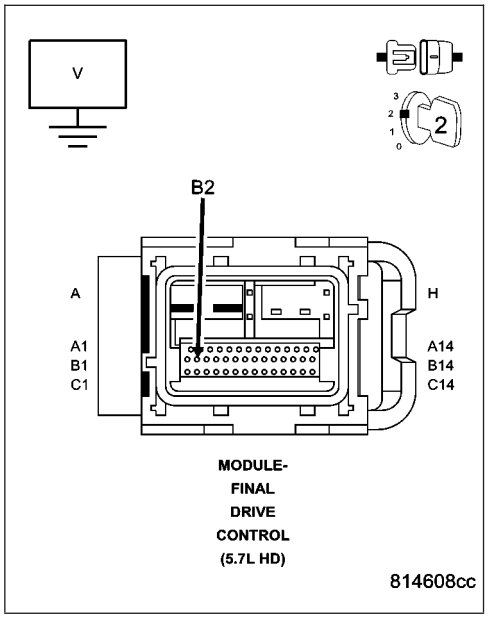

4. (t536) SWITCH SUPPLY CIRCUIT OPEN FROM THE AXLE LOCKER SWITCH AND THE FDCM

Turn the ignition off.

Measure the resistance of the (T536) Switch Supply circuit between the Axle Locker Switch harness connector and the FDCM harness connector.

Is the resistance below 5.0 ohms?

Yes >> Go to 5

No >> Repair the open in the Switch Supply circuit.
Perform FDCM VERIFICATION TEST.

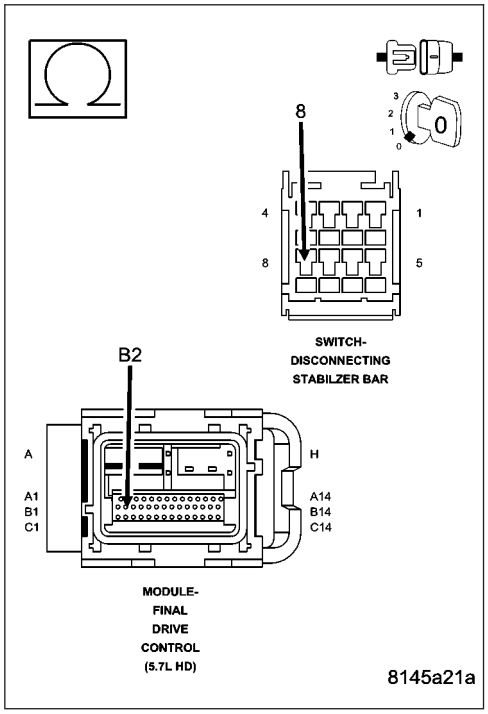

C2311-STABILIZER/DIFFERENTIAL INDICATOR SUPPLY CIRCUIT HIGH (CONTINUED)

5. (T536) SWITCH SUPPLY CIRCUIT OPEN FROM THE AXLE LOCKER SWITCH AND THE DISCONNECTING STABILIZER BAR SWITCH

Turn the ignition off.

Measure the resistance of the (T536) Switch Supply circuit between the Axle Locker Switch harness connector and the Disconnecting Stabilizer Bar Switch harness connector.

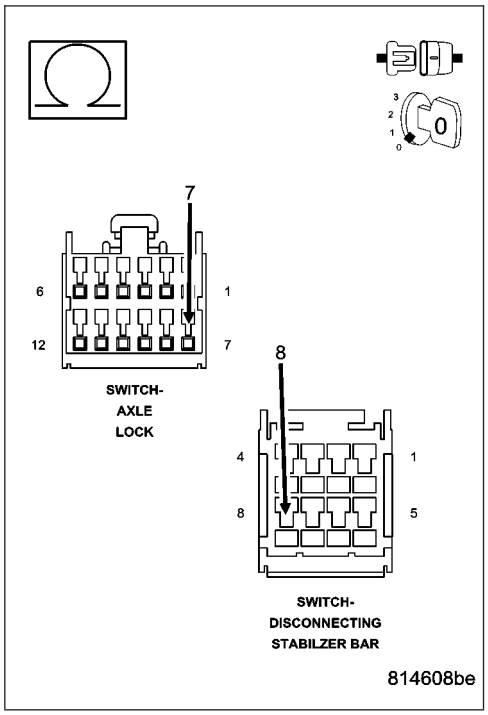

Is the resistance below 5.0 ohms?

Yes >> Go to 6

No >> Repair the open in the Switch Supply circuit. Perform FDCM VERIFICATION TEST.

6. DISCONNECTING STABILIZER BAR SWITCH

Turn the ignition off.

Connect the Axle Locker Switch harness connector.

Connect the Disconnecting Stabilizer Bar Switch harness connector

Turn the ignition on.

Measure the voltage on the (T536) Switch Supply circuit in the FDCM harness connector.

Does the voltmeter indicate voltage present?

Yes >> Replace the Disconnecting Stabilizer Bar Switch.

No >> Go To 7

C2311-STABILIZER/DIFFERENTIAL INDICATOR SUPPLY CIRCUIT HIGH (CONTINUED)

7. (T532, T533 or T534) LOCKER ILLUMINATION SENSE CIRCUIT SHORTED TO VOLTAGE

Disconnect the Axle Locker Switch harness connector.

Measure the voltage at each of the following circuit at the FDCM harness connector.

- (T532) Locker Open Illumination Sense circuit
- (T533) Locker Rear Illumination Sense circuit
- (T534) Locker FR/RR Illumination Sense circuit

Does the voltmeter indicate voltage present for any of the above circuit?

Yes >> Repair the Locker Illumination Sense circuit that indicated a short to voltage.

No >> Go To 8
Perform FDCM VERIFICATION TEST.

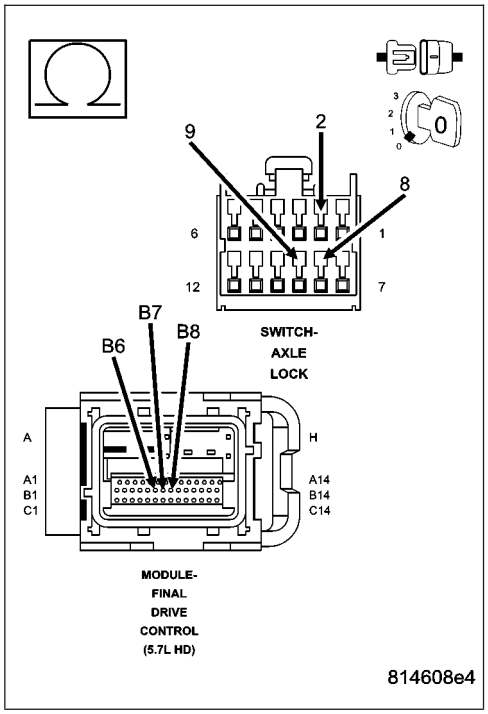

8. (T532, T533 or T534) LOCKER ILLUMINATION SENSE CIRCUIT OPEN

Measure the resistance of each of the following circuits between the FDCM harness connector and the Axle Locker Switch harness connector.

- (T532) Locker Open Illumination Sense circuit
- (T533) Locker Rear Illumination Sense circuit
- (T534) Locker FR/RR Illumination Sense circuit

Does the ohmmeter indicate each measurement below 5.0 ohms?

Yes >> Replace the FDCM in accordance with the Service Information.
Perform FDCM VERIFICATION TEST.

No >> Repair the Locker Illumination Sense circuit that indicated an open circuit.
Perform FDCM VERIFICATION TEST.

9. INTERMITTENT WIRING AND CONNECTORS

The conditions necessary to set this DTC are not present at this time.

Using the schematics as a guide, inspect the wiring and connectors specific to this circuit.

Wiggle test the wiring harness and connectors while checking for shorted and open circuits.

Using the DRBIII®, monitor the data related to this circuit while performing the wiggle test. Look for the data to change or for the DTC to reset.

Were there any problems found?

Yes >> Repair as necessary.
Perform FDCM VERIFICATION TEST.

No >> Test Complete.

C2314-DIFFERENTIAL INDICATOR CONTROL CIRCUIT

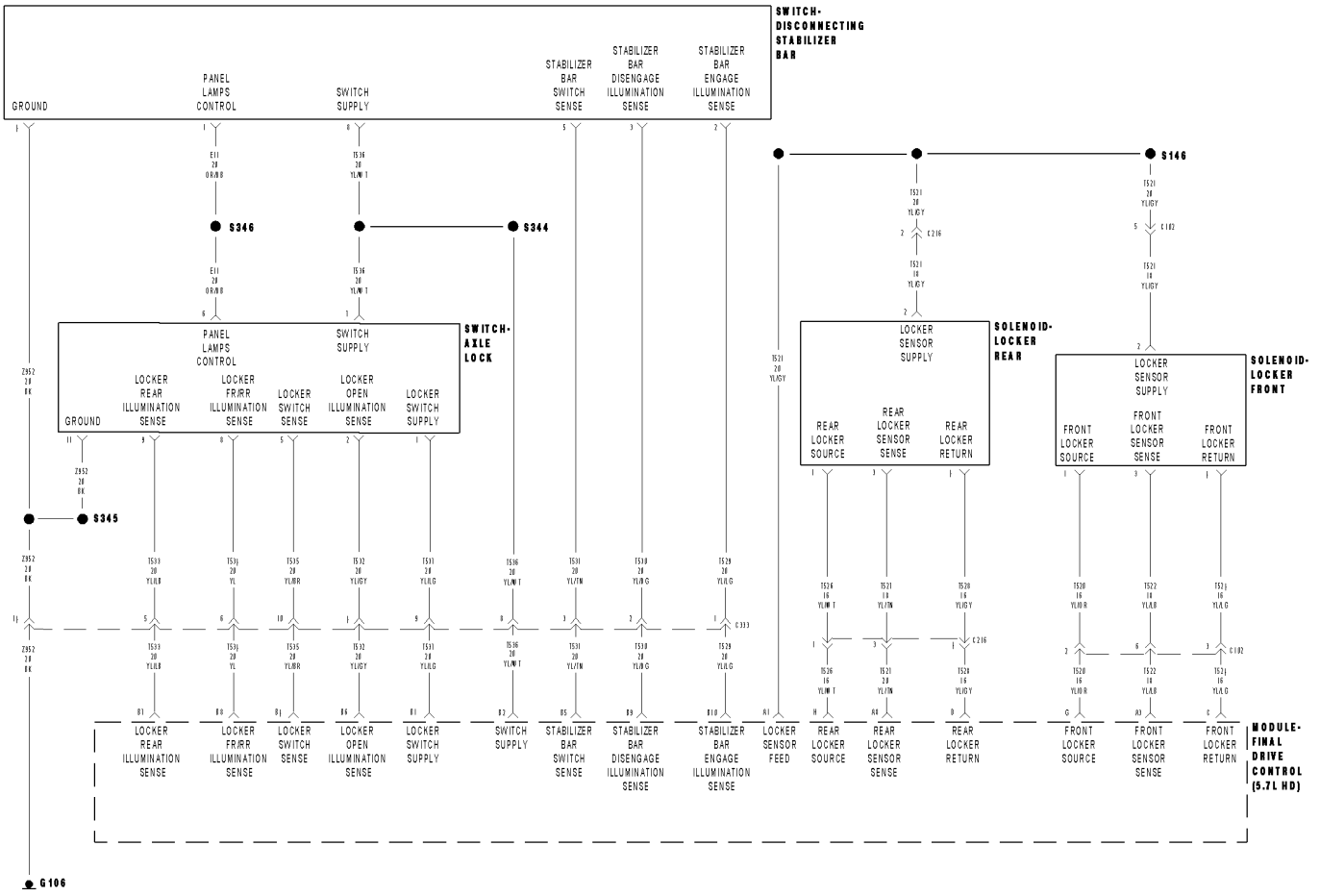

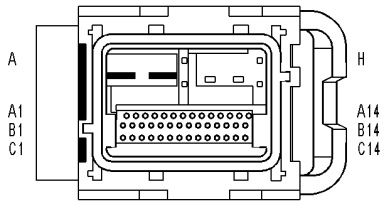

MODULE-FINAL DRIVE CONTROL (5.7L HD)

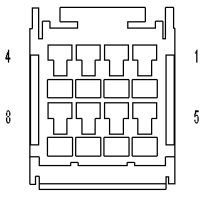

SWITCH-DISCONNECTING STABILZER BAR

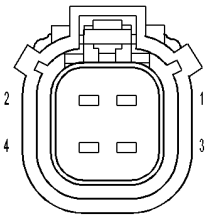

SOLENOID-LOCKER REAR

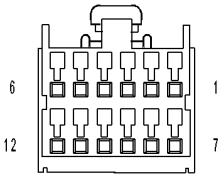

SWITCH-AXLE LOCK

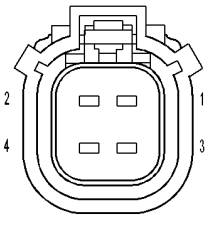

SOLENIOD-LOCKER FRONT

81459daf

C2314-DIFFERENTIAL INDICATOR CONTROL CIRCUIT (CONTINUED)

For a complete wiring diagram **Refer to Section 8W**.

- **When Monitored:**
  Ignition on.
- **Set Condition:**
  The FDCM senses a failure in the Alxe Locker Switch system.

Possible Causes
DISCONNECTING STABILIZER SWITCH
ALXE LOCKER SWITCH
(T536) SWITCH SUPPLY CIRCUIT OPEN/HIGH RESISTANCE
(T532,T533 or T534) LOCKER ILLUMINATION SENSE CIRCUIT OPEN/HIGH RESISTANCE
FDCM

1. DTC ACTIVE

CAUTION: Before removing the FDCM harness connector, clean the connector and locking cam area of dirt and debris. Failure to do so can result in the connector being jammed or damage to the locking cams on the harness connector or module. Do not force the assist arm when releasing or installing the harness connector.

Turn the ignition on, engine not running

With the DRBIII®, read FDCM DTC(s).

Is the DTC active at this time?

Yes >> Go To 2

No >> Go To 6

2. AXLE LOCKER SWITCH OPERATION

NOTE: Before continuing with the below diagnostic test, ensure the FDCM harness connector seal is installed correctly. Inspect the terminals on both harness connector and the module for damage. Failure to do so can result in misdiagnoses of the system.

NOTE: If set along with this DTC, diagnose any Stabilizer Select Switch DTC(s) first before continuing.

Turn the ignition off.

Disconnect the Axle Locker Switch harness connector.

Turn the ignition on.

Measure the voltage on the (T536) Switch Supply circuit in the Axle Locker Switch harness connector.

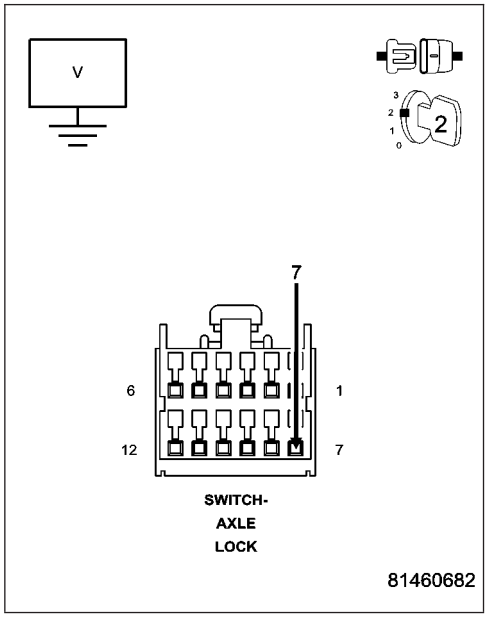

Is the voltage 12 volts?

Yes >> Go To 4

No >> Go To 3

C2314-DIFFERENTIAL INDICATOR CONTROL CIRCUIT (CONTINUED)

3. DISCONNECTING STABILIZER SWITCH

With the voltmeter still on the Switch Supply terminal in the Axle Locker Switch, disconnect the Disconnecting Stabilizer Switch.

Monitor the voltage on the voltmeter.

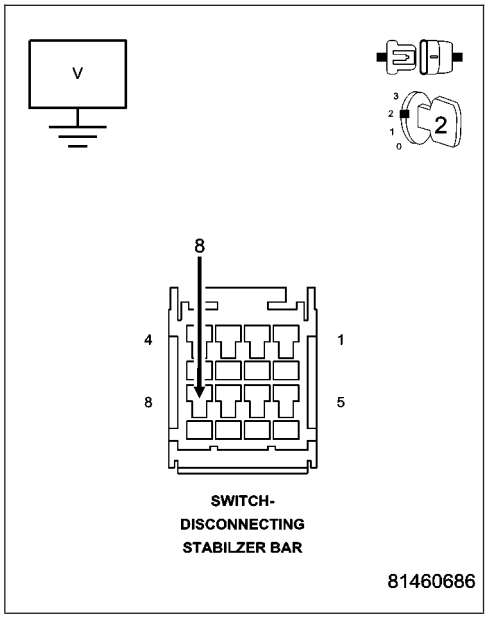

Is the voltage 12 volts?

Yes >> Replace the Disconnecting Stabilizer Bar Switch
Perform FDCM VERIFICATION TEST.

No >> Repair the open or high resistance in the (T536) Switch Supply circuit.
Perform FDCM VERIFICATION TEST.

---

4. AXLE LOCKER SWITCH

Using a test light connected to battery voltage, probe the (T532) Locker Open Illumination Sense circuit in the Axle Locker Switch harness connector.

With the DRBIII®, select System Test and actuate the Locker Open Illumination LED. Select the blinking option.

NOTE: Repeat the above test for the (T533) Locker Rear Illumination Sense circuit terminal and (T534) Locker FR/RR Illumination Sense circuit one at a time.

Does the test light illuminate and flash on and off at each circuit?

Yes >> Replace the Axle Locker Switch.
Perform FDCM VERIFICATION TEST.

No >> Go to 5

C2314-DIFFERENTIAL INDICATOR CONTROL CIRCUIT (CONTINUED)

5. (T532, T533 or T534) LOCKER ILLUMINATION SENSE CIRCUIT OPEN/HIGH RESISTANCE

Measure the resistance of each of the following circuits between the FDCM harness connector and the Axle Locker Switch harness connector.

- (T532) Locker Open Illumination Sense circuit
- (T533) Locker Rear Illumination Sense circuit
- (T534) Locker FR/RR Illumination Sense circuit

Does the ohmmeter indicate each measurement below 5.0 ohms?

Yes >> Replace the FDCM in accordance with the Service Information.
Perform FDCM VERIFICATION TEST.

No >> Repair the open or high resistance in the Illumination Sense circuit that indicated the incorrect resistance reading.
Perform FDCM VERIFICATION TEST.

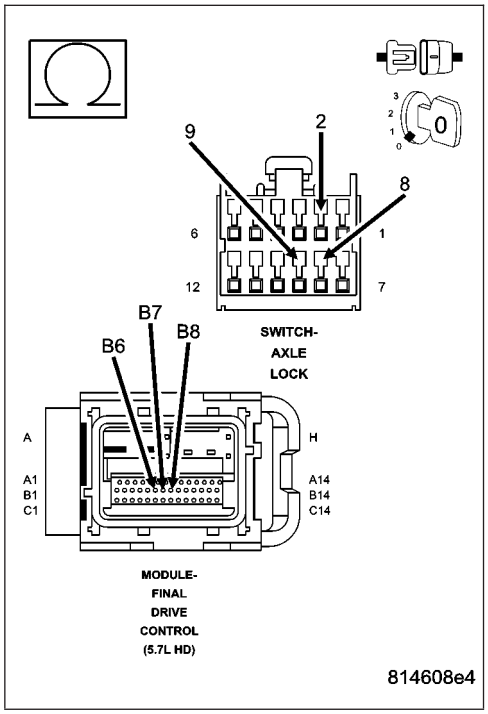

---

6. INTERMITTENT WIRING AND CONNECTORS

The conditions necessary to set this DTC are not present at this time.

Using the schematics as a guide, inspect the wiring and connectors specific to this circuit.

Wiggle test the wiring harness and connectors while checking for shorted and open circuits.

Using the DRBIII®, monitor the data related to this circuit while performing the wiggle test. Look for the data to change or for the DTC to reset.

Were there any problems found?

Yes >> Repair as necessary.
Perform TRANSFER CASE VERIFICATION TEST.

No >> Test Complete.

CHECKING FRONT LOCKER SOLENOID OPERATION

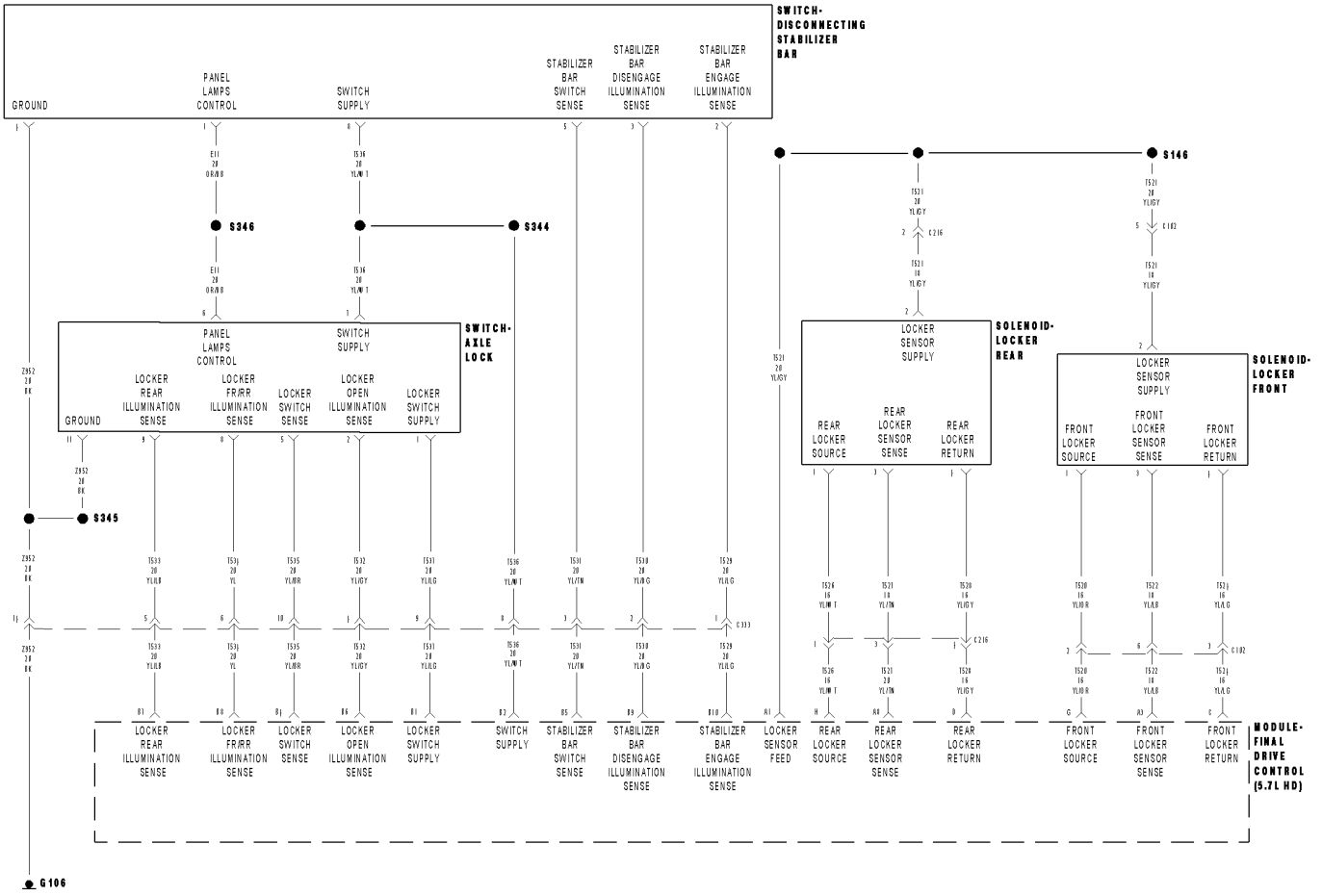

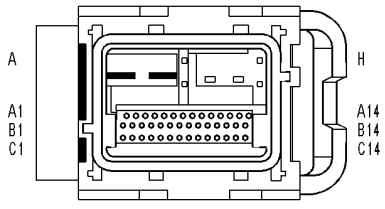

MODULE-FINAL DRIVE CONTROL (5.7L HD)

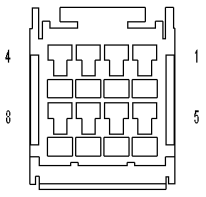

SWITCH-DISCONNECTING STABILZER BAR

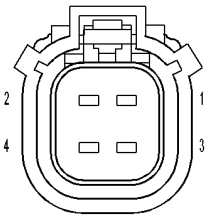

SOLENOID-LOCKER REAR

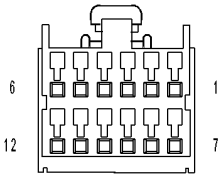

SWITCH-AXLE LOCK

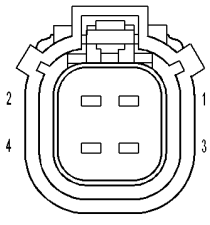

SOLENIOD-LOCKER FRONT

81459daf

CHECKING FRONT LOCKER SOLENOID OPERATION (CONTINUED)

For a complete wiring diagram **Refer to Section 8W**.

Possible Causes
FRONT LOCKER SOLENOID
(T520) FRONT LOCKER SOURCE CIRCUIT SHORTED TO GROUND
(T520) FRONT LOCKER SOURCE CIRCUIT SHORTED TO FRONT LOCKER RETURN CIRCUIT
FDCM

Diagnostic Test

1. AXLE OPERATION

CAUTION: Before removing the FDCM harness connector, clean the connector and locking cam area of dirt and debris. Failure to do so can result in the connector being jammed or damage to the locking cams on the harness connector or module. Do not force the assist arm when releasing or installing the harness connector.

Turn the ignition off.

Secure the vehicle by blocking the rear wheels from the front and back.

Lift one front wheel off the ground.

Turn the ignition on.

Place the vehicle in the drive/first gear and transfer case in LOW LOCK.

With the scan tool, actuate the Front Locker Solenoid.

Manually rotate the wheel that is off the ground. The wheel should lock once the dog clutch is aligned.

Stop the actuation of the Front Locker Solenoid.

Manually rotate the wheel that is off the ground. The wheel should turn.

Does the Front Axle operate as described above?

Yes >> Front Locker Solenoid is operating normally. Test complete.

No >> Go To 2

---

2. FRONT LOCKER SOLENOID OPERATION

NOTE: Before continuing with the below diagnostic test, ensure the FDCM harness connector seal is installed correctly. Inspect the terminals on both harness connector and the module for damage. Failure to do so can result in misdiagnoses of the system.

Turn the ignition off.

Disconnect the Front Locker Solenoid harness connector.

Ignition on, engine not running.

Using a 12-volt test light, jump across from the (T520) Front Locker Source circuit and the (T524) Front Locker Return circuit in the Front Locker harness connector.

With the DRBIII®, actuate the Front Locker Solenoid.

Does the test light illuminate and flash on and off?

Yes >> Inspect the Front Locker Solenoid terminals and connectors for corrosion and/or dirty that may compromise the connection. If OK, replace the Front Locker Solenoid.
Perform FDCM VERIFICATION TEST.

No >> Go To 3

CHECKING FRONT LOCKER SOLENOID OPERATION (CONTINUED)

3. (T520) FRONT LOCKER SOURCE CIRCUIT SHORTED TO GROUND

Turn the ignition off.

Disconnect the FDCM harness connector.

Measure the resistance of the (T520) Front Locker Source circuit at the FDCM harness connector.

Is the resistance below 100 ohms?

Yes >> Repair the short to ground in the Front Locker Source circuit.
Perform FDCM VERIFICATION TEST.

No >> Go To 4

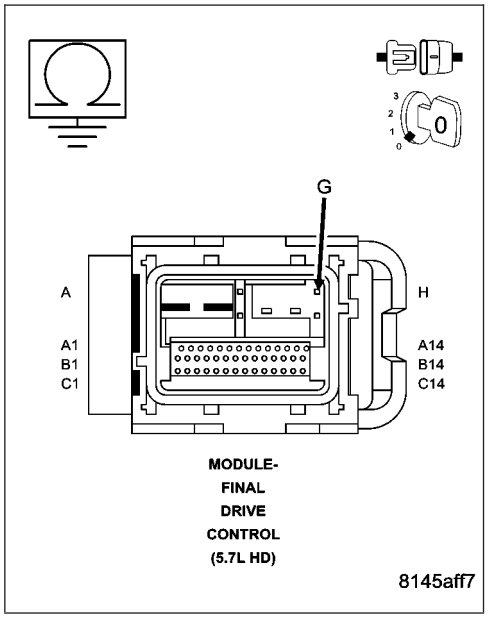

4. (T520) FRONT LOCKER SOURCE CIRCUIT SHORTED TO (T524) FRONT LOCKER RETURN CIRCUIT

Measure the resistance between the (T520) Front Locker Source circuit and the (T524) Front Locker Return circuit in the Front Locker Solenoid harness connector.

Is the resistance below 100 ohms?

Yes >> Repair the short between (T520) Front Locker Source circuit and the (T524) Front Locker Return circuit.
Perform FDCM VERIFICATION TEST

No >> Go To 5

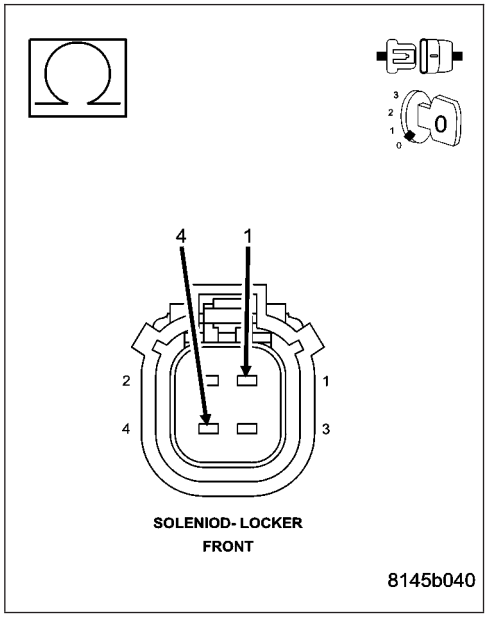

CHECKING FRONT LOCKER SOLENOID OPERATION (CONTINUED)

5. FDCM

NOTE: Before continuing, check the FDCM harness connector terminals for corrosion, damage, or terminal push out. Repair as necessary.

Using the schematics as a guide, inspect the wire harness and connectors. Pay particular attention to all Power and Ground circuits.

Were there any problems found?

Yes >> Repair as necessary.
Perform FDCM VERIFICATION TEST

No >> Replace and program the Final Drive Control Module in accordance with Service Information.
Perform FDCM VERIFICATION TEST.

CHECKING REAR LOCKER SOLENOID OPERATION

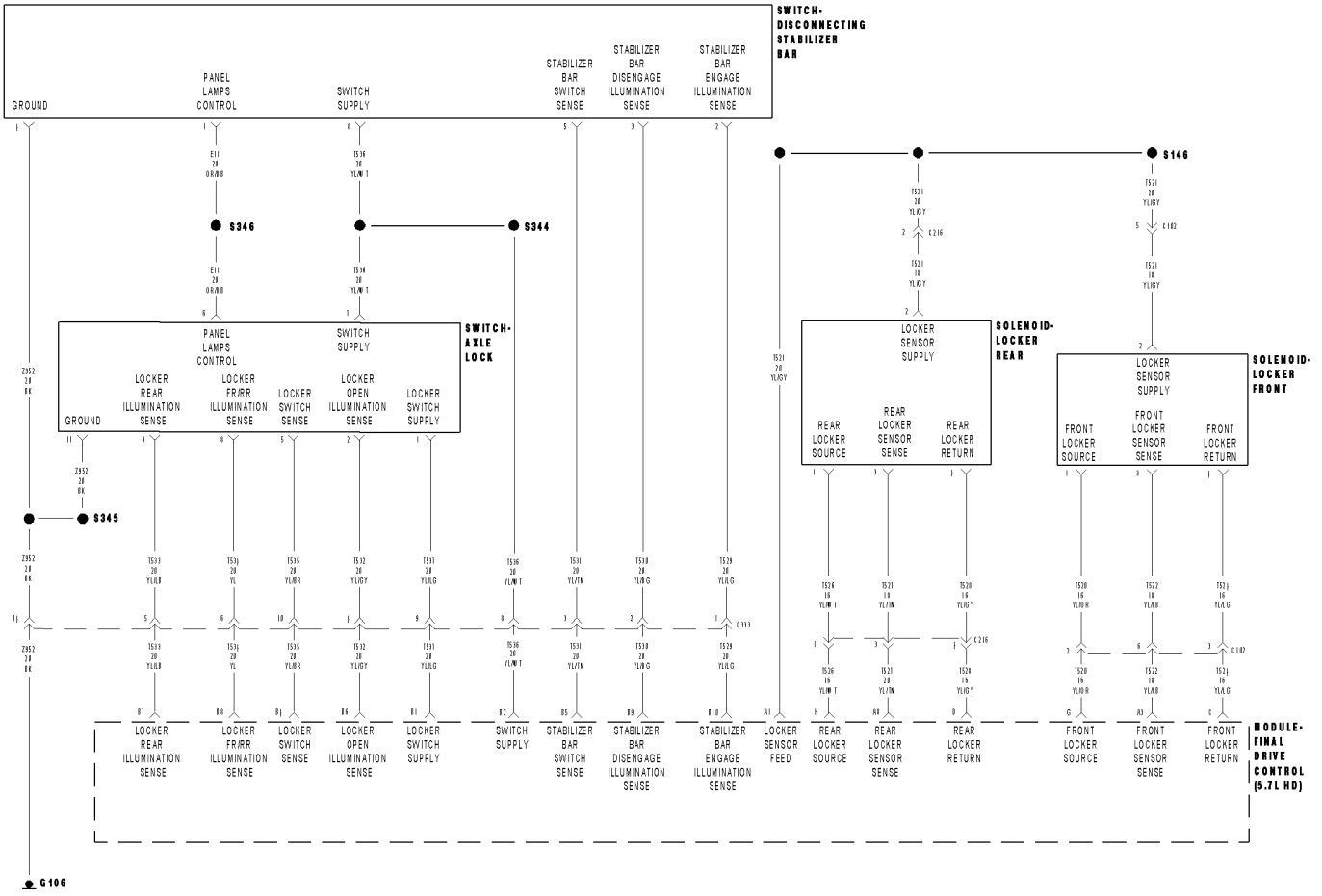

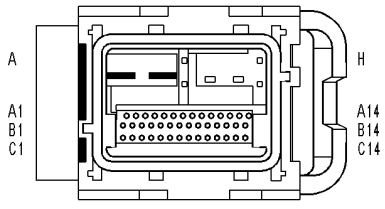

MODULE-FINAL DRIVE CONTROL (5.7L HD)

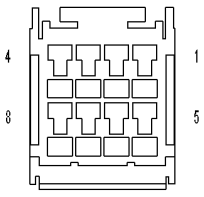

SWITCH-DISCONNECTING STABILZER BAR

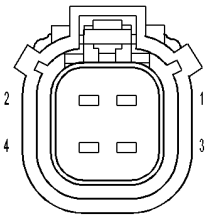

SOLENOID-LOCKER REAR

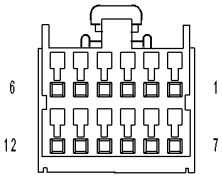

SWITCH-AXLE LOCK

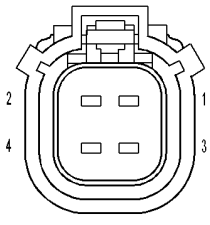

SOLENIOD-LOCKER FRONT

81459daf

CHECKING REAR LOCKER SOLENOID OPERATION (CONTINUED)

For a complete wiring diagram **Refer to Section 8W**.

Possible Causes
REAR LOCKER SOLENOID
(T526) REAR LOCKER SOURCE CIRCUIT SHORTED TO GROUND
(T528) REAR LOCKER SOURCE CIRCUIT SHORTED TO (T528) REAR LOCKER RETURN CIRCUIT
FDCM

Diagnostic Test

1. AXLE OPERATION

CAUTION: Before removing the FDCM harness connector, clean the connector and locking cam area of dirt and debris. Failure to do so can result in the connector being jammed or damage to the locking cams on the harness connector or module. Do not force the assist arm when releasing or installing the harness connector.

Turn the ignition off.

Secure the vehicle by blocking the front wheels from the front and back.

Lift one rear wheel off the ground.

Turn the ignition on.

Place the vehicle in the drive/first gear and transfer case in LOW LOCK.

With the scan tool, actuate the Rear Locker Solenoid.

Manually rotate the wheel that is off the ground. The wheel should lock once the dog clutch is aligned.

Stop the actuation of the Rear Locker Solenoid.

Manually rotate the wheel that is off the ground. The wheel should turn.

Does the Front Axle operate as described above?

Yes >> Rear Locker Solenoid is operating normally. Test complete.

No >> Go To 2

---

2. REAR LOCKER SOLENOID OPERATION

NOTE: Before continuing with the below diagnostic test, ensure the FDCM harness connector seal is installed correctly. Inspect the terminals on both harness connector and the module for damage. Failure to do so can result in misdiagnoses of the system.

Turn the ignition off.

Disconnect the Rear Locker Solenoid harness connector.

Ignition on, engine not running.

Using a 12-volt test light, jump across from the (T526) Rear Locker Source circuit and the (T528) Rear Locker Return circuit in the Rear Locker harness connector.

With a scan tool, actuate the Rear Locker Solenoid.

Does the test light flash on and off?

Yes >> Inspect the Rear Locker Solenoid terminals and connectors for corrosion and/or dirty that may compromise the connection. If OK, replace the Rear Locker Solenoid.
Perform FDCM VERIFICATION TEST.

No >> Go To 3

CHECKING REAR LOCKER SOLENOID OPERATION (CONTINUED)

3. (T526) REAR LOCKER SOURCE CIRCUIT SHORTED TO GROUND

Turn the ignition off.

Disconnect the FDCM harness connector.

Measure the resistance of the (T526) Rear Locker Source circuit at the FDCM harness connector.

Is the resistance below 100 ohms?

Yes >> Repair the short to ground in the Rear Locker Source circuit.
Perform FDCM VERIFICATION TEST.

No >> Go To 4

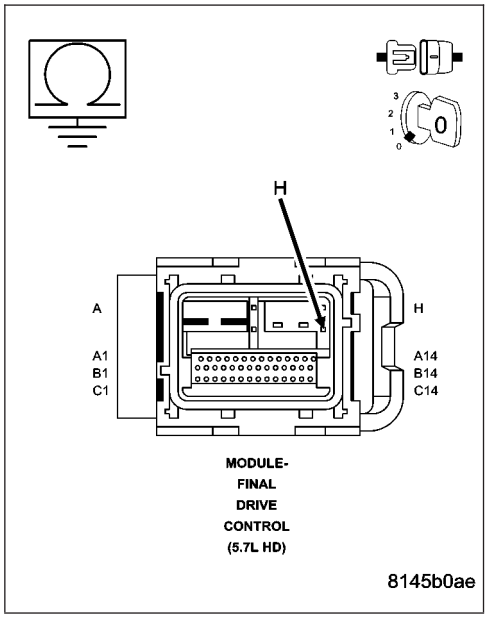

4. (T526) REAR LOCKER SOURCE CIRCUIT SHORTED TO (T528) REAR LOCKER RETURN CIRCUIT

Measure the resistance between the (T526) Rear Locker Source circuit and the (T528) Rear Locker Return circuit in the Rear Locker Solenoid harness connector.

Is the resistance below 100 ohms?

Yes >> Repair the short between (T526) Rear Locker Source circuit and the (T528) Rear Locker Return circuit.
Perform FDCM VERIFICATION TEST

No >> Go To 5

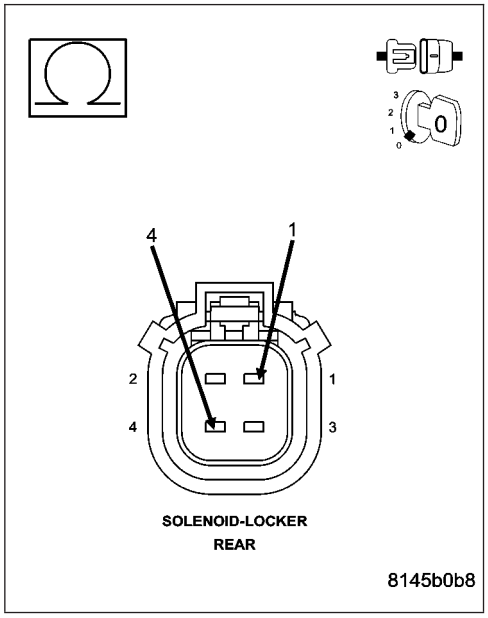

CHECKING REAR LOCKER SOLENOID OPERATION (CONTINUED)

5. FDCM

NOTE: Before continuing, check the FDCM harness connector terminals for corrosion, damage, or terminal push out. Repair as necessary.

Using the schematics as a guide, inspect the wire harness and connectors. Pay particular attention to all Power and Ground circuits.

Were there any problems found?

Yes >> Repair as necessary.
Perform FDCM VERIFICATION TEST

No >> Replace and program the Final Drive Control Module in accordance with Service Information.
Perform FDCM VERIFICATION TEST.

FDCM VERIFICATION TEST

Diagnostic Test

1. PERFORM FDCM VERIFICATION TEST

CAUTION: Before removing the FDCM harness connector, clean the connector and locking cam area of dirt and debris. Failure to do so can result in the connector being jammed or damage to the locking cams on the harness connector or module. Do not force the assist arm when releasing or installing the harness connector.

NOTE: If the SKIM, PCM or FCM was replaced, refer to the service information for proper programming procedures.

1. Disconnect all jumper wires and reconnect all previously disconnected components and connectors.
2. Ensure that all accessories are turned off.
3. Ensure that the battery is fully charged.
4. With the DRBIII®, record and erase all DTC(s) from the FDCM
5. Start and run the engine for 2 minutes while operating all functions of the system that caused the original concern.
6.

NOTE: When a Stabilizer System DTC diagnostic is complete and all repairs have been made, running the Stabilizer Motor System Test and/or LED System Test can also provide verification that the DTC has been repaired and the system is operating normally.

7. Turn the ignition off, wait 5 seconds, then turn the ignition on. Using the DRBIII®, read DTC(s) from the FDCM.

Are any FDCM DTC(s) present or is the original condition still present?

Yes >> The repair is not complete. Refer to the related category for the DTC or symptom that is still present.

No >> The repair is complete.

DIFFERENTIAL & DRIVELINE - SERVICE INFORMATION

TABLE OF CONTENTS

	page		page
PROPELLER SHAFT	99	**REAR AXLE - 9 1/4**	226
HALF SHAFT	131	**REAR AXLE - 10 1/2 AA**	265
FRONT AXLE - C205F	141	**REAR AXLE - 11 1/2 AA**	310
FRONT AXLE - 9 1/4 AA	181	**REAR AXLE - 248RBI**	347

PROPELLER SHAFT

TABLE OF CONTENTS

page

PROPELLER SHAFT
DIAGNOSIS AND TESTING
PROPELLER SHAFT 99
STANDARD PROCEDURE
PROPELLER SHAFT ANGLE 102
STANDARD PROCEDURE - LUBRICATION . 105
SPECIFICATIONS
PROPELLER SHAFT 105
SPECIAL TOOLS 106
SHAFT-PROPELLER LD FRONT
REMOVAL 107
INSTALLATION 108
SHAFT-PROPELLER HD FRONT
REMOVAL 108
INSTALLATION 109
SHAFT-PROPELLER REAR
REMOVAL 109
INSTALLATION 110
BEARING-CENTER
REMOVAL 111
INSTALLATION 111
ADJUSTMENTS 112
UNIVERSAL JOINTS-SINGLE CARDAN
DISASSEMBLY
DISASSEMBLY - WITH INJECTED RING . . . 112
DISASSEMBLY - WITH SNAP RINGS 116
ASSEMBLY
ASSEMBLY - WITH INJECTED RING 117
ASSEMBLY - WITH SNAP RINGS 122
UNIVERSAL JOINTS-DOUBLE CARDAN
DISASSEMBLY 123
ASSEMBLY 125

PROPELLER SHAFT

DIAGNOSIS AND TESTING

PROPELLER SHAFT

PROPELLER SHAFT VIBRATION

Out-of-round tires or wheels that are out of balance, will cause a low frequency vibration.

Driveline vibration can also caused by loose or damaged engine mounts.

Propeller shaft vibration increases with vehicle speed. A vibration that occurs at a specific speed range, is not usually caused by an out of balance propeller shaft. Defective universal joints or an incorrect propeller shaft angle are usually the cause of such a vibration.

DRIVELINE VIBRATION

Drive Condition	Possible Cause	Correction
Propeller Shaft Noise	1) Undercoating or other foreign material on shaft.	1) Clean exterior of shaft and wash with solvent.
	2) Loose U-joint clamp screws.	2) Install new clamps and screws and tighten to proper torque.
	3) Loose or bent U-joint yoke or excessive runout.	3) Install new yoke.
	4) Incorrect driveline angularity.	4) Measure and correct driveline angles.
	5) Rear spring center bolt not in seat.	5) Loosen spring u-bolts and seat center bolt.
	6) Worn U-joint bearings.	6) Install new U-joint.
	7) Propeller shaft damaged or out of balance.	7) Installl new propeller shaft.
	8) Broken rear spring.	8) Install new rear spring.
	9) Excessive runout or unbalanced condition.	9) Re-index propeller shaft, test, and evaluate.
	10) Excessive drive pinion gear shaft runout.	10) Re-index propeller shaft and evaluate.
	11) Excessive axle yoke deflection.	11) Inspect and replace yoke if necessary.
	12) Excessive transfer case runout.	12) Inspect and repair as necessary.
Universal Joint Noise	1) Loose U-joint clamp screws.	1) Install new clamps and screws and tighten to proper torque.
	2) Lack of lubrication.	2) Replace as U-joints as necessary.

PROPELLER SHAFT BALANCE

If propeller shaft is suspected of being out of balance, use the following procedure.

NOTE: Indexing propeller shaft 180° relative to the yoke may eliminate some vibrations.

1. Raise and support vehicle.
2. Clean all foreign material from the propeller shaft and universal joints.
3. Inspect propeller shaft for missing balance weights, broken welds and bent areas. **If propeller shaft is bent, it must be replaced.**
4. Inspect universal joints for wear and properly installed.
5. Check propeller shaft bolt torques.
6. Remove wheels and install lug nuts to retain brake rotors.
7. Mark and number the shaft six inches from the pinion yoke end at four positions 90° apart.

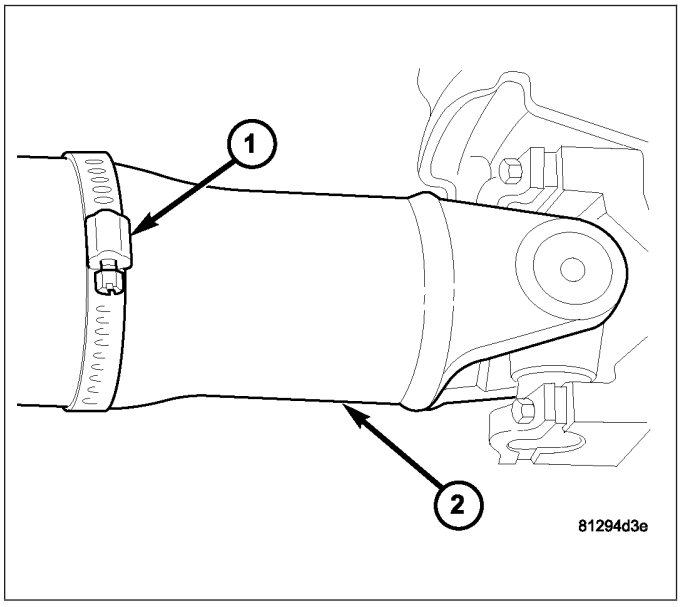

8. Run and accelerate vehicle until vibration occurs. Note the intensity and speed the vibration occurred. Stop the engine.

9. Install a screw clamp at position (1).

10. Start engine and check vibration. If there is little or no change move the clamp to the next positions. Repeat the vibration test.

NOTE: If there is no difference in vibration at this positions, the vibration may not be the propeller shaft.

11. If vibration decreased, install a second clamp (1) and repeat the test.

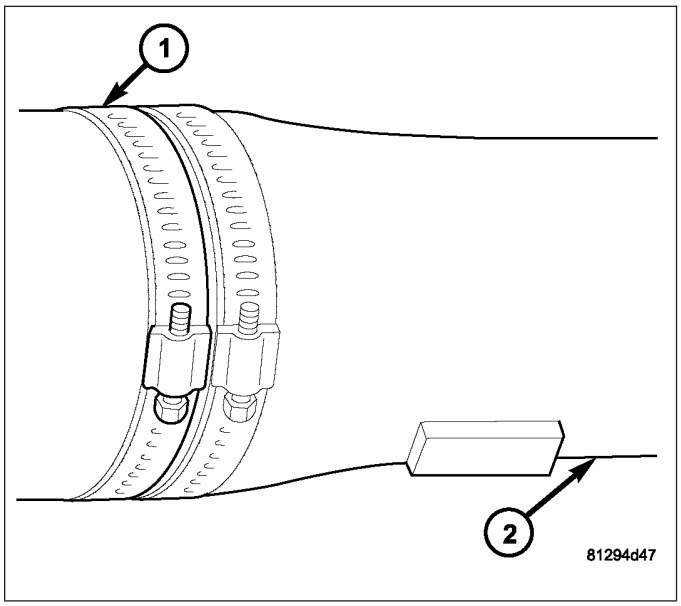

12. If additional clamp causes an additional vibration, separate the clamps 1/2 inch (1) above and below the mark. Repeat the vibration test.
13. Increase distance between the clamp screws (1) (2) and repeat test, until the least amount of vibration is noticed. Bend the slack end of the clamps so screws will not loosen.
14. If vibration remains unacceptable, repeat the procedure to the front end of the propeller shaft.
15. Install wheels and lower vehicle.

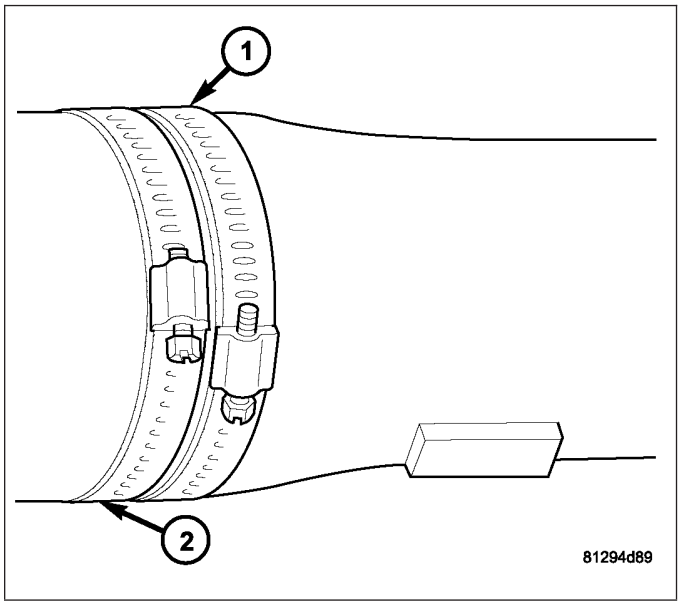

PROPELLER SHAFT RUNOUT

1. Clean propeller shaft surface, where dial indicator will contact the shaft.
2. Install dial indicator perpendicular to the shaft surface.
3. Measure runout at the center and ends of the shaft away from weld areas, so weld process does not affect measurements.
4. Refer to Runout Specifications chart.
5. If runout is out of specification, index the shaft 180° and take shaft runout measurements again.
6. If runout is now within specifications, mark shaft and yokes for proper orientation.
7. If runout is not within specifications, verify runout of the transmission/transfer case and axle are within specifications. Correct as necessary and measure propeller shaft runout again.
8. Replace propeller shaft if the runout still exceeds the limits.

RUNOUT SPECIFICATIONS

Front of Shaft	0.020 in. (0.50 mm)
Center of Shaft	0.025 in. (0.63 mm)
Rear of Shaft	0.020 in. (0.50 mm)
NOTE: Measure front/rear runout approximately 3 inches (76 mm) from the weld seam at each end of the shaft tube for tube lengths over 30 inches. For tube lengths under 30 inches, the maximum allowed runout is 0.020 in. (0.50 mm) for the full length of the tube.	

STANDARD PROCEDURE

PROPELLER SHAFT ANGLE

ONE PIECE PROPELLER SHAFT

This procedure applies to front and rear propeller shafts.

NOTE: To obtain output angle (A) on the front propeller shaft equipped with a C/V joint, place inclinometer on machined surface of the C/V joint.

1. Raise vehicle and support the axles as level as possible, allowing the wheels and propeller shaft to turn.
2. Remove universal joint snap rings if equipped, so inclinometer base sits flat.
3. Rotate shaft until transmission/transfer case output yoke bearing is facing downward.

NOTE: Always take measurements from front to rear and on the same side of the vehicle.

4. Place Inclinometer 7663 on yoke bearing cap or pinion flange ring parallel to the shaft. Center bubble in sight glass and record measurement (A).

This measurement will give you the transmission yoke Output Angle (A).

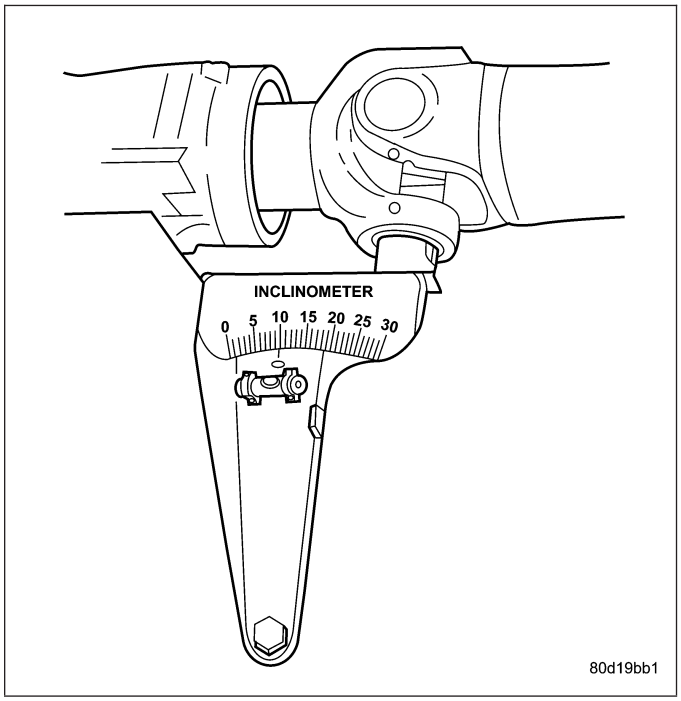

5. Rotate propeller shaft 90 degrees and place Inclinometer on yoke bearing parallel to the shaft. Center bubble in sight glass and record measurement. This measurement can also be taken at the rear end of the shaft.

This measurement will give you the Propeller Shaft Angle (C).

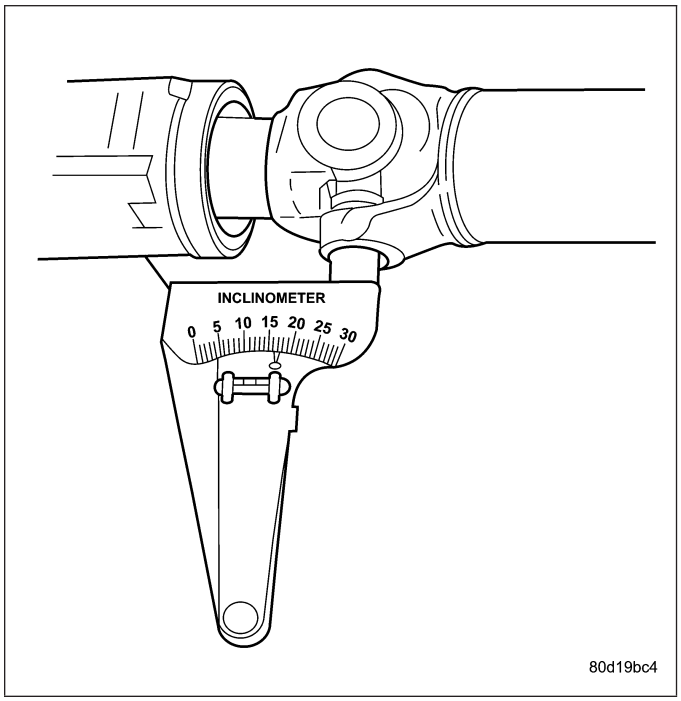

6. Rotate propeller shaft 90 degrees and place inclinometer on companion flange yoke bearing parallel to the shaft. Center bubble in sight glass and record measurement.

This measurement will give you the pinion Companion Flange Input Angle (B).

7. Subtract smaller figure from larger (C minus A) to obtain Transmission/Transfer Case **Output Operating Angle**.
8. Subtract smaller figure from larger (C minus B) to obtain axle **Input Operating Angle**.

Refer to rules and example in for additional information.

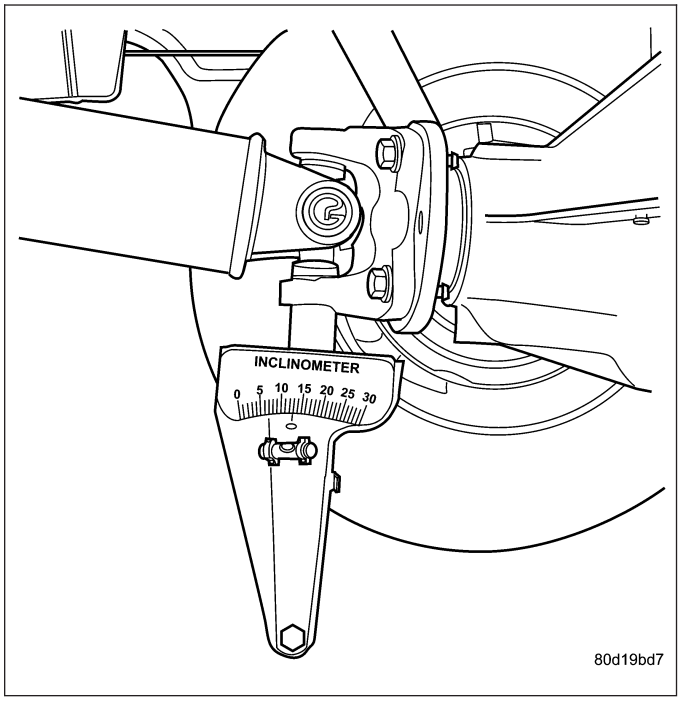

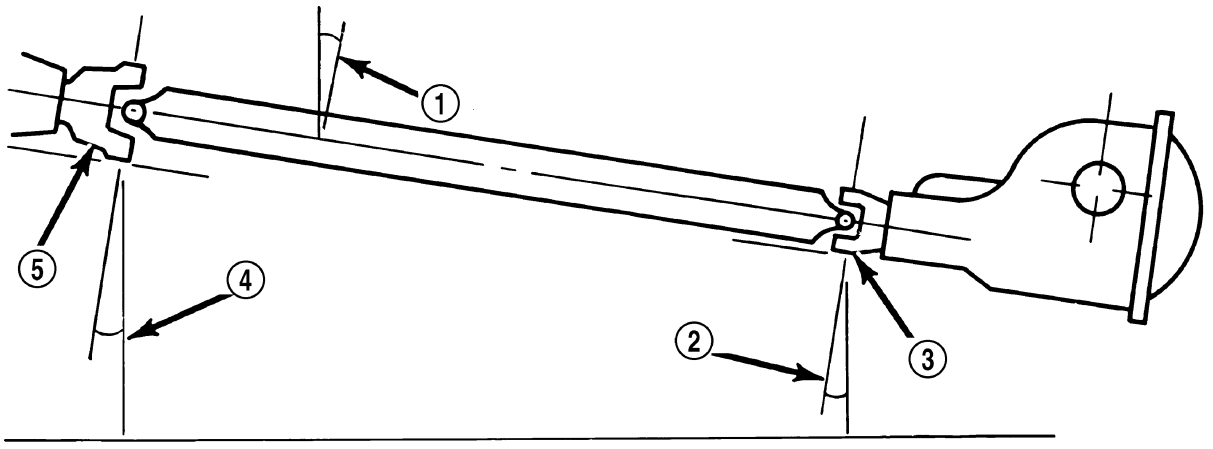

Horizontal Level

(A) Output Yoke	= 3.0° or 4.9°	(B) Axle Input Yoke	= 3.2° or 4.9°
(C) Prop. Shaft	= 4.9° or -3.0°	(C) Prop. Shaft	= 4.9° or -3.2°
Transmission Output Operating Angle	1.9°	Axle Input Operating Angle	1.7°

Trans. Output Operating Angle	1.9°
Axle Input Operating Angle	-1.7°
Amount of U-Joint Cancellation	0.2°

J9316-3

RULES

- Good cancellation of U-joint operating angles should be within 1 degree.
- Operating angles should be less than 3 degrees.
- Operating angles less than 10 degrees for double cardan U-joint.
- At least 1/2 of one degree continuous operating propeller shaft angle.

TWO PIECE PROPELLER SHAFT

Two piece propeller shaft angles measurement is the same as a one-piece propeller shaft.

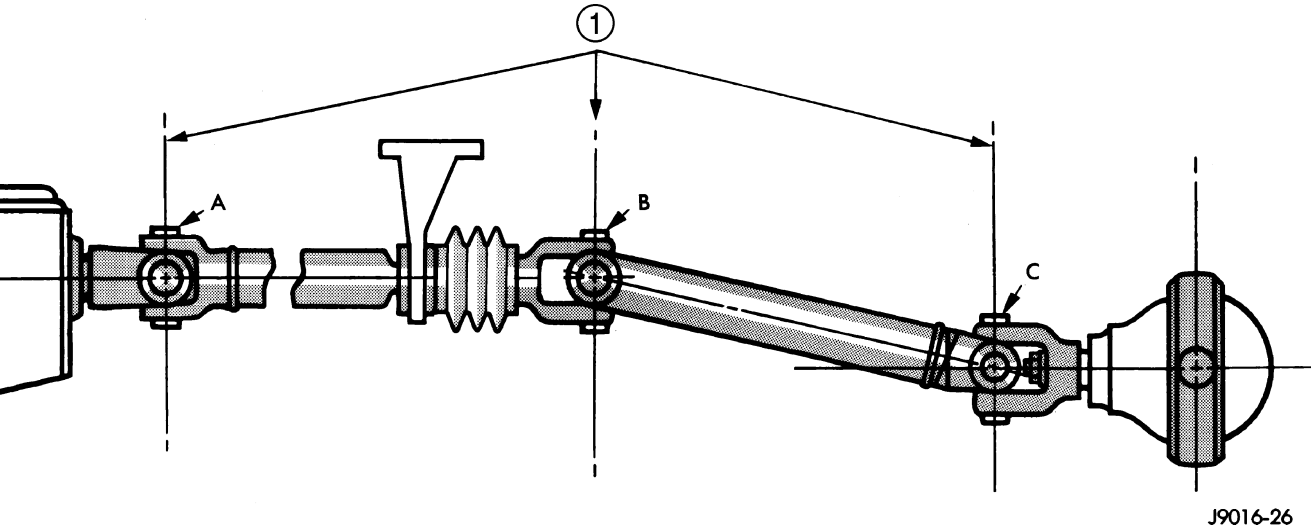

J9016-26

STANDARD PROCEDURE - LUBRICATION

Vehicles with double cardan universal joint front propeller shaft (1) are equipped with a grease fitting (2). Grease the double cardan universal joint at each oil change.

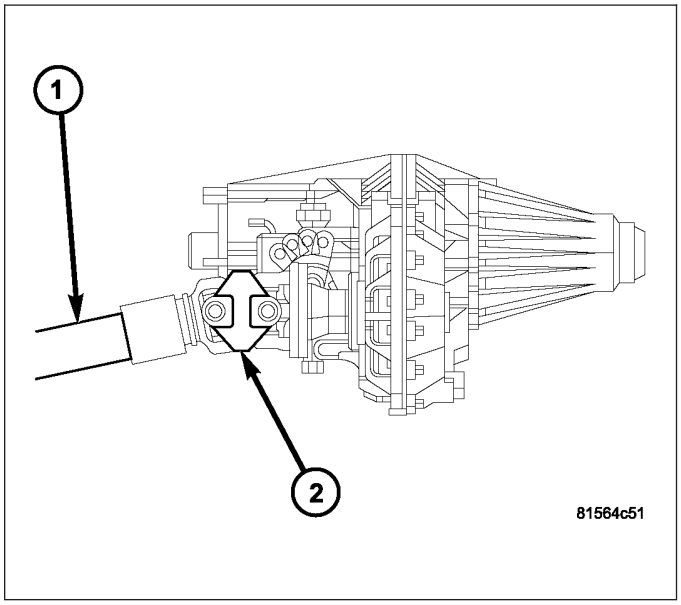

SPECIFICATIONS

PROPELLER SHAFT

TORQUE SPECIFICATIONS

DESCRIPTION	N·m	Ft. Lbs.	In. Lbs.
Center Bearing Bolts	54	40	-
Transfer Case Flange Bolts	88	65	-
LD - Front Pinion Flange Bolts	115	85	-
HD - Front Pinion Flange Bolts	28	21	-
Rear Pinion Flange Bolts	115	85	-
Rear Pinion Yoke Bolts	29	22	-

SPECIAL TOOLS

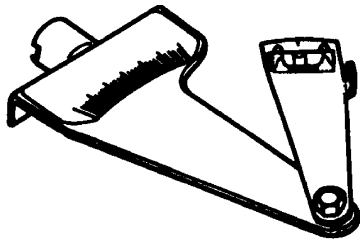

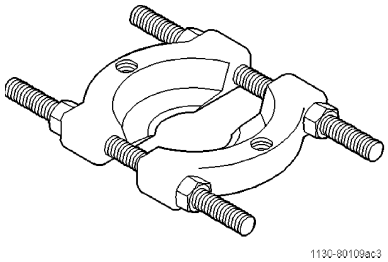

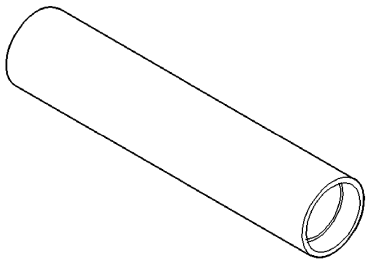

SHAFT-PROPELLER LD FRONT

REMOVAL

1. With vehicle in neutral, position vehicle on hoist.
2. Remove exhaust crossover pipe.
3. Mark a line across the axle companion flange (1), propeller shaft (2), flange yoke (3) and transfer case for installation reference.

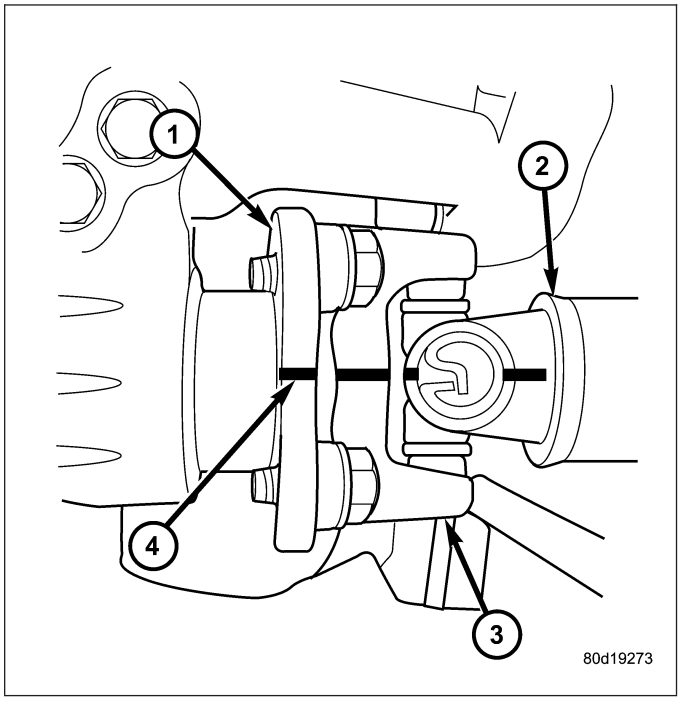

4. Remove axle/transfer case companion flange bolts. Remove dust boot clamp (3) from the C/V jonit (1) end of the shaft if equipped.
5. Remove propeller shaft.

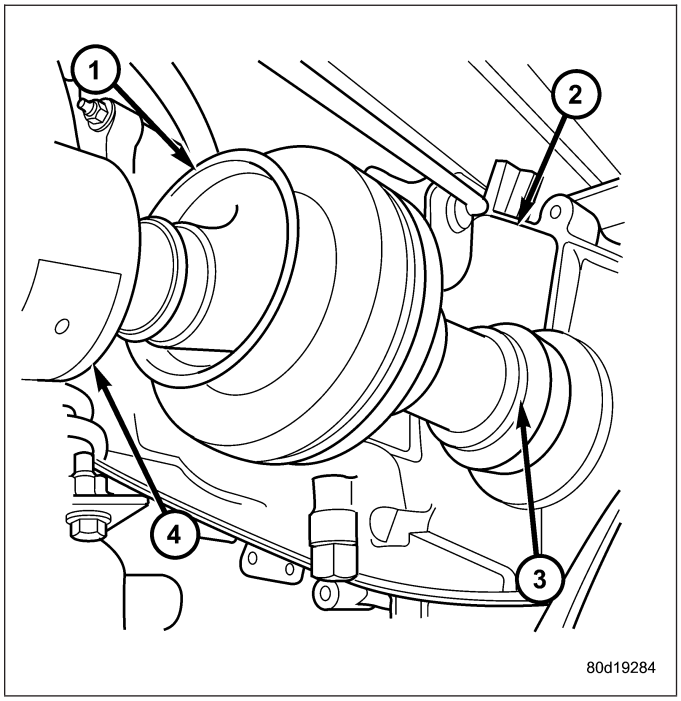

INSTALLATION

1. Install propeller shaft with all reference marks (4) aligned.
2. Install with dust boot clamp at transfer case end.
3. Install **new** axle companion flange bolts and tighten to 115 N·m (85 ft. lbs.).

NOTE: Companion flange bolts incorporate a Loctite® patch, new bolts should be used. If bolts are not available, clean bolts and apply Loctite® 242 to the threads.

4. Install skid plate, if equipped.

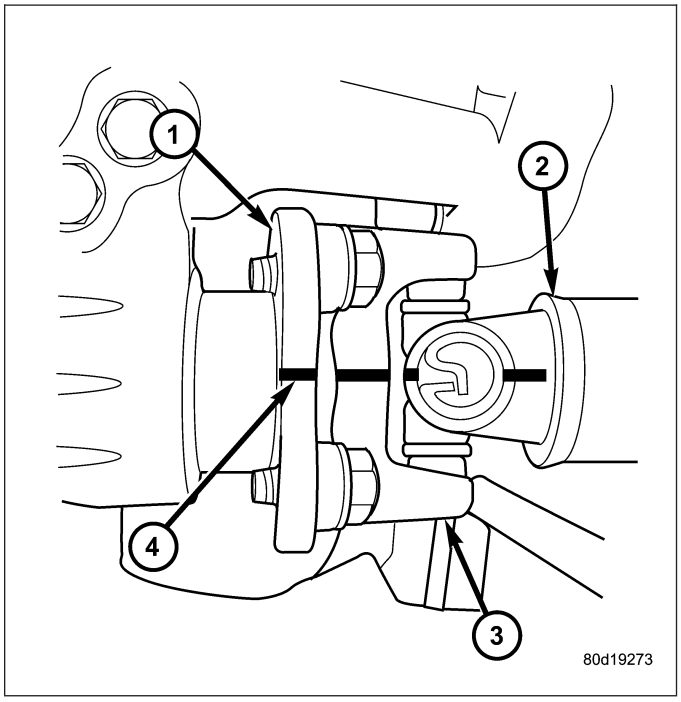

SHAFT-PROPELLER HD FRONT

REMOVAL

1. With vehicle in neutral, position vehicle on hoist.
2. Remove exhaust crossover pipe.
3. Mark a line across axle (3)/transfer case (2) companion flange and propeller shaft flange yokes for installation reference.
4. Remove axle/transfer case companion flange bolts.
5. Remove propeller shaft.

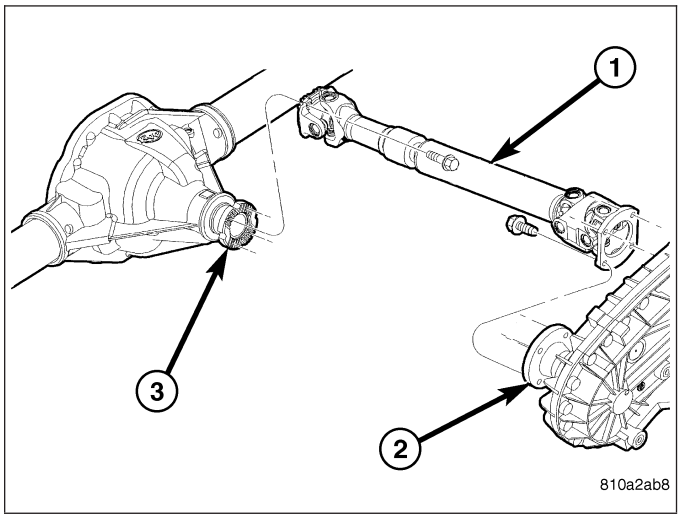

INSTALLATION

1. Install propeller shaft (1) with all reference marks aligned.
2. Install transfer case companion flange (2) bolts and tighten to 88 N·m (65 ft. lbs.).
3. Install **new** axle companion flange (3) bolts and tighten to 28 N·m (21 ft. lbs.).

NOTE: Companion flange bolts incorporate a Loctite® patch, new bolts should be used. If bolts are not available, clean bolts and apply Loctite® 242 to the threads.

4. Install skid plate, if equipped.

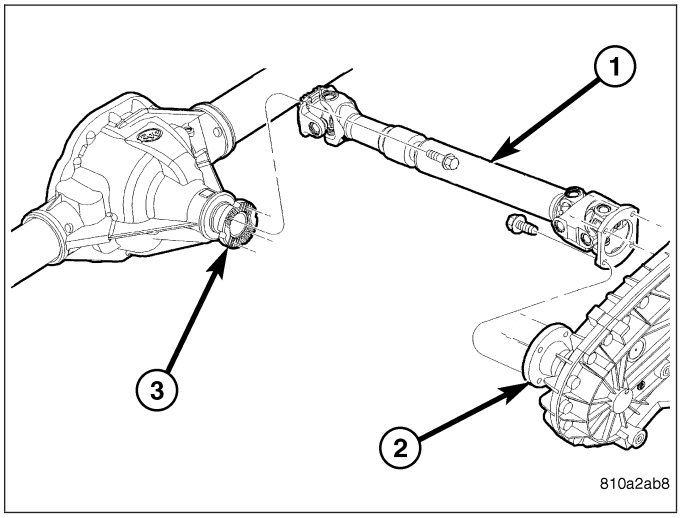

SHAFT-PROPELLER REAR

REMOVAL

1. With vehicle in neutral, position vehicle on hoist.
2. Mark pinion flange (3) or yoke and propeller shaft (1) flange (4) or yoke for installation reference.

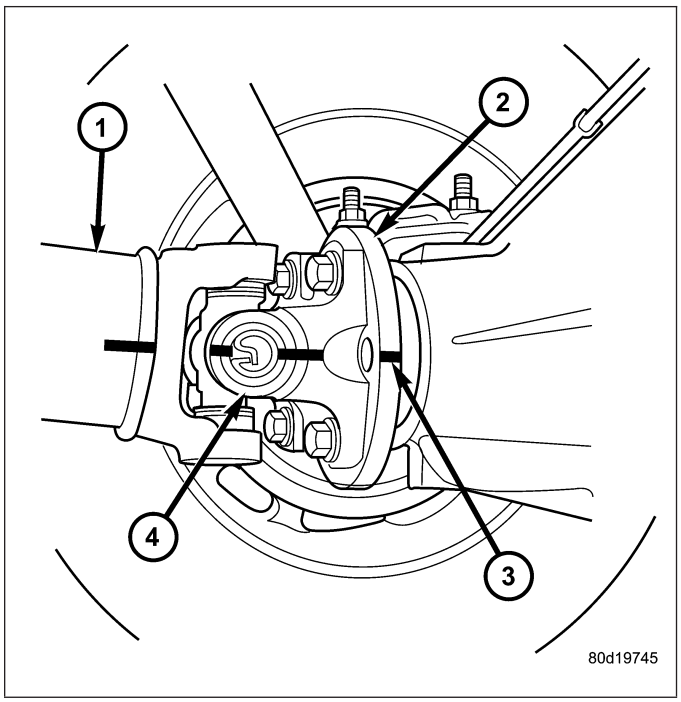

3. Mark the outline of the center bearing (1) on the crossmember for installation reference, if equipped.
4. Remove center bearing mounting nuts (3), if equipped.
5. Remove pinion flange or yoke clamp bolts.
6. Slide propeller shaft back on transmission then mark the shaft and transmission for installation reference.
7. Remove propeller shaft from transmission/ transfer case.

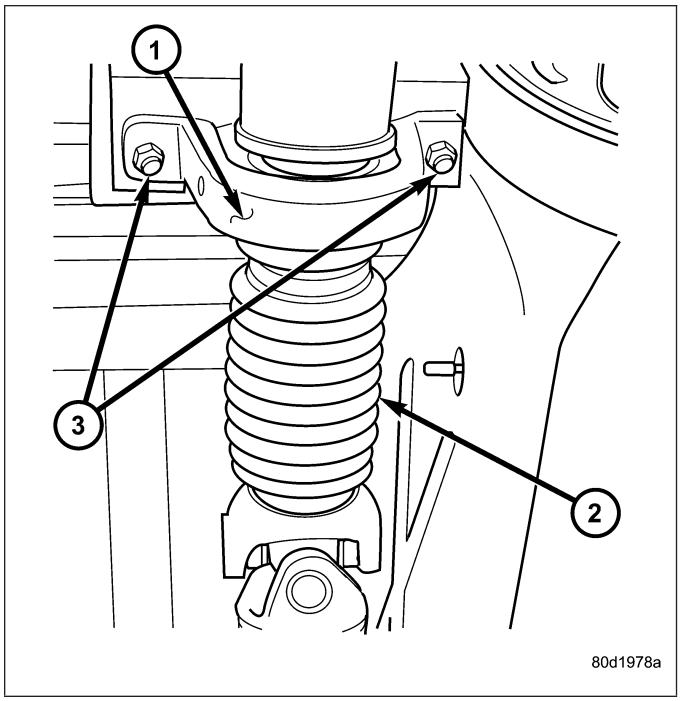

INSTALLATION

1. Slide slip yoke onto the transmission/transfer case output shaft with reference marks aligned.
2. Align and install center bearing on crossmember, if equipped and tighten nuts to 54 N·m (40 ft. lbs.).
3. Align reference marks on propeller shaft (2) and pinion flange or pinon yoke.
4. Install **new** companion flange (1) bolts and tighten to 15 N·m (85 ft. lbs.)

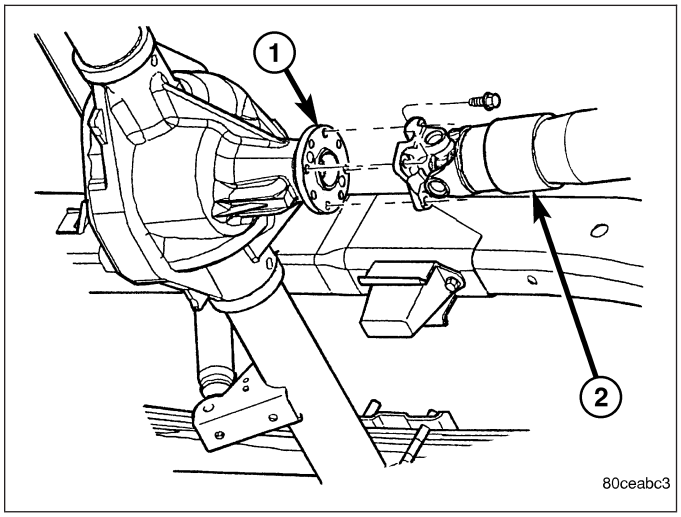

5. Install **new** SRT-10 yoke clamp (4) bolts and tighten to 29 N·m (22 ft. lbs.)

NOTE: Companion flange bolts incorporate a Loctite® patch, new bolts should be used. If bolts are not available, clean bolts and apply Loctite® 242 to the threads.

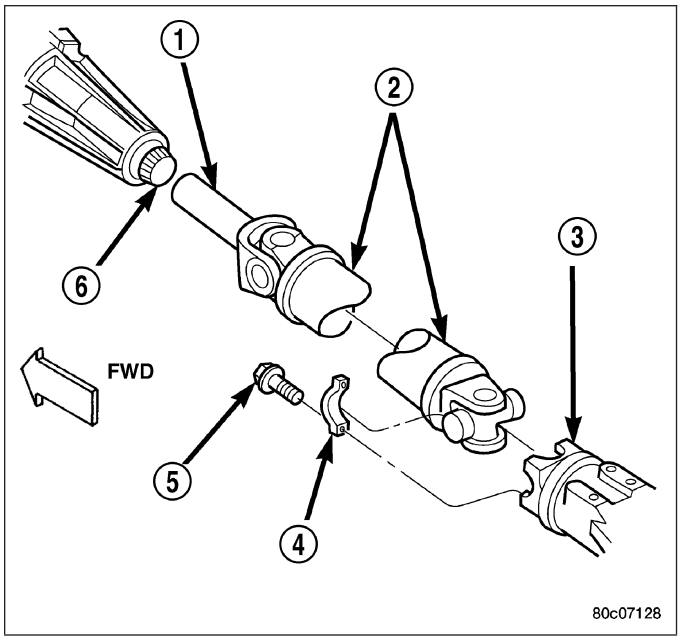

BEARING-CENTER

REMOVAL

1. Remove rear propeller shaft.
2. Make installation reference mark (1) on the two shafts.
3. Remove slip joint boot (4) clamp (3) and separate the two shafts.
4. Use hammer and punch to tap slinger away from shaft to provide room for bearing splitter.
5. Position Bearing Splitter Tool 1130 between slinger and shaft.

CAUTION: Do not damage shaft spline during removal of center bearing.

6. Set shaft in press and press bearing off the shaft.

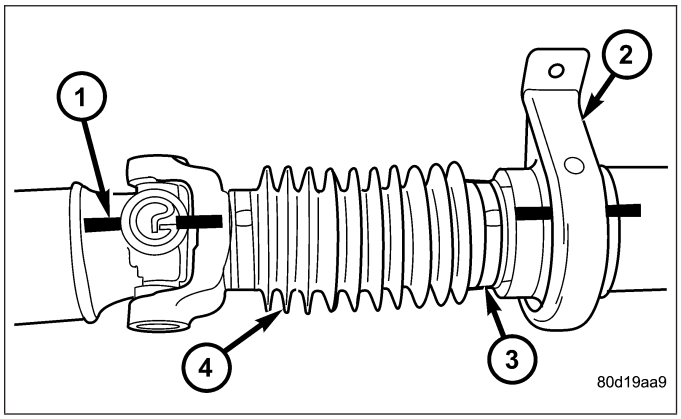

INSTALLATION

NOTE: Two types of center bearings are used and are not interchangeable. Install the same type as the vehicle was built with.

1. Install new slinger on shaft and drive into position with appropriate installer tool.
2. Install new center bearing (2) on shaft with Bearing Installer Tool 6052. Drive on shaft with hammer until bearing is seated.
3. Clean shaft splines and apply a coat of multi-purpose grease.

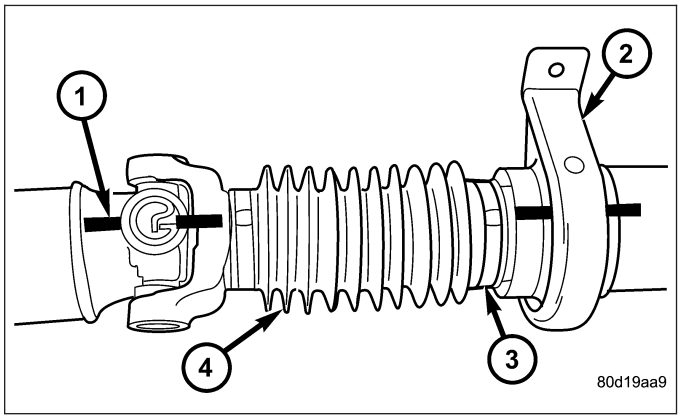

4. Align master splines and slide front and rear half-shafts together. Reposition slip yoke boot (4) and install new clamp (3).
5. Install propeller shaft in vehicle.

ADJUSTMENTS

Launch shudder is a vibration that occurs at first acceleration from a stop. Shudder vibration usually peaks at the engines highest torque output. Shudder is a symptom associated with vehicles using a two-piece propeller shaft. To decrease shudder, lower the center bearing in 1/8 inch increments. Use shim stock or fabricated plates. Plate stock must be used to maintain compression of the rubber insulator around the bearing. Do not use washers. Replace the original bolts with the appropriate increased length bolts.

UNIVERSAL JOINTS-SINGLE CARDAN

DISASSEMBLY

DISASSEMBLY - WITH INJECTED RING

1. Place shaft yoke in vise.
2. Position U-joint press (1) with receiver (2) on propeller shaft yoke.

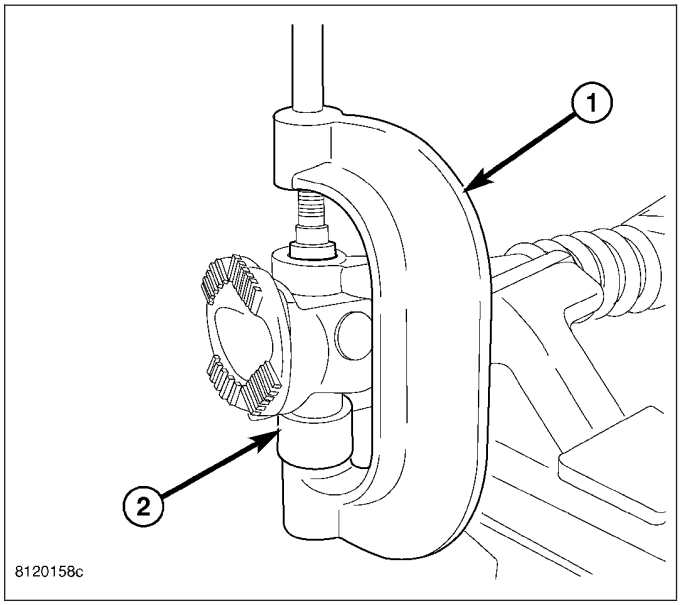

3. Pressed U-joint bearing caps (1) out of shaft yoke (2).
4. Remove lower bearing cap from shaft yoke.

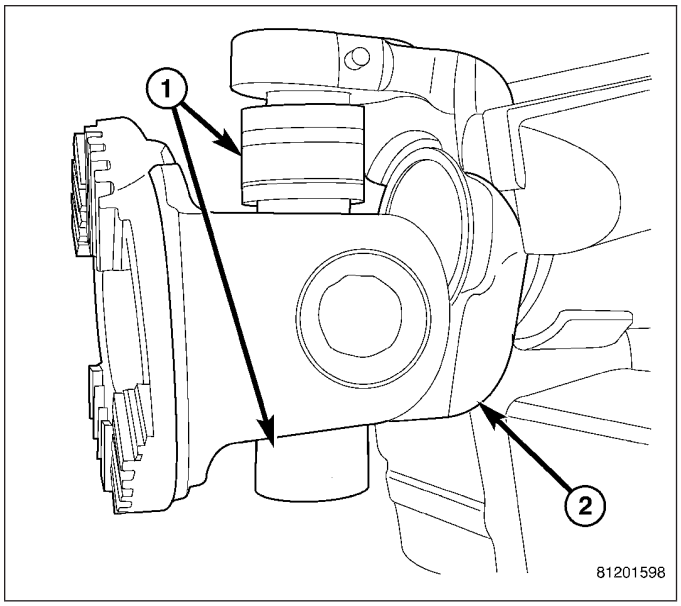

5. Turn shaft over and position press (1) with receiver (2) on shaft yoke.
6. Press remaining U-joint bearing cap out of shaft yoke.

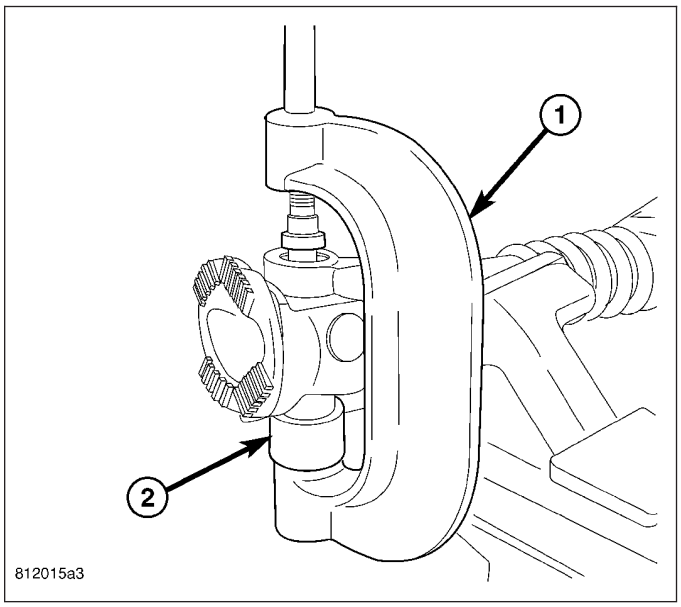

7. Remove flange (1) with U-joint out of shaft yoke (2).

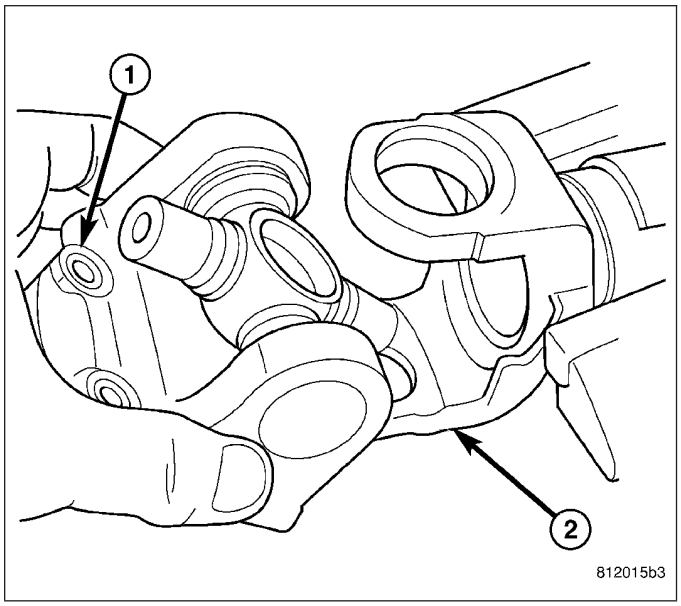

8. Position U-joint press (2) with receiver (1) on flange.

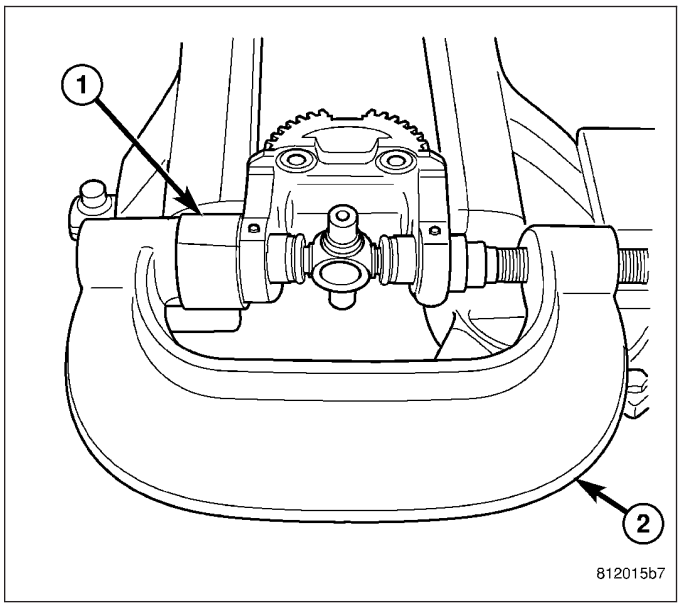

9. Press U-joint bearing caps (1) out of flange (2).
10. Remove bearing cap on the outside of the flange.

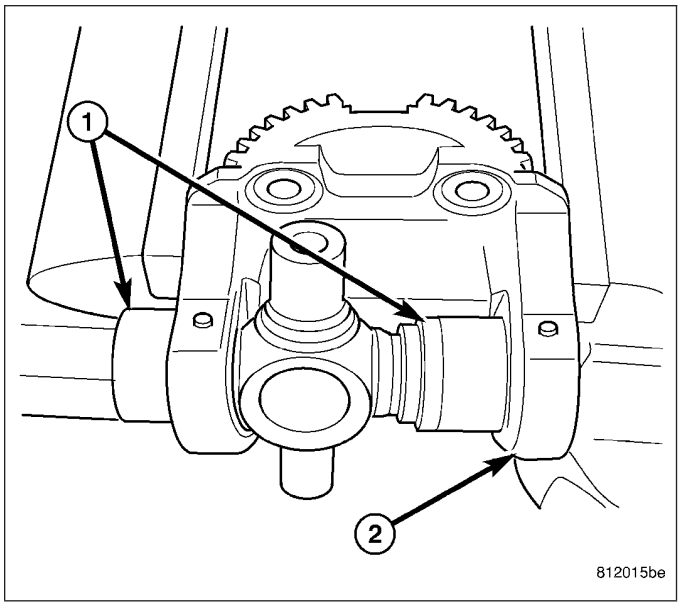

11. Position U-joint press (2) with receiver (1) on flange.
12. Press remaining U-joint bearing cap out of flange.
13. Remove U-joint from flange.

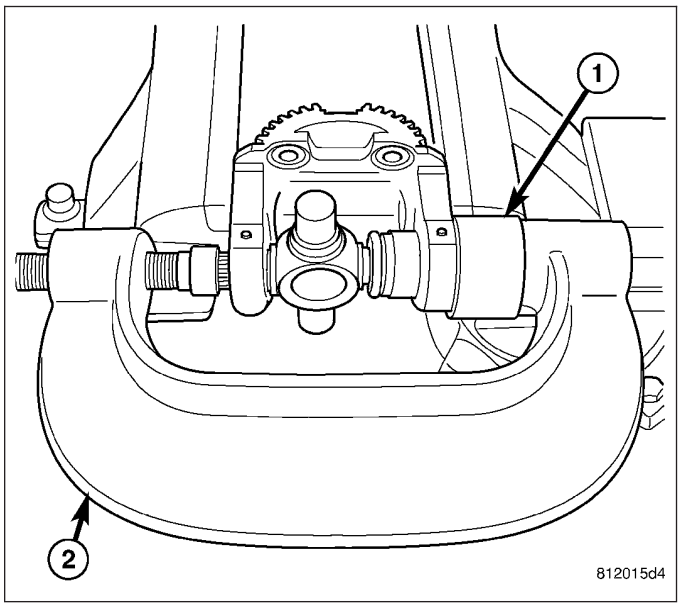

DISASSEMBLY - WITH SNAP RINGS

1. Tap outside of bearing cap with a drift to loosen snap ring.
2. Remove snap rings (1) from both sides of yoke.

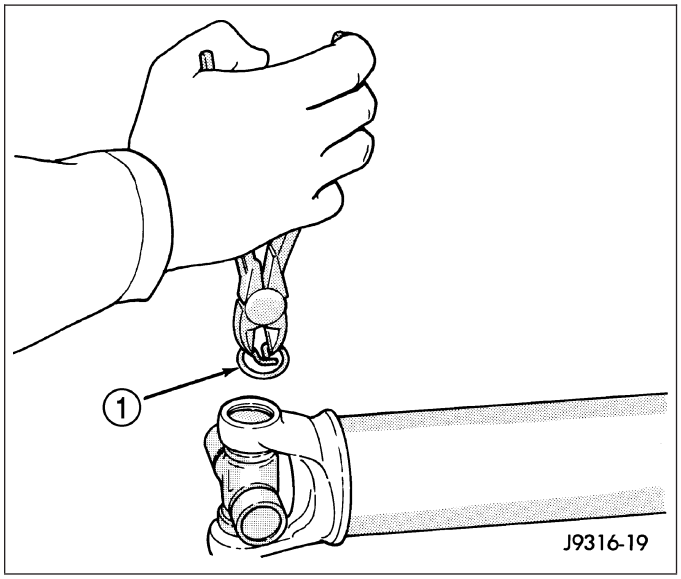

3. Position yoke with the grease fitting if equipped, pointing up.
4. Position a socket (2) with a inside diameter large enough to receive the bearing cap, beneath the yoke on a press.
5. Place another socket with an outside diameter smaller than bearing cap on the upper bearing cap and press (1) the lower cap through the yoke.

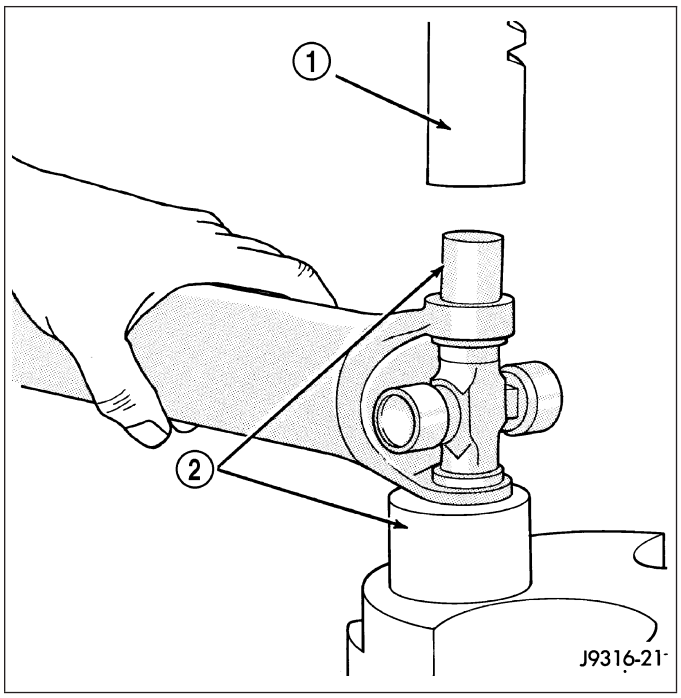

NOTE: If the bearing cap will not pull out of the yoke by hand after pressing, tap the yoke ear near the bearing cap to dislodge the cap.

6. Pull bearing cap of the yoke.
7. Turn yoke over in the press and straighten the cross (1). Press the cross until the remaining bearing cap (2) can be removed.

CAUTION: If cross or bearing cap are not straight during removal, the bearing cap will score the walls of the yoke bore and damage can occur.

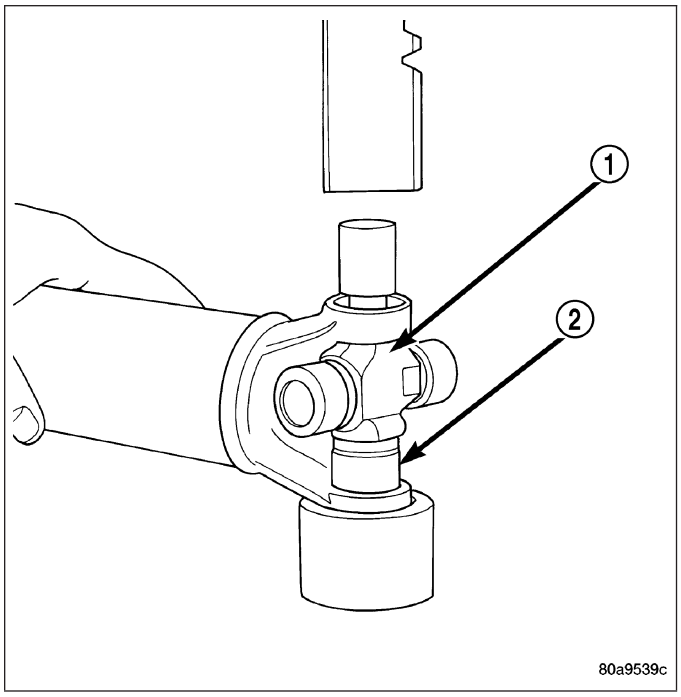

ASSEMBLY

ASSEMBLY - WITH INJECTED RING

NOTE: Replacement joint has internal snap rings.

1. Place joint in flange with one bearing cap.
2. Position press (3) with receiver (1) on flange and bearing cap (2).

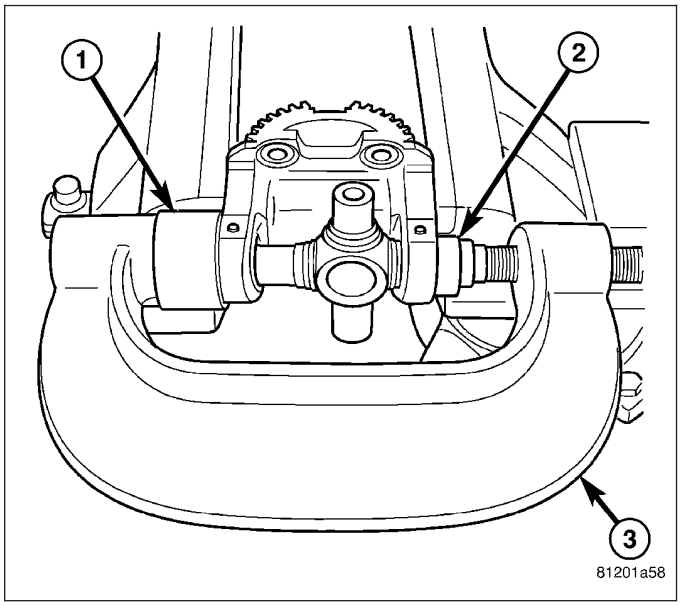

3. Press bearing cap until snap ring groove (1) is through the flange (2).

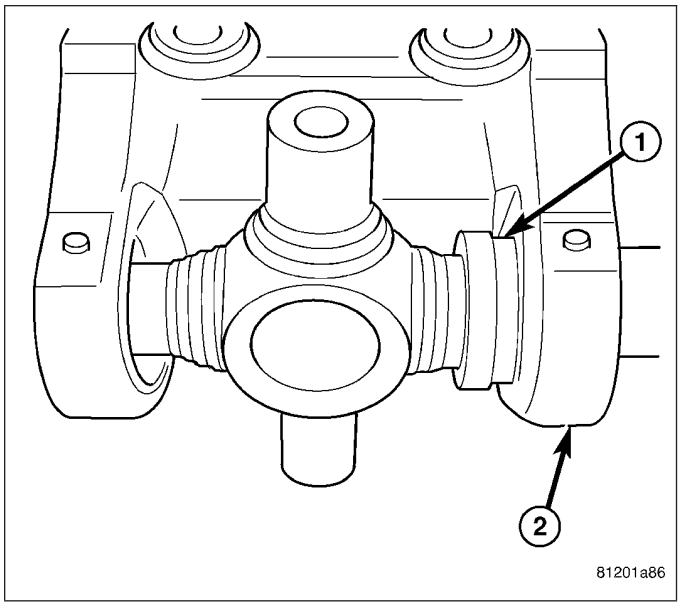

4. Install snap ring (2) on bearing (1).

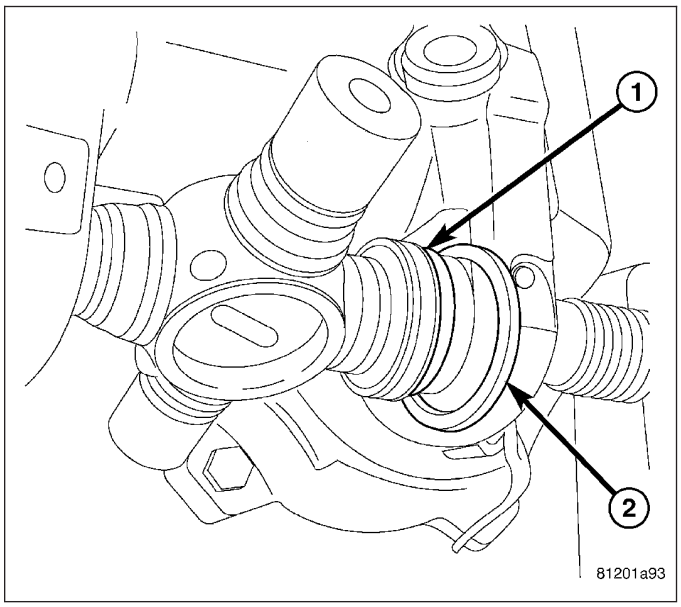

5. Position press (3) with receiver (2) on remaining bearing cap (1) and flange.
6. Press bearing cap until snap ring groove is through the flange.

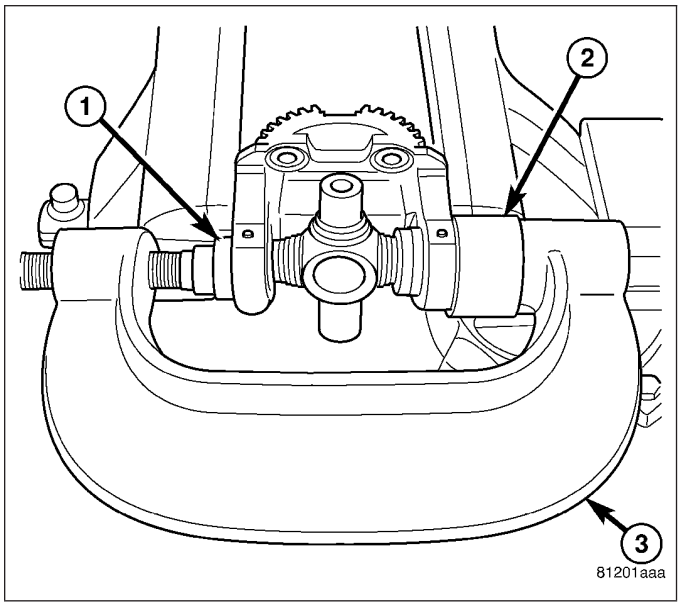

7. Install snap ring (1) on bearing cap (2).

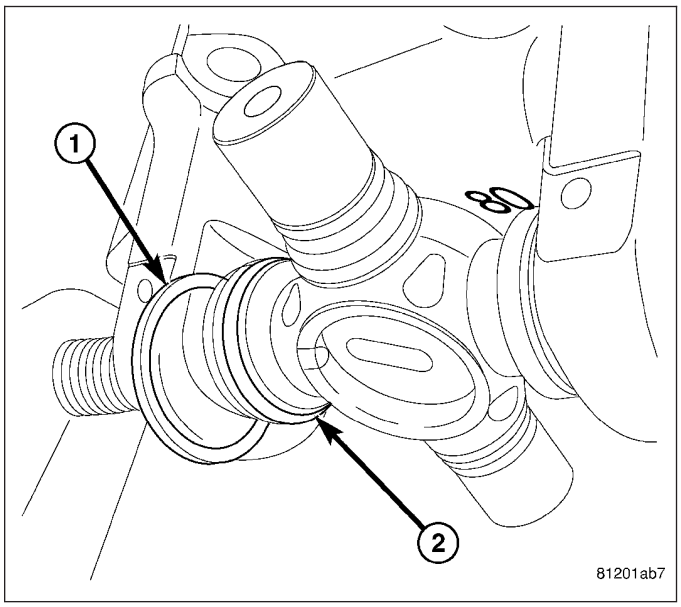

8. Install flange (1) with U-joint in yoke (2).

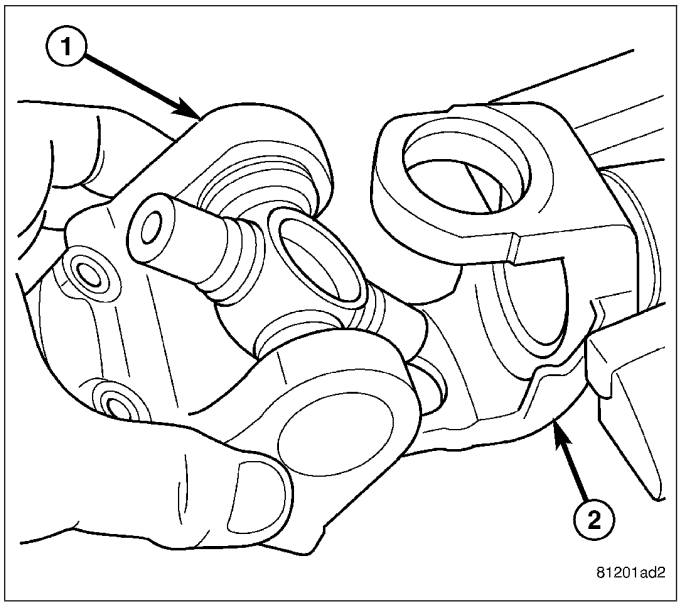

9. Position press (2) with receiver (1) and lower bearing cap (3) on yoke.
10. Press bearing cap until snap ring groove is through the yoke.

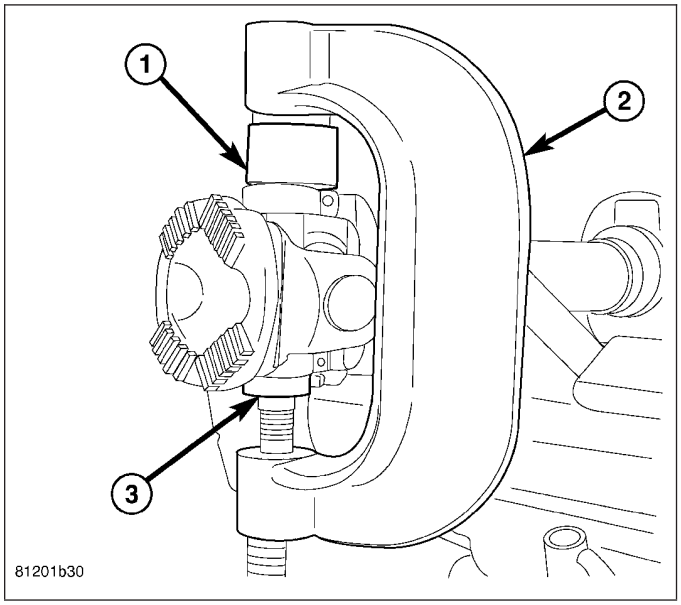

11. Install snap ring (2) on bearing cap (1).

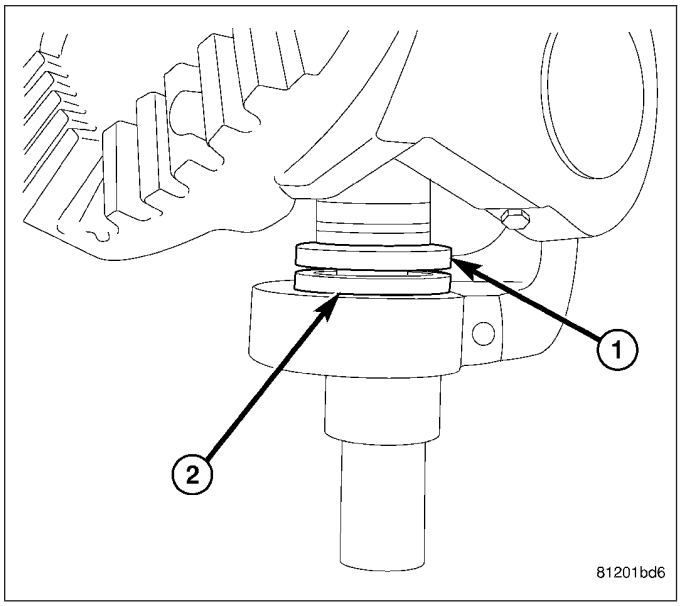

12. Position press (2) with receiver (3) on remaining bearing cap (1) and yoke.
13. Press remaining bearing cap until snap ring groove is through the yoke.

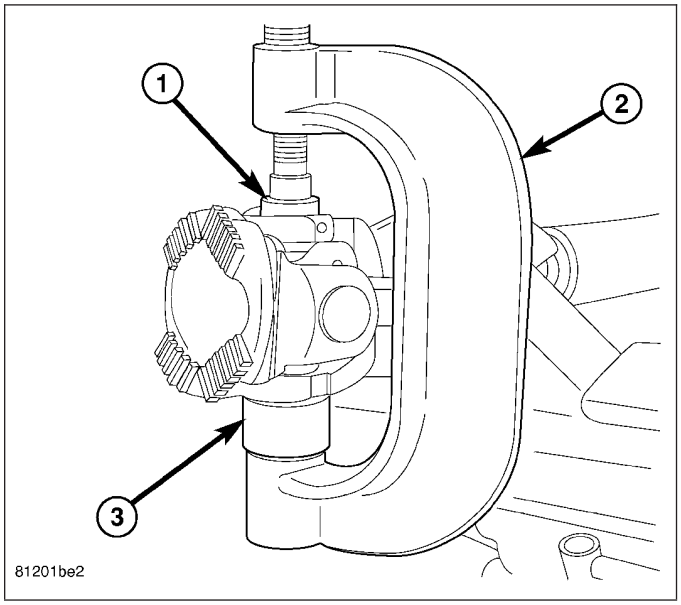

14. Install snap ring (2) on bearing cap (1).

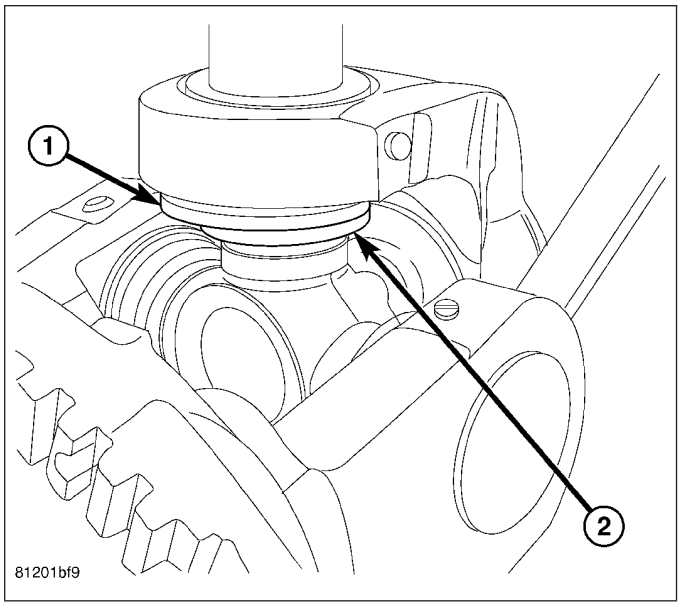

ASSEMBLY - WITH SNAP RINGS

1. Apply (EP) N.L.G.I. Grade 1 or 2 grease to inside of yoke bores.
2. Position cross (1) in yoke with lube fitting pointing up, if equipped.

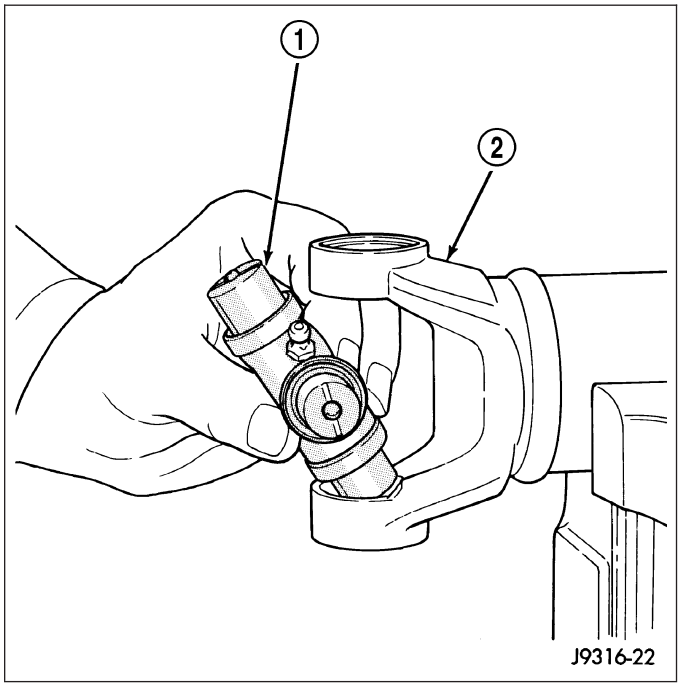

3. Place a bearing cap (1) over the cross end (2) and align cap with yoke bore.
4. Press bearing cap into the yoke bore enough to clear snap ring groove.
5. Repeat Step 3 and Step 4 to install the opposite bearing cap.

NOTE: If joint is stiff or binding, strike the yoke with a soft hammer to seat the needle bearings.

6. Add grease to lube fitting, if equipped.
7. Install propeller shaft.

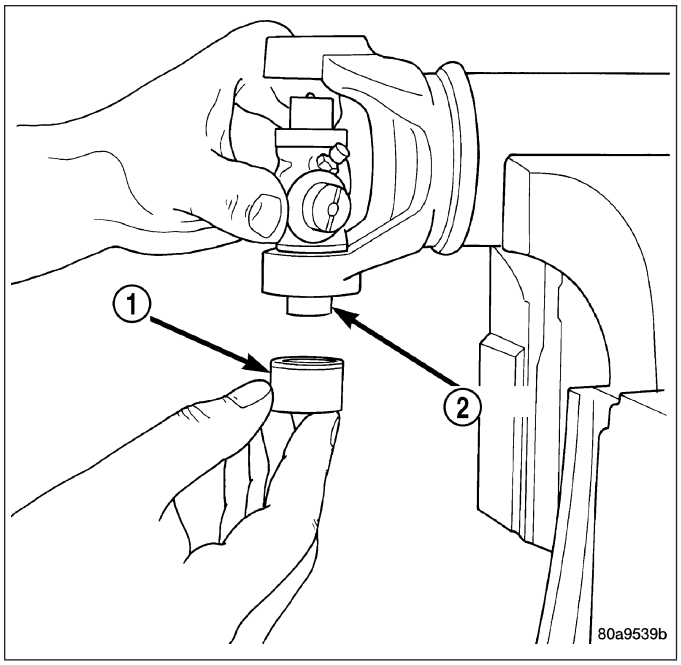

UNIVERSAL JOINTS-DOUBLE CARDAN

DISASSEMBLY

1. Remove propeller shaft.
2. Mark propeller shaft, link yoke and flange yoke for assembly reference.
3. Tap outside of the bearing cap assembly with drift to loosen snap rings.
4. Remove all bearing cap snap rings.
5. Remove grease fittings if equipped.
6. Position a socket on the press with an inside diameter large enough to receive the bearing cap under the link yoke.
7. Place another socket with an outside diameter smaller than the bearing cap on the upper bearing cap.

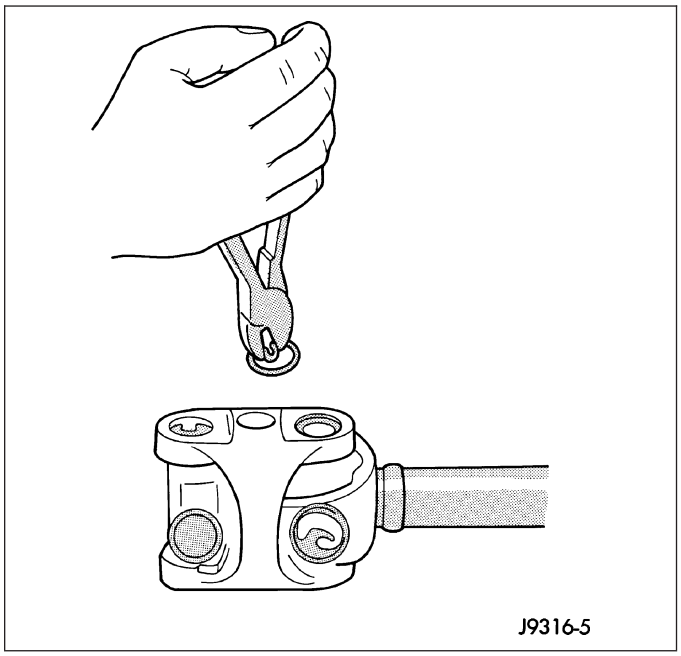

8. Press one bearing cap from outboard side of the link yoke, enough to grasp the cap with vise jaws.

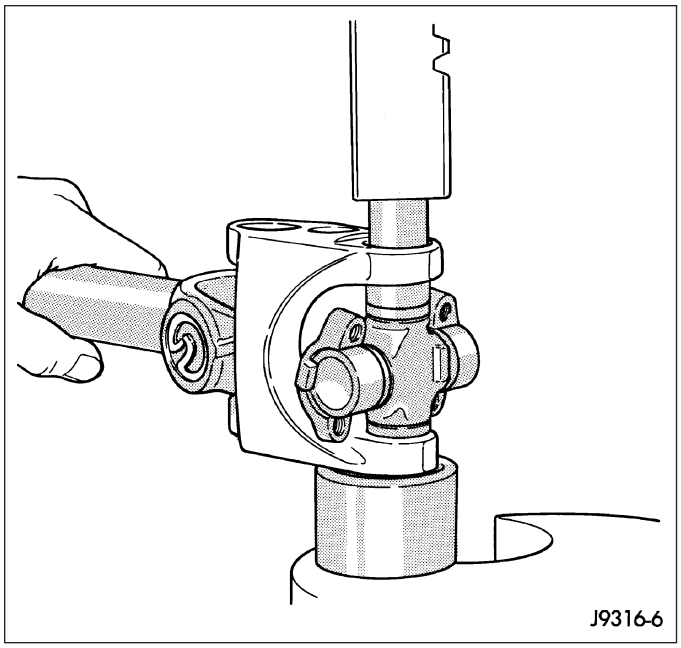

9. Grasp protruding bearing cap with vise jaws and tap link yoke with a mallet to remove bearing cap.
10. Flip assembly and repeat Step 6, Step 7, Step 8 and Step 9 to remove the opposite bearing cap.

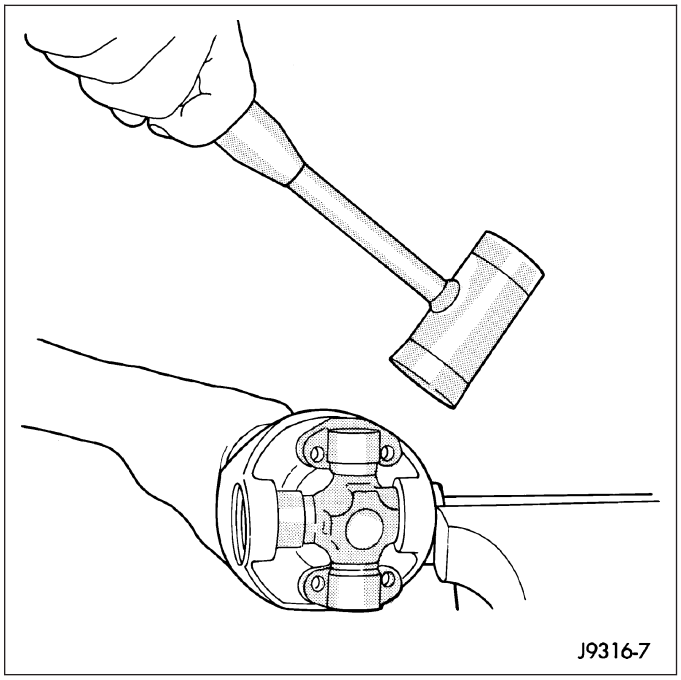

11. Remove cross centering kit assembly and spring.
12. Press remaining bearing caps out the other end of the link yoke.

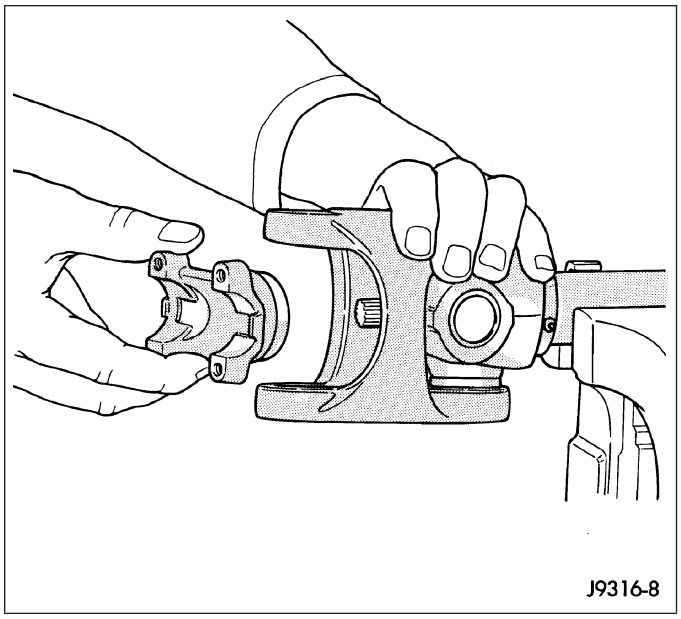

ASSEMBLY

CAUTION: All alignment marks on the link yoke and propeller shaft yoke must be aligned during assembled.

1. Apply (EP) N.L.G.I. Grade 1 or 2 grease to inside of yoke bores.
2. Fit cross into the propeller shaft yoke.

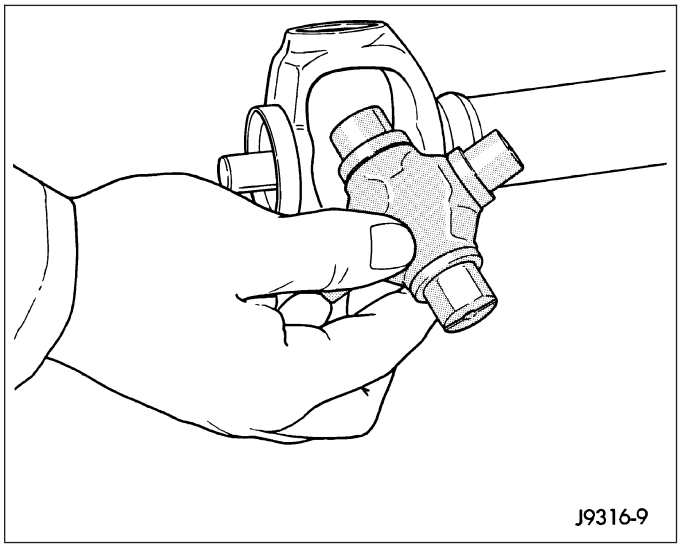

3. Place bearing cap over the trunnion and align cap with the yoke bore. Keep needle bearings upright in the bearing cap.

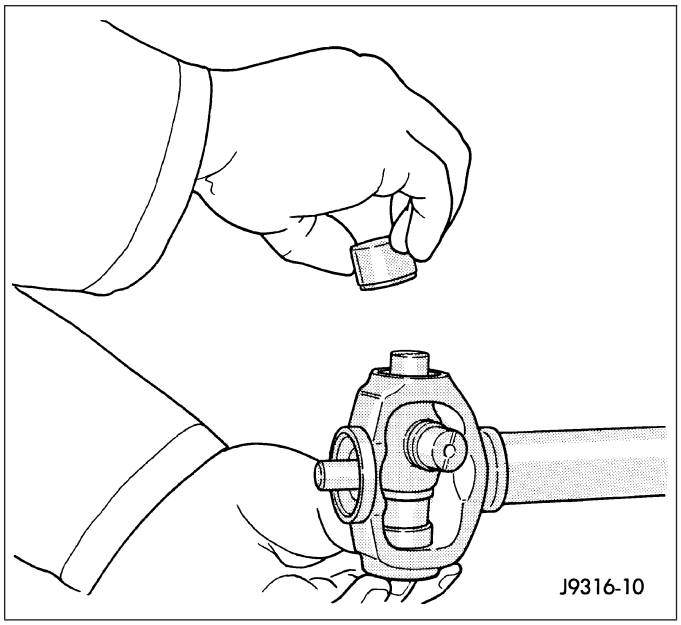

4. Press bearing cap into yoke bore enough to clear snap ring groove and install snap-ring.

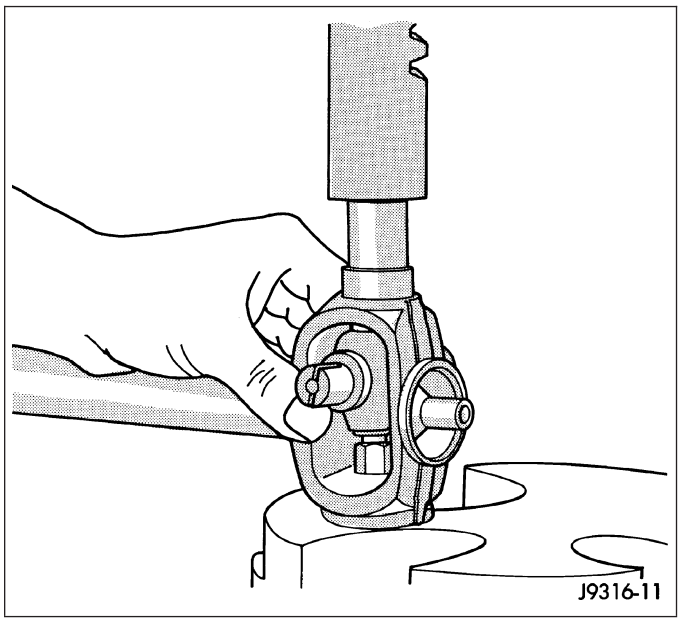

5. Flip propeller shaft yoke and install other bearing cap onto the opposite trunnion and install a snap ring.

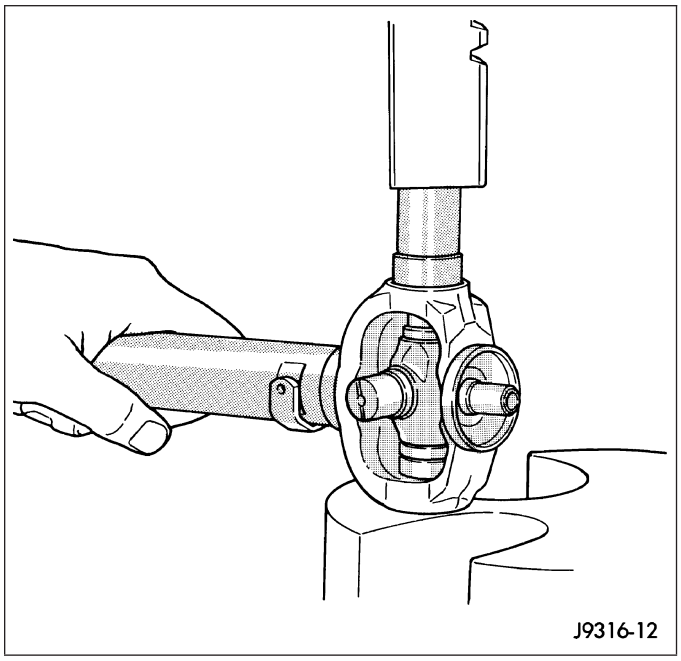

6. Fit link yoke onto remaining trunnions and press both bearing caps into place and install snap rings.

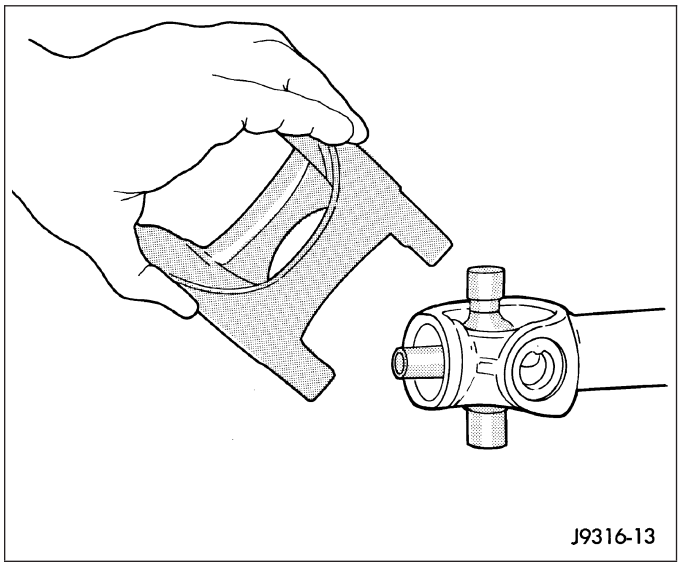

7. Install centering kit assembly inside the link yoke.

NOTE: Verify spring is properly positioned.

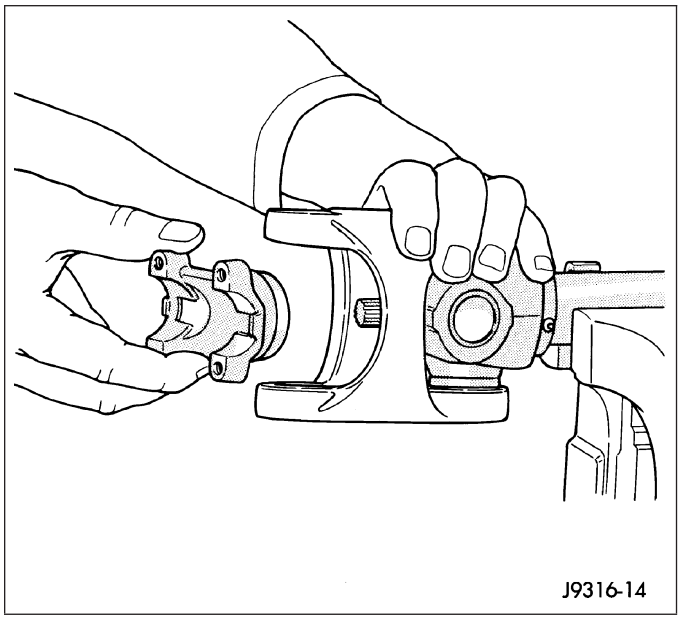

8. Place two bearing caps on opposite trunnions of the remaining cross. Fit open trunnions into the link yoke bores and bearing caps into the centering kit.

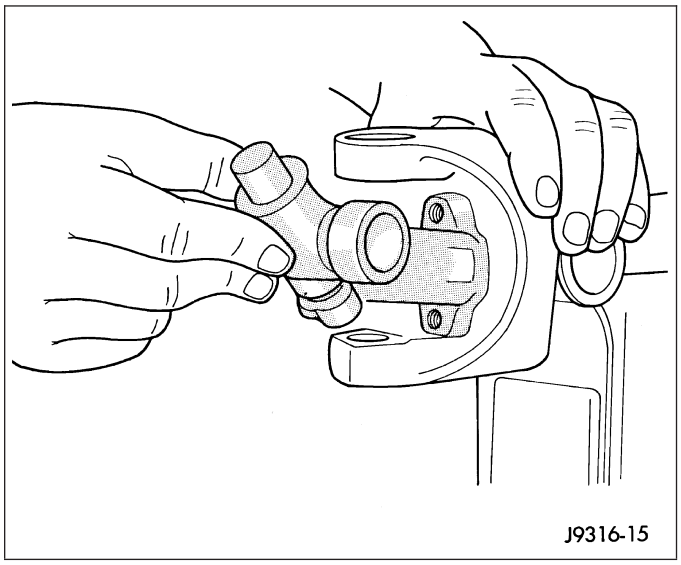

9. Press remaining two bearing caps into place and install snap rings.

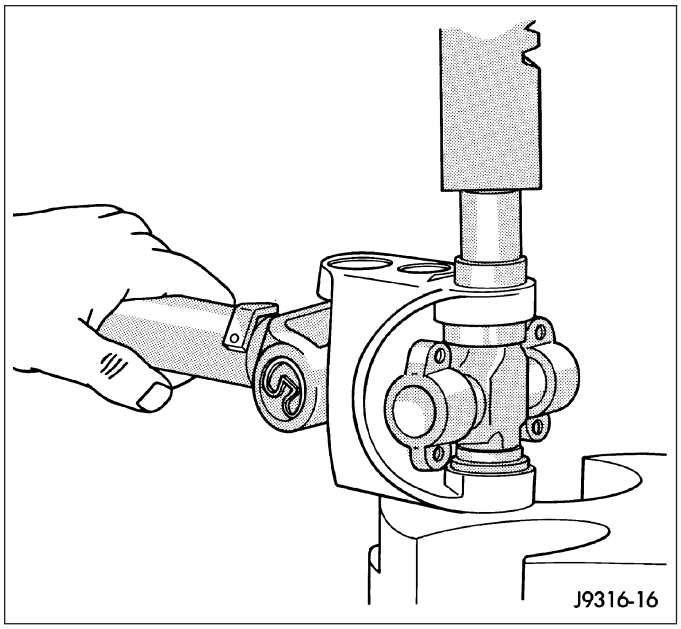

10. Tap snap rings to seat them into the grooves.

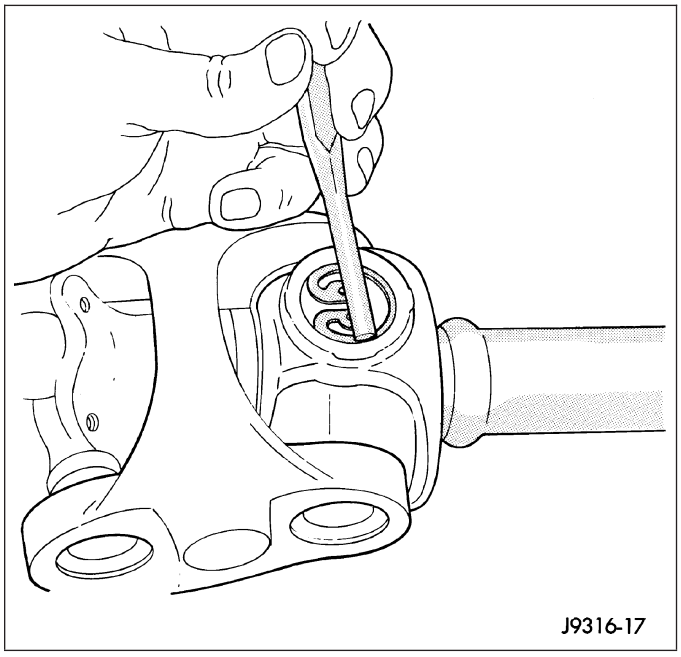

11. Flexing the joint beyond center, the joint should snap over-center in both directions if correctly assembled.
12. Install propeller shaft.

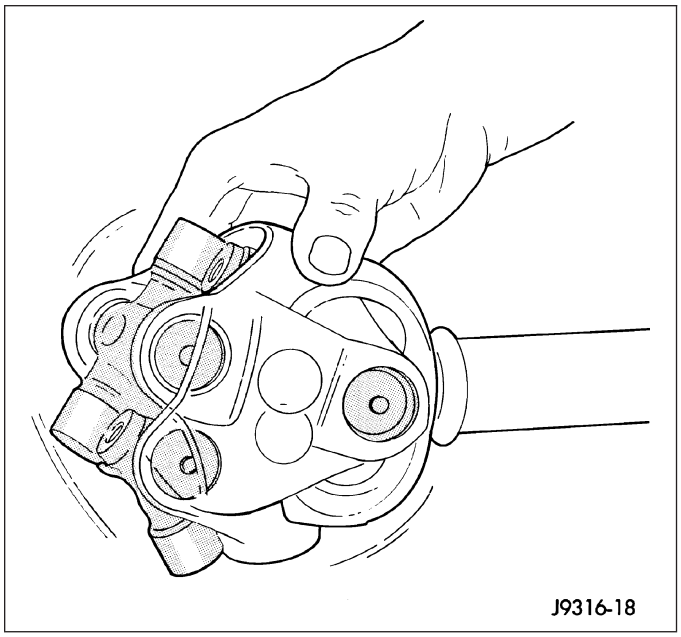

HALF SHAFT

TABLE OF CONTENTS

	page
HALF SHAFT	
CAUTION	131
DIAGNOSIS AND TESTING	
HALF SHAFT	131
REMOVAL	132
INSTALLATION	132
SPECIFICATIONS	
HALF SHAFT	133
SPECIAL TOOLS	134
CV JOINT-OUTER	
REMOVAL	135
INSTALLATION	137
CV JOINT-INNER	
REMOVAL	139
INSTALLATION	140

HALF SHAFT

CAUTION

CAUTION:: Never grasp half shaft assembly by the boots. This may cause the boot to pucker or crease and reduce the service life of the boot.
Avoid over angulating or stroking the C/V joints when handling the half shaft.
Half shafts exposed to battery acid, transmission fluid, brake fluid, differential fluid or gasoline may cause the boots to deteriorate. Failure to follow these instruction will result in damage.

DIAGNOSIS AND TESTING

HALF SHAFT

Check inboard and outboard C/V joint for leaking grease. This is a sign of boot or boot clamp damage.

NOISE/VIBRATION IN TURNS

A clicking noise or vibration in turns could be caused by a damaged outer C/V or inner tripod joint seal boot or seal boot clamps. This will result in the loss/contamination of the joint grease, resulting in inadequate lubrication of the joint. Noise could also be caused by another component of the vehicle coming in contact with the half shafts.

CLUNKING NOISE DURING ACCELERATION

This noise may be a damaged or worn C/V joint. A torn boot or loose/missing clamp on the inner/outer joint which has allowed the grease to be lost will damage the C/V joint.

SHUDDER/VIBRATION DURING ACCELERATION

This could be a worn/damaged inner tripod joint or a sticking tripod joint. Improper wheel alignment may also cause a shudder or vibration.

VIBRATION AT HIGHWAY SPEEDS

This problem could be a result of out of balance front tires or tire/wheel runout. Foreign material (mud, etc.) packed on the backside of the wheel(s) will also cause a vibration.

REMOVAL

1. With vehicle in neutral, position vehicle on hoist.
2. Remove half shaft hub nut.
3. Remove brake caliper and rotor.
4. Position hydraulic jack under lower suspension arm and raise jack to unload rebound bumper.
5. Remove lower shock absorber bolt.
6. Remove upper ball joint nut and seperate ball with Remover 8677 (2).
7. Disengage inner C/V joint from axle shaft with two pry bars between the C/V housing and axle housing.

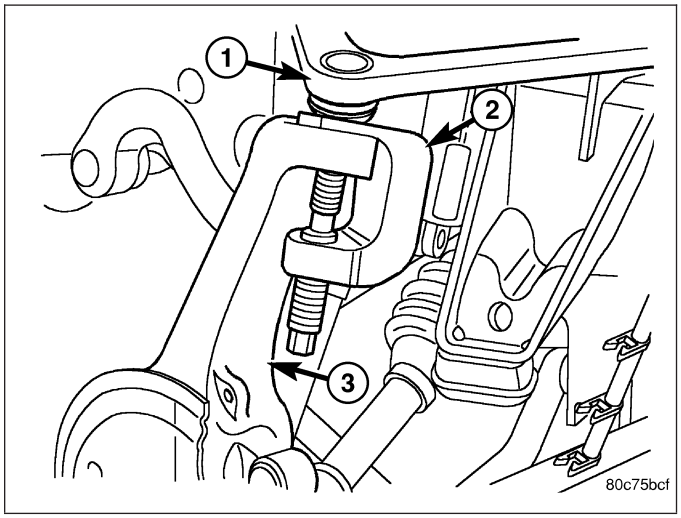

8. Tilt knuckle (1) out and push half shaft (3) out of the knuckle.
9. Remove half shaft from vehicle.

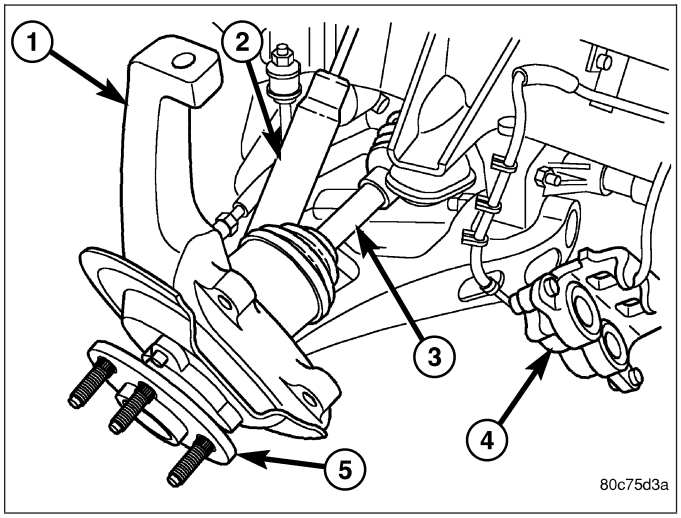

INSTALLATION

1. Clean hub bearing bore, hub bearing mating surface and half shaft splines.
2. Apply a light coating of grease to the front axle shaft output splines.
3. Install half shaft (2) into the knuckle.
4. Install half shaft on axle shaft. Push firmly to engage axle shaft snap ring into the inner C/V housing.
5. Install upper ball joint into the knuckle.
6. Install upper ball joint nut and tighten to specification.
7. Install lower shock absorber bolt and tighten to specification.
8. Install brake rotor and caliper.

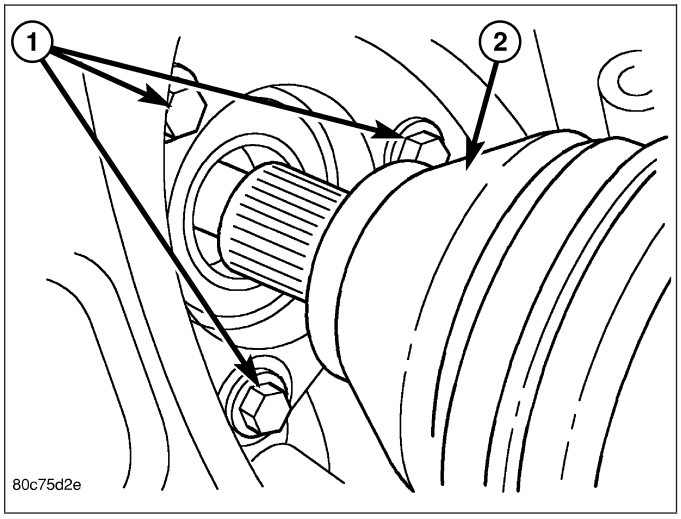

9. Install half shaft hub nut and tighten to 251 N·m (185 ft. lbs.).

SPECIFICATIONS

HALF SHAFT

TORQUE SPECIFICATIONS

DESCRIPTION	N·m	Ft. Lbs.	In. Lbs.
Half Shaft Nut	251	185	-

SPECIAL TOOLS

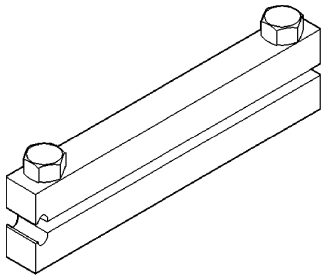

CV JOINT-OUTER

REMOVAL

1. Clamp shaft in a vise (with soft jaws) and support C/V joint.

CAUTION: Do not damage C/V housing or half shaft.

2. Remove clamps (2) (4) with a cut-off wheel or grinder.

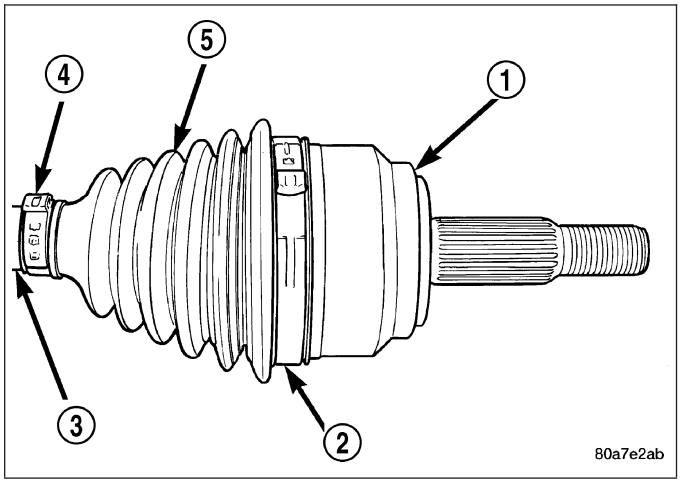

3. Slide the boot down the shaft.
4. Remove lubricant to expose the C/V joint snap ring (1).
5. Spread snap ring (1) and slide the joint off the shaft.
6. Slide boot off the shaft and discard old boot.

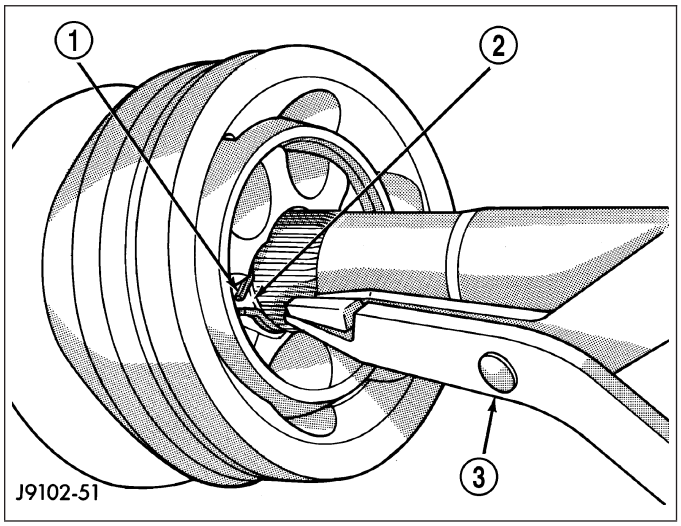

7. Mark alignment marks (1) on the inner race/hub (2), bearing cage (3) and housing with dabs of paint.

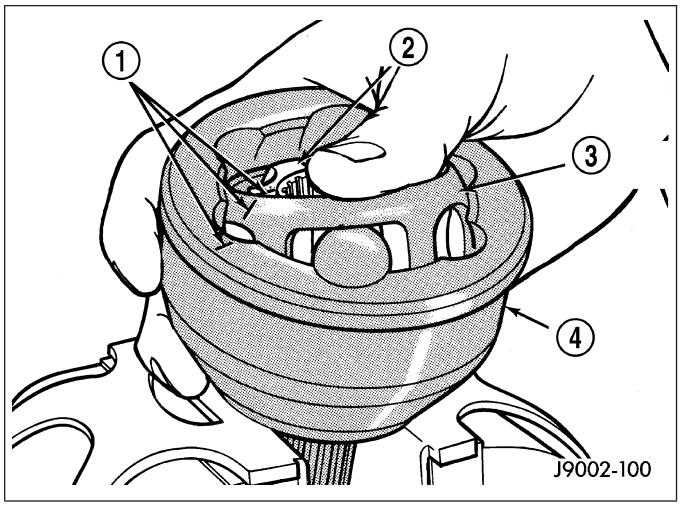

8. Clamp C/V joint in a vertical position in a soft jawed vise.

9. Press down one side of the bearing cage (3) to gain access to the ball at the opposite side.

NOTE: If joint is tight, use a hammer and brass drift to loosen the bearing hub. Do not contact the bearing cage with the drift.

10. Remove ball (4) from the bearing cage (3).
11. Repeat step above until all six balls are removed from the bearing cage.

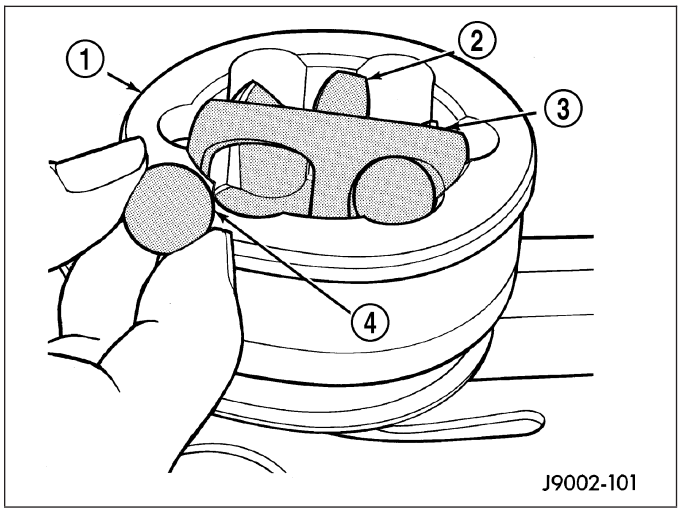

12. Lift cage and inner race (2) upward and out from the housing (1).

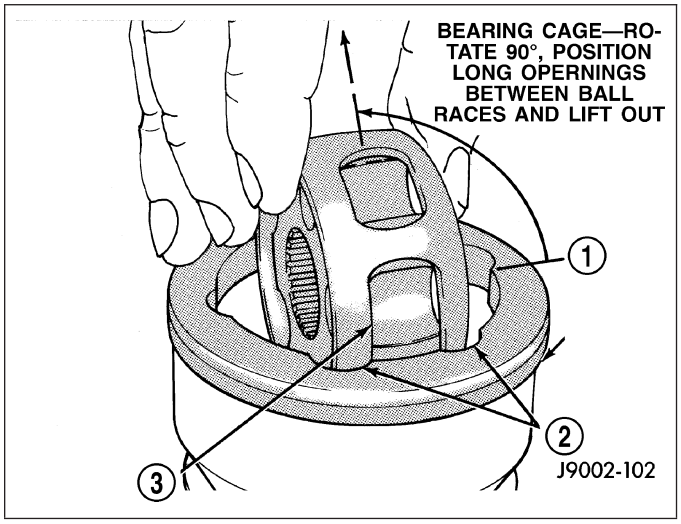

13. Turn inner race 90° in the cage and rotate the inner race/hub out of the cage.

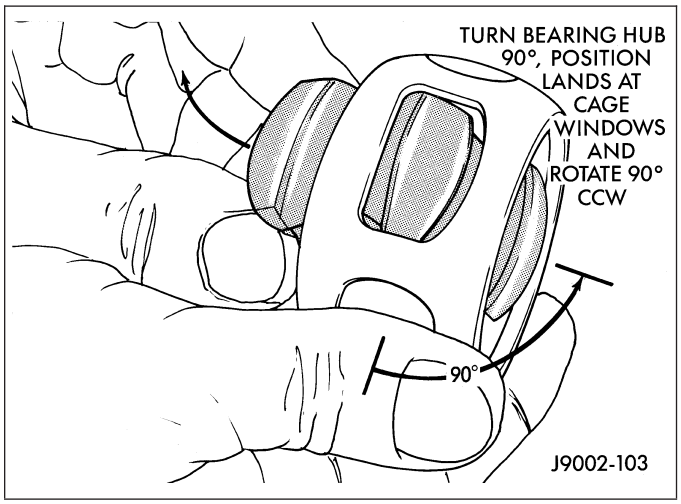

INSTALLATION

NOTE: If C/V joint is worn, replace entire C/V joint and boot.

1. Clean all C/V joint components and shaft.
2. Apply a light coat of grease supplied with the joint/boot to the C/V joint components before assembling them.
3. Align the inner race (1) cage (2) and housing according to the alignment reference marks.
4. Insert the inner race (1) into the cage (2) and rotate race into the cage.

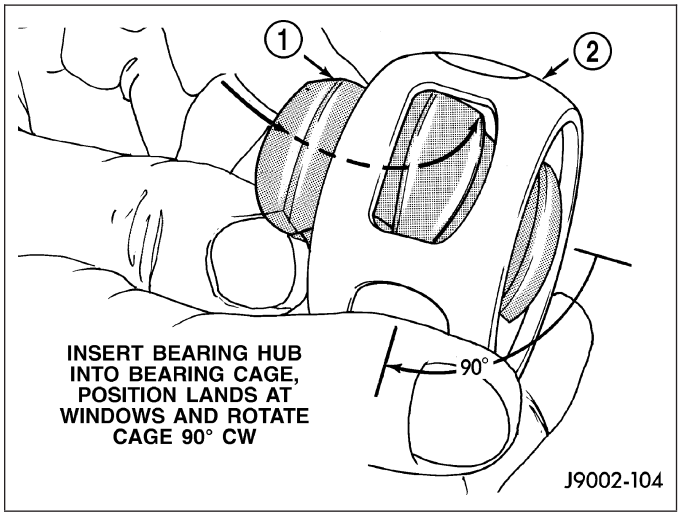

5. Rotate the inner race/hub (2) in the cage.

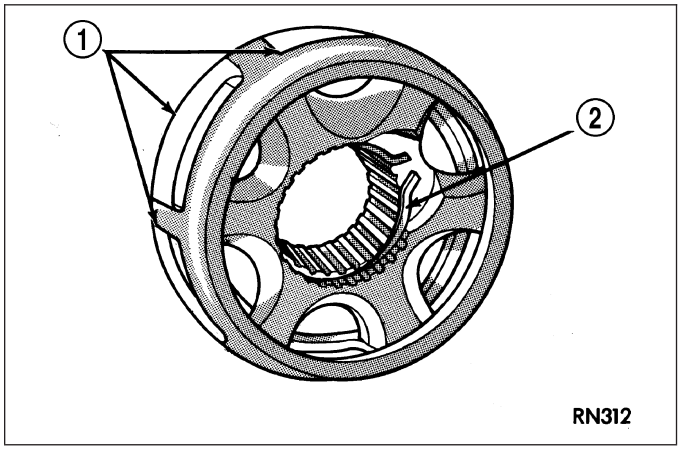

6. Insert cage (2) into the housing. Rotate the cage 90° into the housing (3) so the large bearing hub counterbore is facing outwards.
7. Apply the grease supplied with the joint/boot to the ball races. Spread the grease equally between all the races.

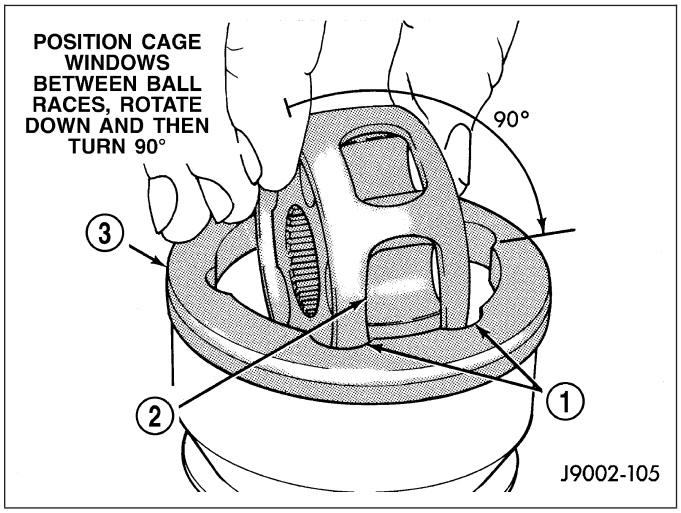

8. Tilt inner race/hub (1) and cage (3) and install the balls(4).
9. Place new clamps onto new boot and slide boot onto the shaft to it's original position.
10. Apply the rest of grease to the C/V joint and boot.

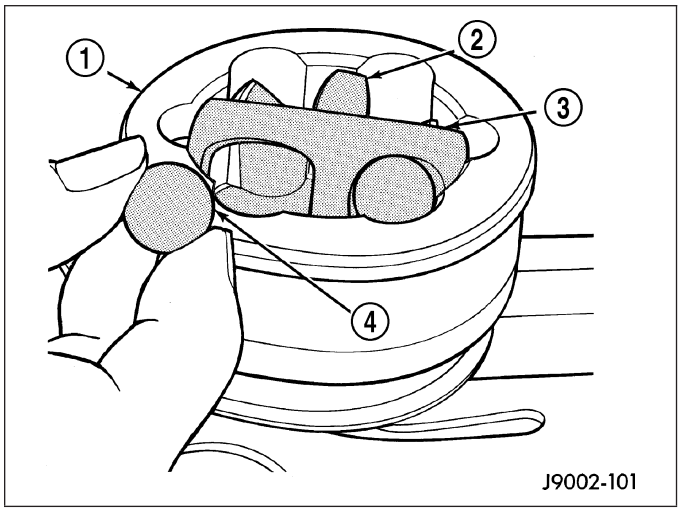

11. Install the joint onto the shaft (2). Push the joint onto the shaft until the snap ring (1) seats in the groove (3).

NOTE: Pull on the joint to verify the span ring has engaged.

12. Position the boot on the joint in it's original position.

NOTE: Verify boot is not twisted and remove any excess air.

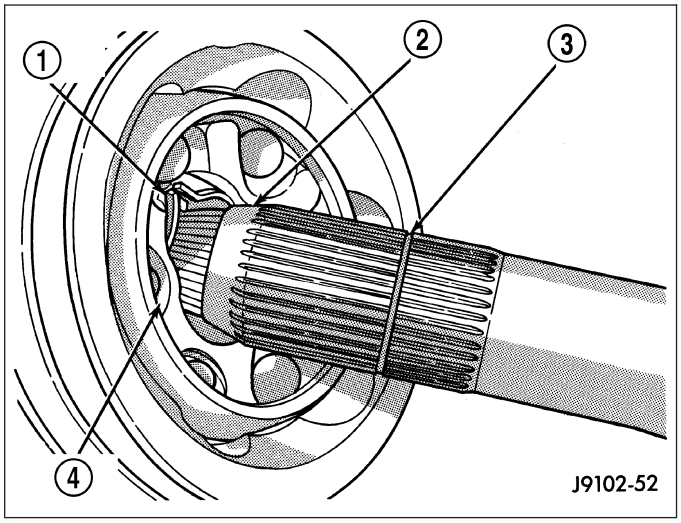

13. Secure both boot (5) clamps (2) (4) with Clamp Installer C-4975A. Place tool on clamp bridge and tighten tool until jaws of the tool are closed.

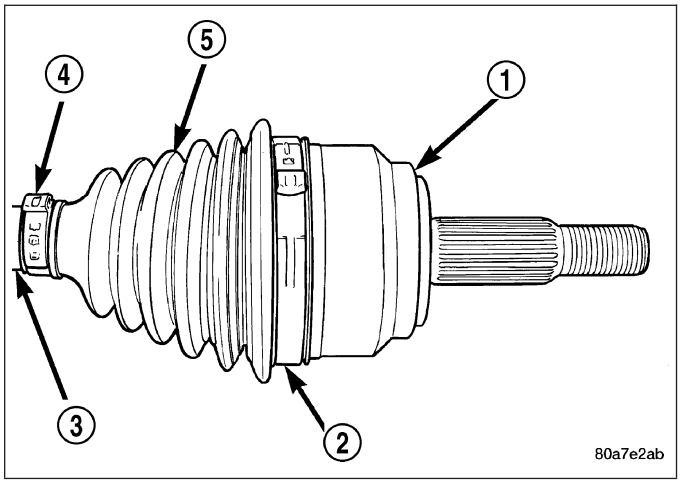

CV JOINT-INNER

REMOVAL

1. Clamp shaft in vise (with soft jaws) and support C/V joint.
2. Remove clamps (2) (4) with a cut-off wheel or grinder.

CAUTION: Do not damage C/V housing or half shaft with cut-off wheel or grinder.

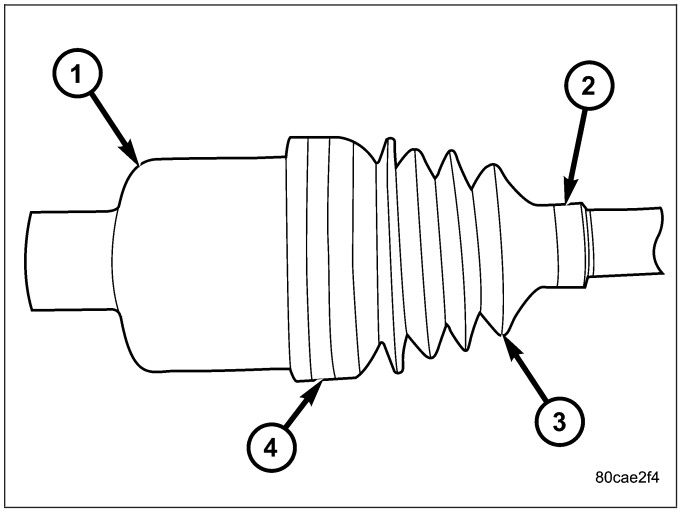

3. Remove housing (1) from the half shaft and slide boot (2) down shaft.
4. Remove housing bushing from the housing.

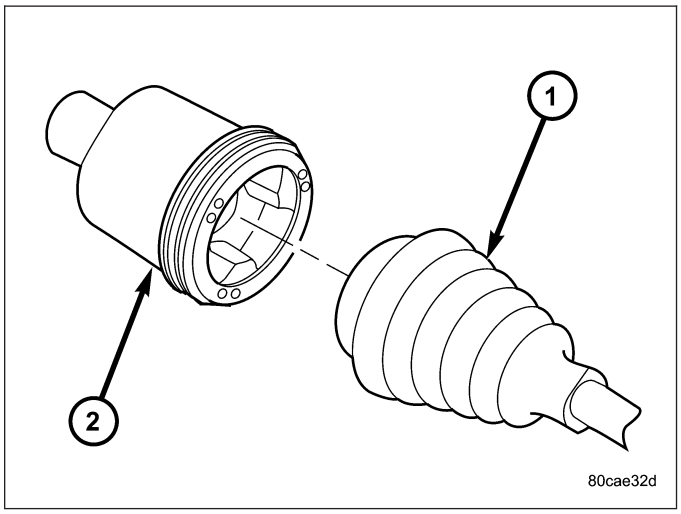

5. Remove tripod (2) snap ring (1).
6. Remove tripod (2) and boot from the half shaft.
7. Clean and inspect C/V components for excessive wear and damage. Replace the tripod as a unit only if necessary.

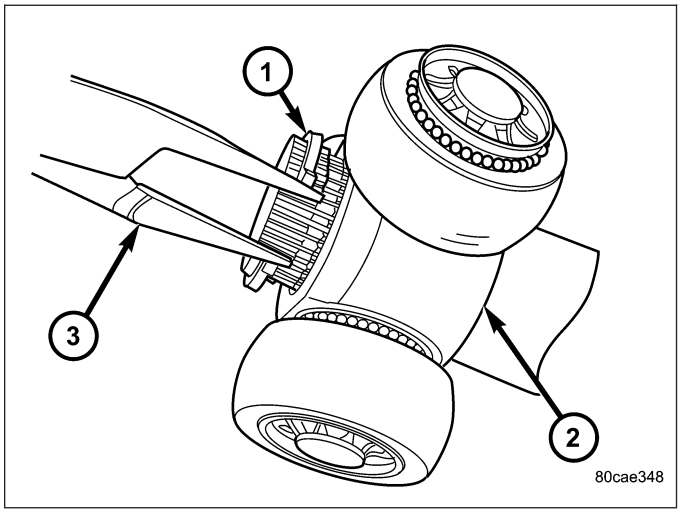

INSTALLATION

1. Clean all C/V joint components and shaft.
2. Slide **new** boot (1) down the half shaft.
3. Install tripod (2) and tripod snap ring on the half shaft.
4. Pack grease supplied with the joint/boot into the housing and boot.
5. Coat tripod with supplied grease.

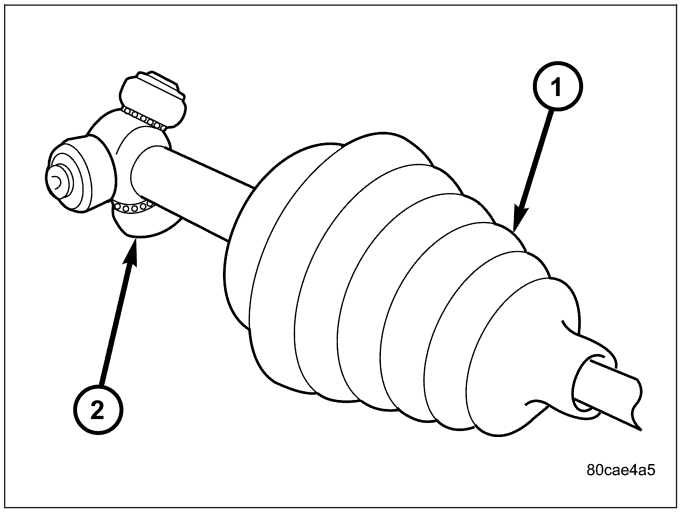

6. Install **new** bushing (1) onto the housing (2).
7. Insert the tripod and shaft in the housing.

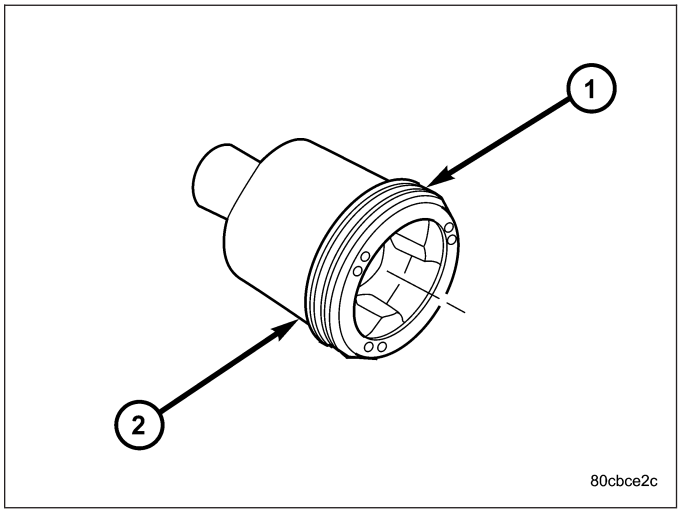

8. Position the boot (2) on the housing (5) and shaft (4) in it's original position.

NOTE: Verify boot is not twisted and remove any excess air.

9. Measure the distance from the end of the housing to the end of the boot on the shaft. This measurement should be 260 mm (10.25 in.).

NOTE: If measurement is not correct, allow more or less air into the boot.

10. Secure both boot clamps (1) (3) with Clamp Installer C-4975A. Place tool on clamp bridge and tighten tool until the jaws of the tool are closed.

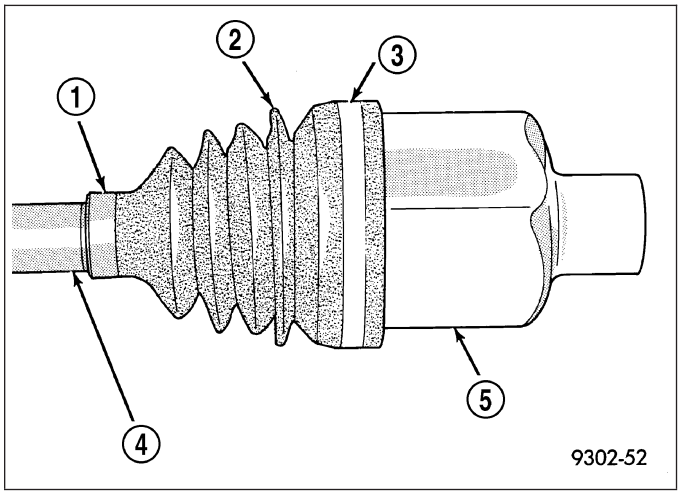

FRONT AXLE - C205F

TABLE OF CONTENTS

page

FRONT AXLE - C205F
DIAGNOSIS AND TESTING
FRONT AXLE - C205F 141
REMOVAL 145
INSTALLATION 147
ADJUSTMENTS 148
SPECIFICATIONS 158
SPECIAL TOOLS 159
SHAFT-AXLE
REMOVAL 163
INSTALLATION 163
SEAL-AXLE SHAFT
REMOVAL 163
INSTALLATION 164
BEARING-AXLE
REMOVAL 164
INSTALLATION 165
SEAL-PINION
REMOVAL 166
INSTALLATION 167
DIFFERENTIAL
REMOVAL 168
DISASSEMBLY 170
ASSEMBLY 170
INSTALLATION 171
BEARINGS-DIFFERENTIAL CASE
REMOVAL 172
INSTALLATION 172
GEAR-PINION/RING
REMOVAL 173
INSTALLATION 176

FRONT AXLE - C205F

DIAGNOSIS AND TESTING

FRONT AXLE - C205F

GEAR NOISE

Axle gear noise can be caused by insufficient lubricant, incorrect backlash, tooth contact, worn/damaged gears or the carrier housing not having the proper offset and squareness.

Gear noise usually happens at a specific speed range. The noise can also occur during a specific type of driving condition. These conditions are acceleration, deceleration, coast, or constant load.

When road testing, first warm-up the axle fluid by driving the vehicle at least 5 miles and then accelerate the vehicle to the speed range where the noise is the greatest. Shift out-of-gear and coast through the peak-noise range. If the noise stops or changes greatly check for:

- Insufficient lubricant.
- Incorrect ring gear backlash.
- Gear damage.

Differential side gears and pinions can be checked by turning the vehicle. The side gears are loaded during turns. They usually do not cause noise during straight-ahead driving when the gears are unloaded. A worn pinion mate shaft can also cause a snapping or a knocking noise.

BEARING NOISE

The axle shaft, differential and pinion bearings can all produce noise when worn or damaged. Bearing noise can be either a whining, or a growling sound.

Pinion bearings have a constant-pitch noise. This noise changes only with vehicle speed. Pinion bearing noise will be higher pitched because it rotates at a faster rate. Drive the vehicle and load the differential. If bearing noise occurs, the rear pinion bearing is the source of the noise. If the bearing noise is heard during a coast, the front pinion bearing is the source.

Differential bearings usually produce a low pitch noise. Differential bearing noise is similar to pinion bearing noise. The pitch of differential bearing noise is also constant and varies only with vehicle speed.

Axle shaft bearings produce noise and vibration when worn or damaged. The noise generally changes when the bearings are loaded. Road test the vehicle. Turn the vehicle sharply to the left and to the right. This will load the bearings and change the noise level. Where axle bearing damage is slight, the noise is usually not noticeable at speeds above 30 m.p.h.

LOW SPEED KNOCK

Low speed knock is generally caused by:

- Worn U-joints/CV joint.
- Worn side-gear thrust washers.
- Worn pinion shaft bore.

VIBRATION

Vibration at the rear of the vehicle is usually caused by:

- Damaged drive shaft.
- Missing drive shaft balance weight(s).
- Worn or out of balance wheels.
- Loose wheel lug nuts.
- Worn U-joint(s).
- Loose/broken springs.
- Damaged axle shaft bearing(s).
- Loose pinion gear nut.
- Excessive pinion yoke run out.
- Bent axle shaft(s).

Check for loose or damaged front end components or engine/transmission mounts. These components can contribute to what appears to be a rear end vibration. Do not overlook engine accessories, brackets and drive belts.

All driveline components should be examined before starting any repair.

DRIVELINE SNAP

A snap or clunk noise when the vehicle is shifted into gear (or the clutch engaged) can be caused by:

- High engine idle speed.
- Transmission shift operation.
- Loose engine/transmission/transfer case mounts.
- Worn U-joints/CV joint.
- Loose spring mounts.
- Loose pinion gear nut and yoke.
- Excessive ring gear backlash.
- Excessive side gear to case clearance.

The source of a snap or a clunk noise can be determined with the assistance of a helper. Raise the vehicle on a hoist with the wheels free to rotate. Instruct the helper to shift the transmission into gear and listen for the noise. A mechanics stethoscope is helpful in isolating the source of a noise.

DIAGNOSTIC CHART

Condition	Possible Causes	Correction
Wheel Noise	1. Wheel loose.	1. Tighten loose nuts.
	2. Faulty, brinelled wheel bearing.	2. Replace bearing.
Axle Shaft Noise	1. Misaligned axle tube.	1. Inspect axle tube alignment. Correct as necessary.
	2. Bent or sprung axle shaft.	2. Inspect and correct as necessary.
	3. End-play in pinion bearings.	3. Refer to pinion pre-load information and correct as necessary.
	4. Excessive gear backlash between the ring gear and pinion.	4. Check adjustment of the ring gear and pinion backlash. Correct as necessary.
	5. Improper adjustment of pinion gear bearings.	5. Adjust the pinion bearings pre-load.
	6. Loose pinion yoke nut.	6. Tighten the pinion yoke nut.
	7. Scuffed gear tooth contact surfaces.	7. Inspect and replace as necessary.
Axle Shaft Broke	1. Misaligned axle tube.	1. Replace the broken shaft after correcting tube mis-alignment.
	2 Vehicle overloaded.	2. Replace broken shaft and avoid excessive weight on vehicle.
	3. Erratic clutch operation.	3. Replace broken shaft and avoid or correct erratic clutch operation.
	4. Grabbing clutch.	4. Replace broken shaft and inspect and repair clutch as necessary.
Differential Cracked	1. Improper adjustment of the differential bearings.	1. Replace case and inspect gears and bearings for further damage. Set differential bearing pre-load properly.
	2. Excessive ring gear backlash.	2. Replace case and inspect gears and bearings for further damage. Set ring gear backlash properly.
	3. Vehicle overloaded.	3. Replace case and inspect gears and bearings for further damage. Avoid excessive vehicle weight.
	4. Erratic clutch operation.	4. Replace case and inspect gears and bearings for further damage. Avoid erratic use of clutch.

Condition	Possible Causes	Correction
Differential Gears Scored	1. Insufficient lubrication.	1. Replace scored gears. Fill differential with the correct fluid type and quantity.
	2. Improper grade of lubricant.	2. Replace scored gears. Fill differential with the correct fluid type and quantity.
	3. Excessive spinning of one wheel/tire.	3. Replace scored gears. Inspect all gears, pinion bores, and shaft for damage. Service as necessary.
Loss Of Lubricant	1. Lubricant level too high.	1. Drain lubricant to the correct level.
	2. Worn axle shaft seals.	2. Replace seals.
	3. Cracked differential housing.	3. Repair as necessary.
	4. Worn pinion seal.	4. Replace seal.
	5. Worn/scored yoke.	5. Replace yoke and seal.
	6. Axle cover not properly sealed.	6. Remove, clean, and re-seal cover.
Axle Overheating	1. Lubricant level low.	1. Fill differential to correct level.
	2. Improper grade of lubricant.	2. Fill differential with the correct fluid type and quantity.
	3. Bearing pre-loads too high.	3. Re-adjust bearing pre-loads.
	4. Insufficient ring gear backlash.	4. Re-adjust ring gear backlash.
Gear Teeth Broke	1. Overloading.	1. Replace gears. Examine other gears and bearings for possible damage.
	2. Erratic clutch operation.	2. Replace gears and examine the remaining parts for damage. Avoid erratic clutch operation.
	3. Ice-spotted pavement.	3. Replace gears and examine remaining parts for damage.
	4. Improper adjustments.	4. Replace gears and examine remaining parts for damage. Ensure ring gear backlash is correct.

Condition	Possible Causes	Correction
Axle Noise	1. Insufficient lubricant.	1. Fill differential with the correct fluid type and quantity.
	2. Improper ring gear and pinion adjustment.	2. Check ring gear and pinion contact pattern.
	3. Unmatched ring gear and pinion.	3. Replace gears with a matched ring gear and pinion.
	4. Worn teeth on ring gear and/or pinion.	4. Replace ring gear and pinion.
	5. Loose pinion bearings.	5. Adjust pinion bearing pre-load.
	6. Loose differential bearings.	6. Adjust differential bearing pre-load.
	7. Mis-aligned or sprung ring gear.	7. Measure ring gear run-out. Replace components as necessary.
	8. Loose differential bearing cap bolts.	8. Inspect differential components and replace as necessary. Ensure that the bearing caps are torqued tot he proper specification.
	9. Housing not machined properly.	9. Replace housing.

REMOVAL

1. With vehicle in neutral, position vehicle on hoist.
2. Remove axle half shafts.
3. Remove exhaust crossover.
4. Mark front propeller shaft and remove shaft.
5. Remove suspension crossmember mounting bolts (3) and remove crossmember.

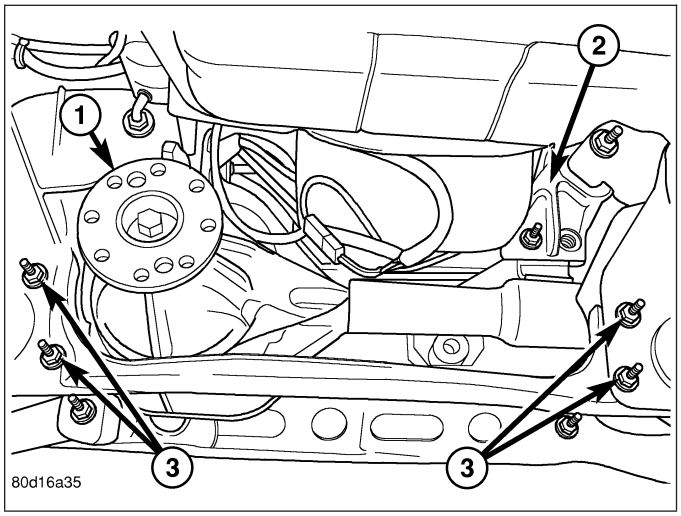

6. Support axle with hydraulic jack.
7. Remove axle housing pinion mounting bolts (1).

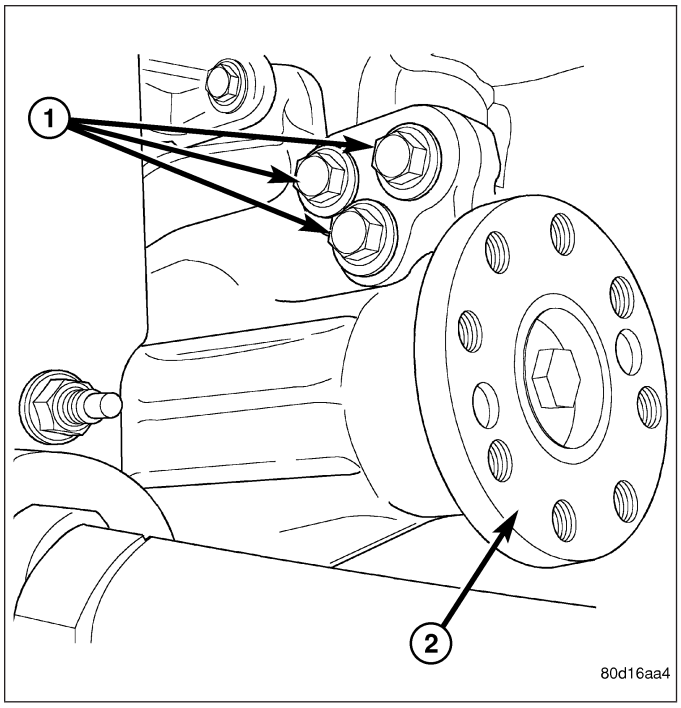

8. Remove axle shaft tube mounting bolts (2).

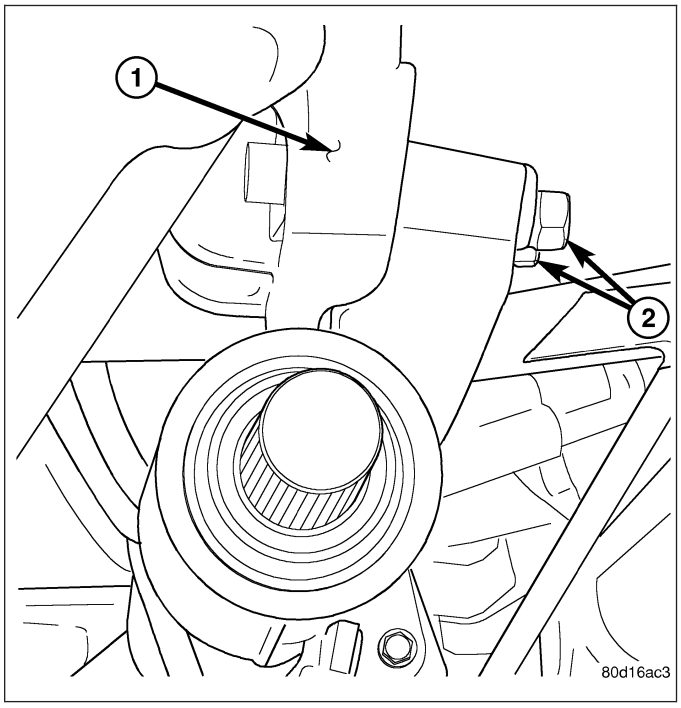

9. Remove differential housing (2) mounting bolts (3).
10. Lower axle from the vehicle.

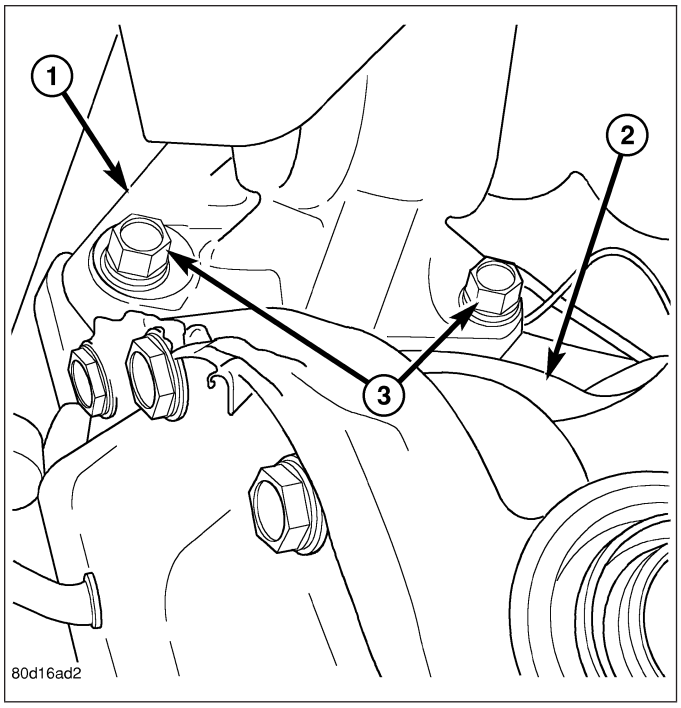

INSTALLATION

1. Raise axle into position.
2. Install axle mounting bolts and tighten nuts to 95 N·m (70 ft. lbs.).
3. Install suspension crossmember and bolts. Tighten crossmember nuts (3) to 102 N·m (75 ft. lbs.).

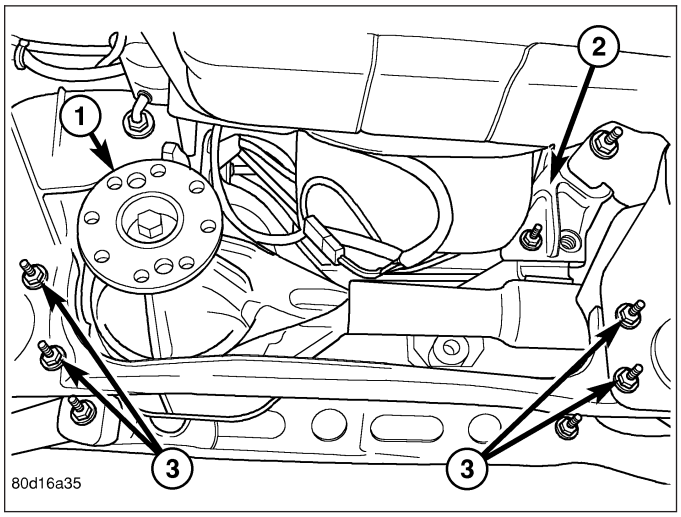

4. Install front propeller shaft (2) with reference marks (4) aligned and tighten bolts to 115 N·m (85 ft. lbs.).
5. Install exhaust crossover.
6. Install axle half shafts.

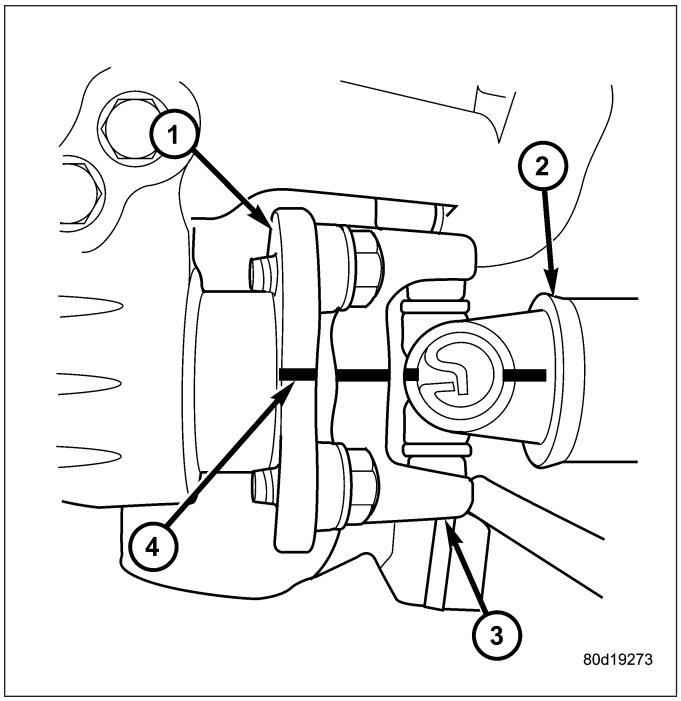

ADJUSTMENTS

Ring gear (3) and pinion are supplied as a matched sets. Identifying numbers for the ring gear and pinion are painted onto the pinion gear shaft and the side of the ring gear. A plus (+) number, minus (–) number or zero (0) along with the gear set sequence number (01 to 99) is on each gear. This first number is the amount (in thousandths of an inch) the depth varies from the standard depth setting of a pinion marked with a (0). The next two numbers are the sequence number of the gear set. The standard depth provides the best teeth contact pattern. Compensation for pinion depth variance is achieved with select shims (1) located between the rear pinion bearing cone and pinion gear head.

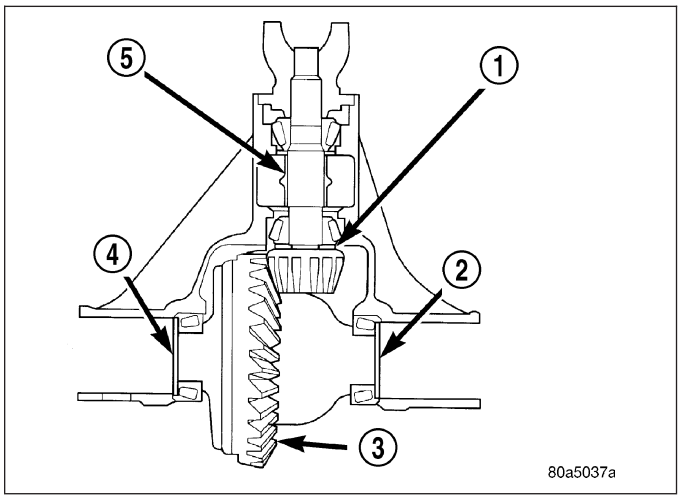

If installing a new gear, note the depth variance number of the original and replacement pinion. Add or subtract this number from the original depth shim/oil slinger to compensate for the difference in the depth variances. The numbers represent thousands of an inch deviation from the standard. If the number is negative, add that value to the required thickness of the depth shims. If the number is positive, subtract that value from the thickness of the depth shim.

Pinion Gear Depth Variance Chart: Note where Old and New Pinion Marking columns intersect. Intersecting figure represents plus or minus the amount needed.

PINION GEAR DEPTH VARIANCE

Original Pinion Gear Depth Variance	New Pinion Gear Depth Variance								
	−4	−3	−2	−1	0	+1	+2	+3	+4
+4	+0.008	+0.007	+0.006	+0.005	+0.004	+0.003	+0.002	+0.001	0
+3	+0.007	+0.006	+0.005	+0.004	+0.003	+0.002	+0.001	0	−0.001
+2	+0.006	+0.005	+0.004	+0.003	+0.002	+0.001	0	−0.001	−0.002
+1	+0.005	+0.004	+0.003	+0.002	+0.001	0	−0.001	−0.002	−0.003
0	+0.004	+0.003	+0.002	+0.001	0	−0.001	−0.002	−0.003	−0.004
−1	+0.003	+0.002	+0.001	0	−0.001	−0.002	−0.003	−0.004	−0.005
−2	+0.002	+0.001	0	−0.001	−0.002	−0.003	−0.004	−0.005	−0.006
−3	+0.001	0	−0.001	−0.002	−0.003	−0.004	−0.005	−0.006	−0.007
−4	0	−0.001	−0.002	−0.003	−0.004	−0.005	−0.006	−0.007	−0.008

PINION DEPTH MEASUREMENT

Measurements are taken with pinion cups and pinion bearings installed in housing. Take measurements with a Pinion Gauge Set, Pinion Block 8177 (6), Arbor Discs 8541(8) and Dial Indicator C-3339 (1).

1. Assemble Pinion Height Block 6739 (3), Pinion Block 8177 (6) and rear pinion bearing onto Screw 6741 (5).

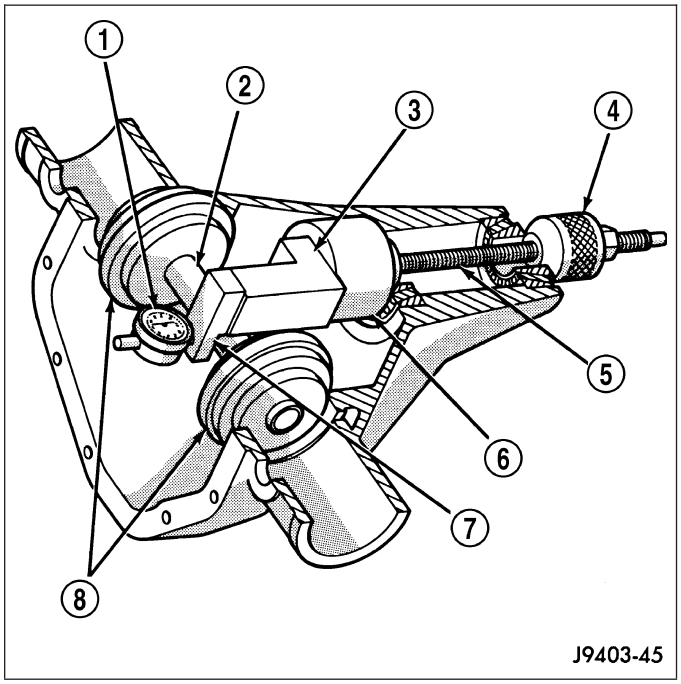

2. Insert assembled height gauge components (1) (2), rear bearing and screw into the housing through the pinion bearing cups.
3. Install front pinion bearing and Cone-Nut 6740 onto the screw. Tighten cone-nut until Torque To Rotate the screw is 2.0 N·m (18 in. lbs.).

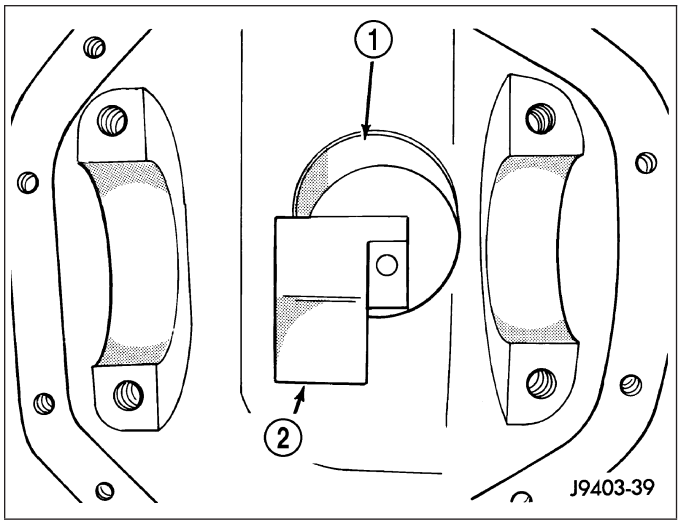

4. Place Arbor Discs 8541 (1) on Arbor D-115-3 (3) in position in the housing side bearing cradles. Install differential bearing caps on arbor discs (1) and tighten cap bolts to specification.
5. Assemble Dial Indicator C-3339 into Scooter Block D-115-2 and secure set screw.
6. Place Scooter Block/Dial Indicator in position in the housing so dial probe and scooter block are flush against the surface of the pinion height block. Hold scooter block in place and zero the dial indicator. Tighten dial indicator face lock screw.

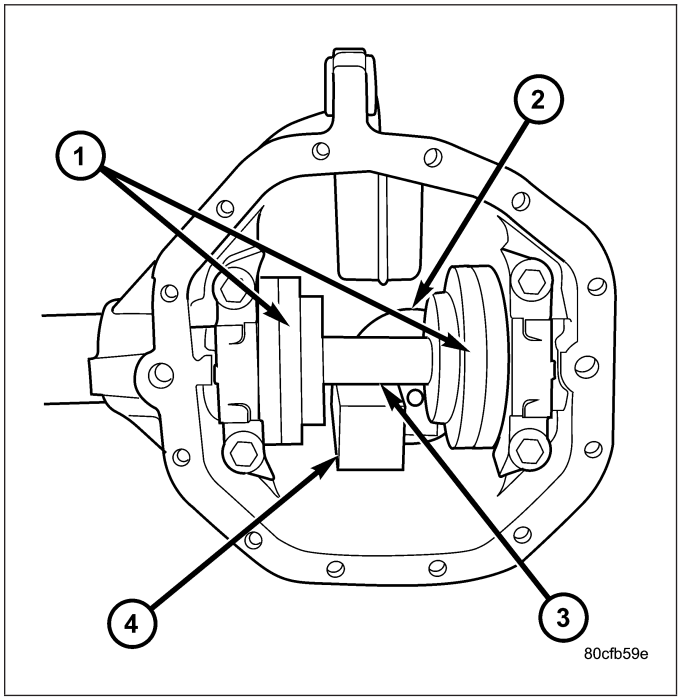

7. Slide the dial indicator (3) probe across the gap between the pinion height block and the arbor bar (1) with the scooter block (2) against the pinion height block. Slide the dial probe to the crest of the arbor bar and record the highest reading.
8. Select a shim equal to the dial indicator reading plus the drive pinion gear depth variance number marked on the shaft of the pinion gear using the opposite sign on the variance number. For example, if the depth variance is –2, add +0.002 in. to the dial indicator reading.
9. Remove the pinion depth gauge components from the housing.

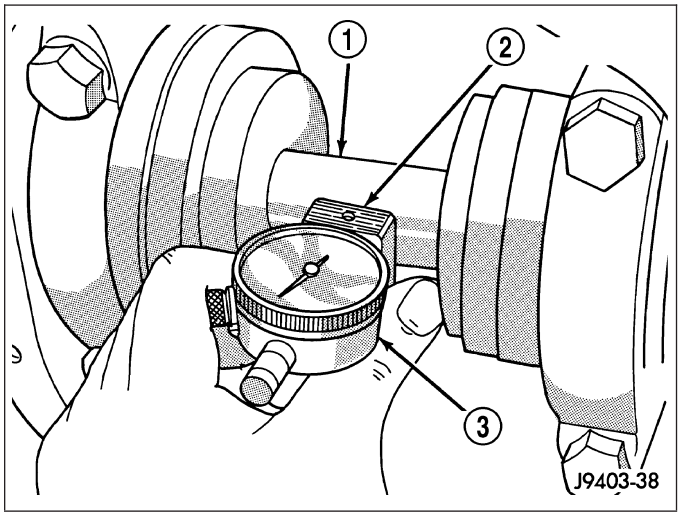

DIFFERENTIAL BEARING PRELOAD

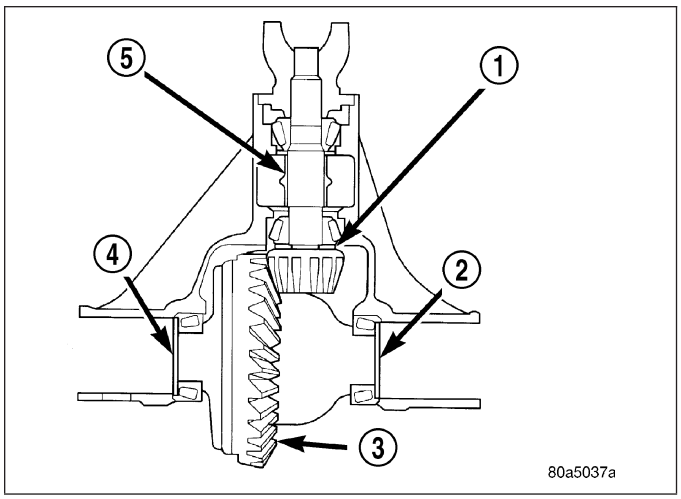

Differential side bearing preload and gear backlash is achieved by selective shims (2) (4) inserted between the bearing cup and the housing. The proper shim thickness can be determined using slip-fit Dummy Bearings 8398 in place of the differential side bearings and a Dial Indicator C-3339. Before measuring differential bearing preload and gear backlash, measure pinion gear depth and prepare pinion for installation. Pinion gear depth is essential to establishing gear backlash and tooth contact patterns. After measuring shim thickness to take up differential side play, install pinion and measure gear backlash shim thickness. Overall shim thickness is the dial indicator reading and preload specification added together. The gear backlash measurement determines the shim thickness used on the ring gear (3) side of the differential case. Subtract gear backlash shim thickness from overall shim thickness to determine shim thickness for pinion gear side of the differential.

SHIM SELECTION

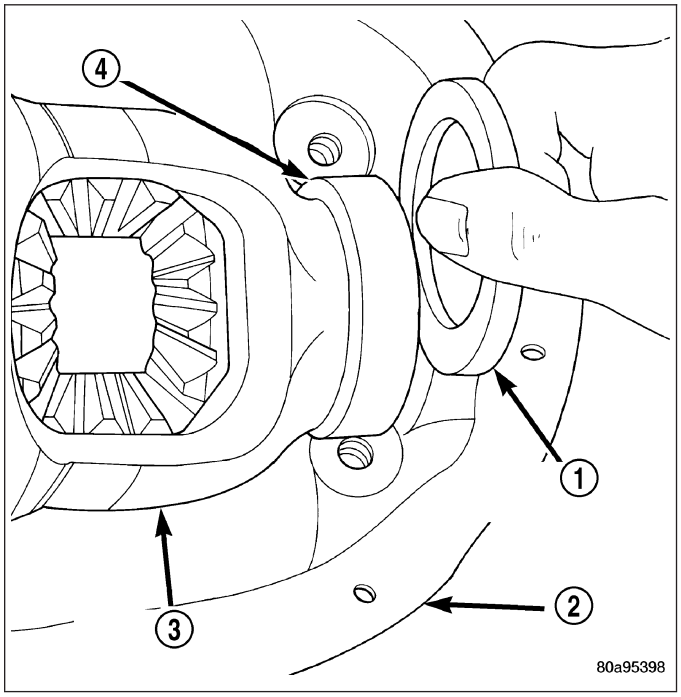

1. Remove side bearings from differential case.
2. Install ring gear if necessary, on differential case and tighten bolts to specification.
3. Install Dummy Bearings 8398 (4) on differential case.
4. Install differential case in the housing.
5. Insert Dummy Shims 8107 (1) starting point shims between both dummy bearings (4) and the housing.

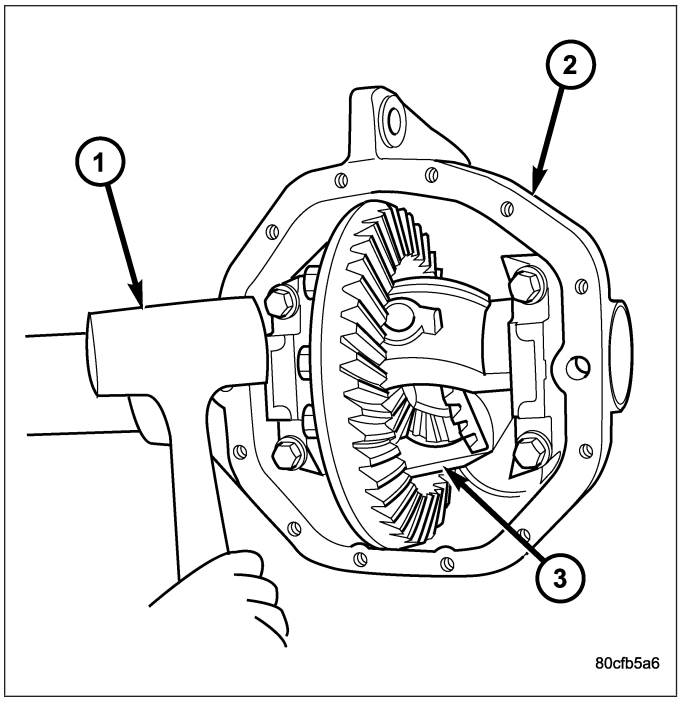

6. Install the marked bearing caps in their correct positions. Install and snug the bolts.
7. Using a dead-blow hammer (1) (2) to seat the differential dummy bearings to each side of the differential housing (2) (1).

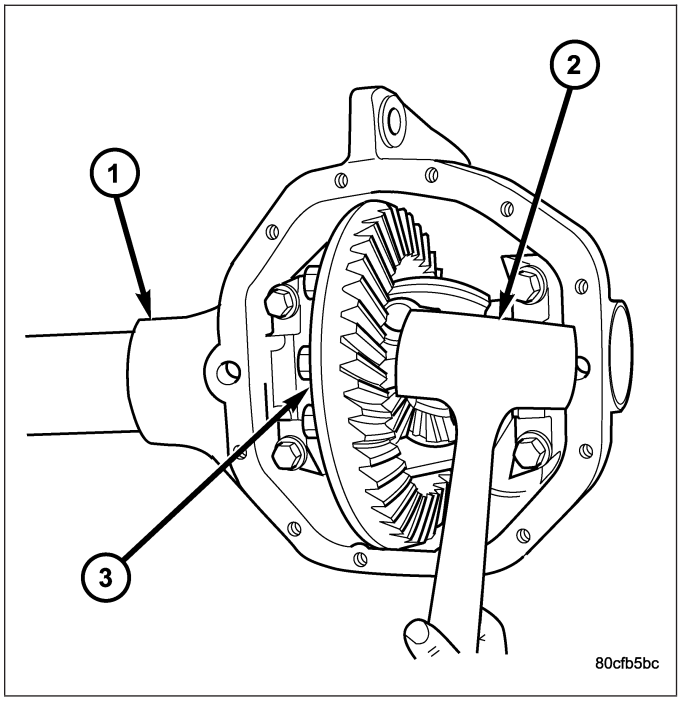

8. Install Pilot Stud C-3288-B (2) in cover bolt hole below ring gear.
9. Attach Dial Indicator C-3339 (3) to post and position dial indicator plunger on a flat surface on a ring gear bolt head.

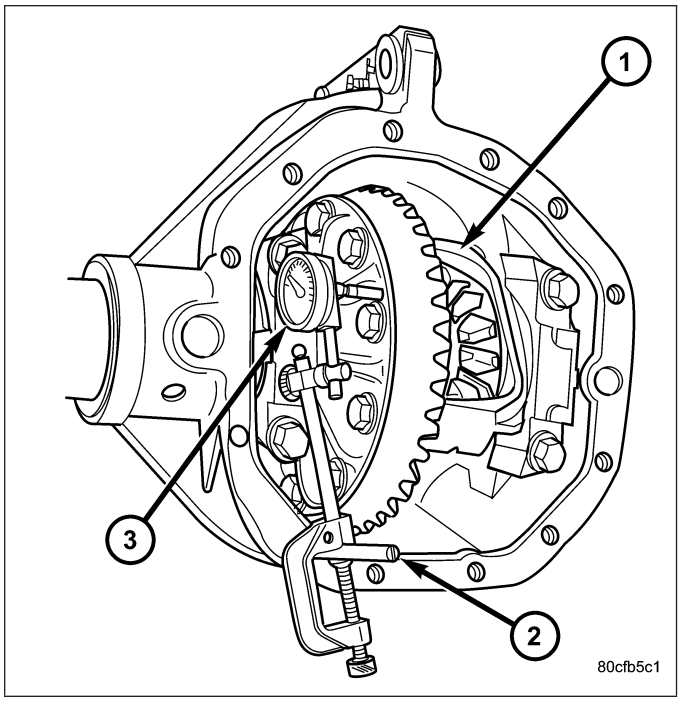

10. Push and hold differential to the pinion gear side (1) of the housing and zero dial indicator (3).

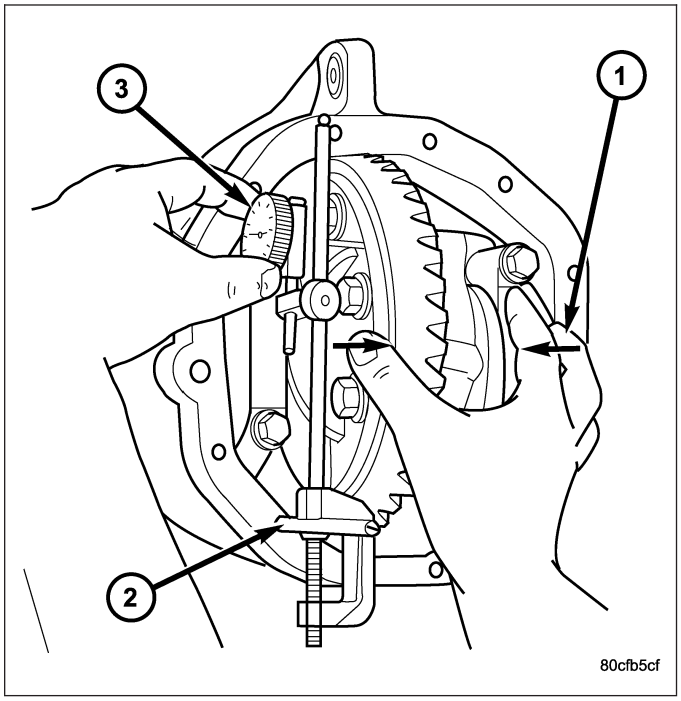

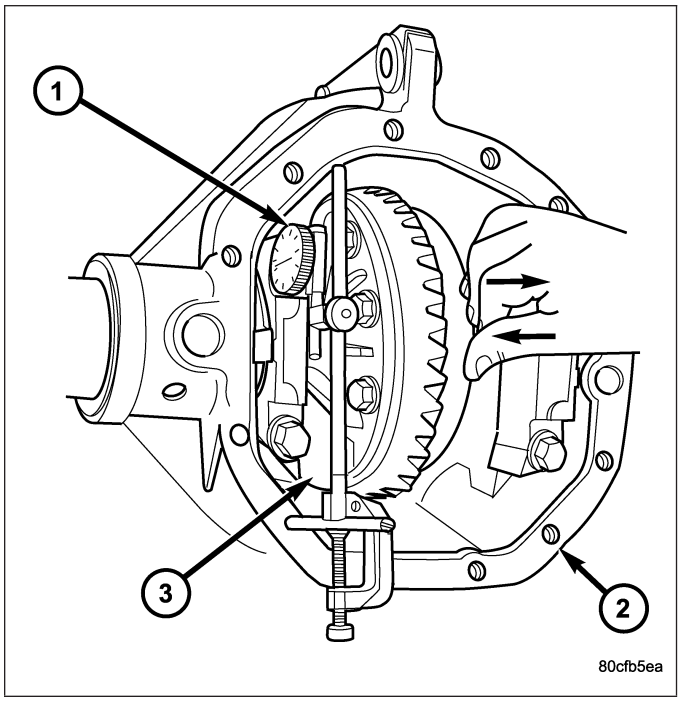

11. Push and hold differential case to the ring gear side (3) and record dial indicator (1) reading.
12. Add the dial indicator reading to the starting point shim thicknesses to determine the total shim thickness necessary to achieve zero differential end play.
13. Add 0.2 mm (0.008 in) to the zero end play total. This new total represents the shims needed to preload the new differential case bearings.
14. Rotate dial indicator out of the way on pilot stud.
15. Remove differential case, dummy bearings and dummy shims from the housing.
16. Install the pinion gear in the housing. Install the companion flange and establish the correct pinion rotating torque.
17. Install differential case and Dummy Bearings in the housing with a single dummy shim on the ring gear side of the axle and tighten retaining cap bolts.
18. Position the dial indicator plunger on a flat surface between the ring gear bolt heads.
19. Push and hold differential case toward pinion.
20. Zero dial indicator face to pointer.
21. Push and hold differential case to ring gear side of the housing.
22. Record dial indicator reading.
23. Subtract 0.05 mm (0.002 in.) from the dial indicator reading to compensate for backlash between ring and pinion gears. Add the resulting measurement to the thickness of the single dummy shim. This is the thickness of shim required to achieve proper backlash.
24. Subtract the backlash shim thickness from the total preload shim thickness. The remainder is the shim thickness required on the pinion side of the housing.
25. Rotate dial indicator out of the way on pilot stud.
26. Remove differential case, dummy bearings and dummy shim from the housing.
27. Install new side bearing cones and cups on differential case.
28. Install Spreader W-129-B and Adapter Plates 8142-A on the housing and spread open enough to receive differential case.

CAUTION: Never spread over 0.50 mm (0.020 in). If the housing is over-spread, it could be distorted or damaged.

29. Place the side bearing shims in the differential housing against the housing shoulder.
30. Install the differential case in the housing.
31. Rotate the differential case several times to seat the side bearings.

GEAR BACKLASH

1. Position the dial indicator (1) plunger against a ring gear tooth (2).
2. Push and hold ring gear upward while not allowing the pinion gear to rotate.
3. Zero dial indicator face to pointer.

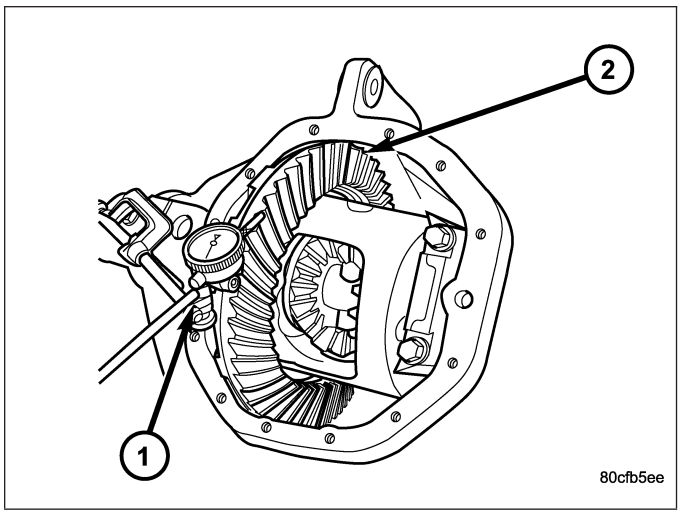

4. Push and hold ring gear downward while not allowing the pinion gear to rotate. Dial indicator reading should be between 0.12 mm (0.005 in.) and 0.20 mm (0.008 in.). If backlash is not within specifications transfer the necessary amount of shim thickness from one side of the differential housing to the other.
5. Verify differential case and ring gear runout by measuring ring to pinion gear backlash at eight locations around the ring gear. Readings should not vary more than 0.05 mm (0.002 in.). If readings vary more than specified, the ring gear or the differential case is defective.

After the proper backlash is achieved, perform the Gear Contact Pattern procedure.

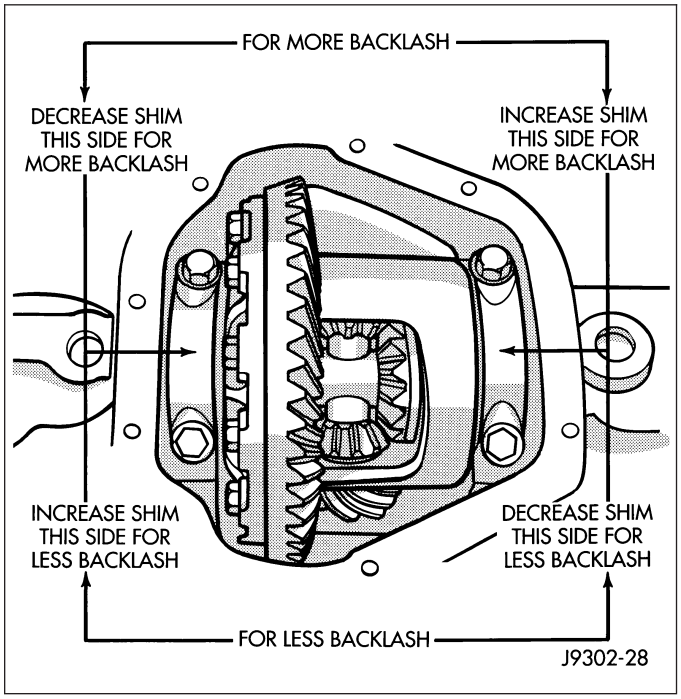

GEAR CONTACT PATTERN

1. Wipe clean each tooth of the ring gear.
2. Apply gear marking compound to all of the ring gear teeth.
3. Verify bearing cap bolts are torque specification.
4. Apply the brakes lightly to create at 14 N·m (10 ft. lbs.) pinion rotating torque.
5. Rotate the pinion/pinion yoke 4 full revolutions in each directions.
6. Read gear tooth contact pattern.

Gear contact pattern correct. Backlash and pinion depth is correct.

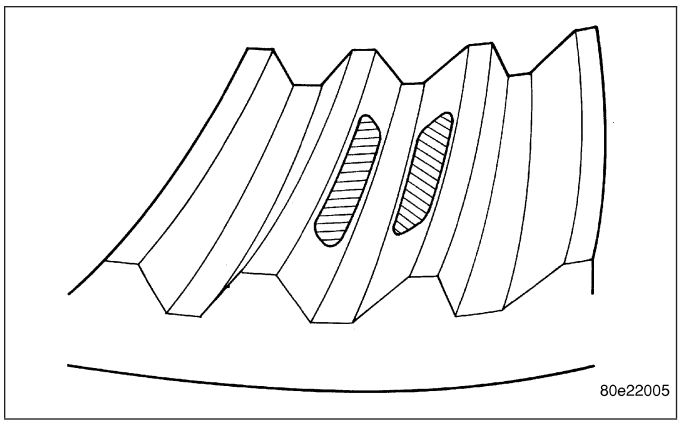

Ring gear too far away from pinion gear coast side toe (1) drive side heel (2). Decrease backlash by moving the ring closer to the pinion gear.

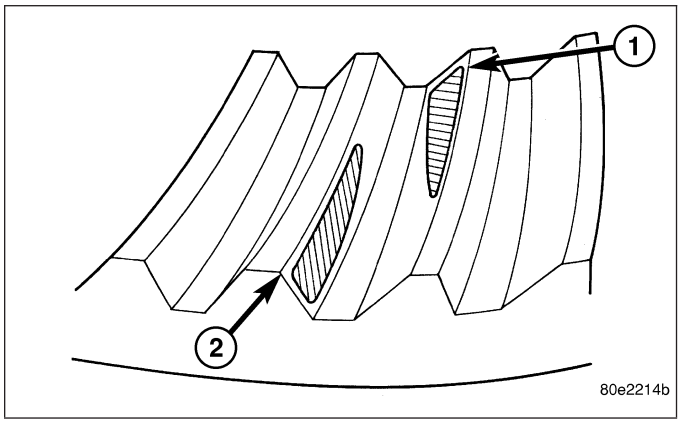

Ring gear too close to pinion gear drive side toe (1) coast side heel (2). Increase backlash, by moving the ring away from the pinion gear.

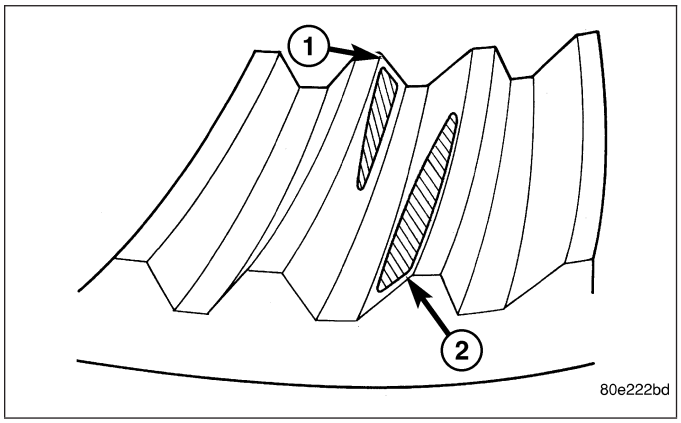

Ring gear too far away from pinion gear drive side heel (1) coast side heel (2). Decrease backlash, by moving the ring closer to the pinion gear.

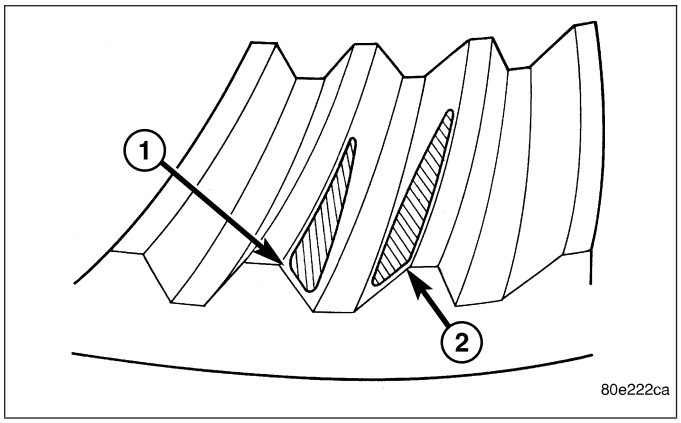

Ring gear too close to pinion gear drive side toe (1) coast side toe (2). Increase backlash, by moving the ring away from the pinion gear.

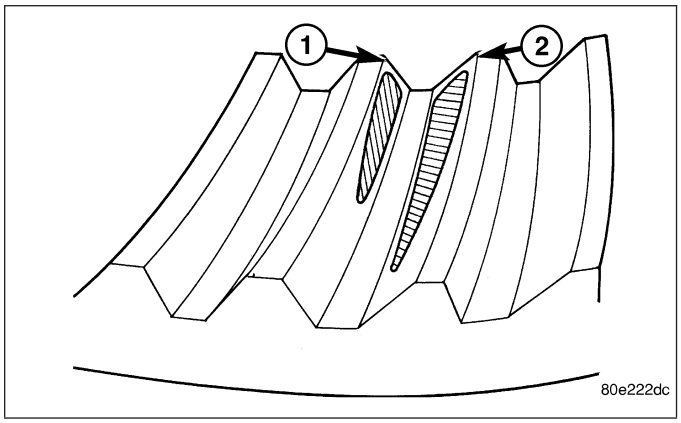

Pinion gear set too low. Increase pinion gear height, by increasing the pinion depth shim thickness.

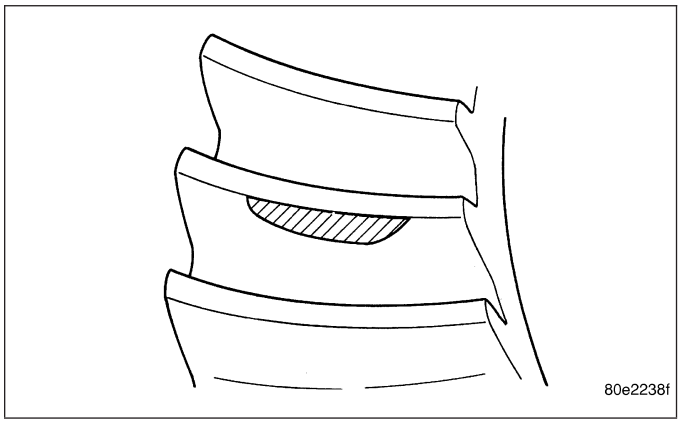

Pinion gear set too high. Decrease pinion depth, by decreasing the pinion depth shim thickness.

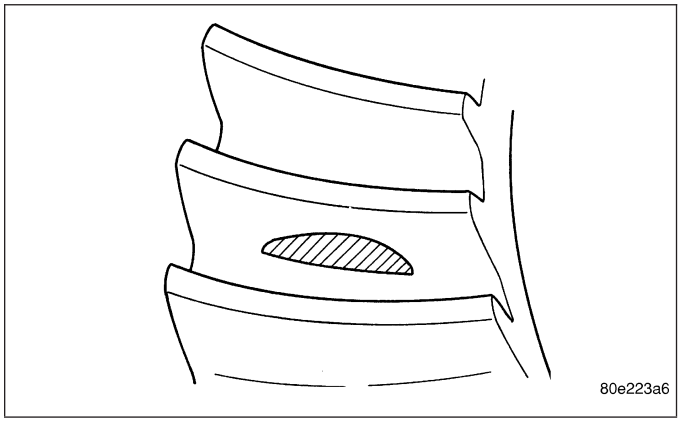

SPECIFICATIONS

AXLE SPECIFICATIONS

DESCRIPTION	SPECIFICATION
Axle Ratio	3.21,3.55, 3.73,3.92
Differential Case Flange Runout	0.076 mm (0.003 in.)
Differential Side Gear Clearance	0-0.15 mm (0-0.006 in.)
Ring Gear Diameter	205 mm (8.0 in.)
Ring Gear Backlash	0.12-0.20 mm (0.005-0.008 in.)
Ring Gear Runout	0.12 mm (0.005 in.)
Pinion Bearing Preload - New Bearings	2.0-2.8 N·m (18-25 in. lbs.)
Pinion Bearing Preload - Original Bearings	1-2 N·m (10-20 in. lbs.)

TORQUE SPECIFICATIONS

DESCRIPTION	N·m	Ft. Lbs.	In. Lbs.
Mounting Nuts	95	70	-
Differential Fill Hole Plug	34	25	-
Differential Cover Bolts	22	15	-
Bearing Cap Bolts	61	45	-
Ring Gear Bolts	108	80	-
Pinion Nut	271-475	200-350	-

SPECIAL TOOLS

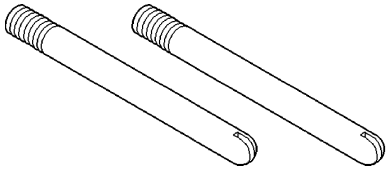

PILOTS C-3288-B

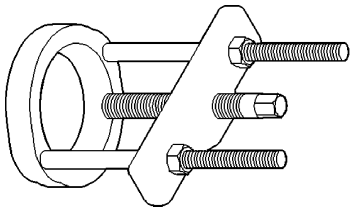

PULLER C-293-PA

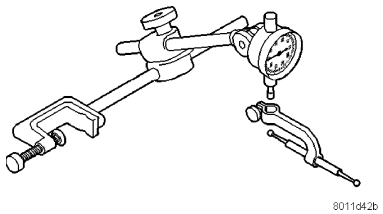

DIAL INDICATOR C-3339

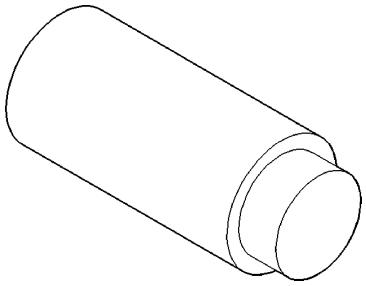

PLUG C-293-3

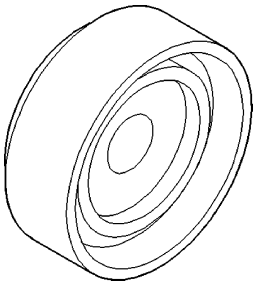

INSTALLER C-3716-A

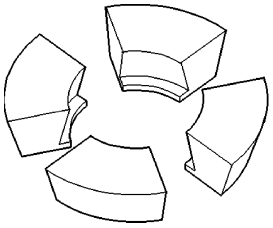

ADAPTER C-293-42

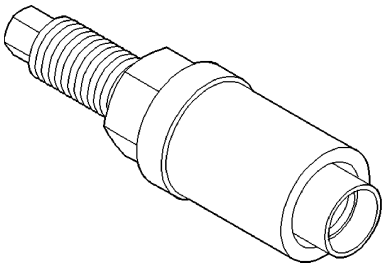

INSTALLER C-3718

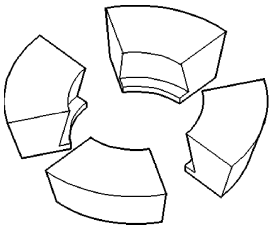

ADAPTER C-293-48

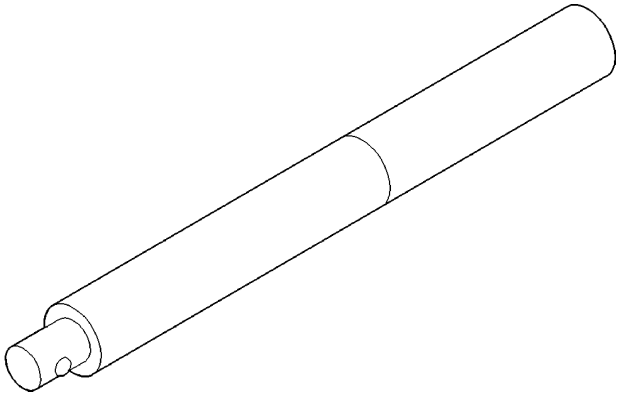

HANDLE C-4171

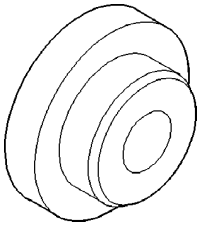

INSTALLER 5063

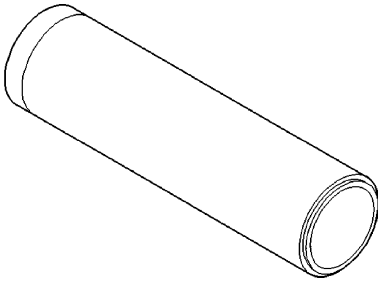

INSTALLER 6448

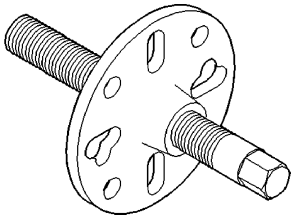

PULLER C-452

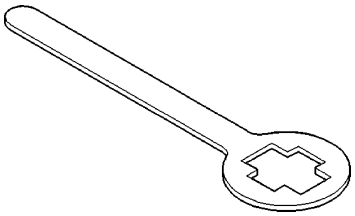

HOLDER 6719A

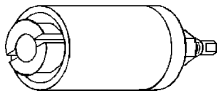

REMOVER C-4660-A

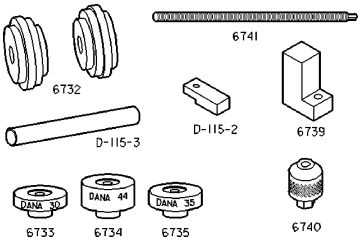

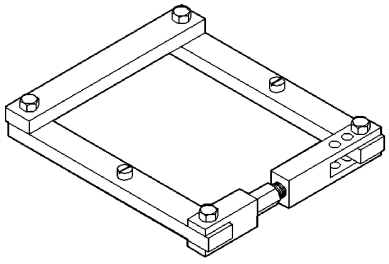

SPREADER W-129-B

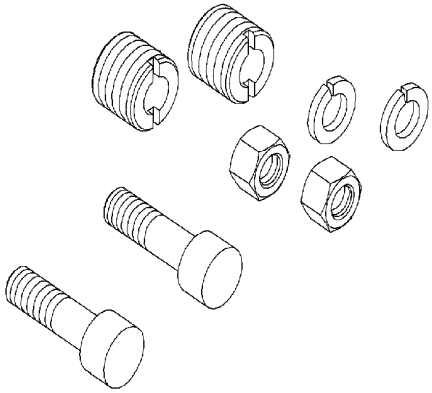

ADAPTER KIT 6987B

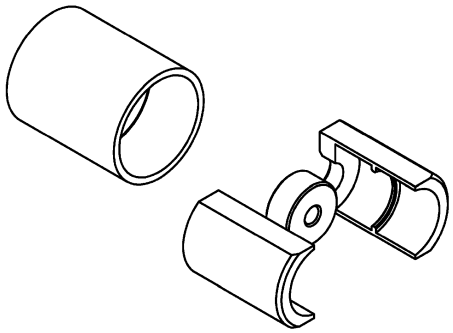

REMOVER 8240A

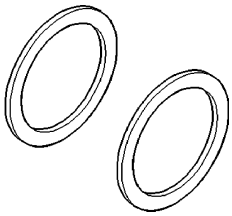

DUMMY SHIM 8107

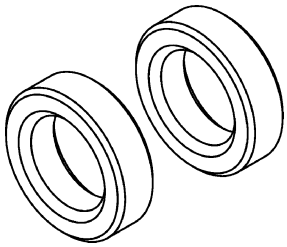

DUMMY BEARING 8398

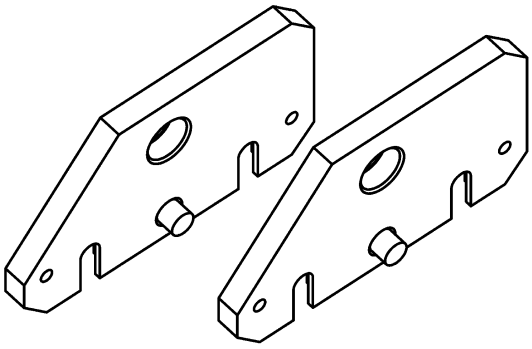

ADAPTER PLATES 8142A

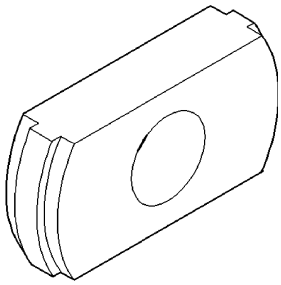

REMOVER 8401

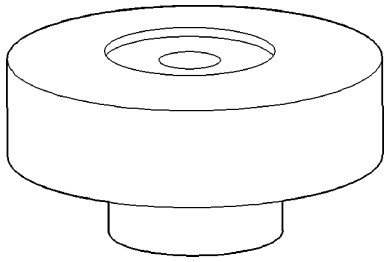

PINION BLOCK 8177

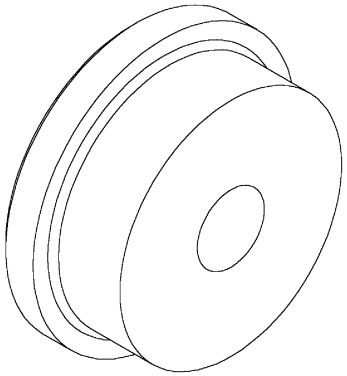

INSTALLER 8692

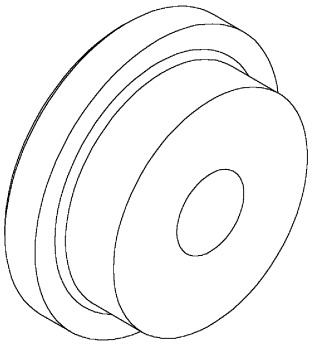

INSTALLER 8693

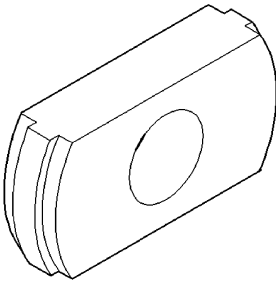

REMOVER 8831

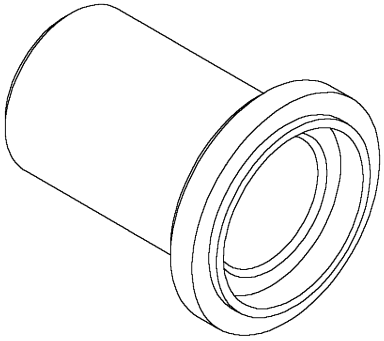

INSTALLER 8694

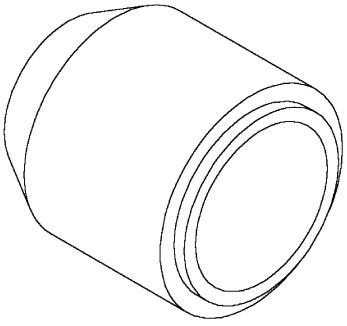

INSTALLER 8695

SHAFT-AXLE

REMOVAL

1. Remove half shaft from vehicle.
2. Remove skid plate, if equipped.
3. Clean axle seal area.
4. Remove snap ring (1) from the axle shaft.
5. Remove axle with Remove 8420A (2) (3) Collar 8420-3 (4) and Slide Hammer C-3752.

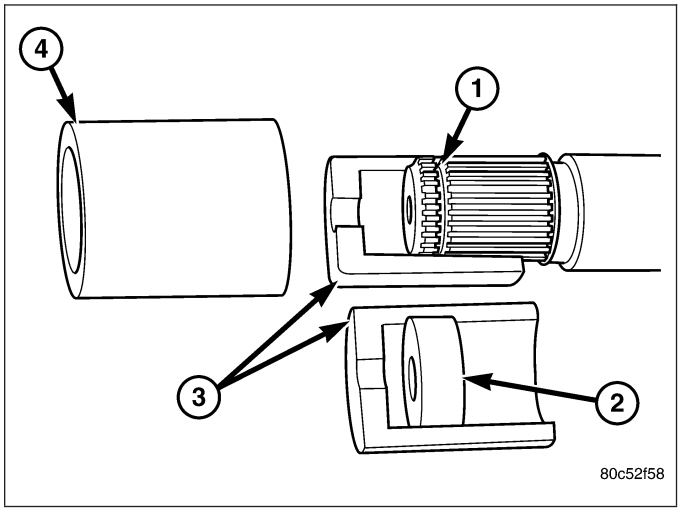

INSTALLATION

1. Lubricate bearing bore and seal lip with gear lubricant.
2. Install axle shaft and push firmly on axle to engage snap-ring.
3. Check differential fluid level and add fluid if necessary.
4. Install half shaft.
5. Install skid plate, if necessary.

SEAL-AXLE SHAFT

REMOVAL

1. Remove half shaft from vehicle.
2. Remove skid plate, if equipped.
3. Clean axle seal area.
4. Remove axle shaft O-ring.
5. Remove axle shaft.
6. Remove axle shaft seal with a small pry bar.

INSTALLATION

1. Wipe axle shaft tube bore clean.
2. Install **new** axle shaft seal with Installer 8402 (1).
3. Install axle shaft and half shaft.

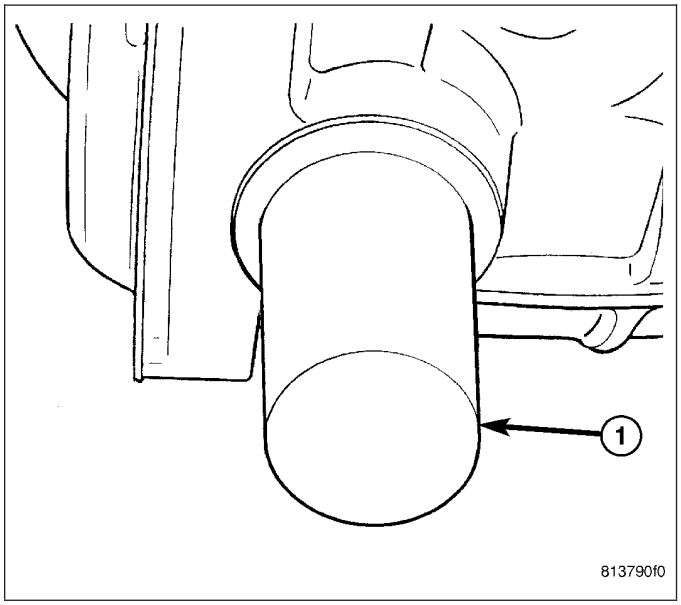

BEARING-AXLE

REMOVAL

1. Remove half shaft, axle shaft and seal.
2. Install axle shaft bearing Remover C-4660-A (3) in the bearing (1). Then tighten the nut (2) to spread the remover in the bearing.

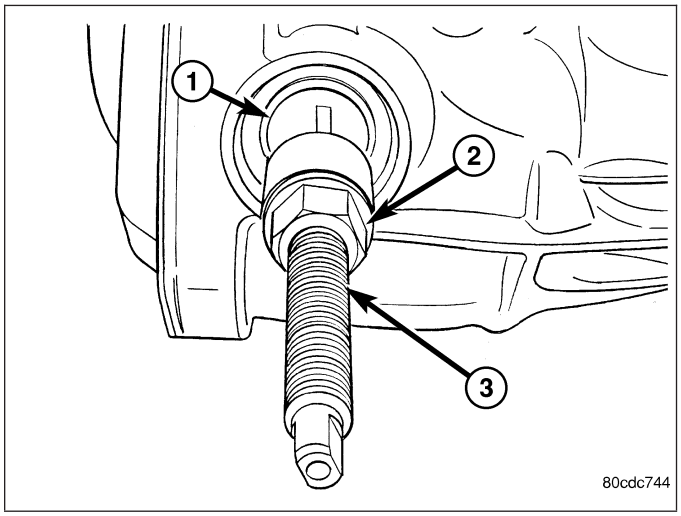

3. Install bearing remove cup (1) bearing (2) and nut (3). Tighten nut (3) to draw the bearing out.
4. Inspect axle shaft tube bore for roughness and burrs.

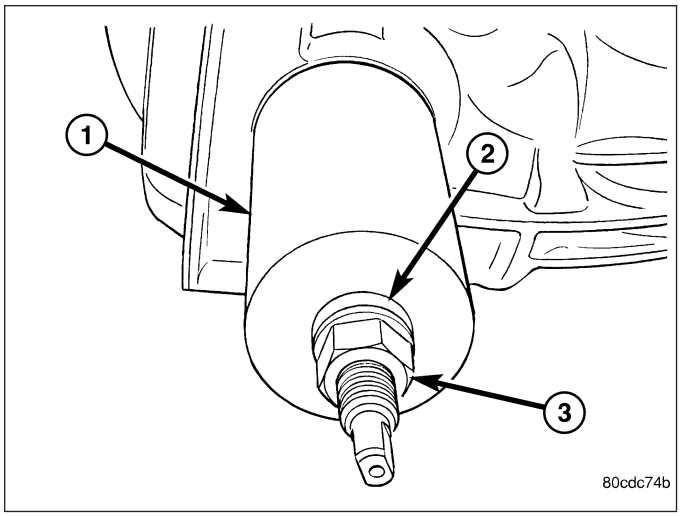

INSTALLATION

1. Wipe the axle shaft tube bore clean.
2. Install axle shaft bearing with Installer 5063 (1) and Handle C-4171 (2).

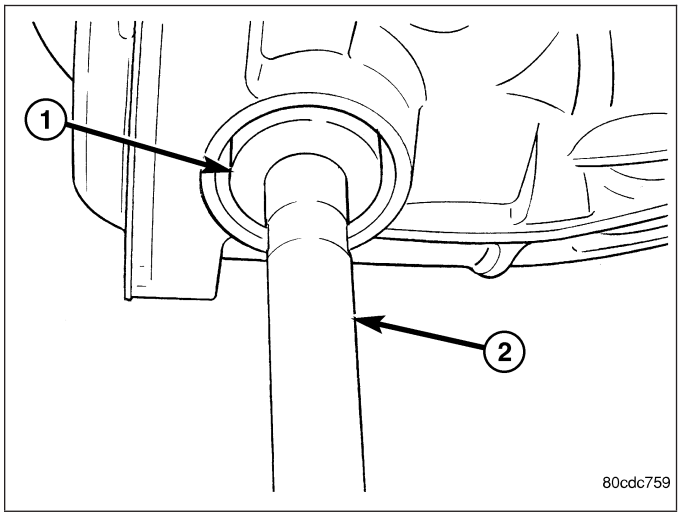

3. Install a **new** axle shaft seal with Installer 8694 (1).
4. Lubricate seal lip with gear lubricant.
5. Insert axle shaft through seal, bearing and engage it into side gear splines. Push firmly on the axle shaft to engage the snap-ring.
6. Install axle shaft O-ring.
7. Install skid plate, if necessary.
8. Install half shaft.

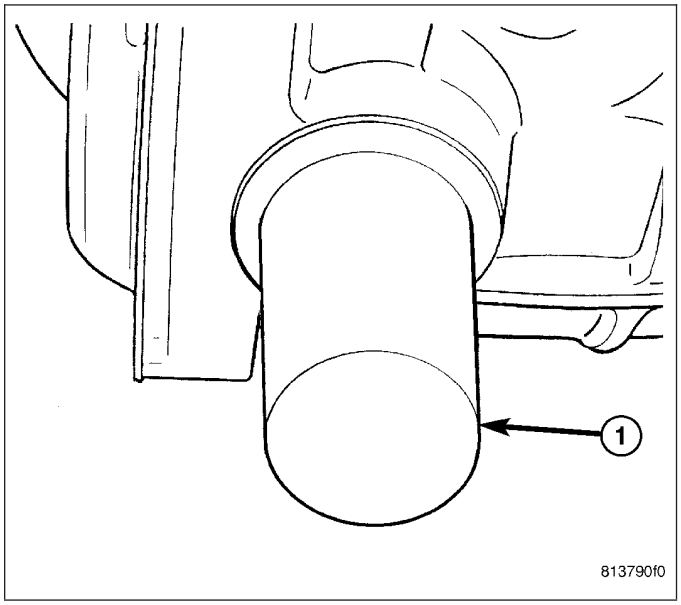

SEAL-PINION

REMOVAL

1. Remove both half shafts.
2. Remove front propeller shaft.
3. Rotate pinion gear three or four times and verify pinion rotates smoothly.
4. Record pinion rotating torque with an inch pound torque wrench (2), for installation reference.
5. Position Holder 6719 against the companion flange (1) and install a four bolts and washers into the threaded holes and tighten the bolts.
6. Remove pinion nut.

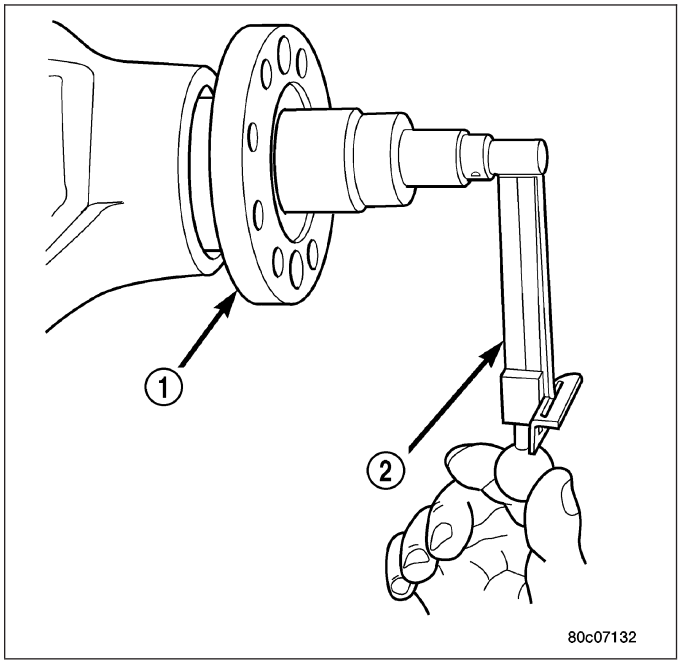

7. Remove companion flange with (1) Remover C-452 (2).
8. Remove pinion seal with a pry tool or a slide hammer mounted screw.

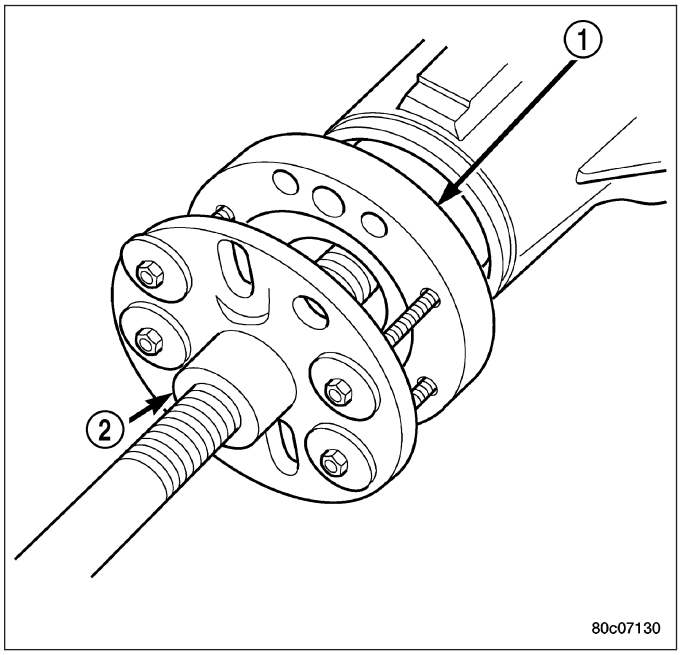

INSTALLATION

1. Apply a light coating of gear lubricant on the lip of pinion seal.
2. Install seal with Installer 8695 (2) and Handle C-4171 (1).
3. Install companion flange onto the pinion with Installer C-3718 and Holder 6719A.

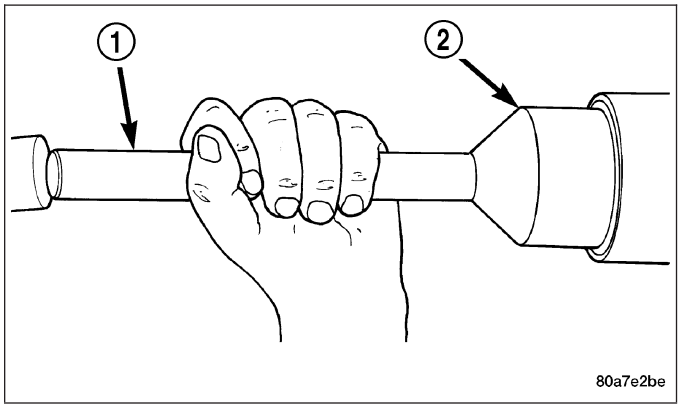

4. Position holder (2) against the companion flange and install four bolts and washers into the threaded holes. Tighten the bolt and washer so that the holder is held to the flange.
5. Install a **new** pinion nut onto the pinion shaft and tighten the pinion nut until there is zero bearing end-play

CAUTION: Do not exceed 271 N·m (200 ft. lbs.) the minimum tightening torque when installing the companion flange at this point. Never loosen pinion nut to decrease pinion bearing rotating torque and never exceed specified preload torque. Failure to these instruction will damage the axle.

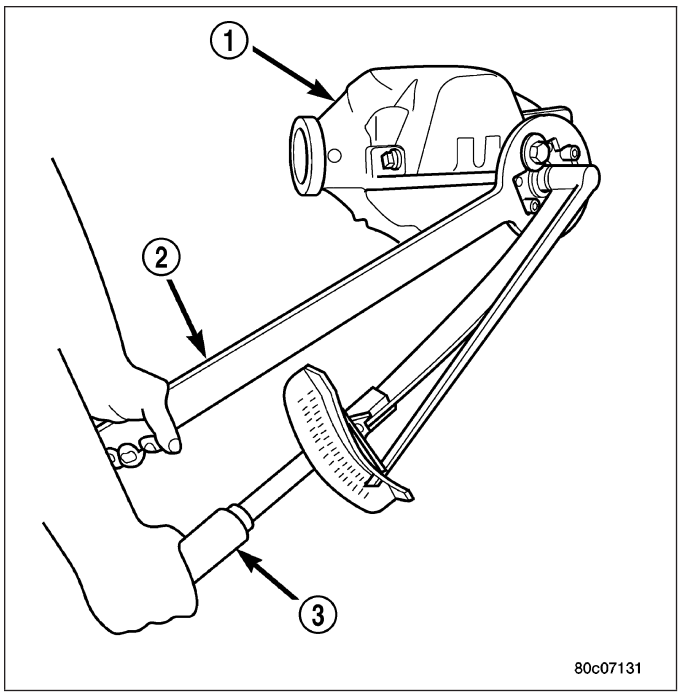

6. Record pinion rotating torque using an inch pound torque wrench (2). The rotating torque should be equal to the reading recorded during removal plus an additional 0.56 N·m (5 in. lbs.).
7. If rotating torque is low, tighten the pinion nut in 6.8 N·m (5 ft. lbs.) increments until the proper rotating torque is achieved.

CAUTION: If maximum tightening torque 475 N·m (350 ft. lbs.) is reached prior to reaching the required rotating torque, the collapsible spacer may have been damaged. Failure to these instruction will damage the axle.

8. Install propeller shaft.

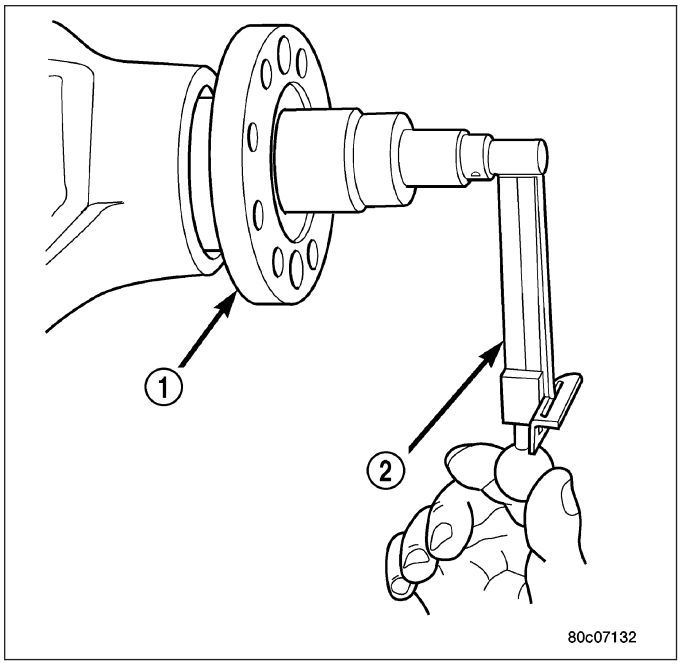

DIFFERENTIAL

REMOVAL

1. Remove differential housing cover and drain fluid.
2. Remove axle shafts.
3. Loosen bearing cap bolts.

NOTE: Differential bearing cap reference numbers are stamped on caps and machined flat on the housing. If reference numbers cannot be found, make new marks for later reference.

4. Install Adapter Plates 8142-A (1) onto the housing.
5. Install Spreader W-129-B (2) onto the adapter plates (1) and tighten the turnbuckle finger-tight.

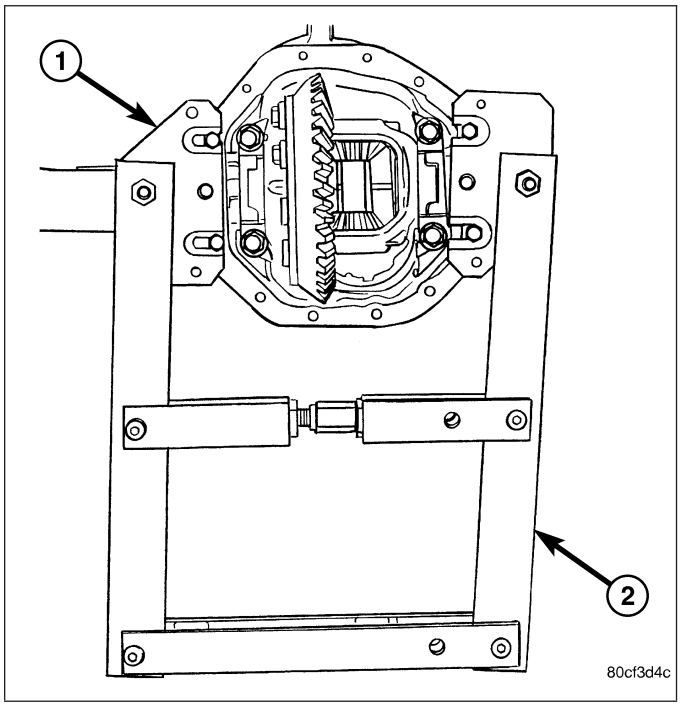

6. Install a Pilot Stud L-4438 at the left side of the differential housing. Attach Dial Indicator C-3339 (1) to pilot stud. Load the indicator plunger against the opposite side of the housing and zero the indicator.
7. Spread the housing to remove the differential case from the housing. Measure the distance with the dial indicator.

CAUTION: Never spread housing over 0.50 mm (0.020 in). Failure to follow these instructions will damaged the housing.

8. Remove dial indicator.
9. While holding the differential case in position, remove bearing cap bolts and caps.

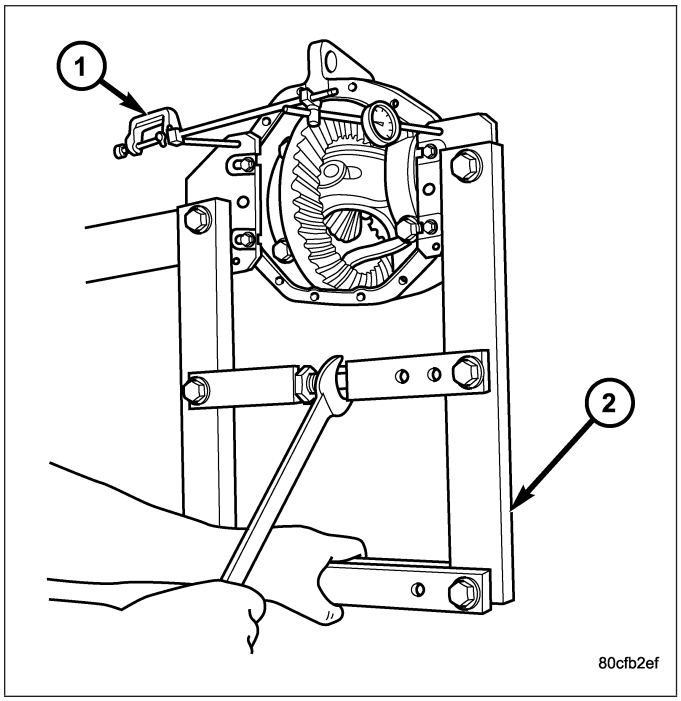

10. Remove differential (2) from the housing (1). Ensure differential bearing cups (3) and shims remain in position on the differential bearings.
11. Tag differential bearing cups and shims to indicate their location.
12. Remove spreader from housing.

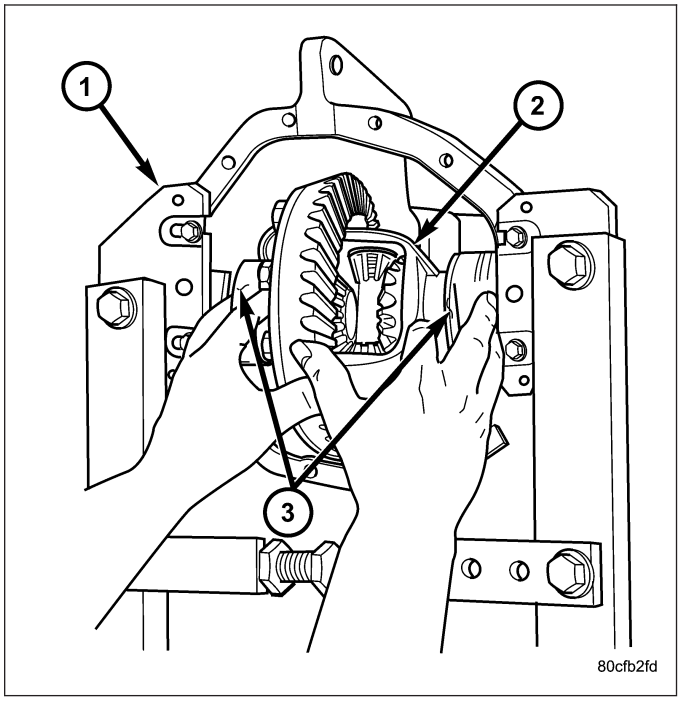

DISASSEMBLY

1. Remove ring gear.
2. Remove roll-pin holding mate shaft in housing.
3. Remove pinion gear mate shaft.
4. Rotate differential side gears (2) and remove pinion gears (3) and thrust washers (1).
5. Remove differential side gears and thrust washers.

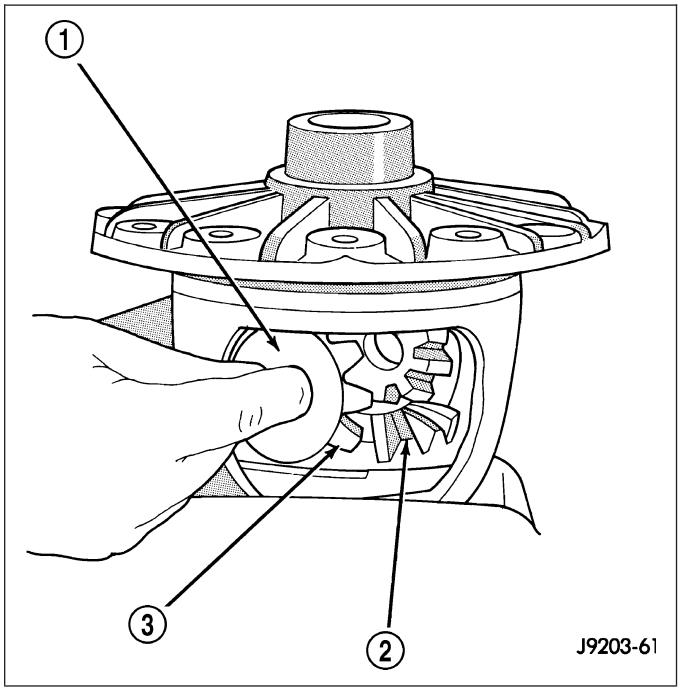

ASSEMBLY

NOTE: If the same gears and thrust washers are being used, install them into their original locations.

1. Lubricate differential components with hypoid gear lubricant.
2. Install side gears and thrust washers into the differentail case.
3. Rotate pinion mate gears and thrust washers into the differentail case.
4. Install pinion gear mate shaft (2).
5. Align hole in pinion gear mate shaft with hole in the differential case.
6. Install roll-pin (3) in the differential case with a punch (1) and hammer. Peen edge of roll-pin hole in differential case in two places 180° apart.
7. Install ring gear.

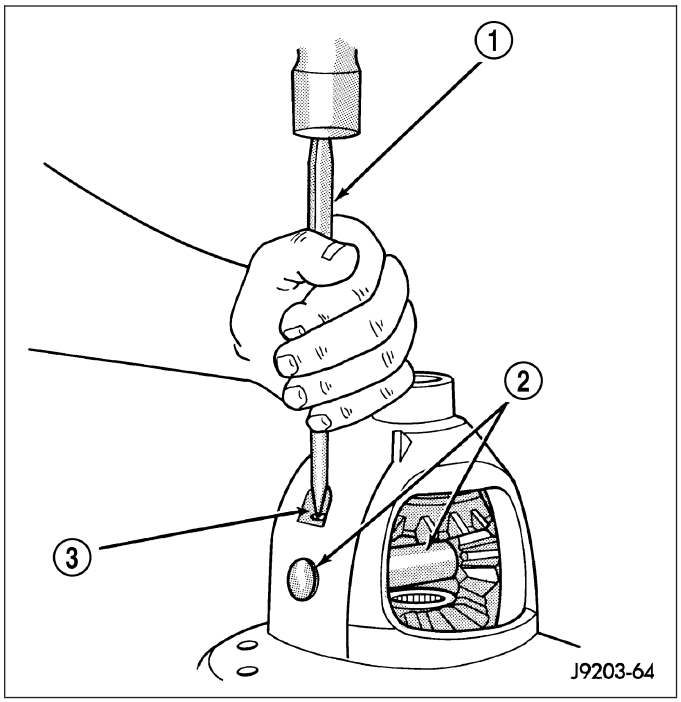

INSTALLATION

NOTE: If replacement differential bearings or differential case are replaced, Refer to adjustments for Differential Bearing Preload and Gear Backlash procedures.

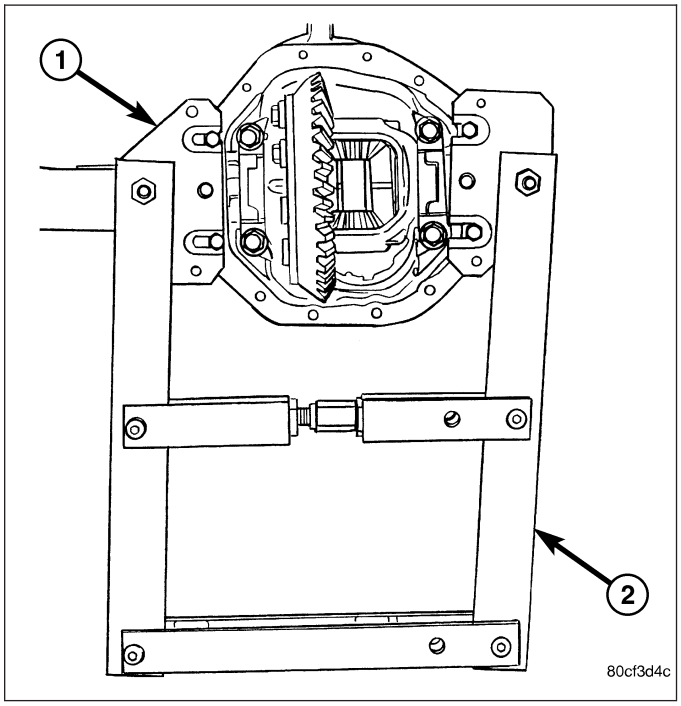

1. Install Spreader W-129-B (2) with the Adapter Plates 8142-A (1) and install the safety holddown clamps. Tighten the tool turnbuckle finger-tight.
2. Install a Pilot Stud L-4438 at the left side of the differential housing. Attach Dial Indicator C-3339 to pilot stud. Load indicator plunger against the opposite side of the housing and zero the indicator.
3. Spread housing and measure the distance with the dial indicator.

CAUTION: Never spread housing over 0.50 mm (0.020 in). Failure to follow these instruction will damage the housing.

4. Remove dial indicator.
5. Install differential case in the housing. Ensure differential bearing cups remain in position on the bearings and the differential preload shims are seated in the housing. Tap differential case to ensure bearings cups are seated in the housing.
6. Install bearing caps to their original locations and loosely install cap bolts.
7. Remove housing spreader.
8. Tighten the bearing cap bolts to 61 N·m (45 ft. lbs.).
9. Install axle shafts.
10. Apply a bead of orange Mopar Axle RTV sealant or equivalent to the housing cover.

CAUTION: If cover is not installed within 3 to 5 minutes, the cover must be cleaned and new RTV applied. Failure to follow these instruction will cause a leak.

11. Install cover and tighten bolts in a criss-cross pattern to 22 N·m (15 ft. lbs.).
12. Fill differential with lubricant.

BEARINGS-DIFFERENTIAL CASE

REMOVAL

1. Remove differential from housing.
2. Remove bearings (3) from differential case (4) with Puller C-293-PA (1) Adapters C-293-48 (2) and Plug C-293-3 (5).

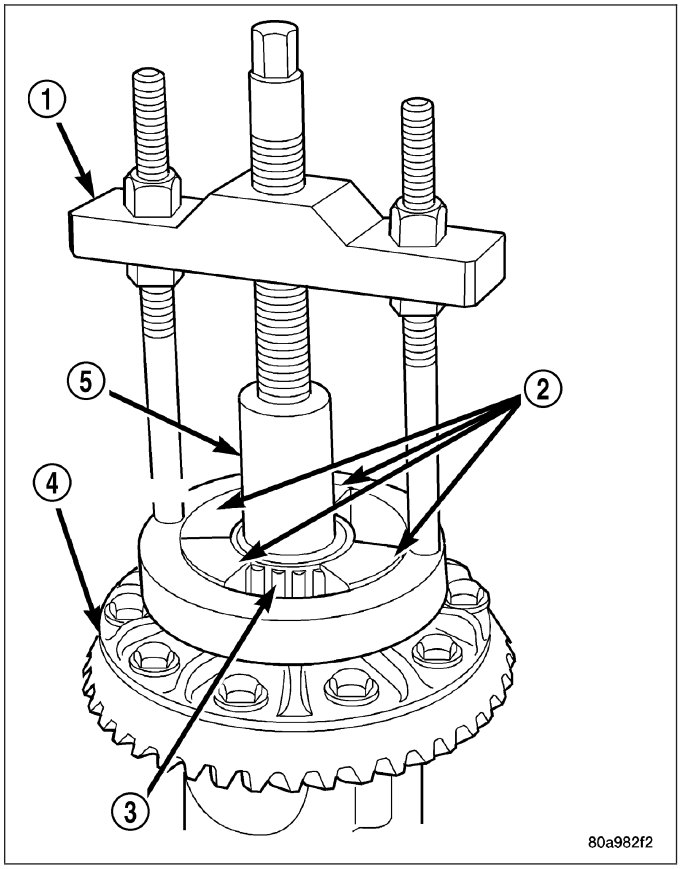

INSTALLATION

1. Install differential case bearings (3) with Installer C-3716-A (4) and Handle C-4171(1).
2. Install differential into the housing.

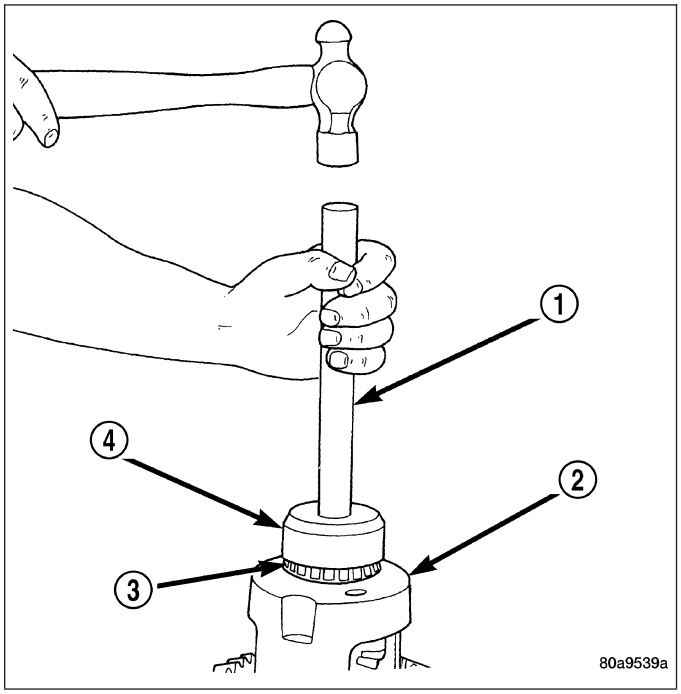

GEAR-PINION/RING

REMOVAL

NOTE: The ring gear and pinion are serviced in a matched set. Never replace one without replacing the other.

1. Remove differential from housing.
2. Place differential case (1) in a vise with soft jaw.
3. Remove bolts holding ring gear to differential case.
4. Drive ring gear (2) from differential case (1) with a soft hammer (3).

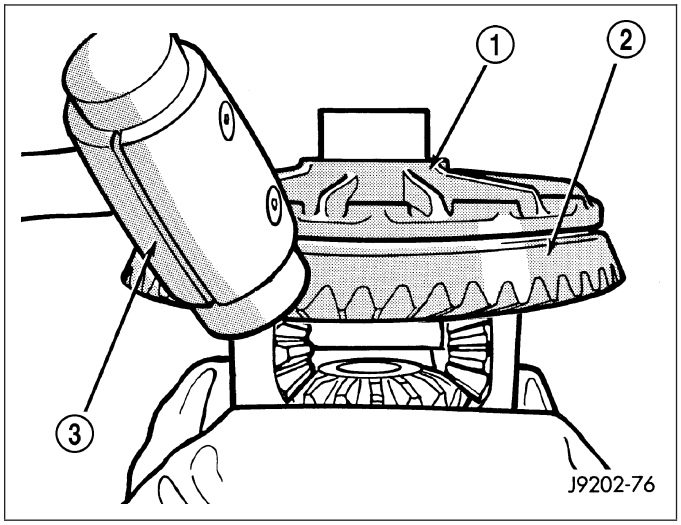

5. Mark companion yoke and companion flange for installation reference.
6. Remove companion flange bolts and tie the propeller shaft to the vehicle underbody.
7. Rotate companion flange (1) three or four times and verify flange rotates smoothly.
8. Record pinion rotating torque an inch pound torque wrench (2) for installation reference.

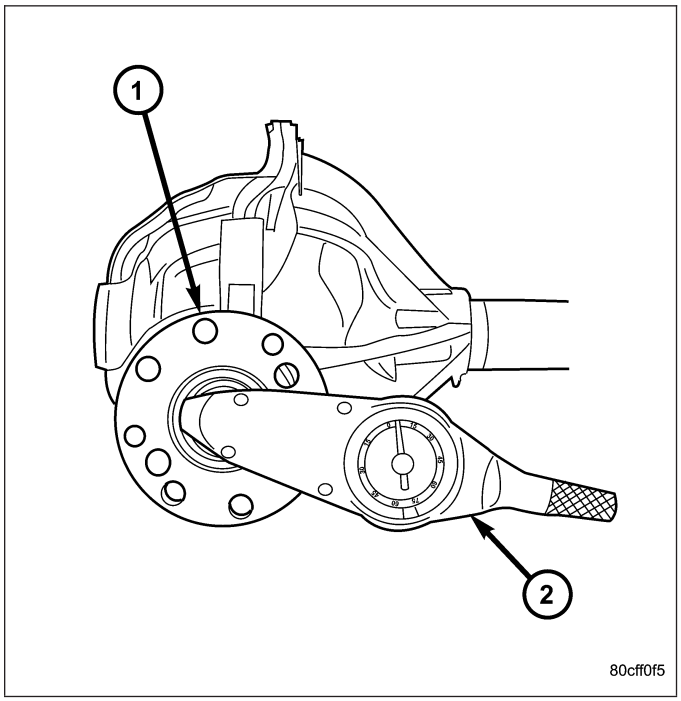

9. Install bolts into two of the threaded holes in the companion flange 180° apart.
10. Position Holder 6719 against the companion flange (1) and install a bolt and washer into one of the remaining threaded holes. Tighten the bolts so that the Holder 6719 is held to the flange.
11. Remove the pinion nut.
12. Remove the companion flange with Remover C-452 (2).

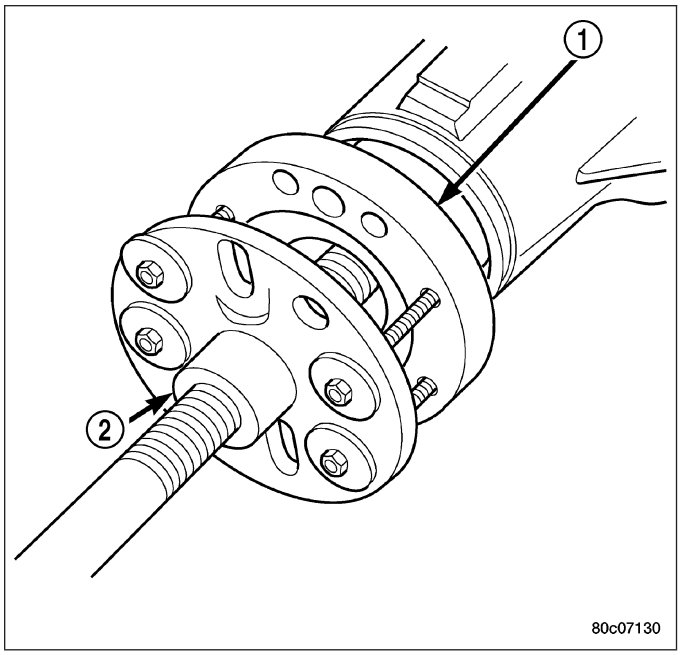

13. Remove pinion from differential housing.
14. Remove pinion seal with a pry tool or a slide hammer mounted screw.
15. Remove oil slinger, if equipped and front pinion bearing.
16. Remove front pinion bearing cup with Remover 8831 (2) and Handle C-4171 (3).

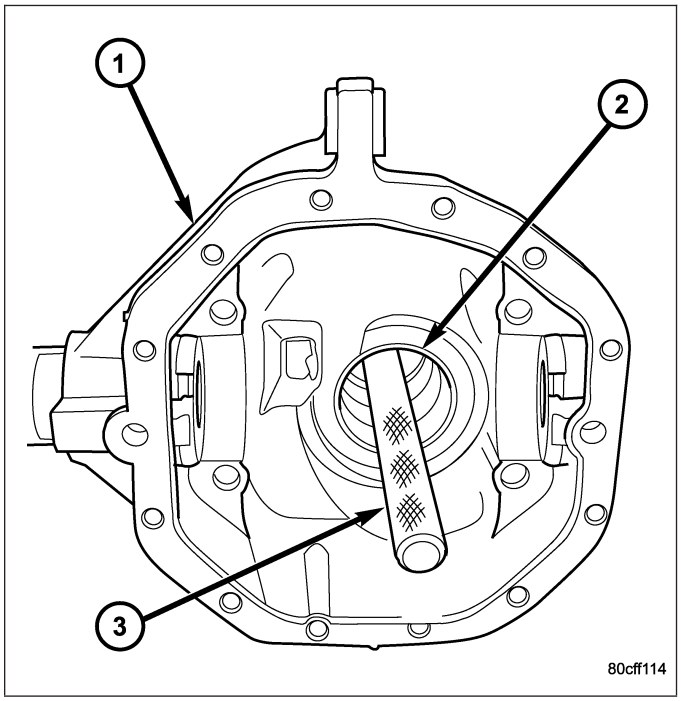

17. Remove rear pinion bearing cup from housing (1) with Remover 8401 (2) and Handle C-4171(3).

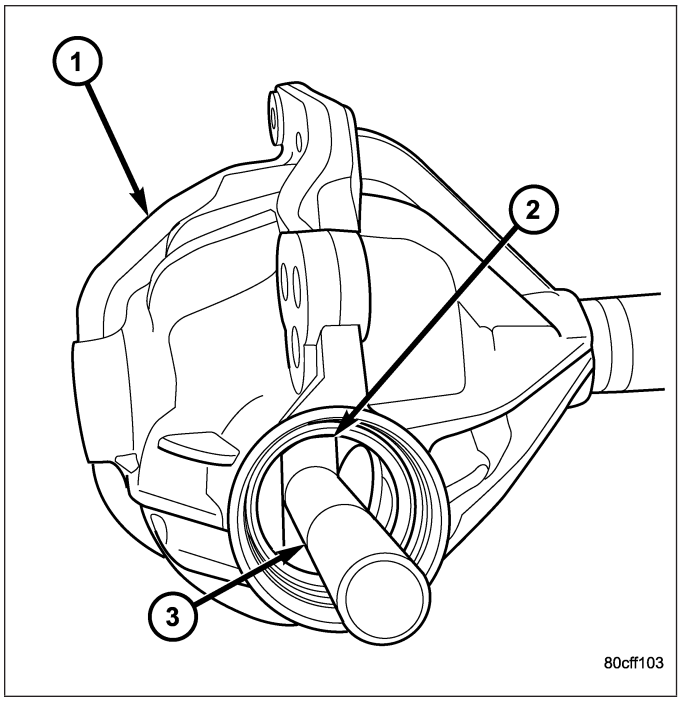

18. Remove collapsible spacer (1) from pinion.

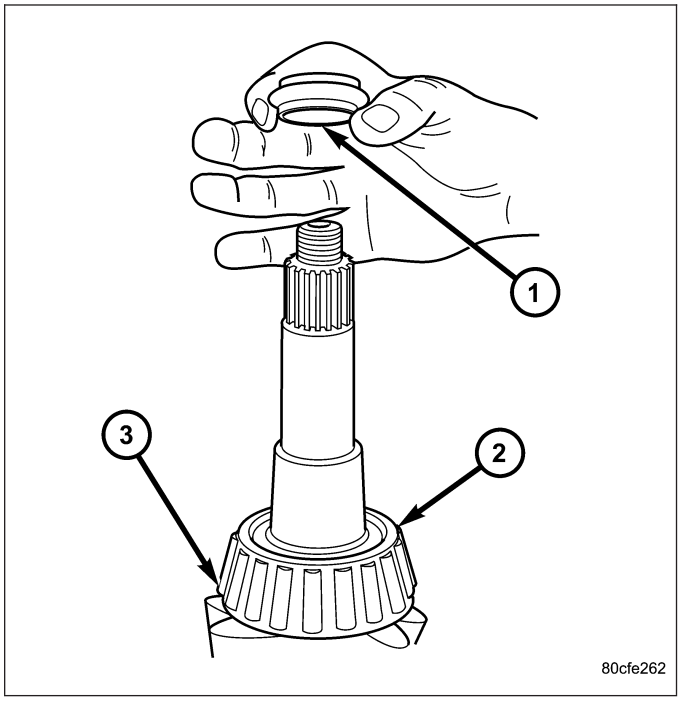

19. Remove rear pinion bearing with Puller/Press C-293-PA (1) and Adapters C-293-42 (3).
20. Remove depth shims from the pinion shaft and record thickness of shims.

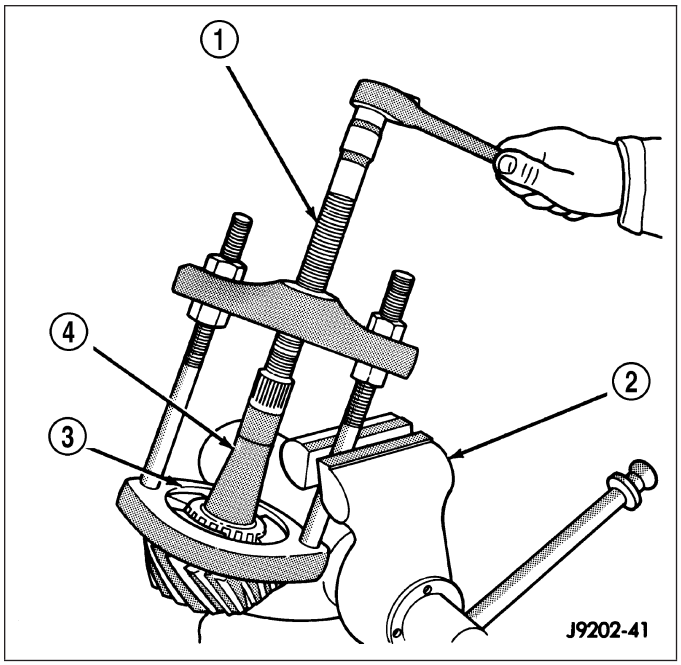

INSTALLATION

NOTE: The ring gear and pinion are serviced in a matched set. Never replace one gear without replacing the other matching gear. If ring and pinion gears or bearings are replaced, Refer to Adjustments for Pinion Gear Depth Setting.

1. Apply Mopar Door Ease or equivalent lubricant to outside surface of the bearing cups.
2. Install rear pinion bearing cup with Installer 8692 (2) and Driver Handle C-4171 (3).

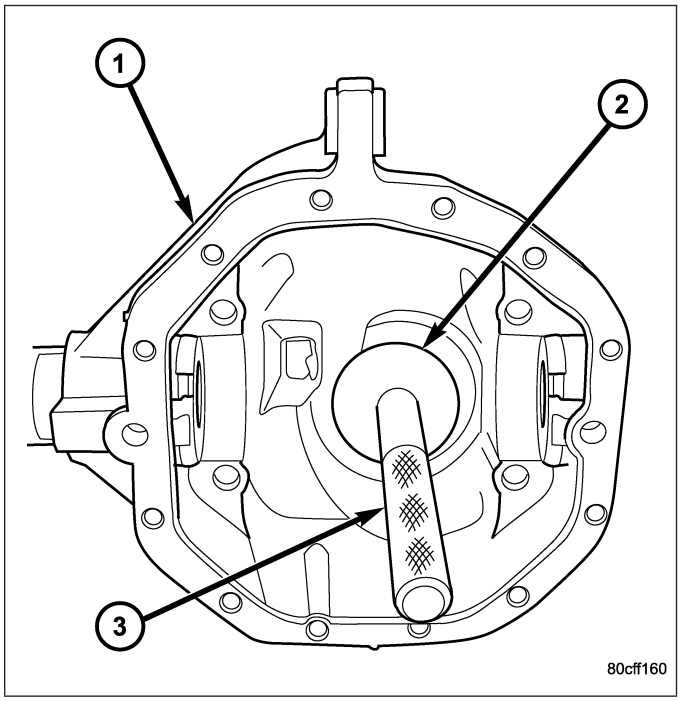

3. Install front pinion bearing cup with Installer 8693 and Handle C-4171.
4. Lubricate front pinion bearing and install bearing in the housing.
5. Apply a light coating of gear lubricant on the lip of pinion seal.
6. Install pinion seal with Installer 8695 (2) and Handle C-4171 (1).

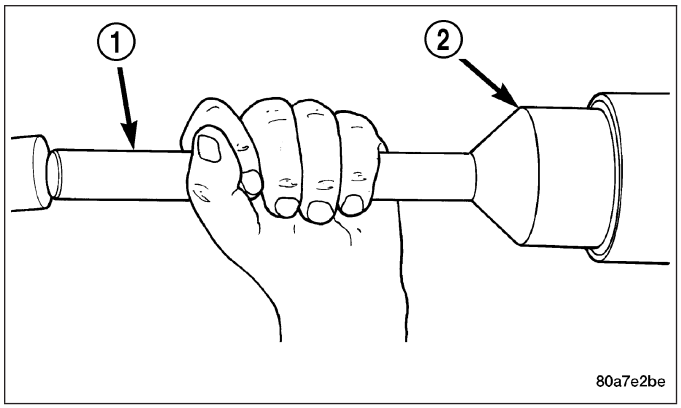

7. Place pinion depth shim (1) on the pinion shaft (2).

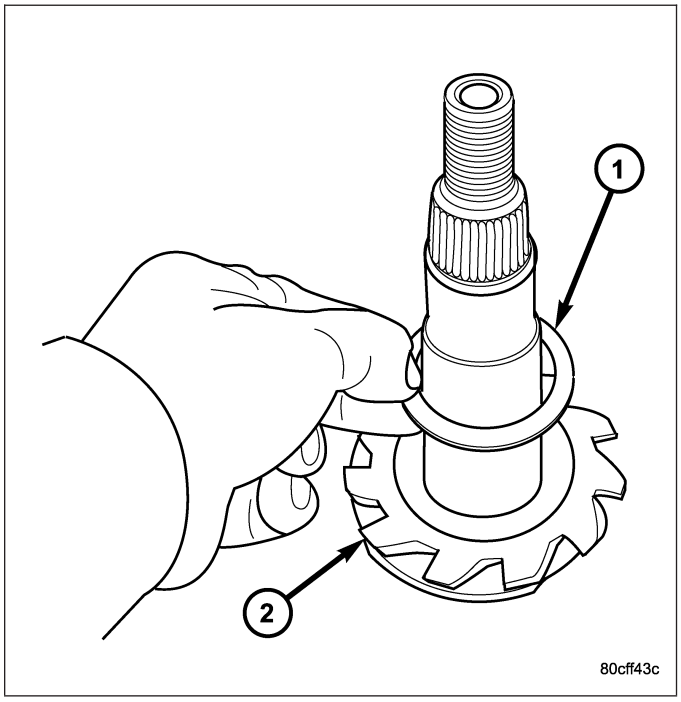

8. Install rear pinion bearing (4) with Installer 6448 (1) and a press (1).

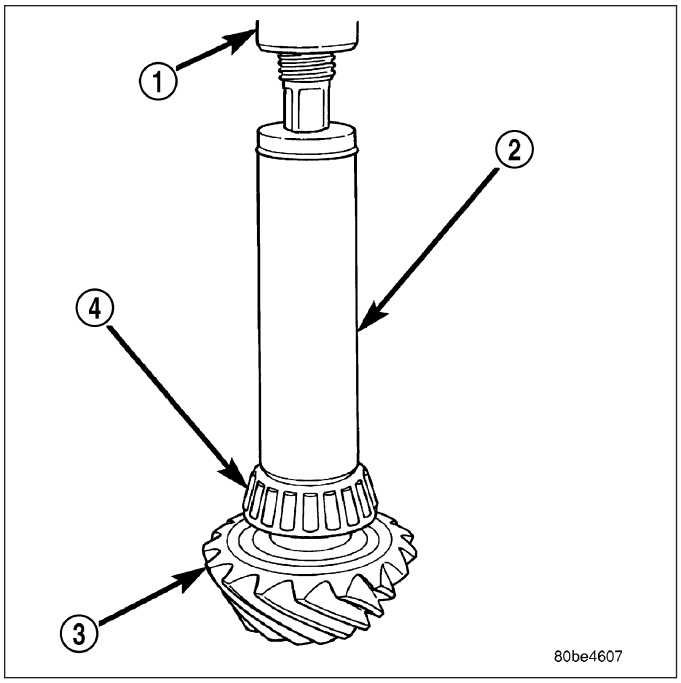

9. Install **new** collapsible spacer (1) onto the pinion shaft.
10. Lubricate rear pinion bearing and install the pinion gear in the housing.

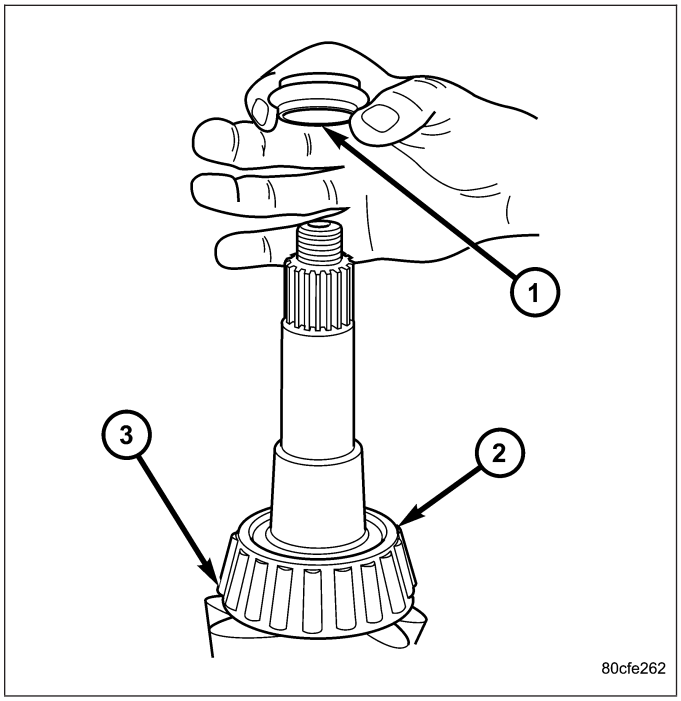

11. Install companion flange with Installer C-3718 and Holder 6719 (2).
12. Install **new** pinion nut and tighten to 271 N·m (200 ft. lbs.).
13. Using Holder 6719 and a torque wrench set at 475 N·m (350 ft. lbs.). Tighten pinion nut until bearing end play is taken up.

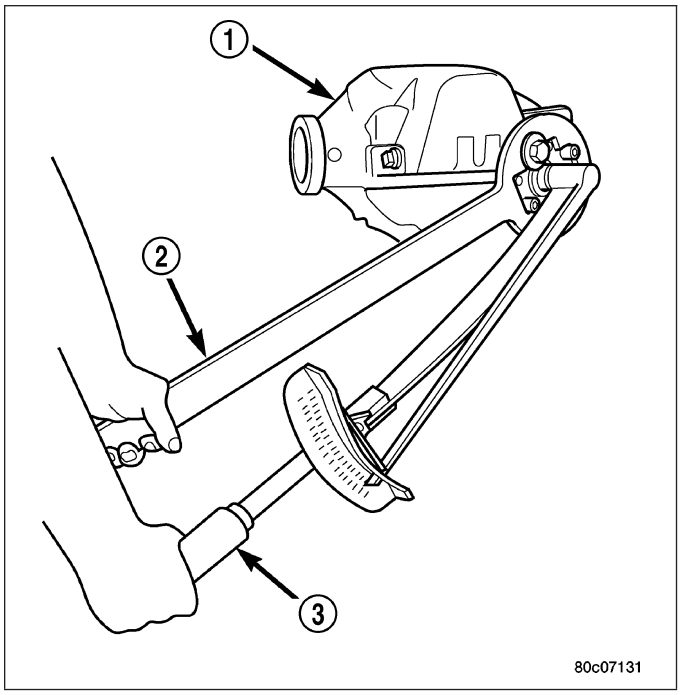

14. Slowly tighten the nut in 6.8 N·m (5 ft. lbs.) increments until desired rotating torque is achieved. Measure rotating torque frequently to avoid overcrushing the collapsible spacer. The pinion rotating torque should be:
    - Original Bearings: 1 to 2.5 N·m (10 to 20 in. lbs.)
    - New Bearings: 2.0 to 2.8 N·m (18 to 25 in. lbs.)

CAUTION: Never loosen pinion nut to decrease pinion bearing rotating torque and never exceed specified preload torque. Failure to follow these instruction will result in damage.

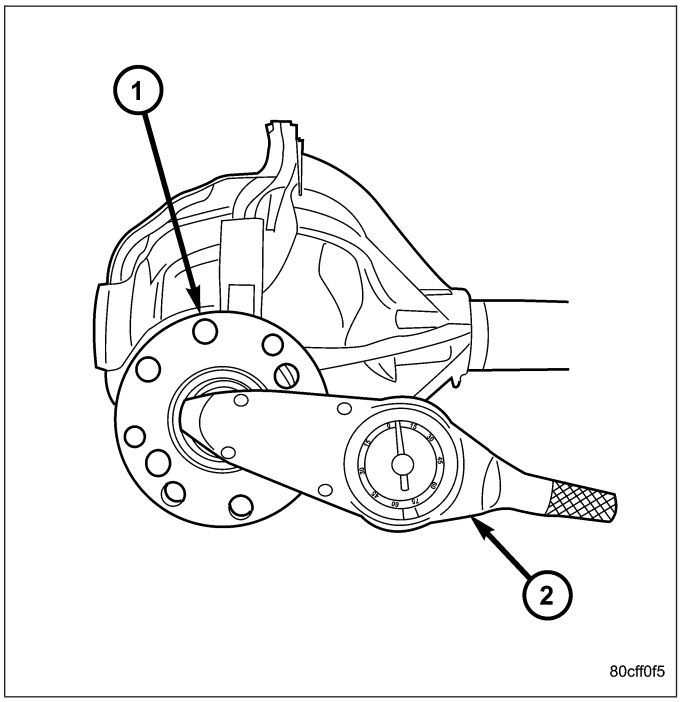

15. Invert differential case (4) and start two ring gear (3) bolts to provide ring gear bolt hole alignment.
16. Invert differential case in the vise.
17. Install **new** ring gear bolts and alternately tighten to 108 N·m (80 ft. lbs.).

CAUTION: Never reuse the ring gear bolts. Failure to follow these instruction will result in damage.

18. Install differential in housing and verify gear mesh, backlash and contact pattern.

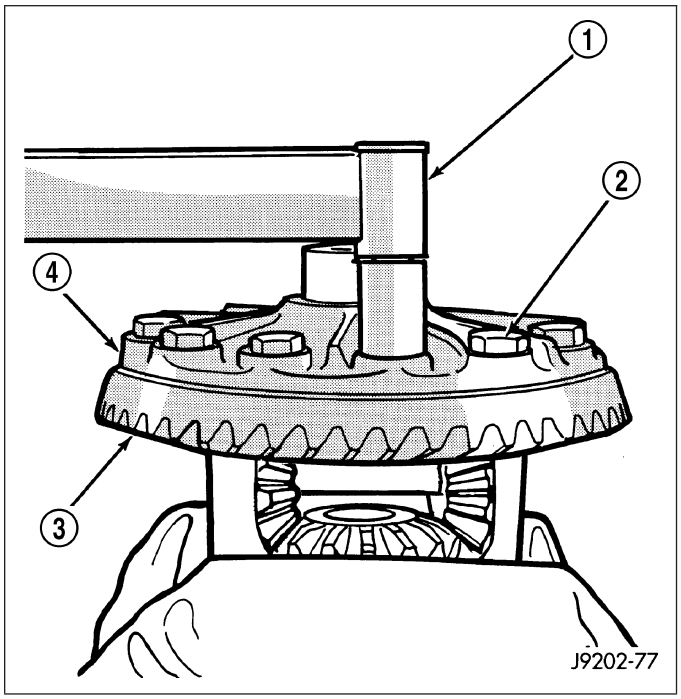

FRONT AXLE - 9 1/4 AA

TABLE OF CONTENTS

page

FRONT AXLE - 9 1/4 AA
DIAGNOSIS AND TESTING
FRONT AXLE - 9 1/4 AA 181
REMOVAL 185
INSTALLATION 187
ADJUSTMENTS 188
SPECIFICATIONS 193
SPECIAL TOOLS 194
SHAFT-AXLE
REMOVAL 198
DISASSEMBLY 199
ASSEMBLY 200
INSTALLATION 201
SEAL-AXLE SHAFT
REMOVAL 201
INSTALLATION 203
SEAL-PINION
REMOVAL 204
INSTALLATION 205
DIFFERENTIAL
REMOVAL 206
DISASSEMBLY 207
ASSEMBLY 208
INSTALLATION 209
BEARING-DIFFERENTIAL CASE
REMOVAL 210
INSTALLATION 211
DIFFERENTIAL-ELECTRIC LOCKER
DIAGNOSIS AND TESTING 211
REMOVAL 212
DISASSEMBLY 213
ASSEMBLY 215
INSTALLATION 216
BEARINGS-EL DIFFERENTIAL CASE
REMOVAL 218
INSTALLATION 219
GEAR-PINION/RING
REMOVAL 219
INSTALLATION 221

FRONT AXLE - 9 1/4 AA

DIAGNOSIS AND TESTING

FRONT AXLE - 9 1/4 AA

GEAR NOISE

Axle gear noise can be caused by insufficient lubricant, incorrect backlash, tooth contact, worn/damaged gears or the carrier housing not having the proper offset and squareness.

Gear noise usually happens at a specific speed range. The noise can also occur during a specific type of driving condition. These conditions are acceleration, deceleration, coast, or constant load.

When road testing, first warm-up the axle fluid by driving the vehicle at least 5 miles and then accelerate the vehicle to the speed range where the noise is the greatest. Shift out-of-gear and coast through the peak-noise range. If the noise stops or changes greatly check for:

- Insufficient lubricant.
- Incorrect ring gear backlash.
- Gear damage.

Differential side gears and pinions can be checked by turning the vehicle. The side gears are loaded during turns. They usually do not cause noise during straight-ahead driving when the gears are unloaded. A worn pinion mate shaft can also cause a snapping or a knocking noise.

BEARING NOISE

The axle shaft, differential and pinion bearings can all produce noise when worn or damaged. Bearing noise can be either a whining, or a growling sound.

Pinion bearings have a constant-pitch noise. This noise changes only with vehicle speed. Pinion bearing noise will be higher pitched because it rotates at a faster rate. Drive the vehicle and load the differential. If bearing noise occurs, the rear pinion bearing is the source of the noise. If the bearing noise is heard during a coast, the front pinion bearing is the source.

Differential bearings usually produce a low pitch noise. Differential bearing noise is similar to pinion bearing noise. The pitch of differential bearing noise is also constant and varies only with vehicle speed.

Axle shaft bearings produce noise and vibration when worn or damaged. The noise generally changes when the bearings are loaded. Road test the vehicle. Turn the vehicle sharply to the left and to the right. This will load the bearings and change the noise level. Where axle bearing damage is slight, the noise is usually not noticeable at speeds above 30 m.p.h.

LOW SPEED KNOCK

Low speed knock is generally caused by:

- Worn U-joint(s).
- Worn side-gear thrust washers.
- Worn pinion shaft bore.

VIBRATION

Vibration at the front/rear of the vehicle is usually caused by:

- Damaged drive shaft.
- Missing drive shaft balance weight(s).
- Worn or out of balance wheels.
- Loose wheel lug nuts.
- Worn U-joint(s).
- Loose/broken springs.
- Damaged axle shaft bearing(s).
- Loose pinion gear nut.
- Excessive pinion yoke run out.
- Bent axle shaft(s).

Check for loose or damaged front end components or engine/transmission mounts. These components can contribute to what appears to be a vibration. Do not overlook engine accessories, brackets and drive belts.

DRIVELINE SNAP

A snap or clunk noise when the vehicle is shifted into gear (or the clutch engaged) can be caused by:

- High engine idle speed.
- Transmission shift operation.
- Loose engine/transmission/transfer case mounts.
- Worn U-joints.
- Loose spring mounts.
- Loose pinion gear nut and yoke.
- Excessive ring gear backlash.
- Excessive side gear to case clearance.

The source of a snap or a clunk noise can be determined with the assistance of a helper. Raise the vehicle on a hoist with the wheels free to rotate. Instruct the helper to shift the transmission into gear and listen for the noise. A mechanics stethoscope is helpful in isolating the source of a noise.

DIAGNOSTIC CHART

Condition	Possible Causes	Correction
Wheel Noise	1. Wheel loose.	1. Tighten loose nuts.
	2. Faulty, brinelled wheel bearing.	2. Replace bearing.
Axle Shaft Noise	1. Misaligned axle tube.	1. Inspect axle tube alignment. Correct as necessary.
	2. Bent or sprung axle shaft.	2. Inspect and correct as necessary.
	3. End-play in pinion bearings.	3. Refer to pinion pre-load information and correct as necessary.
	4. Excessive gear backlash between the ring gear and pinion.	4. Check adjustment of the ring gear and pinion backlash. Correct as necessary.
	5. Improper adjustment of pinion gear bearings.	5. Adjust the pinion bearings pre-load.
	6. Loose pinion yoke nut.	6. Tighten the pinion yoke nut.
	7. Scuffed gear tooth contact surfaces.	7. Inspect and replace as necessary.
Axle Shaft Broke	1. Misaligned axle tube.	1. Replace the broken shaft after correcting tube mis-alignment.
	2 Vehicle overloaded.	2. Replace broken shaft and avoid excessive weight on vehicle.
	3. Erratic clutch operation.	3. Replace broken shaft and avoid or correct erratic clutch operation.
	4. Grabbing clutch.	4. Replace broken shaft and inspect and repair clutch as necessary.
Differential Cracked	1. Improper adjustment of the differential bearings.	1. Replace case and inspect gears and bearings for further damage. Set differential bearing pre-load properly.
	2. Excessive ring gear backlash.	2. Replace case and inspect gears and bearings for further damage. Set ring gear backlash properly.
	3. Vehicle overloaded.	3. Replace case and inspect gears and bearings for further damage. Avoid excessive vehicle weight.
	4. Erratic clutch operation.	4. Replace case and inspect gears and bearings for further damage. Avoid erratic use of clutch.

Condition	Possible Causes	Correction
Differential Gears Scored	1. Insufficient lubrication.	1. Replace scored gears. Fill differential with the correct fluid type and quantity.
	2. Improper grade of lubricant.	2. Replace scored gears. Fill differential with the correct fluid type and quantity.
	3. Excessive spinning of one wheel/tire.	3. Replace scored gears. Inspect all gears, pinion bores, and shaft for damage. Service as necessary.
Loss Of Lubricant	1. Lubricant level too high.	1. Drain lubricant to the correct level.
	2. Worn axle shaft seals.	2. Replace seals.
	3. Cracked differential housing.	3. Repair as necessary.
	4. Worn pinion seal.	4. Replace seal.
	5. Worn/scored yoke.	5. Replace yoke and seal.
	6. Axle cover not properly sealed.	6. Remove, clean, and re-seal cover.
Axle Overheating	1. Lubricant level low.	1. Fill differential to correct level.
	2. Improper grade of lubricant.	2. Fill differential with the correct fluid type and quantity.
	3. Bearing pre-loads too high.	3. Re-adjust bearing pre-loads.
	4. Insufficient ring gear backlash.	4. Re-adjust ring gear backlash.
Gear Teeth Broke	1. Overloading.	1. Replace gears. Examine other gears and bearings for possible damage.
	2. Erratic clutch operation.	2. Replace gears and examine the remaining parts for damage. Avoid erratic clutch operation.
	3. Ice-spotted pavement.	3. Replace gears and examine remaining parts for damage.
	4. Improper adjustments.	4. Replace gears and examine remaining parts for damage. Ensure ring gear backlash is correct.

Condition	Possible Causes	Correction
Axle Noise	1. Insufficient lubricant.	1. Fill differential with the correct fluid type and quantity.
	2. Improper ring gear and pinion adjustment.	2. Check ring gear and pinion contact pattern.
	3. Unmatched ring gear and pinion.	3. Replace gears with a matched ring gear and pinion.
	4. Worn teeth on ring gear and/or pinion.	4. Replace ring gear and pinion.
	5. Loose pinion bearings.	5. Adjust pinion bearing pre-load.
	6. Loose differential bearings.	6. Adjust differential bearing pre-load.
	7. Mis-aligned or sprung ring gear.	7. Measure ring gear run-out. Replace components as necessary.
	8. Loose differential bearing cap bolts.	8. Inspect differential components and replace as necessary. Ensure that the bearing caps are torqued tot he proper specification.
	9. Housing not machined properly.	9. Replace housing.

REMOVAL

1. With vehicle in neutral, position vehicle on hoist.
2. Remove brake calipers and rotors.
3. Disconnect ABS wheel speed sensors.
4. Disconnect axle vent hose.
5. Remove front propeller shaft.
6. Remove stabilizer bar links (2) at the axle brackets with Puller C-3894-D (1)
   .

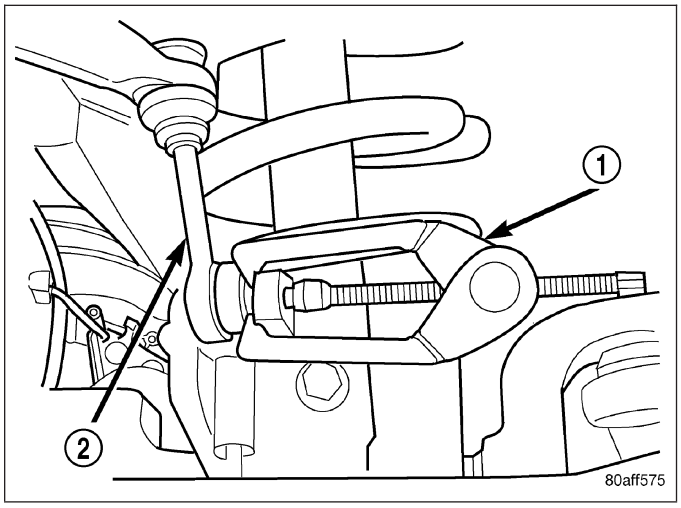

7. Disconnect shock absorbers (1) from axle brackets.

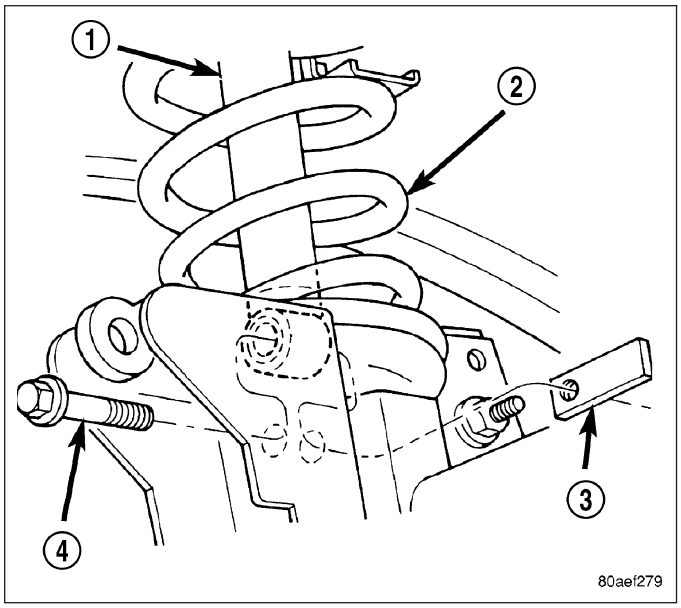

8. Remove track bar (1) from the axle bracket.

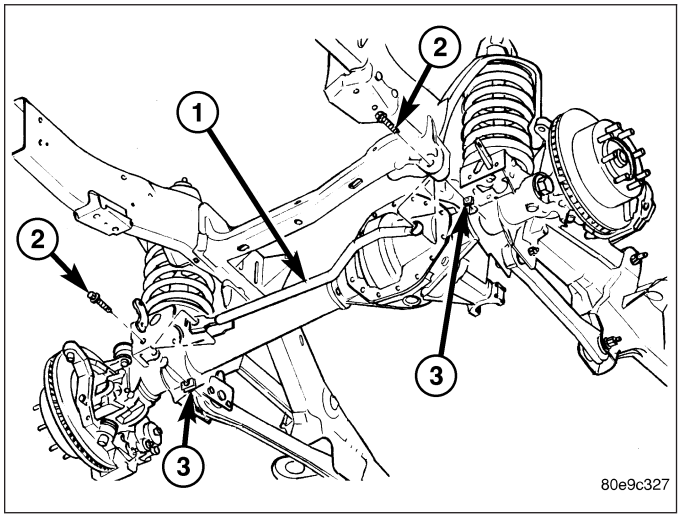

9. Remove tie rod and drag link (2) with Puller C-3894-A (3) from the steering knuckles.

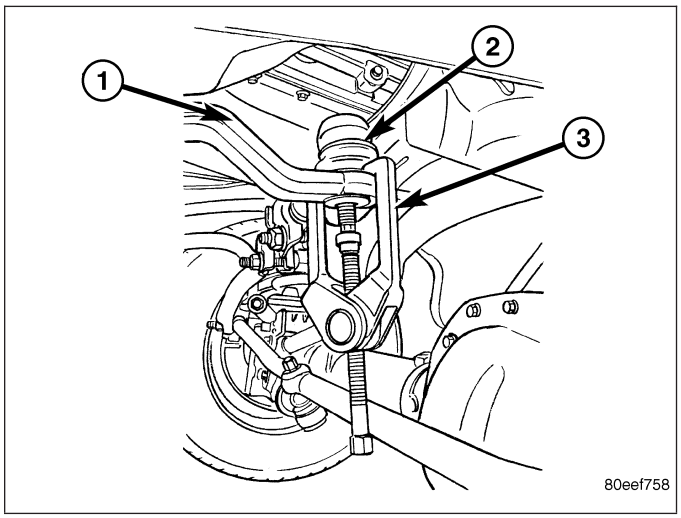

10. Position lift under the axle assembly and secure axle to lift.
11. Mark suspension alignment cams for installation reference.
12. Remove upper suspension arms (4) and lower suspension arms (5) from the axle bracket.
13. Lower the axle. The coil springs will drop with the axle.
14. Remove coil springs from the axle bracket.

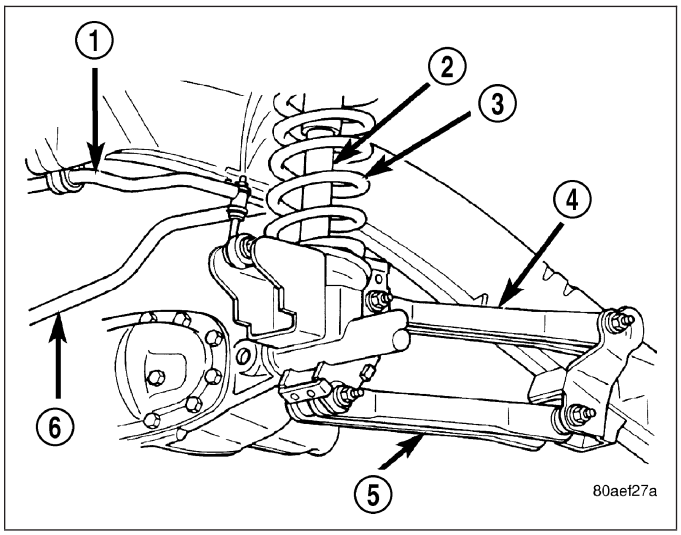

INSTALLATION

CAUTION: Suspension components with rubber bushings should be tightened with the weight of the vehicle on the suspension. Failure to follow these instructions will result in damage.

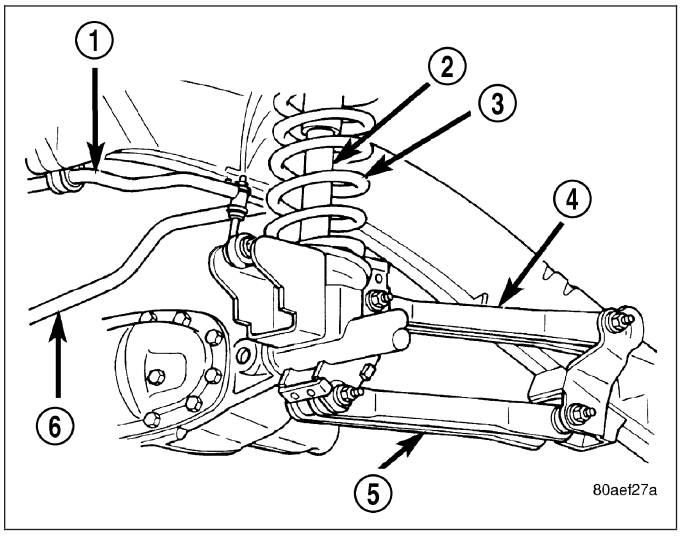

1. Support the axle on a suitable lifting device.
2. Secure axle to lifting device.
3. Position the axle under the vehicle.
4. Install springs (3), retainer clip and bolts.
5. Raise axle and align it with the spring pads.
6. Position upper (4) and lower suspension arms (5) in the axle brackets. Install bolts, nuts and align the suspension alignment cams to the reference marks. Do not tighten at this time.
7. Connect track bar (6) to the axle bracket and install the bolt. Do not tighten at this time.
8. Install shock absorber (2) and tighten bolts to 121 N·m (89 ft. lbs.).
9. Install stabilizer bar (1) link to the axle bracket. Tighten the nut to 68 N·m (50 ft. lbs.).
10. Install drag link and tie rod to the steering knuckles and tighten the nuts to 108 N·m (80 ft. lbs.).
11. Install ABS wheel speed sensors.
12. Install rotors and brake calipers.
13. Connect the axle vent hose.
14. Install front propeller shaft.
15. With vehicle on the ground, tighten upper suspension arm nuts at axle to 149 N·m (110 ft. lbs.). Tighten upper suspension arm nuts at frame to 149 N·m (110 ft. lbs.).
16. With vehicle on the ground, tighten lower suspension arm nuts at axle to 190 N·m (140 ft. lbs.). Tighten the lower suspension arm nuts at frame to 190 N·m (140 ft. lbs.).
17. Tighten track bar bolt at the axle bracket to 176 N·m (130 ft. lbs.).
18. Check front wheel alignment.

ADJUSTMENTS

PINION DEPTH MEASUREMENT

Ring and pinion gears are supplied as matched sets. Compensation for pinion depth variance is achieved with a select shim. located between the rear pinion bearing and pinion gear head.

Measurements are taken with pinion bearing cups and pinion bearings installed in the housing. Take measurements with Pinion Gauge Set and Dial Indicator C-3339.

1. Assemble Pinion Height Block 6739 (3), Pinion Block 8878 (6) and rear pinion bearing onto Screw 6741(5).

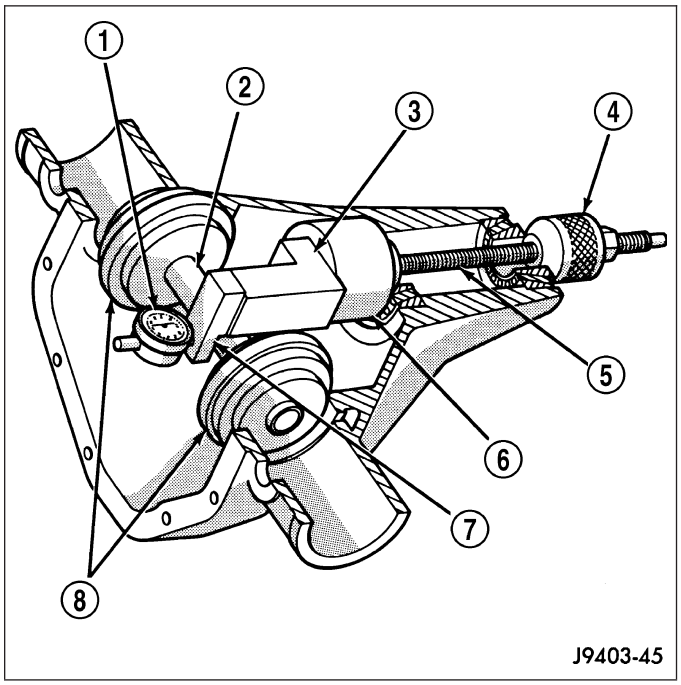

2. Insert assembled pinion height block (1), pinion block (2), rear bearing and screw into the housing through pinion bearing cups.
3. Install front pinion bearing and Cone-Nut 6740 onto the screw. Tighten cone-nut until Torque To Rotate the screw is 1.7-2.26 N·m (15-20 in. lbs.).

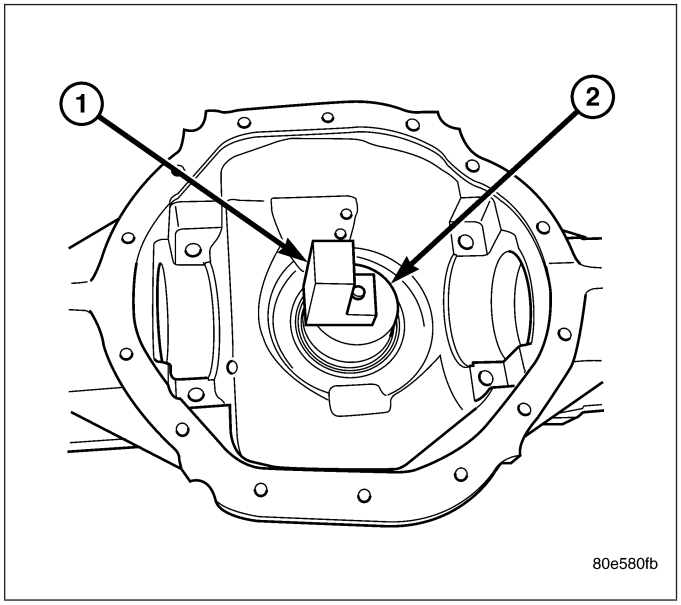

4. Place Arbor Disc 8289 (4) on Arbor D-115-3 (3) in position in the housing side bearing cradles.
5. Install differential bearing caps on arbor discs and snug the bearing cap bolts. Then cross tighten cap bolts to 85 N·m (63 ft. lbs.).

NOTE: Arbor (3) should rotate freely in the arbor disc (4).

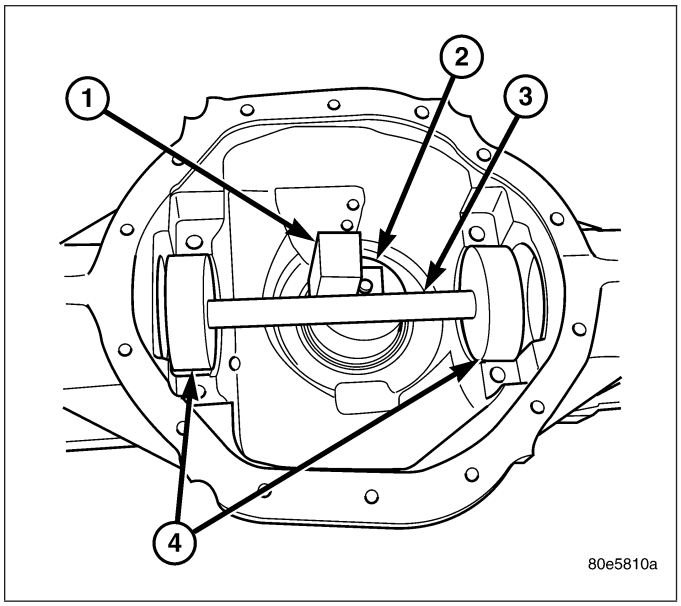

6. Assemble Dial Indicator C-3339 (1) into Scooter Block D-115-2 (3) and secure set screw.
7. Position Scooter Block/Dial Indicator flush on the pinion height block. Hold scooter block and zero the dial indicator (1).
8. Slowly slide the scooter block across the pinion height block over to the arbor. Move scooter block till dial indicator crests the arbor (2), then record the highest reading.
9. Select a shim equal to the dial indicator reading.
10. Install the select shim between the rear pinion bearing and the pinion gear head.

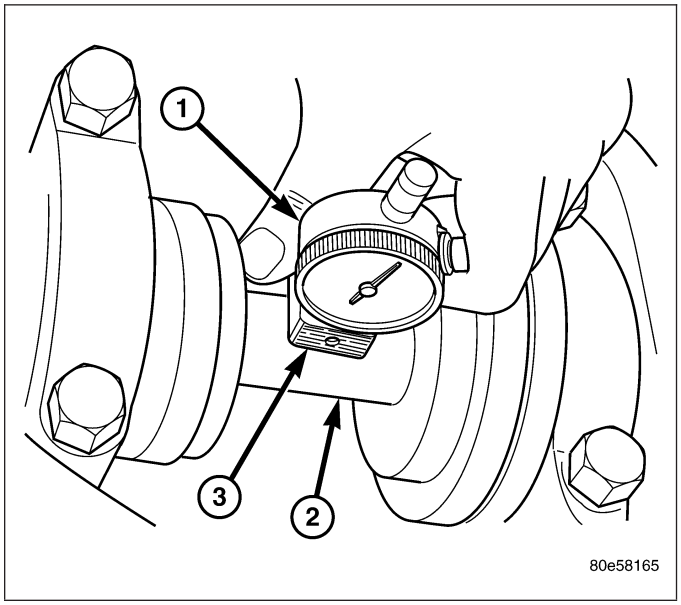

DIFFERENTIAL BEARING PRELOAD AND GEAR BACKLASH

Backlash is adjusted by moving the adjusters in and out or both. By moving the adjusters the case/ring gear will move closer or further away from the pinion. In most cases this adjustment can be used to achieve the correct gear tooth pattern and set the case bearing preload.

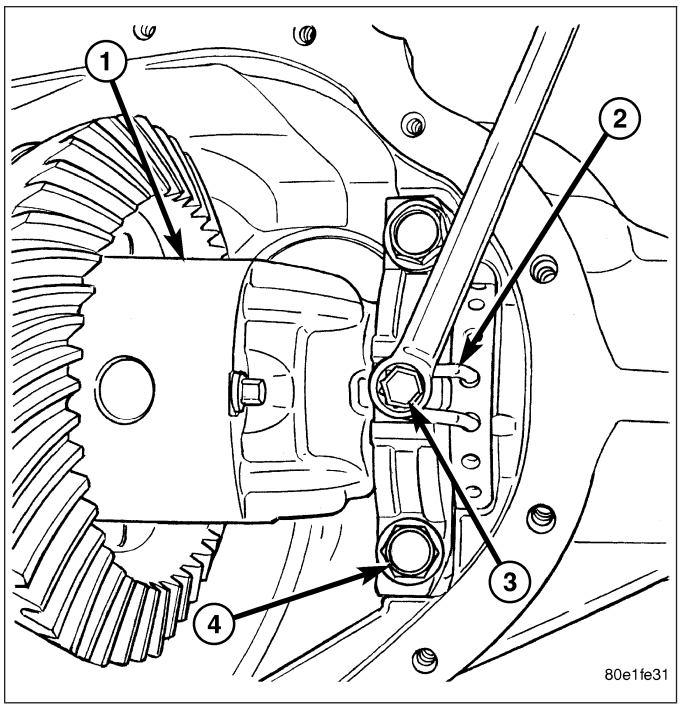

1. Remove adjuster lock bolts (3) and adjuster locks (2).
2. Loosen the differential bearing caps.
3. Slide differential case (1) toward the pinion gear until the gears make contact/zero backlash. If zero backlash cannot be obtained, turn the pinion side adjuster until zero backlash is obtained.
4. Holding the differential case toward the pinion gear, turn bearing adjusters with Spanner Wrench 8883 until they make contact with the differential bearings/cups.
5. Back off the ring gear side adjuster 4 holes, to obtain initial ring gear backlash.
6. Install ring gear side adjuster lock and bolt. Do not tighten adjuster lock bolt at this time.
7. Tighten pinion gear side adjuster firmly against the differential case bearing cup.
8. Rotate the pinion several times to seat the differential bearings.
9. Loosen pinion gear side adjuster until it is no longer in contact with the bearing cup, then tighten it until it makes contact.
10. Tighten pinion gear side adjuster an additional:
    - **New Bearings:** 6 Adjuster Holes
    - **Original Bearings:** 4 Adjuster Holes
11. Install pinion gear side adjuster lock and bolt. Do not tighten adjuster lock bolt at this time.
12. Tighten bearing cap bolts to 85 N·m (63 ft. lbs.).
13. Tighten adjuster lock bolts to 25 N·m (18 ft. lbs.).

14. Measure ring gear backlash with a Dial Indicator C-3339 (1) and Dial Indicator Stud L-4438 at eight points around the drive side of the ring gear (2). The backlash should be 0.08-0.25 mm (0.003-0.010 in) with a preferred backlash of 0.13-0.18 mm (0.005-0.007 in).

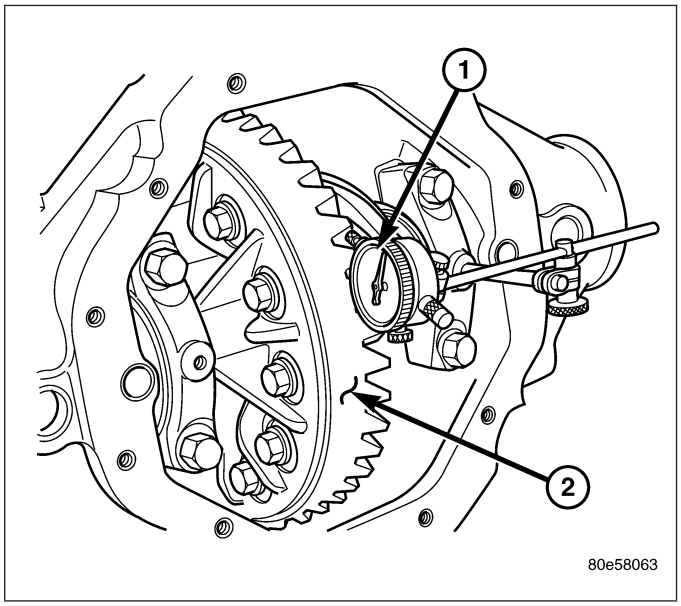

NOTE: Backlash measurement should not vary more than 0.05 mm (0.002 in) between measuring points. If measurement does vary inspect the gears for burrs, the differential case flange and ring gear mounting.

GEAR TOOTH CONTACT PATTERN

1. Wipe clean each tooth of the ring gear.
2. Apply gear marking compound to all of the ring gear teeth.
3. Verify bearing cap bolts are torque to specification.
4. Apply the brakes lightly to create a 14 N·m (10 ft. lbs.) pinion rotating torque.
5. Rotate the pinion/pinion yoke 4 full revolutions in each directions.
6. Read gear tooth contact pattern.

Gear contact pattern is correct. Backlash and pinion depth is correct.

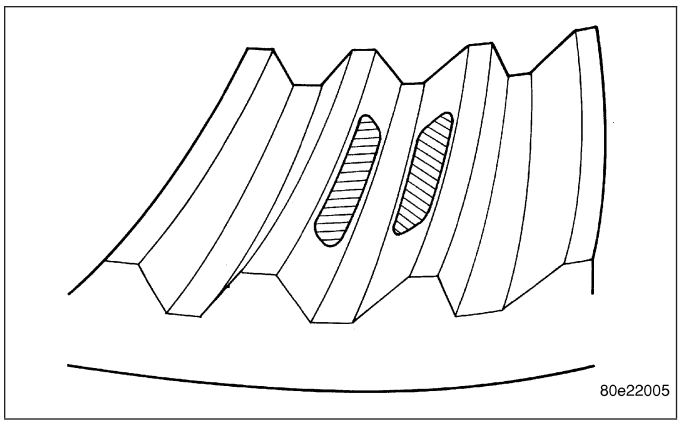

Ring gear too far away from pinion gear, coast side toe (1) and drive side heel (2). Decrease backlash, by moving the ring closer to the pinion gear using the adjusters.

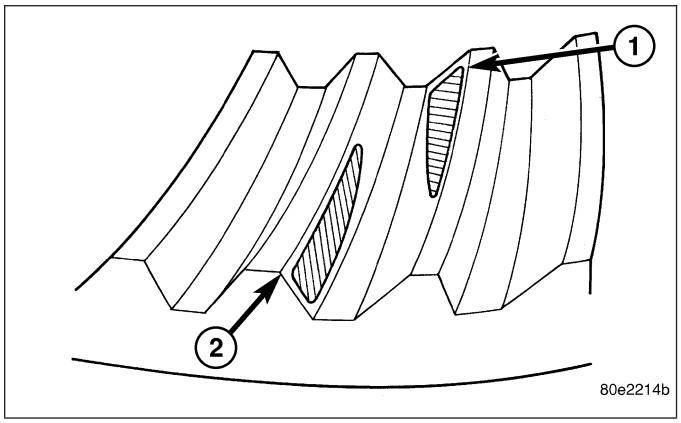

Ring gear too close to pinion gear, drive side toe (1) and coast side heel (2).. Increase backlash, by moving the ring away from the pinion gear using the adjusters.

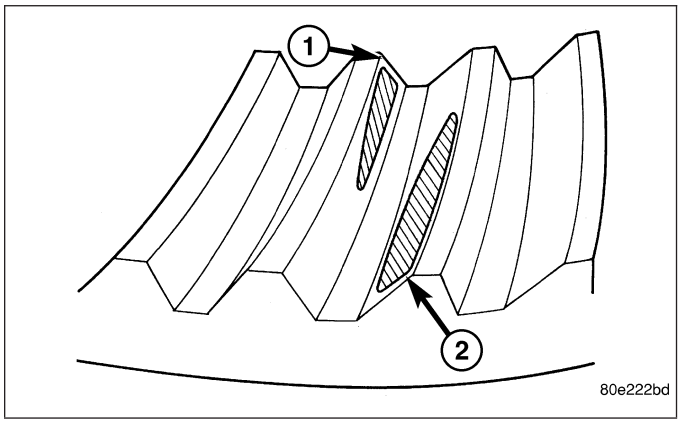

Ring gear too far away from pinion gear, drive side heel (1) and coast side heel (2).. Decrease backlash, by moving the ring closer to the pinion gear using the adjusters.

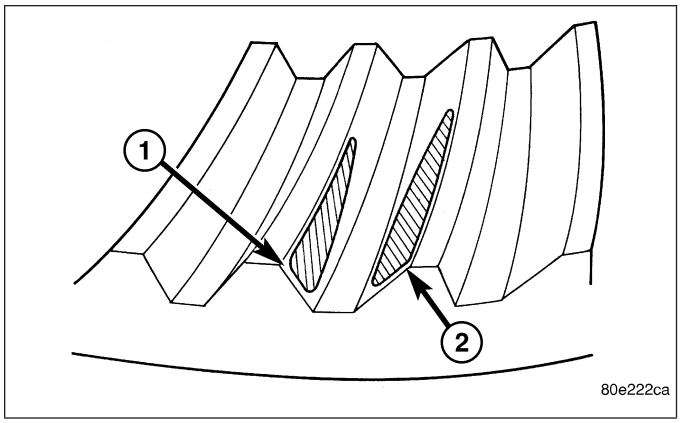

Ring gear too close to pinion gear, drive side toe (1) and coast side toe (2). Increase backlash, by moving the ring away from the pinion gear using the adjusters.

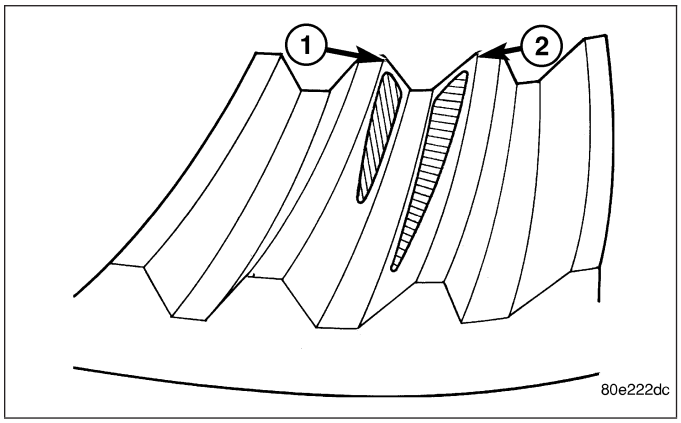

Pinion gear set too low. Increase pinion gear height, by increasing the pinion depth shim thickness.

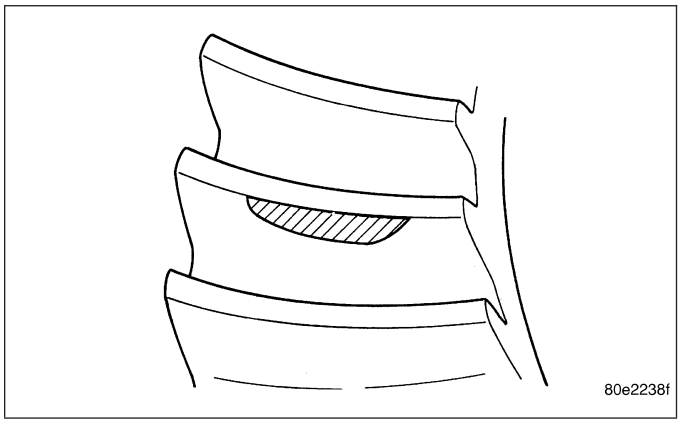

Pinion gear set too high. Decrease pinion depth, by decreasing the pinion depth shim thickness.

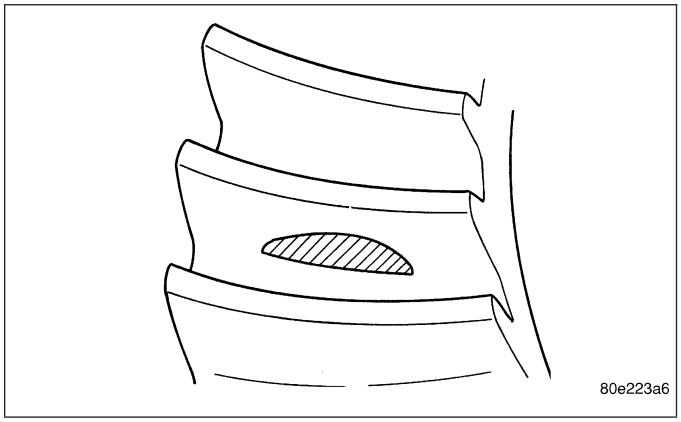

SPECIFICATIONS

AXLE SPECIFICATIONS

DESCRIPTION	SPECIFICATION
Axle Ratio	3.73, 4.10, 4.56
Ring Gear Diameter	235 mm (9.25 in.)
Ring Gear Backlash	0.13-0.18 mm (0.005-0.007 in.)
Pinion Bearing Preload - New Bearing	1.7-2.8 N·m (15-25 in. lbs.)
Pinion Bearing Preload - Original Bearing	1.1-2.2 N·m (10-20 in. lbs.)
Pinion Bearing Preload + Differential Case Bearing Preload - New Bearing	3.4-5.6 N·m (30-50 in. lbs.)
Pinion Bearing Preload + Differential Case Bearing Preload - Original Bearing	2.8-5.1 N·m (25-45 in. lbs.)

TORQUE SPECIFICATIONS

DESCRIPTION	N·m	Ft. Lbs.	In. Lbs.
Fill Hole Plug	32	24	-
Differential Cover Bolts	40	30	-
Bearing Cap Bolts	85	63	-
Ring Gear Bolts	140	103	-
Axle Nut	356	263	-
Pinion Shaft Lock Bolt	52	38	-
Adjuster Lock Bolt	25	18	-

SPECIAL TOOLS

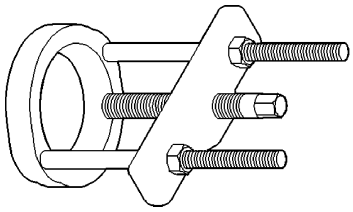

PULLER C-293-PA

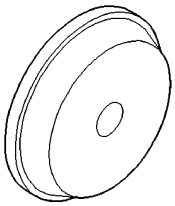

INSTALLER D-146

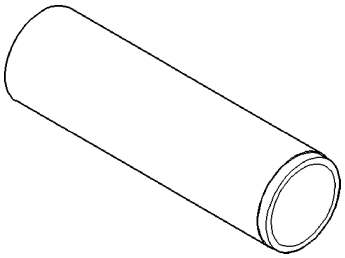

INSTALLER C-3095-A

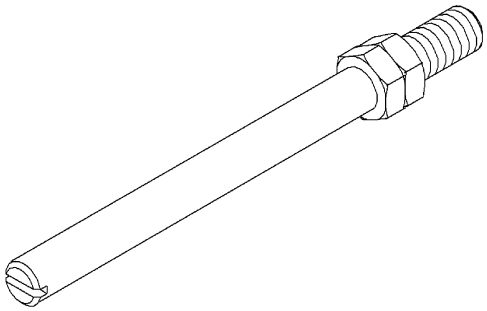

DIAL INDICATOR STUD L-4438

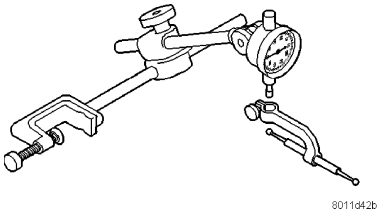

DIAL INDICATOR SET C-3339

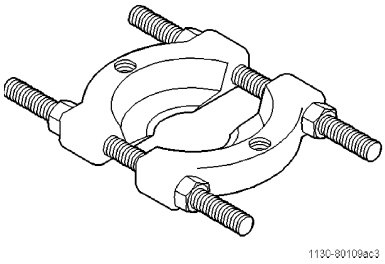

SPLITTER 1130

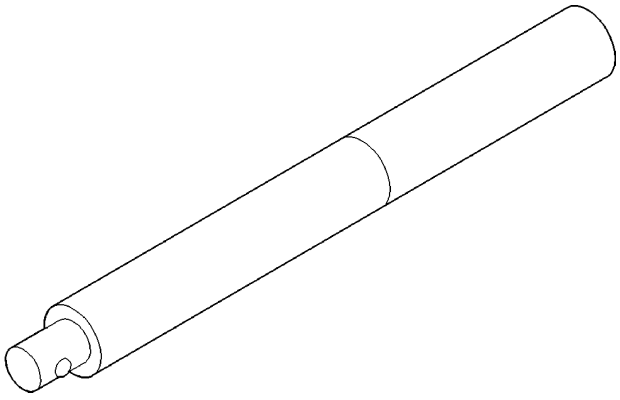

HANDLE C-4171

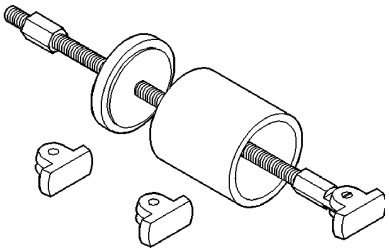

REMOVER/EXTRACTOR 6310

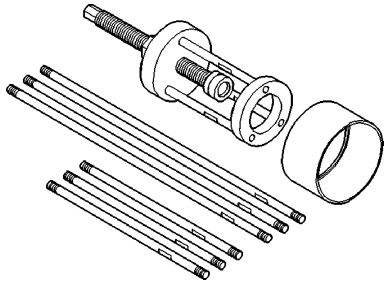

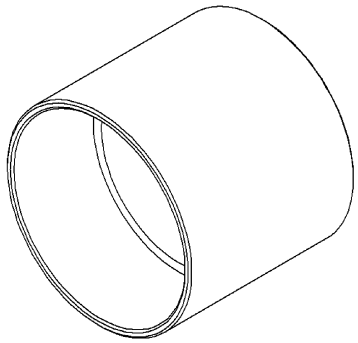

RECEIVER 8498

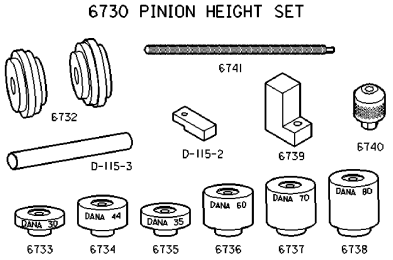

PINION DEPTH SET 6730

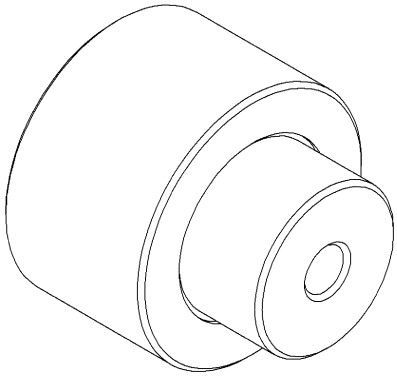

PINION BLOCK 8878

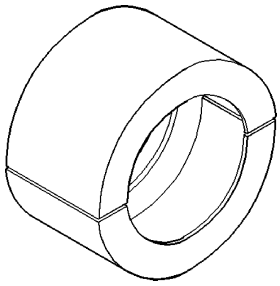

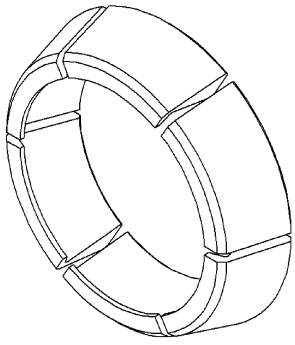

ADAPTERS 8879

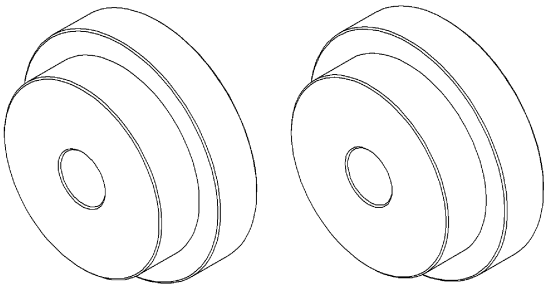

ARBOR DISCS 8289

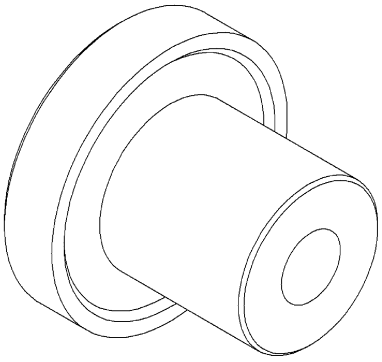

INSTALLER 8881

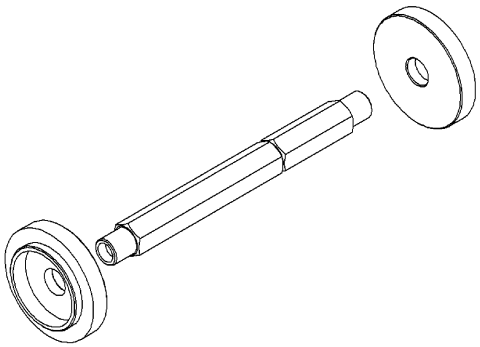

SEAL INSTALLER 8885

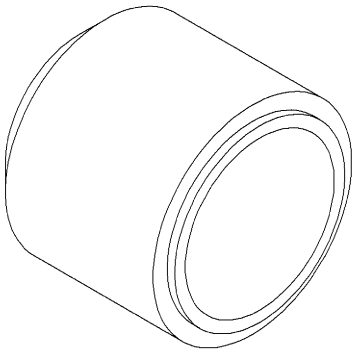

SEAL INSTALLER 8882

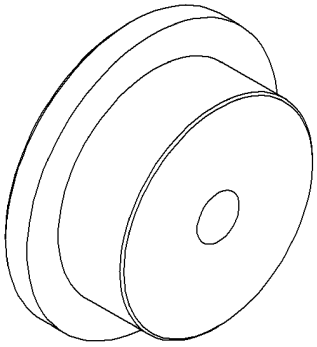

INSTALLER 8886

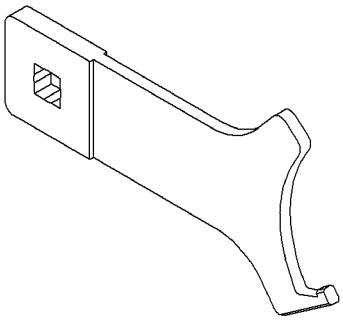

ADJUSTER WRENCH 8883

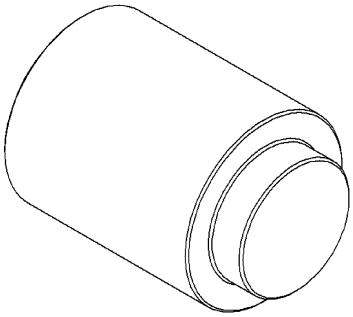

PLUG 8888

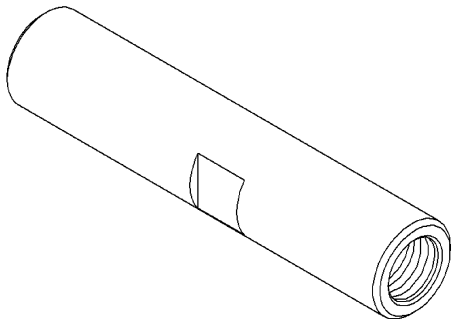

PINION DRIVER 8976

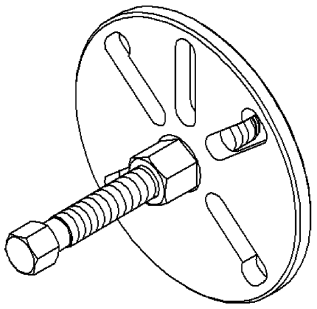

FLANGE PULLER 8992

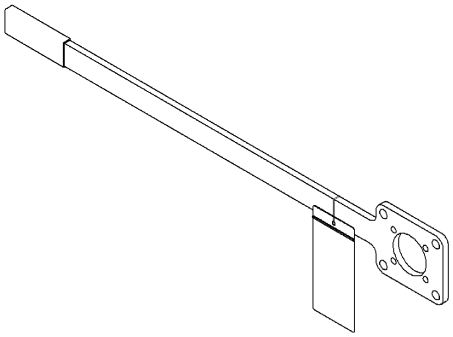

FLANGE WRENCH 8979

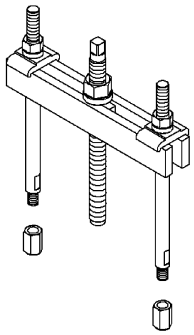

BRIDGE 938

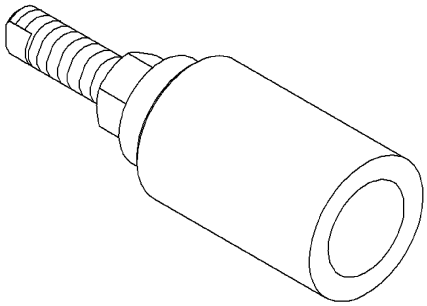

PINION INSTALLER 8982

SHAFT-AXLE

REMOVAL

1. With the vehicle in neutral, position vehicle on hoist.
2. Remove brake caliper, rotor and ABS wheel speed sensor if equipped.
3. Remove axle shaft (2) cotter pin (3), hub nut (1) and washer.

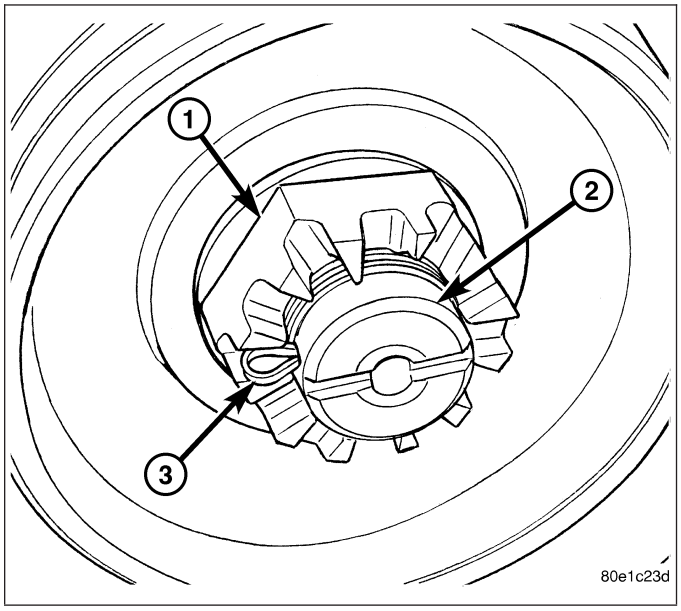

4. Remove four hub bearing bolts (2) from the back of the steering knuckle.
5. Remove hub bearing from the steering knuckle.

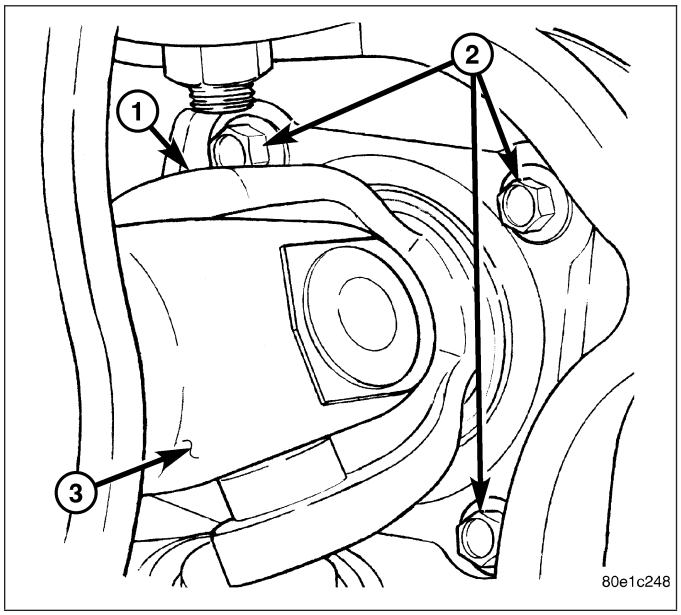

6. Remove axle shaft (2) from steering knuckle (1) and axle housing.

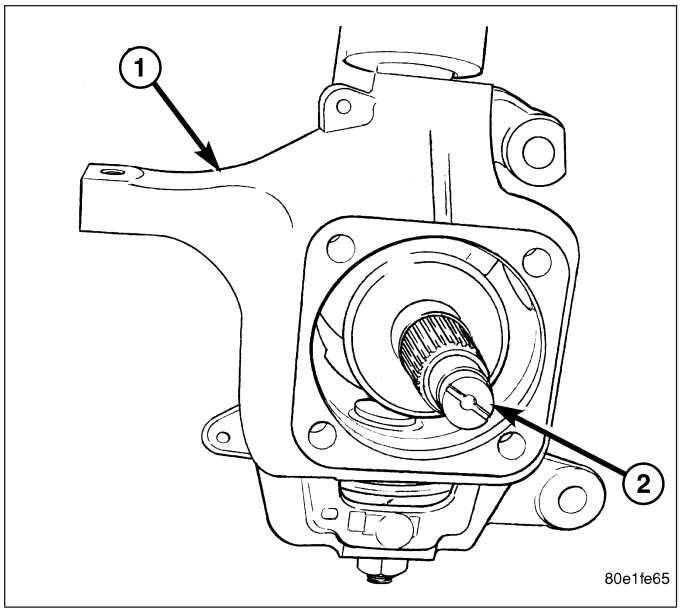

DISASSEMBLY

Single cardan U-joint components are not serviceable. If defective they must be replaced as a unit.

CAUTION: Clamp only the narrow forged portion of the yoke in the vise. Failure to follow these instructions will damage the yoke.

1. Remove the bearing cap (7) retaining snap rings (8).

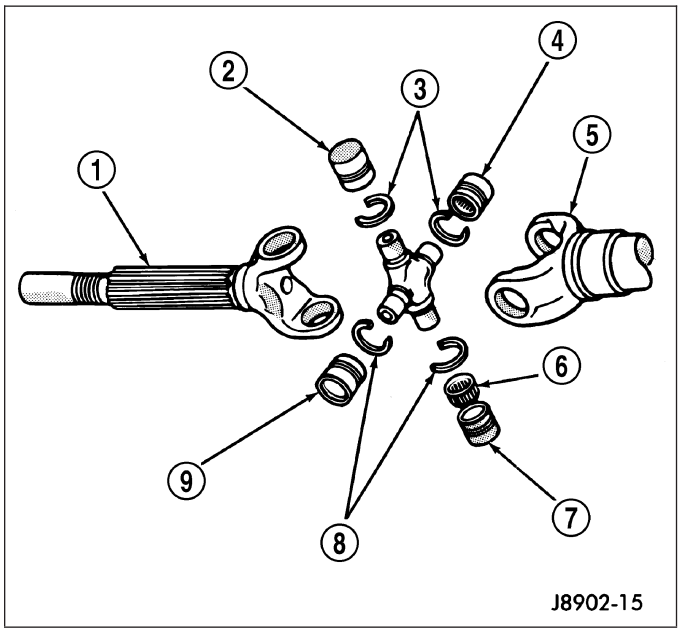

NOTE: Saturate the bearing caps with penetrating oil prior to removal.

2. Locate a socket (1) with an inside diameter that is larger than the bearing cap. Place the socket (receiver) against the yoke and around the perimeter of the bearing cap to be removed.
3. Locate a socket (3) with an outside diameter that is smaller than the bearing cap. Place the socket (driver) against the opposite bearing cap.
4. Position the yoke with the sockets in a vise (2).
5. Tighten the vise jaws to force the bearing cap into the larger socket (receiver).
6. Release the vise jaws. Remove the sockets and bearing cap that was partially forced out of the yoke.
7. Repeat the above procedure for the remaining bearing cap and remove spider from the propeller shaft yoke.

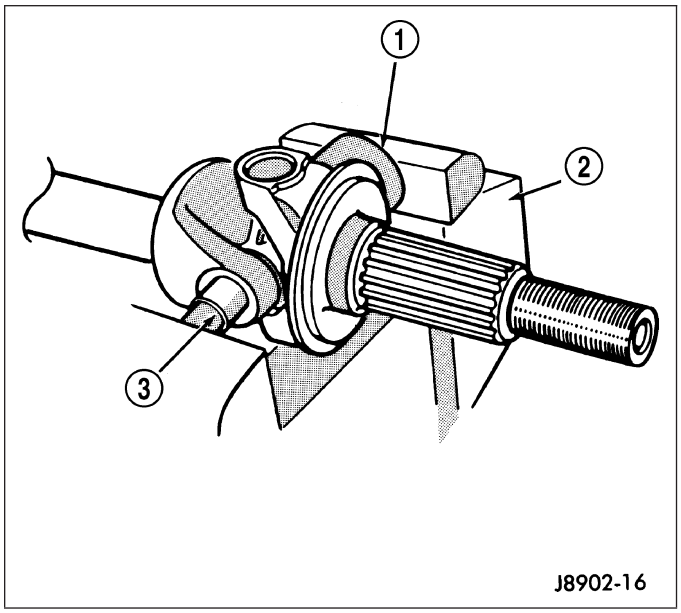

ASSEMBLY

1. Pack the bearing caps 1/3 full of wheel bearing lubricant. Apply extreme pressure (EP), lithium-base lubricant to aid in installation.
2. Position the spider in the yoke (1). Insert the seals and bearings. Tap the bearing caps into the yoke bores far enough to hold the spider in position.
3. Place the socket (driver) against one bearing cap. Position the yoke with the socket in a vise.
4. Tighten the vise to force the bearing caps into the yoke. Force the caps enough to install the retaining clips.
5. Install the bearing cap retaining clips.
6. Install axle shaft.

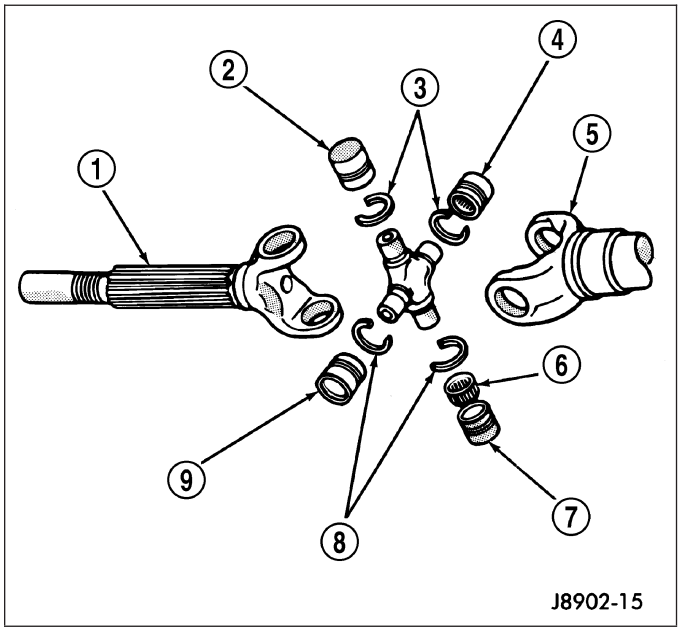

INSTALLATION

1. Clean axle shaft and apply a thin film of Mopar Wheel Bearing Grease to the shaft splines and hub bore.
2. Install axle shaft (2) through the steering knuckle and into the differential side gears.
3. Install hub bearing in the knuckle (3).
4. Install hub bearing bolts and tighten to 202 N·m (149 ft. lbs.).
5. Install ABS wheel speed sensor, brake rotor and caliper.
6. Install axle washer and nut. Tighten axle nut to 179 N·m (132 ft. lbs.).
7. Rotate axle several 5 to 10 times to seat the wheel bearing.
8. Tighten axle nut to final torque of 356 N·m (263 ft. lbs.).
9. Align nut to next cotter pin hole and install new cotter pin.

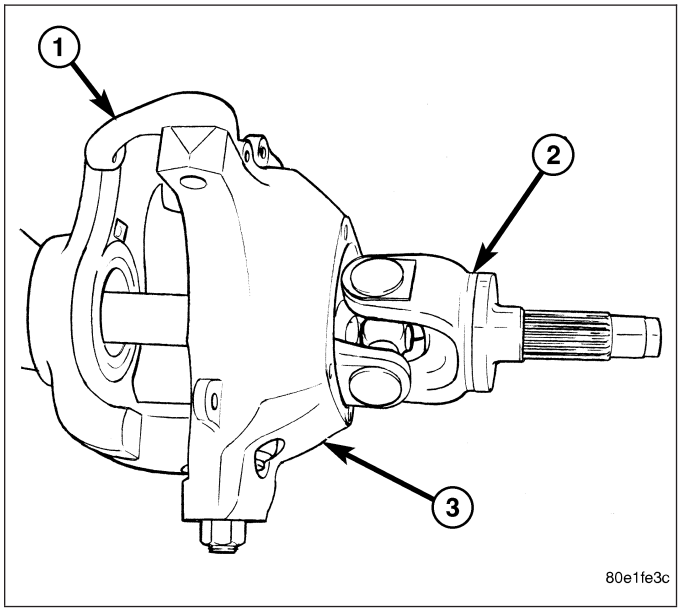

SEAL-AXLE SHAFT

REMOVAL

1. Remove hub bearings and axle shafts.
2. Remove differential from differential housing (2).
3. Remove differential bearing adjusters (1).

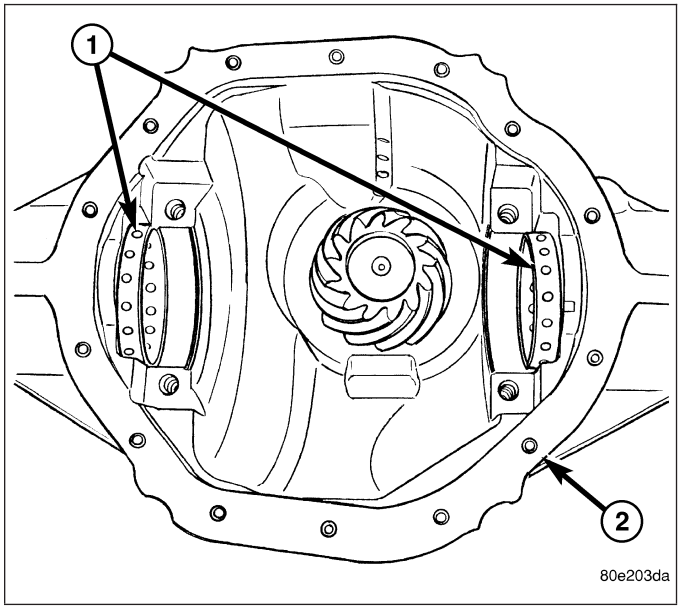

4. Remove axle seals (2) located behind adjusters with Receiver 8498 and Extractor 6310.

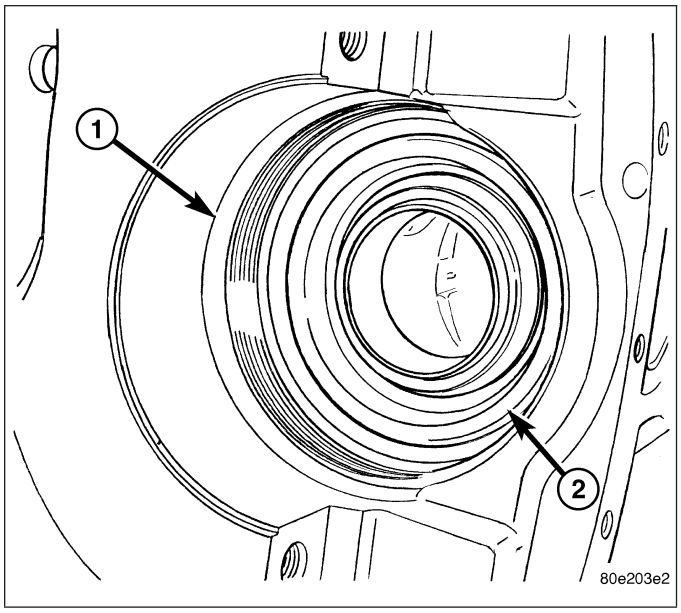

5. Install Receiver 8498 (1) into the adjuster bore.
6. Install Extractor Rod 6310 with Extractor Foot 6310-9 (2) through the receiver and the axle seal.

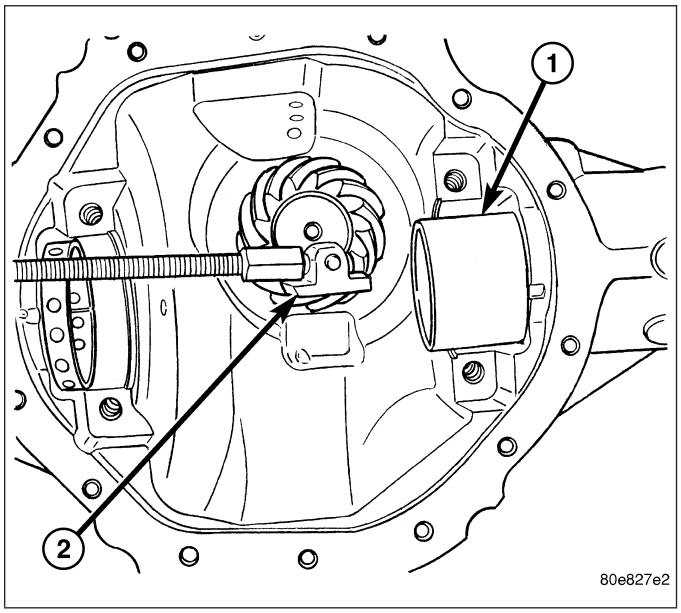

7. Install Extractor Plate 6310-2 and Nut 6310-7 (2) on the extractor rod (1).
8. Tighten nut on the extractor rod and pull the seal out and into the receiver.

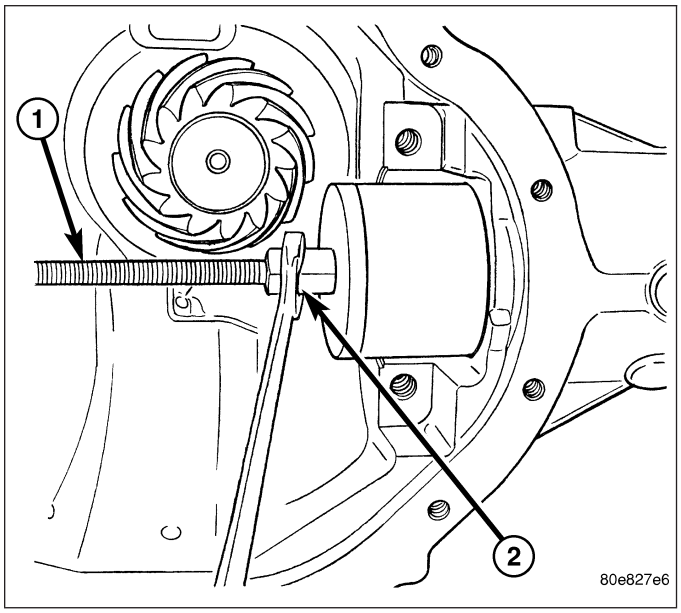

INSTALLATION

1. Install axle seal on Installer Cups 8885-2 (1) (3) and position cups with seals into the housing.

NOTE: Seal are installed with the axle guide facing outward.

2. Install Turnbuckle 8885-1(2) into the installer cups and expand the turnbuckle until the seal bottom out in the housing.
3. Install differential into the axle housing.
4. Install axle shaft and hub bearings.

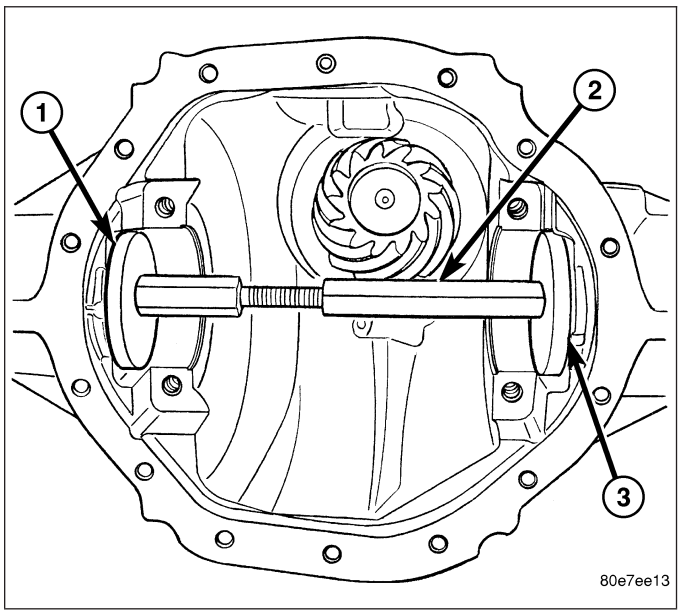

SEAL-PINION

REMOVAL

1. Mark the propeller shaft and pinion flange (1) for installation reference.
2. Remove propeller shaft.
3. Remove hub bearings and axle shafts.
4. Rotate pinion gear three or four times.
5. Measure and record the torque necessary to rotate the pinion gear with an inch pound torque wrench (2).

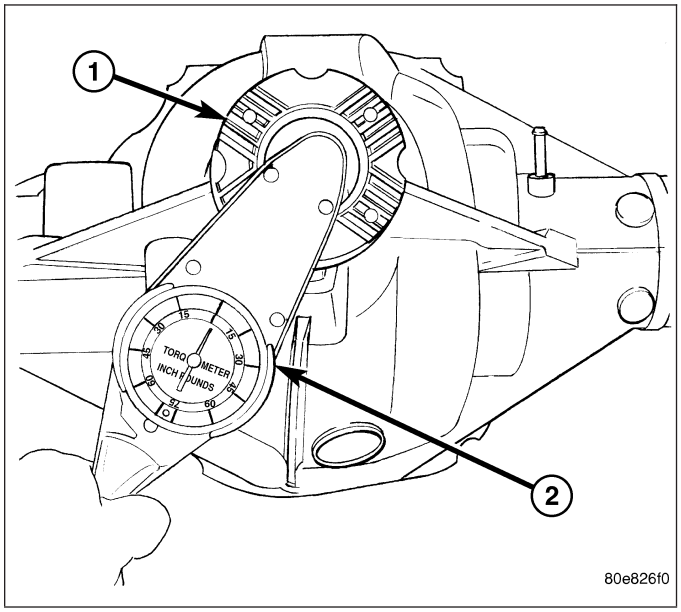

6. Hold pinion flange (1) with Flange Wrench 8979 (2) and remove pinion flange nut and washer.

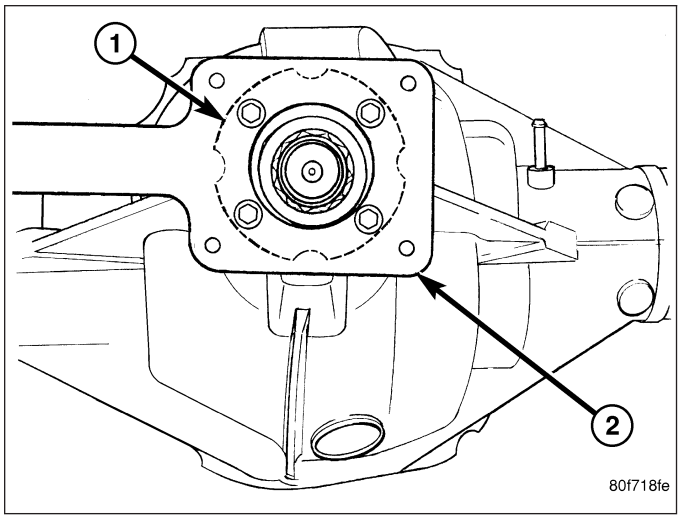

7. Remove pinion flange (1) with Pinion Flange Puller 8992 (2).
8. Remove pinion shaft seal with a pry tool or slide hammer mounted screw.

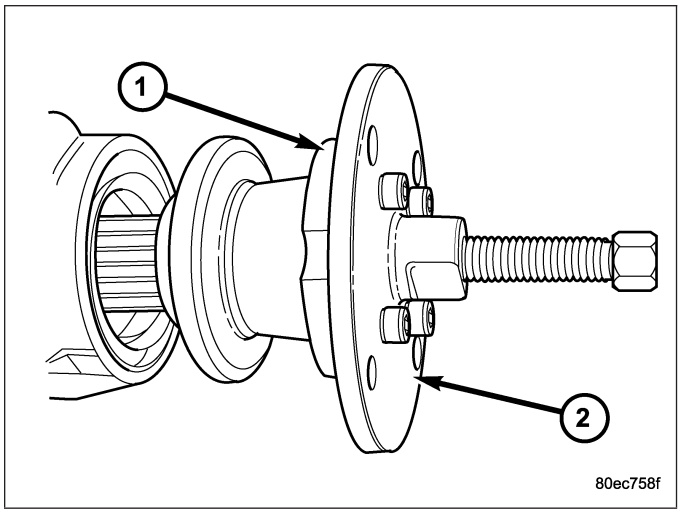

INSTALLATION

1. Install **new** pinion seal with Installer 8882 (2) and Handle C-4171 (1).
2. Apply a light coat of teflon thread sealant to the pinion flange splines.
3. Lightly tap the pinion flange onto the pinion until a few threads are showing.
4. Install flange washer and **new** pinion nut.
5. Hold flange with Flange Wrench 8979 and tighten pinion nut until pinion end play is taken up.
6. Rotate pinion several times to seat bearings.
7. Measure pinion rotating torque with an inch pound torque wrench and compare it to recorded measurement. Tighten pinion nut in small increments, until pinion rotating torque is 0.40-0.57 N·m (3-5 in. lbs.) greater than recorded measurement.
8. Rotate pinion several times then verify pinion rotating torque again.
9. Install axle shafts and hub bearings.
10. Install propeller shaft with reference marks aligned.

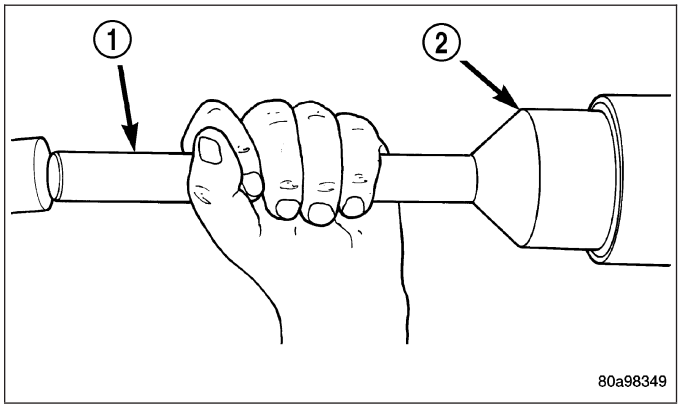

DIFFERENTIAL

REMOVAL

1. Remove differential housing cover and drain lubricant from the housing.
2. Remove hub bearings and axle shafts.
3. Remove adjuster lock bolts (1) and adjuster locks (2).
4. Mark bearing caps (4) left and right for installation reference.
5. Remove bearing cap bolts and remove bearing caps.

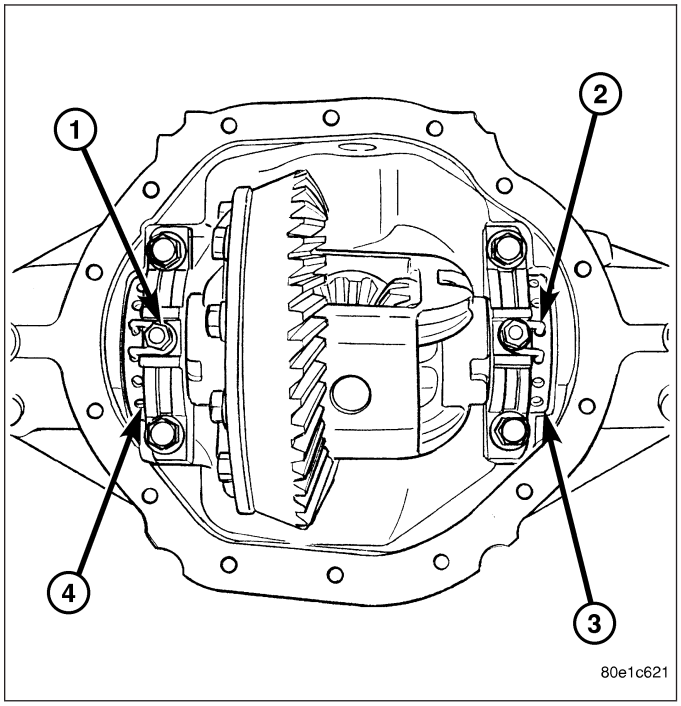

6. Loosen differential bearing adjusters (2) (4) with Spanner Wrench 8883.
7. Remove differential case from the housing.
8. Remove bearing cups (1) (3) and tag them left and right for installation reference.

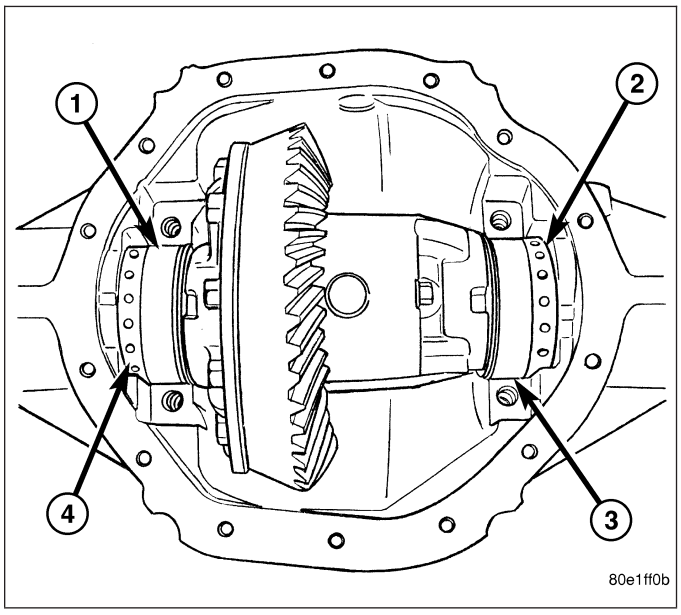

DISASSEMBLY

1. Remove pinion shaft lock bolt.
2. Remove pinion shaft (1).

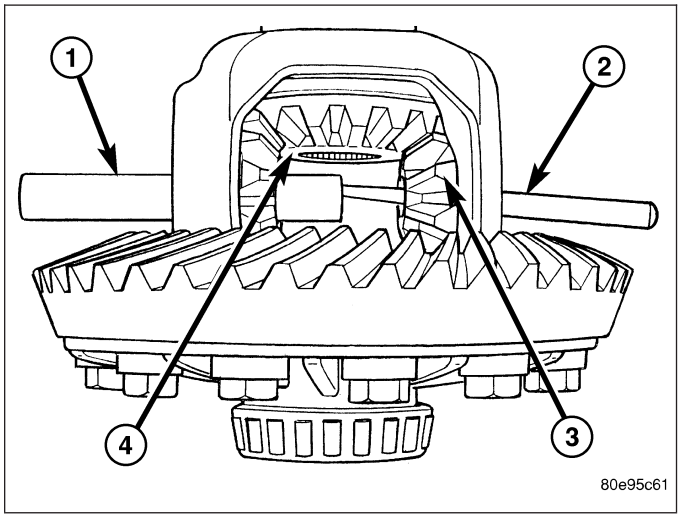

3. Rotate differential pinion gears (2) to differential window (1) and remove pinion gears and thrust washers (3).

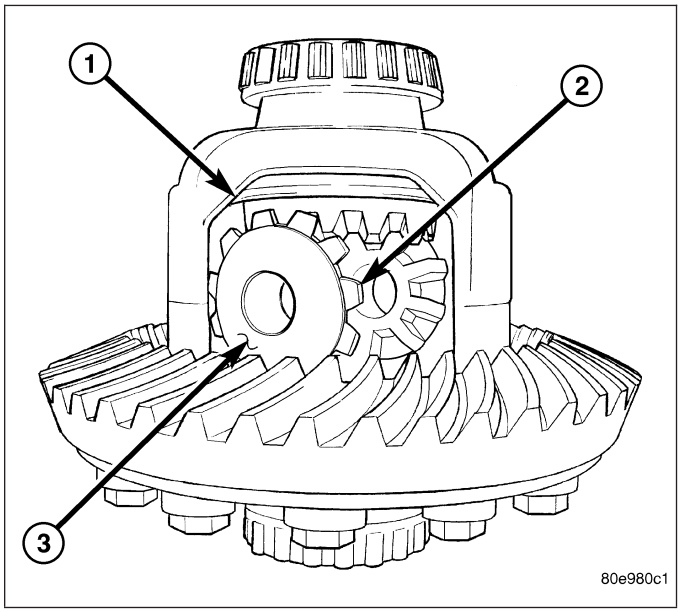

4. Remove differential side gears (1) (2) and thrust washers.

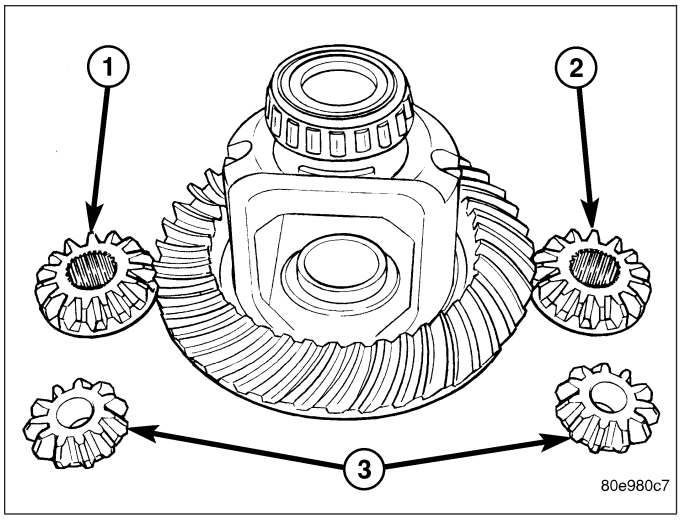

ASSEMBLY

NOTE: If the same gears and thrust washers are being used, install them into their orignial locations.

1. Lubricate all differential components with axle lubricant.
2. Install differential side gears (2) and thrust washers.

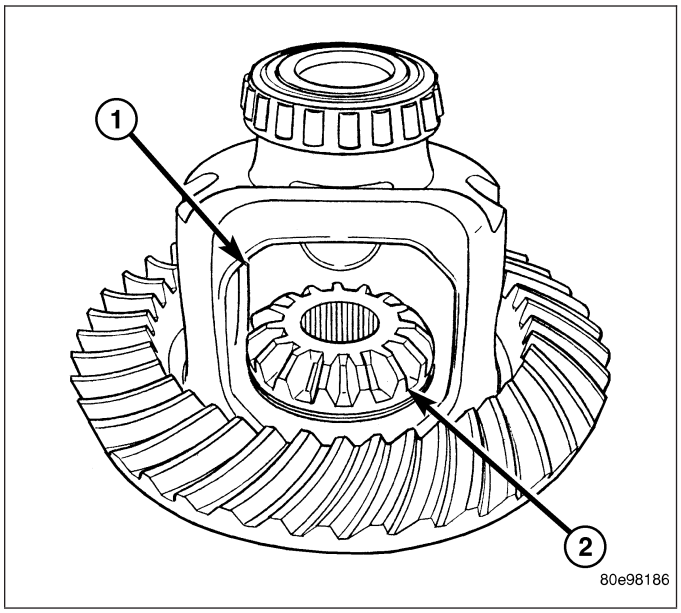

3. Rotate the one pinion gear (3) with thrust washer into the differential case. Then rotate the other pinion gear with thrust washer into the differential case.
4. Align hole in the pinion gears with hole in the differential case.
5. Install pinion shaft.
6. Install **new** pinion shaft lock bolt and tighten to 52 N·m (38 ft. lbs.).

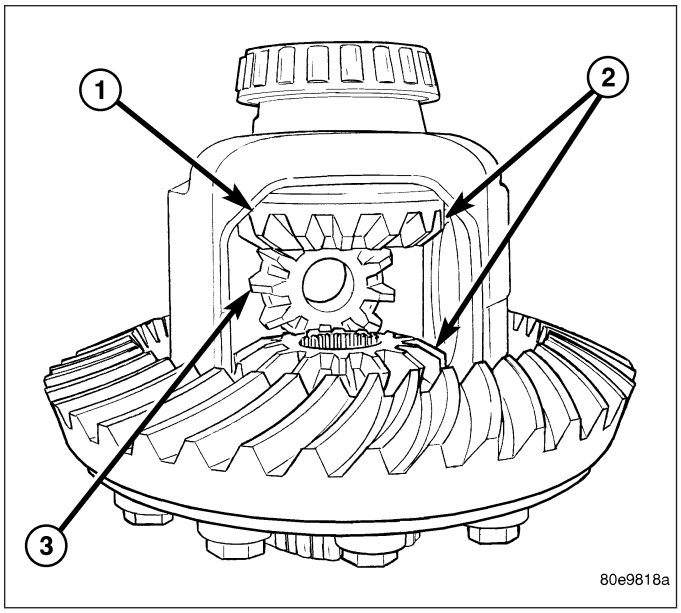

INSTALLATION

1. Clean the housing cavity with a flushing oil, light engine oil or lint free cloth.
2. Lubricate differential case bearing.
3. Install differential case with bearings cups into the housing (1).
4. Install bearing caps (2) and bolts. Tighten the bearing cap bolts finger-tight.

NOTE: Do not torque bearing cap and bolts at this time.

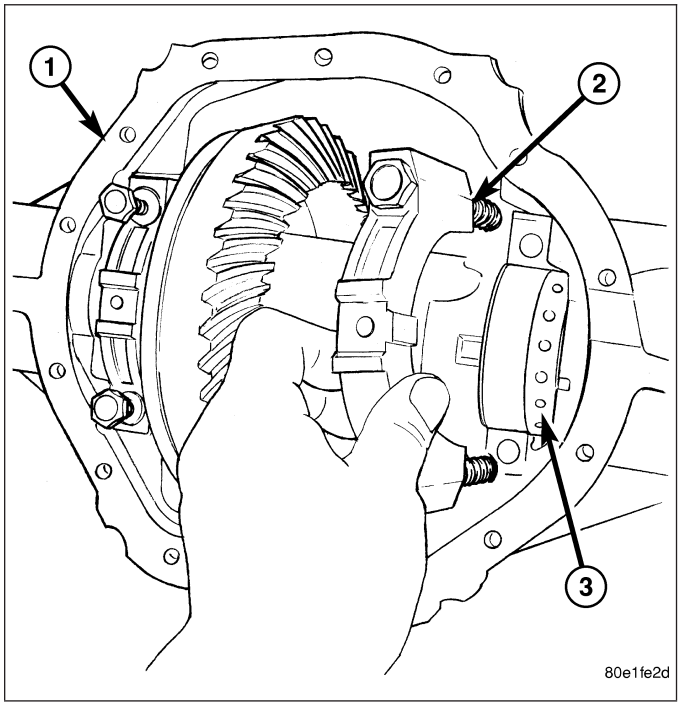

5. Slide differential case toward the pinion gear until the gears make contact/zero backlash. If zero backlash cannot be obtained, turn the pinion side adjuster until zero backlash is obtained.
6. Holding the differential case toward the pinion gear, turn bearing adjusters with Spanner Wrench 8883 until they make contact with the differential bearings/cups.
7. Back off the ring gear side adjuster 4 holes, to obtain initial ring gear backlash.
8. Install ring gear side adjuster lock and bolt. Do not tighten adjuster lock bolt at this time.
9. Tighten pinion gear side adjuster firmly against the differential case bearing cup.
10. Rotate the pinion several times to seat the differential bearings.
11. Loosen pinion gear side adjuster until it is no longer in contact with the bearing cup.
12. Tighten pinion gear side adjuster until it just makes contact with the bearing cup.
13. Tighten pinion gear side adjuster an additional:
    - **New Bearings:** 6 Adjuster Holes
    - **Original Bearings:** 4 Adjuster Holes

14. Install pinion gear side adjuster lock and bolt. Do not tighten adjuster lock bolt at this time.
15. Tighten bearing cap bolts (4) to 85 N·m (63 ft. lbs.).
16. Tighten adjuster lock bolts (3) to 25 N·m (18 ft. lbs.).
17. Measure ring gear backlash and check gear tooth contact pattern. Refer to Adjustments for procedure.
18. Install axle shafts and hub bearings.
19. Install differential housing gasket and cover. Tighten cover bolts to 40 N·m (30 ft. lbs.).
20. Fill differential with lubricant.
21. Install fill plug and tighten to 32 N·m (24 ft. lbs.).

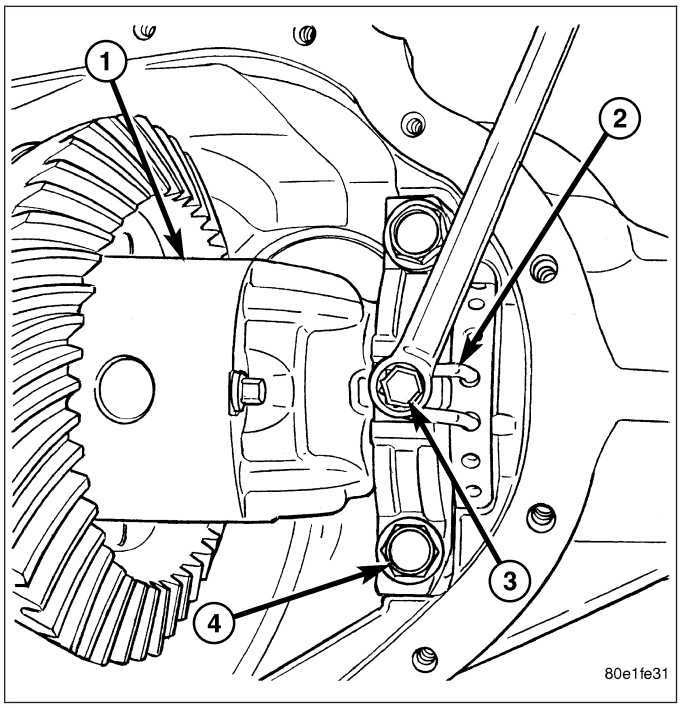

BEARING-DIFFERENTIAL CASE

REMOVAL

1. Remove the differential case from the housing.
2. Install Plug 8888 (4) into the end of the case.
3. Remove differential case bearings (3) with Bearing Splitter 1130 (2) and Bridge 938 (1).

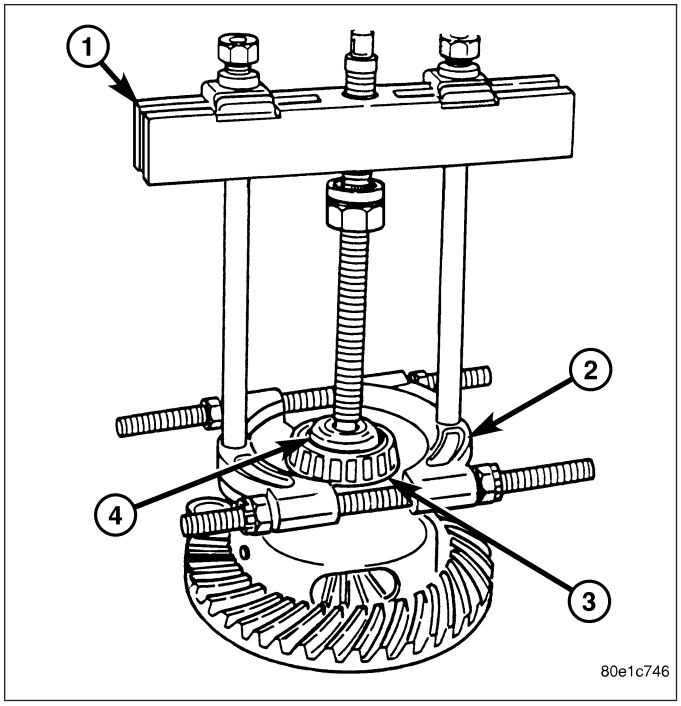

INSTALLATION

1. Set differential case (2) on Plug 8888.
2. Install differential case bearings (3) with Installer 8881 (4) and Handle C-4171 (1).
3. Install differential case into housing.

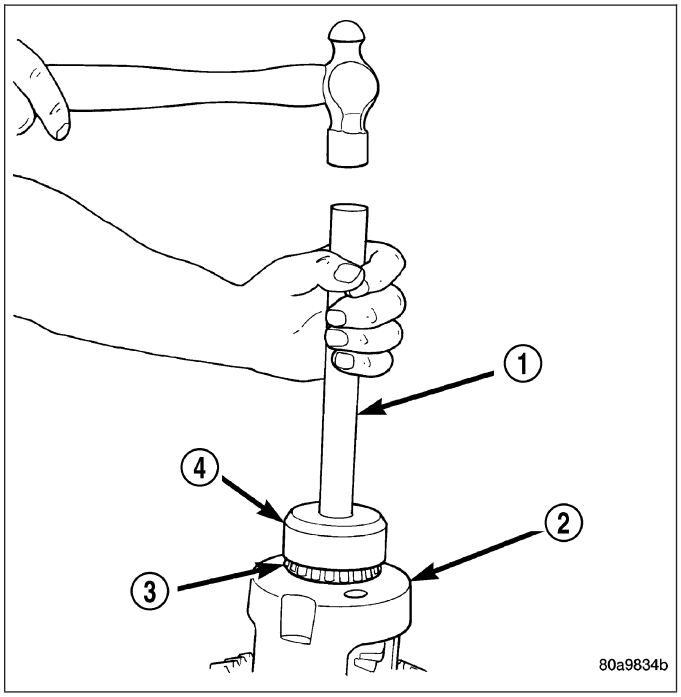

DIFFERENTIAL-ELECTRIC LOCKER

DIAGNOSIS AND TESTING

1. Lift one front wheel of the ground.
2. Turn key to the on position.
3. Place vehicle in drive/first gear and transfer case in LOW LOCK.
4. Activate locker switch.
5. Manually rotate the wheel that is off the ground. The wheel should lock once the dog clutch is aligned.
6. Turn off locker switch.
7. Manually rotate the wheel that is off the ground. The wheel should turn.

NOTE: Only the locker actuator with sensor are serviced. Internal differential components are serviced as a differential case assembly.

REMOVAL

1. Remove differential housing cover and drain lubricant from the housing.
2. Remove hub bearings and axle shafts.
3. Remove adjuster lock bolts (3) and adjuster locks (2).

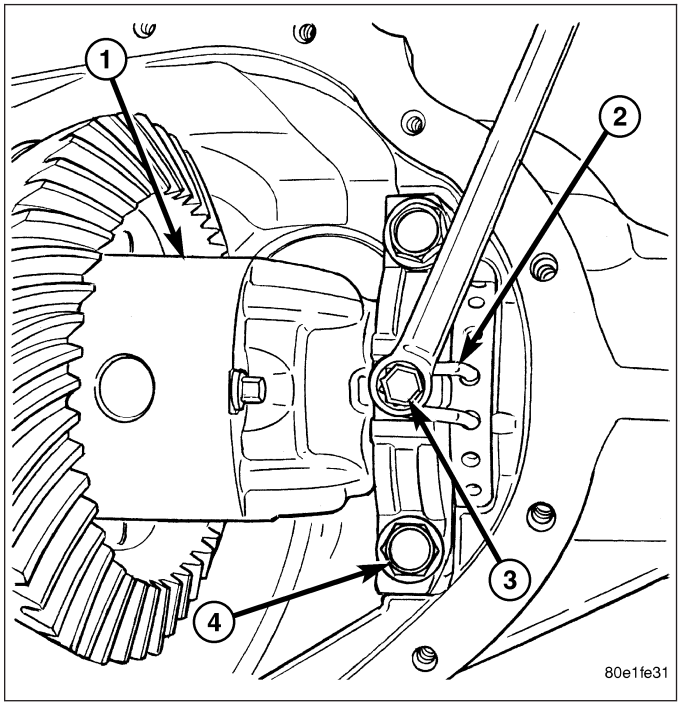

4. Remove electric locker connector (1) retainer (2) bolt (3) from differential housing.

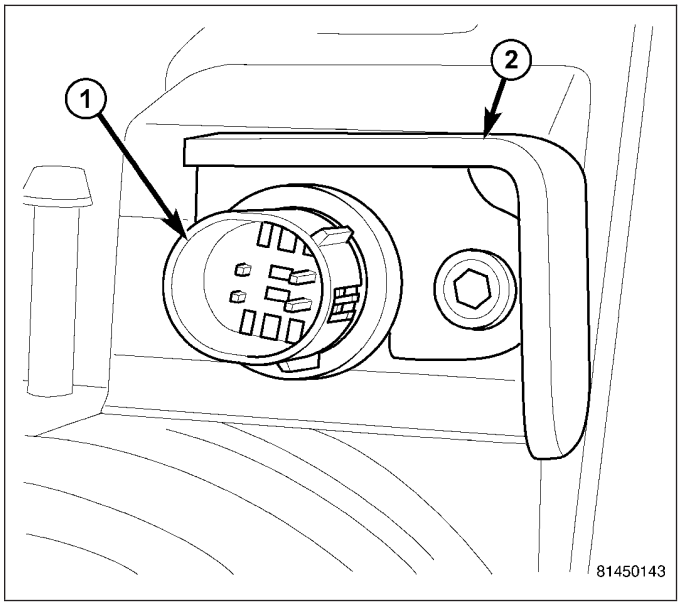

5. Remove retainer (1) and connector (2) from differential housing.
6. Remove retainer (1) from connector (2) and remove o-ring (3) from connector.
7. Mark bearing caps left and right for installation reference.
8. Loosen bearing cap bolts and loosen adjusters with Spanner Wrench 8883.
9. Remove bearing cap bolts, anti rotation bracket and bearing caps.
10. Slid electric locker connector through differential housing.
11. Remove differential case and bearing cups from the housing.
12. Tag bearing cups left and right for installation reference.

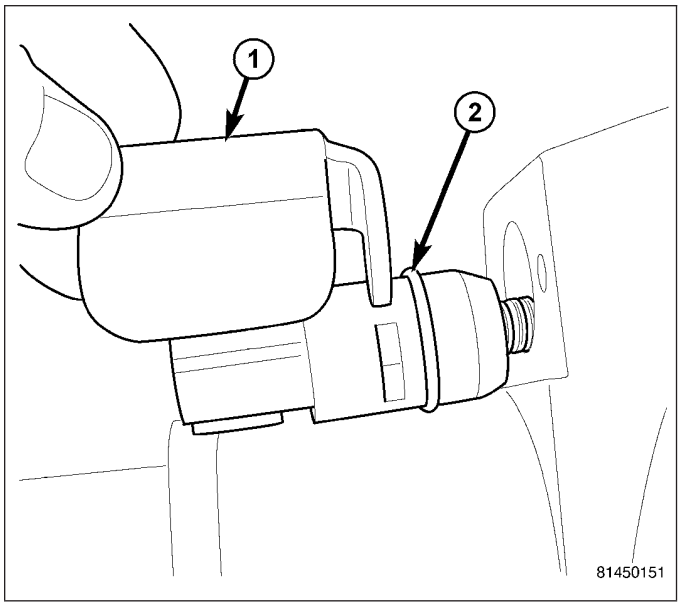

DISASSEMBLY

NOTE: Internal differential components are serviced with the case.

1. Install Plug 9611(1) into coil side of the case.
2. Remove differential case bearing (2) with Puller C-293-PA (3) and Adapters 9613 (4).

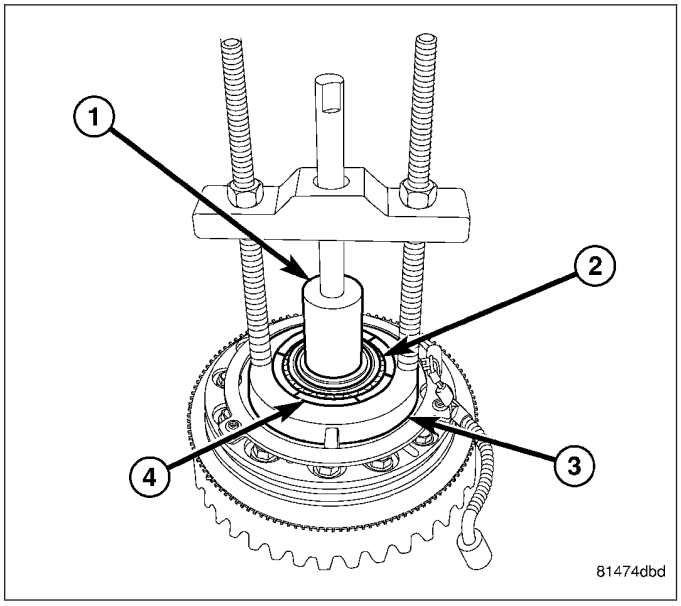

3. Remove coil (1) mounting bolts (2).

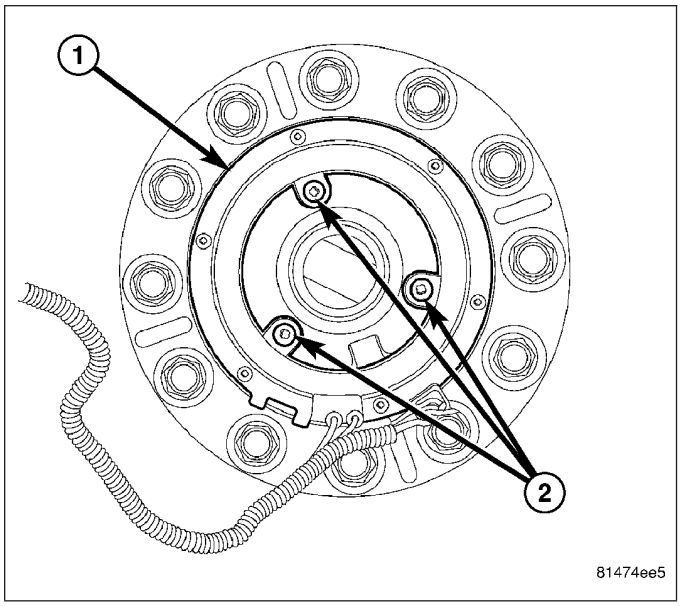

4. Remove coil (1) with sensor (2) and harness.

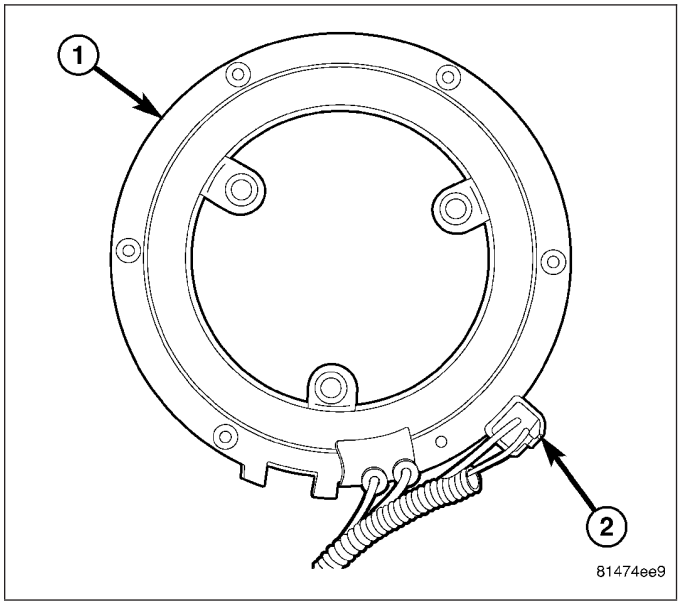

ASSEMBLY

NOTE: Internal differential components are serviced with the case.

1. Position locker coil on differential case (1) mounting location (2).

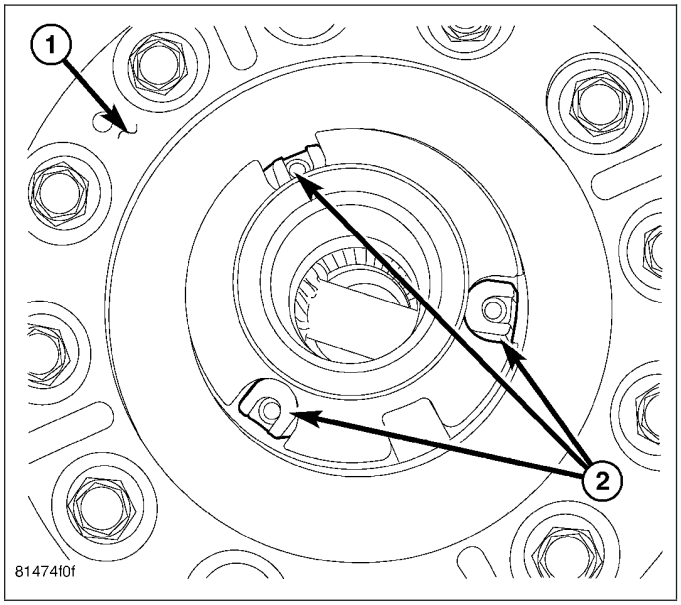

2. Clean coil bolts and apply Mopar® Lock & Seal adhesive to the threads.
3. Install coil (1) and bolts (2).

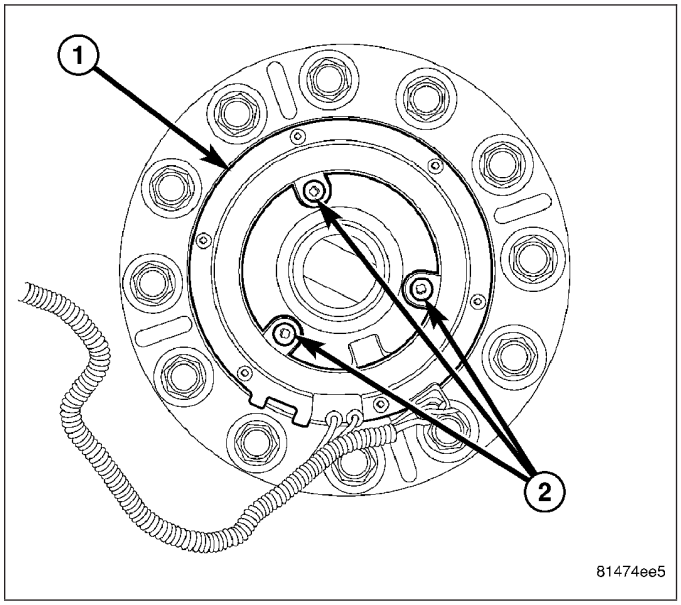

4. Install differential case bearing (1) with Handle C-4171 (2) and Installer 9612 (3).

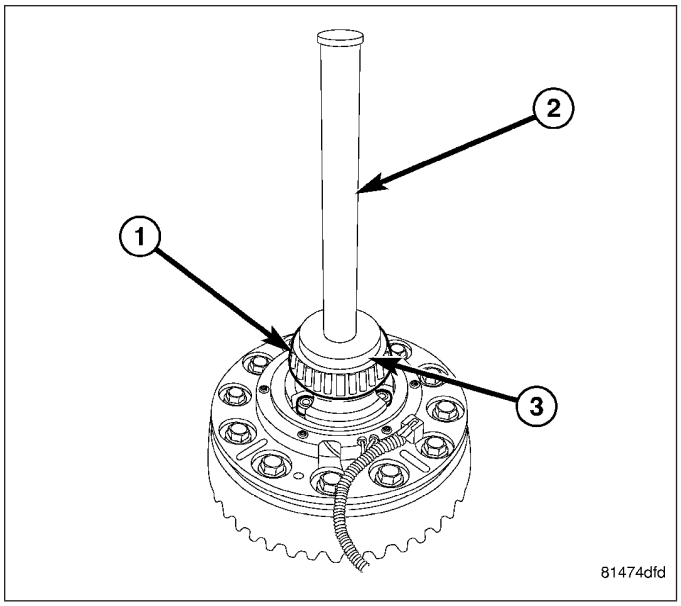

INSTALLATION

1. Clean the housing cavity with a flushing oil, light engine oil or lint free cloth.
2. Lubricate differential case bearing.
3. Install differential case with bearings cups into the housing.
4. Slid electric locker connector through differential housing.
5. Install o-ring on electric locker connector.
6. Install electric locker connector (1) with retainer (2) in differential housing.
7. Install connector retainer and bolt.

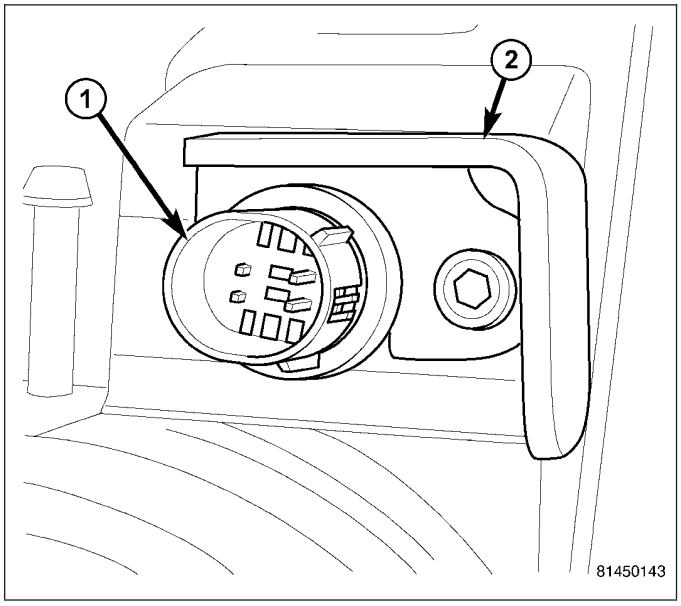

8. Install bearing caps (2), anti rotation bracket and bolts. Tighten bearing cap bolts finger-tight.

NOTE: Do not torque bearing cap and bolts at this time.

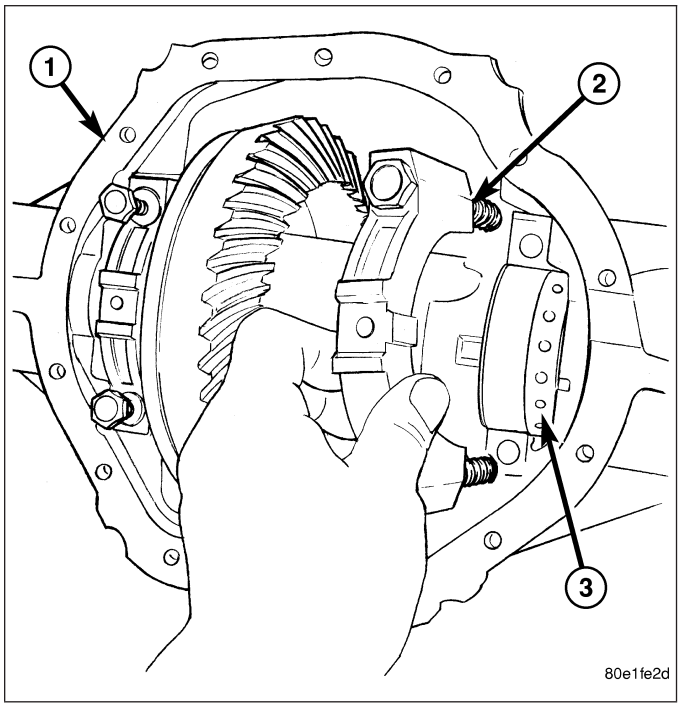

9. Slide differential case toward the pinion gear until the gears make contact/zero backlash. If zero backlash cannot be obtained, turn the pinion side adjuster until zero backlash is obtained.
10. Holding the differential case toward the pinion gear, turn bearing adjusters with Spanner Wrench 8883 until they make contact with the differential bearings/cups.
11. Back off the ring gear side adjuster 4 holes, to obtain initial ring gear backlash.
12. Install ring gear side adjuster lock and bolt. Do not tighten adjuster lock bolt at this time.
13. Tighten pinion gear side adjuster firmly against the differential case bearing cup.
14. Rotate the pinion several times to seat the differential bearings.
15. Loosen pinion gear side adjuster until it is no longer in contact with the bearing cup.
16. Tighten pinion gear side adjuster until it just makes contact with the bearing cup.
17. Tighten pinion gear side adjuster an additional:
    - **New Bearings:** 6 Adjuster Holes
    - **Original Bearings:** 4 Adjuster Holes

18. Route locker wires (1) across anti rotation bracket and along the outside of the bearing cap.

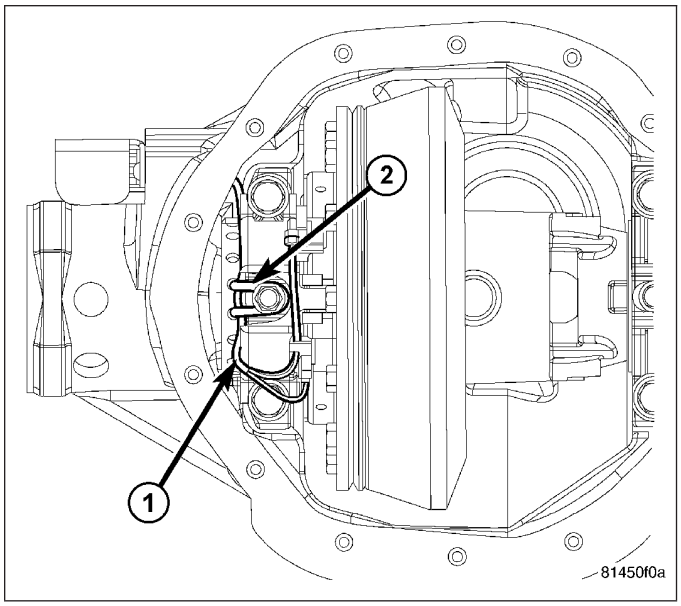

19. Tighten bearing cap bolts (4) to 85 N·m (63 ft. lbs.).
20. Install adjuster locks (2) and tighten bolts (3) to 25 N·m (18 ft. lbs.).

NOTE: Locker wires (1) must be between the adjuster lock (2) and the bearing cap.

21. Measure ring gear backlash and check gear tooth contact pattern. Refer to Adjustments for procedure.
22. Install axle shafts and hub bearings.
23. Install differential housing gasket and cover. Tighten cover bolts to 40 N·m (30 ft. lbs.).
24. Fill differential with lubricant.
25. Install fill plug and tighten to 32 N·m (24 ft. lbs.).

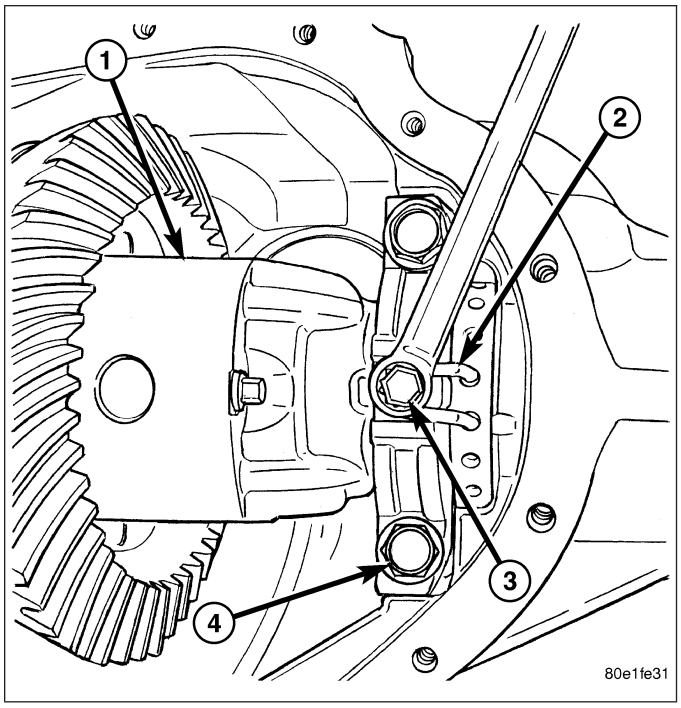

BEARINGS-EL DIFFERENTIAL CASE

REMOVAL

1. Remove the differential case from the housing.
2. Install Plug 9611(1) into the end of the case.
3. Remove differential case bearings (2) with Puller C-293-PA (3) and Adapters 9613 (4).

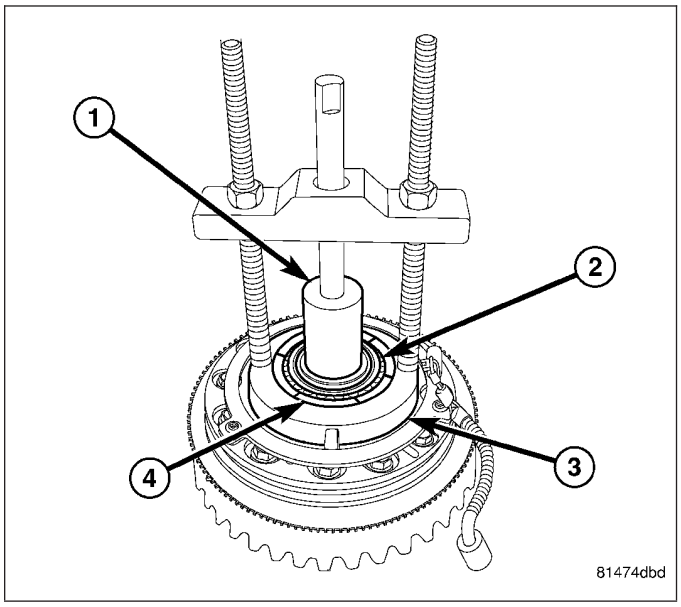

INSTALLATION

1. Install differential case bearings (1) with Handle C-4171 (2) and Installer 9612 (3).

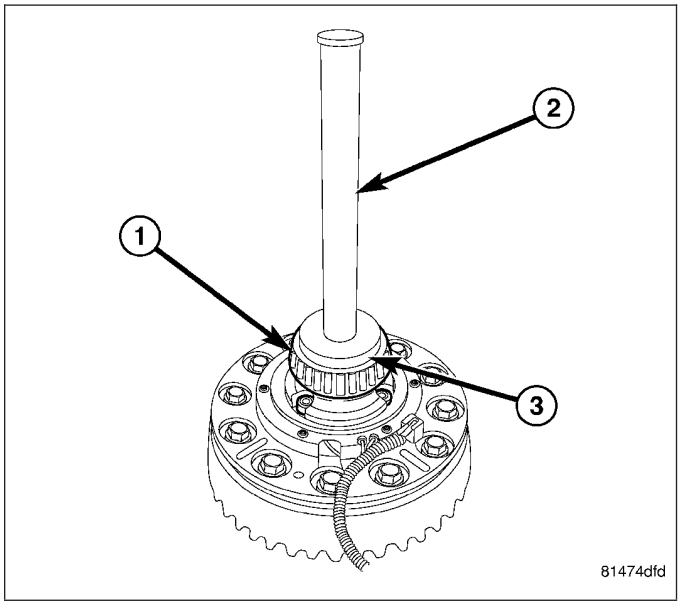

GEAR-PINION/RING

REMOVAL

NOTE: The ring and pinion gears are service in a matched set. Never replace the ring gear/pinion gear without replacing the other matching gear.

1. Mark pinion flange and propeller shaft for installation alignment.
2. Disconnect propeller shaft from pinion flange and remove propeller shaft.
3. Remove axle shafts.
4. Remove differential from housing.
5. Place differential case in a vise with soft metal jaw protectors
6. Remove bolts holding ring gear to differential case.
7. Drive ring gear (2) from differential case (1) with a soft hammer (3).

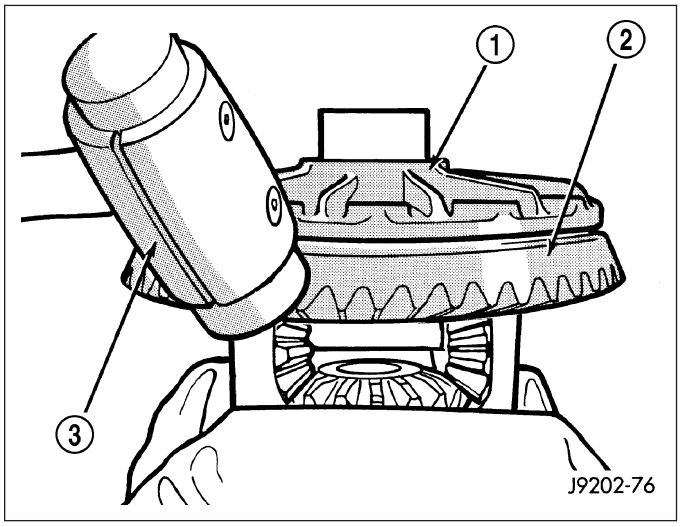

8. Hold pinion flange (1) with Flange Wrench 8979 (2) and remove pinion flange nut and washer.

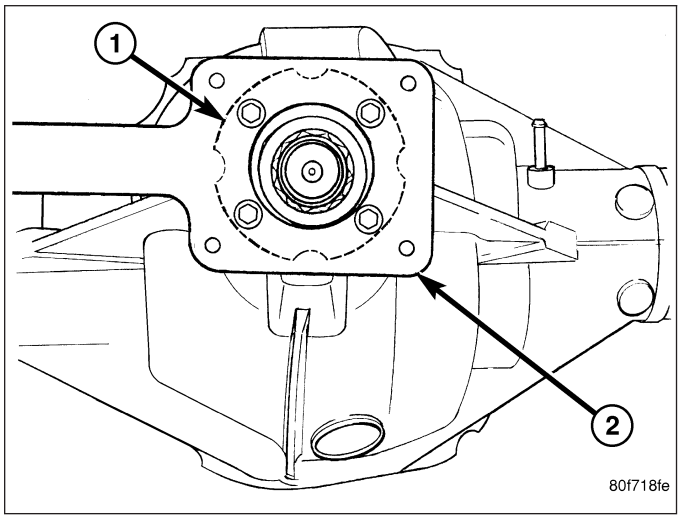

9. Remove pinion flange (1) from pinion with Pinion Flange Puller 8992 (2).

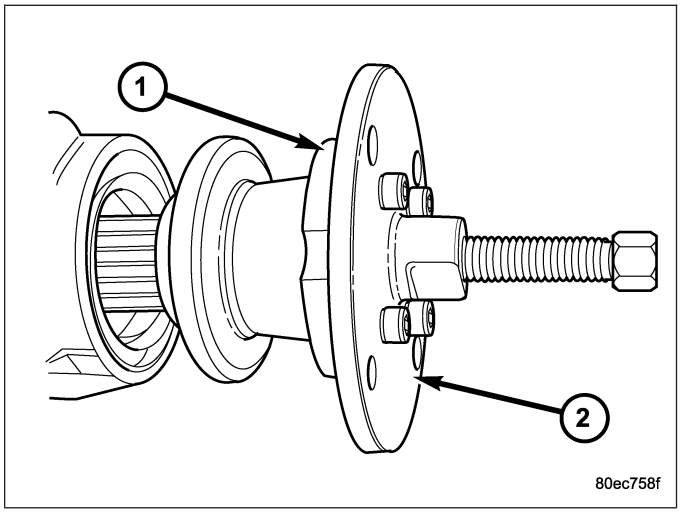

10. Remove pinion gear (1) from housing with Pinion Driver 8976 (2) and a hammer.

NOTE: Thread drive on shaft until it bottoms out.

11. Remove pinion seal with a slide hammer or pry bar.
12. Remove and discard front pinion bearing.
13. Remove collapsible spacer from the pinion shaft.

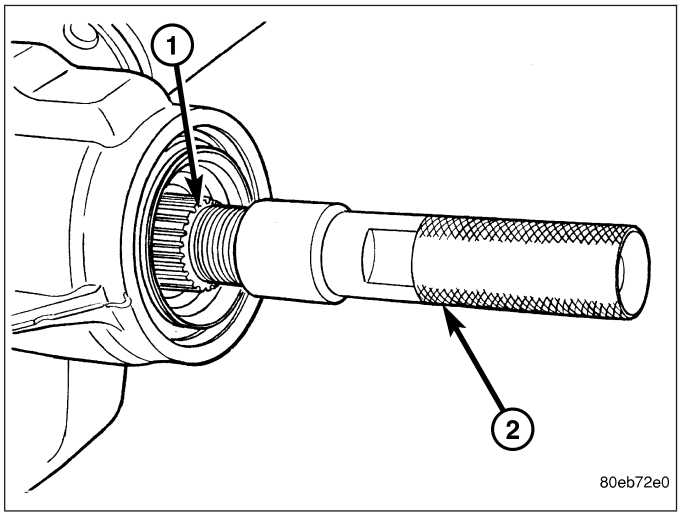

14. Remove rear pinion bearing with Puller C-293-PA (1) and Adapters 8879 (4).
15. Remove pinion depth shim from the pinion gear shaft and record thickness of the shims.
16. Remove front pinion bearing cup from the housing with a punch and hammer and discard cup.
17. Remove rear pinion bearing cup from the housing with a punch and hammer, if bearing is replaced.

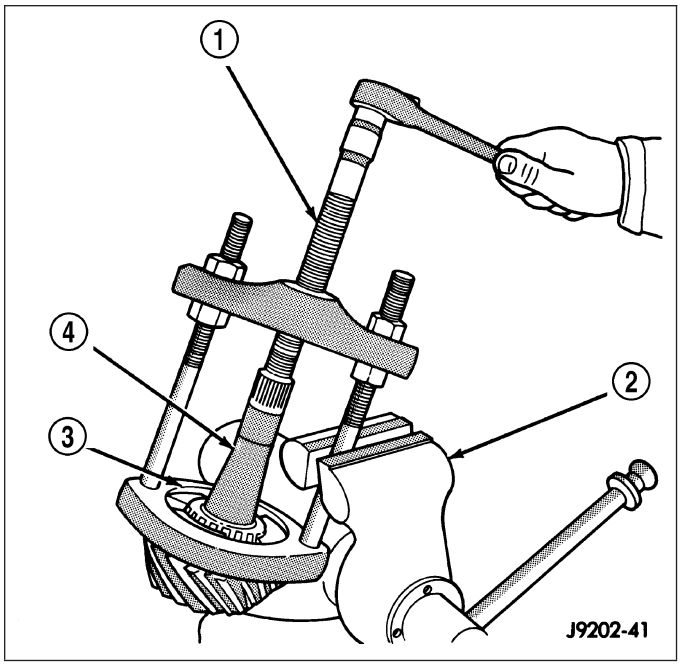

INSTALLATION

1. Install front pinion bearing cup with Installer D-146 (1) and Handle C-4171 (2).

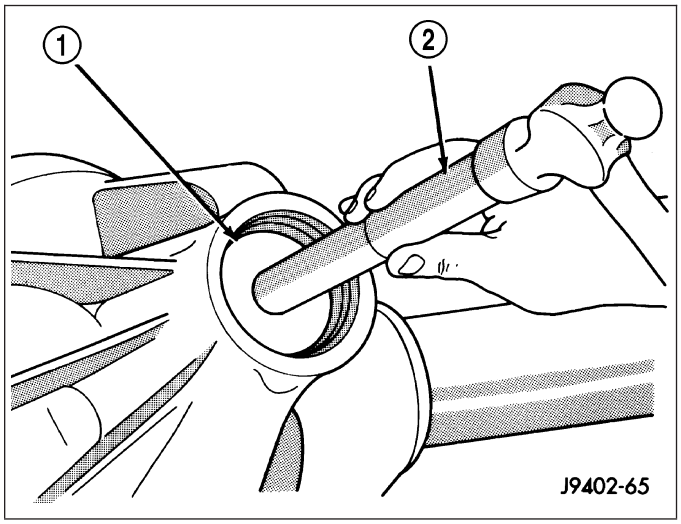

2. Install rear pinion bearing cup with Installer 8886 (1) and Handle C-4171 (2), if bearing is replaced.

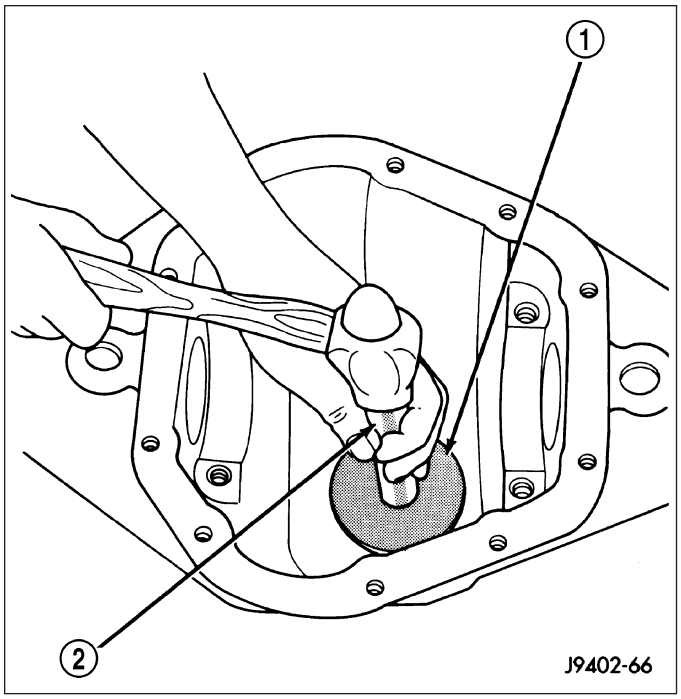

3. Install pinion depth shim (1) on the pinion gear (2) shaft.

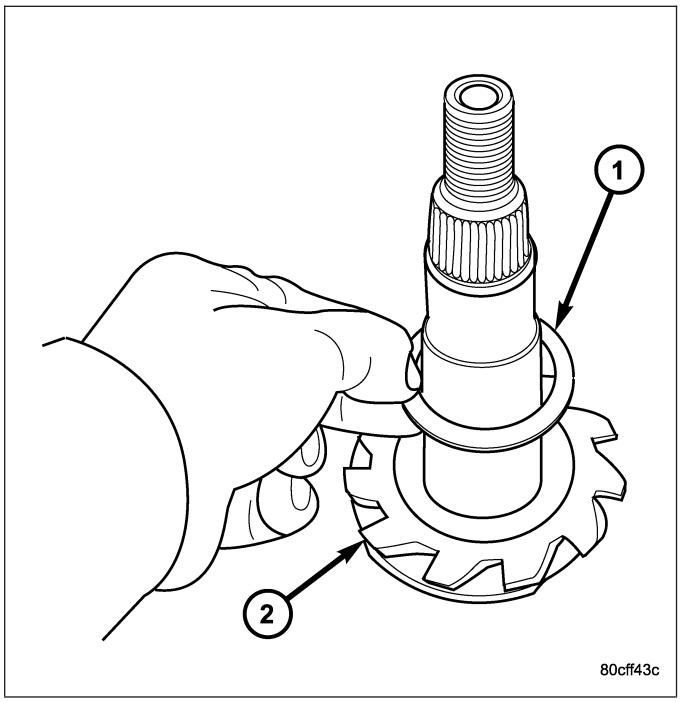

4. Install rear pinion bearing (4) with Installer C-3095-A (2) and a press (1).

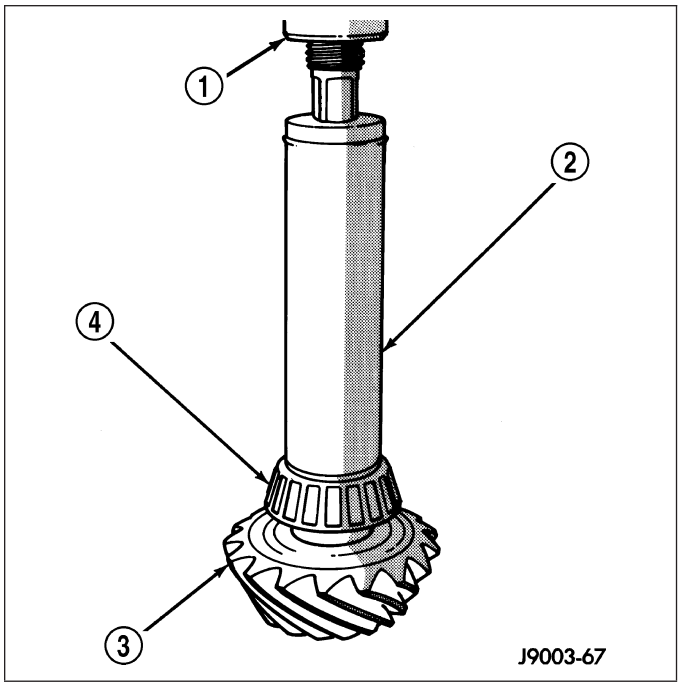

5. Install **new** collapsible spacer (1).
6. Lubricate pinion and bearings.

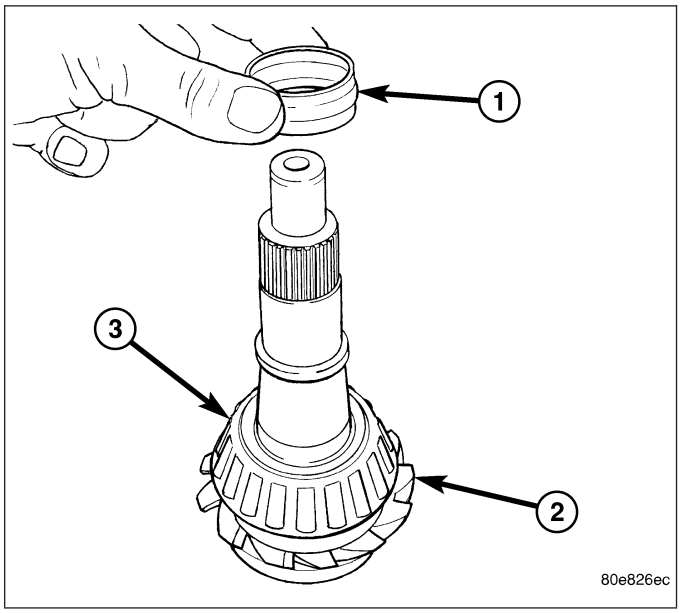

7. Install pinion into the housing (2) and place front pinion bearing onto the pinion shaft. Draw the pinion shaft into the front bearing with Installer 8982 (1).

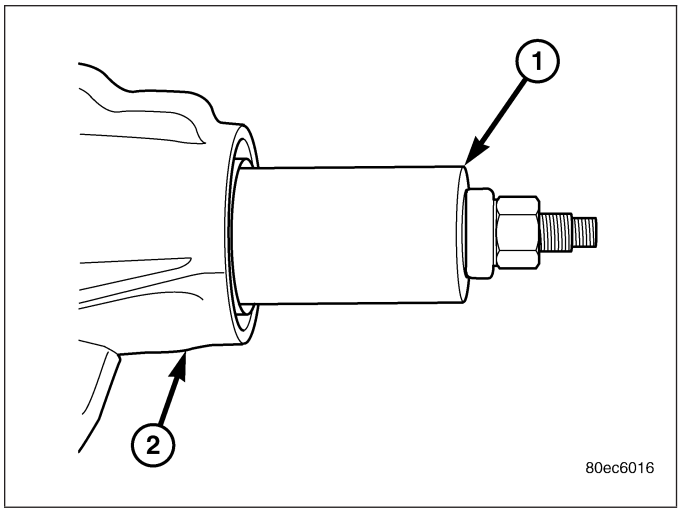

8. Install **new** pinion seal with Installer 8882 (2) and Handle C-4171 (1).
9. Apply a light coat of teflon sealant to the pinion flange splines.
10. Hold pinion and lightly tap the pinion flange onto the pinion shaft, until a few threads are showing.
11. Install pinion flange washer and **new** pinion nut.
12. Hold pinion flange with Flange Wrench 8979 and tighten pinion nut until end play is taken up.

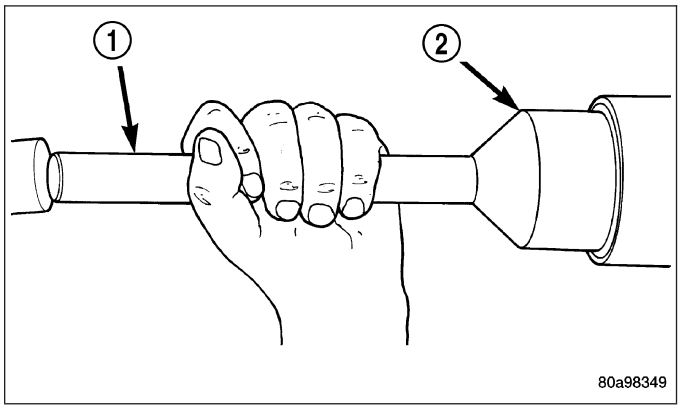

13. Rotate pinion several times to seat bearings.
14. Measure pinion (1) rotating torque with an inch pound torque wrench (2). Tighten pinion nut in small increments until pinion rotating torque is:
    - **New Pinion Bearings:** 1.7-2.8 N·m (15-25 in. lbs.)
    - **Original Pinion Bearings:** 1.1-2.2 N·m (10-20 in. lbs.)
15. Rotate pinion several times then verify pinion rotating torque again.
16. Position the ring gear on differential case and start two **new** ring gear bolts.
17. Install the rest of the **new** ring gear bolts and tighten them alternately to seat the ring gear.
18. Torque ring gear bolts to 140 N·m (103 ft. lbs.).
19. Install differential in housing.
20. Measure final rotating torque with an inch pound torque wrench. The final pinion rotating torque plus differential case bearing preload is:
    - **New Bearings:** 3.4-5.6 N·m (30-50 in. lbs.)
    - **Original Bearings:** 2.8-5.1 N·m (25-45 in. lbs.)
21. Install axle shafts.

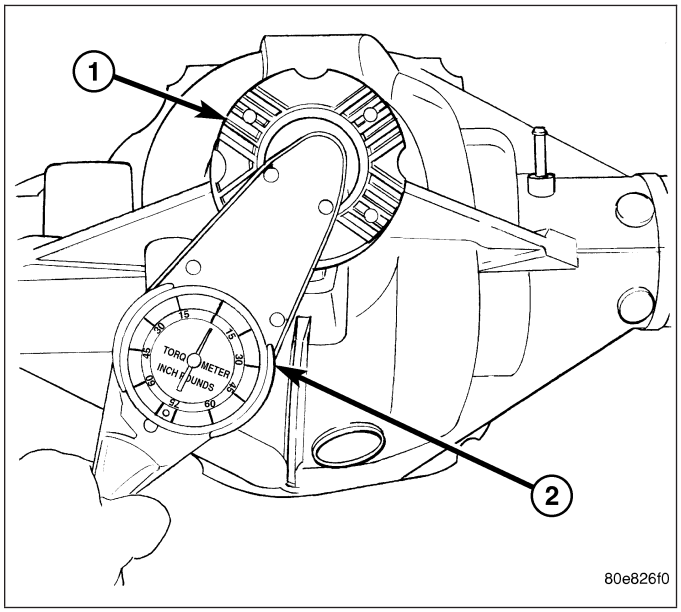

22. Verify ring gear backlash and gear contact pattern.
23. Install the propeller shaft with the reference marks aligned.
24. Install differential cover with gasket and tighten to 40 N·m (30 ft. lbs.).
25. Fill differential with fluid and tighten fill plug to 32 N·m (24 ft. lbs.).

REAR AXLE - 9 1/4

TABLE OF CONTENTS

	page
REAR AXLE - 9 1/4	
DIAGNOSIS AND TESTING	
REAR AXLE - 9 1/4	226
REMOVAL	230
INSTALLATION	231
ADJUSTMENTS	231
SPECIFICATIONS	238
SPECIAL TOOLS	239
SHAFT-AXLE	
REMOVAL	242
INSTALLATION	243
SEAL-AXLE SHAFT	
REMOVAL	244
INSTALLATION	244
BEARING-AXLE	
REMOVAL	245
INSTALLATION	245
SEAL-PINION	
REMOVAL	246
INSTALLATION	247
COVER-DIFFERENTIAL	
REMOVAL	248
INSTALLATION	248
DIFFERENTIAL	
REMOVAL	249
DISASSEMBLY	250
ASSEMBLY	251
INSTALLATION	253
DIFFERENTIAL-TRAC-LOK	
OPERATION	254
DIAGNOSIS AND TESTING	
DIFFERENTIAL-TRAC-LOK	254
BEARING-DIFFERENTIAL CASE	
REMOVAL	255
INSTALLATION	256
GEAR-PINION/RING	
REMOVAL	256
INSTALLATION	260

REAR AXLE - 9 1/4

DIAGNOSIS AND TESTING

REAR AXLE - 9 1/4

GEAR NOISE

Axle gear noise can be caused by insufficient lubricant, incorrect backlash, incorrect pinion depth, tooth contact, worn/damaged gears, or the carrier housing not having the proper offset and squareness.

Gear noise usually happens at a specific speed range. The noise can also occur during a specific type of driving condition. These conditions are acceleration, deceleration, coast, or constant load.

When road testing, first warm-up the axle fluid by driving the vehicle at least 5 miles and then accelerate the vehicle to the speed range where the noise is the greatest. Shift out-of-gear and coast through the peak-noise range. If the noise stops or changes greatly check for:

- Insufficient lubricant.
- Incorrect ring gear backlash.
- Gear damage.

Differential side gears and pinions can be checked by turning the vehicle. They usually do not cause noise during straight-ahead driving when the gears are unloaded. The side gears are loaded during vehicle turns. A worn pinion shaft can also cause a snapping or a knocking noise.

BEARING NOISE

The axle shaft, differential and pinion bearings can all produce noise when worn or damaged. Bearing noise can be either a whining, or a growling sound.

Pinion bearings have a constant-pitch noise. This noise changes only with vehicle speed. Pinion bearing noise will be higher pitched because it rotates at a faster rate. Drive the vehicle and load the differential. If bearing noise occurs, the rear pinion bearing is the source of the noise. If the bearing noise is heard during a coast, the front pinion bearing is the source.

Differential bearings usually produce a low pitch noise. Differential bearing noise is similar to pinion bearing noise. The pitch of differential bearing noise is also constant and varies only with vehicle speed.

Axle shaft bearings produce noise and vibration when worn or damaged. The noise generally changes when the bearings are loaded. Road test the vehicle. Turn the vehicle sharply to the left and to the right. This will load the bearings and change the noise level. Where axle bearing damage is slight, the noise is usually not noticeable at speeds above 30 mph.

LOW SPEED KNOCK

Low speed knock is generally caused by:

- Worn U-joint.
- Worn side gear thrust washers.
- Worn pinion shaft bore.

VIBRATION

Vibration at the rear of the vehicle is usually caused by a:

- Damaged drive shaft.
- Missing drive shaft balance weight(s).
- Worn or out-of-balance wheels.
- Loose wheel lug nuts.
- Worn U-joint(s).
- Loose/broken springs.
- Damaged axle shaft bearing(s).
- Loose pinion gear nut.
- Excessive pinion yoke run out.
- Bent axle shaft(s).

Check for loose or damaged front-end components or engine/transmission mounts. These components can contribute to what appears to be a rearend vibration. Do not overlook engine accessories, brackets and drive belts.

NOTE: All driveline components should be examined before starting any repair.

DRIVELINE SNAP

A snap or clunk noise when the vehicle is shifted into gear (or the clutch engaged), can be caused by:

- High engine idle speed.
- Transmission shift operation.
- Loose engine/transmission/transfer case mounts.
- Worn U-joints.
- Loose spring mounts.
- Loose pinion gear nut and yoke.
- Excessive ring gear backlash.
- Excessive side gear to case clearance.

The source of a snap or a clunk noise can be determined with the assistance of a helper. Raise the vehicle on a hoist with the wheels free to rotate. Instruct the helper to shift the transmission into gear. Listen for the noise, a mechanics stethoscope is helpful in isolating the source of a noise.

DIAGNOSTIC CHART

Condition	Possible Causes	Correction
Wheel Noise	1. Wheel loose.	1. Tighten loose nuts.
	2. Faulty, brinelled wheel bearing.	2. Replace bearing.
Axle Shaft Noise	1. Misaligned axle tube.	1. Inspect axle tube alignment. Correct as necessary.
	2. Bent or sprung axle shaft.	2. Inspect and correct as necessary.
Axle Shaft Broke	1. Misaligned axle tube.	1. Replace the broken shaft after correcting tube mis-alignment.
	2 Vehicle overloaded.	2. Replace broken shaft and avoid excessive weight on vehicle.
	3. Erratic clutch operation.	3. Replace broken shaft and avoid or correct erratic clutch operation.
	4. Grabbing clutch.	4. Replace broken shaft and inspect and repair clutch as necessary.
Differential Cracked	1. Improper adjustment of the differential bearings.	1. Replace case and inspect gears and bearings for further damage. Set differential bearing pre-load properly.
	2. Excessive ring gear backlash.	2. Replace case and inspect gears and bearings for further damage. Set ring gear backlash properly.
	3. Vehicle overloaded.	3. Replace case and inspect gears and bearings for further damage. Avoid excessive vehicle weight.
	4. Erratic clutch operation.	4. Replace case and inspect gears and bearings for further damage. Avoid erratic use of clutch.
Differential Gears Scored	1. Insufficient lubrication.	1. Replace scored gears. Fill differential with the correct fluid type and quantity.
	2. Improper grade of lubricant.	2. Replace scored gears. Fill differential with the correct fluid type and quantity.
	3. Excessive spinning of one wheel/tire.	3. Replace scored gears. Inspect all gears, pinion bores, and shaft for damage. Service as necessary.
Loss Of Lubricant	1. Lubricant level too high.	1. Drain lubricant to the correct level.
	2. Worn axle shaft seals.	2. Replace seals.
	3. Cracked differential housing.	3. Repair as necessary.
	4. Worn pinion seal.	4. Replace seal.
	5. Worn/scored yoke.	5. Replace yoke and seal.
	6. Axle cover not properly sealed.	6. Remove, clean, and re-seal cover.

Condition	Possible Causes	Correction
Axle Overheating	1. Lubricant level low.	1. Fill differential to correct level.
	2. Improper grade of lubricant.	2. Fill differential with the correct fluid type and quantity.
	3. Bearing pre-loads too high.	3. Re-adjust bearing pre-loads.
	4. Insufficient ring gear backlash.	4. Re-adjust ring gear backlash.
Gear Teeth Broke	1. Overloading.	1. Replace gears. Examine other gears and bearings for possible damage.
	2. Erratic clutch operation.	2. Replace gears and examine the remaining parts for damage. Avoid erratic clutch operation.
	3. Ice-spotted pavement.	3. Replace gears and examine remaining parts for damage.
	4. Improper adjustments.	4. Replace gears and examine remaining parts for damage. Ensure ring gear backlash is correct.
Axle Noise	1. Insufficient lubricant.	1. Fill differential with the correct fluid type and quantity.
	2. Improper ring gear and pinion adjustment.	2. Check ring gear and pinion contact pattern. Adjust backlash or pinion depth.
	3. Unmatched ring gear and pinion.	3. Replace gears with a matched ring gear and pinion.
	4. Worn teeth on ring gear and/or pinion.	4. Replace ring gear and pinion.
	5. Loose pinion bearings.	5. Adjust pinion bearing pre-load.
	6. Loose differential bearings.	6. Adjust differential bearing pre-load.
	7. Mis-aligned or sprung ring gear.	7. Measure ring gear run-out. Replace components as necessary.
	8. Loose differential bearing cap bolts.	8. Inspect differential components and replace as necessary. Ensure that the bearing caps are torqued tot he proper specification.
	9. Housing not machined properly.	9. Replace housing.

REMOVAL

1. With vehicle in neutral, position vehicle on hoist.
2. Position a lift under axle and secure axle to lift.
3. Remove all brake components.
4. Remove axle vent hose.
5. Mark propeller shaft and companion flange for installation alignment reference.
6. Remove propeller shaft.
7. Remove shock absorbers (3) from axle (2).

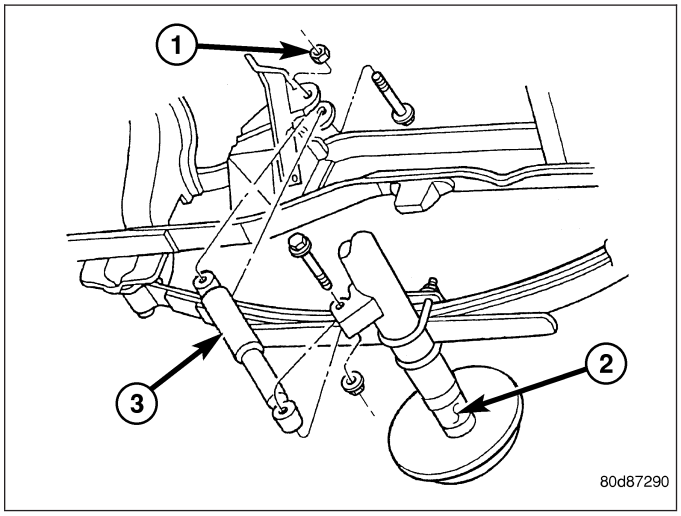

8. Remove U-bolts (5) from axle.
9. Remove axle from the vehicle.

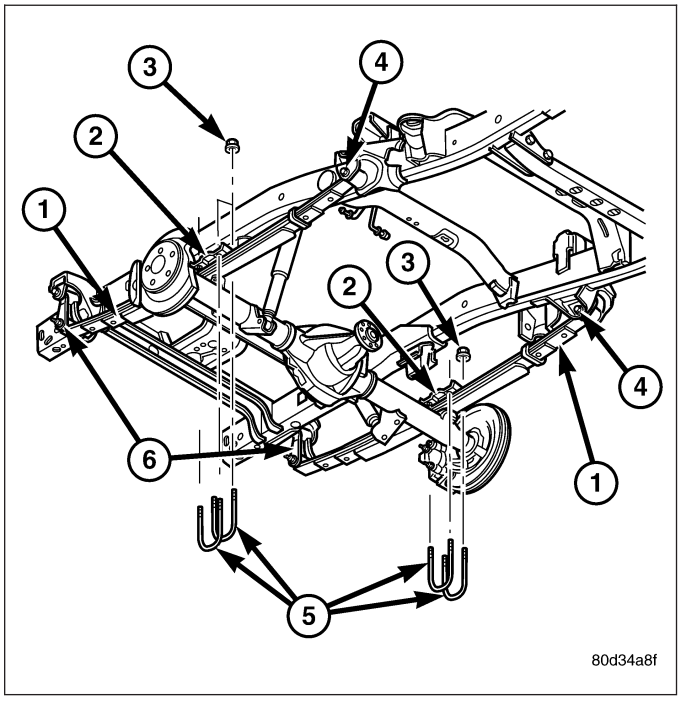

INSTALLATION

1. Raise axle with lift and align to the leaf spring centering bolts.
2. Install axle U-bolts (5) and tighten to 149 N·m (110 ft. lbs.).
3. Install shock absorbers to axle and tighten to specification.
4. Install all brake comonents.
5. Install axle vent hose.
6. Install propeller shaft with reference marks aligned and tighten to specification.
7. Fill differential to specifications.

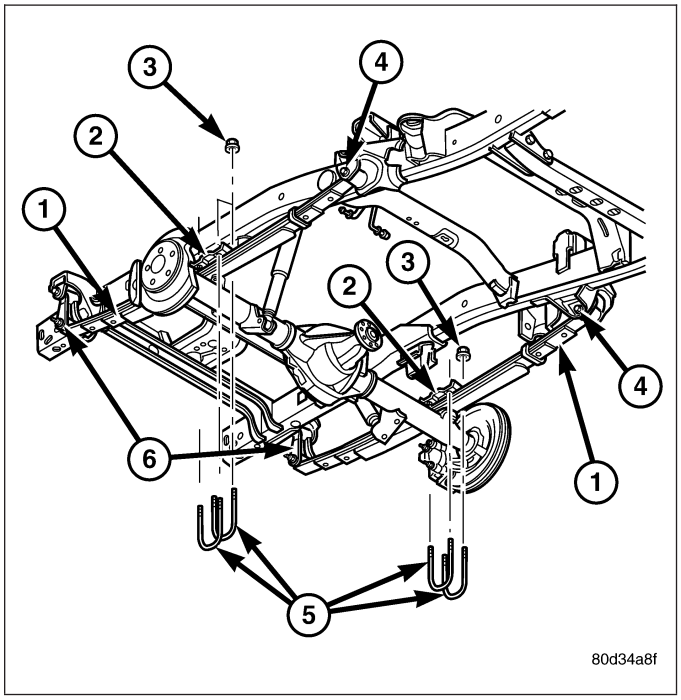

ADJUSTMENTS

Ring gear and pinion are supplied as matched sets. Identifying numbers for the ring gear and pinion are painted onto the pinion gear shaft and the side of the ring gear. A plus (+) number, minus (–) number or zero (0) along with the gear set sequence number (2) (01 to 99) is on each gear. This first number is the amount (in thousandths of an inch) the depth varies (1) from the standard depth setting of a pinion marked with a (0). The next two numbers are the sequence number of the gear set. The standard depth provides the best teeth contact pattern.

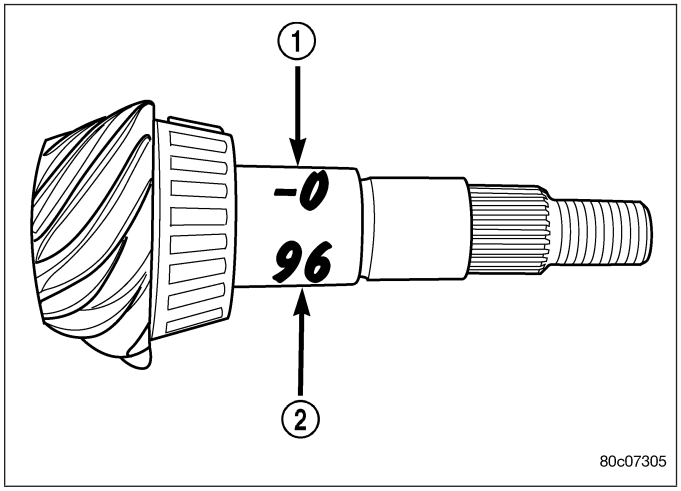

Compensation for pinion gear (5) depth variance is achieved with select shims (4). The shims are placed behind the rear pinion bearing (3).

If installing a new gear, note the depth variance number of the original and replacement pinion. Add or subtract this number from the original depth shim/oil slinger to compensate for the difference in the depth variances. The numbers represent thousands of an inch deviation from the standard. If the number is negative, add that value to the required thickness of the depth shims. If the number is positive, subtract that value from the thickness of the depth shim.

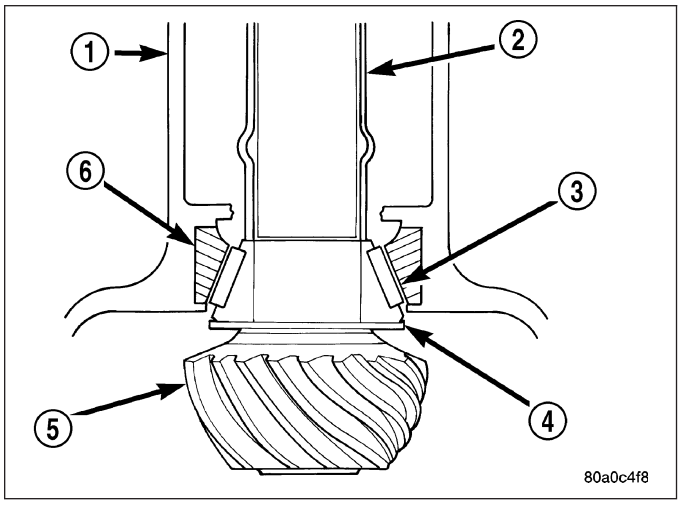

Pinion Gear Depth Variance Chart: Note where Old and New Pinion Marking columns intersect. Intersecting figure represents plus or minus the amount needed.

PINION GEAR DEPTH VARIANCE

Original Pinion Gear Depth Variance	Replacement Pinion Gear Depth Variance								
	−4	−3	−2	−1	0	+1	+2	+3	+4
+4	+0.008	+0.007	+0.006	+0.005	+0.004	+0.003	+0.002	+0.001	0
+3	+0.007	+0.006	+0.005	+0.004	+0.003	+0.002	+0.001	0	−0.001
+2	+0.006	+0.005	+0.004	+0.003	+0.002	+0.001	0	−0.001	−0.002
+1	+0.005	+0.004	+0.003	+0.002	+0.001	0	−0.001	−0.002	−0.003
0	+0.004	+0.003	+0.002	+0.001	0	−0.001	−0.002	−0.003	−0.004
−1	+0.003	+0.002	+0.001	0	−0.001	−0.002	−0.003	−0.004	−0.005
−2	+0.002	+0.001	0	−0.001	−0.002	−0.003	−0.004	−0.005	−0.006
−3	+0.001	0	−0.001	−0.002	−0.003	−0.004	−0.005	−0.006	−0.007
−4	0	−0.001	−0.002	−0.003	−0.004	−0.005	−0.006	−0.007	−0.008

PINION DEPTH MEASUREMENT

Measurements are taken with pinion bearing cups and pinion bearings installed in the housing. Take measurements with Pinion Gauge Set and Dial Indicator C-3339.

1. Assemble Pinion Height Block 6739 (3), Pinion Block 8542 (6) and rear pinion bearing onto Screw 6741 (5).

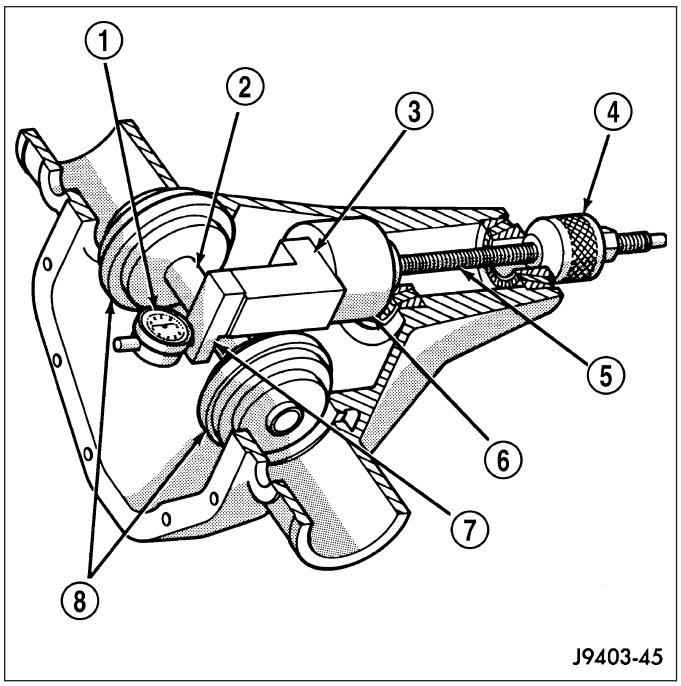

2. Insert pinion block (1), pinion height block (2), rear bearing, and screw into the housing through pinion bearing cups.
3. Install front pinion bearing and Cone-Nut 6740 onto the screw. Tighten cone-nut until Torque To Rotate the screw is 1.7 N·m (15 in. lbs.).

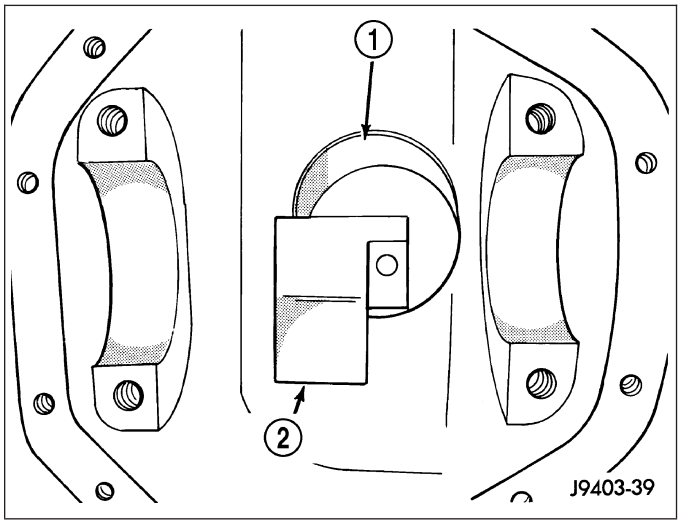

4. Place Arbor Disc 8541 (1) on Arbor D-115-3 (3) in position in the housing side bearing cradles. Install differential bearing caps on arbor discs and tighten cap bolts to 41 N·m (30 ft. lbs.).

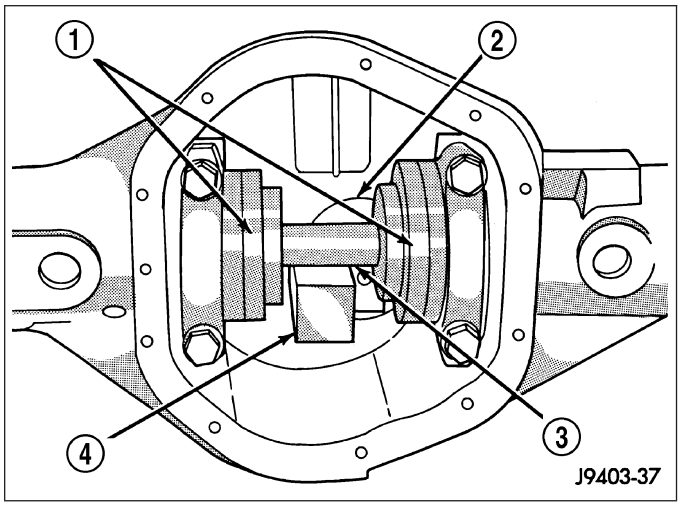

5. Assemble Dial Indicator C-3339 (3) into Scooter Block D-115-2 (2) and secure set screw.
6. Place Scooter Block/Dial Indicator in position in axle housing so dial probe and scooter block are flush against the rearward surface of the pinion height block. Hold scooter block in place and zero the dial indicator. Tighten dial indicator face lock screw.
7. Slide the dial indicator probe across the gap between the pinion height block and the arbor bar (1) with the scooter block against the pinion height block. Continue moving the dial probe to the crest of the arbor bar and record the highest reading.
8. Select a shim equal to the dial indicator reading plus the drive pinion gear depth variance number marked on the shaft of the pinion. For example, if the depth variance is –2, add +0.002 in. to the dial indicator reading.

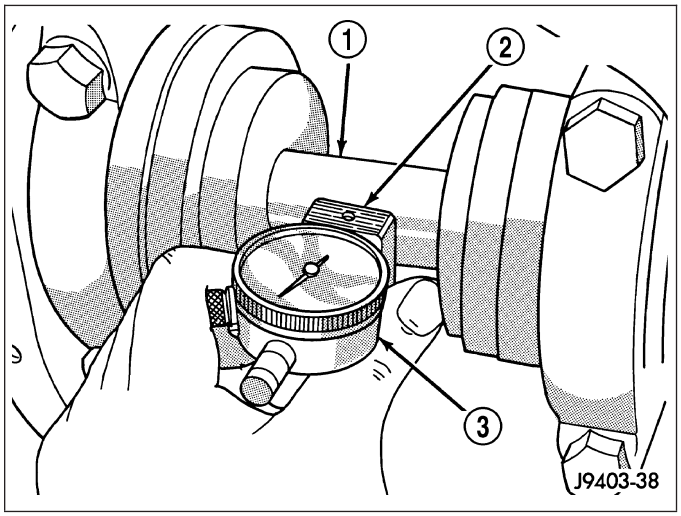

DIFFERENTIAL BEARING PRELOAD AND GEAR BACKLASH

The following must be considered when adjusting bearing preload and gear backlash:

- The maximum ring gear backlash variation is 0.076 mm (0.003 in.).
- Mark the gears so the same teeth are meshed during all backlash measurements.
- Maintain the torque while adjusting the bearing preload and ring gear backlash.
- Excessive adjuster torque will introduce a high bearing load and cause premature bearing failure. Insufficient adjuster torque can result in excessive differential case free-play and ring gear noise.
- Insufficient adjuster torque will not support the ring gear correctly and can cause excessive differential case free-play and ring gear noise.

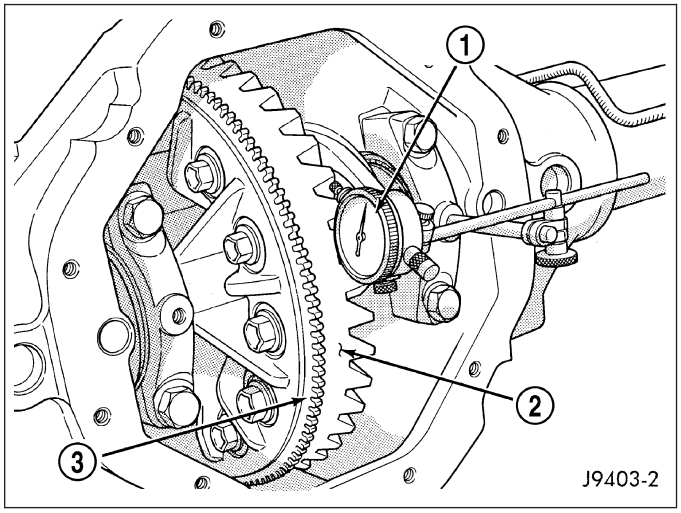

NOTE: The differential bearing cups will not always immediately follow the threaded adjusters as they are moved during adjustment. To ensure accurate bearing cup responses to the adjustments:

- **Maintain the gear teeth engaged (meshed) as marked.**
- **The bearings must be seated by rapidly rotating the pinion gear a half turn back and forth.**
- **Do this five to ten times each time the threaded adjusters are adjusted.**

1. Through the axle tube use Wrench C-4164 to adjust each threaded adjuster inward until the differential bearing free-play is eliminated. Allow some ring gear backlash approximately 0.25 mm (0.01 in.) between the ring and pinion gear. Seat the bearing cups with the procedure described above.
2. Install dial indicator (1) and position the plunger against the drive side of a ring gear tooth. Measure the backlash at 4 positions, 90 degrees apart around the ring gear. Locate and mark the area of minimum backlash.
3. Rotate the ring gear to the position of the least backlash. Mark the gear so that all future backlash measurements will be taken with the same gear teeth meshed.
4. Loosen the right-side, tighten the left-side threaded adjuster. Obtain backlash of 0.076 to 0.102 mm (0.003-0.004 in.) with each adjuster tightened to 14 N·m (10 ft. lbs.). Seat the bearing cups with the procedure described above.
5. Tighten the differential bearing cap bolts 136 N·m (100 ft. lbs.).
6. Tighten the right-side threaded adjuster to 102 N·m (75 ft. lbs.). Seat the bearing cups with the procedure described above. Continue to tighten the right-side adjuster and seat bearing cups until the torque remains constant at 102 N·m (75 ft. lbs.)
7. Measure the ring gear (2) backlash. The range of backlash is 0.15 to 0.203 mm (0.006 to 0.008 in.).
8. Continue increasing the torque at the right-side threaded adjuster until the specified backlash is obtained.

NOTE: The left-side threaded adjuster torque should have approximately 102 N·m (75 ft. lbs.). If the torque is considerably less, the complete adjustment procedure must be repeated.

9. Tighten the left-side threaded adjuster until 102 N·m (75 ft. lbs.) torque is indicated. Seat the bearing rollers with the procedure described above. Do this until the torque remains constant.
10. Install the threaded adjuster locks and tighten the lock screws to 10 N·m (90 in. lbs.).

GEAR CONTACT PATTERN

1. Wipe clean each tooth of the ring gear.
2. Apply gear marking compound to all of the ring gear teeth.
3. Verify bearing cap bolts are torque specification.
4. Apply parking brakes lightly to create at 14 N·m (10 ft. lbs.) pinion rotating torque.
5. Rotate the pinion/pinion yoke 4 full revolutions in each directions.
6. Read gear tooth contact pattern.

Gear contact pattern is correct. Backlash and pinion depth is correct.

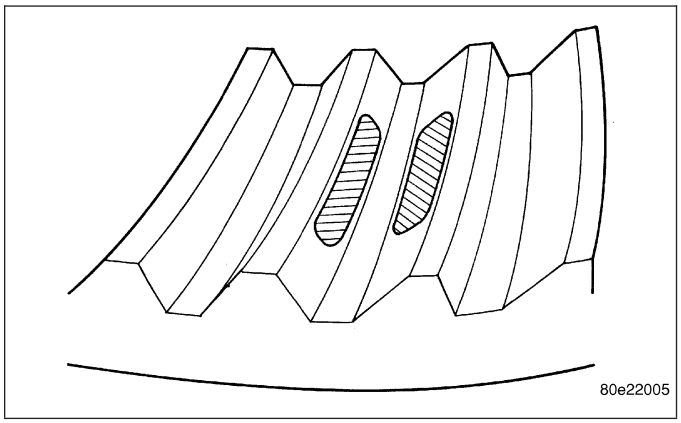

Ring gear too far away from pinion gear, coast side toe (1) and drive side heel (2). Decrease backlash, by moving the ring closer to the pinion gear using the adjusters.

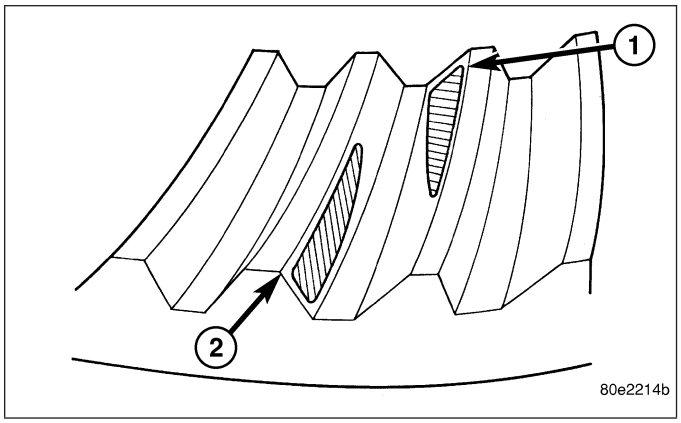

Ring gear too close to pinion gear, drive side toe (1) and coast side heel (2). Increase backlash, by moving the ring away from the pinion gear using the adjusters.

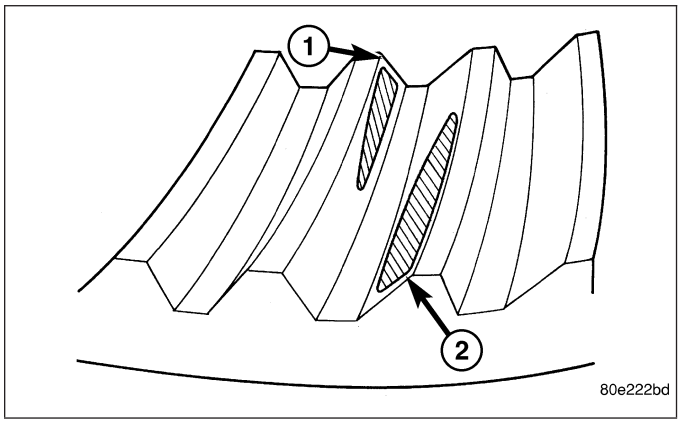

Ring gear too far away from pinion gear, drive side heel (1) and coast side heel (2). Decrease backlash, by moving the ring closer to the pinion gear using the adjusters.

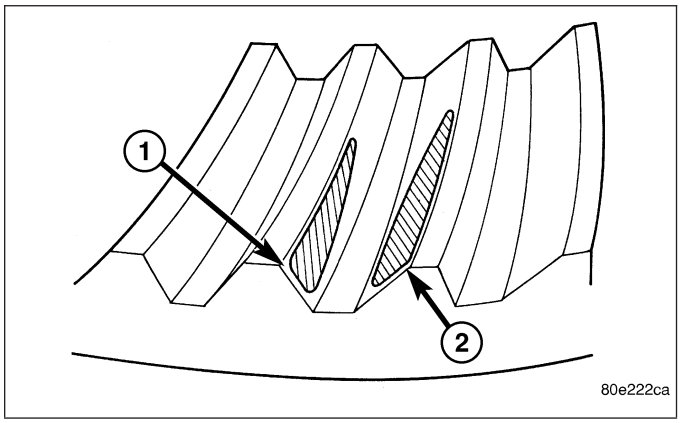

Ring gear too close to pinion gear, drive side toe (1) and coast side toe (2). Increase backlash, by moving the ring away from the pinion gear using the adjusters.

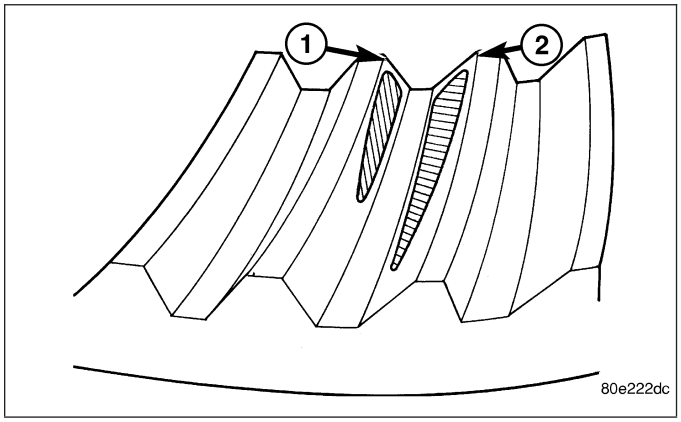

Pinion gear set too low. Increase pinion gear height, by increasing the pinion depth shim thickness.

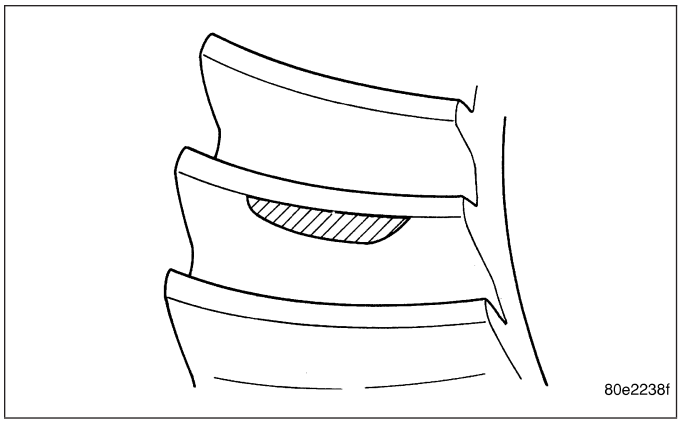

Pinion gear set too high. Decrease pinion depth, by decreasing the pinion depth shim thickness.

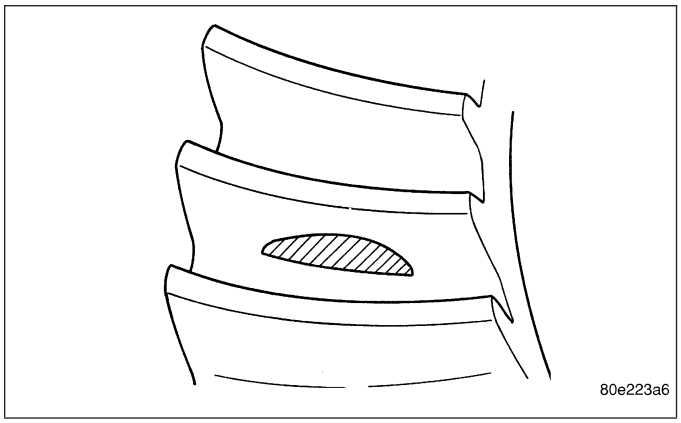

SIDE GEAR CLEARANCE

When measuring side gear (2) clearance, check each gear independently. If it necessary to replace a side gear, replace both gears as a matched set.

1. Install the axle shafts and C-locks and pinion mate shaft.
2. Measure each side gear clearance. Insert a matched pair of feeler gauge (1) blades between the gear and differential housing on opposite sides of the hub.
3. If side gear clearances is no more than 0.005 inch. Determine if the axle shaft is contacting the pinion mate shaft. **Do not remove the feeler gauges, inspect the axle shaft with the feeler gauge inserted behind the side gear.** If the end of the axle shaft is not contacting the pinion mate shaft, the side gear clearance is acceptable.

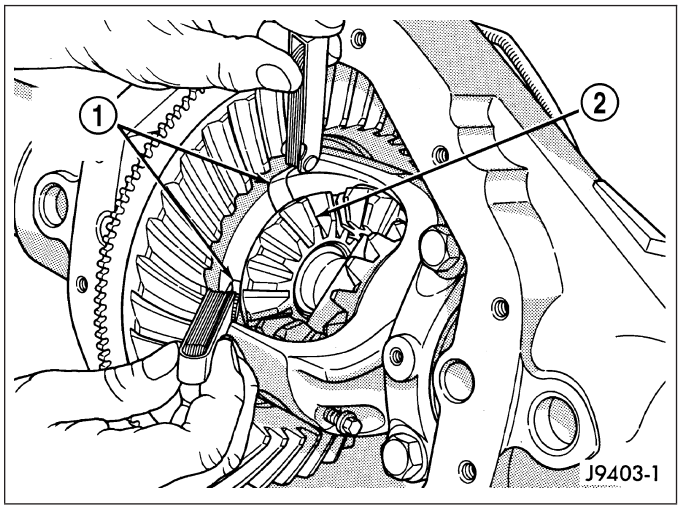

4. If clearance is more than 0.005 inch (axle shaft not contacting mate shaft), record the side gear clearance. Remove the thrust washer and measure its thickness with a micrometer. Add the washer thickness to the recorded side gear clearance. The sum of gear clearance and washer thickness will determine required thickness of replacement thrust washer.

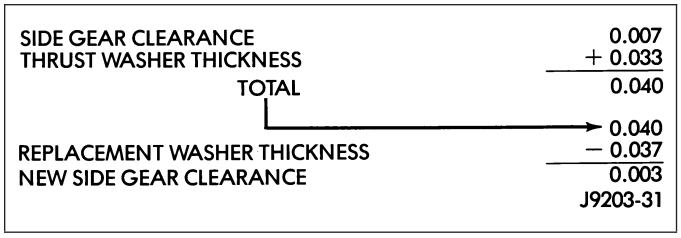

In some cases, the end of the axle shaft will move and contact the mate shaft when the feeler gauge is inserted. The C-lock is preventing the side gear from sliding on the axle shaft.

5. If there is no side gear clearance, remove the C-lock from the axle shaft. Use a micrometer to measure the thrust washer thickness. Record the thickness and re-install the thrust washer. Assemble the differential case without the C-lock installed and re-measure the side gear clearance.
6. Compare both clearance measurements. If the difference is less than 0.012 inch (0.305 mm), add clearance recorded when the C-lock was installed to thrust washer thickness measured. The sum will determine the required thickness of the replacement thrust washer.
7. If clearance is 0.012 inch (0.305 mm) or greater, both side gears must be replaced (matched set) and the clearance measurements repeated.
8. If clearance (above) continues to be 0.012 inch (0.305 mm) or greater, the case must be replaced.

SPECIFICATIONS

AXLE SPECIFICATIONS

DESCRIPTION	SPECIFICATION
Axle Ratio	3.21, 3.55, 3.92
Differential Case Flange Runout	0.076 mm (0.003 in.)
Differential Case Clearance	0.12 mm (0.005 in.)
Ring Gear Diameter	235 mm (9.25 in.)
Ring Gear Backlash	0.12-0.20 mm (0.005-0.008 in.)
Ring Gear Runout	0.12 mm (0.005 in.)
Pinion Bearing Preload - New Bearings	1.7-4 N·m (15-35 in. lbs.)
Pinion Bearing Preload - Original Bearings	1-2 N·m (10-20 in. lbs.)

TORQUE SPECIFICATIONS

DESCRIPTION	N·m	Ft. Lbs.	In. Lbs.
Differential Cover Bolts	41	30	-
Bearing Cap Bolts	136	100	-
Ring Gear Bolts	157	115	-
Pinion Nut Minimum	285	210	-
Adjuster Lock Screw	10	7.5	90
Backing Plate Bolts	65	48	-
Pinion Mate Shaft Lock Screw	11	8	-
Axle U-Bolt Nuts	149	110	-

SPECIAL TOOLS

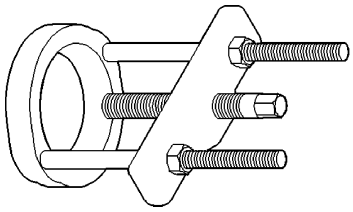

PULLER C-293-PA

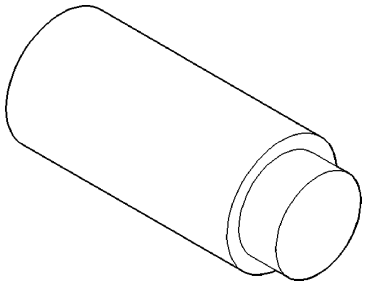

PLUG C-293-3

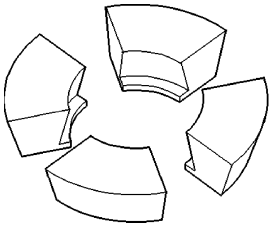

ADAPTERS C-293-37

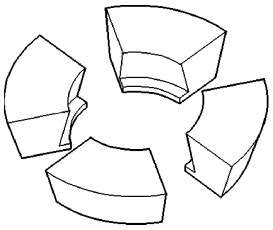

ADAPTERS C-293-47

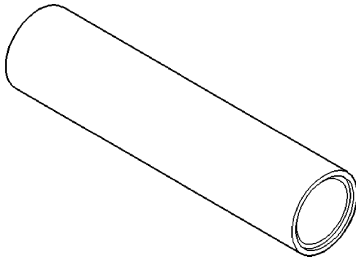

INSTALLER C-3095-A

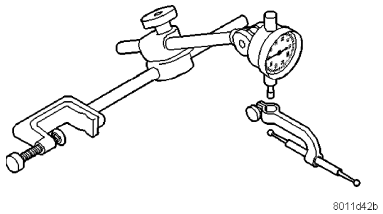

DIAL INDICATOR SET C-3339

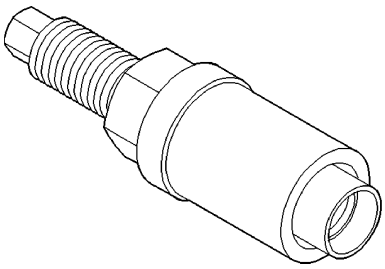

INSTALLER C-3718

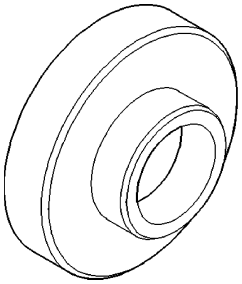

INSTALLER C-4076-B

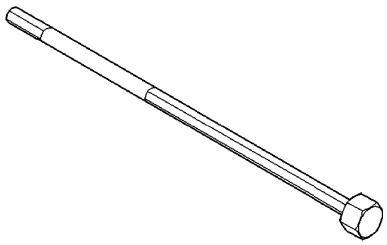

WRENCH C-4164

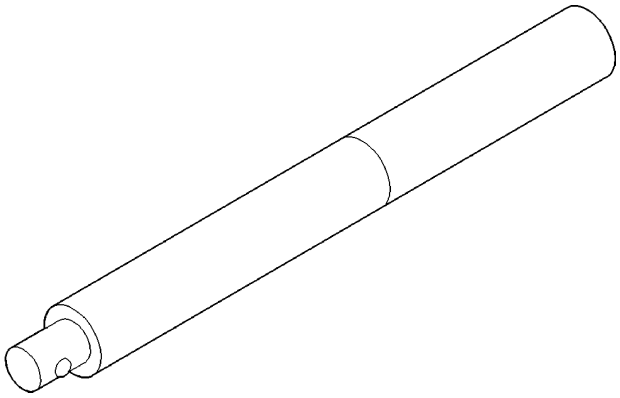

HANDLE C-4171

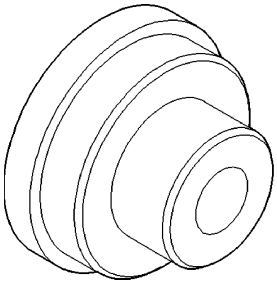

INSTALLER C-4198

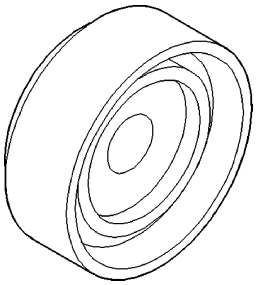

INSTALLER C-4213

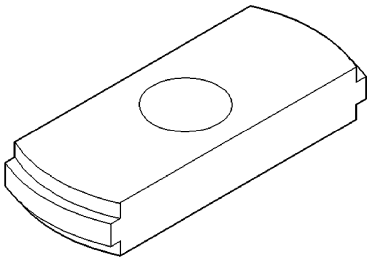

REMOVER C-4307

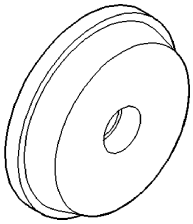

INSTALLER C-4308

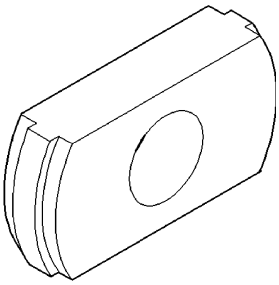

INSTALLER C-4345

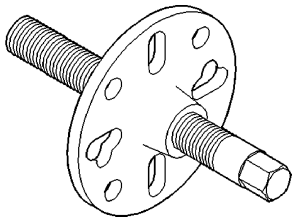

PULLER C-452

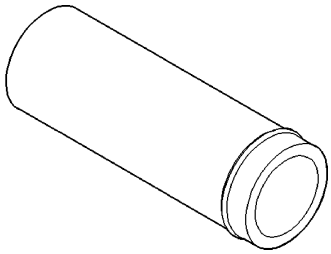

HANDLE C-4735

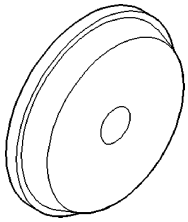

INSTALLER D-130

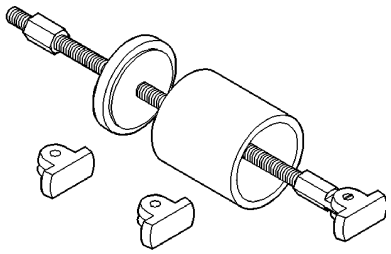

REMOVER 6310

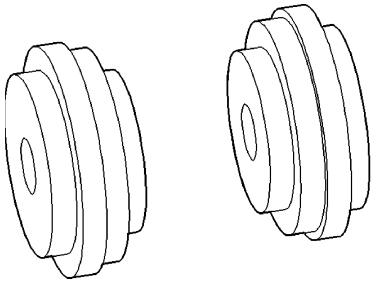

ARBOR DISCS 8541

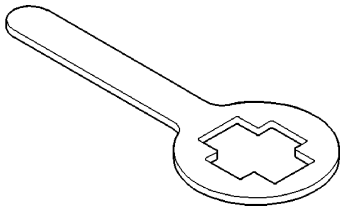

HOLDER 6719A

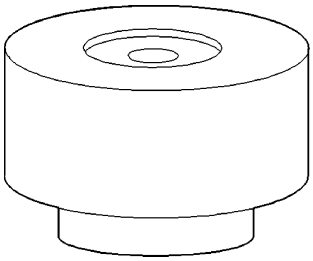

PINION BLOCK 8542

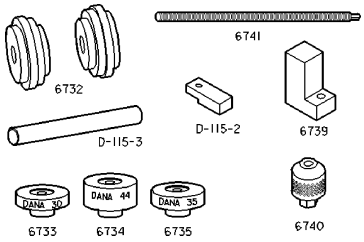

PINION GAUGE SET 6730/6774/6775

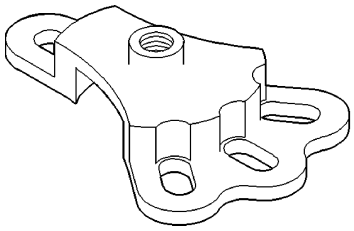

TRAC-LOK TORQUE FIXTURE 6790

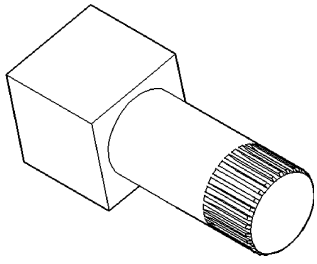

FIXTURE 8136

SHAFT-AXLE

REMOVAL

1. With vehicle in neutral, position vehicle on hoist.
2. Remove wheel and tire assembly.
3. Remove brake caliper (3), adapter (2) and rotor (1).

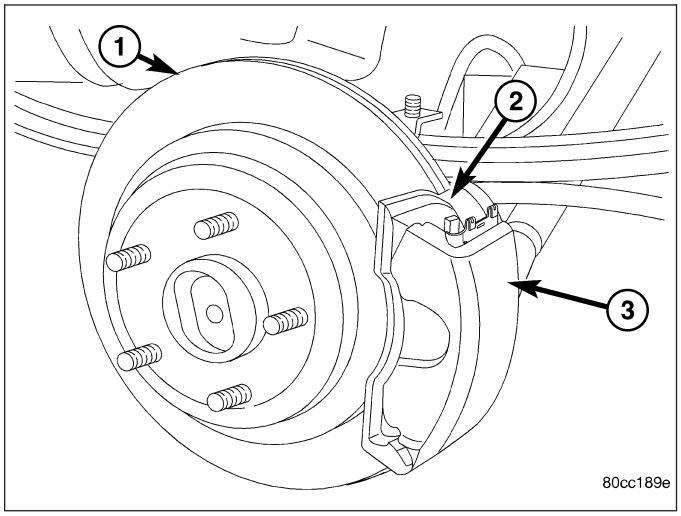

4. Remove differential housing cover and drain lubricant.
5. Rotate differential case so pinion mate shaft lock screw is accessible. Remove lock screw (1) and pinion mate shaft (2) from differential case.

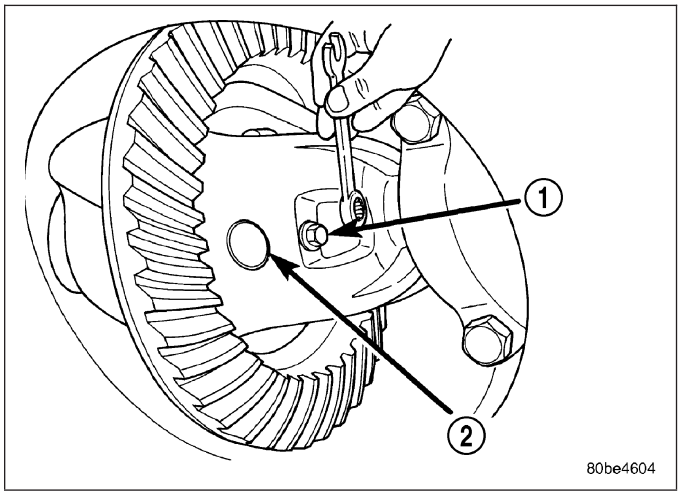

6. Push axle shaft (2) inward and remove C-lock (1) from the axle shaft.

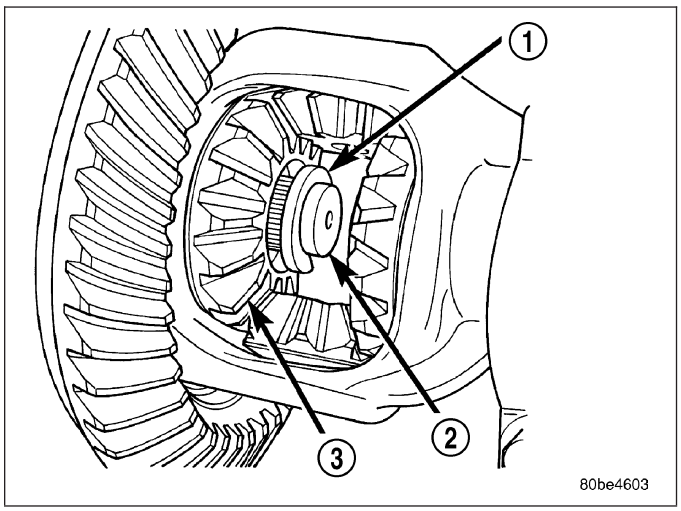

7. Remove axle shaft (1) carefully to prevent damage to the shaft bearing and seal in the axle tube.

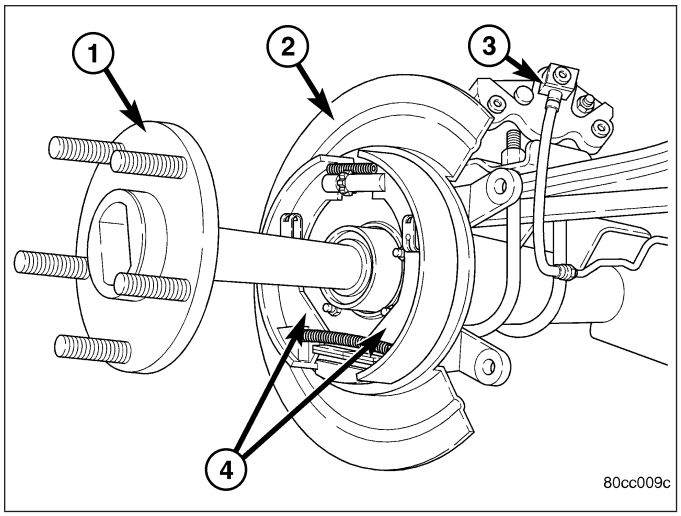

INSTALLATION

1. Lubricate bearing bore and seal lip with gear lubricant.
2. Insall axle shaft and engage into side gear splines.

NOTE: Use care to prevent shaft splines from damaging axle shaft seal.

3. Insert C-lock (1) in end of axle shaft (2) then push axle shaft outward to seat C-lock in side gear (3).

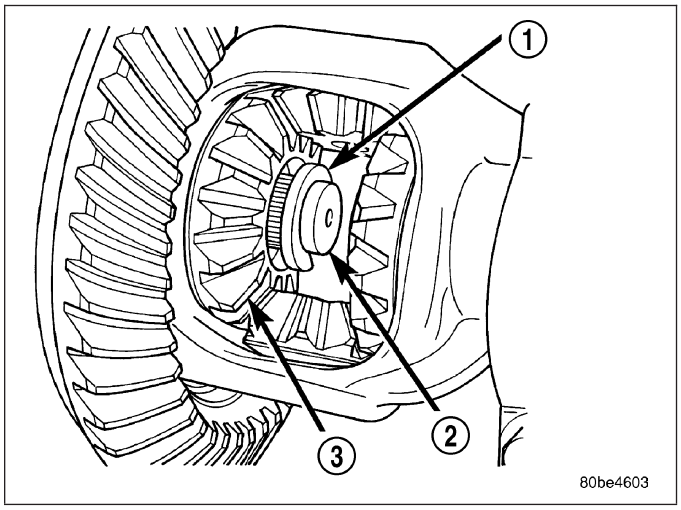

4. Insert pinion shaft into differential case and through thrust washers and differential pinions.
5. Align hole in pinion mate shaft (2) with hole in the differential case and install lock screw (1) with Loctite® on the threads. Tighten lock screw to 11 N·m (8 ft. lbs.).
6. Install differential cover and fill with gear lubricant to the bottom of the fill plug hole.
7. Install brake rotor, caliper adapter and caliper.
8. Install wheel and tire.

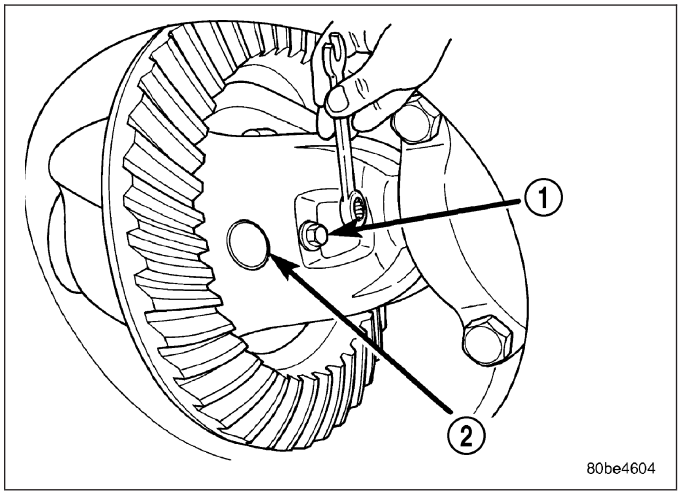

SEAL-AXLE SHAFT

REMOVAL

1. Remove axle shaft.
2. Remove axle shaft seal (1) from the axle tube with a small pry bar.

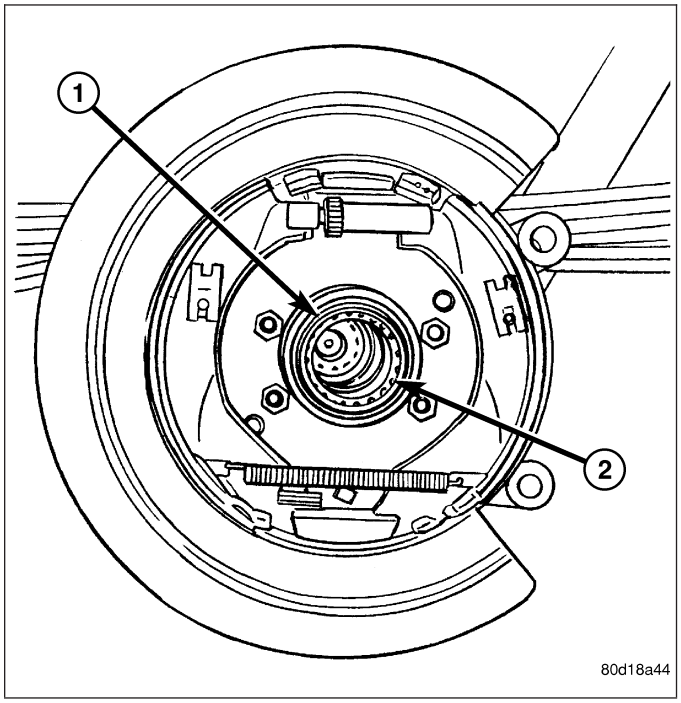

INSTALLATION

1. Wipe the axle tube bore clean. Remove any old sealer or burrs from the tube.
2. Coat the lip of the **new** seal with axle lubricant and install a seal with Installer C-4076-B and Handle C-4735-1.

NOTE: When tool contacts the axle tube, the seal is installed to the correct depth.

3. Install the axle shaft (1).
4. Install differential cover and fill with gear lubricant to the bottom of the fill plug hole.

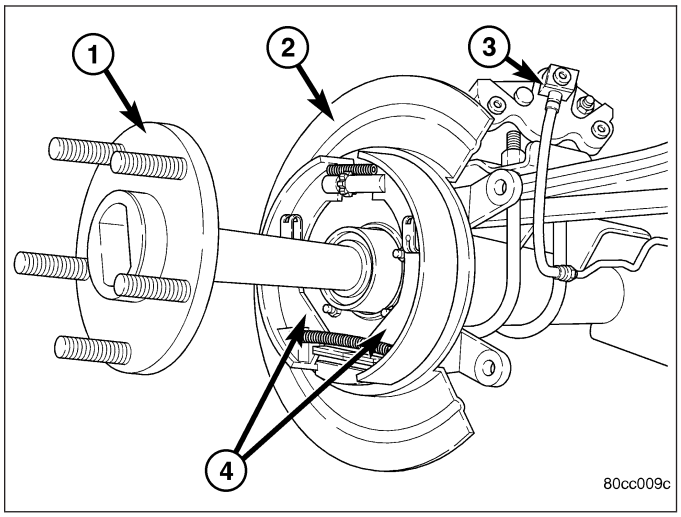

BEARING-AXLE

REMOVAL

1. Remove axle shaft.
2. Remove axle shaft seal from axle tube with a small pry bar.

NOTE: The seal and bearing can be removed at the same time with the bearing removal tool.

3. Remove axle shaft bearing with Bearing Remover 6310 (2) (3) (4) (5) and Foot 6310-9 (7).

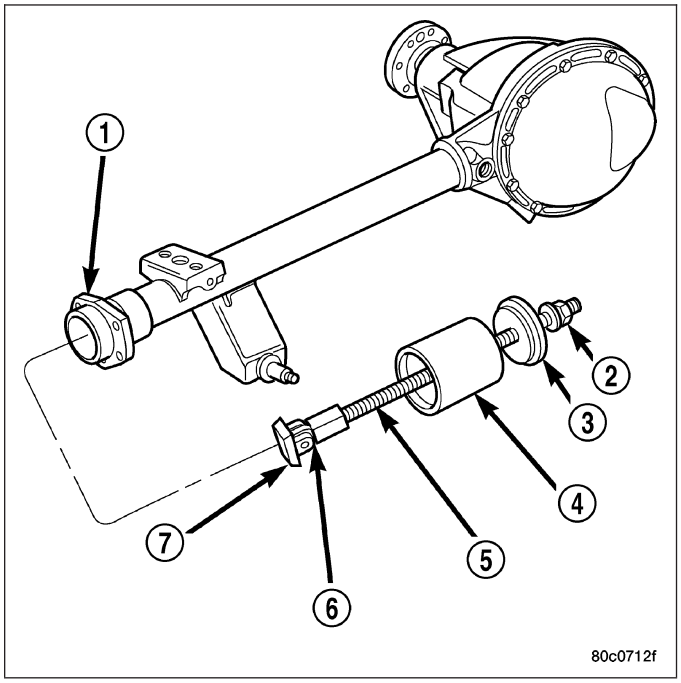

INSTALLATION

1. Wipe axle tube bore clean and remove any old sealer or burrs from the tube.
2. Install axle shaft bearing with Installer C-4198 and Handle C-4171. Drive bearing in until tool contacts the axle tube.

NOTE: Bearing is installed with the bearing part number against the installer.

3. Coat lip of the **new** axle seal with axle lubricant and install with Installer C-4076-B and Handle C-4735-1.
4. Install the axle shaft (1).
5. Install differential cover and fill with gear lubricant to the bottom of the fill plug hole.

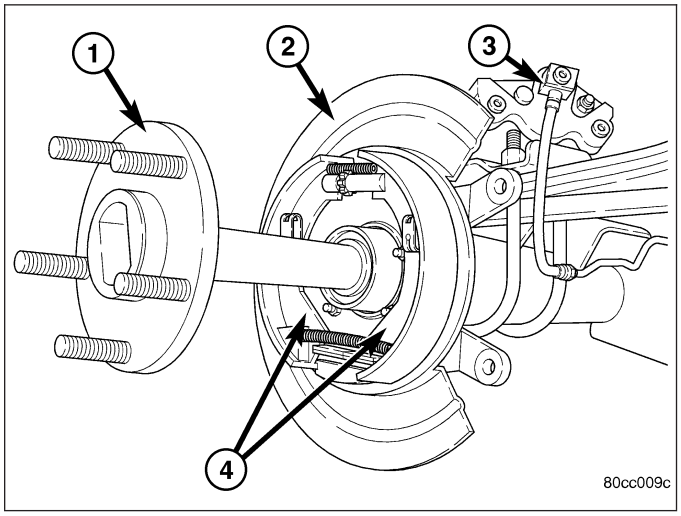

SEAL-PINION

REMOVAL

1. Mark universal joint, companion flange and pinion shaft for installation reference.
2. Remove propeller shaft from the companion flange.
3. Remove the brake rotors to prevent any drag.
4. Rotate companion flange (1) three or four times and record pinion rotating torque with an inch pound torque wrench (2).

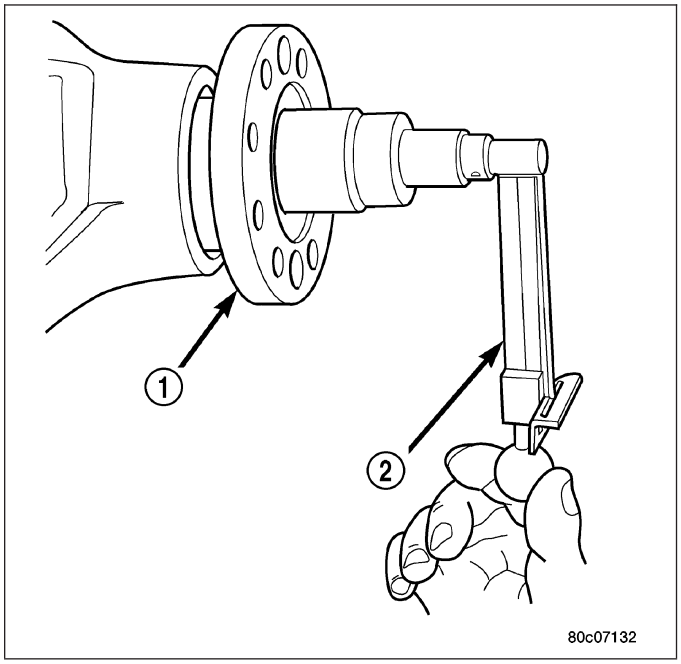

5. Install two bolts into the companion flange threaded holes, 180° apart. Position Holder 6719A against the companion flange and install and tighten two bolts and washers into the remaining holes.
6. Hold the companion flange with Holder 6719A and remove pinion nut and washer.
7. Remove companion flange with Remover C-452 (2).
8. Remove pinion seal with pry tool or slide-hammer mounted screw.

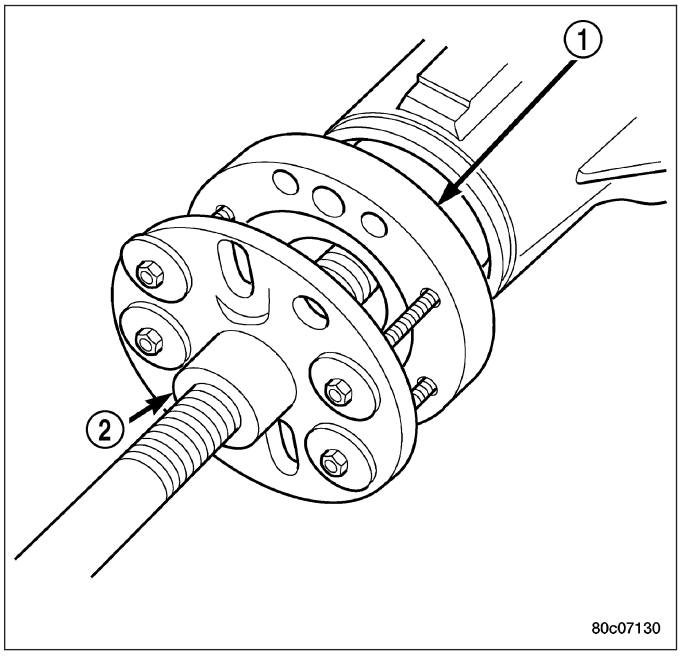

INSTALLATION

1. Apply a light coating of gear lubricant on the lip of pinion seal.
2. Install **new** pinion seal with Installer C-3860-A (2) and Handle C-4171 (1).

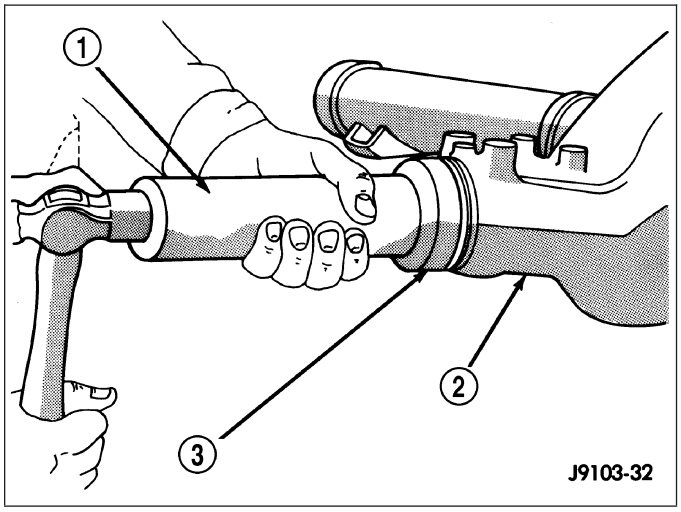

3. Install companion flange on the end of the shaft with the reference marks aligned.
4. Install two bolts into the threaded holes in the companion flange, 180° apart.
5. Position Holder 6719 (2) against the companion flange and install a bolt and washer into one of the remaining threaded holes. Tighten the bolts so holder is held to the flange.
6. Install companion flange on pinion shaft with Installer C-3718 and Holder 6719 (2).
7. Install pinion washer and a **new** pinion nut. The convex side of the washer must face outward.

CAUTION: Never exceed the minimum tightening torque 285 N·m (210 ft. lbs.) when installing the companion flange retaining nut at this point. Failure to follow these instructions will damage the collapsible spacer.

8. Hold companion flange with Holder 6719 (2) and tighten the pinion nut with a torque set to 285 N·m (210 ft. lbs.). Rotate pinion several revolutions to ensure the bearing rollers are seated.

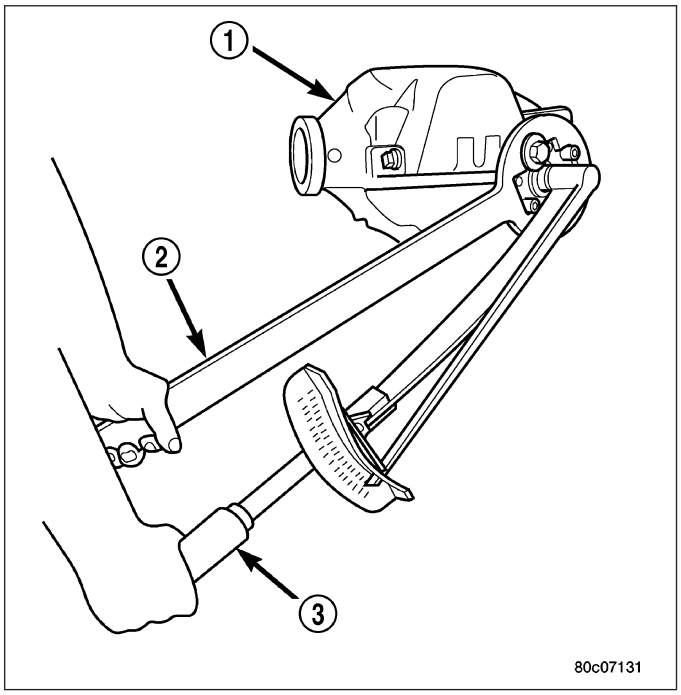

9. Rotate pinion with an inch pound torque wrench (2). Rotating torque should be equal to the reading recorded during removal plus an additional 0.56 N·m (5 in. lbs.).

CAUTION: Never loosen pinion nut to decrease pinion bearing rotating torque and never exceed specified preload torque. If rotating torque is exceeded, a new collapsible spacer must be installed.

10. If rotating torque is low, use Holder 6719 to hold the companion flange (1) and tighten pinion nut in 6.8 N·m (5 ft. lbs.) increments until proper rotating torque is achieved.

NOTE: The bearing rotating torque should be constant during a complete revolution of the pinion. If the rotating torque varies, this indicates a binding condition.

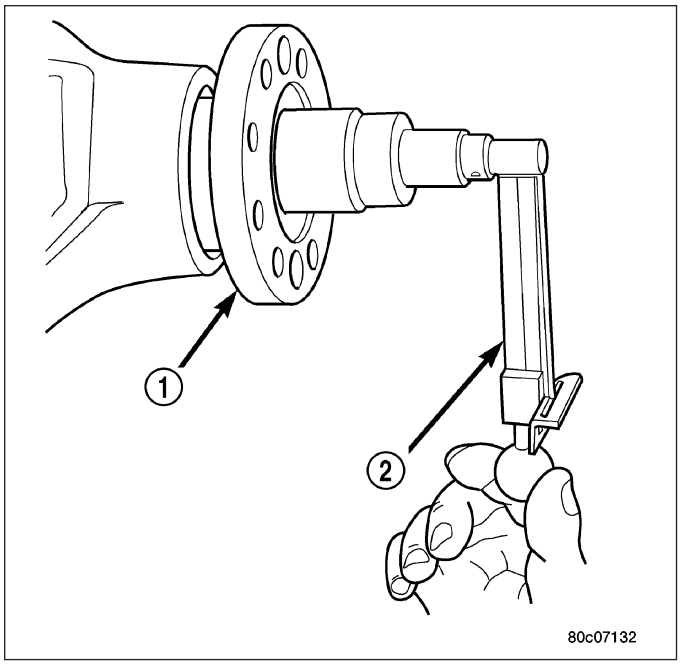

NOTE: The seal replacement is unacceptable if the final pinion nut torque is less than 285 N·m (210 ft. lbs.).

11. Install propeller shaft with the installation reference marks aligned.
12. Tighten the companion flange bolts to 108 N·m (80 ft. lbs.).
13. Install brake rotors.
14. Check the differential lubricant level.

COVER-DIFFERENTIAL

REMOVAL

1. With vehicle in neutral, position vehicle on hoist.
2. Remove drain plug.
3. Remove cover bolts.
4. Remove cover and drain lubricant.

INSTALLATION

1. Apply a 6.35mm (1/4 in.) bead of Mopar Silicone Rubber Sealant (1) or equivalent to the cover (2).

CAUTION: If housing cover is not installed within 3 to 5 minutes, the cover must be cleaned and new RTV applied. Failure to follow these instructions will result in a leak.

2. Install cover and identification tag. Tighten cover bolts in a criss-cross pattern to 41 N·m (30 ft. lbs.).
3. Fill differential to specifications.
4. Install fill plug.

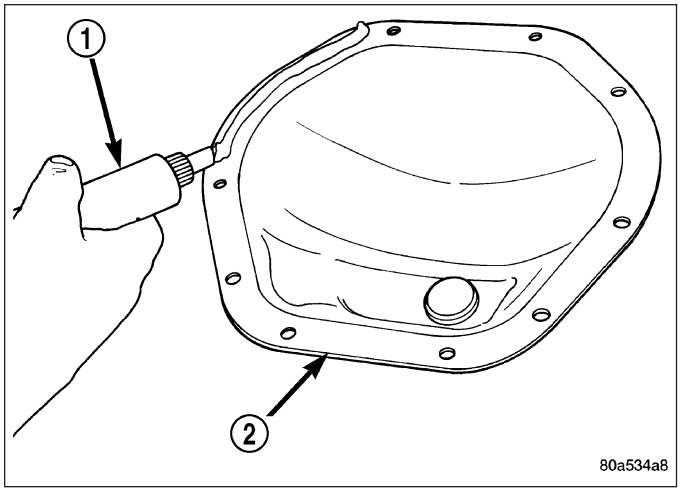

DIFFERENTIAL

REMOVAL

1. Remove filler plug from the differential cover.
2. Remove differential cover and drain the lubricant.
3. Clean housing cavity with flushing oil, light engine oil or a lint free cloth.

NOTE: Do not use steam, kerosene or gasoline to clean the housing.

4. Remove axle shafts.
5. Remove RWAL/ABS sensor from housing.

NOTE: Side play resulting from bearing races being loose on case hubs requires replacement of the differential case.

6. Mark differential housing and bearing caps (3) for installation reference.

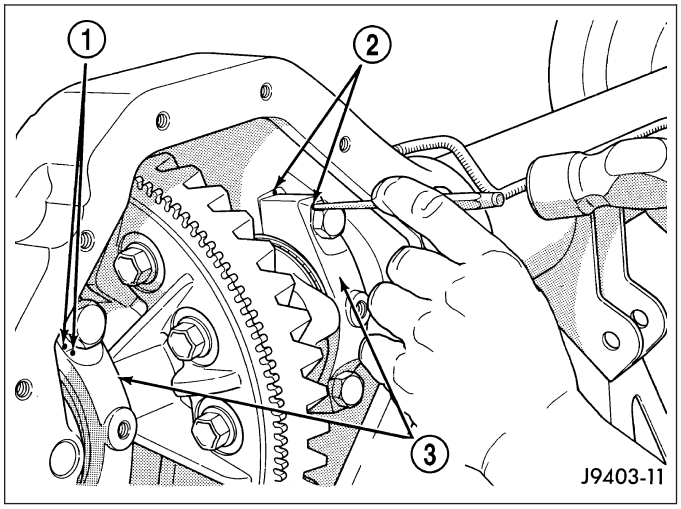

7. Remove bearing threaded adjuster lock from each bearing cap.
8. Loosen differential bearing cap bolts.
9. Loosen differential bearing adjusters through the axle tubes (1) with Wrench C-4164 (3).
10. Hold differential case while removing bearing caps and adjusters.

NOTE: Tag the differential bearing cups and threaded adjusters to indicate their location.

11. Remove differential case.

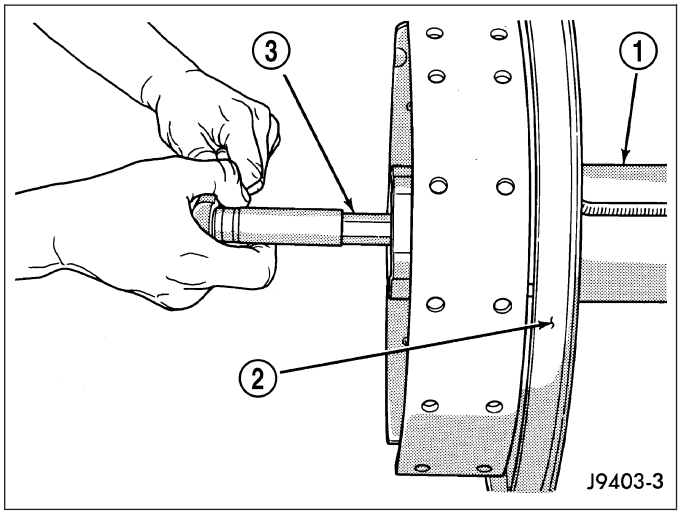

DISASSEMBLY

1. Rotate one pinion gear (2) with thrust washer (3) to the differential window (1) and remove gear and thrust washer.

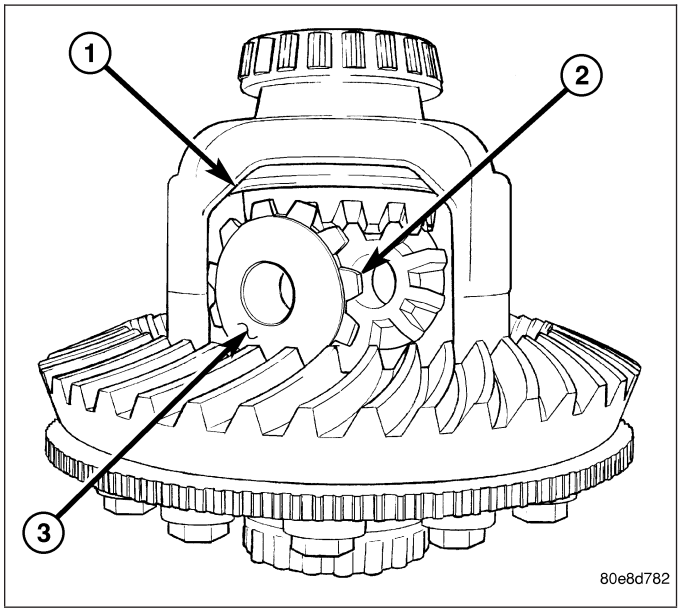

2. Rotate remaining pinion gear (3) with thrust washer (2) to the differential window (1) and remove gear and washer.

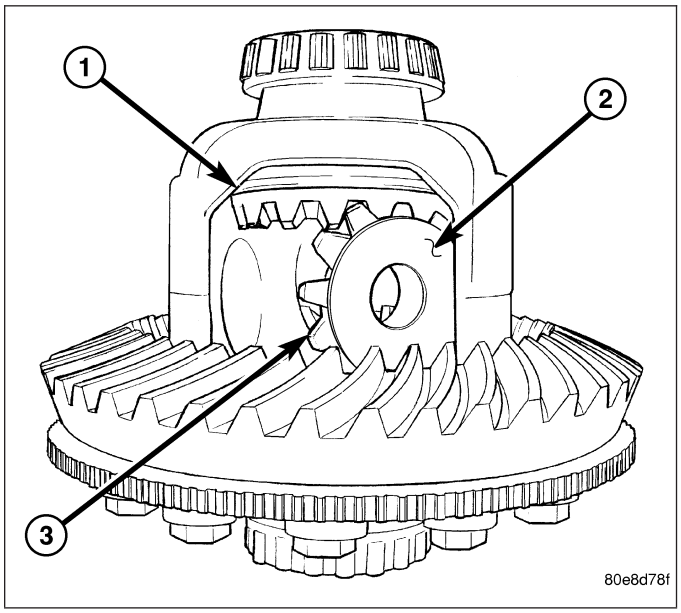

3. Remove differential side gears (1) (2) and thrust washers.

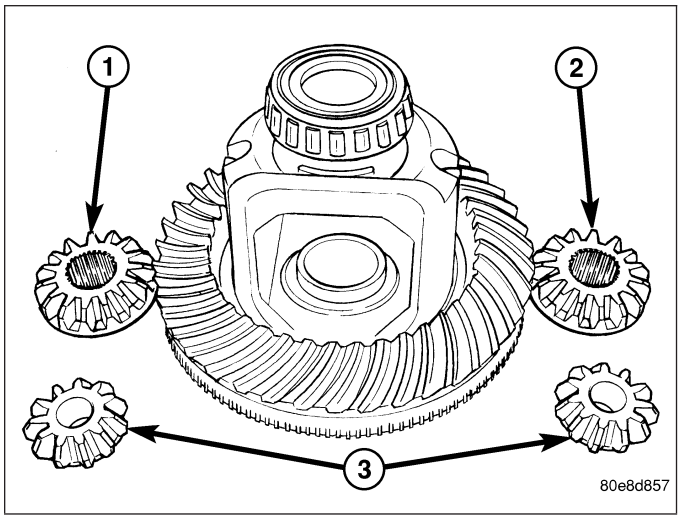

ASSEMBLY

NOTE: If same gears and thrust washers are being used, install them into their original locations.

1. Lubricate all differential components with axle lubricant.
2. Install differential side gears (2) and thrust washers.

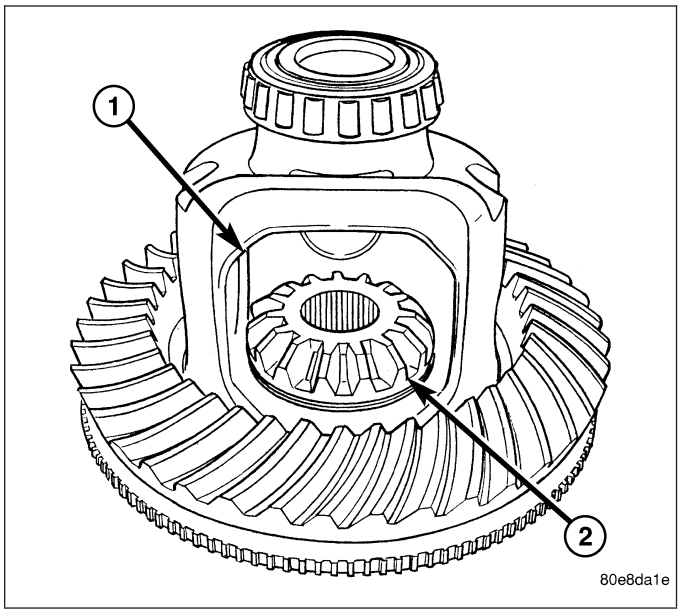

3. Install first pinion gear (3) with thrust washer into differential window (1) and side gears (2). Rotate pinion gear into the case.

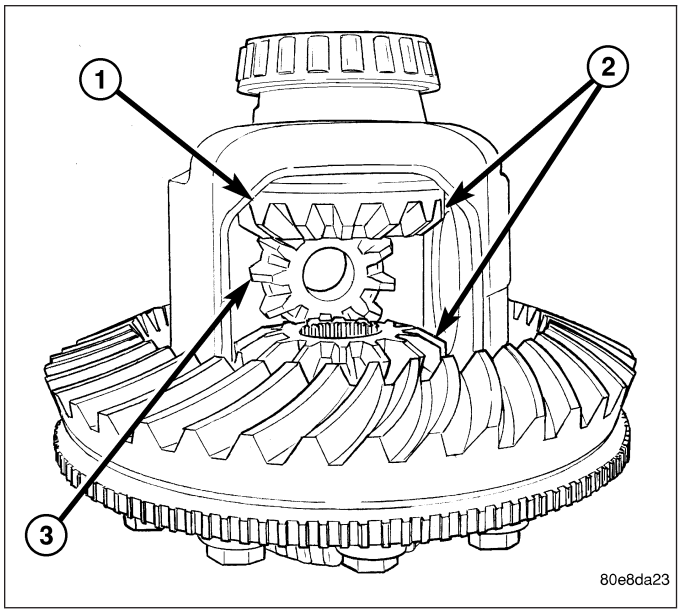

4. Install remaining pinion gear and thrust washer. Rotate gears to align hole in the pinion gears with hole in the differential case.
5. Slide pinion shaft (4) into the case and through the pinion gears (3) to align the gears.

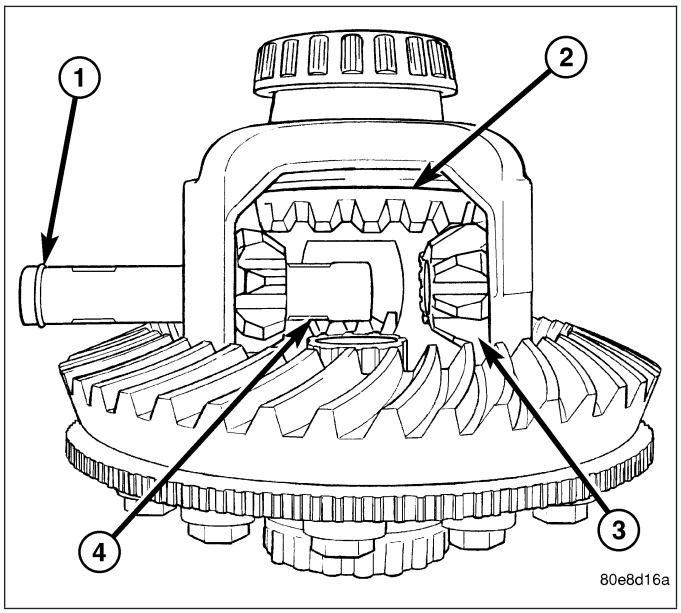

INSTALLATION

1. Apply a coating of hypoid gear lubricant to the differential bearings, bearing cups, and threaded adjusters. A dab of grease can be used to keep the adjusters in position.
2. Install differential assembly into the housing.
3. Install differential bearing caps (4) in their original locations.
4. Install bearing cap bolts and tighten the upper bolts to 14 N·m (10 ft. lbs.). Tighten lower bolts finger-tight until the bolt head is seated. Then perform the differential bearing preload and adjustment procedure.

NOTE: Be sure that all bearing cap bolts are tightened to their final torque of 136 N·m (100 ft.lbs.) before proceeding.

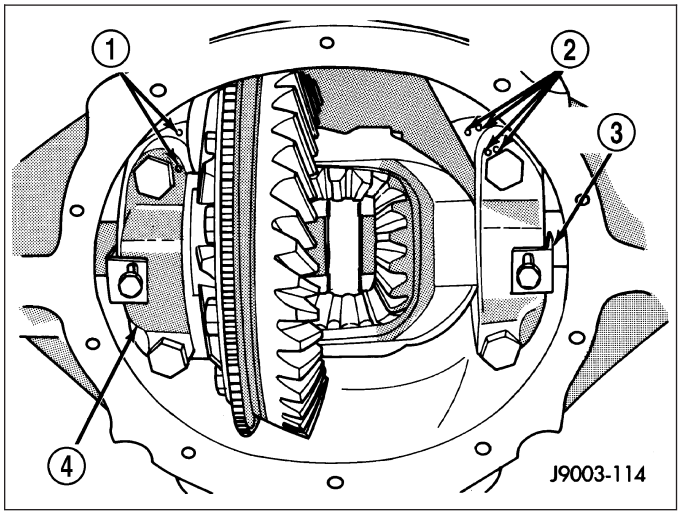

5. Install axle shafts.

6. Apply a bead of orange Mopar Axle RTV Sealant (1) or equivalent to the cover (2).

CAUTION: If cover is not installed within 3 to 5 minutes, the cover must be cleaned and new RTV applied. Failure to follow these instruction will result in a leak.

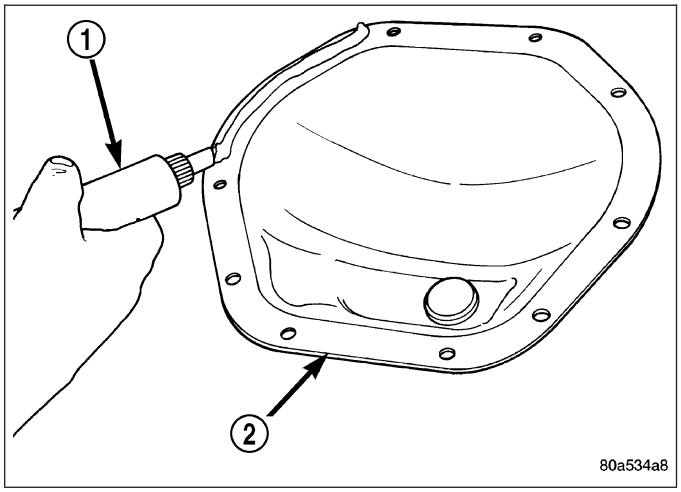

7. Install cover and any identification tag and tighten cover bolts to 41 N·m (30 ft. lbs.).
8. Fill differential with lubricant to bottom of the fill plug hole.

NOTE: Trac-lok™ differential equipped vehicles should be road tested by making 10 to 12 slow figure-eight turns. This maneuver will pump the lubricant through the clutch discs to eliminate a possible chatter noise complaint.

DIFFERENTIAL-TRAC-LOK

OPERATION

This differential clutches are engaged by two concurrent forces. The first being the preload force exerted through Belleville spring washers within the clutch packs (6) (8). The second is the separating forces generated by the side gears (7) as torque is applied through the ring gear (2).

This design provides the differential action needed for turning corners and for driving straight ahead during periods of unequal traction. When one wheel looses traction, the clutch packs transfer additional torque to the wheel having the most traction. This differential resist wheel spin on bumpy roads and provide more pulling power when one wheel looses traction. Pulling power is provided continuously until both wheels loose traction. If both wheels slip due to unequal traction, Trac-lok® operation is normal. In extreme cases of differences of traction, the wheel with the least traction may spin.

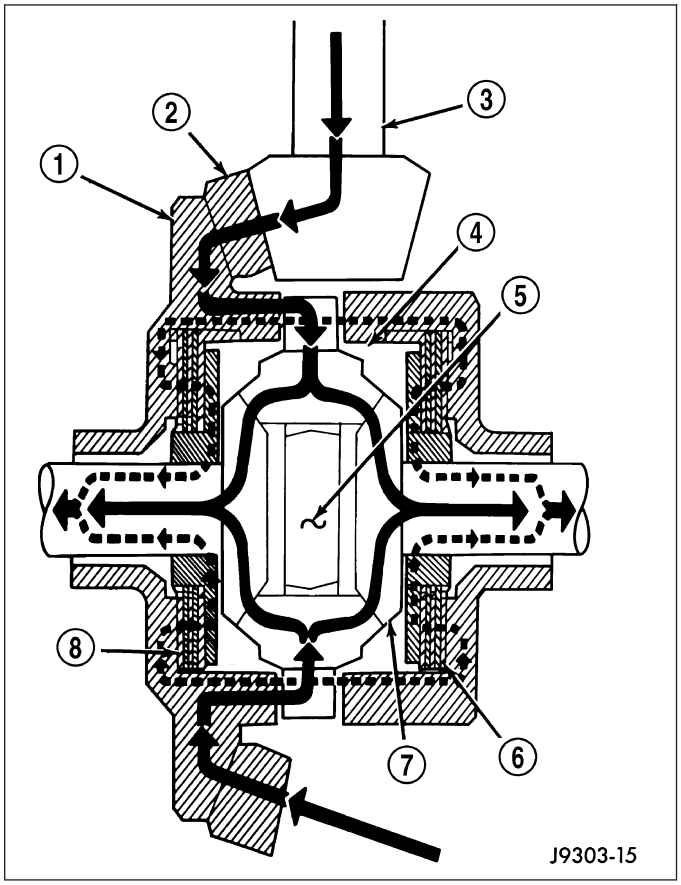

DIAGNOSIS AND TESTING

DIFFERENTIAL-TRAC-LOK

The most common problem is a chatter noise when turning corners. Before removing the unit for repair, drain, flush and refill the axle with the specified lubricant. Add a container of Mopar Limited Slip Additive after repair service or during a lubricant change.

After changing the lubricant, drive the vehicle and make 10 to 12 slow, figure-eight turns. This maneuver will pump lubricant through the clutches. This will correct the condition in most instances. If the chatter persists, clutch damage could have occurred.

The differential can be tested without removing the differential case by measuring rotating torque. Make sure brakes are not dragging during this measurement.

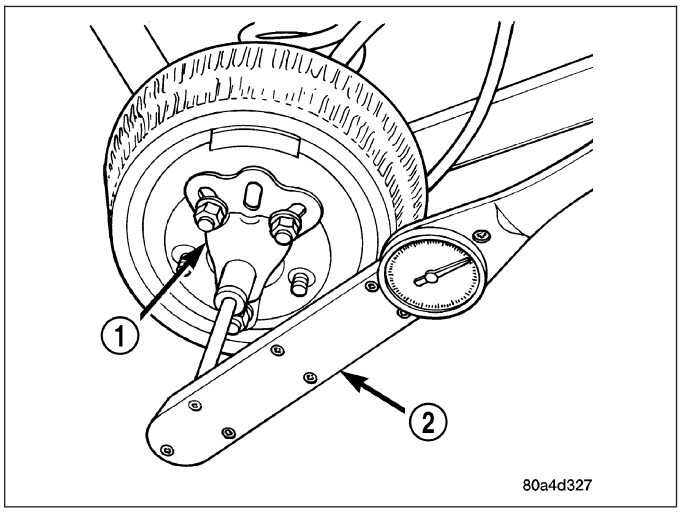

1. Place blocks in front and rear of both front wheels.
2. Raise one rear wheel until it is completely off the ground.
3. Engine off, transmission in neutral, and parking brake off.
4. Remove wheel and bolt Torque Check Tool 6790 (1) or equivalent tool to studs.
5. Use torque wrench (2) on Torque Check Tool (1) to rotate wheel and read rotating torque.

6. If rotating torque is less than 41 N·m (30 ft. lbs.) or more than 271 N·m (200 ft. lbs.) on either wheel the unit must be replaced.

BEARING-DIFFERENTIAL CASE

REMOVAL

1. Remove differential case from axle housing.
2. Remove differential bearings (3) from the case with Puller/Press C-293-PA (1) and Adapters C-293-47 (2) and Plug C-293-3 (5).

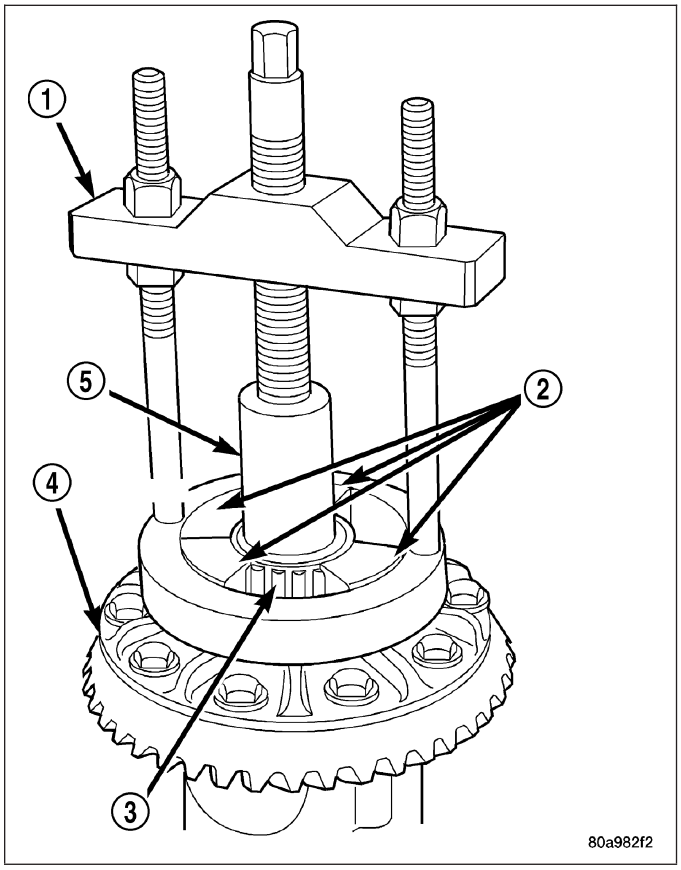

INSTALLATION

1. Install differential side bearings (3) with Installer C-4213 (4) and Handle C-4171 (1).
2. Install differential case into housing.

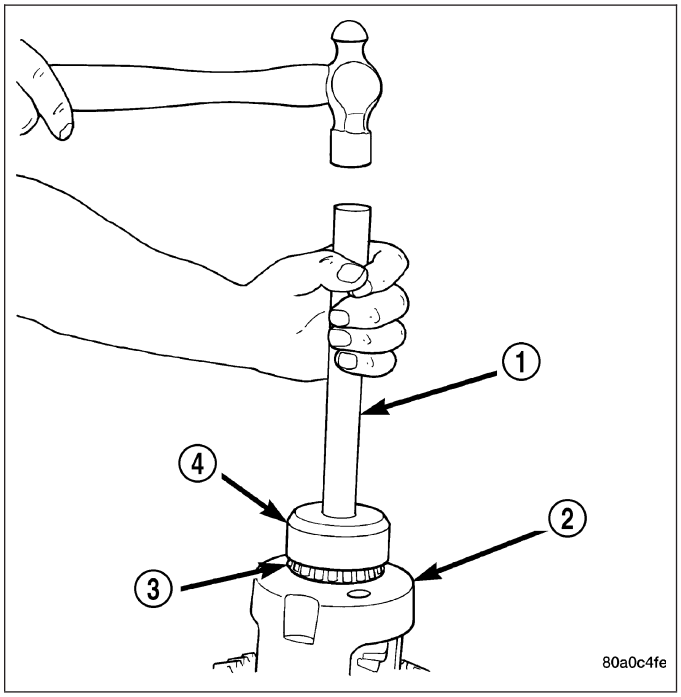

GEAR-PINION/RING

REMOVAL

NOTE: The ring gear and pinion are serviced in a matched set. Never replace one gear without replacing the other matching gear.

1. Mark companion flange and propeller shaft for installation reference.
2. Remove propeller shaft.
3. Remove axle shafts.
4. Remove differential from the differential housing.
5. Place differential case (1) in a vise with soft metal jaw protectors.
6. Remove ring gear bolts from the differential case.
7. Drive ring gear (2) off the differential case (2) with a soft hammer (3).

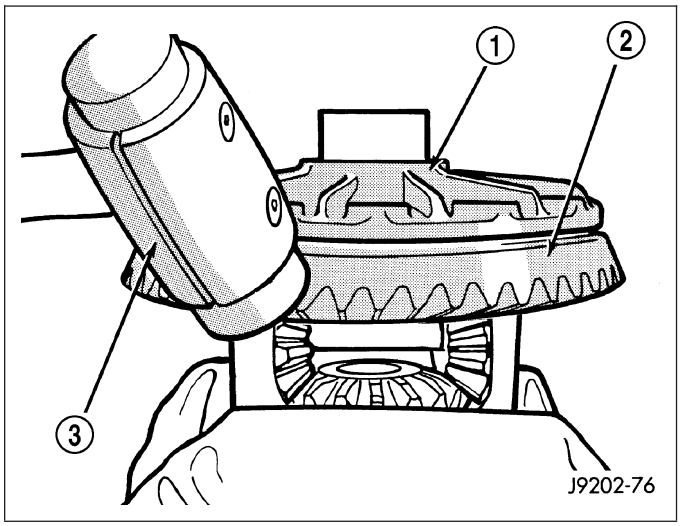

8. Install bolts into two of the threaded holes in the companion flange 180° apart.
9. Position Holder 6719 against the companion flange and install a bolt and washer into one of the remaining threaded holes. Tighten the bolts so the Holder 6719 is held to the flange.
10. Use Holder 6719 to hold companion flange and remove the companion flange nut and washer.
11. Remove companion flange (1) with Remover C-452 (2).

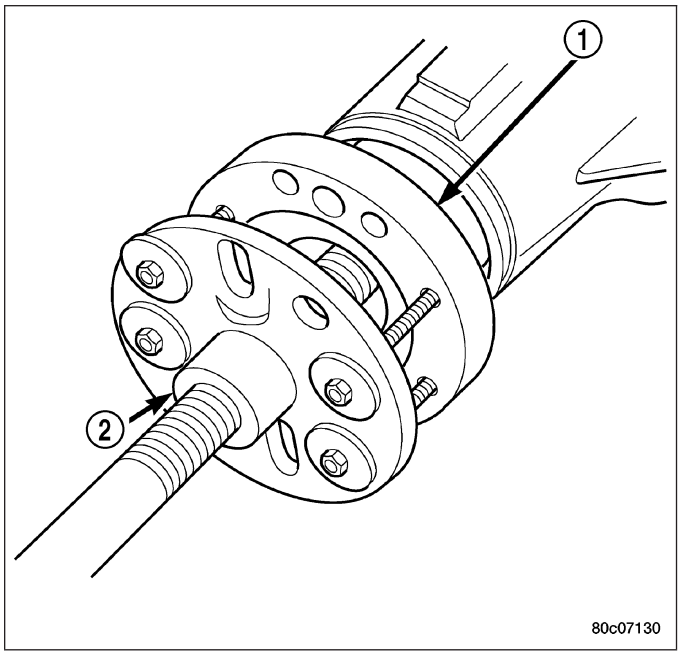

12. Remove pinion gear from the housing with a soft hammer (1).
13. Remove pinion seal with a pry tool or slide-hammer mounted screw.
14. Remove front pinion bearing and oil slinger if equipped.

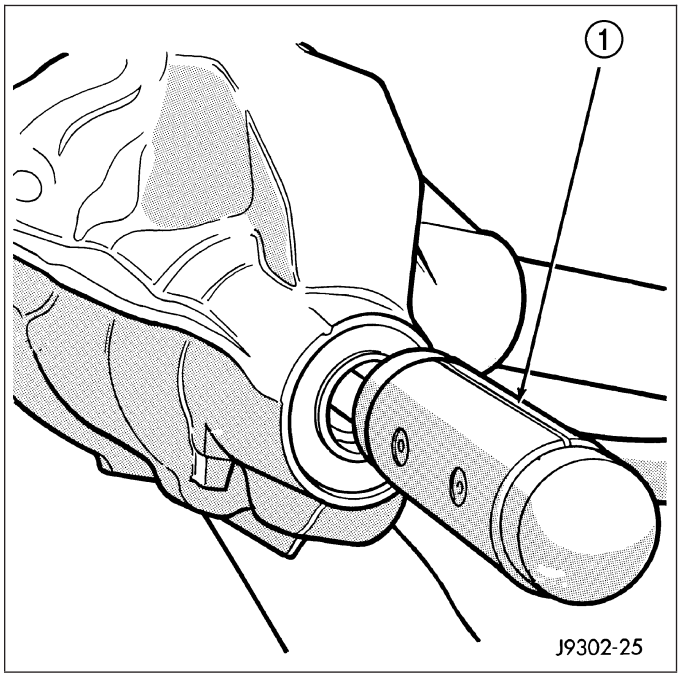

15. Remove front pinion bearing cup with Remover C-4345 (1) and Handle C-4171 (2).

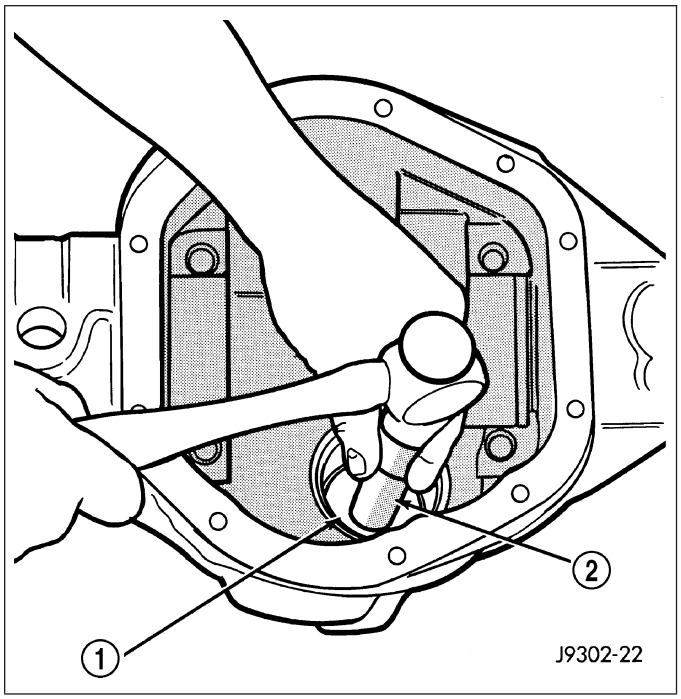

16. Remove rear pinion bearing cup from housing with Remover C-4307 (1) and Handle C-4171 (2).

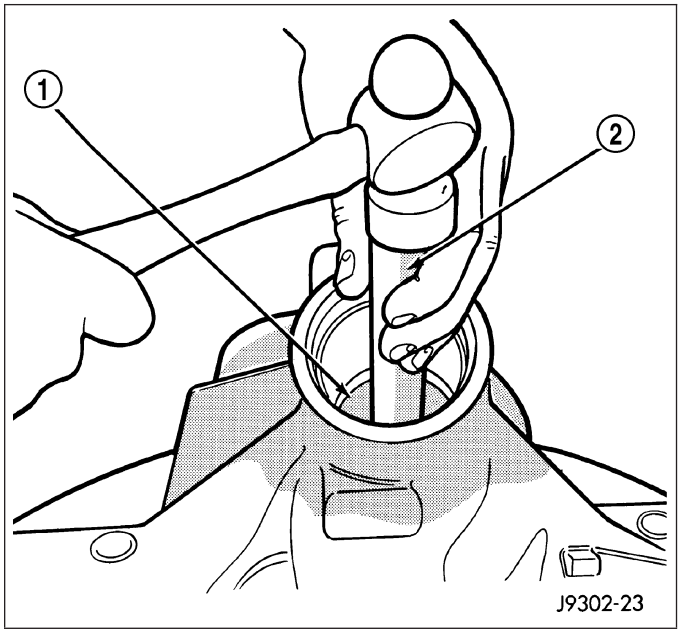

17. Remove collapsible spacer (1) from the pinion shaft.

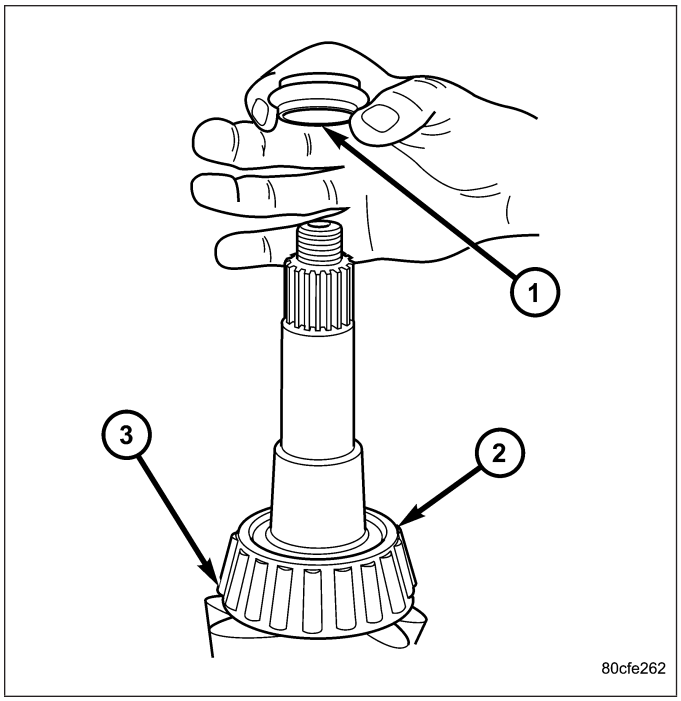

18. Remove rear pinion bearing from the pinion shaft (4) with Puller C-293-PA (1) and Adapters C-293-37 (3).

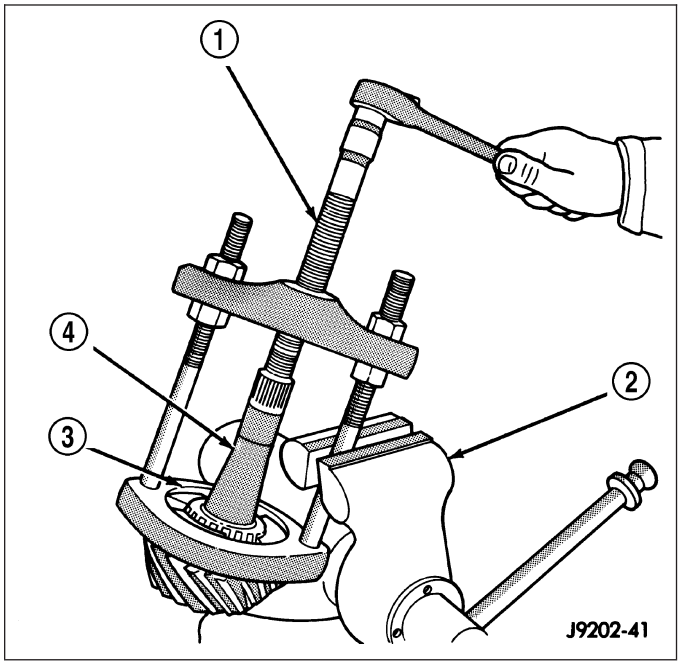

19. Remove pinion depth shim (1) from the pinion shaft (2) and record shim thickness.

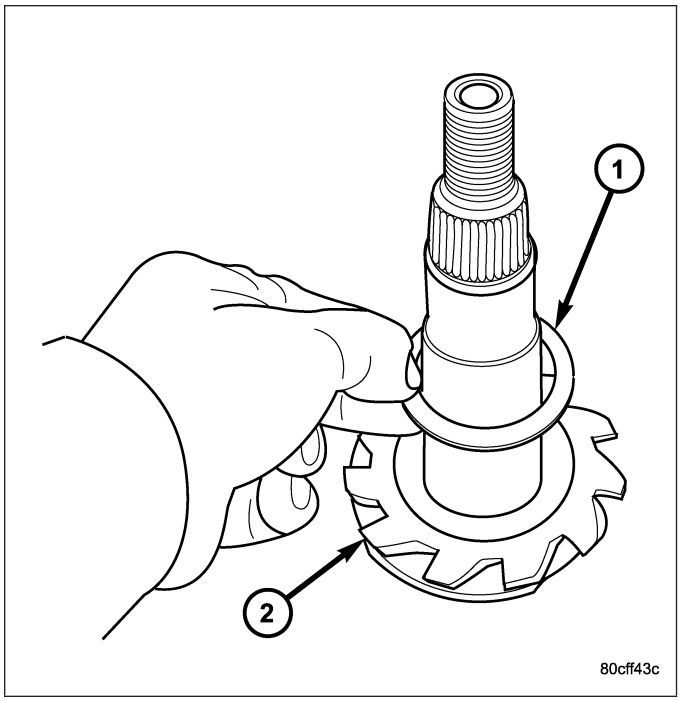

INSTALLATION

NOTE: The ring gear and pinion are serviced in a matched set. Do not replace one gear without replacing the other matching gear. If ring and pinion gears or bearings are replaced, Refer to Adjustments for Pinion Gear Depth Setting.

1. Apply Mopar Door Ease or equivalent stick lubricant to outside surface of the pinion bearing cups.
2. Install rear pinion bearing cup with Installer C-4308 (1) and Handle C-4171 (2) and verify cup is seated.

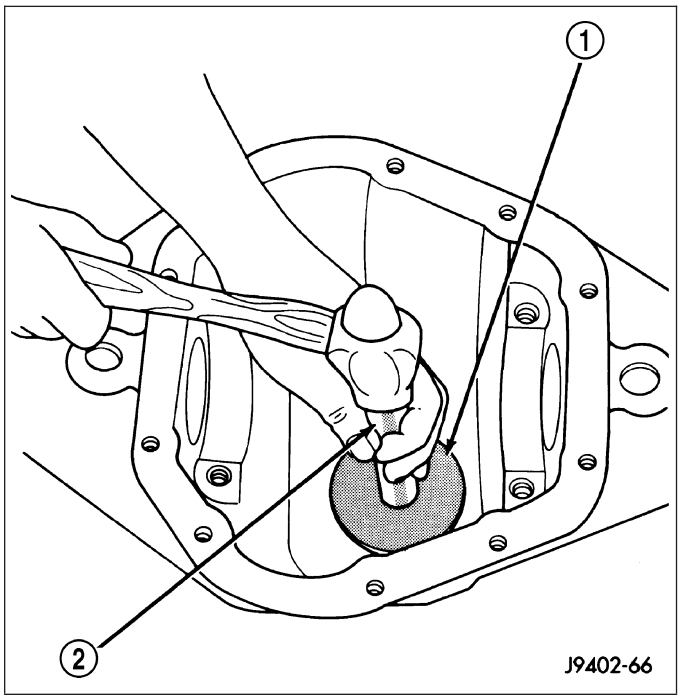

3. Install front pinion bearing cup with Installer D-129 (1) and Handle C-4171 (2) and verify cup is seated.
4. Lubricate and install front pinion bearing into the housing.

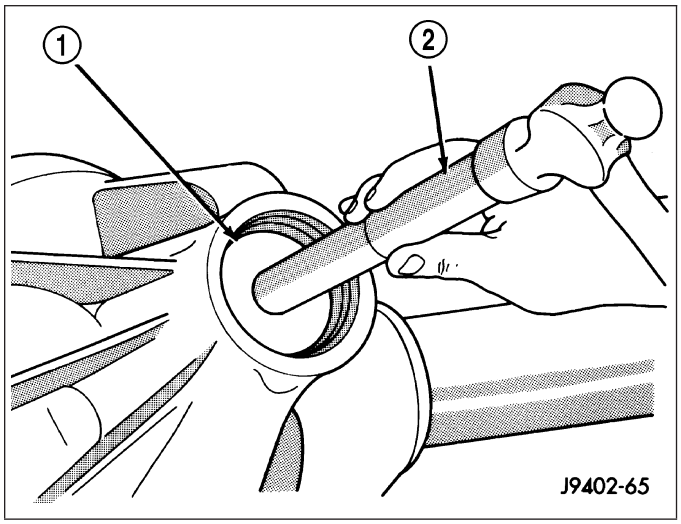

5. Apply a light coating of gear lubricant on the lip of pinion seal. Install seal with Installer C-4076-B (3) and Handle C-4735-1(1).

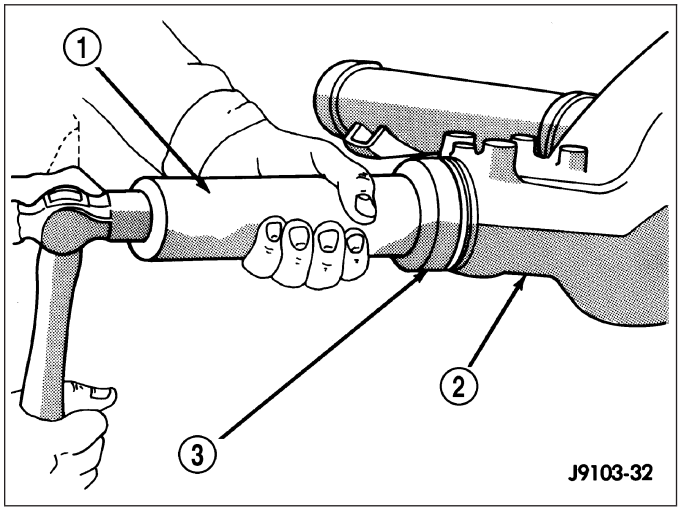

6. Install pinion depth shim (1) on the pinion gear shaft (2).

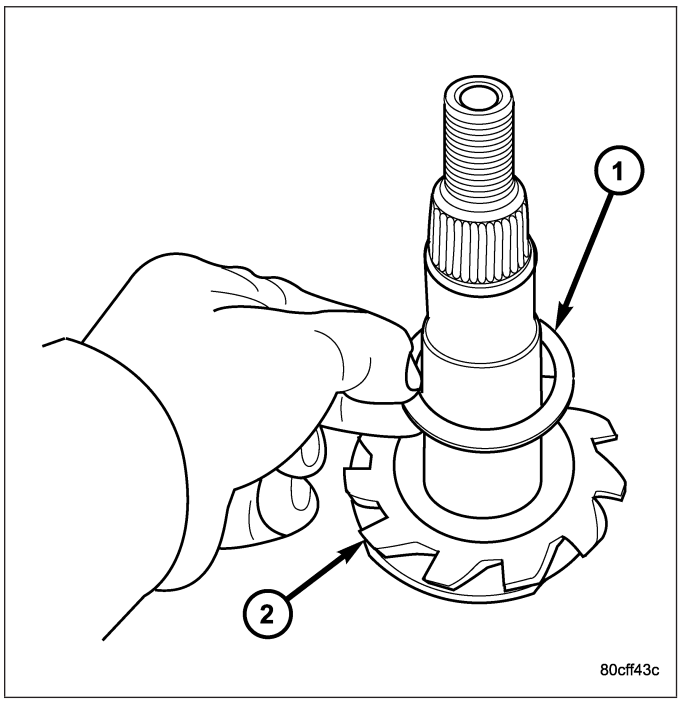

7. Install rear bearing (4) on the pinion (3) with Installer C-3095-A (2) and a press (1).

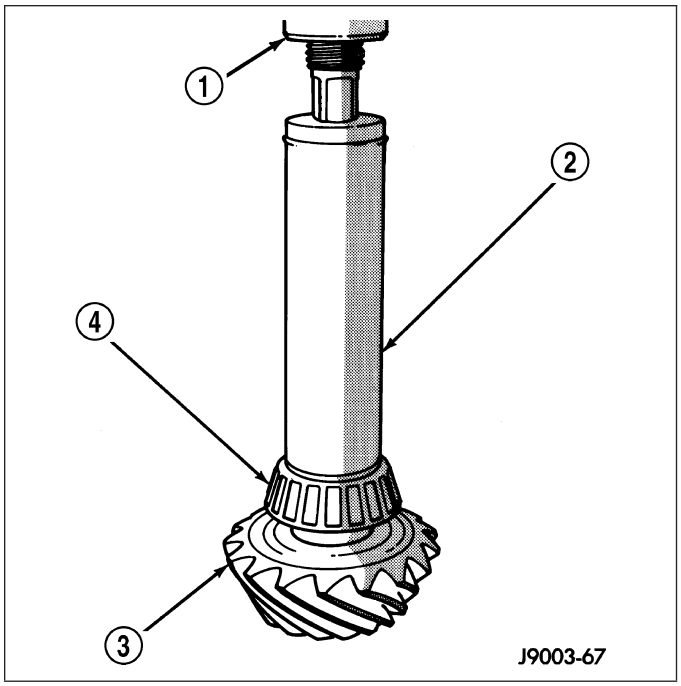

8. Install a **new** collapsible spacer (1) on the pinion shaft.
9. Lubricate rear pinion bearing and install pinion gear into the housing.
10. Install companion flange with Installer C-3718 and Holder 6719.

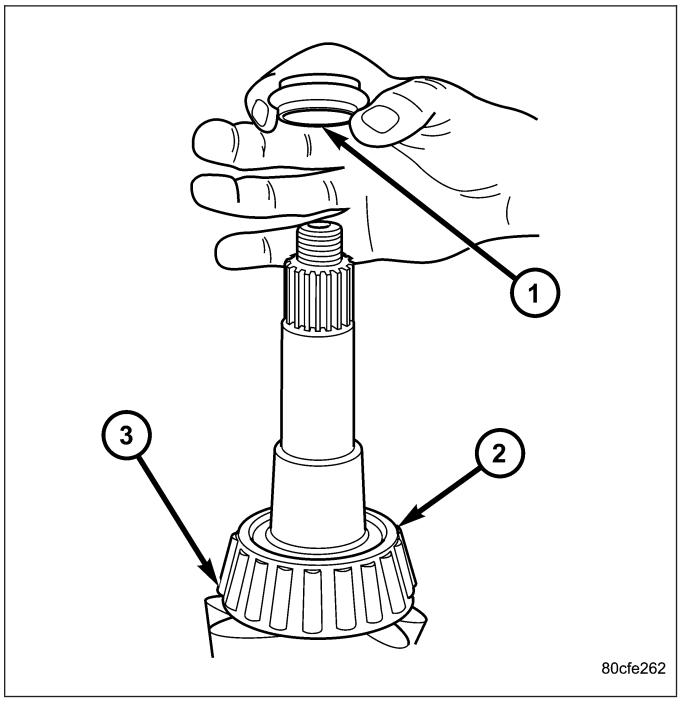

11. Install bolts into two of the threaded holes in the companion flange 180° apart.
12. Position Holder 6719 (2) against the companion flange and install a bolt and washer into one of the remaining threaded holes. Tighten the bolts so the Holder 6719 is held to the flange.
13. Install companion flange washer and a **new** nut on the pinion and tighten the nut until there is zero bearing end-play.
14. With a torque wrench (3) tighten the nut to 285 N·m (210 ft. lbs.).

CAUTION: Never loosen pinion nut to decrease pinion rotating torque and never exceed specified preload torque. Failure to follow these instruction will damage the collapsible spacer.

15. Slowly tighten the nut in 6.8 N·m (5 ft. lbs.) increments until the desired rotating torque is achieved. Measure pinion rotating torque frequently to avoid over crushing the collapsible spacer.

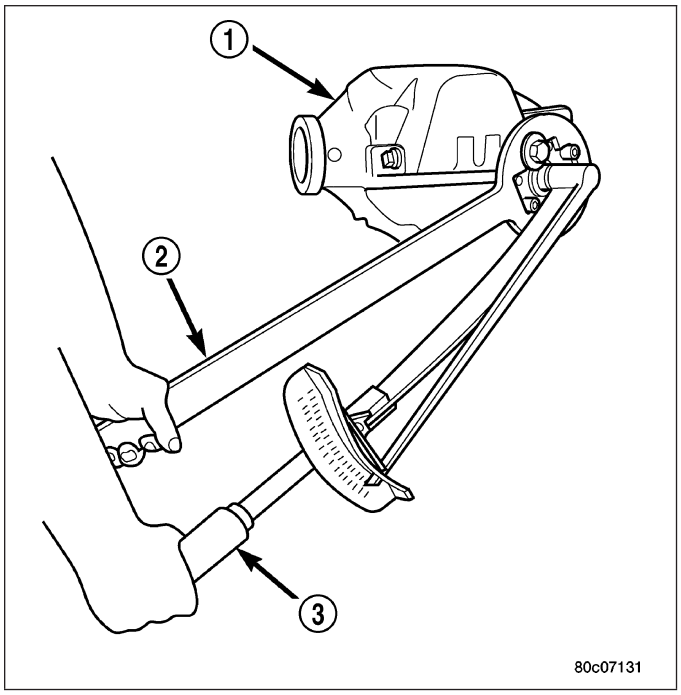

16. Check pinion rotating torque with an inch pound torque wrench (2). The pinion rotating torque should be:
    - Original Bearings: 1 to 3 N·m (10 to 20 in. lbs.).
    - New Bearings: 1.7 to 5 N·m (15 to 35 in. lbs.).
17. Position exciter ring on differential case. With a brass drift, slowly and evenly tap the exciter ring into position.

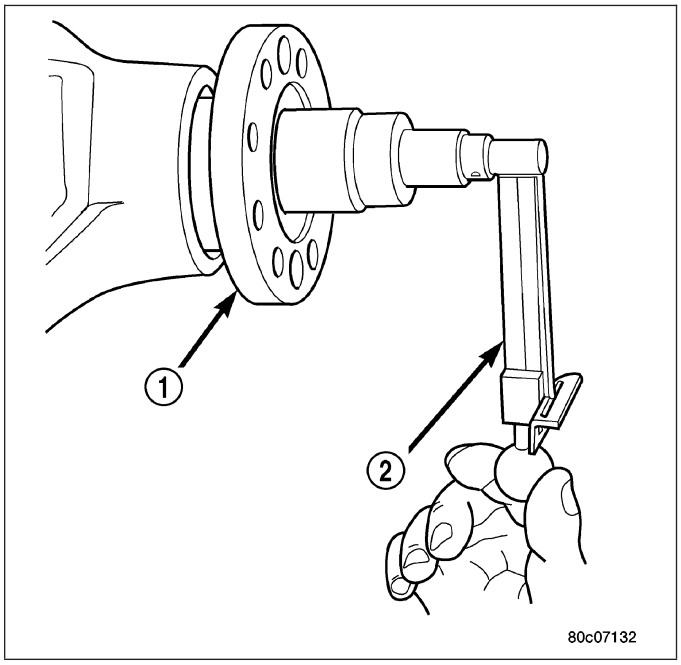

18. Position ring gear (3) on the differential case (4) and start two ring gear bolts (2). This will provide case-to-ring gear bolt hole alignment.
19. Invert the differential case in the vise.
20. Install **new** ring gear bolts and alternately tighten to 156 N·m (115 ft. lbs.).

CAUTION: Never reuse the ring gear bolts. Failure to follow these instruction will damage will damage the bolts.

21. Install differential in housing and verify gear mesh, backlash and contact pattern.
22. Install axle shafts.
23. Install differential cover and fill with gear lubricant.
24. Install propeller shaft with reference marks aligned.

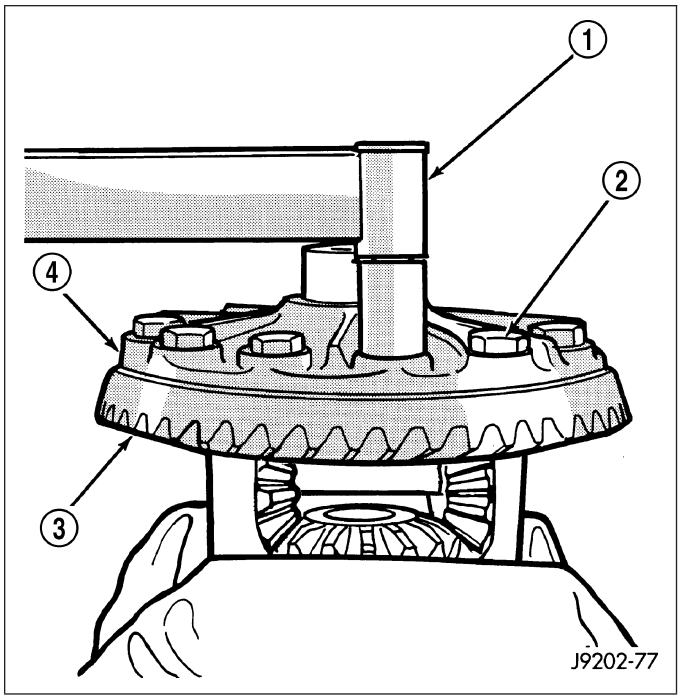

REAR AXLE - 10 1/2 AA

TABLE OF CONTENTS

page

REAR AXLE - 10 1/2 AA
DIAGNOSIS AND TESTING
REAR AXLE-10 1/2 AA 265
REMOVAL 269
INSTALLATION 270
ADJUSTMENTS 270
SPECIFICATIONS 275
SPECIAL TOOLS 277
SHAFT-AXLE
REMOVAL 281
INSTALLATION 281
BEARING-AXLE HUB
REMOVAL 282
INSTALLATION 283
SEAL-PINION
REMOVAL 284
INSTALLATION 285
DIFFERENTIAL
REMOVAL 286
DISASSEMBLY 287
ASSEMBLY 289
INSTALLATION 290
BEARING-DIFFERENTIAL CASE
REMOVAL 292
INSTALLATION 292
DIFFERENTIAL-TRAC-RITE
DESCRIPTION 293
OPERATION 294
CLEANING 294
DIFFERENTIAL-ELECTRIC LOCKER
DIAGNOSIS AND TESTING 294
REMOVAL 295
DISASSEMBLY 297
ASSEMBLY 298
INSTALLATION 300
BEARINGS-EL DIFFERENTIAL CASE
REMOVAL 301
INSTALLATION 302
GEAR-PINION/RING
REMOVAL 302
INSTALLATION 305

REAR AXLE - 10 1/2 AA

DIAGNOSIS AND TESTING

REAR AXLE-10 1/2 AA

GEAR NOISE

Axle gear noise can be caused by insufficient lubricant, incorrect backlash, incorrect pinion depth, tooth contact, worn/damaged gears, or the carrier housing not having the proper offset and squareness.

Gear noise usually happens at a specific speed range. The noise can also occur during a specific type of driving condition. These conditions are acceleration, deceleration, coast, or constant load.

When road testing, first warm-up the axle fluid by driving the vehicle at least 5 miles and then accelerate the vehicle to the speed range where the noise is the greatest. Shift out-of-gear and coast through the peak-noise range. If the noise stops or changes greatly check for:

- Insufficient lubricant.
- Incorrect ring gear backlash.
- Gear damage.

Differential side gears and pinions can be checked by turning the vehicle. The side gears are loaded during turns. They usually do not cause noise during straight-ahead driving when the gears are unloaded. A worn pinion shaft can also cause a snapping or a knocking noise.

BEARING NOISE

The axle shaft, differential and pinion bearings can all produce noise when worn or damaged. Bearing noise can be either a whining, or a growling sound.

Pinion bearings have a constant-pitch noise. This noise changes only with vehicle speed. Pinion bearing noise will be higher pitched because it rotates at a faster rate. Drive the vehicle and load the differential. If bearing noise occurs, the rear pinion bearing is the source of the noise. If the bearing noise is heard during a coast, the front pinion bearing is the source.

Differential bearings usually produce a low pitch noise. Differential bearing noise is similar to pinion bearing noise. The pitch of differential bearing noise is also constant and varies only with vehicle speed.

Axle shaft bearings produce noise and vibration when worn or damaged. The noise generally changes when the bearings are loaded. Road test the vehicle. Turn the vehicle sharply to the left and to the right. This will load the bearings and change the noise level. Where axle bearing damage is slight, the noise is usually not noticeable at speeds above 30 m.p.h.

LOW SPEED KNOCK

Low speed knock is generally caused by:

- Worn U-joint(s).
- Worn side-gear thrust washers.
- Worn pinion shaft bore.

VIBRATION

Vibration at the rear of the vehicle is usually caused by:

- Damaged drive shaft.
- Missing drive shaft balance weight(s).
- Worn or out-of-balance wheels.
- Loose wheel lug nuts.
- Worn U-joint(s).
- Loose/broken springs.
- Damaged axle shaft bearing(s).
- Loose pinion gear nut.
- Excessive pinion yoke run out.
- Bent axle shaft(s).

Check for loose or damaged front-end components or engine/transmission mounts. These components can contribute to what appears to be a rear end vibration. Do not overlook engine accessories, brackets and drive belts.

NOTE: All driveline components should be examined before starting any repair.

DRIVELINE SNAP

A snap or clunk noise when the vehicle is shifted into gear (or the clutch engaged), can be caused by:

- High engine idle speed.
- Transmission shift operation.
- Loose engine/transmission/transfer case mounts.
- Worn U-joints.
- Loose spring mounts.
- Loose pinion gear nut and yoke.
- Excessive ring gear backlash.
- Excessive side gear to case clearance.

The source of a snap or a clunk noise can be determined with the assistance of a helper. Raise the vehicle on a hoist with the wheels free to rotate. Instruct the helper to shift the transmission into gear and listen for the noise. A mechanics stethoscope is helpful in isolating the source of a noise.

DIAGNOSTIC CHART

Condition	Possible Causes	Correction
Wheel Noise	1. Wheel loose.	1. Tighten loose nuts.
	2. Faulty, brinelled wheel bearing.	2. Replace bearing.
Axle Shaft Noise	1. Misaligned axle tube.	1. Inspect axle tube alignment. Correct as necessary.
	2. Bent or sprung axle shaft.	2. Inspect and correct as necessary.
Axle Shaft Broke	1. Misaligned axle tube.	1. Replace the broken shaft after correcting tube mis-alignment.
	2 Vehicle overloaded.	2. Replace broken shaft and avoid excessive weight on vehicle.
	3. Erratic clutch operation.	3. Replace broken shaft and avoid or correct erratic clutch operation.
	4. Grabbing clutch.	4. Replace broken shaft and inspect and repair clutch as necessary.
Differential Cracked	1. Improper adjustment of the differential bearings.	1. Replace case and inspect gears and bearings for further damage. Set differential bearing pre-load properly.
	2. Excessive ring gear backlash.	2. Replace case and inspect gears and bearings for further damage. Set ring gear backlash properly.
	3. Vehicle overloaded.	3. Replace case and inspect gears and bearings for further damage. Avoid excessive vehicle weight.
	4. Erratic clutch operation.	4. Replace case and inspect gears and bearings for further damage. Avoid erratic use of clutch.
Differential Gears Scored	1. Insufficient lubrication.	1. Replace scored gears. Fill differential with the correct fluid type and quantity.
	2. Improper grade of lubricant.	2. Replace scored gears. Fill differential with the correct fluid type and quantity.
	3. Excessive spinning of one wheel/tire.	3. Replace scored gears. Inspect all gears, pinion bores, and shaft for damage. Service as necessary.
Loss Of Lubricant	1. Lubricant level too high.	1. Drain lubricant to the correct level.
	2. Worn axle shaft seals.	2. Replace seals.
	3. Cracked differential housing.	3. Repair as necessary.
	4. Worn pinion seal.	4. Replace seal.
	5. Worn/scored yoke.	5. Replace yoke and seal.
	6. Axle cover not properly sealed.	6. Remove, clean, and re-seal cover.

Condition	Possible Causes	Correction
Axle Overheating	1. Lubricant level low.	1. Fill differential to correct level.
	2. Improper grade of lubricant.	2. Fill differential with the correct fluid type and quantity.
	3. Bearing pre-loads too high.	3. Re-adjust bearing pre-loads.
	4. Insufficient ring gear backlash.	4. Re-adjust ring gear backlash.
Gear Teeth Broke	1. Overloading.	1. Replace gears. Examine other gears and bearings for possible damage.
	2. Erratic clutch operation.	2. Replace gears and examine the remaining parts for damage. Avoid erratic clutch operation.
	3. Ice-spotted pavement.	3. Replace gears and examine remaining parts for damage.
	4. Improper adjustments.	4. Replace gears and examine remaining parts for damage. Ensure ring gear backlash is correct.
Axle Noise	1. Insufficient lubricant.	1. Fill differential with the correct fluid type and quantity.
	2. Improper ring gear and pinion adjustment.	2. Check ring gear and pinion contact pattern. Adjust backlash or pinion depth.
	3. Unmatched ring gear and pinion.	3. Replace gears with a matched ring gear and pinion.
	4. Worn teeth on ring gear and/or pinion.	4. Replace ring gear and pinion.
	5. Loose pinion bearings.	5. Adjust pinion bearing pre-load.
	6. Loose differential bearings.	6. Adjust differential bearing pre-load.
	7. Mis-aligned or sprung ring gear.	7. Measure ring gear run-out. Replace components as necessary.
	8. Loose differential bearing cap bolts.	8. Inspect differential components and replace as necessary. Ensure that the bearing caps are torqued tot he proper specification.
	9. Housing not machined properly.	9. Replace housing.

REMOVAL

1. With vehicle in neutral, position vehicle on hoist.
2. Position a lift under axle and secure lift to the axle.
3. Remove all brake components.
4. Remove axle vent hose.
5. Mark propeller shaft and companion flange for installation alignment reference.
6. Remove propeller shaft.
7. Remove shock absorbers (3) from axle (2).

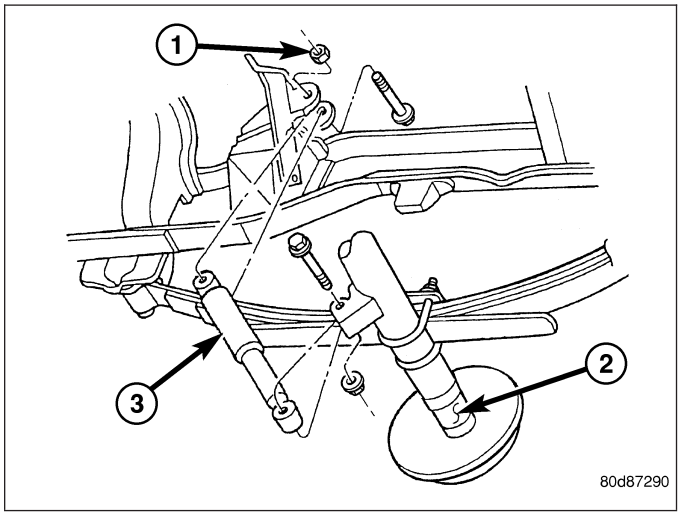

8. Remove U-bolts (5) from axle.
9. Remove axle from the vehicle.

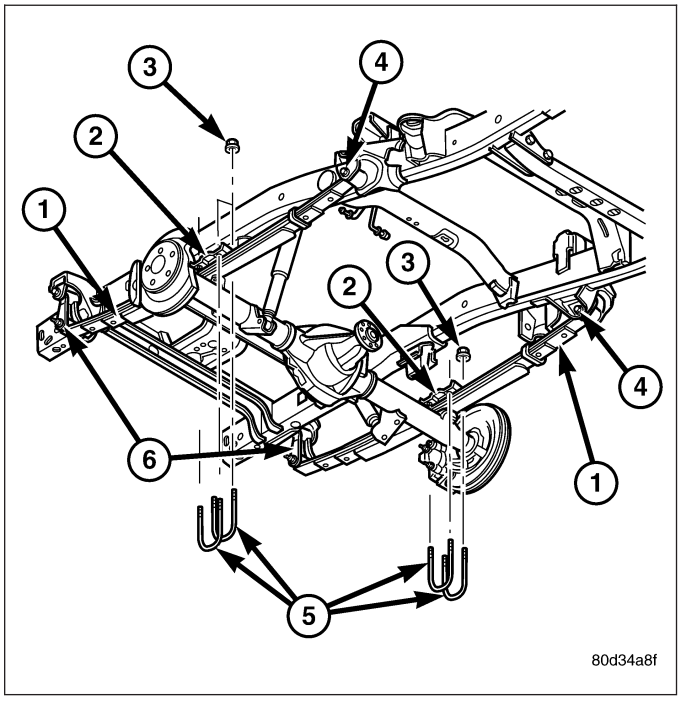

INSTALLATION

1. Raise axle with lift and align to the leaf spring centering bolts.
2. Install axle U-bolts (5) and tighten to 149 N·m (110 ft. lbs.).
3. Install shock absorbers to axle and tighten to specification.
4. Install all brake components.
5. Install axle vent hose.
6. Install propeller shaft with reference marks aligned and tighten to specification.
7. Fill differential to specifications.

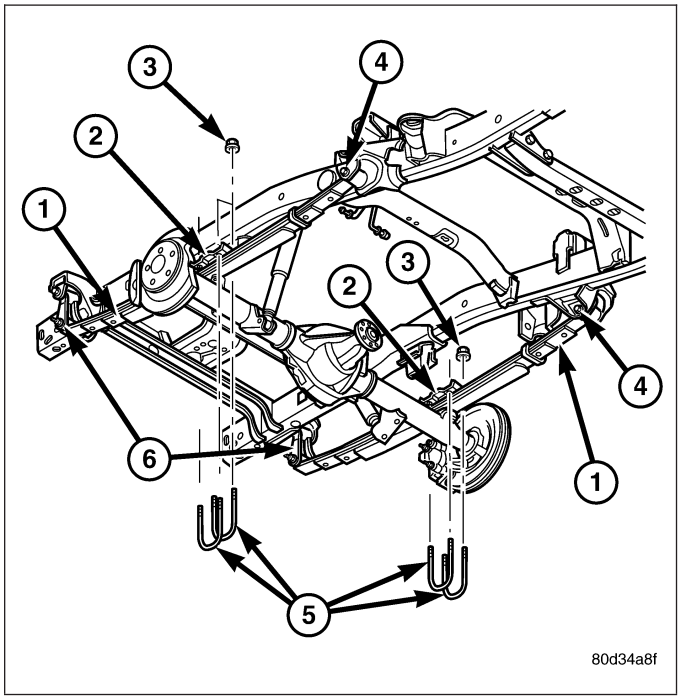

ADJUSTMENTS

PINION DEPTH MEASUREMENT

Ring and pinion gears are supplied as matched sets. Compensation for pinion depth variance is achieved with a select shim. The shim is located between the rear pinion bearing and the pinion gear head.

Measurements are taken with pinion bearing cups and pinion bearings installed in the housing. Take measurements with Pinion Gauge Set and Dial Indicator C-3339.

1. Assemble Pinion Height Block 6739 (3), Pinion Block 8899 (6) and rear pinion bearing onto Screw 6741 (5).

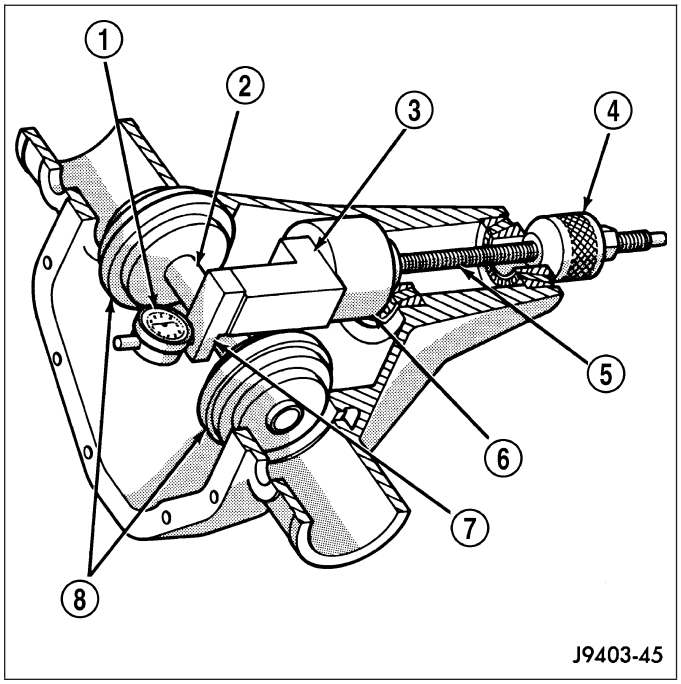

2. Insert pinion block (1), pinion height block (2), rear bearing and screw into the housing through pinion bearing cups.
3. Install front pinion bearing and Cone-nut 6740 onto the screw. Tighten cone-nut until Torque To Rotate the screw is 1.7-2.26 N·m (15-20 in. lbs.).

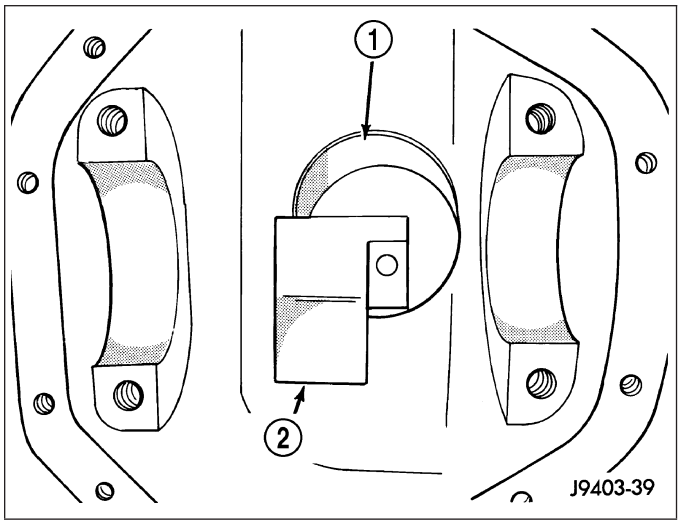

4. Place Arbor Disc 6732 (1) on Arbor D-115-3 (3) in position in the housing side bearing cradles.
5. Install differential bearing caps on arbor discs (1) and snug the bearing cap bolts. Then cross tighten cap bolts to 165 N·m (122 ft. lbs.).

NOTE: Arbor should rotate freely in the arbor discs.

6. Assemble Dial Indicator C-3339 into Scooter Block D-115-2 and secure set screw.

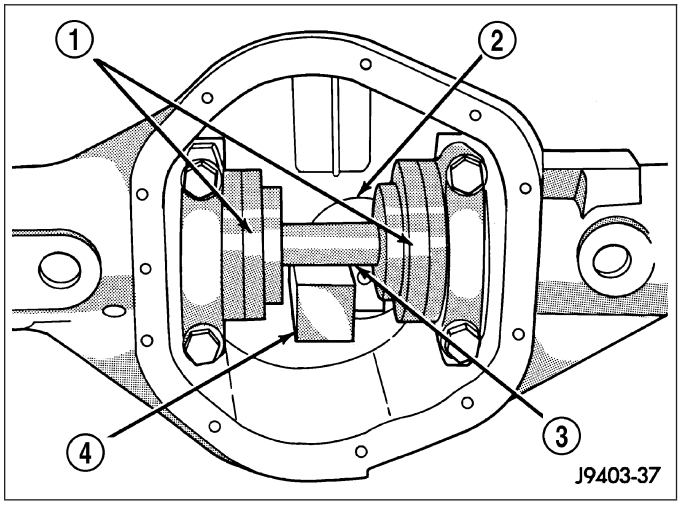

7. Position scooter block (2) with dial indicator (3) flush on the pinion height block. Hold scooter block and zero the dial indicator.
8. Slowly slide the scooter block (2) across the pinion height block over to the arbor (1). Move the scooter block till dial indicator crests the arbor, then record the highest reading.
9. Select a shim equal to the dial indicator reading.
10. Install the select shim between the rear pinion bearing and the pinion gear head.

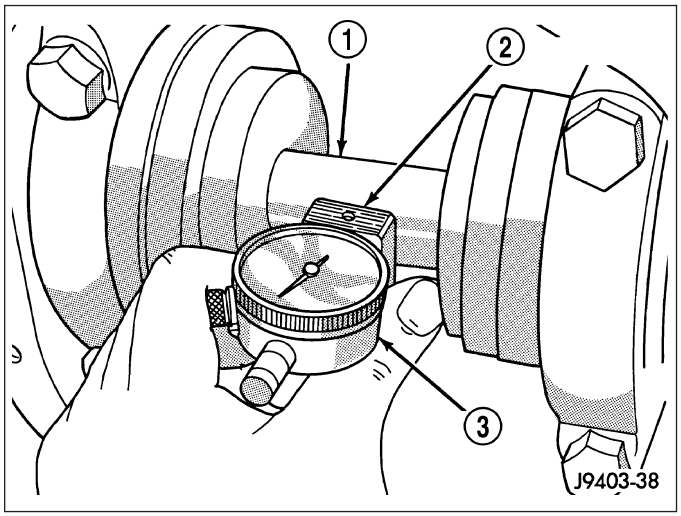

DIFFERENTIAL CASE BEARING PRELOAD AND GEAR BACKLASH

Backlash is adjusted by moving the adjusters in and out or both. By moving the adjusters the case/ring gear will move closer or further away from the pinion. In most cases this adjustment can be used to achieve the correct gear tooth pattern and set the case bearing preload.

1. Remove adjuster lock bolts (3) and adjuster locks (2).
2. Loosen the differential bearing cap bolts (4).
3. Slide differential case (1) toward the pinion gear until the gears make contact/zero backlash. If zero backlash cannot be obtained, turn the pinion side adjuster until zero backlash is obtained.

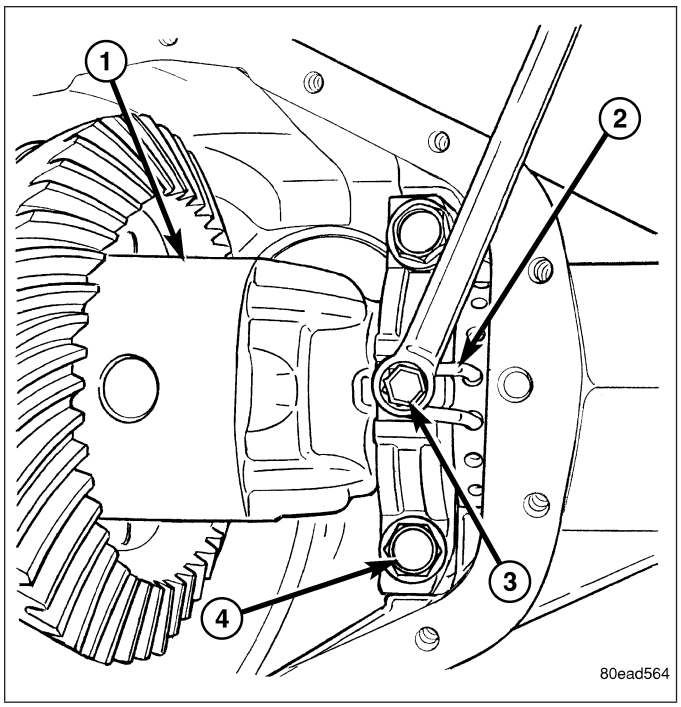

4. Holding the differential case (2) toward the pinion gear, turn bearing adjusters with Spanner Wrench 8883 (1) until they make contact with the differential bearings/cups.
5. Back off the ring gear side adjuster 4 holes, to obtain initial ring gear backlash.
6. Install ring gear side adjuster lock and bolt. Do not tighten adjuster lock bolt at this time.
7. Tighten pinion gear side adjuster firmly against the differential case bearing cup.
8. Rotate the pinion several times to seat the deferential bearings.
9. Loosen pinion gear side adjuster until it is no longer in contact with the bearing cup, then tighten it until it makes contact.

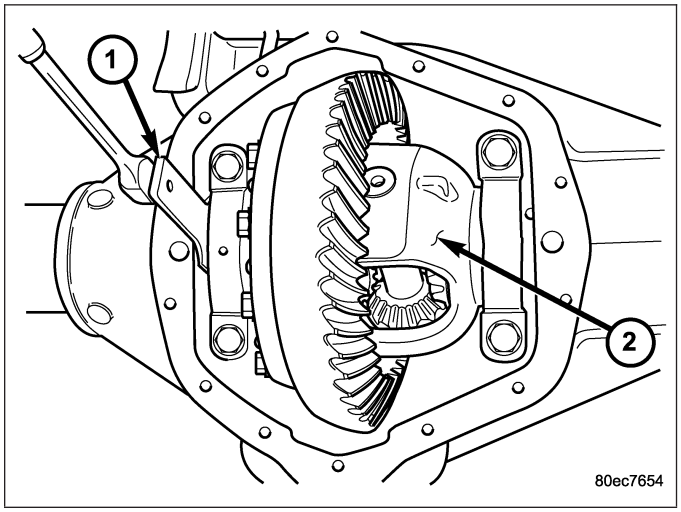

10. Tighten pinion gear side adjuster an additional:
    - **New Bearings:** 6 Adjuster Holes
    - **Original Bearings:** 4 Adjuster Holes
11. Install pinion gear side adjuster lock and bolt. Do not tighten adjuster lock bolt at this time.
12. Tighten bearing cap bolts to 165 N·m (122 ft. lbs.).
13. Tighten adjuster lock bolts to 33 N·m (24 ft. lbs.).

14. Measure ring gear (2) backlash with a Dial Indicator C-3339 (1) and Dial Indicator Stud L-4438 at eight points around the drive side of the ring gear. The backlash should be 0.08-0.25 mm (0.003-0.010 in) with a preferred backlash of 0.13-0.18 mm (0.005-0.007 in).

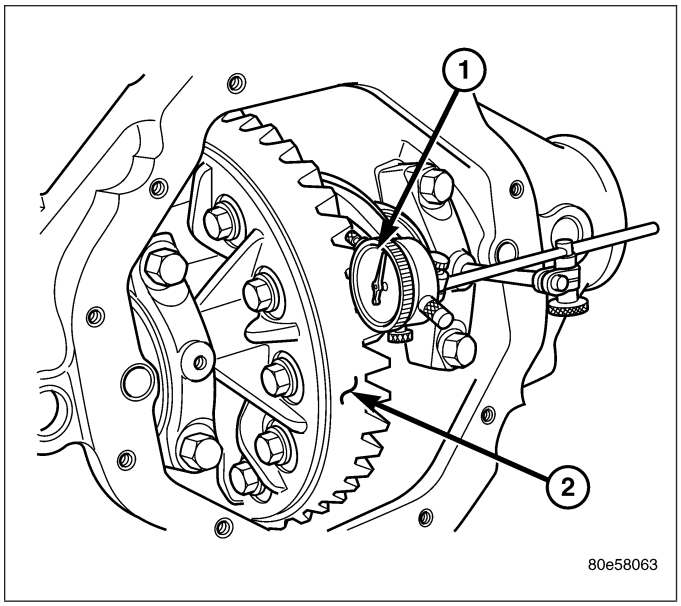

NOTE: Backlash measurement should not vary more than 0.05 mm (0.002 in) between measuring points. If measurement does vary inspect the gears for burrs, the differential case flange and ring gear mounting.

GEAR TOOTH CONTACT PATTERN

1. Wipe clean each tooth of the ring gear.
2. Apply gear marking compound to all of the ring gear teeth.
3. Verify bearing cap bolts are torque to specification.
4. Apply parking brakes lightly to create at 14 N·m (10 ft. lbs.) pinion rotating torque.
5. Rotate the pinion/pinion yoke 4 full revolutions in each directions.
6. Read gear tooth contact pattern.

Gear contact pattern correct. Backlash and pinion depth is correct.

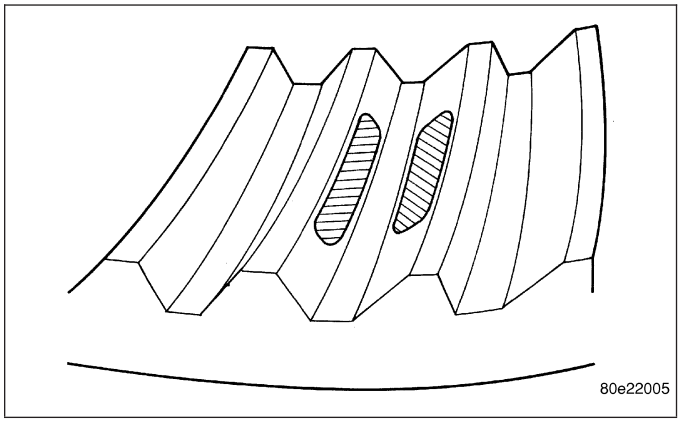

Ring gear too far away from pinion gear, coast side toe (1) and drive side heel (2). Decrease the backlash, by moving the ring closer to the pinion gear using the adjusters.

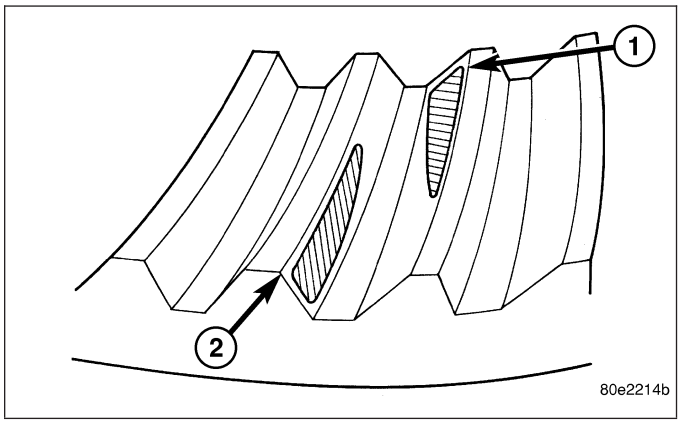

Ring gear too close to pinion gear, drive side toe (1) and coast side heel (2). Increase the backlash, by moving the ring away from the pinion gear using the adjusters.

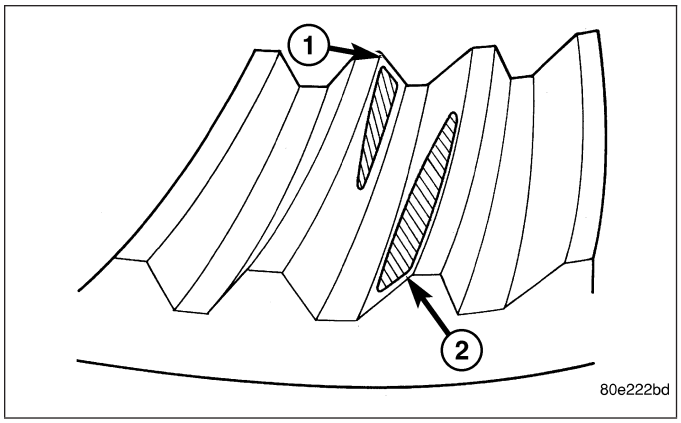

Ring gear too far away from pinion gear, drive side heel (1) and coast side heel (2). Decrease the backlash, by moving the ring closer to the pinion gear using the adjusters.

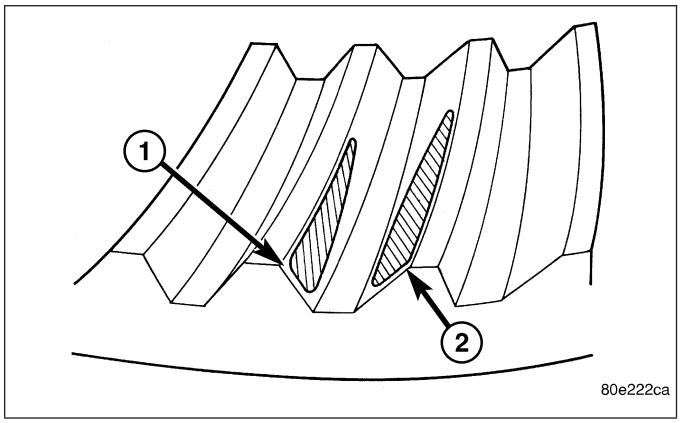

Ring gear too close to pinion gear, drive side toe (1) and coast side toe (2). Increase the backlash, by moving the ring away from the pinion gear using the adjusters.

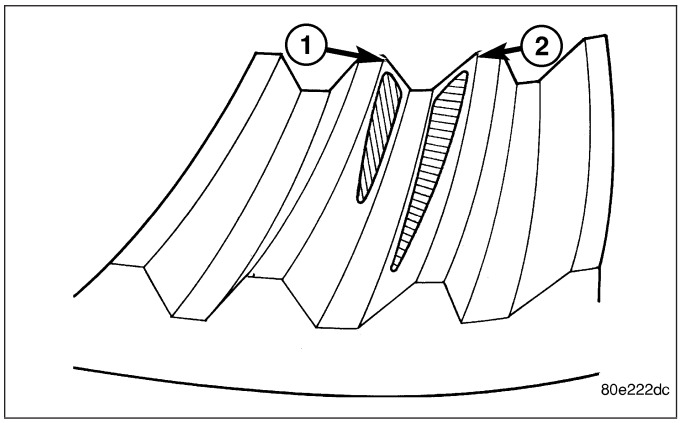

Pinion gear is set too low. Increase the pinion gear height, by increasing the pinion depth shim thickness.

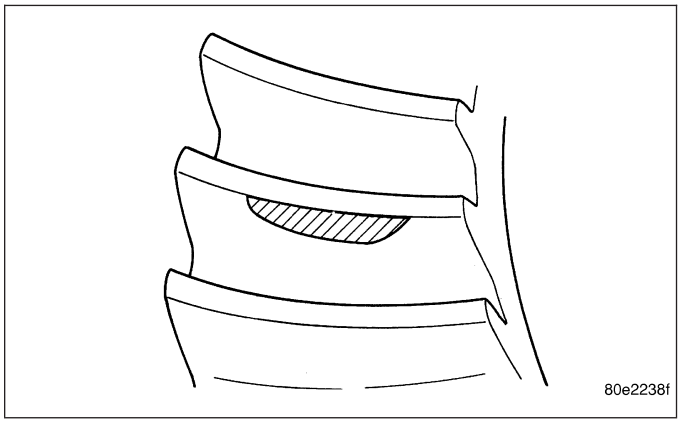

Pinion gear is set too high. Decrease the pinion depth, by decreasing the pinion depth shim thickness.

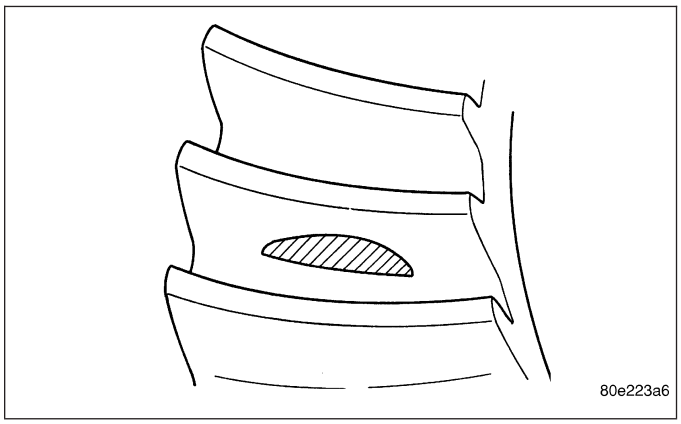

SPECIFICATIONS

AXLE SPECIFICATIONS

DESCRIPTION	SPECIFICATION
Axle Ratio	3.73, 4.10, 4.56
Ring Gear Diameter	266 mm (10.5 in.)
Ring Gear Backlash	0.13-0.18 mm (0.005-0.007 in.)
Pinion Bearing Preload - New Bearings	1.69-2.82 N·m (15-25 in. lbs.)
Pinion Bearing Preload - Original Bearings	1-2 N·m (10-20 in. lbs.)
Pinion Bearing Preload + Diff Case Bearing Preload - New Bearings	3.4-5.6 N·m (30-50 in. lbs.)
Pinion Bearing Preload + Diff Case Bearing Preload - Original Bearings	2.8-5.1 N·m (25-45 in. lbs.)

TORQUE SPECIFICATIONS

DESCRIPTION	N·m	Ft. Lbs.	In. Lbs.
Fill Hole Plug	32	24	-
Differential Cover Bolts	40	30	-
Bearing Cap Bolts	165	122	-
Ring Gear Bolts	237	175	-
Axle Flange Bolts	129	95	-
Adjuster Lock Bolt	25	18	-

SPECIAL TOOLS

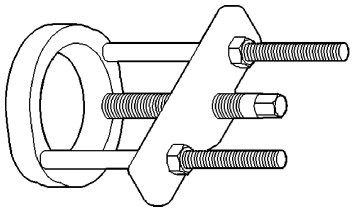

PULLER C-293-PA

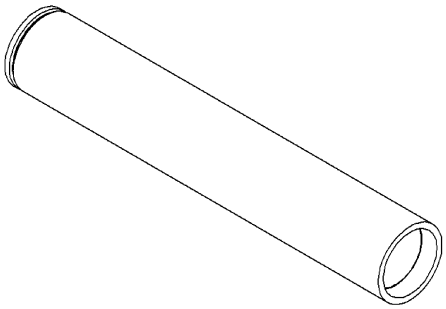

BEARING INSTALLER MD-998805

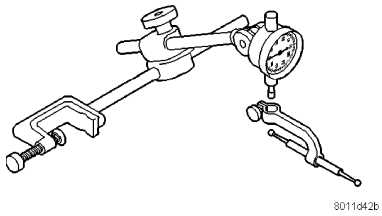

DIAL INDICATOR C-3339

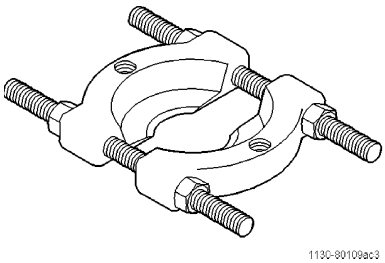

SPLITTER 1130

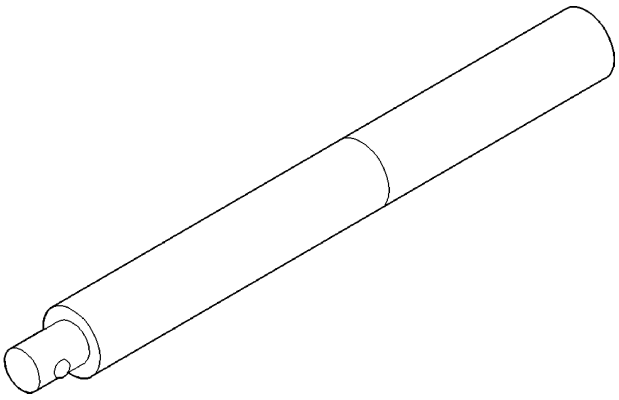

HANDLE C-4171

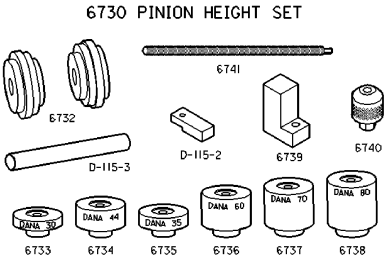

PINION DEPTH GAUGE 6730

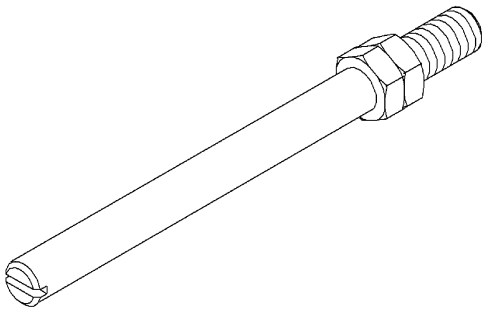

PILOT STUD L-4438

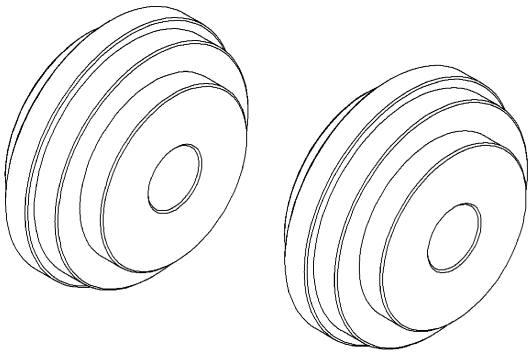

ARBOR DISCS 6732

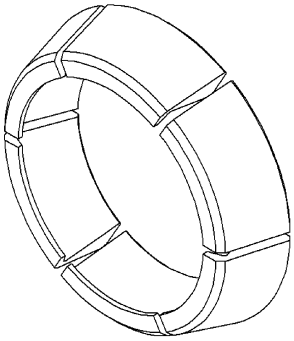

ADAPTERS 8879

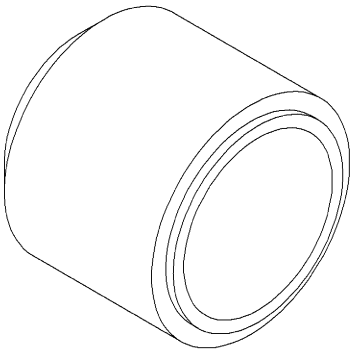

SEAL INSTALLER 8896

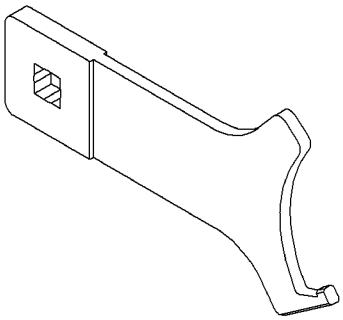

ADJUSTER WRENCH 8883

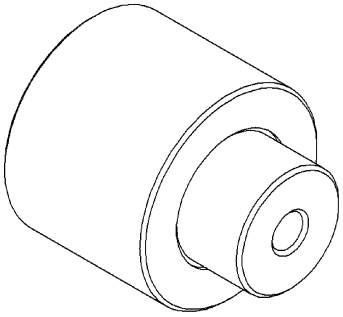

GAUGE BLOCK 8899

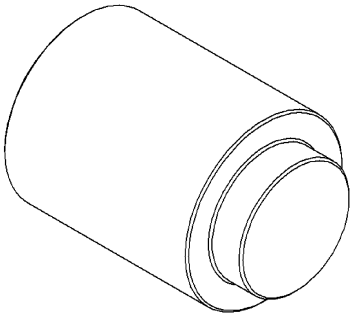

PLUG 8888

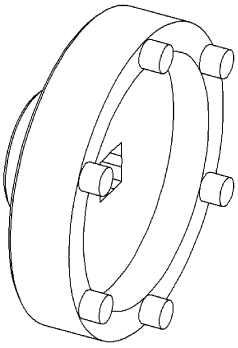

SOCKET 8954

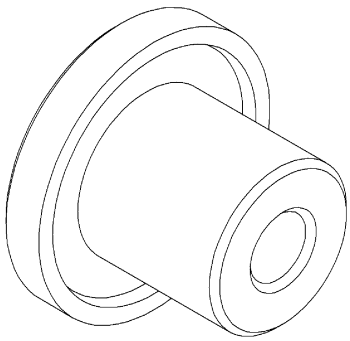

BEARING INSTALLER 8956

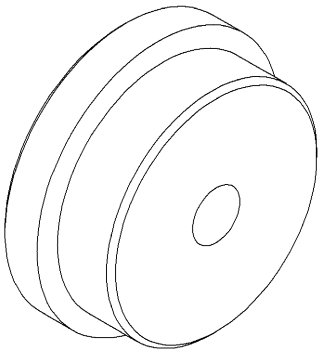

CUP INSTALLER 8961

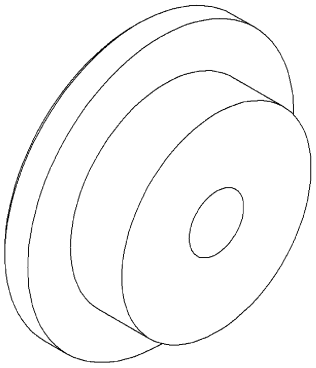

CUP INSTALLER 8959

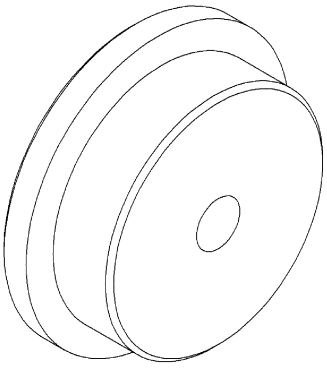

CUP INSTALLER 8962

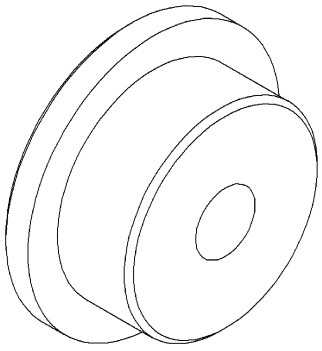

CUP INSTALLER 8960

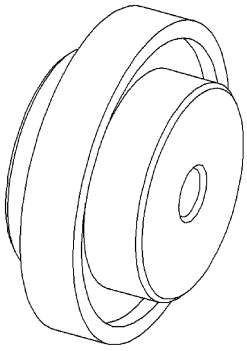

SEAL INSTALLER 8963

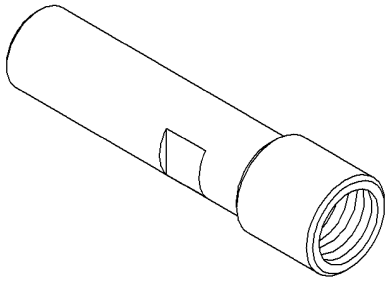

PINION DRIVER 8977

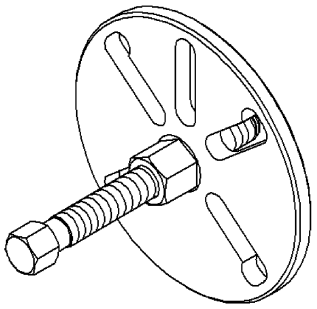

FLANGE PULLER 8992

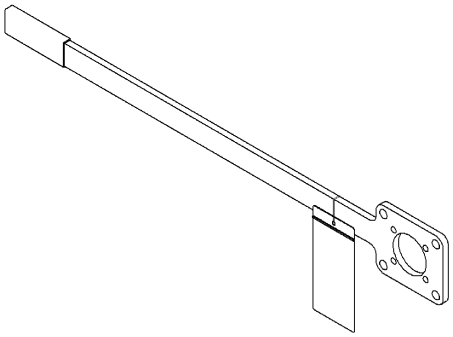

FLANGE WRENCH 8979

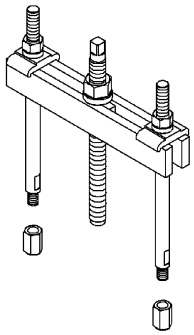

BRIDGE 938

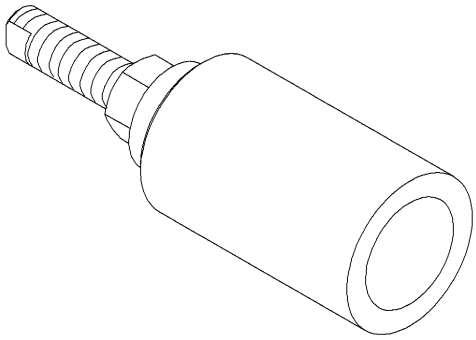

BEARING INSTALLER 8981

SHAFT-AXLE

REMOVAL

1. Remove axle shaft flange (1) bolts (2).
2. Slide axle shaft out of the axle tube.
3. Remove axle shaft gasket.

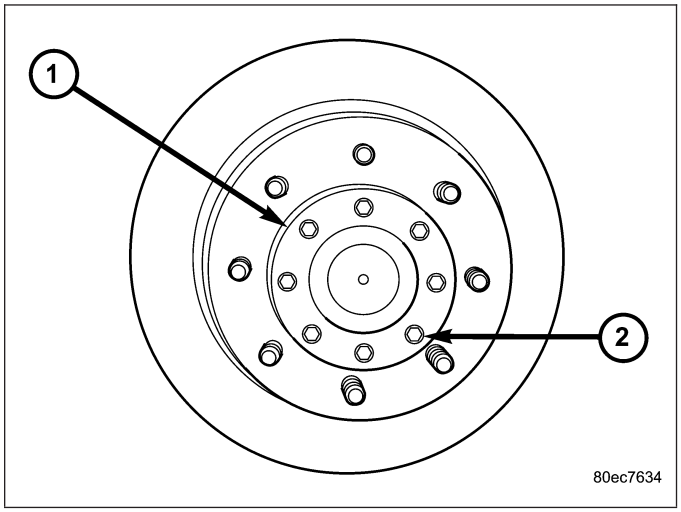

INSTALLATION

NOTE: Axle flange bolts must be replaced or cleaned existing bolts apply Mopar Lock N' Seal or Loctite® 242 on the threads.

1. Clean axle flange and hub.
2. Install new axle shaft gasket.
3. Slide axle shaft into the axle tube.
4. Install axle shaft flange (1) bolts (2) and tighten to 129 N·m (95 ft. lbs.).

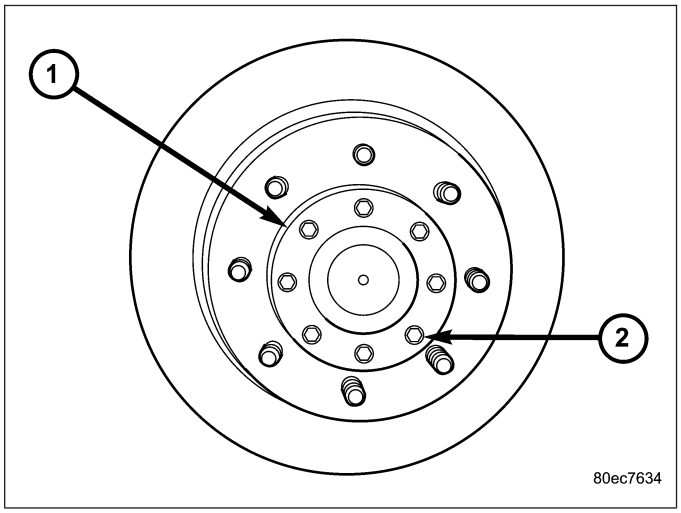

BEARING-AXLE HUB

REMOVAL

1. Remove axle shaft flange bolts and remove axle shaft.
2. Remove retianer ring (1) from the axle shaft tube.

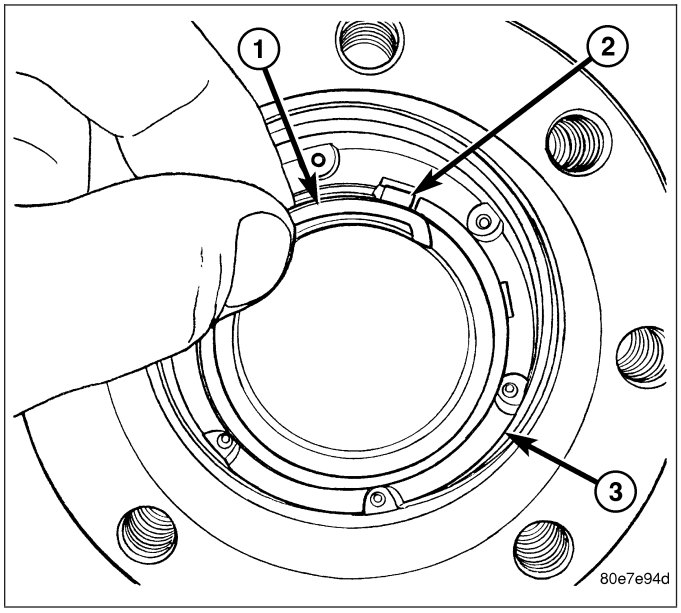

3. Remove hub bearing nut (1) locking key (2).
4. Remove hub bearing nut with Socket 8954.
5. Remove hub and bearings from the axle.

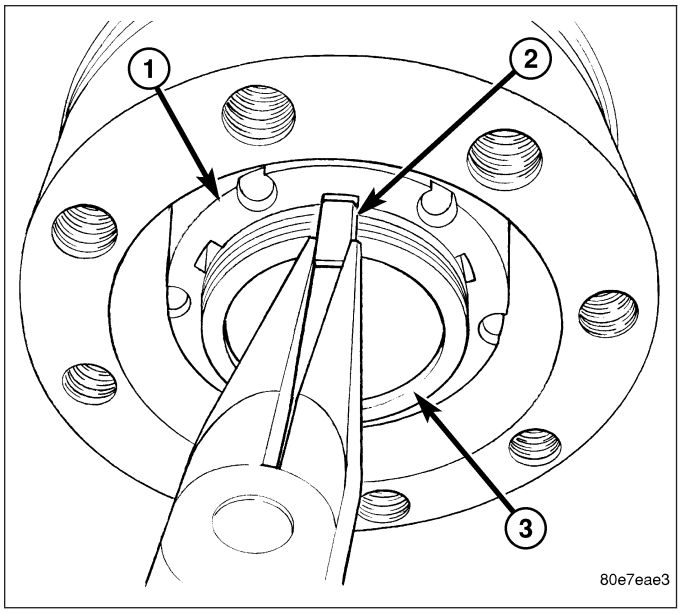

6. Pry out hub bearing seal from the back of the hub.

NOTE: The inner part of the seal (3) may stay on the axle tube (2). This part must also be removed.

7. Remove rear bearing.
8. Remove hub bearing cups with a hammer and drift.

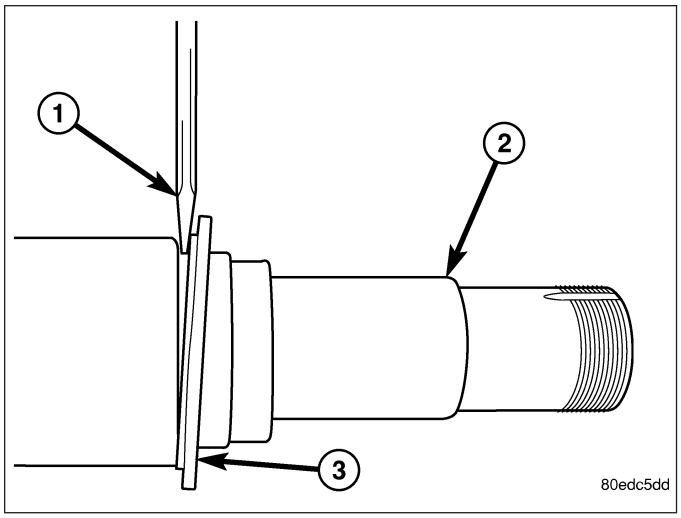

INSTALLATION

1. Install outer hub bearing cup with Installer 8961 and Handle C-4171.
2. Install inner hub bearing cup with Installer 8962 and Handle C-4171.
3. Pack bearings with the appropriate grease.
4. Install rear bearing and install **new** grease seal with Installer 8963 and Handle C-4171.
5. Slide hub on the axle tube and install front bearing into the hub.
6. Install hub bearing nut with Socket 8954 (1) and tighten to 30 N·m (22 ft. lbs.) while rotating the hub.
7. Back off nut about 30° and align next hub nut key slot with axle tube key slot and install locking key. End play should be 0.025-0.25 mm (0.001-0.010 in.).

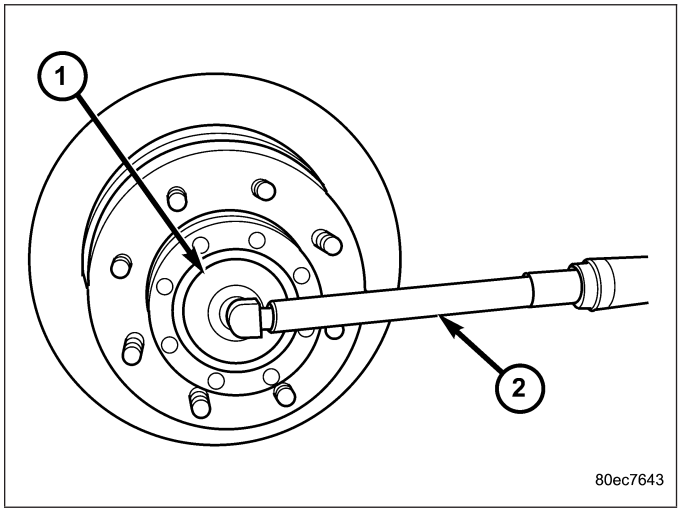

8. Install retainer ring (1) with ring end in the key slot.
9. Install new axle shaft gasket and install axle shaft.

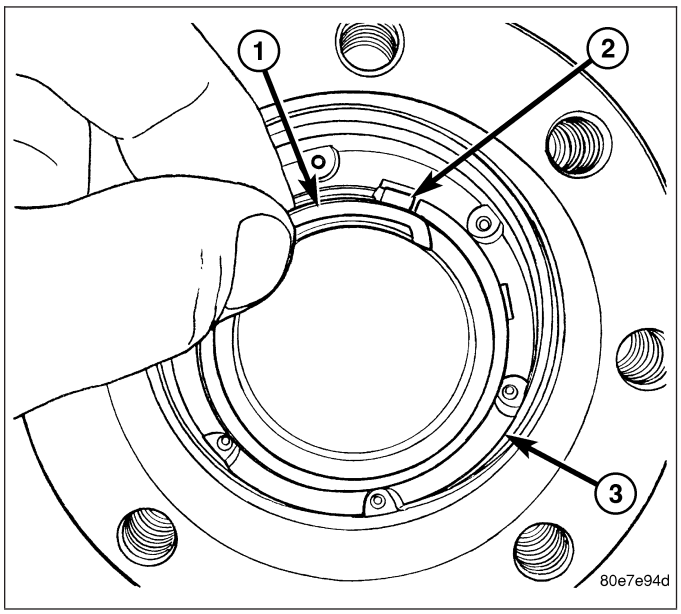

SEAL-PINION

REMOVAL

1. Remove axle shafts.
2. Mark propeller shaft and pinion flange for installation reference and remove shaft.
3. Rotate pinion gear three or four times.
4. Measure and record the amount of torque necessary to rotate the pinion gear (1) with an inch pound torque wrench (2).

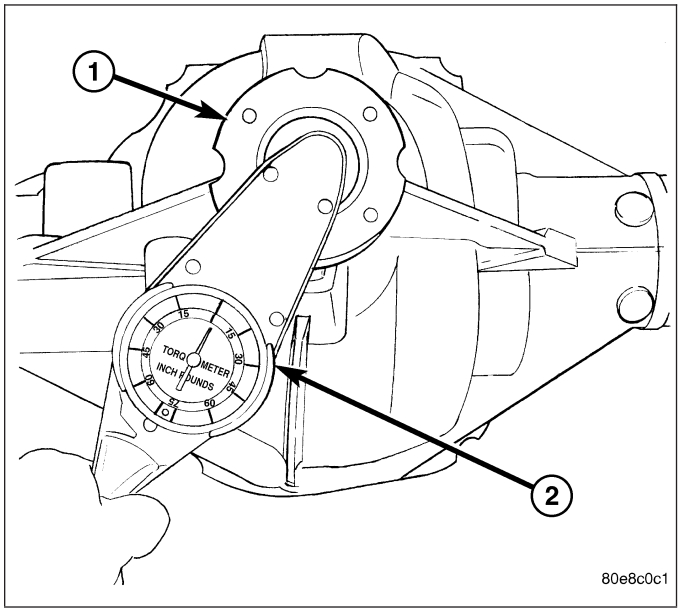

5. Hold pinion flange (1) with Flange Wrench 8979 (2) and remove pinion flange nut and washer.

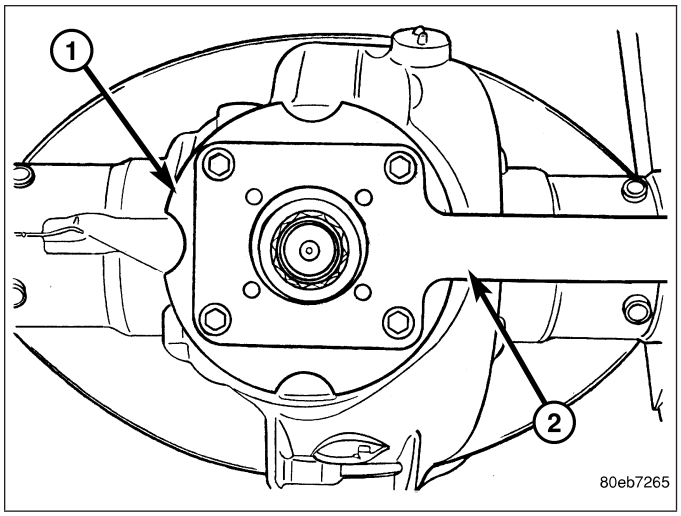

6. Remove pinion flange (1) with Flange Puller 8992 (2).
7. Remove pinion shaft seal with a pry tool or slide hammer mounted screw.

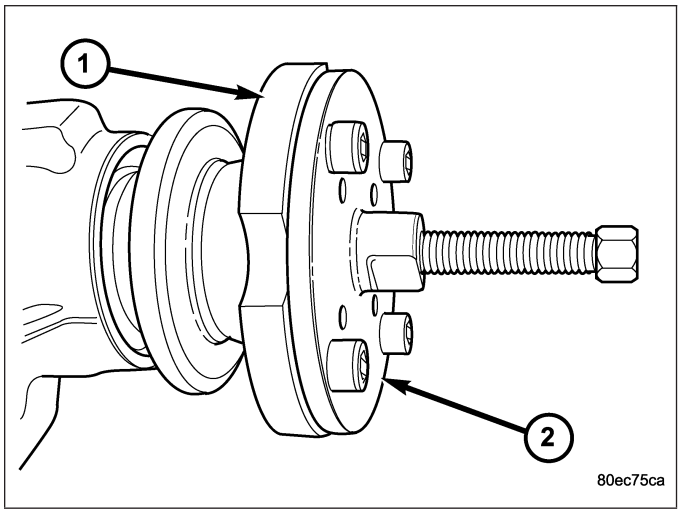

INSTALLATION

1. Install **new** pinion seal with Installer 8896 (2) and Handle C-4171 (1)
   .

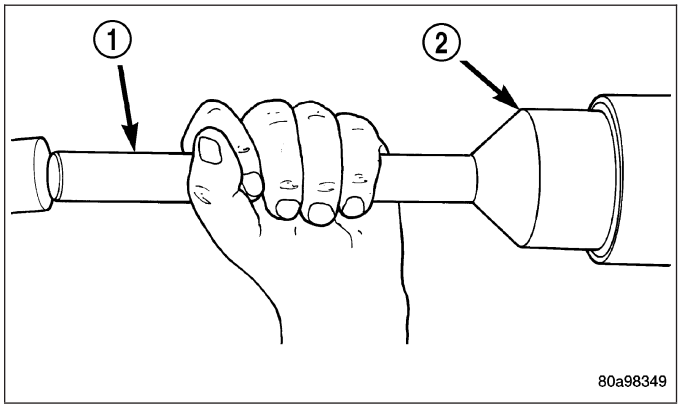

2. Apply a light coat of teflon sealant to the pinion flange splines.
3. Lightly tap the pinion flange onto the pinion until a few threads are showing.
4. Install flange washer and **new** pinion nut.
5. Hold flange (2) with Flange Wrench 8979 (1) and tighten pinion nut until pinion end play is taken up.

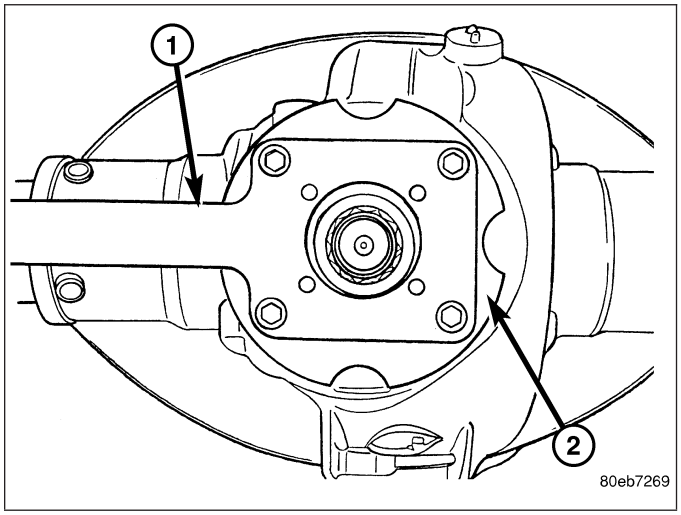

6. Rotate pinion several times to seat bearings.
7. Measure pinion (1) rotating torque with an inch pound torque wrench (2) and compare it to recorded measurement.
8. Tighten pinion nut in small increments, until pinion rotating torque is 0.40-0.57 N·m (3-5 in. lbs.) greater than recorded measurement.
9. Rotate pinion several times then verify pinion rotating torque again.
10. Install axle shafts.
11. Install propeller shaft with reference marks aligned.
12. Check and fill differential if necessary.

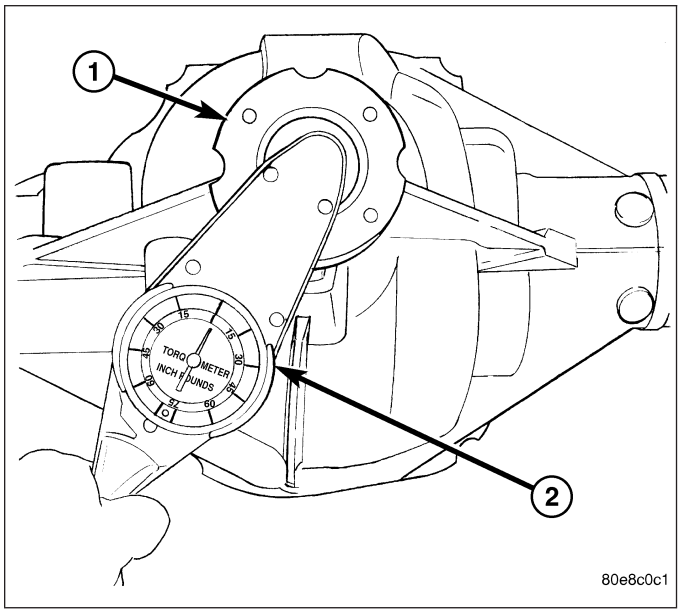

DIFFERENTIAL

REMOVAL

1. Remove lubricant fill hole plug from the differential housing cover.
2. Remove differential housing cover and drain the lubricant from housing.
3. Remove axle shafts.
4. Remove adjuster lock bolts (1) and adjuster locks (2).
5. Mark bearing caps (4) left and right for installation reference.
6. Remove bearing cap bolts and remove bearing caps.

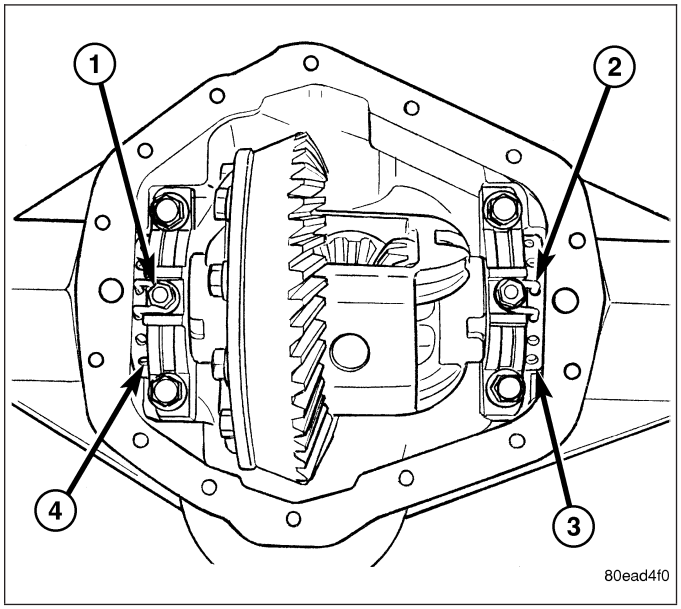

7. Loosen differential bearing adjusters (2) (4) with Spanner Wrench 8883.
8. Remove differential case from the housing.
9. Remove bearing cups and tag them left and right for installation reference.

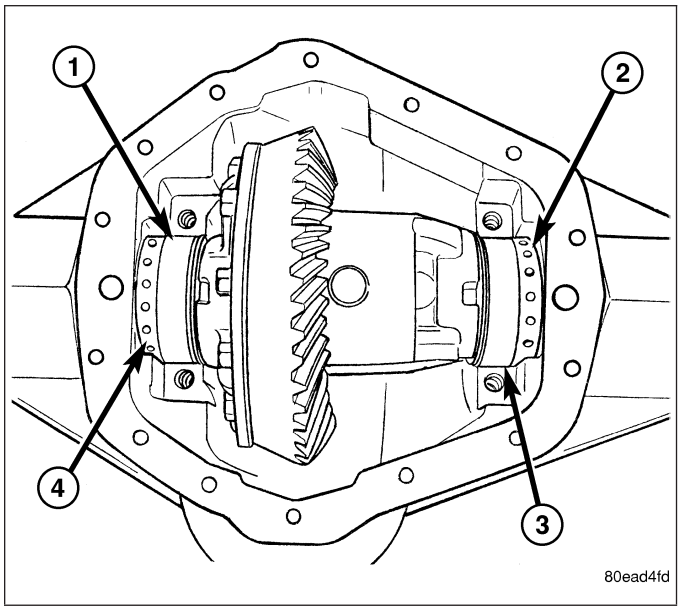

DISASSEMBLY

1. Remove pinion shaft (2) with a hammer and punch from the side with the hole in the pinion shaft.

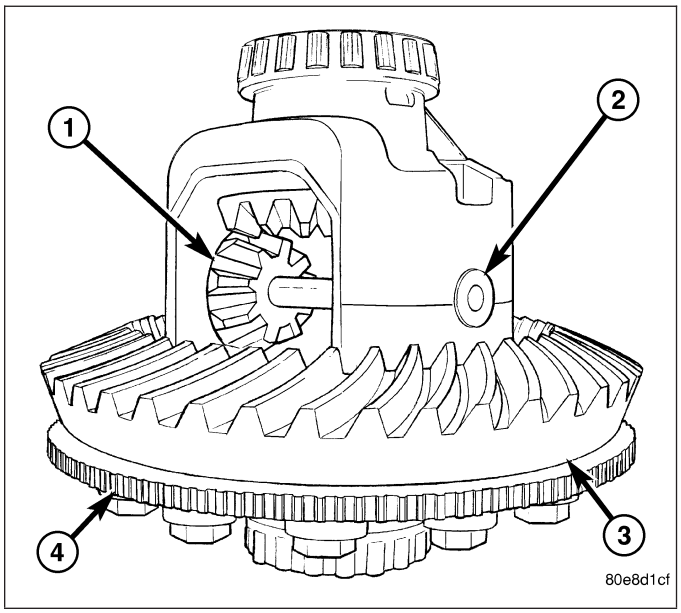

2. Rotate one pinion gear (2) with thrust washer (3) to the differential window (1) and remove the gear.

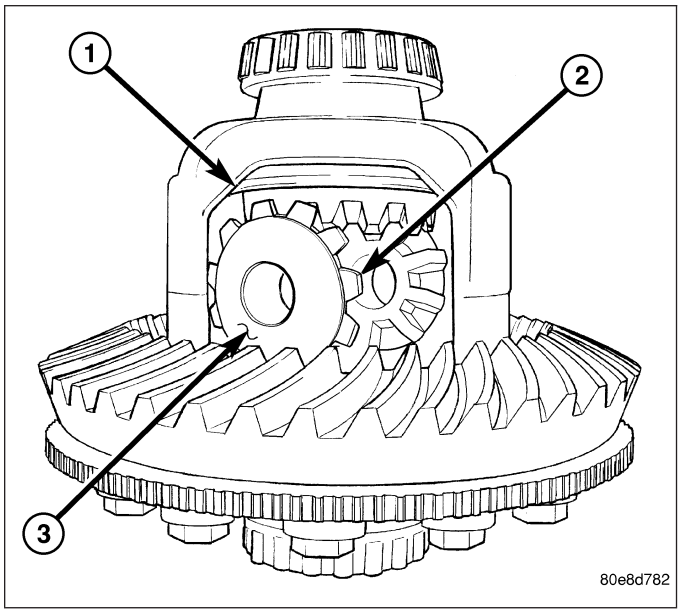

3. Rotate other pinion gear (3) with thrust washer (2) to the differential window (1) and remove the gear.

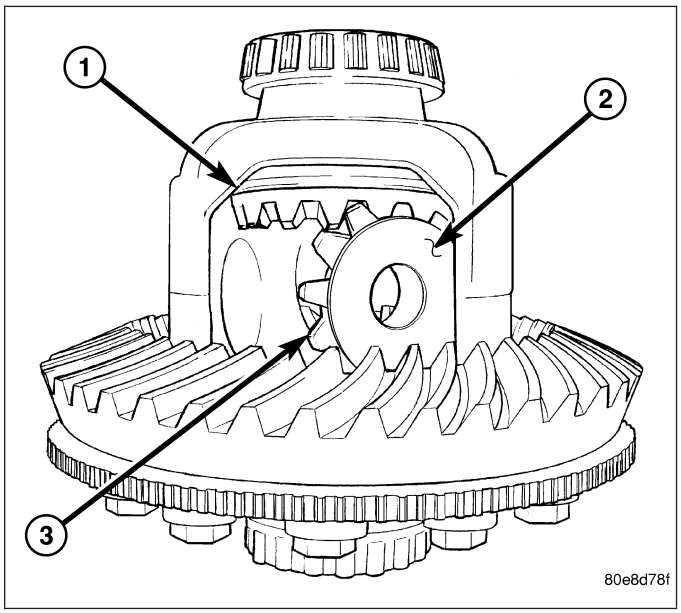

4. Remove differential side gears (1) (2) and thrust washers.

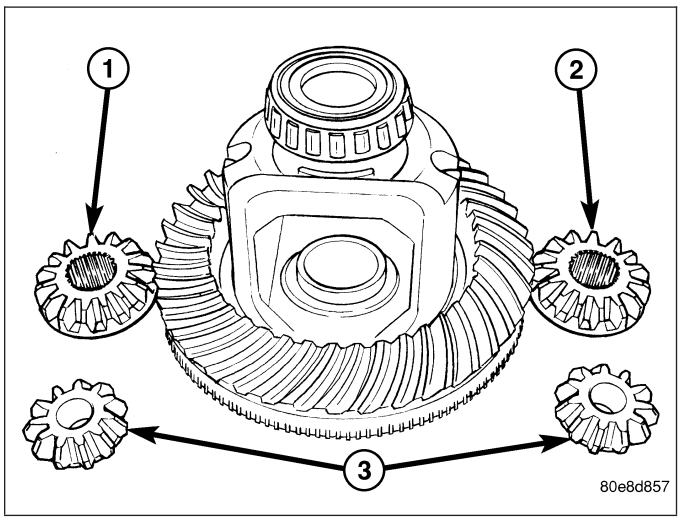

ASSEMBLY

NOTE: If the same gears and thrust washers are being used, install them into their original locations.

1. Lubricate all differential components with axle lubricant.
2. Install differential side gears (2) and thrust washers.

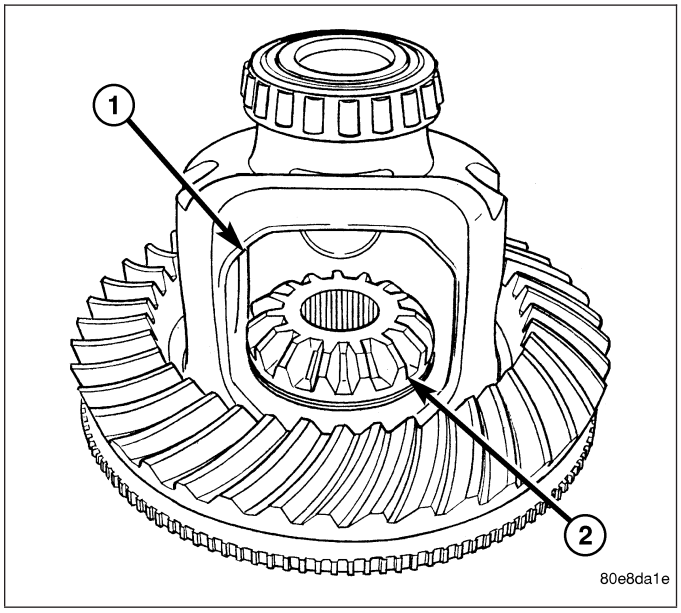

3. Install first pinion gear (3) into the differential window (1) and side gears (2). Rotate the pinion gear to the back of the case.
4. Install other pinion gear and thrust washer. Rotate the gears to align hole in the pinion gears with hole in the differential case.

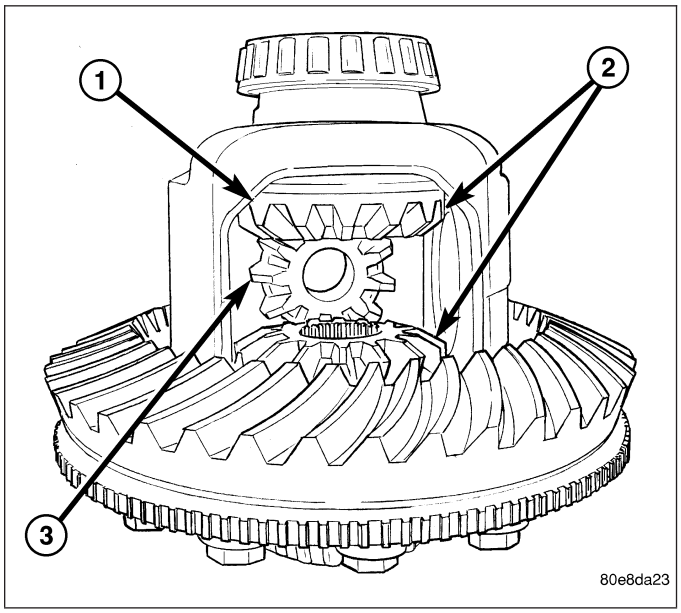

5. Slide pinion shaft (4) into the case and through the pinion gears (3). Tap the shaft to seat the pinion shaft snap-ring (1) into the case.

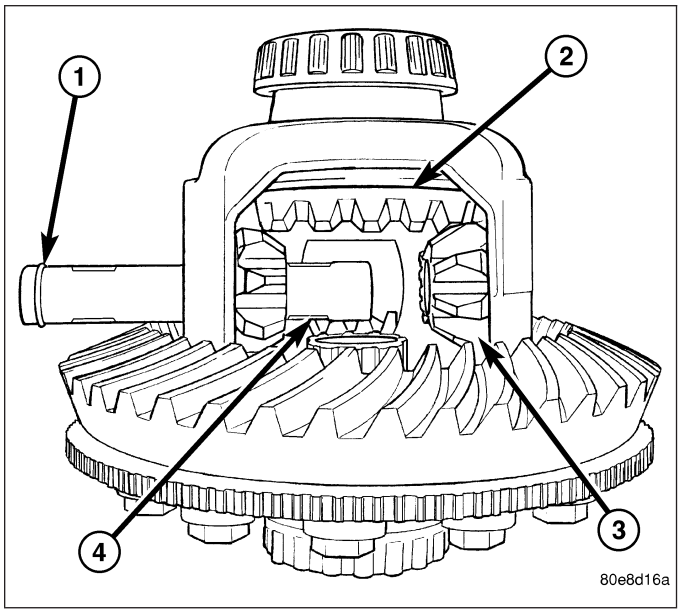

INSTALLATION

1. Clean the housing (1) cavity with a flushing oil, light engine oil or lint free cloth.

CAUTION: Do not use water, steam, kerosene or gasoline for cleaning.

2. Lubricate differential case bearing.
3. Install differential case with bearings cups into the housing.

NOTE: A light coat of grease on the cups will hold them in place during installation.

4. Install bearing caps (2) and bolts. Tighten the bearing cap bolts finger-tight.

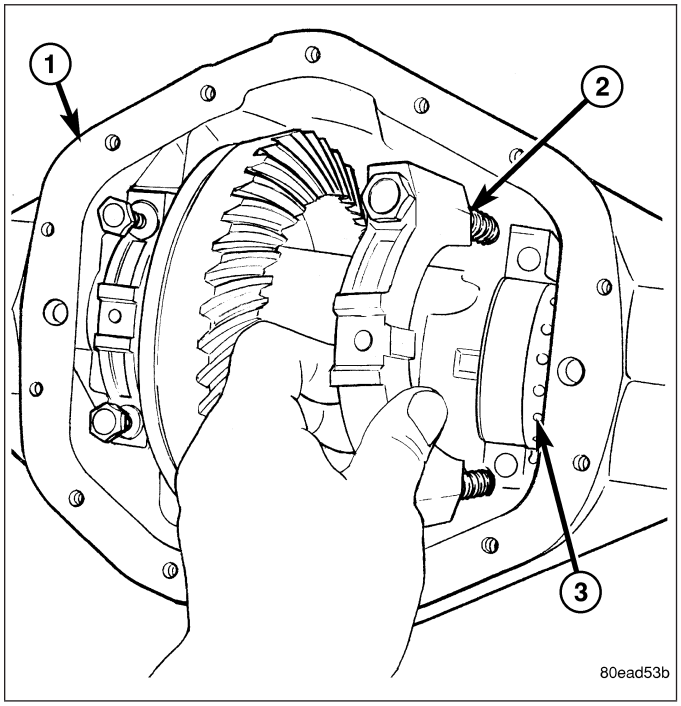

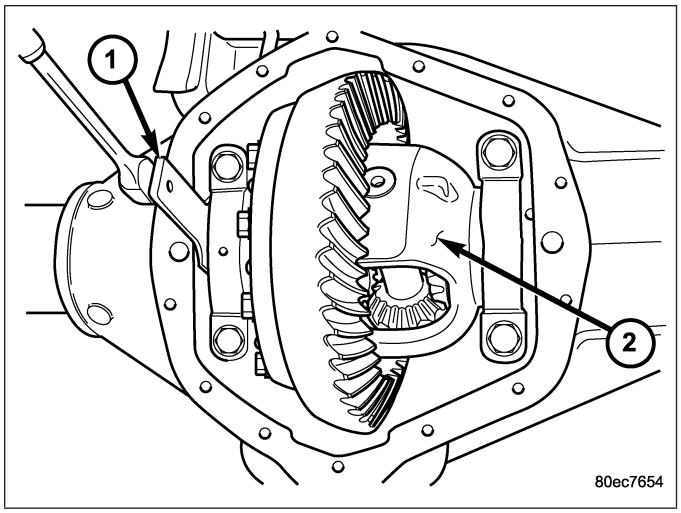

5. Slide differential case toward the pinion gear until the gears make contact/zero backlash. If zero backlash cannot be obtained, turn the pinion side adjuster until zero backlash is obtained.
6. Holding the differential case toward the pinion gear, turn bearing adjusters with Spanner Wrench 8883 (1) until they make contact with the differential bearings/cups.
7. Back off the ring gear side adjuster 4 holes, to obtain initial ring gear backlash.
8. Install ring gear side adjuster lock and bolt. Do not tighten adjuster lock bolt at this time.
9. Tighten pinion gear side adjuster firmly against the differential case bearing cup.
10. Rotate the pinion several times to seat the differential bearings.
11. Loosen pinion gear side adjuster until it is no longer in contact with the bearing cup.
12. Tighten pinion gear side adjuster until it just makes contact with the bearing cup.
13. Tighten pinion gear side adjuster an additional:
    - **New Bearings** 6 Adjuster Holes
    - **Original Bearings** 4 Adjuster Holes
14. Install pinion gear side adjuster lock and bolt. Do not tighten adjuster lock bolt at this time.

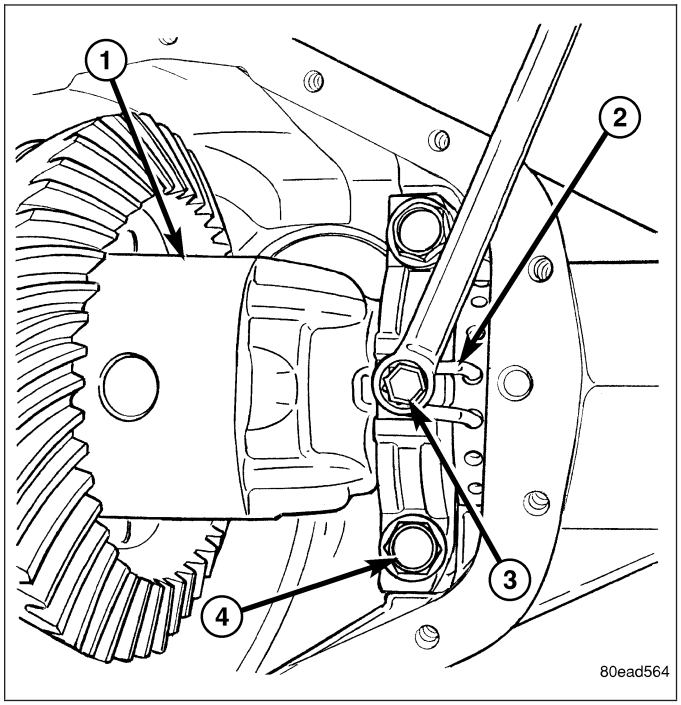

15. Tighten bearing cap bolts to 165 N·m (122 ft. lbs.).
16. Tighten adjuster (2) lock bolts (3) to 25 N·m (18 ft. lbs.).
17. Measure ring gear backlash and check gear tooth contact pattern. Refer to Adjustments for procedure.
18. Install axle shafts.
19. Install differential housing gasket and cover. Tighten cover bolts to 40 N·m (30 ft. lbs.).
20. Fill axle with lubricant, refer to Lubrication & Maintenance for capacity and lubricant type.
21. Install fill plug and tighten to 32 N·m (24 ft. lbs.).

BEARING-DIFFERENTIAL CASE

REMOVAL

1. Remove differential case from the housing.
2. Install Plug 8888 (4) into the end of the case.
3. Remove differental case bearings with Bearing Splitter 1130 (2) and Bridge 938 (1).

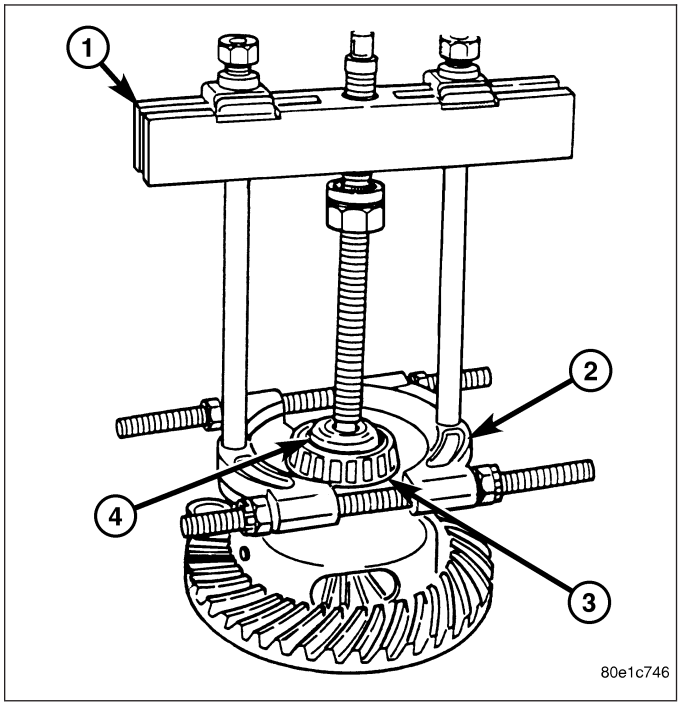

INSTALLATION

1. Install differenial case (2) bearings (3) with Installer 8956 (4) and Handle C-4171 (1).
2. Install differentail case into housing.

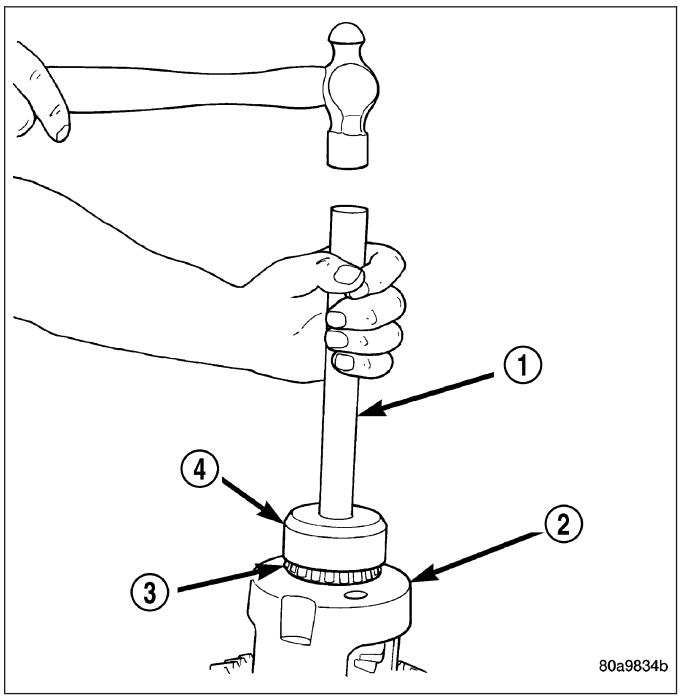

DIFFERENTIAL-TRAC-RITE

DESCRIPTION

CAUTION: The differential is serviced as an assembly only do not attempt to disassemble. Failure to follow these instruction will result in damage to the differential.

The Trac-Rite™ differential is a helical gear differential. The differential has two side gears (3), two thrust washers (1) and one spacer (2).

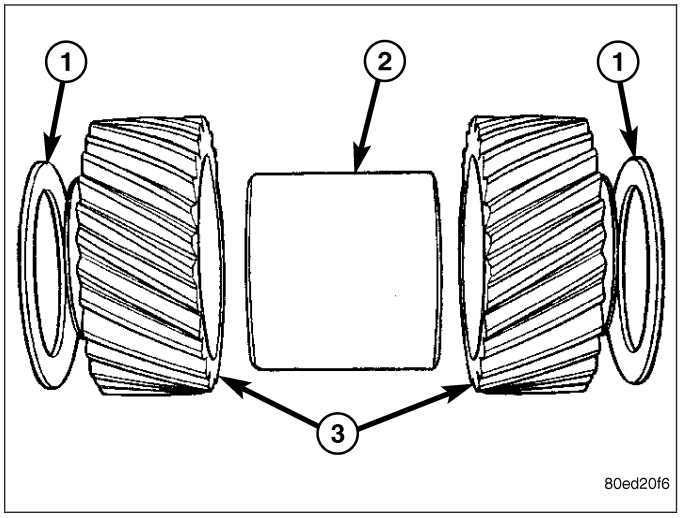

It also has six pinion brake shoes (1) which pivot on the six pinion gear (2) shafts (3).

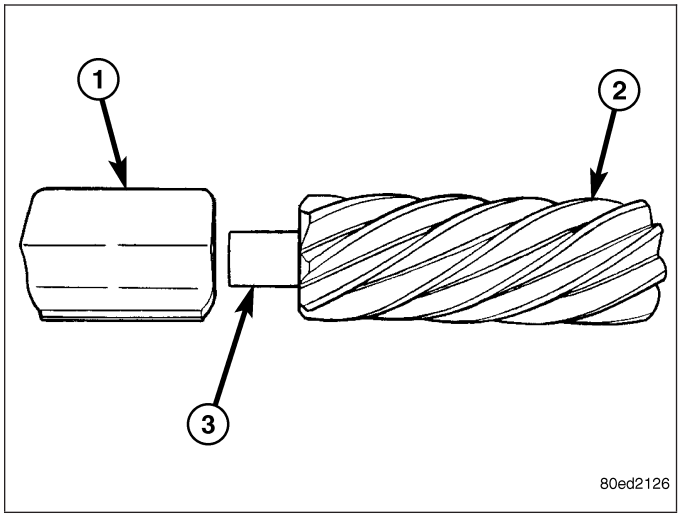

OPERATION

CAUTION: The differential is serviced as an assembly only do not attempt to disassemble. Failure to follow these instruction will result in damage to the differential.

When one wheel begins to spin the pinion gears (2) on that side, are forced toward the pinion brake shoes (1). The pinion brake shoes then cause frictional drag on the opposite pinion gears and the side gear. These friction forces transfer the power to the opposite wheel. Once the frictional forces are overcome, differentiation will occur. The torque will be continually biased by the frictional forces to the high traction wheel.

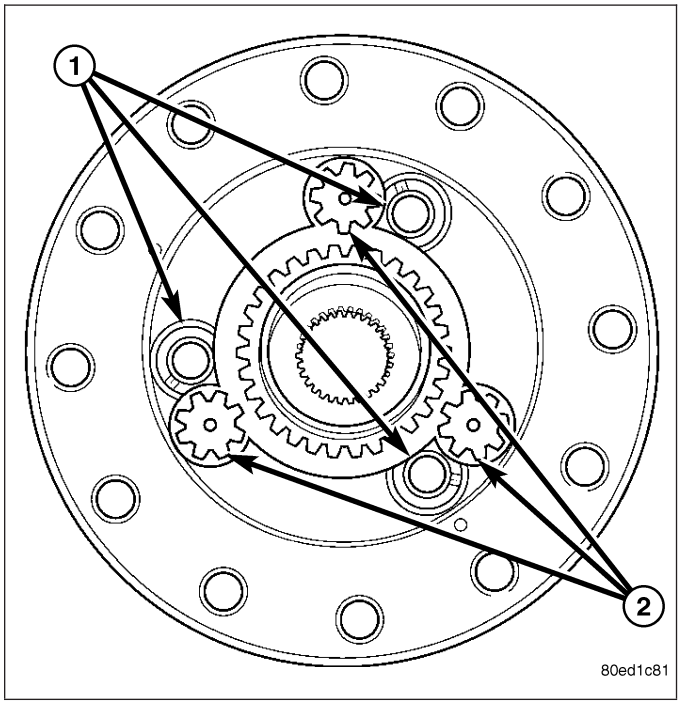

CLEANING

CAUTION: The differential is serviced as an assembly only do not attempt to disassemble. Failure to follow these instruction will result in damage to the differential.

Flush the differential case and gears through openings in the case with light oil.

DIFFERENTIAL-ELECTRIC LOCKER

DIAGNOSIS AND TESTING

1. Lift one rear wheel of the ground.
2. Turn key to the on position.
3. Place vehicle in drive/first gear and transfer case in LOW LOCK.
4. Activate locker switch.
5. Manually rotate the wheel that is off the ground. The wheel should lock once the dog clutch is aligned.
6. Turn off locker switch.
7. Manually rotate the wheel that is off the ground. The wheel should turn.

NOTE: Only the locker actuator with sensor are serviced. Internal differential components are serviced as a differential case assembly.

REMOVAL

1. Remove lubricant fill hole plug from the differential housing cover.
2. Remove differential housing cover and drain the lubricant from housing.
3. Remove axle shafts.
4. Remove adjuster lock bolts (3) and adjuster locks (2).

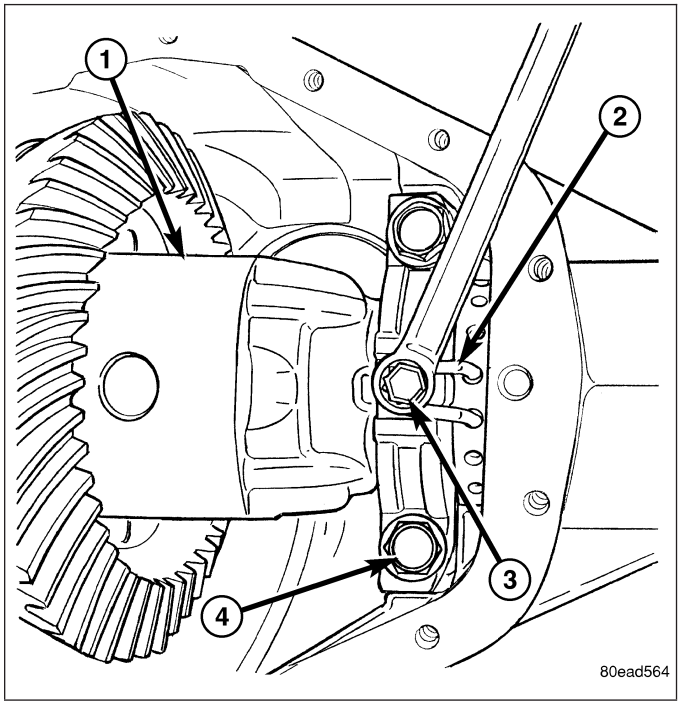

5. Remove electric locker connector (1) retainer (2) bolt from differential housing.
6. Remove connector (1) and retainer (2) from differential housing.

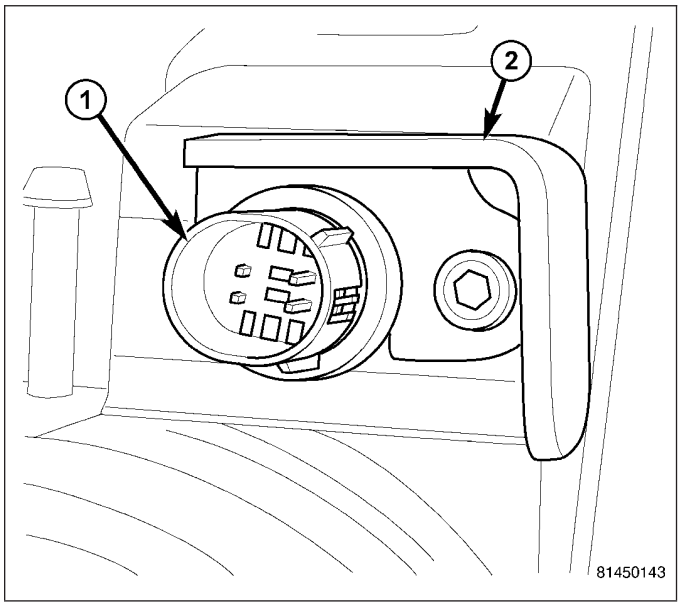

7. Remove retainer (1) from connector and remove o-ring (2) from connector.

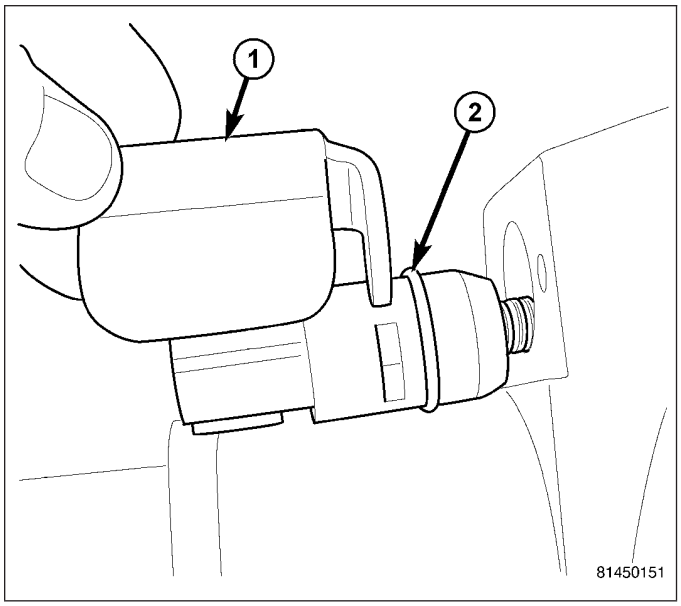

8. Mark bearing caps (2) left and right for installation reference.
9. Remove bearing cap bolts, anti rotation bracket and remove bearing caps (2).
10. Loosen differential bearing adjusters (3) with Spanner Wrench 8883.
11. Slid electric locker connector through differential housing.
12. Remove differential case with bearing cups from the housing.
13. Tag bearing cups left and right for installation reference.

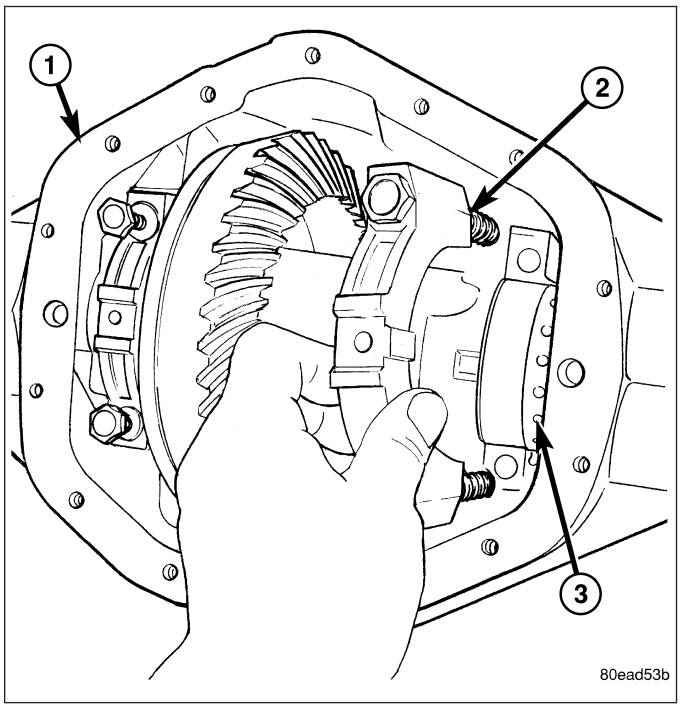

DISASSEMBLY

NOTE: Internal differential components are serviced with the case.

1. Install Plug 8888 (1) into coil side of the case.
2. Remove differential case bearing (2) with Puller C-293-PA (3) and Adapters 9614 (4).

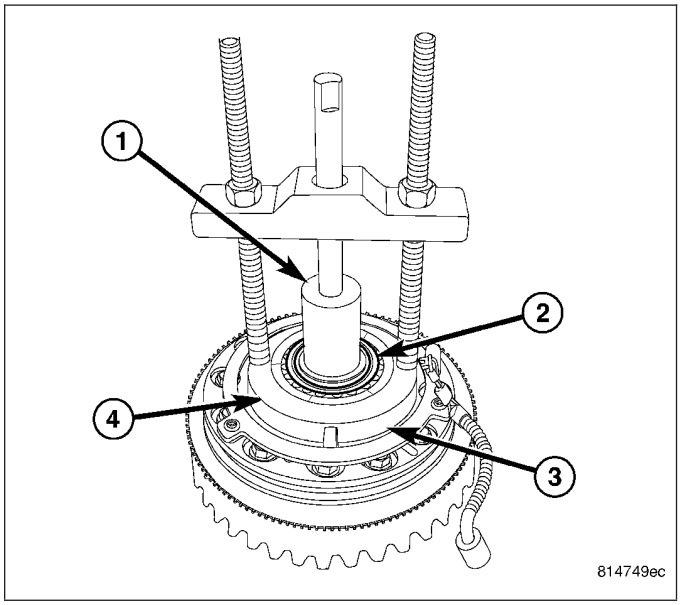

3. Remove coil (1) mounting bolts (2).

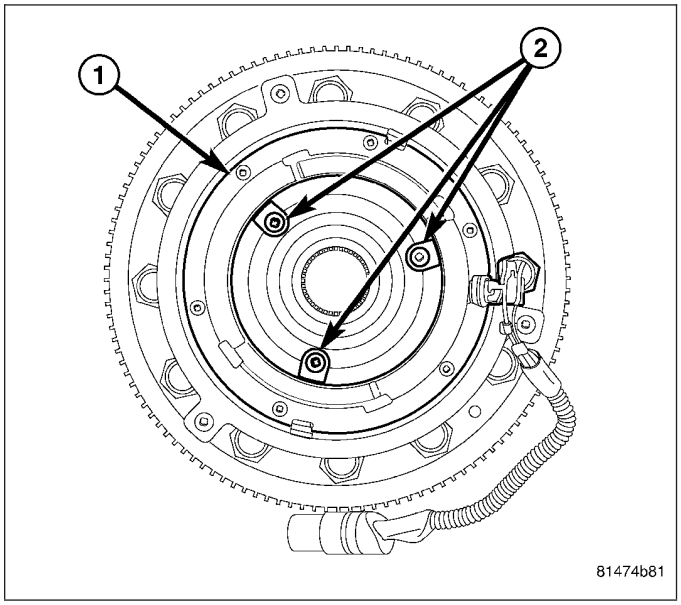

4. Remove coil (1) with sensor (2) and harness.

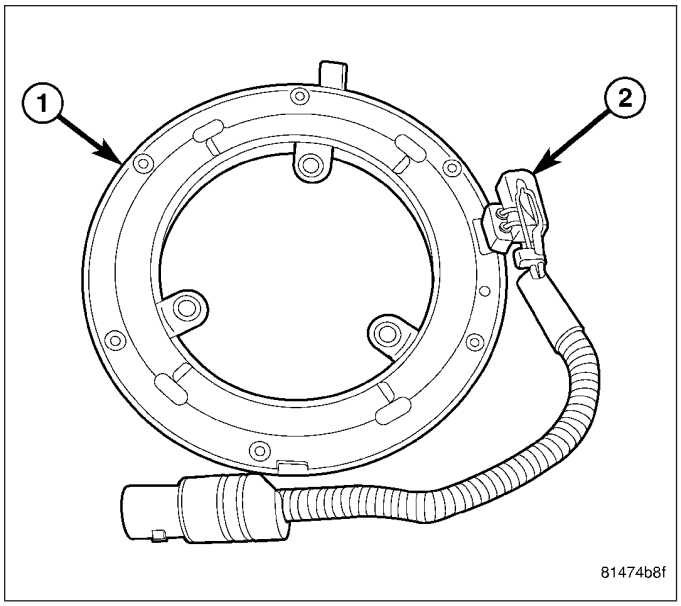

ASSEMBLY

NOTE: Internal differential components are serviced with the case.

1. Position coil on differential case (1) mounting location (2).

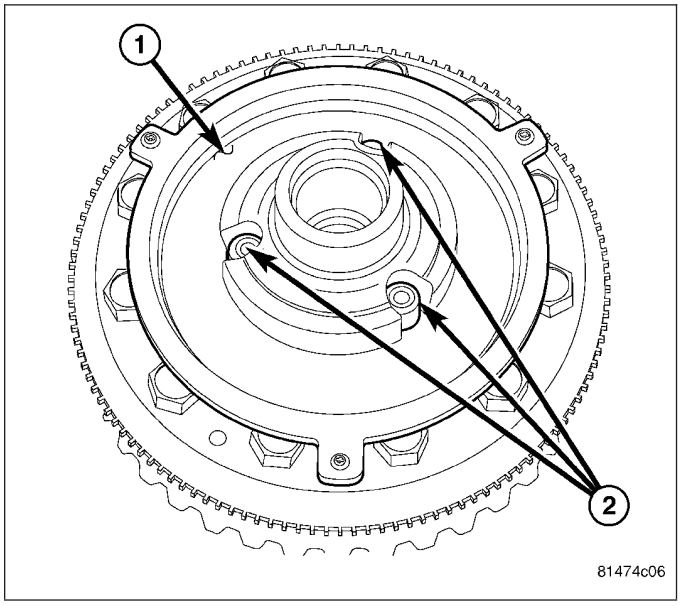

2. Clean coil bolts then apply Mopar® Lock & Seal adhesive to the threads
3. Install coil (1) and bolts (2).

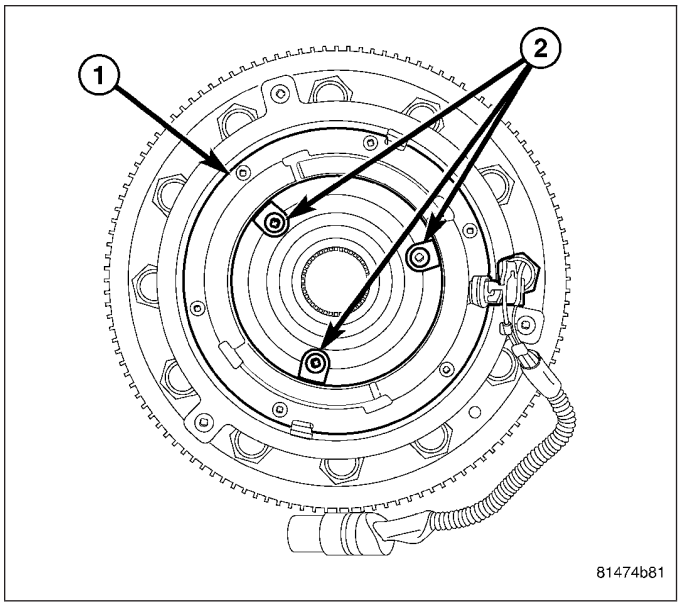

4. Install differential bearing (1) with Handle C-4171 (2) and Installer 8956 (3).

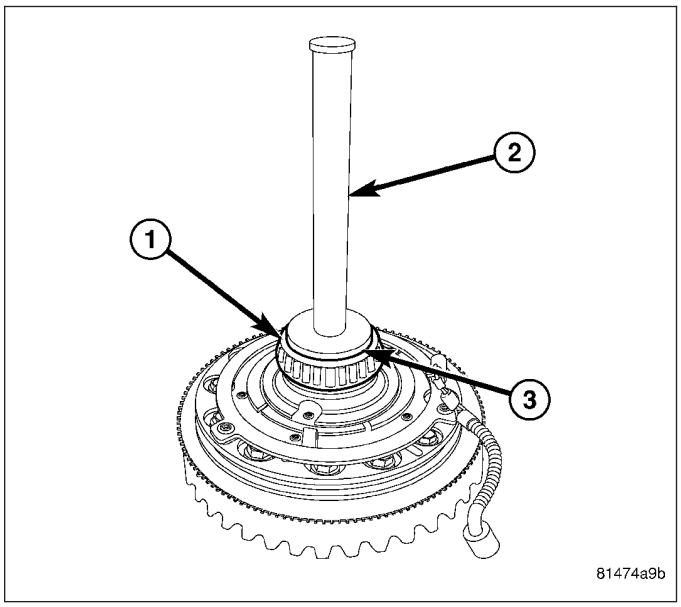

INSTALLATION

1. Clean the housing cavity with a flushing oil, light engine oil or lint free cloth.
2. Lubricate differential case bearing.
3. Install differential case with bearings cups into the housing.
4. Slid electric locker connector through differential housing.
5. Install o-ring (2) on electric locker connector.
6. Install electric locker connector retainer (1) and install connector with retainer in differential housing.
7. Install connector retainer bolt.

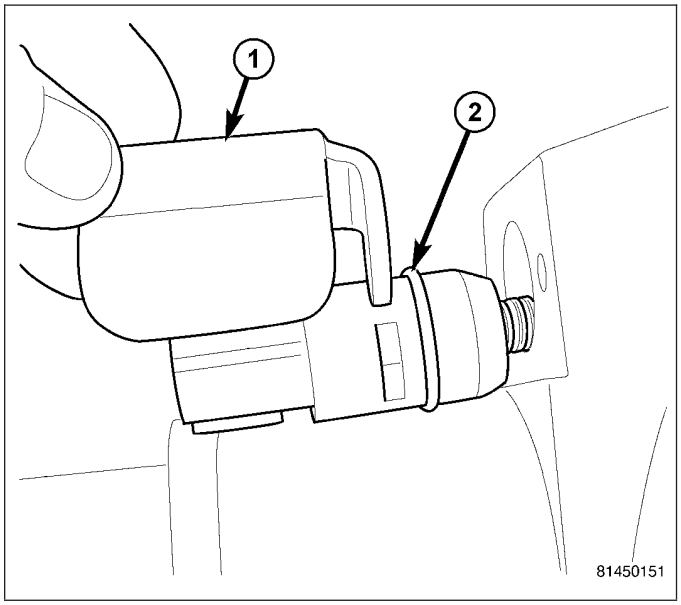

8. Install bearing caps (2), anti rotation bracket and bolts. Tighten bearing cap bolts finger-tight.

NOTE: Do not torque bearing cap and bolts at this time.

9. Slide differential case toward the pinion gear until the gears make contact/zero backlash. If zero backlash cannot be obtained, turn the pinion side adjuster until zero backlash is obtained.
10. Holding the differential case toward the pinion gear, turn bearing adjusters with Spanner Wrench 8883 until they make contact with the differential bearings/cups.
11. Back off the ring gear side adjuster 4 holes, to obtain initial ring gear backlash.
12. Install ring gear side adjuster lock and bolt. Do not tighten adjuster lock bolt at this time.
13. Tighten pinion gear side adjuster firmly against the differential case bearing cup.
14. Rotate the pinion several times to seat the differential bearings.

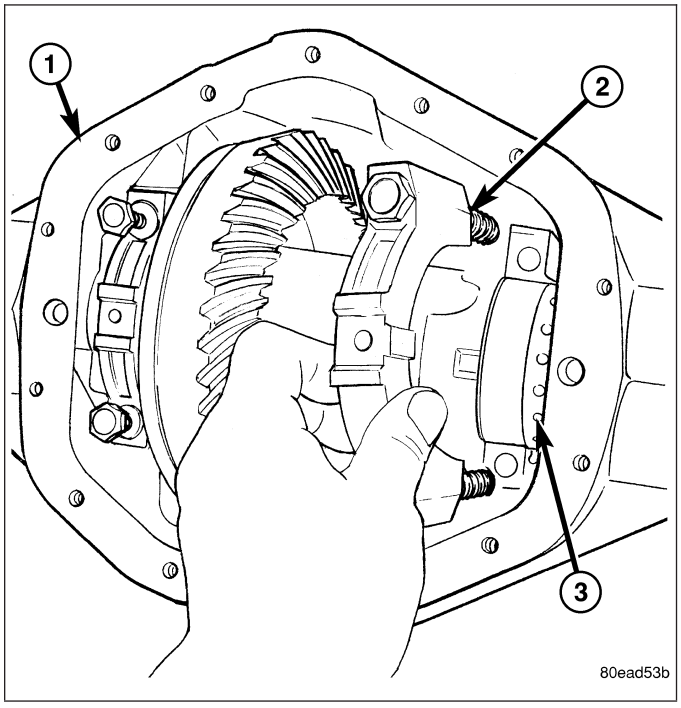

15. Loosen pinion gear side adjuster until it is no longer in contact with the bearing cup.
16. Tighten pinion gear side adjuster until it just makes contact with the bearing cup.
17. Tighten pinion gear side adjuster an additional:
    - **New Bearings:** 6 Adjuster Holes
    - **Original Bearings:** 4 Adjuster Holes
18. Install pinion gear side adjuster lock and bolt. Do not tighten adjuster lock bolt at this time.

19. Tighten bearing cap bolts (4) to 165 N·m (122 ft. lbs.).
20. Tighten adjuster (2) lock bolts (3) to 25 N·m (18 ft. lbs.).
21. Measure ring gear backlash and check gear tooth contact pattern. Refer to Adjustments for procedure.
22. Install axle shafts.
23. Install differential housing gasket and cover. Tighten cover bolts to 40 N·m (30 ft. lbs.).
24. Fill axle with lubricant, refer to Lubrication & Maintenance for capacity and lubricant type.
25. Install fill plug and tighten to 32 N·m (24 ft. lbs.).

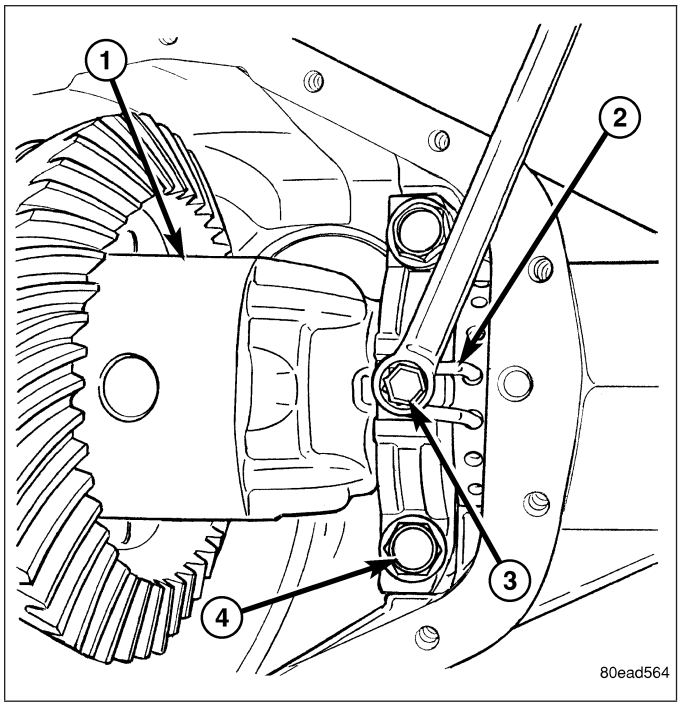

BEARINGS-EL DIFFERENTIAL CASE

REMOVAL

1. Remove the differential case from the housing.
2. Install Plug 8888 (1) into the end of the case.
3. Remove differential case bearings (2) with Puller C-293-PA (3) and Adapters 9614 (4).

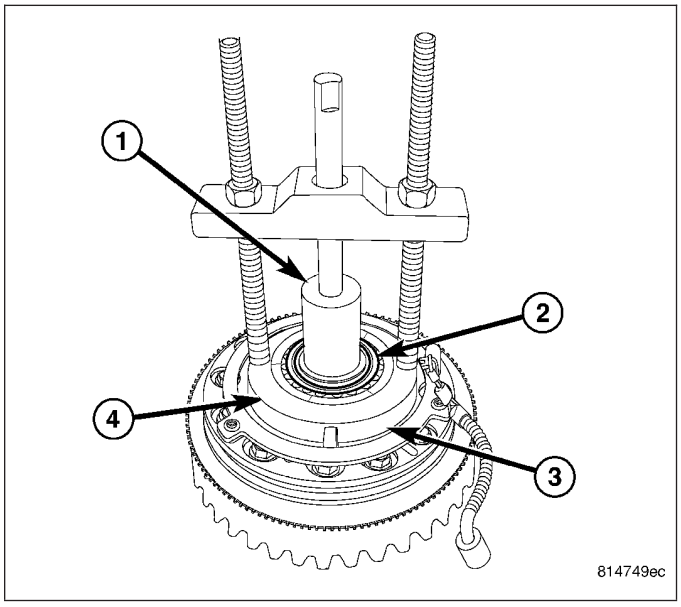

INSTALLATION

1. Install differential bearings (1) with Handle C-4171 (2) and Installer 8956 (3).

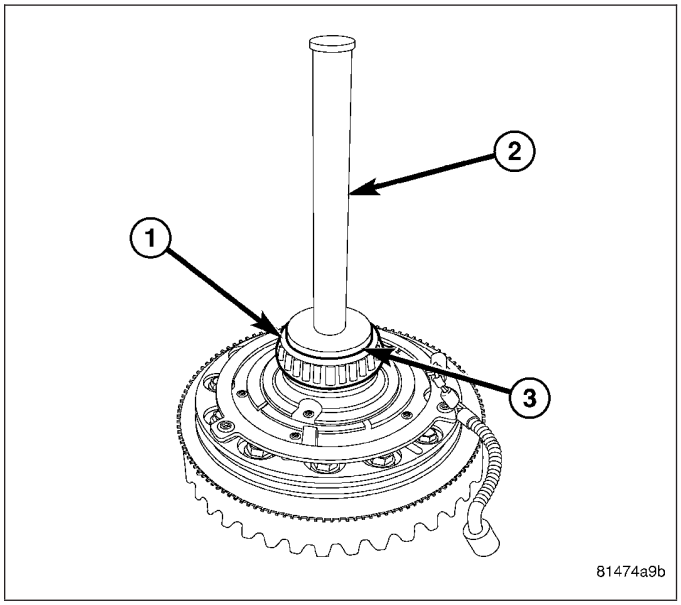

GEAR-PINION/RING

REMOVAL

NOTE: The ring and pinion gears are service in a matched set. Never replace the ring gear/pinion gear without replacing the other matching gear.

1. Mark pinion flange and propeller shaft for installation alignment.
2. Disconnect propeller shaft from pinion flange and remove propeller shaft.
3. Remove differential from axle housing.
4. Place differential on Plug 8888 and drive exciter ring (4) off the differential case (1) with a hammer and punch (3).

NOTE: Do not remove the exciter ring if it is not being replaced.

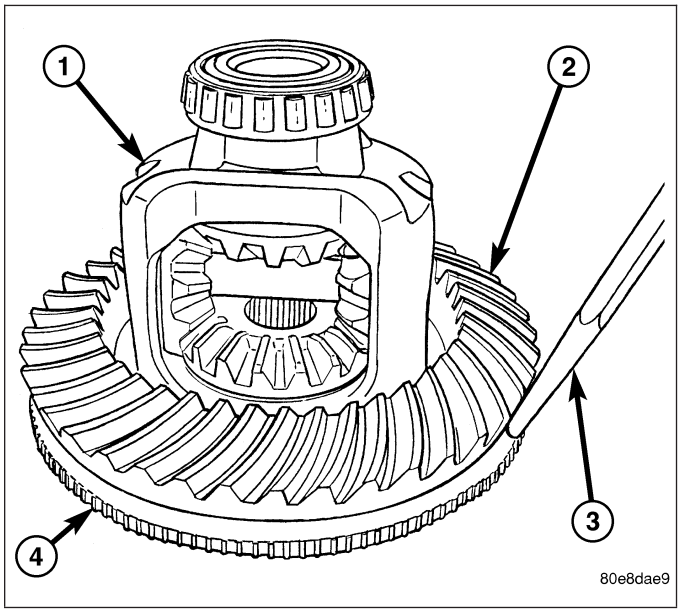

5. Place differential case in a vise with soft metal jaw protectors
6. Remove bolts holding ring gear to differential case.
7. Drive ring gear (2) from differential case (1) with a soft hammer (3).

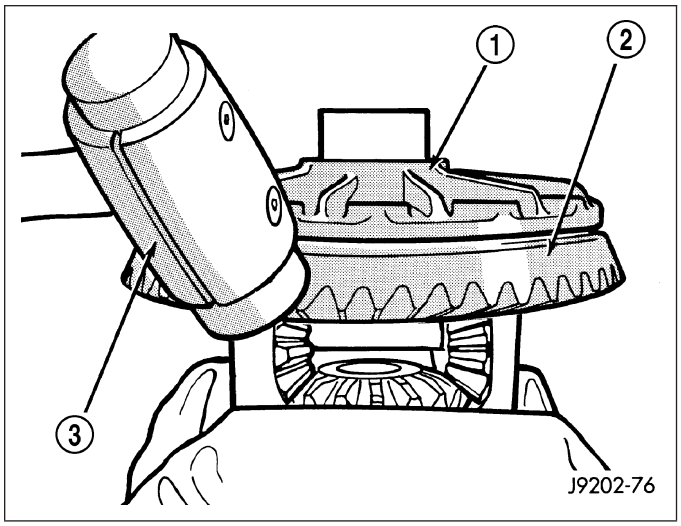

8. Hold pinion flange (1) with Flange Wrench 8979 (2) and remove pinion flnage nut and washer.

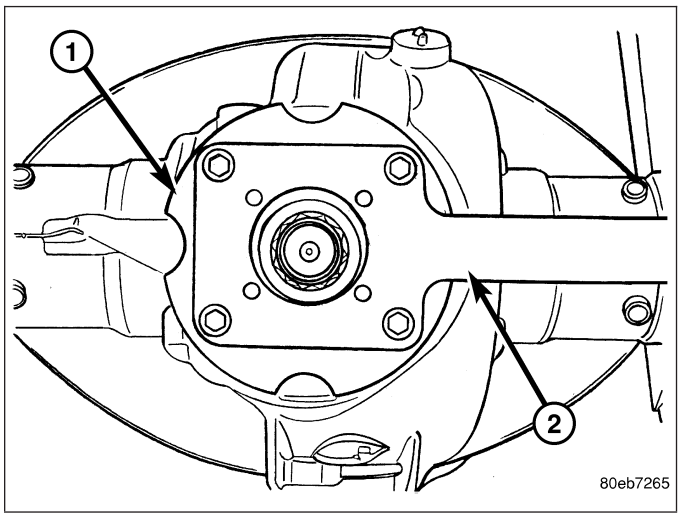

9. Remove pinion flange (1) from the pinion with Flange Puller 8992 (2).

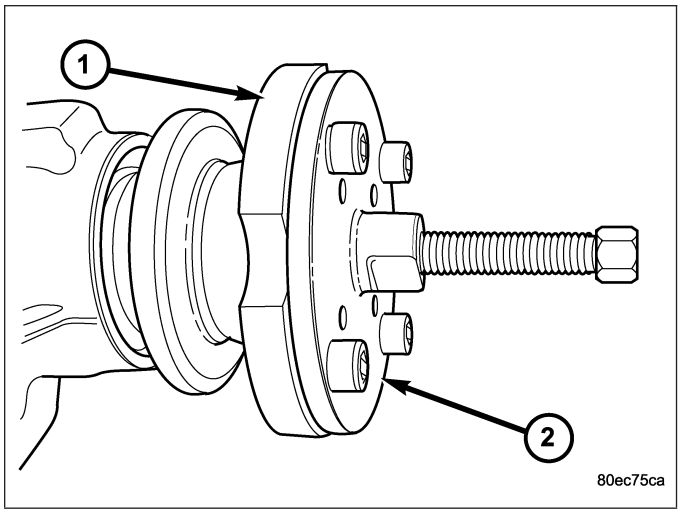

10. Remove pinion gear (1) from housing, with Pinion Driver 8977 (2) and a hammer.

NOTE: Thread the driver on the pinion shaft till it bottoms out.

11. Remove pinion seal with a slide hammer or pry bar.
12. Remove and discard front pinion bearing.

CAUTION: Do not reuse front pinion bearing/cup.

13. Remove collapsible spacer from the pinion shaft.

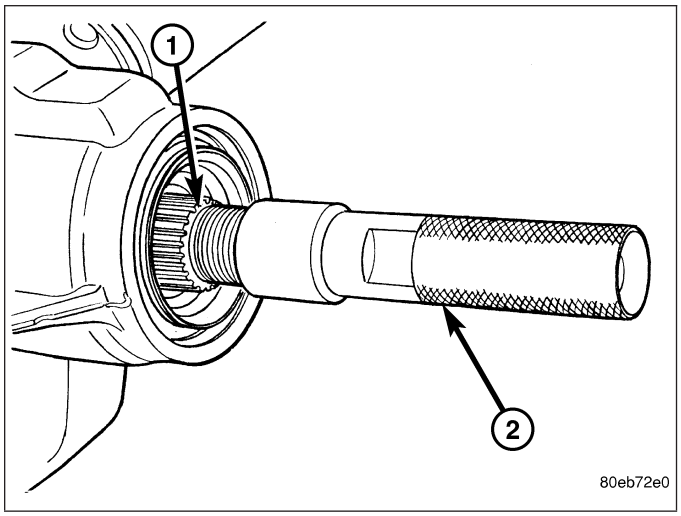

14. Remove rear pinion bearing with Puller C-293-PA (1) and Adapter Blocks 8879 (4).
15. Remove pinion depth shim from the pinion gear shaft and record thickness of the shims.
16. Remove front pinion bearing cup from the housing with a punch and hammer and discard cup.

CAUTION: Do not reuse front pinion bearing/cup.

17. Remove rear pinion bearing cup from the housing with a punch and hammer, if bearing is going to be replaced.

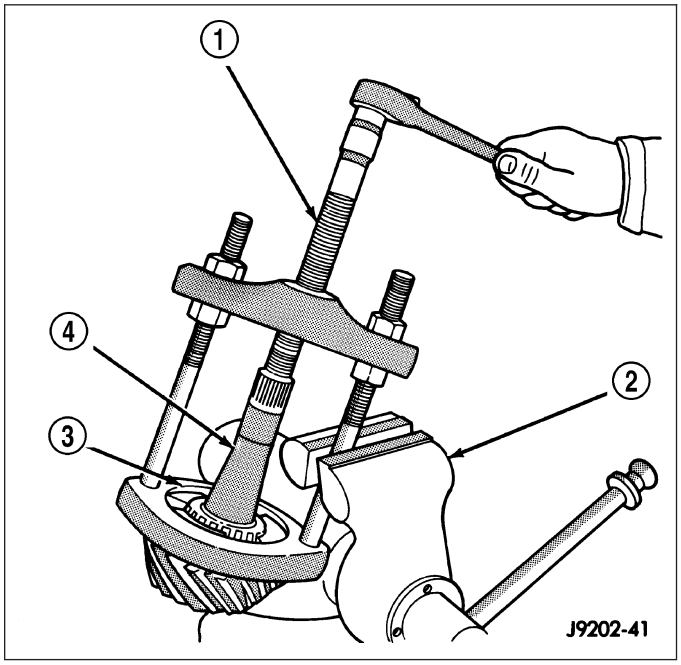

INSTALLATION

1. Install new front pinion bearing cup with Installer 8960 (1) and Handle C-4171 (2).

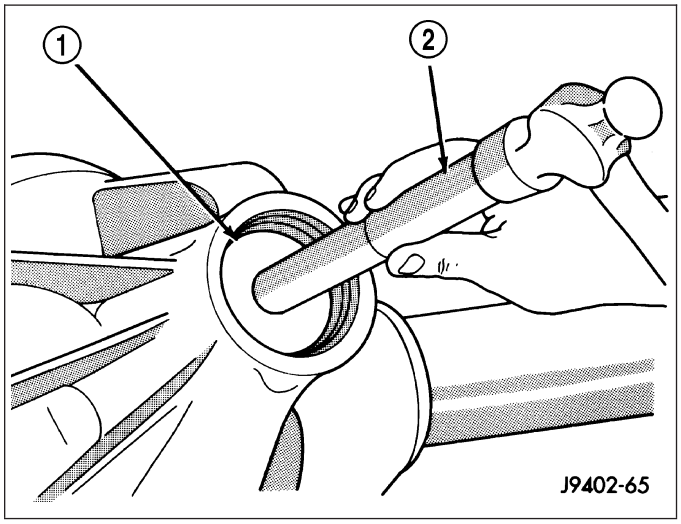

2. Install new rear pinion bearing cup with Installer 8959 (1) and Handle C-4171 (2).

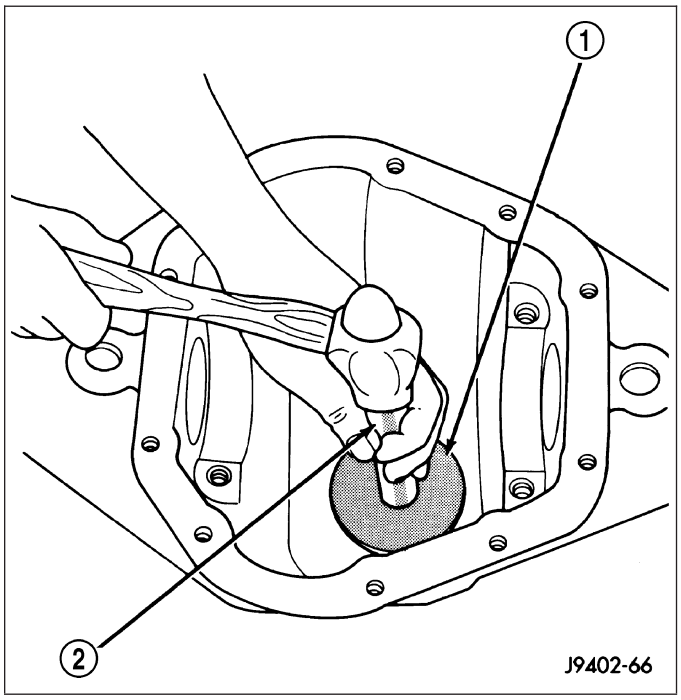

3. Install pinion depth shim (1) on the pinion gear shaft (2).

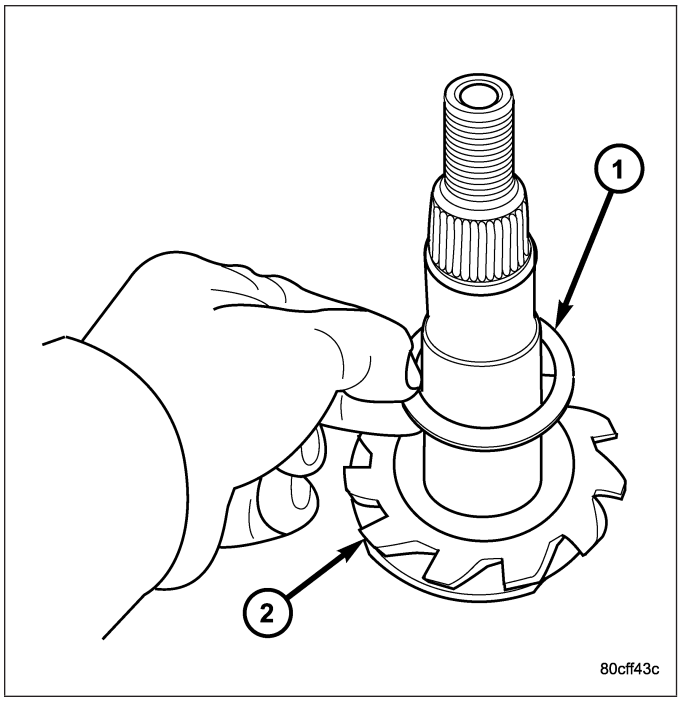

4. Install rear pinion bearing (4) with Installer MD-998805 (2) and a press (1).

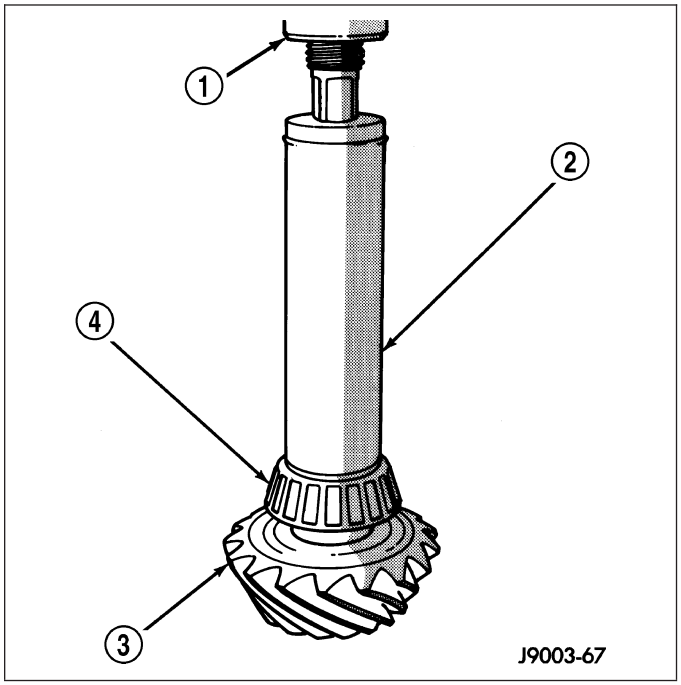

5. Install **new** collapsible spacer (1) on pinion gear (2).

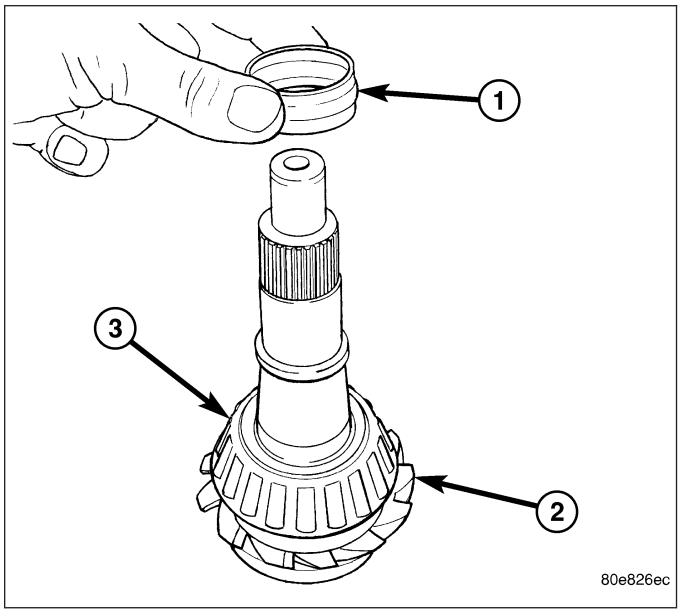

6. Lubricate pinion and bearings.
7. Install pinion into the housing (2) and place front pinion bearing onto the pinion shaft. Draw the pinion shaft into the front bearing with Installer 8981 (1).

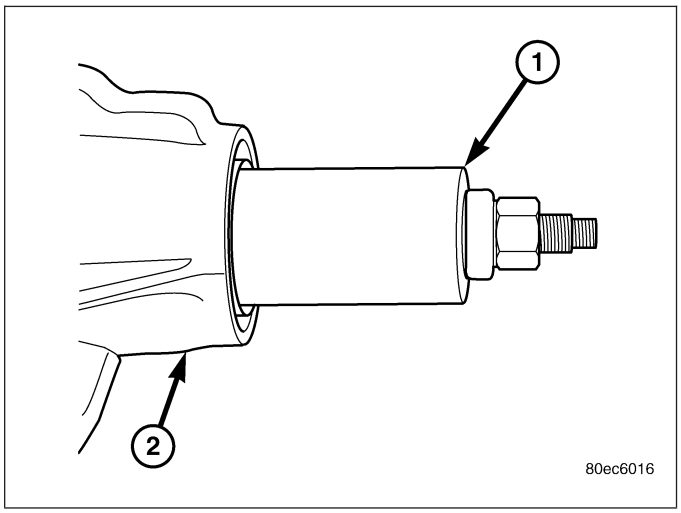

8. Install **new** pinion seal with Installer 8896 (2) and Handle C-4171 (1).

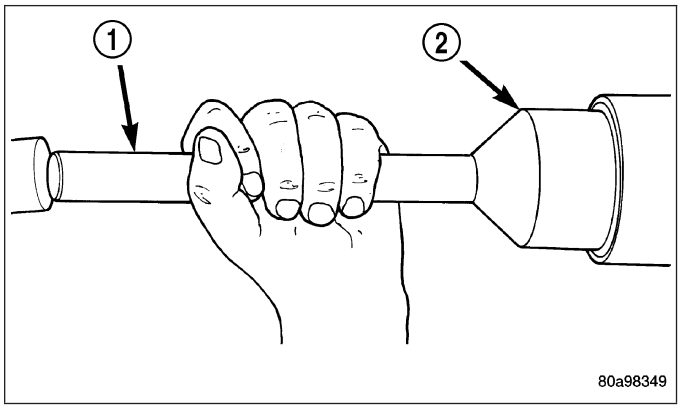

9. Apply a light coat of teflon sealant to the pinion flange splines.
10. Hold the pinion and lightly tap the pinion flange onto the pinion, until a few threads are showing.
11. Install pinion flange washer and **new** pinion nut.
12. Hold pinion flange (2) with Flange Wrench 8979 (1) and tighten pinion nut until pinion end play is taken up.

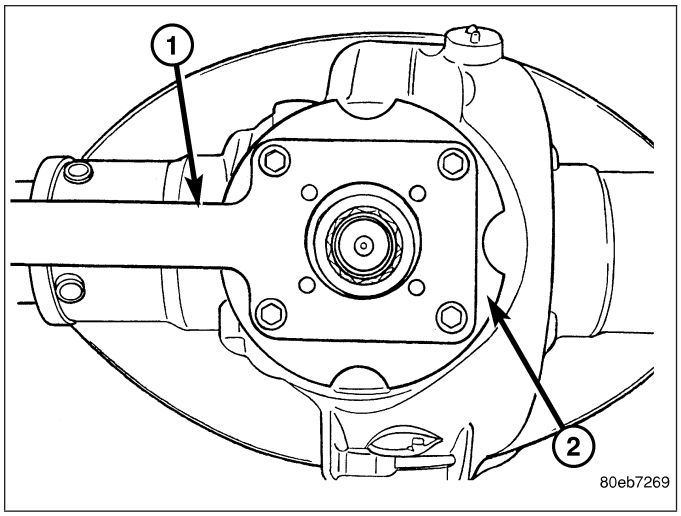

13. Rotate pinion several times to seat bearings.
14. Measure pinion (1) rotating torque with an inch pound torque wrench (2). Tighten pinion nut in small increments until pinion rotating torque is:
    - **New Pinion Bearings:** 1.7-2.8 N·m (15-25 in. lbs.)
    - **Original Pinion Bearings:** 1.1-2.2 N·m (10-20 in. lbs.)
15. Rotate pinion several times then verify pinion rotating torque again.

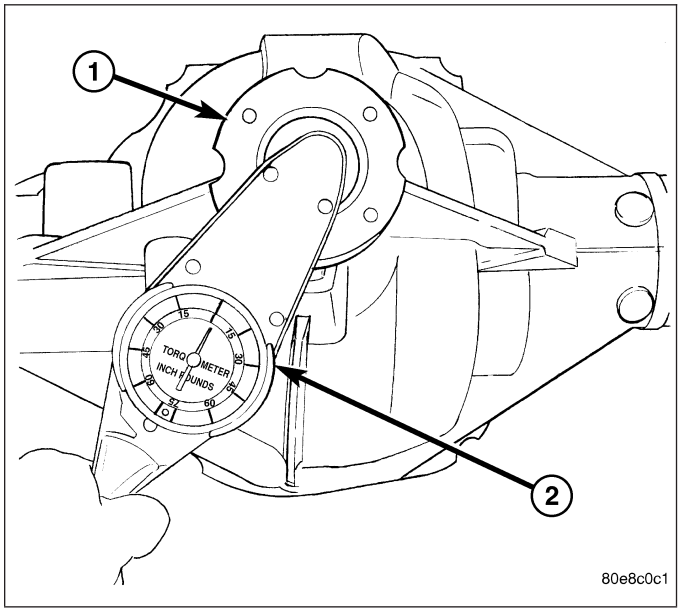

16. Position the ring gear (2) on differential case (4) and start two **new** ring gear bolts.
17. Install the rest of the **new** ring gear bolts and tighten them alternately to seat the ring gear.

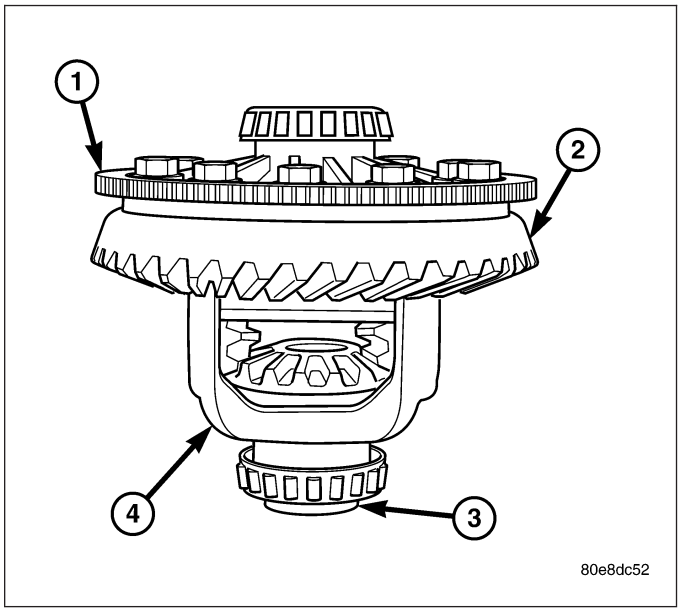

18. Torque ring gear bolts to 237 N·m (175 ft. lbs.).

19. If exciter ring was removed, position differential assembly on differential Plug 8888 and place exciter ring on the differential case.
20. Install exciter ring (1) on the differential case evenly with a hammer and brass punch (2). Drive the ring down until it is seated against the ring gear (3).

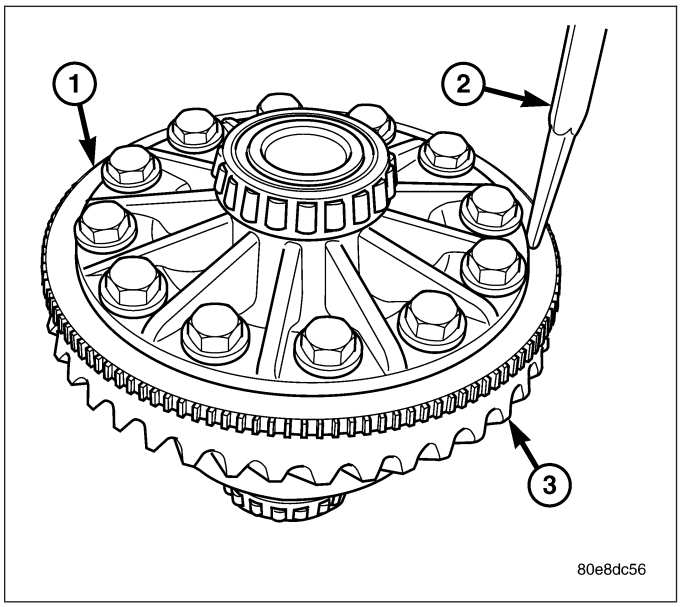

CAUTION: Do not damage exciter ring teeth during installation.

21. Install differential into the housing.
22. Verify ring gear backlash and gear contact pattern.
23. Measure final rotating torque with an inch pound torque wrench. The final pinion rotating torque plus differential case bearing preload is:
    - **New Bearings:** 3.4-5.6 N·m (30-50 in. lbs.)
    - **Original Bearings:** 2.8-5.1 N·m (25-45 in. lbs.)
24. Install axle shafts.
25. Install the propeller shaft with the reference marks aligned.
26. Install differential cover with gasket and tighten bolts to 40 N·m (30 ft. lbs.).
27. Fill differential with fluid and tighten fill plug to 32 N·m (24 ft. lbs.).

REAR AXLE - 11 1/2 AA

TABLE OF CONTENTS

	page
REAR AXLE - 11 1/2 AA	
DIAGNOSIS AND TESTING	
REAR AXLE-11 1/2 AA	310
REMOVAL	314
INSTALLATION	315
ADJUSTMENTS	315
SPECIFICATIONS	320
SPECIAL TOOLS	321
SHAFT-AXLE	
REMOVAL	325
INSTALLATION	325
BEARING-AXLE HUB	
REMOVAL	326
INSTALLATION	327
SEAL-PINION	
REMOVAL	328
INSTALLATION	329
DIFFERENTIAL	
REMOVAL	330
DISASSEMBLY	331
ASSEMBLY	333
INSTALLATION	335
DIFFERENTIAL-TRAC-RITE	
DESCRIPTION	336
OPERATION	337
CLEANING	337
BEARING-DIFFERENTIAL CASE	
REMOVAL	338
INSTALLATION	338
GEAR-PINION/RING	
REMOVAL	339
INSTALLATION	341

REAR AXLE - 11 1/2 AA

DIAGNOSIS AND TESTING

REAR AXLE-11 1/2 AA

GEAR NOISE

Axle gear noise can be caused by insufficient lubricant, incorrect backlash, incorrect pinion depth, tooth contact, worn/damaged gears, or the carrier housing not having the proper offset and squareness.

Gear noise usually happens at a specific speed range. The noise can also occur during a specific type of driving condition. These conditions are acceleration, deceleration, coast, or constant load.

When road testing, first warm-up the axle fluid by driving the vehicle at least 5 miles and then accelerate the vehicle to the speed range where the noise is the greatest. Shift out-of-gear and coast through the peak-noise range. If the noise stops or changes greatly check for:

- Insufficient lubricant.
- Incorrect ring gear backlash.
- Gear damage.

Differential side gears and pinions can be checked by turning the vehicle. The side gears are loaded during turns. They usually do not cause noise during straight-ahead driving when the gears are unloaded. A worn pinion shaft can also cause a snapping or a knocking noise.

BEARING NOISE

The axle shaft, differential and pinion bearings can all produce noise when worn or damaged. Bearing noise can be either a whining, or a growling sound.

Pinion bearings have a constant-pitch noise. This noise changes only with vehicle speed. Pinion bearing noise will be higher pitched because it rotates at a faster rate. Drive the vehicle and load the differential. If bearing noise occurs, the rear pinion bearing is the source of the noise. If the bearing noise is heard during a coast, the front pinion bearing is the source.

Differential bearings usually produce a low pitch noise. Differential bearing noise is similar to pinion bearing noise. The pitch of differential bearing noise is also constant and varies only with vehicle speed.

Axle shaft bearings produce noise and vibration when worn or damaged. The noise generally changes when the bearings are loaded. Road test the vehicle. Turn the vehicle sharply to the left and to the right. This will load the bearings and change the noise level. Where axle bearing damage is slight, the noise is usually not noticeable at speeds above 30 mph.

LOW SPEED KNOCK

Low speed knock is generally caused by:

- Worn U-joint(s).
- Worn side gear thrust washers.
- Worn pinion shaft bore.

VIBRATION

Vibration at the rear of the vehicle is usually caused by:

- Damaged drive shaft.
- Missing drive shaft balance weight(s).
- Worn or out-of-balance wheels.
- Loose wheel lug nuts.
- Worn U-joint(s).
- Loose/broken springs.
- Damaged axle shaft bearing(s).
- Loose pinion gear nut.
- Excessive pinion yoke run out.
- Bent axle shaft(s).

Check for loose or damaged front-end components or engine/transmission mounts. These components can contribute to what appears to be a rear end vibration. Do not overlook engine accessories, brackets and drive belts.

NOTE: All driveline components should be examined before starting any repair.

DRIVELINE SNAP

A snap or clunk noise when the vehicle is shifted into gear (or the clutch engaged), can be caused by:

- High engine idle speed.
- Transmission shift operation.
- Loose engine/transmission/transfer case mounts.
- Worn U-joints.
- Loose spring mounts.
- Loose pinion gear nut and yoke.
- Excessive ring gear backlash.
- Excessive side gear to case clearance.

The source of a snap or a clunk noise can be determined with the assistance of a helper. Raise the vehicle on a hoist with the wheels free to rotate. Instruct the helper to shift the transmission into gear and listen for the noise. A mechanics stethoscope is helpful in isolating the source of a noise.

DIAGNOSTIC CHART

Condition	Possible Causes	Correction
Wheel Noise	1. Wheel loose.	1. Tighten loose nuts.
	2. Faulty, brinelled wheel bearing.	2. Replace bearing.
Axle Shaft Noise	1. Misaligned axle tube.	1. Inspect axle tube alignment. Correct as necessary.
	2. Bent or sprung axle shaft.	2. Inspect and correct as necessary.
Axle Shaft Broke	1. Misaligned axle tube.	1. Replace the broken shaft after correcting tube mis-alignment.
	2 Vehicle overloaded.	2. Replace broken shaft and avoid excessive weight on vehicle.
	3. Erratic clutch operation.	3. Replace broken shaft and avoid or correct erratic clutch operation.
	4. Grabbing clutch.	4. Replace broken shaft and inspect and repair clutch as necessary.
Differential Cracked	1. Improper adjustment of the differential bearings.	1. Replace case and inspect gears and bearings for further damage. Set differential bearing pre-load properly.
	2. Excessive ring gear backlash.	2. Replace case and inspect gears and bearings for further damage. Set ring gear backlash properly.
	3. Vehicle overloaded.	3. Replace case and inspect gears and bearings for further damage. Avoid excessive vehicle weight.
	4. Erratic clutch operation.	4. Replace case and inspect gears and bearings for further damage. Avoid erratic use of clutch.
Differential Gears Scored	1. Insufficient lubrication.	1. Replace scored gears. Fill differential with the correct fluid type and quantity.
	2. Improper grade of lubricant.	2. Replace scored gears. Fill differential with the correct fluid type and quantity.
	3. Excessive spinning of one wheel/tire.	3. Replace scored gears. Inspect all gears, pinion bores, and shaft for damage. Service as necessary.
Loss Of Lubricant	1. Lubricant level too high.	1. Drain lubricant to the correct level.
	2. Worn axle shaft seals.	2. Replace seals.
	3. Cracked differential housing.	3. Repair as necessary.
	4. Worn pinion seal.	4. Replace seal.
	5. Worn/scored yoke.	5. Replace yoke and seal.
	6. Axle cover not properly sealed.	6. Remove, clean, and re-seal cover.

Condition	Possible Causes	Correction
Axle Overheating	1. Lubricant level low.	1. Fill differential to correct level.
	2. Improper grade of lubricant.	2. Fill differential with the correct fluid type and quantity.
	3. Bearing pre-loads too high.	3. Re-adjust bearing pre-loads.
	4. Insufficient ring gear backlash.	4. Re-adjust ring gear backlash.
Gear Teeth Broke	1. Overloading.	1. Replace gears. Examine other gears and bearings for possible damage.
	2. Erratic clutch operation.	2. Replace gears and examine the remaining parts for damage. Avoid erratic clutch operation.
	3. Ice-spotted pavement.	3. Replace gears and examine remaining parts for damage.
	4. Improper adjustments.	4. Replace gears and examine remaining parts for damage. Ensure ring gear backlash is correct.
Axle Noise	1. Insufficient lubricant.	1. Fill differential with the correct fluid type and quantity.
	2. Improper ring gear and pinion adjustment.	2. Check ring gear and pinion contact pattern. Adjust backlash or pinion depth.
	3. Unmatched ring gear and pinion.	3. Replace gears with a matched ring gear and pinion.
	4. Worn teeth on ring gear and/or pinion.	4. Replace ring gear and pinion.
	5. Loose pinion bearings.	5. Adjust pinion bearing pre-load.
	6. Loose differential bearings.	6. Adjust differential bearing pre-load.
	7. Mis-aligned or sprung ring gear.	7. Measure ring gear run-out. Replace components as necessary.
	8. Loose differential bearing cap bolts.	8. Inspect differential components and replace as necessary. Ensure that the bearing caps are torqued tot he proper specification.
	9. Housing not machined properly.	9. Replace housing.

REMOVAL

1. With vehicle in neutral, position vehicle on hoist.
2. Position a lift under axle and secure lift to the axle.
3. Remove all brake components.
4. Mark propeller shaft and companion flange for installation alignment reference.
5. Remove propeller shaft.
6. Remove axle vent hose.
7. Remove shock absorbers (3) from axle (2).

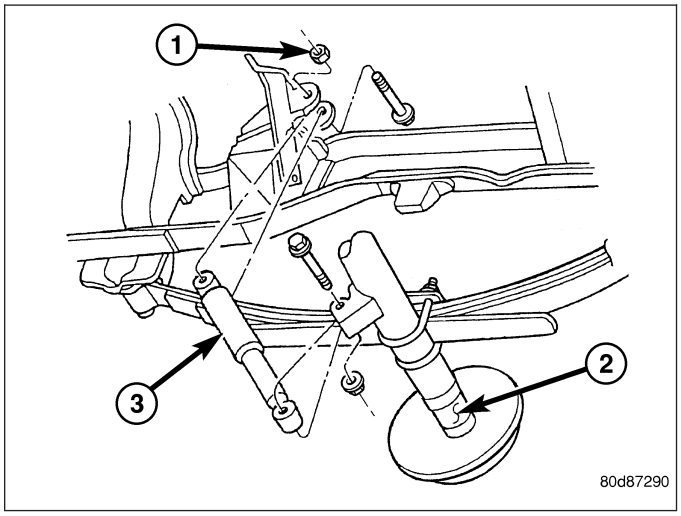

8. Remove U-bolts (4) from axle.
9. Remove axle from the vehicle.

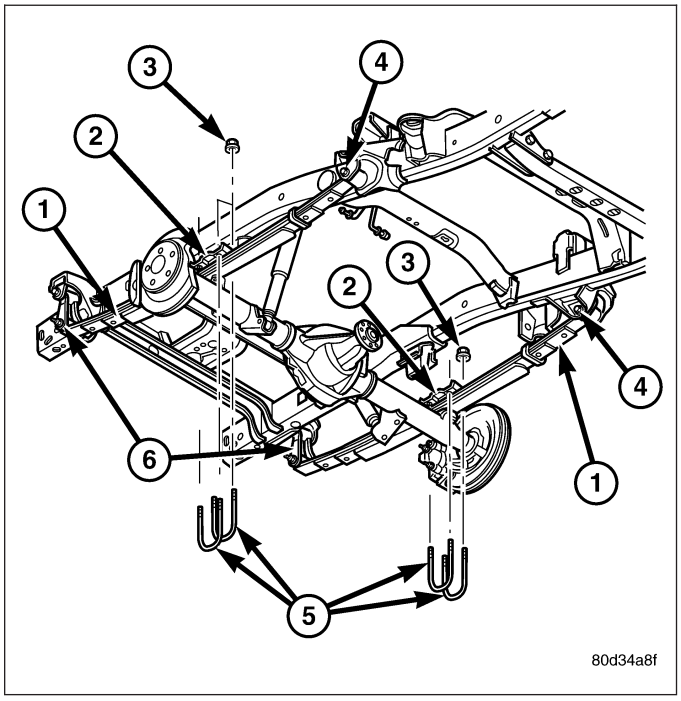

INSTALLATION

1. Raise axle with lift and align to the leaf spring (1) centering bolts.
2. Install axle U-bolts (5) and tighten to 149 N·m (110 ft. lbs.).
3. Install shock absorbers to axle and tighten to specification.
4. Install all brake components.
5. Install propeller shaft with reference marks aligned and tighten to specification.
6. Install axle vent hose.
7. Fill differential to specifications.
8. Remove lift from axle and lower the vehicle.

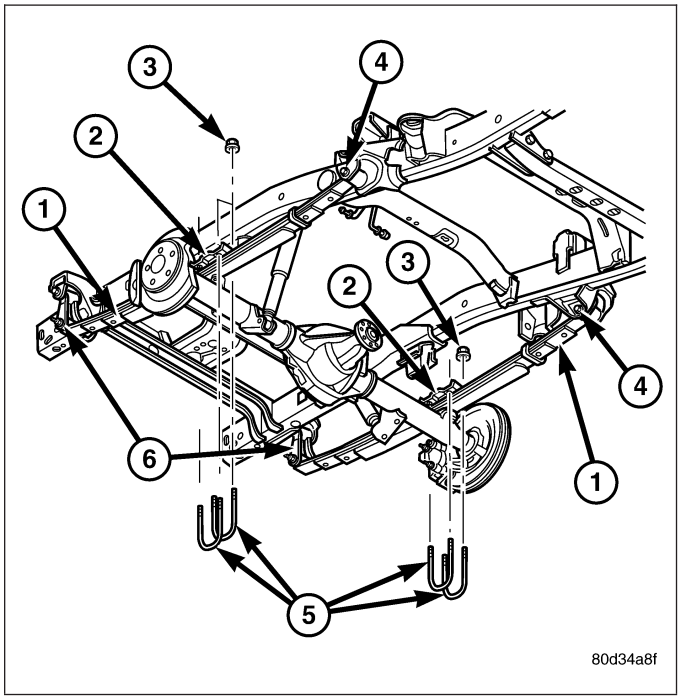

ADJUSTMENTS

PINION DEPTH MEASUREMENT

Ring and pinion gears are supplied as matched sets. Compensation for pinion depth variance is achieved with a select shim, located between the rear pinion bearing and pinion gear head.

Measurements are taken with pinion bearing cups and pinion bearings installed in the housing. Take measurements with Pinion Gauge Set and Dial Indicator C-3339 (1).

1. Assemble Pinion Height Block 6739 (3), Pinion Block 8897 (6) and rear pinion bearing onto Screw 6741(5).

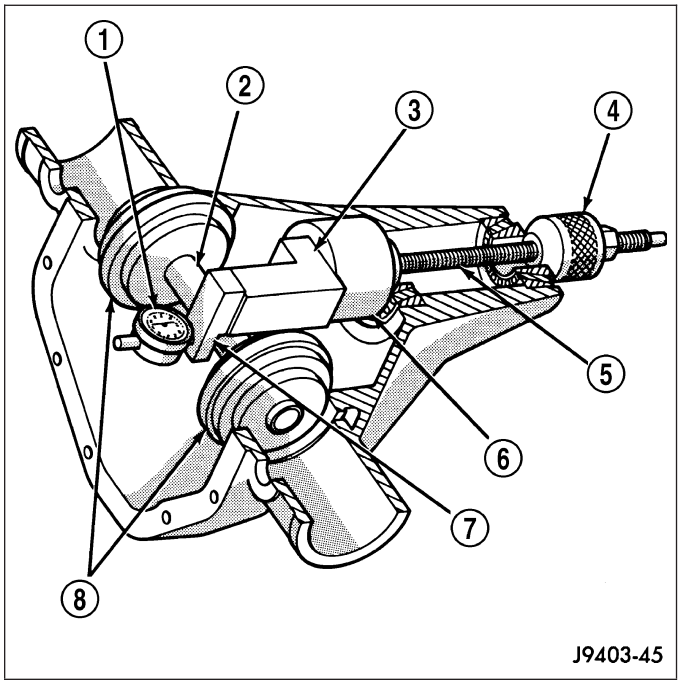

2. Insert assembled pinion block (1), pinion height block (2), rear bearing and screw into the housing through pinion bearing cups.
3. Install front pinion bearing and Cone-nut 6740 onto the screw. Tighten cone-nut until Torque To Rotate the screw is 1.7-2.26 N·m (15-20 in. lbs.).

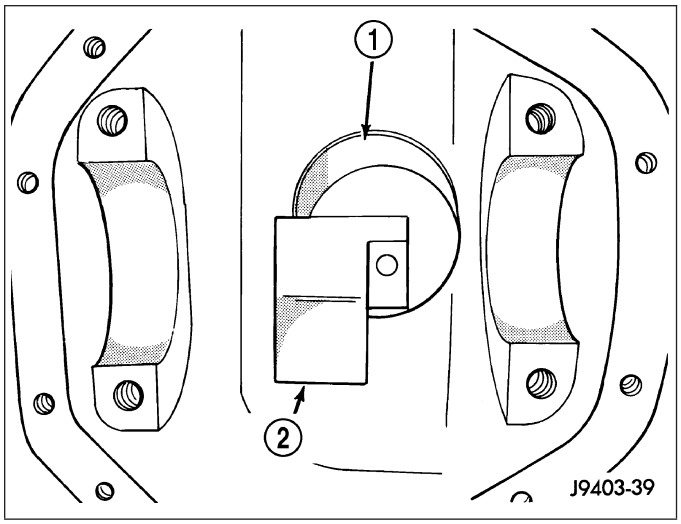

4. Place Arbor Discs 8289 (1) on Arbor D-115-3 (3) in position in the housing side bearing cradles.
5. Install differential bearing caps on arbor discs and snug the bearing cap bolts. Then cross tighten cap bolts to 281 N·m (207 ft. lbs.).

NOTE: Arbor should rotate freely in the arbor discs.

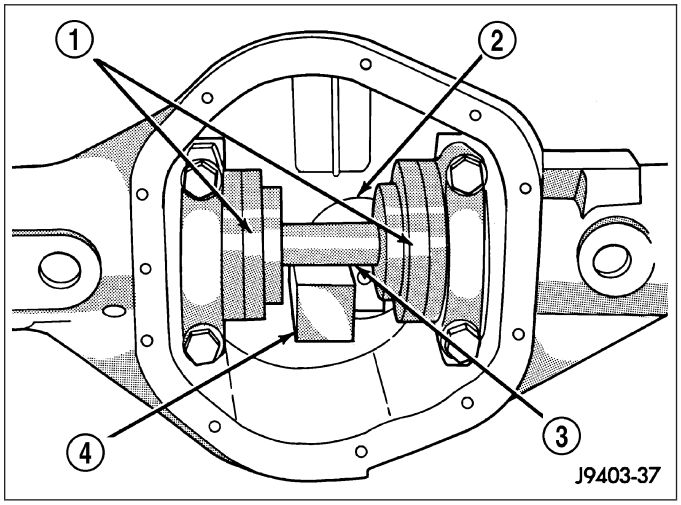

6. Assemble Dial Indicator C-3339 (3) into Scooter Block D-115-2 (2) and secure set screw.
7. Position Scooter Block/Dial Indicator flush on the pinion height block. Hold scooter block and zero the dial indicator.
8. Slowly slide the scooter block across the pinion height block over to the arbor. Move the scooter block till dial indicator crests the arbor (1), then record the highest reading.
9. Select a shim equal to the dial indicator reading.
10. Install the select shim between the rear pinion bearing and the pinion gear head.

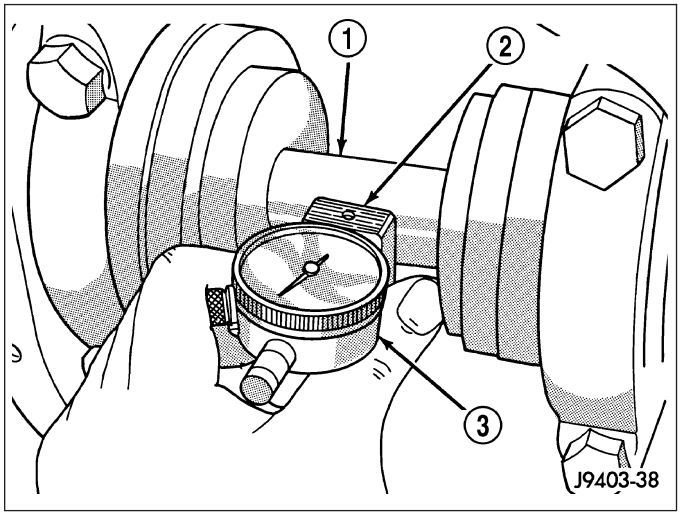

DIFFERENTIAL CASE BEARING PRELOAD AND GEAR BACKLASH

Backlash is adjusted by moving the adjusters in and out or both. By moving the adjusters the case/ring gear will move closer or further away from the pinion. In most cases this adjustment can be used to achieve the correct gear tooth pattern and set the case bearing preload.

1. Remove adjuster lock bolts (3) and adjuster locks (2).
2. Loosen the differential bearing caps (4).
3. Slide differential case toward the pinion gear until the gears make contact/zero backlash. If zero backlash cannot be obtained, turn the pinion side adjuster until zero backlash is obtained.

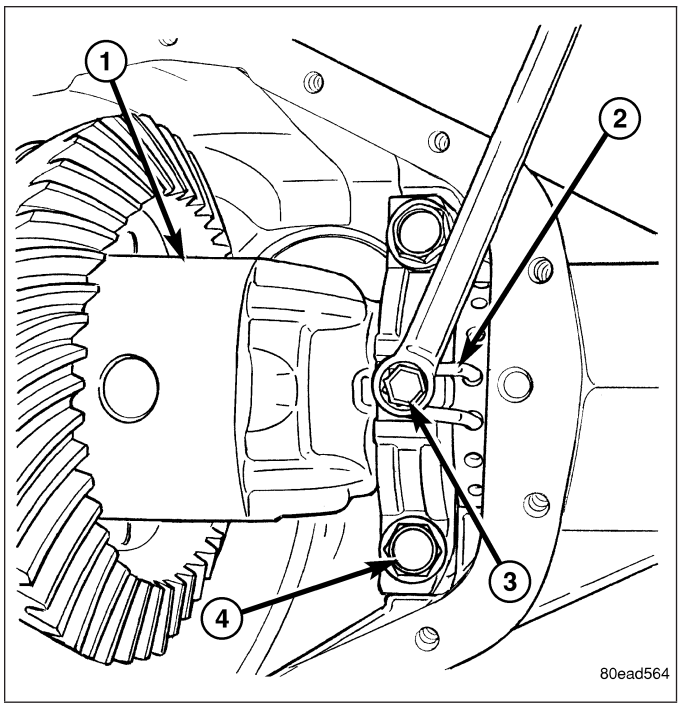

4. Holding the differential case (2) toward the pinion gear, turn bearing adjusters with Adjuster Wrench 8883 (1) until they make contact with the differential bearings/cups.
5. Back off the ring gear side adjuster 4 holes, to obtain initial ring gear backlash.
6. Install ring gear side adjuster lock and bolt. Do not tighten adjuster lock bolt at this time.
7. Tighten pinion gear side adjuster firmly against the differential case bearing cup.
8. Rotate the pinion several times to seat the deferential bearings.
9. Loosen pinion gear side adjuster until it is no longer in contact with the bearing cup, then tighten it until it makes contact.

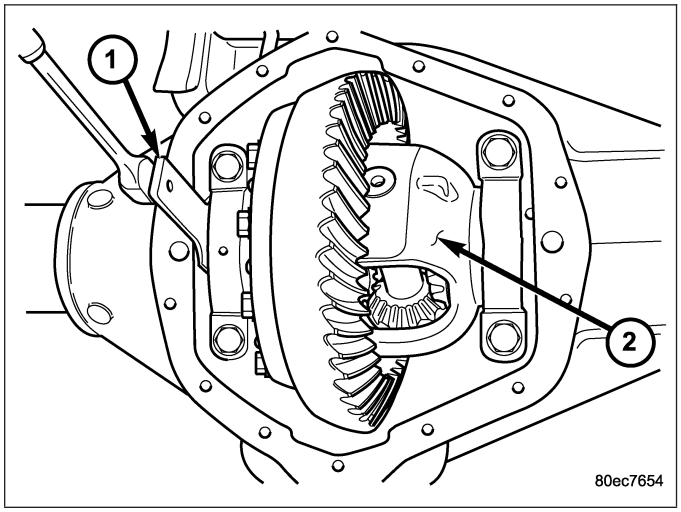

10. Tighten pinion gear side adjuster an additional:
    - **New Bearings:** 6 Adjuster Holes
    - **Original Bearings:** 4 Adjuster Holes
11. Install pinion gear side adjuster lock and bolt. Do not tighten adjuster lock bolt at this time.
12. Tighten bearing cap bolts to 115 N·m (85 ft. lbs.).
13. Tighten adjuster lock bolts to 33 N·m (24 ft. lbs.).

14. Measure ring gear backlash with a Dial Indicator C-3339 (1) and Dial Indicator Stud L-4438 at eight points around the drive side of the ring gear (2). The backlash should be 0.08-0.25 mm (0.003-0.010 in) with a preferred backlash of 0.13-0.18 mm (0.005-0.007 in).

NOTE: Backlash measurement should not vary more than 0.05 mm (0.002 in) between measuring points. If measurement does vary inspect the gears for burrs, the differential case flange and ring gear mounting.

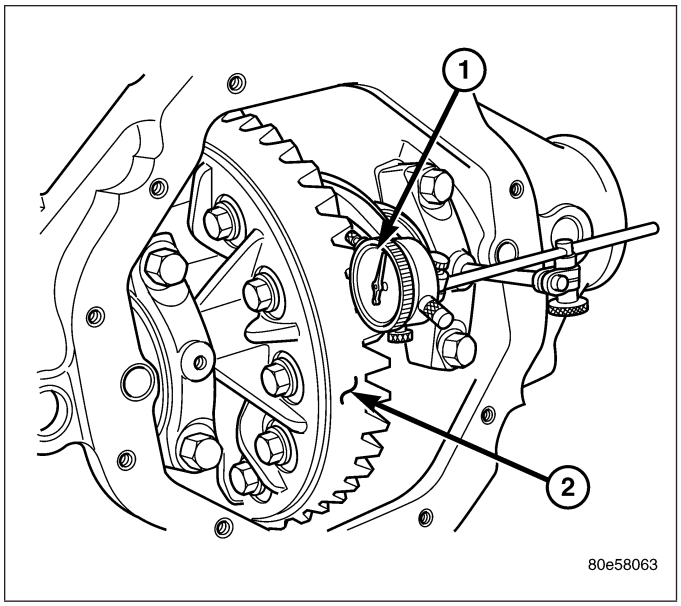

GEAR TOOTH CONTACT PATTERN

1. Wipe clean each tooth of the ring gear.
2. Apply gear marking compound to all of the ring gear teeth.
3. Verify bearing cap bolts are torque specification.
4. Apply parking brakes lightly to create at 14 N·m (10 ft. lbs.) pinion rotating torque.
5. Rotate the pinion/pinion yoke 4 full revolutions in each directions.
6. Read gear tooth contact pattern.

Gear contact pattern correct. Backlash and pinion depth is correct.

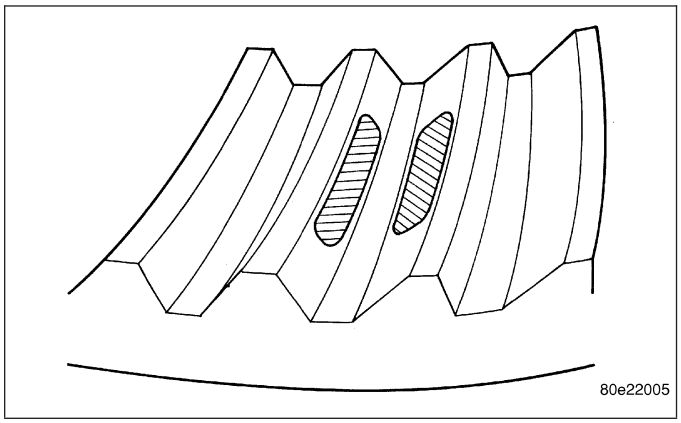

Ring gear too far away from pinion gear, coast side toe (1) and drive side heel (2). Decrease backlash, by moving the ring closer to the pinion gear using the adjusters.

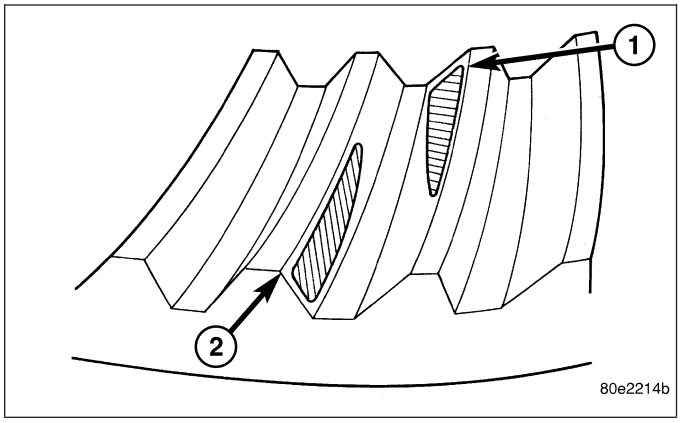

Ring gear too close to pinion gear, drive side toe (1) and coast side heel (2). Increase backlash, by moving the ring away from the pinion gear using the adjusters.

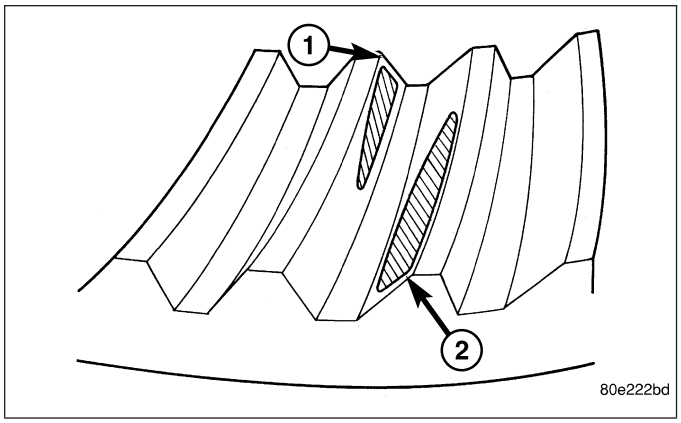

Ring gear too far away from pinion gear, drive side heel (1) and coast side heel (2). Decrease backlash, by moving the ring closer to the pinion gear using the adjusters.

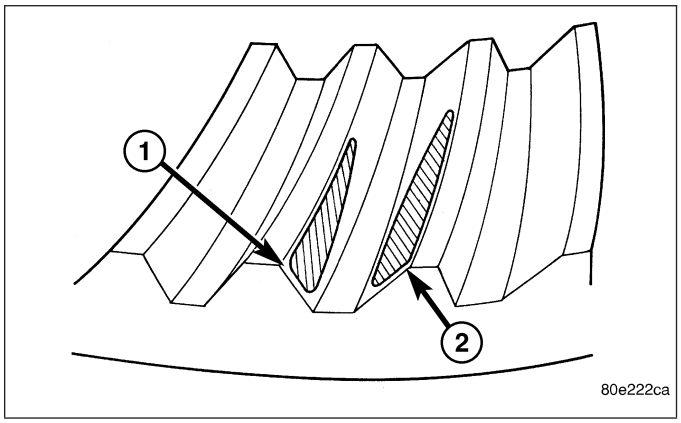

Ring gear too close to pinion gear, drive side toe (1) coast side toe (2). Increase backlash, by moving the ring away from the pinion gear using the adjusters.

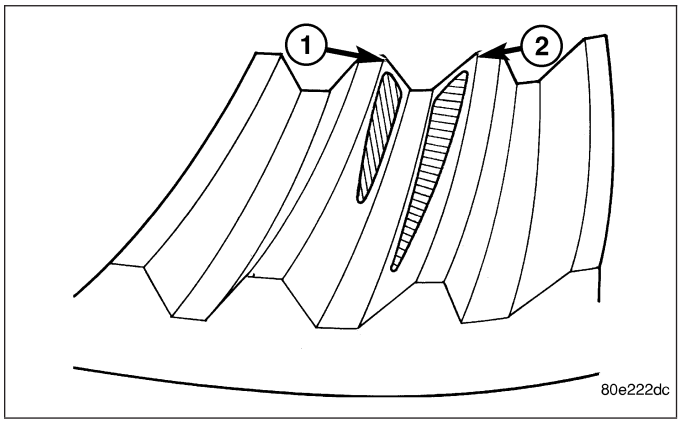

Pinion gear is set too low. Increase pinion gear height, by increasing the pinion depth shim thickness.

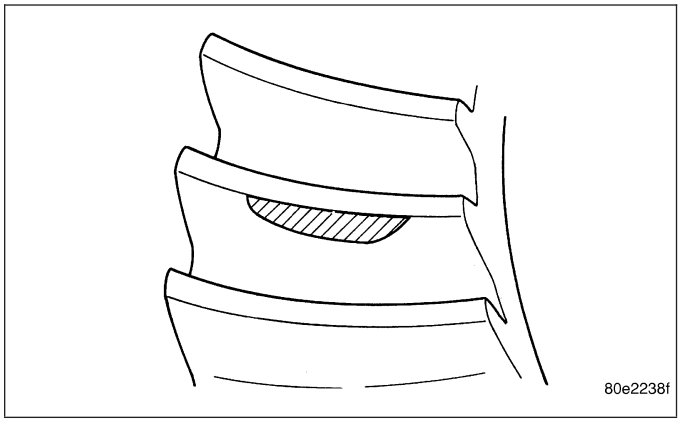

Pinion gear is set too high. Decrease pinion depth, by decreasing the pinion depth shim thickness.

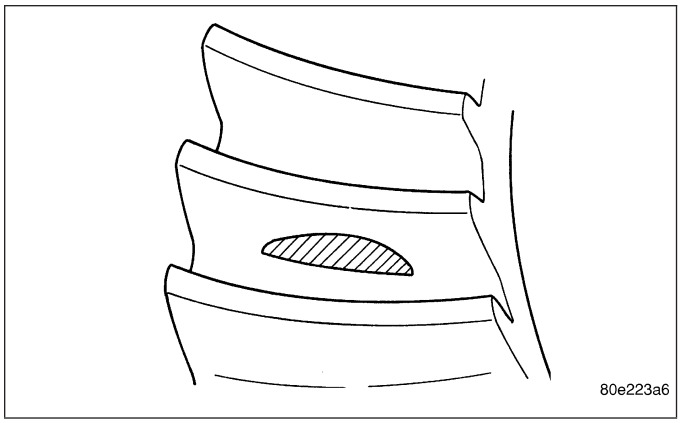

SPECIFICATIONS

AXLE SPECIFICATIONS

DESCRIPTION	SPECIFICATION
Axle Ratio	3.73, 4.10
Ring Gear Diameter	292 mm (11.5 in.)
Ring Gear Backlash	0.13-0.18 mm (0.005-0.007 in.)
Pinion Bearing Preload - New Bearings	1.69-2.82 N·m (15-25 in. lbs.)
Pinion Bearing Preload - Original Bearings	1-2 N·m (10-20 in. lbs.)
Pinion Bearing Preload + Differential Case Bearing Preload - New Bearing	3.4-5.6 N·m (30-50 in. lbs.)
Pinion Bearing Preload + Differential Case Bearing Preload - Original Bearing	2.8-5.1 N·m (25-45 in. lbs.)

TORQUE SPECIFICATIONS

DESCRIPTION	N·m	Ft. Lbs.	In. Lbs.
Fill Hole Plug	32	24	-
Differential Cover Bolts	40	30	-
Bearing Cap Bolts	281	207	-
Ring Gear Bolts	237	175	-
Axle Flange Bolts	129	95	-
Adjuster Lock Bolt	25	18	-

SPECIAL TOOLS

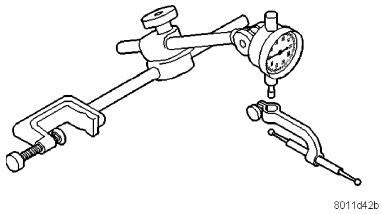

DIAL INDICATOR C-3339

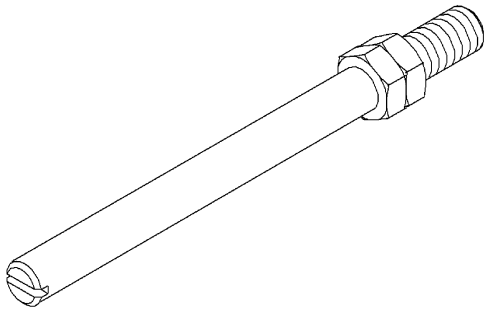

PILOT STUD L-4438

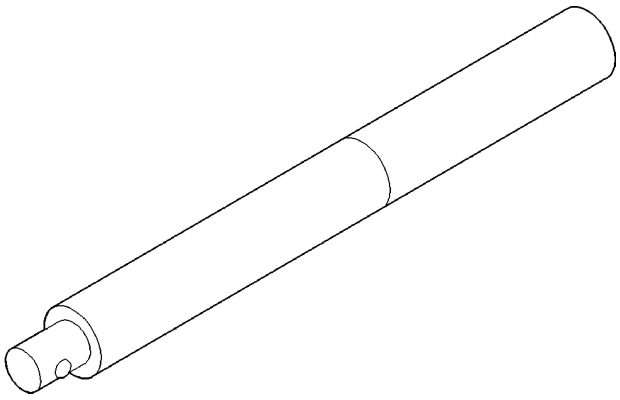

HANDLE C-4171

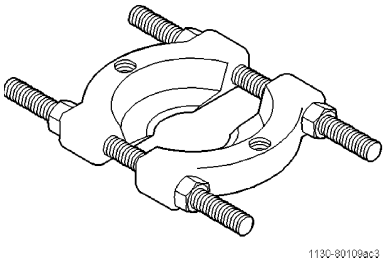

SPLITTER 1130

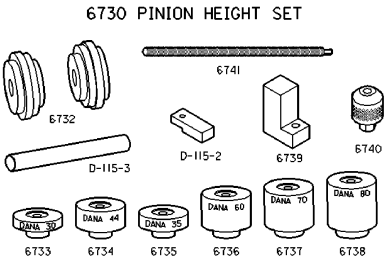

PINION DEPTH GAUGE 6730

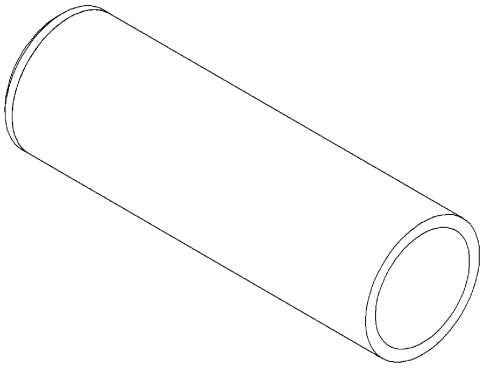

BEARING INSTALLER D-389

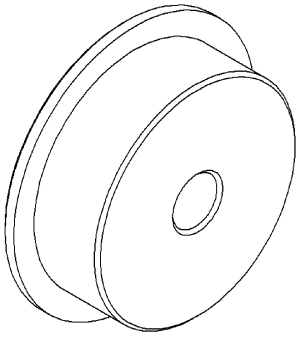

CUP INSTALLER 8153

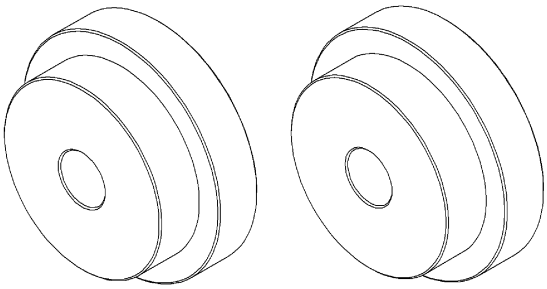

ARBOR DISCS 8289

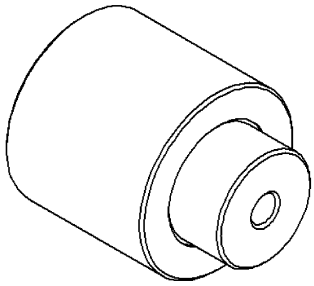

PINION BLOCK 8897

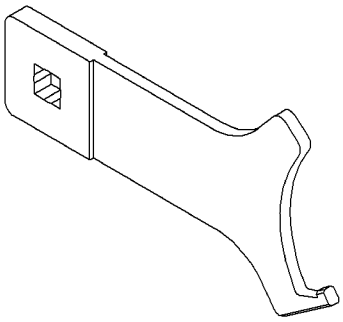

ADJUSTER WRENCH 8883

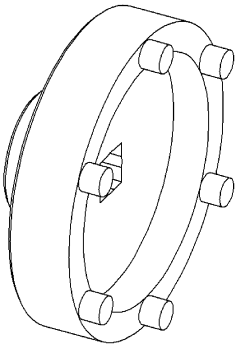

SOCKET 8954

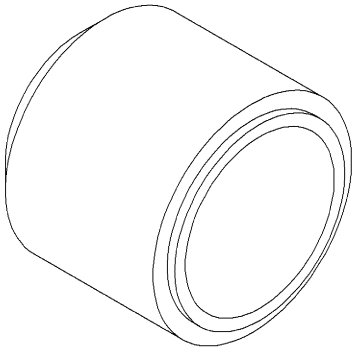

SEAL INSTALLER 8896

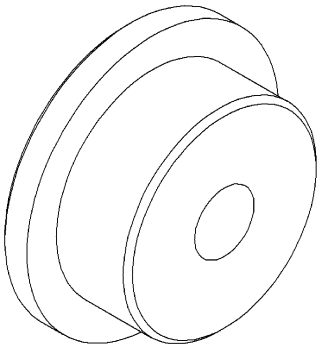

CUP INSTALLER 8960

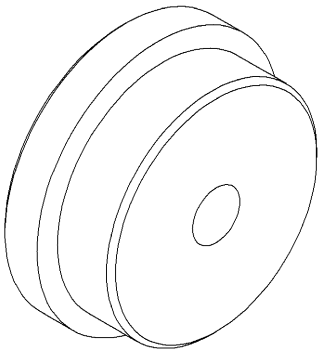

CUP INSTALLER 8961

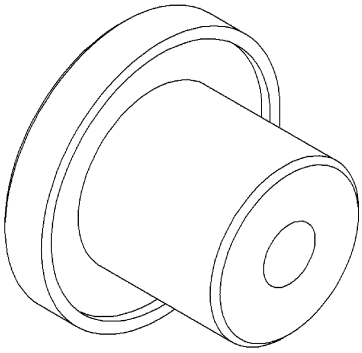

BEARING INSTALLER 8965

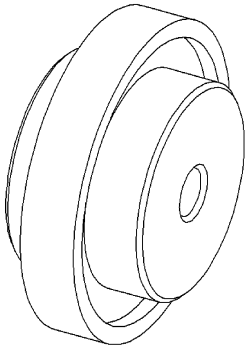

SEAL INSTALLER 8963

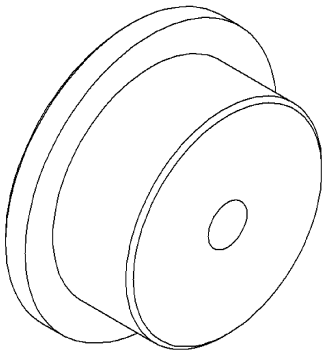

CUP INSTALLER 8968

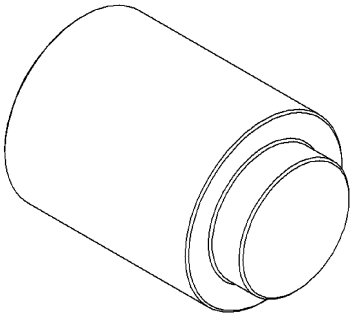

PLUG 8964

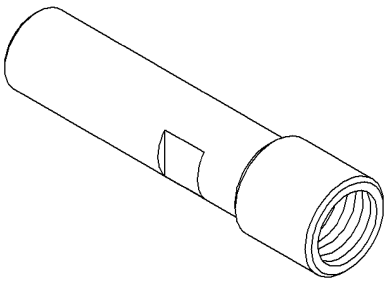

PINION DRIVER 8977

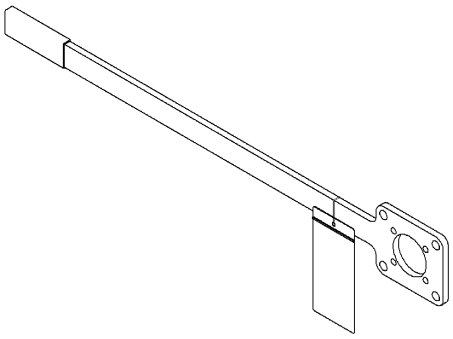

FLANGE WRENCH 8979

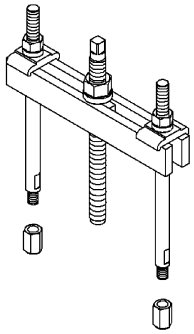

BRIDGE 938

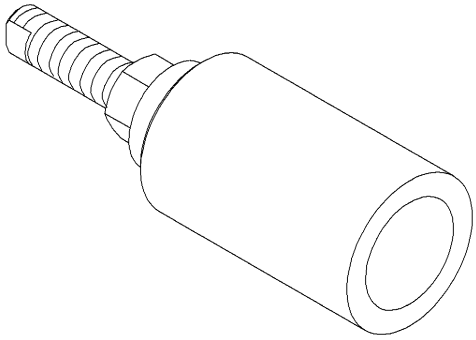

PINION INSTALLER 8981

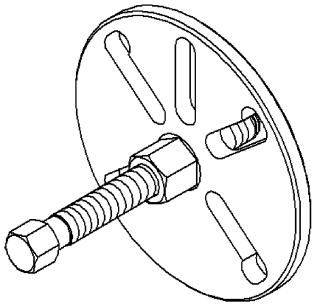

FLANGE PULLER 8992

SHAFT-AXLE

REMOVAL

1. Remove axle shaft flange (1) bolts (2).
2. Slide axle shaft out of the axle tube.
3. Remove axle shaft gasket.

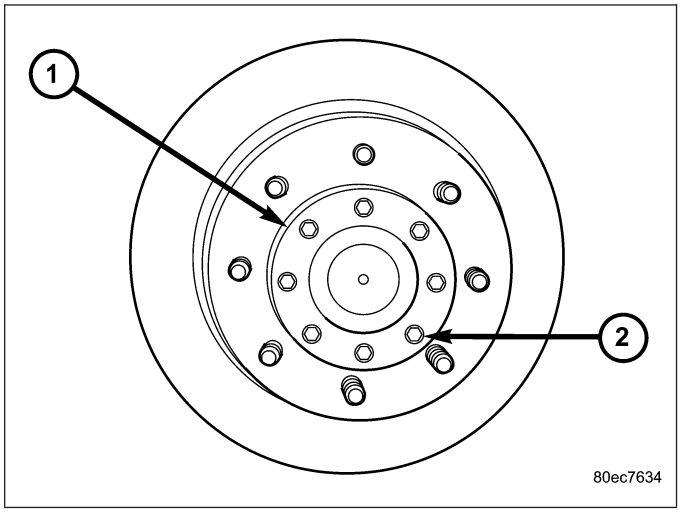

INSTALLATION

NOTE: Axle flange bolts must be replaced or use Mopar Lock N' Seal or Loctite® 242 on cleaned existing bolts.

1. Clean axle flange and hub.
2. Install new axle shaft gasket.
3. Slide axle shaft into the axle tube.
4. Install axle shaft flange (1) bolts (2) and tighten to 129 N·m (95 ft. lbs.).

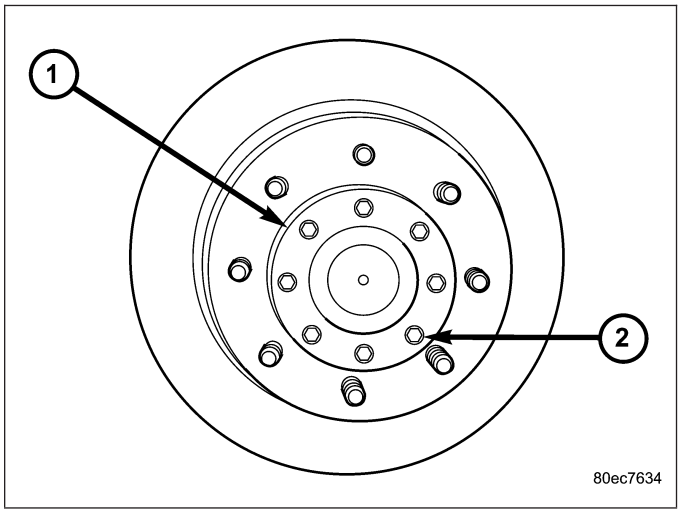

BEARING-AXLE HUB

REMOVAL

1. Remove axle shaft flange bolts and remove shaft.
2. Remove retianer ring (1) from the axle shaft tube.

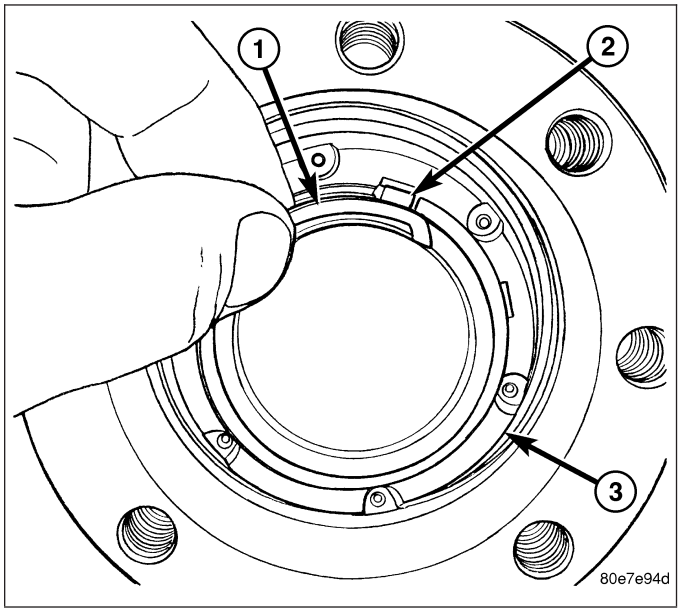

3. Remove hub bearing nut (1) ocking key (2).
4. Remove hub bearing nut with Socket 8954.
5. Remove hub and bearings from the axle.

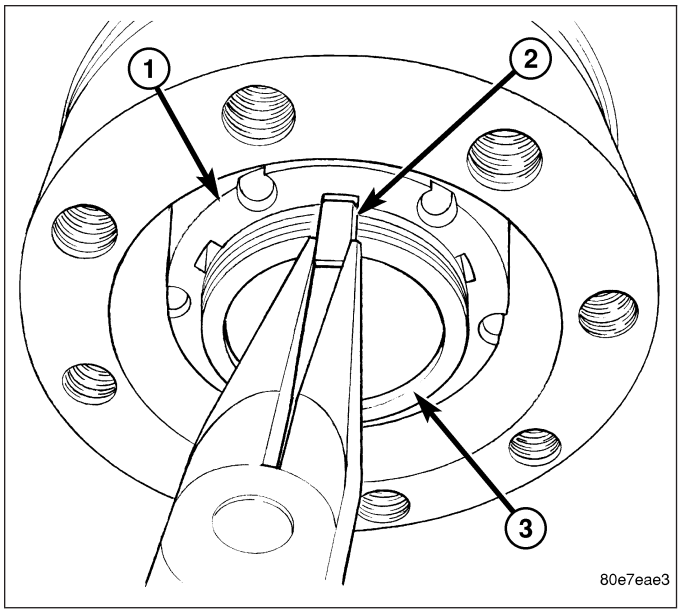

6. Pry out hub bearing seal from the back of the hub.

NOTE: The inner part of the seal (3) may stay on the axle tube (2). This part must also be removed.

7. Remove rear bearing.
8. Remove hub bearing cups with a hammer and drift.

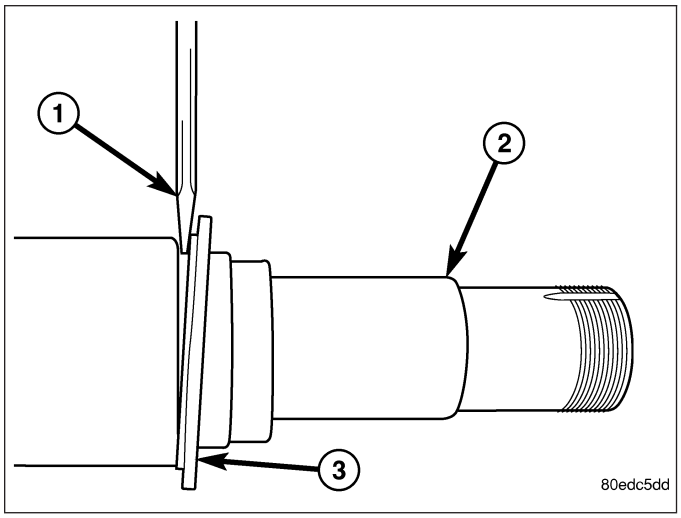

INSTALLATION

1. Install outer hub bearing cup with Installer 8961 and Handle C-4171.
2. Install inner hub bearing cup with Installer 8153 and Handle C-4171.
3. Pack bearings with the appropriate wheel bearing grease.
4. Install rear bearing and install **new** grease seal with Installer 8963 and Handle C-4171.
5. Slide hub on the axle tube and install front bearing into the hub.
6. Install hub bearing nut with Socket 8954 (1) and tighten to 30 N·m (22 ft. lbs.) while rotating the hub.
7. Back off nut about 30° and align next hub nut key slot with axle tube key slot and install locking key.

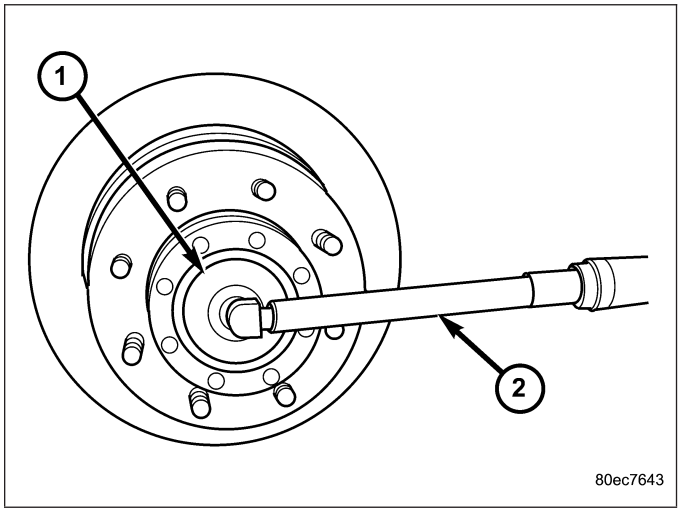

NOTE: End play should be 0.025-0.25 mm (0.01-0.001 in.)

8. Install retainer ring (1) with ring end in the key slot (2).
9. Install new axle shaft gasket and install the axle shaft.

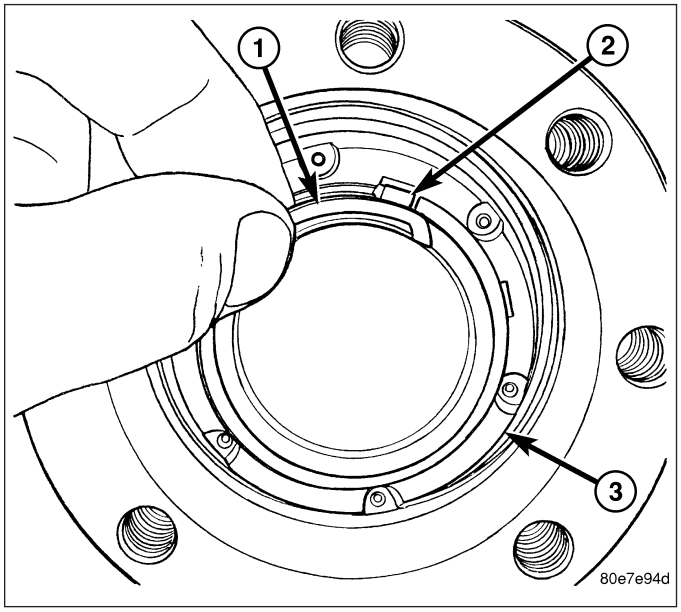

SEAL-PINION

REMOVAL

1. Remove axle shafts.
2. Mark the propeller shaft and pinion flange for installation reference.
3. Remove propeller shaft.
4. Rotate pinion gear (1) three or four times.
5. Measure and record the amount of torque necessary to rotate the pinion gear with an inch pound torque wrench (2).

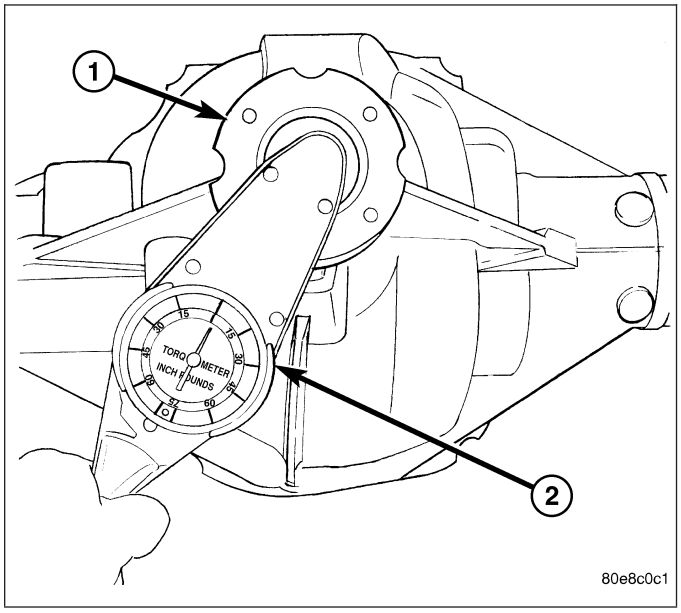

6. Hold pinion flange (1) with Flange Wrench 8979 (2) and remove pinion flange nut.

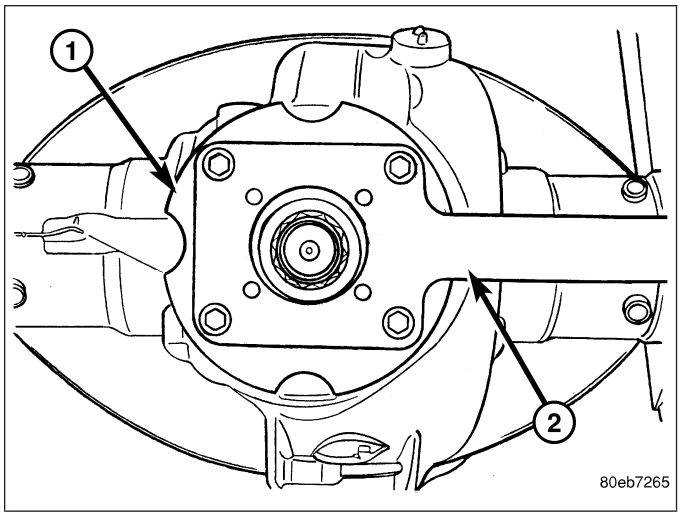

7. Remove pinion flange (1) with Pinion Flange Puller 8992 (2).
8. Remove pinion shaft seal with a pry tool or slide hammer mounted screw.

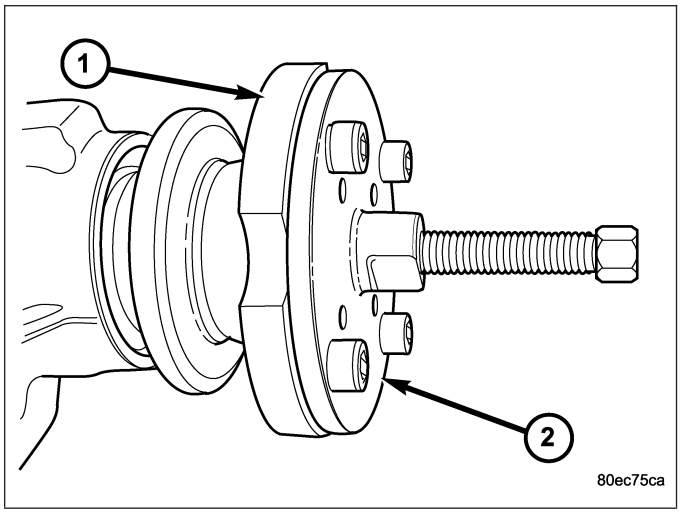

INSTALLATION

1. Install **new** pinion seal with Handle C-4171 (1) and Installer 8896 (2).
2. Apply a light coat of teflon sealant to the pinion flange splines.
3. Lightly tap the pinion flange onto the pinion until a few threads are showing.
4. Install flange washer and **new** pinion nut.

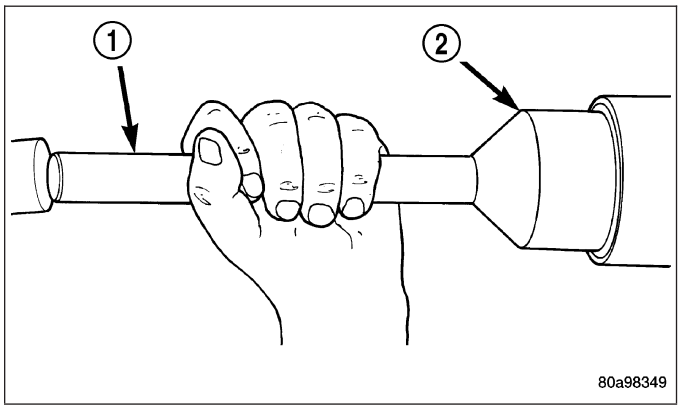

5. Hold pinion flange (2) with Flange Wrench 8979 (1) and tighten pinion nut until pinion end play is taken up.

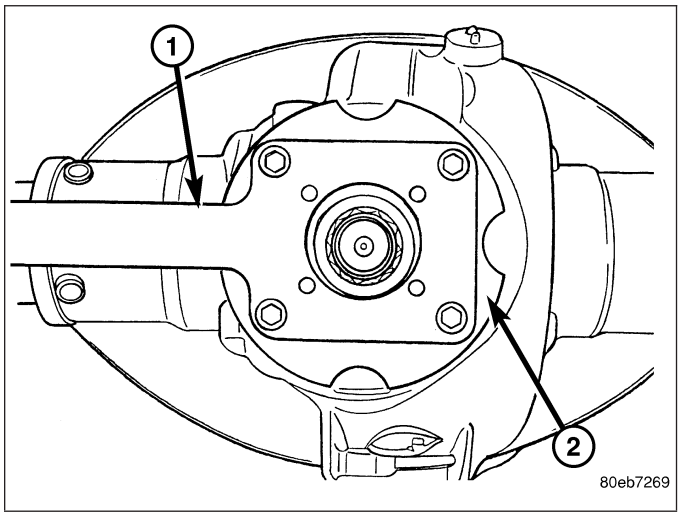

6. Rotate pinion several times to seat bearings.
7. Measure pinion (1) rotating torque with an inch pound torque wrench (2) and compare it to recorded measurement. Tighten pinion nut in small increments, until pinion rotating torque is 0.40-0.57 N·m (3-5 in. lbs.) greater than recorded measurement.
8. Rotate pinion several times then verify pinion rotating torque again.
9. Install axle shafts.
10. Install propeller shaft with reference marks aligned.
11. Check differential fluid level.

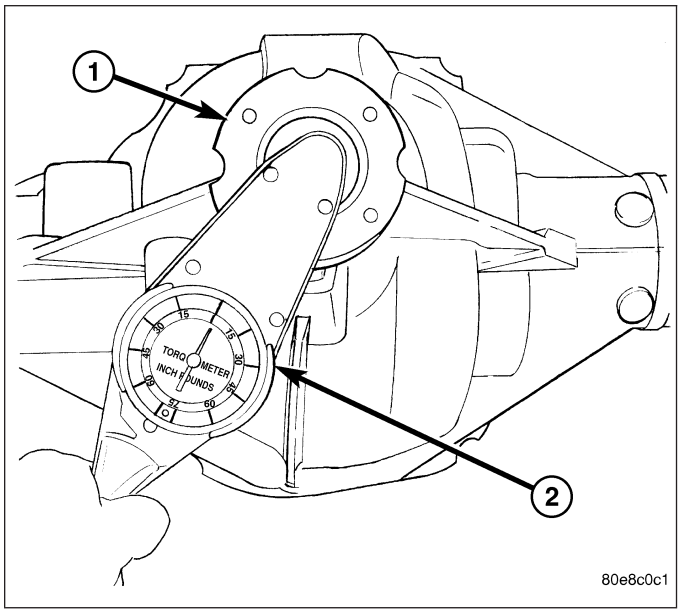

DIFFERENTIAL

REMOVAL

1. Remove fill hole plug from the differential housing cover.
2. Remove differential housing cover and drain the lubricant.
3. Remove axle shafts.
4. Remove adjuster (3) lock bolts (1) and adjuster locks (2).

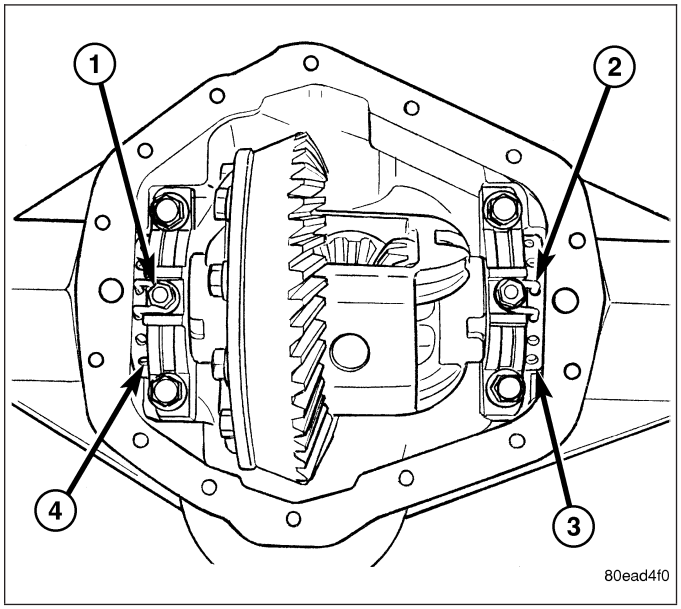

5. Mark bearing caps left and right for installation reference.
6. Remove bearing cap bolts and remove bearing caps.
7. Loosen differential bearing adjusters (2) (4) with Spanner Wrench 8883.
8. Remove differential case from the housing.
9. Remove bearing cups (1) (3) and tag them left and right for installation reference.

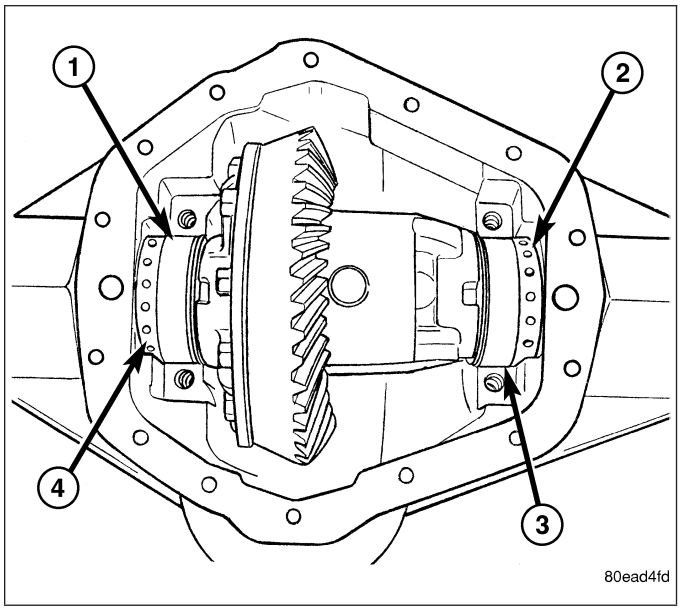

DISASSEMBLY

1. Remove ring gear.
2. Remove pinion shaft (2) with a hammer and punch from the side with the hole in the pinion shaft.

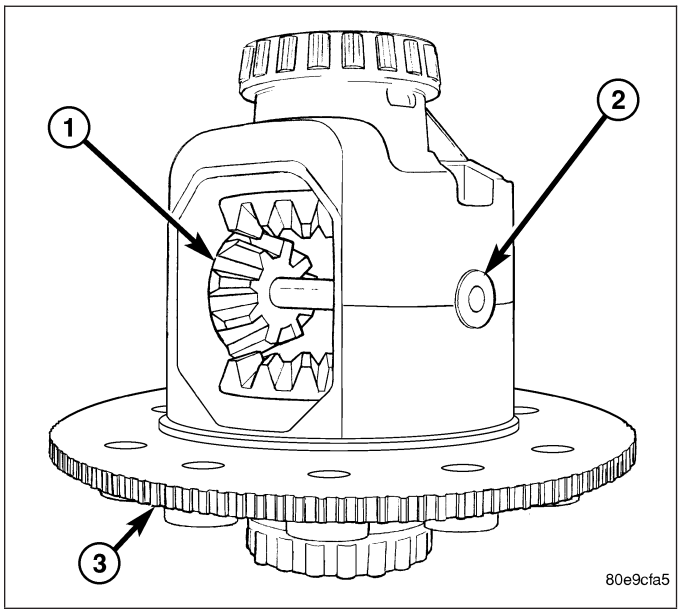

3. Rotate one pinion gear (2) with thrust washer (3) to the differential window (1) and remove the gear.

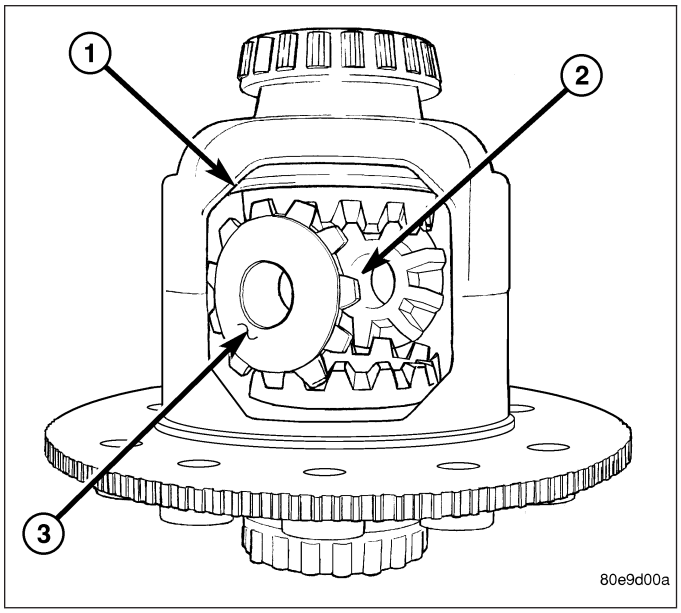

4. Rotate the other pinion gear (3) with thrust washer (2) to the differential window (1) and remove the gear.

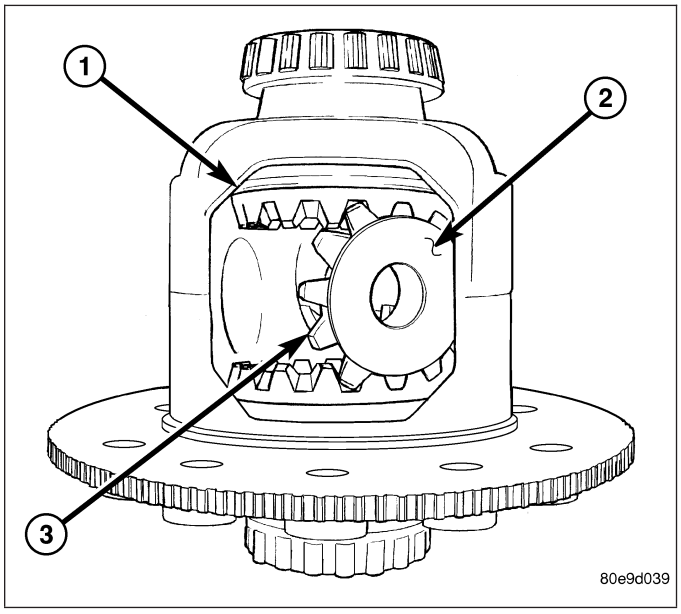

5. Remove differential side gears (1) (2) and thrust washers.

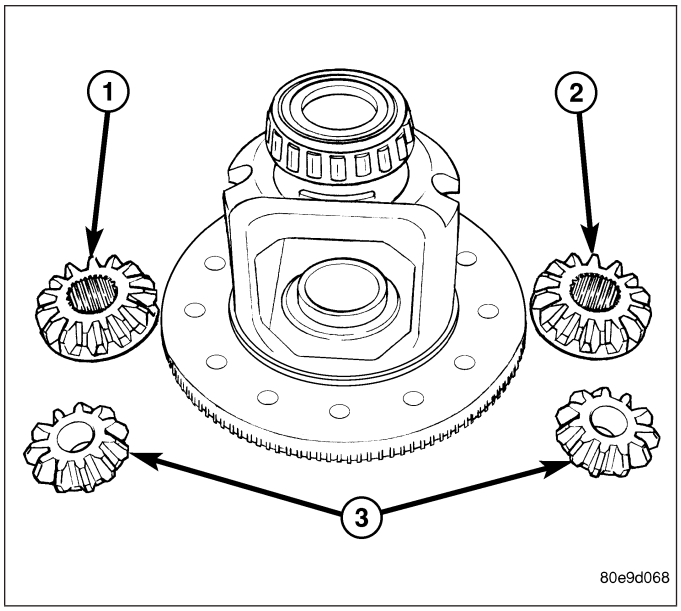

ASSEMBLY

NOTE: If the same gears and thrust washers are being used, install them into their original locations.

1. Lubricate all differential components with axle lubricant.
2. Install differential side gears (2) and thrust washers through the differential window (1).

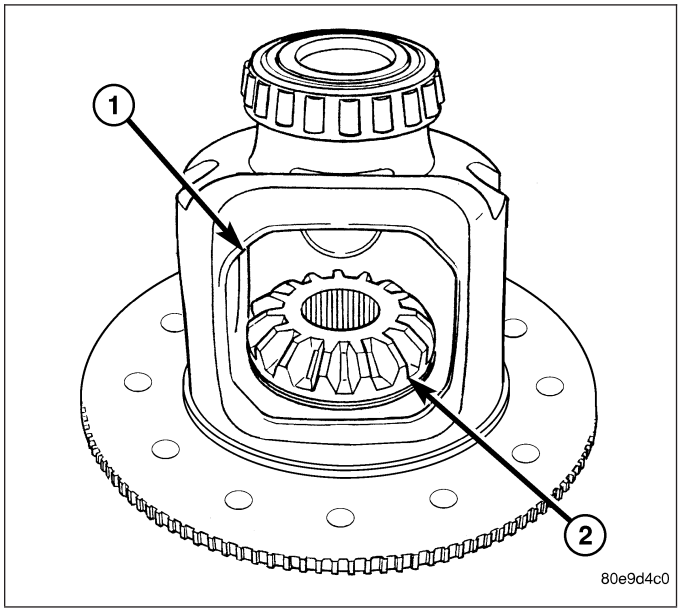

3. Install first pinion gear (3) into the differential window (1) and side gears (2). Rotate the pinion gear to the back of the case.
4. Install the other pinion gear and thrust washer. Rotate the gears to align hole in the pinion gears with hole in the differential case.

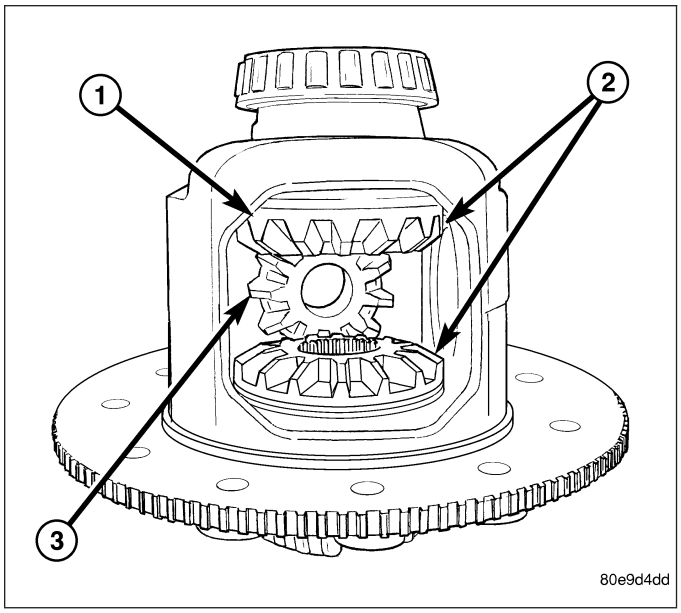

5. Slide pinion shaft (4) into the case and through the pinion gears (3). Tap the shaft to seat the pinion shaft snap-ring (1) into the case.
6. Install ring gear.

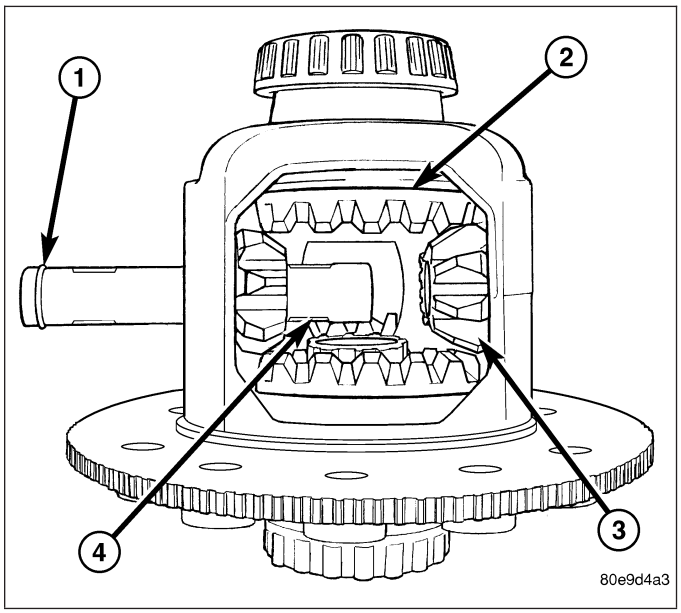

INSTALLATION

1. Clean the housing cavity with a flushing oil, light engine oil or lint free cloth.

NOTE: Do not use water, steam, kerosene or gasoline for cleaning.

2. Lubricate differential case bearing.
3. Install differential case with bearings cups into the housing.

NOTE: A light coat of grease on the cups will hold them in place during installation.

4. Install bearing caps (2) and bolts. Tighten the bearing cap (2) bolts finger-tight.

NOTE: Do not torque bearing cap and bolts at this time.

5. Slide differential case toward the pinion gear until the gears make contact/zero backlash. If zero backlash cannot be obtained, turn the pinion side adjuster until zero backlash is obtained.

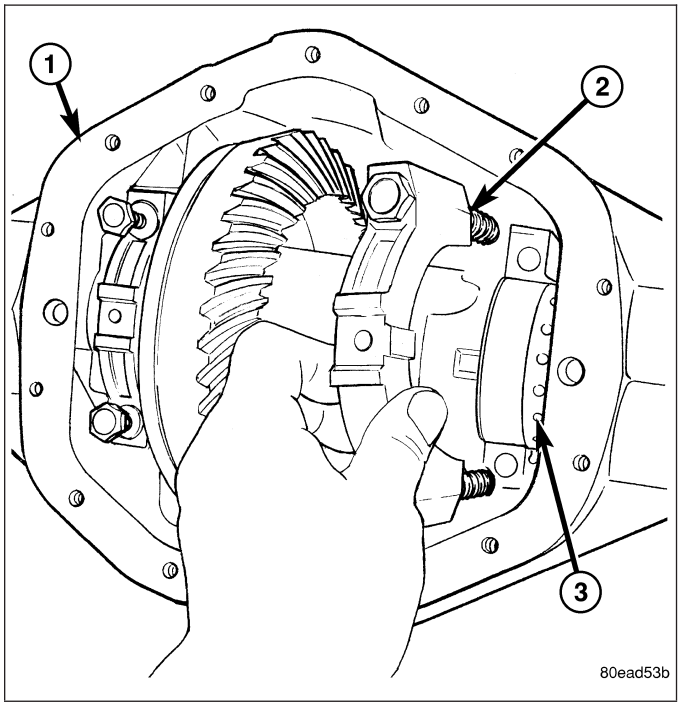

6. Holding the differential case toward the pinion gear, turn bearing adjusters (3) with Spanner Wrench 8883 until they make contact with the differential bearings/cups.
7. Back off the ring gear side adjuster 4 holes, to obtain initial ring gear backlash.
8. Install ring gear side adjuster lock and bolt. Do not tighten adjuster lock bolt at this time.
9. Tighten pinion gear side adjuster firmly against the differential case bearing cup.
10. Rotate the pinion several times to seat the differential bearings.
11. Loosen pinion gear side adjuster until it is no longer in contact with the bearing cup.
12. Tighten pinion gear side adjuster until it just makes contact with the bearing cup.
13. Tighten pinion gear side adjuster an additional:
    - **New Bearings** 6 Adjuster Holes
    - **Original Bearings** 4 Adjuster Holes
14. Install pinion gear side adjuster lock and bolt. Do not tighten adjuster lock bolt at this time.

15. Tighten bearing cap bolts (4) to 281 N·m (207 ft. lbs.).
16. Tighten adjuster lock bolts(3) to 25 N·m (18 ft. lbs.).
17. Measure ring gear backlash and check gear tooth contact pattern. Refer to Adjustments for procedure.
18. Install axle shaft gasket and install axle shafts.
19. Install differential housing gasket and cover. Tighten cover bolts to 40 N·m (30 ft. lbs.).
20. Fill axle with lubricant, refer to Lubrication & Maintenance for capacity and lubricant type.
21. Install fill plug and tighten to 32 N·m (24 ft. lbs.).

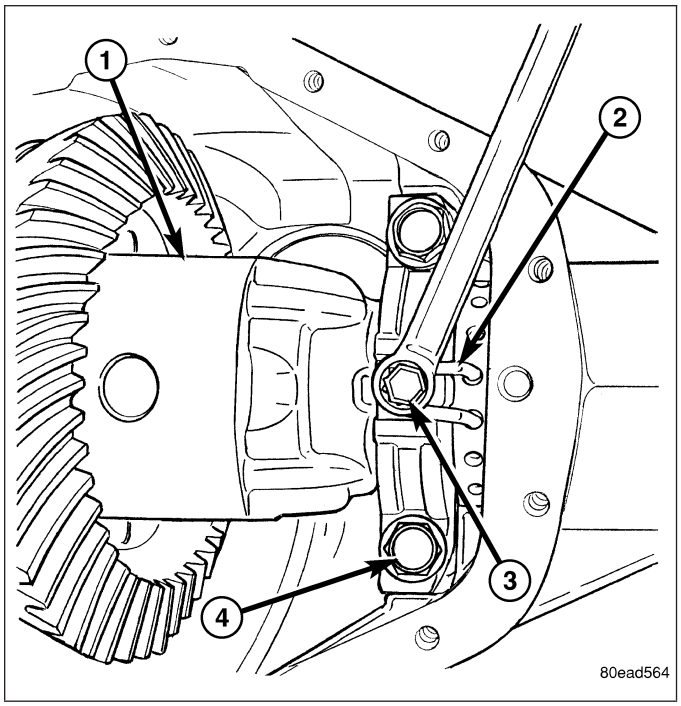

DIFFERENTIAL-TRAC-RITE

DESCRIPTION

CAUTION: The differential is serviced as an assembly only do not attempt to disassemble. Failure to follow these instruction will result in damage to the differential.

The Trac-Rite™ differential is a helical gear differential. The differential has two side gears (3), two thrust washers (1) and one spacer (2).

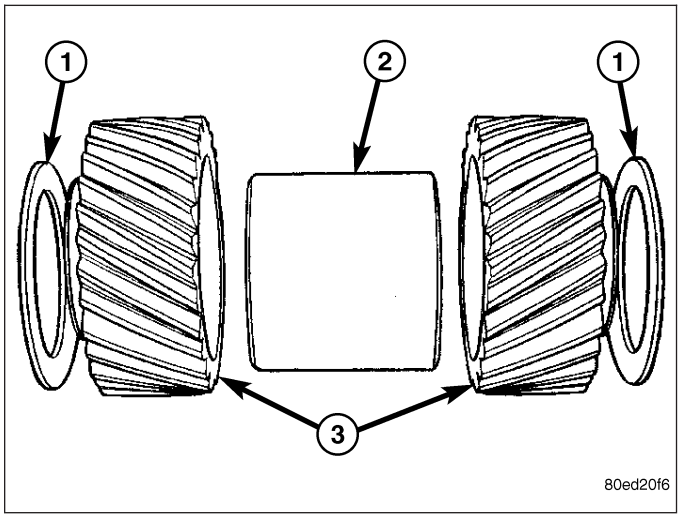

It also has six pinion brake shoes (1) which pivot on the six pinion gear (2) shafts (3).

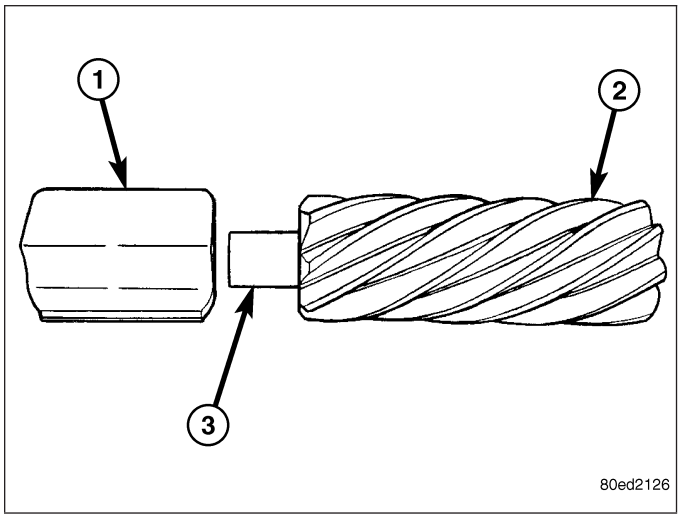

OPERATION

CAUTION: The differential is serviced as an assembly only do not attempt to disassemble. Failure to follow these instruction will result in damage to the differential.

When one wheel begins to spin the pinion gears (2) on that side, are forced toward the pinion brake shoes (1). The pinion brake shoes then cause frictional drag on the opposite pinion gears and the side gear. These friction forces transfer the power to the opposite wheel. Once the frictional forces are overcome, differentiation will occur. The torque will be continually biased by the frictional forces to the high traction wheel.

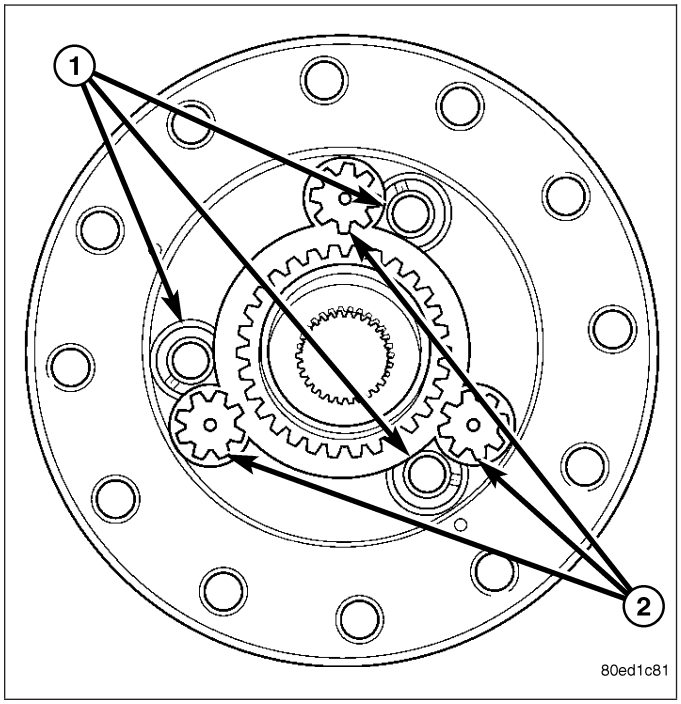

CLEANING

CAUTION: The differential is serviced as an assembly only do not attempt to disassemble. Failure to follow these instruction will result in damage to the differential.

Flush the differential case and gears through openings in the case with light oil.

BEARING-DIFFERENTIAL CASE

REMOVAL

1. Remove differential case from the housing.
2. Install Plug 8964 (4) into the end of the case.
3. Remove differental case bearings (3) with Bearing Splitter 1130 (2) and Bridge 938 (1).

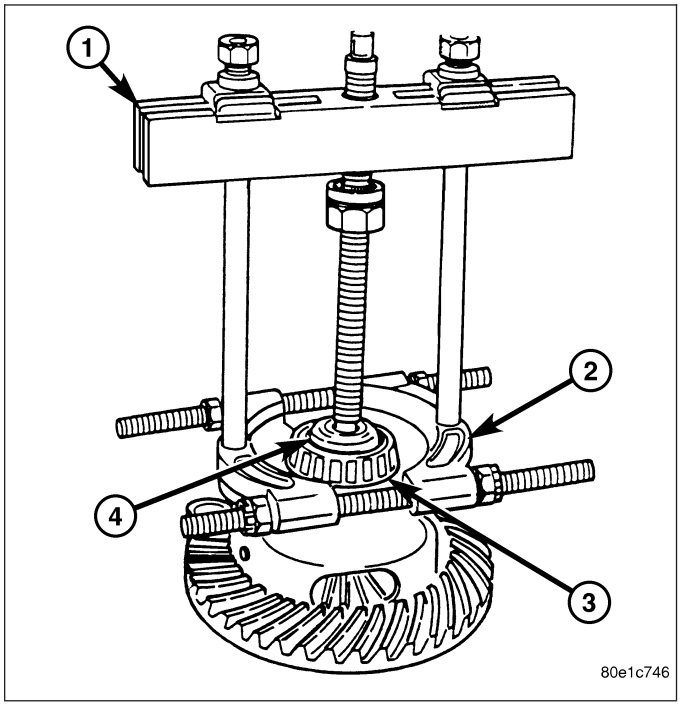

INSTALLATION

1. Install differenial case (2) bearings (3) with Installer 8965 (4) and Handle C-4171(1).
2. Install differentail case into housing.

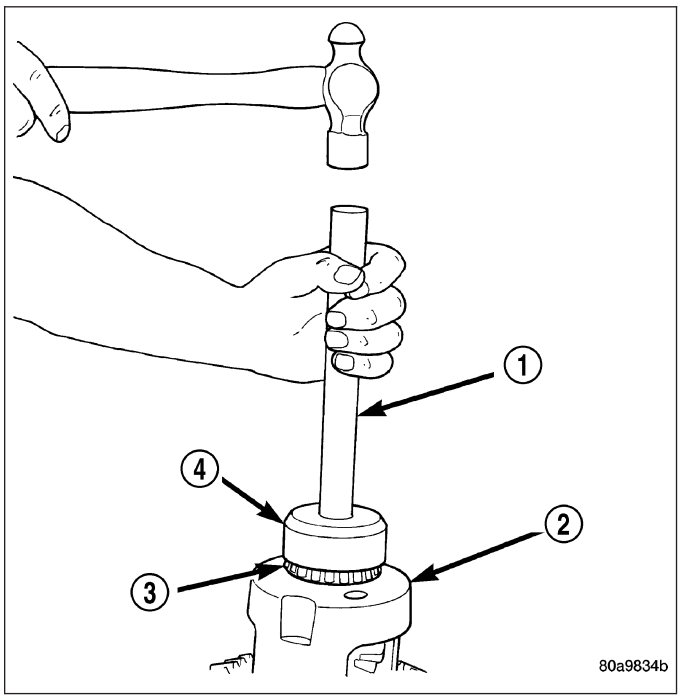

GEAR-PINION/RING

REMOVAL

NOTE: The ring and pinion gears are service in a matched set. Never replace the ring gear/pinion gear without replacing the other matching gear.

1. Mark pinion flange and propeller shaft for installation alignment.
2. Remove propeller shaft.
3. Remove differential from the housing.
4. Place differential case (1) on Plug 8964. Drive exciter ring (4) off the differential case with a hammer and punch (3).

NOTE: Do not remove the exciter ring if it is not being replaced.

5. Place differential case in a vise with soft metal jaw protectors.

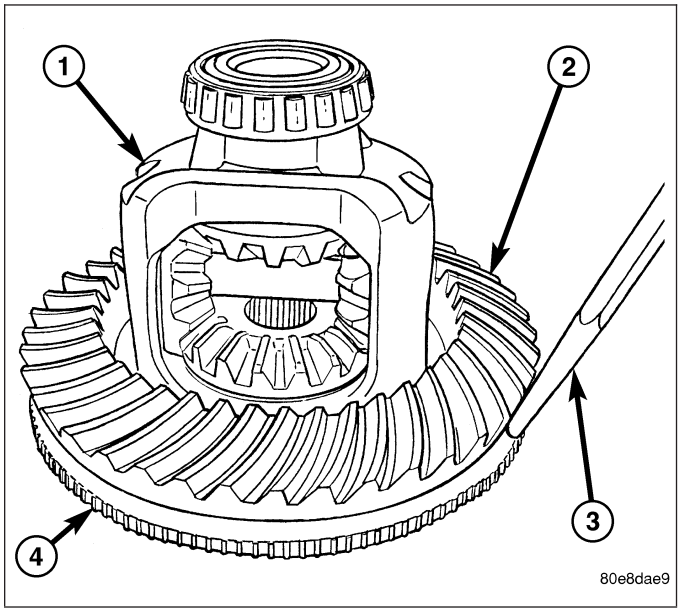

6. Remove bolts holding ring gear to differential case.
7. Drive ring gear (2) from differential case (1) with a soft hammer (3).

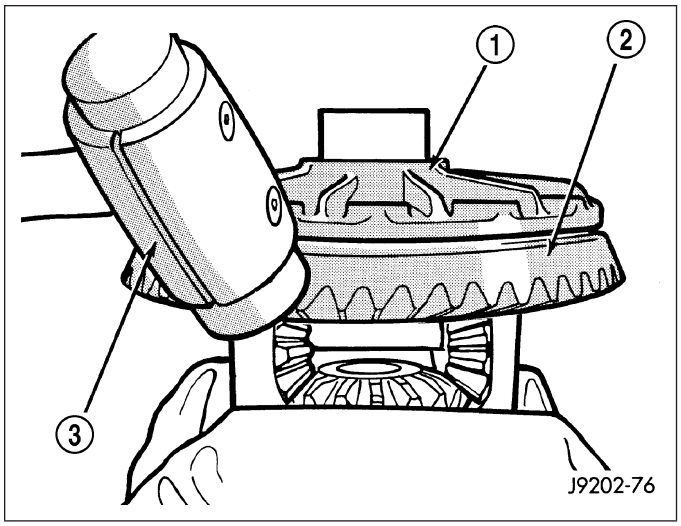

8. Hold pinion flange (1) with Flange Wrench 8979 (2) and remove pinion flange nut.

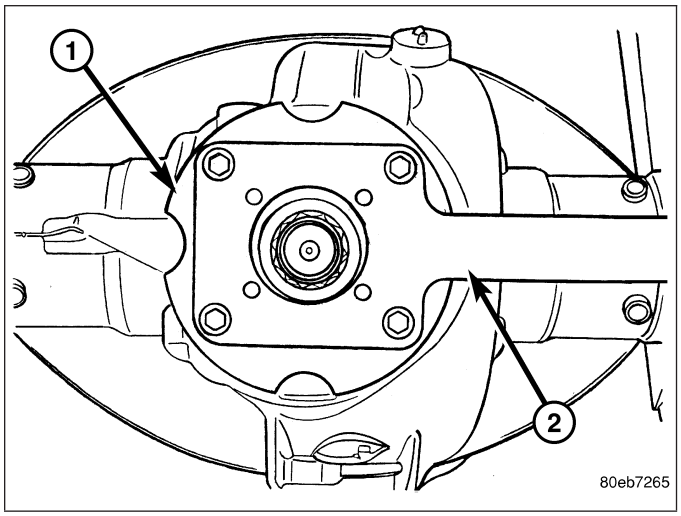

9. Remove pinion flange (1) from pinion with pinion Flange Puller 8992 (2).

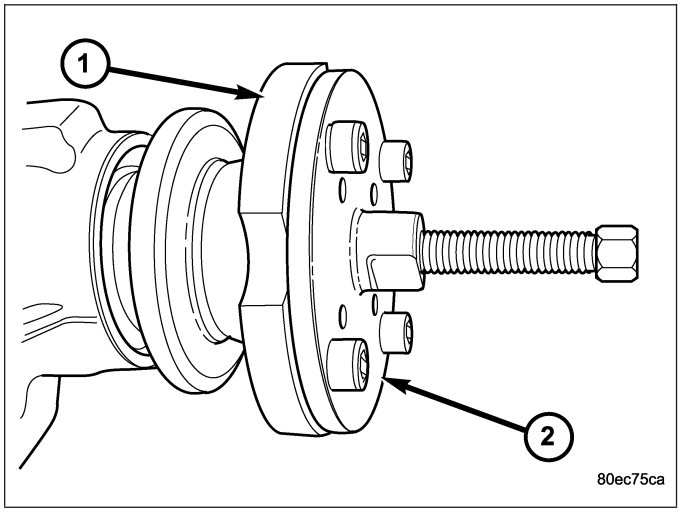

10. Remove pinion gear (1) from housing with pinion Driver 8977 (2)and a hammer.

NOTE: Thread the driver on the pinion shaft till it bottoms out.

11. Remove pinion seal with a slide hammer or pry bar.

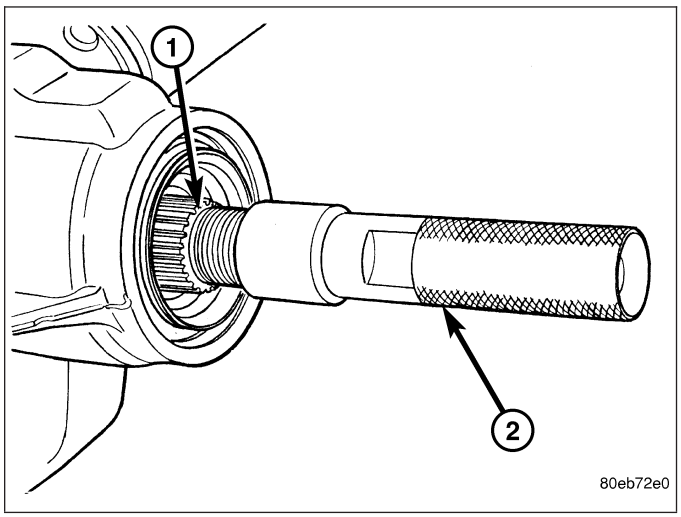

12. Remove front pinion bearing and discard bearing.

NOTE: Do not reuse front pinion bearing/cup.

13. Remove collapsible spacer from the pinion shaft.
14. Remove rear pinion bearing (1) with Bearing Splitter 1130 (2) and a press.
15. Remove pinion depth shim from the pinion gear shaft and record thickness of the shims.
16. Remove front pinion bearing cup from the housing with a punch and hammer, and discard cup.

NOTE: Do not reuse front pinion bearing/cup.

17. Remove rear pinion bearing cup from the housing with a punch and hammer, if bearing is going to be replaced.

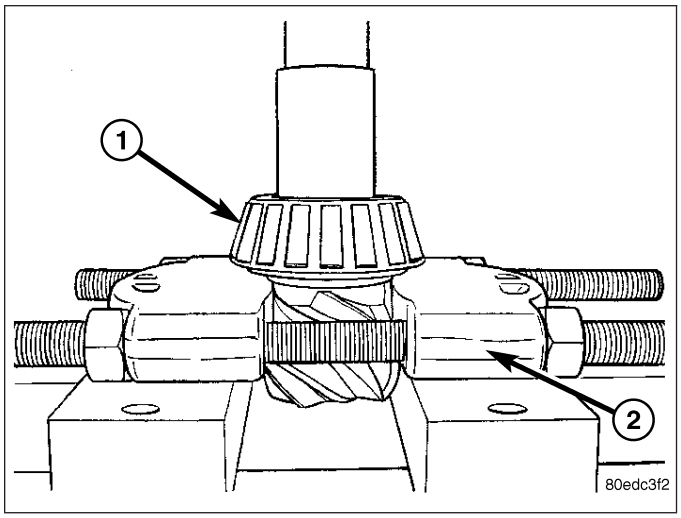

INSTALLATION

1. Install new front pinion bearing cup with Installer 8960 (1) and Handle C-4171 (2).

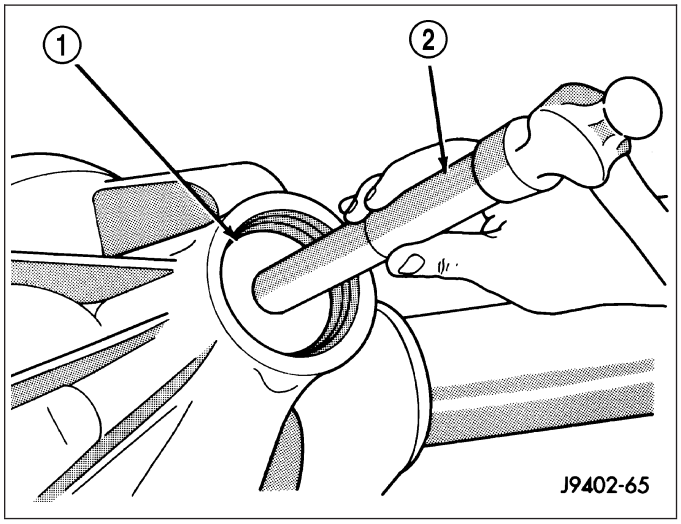

2. Install new rear pinion bearing cup with Installer 8968 (1) and Handle C-4171(2).

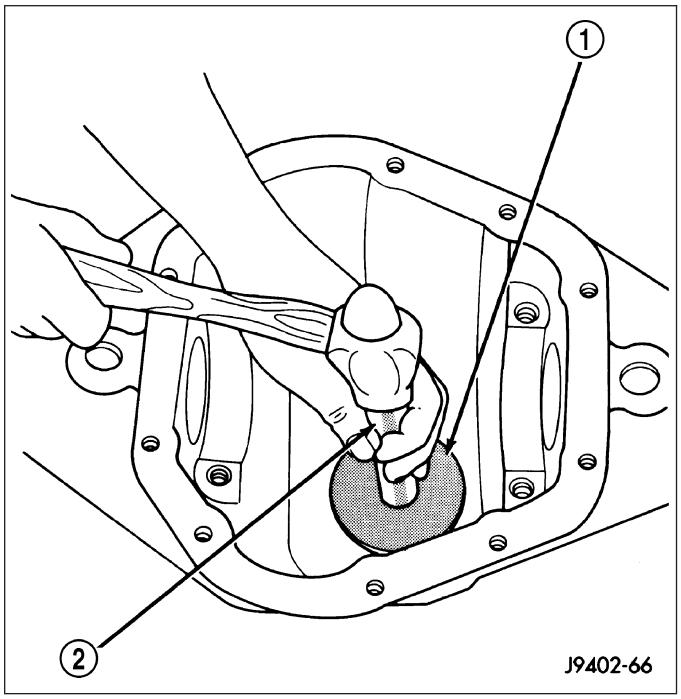

3. Install pinion depth shim (1) on the pinion gear shaft (2).

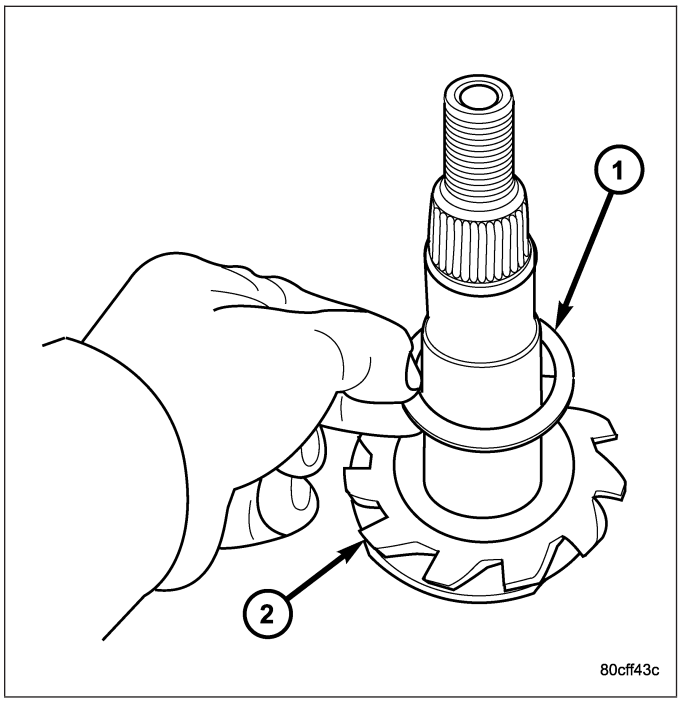

4. Install rear pinion bearing (4) with Installer D-389 (1) and a press (1).

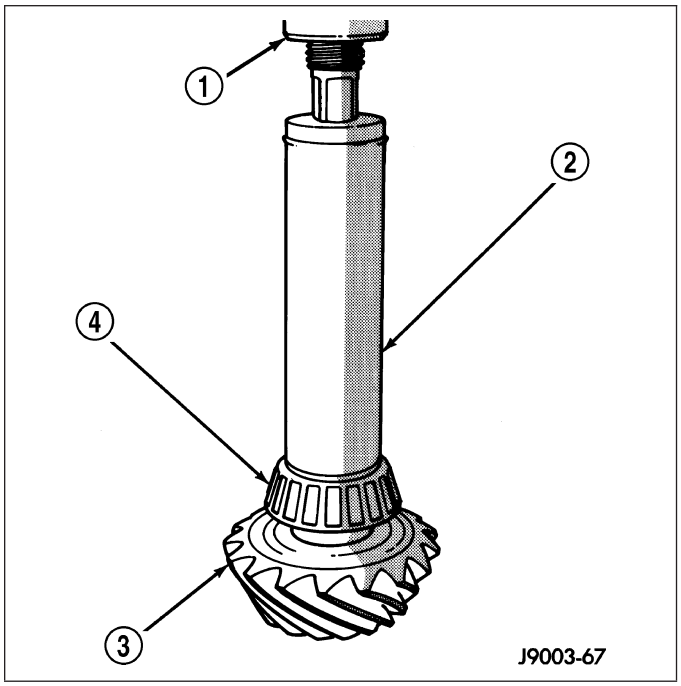

5. Install **new** collapsible spacer (1) on the pinion (2).
6. Lubricate pinion and bearings.

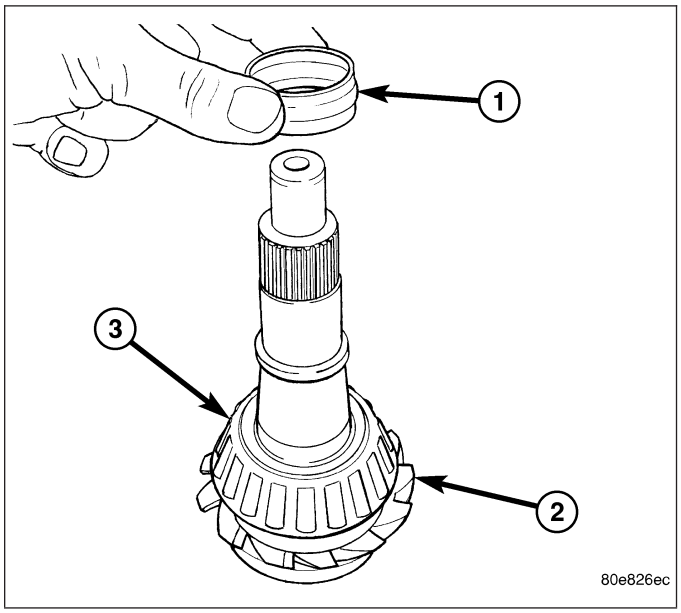

7. Install pinion into the housing (2) and place front pinion bearing onto the pinion shaft. Draw the pinion shaft into the front bearing with Installer 8981 (1).

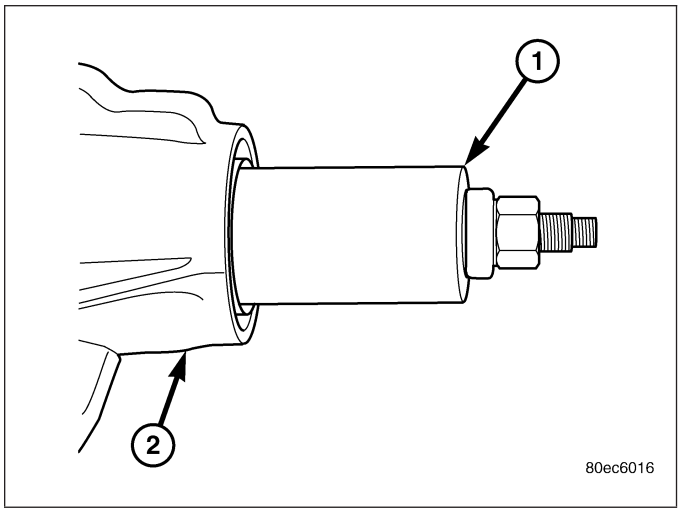

8. Install **new** pinion seal with Installer 8896 (2) and Handle C-4171 (1).

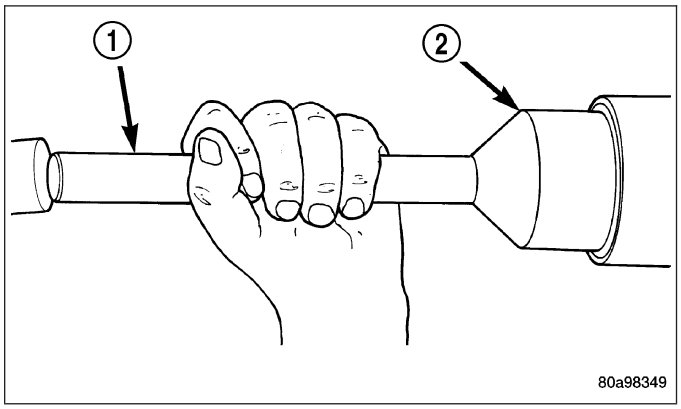

9. Rotate pinion several times to seat bearings.
10. Apply a light coat of teflon sealant to the pinion flange splines.
11. Hold pinion and lightly tap the pinion flange (2) onto the pinion, until a few threads are showing.
12. Install pinion flange washer and **new** pinion nut.
13. Hold pinion flange (2) with Flange Wrench 8979 (1) and tighten pinion nut until pinion end play is taken up.

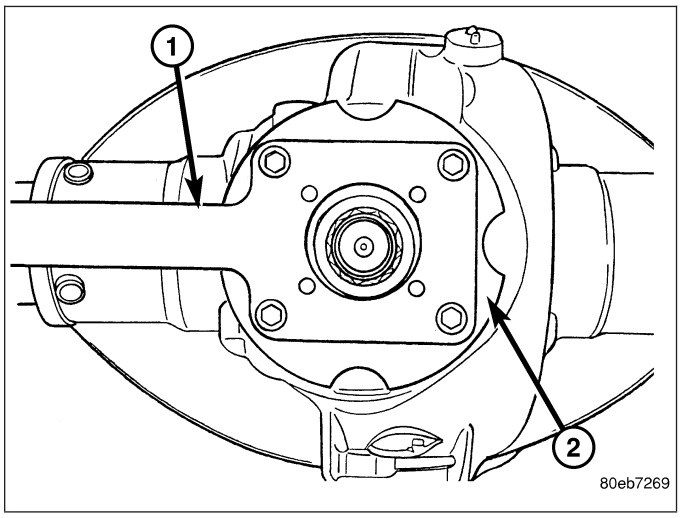

14. Measure pinion rotating torque (1) with an inch pound torque wrench (2). Tighten pinion nut in small increments until pinion rotating torque is:
    - **New Pinion Bearings:** 1.7-2.8 N·m (15-25 in. lbs.)
    - **Original Pinion Bearings:** 1.1-2.2 N·m (10-20 in. lbs.)
15. Rotate pinion several times then verify pinion rotating torque again.

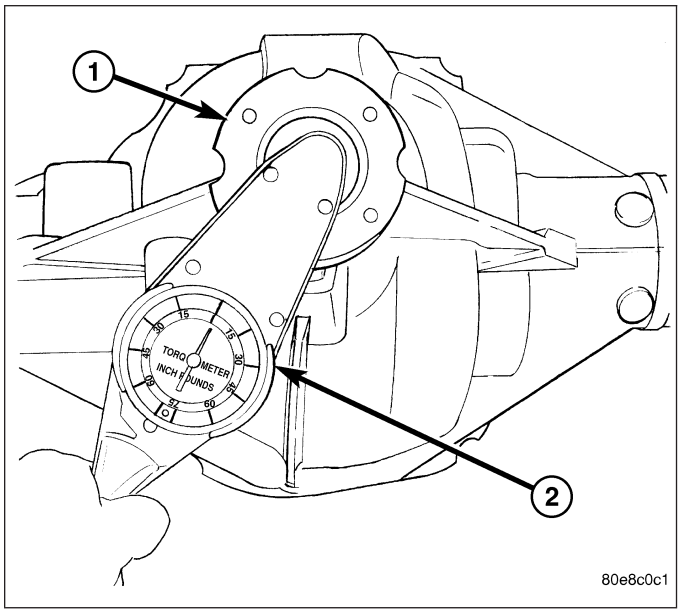

16. Position the ring gear (2) on differential case (4) and start two **new** ring gear bolts.
17. Install the rest of the **new** ring gear bolts and tighten them alternately to seat the ring gear.
18. Torque ring gear bolts to 237 N·m (175 ft. lbs.).

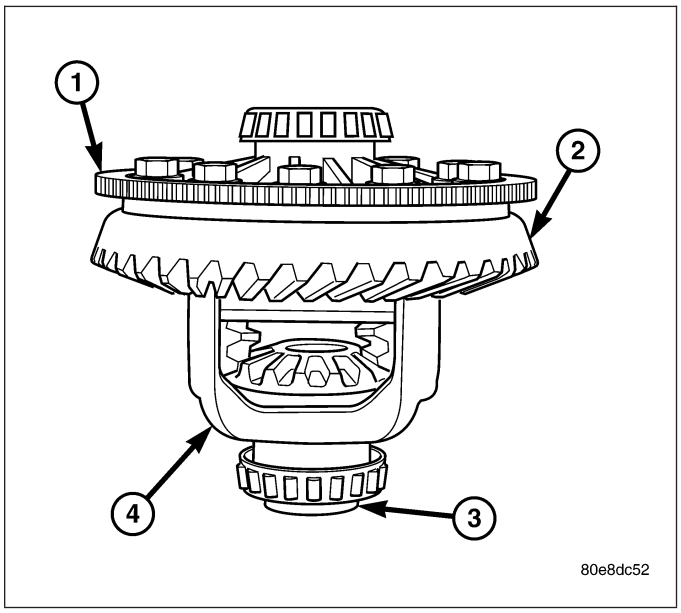

19. If exciter ring was removed, position differential assembly on differential Plug 8965 and place exciter ring (1) on the differential case.
20. Install the exciter ring on the differential case evenly with a hammer and brass punch (2). Drive the ring down until it is seated against the ring gear (2).
21. Install differential in housing and verify gear backlash and gear contact pattern.
22. Measure final rotating torque with an inch pound torque wrench. The final pinion rotating torque plus differential case bearing preload is:
    - **New Bearings:** 3.4-5.6 N·m (30-50 in. lbs.)
    - **Original Bearings:** 2.8-5.1 N·m (25-45 in. lbs.)
23. Install axle shafts.
24. Install the propeller shaft with the reference marks aligned.

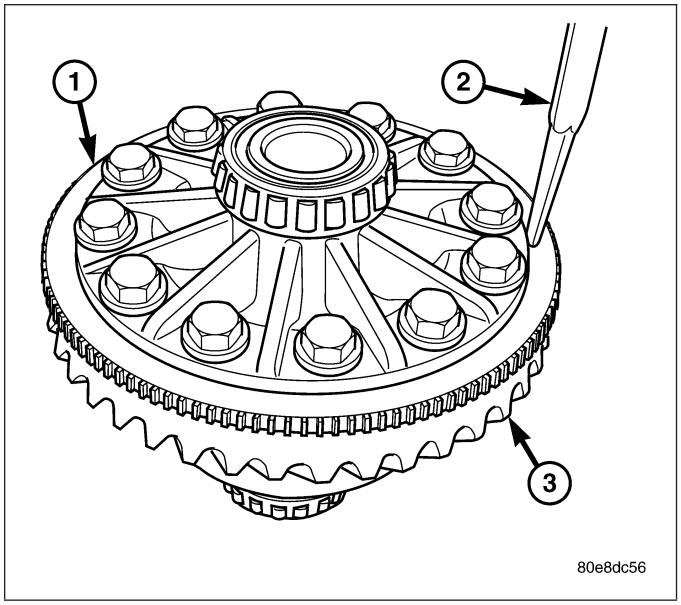

25. Install differential cover with gasket and tighten bolts to 40 N·m (30 ft. lbs.).
26. Fill differential with fluid and tighten fill plug to 32 N·m (24 ft. lbs.).

REAR AXLE - 248RBI

TABLE OF CONTENTS

page

REAR AXLE - 248RBI
DIAGNOSIS AND TESTING
REAR AXLE - 248RBI 347
REMOVAL 351
INSTALLATION 354
ADJUSTMENTS 355
SPECIFICATIONS 364
SPECIAL TOOLS 366
SHAFT-AXLE
REMOVAL 369
INSTALLATION 371
SEAL-AXLE SHAFT
REMOVAL 373
INSTALLATION 373
BEARING-AXLE
REMOVAL 374
INSTALLATION 375
SEAL-PINION
REMOVAL 376

page

INSTALLATION 377
DIFFERENTIAL-TRAC-LOK
DESCRIPTION 378
OPERATION 379
DIAGNOSIS AND TESTING
DIFFERENTIAL-TRAC-LOK 379
REMOVAL 380
DISASSEMBLY 384
ASSEMBLY 387
INSTALLATION 389
BEARING-DIFFERENTIAL CASE
REMOVAL 391
INSTALLATION 392
GEAR-PINION/RING
REMOVAL 392
INSTALLATION 397

REAR AXLE - 248RBI

DIAGNOSIS AND TESTING

REAR AXLE - 248RBI

GEAR NOISE

Axle gear noise can be caused by insufficient lubricant, incorrect backlash, incorrect pinion depth, tooth contact, worn/damaged gears, or the carrier housing not having the proper offset and squareness.

Gear noise usually happens at a specific speed range. The noise can also occur during a specific type of driving condition. These conditions are acceleration, deceleration, coast, or constant load.

When road testing, first warm-up the axle fluid by driving the vehicle at least 5 miles and then accelerate the vehicle to the speed range where the noise is the greatest. Shift out-of-gear and coast through the peak-noise range. If the noise stops or changes greatly:

- Check for insufficient lubricant.
- Incorrect ring gear backlash.
- Gear damage.

Differential side gears and pinions can be checked by turning the vehicle. They usually do not cause noise during straight-ahead driving when the gears are unloaded. The side gears are loaded during vehicle turns. A worn pinion shaft can also cause a snapping or a knocking noise.

BEARING NOISE

The axle shaft, differential and pinion bearings can all produce noise when worn or damaged. Bearing noise can be either a whining, or growling sound.

Pinion bearings have a constant-pitch noise. This noise changes with vehicle speed. Pinion bearing noise will be high pitched because it rotates at a faster rate. Drive the vehicle and load the differential. If bearing noise occurs, the rear pinion bearing is the source of the noise. If bearing noise is heard during a coast, the front pinion bearing is the source.

Differential bearings usually produce a low pitch noise. Differential bearing noise is similar to pinion bearing noise. The pitch of differential bearing noise is also constant and varies only with vehicle speed.

Axle shaft bearings produce noise and vibration when worn or damaged. The noise generally changes when the bearings are loaded. Road test the vehicle turning the vehicle sharply to the left and to the right. This will load the bearings and change the noise level. Where axle bearing damage is slight, the noise is usually not noticeable at speeds above 30 mph.

LOW SPEED KNOCK

Low speed knock is generally caused by a worn U-joint or by worn side–gear thrust washers. A worn pinion shaft bore will also cause low speed knock.

VIBRATION

Vibration at the rear of the vehicle is usually caused by a:

- Damaged drive shaft.
- Missing drive shaft balance weight(s).
- Worn or out-of-balance wheels.
- Loose wheel lug nuts.
- Worn U-joint(s).
- Loose/broken springs.
- Damaged axle shaft bearing(s).
- Loose pinion gear nut.
- Excessive pinion yoke run out.
- Bent axle shaft(s).

Check for loose or damaged front-end components or engine/transmission mounts. These components can contribute to what appears to be a rearend vibration. Do not overlook engine accessories, brackets and drive belts.

NOTE: All driveline components should be examined before starting any repair.

DRIVELINE SNAP

A snap or clunk noise when the vehicle is shifted into gear (or the clutch engaged), can be caused by:

- High engine idle speed.
- Transmission shift operation.
- Loose engine/transmission/transfer case mounts.
- Worn U-joints.
- Loose spring mounts.
- Loose pinion gear nut and yoke.
- Excessive ring gear backlash.
- Excessive side gear to case clearance.

The source of a snap or a clunk noise can be determined with the assistance of a helper. Raise the vehicle on a hoist with the wheels free to rotate. Instruct the helper to shift the transmission into gear. Listen for the noise, a mechanics stethoscope is helpful in isolating the source of a noise.

DIAGNOSTIC CHART

Condition	Possible Causes	Correction
Wheel Noise	1. Wheel loose.	1. Tighten loose nuts.
	2. Faulty, brinelled wheel bearing.	2. Replace bearing.
Axle Shaft Noise	1. Misaligned axle tube.	1. Inspect axle tube alignment. Correct as necessary.
	2. Bent or sprung axle shaft.	2. Inspect and correct as necessary.
Axle Shaft Broke	1. Misaligned axle tube.	1. Replace the broken shaft after correcting tube mis-alignment.
	2 Vehicle overloaded.	2. Replace broken shaft and avoid excessive weight on vehicle.
	3. Erratic clutch operation.	3. Replace broken shaft and avoid or correct erratic clutch operation.
	4. Grabbing clutch.	4. Replace broken shaft and inspect and repair clutch as necessary.
Differential Cracked	1. Improper adjustment of the differential bearings.	1. Replace case and inspect gears and bearings for further damage. Set differential bearing pre-load properly.
	2. Excessive ring gear backlash.	2. Replace case and inspect gears and bearings for further damage. Set ring gear backlash properly.
	3. Vehicle overloaded.	3. Replace case and inspect gears and bearings for further damage. Avoid excessive vehicle weight.
	4. Erratic clutch operation.	4. Replace case and inspect gears and bearings for further damage. Avoid erratic use of clutch.
Differential Gears Scored	1. Insufficient lubrication.	1. Replace scored gears. Fill differential with the correct fluid type and quantity.
	2. Improper grade of lubricant.	2. Replace scored gears. Fill differential with the correct fluid type and quantity.
	3. Excessive spinning of one wheel/tire.	3. Replace scored gears. Inspect all gears, pinion bores, and shaft for damage. Service as necessary.
Loss Of Lubricant	1. Lubricant level too high.	1. Drain lubricant to the correct level.
	2. Worn axle shaft seals.	2. Replace seals.
	3. Cracked differential housing.	3. Repair as necessary.
	4. Worn pinion seal.	4. Replace seal.
	5. Worn/scored yoke.	5. Replace yoke and seal.
	6. Axle cover not properly sealed.	6. Remove, clean, and re-seal cover.

Condition	Possible Causes	Correction
Axle Overheating	1. Lubricant level low.	1. Fill differential to correct level.
	2. Improper grade of lubricant.	2. Fill differential with the correct fluid type and quantity.
	3. Bearing pre-loads too high.	3. Re-adjust bearing pre-loads.
	4. Insufficient ring gear backlash.	4. Re-adjust ring gear backlash.
Gear Teeth Broke	1. Overloading.	1. Replace gears. Examine other gears and bearings for possible damage.
	2. Erratic clutch operation.	2. Replace gears and examine the remaining parts for damage. Avoid erratic clutch operation.
	3. Ice-spotted pavement.	3. Replace gears and examine remaining parts for damage.
	4. Improper adjustments.	4. Replace gears and examine remaining parts for damage. Ensure ring gear backlash is correct.
Axle Noise	1. Insufficient lubricant.	1. Fill differential with the correct fluid type and quantity.
	2. Improper ring gear and pinion adjustment.	2. Check ring gear and pinion contact pattern. Adjust backlash or pinion depth.
	3. Unmatched ring gear and pinion.	3. Replace gears with a matched ring gear and pinion.
	4. Worn teeth on ring gear and/or pinion.	4. Replace ring gear and pinion.
	5. Loose pinion bearings.	5. Adjust pinion bearing pre-load.
	6. Loose differential bearings.	6. Adjust differential bearing pre-load.
	7. Mis-aligned or sprung ring gear.	7. Measure ring gear run-out. Replace components as necessary.
	8. Loose differential bearing cap bolts.	8. Inspect differential components and replace as necessary. Ensure that the bearing caps are torqued tot he proper specification.
	9. Housing not machined properly.	9. Replace housing.

REMOVAL

1. With vehicle in neutral, position vehicle on hoist.
2. Position a lift under axle and secure lift to the axle.
3. Remove all brake components.
4. Remove propeller shaft.
5. Remove power hop damper from the frame, then the differential cover bracket.
6. Remove shock absorbers (1) from axle bracket (2).

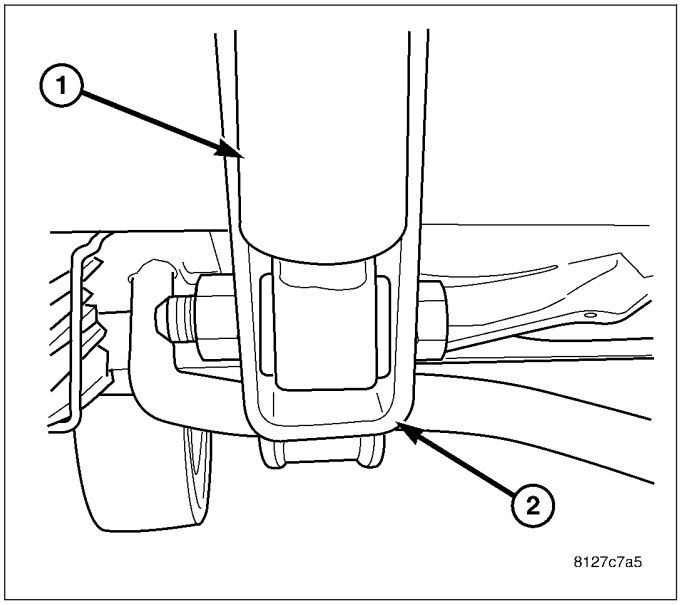

7. Remove stabilizer bar (2) clamps (1) from the axle.

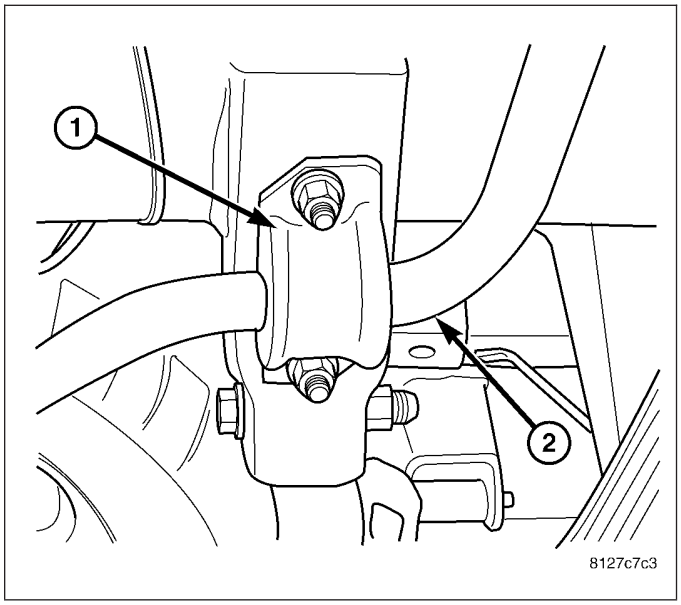

8. Loosen stabilizer link (2) bolts and swing bar forward.

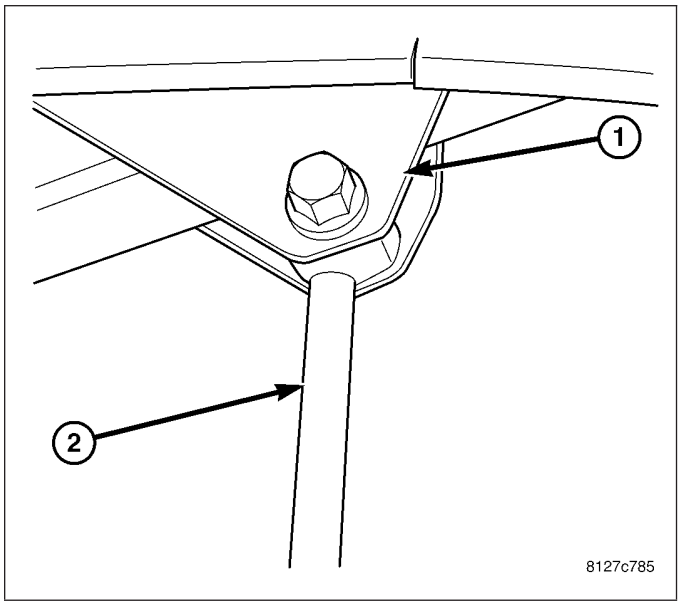

9. Remove spring plate (1) U-bolts from axle (2).

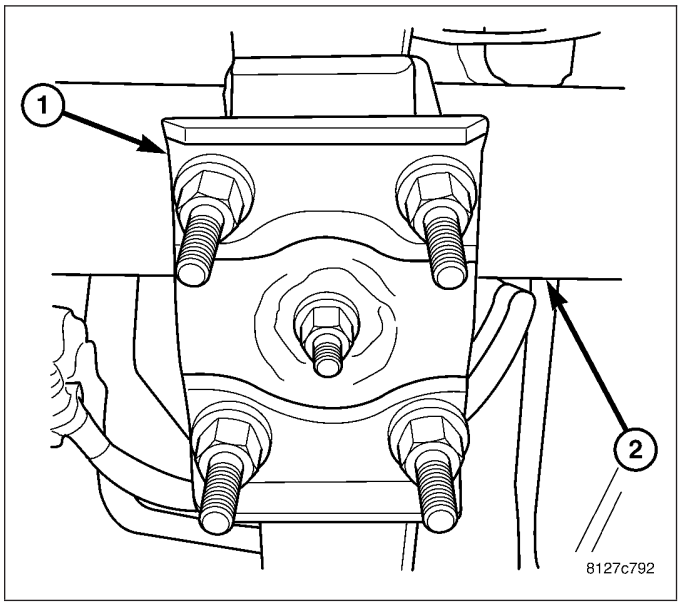

10. Loosen spring (1) bolts at frame bracket (2).

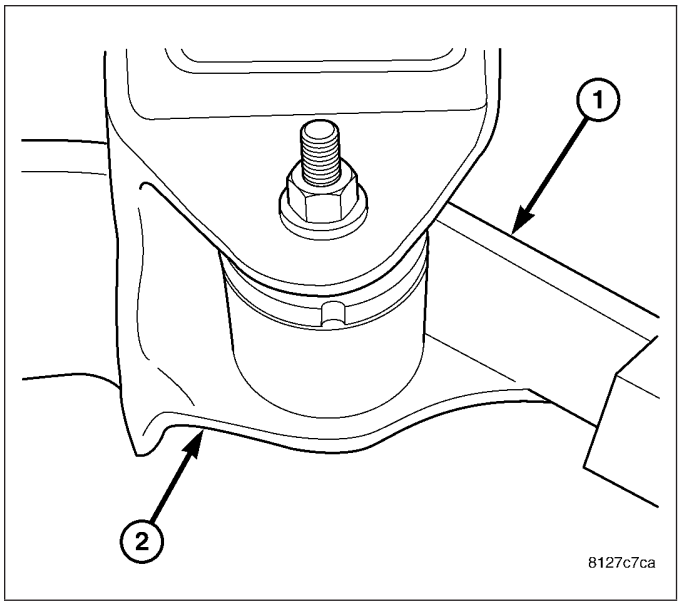

11. Remove spring (2) shackle (1) bolts and swing springs forward.
12. Lower axle from the vehicle.

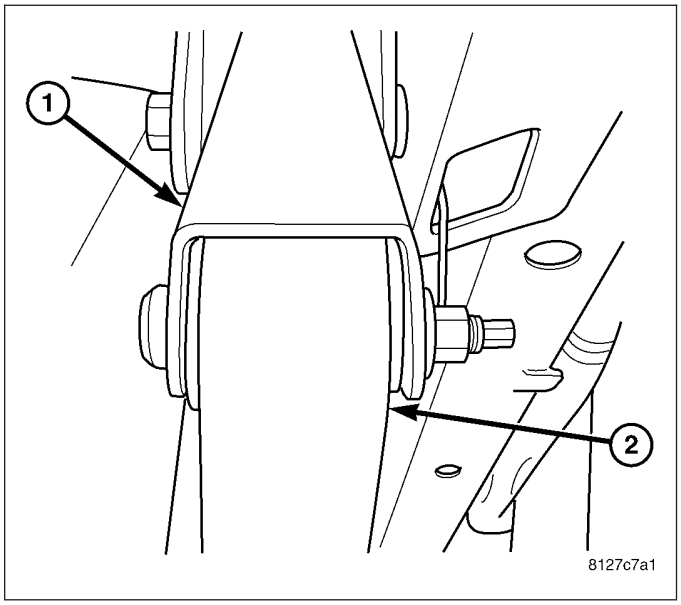

INSTALLATION

1. Raise axle and align to the leaf spring centering bolts.
2. Raise leaf springs and install shackle bolts and nuts finger tight.
3. Install axle (2) spring plate (1) and tighten U-bolt nuts to 149 N·m (110 ft. lbs.).
4. Install shock absorbers to axle and tighten to 135 N·m (100 ft. lbs.).
5. Install power hop damper to differential cover bracket and tighten to 102 N·m (75 ft. lbs.). Then compress the damper and install it on the frame and tighten to specification.
6. Install all brake components.
7. Install stabilizer bar bolts and tighten to specification.
8. Install propeller shaft and tighten to specification.

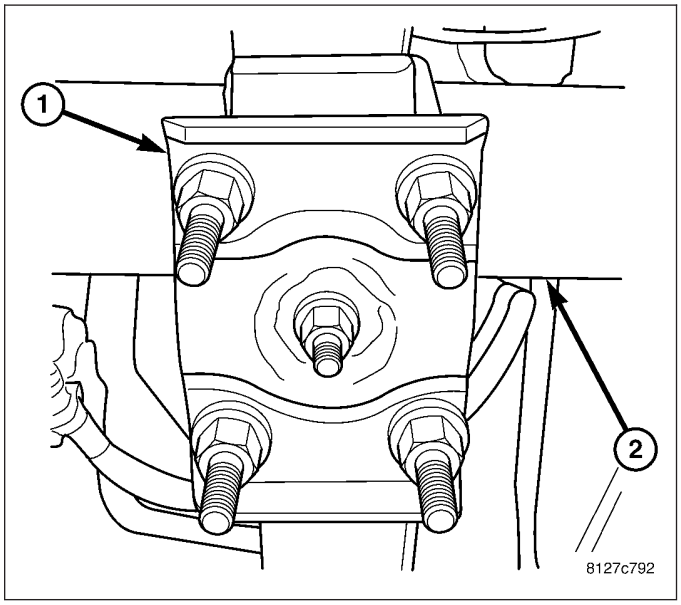

9. Remove supports and lower the vehicle so that the weight is being supported by the tires.
10. Tighten spring (1) bracket (2) nuts to 163 N·m (120 ft. lbs.).

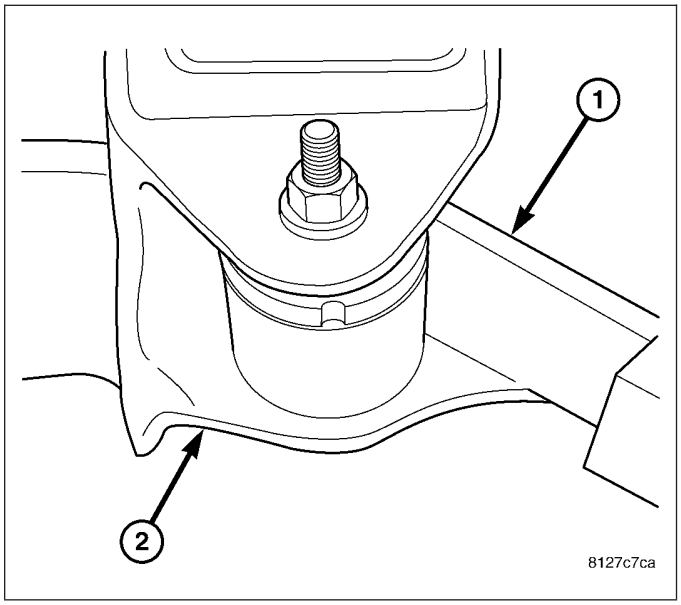

11. Tighten spring (2) shackle (1) nuts to 163 N·m (120 ft. lbs.).

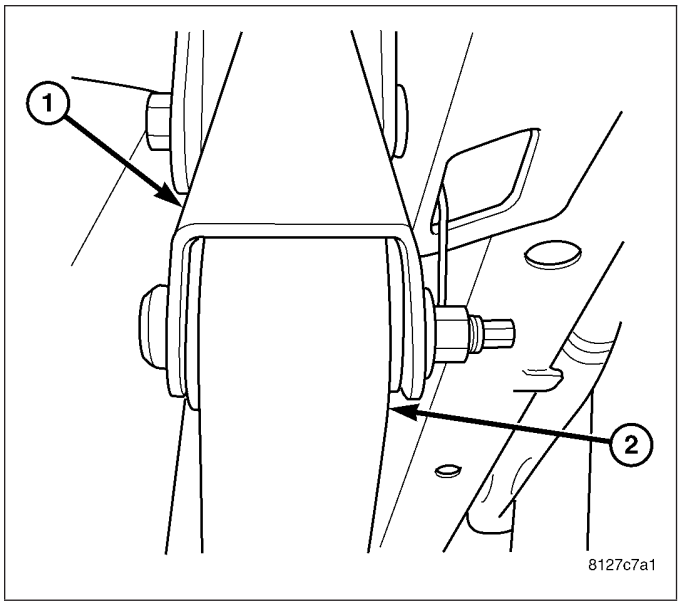

ADJUSTMENTS

Ring and pinion gears are supplied as matched sets. Identifying numbers (3) for the ring and pinion gears are etched into the face of each gear. A plus (+) number, minus (–) number or zero (0) is etched into the face of the pinion gear (2). This number is the amount (in thousandths of an inch) the depth varies from the standard depth setting of a pinion etched with a (0). The standard depth provides the best gear tooth contact pattern.

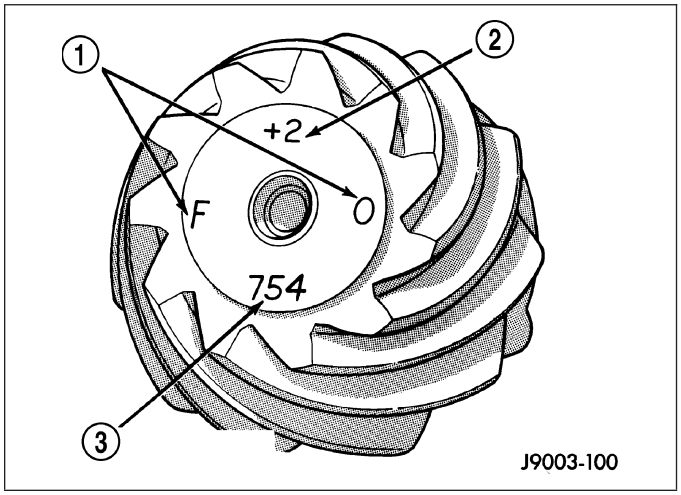

Compensation for pinion depth variance is achieved with a select shim (1). The shims are located between the rear pinion bearing and pinion gear head.

If installing a new gear, note the depth variance number of the original and replacement pinion. Add or subtract this number from the original depth shim/oil slinger to compensate for the difference in the depth variances. The numbers represent thousands of an inch deviation from the standard. If the number is negative, add that value to the required thickness of the depth shims. If the number is positive, subtract that value from the thickness of the depth shim.

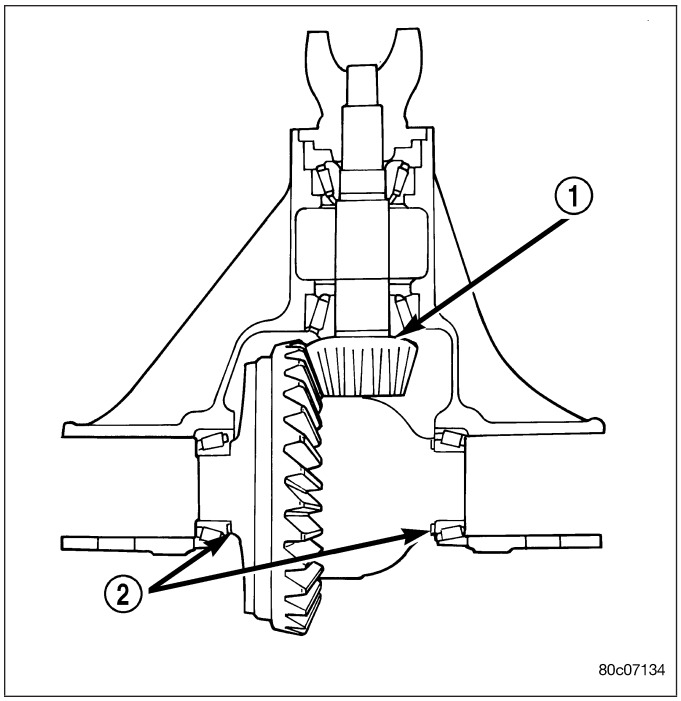

Pinion Gear Depth Variance Chart: Note where Old and New Pinion Marking columns intersect. Intersecting figure represents plus or minus the amount needed.

PINION GEAR DEPTH VARIANCE

Original Pinion Gear Depth Variance	Replacement Pinion Gear Depth Variance								
	−4	−3	−2	−1	0	+1	+2	+3	+4
+4	+0.008	+0.007	+0.006	+0.005	+0.004	+0.003	+0.002	+0.001	0
+3	+0.007	+0.006	+0.005	+0.004	+0.003	+0.002	+0.001	0	−0.001
+2	+0.006	+0.005	+0.004	+0.003	+0.002	+0.001	0	−0.001	−0.002
+1	+0.005	+0.004	+0.003	+0.002	+0.001	0	−0.001	−0.002	−0.003
0	+0.004	+0.003	+0.002	+0.001	0	−0.001	−0.002	−0.003	−0.004
−1	+0.003	+0.002	+0.001	0	−0.001	−0.002	−0.003	−0.004	−0.005
−2	+0.002	+0.001	0	−0.001	−0.002	−0.003	−0.004	−0.005	−0.006
−3	+0.001	0	−0.001	−0.002	−0.003	−0.004	−0.005	−0.006	−0.007
−4	0	−0.001	−0.002	−0.003	−0.004	−0.005	−0.006	−0.007	−0.008

PINION DEPTH MEASUREMENT

Measurements are taken with pinion bearing cups and pinion bearings installed in the housing. Take measurements with Pinion Gauge Set and Dial Indicator C-3339 (1).

1. Assemble Pinion Height Block 6739 (3), Pinion Block 6736 (6) and rear pinion bearing onto Screw 6741(5).

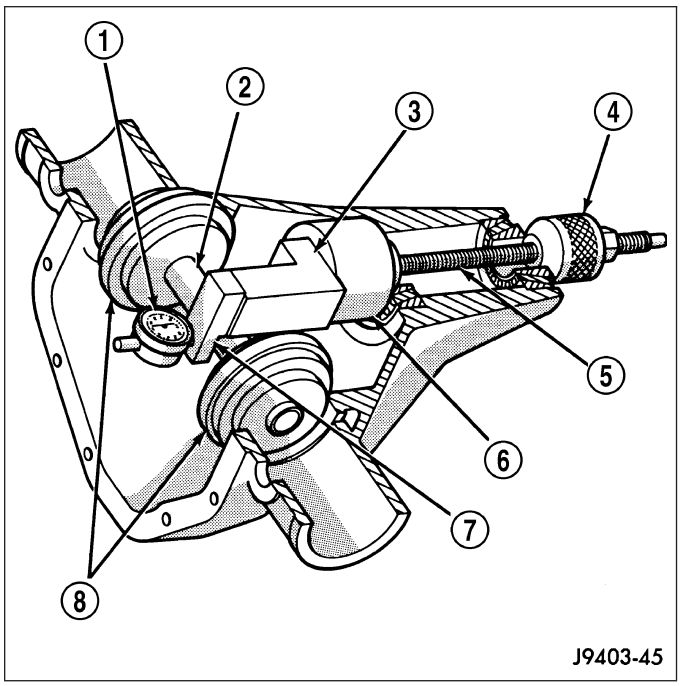

2. Insert assembled pinion block (1), pinion height block (2), rear bearing and screw into the housing through pinion bearing cups.
3. Install front pinion bearing and Cone-nut 6740 onto the screw. Tighten cone-nut until Torque To Rotate the screw is 2.2 N·m (20 in. lbs.).

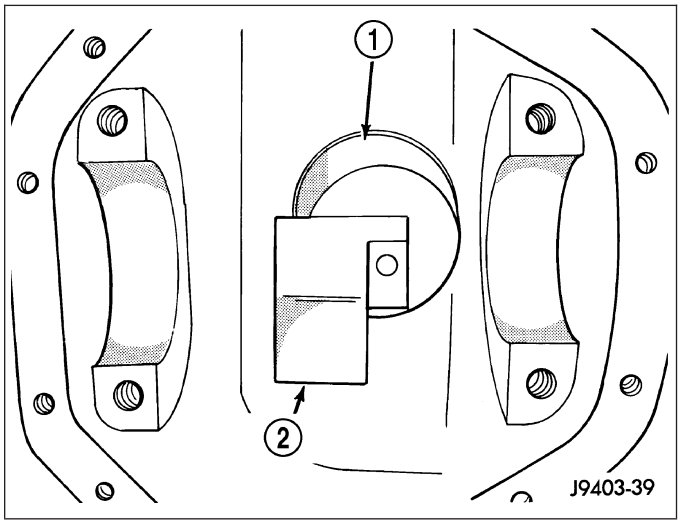

4. Place Arbor Disc 6732 (1) on Arbor D-115-3 (3) in position in the housing side bearing cradles.

NOTE: Arbor Discs 6732 (1) has different step diameters to fit other axles. Choose proper step for axle being serviced.

5. Install differential bearing caps on arbor discs and snug the bearing cap bolts. Then cross tighten cap bolts to 108 N·m (80 ft. lbs.).

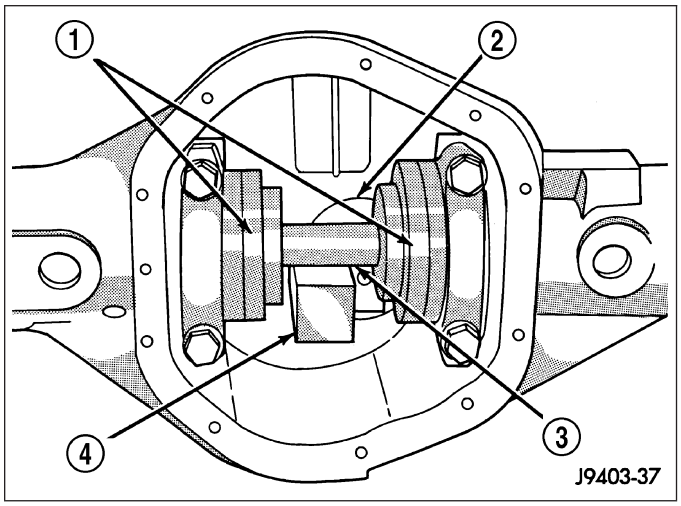

6. Assemble Dial Indicator C-3339 (3) into Scooter Block D-115-2 (2) and secure set screw.
7. Position Scooter Block/Dial Indicator flush on the pinion height block. Hold scooter block and zero the dial indicator.
8. Slowly slide the scooter block across the pinion height block over to the arbor. Move the scooter block till dial indicator crests the arbor (1), then record the highest reading.
9. Select a shim equal to the dial indicator reading plus the pinion depth variance number etched in the face of the pinion. For example, if the depth variance is –2, add +0.002 in. to the dial indicator reading.

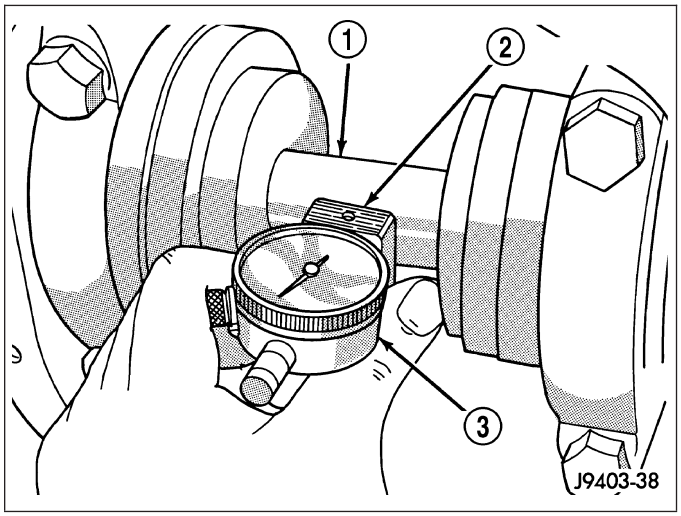

DIFFERENTIAL SIDE BEARING PRELOAD

Differential side bearing preload and gear backlash is achieved by selective shims (2) positioned behind the differential side bearing cones. The proper shim thickness can be determined using slip-fit Dummy Bearings D-343 in place of the differential side bearings and a Dial Indicator C-3339. Before measuring differential bearing preload and gear backlash, measure pinion gear depth and prepare pinion for installation. Pinion gear depth is essential to establishing gear backlash and tooth contact patterns. After measuring shim thickness to take up differential side play, install pinion and measure gear backlash shim thickness. Overall shim thickness is the dial indicator reading and preload specification added together. The gear backlash measurement determines the shim thickness used on the ring gear side of the differential case. Subtract gear backlash shim thickness from overall shim thickness to determine shim thickness for pinion gear side of the differential. Differential shim measurements are performed with spreader W-129-B removed.

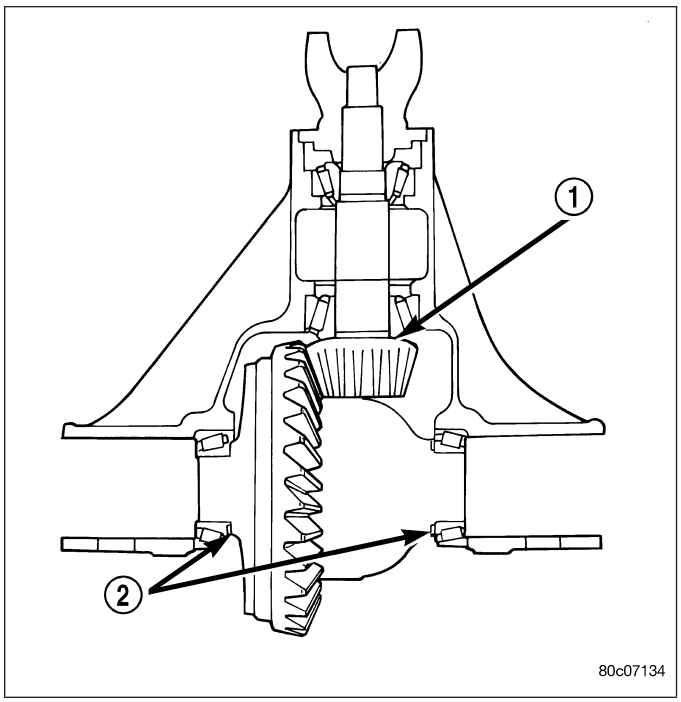

SHIM SELECTION

NOTE: It is difficult to salvage the differential side bearings during the removal procedure. Install replacement bearings if necessary.

1. Remove differential side bearings from differential case.
2. Remove factory installed shims from differential case.
3. Install ring gear on differential case and tighten bolts to specification.
4. Install dummy side bearings D-343 on differential case.
5. Install differential case (3) in the housing (2).
6. Install the marked bearing caps (1) in their correct positions and snug the bolts.

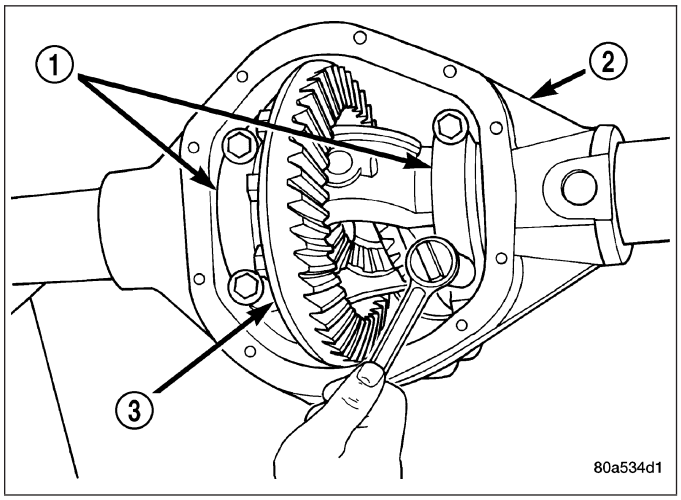

7. With a dead-blow hammer (1), seat the differential dummy bearings to the pinion side of the housing (2).

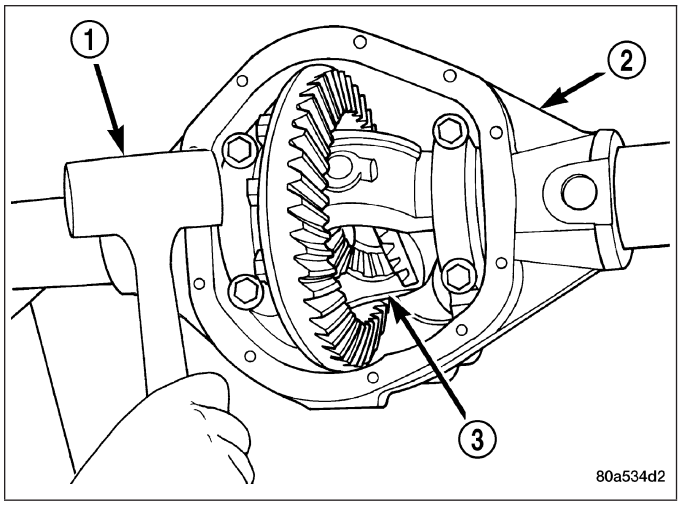

8. With a dead-blow hammer (2), seat the differential dummy bearings to the ring gear side of the housing (1).

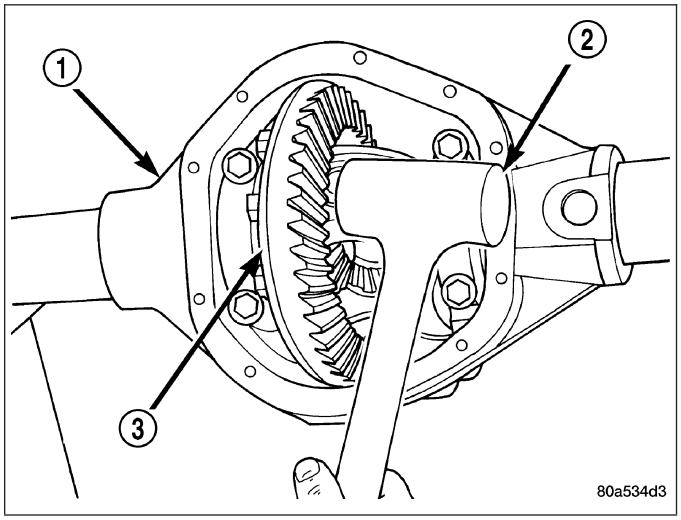

9. Thread Pilot Stud C-3288-B (3) into rear cover bolt hole below ring gear.
10. Attach the Dial Indicator C-3339 (4) to pilot stud. Position the dial indicator plunger on a flat surface between the ring gear bolt heads.

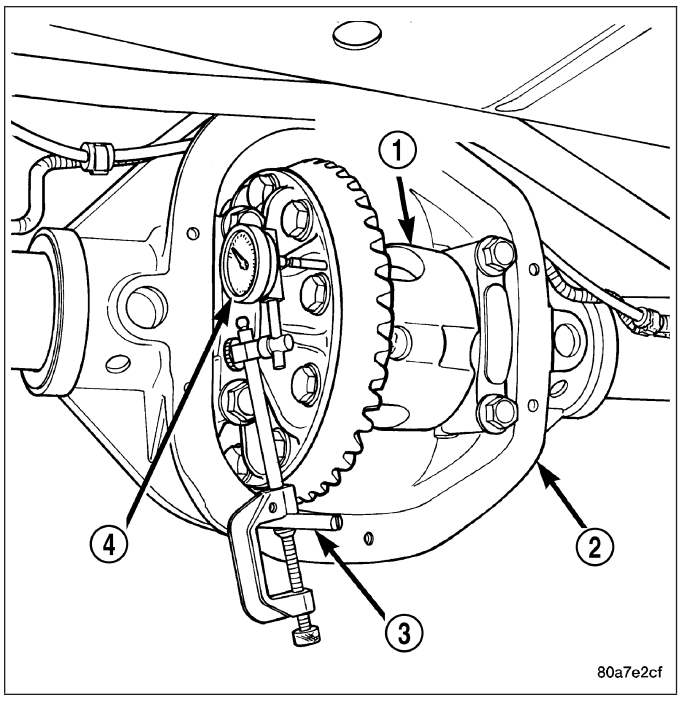

11. Push and hold differential case (1) to pinion gear side of the housing and zero dial indicator (4).

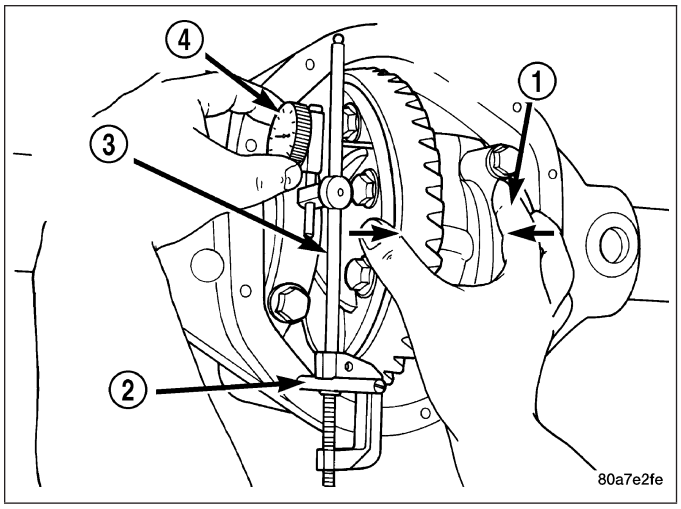

12. Push and hold differential case (2) to ring gear side of the housing (3) and record the dial indicator (1) reading.
13. Add 0.38 mm (0.015 in.) to the zero end play total. This total represents the thickness of shims needed to preload the new bearings when the differential is installed.
14. Rotate dial indicator out of the way on the pilot stud.
15. Remove differential case and dummy bearings from the housing.
16. Install the pinion gear in the housing. Install the pinion yoke and establish the correct pinion rotating torque.

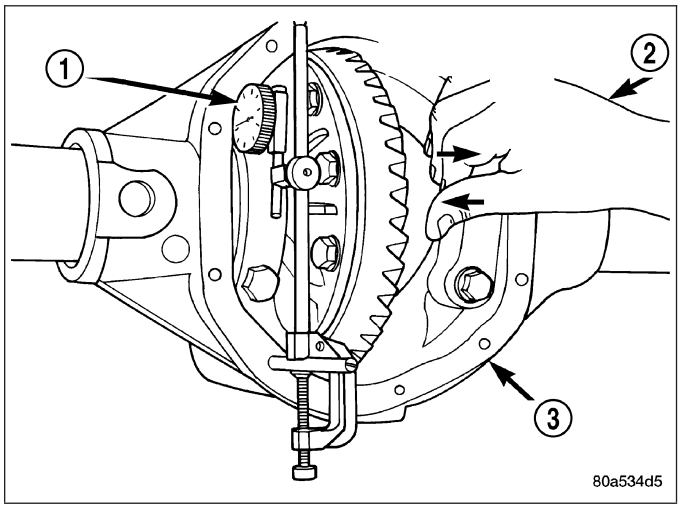

17. Install differential case (5) and dummy bearings D-343 in the housing (without shims), install bearing caps and tighten bolts snug.
18. Seat ring gear side dummy bearing.
19. Position the dial indicator plunger on a flat surface between the ring gear bolt heads.
20. Push and hold differential case (2) toward pinion gear and zero the dial indicator (1).

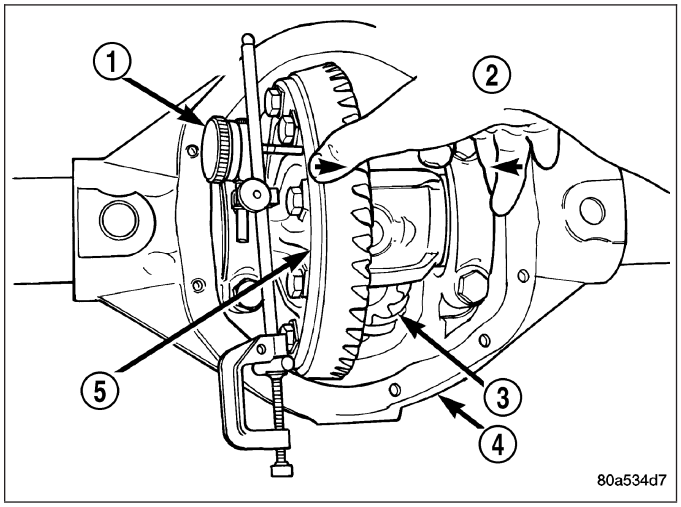

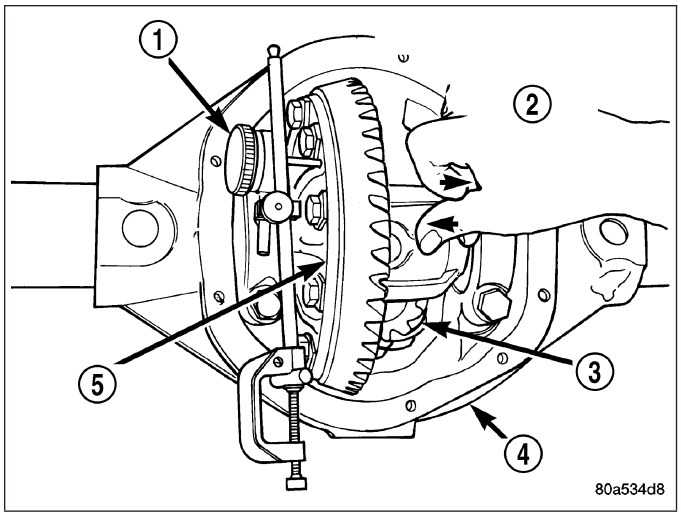

21. Push and hold differential case (2) to ring gear side of the housing and record dial indicator (1) reading.
22. This is the shim thickness needed on the ring gear side of the differential case for proper backlash.
23. Subtract the backlash shim thickness from the total preload shim thickness. The remainder is the shim thickness required on the pinion side of the housing.
24. Rotate dial indicator out of the way on pilot stud.
25. Remove differential case and dummy bearings from the housing.
26. Install the selected side bearing shims onto the differential case hubs.
27. Install side bearings on differential case hubs with Install C-4190 and Handle C-4171.
28. Install bearing cups on differential.
29. Install Spreader W-129-B and some items from Adapter Set 6987 on the housing and spread open enough to receive differential case.

CAUTION: Never spread housing over 0.50 mm (0.020 in.). Failure to follow these instruction will damage the housing.

30. Install differential case into the housing.
31. Remove spreader from the housing.

GEAR BACKLASH

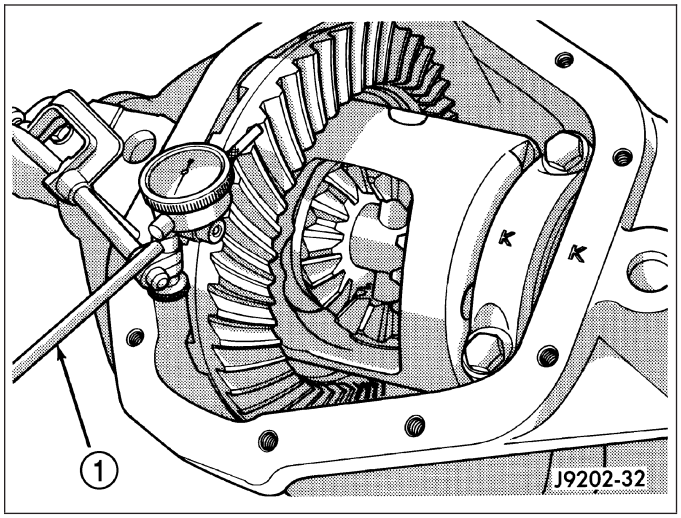

1. Rotate the differential case several times to seat the side bearings.
2. Position the indicator plunger (1) against a ring gear tooth.
3. Push and hold ring gear upward while not allowing the pinion gear to rotate.
4. Zero dial indicator face to pointer.

5. Push and hold ring gear downward while not allowing the pinion gear to rotate. Dial indicator reading should be between 0.12 mm (0.005 in.) and 0.20 mm (0.008 in.). If backlash is not within specifications transfer the necessary amount of shim thickness from one side of the housing to the other.
6. Verify differential case and ring gear runout by measuring ring to pinion gear backlash at eight locations around the ring gear. Readings should not vary more than 0.05 mm (0.002 in.). If readings vary more than specified, the ring gear or the differential case is defective.

After the proper backlash is achieved, perform Gear Contact Pattern Analysis procedure.

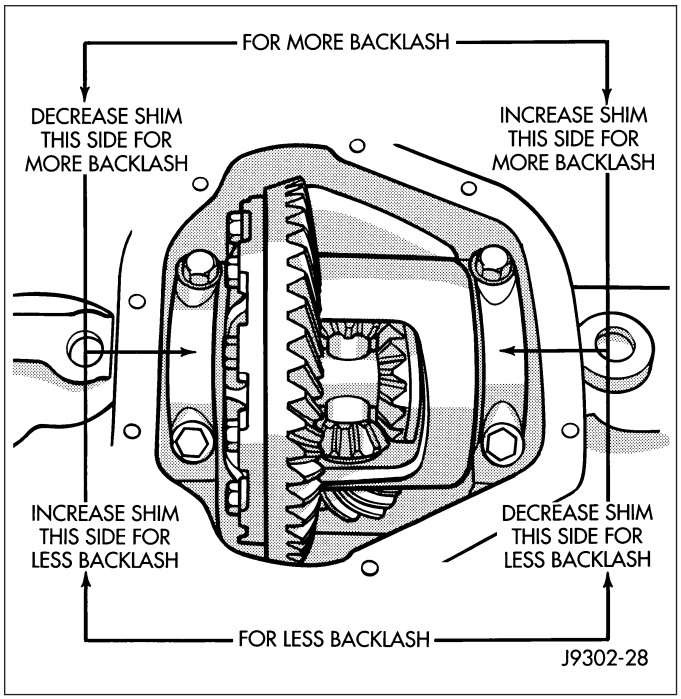

GEAR CONTACT PATTERN

The ring gear and pinion teeth contact patterns will show if the pinion depth is correct in the axle housing. It will also show if the ring gear backlash has been adjusted correctly. The backlash can be adjusted within specifications to achieve desired tooth contact patterns.

The TOP LAND (1) of the gear tooth is the top surface of the tooth. The PROFILE (2) of the gear tooth is the depth of the tooth. The TOE (3) of the gear is the portion of the tooth surface at the end towards the center. The HEEL (4) of the gear is the portion of the tooth at the outer-end. The ROOT (5) of the gear tooth is the lowest portion of the tooth.

NOTE: If the PROFILE across the gear tooth is the same it is a 3 Axis cut gear. If the PROFILE across the gear tooth is tapered it is a 2 Axis cut gear.

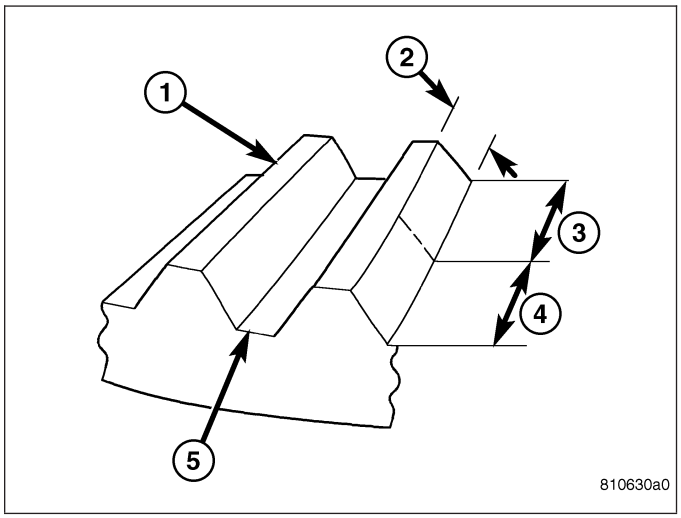

DRIVE SIDE HEEL TOE	CONDITION	COAST SIDE TOE HEEL	CONDITION	ACTION REQUIRED
	**Desirable pattern.** The drive pattern should be centered on the tooth. There should be some clearance between the pattern and the top of the tooth.		**Desirable pattern.** The coast pattern should be centered on the tooth, but may be slightly toward the toe. There should be some clearance between the pattern and the top of the tooth.	None
	**Top toe contact**		**Top heel contact**	Backlash correct. Thicker pinion position shim required.
	**Root heel contact**		**Root toe contact**	Backlash correct. Thinner pinion position shim required.
	**Top heel contact**		**Top toe contact**	Pinion position shim correct. Decrease backlash.
	**Root toe contact**		**Root heel contact**	Pinion position shim correct. Increase backlash.

8106361d

1. Apply a thin coat of hydrated ferric oxide or equivalent, to the drive and coast side of the ring gear teeth.
2. Wrap, twist and hold a shop towel around the pinion yoke to increase the turning resistance of the pinion. This will provide a more distinct contact pattern.
3. Using a boxed end wrench on a ring gear bolt, Rotate the differential case one complete revolution in both directions while a load is being applied from shop towel.

The areas on the ring gear teeth with the greatest degree of contact against the pinion teeth will squeegee the compound to the areas with the least amount of contact. Note and compare patterns on the ring gear teeth to Gear Tooth Contact Patterns chart and adjust pinion depth and gear backlash as necessary.

DIFFERENTIAL BEARING PRELOAD CHECK

The final check on the differential assembly before installing the axles is torque to rotate pinion and differential combined. This will verify the correct differential bearing preload.

Torque to rotate the differential and pinion should be the torque to rotate the pinion plus 0.79-1.24 N·m (7-11 in. lbs.).

SPECIFICATIONS

AXLE SPECIFICATIONS

DESCRIPTION	SPECIFICATION
Axle Ratio	4.56
Ring Gear Diameter	248 mm (9.75 in.)
Ring Gear Backlash	0.12-0.20 mm (0.005-0.008 in.)
Pinion Bearing Preload - Original Bearings	1-3 N·m (10-20 in. lbs.)
Pinion Bearing Preload - New Bearings	1.7-3.9 N·m (15-35 in. lbs.)

TORQUE SPECIFICATIONS

DESCRIPTION	N·m	Ft. Lbs.	In. Lbs.
Fill Hole Plug	27	20	-
Differential Cover Bolts	48	35	-
Bearing Cap Bolts	108	80	-
Ring Gear Bolt	177	130	-
Pinion Nut	292-447	215-330	-
Pinion Mate Shaft Bolt	27	20	-
Power Hop Bracket Bolts	41	30	-
Power Hop Damper Bolt	102	75	-

SPECIAL TOOLS

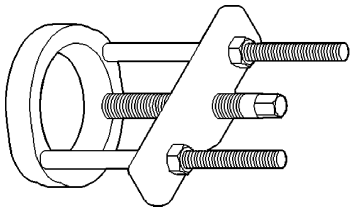

PULLER / PRESS C-293-PA

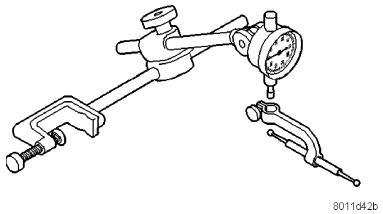

DIAL INDICATOR C-3339

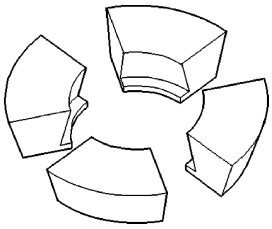

ADAPTERS C-293-37

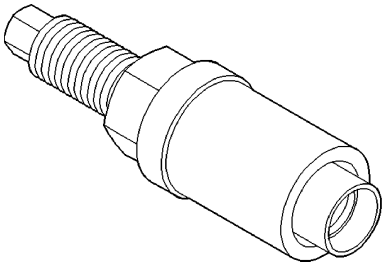

INSTALLER FLANGE C-3718

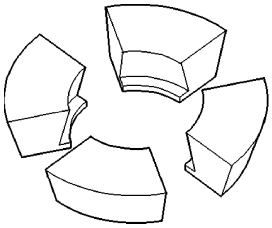

ADAPTERS C-293-62

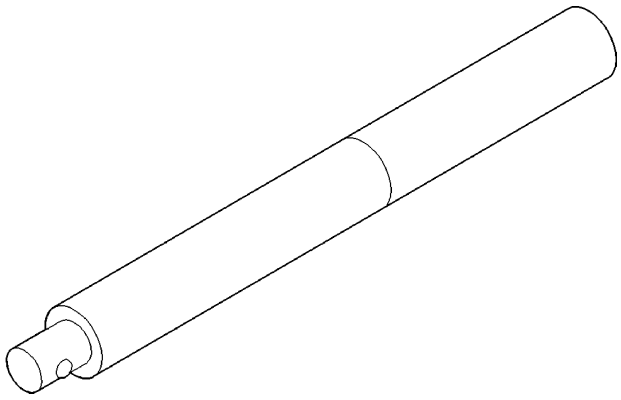

HANDLE C-4171

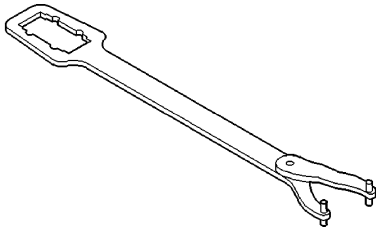

FLANGE WRENCH C-3281

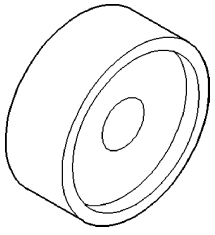

INSTALLER BEARING C-4190

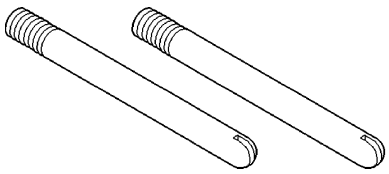

PILOT STUDS C-3288-B

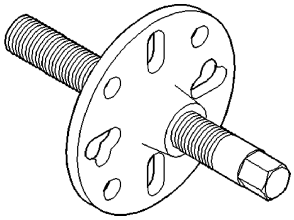

PULLER C-452

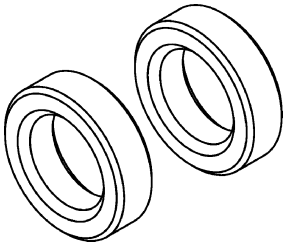

DUMMY BEARINGS D-343

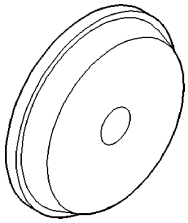

INSTALLER CUP D-111

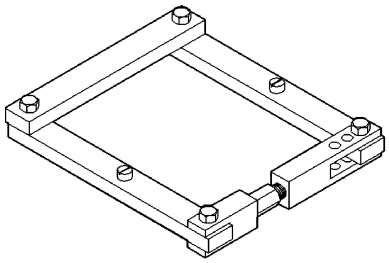

SPREADER W-129-B

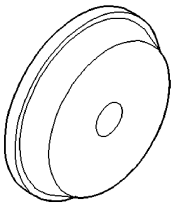

INSTALLER CUP D-146

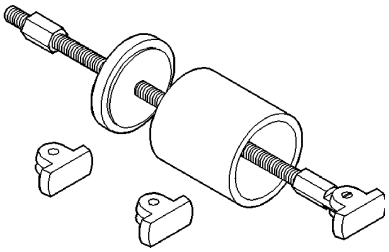

REMOVER/EXTRACTOR 6310

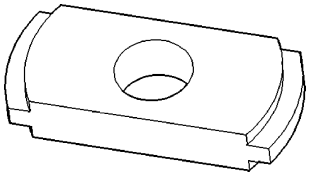

REMOVER CUP D-158

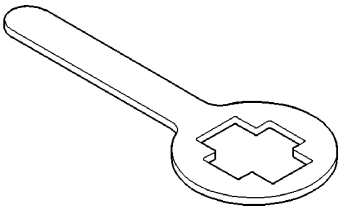

HOLDER 6719A

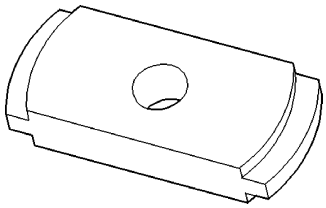

REMOVER CUP D-162

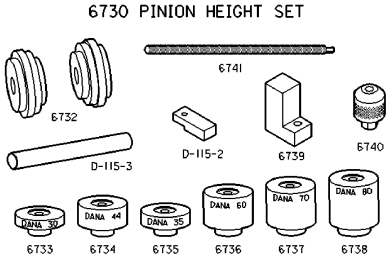

PINION DEPTH TOOLS 6730

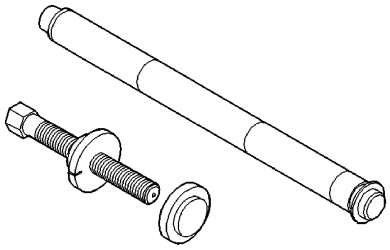

TRAC-LOK TOOLS 6960

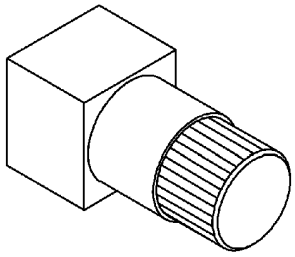

FIXTURE 9346

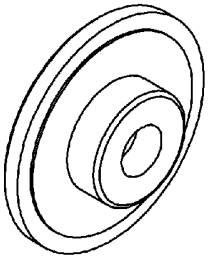

INSTALLER 9343

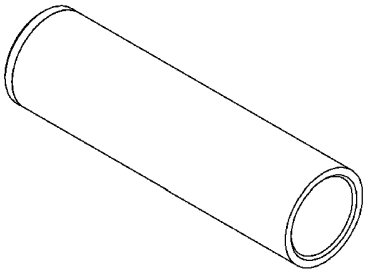

INSTALLER 9347

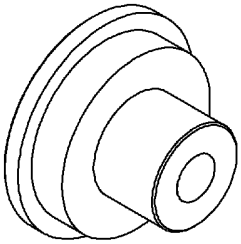

INSTALLER 9344

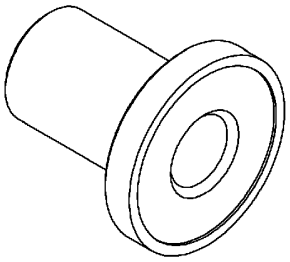

INSTALLER 9348

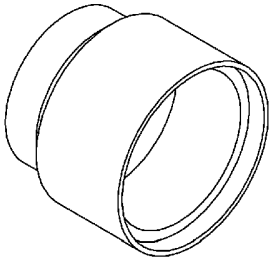

RECEIVER 9345

SHAFT-AXLE

REMOVAL

1. With vehicle in neutral, position vehicle on hoist.
2. Remove brake caliper adapter with caliper and remove rotor.
3. Remove differential housing cover (1) and drain lubricant.

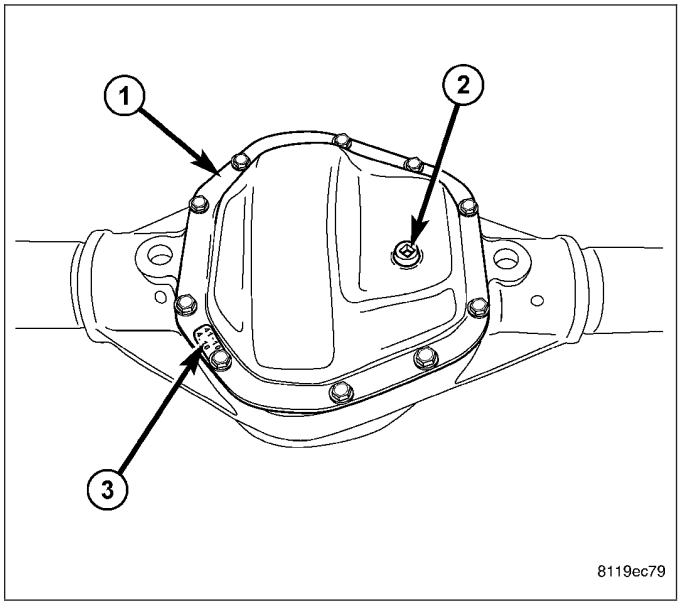

4. Remove pinion mate shaft (1) lock screw (2).

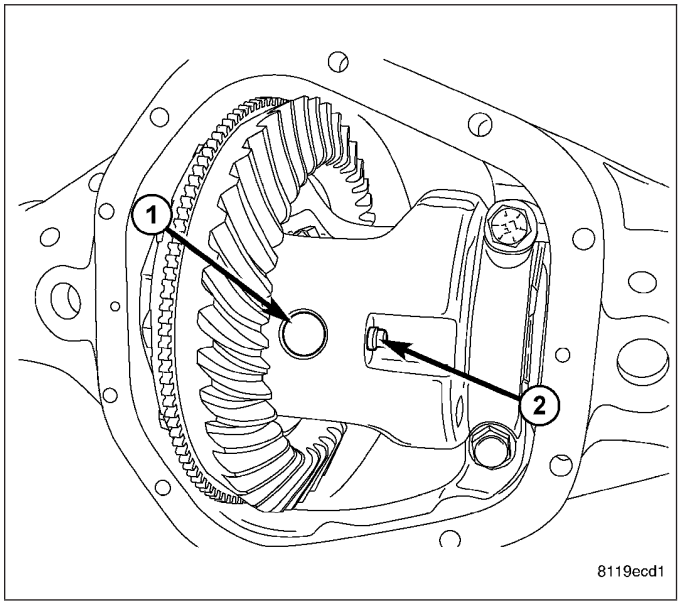

5. Remove pinion mate shaft (2) from differential case.

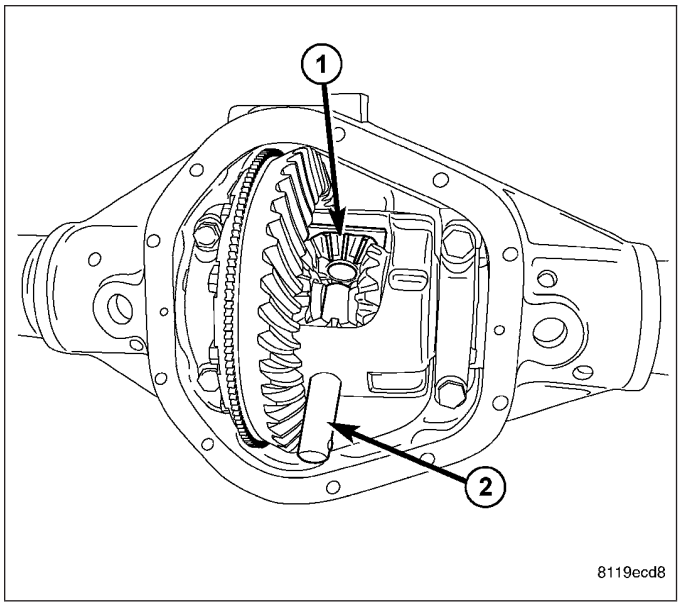

6. Push axle shaft (1) inward and remove axle shaft C-lock (2).
7. Remove axle shaft.

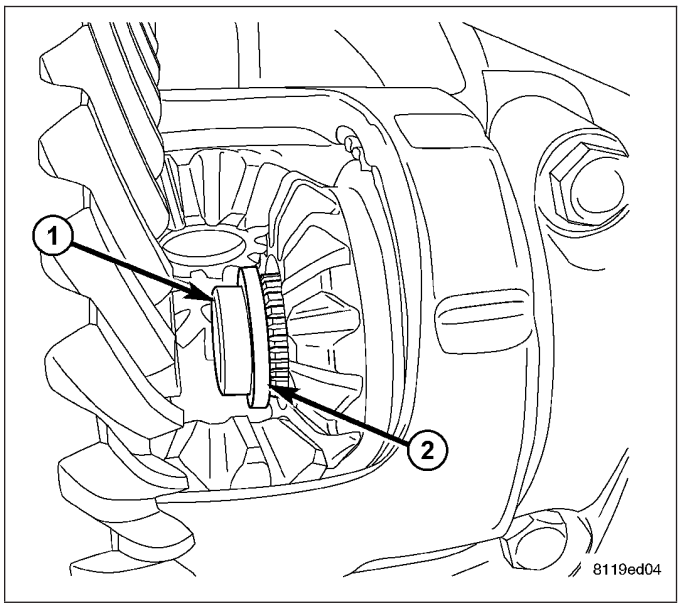

INSTALLATION

1. Lubricate bearing bore and seal lip with gear lubricant.
2. Insert axle shaft (1) through seal (2), bearing and engage into side gear splines.

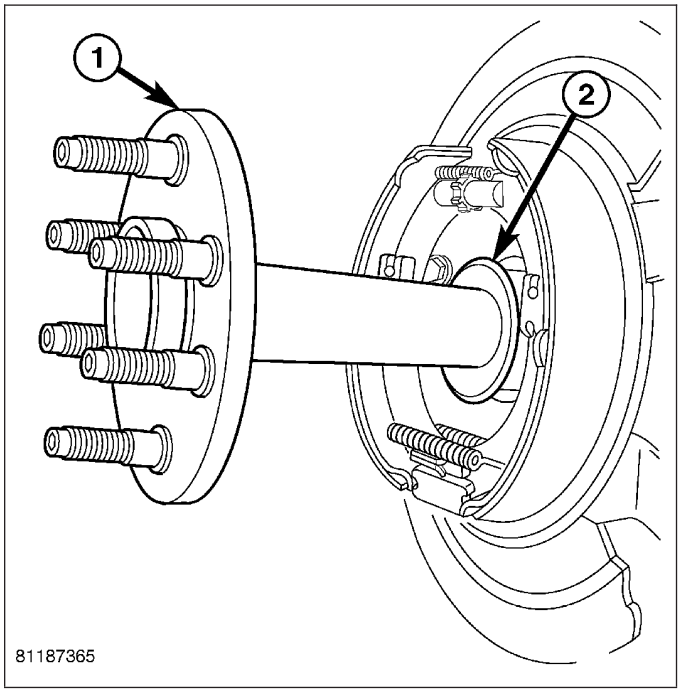

3. Insert C-lock (2) in end of axle shaft (1) then push axle shaft outward to seat C-lock in side gear.
4. Insert pinion mate shaft into differential case and through thrust washer and pinion gear.

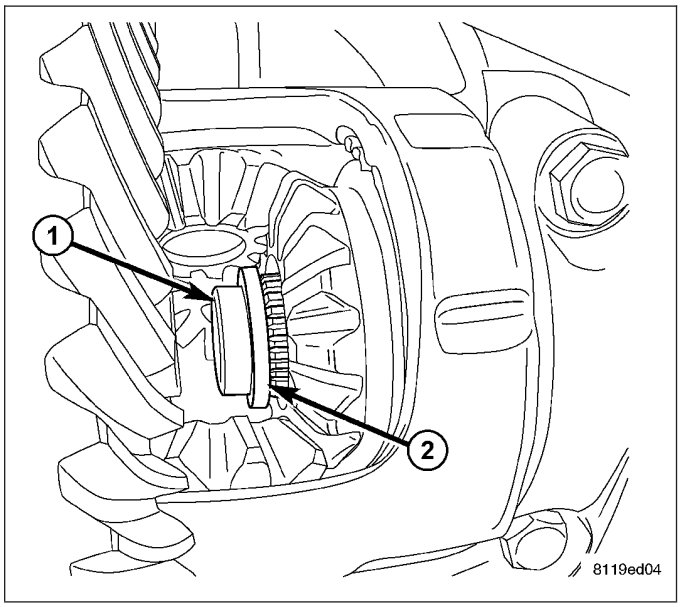

5. Align hole in pinion mate shaft (1) with hole in differential case and install lock screw (3) with Loctite® 242 or equivalent. Tighten lock screw to 27 N·m (20 ft. lbs.).

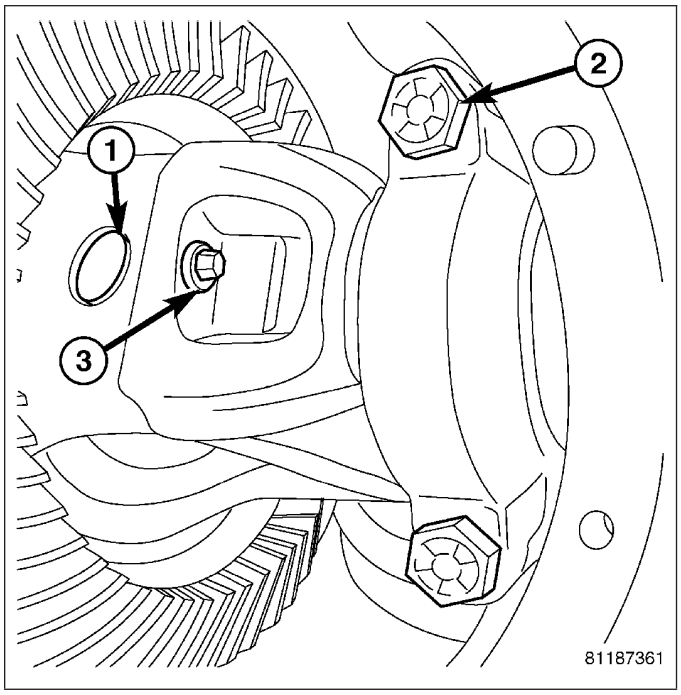

6. Apply a bead of orange Mopar Axle RTV sealant (2) or equivalent to the housing cover (1).

CAUTION: If housing cover is not installed within 3 to 5 minutes, the cover must be cleaned and new RTV applied. Failure to follow these instruction will result in a leak.

7. Install cover and tighten bolts in a criss-cross pattern to 48 N·m (35 ft. lbs.).
8. Fill differential lubricant to bottom of the fill plug hole.
9. Install fill hole plug and tighten to 27 N·m (20 ft. lbs.).
10. Install brake rotor and caliper adapter with caliper.

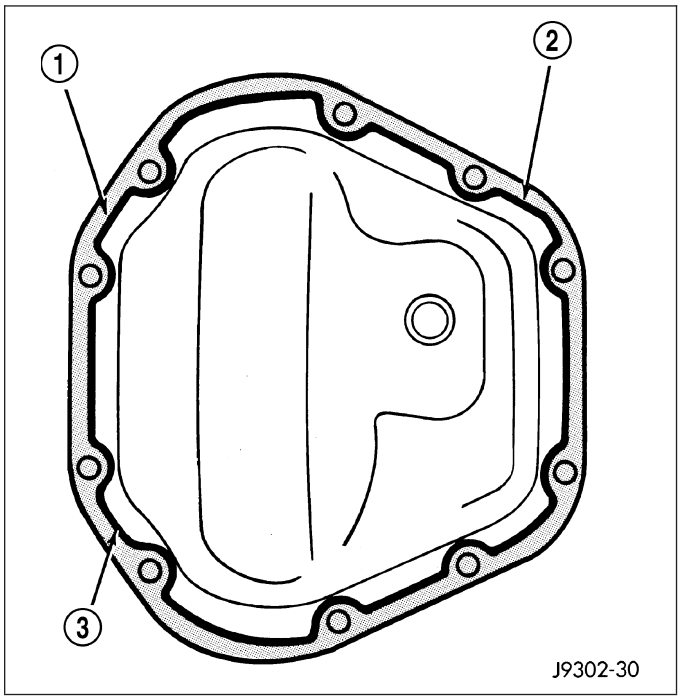

SEAL-AXLE SHAFT

REMOVAL

1. Remove axle shaft.
2. Remove axle shaft seal (1) from the end of the axle tube (2) with a pry bar.

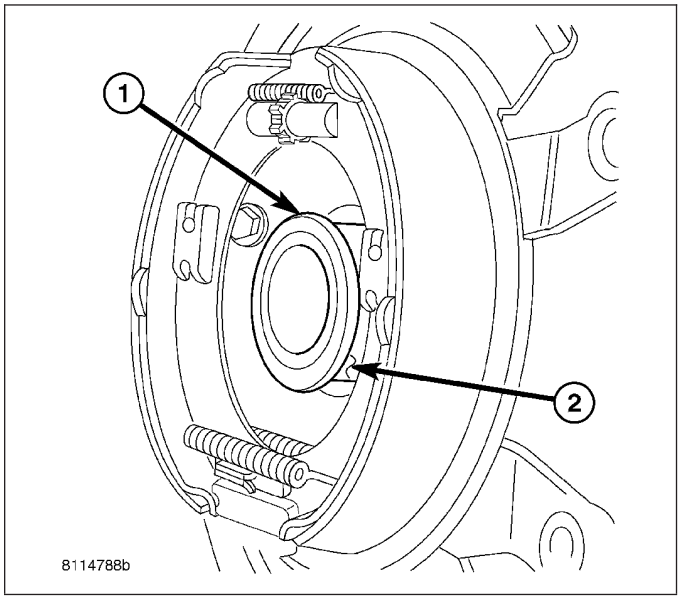

INSTALLATION

1. Remove any old sealer/burrs from axle tube.
2. Coat **new** seal lip with axle lubricant and install seal with Installer 9343 (1) and Handle C-4171(2).
3. Install axle shaft.

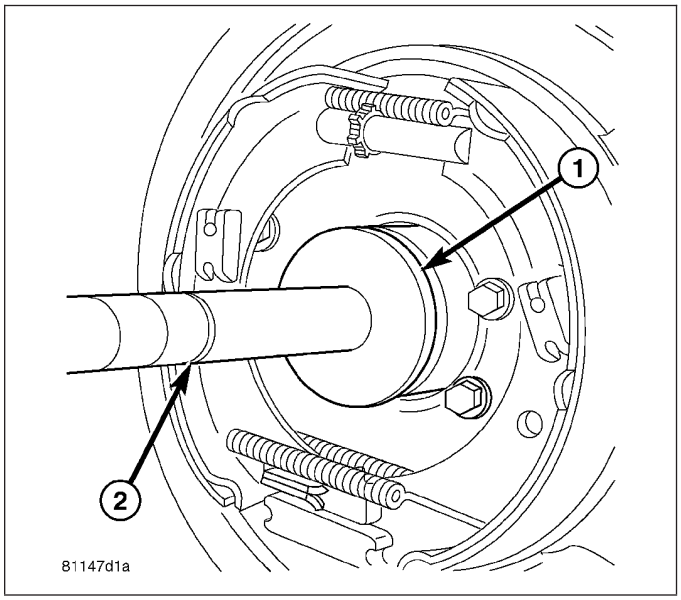

BEARING-AXLE

REMOVAL

1. Remove axle shaft.
2. Remove axle seal with pry bar.
3. Position bearing (2) Receiver 9345 (1) on axle tube.

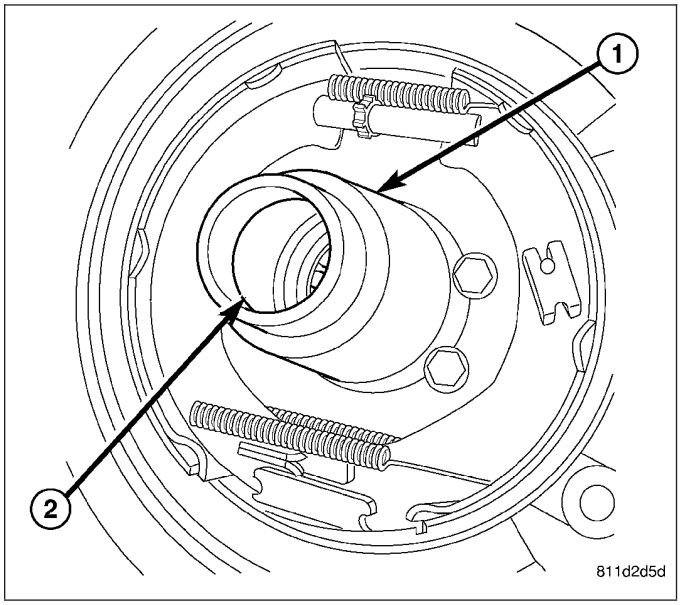

4. Insert bearing Remover 6310 with Foot 6310-9 (3) through receiver (2) and bearing (1).

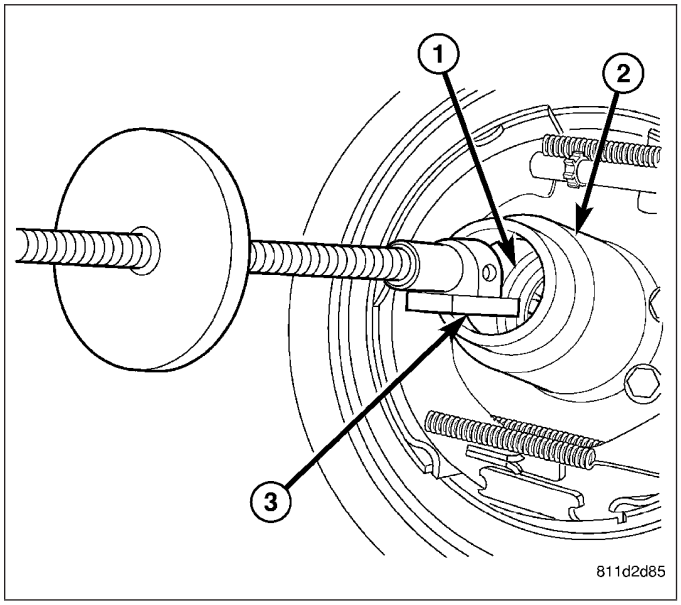

5. Tighten Remove 6310 nut (1) to pull bearing (3) into the receiver (3).

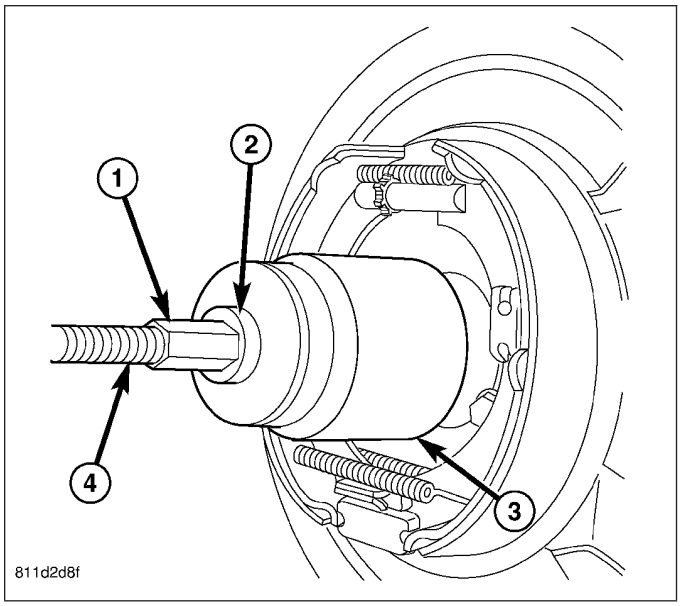

INSTALLATION

1. Remove any old sealer/burrs from axle tube.
2. Install axle shaft bearing with Installer 9344 (1) and Handle C-4171 (2). Drive bearing in until tool contacts the axle tube.

NOTE: Bearing is installed with the bearing part number against the installer.

3. Coat **new** axle seal lip with axle lubricant and install with Installer 9343 and Handle C-4171.
4. Install axle shaft.

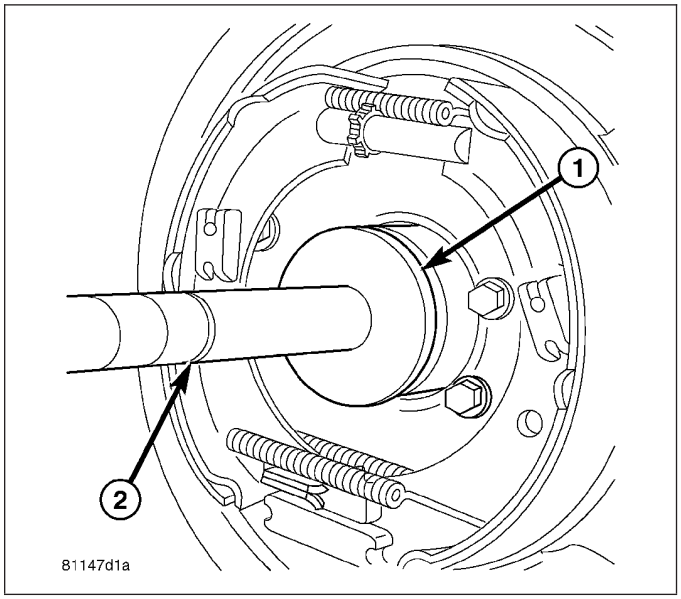

SEAL-PINION

REMOVAL

1. Remove propeller shaft.
2. Remove brake calipers to prevent any drag.
3. Rotate pinion yoke three or four times.
4. Record pinion gear (2) rotating torque with an inch pound torque wrench (1).

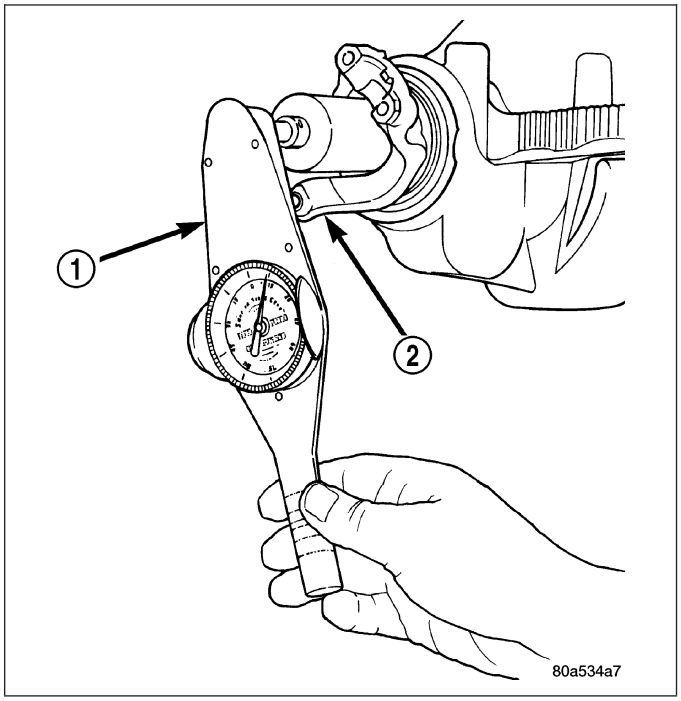

5. Hold yoke with Yoke Holder 6719A and remove pinion shaft nut and washer.
6. Remove pinion yoke (1) with Remover C-452 (2).
7. Remove pinion seal with pry tool or slide-hammer mounted screw.

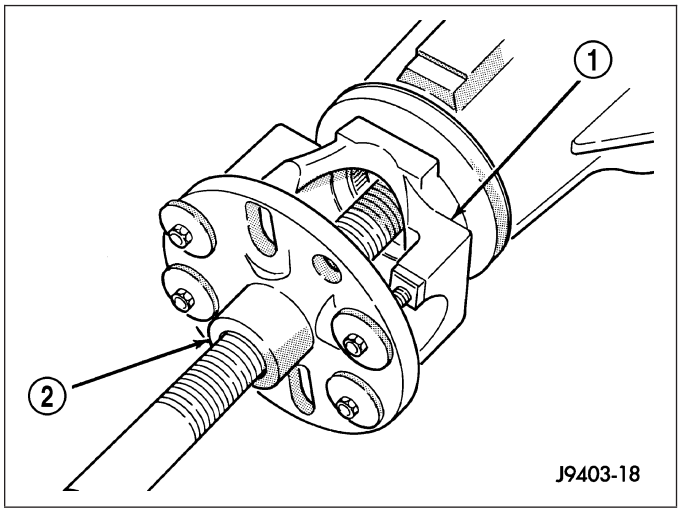

INSTALLATION

1. Coat lip of pinion seal with gear lubricant.
2. Install **new** pinion seal with Installer 9348 (2) and Handle C-4171 (1).
3. Install yoke on pinion shaft with Installer C-3718 and Yoke Holder 6719A.
4. Install pinion yoke washer with the **concave surface** against the yoke end.
5. Install **new** pinion nut.

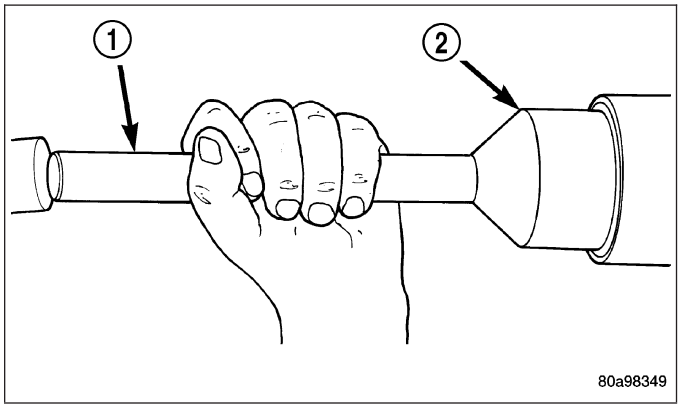

CAUTION: Never exceed minimum tightening torque when installing the pinion yoke retaining nut at this point. Failure to heed caution may result in damage.

6. Hold pinion yoke with Yoke Holder 6719A (2) and tighten nut with torque wrench (3) to 292 N·m (215 ft. lbs.). Rotate pinion shaft several revolutions to ensure bearing rollers are seated.

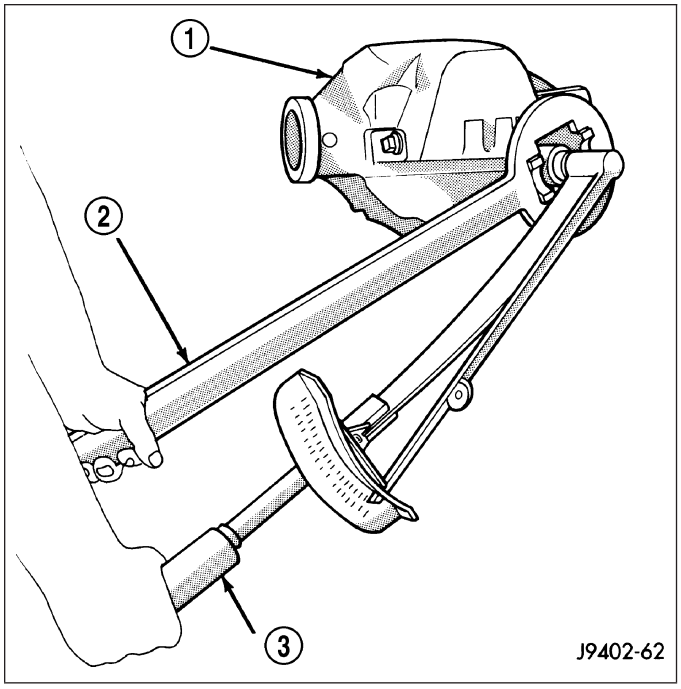

7. Rotate pinion (2) with a inch pound torque wrench (1). Rotating torque should be equal to reading recorded during removal, plus 0.56 N·m (5 in. lbs.).

CAUTION: Never loosen pinion nut to decrease pinion rotating torque and never exceed specified preload torque. Failure to follow these instruction will result in damage.

8. If rotating torque is low, use Yoke Holder 6719 to hold the pinion yoke and tighten the pinion shaft nut in 6.8 N·m (5 ft. lbs.) increments until proper rotating torque is achieved.

NOTE: The bearing rotating torque should be constant during a complete revolution of the pinion. If the rotating torque varies, this indicates a binding condition.

9. Install brake components.
10. Install propeller shaft.

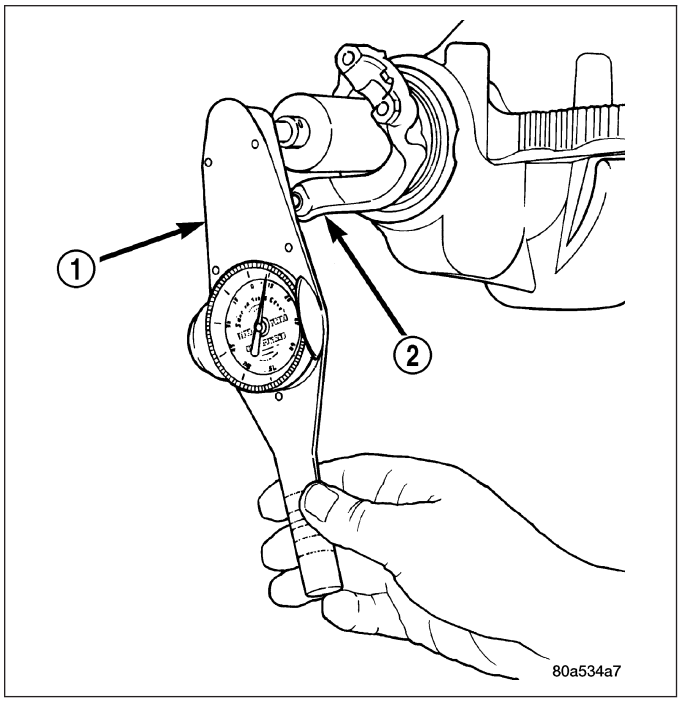

DIFFERENTIAL-TRAC-LOK

DESCRIPTION

The Trac-Lok® differential has a one-piece differential case and similar components as a standard differential, plus two clutch disc packs (1) attached to the side gears (3) with retainers (2) (4). Differential bearing preload and ring gear backlash are adjusted with shims located between the differential case bearing cups and housing. Pinion bearing preload is set and maintained by the use of a collapsible spacer.

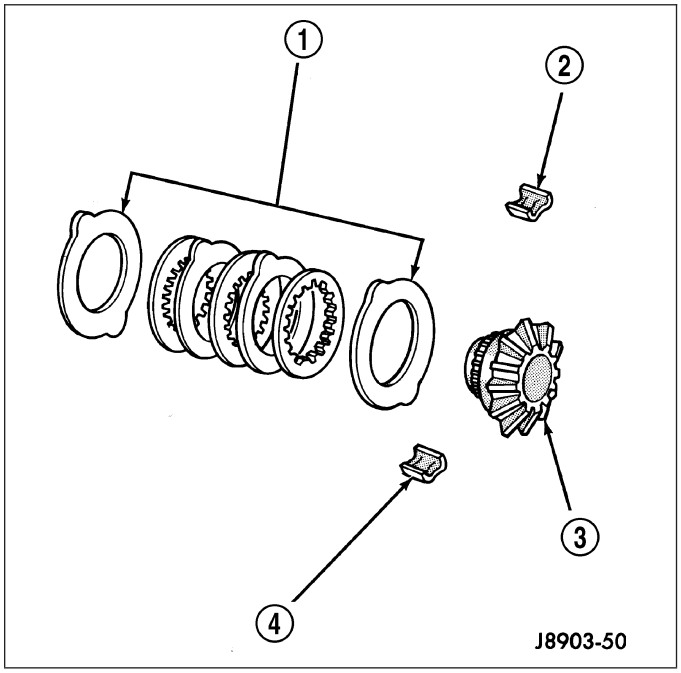

OPERATION

This differentials clutches are engaged by two concurrent forces. The first being the preload force exerted through Belleville spring washers within the clutch packs (6) (8). The second is the separating forces generated by the side gears (7) as torque is applied through the ring gear.

This design provides the differential action needed for turning corners and for driving straight ahead during periods of unequal traction. When one wheel looses traction, the clutch packs transfer additional torque to the wheel having the most traction. This differential resist wheel spin on bumpy roads and provide more pulling power when one wheel looses traction. Pulling power is provided continuously until both wheels loose traction. If both wheels slip due to unequal traction, Trac-lok® operation is normal. In extreme cases of differences of traction, the wheel with the least traction may spin.

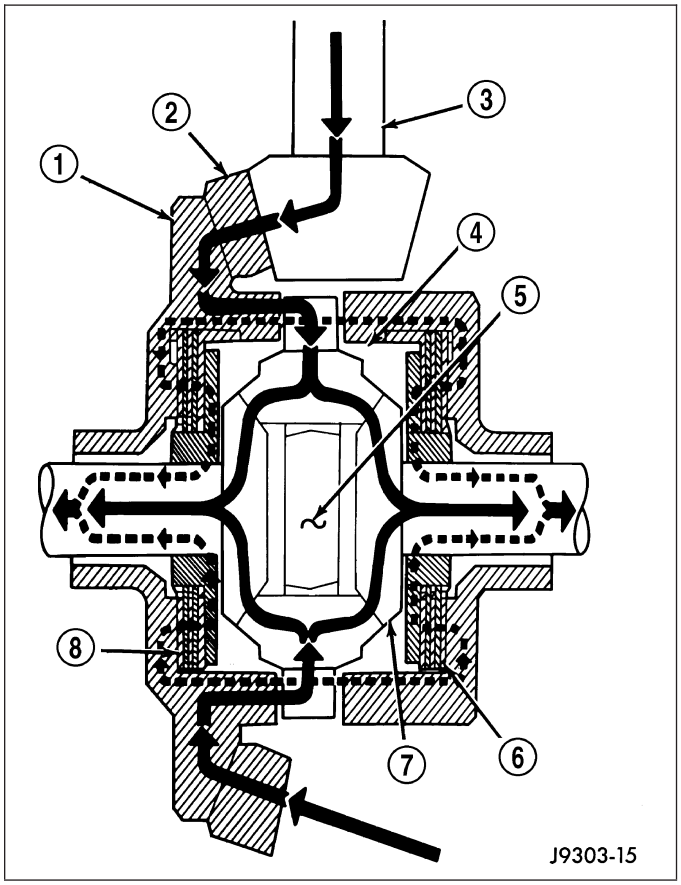

DIAGNOSIS AND TESTING

DIFFERENTIAL-TRAC-LOK

DIFFERENTIAL TEST

The most common problem is a chatter noise when turning corners. Before removing the unit for repair, drain, flush and refill axle with specified lubricant and 118 ml (4 ounce) of Mopar® Limited Slip Additive.

After changing lubricant, drive vehicle and make 10 to 12 slow figure-eight turns. This will pump lubricant through the clutches. This will correct the chatter noise condition in most instances. If chatter persists, clutch damage could have occurred.

The differential can be tested without removing the differential case by measuring rotating torque. Make sure brakes are not dragging during this measurement.

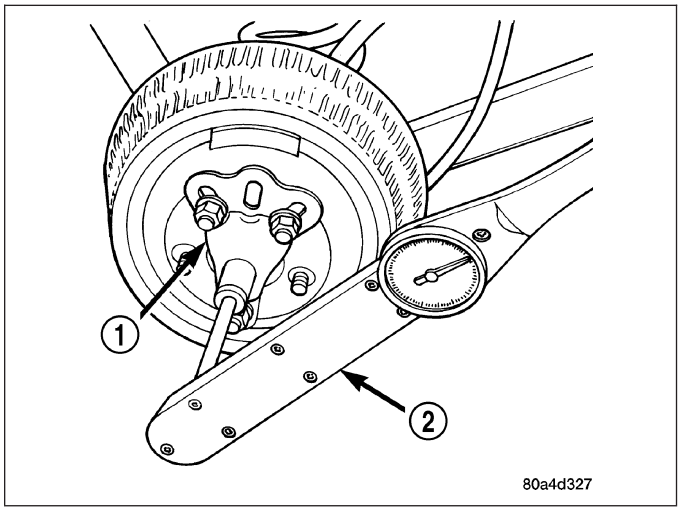

1. Place blocks in front and rear of both front wheels.
2. Raise one rear wheel until it is completely off the ground.
3. Engine off, transmission in neutral, and parking brake off.
4. Remove wheel and bolt Special Tool 6790 (1) or equivalent tool to studs.
5. Use torque wrench (2) on special tool to rotate wheel and read rotating torque.

6. If rotating torque is less than 41 N·m (30 ft. lbs.) or more than 271 N·m (200 ft. lbs.) on either wheel the unit should be serviced.

REMOVAL

1. Remove drain plug (2) from differential cover (1) and drain lubricant.
2. Clean housing cavity with a flushing oil, light engine oil or lint free cloth.

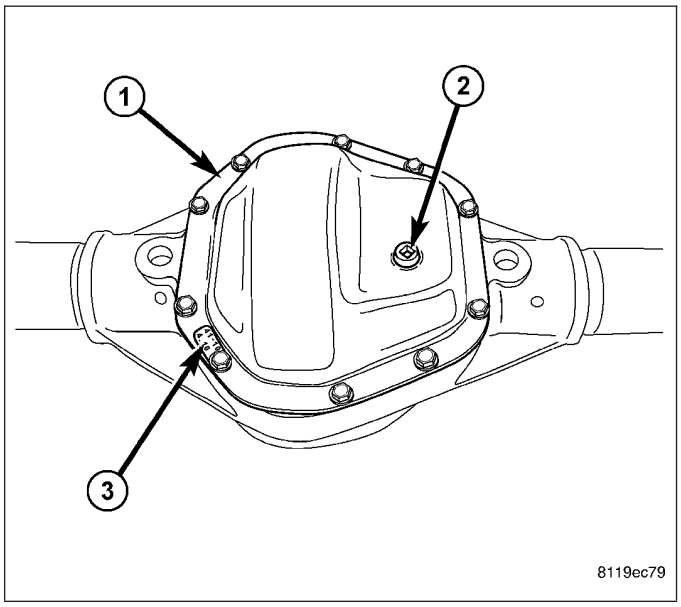

3. Remove pinion mate shaft (1) lock screw (2).

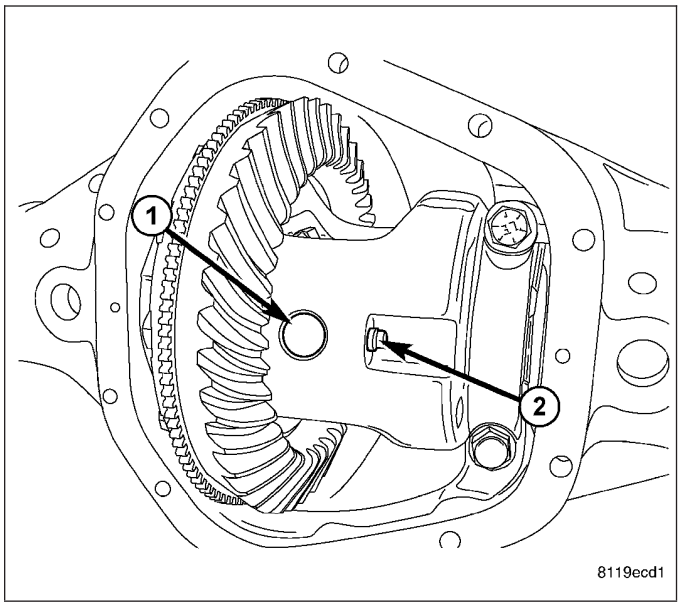

4. Remove pinion mate shaft (2).

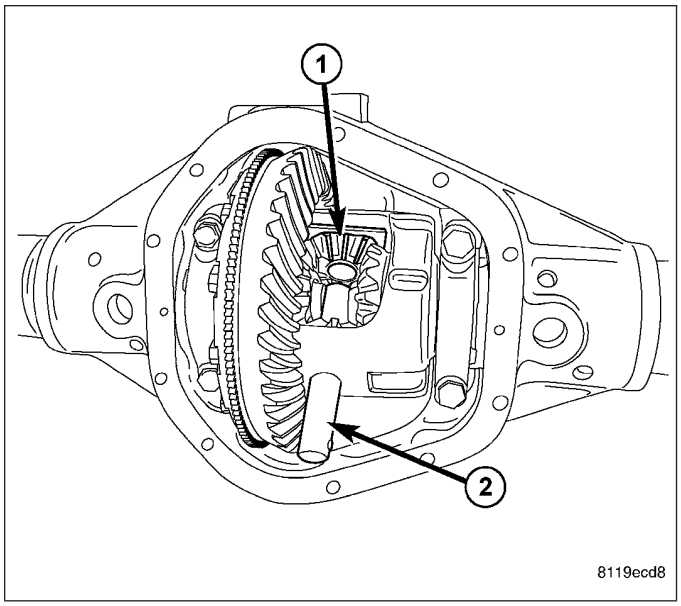

5. Push axle shafts (1) inward and remove axle shafts C-locks (2).
6. Remove axle shafts.

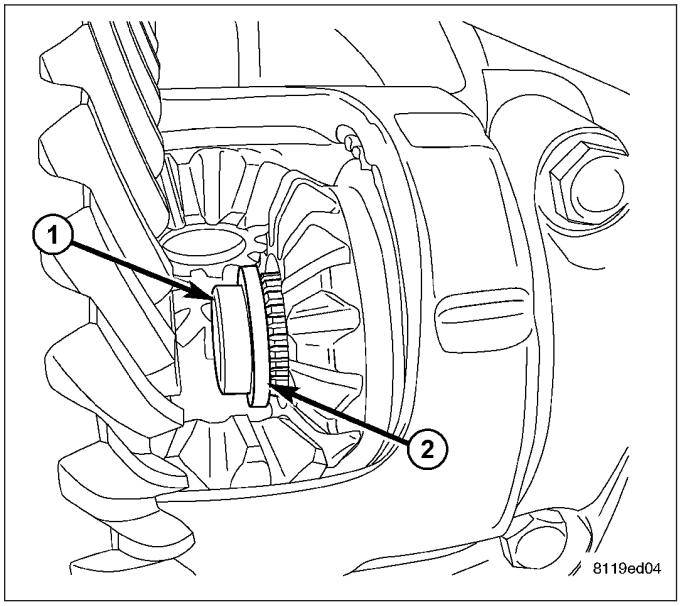

7. Note bearing cap and housing sealing surface location marks (1).
8. Remove differential bearing caps.

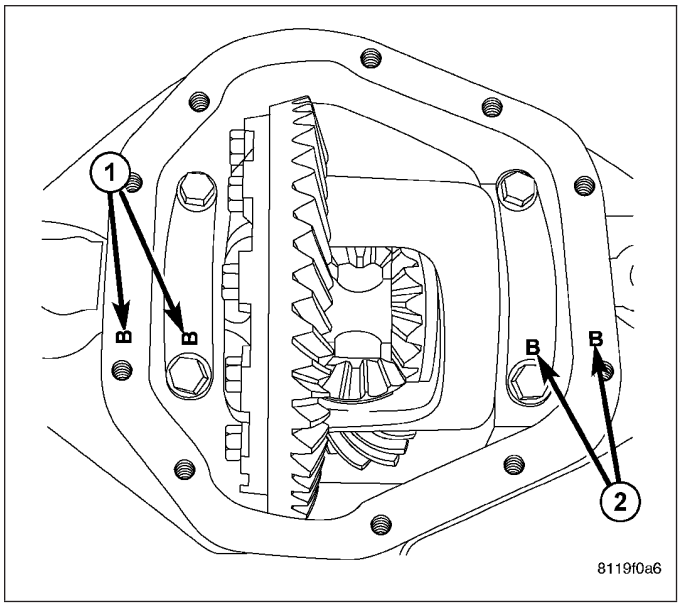

9. Position Spreader W-129-B (4) with tool dowel pins (2) seated in the locating holes. Install holddown clamps (3) and tighten turnbuckle (5) finger-tight.

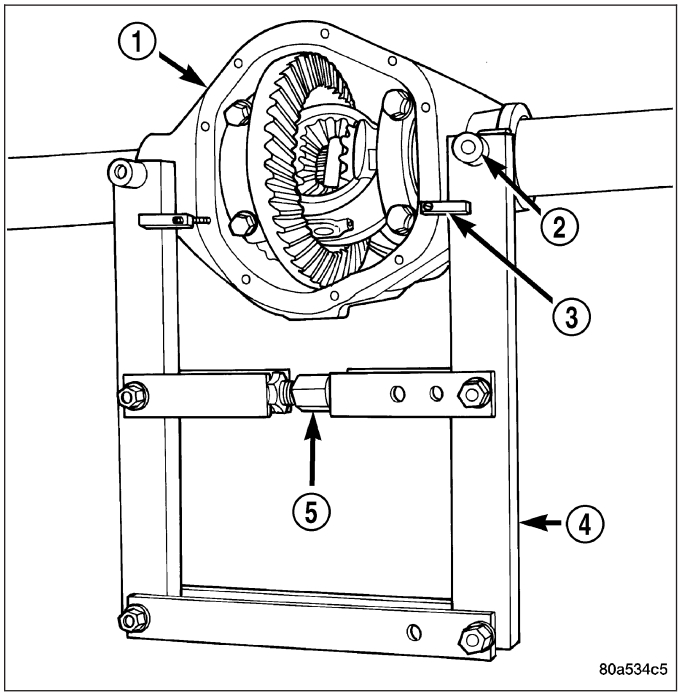

10. Install Pilot Stud C-3288-B (5) on left side of the housing and attach dial indicator (2) to the pilot stud. Load indicator plunger against the opposite side of the housing and zero indicator.

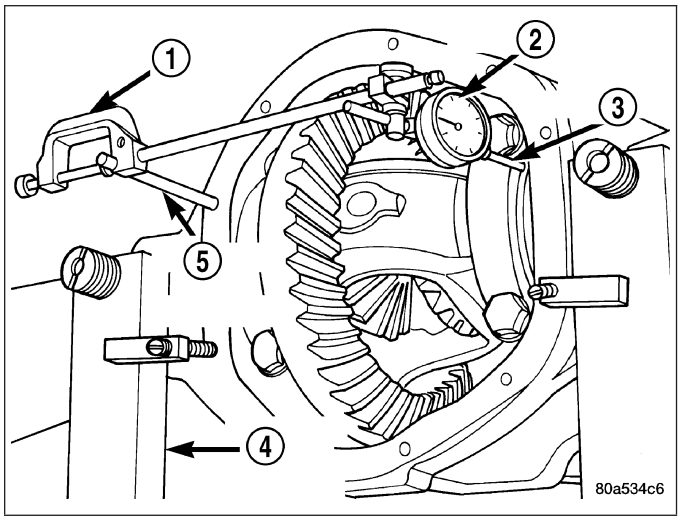

11. Spread (2) housing while measuring the distance with the dial indicator (1).

CAUTION: Never spread the housing over 0.50 mm (0.020 in). If housing is over-spread, it could be distorted or damaged.

12. Remove dial indicator.
13. Hold differential case in position and remove differential bearing caps.
14. Pry differential case loose from housing.

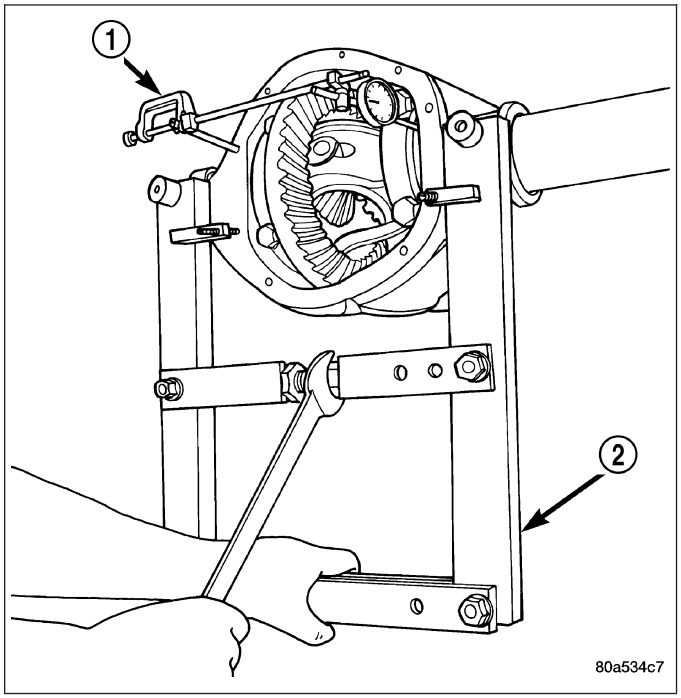

15. Remove case (2) from housing (1) and tag bearing cups (3) and shims location.
16. Remove spreader.

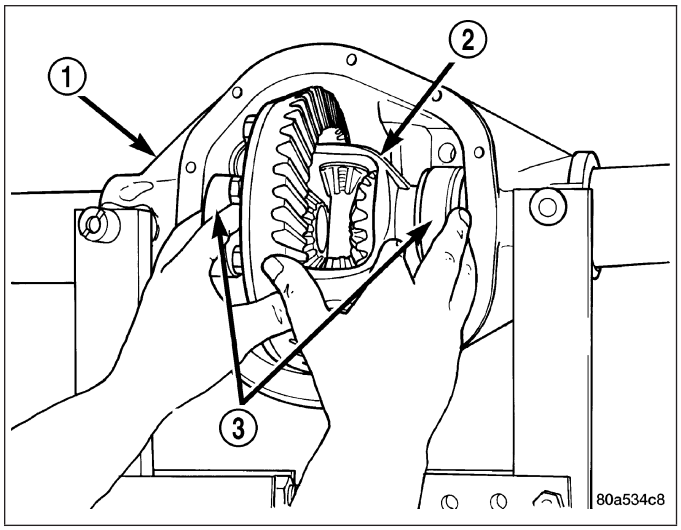

DISASSEMBLY

1. Clamp Holding Fixture 9346 (1) in vise (2) and set differential case (3) on fixture.
2. Remove pinion gear mate shaft screw.
3. Remove pinion gear mate shaft.

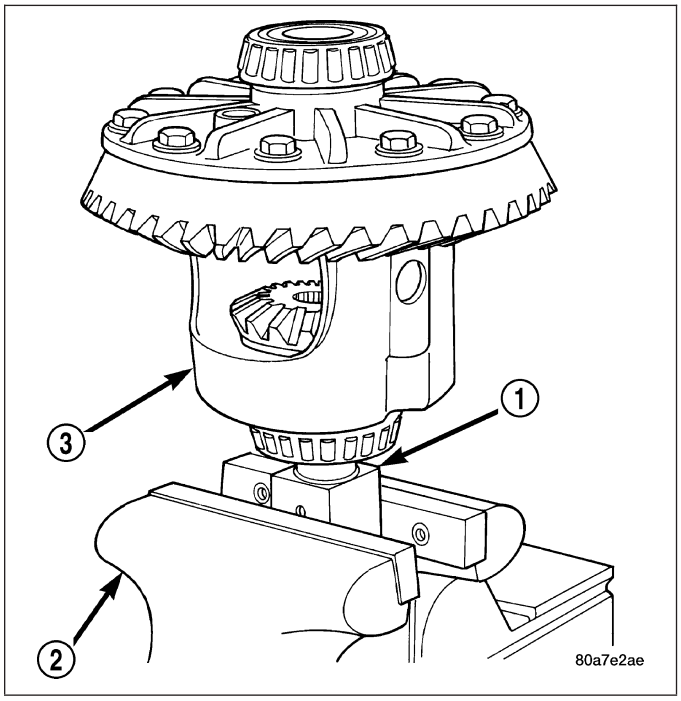

4. Lubricate and install disc (3), that is not threaded from Trac-Lok® Tool Kit 6960 into the lower side gear (1).

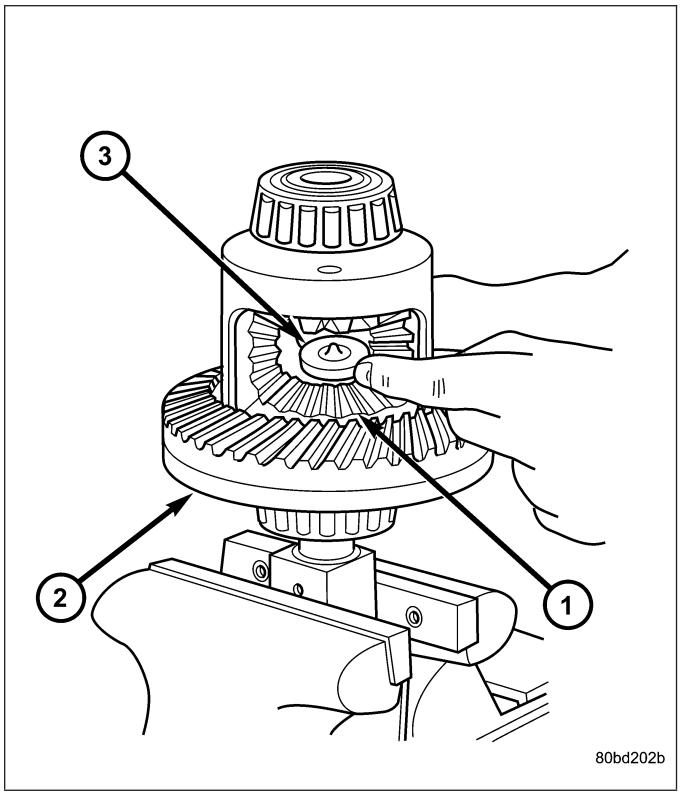

5. Install threaded disc (6) from Trac-Lok® Tool Kit 6960 into top side gear. Thread forcing screw (5) from Trac-Lok® Tool Kit 6960 through top disc until it comes in contact with lower disc (4).
6. Position a small screw driver (3) in slot of top disc (2) to prevent disc from turning.

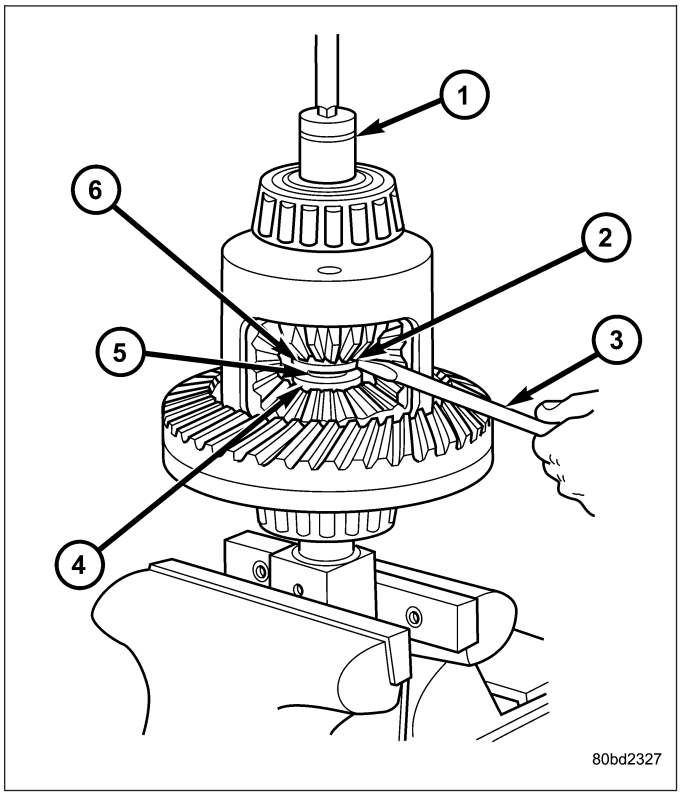

7. Tighten forcing screw (2) with torque wrench (1) to 122 N·m (90 ft. lbs.) maximum to compress Belleville springs in clutch packs.

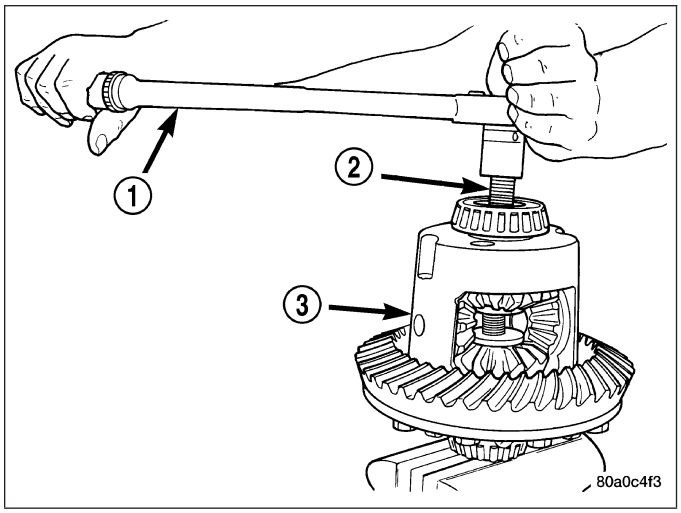

8. With a feeler gauge (2) remove thrust washers (1) from behind the pinion gears.

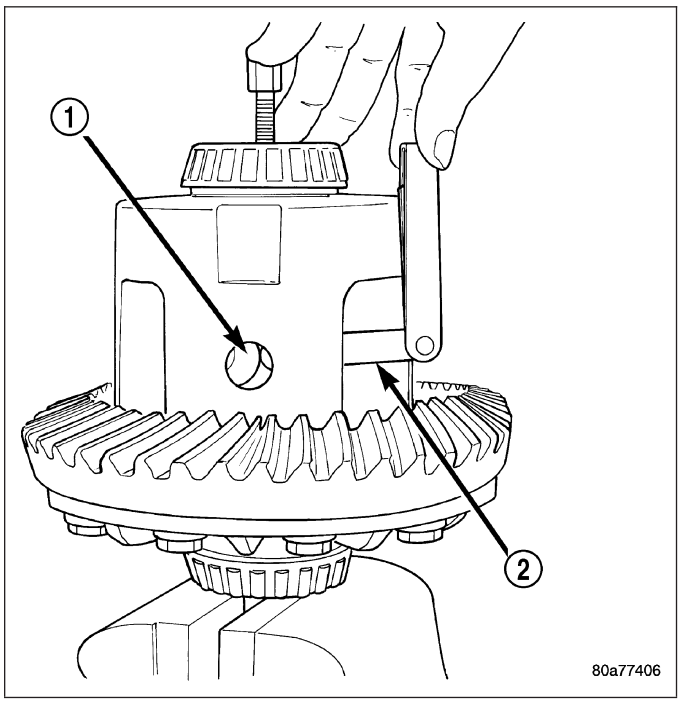

9. Insert turning bar (2) from tool kit into pinion mate shaft hole in the case.
10. Loosen forcing screw in small increments until the clutch pack tension is relieved and differential case can be turned using turning bar.
11. Rotate differential case until the pinion gears (1) can be removed.

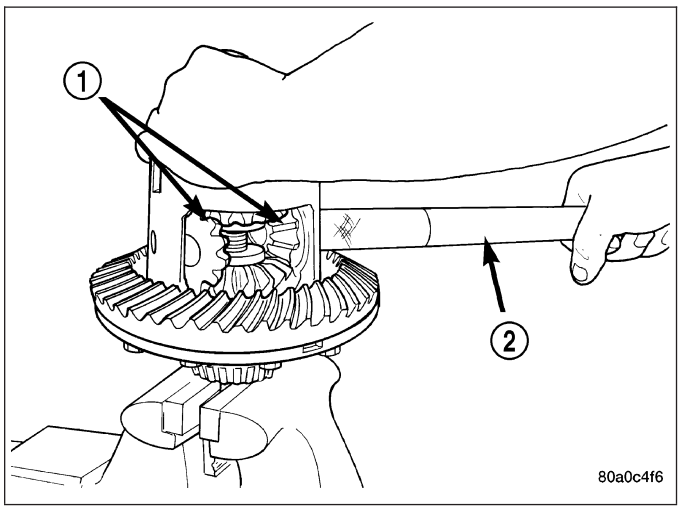

12. Remove pinion gears from differential case.

13. Remove forcing screw and discs.
14. Remove top side gear (3), clutch pack (3) and retainer (2).

NOTE: Keep plates in correct order during removal.

15. Remove differential case from fixture. Remove lower side gear, clutch pack retainer and clutch pack.

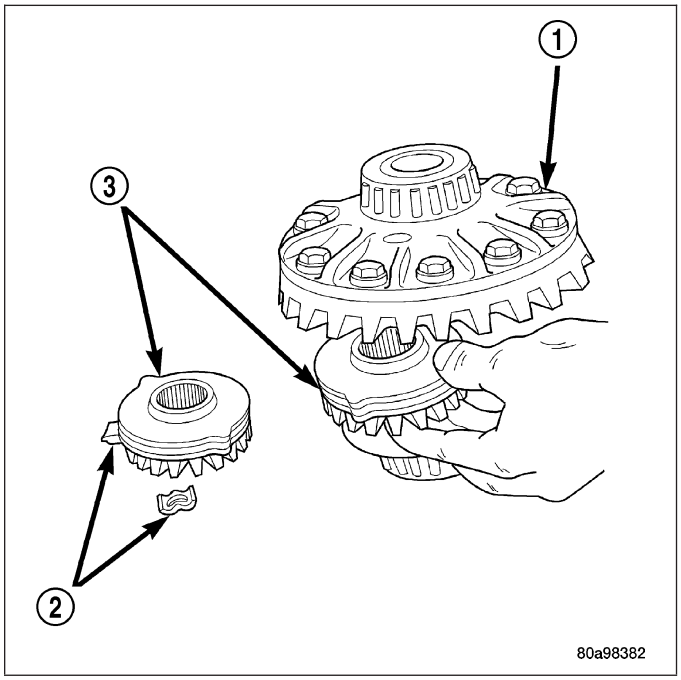

ASSEMBLY

Clean all components in cleaning solvent and dry components with compressed air. Inspect clutch pack plates (1) for wear, scoring or damage. Replace both clutch packs if any one component in either pack is damaged. Inspect side gears and pinions. Replace any gear that is worn, cracked, chipped or damaged. Inspect differential case and pinion shaft. Replace if worn or damaged.

NOTE: New Plates and discs with fiber coating (no grooves or lines) must be presoaked in Friction Modifier before assembly. Soak plates and discs for a minimum of 20 minutes.

1. Lubricate each component with gear lubricant before assembly.
2. Assemble clutch discs (1) into packs and secure disc packs with retaining clips (4).
3. Position differential case on the Holding Fixture 9346.

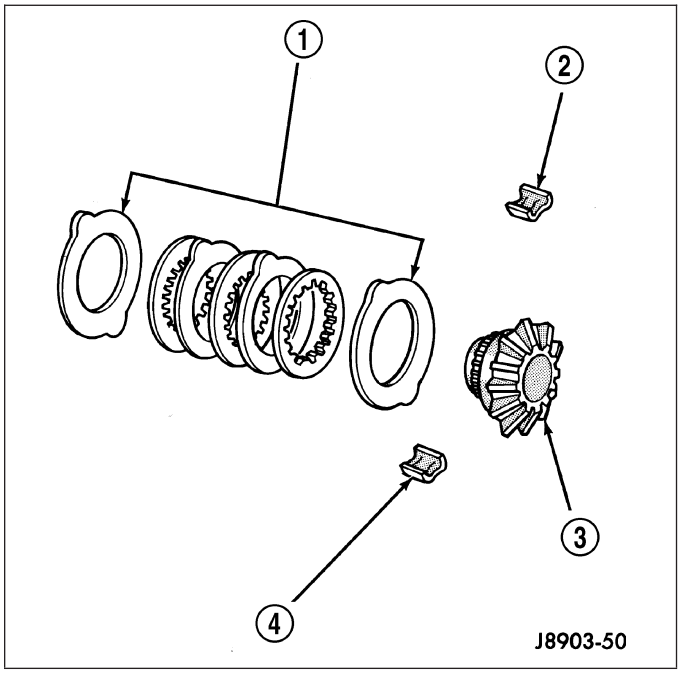

4. Position assembled clutch disc packs on the side gear hubs.
5. Install clutch pack (2) and side gear (2) in the differential case (1) and verify clutch pack retaining clips are in position.
6. Install lubricated disc from Trac-Lok® Tool Kit 6960 into lower side gear.

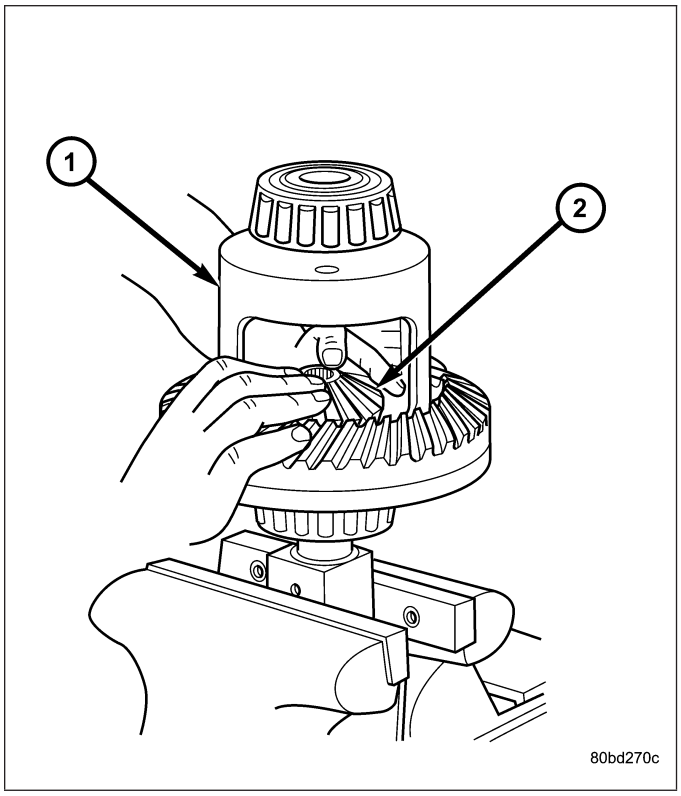

7. Install upper side gear (1) and clutch disc pack (1) and verify clutch pack retaining clips are in position.
8. Hold assembly in position and install threaded disc from tool kit into top side gear.
9. Install forcing screw from Trac-Lok® Tool Kit 6960 and tighten screw to slightly compress clutch disc.
10. Place pinion gears in position in side gears and verify that the pinion mate shaft hole is aligned.
11. Rotate case with turning bar until pinion mate shaft holes in pinion gears align with holes in case.

NOTE: It may be necessary to slightly tighten the forcing screw in order to install the pinion gears.

12. Tighten forcing screw to 122 N·m (90 ft. lbs.) maximum to compress the Belleville springs.
13. Lubricate and install thrust washers behind pinion gears and align washers with a small screw driver. Insert mate shaft into each pinion gear to verify alignment.
14. Remove Forcing Screw, Discs and Threaded Adapter.

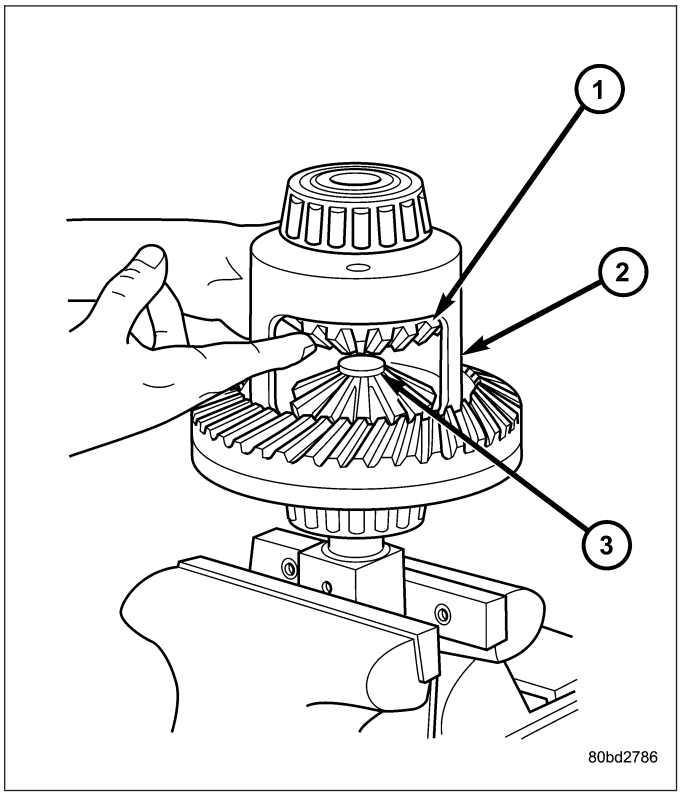

15. Install pinion gear mate shaft and align holes in shaft and case.
16. Install pinion mate shaft screw.

INSTALLATION

NOTE: If differential bearings or differential case are replaced, differential side bearing shim requirements may change.

1. Position Spreader W-129-B with tool dowel pins seated in the locating holes. Install hold down clamps and tighten the tool turnbuckle finger-tight.
2. Install Pilot Stud C-3288-B on left side of the differential housing and attach dial indicator to the pilot stud. Load the indicator plunger against the opposite side of the housing and zero dial indicator.
3. Spread housing while measuring the distance with the dial indicator.

CAUTION: Never spread the housing over 0.50 mm (0.020 in). Failure to follow these instructions will damaged the case.

4. Remove dial indicator.
5. Install differential into the housing. Tap differential case with a soft hammer (1) to ensure bearings are seated.
6. Remove spreader.

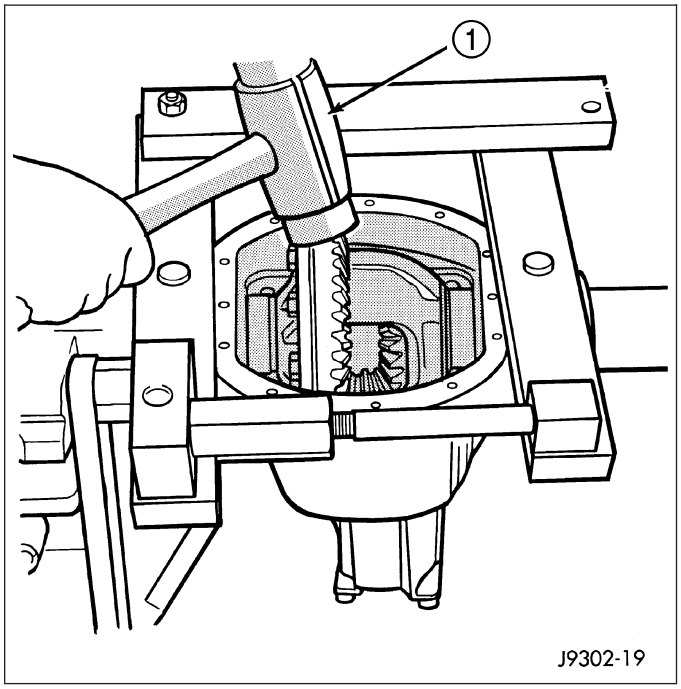

7. Install bearing caps in their original locations (1) (2) and tighten bearing cap bolts in a criss-cross pattern to 108 N·m (80 ft. lbs.).

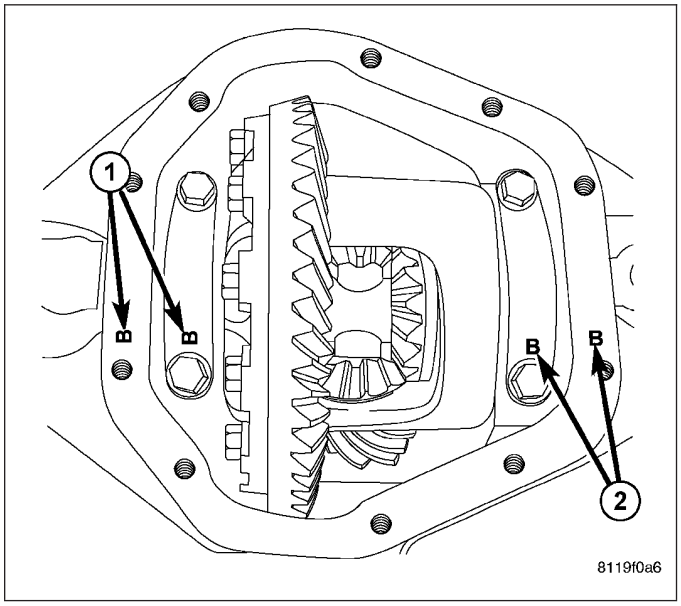

8. Install axle shafts.
9. Install axle shaft (1) C-locks (2).

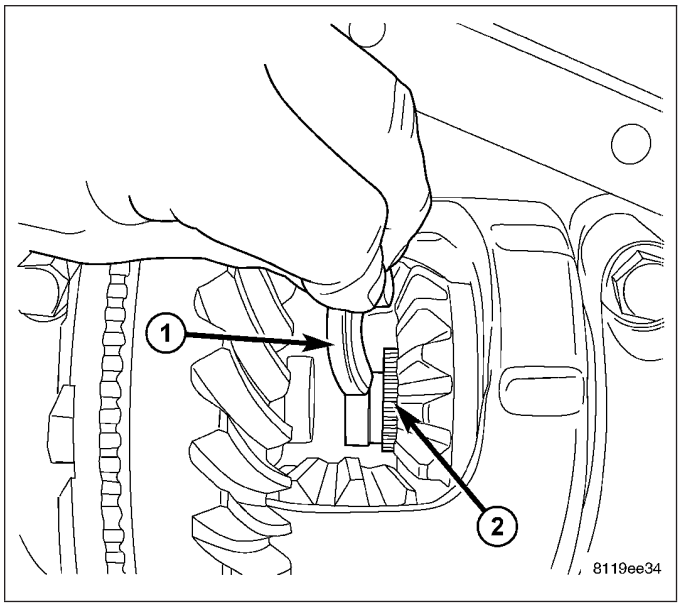

10. Install pinion mate shaft (1) and install mate shaft lock screw (2) and tighten to 27 N·m (20 ft. lbs.).

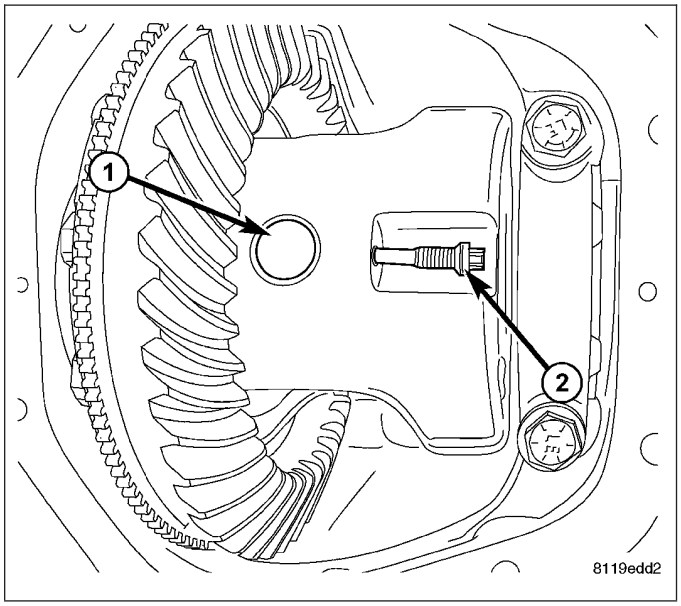

11. Apply a bead of orange Mopar Axle RTV sealant (2) or equivalent to the housing cover (1).

CAUTION: If housing cover is not installed within 3 to 5 minutes, the cover must be cleaned and new RTV applied. Failure to follow these instructions will result in a leak.

12. Install cover and tighten bolts in a criss-cross pattern to 48 N·m (35 ft. lbs.).
13. Fill differential lubricant to bottom of the fill plug hole.
14. Install fill hole plug and tighten to 27 N·m (20 ft. lbs.).

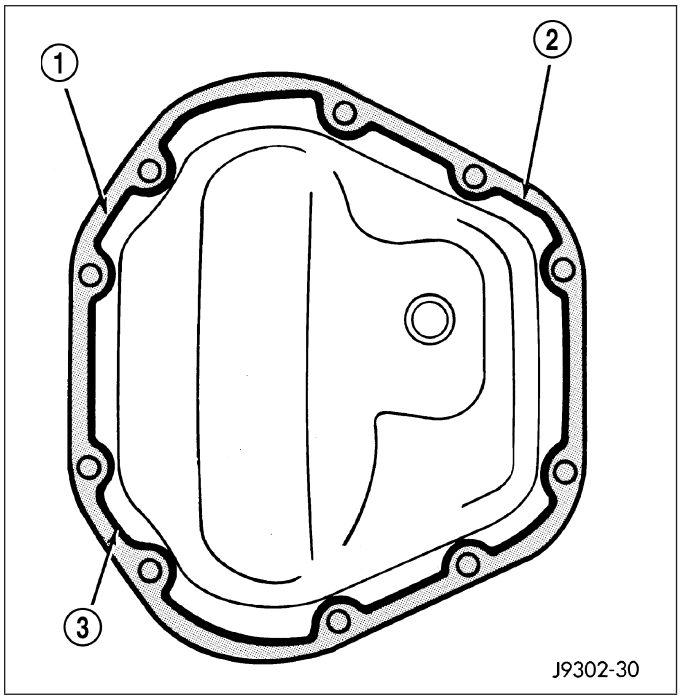

BEARING-DIFFERENTIAL CASE

REMOVAL

1. Remove differential case from housing.
2. Remove bearings (4) from differential case (5) with Puller/Press C-293-PA (1), Adapters C-293-62 (2) and Disc 8139-2 (3).

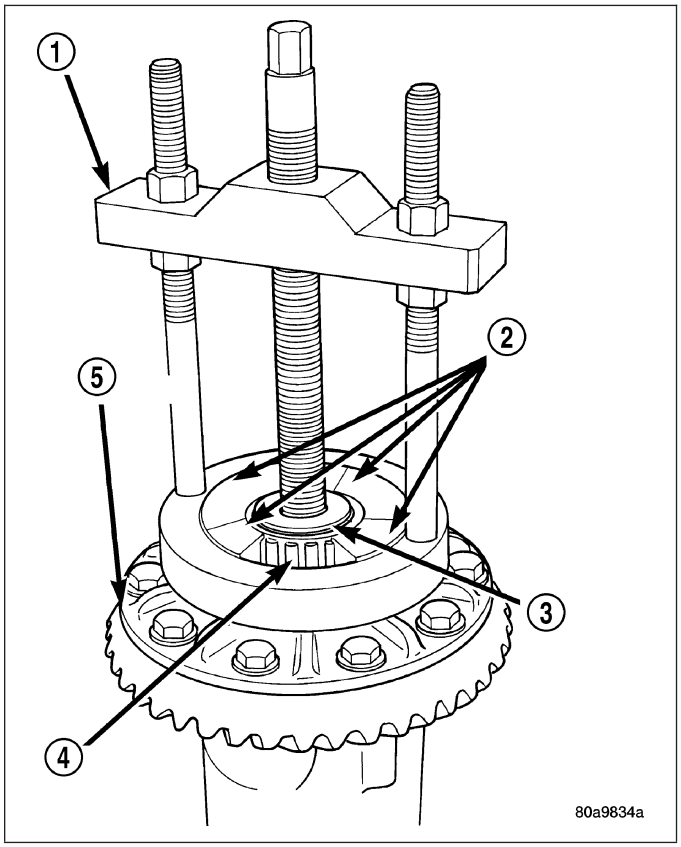

INSTALLATION

1. Install differential side bearings (3) with installer C-4190 (4) and Handle C-4171(1).
2. Install differential case (2) into the housing.

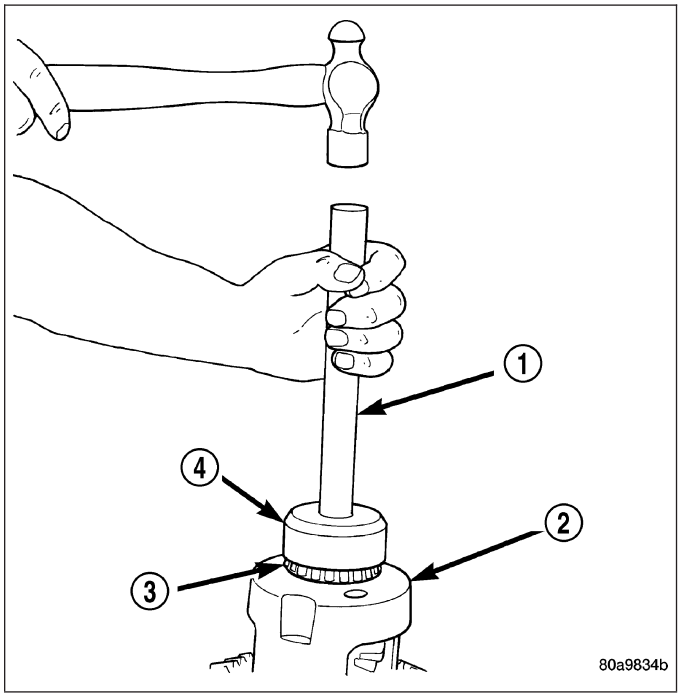

GEAR-PINION/RING

REMOVAL

NOTE: The ring and pinion gears are service as a matched set. Never replace ring gear without replacing the matched pinion gear.

1. Remove differential from housing.
2. Place differential case (1) in a vise with soft metal jaw protectors.
3. Remove bolts holding ring gear to differential case.
4. Drive ring gear (2) from the differential case (1) with a soft hammer (3).
5. Remove exciter ring from the differential case by slowly tapping the ring with a brass drift.

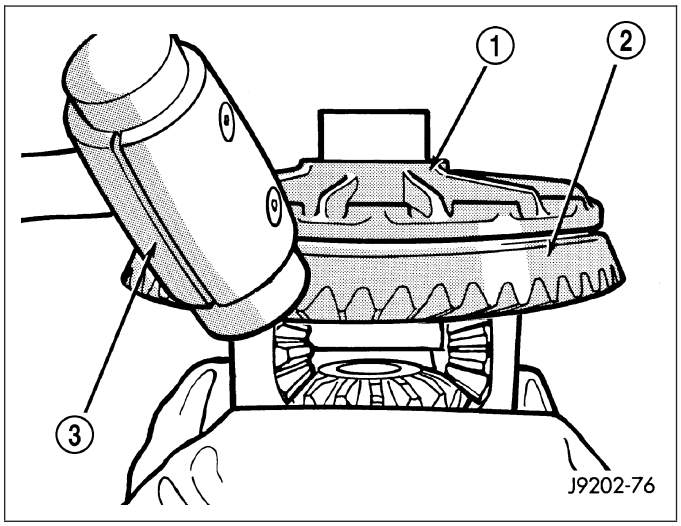

6. Hold yoke with Yoke Holder 6719A and remove pinion yoke nut and washer.
7. Remove pinion yoke (2) with Remover C-452 (3) and Flange Wrench C-3281(1).

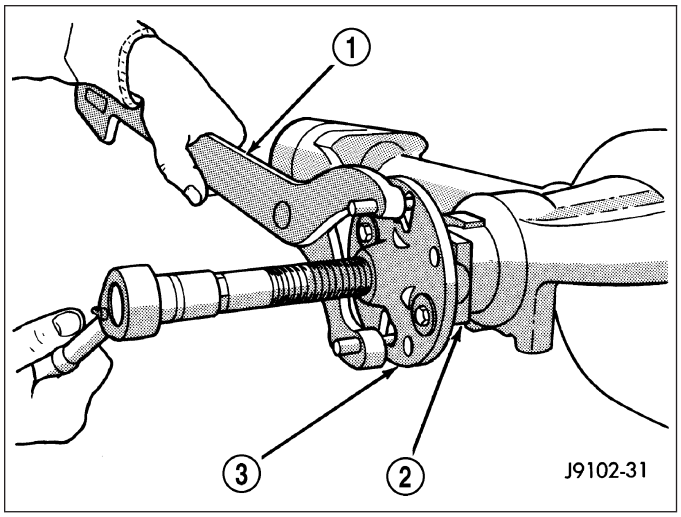

8. Remove pinion gear from housing with a soft hammer (1).

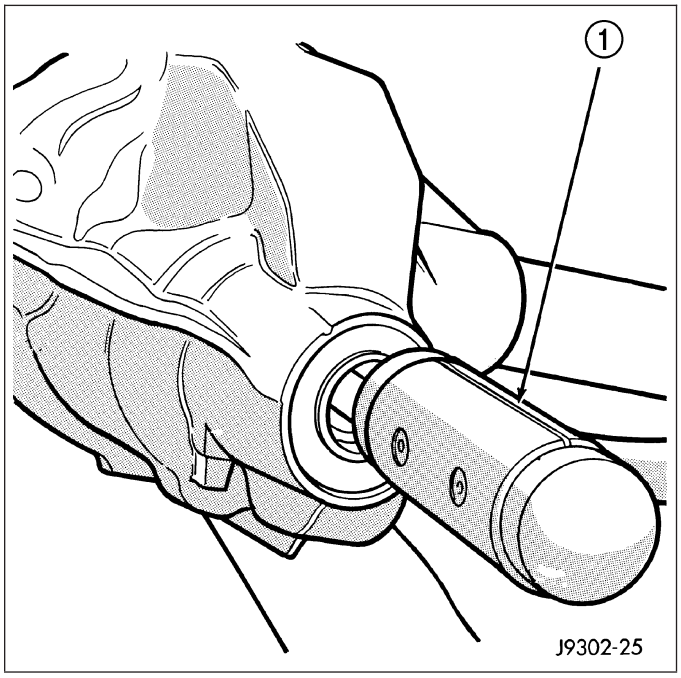

9. Remove pinion seal with a slide hammer or suitable pry bar.
10. Remove oil slinger (1) and front pinion bearing from housing (2).

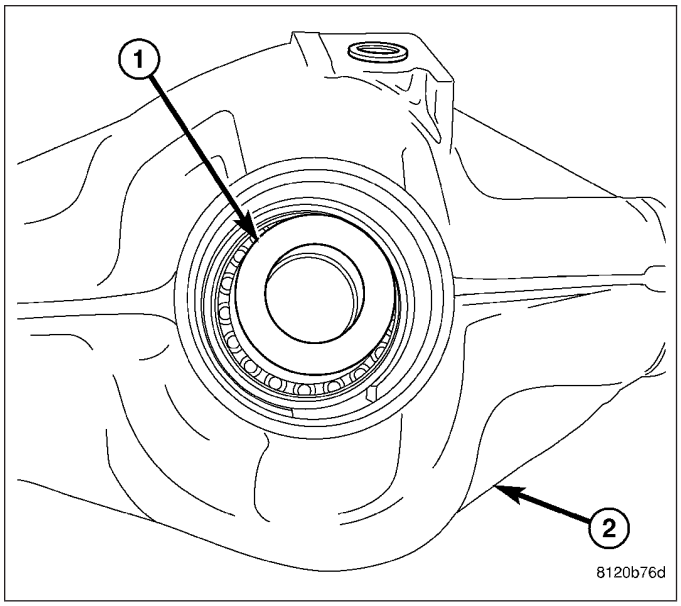

11. Remove front pinion bearing cup with Remover D-158 (1) and Handle C-4171(2).

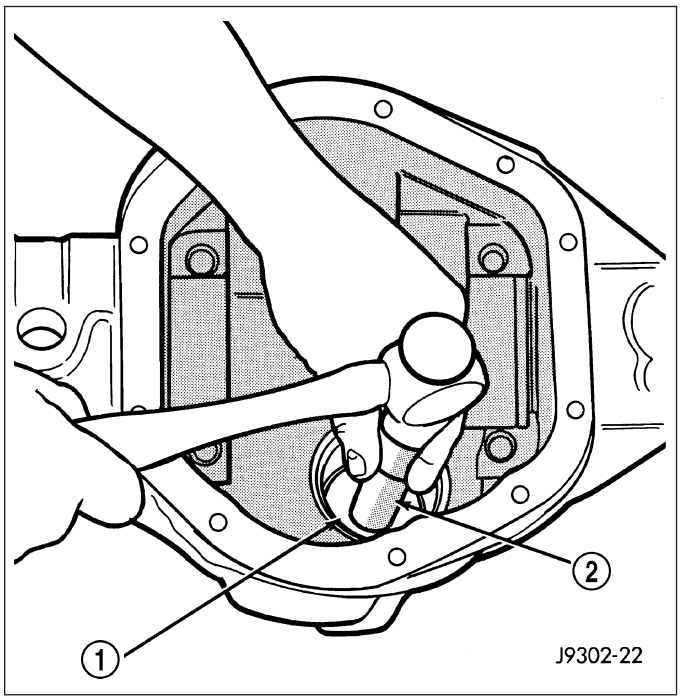

12. Remove rear bearing cup with Remover D-162 (1) and Handle C-4171 (2).

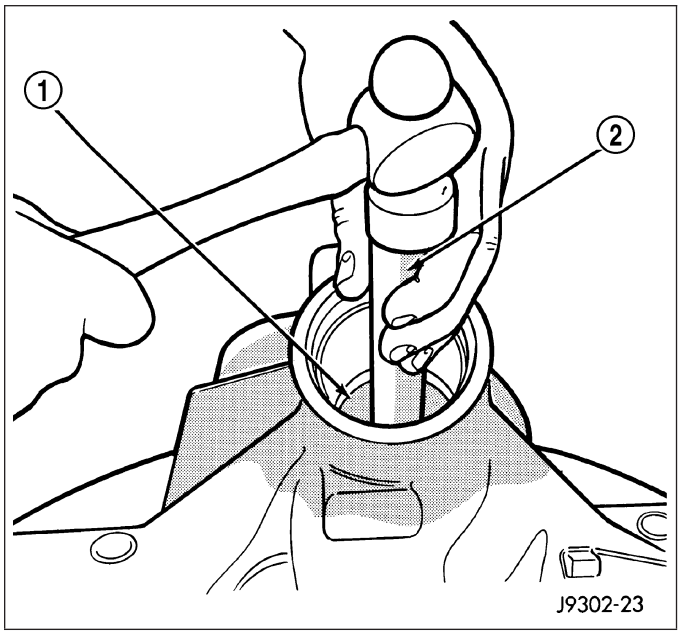

13. Remove pinion preload shims (1) from pinion shaft (2).

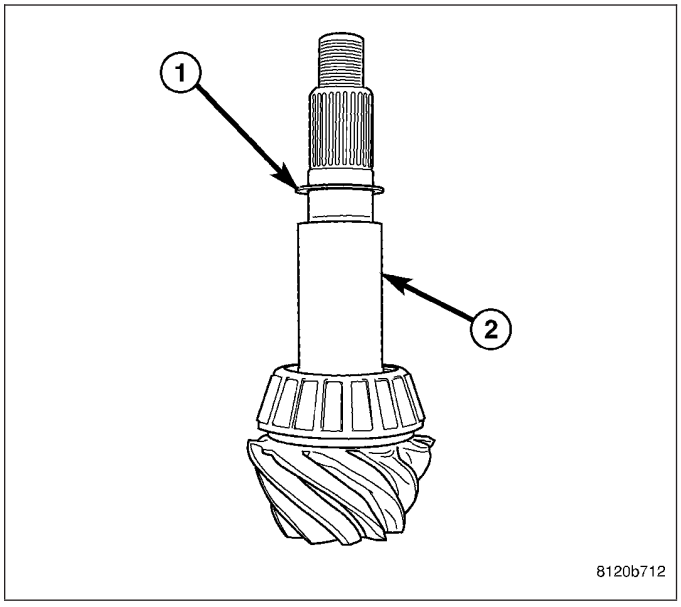

14. Remove rear pinion bearing with Puller/Press C-293-PA (1) and Adapters C-293-37 (3).

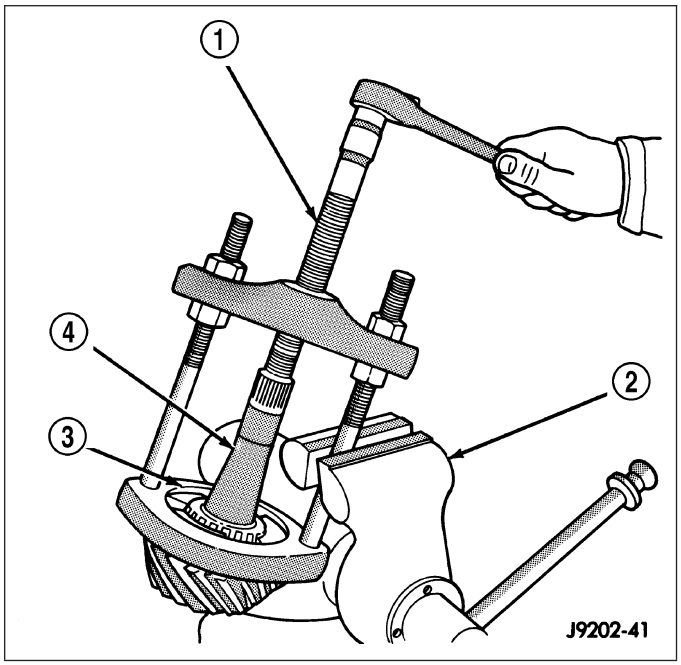

15. Remove pinion depth shims (2) from pinion shaft (1) and record shim thickness.

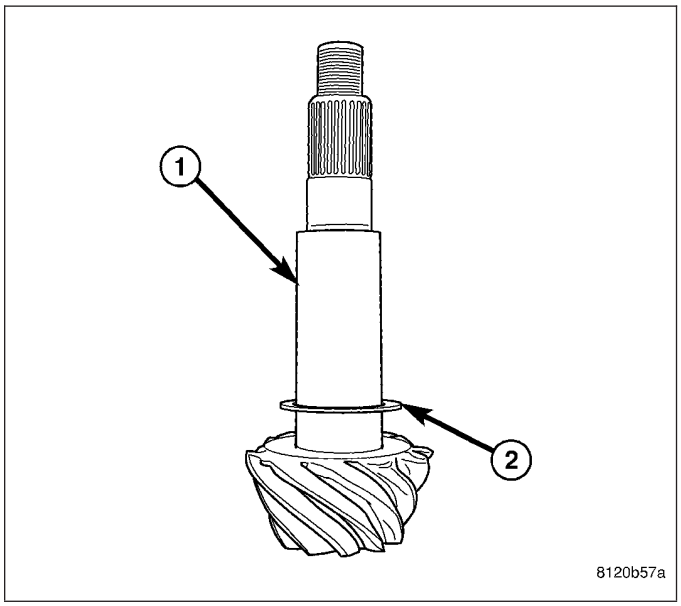

INSTALLATION

1. Apply Mopar Door Ease stick or equivalent lubricant to outside surface of bearing cups.
2. Install rear pinion bearing cup with Installer D-111 (1) and Handle C-4171 (2).

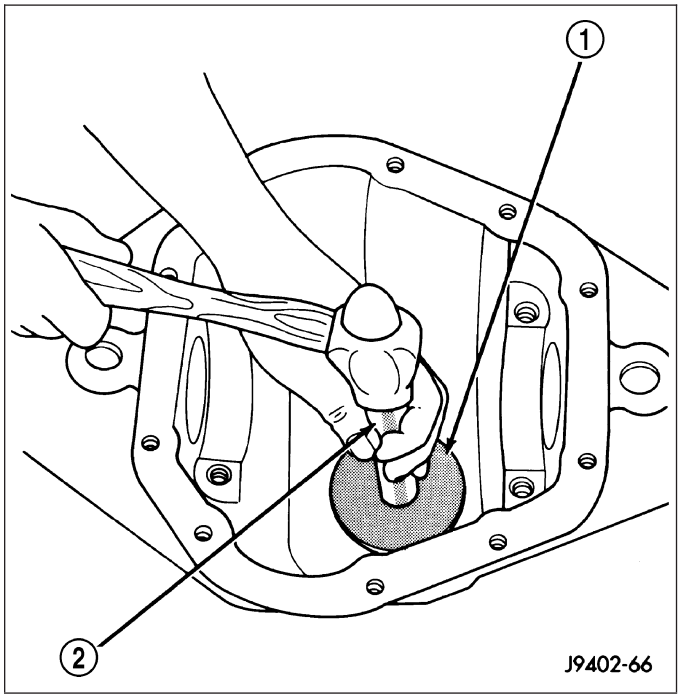

3. Install front pinion bearing cup with Installer D-146 (1) and Handle C-4171 (2).

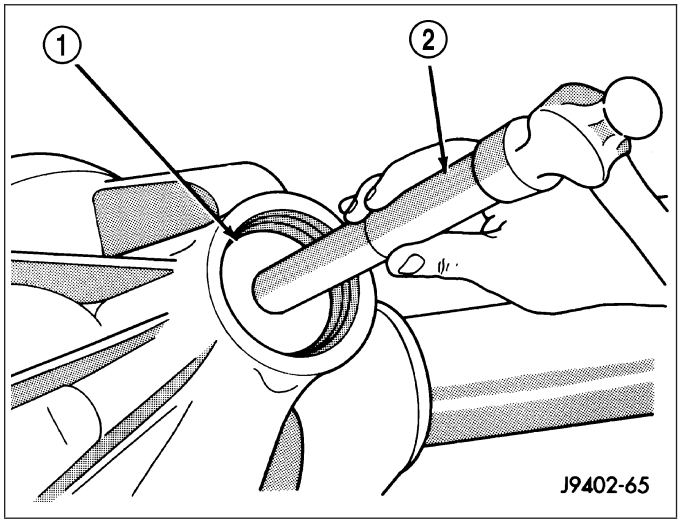

4. Install front pinion bearing (1) into housing (2).

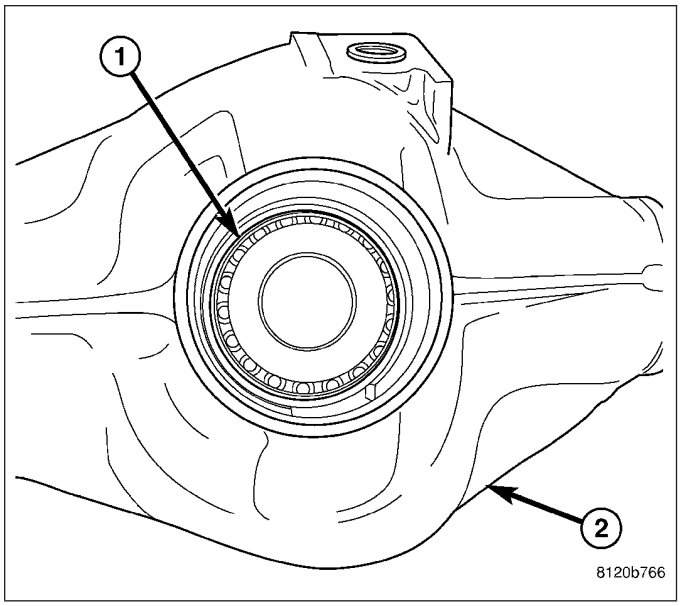

5. Install oil slinger (1) into housing (2).

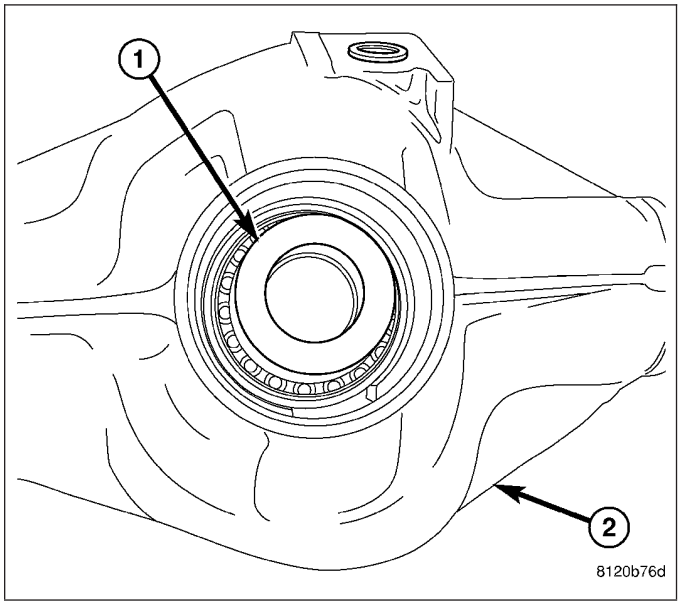

6. Apply a light coating of gear lubricant on the lip of pinion seal. Install **new** pinion seal (1) with Installer 9348 (2).

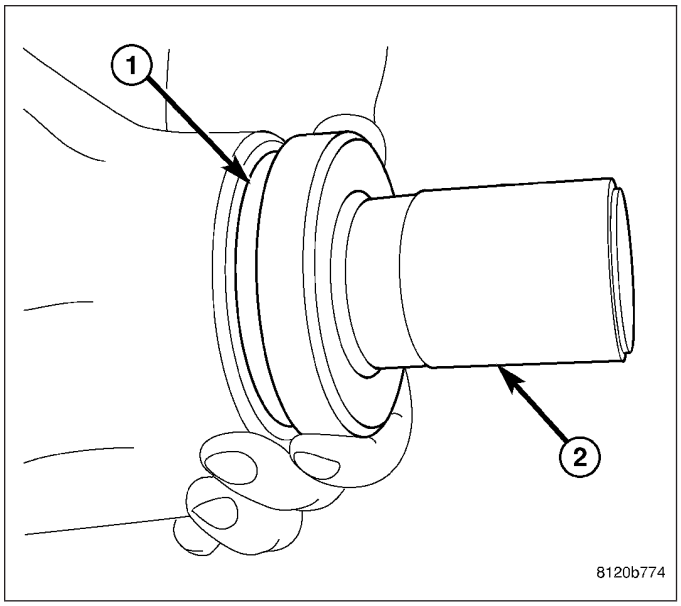

7. Install pinion depth shim (2) on pinion gear shaft (1).

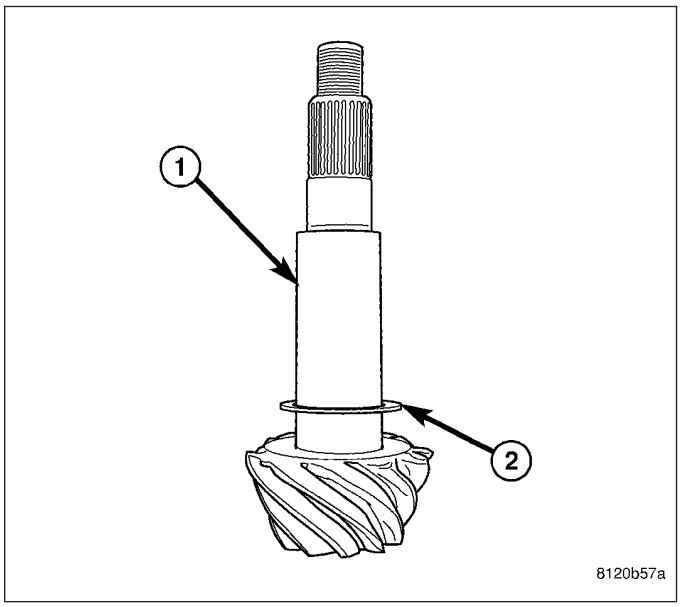

8. Install rear pinion bearing (2) on pinion gear with Installer 9347 (1) and a press.

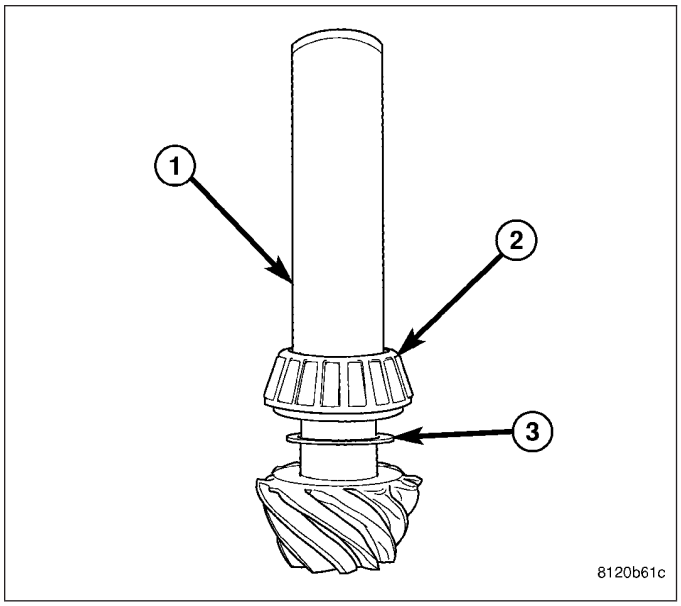

9. Install pinion preload shims (1) on pinion shaft (2).

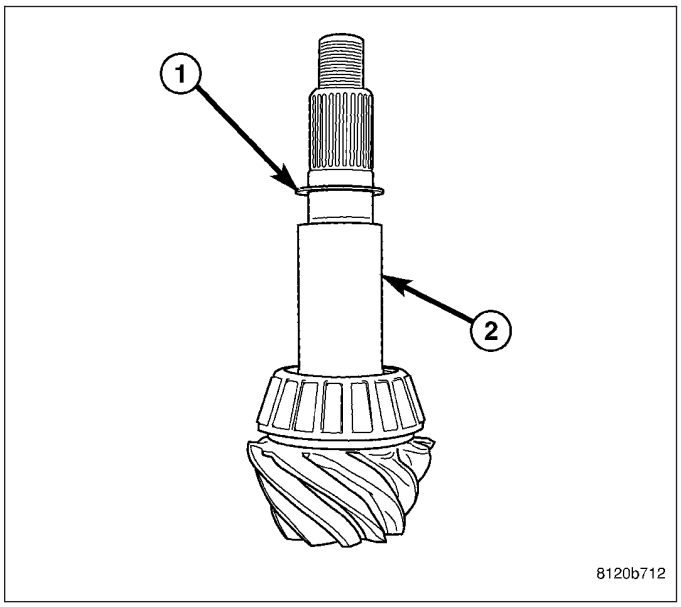

10. Install pinion gear in housing.
11. Install yoke (1) with Installer C-3718 (2).

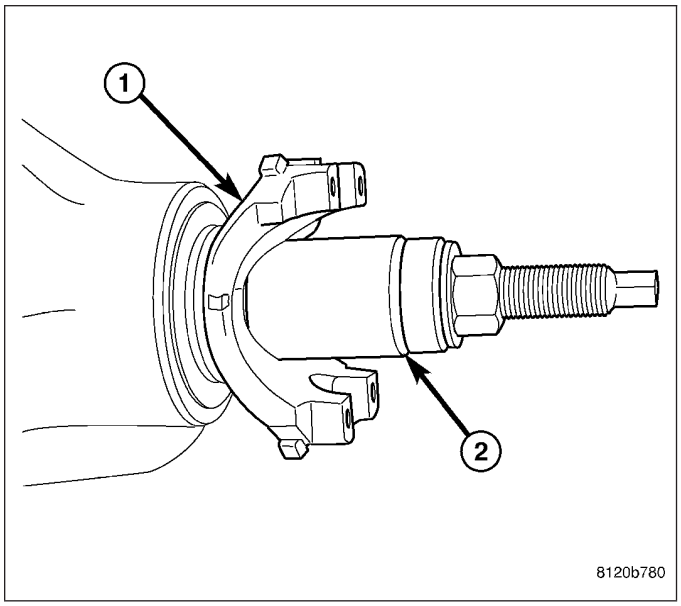

12. Install yoke (2) washer (1) on pinion.

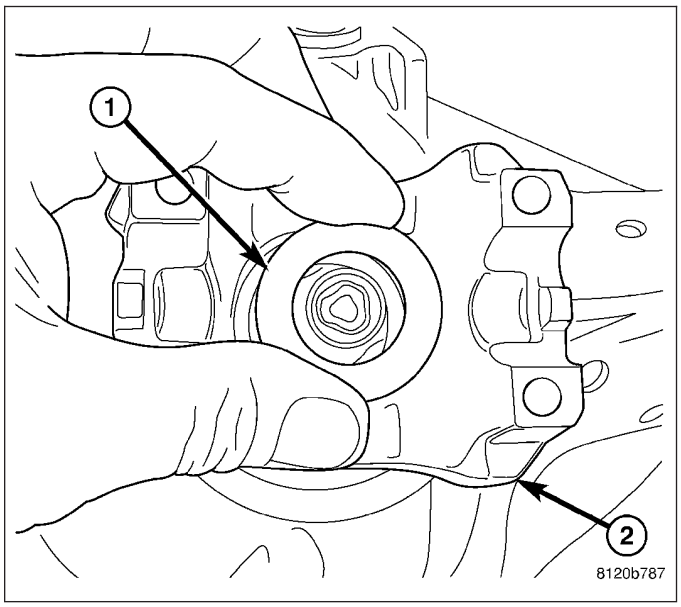

13. Install **new** pinion nut (1).

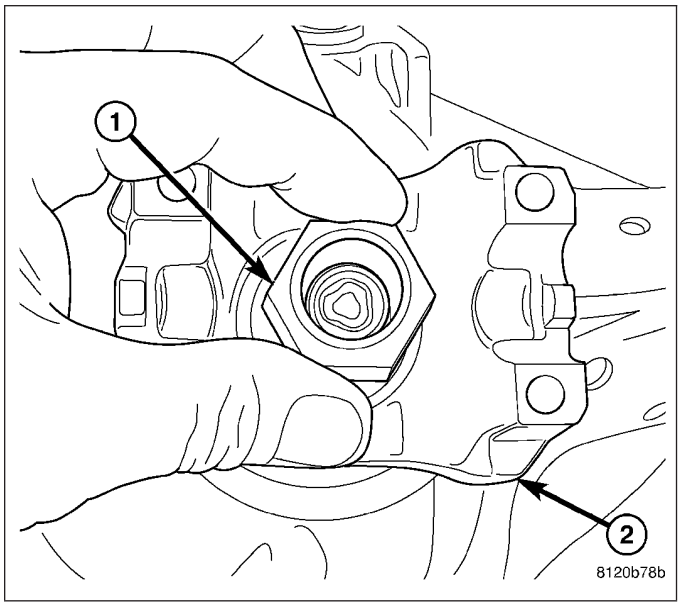

14. Tighten pinion nut with Yoke Holder 6719A to 292 N·m (215 ft. lbs.) minimum. **Do not over-tighten.** Maximum torque is 447 N·m (330 ft. lbs.).
15. Tighten pinion nut with Yoke Holder 6719A and a torque wrench set at 447 N·m (330 ft. lbs.). Slowly tighten the nut in 6.8 N·m (5 ft. lbs.) increments until the rotating torque is achieved. Measure rotating torque with torque wrench (1) frequently.
16. Pinion rotating torque should be:
    - Original Bearings - 1 to 3 N·m (10 to 20 in. lbs.)
    - New Bearings - 1.7 to 3.9 N·m (15 to 35 in. lbs.)
17. Invert differential case in the vise.

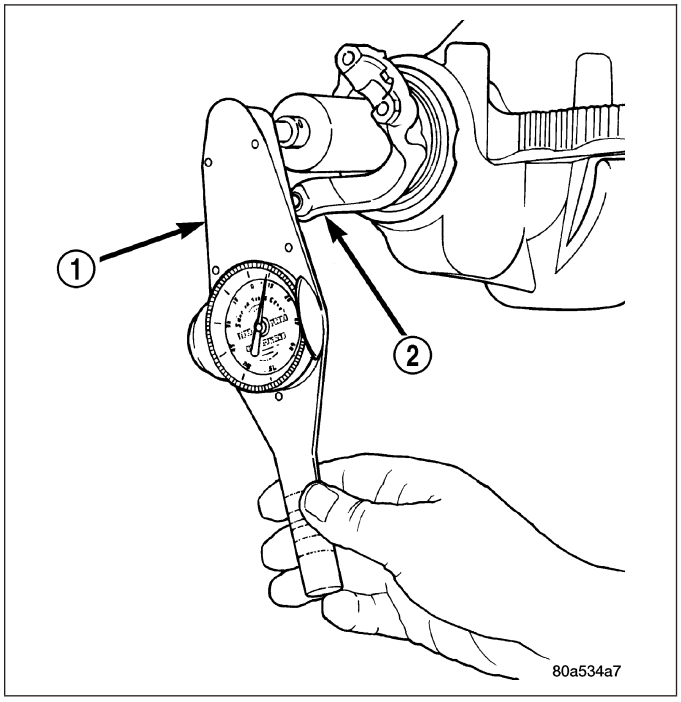

18. Position exciter ring on differential case slowly and evenly tap the exciter ring into position with a brass drift.
19. Install ring gear (2) and start two ring gear bolts (2) to provide case-to-ring gear bolt hole alignment.
20. Invert differential case in the vise.
21. Install **new** ring gear bolts and alternately tighten to 177 N·m (130 ft. lbs.).

CAUTION: Never reuse ring gear bolts. Failure to follow these instructions can fracture bolts causing damage.

22. Install differential into housing and verify backlash and gear contact pattern.
23. Measure Total Torque to Rotate with an inch pound torque wrench. This measurement should be the pinion torque to rotate plus 0.33 - 0.56 N·m (3 - 5 inch pounds).

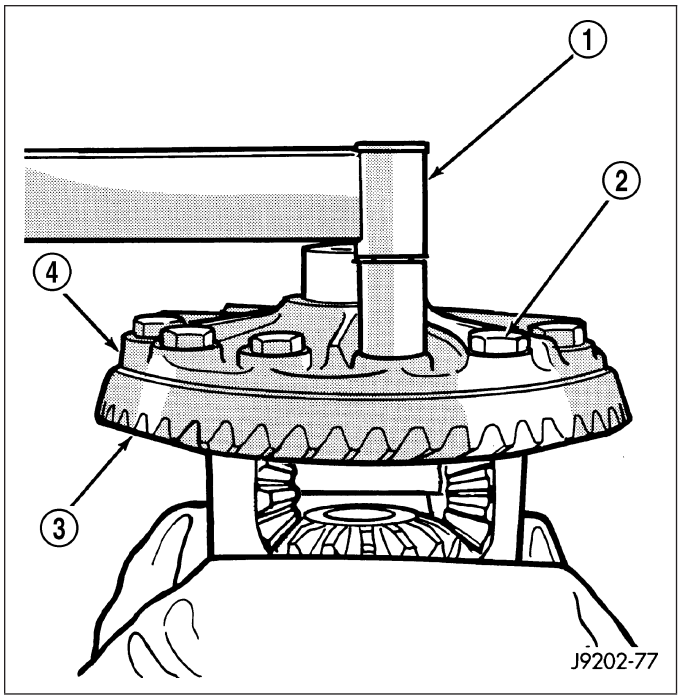

BRAKES

TABLE OF CONTENTS

page

BRAKES - ABS - ELECTRICAL DIAGNOSTICS 1
BRAKES - BASE - SERVICE INFORMATION 200

page

BRAKES - ABS - SERVICE INFORMATION 287

BRAKES - ABS - ELECTRICAL DIAGNOSTICS

TABLE OF CONTENTS

page

BRAKES - ABS - ELECTRICAL DIAGNOSTICS
DIAGNOSIS AND TESTING
*ABS VERIFICATION TEST — VER 1 3
*APS VERIFICATION TEST — VER 1 4
BODY STYLE MISMATCH — 85 5
BRAKE SWITCH CIRCUIT — 81 6
ECU INTERNAL FAILURE -75 10
EXCESSIVE DUMP TIME — 69 11
FOUNDATION BRAKE — 78 13
INTERMITTENT SIGNAL FROM LEFT FRONT SENSOR — 27 17
INTERMITTENT SIGNAL FROM REAR SENSOR — 37 25
INTERMITTENT SIGNAL FROM RIGHT FRONT SENSOR — 27 33
LEFT FRONT SENSOR OPEN — 25 41
LEFT FRONT SENSOR SHORTED — 90 47
NO SIGNAL FROM LEFT FRONT SENSOR - 26 52
NO SIGNAL FROM REAR SENSOR - 36 60
NO SIGNAL FROM RIGHT FRONT SENSOR — 22 67
REAR SENSOR OPEN — 35 74
REAR SENSOR SHORTED — 93 80
RIGHT FRONT SENSOR OPEN — 21 85
RIGHT FRONT SENSOR SHORTED — 91 . . . 91
INTERNAL MAIN RELAY OPEN — 65 96
INTERNAL MAIN RELAY SHORTED — 66 . . 100
LEFT FRONT DUMP SOLENOID OPEN - 46 . 104
LEFT FRONT DUMP SOLENOID SHORTED - 48 109
LEFT FRONT ISOLATION SOLENOID OPEN - 45 114

page

LEFT FRONT ISOLATION SOLENOID SHORTED - 47 119
RIGHT FRONT DUMP SOLENOID OPEN - 42 124
REAR DUMP SOLENOID SHORTED - 53 . . . 129
REAR ISOLATION SOLENOID OPEN - 51 . . 134
REAR ISOLATION SOLENOID SHORTED - 53 139
RIGHT FRONT DUMP SOLENOID OPEN - 42 144
RIGHT FRONT DUMP SOLENOID SHORTED - 44 149
RIGHT FRONT ISOLATION SOLENOID OPEN - 41 154
RIGHT FRONT ISOLATION SOLENOID SHORTED - 43 159
MISMATCHED VIN — 84 164
NUMBER OF TONE RING TEETH OUT OF RANGE - 82 166
PUMP MOTOR CIRCUIT OPEN — 67 167
PUMP MOTOR STALLED — 68 172
RAM READ/WRITE — 71 177
REAR RESET SWITCH CLOSED — 63 178
ROM CHECKSUM – 71 179
TIRE REVS EPR MILE OUT OF RANGE . . . 180
WATCHDOG — 73 182
SYSTEM CONTROL MODE TMEOUT — 74 . 186
SYSTEM OVER/UNDER VOLTAGE - 96 189
*REPLACING THE ANTILOCK BRAKE MODULE 190
APS RELAY CONTROL CIRCUIT HIGH 191
APS RELAY CONTROL CIRCUIT LOW 194
APS RELAY CONTROL CIRCUIT OPEN 197

BRAKES - ABS - ELECTRICAL DIAGNOSTICS

DIAGNOSIS AND TESTING

*ABS VERIFICATION TEST — VER 1

Diagnostic Test

1. *ABS VERIFICATION TEST — VER 1

Turn the ignition off.
Connect all previously disconnected components and connectors.
Make sure all accessories are turned off and the battery is fully charged.
With the scan tool, clear DTCs in all modules.
Cycle the ignition off for 10 seconds, then on.
With the scan tool, select View DTCs in the ABS module.
If any DTCs have reset, perform the appropriate diagnostic procedure before continuing with this test.
If there are no DTCs present, road test the vehicle above 40 m.p.h. for at least two minutes.

CAUTION: Make sure braking capability is available before road testing the vehicle. During the test drive, perform several anti-lock braking stops.
With theDRBIII®, select View DTCs in the Anti-Lock Brake Module.

Are there any DTCs present?

Yes >> Perform the appropriate diagnostic procedure(s).

No >> Test Complete

*APS VERIFICATION TEST — VER 1

Diagnostic Test

1. *APS VERIFICATION TEST — VER 1

Turn the ignition off.

Connect all previously disconnected components and connectors.

Ensure all accessories are turned off and the battery is fully charged.

Ensure that the Ignition is on, and with the DRBIII®, erase all Diagnostic Trouble Codes from ALL modules. Start the engine and allow it to run for 2 minutes and fully operate the system that was malfunctioning.

Turn the ignition off and wait 5 seconds. Turn the ignition on and using the DRBIII, read DTC's from ALL modules.

If any Diagnostic Trouble Codes are present, return to Symptom list and troubleshoot new or recurring symptom.

If there are no DTC's present after turning ignition on, road test the vehicle for at least 5 minutes. Perform several antilock braking stops.

CAUTION: Ensure braking capability is available before road testing.

Again, with the DRBIII® read DTC's. If any DTC's are present, return to Symptom list.

If there are no Diagnostic Trouble Codes (DTC's) present, and the customer's concern can no longer be duplicated, the repair is complete.

Are any DTC's present or is the original concern still present?

Yes >> Perform the appropriate diagnostic procedure(s).

No >> Test Complete

BODY STYLE MISMATCH — 85

For a complete wiring diagram **Refer to Section 8W**.

- **When Monitored:**
  Ignition on.
- **Set Condition:**
  When both the traceability code number and body style can not be read from the NVRAM or they are invalid.

Possible Causes
WRONG CAB OR CAB NOT PROGRAMMED FROM THE FACTORY

Diagnostic Test

1. DTC VERIFICATION

NOTE: Diagnose and repair any Powertrain Control Module VIN or Communication DTCs before continuing with this test.

Turn the ignition on.

With the scan tool, clear DTCs.

Turn the ignition off.

Turn the ignition on.

With the scan tool, select View DTCs.

Does the DTC reset?

Yes >> Replace the Controller Antilock Brake in accordance with the Service Information. Refer to the symptom *Replacing the Controller Antilock Brake for additional information.

Perform ABS VERIFICATION TEST - VER 1. (Refer to 5 - BRAKES/ELECTRICAL - DIAGNOSIS AND TESTING)

No >> Use the scan tool to read DTCs in all other modules. If any communication DTCs are present, perform the appropriate diagnostic procedure. Refer to any Technical Service Bulletins that apply. If no problems are found, test is complete.

BRAKE SWITCH CIRCUIT — 81

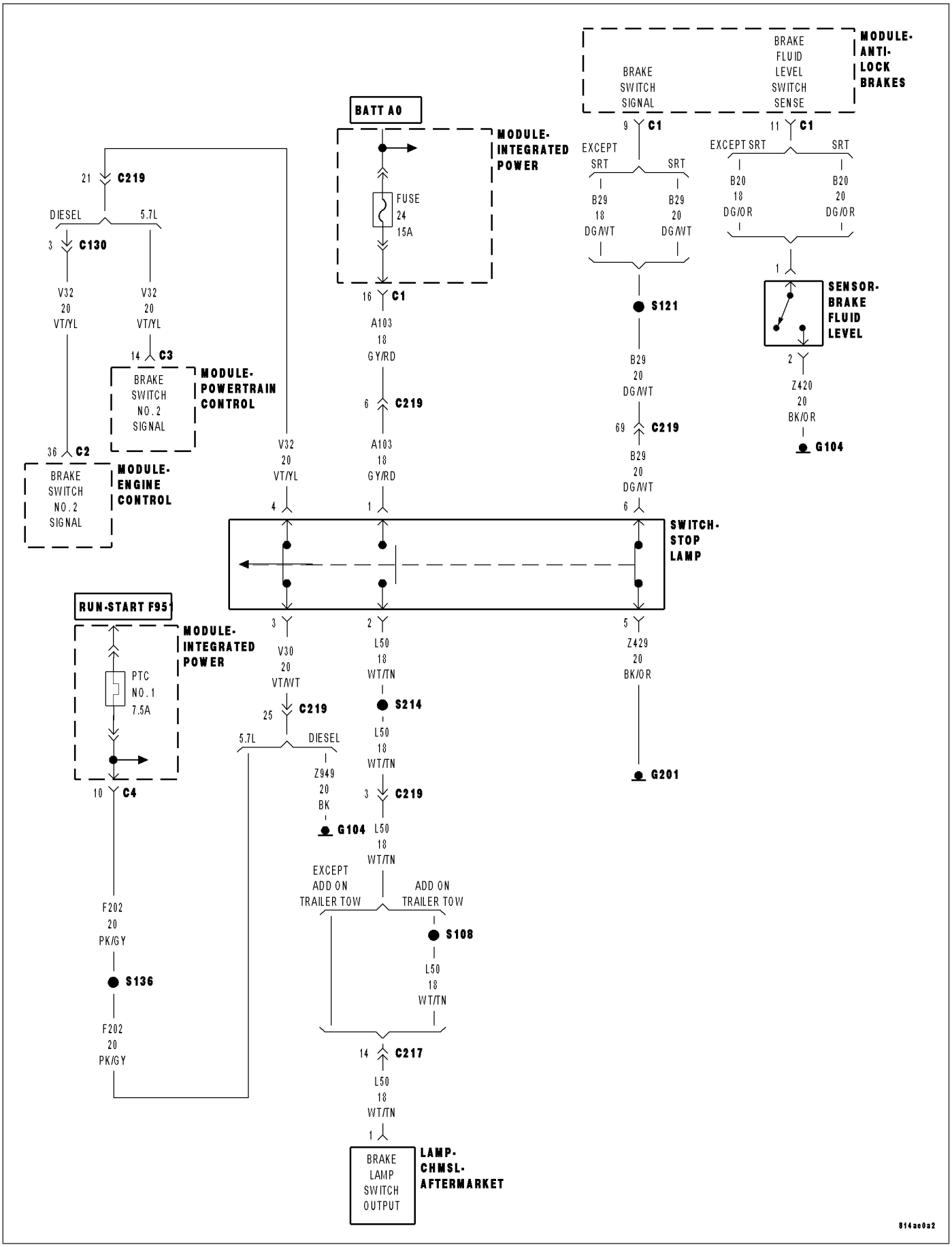

BRAKE SWITCH CIRCUIT — 81 (CONTINUED)
For a complete wiring diagram **Refer to Section 8W**.

- **When Monitored:**
  Ignition on.
- **Set Condition:**
  Continuous brake applied signal after ignition turn-on and remaining with sensed speed above 37.5 MPH (RWAL) or 15 MPH (ABS) for over 10 seconds and/or ABS active for at least a second with brake switch released and never sensed brake applied since power up.

Possible Causes
INTERMITTENT BRAKE SWITCH CIRCUIT DTC
BRAKE SWITCH SIGNAL CIRCUIT SHORT TO VOLTAGE
BRAKE SWITCH SIGNAL CIRCUIT OPEN
GROUND CIRCUIT OPEN
BRAKE LAMP SWITCH
CAB

Diagnostic Test

1. VERIFY THE CONDITION

NOTE: Driving with the brake applied may set this code.
Turn the ignition off.

Ensure all accessories are turned off and the battery is fully charged.

Turn the ignition on.

With the scan tool, monitor the status of the brake switch while pressing and releasing the brake pedal several times.

With the scan tool, erase DTCs.

CAUTION: Determine that braking capability is available before road testing the vehicle.
Road test the vehicle for at least 5 minutes over 40 MPH. Perform several anti-lock braking stops.

With the scan tool, read DTCs.

Does the original DTC reset and/or does intermittent brake switch operation occur?

Yes >> Go To 2

No >> The condition necessary to set this DTC is not present at this time. Using the wiring diagram/schematic as a guide, inspect the wiring and connectors relative to this circuit.
Perform ABS VERIFICATION TEST - VER 1. (Refer to 5 - BRAKES/ELECTRICAL - DIAGNOSIS AND TESTING)

BRAKE SWITCH CIRCUIT — 81 (CONTINUED)

2. BRAKE LAMP SWITCH

Turn ignition off.
Disconnect the Brake Lamp Switch harness connector.
Turn ignition on.
With the scan tool, monitor the brake switch status.
Connect and disconnect a jumper wire between the Ground circuit and the Brake Switch Signal circuit.

Does the scan tool display correctly with the jumper wire connected and disconnected?

Yes >> Replace the Brake Lamp Switch in accordance with the Service Information.
Perform ABS VERIFICATION TEST - VER 1. (Refer to 5 - BRAKES/ELECTRICAL - DIAGNOSIS AND TESTING)

No >> Go To 3

---

3. BRAKE SWITCH SIGNAL CIRCUIT SHORT TO VOLTAGE

Turn the ignition off.
Disconnect the CAB Module harness connector.
Turn the ignition on.
Measure the voltage of the Brake Switch Signal circuit.

Is there any voltage present?

Yes >> Repair the Brake Switch Signal circuit for a short to voltage.
Perform ABS VERIFICATION TEST - VER 1. (Refer to 5 - BRAKES/ELECTRICAL - DIAGNOSIS AND TESTING)

No >> Go To 4

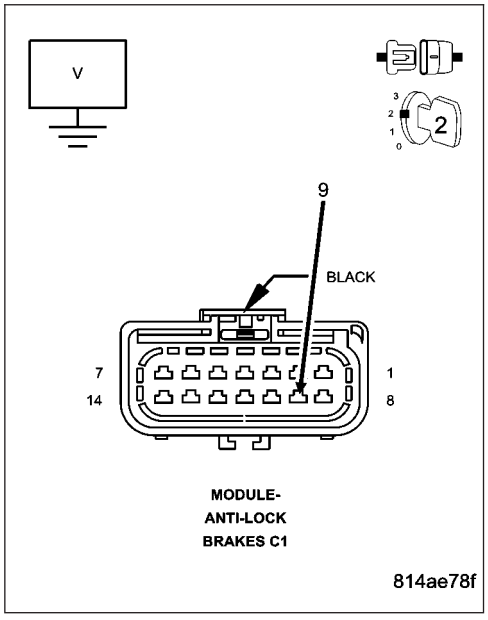

BRAKE SWITCH CIRCUIT — 81 (CONTINUED)

4. BRAKE SWITCH SIGNAL CIRCUIT OPEN

Turn the ignition off.

Measure the resistance of the Brake Switch Signal circuit between the CAB harness connector and the brake switch harness connector.

Is the resistance above 5.0 ohms?

Yes >> Repair the open Brake Switch Signal circuit.
Perform ABS VERIFICATION TEST - VER 1. (Refer to 5 - BRAKES/ELECTRICAL - DIAGNOSIS AND TESTING)

No >> Go To 5

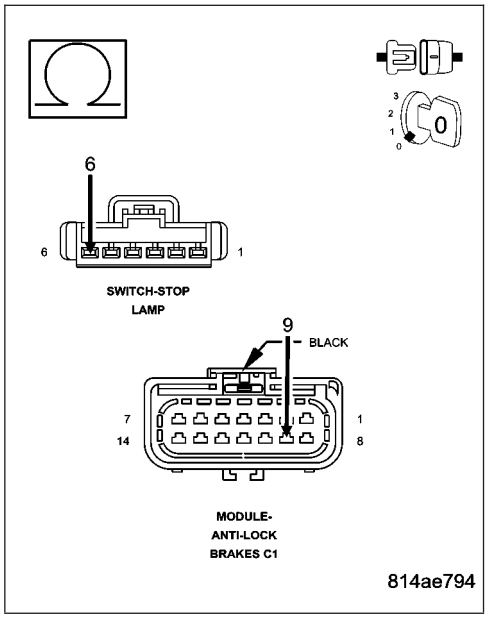

5. GROUND CIRCUIT OPEN

Using a 12–volt test light connected to 12 volts, check the Ground circuit at the brake switch harness connector.

NOTE: The test light should be illuminated and bright. Compare the brightness to that of a direct connection to the battery.

Is the test light illuminated and bright?

Yes >> Replace the Controller Anti-lock in accordance with the Service Information. Refer to the symptom *Replacing the Controller Anti-lock Brake for additional information.
Perform ABS VERIFICATION TEST - VER 1. (Refer to 5 - BRAKES/ELECTRICAL - DIAGNOSIS AND TESTING)

No >> Repair the Ground circuit for an open circuit or high resistance.
Perform ABS VERIFICATION TEST - VER 1. (Refer to 5 - BRAKES/ELECTRICAL - DIAGNOSIS AND TESTING)

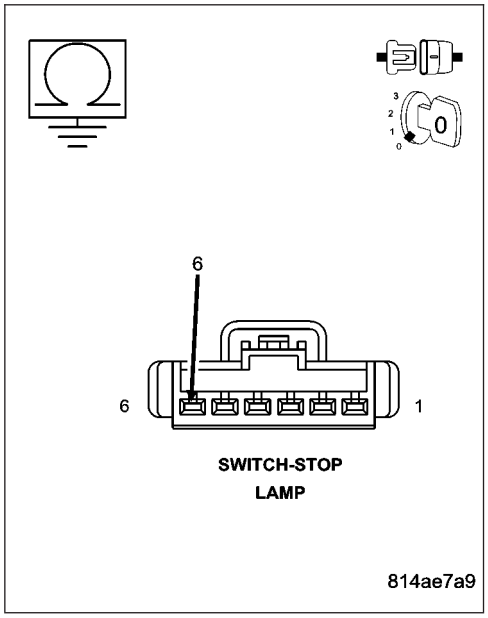

ECU INTERNAL FAILURE -75

For a complete wiring diagram **Refer to Section 8W**.

- **When Monitored:**
  Ignition on.
- **Set Condition:**
  When the CAB internal micro processor has an open/short in the status line which fails to transmit at the correct frequency.

Possible Causes
WHEEL SPEED SENSOR FAILURE
CONTROLLER ANTI-LOCK BRAKE

Diagnostic Test

1. VERIFYING DTC

NOTE: Before continuing, check the Controller Anti-lock Brake harness connector terminals for corrosion, damage, or terminal push out. Repair as necessary.

Turn the ignition on.

With the DRBIII®, erase DTC's.

Turn the ignition off.

Turn the ignition on.

NOTE: Ensure that the Wheel Speed sensor are working properly.

With the DRBIII®, read DTC's.

Does the DRBIII® display ECU INTERNAL FAILURE and a WHEEL SPEED SENSOR DTC'S?

Yes >> Refer to the symptom list and diagnose the display Wheel Speed DTC.
Perform ABS VERIFICATION TEST - VER 1. (Refer to 5 - BRAKES/ELECTRICAL - DIAGNOSIS AND TESTING)

No >> Replace the Controller Anti-lock Brake in accordance with the Service Information. Refer to the symptom *Replacing the Controller Anti-Lock Brake for additional information.
Perform ABS VERIFICATION TEST - VER 1. (Refer to 5 - BRAKES/ELECTRICAL - DIAGNOSIS AND TESTING)

EXCESSIVE DUMP TIME — 69

For a complete wiring diagram **Refer to Section 8W**.

- **When Monitored:**
  Ignition on.
- **Set Condition:**
  Antilock mode is active. Wheel speed is below 4 MPH (RWAL) and above 4 MPH (ABS). Vehicle is in two wheel drive mode. Wheel speed history ruling out any unusual events during the proceeding 15 second (RWAL) and 9 second (ABS). Need for more then maximum allowable dump cycles.

Possible Causes
INTERMITTENT EXCESSIVE DUMP TIME DTC
WHEEL SPEED WIRING HARNESS AND CONNECTORS
SUSPENSION
TONE WHEEL
WHEEL BEARING
BRAKE SYSTEM MECHANICAL CONDITION
ANTI-LOCK BRAKE HYDRAULIC CONTROL UNIT

Diagnostic Test

1. BRAKE SYSTEM MECHANICAL CONDITION

Inspect the front and rear brakes for a mechanical condition that would cause any wheel(s) to lock-up during braking.

Inspect the Parking Brake to make sure it releases properly.

Were any problems found?

Yes >> Repair the braking system as necessary in accordance with the Service Information.
Perform ABS VERIFICATION TEST - VER 1. (Refer to 5 - BRAKES/ELECTRICAL - DIAGNOSIS AND TESTING)

No >> Go To 2

---

2. TONE WHEEL

Inspect each Tone Wheel for damage, missing teeth or looseness in accordance with the Service Information.

NOTE: The Tone Wheel Teeth should be perfectly square, not bent or nicked.

Were any problems found?

Yes >> Replace the Tone Wheel as necessary in accordance with the Service Information.
Perform ABS VERIFICATION TEST - VER 1. (Refer to 5 - BRAKES/ELECTRICAL - DIAGNOSIS AND TESTING)

No >> Go To 3

EXCESSIVE DUMP TIME — 69 (CONTINUED)

3. WHEEL BEARING

Inspect each wheel bearing for excessive run out or improper clearance in accordance with the Service Information.

Were any problems found?

Yes >> Repair or replace the wheel bearing(s) as necessary in accordance with the Service Information.
Perform ABS VERIFICATION TEST - VER 1. (Refer to 5 - BRAKES/ELECTRICAL - DIAGNOSIS AND TESTING)

No >> Go To 4

---

4. WHEEL SPEED SENSOR WIRING HARNESS AND CONNECTORS

Start the engine.
With the scan tool, monitor the output of each Wheel Speed Sensor.
Raise and properly support the vehicle.

WARNING: BE SURE TO KEEP HANDS, FEET AND CLOTHING CLEAR OF ROTATING COMPONENTS.
Allow the drive wheels to rotate.
Rotate the non-driven wheels by hand.
Wiggle test the Wheel Speed wiring harnesses and connectors.
Look for any excessive variations in sensed wheel speed.

Were any problems found?

Yes >> Repair the wiring harness or connectors as necessary in accordance with the Service Information.
Perform ABS VERIFICATION TEST - VER 1. (Refer to 5 - BRAKES/ELECTRICAL - DIAGNOSIS AND TESTING)

No >> Go To 5

---

5. LOADED WHEEL BEARING/SUSPENSION CONCERN

CAUTION: Make sure that the vehicle has braking capability before performing a road test.

NOTE: Have an assistant drive the vehicle while monitoring the scan tool.
With the scan tool, monitor the output of each Wheel Speed Sensor.
Road test vehicle so wheel bearings and suspension are loaded.
Look for any excessive variations in sensed wheel speed.

Were any problems found?

Yes >> Repair as necessary in accordance with the Service Information.
Perform ABS VERIFICATION TEST - VER 1. (Refer to 5 - BRAKES/ELECTRICAL - DIAGNOSIS AND TESTING)

No >> Replace the Hydraulic Control Unit in accordance with the Service Information.
Perform ABS VERIFICATION TEST - VER 1. (Refer to 5 - BRAKES/ELECTRICAL - DIAGNOSIS AND TESTING)

FOUNDATION BRAKE — 78

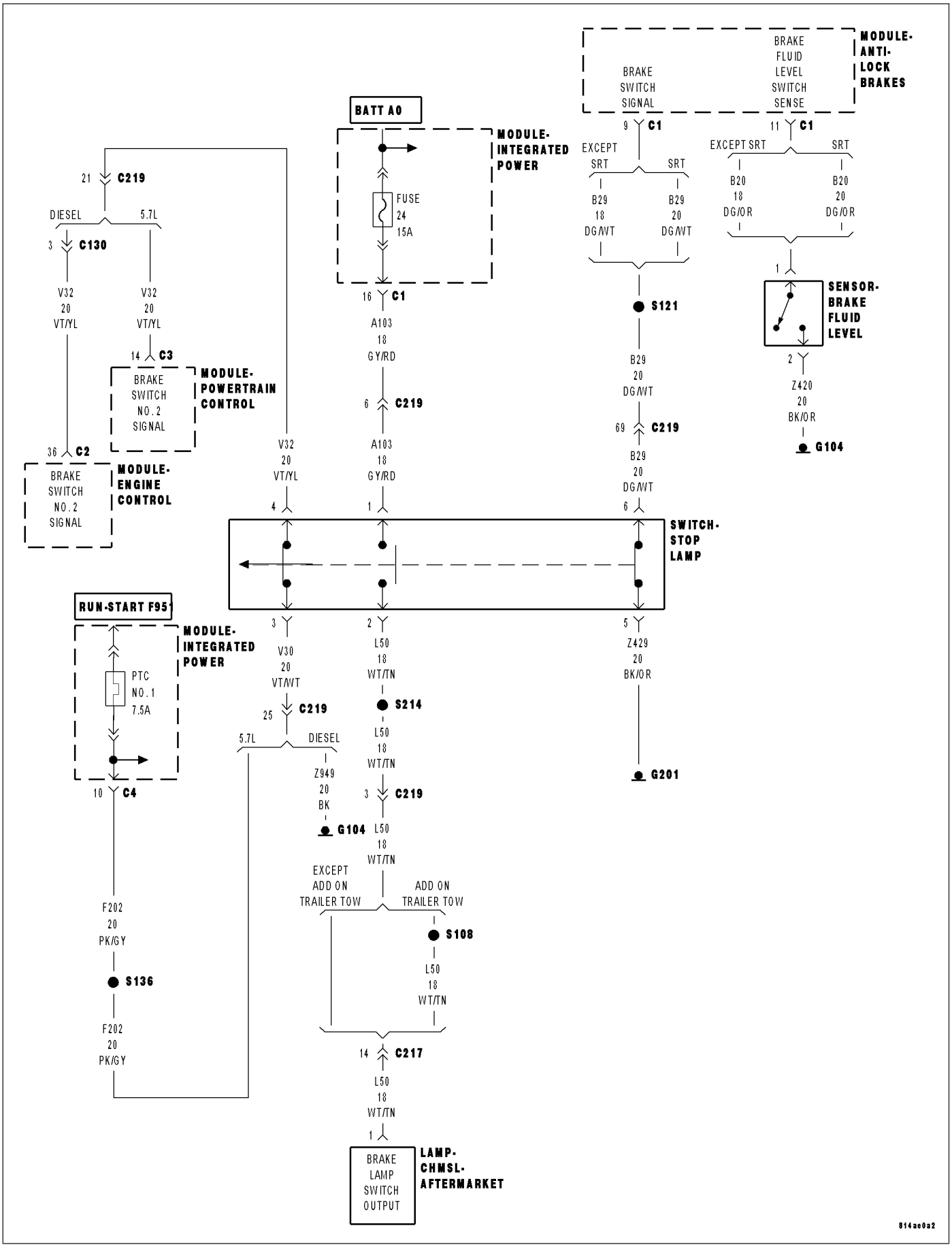

FOUNDATION BRAKE — 78 (CONTINUED)

For a complete wiring diagram **Refer to Section 8W**.

- **When Monitored:**
  With the ignition on and no system under voltage DTC present.
- **Set Condition:**
  Low feedback voltage from the Brake Fluid Level Switch Sense circuit.

Possible Causes
INTERMITTENT BRAKE FLUID LEVEL LOW DTC
BRAKE FLUID LEVEL LOW
BRAKE FLUID LEVEL SWITCH SENSE CIRCUIT SHORT TO GROUND
GROUND CIRCUIT OPEN OR HIGH RESISTANCE
BRAKE FLUID LEVEL SENSOR
CONTROLLER ANTI-LOCK BRAKE

Diagnostic Test

1. DTC CONDITION IS PRESENT

Release the Parking Brake.
Turn the ignition off.
Turn the ignition on.
Monitor the Instrument Cluster.

Does the red Brake Warning Indicator stay on?

Yes >> Go To 2

No >> Go To 6

---

2. BRAKE FLUID LEVEL LOW

Turn the ignition off.
Inspect the Brake Fluid Level in accordance with the Service Information.

Is the Brake Fluid Level Low?

Yes >> Inspect the system and repair as necessary in accordance with the Service Information.
Perform ABS VERIFICATION TEST - VER 1. (Refer to 5 - BRAKES/ELECTRICAL - DIAGNOSIS AND TESTING)

No >> Go To 3

FOUNDATION BRAKE — 78 (CONTINUED)

3. BRAKE FLUID LEVEL SWITCH SENSE CIRCUIT SHORT TO GROUND

Turn the ignition off.

Disconnect the Brake Fluid Level Sensor harness connector.

Disconnect the CAB harness connector.

NOTE: Check connector - Clean/repair as necessary.

Measure the resistance between ground and the Brake Fluid Level Switch Sense circuit.

Is the resistance below 5.0 ohms?

Yes >> Repair the Brake Fluid Level Switch Sense circuit for a short to ground.
Perform ABS VERIFICATION TEST - VER 1. (Refer to 5 - BRAKES/ELECTRICAL - DIAGNOSIS AND TESTING)

No >> Go To 4

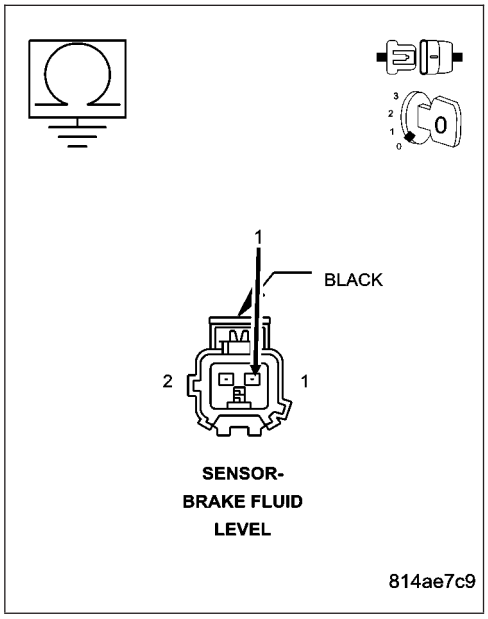

4. BRAKE FLUID LEVEL SENSOR

NOTE: Determine if the Brake Fluid Level Sensor is stuck in the down position. Repair as necessary.

Measure the resistance of the Brake Fluid Level Sensor at the sensor terminals.

NOTE: Resistance should be approximately 10,000 ohms with the reservoir full.

Is the resistance between 9,500 and 10,500 ohms?

Yes >> Go To 5

No >> Replace the Brake Fluid Level Switch in accordance with the Service Information.
Perform ABS VERIFICATION TEST - VER 1. (Refer to 5 - BRAKES/ELECTRICAL - DIAGNOSIS AND TESTING)

FOUNDATION BRAKE — 78 (CONTINUED)

5. GROUND CIRCUIT OPEN OR HIGH RESISTANCE

Using a 12–volt test light connected to 12 volts, check the Ground circuit.

NOTE: The test light should be illuminated and bright. Compare the brightness to that of a direct connection to the battery.

Is the test light illuminated and bright?

Yes >> Replace the Controller Anti-lock Brake in accordance with the Service Information. Refer to the symptom *Replacing the Controller Anti-lock Brake for additional information.
Perform ABS VERIFICATION TEST - VER 1. (Refer to 5 - BRAKES/ELECTRICAL - DIAGNOSIS AND TESTING)

No >> Repair the Brake Fluid Level Switch ground circuit for an open circuit or high resistance.
Perform ABS VERIFICATION TEST - VER 1. (Refer to 5 - BRAKES/ELECTRICAL - DIAGNOSIS AND TESTING)

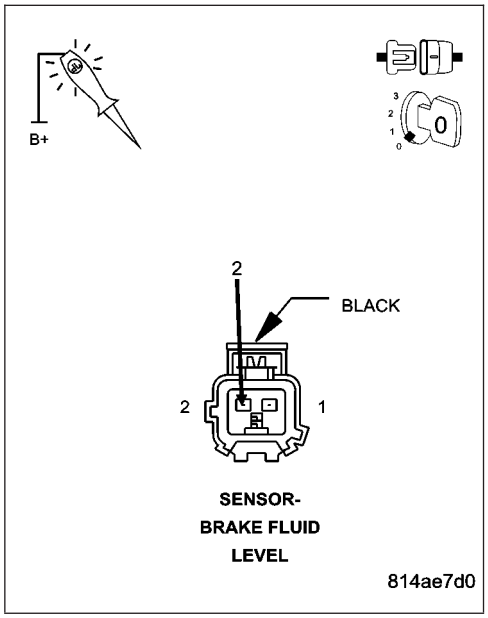

6. WIRING HARNESS INSPECTION

Turn the ignition off.

Visually inspect the related wiring harness. Look for any chafed, pierced, pinched, or partially broken wires.

Visually inspect the related wire harness connectors. Look for broken, bent, pushed out, or corroded terminals.

Refer to any Technical Service Bulletins that may apply.

Were any problems found?

Yes >> Repair as necessary.
Perform ABS VERIFICATION TEST - VER 1. (Refer to 5 - BRAKES/ELECTRICAL - DIAGNOSIS AND TESTING)

No >> Test Complete.

INTERMITTENT SIGNAL FROM LEFT FRONT SENSOR — 27

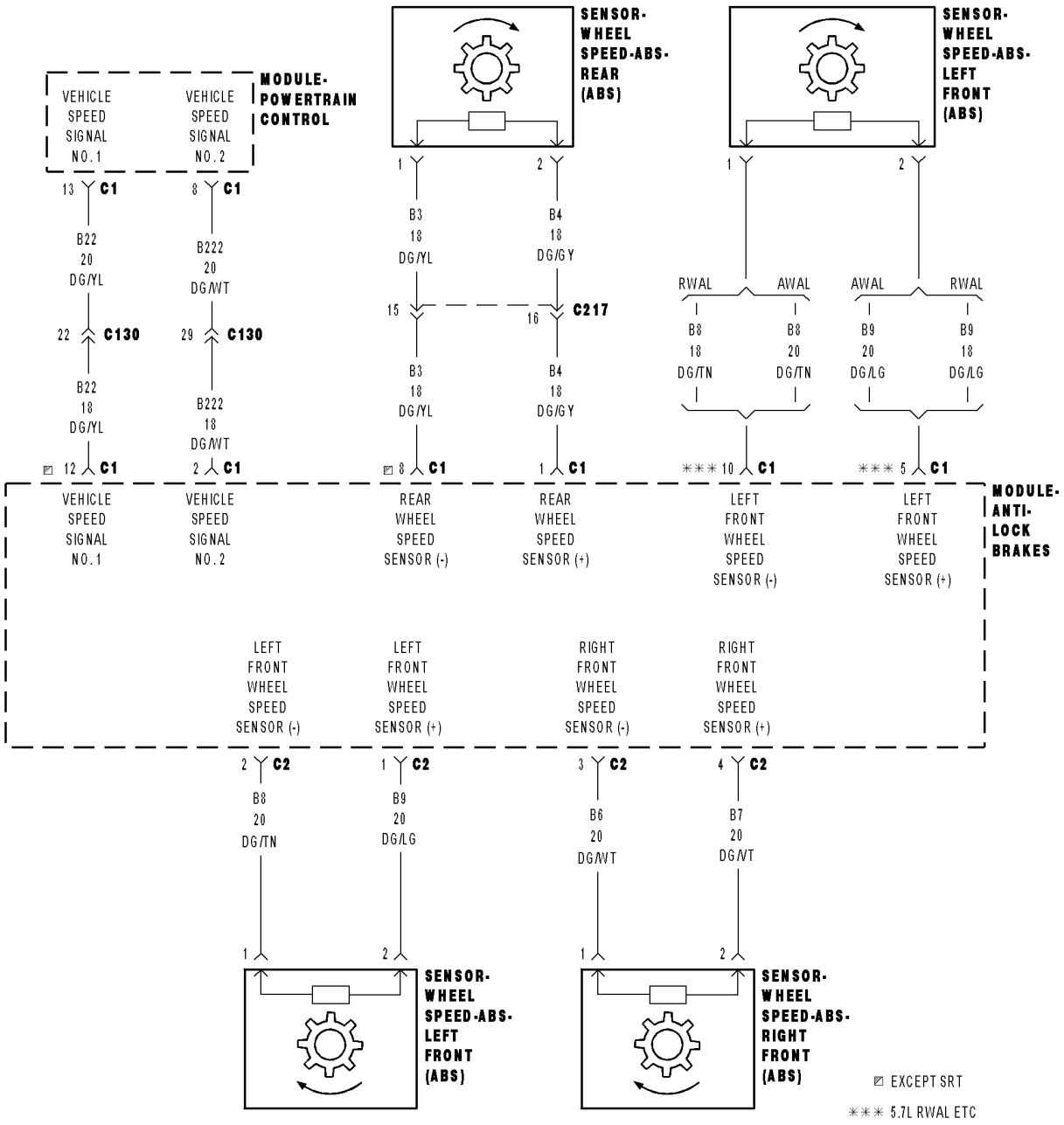

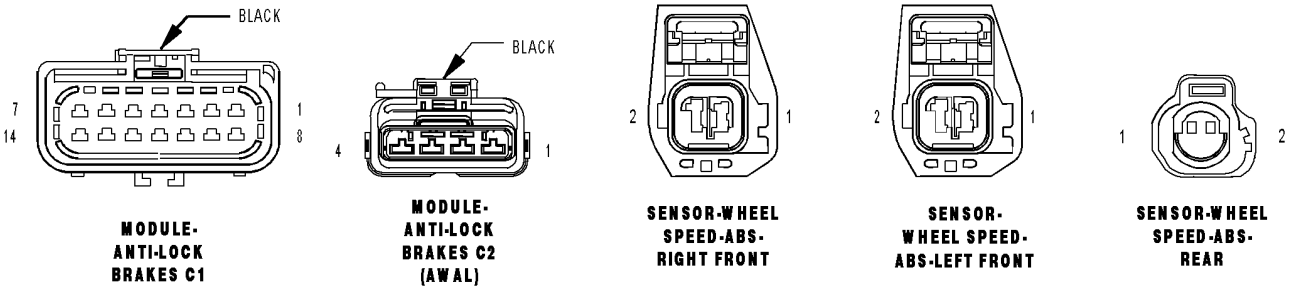

814ae047

INTERMITTENT SIGNAL FROM LEFT FRONT SENSOR — 27 (CONTINUED)
For a complete wiring diagram **Refer to Section 8W**.

- **When Monitored:**
  Ignition turned on for at least 3.5 seconds. Average filtered speed for the two front wheels above 6km/h (4MPH). Speed for each suspect sensor above 32 km/h (20 MPH) (brake applied or ABS active) or 19 km/h (12 MPH) (brake released or ABS inactive).
- **Set Condition:**
  When there is a sudden change of output signal from the sensor.

Possible Causes
INTERMITTENT LEFT FRONT WHEEL SPEED SENSOR DTC
LEFT FRONT WHEEL SPEED SENSOR (+) CIRCUIT SHORT TO GROUND
LEFT FRONT WHEEL SPEED SENSOR (-) CIRCUIT SHORT TO GROUND
LEFT FRONT WHEEL SPEED SENSOR (+) CIRCUIT OPEN
LEFT FRONT WHEEL SPEED SENSOR (-) CIRCUIT OPEN
LEFT FRONT WHEEL SPEED SENSOR (+) CIRCUIT SHORTED TO VOLTAGE
LEFT FRONT WHEEL SPEED SENSOR (-) CIRCUIT SHORTED TO VOLTAGE
LEFT FRONT WHEEL SPEED SENSOR (-) CIRCUIT SHORTED TO THE LEFT FRONT WHEEL SPEED SENSOR (+) CIRCUIT
TONE WHEEL
EXCESSIVE LEFT FRONT WHEEL SPEED SENSOR AIR GAP
WHEEL BEARING
LEFT FRONT WHEEL SPEED SENSOR
CONTROLLER ANTI-LOCK BRAKE

Diagnostic Test

1. DTC IS ACTIVE

Turn the ignition on.
With the DRBIII®, clear DTCs.
Turn the ignition off.
Turn the ignition on.
With the DRBIII®, read DTCs.

Does the DRBIII® display the DTC??

Yes >> Go To 2
No >> Go To 16

INTERMITTENT SIGNAL FROM LEFT FRONT SENSOR — 27 (CONTINUED)

2. CONTROLLER ANTI-LOCK BRAKE HARNESS CONNECTOR INSPECTION

Turn the ignition off.

Inspect the CAB wiring harness. Look for any chafed, pierced, pinched, or partially broken wires.

Inspect the CAB wire harness connectors. Look for broken, bent, pushed out, or corroded terminals.

Were any problems found?

Yes >> Clean or Repair as necessary in accordance with the Service Information.
Perform ABS VERIFICATION TEST - VER 1. (Refer to 5 - BRAKES/ELECTRICAL - DIAGNOSIS AND TESTING)

No >> Go To 3

---

3. WHEEL SPEED SENSOR INSPECTION

Turn the ignition off.

Inspect the Wheel Speed Sensor for proper mounting.

Inspect the Wheel Speed Sensor harness and connector.

Inspect the Wheel Speed Sensor for excessive debris on the sensor.

Were any problems found?

Yes >> Repair as necessary in accordance with the Service Information.
Perform ABS VERIFICATION TEST - VER 1. (Refer to 5 - BRAKES/ELECTRICAL - DIAGNOSIS AND TESTING)

No >> Go To 4

---

4. TONE WHEEL DAMAGED/MISSING

Inspect the Tone Wheel in accordance with the Service Information.

NOTE: The Tone Wheel Teeth should be perfectly square, not bent or nicked.

Were any problems found?

Yes >> Replace the Tone Wheel in accordance with the Service Information.
Perform ABS VERIFICATION TEST - VER 1. (Refer to 5 - BRAKES/ELECTRICAL - DIAGNOSIS AND TESTING)

No >> Go To 5

---

5. EXCESSIVE WHEEL SPEED SENSOR AIR GAP

Measure the Wheel Speed Sensor Air Gap in accordance with the Service Information.

Were any problems found?

Yes >> Repair as necessary in accordance with the Service Information.
Perform ABS VERIFICATION TEST - VER 1. (Refer to 5 - BRAKES/ELECTRICAL - DIAGNOSIS AND TESTING)

No >> Go To 6

INTERMITTENT SIGNAL FROM LEFT FRONT SENSOR — 27 (CONTINUED)

6. WHEEL BEARING LOOSE/BINDING

Inspect the wheel bearings for excessive run out or improper clearance in accordance with the Service Information.

Were any problems found?

Yes >> Repair as necessary in accordance with the Service Information.
Perform ABS VERIFICATION TEST - VER 1. (Refer to 5 - BRAKES/ELECTRICAL - DIAGNOSIS AND TESTING)

No >> Go To 7

---

7. LEFT FRONT WHEEL SPEED SENSOR (+) CIRCUIT SHORTED TO GROUND

Turn the ignition off.
Disconnect the Left Front Wheel Speed Sensor harness connector.
Disconnect the Controller Anti-lock Brake harness connector.

NOTE: Check connector - Clean/repair as necessary.
Measure the resistance between the Left Front Wheel Speed Sensor (+) circuit and ground.

Is the resistance above 5.0 ohms?

Yes >> Go To 8

No >> Repair the Left Front Wheel Speed Sensor (+) circuit for a short to ground.
Perform ABS VERIFICATION TEST - VER 1. (Refer to 5 - BRAKES/ELECTRICAL - DIAGNOSIS AND TESTING)

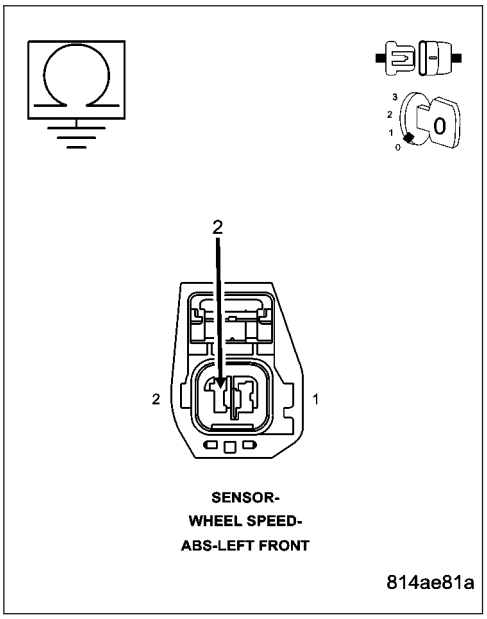

---

8. LEFT FRONT WHEEL SPEED SENSOR (-) CIRCUIT SHORTED TO GROUND

Measure the resistance between the Left Front Wheel Speed Sensor (-) circuit and ground.

Is the resistance above 5.0 ohms?

Yes >> Go To 9

No >> Repair the Left Front Wheel Speed Sensor (-) circuit for a short to ground.
Perform ABS VERIFICATION TEST - VER 1. (Refer to 5 - BRAKES/ELECTRICAL - DIAGNOSIS AND TESTING)

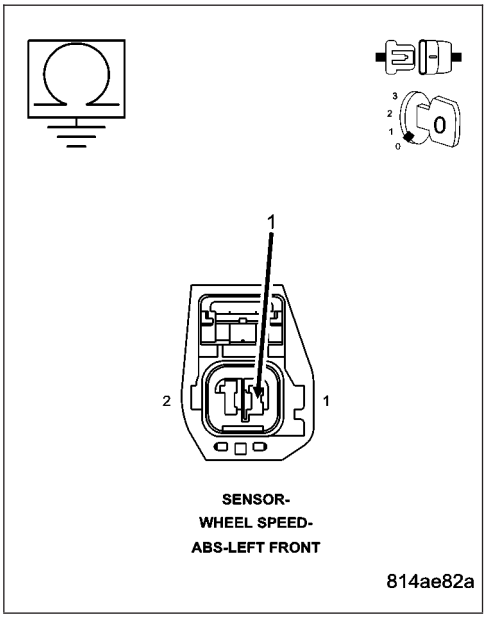

INTERMITTENT SIGNAL FROM LEFT FRONT SENSOR — 27 (CONTINUED)

9. LEFT FRONT WHEEL SPEED SENSOR (+) CIRCUIT OPEN

Measure the resistance of the Left Front Wheel Speed Sensor (+) circuit.

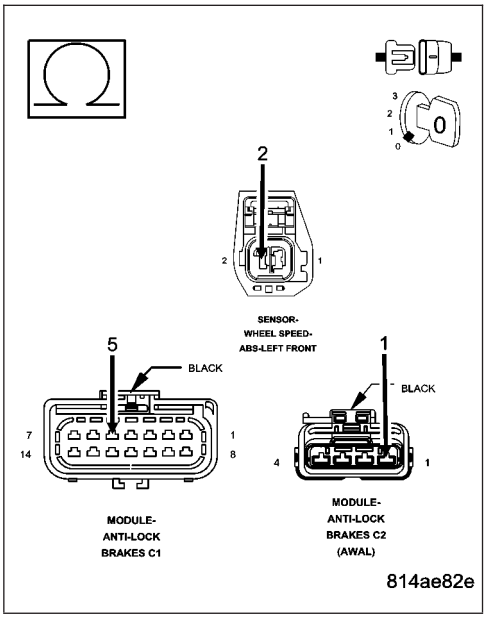

Is the resistance below 5.0 ohms?

Yes >> Go To 10

No >> Repair the open Left Front Wheel Speed Sensor (+) circuit.
Perform ABS VERIFICATION TEST - VER 1. (Refer to 5 - BRAKES/ELECTRICAL - DIAGNOSIS AND TESTING)

10. LEFT FRONT WHEEL SPEED SENSOR (-) CIRCUIT OPEN

Measure the resistance of the Left Front Wheel Speed Sensor (-) circuit.

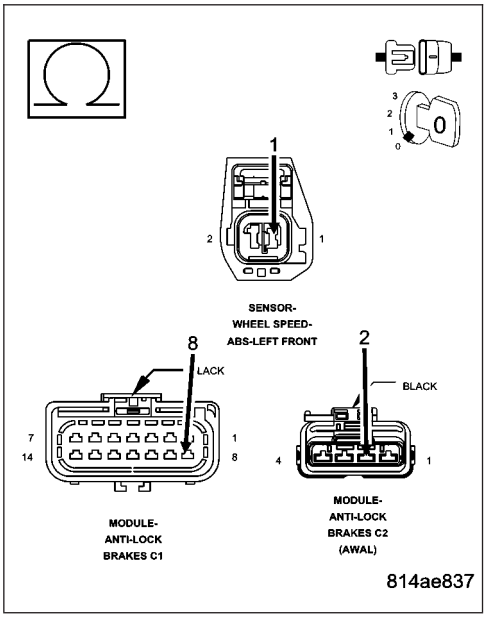

Is the resistance below 5.0 ohms?

Yes >> Go To 11

No >> Repair the open Left Front Wheel Speed Sensor (-) circuit.
Perform ABS VERIFICATION TEST - VER 1. (Refer to 5 - BRAKES/ELECTRICAL - DIAGNOSIS AND TESTING)

INTERMITTENT SIGNAL FROM LEFT FRONT SENSOR — 27 (CONTINUED)

11. LEFT FRONT WHEEL SPEED SENSOR (+) CIRCUIT SHORTED TO VOLTAGE

Turn the ignition on.

Measure the voltage of the Left Front Wheel Speed Sensor (+) circuit.

Is there any voltage present?

Yes >> Repair Left Front Wheel Speed Sensor (+) circuit for a short to voltage.

Perform ABS VERIFICATION TEST - VER 1. (Refer to 5 - BRAKES/ELECTRICAL - DIAGNOSIS AND TESTING)

No >> Go To 12

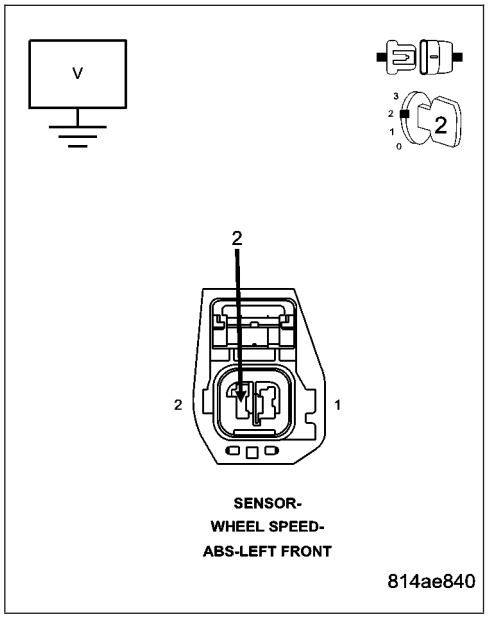

12. LEFT FRONT WHEEL SPEED SENSOR (-) CIRCUIT SHORTED TO VOLTAGE

Measure the voltage of the Left Front Wheel Speed Sensor (-) circuit.

Is there any voltage present?

Yes >> Repair the Left Front Wheel Speed Sensor (-) circuit for a short to voltage.

Perform ABS VERIFICATION TEST - VER 1. (Refer to 5 - BRAKES/ELECTRICAL - DIAGNOSIS AND TESTING)

No >> Go To 13

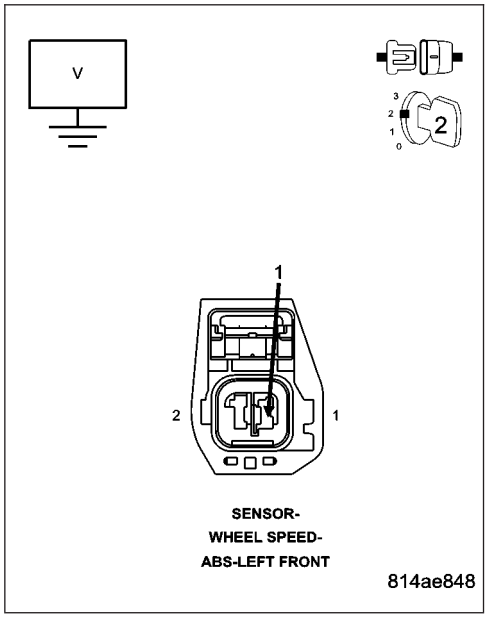

INTERMITTENT SIGNAL FROM LEFT FRONT SENSOR — 27 (CONTINUED)

13. LEFT FRONT WHEEL SPEED SENSOR (+) CIRCUIT SHORTED TO THE LEFT FRONT WHEEL SPEED SENSOR (-) CIRCUIT

Turn the ignition off.

Measure the resistance between the Left Front Wheel Speed Sensor (+) circuit and the Left Front Wheel Speed Sensor (-) circuit at the Controller Anti-lock Brake harness connector.

Is the resistance below 5.0 ohms?

Yes >> Repair Left Front Wheel Speed Sensor (+) circuit for a short to the Left Front Wheel Speed Sensor (-) circuit.
Perform ABS VERIFICATION TEST - VER 1. (Refer to 5 - BRAKES/ELECTRICAL - DIAGNOSIS AND TESTING)

No >> Go To 14

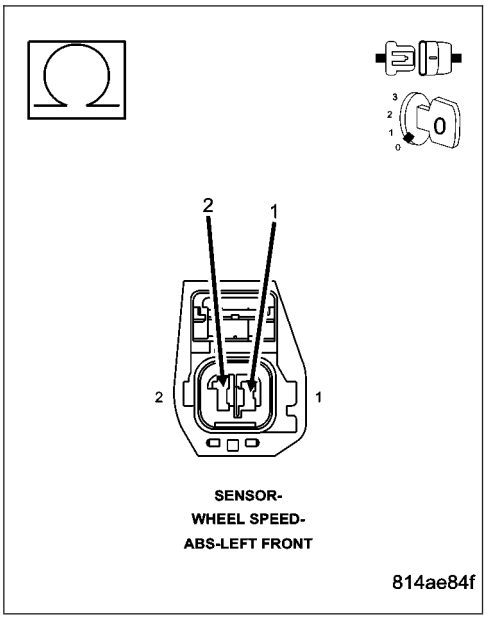

14. LEFT FRONT WHEEL SPEED SENSOR

Turn the ignition off.

Connect the Left Front Wheel Speed Sensor harness connector.

Measure the resistance between the Left Front Wheel Speed Sensor (+) circuit and Left Front Wheel Speed Sensor (-) circuit at the Controller Anti-lock Brake harness connector.

NOTE: The resistance should be approximately 1800–2200 ohms at 76 degrees F.

Is the resistance within the noted range?

Yes >> Go to 15

No >> Replace the Left Front Wheel Speed Sensor in accordance with the Service Information.
Perform ABS VERIFICATION TEST - VER 1. (Refer to 5 - BRAKES/ELECTRICAL - DIAGNOSIS AND TESTING)

15. CONTROLLER ANTI-LOCK BRAKE

Turn the ignition off.

Inspect the related wiring harness. Look for any chafed, pierced, pinched, or partially broken wires.

Inspect the related wire harness connectors. Look for broken, bent, pushed out, or corroded terminals.

Refer to any Technical Service Bulletins that may apply.

Were any problems found?

Yes >> Repair as necessary in accordance with the Service Information.
Perform ABS VERIFICATION TEST - VER 1. (Refer to 5 - BRAKES/ELECTRICAL - DIAGNOSIS AND TESTING)

No >> Replace the Controller Anti-lock Brake in accordance with the Service Information.
Perform ABS VERIFICATION TEST - VER 1. (Refer to 5 - BRAKES/ELECTRICAL - DIAGNOSIS AND TESTING)

INTERMITTENT SIGNAL FROM LEFT FRONT SENSOR — 27 (CONTINUED)

16. WIRING HARNESS INSPECTION

Turn the ignition off.

NOTE: Towing the vehicle with ignition ON may set this DTC.

Inspect the related wiring harness. Look for any chafed, pierced, pinched, or partially broken wires.

Inspect the related wire harness connectors. Look for broken, bent, pushed out, or corroded terminals.

Refer to any Technical Service Bulletins that may apply.

Were any problems found?

Yes >> Repair as necessary in accordance with the Service Information.
Perform ABS VERIFICATION TEST - VER 1. (Refer to 5 - BRAKES/ELECTRICAL - DIAGNOSIS AND TESTING)

No >> Test Complete.

INTERMITTENT SIGNAL FROM REAR SENSOR — 37

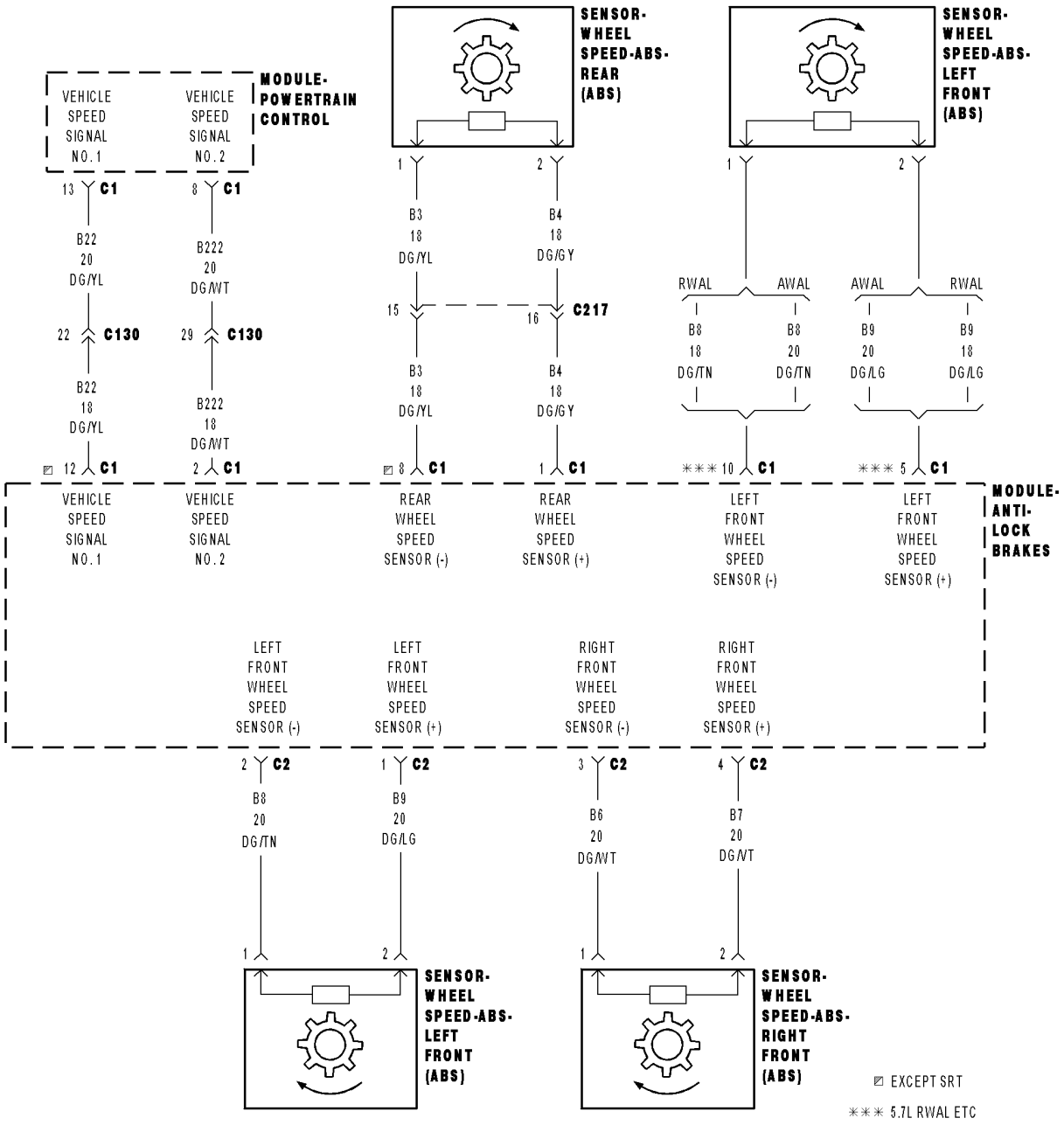

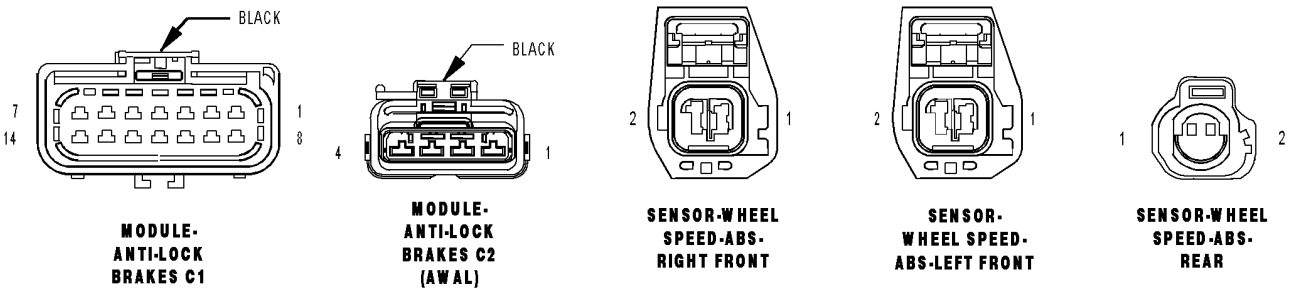

814ae047

INTERMITTENT SIGNAL FROM REAR SENSOR — 37 (CONTINUED)
For a complete wiring diagram **Refer to Section 8W**.

- **When Monitored:**
  Ignition turned on for at least 3.5 seconds. Average filtered speed for the wheels above 19 km/h (12 MPH) (brake released of ABS inactive) or 32 km/h (20 MPH) (brake applied or ABS active).
- **Set Condition:**
  When the is a sudden change of output signal from the sensor.

Possible Causes
INTERMITTENT REAR WHEEL SPEED SENSOR DTC
REAR WHEEL SPEED SENSOR (+) CIRCUIT SHORT TO GROUND
REAR WHEEL SPEED SENSOR (-) CIRCUIT SHORT TO GROUND
REAR WHEEL SPEED SENSOR (+) CIRCUIT OPEN
REAR WHEEL SPEED SENSOR (-) CIRCUIT OPEN
REAR WHEEL SPEED SENSOR (+) CIRCUIT SHORTED TO VOLTAGE
REAR WHEEL SPEED SENSOR (-) CIRCUIT SHORTED TO VOLTAGE
REAR WHEEL SPEED SENSOR (+) CIRCUIT SHORTED TO THE REAR WHEEL SPEED SENSOR (-) CIRCUIT
TONE WHEEL
EXCESSIVE REAR WHEEL SPEED SENSOR AIR GAP
WHEEL BEARING/REAR DIFFERENTIAL
REAR WHEEL SPEED SENSOR
CONTROLLER ANTI-LOCK BRAKE

Diagnostic Test

1. DTC IS ACTIVE

Turn the ignition on.
With the DRBIII®, clear DTCs.
Turn the ignition off.
Turn the ignition on.
With the DRBIII®, read DTCs.

Does the DRBIII® display the DTC?

Yes >> Go To 2

No >> Go To 16

---

2. CONTROLLER ANTI-LOCK BRAKE HARNESS CONNECTOR INSPECTION

Turn the ignition off.
Inspect the CAB wiring harness. Look for any chafed, pierced, pinched, or partially broken wires.
Inspect the CAB wire harness connectors. Look for broken, bent, pushed out, or corroded terminals.

Were any problems found?

Yes >> Clean or Repair as necessary in accordance with the Service Information.
Perform ABS VERIFICATION TEST - VER 1. (Refer to 5 - BRAKES/ELECTRICAL - DIAGNOSIS AND TESTING)

No >> Go To 3

INTERMITTENT SIGNAL FROM REAR SENSOR — 37 (CONTINUED)

3. WHEEL SPEED SENSOR INSPECTION

Turn the ignition off.

Inspect the Wheel Speed Sensor for proper mounting.

Inspect the Wheel Speed Sensor harness and connector.

Inspect the Wheel Speed Sensor for excessive debris on the sensor.

Were any problems found?

Yes >> Repair as necessary in accordance with the Service Information.
Perform ABS VERIFICATION TEST - VER 1. (Refer to 5 - BRAKES/ELECTRICAL - DIAGNOSIS AND TESTING)

No >> Go To 4

---

4. TONE WHEEL DAMAGED/MISSING

Inspect the Tone Wheel in accordance with the Service Information.

NOTE: The Tone Wheel Teeth should be perfectly square, not bent or nicked.

Were any problems found?

Yes >> Replace the Tone Wheel in accordance with the Service Information.
Perform ABS VERIFICATION TEST - VER 1. (Refer to 5 - BRAKES/ELECTRICAL - DIAGNOSIS AND TESTING)

No >> Go To 5

---

5. EXCESSIVE WHEEL SPEED SENSOR AIR GAP

Measure the Wheel Speed Sensor Air Gap in accordance with the Service Information.

Were any problems found?

Yes >> Repair as necessary in accordance with the Service Information.
Perform ABS VERIFICATION TEST - VER 1. (Refer to 5 - BRAKES/ELECTRICAL - DIAGNOSIS AND TESTING)

No >> Go To 6

---

6. WHEEL BEARING/REAR DIFFERENTIAL

Inspect the wheel bearings for excessive run out or improper clearance in accordance with the Service Information.
Inspect the rear differential for proper operating. Refer to the Service information.

Were any problems found?

Yes >> Repair as necessary in accordance with the Service Information.
Perform ABS VERIFICATION TEST - VER 1. (Refer to 5 - BRAKES/ELECTRICAL - DIAGNOSIS AND TESTING)

No >> Go To 7

INTERMITTENT SIGNAL FROM REAR SENSOR — 37 (CONTINUED)

7. REAR WHEEL SPEED SENSOR (+) CIRCUIT SHORTED TO GROUND

Turn the ignition off.

Disconnect the Rear Wheel Speed Sensor harness connector.

Disconnect the Controller Anti-lock Brake harness connector.

NOTE: Check connector - Clean/repair as necessary.

Measure the resistance between the Rear Wheel Speed Sensor (+) circuit and ground.

Is the resistance above 5.0 ohms?

Yes >> Go To 8

No >> Repair the Rear Wheel Speed Sensor (+) circuit for a short to ground.

Perform ABS VERIFICATION TEST - VER 1. (Refer to 5 - BRAKES/ELECTRICAL - DIAGNOSIS AND TESTING)

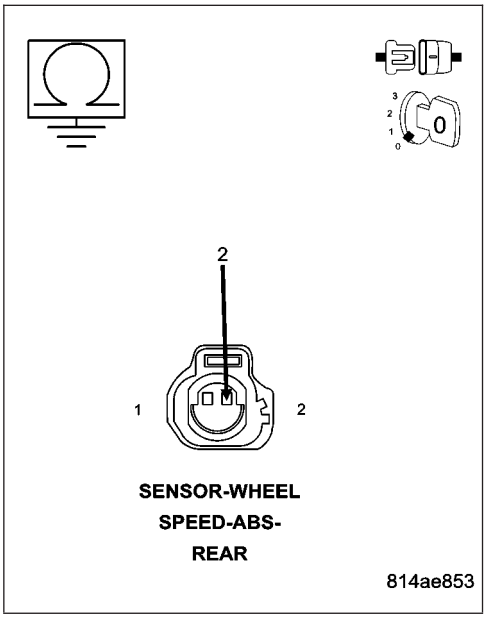

8. REAR WHEEL SPEED SENSOR (-) CIRCUIT SHORTED TO GROUND

Measure the resistance between the Rear Wheel Speed Sensor (-) circuit and ground.

Is the resistance above 5.0 ohms?

Yes >> Go To 9

No >> Repair the Rear Wheel Speed Sensor (-) circuit for a short to ground.

Perform ABS VERIFICATION TEST - VER 1. (Refer to 5 - BRAKES/ELECTRICAL - DIAGNOSIS AND TESTING)

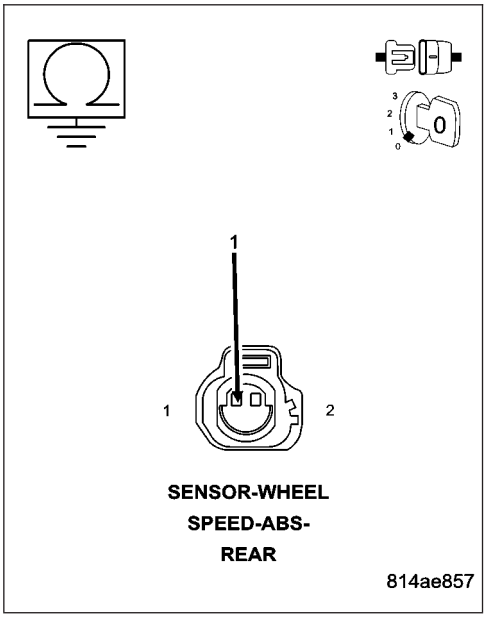

INTERMITTENT SIGNAL FROM REAR SENSOR — 37 (CONTINUED)

9. REAR WHEEL SPEED SENSOR (+) CIRCUIT OPEN

Measure the resistance of the Rear Wheel Speed Sensor (+) circuit.

Is the resistance below 5.0 ohms?

Yes >> Go To 10

No >> Repair the open Rear Wheel Speed Sensor (+) circuit. Perform ABS VERIFICATION TEST - VER 1. (Refer to 5 - BRAKES/ELECTRICAL - DIAGNOSIS AND TESTING)

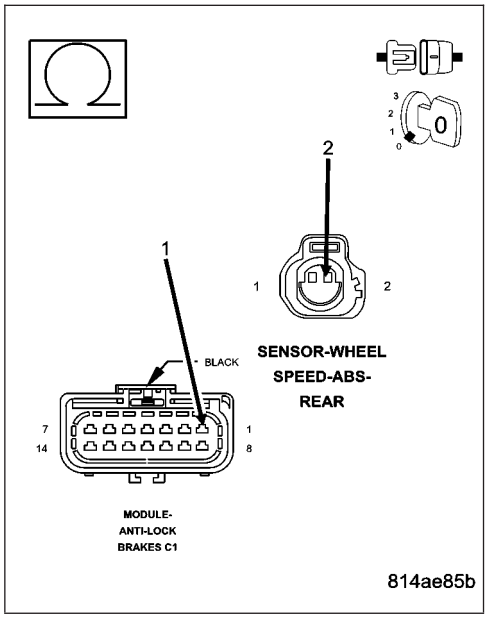

10. REAR WHEEL SPEED SENSOR (-) CIRCUIT OPEN

Measure the resistance of the Rear Wheel Speed Sensor (-) circuit.

Is the resistance below 5 ohms?

Yes >> Go To 11

No >> Repair the open Rear Wheel Speed Sensor (-) circuit. Perform ABS VERIFICATION TEST - VER 1. (Refer to 5 - BRAKES/ELECTRICAL - DIAGNOSIS AND TESTING)

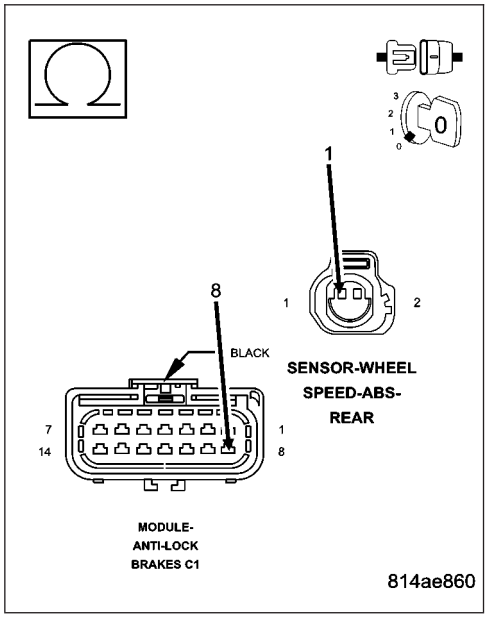

INTERMITTENT SIGNAL FROM REAR SENSOR — 37 (CONTINUED)

11. REAR WHEEL SPEED SENSOR (+) CIRCUIT SHORTED TO VOLTAGE

Turn the ignition on.

Measure the voltage of the Rear Wheel Speed Sensor (+) circuit.

Is there any voltage present?

Yes >> Repair Rear Wheel Speed Sensor (+) circuit for a short to voltage.

Perform ABS VERIFICATION TEST - VER 1. (Refer to 5 - BRAKES/ELECTRICAL - DIAGNOSIS AND TESTING)

No >> Go To 12

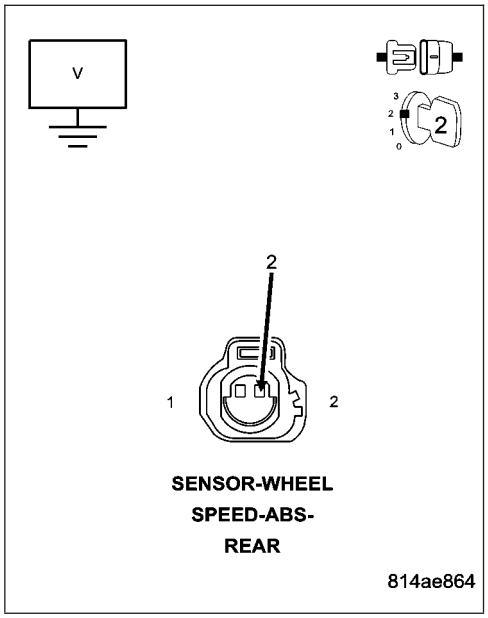

12. REAR WHEEL SPEED SENSOR (-) CIRCUIT SHORTED TO VOLTAGE

Measure the voltage of the Rear Wheel Speed Sensor (-) circuit.

Is there any voltage present?

Yes >> Repair the Rear Wheel Speed Sensor (-) circuit for a short to voltage.

Perform ABS VERIFICATION TEST - VER 1. (Refer to 5 - BRAKES/ELECTRICAL - DIAGNOSIS AND TESTING)

No >> Go To 13

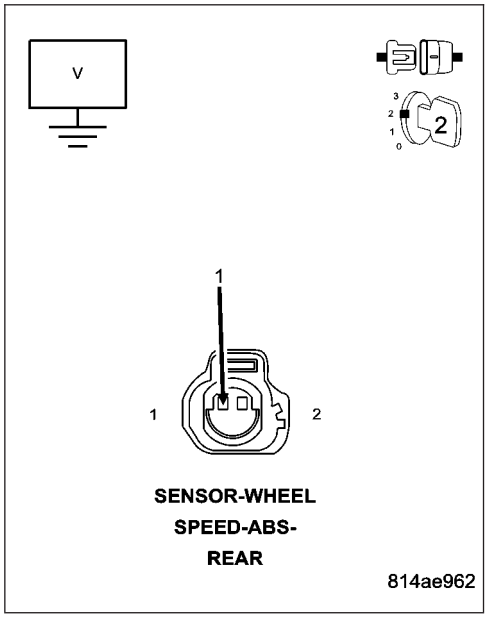

INTERMITTENT SIGNAL FROM REAR SENSOR — 37 (CONTINUED)

13. REAR WHEEL SPEED SENSOR (+) CIRCUIT SHORTED TO THE REAR WHEEL SPEED SENSOR (-) CIRCUIT

Turn the ignition off.

Measure the resistance between the Rear Wheel Speed Sensor (+) circuit and the Rear Wheel Speed Sensor (-) circuit at the Controller Anti-lock Brake harness connector.

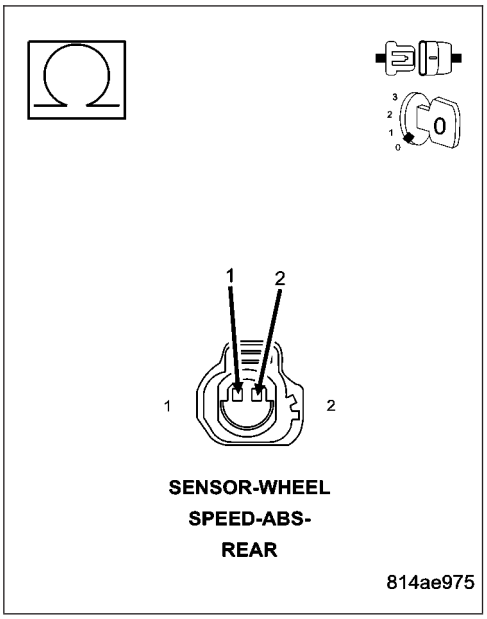

Is the resistance below 5.0 ohms?

Yes >> Repair Rear Wheel Speed Sensor (+) circuit for a short to the Rear Wheel Speed Sensor (-) circuit.
Perform ABS VERIFICATION TEST - VER 1. (Refer to 5 - BRAKES/ELECTRICAL - DIAGNOSIS AND TESTING)

No >> Go To 14

---

14. REAR WHEEL SPEED SENSOR

Turn the ignition off.

Connect the Rear Wheel Speed Sensor harness connector.

Measure the resistance between the Rear Wheel Speed Sensor (+) circuit and Rear Wheel Speed Sensor (-) circuit at the Controller Anti-lock Brake harness connector.

NOTE: The resistance should be approximately 1600–2300 ohms at 76 degrees F.

Is the resistance within the noted range?

Yes >> Go to 15

No >> Replace the Rear Wheel Speed Sensor in accordance with the Service Information.
Perform ABS VERIFICATION TEST - VER 1. (Refer to 5 - BRAKES/ELECTRICAL - DIAGNOSIS AND TESTING)

---

15. CONTROLLER ANTI-LOCK BRAKE

Turn the ignition off.

Inspect the related wiring harness. Look for any chafed, pierced, pinched, or partially broken wires.

Inspect the related wire harness connectors. Look for broken, bent, pushed out, or corroded terminals.

Refer to any Technical Service Bulletins that may apply.

Were any problems found?

Yes >> Repair as necessary in accordance with the Service Information.
Perform ABS VERIFICATION TEST - VER 1. (Refer to 5 - BRAKES/ELECTRICAL - DIAGNOSIS AND TESTING)

No >> Replace the Controller Anti-lock Brake in accordance with the Service Information.
Perform ABS VERIFICATION TEST - VER 1. (Refer to 5 - BRAKES/ELECTRICAL - DIAGNOSIS AND TESTING)

INTERMITTENT SIGNAL FROM REAR SENSOR — 37 (CONTINUED)

16. WIRING HARNESS INSPECTION

Turn the ignition off.

NOTE: Towing the vehicle with ignition ON may set this DTC.

Inspect the related wiring harness. Look for any chafed, pierced, pinched, or partially broken wires.

Inspect the related wire harness connectors. Look for broken, bent, pushed out, or corroded terminals.

Refer to any Technical Service Bulletins that may apply.

Were any problems found?

Yes >> Repair as necessary in accordance with the Service Information.
Perform ABS VERIFICATION TEST - VER 1. (Refer to 5 - BRAKES/ELECTRICAL - DIAGNOSIS AND TESTING)

No >> Test Complete.

INTERMITTENT SIGNAL FROM RIGHT FRONT SENSOR — 27

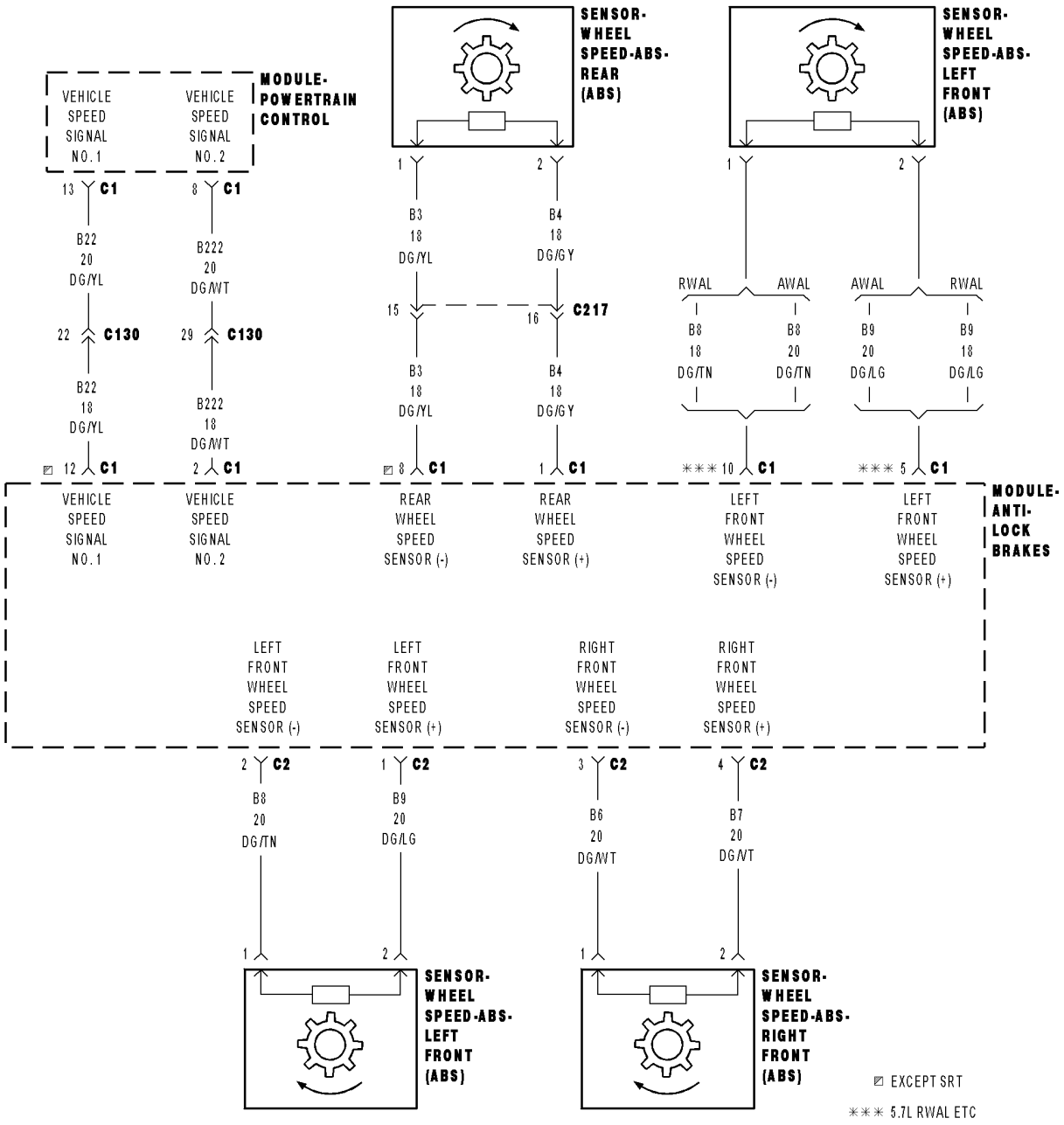

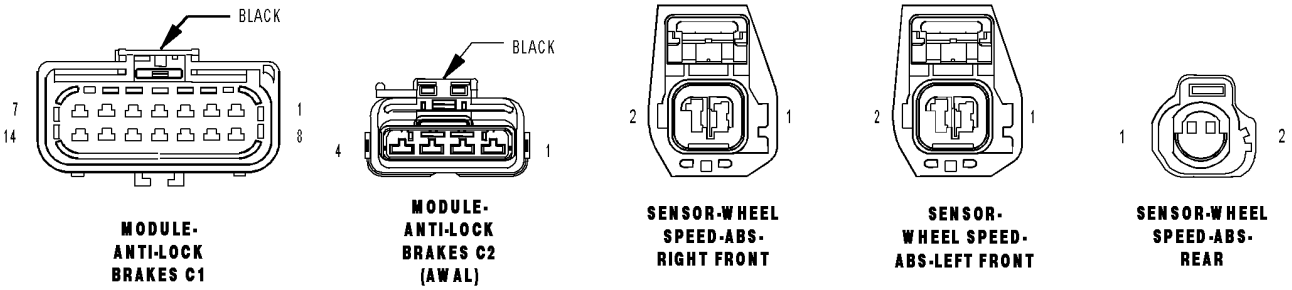

814ae047

INTERMITTENT SIGNAL FROM RIGHT FRONT SENSOR — 27 (CONTINUED)
For a complete wiring diagram **Refer to Section 8W**.

- **When Monitored:**
  Ignition turned on for at least 3.5 seconds. Average filtered speed for the two front wheels above 6 km/h (4MPH). Speed for each suspect sensor above 32 km/h (20 MPH) (brake applied or ABS active) or 19 km/h (12 MPH) (brake released or ABS inactive).
- **Set Condition:**
  When there is a sudden change of output signal from the sensor.

Possible Causes
INTERMITTENT LEFT FRONT WHEEL SPEED SENSOR DTC
RIGHT FRONT WHEEL SPEED SENSOR (+) CIRCUIT SHORT TO GROUND
RIGHT FRONT WHEEL SPEED SENSOR (-) CIRCUIT SHORT TO GROUND
RIGHT FRONT WHEEL SPEED SENSOR (+) CIRCUIT OPEN
RIGHT FRONT WHEEL SPEED SENSOR (-) CIRCUIT OPEN
RIGHT FRONT WHEEL SPEED SENSOR (+) CIRCUIT SHORTED TO VOLTAGE
RIGHT FRONT WHEEL SPEED SENSOR (-) CIRCUIT SHORTED TO VOLTAGE
RIGHT FRONT WHEEL SPEED SENSOR (-) CIRCUIT SHORTED TO THE RIGHT FRONT WHEEL SPEED SENSOR (+) CIRCUIT
TONE WHEEL
EXCESSIVE LEFT FRONT WHEEL SPEED SENSOR AIR GAP
WHEEL BEARING
RIGHT FRONT WHEEL SPEED SENSOR
CONTROLLER ANTI-LOCK BRAKE

Diagnostic Test

1. DTC IS ACTIVE

Turn the ignition on.
With the DRBIII®, clear DTCs.
Turn the ignition off.
Turn the ignition on.
With the DRBIII®, read DTCs.

Does the DRBIII® display the DTC??

Yes >> Go To 2
No >> Go To 16

INTERMITTENT SIGNAL FROM RIGHT FRONT SENSOR — 27 (CONTINUED)

2. CONTROLLER ANTI-LOCK BRAKE HARNESS CONNECTOR INSPECTION

Turn the ignition off.

Inspect the CAB wiring harness. Look for any chafed, pierced, pinched, or partially broken wires.

Inspect the CAB wire harness connectors. Look for broken, bent, pushed out, or corroded terminals.

Were any problems found?

Yes >> Clean or Repair as necessary in accordance with the Service Information.
Perform ABS VERIFICATION TEST - VER 1. (Refer to 5 - BRAKES/ELECTRICAL - DIAGNOSIS AND TESTING)

No >> Go To 3

---

3. WHEEL SPEED SENSOR INSPECTION

Turn the ignition off.

Inspect the Wheel Speed Sensor for proper mounting.

Inspect the Wheel Speed Sensor harness and connector.

Inspect the Wheel Speed Sensor for excessive debris on the sensor.

Were any problems found?

Yes >> Repair as necessary in accordance with the Service Information.
Perform ABS VERIFICATION TEST - VER 1. (Refer to 5 - BRAKES/ELECTRICAL - DIAGNOSIS AND TESTING)

No >> Go To 4

---

4. TONE WHEEL DAMAGED/MISSING

Inspect the Tone Wheel in accordance with the Service Information.

NOTE: The Tone Wheel Teeth should be perfectly square, not bent or nicked.

Were any problems found?

Yes >> Replace the Tone Wheel in accordance with the Service Information.
Perform ABS VERIFICATION TEST - VER 1. (Refer to 5 - BRAKES/ELECTRICAL - DIAGNOSIS AND TESTING)

No >> Go To 5

---

5. EXCESSIVE WHEEL SPEED SENSOR AIR GAP

Measure the Wheel Speed Sensor Air Gap in accordance with the Service Information.

Were any problems found?

Yes >> Repair as necessary in accordance with the Service Information.
Perform ABS VERIFICATION TEST - VER 1. (Refer to 5 - BRAKES/ELECTRICAL - DIAGNOSIS AND TESTING)

No >> Go To 6

INTERMITTENT SIGNAL FROM RIGHT FRONT SENSOR — 27 (CONTINUED)

6. WHEEL BEARING LOOSE/BINDING

Inspect the wheel bearings for excessive run out or improper clearance in accordance with the Service Information.

Were any problems found?

Yes >> Repair as necessary in accordance with the Service Information.
Perform ABS VERIFICATION TEST - VER 1. (Refer to 5 - BRAKES/ELECTRICAL - DIAGNOSIS AND TESTING)

No >> Go To 7

---

7. RIGHT FRONT WHEEL SPEED SENSOR (+) CIRCUIT SHORTED TO GROUND

Turn the ignition off.
Disconnect the Right Front Wheel Speed Sensor harness connector.
Disconnect the Controller Anti-lock Brake harness connector.

NOTE: Check connector - Clean/repair as necessary.
Measure the resistance between the Right Front Wheel Speed Sensor (+) circuit and ground.

Is the resistance above 5.0 ohms?

Yes >> Go To 8

No >> Repair the Right Front Wheel Speed Sensor (+) circuit for a short to ground.
Perform ABS VERIFICATION TEST - VER 1. (Refer to 5 - BRAKES/ELECTRICAL - DIAGNOSIS AND TESTING)

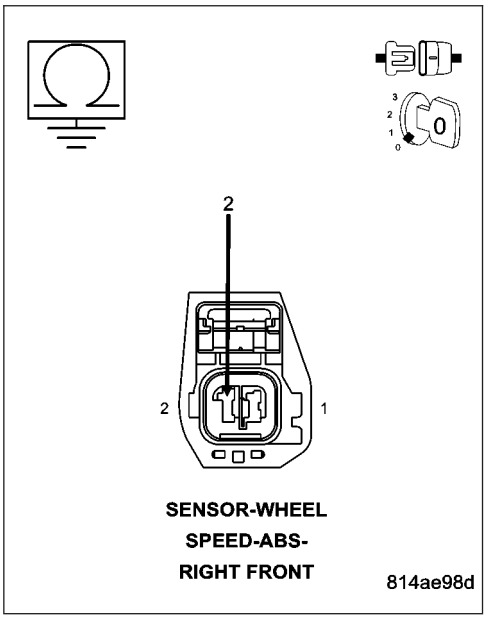

---

8. RIGHT FRONT WHEEL SPEED SENSOR (-) CIRCUIT SHORTED TO GROUND

Measure the resistance between the Right Front Wheel Speed Sensor (-) circuit and ground.

Is the resistance above 5.0 ohms?

Yes >> Go To 9

No >> Repair the Right Front Wheel Speed Sensor (-) circuit for a short to ground.
Perform ABS VERIFICATION TEST - VER 1. (Refer to 5 - BRAKES/ELECTRICAL - DIAGNOSIS AND TESTING)

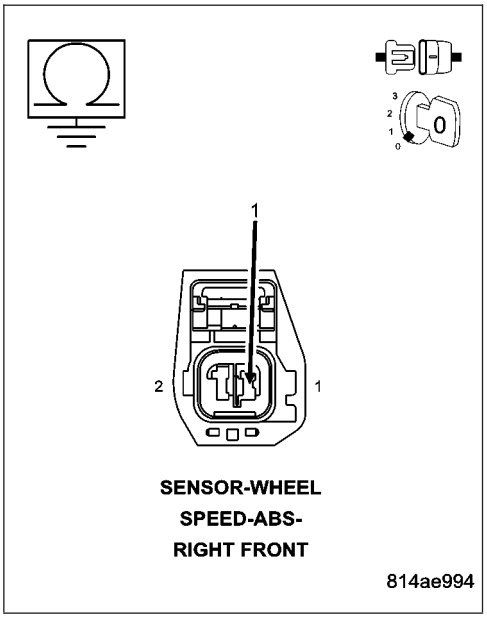

INTERMITTENT SIGNAL FROM RIGHT FRONT SENSOR — 27 (CONTINUED)

9. RIGHT FRONT WHEEL SPEED SENSOR (+) CIRCUIT OPEN

Measure the resistance of the Right Front Wheel Speed Sensor (+) circuit.

Is the resistance below 5.0 ohms?

Yes >> Go To 10

No >> Repair the open Right Front Wheel Speed Sensor (+) circuit.
Perform ABS VERIFICATION TEST - VER 1. (Refer to 5 - BRAKES/ELECTRICAL - DIAGNOSIS AND TESTING)

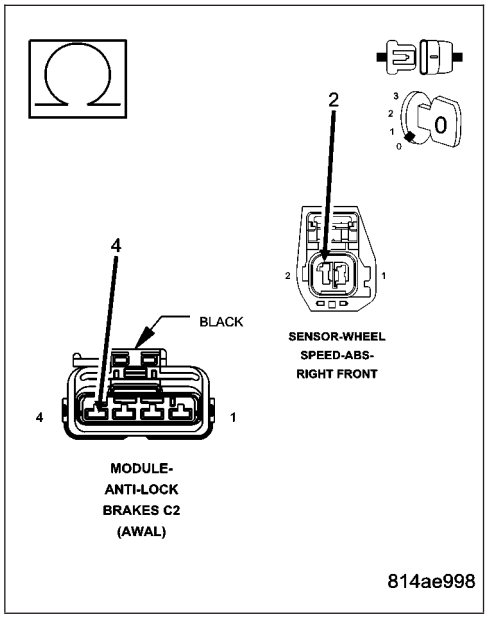

10. RIGHT FRONT WHEEL SPEED SENSOR (-) CIRCUIT OPEN

Measure the resistance of the Right Front Wheel Speed Sensor (-) circuit.

Is the resistance below 5.0 ohms?

Yes >> Go To 11

No >> Repair the open Right Front Wheel Speed Sensor (-) circuit.
Perform ABS VERIFICATION TEST - VER 1. (Refer to 5 - BRAKES/ELECTRICAL - DIAGNOSIS AND TESTING)

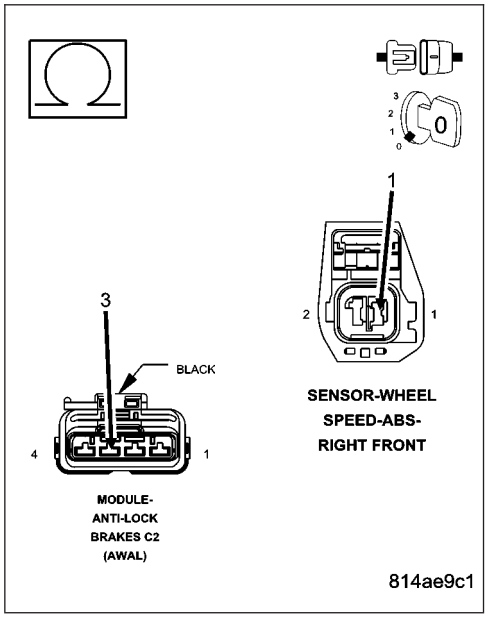

INTERMITTENT SIGNAL FROM RIGHT FRONT SENSOR — 27 (CONTINUED)

11. RIGHT FRONT WHEEL SPEED SENSOR (+) CIRCUIT SHORTED TO VOLTAGE

Turn the ignition on.

Measure the voltage of the Right Front Wheel Speed Sensor (+) circuit.

Is there any voltage present?

Yes >> Repair Right Front Wheel Speed Sensor (+) circuit for a short to voltage.

Perform ABS VERIFICATION TEST - VER 1. (Refer to 5 - BRAKES/ELECTRICAL - DIAGNOSIS AND TESTING)

No >> Go To 12

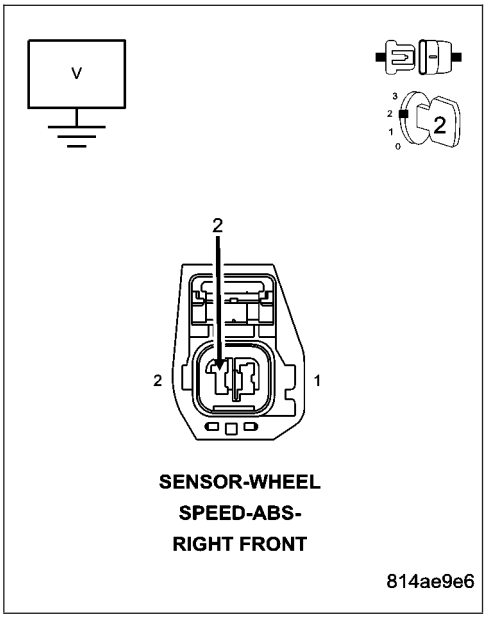

12. RIGHT FRONT WHEEL SPEED SENSOR (-) CIRCUIT SHORTED TO VOLTAGE

Measure the voltage of the Right Front Wheel Speed Sensor (-) circuit.

Is there any voltage present?

Yes >> Repair the Right Front Wheel Speed Sensor (-) circuit for a short to voltage.

Perform ABS VERIFICATION TEST - VER 1. (Refer to 5 - BRAKES/ELECTRICAL - DIAGNOSIS AND TESTING)

No >> Go To 13

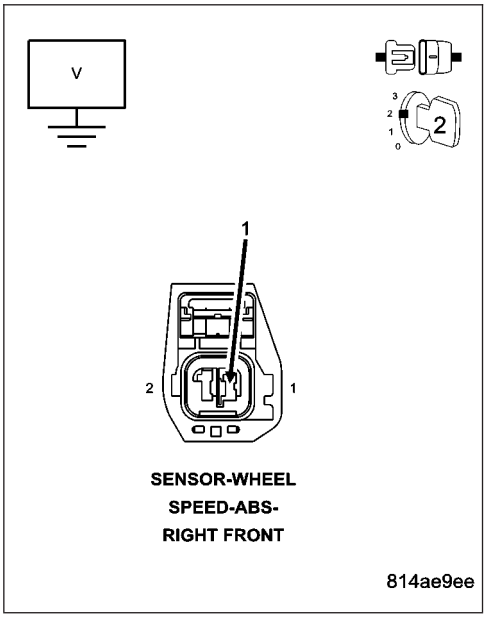

INTERMITTENT SIGNAL FROM RIGHT FRONT SENSOR — 27 (CONTINUED)

13. RIGHT FRONT WHEEL SPEED SENSOR (+) CIRCUIT SHORTED TO THE RIGHT FRONT WHEEL SPEED SENSOR (-) CIRCUIT

Turn the ignition off.

Measure the resistance between the Right Front Wheel Speed Sensor (+) circuit and the Right Front Wheel Speed Sensor (-) circuit at the Controller Anti-lock Brake harness connector.

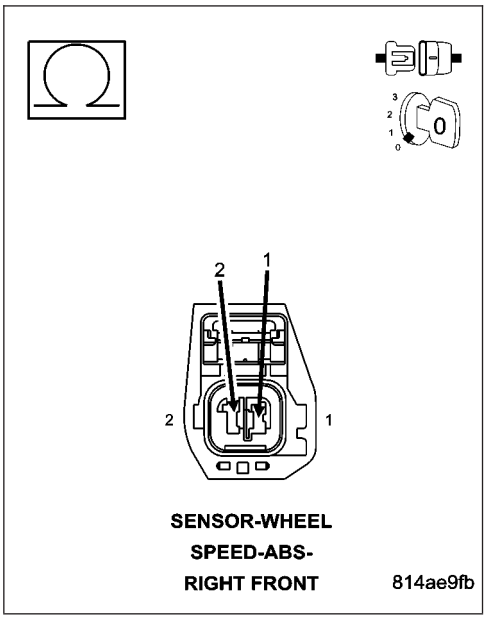

Is the resistance below 5.0 ohms?

Yes >> Repair Right Front Wheel Speed Sensor (+) circuit for a short to the Right Front Wheel Speed Sensor (-) circuit.
Perform ABS VERIFICATION TEST - VER 1. (Refer to 5 - BRAKES/ELECTRICAL - DIAGNOSIS AND TESTING)

No >> Go To 14

14. RIGHT FRONT WHEEL SPEED SENSOR

Turn the ignition off.

Connect the Right Front Wheel Speed Sensor harness connector.

Measure the resistance between the Right Front Wheel Speed Sensor (+) circuit and Right Front Wheel Speed Sensor (-) circuit at the Controller Anti-lock Brake harness connector.

NOTE: The resistance should be approximately 1800–2200 ohms at 76 degrees F.

Is the resistance within the noted range?

Yes >> Go to 15

No >> Replace the Right Front Wheel Speed Sensor in accordance with the Service Information.
Perform ABS VERIFICATION TEST - VER 1. (Refer to 5 - BRAKES/ELECTRICAL - DIAGNOSIS AND TESTING)

15. CONTROLLER ANTI-LOCK BRAKE

Turn the ignition off.

Inspect the related wiring harness. Look for any chafed, pierced, pinched, or partially broken wires.

Inspect the related wire harness connectors. Look for broken, bent, pushed out, or corroded terminals.

Refer to any Technical Service Bulletins that may apply.

Were any problems found?

Yes >> Repair as necessary in accordance with the Service Information.
Perform ABS VERIFICATION TEST - VER 1. (Refer to 5 - BRAKES/ELECTRICAL - DIAGNOSIS AND TESTING)

No >> Replace the Controller Anti-lock Brake in accordance with the Service Information.
Perform ABS VERIFICATION TEST - VER 1. (Refer to 5 - BRAKES/ELECTRICAL - DIAGNOSIS AND TESTING)

INTERMITTENT SIGNAL FROM RIGHT FRONT SENSOR — 27 (CONTINUED)

16. WIRING HARNESS INSPECTION

Turn the ignition off.

NOTE: Towing the vehicle with ignition ON may set this DTC.

Inspect the related wiring harness. Look for any chafed, pierced, pinched, or partially broken wires.

Inspect the related wire harness connectors. Look for broken, bent, pushed out, or corroded terminals.

Refer to any Technical Service Bulletins that may apply.

Were any problems found?

Yes >> Repair as necessary in accordance with the Service Information.
Perform ABS VERIFICATION TEST - VER 1. (Refer to 5 - BRAKES/ELECTRICAL - DIAGNOSIS AND TESTING)

No >> Test Complete.

LEFT FRONT SENSOR OPEN — 25

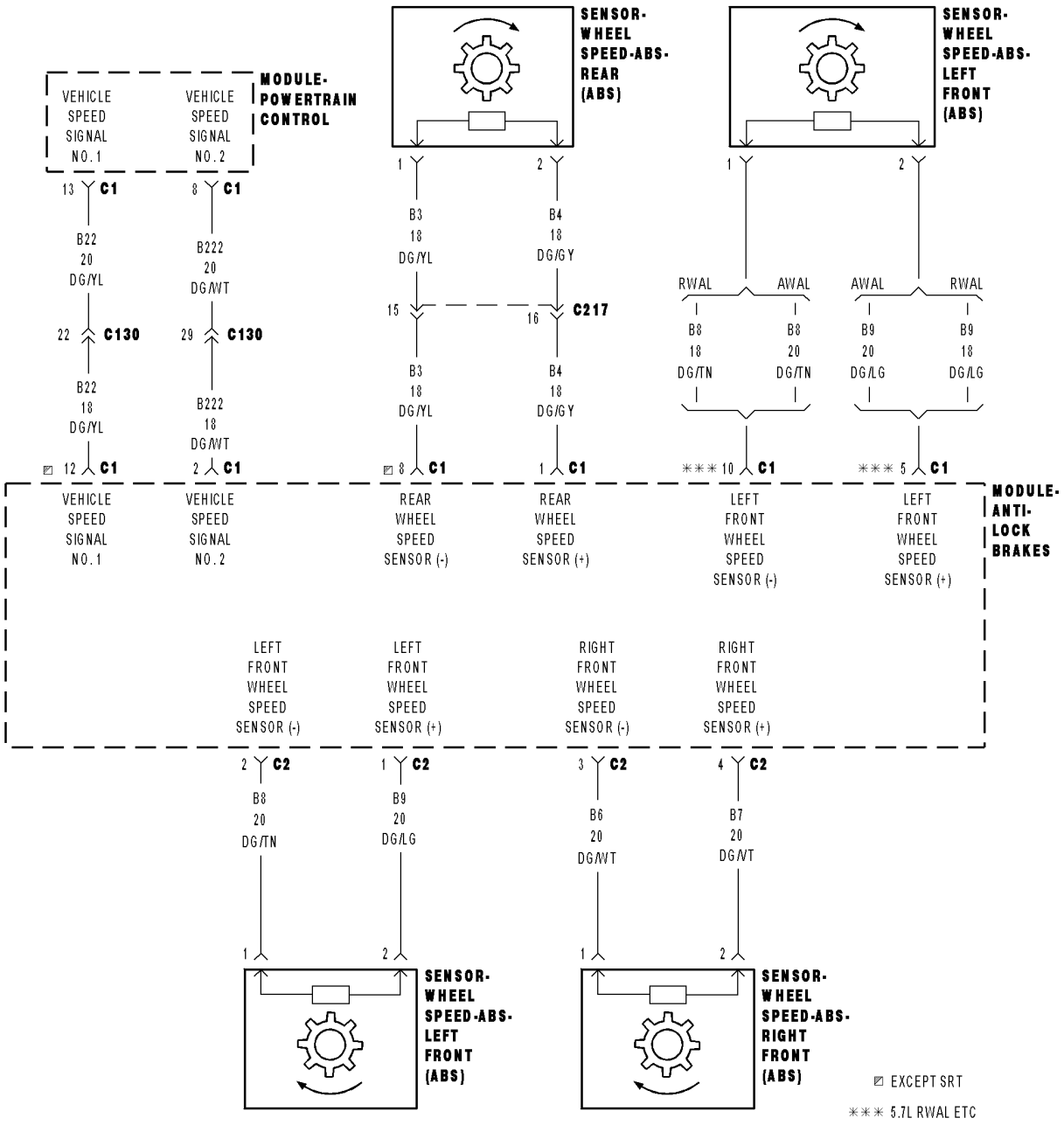

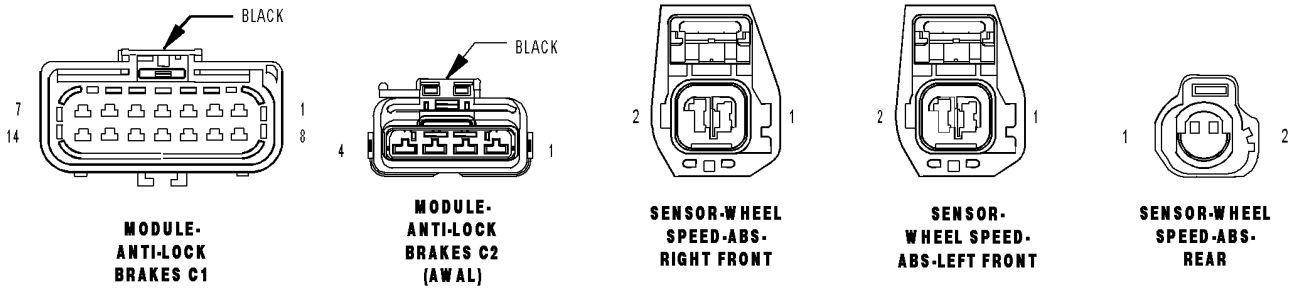

814ae047

LEFT FRONT SENSOR OPEN — 25 (CONTINUED)
For a complete wiring diagram **Refer to Section 8W**.

- **When Monitored:**
  Ignition on.
- **Set Condition:**
  The CAB detects an open in the wheel speed sensor circuit

Possible Causes
INTERMITTENT LEFT FRONT WHEEL SPEED SENSOR DTC
LEFT FRONT WHEEL SPEED SENSOR SUPPLY CIRCUIT SHORT TO GROUND
LEFT FRONT WHEEL SPEED SENSOR SIGNAL CIRCUIT SHORT TO GROUND
LEFT FRONT WHEEL SPEED SENSOR SUPPLY CIRCUIT OPEN
LEFT FRONT WHEEL SPEED SENSOR SIGNAL CIRCUIT OPEN
TONE WHEEL
EXCESSIVE LEFT FRONT WHEEL SPEED SENSOR AIR GAP
WHEEL BEARING
LEFT FRONT WHEEL SPEED SENSOR
CONTROL ANTI-LOCK BRAKE

Diagnostic Test

1. DTC IS ACTIVE

Turn the ignition on.
With the DRBIII®, clear DTCs.
Turn the ignition off.
Turn the ignition on.
With the DRBIII®, select View DTCs.

Does the DRBIII® display the DTC?

Yes >> Go To 2

No >> Go To 12

---

2. WHEEL SPEED SENSOR INSPECTION

Turn the ignition off.
Inspect the Wheel Speed Sensor for proper mounting.
Inspect the Wheel Speed Sensor harness and connector.
Inspect the Wheel Speed Sensor for excessive debris on the sensor.

Were any problems found?

Yes >> Repair as necessary in accordance with the Service Information.
Perform ABS VERIFICATION TEST - VER 1. (Refer to 5 - BRAKES/ELECTRICAL - DIAGNOSIS AND TESTING)

No >> Go To 3

LEFT FRONT SENSOR OPEN — 25 (CONTINUED)

3. TONE WHEEL DAMAGED/MISSING

Inspect the Tone Wheel in accordance with the Service Information.

NOTE: The Tone Wheel Teeth should be perfectly square, not bent or nicked.

Were any problems found?

Yes >> Replace the Tone Wheel in accordance with the Service Information.
Perform ABS VERIFICATION TEST - VER 1. (Refer to 5 - BRAKES/ELECTRICAL - DIAGNOSIS AND TESTING)

No >> Go To 4

---

4. EXCESSIVE WHEEL SPEED SENSOR AIR GAP

Measure the Wheel Speed Sensor Air Gap in accordance with the Service Information.

Were any problems found?

Yes >> Repair as necessary in accordance with the Service Information.
Perform ABS VERIFICATION TEST - VER 1. (Refer to 5 - BRAKES/ELECTRICAL - DIAGNOSIS AND TESTING)

No >> Go To 5

---

5. WHEEL BEARING LOOSE/BINDING

Inspect the wheel bearings for excessive run out or improper clearance in accordance with the Service Information.

Were any problems found?

Yes >> Repair as necessary in accordance with the Service Information.
Perform ABS VERIFICATION TEST - VER 1. (Refer to 5 - BRAKES/ELECTRICAL - DIAGNOSIS AND TESTING)

No >> Go To 6

---

6. LEFT FRONT WHEEL SPEED SENSOR (+) CIRCUIT SHORTED TO GROUND

Turn the ignition off.

Disconnect the Left Front Wheel Speed Sensor harness connector.

Disconnect the Controller Anti-lock Brake harness connector.

NOTE: Check connector - Clean/repair as necessary.

Measure the resistance between the Left Front Wheel Speed Sensor (+) circuit and ground.

Is the resistance above 5.0 ohms?

Yes >> Go To 7

No >> Repair the Left Front Wheel Speed Sensor (+) circuit for a short to ground.
Perform ABS VERIFICATION TEST - VER 1. (Refer to 5 - BRAKES/ELECTRICAL - DIAGNOSIS AND TESTING)

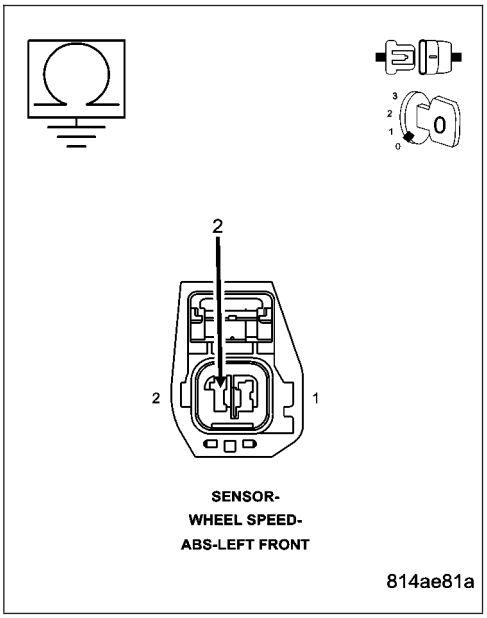

LEFT FRONT SENSOR OPEN — 25 (CONTINUED)

7. LEFT FRONT WHEEL SPEED SENSOR (-)CIRCUIT SHORTED TO GROUND

Measure the resistance between the Left Front Wheel Speed Sensor (-)circuit and ground.

Is the resistance above 5.0 ohms?

Yes >> Go To 8

No >> Repair the Left Front Wheel Speed Sensor (-)circuit for a short to ground.
Perform ABS VERIFICATION TEST - VER 1. (Refer to 5 - BRAKES/ELECTRICAL - DIAGNOSIS AND TESTING)

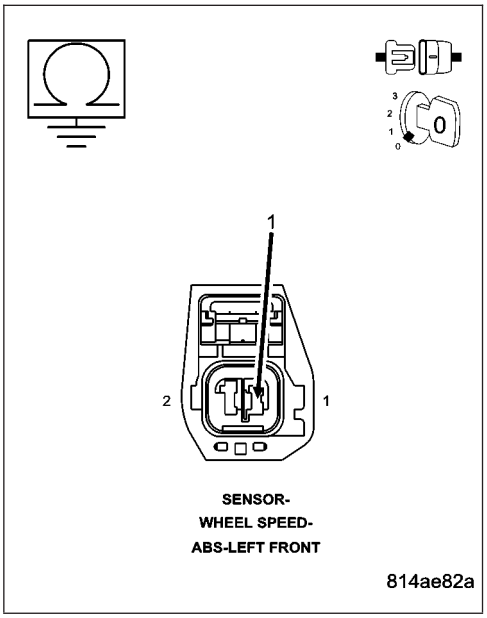

8. LEFT FRONT WHEEL SPEED SENSOR (+) CIRCUIT OPEN

Measure the resistance of the Left Front Wheel Speed Sensor (+) circuit.

Is the resistance below 5.0 ohms?

Yes >> Go To 9

No >> Repair the open Left Front Wheel Speed Sensor (+) circuit.
Perform ABS VERIFICATION TEST - VER 1. (Refer to 5 - BRAKES/ELECTRICAL - DIAGNOSIS AND TESTING)

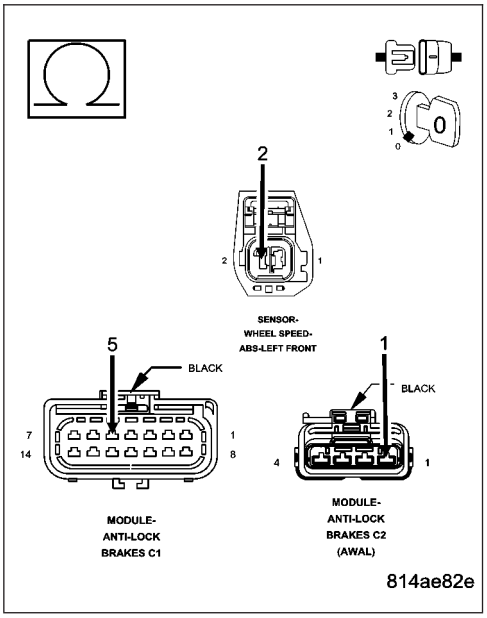

LEFT FRONT SENSOR OPEN — 25 (CONTINUED)

9. LEFT FRONT WHEEL SPEED SENSOR (-) CIRCUIT OPEN

Measure the resistance of the Left Front Wheel Speed Sensor (-)circuit.

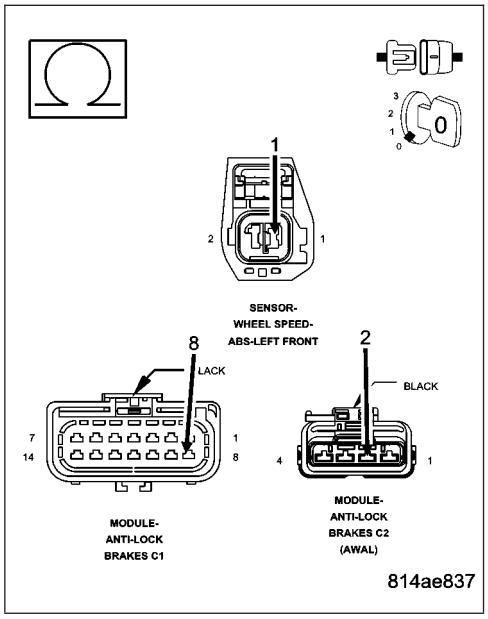

Is the resistance below 5.0 ohms?

Yes >> Go To 10

No >> Repair the open Left Front Wheel Speed Sensor (-)circuit.
Perform ABS VERIFICATION TEST - VER 1. (Refer to 5 - BRAKES/ELECTRICAL - DIAGNOSIS AND TESTING)

---

10. LEFT FRONT WHEEL SPEED SENSOR

Turn the ignition off.

Connect the Left Front Wheel Speed Sensor harness connector.

Measure the resistance between the Left Front Wheel Speed Sensor (+) circuit and Left Front Wheel Speed Sensor (-) circuit at the Controller Anti-lock Brake harness connector.

NOTE: The resistance should be approximately 1600–2300 ohms at 76 degrees F.

Is the resistance within the noted range?

Yes >> Go to 11

No >> Replace the Left Front Wheel Speed Sensor in accordance with the Service Information.
Perform ABS VERIFICATION TEST - VER 1. (Refer to 5 - BRAKES/ELECTRICAL - DIAGNOSIS AND TESTING)

---

11. CONTROLLER ANTI-LOCK BRAKE

Turn the ignition off.

Inspect the related wiring harness. Look for any chafed, pierced, pinched, or partially broken wires.

Inspect the related wire harness connectors. Look for broken, bent, pushed out, or corroded terminals.

Refer to any Technical Service Bulletins that may apply.

Were any problems found?

Yes >> Repair as necessary in accordance with the Service Information.
Perform ABS VERIFICATION TEST - VER 1. (Refer to 5 - BRAKES/ELECTRICAL - DIAGNOSIS AND TESTING)

No >> Replace the Controller Anti-lock Brake in accordance with the Service Information.
Perform ABS VERIFICATION TEST - VER 1. (Refer to 5 - BRAKES/ELECTRICAL - DIAGNOSIS AND TESTING)

LEFT FRONT SENSOR OPEN — 25 (CONTINUED)

12. WIRING HARNESS INSPECTION

Turn the ignition off.

NOTE: Towing the vehicle with ignition ON may set this DTC.

Inspect the related wiring harness. Look for any chafed, pierced, pinched, or partially broken wires.

Inspect the related wire harness connectors. Look for broken, bent, pushed out, or corroded terminals.

Refer to any Technical Service Bulletins that may apply.

Were any problems found?

Yes >> Repair as necessary in accordance with the Service Information.
Perform ABS VERIFICATION TEST - VER 1. (Refer to 5 - BRAKES/ELECTRICAL - DIAGNOSIS AND TESTING)

No >> Test Complete.

LEFT FRONT SENSOR SHORTED — 90

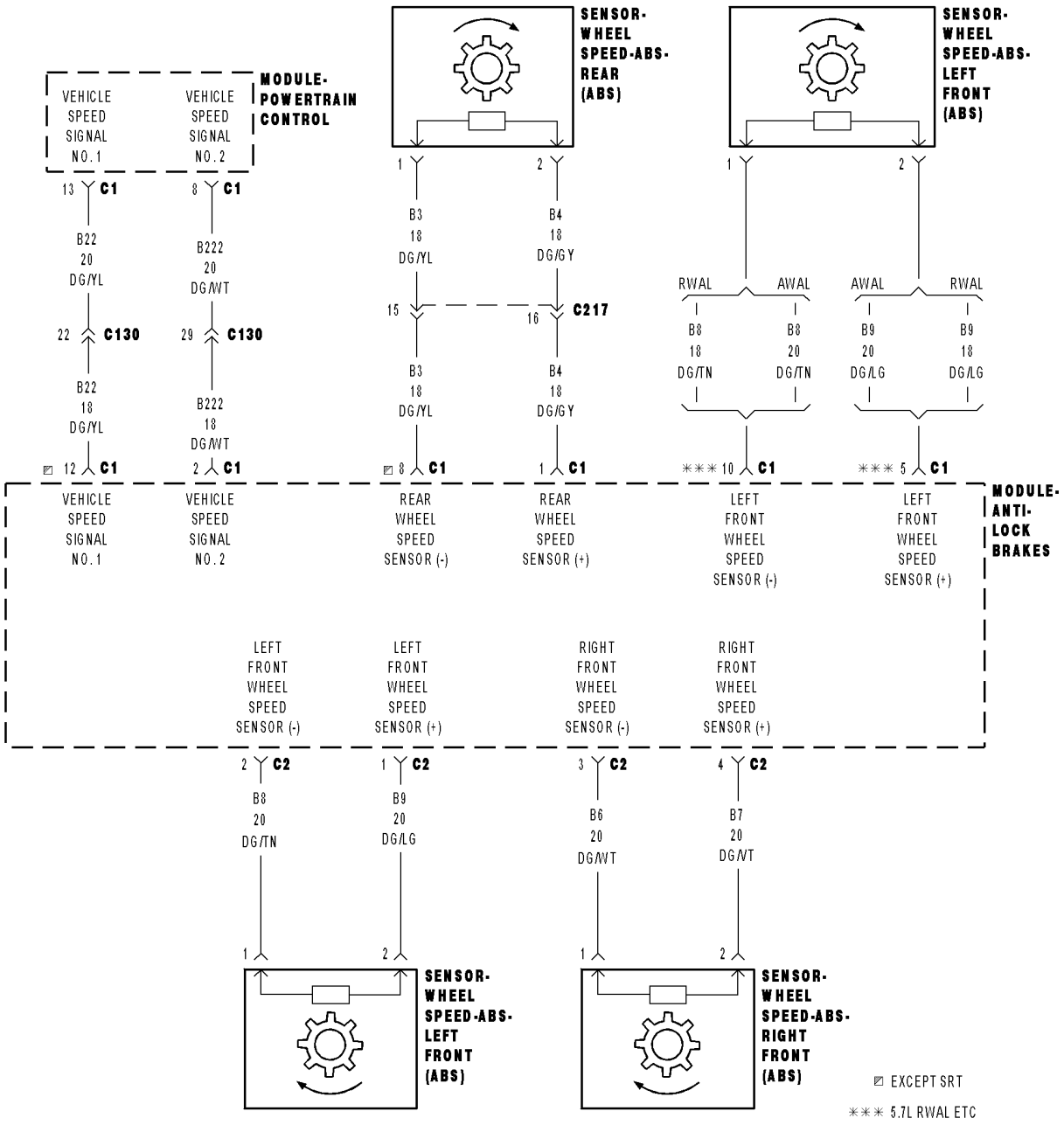

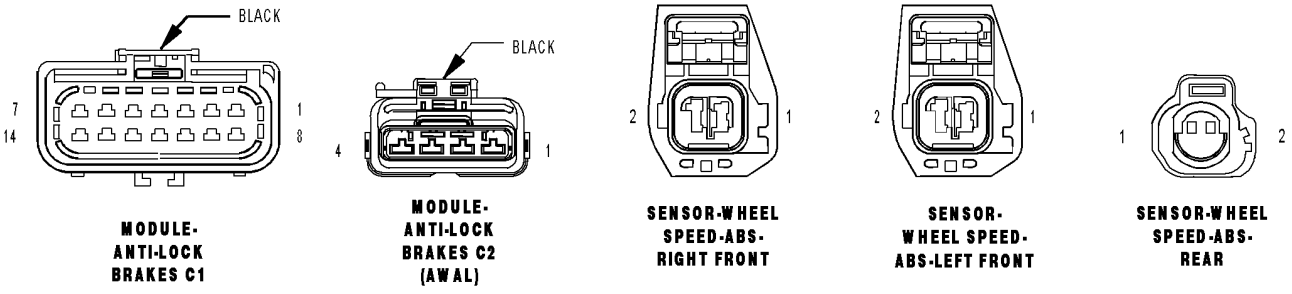

814ae047

LEFT FRONT SENSOR SHORTED — 90 (CONTINUED)

For a complete wiring diagram **Refer to Section 8W**.

- **When Monitored:**
  Ignition on.
- **Set Condition:**
  The CAB detect high voltage on the wheel speed sensor circuit.

Possible Causes
INTERMITTENT LEFT FRONT WHEEL SPEED SENSOR DTC
LEFT FRONT WHEEL SPEED SENSOR (+) CIRCUIT SHORTED TO VOLTAGE
LEFT FRONT WHEEL SPEED SENSOR (-) CIRCUIT SHORTED TO VOLTAGE
LEFT FRONT WHEEL SPEED SENSOR (+) CIRCUIT SHORTED TO THE LEFT FRONT WHEEL SPEED SENSOR(-) CIRCUIT
TONE WHEEL
EXCESSIVE LEFT FRONT WHEEL SPEED SENSOR AIR GAP
WHEEL BEARING
LEFT FRONT WHEEL SPEED SENSOR
CONTROLLER ANTI-LOCK BRAKE

Diagnostic Test

1. DTC IS ACTIVE

Turn the ignition on.
With the scan tool, clear DTCs.
Turn the ignition off.
Turn the ignition on.
With the scan tool, read DTCs.

Does the DRBIII® display the DTC?

Yes >> Go To 2

No >> Go To 11

---

2. WHEEL SPEED SENSOR INSPECTION

Turn the ignition off.
Inspect the Wheel Speed Sensor for proper mounting.
Inspect the Wheel Speed Sensor harness and connector.
Inspect the Wheel Speed Sensor for excessive debris on the sensor.

Were any problems found?

Yes >> Repair as necessary in accordance with the Service Information.
Perform ABS VERIFICATION TEST - VER 1. (Refer to 5 - BRAKES/ELECTRICAL - DIAGNOSIS AND TESTING)

No >> Go To 3

LEFT FRONT SENSOR SHORTED — 90 (CONTINUED)

3. TONE WHEEL DAMAGED/MISSING

Inspect the Tone Wheel in accordance with the Service Information.

NOTE: The Tone Wheel Teeth should be perfectly square, not bent or nicked.

Were any problems found?

Yes >> Replace the Tone Wheel in accordance with the Service Information.
Perform ABS VERIFICATION TEST - VER 1. (Refer to 5 - BRAKES/ELECTRICAL - DIAGNOSIS AND TESTING)

No >> Go To 4

---

4. EXCESSIVE WHEEL SPEED SENSOR AIR GAP

Measure the Wheel Speed Sensor Air Gap in accordance with the Service Information.

Were any problems found?

Yes >> Repair as necessary in accordance with the Service Information.
Perform ABS VERIFICATION TEST - VER 1. (Refer to 5 - BRAKES/ELECTRICAL - DIAGNOSIS AND TESTING)

No >> Go To 5

---

5. WHEEL BEARING LOOSE/BINDING

Inspect the wheel bearings for excessive run out or improper clearance in accordance with the Service Information.

Were any problems found?

Yes >> Repair as necessary in accordance with the Service Information.
Perform ABS VERIFICATION TEST - VER 1. (Refer to 5 - BRAKES/ELECTRICAL - DIAGNOSIS AND TESTING)

No >> Go To 6

---

6. LEFT FRONT WHEEL SPEED SENSOR (+) CIRCUIT SHORTED TO VOLTAGE

Turn the ignition on.

Measure the voltage of the Left Front Wheel Speed Sensor (+) circuit.

Is there any voltage present?

Yes >> Repair Left Front Wheel Speed Sensor (+) circuit for a short to voltage.
Perform ABS VERIFICATION TEST - VER 1. (Refer to 5 - BRAKES/ELECTRICAL - DIAGNOSIS AND TESTING)

No >> Go To 7

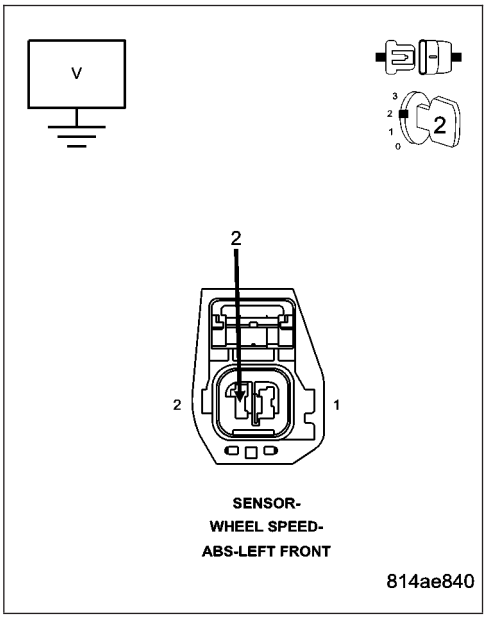

LEFT FRONT SENSOR SHORTED — 90 (CONTINUED)

7. LEFT FRONT WHEEL SPEED SENSOR (-) CIRCUIT SHORTED TO VOLTAGE

Measure the voltage of the Left Front Wheel Speed Sensor (-) circuit.

Is there any voltage present?

Yes >> Repair the Left Front Wheel Speed Sensor (-) circuit for a short to voltage.
Perform ABS VERIFICATION TEST - VER 1. (Refer to 5 - BRAKES/ELECTRICAL - DIAGNOSIS AND TESTING)

No >> Go To 8

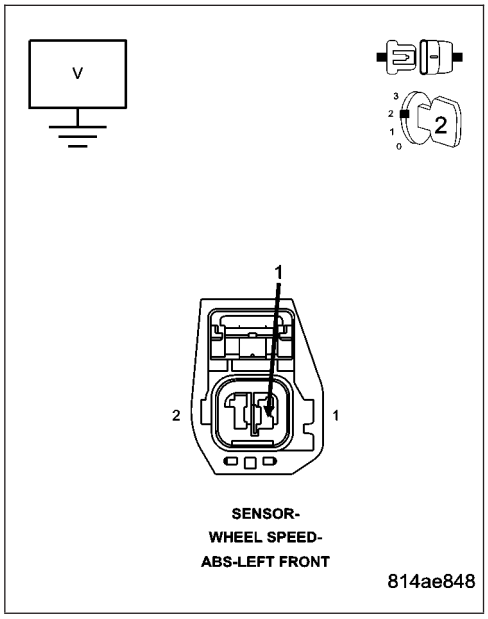

8. LEFT FRONT WHEEL SPEED SENSOR (+) CIRCUIT SHORTED TO THE LEFT FRONT WHEEL SPEED SENSOR (-) CIRCUIT

Turn the ignition off.

Measure the resistance between the Left Front Wheel Speed Sensor (+) circuit and the Left Front Wheel Speed Sensor (-) circuit at the Controller Anti-lock Brake harness connector.

Is the resistance below 5.0 ohms?

Yes >> Repair Left Front Wheel Speed Sensor (+) circuit for a short to the Left Front Wheel Speed Sensor (-) circuit.
Perform ABS VERIFICATION TEST - VER 1. (Refer to 5 - BRAKES/ELECTRICAL - DIAGNOSIS AND TESTING)

No >> Go To 9

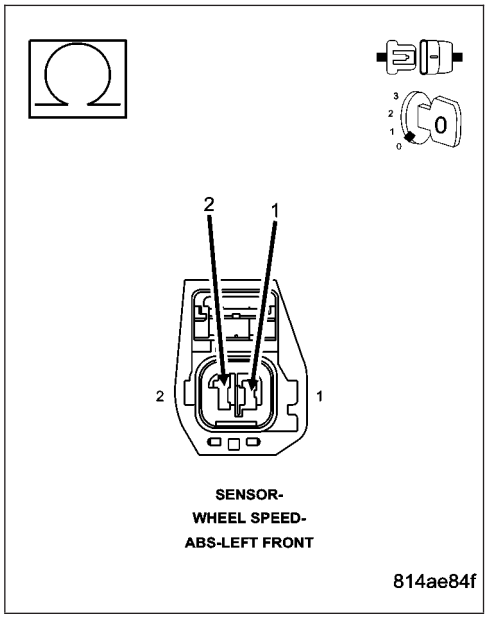

LEFT FRONT SENSOR SHORTED — 90 (CONTINUED)

9. LEFT FRONT WHEEL SPEED SENSOR

Turn the ignition off.

Connect the Left Front Wheel Speed Sensor harness connector.

Measure the resistance between the Left Front Wheel Speed Sensor (+) circuit and Left Front Wheel Speed Sensor (-) circuit at the Controller Anti-lock Brake harness connector.

NOTE: The resistance should be approximately 1600–2300 ohms at 76 degrees F.

Is the resistance within the noted range?

Yes >> Go to 10

No >> Replace the Left Front Wheel Speed Sensor in accordance with the Service Information.
Perform ABS VERIFICATION TEST - VER 1. (Refer to 5 - BRAKES/ELECTRICAL - DIAGNOSIS AND TESTING)

---

10. CONTROLLER ANTI-LOCK BRAKE

Turn the ignition off.

Inspect the related wiring harness. Look for any chafed, pierced, pinched, or partially broken wires.

Inspect the related wire harness connectors. Look for broken, bent, pushed out, or corroded terminals.

Refer to any Technical Service Bulletins that may apply.

Were any problems found?

Yes >> Repair as necessary in accordance with the Service Information.
Perform ABS VERIFICATION TEST - VER 1. (Refer to 5 - BRAKES/ELECTRICAL - DIAGNOSIS AND TESTING)

No >> Replace the Controller Anti-lock Brake in accordance with the Service Information.
Perform ABS VERIFICATION TEST - VER 1. (Refer to 5 - BRAKES/ELECTRICAL - DIAGNOSIS AND TESTING)

---

11. WIRING HARNESS INSPECTION

Turn the ignition off.

NOTE: Towing the vehicle with ignition ON may set this DTC.

Inspect the related wiring harness. Look for any chafed, pierced, pinched, or partially broken wires.

Inspect the related wire harness connectors. Look for broken, bent, pushed out, or corroded terminals.

Refer to any Technical Service Bulletins that may apply.

Were any problems found?

Yes >> Repair as necessary in accordance with the Service Information.
Perform ABS VERIFICATION TEST - VER 1. (Refer to 5 - BRAKES/ELECTRICAL - DIAGNOSIS AND TESTING)

No >> Test Complete.

NO SIGNAL FROM LEFT FRONT SENSOR - 26

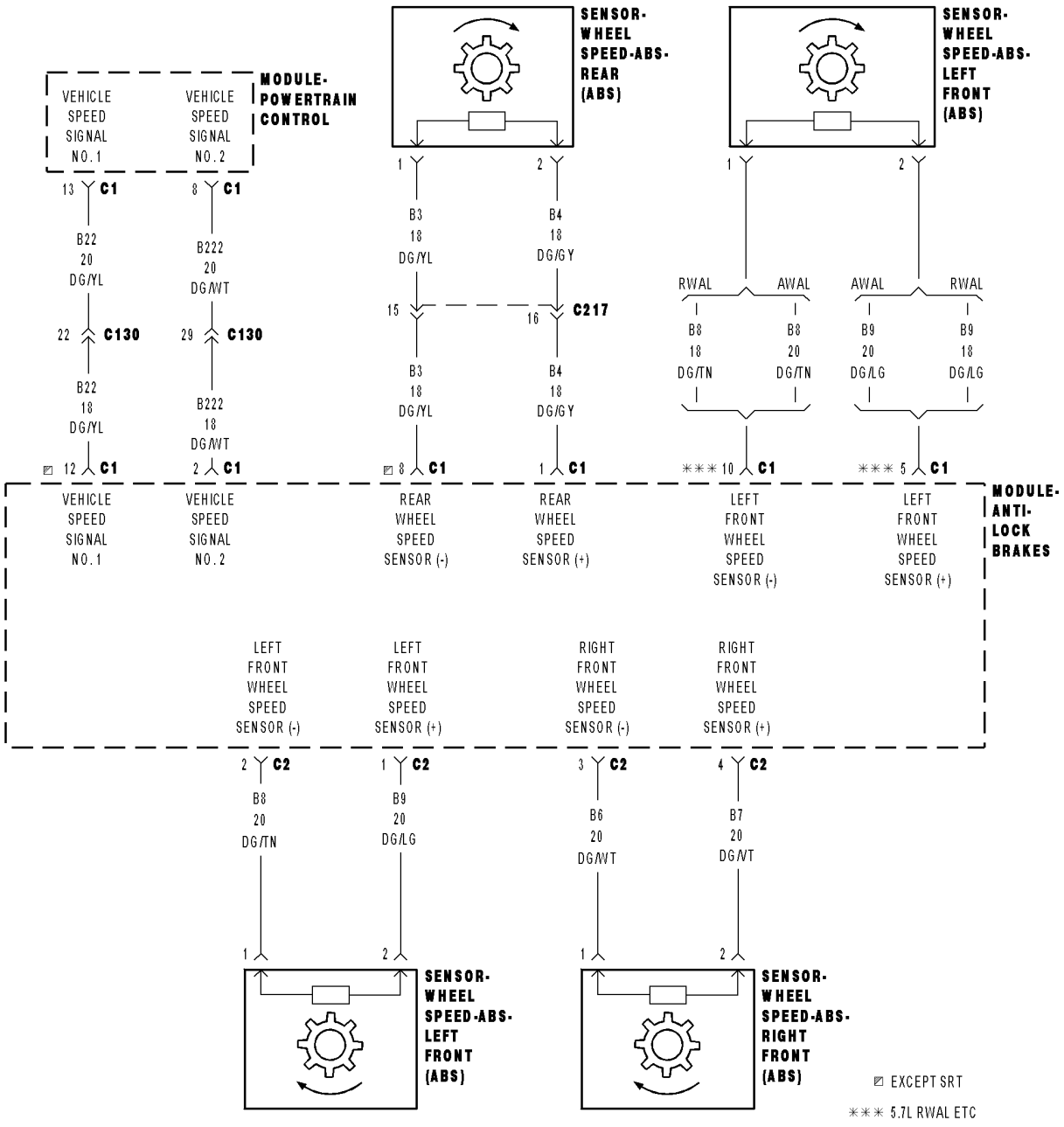

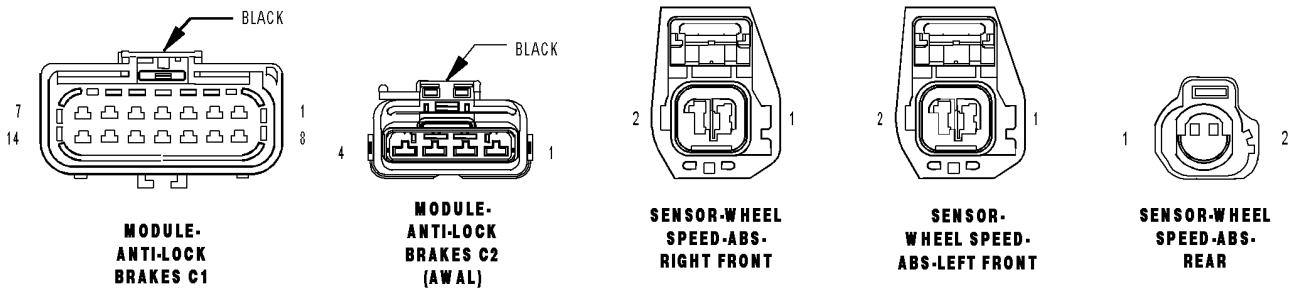

814ae047

NO SIGNAL FROM LEFT FRONT SENSOR - 26 (CONTINUED)
For a complete wiring diagram **Refer to Section 8W**.

- **When Monitored:**
  Ignition turned on for at least 3.5 seconds. Average filtered speed for the two front wheels above 6km/h (4MPH). Speed for each suspect sensor above 32 km/h (20 MPH) (brake applied or ABS active) or 19 km/h (12 MPH) (brake released or ABS inactive).
- **Set Condition:**
  One sensor is unable to reach 4 MPH while the remaining sensors are indicating above 8 MPH.

Possible Causes
INTERMITTENT LEFT FRONT WHEEL SPEED SENSOR DTC
LEFT FRONT WHEEL SPEED SENSOR (+) CIRCUIT SHORT TO GROUND
LEFT FRONT WHEEL SPEED SENSOR (-) CIRCUIT SHORT TO GROUND
LEFT FRONT WHEEL SPEED SENSOR (+) CIRCUIT OPEN
LEFT FRONT WHEEL SPEED SENSOR (-) CIRCUIT OPEN
LEFT FRONT WHEEL SPEED SENSOR (+) CIRCUIT SHORTED TO VOLTAGE
LEFT FRONT WHEEL SPEED SENSOR (-) CIRCUIT SHORTED TO VOLTAGE
LEFT FRONT WHEEL SPEED SENSOR (+) CIRCUIT SHORTED TO THE LEFT FRONT WHEEL SPEED SENSOR (-) CIRCUIT
TONE WHEEL
EXCESSIVE LEFT FRONT WHEEL SPEED SENSOR AIR GAP
WHEEL BEARING
LEFT FRONT WHEEL SPEED SENSOR
CONTROLLER ANTI-LOCK BRAKE

Diagnostic Test

1. DTC IS ACTIVE

Turn the ignition on.
With the DRBIII®, clear DTCs.
Turn the ignition off.
Turn the ignition on.
With the DRBIII®, read DTCs.

Does the DRBIII® display the DTC??

Yes >> Go To 2
No >> Go To 15

NO SIGNAL FROM LEFT FRONT SENSOR - 26 (CONTINUED)

2. WHEEL SPEED SENSOR INSPECTION

Turn the ignition off.

Inspect the Wheel Speed Sensor for proper mounting.

Inspect the Wheel Speed Sensor harness and connector.

Inspect the Wheel Speed Sensor for excessive debris on the sensor.

Were any problems found?

Yes >> Repair as necessary in accordance with the Service Information.
Perform ABS VERIFICATION TEST - VER 1. (Refer to 5 - BRAKES/ELECTRICAL - DIAGNOSIS AND TESTING)

No >> Go To 3

---

3. TONE WHEEL DAMAGED/MISSING

Inspect the Tone Wheel in accordance with the Service Information.

NOTE: The Tone Wheel Teeth should be perfectly square, not bent or nicked.

Were any problems found?

Yes >> Replace the Tone Wheel in accordance with the Service Information.
Perform ABS VERIFICATION TEST - VER 1. (Refer to 5 - BRAKES/ELECTRICAL - DIAGNOSIS AND TESTING)

No >> Go To 4

---

4. EXCESSIVE WHEEL SPEED SENSOR AIR GAP

Measure the Wheel Speed Sensor Air Gap in accordance with the Service Information.

Were any problems found?

Yes >> Repair as necessary in accordance with the Service Information.
Perform ABS VERIFICATION TEST - VER 1. (Refer to 5 - BRAKES/ELECTRICAL - DIAGNOSIS AND TESTING)

No >> Go To 5

---

5. WHEEL BEARING LOOSE/BINDING

Inspect the wheel bearings for excessive run out or improper clearance in accordance with the Service Information.

Were any problems found?

Yes >> Repair as necessary in accordance with the Service Information.
Perform ABS VERIFICATION TEST - VER 1. (Refer to 5 - BRAKES/ELECTRICAL - DIAGNOSIS AND TESTING)

No >> Go To 6

NO SIGNAL FROM LEFT FRONT SENSOR - 26 (CONTINUED)

6. LEFT FRONT WHEEL SPEED SENSOR (+) CIRCUIT SHORTED TO GROUND

Turn the ignition off.

Disconnect the Left Front Wheel Speed Sensor harness connector.

Disconnect the Controller Anti-lock Brake harness connector.

NOTE: Check connector - Clean/repair as necessary.

Measure the resistance between the Left Front Wheel Speed Sensor (+) circuit and ground.

Is the resistance above 5.0 ohms?

Yes >> Go To 7

No >> Repair the Left Front Wheel Speed Sensor (+) circuit for a short to ground.

Perform ABS VERIFICATION TEST - VER 1. (Refer to 5 - BRAKES/ELECTRICAL - DIAGNOSIS AND TESTING)

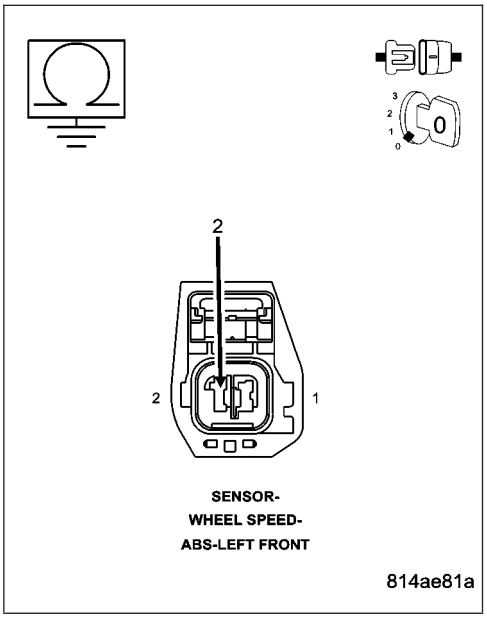

7. LEFT FRONT WHEEL SPEED SENSOR (-) CIRCUIT SHORTED TO GROUND

Measure the resistance between the Left Front Wheel Speed Sensor (-) circuit and ground.

Is the resistance above 5.0 ohms?

Yes >> Go To 8

No >> Repair the Left Front Wheel Speed Sensor (-) circuit for a short to ground.

Perform ABS VERIFICATION TEST - VER 1. (Refer to 5 - BRAKES/ELECTRICAL - DIAGNOSIS AND TESTING)

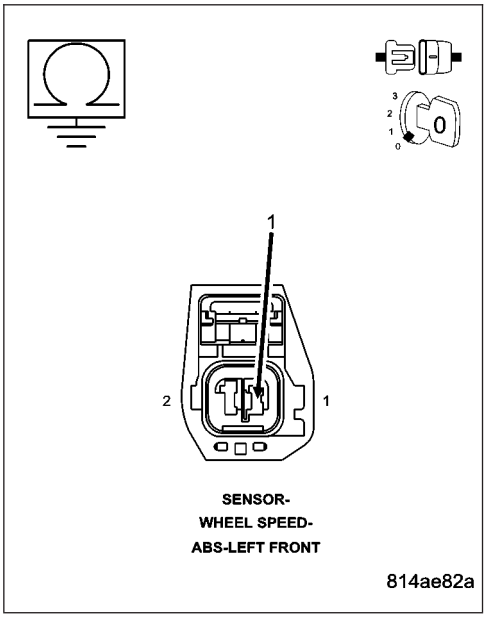

NO SIGNAL FROM LEFT FRONT SENSOR - 26 (CONTINUED)

8. LEFT FRONT WHEEL SPEED SENSOR (+) CIRCUIT OPEN

Measure the resistance of the Left Front Wheel Speed Sensor (+) circuit.

Is the resistance below 5.0 ohms?

Yes >> Go To 9

No >> Repair the open Left Front Wheel Speed Sensor (+) circuit.
Perform ABS VERIFICATION TEST - VER 1. (Refer to 5 - BRAKES/ELECTRICAL - DIAGNOSIS AND TESTING)

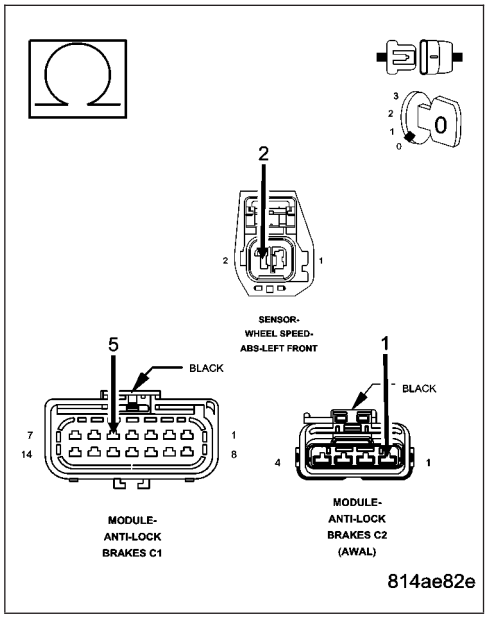

9. LEFT FRONT WHEEL SPEED SENSOR (-) CIRCUIT OPEN

Measure the resistance of the Left Front Wheel Speed Sensor (-) circuit.

Is the resistance below 5.0 ohms?

Yes >> Go To 10

No >> Repair the open Left Front Wheel Speed Sensor (-) circuit.
Perform ABS VERIFICATION TEST - VER 1. (Refer to 5 - BRAKES/ELECTRICAL - DIAGNOSIS AND TESTING)

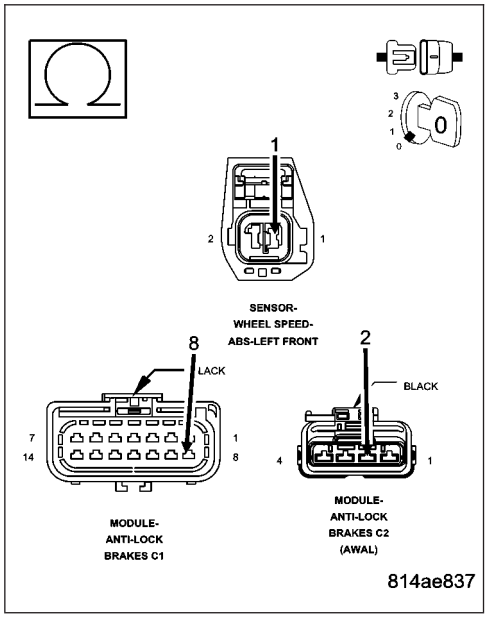

NO SIGNAL FROM LEFT FRONT SENSOR - 26 (CONTINUED)

10. LEFT FRONT WHEEL SPEED SENSOR (+) CIRCUIT SHORTED TO VOLTAGE

Turn the ignition on.

Measure the voltage of the Left Front Wheel Speed Sensor (+) circuit.

Is there any voltage present?

Yes >> Repair Left Front Wheel Speed Sensor (+) circuit for a short to voltage.

Perform ABS VERIFICATION TEST - VER 1. (Refer to 5 - BRAKES/ELECTRICAL - DIAGNOSIS AND TESTING)

No >> Go To 11

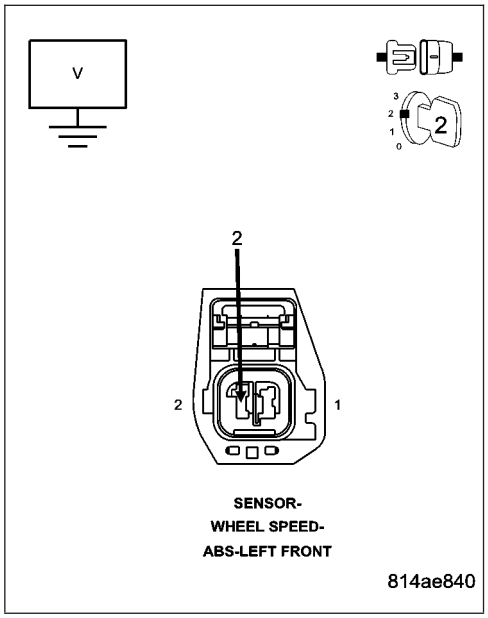

11. LEFT FRONT WHEEL SPEED SENSOR (-) CIRCUIT SHORTED TO VOLTAGE

Measure the voltage of the Left Front Wheel Speed Sensor (-) circuit.

Is there any voltage present?

Yes >> Repair the Left Front Wheel Speed Sensor (-) circuit for a short to voltage.

Perform ABS VERIFICATION TEST - VER 1. (Refer to 5 - BRAKES/ELECTRICAL - DIAGNOSIS AND TESTING)

No >> Go To 12

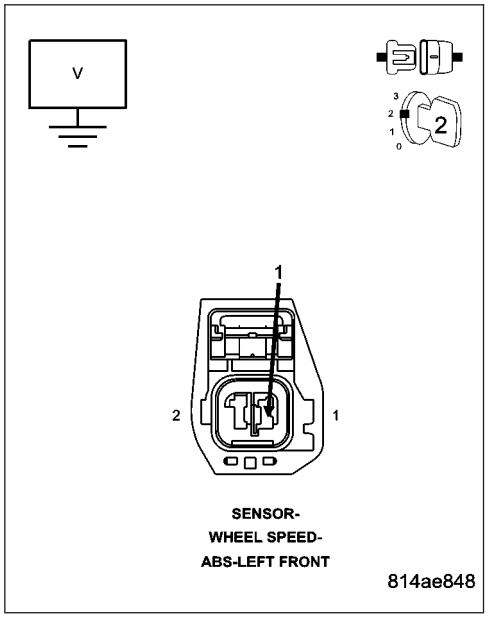

NO SIGNAL FROM LEFT FRONT SENSOR - 26 (CONTINUED)

12. LEFT FRONT WHEEL SPEED SENSOR (+) CIRCUIT SHORTED TO THE LEFT FRONT WHEEL SPEED SENSOR (-) CIRCUIT

Turn the ignition off.

Measure the resistance between the Left Front Wheel Speed Sensor (+) circuit and the Left Front Wheel Speed Sensor (-) circuit at the Controller Anti-lock Brake harness connector.

Is the resistance below 5.0 ohms?

Yes >> Repair Left Front Wheel Speed Sensor (+) circuit for a short to the Left Front Wheel Speed Sensor (-) circuit.
Perform ABS VERIFICATION TEST - VER 1. (Refer to 5 - BRAKES/ELECTRICAL - DIAGNOSIS AND TESTING)

No >> Go To 13

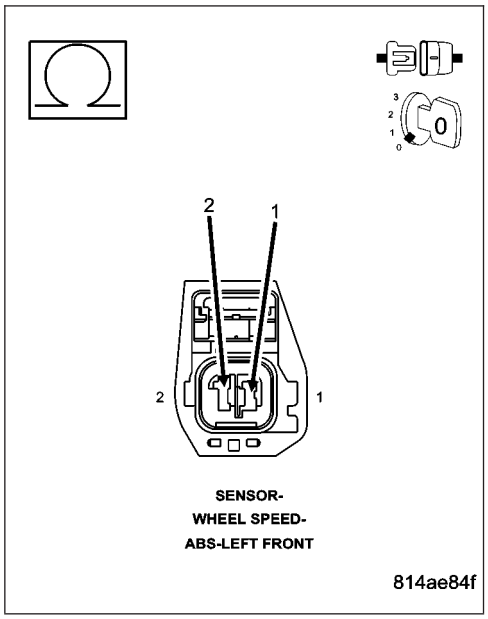

---

13. LEFT FRONT WHEEL SPEED SENSOR

Turn the ignition off.

Connect the Left Front Wheel Speed Sensor harness connector.

Measure the resistance between the Left Front Wheel Speed Sensor (+) circuit and Left Front Wheel Speed Sensor (-) circuit at the Controller Anti-lock Brake harness connector.

NOTE: The resistance should be approximately 1800–2200 ohms at 76 degrees F.

Is the resistance within the noted range?

Yes >> Go to 14

No >> Replace the Left Front Wheel Speed Sensor in accordance with the Service Information.
Perform ABS VERIFICATION TEST - VER 1. (Refer to 5 - BRAKES/ELECTRICAL - DIAGNOSIS AND TESTING)

---

14. CONTROLLER ANTI-LOCK BRAKE

Turn the ignition off.

Inspect the related wiring harness. Look for any chafed, pierced, pinched, or partially broken wires.

Inspect the related wire harness connectors. Look for broken, bent, pushed out, or corroded terminals.

Refer to any Technical Service Bulletins that may apply.

Were any problems found?

Yes >> Repair as necessary in accordance with the Service Information.
Perform ABS VERIFICATION TEST - VER 1. (Refer to 5 - BRAKES/ELECTRICAL - DIAGNOSIS AND TESTING)

No >> Replace the Controller Anti-lock Brake in accordance with the Service Information.
Perform ABS VERIFICATION TEST - VER 1. (Refer to 5 - BRAKES/ELECTRICAL - DIAGNOSIS AND TESTING)

NO SIGNAL FROM LEFT FRONT SENSOR - 26 (CONTINUED)

15. WIRING HARNESS INSPECTION

Turn the ignition off.

NOTE: Towing the vehicle with ignition ON may set this DTC.

Inspect the related wiring harness. Look for any chafed, pierced, pinched, or partially broken wires.

Inspect the related wire harness connectors. Look for broken, bent, pushed out, or corroded terminals.

Refer to any Technical Service Bulletins that may apply.

Were any problems found?

Yes >> Repair as necessary in accordance with the Service Information.
Perform ABS VERIFICATION TEST - VER 1. (Refer to 5 - BRAKES/ELECTRICAL - DIAGNOSIS AND TESTING)

No >> Test Complete.

NO SIGNAL FROM REAR SENSOR - 36

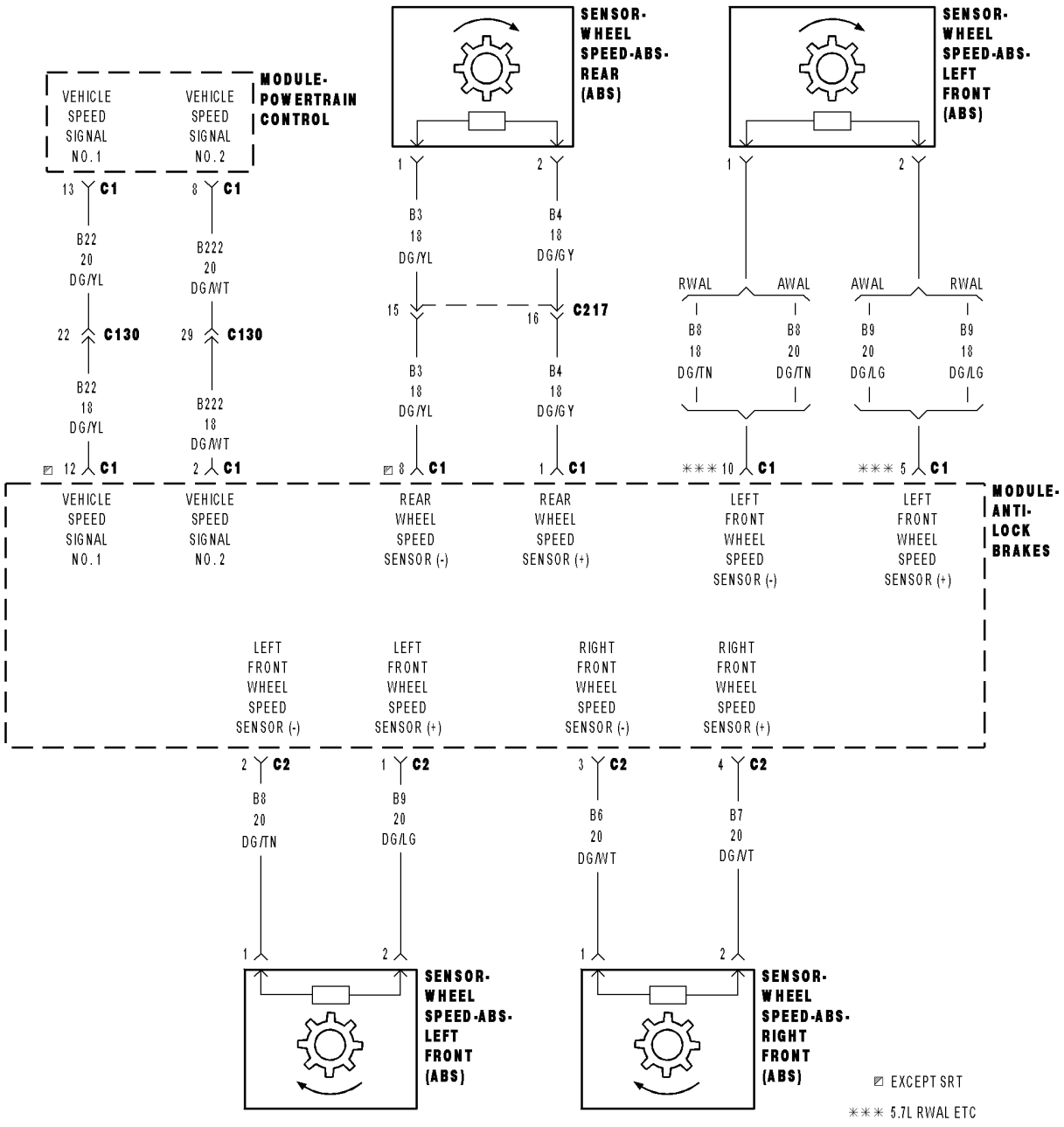

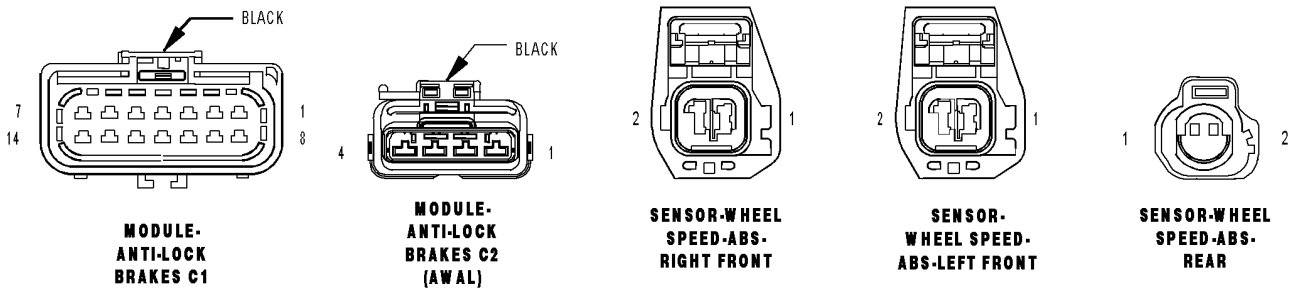

814ae047

NO SIGNAL FROM REAR SENSOR - 36 (CONTINUED)
For a complete wiring diagram **Refer to Section 8W**.

- **When Monitored:**
  Ingition on.
- **Set Condition:**
  One sensor is unable to reach 4 MPH while the remaining sensors are indicating above 8 MPH.

Possible Causes
INTERMITTENT REAR WHEEL SPEED SENSOR DTC
REAR WHEEL SPEED SENSOR (+) CIRCUIT SHORT TO GROUND
REAR WHEEL SPEED SENSOR (-) CIRCUIT SHORT TO GROUND
REAR WHEEL SPEED SENSOR (+) CIRCUIT OPEN
REAR WHEEL SPEED SENSOR (-) CIRCUIT OPEN
REAR WHEEL SPEED SENSOR (+) CIRCUIT SHORTED TO VOLTAGE
REAR WHEEL SPEED SENSOR (+) CIRCUIT SHORTED TO VOLTAGE
REAR WHEEL SPEED SENSOR (+) CIRCUIT SHORTED TO THE REAR WHEEL SPEED SENSOR (-) CIRCUIT
TONE WHEEL
EXCESSIVE REAR WHEEL SPEED SENSOR AIR GAP
WHEEL BEARING/REAR DIFFERENTIAL
REAR WHEEL SPEED SENSOR
CONTROLLER ANTI-LOCK BRAKE

Diagnostic Test

1. DTC IS ACTIVE

Turn the ignition on.
With the DRBIII®, clear DTCs.
Turn the ignition off.
Turn the ignition on.
With the DRBIII®, read DTCs.

Does the DRBIII® display the DTC?

Yes >> Go To 2

No >> Go To 15

---

2. WHEEL SPEED SENSOR INSPECTION

Turn the ignition off.
Inspect the Wheel Speed Sensor for proper mounting.
Inspect the Wheel Speed Sensor harness and connector.
Inspect the Wheel Speed Sensor for excessive debris on the sensor.

Were any problems found?

Yes >> Repair as necessary in accordance with the Service Information.
Perform ABS VERIFICATION TEST - VER 1. (Refer to 5 - BRAKES/ELECTRICAL - DIAGNOSIS AND TESTING)

No >> Go To 3

NO SIGNAL FROM REAR SENSOR - 36 (CONTINUED)

3. TONE WHEEL DAMAGED/MISSING

Inspect the Tone Wheel in accordance with the Service Information.

NOTE: The Tone Wheel Teeth should be perfectly square, not bent or nicked.

Were any problems found?

Yes >> Replace the Tone Wheel in accordance with the Service Information.
Perform ABS VERIFICATION TEST - VER 1. (Refer to 5 - BRAKES/ELECTRICAL - DIAGNOSIS AND TESTING)

No >> Go To 4

---

4. EXCESSIVE WHEEL SPEED SENSOR AIR GAP

Measure the Wheel Speed Sensor Air Gap in accordance with the Service Information.

Were any problems found?

Yes >> Repair as necessary in accordance with the Service Information.
Perform ABS VERIFICATION TEST - VER 1. (Refer to 5 - BRAKES/ELECTRICAL - DIAGNOSIS AND TESTING)

No >> Go To 5

---

5. WHEEL BEARING/REAR DIFFERENTIAL

Inspect the wheel bearings for excessive run out or improper clearance in accordance with the Service Information. Inspect the rear differential for proper operating. Refer to the Service information.

Were any problems found?

Yes >> Repair as necessary in accordance with the Service Information.
Perform ABS VERIFICATION TEST - VER 1. (Refer to 5 - BRAKES/ELECTRICAL - DIAGNOSIS AND TESTING)

No >> Go To 6

---

6. REAR WHEEL SPEED SENSOR (+) CIRCUIT SHORTED TO GROUND

Turn the ignition off.

Disconnect the Rear Wheel Speed Sensor harness connector.

Disconnect the Controller Anti-lock Brake harness connector.

NOTE: Check connector - Clean/repair as necessary.

Measure the resistance between the Rear Wheel Speed Sensor (+) circuit and ground.

Is the resistance above 5.0 ohms?

Yes >> Go To 7

No >> Repair the Rear Wheel Speed Sensor (+) circuit for a short to ground.
Perform ABS VERIFICATION TEST - VER 1. (Refer to 5 - BRAKES/ELECTRICAL - DIAGNOSIS AND TESTING)

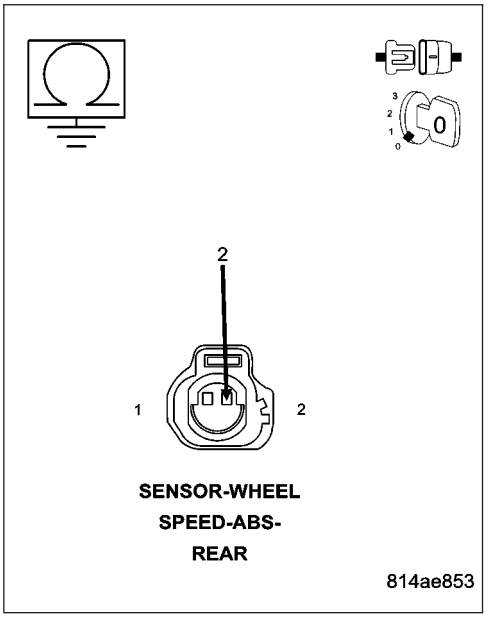

NO SIGNAL FROM REAR SENSOR - 36 (CONTINUED)

7. REAR WHEEL SPEED SENSOR (-) CIRCUIT SHORTED TO GROUND

Measure the resistance between the Rear Wheel Speed Sensor (-) circuit and ground.

Is the resistance above 5.0 ohms?

Yes >> Go To 8

No >> Repair the Rear Wheel Speed Sensor (-) circuit for a short to ground.
Perform ABS VERIFICATION TEST - VER 1. (Refer to 5 - BRAKES/ELECTRICAL - DIAGNOSIS AND TESTING)

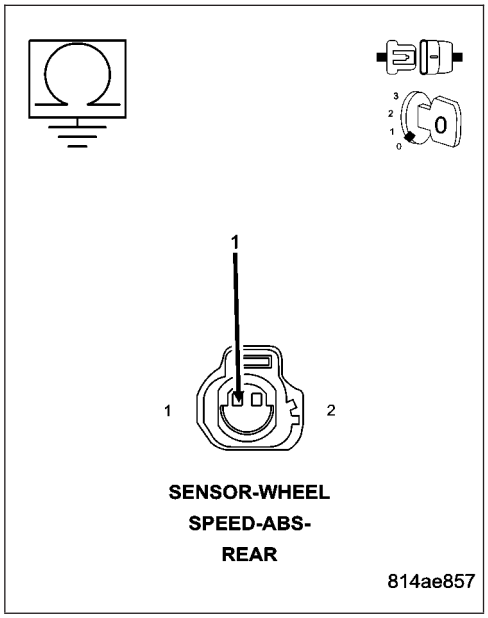

8. REAR WHEEL SPEED SENSOR (+) CIRCUIT OPEN

Measure the resistance of the Rear Wheel Speed Sensor (+) circuit.

Is the resistance below 5.0 ohms?

Yes >> Go To 9

No >> Repair the open Rear Wheel Speed Sensor (+) circuit.
Perform ABS VERIFICATION TEST - VER 1. (Refer to 5 - BRAKES/ELECTRICAL - DIAGNOSIS AND TESTING)

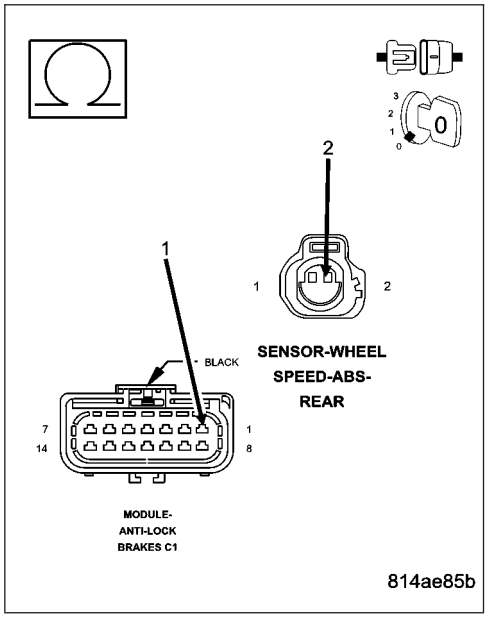

NO SIGNAL FROM REAR SENSOR - 36 (CONTINUED)

9. REAR WHEEL SPEED SENSOR (-) CIRCUIT OPEN

Measure the resistance of the Rear Wheel Speed Sensor (-) circuit.

Is the resistance below 5 ohms?

Yes >> Go To 10

No >> Repair the open Rear Wheel Speed Sensor (-) circuit.
Perform ABS VERIFICATION TEST - VER 1. (Refer to 5 - BRAKES/ELECTRICAL - DIAGNOSIS AND TESTING)

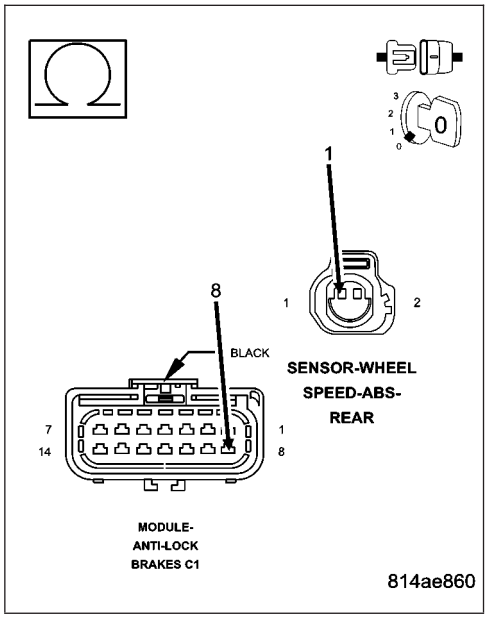

10. REAR WHEEL SPEED SENSOR (+) CIRCUIT SHORTED TO VOLTAGE

Turn the ignition on.

Measure the voltage of the Rear Wheel Speed Sensor (+) circuit.

Is there any voltage present?

Yes >> Repair Rear Wheel Speed Sensor (+) circuit for a short to voltage.
Perform ABS VERIFICATION TEST - VER 1. (Refer to 5 - BRAKES/ELECTRICAL - DIAGNOSIS AND TESTING)

No >> Go To 11

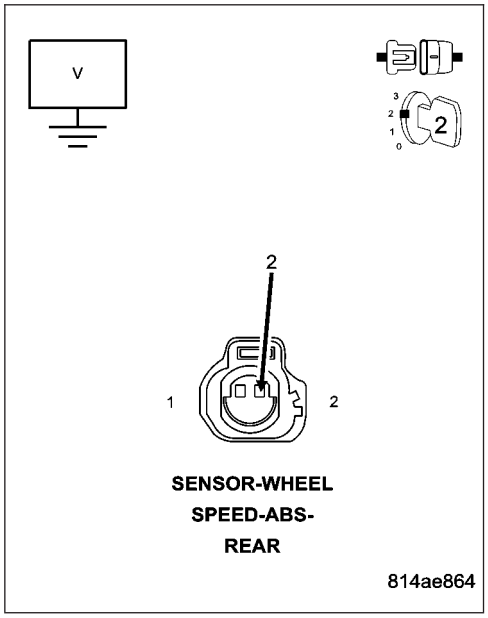

NO SIGNAL FROM REAR SENSOR - 36 (CONTINUED)

11. REAR WHEEL SPEED SENSOR (-) CIRCUIT SHORTED TO VOLTAGE

Measure the voltage of the Rear Wheel Speed Sensor (-) circuit.

Is there any voltage present?

Yes >> Repair the Rear Wheel Speed Sensor (-) circuit for a short to voltage.
Perform ABS VERIFICATION TEST - VER 1. (Refer to 5 - BRAKES/ELECTRICAL - DIAGNOSIS AND TESTING)

No >> Go To 12

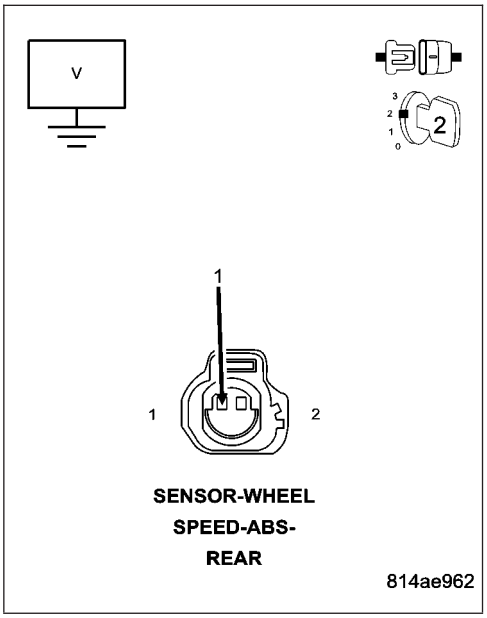

12. REAR WHEEL SPEED SENSOR (+) CIRCUIT SHORTED TO THE REAR WHEEL SPEED SENSOR (-) CIRCUIT

Turn the ignition off.

Measure the resistance between the Rear Wheel Speed Sensor (+) circuit and the Rear Wheel Speed Sensor (-) circuit at the Controller Anti-lock Brake harness connector.

Is the resistance below 5.0 ohms?

Yes >> Repair Rear Wheel Speed Sensor (+) circuit for a short to the Rear Wheel Speed Sensor (-) circuit.
Perform ABS VERIFICATION TEST - VER 1. (Refer to 5 - BRAKES/ELECTRICAL - DIAGNOSIS AND TESTING)

No >> Go To 13

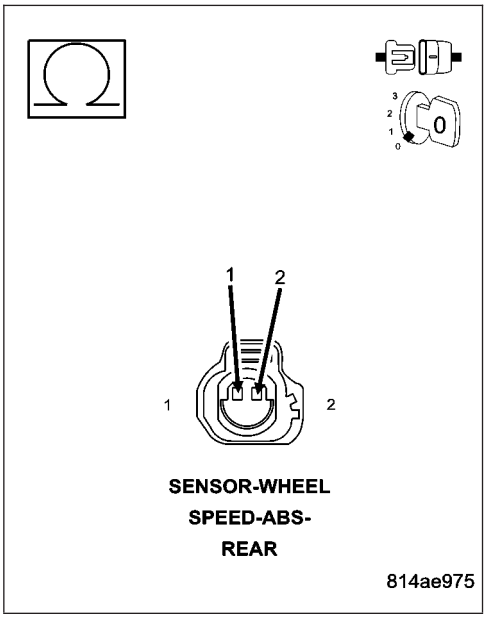

NO SIGNAL FROM REAR SENSOR - 36 (CONTINUED)

13. REAR WHEEL SPEED SENSOR

Turn the ignition off.

Connect the Rear Wheel Speed Sensor harness connector.

Measure the resistance between the Rear Wheel Speed Sensor (+) circuit and Rear Wheel Speed Sensor (-) circuit at the Controller Anti-lock Brake harness connector.

NOTE: The resistance should be approximately 1600–2300 ohms at 76 degrees F.

Is the resistance within the noted range?

Yes >> Go to 14

No >> Replace the Rear Wheel Speed Sensor in accordance with the Service Information.
Perform ABS VERIFICATION TEST - VER 1. (Refer to 5 - BRAKES/ELECTRICAL - DIAGNOSIS AND TESTING)

---

14. CONTROLLER ANTI-LOCK BRAKE

Turn the ignition off.

Inspect the related wiring harness. Look for any chafed, pierced, pinched, or partially broken wires.

Inspect the related wire harness connectors. Look for broken, bent, pushed out, or corroded terminals.

Refer to any Technical Service Bulletins that may apply.

Were any problems found?

Yes >> Repair as necessary in accordance with the Service Information.
Perform ABS VERIFICATION TEST - VER 1. (Refer to 5 - BRAKES/ELECTRICAL - DIAGNOSIS AND TESTING)

No >> Replace the Controller Anti-lock Brake in accordance with the Service Information.
Perform ABS VERIFICATION TEST - VER 1. (Refer to 5 - BRAKES/ELECTRICAL - DIAGNOSIS AND TESTING)

---

15. WIRING HARNESS INSPECTION

Turn the ignition off.

NOTE: Towing the vehicle with ignition ON may set this DTC.

Inspect the related wiring harness. Look for any chafed, pierced, pinched, or partially broken wires.

Inspect the related wire harness connectors. Look for broken, bent, pushed out, or corroded terminals.

Refer to any Technical Service Bulletins that may apply.

Were any problems found?

Yes >> Repair as necessary in accordance with the Service Information.
Perform ABS VERIFICATION TEST - VER 1. (Refer to 5 - BRAKES/ELECTRICAL - DIAGNOSIS AND TESTING)

No >> Test Complete.

NO SIGNAL FROM RIGHT FRONT SENSOR — 22

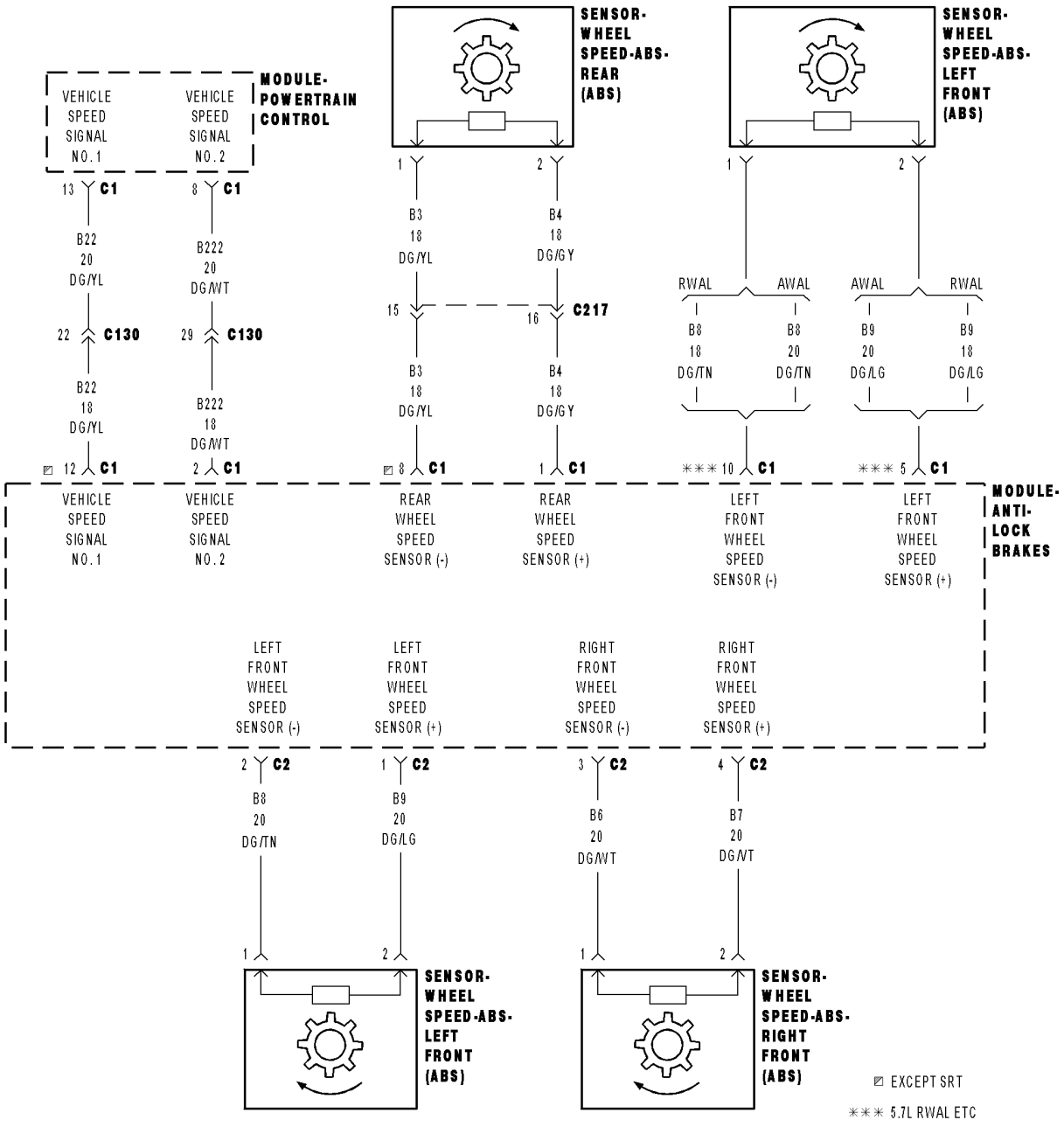

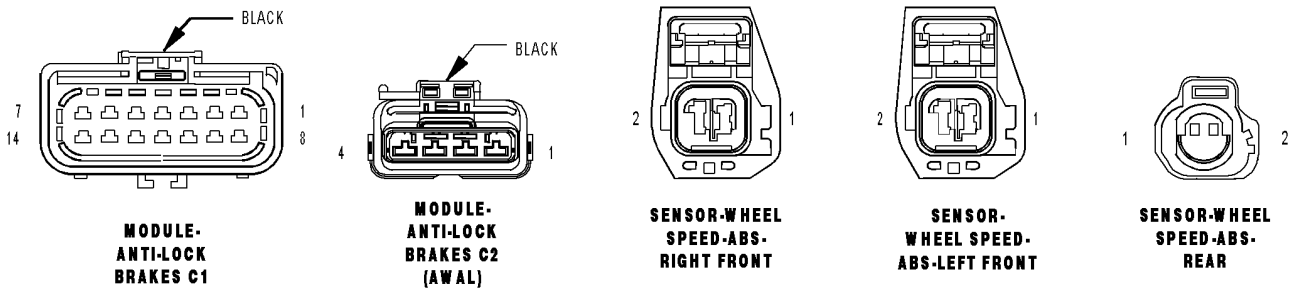

814ae047

NO SIGNAL FROM RIGHT FRONT SENSOR — 22 (CONTINUED)
For a complete wiring diagram **Refer to Section 8W**.

- **When Monitored:**
  Ignition on.
- **Set Condition:**
  One sensor is unable to reach 4 MPH while the remaining sensors are indicating above 8 MPH.

Possible Causes
INTERMITTENT LEFT FRONT WHEEL SPEED SENSOR DTC
RIGHT FRONT WHEEL SPEED SENSOR (+) CIRCUIT SHORT TO GROUND
RIGHT FRONT WHEEL SPEED SENSOR (-) CIRCUIT SHORT TO GROUND
RIGHT FRONT WHEEL SPEED SENSOR (+) CIRCUIT OPEN
RIGHT FRONT WHEEL SPEED SENSOR (-) CIRCUIT OPEN
RIGHT FRONT WHEEL SPEED SENSOR (+) CIRCUIT SHORTED TO VOLTAGE
RIGHT FRONT WHEEL SPEED SENSOR (-) CIRCUIT SHORTED TO VOLTAGE
RIGHT FRONT WHEEL SPEED SENSOR (+) CIRCUIT SHORTED TO THE RIGHT FRONT WHEEL SPEED SENSOR (-) CIRCUIT
TONE WHEEL
EXCESSIVE LEFT FRONT WHEEL SPEED SENSOR AIR GAP
WHEEL BEARING
RIGHT FRONT WHEEL SPEED SENSOR
CONTROLLER ANTI-LOCK BRAKE

Diagnostic Test

1. DTC IS ACTIVE

Turn the ignition on.
With the DRBIII®, clear DTCs.
Turn the ignition off.
Turn the ignition on.
With the DRBIII®, read DTCs.

Does the DRBIII® display the DTC??

Yes >> Go To 2
No >> Go To 15

---

2. WHEEL SPEED SENSOR INSPECTION

Turn the ignition off.
Inspect the Wheel Speed Sensor for proper mounting.
Inspect the Wheel Speed Sensor harness and connector.
Inspect the Wheel Speed Sensor for excessive debris on the sensor.

Were any problems found?

Yes >> Repair as necessary in accordance with the Service Information.
Perform ABS VERIFICATION TEST - VER 1. (Refer to 5 - BRAKES/ELECTRICAL - DIAGNOSIS AND TESTING)
No >> Go To 3

NO SIGNAL FROM RIGHT FRONT SENSOR — 22 (CONTINUED)

3. TONE WHEEL DAMAGED/MISSING

Inspect the Tone Wheel in accordance with the Service Information.

NOTE: The Tone Wheel Teeth should be perfectly square, not bent or nicked.

Were any problems found?

Yes >> Replace the Tone Wheel in accordance with the Service Information.
Perform ABS VERIFICATION TEST - VER 1. (Refer to 5 - BRAKES/ELECTRICAL - DIAGNOSIS AND TESTING)

No >> Go To 4

---

4. EXCESSIVE WHEEL SPEED SENSOR AIR GAP

Measure the Wheel Speed Sensor Air Gap in accordance with the Service Information.

Were any problems found?

Yes >> Repair as necessary in accordance with the Service Information.
Perform ABS VERIFICATION TEST - VER 1. (Refer to 5 - BRAKES/ELECTRICAL - DIAGNOSIS AND TESTING)

No >> Go To 5

---

5. WHEEL BEARING LOOSE/BINDING

Inspect the wheel bearings for excessive run out or improper clearance in accordance with the Service Information.

Were any problems found?

Yes >> Repair as necessary in accordance with the Service Information.
Perform ABS VERIFICATION TEST - VER 1. (Refer to 5 - BRAKES/ELECTRICAL - DIAGNOSIS AND TESTING)

No >> Go To 6

---

6. RIGHT FRONT WHEEL SPEED SENSOR (+) CIRCUIT SHORTED TO GROUND

Turn the ignition off.

Disconnect the Right Front Wheel Speed Sensor harness connector.

Disconnect the Controller Anti-lock Brake harness connector.

NOTE: Check connector - Clean/repair as necessary.

Measure the resistance between the Right Front Wheel Speed Sensor (+) circuit and ground.

Is the resistance above 5.0 ohms?

Yes >> Go To 7

No >> Repair the Right Front Wheel Speed Sensor (+) circuit for a short to ground.
Perform ABS VERIFICATION TEST - VER 1. (Refer to 5 - BRAKES/ELECTRICAL - DIAGNOSIS AND TESTING)

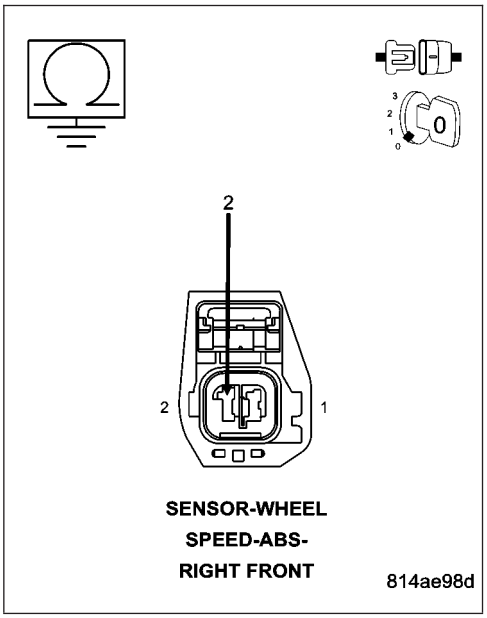

NO SIGNAL FROM RIGHT FRONT SENSOR — 22 (CONTINUED)

7. RIGHT FRONT WHEEL SPEED SENSOR (-) CIRCUIT SHORTED TO GROUND

Measure the resistance between the Right Front Wheel Speed Sensor (-) circuit and ground.

Is the resistance above 5.0 ohms?

Yes >> Go To 8

No >> Repair the Right Front Wheel Speed Sensor (-) circuit for a short to ground.
Perform ABS VERIFICATION TEST - VER 1. (Refer to 5 - BRAKES/ELECTRICAL - DIAGNOSIS AND TESTING)

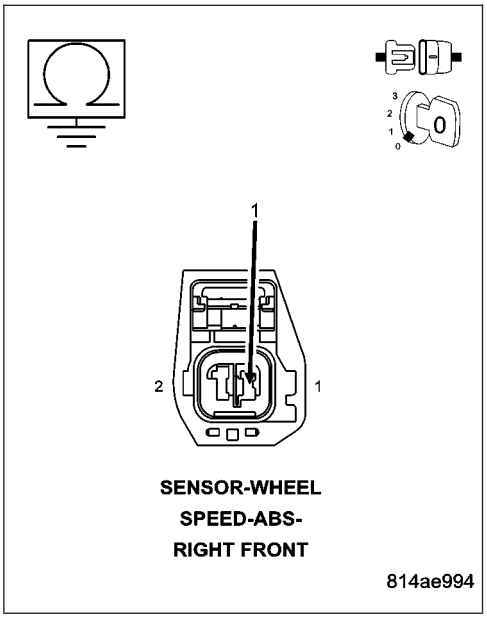

8. RIGHT FRONT WHEEL SPEED SENSOR (+) CIRCUIT OPEN

Measure the resistance of the Right Front Wheel Speed Sensor (+) circuit.

Is the resistance below 5.0 ohms?

Yes >> Go To 9

No >> Repair the open Right Front Wheel Speed Sensor (+) circuit.
Perform ABS VERIFICATION TEST - VER 1. (Refer to 5 - BRAKES/ELECTRICAL - DIAGNOSIS AND TESTING)

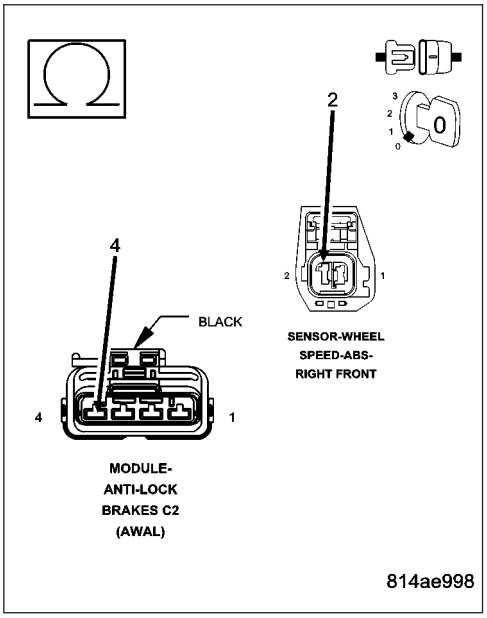

NO SIGNAL FROM RIGHT FRONT SENSOR — 22 (CONTINUED)

9. RIGHT FRONT WHEEL SPEED SENSOR (-) CIRCUIT OPEN

Measure the resistance of the Right Front Wheel Speed Sensor (-) circuit.

Is the resistance below 5.0 ohms?

Yes >> Go To 10

No >> Repair the open Right Front Wheel Speed Sensor (-) circuit.
Perform ABS VERIFICATION TEST - VER 1. (Refer to 5 - BRAKES/ELECTRICAL - DIAGNOSIS AND TESTING)

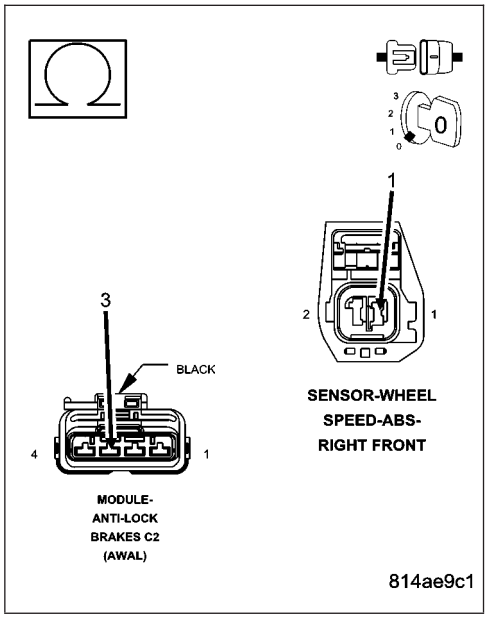

10. RIGHT FRONT WHEEL SPEED SENSOR (+) CIRCUIT SHORTED TO VOLTAGE

Turn the ignition on.

Measure the voltage of the Right Front Wheel Speed Sensor (+) circuit.

Is there any voltage present?

Yes >> Repair Right Front Wheel Speed Sensor (+) circuit for a short to voltage.
Perform ABS VERIFICATION TEST - VER 1. (Refer to 5 - BRAKES/ELECTRICAL - DIAGNOSIS AND TESTING)

No >> Go To 11

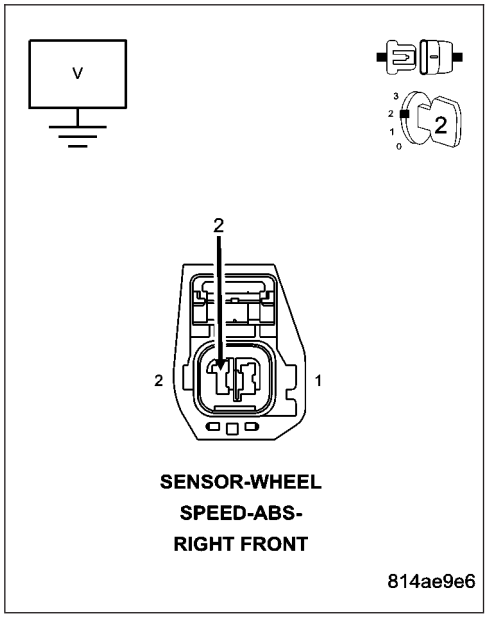

NO SIGNAL FROM RIGHT FRONT SENSOR — 22 (CONTINUED)

11. RIGHT FRONT WHEEL SPEED SENSOR (-) CIRCUIT SHORTED TO VOLTAGE

Measure the voltage of the Right Front Wheel Speed Sensor (-) circuit.

Is there any voltage present?

Yes >> Repair the Right Front Wheel Speed Sensor (-) circuit for a short to voltage.
Perform ABS VERIFICATION TEST - VER 1. (Refer to 5 - BRAKES/ELECTRICAL - DIAGNOSIS AND TESTING)

No >> Go To 12

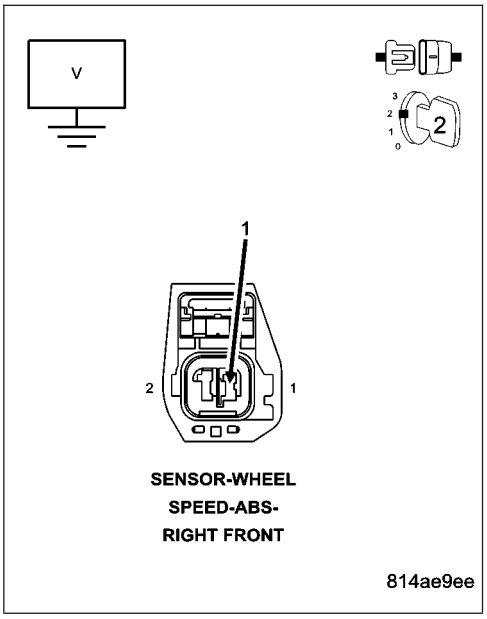

12. RIGHT FRONT WHEEL SPEED SENSOR (+) CIRCUIT SHORTED TO THE RIGHT FRONT WHEEL SPEED SENSOR (-) CIRCUIT

Turn the ignition off.

Measure the resistance between the Right Front Wheel Speed Sensor (+) circuit and the Right Front Wheel Speed Sensor (-) circuit at the Controller Anti-lock Brake harness connector.

Is the resistance below 5.0 ohms?

Yes >> Repair Right Front Wheel Speed Sensor (+) circuit for a short to the Right Front Wheel Speed Sensor (-) circuit.
Perform ABS VERIFICATION TEST - VER 1. (Refer to 5 - BRAKES/ELECTRICAL - DIAGNOSIS AND TESTING)

No >> Go To 13

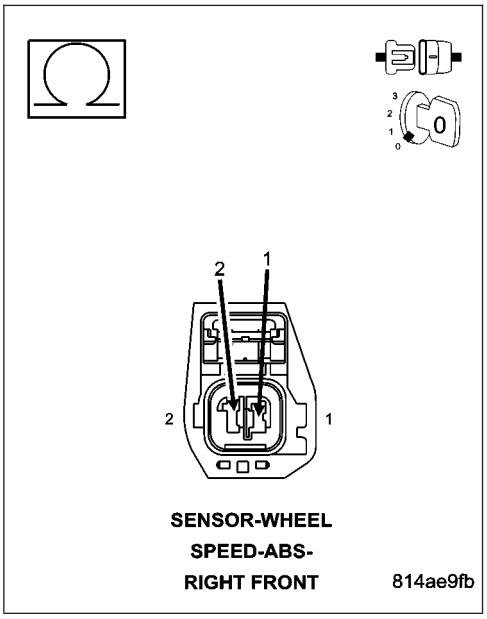

NO SIGNAL FROM RIGHT FRONT SENSOR — 22 (CONTINUED)

13. RIGHT FRONT WHEEL SPEED SENSOR

Turn the ignition off.

Connect the Right Front Wheel Speed Sensor harness connector.

Measure the resistance between the Right Front Wheel Speed Sensor (+) circuit and Right Front Wheel Speed Sensor (-) circuit at the Controller Anti-lock Brake harness connector.

NOTE: The resistance should be approximately 1800–2200 ohms at 76 degrees F.

Is the resistance within the noted range?

Yes >> Go to 14

No >> Replace the Right Front Wheel Speed Sensor in accordance with the Service Information.
Perform ABS VERIFICATION TEST - VER 1. (Refer to 5 - BRAKES/ELECTRICAL - DIAGNOSIS AND TESTING)

---

14. CONTROLLER ANTI-LOCK BRAKE

Turn the ignition off.

Inspect the related wiring harness. Look for any chafed, pierced, pinched, or partially broken wires.

Inspect the related wire harness connectors. Look for broken, bent, pushed out, or corroded terminals.

Refer to any Technical Service Bulletins that may apply.

Were any problems found?

Yes >> Repair as necessary in accordance with the Service Information.
Perform ABS VERIFICATION TEST - VER 1. (Refer to 5 - BRAKES/ELECTRICAL - DIAGNOSIS AND TESTING)

No >> Replace the Controller Anti-lock Brake in accordance with the Service Information.
Perform ABS VERIFICATION TEST - VER 1. (Refer to 5 - BRAKES/ELECTRICAL - DIAGNOSIS AND TESTING)

---

15. WIRING HARNESS INSPECTION

Turn the ignition off.

NOTE: Towing the vehicle with ignition ON may set this DTC.

Inspect the related wiring harness. Look for any chafed, pierced, pinched, or partially broken wires.

Inspect the related wire harness connectors. Look for broken, bent, pushed out, or corroded terminals.

Refer to any Technical Service Bulletins that may apply.

Were any problems found?

Yes >> Repair as necessary in accordance with the Service Information.
Perform ABS VERIFICATION TEST - VER 1. (Refer to 5 - BRAKES/ELECTRICAL - DIAGNOSIS AND TESTING)

No >> Test Complete.

REAR SENSOR OPEN — 35

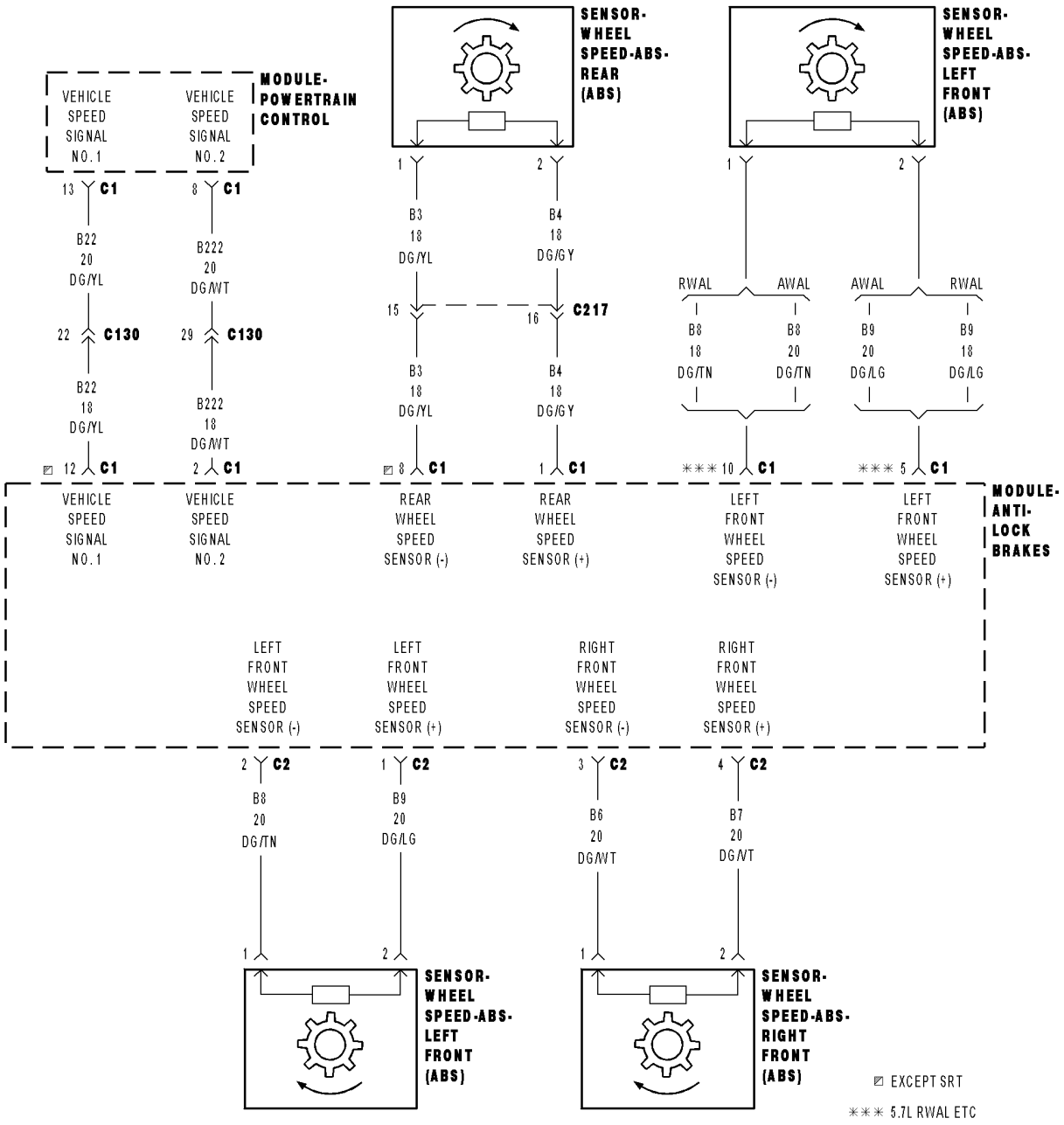

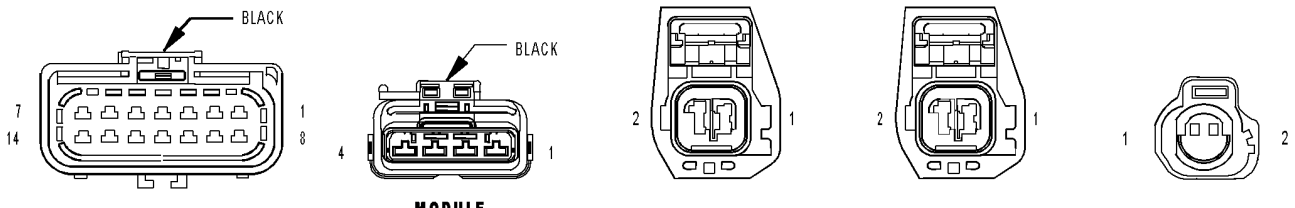

814ae047

REAR SENSOR OPEN — 35 (CONTINUED)
For a complete wiring diagram **Refer to Section 8W**.

- **When Monitored:**
  Ignition on.
- **Set Condition:**
  The CAB detects an open in the wheel speed sensor circuit

Possible Causes
INTERMITTENT LEFT FRONT WHEEL SPEED SENSOR DTC
REAR WHEEL SPEED SENSOR (+) CIRCUIT SHORT TO GROUND
REAR WHEEL SPEED SENSOR (-) CIRCUIT SHORT TO GROUND
REAR WHEEL SPEED SENSOR (+) CIRCUIT OPEN
REAR FRONT WHEEL SPEED SENSOR (+) CIRCUIT OPEN
TONE WHEEL
EXCESSIVE REAR FRONT WHEEL SPEED SENSOR AIR GAP
WHEEL BEARING/REAR DIFFERENTIAL
REAR WHEEL SPEED SENSOR
CONTROL ANTI-LOCK BRAKE

Diagnostic Test

1. DTC IS ACTIVE

Turn the ignition on.
With the DRBIII®, clear DTCs.
Turn the ignition off.
Turn the ignition on.
With the DRBIII®, select View DTCs.

Does the DRBIII® display the DTC?

Yes >> Go To 2

No >> Go To 12

---

2. WHEEL SPEED SENSOR INSPECTION

Turn the ignition off.
Inspect the Wheel Speed Sensor for proper mounting.
Inspect the Wheel Speed Sensor harness and connector.
Inspect the Wheel Speed Sensor for excessive debris on the sensor.

Were any problems found?

Yes >> Repair as necessary in accordance with the Service Information.
Perform ABS VERIFICATION TEST - VER 1. (Refer to 5 - BRAKES/ELECTRICAL - DIAGNOSIS AND TESTING)

No >> Go To 3

REAR SENSOR OPEN — 35 (CONTINUED)

3. TONE WHEEL DAMAGED/MISSING

Inspect the Tone Wheel in accordance with the Service Information.

NOTE: The Tone Wheel Teeth should be perfectly square, not bent or nicked.

Were any problems found?

Yes >> Replace the Tone Wheel in accordance with the Service Information.
Perform ABS VERIFICATION TEST - VER 1. (Refer to 5 - BRAKES/ELECTRICAL - DIAGNOSIS AND TESTING)

No >> Go To 4

---

4. EXCESSIVE WHEEL SPEED SENSOR AIR GAP

Measure the Wheel Speed Sensor Air Gap in accordance with the Service Information.

Were any problems found?

Yes >> Repair as necessary in accordance with the Service Information.
Perform ABS VERIFICATION TEST - VER 1. (Refer to 5 - BRAKES/ELECTRICAL - DIAGNOSIS AND TESTING)

No >> Go To 5

---

5. WHEEL BEARING/REAR DIFFERENTIAL

Inspect the wheel bearings for excessive run out or improper clearance in accordance with the Service Information. Ensure the Rear Differential is operating properly. Refer to the Service Information.

Were any problems found?

Yes >> Repair as necessary in accordance with the Service Information.
Perform ABS VERIFICATION TEST - VER 1. (Refer to 5 - BRAKES/ELECTRICAL - DIAGNOSIS AND TESTING)

No >> Go To 6

---

6. REAR WHEEL SPEED SENSOR (+) CIRCUIT SHORTED TO GROUND

Turn the ignition off.

Disconnect the Rear Wheel Speed Sensor harness connector.

Disconnect the Controller Anti-lock Brake harness connector.

NOTE: Check connector - Clean/repair as necessary.

Measure the resistance between the Rear Wheel Speed Sensor (+) circuit and ground.

Is the resistance above 5.0 ohms?

Yes >> Go To 7

No >> Repair the Rear Wheel Speed Sensor (+) circuit for a short to ground.
Perform ABS VERIFICATION TEST - VER 1. (Refer to 5 - BRAKES/ELECTRICAL - DIAGNOSIS AND TESTING)

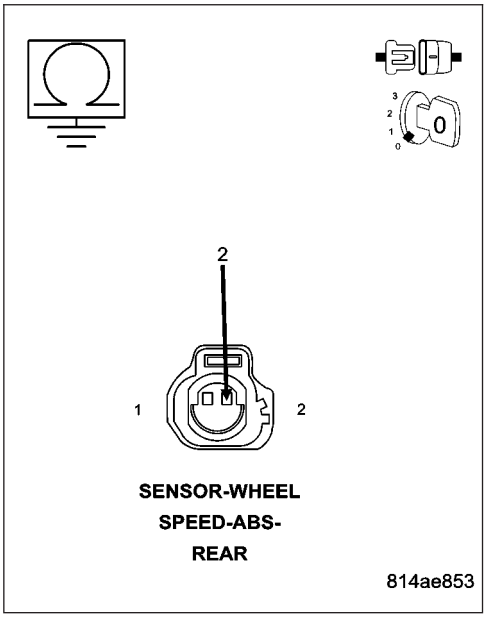

REAR SENSOR OPEN — 35 (CONTINUED)

7. REAR WHEEL SPEED SENSOR (-) CIRCUIT SHORTED TO GROUND

Measure the resistance between the Rear Wheel Speed Sensor (-) circuit and ground.

Is the resistance above 5.0 ohms?

Yes >> Go To 8

No >> Repair the Rear Wheel Speed Sensor (-) circuit for a short to ground.
Perform ABS VERIFICATION TEST - VER 1. (Refer to 5 - BRAKES/ELECTRICAL - DIAGNOSIS AND TESTING)

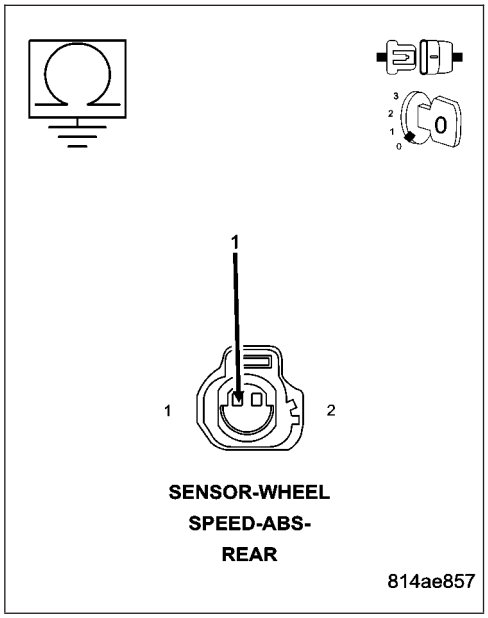

8. REAR WHEEL SPEED SENSOR (+) CIRCUIT OPEN

Measure the resistance of the Rear Wheel Speed Sensor (+) circuit.

Is the resistance below 5.0 ohms?

Yes >> Go To 9

No >> Repair the open Rear Wheel Speed Sensor (+) circuit.
Perform ABS VERIFICATION TEST - VER 1. (Refer to 5 - BRAKES/ELECTRICAL - DIAGNOSIS AND TESTING)

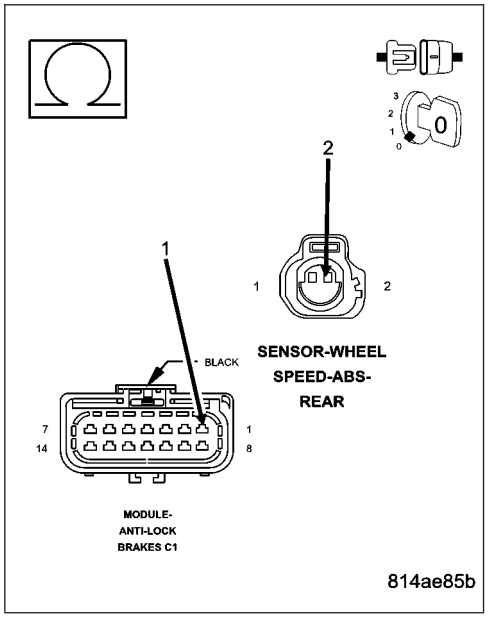

REAR SENSOR OPEN — 35 (CONTINUED)

9. REAR WHEEL SPEED SENSOR (-) CIRCUIT OPEN

Measure the resistance of the Rear Wheel Speed Sensor (-) circuit.

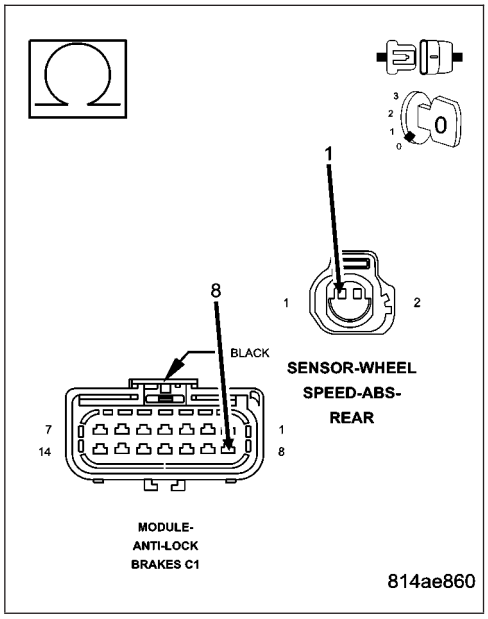

Is the resistance below 5.0 ohms?

Yes >> Go To 10

No >> Repair the open Rear Wheel Speed Sensor (-) circuit.
Perform ABS VERIFICATION TEST - VER 1. (Refer to 5 - BRAKES/ELECTRICAL - DIAGNOSIS AND TESTING)

---

10. REAR WHEEL SPEED SENSOR

Turn the ignition off.

Connect the Rear Wheel Speed Sensor harness connector.

Measure the resistance between the Rear Wheel Speed Sensor (+) circuit and Rear Wheel Speed Sensor (-) circuit at the Controller Anti-lock Brake harness connector.

NOTE: The resistance should be approximately 1600–2300 ohms at 76 degrees F.

Is the resistance within the noted range?

Yes >> Go to 11

No >> Replace the Rear Wheel Speed Sensor in accordance with the Service Information.
Perform ABS VERIFICATION TEST - VER 1. (Refer to 5 - BRAKES/ELECTRICAL - DIAGNOSIS AND TESTING)

---

11. CONTROLLER ANTI-LOCK BRAKE

Turn the ignition off.

Inspect the related wiring harness. Look for any chafed, pierced, pinched, or partially broken wires.

Inspect the related wire harness connectors. Look for broken, bent, pushed out, or corroded terminals.

Refer to any Technical Service Bulletins that may apply.

Were any problems found?

Yes >> Repair as necessary in accordance with the Service Information.
Perform ABS VERIFICATION TEST - VER 1. (Refer to 5 - BRAKES/ELECTRICAL - DIAGNOSIS AND TESTING)

No >> Replace the Controller Anti-lock Brake in accordance with the Service Information.
Perform ABS VERIFICATION TEST - VER 1. (Refer to 5 - BRAKES/ELECTRICAL - DIAGNOSIS AND TESTING)

REAR SENSOR OPEN — 35 (CONTINUED)

12. WIRING HARNESS INSPECTION

Turn the ignition off.

NOTE: Towing the vehicle with ignition ON may set this DTC.

Inspect the related wiring harness. Look for any chafed, pierced, pinched, or partially broken wires.

Inspect the related wire harness connectors. Look for broken, bent, pushed out, or corroded terminals.

Refer to any Technical Service Bulletins that may apply.

Were any problems found?

Yes >> Repair as necessary in accordance with the Service Information.
Perform ABS VERIFICATION TEST - VER 1. (Refer to 5 - BRAKES/ELECTRICAL - DIAGNOSIS AND TESTING)

No >> Test Complete.

REAR SENSOR SHORTED — 93

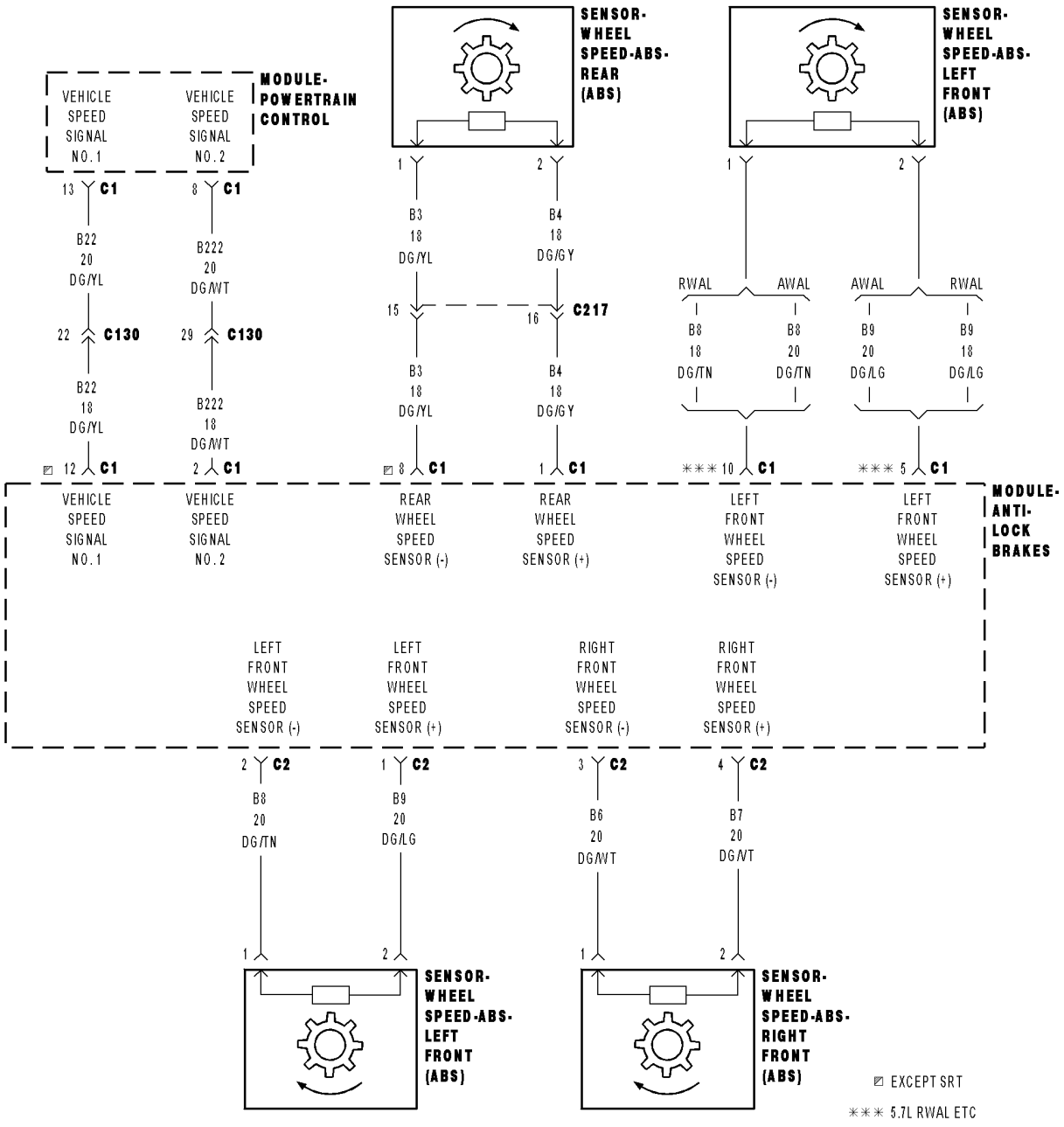

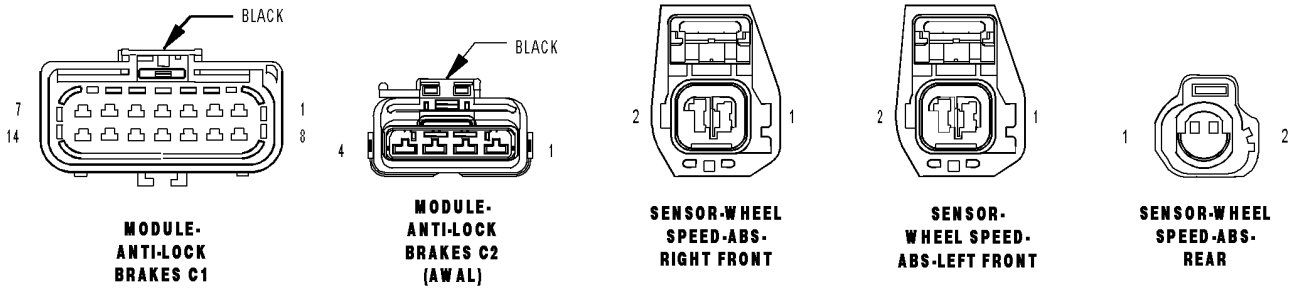

814ae047

REAR SENSOR SHORTED — 93 (CONTINUED)
For a complete wiring diagram **Refer to Section 8W**.

- **When Monitored:**
  Ignition on.
- **Set Condition:**
  The CAB detect high voltage on the wheel speed sensor circuit.

Possible Causes
INTERMITTENT REAR FRONT WHEEL SPEED SENSOR DTC
REAR FRONT WHEEL SPEED SENSOR (+) CIRCUIT SHORTED TO VOLTAGE
REAR FRONT WHEEL SPEED SENSOR (-) CIRCUIT SHORTED TO VOLTAGE
REAR FRONT WHEEL SPEED SENSOR (+) CIRCUIT SHORTED TO THE REAR FRONT WHEEL SPEED SENSOR (-) CIRCUIT
TONE WHEEL
EXCESSIVE REAR FRONT WHEEL SPEED SENSOR AIR GAP
WHEEL BEARING
REAR FRONT WHEEL SPEED SENSOR
CONTROLLER ANTI-LOCK BRAKE

Diagnostic Test

1. DTC IS ACTIVE

Turn the ignition on.
With the scan tool, clear DTCs.
Turn the ignition off.
Turn the ignition on.
With the scan tool, read DTCs.

Does the DRBIII® display the DTC?

Yes >> Go To 2

No >> Go To 11

---

2. WHEEL SPEED SENSOR INSPECTION

Turn the ignition off.
Inspect the Wheel Speed Sensor for proper mounting.
Inspect the Wheel Speed Sensor harness and connector.
Inspect the Wheel Speed Sensor for excessive debris on the sensor.

Were any problems found?

Yes >> Repair as necessary in accordance with the Service Information.
Perform ABS VERIFICATION TEST - VER 1. (Refer to 5 - BRAKES/ELECTRICAL - DIAGNOSIS AND TESTING)

No >> Go To 3

REAR SENSOR SHORTED — 93 (CONTINUED)

3. TONE WHEEL DAMAGED/MISSING

Inspect the Tone Wheel in accordance with the Service Information.

NOTE: The Tone Wheel Teeth should be perfectly square, not bent or nicked.

Were any problems found?

Yes >> Replace the Tone Wheel in accordance with the Service Information.
Perform ABS VERIFICATION TEST - VER 1. (Refer to 5 - BRAKES/ELECTRICAL - DIAGNOSIS AND TESTING)

No >> Go To 4

---

4. EXCESSIVE WHEEL SPEED SENSOR AIR GAP

Measure the Wheel Speed Sensor Air Gap in accordance with the Service Information.

Were any problems found?

Yes >> Repair as necessary in accordance with the Service Information.
Perform ABS VERIFICATION TEST - VER 1. (Refer to 5 - BRAKES/ELECTRICAL - DIAGNOSIS AND TESTING)

No >> Go To 5

---

5. WHEEL BEARING LOOSE/BINDING

Inspect the wheel bearings for excessive run out or improper clearance in accordance with the Service Information.

Were any problems found?

Yes >> Repair as necessary in accordance with the Service Information.
Perform ABS VERIFICATION TEST - VER 1. (Refer to 5 - BRAKES/ELECTRICAL - DIAGNOSIS AND TESTING)

No >> Go To 6

---

6. REAR WHEEL SPEED SENSOR (+) CIRCUIT SHORTED TO VOLTAGE

Turn the ignition on.

Measure the voltage of the Rear Wheel Speed Sensor (+) circuit.

Is there any voltage present?

Yes >> Repair Rear Wheel Speed Sensor (+) circuit for a short to voltage.
Perform ABS VERIFICATION TEST - VER 1. (Refer to 5 - BRAKES/ELECTRICAL - DIAGNOSIS AND TESTING)

No >> Go To 7

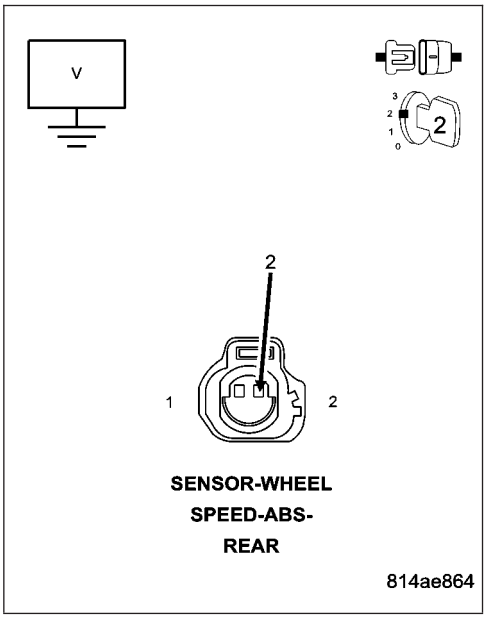

REAR SENSOR SHORTED — 93 (CONTINUED)

7. REAR WHEEL SPEED SENSOR (-) CIRCUIT SHORTED TO VOLTAGE

Measure the voltage of the Rear Wheel Speed Sensor (-) circuit.

Is there any voltage present?

Yes >> Repair the Rear Wheel Speed Sensor (-) circuit for a short to voltage.
Perform ABS VERIFICATION TEST - VER 1. (Refer to 5 - BRAKES/ELECTRICAL - DIAGNOSIS AND TESTING)

No >> Go To 8

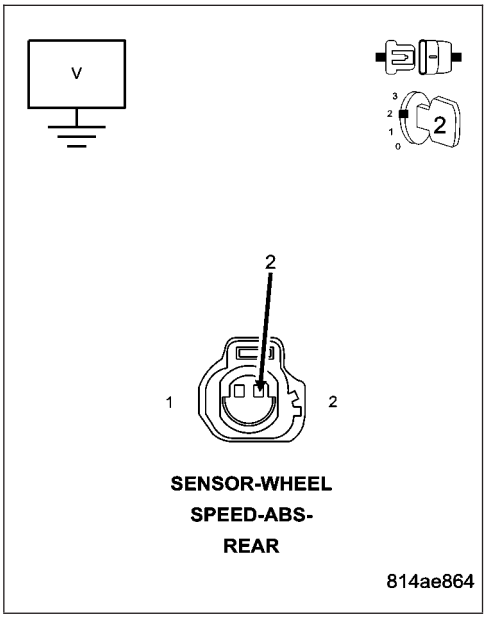

8. REAR WHEEL SPEED SENSOR (+) CIRCUIT SHORTED TO THE Rear WHEEL SPEED SENSOR (-) CIRCUIT

Turn the ignition off.

Measure the resistance between the Rear Wheel Speed Sensor (+) circuit and the Rear Wheel Speed Sensor (-) circuit at the Controller Anti-lock Brake harness connector.

Is the resistance below 5.0 ohms?

Yes >> Repair Rear Wheel Speed Sensor (+) circuit for a short to the Rear Wheel Speed Sensor (-) circuit.
Perform ABS VERIFICATION TEST - VER 1. (Refer to 5 - BRAKES/ELECTRICAL - DIAGNOSIS AND TESTING)

No >> Go To 9

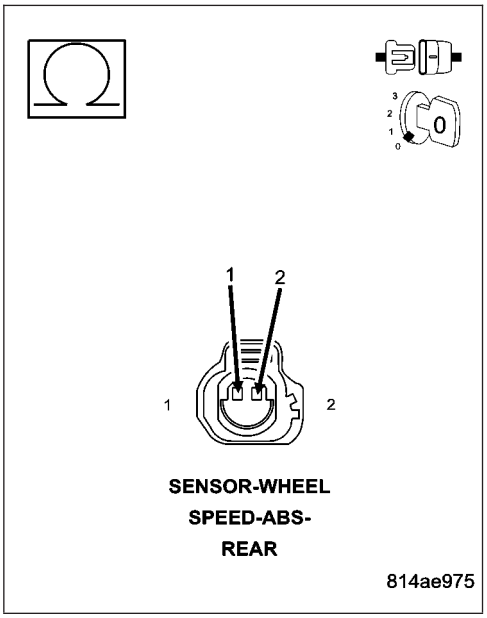

REAR SENSOR SHORTED — 93 (CONTINUED)

9. REAR WHEEL SPEED SENSOR

Turn the ignition off.

Connect the Rear Wheel Speed Sensor harness connector.

Measure the resistance between the Rear Wheel Speed Sensor (+) circuit and Rear Wheel Speed Sensor (-) circuit at the Controller Anti-lock Brake harness connector.

NOTE: The resistance should be approximately 1600–2300 ohms at 76 degrees F.

Is the resistance within the noted range?

Yes >> Go to 10

No >> Replace the Rear Wheel Speed Sensor in accordance with the Service Information.
Perform ABS VERIFICATION TEST - VER 1. (Refer to 5 - BRAKES/ELECTRICAL - DIAGNOSIS AND TESTING)

---

10. CONTROLLER ANTI-LOCK BRAKE

Turn the ignition off.

Inspect the related wiring harness. Look for any chafed, pierced, pinched, or partially broken wires.

Inspect the related wire harness connectors. Look for broken, bent, pushed out, or corroded terminals.

Refer to any Technical Service Bulletins that may apply.

Were any problems found?

Yes >> Repair as necessary in accordance with the Service Information.
Perform ABS VERIFICATION TEST - VER 1. (Refer to 5 - BRAKES/ELECTRICAL - DIAGNOSIS AND TESTING)

No >> Replace the Controller Anti-lock Brake in accordance with the Service Information.
Perform ABS VERIFICATION TEST - VER 1. (Refer to 5 - BRAKES/ELECTRICAL - DIAGNOSIS AND TESTING)

---

11. WIRING HARNESS INSPECTION

Turn the ignition off.

NOTE: Towing the vehicle with ignition ON may set this DTC.

Inspect the related wiring harness. Look for any chafed, pierced, pinched, or partially broken wires.

Inspect the related wire harness connectors. Look for broken, bent, pushed out, or corroded terminals.

Refer to any Technical Service Bulletins that may apply.

Were any problems found?

Yes >> Repair as necessary in accordance with the Service Information.
Perform ABS VERIFICATION TEST - VER 1. (Refer to 5 - BRAKES/ELECTRICAL - DIAGNOSIS AND TESTING)

No >> Test Complete.

RIGHT FRONT SENSOR OPEN — 21

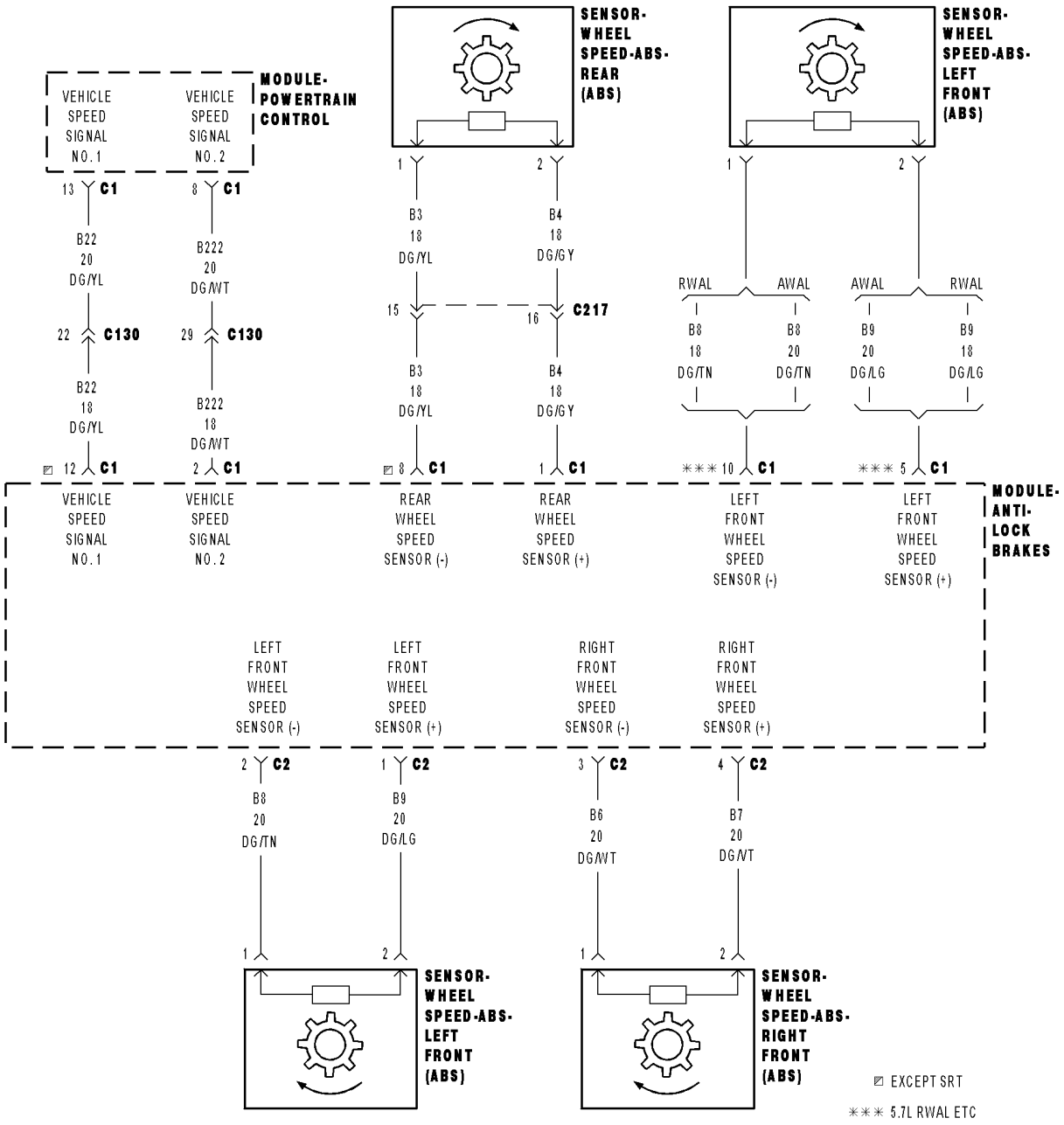

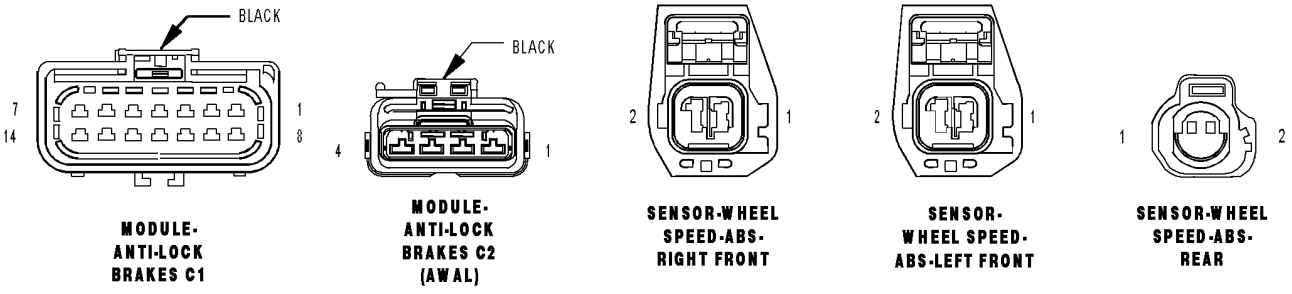

814ae047

RIGHT FRONT SENSOR OPEN — 21 (CONTINUED)
For a complete wiring diagram **Refer to Section 8W**.

- **When Monitored:**
  Ignition on.
- **Set Condition:**
  The CAB detects an open in the wheel speed sensor circuit

Possible Causes
INTERMITTENT RIGHT FRONT WHEEL SPEED SENSOR DTC
RIGHT FRONT WHEEL SPEED SENSOR (+) CIRCUIT SHORT TO GROUND
RIGHT FRONT WHEEL SPEED SENSOR (-) CIRCUIT SHORT TO GROUND
RIGHT FRONT WHEEL SPEED SENSOR (+) CIRCUIT OPEN
RIGHT FRONT WHEEL SPEED SENSOR (-) CIRCUIT OPEN
TONE WHEEL
EXCESSIVE RIGHT FRONT WHEEL SPEED SENSOR AIR GAP
WHEEL BEARING
RIGHT FRONT WHEEL SPEED SENSOR
CONTROL ANTI-LOCK BRAKE

Diagnostic Test

1. DTC IS ACTIVE

Turn the ignition on.
With the DRBIII®, clear DTCs.
Turn the ignition off.
Turn the ignition on.
With the DRBIII®, select View DTCs.

Does the DRBIII® display the DTC?

Yes >> Go To 2

No >> Go To 12

---

2. WHEEL SPEED SENSOR INSPECTION

Turn the ignition off.
Inspect the Wheel Speed Sensor for proper mounting.
Inspect the Wheel Speed Sensor harness and connector.
Inspect the Wheel Speed Sensor for excessive debris on the sensor.

Were any problems found?

Yes >> Repair as necessary in accordance with the Service Information.
Perform ABS VERIFICATION TEST - VER 1. (Refer to 5 - BRAKES/ELECTRICAL - DIAGNOSIS AND TESTING)

No >> Go To 3

RIGHT FRONT SENSOR OPEN — 21 (CONTINUED)

3. TONE WHEEL DAMAGED/MISSING

Inspect the Tone Wheel in accordance with the Service Information.

NOTE: The Tone Wheel Teeth should be perfectly square, not bent or nicked.

Were any problems found?

Yes >> Replace the Tone Wheel in accordance with the Service Information.
Perform ABS VERIFICATION TEST - VER 1. (Refer to 5 - BRAKES/ELECTRICAL - DIAGNOSIS AND TESTING)

No >> Go To 4

---

4. EXCESSIVE WHEEL SPEED SENSOR AIR GAP

Measure the Wheel Speed Sensor Air Gap in accordance with the Service Information.

Were any problems found?

Yes >> Repair as necessary in accordance with the Service Information.
Perform ABS VERIFICATION TEST - VER 1. (Refer to 5 - BRAKES/ELECTRICAL - DIAGNOSIS AND TESTING)

No >> Go To 5

---

5. WHEEL BEARING LOOSE/BINDING

Inspect the wheel bearings for excessive run out or improper clearance in accordance with the Service Information.

Were any problems found?

Yes >> Repair as necessary in accordance with the Service Information.
Perform ABS VERIFICATION TEST - VER 1. (Refer to 5 - BRAKES/ELECTRICAL - DIAGNOSIS AND TESTING)

No >> Go To 6

---

6. RIGHT FRONT WHEEL SPEED SENSOR (+) CIRCUIT SHORTED TO GROUND

Turn the ignition off.

Disconnect the Right Front Wheel Speed Sensor harness connector.

Disconnect the Controller Anti-lock Brake harness connector.

NOTE: Check connector - Clean/repair as necessary.

Measure the resistance between the Right Front Wheel Speed Sensor (+) circuit and ground.

Is the resistance above 5.0 ohms?

Yes >> Go To 7

No >> Repair the Right Front Wheel Speed Sensor (+) circuit for a short to ground.
Perform ABS VERIFICATION TEST - VER 1. (Refer to 5 - BRAKES/ELECTRICAL - DIAGNOSIS AND TESTING)

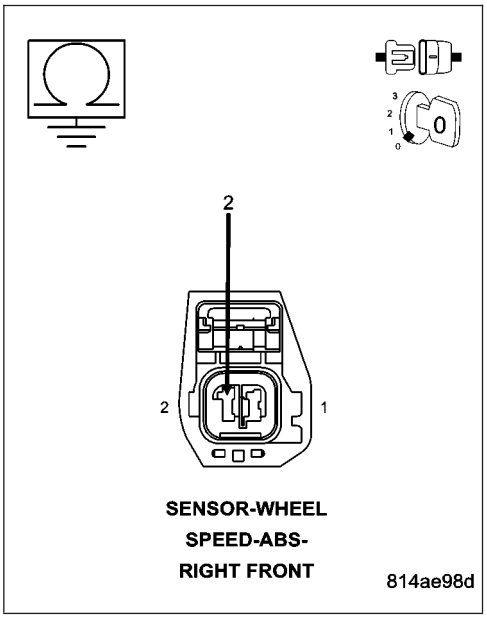

RIGHT FRONT SENSOR OPEN — 21 (CONTINUED)

7. RIGHT FRONT WHEEL SPEED SENSOR (-) CIRCUIT SHORTED TO GROUND

Measure the resistance between the Right Front Wheel Speed Sensor (-) circuit and ground.

Is the resistance above 5.0 ohms?

Yes >> Go To 8

No >> Repair the Right Front Wheel Speed Sensor (-) circuit for a short to ground.
Perform ABS VERIFICATION TEST - VER 1. (Refer to 5 - BRAKES/ELECTRICAL - DIAGNOSIS AND TESTING)

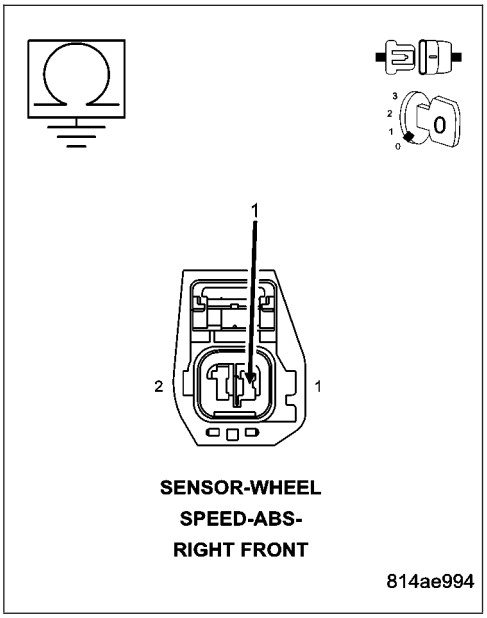

8. RIGHT FRONT WHEEL SPEED SENSOR (+) CIRCUIT OPEN

Measure the resistance of the Right Front Wheel Speed Sensor (+) circuit.

Is the resistance below 5.0 ohms?

Yes >> Go To 9

No >> Repair the open Right Front Wheel Speed Sensor (+) circuit.
Perform ABS VERIFICATION TEST - VER 1. (Refer to 5 - BRAKES/ELECTRICAL - DIAGNOSIS AND TESTING)

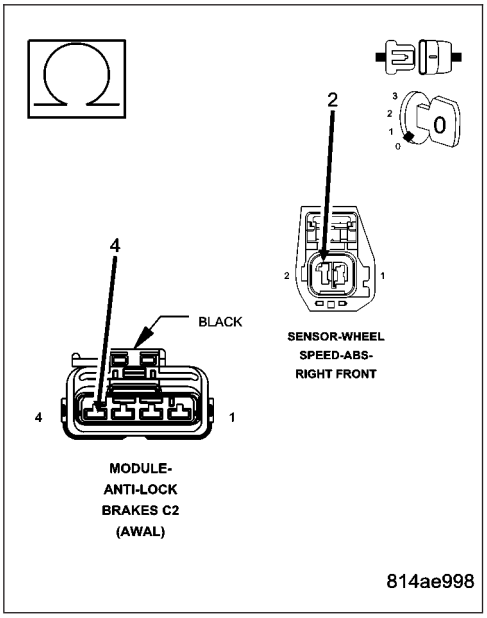

RIGHT FRONT SENSOR OPEN — 21 (CONTINUED)

9. RIGHT FRONT WHEEL SPEED SENSOR (-) CIRCUIT OPEN

Measure the resistance of the Right Front Wheel Speed Sensor (-) circuit.

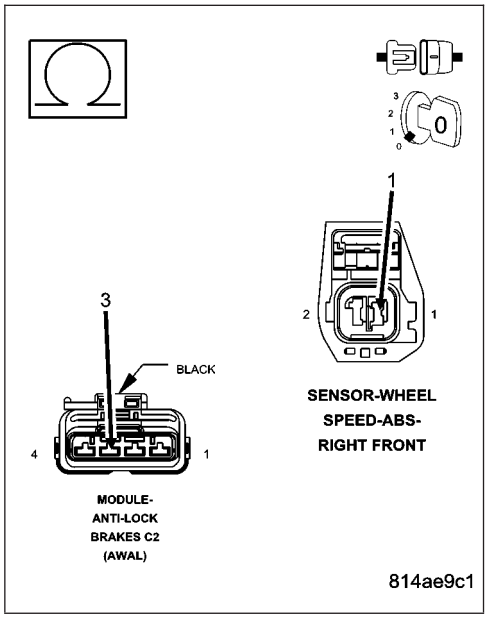

Is the resistance below 5.0 ohms?

Yes >> Go To 10

No >> Repair the open Right Front Wheel Speed Sensor (-) circuit.
Perform ABS VERIFICATION TEST - VER 1. (Refer to 5 - BRAKES/ELECTRICAL - DIAGNOSIS AND TESTING)

---

10. RIGHT FRONT WHEEL SPEED SENSOR

Turn the ignition off.

Connect the Right Front Wheel Speed Sensor harness connector.

Measure the resistance between the Right Front Wheel Speed Sensor (+) circuit and Right Front Wheel Speed Sensor (-) circuit at the Controller Anti-lock Brake harness connector.

NOTE: The resistance should be approximately 1600–2300 ohms at 76 degrees F.

Is the resistance within the noted range?

Yes >> Go to 11

No >> Replace the Right Front Wheel Speed Sensor in accordance with the Service Information.
Perform ABS VERIFICATION TEST - VER 1. (Refer to 5 - BRAKES/ELECTRICAL - DIAGNOSIS AND TESTING)

---

11. CONTROLLER ANTI-LOCK BRAKE

Turn the ignition off.

Inspect the related wiring harness. Look for any chafed, pierced, pinched, or partially broken wires.

Inspect the related wire harness connectors. Look for broken, bent, pushed out, or corroded terminals.

Refer to any Technical Service Bulletins that may apply.

Were any problems found?

Yes >> Repair as necessary in accordance with the Service Information.
Perform ABS VERIFICATION TEST - VER 1. (Refer to 5 - BRAKES/ELECTRICAL - DIAGNOSIS AND TESTING)

No >> Replace the Controller Anti-lock Brake in accordance with the Service Information.
Perform ABS VERIFICATION TEST - VER 1. (Refer to 5 - BRAKES/ELECTRICAL - DIAGNOSIS AND TESTING)

RIGHT FRONT SENSOR OPEN — 21 (CONTINUED)

12. WIRING HARNESS INSPECTION

Turn the ignition off.

NOTE: Towing the vehicle with ignition ON may set this DTC.

Inspect the related wiring harness. Look for any chafed, pierced, pinched, or partially broken wires.

Inspect the related wire harness connectors. Look for broken, bent, pushed out, or corroded terminals.

Refer to any Technical Service Bulletins that may apply.

Were any problems found?

Yes >> Repair as necessary in accordance with the Service Information.
Perform ABS VERIFICATION TEST - VER 1. (Refer to 5 - BRAKES/ELECTRICAL - DIAGNOSIS AND TESTING)

No >> Test Complete.

RIGHT FRONT SENSOR SHORTED — 91

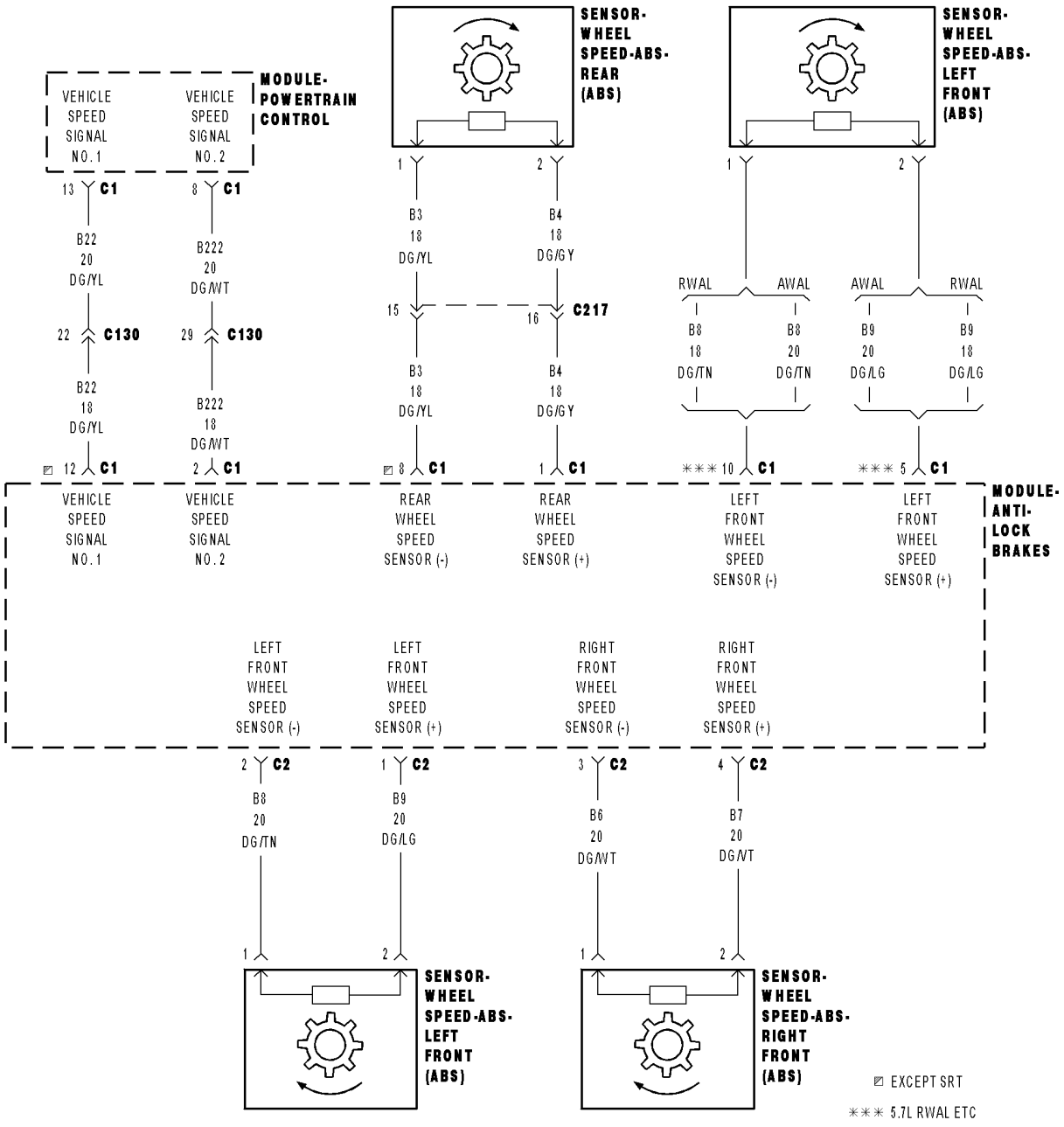

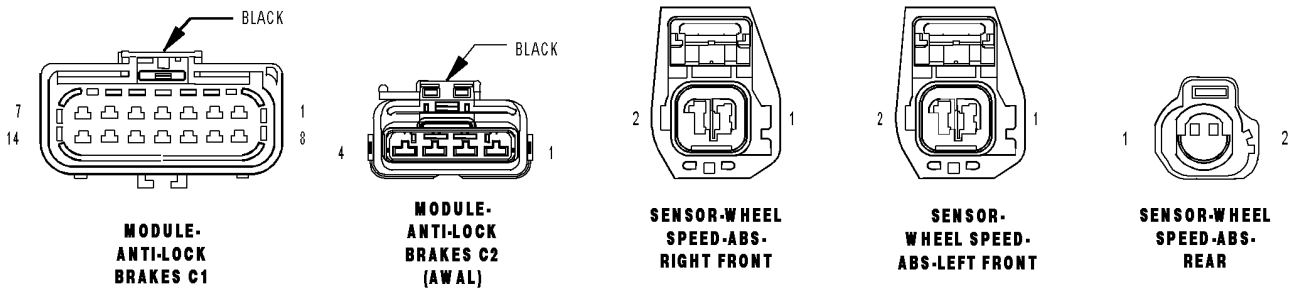

814ae047

RIGHT FRONT SENSOR SHORTED — 91 (CONTINUED)
For a complete wiring diagram **Refer to Section 8W**.

- **When Monitored:**
  Ignition on.
- **Set Condition:**
  The CAB detect high voltage on the wheel speed sensor circuit.

Possible Causes
INTERMITTENT RIGHT FRONT WHEEL SPEED SENSOR DTC
RIGHT FRONT WHEEL SPEED SENSOR (+) CIRCUIT SHORTED TO VOLTAGE
RIGHT FRONT WHEEL SPEED SENSOR (-) CIRCUIT SHORTED TO VOLTAGE
RIGHT FRONT WHEEL SPEED SENSOR (+) CIRCUIT SHORTED TO THE RIGHT FRONT WHEEL SPEED SENSOR (-) CIRCUIT
TONE WHEEL
EXCESSIVE RIGHT FRONT WHEEL SPEED SENSOR AIR GAP
WHEEL BEARING
RIGHT FRONT WHEEL SPEED SENSOR
CONTROLLER ANTI-LOCK BRAKE

Diagnostic Test

1. DTC IS ACTIVE

Turn the ignition on.
With the scan tool, clear DTCs.
Turn the ignition off.
Turn the ignition on.
With the scan tool, read DTCs.

Does the DRBIII® display the DTC?

Yes >> Go To 2

No >> Go To 11

---

2. WHEEL SPEED SENSOR INSPECTION

Turn the ignition off.
Inspect the Wheel Speed Sensor for proper mounting.
Inspect the Wheel Speed Sensor harness and connector.
Inspect the Wheel Speed Sensor for excessive debris on the sensor.

Were any problems found?

Yes >> Repair as necessary in accordance with the Service Information.
Perform ABS VERIFICATION TEST - VER 1. (Refer to 5 - BRAKES/ELECTRICAL - DIAGNOSIS AND TESTING)

No >> Go To 3

RIGHT FRONT SENSOR SHORTED — 91 (CONTINUED)

3. TONE WHEEL DAMAGED/MISSING

Inspect the Tone Wheel in accordance with the Service Information.

NOTE: The Tone Wheel Teeth should be perfectly square, not bent or nicked.

Were any problems found?

Yes >> Replace the Tone Wheel in accordance with the Service Information.
Perform ABS VERIFICATION TEST - VER 1. (Refer to 5 - BRAKES/ELECTRICAL - DIAGNOSIS AND TESTING)

No >> Go To 4

---

4. EXCESSIVE WHEEL SPEED SENSOR AIR GAP

Measure the Wheel Speed Sensor Air Gap in accordance with the Service Information.

Were any problems found?

Yes >> Repair as necessary in accordance with the Service Information.
Perform ABS VERIFICATION TEST - VER 1. (Refer to 5 - BRAKES/ELECTRICAL - DIAGNOSIS AND TESTING)

No >> Go To 5

---

5. WHEEL BEARING LOOSE/BINDING

Inspect the wheel bearings for excessive run out or improper clearance in accordance with the Service Information.

Were any problems found?

Yes >> Repair as necessary in accordance with the Service Information.
Perform ABS VERIFICATION TEST - VER 1. (Refer to 5 - BRAKES/ELECTRICAL - DIAGNOSIS AND TESTING)

No >> Go To 6

---

6. RIGHT FRONT WHEEL SPEED SENSOR (+) CIRCUIT SHORTED TO VOLTAGE

Turn the ignition on.

Measure the voltage of the Right Front Wheel Speed Sensor (+) circuit.

Is there any voltage present?

Yes >> Repair Right Front Wheel Speed Sensor (+) circuit for a short to voltage.
Perform ABS VERIFICATION TEST - VER 1. (Refer to 5 - BRAKES/ELECTRICAL - DIAGNOSIS AND TESTING)

No >> Go To 7

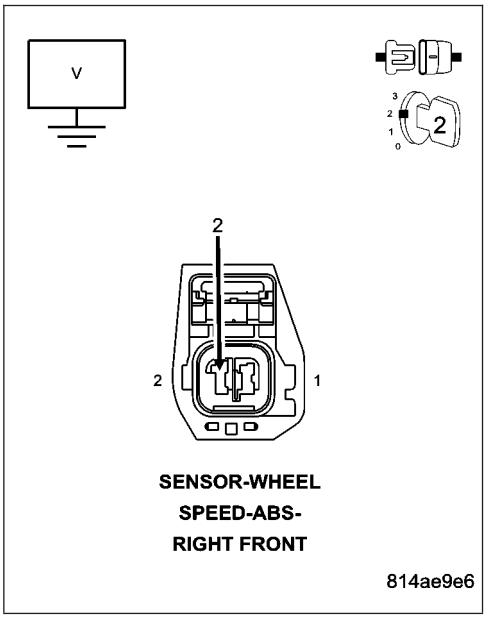

RIGHT FRONT SENSOR SHORTED — 91 (CONTINUED)

7. RIGHT FRONT WHEEL SPEED SENSOR (-) CIRCUIT SHORTED TO VOLTAGE

Measure the voltage of the Right Front Wheel Speed Sensor (-) circuit.

Is there any voltage present?

Yes >> Repair the Right Front Wheel Speed Sensor (-) circuit for a short to voltage.
Perform ABS VERIFICATION TEST - VER 1. (Refer to 5 - BRAKES/ELECTRICAL - DIAGNOSIS AND TESTING)

No >> Go To 8

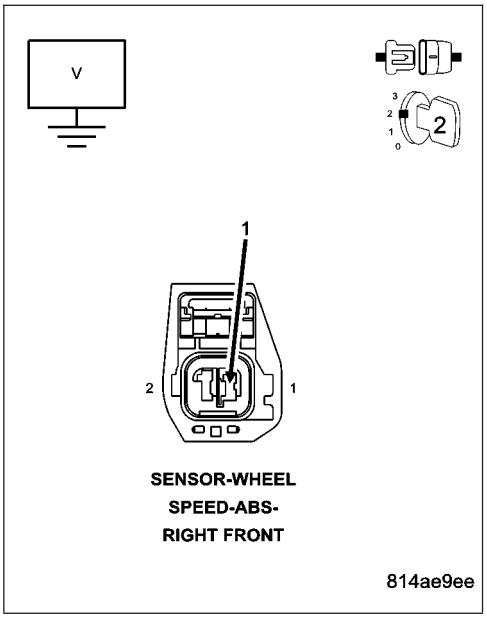

8. RIGHT FRONT WHEEL SPEED SENSOR (+) CIRCUIT SHORTED TO THE RIGHT FRONT WHEEL SPEED SENSOR (-) CIRCUIT

Turn the ignition off.

Measure the resistance between the Right Front Wheel Speed Sensor (+) circuit and the Right Front Wheel Speed Sensor (-) circuit at the Controller Anti-lock Brake harness connector.

Is the resistance below 5.0 ohms?

Yes >> Repair Right Front Wheel Speed Sensor (+) circuit for a short to the Right Front Wheel Speed Sensor (-) circuit.
Perform ABS VERIFICATION TEST - VER 1. (Refer to 5 - BRAKES/ELECTRICAL - DIAGNOSIS AND TESTING)

No >> Go To 9

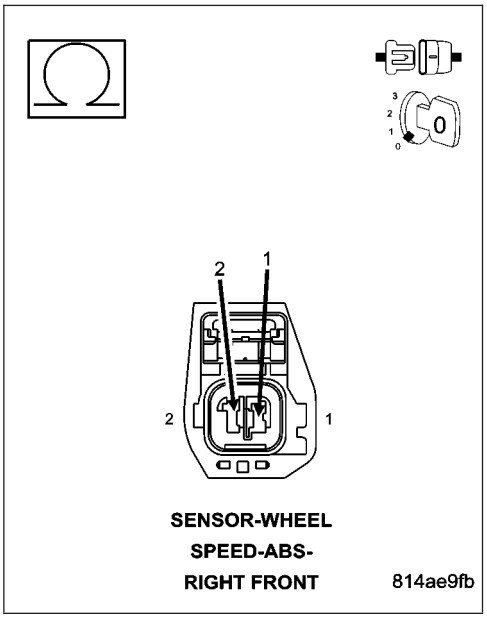

RIGHT FRONT SENSOR SHORTED — 91 (CONTINUED)

9. RIGHT FRONT WHEEL SPEED SENSOR

Turn the ignition off.

Connect the Right Front Wheel Speed Sensor harness connector.

Measure the resistance between the Right Front Wheel Speed Sensor (+) circuit and Right Front Wheel Speed Sensor (-) circuit at the Controller Anti-lock Brake harness connector.

NOTE: The resistance should be approximately 1600–2300 ohms at 76 degrees F.

Is the resistance within the noted range?

Yes >> Go to 10

No >> Replace the Right Front Wheel Speed Sensor in accordance with the Service Information.
Perform ABS VERIFICATION TEST - VER 1. (Refer to 5 - BRAKES/ELECTRICAL - DIAGNOSIS AND TESTING)

---

10. CONTROLLER ANTI-LOCK BRAKE

Turn the ignition off.

Inspect the related wiring harness. Look for any chafed, pierced, pinched, or partially broken wires.

Inspect the related wire harness connectors. Look for broken, bent, pushed out, or corroded terminals.

Refer to any Technical Service Bulletins that may apply.

Were any problems found?

Yes >> Repair as necessary in accordance with the Service Information.
Perform ABS VERIFICATION TEST - VER 1. (Refer to 5 - BRAKES/ELECTRICAL - DIAGNOSIS AND TESTING)

No >> Replace the Controller Anti-lock Brake in accordance with the Service Information.
Perform ABS VERIFICATION TEST - VER 1. (Refer to 5 - BRAKES/ELECTRICAL - DIAGNOSIS AND TESTING)

---

11. WIRING HARNESS INSPECTION

Turn the ignition off.

NOTE: Towing the vehicle with ignition ON may set this DTC.

Inspect the related wiring harness. Look for any chafed, pierced, pinched, or partially broken wires.

Inspect the related wire harness connectors. Look for broken, bent, pushed out, or corroded terminals.

Refer to any Technical Service Bulletins that may apply.

Were any problems found?

Yes >> Repair as necessary in accordance with the Service Information.
Perform ABS VERIFICATION TEST - VER 1. (Refer to 5 - BRAKES/ELECTRICAL - DIAGNOSIS AND TESTING)

No >> Test Complete.

INTERNAL MAIN RELAY OPEN — 65

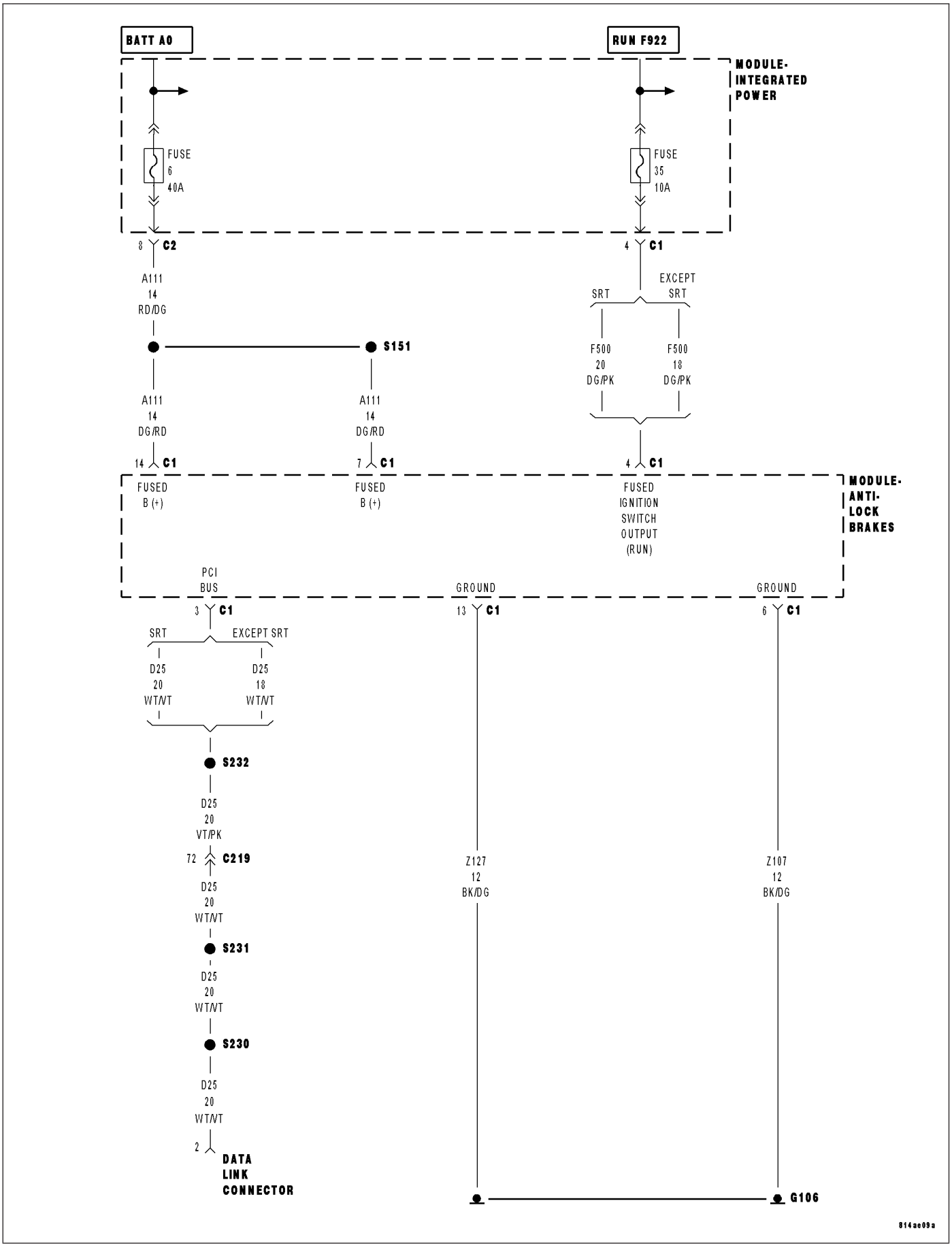

INTERNAL MAIN RELAY OPEN — 65 (CONTINUED)
For a complete wiring diagram **Refer to Section 8W**.

- **When Monitored:**
  Ignition on.
- **Set Condition:**
  Solenoid feedback voltage is below the calibrated value. (solenoids do not energize)

Possible Causes
INTERMITTENT BATTERY VOLTAGE LOW DTC
FUSED RUN RELAY OUTPUT CIRCUIT OPEN OR HIGH RESISTANCE
FUSED B+ CIRCUIT OPEN OR HIGH RESISTANCE
GROUND CIRCUIT OPEN OR HIGH RESISTANCE
CONTROLLER ANTI-LOCK BRAKE

Diagnostic Test

1. DTC IS ACTIVE

NOTE: Diagnose and repair any powertrain Charging system DTCs before continuing with this procedure.
NOTE: Ensure the battery is fully charged.
Turn the ignition on.
With the DRBIII®, erase DTCs.
Turn the ignition off.
Start the engine.
With the DRBIII® read DTCs.

Does the DTC reset?

Yes >> Go To 2
No >> Go To 5

INTERNAL MAIN RELAY OPEN — 65 (CONTINUED)

2. FUSED IGNITION SWITCH OUTPUT CIRCUIT OPEN OR HIGH RESISTANCE

NOTE: Before continuing, inspect the fuses that are related to the ABS system.

Turn the ignition off.

Disconnect the Controller Anti-lock Brake harness connector.

Check connectors - Clean/repair as necessary.

Turn the ignition on.

Using a 12–volt test light connected to ground, probe the Fused Ignition Switch Output circuit.

NOTE: The test light should be illuminated and bright. Compare the brightness to that of a direct connection to the battery.

Is the test light illuminated and bright?

Yes >> Go To 3

No >> Repair the Fused Ignition Switch Output circuit for an open circuit or high resistance.

Perform ABS VERIFICATION TEST - VER 1. (Refer to 5 - BRAKES/ELECTRICAL - DIAGNOSIS AND TESTING)

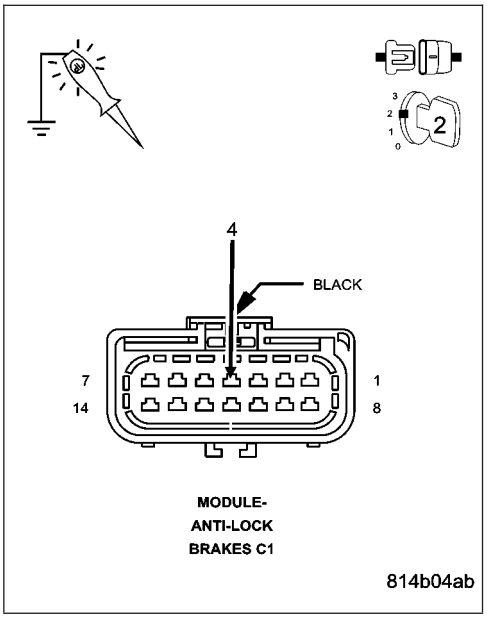

3. FUSED B+ CIRCUIT OPEN OR HIGH RESISTANCE

Using a 12–volt test light connected to ground, probe the Fused B+circuit.

NOTE: The test light should be illuminated and bright. Compare the brightness to that of a direct connection to the battery.

Is the test light illuminated and bright?

Yes >> Go To 4

No >> Repair the Fused B+circuit for an open circuit or high resistance.

Perform ABS VERIFICATION TEST - VER 1. (Refer to 5 - BRAKES/ELECTRICAL - DIAGNOSIS AND TESTING)

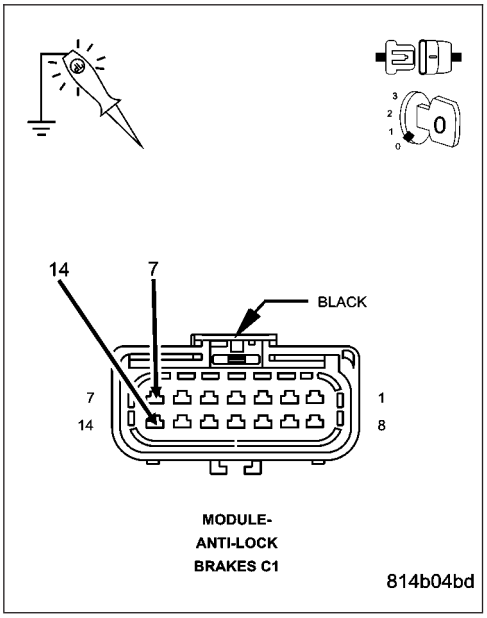

INTERNAL MAIN RELAY OPEN — 65 (CONTINUED)

4. GROUND CIRCUIT(S) OPEN OR HIGH RESISTANCE

Turn the ignition off.

Using a 12–volt test light connected to B+, probe both the Ground circuit.

NOTE: The test light should be illuminated and bright. Compare the brightness to that of a direct connection to the battery at each circuit.

Is the test light illuminated and bright?

Yes >> Replace the Controller Anti-lock Brake Module in accordance with the Service Information.
Perform ABS VERIFICATION TEST - VER 1. (Refer to 5 - BRAKES/ELECTRICAL - DIAGNOSIS AND TESTING)

No >> Repair the Ground circuit(s) for an open circuit or high resistance.
Perform ABS VERIFICATION TEST - VER 1. (Refer to 5 - BRAKES/ELECTRICAL - DIAGNOSIS AND TESTING)

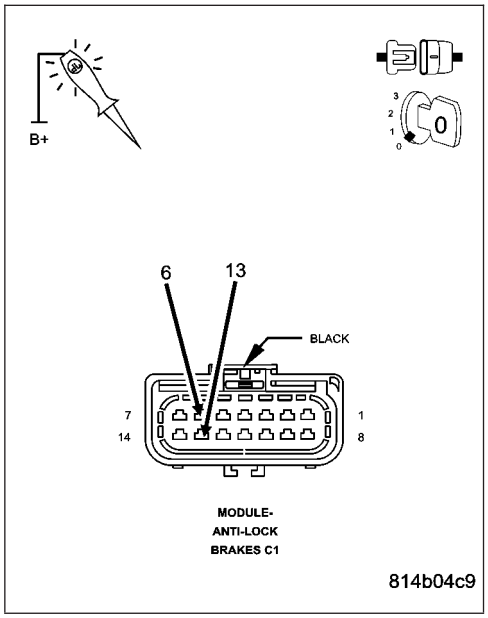

5. INTERMITTENT DTC

Turn the ignition off.

Using the wiring diagram/schematic as a guide, inspect the wiring and connectors.

Check connectors - Clean/repair as necessary.

Inspect the vehicle for aftermarket accessories that may exceed the Charging System output.

Refer to any Technical Service Bulletins that may apply.

Were any problems found?

Yes >> Repair as necessary.
Perform ABS VERIFICATION TEST - VER 1. (Refer to 5 - BRAKES/ELECTRICAL - DIAGNOSIS AND TESTING)

No >> Test Complete.

INTERNAL MAIN RELAY SHORTED — 66

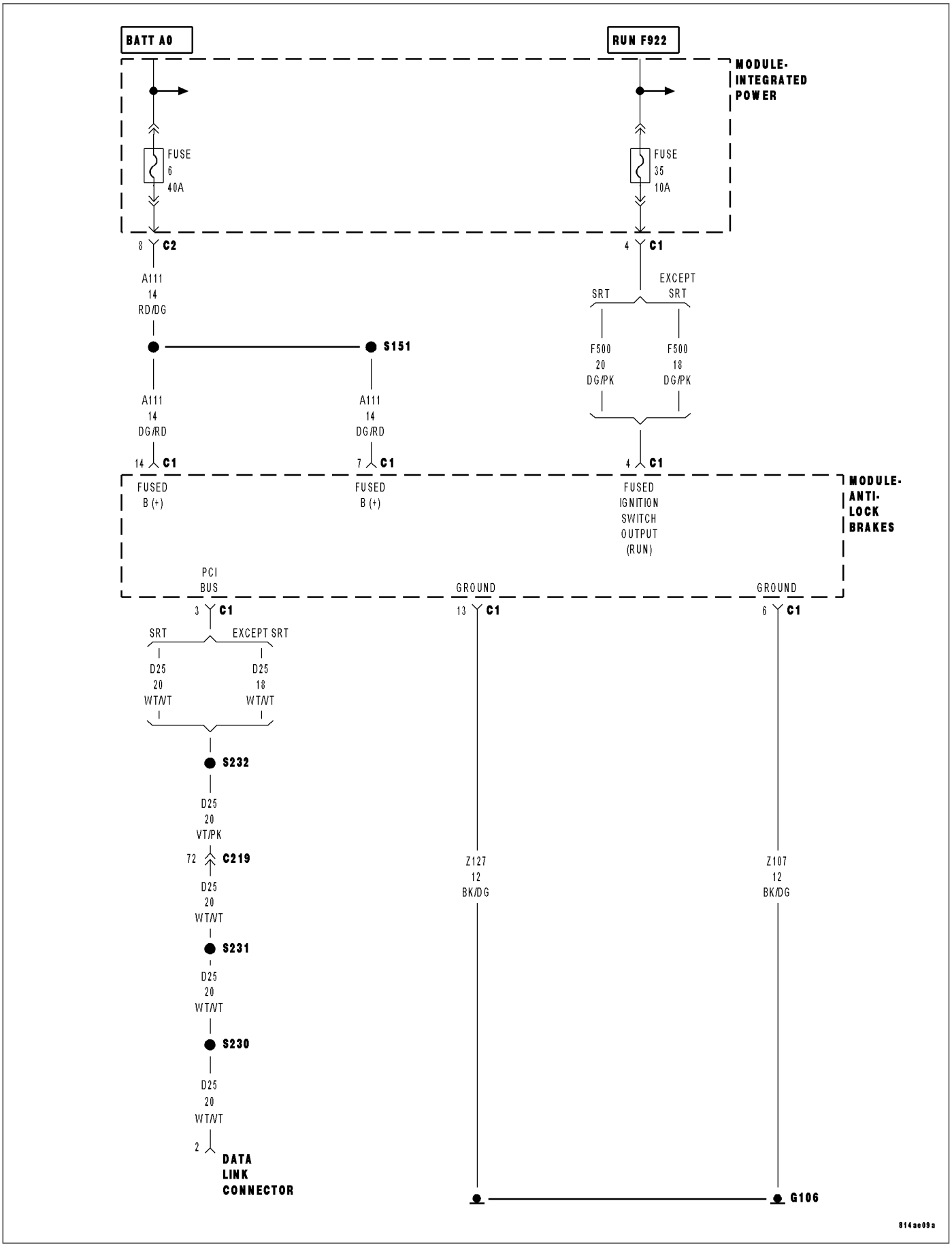

INTERNAL MAIN RELAY SHORTED — 66 (CONTINUED)
For a complete wiring diagram **Refer to Section 8W**.

- **When Monitored:**
  Ignition on.
- **Set Condition:**
  The Relay feedback is above the calibrated value.

Possible Causes
INTERMITTENT BATTERY VOLTAGE HIGH DTC
POWERTRAIN CHARGING SYSTEM DTCS PRESENT
FUSED B+ CIRCUIT
GROUND CIRCUIT
CONTROLLER ANTI-LOCK BRAKE

Diagnostic Test

1. DTC IS ACTIVE

NOTE: Diagnose and repair any powertrain Charging system DTCs before continuing with this procedure.
NOTE: Ensure the battery is fully charged.
Turn the ignition on.
With the DRBIII®, erase DTCs.
Turn the ignition off.
Start the engine.
With the DRBIII® read DTCs.

Does the DTC reset?

Yes >> Go To 2
No >> Go To 4

INTERNAL MAIN RELAY SHORTED — 66 (CONTINUED)

2. FUSED B+ CIRCUIT SHORTED TO FUSED IGNITION SWITCH OUTPUT CIRCUIT

Turn the ignition off.

Disconnect the Controller Anti-Lock Brake harness connector.

Using a 12–volt test light connected to ground, probe the Fused Ignition Switch Output circuit.

Does the test light illuminate?

Yes >> Repair the Fused B+ circuit shorted to the Fused Ignition Switch Output circuit.
Perform ABS VERIFICATION TEST - VER 1. (Refer to 5 - BRAKES/ELECTRICAL - DIAGNOSIS AND TESTING)

No >> Go To 3

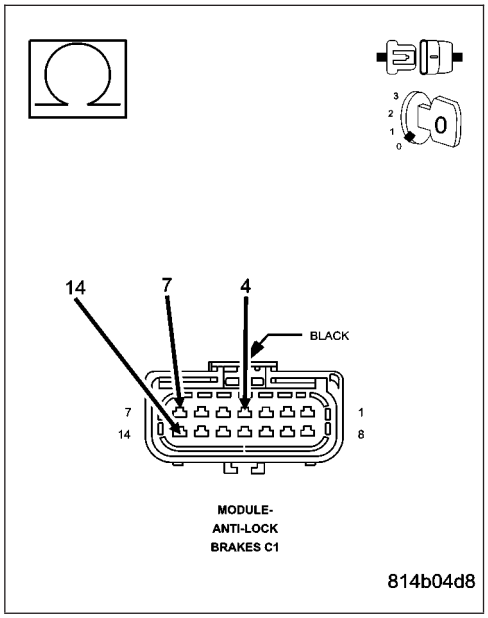

3. GROUND CIRCUIT(S) OPEN OR HIGH RESISTANCE

Turn the ignition off.

Using a 12–volt test light connected to B+, probe both the Ground circuit.

NOTE: The test light should be illuminated and bright. Compare the brightness to that of a direct connection to the battery at each circuit.

Is the test light illuminated and bright?

Yes >> Replace the Controller Anti-lock Brake Module in accordance with the Service Information.
Perform ABS VERIFICATION TEST - VER 1. (Refer to 5 - BRAKES/ELECTRICAL - DIAGNOSIS AND TESTING)

No >> Repair the Ground circuit(s) for an open circuit or high resistance.
Perform ABS VERIFICATION TEST - VER 1. (Refer to 5 - BRAKES/ELECTRICAL - DIAGNOSIS AND TESTING)

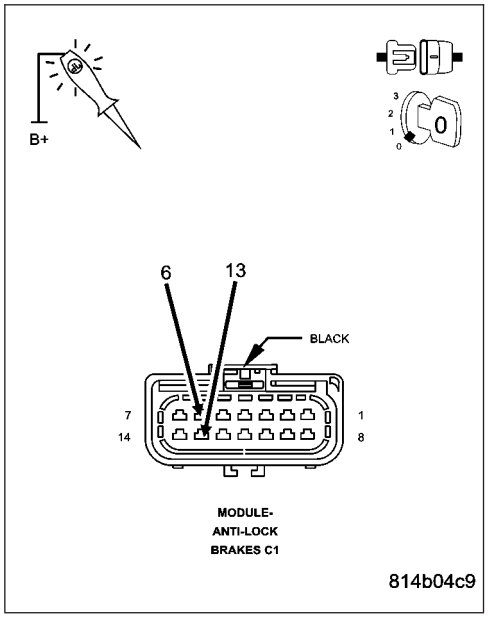

INTERNAL MAIN RELAY SHORTED — 66 (CONTINUED)

4. INTERMITTENT DTC

NOTE: Check the PowertrainControl Module for any charging system DTCs and repair as necessary.

Turn the ignition off.

Using the wiring diagram/schematic as a guide, inspect the wiring and connectors.

Check connectors - Clean/repair as necessary.

Ensure the charging system is operating properly.

Inspect the vehicle for aftermarket accessories that may exceed the Charging System output.

Refer to any Technical Service Bulletins that may apply.

Were any problems found?

Yes >> Repair as necessary.
Perform ABS VERIFICATION TEST - VER 1. (Refer to 5 - BRAKES/ELECTRICAL - DIAGNOSIS AND TESTING)

No >> Test Complete.

LEFT FRONT DUMP SOLENOID OPEN - 46

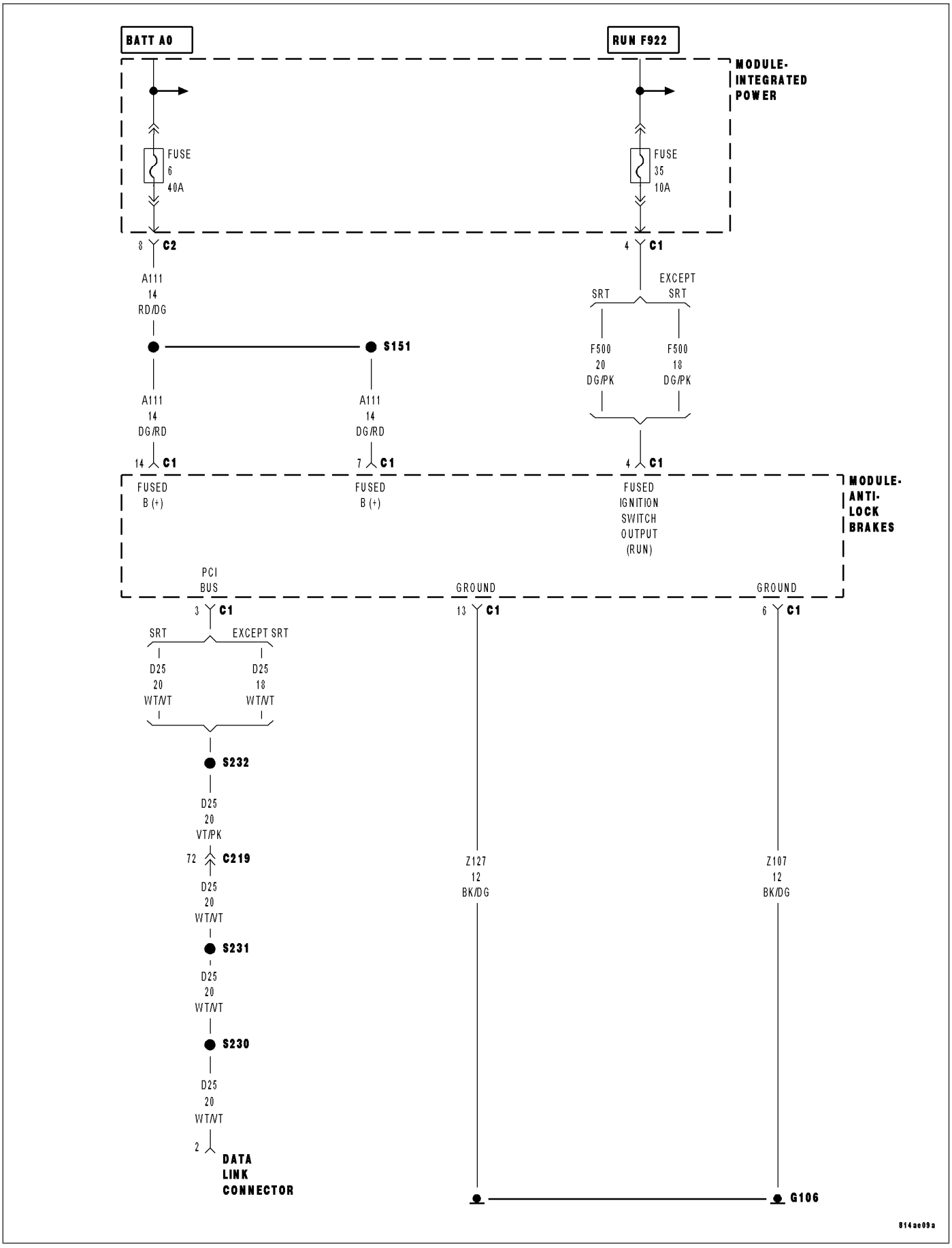

LEFT FRONT DUMP SOLENOID OPEN - 46 (CONTINUED)

For a complete wiring diagram **Refer to Section 8W**.

- **When Monitored:**
  Ignition on.
- **Set Condition:**
  When there is low logic feedback voltage from the solenoid when it is expect to be high. (solenoid not energized)

Possible Causes
INTERMITTENT BATTERY VOLTAGE LOW DTC
FUSED RUN RELAY OUTPUT CIRCUIT OPEN OR HIGH RESISTANCE
FUSED B+ CIRCUIT OPEN OR HIGH RESISTANCE
FUSED B+ CIRCUIT SHORTED TO FUSED IGNITION SWITCH OUTPUT CIRCUIT
GROUND CIRCUIT OPEN OR HIGH RESISTANCE
CONTROLLER ANTI-LOCK BRAKE

Diagnostic Test

1. DTC IS ACTIVE

Turn the ignition on.
With the DRBIII®, erase DTCs.
Turn the ignition off.
Start the engine.
With the DRBIII® read DTCs.

Does the DTC reset?

Yes >> Go To 2

No >> Go To 6

LEFT FRONT DUMP SOLENOID OPEN - 46 (CONTINUED)

2. FUSED IGNITION SWITCH OUTPUT CIRCUIT OPEN OR HIGH RESISTANCE

NOTE: Before continuing, inspect the fuses that are related to the ABS system. If one or more is found to be opened, use the schematic and repair the short to ground.

Turn the ignition off.

Disconnect the Controller Anti-lock Brake harness connector.

Check connectors - Clean/repair as necessary.

Turn the ignition on.

Using a 12–volt test light connected to ground, probe the Fused Ignition Switch Output circuit.

NOTE: The test light should be illuminated and bright. Compare the brightness to that of a direct connection to the battery.

Is the test light illuminated and bright?

Yes >> Go To 3

No >> Repair the Fused Ignition Switch Output circuit for an open circuit or high resistance.

Perform ABS VERIFICATION TEST - VER 1. (Refer to 5 - BRAKES/ELECTRICAL - DIAGNOSIS AND TESTING)

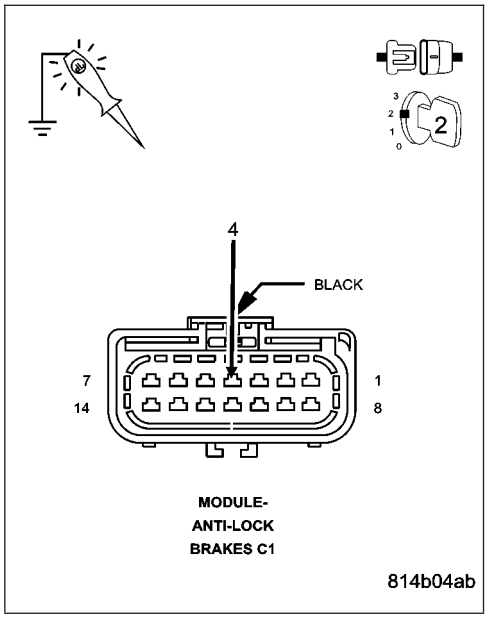

3. FUSED B+ CIRCUIT OPEN OR HIGH RESISTANCE

Using a 12–volt test light connected to ground, probe the Fused B+ circuit.

NOTE: The test light should be illuminated and bright. Compare the brightness to that of a direct connection to the battery.

Is the test light illuminated and bright?

Yes >> Go To 4

No >> Repair the Fused B+ circuit for an open circuit or high resistance.

Perform ABS VERIFICATION TEST - VER 1. (Refer to 5 - BRAKES/ELECTRICAL - DIAGNOSIS AND TESTING)

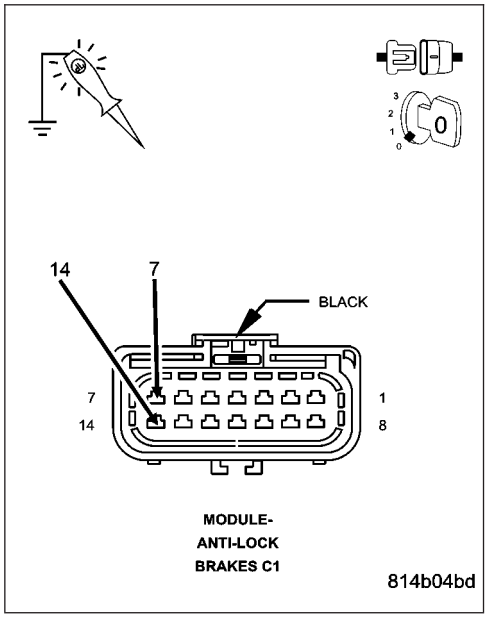

LEFT FRONT DUMP SOLENOID OPEN - 46 (CONTINUED)

4. FUSED B+ CIRCUIT SHORTED TO FUSED IGNITION SWITCH OUTPUT CIRCUIT

Turn the ignition off.

Disconnect the Controller Anti-Lock Brake harness connector.

Using a 12–volt test light connected to ground, probe the Fused Ignition Switch Output circuit.

Does the test light illuminate?

Yes >> Repair the Fused B+ circuit shorted to the Fused Ignition Switch Output circuit.

Perform ABS VERIFICATION TEST - VER 1. (Refer to 5 - BRAKES/ELECTRICAL - DIAGNOSIS AND TESTING)

No >> Go To 5

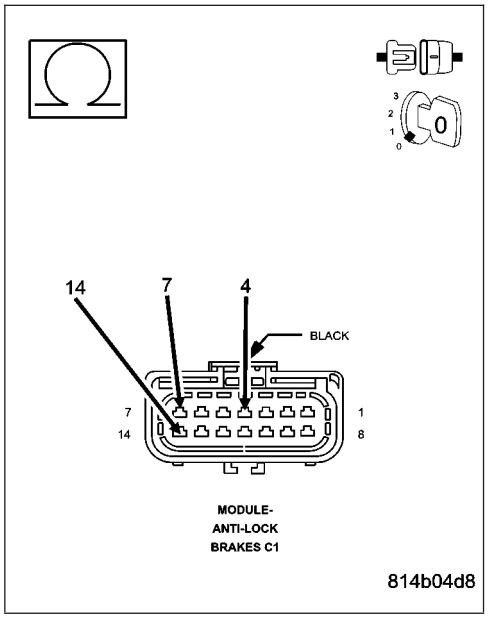

5. GROUND CIRCUIT(S) OPEN OR HIGH RESISTANCE

Turn the ignition off.

Using a 12–volt test light connected to B+, probe both the Ground circuit.

NOTE: The test light should be illuminated and bright. Compare the brightness to that of a direct connection to the battery at each circuit.

Is the test light illuminated and bright?

Yes >> Replace the Controller Anti-lock Brake Module in accordance with the Service Information.

Perform ABS VERIFICATION TEST - VER 1. (Refer to 5 - BRAKES/ELECTRICAL - DIAGNOSIS AND TESTING)

No >> Repair the Ground circuit(s) for an open circuit or high resistance.

Perform ABS VERIFICATION TEST - VER 1. (Refer to 5 - BRAKES/ELECTRICAL - DIAGNOSIS AND TESTING)

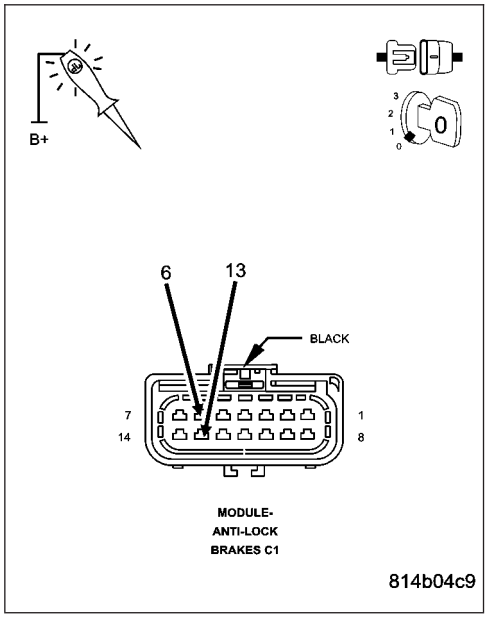

LEFT FRONT DUMP SOLENOID OPEN - 46 (CONTINUED)

6. INTERMITTENT DTC

Turn the ignition off.

Using the wiring diagram/schematic as a guide, inspect the wiring and connectors.

Check connectors - Clean/repair as necessary.

Inspect the vehicle for aftermarket accessories that may exceed the Charging System output.

Refer to any Technical Service Bulletins that may apply.

Were any problems found?

Yes >> Repair as necessary.
Perform ABS VERIFICATION TEST - VER 1. (Refer to 5 - BRAKES/ELECTRICAL - DIAGNOSIS AND TESTING)

No >> Test Complete.

LEFT FRONT DUMP SOLENOID SHORTED - 48

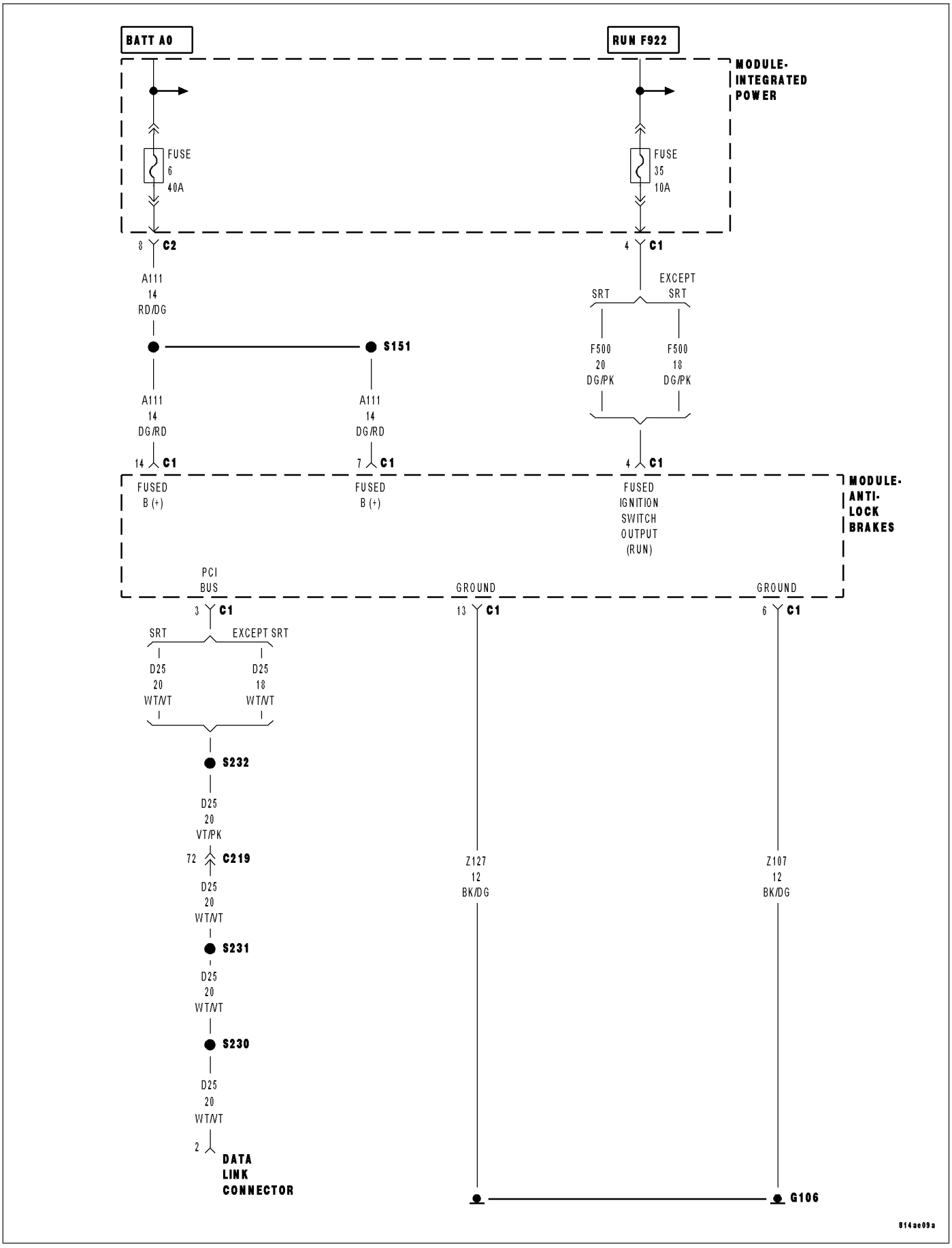

LEFT FRONT DUMP SOLENOID SHORTED - 48 (CONTINUED)

For a complete wiring diagram **Refer to Section 8W**.

- **When Monitored:**
  Ignition on.
- **Set Condition:**
  When there is high logic feedback voltage from the solenoid when it is supposed to be low. (solenoid energized)

Possible Causes
INTERMITTENT BATTERY VOLTAGE LOW DTC
FUSED RUN RELAY OUTPUT CIRCUIT OPEN OR HIGH RESISTANCE
FUSED B+ CIRCUIT OPEN OR HIGH RESISTANCE
FUSED B+ CIRCUIT SHORTED TO FUSED IGNITION SWITCH OUTPUT CIRCUIT
GROUND CIRCUIT OPEN OR HIGH RESISTANCE
CONTROLLER ANTI-LOCK BRAKE

Diagnostic Test

1. DTC IS ACTIVE

Turn the ignition on.
With the DRBIII®, erase DTCs.
Turn the ignition off.
Start the engine.
With the DRBIII® read DTCs.

Does the DTC reset?

Yes >> Go To 2
No >> Go To 6

LEFT FRONT DUMP SOLENOID SHORTED - 48 (CONTINUED)

2. FUSED IGNITION SWITCH OUTPUT CIRCUIT OPEN OR HIGH RESISTANCE

NOTE: Before continuing, inspect the fuses that are related to the ABS system. If one or more is found to be opened, use the schematic and repair the short to ground.

Turn the ignition off.

Disconnect the Controller Anti-lock Brake harness connector.

Check connectors - Clean/repair as necessary.

Turn the ignition on.

Using a 12–volt test light connected to ground, probe the Fused Ignition Switch Output circuit.

NOTE: The test light should be illuminated and bright. Compare the brightness to that of a direct connection to the battery.

Is the test light illuminated and bright?

Yes >> Go To 3

No >> Repair the Fused Ignition Switch Output circuit for an open circuit or high resistance.

Perform ABS VERIFICATION TEST - VER 1. (Refer to 5 - BRAKES/ELECTRICAL - DIAGNOSIS AND TESTING)

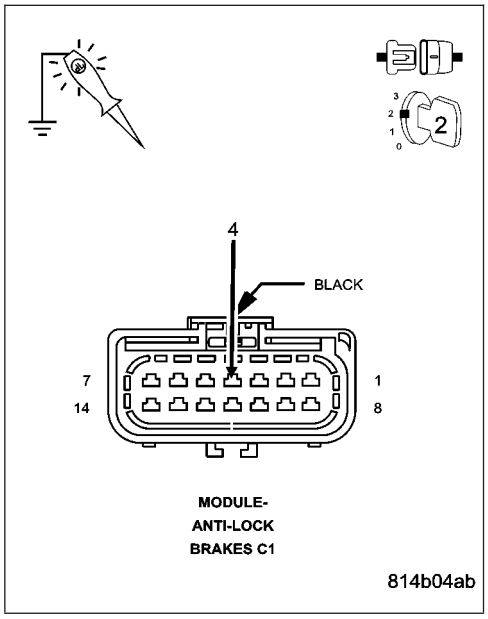

3. FUSED B+ CIRCUIT OPEN OR HIGH RESISTANCE

Using a 12–volt test light connected to ground, probe the Fused B+ circuit.

NOTE: The test light should be illuminated and bright. Compare the brightness to that of a direct connection to the battery.

Is the test light illuminated and bright?

Yes >> Go To 4

No >> Repair the Fused B+ circuit for an open circuit or high resistance.

Perform ABS VERIFICATION TEST - VER 1. (Refer to 5 - BRAKES/ELECTRICAL - DIAGNOSIS AND TESTING)

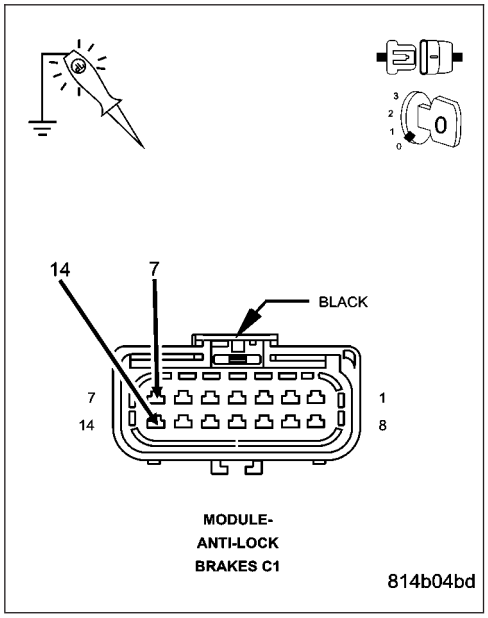

LEFT FRONT DUMP SOLENOID SHORTED - 48 (CONTINUED)

4. FUSED B+ CIRCUIT SHORTED TO FUSED IGNITION SWITCH OUTPUT CIRCUIT

Turn the ignition off.

Disconnect the Controller Anti-Lock Brake harness connector.

Using a 12–volt test light connected to ground, probe the Fused Ignition Switch Output circuit.

Does the test light illuminate?

Yes >> Repair the Fused B+ circuit shorted to the Fused Ignition Switch Output circuit.
Perform ABS VERIFICATION TEST - VER 1. (Refer to 5 - BRAKES/ELECTRICAL - DIAGNOSIS AND TESTING)

No >> Go To 5

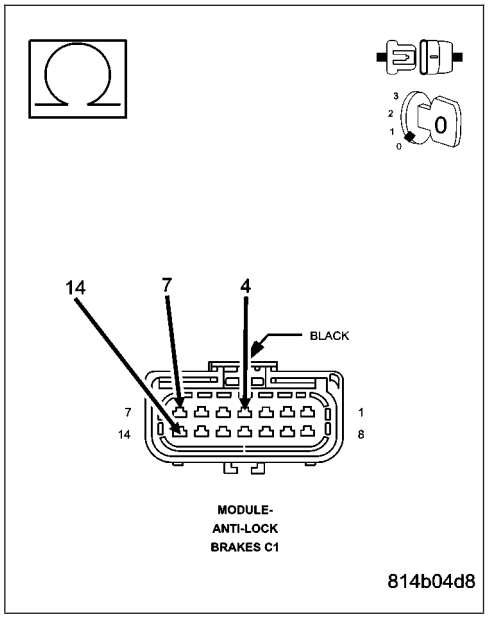

5. GROUND CIRCUIT(S) OPEN OR HIGH RESISTANCE

Turn the ignition off.

Using a 12–volt test light connected to B+, probe both the Ground circuit.

NOTE: The test light should be illuminated and bright. Compare the brightness to that of a direct connection to the battery at each circuit.

Is the test light illuminated and bright?

Yes >> Replace the Controller Anti-lock Brake Module in accordance with the Service Information.
Perform ABS VERIFICATION TEST - VER 1. (Refer to 5 - BRAKES/ELECTRICAL - DIAGNOSIS AND TESTING)

No >> Repair the Ground circuit(s) for an open circuit or high resistance.
Perform ABS VERIFICATION TEST - VER 1. (Refer to 5 - BRAKES/ELECTRICAL - DIAGNOSIS AND TESTING)

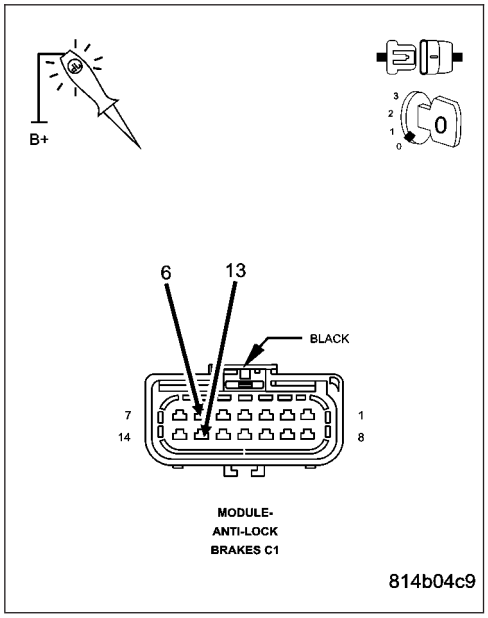

LEFT FRONT DUMP SOLENOID SHORTED - 48 (CONTINUED)

6. INTERMITTENT DTC

Turn the ignition off.

Using the wiring diagram/schematic as a guide, inspect the wiring and connectors.

Check connectors - Clean/repair as necessary.

Inspect the vehicle for aftermarket accessories that may exceed the Charging System output.

Refer to any Technical Service Bulletins that may apply.

Were any problems found?

Yes >> Repair as necessary.
Perform ABS VERIFICATION TEST - VER 1. (Refer to 5 - BRAKES/ELECTRICAL - DIAGNOSIS AND TESTING)

No >> Test Complete.

LEFT FRONT ISOLATION SOLENOID OPEN - 45

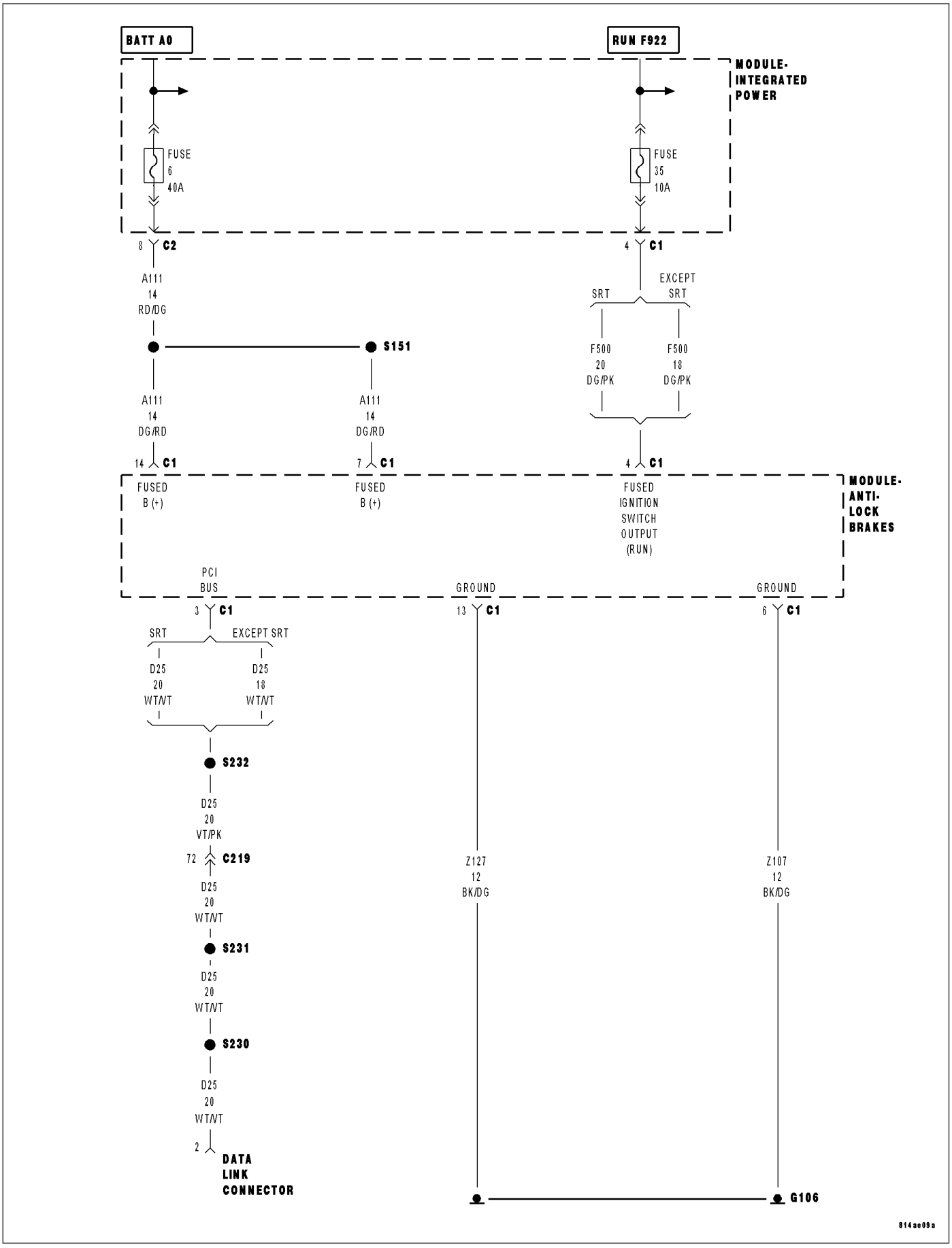

LEFT FRONT ISOLATION SOLENOID OPEN - 45 (CONTINUED)

For a complete wiring diagram **Refer to Section 8W**.

- **When Monitored:**
  Ignition on.
- **Set Condition:**
  When there is low logic feedback voltage from the solenoid when it is expect to be high. (solenoid not energized)

Possible Causes
INTERMITTENT BATTERY VOLTAGE LOW DTC
FUSED RUN RELAY OUTPUT CIRCUIT OPEN OR HIGH RESISTANCE
FUSED B+ CIRCUIT OPEN OR HIGH RESISTANCE
FUSED B+ CIRCUIT SHORTED TO FUSED IGNITION SWITCH OUTPUT CIRCUIT
GROUND CIRCUIT OPEN OR HIGH RESISTANCE
CONTROLLER ANTI-LOCK BRAKE

Diagnostic Test

1. DTC IS ACTIVE

Turn the ignition on.
With the DRBIII®, erase DTCs.
Turn the ignition off.
Start the engine.
With the DRBIII® read DTCs.

Does the DTC reset?

Yes >> Go To 2

No >> Go To 6

LEFT FRONT ISOLATION SOLENOID OPEN - 45 (CONTINUED)

2. FUSED IGNITION SWITCH OUTPUT CIRCUIT OPEN OR HIGH RESISTANCE

NOTE: Before continuing, inspect the fuses that are related to the ABS system. If one or more is found to be opened, use the schematic and repair the short to ground.

Turn the ignition off.

Disconnect the Controller Anti-lock Brake harness connector.

Check connectors - Clean/repair as necessary.

Turn the ignition on.

Using a 12–volt test light connected to ground, probe the Fused Ignition Switch Output circuit.

NOTE: The test light should be illuminated and bright. Compare the brightness to that of a direct connection to the battery.

Is the test light illuminated and bright?

Yes >> Go To 3

No >> Repair the Fused Ignition Switch Output circuit for an open circuit or high resistance.

Perform ABS VERIFICATION TEST - VER 1. (Refer to 5 - BRAKES/ELECTRICAL - DIAGNOSIS AND TESTING)

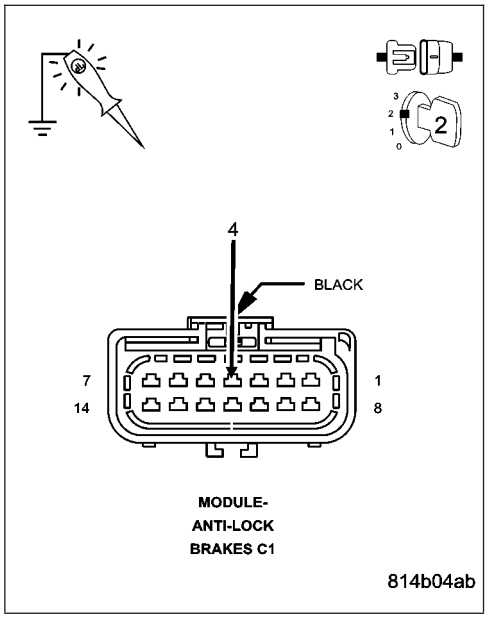

3. FUSED B+ CIRCUIT OPEN OR HIGH RESISTANCE

Using a 12–volt test light connected to ground, probe the Fused B+ circuit.

NOTE: The test light should be illuminated and bright. Compare the brightness to that of a direct connection to the battery.

Is the test light illuminated and bright?

Yes >> Go To 4

No >> Repair the Fused B+ circuit for an open circuit or high resistance.

Perform ABS VERIFICATION TEST - VER 1. (Refer to 5 - BRAKES/ELECTRICAL - DIAGNOSIS AND TESTING)

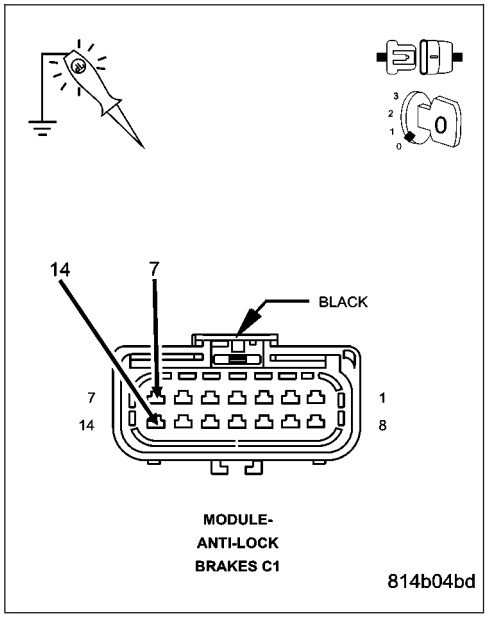

LEFT FRONT ISOLATION SOLENOID OPEN - 45 (CONTINUED)

4. FUSED B+ CIRCUIT SHORTED TO FUSED IGNITION SWITCH OUTPUT CIRCUIT

Turn the ignition off.

Disconnect the Controller Anti-Lock Brake harness connector.

Using a 12–volt test light connected to ground, probe the Fused Ignition Switch Output circuit.

Does the test light illuminate?

Yes >> Repair the Fused B+ circuit shorted to the Fused Ignition Switch Output circuit.
Perform ABS VERIFICATION TEST - VER 1. (Refer to 5 - BRAKES/ELECTRICAL - DIAGNOSIS AND TESTING)

No >> Go To 5

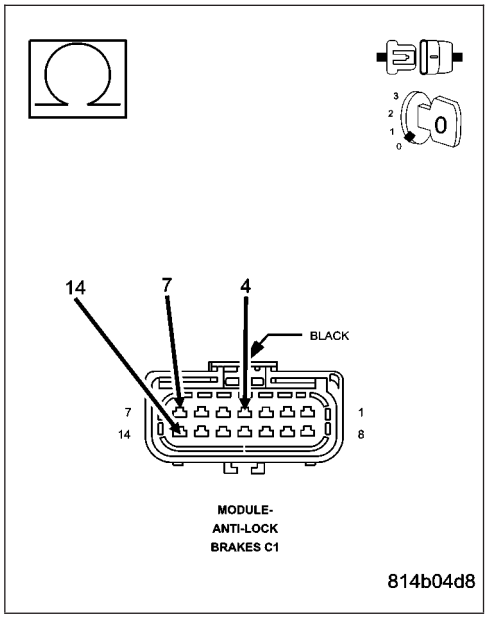

5. GROUND CIRCUIT(S) OPEN OR HIGH RESISTANCE

Turn the ignition off.

Using a 12–volt test light connected to B+, probe both the Ground circuit.

NOTE: The test light should be illuminated and bright. Compare the brightness to that of a direct connection to the battery at each circuit.

Is the test light illuminated and bright?

Yes >> Replace the Controller Anti-lock Brake Module in accordance with the Service Information.
Perform ABS VERIFICATION TEST - VER 1. (Refer to 5 - BRAKES/ELECTRICAL - DIAGNOSIS AND TESTING)

No >> Repair the Ground circuit(s) for an open circuit or high resistance.
Perform ABS VERIFICATION TEST - VER 1. (Refer to 5 - BRAKES/ELECTRICAL - DIAGNOSIS AND TESTING)

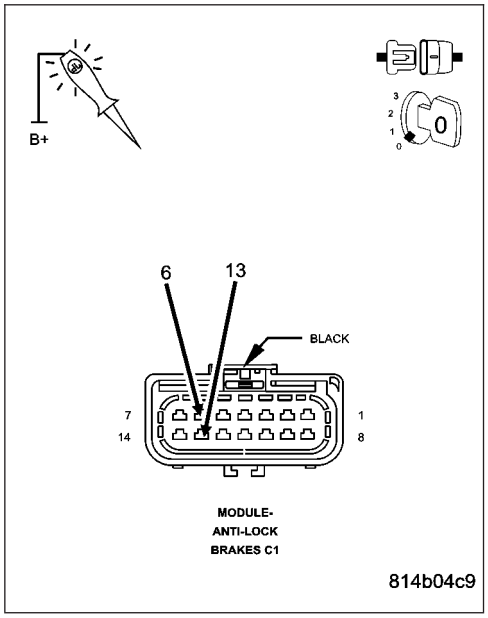

LEFT FRONT ISOLATION SOLENOID OPEN - 45 (CONTINUED)

6. INTERMITTENT DTC

Turn the ignition off.

Using the wiring diagram/schematic as a guide, inspect the wiring and connectors.

Check connectors - Clean/repair as necessary.

Inspect the vehicle for aftermarket accessories that may exceed the Charging System output.

Refer to any Technical Service Bulletins that may apply.

Were any problems found?

Yes >> Repair as necessary.
Perform ABS VERIFICATION TEST - VER 1. (Refer to 5 - BRAKES/ELECTRICAL - DIAGNOSIS AND TESTING)

No >> Test Complete.

LEFT FRONT ISOLATION SOLENOID SHORTED - 47

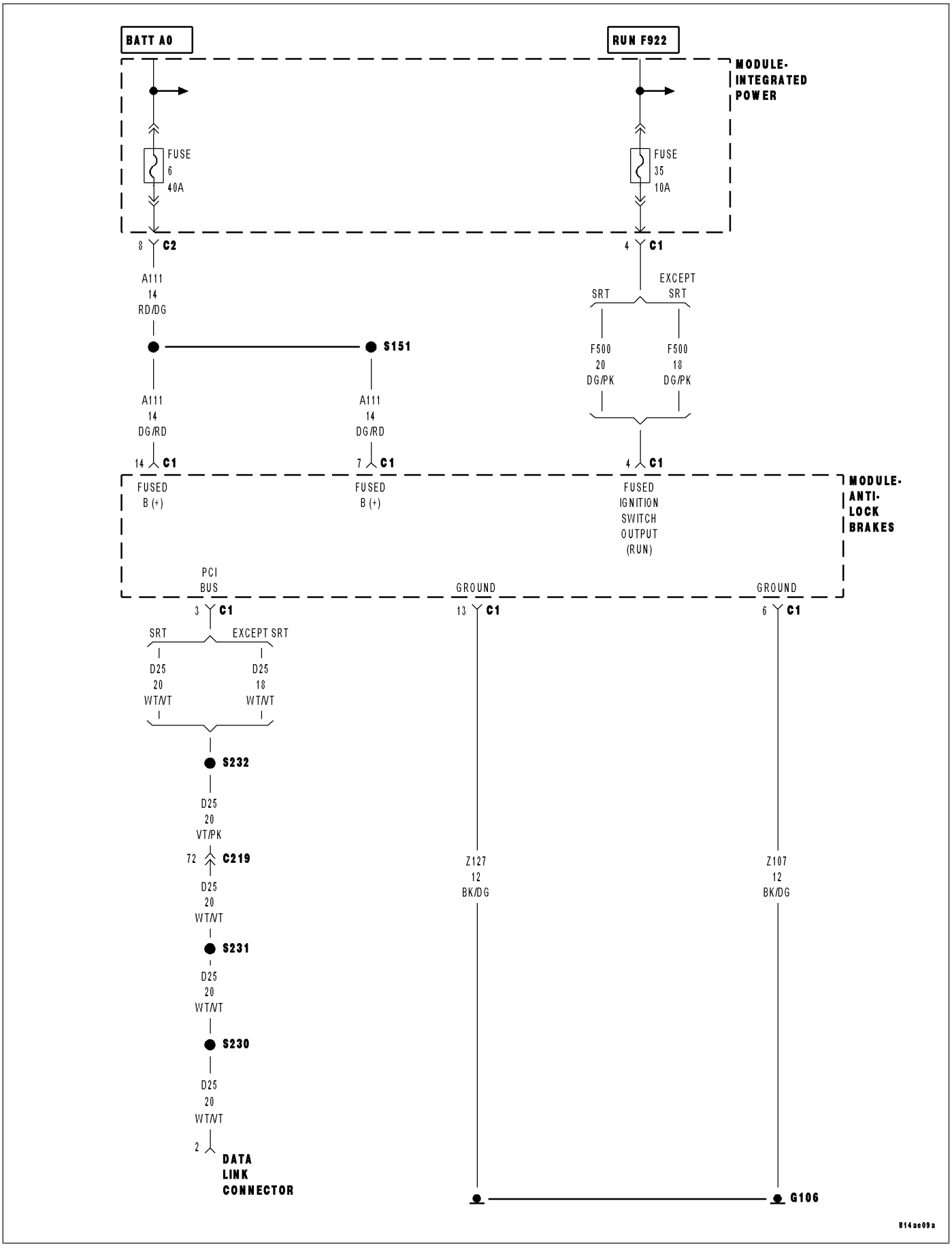

LEFT FRONT ISOLATION SOLENOID SHORTED - 47 (CONTINUED)

For a complete wiring diagram **Refer to Section 8W**.

- **When Monitored:**
  Ignition on.
- **Set Condition:**
  When there is high logic feedback voltage from the solenoid when it is supposed to be low. (solenoid energized)

Possible Causes
INTERMITTENT BATTERY VOLTAGE LOW DTC
FUSED RUN RELAY OUTPUT CIRCUIT OPEN OR HIGH RESISTANCE
FUSED B+ CIRCUIT OPEN OR HIGH RESISTANCE
FUSED B+ CIRCUIT SHORTED TO FUSED IGNITION SWITCH OUTPUT CIRCUIT
GROUND CIRCUIT OPEN OR HIGH RESISTANCE
CONTROLLER ANTI-LOCK BRAKE

Diagnostic Test

1. DTC IS ACTIVE

Turn the ignition on.
With the DRBIII®, erase DTCs.
Turn the ignition off.
Start the engine.
With the DRBIII® read DTCs.

Does the DTC reset?

Yes >> Go To 2

No >> Go To 6

LEFT FRONT ISOLATION SOLENOID SHORTED - 47 (CONTINUED)

2. FUSED IGNITION SWITCH OUTPUT CIRCUIT OPEN OR HIGH RESISTANCE

NOTE: Before continuing, inspect the fuses that are related to the ABS system. If one or more is found to be opened, use the schematic and repair the short to ground.

Turn the ignition off.

Disconnect the Controller Anti-lock Brake harness connector.

Check connectors - Clean/repair as necessary.

Turn the ignition on.

Using a 12–volt test light connected to ground, probe the Fused Ignition Switch Output circuit.

NOTE: The test light should be illuminated and bright. Compare the brightness to that of a direct connection to the battery.

Is the test light illuminated and bright?

Yes >> Go To 3

No >> Repair the Fused Ignition Switch Output circuit for an open circuit or high resistance.

Perform ABS VERIFICATION TEST - VER 1. (Refer to 5 - BRAKES/ELECTRICAL - DIAGNOSIS AND TESTING)

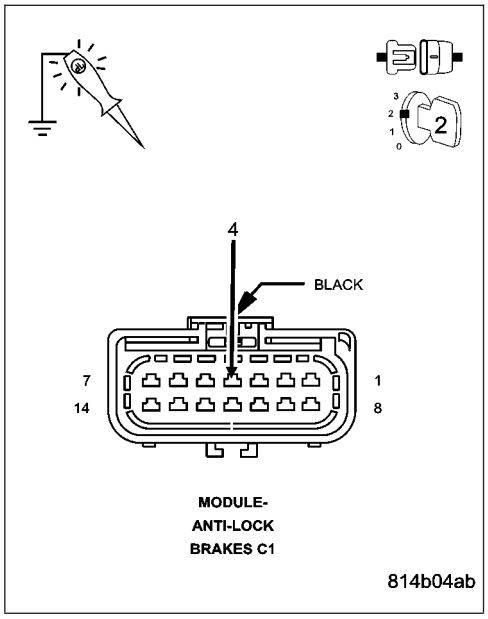

3. FUSED B+ CIRCUIT OPEN OR HIGH RESISTANCE

Using a 12–volt test light connected to ground, probe the Fused B+ circuit.

NOTE: The test light should be illuminated and bright. Compare the brightness to that of a direct connection to the battery.

Is the test light illuminated and bright?

Yes >> Go To 4

No >> Repair the Fused B+ circuit for an open circuit or high resistance.

Perform ABS VERIFICATION TEST - VER 1. (Refer to 5 - BRAKES/ELECTRICAL - DIAGNOSIS AND TESTING)

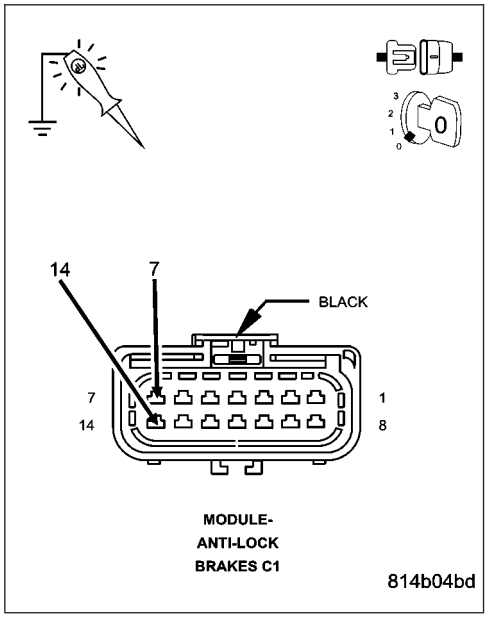

LEFT FRONT ISOLATION SOLENOID SHORTED - 47 (CONTINUED)

4. FUSED B+ CIRCUIT SHORTED TO FUSED IGNITION SWITCH OUTPUT CIRCUIT

Turn the ignition off.

Disconnect the Controller Anti-Lock Brake harness connector.

Using a 12–volt test light connected to ground, probe the Fused Ignition Switch Output circuit.

Does the test light illuminate?

Yes >> Repair the Fused B+ circuit shorted to the Fused Ignition Switch Output circuit.
Perform ABS VERIFICATION TEST - VER 1. (Refer to 5 - BRAKES/ELECTRICAL - DIAGNOSIS AND TESTING)

No >> Go To 5

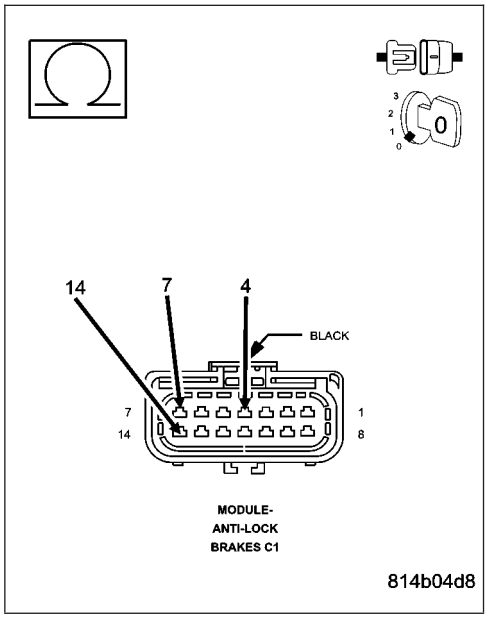

5. GROUND CIRCUIT(S) OPEN OR HIGH RESISTANCE

Turn the ignition off.

Using a 12–volt test light connected to B+, probe both the Ground circuit.

NOTE: The test light should be illuminated and bright. Compare the brightness to that of a direct connection to the battery at each circuit.

Is the test light illuminated and bright?

Yes >> Replace the Controller Anti-lock Brake Module in accordance with the Service Information.
Perform ABS VERIFICATION TEST - VER 1. (Refer to 5 - BRAKES/ELECTRICAL - DIAGNOSIS AND TESTING)

No >> Repair the Ground circuit(s) for an open circuit or high resistance.
Perform ABS VERIFICATION TEST - VER 1. (Refer to 5 - BRAKES/ELECTRICAL - DIAGNOSIS AND TESTING)

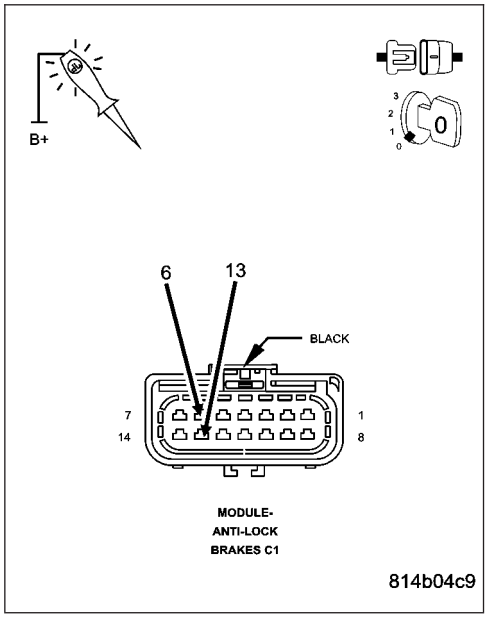

LEFT FRONT ISOLATION SOLENOID SHORTED - 47 (CONTINUED)

6. INTERMITTENT DTC

Turn the ignition off.

Using the wiring diagram/schematic as a guide, inspect the wiring and connectors.

Check connectors - Clean/repair as necessary.

Inspect the vehicle for aftermarket accessories that may exceed the Charging System output.

Refer to any Technical Service Bulletins that may apply.

Were any problems found?

Yes >> Repair as necessary.
Perform ABS VERIFICATION TEST - VER 1. (Refer to 5 - BRAKES/ELECTRICAL - DIAGNOSIS AND TESTING)

No >> Test Complete.

RIGHT FRONT DUMP SOLENOID OPEN - 42

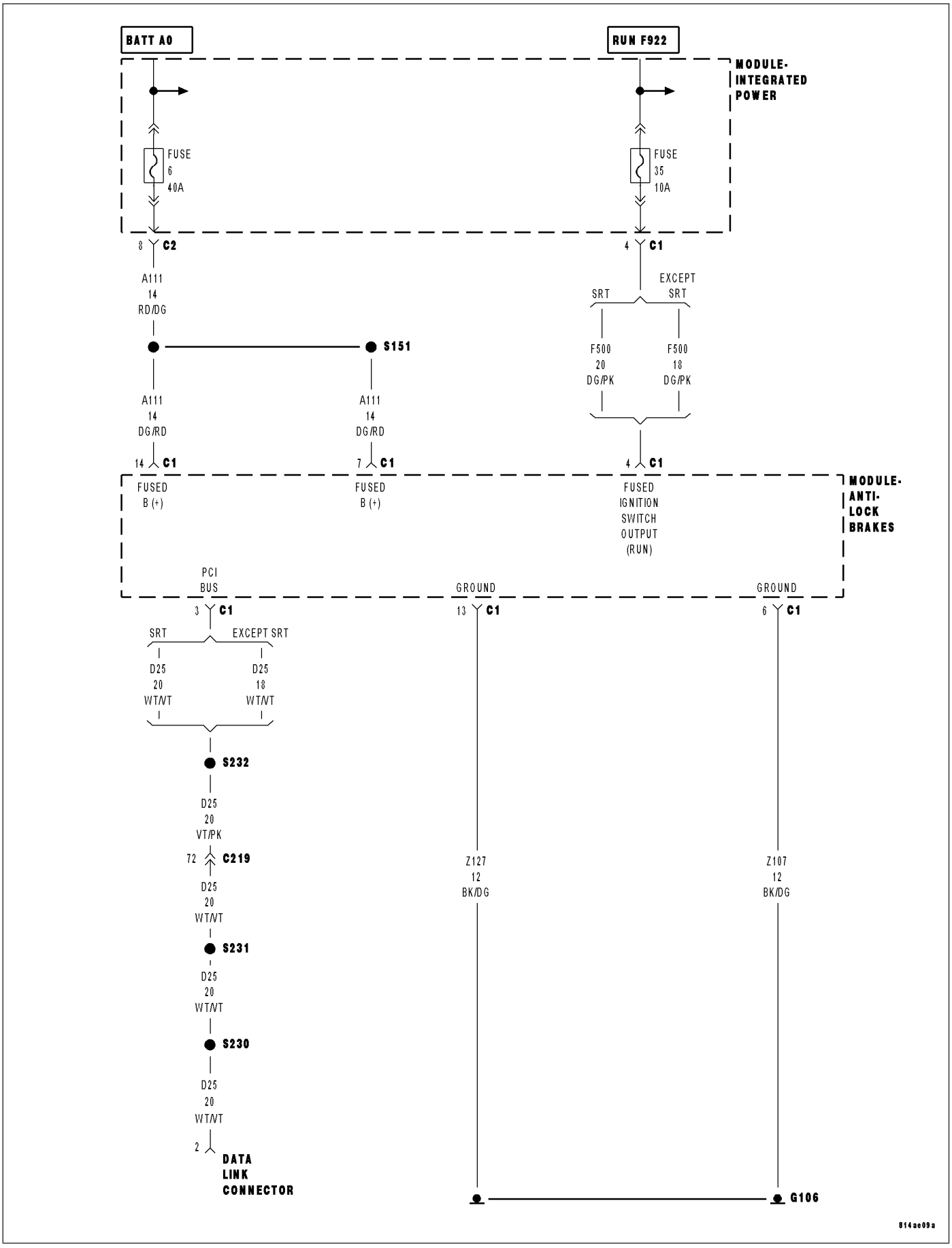

RIGHT FRONT DUMP SOLENOID OPEN - 42 (CONTINUED)
For a complete wiring diagram **Refer to Section 8W**.

- **When Monitored:**
  Ignition on.
- **Set Condition:**
  When there is low logic feedback voltage from the solenoid when it is expect to be high. (solenoid not energized)

Possible Causes
INTERMITTENT BATTERY VOLTAGE LOW DTC
FUSED RUN RELAY OUTPUT CIRCUIT OPEN OR HIGH RESISTANCE
FUSED B+ CIRCUIT OPEN OR HIGH RESISTANCE
FUSED B+ CIRCUIT SHORTED TO FUSED IGNITION SWITCH OUTPUT CIRCUIT
GROUND CIRCUIT OPEN OR HIGH RESISTANCE
CONTROLLER ANTI-LOCK BRAKE

Diagnostic Test

1. DTC IS ACTIVE

Turn the ignition on.
With the DRBIII®, erase DTCs.
Turn the ignition off.
Start the engine.
With the DRBIII® read DTCs.

Does the DTC reset?

Yes >> Go To 2
No >> Go To 6

RIGHT FRONT DUMP SOLENOID OPEN - 42 (CONTINUED)

2. FUSED IGNITION SWITCH OUTPUT CIRCUIT OPEN OR HIGH RESISTANCE

NOTE: Before continuing, inspect the fuses that are related to the ABS system. If one or more is found to be opened, use the schematic and repair the short to ground.

Turn the ignition off.

Disconnect the Controller Anti-lock Brake harness connector.

Check connectors - Clean/repair as necessary.

Turn the ignition on.

Using a 12–volt test light connected to ground, probe the Fused Ignition Switch Output circuit.

NOTE: The test light should be illuminated and bright. Compare the brightness to that of a direct connection to the battery.

Is the test light illuminated and bright?

Yes >> Go To 3

No >> Repair the Fused Ignition Switch Output circuit for an open circuit or high resistance.
Perform ABS VERIFICATION TEST - VER 1. (Refer to 5 - BRAKES/ELECTRICAL - DIAGNOSIS AND TESTING)

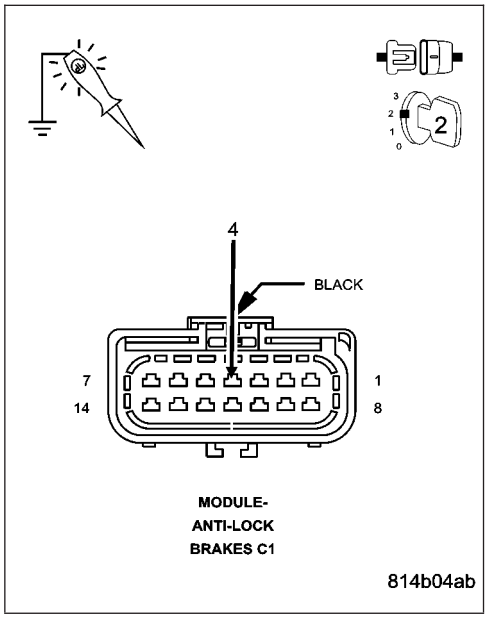

3. FUSED B+ CIRCUIT OPEN OR HIGH RESISTANCE

Using a 12–volt test light connected to ground, probe the Fused B+ circuit.

NOTE: The test light should be illuminated and bright. Compare the brightness to that of a direct connection to the battery.

Is the test light illuminated and bright?

Yes >> Go To 4

No >> Repair the Fused B+ circuit for an open circuit or high resistance.
Perform ABS VERIFICATION TEST - VER 1. (Refer to 5 - BRAKES/ELECTRICAL - DIAGNOSIS AND TESTING)

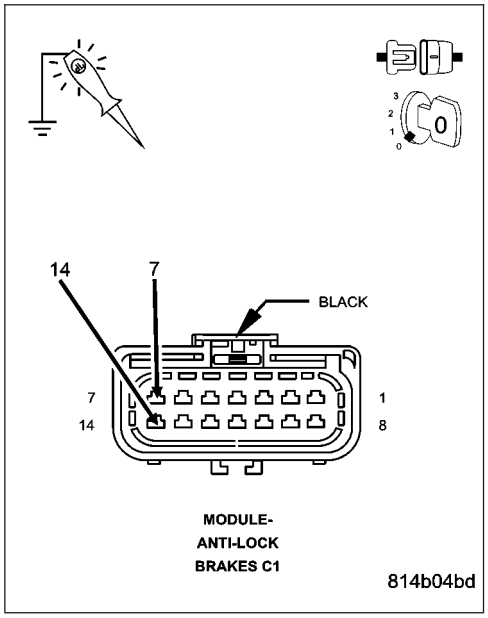

RIGHT FRONT DUMP SOLENOID OPEN - 42 (CONTINUED)

4. FUSED B+ CIRCUIT SHORTED TO FUSED IGNITION SWITCH OUTPUT CIRCUIT

Turn the ignition off.

Disconnect the Controller Anti-Lock Brake harness connector.

Using a 12–volt test light connected to ground, probe the Fused Ignition Switch Output circuit.

Does the test light illuminate?

Yes >> Repair the Fused B+ circuit shorted to the Fused Ignition Switch Output circuit.
Perform ABS VERIFICATION TEST - VER 1. (Refer to 5 - BRAKES/ELECTRICAL - DIAGNOSIS AND TESTING)

No >> Go To 5

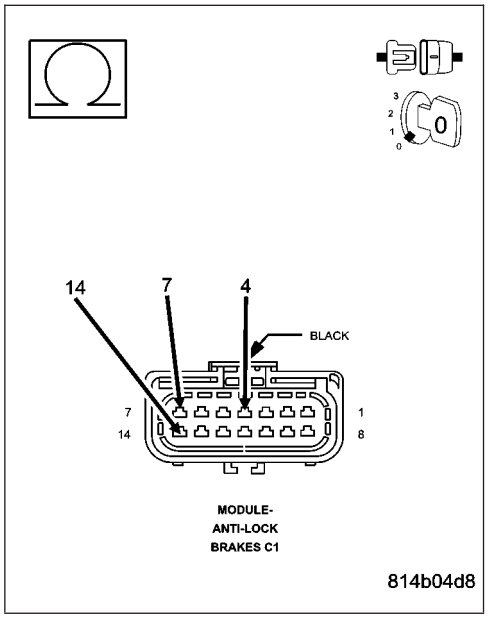

5. GROUND CIRCUIT(S) OPEN OR HIGH RESISTANCE

Turn the ignition off.

Using a 12–volt test light connected to B+, probe both the Ground circuit.

NOTE: The test light should be illuminated and bright. Compare the brightness to that of a direct connection to the battery at each circuit.

Is the test light illuminated and bright?

Yes >> Replace the Controller Anti-lock Brake Module in accordance with the Service Information.
Perform ABS VERIFICATION TEST - VER 1. (Refer to 5 - BRAKES/ELECTRICAL - DIAGNOSIS AND TESTING)

No >> Repair the Ground circuit(s) for an open circuit or high resistance.
Perform ABS VERIFICATION TEST - VER 1. (Refer to 5 - BRAKES/ELECTRICAL - DIAGNOSIS AND TESTING)

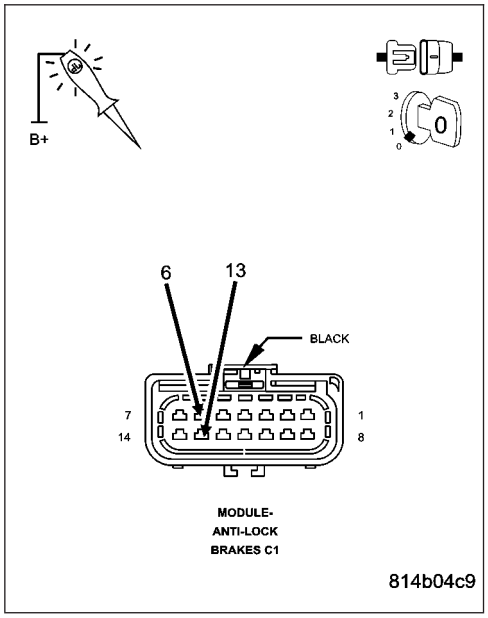

RIGHT FRONT DUMP SOLENOID OPEN - 42 (CONTINUED)

6. INTERMITTENT DTC

Turn the ignition off.

Using the wiring diagram/schematic as a guide, inspect the wiring and connectors.

Check connectors - Clean/repair as necessary.

Inspect the vehicle for aftermarket accessories that may exceed the Charging System output.

Refer to any Technical Service Bulletins that may apply.

Were any problems found?

Yes >> Repair as necessary.
Perform ABS VERIFICATION TEST - VER 1. (Refer to 5 - BRAKES/ELECTRICAL - DIAGNOSIS AND TESTING)

No >> Test Complete.

REAR DUMP SOLENOID SHORTED - 53

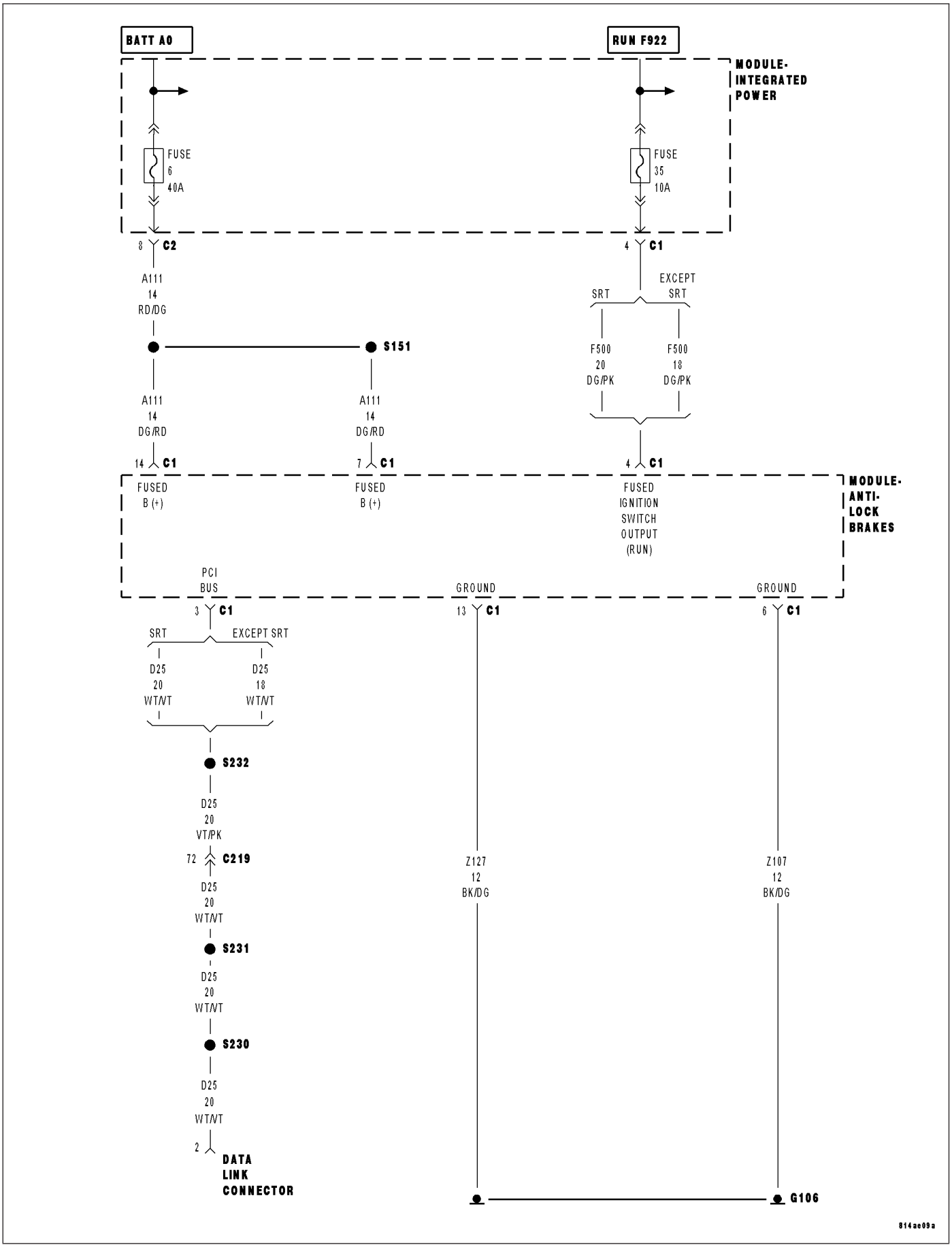

REAR DUMP SOLENOID SHORTED - 53 (CONTINUED)

For a complete wiring diagram **Refer to Section 8W**.

- **When Monitored:**
  Ignition on.
- **Set Condition:**
  When there is high logic feedback voltage from the solenoid when it is supposed to be low. (solenoid energized)

Possible Causes
INTERMITTENT BATTERY VOLTAGE LOW DTC
FUSED RUN RELAY OUTPUT CIRCUIT OPEN OR HIGH RESISTANCE
FUSED B+ CIRCUIT OPEN OR HIGH RESISTANCE
FUSED B+ CIRCUIT SHORTED TO FUSED IGNITION SWITCH OUTPUT CIRCUIT
GROUND CIRCUIT OPEN OR HIGH RESISTANCE
CONTROLLER ANTI-LOCK BRAKE

Diagnostic Test

1. DTC IS ACTIVE

Turn the ignition on.
With the DRBIII®, erase DTCs.
Turn the ignition off.
Start the engine.
With the DRBIII® read DTCs.

Does the DTC reset?

Yes >> Go To 2

No >> Go To 6

REAR DUMP SOLENOID SHORTED - 53 (CONTINUED)

2. FUSED IGNITION SWITCH OUTPUT CIRCUIT OPEN OR HIGH RESISTANCE

NOTE: Before continuing, inspect the fuses that are related to the ABS system. If one or more is found to be opened, use the schematic and repair the short to ground.

Turn the ignition off.

Disconnect the Controller Anti-lock Brake harness connector.

Check connectors - Clean/repair as necessary.

Turn the ignition on.

Using a 12–volt test light connected to ground, probe the Fused Ignition Switch Output circuit.

NOTE: The test light should be illuminated and bright. Compare the brightness to that of a direct connection to the battery.

Is the test light illuminated and bright?

Yes >> Go To 3

No >> Repair the Fused Ignition Switch Output circuit for an open circuit or high resistance.

Perform ABS VERIFICATION TEST - VER 1. (Refer to 5 - BRAKES/ELECTRICAL - DIAGNOSIS AND TESTING)

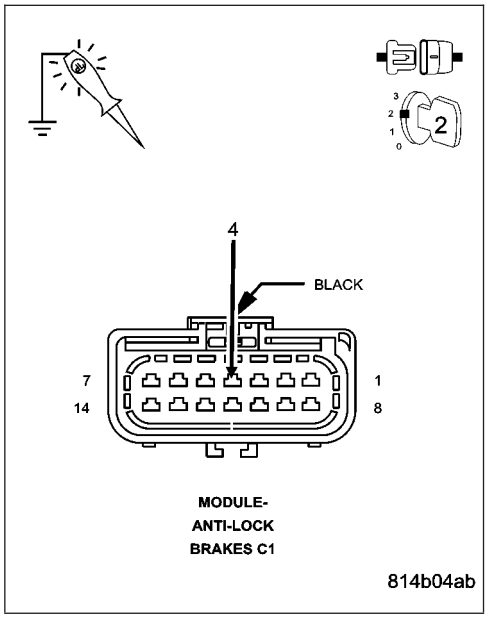

3. FUSED B+ CIRCUIT OPEN OR HIGH RESISTANCE

Using a 12–volt test light connected to ground, probe the Fused B+ circuit.

NOTE: The test light should be illuminated and bright. Compare the brightness to that of a direct connection to the battery.

Is the test light illuminated and bright?

Yes >> Go To 4

No >> Repair the Fused B+ circuit for an open circuit or high resistance.

Perform ABS VERIFICATION TEST - VER 1. (Refer to 5 - BRAKES/ELECTRICAL - DIAGNOSIS AND TESTING)

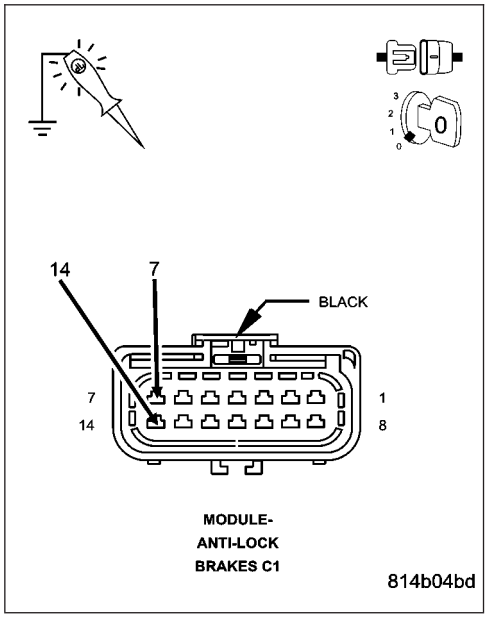

REAR DUMP SOLENOID SHORTED - 53 (CONTINUED)

4. FUSED B+ CIRCUIT SHORTED TO FUSED IGNITION SWITCH OUTPUT CIRCUIT

Turn the ignition off.

Disconnect the Controller Anti-Lock Brake harness connector.

Using a 12–volt test light connected to ground, probe the Fused Ignition Switch Output circuit.

Does the test light illuminate?

Yes >> Repair the Fused B+ circuit shorted to the Fused Ignition Switch Output circuit.
Perform ABS VERIFICATION TEST - VER 1. (Refer to 5 - BRAKES/ELECTRICAL - DIAGNOSIS AND TESTING)

No >> Go To 5

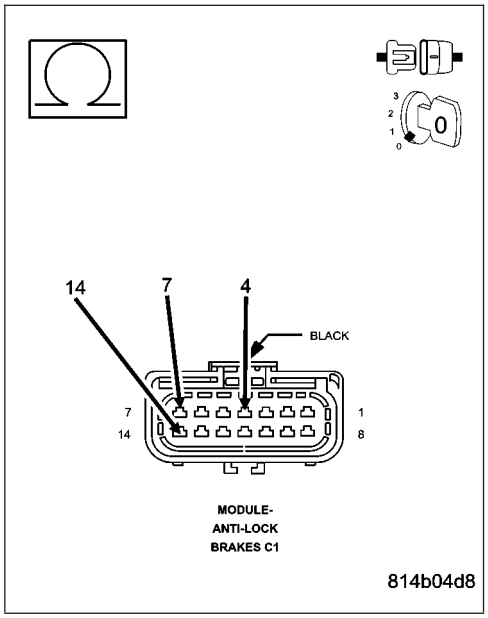

5. GROUND CIRCUIT(S) OPEN OR HIGH RESISTANCE

Turn the ignition off.

Using a 12–volt test light connected to B+, probe both the Ground circuit.

NOTE: The test light should be illuminated and bright. Compare the brightness to that of a direct connection to the battery at each circuit.

Is the test light illuminated and bright?

Yes >> Replace the Controller Anti-lock Brake Module in accordance with the Service Information.
Perform ABS VERIFICATION TEST - VER 1. (Refer to 5 - BRAKES/ELECTRICAL - DIAGNOSIS AND TESTING)

No >> Repair the Ground circuit(s) for an open circuit or high resistance.
Perform ABS VERIFICATION TEST - VER 1. (Refer to 5 - BRAKES/ELECTRICAL - DIAGNOSIS AND TESTING)

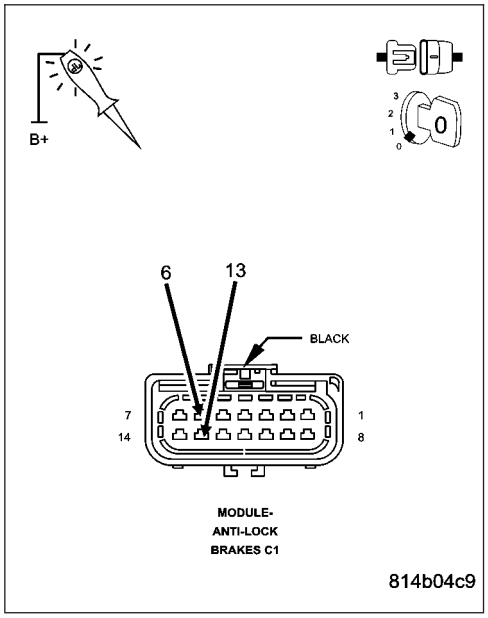

REAR DUMP SOLENOID SHORTED - 53 (CONTINUED)

6. INTERMITTENT DTC

Turn the ignition off.

Using the wiring diagram/schematic as a guide, inspect the wiring and connectors.

Check connectors - Clean/repair as necessary.

Inspect the vehicle for aftermarket accessories that may exceed the Charging System output.

Refer to any Technical Service Bulletins that may apply.

Were any problems found?

Yes >> Repair as necessary.
Perform ABS VERIFICATION TEST - VER 1. (Refer to 5 - BRAKES/ELECTRICAL - DIAGNOSIS AND TESTING)

No >> Test Complete.

REAR ISOLATION SOLENOID OPEN - 51

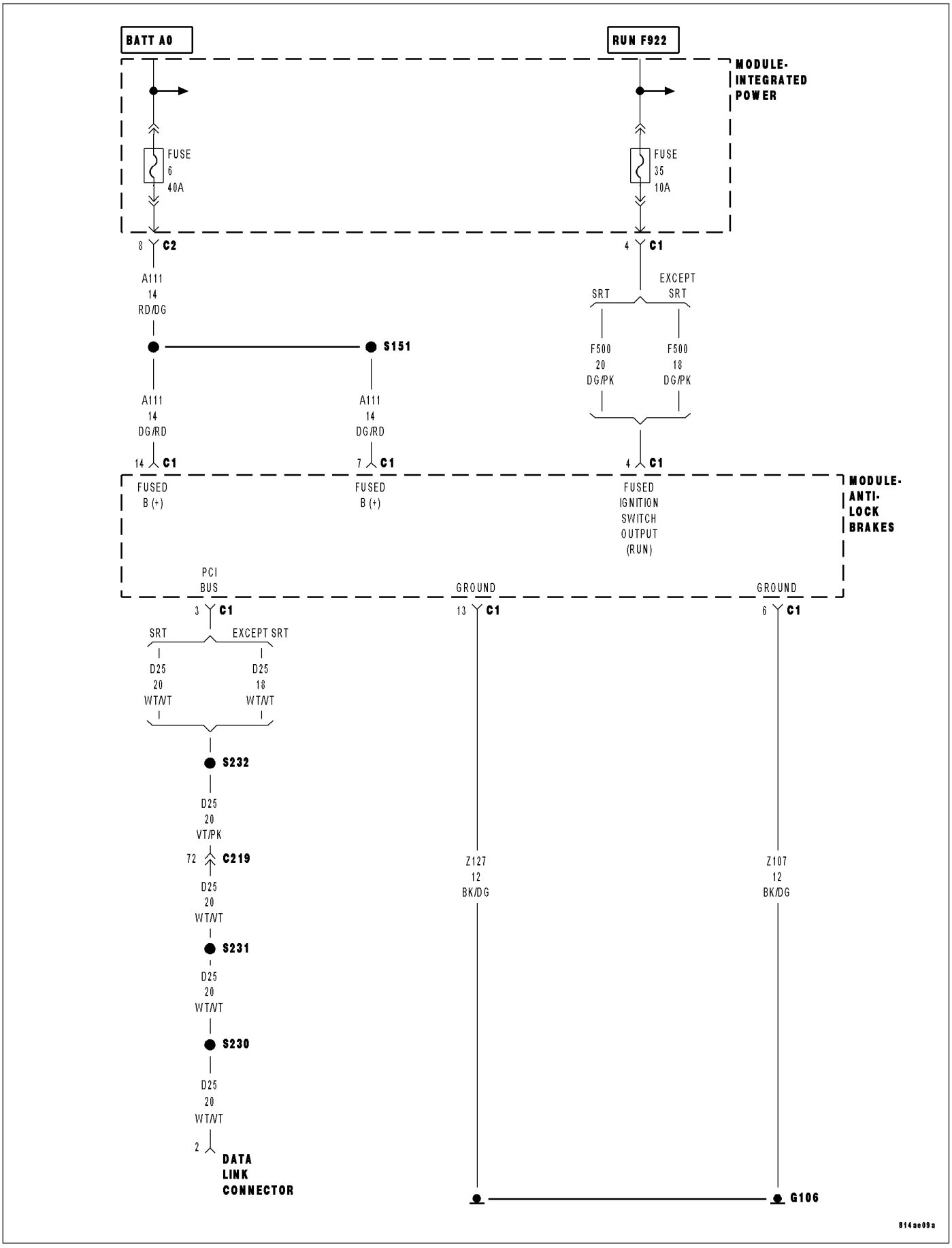

REAR ISOLATION SOLENOID OPEN - 51 (CONTINUED)
For a complete wiring diagram **Refer to Section 8W**.

- **When Monitored:**
  Ignition on.
- **Set Condition:**
  When there is low logic feedback voltage from the solenoid when it is expect to be high. (solenoid not energized)

Possible Causes
INTERMITTENT BATTERY VOLTAGE LOW DTC
FUSED RUN RELAY OUTPUT CIRCUIT OPEN OR HIGH RESISTANCE
FUSED B+ CIRCUIT OPEN OR HIGH RESISTANCE
FUSED B+ CIRCUIT SHORTED TO FUSED IGNITION SWITCH OUTPUT CIRCUIT
GROUND CIRCUIT OPEN OR HIGH RESISTANCE
CONTROLLER ANTI-LOCK BRAKE

Diagnostic Test

1. DTC IS ACTIVE

Turn the ignition on.
With the DRBIII®, erase DTCs.
Turn the ignition off.
Start the engine.
With the DRBIII® read DTCs.

Does the DTC reset?

Yes >> Go To 2
No >> Go To 6

REAR ISOLATION SOLENOID OPEN - 51 (CONTINUED)

2. FUSED IGNITION SWITCH OUTPUT CIRCUIT OPEN OR HIGH RESISTANCE

NOTE: Before continuing, inspect the fuses that are related to the ABS system. If one or more is found to be opened, use the schematic and repair the short to ground.

Turn the ignition off.

Disconnect the Controller Anti-lock Brake harness connector.

Check connectors - Clean/repair as necessary.

Turn the ignition on.

Using a 12–volt test light connected to ground, probe the Fused Ignition Switch Output circuit.

NOTE: The test light should be illuminated and bright. Compare the brightness to that of a direct connection to the battery.

Is the test light illuminated and bright?

Yes >> Go To 3

No >> Repair the Fused Ignition Switch Output circuit for an open circuit or high resistance.

Perform ABS VERIFICATION TEST - VER 1. (Refer to 5 - BRAKES/ELECTRICAL - DIAGNOSIS AND TESTING)

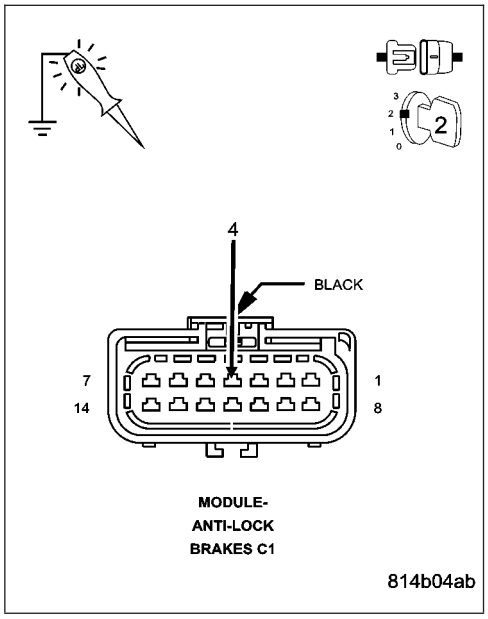

3. FUSED B+ CIRCUIT OPEN OR HIGH RESISTANCE

Using a 12–volt test light connected to ground, probe the Fused B+ circuit.

NOTE: The test light should be illuminated and bright. Compare the brightness to that of a direct connection to the battery.

Is the test light illuminated and bright?

Yes >> Go To 4

No >> Repair the Fused B+ circuit for an open circuit or high resistance.

Perform ABS VERIFICATION TEST - VER 1. (Refer to 5 - BRAKES/ELECTRICAL - DIAGNOSIS AND TESTING)

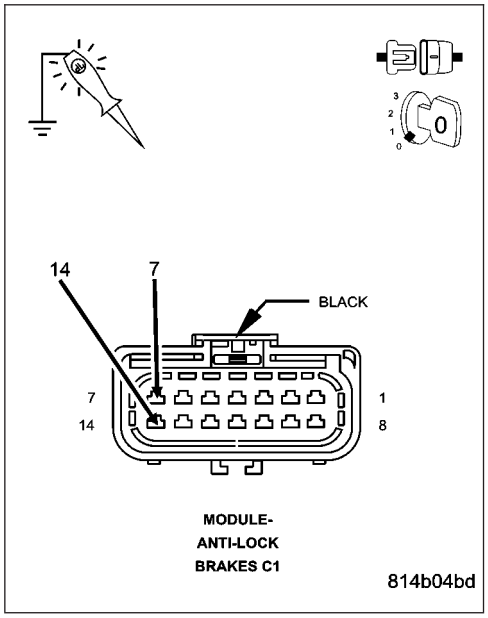

REAR ISOLATION SOLENOID OPEN - 51 (CONTINUED)

4. FUSED B+ CIRCUIT SHORTED TO FUSED IGNITION SWITCH OUTPUT CIRCUIT

Turn the ignition off.

Disconnect the Controller Anti-Lock Brake harness connector.

Using a 12–volt test light connected to ground, probe the Fused Ignition Switch Output circuit.

Does the test light illuminate?

Yes >> Repair the Fused B+ circuit shorted to the Fused Ignition Switch Output circuit.
Perform ABS VERIFICATION TEST - VER 1. (Refer to 5 - BRAKES/ELECTRICAL - DIAGNOSIS AND TESTING)

No >> Go To 5

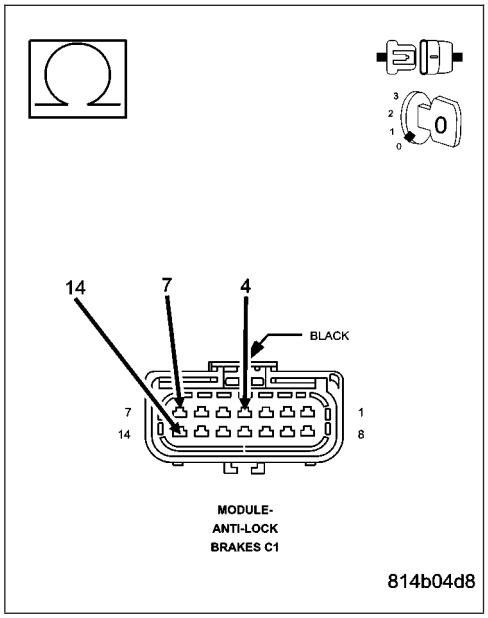

5. GROUND CIRCUIT(S) OPEN OR HIGH RESISTANCE

Turn the ignition off.

Using a 12–volt test light connected to B+, probe both the Ground circuit.

NOTE: The test light should be illuminated and bright. Compare the brightness to that of a direct connection to the battery at each circuit.

Is the test light illuminated and bright?

Yes >> Replace the Controller Anti-lock Brake Module in accordance with the Service Information.
Perform ABS VERIFICATION TEST - VER 1. (Refer to 5 - BRAKES/ELECTRICAL - DIAGNOSIS AND TESTING)

No >> Repair the Ground circuit(s) for an open circuit or high resistance.
Perform ABS VERIFICATION TEST - VER 1. (Refer to 5 - BRAKES/ELECTRICAL - DIAGNOSIS AND TESTING)

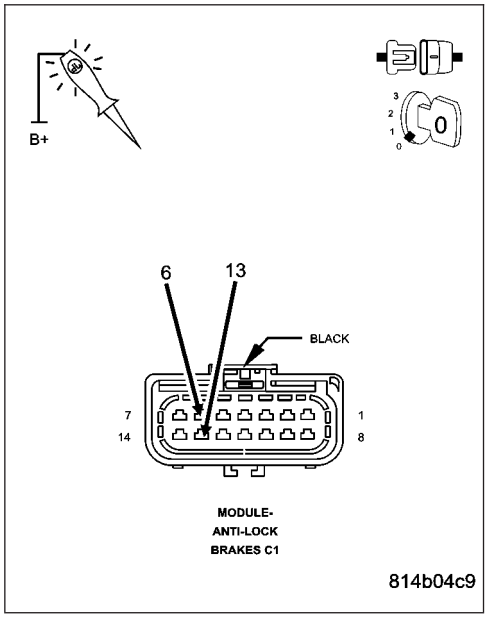

REAR ISOLATION SOLENOID OPEN - 51 (CONTINUED)

6. INTERMITTENT DTC

Turn the ignition off.

Using the wiring diagram/schematic as a guide, inspect the wiring and connectors.

Check connectors - Clean/repair as necessary.

Inspect the vehicle for aftermarket accessories that may exceed the Charging System output.

Refer to any Technical Service Bulletins that may apply.

Were any problems found?

Yes >> Repair as necessary.
Perform ABS VERIFICATION TEST - VER 1. (Refer to 5 - BRAKES/ELECTRICAL - DIAGNOSIS AND TESTING)

No >> Test Complete.

REAR ISOLATION SOLENOID SHORTED - 53

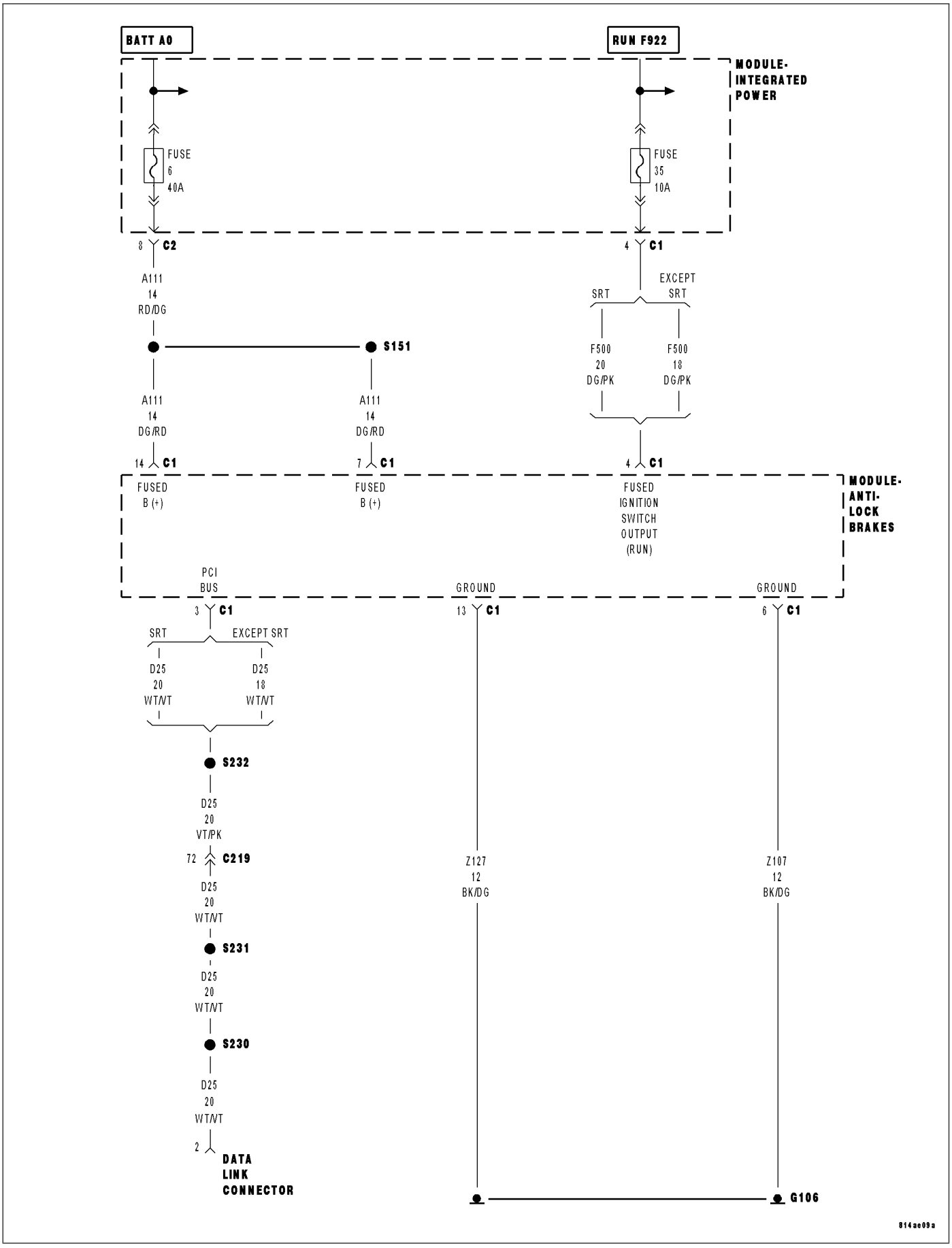

REAR ISOLATION SOLENOID SHORTED - 53 (CONTINUED)

For a complete wiring diagram **Refer to Section 8W**.

- **When Monitored:**
  Ignition on.
- **Set Condition:**
  When there is high logic feedback voltage from the solenoid when it is supposed to be low. (solenoid energized)

Possible Causes
INTERMITTENT BATTERY VOLTAGE LOW DTC
FUSED RUN RELAY OUTPUT CIRCUIT OPEN OR HIGH RESISTANCE
FUSED B+ CIRCUIT OPEN OR HIGH RESISTANCE
FUSED B+ CIRCUIT SHORTED TO FUSED IGNITION SWITCH OUTPUT CIRCUIT
GROUND CIRCUIT OPEN OR HIGH RESISTANCE
CONTROLLER ANTI-LOCK BRAKE

Diagnostic Test

1. DTC IS ACTIVE

Turn the ignition on.
With the DRBIII®, erase DTCs.
Turn the ignition off.
Start the engine.
With the DRBIII® read DTCs.

Does the DTC reset?

Yes >> Go To 2

No >> Go To 6

REAR ISOLATION SOLENOID SHORTED - 53 (CONTINUED)

2. FUSED IGNITION SWITCH OUTPUT CIRCUIT OPEN OR HIGH RESISTANCE

NOTE: Before continuing, inspect the fuses that are related to the ABS system. If one or more is found to be opened, use the schematic and repair the short to ground.

Turn the ignition off.

Disconnect the Controller Anti-lock Brake harness connector.

Check connectors - Clean/repair as necessary.

Turn the ignition on.

Using a 12–volt test light connected to ground, probe the Fused Ignition Switch Output circuit.

NOTE: The test light should be illuminated and bright. Compare the brightness to that of a direct connection to the battery.

Is the test light illuminated and bright?

Yes >> Go To 3

No >> Repair the Fused Ignition Switch Output circuit for an open circuit or high resistance.
Perform ABS VERIFICATION TEST - VER 1. (Refer to 5 - BRAKES/ELECTRICAL - DIAGNOSIS AND TESTING)

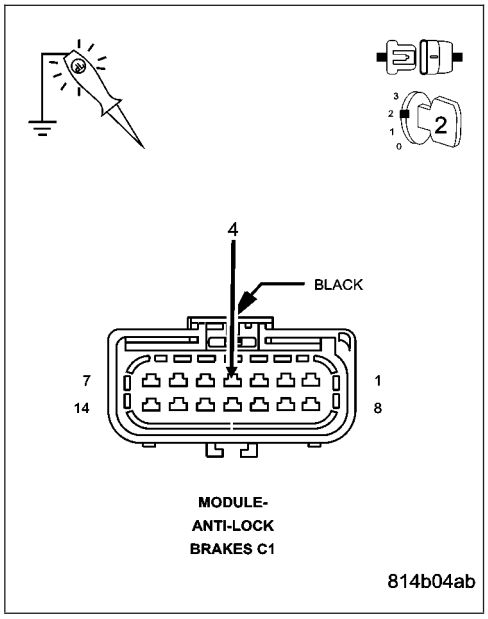

3. FUSED B+ CIRCUIT OPEN OR HIGH RESISTANCE

Using a 12–volt test light connected to ground, probe the Fused B+ circuit.

NOTE: The test light should be illuminated and bright. Compare the brightness to that of a direct connection to the battery.

Is the test light illuminated and bright?

Yes >> Go To 4

No >> Repair the Fused B+ circuit for an open circuit or high resistance.
Perform ABS VERIFICATION TEST - VER 1. (Refer to 5 - BRAKES/ELECTRICAL - DIAGNOSIS AND TESTING)

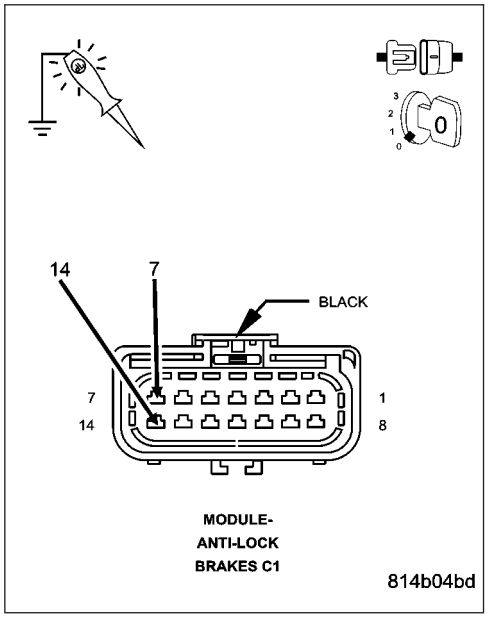

REAR ISOLATION SOLENOID SHORTED - 53 (CONTINUED)

4. FUSED B+ CIRCUIT SHORTED TO FUSED IGNITION SWITCH OUTPUT CIRCUIT

Turn the ignition off.

Disconnect the Controller Anti-Lock Brake harness connector.

Using a 12–volt test light connected to ground, probe the Fused Ignition Switch Output circuit.

Does the test light illuminate?

Yes >> Repair the Fused B+ circuit shorted to the Fused Ignition Switch Output circuit.
Perform ABS VERIFICATION TEST - VER 1. (Refer to 5 - BRAKES/ELECTRICAL - DIAGNOSIS AND TESTING)

No >> Go To 5

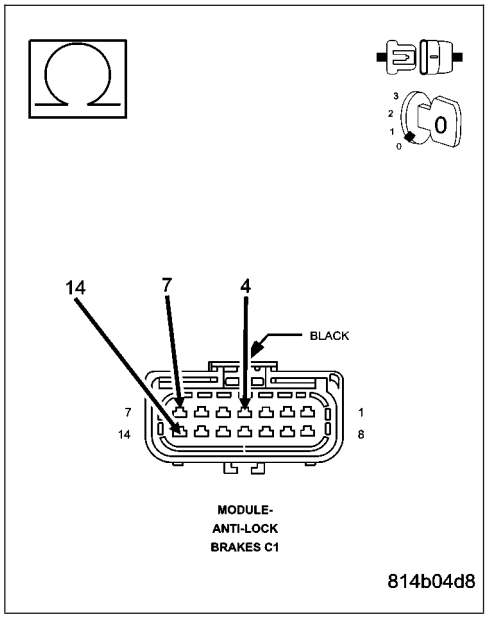

5. GROUND CIRCUIT(S) OPEN OR HIGH RESISTANCE

Turn the ignition off.

Using a 12–volt test light connected to B+, probe both the Ground circuit.

NOTE: The test light should be illuminated and bright. Compare the brightness to that of a direct connection to the battery at each circuit.

Is the test light illuminated and bright?

Yes >> Replace the Controller Anti-lock Brake Module in accordance with the Service Information.
Perform ABS VERIFICATION TEST - VER 1. (Refer to 5 - BRAKES/ELECTRICAL - DIAGNOSIS AND TESTING)

No >> Repair the Ground circuit(s) for an open circuit or high resistance.
Perform ABS VERIFICATION TEST - VER 1. (Refer to 5 - BRAKES/ELECTRICAL - DIAGNOSIS AND TESTING)

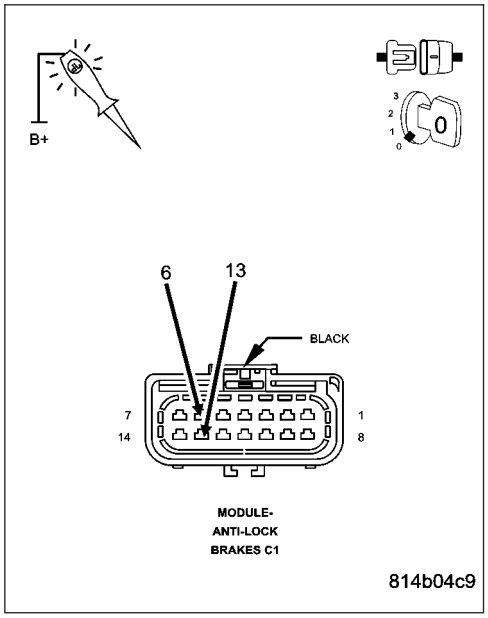

REAR ISOLATION SOLENOID SHORTED - 53 (CONTINUED)

6. INTERMITTENT DTC

Turn the ignition off.

Using the wiring diagram/schematic as a guide, inspect the wiring and connectors.

Check connectors - Clean/repair as necessary.

Inspect the vehicle for aftermarket accessories that may exceed the Charging System output.

Refer to any Technical Service Bulletins that may apply.

Were any problems found?

Yes >> Repair as necessary.
Perform ABS VERIFICATION TEST - VER 1. (Refer to 5 - BRAKES/ELECTRICAL - DIAGNOSIS AND TESTING)

No >> Test Complete.

RIGHT FRONT DUMP SOLENOID OPEN - 42

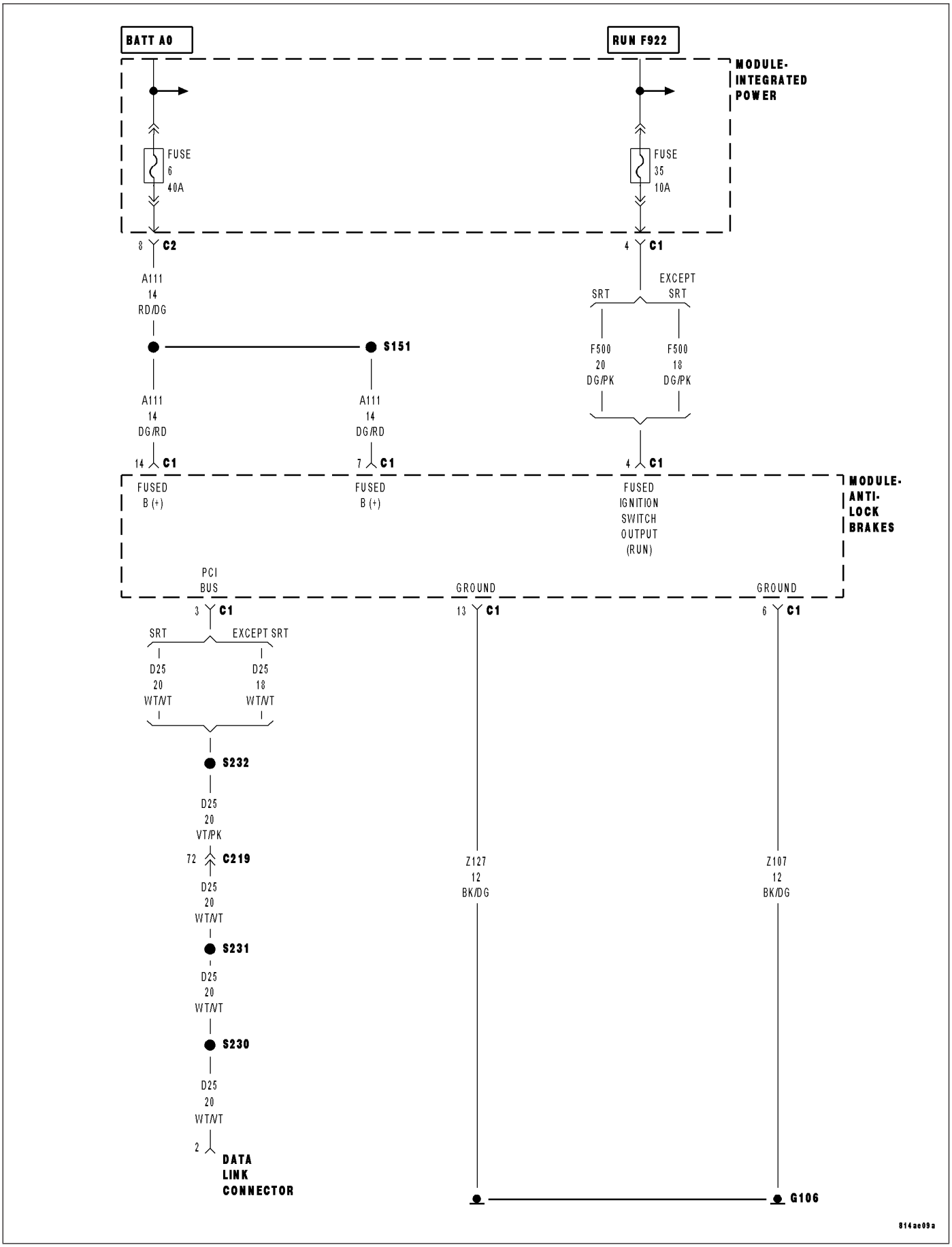

RIGHT FRONT DUMP SOLENOID OPEN - 42 (CONTINUED)
For a complete wiring diagram **Refer to Section 8W**.

- **When Monitored:**
  Ignition on.
- **Set Condition:**
  When there is low logic feedback voltage from the solenoid when it is expect to be high. (solenoid not energized)

Possible Causes
INTERMITTENT BATTERY VOLTAGE LOW DTC
FUSED RUN RELAY OUTPUT CIRCUIT OPEN OR HIGH RESISTANCE
FUSED B+ CIRCUIT OPEN OR HIGH RESISTANCE
FUSED B+ CIRCUIT SHORTED TO FUSED IGNITION SWITCH OUTPUT CIRCUIT
GROUND CIRCUIT OPEN OR HIGH RESISTANCE
CONTROLLER ANTI-LOCK BRAKE

Diagnostic Test

1. DTC IS ACTIVE

Turn the ignition on.
With the DRBIII®, erase DTCs.
Turn the ignition off.
Start the engine.
With the DRBIII® read DTCs.

Does the DTC reset?

Yes >> Go To 2
No >> Go To 6

RIGHT FRONT DUMP SOLENOID OPEN - 42 (CONTINUED)

2. FUSED IGNITION SWITCH OUTPUT CIRCUIT OPEN OR HIGH RESISTANCE

NOTE: Before continuing, inspect the fuses that are related to the ABS system. If one or more is found to be opened, use the schematic and repair the short to ground.

Turn the ignition off.

Disconnect the Controller Anti-lock Brake harness connector.

Check connectors - Clean/repair as necessary.

Turn the ignition on.

Using a 12–volt test light connected to ground, probe the Fused Ignition Switch Output circuit.

NOTE: The test light should be illuminated and bright. Compare the brightness to that of a direct connection to the battery.

Is the test light illuminated and bright?

Yes >> Go To 3

No >> Repair the Fused Ignition Switch Output circuit for an open circuit or high resistance.
Perform ABS VERIFICATION TEST - VER 1. (Refer to 5 - BRAKES/ELECTRICAL - DIAGNOSIS AND TESTING)

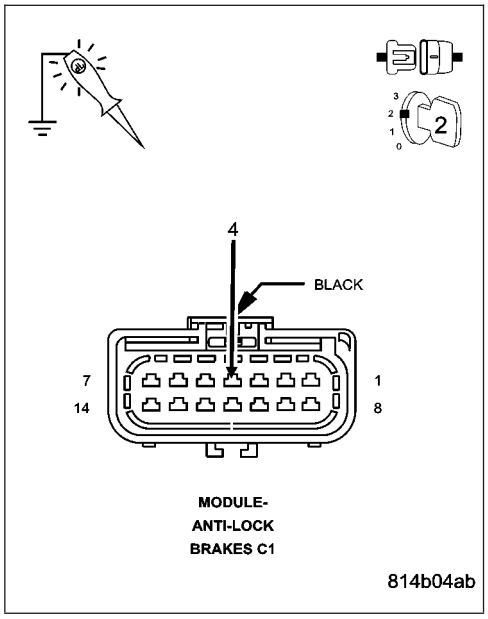

3. FUSED B+ CIRCUIT OPEN OR HIGH RESISTANCE

Using a 12–volt test light connected to ground, probe the Fused B+ circuit.

NOTE: The test light should be illuminated and bright. Compare the brightness to that of a direct connection to the battery.

Is the test light illuminated and bright?

Yes >> Go To 4

No >> Repair the Fused B+ circuit for an open circuit or high resistance.
Perform ABS VERIFICATION TEST - VER 1. (Refer to 5 - BRAKES/ELECTRICAL - DIAGNOSIS AND TESTING)

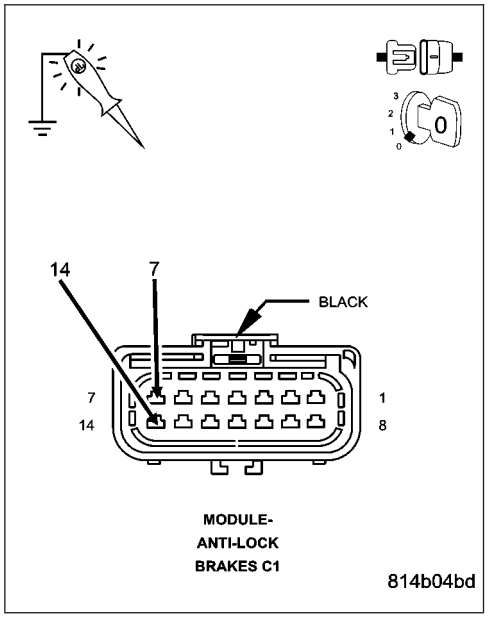

RIGHT FRONT DUMP SOLENOID OPEN - 42 (CONTINUED)

4. FUSED B+ CIRCUIT SHORTED TO FUSED IGNITION SWITCH OUTPUT CIRCUIT

Turn the ignition off.

Disconnect the Controller Anti-Lock Brake harness connector.

Using a 12–volt test light connected to ground, probe the Fused Ignition Switch Output circuit.

Does the test light illuminate?

Yes >> Repair the Fused B+ circuit shorted to the Fused Ignition Switch Output circuit.

Perform ABS VERIFICATION TEST - VER 1. (Refer to 5 - BRAKES/ELECTRICAL - DIAGNOSIS AND TESTING)

No >> Go To 5

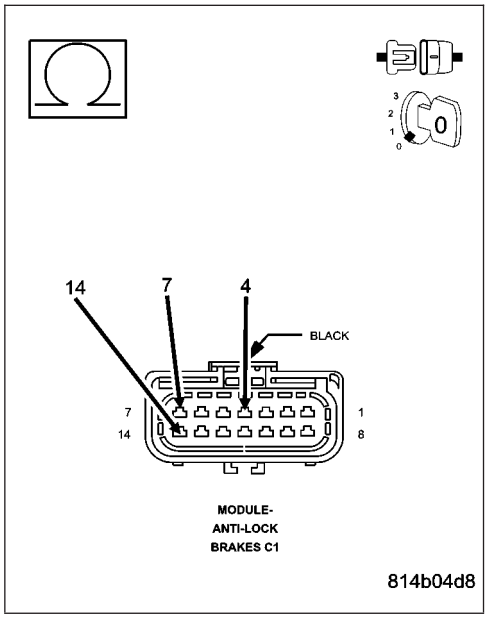

5. GROUND CIRCUIT(S) OPEN OR HIGH RESISTANCE

Turn the ignition off.

Using a 12–volt test light connected to B+, probe both the Ground circuit.

NOTE: The test light should be illuminated and bright. Compare the brightness to that of a direct connection to the battery at each circuit.

Is the test light illuminated and bright?

Yes >> Replace the Controller Anti-lock Brake Module in accordance with the Service Information.

Perform ABS VERIFICATION TEST - VER 1. (Refer to 5 - BRAKES/ELECTRICAL - DIAGNOSIS AND TESTING)

No >> Repair the Ground circuit(s) for an open circuit or high resistance.

Perform ABS VERIFICATION TEST - VER 1. (Refer to 5 - BRAKES/ELECTRICAL - DIAGNOSIS AND TESTING)

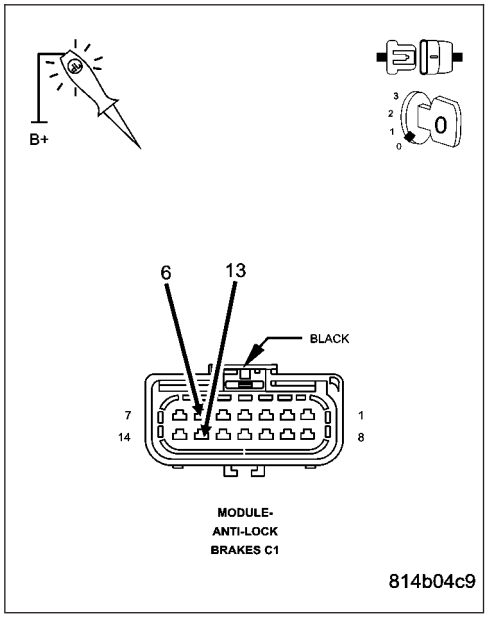

RIGHT FRONT DUMP SOLENOID OPEN - 42 (CONTINUED)

6. INTERMITTENT DTC

Turn the ignition off.

Using the wiring diagram/schematic as a guide, inspect the wiring and connectors.

Check connectors - Clean/repair as necessary.

Inspect the vehicle for aftermarket accessories that may exceed the Charging System output.

Refer to any Technical Service Bulletins that may apply.

Were any problems found?

Yes >> Repair as necessary.
Perform ABS VERIFICATION TEST - VER 1. (Refer to 5 - BRAKES/ELECTRICAL - DIAGNOSIS AND TESTING)

No >> Test Complete.

RIGHT FRONT DUMP SOLENOID SHORTED - 44

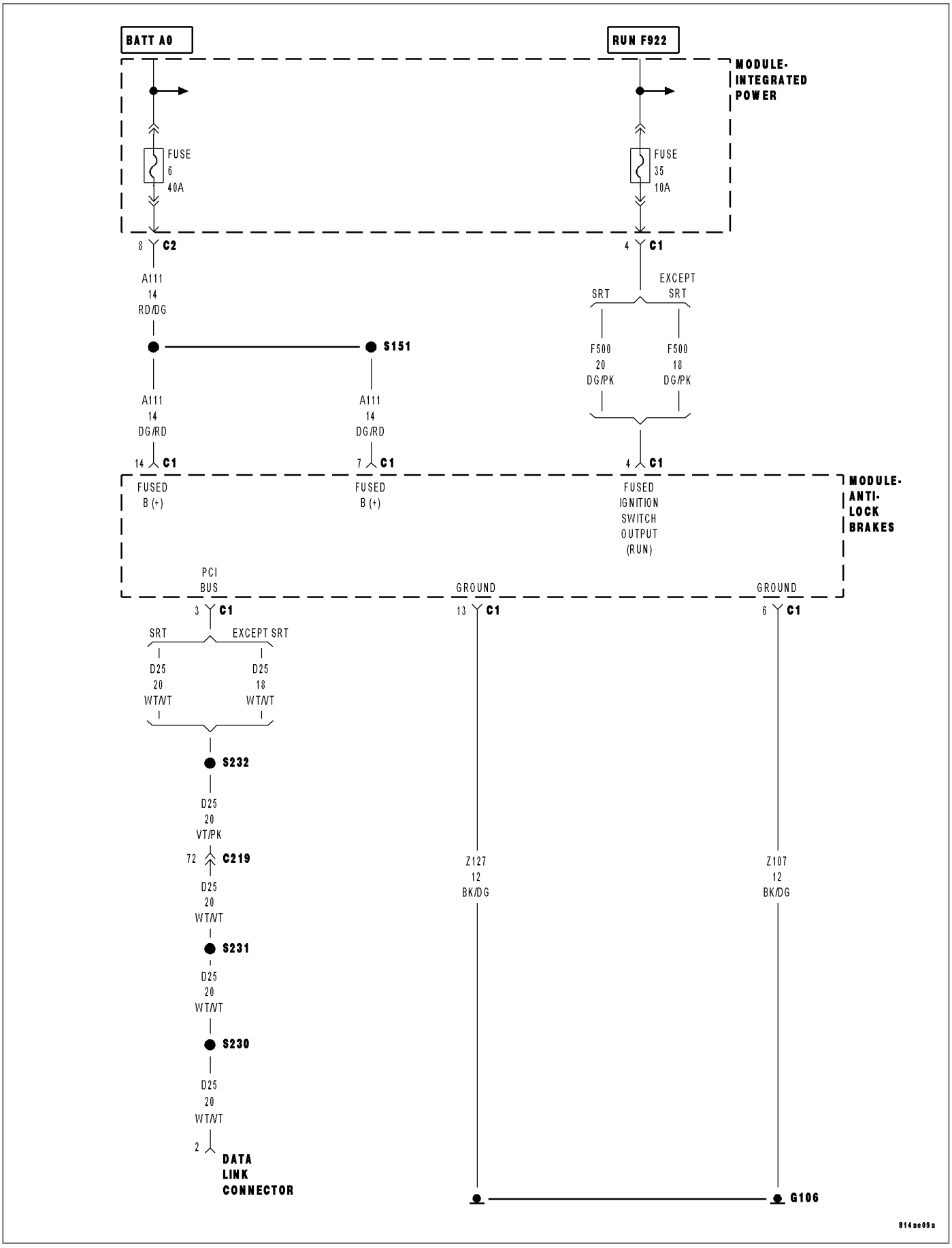

RIGHT FRONT DUMP SOLENOID SHORTED - 44 (CONTINUED)

For a complete wiring diagram **Refer to Section 8W**.

- **When Monitored:**
  Ignition on.
- **Set Condition:**
  When there is high logic feedback voltage from the solenoid when it is supposed to be low. (solenoid energized)

Possible Causes
INTERMITTENT BATTERY VOLTAGE LOW DTC
FUSED RUN RELAY OUTPUT CIRCUIT OPEN OR HIGH RESISTANCE
FUSED B+ CIRCUIT OPEN OR HIGH RESISTANCE
FUSED B+ CIRCUIT SHORTED TO FUSED IGNITION SWITCH OUTPUT CIRCUIT
GROUND CIRCUIT OPEN OR HIGH RESISTANCE
CONTROLLER ANTI-LOCK BRAKE

Diagnostic Test

1. DTC IS ACTIVE

Turn the ignition on.
With the DRBIII®, erase DTCs.
Turn the ignition off.
Start the engine.
With the DRBIII® read DTCs.

Does the DTC reset?

Yes >> Go To 2

No >> Go To 6

RIGHT FRONT DUMP SOLENOID SHORTED - 44 (CONTINUED)

2. FUSED IGNITION SWITCH OUTPUT CIRCUIT OPEN OR HIGH RESISTANCE

NOTE: Before continuing, inspect the fuses that are related to the ABS system. If one or more is found to be opened, use the schematic and repair the short to ground.

Turn the ignition off.

Disconnect the Controller Anti-lock Brake harness connector.

Check connectors - Clean/repair as necessary.

Turn the ignition on.

Using a 12–volt test light connected to ground, probe the Fused Ignition Switch Output circuit.

NOTE: The test light should be illuminated and bright. Compare the brightness to that of a direct connection to the battery.

Is the test light illuminated and bright?

Yes >> Go To 3

No >> Repair the Fused Ignition Switch Output circuit for an open circuit or high resistance.

Perform ABS VERIFICATION TEST - VER 1. (Refer to 5 - BRAKES/ELECTRICAL - DIAGNOSIS AND TESTING)

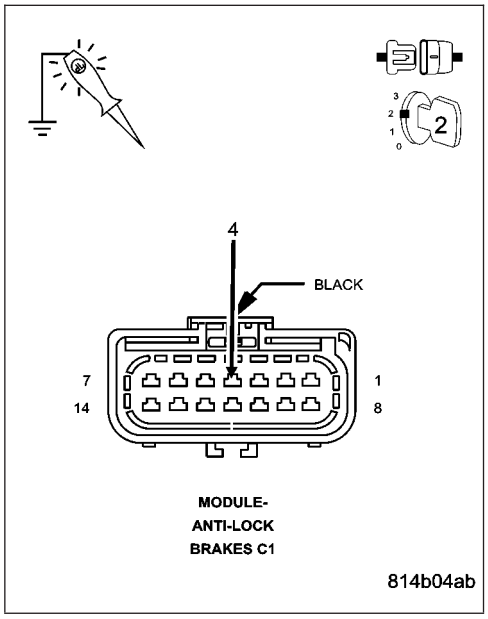

3. FUSED B+ CIRCUIT OPEN OR HIGH RESISTANCE

Using a 12–volt test light connected to ground, probe the Fused B+ circuit.

NOTE: The test light should be illuminated and bright. Compare the brightness to that of a direct connection to the battery.

Is the test light illuminated and bright?

Yes >> Go To 4

No >> Repair the Fused B+ circuit for an open circuit or high resistance.

Perform ABS VERIFICATION TEST - VER 1. (Refer to 5 - BRAKES/ELECTRICAL - DIAGNOSIS AND TESTING)

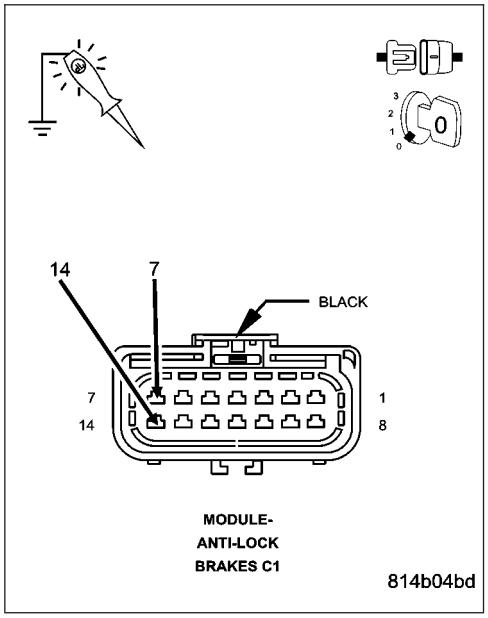

RIGHT FRONT DUMP SOLENOID SHORTED - 44 (CONTINUED)

4. FUSED B+ CIRCUIT SHORTED TO FUSED IGNITION SWITCH OUTPUT CIRCUIT

Turn the ignition off.

Disconnect the Controller Anti-Lock Brake harness connector.

Using a 12–volt test light connected to ground, probe the Fused Ignition Switch Output circuit.

Does the test light illuminate?

Yes >> Repair the Fused B+ circuit shorted to the Fused Ignition Switch Output circuit.
Perform ABS VERIFICATION TEST - VER 1. (Refer to 5 - BRAKES/ELECTRICAL - DIAGNOSIS AND TESTING)

No >> Go To 5

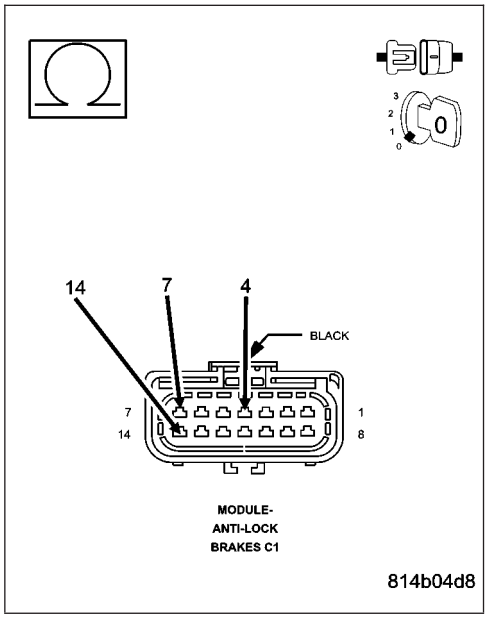

5. GROUND CIRCUIT(S) OPEN OR HIGH RESISTANCE

Turn the ignition off.

Using a 12–volt test light connected to B+, probe both the Ground circuit.

NOTE: The test light should be illuminated and bright. Compare the brightness to that of a direct connection to the battery at each circuit.

Is the test light illuminated and bright?

Yes >> Replace the Controller Anti-lock Brake Module in accordance with the Service Information.
Perform ABS VERIFICATION TEST - VER 1. (Refer to 5 - BRAKES/ELECTRICAL - DIAGNOSIS AND TESTING)

No >> Repair the Ground circuit(s) for an open circuit or high resistance.
Perform ABS VERIFICATION TEST - VER 1. (Refer to 5 - BRAKES/ELECTRICAL - DIAGNOSIS AND TESTING)

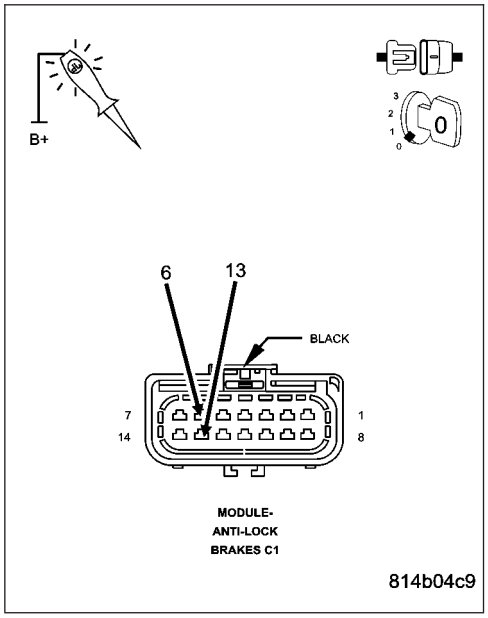

RIGHT FRONT DUMP SOLENOID SHORTED - 44 (CONTINUED)

6. INTERMITTENT DTC

Turn the ignition off.

Using the wiring diagram/schematic as a guide, inspect the wiring and connectors.

Check connectors - Clean/repair as necessary.

Inspect the vehicle for aftermarket accessories that may exceed the Charging System output.

Refer to any Technical Service Bulletins that may apply.

Were any problems found?

Yes >> Repair as necessary.
Perform ABS VERIFICATION TEST - VER 1. (Refer to 5 - BRAKES/ELECTRICAL - DIAGNOSIS AND TESTING)

No >> Test Complete.

RIGHT FRONT ISOLATION SOLENOID OPEN - 41

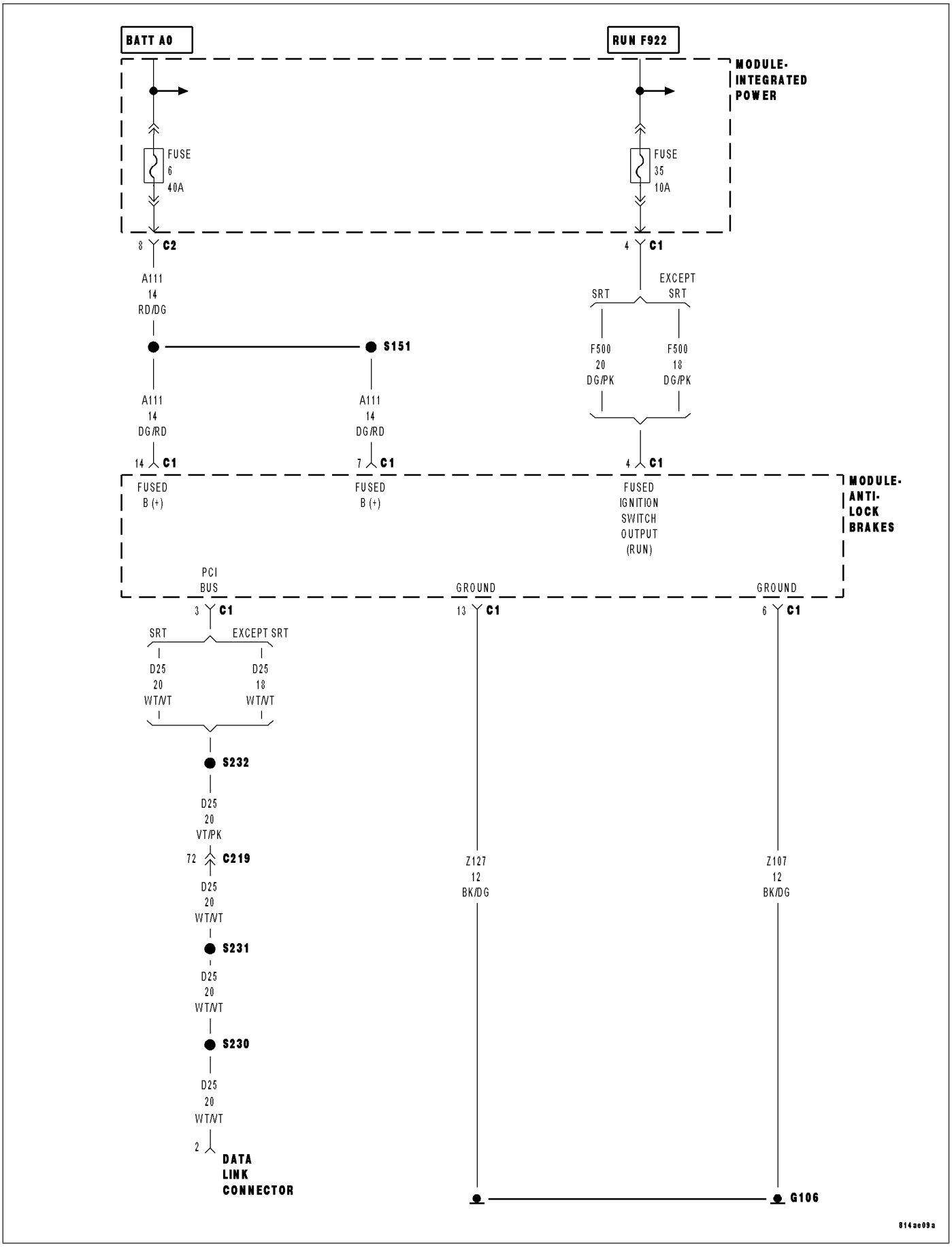

RIGHT FRONT ISOLATION SOLENOID OPEN - 41 (CONTINUED)
For a complete wiring diagram **Refer to Section 8W**.

- **When Monitored:**
  Ignition on.
- **Set Condition:**
  When there is low logic feedback voltage from the solenoid when it is expect to be high. (solenoid not energized)

Possible Causes
INTERMITTENT BATTERY VOLTAGE LOW DTC
FUSED RUN RELAY OUTPUT CIRCUIT OPEN OR HIGH RESISTANCE
FUSED B+ CIRCUIT OPEN OR HIGH RESISTANCE
FUSED B+ CIRCUIT SHORTED TO FUSED IGNITION SWITCH OUTPUT CIRCUIT
GROUND CIRCUIT OPEN OR HIGH RESISTANCE
CONTROLLER ANTI-LOCK BRAKE

Diagnostic Test

1. DTC IS ACTIVE

Turn the ignition on.
With the DRBIII®, erase DTCs.
Turn the ignition off.
Start the engine.
With the DRBIII® read DTCs.

Does the DTC reset?

Yes >> Go To 2
No >> Go To 6

RIGHT FRONT ISOLATION SOLENOID OPEN - 41 (CONTINUED)

2. FUSED IGNITION SWITCH OUTPUT CIRCUIT OPEN OR HIGH RESISTANCE

NOTE: Before continuing, inspect the fuses that are related to the ABS system. If one or more is found to be opened, use the schematic and repair the short to ground.

Turn the ignition off.

Disconnect the Controller Anti-lock Brake harness connector.

Check connectors - Clean/repair as necessary.

Turn the ignition on.

Using a 12–volt test light connected to ground, probe the Fused Ignition Switch Output circuit.

NOTE: The test light should be illuminated and bright. Compare the brightness to that of a direct connection to the battery.

Is the test light illuminated and bright?

Yes >> Go To 3

No >> Repair the Fused Ignition Switch Output circuit for an open circuit or high resistance.

Perform ABS VERIFICATION TEST - VER 1. (Refer to 5 - BRAKES/ELECTRICAL - DIAGNOSIS AND TESTING)

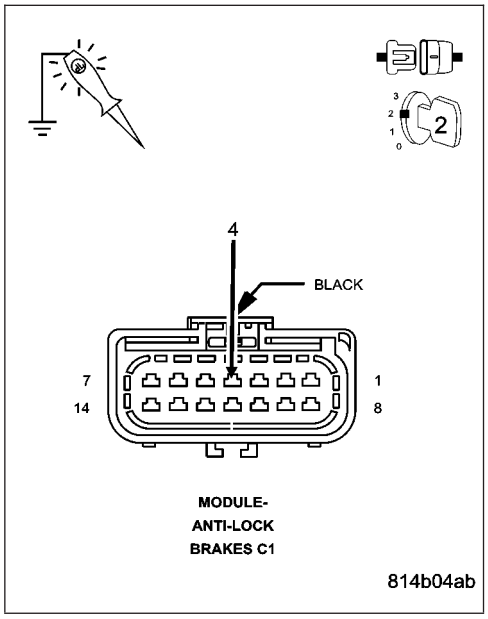

3. FUSED B+ CIRCUIT OPEN OR HIGH RESISTANCE

Using a 12–volt test light connected to ground, probe the Fused B+ circuit.

NOTE: The test light should be illuminated and bright. Compare the brightness to that of a direct connection to the battery.

Is the test light illuminated and bright?

Yes >> Go To 4

No >> Repair the Fused B+ circuit for an open circuit or high resistance.

Perform ABS VERIFICATION TEST - VER 1. (Refer to 5 - BRAKES/ELECTRICAL - DIAGNOSIS AND TESTING)

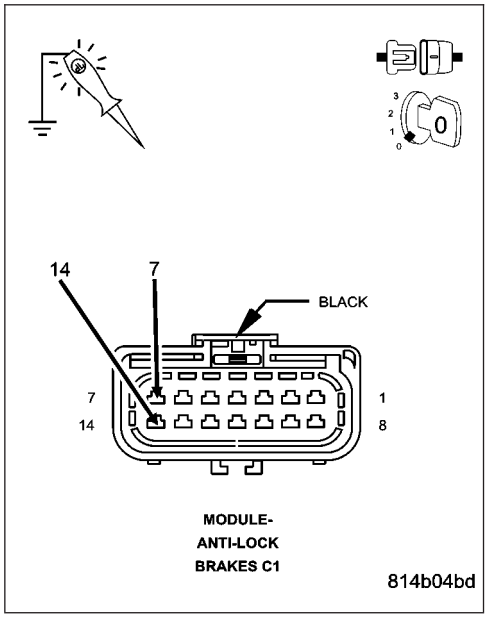

RIGHT FRONT ISOLATION SOLENOID OPEN - 41 (CONTINUED)

4. FUSED B+ CIRCUIT SHORTED TO FUSED IGNITION SWITCH OUTPUT CIRCUIT

Turn the ignition off.

Disconnect the Controller Anti-Lock Brake harness connector.

Using a 12–volt test light connected to ground, probe the Fused Ignition Switch Output circuit.

Does the test light illuminate?

Yes >> Repair the Fused B+ circuit shorted to the Fused Ignition Switch Output circuit.
Perform ABS VERIFICATION TEST - VER 1. (Refer to 5 - BRAKES/ELECTRICAL - DIAGNOSIS AND TESTING)

No >> Go To 5

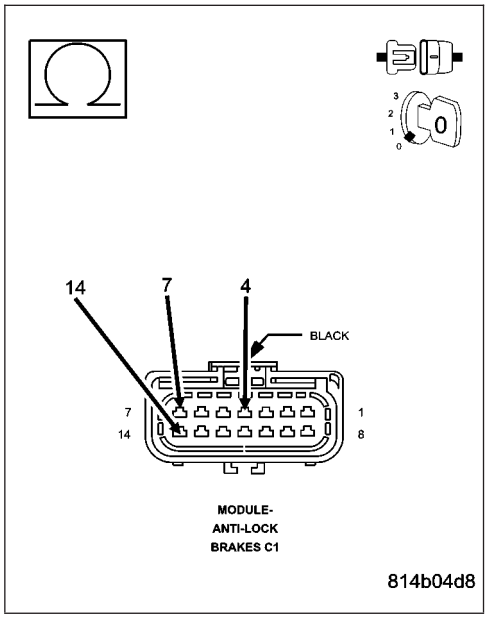

5. GROUND CIRCUIT(S) OPEN OR HIGH RESISTANCE

Turn the ignition off.

Using a 12–volt test light connected to B+, probe both the Ground circuit.

NOTE: The test light should be illuminated and bright. Compare the brightness to that of a direct connection to the battery at each circuit.

Is the test light illuminated and bright?

Yes >> Replace the Controller Anti-lock Brake Module in accordance with the Service Information.
Perform ABS VERIFICATION TEST - VER 1. (Refer to 5 - BRAKES/ELECTRICAL - DIAGNOSIS AND TESTING)

No >> Repair the Ground circuit(s) for an open circuit or high resistance.
Perform ABS VERIFICATION TEST - VER 1. (Refer to 5 - BRAKES/ELECTRICAL - DIAGNOSIS AND TESTING)

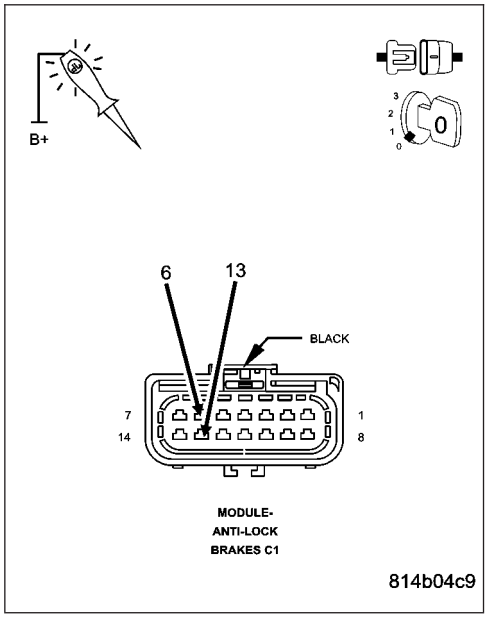

RIGHT FRONT ISOLATION SOLENOID OPEN - 41 (CONTINUED)

6. INTERMITTENT DTC

Turn the ignition off.

Using the wiring diagram/schematic as a guide, inspect the wiring and connectors.

Check connectors - Clean/repair as necessary.

Inspect the vehicle for aftermarket accessories that may exceed the Charging System output.

Refer to any Technical Service Bulletins that may apply.

Were any problems found?

Yes >> Repair as necessary.
Perform ABS VERIFICATION TEST - VER 1. (Refer to 5 - BRAKES/ELECTRICAL - DIAGNOSIS AND TESTING)

No >> Test Complete.

RIGHT FRONT ISOLATION SOLENOID SHORTED - 43

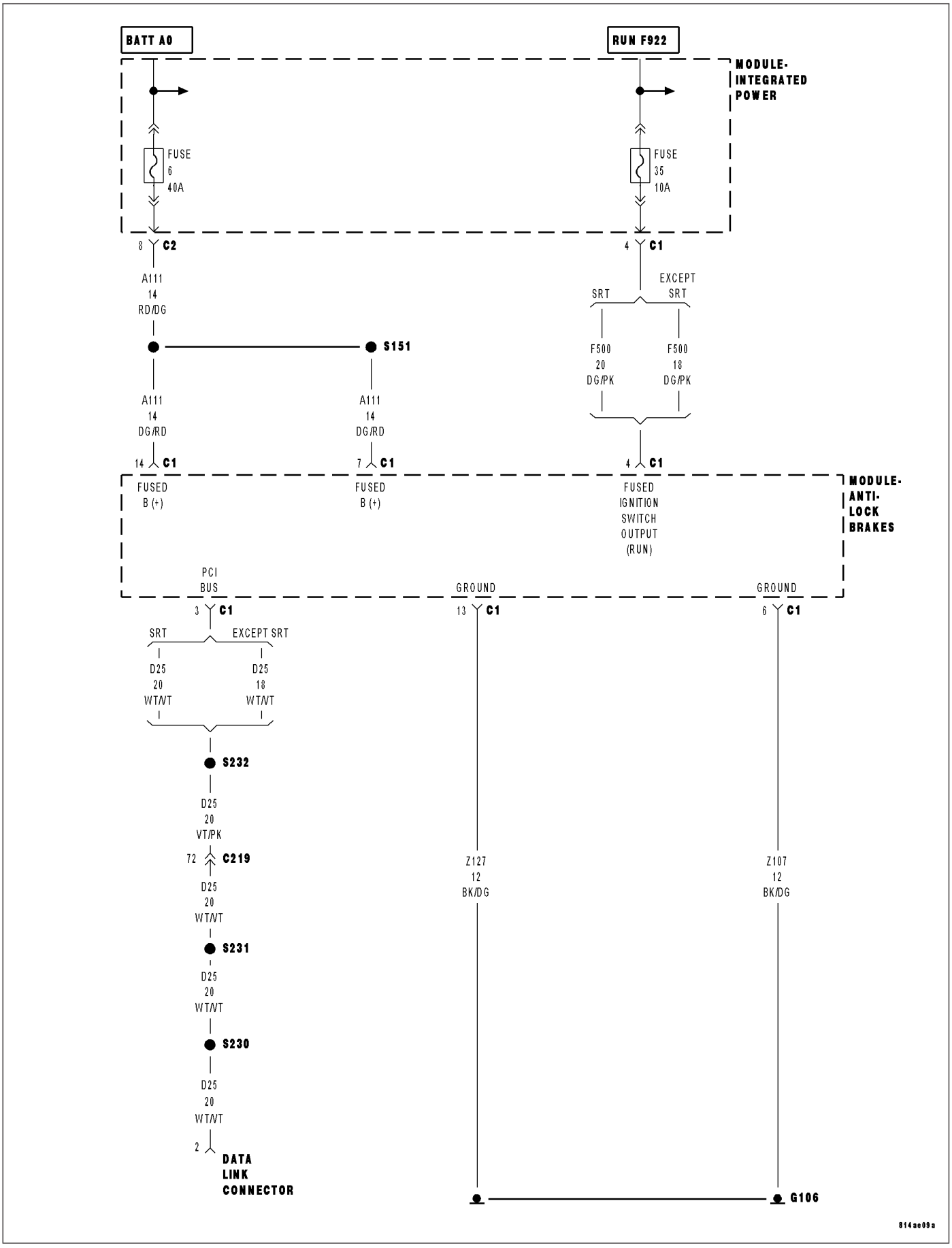

RIGHT FRONT ISOLATION SOLENOID SHORTED - 43 (CONTINUED)

For a complete wiring diagram **Refer to Section 8W**.

- **When Monitored:**
  Ignition on.
- **Set Condition:**
  When there is high logic feedback voltage from the solenoid when it is supposed to be low. (solenoid energized)

Possible Causes
INTERMITTENT BATTERY VOLTAGE LOW DTC
FUSED RUN RELAY OUTPUT CIRCUIT OPEN OR HIGH RESISTANCE
FUSED B+ CIRCUIT OPEN OR HIGH RESISTANCE
FUSED B+ CIRCUIT SHORTED TO FUSED IGNITION SWITCH OUTPUT CIRCUIT
GROUND CIRCUIT OPEN OR HIGH RESISTANCE
CONTROLLER ANTI-LOCK BRAKE

Diagnostic Test

1. DTC IS ACTIVE

Turn the ignition on.
With the DRBIII®, erase DTCs.
Turn the ignition off.
Start the engine.
With the DRBIII® read DTCs.

Does the DTC reset?

Yes >> Go To 2

No >> Go To 6

RIGHT FRONT ISOLATION SOLENOID SHORTED - 43 (CONTINUED)

2. FUSED IGNITION SWITCH OUTPUT CIRCUIT OPEN OR HIGH RESISTANCE

NOTE: Before continuing, inspect the fuses that are related to the ABS system. If one or more is found to be opened, use the schematic and repair the short to ground.

Turn the ignition off.

Disconnect the Controller Anti-lock Brake harness connector.

Check connectors - Clean/repair as necessary.

Turn the ignition on.

Using a 12–volt test light connected to ground, probe the Fused Ignition Switch Output circuit.

NOTE: The test light should be illuminated and bright. Compare the brightness to that of a direct connection to the battery.

Is the test light illuminated and bright?

Yes >> Go To 3

No >> Repair the Fused Ignition Switch Output circuit for an open circuit or high resistance.

Perform ABS VERIFICATION TEST - VER 1. (Refer to 5 - BRAKES/ELECTRICAL - DIAGNOSIS AND TESTING)

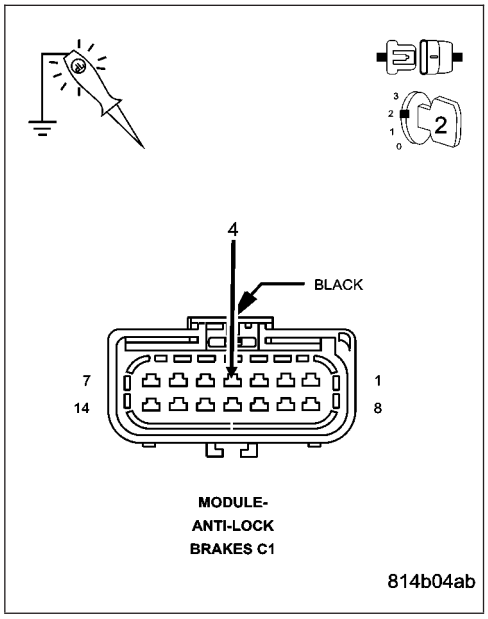

3. FUSED B+ CIRCUIT OPEN OR HIGH RESISTANCE

Using a 12–volt test light connected to ground, probe the Fused B+ circuit.

NOTE: The test light should be illuminated and bright. Compare the brightness to that of a direct connection to the battery.

Is the test light illuminated and bright?

Yes >> Go To 4

No >> Repair the Fused B+ circuit for an open circuit or high resistance.

Perform ABS VERIFICATION TEST - VER 1. (Refer to 5 - BRAKES/ELECTRICAL - DIAGNOSIS AND TESTING)

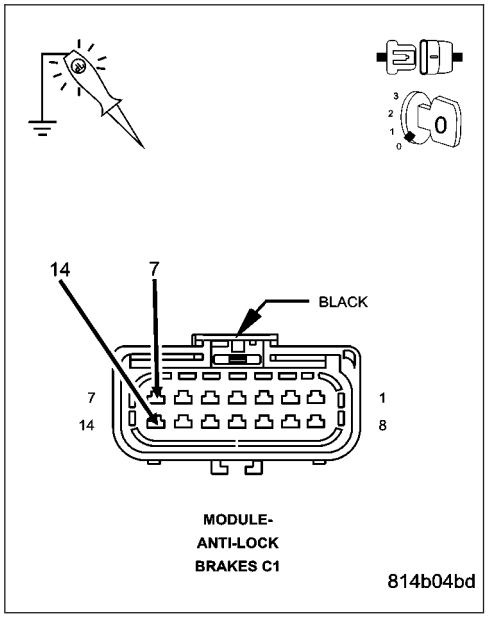

RIGHT FRONT ISOLATION SOLENOID SHORTED - 43 (CONTINUED)

4. FUSED B+ CIRCUIT SHORTED TO FUSED IGNITION SWITCH OUTPUT CIRCUIT

Turn the ignition off.

Disconnect the Controller Anti-Lock Brake harness connector.

Using a 12–volt test light connected to ground, probe the Fused Ignition Switch Output circuit.

Does the test light illuminate?

Yes >> Repair the Fused B+ circuit shorted to the Fused Ignition Switch Output circuit.
Perform ABS VERIFICATION TEST - VER 1. (Refer to 5 - BRAKES/ELECTRICAL - DIAGNOSIS AND TESTING)

No >> Go To 5

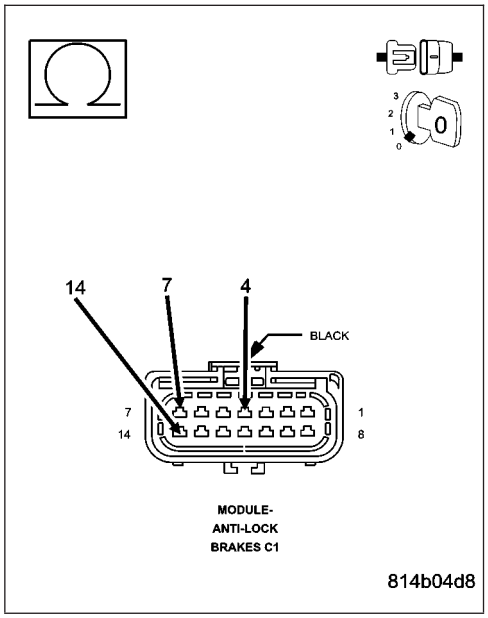

5. GROUND CIRCUIT(S) OPEN OR HIGH RESISTANCE

Turn the ignition off.

Using a 12–volt test light connected to B+, probe both the Ground circuit.

NOTE: The test light should be illuminated and bright. Compare the brightness to that of a direct connection to the battery at each circuit.

Is the test light illuminated and bright?

Yes >> Replace the Controller Anti-lock Brake Module in accordance with the Service Information.
Perform ABS VERIFICATION TEST - VER 1. (Refer to 5 - BRAKES/ELECTRICAL - DIAGNOSIS AND TESTING)

No >> Repair the Ground circuit(s) for an open circuit or high resistance.
Perform ABS VERIFICATION TEST - VER 1. (Refer to 5 - BRAKES/ELECTRICAL - DIAGNOSIS AND TESTING)

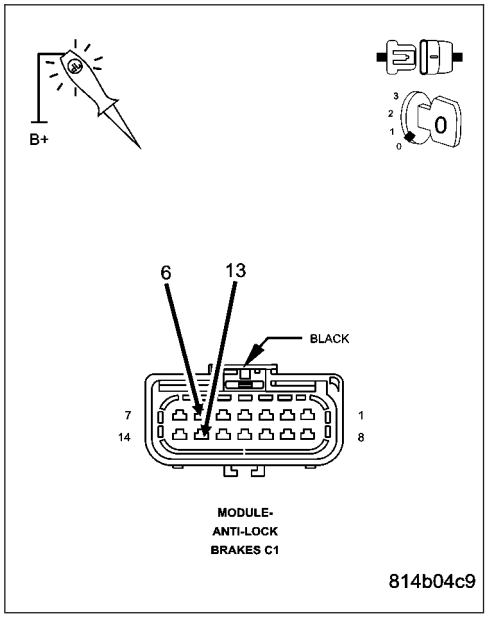

RIGHT FRONT ISOLATION SOLENOID SHORTED - 43 (CONTINUED)

6. INTERMITTENT DTC

Turn the ignition off.

Using the wiring diagram/schematic as a guide, inspect the wiring and connectors.

Check connectors - Clean/repair as necessary.

Inspect the vehicle for aftermarket accessories that may exceed the Charging System output.

Refer to any Technical Service Bulletins that may apply.

Were any problems found?

Yes >> Repair as necessary.
Perform ABS VERIFICATION TEST - VER 1. (Refer to 5 - BRAKES/ELECTRICAL - DIAGNOSIS AND TESTING)

No >> Test Complete.

MISMATCHED VIN — 84

For a complete wiring diagram **Refer to Section 8W**.

- **When Monitored:**
  Ignition on.
- **Set Condition:**
  This DTC will set if the current VIN does not match the broadcast VIN from the PCM within 10 seconds.

Possible Causes
ICOMMUNICATIONS DTC(S) PRESENT
POWERTRAIN CONTROL MODULE
ANTI-LOCK BRAKE MODULE

Diagnostic Test

1. DTC IS ACTIVE

Turn the ignition on.
With the DRBIII®, erase DTCs.
Turn the ignition off.
Turn the ignition on.
Wait ten seconds.
With the DRBIII®, read DTCs.

Does the DTC reset?

Yes >> Go To 2

No >> Go To 3

---

2. WRONG VIN PROGRAMMED IN PCM

Turn the ignition on.
With the DRBIII®, read the VIN in the PCM.
Compare VIN in the PCM to the vehicle VIN.

Is the correct VIN programmed in the PCM?

Yes >> Replace the Antilock Brake Module in accordance with the Service Information.
Perform ABS VERIFICATION TEST - VER 1. (Refer to 5 - BRAKES/ELECTRICAL - DIAGNOSIS AND TESTING)

No >> Replace the Powertrain Control Module in accordance with the Service Information.
Perform ABS VERIFICATION TEST - VER 1. (Refer to 5 - BRAKES/ELECTRICAL - DIAGNOSIS AND TESTING)

MISMATCHED VIN — 84 (CONTINUED)

3. COMMUNICATION DTCS PRESENT

Turn the ignition off.

With the DRBIII®, read DTCs in all other modules. If any communications DTCs are present, refer to the appropriate diagnostic procedure.

Refer to any Technical Service Bulletins that may apply.

Were any problems found?

Yes >> Repair as necessary.
Perform ABS VERIFICATION TEST - VER 1. (Refer to 5 - BRAKES/ELECTRICAL - DIAGNOSIS AND TESTING)

No >> Test Complete.

NUMBER OF TONE RING TEETH OUT OF RANGE - 82

For a complete wiring diagram **Refer to Section 8W**.

- **When Monitored:**
  Ignition on.
- **Set Condition:**
  The DTC will set if the stored tone wheel tooth count is out of range.

Possible Causes
TONE RING/AXLE SIZE MISMATCH
ANTI-LOCK BRAKE MODULE

Diagnostic Test

1. TONE RING/AXLE SIZE MISMATCH

Turn the ignition on.

With the DRBIII®, determine the axle size that is programmed into the Controller Anti-lock Brake.

Inspect and identify the vehicle axle size.

Compare the axle size programmed into the Anti-lock Brake Module, and the actual axle size installed into the vehicle.

Does the programmed axle size match the installed axle?

Yes >> Replace the Controller Anti-lock Brake in accordance with the Service Information. Refer to the symptom *Replacing the Anti-lock Brake Module for additional information.
Perform ABS VERIFICATION TEST - VER 1. (Refer to 5 - BRAKES/ELECTRICAL - DIAGNOSIS AND TESTING)

No >> Reprogram the Anti-lock Brake Module in accordance with the Service Information.
Perform ABS VERIFICATION TEST - VER 1. (Refer to 5 - BRAKES/ELECTRICAL - DIAGNOSIS AND TESTING)

PUMP MOTOR CIRCUIT OPEN — 67

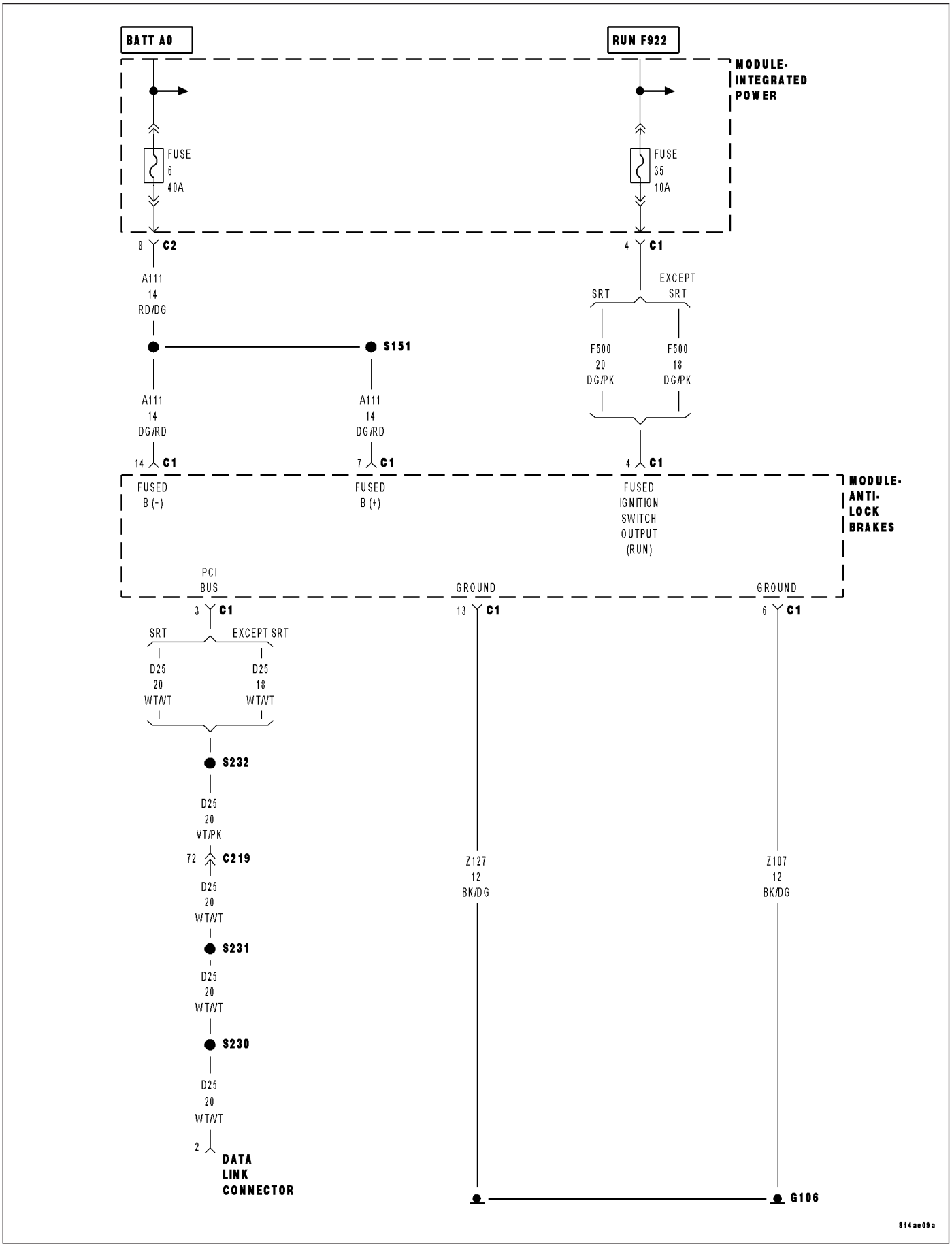

PUMP MOTOR CIRCUIT OPEN — 67 (CONTINUED)
For a complete wiring diagram **Refer to Section 8W**.

- **When Monitored:**
  Ignition on.
- **Set Condition:**
  Ignition on for at least 3.5 seconds. ABS pump motor command never given during the current ABS command. Low feedback voltage from the low side of the motor.

Possible Causes
ABS PUMP MOTOR INTERMITTENT DTC
FUSED B(+) CIRCUIT INTERMITTENTLY SHORTED TO GROUND
FUSED B(+) CIRCUIT SHORTED TO GROUND
FUSE OPEN - PUMP MOTOR CIRCUIT
NO B+ SUPPLY TO FUSE
ABS PUMP MOTOR INOPERATIVE
FUSED B(+) CIRCUIT OPEN
GROUND CIRCUIT OPEN
GROUND CIRCUIT HIGH RESISTANCE
CONTROLLER ANTI-LOCK BRAKE

Diagnostic Test

1. DTC IS ACTIVE

Turn the ignition on.
With the DRBIII®, read DTC's.
With the DRBIII®, erase DTC's.
Turn the ignition off.
Turn the ignition on.
With the DRBIII®, actuate the ABS pump motor.

Did the Pump Motor operate when actuated?

Yes >> Go To 10
No >> Go To 2

---

2. FUSE OPEN - PUMP MOTOR CIRCUIT

Turn the ignition off.
Remove and inspect the ABS Pump Motor fuse.

Is the Fuse open?

Yes >> Go To 3
No >> Go To 5

PUMP MOTOR CIRCUIT OPEN — 67 (CONTINUED)

3. FUSED B(+) CIRCUIT INTERMITTENTLY SHORT

Ensure the Pump Motor connector is secure.

Visually inspect the Fused B(+) circuit in the wiring harness from the ABS PUMP fuse to the CAB harness connector. Look for any signs of an intermittent short to ground.

Is the wiring harness OK?

Yes >> Go To 4

No >> Repair as necessary.
Perform ABS VERIFICATION TEST - VER 1. (Refer to 5 - BRAKES/ELECTRICAL - DIAGNOSIS AND TESTING)

---

4. FUSED B(+) CIRCUIT SHORTED TO GROUND

Disconnect the CAB harness connector.

Ensure the ABS Pump Motor connector is secure.

Measure the resistance of the Fused B(+) circuit to ground.

Is the resistance above 5.0 ohms?

Yes >> Replace the Controller Anti-Brake in accordance with the service manual. Refer to the symptom *Replacing the Controller Anti-Lock Brake for additional information
Perform ABS VERIFICATION TEST - VER 1. (Refer to 5 - BRAKES/ELECTRICAL - DIAGNOSIS AND TESTING)

No >> Repair the Fused B(+) circuit short to ground.
Perform ABS VERIFICATION TEST - VER 1. (Refer to 5 - BRAKES/ELECTRICAL - DIAGNOSIS AND TESTING)

---

5. FUSED B(+) CIRCUIT OPEN

Remove the ABS PUMP Fuse.

Disconnect the CAB harness connector.

Measure the resistance of the Fused B (+) circuit between the ABS PUMP Fuse Terminal and the CAB harness connector.

Is the resistance below 5.0 ohms?

Yes >> Go To 6

No >> Repair the open in the Fused B(+) circuit.
Perform ABS VERIFICATION TEST - VER 1. (Refer to 5 - BRAKES/ELECTRICAL - DIAGNOSIS AND TESTING)

---

6. NO B+ SUPPLY TO FUSE

Turn the ignition on.

Measure the voltage of the B(+) supply at the ABS PUMP Fuse terminal.

Is the voltage above 11 volts?

Yes >> Go To 7

No >> Repair the B(+) Supply circuit.
Perform ABS VERIFICATION TEST - VER 1. (Refer to 5 - BRAKES/ELECTRICAL - DIAGNOSIS AND TESTING)

PUMP MOTOR CIRCUIT OPEN — 67 (CONTINUED)

7. ABS PUMP MOTOR INOPERATIVE

Turn the ignition off.
Disconnect the ABS Pump Motor connector.
Connect a 10 gauge jumper wire between ABS Pump Motor Fused B(+) circuit and a 40 Amp Fused B(+) circuit.
Connect a 10 gauge jumper wire between ABS Pump Motor ground circuit and ground.
Monitor ABS Pump Motor operation.

Is the ABS Pump Motor operating?

Yes >> Go To 8

No >> Replace the ABS Pump Motor/Hydraulic Control Unit assembly.
Perform ABS VERIFICATION TEST - VER 1. (Refer to 5 - BRAKES/ELECTRICAL - DIAGNOSIS AND TESTING)

---

8. GROUND CIRCUIT OPEN

Turn the ignition off.
Disconnect the CAB harness connector.
Measure the resistance of the CAB Ground circuits.

Is the resistance below 5.0 ohms?

Yes >> Go To 9

No >> Repair the open in the Ground circuit.
Perform ABS VERIFICATION TEST - VER 1. (Refer to 5 - BRAKES/ELECTRICAL - DIAGNOSIS AND TESTING)

---

9. GROUND CIRCUIT HIGH RESISTANCE

Make sure the ABS Pump Motor connector is secure.
Turn the ignition on.
With the DRBIII®, enable ABS Pump Motor actuation.

NOTE: NOTE: ABS Pump Motor will not operate, but voltage will be applied.
Measure the voltage drop across the ABS Ground circuit connection, with ABS Pump Motor actuation enabled.

Is the voltage below 0.1 volt?

Yes >> Replace the Controller Anti-Lock Brake in accordance with the service manual.
Perform ABS VERIFICATION TEST - VER 1. (Refer to 5 - BRAKES/ELECTRICAL - DIAGNOSIS AND TESTING)

No >> Repair the high resistance in the Ground circuit.
Perform ABS VERIFICATION TEST - VER 1. (Refer to 5 - BRAKES/ELECTRICAL - DIAGNOSIS AND TESTING)

PUMP MOTOR CIRCUIT OPEN — 67 (CONTINUED)

10. WIRING HARNESS INSPECTION

Turn the ignition off.

Visually inspect the related wiring harness. Look for any chafed, pierced, pinched, or partially broken wires.

Make sure the Pump Motor connecter is secure.

Visually inspect the related wire harness connectors. Look for broken, bent, pushed out, or corroded terminals.

Refer to any Technical Service Bulletins that may apply.

Were any problems found?

Yes >> Repair the Left Front Wheel Speed Sensor Signal circuit for a short to voltage.
Perform ABS VERIFICATION TEST - VER 1. (Refer to 5 - BRAKES/ELECTRICAL - DIAGNOSIS AND TESTING)

No >> Test Complete.

PUMP MOTOR STALLED — 68

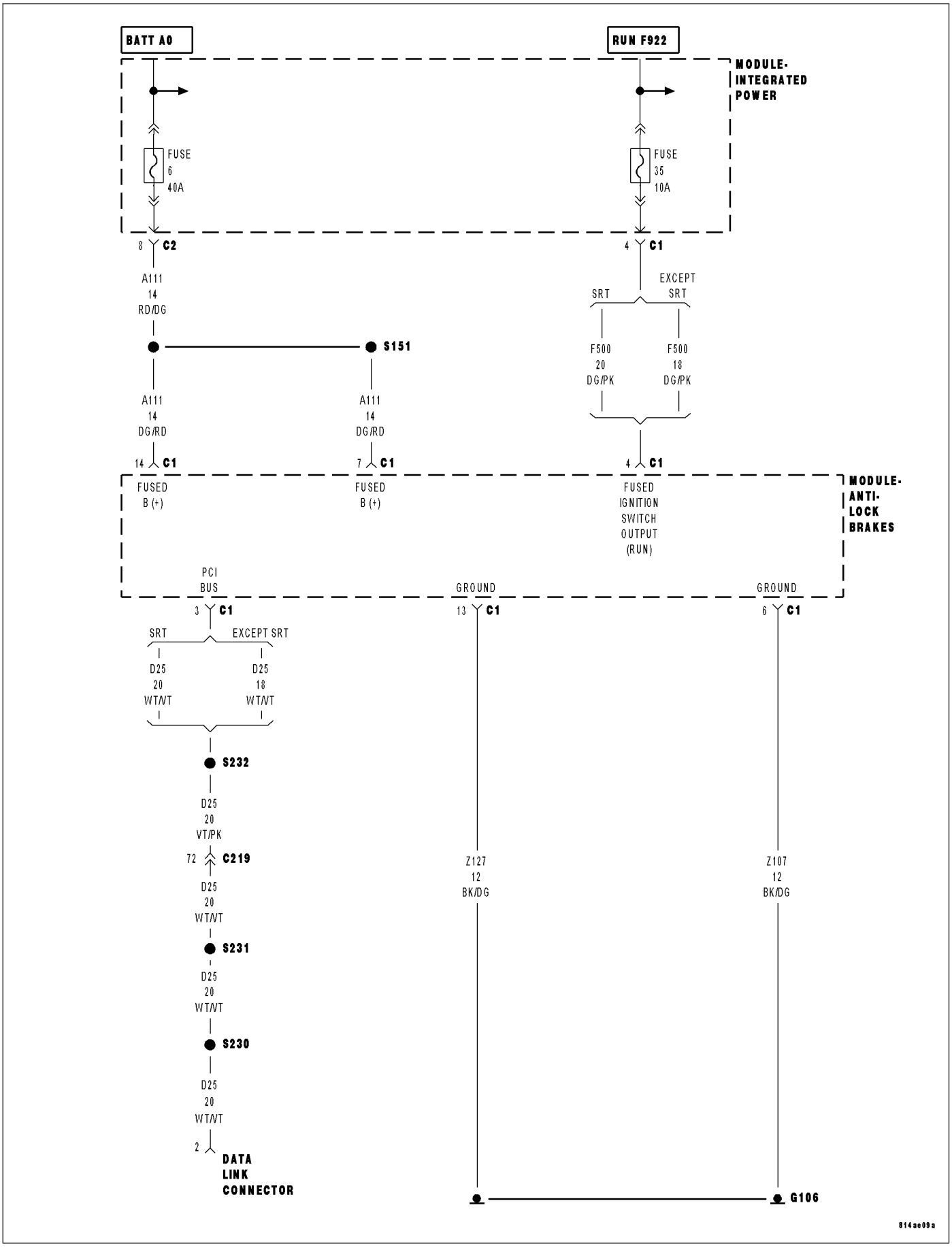

PUMP MOTOR STALLED — 68 (CONTINUED)
For a complete wiring diagram **Refer to Section 8W**.

- **When Monitored:**
  Ignition on.
- **Set Condition:**
  When vehicle speed is above 15 MPH without ABS active. Vehicle speed above 4 MPH with a fault from the previous ignition cycle. ABS pump motor command given and then turned off. High feedback voltage from the low side of the motor continuously.

Possible Causes
ABS PUMP MOTOR INTERMITTENT DTC
FUSED B(+) CIRCUIT INTERMITTENTLY SHORTED TO GROUND
FUSED B(+) CIRCUIT SHORTED TO GROUND
FUSE OPEN - PUMP MOTOR CIRCUIT
NO B+ SUPPLY TO FUSE
ABS PUMP MOTOR INOPERATIVE
FUSED B(+) CIRCUIT OPEN
GROUND CIRCUIT OPEN
GROUND CIRCUIT HIGH RESISTANCE
CONTROLLER ANTI-LOCK BRAKE

Diagnostic Test

1. DTC IS ACTIVE

Turn the ignition on.
With the DRBIII®, read DTC's.
With the DRBIII®, erase DTC's.
Turn the ignition off.
Turn the ignition on.
With the DRBIII®, actuate the ABS pump motor.

Did the Pump Motor operate when actuated?

Yes >> Go To 10
No >> Go To 2

---

2. FUSE OPEN - PUMP MOTOR CIRCUIT

Turn the ignition off.
Remove and inspect the ABS Pump Motor fuse.

Is the Fuse open?

Yes >> Go To 3
No >> Go To 5

PUMP MOTOR STALLED — 68 (CONTINUED)

3. FUSED B(+) CIRCUIT INTERMITTENTLY SHORT

Ensure the Pump Motor connector is secure.

Visually inspect the Fused B(+) circuit in the wiring harness from the ABS PUMP fuse to the CAB harness connector. Look for any signs of an intermittent short to ground.

Is the wiring harness OK?

Yes >> Go To 4

No >> Repair as necessary.
Perform ABS VERIFICATION TEST - VER 1. (Refer to 5 - BRAKES/ELECTRICAL - DIAGNOSIS AND TESTING)

---

4. FUSED B(+) CIRCUIT SHORTED TO GROUND

Disconnect the CAB harness connector.

Ensure the ABS Pump Motor connector is secure.

Measure the resistance of the Fused B(+) circuit to ground.

Is the resistance above 5.0 ohms?

Yes >> Replace the Controller Anti-Brake in accordance with the service manual. Refer to the symptom *Replacing the Controller Anti-Lock Brake for additional information
Perform ABS VERIFICATION TEST - VER 1. (Refer to 5 - BRAKES/ELECTRICAL - DIAGNOSIS AND TESTING)

No >> Repair the Fused B(+) circuit short to ground.
Perform ABS VERIFICATION TEST - VER 1. (Refer to 5 - BRAKES/ELECTRICAL - DIAGNOSIS AND TESTING)

---

5. FUSED B(+) CIRCUIT OPEN

Remove the ABS PUMP Fuse.

Disconnect the CAB harness connector.

Measure the resistance of the Fused B (+) circuit between the ABS PUMP Fuse Terminal and the CAB harness connector.

Is the resistance below 5.0 ohms?

Yes >> Go To 6

No >> Repair the open in the Fused B(+) circuit.
Perform ABS VERIFICATION TEST - VER 1. (Refer to 5 - BRAKES/ELECTRICAL - DIAGNOSIS AND TESTING)

---

6. NO B+ SUPPLY TO FUSE

Turn the ignition on.

Measure the voltage of the B(+) supply at the ABS PUMP Fuse terminal.

Is the voltage above 11 volts?

Yes >> Go To 7

No >> Repair the B(+) Supply circuit.
Perform ABS VERIFICATION TEST - VER 1. (Refer to 5 - BRAKES/ELECTRICAL - DIAGNOSIS AND TESTING)

PUMP MOTOR STALLED — 68 (CONTINUED)

7. ABS PUMP MOTOR INOPERATIVE

Turn the ignition off.
Disconnect the ABS Pump Motor connector.
Connect a 10 gauge jumper wire between ABS Pump Motor Fused B(+) circuit and a 40 Amp Fused B(+) circuit.
Connect a 10 gauge jumper wire between ABS Pump Motor ground circuit and ground.
Monitor ABS Pump Motor operation.

Is the ABS Pump Motor operating?

Yes >> Go To 8

No >> Replace the ABS Pump Motor/Hydraulic Control Unit assembly.
Perform ABS VERIFICATION TEST - VER 1. (Refer to 5 - BRAKES/ELECTRICAL - DIAGNOSIS AND TESTING)

---

8. GROUND CIRCUIT OPEN

Turn the ignition off.
Disconnect the CAB harness connector.
Measure the resistance of the CAB Ground circuits.

Is the resistance below 5.0 ohms?

Yes >> Go To 9

No >> Repair the open in the Ground circuit.
Perform ABS VERIFICATION TEST - VER 1. (Refer to 5 - BRAKES/ELECTRICAL - DIAGNOSIS AND TESTING)

---

9. GROUND CIRCUIT HIGH RESISTANCE

Make sure the ABS Pump Motor connector is secure.
Turn the ignition on.
With the DRBIII®, enable ABS Pump Motor actuation.

NOTE: NOTE: ABS Pump Motor will not operate, but voltage will be applied.
Measure the voltage drop across the ABS Ground circuit connection, with ABS Pump Motor actuation enabled.

Is the voltage below 0.1 volt?

Yes >> Replace the Controller Anti-Lock Brake in accordance with the service manual.
Perform ABS VERIFICATION TEST - VER 1. (Refer to 5 - BRAKES/ELECTRICAL - DIAGNOSIS AND TESTING)

No >> Repair the high resistance in the Ground circuit.
Perform ABS VERIFICATION TEST - VER 1. (Refer to 5 - BRAKES/ELECTRICAL - DIAGNOSIS AND TESTING)

PUMP MOTOR STALLED — 68 (CONTINUED)

10. WIRING HARNESS INSPECTION

Turn the ignition off.

Visually inspect the related wiring harness. Look for any chafed, pierced, pinched, or partially broken wires.

Make sure the Pump Motor connector is secure.

Visually inspect the related wire harness connectors. Look for broken, bent, pushed out, or corroded terminals.

Refer to any Technical Service Bulletins that may apply.

Were any problems found?

Yes >> Repair the Left Front Wheel Speed Sensor Signal circuit for a short to voltage.
Perform ABS VERIFICATION TEST - VER 1. (Refer to 5 - BRAKES/ELECTRICAL - DIAGNOSIS AND TESTING)

No >> Test Complete.

RAM READ/WRITE — 71

For a complete wiring diagram **Refer to Section 8W**.

- **When Monitored:**
  Ignition on.
- **Set Condition:**
  The CAB is unable to change, recognize or clear a value (bit) in RAM.

Possible Causes
ANTI-LOCK BRAKE MODULE

Diagnostic Test

1. ANTI-LOCK BRAKE MODULE

NOTE: Diagnose and repair any Powertrain Control Module VIN or Communication DTCs before continuing with this test.

Turn the ignition on.

With the DRBIII®, clear DTCs.

Turn the ignition off.

Turn the ignition on.

With the DRBIII®, read DTCs.

Does the DTC reset?

Yes >> Replace the Controller Antilock Brake in accordance with the Service Information.
Perform ABS VERIFICATION TEST - VER 1. (Refer to 5 - BRAKES/ELECTRICAL - DIAGNOSIS AND TESTING)

No >> Inspect the wiring harness and connector on the CAB. Check for chafed, pierced, pinched, or partially broken wires. Check the connector for broken hold down tab, bent or pushed out terminals. repair as necessary.
Perform ABS VERIFICATION TEST - VER 1. (Refer to 5 - BRAKES/ELECTRICAL - DIAGNOSIS AND TESTING)

REAR RESET SWITCH CLOSED — 63

- **When Monitored:**
  Ignition on.
- **Set Condition:**
  When not in Antilock control mode and the reset swithc voltage is low.

Possible Causes
HYDRAULIC CONTROL UNIT

Diagnostic Test

1. VERIFING DTC

Turn the ignition on.
With the DBRIII®, clear DTCs.
Turn the ignition off.
Turn the ignition on.
With the DBRIII®, read DTCs.

Does the DTC reset?

Yes >> Replace the Hydraulic Control Unit in accordance with the Service Information.
Perform ABS VERIFICATION TEST - VER 1. (Refer to 5 - BRAKES/ELECTRICAL - DIAGNOSIS AND TESTING)

No >> Test Complete.

ROM CHECKSUM – 71

For a complete wiring diagram **Refer to Section 8W**.

- **When Monitored:**
  Ignition on.
- **Set Condition:**
  The SUM of all the storage bytes in the CAB's ROM not equal to the original sum stored in ROM..

Possible Causes
ANTI-LOCK BRAKE MODULE

Diagnostic Test

1. ANTI-LOCK BRAKE MODULE

NOTE: Diagnose and repair any Powertrain Control Module VIN or Communication DTCs before continuing with this test.

Turn the ignition on.

With the DRBIII®, clear DTCs.

Turn the ignition off.

Turn the ignition on.

With the DRBIII®, read DTCs.

Does the DTC reset?

Yes >> Replace the Controller Antilock Brake in accordance with the Service Information.
Perform ABS VERIFICATION TEST - VER 1. (Refer to 5 - BRAKES/ELECTRICAL - DIAGNOSIS AND TESTING)

No >> Inspect the wiring harness and connector on the CAB. Check for chafed, pierced, pinched, or partially broken wires. Check the connector for broken hold down tab, bent or pushed out terminals. repair as necessary.
Perform ABS VERIFICATION TEST - VER 1. (Refer to 5 - BRAKES/ELECTRICAL - DIAGNOSIS AND TESTING)

TIRE REVS EPR MILE OUT OF RANGE

For a complete wiring diagram **Refer to Section 8W**.

- **When Monitored:**
  With the ignition on.
- **Set Condition:**
  The DTC will set if the stored tire size is out of range.

Possible Causes
INTERMITTENT TIRE REVOLUTIONS RANGE PERFORMANCE DTC
INCORRECT TIRE SIZE PROGRAMMED INTO ANTI-LOCK BRAKE MODULE
ANTI-LOCK BRAKE MODULE

Diagnostic Test

1. DTC CONDITION IS PRESENT

Turn the ignition on.
Observe the ABS Warning Indicator.

Is the ABS Warning Indicator Flashing?

Yes >> Go To 2

No >> Go To 3

---

2. INCORRECT TIRES PROGRAMMED INTO ANTI-LOCK BRAKE MODULE

Inspect all four tires on the vehicle and note the size of each tire.

NOTE: A non-production size tire cannot be programmed into the CAB. The production Powertrain, with the production size tires, is the only emissions certified configuration that is available for reprogramming.
Turn the ignition on.
With the scan tool, read the tire size that is programmed into the CAB.

Does the displayed tire size match the actual tire size on the vehicle?

Yes >> Replace the Controller Anti-lock Brake in accordance with the Service Information. Refer to the symptom *Replacing the Anti-lock Brake Module for additional information.
Perform ABS VERIFICATION TEST - VER 1. (Refer to 5 - BRAKES/ELECTRICAL - DIAGNOSIS AND TESTING)

No >> Reprogram the tire size in accordance with the Service Information. Make sure that the ignition is on throughout the reprogramming procedure.
Perform ABS VERIFICATION TEST - VER 1. (Refer to 5 - BRAKES/ELECTRICAL - DIAGNOSIS AND TESTING)

TIRE REVS EPR MILE OUT OF RANGE (CONTINUED)

3. WIRING HARNESS INSPECTION

Turn the ignition off.

Visually inspect the related wiring harness. Look for any chafed, pierced, pinched, or partially broken wires.

Visually inspect the related wire harness connectors. Look for broken, bent, pushed out, or corroded terminals.

Refer to any Hotline letters or Technical Service Bulletins that may apply.

Were any problems found?

Yes >> Repair as necessary.
Perform ABS VERIFICATION TEST - VER 1. (Refer to 5 - BRAKES/ELECTRICAL - DIAGNOSIS AND TESTING)

No >> Test Complete.

WATCHDOG — 73

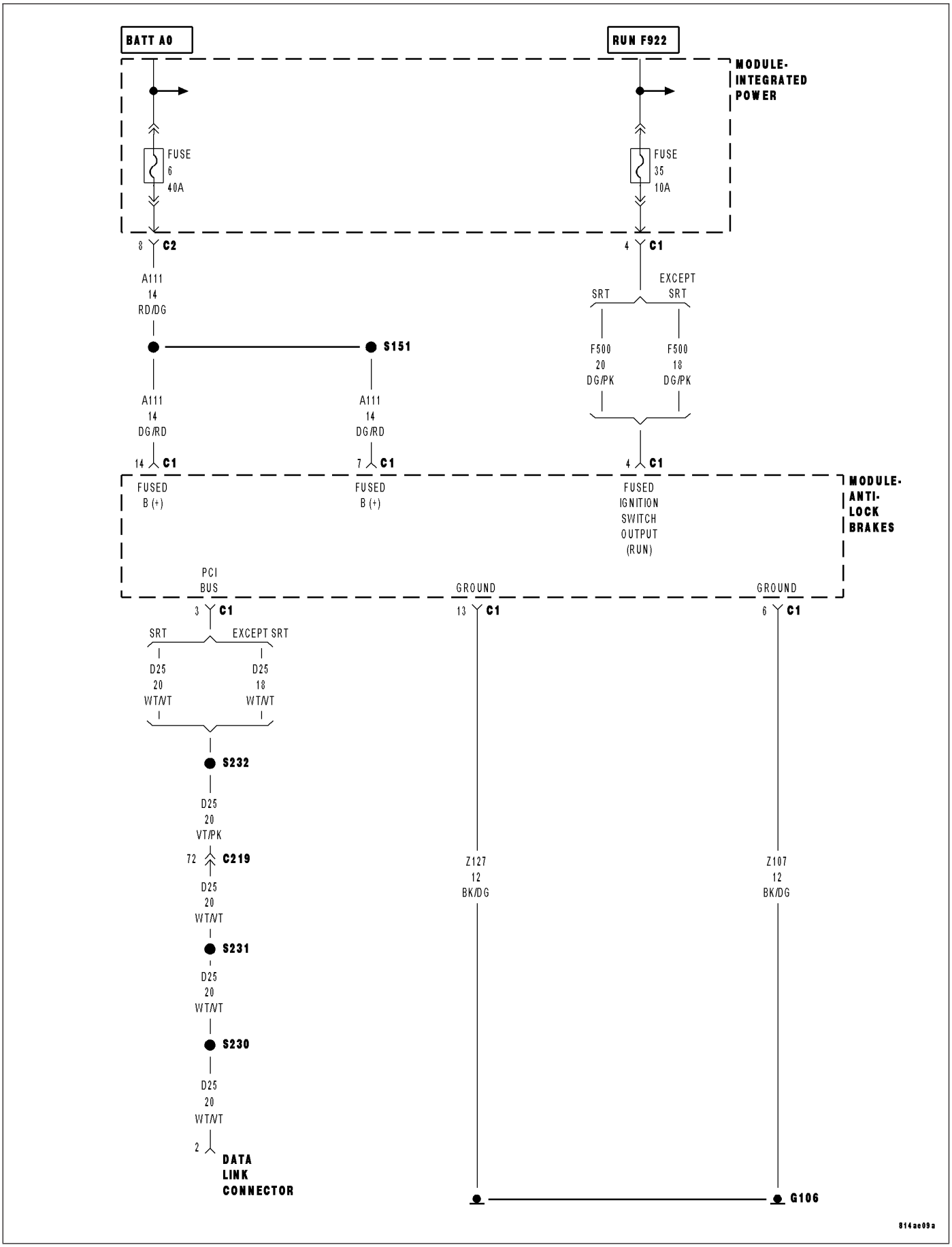
BATT A0
RUN F922
MODULE-
INTEGRATED
POWER
FUSE
6
40A
FUSE
35
10A
8 C2
4 C1
A111
14
RD/DG
EXCEPT
SRT
SRT
S151
F500
20
DG/PK
F500
18
DG/PK
A111
14
DG/RD
A111
14
DG/RD
14 C1
7 C1
4 C1
FUSED
B (+)
FUSED
B (+)
FUSED
IGNITION
SWITCH
OUTPUT
(RUN)
MODULE-
ANTI-
LOCK
BRAKES
PCI
BUS
GROUND
GROUND
3 C1
13 C1
6 C1
SRT
EXCEPT SRT
D25
20
WT/VT
D25
18
WT/VT
S232
D25
20
VT/PK
72 C219
D25
20
WT/VT
S231
D25
20
WT/VT
S230
D25
20
WT/VT
2
DATA
LINK
CONNECTOR
Z127
12
BK/DG
Z107
12
BK/DG
G106
814ae09a

WATCHDOG — 73 (CONTINUED)

For a complete wiring diagram **Refer to Section 8W**.

- **When Monitored:**
  Ignition on.
- **Set Condition:**
  When there is a deviation from the expected result of a CAB internal self check.

Possible Causes
INTERMITTENT BATTERY VOLTAGE LOW DTC
FUSED RUN RELAY OUTPUT CIRCUIT OPEN OR HIGH RESISTANCE
FUSED B+ CIRCUIT OPEN OR HIGH RESISTANCE
GROUND CIRCUIT OPEN OR HIGH RESISTANCE
CONTROLLER ANTI-LOCK BRAKE

Diagnostic Test

1. DTC IS ACTIVE

Turn the ignition on.
With the DRBIII®, erase DTCs.
Turn the ignition off.
Start the engine.
With the DRBIII® read DTCs.

Does the DTC reset?

Yes >> Go To 2

No >> Go To 5

---

2. FUSED IGNITION SWITCH OUTPUT CIRCUIT OPEN OR HIGH RESISTANCE

NOTE: Before continuing, inspect the fuses that are related to the ABS system.

Turn the ignition off.
Disconnect the Controller Anti-lock Brake harness connector.
Check connectors - Clean/repair as necessary.
Turn the ignition on.
Using a 12–volt test light connected to ground, probe the Fused Ignition Switch Output circuit.

NOTE: The test light should be illuminated and bright. Compare the brightness to that of a direct connection to the battery.

Is the test light illuminated and bright?

Yes >> Go To 3

No >> Repair the Fused Ignition Switch Output circuit for an open circuit or high resistance.
Perform ABS VERIFICATION TEST - VER 1. (Refer to 5 - BRAKES/ELECTRICAL - DIAGNOSIS AND TESTING)

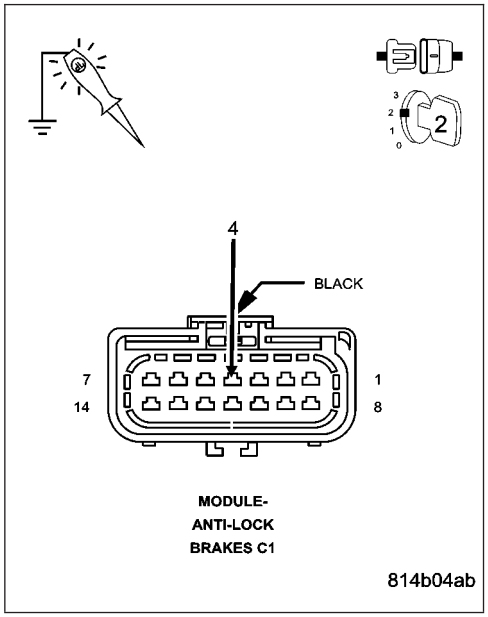

WATCHDOG — 73 (CONTINUED)

3. FUSED B+ CIRCUIT OPEN OR HIGH RESISTANCE

Using a 12–volt test light connected to ground, probe the Fused B+circuit.

NOTE: The test light should be illuminated and bright. Compare the brightness to that of a direct connection to the battery.

Is the test light illuminated and bright?

Yes >> Go To 4

No >> Repair the Fused B+circuit for an open circuit or high resistance.
Perform ABS VERIFICATION TEST - VER 1. (Refer to 5 - BRAKES/ELECTRICAL - DIAGNOSIS AND TESTING)

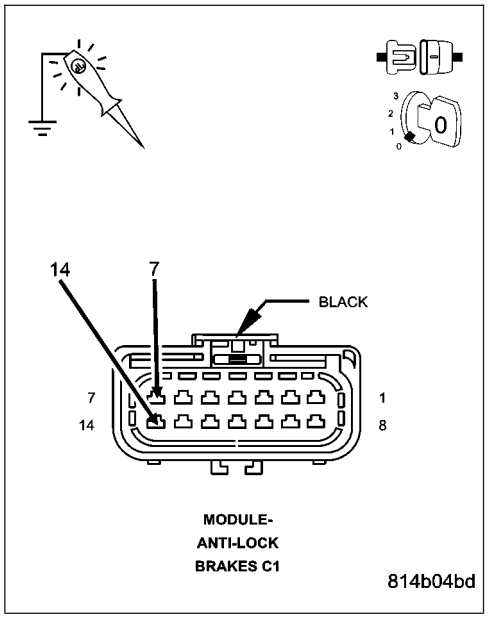

4. GROUND CIRCUIT(S) OPEN OR HIGH RESISTANCE

Turn the ignition off.

Using a 12–volt test light connected to B+, probe both the Ground circuit.

NOTE: The test light should be illuminated and bright. Compare the brightness to that of a direct connection to the battery at each circuit.

Is the test light illuminated and bright?

Yes >> Replace the Controller Anti-lock Brake Module in accordance with the Service Information.
Perform ABS VERIFICATION TEST - VER 1. (Refer to 5 - BRAKES/ELECTRICAL - DIAGNOSIS AND TESTING)

No >> Repair the Ground circuit(s) for an open circuit or high resistance.
Perform ABS VERIFICATION TEST - VER 1. (Refer to 5 - BRAKES/ELECTRICAL - DIAGNOSIS AND TESTING)

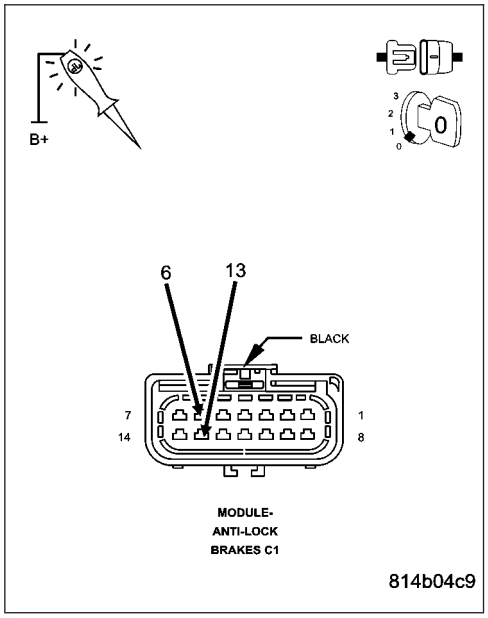

WATCHDOG — 73 (CONTINUED)

5. INTERMITTENT DTC

Turn the ignition off.

Using the wiring diagram/schematic as a guide, inspect the wiring and connectors.

Check connectors - Clean/repair as necessary.

Inspect the vehicle for aftermarket accessories that may exceed the Charging System output.

Refer to any Technical Service Bulletins that may apply.

Were any problems found?

Yes >> Repair as necessary.
Perform ABS VERIFICATION TEST - VER 1. (Refer to 5 - BRAKES/ELECTRICAL - DIAGNOSIS AND TESTING)

No >> Test Complete.

SYSTEM CONTROL MODE TMEOUT — 74

For a complete wiring diagram **Refer to Section 8W**.

- **When Monitored:**
  Ignition on.
- **Set Condition:**
  When the vehcile is in antilock control mode. Vehicle speed is above 4 MPH for 2 seconds. ABS mode is on continuous pressure control mode for an excessive period of time (two minutes).

Possible Causes
INTERMITTENT EXCESSIVE DUMP TIME DTC
WHEEL SPEED WIRING HARNESS AND CONNECTORS
SUSPENSION
TONE WHEEL
WHEEL BEARING
BRAKE SYSTEM MECHANICAL CONDITION
BRAKE SWITCH SENSE CIRCUIT
BRAKE SWITCH
CONTROLLER ANTI-LOCK BRAKE

Diagnostic Test

1. BRAKE SYSTEM MECHANICAL CONDITION

NOTE: This DTC must be active before continuing, clear all DTC(s) and attempt to reset. Riding the brake for an extended period of time while driving can cause this DTC to set. If the DTC does not reset review with the customer driving habits.

Inspect the front and rear brakes for a mechanical condition that would cause any wheel(s) to lock-up during braking.

Inspect the Parking Brake to make sure it releases properly.

Were any problems found?

Yes >> Repair the braking system as necessary in accordance with the Service Information.
Perform ABS VERIFICATION TEST - VER 1. (Refer to 5 - BRAKES/ELECTRICAL - DIAGNOSIS AND TESTING)

No >> Go To 2

---

2. TONE WHEEL

Inspect each Tone Wheel for damage, missing teeth or looseness in accordance with the Service Information.

NOTE: The Tone Wheel Teeth should be perfectly square, not bent or nicked.

Were any problems found?

Yes >> Replace the Tone Wheel as necessary in accordance with the Service Information.
Perform ABS VERIFICATION TEST - VER 1. (Refer to 5 - BRAKES/ELECTRICAL - DIAGNOSIS AND TESTING)

No >> Go To 3

SYSTEM CONTROL MODE TMEOUT — 74 (CONTINUED)

3. WHEEL BEARING

Inspect each wheel bearing for excessive run out or improper clearance in accordance with the Service Information.

Were any problems found?

Yes >> Repair or replace the wheel bearing(s) as necessary in accordance with the Service Information.
Perform ABS VERIFICATION TEST - VER 1. (Refer to 5 - BRAKES/ELECTRICAL - DIAGNOSIS AND TESTING)

No >> Go To 4

---

4. WHEEL SPEED SENSOR WIRING HARNESS AND CONNECTORS

Start the engine.

With the scan tool, monitor the output of each Wheel Speed Sensor.

Raise and properly support the vehicle.

WARNING: BE SURE TO KEEP HANDS, FEET AND CLOTHING CLEAR OF ROTATING COMPONENTS.

Allow the drive wheels to rotate.

Rotate the non-driven wheels by hand.

Wiggle test the Wheel Speed wiring harnesses and connectors.

Look for any excessive variations in sensed wheel speed.

Were any problems found?

Yes >> Repair the wiring harness or connectors as necessary in accordance with the Service Information.
Perform ABS VERIFICATION TEST - VER 1. (Refer to 5 - BRAKES/ELECTRICAL - DIAGNOSIS AND TESTING)

No >> Go To 5

---

5. LOADED WHEEL BEARING/SUSPENSION CONCERN

CAUTION: Make sure that the vehicle has braking capability before performing a road test.

NOTE: Have an assistant drive the vehicle while monitoring the scan tool.

With the scan tool, monitor the output of each Wheel Speed Sensor.

Road test vehicle so wheel bearings and suspension are loaded.

Look for any excessive variations in sensed wheel speed.

Were any problems found?

Yes >> Repair as necessary in accordance with the Service Information.
Perform ABS VERIFICATION TEST - VER 1. (Refer to 5 - BRAKES/ELECTRICAL - DIAGNOSIS AND TESTING)

No >> Go To 6

SYSTEM CONTROL MODE TMEOUT — 74 (CONTINUED)

6. BRAKE SWITCH SENSE CIRCUIT

NOTE: The brake lamps must be operating properly before contining.

NOTE: Riding the brake can cause this fault, a review of the customers driving habits may help in the diagnosing of this DTC.

With the DRBIII®, in the Inputs/Outputs, monitor the Brake Switch state.

Apply and release the brake pedal.

Does the Brake Switch state on the DRBIII® match the actual pedal state?

Yes >> Replace the Controller Antilock Brake in accordance with the Service Information. refer to the symptom *Replacing the Controller Antilock Brake for additional information.

Perform ABS VERIFICATION TEST - VER 1. (Refer to 5 - BRAKES/ELECTRICAL - DIAGNOSIS AND TESTING)

No >> Repair the Brake Switch Sense circuit. If OK, replace the Brake Switch.

Perform ABS VERIFICATION TEST - VER 1. (Refer to 5 - BRAKES/ELECTRICAL - DIAGNOSIS AND TESTING)

SYSTEM OVER/UNDER VOLTAGE - 96

For a complete wiring diagram **Refer to Section 8W**.

- **When Monitored:**
  Ignition on.
- **Set Condition:**
  When CAB voltage drops below 9.5 volts or if the voltage rises above 17 volts. ABS will be disabled for the duration of the out of voltage.

Possible Causes
INTERMITTENT BATTERY VOLTAGE HIGH DTC
POWERTRAIN CHARGING SYSTEM DTCS PRESENT
CONTROLLER ANTI-LOCK BRAKE

Diagnostic Test

1. DTC IS ACTIVE

NOTE: Diagnose and repair any powertrain Charging system DTCs before continuing with this procedure.

NOTE: Ensure the battery is fully charged.

Turn the ignition on.

With the DRBIII®, record and erase DTCs.

Start the engine.

Measure the voltage at both the Fused B+ circuit and Fused Ignition Switch Output circuit at the by back probeing the CAB harness connector.

Is the voltage between 10 and 16.5 volts and the DTC is present?

Yes >> Replace the Controller Anti-lock Brake Module in accordance with the Service Information.
Perform ABS VERIFICATION TEST - VER 1. (Refer to 5 - BRAKES/ELECTRICAL - DIAGNOSIS AND TESTING)

No >> Go To 2

---

2. INTERMITTENT DTC

NOTE: Check the Powertrain Control Module for any charging system DTCs and repair as necessary.

Turn the ignition off.

NOTE: Inspect the CAB fuses, harness connector, and wiring, look for open fuses, corrosion, and/or damage.

Using the wiring diagram/schematic as a guide, inspect the wiring and connectors.

Check connectors - Clean/repair as necessary.

Ensure the charging system is operating properly.

Inspect the vehicle for aftermarket accessories that may exceed the Charging System output.

Refer to any Technical Service Bulletins that may apply.

Were any problems found?

Yes >> Repair as necessary.
Perform ABS VERIFICATION TEST - VER 1. (Refer to 5 - BRAKES/ELECTRICAL - DIAGNOSIS AND TESTING)

No >> Test Complete.

---

*REPLACING THE ANTILOCK BRAKE MODULE

Possible Causes
REPLACING THE ANTI-LOCK BRAKE MODULE

Diagnostic Test

1. REPLACING THE ANTILOCK BRAKE MODULE

NOTE: Note: It may be necessary to call STAR to order a new ABS module.

NOTE: Note: Failure to properly program the ABS module will result in an illuminated or blinking ABS indicator.

Turn the ignition off.

Replace the Anti-lock Brake Module in accordance with the Service Information.

With the scan tool, perform the module configuration procedures as necessary in accordance with the Service Information.

Road test the vehicle above 40 m.p.h. for at least two minutes.

With the scan tool, select View DTCs in the Anti-Lock Brake Module.

Are there any DTCs present?

Yes >> Perform the appropriate diagnostic procedure(s).

No >> Test Complete
Perform ABS VERIFICATION TEST - VER 1. (Refer to 5 - BRAKES/ELECTRICAL - DIAGNOSIS AND TESTING)

APS RELAY CONTROL CIRCUIT HIGH

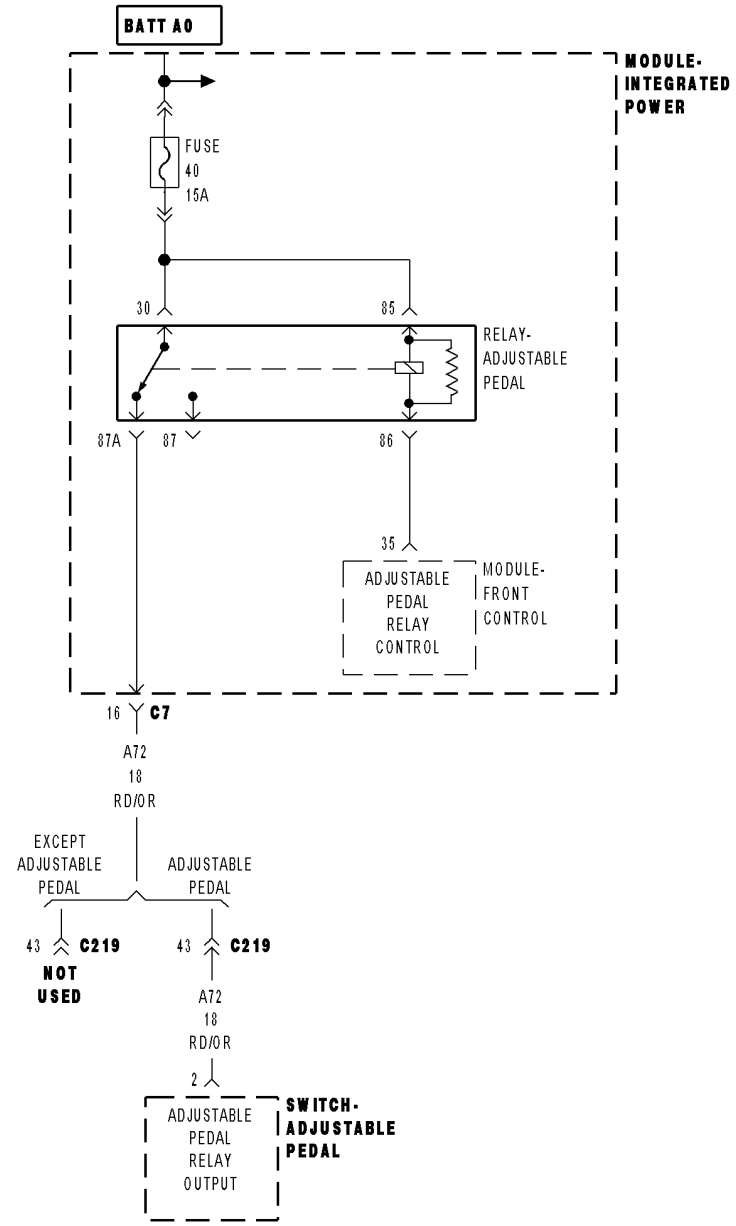

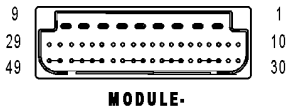

MODULE-
FRONT
CONTROL IPM

814b2cc7

APS RELAY CONTROL CIRCUIT HIGH (CONTINUED)

For a complete wiring diagram **Refer to Section 8W**.

- **When Monitored:**
  Ignition on.
- **Set Condition:**
  When the FCM detects a short to voltage on the Adjustable Pedals Relay Control circuit.

Possible Causes
INTERMITTENT DTC
ADJUSTABLE PEDAL RELAY
ADJUSTABLE PEDAL CONTROL CIRCUIT SHORTED TO VOLTAGE
ANTI-LOCK BRAKE MODULE

Diagnostic Test

1. VERIFY DTC

With the DRBIII®, record and erase DTCs.
Turn the ignition on.
With the DRBIII®, read DTCs.

Does the DTC reset?

Yes >> Go To 2

No >> Go To 4

---

2. ADJUSTABLE PEDALS RELAY OPERATION

Turn the ignition off.
Substitute the Adjustable Pedals Relay with a known good one.
Turn the ignition on.
Attempt to operate the Adjustable Pedals.
With the DRBIII®, read DTC.

Does the DTC reset?

Yes >> Go To 3

No >> Replace the Adjustable Pedals Relay.
Perform APS VERIFICATION TEST - VER 1. (Refer to 5 - BRAKES/ELECTRICAL - DIAGNOSIS AND TESTING)

APS RELAY CONTROL CIRCUIT HIGH (CONTINUED)

3. ADJUSTABLE PEDALS RELAY CONTROL CIRCUIT SHORTED TO VOLTAGE

Turn the ignition off.

Remove the FCM from the IPM.

Remove the Adjustable Pedals Relay.

Turn the ignition on.

Measure the voltage on the Adjustable Pedals Relay Control circuit in the Adjustable Pedals Relay Control circuit terminal.

Does the voltmeter indicate voltage present?

Yes >> Repair the short to voltage in the Adjustable Pedals Relay Control circuit.
Perform APS VERIFICATION TEST - VER 1. (Refer to 5 - BRAKES/ELECTRICAL - DIAGNOSIS AND TESTING)

No >> Replace the FCM in accordance with the Service Information
Perform APS VERIFICATION TEST - VER 1. (Refer to 5 - BRAKES/ELECTRICAL - DIAGNOSIS AND TESTING)

---

4. INTERMITTENT DTC

Turn the ignition off.

Using the wiring diagram/schematic as a guide, inspect the wiring and connectors.

Check connectors - Clean/repair as necessary.

Refer to any Technical Service Bulletins that may apply.

Were any problems found?

Yes >> Repair as necessary.
Perform APS VERIFICATION TEST - VER 1. (Refer to 5 - BRAKES/ELECTRICAL - DIAGNOSIS AND TESTING)

No >> Test Complete.

APS RELAY CONTROL CIRCUIT LOW

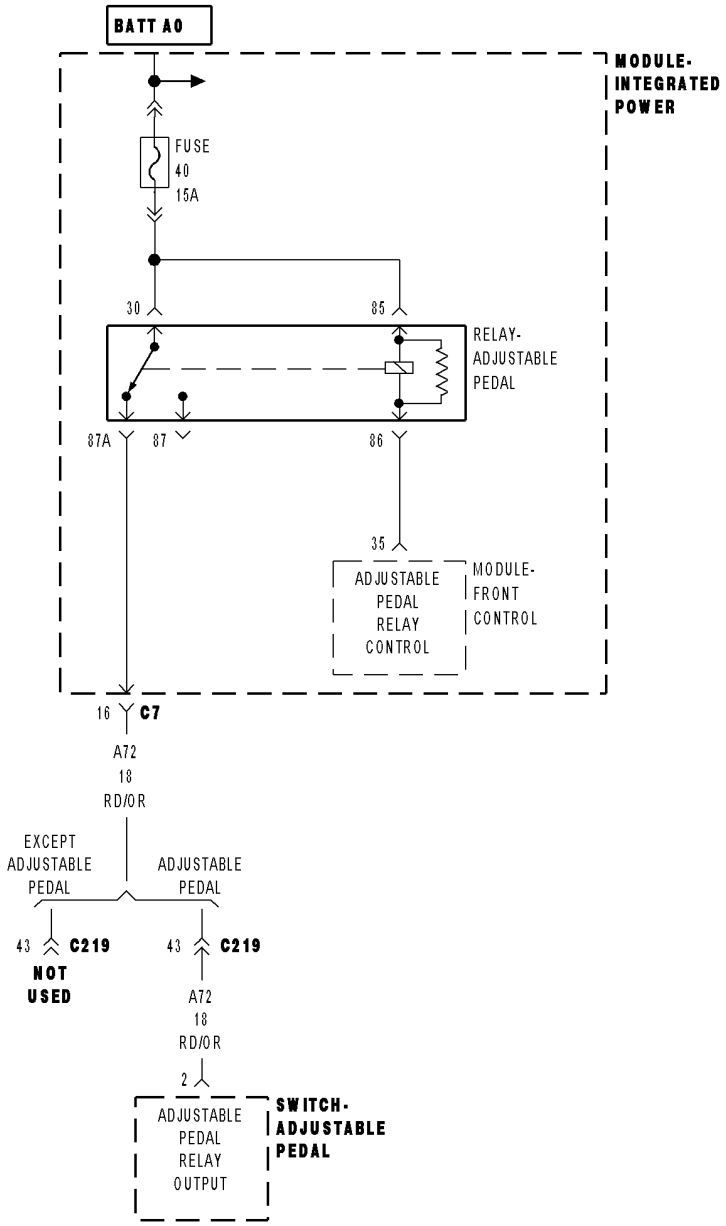

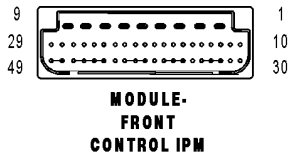

814b2cc7

APS RELAY CONTROL CIRCUIT LOW (CONTINUED)
For a complete wiring diagram **Refer to Section 8W**.

- **When Monitored:**
  Ignition on.
- **Set Condition:**
  When the FCM detects a short to ground on the Adjustable Pedals Relay Control circuit.

Possible Causes
INTERMITTENT DTC
ADJUSTABLE PEDAL RELAY
ADJUSTABLE PEDAL CONTROL CIRCUIT SHORTED TO GROUND
ANTI-LOCK BRAKE MODULE

Diagnostic Test

1. VERIFY DTC

With the DRBIII®, record and erase DTCs.
Turn the ignition on.
With the DRBIII®, read DTCs.

Does the DTC reset?

Yes >> Go To 2

No >> Go To 4

---

2. ADJUSTABLE PEDALS RELAY OPERATION

Turn the ignition off.
Substitute the Adjustable Pedals Relay with a known good one.
Turn the ignition on.
Attempt to operate the Adjustable Pedals.
With the DRBIII®, read DTC.

Does the DTC reset?

Yes >> Go To 3

No >> Replace the Adjustable Pedals Relay.
Perform APS VERIFICATION TEST - VER 1. (Refer to 5 - BRAKES/ELECTRICAL - DIAGNOSIS AND TESTING)

APS RELAY CONTROL CIRCUIT LOW (CONTINUED)

3. ADJUSTABLE PEDALS RELAY CONTROL CIRCUIT SHORTED TO GROUND

Turn the ignition off.

Remove the FCM from the IPM.

Remove the Adjustable Pedals Relay.

Turn the ignition on.

Measure the resistance between ground and the Adjustable Pedals Relay Control circuit in the Adjustable Pedals Relay Control circuit terminal.

Is the resistance below 100 ohms?

Yes >> Repair the short to ground in the Adjustable Pedals Relay Control circuit.
Perform APS VERIFICATION TEST - VER 1. (Refer to 5 - BRAKES/ELECTRICAL - DIAGNOSIS AND TESTING)

No >> Replace the FCM in accordance with the Service Information
Perform APS VERIFICATION TEST - VER 1. (Refer to 5 - BRAKES/ELECTRICAL - DIAGNOSIS AND TESTING)

---

4. INTERMITTENT DTC

Turn the ignition off.

Using the wiring diagram/schematic as a guide, inspect the wiring and connectors.

Check connectors - Clean/repair as necessary.

Refer to any Technical Service Bulletins that may apply.

Were any problems found?

Yes >> Repair as necessary.
Perform APS VERIFICATION TEST - VER 1. (Refer to 5 - BRAKES/ELECTRICAL - DIAGNOSIS AND TESTING)

No >> Test Complete.

APS RELAY CONTROL CIRCUIT OPEN

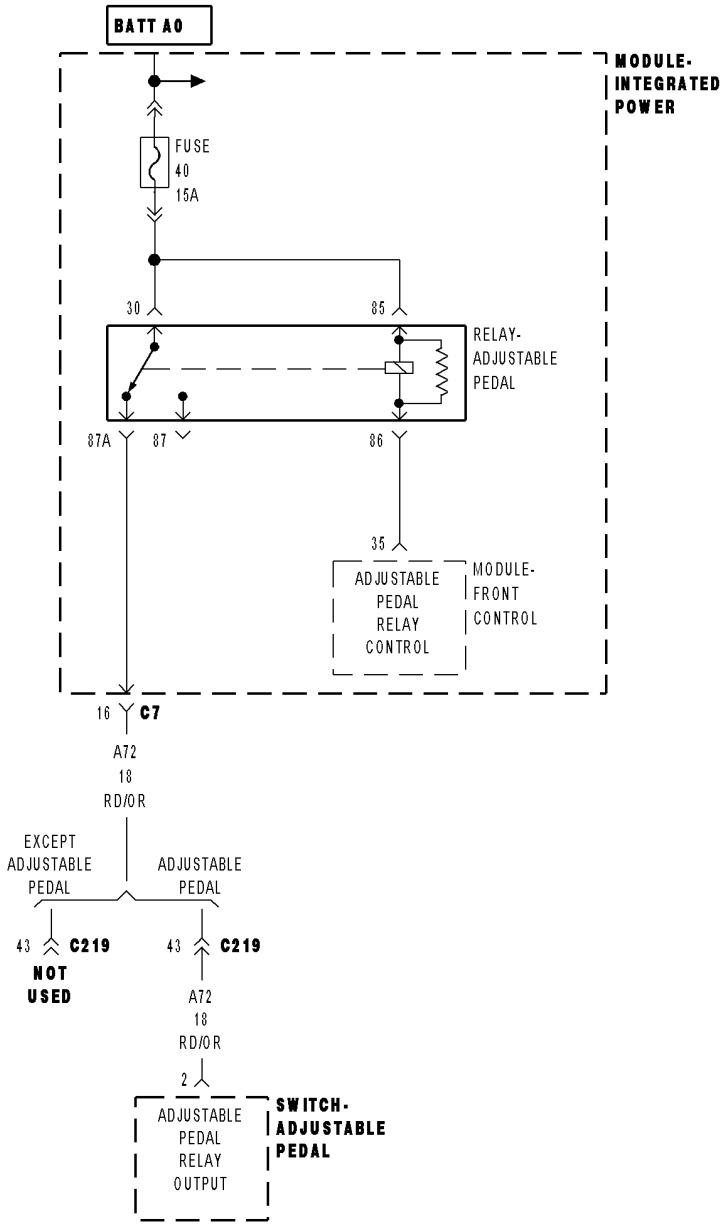

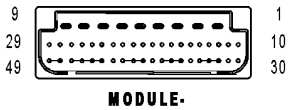

MODULE-
FRONT
CONTROL IPM

814b2cc7

APS RELAY CONTROL CIRCUIT OPEN (CONTINUED)

For a complete wiring diagram **Refer to Section 8W**.

- **When Monitored:**
  Ignition on.
- **Set Condition:**
  When the FCM detects an open on the Adjustable Pedals Relay Control circuit.

Possible Causes
INTERMITTENT DTC
ADJUSTABLE PEDAL RELAY
ADJUSTABLE PEDAL CONTROL CIRCUIT OPEN
ANTI-LOCK BRAKE MODULE

Diagnostic Test

1. VERIFY DTC

With the DRBIII®, record and erase DTCs.
Turn the ignition on.
With the DRBIII®, read DTCs.

Does the DTC reset?

Yes >> Go To 2

No >> Go To 4

---

2. ADJUSTABLE PEDALS RELAY OPERATION

Turn the ignition off.
Substitute the Adjustable Pedals Relay with a known good one.
Turn the ignition on.
Attempt to operate the Adjustable Pedals.
With the DRBIII®, read DTC.

Does the DTC reset?

Yes >> Go To 3

No >> Replace the Adjustable Pedals Relay.
Perform APS VERIFICATION TEST - VER 1. (Refer to 5 - BRAKES/ELECTRICAL - DIAGNOSIS AND TESTING)

APS RELAY CONTROL CIRCUIT OPEN (CONTINUED)

3. ADJUSTABLE PEDALS RELAY CONTROL CIRCUIT OPEN

Turn the ignition off.

Remove the FCM from the IPM.

Remove the Adjustable Pedals Relay.

Turn the ignition on.

Measure the resistance of the Adjustable Pedals Relay Control circuit between the Adjustable Pedals Relay Control circuit terminal and the FCM connector.

Is the resistance below 100 ohms?

Yes >> Repair the short to ground in the Adjustable Pedals Relay Control circuit.
Perform APS VERIFICATION TEST - VER 1. (Refer to 5 - BRAKES/ELECTRICAL - DIAGNOSIS AND TESTING)

No >> Replace the FCM in accordance with the Service Information
Perform APS VERIFICATION TEST - VER 1. (Refer to 5 - BRAKES/ELECTRICAL - DIAGNOSIS AND TESTING)

---

4. INTERMITTENT DTC

Turn the ignition off.

Using the wiring diagram/schematic as a guide, inspect the wiring and connectors.

Check connectors - Clean/repair as necessary.

Refer to any Technical Service Bulletins that may apply.

Were any problems found?

Yes >> Repair as necessary.
Perform APS VERIFICATION TEST - VER 1. (Refer to 5 - BRAKES/ELECTRICAL - DIAGNOSIS AND TESTING)

No >> Test Complete.

BRAKES - BASE - SERVICE INFORMATION

TABLE OF CONTENTS

page

BRAKES - BASE - SERVICE INFORMATION
DIAGNOSIS AND TESTING
BASE BRAKE SYSTEM 201
STANDARD PROCEDURE
MANUAL BLEEDING 205
PRESSURE BLEEDING 205
SPECIAL TOOLS
BASE BRAKES 206
SWITCH-ADJUSTABLE PEDALS
REMOVAL 207
INSTALLATION 207
MOTOR-ADJUSTABLE PEDALS
DESCRIPTION 208
REMOVAL 208
INSTALLATION 209
HYDRAULIC/MECHANICAL
SPECIFICATIONS
SPECIFICATIONS - TORQUE CHART 210
BASE BRAKE 212
LINES-BRAKE
STANDARD PROCEDURE
DOUBLE INVERTED FLARING 214
ISO FLARING 214
REMOVAL
REAR BRAKE HOSE 215
REAR TUBE / HOSE ASSEMBLY 216
FRONT HOSE 216
INSTALLATION
REAR BRAKE HOSE 217
REAR TUBE / HOSE ASSEMBLY 218
FRONT BRAKE HOSE 218
PADS - BRAKE
REMOVAL
FRONT 219
REAR 221
INSTALLATION
FRONT 224
REAR 226
CALIPERS-DISC BRAKE
DESCRIPTION
LIGHT DUTY (LD) CALIPERS 228
HEAVY DUTY (HD) CALIPERS 228
FRONT CALIPERS – SRT-10 229
OPERATION 229
REMOVAL
FRONT 230
FRONT - SRT-10 231
REAR 232
REAR - SRT-10 232
DISASSEMBLY
DISC BRAKE CALIPER 233
DISC BRAKE CALIPER - FRONT - SRT-10 . . 235
INSPECTION 239
ASSEMBLY
DISC BRAKE CALIPER 240
DISC BRAKE CALIPER - FRONT - SRT-10 . . 241
INSTALLATION
FRONT 242
FRONT - SRT-10 243
REAR 244
REAR - SRT-10 244
ADAPTER-DISC BRAKE CALIPER
REMOVAL
FRONT 245
REAR 245
INSTALLATION
FRONT 246
REAR 247
MOUNT-DISC BRAKE CALIPER ADAPTER
REMOVAL - REAR 247
INSTALLATION 248
FLUID
DIAGNOSIS AND TESTING
BRAKE FLUID CONTAMINATION 248
STANDARD PROCEDURE
BRAKE FLUID LEVEL 249
SPECIFICATIONS
BRAKE FLUID 249
RESERVOIR-FLUID
REMOVAL 250
INSTALLATION 250
BRAKE JUNCTION BLOCK
REMOVAL 251
INSTALLATION 251
MASTER CYLINDER
DESCRIPTION 251
OPERATION 252
DIAGNOSIS AND TESTING
MASTER CYLINDER/POWER BOOSTER . . . 252
STANDARD PROCEDURE
MASTER CYLINDER BLEEDING 253
REMOVAL
ALL EXCEPT HYDROBOOST 254
HYDROBOOST 254
INSTALLATION
ALL EXCEPT HYDROBOOST 254
HYDROBOOST 255
PEDAL
DESCRIPTION 256
OPERATION 256
REMOVAL 256
INSTALLATION 257

BOOSTER-POWER BRAKE
DESCRIPTION 258
OPERATION 258
REMOVAL 259
INSTALLATION 259
BOOSTER-HYDRO-BOOST BRAKE
DIAGNOSIS AND TESTING
HYDRAULIC BOOSTER 259
STANDARD PROCEDURE
BLEEDING 261
REMOVAL 261
INSTALLATION 262
ROTORS
DIAGNOSIS AND TESTING
DISC BRAKE ROTOR 263
REMOVAL
FRONT 264
REAR 265
REAR DUAL WHEELS 265
INSTALLATION
FRONT 266
REAR 267
REAR DUAL WHEELS 267
PLATE-SUPPORT
REMOVAL 268
INSTALLATION 268
DUCTS-BRAKE COOLING - SRT-10
REMOVAL 269
INSTALLATION 271
PARKING BRAKE
DESCRIPTION 272
OPERATION 272
CABLES
REMOVAL
FRONT PARKING BRAKE CABLE 273
REAR PARK BRAKE CABLE 274
RIGHT REAR CABLE 274
LEFT REAR CABLE 275
INSTALLATION
FRONT PARKING BRAKE CABLE 276
REAR PARK BRAKE CABLE 276
RIGHT REAR CABLE 277
LEFT REAR CABLE 277
SHOES
REMOVAL 278
CLEANING - REAR DRUM IN HAT BRAKE . . . 279
INSPECTION - REAR DRUM IN HAT BRAKE . . 279
INSTALLATION 279
ADJUSTMENTS
PARKING BRAKE SHOES 280
WITH ADJUSTING TOOL 282
PEDAL
REMOVAL 282
INSTALLATION 283
TENSIONER-CABLE
ADJUSTMENTS
CABLE TENSIONER 284
HANDLE-RELEASE
REMOVAL 285
INSTALLATION 286

BRAKES - BASE - SERVICE INFORMATION

DIAGNOSIS AND TESTING

BASE BRAKE SYSTEM

Base brake components consist of the brake pads, calipers, brake drum in hat rotor in the rear, rotors, brake lines, master cylinder, booster, and parking brake components.

Brake diagnosis involves determining if the problem is related to a mechanical, hydraulic, or vacuum operated component.

The first diagnosis step is the preliminary check.

PRELIMINARY BRAKE CHECK

1. Check condition of tires and wheels. Damaged wheels and worn, damaged, or underinflated tires can cause pull, shudder, vibration, and a condition similar to grab.
2. If complaint was based on noise when braking, check suspension components. Jounce front and rear of vehicle and listen for noise that might be caused by loose, worn or damaged suspension or steering components.
3. Inspect brake fluid level and condition. Note that the brake reservoir fluid level will decrease in proportion to normal lining wear. **Also note that brake fluid tends to darken over time. This is normal and should not be mistaken for contamination.**
   a. If fluid level is abnormally low, look for evidence of leaks at calipers, wheel cylinders, brake lines, and master cylinder.

b. If fluid appears contaminated, drain out a sample to examine. System will have to be flushed if fluid is separated into layers, or contains a substance other than brake fluid. The system seals and cups will also have to be replaced after flushing. Use clean brake fluid to flush the system.

4. Check parking brake operation. Verify free movement and full release of cables and pedal. Also note if vehicle was being operated with parking brake partially applied.
5. Check brake pedal operation. Verify that pedal does not bind and has adequate free play. If pedal lacks free play, check pedal and power booster for being loose or for bind condition. Do not road test until condition is corrected.
6. Check booster vacuum check valve and hose.
7. If components checked appear OK, road test the vehicle.

ROAD TESTING

1. If complaint involved low brake pedal, pump pedal and note if it comes back up to normal height.
2. Check brake pedal response with transmission in Neutral and engine running. Pedal should remain firm under constant foot pressure.
3. During road test, make normal and firm brake stops in 25-40 mph range. Note faulty brake operation such as low pedal, hard pedal, fade, pedal pulsation, pull, grab, drag, noise, etc.
4. Attempt to stop the vehicle with the parking brake only and note grab, drag, noise, etc.

PEDAL FALLS AWAY

A brake pedal that falls away under steady foot pressure is generally the result of a system leak or fluid contamination. The leak point could be at a brake line, fitting, hose, or caliper/wheel cylinder. If leakage is severe, fluid will be evident at or around the leaking component.

Internal leakage (seal by-pass) in the master cylinder caused by worn or damaged piston cups, may also be the problem cause.

An internal leak in the ABS or RWAL system may also be the problem with no physical evidence.

LOW PEDAL

If a low pedal is experienced, pump the pedal several times. If the pedal comes back up worn linings, rotors, drums, or rear brakes out of adjustment are the most likely causes. The proper course of action is to inspect and replace all worn component and make the proper adjustments.

SPONGY PEDAL

A spongy pedal is most often caused by air in the system. However, thin brake drums or substandard brake lines and hoses can also cause a spongy pedal. The proper course of action is to bleed the system, and replace thin drums and substandard quality brake hoses if suspected.

HARD PEDAL OR HIGH PEDAL EFFORT

A hard pedal or high pedal effort may be due to lining that is water soaked, contaminated, glazed, or badly worn. The power booster or check valve or a vacuum hose could also be faulty.

PEDAL PULSATION

Pedal pulsation is caused by components that are loose, or beyond tolerance limits.

The primary cause of pulsation are disc brake rotors with excessive lateral runout or thickness variation, or out of round brake drums. Other causes are loose wheel bearings or calipers and worn, damaged tires.

NOTE: Some pedal pulsation may be felt during ABS activation.

BRAKE DRAG

Brake drag occurs when the lining is in constant contact with the rotor or drum. Drag can occur at one wheel, all wheels, fronts only, or rears only.

Drag is a product of incomplete brake shoe release. Drag can be minor or severe enough to overheat the linings, rotors and drums.

Minor drag will usually cause slight surface charring of the lining. It can also generate hard spots in rotors and drums from the overheat-cool down process. In most cases, the rotors, drums, wheels and tires are quite warm to the touch after the vehicle is stopped.

Severe drag can char the brake lining all the way through. It can also distort and score rotors and drums to the point of replacement. The wheels, tires and brake components will be extremely hot. In severe cases, the lining may generate smoke as it chars from overheating.

Common causes of brake drag are:

- Seized or improperly adjusted parking brake cables.
- Loose/worn wheel bearing.
- Seized caliper or wheel cylinder piston.
- Caliper binding on corroded bushings or rusted slide surfaces.
- Loose caliper mounting.
- Drum brake shoes binding on worn/damaged support plates.
- Mis-assembled components.
- Long booster output rod.

If brake drag occurs at all wheels, the problem may be related to a blocked master cylinder return port, or faulty power booster (binds-does not release).

BRAKE FADE

Brake fade is usually a product of overheating caused by brake drag. However, brake overheating and resulting fade can also be caused by riding the brake pedal, making repeated high deceleration stops in a short time span, or constant braking on steep mountain roads. Refer to the Brake Drag information in this section for causes.

BRAKE PULL

Front brake pull condition could result from:

- Contaminated lining in one caliper
- Seized caliper piston
- Binding caliper
- Loose caliper
- Rusty caliper slide surfaces
- Improper brake pads
- Damaged rotor

A worn, damaged wheel bearing or suspension component are further causes of pull. A damaged front tire (bruised, ply separation) can also cause pull.

A common and frequently misdiagnosed pull condition is where direction of pull changes after a few stops. The cause is a combination of brake drag followed by fade at one of the brake units.

As the dragging brake overheats, efficiency is so reduced that fade occurs. Since the opposite brake unit is still functioning normally, its braking effect is magnified. This causes pull to switch direction in favor of the normally functioning brake unit.

An additional point when diagnosing a change in pull condition concerns brake cool down. Remember that pull will return to the original direction, if the dragging brake unit is allowed to cool down (and is not seriously damaged).

REAR BRAKE GRAB OR PULL

Rear grab or pull is usually caused by improperly adjusted or seized parking brake cables, contaminated lining, bent or binding shoes and support plates, or improperly assembled components. This is particularly true when only one rear wheel is involved. However, when both rear wheels are affected, the master cylinder or proportioning valve could be at fault.

BRAKES DO NOT HOLD AFTER DRIVING THROUGH DEEP WATER PUDDLES

This condition is generally caused by water soaked lining. If the lining is only wet, it can be dried by driving with the brakes very lightly applied for a mile or two. However, if the lining is both soaked and dirt contaminated, cleaning and/or replacement will be necessary.

BRAKE LINING CONTAMINATION

Brake lining contamination is mostly a product of leaking calipers or worn seals, driving through deep water puddles, or lining that has become covered with grease and grit during repair. Contaminated lining should be replaced to avoid further brake problems.

WHEEL AND TIRE PROBLEMS

Some conditions attributed to brake components may actually be caused by a wheel or tire problem.

A damaged wheel can cause shudder, vibration and pull. A worn or damaged tire can also cause pull.

Severely worn tires with very little tread left can produce a grab-like condition as the tire loses and recovers traction. Flat-spotted tires can cause vibration and generate shudder during brake operation. A tire with internal damage such as a severe bruise, cut, or ply separation can cause pull and vibration.

BRAKE NOISES

Some brake noise is common with rear drum brakes and on some disc brakes during the first few stops after a vehicle has been parked overnight or stored. This is primarily due to the formation of trace corrosion (light rust) on metal surfaces. This light corrosion is typically cleared from the metal surfaces after a few brake applications causing the noise to subside.

BRAKE SQUEAK/SQUEAL

Brake squeak or squeal may be due to linings that are wet or contaminated with brake fluid, grease, or oil. Glazed linings and rotors with hard spots can also contribute to squeak. Dirt and foreign material embedded in the brake lining will also cause squeak/squeal.

A very loud squeak or squeal is frequently a sign of severely worn brake lining. If the lining has worn through to the brake pads in spots, metal-to-metal contact occurs. If the condition is allowed to continue, rotors can become so scored that replacement is necessary.

BRAKE CHATTER

Brake chatter is usually caused by loose or worn components, or glazed/burnt lining. Rotors with hard spots can also contribute to chatter. Additional causes of chatter are out-of-tolerance rotors, brake lining not securely attached to the shoes, loose wheel bearings and contaminated brake lining.

THUMP/CLUNK NOISE

Thumping or clunk noises during braking are frequently **not** caused by brake components. In many cases, such noises are caused by loose or damaged steering, suspension, or engine components. However, calipers that bind on the slide surfaces can generate a thump or clunk noise.

STANDARD PROCEDURE

MANUAL BLEEDING

Use Mopar brake fluid, or an equivalent quality fluid meeting SAE J1703-F and DOT 3 standards only. Use fresh, clean fluid from a sealed container at all times.

1. Remove reservoir filler caps and fill reservoir.
2. If calipers were overhauled, open all caliper bleed screws. Then close each bleed screw as fluid starts to drip from it. Top off master cylinder reservoir once more before proceeding.
3. Attach one end of bleed hose (1) to bleed screw and insert opposite end in glass container (2) partially filled with brake fluid. Be sure end of bleed hose is immersed in fluid.

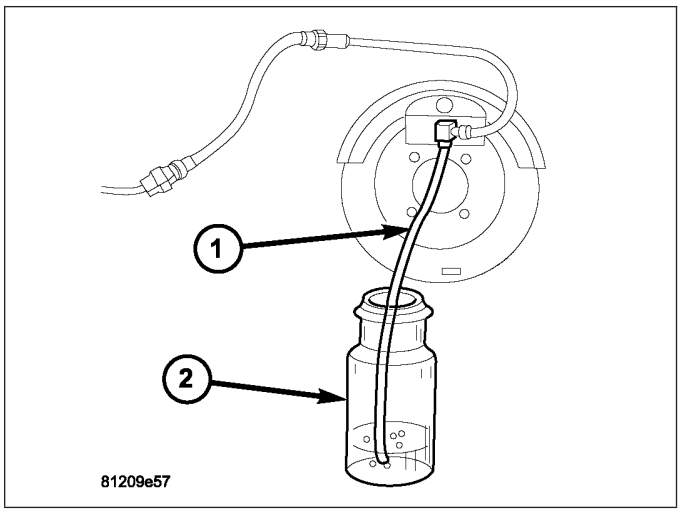

NOTE: Bleed procedure should be in this order (1) Right rear (2) Left rear (3) Right front (4) Left front.

4. Open up bleeder, then have a helper press down the brake pedal. Once the pedal is down close the bleeder. Repeat bleeding until fluid stream is clear and free of bubbles. Then move to the next wheel.
5. Before moving the vehicle verify the pedal is firm and not mushy.
6. Top off the brake fluid and install the reservoir cap.

PRESSURE BLEEDING

Use Mopar brake fluid, or an equivalent quality fluid meeting SAE J1703-F and DOT 3 standards only. Use fresh, clean fluid from a sealed container at all times.

Follow the manufacturers instructions carefully when using pressure equipment. Do not exceed the tank manufacturers pressure recommendations. Generally, a tank pressure of 15-20 psi is sufficient for bleeding.

Fill the bleeder tank with recommended fluid and purge air from the tank lines before bleeding.

Do not pressure bleed without a proper master cylinder adapter. The wrong adapter can lead to leakage, or drawing air back into the system.

SPECIAL TOOLS

BASE BRAKES

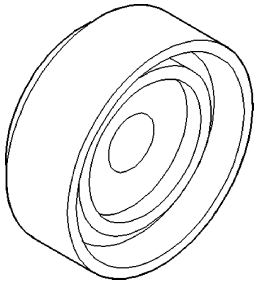

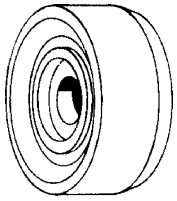

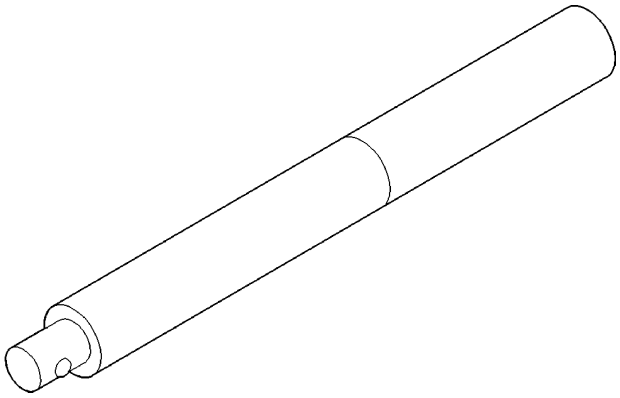

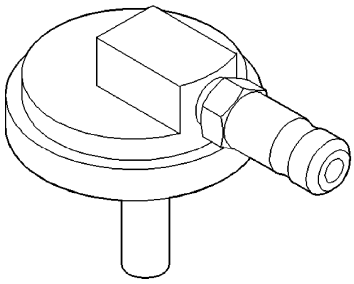

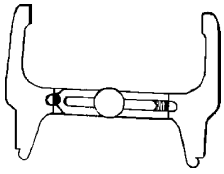

SWITCH-ADJUSTABLE PEDALS

REMOVAL

1. Remove the lower drivers side bezel (4) (Refer to 23 - BODY/INSTRUMENT PANEL/INSTRUMENT PANEL DR SIDE BEZEL - REMOVAL).
2. Disconnect the electrical connector (3) from the adjustable pedal switch (2).
3. Remove the switch (2) from the lower drivers side bezel (4) by squeezing the retaining clips together and pushing the switch outwards.

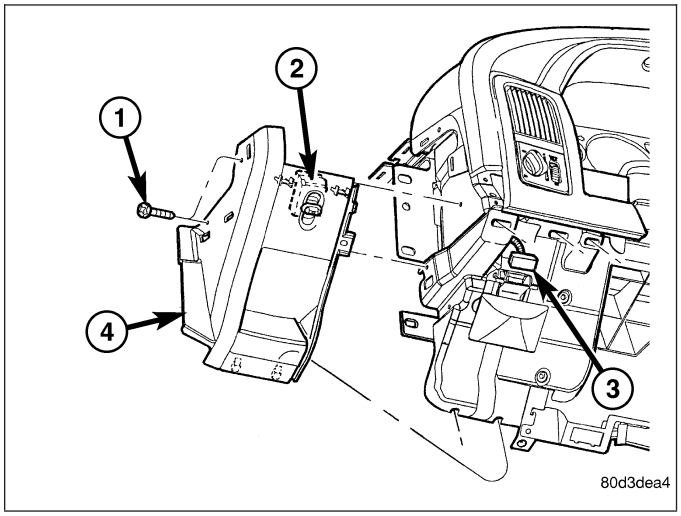

INSTALLATION

1. Install the switch (2) to the lower drivers side bezel (4) by pushing the switch inwards seating the retaining clips to the lower drivers side bezel (4).
2. Reconnect the electrical connector (3) to the adjustable pedal switch (2).
3. Install the lower drivers side bezel (4) (Refer to 23 - BODY/INSTRUMENT PANEL/INSTRUMENT PANEL DR SIDE BEZEL - INSTALLATION).

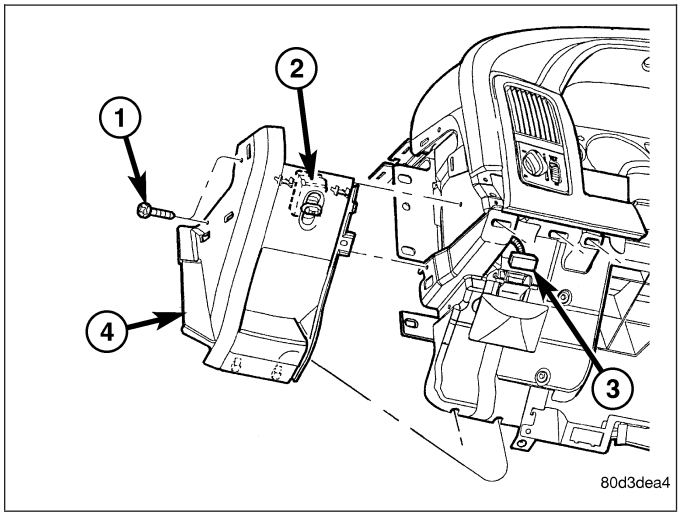

MOTOR-ADJUSTABLE PEDALS

DESCRIPTION

The Adjustable Pedals System (APS) is designed to enable the fore and aft repositioning of the brake and accelerator pedals. This results in improved ergonomics in relation to the steering wheel for taller and shorter drivers. Being able to adjust the pedal positions also allows the driver to set steering wheel tilt and seat position to the most comfortable position. The position of the brake and accelerator pedals can be adjusted without compromising safety or comfort in actuating the pedals.

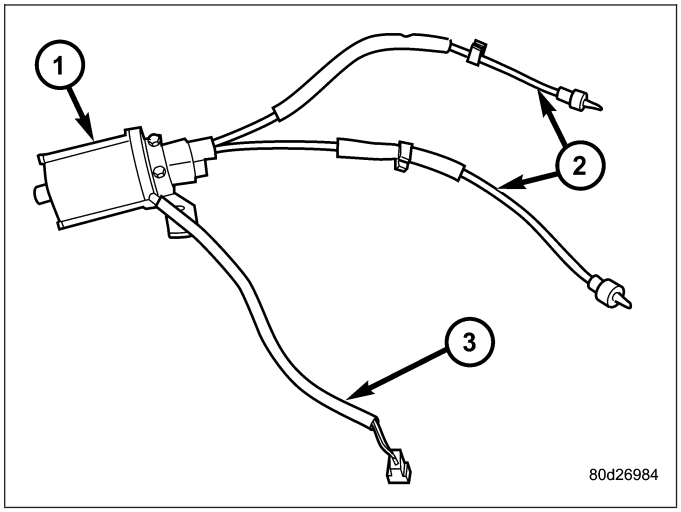

Change of pedal position is accomplished by means of a motor driven screw. Operating the adjustable pedal switch activates the pedal drive motor (1). The pedal drive motor turns a screw that changes the position of the brake and accelerator pedals. The pedal can be moved rearward (closer to the driver) or forward (away from driver). The brake pedal is moved on its drive screw to a position where the driver feels most comfortable.

The accelerator pedal is moved at the same time and the same distance as the brake pedal.

Neither the pedal drive motor (1) nor drive mechanism are subject to the mechanical stress of brake or accelerator application.

- SYSTEM FEATURES:
  - Range of Adjustment: The pedals may be adjusted up to 3 in. (75 mm)
  - Pedal Adjustment Speed: 0.5 in./sec (12.5 mm/sec)
  - Pedal Adjustment Inhibitors: Pedal adjustment is inhibited when the vehicle is in reverse or when cruise control is activated.

REMOVAL

1. Disconnect the negative battery cable.
2. Remove the kneeblocker (Refer to 23 - BODY/INSTRUMENT PANEL/STEERING COLUMN OPENING COVER - REMOVAL).
3. Remove the brake light switch and discard (Refer to 8 - ELECTRICAL/LAMPS/LIGHTING - EXTERIOR/BRAKE LAMP SWITCH - REMOVAL).
4. Disconnect the adjustable pedal cables from the brake and accelerator pedals **Also clutch pedal if equipped with a manual transmission**.
5. Disconnect the electrical connector.
6. Unclip the cable fasteners to the support.
7. Remove the one mounting bolt (2) for the adjustable pedal motor (1).
8. Remove the adjustable pedal motor (1) with the cables.

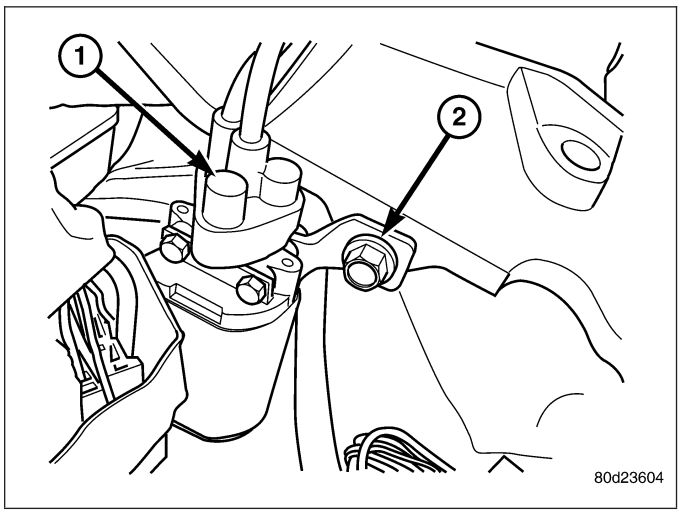

NOTE: Adjustable pedal cables are not serviceable. If they need service the adjustable pedal motor with the cables must be installed.

INSTALLATION

NOTE: Adjustable pedal cables are not serviceable. If they need service the adjustable pedal motor with the cables must be installed.

1. Install the adjustable pedal motor (1) with the cables.
2. Install the one mounting bolt (2) for the adjustable pedal motor (1).

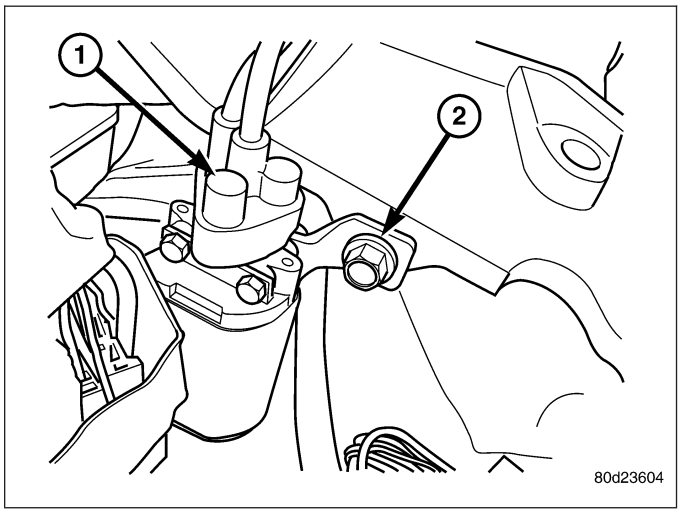

3. Clip the cable fasteners to the support.
4. Reconnect the electrical connector.
5. Reconnect the adjustable pedal cables to the brake and accelerator pedals **Also clutch pedal if equipped with a manual transmission**.
6. Install the new brake light switch (Refer to 8 - ELECTRICAL/LAMPS/LIGHTING - EXTERIOR/BRAKE LAMP SWITCH - REMOVAL).
7. Install the kneeblocker (Refer to 23 - BODY/INSTRUMENT PANEL/STEERING COLUMN OPENING COVER - INSTALLATION).
8. Reconnect the negative battery cable.
9. Check for proper operation of the pedals.

HYDRAULIC/MECHANICAL

SPECIFICATIONS

SPECIFICATIONS - TORQUE CHART

TORQUE SPECIFICATIONS

DESCRIPTION	N·m	Ft. Lbs.	In. Lbs.
Brake Booster Mounting Nuts	28	21	250
Master Cylinder Mounting Nuts	18	—	160
Caliper Bleed Screws	19	14	168
Caliper Mounting Pins Front	32	24	—
Caliper Mounting Pins Rear	30	22	—
Caliper Adapter Mounting Bolts Front LD	176	130	—
Caliper Adapter Mounting Bolts Front HD & SRT-10	339	250	—
Caliper Adapter Mounting Bolts Rear LD	135	100	—
Caliper Adapter Mounting Bolts Rear HD & SRT-10	197	145	—
Junction Block Bolts To Frame	10	7.5	—
Brake Pedal Assembly Bracket Nuts	28	21	—
Support Plate Mounting Bolts/Nuts LD	64	47	—
Support Plate Mounting Bolts/Nuts SRT-10 & HD	203	150	—
Brake Line Fittings Master Cylinder	19	14	170

DESCRIPTION	N·m	Ft. Lbs.	In. Lbs.
Brake Line Fittings Junction Block	19	14	170
Caliper Brake Line Banjo Bolt Front	27	20	245
Caliper Brake Line Banjo Bolt Rear	27	20	245
Brake Hose Front Bolts To Frame	10	7.5	—
Brake Hose Front Fitting	19	14	250
Brake Hose Rear Fitting	19	14	250
Parking Brake Pedal Assembly	19	14	250
Rotor to Hub Bolt Rear HD DRW	128	95	—
Extension to Rotor Nut HD DRW Front	130	96	—
Hub/Bearing Bolts LD & SRT-10	163	120	—
Hub/Bearing Bolts Front 4X2 HD	176	130	—

BASE BRAKE

SPECIFICATIONS

DESCRIPTION	SPECIFICATION
Front Disc Brake Caliper Type	Dual Piston Sliding
Rear Disc Brake Caliper Type LD	Single Piston Sliding
Rear Disc Brake Caliper Type SRT-10	Dual Piston Sliding
Rear Disc Brake Caliper Type HD	Dual Piston Sliding
Front Disc Brake Caliper LD	2X54 mm (2.12 in.)
Front Disc Brake Caliper SRT-10	4X57 mm (2.24 in.)
Front Disc Brake Caliper HD	2X56 mm (2.20 in.)
Front Disc Brake Rotor LD	336×28 mm (13.2×1.1 in.)
Front Disc Brake Rotor SRT-10	380×35.5 mm (14.96×1.397 in.)
Front Disc Brake Rotor HD	353×35.5 mm (13.89×1.397 in.)
Front/Rear Disc Brake Rotor Max. Runout LD	0.050 mm (0.002 in.)
Front Disc Brake Rotor Max. Runout SRT-10	0.050 mm (0.002 in.)
Rear Disc Brake Rotor Max. Runout SRT-10	0.050 mm (0.002 in.)
Front/Rear Disc Brake Rotor Max. Runout HD SRW	0.131 mm (0.005 in.)
Rear Disc Brake Rotor Max. Runout HD DRW	0.328 mm (0.012 in.)
Front/Rear Disc Brake Rotor Max. Thickness Variation LD	0.012 mm (0.0005 in.)
Front Disc Brake Rotor Max. Thickness Variation SRT-10	0.012 mm (0.0005 in.)

DESCRIPTION	SPECIFICATION
Rear Disc Brake Rotor Max. Thickness Variation SRT-10	0.012 mm (0.0005 in.)
Front/Rear Disc Brake Rotor Max. Thickness Variation HD	0.013 mm (0.0005 in.) Loose Rotor
Minimum Front Rotor Thickness LD	26.4 mm (1.039 in.)
Minimum Front Rotor Thickness SRT-10	33.9 mm (1.344 in.)
Minimum Front Rotor Thickness HD	34 mm (1.33 in.)
Mininium Rear Rotor Thickness LD	20.4 mm (.803 in)
Mininium Rear Rotor Thickness HD	28.39 mm (1.117 in)
Mininium Rear Rotor Thickness SRT-10	28.4 mm (1.118 in.)
Rear Disc Brake Caliper LD	1x54 mm (2.12 in)
Rear Disc Brake Caliper SRT-10	2x36 mm (1.42 in)
Rear Disc Brake Caliper HD SRW	2x45 mm (1.77 in)
Rear Disc Brake Caliper HD DRW	2x51 mm (2.00 in)
Rear Disc Brake Rotor LD	350x22 mm (13.77 X .86 in)
Rear Disc Brake Rotor SRT-10	350x22 mm (13.77 X .86 in)
Rear Disc Brake Rotor HD	353x30 mm (13.89 X 1.18 in)
Rear Disc Brake Rotor Max Drum Diameter SRT-10 & HD	207.2 mm (8.157 in.)
Brake Booster Type Gasoline Engines LD	Vacuum Dual Diaphragm
Brake Booster Type Gasoline Engines HD SRW	Vacuum Dual Diaphragm
Brake Booster Type Diesel Engines HD DRW	Hydroboost

LINES-BRAKE

STANDARD PROCEDURE

DOUBLE INVERTED FLARING

A preformed metal brake tube is recommended and preferred for all repairs. However, double-wall steel tube can be used for emergency repair when factory replacement parts are not readily available.

1. Cut off damaged tube with Tubing Cutter.
2. Ream cut edges of tubing to ensure proper flare.
3. Install replacement tube nut on the tube.
4. Insert tube in flaring tool.
5. Place gauge form over the end of the tube.
6. Push tubing through flaring tool jaws until tube contacts recessed notch in gauge that matches tube diameter.
7. Tighten the tool bar on the tube
8. Insert plug on gauge in the tube. Then swing compression disc over gauge and center tapered flaring screw in recess of compression disc.
9. Tighten tool handle until plug gauge is squarely seated on jaws of flaring tool. This will start the inverted flare.
10. Remove the plug gauge and complete the inverted flare.

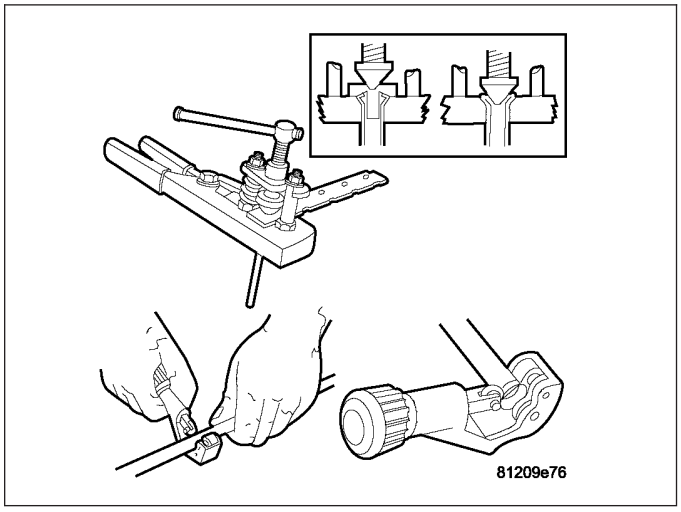

ISO FLARING

A preformed metal brake tube is recommended and preferred for all repairs. However, double-wall steel tube can be used for emergency repair when factory replacement parts are not readily available.

To make a ISO flare use an ISO flaring tool kit.

1. Cut off damaged tube with Tubing Cutter.
2. Remove any burrs from the inside of the tube.
3. Install tube nut on the tube.
4. Position the tube in the flaring tool flush with the top of the tool bar (6). Then tighten the tool bar on the tube.
5. Install the correct size adaptor (1) on the flaring tool yoke screw.
6. Lubricate the adaptor (2).
7. Align the adaptor and yoke screw over the tube.
8. Turn the yoke screw in until the adaptor is squarely seated on the tool bar.

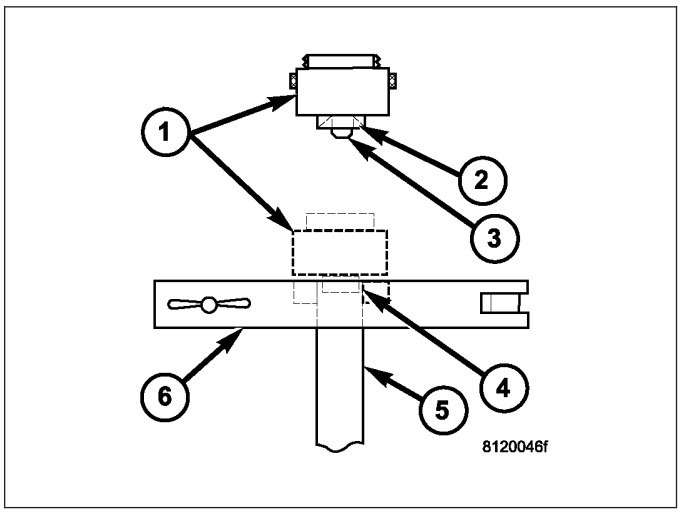

REMOVAL

REAR BRAKE HOSE

1. Raise and support the vehicle.
2. Remove the brake line (3) from the hose (1) at the frame.
3. Remove the brake hose clip (2) at the top of the hose located at the frame.

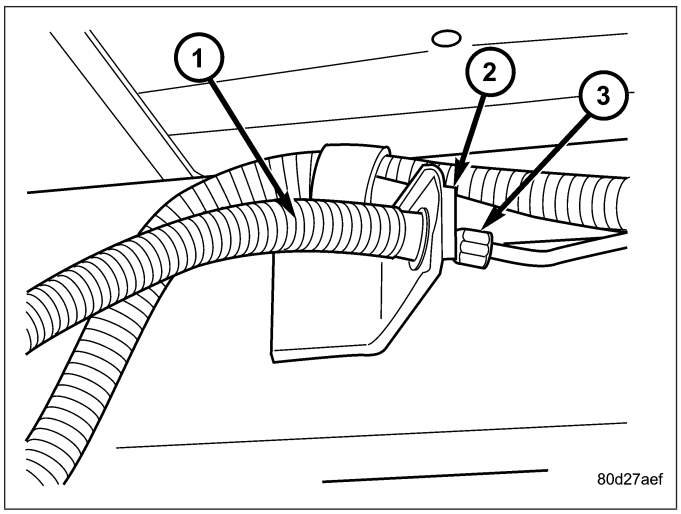

4. Remove the vent hose (2).
5. Remove the two brake lines (3) at the bottom of the hose (1) located at the axle.
6. Remove the mounting bolt for the brake hose at the axle.
7. Remove the hose.

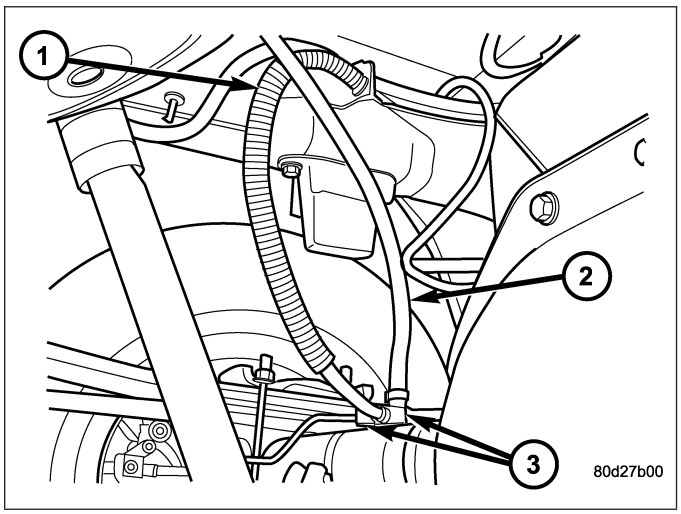

REAR TUBE / HOSE ASSEMBLY

1. Raise and support the vehicle.
2. Remove the brake line located at the axle.
3. Remove the mounting bolt (2) for the brake hose (3) at the axle.
4. Remove the banjo bolt (1) at the caliper.
5. Remove the hose.

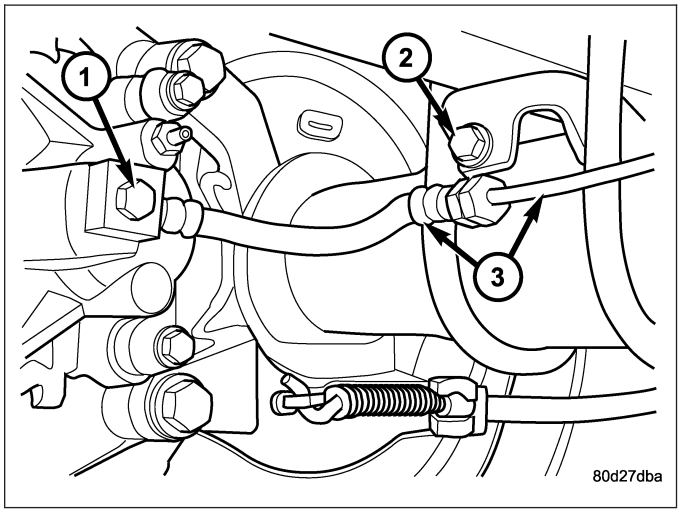

FRONT HOSE

1. Raise and support vehicle.
2. Remove the tire and wheel assembly.
3. Remove the brake hose (2) from the brake line located at the frame.
4. Remove the brake hose banjo bolt (3) at the caliper.
5. Remove the mounting bolt securing the brake hose (2) to the frame and remove the wheel speed sensor wire (4) from the brake hose (2).
6. Remove the hose.

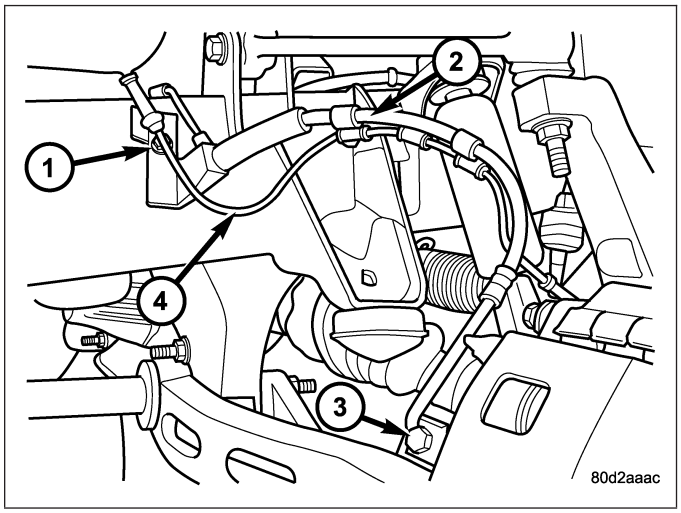

INSTALLATION

REAR BRAKE HOSE

1. Install the hose (1).
2. Install the mounting bolt for the brake hose (1) at the axle.
3. Install the two brake lines (3) at the bottom of the hose located at the axle.
4. Install the vent hose (2).

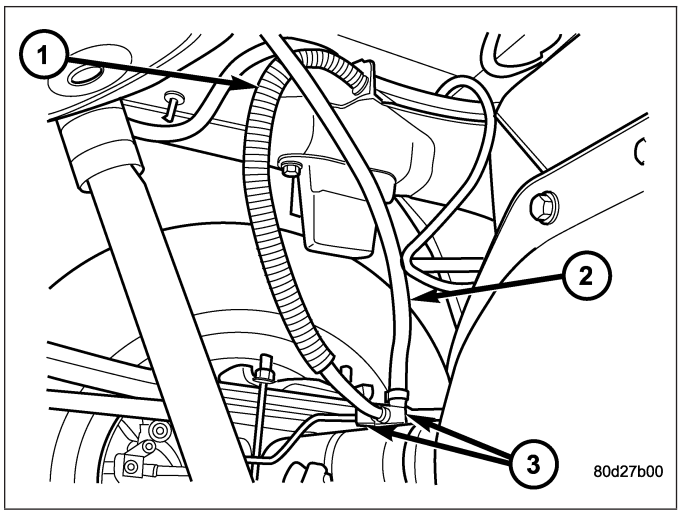

5. Install the brake hose clip (2) at the top of the hose (1) located at the frame.
6. Install the brake line (3) to the hose at the frame.
7. Lower the vehicle and remove the support.
8. Bleed the brake system (Refer to 5 - BRAKES - STANDARD PROCEDURE).

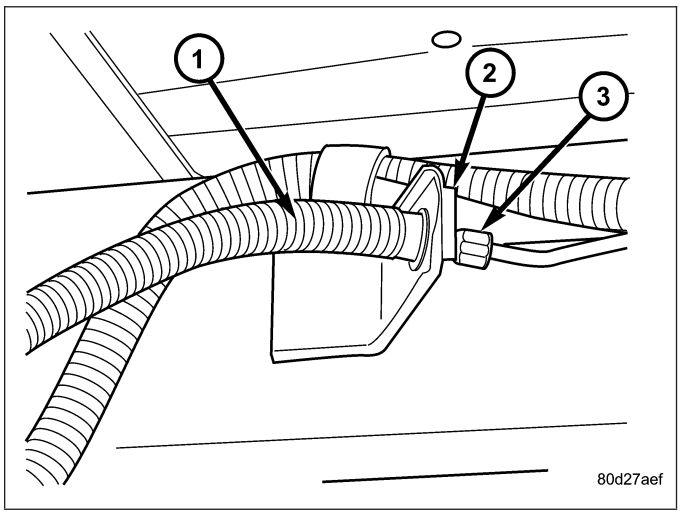

REAR TUBE / HOSE ASSEMBLY

1. Install the hose (3).
2. Install the banjo bolt (1) at the caliper and tighten fitting bolt to 27 N·m (245 in. lbs.).
3. Install the mounting bolt (2) for the brake hose (3) at the axle.
4. Install the brake line located at the axle.
5. Lower the vehicle and remove the support.
6. Bleed the brake system (Refer to 5 - BRAKES - STANDARD PROCEDURE).

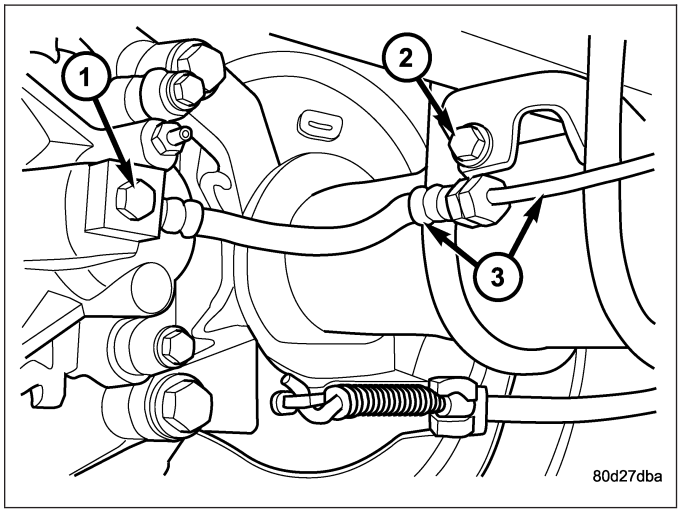

FRONT BRAKE HOSE

1. Install the hose (3).
2. Install the mounting bolt (1) for the brake hose (3) at the frame.
3. Install the brake hose banjo bolt at the caliper.
4. Reinstall the wheel speed sensor wire (2) to the brake hose.
5. Remove the support and lower the vehicle.
6. Bleed the brake system (Refer to 5 - BRAKES - STANDARD PROCEDURE).

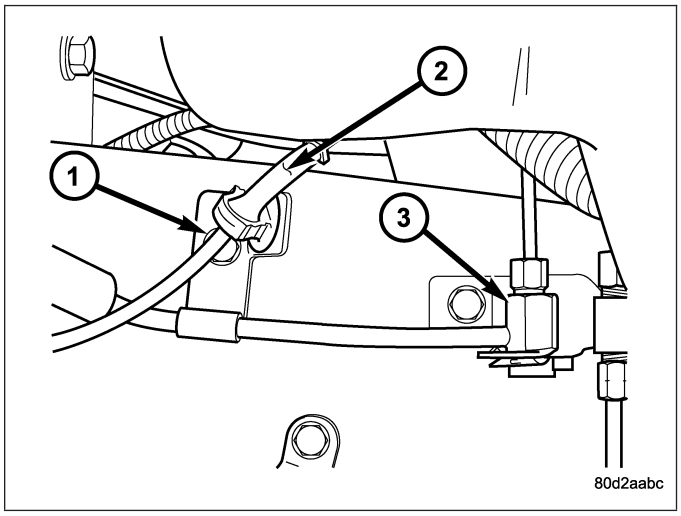

PADS - BRAKE

REMOVAL

FRONT

1. Raise and support vehicle.
2. Remove the wheel and tire assemblies.
3. Compress the caliper.
4. Remove the caliper (1), (Refer to 5 - BRAKES/HYDRAULIC/MECHANICAL/DISC BRAKE CALIPERS - REMOVAL).
5. Remove the caliper (1) by tilting the top up and off the caliper adapter (2).

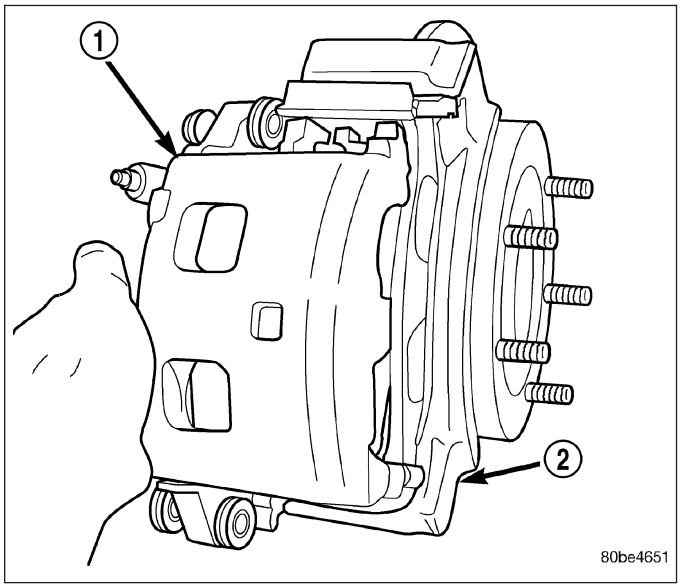

NOTE: Do not allow brake hose to support caliper assembly.

6. Support and hang the caliper (2).

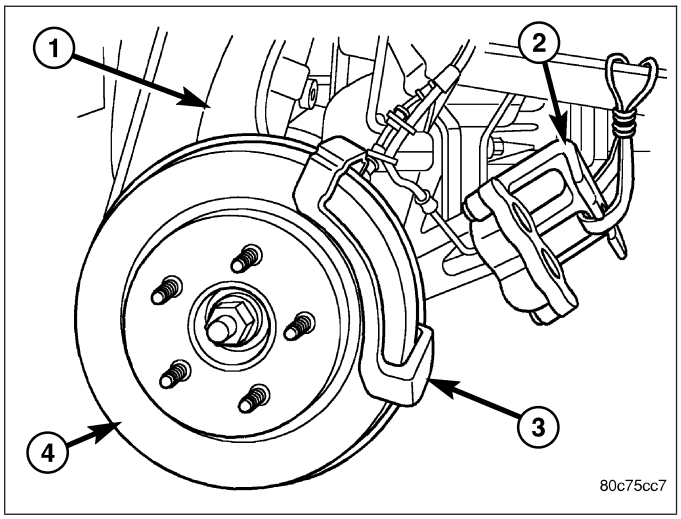

7. Remove the inboard brake shoe (1) from the caliper adapter (2).

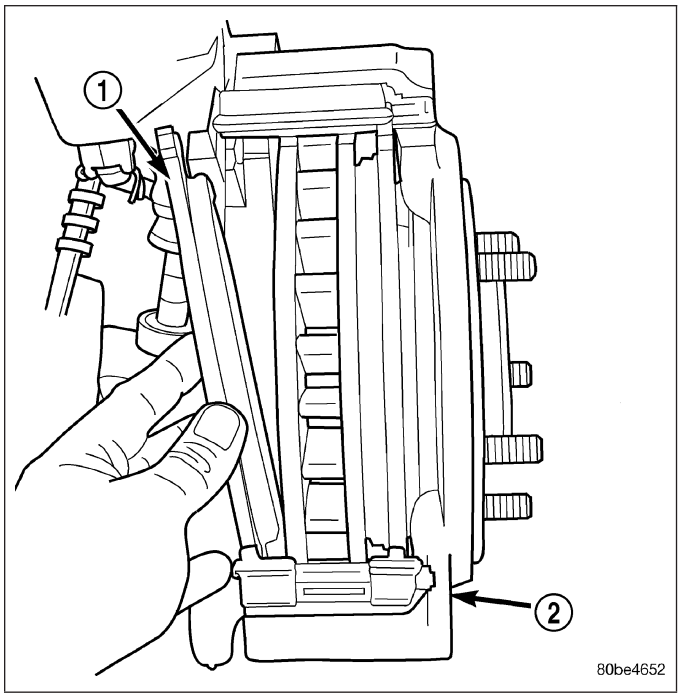

8. Remove the outboard brake shoe (1) from the caliper adapter (2).

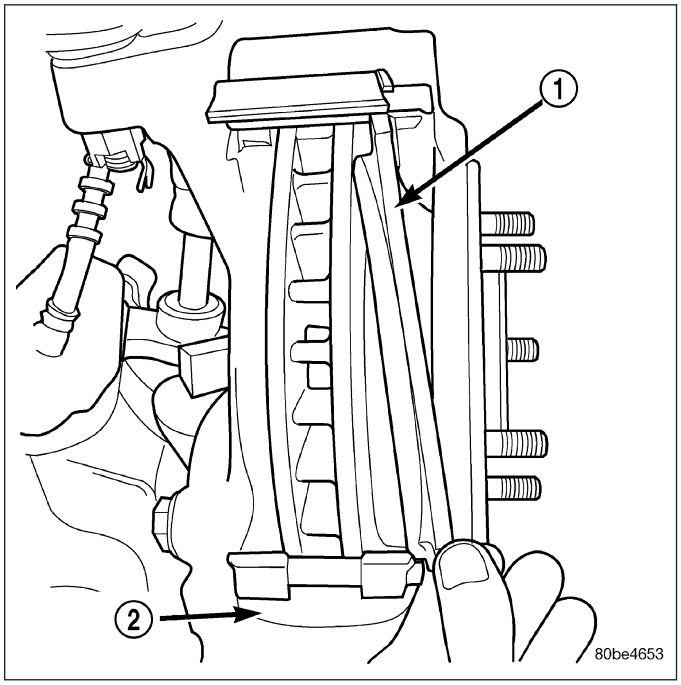

NOTE: Anti-rattle springs are not interchangeable.

9. Remove the top anti-rattle springs (2) from the caliper adapter (1).

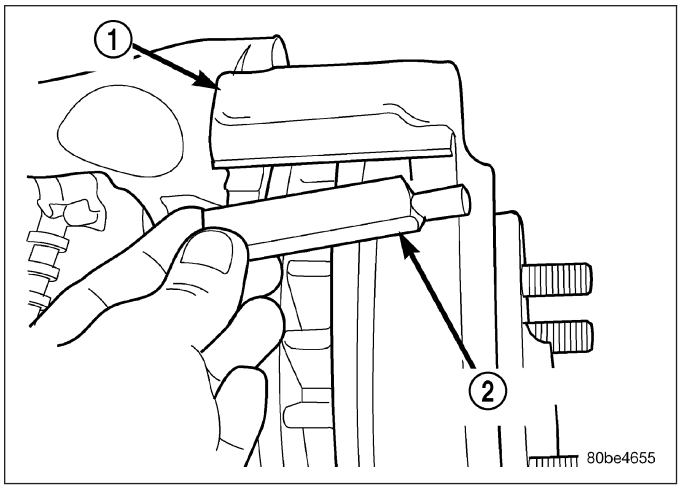

10. Remove the bottom anti-rattle springs (2) from the caliper adapter (1).

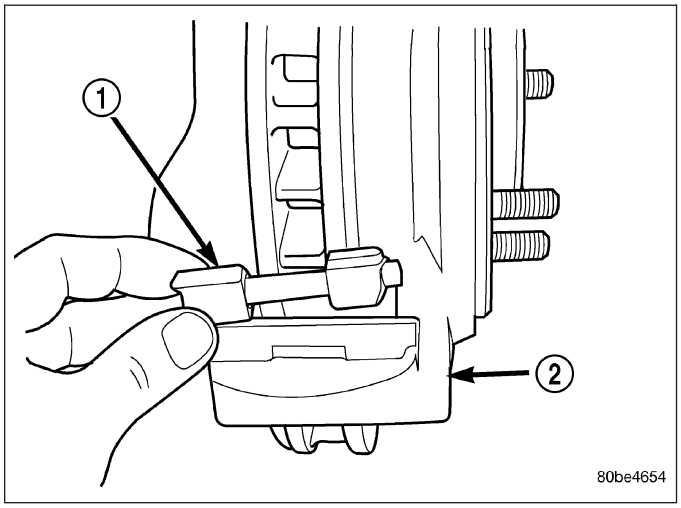

REAR

1. Raise and support the vehicle.
2. Remove the rear wheel and tire assemblies.
3. Compress the caliper.
4. Remove caliper slide bolts (3).

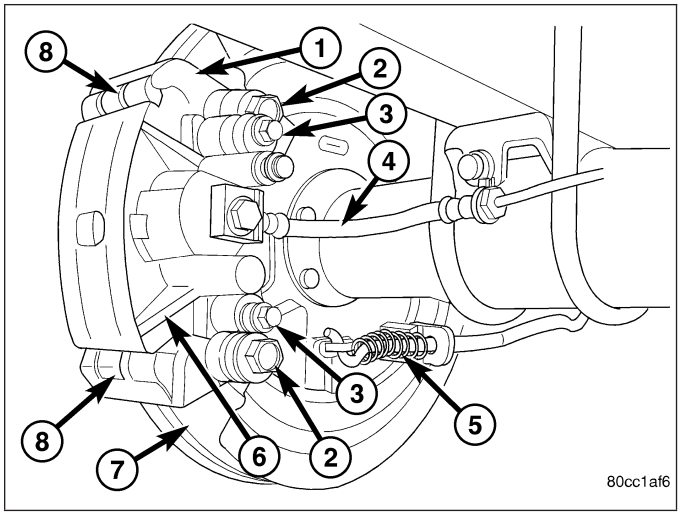

NOTE: Do not allow brake hose to support caliper assembly.

5. Remove the caliper (3), (Refer to 5 - BRAKES/HYDRAULIC/MECHANICAL/DISC BRAKE CALIPERS - REMOVAL) and then tilt the top up and off the caliper adapter.

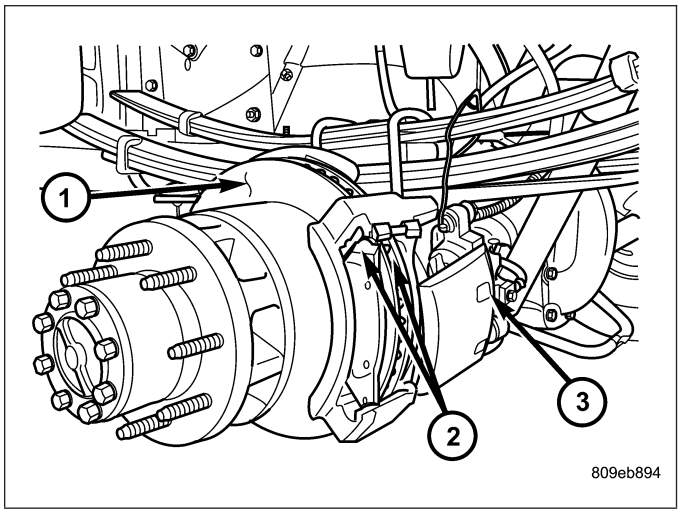

6. Remove inboard brake shoe (1) from the caliper adapter (2).

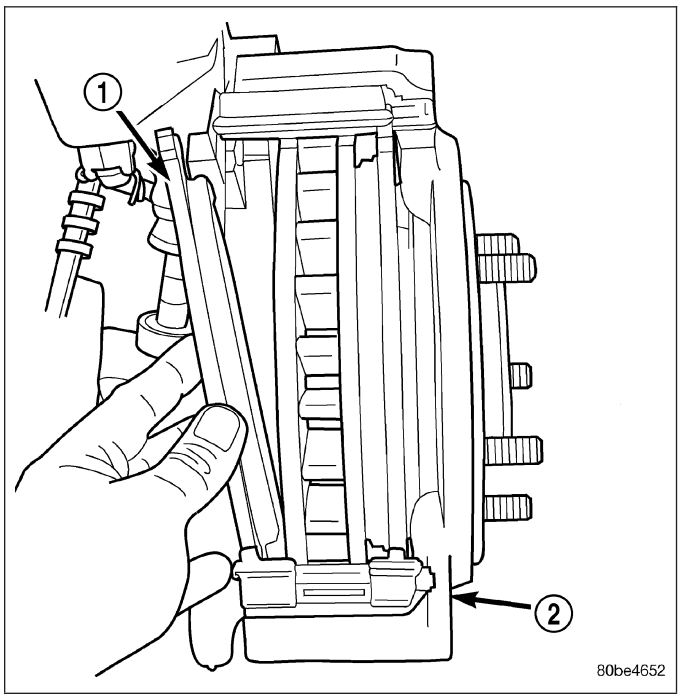

7. Remove outboard brake shoe (1) from caliper adapter (2).

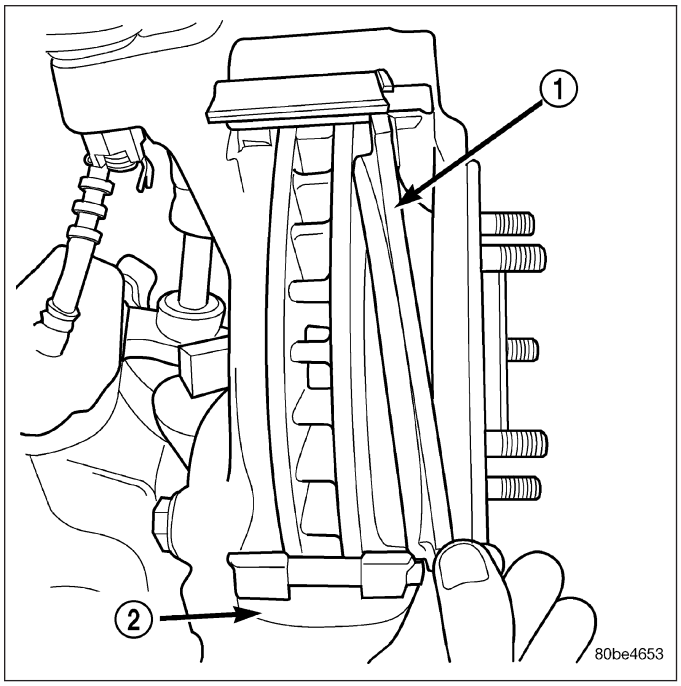

NOTE: Anti-rattle springs are not interchangeable.

8. Remove the top anti-rattle spring (2) from the caliper adapter (1).

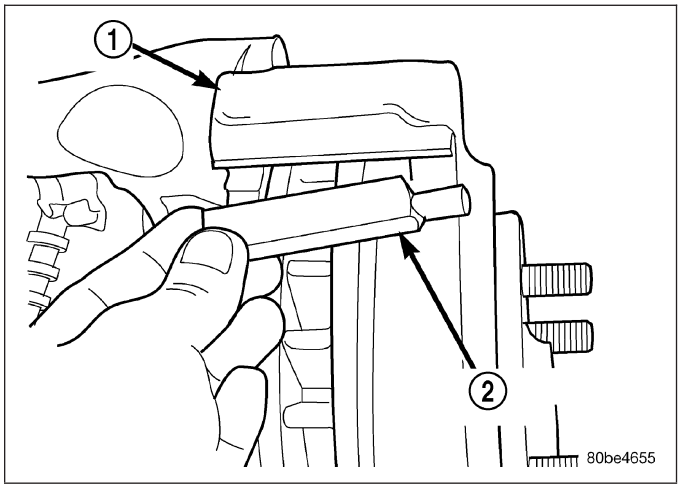

9. Remove the top anti-rattle spring (2) from the caliper adapter (1).

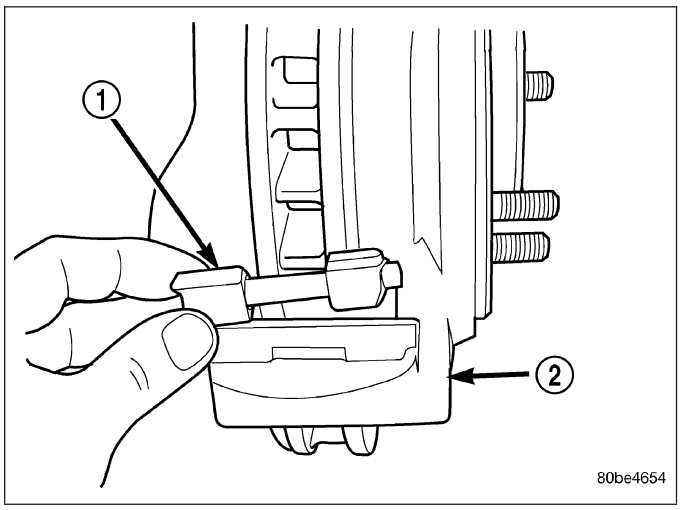

INSTALLATION

FRONT

1. Bottom pistons in caliper bore with C-clamp. Place an old brake shoe between a C-clamp and caliper piston.
2. Clean caliper mounting adapter (1) and anti-rattle springs (2).
3. Lubricate anti-rattle springs with Mopar brake grease.

NOTE: Anti-rattle springs are not interchangeable.

4. Install **new** top anti-rattle springs (2).

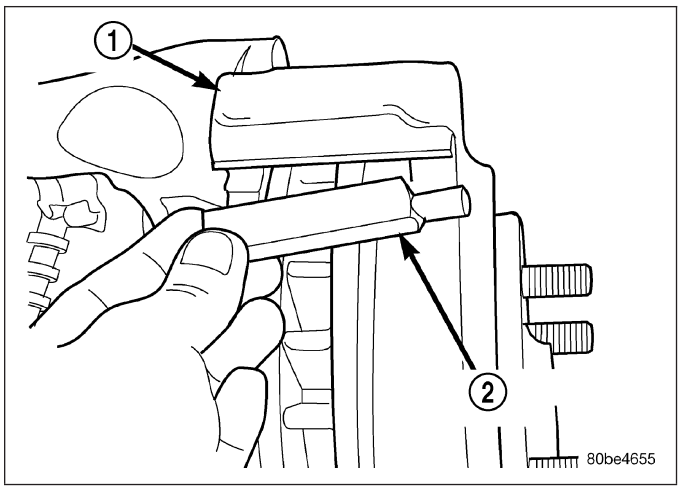

5. Install **new** bottom anti-rattle springs (1).

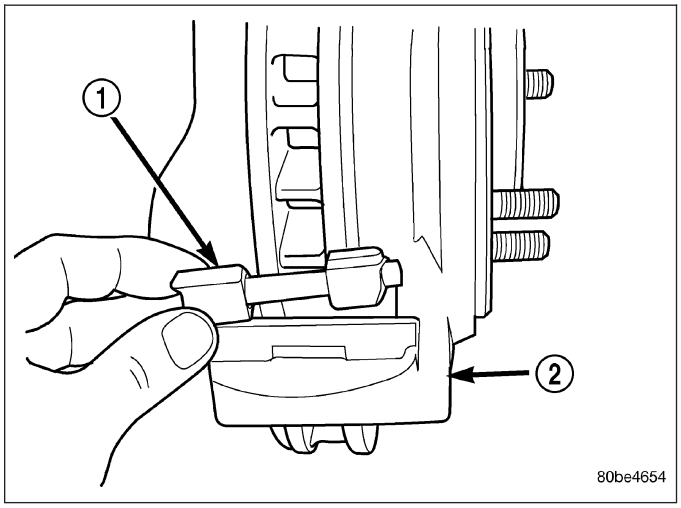

6. Install inboard brake shoe (1) in adapter (2).

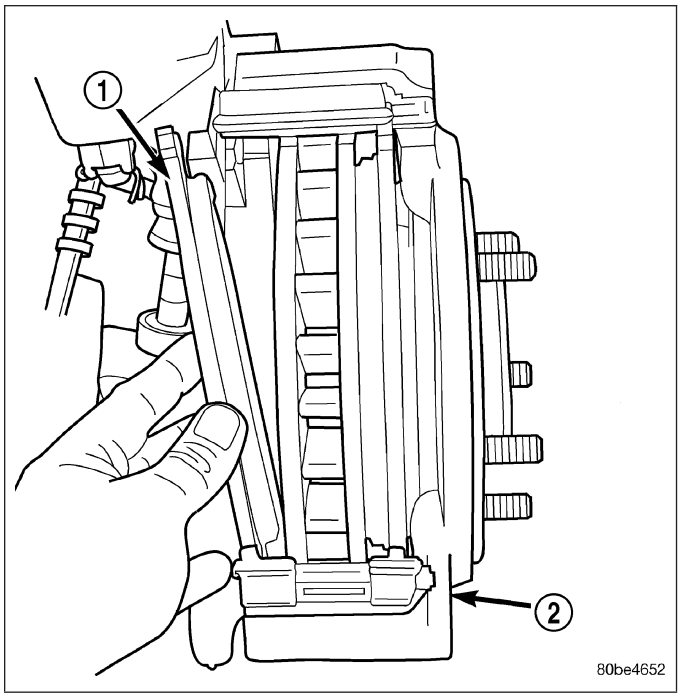

7. Install outboard brake shoe (1) in adapter (2).

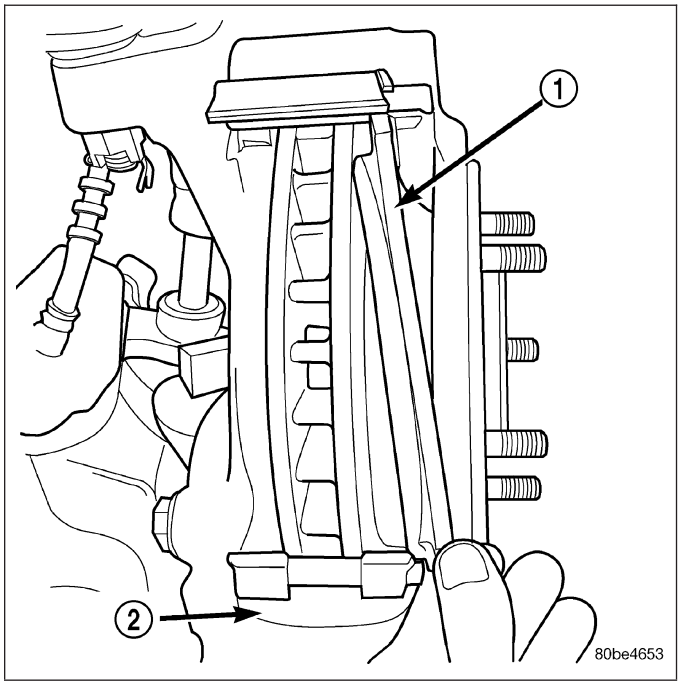

8. Tilt the top of the caliper (1) over rotor and under adapter (2). Then push the bottom of the caliper down onto the adapter.
9. Install caliper (1), (Refer to 5 - BRAKES/HYDRAULIC/MECHANICAL/DISC BRAKE CALIPERS - INSTALLATION).
10. Install wheel and tire assemblies and lower vehicle, (Refer to 22 - TIRES/WHEELS/WHEELS - STANDARD PROCEDURE).
11. Apply brakes several times to seat caliper pistons and brake shoes and obtain firm pedal.
12. Top off master cylinder fluid level.

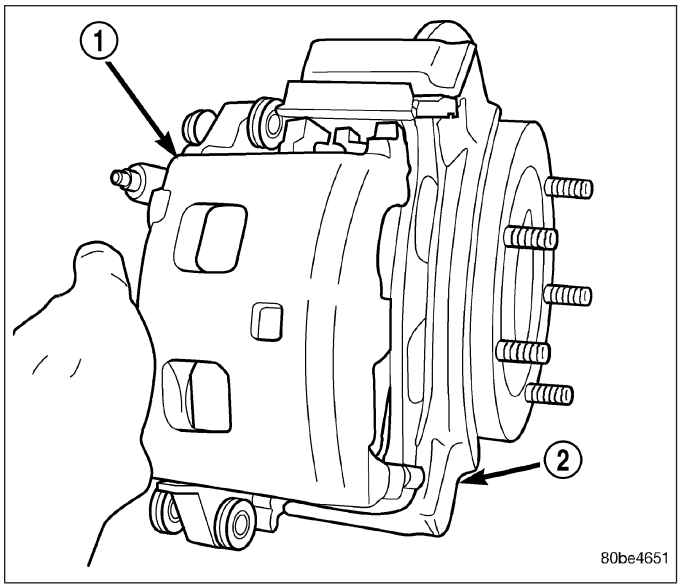

REAR

1. Clean caliper mounting adapter (1) and anti-rattle springs (2).
2. Lubricate anti-rattle springs with Mopar brake grease.

NOTE: Anti-rattle springs are not interchangeable.

3. Install **new** top anti-rattle spring (2).

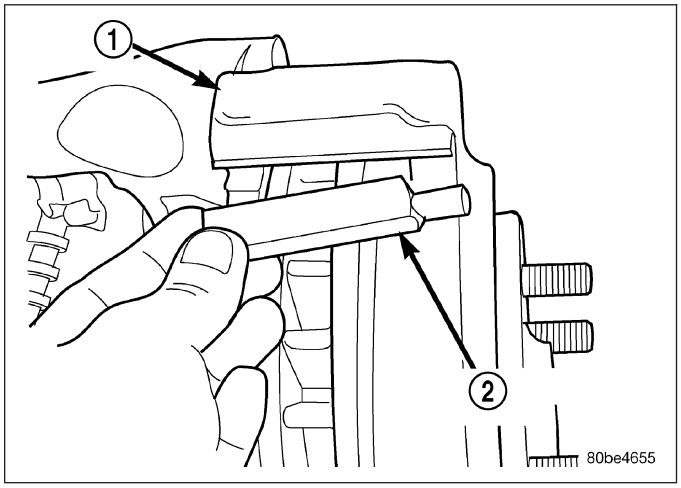

4. Install **new** bottom anti-rattle spring (1).

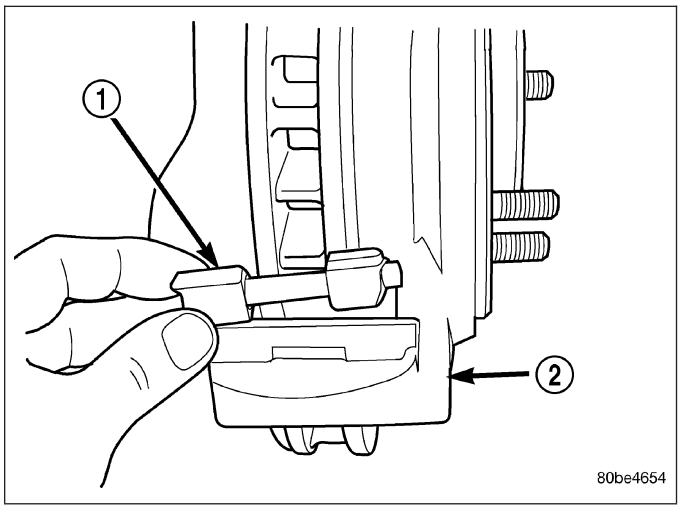

5. Install inboard brake shoe (1) in adapter (2).

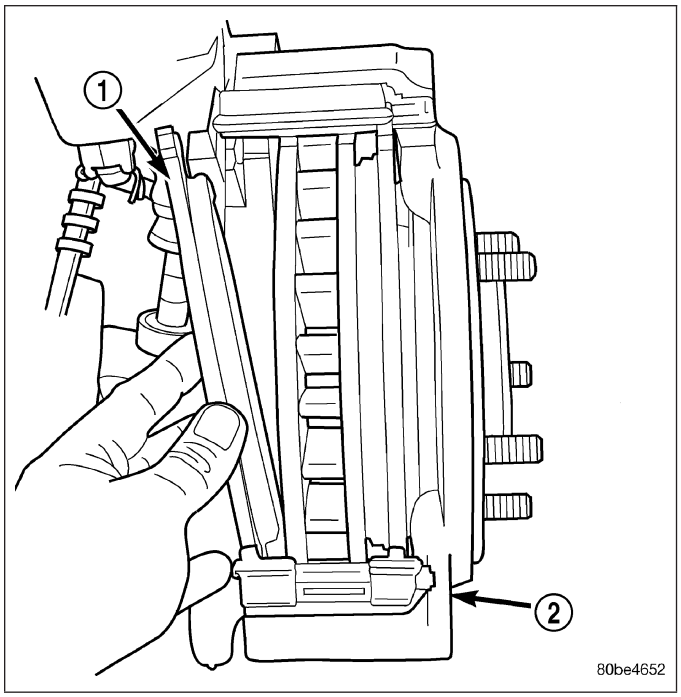

6. Install outboard brake shoe (1) in adapter (2).

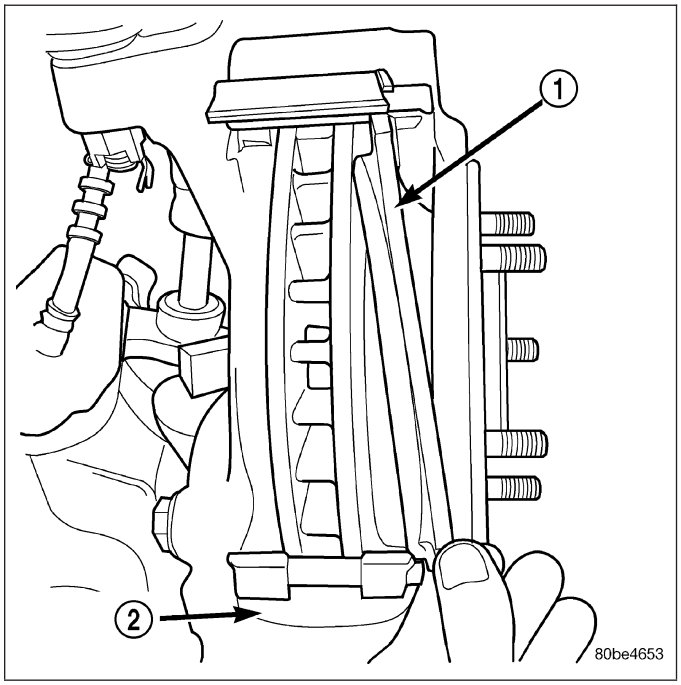

7. Tilt the bottom of the caliper (3) over rotor (1) and under adapter. Then push the top of the caliper down onto the adapter.

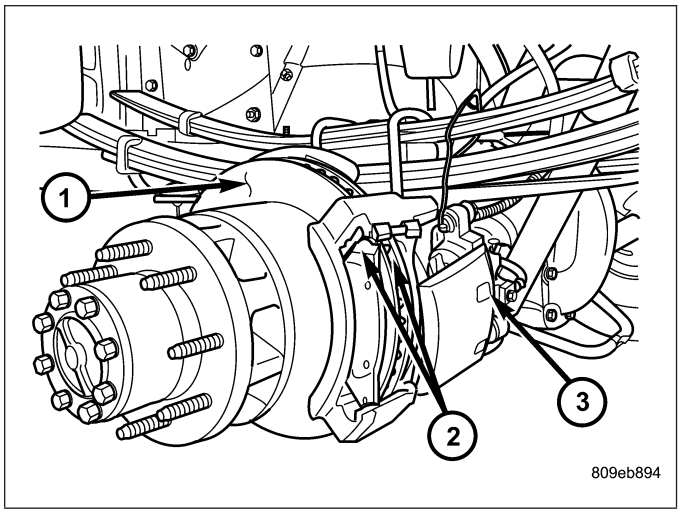

8. Install caliper (6), (Refer to 5 - BRAKES/HYDRAULIC/MECHANICAL/DISC BRAKE CALIPERS - INSTALLATION) (Refer to 5 - BRAKES/HYDRAULIC/MECHANICAL/DISC BRAKE CALIPERS - INSTALLATION).
9. Install wheel and tire assemblies and lower vehicle, (Refer to 22 - TIRES/WHEELS/WHEELS - STANDARD PROCEDURE).
10. Apply brakes several times to seat caliper pistons and brake shoes and obtain firm pedal.
11. Top off master cylinder fluid level.

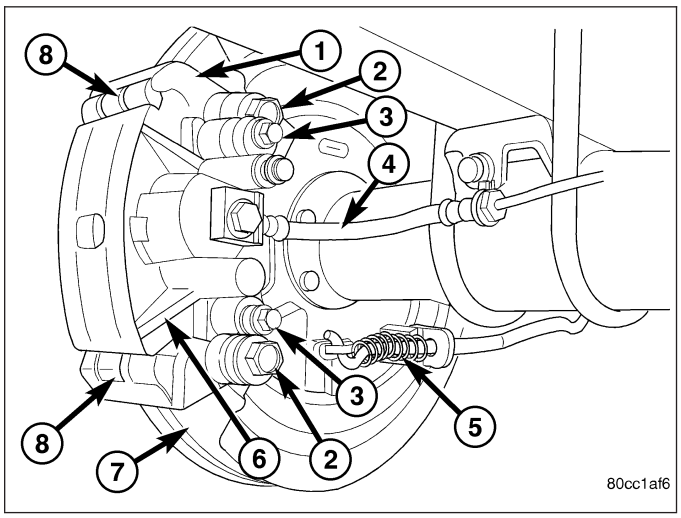

CALIPERS-DISC BRAKE

DESCRIPTION

LIGHT DUTY (LD) CALIPERS

The calipers are a single piston type in the rear and dual piston type in the front. The calipers are free to slide laterally, this allows continuous compensation for lining wear.

HEAVY DUTY (HD) CALIPERS

The calipers are a dual piston type in the front & rear. The calipers are free to slide laterally, this allows continuous compensation for lining wear.

FRONT CALIPERS – SRT-10

The front calipers (1) are a four piston type and the rear calipers are a dual piston type. The calipers are free to slide laterally, this allows continuous compensation for lining wear.

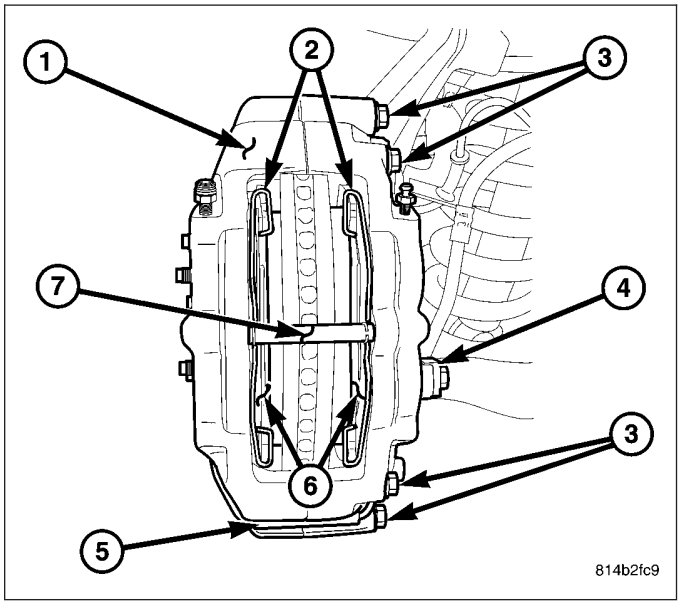

OPERATION

When the brakes are applied fluid pressure is exerted against the caliper piston (2). The fluid pressure is exerted equally and in all directions. This means pressure exerted against the caliper piston and within the caliper bore will be equal.

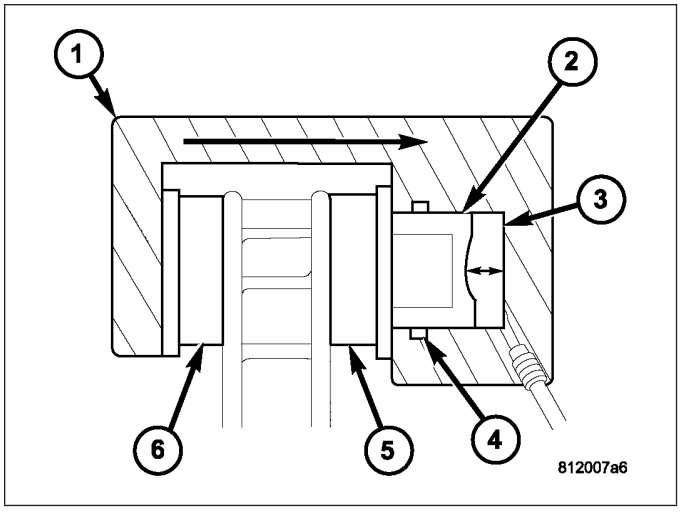

Fluid pressure applied to the piston is transmitted directly to the inboard brake pad (5). This forces the pad lining against the inner surface of the disc brake rotor. At the same time, fluid pressure within the piston bore forces the caliper to slide inward on the mounting bolts. This action brings the outboard brake pad lining (6) into contact with the outer surface of the disc brake rotor.

In summary, fluid pressure acting simultaneously on both piston and caliper, produces a strong clamping action. When sufficient force is applied, friction will attempt to stop the rotors from turning and bring the vehicle to a stop.

Application and release of the brake pedal generates only a very slight movement of the caliper and piston. Upon release of the pedal, the caliper and piston return to a rest position. The brake pads do not retract an appreciable distance from the rotor. In fact, clearance is usually at, or close to zero. The reasons for this are to keep road debris from getting between the rotor and lining and in wiping the rotor surface clear each revolution.

The caliper piston seal (4) controls the amount of piston (2) extension needed to compensate for normal lining wear.

During brake application, the seal is deflected outward by fluid pressure and piston movement(6). When the brakes (and fluid pressure) are released, the seal relaxes and retracts the piston (3).

The amount of piston retraction is determined by the amount of seal deflection. Generally the amount is just enough to maintain contact between the piston and inboard brake pad.

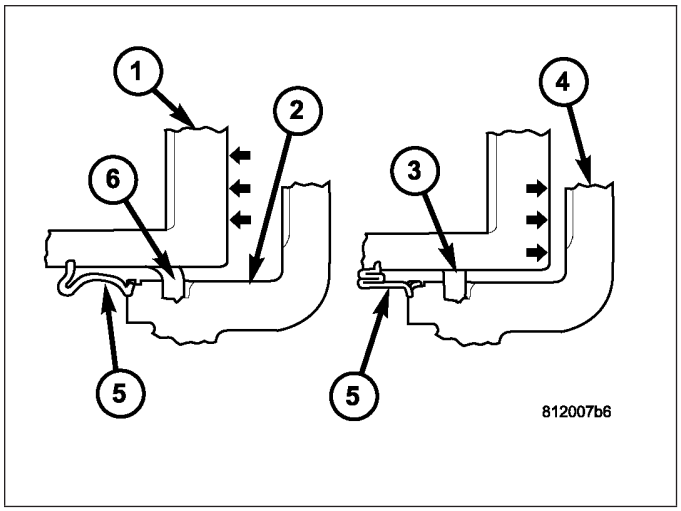

REMOVAL

FRONT

CAUTION: Never allow the disc brake caliper to hang from the brake hose. Damage to the brake hose will result. Provide a suitable support to hang the caliper securely.

1. Raise and support the vehicle.
2. Remove the tire and wheel assembly.
3. Compress the disc brake caliper.
4. Remove the banjo bolt and discard the copper washer.
5. Remove the caliper slide bolts.
6. Remove the disc brake caliper (2).

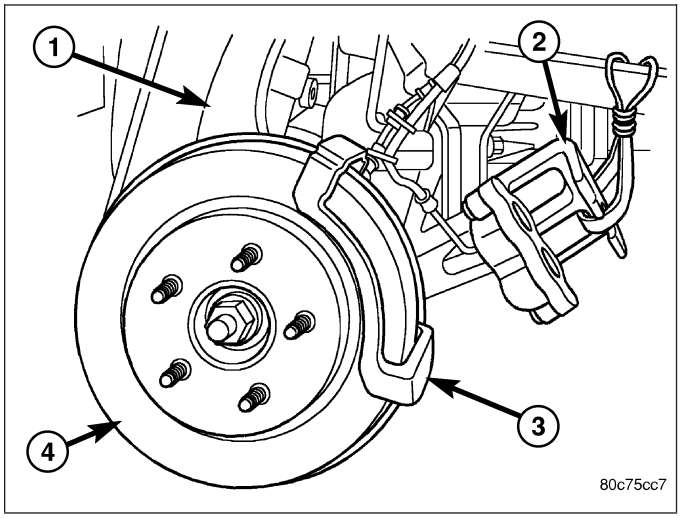

FRONT - SRT-10

CAUTION: Never allow the disc brake caliper to hang from the brake hose. Damage to the brake hose will result. Provide a suitable support to hang the caliper securely.

1. Raise and support the vehicle.
2. Remove the tire and wheel assembly.
3. Compress the disc brake caliper.
4. Remove the banjo bolt (1) and discard the copper washer.
5. Remove the caliper mounting bolts (3).

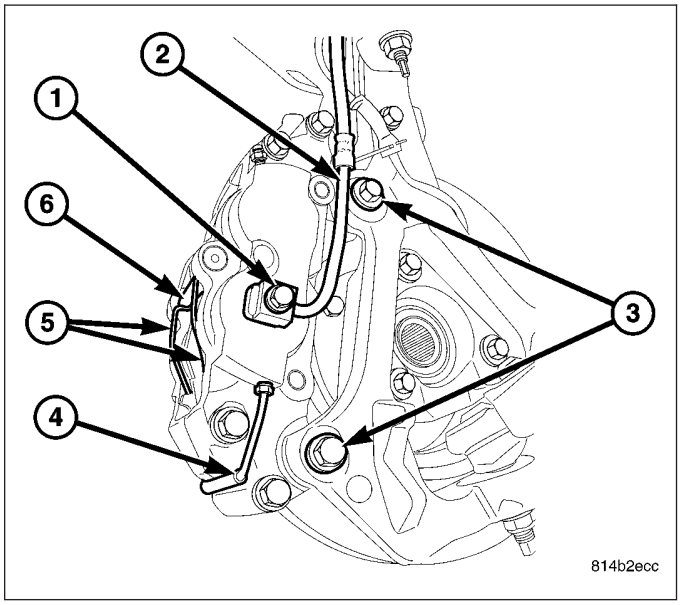

6. Remove the disc brake caliper (1).

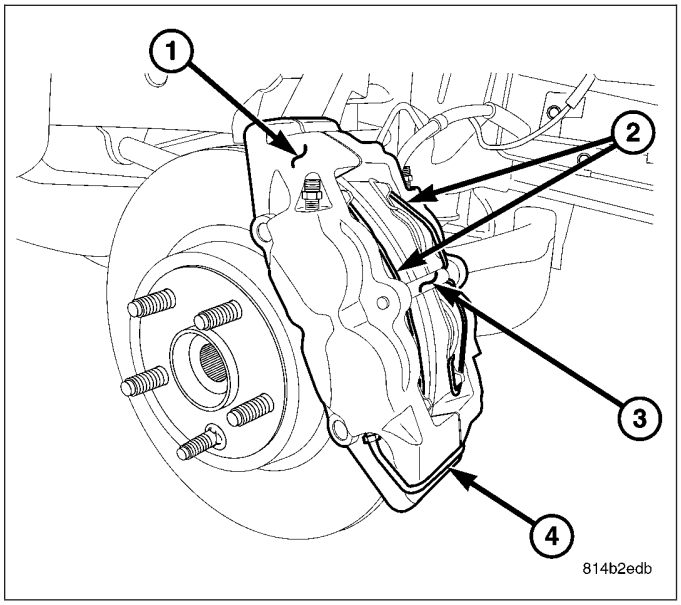

REAR

CAUTION: Never allow the disc brake caliper to hang from the brake hose. Damage to the brake hose will result. Provide a suitable support to hang the caliper securely.

1. Raise and support vehicle.
2. Remove the wheel and tire assembly.
3. Drain small amount of fluid from master cylinder brake reservoir with suction gun.
4. Remove the brake hose banjo bolt and discard the copper washers if replacing caliper.
5. Remove the caliper slide bolts (3).
6. Remove the caliper (6) from vehicle.

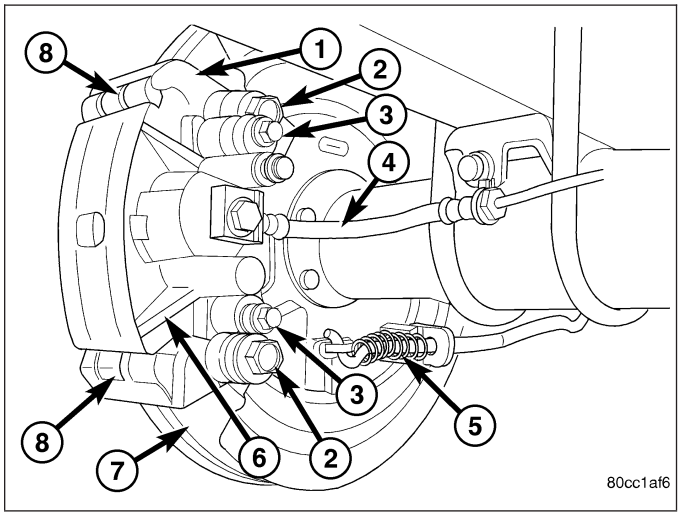

REAR - SRT-10

1. Raise and support the vehicle.
2. Remove the tire and wheel assembly.
3. Compress the disc brake caliper using tool #C4212F.
4. Remove the caliper pin bolts (3).
5. Remove the banjo bolt (6) and discard the copper washer.

CAUTION: Never allow the disc brake caliper to hang from the brake hose. Damage to the brake hose with result. Provide a suitable support to hang the caliper securely.

6. Remove the rear disc brake caliper.

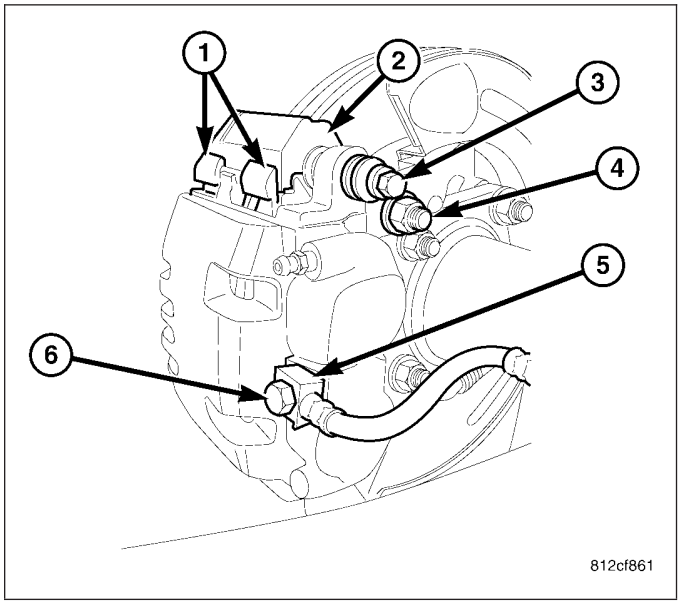

DISASSEMBLY

DISC BRAKE CALIPER

1. Drain the brake fluid from caliper.
2. C-clamp (2) a block of wood (1) over one piston.

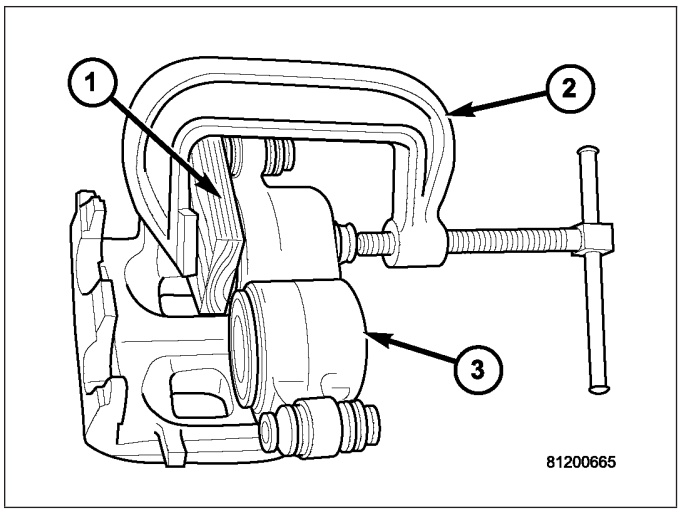

3. Take another piece of wood and pad it with one-inch thickness of shop towels (2). Place this piece in the outboard shoe side of the caliper in front of the other piston. This will cushion and protect caliper piston during removal.
4. To remove the caliper piston direct **short bursts of low pressure air** with a blow gun through the caliper brake hose port. Use only enough air pressure to ease the piston out.

CAUTION: Do not blow the piston out of the bore with sustained air pressure. This could result in a cracked piston.

WARNING: NEVER ATTEMPT TO CATCH THE PISTON AS IT LEAVES THE BORE. THIS COULD RESULT IN PERSONAL INJURY.

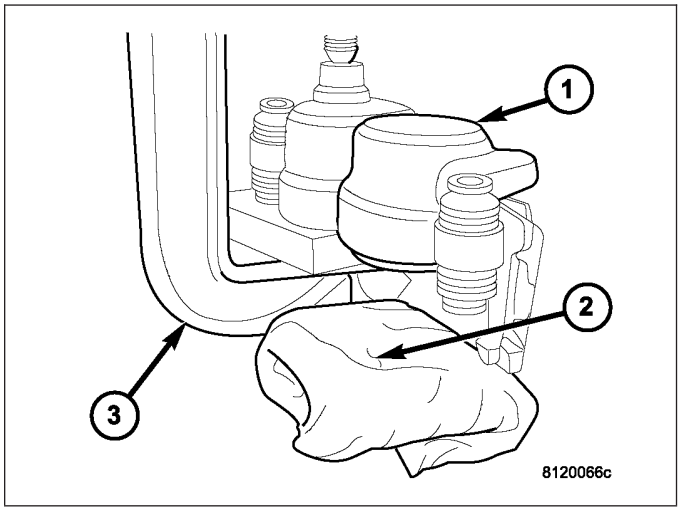

5. Remove the C-clamp and block of wood from the caliper and clamp it over the dust boot of the first piston removed. This will seal the empty piston bore.
6. Move the padded piece of wood in front of the other piston.
7. Remove the second piston using the same procedure with **short bursts of low pressure air**.

8. Remove piston dust boots (2) with a suitable pry tool.

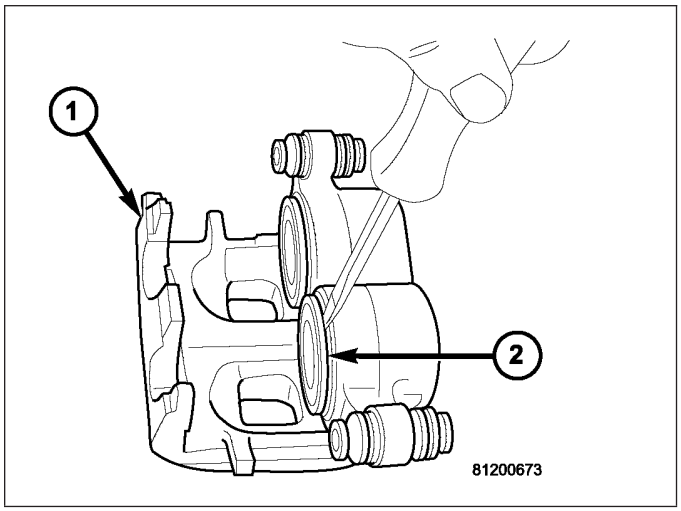

CAUTION: Do not scratch piston bore while removing the seals.

9. Remove piston seals (3) from caliper (1).

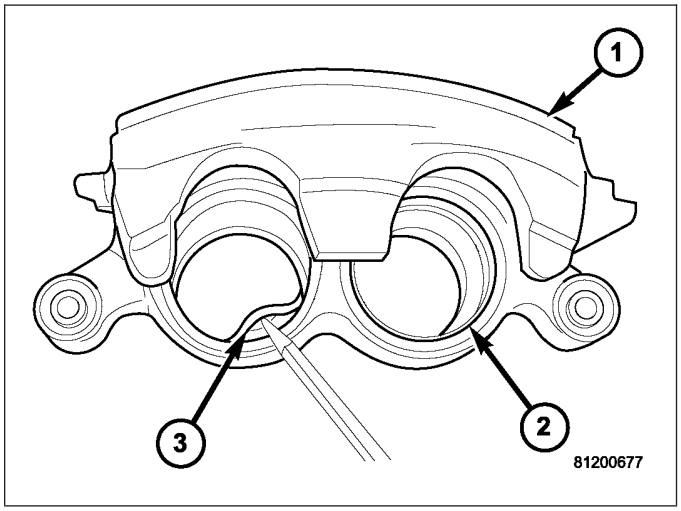

10. Push caliper mounting bolt bushings (3) out of the boot seals (2) and remove the boot seals from the caliper (1).
11. Remove caliper bleed screw.

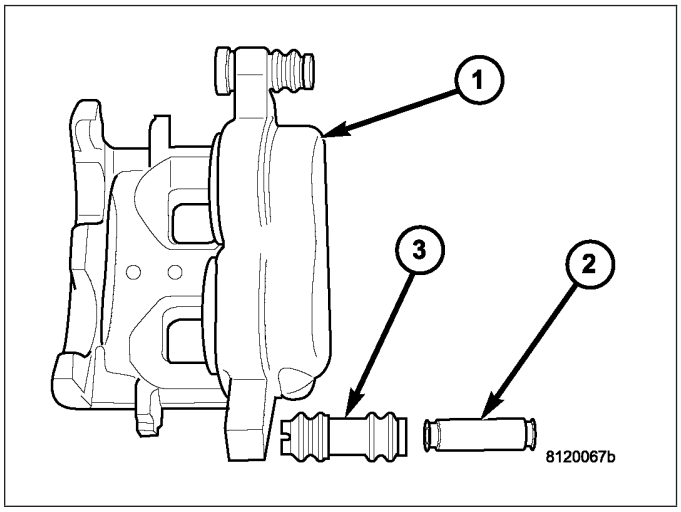

DISC BRAKE CALIPER - FRONT - SRT-10

NOTE: Before disassembling caliper, clean and inspect it. (Refer to 5 - BRAKES/HYDRAULIC/MECHANICAL/DISC BRAKE CALIPER - CLEANING) (Refer to 5 - BRAKES/HYDRAULIC/MECHANICAL/DISC BRAKE CALIPER - INSPECTION)

1. Remove front disc brake caliper (1) from vehicle. (Refer to 5 - BRAKES/HYDRAULIC/MECHANICAL/DISC BRAKE CALIPER - REMOVAL).
2. If brake pads were not removed from caliper prior to removing caliper from vehicle, remove brake pads (6). (Refer to 5 - BRAKES/HYDRAULIC/MECHANICAL/BRAKE PADS/pads - REMOVAL)
3. Remove transfer brake tube (5) between inboard and outboard caliper halves.

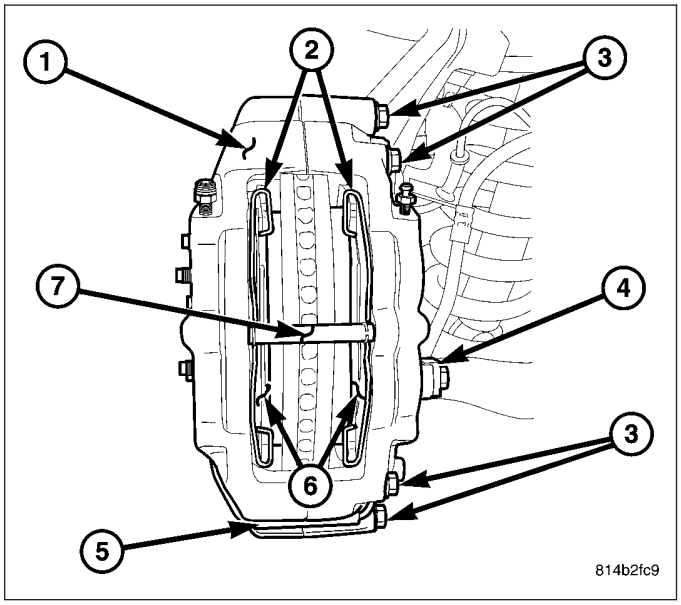

4. Install M10 X 1.0 threaded plug(2) in flex hose banjo bolt hole (1). This hole needs to be plugged to remove caliper inboard pistons using compressed air.

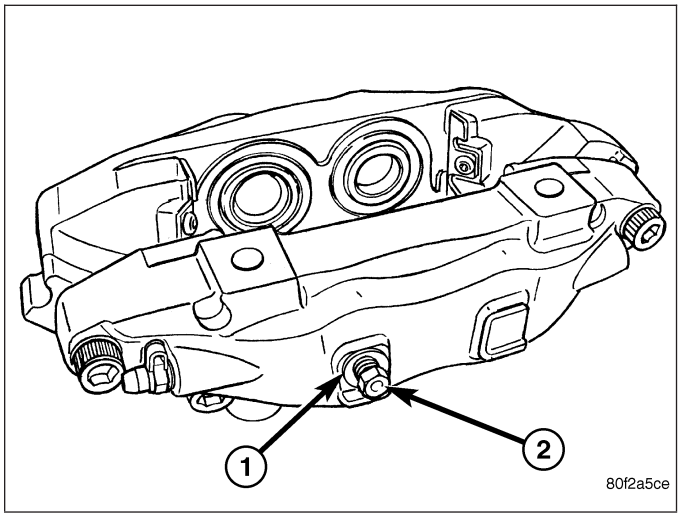

5. Install C-clamp (2) over inboard caliper piston nearest to bleeder screw as follows:
   a. Lay shop towel (3) over outside of inboard caliper half to protect finish.
   b. Place Installer, Special Tool 6454 (5), over piston and boot nearest to bleeder screw and hold in place. Either side of Installer will work.
   c. Place C-clamp (2) over tool and towel as shown and tighten C-clamp. DO NOT USE EXCESSIVE FORCE; excessive force could damage caliper or piston.

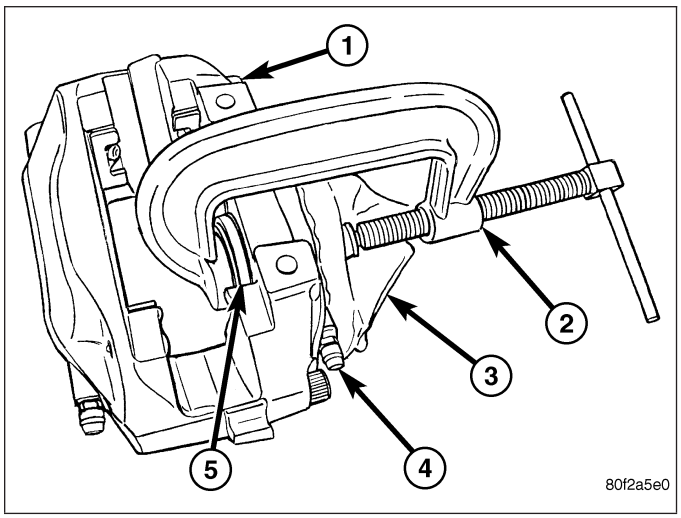

6. Place an appropriate size block (1) of wood inside center area of caliper, in front of first piston to be removed. Block of wood should be large enough to allow piston to exit piston bore just far enough for piston to be pulled out remaining distance by hand, but not exit the bore completely.

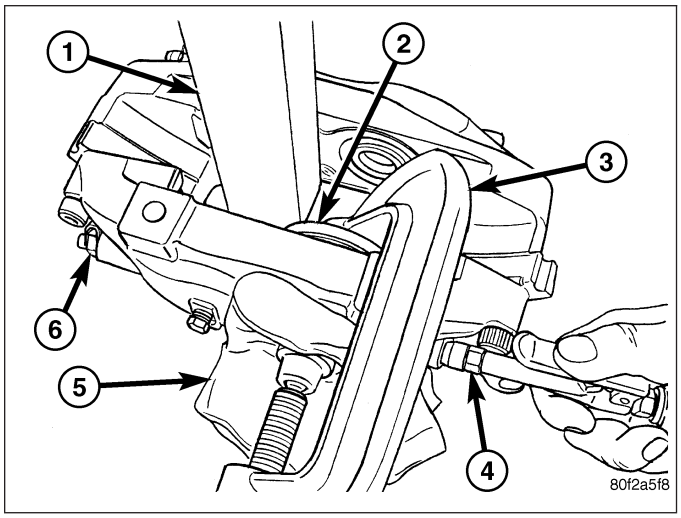

WARNING: DO NOT PLACE FACE OR HANDS NEAR PISTONS OR INTO CENTER AREA OF CALIPER WHEN USING COMPRESSED AIR TO REMOVE PISTONS FROM BORE OF CALIPER. PERSONAL INJURY CAN RESULT FROM SUCH ACTION.

WARNING: UNDER NO CONDITIONS SHOULD HIGH PRESSURE AIR BE USED TO REMOVE PISTON FROM CALIPER BORE. PERSONAL INJURY CAN RESULT FROM SUCH ACTION.

7. Using a rubber tipped air nozzle (4), apply short bursts of low pressure compressed air to caliper transfer port to force piston from bore.
8. Remove block of wood (1) from center area of caliper.
9. Remove piston from caliper bore, but leave piston dust boot in place.
10. Transfer C-clamp (3) and Installer to cover piston boot and bore where piston was just removed. It may be necessary to place a small piece of rubber over hole in center of Installer to seal off installer.
11. Place block of wood (1) inside center area of caliper, in front of second piston to be removed.
12. Using a rubber tipped air nozzle (4), apply short bursts of low pressure compressed air to caliper transfer port to force piston from bore.
13. Remove block of wood (1) from center area of caliper.
14. Remove piston from caliper bore.
15. Remove C-clamp (3) and Installer.

16. Remove piston dust boots (1) from empty piston bores of caliper. To do so, carefully pry each boot from its retaining groove using a small screwdriver. The screwdriver must be inserted between outer edge of dust boot and caliper. **Do not insert screwdriver into bore of caliper to remove boot; scoring of bore may occur.**

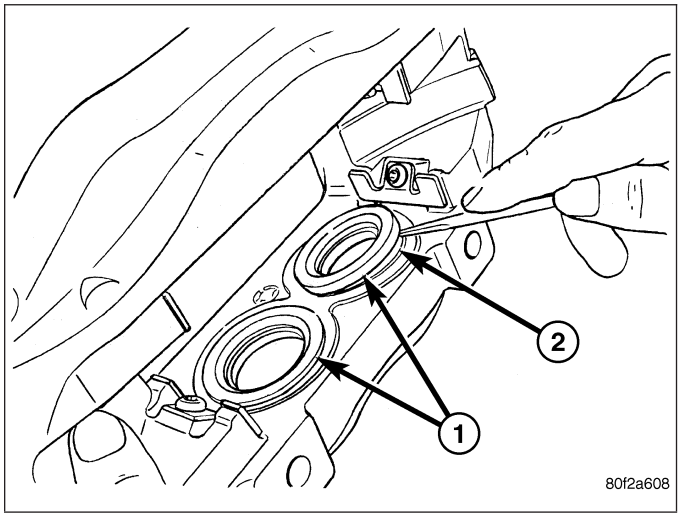

17. Remove piston seal (1) from each empty piston bores using a trim stick (2) or other suitable tool. **Do not use a screwdriver or other metal tool; scoring of bore or burring of seal groove may occur.**

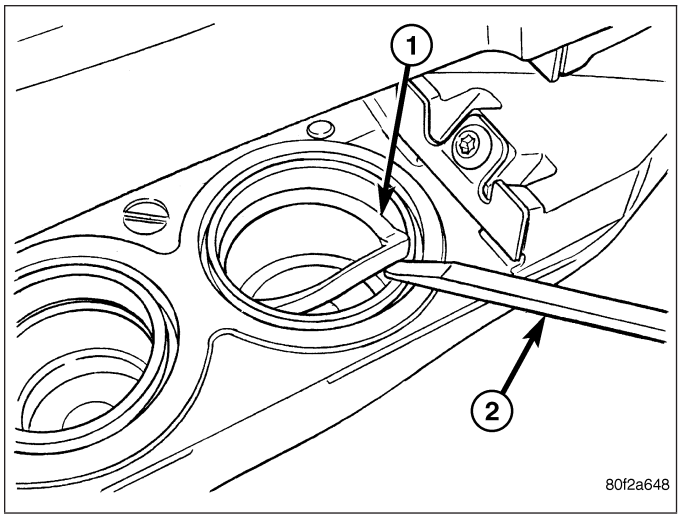

18. Remove bleeder screw from inboard half of caliper.
19. Remove threaded plug (2) from banjo bolt hole (1) in inboard half of caliper.

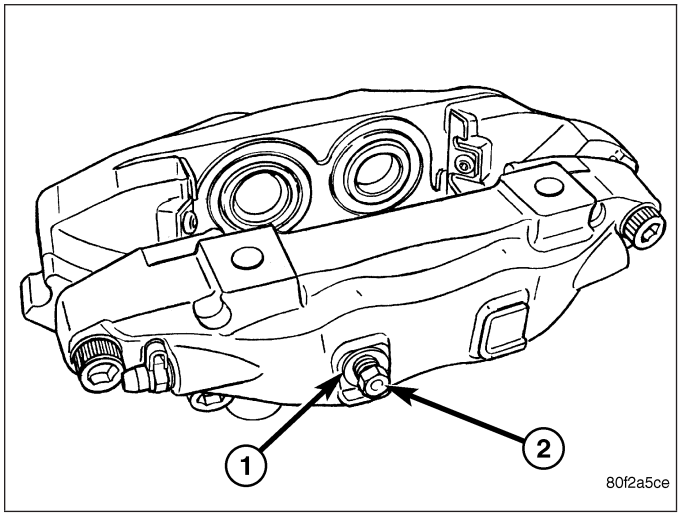

20. Install C-clamp (2) over outboard caliper piston nearest to bleeder screw as follows:
    a. Lay shop towel (3) over outside of outboard caliper half to protect finish.
    b. Place Installer, Special Tool 6454 (4) , over piston and boot nearest to bleeder screw and hold in place. Either side of Installer will work.
    c. Place C-clamp (2) over tool and cloth as shown and tighten C-clamp. DO NOT USE EXCESSIVE FORCE; excessive force could damage caliper or piston.
21. Place an appropriate size block of wood (1) inside center area of caliper, in front of piston nearest transfer tube port. Block of wood should be large enough to allow piston to exit piston bore just far enough for piston to be pulled out remaining distance by hand, but not exit the bore completely.

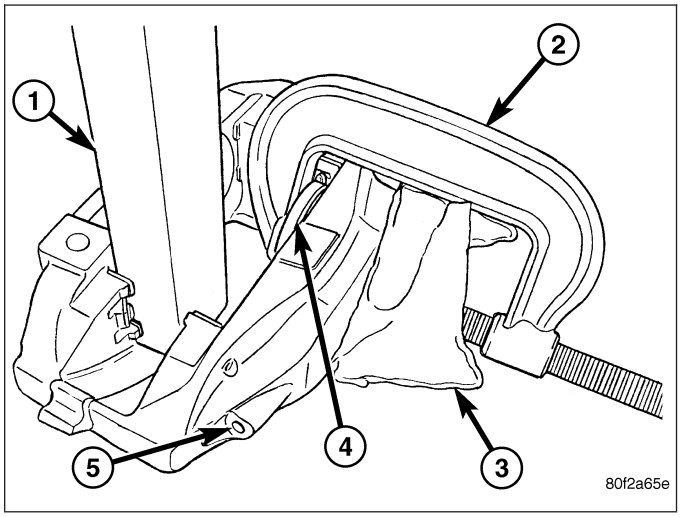

WARNING: DO NOT PLACE FACE OR HANDS NEAR PISTONS OR INTO CENTER AREA OF CALIPER WHEN USING COMPRESSED AIR TO REMOVE PISTONS FROM BORE OF CALIPER. PERSONAL INJURY CAN RESULT FROM SUCH ACTION.

WARNING: UNDER NO CONDITIONS SHOULD HIGH PRESSURE AIR BE USED TO REMOVE PISTON FROM CALIPER BORE. PERSONAL INJURY CAN RESULT FROM SUCH ACTION.

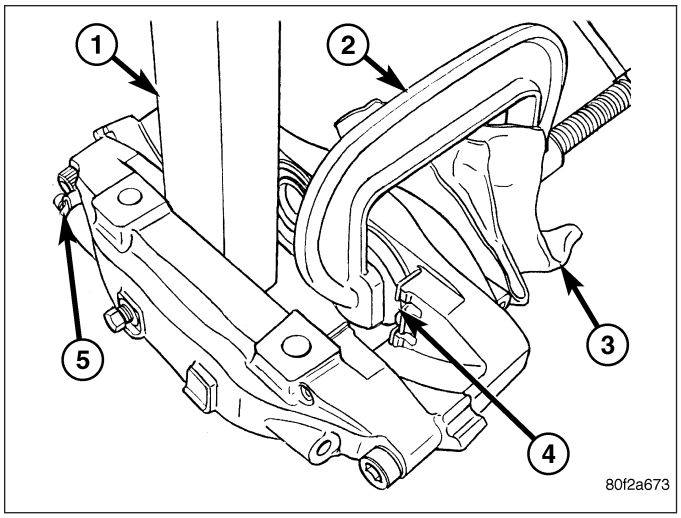

22. Using a rubber tipped air nozzle, apply short bursts of low pressure compressed air to caliper transfer port to force piston from bore.
23. Remove block of wood (1) from center area of caliper.
24. Remove piston from caliper bore, but leave piston dust boot in place.
25. Transfer C-clamp (2) and Installer to cover piston boot and bore where piston was just removed. It may be necessary to place a small piece of rubber over hole in center of Installer to seal off installer.
26. Place the piece of wood (1) inside center area of caliper, in front of piston to be removed.
27. Using a rubber tipped air nozzle, apply short bursts of low pressure compressed air to caliper transfer port to force piston from bore.
28. Remove piece of wood from center area of caliper.
29. Remove piston from caliper bore.
30. Remove C-clamp and Installer.

31. Remove piston dust boots (1) from empty piston bores of outboard half of caliper. To do so, carefully pry each boot from its retaining groove (2) using a small screwdriver. The screwdriver must be inserted between outer edge of dust boot and caliper. **Do not insert screwdriver into bore of caliper to remove boot; scoring of bore may occur.**

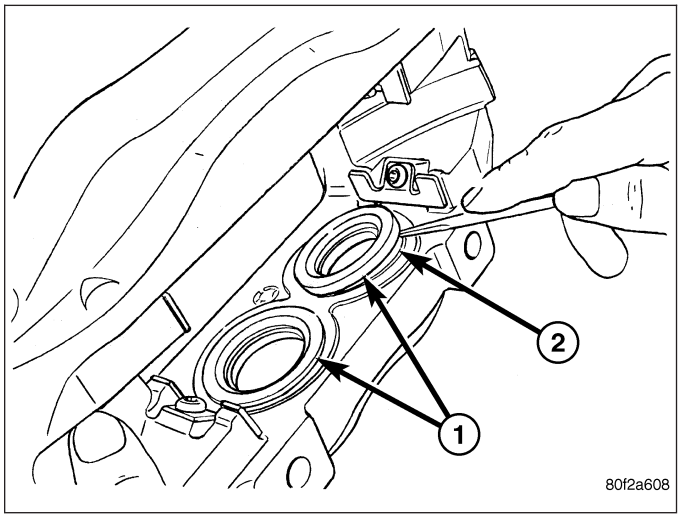

32. Remove piston seal (1) from each empty piston bore of outboard half of caliper using a trim stick (2) or other suitable tool. **Do not use a screwdriver or other metal tool; scoring of bore or burring of seal groove may occur.**
33. Remove bleeder screw on outboard half of caliper.

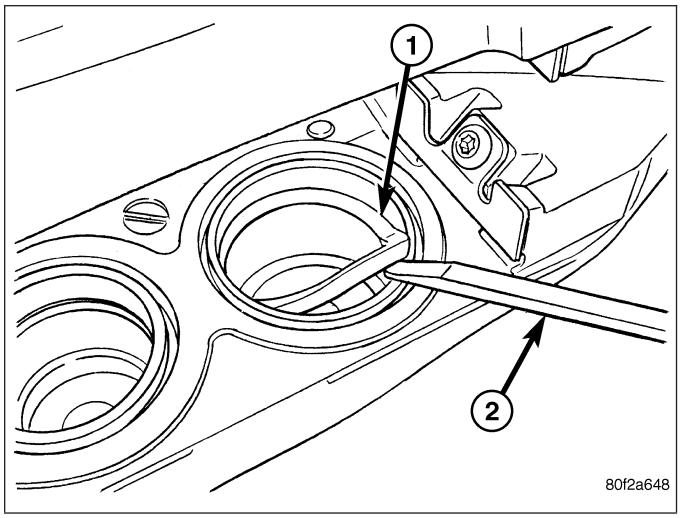

34. Thoroughly clean each of the four pistons using Mopar® Non-Clorinated Brake Parts Cleaner, alcohol or other suitable solvent and wipe dry using a lint free towel. Inspect all surfaces of each piston for any signs of corrosion or scoring. If any corrosion on piston cannot be removed using these products, or if piston is scored, replace piston. **Do not sand piston to remove corrosion or scoring.**

CAUTION: Do not attempt to hone piston bores of this caliper. If bores cannot be cleaned using appropriate solvents, caliper must be replaced.

35. Clean piston bores of caliper using Mopar® Non-Clorinated Brake Parts Cleaner, alcohol or another suitable solvent saturated into a lint free towel. Once thoroughly cleaned, wipe each bore dry using a clean lint free towel. Inspect all surfaces inside caliper bores for any signs of corrosion or scoring. If any corrosion inside piston bores cannot be removed using these products, or if any bore is scored, the caliper assembly must be replaced.
36. Using compressed air, blow out piston bores of caliper to remove any particles that may be left from cleaning procedure and to ensure bore is dry.
37. Proceed to Assembly to assemble caliper. (Refer to 5 - BRAKES/HYDRAULIC/MECHANICAL/DISC BRAKE CALIPER - ASSEMBLY)

INSPECTION

The piston is made from a phenolic resin (plastic material) and should be smooth and clean.

The piston must be replaced if cracked or scored. Do not attempt to restore a scored piston surface by sanding or polishing.

CAUTION: If the caliper piston is replaced, install the same type of piston in the caliper. Never interchange phenolic resin and steel caliper pistons. The pistons, seals, seal grooves, caliper bore and piston tolerances are different.

The bore can be **lightly** polished with a brake hone (3) to remove very minor surface imperfections. The caliper should be replaced if the bore is severely corroded, rusted, scored, or if polishing would increase bore diameter more than 0.025 mm (0.001 inch).

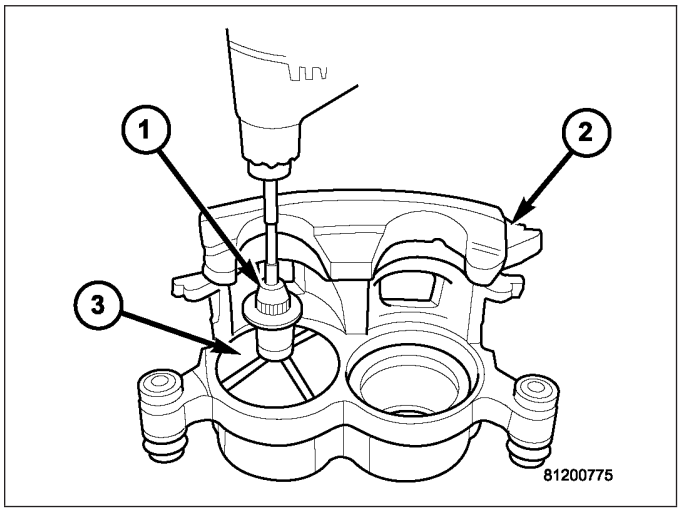

ASSEMBLY

DISC BRAKE CALIPER

CAUTION: Dirt, oil, and solvents can damage caliper seals. Insure assembly area is clean and dry.

1. Lubricate caliper pistons, piston seals and piston bores with clean, fresh brake fluid.

NOTE: Verify seal is fully seated and not twisted.

2. Install new piston seals (3) into caliper bores (2).

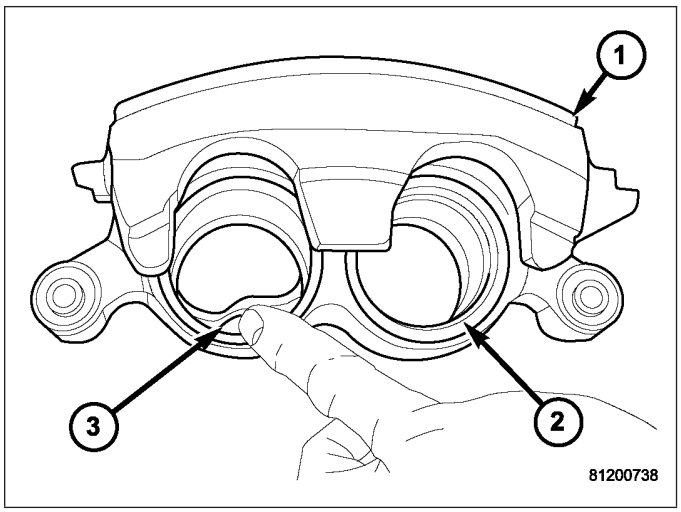

3. Lightly lubricate lip of new boot with silicone grease. Install boot on piston and work boot lip into the groove at the top of piston (3).
4. Stretch boot (2) rearward to straighten boot folds, then move boot forward until folds snap into place.
5. Install piston (3) into caliper bore and press piston down to the bottom of the caliper bore by hand or with hammer handle.

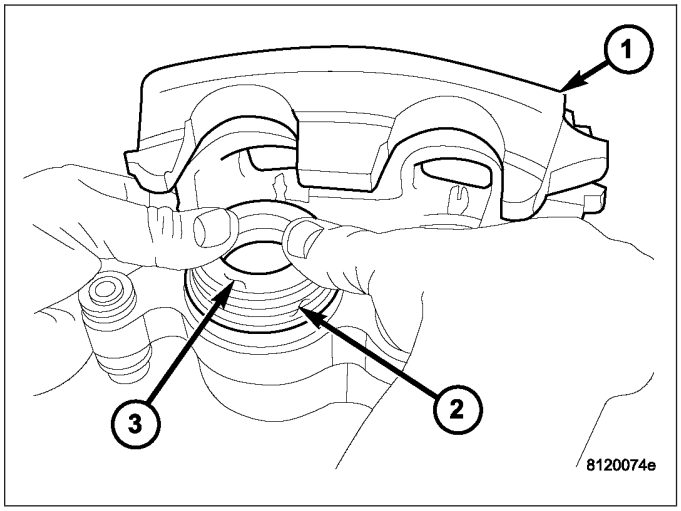

6. Seat dust boot in caliper (2) with Handle C-4171 (1) and Installer (3):
   - 54 mm caliper: Installer C-3716-A
7. Install the second piston and dust boot.
8. Lubricate caliper mounting bolt bushings, boot seals and bores with Mopar brake grease or Dow Corning® 807 grease only.

CAUTION: Use of alternative grease may cause damage to the boots seals.

9. Install the boot seals into the caliper seal bores and center the seals in the bores.
10. Install mounting bolt bushings into the boot seals and insure seal lip is engaged into the bushing grooves at either end of the bushing.

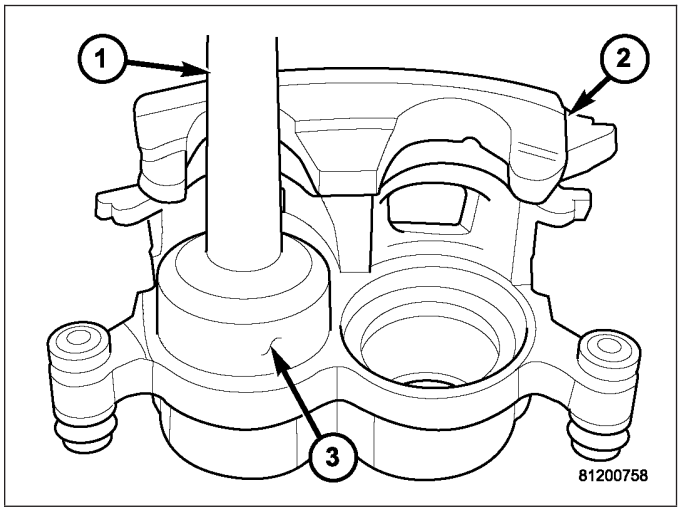

11. Install caliper bleed screw.

DISC BRAKE CALIPER - FRONT - SRT-10

NOTE: Perform Step 1 through Step 4 for each piston and bore of caliper. Keep in mind there are two different size pistons, bores, seals and boots used on each caliper.

1. Dip NEW piston seal in fresh clean Mopar® brake fluid conforming to DOT 4 specifications. By hand, gently work seal into seal groove in caliper piston bore until the seal is properly seated.

2. Lightly coat inside of NEW dust boot (1) with fresh clean Mopar® brake fluid conforming to DOT 4 specifications. Install dust boot on caliper piston (3). Be sure dust boot is completely seated in retaining groove (2) of caliper piston.

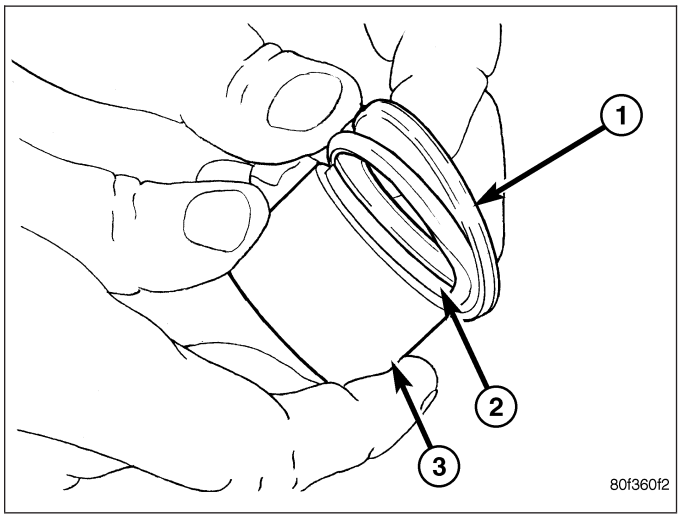

CAUTION: When installing piston (3), force must be applied to the piston uniformly to avoid cocking and binding the piston in the bore.

3. Squarely position piston (3) into top portion of piston bore. Using finger pressure, evenly apply pressure to top of piston, pressing it into bore until it is past piston seal, bottomed in bore.
4. Using finger pressure, press outer ring of dust boot into retaining groove surrounding caliper bore until flush with caliper machined surface.

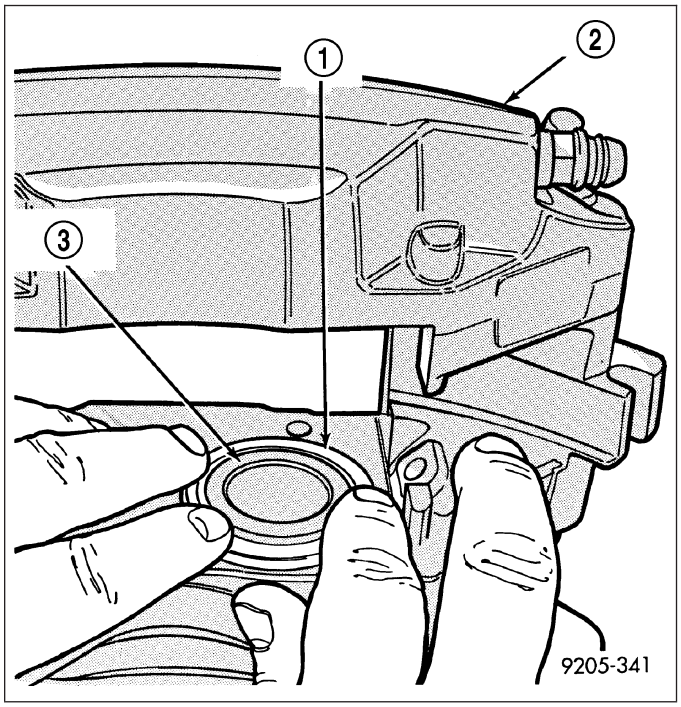

5. Repeat above procedure for remaining pistons and bores.
6. Install bleeder screws in top of caliper.
7. Install transfer brake fluid tube (5) between inboard and outboard caliper halves. Tighten tube nuts to 17 N·m (145 in. lbs.) torque.
8. Install brake pads (6) in caliper (1). (Refer to 5 - BRAKES/HYDRAULIC/MECHANICAL/BRAKE PADS/SHOES - INSTALLATION)
9. Install caliper (1) on vehicle. (Refer to 5 - BRAKES/ HYDRAULIC/MECHANICAL/DISC BRAKE CALIPER - INSTALLATION)

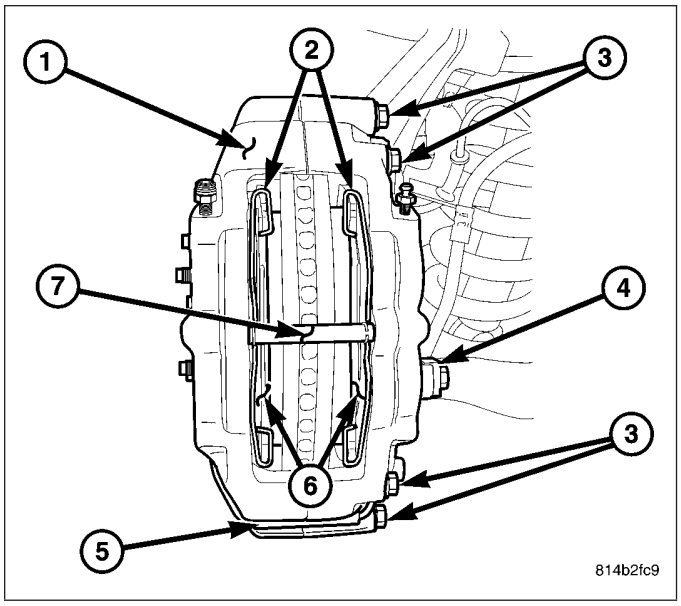

INSTALLATION

FRONT

NOTE: Install a new copper washers on the banjo bolt when installing

1. Install the disc brake caliper (2).

CAUTION: Verify brake hose is not twisted or kinked before tightening fitting bolt.

2. Install the banjo bolt with new copper washers to the caliper. Tighten to 27 N·m (20 ft. lbs.)
3. Install the caliper slide pin bolts. tighten to 32 N·m (24 ft. lbs.)
4. Bleed the base brake system, (Refer to 5 - BRAKES/HYDRAULIC/MECHANICAL - STANDARD PROCEDURE).
5. Install the tire and wheel assembly, (Refer to 22 - TIRES/WHEELS/WHEELS - STANDARD PROCEDURE).
6. Lower the vehicle.

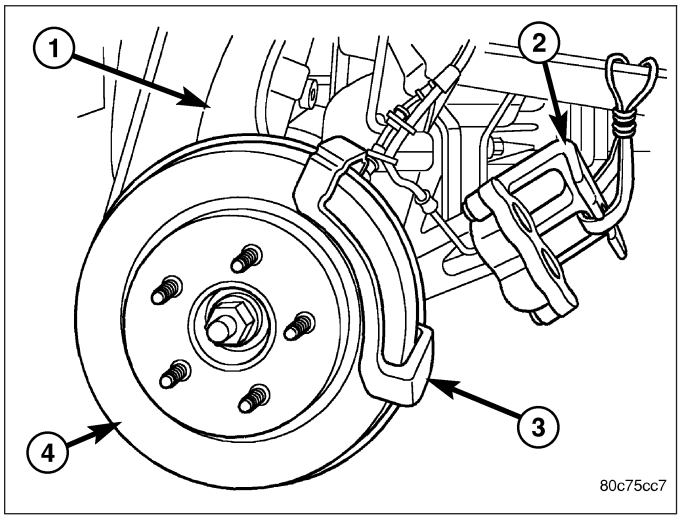

FRONT - SRT-10

NOTE: Install a new copper washers on the banjo bolt when installing

1. Install the disc brake pads, anti-rattle springs (2) and pad retaining pin (3).
2. Install the disc brake caliper (1).

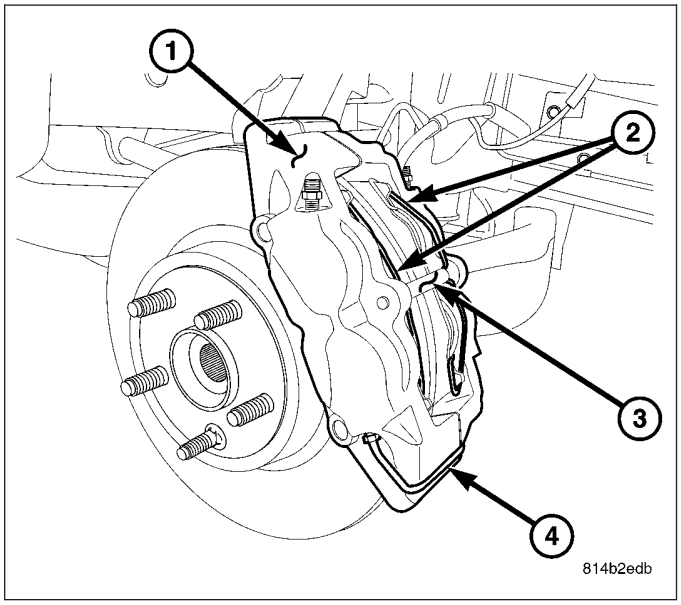

CAUTION: Verify brake hose is not twisted or kinked before tightening fitting bolt.

3. Install the brake hose (2) banjo bolt (1) with new copper washers to the caliper. Tighten to 27 N·m (20 ft. lbs.)
4. Install the caliper mounting bolts (3). tighten to 32 N·m (24 ft. lbs.).
5. Bleed the base brake system, (Refer to 5 - BRAKES/HYDRAULIC/MECHANICAL - STANDARD PROCEDURE).
6. Install the tire and wheel assembly, (Refer to 22 - TIRES/WHEELS/WHEELS - STANDARD PROCEDURE).
7. Lower the vehicle.

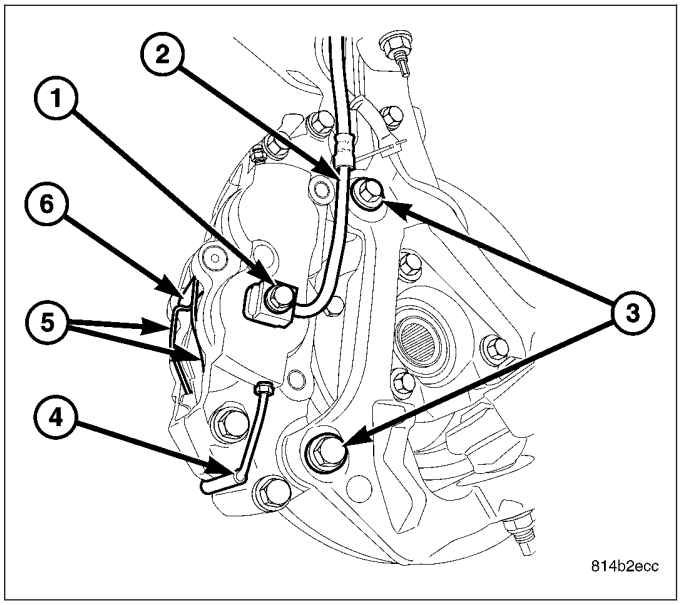

REAR

1. Install caliper (6) to the caliper adapter (1).
2. Coat the caliper mounting slide pin bolts (3) with silicone grease. Then install and tighten the bolts to 30 N·m (22 ft. lbs.).
3. Install the brake hose banjo bolt if removed.
4. Install the brake hose (4) to the caliper (6) with **new seal washers** and tighten fitting bolt to 27 N·m (245 in. lbs.).

CAUTION: Verify brake hose is not twisted or kinked before tightening fitting bolt.

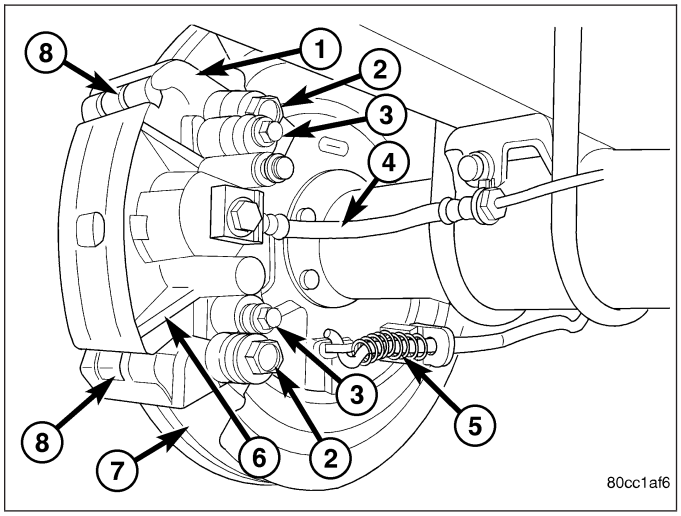

5. Bleed the base brake system, (Refer to 5 - BRAKES - STANDARD PROCEDURE) OR (Refer to 5 - BRAKES - STANDARD PROCEDURE).
6. Install the wheel and tire assemblies (Refer to 22 - TIRES/WHEELS/WHEELS - STANDARD PROCEDURE).
7. Remove the supports and lower the vehicle.
8. Verify a firm pedal before moving the vehicle.

REAR - SRT-10

NOTE: Install a new copper washers on the banjo bolt when installing

1. Install the rear disc brake caliper.
2. Install the banjo bolt (6) with new copper washers to the caliper.tighten to 27 N·m (20 ft. lbs.)
3. Install the caliper pin bolts (3). tighten to 30 N·m (22 ft. lbs.)
4. Bleed the base brake system, (Refer to 5 - BRAKES/HYDRAULIC/MECHANICAL - STANDARD PROCEDURE).
5. Install the tire and wheel assembly, (Refer to 22 - TIRES/WHEELS/WHEELS - STANDARD PROCEDURE).
6. Lower the vehicle.

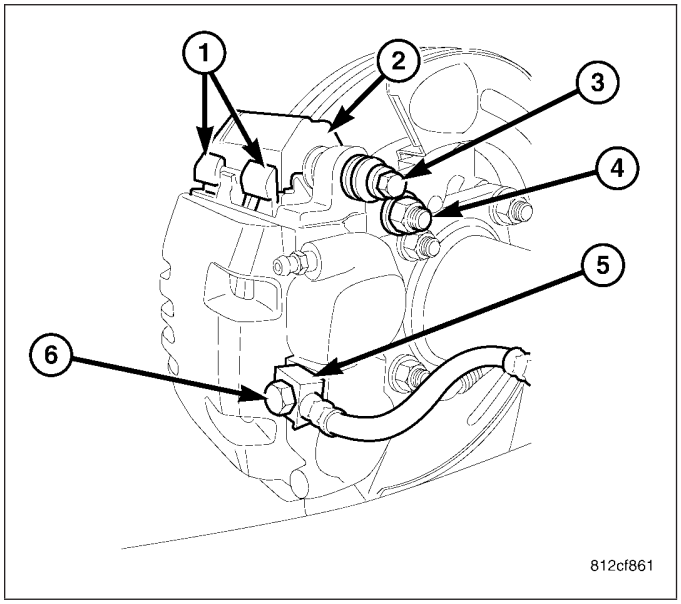

ADAPTER-DISC BRAKE CALIPER

REMOVAL

FRONT

1. Raise and support the vehicle.
2. Remove the tire and wheel assembly.
3. Remove the disc brake caliper (1) (Refer to 5 - BRAKES/HYDRAULIC/MECHANICAL/DISC BRAKE CALIPERS - REMOVAL).
4. Remove the bolts (2) securing the caliper adapter to the steering knuckle.

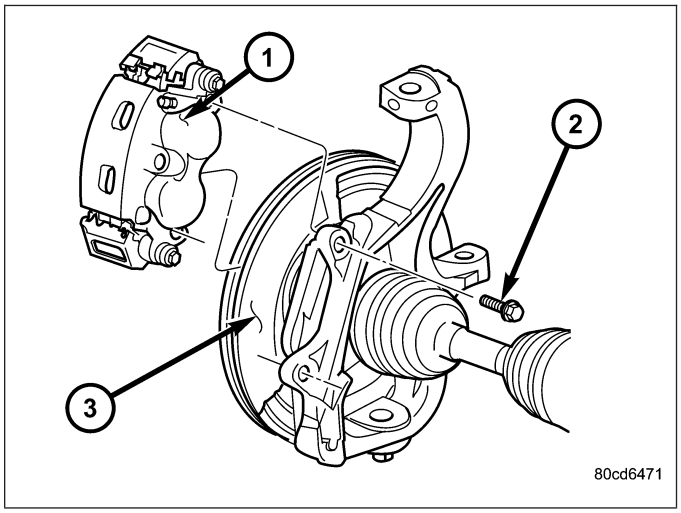

5. Remove the caliper adapter (1).

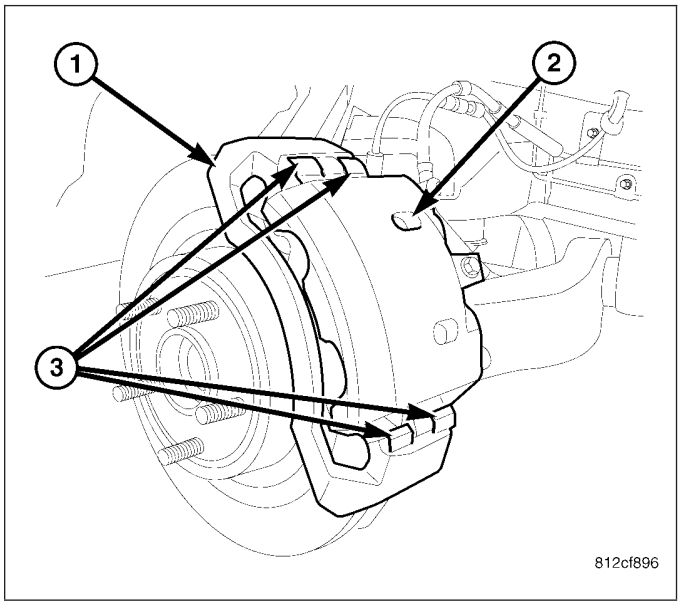

REAR

1. Raise and support the vehicle.
2. Remove the wheel and tire assembly.
3. Drain a small amount of fluid from master cylinder brake reservoir with a **clean** suction gun.
4. Bottom the caliper pistons into the caliper by prying the caliper over.
5. Remove the caliper slide bolts.
6. Remove the disc brake caliper from the mount.

CAUTION: Never allow the disc brake caliper to hang from the brake hose. Damage to the brake hose will result. Provide a suitable support to hang the caliper securely.

7. Remove the inboard and outboard brake pads (1).
8. Remove the anti-rattle clips (2).
9. Remove the caliper adapter mounting bolts (4).

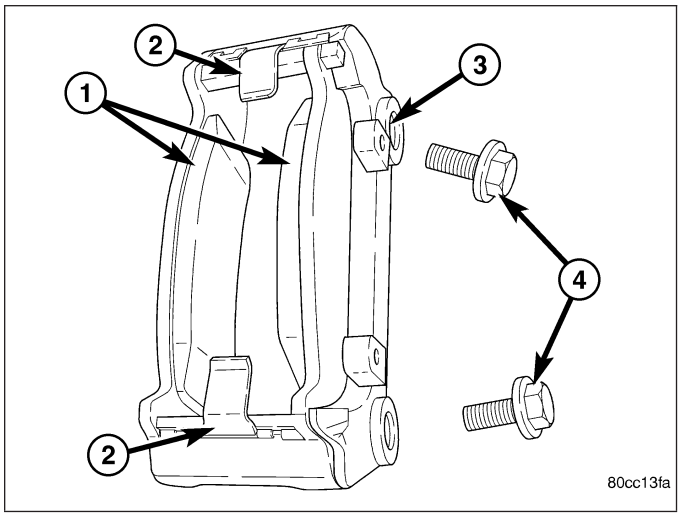

10. Remove the caliper adapter (1).

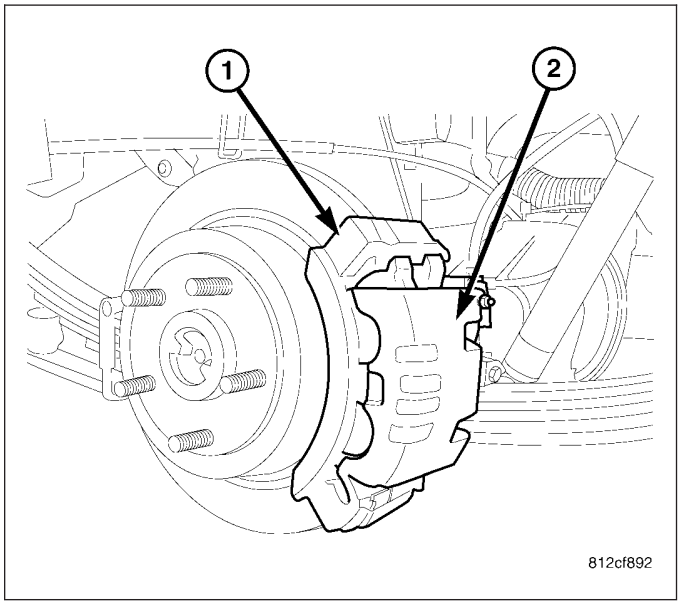

INSTALLATION

FRONT

1. Install the caliper adapter to the steering knuckle.
2. Install the caliper adapter mounting bolts (2) and tighten to 176 N·m (130 ft.lbs.) **LD** or tighten to 339 N·m (250 ft.lbs.) **HD** .
3. Install the disc brake caliper (1) (Refer to 5 - BRAKES/HYDRAULIC/MECHANICAL/DISC BRAKE CALIPERS - INSTALLATION).
4. Install the tire and wheel assembly (Refer to 22 - TIRES/WHEELS/WHEELS - STANDARD PROCEDURE).
5. Remove the support and lower the vehicle.

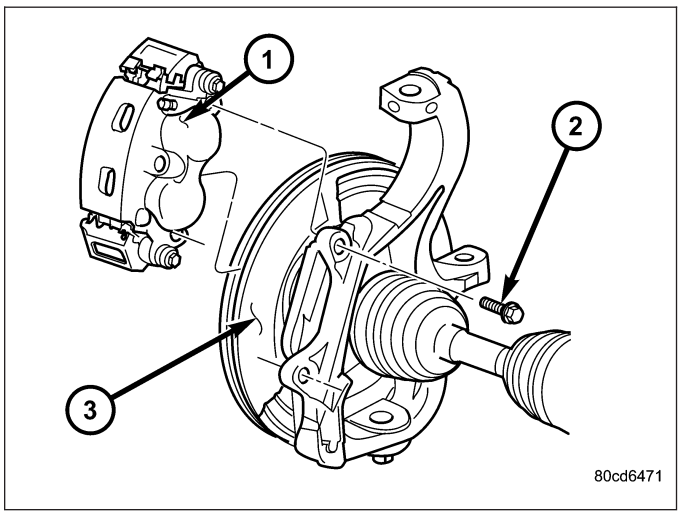

REAR

1. Install the caliper adapter mounting bolts (4). Tighten the mounting bolts to 135 N·m (100 ft.lbs) **LD** or tighten to 197 N·m (145 ft.lbs.) **HD**.
2. Install the anti-rattle clips (2).
3. Install the inboard and outboard pads (1).
4. Install the caliper mounting bolts.
5. Install the tire and wheel assembly.

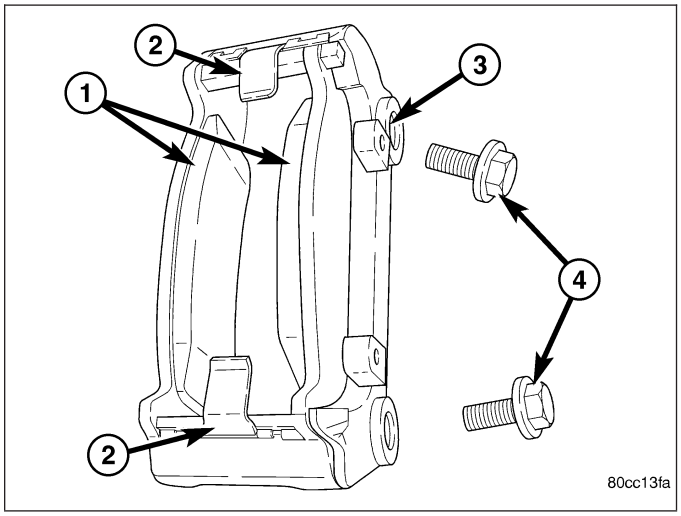

MOUNT-DISC BRAKE CALIPER ADAPTER

REMOVAL - REAR

1. Remove wheel and tire assembly.
2. Remove the disc brake caliper (Refer to 5 - BRAKES/HYDRAULIC/MECHANICAL/DISC BRAKE CALIPERS - REMOVAL).
3. Remove the caliper adapter (Refer to 5 - BRAKES/HYDRAULIC/MECHANICAL/DISC BRAKE CALIPER ADAPTER - REMOVAL).
4. Remove the rotor (Refer to 5 - BRAKES/HYDRAULIC/MECHANICAL/ROTORS - REMOVAL).
5. Remove the axle shaft (Refer to 3 - DIFFERENTIAL & DRIVELINE/REAR AXLE - 9 1/4/AXLE SHAFTS - REMOVAL).
6. Remove the park brake shoes (Refer to 5 - BRAKES/PARKING BRAKE/SHOES - REMOVAL).
7. Remove the parking brake cable from the brake lever.
8. Remove the bolts (3) attaching the support plate to the axle and remove the support plate.
9. Remove the caliper adapter mount (1) from the axle housing (2).

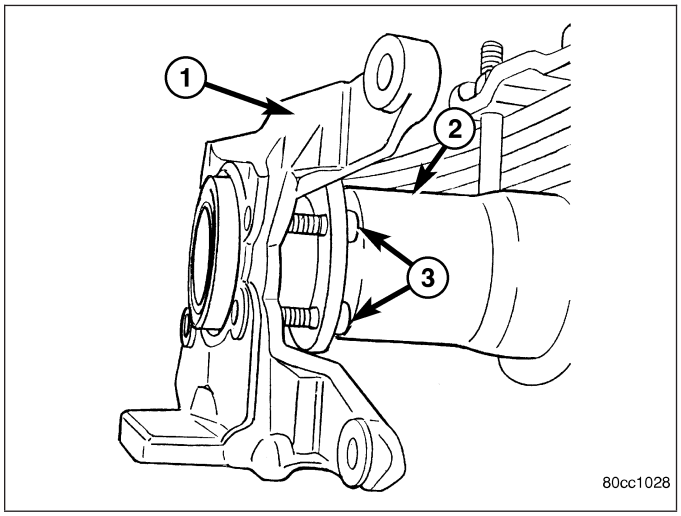

INSTALLATION

1. Install the caliper adapter mount (1) on the axle housing (2).
2. Install support plate on axle flange. Tighten attaching bolts (3) to 68 N·m (50 ft. lbs.) **LD** or tighten to 203 N·m (150 ft.lbs.) **HD**.

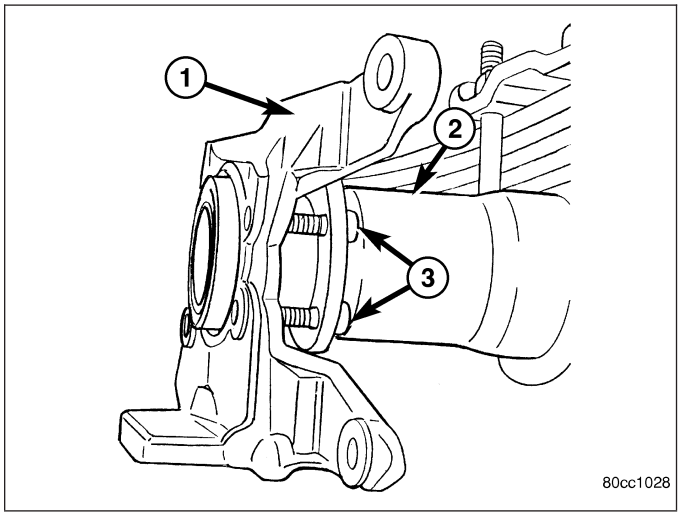

3. Install parking brake cable in the brake lever.
4. Install the park brake shoes (Refer to 5 - BRAKES/PARKING BRAKE/SHOES - INSTALLATION)..
5. Install axle shaft, (Refer to 3 - DIFFERENTIAL & DRIVELINE/REAR AXLE - 9 1/4/AXLE SHAFTS - INSTALLATION).
6. Adjust brake shoes to drum with brake gauge (Refer to 5 - BRAKES/PARKING BRAKE/SHOES - ADJUSTMENTS).
7. Install the rotor (Refer to 5 - BRAKES/HYDRAULIC/MECHANICAL/ROTORS - INSTALLATION).
8. Install the caliper adapter (Refer to 5 - BRAKES/HYDRAULIC/MECHANICAL/DISC BRAKE CALIPER ADAPTER - INSTALLATION).
9. Install the caliper (Refer to 5 - BRAKES/HYDRAULIC/MECHANICAL/DISC BRAKE CALIPERS - INSTALLATION).
10. Install wheel and tire assembly.

FLUID

DIAGNOSIS AND TESTING

BRAKE FLUID CONTAMINATION

Indications of fluid contamination are swollen or deteriorated rubber parts.

Swollen rubber parts indicate the presence of petroleum in the brake fluid.

To test for contamination, put a small amount of drained brake fluid in clear glass jar. If fluid separates into layers, there is mineral oil or other fluid contamination of the brake fluid.

If brake fluid is contaminated, drain and thoroughly flush system. Replace master cylinder, proportioning valve, caliper seals, wheel cylinder seals, Antilock Brakes hydraulic unit and all hydraulic fluid hoses.

STANDARD PROCEDURE

BRAKE FLUID LEVEL

Always clean the master cylinder reservoir (1) and cap (2) before checking fluid level. If not cleaned, dirt could enter the fluid.

The fluid fill level is indicated on the side of the master cylinder reservoir (1).

The correct fluid level is to the MAX indicator on the side of the reservoir. If necessary, add fluid to the proper level.

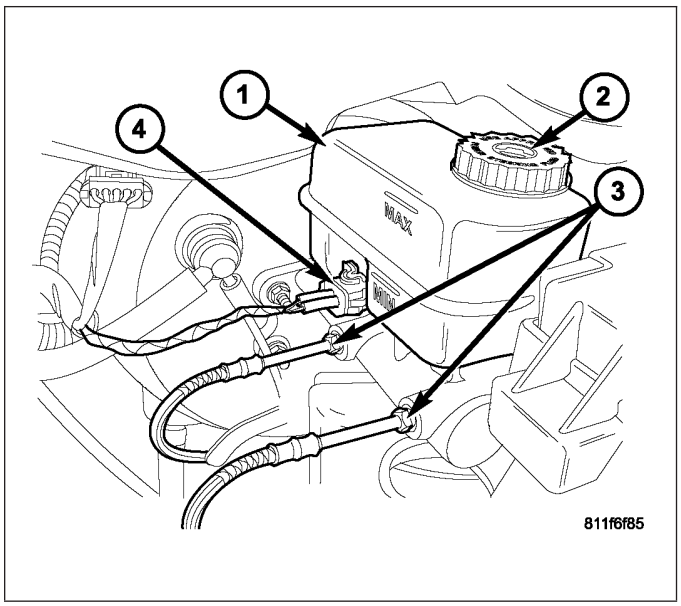

SPECIFICATIONS

BRAKE FLUID

The brake fluid used in this vehicle must conform to DOT 3 specifications and SAE J1703 standards. No other type of brake fluid is recommended or approved for usage in the vehicle brake system. Use only Mopar brake fluid or an equivalent from a tightly sealed container.

CAUTION: Never use reclaimed brake fluid or fluid from an container which has been left open. An open container of brake fluid will absorb moisture from the air and contaminate the fluid.

CAUTION: Never use any type of a petroleum-based fluid in the brake hydraulic system. Use of such type fluids will result in seal damage of the vehicle brake hydraulic system causing a failure of the vehicle brake system. Petroleum based fluids would be items such as engine oil, transmission fluid, power steering fluid, etc.

RESERVOIR-FLUID

REMOVAL

1. Install the prop rod on the brake pedal to keep pressure on the brake system.
2. Remove the reservoir cap (1) and siphon fluid into a drain container.
3. Remove the electrical connector from the fluid level switch (3) in the reservoir (2).
4. Remove the reservoir mounting bolt (5).
5. Remove the reservoir (2) from the master cylinder (4) by pulling upwards.
6. Remove old grommets from cylinder body.

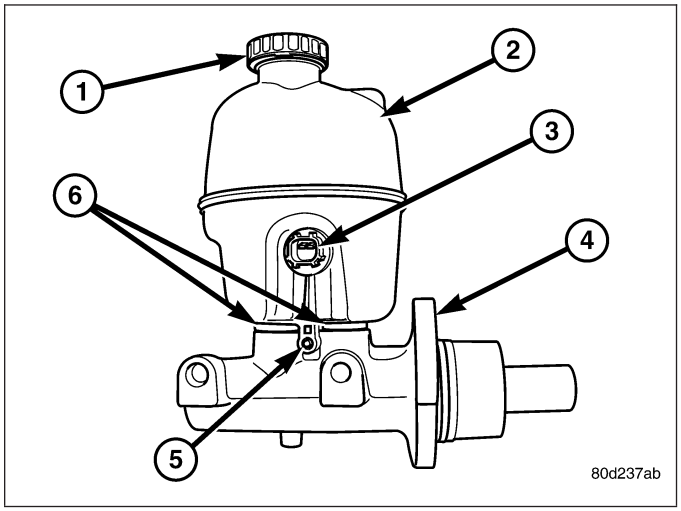

INSTALLATION

CAUTION: Do not use any type of tool to install the grommets. Tools may cut, or tear the grommets creating a leak problem after installation. Install the grommets using finger pressure only.

1. Lubricate the new grommets (6) with clean brake fluid and Install new grommets in cylinder body. Use finger pressure to install and seat grommets (6).
2. Start the reservoir (2) in grommets (6). Then rock the reservoir back and forth while pressing downward to seat it into the grommets.
3. Install the mounting bolt (5) for the reservoir (2) to the master cylinder (4).
4. Reconnect the electrical connector to the fluid reservoir level switch (3).
5. Remove the prop rod from the vehicle.
6. Fill and bleed base brake system, (Refer to 5 - BRAKES - STANDARD PROCEDURE).

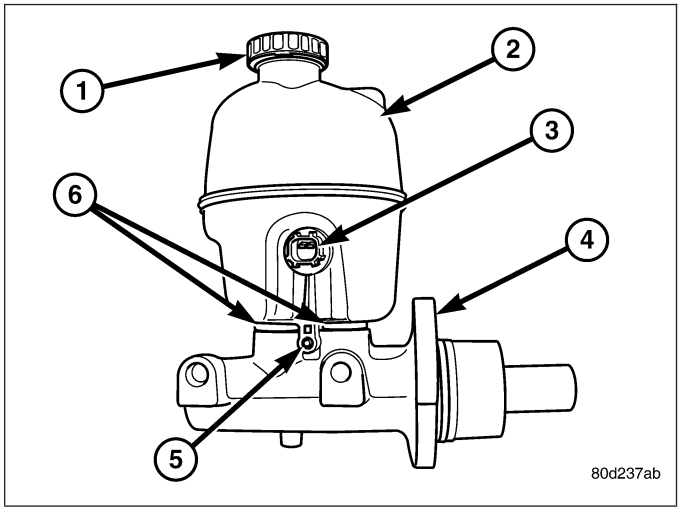

BRAKE JUNCTION BLOCK

REMOVAL

1. Remove the brake lines (1) from the junction block (2).
2. Remove the junction block (2) mounting bolt and remove the junction block from the bracket.

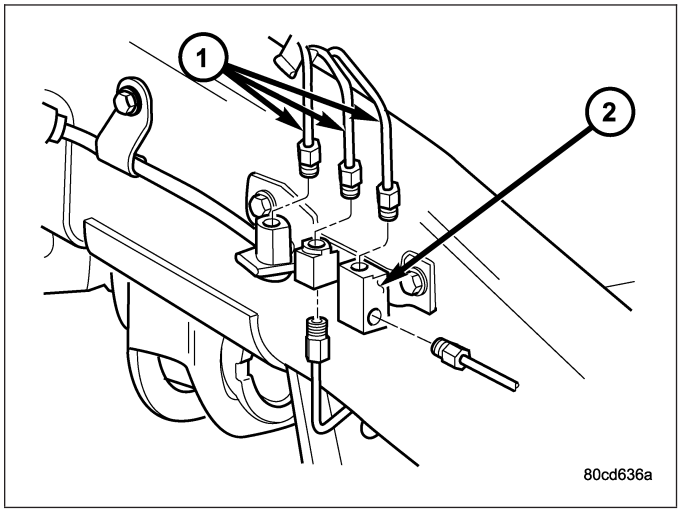

INSTALLATION

1. Position the junction block (2) on the bracket and install the mounting bolt. Tighten the mounting bolt to 23 N·m (210 in. lbs.).
2. Install the brake lines (1) into the junction block (2) and tighten to 19-23 N·m (170-200 in. lbs.).
3. Bleed the base brake system, (Refer to 5 - BRAKES/HYDRAULIC/MECHANICAL - STANDARD PROCEDURE).

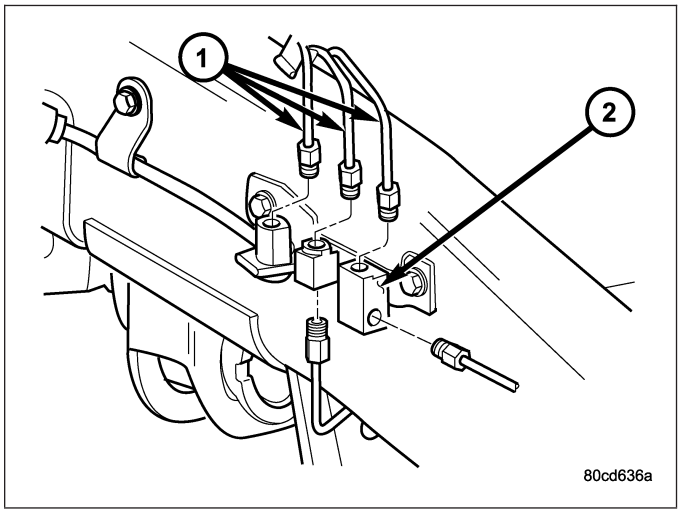

MASTER CYLINDER

DESCRIPTION

A two-piece master cylinder is used on all models. The cylinder body containing the primary and secondary pistons is made of aluminum. The removable fluid reservoir is made of nylon reinforced with glass fiber. The reservoir stores reserve brake fluid for the hydraulic brake circuits and has a switch for indicating low fluid levels. The reservoir is the only serviceable component.

The fluid compartments of the nylon reservoir are interconnected to permit fluid level equalization. However, the equalization feature does not affect circuit separation in the event of a front or rear brake malfunction. The reservoir compartments will retain enough fluid to operate the functioning hydraulic circuit.

Care must be exercised when removing/installing the master cylinder connecting lines. The threads in the cylinder fluid ports can be damaged if care is not exercised. Start all brake line fittings by hand to avoid cross threading.

The cylinder reservoir can be replaced when necessary. However, the aluminum body section of the master cylinder is not a repairable component.

NOTE: If diagnosis indicates that an internal malfunction has occurred, the aluminum body section must be replaced as an assembly.

OPERATION

The master cylinder bore contains a primary and secondary piston. The primary piston supplies hydraulic pressure to the front brakes. The secondary piston supplies hydraulic pressure to the rear brakes.

DIAGNOSIS AND TESTING

MASTER CYLINDER/POWER BOOSTER

1. Start engine and check booster vacuum hose connections. A hissing noise indicates vacuum leak. Correct any vacuum leak before proceeding.
2. Stop engine and shift transmission into Neutral.
3. Pump brake pedal until all vacuum reserve in booster is depleted.
4. Press and hold brake pedal under light foot pressure. The pedal should hold firm, if the pedal falls away master cylinder is faulty (internal leakage).
5. Start engine and note pedal action. It should fall away slightly under light foot pressure then hold firm. If no pedal action is discernible, power booster, vacuum supply, or vacuum check valve is faulty. Proceed to the POWER BOOSTER VACUUM TEST.
6. If the POWER BOOSTER VACUUM TEST passes, rebuild booster vacuum reserve as follows: Release brake pedal. Increase engine speed to 1500 rpm, close the throttle and immediately turn off ignition to stop engine.
7. Wait a minimum of 90 seconds and try brake action again. Booster should provide two or more vacuum assisted pedal applications. If vacuum assist is not provided, booster is faulty.

POWER BOOSTER VACUUM TEST

1. Connect vacuum gauge (6) to booster check valve (4) with short length of hose (3) and T-fitting (2).
2. Start and run engine at curb idle speed for one minute.
3. Observe the vacuum supply. If vacuum supply is not adequate, repair vacuum supply.
4. Clamp (1) hose (7) shut between intake vacuum source (5) and check valve (4).
5. Stop engine and observe vacuum gauge (6).
6. If vacuum drops more than one inch HG (33 millibars) within 15 seconds, booster diaphragm or check valve is faulty.

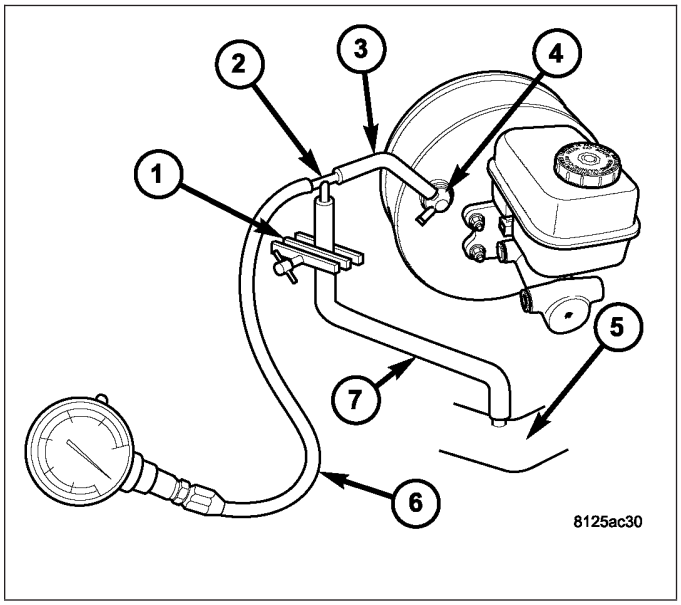

POWER BOOSTER CHECK VALVE TEST

1. Disconnect vacuum hose from check valve (1).
2. Remove check valve (1) and valve seal (2) from booster (3).
3. Use a hand operated vacuum pump for test.
4. Apply 15-20 inches vacuum at large end of check valve.
5. Plug off the small end to prevent vacuum leakage.
6. Vacuum should hold steady. If gauge on pump indicates vacuum loss, check valve is faulty and should be replaced.

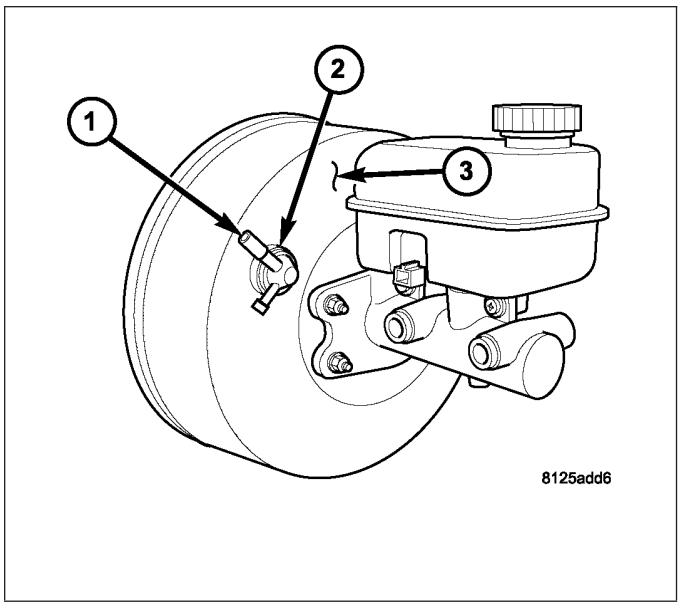

STANDARD PROCEDURE

MASTER CYLINDER BLEEDING

A new master cylinder should be bled before installation on the vehicle. Required bleeding tools include bleed tubes and a wood dowel to stroke the pistons. Bleed tubes can be fabricated from brake line.

1. Mount master cylinder in vise.
2. Attach bleed tubes to cylinder outlet ports (1). Then position each tube end into reservoir (2).
3. Fill reservoir with fresh brake fluid.
4. Press cylinder pistons inward with wood dowel. Then release pistons and allow them to return under spring pressure. Continue bleeding operations until air bubbles are no longer visible in fluid.

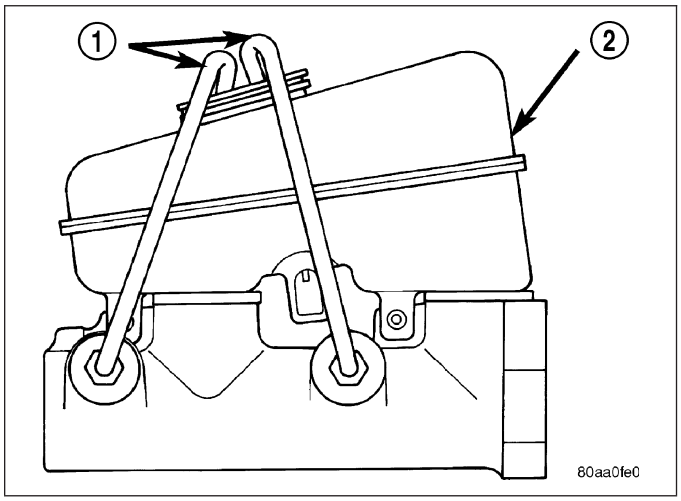

REMOVAL

ALL EXCEPT HYDROBOOST

1. Depress the brake pedal five times to deplete any vacuum that may remain in the booster unit.
2. Siphon and drain the fluid from the reservoir.
3. Disconnect the electrical connector for the low fluid level.
4. Place a towel or rag under the master cylinder outlet port area to protect the vehicle from brake fluid damage.
5. Remove the brake lines (3) from the master cylinder (4).
6. Remove the mounting nuts from the master cylinder (4).
7. Remove the master cylinder (4).

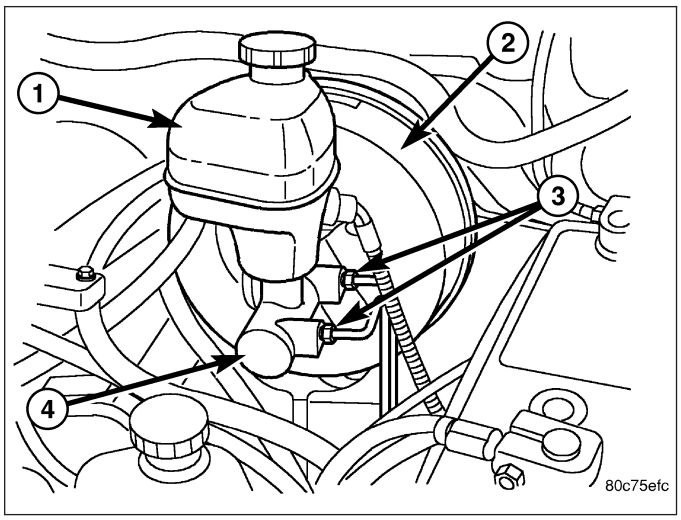

NOTE: Gently ease the master cylinder & reservoir assembly away from the booster, During removal the master cylinder should be kept as perpendicular to the front of the booster as possible to avoid excess interference with the booster output rod and in order not to dislodge the output rod from its seat inside the booster.

HYDROBOOST

1. Remove the brake lines from the master cylinder.
2. Disconnect the electrical connector for the low fluid level.
3. Remove the mounting nuts (4) from the master cylinder (3).
4. Remove the master cylinder (3).

NOTE: Using care remove the master cylinder directly forward in order not to dislodge the output rod from its seat inside the booster.

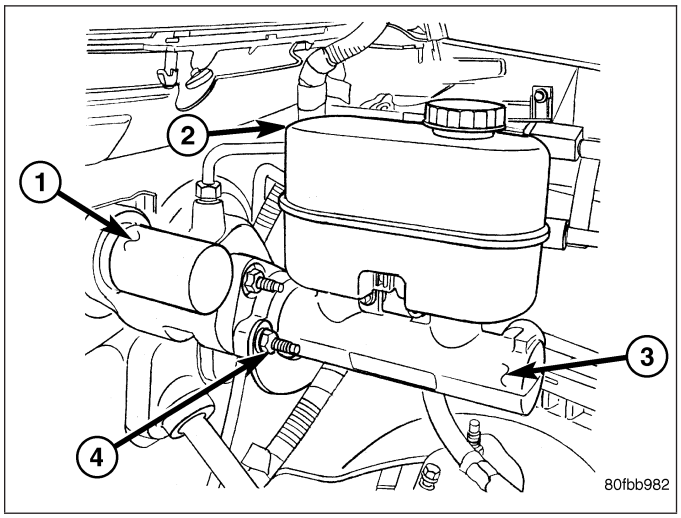

INSTALLATION

ALL EXCEPT HYDROBOOST

NOTE: If master cylinder is replaced bleed cylinder before installation.

NOTE: Make sure the output rod of the brake booster is in position and retained by a output rod retaining ring, by looking into the boosters master cylinder mounting hole. This position will enable the output rod to enter inside of the master cylinder plunger sleeve during installation. Proper position is obtained when the output rod is centered perpendicular to the master cylinder mounting hole.

NOTE: Prior to installing the master cylinder assembly check that there is a vacuum seal present at the shoulder of the master cylinder flange and it's neck. A square seal must be present to ensure vacuum integrity with the booster.

1. Gently install the master cylinder (9) on the booster mounting studs (4).

NOTE: Take precautions to locate the master cylinder plunger over the booster output rod, before installing the master cylinder. If correctly fitted the master cylinder should slide easily onto the booster output rod before the mounting studs are engaged in the flange holes of the master cylinder.

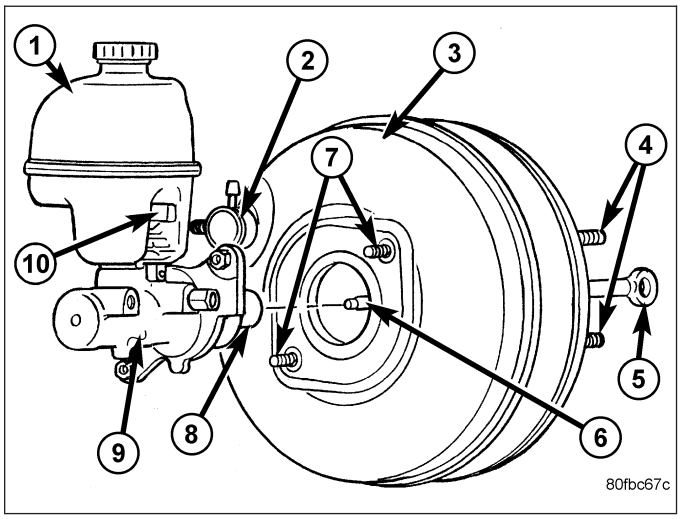

2. Install new mounting nuts and tighten to 25 N·m (221 in. lbs.)
3. Install the brake lines and tighten to 19 N·m (170 in. lbs.)
4. Reconnect the electrical connector for the low fluid level switch.
5. Fill and bleed the base brake system. (Refer to 5 - BRAKES - STANDARD PROCEDURE).

HYDROBOOST

NOTE: If master cylinder is replaced bleed cylinder before installation.

1. Install the master cylinder (3) on the booster mounting studs.
2. Install new mounting nuts (4) and tighten to 25 N·m (221 in. lbs.)
3. Install the brake lines and tighten to 19 N·m (170 in. lbs.)
4. Reconnect the elctrical connector for the low fluid level switch.
5. Fill and bleed the base brake system. (Refer to 5 - BRAKES - STANDARD PROCEDURE).

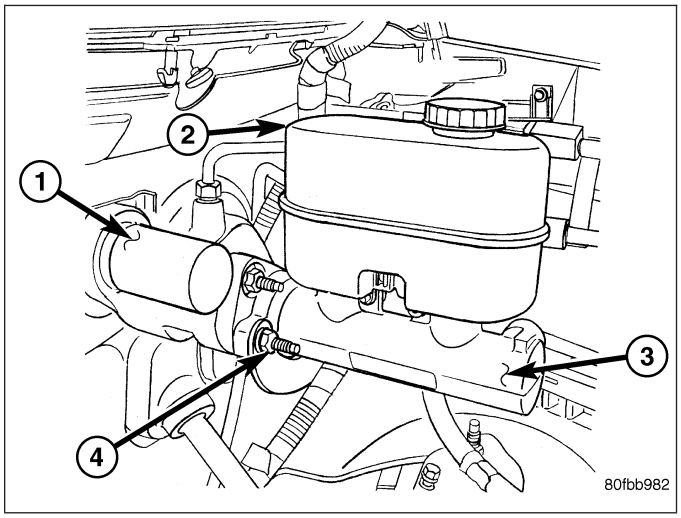

PEDAL

DESCRIPTION

NOTE: The brake pedal is serviced as a complete assembly including accelerator pedal and the bracket.

A suspended-type brake pedal is used. The pedal is attached to the pedal support bracket with a pivot shaft pin (3) and bushings (2). If the bushings (2) become dry a spray lubricant can be used to eliminate noises. The booster push rod is attached to the pedal with a clip (1). The pedal (4), bushings (2), pivot pin (3) and support bracket are not serviceable components.

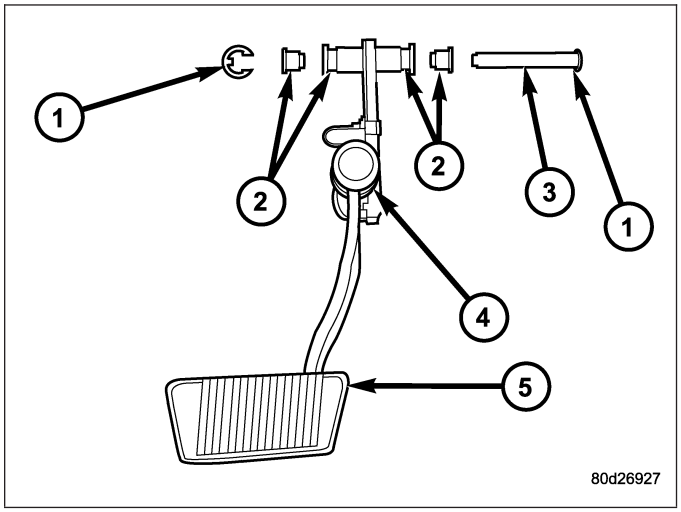

OPERATION

The brake pedal is attached to the booster push rod. When the pedal is depressed, the primary booster push rod is depressed which moves the booster secondary rod. The booster secondary rod depress the master cylinder piston.

REMOVAL

NOTE: The brake pedal is serviced as a complete assembly including accelerator pedal and the bracket.

1. Disconnect the negative battery cable.
2. Remove the steering column opening cover (Refer to 23 - BODY/INSTRUMENT PANEL/STEERING COLUMN OPENING COVER - REMOVAL).
3. Remove the brake lamp switch and discard (Refer to 8 - ELECTRICAL/LAMPS/LIGHTING - EXTERIOR/BRAKE LAMP SWITCH - REMOVAL).
4. **On vehicles equipped with adjustable pedals.** Disconnect the adjuster cable (1) to the pedal (2).

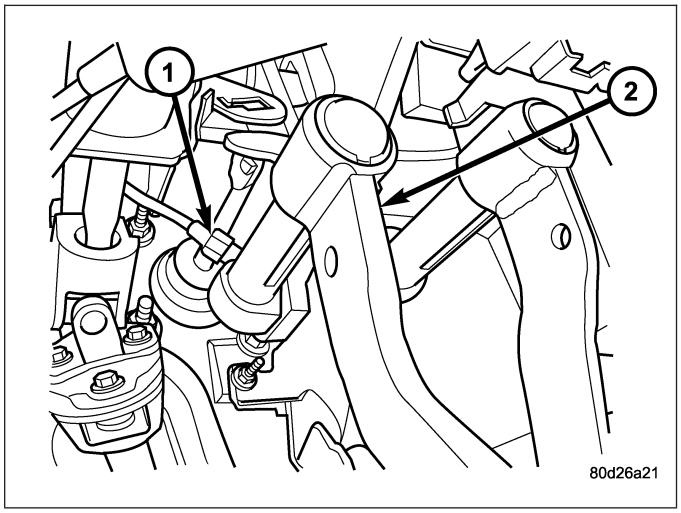

5. Remove the steering column (Refer to 19 - STEERING/COLUMN - REMOVAL).

6. Remove the brake booster (5) (Refer to 5 - BRAKES/HYDRAULIC/MECHANICAL/POWER BRAKE BOOSTER - REMOVAL).
7. Disconnect the electrical connectors.
8. Remove the module mounting bolts.
9. Disconnect the accelerator pedal cable.
10. Remove the pedal assembly mounting nuts/fasteners (4).

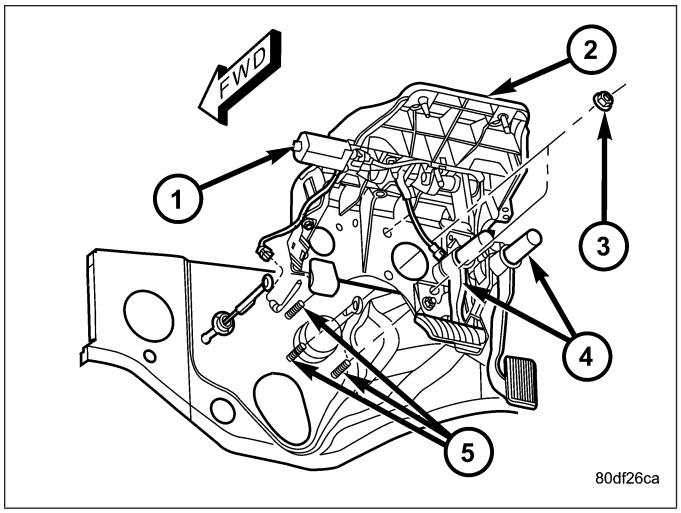

INSTALLATION

1. Install the pedal assembly (4) to the vehicle.
2. Install the mounting bolts (3) and tighten to 28 N·m (21 ft. lbs.).

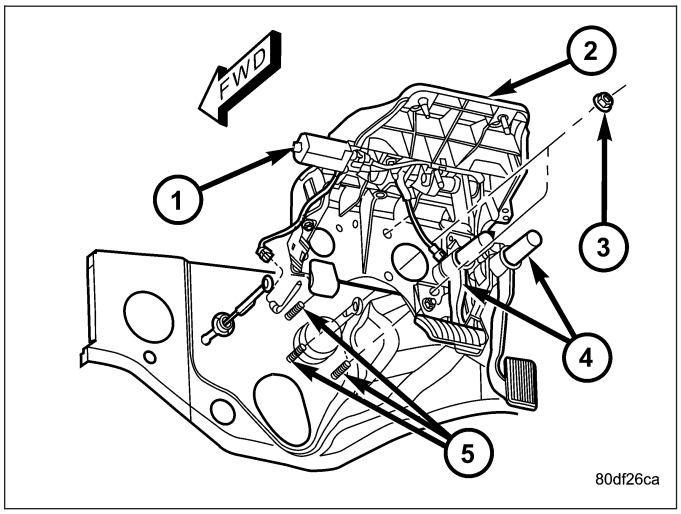

3. Reconnect the accelerator cable (1) to the pedal (2).

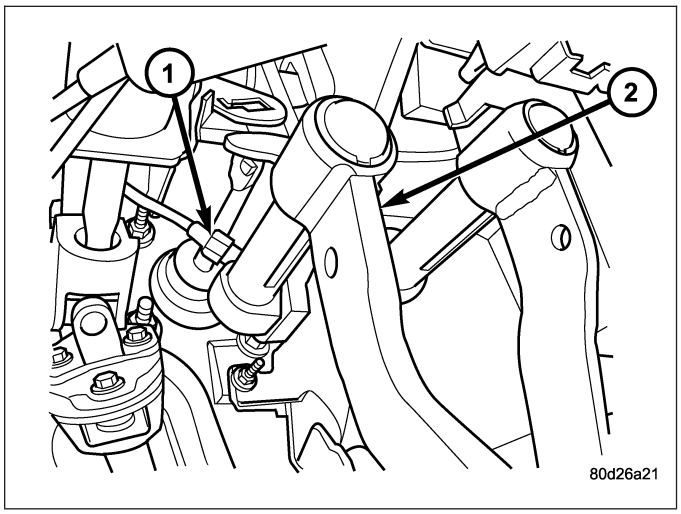

4. Install the module mounting bolts and tighten to 38 N·m (28 ft. lbs.).
5. Reconnect the electrical connectors.

6. Install the brake booster (Refer to 5 - BRAKES/HYDRAULIC/MECHANICAL/POWER BRAKE BOOSTER - INSTALLATION).
7. Install the steering column (Refer to 19 - STEERING/COLUMN - INSTALLATION).
8. Install a new brake lamp switch. (Refer to 8 - ELECTRICAL/LAMPS/LIGHTING - EXTERIOR/BRAKE LAMP SWITCH - REMOVAL).
9. **On vehicles equipped with adjustable brake pedal.**Reconnect the electrical connector to the motor and the adjuster cable at the pedal.
10. Install the steering column opening cover (Refer to 23 - BODY/INSTRUMENT PANEL/STEERING COLUMN OPENING COVER - INSTALLATION).
11. Reconnect the negative battery cable.

BOOSTER-POWER BRAKE

DESCRIPTION

All models use a tandem diaphragm, power brake booster (3).

NOTE: The power brake booster is not a repairable component. The booster must be replaced as an assembly if diagnosis indicates a malfunction has occurred.

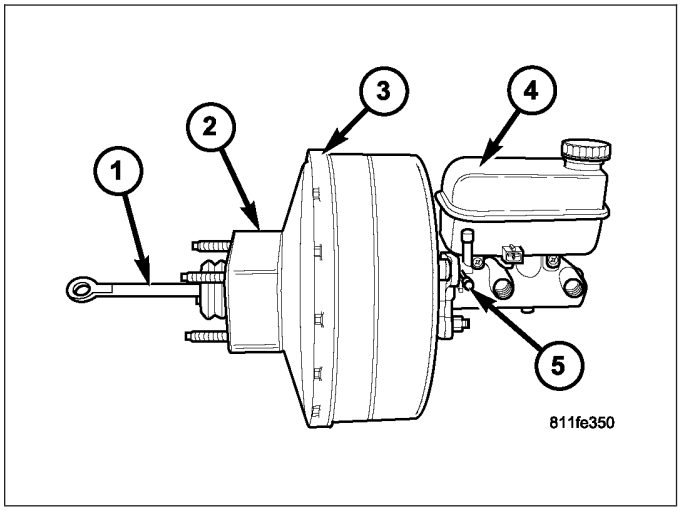

OPERATION

The booster unit consists of a single housing divided into two by a tandem diaphragm (3). The outer edge of the diaphragm is secured to the housing. A spacer block (2) is located in between the cowl and the booster housing. The booster push rod (1), connects the booster to the brake pedal and master cylinder (4), is attached to the center of the diaphragm. A check valve (5) is used in the booster outlet connected to the engine intake manifold. Power assist is generated by utilizing a combination of vacuum and atmospheric pressure to boost brake assist.

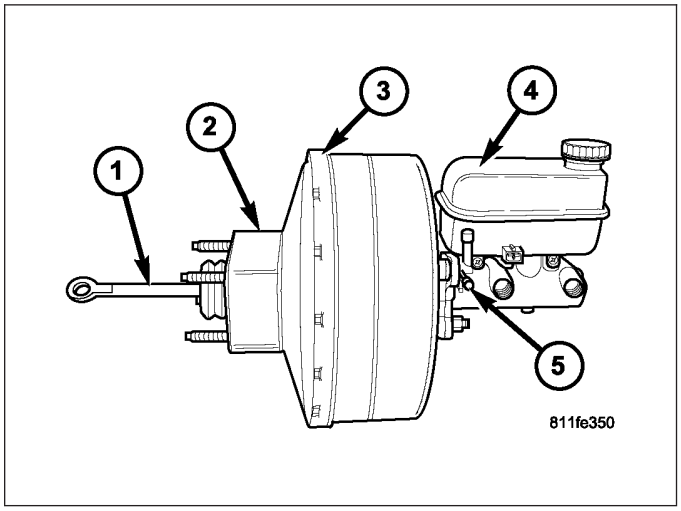

REMOVAL

1. Remove master cylinder. (Refer to 5 - BRAKES/HYDRAULIC/MECHANICAL/MASTER CYLINDER - REMOVAL).
2. Disconnect vacuum line at booster.
3. Remove clip securing booster push rod to brake pedal (Refer to 5 - BRAKES/HYDRAULIC/MECHANICAL/PEDAL - REMOVAL)..
4. Remove the nuts (1) from the booster mounting studs.
5. Remove the booster (2) and gasket from front cowl panel.

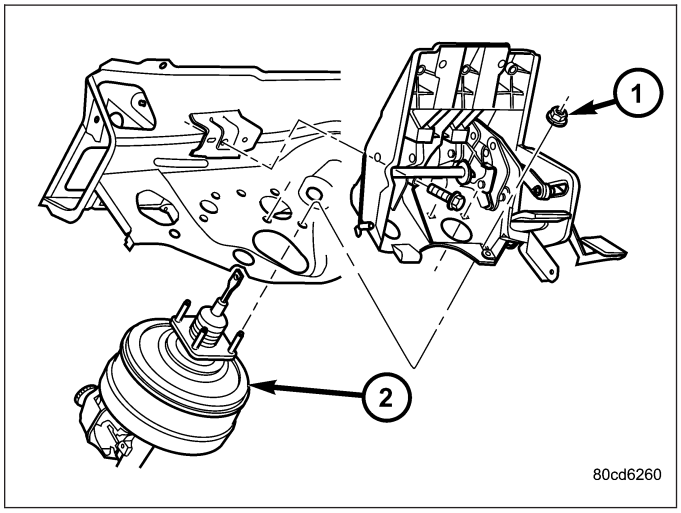

INSTALLATION

1. Guide the booster (2) studs into the cowl panel holes and seat the booster on the panel.
2. Install and tighten new booster attaching nuts (1) to 28 N·m (250 in. lbs.).

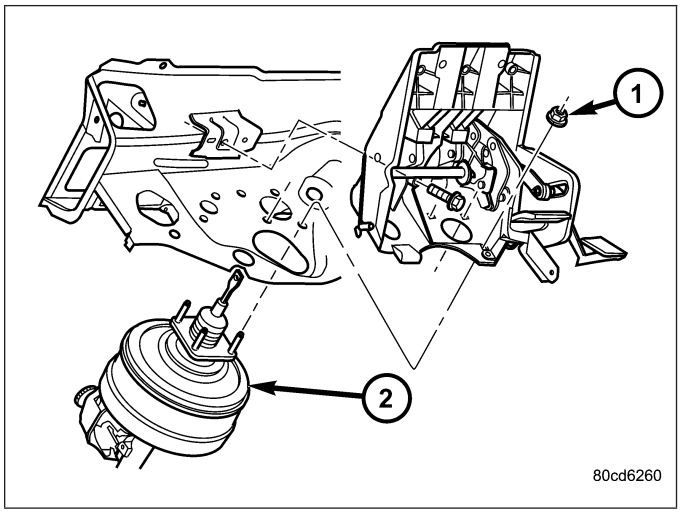

3. Install the booster push rod on brake pedal and install clip.
4. Install the booster check valve if removed and connect the vacuum hose to the check valve.
5. Install the master cylinder. (Refer to 5 - BRAKES/HYDRAULIC/MECHANICAL/MASTER CYLINDER - INSTALLATION).
6. Fill and bleed the brake system. (Refer to 5 - BRAKES - STANDARD PROCEDURE).

BOOSTER-HYDRO-BOOST BRAKE

DIAGNOSIS AND TESTING

HYDRAULIC BOOSTER

The hydraulic booster uses hydraulic pressure from the power steering pump. Before diagnosing a booster problem, first verify the power steering pump is operating properly. Perform the following checks.

- Check the power steering fluid level.
- Check the brake fluid level.
- Check all power steering hoses and lines for leaks and restrictions.

- Check power steering pump pressure.

NOISES

The hydraulic booster unit will produce certain characteristic booster noises. The noises may occur when the brake pedal is used in a manner not associated with normal braking or driving habits.

HISSING

A hissing noise may be noticed when above normal brake pedal pressure is applied, 40 lbs. or above. The noise will be more noticeable if the vehicle is not moving. The noise will increase with the brake pedal pressure and an increase of system operating temperature.

CLUNK-CHATTER-CLICKING

A clunk-chatter-clicking may be noticed when the brake pedal is released quickly, after above normal brake pedal pressure is applied 50-100 lbs..

BOOSTER FUNCTION TEST

With the engine off depress the brake pedal several times to discharge the accumulator. Then depress the brake pedal using 40 lbs. of force and start the engine. The brake pedal should fall and then push back against your foot. This indicates the booster is operating properly.

ACCUMULATOR LEAKDOWN

1. Start the engine, apply the brakes and turn the steering wheel from lock to lock. This will ensure the accumulator is charged. Turn off the engine and let the vehicle sit for one hour. After one hour there should be at least two power assisted brake application with the engine off. If the system does not retain a charge the booster must be replaced.
2. With the engine off depress the brake pedal several times to discharge the accumulator. Grasp the accumulator and see if it wobbles or turns. If it does the accumulator has lost a gas charge and the booster must be replaced.

SEAL LEAKAGE

If the booster leaks from any of the seals the booster assembly must be replaced.

- **INPUT ROD SEAL (3):** Fluid leakage from rear end of the booster.
- **PISTON SEAL (6):** Fluid leakage from vent at front of booster.
- **HOUSING SEAL (4):** Fluid leakage between housing and housing cover.
- **SPOOL VALVE SEAL (7):** Fluid leakage near spool plug.
- **RETURN PORT FITTING SEAL (8):** Fluid leakage from port fitting.

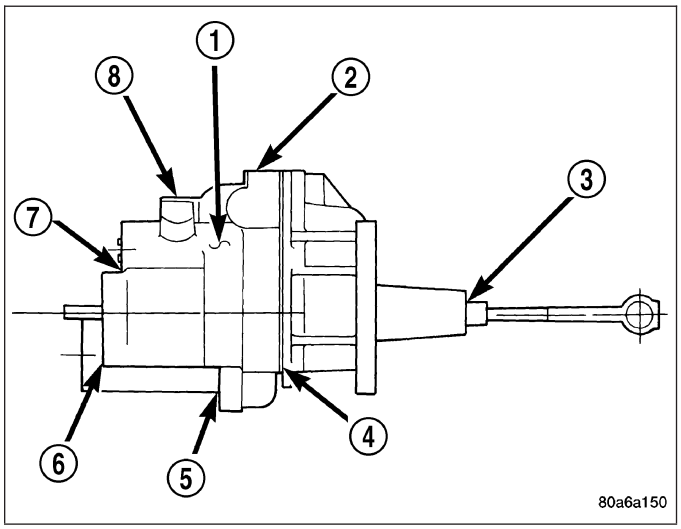

HYDRAULIC BOOSTER DIAGNOSIS CHART

CONDITION	POSSIBLE CAUSES	CORRECTION
Slow Brake Pedal Return	1. Excessive seal friction in booster.	1. Replace booster.
	2. Faulty spool valve action.	2. Replace booster.
	3. Restriction in booster return hose.	3. Replace hose.
	4. Damaged input rod.	4. Replace booster.
Excessive Brake Pedal Effort.	1. Internal or external seal leakage.	1. Replace booster.
	2. Faulty steering pump.	2. Replace pump.
Brakes Self Apply	1. Dump valve faulty.	1. Replace booster.
	2. Contamination in hydraulic system.	2. Flush hydraulic system and replace booster.
	3. Restriction in booster return hose.	3. Replace hose.
Booster Chatter, Pedal Vibration	1. Slipping pump belt.	1. Replace power steering belt.
	2. Low pump fluid level.	2. Fill pump and check for leaks.
Grabbing Brakes	1. Low pump flow.	1. Test and repair/replace pump.
	2. Faulty spool valve action.	2. Replace booster.

STANDARD PROCEDURE

BLEEDING

The hydraulic booster is generally self-bleeding, this procedure will normally bleed the air from the booster. Normal driving and operation of the unit will remove any remaining trapped air.

1. Fill power steering pump reservoir.
2. Disconnect fuel shutdown relay and crank the engine for several seconds, Refer to Fuel System for relay location and WARNING.
3. Check fluid level and add if necessary.
4. Connect fuel shutdown relay and start the engine.
5. Turn the steering wheel slowly from lock to lock twice.
6. Stop the engine and discharge the accumulator by depressing the brake pedal 5 times.
7. Start the engine and turn the steering wheel slowly from lock to lock twice.
8. Turn off the engine and check fluid level and add if necessary.

NOTE: If fluid foaming occurs, wait for foam to dissipate and repeat steps 7 and 8.

REMOVAL

NOTE: If the booster is being replaced because the power steering fluid is contaminated, flush the power steering system before replacing the booster.

1. With engine off depress the brake pedal 5 times to discharge the accumulator.
2. Remove brake lines from master cylinder.
3. Remove mounting nuts from the master cylinder.
4. Remove the bracket from the hydraulic booster lines and master cylinder mounting studs.

5. Remove the master cylinder (3).
6. Remove the return hose (4) and the two pressure lines (1&5) from the hydraulic booster (2).
7. Remove the booster push rod clip, washer and rod remove from the brake pedal.
8. Remove the mounting nuts from the hydraulic booster and remove the booster.

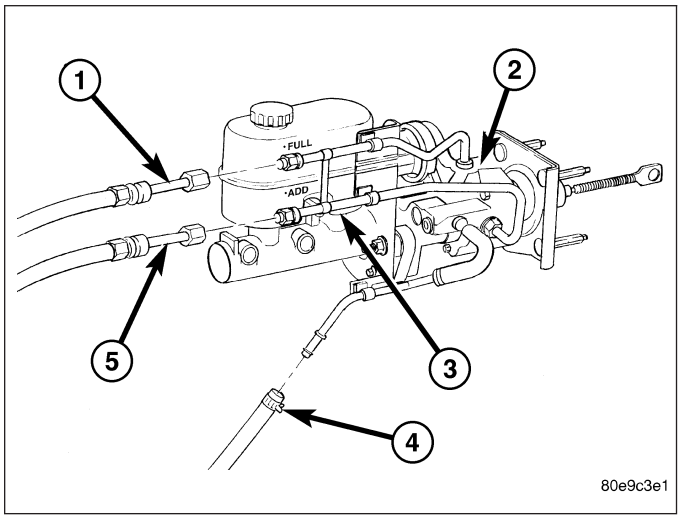

INSTALLATION

1. Install the hydraulic booster (2) and tighten the mounting nuts to 28 N·m (21 ft. lbs.).
2. Install the booster push rod, washer and clip onto the brake pedal.
3. Install the master cylinder (3) on the mounting studs. and tighten the mounting nuts to 23 N·m (17 ft. lbs.).
4. Install the brake lines to the master cylinder and tighten to 19 N·m (170 in. lbs.).
5. Install the hydraulic booster line bracket onto the master cylinder mounting studs.
6. Install the master cylinder mounting nuts and tighten to 23 N·m (17 ft. lbs.).
7. Install the hydraulic booster pressure lines (1&5) to the bracket and booster.
8. Tighten the pressure lines to 41 N·m (30 ft. lbs.).

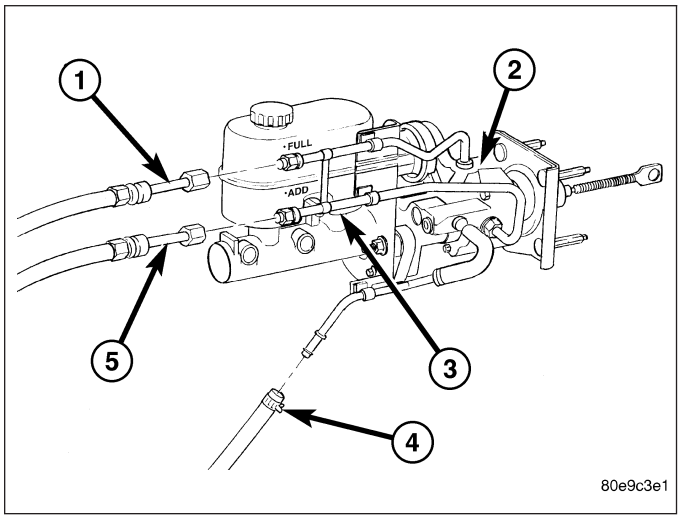

NOTE: Inspect o-rings on the pressure line fittings to insure they are in good condition before installation. Replace o-rings if necessary.

9. Install the return hose (4) to the booster.
10. Bleed base brake system, (Refer to 5 - BRAKES/HYDRAULIC/MECHANICAL - STANDARD PROCEDURE).
11. Fill the power steering pump with fluid, (Refer to 19 - STEERING/PUMP - STANDARD PROCEDURE).

CAUTION: MOPAR (MS-9602) ATF+4 is to be used in the power steering system. No other power steering or automatic transmission fluid is to be used in the system. Damage may result to the power steering pump and system if any other fluid is used, and do not overfill.

12. Bleed the hydraulic booster (Refer to 5 - BRAKES/HYDRAULIC/MECHANICAL/POWER BRAKE BOOSTER - STANDARD PROCEDURE).

ROTORS

DIAGNOSIS AND TESTING

DISC BRAKE ROTOR

The rotor braking surfaces should not be refinished unless necessary.

Light surface rust and scale can be removed with a lathe equipped with dual sanding discs. The rotor surfaces can be restored by machining with a disc brake lathe if surface scoring and wear are light.

Replace the rotor for the following conditions:

- Severely Scored
- Tapered
- Hard Spots
- Cracked
- Below Minimum Thickness

ROTOR MINIMUM THICKNESS

Measure rotor thickness at the center of the brake shoe contact surface. Replace the rotor if below minimum thickness, or if machining would reduce thickness below the allowable minimum.

Rotor minimum thickness is usually specified on the rotor hub. The specification is either stamped or cast into the hub surface.

ROTOR RUNOUT

Check rotor lateral runout with dial indicator C-3339 (1). Excessive lateral runout will cause brake pedal pulsation and rapid, uneven wear of the brake shoes. Position the dial indicator plunger approximately 25.4 mm (1 in.) inward from the rotor edge.

NOTE: Be sure wheel bearing has zero end play before checking rotor runout.

Maximum allowable rotor runout is 0.131 mm (0.005 in.) **HD**.

Maximum allowable rotor runout is 0.050 mm (0.002 in.) **LD**.

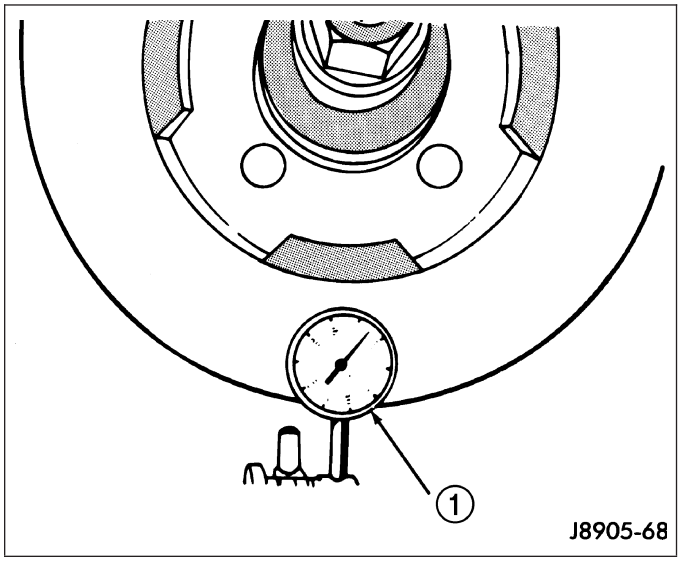

ROTOR THICKNESS VARIATION

Variations in rotor thickness will cause pedal pulsation, noise and shudder.

Measure rotor thickness at 6 to 12 points around the rotor face.

Position the micrometer (1) approximately 25.4 mm (1 in.) from the rotor (2) outer circumference for each measurement.

Thickness should not **vary** by more than 0.015 mm (0.0059 in.) from point-to-point on the rotor. Machine or replace the rotor if necessary.

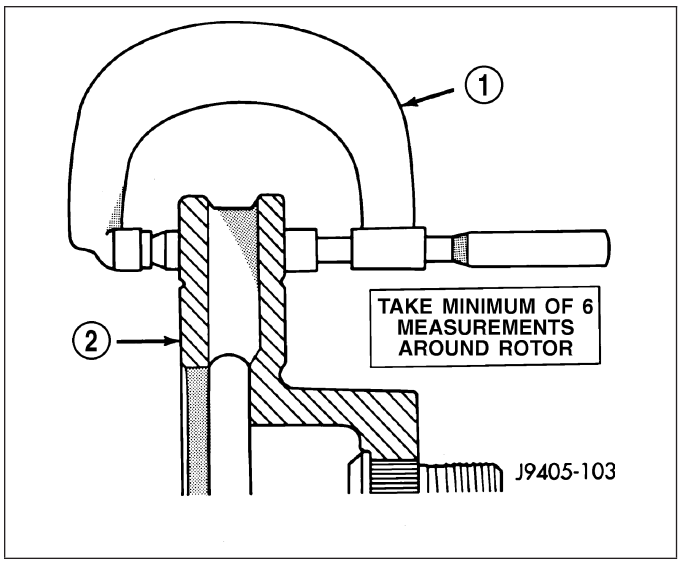

REMOVAL

FRONT

1. Raise and support the vehicle.
2. Remove the wheel and tire assembly.

NOTE: Do not allow brake hose to support caliper adapter assembly.

3. Remove the caliper (2) from the steering knuckle (1), (Refer to 5 - BRAKES/HYDRAULIC/MECHANICAL/DISC BRAKE CALIPERS - REMOVAL) and remove caliper adapter assembly.

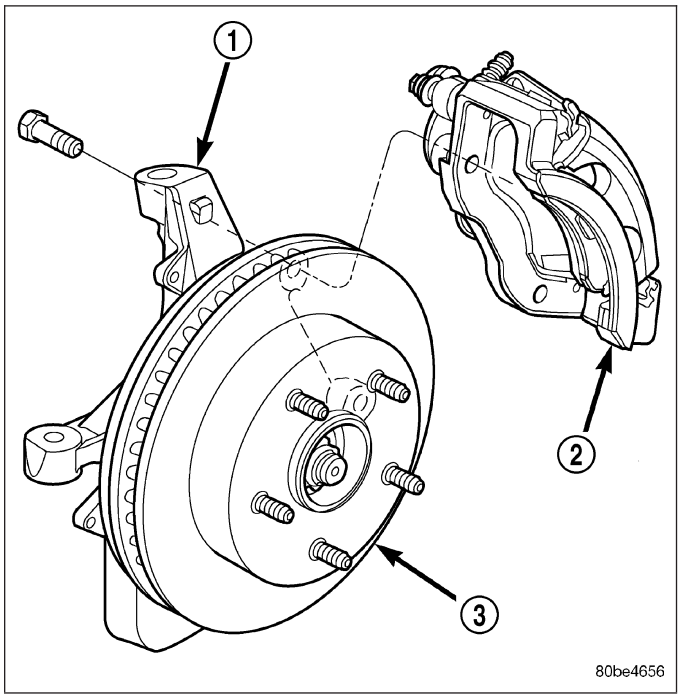

4. Remove the extension to the rotor nuts **HD DRW ONLY**.
5. Remove the rotor (1) from the hub/bearing (2) wheel studs.

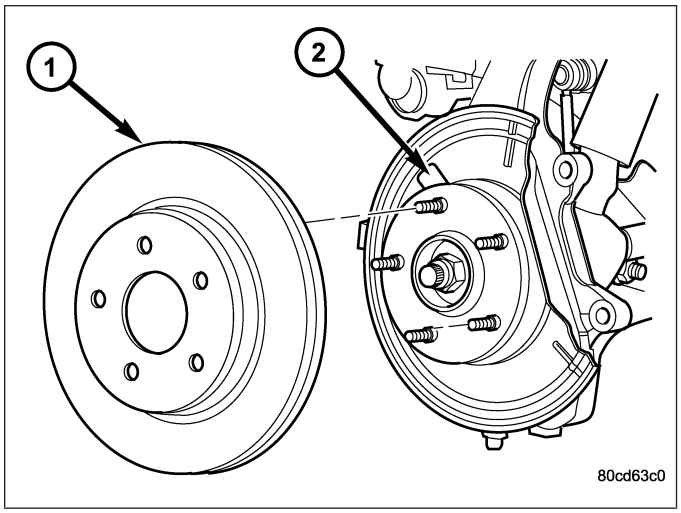

REAR

1. Raise and support the vehicle
2. Remove the tire and wheel assembly.
3. Remove the disc brake caliper (3), (Refer to 5 - BRAKES/HYDRAULIC/MECHANICAL/DISC BRAKE CALIPERS - REMOVAL).
4. Remove the caliper adapter (2) bolts. (Refer to 5 - BRAKES/HYDRAULIC/MECHANICAL/DISC BRAKE CALIPER ADAPTER - REMOVAL)
5. Remove the retaining clips and rotor assembly (1).

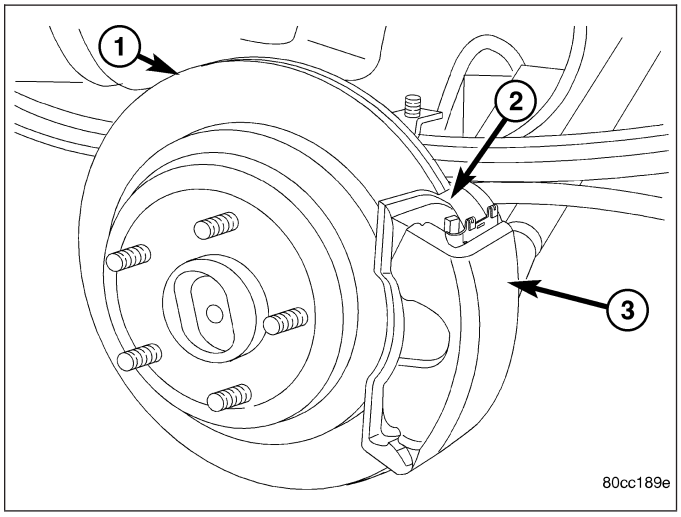

REAR DUAL WHEELS

1. Raise and support the vehicle
2. Remove the tire and wheel assembly.
3. Remove the disc brake caliper, (Refer to 5 - BRAKES/HYDRAULIC/MECHANICAL/DISC BRAKE CALIPERS - REMOVAL).
4. Remove the caliper adapter bolts.
5. Remove the rear axle shaft from the housing on dual rear wheels, (Refer to 3 - DIFFERENTIAL & DRIVELINE/REAR AXLE - 286RBI/AXLE SHAFTS - REMOVAL).
6. Remove the hub and rotor assembly (C3500 only).

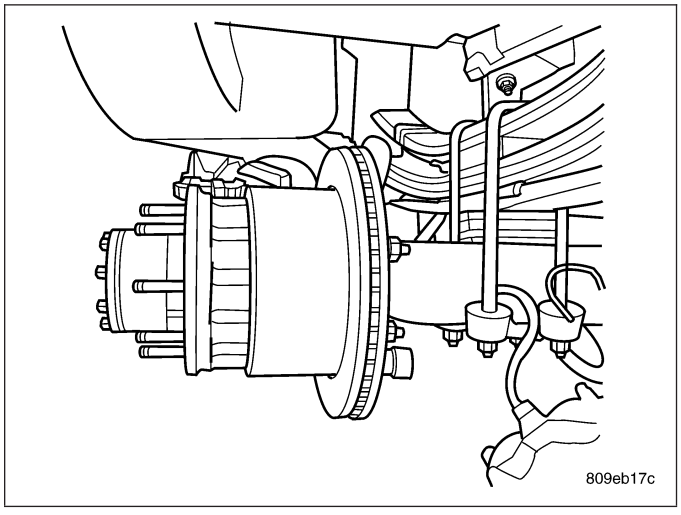

INSTALLATION

FRONT

1. On models with all-wheel antilock system (ABS), check condition of tone wheel on hub/bearing (2). If teeth on wheel are damaged, hub/bearing assembly will have to be replaced (tone wheel is not serviced separately).
2. Install the hub extension and nuts to the front rotor. Tighten nuts to 130 N·m (96 ft.lbs). **HD DRW ONLY.**
3. Install the rotor (1) onto the hub/bearing (2) wheel studs.

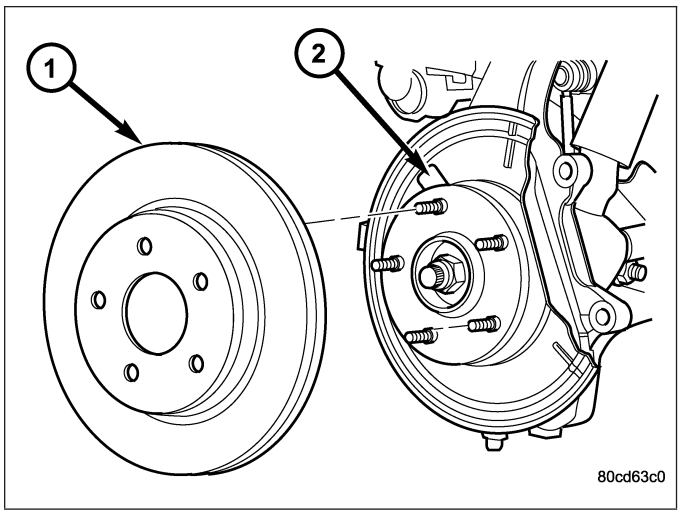

4. Install the caliper adapter assembly (2), (Refer to 5 - BRAKES/HYDRAULIC/MECHANICAL/DISC BRAKE CALIPERS - INSTALLATION) and tighten adapter bolts to:
5. Install the wheel and tire assembly, (Refer to 22 - TIRES/WHEELS/WHEELS - STANDARD PROCEDURE) and lower the vehicle.
6. Apply the brakes several times to seat brake pads. Be sure to obtain firm pedal before moving vehicle.

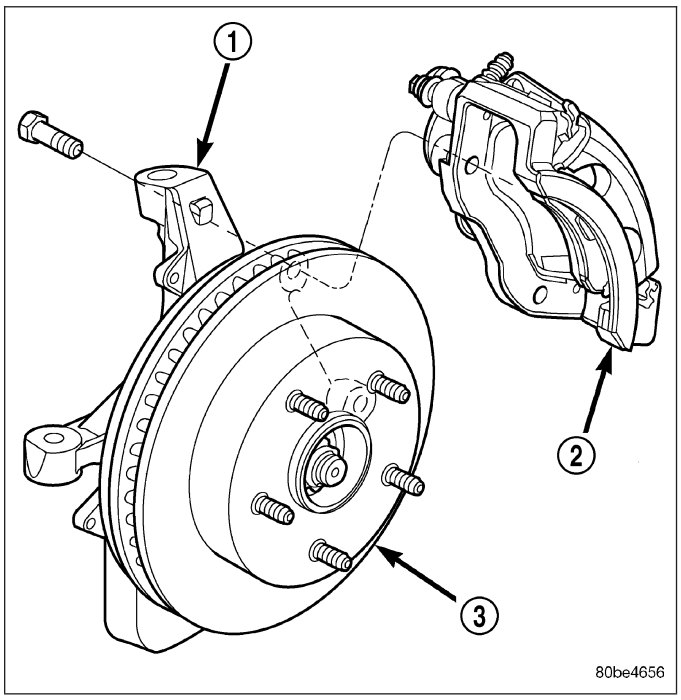

REAR

1. Install the rotor (1) to the axleshaft.
2. Install the caliper adapter (2) (Refer to 5 - BRAKES/HYDRAULIC/MECHANICAL/DISC BRAKE CALIPER ADAPTER - INSTALLATION).
3. Install the caliper adapter bolts and tighten the mounting bolts to 135 N·m (100 ft.lbs) **LD** or 197 N·m (145 ft.lbs) **HD**.
4. Install the disc brake caliper (3), (Refer to 5 - BRAKES/HYDRAULIC/MECHANICAL/DISC BRAKE CALIPERS - INSTALLATION).
5. Install the tire and wheel assembly (Refer to 22 - TIRES/WHEELS/WHEELS - STANDARD PROCEDURE).
6. Lower the vehicle.

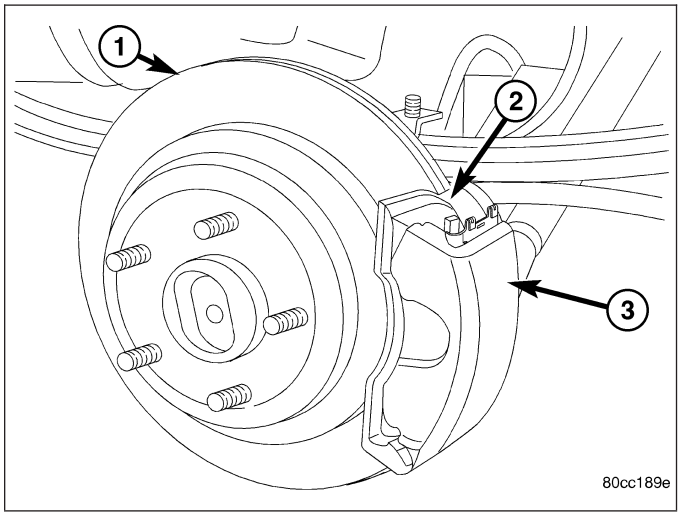

REAR DUAL WHEELS

1. Install the hub to the rotor. Tighten the bolts (1) to 128 N·m (95 ft. lbs.).

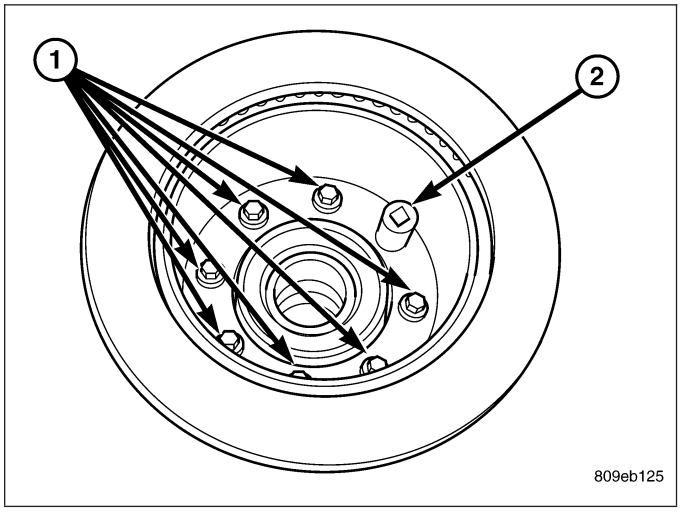

2. Install the hub and rotor assembly.
3. Install the rear axle shaft to the housing with dual wheels, (Refer to 3 - DIFFERENTIAL & DRIVELINE/REAR AXLE - 286RBI/AXLE SHAFTS - INSTALLATION).
4. Install the caliper adapter bolts 197 N·m (145 ft.lbs) **LD**.
5. Install the disc brake caliper, (Refer to 5 - BRAKES/HYDRAULIC/MECHANICAL/DISC BRAKE CALIPERS - INSTALLATION)..
6. Install the tire and wheel assembly, (Refer to 22 - TIRES/WHEELS/WHEELS - STANDARD PROCEDURE).
7. Lower the vehicle.

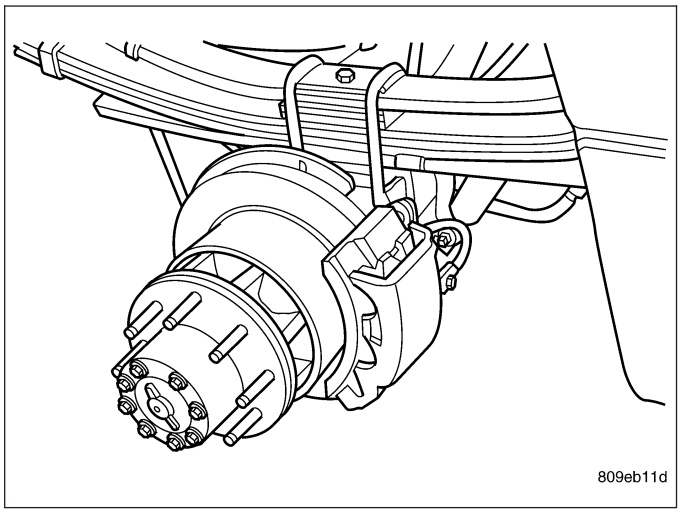

PLATE-SUPPORT

REMOVAL

1. Remove wheel and tire assembly.
2. Remove the disc brake caliper (Refer to 5 - BRAKES/HYDRAULIC/MECHANICAL/DISC BRAKE CALIPERS - REMOVAL).
3. Remove the caliper adapter (Refer to 5 - BRAKES/HYDRAULIC/MECHANICAL/DISC BRAKE CALIPER ADAPTER - REMOVAL).
4. Remove the rotor (Refer to 5 - BRAKES/HYDRAULIC/MECHANICAL/ROTORS - REMOVAL).
5. Remove the axle shaft (Refer to 3 - DIFFERENTIAL & DRIVELINE/REAR AXLE - 9 1/4/AXLE SHAFTS - REMOVAL).
6. Remove the park brake shoes (Refer to 5 - BRAKES/PARKING BRAKE/SHOES - REMOVAL).
7. Remove the parking brake cable from the brake lever.
8. Remove the bolts (2) attaching the support plate (1) to the axle and remove the support plate.

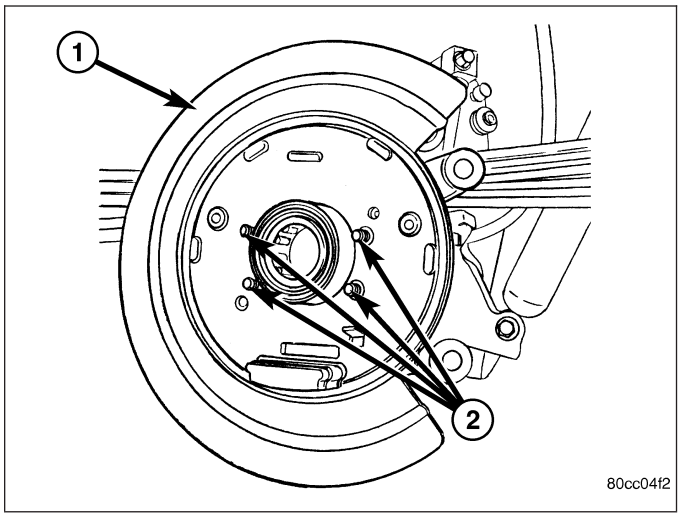

INSTALLATION

1. Install support plate (1) on axle flange. Tighten attaching bolts (2) to 68 N·m (50 ft. lbs.) **LD** or 203 N·m (150 ft.lbs) **HD**.
2. Install parking brake cable in the brake lever.
3. Install the park brake shoes (Refer to 5 - BRAKES/PARKING BRAKE/SHOES - INSTALLATION)..

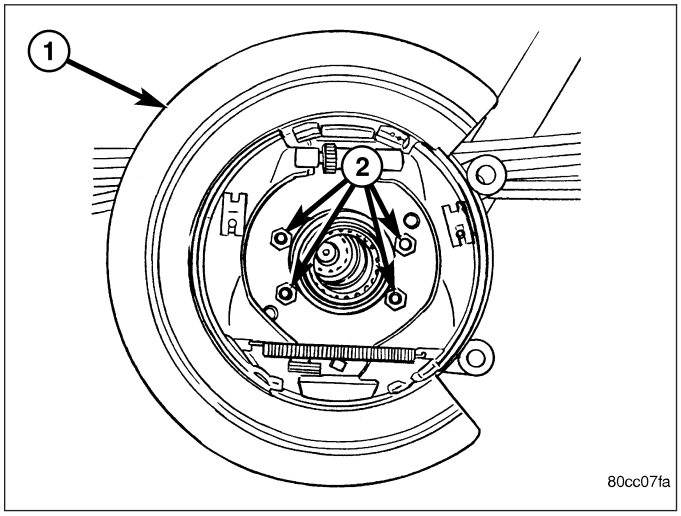

4. Install axle shaft, (Refer to 3 - DIFFERENTIAL & DRIVELINE/REAR AXLE - 9 1/4/AXLE SHAFTS - INSTALLATION).
5. Adjust brake shoes to drum with brake gauge (Refer to 5 - BRAKES/PARKING BRAKE/SHOES - ADJUSTMENTS).

6. Install the rotor (Refer to 5 - BRAKES/HYDRAULIC/MECHANICAL/ROTORS - INSTALLATION).
7. Install the caliper adapter (Refer to 5 - BRAKES/HYDRAULIC/MECHANICAL/DISC BRAKE CALIPER ADAPTER - INSTALLATION).
8. Install the caliper (Refer to 5 - BRAKES/HYDRAULIC/MECHANICAL/DISC BRAKE CALIPERS - INSTALLATION).
9. Install the wheel and tire assembly (Refer to 22 - TIRES/WHEELS/WHEELS - STANDARD PROCEDURE).

DUCTS-BRAKE COOLING - SRT-10

REMOVAL

1. Raise and support the vehicle.
2. Remove the lower air deflector (2) (Refer to 23 - BODY/EXTERIOR/BELLY PAN - DESCRIPTION).

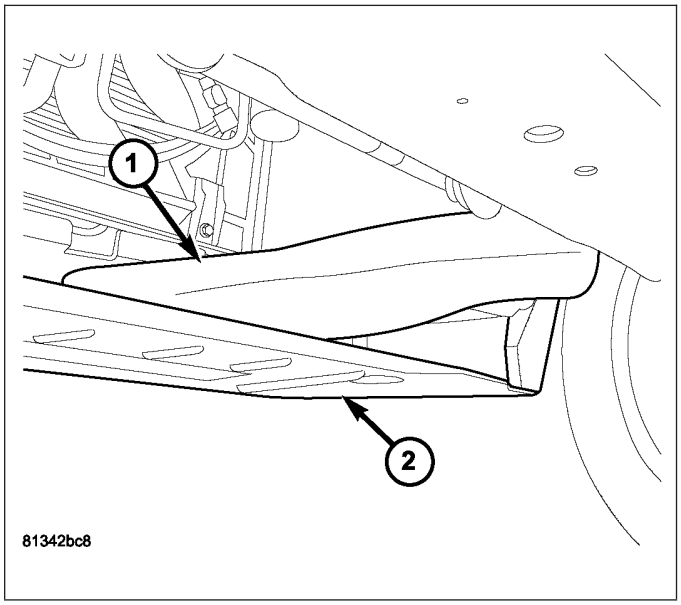

3. Disconnect the brake cooling duct support bracket (1) from the cooling duct (2).

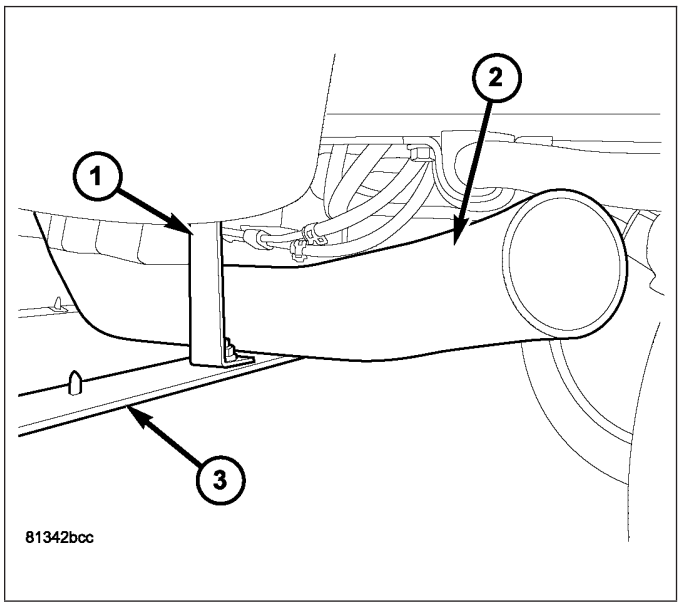

4. Remove the front fascia (Refer to 13 - FRAME & BUMPERS/BUMPERS/FRONT FASCIA - REMOVAL).
5. Remove the air deflector (4) between the a/c condenser and the bumper (3).

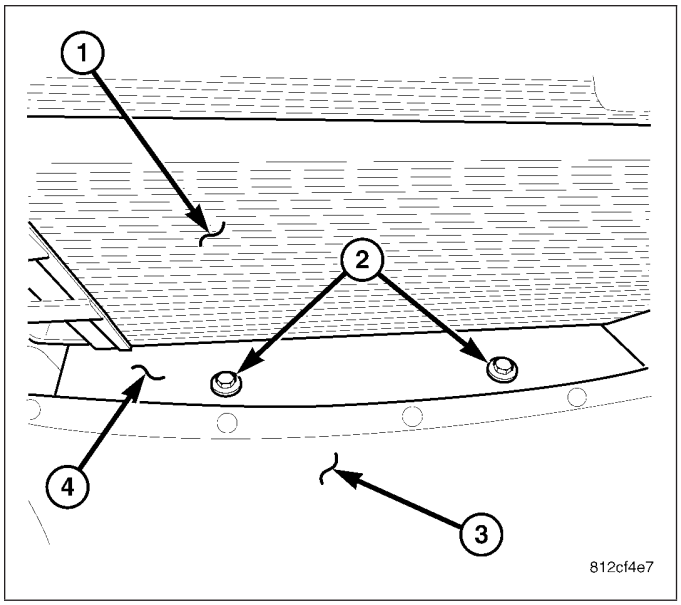

6. Remove the brake duct (1) upper retaining mounts.
7. Remove the brake cooling duct (1).

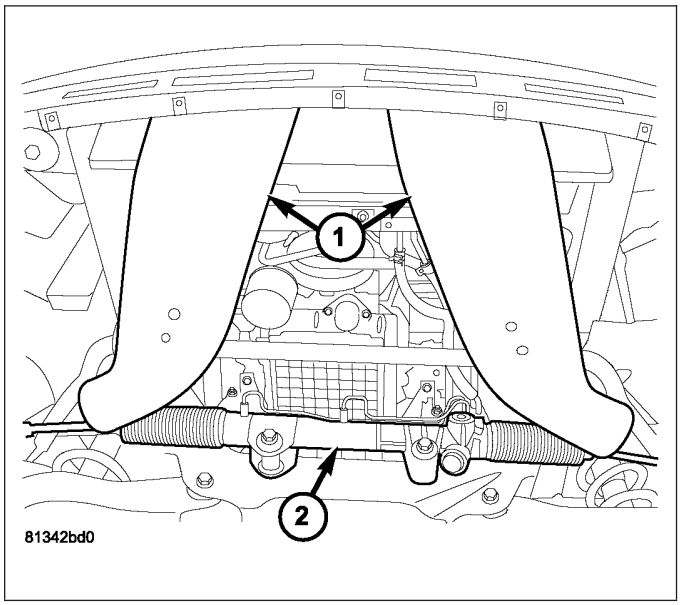

INSTALLATION

1. Install the brake cooling duct (1) to the vehicle.
2. Install the brake duct upper retaining screws by the bumper.

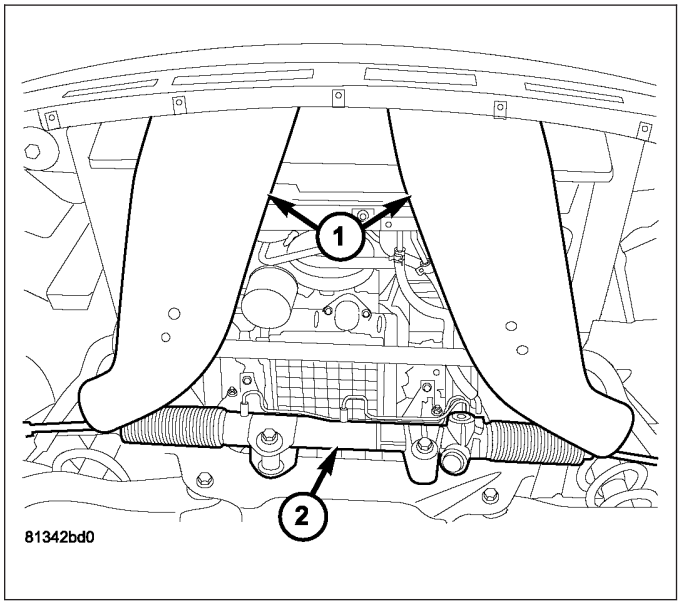

3. Install the air deflector (4) between the A/C condenser and bumper (3).
4. Install the front fascia (Refer to 13 - FRAME & BUMPERS/BUMPERS/FRONT FASCIA - INSTALLATION).

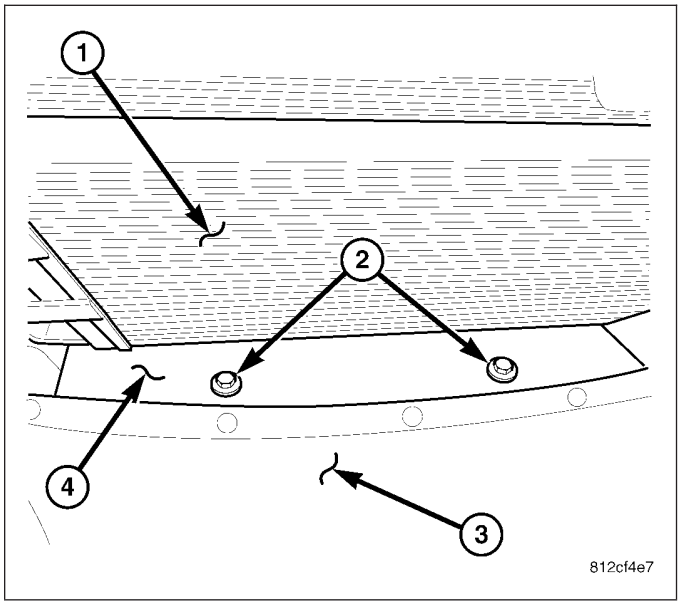

5. Install the cooling duct (2) to the bracket (1).
6. Install the lower air deflector (3) (Refer to 23 - BODY/EXTERIOR/BELLY PAN - DESCRIPTION).

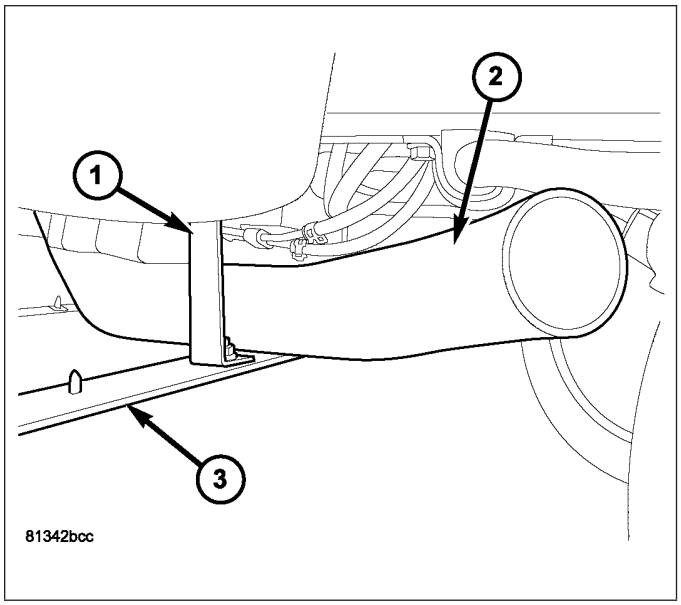

PARKING BRAKE

DESCRIPTION

The parking brakes are secured to a support plate (1) and operated by a system of cables and levers attached to a primary and secondary shoe (2) positioned within the drum section of the rotor.

The drum-in-hat design utilizes an independent set of shoes (2) to park the vehicle.

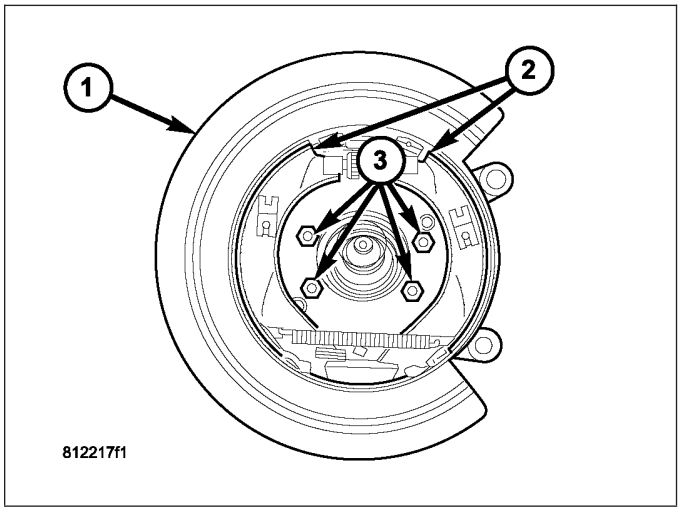

OPERATION

To apply the parking brake the pedal is depressed. This creates tension in the cable which pulls forward on the park brake lever. The lever pushes the park brake shoes outward and into contact with the drum section of the rotor. The contact of shoe to rotor parks the vehicle.

A torsion locking mechanism is used to hold the pedal in an applied position. Parking brake release is accomplished by the hand release.

A parking brake switch is mounted on the parking brake lever and is actuated by movement of the lever. The switch, which is in circuit with the red warning light in the dash, will illuminate the warning light whenever the parking brake is applied.

Parking brake adjustment is controlled by a cable tensioner mechanism. The cable tensioner, once adjusted at the factory, should not need further adjustment under normal circumstances. Adjustment may be required if a new tensioner, or cables are installed, or disconnected.

CABLES

REMOVAL

FRONT PARKING BRAKE CABLE

1. Raise and support vehicle.
2. Lockout the parking brake cable (2).

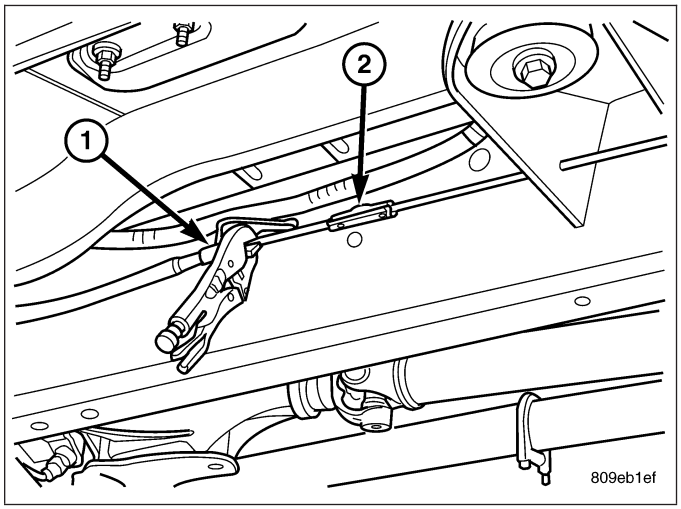

3. Loosen adjusting nut to create slack in front cable.
4. Remove the front cable from the cable connector.
5. Compress cable end fitting at underbody bracket and remove the cable from the bracket.
6. Lower vehicle.
7. Push ball end of cable out of pedal clevis with small screwdriver.
8. Compress cable end fitting at the pedal bracket (1) and remove the cable (2).
9. Remove the left cowl trim and sill plate.
10. Pull up the carpet and remove the cable from the body clip.
11. Pull up on the cable and remove the cable with the body grommet.

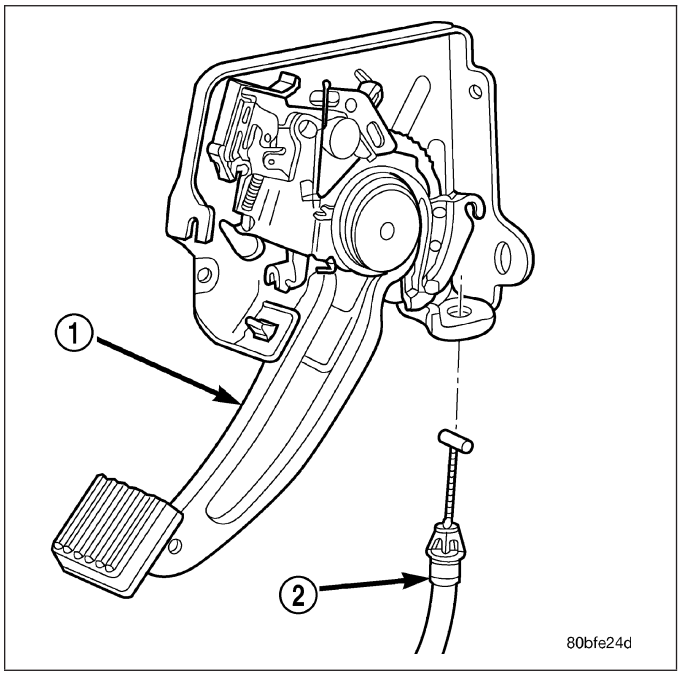

REAR PARK BRAKE CABLE

1. Raise and support the vehicle.
2. Lockout the parking brake cable (2).

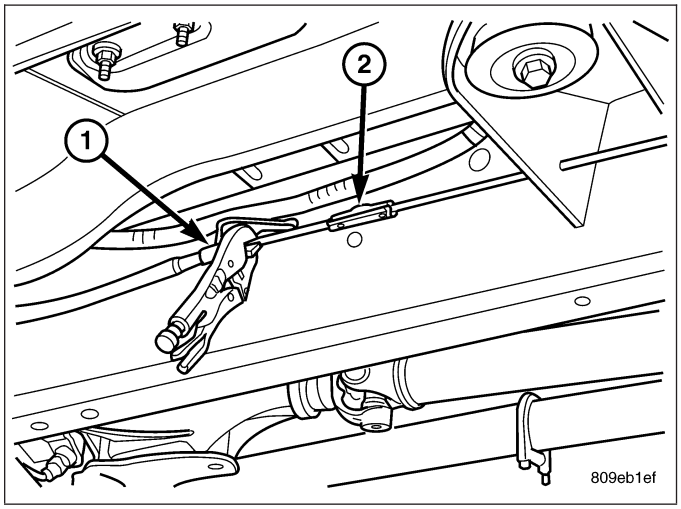

3. Loosen cable adjuster nut.
4. Remove the rear park brake cable from the intermediate park brake cable.
5. Compress tabs on cable end fitting on the rear park brake cable to the frame mount bracket. Then pull the cable through the bracket.
6. Disengage the park brake cable (2) from behind the rotor assembly..
7. Compress cable tabs on each cable end fitting at the brake cable support plate.
8. Remove the cables from the brake cable support plates.

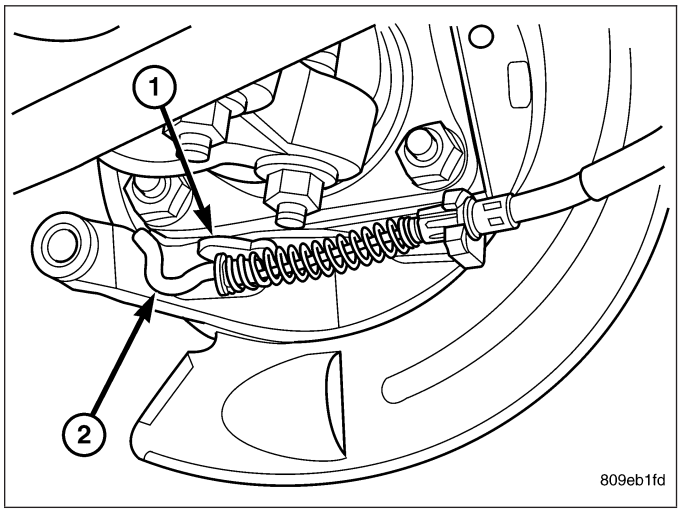

RIGHT REAR CABLE

1. Raise and support the vehicle.
2. Lockout the parking brake cable (2).

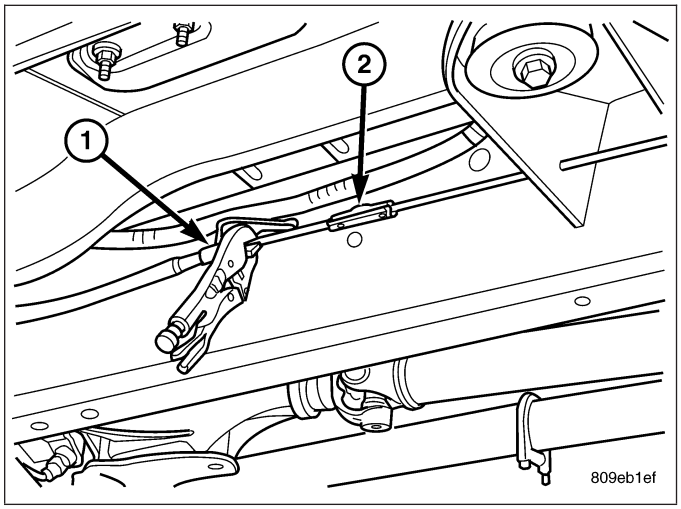

3. Loosen the brake cable at the equalizer and adjuster nut.

4. Remove the right cable from the front cable.
5. Remove the right cable from the equalizer.
6. Remove the cable from the frame bracket.
7. Remove the cable from the axle bracket.
8. Remove the cable bracket from the shock bracket.
9. Remove the brake cable (4) from the brake lever (3).

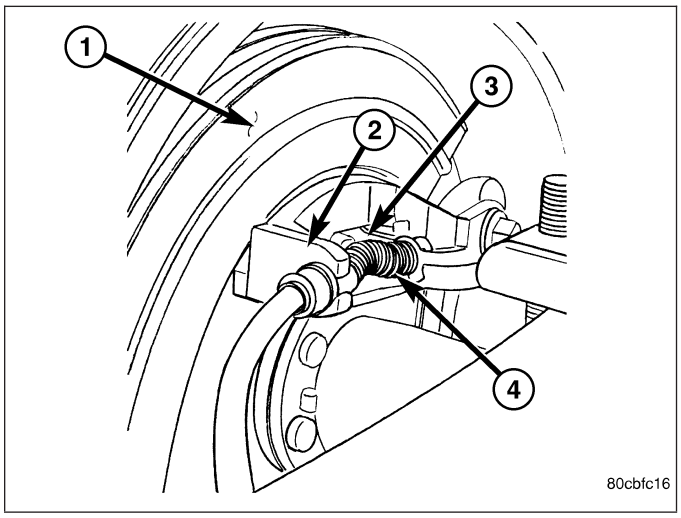

LEFT REAR CABLE

1. Raise and support the vehicle.
2. Lockout the parking brake cable (2).
3. Loosen the brake cable at the equalizer and adjuster nut.

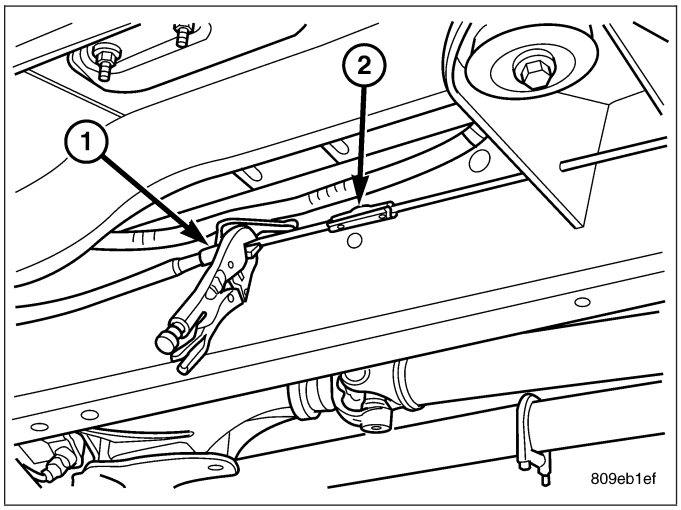

4. Remove the left brake cable from the equalizer.
5. Remove the brake cable (4) from the frame bracket.
6. Remove the brake cable (4) from the brake lever.

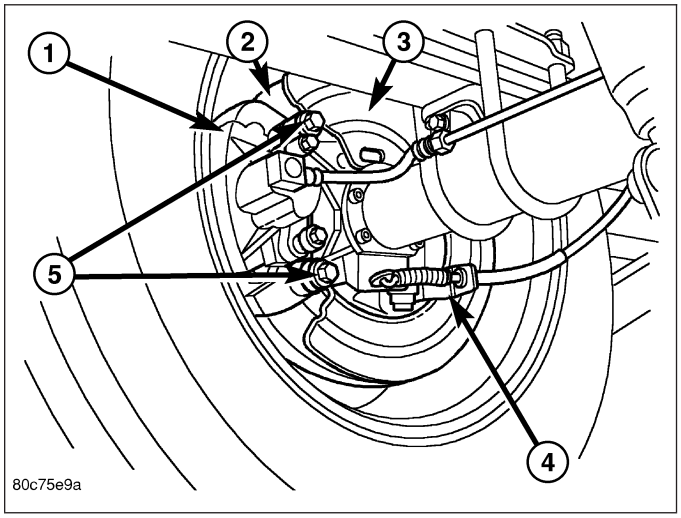

INSTALLATION

FRONT PARKING BRAKE CABLE

1. From inside the vehicle, insert the cable end fitting (2) into the hole in the pedal assembly (1).
2. Seat the cable retainer in the pedal assembly (1).
3. Engage the cable ball end in clevis on the pedal assembly.

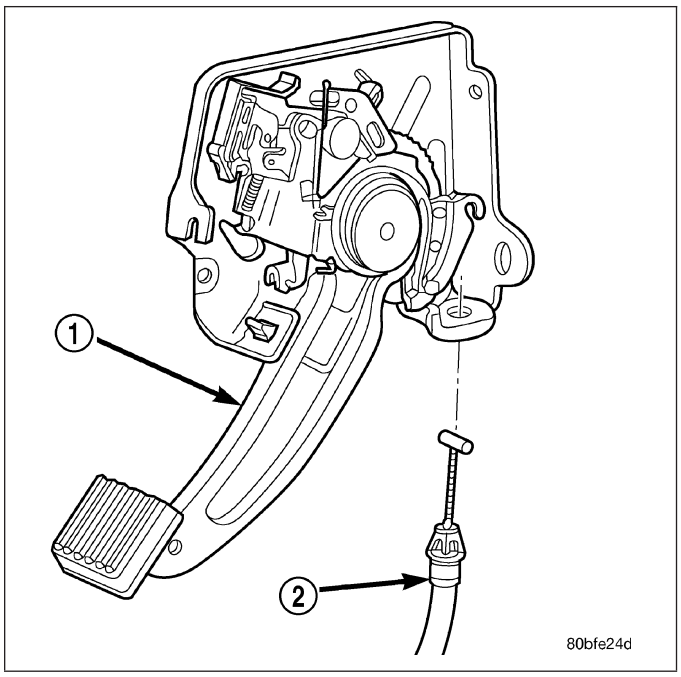

4. Route the cable through the floorpan and install the body grommet.
5. Place the carpet down and install the left cowl trim and sill plate.
6. Raise and support the vehicle.
7. Route the cable through the underbody bracket and seat the cable end fitting in the bracket.
8. Connect the cable to the cable connector.
9. Perform the park brake adjustment procedure, (Refer to 5 - BRAKES/PARKING BRAKE/CABLE TENSIONER - ADJUSTMENTS).
10. Lower the vehicle.

REAR PARK BRAKE CABLE

1. Push each cable end (2) through the brake cable support plate hole until the cable end fitting tabs lock into place.

NOTE: Pull on the cable to ensure it is locked into place.

2. Push the cable through the frame bracket.
3. Lock the left cable end fitting tabs into the frame bracket hole.
4. Install the rear cables into the tensioner rod behind the rear of the brake assembly.

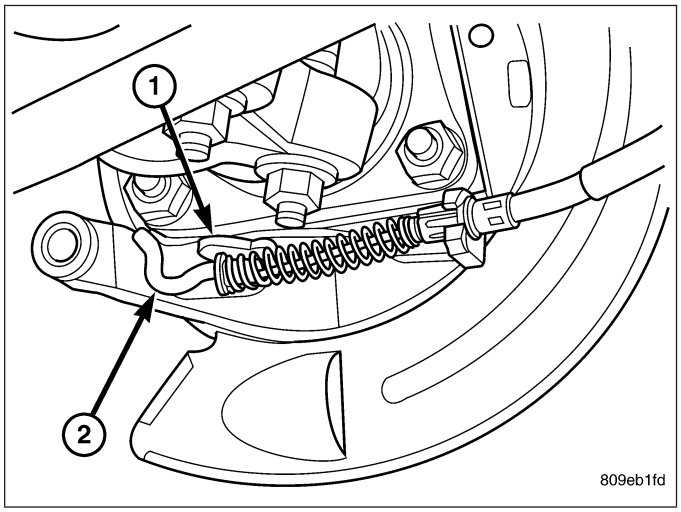

5. Install the cable to the intermediate cable connector.

6. Release and remove the lock out device.
7. Perform the park brake adjustment procedure, (Refer to 5 - BRAKES/PARKING BRAKE/CABLE TENSIONER - ADJUSTMENTS).
8. Remove the supports and lower the vehicle.

RIGHT REAR CABLE

1. Install the brake cable (2) to the brake lever (3).
2. Install the cable bracket to the shock bracket.
3. Install the cable to the axle bracket.
4. Install the cable to the frame bracket.
5. Install the right cable to the equalizer.
6. Install the right cable to the front cable.
7. Adjust the brake cable at the equalizer and using the adjuster nut.

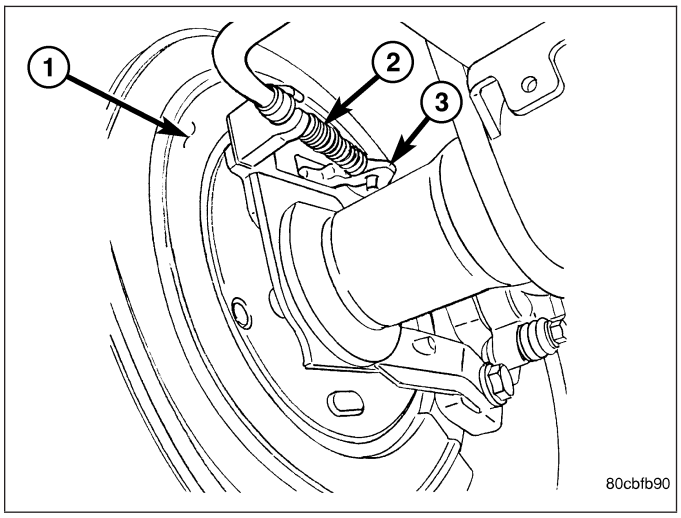

LEFT REAR CABLE

1. Install the brake cable (4) to the brake lever.
2. Install the brake cable to the frame bracket.
3. Install the left brake cable to the equalizer.
4. Adjust the brake cable at the equalizer and adjuster nut.

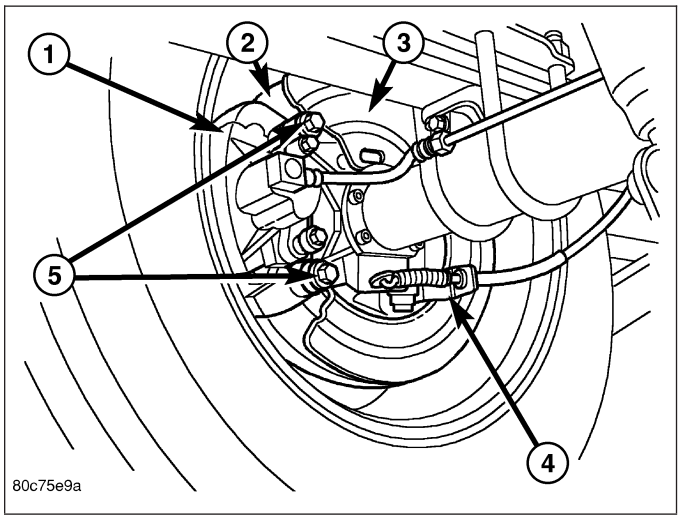

SHOES

REMOVAL

1. Raise and support the vehicle.
2. Remove the tire and wheel assembly.
3. Remove the disc brake caliper, (Refer to 5 - BRAKES/HYDRAULIC/MECHANICAL/DISC BRAKE CALIPERS - REMOVAL).
4. Remove the disc brake rotor, (Refer to 5 - BRAKES/HYDRAULIC/MECHANICAL/ROTORS - REMOVAL).
5. Lockout the parking brake cable (2).

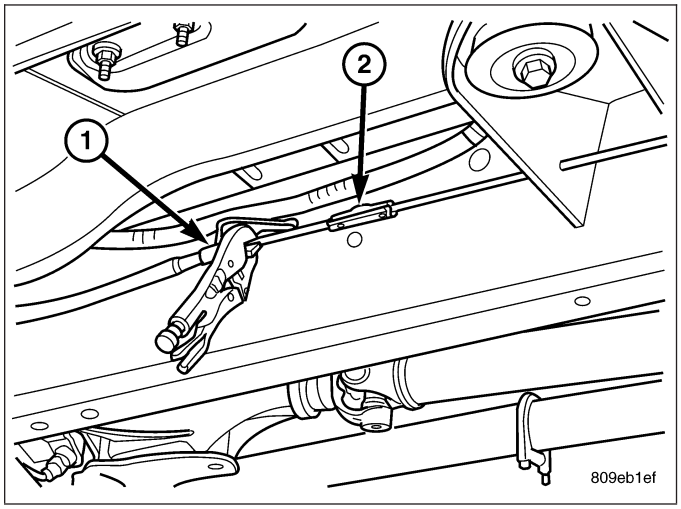

6. Disengage the park brake cable (2) from behind the rotor assembly to allow easier disassembly of the park brake shoes.

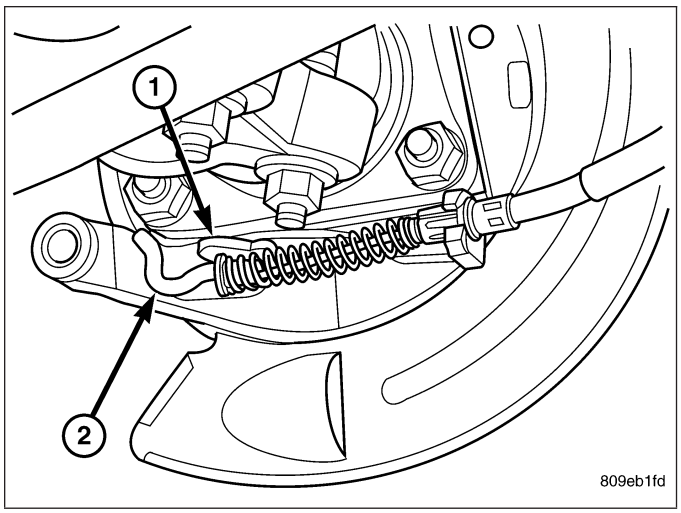

7. Remove the axleshaft (1) (Refer to 3 - DIFFERENTIAL & DRIVELINE/REAR AXLE - 11 1/2 AA/AXLE SHAFTS - REMOVAL).
8. Disassemble the rear park brake shoes (4).

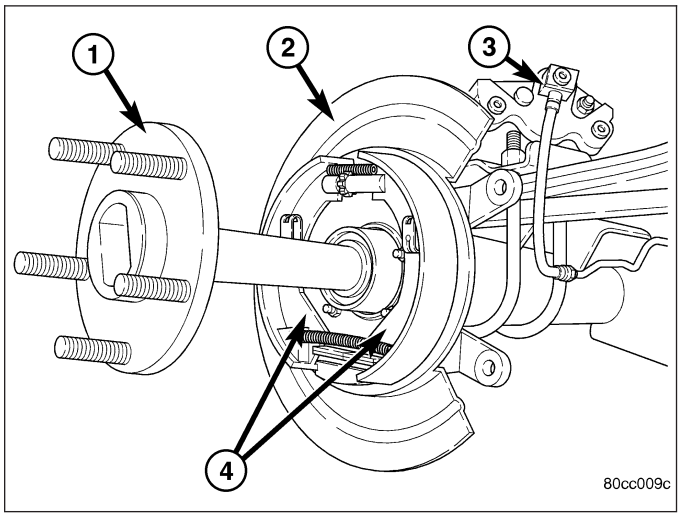

CLEANING - REAR DRUM IN HAT BRAKE

Clean the individual brake components, including the support plate exterior, with a water dampened cloth or with brake cleaner. Do not use any other cleaning agents. Remove light rust and scale from the brake shoe contact pads on the support plate with fine sandpaper.

INSPECTION - REAR DRUM IN HAT BRAKE

As a general rule, riveted brake shoes (2) should be replaced when worn to within 0.78 mm (1/32 in.) of the rivet heads. Bonded lining should be replaced when worn to a thickness of 1.6 mm (1/16 in.).

Examine the lining contact pattern to determine if the shoes are bent or the drum is tapered. The lining should exhibit contact across its entire width. Shoes (2) exhibiting contact only on one side should be replaced and the drum checked for runout or taper.

Inspect the adjuster screw assembly (5). Replace the assembly if the star wheel or threads are damaged, or the components are severely rusted or corroded.

Discard the brake springs (3) and retainer components (4) if worn, distorted or collapsed. Also replace the springs if a brake drag condition had occurred. Overheating will distort and weaken the springs.

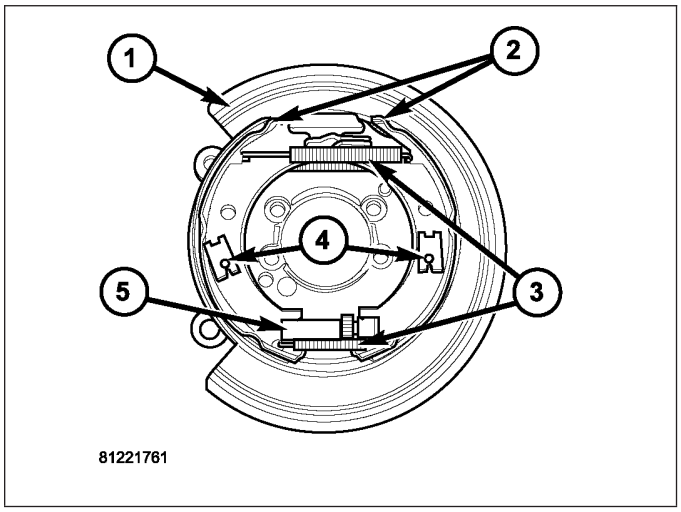

Inspect the brake shoe contact pads on the support plate (1), replace the support plate if any of the pads are worn or rusted through. Also replace the plate (1) if it is bent or distorted.

INSTALLATION

NOTE: On a new vehicle or after parking brake lining replacement, it is recommended that the parking brake system be conditioned prior to use. This is done by making one stop from 25 mph on dry pavement or concrete using light to moderate force on the parking brake foot pedal.

1. Reassemble the rear park brake shoes (1) or.

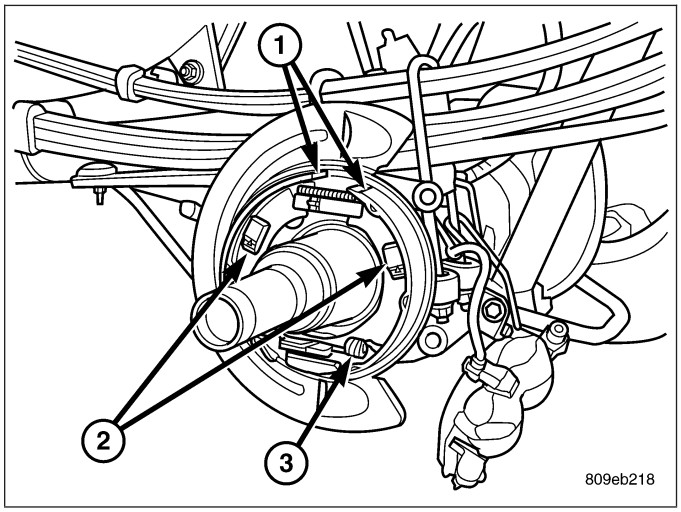

2. Install the axleshaft (1) (Refer to 3 - DIFFERENTIAL & DRIVELINE/REAR AXLE - 9 1/4/AXLE SHAFTS - INSTALLATION) or (Refer to 3 - DIFFERENTIAL & DRIVELINE/REAR AXLE - 11 1/2 AA/10 1/2 AA/AXLE SHAFTS - INSTALLATION).

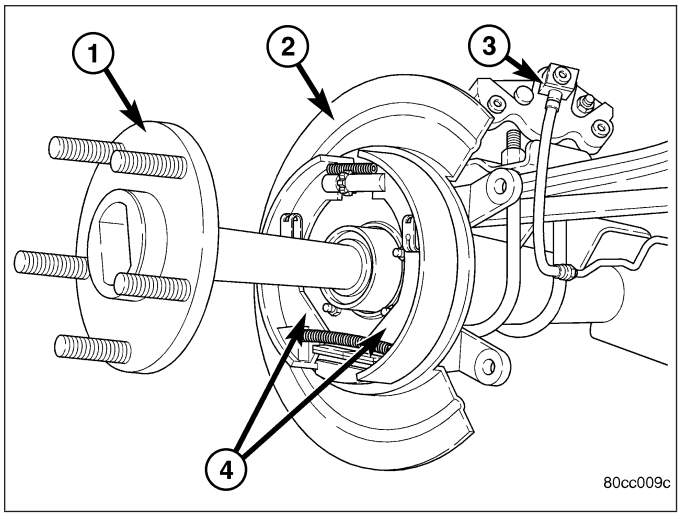

3. Install the park brake cable to the lever behind the support plate.
4. Unlock the park brake cable.
5. Install the disc brake rotor (Refer to 5 - BRAKES/HYDRAULIC/MECHANICAL/ROTORS - INSTALLATION).
6. Install the disc brake caliper (Refer to 5 - BRAKES/HYDRAULIC/MECHANICAL/DISC BRAKE CALIPERS - INSTALLATION).
7. Adjust the rear brake shoes (Refer to 5 - BRAKES/PARKING BRAKE/SHOES - ADJUSTMENTS).
8. Install the tire and wheel assembly (Refer to 22 - TIRES/WHEELS/WHEELS - STANDARD PROCEDURE).
9. Lower the vehicle.

ADJUSTMENTS

PARKING BRAKE SHOES

CAUTION: Before adjusting the park brake shoes be sure that the park brake pedal is in the fully released position. If park brake pedal is not in the fully released position, the park brake shoes can not be accurately adjusted.

1. Raise vehicle.
2. Remove tire and wheel.
3. Remove disc brake caliper from caliper adapter (Refer to 5 - BRAKES/HYDRAULIC/MECHANICAL/DISC BRAKE CALIPERS - REMOVAL).
4. Remove rotor from the axleshaft (Refer to 5 - BRAKES/HYDRAULIC/MECHANICAL/ROTORS - REMOVAL).

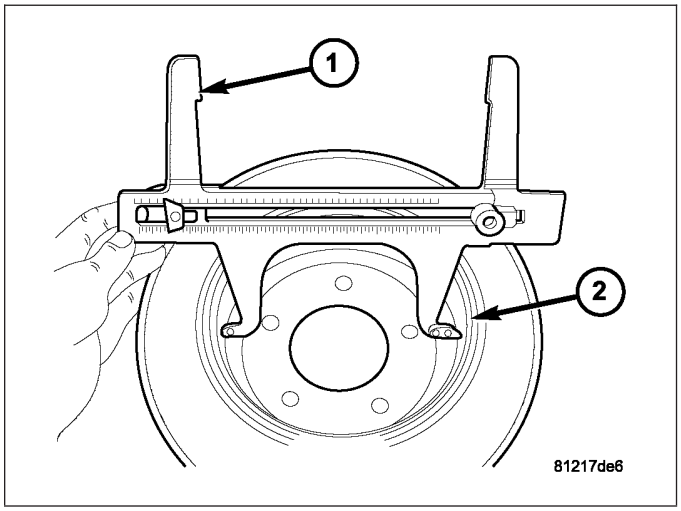

NOTE: When measuring the brake drum diameter, the diameter should be measured in the center of the area in which the park brake shoes contact the surface of the brake drum.

5. Using Brake Shoe Gauge, Special Tool C-3919 (1), or equivalent, **accurately** measure the inside diameter of the park brake drum portion (2) of the rotor.

6. Using a ruler (2) that reads in 64th of an inch, accurately read the measurement of the inside diameter of the park brake drum from the special tool (2).

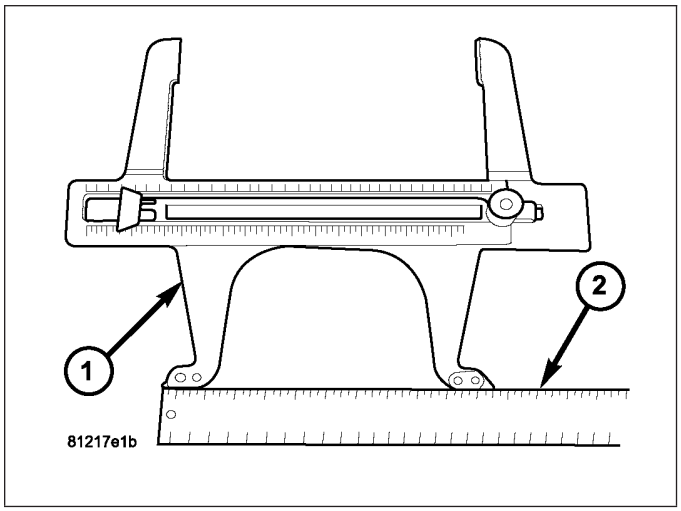

7. Reduce the inside diameter measurement of the brake drum that was taken using Special Tool C-3919 (2) by 1/64 of an inch. Reset Gauge, Brake Shoe, Special Tool C-3919 (2) or the equivalent used, so that the outside measurement jaws are set to the reduced measurement.

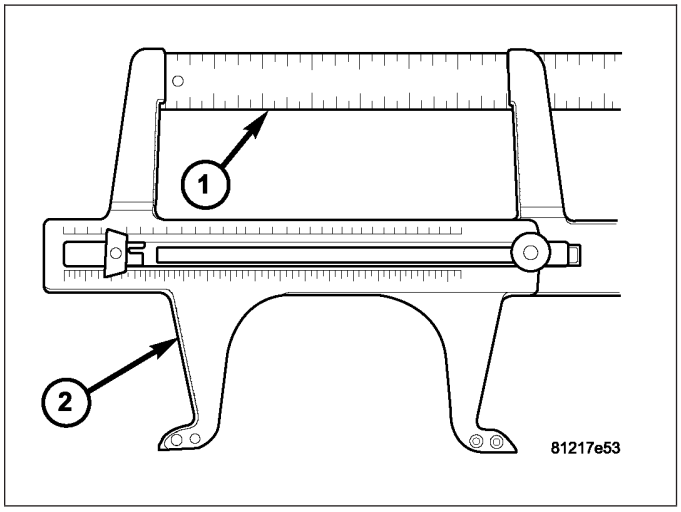

8. Place Gauge, Brake Shoe, Special Tool C-3919, or equivalent over the park brake shoes. The special tool must be located diagonally across at the top of one shoe and bottom of opposite shoe (widest point) of the park brake shoes.
9. Using the star wheel adjuster, adjust the park brake shoes until the lining on the park brake shoes just touches the jaws on the special tool.
10. Repeat step 8 above and measure shoes in both directions.
11. Install brake rotor on the axleshaft (Refer to 5 - BRAKES/HYDRAULIC/MECHANICAL/ROTORS - INSTALLATION).
12. Rotate rotor to verify that the park brake shoes are not dragging on the brake drum. If park brake shoes are dragging, remove rotor and back off star wheel adjuster one notch and recheck for brake shoe drag against drum. Continue with the previous step until brake shoes are not dragging on brake drum.
13. Install disc brake caliper on caliper adapter (Refer to 5 - BRAKES/HYDRAULIC/MECHANICAL/DISC BRAKE CALIPERS - INSTALLATION).
14. Install wheel and tire.
15. Tighten the wheel mounting nuts in the proper sequence until all nuts are torqued to half the specified torque. Then repeat the tightening sequence to the full specified torque of 129 N·m (95 ft. lbs.) **LD**, 197 N·m (145 ft. lbs.) **HD SRW**, 210 N·m (155 ft. lbs.) **HD DRW**.
16. Lower vehicle.
17. Apply and release the park brake pedal one time. This will seat and correctly adjust the park brake cables.

CAUTION: Before moving vehicle, pump brake pedal several times to ensure the vehicle has a firm enough pedal to stop the vehicle.

18. Road test the vehicle to ensure proper function of the vehicle's brake system.

WITH ADJUSTING TOOL

Adjustment can be made with a standard brake gauge or with adjusting tool. Adjustment is performed with the complete brake assembly installed on the backing plate.

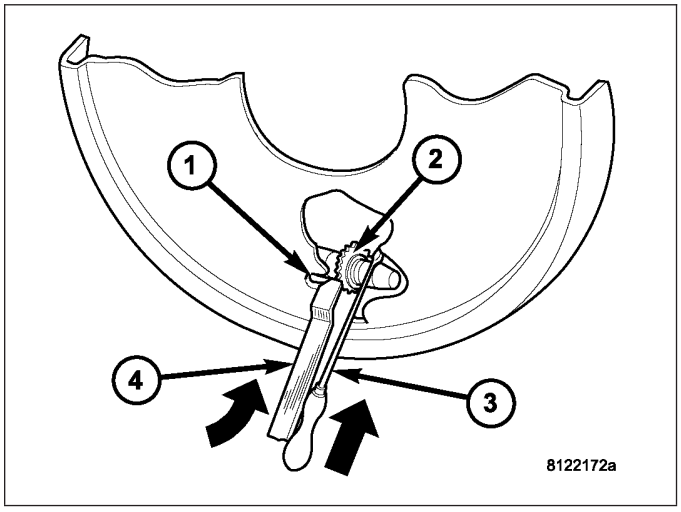

1. Be sure parking brake lever is fully released.
2. Raise vehicle so rear wheels can be rotated freely.
3. Remove plug from each access hole in brake support plates.
4. Loosen parking brake cable adjustment nut until there is slack in front cable.
5. Insert adjusting tool (4) through support plate access hole (1) and engage tool in teeth of adjusting screw star wheel (2).
6. Rotate adjuster screw star wheel (move tool handle upward) until slight drag can be felt when wheel is rotated.
7. Push and hold adjuster lever away from star wheel with thin screwdriver (3).
8. Back off adjuster screw star wheel until brake drag is eliminated.
9. Repeat adjustment at opposite wheel. Be sure adjustment is equal at both wheels.
10. Install support plate access hole plugs.
11. Adjust parking brake cable and lower vehicle.
12. Depress park brake pedal and make sure park brakes hold the vehicle staionary.
13. Release park brake pedal.

PEDAL

REMOVAL

1. Release the parking brake.
2. Raise the vehicle.
3. Loosen the cable tensioner nut at the equalizer to create slack in the front cable.
4. Lower the vehicle.
5. Remove the knee bolster, (Refer to 23 - BODY/INSTRUMENT PANEL/STEERING COLUMN OPENING COVER - REMOVAL).

6. Disconnect the brake lamp wire from the switch on the pedal assembly (2).
7. Roll the carpet back, loosen the front cable grommet from the floorpan and the cable retainer.
8. Disengage the release rod (1) from the arm on the pedal assembly (2).
9. Remove the bolts/nuts from the pedal assembly (2) and remove the assembly.

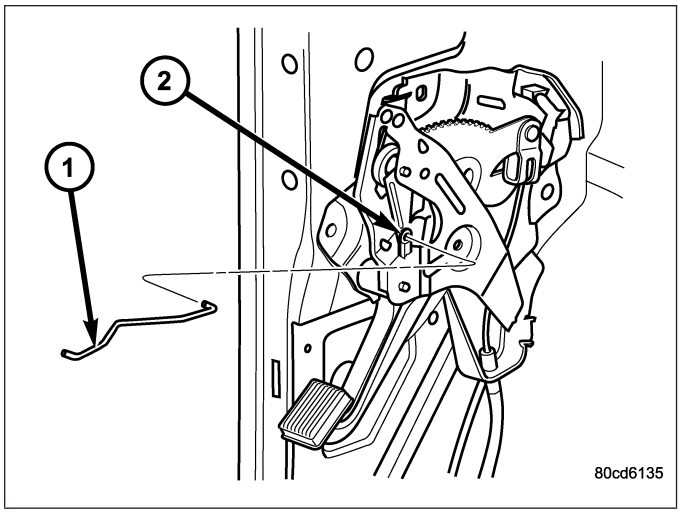

INSTALLATION

1. Position the replacement pedal assembly (1) on the dash and cowl.
2. Install the bolts/nuts (2) and tighten to 28 N·m (21 ft. lbs.).
3. Install the park brake release rod.
4. Connect the front cable to the arm on the pedal assembly (1).
5. Install the front cable grommet into the floorpan and the cable retainer, roll the carpet back.
6. Connect the wires to the brake lamp switch.
7. Install the knee bolster, (Refer to 23 - BODY/INSTRUMENT PANEL/STEERING COLUMN OPENING COVER - INSTALLATION).
8. Raise the vehicle.

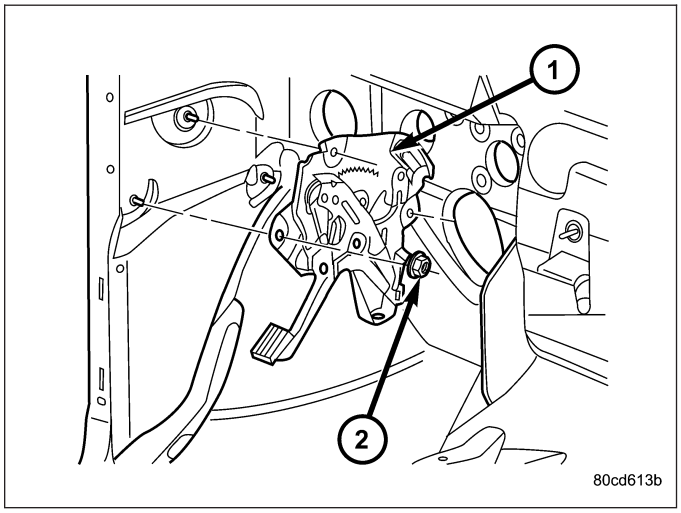

9. Adjust the parking brake cable tensioner (Refer to 5 - BRAKES/PARKING BRAKE/CABLE TENSIONER - ADJUSTMENTS).

TENSIONER-CABLE

ADJUSTMENTS

CABLE TENSIONER

NOTE: Tensioner adjustment is only necessary when the tensioner, or a cable has been replaced or disconnected for service. When adjustment is necessary, perform adjustment only as described in the following procedure. This is necessary to avoid faulty park brake operation.

1. Raise the vehicle.
2. Back off the cable tensioner adjusting nut (5) to create slack in the cables.

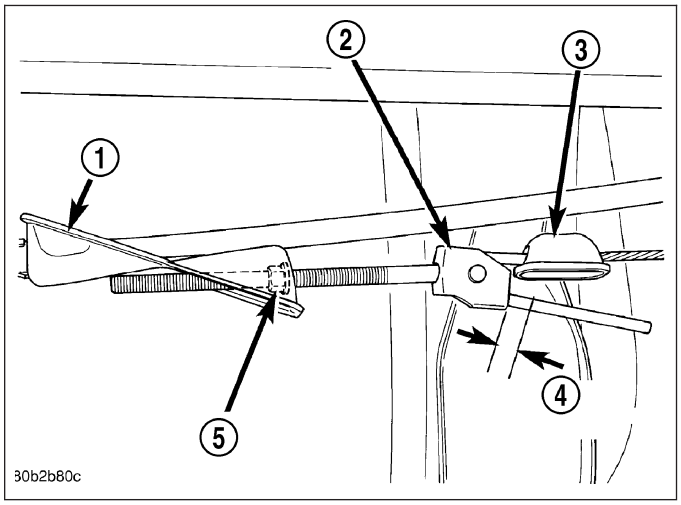

3. Remove the rear wheel/tire assemblies. Then remove the brake rotors (Refer to 5 - BRAKES/HYDRAULIC/MECHANICAL/ROTORS - REMOVAL).
4. Verify the brakes are in good condition and operating properly.
5. Verify the park brake cables operate freely and are not binding, or seized.
6. Check the rear brake shoe adjustment with standard brake gauge (Refer to 5 - BRAKES/PARKING BRAKE/SHOES - ADJUSTMENTS).
7. Install the rotors (Refer to 5 - BRAKES/HYDRAULIC/MECHANICAL/ROTORS - INSTALLATION) and verify that the rotors rotate freely without drag.
8. Install the wheel/tire assemblies, (Refer to 22 - TIRES/WHEELS/WHEELS - STANDARD PROCEDURE).
9. Lower the vehicle enough for access to the park brake foot pedal. Then fully apply the park brakes.

NOTE: Leave park brakes applied until adjustment is complete.

10. Raise the vehicle again.
11. Mark the tensioner rod 6.35 mm (1/4 in.) from edge of the tensioner (2).
12. Tighten the adjusting nut (5) on the tensioner rod until the mark is no longer visible.

CAUTION: Do not loosen, or tighten the tensioner adjusting nut for any reason after completing adjustment.

13. Lower the vehicle until the rear wheels are 15-20 cm (6-8 in.) off the shop floor.
14. Release the park brake foot pedal and verify that rear wheels rotate freely without drag. Then lower the vehicle.

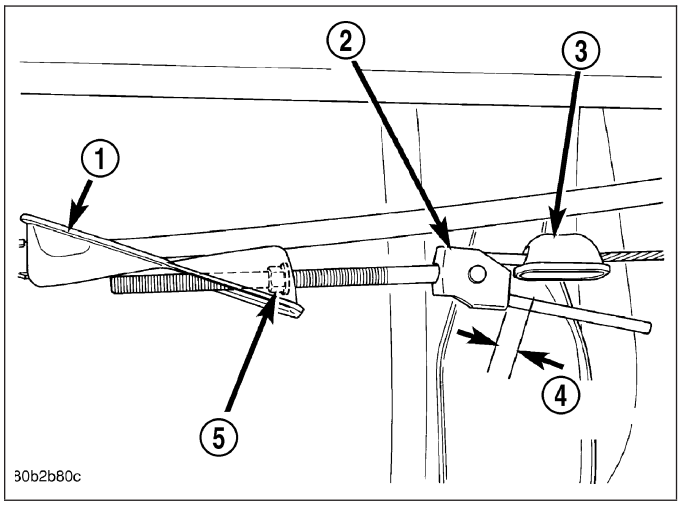

HANDLE-RELEASE

REMOVAL

1. Disconnect and isolate the battery negative cable.
2. Reach under the driver side outboard end of the instrument panel to access and unsnap the plastic retainer clip that secures the park brake release linkage rod to the park brake mechanism on the left cowl side inner panel.
3. Disengage the park brake release linkage rod end from the park brake mechanism.
4. Lift the park brake release handle to access and unsnap the plastic retainer clip that secures the park brake release linkage rod to the lever on the back of the park brake release handle.
5. Lower the park brake release handle and reach under the driver side outboard end of the instrument panel to disengage the park brake release linkage rod end from the lever on the back of the park brake release handle.
6. Lift the park brake release handle to access the handle mounting bracket.
7. Using a trim stick (4) or another suitable wide flat-bladed tool, gently pry each of the park brake release handle (6) mounting bracket latch tabs (5) away from the retaining notches in the instrument panel receptacle.
8. With both of the park brake release handle mounting bracket latches released, slide the handle and bracket assembly down and out of the instrument panel receptacle.

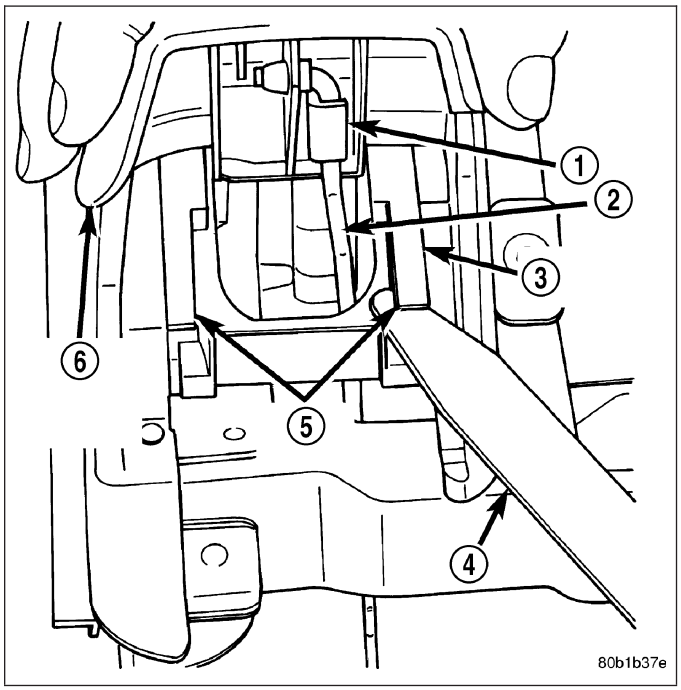

INSTALLATION

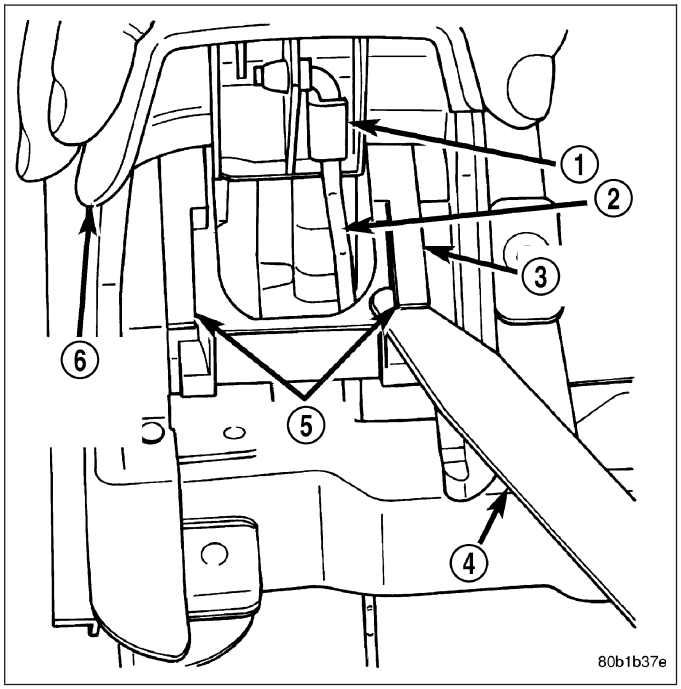

1. Position the park brake release handle to the instrument panel.
2. Slide the handle and bracket assembly up into the instrument panel receptacle until both of the park brake release handle (6) mounting bracket latches are engaged with the notches in the instrument panel receptacle.
3. Lower the park brake release handle and reach under the driver side outboard end of the instrument panel to engage the park brake release linkage rod end with the lever on the back of the park brake release handle (6).
4. Lift the park brake release handle to access and snap the plastic retainer clip that secures the park brake release linkage rod to the lever on the back of the park brake release handle over the linkage rod.
5. Reach under the driver side outboard end of the instrument panel to access and engage the park brake release linkage rod end to the park brake mechanism.
6. Snap the plastic retainer clip that secures the park brake release linkage rod to the park brake mechanism on the left cowl side inner panel over the linkage rod.
7. Reconnect the battery negative cable.

BRAKES - ABS - SERVICE INFORMATION

TABLE OF CONTENTS

page

BRAKES - ABS - SERVICE INFORMATION
DESCRIPTION 287
OPERATION 287
STANDARD PROCEDURE
ABS BRAKE BLEEDING 288
SPECIFICATIONS
TORQUE CHART 289
SENSOR- WHEEL SPEED-ABS-FRONT
DESCRIPTION 289
OPERATION 289
REMOVAL 290
INSTALLATION 291
SENSOR-WHEEL SPEED-ABS-REAR
DIAGNOSIS AND TESTING
REAR WHEEL ANTILOCK 291
REMOVAL 291
INSTALLATION 292
WHEEL-TONE
DIAGNOSIS AND TESTING
REAR WHEEL SPEED SENSOR 292

page

HYDRAULIC/MECHANICAL
DESCRIPTION - ELECTRONIC VARIABLE
BRAKE PROPORTIONING 292
OPERATION - ELECTRONIC VARIABLE
BRAKE PROPORTIONING 292
HCU (HYDRAULIC CONTROL UNIT)
DESCRIPTION 293
OPERATION 293
REMOVAL 294
INSTALLATION 294
VALVE-RWAL
DESCRIPTION 295
OPERATION 295
REMOVAL 295
INSTALLATION 296

BRAKES - ABS - SERVICE INFORMATION

DESCRIPTION

The antilock brake system (ABS) is an electronically operated, three channel brake control system. The vehicle has Electronic Variable Brake Proportioning (EVBP) designed into the system which eliminates the combination/proportioning valve.

The system is designed to prevent wheel lockup and maintain steering control during braking. Preventing lockup is accomplished by modulating fluid pressure to the wheel brake units.

The hydraulic system is a three channel design. The front wheel brakes are controlled individually and the rear wheel brakes in tandem. The ABS electrical system is separate from other electrical circuits in the vehicle. A specially programmed controller antilock brake unit operates the system components.

ABS system major components include:

- Controller Antilock Brakes (CAB)
- Hydraulic Control Unit (HCU)
- Wheel Speed Sensors (WSS)
- ABS Warning Light

OPERATION

Battery voltage is supplied to the CAB. The CAB performs a system initialization procedure at start up. A check of the ABS motor is performed at 15 miles per hour. Initialization consists of a static and dynamic self check of system electrical components.

The static and dynamic checks occurs at ignition start up. During the dynamic check, the CAB briefly cycles solenoids to verify operation. An audible noise may be heard during this self check. This noise should be considered normal. The ABS motor and pump are then checked at a speed of 15 mile per hour.

If an ABS component exhibits a fault during initialization, the CAB illuminates the amber warning light and registers a fault code in the microprocessor memory.

The CAB monitors wheel speed sensor inputs continuously while the vehicle is in motion. However, the CAB will not activate any ABS components as long as sensor inputs indicate normal braking.

During normal braking, the master cylinder, power booster and wheel brake units all function as they would in a vehicle without ABS. The HCU components are not activated.

The purpose of the antilock system is to prevent wheel lockup. Preventing lockup helps maintain vehicle braking action and steering control.

The antilock CAB activates the system whenever sensor signals indicate periods of wheel slip.

The antilock system prevents lockup during a wheel slip condition by modulating fluid apply pressure to the wheel brake units.

Brake fluid apply pressure is modulated according to wheel speed, degree of slip and rate of deceleration. Sensors at each front wheel convert wheel speed into electrical signals. These signals are transmitted to the CAB for processing and determination of wheel slip and deceleration rate.

The ABS system has three fluid pressure control channels. The front brakes are controlled separately and the rear brakes in tandem. A speed sensor input signal indicating a wheel slip condition activates the CAB antilock program.

There are Two solenoid valves (Isolation and Dump valve) which are used in each antilock control channel. The valves are all located within the HCU valve body and work in pairs to either increase, hold, or decrease apply pressure as needed in the individual control channels.

During an ABS stop the ISO valve is energized which acts to prevent further pressure build-up to the calipers. Then the Dump valve dumps off pressure until the wheel unlocks. This will continue until the wheels quit slipping altogether.

STANDARD PROCEDURE

ABS BRAKE BLEEDING

ABS system bleeding requires conventional bleeding methods plus use of the DRB scan tool. The procedure involves performing a base brake bleeding, followed by use of the scan tool to cycle and bleed the HCU pump and solenoids. A second base brake bleeding procedure is then required to remove any air remaining in the system.

1. Perform base brake bleeding, (Refer to 5 - BRAKES - STANDARD PROCEDURE) OR (Refer to 5 - BRAKES - STANDARD PROCEDURE).
2. Connect scan tool to the Data Link Connector.
3. Select ANTILOCK BRAKES, followed by MISCELLANEOUS, then ABS BRAKES. Follow the instructions displayed. When scan tool displays TEST COMPLETE, disconnect scan tool and proceed.
4. Perform base brake bleeding a second time, (Refer to 5 - BRAKES - STANDARD PROCEDURE) OR (Refer to 5 - BRAKES - STANDARD PROCEDURE).
5. Top off master cylinder fluid level and verify proper brake operation before moving vehicle.

SPECIFICATIONS

TORQUE CHART

TORQUE SPECIFICATIONS

DESCRIPTION	N·m	Ft. Lbs.	In. Lbs.
ABS Assembly Mounting Bolts	15	11	—
ABS Assembly CAB Screws	3.5	—	31
ABS Assembly Brake Line Fittings	19	—	170
Wheel Speed Sensors Front Sensor Bolt	21	—	190
Wheel Speed Sensors Bracket To Knuckle	6.7	—	60
Wheel Speed Sensors Rear Sensor Stud	22.5	—	200
Controller Mounting Screws	6	—	53
RWAL Module Mounting Bolts	15	11	—
RWAL Valve Brake Line Fittings	19	—	170
Rear Wheel Speed Sensor Mounting Bolt	24	—	200

SENSOR- WHEEL SPEED-ABS-FRONT

DESCRIPTION

The ABS brake system uses 3 wheel speed sensors. A sensor is mounted to each front hub/bearings. The third sensor is mounted on top of the rear axle differential housing.

OPERATION

The Wheel Speed Sensor consists of a magnet (1) surrounded by windings from a single strand of wire (5). The sensor sends a small AC signal to the ABM. This signal is generated by magnetic induction. The magnetic induction is created when a toothed sensor ring (exciter ring or tone wheel) (4) passes the stationary magnetic WSS.

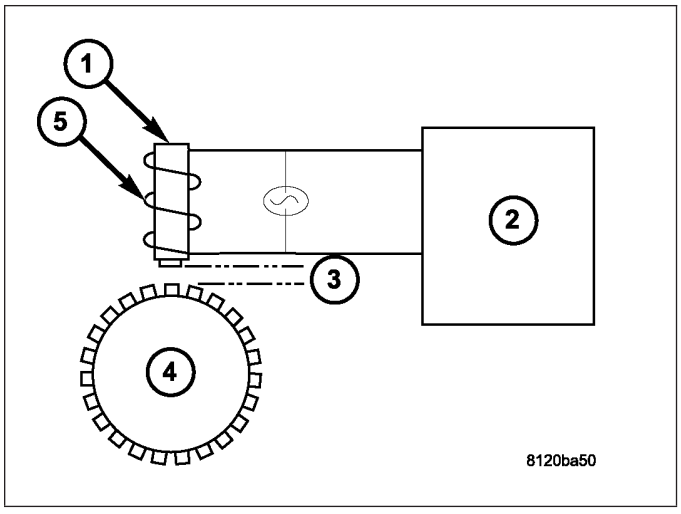

When the ring gear is rotated, the exciter ring (4) passes the tip of the WSS. As the exciter ring tooth approaches the tip of the WSS, the magnetic lines of force expand, causing the magnetic field to cut across the sensor's windings (5). This, in turn causes current to flow through the WSS circuit in one direction. When the exciter ring tooth moves away from the sensor tip, the magnetic lines of force collapse cutting the winding in the opposite direction. This causes the current to flow in the opposite direction. Every time a tooth of

the exciter ring passes the tip of the WSS, an AC signal is generated current. Each AC signal (positive to negative signal or squarewave) is interpreted by the ABM. It then compares the frequency of the sinewave to a time value to calculate vehicle speed. The ABM continues to monitor the frequency to determine a deceleration rate that would indicate a possible wheel-locking tendency.

The signal strength of any magnetic induction sensor is directly affected by:

- Magnetic field strength; the stronger the magnetic field, the stronger the signal
- Number of windings in the sensor; more windings provide a stronger signal
- Exciter ring speed; the faster the exciter ring/tone wheel rotates, the stronger the signal will be
- Distance (3) “air gap” between the exciter ring teeth and WSS; the closer the WSS is to the exciter ring/tone wheel, the stronger the signal will be.

The WSS is not adjustable. A clearance specification has been established for manufacturing tolerances. If the clearance is not within these specifications, then either the WSS or other components may be damaged. The clearance between the WSS and the exciter ring is 0.005 – 0.050 in.

The assembly plant performs a “Rolls Test” on every vehicle that leaves the assembly plant. One of the test performed is a test of the WSS. To properly test the sensor, the assembly plant connects test equipment to the Data Link Connector (DLC). This connector is located to the right of the steering column and attached to the lower portion of the instrument panel. The rolls test terminal is spliced to the WSS circuit. The vehicle is then driven on a set of rollers and the WSS output is monitored for proper operation.

REMOVAL

1. Remove the front rotor (Refer to 5 - BRAKES/HYDRAULIC/MECHANICAL/ROTORS - REMOVAL).
2. Remove the wheel speed sensor mounting bolt (1) from the hub (3).
3. Remove the wheel speed sensor (2) from the hub (3).
4. Remove the wiring from the clips and disconnect the electrical connector.

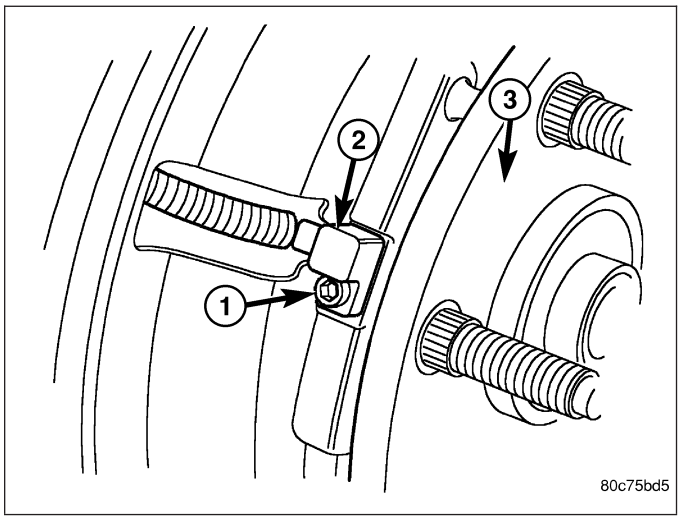

INSTALLATION

1. Install the wiring to the clips and Reconnect the electrical connector.
2. Install the wheel speed sensor (2) to the hub (3).
3. Install the wheel speed sensor mounting bolt (1) to the hub (3). Tighten the bolt to 21 N·m (190 in. lbs.).
4. Install the front rotor and brake caliper assembly (Refer to 5 - BRAKES/HYDRAULIC/MECHANICAL/ ROTORS - INSTALLATION).

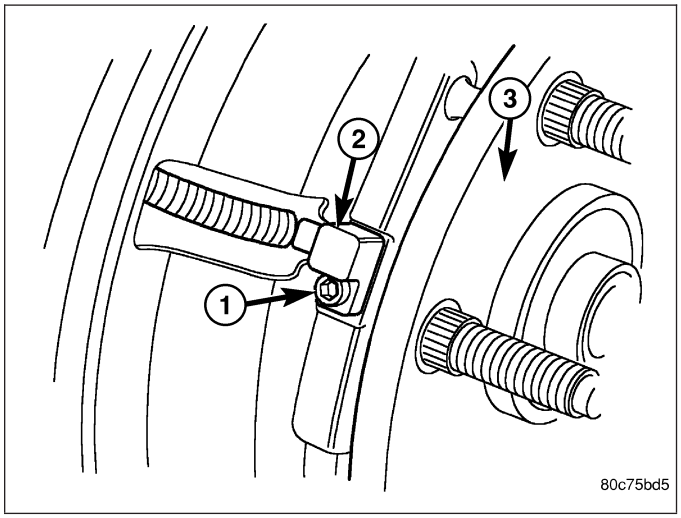

SENSOR-WHEEL SPEED-ABS-REAR

DIAGNOSIS AND TESTING

REAR WHEEL ANTILOCK

Diagnosis of base brake conditions which are mechanical in nature should be performed first. This includes brake noise, lack of power assist, parking brake, or vehicle vibration during normal braking.

The RWAL brake system performs several self-tests every time the ignition switch is turned on and the vehicle is driven. The CAB monitors the system inputs and outputs circuits to verify the system is operating properly. If the CAB senses a malfunction in the system it will set a DTC into memory and trigger the warning lamp.

NOTE: The MDS or DRB III scan tool is used to diagnose the RWAL system. For test procedures refer to the Chassis Diagnostic Manual.

REMOVAL

1. Raise the vehicle on a hoist.
2. Remove the brake line mounting nut and remove the brake line from the sensor stud.
3. Remove the mounting stud (2) from the sensor and shield.
4. Remove the sensor (1) and shield from the differential housing (3).
5. Disconnect the sensor wire harness and remove the sensor (1).

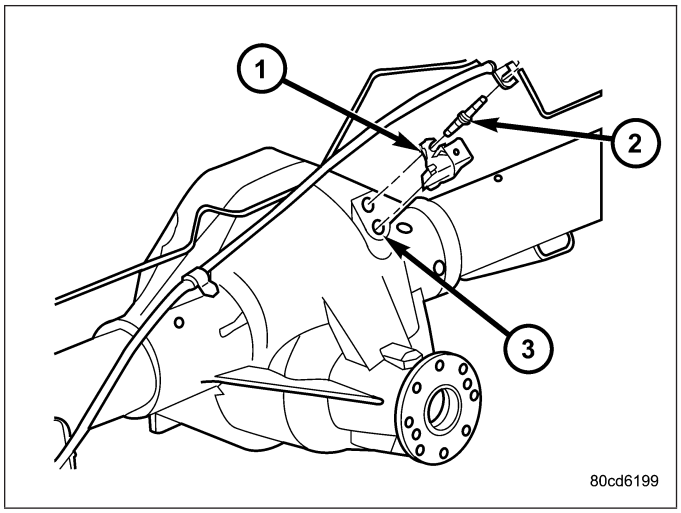

INSTALLATION

1. Connect the harness to the sensor. **Be sure the seal is securely in place between the sensor and the wiring connector.**
2. Install the O-ring on the sensor (if removed).
3. Insert the sensor (1) in the differential housing (3).
4. Install the sensor shield.
5. Install the sensor mounting stud (2) and tighten to 24 N·m (200 in. lbs.).
6. Install the brake line on the sensor stud (2)and install the nut.
7. Lower the vehicle.

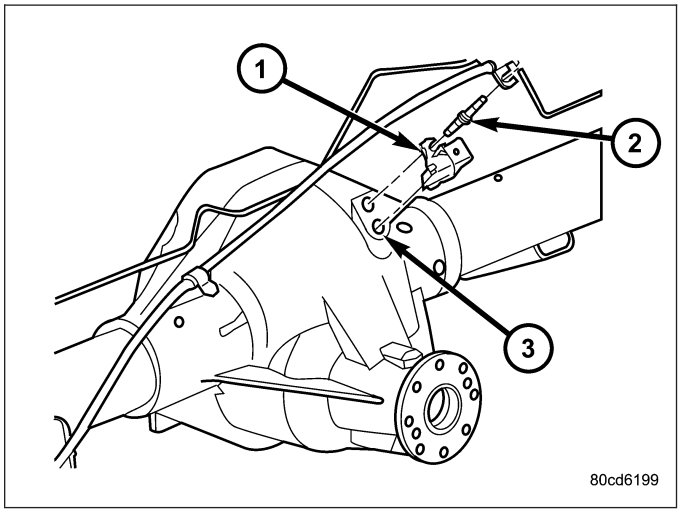

WHEEL-TONE

DIAGNOSIS AND TESTING

REAR WHEEL SPEED SENSOR

Diagnosis of base brake conditions which are mechanical in nature should be performed first. This includes brake noise, lack of power assist, parking brake, or vehicle vibration during normal braking.

The Antilock brake system performs several self-tests every time the ignition switch is turned on and the vehicle is driven. The CAB monitors the system inputs and outputs circuits to verify the system is operating properly. If the CAB senses a malfunction in the system it will set a DTC into memory and trigger the warning lamp.

NOTE: The MDS or DRB III scan tool is used to diagnose the Antilock Brake system. For test procedures refer to the Chassis Diagnostic Manual.

HYDRAULIC/MECHANICAL

DESCRIPTION - ELECTRONIC VARIABLE BRAKE PROPORTIONING

Vehicles equipped with ABS use electronic variable brake proportioning (EVBP) to balance front-to-rear braking. The EVBP is used in place of a rear proportioning valve. The EVBP system uses the ABS system to control the slip of the rear wheels in partial braking range. The braking force of the rear wheels is controlled electronically by using the inlet and outlet valves located in the integrated control unit (ICU).

OPERATION - ELECTRONIC VARIABLE BRAKE PROPORTIONING

EVBP is able to decrease, hold and increase rear brake pressure without activating full ABS control. Upon entry into EVBP the inlet valve for the rear brake circuit is switched on so that the fluid supply from the master cylinder is shut off. In order to decrease the rear brake pressure, the outlet valve for the rear brake circuit is pulsed. This allows fluid to enter the low pressure accumulator (LPA) in the hydraulic control unit (HCU) resulting in a drop in fluid pressure to the rear brakes. In order to increase the rear brake pressure, the outlet valve is switched off and the inlet valve is pulsed. This increases the pressure to the rear brakes.

The EVBP will remain functional during many ABS fault modes. If both the red BRAKE and amber ABS warning indicators are illuminated, the EVBP may not be functioning.

HCU (HYDRAULIC CONTROL UNIT)

DESCRIPTION

The HCU (1) consists of a valve body, pump motor, low pressure accumulators, inlet valves, outlet valves and noise attenuators.

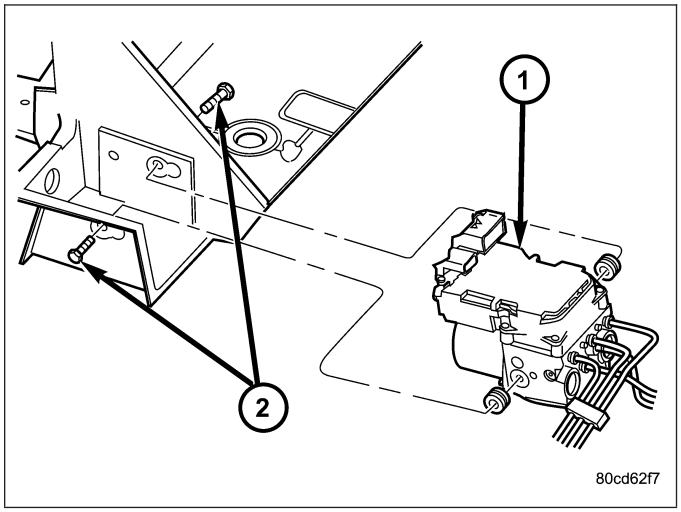

OPERATION

Accumulators in the valve body store extra fluid released to the system for ABS mode operation. The pump provides the fluid volume needed and is operated by a DC type motor. The motor is controlled by the CAB.

The valves modulate brake pressure during antilock braking and are controlled by the CAB.

The HCU provides three channel pressure control to the front and rear brakes. One channel controls the rear wheel brakes in tandem. The two remaining channels control the front wheel brakes individually.

During antilock braking, the solenoid valves are opened and closed as needed.

During normal braking, the HCU solenoid valves and pump are not activated. The master cylinder and power booster operate the same as a vehicle without an ABS brake system.

NOTE: The three modes mentioned below do occur but not necessarily in the order listed everytime.

During antilock braking, solenoid valve pressure modulation occurs in three stages, pressure increase, pressure hold, and pressure decrease. The valves are all contained in the valve body portion of the HCU.

PRESSURE DECREASE

The outlet valve is opened and the inlet valve is closed during the pressure decrease cycle.

A pressure decrease cycle is initiated when speed sensor signals indicate high wheel slip at one or more wheels. At this point, the CAB closes the inlet then opens the outlet valve, which also opens the return circuit to the accumulators. Fluid pressure is allowed to bleed off (decrease) as needed to prevent wheel lock.

Once the period of high wheel slip has ended, the CAB closes the outlet valve and begins a pressure increase or hold cycle as needed.

PRESSURE HOLD

Both solenoid valves are closed in the pressure hold cycle but only the inlet valve is energized. Fluid apply pressure in the control channel is maintained at a constant rate. The CAB maintains the hold cycle until sensor inputs indicate a pressure change is necessary.

PRESSURE INCREASE

The inlet valve is open and the outlet valve is closed during the pressure increase cycle. The pressure increase cycle is used to reapply thew brakes. This cycle controls re-application of fluid apply pressure.

REMOVAL

1. Disconnect the battery cables from the battery.
2. Remove the battery.
3. Disconnect the two electrical harness connectors.
4. Remove the five brake lines from the HCU (1).
5. Remove HCU/CAB mounting bolts (1) and remove the HCU/CAB (1).

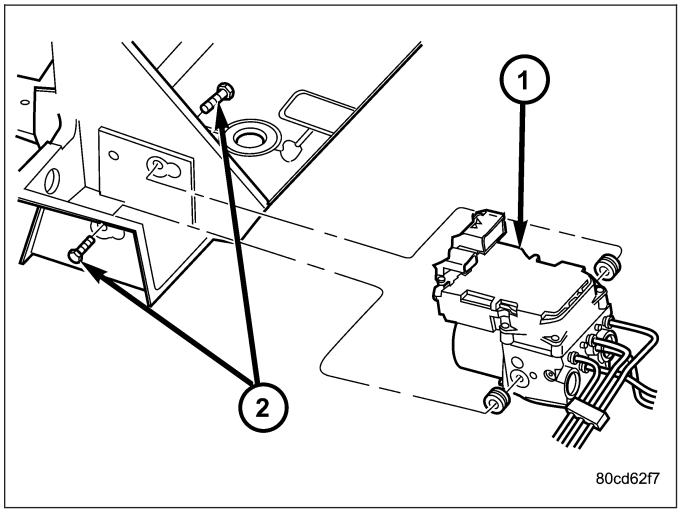

INSTALLATION

NOTE: If the CAB is being replaced with a new CAB is must be reprogrammed with the use of a DRB III.

1. Install HCU/CAB (1) on the mounts (2) and Tighten the bolts to 15N·m (11 ft. lbs.).
2. Install the five brake lines to the HCU (1) and tighten to 19 N·m (170 in. lbs.).
3. Install the two electrical harness connectors to the HCU/CAB (1) and push down on the release to secure the connectors.

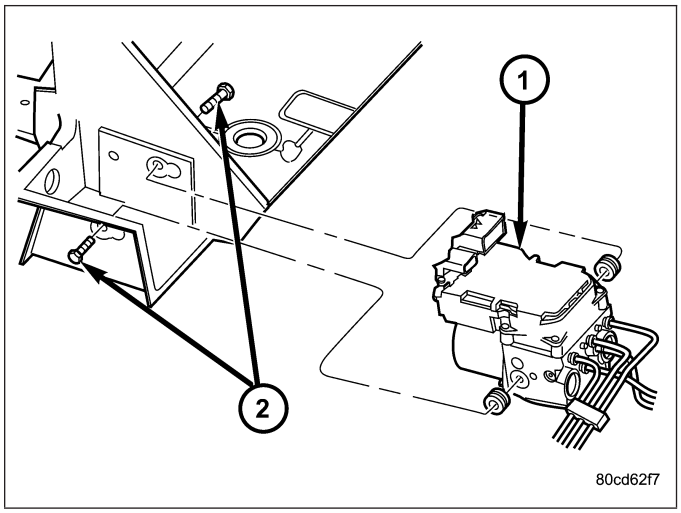

4. Install the battery.
5. Install the battery cables to the battery.
6. Bleed ABS brake system (Refer to 5 - BRAKES - STANDARD PROCEDURE).

VALVE-RWAL

DESCRIPTION

Rear Wheel Antilock (RWAL) brake system is standard equipment on 1500 series vehicles. The RWAL brake system is designed to prevent rear wheel lock-up on virtually all types of road surfaces. RWAL braking is desirable because a vehicle which is stopped without locking the rear wheels will retain directional stability. This allows the driver to retain greater control of the vehicle during braking.

The valve is located on the drivers side inner fender under the hood. The valve modulates hydraulic pressure to the rear brakes.

The RWAL components include:

- RWAL Valve(1)
- Controller Antilock brake (CAB)
- Rear Wheel Speed Sensor (WSS)

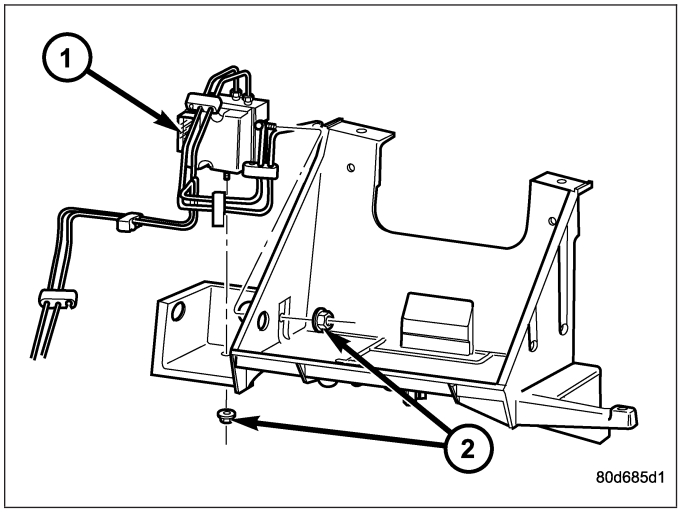

OPERATION

When the brakes are applied, hydraulic fluid is routed from the master cylinder's secondary circuit to the RWAL valve. From there hydraulic fluid is routed to the rear brakes. The Controller Antilock Brake (CAB) contains an Electronic Variable Brake Proportioning (EVBP) control algorithm, which proportions the applied braking force to the rear wheels during braking. The EVBP function of the RWAL system takes the place of a conventional hydraulic proportioning valve. The CAB monitors the rear wheel speed through the rear wheel speed sensor and calculates an estimated vehicle deceleration. When an established deceleration threshold is exceeded, an isolation valve is closed to hold the applied brake pressure to the rear brakes constant. Upon further increases in the estimated vehicle deceleration, the isolation valve is selectively opened to increase rear brake pressure in proportion to the front brake pressure. If impending rear wheel lock-up is sensed, the CAB signals the RWAL valve to modulate hydraulic brake pressure to the rear wheels to prevent lock-up.

NORMAL BRAKING Since the RWAL valve also performs the EVBP or proportioning function, vehicle deceleration under normal braking may be sufficient to trigger the EVBP function of the RWAL system without full RWAL activity as would normally occur during an impending rear wheel lock-up. As previously mentioned, the isolation valve is selectively closed and opened to increase rear brake pressure in proportion to the front brake pressure under EVBP control. Slight brake pedal pulsations may be noticed as the isolation valve is opened.

REMOVAL

1. Disconnect the battery cables from the battery.
2. Remove the battery.
3. Disconnect the electrical harness connector.
4. Remove the brake lines from the rwal valve (1).
5. Remove rwal valve mounting nuts (2) and remove the rwal valve (1).

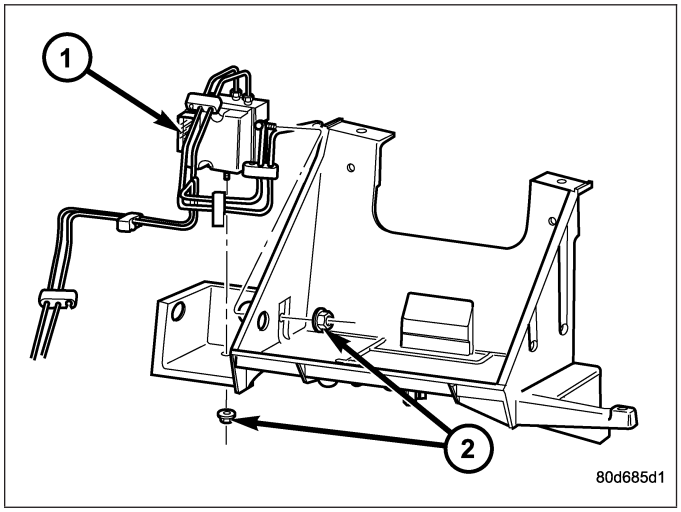

INSTALLATION

1. Install rwal valve (1) and Tighten the nuts (2) to 15 N·m (11 ft. lbs.).
2. Install the brake lines to the rwal valve and tighten to 19 N·m (170 in. lbs.).
3. Install the electrical harness connector to the rwal valve and secure the connector.
4. Install the battery.
5. Install the battery cables to the battery.
6. Bleed ABS brake system (Refer to 5 - BRAKES - STANDARD PROCEDURE).

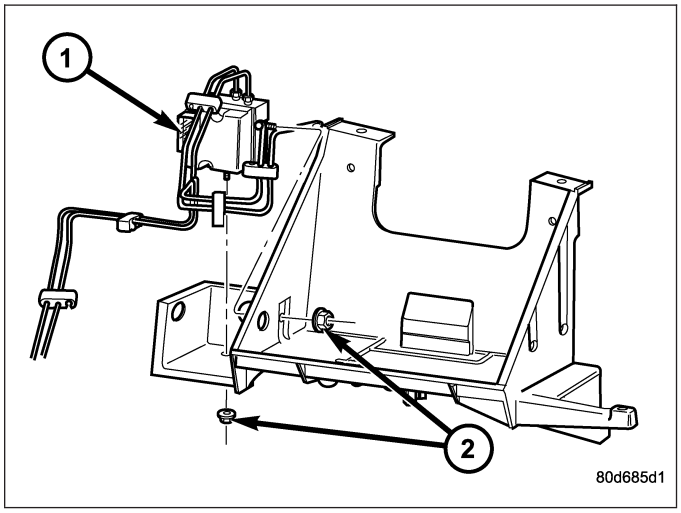

CLUTCH

TABLE OF CONTENTS

page

CLUTCH
WARNING 1
DIAGNOSIS AND TESTING
CLUTCH 1
SPECIFICATIONS 5
SPECIAL TOOLS 6
DISC CLUTCH
REMOVAL 7
INSTALLATION 8
ADJUSTMENTS
ADJUSTMENT 8A
DISC CLUTCH - SRT-10
REMOVAL 9
CLEANING 9
INSTALLATION 10
HOUSING CLUTCH
DIAGNOSIS AND TESTING
CLUTCH HOUSING 10
REMOVAL 13
INSTALLATION 14
BEARING CLUTCH RELEASE
REMOVAL 14
INSTALLATION 15
BEARING CLUTCH RELEASE - SRT-10
REMOVAL 15
INSTALLATION 16

page

FLYWHEEL
DESCRIPTION 16
DIAGNOSIS AND TESTING
FLYWHEEL 16
REMOVAL 17
INSTALLATION 17
FLYWHEEL - SRT-10
DIAGNOSIS AND TESTING
FLYWHEEL 17
REMOVAL 18
INSTALLATION 18
BEARING PILOT
REMOVAL 19
INSTALLATION 19
LINKAGE
REMOVAL 20
INSTALLATION 20
LINKAGE - SRT-10
REMOVAL 21
INSTALLATION 22
SWITCH CLUTCH PEDAL POSITION
DIAGNOSIS AND TESTING
CLUTCH PEDAL POSITION SWITCH 23
SWITCH CLUTCH PEDAL - SRT-10
DIAGNOSIS AND TESTING 23
REMOVAL 24
INSTALLATION 25

CLUTCH

WARNING

WARNING: Exercise care when servicing clutch components. Factory installed clutch discs do not contain asbestos fibers. Dust and dirt on clutch parts may contain asbestos fibers from aftermarket components. Breathing excessive concentrations of these fibers can cause serious bodily harm. Wear a respirator during service and never clean clutch components with compressed air or with a dry brush. Either clean the components with water dampened rags or use a vacuum cleaner specifically designed to remove asbestos fibers and dust. Do not create dust by sanding a clutch discs. Replace the disc if the friction material is damaged. Dispose of all dust and dirt containing asbestos fibers in sealed bags or containers. This will minimize exposure to yourself and to others. Follow all recommended safety practices prescribed by the occupational safety and health administration (OSHA) and the environmental safety agency (EPA), for the handling and disposal of products containing asbestos. Failure to follow these instructions may result in personal injury or death

DIAGNOSIS AND TESTING

CLUTCH

Road test and inspect components to determine a clutch problem. Road test the vehicle at normal speeds. Shift the transmission through all gear ranges and observe clutch action. If clutch chatters, grabs, slips or does not release

properly, remove and inspect clutch components. If problem is noise or hard shifting, further diagnosis may be needed to the transmission and driveline component.

CLUTCH CONTAMINATION

Contamination is a frequent cause of clutch malfunctions. Oil, water or clutch fluid on the clutch disc and pressure plate surfaces will cause chatter, slip and grab. Oil contamination indicates a leak at either the rear main seal or transmission input shaft. Clutch fluid leaks are usually from damaged slave cylinder push rod seals. Heat buildup caused by slippage between the pressure plate, disc and flywheel can bake the oil residue onto the components. The glaze-like residue ranges in color from amber to black.

Road splash contamination is dirt/water entering the clutch housing due to loose bolts, housing cracks. Driving through deep water puddles can force water/road splash into the housing through such openings.

IMPROPER RELEASE OR CLUTCH ENGAGEMENT

Clutch release or engagement problems can be caused by worn or damage clutch components.

Release problems can cause hard shifting and noise. Look for leaks at clutch cylinders, connecting line and loose slave cylinder bolts. Also worn/loose release fork, pivot stud, clutch disc, pressure plate or release bearing.

Engagement problems can cause slip, chatter/shudder and noisy operation. The causes may be clutch disc contamination, wear, distortion or flywheel damage.

CLUTCH MISALIGNMENT

Clutch components must be in proper alignment with the crankshaft and transmission input shaft. Misalignment caused by excessive runout or warpage of any clutch component will cause grab, chatter and improper clutch release.

CLUTCH COVER AND DISC RUNOUT

Check the clutch disc before installation. Axial (face) runout of a **new** disc should not exceed 0.50 mm (0.020 in.). Measure runout about 6 mm (1/4 in.) from the outer edge of the disc facing. Obtain another disc if runout is excessive.

Check condition of the clutch before installation. A warped cover or diaphragm spring will cause grab and incomplete release or engagement. Be careful when handling the cover and disc. Impact can distort the cover, diaphragm spring, release fingers and the hub of the clutch disc.

Use an alignment tool when positioning the disc on the flywheel. The tool prevents accidental misalignment which could result in cover distortion and disc damage.

A frequent cause of clutch cover distortion (and consequent misalignment) is improper bolt tightening.

FLYWHEEL RUNOUT

Check flywheel runout whenever misalignment is suspected. Flywheel runout should not exceed 0.08 mm (0.003 in.). Measure runout at the outer edge of the flywheel face with a dial indicator.

Common causes of runout are:

- heat warpage
- improper machining
- incorrect bolt tightening
- improper seating on crankshaft flange shoulder
- foreign material on crankshaft flange

Flywheel machining is not recommended. The flywheel clutch surface is machined to a unique contour and machining will negate this feature. Minor flywheel scoring can be cleaned up by hand with 180 grit emery or with turning equipment. Remove only enough material to reduce scoring (approximately 0.001 - 0.003 in.). Heavy stock removal is **not recommended.** Replace the flywheel if scoring is severe and deeper than 0.076 mm (0.003 in.). Excessive stock removal can result in flywheel cracking or warpage after installation; it can also weaken the flywheel and interfere with proper clutch release.

Clean the crankshaft flange before mounting the flywheel. Dirt and grease on the flange surface may cock the flywheel causing excessive runout. Use new bolts when remounting a flywheel and secure the bolts with Mopar Lock

And Seal or equivalent. Tighten flywheel bolts to specified torque only. Overtightening can distort the flywheel hub causing runout.

DIAGNOSIS CHART

The diagnosis charts Diagnosis Chart describe common clutch problems, causes and correction.

Diagnosis Chart

CONDITION	POSSIBLE CAUSES	CORRECTION
Disc facing worn out	1. Normal wear.	1. Replace cover and disc.
	2. Driver frequently rides (slips) the clutch. Results in rapid overheating and wear.	2. Replace cover and disc.
	3. Insufficient clutch cover diaphragm spring tension.	3. Replace cover and disc.
Clutch disc facing contaminated with oil, grease, or clutch fluid.	1. Leak at rear main engine seal or transmission input shaft seal.	1. Replace appropriate seal.
	2. Excessive amount of grease applied to the input shaft splines.	2. Remove grease and apply the correct amount of grease.
	3. Road splash, water entering housing.	3. Replace clutch disc. Clean clutch cover and reuse if in good condition.
	4. Slave cylinder leaking.	4. Replace hydraulic clutch linkage.
Clutch is running partially disengaged.	1. Release bearing sticking or binding and does not return to the normal running position.	1. Verify failure. Replace the release bearing and transmission front bearing retainer as necessary.
Flywheel below minimum thickness specification.	1. Improper flywheel machining. Flywheel has excessive taper or excessive material removal.	1. Replace flywheel.
Clutch disc, cover and/or diaphragm spring warped or distorted.	1. Rough handling. Impact bent cover, spring, or disc.	1. Replace disc or cover as necessary.
	2. Improper bolt tightening procedure.	2. Tighten clutch cover using proper procedure.
Facing on flywheel side of disc torn, gouged, or worn.	1. Flywheel surface scored or nicked.	1. Correct surface condition if possible. Replace flywheel and disc as necessary.
	2. Clutch disc sticking or binding on transmission input shaft.	2. Inspect components and correct/replace as necessary.
Clutch disc facing burnt. Flywheel and cover pressure plate surfaces heavily glazed.	1. Frequent operation under high loads or hard acceleration conditions.	1. Correct condition of flywheel and pressure plate surface. Replace clutch cover and disc. Alert driver to problem cause.
	2. Driver frequently rides (slips) clutch. Results in rapid wear and overheating of disc and cover.	2. Correct condition of flywheel and pressure plate surface. Replace clutch cover and disc. Alert driver to problem cause.

CONDITION	POSSIBLE CAUSES	CORRECTION
Clutch disc binds on input shaft splines.	1. Clutch disc hub splines damaged during installation.	1. Clean, smooth, and lubricate hub splines if possible. Replace disc if necessary.
	2. Input shaft splines rough, damaged, or corroded.	2. Clean, smooth, and lubricate shaft splines if possible. Replace input shaft if necessary.
Clutch disc rusted to flywheel and/or pressure plate.	1. Clutch not used for an extended period of time (e.g. long term vehicle storage).	1. Sand rusted surfaces with 180 grit sanding paper. Replace clutch cover and flywheel if necessary.
Pilot bearing seized, loose, or rollers are worn.	1. Bearing cocked during installation.	1. Install a new bearing.
	2. Bearing defective.	2. Install a new bearing.
	3. Bearing not lubricated.	3. Install a new bearing.
	4. Clutch misalignment.	4. Inspect clutch and correct as necessary. Install and lubricate a new bearing.
Clutch will not disengage properly.	1. Low hydraulic linkage fluid level.	1. Add hydraulic linkage fluid.
	2. Clutch cover loose.	2. Follow proper bolt tightening procedure.
	3. Clutch disc bent or distorted.	3. Replace clutch disc.
	4. Clutch cover diaphragm spring bent or warped.	4. Replace clutch cover.
	5. Clutch disc installed backwards.	5. Remove and install clutch disc correctly.
	6. Release fork bent or fork pivot loose or damaged.	6. Replace fork or pivot as necessary.
	7. Clutch master or slave cylinder failure.	7. Replace hydraulic linkage assembly.
Clutch pedal squeak.	1. Pivot pin loose.	1. Tighten pivot pin if possible. Replace clutch pedal if necessary.
	2. Master cylinder bushing not lubricated.	2. Lubricate master cylinder bushing.
	3. Pedal bushings worn out or cracked.	3. Replace and lubricate bushings.
	4. Rough surface on front bearing retainer.	4. Replace front bearing retainer.
Clutch master or slave cylinder plunger dragging andør binding	1. Master or slave cylinder components worn or corroded.	1. Replace clutch hydraulic linkage assembly.
Release bearing is noisy.	1. Release bearing defective or damaged.	1. Replace release bearing.

CONDITION	POSSIBLE CAUSES	CORRECTION
Contact surface of release bearing damaged.	1. Clutch cover incorrect or release fingers bent or distorted. 2. Release bearing defective or damaged. 3. Release bearing misaligned.	1. Replace clutch cover and release bearing. 2. Replace the release bearing. 3. Check and correct runout of clutch components. Check front bearing sleeve for damage/ alignment. Repair as necessary.
Partial engagement of clutch disc. One side of disc is worn and the other side is glazed and lightly worn.	1. Clutch pressure plate position incorrect. 2. Clutch cover, spring, or release fingers bent or distorted. 3. Clutch disc damaged or distorted. 4. Clutch misalignment.	1. Replace clutch disc and cover. 2. Replace clutch disc and cover. 2. Replace clutch disc. 4. Check alignment and runout of flywheel, disc, pressure plate, andør clutch housing. Correct as necessary.

SPECIFICATIONS

TORQUE SPECIFICATIONS

DESCRIPTION	N·m	Ft. Lbs.	In. Lbs.
Slave Cylinder Nuts	23	17	-
Clutch Master Cylinder Nuts	28	21	-
Pressure Plate Bolts - V6 & V8	50	37	-
Pressure Plate Bolts - V10	30	22.5	-
Pressure Plate Bolts - Diesel	30	22.5	-
Release Bearing Pivot	23	17	-
Flywheel Bolts	95	70	-
Dual Mass Flywheel To Adapter Bolts	55	40	-
Dual Mass Flywheel Adapter To Crankshaft Bolts	137	100	-

SPECIAL TOOLS

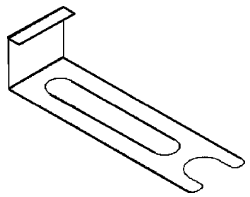

LINE DISCONNECT TOOL 6638

DISC CLUTCH

REMOVAL

1. Support engine with wood block and adjustable jack stand, to prevent strain on engine mounts.
2. Remove transmission and transfer case, if equipped.
3. If pressure plate (3) will be reused, mark (2) the position on flywheel (1) with paint or scriber. Also note location marks on the pressure next to the bolt holes. The mark will be a L or a circle with an X in it.

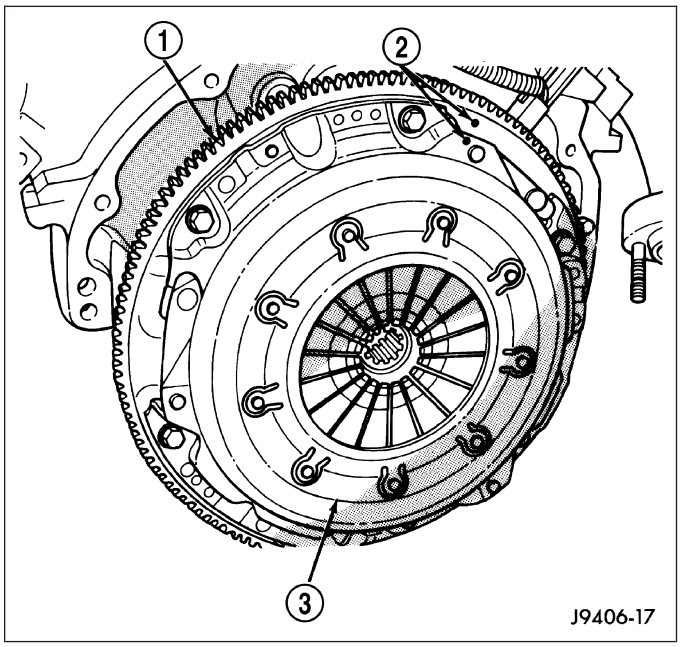

4. Insert clutch alignment tool (3) through pressure plate (2) and into pilot bushing, to hold disc in place while removing bolts.
5. Loosen pressure plate bolts evenly, a few threads at a time and in a diagonal pattern to prevent warping the plate.
6. Remove bolts completely and remove pressure plate, disc and alignment tool.

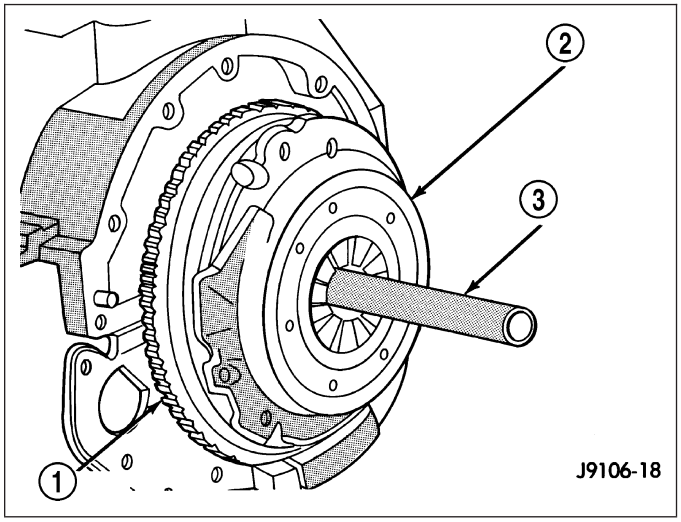

INSTALLATION

CAUTION: Before installing a clutch disc on 5.9L Diesel with Dual Mass Flywheel and self-adjusting pressure plate, the pressure plate must be reset. Failure to reset the pressure will result in damage to the clutch disc.

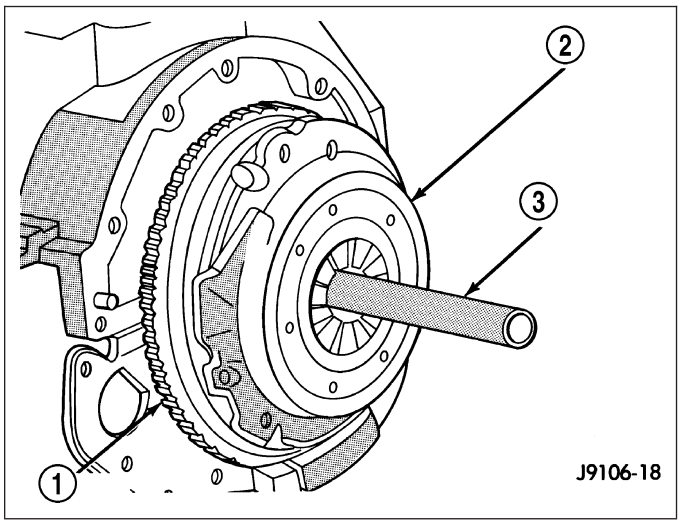

1. Check runout and free operation of new clutch disc.
2. Lubricate crankshaft pilot bearing with a NLGI - 2 rated grease.
3. Install clutch alignment tool in clutch disc hub with the raised side of hub is facing away from the flywheel.

NOTE: Flywheel side is imprinted on the disc face.

4. Install alignment tool (3) in pilot bearing and position disc on the flywheel (1).
5. Position pressure plate over disc (2) and onto the flywheel.
6. Align and hold pressure plate in position and install bolts finger tight.
7. Tighten bolts evenly and a few threads at a time in a diagonal pattern.

CAUTION: Bolts must be tightened evenly and to specified torque to avoid warping pressure plate cover.

8. Tighten pressure plate bolts to:
   - V6 & V8 Engines - 50 N·m (37 ft. lbs.)
   - V10 & Diesel Engines - 30 N·m (22.5 ft. lbs.)

9. Remove release lever (3) and release bearing from clutch housing (1). Apply Mopar high temperature bearing grease to bore (4) of release bearing, release lever (5) contact surfaces and release lever pivot stud (2).

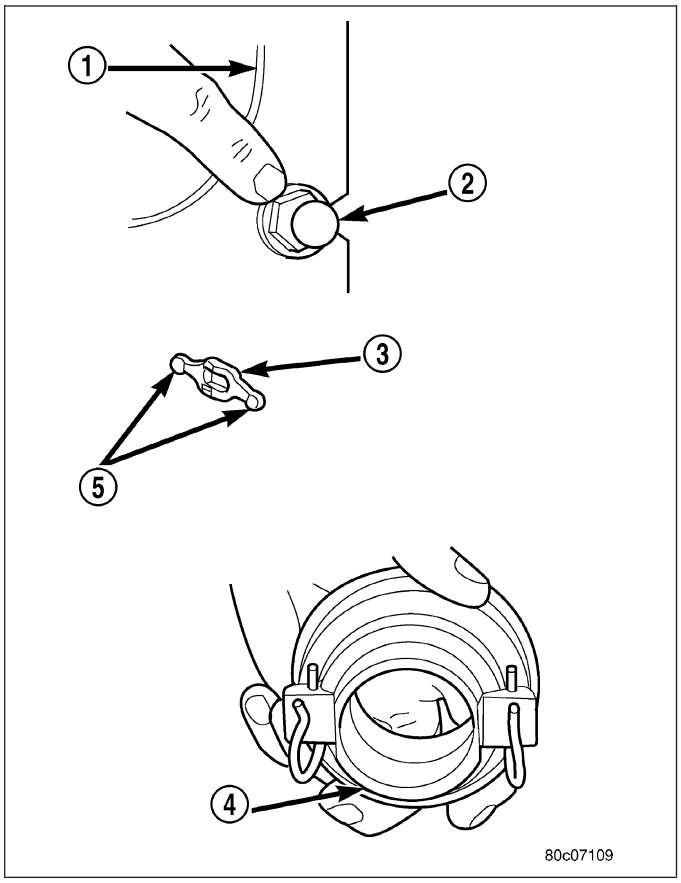

10. Apply light coat of Mopar high temperature bearing grease to splines (3) of transmission input shaft (1) and to release bearing slide surface of the transmission front bearing retainer (2).

CAUTION: Do not over lubricate shaft splines. This can result in grease contamination of the disc.

11. Wipe pilot bearing surface clean.

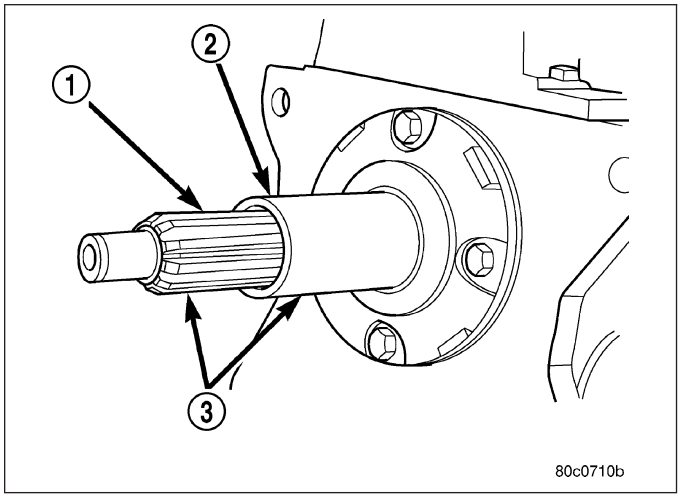

12. Install release lever and bearing in clutch housing. Verify spring clip (2) that retain lever on pivot ball (4) and release bearing (3) clips (1) on lever (1) are installed properly.

NOTE: If release lever is installed correctly, the lever part number will be toward the bottom of the transmission and right side up. There is also a stamped "I" in the lever which goes to the pivot ball side of the transmission.

13. Install transmission and transfer case if equipped.
14. Check fluid level in clutch master cylinder.

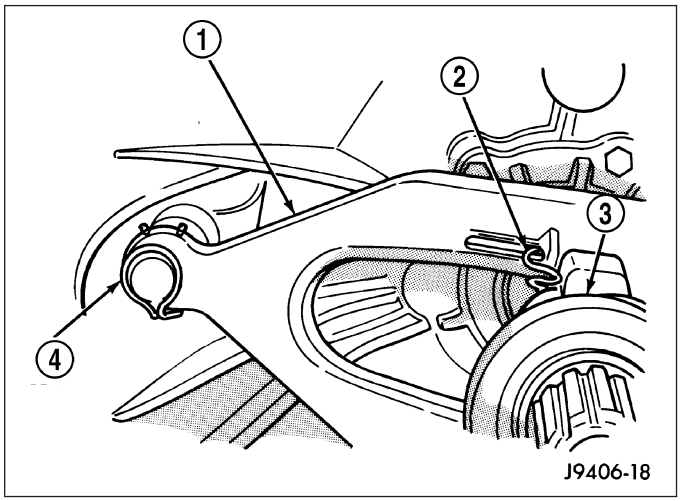

ADJUSTMENTS

ADJUSTMENT

NOTE: Perform the following procedure, when replacing only the clutch disc on 5.9L Diesel with Dual Mass Flywheel and self-adjusting pressure plate. The pressure plate must be reset before installing a new disc.

1. Place pressure plate with disc on a press.
2. Center press ram (2) on the pressure plate diaphragm spring fingers (1).
3. Compress the diaphragm spring fingers (1), until tension is released from the stepped adjusting ring.

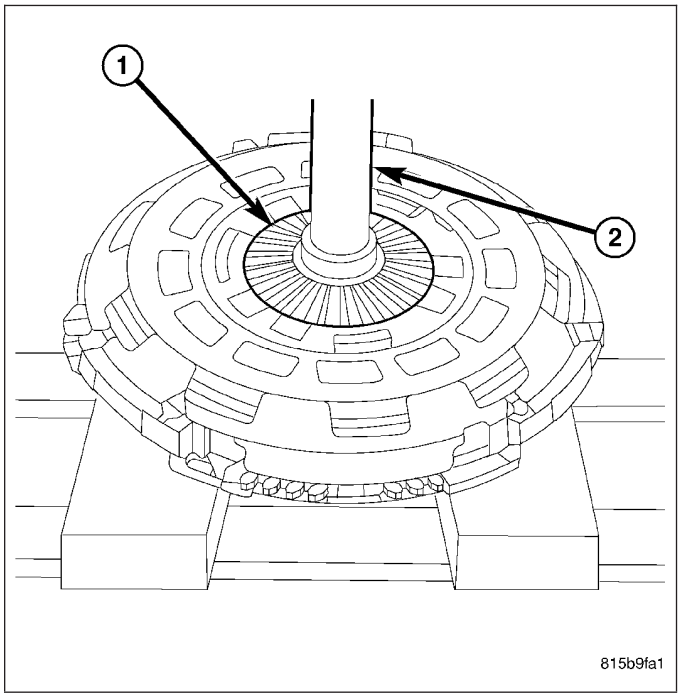

4. Place two screwdrivers against two of the three stepped adjusting ring (1) tension spring stops, just ahead of the adjusting ring tension springs on the pressure plate (2).

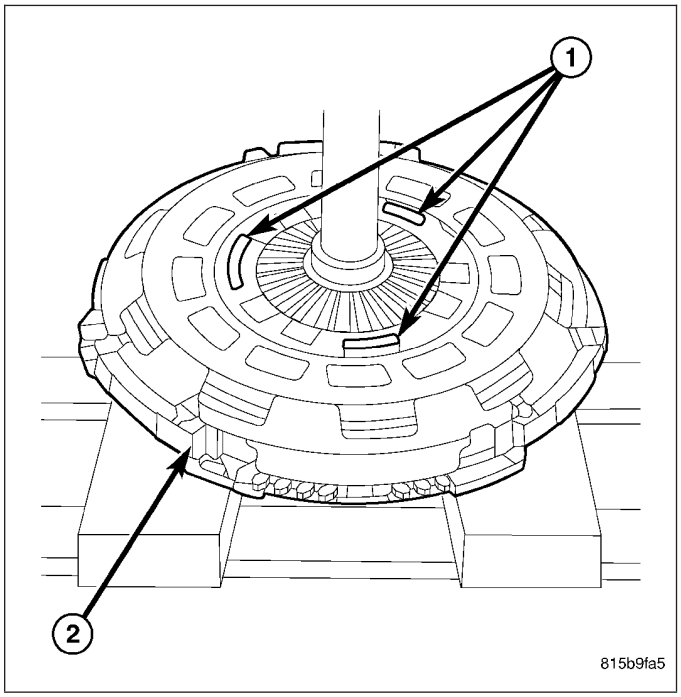

5. Rotate stepped adjusting ring (1) on the pressure plate (2) counterclockwise until adjusting ring steps are adjusted out fully. Then hold adjusting ring while releasing the press pressure.
6. Remove the screwdrivers. The pressure plate is know adjusted for a new clutch disc.

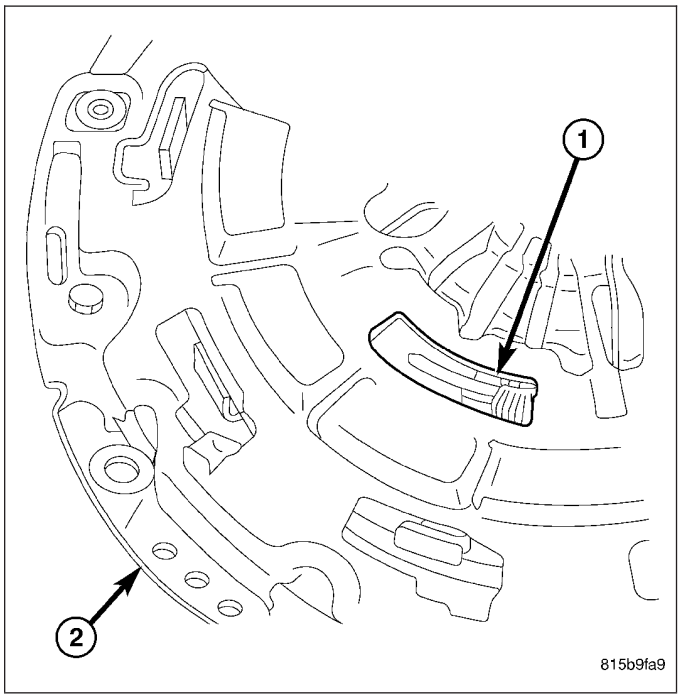

DISC CLUTCH - SRT-10

REMOVAL

1. Remove transmission.
2. Remove clutch housing (3) bolts and remove clutch housing from engine.

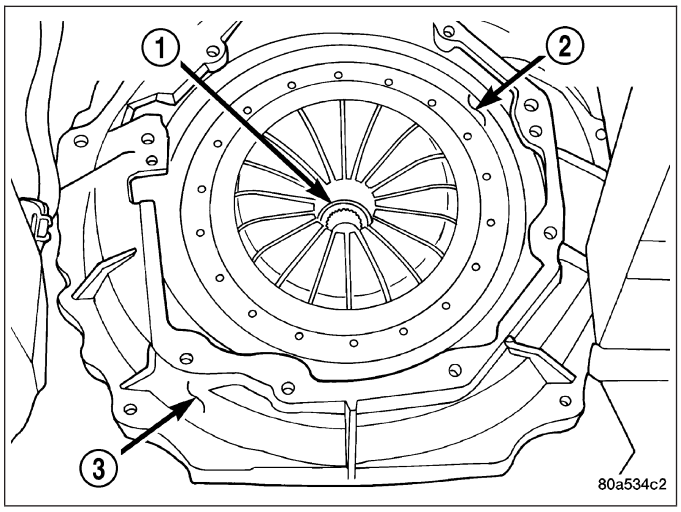

3. Mark pressure plate (1) and flywheel to maintain their position when installing clutch assembly.
4. Insert Clutch Disc Aligning Tool through the clutch disc hub to prevent the clutch disc from falling and damaging the facings.
5. Loosen pressure plate bolts (2) one or two turns at a time, in a crisscross pattern. This will release spring pressure evenly and avoid clutch cover damage.
6. Remove pressure plate assembly and disc.

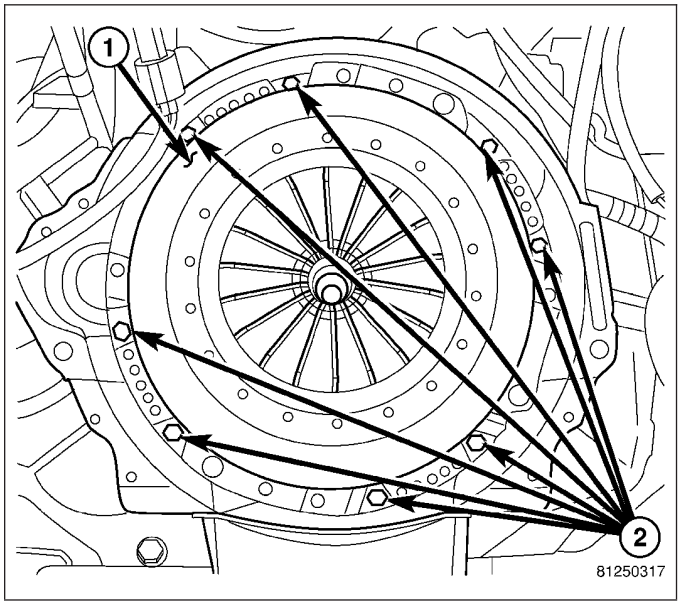

CLEANING

Clean flywheel face with crocus cloth or 400-600 grade sandpaper, then wipe the surface with mineral spirits. If the surface is severely scored, heat checked or warped, replace the flywheel.

CAUTION: Never machine the flywheel face. If flywheel surface is bad the flywheel must be replaced.

Wipe the friction surface of the pressure plate with mineral spirits.

INSTALLATION

NOTE: Clutch disc is marked flywheel side.

1. Mount clutch assembly on flywheel, being careful to properly align dowels and alignment marks made before removal. If new clutch or flywheel is installed, align cover balance spot as close as possible to flywheel balance orange spot. Apply pressure to the alignment tool. Lightly tighten the clutch cover bolts enough to hold the disc in position.

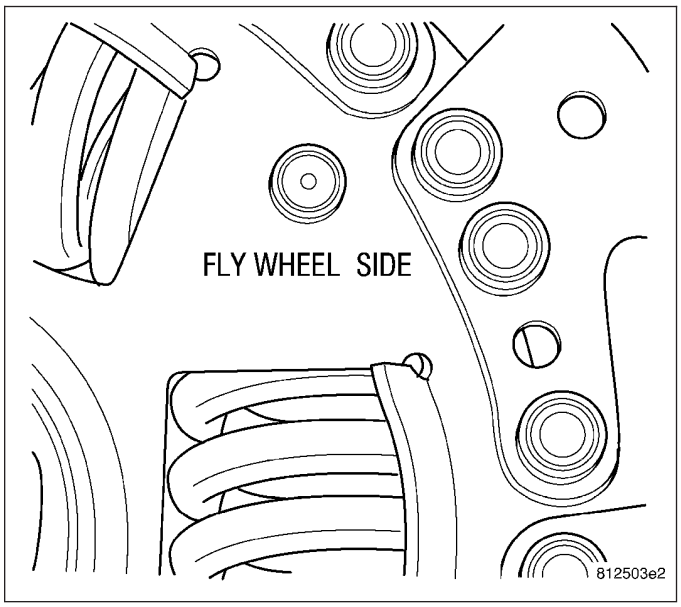

2. Tighten pressure plate bolts a few turns at a time in a crisscross pattern until bolts are all seated. Then tighten bolts sequence to 30 N·m (270 in. lbs.). Remove clutch disc alignment tool.
3. Install bellhousing on engine.
4. Install transmission.

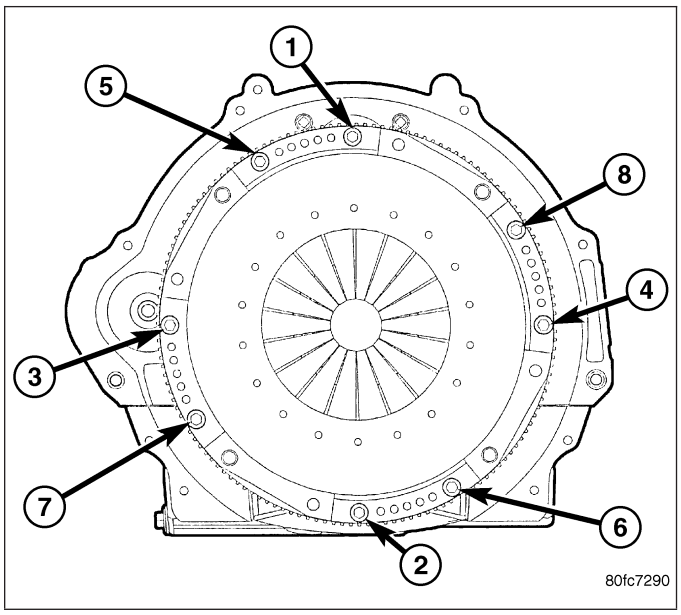

HOUSING CLUTCH

DIAGNOSIS AND TESTING

CLUTCH HOUSING

The clutch housing maintains alignment between the crankshaft and transmission input shaft. Misalignment can cause clutch noise, hard shifting, incomplete release and chatter. Also premature pilot bearing, cover release fingers and clutch disc wear. In severe cases, it can cause premature wear of the transmission input shaft and front bearing.

NOTE: Only the NV4500 clutch housing can be checked using the following bore and face runout procedures. The NV5600 clutch housing is a integral part of the transmission and can only be checked off the vehicle.

CLUTCH HOUSING BORE RUNOUT

CAUTION: On diesel engines if housing bore runout exceeds 0.015 inch, the clutch housing/ transmission adapter plate must be replaced. On gas engines if housing bore runout exceeds 0.053 in. the clutch housing must be replaced.

NOTE: Offset dowels are available for gas engines to correct housing bore runout. They are not available for diesel engines.

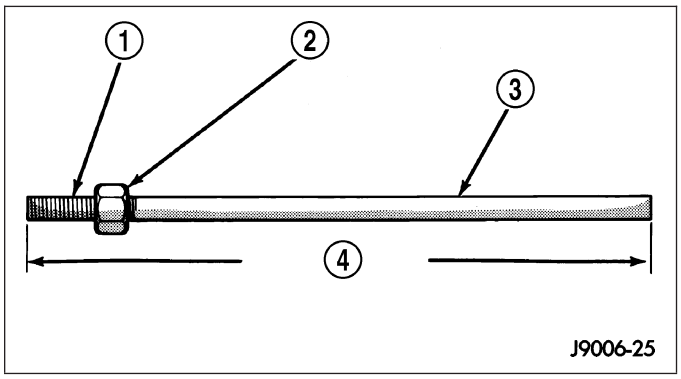

1. Remove the clutch housing.
2. Remove the clutch cover and disc.
3. Replace one of the flywheel bolts with an appropriate size threaded rod (3) that is 10 in. (25.4 cm) long. The rod will be used to mount the dial indicator.
4. Remove release fork from the clutch housing.
5. Install clutch housing. Tighten the housing bolts nearest the alignment dowels first.
6. Mount dial indicator (2) on the threaded rod (1) and position indicator plunger (3) on the clutch housing bore (4).

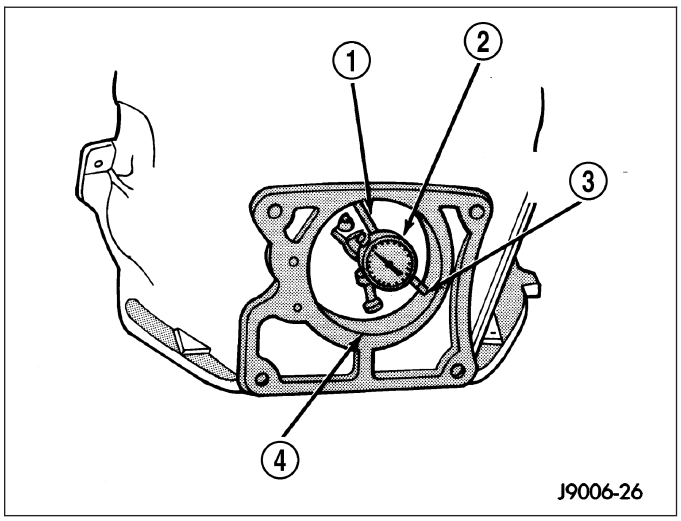

7. Rotate crankshaft until indicator plunger is at the top of the housing bore (1). Zero the indicator at this point.
8. Rotate crankshaft and record indicator readings at eight points (45° apart) around the bore. Take measurement at least twice for accuracy.

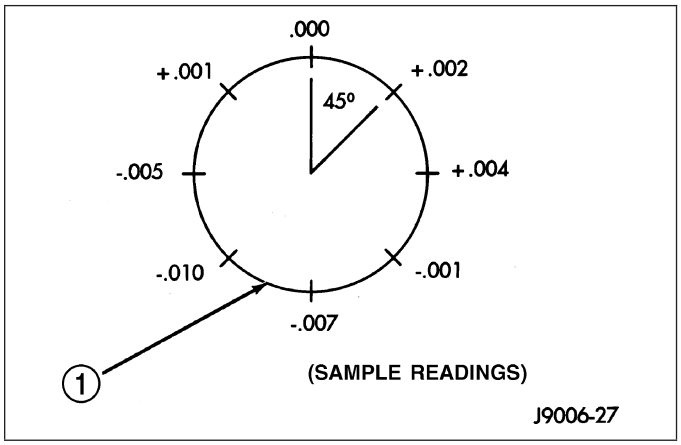

9. Subtract each reading from the one 180° opposite to determine runout and direction. Bore runout example:
   - 0.000 – (–0.007) = 0.007 in.
   - +0.002 – (–0.010) = 0.012 in.
   - +0.004 – (–0.005) = 0.009 in.
   - –0.001 – (+0.001) = –0.002 in.

In this example the largest or total indicator reading (TIR) difference is 0.012 inch. This means the housing bore is offset from the crankshaft centerline by 0.006 in. which is 1/2 of 0.012 inch. The dowels (2) needed to correct this have an offset of 0.007 in.

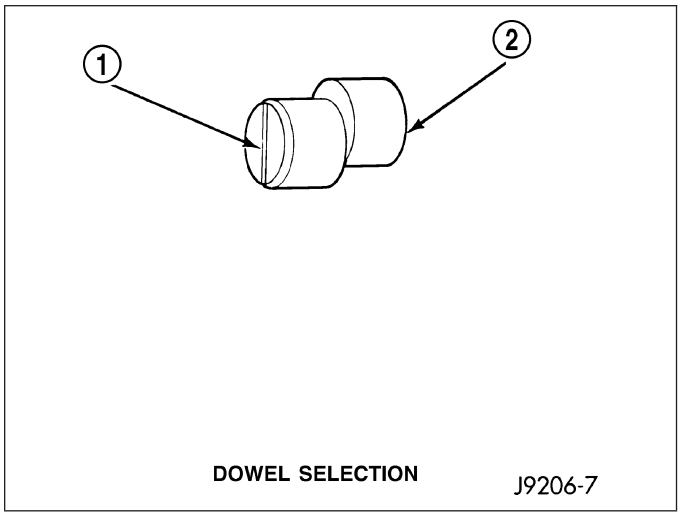

Remove housing and install dowels with the slotted side facing out so they can be turned with a screwdriver. Then install the housing and mount the dial indicator and check bore runout again. Rotate the dowels until the TIR is less than 0.010 inch.

Clutch Housing Face Runout

1. Position dial indicator (2) towards the housing face with indicator plunger (1) on the rim of the housing bore.
2. Rotate crankshaft until indicator plunger is at the 10 O'clock position and zero the dial indicator.

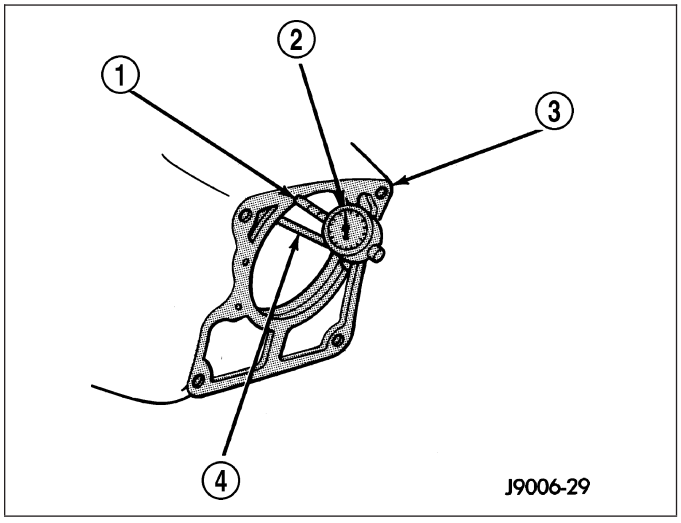

3. Measure and record face runout (1) readings at four points 90° apart. Take measurement at least twice for accuracy.
4. Subtract lowest reading from highest to determine total runout. If low reading was **minus** 0.004 in. and highest reading was **plus** 0.009 in. the total runout is 0.013 inch.

NOTE: Maximum acceptable face runout is 0.010 inch.

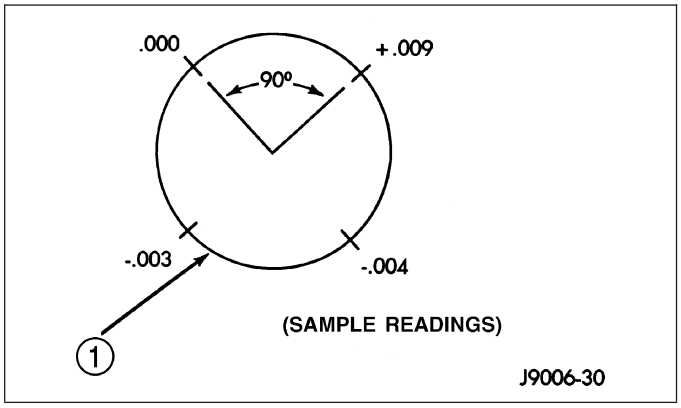

To correct this example the shims needed between the clutch housing and transmission are:

- 0.009 in. at the 0.000 corner
- 0.012 in. at the –0.003 corner
- 0.013 in. at the –0.004 corner

After installing the clutch assembly and housing, tighten the housing bolts nearest the alignment dowels first.

NOTE: Shims can be made from shim stock or similar materials of the required thickness.

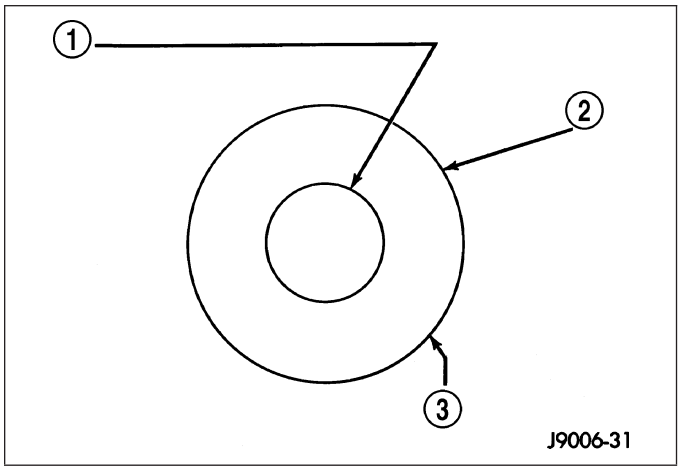

REMOVAL

1. Remove transmission (2) and transfer case.
2. Remove starter from clutch housing.
3. Remove structural dust cover bolts from clutch housing.

CAUTION: Do not remove structural dust cover from enigne block. If cover is removed clutch housing and cover must be aligned with the engine.

4. Remove clutch housing (1) bolts and remove housing from the engine.

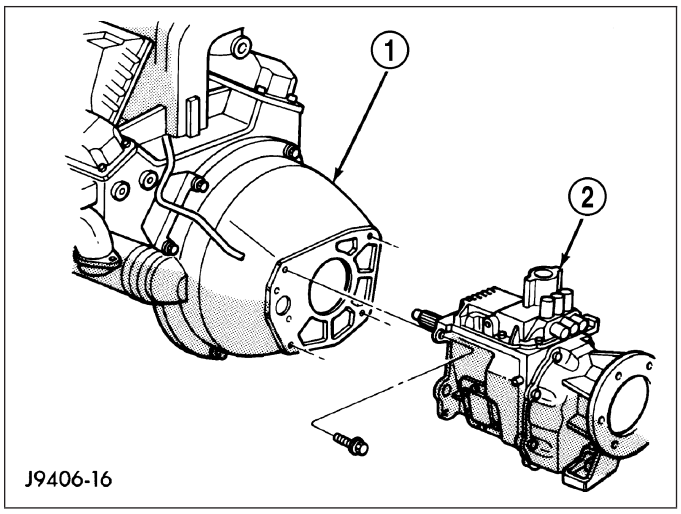

INSTALLATION

1. Clean housing mounting surface of engine block (1) with wax and grease remover.
2. Verify that clutch housing alignment dowels are in good condition and properly seated.
3. Transfer slave cylinder, release fork and boot, fork pivot stud and wire/hose brackets to new housing (3).
4. Install structural dust cover (4) if removed (Refer to 9 - ENGINE/ENGINE BLOCK/STRUCTURAL COVER - INSTALLATION).
5. Align and install clutch housing (3) on engine (1). Tighten housing bolts across the top of the housing first and to the following torque values:
   - “A” bolts 1/4in. diameter - 4.5 N·m (40 in.lb.)
   - “A” bolts 3/8in. diameter - 40 N·m (30 ft.lb.)
   - “A” bolts 7/16in. diameter - 68 N·m (50 ft.lb.)
   - “B” bolts for 5.7L 5.9L TD/8.0L engines - 47.5 N·m (40 ft.lb.)
   - “C” bolts for 5.7L engine - 68 N·m (50 ft.lb.)
   - “C” bolts for 5.9L TD engine - 47.5 N·m (35 ft.lb.)
   - “C” bolts for 8.0L engine - 74.5 N·m (55 ft.lb.)
6. Install starter to clutch housing.
7. Install transmission and transfer case, if equipped.

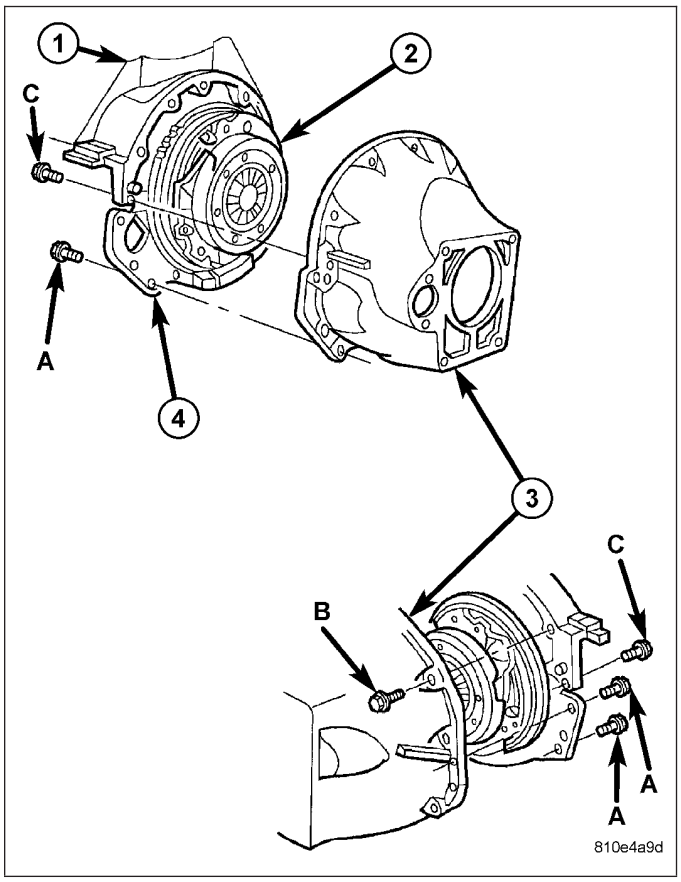

BEARING CLUTCH RELEASE

REMOVAL

1. Remove transmission and transfer case, if equipped.
2. Remove spring clip (6).
3. Disconnect release bearing (4) from release lever (3) and remove bearing.

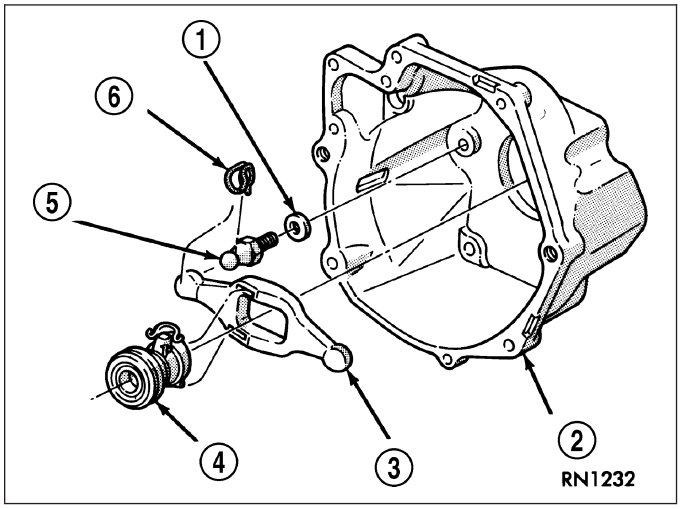

INSTALLATION

1. Inspect bearing slide surface on transmission front bearing retainer. Replace retainer if slide surface is scored, worn, or cracked.
2. Inspect release lever and pivot stud (1). Verify stud is secure and in good condition and lever is not distorted or worn. Replace fork spring clips if bent or damaged.
3. Lubricate input shaft splines, bearing retainer slide surface, lever pivot ball stud (1), and release lever pivot surface with Mopar® high temperature bearing grease.
4. Install release fork and release bearing. Verify fork and bearing are properly secured by spring clips and release lever is installed properly. Rear side of release lever has one end with a raised area, which goes toward the slave cylinder side of the transmission.
5. Install clutch housing, if removed.
6. Install transmission and transfer case.

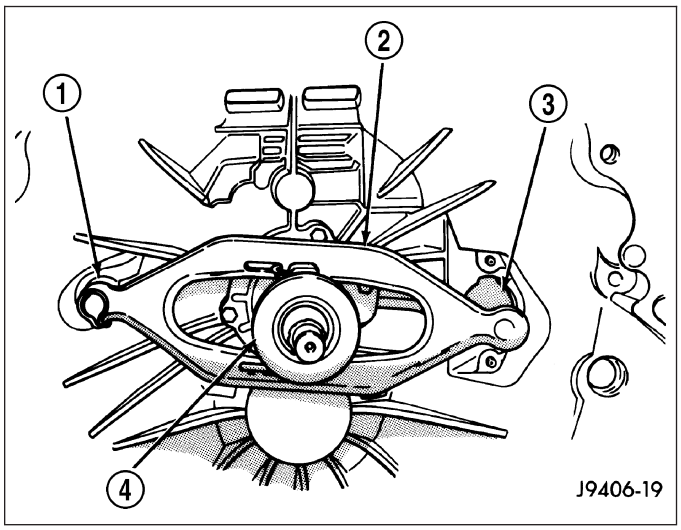

BEARING CLUTCH RELEASE - SRT-10

REMOVAL

NOTE: The bearing and slave cylinder are serviced together as an assembly. Do not attempt to separate the bearing from the slave cylinder.

1. With vehicle in neutral, position vehicle on hoist.
2. Disconnect hydraulic line from hydraulic slave cylinder with Line Disconnect Tool 6638/6638A.
3. Remove transmission.
4. Remove slave cylinder (1) bolts and remove cylinder.

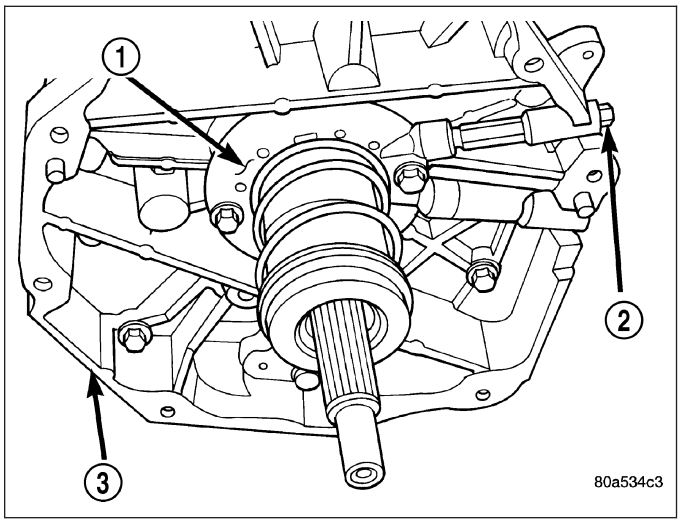

INSTALLATION

1. Install slave cylinder (1) onto transmission (3) and tighten bolts to 22 N·m (200 in. lbs.).
2. Install transmission assembly.
3. Connect hydraulic line to slave cylinder.
4. Bleed the system.

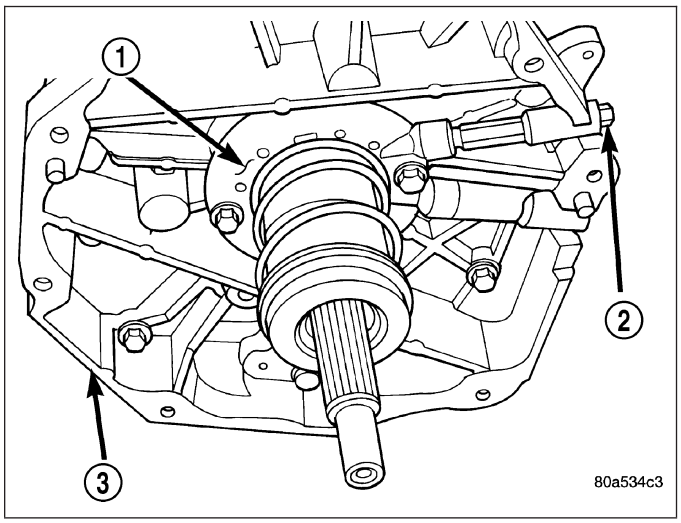

FLYWHEEL

DESCRIPTION

STANDARD FLYWHEEL

The standard (3) is a heavy plate bolted to the rear of the crankshaft (1). The flywheel incorporates the ring gear (2) around the outer circumference to mesh with the starter to permit engine cranking. The rear face of the flywheel serves as the driving member to the clutch disc.

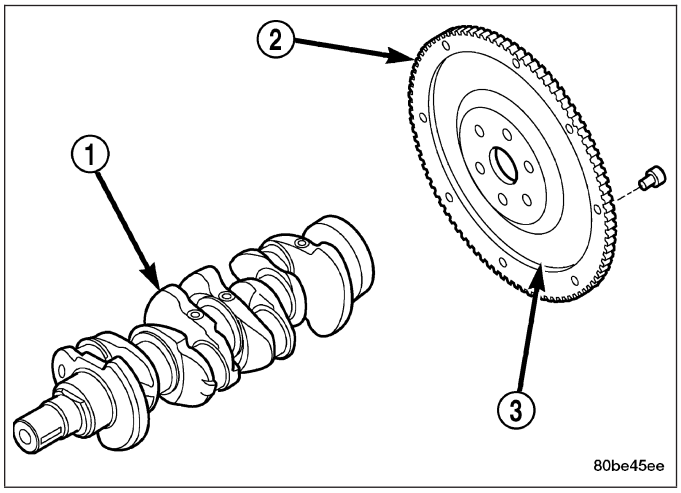

DUAL MASS FLYWHEEL

The Dual Mass Flywheel is used on the 5.9L Diesel engine with G56 transmission. The flywheel incorporates the ring gear around the outer circumference to mesh with the starter to permit engine cranking. The primary flywheel side is bolted to the crankshaft. The secondary flywheel side serves as the driving member to the clutch disc. Internal springs between the flywheels are use to dampen energy. The Dual Mass Flywheel is serviced as an assembly only and should never be taken apart.

DIAGNOSIS AND TESTING

FLYWHEEL

Check flywheel runout whenever misalignment is suspected. Flywheel runout should not exceed 0.08 mm (0.003 in.). Measure runout at the outer edge of the flywheel face with a dial indicator. Mount the indicator on a stud installed in place of one of the flywheel bolts.

Common causes of runout are:

- heat warpage
- improper machining
- incorrect bolt tightening
- improper seating on crankshaft flange shoulder
- foreign material on crankshaft flange

Flywheel machining is not recommended. The flywheel clutch surface is machined to a unique contour and machining will negate this feature. Minor flywheel scoring can be cleaned up by hand with 180 grit emery or with surface grinding equipment. Remove only enough material to reduce scoring (approximately 0.001 - 0.003 in.). Heavy stock removal is **not recommended.** Replace the flywheel if scoring is severe and deeper than 0.076 mm (0.003 in.). Excessive stock removal can result in flywheel cracking or warpage after installation; it can also weaken the flywheel and interfere with proper clutch release.

Clean the crankshaft flange before mounting the flywheel. Dirt and grease on the flange surface may cock the flywheel causing excessive runout. Use new bolts when remounting a flywheel and secure the bolts with Mopar Lock And Seal or equivalent. Tighten flywheel bolts to specified torque only. Overtightening can distort the flywheel hub causing runout.

REMOVAL

1. Remove transmission.
2. Loosen pressure plate bolts evenly, a few threads at a time and in a diagonal pattern to prevent warping the plate.
3. Remove bolts completely and remove pressure plate and disc.
4. Remove flywheel bolts and remove flywheel.

NOTE: Vehicle with a Dual Mass Flywheel use a adapter plate between the flywheel and crank. This plate does not need to be removed.

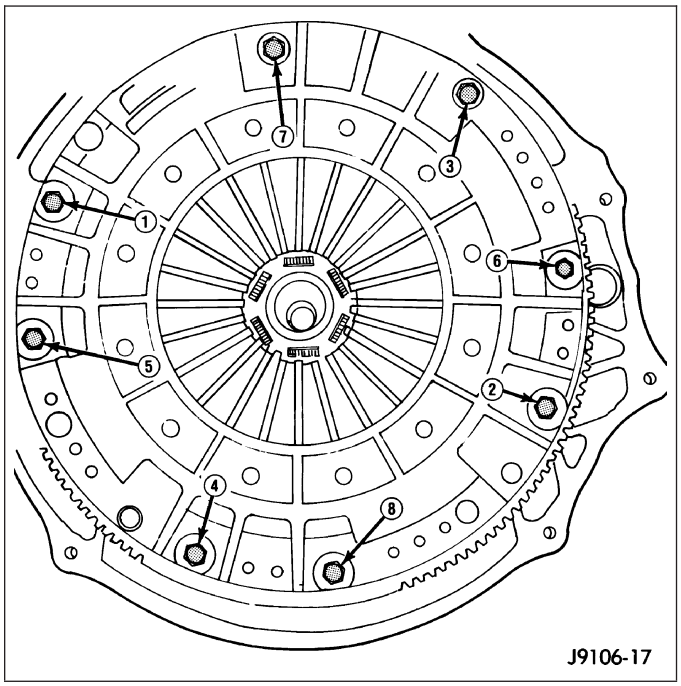

INSTALLATION

1. Install flywheel on the crank shaft.
2. Install flywheel bolts and tighten to 95 N·m (70 ft. lbs.). Vehicles with Dual Mass Flywheel, tighten bolts to 55 N·m (40 ft. lbs.).
3. Install clutch.
4. Install transmission.

FLYWHEEL - SRT-10

DIAGNOSIS AND TESTING

FLYWHEEL

Common causes of flywheel problems:

- Incorrect bolt tightening
- Mounting the flywheel on a dirty crankshaft flange
- Improper seating on the crankshaft flange shoulder
- Heat warpage
- Loose flywheel to crankshaft bolts

The flywheel should be replaced if warped or overheated. **Do not machine the face of the flywheel to correct a warped or overheated condition.**

Clean the crankshaft flange and its mating surface on the flywheel before assembling. dirt/grease in this area could cause the flywheel to mis-align when installing.

Use **new** bolts when mounting flywheel and secure the bolts with Mopar Lock and Seal or equivalent. Tighten flywheel bolts to specified torque only. Over tightening can distort the flywheel causing run out.

REMOVAL

1. Remove transmission clutch housing and clutch assembly (2).
2. Remove flywheel (1) bolts and remove flywheel.

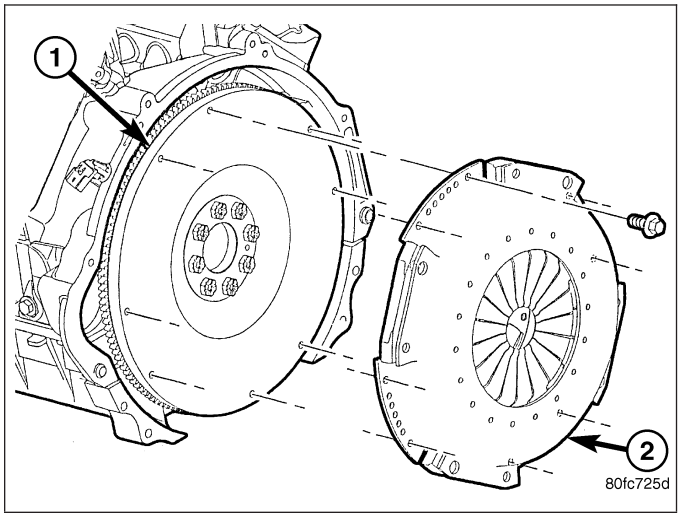

INSTALLATION

1. Clean flywheel bolts and apply thread sealer.
2. Install flywheel (1) on engine and install flywheel bolts.
3. Tighten flywheel bolts to 74 N·m (55 ft. lbs.).
4. Install clutch assembly (2), clutch housing and transmission.

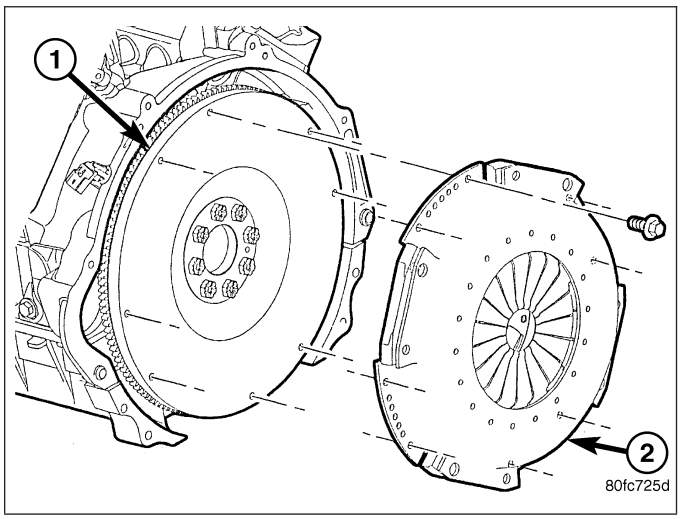

BEARING PILOT

REMOVAL

1. Remove transmission assembly from the vehicle.
2. Remove pressure plate (2) and clutch disc.
3. Remove pilot bearing with an internal puller and slide hammer to remove.

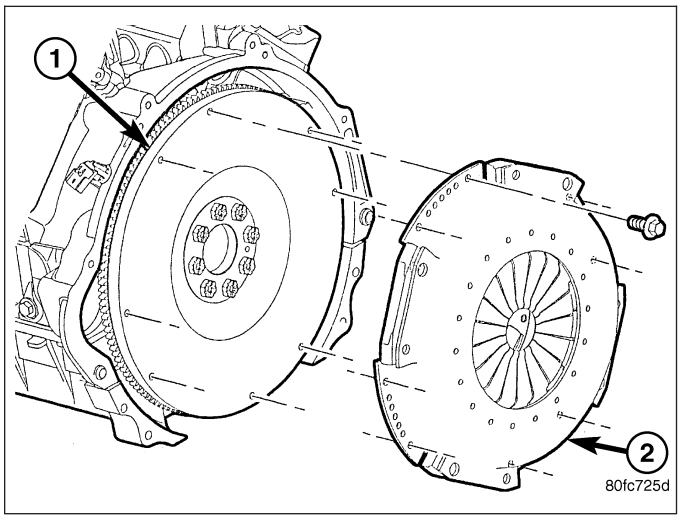

INSTALLATION

1. Clean bearing bore with solvent and wipe dry with shop towel.
2. Install new bearing (1) with clutch alignment tool (2) and letter side of the bearing (3) facing the transmission. Bearing should be flush with edge of bearing bore.

CAUTION: Do not allow bearing to become cocked and do not recess bearing.

3. Install clutch disc, pressure plate and transmission.

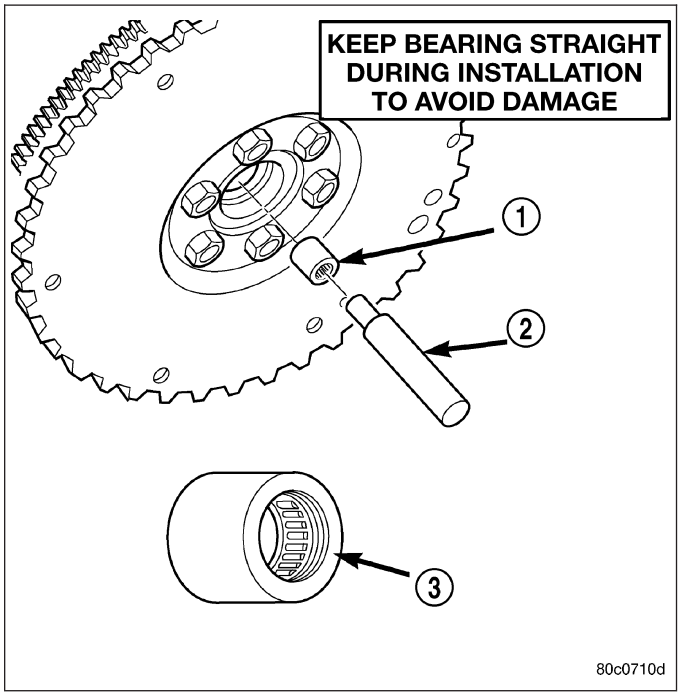

LINKAGE

REMOVAL

CAUTION: The hydraulic linkage has a quick disconnect at the slave cylinder. This fitting should never be disconnected or tampered with. Once the hydraulic line is connected to the slave cylinder, it should never be disconnected.

1. Raise and support vehicle.
2. Remove heat sheild over hydraulic line.
3. Remove slave cylinder (2) nuts (1) on clutch housing.
4. Remove slave cylinder from clutch housing.
5. Remove plastic clip securing the hydraulic line to the dash panel from the lower dash panel flange.
6. Remove plastic clip securing hydraulic line to the dash panel from the upper dash panel stud.
7. Lower vehicle.

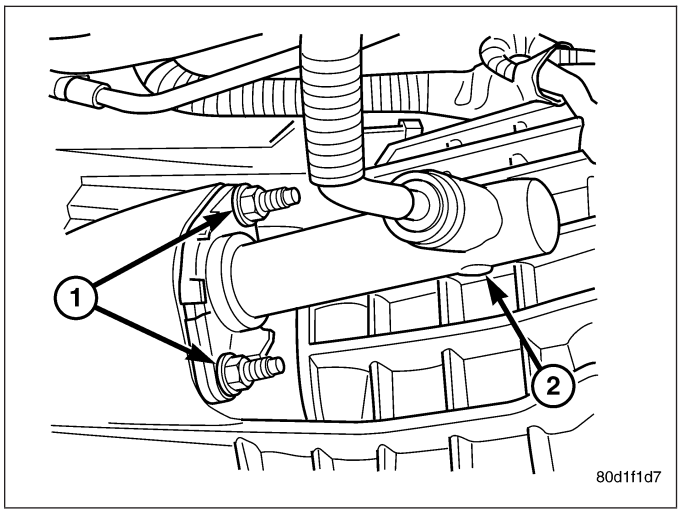

8. Disconnect clutch pedal interlock switch connector (2).
9. Remove clutch master cylinder (1) rod pin (3).
10. Verify that cap on clutch master cylinder reservoir is tight. This will avoid spillage during removal.
11. Remove clutch master cylinder nuts holding the to the dash panel.
12. Remove clutch cylinders, reservoir and connecting lines from vehicle.

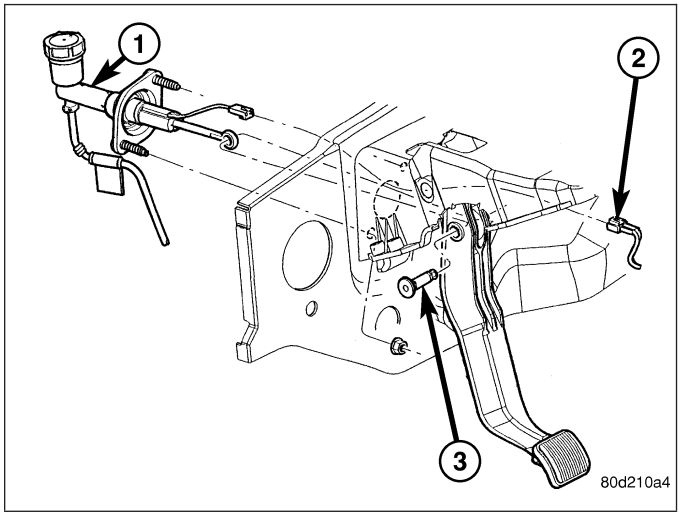

INSTALLATION

1. Position cylinders and connecting line in vehicle engine compartment. Position clutch hydraulic line against the dash panel and behind all engine hoses and wiring.
2. Apply a light coating of grease to the inside diameter of the master cylinder push rod eye.
3. Install clutch master cylinder (1) on dash panel and tighten clutch master cylinder nuts to 28 N·m (21 ft. lbs.).
4. Install clutch master cylinder push rod pin (3).
5. Connect clutch pedal position interlock switch connector (2).
6. Install plastic clip securing hydraulic line to the dash panel into the lower dash panel flange.

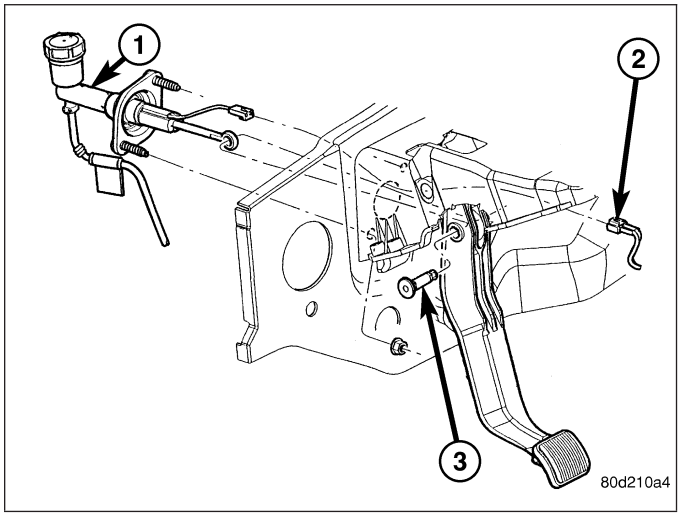

7. Install plastic clip securing hydraulic line to the dash panel onto the upper dash panel stud.
8. Raise vehicle.
9. Install slave cylinder (2) and verify cylinder rod is properly seated in release lever.
10. Install and tighten slave cylinder nuts (1) to 23 N·m (17 ft. lbs.).
11. If **new** clutch linkage is being installed, connect the clutch hydraulic line to the clutch slave cylinder.

CAUTION: Once the clutch hydraulic line is connected to the slave cylinder, it should never be disconnected.

12. Install heat sheild over hydraulic line.
13. Operate linkage several times to verify proper operation.

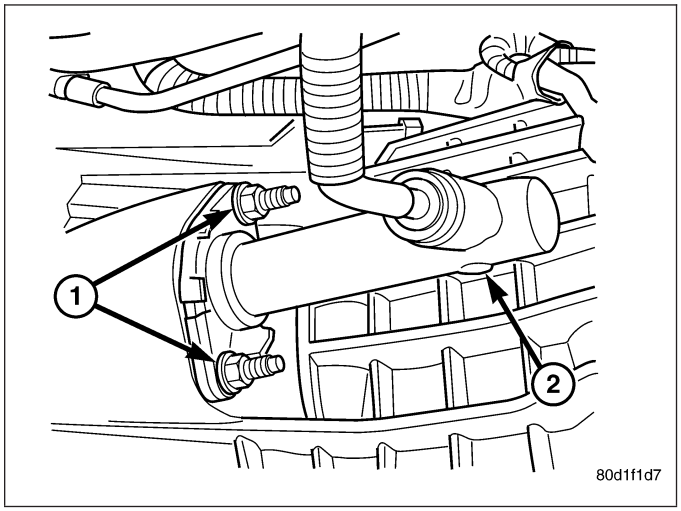

LINKAGE - SRT-10

REMOVAL

1. Remove nuts attaching slave cylinder to studs on clutch housing.

CAUTION: The hydraulic linkage has a quick disconnect at the slave cylinder. This fitting should never be disconnected or tampered with. Once the hydraulic line is connected to the slave cylinder, it should never be disconnected.

2. Raise and support vehicle.
3. Remove heat shield over hydraulic line.
4. Remove slave cylinder (2) from clutch housing.
5. Remove plastic clip securing the hydraulic line to the dash panel from the lower dash panel flange.
6. Remove plastic clip securing hydraulic line to the dash panel from the upper dash panel stud.
7. Lower vehicle.

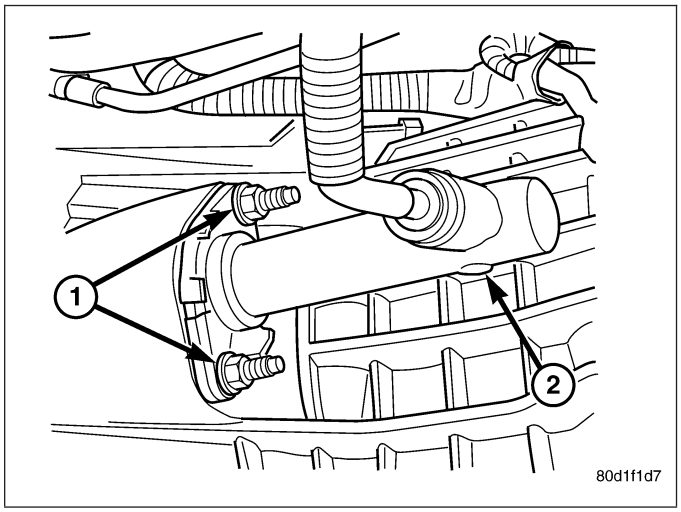

8. Disconnect clutch pedal interlock switch connector (2).
9. Remove clutch master cylinder rod pin (3).
10. Verify that cap on clutch master cylinder reservoir is tight. This will avoid spillage during removal.
11. Remove clutch master cylinder nuts holding the to the dash panel.
12. Remove clutch cylinders, reservoir and connecting lines from vehicle.

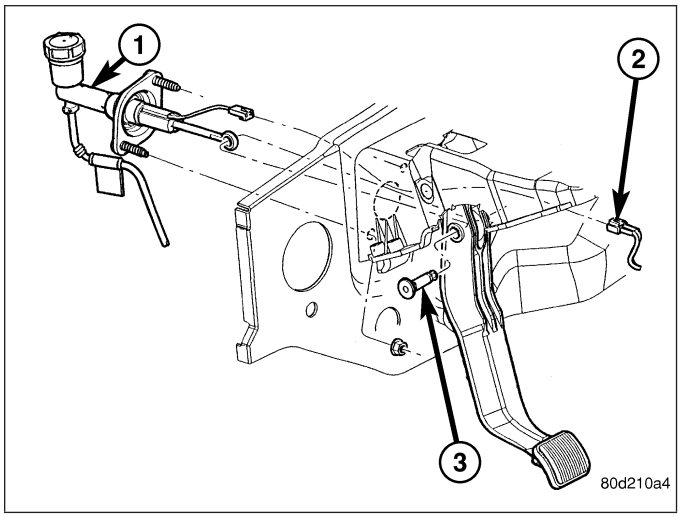

INSTALLATION

1. Position cylinders and connecting line in vehicle engine compartment. Position clutch hydraulic line against the dash panel and behind all engine hoses and wiring.
2. Apply a light coating of grease to the inside diameter of the master cylinder push rod 93) eye.
3. Install clutch master cylinder (1) on dash panel and tighten clutch master cylinder nuts to 28 N·m (21 ft. lbs.).
4. Install clutch master cylinder push rod pin.
5. Connect clutch pedal position interlock switch connector (2).
6. Install plastic clip securing hydraulic line to the dash panel into the lower dash panel flange.
7. Install plastic clip securing hydraulic line to the dash panel onto the upper dash panel stud.
8. Raise vehicle.

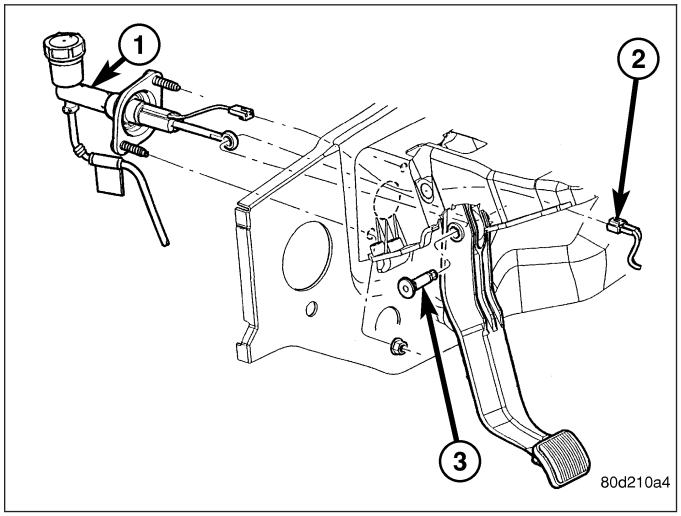

9. Install slave cylinder (2) and verify cylinder rod is properly seated in release lever.
10. Install and tighten slave cylinder nuts (1) to 23 N·m (17 ft. lbs.).
11. If **new** clutch linkage is being installed, connect the clutch hydraulic line to the clutch slave cylinder.

CAUTION: Once the clutch hydraulic line is connected to the slave cylinder, it should never be disconnected.

12. Install heat sheild over hydraulic line.
13. Operate linkage several times to verify proper operation.

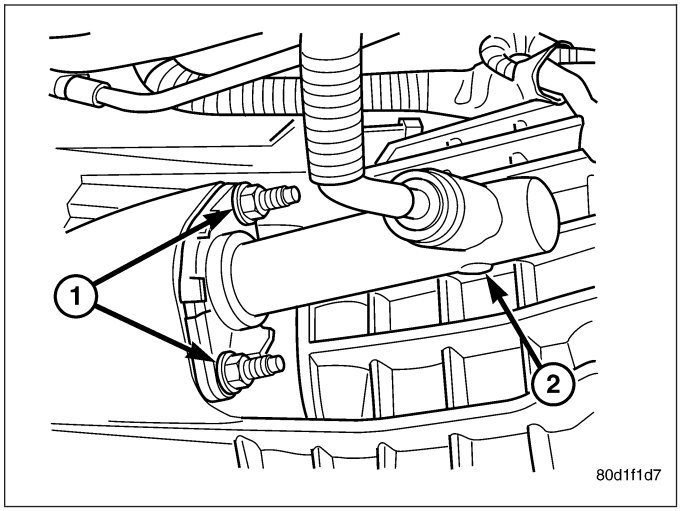

SWITCH CLUTCH PEDAL POSITION

DIAGNOSIS AND TESTING

CLUTCH PEDAL POSITION SWITCH

1. Disconnect switch 2-wire connector (2) attached to pedal support bracket (1), under instrument panel to left of clutch pedal.
2. Check switch continuity with an ohmmeter while operating clutch pedal.
   - Pedal Depressed - Continuity
   - Pedal Released - No Continuity
3. If continuity is not present or always present, replace clutch master cylinder. Switch is not serviced separately.

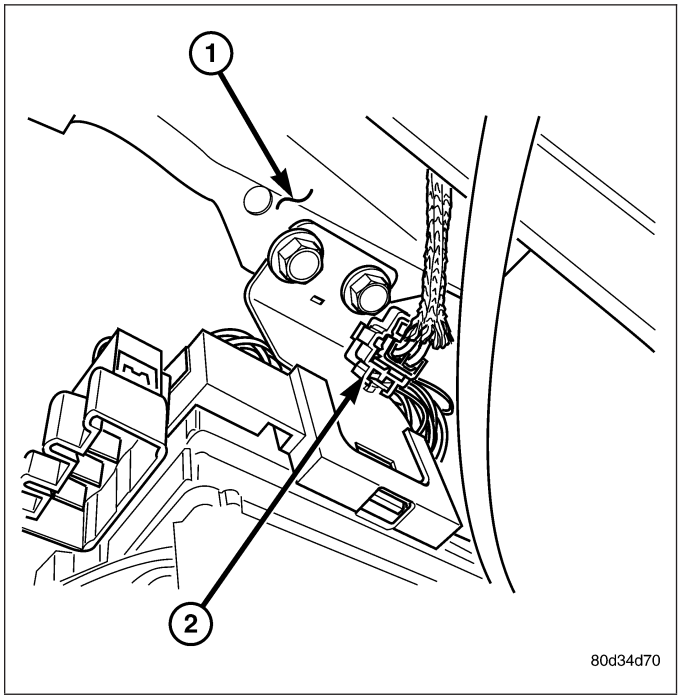

SWITCH CLUTCH PEDAL - SRT-10

DIAGNOSIS AND TESTING

1. Disconnect the connector on the clutch position switch (1) from the vehicle wiring harness.
2. Place a ohmmeter across the terminals of the switch connector. The switch should show no continuity with the clutch pedal in the released (clutch engaged) position.
3. Slowly push the clutch pedal to the floor (clutch disengaged). The ohmmeter should show continuity just before the pedal reaches the end of its travel.
4. If the clutch switch shows continuity with clutch pedal up or no continuity with clutch pedal down, the switch is defective. The switch has no serviceable parts and should be replaced as an assembly.

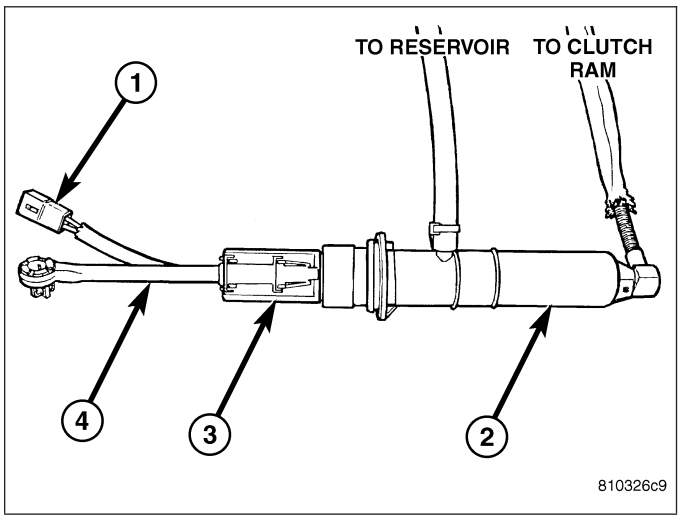

REMOVAL

1. Disconnect the clutch pedal position switch connector.
2. Disconnect the clutch actuation rod from the clutch pedal.
3. Remove the clutch master cylinder from the toe box.
4. Remove the white clutch pedal position switch retaining clip (1).

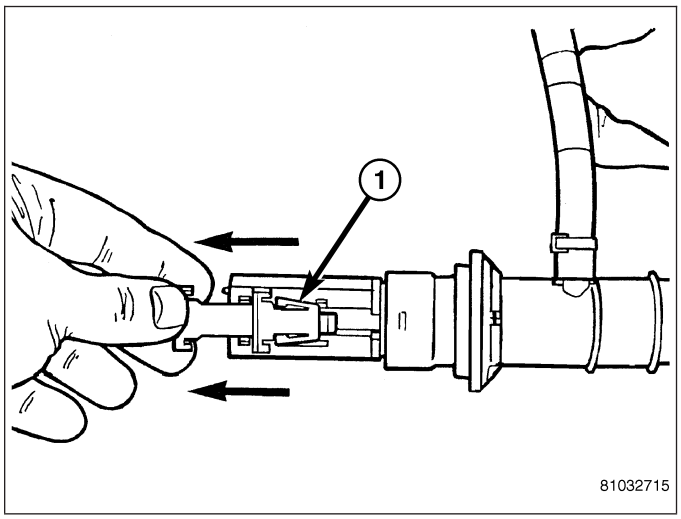

5. Push the switch up (1) the rod (2) slightly. Then pull the bottom of the switch outward.

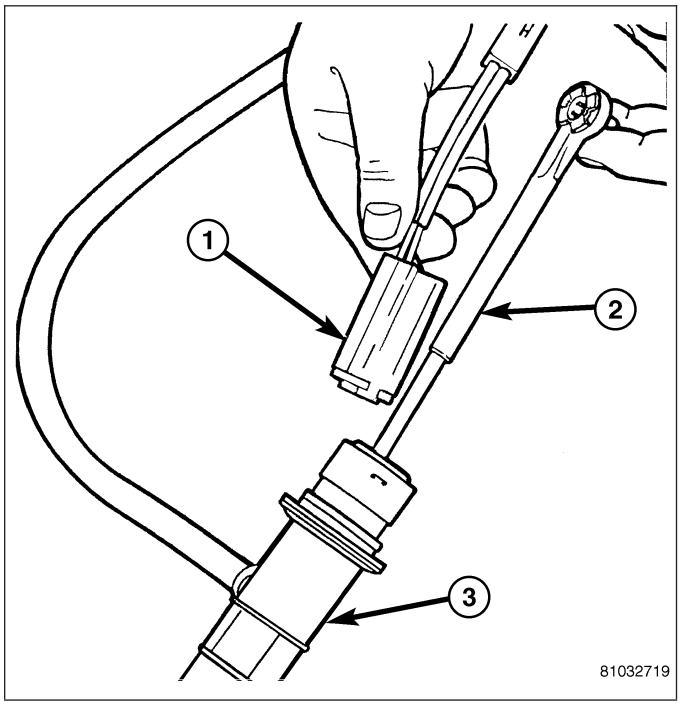

INSTALLATION

1. Install new switch (1) as shown. Be sure that the spring loaded plunger inside the switch is slightly compressed. The plunger inside the switch must go on the narrow section of the clutch master cylinder actuation rod. Place the top of the switch against the rod. Then push the switch up slightly. This will compress the plunger. Then push the bottom of the switch against the rod. Failure to install the switch as described or forcing the switch onto the rod will crack the switch.
2. Install new white plastic retaining clip.
3. Install the clutch master cylinder back into the vehicle.
4. Reconnect the clutch switch connector.
5. Check clutch position switch operation.

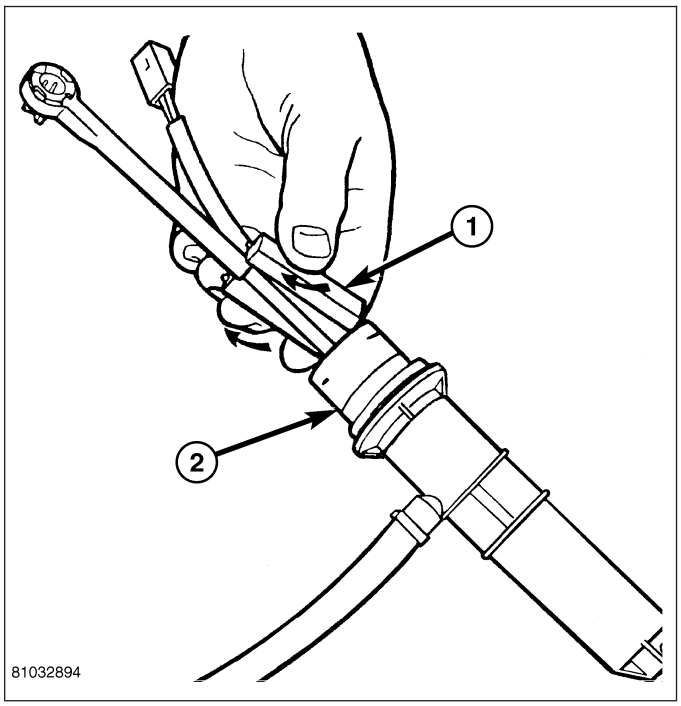

COOLING

TABLE OF CONTENTS

page

COOLING
- DESCRIPTION
  - GAS ENGINE 2
  - 5.9L DIESEL 5
  - HOSE CLAMPS 6
- OPERATION
  - COOLING SYSTEM 6
  - HOSE CLAMPS 6
- DIAGNOSIS AND TESTING
  - ON-BOARD DIAGNOSTICS (OBD) 7
  - COOLING SYSTEM - TESTING FOR LEAKS . . 7
  - COOLING SYSTEM DIESEL ENGINE 9
  - PRELIMINARY CHECKS 12
- STANDARD PROCEDURE
  - COOLANT LEVEL CHECK 19
  - COOLING SYSTEM CLEANING/REVERSE FLUSHING 19

page

  - DRAINING COOLING SYSTEM - ALL GAS ENGINES 20
  - REFILLING COOLING SYSTEM - ALL GAS ENGINES 20
  - DRAINING COOLING SYSTEM - 5.9L DIESEL ENGINE 21
  - REFILLING COOLING SYSTEM - 5.9L DIESEL ENGINE 21
  - ADDING ADDITIONAL COOLANT 21
- SPECIFICATIONS
  - TORQUE 22
  - SPECIFICATIONS - FILL VOLUMES 23
- SPECIAL TOOLS
  - COOLING 24

ACCESSORY DRIVE 25
ENGINE 38
TRANSMISSION 93

COOLING

DESCRIPTION

GAS ENGINE

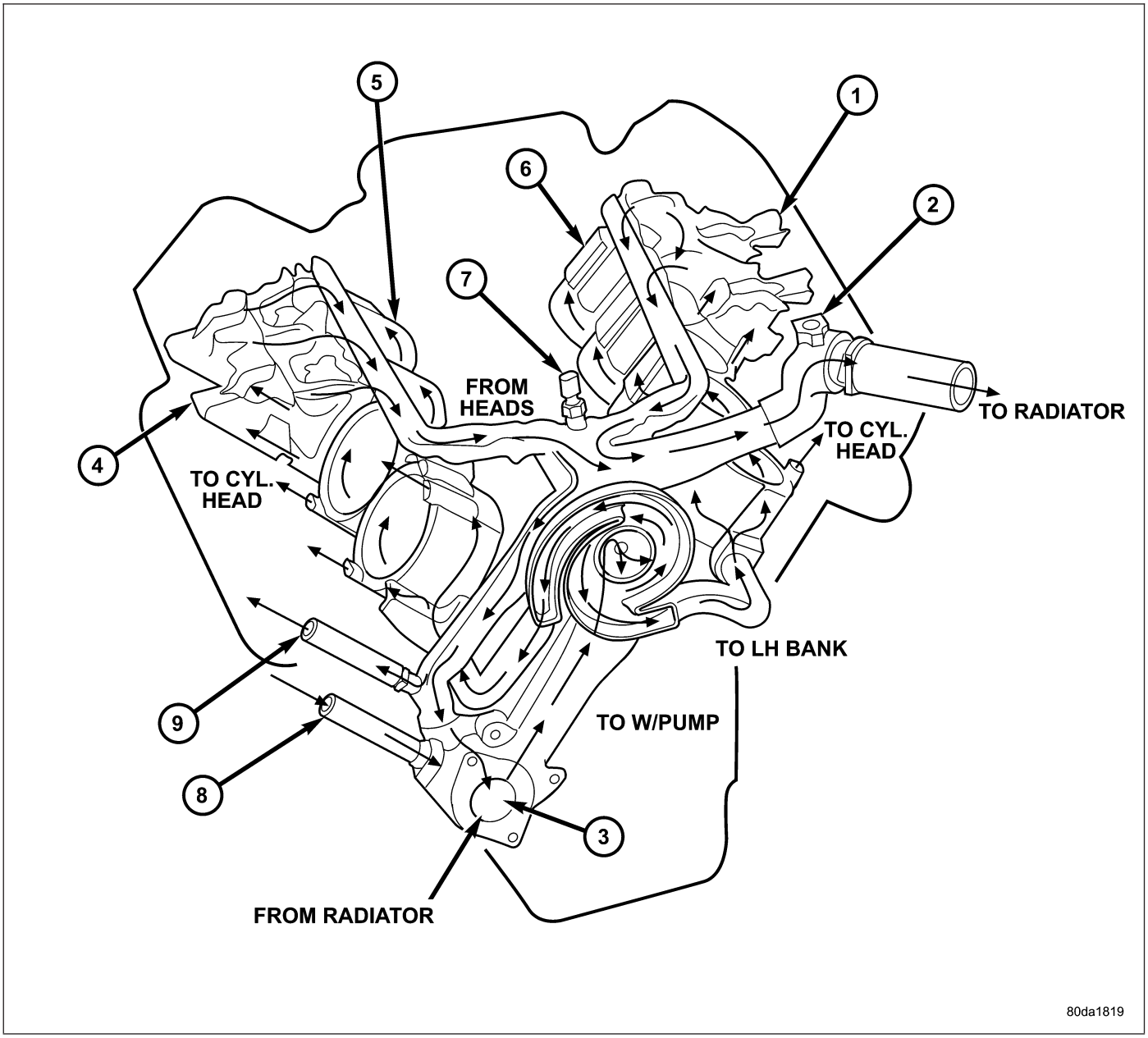

Engine Cooling System Flow - 3.7L/4.7L

The cooling system regulates engine operating temperature. It allows the engine to reach normal operating temperature as quickly as possible. It also maintains normal operating temperature and prevents overheating.

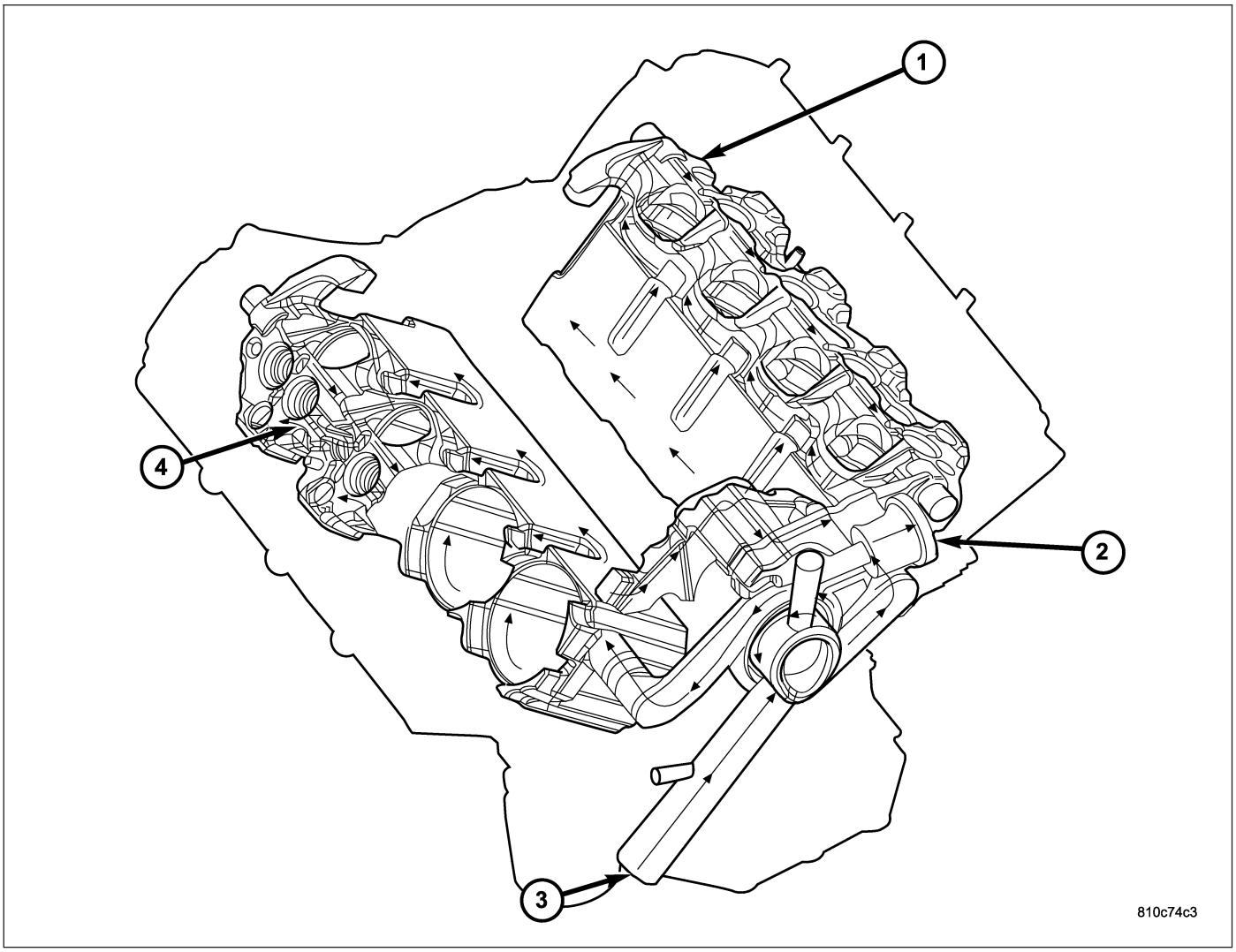

5.7L Engine Coolant System Flow

The cooling system provides a means of heating the passenger compartment and cooling the automatic transmission fluid (if equipped). The cooling system is pressurized and uses a centrifugal water pump to circulate coolant through the system. The coolant recovery/reserve system utilizes an ambient overflow bottle and

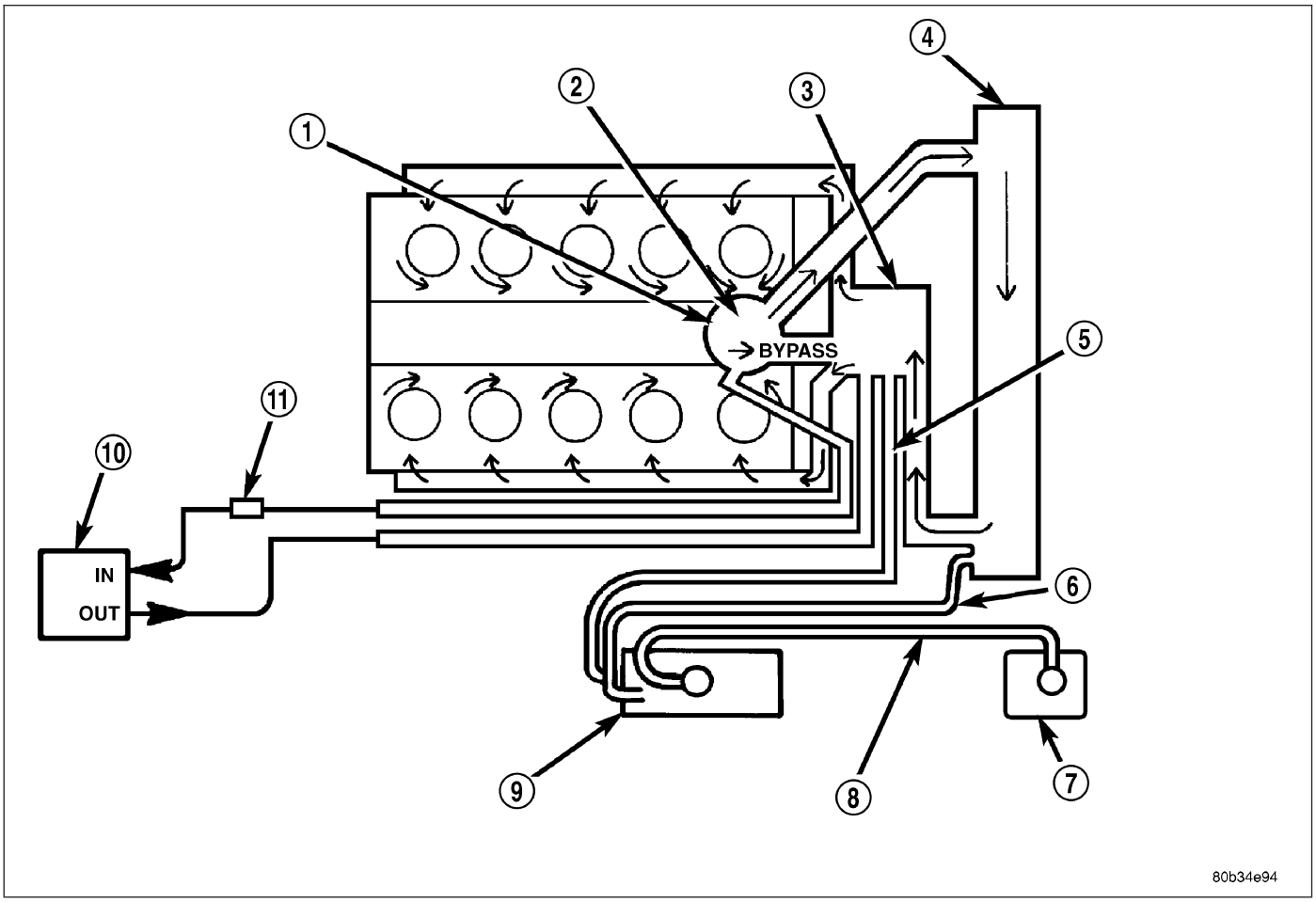

8.3L Cooling System

An optional factory installed maximum duty cooling package is available on most models. This package will provide additional cooling capacity for vehicles used under extreme conditions such as trailer towing in high ambient temperatures.

5.9L DIESEL

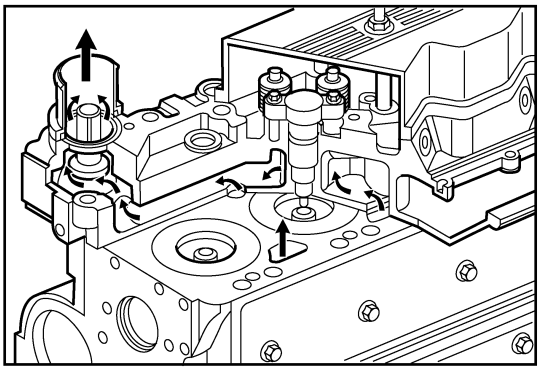

COOLANT FLOW THROUGH CYLINDER HEAD

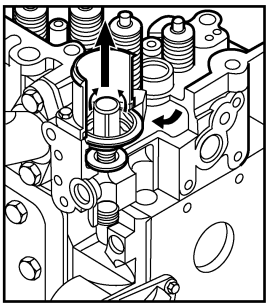

THERMOSTAT OPEN BYPASS CLOSED

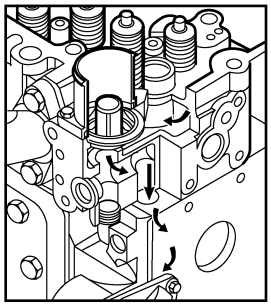

THERMOSTAT CLOSED BYPASS OPEN

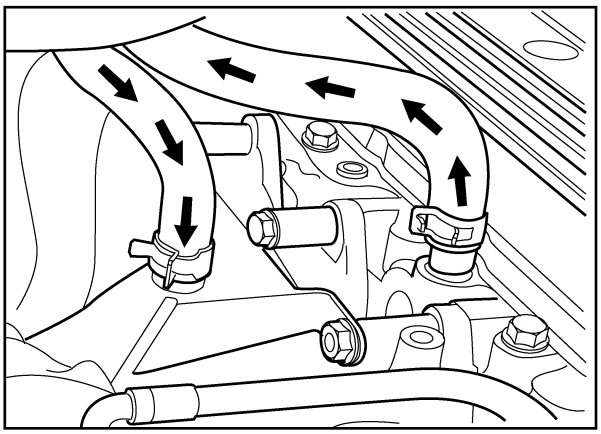

HEATER CORE SUPPLY AND RETURN HOSES

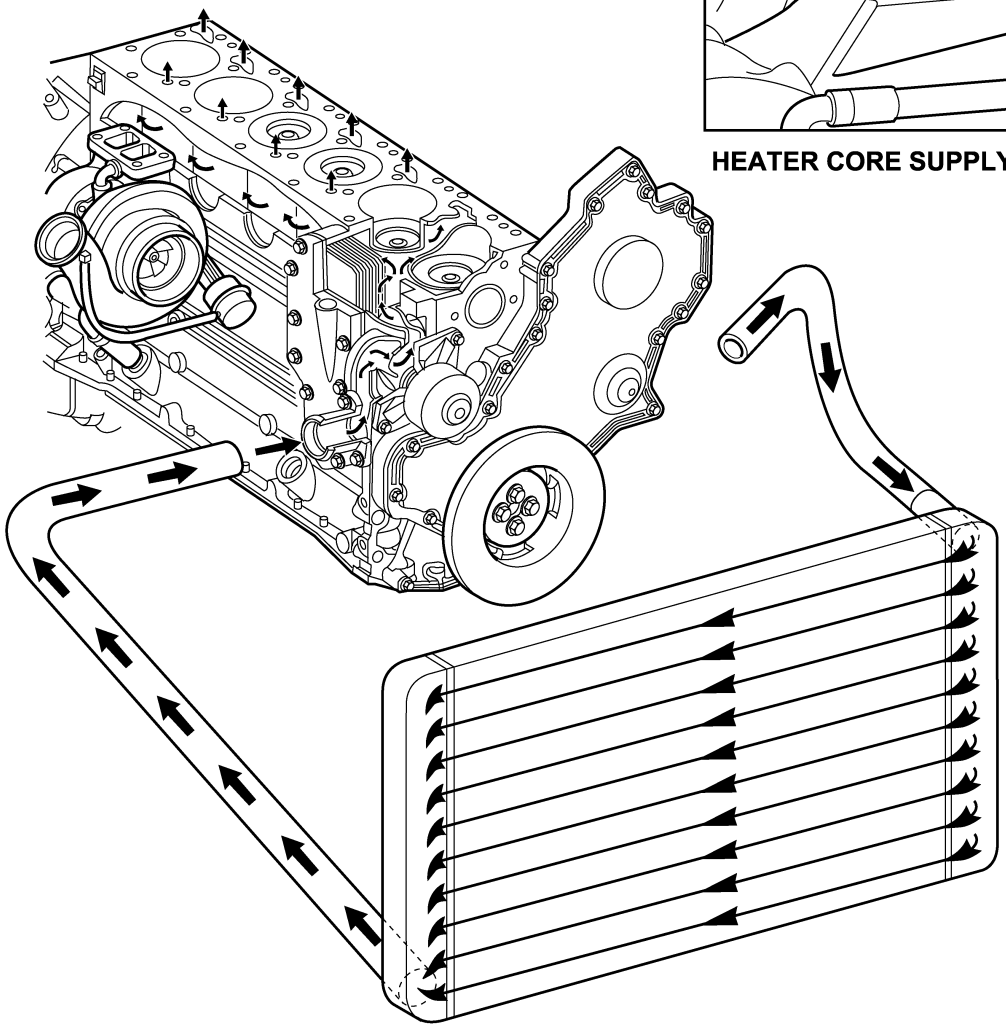

8087bc7e

Cooling System Circulation - 5.9L Diesel Engine

The diesel engine cooling system consists of :

- Cross-flow radiator
- Belt driven water pump
- Cooling fan (attached to the electronic viscous fan drive)
- Belt driven Electronic viscous fan drive
- Engine mounted fan shroud
- Radiator pressure cap
- Vertically mounted thermostat
- Coolant reserve/recovery system
- Engine mounted Transmission oil cooler (Automatic Only)
- Coolant

Coolant flow circuits for the 5.9L diesel engine are shown in.

HOSE CLAMPS

The cooling system utilizes spring type hose clamps. If a spring type clamp replacement is necessary, replace with the original Mopar® equipment spring type clamp.

CAUTION: A number or letter is stamped into the tongue of constant tension clamps. If replacement is necessary, use only a original equipment clamp with matching number or letter and ensure the clamp has the same size width.

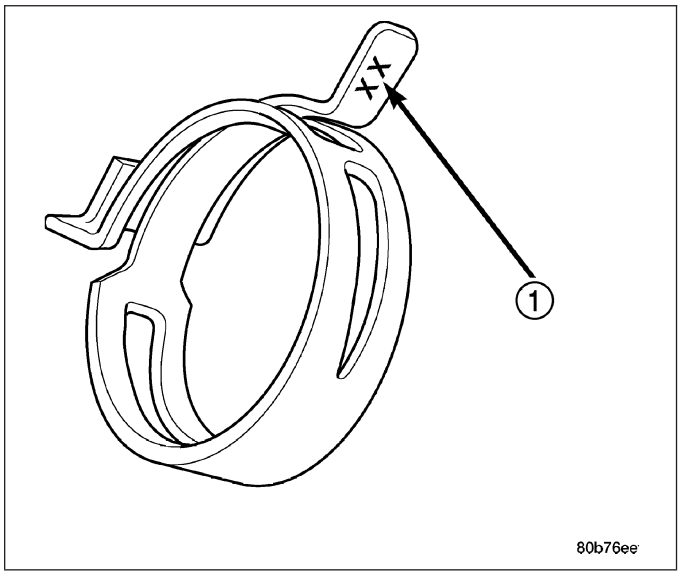

OPERATION

COOLING SYSTEM

The cooling system regulates engine operating temperature. It allows the engine to reach normal operating temperature as quickly as possible. It also maintains normal operating temperature and prevents overheating.

The cooling system also provides a source of hot water (coolant) for heating the passenger compartment and cooling the automatic transmission fluid (if equipped). The cooling system is pressurized and uses a centrifugal water pump to circulate coolant throughout the system.

- When engine is cold the thermostat is closed. The cooling system has no flow through the radiator. The coolant flows through the engine, water pump, and heater.
- When engine is warm the thermostat is full open. The coolant flows through the radiator, heater, and water pump.

All engines utilize an ambient overflow bottle for coolant recovery/reserve.

An optional factory installed maximum duty cooling package is available on most models. This package will provide additional cooling capacity for vehicles used under extreme conditions such as trailer towing in high ambient temperatures.

HOSE CLAMPS

The spring type hose clamp applies constant tension on a hose connection. To remove a spring type hose clamp, only use constant tension clamp pliers designed to compress the hose clamp.

DIAGNOSIS AND TESTING

ON-BOARD DIAGNOSTICS (OBD)

COOLING SYSTEM RELATED DIAGNOSTICS

The Engine Control Module (ECM) has been programmed to monitor certain cooling system components:

- If the engine has remained cool for too long a period, such as with a stuck open thermostat, a Diagnostic Trouble Code (DTC) can be set.
- If an open or shorted condition has developed in the electronically controlled viscous fan clutch circuit, a Diagnostic Trouble Code (DTC) can be set.
- If fan speed is not detected a DTC will be set.
- Coolant temperature sensor circuit problems can set a DTC.

If the problem is sensed in a monitored circuit often enough to indicated an actual problem, a DTC is stored. The DTC will be stored in the ECM memory for eventual display to the service technician. (Refer to 25 - EMISSIONS CONTROL - DESCRIPTION).

ACCESSING DIAGNOSTIC TROUBLE CODES

To read DTC's and to obtain cooling system data, (Refer to 25 - EMISSIONS CONTROL - DESCRIPTION).

ERASING TROUBLE CODES

After the problem has been repaired, use the DRBIII® scan tool to erase a DTC. Refer to the appropriate Powertrain Diagnostic Procedures service information for operation of the DRBIII® scan tool.

COOLING SYSTEM - TESTING FOR LEAKS

ULTRAVIOLET LIGHT METHOD

A leak detection additive is available through the parts department that can be added to cooling system. The additive is highly visible under ultraviolet light (black light). Pour one ounce of additive into cooling system. Place heater control unit in HEAT position. Start and operate the engine until the radiator upper hose is warm to the touch. Aim the commercially available black light tool at the components to be checked. If leaks are present, the black light will cause the additive to glow a bright green color.

The black light can be used in conjunction with a pressure tester to determine if any external leaks exist.

PRESSURE TESTER METHOD

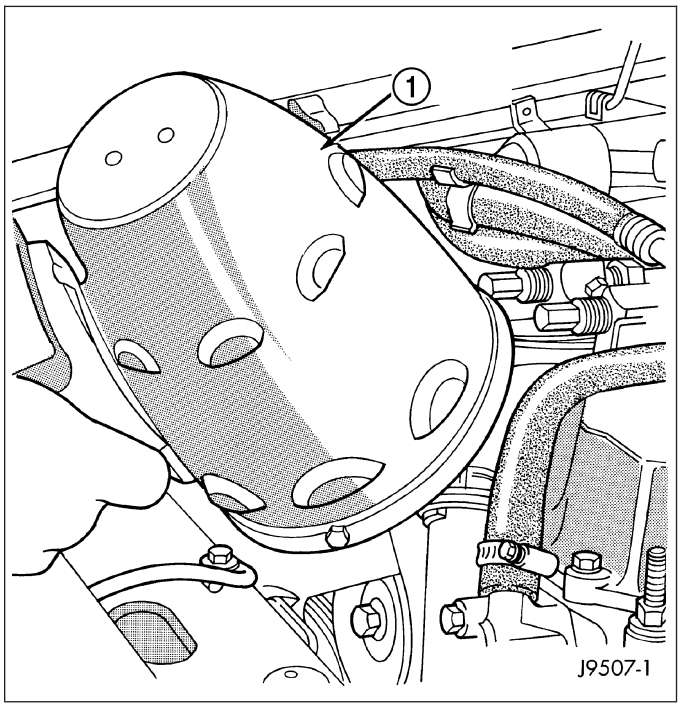

The engine should be at normal operating temperature. Recheck the system cold if the cause of coolant loss is not located during the warm engine examination.

WARNING: HOT, PRESSURIZED COOLANT CAN CAUSE INJURY BY SCALDING.

Carefully remove the radiator pressure cap from the filler neck and check the coolant level. Push down on the cap to disengage it from the stop tabs. Wipe the inside of the filler neck and examine the lower inside sealing seat for nicks, cracks, paint, dirt and solder residue. Inspect the radiator-to- reserve/overflow tank hose for internal obstructions. Insert a wire through the hose to be sure it is not obstructed.

Inspect the cams on the outside of the filler neck. If the cams are damaged, seating of the pressure cap valve and tester seal will be affected.

Attach pressure tester (7700 or an equivalent) to radiator filler neck.

Operate the tester pump to apply 103.4 kPa (15 psi) pressure to the system. If the hoses enlarge excessively or bulges while testing, replace as necessary. Observe the gauge pointer and determine the condition of the cooling system according to following criteria:

Holds Steady: If the pointer remains steady for two minutes, serious coolant leaks are not present in system. However, there could be an internal leak that does not appear with normal system test pressure. If it is certain that coolant is being lost and leaks cannot be detected, inspect for interior leakage or perform Internal Leakage Test. Refer to INTERNAL LEAKAGE INSPECTION .

Drops Slowly: Indicates a small leak or seepage is occurring. Examine all of the connections for seepage or slight leakage with a flashlight. Inspect the radiator, hoses, gasket edges and heater. Seal the small leak holes with a Sealer Lubricant (or equivalent). Repair the leak holes and inspect the system again with pressure applied.

Drops Quickly: Indicates that serious leakage is occurring. Examine the system for external leakage. If leaks are not visible, inspect for internal leakage. Large radiator leak holes should be repaired by a reputable radiator repair shop.

INTERNAL LEAKAGE INSPECTION

Remove the engine oil pan drain plug and drain a small amount of engine oil. If coolant is present in the pan, it will drain first because it is heavier than oil. An alternative method is to operate engine for a short period to churn the oil. After this is done, remove the engine dipstick and inspect for water globules. Also inspect the transmission dipstick for water globules and transmission fluid cooler for leakage.

WARNING: WITH RADIATOR PRESSURE TESTER TOOL INSTALLED ON RADIATOR, DO NOT ALLOW PRESSURE TO EXCEED 145 kPa (21 PSI). PRESSURE WILL BUILD UP QUICKLY IF A COMBUSTION LEAK IS PRESENT. TO RELEASE PRESSURE, ROCK TESTER FROM SIDE TO SIDE. WHEN REMOVING TESTER, DO NOT TURN TESTER MORE THAN 1/2 TURN IF SYSTEM IS UNDER PRESSURE.

Operate the engine without the pressure cap on the radiator until the thermostat opens. Attach a Pressure Tester to the filler neck. If pressure builds up quickly it indicates a combustion leak exists. This is usually the result of a cylinder head gasket leak or crack in engine. Repair as necessary.

If there is not an immediate pressure increase, pump the Pressure Tester. Do this until indicated pressure is within system range of 110 kPa (16 psi). Fluctuation of the gauge pointer indicates compression or combustion leakage into cooling system.

Because the vehicle is equipped with a catalytic converter, **do not** short out cylinders to isolate compression leak.

If the needle on dial of the pressure tester does not fluctuate, race engine a few times to check for an abnormal amount of coolant or steam. This would be emitting from exhaust pipe. Coolant or steam from exhaust pipe may indicate a faulty cylinder head gasket, cracked engine cylinder block or cylinder head.

A convenient check for exhaust gas leakage into cooling system is provided by a commercially available Block Leak Check tool. Follow manufacturers instructions when using this product.

COMBUSTION LEAKAGE TEST - WITHOUT PRESSURE TESTER

DO NOT WASTE reusable coolant. If the solution is clean, drain the coolant into a clean container for reuse.

WARNING: DO NOT REMOVE CYLINDER BLOCK DRAIN PLUGS OR LOOSEN RADIATOR DRAINCOCK WITH SYSTEM HOT AND UNDER PRESSURE. SERIOUS BURNS FROM COOLANT CAN OCCUR.

Drain sufficient coolant to allow thermostat removal. (Refer to 7 - COOLING/ENGINE/ENGINE COOLANT THERMOSTAT - REMOVAL). Remove accessory drive belt (Refer to 7 - COOLING/ACCESSORY DRIVE/DRIVE BELTS - REMOVAL).

Add coolant to radiator to bring level to within 6.3 mm (1/4 in) of the top of the thermostat housing.

CAUTION: Avoid overheating. Do not operate engine for an excessive period of time. Open draincock immediately after test to eliminate boil over.

Start engine and accelerate rapidly three times, to approximately 3000 rpm while observing coolant. If internal engine combustion gases are leaking into cooling system, bubbles will appear in coolant. If bubbles do not appear, internal combustion gas leakage is not present.

COOLING SYSTEM DIESEL ENGINE

COOLING SYSTEM DIAGNOSIS - DIESEL ENGINE

CONDITION	POSSIBLE CAUSES	CORRECTION
TEMPERATURE GAUGE READS LOW NOTE: Information on dash cluster is displayed based on broadcast data from ECM. DTC will be set for engine sensor circuit concern.	1. Vehicle is equipped with a heavy duty cooling system.	1. None. System operating normally.
	2. Thermostat stuck open	2. Inspect and test thermostat.
	3. Coolant level low.	3. Fill cooling system. (Refer to 7 - COOLING - STANDARD PROCEDURE)
	4. Temperature gauge not functioning correctly.	4. Check cluster (Refer to 8 - ELECTRICAL/INSTRUMENT CLUSTER - DIAGNOSIS AND TESTING)
	5. Engine sensor stuck in range	5. Monitor sensor with DRB III to verify sensor reading changes with increasing temperature.
	6. Engine sensor failed out of range.	6. A DTC will be set.
	7. Electronically Controlled Viscous Fan Drive not operating properly.	7. Check Electronically Controlled Viscous Fan Drive (Refer to 7 - COOLING/ENGINE/FAN DRIVE VISCOUS CLUTCH - DIAGNOSIS AND TESTING)
TEMPERATURE GAUGE READS HIGH. COOLANT MAY OR MAY NOT BE LEAKING FROM SYSTEM	1. Vehicle overloaded, high ambient (outside) temperatures with A/C turned on, stop and go driving or prolonged operation at idle speeds.	1. Temporary condition, repair not required. Notify customer of vehicle operation instructions located in Owners Manual.

CONDITION	POSSIBLE CAUSES	CORRECTION
NOTE: Information on dash cluster is displayed based on broadcast information from ECM. DTC will be set for engine sensor circuit concern.	2. Temperature gauge not functioning correctly.	2. Check cluster (Refer to 8 - ELECTRICAL/INSTRUMENT CLUSTER - DIAGNOSIS AND TESTING)
	3. Air trapped in cooling system	3. Drain cooling system (Refer to 7 - COOLING - STANDARD PROCEDURE) and refill (Refer to 7 - COOLING - STANDARD PROCEDURE)
	4. Radiator cap faulty.	4. Replace radiator cap.
	5. Plugged A/C or radiator cooling fins.	5. Clean all debris away from A/C and radiator cooling fins.
	6. Coolant mixture incorrect.	6. Drain cooling system (Refer to 7 - COOLING - STANDARD PROCEDURE) refill with correct mixture (Refer to 7 - COOLING - STANDARD PROCEDURE).
	7. Thermostat stuck shut.	7. Inspect and test thermostat. Replace thermostat if necessary.
	8. Bug screen or winter front being used.	8. Remove bug screen or winter front.
	9. Electronically controlled viscous fan drive not operating properly.	9. Check viscous fan (Refer to 7 - COOLING/ENGINE/FAN DRIVE VISCOUS CLUTCH - DIAGNOSIS AND TESTING)
	10. Cylinder head gasket leaking.	10. Check for leaking head gaskets (Refer to 7 - COOLING - DIAGNOSIS AND TESTING).
	11. Heater core leaking.	11. Replace heater core.
	12. Cooling system hoses leaking.	12. Tighten clamps or Replace hoses.
	13. Brakes dragging.	13. Check brakes. (Refer to 5 - BRAKES/HYDRAULIC/ MECHANICAL - DIAGNOSIS AND TESTING)
	14. Accessory drive belt.	14. Inspect. Replace as necessary.
	15. Water Pump.	15. Inspect and replace as necessary.
	16. Engine sensor stuck in range.	16. Monitor sensor with DRBIII to verify sensor reading changes increase in temperature.
	17. Temperature sensor failed out of range.	17. A DTC will be set.
TEMPERATURE GAUGE READING INCONSISTENT (ERRATIC, CYCLES OR FLUCTUATES)	1. Heavy duty cooling system, extreme cold ambient (outside) temperature or heater blower motor in high position.	1. None. System operating normally.

CONDITION	POSSIBLE CAUSES	CORRECTION
NOTE: Information on dash cluster is displayed based on broadcast data from ECM. DTC will be set for engine sensor circuit wiring.	2. Temperature gauge or sensor defective.	2. Check cluster or engine coolant temp sensor (Refer to 8 - ELECTRICAL/INSTRUMENT CLUSTER - DIAGNOSIS AND TESTING)
	3. Temporary heavy usage or load.	3. None. Normal condition.
	4. Air trapped in cooling system.	4. Fill cooling system (Refer to 7 - COOLING - STANDARD PROCEDURE).
	5. Water pump	5. Replace water pump.
	6. Air leak on suction side of water pump.	6. Check for leak. (Refer to 7 - COOLING - DIAGNOSIS AND TESTING)
RADIATOR CAP LEAKING STEAM AND /OR COOLANT INTO RESERVOIR BOTTLE. (TEMPERATURE GAUGE MAY READ HIGH)	1. Radiator cap defective.	1. Replace radiator cap.
	2. Radiator neck surface damaged.	2. Replace radiator.
HOSE OR HOSES COLLAPSE WHEN ENGINE IS COOLING.	1. Vacuum created in cooling system on engine cool-down is not being relieved through coolant reservoir/overflow system.	1. Replace radiator cap, check vent hose between radiator and reservoir bottle for blockage also check reservoir bottle vent for blockage.
NOISY FAN	1. Fan blade(s) loose, damaged.	1. Replace fan blade assembly.
	2. Electronically controlled viscous fan drive.	2. None. Normal condition.
	3. Fan blades striking surrounding objects.	3. Locate contact point and repair as necessary.
	4. Electronically controlled viscous fan drive bearing concern.	4. Check viscous fan drive (Refer to 7 - COOLING/ENGINE/FAN DRIVE VISCOUS CLUTCH - DIAGNOSIS AND TESTING)
	5. Electronically controlled viscous fan stuck on.	5. Check viscous fan drive (Refer to 7 - COOLING/ENGINE/FAN DRIVE VISCOUS CLUTCH - DIAGNOSIS AND TESTING)
	6. Obstructed air flow through radiator.	6. Remove obstruction.
INADEQUATE AIR CONDITIONER PERFORMANCE (COOLING SYSTEM SUSPECTED)	1. Radiator and/or A/C condenser air flow obstructed.	1. Remove obstruction and/or clean.
	2. Electronically controlled viscous fan drive not working.	2. Check viscous fan drive (Refer to 7 - COOLING/ENGINE/FAN DRIVE VISCOUS CLUTCH - DIAGNOSIS AND TESTING)
	3. Air seals around radiator damaged or missing.	3. Inspect air seals, repair or replace as necessary.

CONDITION	POSSIBLE CAUSES	CORRECTION
INADEQUATE HEATER PERFORMANCE. GAUGE MAY OR MAY NOT READ LOW.	1. Heavy duty cooling system, and cooler ambient temperatures.	1. None. Normal condition.
	2. Obstruction in heater hoses.	2. Remove hoses, remove obstruction.
	3. Electronically controlled viscous fan stuck on.	Check viscous fan drive. (Refer to 7 - COOLING/ENGINE/FAN DRIVE VISCOUS CLUTCH - DIAGNOSIS AND TESTING)
	4. Water pump damaged.	4. Replace water pump.
HEAT ODOR	1. Damaged or missing drive line heat shields.	1. Repair or replace damaged or missing heat shields.
	2. Electronically controlled viscous fan drive damaged.	2. Check viscous fan drive. (Refer to 7 - COOLING/ENGINE/FAN DRIVE VISCOUS CLUTCH - DIAGNOSIS AND TESTING)

PRELIMINARY CHECKS

ENGINE COOLING SYSTEM OVERHEATING

Establish what driving conditions caused the complaint. Abnormal loads on the cooling system such as the following may be the cause:

- PROLONGED IDLE
- VERY HIGH AMBIENT TEMPERATURE
- SLIGHT TAIL WIND AT IDLE
- SLOW TRAFFIC
- TRAFFIC JAMS
- HIGH SPEED OR STEEP GRADES

Driving techniques that avoid overheating are:

- Idle with A/C off when temperature gauge is at end of normal range.
- Increasing engine speed for more air flow is recommended.

TRAILER TOWING:

Consult Trailer Towing section of owners manual. Do not exceed limits.

RECENT SERVICE OR ACCIDENT REPAIR:

Determine if any recent service has been performed on vehicle that may affect the cooling system. This may be:

- Engine adjustments (incorrect timing)
- Slipping engine accessory drive belt(s)
- Brakes (possibly dragging)
- Changed parts. Incorrect water pump or pump rotating in wrong direction due to belt not correctly routed
- Reconditioned radiator or cooling system refilling (possibly under filled or air trapped in system).
- Service to electrically controlled viscous fan clutch

NOTE: If investigation reveals none of the previous items as a cause for an engine overheating complaint, refer to COOLING SYSTEM DIAGNOSIS CHART BELOW.

These charts are to be used as a quick-reference only. Refer to COOLING SYSTEM DIAGNOSIS CHART

COOLING SYSTEM DIAGNOSIS CHART

CONDITION	POSSIBLE CAUSES	CORRECTION
TEMPERATURE GAUGE READS LOW	1. Has a Diagnostic Trouble Code (DTC) been set indicating a stuck open thermostat?	1. (Refer to 25 - EMISSIONS CONTROL - DESCRIPTION) for On-Board Diagnostics and DTC information. Replace thermostat if necessary.
	2. Is the temperature sending unit connected?	2. Check the temperature sensor connector. (Refer to 8 - ELECTRICAL/INSTRUMENT CLUSTER - SCHEMATIC - ELECTRICAL) Repair connector if necessary.
	3. Is the temperature gauge operating OK?	3. Check gauge operation. (Refer to 8 - ELECTRICAL/INSTRUMENT CLUSTER/ENGINE TEMPERATURE GAUGE - DESCRIPTION). Repair as necessary.
	4. Coolant level low in cold ambient temperatures accompanied with poor heater performance.	4. Check coolant level in the coolant reserve/overflow tank or degas bottle and the radiator. Inspect system for leaks. Repair leaks as necessary. Refer to the Coolant section of the manual text for WARNINGS and CAUTIONS associated with removing the radiator cap.
	5. Improper operation of internal heater doors or heater controls.	5. Inspect heater and repair as necessary. (Refer to 24 - HEATING & AIR CONDITIONING - DIAGNOSIS AND TESTING) for procedures.

CONDITION	POSSIBLE CAUSES	CORRECTION
TEMPERATURE GAUGE READS HIGH OR THE COOLANT WARNING LAMP ILLUMINATES. COOLANT MAY OR MAY NOT BE LOST OR LEAKING FROM THE COOLING SYSTEM	1. Trailer is being towed, a steep hill is being climbed, vehicle is operated in slow moving traffic, or engine is being idled with very high ambient (outside) temperatures and the air conditioning is on. Higher altitudes could aggravate these conditions.	1. This may be a temporary condition and repair is not necessary. Turn off the air conditioning and attempt to drive the vehicle without any of the previous conditions. Observe the temperature gauge. The gauge should return to the normal range. If the gauge does not return to the normal range, determine the cause for overheating and repair. Refer to Possible Causes (2-18).
	2. Is the temperature gauge reading correctly?	2. Check gauge. (Refer to 8 - ELECTRICAL/INSTRUMENT CLUSTER - SCHEMATIC - ELECTRICAL). Repair as necessary.
	3. Is the temperature warning illuminating unnecessarily?	3. (Refer to 8 - ELECTRICAL/ INSTRUMENT CLUSTER - SCHEMATIC - ELECTRICAL).
	4. Coolant low in coolant reserve/ overflow tank and radiator?	4. Check for coolant leaks and repair as necessary. (Refer to 7 - COOLING - DIAGNOSIS AND TESTING).
	5. Pressure cap not installed tightly. If cap is loose, boiling point of coolant will be lowered. Also refer to the following Step 6.	5. Tighten cap
	6. Poor seals at the radiator cap.	6. (a) Check condition of cap and cap seals. Refer to Radiator Cap. Replace cap if necessary. (b) Check condition of radiator filler neck. If neck is bent or damaged, replace radiator (5.9L Diesel) or degas bottle (3.7L, 4.7L).
	7. Coolant level low in radiator but not in coolant reserve/overflow tank. This means the radiator is not drawing coolant from the coolant reserve/overflow tank as the engine cools (5.9L Diesel).	7. (a) Check condition of radiator cap and cap seals. Refer to Radiator Cap in this Group. Replace cap if necessary. (b) Check condition of radiator filler neck. If neck is bent or damaged, replace radiator. (c) Check condition of the hose from the radiator to the coolant tank. It should fit tight at both ends without any kinks or tears. Replace hose if necessary. (d) Check coolant reserve/overflow tank and tanks hoses for blockage. Repair as necessary.
	8. Incorrect coolant concentration	8. Check coolant. (Refer to LUBRICATION & MAINTENANCE/ FLUID TYPES - DESCRIPTION).

CONDITION	POSSIBLE CAUSES	CORRECTION
	9. Coolant not flowing through system	9. Check for coolant flow at radiator filler neck with some coolant removed, engine warm and thermostat open. Coolant should be observed flowing through radiator. If flow is not observed, determine area of obstruction and repair as necessary.
	10. Radiator or A/C condenser fins are dirty or clogged.	10. Remove insects and debris. (Refer to 7 - COOLING - STANDARD PROCEDURE).
	11. Radiator core is corroded or plugged.	11. Have radiator re-cored or replaced.
	12. Fuel or ignition system problems.	12. Refer to 14 - Fuel System or 8 - Electrical for diagnosis and testing procedures.
	13. Dragging brakes.	13. Check and correct as necessary. (Refer to 5 - BRAKES - DIAGNOSIS AND TESTING) for correct procedures.
	14. Bug screen or cardboard is being , reducing air flow.	14. Remove bug screen or cardboard.
	15. Thermostat partially or completely shut.	15. Check thermostat operation and replace as necessary. (Refer to 7 - COOLING/ENGINE/ENGINE COOLANT THERMOSTAT - REMOVAL) .
	16. Viscous fan drive not operating properly.	16. Check fan drive operation and replace as necessary. (Refer to 7 - COOLING/ENGINE/FAN DRIVE VISCOUS CLUTCH - REMOVAL).
	17. Cylinder head gasket leaking.	17. Check for cylinder head gasket leaks. (Refer to 7 - COOLING - DIAGNOSIS AND TESTING).
	18. Heater core leaking.	18. Check heater core for leaks. (Refer to 24 - HEATING & AIR CONDITIONING/PLUMBING - DIAGNOSIS AND TESTING). Repair as necessary.

CONDITION	POSSIBLE CAUSES	CORRECTION
Temperature gauge reading is inconsistent (fluctuates, cycles or is erratic)	1. During cold weather operation, with the heater blower in the high position, the gauge reading may drop slightly.	1. A normal condition. No correction necessary.
	2. Temperature gauge or engine mounted gauge sensor defective or shorted. Also, corroded or loose wiring in this circuit.	2. Check operation of gauge and repair if necessary. (Refer to 8 - ELECTRICAL/INSTRUMENT CLUSTER - DIAGNOSIS AND TESTING).
	3. Gauge reading rises when vehicle is brought to a stop after heavy use (engine still running)	3. A normal condition. No correction is necessary. Gauge should return to normal range after vehicle is driven.
	4. Gauge reading high after re-starting a warmed up (hot) engine.	4. A normal condition. No correction is necessary. The gauge should return to normal range after a few minutes of engine operation.
	5. Coolant level low in radiator (air will build up in the cooling system causing the thermostat to open late).	5. Check and correct coolant leaks. (Refer to 7 - COOLING - DIAGNOSIS AND TESTING).
	6. Cylinder head gasket leaking allowing exhaust gas to enter cooling system causing a thermostat to open late.	6. (a) Check for cylinder head gasket leaks. (Refer to 7 - COOLING - DIAGNOSIS AND TESTING). (b) Check for coolant in the engine oil. Inspect for white steam emitting from the exhaust system. Repair as necessary.
	7. Water pump impeller loose on shaft.	7. Check water pump and replace as necessary. (Refer to 7 - COOLING/ENGINE/WATER PUMP - REMOVAL).
	8. Loose accessory drive belt. (water pump slipping)	8. (Refer to 7 - COOLING/ ACCESSORY DRIVE/DRIVE BELTS - DIAGNOSIS AND TESTING). Check and correct as necessary.
	9. Air leak on the suction side of the water pump allows air to build up in cooling system causing thermostat to open late.	9. Locate leak and repair as necessary.
PRESSURE CAP IS BLOWING OFF STEAM AND/OR COOLANT TO COOLANT TANK. TEMPERATURE GAUGE READING MAY BE ABOVE NORMAL BUT NOT HIGH. COOLANT LEVEL MAY BE HIGH IN COOLANT RESERVE/ OVERFLOW TANK	1. Pressure relief valve in radiator cap is defective.	1. Check condition of radiator cap and cap seals. (Refer to 7 - COOLING/ENGINE/RADIATOR PRESSURE CAP - DIAGNOSIS AND TESTING). Replace cap as necessary.

CONDITION	POSSIBLE CAUSES	CORRECTION
COOLANT LOSS TO THE GROUND WITHOUT PRESSURE CAP BLOWOFF. GAUGE READING HIGH OR HOT	1. Coolant leaks in radiator, cooling system hoses, water pump or engine.	1. Pressure test and repair as necessary. (Refer to 7 - COOLING - DIAGNOSIS AND TESTING).
DETONATION OR PRE-IGNITION (NOT CAUSED BY IGNITION SYSTEM). GAUGE MAY OR MAY NOT BE READING HIGH	1. Engine overheating. 2. Freeze point of coolant not correct. Mixture is too rich or too lean.	1. Check reason for overheating and repair as necessary. 2. Check coolant concentration. (Refer to LUBRICATION & MAINTENANCE/FLUID TYPES - DESCRIPTION).
HOSE OR HOSES COLLAPSE WHILE ENGINE IS RUNNING	1. Vacuum created in cooling system on engine cool-down is not being relieved through coolant reserve/overflow system.	1. (a) Radiator cap relief valve stuck. (Refer to 7 - COOLING/ ENGINE/RADIATOR PRESSURE CAP - DIAGNOSIS AND TESTING). Replace if necessary (b) Hose between coolant reserve/overflow tank and radiator is kinked. Repair as necessary. (c) Vent at coolant reserve/overflow tank is plugged. Clean vent and repair as necessary. (d) Reserve/overflow tank is internally blocked or plugged. Check for blockage and repair as necessary.
NOISY VISCOUS FAN/DRIVE	1. Fan blades loose. 2. Fan blades striking a surrounding object. 3. Air obstructions at radiator or air conditioning condenser. 4. Thermal viscous fan drive has defective bearing. 5. A certain amount of fan noise may be evident on models equipped with a thermal viscous fan drive. Some of this noise is normal.	1. Replace fan blade assembly. (Refer to 7 - COOLING/ENGINE/ RADIATOR FAN - REMOVAL) 2. Locate point of fan blade contact and repair as necessary. 3. Remove obstructions and/or clean debris or insects from radiator or A/C condenser. 4. Replace fan drive. Bearing is not serviceable. (Refer to 7 - COOLING/ ENGINE/FAN DRIVE VISCOUS CLUTCH - REMOVAL). 5. (Refer to 7 - COOLING/ENGINE/ FAN DRIVE VISCOUS CLUTCH - DESCRIPTION) for an explanation of normal fan noise.

CONDITION	POSSIBLE CAUSES	CORRECTION
INADEQUATE HEATER PERFORMANCE. THERMOSTAT FAILED IN OPEN POSITION	1. Has a Diagnostic trouble Code (DTC) been set?	1. (Refer to 25 - EMISSIONS CONTROL - DESCRIPTION) for correct procedures and replace thermostat if necessary
	2. Coolant level low	2. (Refer to 7 - COOLING - DIAGNOSIS AND TESTING).
	3. Obstructions in heater hose/ fittings	3. Remove heater hoses at both ends and check for obstructions
	4. Heater hose kinked	4. Locate kinked area and repair as necessary
	5. Water pump is not pumping water to/through the heater core. When the engine is fully warmed up, both heater hoses should be hot to the touch. If only one of the hoses is hot, the water pump may not be operating correctly or the heater core may be plugged. Accessory drive belt may be slipping causing poor water pump operation.	5. (Refer to 7 - COOLING/ENGINE/ WATER PUMP - REMOVAL). If a slipping belt is detected, (Refer to 7 - COOLING/ACCESSORY DRIVE/DRIVE BELTS - DIAGNOSIS AND TESTING). If heater core obstruction is detected, (Refer to 24 - HEATING & AIR CONDITIONING/PLUMBING/ HEATER CORE - REMOVAL).
STEAM IS COMING FROM THE FRONT OF VEHICLE NEAR THE GRILL AREA WHEN WEATHER IS WET, ENGINE IS WARMED UP AND RUNNING, AND VEHICLE IS STATIONARY. TEMPERATURE GAUGE IS IN NORMAL RANGE	1. During wet weather, moisture (snow, ice or rain condensation) on the radiator will evaporate when the thermostat opens. This opening allows heated water into the radiator. When the moisture contacts the hot radiator, steam may be emitted. This usually occurs in cold weather with no fan or air flow to blow it away.	1. Occasional steam emitting from this area is normal. No repair is necessary.
COOLANT COLOR	1. Coolant color is not necessarily an indication of adequate corrosion or temperature protection. Do not rely on coolant color for determining condition of coolant.	1. (Refer to LUBRICATION & MAINTENANCE/FLUID TYPES - DESCRIPTION) Adjust coolant mixture as necessary.
COOLANT LEVEL CHANGES IN COOLANT RESERVE/OVERFLOW TANK. TEMPERATURE GAUGE IS IN NORMAL RANGE	1. Level changes are to be expected as coolant volume fluctuates with engine temperature. If the level in the tank was between the FULL and ADD marks at normal operating temperature, the level should return to within that range after operation at elevated temperatures.	1. A normal condition. No repair is necessary.

STANDARD PROCEDURE

COOLANT LEVEL CHECK

NOTE: Do not remove radiator cap for routine coolant level inspections. The coolant level can be checked at coolant recovery bottle or the coolant degas bottle.

WARNING: DO NOT REMOVE OR LOOSEN THE RADIATOR CAP WITH THE COOLING SYSTEM HOT AND UNDER PRESSURE. SERIOUS BURNS FROM COOLANT OR HIGH PRESSURE STEAM CAN OCCUR.

The coolant reserve/overflow system provides a quick method for determining the coolant level without removing the radiator pressure cap. With the engine at normal operating temperature and idling, observe the level of the coolant on the external level indicator on the side of the coolant reserve / overflow bottle. The coolant level should be between the MIN and MAX marks. If the coolant is below the MIN mark, add coolant (Refer to LUBRICATION & MAINTENANCE/FLUID TYPES - DESCRIPTION) to the bottle until the level reaches the MIN mark. **Do Not Overfill the bottle by adding fluid above the MAX line.** This may cause coolant to spill onto the ground during subsequent vehicle operation.

COOLING SYSTEM CLEANING/REVERSE FLUSHING

CLEANING

Drain the cooling system and refill with water. Run the engine with the radiator cap installed until the upper radiator hose is hot. Stop the engine and drain the water from system. If the water is dirty, fill the system with water, run the engine and drain the system. Repeat this procedure until the water drains clean.

REVERSE FLUSHING

Reverse flushing of the cooling system is the forcing of water through the cooling system. This is done using air pressure in the opposite direction of normal coolant flow. It is usually only necessary with very dirty systems with evidence of partial plugging.

REVERSE FLUSHING RADIATOR

Disconnect the radiator hoses from the radiator inlet and outlet. Attach a section of the radiator hose to the radiator bottom outlet fitting and insert the flushing gun. Connect a water supply hose and air supply hose to the flushing gun.

CAUTION: Internal radiator pressure must not exceed 138 kPa (20 psi) as damage to radiator may result.

Allow the radiator to fill with water. When the radiator is filled, apply air in short blasts. Allow the radiator to refill between blasts. Continue this reverse flushing until clean water flows out through the rear of the radiator cooling tube passages.

REVERSE FLUSHING ENGINE

Drain the cooling system. Remove the thermostat housing and thermostat. Install the thermostat housing. Disconnect the radiator upper hose from the radiator and attach the flushing gun to the hose. Disconnect the radiator lower hose from the water pump and attach a lead-away hose to the water pump inlet fitting.

CAUTION: On vehicles equipped with a heater water control valve, be sure the heater control valve is closed (heat off). This will prevent coolant flow with scale and other deposits from entering the heater core.

Connect the water supply hose and air supply hose to flushing gun. Allow the engine to fill with water. When the engine is filled, apply air in short blasts, allowing the system to fill between air blasts. Continue until clean water flows through the lead away hose.

Remove the lead away hose, flushing gun, water supply hose and air supply hose. Remove the thermostat housing and install the thermostat. Install the thermostat housing with a replacement gasket. Refer to Thermostat Replacement. Connect the radiator hoses. Refill the cooling system with the correct antifreeze/water mixture (Refer to LUBRICATION & MAINTENANCE/FLUID TYPES - DESCRIPTION). Refer to Refilling the Cooling System.

CHEMICAL CLEANING

In some instances, use a radiator cleaner (Mopar® Radiator Kleen or equivalent) before flushing. This will soften scale and other deposits and aid flushing operation.

CAUTION: Follow manufacturers instructions when using these products.

DRAINING COOLING SYSTEM - ALL GAS ENGINES

WARNING: DO NOT REMOVE CYLINDER BLOCK DRAIN PLUGS OR LOOSEN RADIATOR DRAINCOCK WITH SYSTEM HOT AND UNDER PRESSURE. SERIOUS BURNS FROM COOLANT CAN OCCUR.

DO NOT WASTE reusable coolant. If solution is clean, drain coolant into a clean container for reuse.

1. Attach one end of a hose to the draincock. Put the other end into a clean container.
2. **DO NOT REMOVE THE RADIATOR CAP** when draining the coolant from the reservoir/overflow tank. Open radiator draincock and when the tank is empty, remove the radiator cap and continue draining the cooling system.

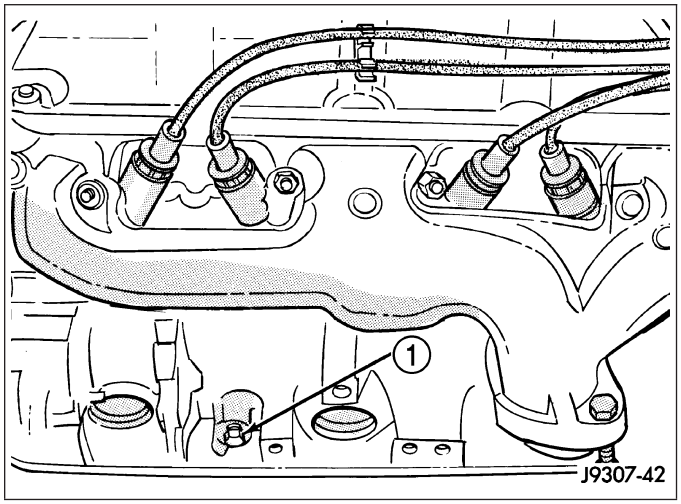

3. If draining the entire engine, remove the cylinder block drain plugs. Refer to or.

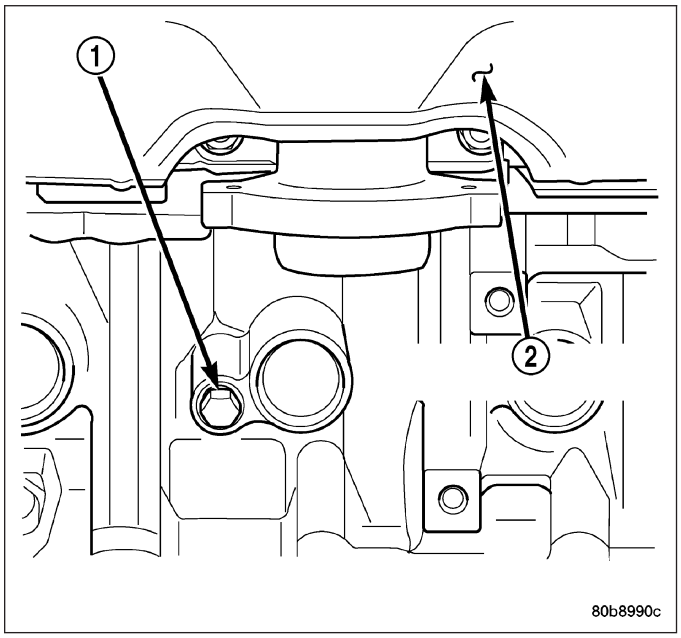

REFILLING COOLING SYSTEM - ALL GAS ENGINES

The use of aluminum cylinder blocks, cylinder heads and water pumps requires special corrosion protection. In order to maintain the required protection for these components and cooling system performance, only use the appropriate fluid (Refer to LUBRICATION & MAINTENANCE/FLUID TYPES - DESCRIPTION) when servicing the vehicle. This coolant offers the best engine cooling without corrosion when mixed with 50% distilled water to obtain a freeze point of -37°C (-35°F). If it loses color or becomes contaminated, drain, flush, and replace with fresh properly mixed coolant solution.

WARNING: DO NOT REMOVE CYLINDER BLOCK DRAIN PLUGS OR LOOSEN RADIATOR DRAINCOCK WITH SYSTEM HOT AND UNDER PRESSURE. SERIOUS BURNS FROM COOLANT CAN OCCUR.

DO NOT WASTE reusable coolant. If solution is clean, drain coolant into a clean container for reuse.

Clean cooling system prior to refilling. (Refer to 7 - COOLING - STANDARD PROCEDURE).

1. Install cylinder block drain plugs. Coat the threads with Mopar® Thread Sealant with Teflon.
2. Close radiator petcock.
3. Fill cooling system with the antifreeze mixture (Refer to LUBRICATION & MAINTENANCE/FLUID TYPES - DESCRIPTION).
4. Fill coolant reserve/overflow tank to MAX mark on bottle.
5. Start and operate engine until thermostat opens (upper radiator hose warm to touch).
6. If necessary, add antifreeze mixture to the coolant reserve/overflow tank. This is done to maintain coolant level between the MAX and MIN marks. The level in the reserve/overflow tank may drop below the MIN mark after three or four warm-up and cool-down cycles.

DRAINING COOLING SYSTEM - 5.9L DIESEL ENGINE

WARNING: DO NOT REMOVE THE CYLINDER BLOCK DRAIN PLUGS OR LOOSEN THE RADIATOR DRAIN PLUG WITH SYSTEM HOT AND UNDER PRESSURE. SERIOUS BURNS FROM COOLANT CAN OCCUR.

DO NOT WASTE reusable coolant. If the solution is clean, drain the coolant into a clean container for reuse.

1. Start the engine and place the heater control temperature selector in the Full-On position.
2. Turn the ignition off.
3. Do not remove radiator cap when draining coolant from reserve/overflow tank. Open radiator drain plug and when tank is empty, remove radiator cap. If the coolant reserve/overflow tank does not drain, (Refer to 7 - COOLING - DIAGNOSIS AND TESTING). The coolant need not be removed from tank unless the system is being refilled with fresh mixture.
4. Remove radiator pressure cap.

REFILLING COOLING SYSTEM - 5.9L DIESEL ENGINE

Clean cooling system prior to refilling (Refer to 7 - COOLING - STANDARD PROCEDURE).

1. Close radiator drain plug.

CAUTION: Due to the use of the one-way check valve, the engine must not be operating when refilling the cooling system.

NOTE: The diesel engine is equipped with two one-way check valves (jiggle pins). The check valves are used as a servicing feature and will vent air when the system is being filled. Water pressure (or flow) will hold the valves closed.

2. Fill the cooling system with a 50/50 mixture of water and antifreeze.
3. Fill coolant reserve/overflow tank to the FULL mark.
4. Start and operate engine until thermostat opens. Upper radiator hose should be warm to touch.
5. If necessary, add 50/50 water and antifreeze mixture to the coolant reserve/overflow tank to maintain coolant level. This level should be between the ADD and FULL marks. The level in the reserve/overflow tank may drop below the ADD mark after three or four warm-up and cool-down cycles.

ADDING ADDITIONAL COOLANT

The use of aluminum cylinder blocks, cylinder heads and water pumps requires special corrosion protection. In order to maintain the required protection for these components and cooling system performance, only use the appropriate fluid (Refer to LUBRICATION & MAINTENANCE/FLUID TYPES - DESCRIPTION) when servicing the vehicle. This coolant offers the best engine cooling without corrosion when mixed with 50% distilled water to obtain a freeze point of -37°C (-35°F). If it loses color or becomes contaminated, drain, flush, and replace with fresh properly mixed coolant solution. This coolant offers the best engine cooling without corrosion when mixed with 50% distilled water to obtain a freeze point of -37°C (-35°F). If it loses color or becomes contaminated, drain, flush, and replace with fresh properly mixed coolant solution.

CAUTION: Do not use coolant additives that are claimed to improve engine cooling.

Do not remove the radiator cap to add coolant to the system. When adding coolant to maintain the correct level, do so only at the reserve/overflow bottle. Remove the radiator cap only for testing or when refilling the system after service. Removing the cap unnecessarily can cause loss of coolant and allow air to enter the system, which produces corrosion.

WARNING: DO NOT REMOVE OR LOOSEN THE RADIATOR CAP WITH THE COOLING SYSTEM HOT AND UNDER PRESSURE. SERIOUS BURNS FROM THE COOLANT OR HIGH PRESSURE STEAM CAN OCCUR.

SPECIFICATIONS

TORQUE

DESCRIPTION	N·m	Ft. Lbs.	In. Lbs.
Bolt - Automatic Belt Tensioner to Block	41	30	-
Bolt - Automatic Belt Tensioner Pulley	61	45	-
Bolt - Automatic Belt Tensioner Pulley - Diesel	43	32	-
Engine Mounted Fan Shroud Brackets (Upper and Lower)	24	18	-
Fan Shroud Ring to Fan Shroud Brackets	24	18	-
Bolt - Block Heater	2	-	17
Bolts - Generator/Compressor Mounting Bracket			
# 1 and 2	54	40	-
# 3	40	30	-
Bolts - Generator/Compressor Mounting Bracket - Diesel	24	18	-
Bolts - Fan Shroud to Radiator Mounting - All Except 5.9L Diesel	6	-	55
5.9L Diesel	11.8	-	105
Bolts - Radiator to Support	8.5	-	75
Bolts - Fan Blade to Viscous Fan Drive	24	18	-
Fan Drive - All Except 8.0L/5.9L Diesel	50	37	-
8.0L/5.9L Diesel	115	85	-
Bolt - Idler Pulley	54	40	-
Bolt - Idler Pulley - Diesel	43	32	-
Bolts - Thermostat Housing - All Except 5.9L Diesel	13	-	112
Bolts - Thermostat Housing 5.9L	23	16	-
Bolts - Thermostat Housing - Diesel	10	-	89
Bolts - Power Steering Oil Cooler	8.4	-	75
Bolts - Transmission Auxiliary Oil Cooler	6	-	55
Nuts - Transmission Oil Cooler Tube	31.5	24	-
Bolts - Coolant Bottle	8.5	-	75
Tube Nuts - Transmission Oil Cooler to Transmission			
5.9L/46RE	31.5	24	-
3.7L/4.7L/5.7L/45RFE	20	18	-
Bolts - Water Pump - Diesel	24	18	-
Bolts - Water Pump - 4.7L	58	43	-
Block Heater - Diesel	75	55	-
Transmission Oil Cooler - Diesel			
M8	24	18	-
M12	77	57	-

SPECIFICATIONS - FILL VOLUMES

DESCRIPTION	SPECIFICATION	
	Metric	Standard
3.7/4.7L/5.7L Engine	15.4L	16.2 qts.- to the middle of the cold fill range
8.3L SRT-10 Engine	18.9L	20 qts.
5.9L Diesel Engine	28L	29.5 qts.

SPECIAL TOOLS

COOLING

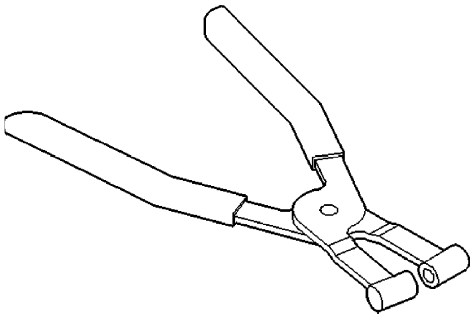

Pliers Constant Pressure Hose Clamp - 6094

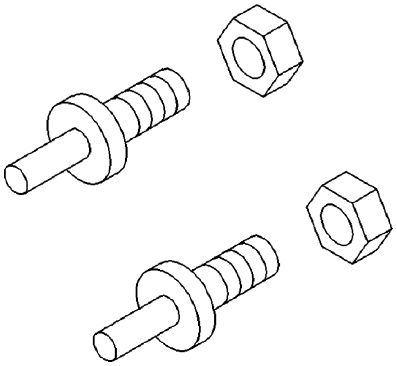

Adapter Pins 8346

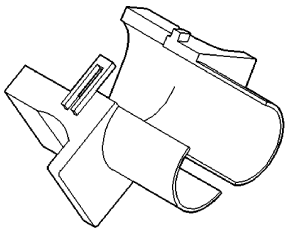

3/8” Quick Connect Release Tool - 6935

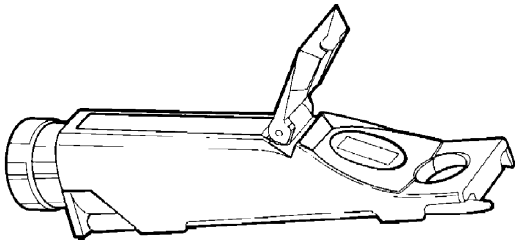

Coolant Refractometer 8286

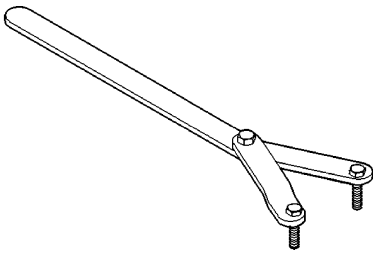

SPANNER WRENCH - 6958

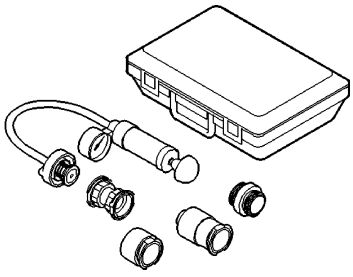

Cooling System Pressure Tester - 7700A

ACCESSORY DRIVE

TABLE OF CONTENTS

page

TENSIONER-BELT
- DESCRIPTION . . . 25
- OPERATION . . . 25
- REMOVAL
  - 3.7L/4.7L ENGINE . . . 26
  - 5.7L ENGINE . . . 26
  - 5.9L DIESEL . . . 27
  - 8.3L ENGINE . . . 27
- INSTALLATION
  - 3.7L/4.7L ENGINE . . . 28
  - 5.7L ENGINE . . . 28
  - 5.9L DIESEL . . . 29
  - 8.3L ENGINE . . . 29

page

BELT-DRIVE
- DIAGNOSIS AND TESTING
  - ACCESSORY DRIVE BELT . . . 30
- REMOVAL
  - 3.7L/4.7L ENGINE . . . 32
  - 5.7L ENGINE . . . 33
  - 5.9L DIESEL . . . 33
  - 8.3L ENGINE . . . 34
- INSTALLATION
  - 3.7L/4.7L ENGINE . . . 35
  - 5.7L ENGINE . . . 36
  - 5.9L DIESEL . . . 36
  - 8.3L ENGINE . . . 37

TENSIONER-BELT

DESCRIPTION

Correct drive belt tension is required to ensure optimum performance of the belt driven engine accessories. If specified tension is not maintained, belt slippage may cause; engine overheating, lack of power steering assist, loss of air conditioning capacity, reduced generator output rate, and greatly reduced belt life.

It is not necessary to adjust belt tension. All engines are equipped with an automatic belt tensioner. The tensioner maintains correct belt tension at all times.

CAUTION: Do not attempt to check belt tension with a belt tension gauge on vehicles equipped with an automatic belt tensioner.

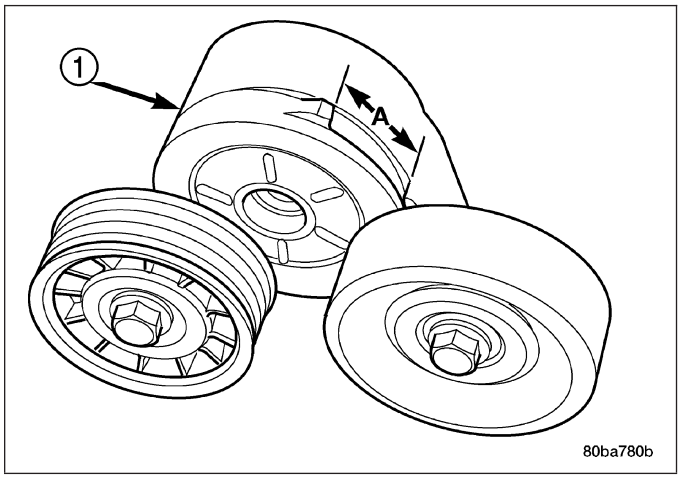

OPERATION

The automatic belt tensioner maintains belt tension by using internal spring pressure, a pivoting arm and pulley to press against the drive belt.

REMOVAL

3.7L/4.7L ENGINE

On 3.7L and 4.7L engines, the tensioner is equipped with an indexing tang on back of tensioner and an indexing stop on tensioner housing. If a new belt is being installed, tang must be within approximately 24 mm (.94 inches) of indexing stop. Belt is considered new if it has been used 15 minutes or less.

If the above specification cannot be met, check for:

- The wrong belt being installed (incorrect length/ width)
- Worn bearings on an engine accessory (A/C compressor, power steering pump, water pump, idler pulley or generator)
- A pulley on an engine accessory being loose
- Misalignment of an engine accessory
- Belt incorrectly routed.

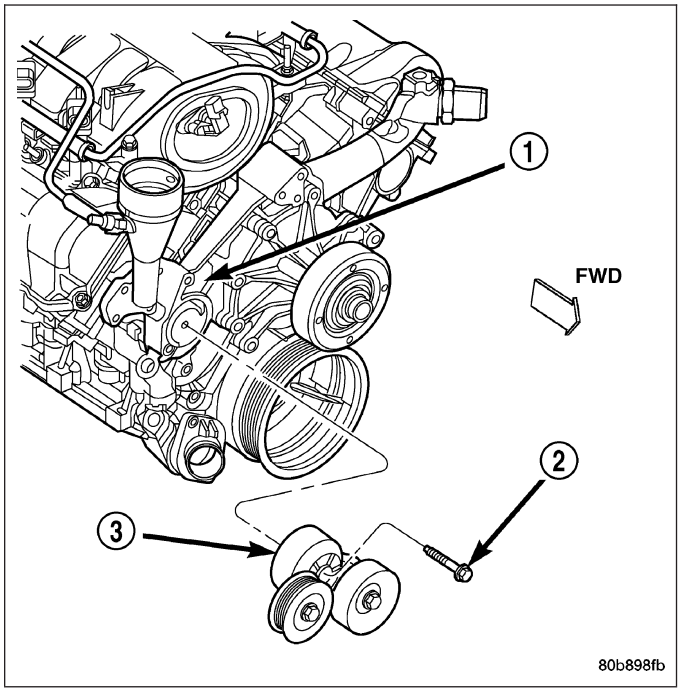

NOTE: A used belt should be replaced if tensioner indexing arrow has moved to the minimum tension indicator. Tensioner travel stops at this point.

1. Remove accessory drive belt (Refer to 7 - COOLING/ACCESSORY DRIVE/DRIVE BELTS - REMOVAL).
2. Remove tensioner assembly from mounting bracket.

WARNING: BECAUSE OF HIGH SPRING PRESSURE, DO NOT ATTEMPT TO DISASSEMBLE AUTOMATIC TENSIONER. UNIT IS SERVICED AS AN ASSEMBLY EXCEPT FOR PULLEY ON TENSIONER.

3. Remove pulley bolt. Remove pulley from tensioner.

5.7L ENGINE

1. Remove accessory drive belt (Refer to 7 - COOLING/ACCESSORY DRIVE/DRIVE BELTS - REMOVAL).
2. Remove tensioner and mounting bracket.
3. Remove the tensioner assembly from the mounting bracket.

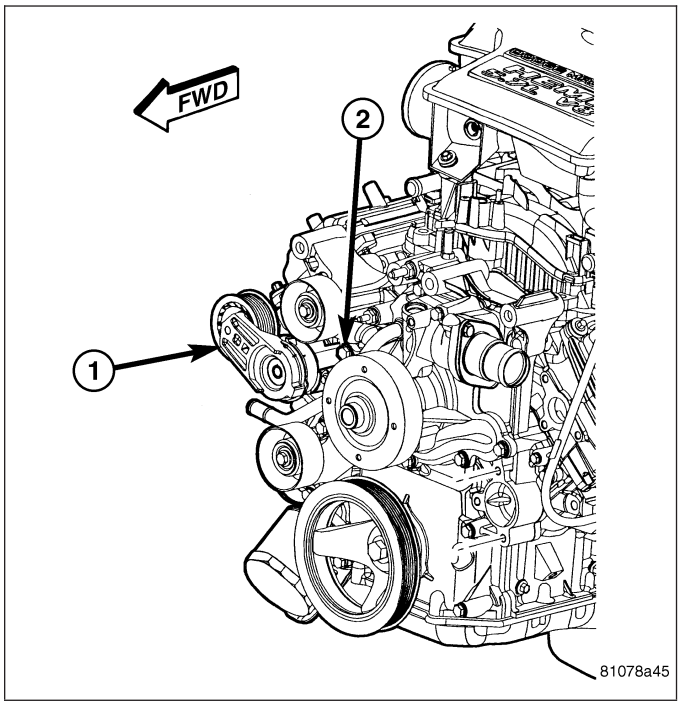

5.9L DIESEL

WARNING: BECAUSE OF HIGH SPRING PRESSURE, DO NOT ATTEMPT TO DISASSEMBLE AUTOMATIC TENSIONER. UNIT IS SERVICED AS AN ASSEMBLY.

1. Remove accessory drive belt (Refer to 7 - COOLING/ACCESSORY DRIVE/DRIVE BELTS - REMOVAL).
2. Remove tensioner mounting bolt and remove tensioner (7).

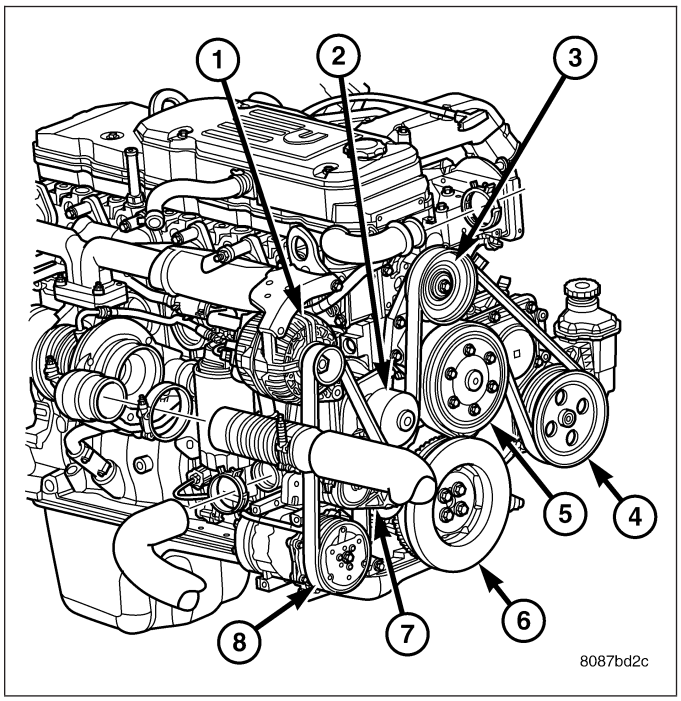

8.3L ENGINE

1. Remove the air intake tube between intake manifold and air filter assembly (Refer to 9 - ENGINE/ AIR INTAKE SYSTEM/AIR CLEANER ELEMENT - REMOVAL).
2. Release the belt tension by rotating the tensioner **counterclockwise** with a 15 mm wrench on the tensioner pulley bolt. Rotate belt tensioner until belt can be removed from pulleys.
3. Remove accessory drive belt.
4. Gently release tensioner.
5. Remove tensioner mounting nut.

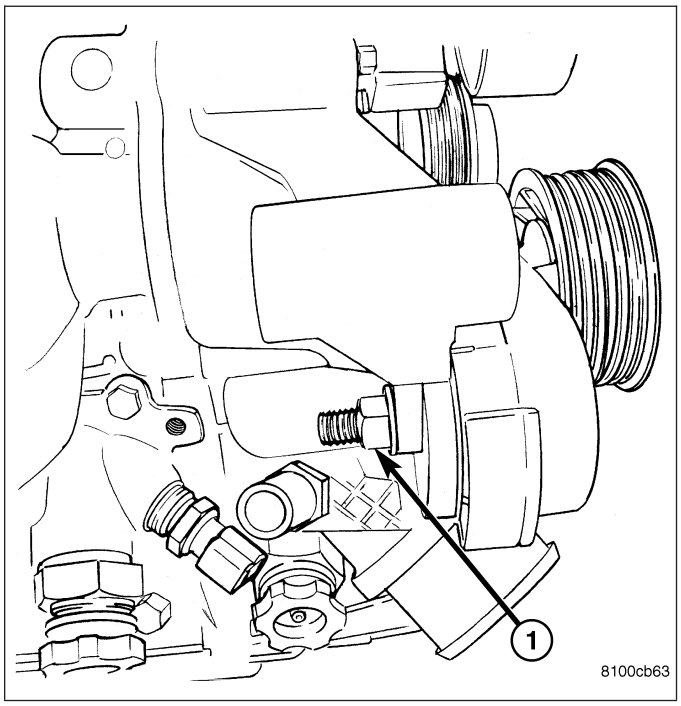

INSTALLATION

3.7L/4.7L ENGINE

1. Install pulley and pulley bolt to tensioner. Tighten bolt to 61 N·m (45 ft. lbs.) torque.
2. An indexing slot is located on back of tensioner. Align this slot to the head of the bolt on the front cover. Install the mounting bolt. Tighten bolt to 41 N·m (30 ft. lbs.).
3. Install accessory drive belt (Refer to 7 - COOLING/ ACCESSORY DRIVE/DRIVE BELTS - INSTALLATION).
4. Check belt indexing marks.

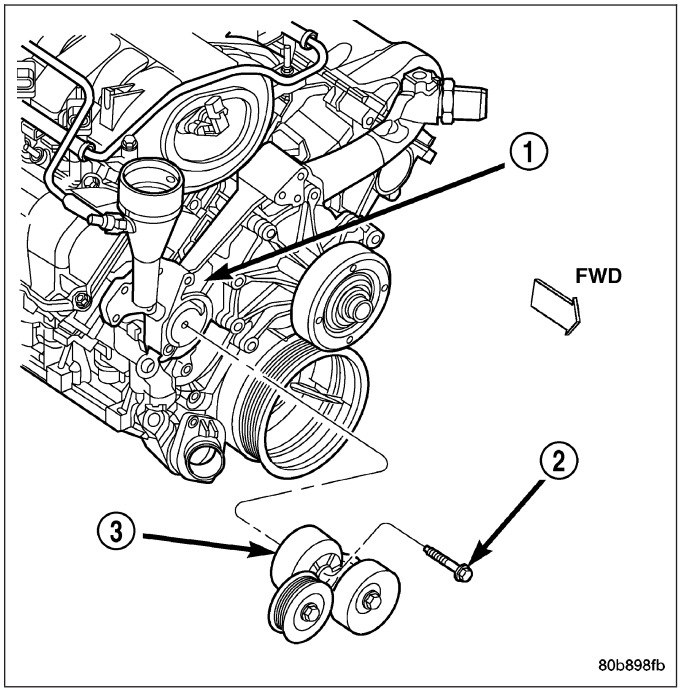

5.7L ENGINE

1. Install tensioner on to the mounting bracket. Tighten bolt to 41 N·m (30 ft. lbs.).
2. Install tensioner and bracket assembly
3. Install accessory drive belt (Refer to 7 - COOLING/ ACCESSORY DRIVE/DRIVE BELTS - INSTALLATION).

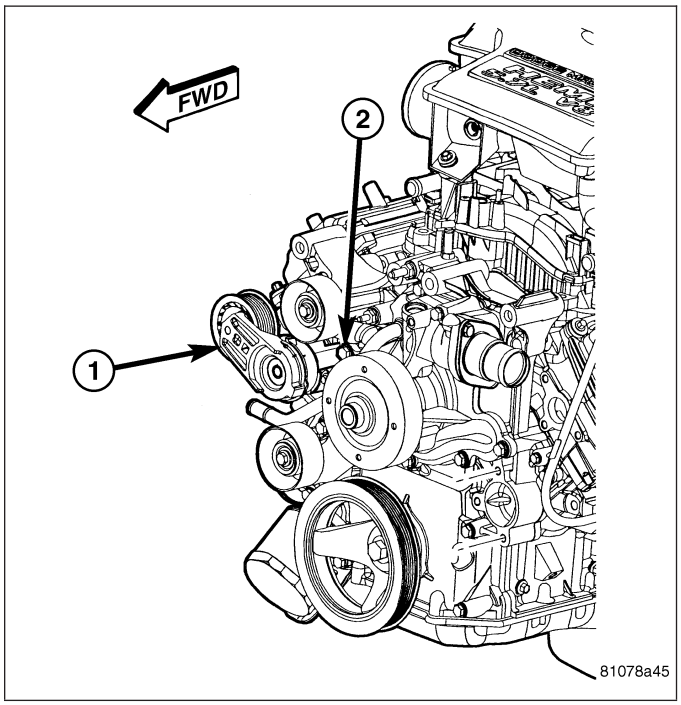

5.9L DIESEL

1. Install tensioner assembly (7) to water inlet bracket. A dowel is located on back of tensioner. Align this dowel to hole in tensioner mounting bracket. Tighten bolt to 43 N·m (32 ft. lbs.) torque.
2. Install drive belt (Refer to 7 - COOLING/ACCESSORY DRIVE/DRIVE BELTS - INSTALLATION).

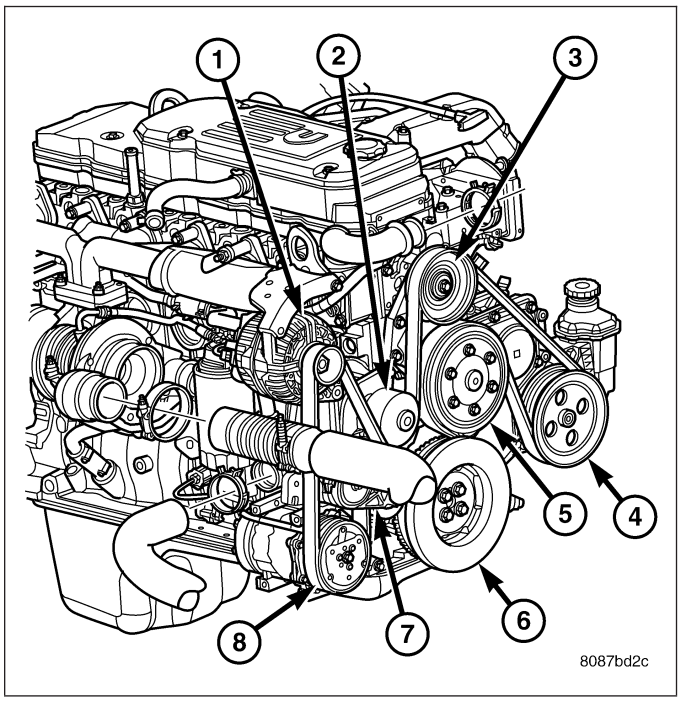

8.3L ENGINE

NOTE: When installing accessory drive belt onto pulleys, make sure that belt is properly routed and all V-grooves make proper contact with pulleys.

1. Install tensioner and mounting nut. Torque mounting nut to 41 N·m (30 ft. lbs.).
2. Install accessory drive belt (Refer to 7 - COOLING/ACCESSORY DRIVE/DRIVE BELTS - INSTALLATION).
3. Install the air intake tube between intake manifold and air filter assembly.

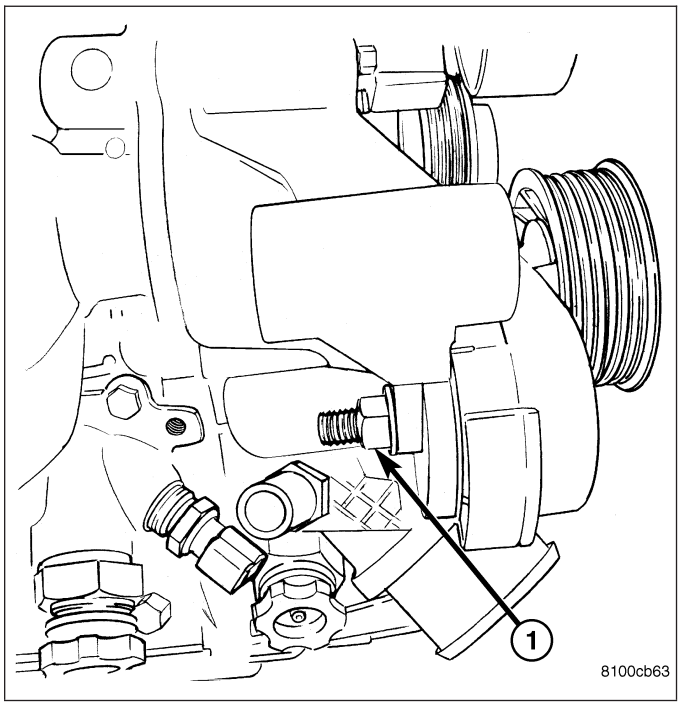

BELT-DRIVE

DIAGNOSIS AND TESTING

ACCESSORY DRIVE BELT

VISUAL DIAGNOSIS

NOTE: 5.9L DIesel Engine - If a belt is broken or frayed, inspect engine speed sensor (located near the crankshaft damper) for damage.

When diagnosing serpentine accessory drive belts, small cracks that run across the ribbed surface of the belt from rib to rib , are considered normal. These are not a reason to replace the belt. However, cracks running along a rib (not across) are **not** normal. Any belt with cracks running along a rib must be replaced. Also replace the belt if it has excessive wear, frayed cords or severe glazing.

Refer to ACCESSORY DRIVE BELT DIAGNOSIS CHART for further belt diagnosis.

NOISE DIAGNOSIS

Noises generated by the accessory drive belt are most noticeable at idle. Before replacing a belt to resolve a noise condition, inspect all of the accessory drive pulleys for alignment, glazing, or excessive end play.

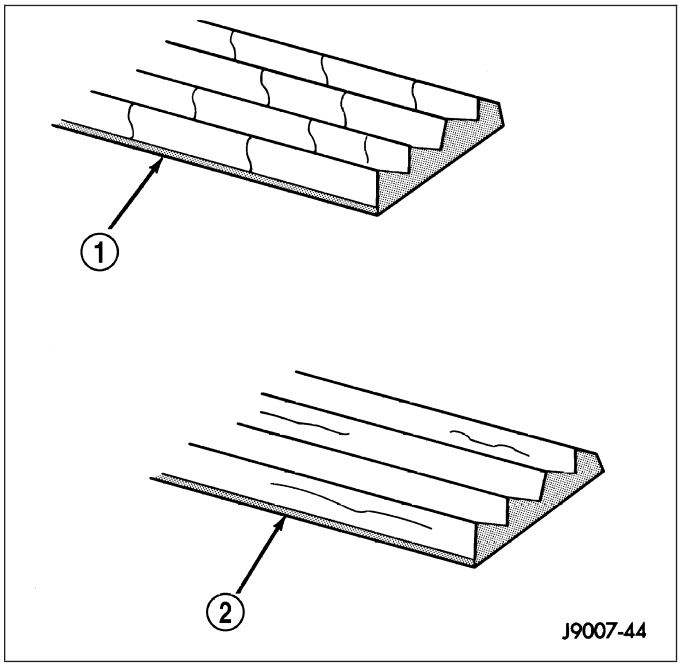

ACCESSORY DRIVE BELT DIAGNOSIS CHART

CONDITION	POSSIBLE CAUSES	CORRECTION
RIB CHUNKING (One or more ribs has separated from belt body)	1. Foreign objects imbedded in pulley grooves.	1. Remove foreign objects from pulley grooves. Replace belt.
	2. Installation damage	2. Replace belt
RIB OR BELT WEAR	1. Pulley misaligned	1. Align pulley(s)
	2. Abrasive environment	2. Clean pulley(s). Replace belt if necessary
	3. Rusted pulley(s)	3. Clean rust from pulley(s)
	4. Sharp or jagged pulley groove tips	4. Replace pulley. Inspect belt.
	5. Belt rubber deteriorated	5. Replace belt
BELT SLIPS	1. Belt slipping because of insufficient tension	1. Inspect/Replace tensioner if necessary
	2. Belt or pulley exposed to substance that has reduced friction (belt dressing, oil, ethylene glycol)	2. Replace belt and clean pulleys
	3. Driven component bearing failure (seizure)	3. Replace faulty component or bearing
	4. Belt glazed or hardened from heat and excessive slippage	4. Replace belt.
LONGITUDAL BELT CRACKING	1. Belt has mistracked from pulley groove	1. Replace belt
	2. Pulley groove tip has worn away rubber to tensile member	2. Replace belt
″GROOVE JUMPING″ (Belt does not maintain correct position on pulley)	1. Incorrect belt tension	1. Inspect/Replace tensioner if necessary
	2. Pulley(s) not within design tolerance	2. Replace pulley(s)
	3. Foreign object(s) in grooves	3. Remove foreign objects from grooves
	4. Pulley misalignment	4. Align component
	5. Belt cordline is broken	5. Replace belt
BELT BROKEN (Note: Identify and correct problem before new belt is installed)	1. Incorrect belt tension	1. Replace Inspect/Replace tensioner if necessary
	2. Tensile member damaged during belt installation	2. Replace belt
	3. Severe misalignment	3. Align pulley(s)
	4. Bracket, pulley, or bearing failure	4. Replace defective component and belt

CONDITION	POSSIBLE CAUSES	CORRECTION
NOISE (Objectionable squeal, squeak, or rumble is heard or felt while drive belt is in operation)	1. Incorrect belt tension	1. Inspect/Replace tensioner if necessary
	2. Bearing noise	2. Locate and repair
	3. Belt misalignment	3. Align belt/pulley(s)
	4. Belt to pulley mismatch	4. Install correct belt
	5. Driven component induced vibration	5. Locate defective driven component and repair
TENSION SHEETING FABRIC FAILURE (Woven fabric on outside, circumference of belt has cracked or separated from body of belt)	1. Tension sheeting contacting stationary object	1. Correct rubbing condition
	2. Excessive heat causing woven fabric to age	2. Replace belt
	3. Tension sheeting splice has fractured	3. Replace belt
CORD EDGE FAILURE (Tensile member exposed at edges of belt or separated from belt body)	1. Incorrect belt tension	1. Inspect/Replace tensioner if necessary
	2. Belt contacting stationary object	2. Replace belt
	3. Pulley(s) out of tolerance	3. Replace pulley
	4. Insufficient adhesion between tensile member and rubber matrix	4. Replace belt

REMOVAL

3.7L/4.7L ENGINE

CAUTION: DO NOT LET TENSIONER ARM SNAP BACK TO THE FREEARM POSITION, SEVER DAMAGE MAY OCCUR TO THE TENSIONER.

Belt tension is not adjustable. Belt adjustment is maintained by an automatic (spring load) belt tensioner.

1. Disconnect negative battery cable from battery.
2. Rotate belt tensioner until it contacts it's stop. Remove belt, then slowly rotate the tensioner into the freearm position..

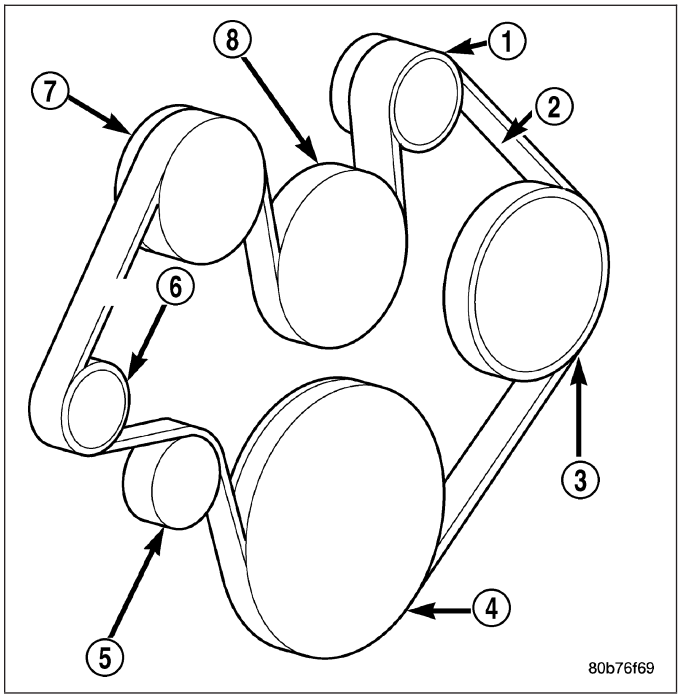

5.7L ENGINE

1. Remove the air intake tube between intake manifold and air filter assembly..
2. Release the belt tension by rotating the tensioner **counterclockwise** with a 15 mm wrench on the tensioner pulley bolt. Rotate belt tensioner until belt can be removed from pulleys.
3. Remove belt.
4. Gently release tensioner.

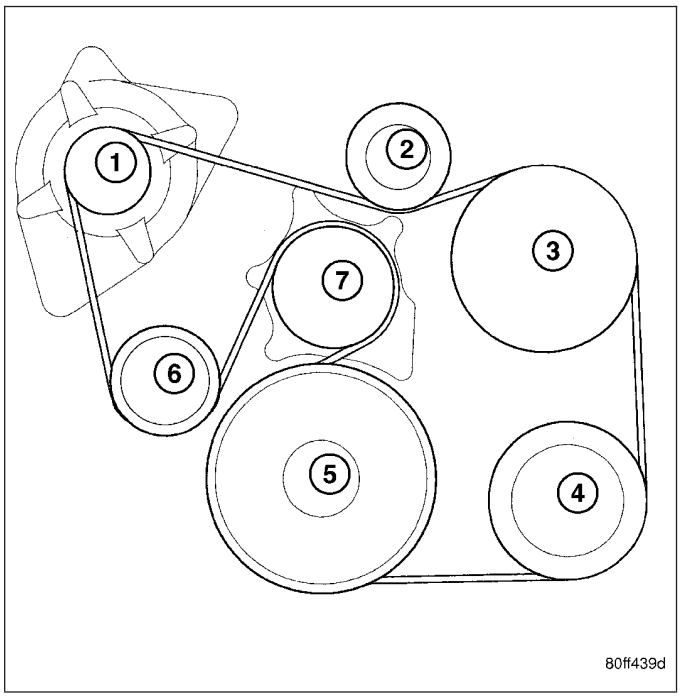

5.9L DIESEL

CAUTION: Do not attempt to check belt tension with a belt tension gauge on vehicles equipped with an automatic belt tensioner. Refer to Automatic Belt Tensioner in this group.

NOTE: The belt routing schematics are published from the latest information available at the time of publication. If anything differs between these schematics and the Belt Routing Label, use the schematics on Belt Routing Label.This label is located in the engine compartment.

Drive belts on diesel engines are equipped with a spring loaded automatic belt tensioner.

This belt tensioner will be used on all belt configurations, such as with or without air conditioning. For more information, (Refer to 7 - COOLING/ACCESSORY DRIVE/BELT TENSIONERS - DESCRIPTION).

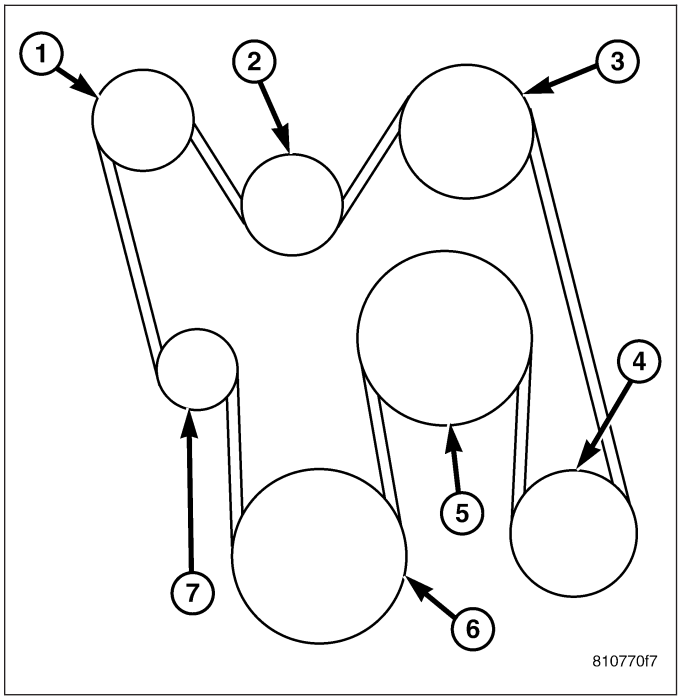

Belt Routing - 5.9L Diesel Engine Without A/C

1. A 1/2 inch square hole is provided in the automatic belt tensioner. Attach a 1/2 inch drive-long handle ratchet to this hole.
2. Rotate ratchet and tensioner assembly clockwise (as viewed from front) until tension has been relieved from belt.
3. Remove belt from water pump pulley first.
4. Remove belt from vehicle.

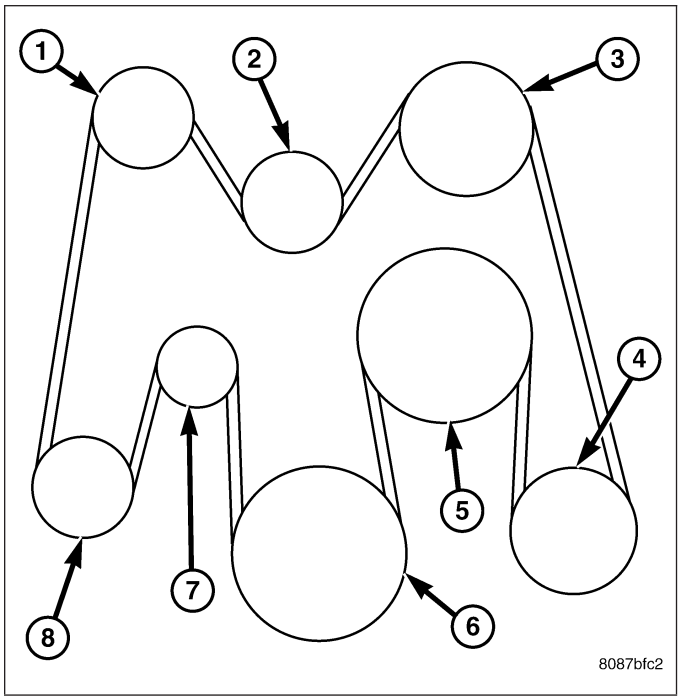

Belt Routing – 5.9L Diesel Engine With A/C

8.3L ENGINE

1. Remove the air intake tube between intake manifold and air filter assembly (Refer to 9 - ENGINE/ AIR INTAKE SYSTEM/AIR CLEANER HOUSING - REMOVAL).
2. Release the belt tension by rotating the tensioner **counterclockwise** with a 15 mm wrench on the tensioner pulley bolt. Rotate belt tensioner until belt can be removed from pulleys.
3. Remove accessory drive belt.
4. Gently release tensioner.

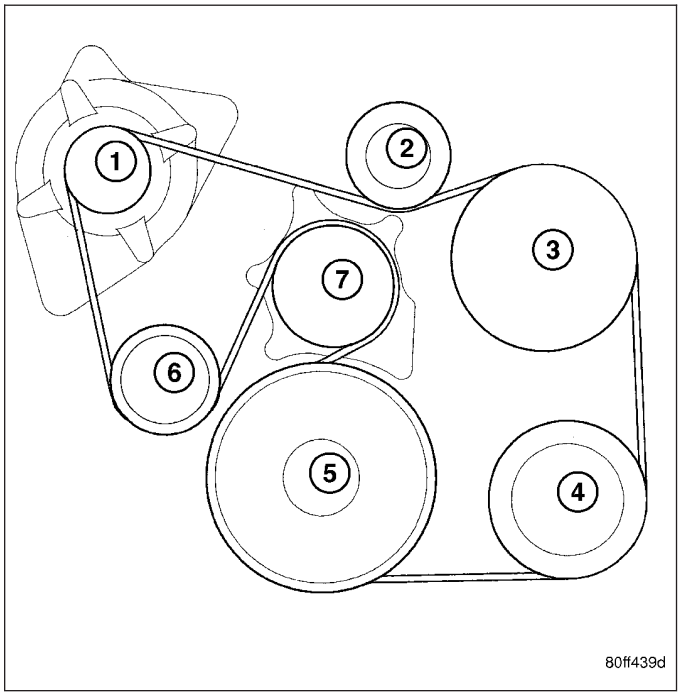

INSTALLATION

3.7L/4.7L ENGINE

Belt tension is not adjustable. Belt adjustment is maintained by an automatic (spring load) belt tensioner.

1. Check condition of all pulleys.

CAUTION: When installing the serpentine accessory drive belt, the belt MUST be routed correctly. If not, the engine may overheat due to the water pump rotating in the wrong direction.

2. Install new belt. Route the belt around all pulleys except the idler pulley. Rotate the tensioner arm until it contacts it's stop position. Route the belt around the idler and slowly let the tensioner rotate into the belt. Make sure the belt is seated onto all pulleys.

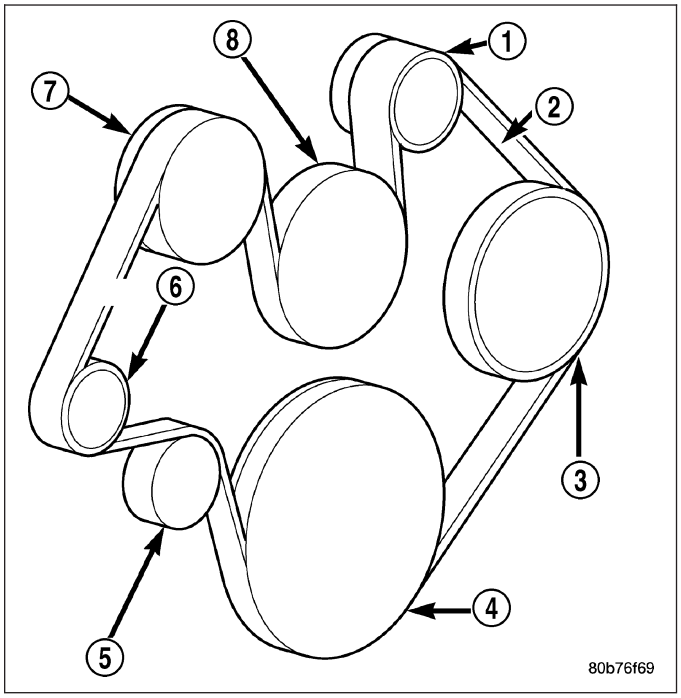

3. With the drive belt installed, inspect the belt wear indicator. On 4.7L Engines only, the gap between the tang and the housing stop (measurement A) must not exceed 24 mm (.94 inches). If the measurement exceeds this specification replace the serpentine accessory drive belt.

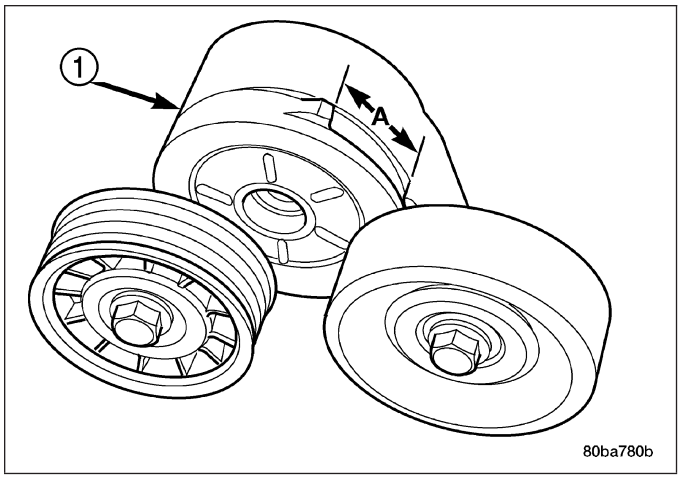

5.7L ENGINE

NOTE: When installing accessory drive belt onto pulleys, make sure that belt is properly routed and all V-grooves make proper contact with pulleys.

1. Position the drive belt over all pulleys except for the water pump pulley.
2. Rotate tensioner **counterclockwise** and slip the belt over the water pump pulley.
3. Gently release tensioner.
4. Install the air intake tube between intake manifold and air filter assembly.

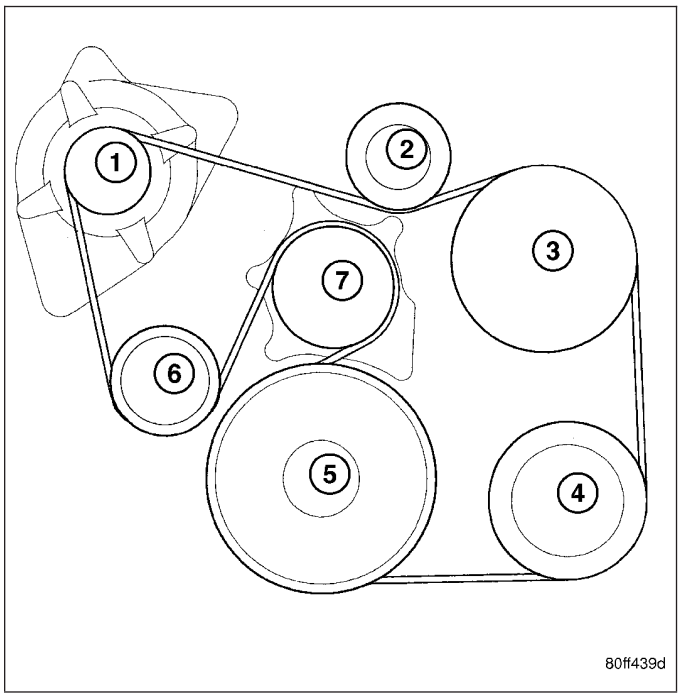

5.9L DIESEL

CAUTION: When installing the accessory drive belt, the belt must be routed correctly. If not, engine may overheat due to water pump rotating in wrong direction. Refer to or for correct engine belt routing. The correct belt with correct length must be used.

1. Position drive belt over all pulleys **except** water pump pulley.
2. Attach a 1/2 inch ratchet to tensioner.

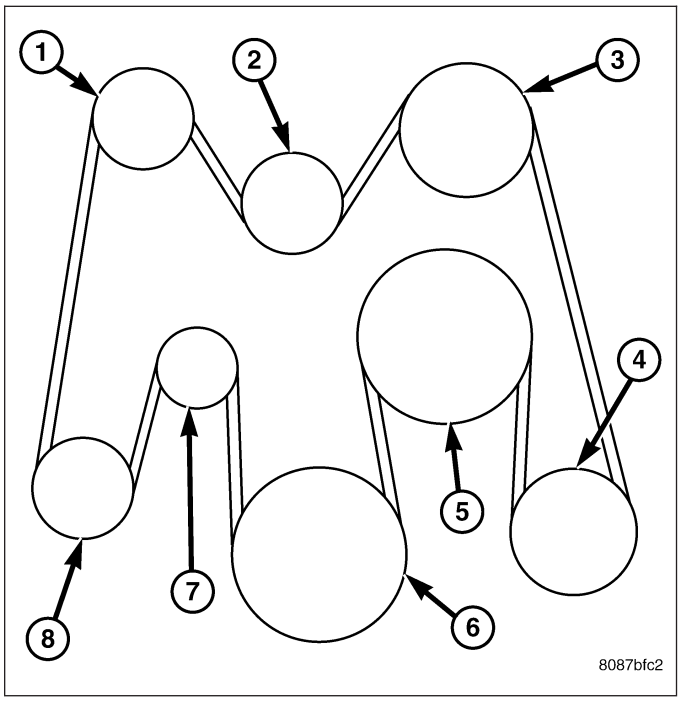

Belt Routing – 5.9L Diesel Engine With A/C

3. Rotate ratchet and belt tensioner clockwise. Place belt over water pump pulley. Let tensioner rotate back into place. Remove ratchet. Be sure belt is properly seated on all pulleys.

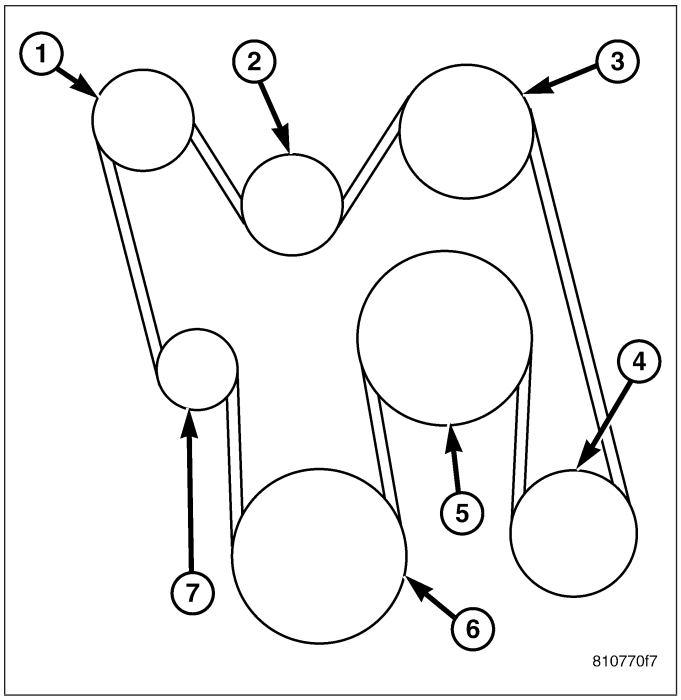

Belt Routing - 5.9L Diesel Engine Without A/C

8.3L ENGINE

NOTE: When installing accessory drive belt onto pulleys, make sure that belt is properly routed and all V-grooves make proper contact with pulleys.

1. Position the drive belt over all pulleys except for the water pump pulley.
2. Rotate tensioner **counterclockwise** and slip the belt over the water pump pulley.
3. Gently release tensioner.
4. Install the air intake tube between intake manifold and air filter assembly (Refer to 9 - ENGINE/AIR INTAKE SYSTEM/AIR CLEANER HOUSING - INSTALLATION).

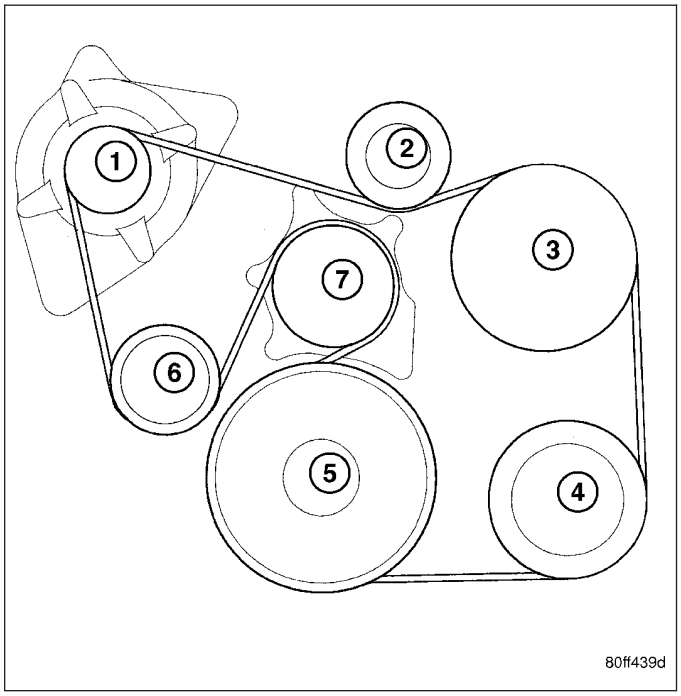

ENGINE

TABLE OF CONTENTS

page

COOLANT
DESCRIPTION
ENGINE COOLANT 39
HOAT COOLANT 40
OPERATION 41
DIAGNOSIS AND TESTING
COOLANT CONCENTRATION TESTING 41
CONTAINER-COOLANT RECOVERY-GAS ENGINES
DESCRIPTION 42
OPERATION 42
REMOVAL
3.7L/4.7L/5.7L ENGINE 43
5.9L DIESEL ENGINE 43
8.3L ENGINE 44
INSTALLATION
3.7L/4.7L/5.7L ENGINE 44
5.9L DIESEL ENGINE 45
8.3L ENGINE 45
RADIATOR FAN
REMOVAL
3.7L/4.7L/5.7L ENGINE 46
5.9L DIESEL 47
8.3L ENGINE 48
CLEANING 49
INSPECTION 49
INSTALLATION
3.7L/4.7L/5.7L ENGINE 49
5.9L DIESEL 50
8.3L ENGINE 51
HEATER-ENGINE BLOCK
DESCRIPTION 52
OPERATION 52
DIAGNOSIS AND TESTING - ENGINE BLOCK HEATER 53
REMOVAL
GAS ENGINES 53
5.9L DIESEL 54
INSTALLATION
GAS ENGINES 54
5.9L DIESEL 55
SENSOR-ENGINE COOLANT TEMPERATURE
DESCRIPTION 55
OPERATION 55
REMOVAL
3.7L V-6 56
4.7L V-8 56
5.7L V-8 57
5.9L Diesel 58
8.3L V-10 58

page

INSTALLATION
3.7L V-6 59
4.7L V-8 59
5.7L V-8 60
5.9L Diesel 60
8.3L V-10 61
THERMOSTAT-ENGINE COOLANT
DESCRIPTION
GAS ENGINE 61
5.9L DIESEL 62
OPERATION
3.7L/4.7L/5.7L ENGINE 63
8.3L ENGINE 63
DIAGNOSIS AND TESTING
THERMOSTAT 63
REMOVAL
3.7L/4.7L ENGINE 64
5.7L ENGINE 65
5.9L DIESEL ENGINE 65
8.3L ENGINE 66
INSTALLATION
3.7L/4.7L ENGINE 67
5.7L ENGINE 67
5.9L DIESEL ENGINE 68
8.3L ENGINE 68
FAN DRIVE VISCOUS
DESCRIPTION
GAS ENGINES 69
5.9L DIESEL ENGINE 70
OPERATION
GAS ENGINES 70
5.9L DIESEL 70
DIAGNOSIS AND TESTING
VISCOUS FAN DRIVE 71
ELECTRONICALLY CONTROLLED VISCOUS FAN DRIVE 72
REMOVAL
3.7L/4.7L/5.7L ENGINE 73
5.9L DIESEL ENGINE 74
INSTALLATION
3.7L/4.7L/5.7L ENGINE 75
5.9L DIESEL ENGINE 75
RADIATOR
DESCRIPTION 76
OPERATION 76
DIAGNOSIS AND TESTING
RADIATOR COOLANT FLOW 77
REMOVAL
3.7L/4.7L/5.7L ENGINE 77
5.9L DIESEL ENGINE 78
8.3L ENGINE 79

CLEANING 80
INSPECTION 80
INSTALLATION
3.7L/4.7L/5.7L ENGINE 80
5.9L DIESEL ENGINE 81
8.3L ENGINE 82
CAP-RADIATOR PRESSURE
DESCRIPTION 83
OPERATION 83
DIAGNOSIS AND TESTING
RADIATOR CAP-TO-FILLER NECK SEAL . . . 83
RADIATOR CAP 84
CLEANING 84
INSPECTION 84
PUMP-WATER
DESCRIPTION
DESCRIPTION 85
DESCRIPTION - WATER PUMP BYPASS 85
OPERATION
OPERATION 86
WATER PUMP BYPASS – 3.7L/4.7L ENGINE . 86
DIAGNOSIS AND TESTING - WATER PUMP . . . 86
REMOVAL
3.7L/4.7L ENGINE 86
5.7L ENGINE 87
5.9L DIESEL ENGINE 88
8.3L ENGINE 88
CLEANING 89
INSPECTION 89
INSTALLATION
3.7L/4.7L ENGINE 90
5.7L ENGINE 91
5.9L DIESEL ENGINE 91
8.3L ENGINE 92

COOLANT

DESCRIPTION

ENGINE COOLANT

WARNING: ANTIFREEZE IS AN ETHYLENE GLYCOL BASE COOLANT AND IS HARMFUL IF SWALLOWED OR INHALED. IF SWALLOWED, DRINK TWO GLASSES OF WATER AND INDUCE VOMITING. IF INHALED, MOVE TO FRESH AIR AREA. SEEK MEDICAL ATTENTION IMMEDIATELY. DO NOT STORE IN OPEN OR UNMARKED CONTAINERS. WASH SKIN AND CLOTHING THOROUGHLY AFTER COMING IN CONTACT WITH ETHYLENE GLYCOL. KEEP OUT OF REACH OF CHILDREN. DISPOSE OF GLYCOL BASE COOLANT PROPERLY, CONTACT YOUR DEALER OR GOVERNMENT AGENCY FOR LOCATION OF COLLECTION CENTER IN YOUR AREA. DO NOT OPEN A COOLING SYSTEM WHEN THE ENGINE IS AT OPERATING TEMPERATURE OR HOT UNDER PRESSURE, PERSONAL INJURY CAN RESULT. AVOID RADIATOR COOLING FAN WHEN ENGINE COMPARTMENT RELATED SERVICE IS PERFORMED, PERSONAL INJURY CAN RESULT.

ETHYLENE-GLYCOL MIXTURES

CAUTION: Richer antifreeze mixtures cannot be measured with normal field equipment and can cause problems associated with 100 percent ethylene-glycol.

The use of aluminum cylinder blocks, cylinder heads and water pumps requires special corrosion protection. Only Mopar® Antifreeze/Coolant, 5 year/100,000 Mile Formula (ethylene-glycol base coolant with corrosion inhibitors called HOAT, for Hybrid Additive Technology) is recommended. This coolant offers the best engine cooling without corrosion when mixed with 50% distilled water to obtain a freeze point of -37°C (-35°F).

The required ethylene-glycol (antifreeze) and water mixture depends upon the climate and vehicle operating conditions. The antifreeze concentration **must always** be a minimum of 44 percent, year-round in all climates. **If percentage is lower than 44 percent, engine parts may be eroded by cavitation, and cooling system components may be severely damaged by corrosion.** Maximum protection against freezing is provided with a 68% antifreeze concentration, which prevents freezing down to -67.7° C (-90° F). A higher percentage will freeze at a warmer temperature. Also, a higher percentage of antifreeze can cause the engine to overheat because the specific heat of antifreeze is lower than that of water.

Use of 100 percent ethylene-glycol will cause formation of additive deposits in the system, as the corrosion inhibitive additives in ethylene-glycol require the presence of water to dissolve. The deposits act as insulation, causing temperatures to rise to as high as 149°C (300°F). This temperature is hot enough to melt plastic and soften solder. The increased temperature can result in engine detonation. In addition, 100 percent ethylene-glycol freezes at 22°C (-8°F).

PROPYLENE-GLYCOL MIXTURES

It's overall effective temperature range is smaller than that of ethylene-glycol. The freeze point of 50/50 propylene-glycol and water is -32°C (-26°F). 5°C higher than ethylene-glycol's freeze point. The boiling point (protection against summer boil-over) of propylene-glycol is 125°C (257°F) at 96.5 kPa (14 psi), compared to 128°C (263°F) for ethylene-glycol. Use of propylene-glycol can result in boil-over or freeze-up on a cooling system designed for ethylene-glycol. Propylene glycol also has poorer heat transfer characteristics than ethylene glycol. This can increase cylinder head temperatures under certain conditions.

Propylene-glycol/ethylene-glycol Mixtures can cause the destabilization of various corrosion inhibitors, causing damage to the various cooling system components. Also, once ethylene-glycol and propylene-glycol based coolants are mixed in the vehicle, conventional methods of determining freeze point will not be accurate. Both the refractive index and specific gravity differ between ethylene glycol and propylene glycol.

HOAT COOLANT

WARNING: ANTIFREEZE IS AN ETHYLENE-GLYCOL BASE COOLANT AND IS HARMFUL IF SWALLOWED OR INHALED. IF SWALLOWED, DRINK TWO GLASSES OF WATER AND INDUCE VOMITING. IF INHALED, MOVE TO FRESH AIR AREA. SEEK MEDICAL ATTENTION IMMEDIATELY. DO NOT STORE IN OPEN OR UNMARKED CONTAINERS. WASH SKIN AND CLOTHING THOROUGHLY AFTER COMING IN CONTACT WITH ETHYLENE-GLYCOL. KEEP OUT OF REACH OF CHILDREN. DISPOSE OF GLYCOL BASE COOLANT PROPERLY, CONTACT YOUR DEALER OR GOVERNMENT AGENCY FOR LOCATION OF COLLECTION CENTER IN YOUR AREA. DO NOT OPEN A COOLING SYSTEM WHEN THE ENGINE IS AT OPERATING TEMPERATURE OR HOT UNDER PRESSURE, PERSONAL INJURY CAN RESULT. AVOID RADIATOR COOLING FAN WHEN ENGINE COMPARTMENT RELATED SERVICE IS PERFORMED, PERSONAL INJURY CAN RESULT.

CAUTION: Use of Propylene-Glycol based coolants is not recommended, as they provide less freeze protection and less corrosion protection.

The cooling system is designed around the coolant. The coolant must accept heat from engine metal, in the cylinder head area near the exhaust valves and engine block. Then coolant carries the heat to the radiator where the tube/fin radiator can transfer the heat to the air.

The use of aluminum cylinder blocks, cylinder heads, and water pumps requires special corrosion protection. Mopar® Antifreeze/Coolant, 5 Year/100,000 Mile Formula (MS-9769), or the equivalent ethylene-glycol base coolant with organic corrosion inhibitors (called HOAT, for Hybrid Organic Additive Technology) is recommended. This coolant offers the best engine cooling without corrosion when mixed with 50% ethylene-glycol and 50% distilled water to obtain a freeze point of -37°C (-35°F). If it loses color or becomes contaminated, drain, flush, and replace with fresh properly mixed coolant solution.

CAUTION: Mopar® Antifreeze/Coolant, 5 Year/100,000 Mile Formula (MS-9769) may not be mixed with any other type of antifreeze. Mixing of coolants other than specified (non-HOAT or other HOAT), may result in engine damage that may not be covered under the new vehicle warranty, and decreased corrosion protection.

COOLANT PERFORMANCE

The required ethylene-glycol (antifreeze) and water mixture depends upon climate and vehicle operating conditions. The coolant performance of various mixtures follows:

Pure Water- Water can absorb more heat than a mixture of water and ethylene-glycol. This is for purpose of heat transfer only. Water also freezes at a higher temperature and allows corrosion.

100 percent Ethylene-Glycol - The corrosion inhibiting additives in ethylene-glycol need the presence of water to dissolve. Without water, additives form deposits in system. These act as insulation causing temperature to rise to as high as 149°C (300°F). This temperature is hot enough to melt plastic and soften solder. The increased temperature can result in engine detonation. In addition, 100 percent ethylene-glycol freezes at -22°C (-8°F).

50/50 Ethylene-Glycol and Water - Is the recommended mixture, it provides protection against freezing to -37°C (-34°F). The antifreeze concentration **must always** be a minimum of 44 percent, year-round in all climates. If percentage is lower, engine parts may be eroded by cavitation. Maximum protection against freezing is provided with a 68 percent antifreeze concentration, which prevents freezing down to -67.7°C (-90°F). A higher percentage will

freeze at a warmer temperature. Also, a higher percentage of antifreeze can cause the engine to overheat because specific heat of antifreeze is lower than that of water.

CAUTION: Richer antifreeze mixtures cannot be measured with normal field equipment and can cause problems associated with 100 percent ethylene-glycol.

COOLANT SELECTION AND ADDITIVES

The use of aluminum cylinder blocks, cylinder heads and water pumps requires special corrosion protection. Only Mopar® Antifreeze/Coolant, 5 Year/100,000 Mile Formula (glycol base coolant with corrosion inhibitors called HOAT, for Hybrid Organic Additive Technology) is recommended. This coolant offers the best engine cooling without corrosion when mixed with 50% distilled water to obtain to obtain a freeze point of -37°C (-35°F). If it loses color or becomes contaminated, drain, flush, and replace with fresh properly mixed coolant solution.

CAUTION: Do not use coolant additives that are claimed to improve engine cooling.

OPERATION

Coolant flows through the engine block absorbing the heat from the engine, then flows to the radiator where the cooling fins in the radiator transfers the heat from the coolant to the atmosphere. During cold weather the ethylene-glycol or propylene-glycol coolant prevents water present in the cooling system from freezing within temperatures indicated by mixture ratio of coolant to water.

DIAGNOSIS AND TESTING

COOLANT CONCENTRATION TESTING

Coolant concentration should be checked when any additional coolant was added to system or after a coolant drain, flush and refill. The coolant mixture offers optimum engine cooling and protection against corrosion when mixed to a freeze point of -37°C (-34°F) to -46°C (-50°F). The use of a hydrometer or a refractometer can be used to test coolant concentration.

A hydrometer will test the amount of glycol in a mixture by measuring the specific gravity of the mixture. The higher the concentration of ethylene glycol, the larger the number of balls that will float, and higher the freeze protection (up to a maximum of 60% by volume glycol).

A refractometer Tool 8286 (Refer to 7 - COOLING - SPECIAL TOOLS) will test the amount of glycol in a coolant mixture by measuring the amount a beam of light bends as it passes through the fluid.

Some coolant manufactures use other types of glycols into their coolant formulations. Propylene glycol is the most common new coolant. However, propylene glycol based coolants do not provide the same freezing protection and corrosion protection and is not recommended.

CAUTION: Do not mix types of coolant - corrosion protection will be severely reduced.

CONTAINER-COOLANT RECOVERY-GAS ENGINES

DESCRIPTION

The coolant reserve/overflow tank is mounted on top of the fan shroud, and is made of high temperature plastic.

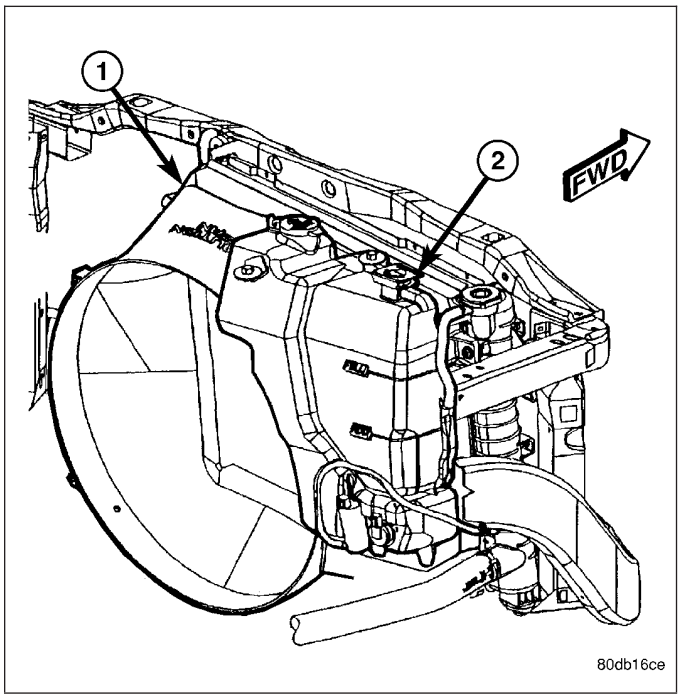

OPERATION

The coolant reserve/overflow system works in conjunction with the radiator pressure cap. It utilizes thermal expansion and contraction of coolant to keep coolant free of trapped air. It provides a volume for expansion and contraction of coolant. It also provides a convenient and safe method for checking coolant level and adjusting level at atmospheric pressure. This is done without removing the radiator pressure cap. The system also provides some reserve coolant to the radiator to cover minor leaks and evaporation or boiling losses.

As the engine cools, a vacuum is formed in the cooling system of both the radiator and engine. Coolant will then be drawn from the coolant tank and returned to a proper level in the radiator.

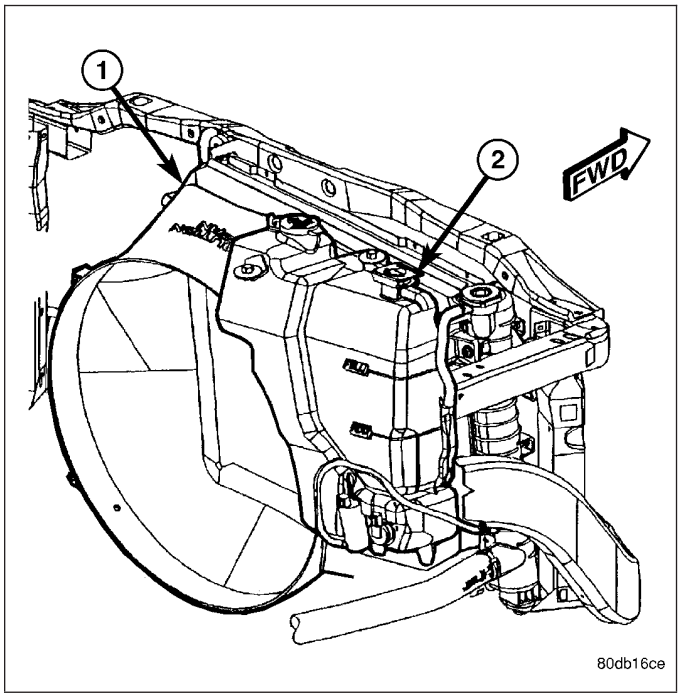

REMOVAL

3.7L/4.7L/5.7L ENGINE

1. Disconnect washer pump electrical connector.
2. Remove recovery hose (3) from radiator (4).
3. Remove the coolant container to fan shroud mounting bolts (1).
4. Tilt the container (2) backward towards the engine to disengage the mounting pin locking features and lift the container away from the fan shroud (5).

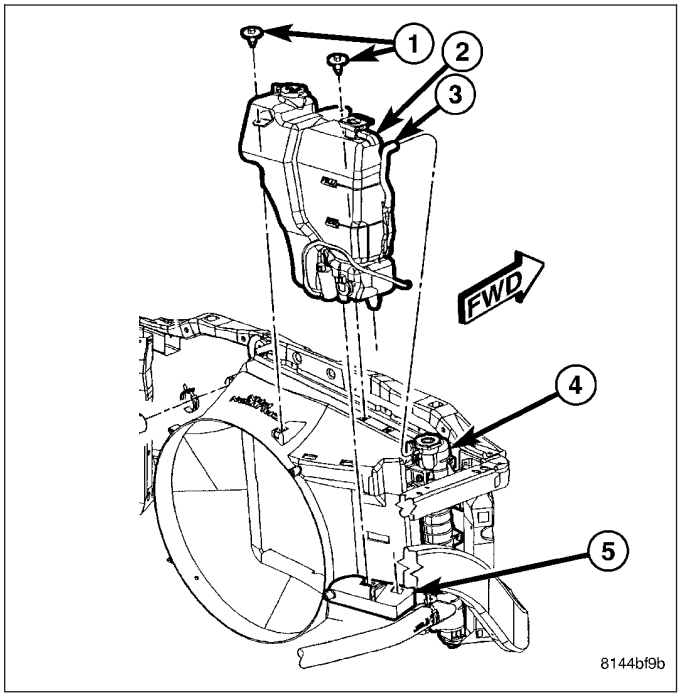

5.9L DIESEL ENGINE

1. Remove overflow hose (5) from radiator (1)
2. Remove mounting bolts (4).
3. Remove coolant recovery bottle (2) from bracket (3).

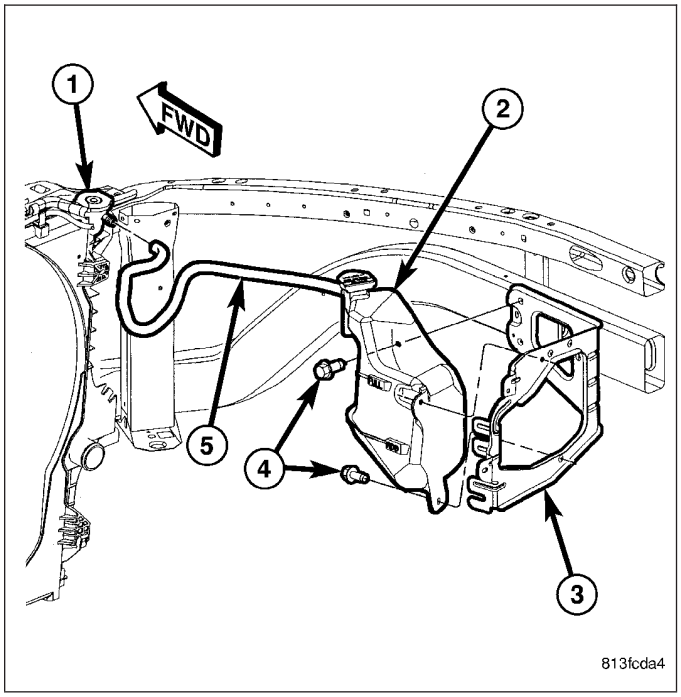

8.3L ENGINE

1. Remove coolant recovery tube from radiator filler neck.
2. Remove coolant recovery container mounting bolt.
3. Remove coolant recover container.

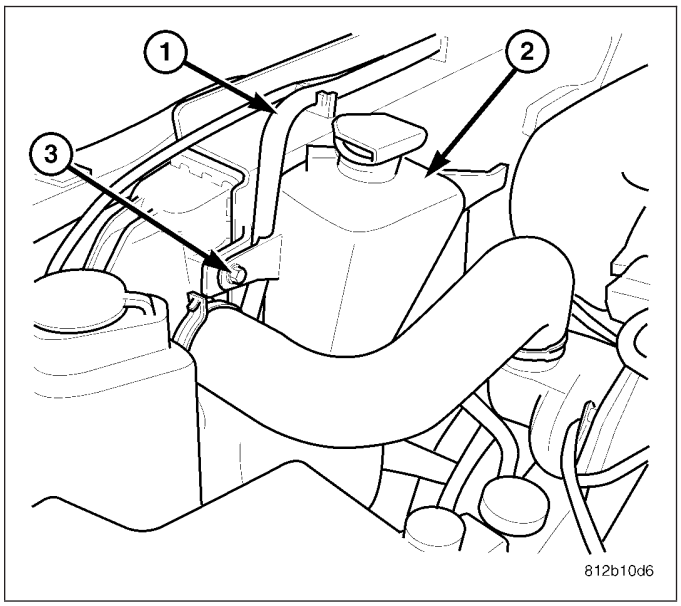

INSTALLATION

3.7L/4.7L/5.7L ENGINE

1. Align the coolant container mounting pins into the slots on the fan shroud (5)and push the container onto the fan shroud.
2. Secure the container to the fan shroud with the bolts (1). Tighten to 8.5N·m (75 in-lbs).

NOTE: Ensure that the locking feature on the mounting pins has engaged.

3. Connect the recovery hose (3) to the radiator (4).
4. Connect washer pump electrical connector.

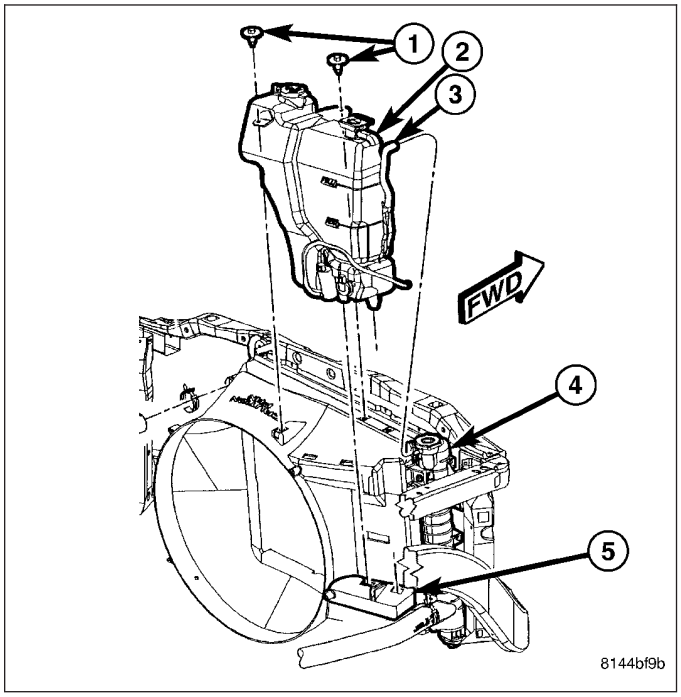

5.9L DIESEL ENGINE

1. Position coolant recovery bottle (2) on bracket (3).
2. Install mounting bolts (4). Tighten to 8.5N·m (75 in-lbs).
3. Install overflow hose (5) onto radiator (1).

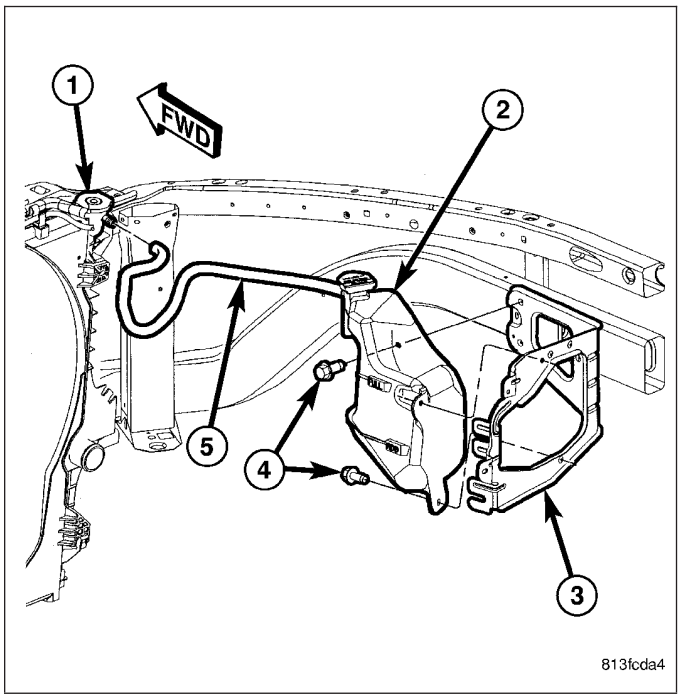

8.3L ENGINE

1. Position coolant recover bottle.
2. Install mounting bolt. Tighten bolt to 10 N·m (89 in. lbs.)
3. Route and connect coolant recovery tube to radiator filler neck.
4. Check coolanrt level (Refer to 7 - COOLING - STANDARD PROCEDURE).

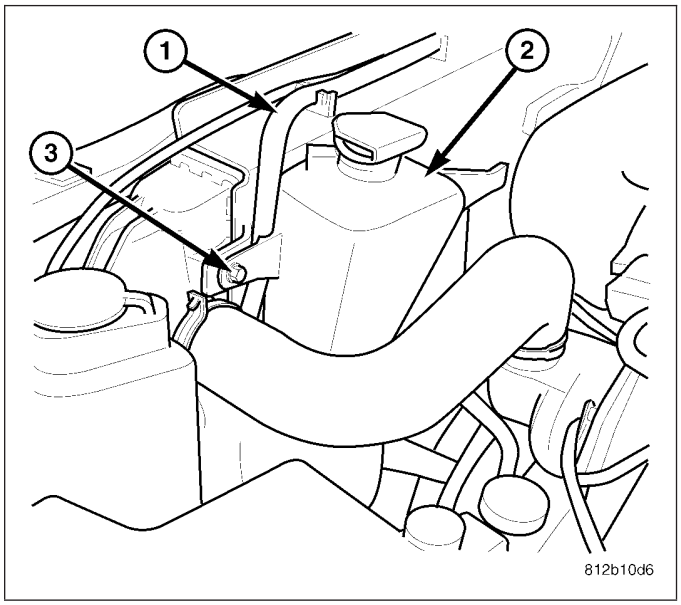

RADIATOR FAN

REMOVAL

3.7L/4.7L/5.7L ENGINE

1. **Do Not** attempt to remove the fan/viscous fan drive assembly from the vehicle at this time.

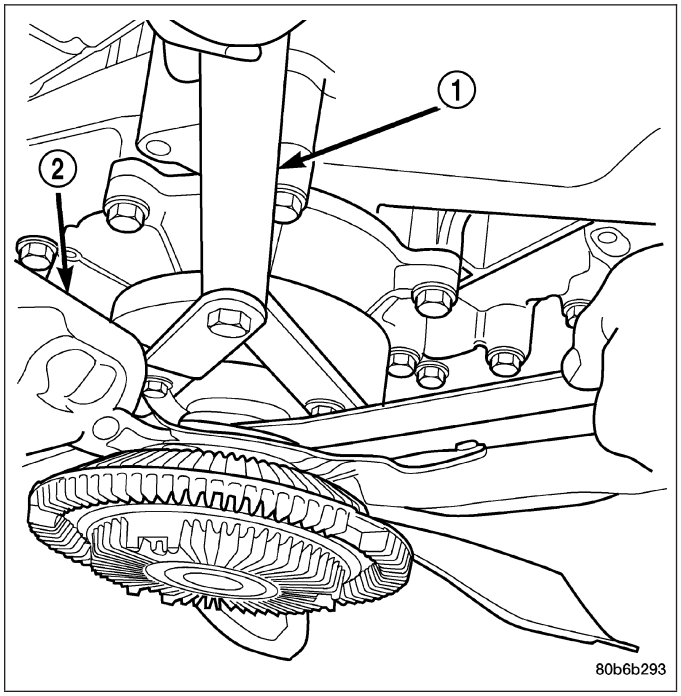

CAUTION: If the viscous fan drive is replaced because of mechanical damage, the cooling fan blades should also be inspected. Inspect for fatigue cracks, loose blades, or loose rivets that could have resulted from excessive vibration. Replace fan blade assembly if any of these conditions are found. Also inspect water pump bearing and shaft assembly for any related damage due to a viscous fan drive malfunction.

2. Disconnect negative battery cable from battery.
3. Remove coolant reserve/overflow container from fan shroud and lay aside. **Do Not** disconnect the hoses or drain coolant from the container.
4. The thermal viscous fan drive/fan blade assembly is attached (threaded) to the water pump hub shaft. Remove the fan blade/viscous fan drive assembly from the water pump by turning the mounting nut counterclockwise as viewed from the front. Threads on the viscous fan drive are **RIGHT-HAND.** A 36 MM Fan Wrench should be used to prevent pulley from rotating .
5. **Do Not** unbolt the fan blade assembly from viscous fan drive at this time.
6. Remove the fan shroud-to-radiator mounting bolts.
7. Pull the lower shroud mounts out of the radiator tank clips.
8. Remove the fan shroud and fan blade/viscous fan drive assembly as a complete unit from vehicle.

9. After removing the fan blade/viscous fan drive assembly, **do not** place the viscous fan drive in a horizontal position. If stored horizontally, silicone fluid in the viscous fan drive could drain into its bearing assembly and contaminate lubricant.

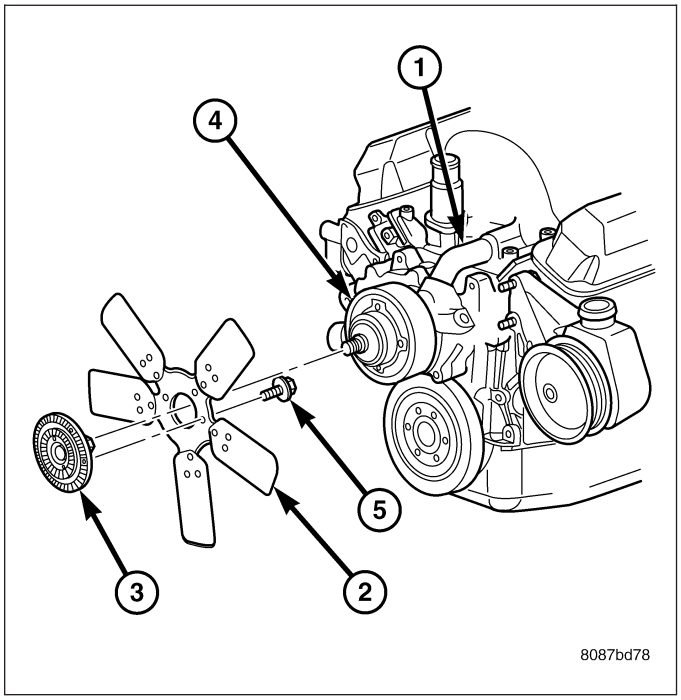

CAUTION: Do not remove water pump pulley-to-water pump bolts. This pulley is under spring tension.

10. Remove four bolts securing fan blade assembly to viscous fan drive.

CAUTION: Some engines equipped with serpentine drive belts have reverse rotating fans and viscous fan drives. They are marked with the word REVERSE to designate their usage. Installation of the wrong fan or viscous fan drive can result in engine overheating.

5.9L DIESEL

CAUTION: If the electronically controlled viscous fan drive is replaced because of mechanical damage, the cooling fan blades should also be inspected. Inspect for fatigue cracks, or chipped blades that could have resulted from excessive vibration. Replace fan blade assembly if any of these conditions are found. Also inspect wiring harness and connectors for damage.

1. Disconnect the battery negative cables.
2. Remove fan shroud-to-engine bracket nuts (1).

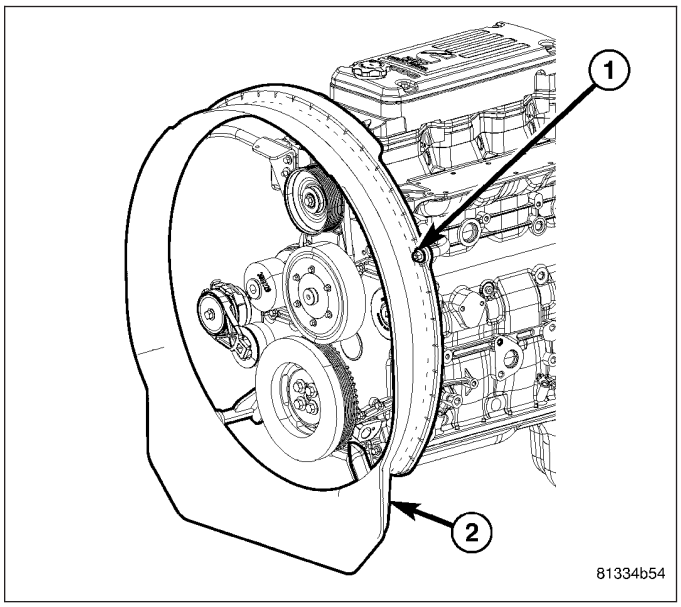

3. Disconnect electronically controlled viscous fan electrical connector (4) at lower fan shroud bracket.
4. Remove wiring bracket -to-lower fan shroud bracket mounting bolt (2).
5. Remove fan drive wire harness support from fan sharoud.

CAUTION: Do not remove the fan pulley bolts. This pulley is under spring tension.

6. The electronically controlled viscous fan drive/fan blade assembly is attached (threaded) to the fan pulley shaft. Remove the fan blade/fan drive assembly from fan pulley by turning the mounting nut counterclockwise (as viewed from front). Threads on the viscous fan drive are **RIGHT-HAND.** A 36 MM Fan Wrench can be used. Place a bar or screwdriver between the fan pulley bolts to prevent pulley from rotating.

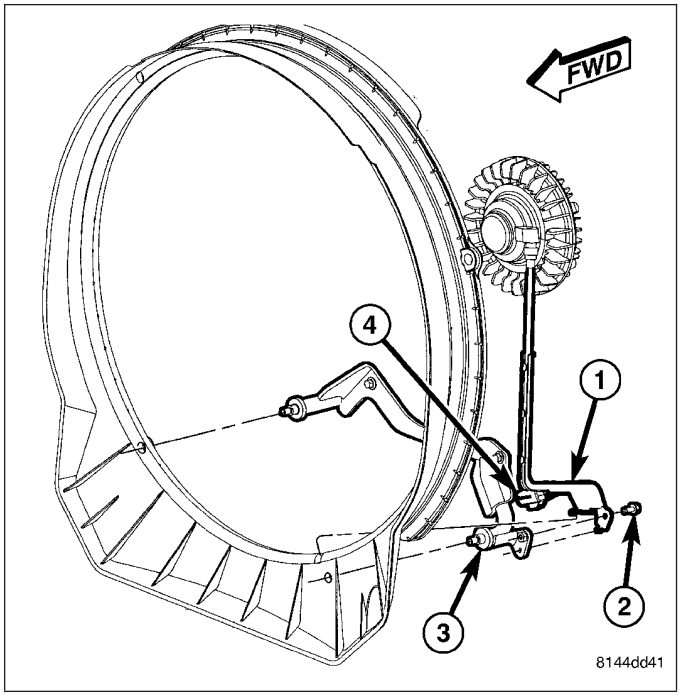

NOTE: It may be necessary to loosen the top two fan shroud brackets. Removal of the engine mounted fan shroud brackets is not necessary unless removing or installing the engine.

7. Collapse fan shroud toward front of vehicle and remove fan drive/fan blade and fan shroud as an assembly.

CAUTION: The electronically controlled viscous fan drive is vibration and impact sensitive, especially at the electrical connectors. Do not drop the unit.

8. Remove the six fan blade-to-viscous fan drive mounting bolts.
9. Inspect the fan for cracked, chipped or damaged fan blades.

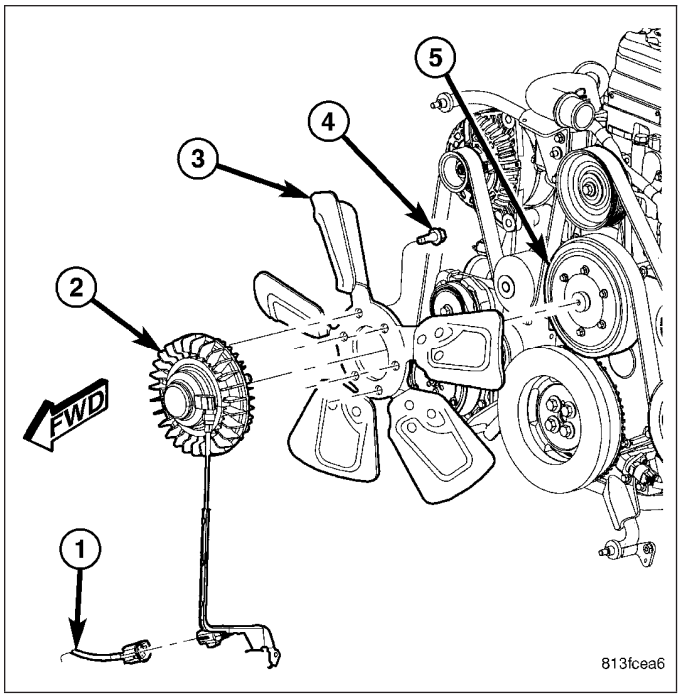

8.3L ENGINE

1. Disconnect the battery negative cables.
2. Drain the cooling system (Refer to 7 - COOLING - STANDARD PROCEDURE).
3. Remove air intake tube between intake manifold and air filter assembly.
4. Unclip A/C lines from radiator fan shroud, and position out of the way
5. Remove coolant recover bottle and coolant container tube.
6. Remove upper radiator hose from radiator and position out of the way.

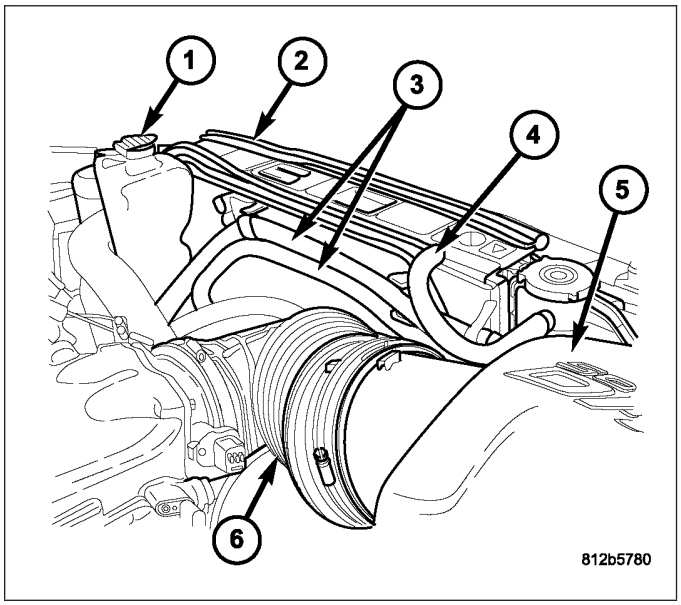

7. Raise vehicle on hoist.
8. Disconnect the high and low pressure hydraulic hoses at the hydraulic fan motor.
9. Disconnect solenoid electrical connector (1).
10. Lower vehicle
11. Remove the four fan shroud retaining bolts.
12. Remove the fan motor and shroud assembly from the vehicle.

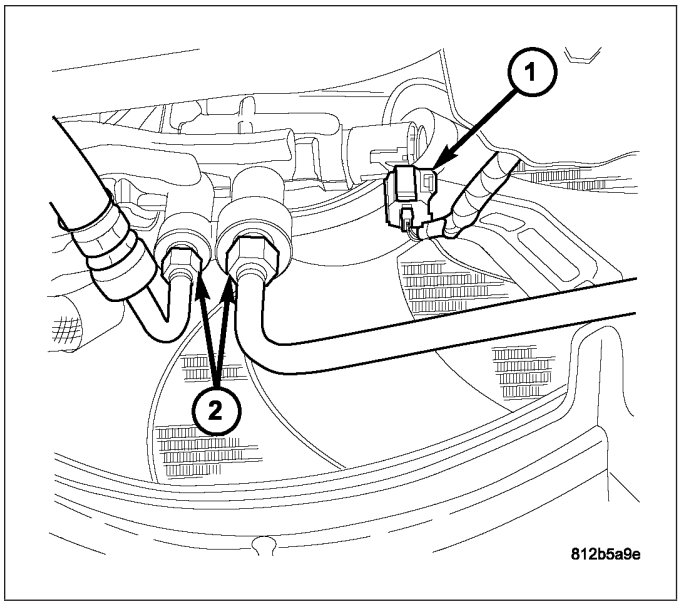

CLEANING

Clean the fan blades using a mild soap and water. Do not use an abrasive to clean the blades.

INSPECTION

WARNING: DO NOT ATTEMPT TO BEND OR STRAIGHTEN FAN BLADES IF FAN IS NOT WITHIN SPECIFICATIONS.

CAUTION: If fan blade assembly is replaced because of mechanical damage, water pump and viscous fan drive should also be inspected. These components could have been damaged due to excessive vibration.

INSTALLATION

3.7L/4.7L/5.7L ENGINE

NOTE: Viscous Fan Drive Fluid Pump Out Requirement: After installing a new viscous fan drive, bring the engine speed up to approximately 2000 rpm and hold for approximately two minutes. This will ensure proper fluid distribution within the drive.

1. Install fan blade assembly to the viscous fan drive. Tighten the bolts to 24 N·m (18 ft. lbs.) torque.
2. Position the fan shroud and the fan blade/viscous fan drive assembly to the vehicle as a complete unit.
3. Install the fan shroud.
4. Install the fan blade/viscous fan drive assembly to the water pump shaft. Tighten mounting nut to 50 N·m (37 ft. lbs.).
5. Install the coolant reserve/overflow container to the fan shroud.
6. Connect the negative battery cable.

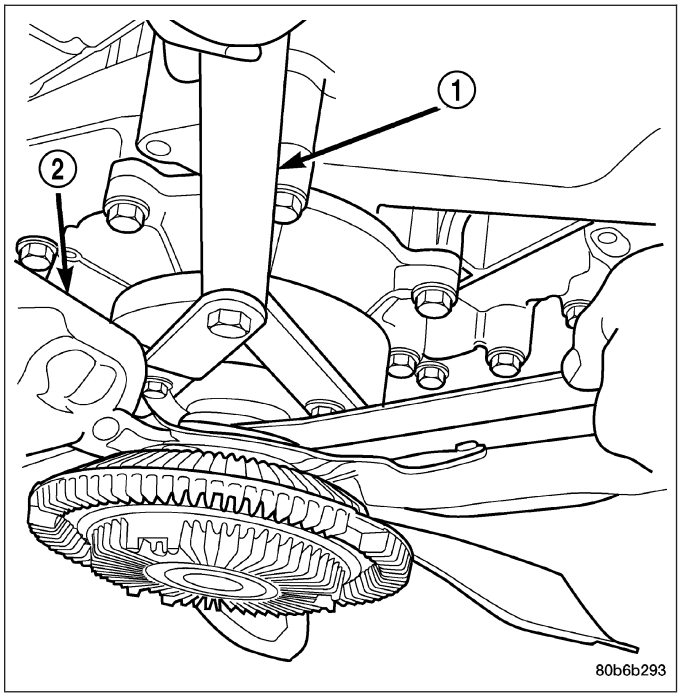

5.9L DIESEL

NOTE: Viscous Fan Drive Fluid Pump Out Requirement: After installing a new viscous fan drive, bring the engine speed up to approximately 2000 rpm and hold for approximately two minutes. This will ensure proper fluid distribution within the drive.

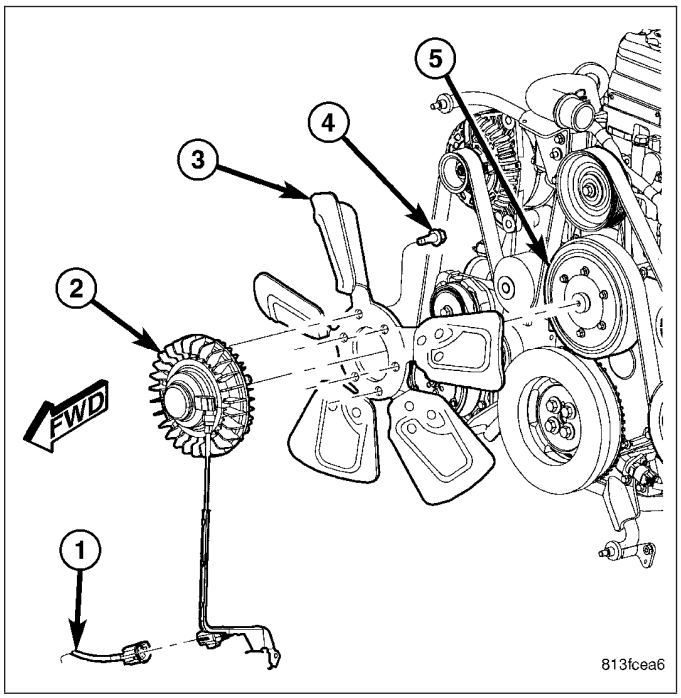

1. Install fan blade assembly to electrically controlled viscous fan drive. Tighten mounting bolts to 24 N·m (18 ft. lbs.) torque.
2. Lossen both upper engine mounted fan shroud brackets.
3. Make sure lower engine mounted fan shroud bracket bolts are tightened to 24 N·m (18 ft. lbs.).
4. Position fan/fan drive assembly inside fan shroud and lower into position.
5. Install the viscous fan drive assembly onto fan pulley hub shaft. Tighten mounting nut to 115 N·m (85 ft. lbs.) torque.
6. Install fan drive wire harness support to fan shroud.
7. Install viscous fan wiring bracket onto lower fan shroud bracket. Tighten nut to 24 N·m (18 ft. lbs.).
8. Install fan shroud onto fan shroud brackets.
9. Connect fan drive wire harness.

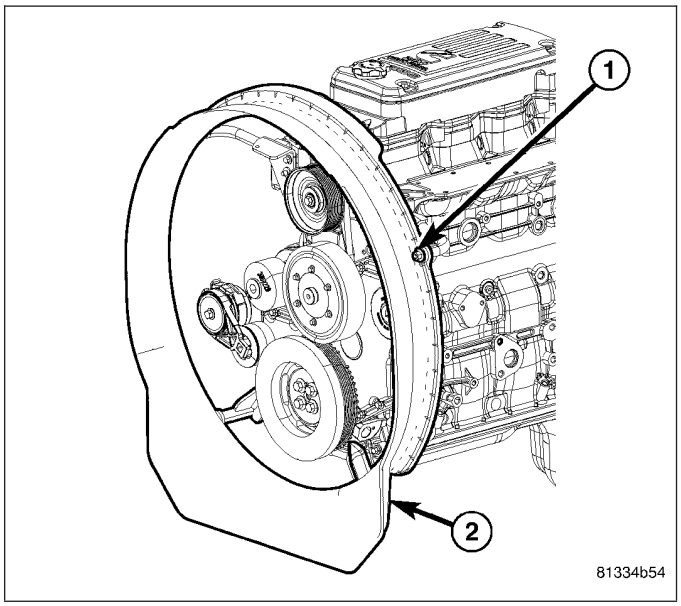

10. Install fan shroud to upper engine fan shroud brackets. Tighten nut finger tight.
11. Tighten upper engine fan shroud bracket bolts to 24 N·m (18 ft. lbs.).
12. Tighten four fan shroud bracket nuts to 24 N·m (18 ft. lbs.).
13. Make sure of fan tip clearance all the way around inside of fan shroud.
14. Connect the battery negative cables.

8.3L ENGINE

1. Position fan motor and shroud assembly in vehicle.
2. Install the mounting bolts. Tighten bolts to 10 N·m (98 in. lbs.)
3. Install coolant recovery bottle.
4. Raise vehicle.

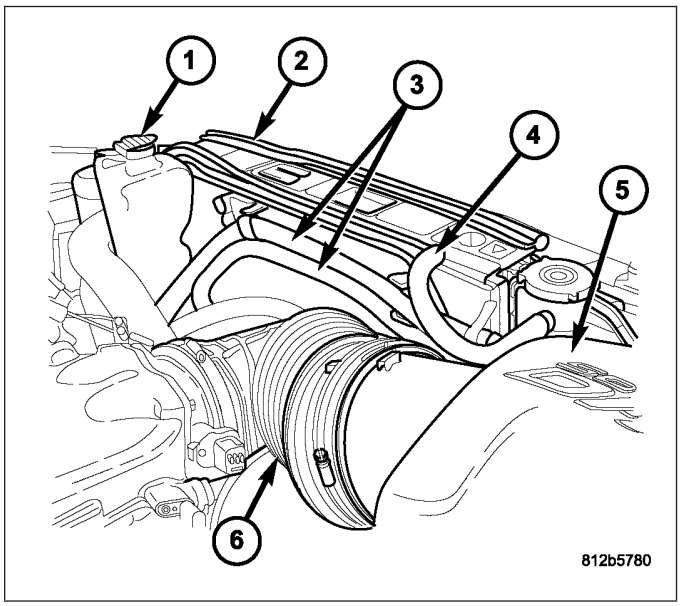

5. Connect fan solenoid electrical connector.
6. Install pressure line to radiator fan motor. Tighten fitting to 47 N·m (35 ft. lbs.).
7. Install return line to radiator fan motor. Tighten fitting to 29 N·m (21 ft. lbs.)
8. Lower vehicle.
9. Fill cooling system (Refer to 7 - COOLING - STANDARD PROCEDURE).
10. Connect negative battery cable.
11. Fill power steering system (Refer to 19 - STEERING/PUMP - STANDARD PROCEDURE).

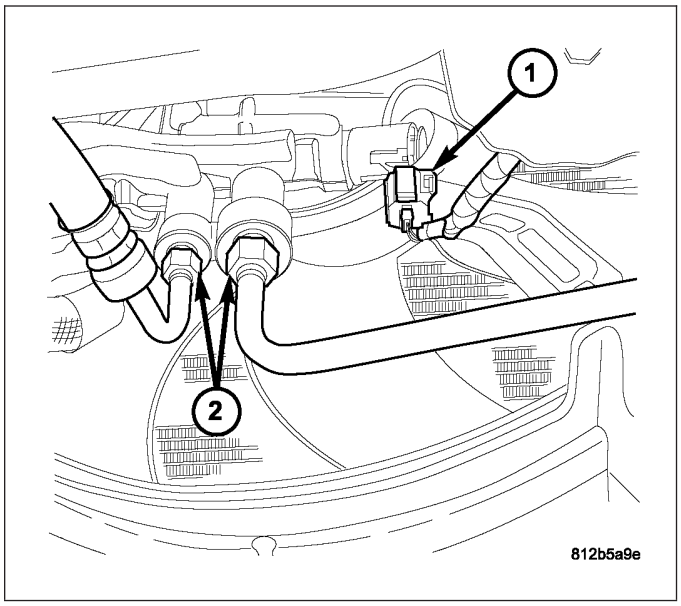

HEATER-ENGINE BLOCK

DESCRIPTION

WARNING: DO NOT OPERATE ENGINE UNLESS BLOCK HEATER CORD HAS BEEN DISCONNECTED FROM POWER SOURCE AND SECURED IN PLACE. THE POWER CORD MUST BE SECURED IN ITS RETAINING CLIPS AND ROUTED AWAY FROM EXHAUST MANIFOLDS AND MOVING PARTS.

An optional engine block heater is available with all models. The heater is equipped with a power cord. The cord is attached to an engine compartment component with tie-straps. The heater warms the engine providing easier engine starting and faster warm-up in low temperatures. The heater is mounted in a core hole of the engine cylinder block in place of a freeze plug with the heating element immersed in engine coolant. The 3.7L/4.7L gas powered engines have the block heater located to the rear on the right side of the engine.

The 5.9L diesel engine has the block heater located on the right side of the engine below the exhaust manifold next to the oil cooler (1).

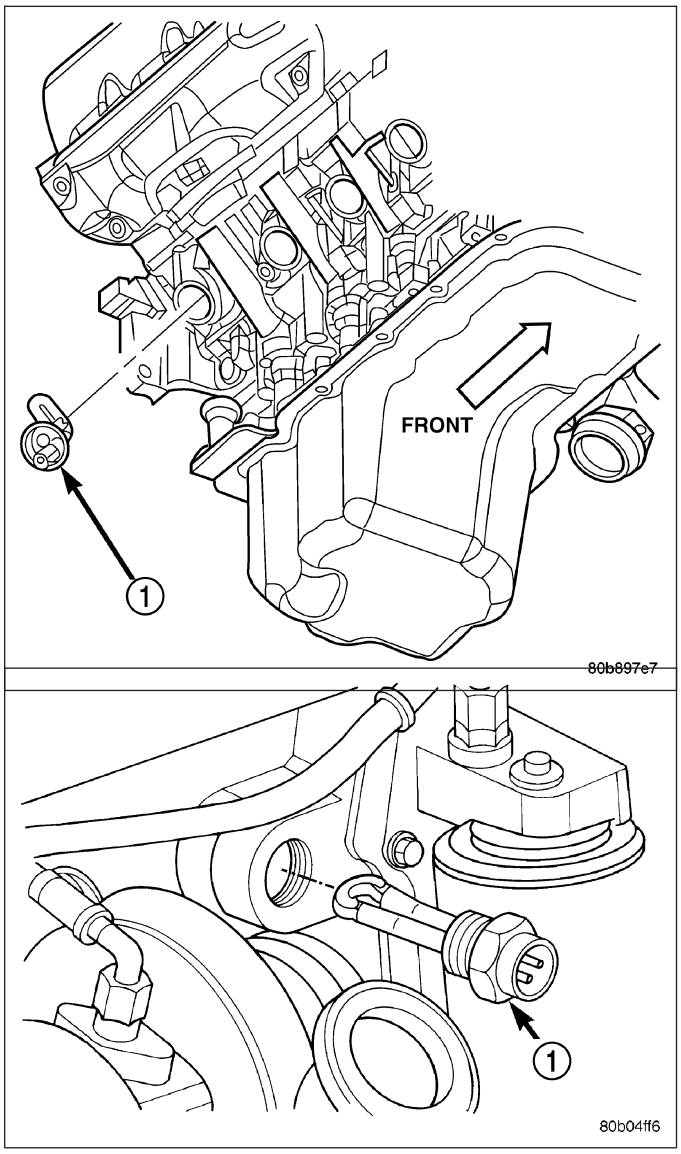

OPERATION

The heater warms the engine coolant providing easier engine starting and faster warm-up in low temperatures. Connecting the power cord to a grounded 110-120 volt AC electrical outlet with a grounded three wire extension cord provides the electricity needed to heat the element.

DIAGNOSIS AND TESTING - ENGINE BLOCK HEATER

If the unit does not operate, possible causes can be either the power cord or the heater element. Test the power cord for continuity with a 110-volt voltmeter or 110-volt test light. Test heater element continuity with an ohmmeter or a 12-volt test light.

CAUTION: To prevent damage, the power cord must be secured in it's retainer clips and away from any components that may cause abrasion or damage, such as linkages, exhaust components, etc.

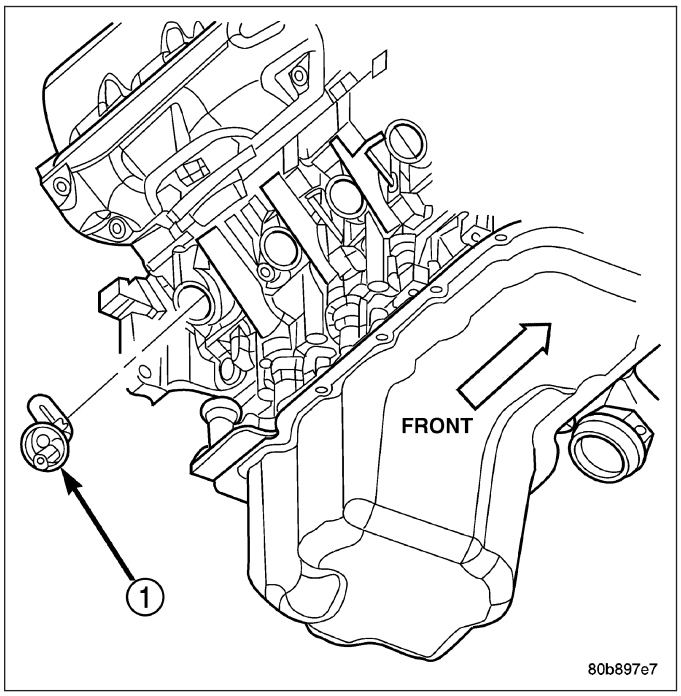

REMOVAL

GAS ENGINES

1. Disconnect the battery negative cable.
2. Drain the coolant (Refer to 7 - COOLING - STANDARD PROCEDURE).
3. Remove the power cord from the heater by unplugging.
4. Loosen (but do not completely remove) the screw at center of block heater.
5. Remove the block heater by carefully prying from side-to-side. Note the direction of the heating element coil (up or down). The element coil must be installed correctly to prevent damage.

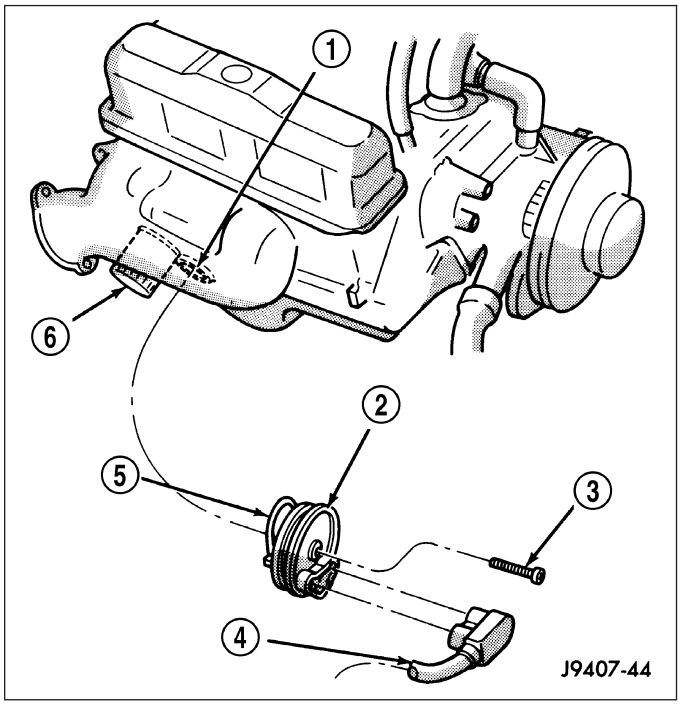

5.9L DIESEL

1. Disconnect the battery negative cables.
2. Drain coolant from radiator and cylinder block (Refer to 7 - COOLING - STANDARD PROCEDURE).
3. Unscrew the power cord retaining cap and disconnect cord from heater element.
4. Using a suitable size socket, loosen and remove the block heater element.

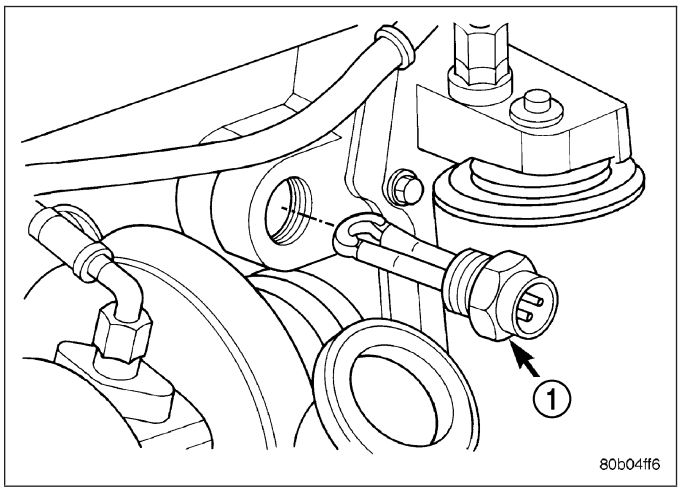

INSTALLATION

GAS ENGINES

1. Clean and inspect the block heater hole.
2. Install the new O-ring seal(s) to heater.
3. Insert the block heater into cylinder block and position the element properly.
4. With the heater fully seated, tighten center screw to 2 N·m (17 in. lbs.).
5. Fill the cooling system with the recommended coolant. (Refer to 7 - COOLING - STANDARD PROCEDURE).
6. Start and warm the engine.
7. Check the block heater for leaks.

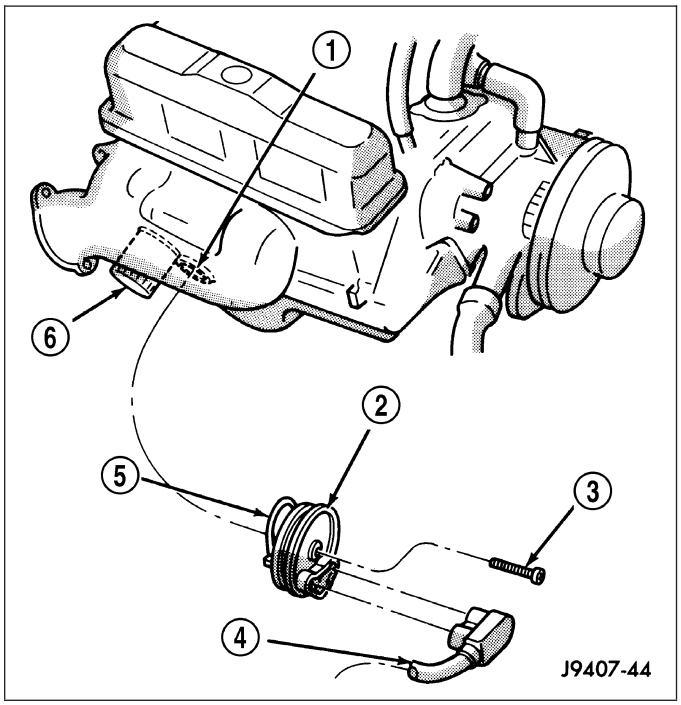

5.9L DIESEL

1. Clean and inspect the threads in the cylinder block and heater element.
2. Coat heater element threads with Mopar® Thread Sealer with Teflon.
3. Screw block heater into cylinder block and tighten to 75 N·m (55 ft. lbs.).
4. Connect block heater cord and tighten retaining cap.
5. Fill cooling system with recommended coolant (Refer to 7 - COOLING - STANDARD PROCEDURE).
6. Start and warm the engine.
7. Check block heater for leaks.

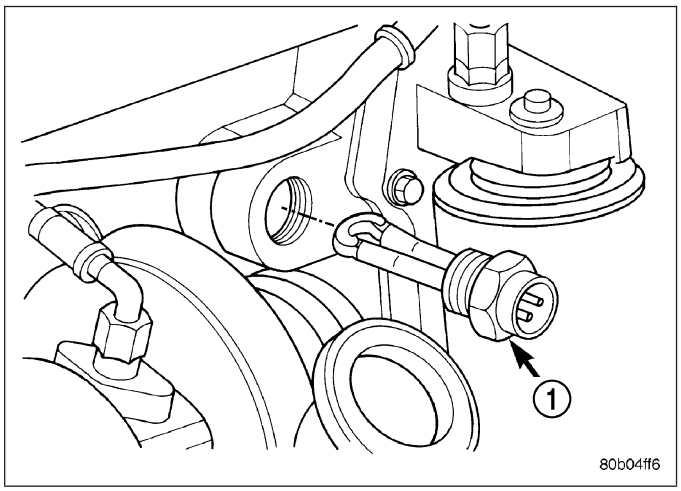

SENSOR-ENGINE COOLANT TEMPERATURE

DESCRIPTION

The Engine Coolant Temperature (ECT) sensor is used to sense engine coolant temperature. The sensor protrudes into an engine water jacket.

The ECT sensor is a two-wire Negative Thermal Coefficient (NTC) sensor. Meaning, as engine coolant temperature increases, resistance (voltage) in the sensor decreases. As temperature decreases, resistance (voltage) in the sensor increases.

OPERATION

At key-on, the Powertrain Control Module (PCM) sends out a regulated 5 volt signal to the ECT sensor. The PCM then monitors the signal as it passes through the ECT sensor to the sensor ground (sensor return).

When the engine is cold, the PCM will operate in Open Loop cycle. It will demand slightly richer air-fuel mixtures and higher idle speeds. This is done until normal operating temperatures are reached.

The PCM uses inputs from the ECT sensor for the following calculations:

- for engine coolant temperature gauge operation through CCD or PCI (J1850) communications
- Injector pulse-width
- Spark-advance curves
- ASD relay shut-down times
- Idle Air Control (IAC) motor key-on steps
- Pulse-width prime-shot during cranking
- O2 sensor closed loop times
- Purge solenoid on/off times
- Cooling fan control
- Temperature gauge operation
- A/C cutoff at high coolant temperatures
- EGR solenoid on/off times (if equipped)
- Leak Detection Pump operation (if equipped)
- Radiator fan relay on/off times (if equipped)
- Target idle speed

REMOVAL

3.7L V-6

The Engine Coolant Temperature (ECT) sensor on the 3.7L engine is installed into a water jacket at front of intake manifold near rear of generator.

WARNING: HOT, PRESSURIZED COOLANT CAN CAUSE INJURY BY SCALDING. COOLING SYSTEM MUST BE PARTIALLY DRAINED BEFORE REMOVING THE COOLANT TEMPERATURE SENSOR.

1. Partially drain the cooling system.
2. Disconnect the electrical connector from the sensor.
3. Remove the sensor from the intake manifold.

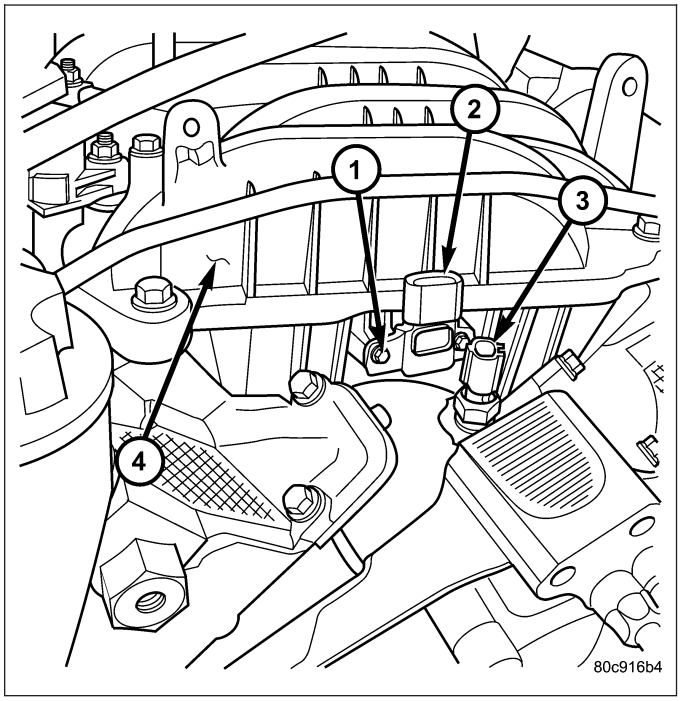

4.7L V-8

WARNING: HOT, PRESSURIZED COOLANT CAN CAUSE INJURY BY SCALDING. COOLING SYSTEM MUST BE PARTIALLY DRAINED BEFORE REMOVING THE ENGINE COOLANT TEMPERATURE (ECT) SENSOR.

The Engine Coolant Temperature (ECT) sensor on the 4.7L V-8 engine is located near the front of the intake manifold.

1. Partially drain the cooling system (Refer to 7 - COOLING - STANDARD PROCEDURE).
2. Disconnect the electrical connector from the ECT sensor.
3. Remove the sensor from the intake manifold.

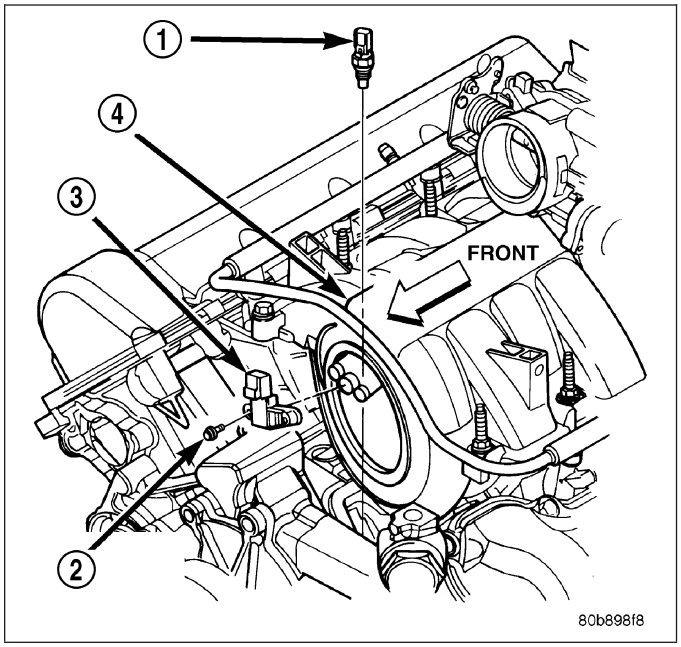

5.7L V-8

The Engine Coolant Temperature (ECT) sensor on the 5.7L engine is located under the air conditioning compressor. It is installed into a water jacket at the front of the cylinder block.

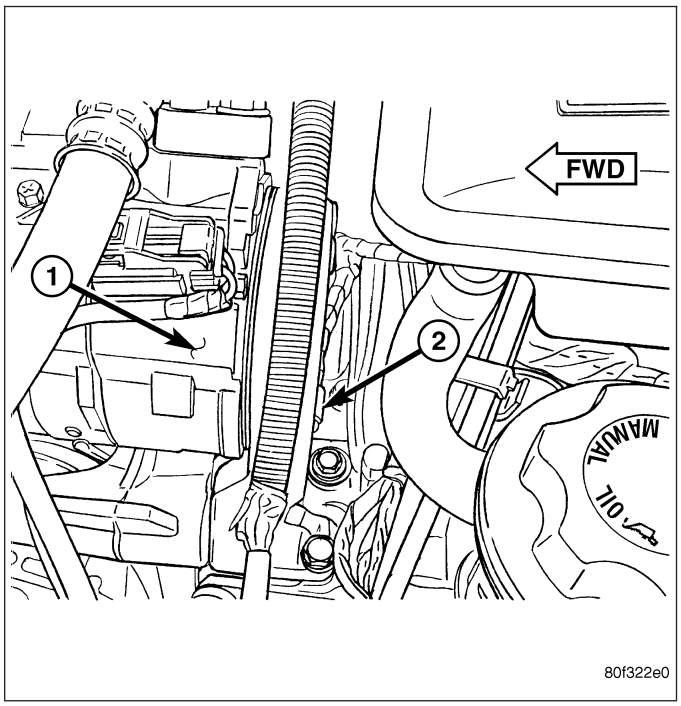

WARNING: HOT, PRESSURIZED COOLANT CAN CAUSE INJURY BY SCALDING. COOLING SYSTEM MUST BE PARTIALLY DRAINED BEFORE REMOVING THE COOLANT TEMPERATURE SENSOR.

1. Partially drain the cooling system (Refer to 7 - COOLING - STANDARD PROCEDURE).
2. Remove accessory drive belt (Refer to 7 - COOLING/ACCESSORY DRIVE/DRIVE BELTS - REMOVAL).
3. Carefully unbolt air conditioning compressor from front of engine. Do not disconnect any A/C hoses from compressor. Temporarily support compressor to gain access to ECT sensor. Refer to Heating and Air Conditioning section for information.
4. Disconnect electrical connector from sensor.
5. Remove sensor from cylinder block.

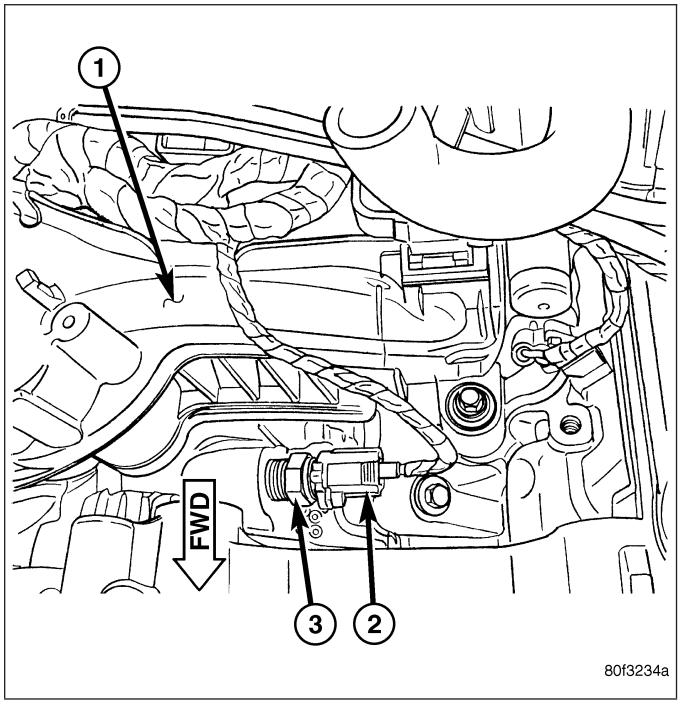

5.9L Diesel

The Engine Coolant Temperature (ECT) sensor on the 5.9L diesel engine is located near the thermostat housing.

WARNING: HOT, PRESSURIZED COOLANT CAN CAUSE INJURY BY SCALDING. COOLING SYSTEM MUST BE PARTIALLY DRAINED BEFORE REMOVING THE COOLANT TEMPERATURE SENSOR.

1. Partially drain the cooling system (Refer to 7 - COOLING - STANDARD PROCEDURE).
2. Disconnect the electrical connector (3) from the sensor (3).
3. Remove the sensor from the cylinder head.

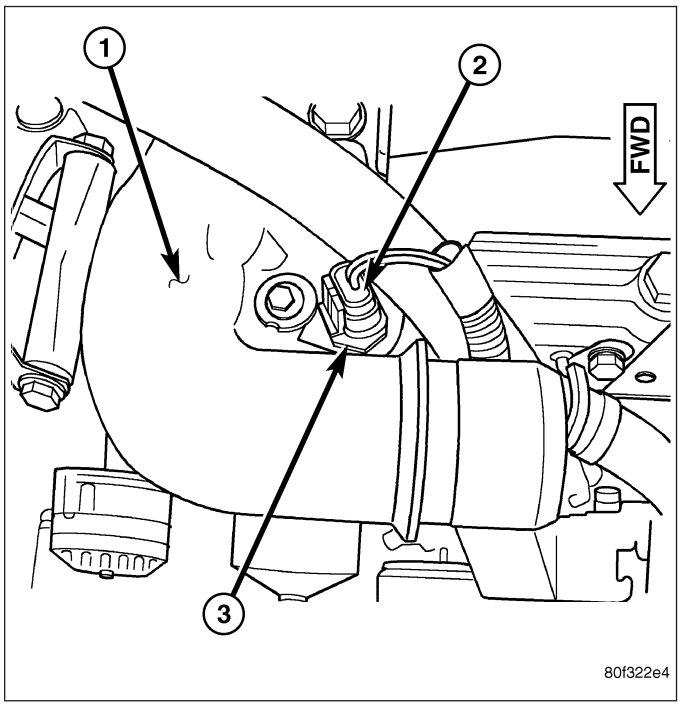

8.3L V-10

The Engine Coolant Temperature (ECT) sensor on the 8.0L V-10 engine is threaded into the thermostat housing.

WARNING: HOT, PRESSURIZED COOLANT CAN CAUSE INJURY BY SCALDING. COOLING SYSTEM MUST BE PARTIALLY DRAINED BEFORE REMOVING THE COOLANT TEMPERATURE SENSOR.

1. Partially drain the cooling system (Refer to 7 - COOLING - STANDARD PROCEDURE).
2. Disconnect the electrical connector from the sensor.
3. Remove the sensor from the cylinder head.

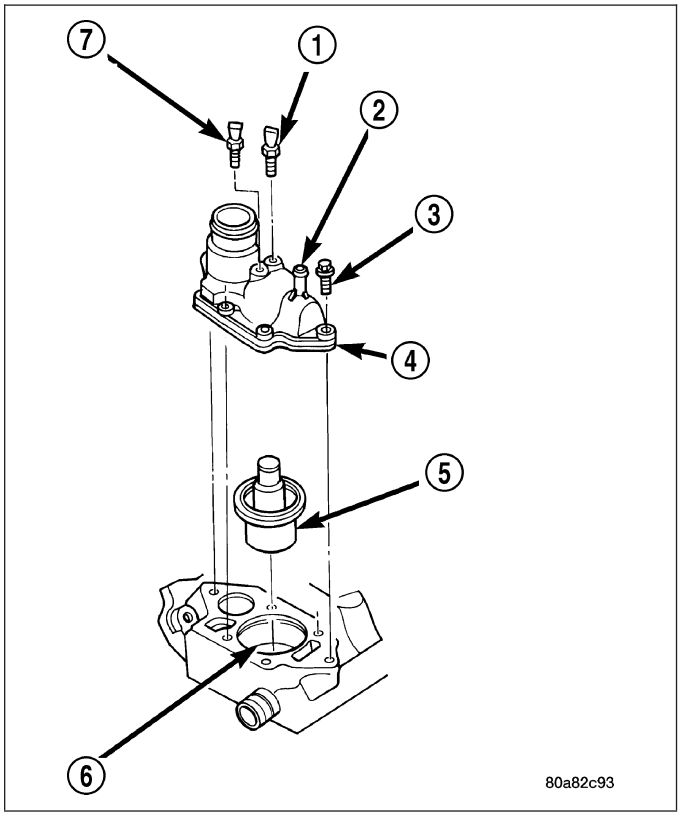

INSTALLATION

3.7L V-6

1. Apply thread sealant to sensor threads.
2. Install sensor to engine.
3. Tighten sensor to 11 N·m (8 ft. lbs.) torque.
4. Connect electrical connector to sensor.
5. Replace any lost engine coolant. (Refer to 7 - COOLING - STANDARD PROCEDURE).

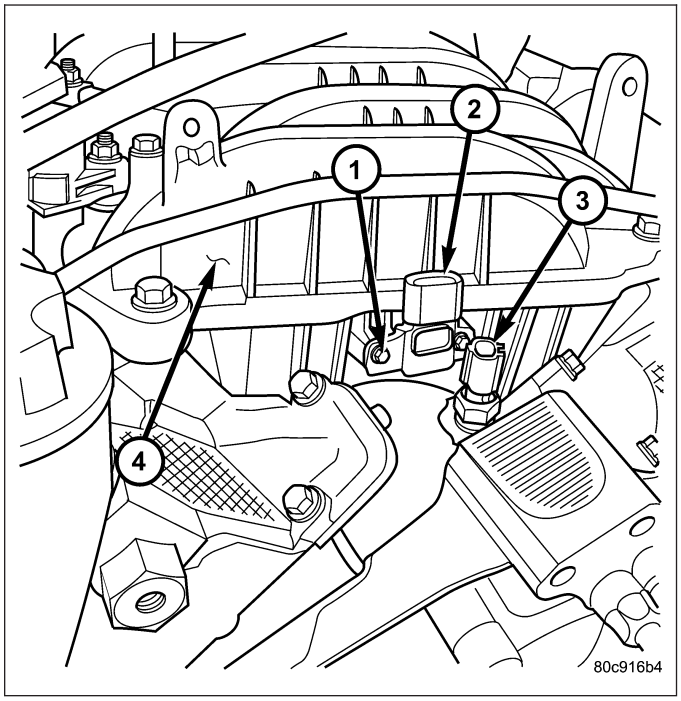

4.7L V-8

1. Apply thread sealant to sensor threads.
2. Install sensor to engine.
3. Tighten sensor to 11 N·m (8 ft. lbs.) torque.
4. Connect electrical connector to sensor.
5. Replace any lost engine coolant. (Refer to 7 - COOLING - STANDARD PROCEDURE).

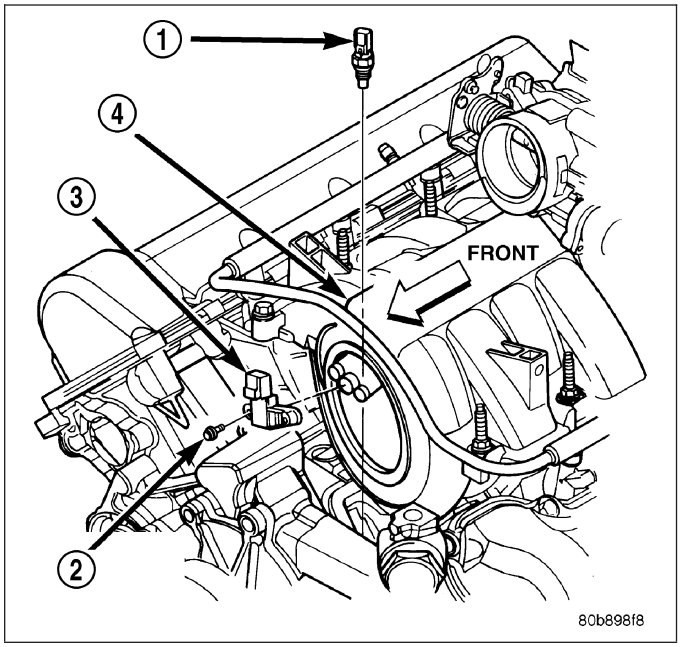

5.7L V-8

1. Apply thread sealant to sensor threads.
2. Install sensor into engine.
3. Tighten sensor to 11 N·m (8 ft. lbs.) torque.
4. Connect electrical connector to sensor.
5. Carefully bolt air conditioning compressoronto the front of engine. Refer to Heating and Air Conditioning section for information.
6. Install accessory drive belt (Refer to 7 - COOLING/ ACCESSORY DRIVE/DRIVE BELTS - INSTALLATION).
7. Replace any lost engine coolant. (Refer to 7 - COOLING - STANDARD PROCEDURE).

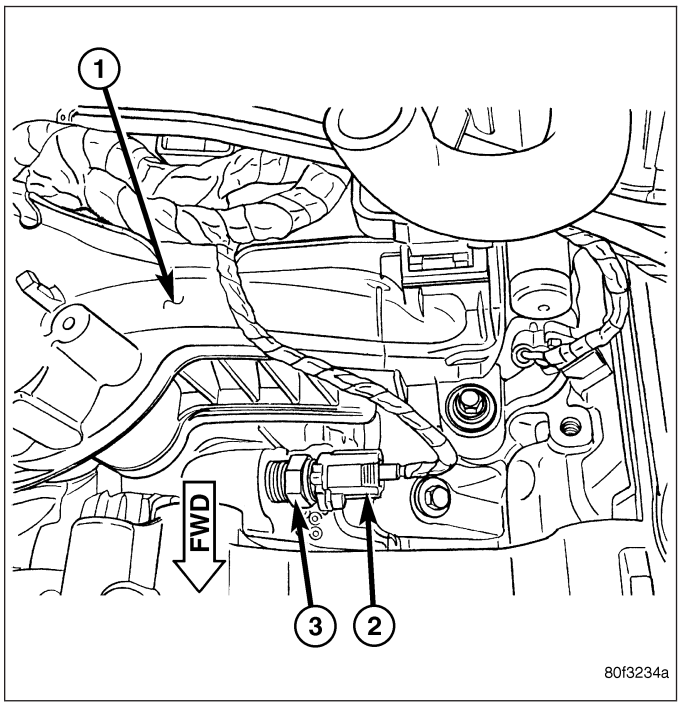

5.9L Diesel

1. Install sensor (3) to engine.
2. Tighten sensor to 18 N·m (13 ft. lbs.) torque.
3. Connect electrical connector (2) to sensor (3).
4. Replace any lost engine coolant (Refer to 7 - COOLING - STANDARD PROCEDURE).

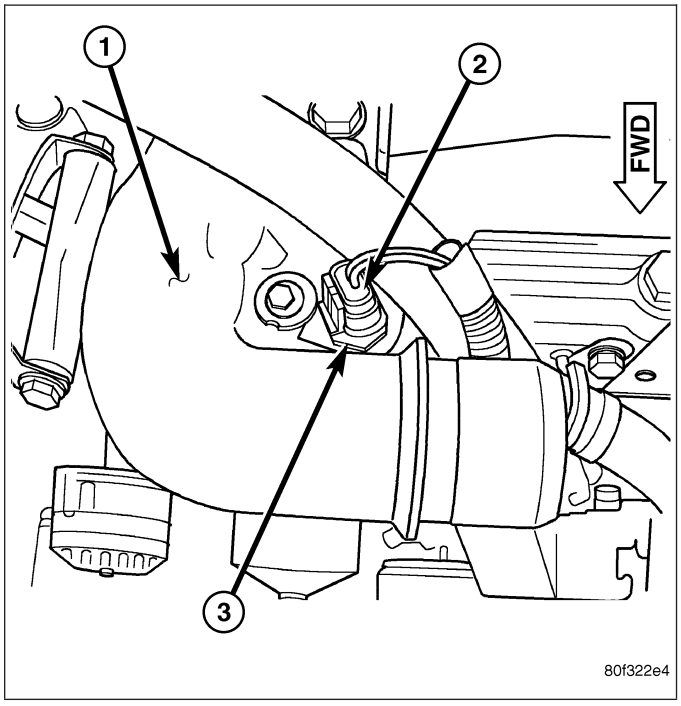

8.3L V-10

1. Apply thread sealant to sensor threads.
2. Install sensor to engine.
3. Tighten sensor to 11 N·m (8 ft. lbs.) torque.
4. Connect electrical connector to sensor.
5. Replace any lost engine coolant (Refer to 7 - COOLING - STANDARD PROCEDURE).

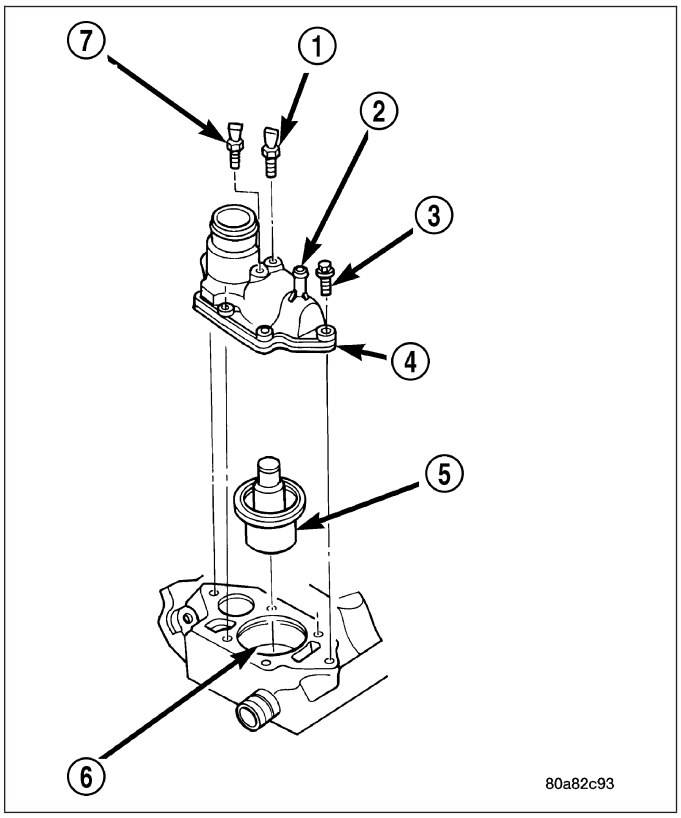

THERMOSTAT-ENGINE COOLANT

DESCRIPTION

GAS ENGINE

CAUTION: Do not operate the engine without a thermostat, except for servicing or testing.

The 3.7L/4.7L/5.7L engines use a pellet-type thermostat that controls the operating temperature of the engine by controlling the amount of coolant flow to the radiator. The 8.3L engine uses a movable sleeve type thermostat. On all engines the thermostat is closed below 195°F (90°C). Above this temperature, coolant is allowed to flow to the radiator. This provides quick engine warm up and overall temperature control.

Coolant leakage into the pellet container will cause the thermostat to fail in the open position. Thermostats very rarely stick. Do not attempt to free a thermostat with a prying device.

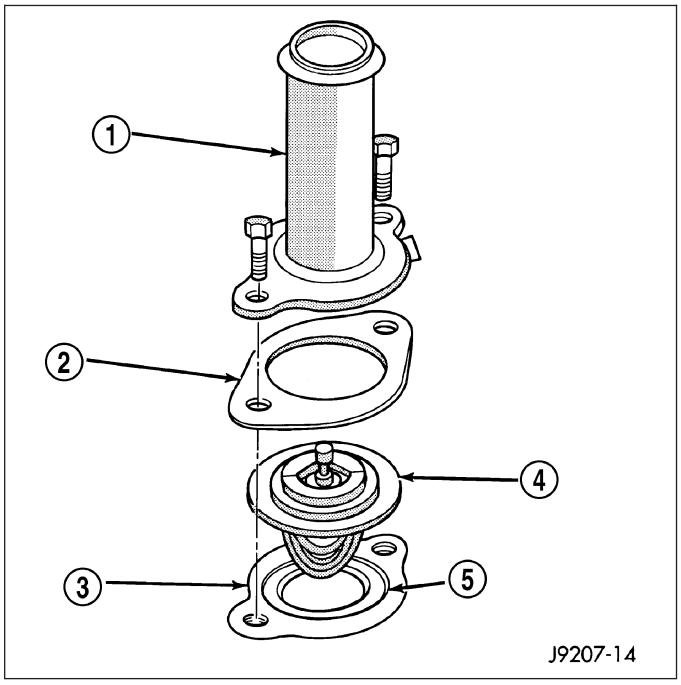

On the 3.7L/4.7L engine the thermostat is designed to block the flow of the coolant bypass journal by 50% instead of completely blocking the flow. This design controls coolant temperature more accurately.

The same thermostat is used for winter and summer seasons. An engine should not be operated without a thermostat, except for servicing or testing. Operating without a thermostat causes other problems. These are: longer engine warm-up time, unreliable warm-up performance, increased exhaust emissions and crankcase condensation. This condensation can result in sludge formation.

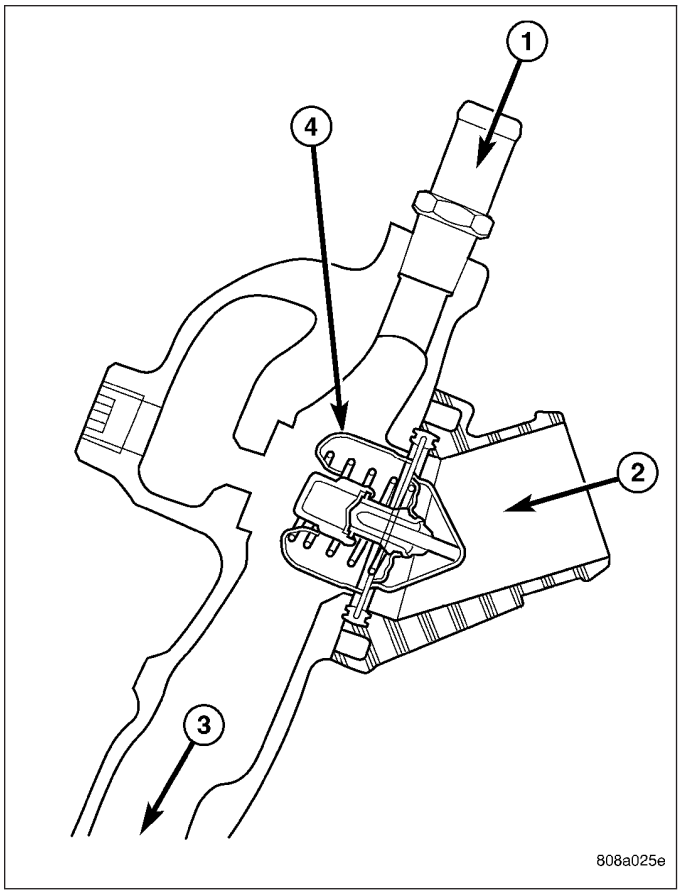

5.9L DIESEL

CAUTION: Do not operate an engine without a thermostat, except for servicing or testing. An engine with the thermostat removed will operate in the radiator bypass mode, causing an overheat condition.

The thermostat of the 5.9L diesel engine is located in the front of the cylinder head, underneath the thermostat housing.

The same thermostat is used for winter and summer seasons. An engine should not be operated without a thermostat, except for servicing or testing. Operating without a thermostat will cause overheating.

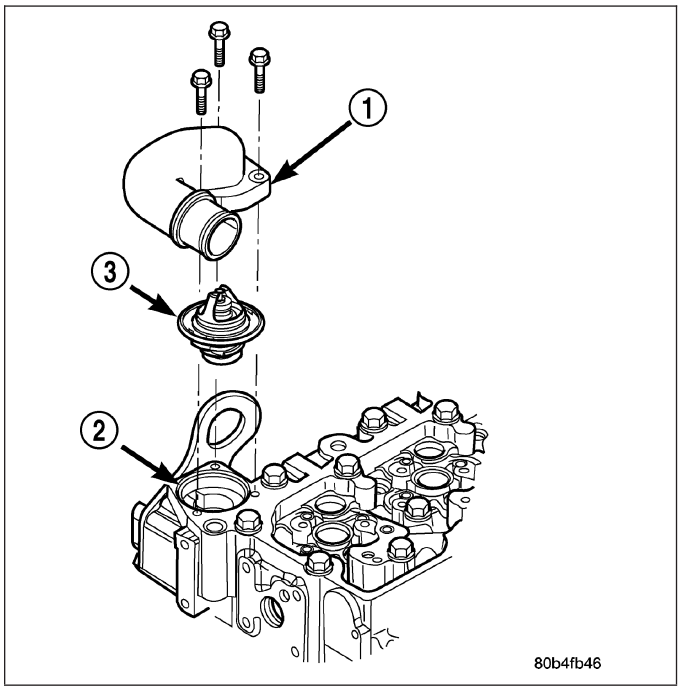

OPERATION

3.7L/4.7L/5.7L ENGINE

The wax pellet is located in a sealed container at the spring end of the thermostat. When heated, the pellet expands, overcoming closing spring tension and water pump pressure to force the valve to open.

8.3L ENGINE

The thermostat's primary purpose is to maintain engine temperature in a range that will provide satisfactory engine performance and emission levels under all expected driving conditions.

The thermostat is unique because the center does not open and close like a conventional thermostat; it works like a sliding sleeve. The outside sleeve moves, directing coolant flow through the engine block or through the bypass passages back to the water pump. During warm-up below 85°C (185°F), the thermostat is seated in the retracted position. This will allow the coolant to flow into the bypass passage, and back to the water pump. At 85°C (185°F) the thermostat begins to open, allowing coolant to flow through both the bypass and the radiator. At 97°C (207°F) the thermostat will fully open, blocking the path to the bypass, allowing all coolant to flow through the radiator.

DIAGNOSIS AND TESTING

THERMOSTAT

ON-BOARD DIAGNOSTICS - GAS ENGINES

All **gasoline powered models** are equipped with On-Board Diagnostics for certain cooling system components. Refer to On-Board Diagnostics (OBD) in the Diagnosis section of this group for additional information. If the powertrain control module (PCM) detects low engine coolant temperature, it will record a Diagnostic Trouble Code (DTC) in the PCM memory. Do not change a thermostat for lack of heat as indicated by the instrument panel gauge or by poor heater performance unless a DTC is present. Refer to the Diagnosis section of this group for other probable causes.

The DTC can also be accessed through the DRBIII® scan tool. Refer to the appropriate Powertrain Diagnostic Procedures information for diagnostic information and operation of the DRBIII® scan tool.

5.9L DIESEL ENGINE

The cooling system used with the diesel engine provides the extra coolant capacity and extra cooling protection needed for higher GVWR (Gross Vehicle Weight Rating) and GCWR (Gross Combined Weight Rating) vehicles.

This system capacity will not affect warm up or cold weather operating characteristics if the thermostat is operating properly. This is because coolant will be held in the engine until it reaches the thermostat "set" temperature.

Diesel engines, due to their inherent efficiency are slower to warm up than gasoline powered engines, and will operate at lower temperatures when the vehicle is unloaded. Because of this, lower temperature gauge readings for diesel versus gasoline engines may, at times be normal.

Typically, complaints of low engine coolant temperature are observed as low heater output when combined with cool or cold outside temperatures.

To help promote faster engine warm-up, the electric engine block heater must be used with cool or cold outside temperatures. This will help keep the engine coolant warm when the vehicle is parked.

A "Cold Weather Cover" is available from the parts department through the Mopar Accessories product line. This accessory cover is designed to block airflow entering the radiator and engine compartment to promote faster engine warm-up. It attaches to the front of the vehicle at the grill opening. **The cover is to be used with cool or cold temperatures only. If used with high outside temperatures, serious engine damage could result.** Refer to the literature supplied with the cover for additional information.

For engines equipped with exhaust brakes, this device can be used to aid engine warm-up while the engine is idling.

1. To determine if the thermostat is defective, it must be removed from the vehicle (Refer to 7 - COOLING/ENGINE/ ENGINE COOLANT THERMOSTAT - REMOVAL).

2. After the thermostat has been removed, examine the thermostat and inside of thermostat housing for contaminants. If contaminants are found, the thermostat may already be in a “stuck open” position. Flush the cooling system before replacing thermostat (Refer to 7 - COOLING - STANDARD PROCEDURE).
3. Place the thermostat into a container filled with water.
4. Place the container on a hot plate or other suitable heating device.
5. Place a commercially available radiator thermometer into the water.
6. Apply heat to the water while observing the thermostat and thermometer.
7. The thermostat will begin to open at 85.5 - 89.4°C. (186 - 193°F). If the valve starts to move before this temperature is reached, it is opening too early. Replace thermostat. The thermostat should be fully open (valve will stop moving) at 97°C (207°F). If the valve is still moving when the water temperature reaches 97°C (207°F), it is opening too late. Replace thermostat. If the valve refuses to move at any time, replace thermostat.

REMOVAL

3.7L/4.7L ENGINE

WARNING: DO NOT LOOSEN THE RADIATOR DRAINCOCK WITH THE COOLING SYSTEM HOT AND PRESSURIZED. SERIOUS BURNS FROM THE COOLANT CAN OCCUR.

Do not waste reusable coolant. If the solution is clean, drain the coolant into a clean container for reuse.

If the thermostat is being replaced, be sure that the replacement is the specified thermostat for the vehicle model and engine type.

1. Disconnect the negative battery cable.
2. Drain the cooling system (Refer to 7 - COOLING - STANDARD PROCEDURE).
3. Raise and support the vehicle.
4. Remove the splash shield.
5. Remove the lower radiator hose clamp and the lower radiator hose at the thermostat housing.
6. Remove the thermostat housing mounting bolts, thermostat housing and thermostat.

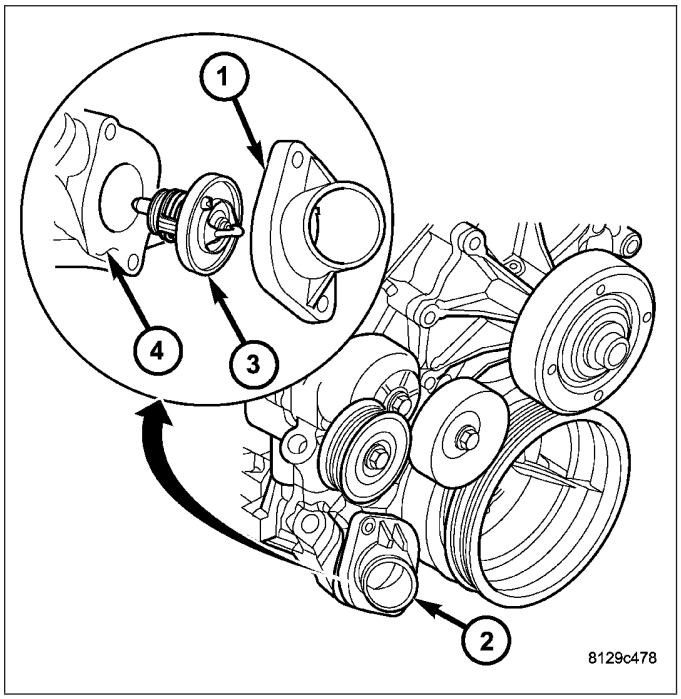

5.7L ENGINE

WARNING: DO NOT LOOSEN THE RADIATOR DRAINCOCK WITH THE COOLING SYSTEM HOT AND PRESSURIZED. SERIOUS BURNS FROM THE COOLANT CAN OCCUR.

Do not waste reusable coolant. If the solution is clean, drain the coolant into a clean container for reuse.

If the thermostat is being replaced, be sure that the replacement is the specified thermostat for the vehicle model and engine type.

1. Disconnect the negative battery cable.
2. Drain the cooling system
3. Remove the radiator hose clamp (3) and radiator hose (4) at the thermostat housing (2).
4. Remove the thermostat housing mounting bolts, thermostat housing and thermostat.

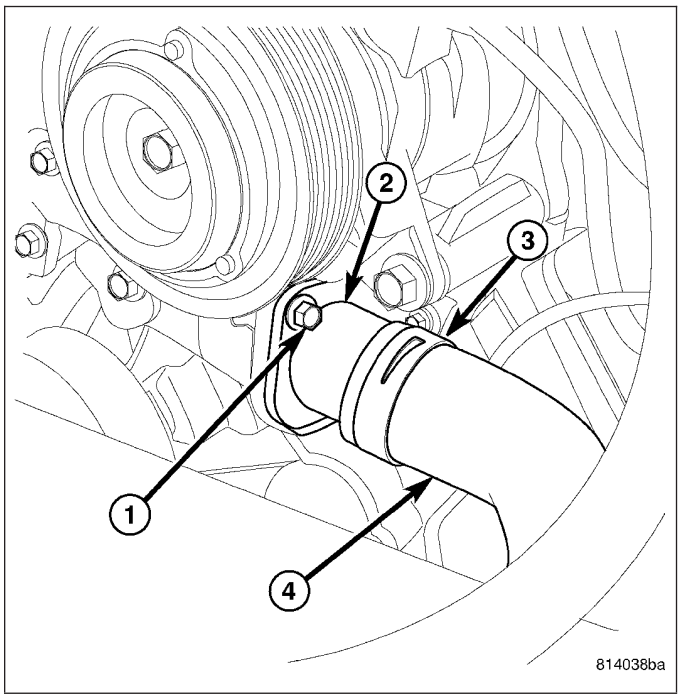

5.9L DIESEL ENGINE

WARNING: DO NOT LOOSEN THE RADIATOR DRAINCOCK WITH THE SYSTEM HOT AND PRESSURIZED. SERIOUS BURNS FROM THE COOLANT CAN OCCUR.

Do not waste reusable coolant. If the solution is clean, drain the coolant into a clean container for reuse.

1. Disconnect the battery negative cables.
2. Drain cooling system until coolant level is below thermostat (Refer to 7 - COOLING - STANDARD PROCEDURE).

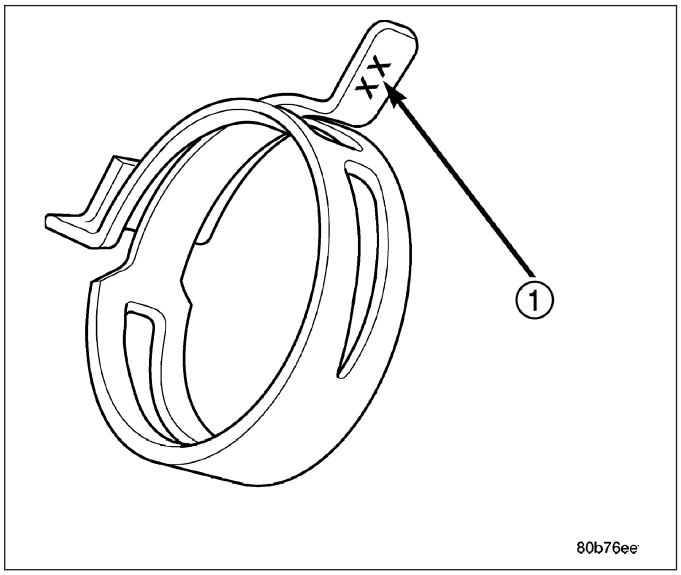

WARNING: CONSTANT TENSION HOSE CLAMPS ARE USED ON MOST COOLING SYSTEM HOSES. WHEN REMOVING OR INSTALLING, USE ONLY TOOLS DESIGNED FOR SERVICING THIS TYPE OF CLAMP, SUCH AS SPECIAL CLAMP TOOL (NUMBER 6094).

CAUTION: A number or letter is stamped into the tongue of constant tension clamps. If replacement is necessary, use only an original equipment clamp with a matching number or letter.

3. Remove radiator hose clamp and hose from thermostat housing (1).
4. Remove the three water outlet-to-cylinder head bolts and remove the water outlet connector.
5. Clean the mating surfaces of the water outlet connector and clean the thermostat seat groove at the top of the thermostat housing.

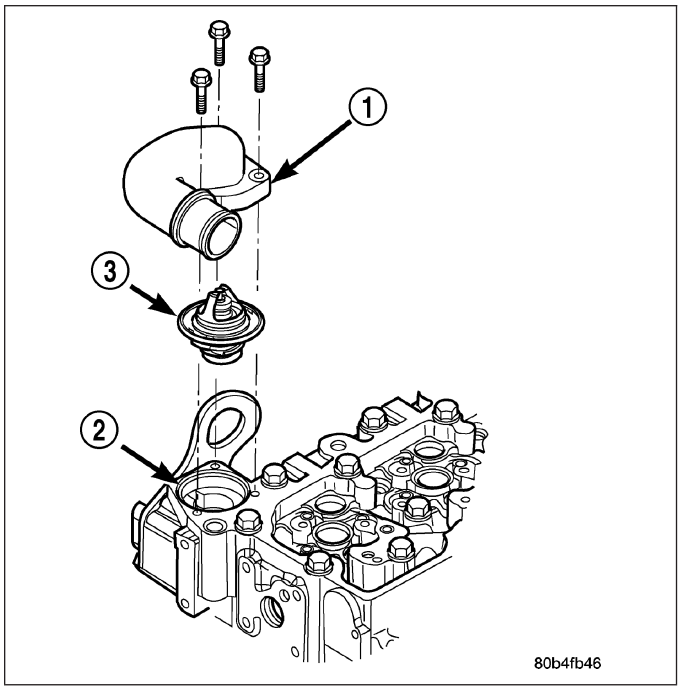

8.3L ENGINE

1. Partially drain the cooling system below the thermostat level.
2. Disconnect throttle body air inlet hose, remove air cleaner housing assembly.
3. Disconnect upper radiator hose from thermostat housing.
4. Remove thermostat housing attaching bolts in the reverse order of the torque sequence.
5. Remove thermostat housing.
6. Remove thermostat from housing and discard thermostat housing gasket.

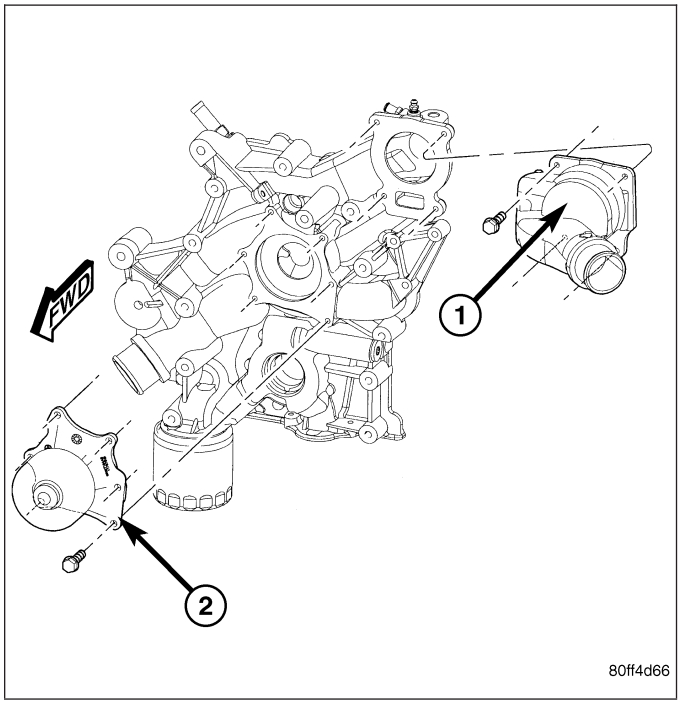

INSTALLATION

3.7L/4.7L ENGINE

1. Clean the mating areas of the timing chain cover and the thermostat housing.
2. Install the thermostat (spring side down) into the recessed machined groove on the timing chain cover.
3. Position the thermostat housing on the timing chain cover.
4. Install the housing-to-timing chain cover bolts. Tighten the bolts to 13 N·m (112 in. lbs.).

CAUTION: The housing must be tightened evenly and the thermostat must be centered into the recessed groove in the timimg chain cover. If not, it may result in a cracked housing, damaged timing chain cover threads or coolant leaks.

5. Install the lower radiator hose on the thermostat housing.
6. Install the splash shield.
7. Lower the vehicle.
8. Fill the cooling system (Refer to 7 - COOLING - STANDARD PROCEDURE).
9. Connect negative battery cable.
10. Start and warm the engine. Check for leaks.

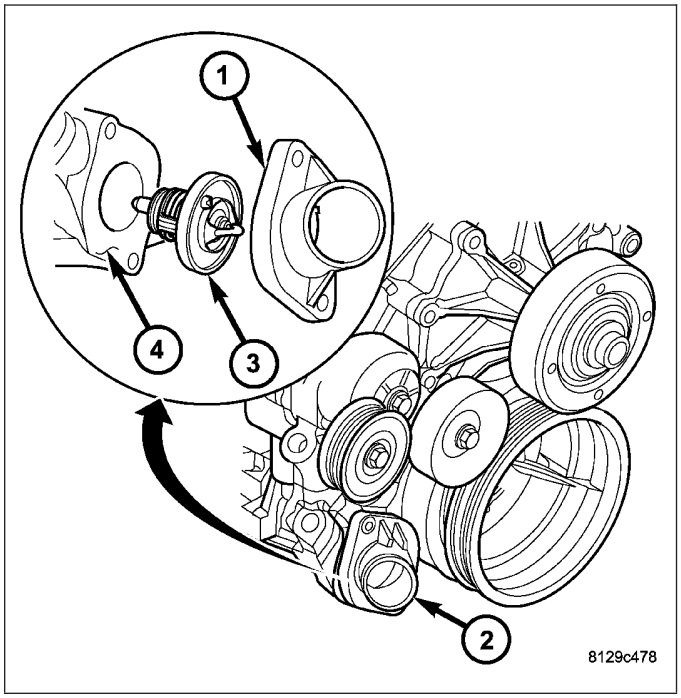

5.7L ENGINE

1. Position the thermostat and housing (2) on the front cover.
2. Install thermostat housing bolts (1). Tighten the bolts (1) to 13 N·m (112 in. lbs.).
3. Install the radiator hose (4) onto the thermostat housing (2).
4. Fill the cooling system (Refer to 7 - COOLING - STANDARD PROCEDURE).
5. Connect negative battery cable.
6. Start and warm the engine. Check for leaks.

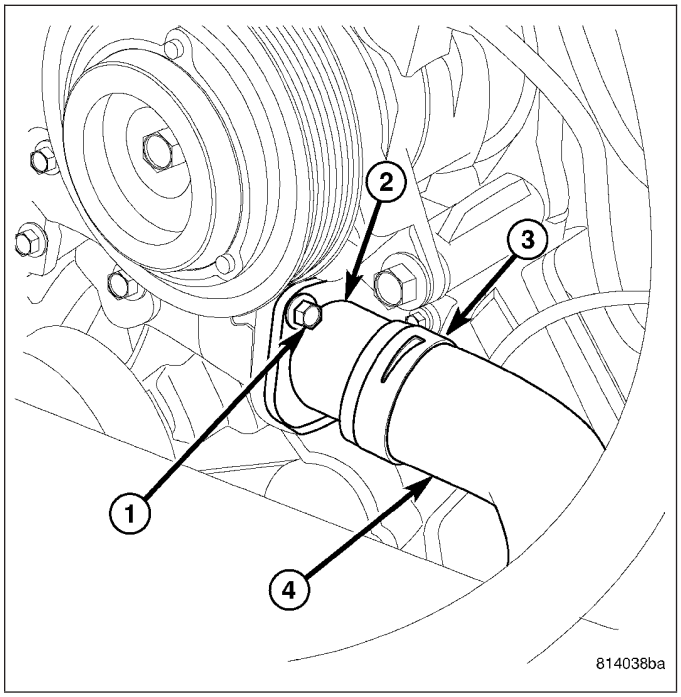

5.9L DIESEL ENGINE

1. Inspect thermostat seal for cuts or nicks. Replace if damaged.
2. Install the thermostat into the groove in the top of the cylinder head (2).
3. Install the thermostat housing (1) and bolts. Tighten the bolts to 10 N·m (89 in. lbs.) torque.
4. Install the radiator upper hose and clamp.
5. Fill the cooling system with coolant (Refer to 7 - COOLING - STANDARD PROCEDURE).
6. Connect the battery negative cables.
7. Start the engine and check for coolant leaks. Run engine to check for proper thermostat operation.

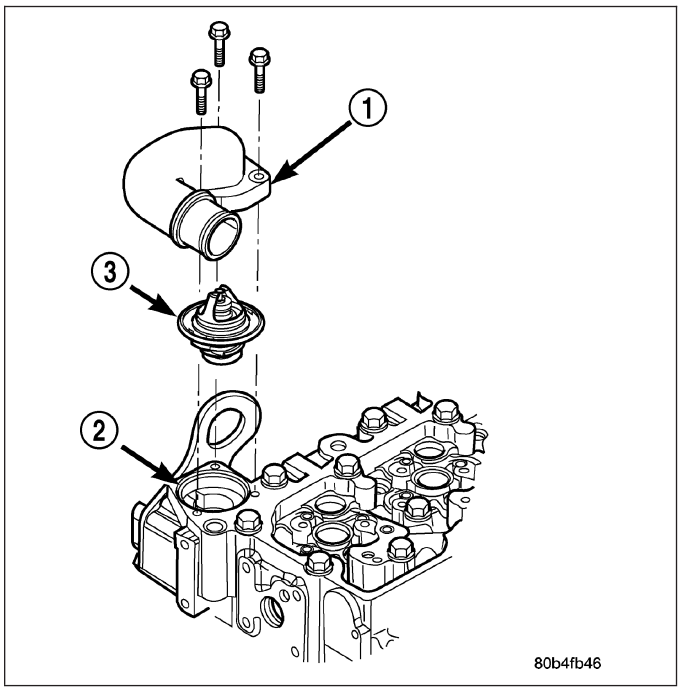

8.3L ENGINE

CAUTION: Do not use a metal scraper to clean aluminum sealing surfaces, as damage to surfaces may occur. Use only a plastic scraper and Mopar® Brake Parts Cleaner or the equivalent

1. Clean both sealing surfaces using a plastic scraper and Mopar® Brake Parts Cleaner or the equivalent. Take care not to scratch or gouge sealing surfaces.
2. Install new thermostat into thermostat housing.
3. Install new thermostat housing gasket.

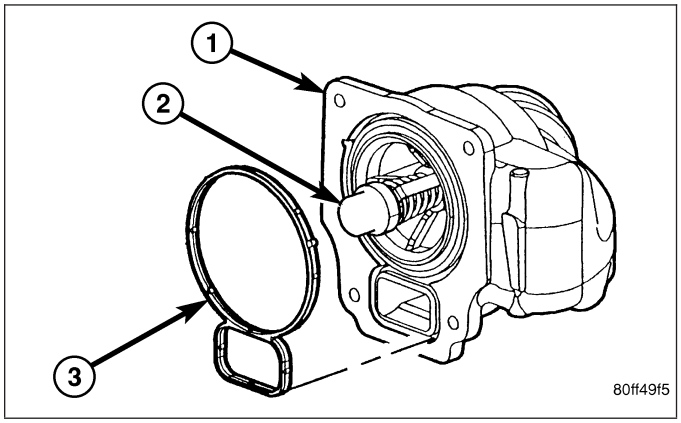

4. Install thermostat housing to chain case cover.
5. Tighten thermostat housing bolts in the sequence shown in to 11 N·m (95 in. lbs.).
6. Connect upper radiator hose to thermostat housing.
7. Install air cleaner housing assembly, connect throttle body air inlet hose.
8. Refill cooling system (Refer to 7 - COOLING - STANDARD PROCEDURE).

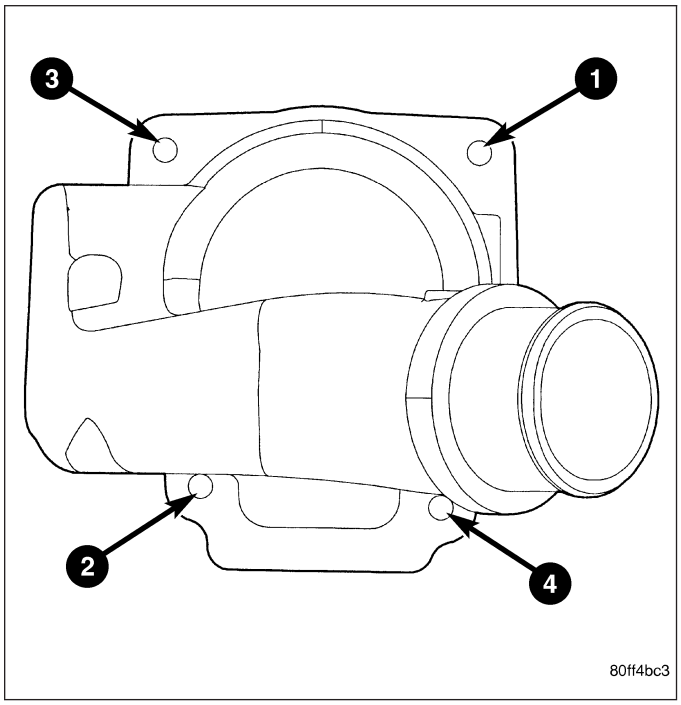

FAN DRIVE VISCOUS

DESCRIPTION

GAS ENGINES

The thermal viscous fan drive is a silicone-fluid- filled coupling used to connect the fan blades to the water pump shaft. The coupling allows the fan to be driven in a normal manner. This is done at low engine speeds while limiting the top speed of the fan to a predetermined maximum level at higher engine speeds.

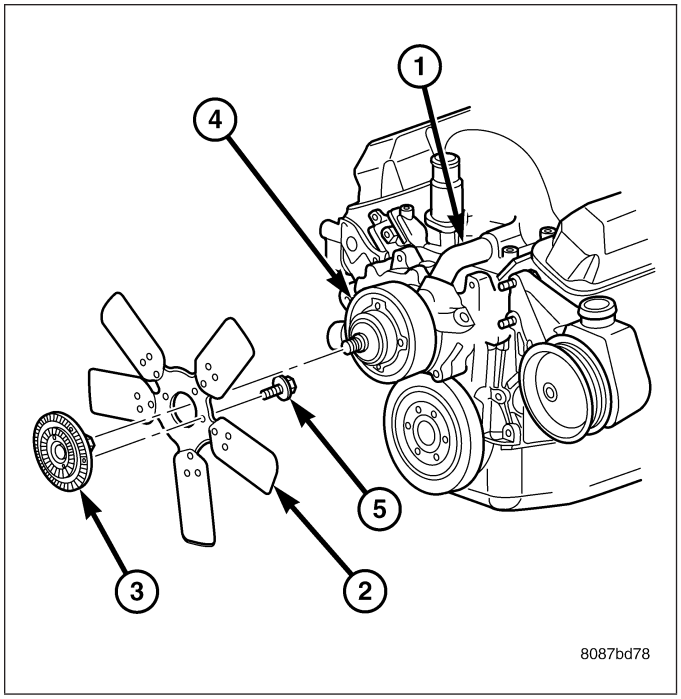

5.9L DIESEL ENGINE

The electronically controlled viscous fan drive is attached to the fan drive pulley mounted to the engine. The coupling allows the fan to be driven in a normal manner. The fan speed is controlled by the electronic control module.

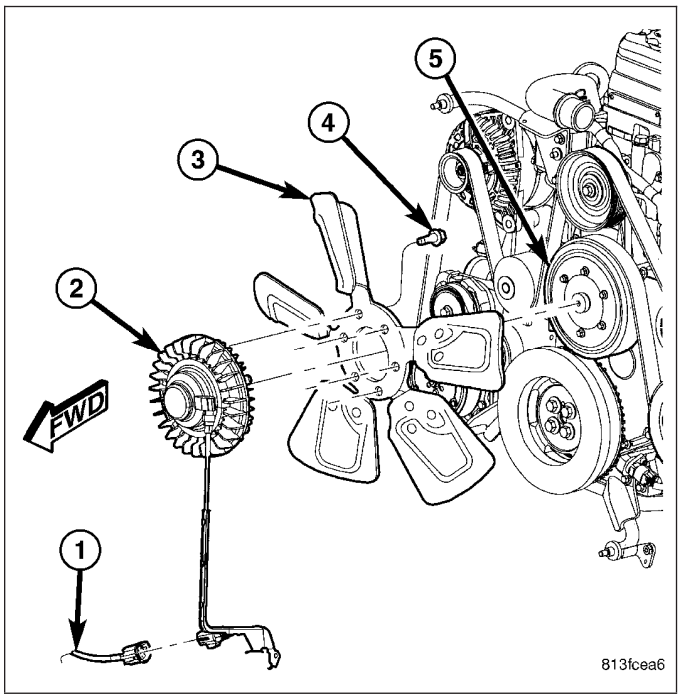

OPERATION

GAS ENGINES

A thermostatic bimetallic spring coil is located on the front face of the viscous fan drive unit (a typical viscous unit is shown in. This spring coil reacts to the temperature of the radiator discharge air. It engages the viscous fan drive for higher fan speed if the air temperature from the radiator rises above a certain point. Until additional engine cooling is necessary, the fan will remain at a reduced rpm regardless of engine speed.

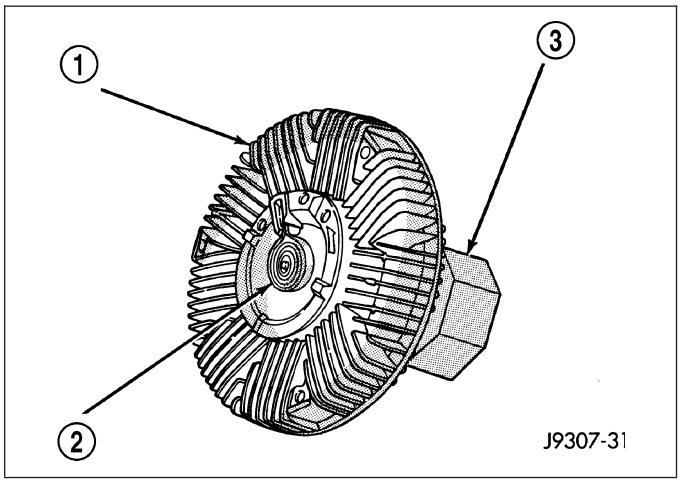

Only when sufficient heat is present, will the viscous fan drive engage. This is when the air flowing through the radiator core causes a reaction to the bimetallic coil. It then increases fan speed to provide the necessary additional engine cooling.

Once the engine has cooled, the radiator discharge temperature will drop. The bimetallic coil again reacts and the fan speed is reduced to the previous disengaged speed.

5.9L DIESEL

The Engine Control Module (ECM) controls the level of engagement of the electronically controlled viscous fan clutch by monitoring coolant temperature, intake manifold temperature, air conditioning pressure and transmission oil temperature. Based on cooling requirements, the ECM sends a signal to the viscous fan clutch to increase or decrease the fan speed.

Fan speed is monitored by the ECM. Fan speeds above or below a calibrated threshold will set a DTC. Circuit concerns will also set fan clutch DTC's.

DIAGNOSIS AND TESTING

VISCOUS FAN DRIVE

NOISE

NOTE: It is normal for fan noise to be louder (roaring) when:

- The underhood temperature is above the engagement point for the viscous drive coupling. This may occur when ambient (outside air temperature) is very high.
- Engine loads and temperatures are high such as when towing a trailer.
- Cool silicone fluid within the fan drive unit is being redistributed back to its normal disengaged (warm) position. This can occur during the first 15 seconds to one minute after engine start-up on a cold engine.

LEAKS

Viscous fan drive operation is not affected by small oil stains near the drive bearing. If leakage appears excessive, replace the fan drive unit.

VISCOUS DRIVE

If the fan assembly free-wheels without drag (the fan blades will revolve more than five turns when spun by hand), replace the fan drive. This spin test must be performed when the engine is cool.

For the following test, the cooling system must be in good condition. It also will ensure against excessively high coolant temperature.

WARNING: BE SURE THAT THERE IS ADEQUATE FAN BLADE CLEARANCE BEFORE DRILLING.

1. Drill a 3.18-mm (1/8-in) diameter hole in the top center of the fan shroud.
2. Obtain a dial thermometer with an 8 inch stem (or equivalent). It should have a range of -18°-to-105°C (0°-to-220° F). Insert thermometer through the hole in the shroud. Be sure that there is adequate clearance from the fan blades.
3. Connect a tachometer and an engine ignition timing light. The timing light is to be used as a strobe light. This step cannot be used on the diesel engine.
4. Block the air flow through the radiator. Secure a sheet of plastic in front of the radiator. Use tape at the top to secure the plastic and be sure that the air flow is blocked.
5. Be sure that the air conditioner (if equipped) and blowe fan is turned off.

WARNING: USE EXTREME CAUTION WHEN THE ENGINE IS OPERATING. DO NOT STAND IN A DIRECT LINE WITH THE FAN. DO NOT PUT YOUR HANDS NEAR THE PULLEYS, BELTS OR FAN. DO NOT WEAR LOOSE CLOTHING.

6. Start the engine and operate at 2400 rpm. Within ten minutes the air temperature (indicated on the dial thermometer) should be up to 88° C (190° F). Fan drive **engagement** should start to occur at/between:
   - 3.7L Automatic - 93° C - 99°C (200° F - 210° F)
   - 3.7L Manual/4.7L Automatic/5.9L - 85° - 91° C (185° - 195° F)
   - 4.7L Manual - 74° - 79° C (165° - 175° F)
   - 5.7L
   - 5.9L
   - Engagement is distinguishable by a definite **increase** in fan flow noise (roaring). The timing light also will indicate an increase in the speed of the fan.
7. When viscous drive engagement is verified, remove the plastic sheet. Fan drive **disengagement** should start to occur at or between:
   - 3.7L Automatic - 76°C - 81°C (168° F - 178° F)
   - 3.7L Manual/4.7L Auto/ 5.9L - 67°C - 73°C (153° F - 163° F)
   - 4.7L Manual - 56°C - 62°C (133° F - 143° F)
   - 5.7L

- 5.9L
- 8.3L engine - 93° to 101° C (190° - 205° F) Minimum 73°C (163°F). A definite **decrease** of fan flow noise (roaring) should be noticed. If not, replace the defective viscous fan drive unit.

CAUTION: Some engines equipped with serpentine drive belts have reverse rotating fans and viscous fan drives. They are marked with the word REVERSE to designate their usage. Installation of the wrong fan or viscous fan drive can result in engine overheating.

CAUTION: If the viscous fan drive is replaced because of mechanical damage, the cooling fan blades should also be inspected. Inspect for fatigue cracks, loose blades, or loose rivets that could have resulted from excessive vibration. Replace fan blade assembly if any of these conditions are found. Also inspect water pump bearing and shaft assembly for any related damage due to a viscous fan drive malfunction.

ELECTRONICALLY CONTROLLED VISCOUS FAN DRIVE

NOISE

NOTE: It is normal for fan noise to be louder (roaring) when:

- Fan duty cycle high. This may occur when ambient (outside air temperature) is very high.
- Engine loads and temperatures are high such as when towing a trailer.
- Operating conditions where transmission temperatures may be high
- Cool silicone fluid within the fan drive unit is being redistributed back to its normal disengaged (warm) position. This can occur during the first 15 seconds to one minute after engine start-up on a cold engine.

LEAKS

Viscous fan drive operation is not affected by small oil stains near the drive bearing. If leakage appears excessive, replace the fan drive unit.

ELECTRONICALLY CONTROLLED VISCOUS DRIVE – 5.9L DIESEL

If the fan assembly free-wheels without drag (the fan blades will revolve more than five turns when spun by hand), do not replace the fan drive. This spin test must be performed when the engine is cool.

If the fan assembly does not free-wheel and a metallic grinding sound exists, replace the electronically controlled fan drive (Refer to 7 - COOLING/ENGINE/RADIATOR FAN - REMOVAL).

NOTE: The following test may take up to 15 minutes to perform.

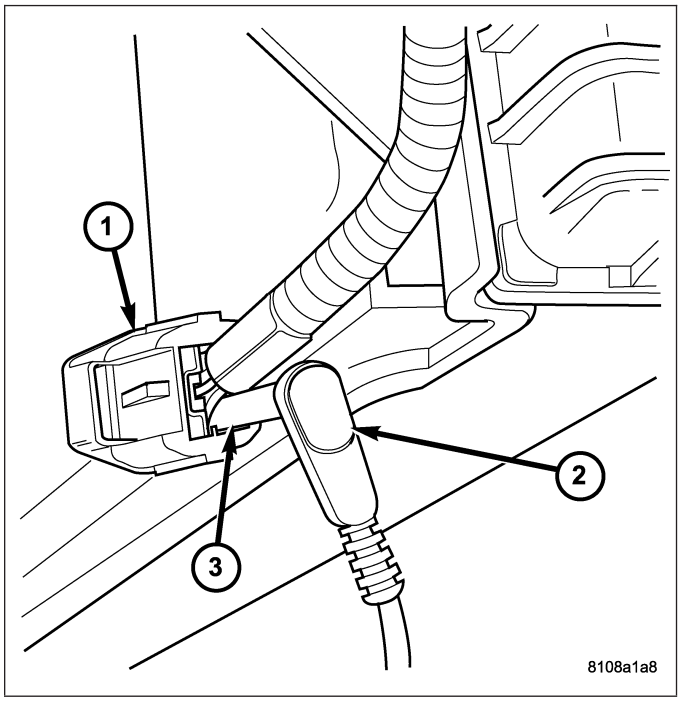

The engine should be at normal operating temperature.

1. Set the parking brake and verify the transmission is in park or neutral.
2. Set air conditioner (if equipped) and blower fan to OFF.
3. Start and allow engine to reach normal operating temperatures.
4. Stop engine, connect the scan tool and select appropriate model year and engine option.
5. Check for and correct existing DTC's
6. Using Tool 6801, connect pin 1 of the electronically controlled viscous fan drive connector, located at the lower fan shroud to battery ground.

7. Using the scan tool, verify that DTC 0480 set.
8. Start the engine.
9. Go to the SENSOR screen and observe the fan speed.
10. Run the engine at 2500 rpm.

NOTE: It maybe take 15 minutes before fan speed increases.

11. The fan speed should increase according to the table below.
12. If fan speed does not increase, replace the electronically control viscous fan drive.

ELECTRONICALLY CONTROLLED VISCOUS FAN DRIVE SPEEDS	
ENGINE RPM	**FAN RPM** (Min)
500	490
1000	950
1500	1420
2000	1850
2500	2230
3000	2440

13. If the fan speed does increase and there is still a concern, refer to the appropriate Engine Electrical Diagnosis Section to diagnosis the electronically controlled viscous fan drive control circuit.

CAUTION: If the viscous fan drive is replaced because of mechanical damage, the cooling fan blades should also be inspected. Inspect for fatigue cracks or chips that could result in excessive vibration. Replace fan blade assembly if any of these conditions are found.

REMOVAL

3.7L/4.7L/5.7L ENGINE

1. **Do Not** attempt to remove the fan/viscous fan drive assembly from the vehicle at this time.

CAUTION: If the viscous fan drive is replaced because of mechanical damage, the cooling fan blades should also be inspected. Inspect for fatigue cracks, loose blades, or loose rivets that could have resulted from excessive vibration. Replace fan blade assembly if any of these conditions are found. Also inspect water pump bearing and shaft assembly for any related damage due to a viscous fan drive malfunction.

2. Disconnect negative battery cable from battery.
3. Remove coolant reserve/overflow container from fan shroud and lay aside. **Do Not** disconnect the hoses or drain coolant from the container.
4. Using Special Tool 6958, remove the fan blade/viscous fan drive assembly from the water pump by turning the mounting nut counterclockwise as viewed from the front. Threads on the viscous fan drive are **RIGHT-HAND.**.

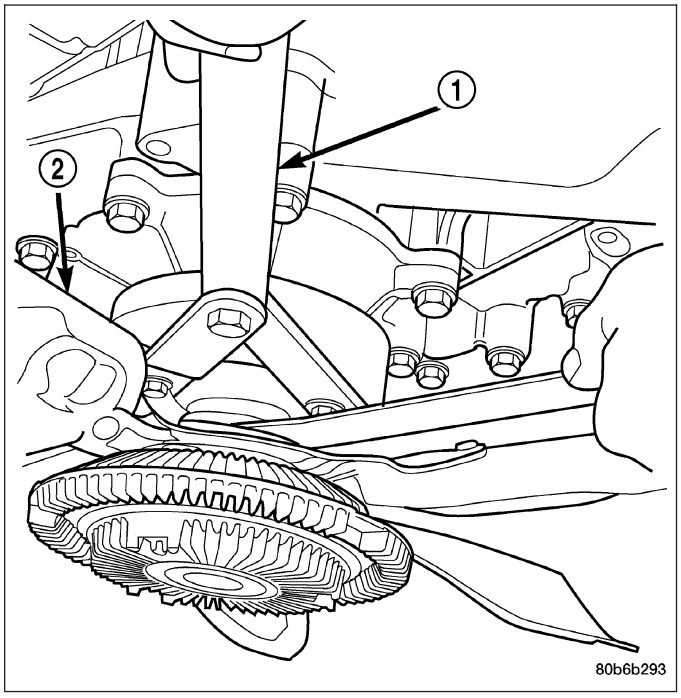

5. **Do Not** unbolt the fan blade assembly from viscous fan drive at this time.
6. Remove the fan shroud-to-radiator mounting bolts.
7. Pull the lower shroud mounts out of the radiator tank clips.

8. Remove the fan shroud and fan blade/viscous fan drive assembly as a complete unit from vehicle.
9. After removing the fan blade/viscous fan drive assembly, **do not** place the viscous fan drive in a horizontal position. If stored horizontally, silicone fluid in the viscous fan drive could drain into its bearing assembly and contaminate lubricant.

CAUTION: Do not remove water pump pulley-to-water pump bolts. This pulley is under spring tension.

10. Remove four bolts securing fan blade assembly to viscous fan drive.

CAUTION: Some engines equipped with serpentine drive belts have reverse rotating fans and viscous fan drives. They are marked with the word REVERSE to designate their usage. Installation of the wrong fan or viscous fan drive can result in engine overheating.

5.9L DIESEL ENGINE

CAUTION: The electronically controlled viscous fan drive is vibration and impact sensitive, especially at the electrical connectors. Do not drop the unit.

CAUTION: If the electronically controlled viscous fan drive is replaced because of mechanical damage, the cooling fan blades should also be inspected. Inspect for fatigue cracks, or chipped blades that could have resulted from excessive vibration. Replace fan blade assembly if any of these conditions are found. Also inspect wiring harness and connectors for damage.

1. Disconnect the battery negative cables.
2. Remove fan shroud-to-engine bracket nuts.

CAUTION: Do not remove the fan pulley bolts. This pulley is under spring tension.

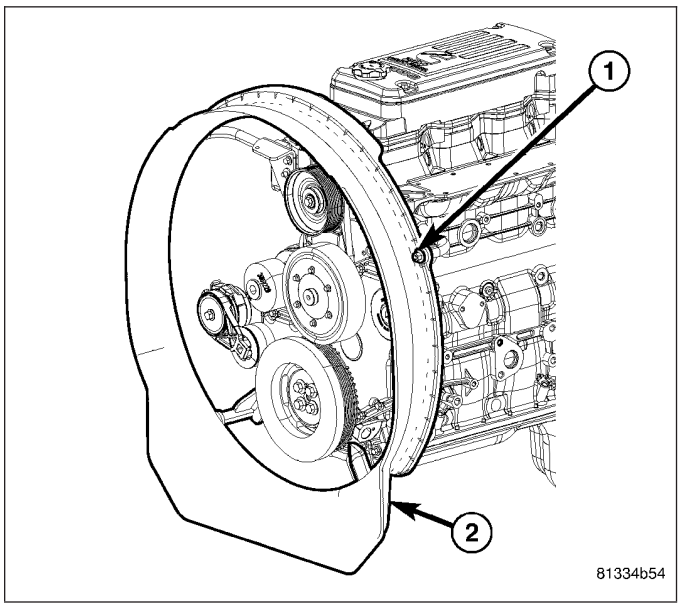

3. The electronically controlled viscous fan drive/fan blade assembly is attached (threaded) to the fan pulley shaft. Remove the fan blade/fan drive assembly from fan pulley by turning the mounting nut counterclockwise (as viewed from front). Threads on the viscous fan drive are **RIGHT-HAND.** A 36 mm fan wrench can be used. Place a bar or screwdriver between the fan pulley bolts to prevent pulley from rotating.
4. Disconnect electronically controlled fan clutch connector at lower fan shroud bracket.
5. Remove fan drive wire harness-to-lower fan shroud bracket mounting bolt.
6. Remove fan drive wire harness support from fan shroud.

NOTE: It may be necessary to loosen the top two fan shroud brackets. Removal of the engine mounted fan shroud brackets is not necessary unless removing or installing the engine.

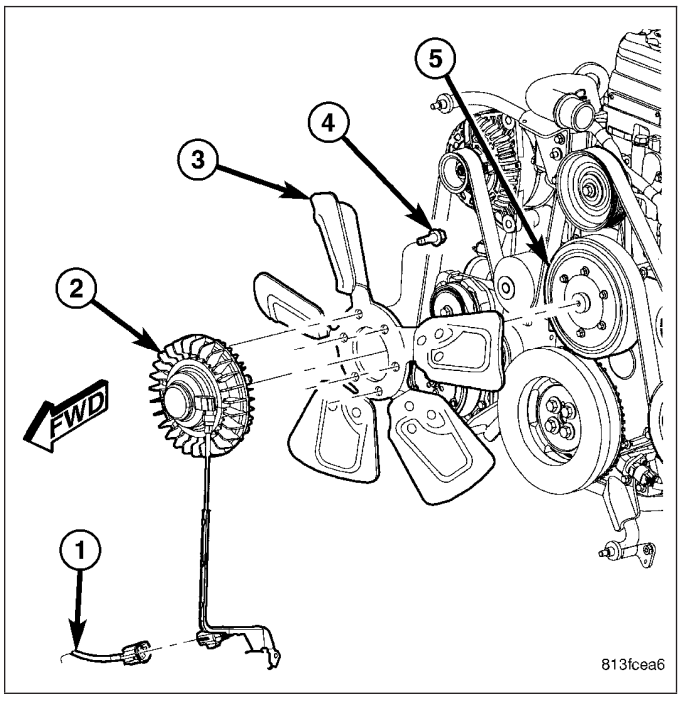

7. Collapse fan shroud toward front of vehicle and remove fan drive/fan blade and fan shroud as an assembly.
8. Remove the six fan blade-to-viscous fan drive mounting bolts.
9. Inspect the fan for cracked, chipped or damaged fan blades.

INSTALLATION

3.7L/4.7L/5.7L ENGINE

NOTE: Viscous Fan Drive Fluid Pump Out Requirement: After installing a new viscous fan drive, bring the engine speed up to approximately 2000 rpm and hold for approximately two minutes. This will ensure proper fluid distribution within the drive.

1. Install fan blade assembly to the viscous fan drive. Tighten the bolts to 24 N·m (18 ft. lbs.) torque.
2. Position the fan shroud and the fan blade/viscous fan drive assembly to the vehicle as a complete unit.
3. Install the fan shroud.
4. Using Special Tool 6958, install the fan blade/viscous fan drive assembly to the water pump shaft. Tighten mounting nut to 50 N·m (37 ft. lbs.).
5. Install the coolant reserve/overflow container to the fan shroud.
6. Connect the negative battery cable.

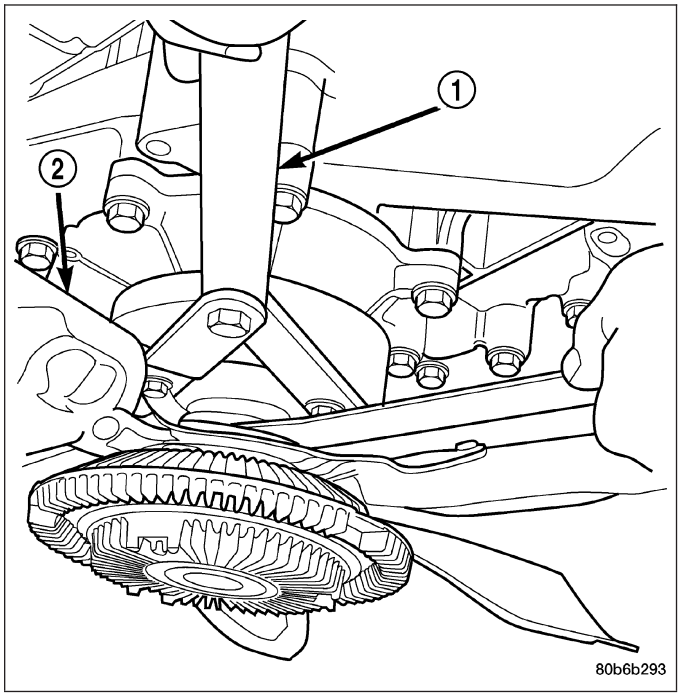

5.9L DIESEL ENGINE

NOTE: Viscous Fan Drive Fluid Pump Out Requirement: After installing a new viscous fan drive, bring the engine speed up to approximately 2000 rpm and hold for approximately two minutes. This will ensure proper fluid distribution within the drive.

1. Install fan blade assembly to electrically controlled viscous fan drive. Tighten mounting bolts to 24 N·m (18 ft. lbs.) torque.

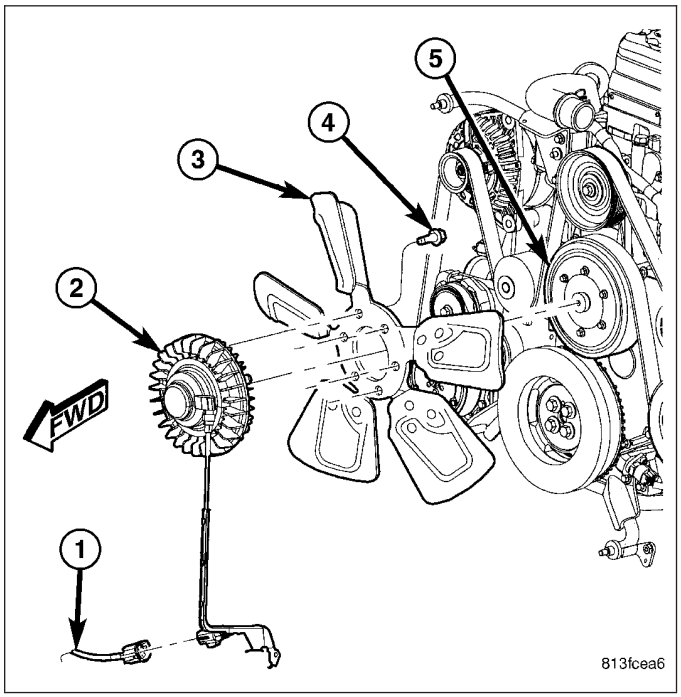

2. Loosen both upper engine mounted fan shroud brackets.
3. Make sure lower engine mounted fan shroud bracket nuts are tightened to 24 N·m (18 ft. lbs.).
4. Position fan/fan drive assembly inside fan shroud and lower into position.
5. Install the viscous fan drive assembly onto fan pulley hub shaft. Tighten mounting nut to 115 N·m (85 ft. lbs.) torque.
6. Install fan drive wir harness support to fan shroud.
7. Install the fan drive wiring harness bracket onto the lower shroud bracket. Tighten nut to 24 N·m (18 ft. lbs.).
8. Connect fan drive wire harness.
9. Install fan shroud to upper engine fan shroud brackets. Tighten nut finger tight.
10. Tighten upper engine fan shroud bracket bolts to 24 NM (18 ft. lbs).
11. Tighten four fan shroud bracket nuts to 24 NM (18 ft. lbs.).
12. Make sure of fan tip clearance all the way around inside of fan shroud.
13. Connect the battery negative cables.

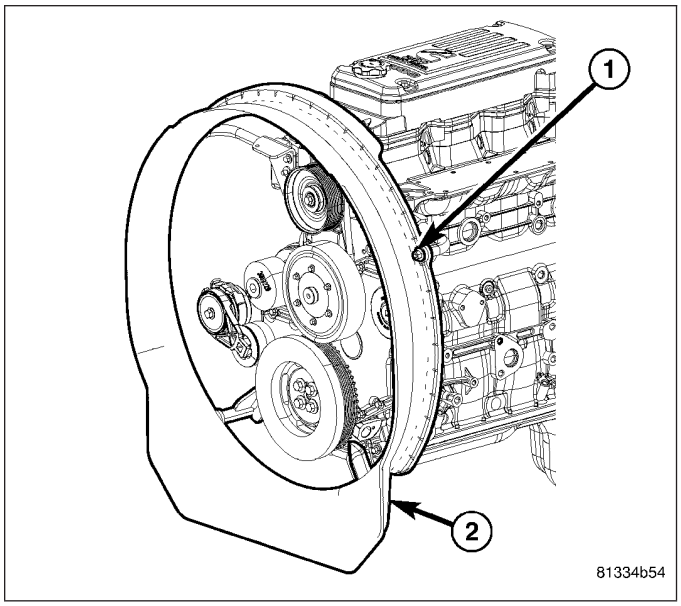

RADIATOR

DESCRIPTION

The radiator is a aluminum cross-flow design with horizontal tubes through the radiator core and vertical plastic side tanks.

This radiator does not contain an internal transmission oil cooler.

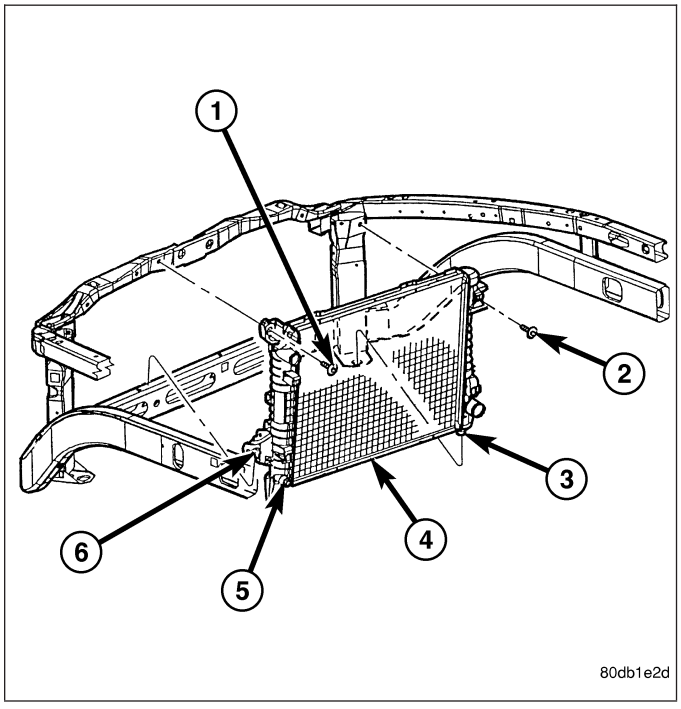

OPERATION

The radiator supplies sufficient heat transfer using the cooling fins interlaced between the horizontal tubes in the radiator core to cool the engine.

DIAGNOSIS AND TESTING

RADIATOR COOLANT FLOW

Use the following procedure to determine if coolant is flowing through the cooling system.

1. Idle engine until operating temperature is reached. If the upper radiator hose is warm to the touch, the thermostat is opening and coolant is flowing to the radiator.

WARNING: HOT, PRESSURIZED COOLANT CAN CAUSE INJURY BY SCALDING. USING A RAG TO COVER THE RADIATOR PRESSURE CAP, OPEN RADIATOR CAP SLOWLY TO THE FIRST STOP. THIS WILL ALLOW ANY BUILT-UP PRESSURE TO VENT TO THE RESERVE/OVERFLOW TANK. AFTER PRESSURE BUILD-UP HAS BEEN RELEASED, REMOVE CAP FROM FILLER NECK.

2. Drain a small amount of coolant from the radiator until the ends of the radiator tubes are visible through the filler neck. Idle the engine at normal operating temperature. If coolant is flowing past the exposed tubes, the coolant is circulating.

REMOVAL

3.7L/4.7L/5.7L ENGINE

1. Disconnect battery negative cables.

WARNING: DO NOT REMOVE THE CYLINDER BLOCK DRAIN PLUGS OR LOOSEN THE RADIATOR DRAINCOCK WITH THE SYSTEM HOT AND UNDER PRESSURE. SERIOUS BURNS FROM THE COOLANT CAN OCCUR.

2. Drain the cooling system (Refer to 7 - COOLING - STANDARD PROCEDURE).

WARNING: CONSTANT TENSION HOSE CLAMPS ARE USED ON MOST COOLING SYSTEM HOSES. WHEN REMOVING OR INSTALLING, USE ONLY TOOLS DESIGNED FOR SERVICING THIS TYPE OF CLAMP. ALWAYS WEAR SAFETY GLASSES WHEN SERVICING CONSTANT TENSION CLAMPS.

CAUTION: A number or letter is stamped into the tongue of constant tension clamps. If replacement is necessary, use only an original equipment clamp with a matching number or letter and the correct width.

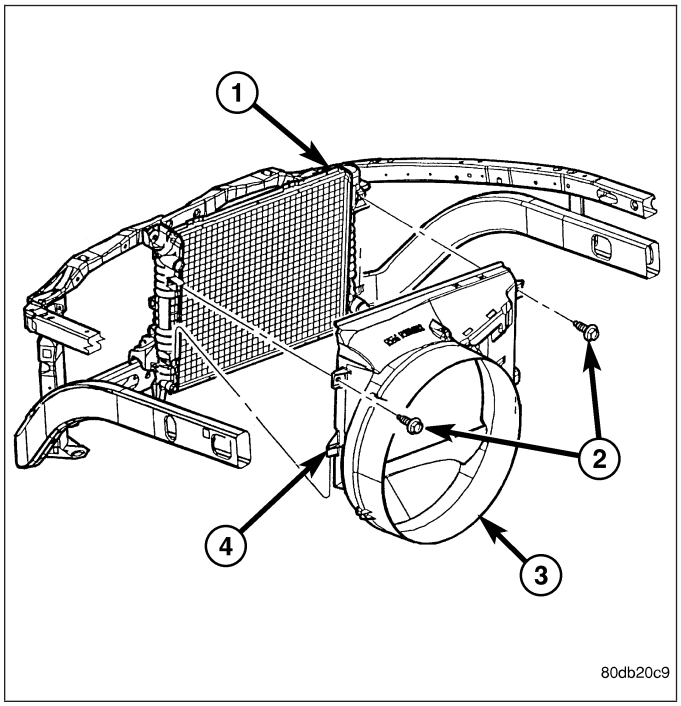

3. Remove the hose clamps and hoses from radiator.
4. Remove the coolant reserve/overflow tank hose from the radiator filler neck.
5. Remove the coolant reserve/overflow tank from the fan shroud (pull straight up). The tank slips into slots on the fan shroud.
6. Unclip the power steering hoses from the fan shroud.
7. Disconnect the electrical connectors at the windshield washer reservoir tank and remove the tank.
8. Remove the fan shroud mounting bolts and pull up and out of the radiator tank clips. Position shroud rearward over the fan blades towards engine.
9. Disconnect the transmission cooler lines from the transmission cooler, then plug the transmission lines and cooler to prevent leakage.
10. Disconnect the power steering lines from the power steering cooler, then plug the power steering lines and cooler to prevent leakage.
11. Remove the two radiator upper mounting bolts.

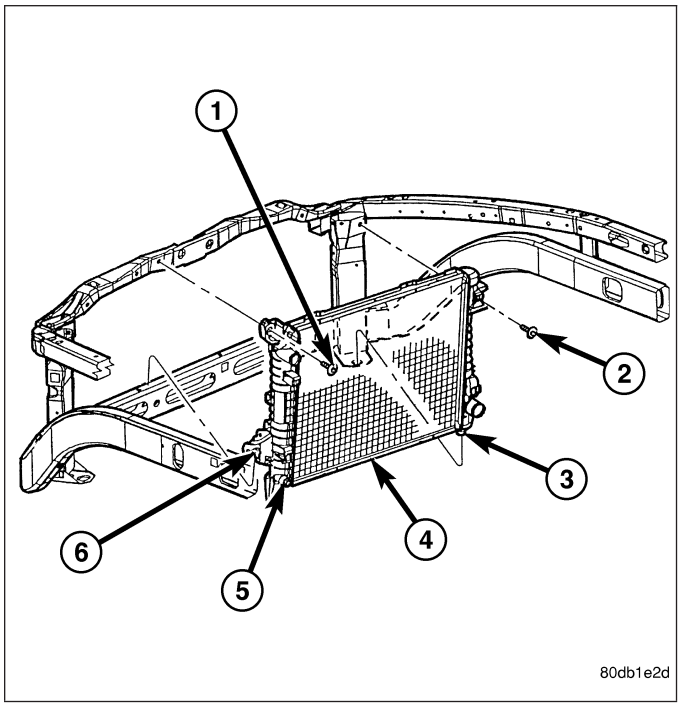

12. Lift the radiator straight up and out of the engine compartment. Take care not to damage cooling fins or tubes on the radiator and oil coolers when removing.

NOTE: The radiator is equipped with one alignment dowel on the bottom of the outlet tank and one retaining bracket on the front side of the inlet tank. Both features have rubber insulators attached to them that must be present. The alignment dowel fits into a hole at the bottom of the front end sheet metal vertical support post and the support bracket rests on top of the lower radiator closure tube.

5.9L DIESEL ENGINE

1. Disconnect both battery negative cables.

WARNING: DO NOT REMOVE THE CYLINDER BLOCK DRAIN PLUGS OR LOOSEN THE RADIATOR DRAINCOCK WITH THE SYSTEM HOT AND UNDER PRESSURE. SERIOUS BURNS FROM COOLANT CAN OCCUR.

2. Drain the cooling system (Refer to 7 - COOLING - STANDARD PROCEDURE).

WARNING: CONSTANT TENSION HOSE CLAMPS ARE USED ON MOST COOLING SYSTEM HOSES. WHEN REMOVING OR INSTALLING, USE ONLY TOOLS DESIGNED FOR SERVICING THIS TYPE OF CLAMP, SUCH AS SPECIAL CLAMP TOOL (NUMBER 6094). ALWAYS WEAR SAFETY GLASSES WHEN SERVICING CONSTANT TENSION CLAMPS.

CAUTION: A number or letter is stamped into the tongue of constant tension clamps. If replacement is necessary, use only an original equipment clamp with a matching number or letter.

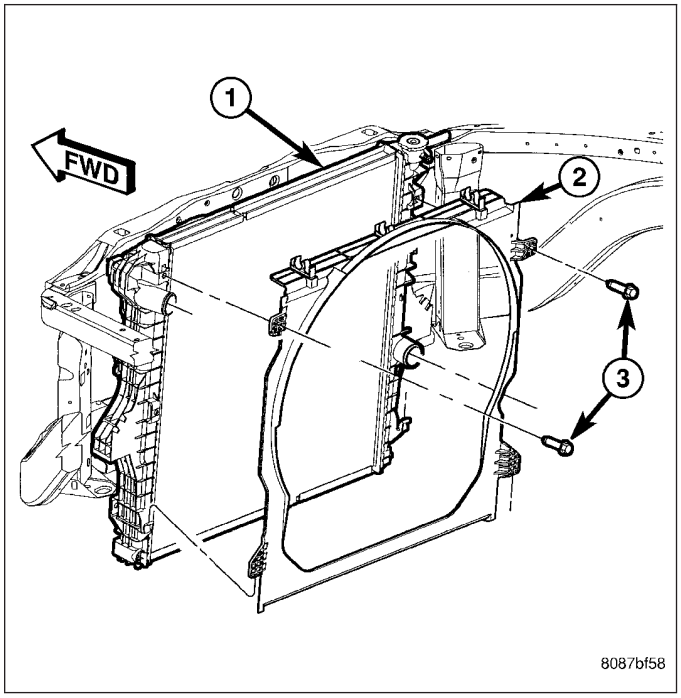

3. Remove air box and turbocharger inlet tube.

4. Remove coolant tank hose, washer bottle hose and the positive battery cable from the fastening clips located on top of the radiator.
5. Remove hose clamps and hoses from radiator.
6. Remove fan shroud mounting nuts from mounting brackets.
7. Pull shroud toward front of vehicle to clear mounting brackets
8. Turn shroud slightly and push toward engine to gain clearance for radiator.
9. Remove the power steering cooler mounting bolts and position the power steering cooler out of the way.
10. Disconnect the transmission cooler lines at the transmission cooler. The transmission cooler will remain on the radiator and can be removed as an assembly.
11. Remove the two radiator upper mounting bolts.
12. Tilt radiator toward front of vehicle and lift out of engine compartment. The bottom of the radiator is equipped with two alignment dowels that fit into holes in the lower radiator support panel. Rubber biscuits (insulators) are installed to these dowels. Take care not to damage cooling fins or tubes on the radiator and air conditioning condenser or the electronic viscous fan connector when removing.

8.3L ENGINE

WARNING: CONSTANT TENSION HOSE CLAMPS ARE USED ON MOST COOLING SYSTEM HOSES. WHEN REMOVING OR INSTALLING, USE ONLY TOOLS DESIGNED FOR SERVICING THIS TYPE OF CLAMP. ALWAYS WEAR SAFETY GLASSES WHEN SERVICING CONSTANT TENSION CLAMPS.

1. Disconnect both battery negative cables.
2. Drain the cooling system (Refer to 7 - COOLING - STANDARD PROCEDURE).
3. Remove radiator fan (Refer to 7 - COOLING/ENGINE/RADIATOR FAN - REMOVAL).
4. Remove the power steering cooler mounting bolts (1) and pushpins (5). Position the power steering cooler out of the way.

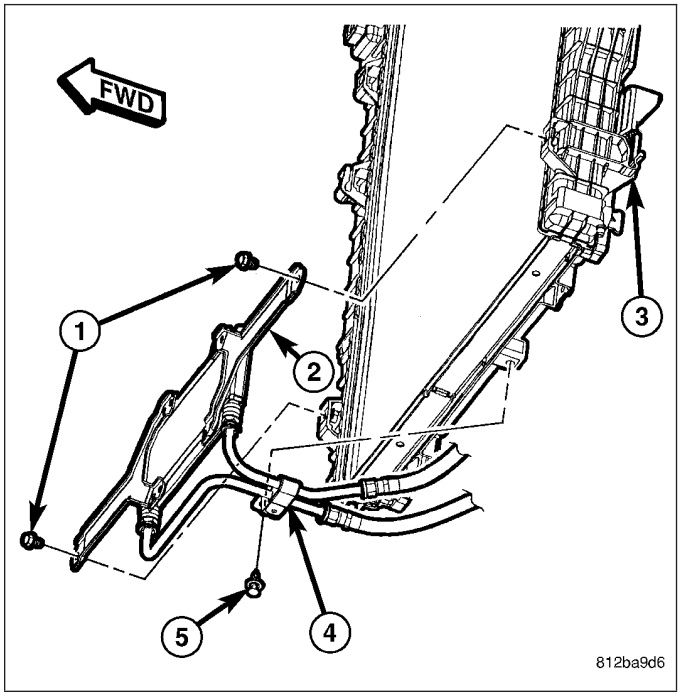

5. Lower vehicle.
6. Remove the two radiator upper mounting bolts.
7. Lift radiator straight up and out of engine compartment. The bottom of the radiator is equipped with two alignment dowels that fit into holes in the lower radiator support panel. Rubber biscuits (insulators) are installed to these dowels. Take care not to damage cooling fins or tubes on the radiator and air conditioning condenser when removing.

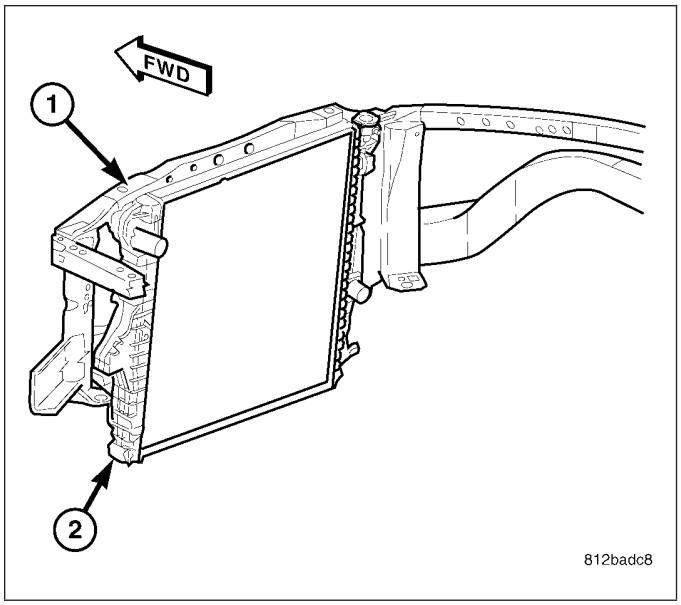

CLEANING

Clean radiator fins are necessary for good heat transfer. The radiator and oil cooler fins should be cleaned when an accumulation of debris has occurred. With the engine cold, apply cold water and compressed air to the back (engine side) of the radiator to flush the radiator and/or oil coolers of debris.

INSPECTION

Inspect the radiator side tanks for cracks, and broken or missing fittings. Inspect the joint where the tanks seam up to the radiator core for signs of leakage and/or deteriorating seals.

Inspect radiator core for corroded, bent or missing cooling fins. Inspect the core for bent or damaged cooling tubes.

INSTALLATION

3.7L/4.7L/5.7L ENGINE

1. Position the fan shroud over the fan blades rearward towards engine.
2. Install the rubber insulators to the lower radiator mounting features (alignment dowel and support bracket at the lower part of the radiator).
3. Lower the radiator into position while guiding the alignment dowel into the vertical post bracket. Position and seat the lower radiator support bracket onto the lower radiator closure tube.
4. Install the upper radiator mounting bolts. Tighten bolts to 10 N·m (90 in. lbs.).
5. Connect the lower radiator hose and install the clamp in the proper position.
6. Connect the power steering hoses to the power steering oil cooler and install the clamps.
7. Connect the transmission oil cooler lines to the transmission oil cooler and install the secondary latches.

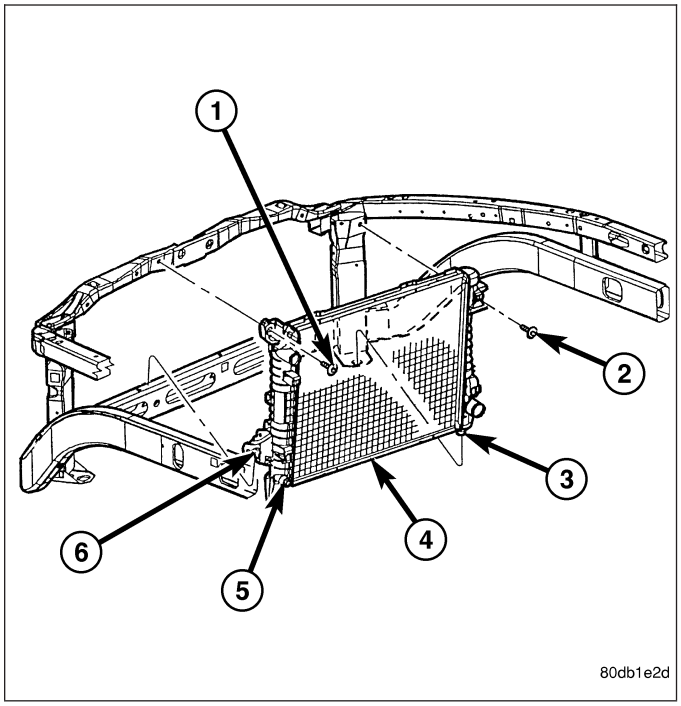

8. Position the fan shroud into the mounting clips on the radiator tanks and secure with bolts. Tighten the bolts to 8.5 N·m (75 in. lbs.).
9. Secure the power steering hoses into the clip on the lower fan shroud.
10. Install the windshield washer reservoir tank and connect the hose and electrical connector.
11. Install coolant reserve/overflow container hose(s) to radiator filler neck and secure properly with clamps.
12. Install coolant reserve/overflow container or degas container to fan shroud and tighten the bolts to 8.5 N·m (75 in. lbs.).
13. Connect upper radiator hose and install clamp.
14. Install battery negative cable.
15. Fill cooling system with coolant (Refer to 7 - COOLING - STANDARD PROCEDURE).
16. Operate the engine until it reaches normal operating temperature. Check cooling system fluid levels.

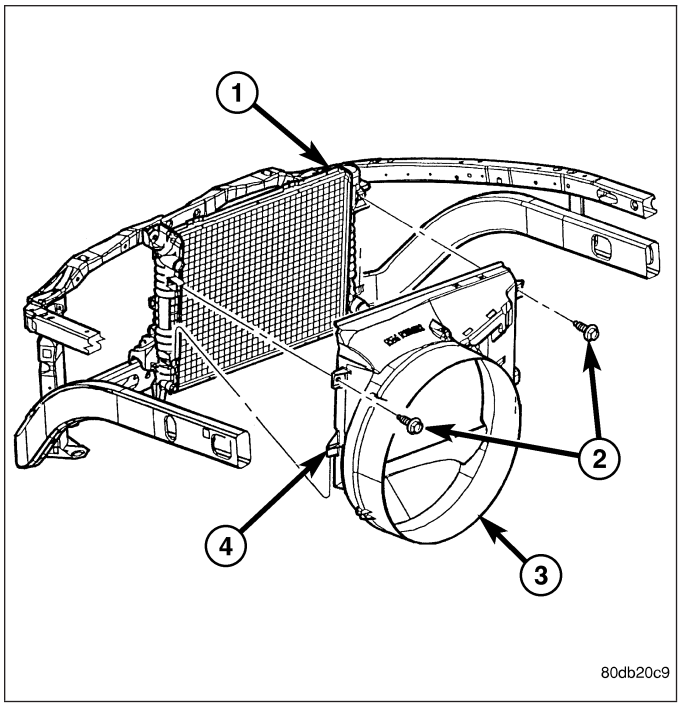

5.9L DIESEL ENGINE

1. Install rubber insulators to alignment dowels at lower part of radiator.
2. Lower the radiator into position while guiding the two alignment dowels into lower radiator support. Different alignment holes are provided in the lower radiator support for each engine application.
3. Install two upper radiator mounting bolts. Tighten bolts to 11.8 N·m (105 in. lbs.) torque.
4. Connect both radiator hoses and install hose clamps.
5. Connect transmission cooler lines to transmission cooler. Inspect quick connect fittings for debris and install until an audible “click” is heard. Tug on lines to verify connection.
6. Position power steering cooler on the radiator and tighten nuts to 10 N·m (90 in. lbs.)
7. Position fan shroud on brackets.
8. Install fan shroud mounting nut. Tighten nut to 24 N·m (18 ft. lbs.).
9. Install the coolant recovery container (Refer to 7 - COOLING/ENGINE/COOLANT RECOVERY CONTAINER - INSTALLATION).

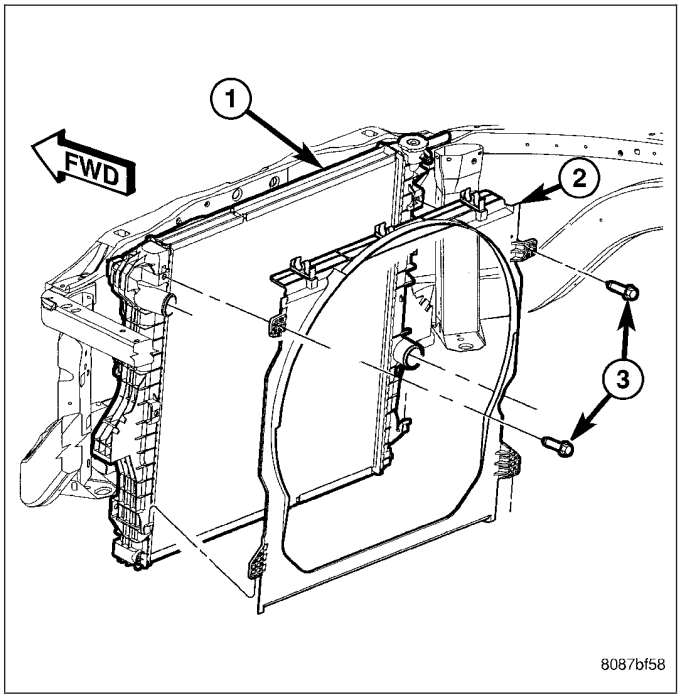

10. Position coolant recovery tank hose, washer bottle hose and the positive battery cable into the clips located on the top of the radiator.
11. Install air box and turbocharger inlet hose. Tighten clamps to 4 N·m (35 in. lbs.).
12. Position heater controls to **full heat** position.
13. Fill cooling system with coolant (Refer to 7 - COOLING - STANDARD PROCEDURE).
14. Operate engine until it reaches normal temperature. Check cooling system and automatic transmission (if equipped) fluid levels.

8.3L ENGINE

1. Install rubber insulators to alignment dowels at lower part of radiator.
2. Lower the radiator into position while guiding the two alignment dowels into lower radiator support. Different alignment holes are provided in the lower radiator support for each engine application.
3. Install two upper radiator mounting bolts. Tighten bolts to 11.8 N·m (105 in. lbs.) torque.
4. Install radiator fan and shroud assembly (Refer to 7 - COOLING/ENGINE/RADIATOR FAN - INSTALLATION).
5. Install the coolant recovery container (Refer to 7 - COOLING/ENGINE/COOLANT RECOVERY CONTAINER - INSTALLATION).
6. Install upper radiator hose.
7. Raise vehicle.
8. Install pressure line to radiator fan motor. Tighten fitting to 47 N·m (35 ft. lbs.).

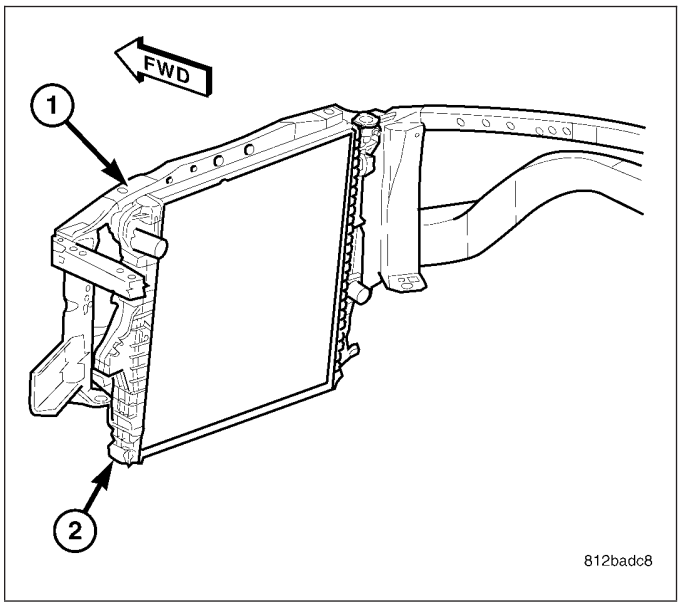

9. Install return line to radiator fan motor. Tighten fitting to 29 N·m (21 ft. lbs.)
10. Install lower radiator hoses.
11. Position power steering cooler on the radiator and tighten nuts to 10 N·m (90 in. lbs.)
12. Install cushion clamp (4) and pushpin (5).
13. Lower vehicle.
14. Install air box and inlet hose. Tighten clamps to 4 N·m (35 in. lbs.).
15. Fill cooling system (Refer to 7 - COOLING - STANDARD PROCEDURE).
16. Connect negative battery cable.
17. Fill power steering system (Refer to 19 - STEERING/PUMP/FLUID - STANDARD PROCEDURE).
18. Operate engine until it reaches normal temperature. Check cooling system and automatic transmission (if equipped) fluid levels.

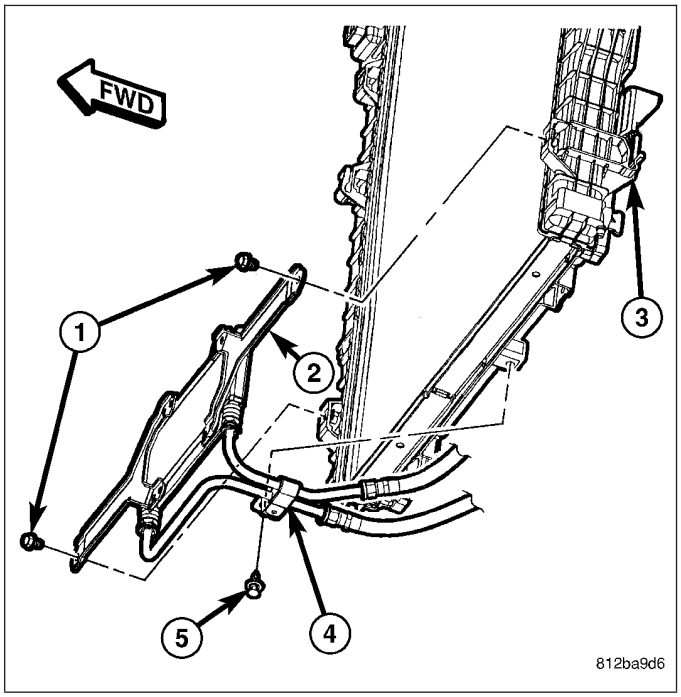

CAP-RADIATOR PRESSURE

DESCRIPTION

All cooling systems are equipped with a pressure cap. For 5.9L engines, the pressure cap is located on top of the radiator outlet tank. For all engines, the pressure cap is located on top of the coolant degas container. The cap releases pressure at some point within a range of 97-to-124 kPa (14-to-18 psi). The pressure relief point (in pounds) is engraved on top of the cap

The cooling system will operate at pressures slightly above atmospheric pressure. This results in a higher coolant boiling point allowing increased radiator cooling capacity. The cap contains a spring-loaded pressure relief valve. This valve opens when system pressure reaches the release range of 97-to-124 kPa (14-to-18 psi).

A rubber gasket seals the radiator filler neck. This is done to maintain vacuum during coolant cool-down and to prevent leakage when system is under pressure.

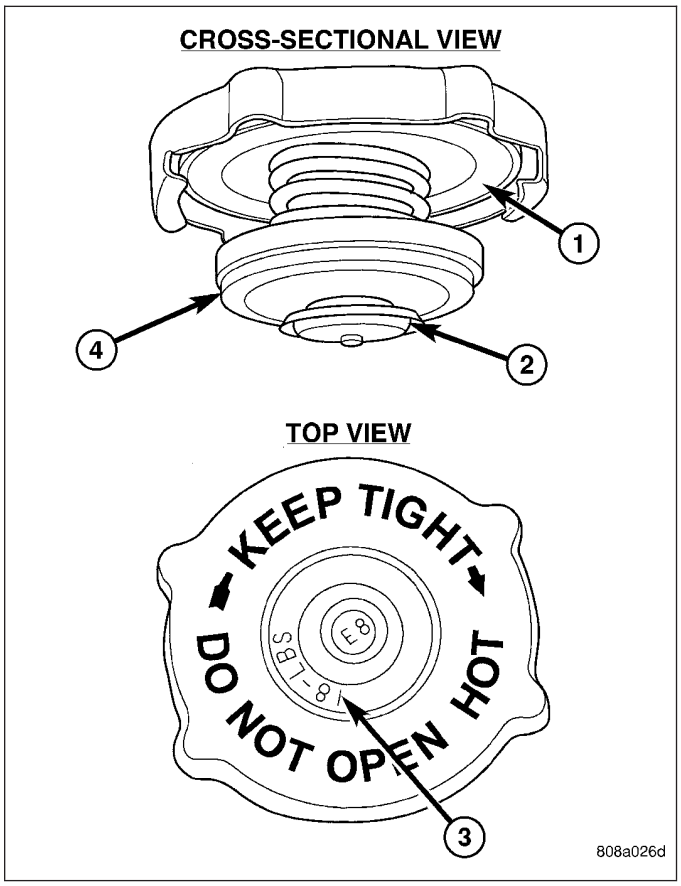

OPERATION

A vent valve in the center of the cap will remain shut as long as the cooling system is pressurized. As the coolant cools, it contracts and creates a vacuum in the cooling system. This causes the vacuum valve to open and coolant in the reserve/overflow container to be drawn through the recovery hose connecting the filler neck and reserve/overflow container. If the vacuum valve is stuck shut, or the recovery hose is kinked, radiator hoses will collapse on cool down.

DIAGNOSIS AND TESTING

RADIATOR CAP-TO-FILLER NECK SEAL

The pressure cap upper gasket (seal) pressure relief can be tested by removing overflow hose from the radiator filler neck tube. Attach the hose of the pressure tester tool 7700 (or equivalent) to the tube. It will be necessary to disconnect hose from its adapter for the filler neck. Pump air into radiator. The pressure cap upper gasket should relieve at 69 to 124kPa (10 to 18 psi) and hold pressure at a minimum of 55 kPa (8 psi).

WARNING: THE WARNING WORDS, ”DO NOT OPEN HOT”, ON RADIATOR PRESSURE CAP, ARE A SAFETY PRECAUTION. WHEN HOT, PRESSURE BUILDS UP IN COOLING SYSTEM. TO PREVENT SCALDING OR INJURY, RADIATOR CAP SHOULD NOT BE REMOVED WHILE SYSTEM IS HOT AND/OR UNDER PRESSURE.

Do not remove the radiator cap at any time **except** for the following purposes:

- Check and adjust antifreeze freeze point.
- Refill the system with new antifreeze.
- Conducting service procedures.
- Checking for vacuum leaks.

WARNING: IF VEHICLE HAS BEEN RUN RECENTLY, WAIT AT LEAST 15 MINUTES BEFORE REMOVING RADIATOR CAP. WITH A RAG, SQUEEZE RADIATOR UPPER HOSE TO CHECK IF SYSTEM IS UNDER PRESSURE. PLACE A RAG OVER CAP AND WITHOUT PUSHING CAP DOWN, ROTATE IT COUNTER-CLOCKWISE TO FIRST STOP. ALLOW FLUID TO ESCAPE THROUGH THE COOLANT RESERVE/OVERFLOW HOSE INTO RESERVE/OVERFLOW TANK. SQUEEZE RADIATOR UPPER HOSE TO DETERMINE WHEN PRESSURE HAS BEEN RELEASED. WHEN COOLANT AND STEAM STOP BEING PUSHED INTO TANK AND SYSTEM PRESSURE DROPS, REMOVE RADIATOR CAP COMPLETELY.

RADIATOR CAP

Remove the cap from the radiator. Be sure that the sealing surfaces are clean. Moisten the rubber gasket with water and install the cap on the pressure tester 7700 or an equivalent.

Operate the tester pump to bring the pressure to 104 kPa (15 psi) on the gauge. If the pressure cap fails to hold pressure of at least 97 kPa (14 psi) replace the cap. Refer to the following **CAUTION**.

The pressure cap may test properly while positioned on tool 7700 (or equivalent). It may not hold pressure or vacuum when installed on the radiator. If so, inspect the radiator filler neck and radiator cap's top gasket for damage. Also inspect for dirt or distortion that may prevent the cap from sealing properly.

CAUTION: Radiator pressure testing tools are very sensitive to small air leaks which will not cause cooling system problems. A pressure cap that does not have a history of coolant loss should not be replaced just because it leaks slowly when tested with this tool. Add water to tool. Turn tool upside down and recheck pressure cap to confirm that cap needs replacement.

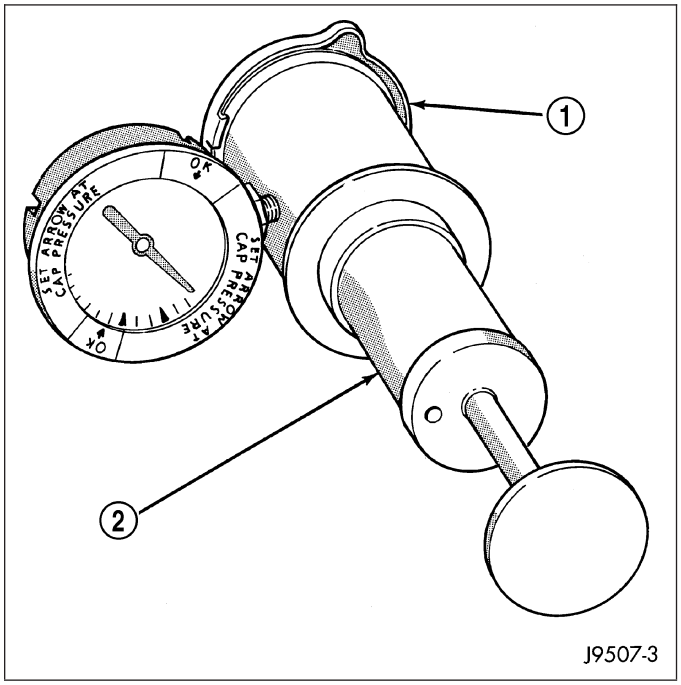

CLEANING

Use only a mild soap and water to clean the radiator cap. Using any type of solvent may cause damage to the seal in the radiator cap.

INSPECTION

Hold cap at eye level, right side up. The vent valve at bottom of cap should closed. A slight downward pull on the vent valve should open it. If the rubber gasket has swollen and prevents vent valve from opening, replace cap.

Hold cap at eye level, upside down. If any light can be seen between vent valve and rubber gasket, replace cap. A replacement cap must be the type designed for a coolant reserve/overflow system with a completely sealed diaphragm spring and a rubber gasket. This gasket is used to seal to radiator filler neck top surface. Use of proper cap will allow coolant return to radiator.

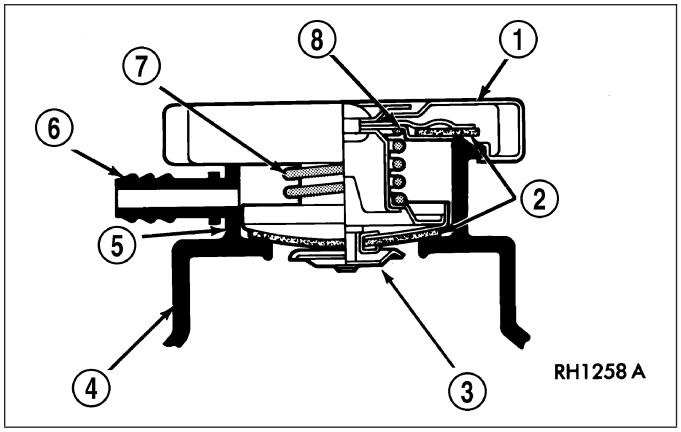

PUMP-WATER

DESCRIPTION

DESCRIPTION

A centrifugal water pump circulates coolant through the water jackets, passages, intake manifold, radiator core, cooling system hoses and heater core. The pump is driven from the engine crankshaft by a single serpentine drive belt.

The water pump impeller is pressed onto the rear of a shaft that rotates in bearings pressed into the housing. The housing has two small holes to allow seepage to escape. The water pump seals are lubricated by the antifreeze in the coolant mixture. No additional lubrication is necessary.

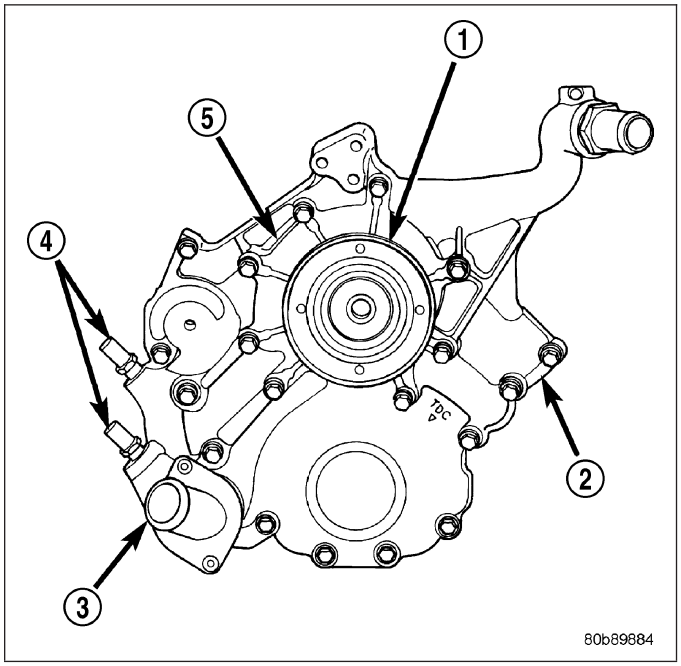

DESCRIPTION - WATER PUMP BYPASS

The 3.7L and 4.7L engine uses an internal water/coolant bypass system. The design uses galleries in the timing chain cover to circulate coolant during engine warm-up preventing the coolant from flowing through the radiator.

OPERATION

OPERATION

A centrifugal water pump circulates coolant through the water jackets, passages, intake manifold, radiator core, cooling system hoses and heater core, this coolant absorbs the heat generated when the engine is running. The pump is driven by the engine crankshaft via a drive belt.

WATER PUMP BYPASS – 3.7L/4.7L ENGINE

When the thermostat is in the closed position the bypass gallery is not obstructed allowing 100% flow. When the thermostat is in the open position the pill partially covers the bypass hole, reducing the amount of bypass flow. This design allows the coolant to reach operating temperature quickly when cold, while adding extra cooling during normal temperature operation.

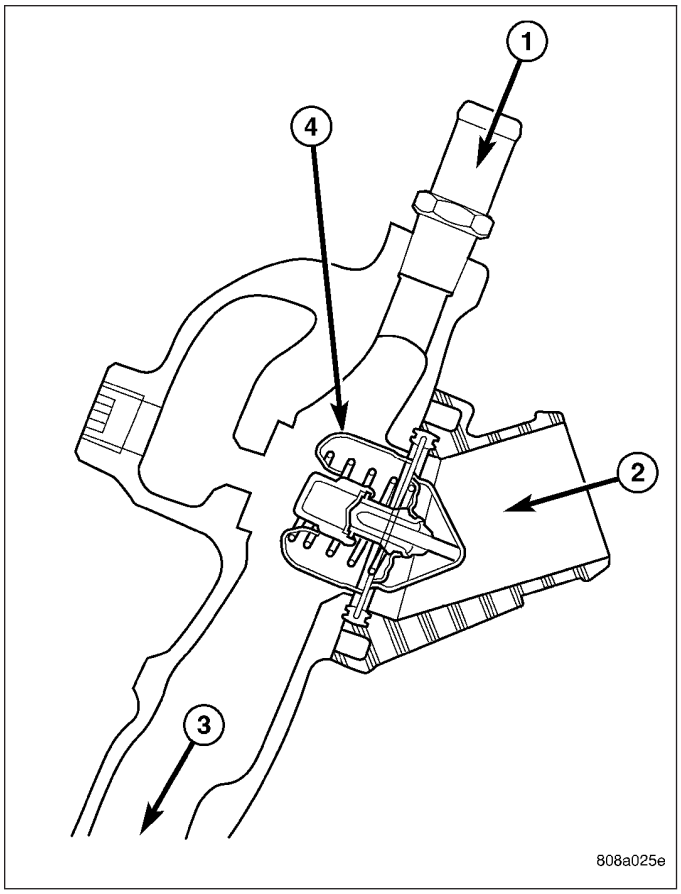

DIAGNOSIS AND TESTING - WATER PUMP

A quick test to determine if pump is working is to check if heater warms properly. A defective water pump will not be able to circulate heated coolant through the long heater hose to the heater core.

REMOVAL

3.7L/4.7L ENGINE

The water pump on 3.7L/4.7L engines is bolted directly to the engine timing chain case cover.

1. Disconnect the negative battery cable.
2. Drain cooling system (Refer to 7 - COOLING - STANDARD PROCEDURE).
3. Remove fan/viscous fan drive assembly from water pump (Refer to 7 - COOLING/ENGINE/FAN DRIVE VISCOUS CLUTCH - REMOVAL). Do not attempt to remove fan/viscous fan drive assembly from vehicle at this time.

WARNING: CONSTANT TENSION HOSE CLAMPS ARE USED ON MOST COOLING SYSTEM HOSES. WHEN REMOVING OR INSTALLING, USE ONLY TOOLS DESIGNED FOR SERVICING THIS TYPE OF CLAMP. ALWAYS WEAR SAFETY GLASSES WHEN SERVICING CONSTANT TENSION CLAMPS.

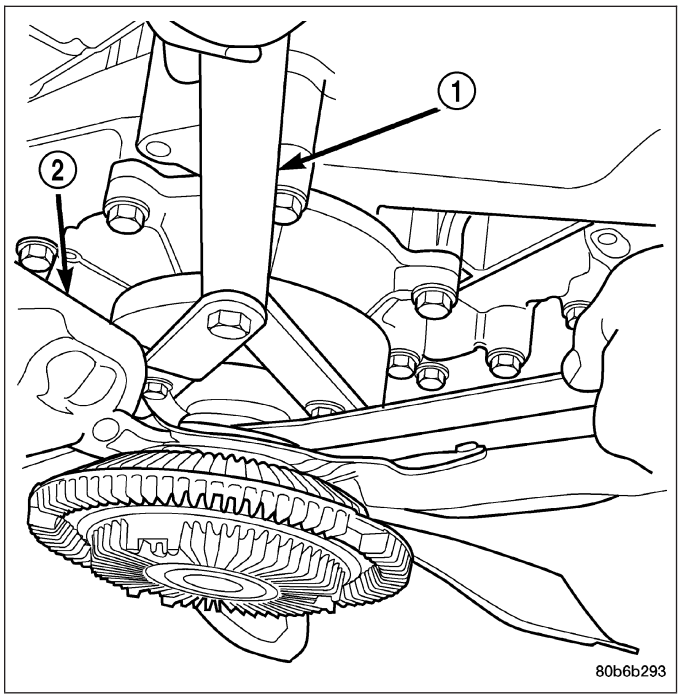

CAUTION: A number or letter is stamped into the tongue of constant tension clamps. If replacement is necessary, use only an original equipment clamp with matching number or letter and width.

4. If the water pump is being replaced, do not unbolt the fan blade assembly from the thermal viscous fan drive.
5. Remove the radiator fan (Refer to 7 - COOLING/ENGINE/RADIATOR FAN - REMOVAL).
6. Remove accessory drive belt (Refer to 7 - COOLING/ACCESSORY DRIVE/DRIVE BELTS - REMOVAL).
7. Remove the lower radiator hose clamp and remove the lower hose at the water pump.
8. Remove the water pump mounting bolts.

CAUTION: Do not pry water pump at timing chain case/cover. The machined surfaces may be damaged resulting in leaks.

9. Remove the water pump and gasket. Discard gasket.

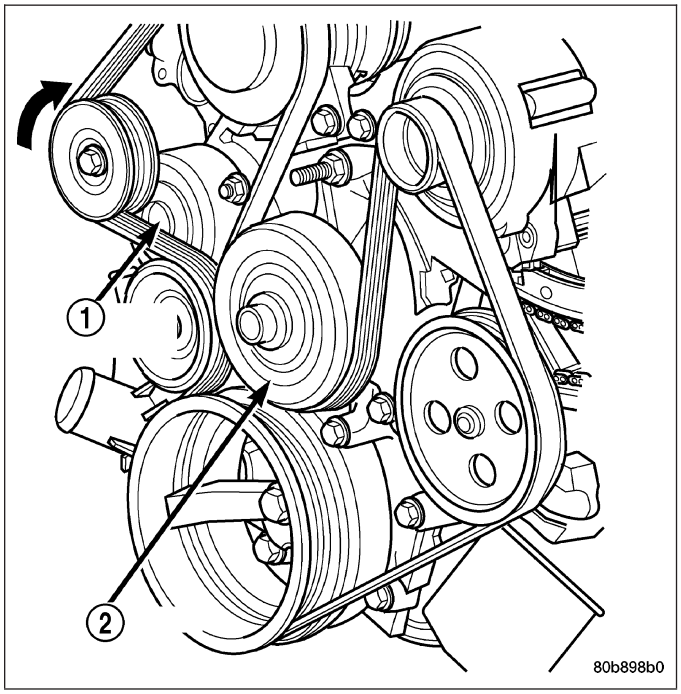

5.7L ENGINE

1. Disconnect negative battery cable.
2. Drain coolant.
3. Remove serpentine belt.
4. Remove fan clutch assembly.
5. Remove coolant fill bottle.
6. Disconnect washer bottle wiring and hose.
7. Remove fan shroud assembly.
8. Remove A/C compressor and generator brace.
9. Remove idler pulleys.
10. Remove belt tensioner assembly.
11. Remove upper and lower radiator hoses.
12. Remove heater hoses.
13. Remove water pump mounting bolts and remove pump.

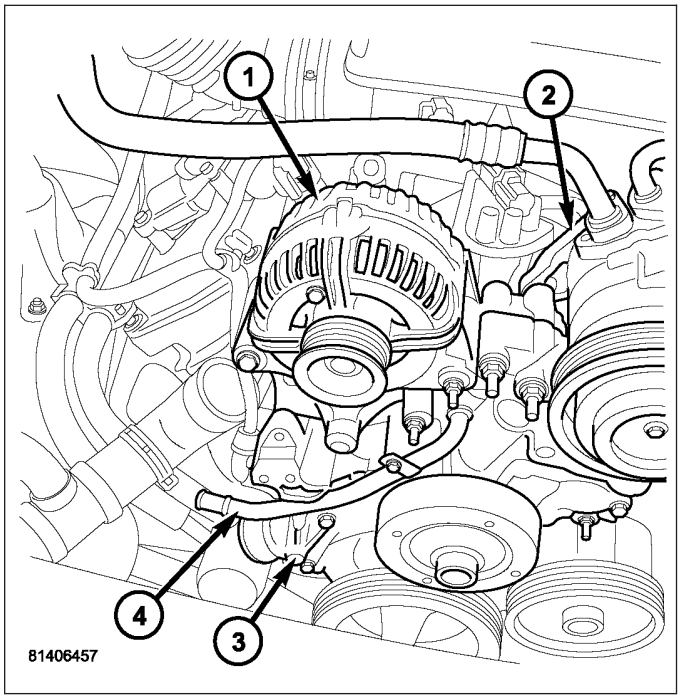

5.9L DIESEL ENGINE

1. Disconnect battery negative cables.
2. Drain cooling system (Refer to 7 - COOLING - STANDARD PROCEDURE).
3. Remove the accessory drive belt (Refer to 7 - COOLING/ACCESSORY DRIVE/DRIVE BELTS - REMOVAL).
4. Remove water pump mounting bolts (3).
5. Clean water pump sealing surface on cylinder block.

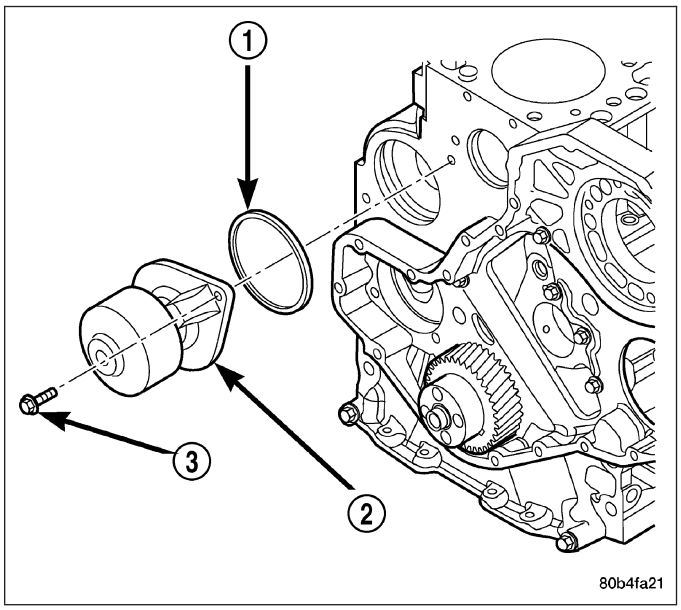

8.3L ENGINE

NOTE:
The water pump on all models can be removed without discharging the air conditioning system (if equipped).
The water pump on all gas powered engines is bolted directly to the engine timing chain case/ cover.
On the 8.0L V-10 engine, a rubber o-ring (instead of a gasket) is used as a seal between the water pump and timing chain case/cover.

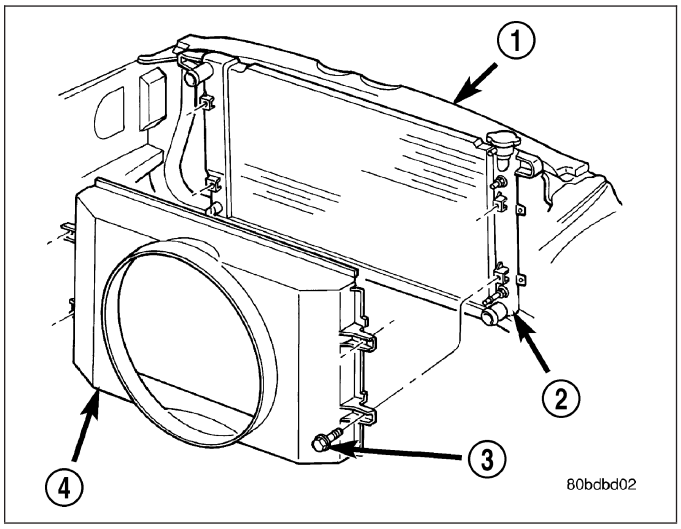

If water pump is replaced because of bearing/shaft damage or leaking shaft seal, the mechanical cooling fan assembly should also be inspected. Inspect for fatigue cracks, loose blades or loose rivets that could have resulted from excessive vibration. Replace fan if any of these conditions are found. Also check condition of the thermal viscous fan drive (Refer to 7 - COOLING/ENGINE/FAN DRIVE VISCOUS CLUTCH - DIAGNOSIS AND TESTING).

1. Disconnect negative battery cable from battery.
2. Drain cooling system (Refer to 7 - COOLING - STANDARD PROCEDURE).

Do not waste reusable coolant. If solution is clean, drain coolant into a clean container for reuse.

3. Remove windshield washer reservoir tank from radiator fan shroud.
4. Remove the four fan shroud mounting bolts at the radiator. Do not attempt to remove shroud from vehicle at this time.

WARNING: CONSTANT TENSION HOSE CLAMPS ARE USED ON MOST COOLING SYSTEM HOSES. WHEN REMOVING OR INSTALLING, USE ONLY TOOLS DESIGNED FOR SERVICING THIS TYPE OF CLAMP, SUCH AS SPECIAL CLAMP TOOL NUMBER 6094. ALWAYS WEAR SAFETY GLASSES WHEN SERVICING CONSTANT TENSION CLAMPS.

CAUTION: A number or letter is stamped into the tongue of constant tension clamps. If replacement is necessary, use only an original equipment clamp with a matching number or letter.

5. Remove radiator upper hose at radiator.
6. Remove accessory drive belt (Refer to 7 - COOLING/ACCESSORY DRIVE/DRIVE BELTS - REMOVAL).
7. Remove the radiator lower hose at water pump.
8. Remove heater hose at water pump fitting.
9. Remove the seven water pump mounting bolts.
10. Loosen the clamp at the water pump end of bypass hose. Slip the bypass hose from the water pump while removing pump from vehicle. Do not remove the clamp from the bypass hose.

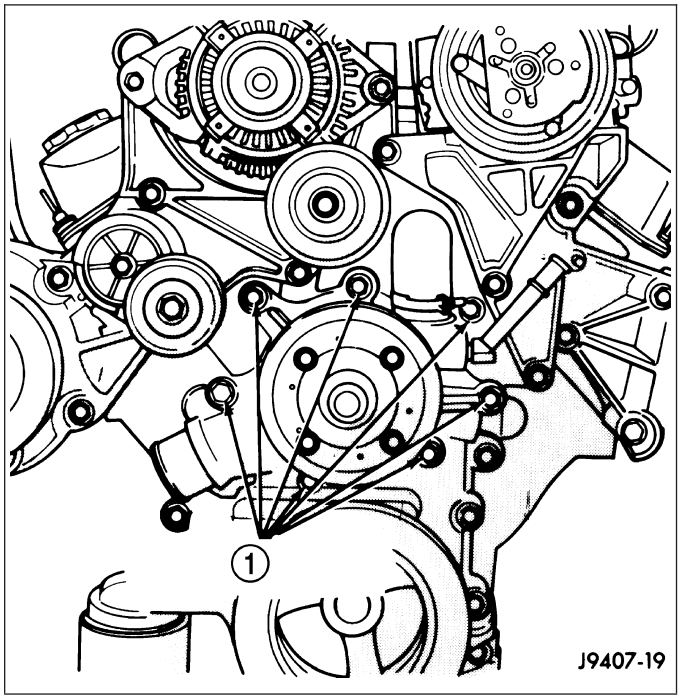

11. Discard the water pump-to-timing chain/case cover o-ring seal.
12. Remove the heater hose fitting from water pump if pump replacement is necessary. Note position (direction) of fitting before removal. Fitting must be re-installed to same position.

CAUTION: Do not pry the water pump at timing chain case/cover. The machined surfaces may be damaged resulting in leaks.

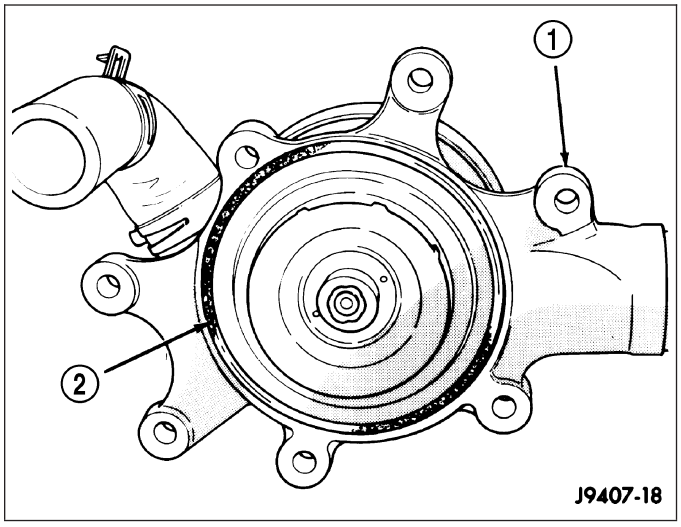

CLEANING

Clean the gasket mating surface. Use caution not to damage the gasket sealing surface.

INSPECTION

Inspect the water pump assembly for cracks in the housing, water leaks from shaft seal, worn bearing or impeller rubbing either the pump body or timing chain case/cover.

INSTALLATION

3.7L/4.7L ENGINE

The water pump on 3.7L/4.7L engine is bolted directly to the engine timing chain case cover.

1. Clean the gasket mating surfaces.
2. Using a new gasket, position water pump and install the mounting bolts.. Tighten the water pump mounting bolts to 58 N·m (43 ft. lbs.).
3. Spin the water pump to be sure that the pump impeller does not rub against the timing chain case/cover.
4. Connect the radiator lower hose to the water pump.

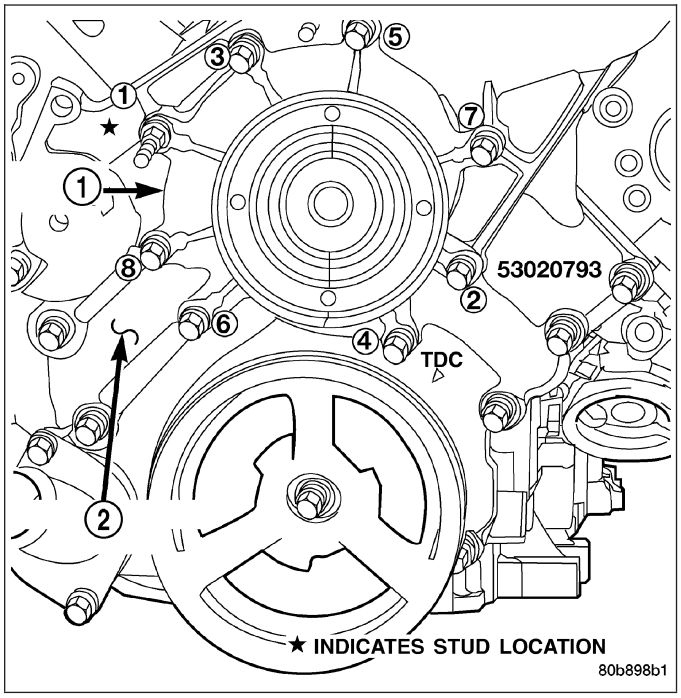

5. Relax the tension from the belt tensioner. Install the drive belt (Refer to 7 - COOLING/ACCESSORY DRIVE/DRIVE BELTS - INSTALLATION).

CAUTION: When installing the serpentine accessory drive belt, the belt must be routed correctly. If not, the engine may overheat due to the water pump rotating in the wrong direction. Refer to for the correct belt routing. Or, refer to the Belt Routing Label located in the engine compartment. The correct belt with correct length must be used.

6. Install the radiator fan (Refer to 7 - COOLING/ENGINE/RADIATOR FAN - INSTALLATION).
7. Fill cooling system (Refer to 7 - COOLING - STANDARD PROCEDURE).
8. Connect the negative battery cable.
9. Start and warm the engine. Check for leaks.

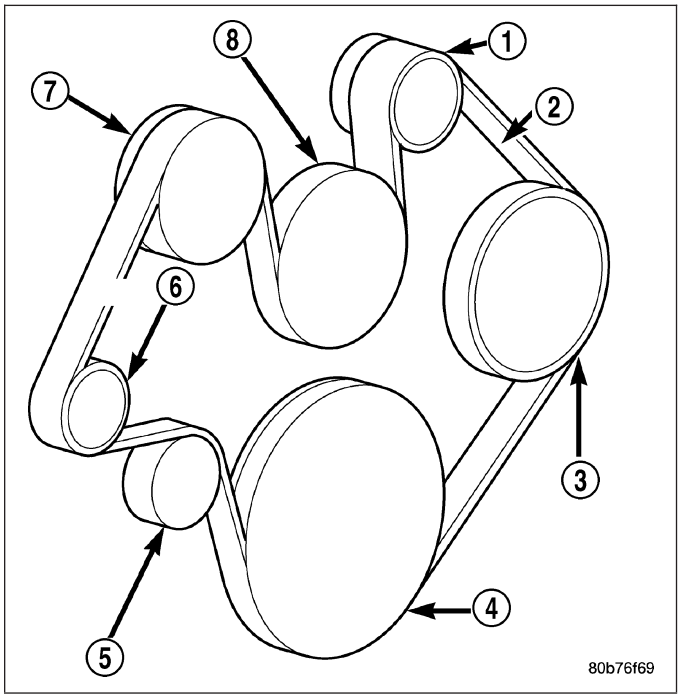

5.7L ENGINE

1. Install water pump and mounting bolts. Tighten moubting bolts to 24 N·m (18 ft. lbs.).
2. Install heater hoses.
3. Install upper and lower radiator hoses.
4. Install belt tensioner assembly.
5. Install idler pulleys.
6. Install A/C compressor and alternator brace. Tighten bolt and nuts to 28 N·m (21 ft. lbs.).
7. Install fan shroud assembly.
8. Connect washer bottle wiring and hose.
9. Install coolant fill bottle.
10. Install fan clutch assembly.
11. Install serpentine belt.
12. Connect negative battery cable.
13. Fill coolant.
14. Pressure test coolant system

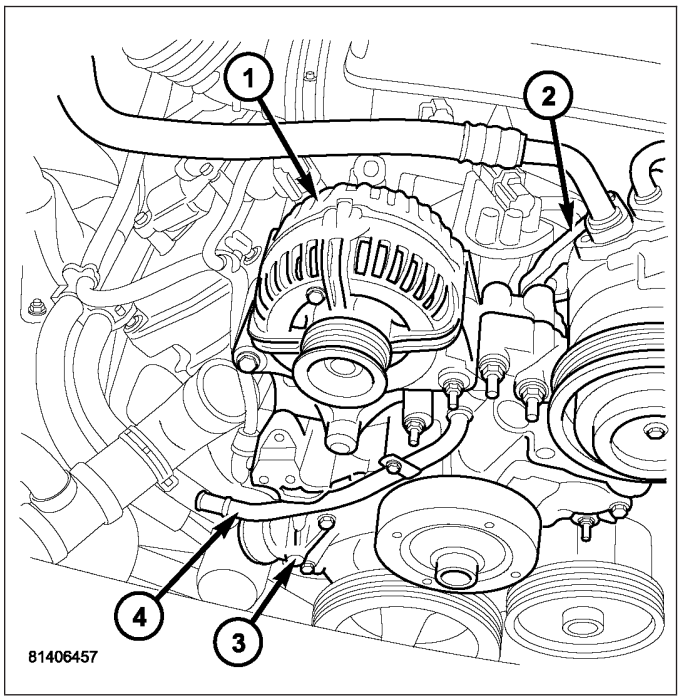

5.9L DIESEL ENGINE

1. Install new O-ring seal in groove on water pump.
2. Install water pump with the weep hole facing downward. Tighten mounting bolts to 24 N·m (18 ft. lbs.) torque.
3. Install accessory drive belt (Refer to 7 - COOLING/ ACCESSORY DRIVE/DRIVE BELTS - INSTALLATION).
4. Fill cooling system (Refer to 7 - COOLING - STANDARD PROCEDURE).
5. Connect both battery cables.
6. Start and warm the engine. Check for leaks.

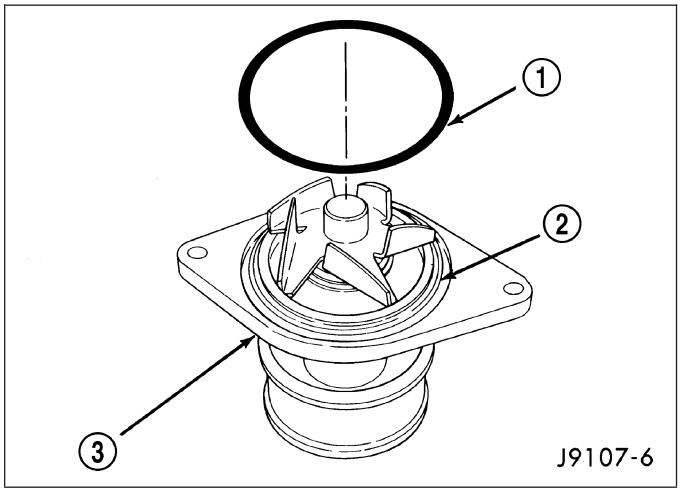

8.3L ENGINE

1. If water pump is being replaced, install the heater hose fitting to the pump. Tighten fitting to 16 N·m (144 in. lbs.) torque. After fitting has been torqued, position fitting as shown in. When positioning fitting, do not back off (rotate counterclockwise). Use a sealant on the fitting such as Mopar® Thread Sealant With Teflon. Refer to the directions on the package.

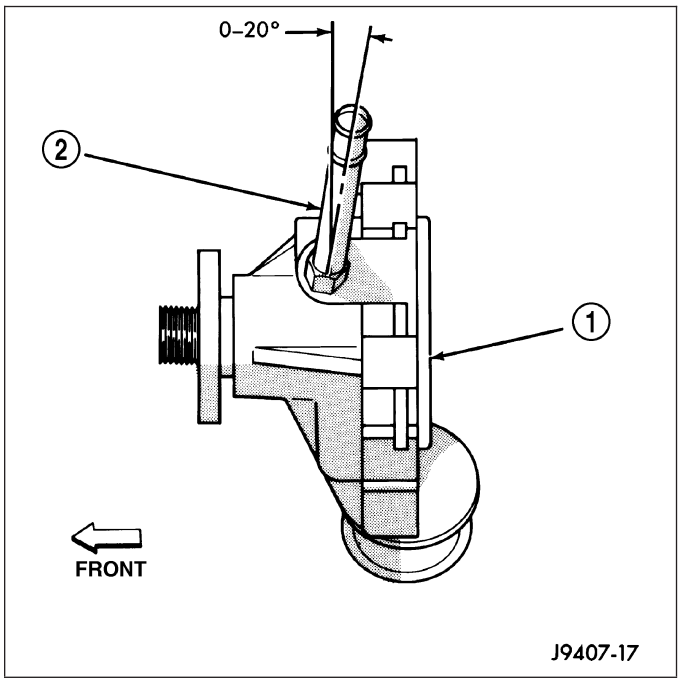

CAUTION: This heater hose fitting must be installed to pump before pump is installed to engine.

2. Clean the o-ring mating surfaces at rear of water pump and front of timing chain/case cover.
3. Apply a small amount of petroleum jelly to o-ring. This will help retain o-ring to water pump.
4. Install water pump to engine as follows: Guide water pump fitting into bypass hose as pump is being installed. Install water pump bolts. Tighten water pump mounting bolts to 40 N·m (30 ft. lbs.) torque.
5. Position bypass hose clamp to bypass hose.
6. Spin water pump to be sure that pump impeller does not rub against timing chain case/cover.
7. Connect radiator lower hose to water pump.
8. Connect heater hose and hose clamp to heater hose fitting.
9. Install drive belt (Refer to 7 - COOLING/ACCESSORY DRIVE/DRIVE BELTS - INSTALLATION).
10. Position fan shroud and fan blade/viscous fan drive assembly to vehicle as a complete unit.
11. Install fan shroud to radiator. Tighten bolts to 6 N·m (50 in. lbs.) torque.
12. Install fan blade/viscous fan drive assembly to water pump shaft.
13. Fill cooling system (Refer to 7 - COOLING - STANDARD PROCEDURE).
14. Connect negative battery cable.
15. Start and warm the engine. Check for leaks.

TRANSMISSION

TABLE OF CONTENTS

page

TRANSMISSION
STANDARD PROCEDURE
TRANSMISSION COOLER LINE QUICK CONNECT FITTING DISASSEMBLY/ ASSEMBLY 94
COOLER-TRANSMISSION OIL
DESCRIPTION
ALL VEHICLES 96
5.9L DIESEL 96
OPERATION
GAS ENGINES 97
5.9L DIESEL ENGINE 97
REMOVAL
3.7L ENGINE 98
4.7L ENGINE 98
5.7L ENGINE 99
AIR TO OIL COOLER - 5.9L DIESEL 99
REMOVAL - WATER TO OIL COOLER 99
8.3L ENGINE 100
DISASSEMBLY - 5.9L DIESEL - 8.3L ENGINES . 100
ASSEMBLY - 5.9L DIESEL - 8.3L ENGINES . . . 101
INSTALLATION
3.7L ENGINE 101
4.7L ENGINE 102
5.7L ENGINE 102
AIR TO OIL COOLER - 5.9L DIESEL 103
INSTALLATION - WATER-TO-OIL COOLER . 103
8.3L ENGINE 104

TRANSMISSION

STANDARD PROCEDURE

TRANSMISSION COOLER LINE QUICK CONNECT FITTING DISASSEMBLY/ ASSEMBLY

DISCONNECT

1. Remove dust cap by pulling it straight back off of quick connect fitting.
2. Place disconnect tool Special Tool 8875A onto transmission cooler line with the fingers of the tool facing the quick connect fitting.
3. Slide disconnect tool down the transmission line and engage the fingers of the tool into the retaining clip. When properly engaged in the clip, the tool will fit flush against the quick connect fitting.
4. Rotate the disconnect tool 60° to expand the retaining clip.
5. While holding the disconnect tool against the quick connect fitting, pull back on the transmission cooler line to remove.

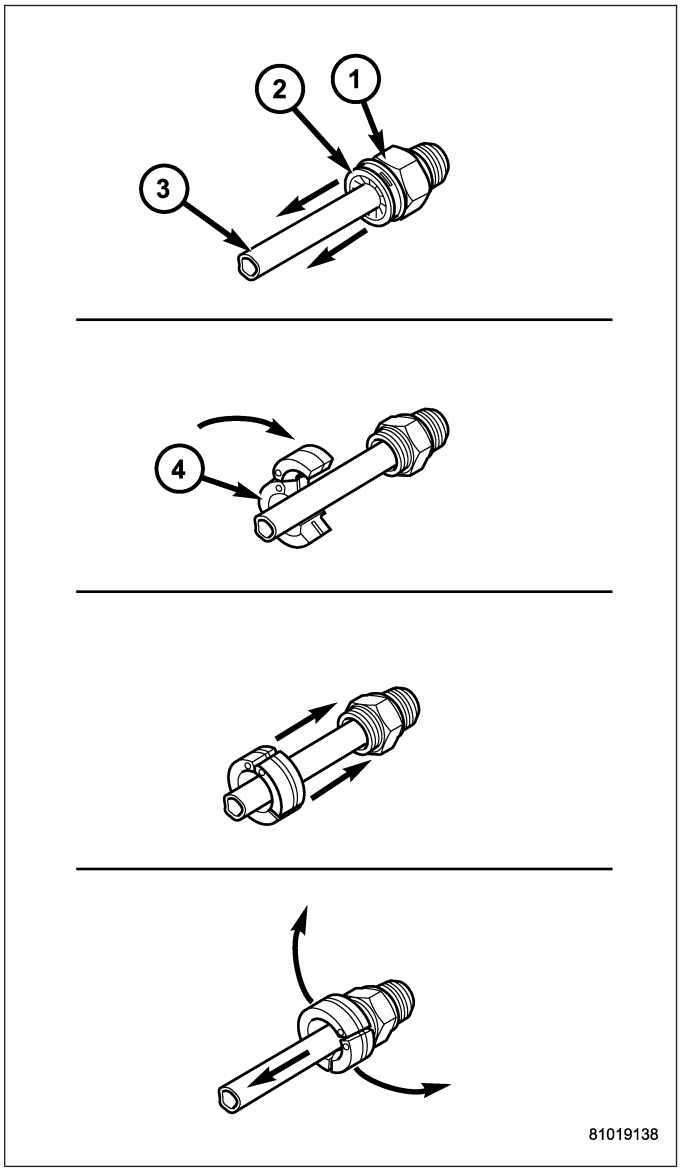

CONNECT

1. Align transmission cooler line with quick connect fitting while pushing straight into the fitting.
2. Push in on transmission cooler line until a “click” is heard or felt.
3. Slide dust cap down the transmission cooler line and snap it over the quick connect fitting until it is fully seated and rotates freely. Dust cap will only snap over quick connect fitting when the transmission cooler line is properly installed.

NOTE: If dust cap will not snap into place, repeat assembly step 2.

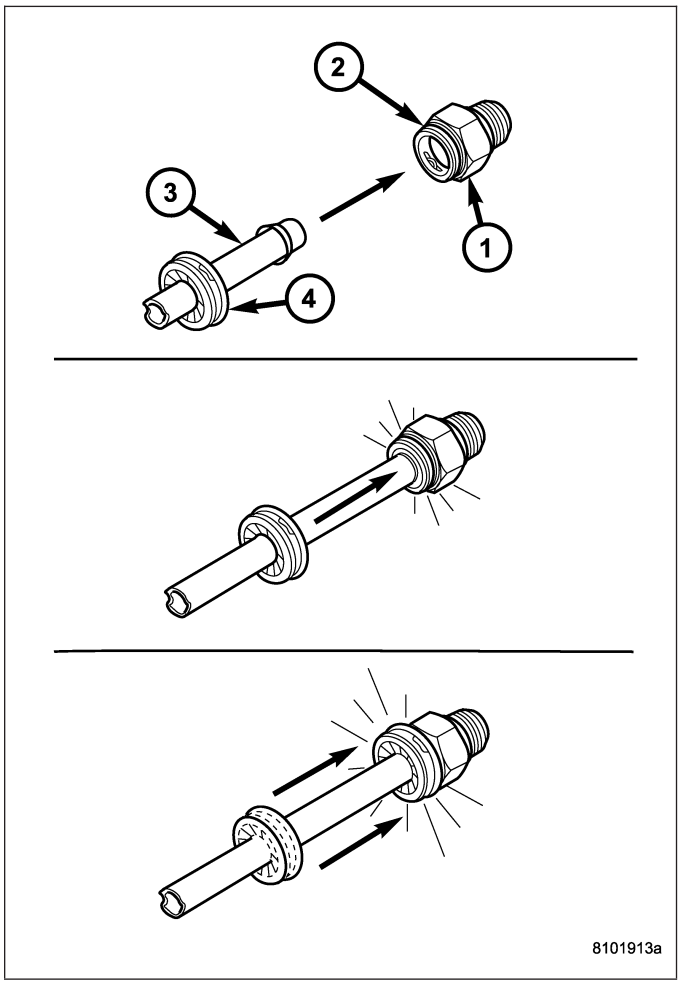

COOLER-TRANSMISSION OIL

DESCRIPTION

ALL VEHICLES

An air-to-oil transmission oil cooler is standard on all engine packages. The transmission oil cooler is mounted to the front of the radiator above the power steering cooler and

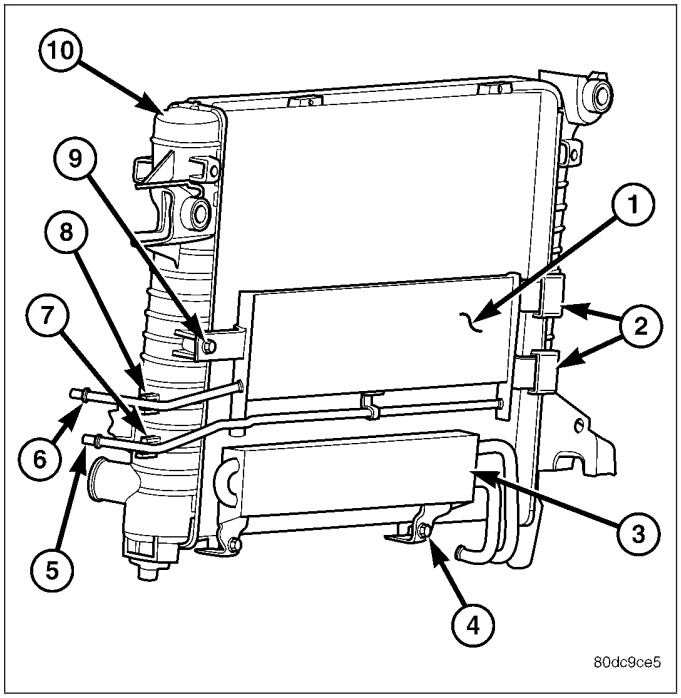

5.9L DIESEL

All diesel models equipped with an automatic transmission are equipped with both a main water-to-oil cooler and a separate air-to-oil cooler. Both coolers are supplied as standard equipment on diesel engine powered models when equipped with an automatic transmission.

The main water-to-oil transmission oil cooler is mounted to a bracket on the intake side of the engine.

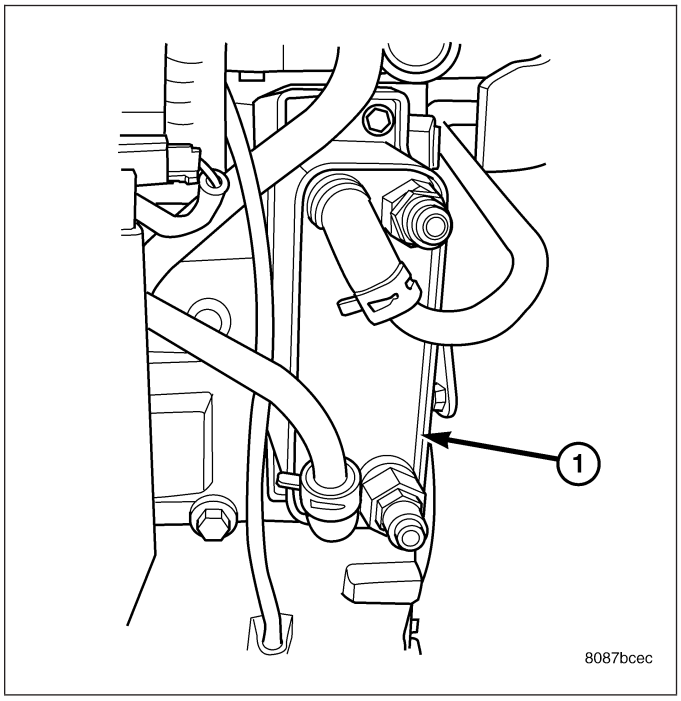

The air-to-oil cooler is located in front of the radiator.

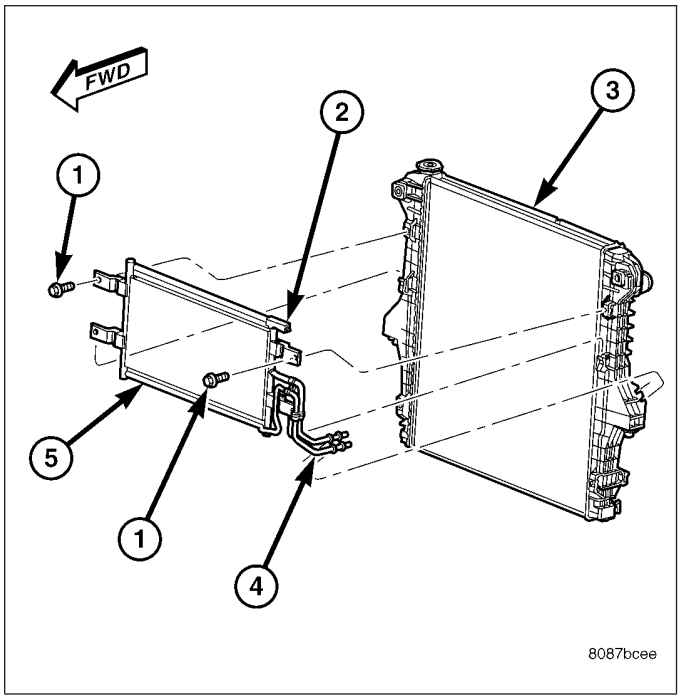

OPERATION

GAS ENGINES

Transmission oil is routed through the cooler where heat is removed from the transmission oil before returning to the transmission.

5.9L DIESEL ENGINE

The transmission oil is routed through the main cooler first, then the auxiliary cooler where additional heat is removed from the transmission oil before returning to the transmission. The auxiliary cooler has an internal thermostat that controls fluid flow through the cooler. When the transmission fluid is cold (less then operating temperature), the fluid is routed through the cooler bypass. When the transmission fluid reaches operating temperatures and above, the thermostat closes off the bypass allowing fluid flow through the cooler. The thermostat is servicable.

REMOVAL

3.7L ENGINE

1. Place a drain pan under the oil cooler lines.
2. Disconnect the transmission oil cooler line quick-connect fitting at the cooler outlet using the quick connect release tool 6935. Plug the cooler lines to prevent oil leakage.
3. Unsnap the transmission cooler tubes from the radiator tank clips.
4. Remove the bolt attaching the transmission cooler to the radiator.
5. Remove oil cooler from the vehicle. Take care not to damage the radiator core or transmission cooler tubes.

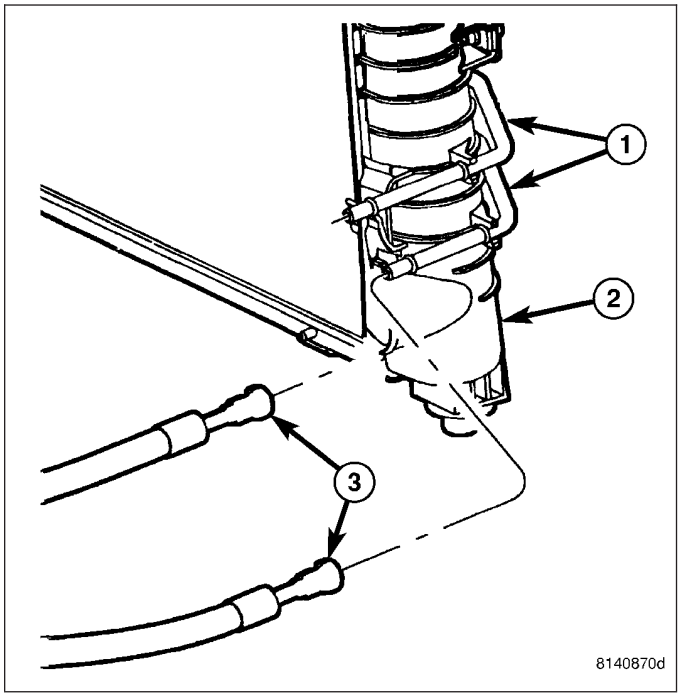

4.7L ENGINE

1. Place a drain pan under the oil cooler lines.
2. Disconnect the transmission oil cooler line quick-connect fitting at the cooler outlet using the quick connect release tool 6935 (Refer to 7 - COOLING/ TRANSMISSION - STANDARD PROCEDURE). Plug the cooler lines to prevent oil leakage.
3. Unsnap the transmission cooler tubes from the radiator tank clips.
4. Remove the bolt attaching the transmission cooler to the radiator.
5. Remove oil cooler from the vehicle. Take care not to damage the radiator core or transmission cooler tubes.

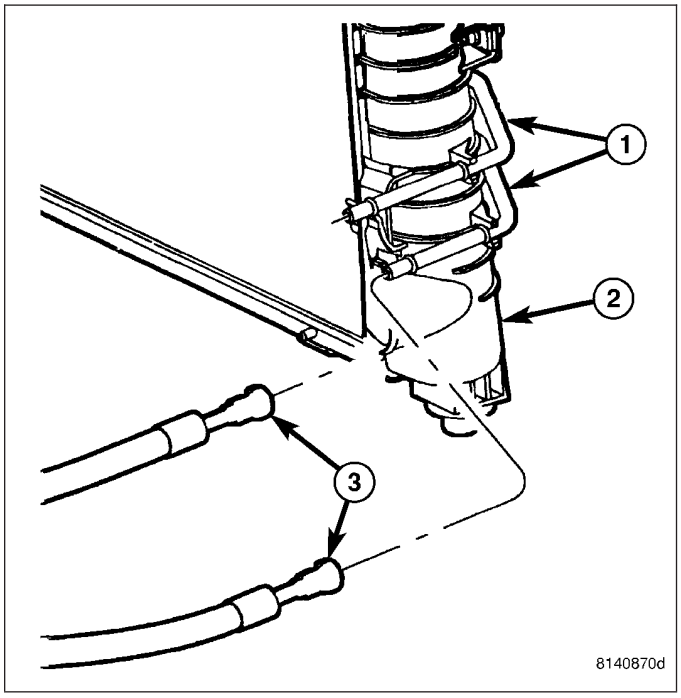

5.7L ENGINE

1. Place a drain pan under the oil cooler lines.
2. Disconnect the transmission oil cooler line quick-connect fitting at the cooler outlet using the quick connect release tool 6935. Plug the cooler lines to prevent oil leakage.
3. Unsnap the transmission cooler tubes from the radiator tank clips.
4. Remove the bolt attaching the transmission cooler to the radiator.
5. Remove oil cooler from the vehicle. Take care not to damage the radiator core or transmission cooler tubes.

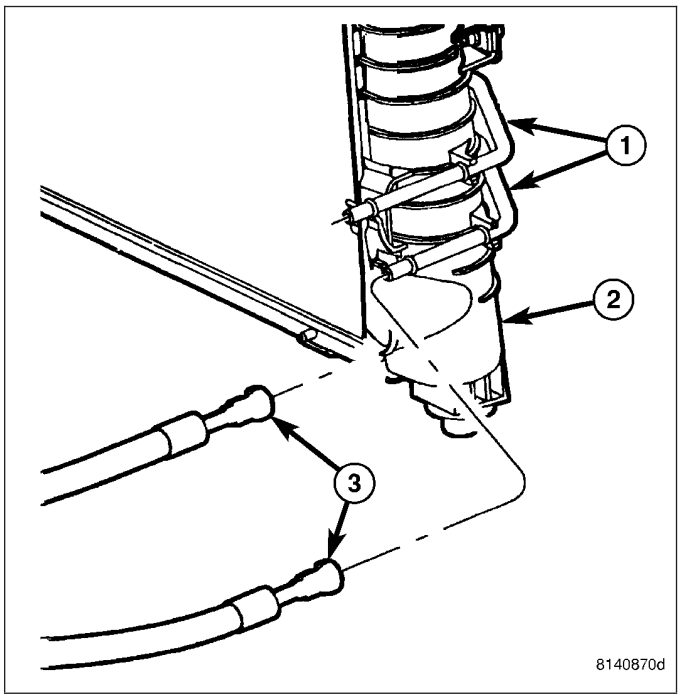

AIR TO OIL COOLER - 5.9L DIESEL

1. Remove Charge Air Cooler (Refer to 11 - EXHAUST SYSTEM/TURBOCHARGER SYSTEM/ CHARGE AIR COOLER AND PLUMBING - REMOVAL).
2. Place a drain pan under the oil cooler.
3. Raise the vehicle.
4. Disconnect the oil cooler quick-connect fittings from the transmission lines.
5. Remove the charge air cooler-to-oil cooler bolt.
6. Remove two mounting nuts.
7. Remove the oil cooler and line assembly towards the front of vehicle. Cooler must be rotated and tilted into position while removing.

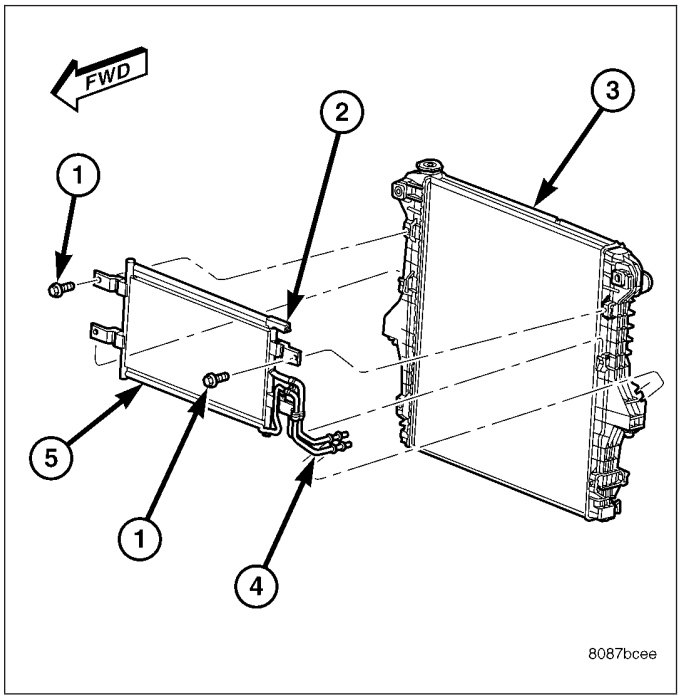

REMOVAL - WATER TO OIL COOLER

CAUTION: If a leak should occur in the water-to-oil cooler mounted to the side of the engine block, engine coolant may become mixed with transmission fluid. Transmission fluid may also enter engine cooling system. Both cooling system and transmission should be drained and inspected in case of oil cooler leakage.

1. Disconnect both battery negative cables.

2. Remove starter (Refer to 8 - ELECTRICAL/STARTING/STARTER MOTOR - REMOVAL).
3. Drain cooling system (Refer to 7 - COOLING - STANDARD PROCEDURE).
4. Disconnect coolant lines from cooler.

NOTE: Use a back-up wrench on the transmission cooler fittings to prevent damage to the cooler.

5. Disconnect transmission oil lines from cooler. Plug cooler lines to prevent oil leakage.
6. Remove cooler bracket to transmission adapter bolt.
7. Remove two cooler bracket to block bolts.
8. Remove cooler assembly from vehicle.

8.3L ENGINE

1. Place a drain pan under the oil cooler.
2. Raise the vehicle.
3. Disconnect the oil cooler quick-connect fittings from the transmission lines.
4. Remove cooler mounting bolts.
5. Remove the oil cooler and line assembly towards the front of vehicle. Cooler must be rotated and tilted into position while removing.

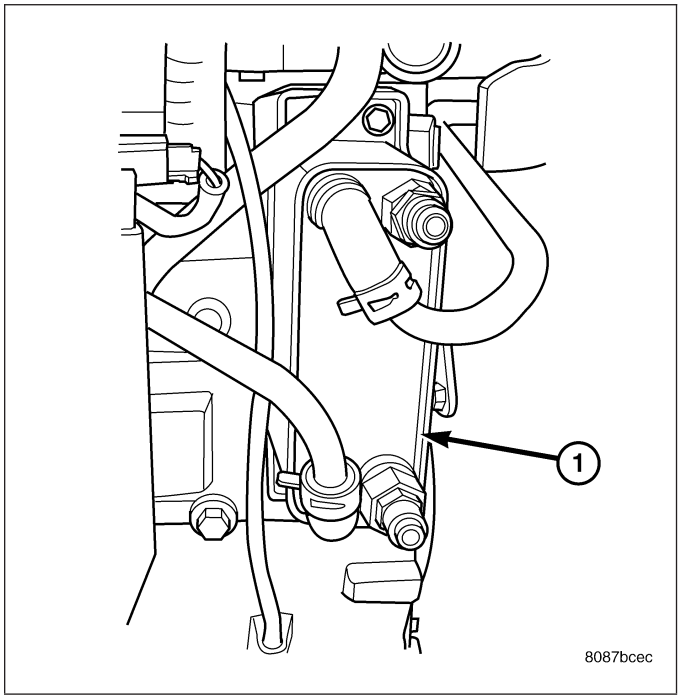

DISASSEMBLY - 5.9L DIESEL - 8.3L ENGINES

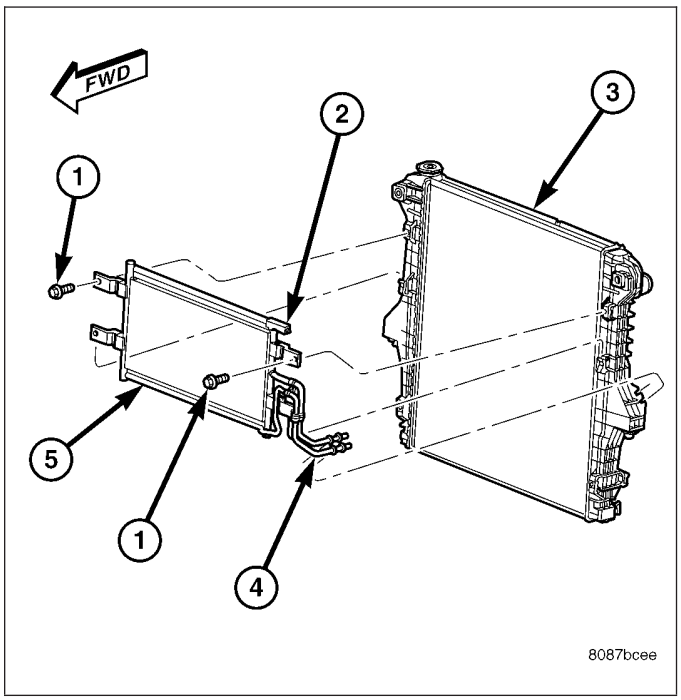

NOTE: The transmission oil cooler uses an internal thermostat to control transmission oil flow through the cooler. This thermostat is servicable.

1. Remove the transmission oil cooler (Refer to 7 - COOLING/TRANSMISSION/TRANS COOLER - REMOVAL).
2. Remove the snap ring retaining the thermostat end plug.
3. Remove the end plug, thermostat and spring from transmission oil cooler.

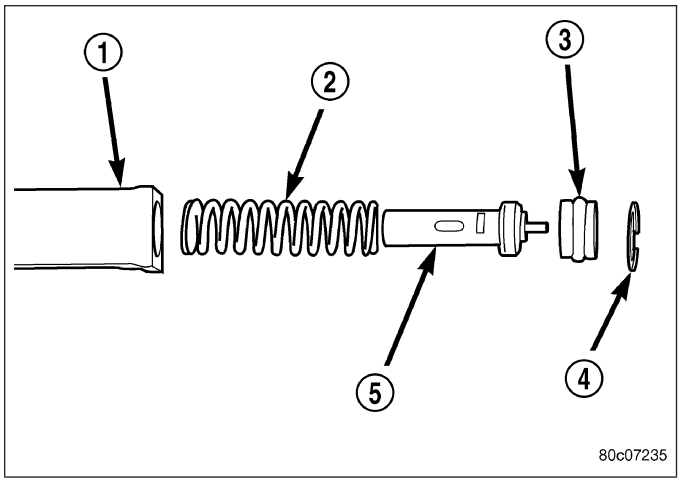

ASSEMBLY - 5.9L DIESEL - 8.3L ENGINES

1. Throughly clean the thermostat bore on the transmission oil cooler.
2. Install the new spring, thermostat, end plug and snap ring.
3. Install the transmission oil cooler (Refer to 7 - COOLING/TRANSMISSION/TRANS COOLER - INSTALLATION).

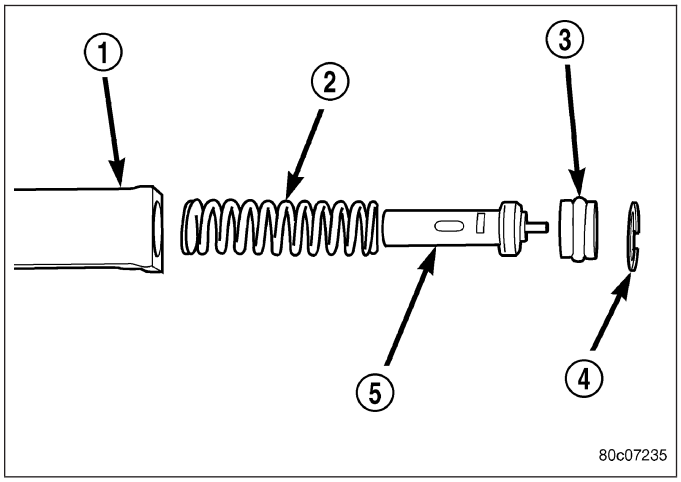

INSTALLATION

3.7L ENGINE

1. Position the transmission cooler tubes to the front of the radiator by sliding brackets into slots on radiator inlet tank.
2. Snap the transmission cooler tubes into the clips on the side of the radiator tank.
3. Install the transmission cooler attaching bolt. Tighten the bolt to 16 N·m (140 in. lbs.).
4. Inspect the quick connect fittings for debris and install the quick connect fitting on the cooler tube until an audible “click” is heard. Pull apart the connection to verify proper installation and install the secondary latches.
5. Start the engine and check all fittings for leaks.
6. Check the fluid level in the automatic transmission. Refer to the appropriate transmission section (Refer to 21 - TRANSMISSION/TRANSAXLE/AUTOMATIC - 45RFE/545RFE/FLUID - STANDARD PROCEDURE) or (Refer to 21 - TRANSMISSION/TRANSAXLE/AUTOMATIC - 46RE/FLUID - STANDARD PROCEDURE).

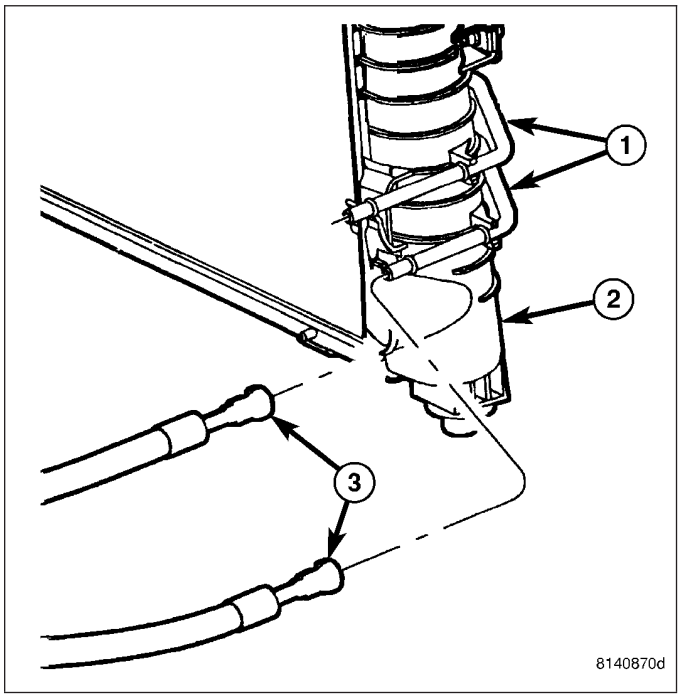

4.7L ENGINE

1. Position the transmission cooler tubes to the front of the radiator by sliding brackets into slots on radiator inlet tank.
2. Snap the transmission cooler tubes into the clips on the side of the radiator tank.
3. Install the transmission cooler attaching bolt. Tighten the bolt to 16 N·m (140 in. lbs.).
4. Inspect the quick connect fittings for debris and install the quick connect fitting on the cooler tube until an audible “click” is heard. Pull apart the connection to verify proper installation and install the secondary latches (Refer to 7 - COOLING/TRANSMISSION - STANDARD PROCEDURE).
5. Start the engine and check all fittings for leaks.
6. Check the fluid level in the automatic transmission. Refer to the appropriate transmission section (Refer to 21 - TRANSMISSION/TRANSAXLE/AUTOMATIC - 45RFE/545RFE/FLUID - STANDARD PROCEDURE) or (Refer to 21 - TRANSMISSION/TRANSAXLE/AUTOMATIC - 46RE/FLUID - STANDARD PROCEDURE).

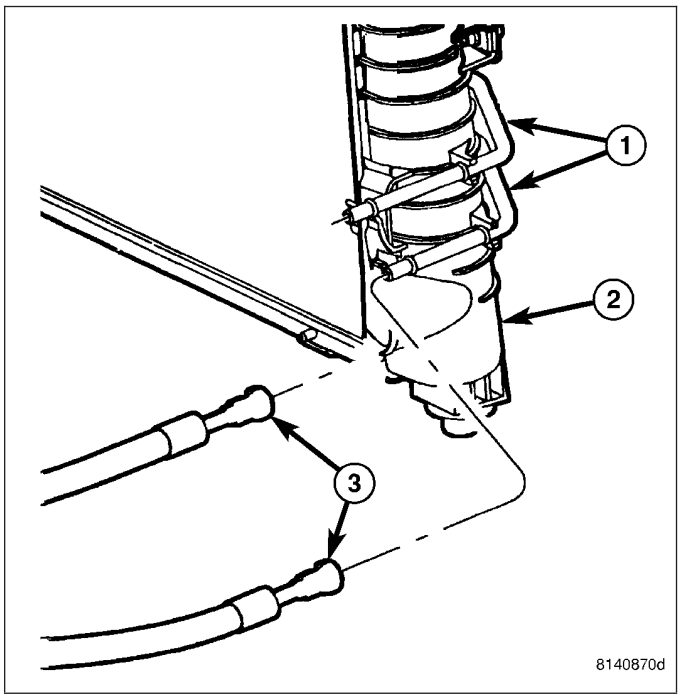

5.7L ENGINE

1. Position the transmission cooler tubes to the front of the radiator by sliding brackets into slots on radiator inlet tank.
2. Snap the transmission cooler tubes into the clips on the side of the radiator tank.
3. Install the transmission cooler attaching bolt. Tighten the bolt to 16 N·m (140 in. lbs.).
4. Inspect the quick connect fittings for debris and install the quick connect fitting on the cooler tube until an audible “click” is heard. Pull apart the connection to verify proper installation and install the secondary latches (Refer to 7 - COOLING/TRANSMISSION - STANDARD PROCEDURE).
5. Start the engine and check all fittings for leaks.
6. Check the fluid level in the automatic transmission. Refer to the appropriate transmission section (Refer to 21 - TRANSMISSION/TRANSAXLE/AUTOMATIC - 45RFE/545RFE/FLUID - STANDARD PROCEDURE) or (Refer to 21 - TRANSMISSION/TRANSAXLE/AUTOMATIC - 46RE/FLUID - STANDARD PROCEDURE).

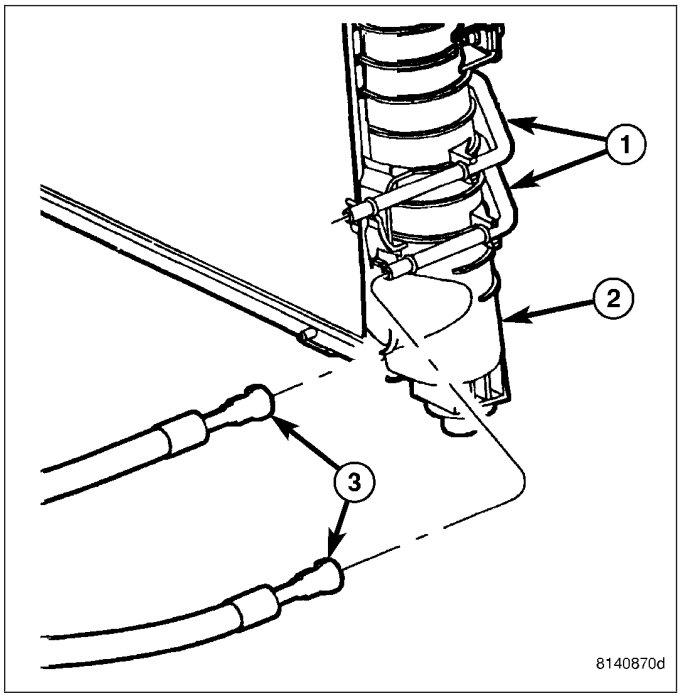

AIR TO OIL COOLER - 5.9L DIESEL

1. Carefully position the oil cooler assembly to the vehicle.
2. Install two nuts and one bolt. Tighten to 11 N·m (95 in. lbs.) torque.
3. Connect the quick-connect fittings to the transmission cooler lines.
4. Install Charge Air Cooler (Refer to 11 - EXHAUST SYSTEM/TURBOCHARGER SYSTEM/CHARGE AIR COOLER AND PLUMBING - INSTALLATION).
5. Start the engine and check all fittings for leaks.
6. Check the fluid level in the automatic transmission (Refer to 21 - TRANSMISSION/TRANSAXLE/AUTOMATIC - 47RE/FLUID - STANDARD PROCEDURE).

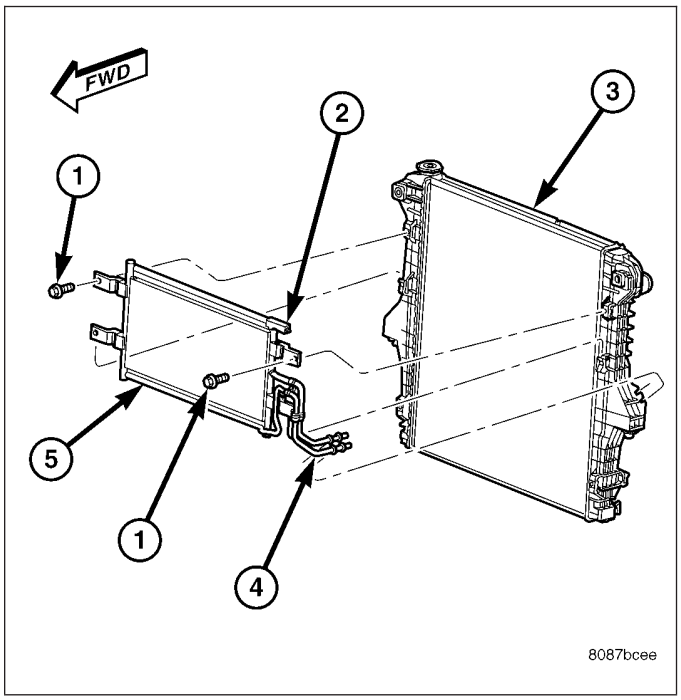

INSTALLATION - WATER-TO-OIL COOLER

1. Position oil cooler on cylinder block.
2. Install lower mounting bolt to cooler at the cylinder block. Torque bolt to 77 N·m (57 ft. lbs.)
3. Install upper mounting bolt at the cylinder block. Torque bolt to 24 N·m (18 ft. lbs.)
4. Install cooler bracket to transmission adapter bolt. Tighten to 24 N·m (18 ft. lbs.).

NOTE: Use a back-up wrench on the transmission cooler fittings to prevent damage to the cooler.

5. Connect transmission oil lines to cooler.
6. Connect coolant hoses to cooler.
7. Install starter motor (Refer to 8 - ELECTRICAL/STARTING/STARTER MOTOR - INSTALLATION).
8. Connect battery negative cables.
9. Fill cooling system (Refer to 7 - COOLING - STANDARD PROCEDURE).
10. Check transmission oil level and fill as necessary (Refer to 21 - TRANSMISSION/TRANSAXLE/AUTOMATIC - 47RE/FLUID - STANDARD PROCEDURE).

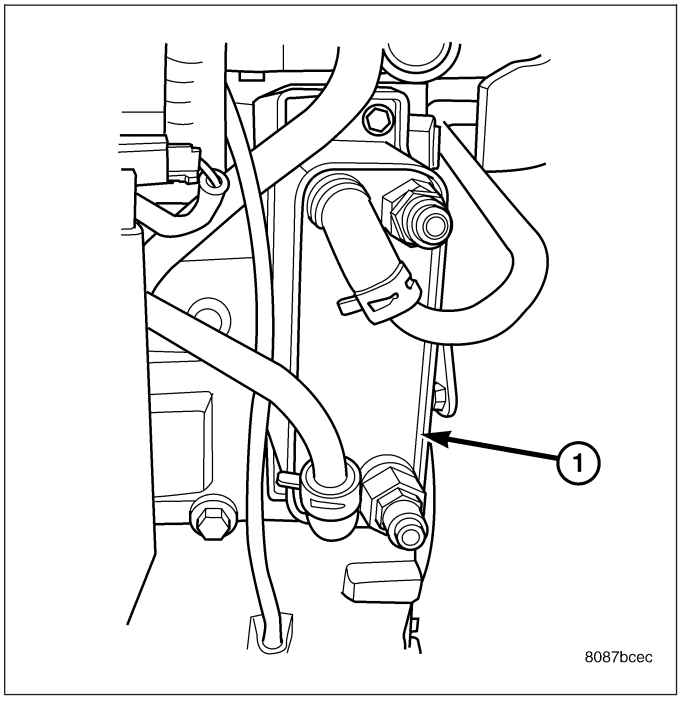

8.3L ENGINE

1. Carefully position the oil cooler assembly to the vehicle.
2. Install two nuts and one bolt. Tighten to 11 N·m (95 in. lbs.) torque.
3. Connect the quick-connect fittings to the transmission cooler lines.
4. Start the engine and check all fittings for leaks.
5. Check the fluid level in the automatic transmission (Refer to 21 - TRANSMISSION/TRANSAXLE/AUTOMATIC - 47RE/FLUID - STANDARD PROCEDURE).

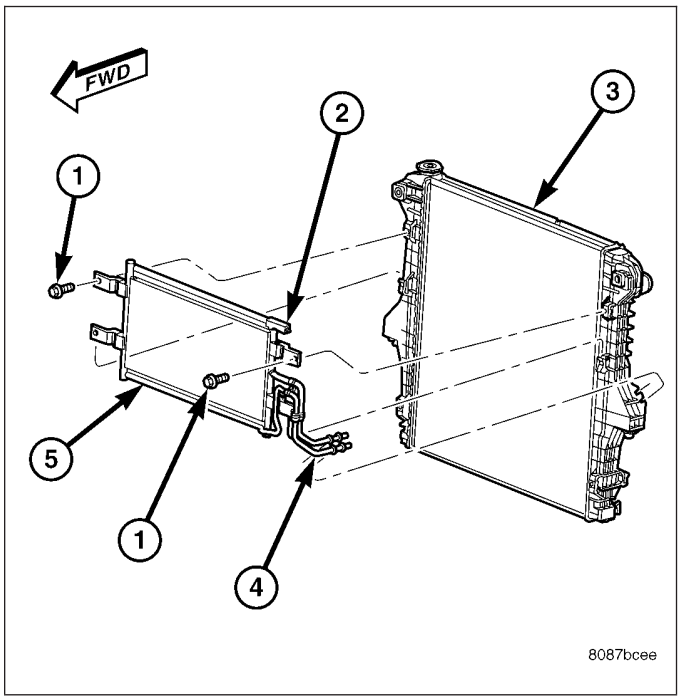

AUDIO/VIDEO

TABLE OF CONTENTS

page

AUDIO - ELECTRICAL DIAGNOSTICS 1
AUDIO - SERVICE INFORMATION 51
AUDIO - SRT10 - AMP - ELECTRICAL DIAGNOSTICS 89

AUDIO - ELECTRICAL DIAGNOSTICS

TABLE OF CONTENTS

page

AUDIO - ELECTRICAL DIAGNOSTICS
DIAGNOSIS AND TESTING
NO ANTENNA CONNECTION 2
POWER AMP SHUTDOWN - BASE RADIO . . . 4
POWER AMP SHUTDOWN - PREMIUM 7
REMOTE RADIO SWITCH CIRCUIT HIGH . . . 10
REMOTE RADIO SWITCH CIRCUIT STUCK . 14
PCI FAILURE 17
SOFTWARE CHECKSUM FAILURE 18
RIGHT FRONT I/P CHANNEL SHORT ACROSS 19
RIGHT FRONT DOOR CHANNEL SHORT ACROSS 20
LEFT REAR CHANNEL SHORT ACROSS . . . 21
RIGHT REAR CHANNEL SHORT ACROSS . . 22
RIGHT FRONT I/P AND LEFT FRONT DOOR CHANNELS SHORT ACROSS 23
RIGHT FRONT I/P AND RIGHT FRONT DOOR CHANNELS SHORT ACROSS 25
RIGHT FRONT I/P AND LEFT REAR CHANNELS SHORT ACROSS 27
RIGHT FRONT I/P AND RIGHT REAR CHANNELS SHORT ACROSS 29
RIGHT I/P SPEAKER AND BOTH REAR CHANNELS SHORT ACROSS 31
RIGHT FRONT DOOR AND LEFT REAR CHANNELS SHORT ACROSS 33
RIGHT FRONT DOOR AND RIGHT REAR CHANNELS SHORT ACROSS 35
REAR SPEAKERS SHORT TOGETHER OR TO GROUND 37
LEFT FRONT INPUT NO ACTIVITY 40
RIGHT FRONT INPUT NO ACTIVITY 42
LEFT REAR INPUT NO ACTIVITY 44
RIGHT REAR INPUT NO ACTIVITY 46
LOW VOLTAGE LEVEL 48
RADIO AND NAV GPS ANTENNA NOT CONNECTED 49

AUDIO - ELECTRICAL DIAGNOSTICS

DIAGNOSIS AND TESTING

NO ANTENNA CONNECTION

For the Audio system circuit diagram (Refer to 8 - ELECTRICAL/AUDIO - SCHEMATICS AND DIAGRAMS).

For a complete wiring diagram **Refer to Section 8W**.

- **When Monitored:**
  With the ignition on and the radio in seek up/down mode.
- **Set Condition:**
  With the radio in seek or scan mode for two minutes and the radio does not detect an antenna connection or does not receive a radio station signal.

Possible Causes
BAD ANTENNA CONNECTION
ANTENNA
RADIO

1. BAD ANTENNA CONNECTION

Turn the ignition off.
Disconnect the Radio Antenna connector.
Inspect the Radio Antenna connection.

Was the Antenna connection clean and tight?

Yes >> Go To 2

No >> Repair Antenna connection as needed.
Perform BODY VERIFICATION TEST - VER 1.

---

2. TEST ANTENNA

Refer to the Audio System in the service information and test the Antenna in accordance with the service procedure.

Is the Antenna ok?

Yes >> Go To 3

No >> Repair or replace the Antenna assembly as necessary.
Perform BODY VERIFICATION TEST - VER 1.

NO ANTENNA CONNECTION (CONTINUED)

3. RADIO

NOTE: NOTE: Reconnect all previously disconnected components.

Turn the ignition and Radio on.

NOTE: NOTE: Move vehicle outside approximately 30ft from any structure.

With the DRBIII®, erase the audio DTC's, put the radio in seek up and seek down mode for approximately 2 minutes before proceeding.

With the DRBIII®, read the audio DTC's.

Did this DTC reset?

Yes >> Replace the Radio.
Perform BODY VERIFICATION TEST - VER 1.

No >> Test Complete.

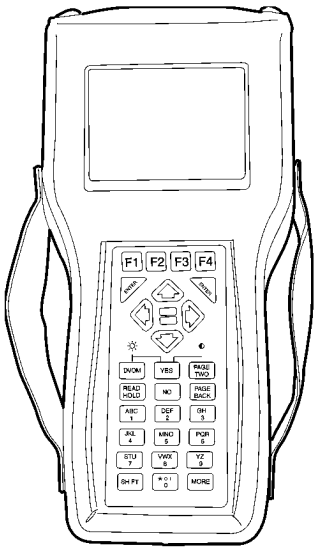

POWER AMP SHUTDOWN - BASE RADIO

For the Audio system circuit diagram (Refer to 8 - ELECTRICAL/AUDIO - SCHEMATICS AND DIAGRAMS).

For a complete wiring diagram **Refer to Section 8W**.

- **When Monitored:**
  Ignition in RUN and IOD fuse installed.
- **Set Condition:**
  The radio has sensed a short on the output for more than 10 seconds.

Possible Causes
FRONT SHORTED SPEAKER
REAR SHORTED SPEAKER
(+) CIRCUIT SHORTED TO GROUND
SPEAKER (+) & (-) CIRCUITS SHORTED TOGETHER
(-) CIRCUIT SHORTED TO GROUND

1. DETERMINE FAULT

Turn the ignition on.

Turn the Radio on.

With the DRBIII®, erase the audio DTC's.

Cycle the ignition switch from off to on and wait 10 seconds.

With the DRBIII®, read the audio DTC's.

Does the DRBIII® display POWER AMP SHUT-DOWN?

Yes >> Go To 2

No >> Refer to the wiring diagrams located in the service information to help isolate a possible intermittent short.
Perform BODY VERIFICATION TEST - VER 1.

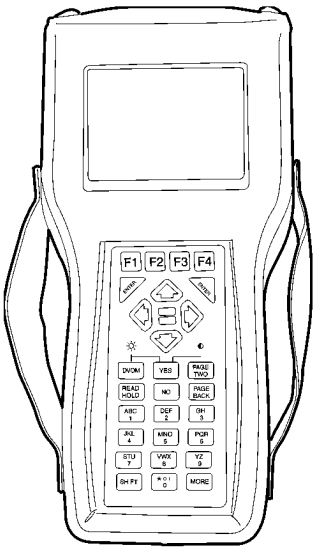

POWER AMP SHUTDOWN - BASE RADIO (CONTINUED)

2. FRONT SHORTED SPEAKER

Turn the ignition off.

NOTE: NOTE: Perform this procedure after disconnecting each front speaker connector.
Disconnect each front speaker harness connector one at a time.
Turn the ignition on.
Turn the radio on.
With the DRBIII®, erase the audio DTCs.
Cycle the ignition switch from off to on and wait 10 seconds.
With the DRBIII®, read DTC's.

Does the DRBIII® display POWER AMP SHUTDOWN with all the speakers disconnected?

Yes >> Go To 3

No >> Replace the Speaker that when disconnected the DTC did not reset.
Perform BODY VERIFICATION TEST - VER 1.

---

3. REAR SHORTED SPEAKER

Turn the ignition off.

NOTE: NOTE: Perform this procedure after disconnecting each rear speaker connector.
Disconnect each rear speaker harness connector one at a time.
Turn the ignition on.
Turn the radio on.
With the DRBIII®, erase the audio DTCs.
Cycle the ignition switch from off to on and wait 10 seconds.
With the DRBIII®, read DTC's.

Does the DRBIII® display POWER AMP SHUTDOWN with all the rear speakers disconnected?

Yes >> Go To 4

No >> Replace the Speaker that when disconnected the DTC did not reset.
Perform BODY VERIFICATION TEST - VER 1.

---

4. (+) CIRCUIT SHORTED TO GROUND

Turn the ignition off.
Disconnect each front and rear speaker harness connector.
Disconnect the Radio harness connector.
Measure the resistance between ground and each speaker (+) circuit.

Is the resistance below 1000.0 (1K) ohms?

Yes >> Repair the speaker (+) circuit for a short to ground.
Perform BODY VERIFICATION TEST - VER 1.

No >> Go To 5

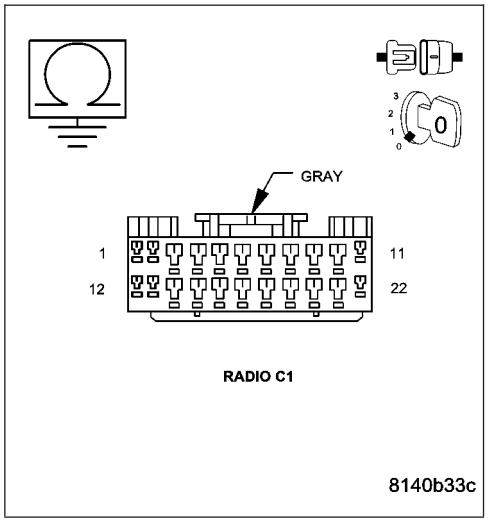

POWER AMP SHUTDOWN - BASE RADIO (CONTINUED)

5. (-) CIRCUIT SHORTED TO GROUND

Turn the ignition off.
Disconnect each front and rear speaker harness connector.
Disconnect the Radio harness connector.
Measure the resistance between ground and each speaker (-) circuit.

Is the resistance below 1000.0 (1K) ohms?

Yes >> Repair the speaker (-) circuit for a short to ground.
Perform BODY VERIFICATION TEST - VER 1.

No >> Go To 6

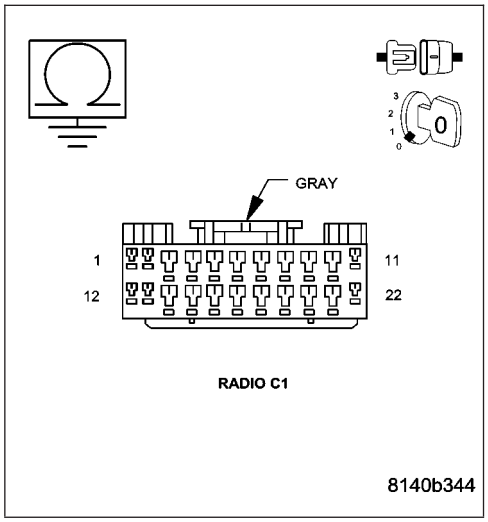

6. SPEAKER (+) & (-) CIRCUITS SHORTED TOGETHER

Turn the ignition off.
Disconnect each front and rear speaker harness connector.
Disconnect the Radio harness connector.
Measure the resistance between each speaker (+) circuit and each speaker (-) circuit.

Is the resistance below 1000.0 (1K) ohms for any of the measurements?

Yes >> Repair the speaker circuits shorted together.
Perform BODY VERIFICATION TEST - VER 1.

No >> Go To 7

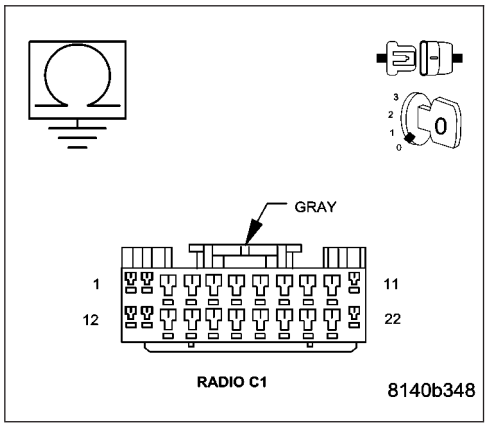

7. SPEAKER SECTION OF RADIO

If there are no possible causes remaining, view repair.

Repair

Replace the Radio.
Perform BODY VERIFICATION TEST - VER 1.

POWER AMP SHUTDOWN - PREMIUM

For the Audio system circuit diagram (Refer to 8 - ELECTRICAL/AUDIO - SCHEMATICS AND DIAGRAMS).

For a complete wiring diagram **Refer to Section 8W**.

- **When Monitored:**
  Ignition in RUN and IOD fuse installed.
- **Set Condition:**
  The radio has sensed a short on the output for more than 10 seconds.

Possible Causes
AMPLIFIER
(+) CIRCUIT SHORTED TO GROUND
(-) CIRCUIT SHORTED TO GROUND
SPEAKER (+) & (-) CIRCUITS SHORTED TOGETHER

1. DETERMINE FAULT

Turn the ignition on.

Turn the Radio on.

With the DRBIII®, erase the audio DTC's.

Cycle the ignition switch from off to on and wait 10 seconds.

With the DRBIII®, read the audio DTC's.

Does the DRBIII® display POWER AMP SHUTDOWN?

Yes >> Go To 2

No >> Refer to the wiring diagrams located in the service information to help isolate a possible intermittent short.
Perform BODY VERIFICATION TEST - VER 1.

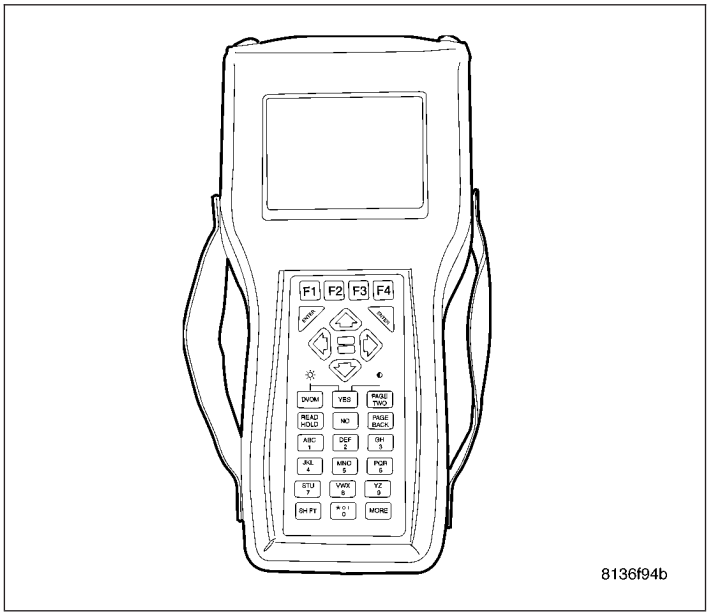

2. SPEAKER SECTION OF POWER AMPLIFIER

Turn the ignition off.

Disconnect the Power Amplifier harness connector.

Turn the ignition on.

Turn the radio on.

With the DRBIII®, erase the audio DTCs.

Cycle the ignition switch from off to on and wait 10 seconds.

With the DRBIII®, read DTC's.

Does the DRBIII® display POWER AMP SHUTDOWN?

Yes >> Go To 3

No >> Replace the Power Amplifier in accordance with the service information.
Perform BODY VERIFICATION TEST - VER 1.

POWER AMP SHUTDOWN - PREMIUM (CONTINUED)

3. (+) CIRCUIT SHORTED TO GROUND

Turn the ignition off.
Disconnect the Power Amplifier harness connector.
Disconnect the Radio harness connector.
Measure the resistance between ground and any speaker (+) circuit.

Is the resistance below 1000.0 (1K) ohms?

Yes >> Repair the speaker (+) circuit for a short to ground. Perform BODY VERIFICATION TEST - VER 1.

No >> Go To 4

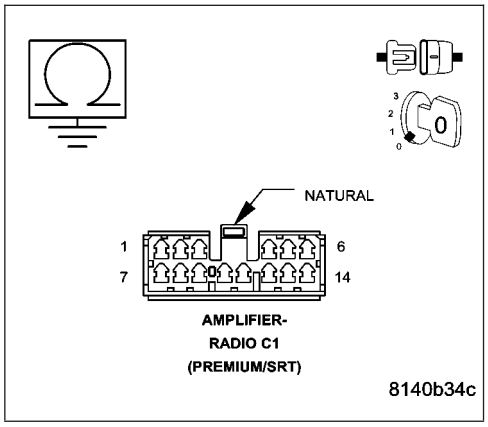

4. (-) CIRCUIT SHORTED TO GROUND

Turn the ignition off.
Disconnect the Power Amplifier harness connector.
Disconnect the Radio harness connector.
Measure the resistance between ground and any speaker (-) circuit.

Is the resistance below 1000.0 (1K) ohms?

Yes >> Repair the speaker (-) circuit for a short to ground. Perform BODY VERIFICATION TEST - VER 1.

No >> Go To 5

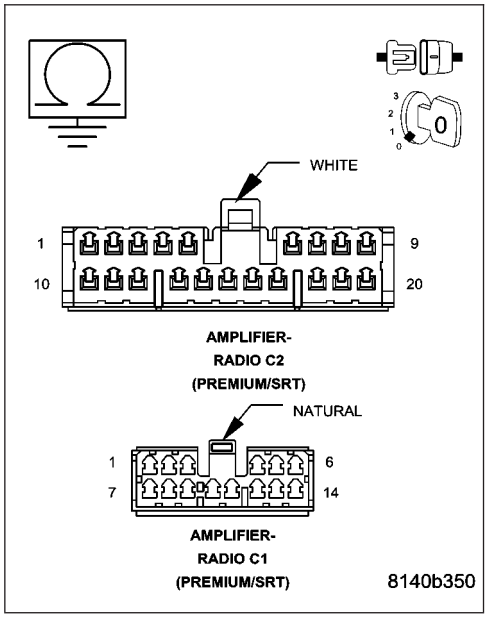

POWER AMP SHUTDOWN - PREMIUM (CONTINUED)

5. SPEAKER (+) & (-) CIRCUITS SHORTED TOGETHER

Turn the ignition off.

Disconnect the Power Amplifier harness connector.

Disconnect the Radio harness connector.

Measure the resistance between each speaker (+) circuit and each speaker (-) circuit.

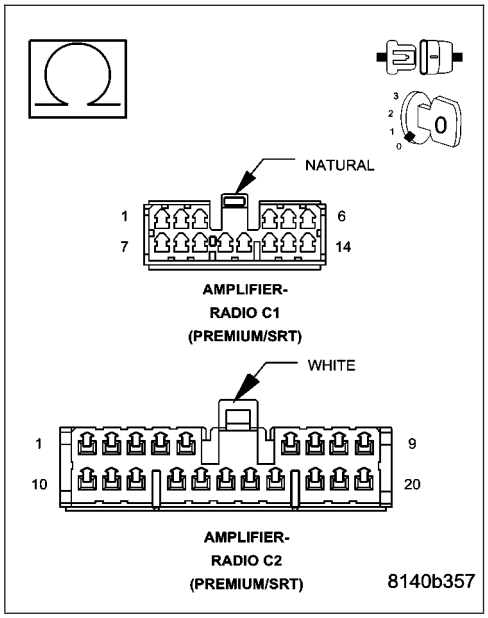

Is the resistance below 1000.0 (1K) ohms for any of the measurements?

Yes >> Repair the speaker circuits shorted together.
Perform BODY VERIFICATION TEST - VER 1.

No >> Go To 6

6. SPEAKER SECTION OF RADIO

If there are no possible causes remaining, view repair.

Repair

Replace the Radio.
Perform BODY VERIFICATION TEST - VER 1.

REMOTE RADIO SWITCH CIRCUIT HIGH

For the Audio system circuit diagram (Refer to 8 - ELECTRICAL/AUDIO - SCHEMATICS AND DIAGRAMS).

For a complete wiring diagram **Refer to Section 8W**.

- **When Monitored:**
  With the ignition on.
- **Set Condition:**
  Remote radio control MUX circuit is open (above 5.0 volts).

Possible Causes
CLOCKSPRING SHORTED TO VOLTAGE
RADIO CONTROL MUX CIRCUIT SHORTED TO VOLTAGE
CLOCKSPRING OPEN
GROUND CIRCUIT OPEN
OPEN RADIO CONTROL MUX CIRCUIT
INSTRUMENT CLUSTER

1. DETERMINE FAULT

Turn the ignition on.

NOTE: NOTE: Make sure the DRB can communicate with the Radio before continuing.
With the DRBIII®, erase the Instrument Cluster DTC's.

Cycle the ignition switch from off to on and wait 1 minute.

With the DRBIII®, read the DTC's.

Did this DTC reset?

Yes >> Go To 2

No >> Refer to the wiring diagrams located in the service information to help isolate a possible intermittent open or short.
Perform BODY VERIFICATION TEST - VER 1.

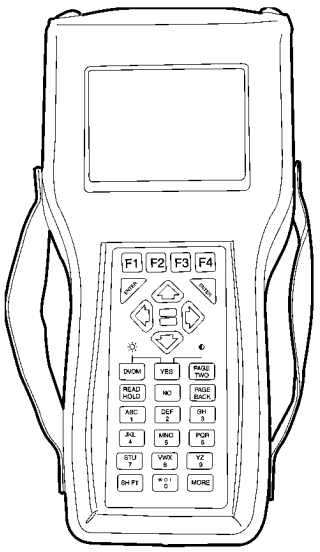

REMOTE RADIO SWITCH CIRCUIT HIGH (CONTINUED)

2. CHECK VOLTAGE AT SWITCH

WARNING: WARNING: To avoid personal injury or death, turn the ignition off, disconnect the battery and wait 2 minutes before proceeding.

CAUTION: CAUTION: Do not place an intact undeployed airbag module face down on a hard surface, the airbag module will propel into the air if accidently deployed.

Remove the Driver Airbag Module.

Disconnect either remote radio switch harness connector.

Turn the ignition on, reconnect the battery.

Measure the voltage between the Radio Control MUX circuit and the ground circuit at the remote radio switch connector.

Is the voltage above 3.6 volts?

Yes >> Go To 3

No >> Go To 5

3. CLOCKSPRING SHORTED TO VOLTAGE

Turn the ignition off.

Disconnect the Clockspring C1 harness connector.

Turn the ignition on.

Measure the voltage of the Radio Control MUX circuit at the clockspring C1 harness connector.

Is the voltage above 5.0 volts?

Yes >> Go To 4

No >> Repair the radio control MUX circuit for a short to voltage between the clockspring and the splice. If OK, replace the Clockspring.
Perform BODY VERIFICATION TEST - VER 1.

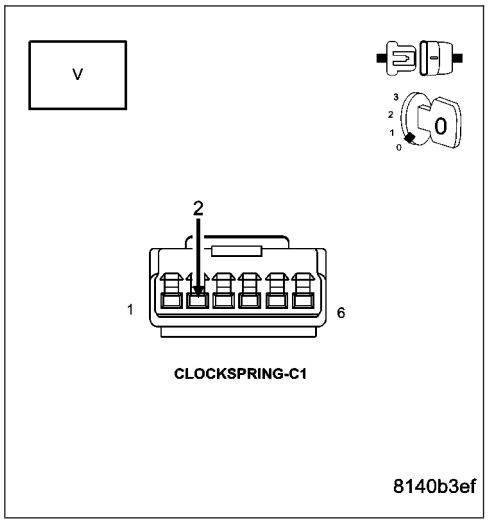

4. RADIO CONTROL MUX CIRCUIT SHORTED TO VOLTAGE

Turn the ignition off.

Disconnect the Clockspring C1 harness connector.

Disconnect the Instrument Cluster harness connectors.

Turn the ignition on.

Measure the voltage of the Radio Control MUX circuit at the clockspring C1 harness connector.

Is the voltage above 5.0 volts?

Yes >> Repair the Radio Control MUX circuit for a short to voltage between the Instrument Cluster and the Clockspring.
Perform BODY VERIFICATION TEST - VER 1.

No >> Replace the Instrument Cluster in accordance with the service information.
Perform BODY VERIFICATION TEST - VER 1.

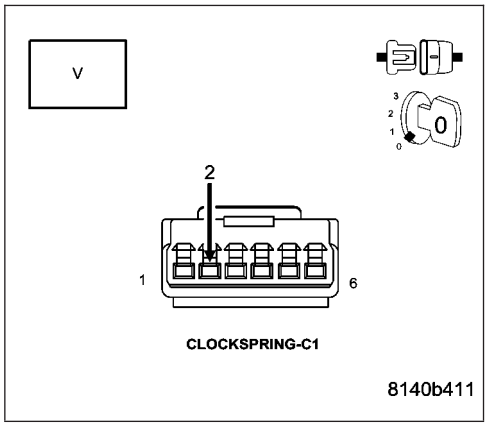

REMOTE RADIO SWITCH CIRCUIT HIGH (CONTINUED)

5. CLOCKSPRING OPEN

Turn the ignition off.

Disconnect the Clockspring C1 harness connector.

Turn the ignition on.

Turn the Radio on.

Connect a jumper wire between the Radio Control MUX circuit and the Ground circuit.

Did the radio change stations?

Yes >> Repair the ground circuit or the radio control MUX circuit for an open between the clockspring and the splice. If OK, replace the Clockspring.
Perform BODY VERIFICATION TEST - VER 1.

No >> Go To 6

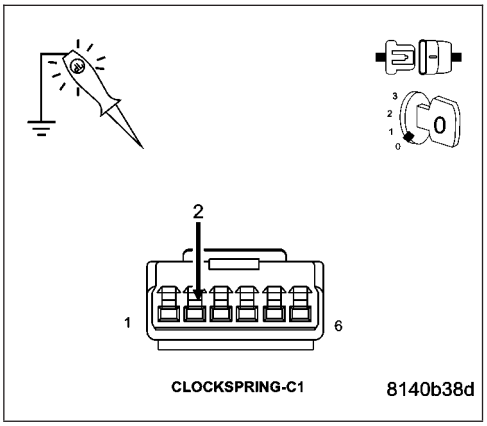

6. GROUND CIRCUIT OPEN

Turn the ignition off.

Disconnect the Clockspring C1 harness connector.

Measure the resistance between ground and the Ground circuit at the Clockspring C1 harness connector.

Is the resistance below 5.0 ohms?

Yes >> Go To 7

No >> Repair the Ground circuit for an open.
Perform BODY VERIFICATION TEST - VER 1.

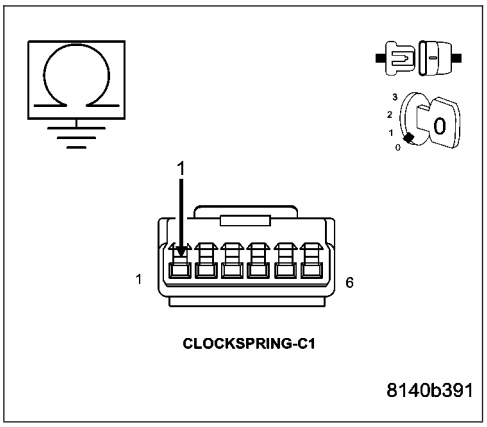

7. OPEN RADIO CONTROL MUX CIRCUIT

Turn the ignition off.

Disconnect the Clockspring C1 harness connector.

Disconnect the Instrument Cluster harness connectors.

Measure the resistance of the Radio Control MUX circuit between the Instrument Cluster connector and the Clockspring C1 connector.

Is the resistance below 5.0 ohms?

Yes >> Go To 8

No >> Repair the Radio Control MUX circuit for an open between the clockspring and the Instrument Cluster.
Perform BODY VERIFICATION TEST - VER 1.

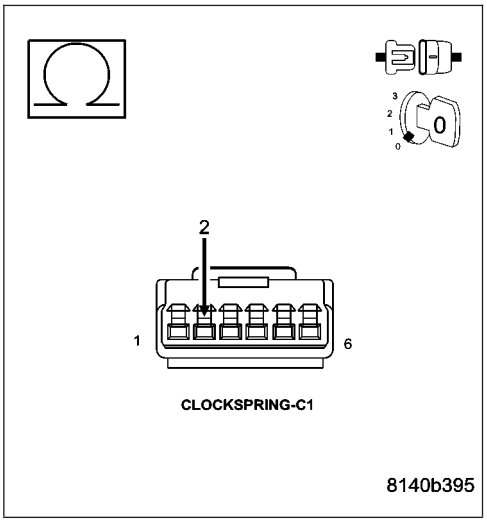

REMOTE RADIO SWITCH CIRCUIT HIGH (CONTINUED)

8. INSTRUMENT CLUSTER

If there are no possible causes remaining, view repair.

Repair

Replace the Instrument Cluster in accordance with the service information.
Perform BODY VERIFICATION TEST - VER 1.

REMOTE RADIO SWITCH CIRCUIT STUCK

For the Audio system circuit diagram (Refer to 8 - ELECTRICAL/AUDIO - SCHEMATICS AND DIAGRAMS).

For a complete wiring diagram **Refer to Section 8W**.

- **When Monitored:**
  With the ignition on.
- **Set Condition:**
  Remote radio control MUX circuit is stuck or shorted to ground for greater than 30 seconds.

Possible Causes
LEFT REMOTE RADIO SWITCH STUCK OR SHORTED TO GROUND
RIGHT REMOTE RADIO SWITCH STUCK OR SHORTED TO GROUND
CLOCKSPRING
RADIO CONTROL MUX CIRCUIT SHORTED TO GROUND AT THE SWITCH
CLOCKSPRING SHORTED TO GROUND
RADIO CONTROL MUX CIRCUIT SHORTED TO GROUND
INSTRUMENT CLUSTER

1. DETERMINE FAULT

Turn the ignition on.

NOTE: NOTE: Make sure the DRB can communicate with the Radio before continuing.

With the DRBIII®, erase the Instrument Cluster DTC's.

Cycle the ignition switch from off to on and wait 1 minute.

With the DRBIII®, read the DTC's.

Did this DTC reset?

Yes >> Go To 2

No >> Refer to the wiring diagrams located in the service information to help isolate a possible intermittent open or short.

Perform BODY VERIFICATION TEST - VER 1.

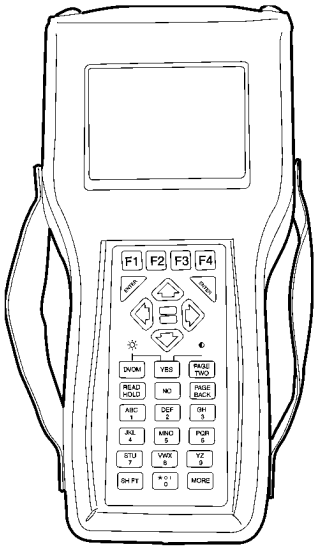

REMOTE RADIO SWITCH CIRCUIT STUCK (CONTINUED)

2. LEFT REMOTE RADIO SWITCH STUCK OR SHORTED TO GROUND

WARNING: WARNING: To avoid personal injury or death, turn the ignition off, disconnect the battery and wait 2 minutes before proceeding.

CAUTION: CAUTION: Do not place an intact undeployed airbag module face down on a hard surface, the airbag module will propel into the air if accidently deployed.

Remove the Driver Airbag Module.

Disconnect the Left Remote Radio Switch harness connector.

Turn the ignition on, reconnect the battery.

With the DRB, enter Instrument Cluster then Sensors and monitor the Remote Radio SW voltage.

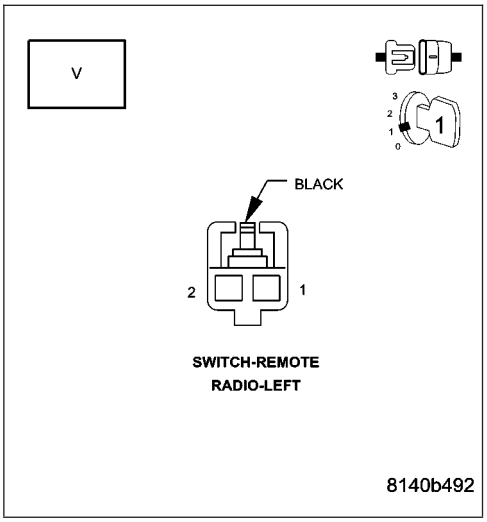

Is the voltage above 3.2 volts?

Yes >> Replace the Left Remote Radio Switch.
Perform BODY VERIFICATION TEST - VER 1.

No >> Go To 3

---

3. RIGHT REMOTE RADIO SWITCH STUCK OR SHORTED TO GROUND

WARNING: WARNING: To avoid personal injury or death, turn the ignition off, disconnect the battery and wait 2 minutes before proceeding.

CAUTION: CAUTION: Do not place an intact undeployed airbag module face down on a hard surface, the airbag module will propel into the air if accidently deployed.

Remove the Driver Airbag Module.

Disconnect the Right Remote Radio Switch harness connector.

Turn the ignition on, reconnect the battery.

With the DRB, enter Instrument Cluster then Sensors and monitor the Remote Radio SW voltage.

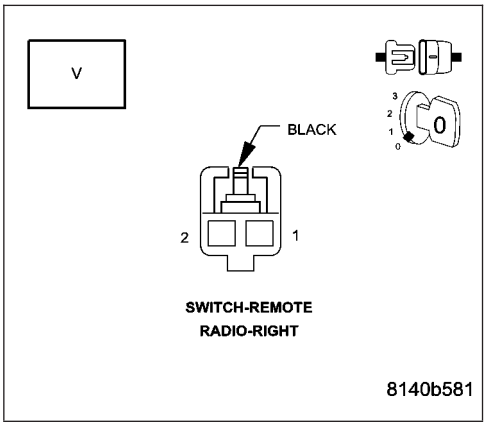

Is the voltage above 3.2 volts?

Yes >> Replace the Right Remote Radio Switch.
Perform BODY VERIFICATION TEST - VER 1.

No >> Go To 4

---

4. CHECK THE CLOCKSPRING

Turn the ignition off.

Disconnect the Clockspring C4 harness connector.

Turn the ignition on.

With the DRB, enter Instrument Cluster then Sensors and monitor the Remote Radio SW voltage.

Is the voltage above 3.2 volts?

Yes >> Go To 5

No >> Go To 6

REMOTE RADIO SWITCH CIRCUIT STUCK (CONTINUED)

5. RADIO CONTROL MUX CIRCUIT SHORTED TO GROUND AT THE SWITCH

Turn the ignition off.

Disconnect the Clockspring C4 harness connector.

NOTE: NOTE: Ensure both remote radio switches are disconnected.

Measure the resistance between ground and the Radio Control MUX circuit at the Clockspring C4 harness connector.

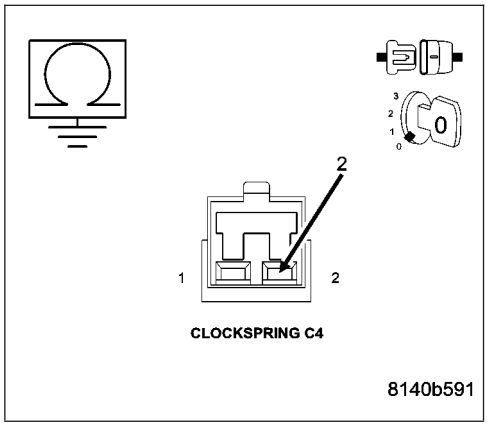

Is the resistance below 5.0 ohms?

Yes >> Repair the Radio Control MUX circuit for a short to ground between the clockspring and the remote radio switches.
Perform BODY VERIFICATION TEST - VER 1.

No >> Repair the Radio Control MUX circuit for a short to the Ground circuit between the clockspring and the remote radio switches.
Perform BODY VERIFICATION TEST - VER 1.

---

6. CLOCKSPRING SHORTED TO GROUND

Turn the ignition off.

Disconnect the Clockspring C1 harness connector.

Turn the ignition on.

With the DRB, enter Instrument Cluster then Sensors and monitor the Remote Radio SW voltage.

Is the voltage above 3.2 volts?

Yes >> Replace the Clockspring in accordance with the service information.
Perform BODY VERIFICATION TEST - VER 1.

No >> Go To 7

---

7. RADIO CONTROL MUX CIRCUIT SHORTED TO GROUND

Turn the ignition off.

Disconnect the Clockspring C1 harness connector.

Disconnect the Instrument Cluster harness connectors.

Measure the resistance between ground and the Radio Control MUX circuit.

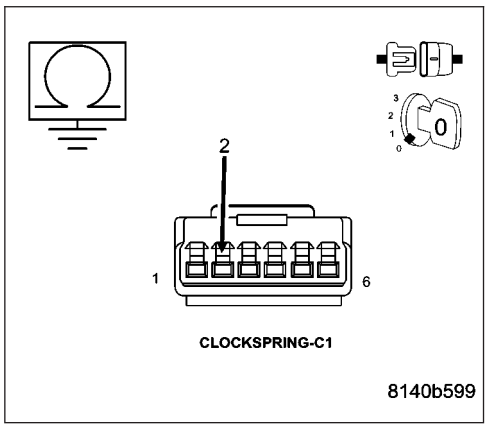

Is the resistance below 5.0 ohms?

Yes >> Repair the Radio Control MUX circuit for a short to ground between the clockspring and the Instrument Cluster.
Perform BODY VERIFICATION TEST - VER 1.

No >> Replace the Instrument Cluster in accordance with the service information.
Perform BODY VERIFICATION TEST - VER 1.

PCI FAILURE

For the Audio system circuit diagram (Refer to 8 - ELECTRICAL/AUDIO - SCHEMATICS AND DIAGRAMS).

For a complete wiring diagram **Refer to Section 8W**.

- **When Monitored:**
  When the DRBIII® performs the PCI Amplifier Test.
- **Set Condition:**
  When the Amplifier detects a fault with the PCI circuitry.

Possible Causes
AMPLIFIER

1. AMPLIFIER

NOTE: NOTE: The fault condition must be present to continue diagnosis. Use the DRBIII® to perform the Amplifier pretest to verify the fault condition is present before continuing diagnosis.

Turn the ignition on.

With the DRBIII®, perform the Amplifier pretest.

Is the fault condition present?

Yes >> Replace the Amplifier in accordance with the Service Information.
Perform BODY VERIFICATION TEST - VER 1.

No >> Refer to the wiring diagrams in the service information to help isolate a possible intermittent condition.
Perform BODY VERIFICATION TEST - VER 1.

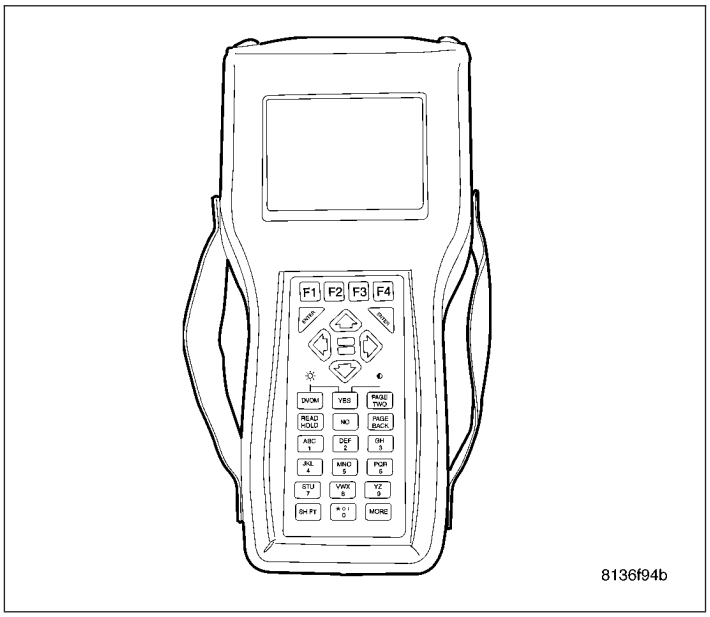

SOFTWARE CHECKSUM FAILURE

For the Audio system circuit diagram (Refer to 8 - ELECTRICAL/AUDIO - SCHEMATICS AND DIAGRAMS).

For a complete wiring diagram **Refer to Section 8W**.

- **When Monitored:**
  When the DRBIII® performs the PCI Amplifier Test.
- **Set Condition:**
  When the Amplifier detects a fault with the software checksum.

Possible Causes
AMPLIFIER

1. AMPLIFIER

NOTE: NOTE: The fault condition must be present to continue diagnosis. Use the DRBIII® to perform the Amplifier pretest to verify the fault condition is present before continuing diagnosis.

Turn the ignition on.

With the DRBIII®, perform the Amplifier pretest.

Is the fault condition present?

Yes >> Replace the Amplifier in accordance with the Service Information.
Perform BODY VERIFICATION TEST - VER 1.

No >> Refer to the wiring diagrams in the service information to help isolate a possible intermittent condition.
Perform BODY VERIFICATION TEST - VER 1.

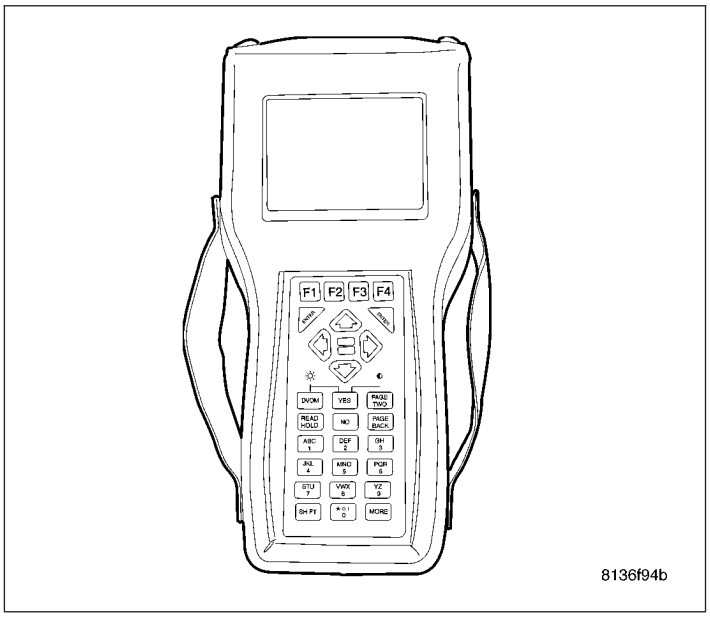

RIGHT FRONT I/P CHANNEL SHORT ACROSS

For the Audio system circuit diagram (Refer to 8 - ELECTRICAL/AUDIO - SCHEMATICS AND DIAGRAMS).

For a complete wiring diagram **Refer to Section 8W**.

- **When Monitored:**
  When the DRBIII® performs the Speaker Output test.
- **Set Condition:**
  When the Right Front I/P Speaker circuit is shorted.

Possible Causes
RIGHT FRONT I/P CHANNEL SHORT ACROSS
RIGHT FROM IP SPEAKER
RIGHT FRONT I/P SPEAKER CIRCUITS SHORTED
AMPLIFIER

1. RIGHT FRONT I/P CHANNEL SHORT ACROSS

NOTE: NOTE: The fault condition must be present to continue diagnosis. Use the DRBIII® to perform the Amplifier pretest to verify the fault condition is present before continuing diagnosis.

Turn the ignition off.

Access and disconnect the Right Front I/P Speaker harness connector.

Turn the ignition on.

With the DRBIII®, perform the Amplifier pretest.

Is the fault condition still present?

Yes >> Go To 2

No >> Replace the Right Front I/P Speaker in accordance with the Service Information.
Perform BODY VERIFICATION TEST - VER 1.

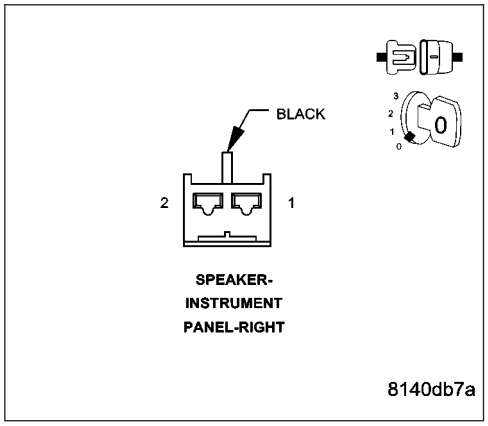

2. RIGHT FRONT I/P SPEAKER CIRCUITS SHORTED

Turn the ignition off.

Access and disconnect the Right Front I/P Speaker harness connector.

Access and disconnect the Amplifier C2 harness connector.

Measure the resistance of the Right Front I/P Speaker (+) and (-) circuits.

Is the resistance below 5.0 ohms?

Yes >> Repair the Right Front I/P Speaker (+) and (-) circuits for a short together.
Perform BODY VERIFICATION TEST - VER 1.

No >> Replace the Amplifier in accordance with the Service Information.
Perform BODY VERIFICATION TEST - VER 1.

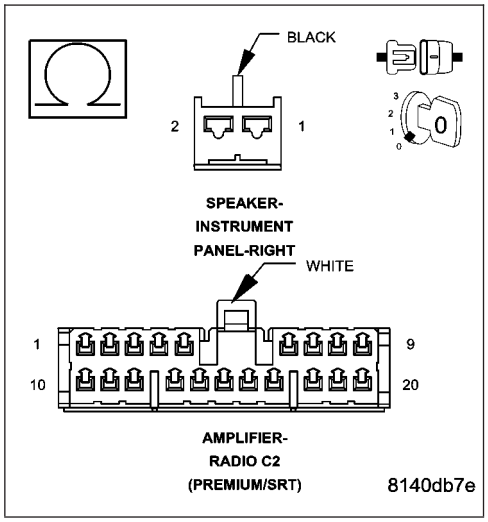

RIGHT FRONT DOOR CHANNEL SHORT ACROSS

For the Audio system circuit diagram (Refer to 8 - ELECTRICAL/AUDIO - SCHEMATICS AND DIAGRAMS).

For a complete wiring diagram **Refer to Section 8W**.

- **When Monitored:**
  When the DRBIII® performs the Speaker Output test.
- **Set Condition:**
  When the Right Front Door circuit is shorted.

Possible Causes
RIGHT FRONT DOOR CHANNEL SHORT ACROSS
RIGHT FRONT DOOR SPEAKER CIRCUITS SHORTED
RIGHT FRONT DOOR SPEAKER
AMPLIFIER

1. RIGHT FRONT DOOR CHANNEL SHORT ACROSS

NOTE: NOTE: The fault condition must be present to continue diagnosis. Use the DRBIII® to perform the Amplifier pretest to verify the fault condition is present before continuing diagnosis.

Turn the ignition off.

Access and disconnect the Right Front Door Speaker harness connector.

Turn the ignition on.

With the DRBIII®, perform the Amplifier pretest.

Is the fault condition still present?

Yes >> Go To 2

No >> Replace the Right Front Door Speaker in accordance with the Service Information.
Perform BODY VERIFICATION TEST - VER 1.

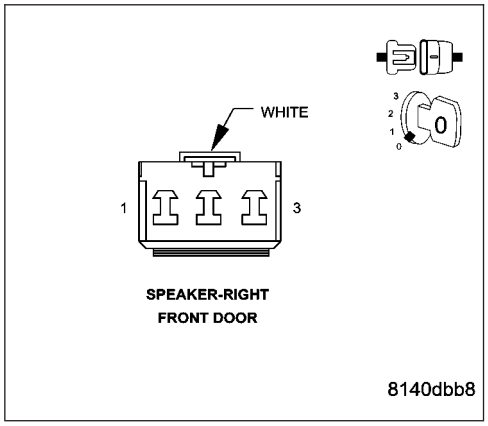

2. RIGHT FRONT DOOR SPEAKER CIRCUITS SHORTED

Turn the ignition off.

Access and disconnect the Right Front Door Speaker harness connector.

Access and disconnect the Amplifier C2 harness connector.

Measure the resistance of the Right Front Door Speaker (+) and (-) circuits.

Is the resistance below 5.0 ohms?

Yes >> Repair the Right Front Door Speaker (+) and (-) circuits for a short together.
Perform BODY VERIFICATION TEST - VER 1.

No >> Replace the Amplifier in accordance with the Service Information.
Perform BODY VERIFICATION TEST - VER 1.

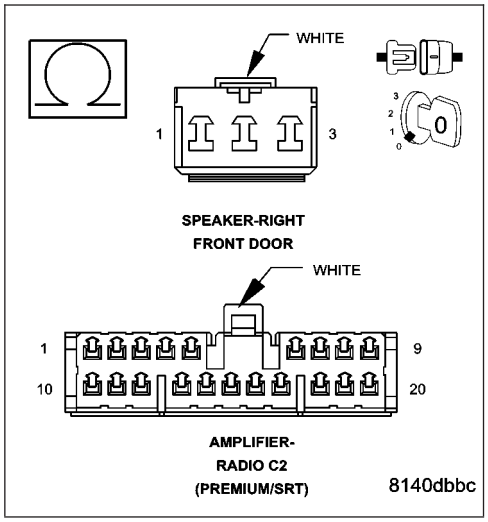

LEFT REAR CHANNEL SHORT ACROSS

For the Audio system circuit diagram (Refer to 8 - ELECTRICAL/AUDIO - SCHEMATICS AND DIAGRAMS).

For a complete wiring diagram **Refer to Section 8W**.

- **When Monitored:**
  When the DRBIII® performs the Speaker Output test.
- **Set Condition:**
  When the Left Rear Speaker circuit is shorted.

Possible Causes
LEFT REAR CHANNEL SHORT ACROSS
LEFT REAR SPEAKER CIRCUITS SHORTED
AMPLIFIER

1. LEFT REAR CHANNEL SHORT ACROSS

NOTE: NOTE: The fault condition must be present to continue diagnosis. Use the DRBIII® to perform the Amplifier pretest to verify the fault condition is present before continuing diagnosis.

Turn the ignition off.

Access and disconnect the Left Rear Speaker harness connector.

Turn the ignition on.

With the DRBIII®, perform the Amplifier pretest.

Is the fault condition still present?

Yes >> Go To 2

No >> Replace the Left Rear Speaker in accordance with the Service Information.
Perform BODY VERIFICATION TEST - VER 1.

---

2. LEFT REAR SPEAKER CIRCUITS SHORTED

Turn the ignition off.

Access and disconnect the Left Rear Speaker harness connector.

Access and disconnect the Amplifier C2 harness connector.

Measure the resistance of the Left Rear Speaker (+) and (-) circuits.

Is the resistance below 5.0 ohms?

Yes >> Repair the Left Rear Speaker (+) and (-) circuits for a short together.
Perform BODY VERIFICATION TEST - VER 1.

No >> Replace the Amplifier in accordance with the Service Information.
Perform BODY VERIFICATION TEST - VER 1.

RIGHT REAR CHANNEL SHORT ACROSS

For the Audio system circuit diagram (Refer to 8 - ELECTRICAL/AUDIO - SCHEMATICS AND DIAGRAMS).

For a complete wiring diagram **Refer to Section 8W**.

- **When Monitored:**
  When the DRBIII® performs the Speaker Output test.
- **Set Condition:**
  When the Right Rear Speaker circuit is shorted.

Possible Causes
RIGHT REAR CHANNEL SHORT ACROSS
AMPLIFIER
RIGHT REAR SPEAKER CIRCUITS SHORTED

1. RIGHT REAR CHANNEL SHORT ACROSS

NOTE: NOTE: The fault condition must be present to continue diagnosis. Use the DRBIII® to perform the Amplifier pretest to verify the fault condition is present before continuing diagnosis.

Turn the ignition off.

Access and disconnect the Right Rear Speaker harness connector.

Turn the ignition on.

With the DRBIII®, perform the Amplifier pretest.

Is the fault condition still present?

Yes >> Go To 2

No >> Replace the Right Rear Speaker in accordance with the Service Information.
Perform BODY VERIFICATION TEST - VER 1.

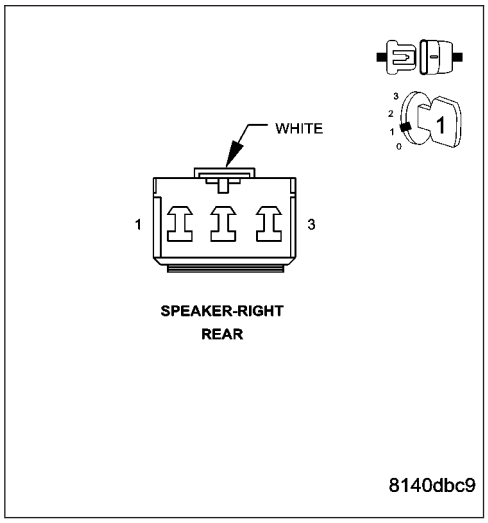

2. RIGHT REAR SPEAKER CIRCUITS SHORTED

Turn the ignition off.

Access and disconnect the Right Rear Speaker harness connector.

Access and disconnect the Amplifier C2 harness connector.

Measure the resistance of the Right Rear Speaker (+) and (-) circuits.

Is the resistance below 5.0 ohms?

Yes >> Repair the Right Rear Speaker (+) and (-) circuits for a short together.
Perform BODY VERIFICATION TEST - VER 1.

No >> Replace the Amplifier in accordance with the Service Information.
Perform BODY VERIFICATION TEST - VER 1.

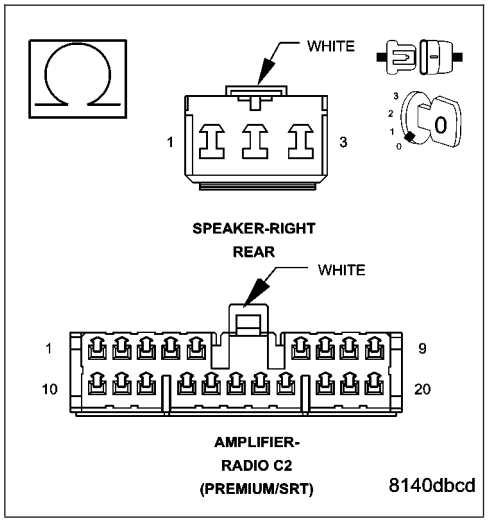

RIGHT FRONT I/P AND LEFT FRONT DOOR CHANNELS SHORT ACROSS

For the Audio system circuit diagram (Refer to 8 - ELECTRICAL/AUDIO - SCHEMATICS AND DIAGRAMS).

For a complete wiring diagram **Refer to Section 8W**.

- **When Monitored:**
  When the DRBIII® performs the Speaker Output test.
- **Set Condition:**
  When the Right Front I/P Speaker and Left Front Door Speaker circuits are simultaneously shorted.

Possible Causes
RIGHT FRONT I/P AND LEFT FRONT DOOR CHANNELS SHORTED ACROSS
RIGHT FRONT I/P AND LEFT FRONT DOOR SPEAKER CIRCUITS SHORTED
RIGHT FRONT IP SPEAKER AND THE LEFT FRONT DOOR SPEAKER AMPLIFIER

1. RIGHT FRONT I/P AND LEFT FRONT DOOR CHANNELS SHORTED ACROSS

NOTE: NOTE: The fault condition must be present to continue diagnosis. Use the DRBIII® to perform the Amplifier pretest to verify the fault condition is present before continuing diagnosis.

NOTE: NOTE: Amplifier speaker circuits are both shorted simultaneously.

Turn the ignition off.

Access and disconnect the Right Front I/P and Left Front Door Speaker harness connectors.

Turn the ignition on.

With the DRBIII®, perform the Amplifier pretest.

Is the fault condition still present?

Yes >> Go To 2

No >> Replace the Right Front I/P and Left Front Door Speakers in accordance with the Service Information.
Perform BODY VERIFICATION TEST - VER 1.

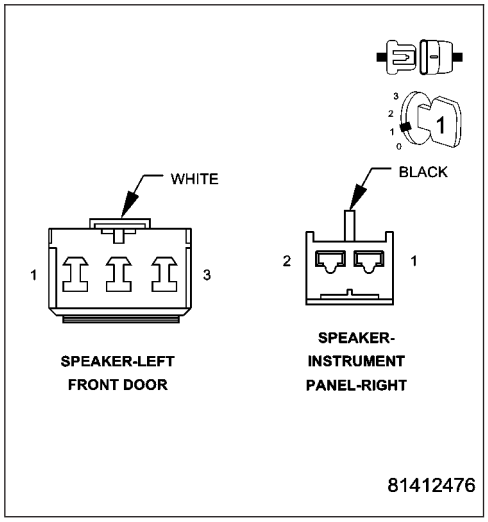

RIGHT FRONT I/P AND LEFT FRONT DOOR CHANNELS SHORT ACROSS (CONTINUED)

2. RIGHT FRONT I/P AND LEFT FRONT DOOR SPEAKER CIRCUITS SHORTED

Turn the ignition off.

Access and disconnect the Right Front I/P Speaker harness connector.

Access and disconnect the Left Front Door Speaker harness connector.

Access and disconnect the Amplifier C2 harness connector.

Measure the resistance of the Right Front I/P Speaker (+) and (-) circuits.

Measure the resistance of the Left Front Door Speaker (+) and (-) circuits.

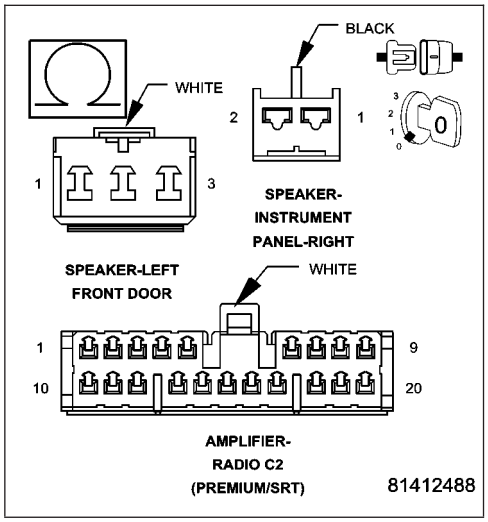

Is the resistance below 5.0 ohms on each measurement?

Yes >> Repair both Speaker (+) and (-) circuits for a short together.

Perform BODY VERIFICATION TEST - VER 1.

No >> Replace the Amplifier in accordance with the Service Information.

Perform BODY VERIFICATION TEST - VER 1.

RIGHT FRONT I/P AND RIGHT FRONT DOOR CHANNELS SHORT ACROSS

For the Audio system circuit diagram (Refer to 8 - ELECTRICAL/AUDIO - SCHEMATICS AND DIAGRAMS).

For a complete wiring diagram **Refer to Section 8W**.

- **When Monitored:**
  When the DRBIII® performs the Speaker Output test.
- **Set Condition:**
  When the Right Front I/P Speaker and Right Front Door Speaker circuits are simultaneously shorted.

Possible Causes
RIGHT FRONT I/P AND RIGHT FRONT DOOR CHANNELS SHORTED ACROSS
RIGHT FRONT IP SPEAKER AND RIGHT FRONT DOOR SPEAKER
RIGHT FRONT I/P AND RIGHT FRONT DOOR SPEAKER CIRCUITS SHORTED
AMPLIFIER

1. RIGHT FRONT I/P AND RIGHT FRONT DOOR CHANNELS SHORTED ACROSS

NOTE: NOTE: The fault condition must be present to continue diagnosis. Use the DRBIII® to perform the Amplifier pretest to verify the fault condition is present before continuing diagnosis.

NOTE: NOTE: Amplifier speaker circuits are both shorted simultaneously.

Turn the ignition off.

Access and disconnect the Right Front I/P and Right Front Door Speaker harness connectors.

Turn the ignition on.

With the DRBIII®, perform the Amplifier pretest.

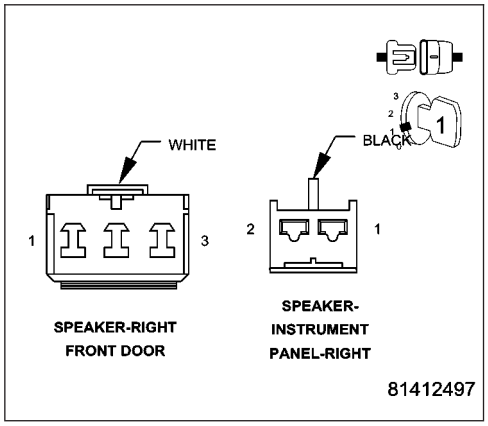

Is the fault condition still present?

Yes >> Go To 2

No >> Replace the Right Front I/P and Right Front Door Speakers in accordance with the Service Information. Perform BODY VERIFICATION TEST - VER 1.

RIGHT FRONT I/P AND RIGHT FRONT DOOR CHANNELS SHORT ACROSS (CONTINUED)

2. RIGHT FRONT I/P AND RIGHT FRONT DOOR SPEAKER CIRCUITS SHORTED

Turn the ignition off.

Access and disconnect the Right Front I/P Speaker harness connector.

Access and disconnect the Right Front Door Speaker harness connector.

Access and disconnect the Amplifier C2 harness connector.

Measure the resistance of the Right Front I/P Speaker (+) and (-) circuits.

Measure the resistance of the Right Front Door Speaker (+) and (-) circuits.

Is the resistance below 5.0 ohms on each measurement?

Yes >> Repair both Speaker (+) and (-) circuits for a short together.
Perform BODY VERIFICATION TEST - VER 1.

No >> Replace the Amplifier in accordance with the Service Information.
Perform BODY VERIFICATION TEST - VER 1.

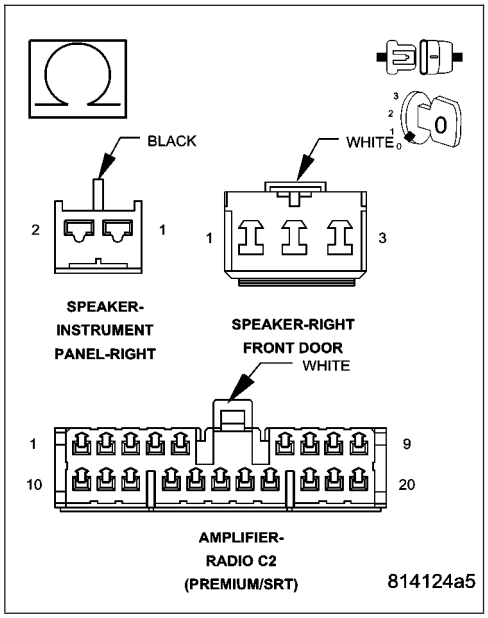

RIGHT FRONT I/P AND LEFT REAR CHANNELS SHORT ACROSS

For the Audio system circuit diagram (Refer to 8 - ELECTRICAL/AUDIO - SCHEMATICS AND DIAGRAMS).

For a complete wiring diagram **Refer to Section 8W**.

- **When Monitored:**
  When the DRBIII® performs the Speaker Output test.
- **Set Condition:**
  When the Right Front I/P Speaker and Left Rear Speaker circuits are simultaneously shorted.

Possible Causes
RIGHT FRONT I/P AND LEFT REAR CHANNELS SHORTED ACROSS
RIGHT FRONT I/P AND LEFT REAR SPEAKER CIRCUITS SHORTED
RIGHT FROM IP SPEAKER AND LEFT REAR SPEAKER
AMPLIFIER

1. RIGHT FRONT I/P AND LEFT REAR CHANNELS SHORTED ACROSS

NOTE: NOTE: The fault condition must be present to continue diagnosis. Use the DRBIII® to perform the Amplifier pretest to verify the fault condition is present before continuing diagnosis.

NOTE: NOTE: Amplifier speaker circuits are both shorted simultaneously.

Turn the ignition off.

Access and disconnect the Right Front I/P and Left Rear Speaker harness connectors.

Turn the ignition on.

With the DRBIII®, perform the Amplifier pretest.

Is the fault condition still present?

Yes >> Go To 2

No >> Replace the Right Front I/P and Left Rear Speakers in accordance with the Service Information.
Perform BODY VERIFICATION TEST - VER 1.

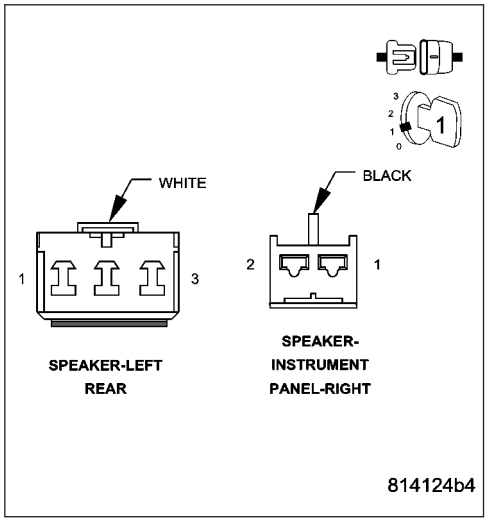

RIGHT FRONT I/P AND LEFT REAR CHANNELS SHORT ACROSS (CONTINUED)

2. RIGHT FRONT I/P AND LEFT REAR SPEAKER CIRCUITS SHORTED

Turn the ignition off.

Access and disconnect the Right Front I/P Speaker harness connector.

Access and disconnect the Left Rear Speaker harness connector.

Access and disconnect the Amplifier C2 harness connector.

Measure the resistance of the Right Front I/P Speaker (+) and (-) circuits.

Measure the resistance of the Left Rear Speaker (+) and (-) circuits.

Is the resistance below 5.0 ohms on each measurement?

Yes >> Repair both Speaker (+) and (-) circuits for a short together.
Perform BODY VERIFICATION TEST - VER 1.

No >> Replace the Amplifier in accordance with the Service Information.
Perform BODY VERIFICATION TEST - VER 1.

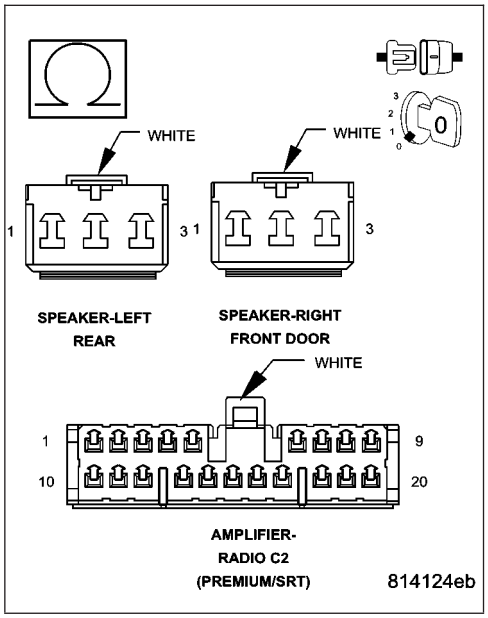

RIGHT FRONT I/P AND RIGHT REAR CHANNELS SHORT ACROSS

For the Audio system circuit diagram (Refer to 8 - ELECTRICAL/AUDIO - SCHEMATICS AND DIAGRAMS).

For a complete wiring diagram **Refer to Section 8W**.

- **When Monitored:**
  When the DRBIII® performs the Speaker Output test.
- **Set Condition:**
  When the Right Front I/P Speaker and Right Rear Speaker circuits are simultaneously shorted.

Possible Causes
RIGHT FRONT I/P AND RIGHT REAR CHANNELS SHORTED ACROSS
RIGHT FRONT I/P AND RIGHT REAR SPEAKER CIRCUITS SHORTED
AMPLIFIER

1. RIGHT FRONT I/P AND RIGHT REAR CHANNELS SHORTED ACROSS

NOTE: NOTE: The fault condition must be present to continue diagnosis. Use the DRBIII® to perform the Amplifier pretest to verify the fault condition is present before continuing diagnosis.

NOTE: NOTE: Amplifier speaker circuits are both shorted simultaneously.

Turn the ignition off.

Access and disconnect the Right Front I/P and Right Rear Speaker harness connectors.

Turn the ignition on.

With the DRBIII®, perform the Amplifier pretest.

Is the fault condition still present?

Yes >> Go To 2

No >> Replace the Right Front I/P and Right Rear Speakers in accordance with the Service Information.
Perform BODY VERIFICATION TEST - VER 1.

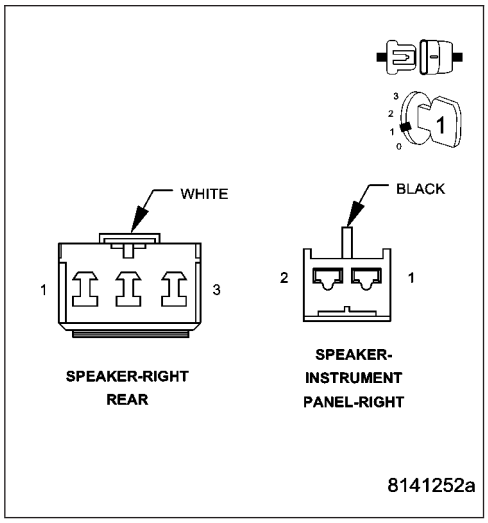

RIGHT FRONT I/P AND RIGHT REAR CHANNELS SHORT ACROSS (CONTINUED)

2. RIGHT FRONT I/P AND RIGHT REAR SPEAKER CIRCUITS SHORTED

Turn the ignition off.

Access and disconnect the Right Front I/P Speaker harness connector.

Access and disconnect the Right Rear Speaker harness connector.

Access and disconnect the Amplifier C2 harness connector.

Measure the resistance of the Right Front I/P Speaker (+) and (-) circuits.

Measure the resistance of the Right Rear Speaker (+) and (-) circuits.

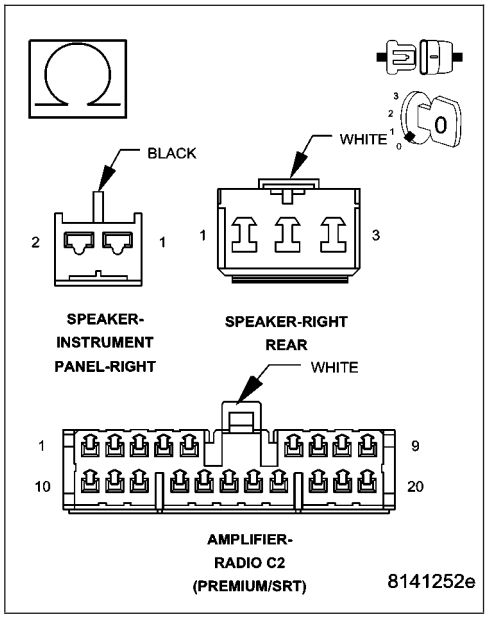

Is the resistance below 5.0 ohms on each measurement?

Yes >> Repair both Speaker (+) and (-) circuits for a short together.
Perform BODY VERIFICATION TEST - VER 1.

No >> Replace the Amplifier in accordance with the Service Information.
Perform BODY VERIFICATION TEST - VER 1.

RIGHT I/P SPEAKER AND BOTH REAR CHANNELS SHORT ACROSS

For the Audio system circuit diagram (Refer to 8 - ELECTRICAL/AUDIO - SCHEMATICS AND DIAGRAMS).

For a complete wiring diagram **Refer to Section 8W**.

- **When Monitored:**
  When the DRBIII® performs the Speaker Output test.
- **Set Condition:**
  When the Right I/P Speaker and both Rear Speaker circuits are simultaneously shorted.

Possible Causes
RIGHT I/P SPEAKER AND BOTH REAR CHANNELS SHORTED ACROSS
RIGHT I/P SPEAKER AND BOTH REAR SPEAKER CIRCUITS SHORTED
AMPLIFIER

1. RIGHT I/P SPEAKER AND BOTH REAR CHANNELS SHORTED ACROSS

NOTE: NOTE: The fault condition must be present to continue diagnosis. Use the DRBIII® to perform the Amplifier pretest to verify the fault condition is present before continuing diagnosis.

NOTE: NOTE: Amplifier speaker circuits are all shorted simultaneously.

Turn the ignition off.

Access and disconnect the Right I/P Speaker and both Rear Speaker harness connectors.

Turn the ignition on.

With the DRBIII®, perform the Amplifier pretest.

Is the fault condition still present?

Yes >> Go To 2

No >> Replace the Right I/P Speaker and both Rear Speakers in accordance with the Service Information.
Perform BODY VERIFICATION TEST - VER 1.

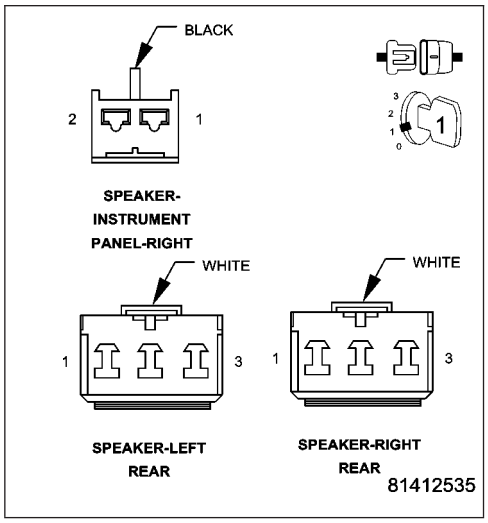

RIGHT I/P SPEAKER AND BOTH REAR CHANNELS SHORT ACROSS (CONTINUED)

2. RIGHT I/P SPEAKER AND BOTH REAR SPEAKER CIRCUITS SHORTED

Turn the ignition off.
Access and disconnect the Right I/P Speaker harness connector.
Access and disconnect both Rear Speaker harness connectors.
Access and disconnect the Amplifier C2 harness connector.
Measure the resistance of the Right I/P Speaker (+) and (-) circuits.
Measure the resistance of both Rear Speaker (+) and (-) circuits.

Is the resistance below 5.0 ohms on each measurement?

Yes >> Repair all Speaker (+) and (-) circuits for a short together.
Perform BODY VERIFICATION TEST - VER 1.

No >> Replace the Amplifier in accordance with the Service Information.
Perform BODY VERIFICATION TEST - VER 1.

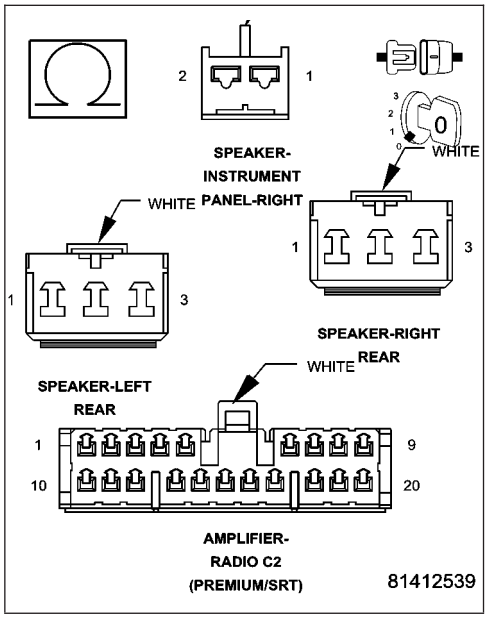

RIGHT FRONT DOOR AND LEFT REAR CHANNELS SHORT ACROSS

For the Audio system circuit diagram (Refer to 8 - ELECTRICAL/AUDIO - SCHEMATICS AND DIAGRAMS).

For a complete wiring diagram **Refer to Section 8W**.

- **When Monitored:**
  When the DRBIII® performs the Speaker Output test.
- **Set Condition:**
  When the Right Front Door Speaker and Left Rear Speaker circuits are simultaneously shorted.

Possible Causes
RIGHT FRONT DOOR AND LEFT REAR CHANNELS SHORTED ACROSS
RIGHT FRONT DOOR AND LEFT REAR SPEAKER CIRCUITS SHORTED
RIGHT FRONT DOOR SPEAKER AND LEFT REAR SPEAKER AMPLIFIER

1. RIGHT FRONT DOOR AND LEFT REAR CHANNELS SHORTED ACROSS

NOTE: NOTE: The fault condition must be present to continue diagnosis. Use the DRBIII® to perform the Amplifier pretest to verify the fault condition is present before continuing diagnosis.

NOTE: NOTE: Amplifier speaker circuits are both shorted simultaneously.

Turn the ignition off.

Access and disconnect the Right Front Door and Left Rear Speaker harness connectors.

Turn the ignition on.

With the DRBIII®, perform the Amplifier pretest.

Is the fault condition still present?

Yes >> Go To 2

No >> Replace the Right Front Door and Left Rear Speakers in accordance with the Service Information.
Perform BODY VERIFICATION TEST - VER 1.

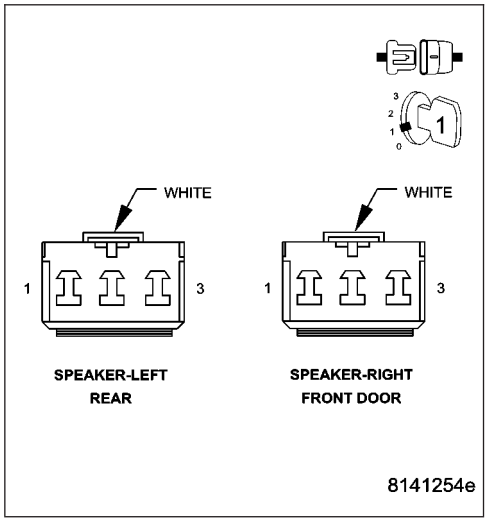

RIGHT FRONT DOOR AND LEFT REAR CHANNELS SHORT ACROSS (CONTINUED)

2. RIGHT FRONT DOOR AND LEFT REAR SPEAKER CIRCUITS SHORTED

Turn the ignition off.

Access and disconnect the Right Front Door Speaker harness connector.

Access and disconnect the Left Rear Speaker harness connector.

Access and disconnect the Amplifier C2 harness connector.

Measure the resistance of the Right Front Door Speaker (+) and (-) circuits.

Measure the resistance of the Left Rear Speaker (+) and (-) circuits.

Is the resistance below 5.0 ohms on each measurement?

Yes >> Repair both Speaker (+) and (-) circuits for a short together.
Perform BODY VERIFICATION TEST - VER 1.

No >> Replace the Amplifier in accordance with the Service Information.
Perform BODY VERIFICATION TEST - VER 1.

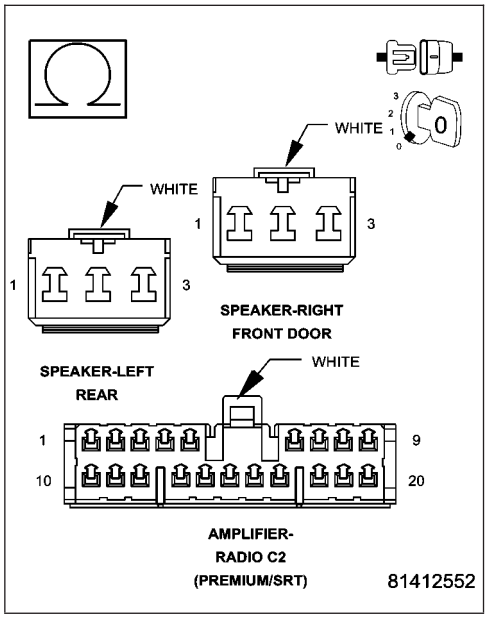

RIGHT FRONT DOOR AND RIGHT REAR CHANNELS SHORT ACROSS

For the Audio system circuit diagram (Refer to 8 - ELECTRICAL/AUDIO - SCHEMATICS AND DIAGRAMS).

For a complete wiring diagram **Refer to Section 8W**.

- **When Monitored:**
  When the DRBIII® performs the Speaker Output test.
- **Set Condition:**
  When the Right Front Door Speaker and Right Rear Speaker circuits are simultaneously shorted.

Possible Causes
RIGHT FRONT DOOR AND RIGHT REAR CHANNELS SHORTED ACROSS
RIGHT FRONT DOOR AND RIGHT REAR SPEAKER CIRCUITS SHORTED
RIGHT FRONT DOOR SPEAKER AND RIGHT REAR SPEAKER AMPLIFIER

1. RIGHT FRONT DOOR AND RIGHT REAR CHANNELS SHORTED ACROSS

NOTE: NOTE: The fault condition must be present to continue diagnosis. Use the DRBIII® to perform the Amplifier pretest to verify the fault condition is present before continuing diagnosis.

NOTE: NOTE: Amplifier speaker circuits are both shorted simultaneously.

Turn the ignition off.

Access and disconnect the Right Front Door and Right Rear Speaker harness connectors.

Turn the ignition on.

With the DRBIII®, perform the Amplifier pretest.

Is the fault condition still present?

Yes >> Go To 2

No >> Replace the Right Front Door and Right Rear Speakers in accordance with the Service Information.
Perform BODY VERIFICATION TEST - VER 1.

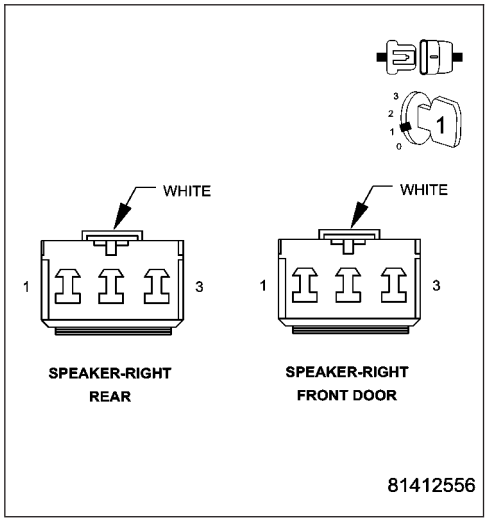

RIGHT FRONT DOOR AND RIGHT REAR CHANNELS SHORT ACROSS (CONTINUED)

2. RIGHT FRONT DOOR AND RIGHT REAR SPEAKER CIRCUITS SHORTED

Turn the ignition off.

Access and disconnect the Right Front Door Speaker harness connector.

Access and disconnect the Right Rear Speaker harness connector.

Access and disconnect the Amplifier C2 harness connector.

Measure the resistance of the Right Front Door Speaker (+) and (-) circuits.

Measure the resistance of the Right Rear Speaker (+) and (-) circuits.

Is the resistance below 5.0 ohms on each measurement?

Yes >> Repair both Speaker (+) and (-) circuits for a short together.

Perform BODY VERIFICATION TEST - VER 1.

No >> Replace the Amplifier in accordance with the Service Information.

Perform BODY VERIFICATION TEST - VER 1.

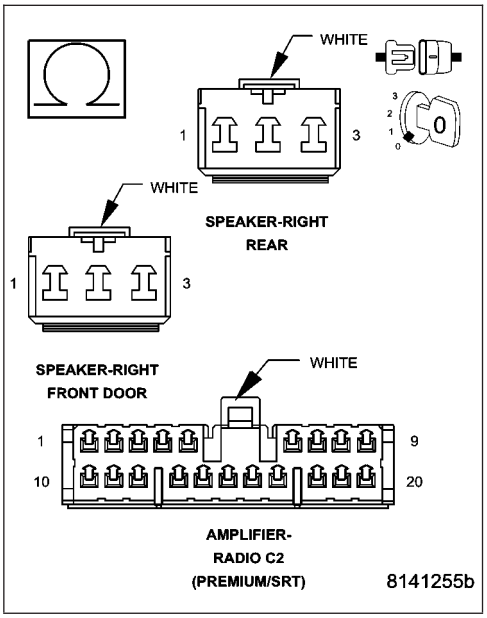

REAR SPEAKERS SHORT TOGETHER OR TO GROUND

For the Audio system circuit diagram (Refer to 8 - ELECTRICAL/AUDIO - SCHEMATICS AND DIAGRAMS).

For a complete wiring diagram **Refer to Section 8W**.

- **When Monitored:**
  When the DRBIII® performs the Speaker Output Test.
- **Set Condition:**
  Each Amplifier rear channel is shorted together or to ground.

Possible Causes
RIGHT REAR SPEAKER
LEFT REAR SPEAKER
REAR SPEAKER CIRCUIT SHORTED TO GROUND
REAR SPEAKER CIRCUITS SHORTED TOGETHER
AMPLIFIER

1. RIGHT REAR SPEAKER

NOTE: NOTE: The fault condition must be present to continue diagnosis. Use the DRB III to perform the Amplifier Pre-test to verify the fault condition is present before continuing diagnosis.

Turn the ignition off.

Access and disconnect the Right Rear Speaker harness connector.

Turn the ignition on.

Using the DRB III, perform the Amplifier Pre-test.

Is the fault condition still present?

Yes >> Go To 2

No >> Replace the Right Rear Speaker in accordance with the service information.
Perform BODY VERIFICATION TEST - VER 1.

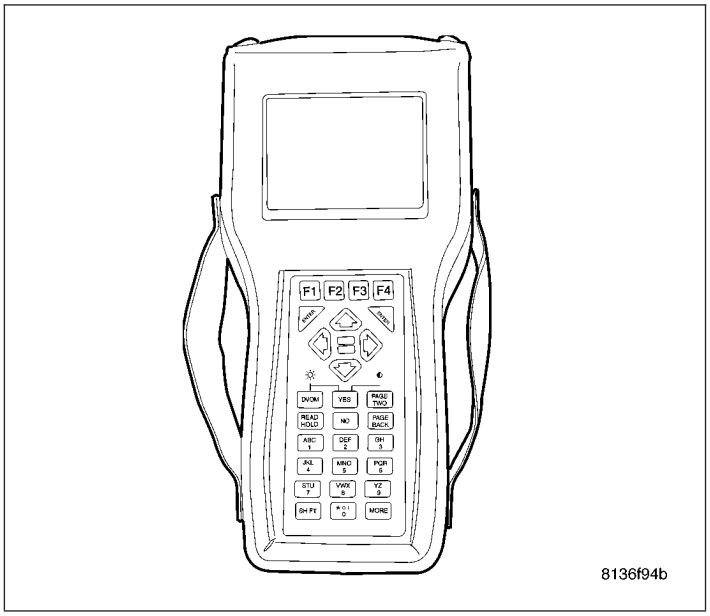

2. LEFT REAR SPEAKER

Turn the ignition off.

Access and disconnect the Left Rear Speaker harness connector.

Turn the ignition on.

Using the DRB III, perform the Amplifier Pre-test.

Is the fault condition still present?

Yes >> Go To 3

No >> Replace the Left Rear Speaker in accordance with the service information.
Perform BODY VERIFICATION TEST - VER 1.

REAR SPEAKERS SHORT TOGETHER OR TO GROUND (CONTINUED)

3. REAR SPEAKER CIRCUIT SHORTED TO GROUND

Turn the ignition off.

Access and disconnect the Right Rear and Left Rear Speaker harness connectors.

Disconnect the Amplifier C2 harness connecter.

Measure the resistance between ground and each of the 4 Rear Speaker circuits.

Is the resistance above 1000 ohms for each of the measurements?

Yes >> Go To 4

No >> Repair the Rear Speaker circuit that measured below 1000 ohms for a short to ground.
Perform BODY VERIFICATION TEST - VER 1.

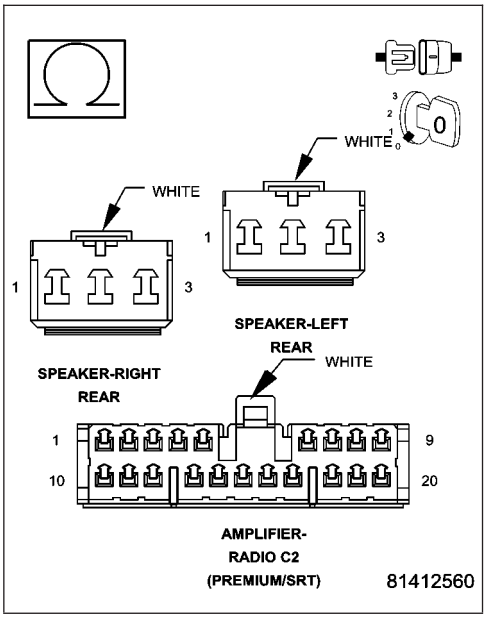

4. REAR SPEAKER CIRCUITS SHORTED TOGETHER

Turn the ignition off.

Access and disconnect the Right Rear and Left Rear Speaker harness connectors.

Disconnect the Amplifier C2 harness connecter.

At the Amplifier C2 harness connector, measure the resistance between the Left Rear Speaker (-) circuit and the following circuits: Left Rear Speaker (+), Right Rear Speaker (-) and Right Rear Speaker (+).

Is the resistance above 1000 ohms for each of the measurements?

Yes >> Go To 5

No >> Repair the Rear Speaker circuits that are shorted together.
Perform BODY VERIFICATION TEST - VER 1.

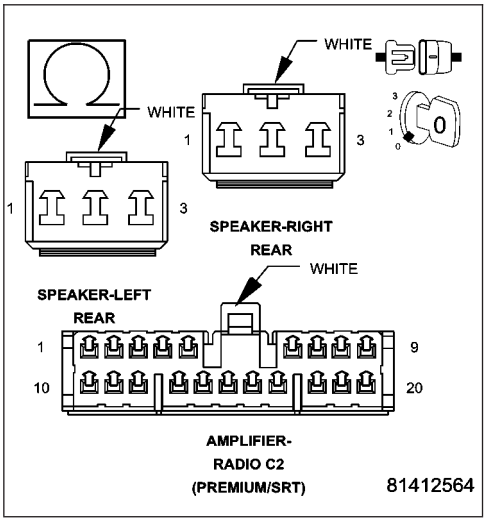

REAR SPEAKERS SHORT TOGETHER OR TO GROUND (CONTINUED)

5. REAR SPEAKER CIRCUITS SHORTED TOGETHER

Turn the ignition off.

Access and disconnect the Right Rear and Left Rear Speaker harness connectors.

Disconnect the Amplifier C2 harness connecter.

At the Amplifier C2 harness connector, measure the resistance between the Left Rear Speaker (+) circuit and the following circuits: Right Rear Speaker (-) and Right Rear Speaker (+).

Is the resistance above 1000 ohms for each of the measurements?

Yes >> Go To 6

No >> Repair the Rear Speaker circuits that are shorted together.
Perform BODY VERIFICATION TEST - VER 1.

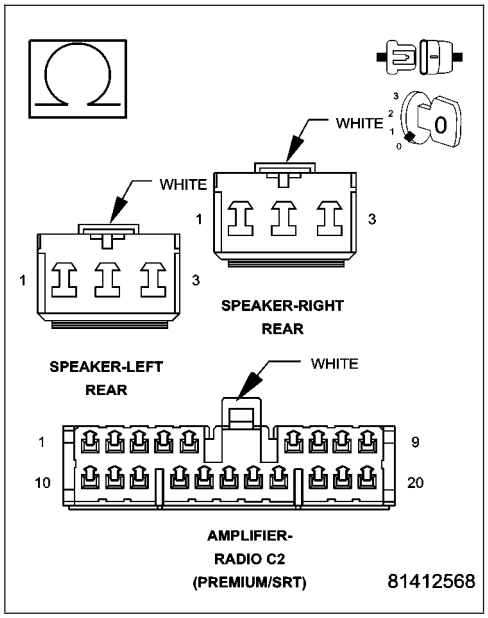

6. REAR SPEAKER CIRCUITS SHORTED TOGETHER

Turn the ignition off.

Access and disconnect the Right Rear Speaker harness connector.

Disconnect the Amplifier C2 harness connecter.

At the Amplifier C2 harness connector, measure the resistance between the Right Rear Speaker (+) circuit and Right Rear Speaker (-) circuit.

Is the resistance above 1000 ohms?

Yes >> Replace the Amplifier in accordance with the service information.
Perform BODY VERIFICATION TEST - VER 1.

No >> Repair the Rear Speaker circuits that are shorted together.
Perform BODY VERIFICATION TEST - VER 1.

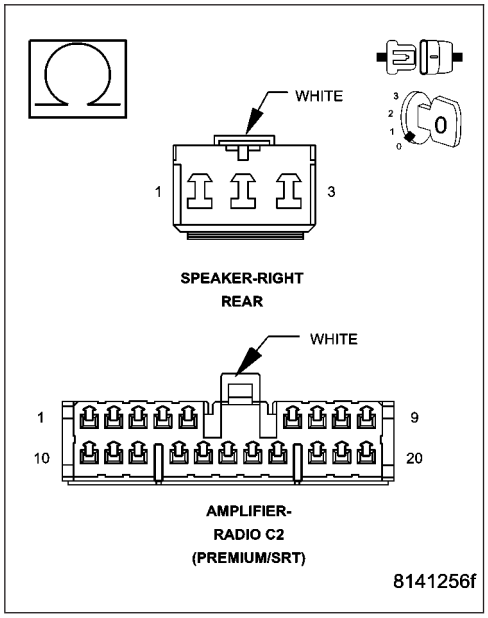

LEFT FRONT INPUT NO ACTIVITY

For the Audio system circuit diagram (Refer to 8 - ELECTRICAL/AUDIO - SCHEMATICS AND DIAGRAMS).

For a complete wiring diagram **Refer to Section 8W**.

- **When Monitored:**
  When the DRBIII® performs the amplifier Input Test.
- **Set Condition:**
  The Amplifier detects no activity on the input circuit.

Possible Causes
(+) CIRCUIT SHORTED TO GROUND
(-) CIRCUIT SHORTED TO GROUND
OPEN SPEAKER CIRCUITS
RADIO
AMPLIFIER

1. (+) CIRCUIT SHORTED TO GROUND

NOTE: NOTE: The fault condition must be present to continue diagnosis. Use the DRBIII® to perform the Amplifier pretest to verify the fault condition is present before continuing diagnosis.

Turn the ignition off.

Disconnect the Amplifier C1 harness connector.

Disconnect the Radio harness connector.

Measure the resistance between ground and the left front speaker (+) circuit.

Is the resistance below 1000.0 (1K) ohms?

Yes >> Repair the speaker (+) circuit for a short to ground.
Perform BODY VERIFICATION TEST - VER 1.

No >> Go To 2

---

2. (-) CIRCUIT SHORTED TO GROUND

Turn the ignition off.

Disconnect the Amplifier C1 harness connector.

Disconnect the Radio harness connector.

Measure the resistance between ground and the left front speaker (-) circuit.

Is the resistance below 1000.0 (1K) ohms?

Yes >> Repair the speaker (-) circuit for a short to ground.
Perform BODY VERIFICATION TEST - VER 1.

No >> Go To 3

LEFT FRONT INPUT NO ACTIVITY (CONTINUED)

3. OPEN SPEAKER CIRCUITS

Turn the ignition off.

Disconnect the Amplifier C1 harness connector.

Disconnect the Radio harness connector.

Measure the resistance of each left front speaker (+) and (-) circuit between the Radio and the Amplifier.

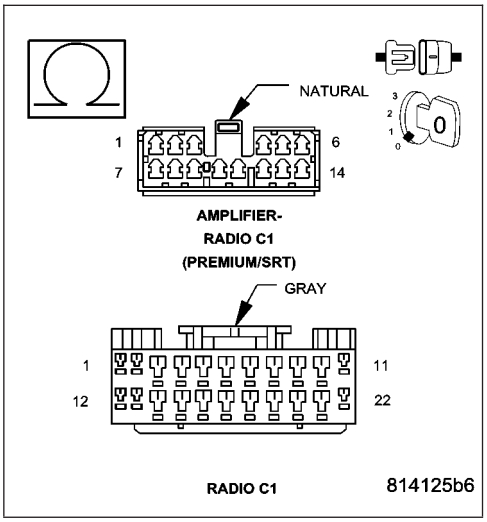

Is the resistance below 5.0 ohms for each circuit?

Yes >> Go To 4

No >> Repair the speaker circuits for an open.
Perform BODY VERIFICATION TEST - VER 1.

---

4. AMPLIFIER

Turn the ignition off.

Reconnect the Radio harness connector.

Disconnect the Amplifier C1 harness connector.

Turn the ignition on and the Radio on to a known good radio station or have a tape or CD playing.

Turn the radio volume control up at least 25 positions.

With the voltmeter in the AC voltage scale, measure the voltage of each left front speaker circuit at the Amplifier C1 connector.

NOTE: NOTE: Perform this test on each left front speaker circuit.

Is the voltage at least 120mV AC (0.12 VAC) on each speaker circuit?

Yes >> Replace the Amplifier in accordance with the Service Information.
Perform BODY VERIFICATION TEST - VER 1.

No >> Replace the Radio.
Perform BODY VERIFICATION TEST - VER 1.

RIGHT FRONT INPUT NO ACTIVITY

For the Audio system circuit diagram (Refer to 8 - ELECTRICAL/AUDIO - SCHEMATICS AND DIAGRAMS).

For a complete wiring diagram **Refer to Section 8W**.

- **When Monitored:**
  When the DRBIII® performs the amplifier Input Test.
- **Set Condition:**
  The Amplifier detects no activity on the input circuit.

Possible Causes
(+) CIRCUIT SHORTED TO GROUND
(-) CIRCUIT SHORTED TO GROUND
OPEN SPEAKER CIRCUITS
AMPLIFIER

1. (+) CIRCUIT SHORTED TO GROUND

NOTE: NOTE: The fault condition must be present to continue diagnosis. Use the DRBIII® to perform the Amplifier pretest to verify the fault condition is present before continuing diagnosis.

Turn the ignition off.

Disconnect the Amplifier C1 harness connector.

Disconnect the Radio harness connector.

Measure the resistance between ground and the right front speaker (+) circuit.

Is the resistance below 1000.0 (1K) ohms?

Yes >> Repair the speaker (+) circuit for a short to ground.
Perform BODY VERIFICATION TEST - VER 1.

No >> Go To 2

2. (-) CIRCUIT SHORTED TO GROUND

Turn the ignition off.

Disconnect the Amplifier C1 harness connector.

Disconnect the Radio harness connector.

Measure the resistance between ground and the right front speaker (-) circuit.

Is the resistance below 1000.0 (1K) ohms?

Yes >> Repair the speaker (-) circuit for a short to ground.
Perform BODY VERIFICATION TEST - VER 1.

No >> Go To 3

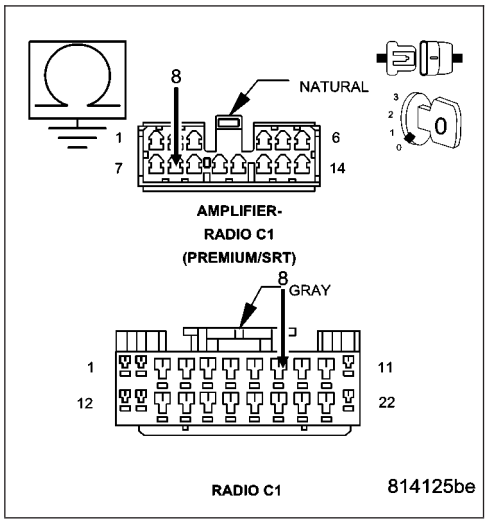

RIGHT FRONT INPUT NO ACTIVITY (CONTINUED)

3. OPEN SPEAKER CIRCUITS

Turn the ignition off.

Disconnect the Amplifier C1 harness connector.

Disconnect the Radio harness connector.

Measure the resistance of each right front speaker (+) and (-) circuit between the Radio and the Amplifier.

Is the resistance below 5.0 ohms for each circuit?

Yes >> Go To 4

No >> Repair the speaker circuits for an open.
Perform BODY VERIFICATION TEST - VER 1.

---

4. AMPLIFIER

Turn the ignition off.

Reconnect the Radio harness connector.

Disconnect the Amplifier C1 harness connector.

Turn the ignition on and the Radio on to a known good radio station or have a tape or CD playing.

Turn the radio volume control up at least 25 positions.

With the voltmeter in the AC voltage scale, measure the voltage of each right front speaker circuit at the Amplifier C1 connector.

NOTE: NOTE: Perform this test on each right front speaker circuit.

Is the voltage at least 120mV AC (0.12 VAC) on each speaker circuit?

Yes >> Replace the Amplifier in accordance with the Service Information.
Perform BODY VERIFICATION TEST - VER 1.

No >> Replace the Radio.
Perform BODY VERIFICATION TEST - VER 1.

LEFT REAR INPUT NO ACTIVITY

For the Audio system circuit diagram (Refer to 8 - ELECTRICAL/AUDIO - SCHEMATICS AND DIAGRAMS).

For a complete wiring diagram **Refer to Section 8W**.

- **When Monitored:**
  When the DRBIII® performs the amplifier Input Test.
- **Set Condition:**
  The Amplifier detects no activity on the input circuit.

Possible Causes
(+) CIRCUIT SHORTED TO GROUND
(-) CIRCUIT SHORTED TO GROUND
OPEN SPEAKER CIRCUITS
RADIO
AMPLIFIER

1. (+) CIRCUIT SHORTED TO GROUND

NOTE: NOTE: The fault condition must be present to continue diagnosis. Use the DRBIII® to perform the Amplifier pretest to verify the fault condition is present before continuing diagnosis.

Turn the ignition off.

Disconnect the Amplifier C1 harness connector.

Disconnect the Radio harness connector.

Measure the resistance between ground and the left rear speaker (+) circuit.

Is the resistance below 1000.0 (1K) ohms?

Yes >> Repair the speaker (+) circuit for a short to ground.
Perform BODY VERIFICATION TEST - VER 1.

No >> Go To 2

---

2. (-) CIRCUIT SHORTED TO GROUND

Turn the ignition off.

Disconnect the Amplifier C1 harness connector.

Disconnect the Radio harness connector.

Measure the resistance between ground and the left rear speaker (-) circuit.

Is the resistance below 1000.0 (1K) ohms?

Yes >> Repair the speaker (-) circuit for a short to ground.
Perform BODY VERIFICATION TEST - VER 1.

No >> Go To 3

LEFT REAR INPUT NO ACTIVITY (CONTINUED)

3. OPEN SPEAKER CIRCUITS

Turn the ignition off.

Disconnect the Amplifier C1 harness connector.

Disconnect the Radio harness connector.

Measure the resistance of each left rear speaker (+) and (-) circuit between the Radio and the Amplifier.

Is the resistance below 5.0 ohms for each circuit?

Yes >> Go To 4

No >> Repair the speaker circuits for an open.
Perform BODY VERIFICATION TEST - VER 1.

---

4. AMPLIFIER

Turn the ignition off.

Reconnect the Radio harness connector.

Disconnect the Amplifier C1 harness connector.

Turn the ignition on and the Radio on to a known good radio station or have a tape or CD playing.

Turn the radio volume control up at least 25 positions.

With the voltmeter in the AC voltage scale, measure the voltage of each left rear speaker circuit at the Amplifier C1 connector.

NOTE: NOTE: Perform this test on each left rear speaker circuit.

Is the voltage at least 120mV AC (0.12 VAC) on each speaker circuit?

Yes >> Replace the Amplifier in accordance with the Service Information.
Perform BODY VERIFICATION TEST - VER 1.

No >> Replace the Radio.
Perform BODY VERIFICATION TEST - VER 1.

RIGHT REAR INPUT NO ACTIVITY

For the Audio system circuit diagram (Refer to 8 - ELECTRICAL/AUDIO - SCHEMATICS AND DIAGRAMS).

For a complete wiring diagram **Refer to Section 8W**.

- **When Monitored:**
  When the DRBIII® performs the amplifier Input Test.
- **Set Condition:**
  The Amplifier detects no activity on the input circuit.

Possible Causes
(+) CIRCUIT SHORTED TO GROUND
(-) CIRCUIT SHORTED TO GROUND
AMPLIFIER
OPEN SPEAKER CIRCUITS

1. (+) CIRCUIT SHORTED TO GROUND

NOTE: NOTE: The fault condition must be present to continue diagnosis. Use the DRBIII® to perform the Amplifier pretest to verify the fault condition is present before continuing diagnosis.

Turn the ignition off.

Disconnect the Amplifier C1 harness connector.

Disconnect the Radio harness connector.

Measure the resistance between ground and the right rear speaker (+) circuit.

Is the resistance below 1000.0 (1K) ohms?

Yes >> Repair the speaker (+) circuit for a short to ground.
Perform BODY VERIFICATION TEST - VER 1.

No >> Go To 2

---

2. (-) CIRCUIT SHORTED TO GROUND

Turn the ignition off.

Disconnect the Amplifier C1 harness connector.

Disconnect the Radio harness connector.

Measure the resistance between ground and the right rear speaker (-) circuit.

Is the resistance below 1000.0 (1K) ohms?

Yes >> Repair the speaker (-) circuit for a short to ground.
Perform BODY VERIFICATION TEST - VER 1.

No >> Go To 3

RIGHT REAR INPUT NO ACTIVITY (CONTINUED)

3. OPEN SPEAKER CIRCUITS

Turn the ignition off.

Disconnect the Amplifier C1 harness connector.

Disconnect the Radio harness connector.

Measure the resistance of each right rear speaker (+) and (-) circuit between the Radio and the Amplifier.

Is the resistance below 5.0 ohms for each circuit?

Yes >> Go To 4

No >> Repair the speaker circuits for an open.
Perform BODY VERIFICATION TEST - VER 1.

---

4. AMPLIFIER

Turn the ignition off.

Reconnect the Radio harness connector.

Disconnect the Amplifier C1 harness connector.

Turn the ignition on and the Radio on to a known good radio station or have a tape or CD playing.

Turn the radio volume control up at least 25 positions.

With the voltmeter in the AC voltage scale, measure the voltage of each right rear speaker circuit at the Amplifier C1 connector.

NOTE: NOTE: Perform this test on each right rear speaker circuit.

Is the voltage at least 120mV AC (0.12 VAC) on each speaker circuit?

Yes >> Replace the Amplifier in accordance with the Service Information.
Perform BODY VERIFICATION TEST - VER 1.

No >> Replace the Radio.
Perform BODY VERIFICATION TEST - VER 1.

LOW VOLTAGE LEVEL

For the Audio system circuit diagram (Refer to 8 - ELECTRICAL/AUDIO - SCHEMATICS AND DIAGRAMS).

For a complete wiring diagram **Refer to Section 8W**.

- **Set Condition:**
  The radio detects lower than normal voltage.

Possible Causes
CHARGING SYSTEM
VOLTAGE LEVEL AT RADIO
RADIO

1. CHECK CHARGING SYSTEM

Check the charging system in accordance with the service information.

Is the charging system operating properly?

Yes >> Go To 2

No >> Refer to the appropriate service information and repair as necessary.
Perform BODY VERIFICATION TEST - VER 1.

2. CHECK VOLTAGE LEVEL AT RADIO

Turn the ignition off.

Disconnect the Radio harness connector.

Start the engine.

Measure the voltage of each Fused B+ circuit and the Fused Ignition Switch Output circuit.

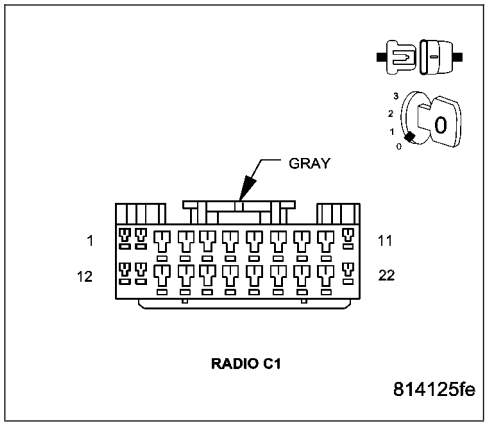

Is the voltage above or approximately 14 volts for each measurement?

Yes >> Go To 3

No >> Repair the circuit for high resistance.
Perform BODY VERIFICATION TEST - VER 1.

3. RADIO

NOTE: Note: Reconnect all previously disconnected components.

Turn the ignition and Radio on.

With the DRBIII®, erase the audio DTC's.

Start the engine.

With the DRBIII®, read the audio DTC's.

Did this DTC reset?

Yes >> Replace the Radio.
Perform BODY VERIFICATION TEST - VER 1.

No >> Test Complete.

RADIO AND NAV GPS ANTENNA NOT CONNECTED

For the Audio system circuit diagram (Refer to 8 - ELECTRICAL/AUDIO - SCHEMATICS AND DIAGRAMS).

For a complete wiring diagram **Refer to Section 8W**.

- **When Monitored:**
  With the radio on
- **Set Condition:**
  The Radio dectects a improper antenna signal

Possible Causes
BAD ANTENNA CONNECTION
ANTENNA
RADIO

1. BAD ANTENNA CONNECTION

Turn the ignition off.

Disconnect the Antenna connectors.

Inspect the Antenna connections.

Was the Antenna connections clean and tight?

Yes >> Go To 2

No >> Repair the Antenna connections as needed.
Perform BODY VERIFICATION TEST - VER 1.

---

2. ANTENNA

Refer to the Audio System in the service information and test the Antennas in accordance with the service procedure.

Are the Antennas ok?

Yes >> Go To 3

No >> Repair or replace the Antenna assemblies as necessary.
Perform BODY VERIFICATION TEST - VER 1.

RADIO AND NAV GPS ANTENNA NOT CONNECTED (CONTINUED)

3. RADIO

NOTE: NOTE: Reconnect all previously disconnected components.

NOTE: NOTE: Move vehicle outside approximately 30ft from any structure.

Turn the ignition and Radio on.

With the DRBIII®, erase the audio DTC's and operate the radio and the navigation system.

With the DRBIII®, read the audio DTC's.

Did this DTC reset?

Yes >> Replace the Radio in accordance with the service information.

Perform BODY VERIFICATION TEST - VER 1.

No >> Test Complete.

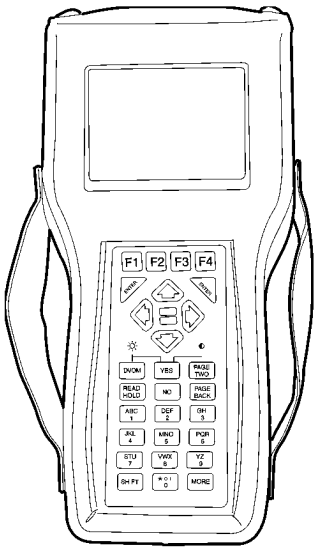

AUDIO - SERVICE INFORMATION

TABLE OF CONTENTS

page

AUDIO - SERVICE INFORMATION
DESCRIPTION 51
OPERATION 52
DIAGNOSIS AND TESTING
AUDIO 52
AMPLIFIER
DESCRIPTION 54
OPERATION 54
REMOVAL 54
INSTALLATION 55
ANTENNA - NAVIGATION
REMOVAL 56
INSTALLATION 57
ANTENNA-SATELLITE
DESCRIPTION 58
OPERATION 58
REMOVAL 59
INSTALLATION 59
ANTENNA BODY & CABLE
DESCRIPTION 59
OPERATION 60
DIAGNOSIS AND TESTING
ANTENNA BODY AND CABLE 60
REMOVAL 62
INSTALLATION 62
ANTENNA CABLE - INSTRUMENT PANEL
REMOVAL 63
INSTALLATION 64
ANTENNA CABLE - SATELLITE RADIO
DESCRIPTION 64
REMOVAL 65
INSTALLATION 66
RADIO
DESCRIPTION 67
OPERATION 67
REMOVAL 67
INSTALLATION 68
RECEIVER-SATELLITE
DESCRIPTION 70
OPERATION 70
REMOVAL 71
INSTALLATION 72
SPEAKER
DESCRIPTION 74
OPERATION 74
DIAGNOSIS AND TESTING
SPEAKER 74
REMOVAL 75
INSTALLATION 78
SUPPRESSION COMPONENTS - RADIO NOISE
DESCRIPTION 82
OPERATION 82
REMOVAL 83
INSTALLATION 85
SWITCH - REMOTE RADIO
DESCRIPTION 86
OPERATION 86
DIAGNOSIS AND TESTING
REMOTE SWITCHES 86
REMOVAL 88
INSTALLATION 88

AUDIO - SERVICE INFORMATION

DESCRIPTION

Several combinations of radio receivers and speaker systems are offered. The audio system uses an ignition switched source of battery current so that the system will only operate when the ignition switch is in the RUN or ACCESSORY positions.

A optional navigation radio (RB4) is available on this vehicle. With this system, the operator has the option of choosing a street address, point of interest, trip itinerary as well as other features.

The audio system includes the following components:

- Antenna (radio, navigation, satellite)
- Power amplifier (with premium speaker system only)
- Radio noise suppression components
- Radio receiver
- Remote radio switches (if equipped)
- Satellite receiver (if equipped)
- Speakers

Certain functions and features of the audio system rely upon resources shared with other electronic modules in the vehicle over the Programmable Communication Interface (PCI) bus network. The data bus network allows the sharing of sensor information. For diagnosis of these electronic modules or of the data bus network, the use of a scan tool and the proper Diagnostic Procedures information is recommended.

OPERATION

The audio system components are designed to provide audio entertainment and information through the reception, tuning and amplification of locally broadcast radio signals in both the Amplitude Modulating (AM) and Frequency Modulating (FM) commercial frequency ranges.

The audio system components operate on battery current received through a fuse in the Integrated Power Module (IPM) on a fused ignition switch output (run-acc) circuit so that the system will only operate when the ignition switch is in the Run or Accessory positions.

The optional navigation radio system receives GPS signals from up to eight satellites to display the position and direction of the vehicle. Map information is supplied through a DVD-ROM. An electronic gyro-sensor and the vehicle's speed sensor enable the system to display the present vehicle position even in locations where GPS signals may be blocked.

When a destination is selected, the navigation system uses information from the map to quickly calculate a route. As the vehicle is driven along the chosen route, the operator is guided with pictorial displays and voice prompts.

On vehicles that are equipped with the optional remote radio switches, the Instrument Cluster receives hard wired resistor multiplexed inputs from the remote radio switches. The programming in the Instrument Cluster allows it to process those inputs and send the proper messages to the radio receiver over the Programmable Communication Interface (PCI) bus network to control the radio volume up or down, station seek up or down, preset station advance, and mode advance functions.

DIAGNOSIS AND TESTING

AUDIO

Any diagnosis of the Audio system should begin with the use of a scan tool. For information on the use of the scan tool, refer to the appropriate Diagnostic Service information.

Refer to the appropriate wiring information.

WARNING: DISABLE THE AIRBAG SYSTEM BEFORE ATTEMPTING ANY STEERING WHEEL, STEERING COLUMN, SEAT BELT TENSIONER, SIDE AIRBAG, OR INSTRUMENT PANEL COMPONENT DIAGNOSIS OR SERVICE. DISCONNECT AND ISOLATE THE BATTERY NEGATIVE (GROUND) CABLE, THEN WAIT TWO MINUTES FOR THE AIRBAG SYSTEM CAPACITOR TO DISCHARGE BEFORE PERFORMING FURTHER DIAGNOSIS OR SERVICE. THIS IS THE ONLY SURE WAY TO DISABLE THE AIRBAG SYSTEM. FAILURE TO TAKE THE PROPER PRECAUTIONS COULD RESULT IN ACCIDENTAL AIRBAG DEPLOYMENT AND POSSIBLE PERSONAL INJURY.

AUDIO SYSTEM DIAGNOSIS TABLE

CONDITION	POSSIBLE CAUSES	CORRECTION
NO AUDIO	1. Fuse inoperative.	1. Check radio fuse and Ignition-Off Draw (IOD) fuse in the Integrated Power Module (IPM). Replace fuses, if required.
	2. Radio/amplifier (if equipped) connector damaged.	2. Check for loose or corroded radio/amplifier connector. Repair, as required.
	3. Wiring damaged.	3. Check for shorted or open wires. Repair wiring as required.
	4. Radio/amplifier (if equipped) ground damaged.	4. Check for continuity between radio chassis and a known good ground. There should be continuity. Repair ground as required.

CONDITION	POSSIBLE CAUSES	CORRECTION
	5. Radio/amplifier (if equipped) inoperative.	5. Refer to appropriate Diagnostic Service information.
	6. Speakers inoperative.	6. Refer to appropriate Diagnostic Service information.
NO RADIO DISPLAY	1. Fuse inoperative.	1. Check radio fuse and Ignition-Off Draw (IOD) fuse in Integrated Power Module (IPM). Replace fuses as required.
	2. Radio connector damaged.	2. Check for loose or corroded radio connector. Repair as required.
	3. Wiring damaged.	3. Check for battery voltage at radio connector. Repair wiring as required.
	4. Radio ground damaged.	4. Check for continuity between radio chassis and a known good ground. There should be continuity. Repair ground as required.
	5. Radio inoperative.	5. Refer to appropriate Diagnostic Service information.
CLOCK WILL NOT KEEP SET TIME	1. Fuse inoperative.	1. Check Ignition-Off Draw (IOD) fuse in the Integrated Power Module (IPM). Replace fuse if required.
	2. Radio connector damaged.	2. Check for loose or corroded radio connector. Repair as required.
	3. Wiring damaged.	3. Check for battery voltage at radio connector. Repair wiring as required.
	4. Radio ground damaged.	4. Check for continuity between radio chassis and a known good ground. There should be continuity. Repair ground as required.
	5. Radio inoperative.	5. Refer to appropriate Diagnostic Service information.
POOR RADIO RECEPTION	1. Antenna inoperative.	1. (Refer to 8 - ELECTRICAL/AUDIO/ANTENNA BODY & CABLE - DIAGNOSIS AND TESTING).
	2. Radio ground damaged.	2. Check for continuity between radio chassis and a known good ground. There should be continuity. Repair ground as required.
	3. Radio noise suppression inoperative or damaged.	3. Repair or replace ground strap as necessary.
	4. Radio inoperative.	4. Refer to appropriate Diagnostic Service inoperative.
SOUND DISTORTION (VIBRATION FROM SPEAKER AREA, BUZZING - HUMMING)	1. Door trim panel loose or missing fasteners.	1. Inspect door trim panel and correct as necessary. Replace any missing fasteners.
	2. Water shield loose or misaligned.	2. Inspect water shield and adjust as required.
	3. Items placed in door trim panel map pockets vibrating or moving from side to side.	3. Remove items from door trim panel. Ensure that vibration is no longer present.

CONDITION	POSSIBLE CAUSES	CORRECTION
NO/POOR TAPE OPERATION	1. Tape damaged.	1. Insert known good tape and test operation.
	2. Foreign objects behind tape door.	2. Remove foreign objects and test operation.
	3. Cassette tape head dirty.	3. Clean head with Mopar Cassette Head Cleaner.
	4. Radio inoperative.	4. Refer to appropriate Diagnostic Service inoperative.
NO COMPACT DISC OPERATION	1. CD damaged.	1. Insert known good CD and test operation.
	2. Foreign material on CD.	2. Clean CD and test operation.
	3. Condensation on CD or optics.	3. Allow temperature of vehicle interior to stabilize and test operation.
	4. Radio inoperative.	4. Refer to appropriate Diagnostic Service information.

AMPLIFIER

DESCRIPTION

The optional Infinity premium speaker system includes a separate Infinity audio power amplifier. The amplifier is an eight-channel unit rated at 368 total output watts. The amplifier is located behind the glove box. If equipped, an additional amplifier rated at 140 watts is located under the center passenger seat.

OPERATION

The power amplifier electronically increases the frequency response of the normal audio signal output from the radio amplifier in order to improve the acoustic performance of the speakers. On vehicles equipped with an amplifier, the amplifier section of the radio becomes a pre-amplifier.

The amplifier receives audio signal inputs for speaker channels from the radio, then sends amplified audio outputs through six separate channels with dedicated feed and return circuits to the individual speakers.

REMOVAL

INSTRUMENT PANEL MOUNTED

1. Disconnect and isolate the battery negative cable.
2. Remove glove box (Refer to 23 - BODY/INSTRUMENT PANEL/GLOVE BOX - REMOVAL).
3. Remove instrument panel center bezel (Refer to 23 - BODY/INSTRUMENT PANEL/INSTRUMENT PANEL CENTER BEZEL - REMOVAL).
4. Remove instrument panel lower right center bezel (Refer to 23 - BODY/INSTRUMENT PANEL/IP LOWER RIGHT CENTER BEZEL - REMOVAL).
5. Disconnect electrical harness connector (4) from amplifier (2)
6. Remove mounting bolts (3) and amplifier.

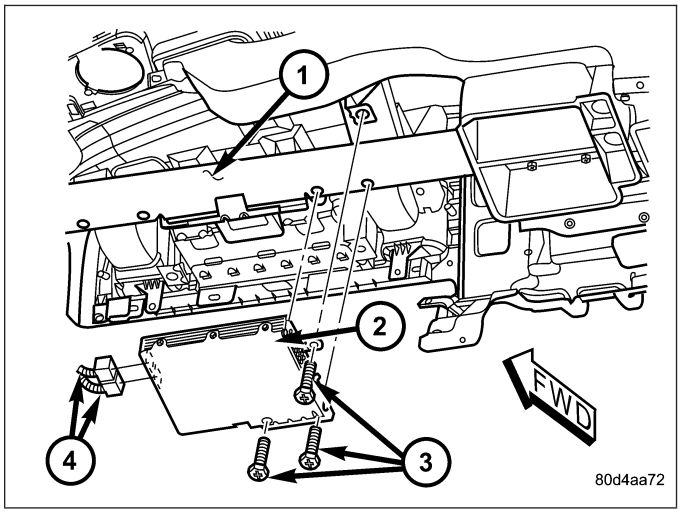

CENTER SEAT MOUNTED

1. Disconnect and isolate the battery negative cable.
2. Raise center seat cushion to access amplifier.
3. Remove mounting fasteners.
4. Disconnect electrical harness connector and remove amplifier.

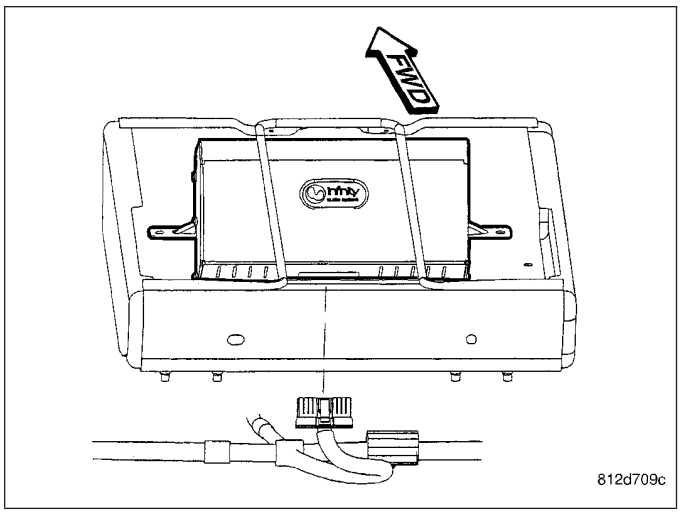

INSTALLATION

INSTRUMENT PANEL MOUNTED

1. Connect electrical harness connector (4) and install amplifier (2).
2. Install and tighten mounting bolts (3).
3. Install instrument panel lower right center bezel (Refer to 23 - BODY/INSTRUMENT PANEL/IP LOWER RIGHT CENTER BEZEL - INSTALLATION).
4. Install instrument panel center bezel (Refer to 23 - BODY/INSTRUMENT PANEL/INSTRUMENT PANEL CENTER BEZEL - INSTALLATION).
5. Install glove box (Refer to 23 - BODY/INSTRUMENT PANEL/GLOVE BOX - INSTALLATION).
6. Connect battery negative cable.

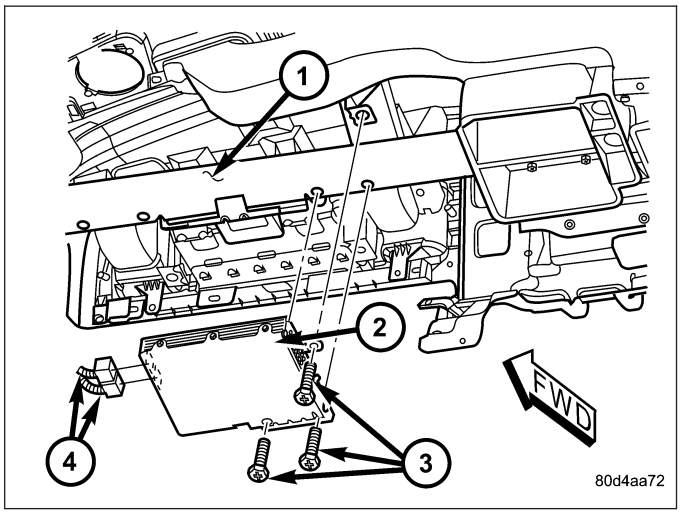

CENTER SEAT MOUNTED

1. Connect electrical harness connector and position amplifier.
2. Install and tighten mounting fasteners.
3. Lower center seat.
4. Connect battery negative cable.

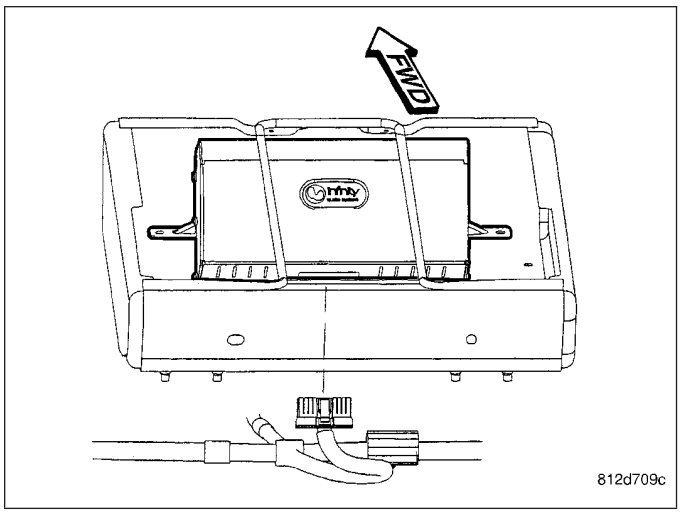

ANTENNA - NAVIGATION

REMOVAL

1. Disconnect and isolate the battery negative cable.
2. Remove the instrument panel top cover (Refer to 23 - BODY/INSTRUMENT PANEL/INSTRUMENT PANEL TOP COVER - REMOVAL).
3. Remove the radio (Refer to 8 - ELECTRICAL/AUDIO/RADIO - REMOVAL).
4. Remove the antenna mounting fasteners.

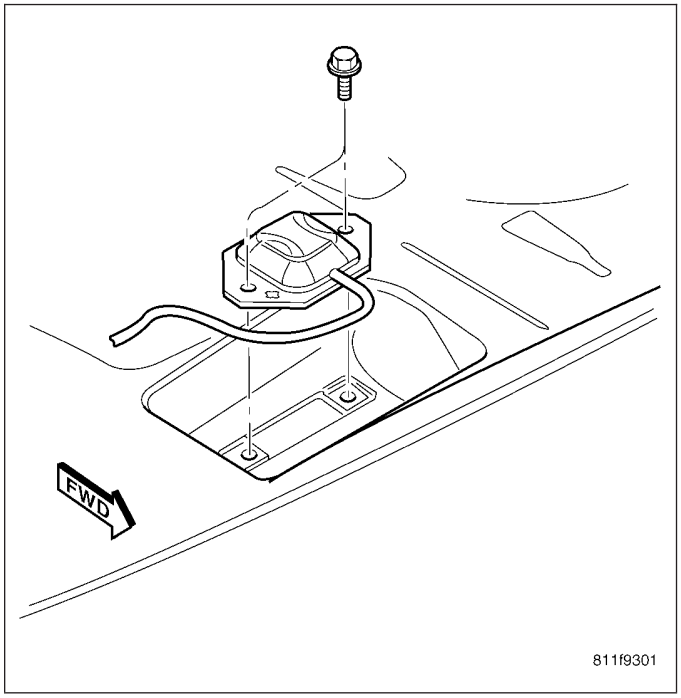

5. Cut each end of the cable (1) and leave remaining portion in the instrument panel.

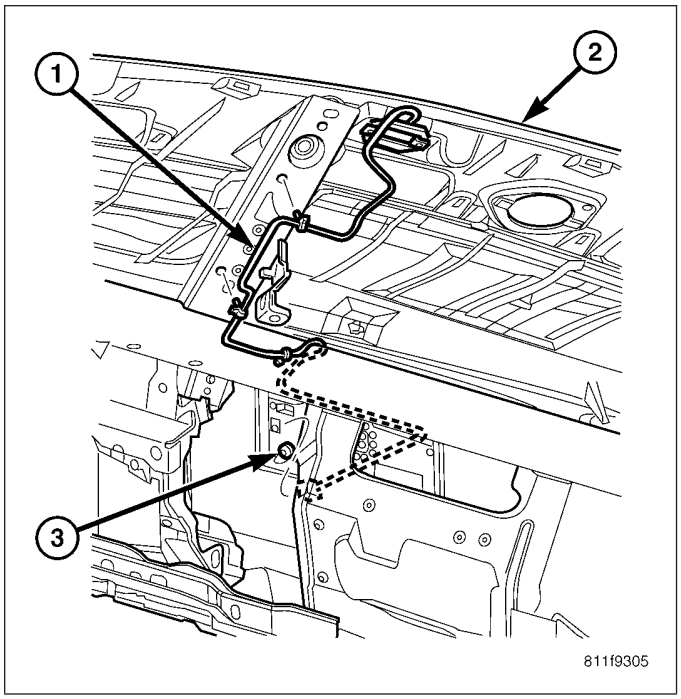

INSTALLATION

1. Position new antenna cable to wire harness. Secure into place.

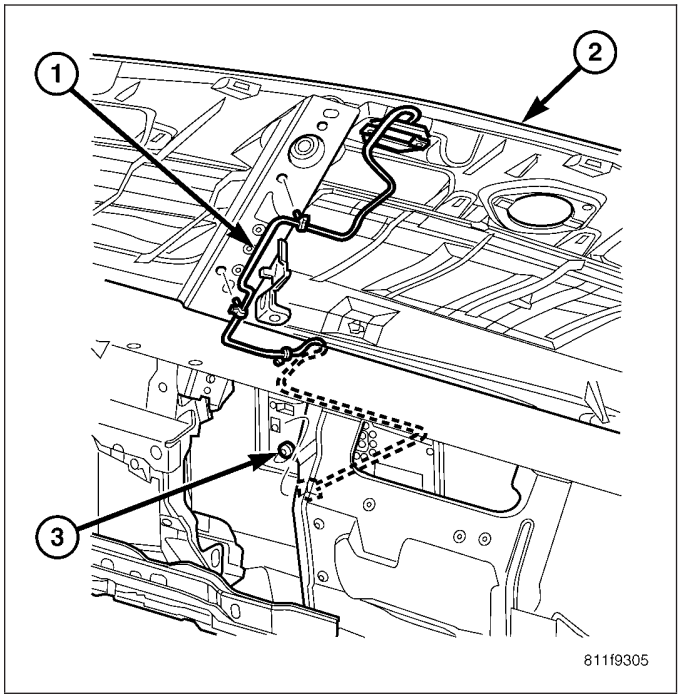

2. Install antenna mounting fasteners.
3. Install radio (Refer to 8 - ELECTRICAL/AUDIO/RADIO - INSTALLATION).
4. Install instrument panel top cover (Refer to 23 - BODY/INSTRUMENT PANEL/INSTRUMENT PANEL TOP COVER - INSTALLATION).
5. Connect battery negative cable.

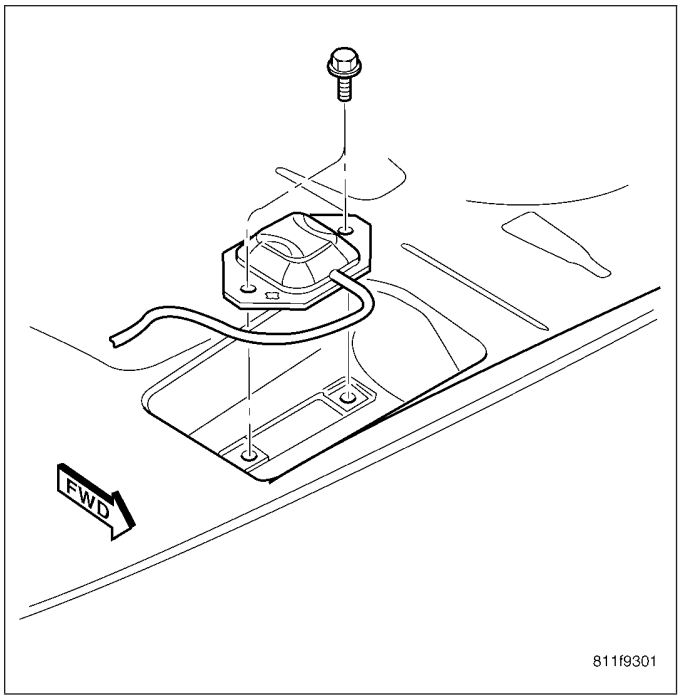

ANTENNA-SATELLITE

DESCRIPTION

The satellite radio antenna (1) is secured by a bolt and two retainers that protrude through a hole in the roof panel (2). Two connectors from the antenna are connected to the satellite receiver cable.

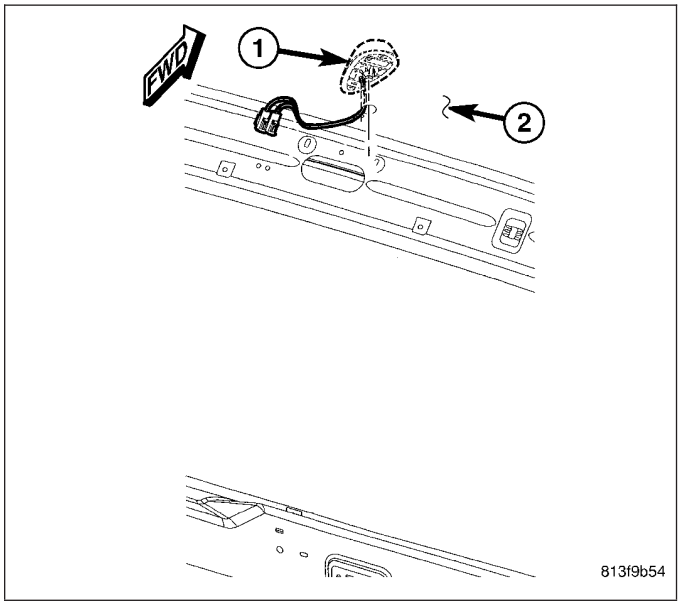

OPERATION

The satellite radio antenna receives signals from orbiting satellites and sends these signals to the satellite receiver module. The satellite radio antenna must have open space in which to operate. Items carried on the roof, parking inside etc. can have an effect on the antenna's ability to receive signals.

REMOVAL

1. Disconnect and isolate the battery negative cable.
2. Lower the rear portion of the headliner as necessary to access underside of antenna (1) (Refer to 23 - BODY/INTERIOR/HEADLINER - REMOVAL).
3. Disconnect the antenna cables.
4. Remove retaining fastener.
5. From inside the vehicle, and using a flat bladed tool, depress one of the retaining tabs on the antenna. Push up the one side of the antenna connector through the roof panel. Depress the other side of the connector and remove the antenna.

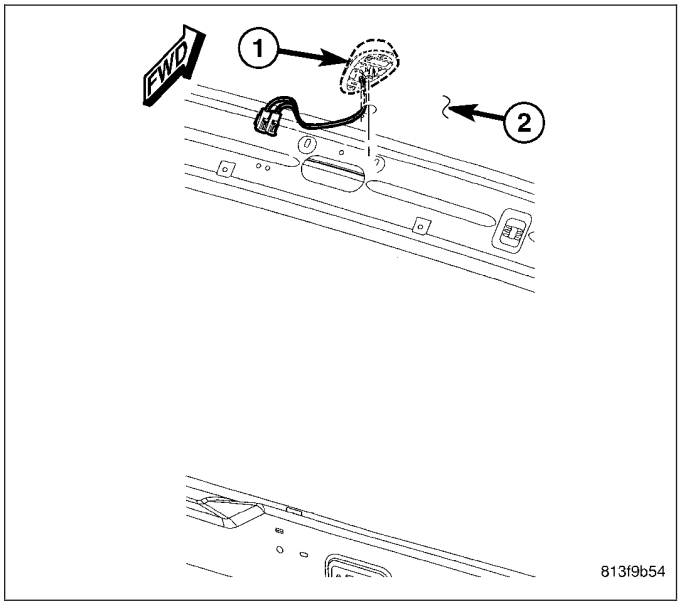

INSTALLATION

1. Insert wire harness through hole in roof panel (2). Press antenna (1) into position until both retainers snap into place.
2. Install and tighten mounting fastener.
3. Connect antenna cables.
4. Install headliner (Refer to 23 - BODY/INTERIOR/HEADLINER - INSTALLATION).
5. Connect battery negative cable.

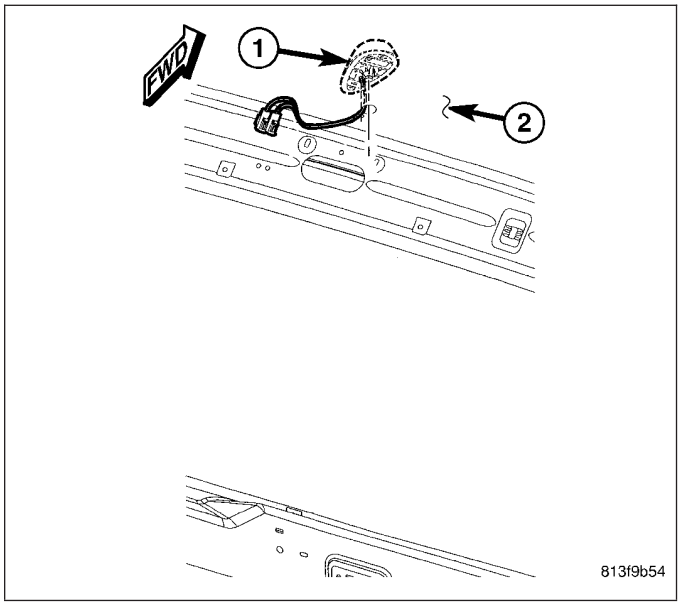

ANTENNA BODY & CABLE

DESCRIPTION

The antenna body and cable is secured below the fender panel by the antenna cap nut through a mounting hole in the right front fender. The primary coaxial antenna cable is then routed beneath the fender sheet metal and through a entry hole in the right cowl side panel into the interior of the vehicle. Inside the vehicle, the primary coaxial cable is connected to a secondary instrument panel antenna coaxial cable with an in-line connector that is located behind the right kick panel. The secondary coaxial cable is then routed behind the instrument panel to the back of the radio.

OPERATION

The antenna body and cable connects the antenna mast to the radio. The radio antenna is an electromagnetic circuit component used to capture radio frequency signals that are broadcast by local commercial radio stations in both the Amplitude Modulating (AM) and Frequency Modulating (FM) frequency ranges. These electromagnetic radio frequency signals induce small electrical modulations into the antenna as they move past the mast. The antenna body transfers the weak electromagnetic radio waves induced into the rigid antenna mast into the center conductor of the flexible primary antenna coaxial cable. The braided outer shield of the antenna coaxial cable is grounded through both the antenna body and the radio chassis, effectively shielding the radio waves as they are conducted to the radio. The radio then tunes and amplifies the weak radio signals into stronger electrical signals in order to operate the audio system speakers.

DIAGNOSIS AND TESTING

ANTENNA BODY AND CABLE

The following four tests are used to diagnose the antenna with an ohmmeter:

- **Test 1** - Mast to ground test
- **Test 2** - Tip-of-mast to tip-of-conductor test
- **Test 3** - Body ground to battery ground test
- **Test 4** - Body ground to antenna coaxial cable shield test.

WARNING: DISABLE THE AIRBAG SYSTEM BEFORE ATTEMPTING ANY STEERING WHEEL, STEERING COLUMN, SEAT BELT TENSIONER, SIDE AIRBAG, OR INSTRUMENT PANEL COMPONENT DIAGNOSIS OR SERVICE. DISCONNECT AND ISOLATE THE BATTERY NEGATIVE (GROUND) CABLE, THEN WAIT TWO MINUTES FOR THE AIRBAG SYSTEM CAPACITOR TO DISCHARGE BEFORE PERFORMING FURTHER DIAGNOSIS OR SERVICE. THIS IS THE ONLY SURE WAY TO DISABLE THE AIRBAG SYSTEM. FAILURE TO TAKE THE PROPER PRECAUTIONS COULD RESULT IN ACCIDENTAL AIRBAG DEPLOYMENT AND POSSIBLE PERSONAL INJURY.

The ohmmeter test lead connections for each test are shown in the illustration.

NOTE: This model has a two-piece antenna coaxial cable. Tests 2 and 4 must be conducted in two steps to isolate an antenna cable problem. First, test the primary antenna cable (integral to the antenna body and cable) from the coaxial cable connector behind the right side kick panel to the antenna body. Then, test the secondary antenna cable (instrument panel antenna cable) from the coaxial cable connector behind the right side kick panel to the coaxial cable connector at the radio.

TEST 1

Test 1 determines if the antenna mast is insulated from ground. Proceed as follows:

1. Disconnect and isolate the antenna coaxial cable connector behind the right side kick panel.
2. Touch one ohmmeter test lead to the tip of the antenna mast. Touch the other test lead to known ground. Check the ohmmeter reading for continuity.
3. There should be no continuity. If OK, go to Test 2. If not OK, replace the faulty antenna body and cable.

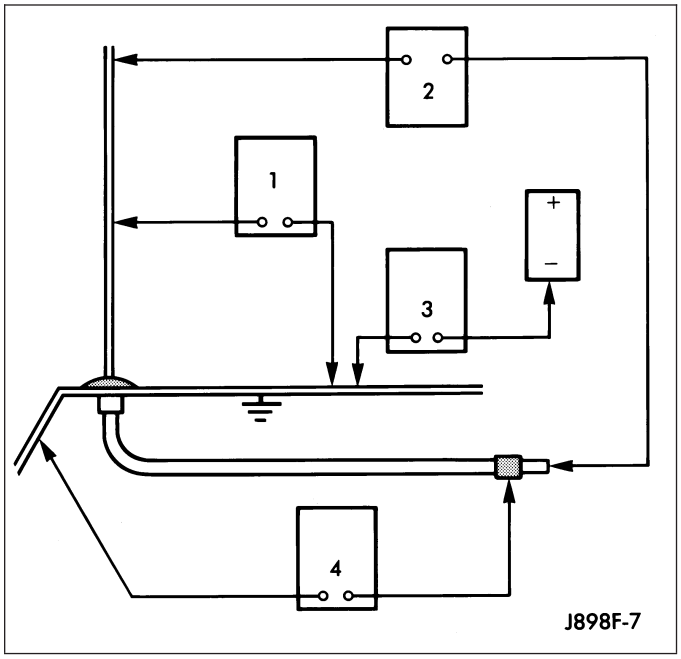

TEST 2

Test 2 checks the antenna conductor components for an open circuit. This test should be performed first on the entire antenna circuit, from the antenna mast to the center conductor of the coaxial cable connector at the radio. If an open circuit is detected, each of the three antenna conductor components (antenna mast, antenna body and cable, instrument panel antenna cable) should be isolated and tested individually to locate the exact component that is the source of the open circuit. To begin this test, proceed as follows:

1. Disconnect the instrument panel antenna cable coaxial connector from the back of the radio.
2. Touch one ohmmeter test lead to the tip of the antenna mast. Touch the other test lead to the center conductor pin of the instrument panel antenna cable coaxial connector for the radio. Check the ohmmeter reading for continuity.
3. There should be continuity. The ohmmeter should register only a fraction of an ohm resistance. High or infinite resistance indicates a damaged or open antenna conductor. If OK, go to Test 3. If not OK, isolate and test each of the individual antenna conductor components. Replace only the faulty antenna conductor component.

TEST 3

Test 3 checks the condition of the vehicle body ground connection. To begin this test, proceed as follows:

1. This test must be performed with the battery positive cable disconnected from the battery. Disconnect and isolate both battery cables, negative cable first.
2. Reconnect the battery negative cable.
3. Touch one ohmmeter test lead to a good clean ground point on the vehicle fender. Touch the other test lead to the battery negative terminal post. Check the ohmmeter reading for continuity.
4. There should be continuity. The ohmmeter should register less than one ohm resistance. High or infinite resistance indicates a loose, corroded, or damaged connection between the battery negative terminal and the vehicle body. If OK, go to Test 4. If not OK, check the battery negative cable connection to the vehicle body and the radio noise suppression ground strap connections to the engine and the vehicle body for being loose or corroded. Clean or tighten these connections as required.

TEST 4

Test 4 checks the condition of the connection between the antenna coaxial cable shield and the vehicle body ground as follows:

1. Disconnect and isolate the antenna coaxial cable connector behind the right side kick panel.
2. Touch one ohmmeter test lead to a good clean ground point on the vehicle fender. Touch the other test lead to the outer crimp on the antenna coaxial cable connector. Check the ohmmeter reading for continuity.
3. There should be continuity. The ohmmeter should register less than one ohm resistance. High or infinite resistance indicates a loose, corroded, or damaged connection between the antenna body and the vehicle body or between the antenna body and the antenna coaxial cable shield. If not OK, clean the antenna body to fender mating surfaces and tighten the antenna cap nut to specifications.
4. Check the resistance again with an ohmmeter. If the resistance is still more then one ohm, replace the faulty antenna body and cable.

REMOVAL

1. Disconnect and isolate the battery negative cable.
2. Remove the right side kick panel.
3. Disconnect antenna body cable (2) from instrument panel cable.
4. Securely tie a suitable length of cord or twine to the antenna half of the coaxial cable connector. This cord will be used to pull the cable back into position during installation.
5. Remove the antenna mast.
6. Remove the antenna cap nut (1) using an antenna nut wrench (Special Tool C-4816).
7. Remove the antenna adapter (4).
8. With the right door open, pull the antenna body assembly out through the opening between the fender and body.

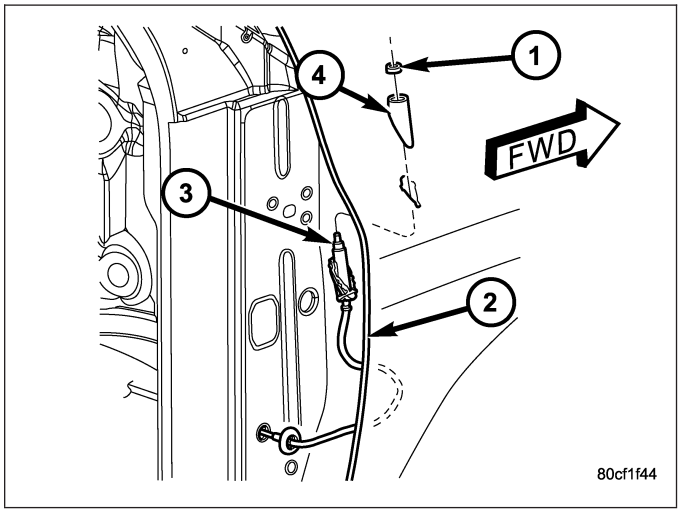

INSTALLATION

1. Tie the cord that was used during the removal procedure to the cable being installed.
2. Using the cord, pull the antenna cable through the hole in the door opening and seat grommet into place.
3. Connect the antenna body and cable (2) to the instrument panel cable.
4. Install the right side kick panel.
5. Insert the antenna body through the hole in the fender and install adapter (4).
6. Install and tighten the antenna cap nut (1).
7. Install the antenna mast.
8. Connect the battery negative cable.

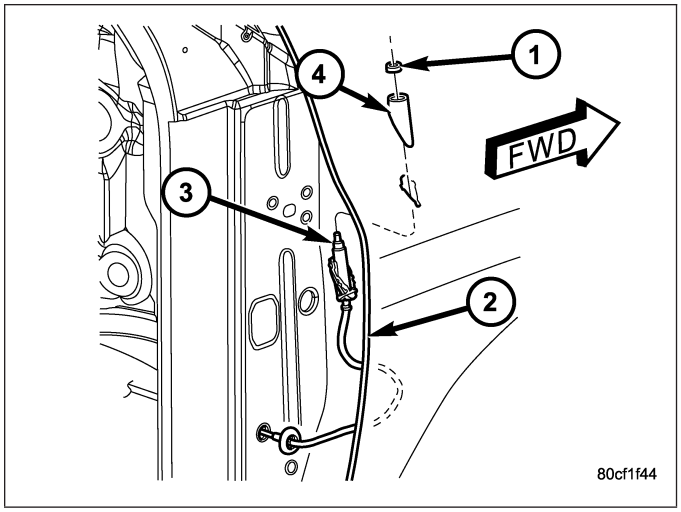

ANTENNA CABLE - INSTRUMENT PANEL

REMOVAL

1. Disconnect and isolate the battery negative cable.
2. Remove the glove box (Refer to 23 - BODY/INSTRUMENT PANEL/GLOVE BOX - REMOVAL).
3. Remove the instrument panel center bezel (Refer to 23 - BODY/INSTRUMENT PANEL/INSTRUMENT PANEL CENTER BEZEL - REMOVAL).
4. Remove the instrument panel lower right center bezel (Refer to 23 - BODY/INSTRUMENT PANEL/IP LOWER RIGHT CENTER BEZEL - REMOVAL).
5. Remove the radio (Refer to 8 - ELECTRICAL/AUDIO/RADIO - REMOVAL).

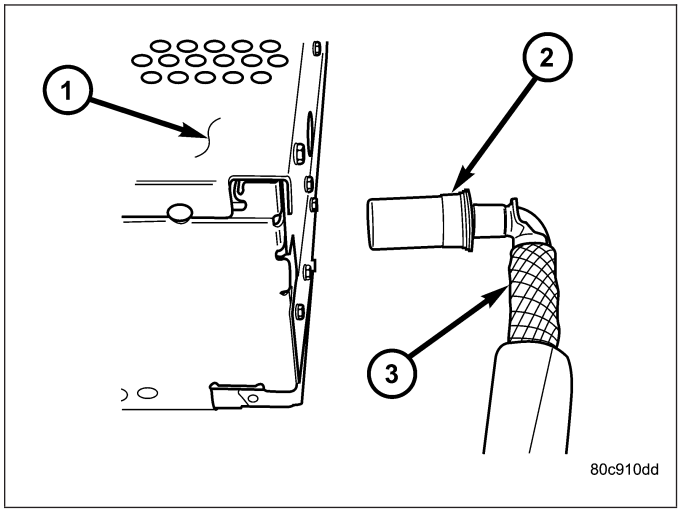

CAUTION: Pulling the antenna cable straight out of the radio without pulling on the locking antenna connector could damage the cable or radio.

6. Disconnect the antenna cable by pulling the locking antenna connector away from the radio.
7. Remove antenna cable from instrument panel by pulling on retaining fasteners.

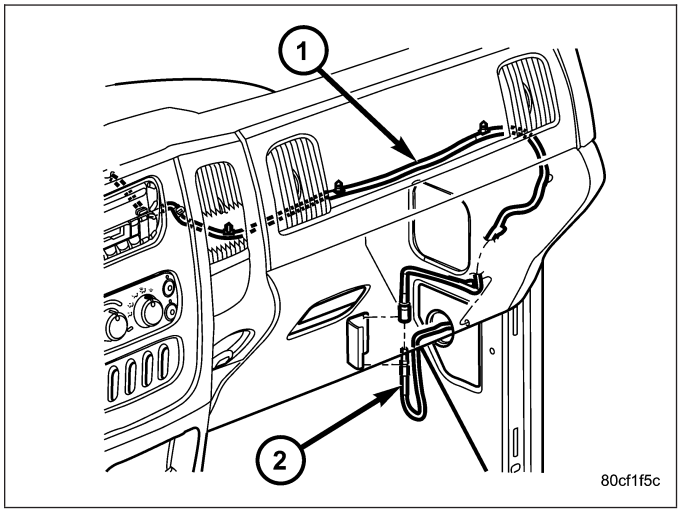

INSTALLATION

1. Install antenna cable (1) to instrument panel by pressing retaining fasteners into position.
2. Connect instrument panel antenna cable to antenna body and cable (2).
3. Install radio (Refer to 8 - ELECTRICAL/AUDIO/RADIO - INSTALLATION).
4. Install the instrument panel lower right center bezel (Refer to 23 - BODY/INSTRUMENT PANEL/IP LOWER RIGHT CENTER BEZEL - INSTALLATION).
5. Install the instrument panel center bezel (Refer to 23 - BODY/INSTRUMENT PANEL/INSTRUMENT PANEL CENTER BEZEL - INSTALLATION).
6. Install the glove box (Refer to 23 - BODY/INSTRUMENT PANEL/GLOVE BOX - INSTALLATION).
7. Connect the battery negative cable.

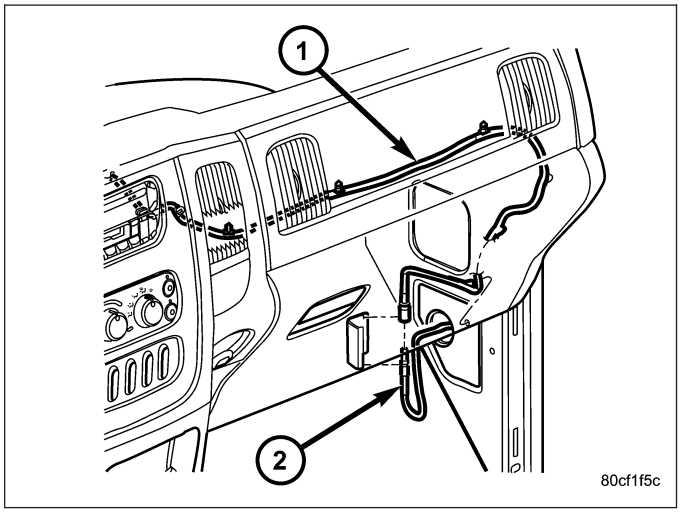

ANTENNA CABLE - SATELLITE RADIO

DESCRIPTION

The satellite radio antenna cable (1) connects the roof mounted antenna (2) to the satellite receiver (3). It has two connectors at each end and is routed above the headliner, then down the right side of the vehicle floor below the carpet.

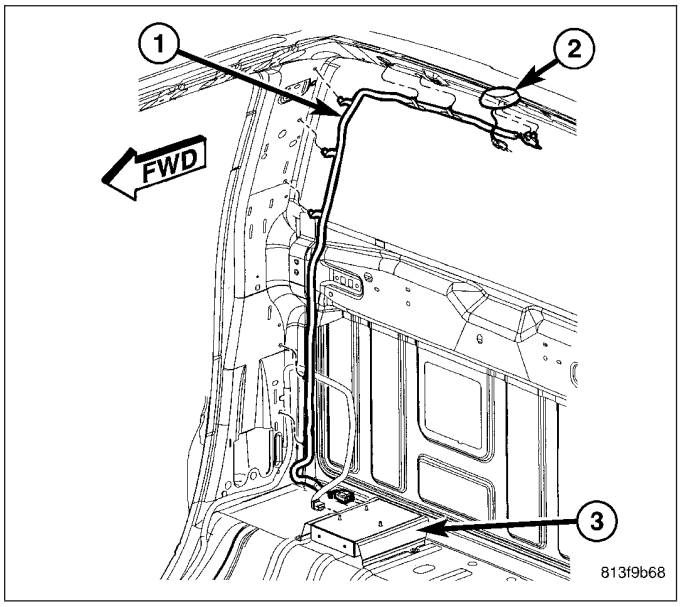

REMOVAL

REGULAR CAB

1. Disconnect and isolate the battery negative cable.
2. Lower the rear portion of the headliner as necessary to access the underside of the satellite antenna (2) (Refer to 23 - BODY/INTERIOR/HEADLINER - REMOVAL).
3. Remove the B-pillar upper trim panel (Refer to 23 - BODY/INTERIOR/B-PILLAR UPPER TRIM - REMOVAL).
4. Remove the B-pillar lower trim panel (Refer to 23 - BODY/INTERIOR/B-PILLAR LOWER TRIM - REMOVAL).
5. Move carpet to access cable (1).
6. Disconnect each end of the cable.

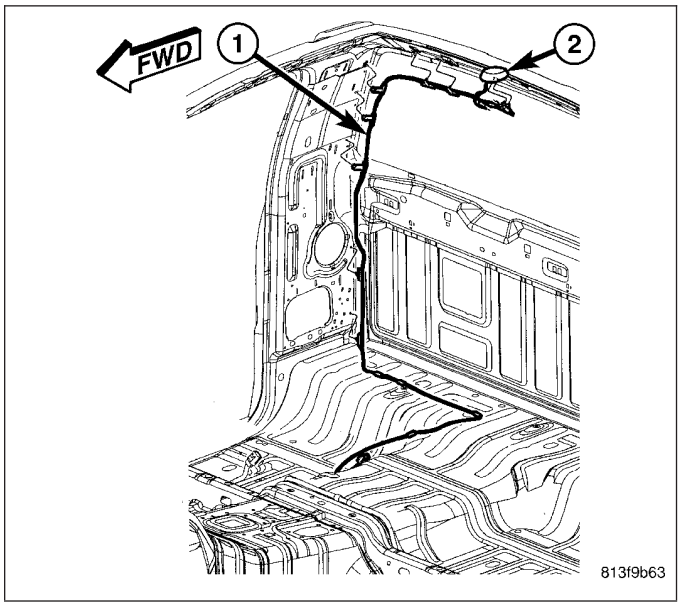

QUAD CAB

1. Disconnect and isolate the battery negative cable.
2. Lower the rear portion of the headliner as necessary to access the underside of the satellite antenna (2) (Refer to 23 - BODY/INTERIOR/HEADLINER - REMOVAL).
3. Remove the C-pillar upper trim panel (Refer to 23 - BODY/INTERIOR/C-PILLAR TRIM - REMOVAL).
4. Remove the C-pillar lower trim panel (Refer to 23 - BODY/INTERIOR/C-PILLAR TRIM - REMOVAL).
5. Move carpet to access cable (1).
6. Disconnect each end of the cable.

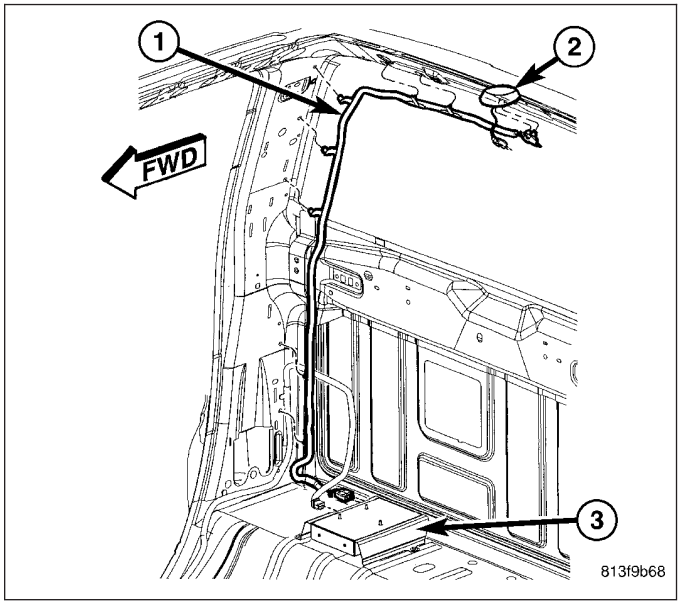

INSTALLATION

REGULAR CAB

1. Connect each end of the cable (1).
2. Place carpet into position.
3. Install the B-pillar lower trim panel (Refer to 23 - BODY/INTERIOR/B-PILLAR LOWER TRIM - INSTALLATION).
4. Install the B-pillar upper trim panel Remove the C-pillar upper trim panel.
5. Install the headliner (Refer to 23 - BODY/INTERIOR/HEADLINER - INSTALLATION).
6. Connect the battery negative cable.

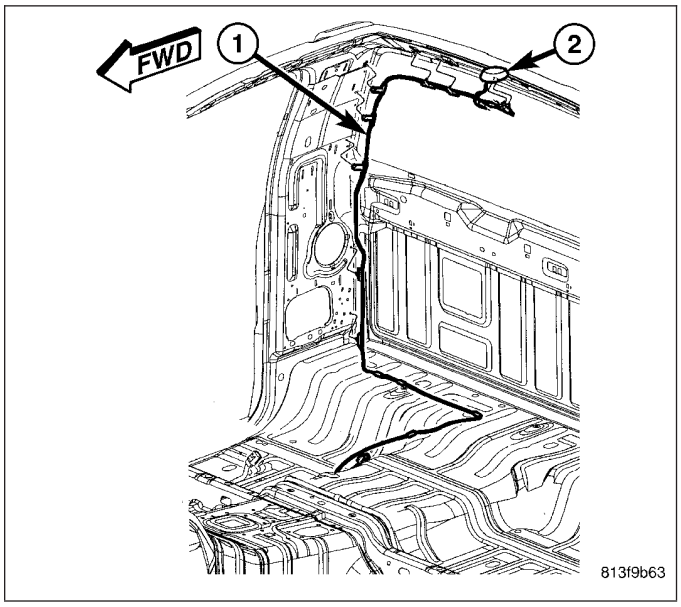

QUAD CAB

1. Connect each end of the cable (1).
2. Place carpet into position.
3. Install the C-pillar lower trim panel (Refer to 23 - BODY/INTERIOR/C-PILLAR TRIM - INSTALLATION).
4. Install the C-pillar upper trim panel (Refer to 23 - BODY/INTERIOR/C-PILLAR TRIM - INSTALLATION).
5. Install the headliner (Refer to 23 - BODY/INTERIOR/HEADLINER - INSTALLATION).
6. Connect the battery negative cable.

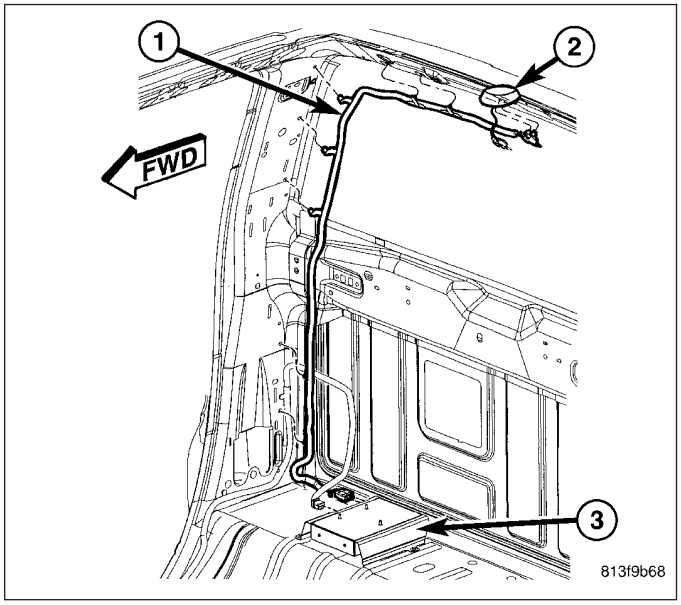

RADIO

DESCRIPTION

Available radio receivers for this vehicle include:

- AM/FM/cassette with CD changer control feature (RBB sales code)
- AM/FM/cassette/CD/ with CD changer control feature (RAZ sales code)
- AM/FM/CD with CD changer control feature (RBK sales code)
- AM/FM/cassette/CD with CD changer control (RBY sales code)
- AM/FM/multiple CD (RBQ sales code)
- AM/FM/CD with GPS navigation (RB4 sales code)
- AM/FM/cassette/CD (RBY sales code) - export only

All factory-installed radio receivers can communicate on the Programmable Communications Interface (PCI) data bus network. All factory-installed receivers include an electronic digital clock function.

OPERATION

The radio receiver operates on ignition switched battery current that is available only when the ignition switch is in the On or Accessory positions. The electronic digital clock function of the radio operates on fused battery current supplied through the IOD fuse, regardless of the ignition switch position.

REMOVAL

1. Disconnect and isolate the battery negative cable.
2. Remove center instrument panel bezel (Refer to 23 - BODY/INSTRUMENT PANEL/INSTRUMENT PANEL CENTER BEZEL - REMOVAL).
3. Remove radio mounting fasteners.

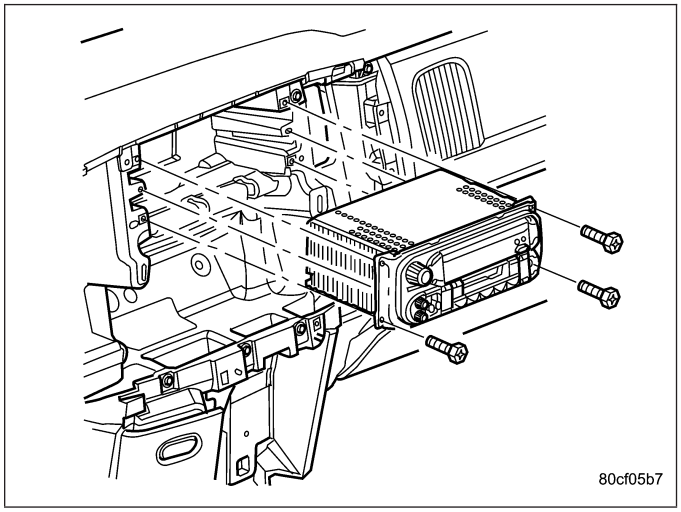

CAUTION: Pulling the antenna cable straight out of the radio without pulling on the locking antenna connector could damage the cable or radio.

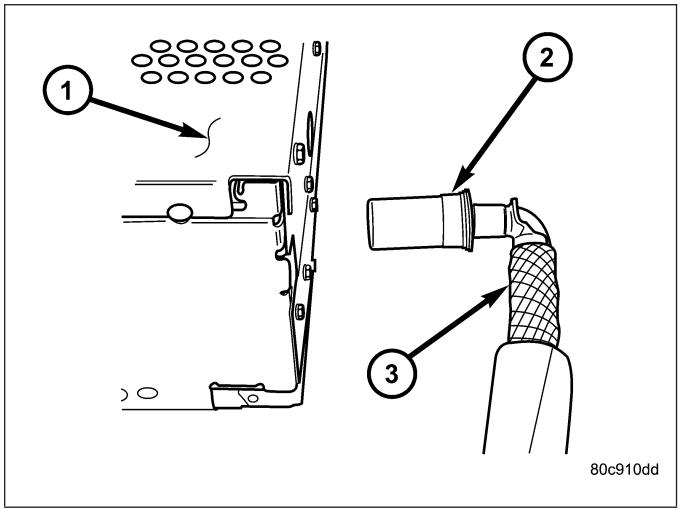

4. Disconnect the antenna cable by pulling the locking antenna connector (2) away from the radio.

5. Disconnect electrical harness connector.

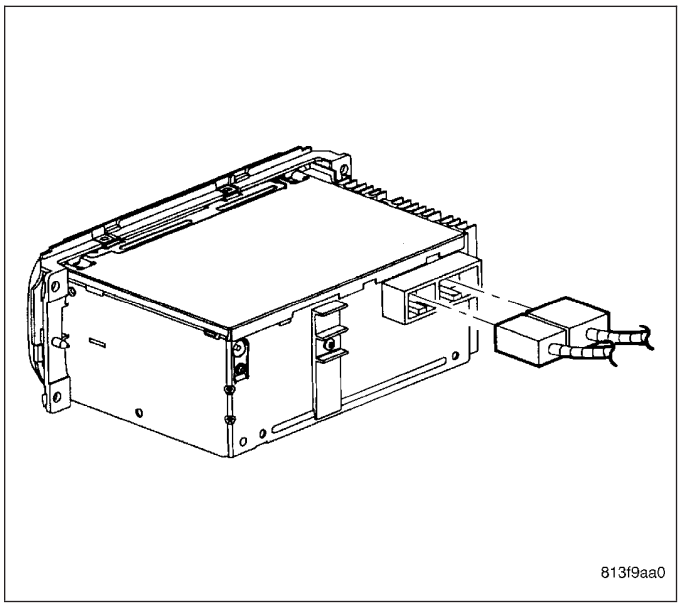

INSTALLATION

1. Connect electrical harness connector to radio.

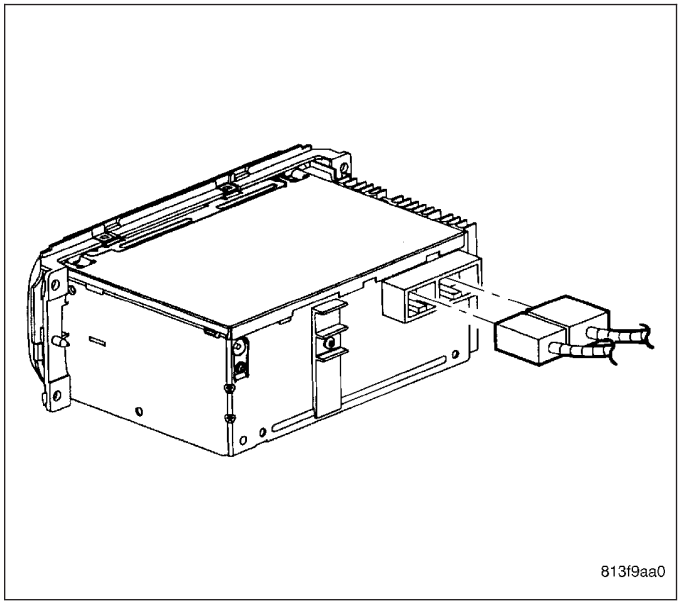

2. Install antenna cable (3) to radio (1).

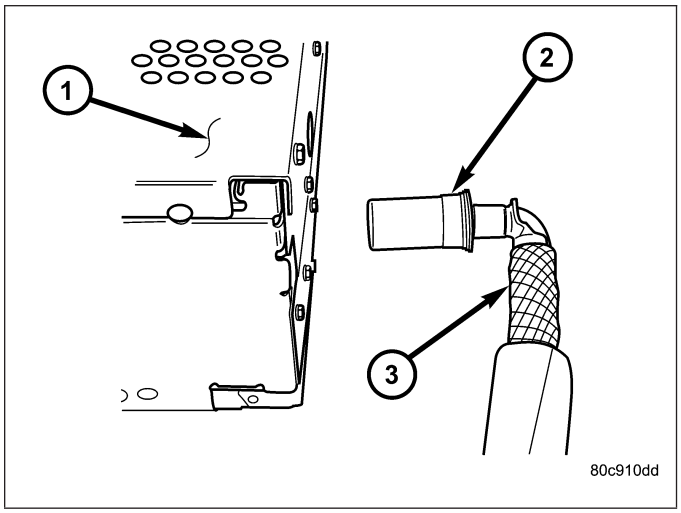

3. Position radio to instrument panel.
4. Install and tighten mounting fasteners.
5. Install instrument panel center bezel (Refer to 23 - BODY/INSTRUMENT PANEL/INSTRUMENT PANEL CENTER BEZEL - INSTALLATION).
6. Connect battery negative cable.

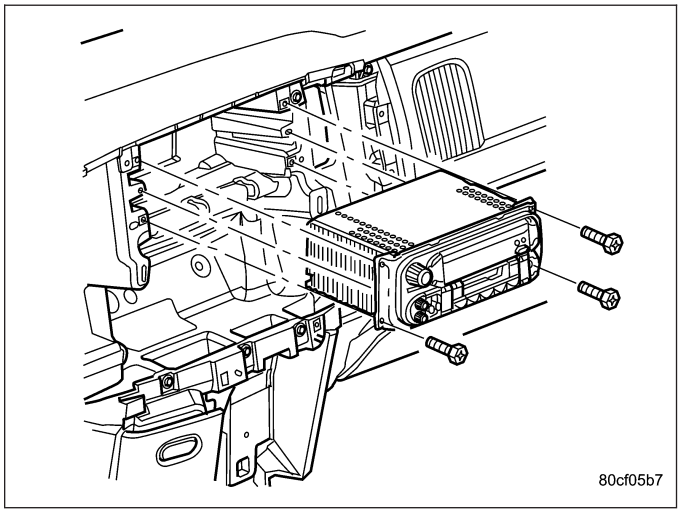

RECEIVER-SATELLITE

DESCRIPTION

The satellite receiver for the regular cab is located behind the center seat on the floor.

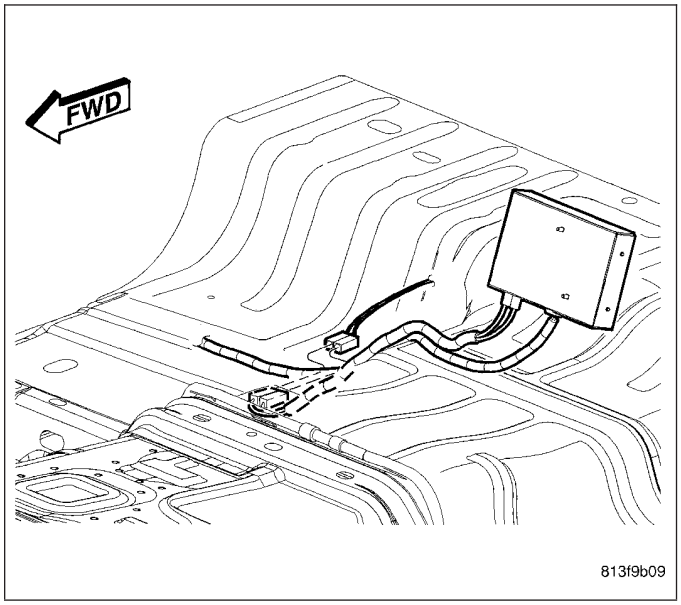

The satellite receiver for the quad cab is located in the right rear corner of the cab, on the floor.

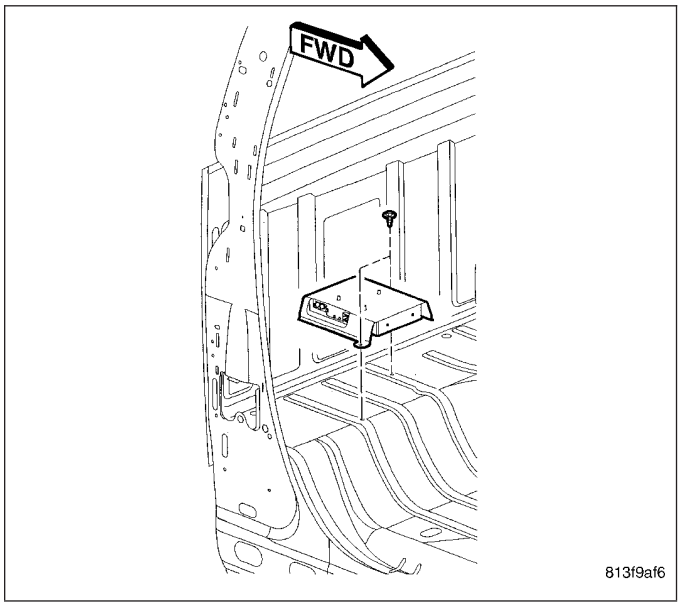

OPERATION

The satellite receiver module receives signals from the roof mounted antenna and processes this information before it is sent to the radio. The module operates on both battery feed circuits and CAN bus messages. It will operate with the ignition key in the run or accessory position only.

REMOVAL

NOTE:
If the owner's satellite service was active before the satellite receiver module was replaced the new satellite receiver module will have to be activated. The existing satellite receiver module will have to be deactivated before the replacement satellite receiver module can be activated.
To activate Sirius satellite radio service, call Sirius at their toll-free number. Please have the following information available when activating a system:

- **Electronic Serial Number / Sirius Identification Number (ESN/SID) of the unit to be replaced**
- **ESN/SID of the replacement receiver**
- **Vehicle Owner's name and address**
- **VIN**

  The ESN/SID number can be obtained through the radio display by following the steps in the satellite radio owners manual.

  The vehicle must be outside with the audio system powered on, in the satellite radio mode, to receive the activation signal.

REGULAR CAB

1. Disconnect and isolate the battery negative cable.
2. Place front passenger seat in the forward position.
3. Remove the mounting fasteners.
4. Disconnect the antenna cable and electrical harness connectors.
5. Remove the satellite receiver.

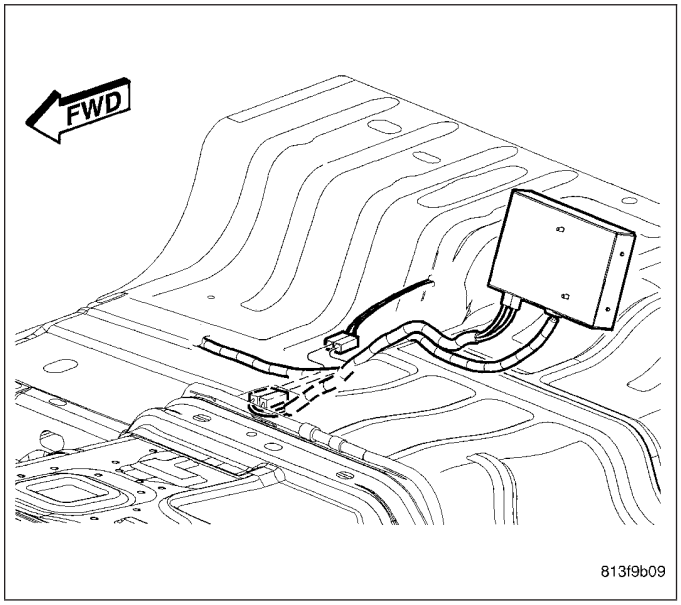

QUAD CAB

1. Disconnect and isolate the battery negative cable.
2. Remove the mounting fasteners.
3. Disconnect the antenna cable and electrical harness connectors.
4. Remove the satellite receiver
   .

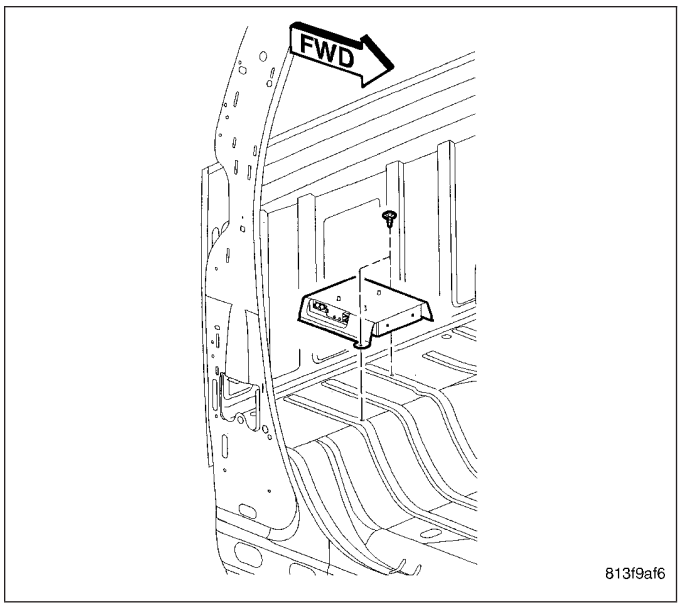

INSTALLATION

REGULAR CAB

NOTE:
If the owner's satellite service was active before the satellite receiver was replaced, the new satellite receiver will have to be activated. The existing satellite receiver will have to be deactivated before the replacement satellite receiver can be activated.
To activate Sirius satellite radio service, call Sirius at their toll-free number. Please have the following information available when activating a system:

- **Electronic Serial Number / Sirius Identification Number (ESN/SID) of the unit to be replaced**
- **ESN/SID of the replacement receiver**
- **Vehicle Owner's name and address**
- **VIN**

  The ESN/SID number can be obtained through the radio display by following the steps in the satellite radio owners manual.

  The vehicle must be outside with the audio system powered on, in the satellite radio mode, to receive the activation signal.

1. Connect antenna cable and electrical harness connector to receiver.
2. Position module and install mounting fasteners. Tighten fasteners.
3. Connect battery negative cable.

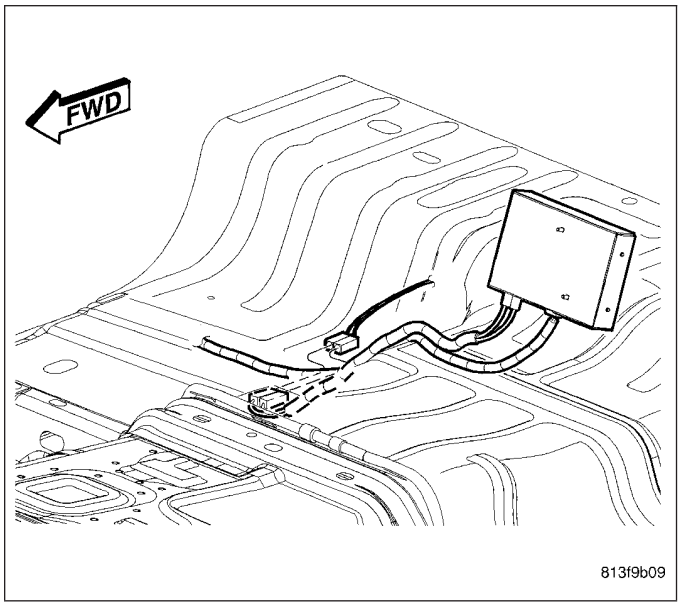

QUAD CAB

1. Connect antenna cable and electrical harness connector to receiver.
2. Position receiver and install mounting fasteners. Tighten fasteners.
3. Connect battery negative cable.

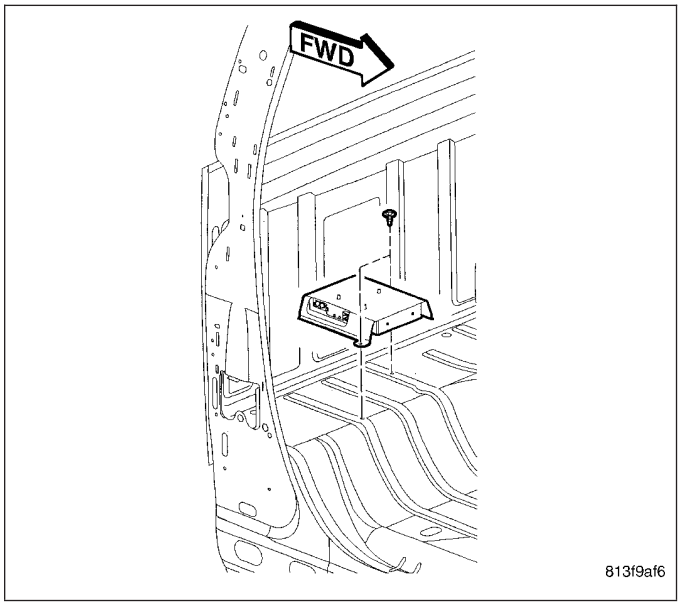

SPEAKER

DESCRIPTION

STANDARD

The standard equipment speaker system includes speakers in four locations. One 15.2 X 22.8 centimeter (6 X 9 inch) full-range speaker is located in each front door. There is also one full-range 13.3 centimeter (5.25 inch) diameter full-range speaker located in each rear door (quad cab) or B-pillar (regular cab).

PREMIUM

The optional premium speaker system features eleven Premium model speakers in seven locations. Each of the standard speakers is replaced with Premium model speakers. One 8.8 centimeter (3.50 inch) diameter speaker is located on each end of the instrument panel top pad. One 6.3 centimeter (2.50 inch) diameter speaker is located in the center of the instrument panel top pad. One 15.2 X 22.8 centimeter (6 X 9 inch) Premium speaker is located in each front door. There is also one coaxial 13.3 centimeter (5.25 inch) diameter Premium full-range speaker located in each rear door (quad cab) or B-pillar (regular cab). The premium speaker system also includes a power amplifier mounted behind the glove box. The total available power of the premium speaker system is 368 watts. If equipped, a 25.4 centimeter (10 inch) subwoofer is located behind the center passenger seat along with a amplifier (rated at 150 watts) located under the center passenger seat. The total available power if equipped with the subwoofer and second power amplifier is 518 watts.

OPERATION

Two wires connected to each speaker, one feed circuit (+) and one return circuit (–), allow the audio output signal electrical current to flow through the voice coil. For complete circuit diagrams, refer to the appropriate wiring information. The wiring information includes wiring diagrams, proper wire and connector repair procedures, details of wire harness routing and retention, connector pin-out information and location views for the various wire harness connectors, splices and grounds.

DIAGNOSIS AND TESTING

SPEAKER

Any diagnosis of the Audio system should begin with the use of a scan tool. For information on the use of the scan tool, refer to the appropriate Diagnostic Service information.

Refer to the appropriate wiring information.

WARNING: DISABLE THE AIRBAG SYSTEM BEFORE ATTEMPTING ANY STEERING WHEEL, STEERING COLUMN, SEAT BELT TENSIONER, SIDE AIRBAG, OR INSTRUMENT PANEL COMPONENT DIAGNOSIS OR SERVICE. DISCONNECT AND ISOLATE THE BATTERY NEGATIVE (GROUND) CABLE, THEN WAIT TWO MINUTES FOR THE AIRBAG SYSTEM CAPACITOR TO DISCHARGE BEFORE PERFORMING FURTHER DIAGNOSIS OR SERVICE. THIS IS THE ONLY SURE WAY TO DISABLE THE AIRBAG SYSTEM. FAILURE TO TAKE THE PROPER PRECAUTIONS COULD RESULT IN ACCIDENTAL AIRBAG DEPLOYMENT AND POSSIBLE PERSONAL INJURY.

CAUTION: The speaker output of the radio is a “floating ground” system. Do not allow any speaker lead to short to ground, as damage to the radio and/or amplifier may result.

1. If all speakers are inoperative, check the fuses in the Integrated Power Module (IPM). If OK, go to Step 2. If not OK, repair the shorted circuit or component as required and replace the faulty fuse.
2. Check the amplifier fuse (if equipped) in the IPM. If OK, go to Step 3. If not OK, repair the shorted circuit or component as required and replace the faulty fuse.
3. Turn the ignition switch to the ON position. Turn the radio receiver ON. Adjust the balance and fader control controls to check the performance of each individual speaker. Note the speaker locations that are not performing correctly. Go to Step 4.

4. Turn the radio receiver OFF. Turn the ignition OFF. Disconnect and isolate the battery negative cable. If vehicle is **not** equipped with a amplifier, remove the radio receiver. If vehicle is equipped with an amplifier. disconnect wire harness connector at output side of amplifier. Go to Step 5.
5. Check both the speaker feed (+) circuit and return (-) circuit cavities for the inoperative speaker at the radio receiver wire harness connector for continuity to ground. There should be no continuity. If OK, go to Step 6. If not OK, repair the shorted speaker feed (+) and/or return (-) circuits(s) to the speaker as required.
6. Disconnect wire harness connector at the inoperative speaker. Check for continuity between the speaker feed (+) circuit cavities of the radio receiver wire harness connector or if equipped, the amplifier wire harness connector and the speaker wire harness connector. Repeat the check between the speaker return (-) circuit cavities of the radio receiver wire harness connector and the speaker wire harness connector. In each case, there should be continuity. If OK, replace the faulty speaker. If not OK, repair the open speaker feed (+) and/or return (-) circuits(s) as required.

REMOVAL

FRONT DOOR SPEAKER

1. Disconnect and isolate the battery negative cable.
2. Remove front door trim panel (Refer to 23 - BODY/ DOOR - FRONT/TRIM PANEL - REMOVAL).
3. Remove mounting fasteners.
4. Disconnect electrical harness connector and remove speaker.

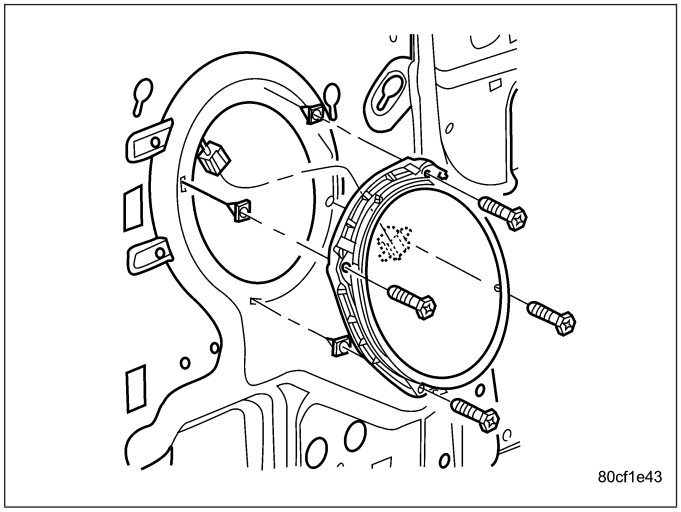

INSTRUMENT PANEL CENTER SPEAKER

1. Disconnect and isolate the battery negative cable.
2. Remove instrument panel top cover (Refer to 23 - BODY/INSTRUMENT PANEL/INSTRUMENT PANEL TOP COVER - REMOVAL).
3. Remove speaker mounting fasteners.
4. Disconnect electrical harness connector and remove speaker.

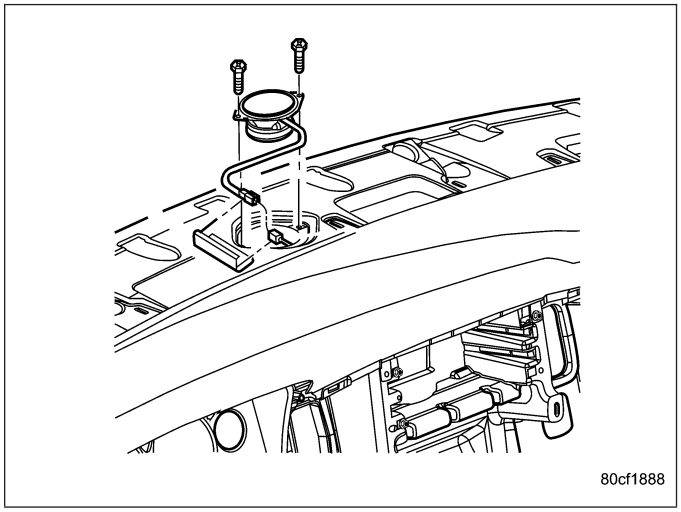

INSTRUMENT PANEL END SPEAKER

1. Disconnect and isolate the battery negative cable.
2. Remove instrument panel top cover (Refer to 23 - BODY/INSTRUMENT PANEL/INSTRUMENT PANEL TOP COVER - REMOVAL).
3. Remove speaker mounting fasteners.
4. Disconnect electrical harness connector and remove speaker.

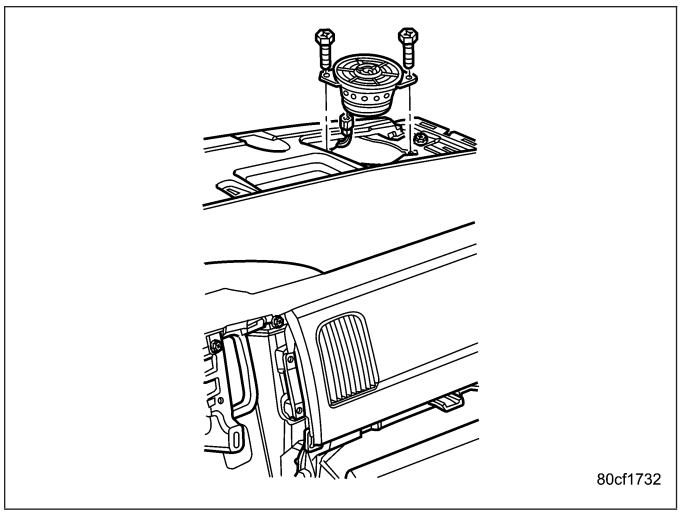

REAR CAB SIDE SPEAKER

1. Disconnect and isolate the battery negative cable.
2. Remove B-pillar lower trim (Refer to 23 - BODY/INTERIOR/B-PILLAR LOWER TRIM - REMOVAL).
3. Remove speaker mounting fasteners.
4. Disconnect electrical harness connector and remove speaker.

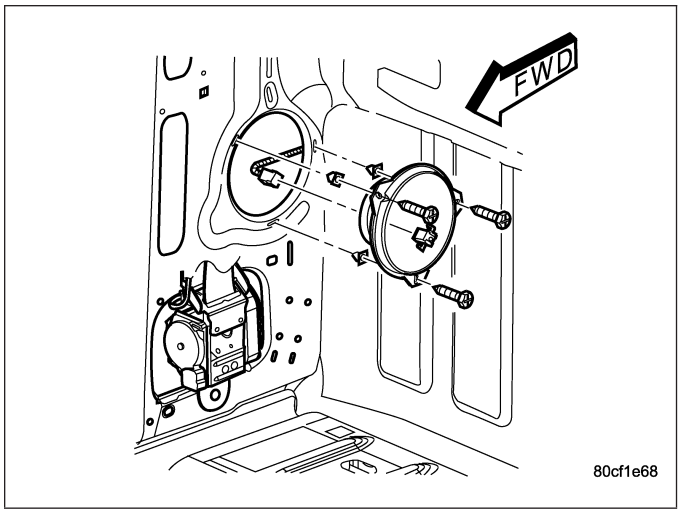

REAR DOOR SPEAKER

1. Disconnect and isolate the battery negative cable.
2. Remove rear door trim panel (Refer to 23 - BODY/DOORS - REAR/TRIM PANEL - REMOVAL).
3. Remove speaker mounting fasteners.
4. Disconnect electrical harness connector and remove speaker.

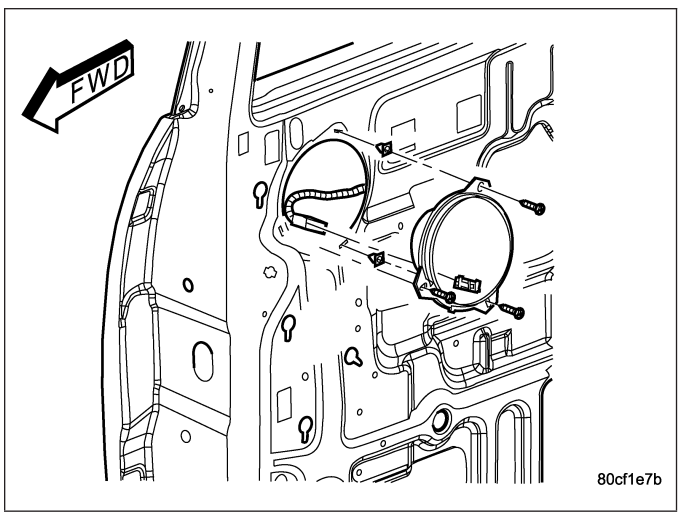

SUBWOOFER - REGULAR CAB

1. Disconnect and isolate the battery negative cable.
2. Remove mounting fasteners to subwoofer housing.

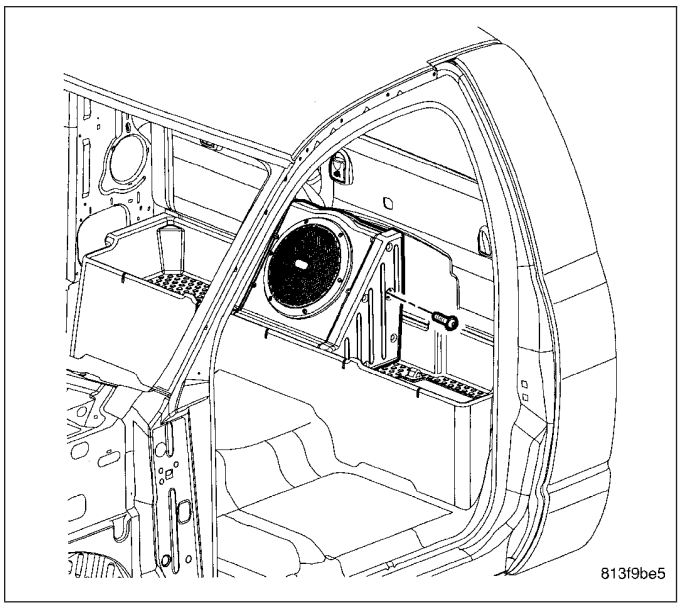

3. Disconnect electrical harness connector.

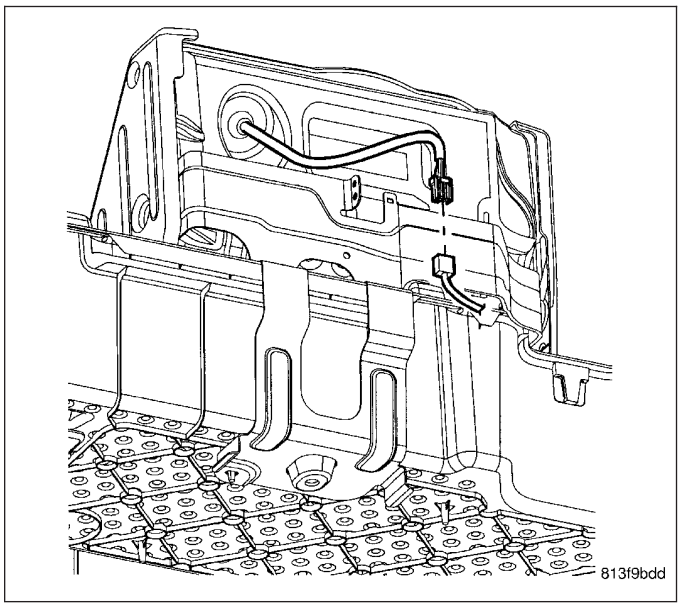

4. Remove subwoofer from vehicle.

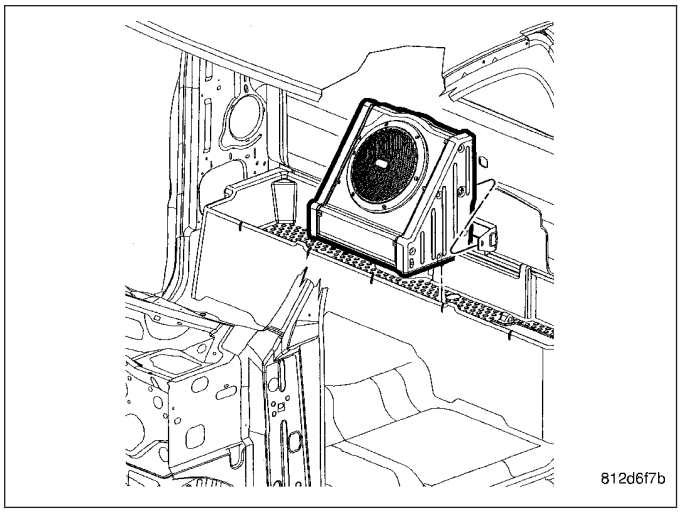

SUBWOOFER - QUAD CAB

1. Disconnect and isolate the battery negative cable.
2. Raise left rear seat to access subwoofer.
3. Disconnect electrical harness connector.
4. Remove mounting fasteners and remove subwoofer.

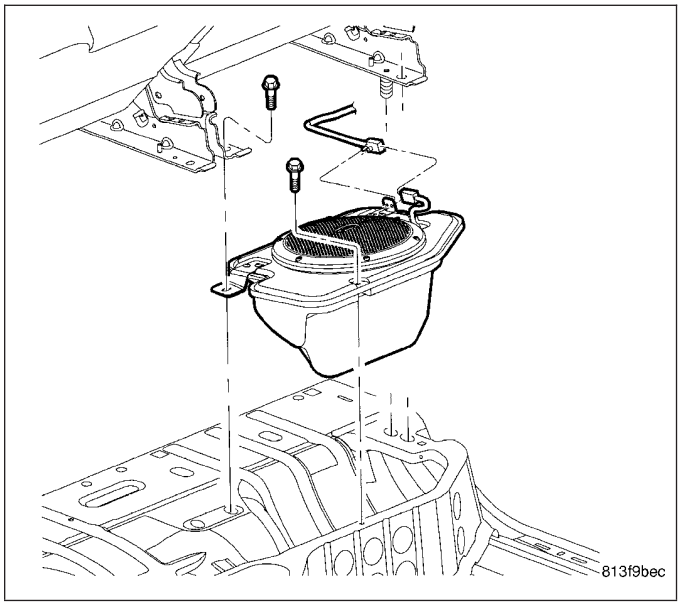

INSTALLATION

FRONT DOOR SPEAKER

1. Connect electrical harness connector and install speaker.
2. Install and tighten mounting fasteners.
3. Install front door trim panel (Refer to 23 - BODY/ DOOR - FRONT/TRIM PANEL - INSTALLATION).
4. Connect battery negative cable.

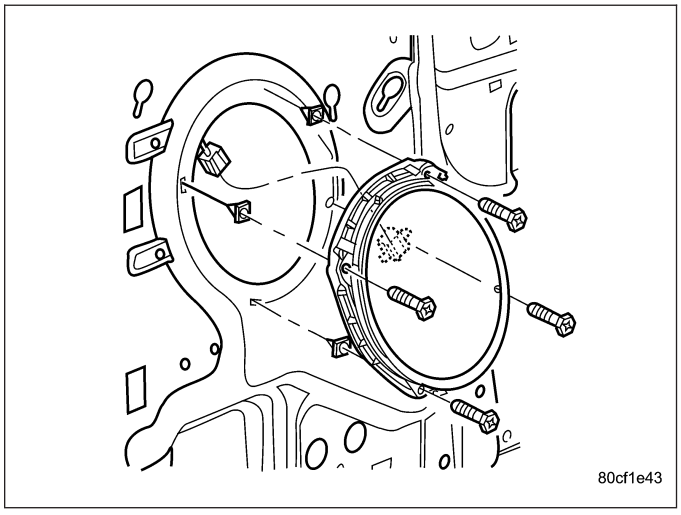

INSTRUMENT PANEL CENTER SPEAKER

1. Connect electrical harness connector and install speaker.
2. Install and tighten mounting fasteners.
3. Install instrument panel top cover (Refer to 23 - BODY/INSTRUMENT PANEL/INSTRUMENT PANEL TOP COVER - INSTALLATION).
4. Connect battery negative cable.

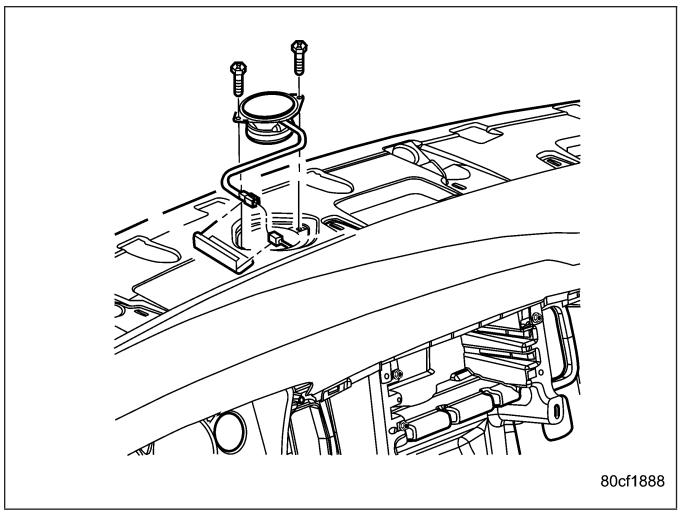

INSTRUMENT PANEL END SPEAKER

1. Connect electrical harness connector and install speaker.
2. Install and tighten mounting fasteners.
3. Install instrument panel top cover (Refer to 23 - BODY/INSTRUMENT PANEL/INSTRUMENT PANEL TOP COVER - INSTALLATION).
4. Connect battery negative cable.

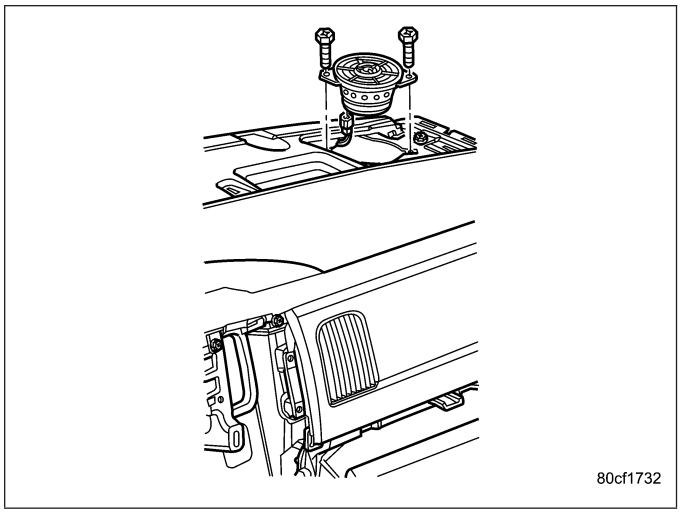

REAR CAB SIDE SPEAKER

1. Connect electrical harness connector and install speaker.
2. Install and tighten mounting fasteners.
3. Install B-pillar lower trim (Refer to 23 - BODY/INTERIOR/B-PILLAR LOWER TRIM - INSTALLATION).
4. Connect battery negative cable.

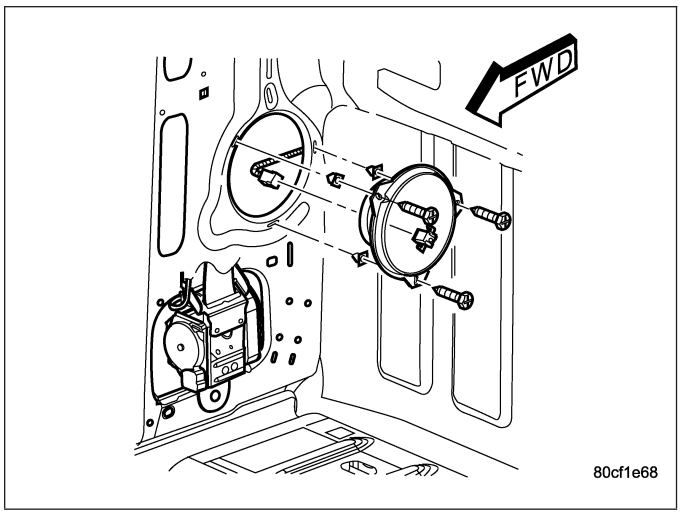

REAR DOOR SPEAKER

1. Connect electrical harness connector and install speaker.
2. Install and tighten mounting fasteners.
3. Install rear door trim panel (Refer to 23 - BODY/ DOORS - REAR/TRIM PANEL - INSTALLATION).
4. Connect battery negative cable.

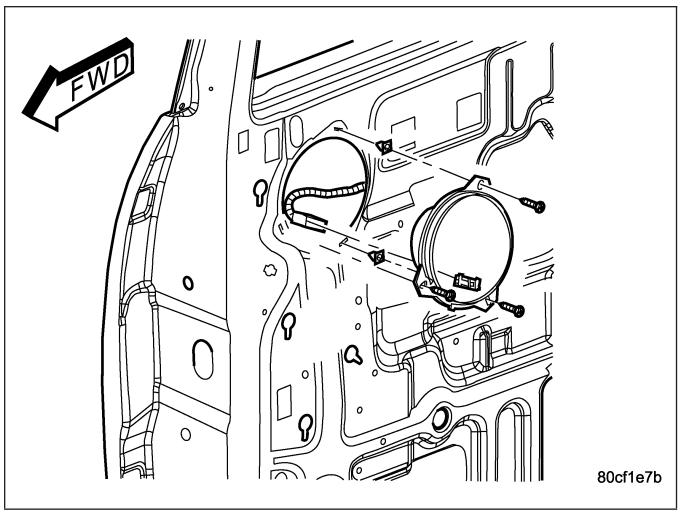

SUBWOOFER - REGULAR CAB

1. Position subwoofer housing into the vehicle.

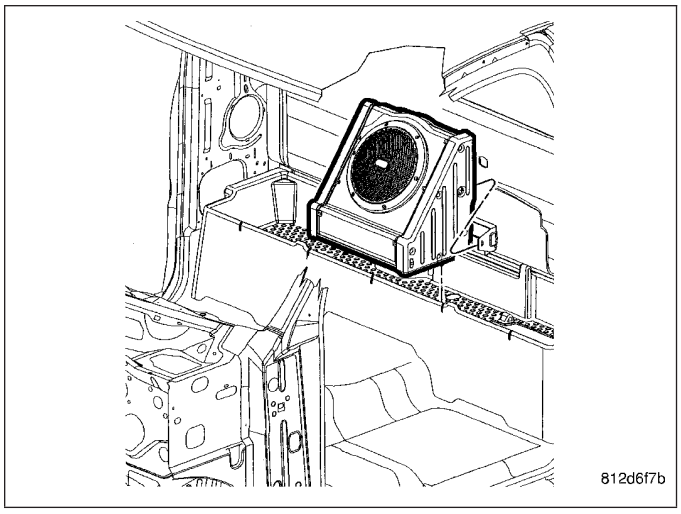

2. Connect electrical harness connector.

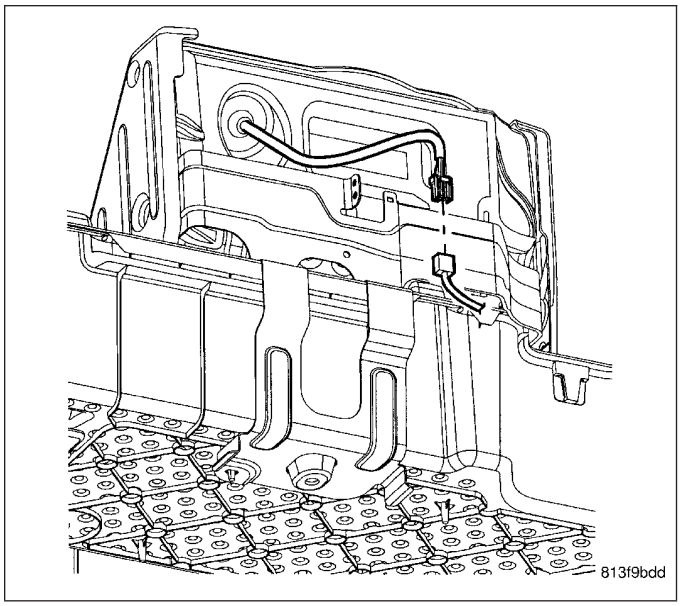

3. Install mounting fasteners.
4. Connect battery negative cable.

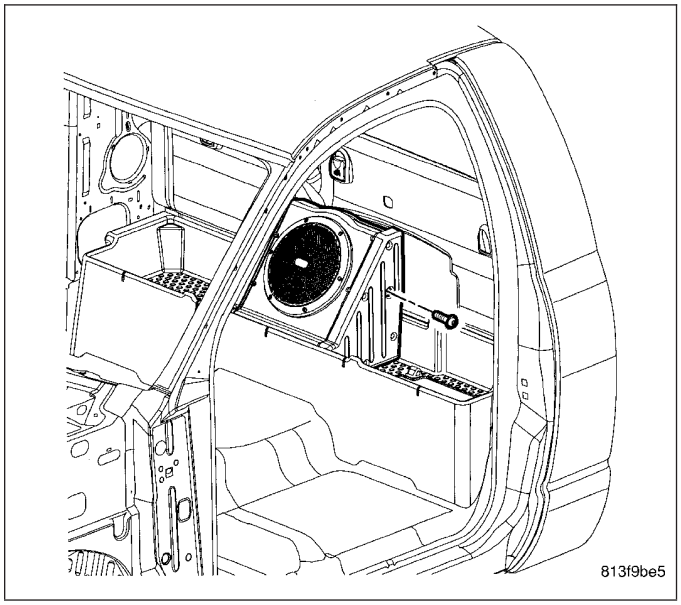

SUBWOOFER – QUAD CAB

1. Position subwoofer to vehicle.
2. Connect electrical harness connector.
3. Install and tighten mounting fasteners.
4. Lower seat.
5. Connect battery negative cable.

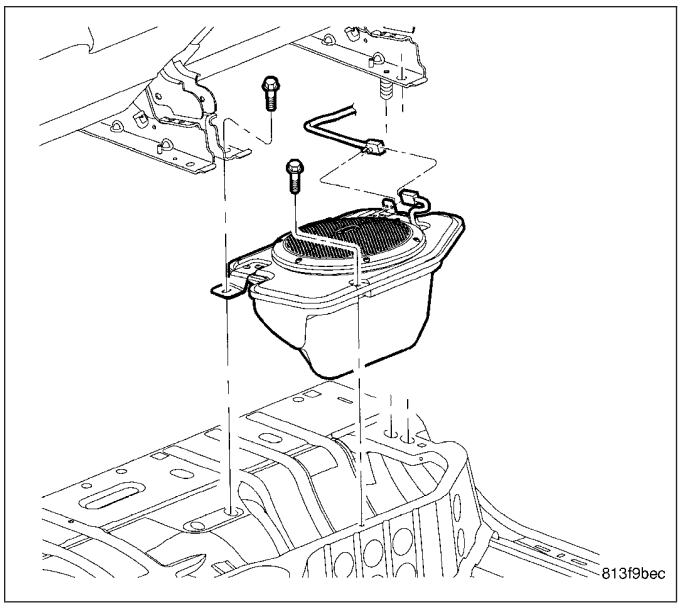

SUPPRESSION COMPONENTS - RADIO NOISE

DESCRIPTION

Radio noise suppression devices are Installed on this vehicle. Radio Frequency Interference (RFI) and ElectroMagnetic Interference (EMI) can be produced by any on-board or external source of electromagnetic energy. These electromagnetic energy sources can radiate electromagnetic signals through the air, or conduct them through the vehicle electrical system.

When the audio system converts RFI or EMI to an audible acoustic wave form, it is referred to as radio noise. This undesirable radio noise is generally manifested in the form of “buzzing,” “hissing,” “popping,” “clicking,” “crackling,” and/or “whirring” sounds. In most cases, RFI and EMI radio noise can be suppressed using a combination of vehicle and component grounding, filtering and shielding techniques. This vehicle is equipped with factory-installed radio noise suppression devices that were designed to minimize exposure to typical sources of RFI and EMI; thereby, minimizing radio noise complaints.

Factory-installed radio noise suppression is accomplished primarily through circuitry or devices that are integral to the factory-installed radios, audio power amplifiers and other on-board electrical components such as generators, wiper motors, blower motors, and fuel pumps that have been found to be potential sources of RFI or EMI. External radio noise suppression devices that are used on this vehicle to control RFI or EMI, and can be serviced, include the following:

- **Engine-to-body ground strap** - This length of braided ground strap has an eyelet terminal connector crimped to each end. One end is secured to the engine cylinder head(s). The other is secured to the plenum at the exhaust heat shield forward/outer attaching stud.
- **Resistor-type spark plugs** - This type of spark plug has an internal resistor connected in series between the spark plug terminal and the center electrode to help reduce the production of electromagnetic radiation that can result in radio noise.

OPERATION

There are two common strategies that can be used to suppress Radio Frequency Interference (RFI) and Electro-Magnetic Interference (EMI) radio noise. The first suppression strategy involves preventing the production of RFI and EMI electromagnetic signals at their sources. The second suppression strategy involves preventing the reception of RFI and EMI electromagnetic signals by the audio system components.

The use of braided ground straps in key locations is part of the RFI and EMI prevention strategy. These ground straps ensure adequate ground paths, particularly for high current components such as many of those found in the starting, charging, ignition, engine control and transmission control systems. An insufficient ground path for any of

these high current components may result in radio noise caused by induced voltages created as the high current seeks alternative ground paths through components or circuits intended for use by, or in close proximity to the audio system components or circuits.

Preventing the reception of RFI and EMI is accomplished by ensuring that the audio system components are correctly installed in the vehicle. Loose, corroded or improperly soldered wire harness connections, improperly routed wiring and inadequate audio system component grounding can all contribute to the reception of RFI and EMI. A properly grounded antenna body and radio chassis, as well as a shielded antenna coaxial cable with clean and tight connections will each help reduce the potential for reception of RFI and EMI.

REMOVAL

BED TO CAB

1. Disconnect and isolate the battery negative cable.
2. Remove the attaching bolts and strap.

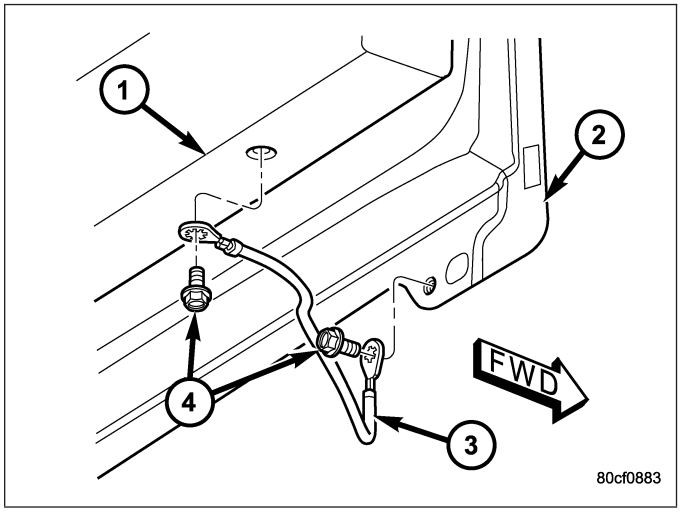

ENGINE TO HEAT SHIELD - 3.7L ENGINE

1. Disconnect and isolate the battery negative cable.
2. Remove the attaching bolts (2) from the cylinder heads.

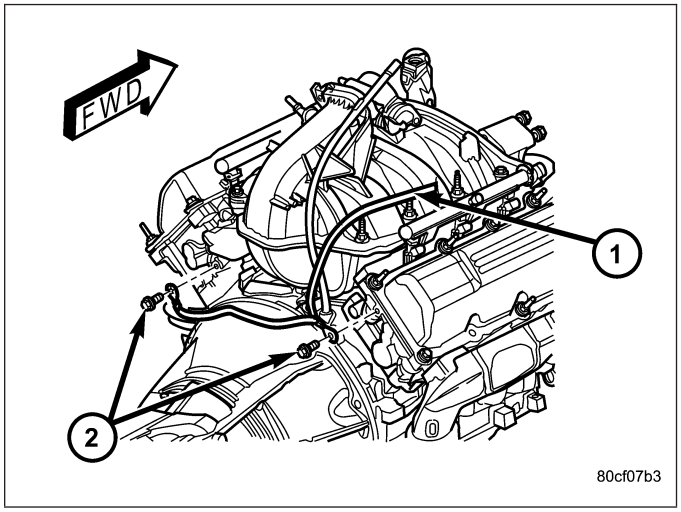

3. Remove nut (3) from heat shield (1) and remove strap (2).

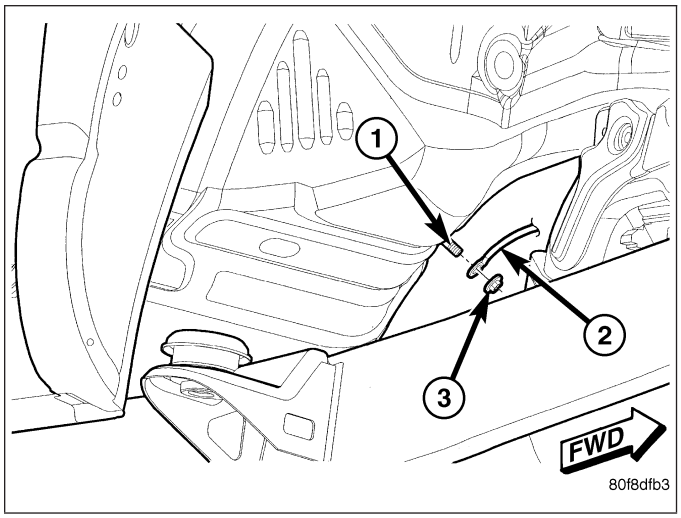

ENGINE TO HEAT SHIELD - 4.7L AND 5.7L ENGINE

1. Disconnect and isolate the battery negative cable.
2. Remove the attaching bolts (2) from the cylinder heads.

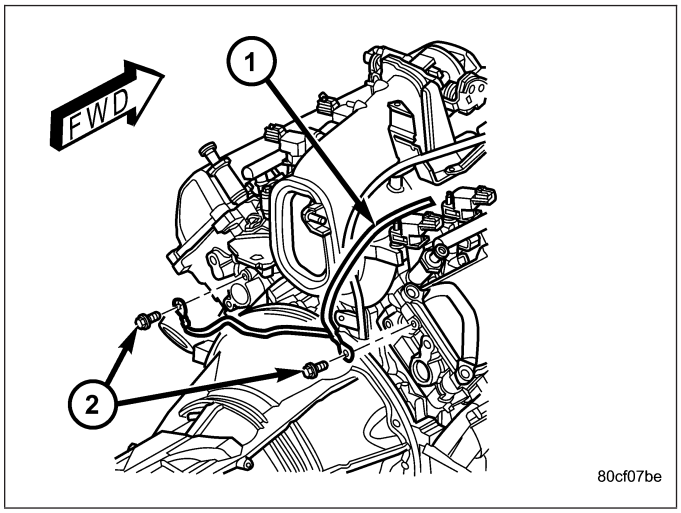

3. Remove nut (3) from heat shield (1) and remove strap (2).

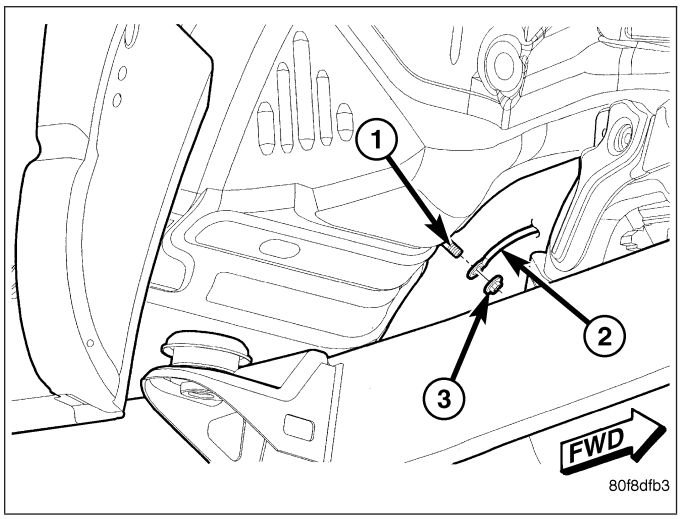

INSTALLATION

BED TO CAB

1. Install the ground strap (3) and mounting fasteners (4).
2. Tighten mounting fasteners.
3. Connect the battery negative cable.

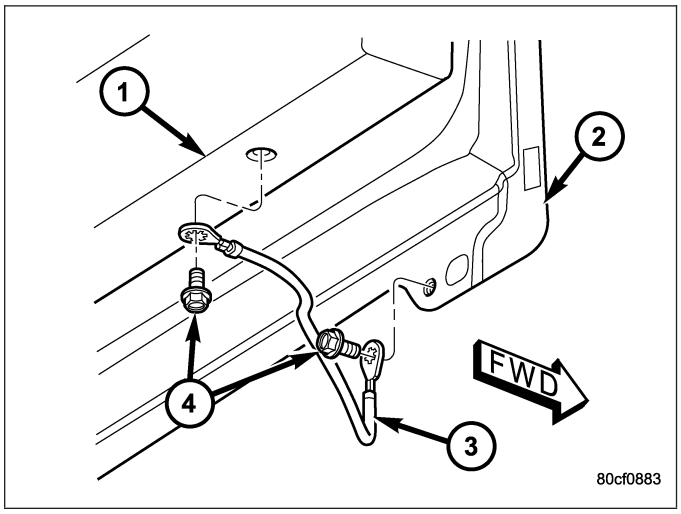

ENGINE TO HEAT SHIELD

1. Install the mounting fastener (3) and ground strap (2) to the heat shield (1).
2. Tighten mounting fastener.

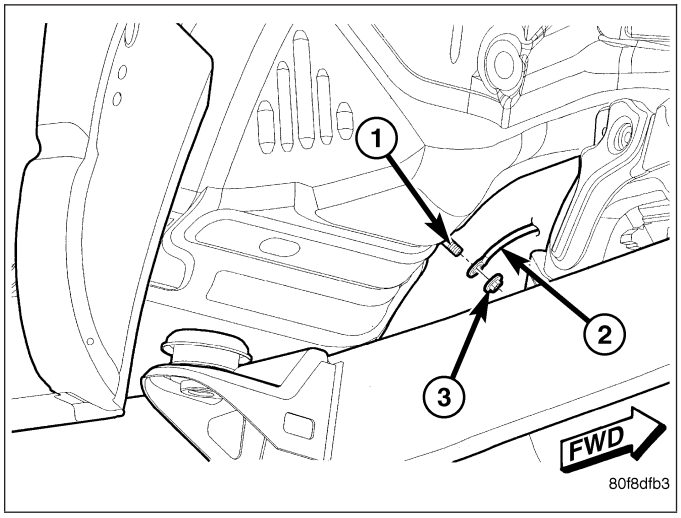

3. Install the retaining bolt and ground strap to the engine cylinder heads.
4. Tighten the retaining bolts.
5. Connect the battery negative cable.

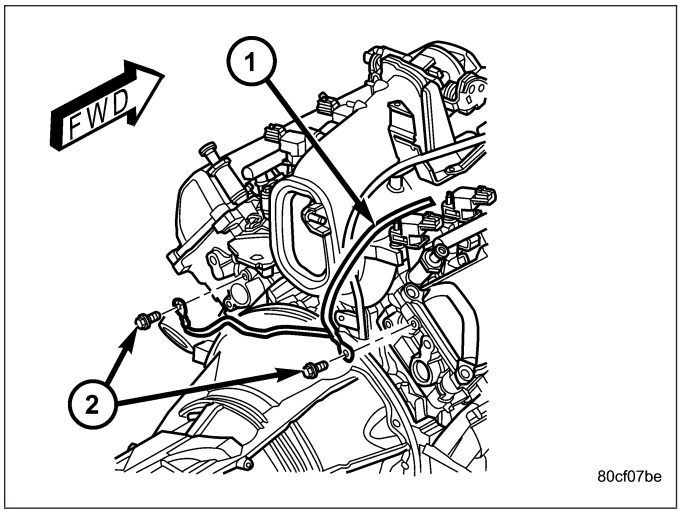

SWITCH - REMOTE RADIO

DESCRIPTION

Two rocker-type switches (if equipped) are mounted on the back (instrument panel side) of the steering wheel spokes. The switch on the left spoke is the seek switch and has seek up, seek down, and preset station advance functions. The switch on the right spoke is the volume control switch and has volume up, and volume down functions. The switch on the right spoke also includes a “mode” control that allows the driver to sequentially select AM radio, FM radio, cassette player, CD player or CD changer (if equipped).

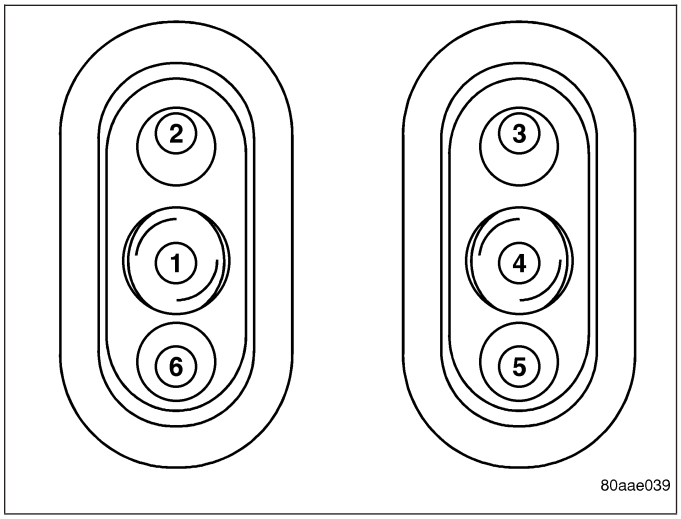

OPERATION

The six switches in the two remote radio switch units are normally open, resistor multiplexed momentary switches that are hard wired to the Integrated Power Module (IPM) through the clockspring. The IPM sends a five volt reference signal to both switch units on one circuit, and senses the status of all of the switches by reading the voltage drop on a second circuit.

When the IPM senses an input (voltage drop) from any one of the remote radio switches, it sends the proper switch status messages on the Programmable Communication Interface (PCI) data bus network to the radio receiver. The electronic circuitry within the radio receiver is programmed to respond to these remote radio switch status messages by adjusting the radio settings as requested. For diagnosis of the IPM or the PCI data bus, the use of a scan tool and the proper Diagnostic Procedures information is recommended.

DIAGNOSIS AND TESTING

REMOTE SWITCHES

Any diagnosis of the Audio system should begin with the use of scan tool. For information on the use of the scan tool, refer to the appropriate Diagnostic Service information.

For complete circuit diagrams, refer to the appropriate wiring information.

WARNING: DISABLE THE AIRBAG SYSTEM BEFORE ATTEMPTING ANY STEERING WHEEL, STEERING COLUMN, SEAT BELT TENSIONER, SIDE AIRBAG, OR INSTRUMENT PANEL COMPONENT DIAGNOSIS OR SERVICE. DISCONNECT AND ISOLATE THE BATTERY NEGATIVE (GROUND) CABLE, THEN WAIT TWO MINUTES FOR THE AIRBAG SYSTEM CAPACITOR TO DISCHARGE BEFORE PERFORMING FURTHER DIAGNOSIS OR SERVICE. THIS IS THE ONLY SURE WAY TO DISABLE THE AIRBAG SYSTEM. FAILURE TO TAKE THE PROPER PRECAUTIONS COULD RESULT IN ACCIDENTAL AIRBAG DEPLOYMENT AND POSSIBLE PERSONAL INJURY.

1. Disconnect and isolate the battery negative cable.
2. Remove the remote radio switch(es) from the steering wheel (Refer to 8 - ELECTRICAL/AUDIO/ REMOTE SWITCHES - REMOVAL).
3. Use an ohmmeter to check the switch resistances as shown in the Remote Radio Switch Test chart. If the remote radio switch resistances check OK, go to Step 4. If not OK, replace the faulty switch.

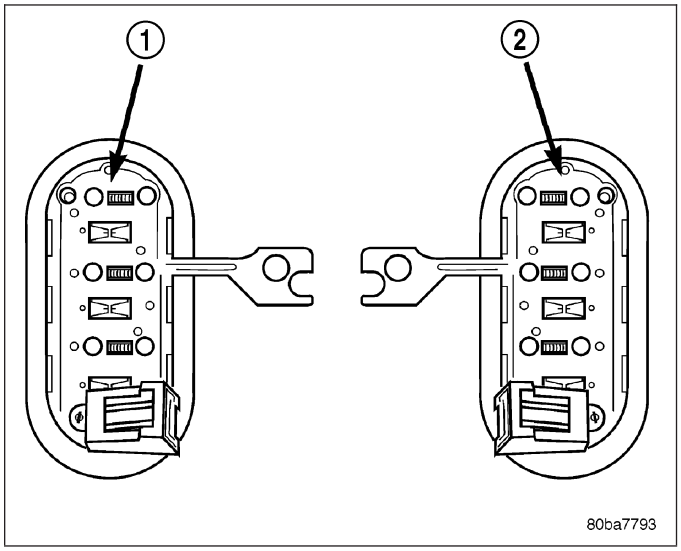

REMOTE RADIO SWITCH TEST TABLE

Switch	Switch Position	Resistance
Right (White)	Volume Up	1.210 Kilohms ± 1%
Right (White)	Volume Down	3.010 Kilohms ± 1%
Right (White)	Mode Advance	0.0511 Kilohms ± 1%
Left (Black)	Seek Up	0.261 Kilohms ± 1%
Left (Black)	Seek Down	0.681 Kilohms ± 1%
Left (Black)	Pre-Set Station Advance	0.162 Kilohms ± 1%

4. Connect the battery negative cable. Turn the ignition switch to the On position. Check for 5 volts at the radio control mux circuit cavities of the steering wheel wire harness connectors for both remote radio switches. If OK, go to Step 5. If not OK, repair the open or shorted radio control mux circuit to the Integrated Power Module (IPM) as required.
5. Disconnect and isolate the battery negative cable. Disconnect the 22-way instrument panel wire harness connector from the IPM. Check for continuity between the remote radio switch ground circuit cavities of the steering wheel wire harness connectors for both remote radio switches and a good ground. There should be no continuity. If OK, go to Step 6. If not OK, repair the shorted remote radio switch ground circuit to the IPM as required.
6. Check for continuity between the remote radio switch ground circuit cavities of the steering wheel wire harness connectors for both remote radio switches and the 22-way instrument panel wire harness connector for the IPM. There should be continuity. If OK, refer to the proper Diagnostic Procedures manual to test the IPM and the PCI data bus. If not OK, repair the open remote radio switch ground circuit as required.

REMOVAL

WARNING: DISABLE THE AIRBAG SYSTEM BEFORE ATTEMPTING ANY STEERING WHEEL, STEERING COLUMN, SEAT BELT TENSIONER, SIDE AIRBAG, OR INSTRUMENT PANEL COMPONENT DIAGNOSIS OR SERVICE. DISCONNECT AND ISOLATE THE BATTERY NEGATIVE (GROUND) CABLE, THEN WAIT TWO MINUTES FOR THE AIRBAG SYSTEM CAPACITOR TO DISCHARGE BEFORE PERFORMING FURTHER DIAGNOSIS OR SERVICE. THIS IS THE ONLY SURE WAY TO DISABLE THE AIRBAG SYSTEM. FAILURE TO TAKE THE PROPER PRECAUTIONS COULD RESULT IN ACCIDENTAL AIRBAG DEPLOYMENT AND POSSIBLE PERSONAL INJURY.

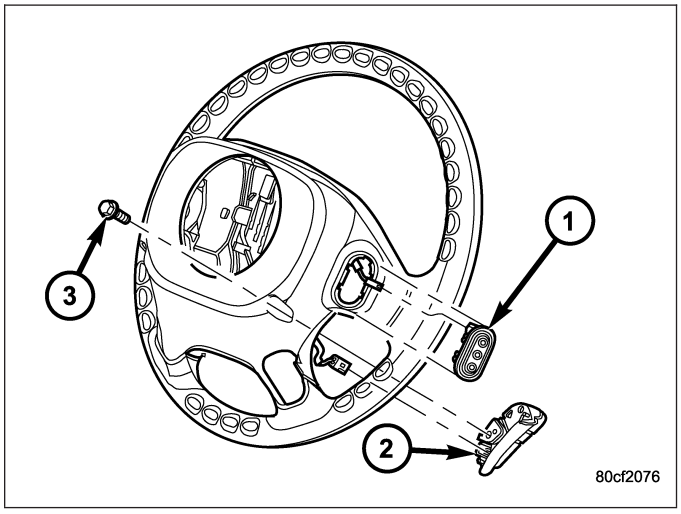

1. Disconnect and isolate the battery negative cable.
2. Remove the driver airbag (Refer to 8 - ELECTRICAL/RESTRAINTS/DRIVER AIRBAG - REMOVAL).
3. Remove the speed control switches (2) (Refer to 8 - ELECTRICAL/SPEED CONTROL/SWITCH - REMOVAL).
4. Unplug the wire harness connector from the remote radio switch (1).
5. Depress the tabs on each side of each switch and push the switch through the rear steering wheel cover.

INSTALLATION

WARNING: DISABLE THE AIRBAG SYSTEM BEFORE ATTEMPTING ANY STEERING WHEEL, STEERING COLUMN, SEAT BELT TENSIONER, SIDE AIRBAG, OR INSTRUMENT PANEL COMPONENT DIAGNOSIS OR SERVICE. DISCONNECT AND ISOLATE THE BATTERY NEGATIVE (GROUND) CABLE, THEN WAIT TWO MINUTES FOR THE AIRBAG SYSTEM CAPACITOR TO DISCHARGE BEFORE PERFORMING FURTHER DIAGNOSIS OR SERVICE. THIS IS THE ONLY SURE WAY TO DISABLE THE AIRBAG SYSTEM. FAILURE TO TAKE THE PROPER PRECAUTIONS COULD RESULT IN ACCIDENTAL AIRBAG DEPLOYMENT AND POSSIBLE PERSONAL INJURY.

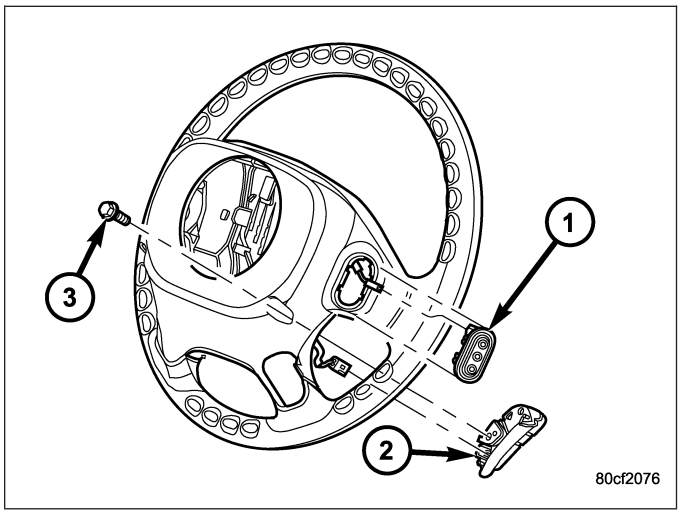

1. Install remote radio switch (1) to the steering wheel.
2. Connect the wire harness to the remote radio switch.
3. Install the speed control switches (2) (Refer to 8 - ELECTRICAL/SPEED CONTROL/SWITCH - INSTALLATION).
4. Install the driver airbag (Refer to 8 - ELECTRICAL/RESTRAINTS/DRIVER AIRBAG - INSTALLATION).
5. Connect the battery negative cable.

AUDIO - SRT10 - AMP - ELECTRICAL DIAGNOSTICS

TABLE OF CONTENTS

page

AUDIO - SRT10 - AMP - ELECTRICAL DIAGNOSTICS
DIAGNOSIS AND TESTING
LOOPBACK FAILURE - INTERNAL ERROR . . 90
PCI BUS LOW/BUSY 91
NO COMMUNICATION WITH RADIO 94
CHANNEL X DC OFFSET 96
CHANNEL X CIRCUIT SHORT TO GROUND . 97

page

CHANNEL X SHORT TO BATTERY 99
CHANNEL X OPEN 101
CHANNEL X SHORT TOGETHER 103
CABIN EQ MISMATCH 105
SOFTWARE CHECKSUM FAILURE 107
BATTERY VOLTAGE LOW 108
BATTERY VOLTAGE HIGH 110
SCHEMATICS AND DIAGRAMS 112

AUDIO - SRT10 - AMP - ELECTRICAL DIAGNOSTICS

DIAGNOSIS AND TESTING

LOOPBACK FAILURE - INTERNAL ERROR

For the Audio Amplifier system circuit diagram (Refer to 8 - ELECTRICAL/AUDIO - SCHEMATICS AND DIAGRAMS).

For a complete wiring diagram **Refer to Section 8W**.

Possible Causes
AMP FAILURE

1. AMP FAILURE

Cycle the ignition switch from on to off to on.

With the DRBIII®, read Amplifier DTCs.

Is the DTC active at this time?

Yes >> This is an internal AMP Failure. Replace the Amplifier in accordance with the service information.
Perform BODY VERIFICATION TEST — VER 1.

No >> Test Complete.
Perform BODY VERIFICATION TEST — VER 1.

PCI BUS LOW/BUSY

For the Audio Amplifier system circuit diagram (Refer to 8 - ELECTRICAL/AUDIO - SCHEMATICS AND DIAGRAMS).

For a complete wiring diagram **Refer to Section 8W**.

Possible Causes
WIRING HARNESS INTERMITTENT
OPEN PCI BUS CIRCUIT AT THE DATA LINK CONNECTOR (DLC)
PCI BUS CIRCUIT SHORTED TO VOLTAGE
MODULE SHORT TO VOLTAGE
PCI BUS CIRCUIT SHORTED TO GROUND
MODULE SHORT TO GROUND

1. PCI BUS UNABLE TO COMMUNICATE WITH DRBIII®

NOTE: Note: Determine which modules this vehicle is equipped with before beginning.

NOTE: NOTE: When attempting to communicate with any of the modules on this vehicle, the DRBIII® will display 1 of 2 different communication errors: a NO RESPONSE message or a BUS +/- SIGNALS OPEN message.

Turn the ignition on.

Using the DRBIII®, attempt to communicate with the following control modules:

Airbag Control Module

Front Control Module

Instrument Cluster

Was the DRBIII® able to communicate with one or more Module(s)?

Yes >> Go To 2

No >> Go To 3

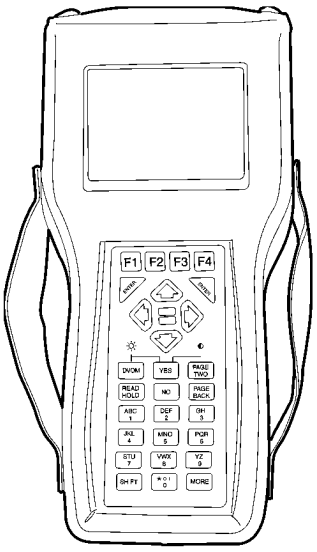

PCI BUS LOW/BUSY (CONTINUED)

2. WIRING HARNESS INSPECTION

Turn the ignition off.

NOTE: Note: Visually inspect the related wiring harness. Look for any chafed, pierced, pinched, or partially broken wires.

NOTE: Note: Visually inspect the related wire harness connectors. Look for broken, bent, pushed out, or corroded terminals.

NOTE: NOTE: If the DRBIII® can not communicate with a single module, refer to the category list for the related symptom.

Were any problems found?

Yes >> Repair wiring harness/connectors as necessary.
Perform the BODY VERIFICATION TEST — VER 1.

No >> Test Complete.
Perform the BODY VERIFICATION TEST — VER 1.

---

3. OPEN PCI BUS CIRCUIT AT THE DATA LINK CONNECTOR (DLC)

Turn the ignition off.

Disconnect the PCM harness connector. Note:

Disconnect the DRBIII® from the Data Link Connector (DLC).

Disconnect the negative battery cable.

Measure the resistance of the PCI Bus circuit between the Data Link Connector (DLC) and the PCM harness connector.

Is the resistance below 5.0 ohms?

Yes >> Go To 4

No >> Repair the PCI Bus circuit for an open.
Perform the BODY VERIFICATION TEST — VER 1.

---

4. MEASURE THE VOLTAGE OF THE PCI BUS CIRCUIT

NOTE: NOTE: Reconnect the PCM harness connector and the negative battery cable.

Turn the ignition on.

Measure the voltage of the PCI Bus circuit at the Data Link Connector (DLC).

Is the voltage above 7.0 volts?

Yes >> Go To 5

No >> Go To 6

PCI BUS LOW/BUSY (CONTINUED)

5. PCI BUS CIRCUIT SHORTED TO VOLTAGE

Turn the ignition off.

Using a voltmeter, connect one end to the PCI Bus circuit at the DLC, and the other end to ground.

NOTE: Note: When performing the next step turn the ignition off (wait one minute) before disconnecting any module. When the module is disconnected turn the ignition on to check for a short to voltage.

Turn the ignition on.

While monitoring the voltmeter, disconnect each module the vehicle is equipped with one at a time.

Is the voltage steadily above 7.0 volts with all the modules disconnected?

Yes >> Repair the PCI Bus circuit for a short to voltage.
Perform the BODY VERIFICATION TEST — VER 1.

No >> Test Complete.
Perform the BODY VERIFICATION TEST — VER 1.

---

6. PCI BUS CIRCUIT SHORTED TO GROUND

Turn the ignition off.

Disconnect the negative battery cable.

Using a ohmmeter, connect one end to the PCI Bus circuit at the DLC, and the other end to ground.

While monitoring the ohmmeter, disconnect each module the vehicle is equipped with one at a time.

NOTE: NOTE: Total bus resistance to ground thru all of the modules is typically between 350 to 1000 ohms. The more modules on the bus, the lower the total bus resistance will be.

Is the resistance below 150.0 ohms with all the modules disconnected?

Yes >> Repair the PCI Bus circuit for a short to ground.
Perform the BODY VERIFICATION TEST — VER 1.

No >> Test Complete.
Perform the BODY VERIFICATION TEST — VER 1.

NO COMMUNICATION WITH RADIO

For the Audio Amplifier system circuit diagram (Refer to 8 - ELECTRICAL/AUDIO - SCHEMATICS AND DIAGRAMS).

For a complete wiring diagram **Refer to Section 8W**.

Possible Causes
GROUND CIRCUIT OPEN
FUSED B(+) CIRCUIT OPEN
FUSED IGNITION SWITCH OUTPUT CIRCUIT OPEN
OPEN PCI BUS CIRCUIT

1. ATTEMPT TO COMMUNICATE WITH THE MIC

Turn the ignition on.

With the DRBIII®, attempt to communicate with the Instrument Cluster.

Was the DRBIII® able to I/D or communicate with the Instrument Cluster?

Yes >> Go To 2

No >> Refer to the communication symptom list for problems related to no communication with the Instrument Cluster.
Perform BODY VERIFICATION TEST — VER 1.

---

2. GROUND CIRCUIT OPEN

Turn the ignition off.

Disconnect the radio harness connector.

Using a 12-volt test light connected to 12-volts, probe the ground circuit.

Is the test light illuminated?

Yes >> Go To 3

No >> Repair the ground circuit for an open.
Perform BODY VERIFICATION TEST — VER 1.

---

3. FUSED B(+) CIRCUIT OPEN

Turn the ignition off.

Disconnect the Radio harness connector.

Using a 12-volt test light connected to ground, probe the Fused B(+) circuits.

Is the test light illuminated?

Yes >> Go To 4

No >> Repair the Fused B+ circuit for an open.
Perform BODY VERIFICATION TEST — VER 1.

NO COMMUNICATION WITH RADIO (CONTINUED)

4. FUSED IGNITION SWITCH OUTPUT CIRCUIT OPEN

Turn the ignition off.

Disconnect the Radio harness connector.

Turn the ignition on.

Using a 12-volt test light connected to ground, probe the Fused Ignition Switch Output circuit.

Is the test light illuminated?

Yes >> Go To 5

No >> Repair the Fused Ignition Switch Output circuit for an open.
Perform BODY VERIFICATION TEST — VER 1.

---

5. OPEN PCI BUS CIRCUIT

NOTE: NOTE: Ensure there is PCI Bus communication with other modules on the vehicle before proceeding. If not, refer to the symptom list from the menu and repair as necessary.

Disconnect the Radio harness connector.

Use Scope input cable CH7058, Cable to Probe adapter CH7062, and the red and black test probes.

Connect the scope input cable to the channel one connector on the DRBIII®. Attach the red and black leads and the cable to probe adapter to the scope input cable.

With the DRBIII® select Pep Module Tools.

Select lab scope.

Select Live Data.

Select 12 volt square wave.

Press F2 for Scope.

Press F2 and use the down arrow to set voltage range to 20 volts. Press F2 again when complete.

Connect the Black lead to the chassis ground. Connect the Red lead to the PCI Bus circuit in the Radio connector.

Turn the ignition on.

Observe the voltage display on the DRBIII® Lab Scope.

Does the voltage pulse from 0 to approximately 7.5 volts?

Yes >> Test Complete.
Perform BODY VERIFICATION TEST — VER 1.

No >> Repair the PCI Bus circuit for an open.
Perform BODY VERIFICATION TEST — VER 1.

CHANNEL X DC OFFSET

For the Audio Amplifier system circuit diagram (Refer to 8 - ELECTRICAL/AUDIO - SCHEMATICS AND DIAGRAMS).

For a complete wiring diagram **Refer to Section 8W**.

NOTE: All symptoms listed through CHANNEL 1 DC OFFSET thru CHANNEL 8 DC OFFSET are diagnosed using the same tests. The title for the tests will be CHANNEL X DC OFFSET. Use the 8W wiring section for circuit ID's and wiring repairs.

Possible Causes
AMP FAILURE

1. AMP FAILURE

Cycle the ignition switch from on to off to on.
With the DRBIII®, read Amplifier DTCs.

Is the DTC active at this time?

Yes >> This is an internal AMP Failure. Replace the Amplifier in accordance with the service information.
Perform BODY VERIFICATION TEST — VER 1.

No >> Test Complete.
Perform BODY VERIFICATION TEST — VER 1.

CHANNEL X CIRCUIT SHORT TO GROUND

For the Audio Amplifier system circuit diagram (Refer to 8 - ELECTRICAL/AUDIO - SCHEMATICS AND DIAGRAMS).

For a complete wiring diagram **Refer to Section 8W**.

- **When Monitored:**
  With the ignition on.
- **Set Condition:**
  The Amplifier detects a short to ground condition on the output circuit.

Possible Causes
CHANNEL X (+) CIRCUIT SHORTED TO GROUND
CHANNEL X (-) CIRCUIT SHORTED TO GROUND
SPEAKER
AMPLIFIER

1. INTERMITTENT CONDITION

NOTE: NOTE: This is a generic test for all Speakers listed for Channel 1 thru Channel 8. Use the following diagnostics for the specific speaker that set the DTC. Refer to 8W for circuit ID's and wiring repairs.

Turn the ignition on.

Turn the ignition off.

Turn the ignition on.

With the DRBIII®, read Amplifier DTCs.

Is the Channel X Circuit Short to Ground DTC active?

Yes >> Go To 2

No >> The conditions that caused this code to set are not present at this time. Use the wiring diagrams/schematics as a guide to locate and inspect the related wiring and connectors.
Perform BODY VERIFICATION TEST - VER 1.

---

2. CHANNEL X (+) CIRCUIT SHORTED TO GROUND

Disconnect the appropriate Speaker harness connector.

Disconnect the Amplifier harness connectors.

Measure the resistance between ground and the Channel X (+) circuit at the speaker harness connector.

Is the resistance below 100 ohms?

Yes >> Repair the short to ground in the Channel X (+) circuit.
Perform BODY VERIFICATION TEST - VER 1.

No >> Go To 3

---

3. CHANNEL X (-) CIRCUIT SHORTED TO GROUND

Measure the resistance between ground and the Channel X (-) circuit at the speaker harness connector.

Is the resistance below 100 ohms?

Yes >> Repair the short to ground in the Channel X (-) circuit.
Perform BODY VERIFICATION TEST - VER 1.

No >> Go To 4

CHANNEL X CIRCUIT SHORT TO GROUND (CONTINUED)

4. SPEAKER

Connect the Speaker harness connector.

Measure the resistance between ground and the Channel X (+) circuit at the Amplifier harness connector.

Is the resistance below 100 ohms?

Yes >> Replace the Speaker per Service Information.
Perform BODY VERIFICATION TEST - VER 1.

No >> Replace the Amplifier per Service Information.
Perform BODY VERIFICATION TEST - VER 1.

CHANNEL X SHORT TO BATTERY

For the Audio Amplifier system circuit diagram (Refer to 8 - ELECTRICAL/AUDIO - SCHEMATICS AND DIAGRAMS).

For a complete wiring diagram **Refer to Section 8W**.

- **When Monitored:**
  With the ignition on.
- **Set Condition:**
  The Amplifier detects a short to battery voltage condition on the output circuit.

Possible Causes
CHANNEL X (+) CIRCUIT SHORTED TO BATTERY
CHANNEL X (-) CIRCUIT SHORTED TO BATTERY
AMPLIFIER

1. INTERMITTENT CONDITION

NOTE: NOTE: This is a generic test for all Speakers Channel 1 Short to Battery thur Channel 8 Short to Battery. Use the following diagnostics for the specific speaker that set the DTC. Use the 8W wiring diagrams for circuit ID's and wiring repairs.

Turn the ignition on.

Turn the ignition off.

Turn the ignition on.

With the DRBIII®, read Amplifier DTCs.

Is the Channel X Circuit Short to Battery DTC active?

Yes >> Go To 2

No >> The conditions that caused this code to set are not present at this time. Use the wiring diagrams/schematics as a guide to locate and inspect the related wiring and connectors.
Perform BODY VERIFICATION TEST - VER 1.

---

2. CHANNEL X (+) CIRCUIT SHORTED TO BATTERY

NOTE: NOTE: This is a generic test for all Speakers. Use the following diagnostics for the specific speaker that set the DTC.

Turn the ignition off.

Disconnect the appropriate Speaker harness connector.

Disconnect the Amplifier harness connectors.

Turn the ignition on.

Measure the voltage on the Channel X (+) circuit at the Speaker harness connector.

Is the voltage above 1.0 volt?

Yes >> Repair the short to battery voltage in the Channel X (+) circuit.
Perform BODY VERIFICATION TEST - VER 1.

No >> Go To 3

CHANNEL X SHORT TO BATTERY (CONTINUED)

3. CHANNEL X (-) CIRCUIT SHORTED TO BATTERY

Measure the voltage on the Channel X (-) circuit at the speaker harness connector.

Is the voltage above 1.0 volt?

Yes >> Repair the short to battery voltage in the Channel X (-) circuit. Perform BODY VERIFICATION TEST - VER 1.

No >> Test Complete.

CHANNEL X OPEN

For the Audio Amplifier system circuit diagram (Refer to 8 - ELECTRICAL/AUDIO - SCHEMATICS AND DIAGRAMS).

For a complete wiring diagram **Refer to Section 8W**.

- **When Monitored:**
  Amplifier Bus wake-up. Amplifier reset with scan tool.
- **Set Condition:**
  The Amplifier detects an open condition on the speaker output circuit.

Possible Causes
CHANNEL X (-) CIRCUIT SHORTED TO CHANNEL X (+) CIRCUIT
SPEAKER
AMPLIFIER

1. INTERMITTENT CONDITION

NOTE: NOTE: This is a generic test for all Speakers Channel 1 Open thur Channel 8 Open. Use the following diagnostics for the specific speaker that set the DTC. Use the 8W wiring diagrams for circuit ID's and wiring repairs.

Turn the ignition on.

Turn the ignition off.

Turn the ignition on.

With the DRBIII®, read Amplifier DTCs.

Is the Channel X Shorted Together DTC active?

Yes >> Go To 2

No >> The conditions that caused this code to set are not present at this time. Use the wiring diagrams/schematics as a guide to locate and inspect the related wiring and connectors.
Perform BODY VERIFICATION TEST - VER 1.

---

2. CHANNEL X (-) CIRCUIT SHORTED TO CHANNEL X (+) CIRCUIT

Turn the ignition off.

Disconnect the Amplifier harness connectors.

Disconnect the appropriate Speaker harness connector.

Measure the resistance between the Channel X (-) circuit and the Channel X (+) circuit at the Speaker harness connector.

Is the resistance below 5.0 ohms?

Yes >> Go To 3

No >> Repair the short between the Channel X (-) circuit and the Channel X (+) circuit.
Perform BODY VERIFICATION TEST - VER 1.

CHANNEL X OPEN (CONTINUED)

3. SPEAKER

Measure the resistance of the Speaker between the Channel XX (-) circuit terminal and the Channel XX (+) circuit terminal at the Speaker.

Is the resistance below 1.0 ohm?

Yes >> Replace the Speaker per Service Information.
Perform BODY VERIFICATION TEST - VER 1.

No >> Replace the Amplifier per Service Information.
Perform BODY VERIFICATION TEST - VER 1.

CHANNEL X SHORT TOGETHER

For the Audio Amplifier system circuit diagram (Refer to 8 - ELECTRICAL/AUDIO - SCHEMATICS AND DIAGRAMS).

For a complete wiring diagram **Refer to Section 8W**.

- **When Monitored:**
  With the ignition on and radio volume at 25 or higher.
- **Set Condition:**
  The amplifier detects that the output circuits are shorted together.

Possible Causes
CHANNEL X (-) CIRCUIT SHORTED TO CHANNEL X (+) CIRCUIT
SPEAKER
AMPLIFIER

1. INTERMITTENT CONDITION

NOTE: NOTE: This is a generic test for all Speakers Channel 1 thru Channel 8. Use the following diagnostics for the specific speaker that set the DTC. Use the 8W wiring diagrams for circuit ID's and wiring repairs.
Turn the ignition on.
Turn the ignition off.
Turn the ignition on.
With the DRBIII®, read Amplifier DTCs.

Is the Channel X Shorted Together DTC active?

Yes >> Go To 2

No >> The conditions that caused this code to set are not present at this time. Use the wiring diagrams/schematics as a guide to locate and inspect the related wiring and connectors.
Perform BODY VERIFICATION TEST - VER 1.

---

2. CHANNEL X (-) CIRCUIT SHORTED TO CHANNEL X (+) CIRCUIT

Turn the ignition off.
Disconnect the Amplifier harness connectors.
Disconnect the appropriate Speaker harness connector.
Measure the resistance between the Channel X (-) circuit and the Channel X (+) circuit at the Speaker harness connector.

Is the resistance below 5.0 ohms?

Yes >> Go To 3

No >> Repair the short between the Channel X (-) circuit and the Channel X (+) circuit.
Perform BODY VERIFICATION TEST - VER 1.

CHANNEL X SHORT TOGETHER (CONTINUED)

3. SPEAKER

Measure the resistance of the Speaker between the Channel XX (-) circuit terminal and the Channel XX (+) circuit terminal at the Speaker.

Is the resistance below 1.0 ohm?

Yes >> Replace the Speaker per Service Information.
Perform BODY VERIFICATION TEST - VER 1.

No >> Replace the Amplifier per Service Information.
Perform BODY VERIFICATION TEST - VER 1.

CABIN EQ MISMATCH

For the Audio Amplifier system circuit diagram (Refer to 8 - ELECTRICAL/AUDIO - SCHEMATICS AND DIAGRAMS).

For a complete wiring diagram **Refer to Section 8W**.

- **When Monitored:**
  With the ignition on.
- **Set Condition:**
  If the cabin EQ message is incompatible with the EQ's stored in the amplifier for 10 consecutive cycles, then the amplifier will set this DTC.

Possible Causes
CHECK AMPLIFIER BUSSED INPUTS AND OUTPUTS
FCM ACTIVE ON THE BUS CIRCUIT
ACTIVE DTCS STORED IN THE FCM
FRONT CONTROL MODULE

1. INTERMITTENT CONDITION

Turn the ignition on.
Turn the radio on.
With the DRBIII®, erase Amplifier DTCs.
With the DRBIII®, reset the Amplifier.
With the DRBIII®, read Amplifier DTCs.

Is the DTC active at this time?

Yes >> Go To 2

No >> The conditions that caused this code to set are not present at this time. Use the wiring diagrams/schematics as a guide to locate and inspect the related wiring and connectors.
Perform BODY VERIFICATION TEST - VER 1.

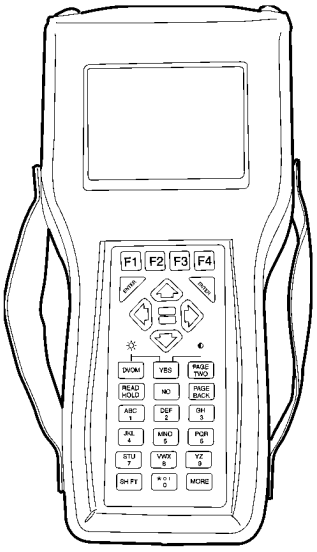

2. CHECK AMPLIFIER BUSSED INPUTS AND OUTPUTS

With the DRBIII®, in Amplifier Data Display, read the Cabin EQ# settings in the Bussed Inputs and Bussed Outputs Sections.

NOTE: NOTE: The Cabin EQ# settings in the Inputs/Outputs sections should match one another. The Cabin EQ# in the Inputs section is the information that is received from the FCM. The Cabin EQ# in the Outputs section, is the information stored in the Amp Memory.

Dos the Cabin EQ# settings match one another?

Yes >> Replace the Amplifier per Service Information.
Perform BODY VERIFICATION TEST - VER 1.

No >> Go To 3

CABIN EQ MISMATCH (CONTINUED)

3. FCM ACTIVE ON THE BUS CIRCUIT

With the DRBIII®, attempt to communicate with the FCM.

Are you able to communicate with the FCM?

Yes >> Go To 4

No >> Refer to the Communication Category for related symptoms/DTCs.
Perform BODY VERIFICATION TEST - VER 1.

---

4. ACTIVE DTCS STORED IN THE FCM

With the DRBIII®, erase FCM DTCs.
Turn the ignition off.
Wait at least 10 seconds.
Turn the ignition on.
With the DRBIII®, read FCM DTCs.

Are any DTCs active present?

Yes >> Refer to the symptom list for problems related to the Front Control Module.
Perform BODY VERIFICATION TEST - VER 1.

No >> Replace the Front Control Module per Service Information.
Perform BODY VERIFICATION TEST - VER 1.

SOFTWARE CHECKSUM FAILURE

For the Audio Amplifier system circuit diagram (Refer to 8 - ELECTRICAL/AUDIO - SCHEMATICS AND DIAGRAMS).

For a complete wiring diagram **Refer to Section 8W**.

- **When Monitored:**
  With the ignition on
- **Set Condition:**
  The Amplifier sets an internal software failure

Possible Causes
AMPLIFIER

1. Amplifier

Turn the ignition on.
Turn the radio on.
With the DRBIII®, erase Amplifier DTCs.
With the DRBIII®, reset the Amplifier.
With the DRBIII®, read Amplifier DTCs.

Is the DTC: SOFTWARE CHECKSUM FAILURE active at this time?

Yes >> Replace the Amplifier in accordance with the service information.

No >> The conditions that caused this code to set are not present at this time. Use the wiring diagrams/schematics as a guide to locate and inspect the related wiring and connectors.
Perform BODY VERIFICATION TEST - VER 1.

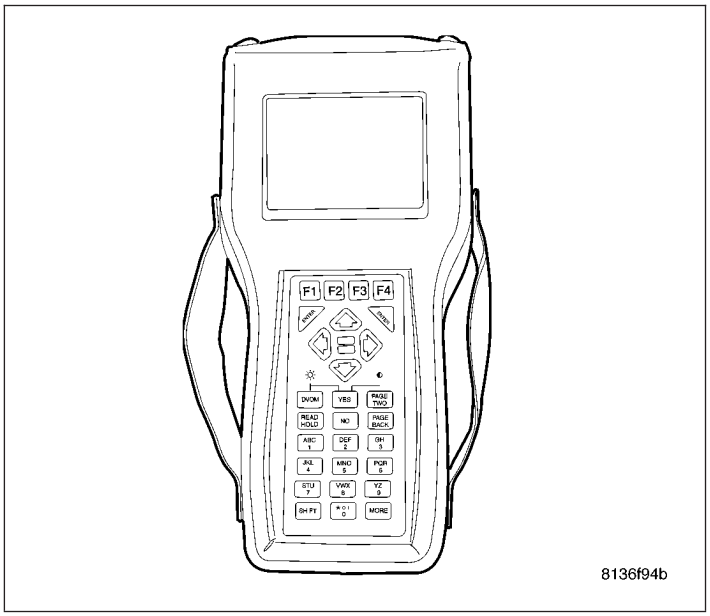

BATTERY VOLTAGE LOW

For the Audio Amplifier system circuit diagram (Refer to 8 - ELECTRICAL/AUDIO - SCHEMATICS AND DIAGRAMS).

For a complete wiring diagram **Refer to Section 8W**.

- **When Monitored:**
  With the ignition on.
- **Set Condition:**
  If the module detects the battery voltage being less and 9.0 volts for greater than 1 second.

Possible Causes
BATTERY VOLTAGE LOW AT AMPLIFIER
CHARGING SYSTEM DTCS IN PCM
AMPLIFIER

1. INTERMITTENT CONDITION

Cycle the ignition switch from on to off to on.
With the DRBIII®, read Amplifier DTCs.

Is the DTC active at this time?

Yes >> Go To 2

No >> The conditions that caused this code to set are not present at this time. Use the wiring diagrams/schematics as a guide to locate and inspect the related wiring and connectors.
Perform BODY VERIFICATION TEST - VER 1.

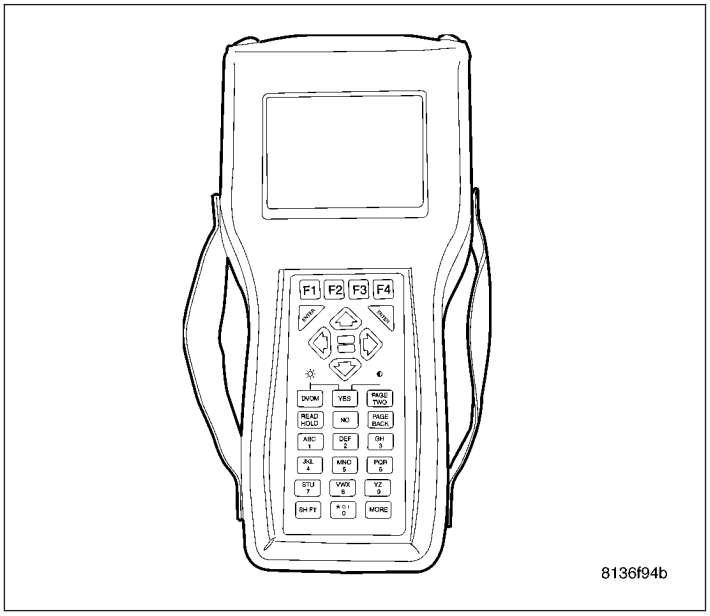

2. BATTERY VOLTAGE LOW AT AMPLIFIER

With the DRBIII® in Data Display, read the Amplifier battery voltage.

Is the voltage less than 9.0 volts?

Yes >> Go To 3

No >> Replace the Amplifier per Service Information.
Perform BODY VERIFICATION TEST - VER 1.

BATTERY VOLTAGE LOW (CONTINUED)

3. **CHARGING SYSTEM DTCS IN PCM**

With the DRBIII® read PCM DTCs.

Are any Charging System related DTCs set in the PCM?

Yes >> Diagnose and repair the DTCs using the Powertrain Diagnostic Manual.
Perform BODY VERIFICATION TEST - VER 1.

No >> Replace the Amplifier per Service Information.
Perform BODY VERIFICATION TEST - VER 1.

BATTERY VOLTAGE HIGH

For the Audio Amplifier system circuit diagram (Refer to 8 - ELECTRICAL/AUDIO - SCHEMATICS AND DIAGRAMS).

For a complete wiring diagram **Refer to Section 8W**.

- **When Monitored:**
  With the ignition on.
- **Set Condition:**
  If the module detects the battery voltage is greater than 16.5 volts for greater than 1 second.

Possible Causes
BATTERY VOLTAGE HIGH AT AMPLIFIER
CHARGING SYSTEM DTCS IN PCM
AMPLIFIER

1. INTERMITTENT CONDITION

Cycle the ignition switch from on to off to on.
With the DRBIII®, read Amplifier DTCs.

Is the DTC active at this time?

Yes >> Go To 2

No >> The conditions that caused this code to set are not present at this time. Use the wiring diagrams/schematics as a guide to locate and inspect the related wiring and connectors.
Perform BODY VERIFICATION TEST - VER 1.

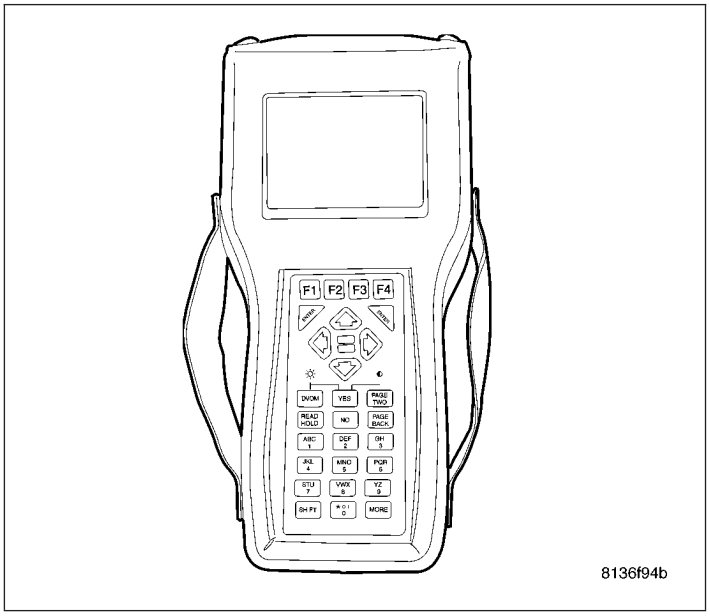

2. BATTERY VOLTAGE HIGH AT AMPLIFIER

With the DRBIII® in Data Display, read the Amplifier battery voltage.

Is the voltage greater than 16.5 volts?

Yes >> Go To 3

No >> Replace the Amplifier per Service Information.
Perform BODY VERIFICATION TEST - VER 1.

BATTERY VOLTAGE HIGH (CONTINUED)

3. **CHARGING SYSTEM DTCS IN PCM**

With the DRBIII® read PCM DTCs.

Are any Charging System related DTCs set in the PCM?

Yes >> Diagnose and repair the DTCs using the Powertrain Diagnostic Manual.
Perform BODY VERIFICATION TEST - VER 1.

No >> Replace the Amplifier per Service Information.
Perform BODY VERIFICATION TEST - VER 1.

SCHEMATICS AND DIAGRAMS

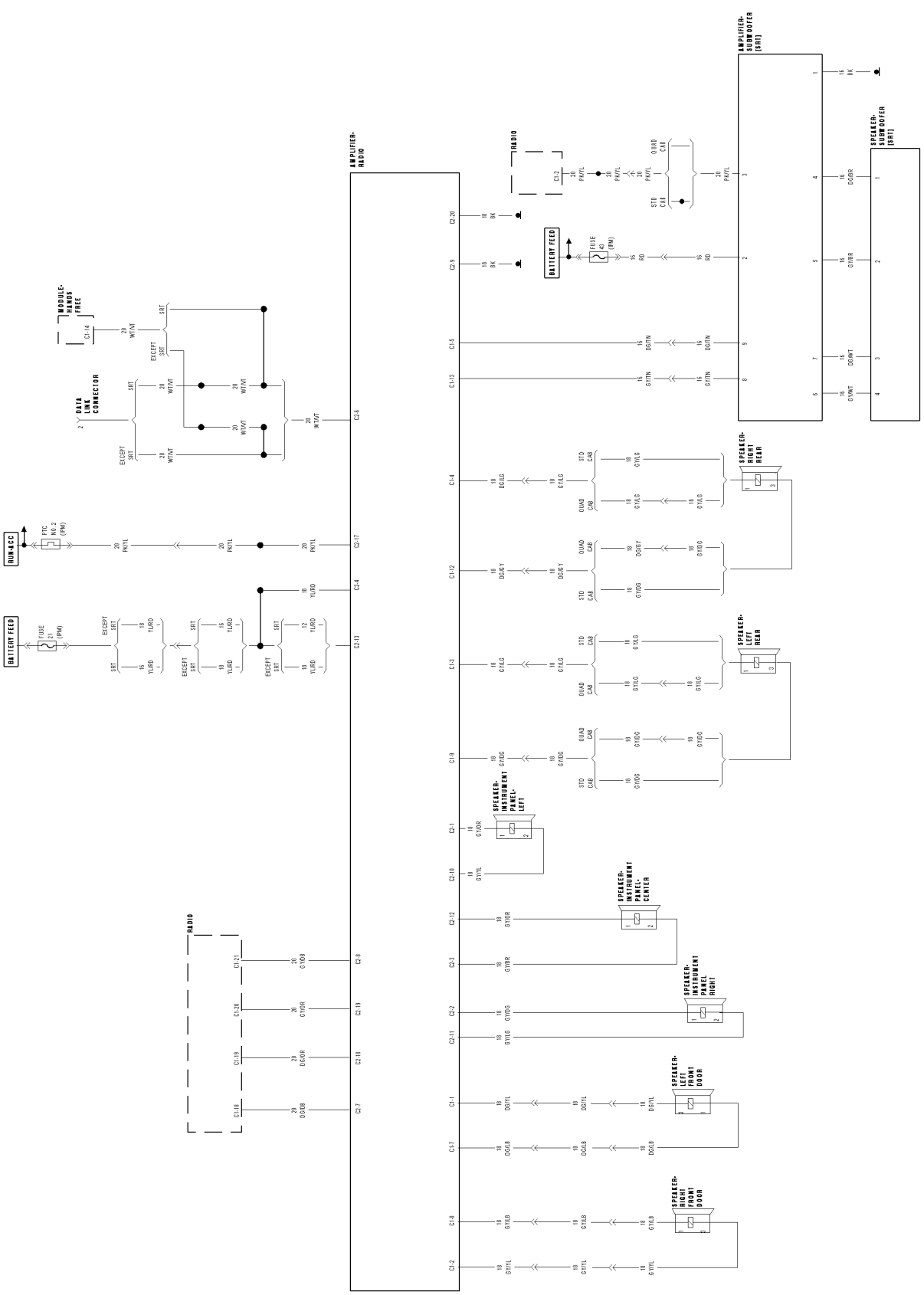

AUDIO AMPLIFIER SCHEMATIC

CHIME/BUZZER

TABLE OF CONTENTS

	page		page
CHIME/BUZZER - ELECTRICAL DIAGNOSTICS	**1**	**CHIME/BUZZER - SERVICE INFORMATION**	**12**

CHIME/BUZZER - ELECTRICAL DIAGNOSTICS

TABLE OF CONTENTS

	page		page
CHIME/BUZZER - ELECTRICAL DIAGNOSTICS		*CHIME INOPERATIVE	9
DIAGNOSIS AND TESTING		*VEHICLE SPEED WARNING CHIME PROBLEM	10
*CHIME SOUNDS WITH DRIVER DOOR OPEN KEY REMOVED	2	SCHEMATICS AND DIAGRAMS	11
*KEY IN IGNITION AND DRIVER'S DOOR OPEN CHIME INOPERATIVE	5		

CHIME/BUZZER - ELECTRICAL DIAGNOSTICS

DIAGNOSIS AND TESTING

*CHIME SOUNDS WITH DRIVER DOOR OPEN KEY REMOVED

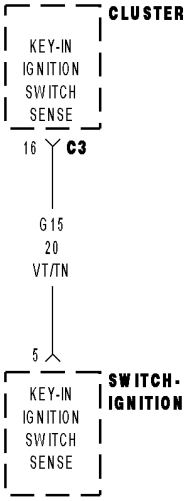

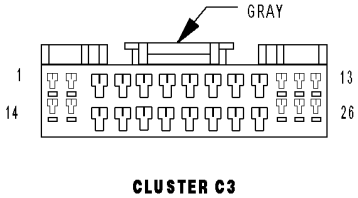

CLUSTER C3

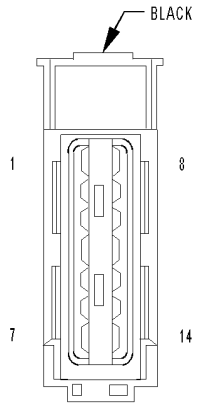

SWITCH-IGNITION

813e9091

***CHIME SOUNDS WITH DRIVER DOOR OPEN KEY REMOVED (CONTINUED)**

For the Chime system circuit diagram (Refer to 8 - ELECTRICAL/CHIME/BUZZER - SCHEMATICS AND DIAGRAMS)

For a complete wiring diagram **Refer to Section 8W**.

Possible Causes
KEY-IN IGN SW STATUS
IGNITION SWITCH SHORTED
(G26) KEY-IN IGNITION SW SENSE SHORT TO GROUND
CLUSTER

Diagnostic Test

1. READ KEY-IN IGNITION SWITCH STATUS ON DRBIII

NOTE: Ensure the exterior lamps turn on and off properly and are off before continuing this test.

With the DRBIII® select: Electro/Mech Cluster, Input Output.

Read the Key-In Ign Sw.

Remove the key from the ignition switch.

Does the DRBIII® show Key-In Ign OPEN?

Yes >> Replace and program the Cluster in accordance with the Service Information.

Perform BODY VERIFICATION TEST - VER 1 (Refer to BODY VERIFICATION TEST - VER 1).

No >> Go To 2

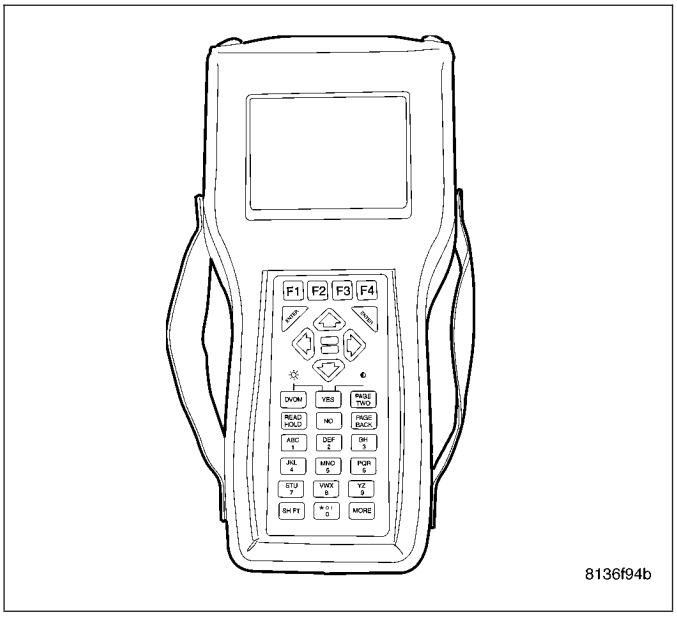

***CHIME SOUNDS WITH DRIVER DOOR OPEN KEY REMOVED (CONTINUED)**

2. KEY-IN IGN SWITCH SHORTED

Disconnect the Ignition Switch connector.

Did the chime turn off?

Yes >> Check the Ignition Lock Cylinder for damage. If OK replace the Ignition Switch.
Perform BODY VERIFICATION TEST - VER 1 (Refer to BODY VERIFICATION TEST - VER 1).

No >> Go To 3

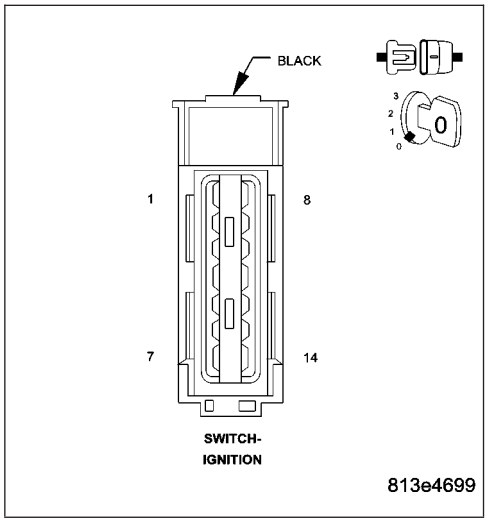

3. (G26) KEY-IN IGNITION SWITCH SENSE WIRE SHORT TO GROUND

Turn ignition off.

Disconnect the Ignition Switch connector.

Disconnect the Cluster C3 connector.

Measure the resistance of the (G26) Key-in Ignition Switch Sense circuit to ground at the Ignition Switch connector.

Is the resistance below 100.0 ohms?

Yes >> Repair the (G26) Key-In Ignition Switch Sense wire for a short to ground.
Perform BODY VERIFICATION TEST - VER 1 (Refer to BODY VERIFICATION TEST - VER 1).

No >> Replace and program the Cluster in accordance with the Service Information.
Perform BODY VERIFICATION TEST - VER 1 (Refer to BODY VERIFICATION TEST - VER 1).

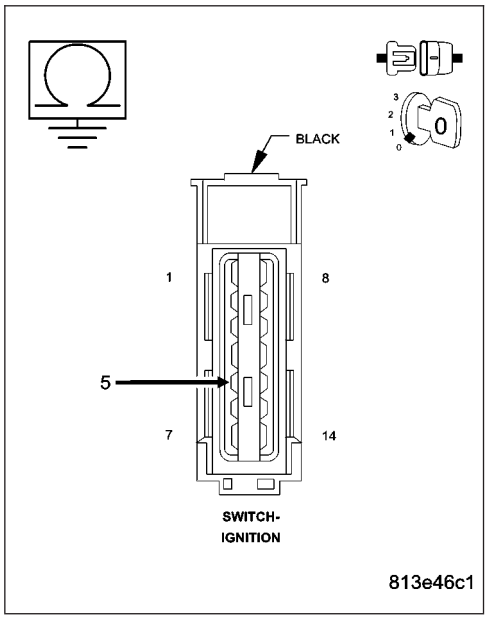

*KEY IN IGNITION AND DRIVER'S DOOR OPEN CHIME INOPERATIVE

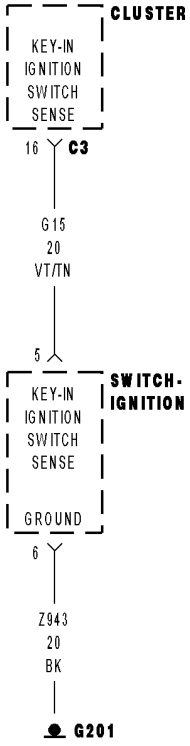

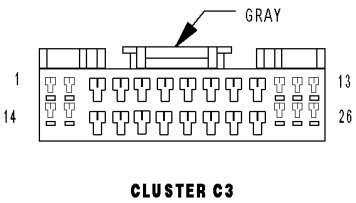

CLUSTER C3

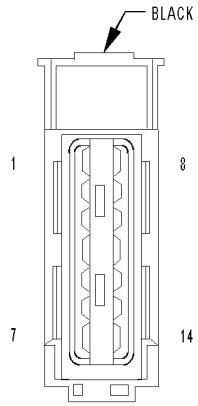

SWITCH-IGNITION

814533c5

***KEY IN IGNITION AND DRIVER'S DOOR OPEN CHIME INOPERATIVE (CONTINUED)**

For the Chime system circuit diagram (Refer to 8 - ELECTRICAL/CHIME/BUZZER - SCHEMATICS AND DIAGRAMS)

For a complete wiring diagram **Refer to Section 8W**.

Possible Causes
(Z42) GROUND OPEN
(G26) KEY-IN IGNITION SWITCH OPEN
IGNITION SWITCH
CLUSTER

Diagnostic Test

1. READ KEY-IN IGNITION SWITCH STATUS ON DRBIII

NOTE: The driver's door ajar switch must be operational for the result of this test to be valid.

Ensure that the Key is still in the Ignition Switch.

With the DRBIII® select: Electro/Mech Cluster, Input Output.

Read the Key-In Ign Sw.

Does the DRBIII® show Key-In Ign CLOSED?

Yes >> Replace and program the Cluster in accordance with the Service Information.

Perform BODY VERIFICATION TEST - VER 1 (Refer to BODY VERIFICATION TEST - VER 1).

No >> Go To 2

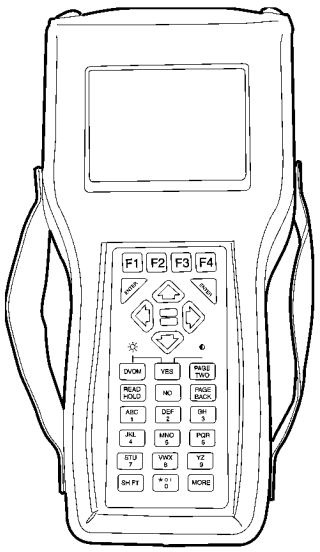

***KEY IN IGNITION AND DRIVER'S DOOR OPEN CHIME INOPERATIVE (CONTINUED)**

2. IGNITION SWITCH GROUND CIRCUIT OPEN

Turn the ignition off.

Disconnect the Ignition Switch connector.

Turn all lights off.

Measure the resistance between ground and the (Z42) Ground circuit in the ignition switch harness connector.

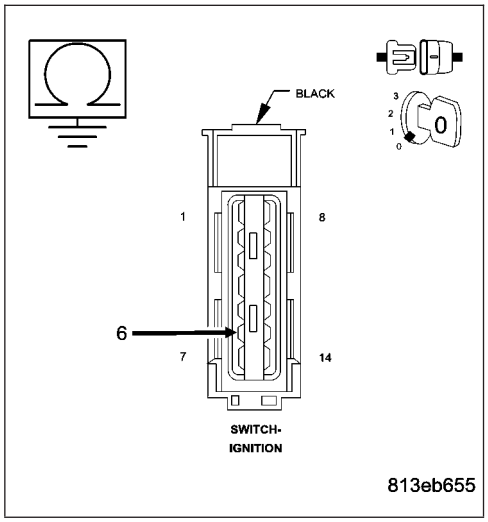

Is the resistance below 5.0 ohms?

Yes >> Go To 3

No >> Repair the (Z42) Ground circuit for an open.
Perform BODY VERIFICATION TEST - VER 1 (Refer to BODY VERIFICATION TEST - VER 1).

3. IGNITION SWITCH OPEN

Connect the ignition switch connector if disconnected.

Turn ignition on.

With the ignition switch connector connected, back jumper the (G26) Key-In Ignition Switch Sense circuit to ground at the ignition switch connector.

With the DRBIII®, enter Instrument Cluster Input/Outputs and observe the Key-In Ign Sw status.

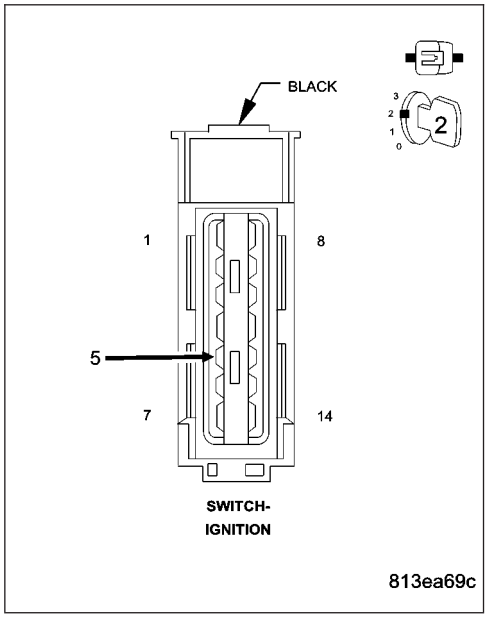

Does the DRBIII display Key-In Ign SW: Closed?

Yes >> Replace the Ignition Switch.
Perform BODY VERIFICATION TEST - VER 1 (Refer to BODY VERIFICATION TEST - VER 1).

No >> Go To 4

*KEY IN IGNITION AND DRIVER'S DOOR OPEN CHIME INOPERATIVE (CONTINUED)

4. KEY-IN IGNITION SWITCH SENSE CIRCUIT OPEN

Turn the ignition off.

Disconnect the Ignition Switch harness connector.

Disconnect the Cluster C3 harness connector.

Measure the resistance of the (G26) Key-In Ignition Switch Sense circuit between the ignition switch connector and the Instrument Cluster C3 connector.

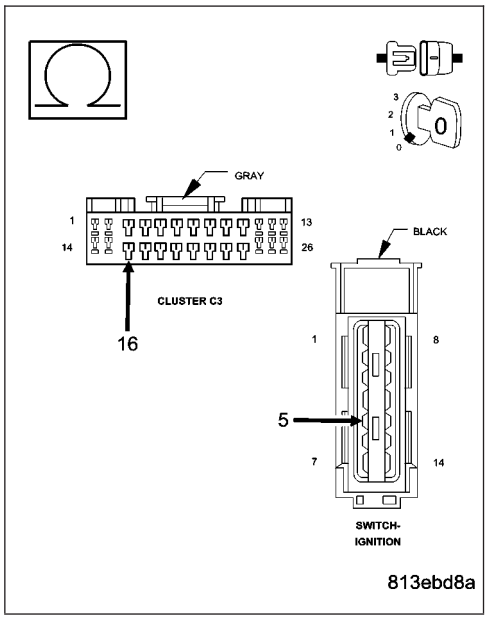

Is the resistance below 5.0 ohms?

Yes >> Replace and program the Instrument Cluster in accordance with the Service Information.

Perform BODY VERIFICATION TEST - VER 1 (Refer to BODY VERIFICATION TEST - VER 1).

No >> Repair the (G26) Key-In Ignition Switch Sense circuit for an open

Perform BODY VERIFICATION TEST - VER 1 (Refer to BODY VERIFICATION TEST - VER 1).

*CHIME INOPERATIVE

For the Chime system circuit diagram (Refer to 8 - ELECTRICAL/CHIME/BUZZER - SCHEMATICS AND DIAGRAMS)

For a complete wiring diagram **Refer to Section 8W**.

Possible Causes
CLUSTER

Diagnostic Test

1. ACTUATE THE CHIME WITH THE DRBIII

Turn the ignition on.

Close the doors.

With the DRBIII® select: Electro/Mech Cluster and actuate the Chime.

Does the chime sound when actuated by the DRBIII®?

Yes >> If the chime operates as it should, check for other reasons that the chime is being inoperative.

Perform BODY VERIFICATION TEST - VER 1 (Refer to BODY VERIFICATION TEST - VER 1).

No >> Replace and program the Cluster in accordance with the Service Information.

Perform BODY VERIFICATION TEST - VER 1 (Refer to BODY VERIFICATION TEST - VER 1).

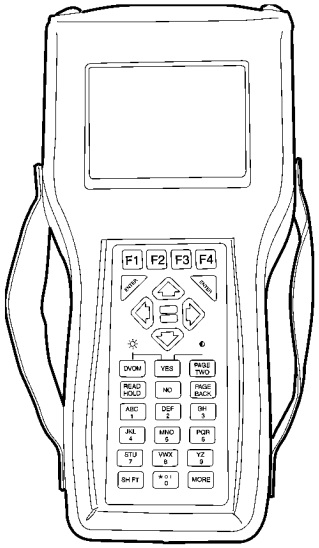

*VEHICLE SPEED WARNING CHIME PROBLEM

For the Chime system circuit diagram (Refer to 8 - ELECTRICAL/CHIME/BUZZER - SCHEMATICS AND DIAGRAMS)

For a complete wiring diagram **Refer to Section 8W**.

Possible Causes
INCORRECT COUNTRY CODE PROGRAMMED IN CLUSTER
CLUSTER

Diagnostic Test

1. WITH THE DRBIII CHECK THE COUNTRY CODE SETTING

NOTE: The high speed warning chime is for Gulf Coast Countries only.

Turn the ignition on.

With the DRBIII® in Miscellaneous check the Cluster country code setting.

Is the country code incorrect?

Yes >> Program the correct country code.
Perform BODY VERIFICATION TEST - VER 1 (Refer to BODY VERIFICATION TEST - VER 1).

No >> Replace and program the Cluster in accordance with the Service Information.
Perform BODY VERIFICATION TEST - VER 1 (Refer to BODY VERIFICATION TEST - VER 1).

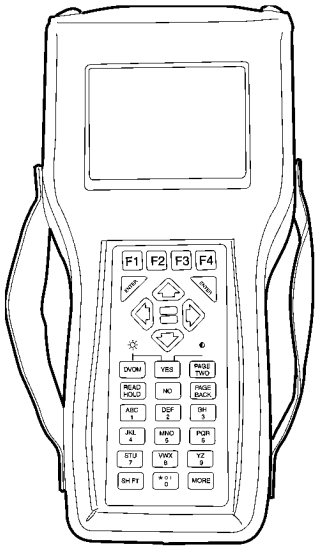

8136f94b

SCHEMATICS AND DIAGRAMS

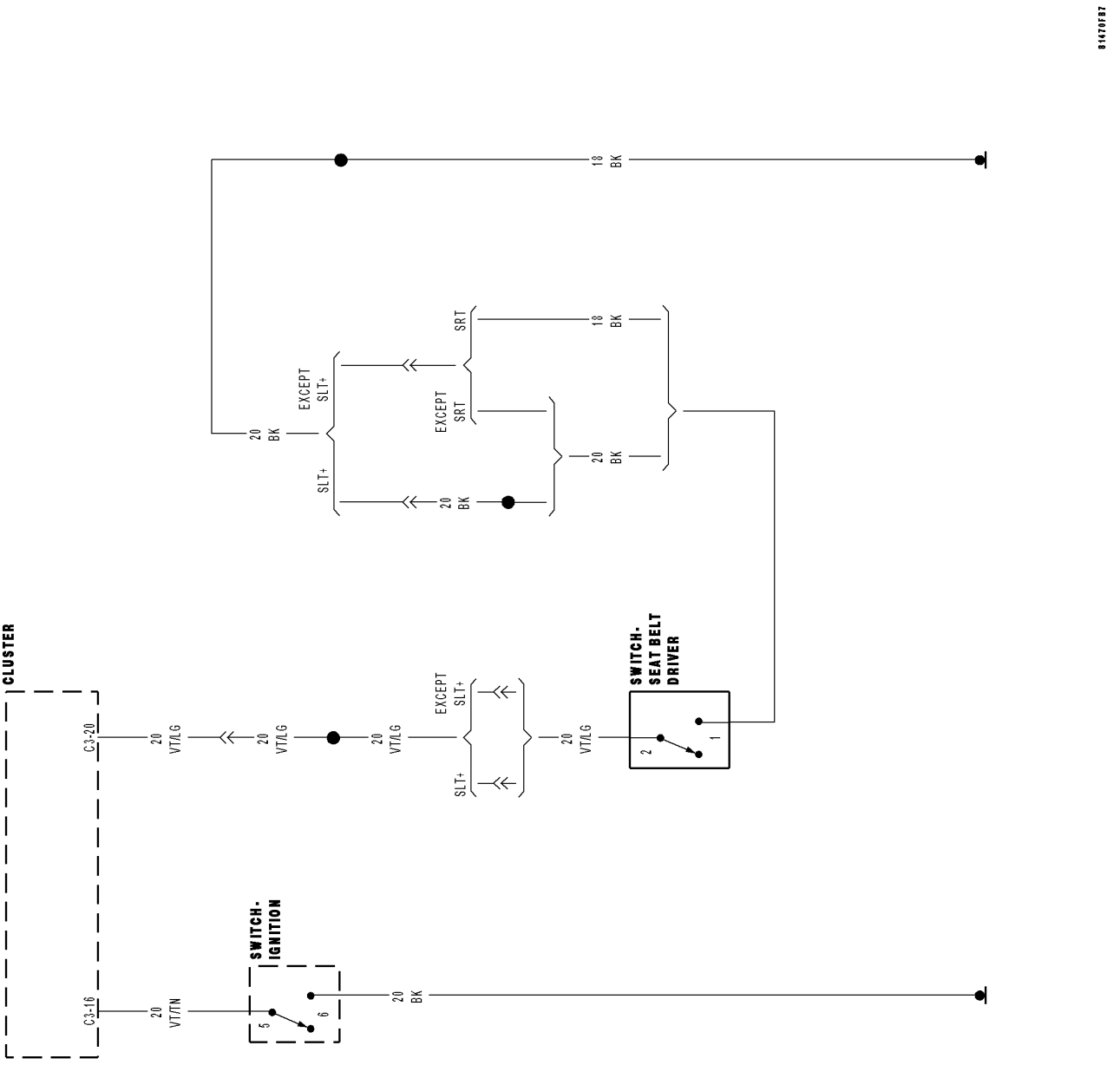

CHIME/BUZZER - SERVICE INFORMATION

TABLE OF CONTENTS

	page		page
CHIME/BUZZER - SERVICE INFORMATION		DIAGNOSIS AND TESTING	
DESCRIPTION	12	CHIME WARNING SYSTEM	15
OPERATION	13		

CHIME/BUZZER - SERVICE INFORMATION

DESCRIPTION

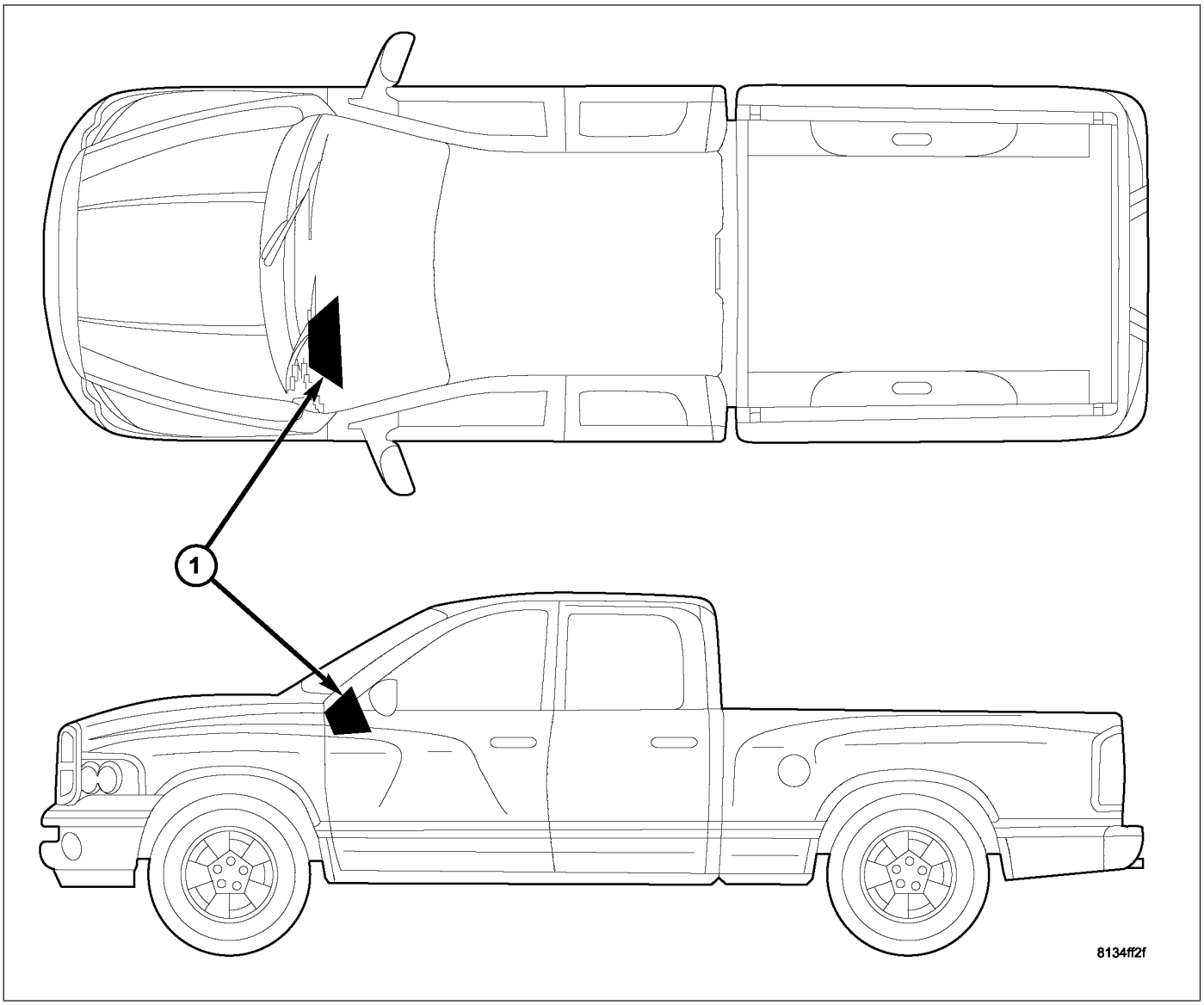

A chime warning system is standard factory-installed equipment. The chime warning system uses an electromechanical transducer and an electromechanical relay that are soldered onto the electronic circuit board inside of the ElectroMechanical Instrument Cluster (EMIC) (1) to provide audible indications of various vehicle conditions that may require the attention of the vehicle operator or occupants. The EMIC also includes the hardware and software necessary to serve as the electronic body control module and is sometimes referred to as the Cab Compartment Node or CCN.

The electromechanical transducer generates beep tones and chime tones, while the electromechanical relay generates click tones to emulate the sounds associated with conventional turn signal and hazard warning flasher operation. The microprocessor-based EMIC utilizes electronic chime request messages received from other modules in the vehicle over the Programmable Communications Interface (PCI) data bus network along with hard wired inputs to monitor many sensors and switches throughout the vehicle. In response to those inputs, the circuitry and programming of the EMIC allow it to control the audible outputs that are produced through its on-board transducer and relay.

The EMIC is capable of producing the following audible outputs:

- **Slow Rate Repetitive Click** - Repeated “click” tones that are issued at a slow rate of about 50 clicks per minute.
- **Fast Rate Repetitive Click** - Repeated “click” tones that are issued at a fast rate of more than about 100 clicks per minute.
- **Fixed Duration Beep** - A short, sharp, single tactile “beep” tone.
- **Single Chime Tone** - A single “chime” tone.
- **Slow Rate Repetitive Chime** - Repeated “chime” tones that are issued at a slow rate of about 50 chimes per minute.
- **Fast Rate Repetitive Chime** - Repeated “chime” tones that are issued at a fast rate of about 180 chimes per minute.

Hard wired circuitry connects the EMIC and the various chime warning system switch and sensor inputs to their modules and to each other through the electrical system of the vehicle. These hard wired circuits are integral to several wire harnesses, which are routed throughout the vehicle and retained by many different methods. These circuits may be connected to each other, to the vehicle electrical system and to the EMIC through the use of a combination of soldered splices, splice block connectors, and many different types of wire harness terminal connectors and insulators. Refer to the appropriate wiring information. The wiring information includes wiring diagrams, proper wire and connector repair procedures, further details on wire harness routing and retention, as well as pin-out and location views for the various wire harness connectors, splices and grounds.

The EMIC chime warning system circuits and components cannot be adjusted or repaired. If the EMIC circuitry, the on-board transducer or the relay are damaged or faulty, the EMIC unit must be replaced.

OPERATION

The chime warning system operates on battery voltage received through the Ignition-Off Draw (IOD) fuse in the Power Distribution Center (PDC) on a non-switched fused B(+) circuit so that the system may operate regardless of the ignition switch position. The chime warning system also monitors the ignition switch position so that some chime features are functional only with the ignition switch in the On position, while others are functional regardless of the ignition switch position.

The chime warning system provides an audible indication to the vehicle operator or occupants under the following conditions:

- **Airbag Indicator Warning** - The ElectroMechanical Instrument Cluster (EMIC) transducer will generate one short chime when the ignition switch is in the On position, and an electronic message is received over the Programmable Communications Interface (PCI) data bus from the Airbag Control Module (ACM) requesting “Airbag” indicator illumination. This warning will only occur following completion of the “Airbag” indicator bulb test, and will only occur once during any ignition cycle.
- **Compass Mini-Trip Computer Global Reset** - The EMIC transducer will generate one short chime when the ignition switch is in the On position, and an electronic message is received over the PCI data bus from the optional Compass Mini-Trip Computer (CMTC) requesting that the CMTC average fuel economy, trip odometer and distance to empty data be reset. The CMTC monitors hard wired inputs from the U.S./Metric and Reset button switches to determine the proper reset messages to send to the EMIC.
- **Door Ajar Indicator Warning** - The EMIC transducer will generate one short chime when the ignition switch is in the On position, a hard wired input is received indicating that the status of any door ajar switch has changed, and an electronic message is received over the PCI data bus indicating that the vehicle is moving.
- **Engine Coolant Temperature High Warning (Diesel Engine Only)** - The EMIC transducer will generate a single chime tone when the “Check Gauges” indicator is illuminated for a high or critical engine coolant temperature condition. The instrument cluster uses engine coolant temperature message inputs received from the diesel Engine Control Module (ECM) over the PCI data bus to illuminate the “Check Gauges” indicator for a coolant temperature high condition.

- **Fasten Seat Belt Indicator Warning** - The EMIC transducer will generate repetitive chimes at a slow rate to announce that a hard wired input from the seat belt switch indicates that the driver side front seat belt is not fastened with the ignition switch in the On position. The chime warning system also supports the enhanced seatbelt reminder (beltminder) when this feature is enabled. (Refer to 8 - ELECTRICAL/INSTRUMENT CLUSTER/SEATBELT INDICATOR - OPERATION).
- **Head/Park Lamps-On Warning** - The EMIC transducer will generate repetitive chimes at a fast rate to indicate that hard wired inputs from the driver door ajar switch, the headlamp switch, and the ignition switch indicate that the exterior lamps are turned On with the driver side front door opened and the ignition switch in the Off position. The chimes will continue to sound until the exterior lamps are turned Off, the driver side front door is closed, or the ignition switch is turned to the On position, or the battery saver (load shed) time-out expires, whichever occurs first.
- **Key-In-Ignition Warning** - The EMIC transducer will generate repetitive chimes at a fast rate to announce that the hard wired inputs from the driver door ajar switch, the ignition switch, and the key-in ignition switch circuitry of the ignition switch indicate that the key is in the ignition lock cylinder with the driver side front door open and the ignition switch in the Off position. The chimes will continue to sound until the key is removed from the ignition lock cylinder, the driver side front door is closed, or the ignition switch is turned to the On position, whichever occurs first.
- **Low Fuel Indicator Warning** - The EMIC transducer will generate one short chime tone when the “Low Fuel” indicator is illuminated by the instrument cluster circuitry. This chime will only occur once during any ignition cycle.
- **Low Oil Pressure Warning (Diesel Engine Only)** - The EMIC transducer will generate repetitive chimes at a fast rate when the “Check Gauges” indicator is illuminated for a low oil pressure condition. The instrument cluster uses engine speed and oil pressure message inputs received from the diesel Engine Control Module (ECM) over the PCI data bus indicating that the engine is running and that the oil pressure is low to illuminate the “Check Gauges” indicator. The chimes will continue to sound for five seconds, until the engine oil pressure message indicates that the oil pressure is not low, or until the engine speed message indicates that the engine is not running, whichever occurs first. This chime will only occur once during any ignition cycle.
- **Low Wash Indicator Warning** - The EMIC transducer will generate one short chime when the “Low Washer Fluid” indicator is illuminated by the instrument cluster circuitry. This chime will only occur once during any ignition cycle.
- **Overspeed Warning** - The EMIC transducer will generate repetitive chimes at a slow rate to indicate that the vehicle speed is over a pre-programmed speed value. The EMIC monitors electronic vehicle speed messages received over the PCI data bus. This feature is only enabled on an EMIC that has been programmed with a Middle East Gulf Coast Country (GCC) country code.
- **Park Brake Reminder** - The EMIC transducer will generate ten repetitive chimes at a slow rate to announce that the hard wired input from the park brake switch and a vehicle speed message input received over the PCI data bus indicate that the park brake is applied and the vehicle is moving. This chime will repeat each time the input conditions are met.
- **Sentry Key “Customer Learn” Mode Announcement** - The EMIC transducer will generate one short chime to confirm that an electronic “Customer Learn” mode message has been received over the PCI data bus to indicate the Sentry Key Immobilizer Module (SKIM) is prepared for programming additional sentry key transponders. This chime feature is only active on vehicles equipped with the optional Sentry Key Immobilizer System (SKIS), and sold in markets where “Customer Learn” programming is an allowed feature.
- **Trans Overtemp Indicator Warning (Automatic Transmission Only)** - The EMIC transducer will generate repetitive chimes at a slow rate when the “Trans Temp” indicator is illuminated by the instrument cluster circuitry for a high or critical transmission fluid temperature condition. This chime will repeat each time the trans overtemp indicator is cycled from Off to On.
- **Turn Signal/Hazard Warning Flasher Emulation** - The EMIC relay will generate repetitive clicks at a slow rate to emulate an electromechanical flasher when the turn signal or hazard warning system are operating. The EMIC relay will generate repetitive clicks at a fast rate to indicate that the right or left turn signal are operating with one or more bulbs inoperative. In either case, the clicks will continue until the turn signal and hazard warning systems are turned off.

- **Turn Signal On Warning** - The EMIC transducer will generate repetitive chimes at a slow rate to indicate that a turn signal has been active continuously for 1.6 kilometers (1 mile) with the vehicle speed greater than 22 kilometers-per-hour (15 miles-per hour). Vehicles built for markets other than the United States and Canada have a revised distance threshold of 4 kilometers for this feature. The chime will continue until the turn signal input becomes inactive or until the vehicle speed message indicates that the speed is less than 22 kilometers-per-hour (15 miles-per-hour), whichever occurs first. The hazard warning flashers will not activate this chime feature.
- **Warning Indicator Announcement** - The EMIC transducer will generate one short chime each time the “Check Gauges” indicator is illuminated by the instrument cluster circuitry. The “Check Gauges” indicator may be illuminated when any critical engine or transmission systems are operating outside of their normal parameters. The instrument cluster monitors electronic messages received over the PCI data bus to determine when to illuminate the “Check Gauges” indicator.

The EMIC provides chime service for all available features in the chime warning system. The EMIC relies upon its internal programming, numerous hard wired inputs, and electronic message inputs received from other modules over the PCI data bus network to provide the chime warning system features. The internal programming of the EMIC determines the priority of each chime request input that is received, as well as the rate and duration of each chime that is to be generated.

The hard wired chime warning system inputs to the EMIC may be diagnosed and tested using conventional diagnostic tools and methods. However, conventional diagnostic methods may not prove conclusive in the diagnosis of the EMIC, the PCI data bus, or the electronic messages received by the EMIC from other modules for control of the chime warning system. The most reliable, efficient and accurate means to diagnose the EMIC, the PCI data bus, or the electronic message inputs used for the chime warning system requires the use of a diagnostic scan tool. Refer to the appropriate diagnostic information.

DIAGNOSIS AND TESTING

CHIME WARNING SYSTEM

WARNING: To avoid personal injury or death, on vehicles equipped with airbags, disable the supplemental restraint system before attempting any steering wheel, steering column, airbag, seat belt tensioner, impact sensor, or instrument panel component diagnosis or service. Disconnect and isolate the battery negative (ground) cable, then wait two minutes for the system capacitor to discharge before performing further diagnosis or service. This is the only sure way to disable the supplemental restraint system. Failure to take the proper precautions could result in accidental airbag deployment.

The hard wired chime warning system inputs to the ElectroMechanical Instrument Cluster (EMIC), as well as other hard wired circuits for this system may be diagnosed and tested using conventional diagnostic tools and methods. Refer to the appropriate wiring information. The wiring information includes wiring diagrams, proper wire and connector repair procedures, details of wire harness routing and retention, connector pin-out information and location views for the various wire harness connectors, splices and grounds.

However, conventional diagnostic methods may not prove conclusive in the diagnosis of the EMIC, the Programmable Communications Interface (PCI) data bus, or the electronic message inputs used by the EMIC to provide chime warning system service. The most reliable, efficient, and accurate means to diagnose the EMIC, the PCI data bus, and the electronic message inputs for the chime warning system requires the use of a diagnostic scan tool. Refer to the appropriate diagnostic information.

CONDITION	POSSIBLE CAUSES	CORRECTION
NO SEAT BELT WARNING CHIME WITH SEAT BELT UNBUCKLED, BUT OTHER CHIME FEATURES OK	1. Seat belt switch ground circuit open.	1. Check for continuity between the ground circuit for the driver seat belt switch and a good ground. Repair open ground circuit, if required.
	2. Seat belt switch sense circuit open.	2. Check for continuity between the seat belt switch sense circuit for the driver seat belt switch and the instrument cluster connector. Repair the open seat belt switch sense circuit, if required.
	3. Faulty seat belt switch.	3. Check for continuity between the ground circuit and the driver seat belt switch sense circuit of the seat belt switch. There should be continuity with the seat belt unbuckled. Replace the faulty seat belt, if required.
SEAT BELT WARNING CHIME WITH SEAT BELT BUCKLED	1. Seat belt switch sense circuit shorted.	1. With the driver seat belt switch and the instrument cluster connector disconnected, there should be no continuity between the seat belt switch sense circuit and a good ground. Repair the shorted seat belt switch sense circuit, if required.
	2. Faulty seat belt switch.	2. Check for continuity between the ground circuit cavity and the seat belt switch sense circuit of the driver seat belt switch. There should be no continuity with the seat belt buckled. Replace the faulty seat belt, if required.
NO KEY-IN IGNITION WARNING CHIME, BUT OTHER CHIME FEATURES OK	1. Driver door ajar switch sense circuit open.	1. Check for continuity between the driver door ajar switch sense circuit connector and the instrument cluster connector. Repair the open driver door ajar switch sense circuit, if required.
	2. Key-in ignition switch sense circuit open.	2. Check for continuity between the key-in ignition switch sense circuit connector and instrument cluster connector. Repair the open key-in ignition switch sense circuit, if required.
	3. Key-in ignition switch ground circuit open.	3. Check for continuity between the ground circuit cavity of the ignition switch connector and a good ground. Repair the open ground circuit, if required
	4. Faulty ignition switch.	4. Check for continuity between the ground circuit terminal and the key-in ignition switch sense circuit terminal in the ignition switch connector. There should be continuity with a key in the ignition lock cylinder. Replace the faulty ignition switch, if required.

CONDITION	POSSIBLE CAUSES	CORRECTION
NO EXTERIOR LAMPS-ON WARNING CHIME, BUT OTHER CHIME FEATURES OK	1. Driver door ajar switch sense circuit open.	1. Check for continuity between the driver door ajar switch sense circuit connector and the instrument cluster connector. Repair the open driver door ajar switch sense circuit, if required.
	2. Headlamp switch signal circuit open.	2. Check for continuity between the headlamp switch output circuit connector and the and the instrument cluster connector. Repair the open headlamp switch signal circuit, if required.
NO CHIMES AND OTHER INSTRUMENT CLUSTER FEATURES ERRATIC OR DISABLED	1. Instrument cluster ground circuit(s) open.	1. Check for continuity between the ground circuits of the instrument cluster connector and a good ground. Repair the open ground circuits(s), if required.
	2. Instrument cluster fused B(+) circuit(s) open.	2. Check for battery voltage at the B(+) circuits of the instrument cluster connector. Repair the open fused B(+) circuit(s), if required.
	3. Instrument cluster fused ignition switch output (run-start) circuit open.	3. With the ignition switch in the On position, check for battery voltage at the fused ignition switch output (run-start) circuit of the instrument cluster connector. Repair the open fused ignition switch output (run-start) circuit, if required.
	4. Faulty instrument cluster.	4. Replace the faulty instrument cluster, if required.
NO CHIMES, BUT ALL OTHER INSTRUMENT CLUSTER FEATURES OK	1. Faulty instrument cluster.	1. Replace the faulty instrument cluster, if required.

ELECTRONIC CONTROL MODULES

TABLE OF CONTENTS

page

ELECTRONIC CONTROL MODULES - ELECTRICAL DIAGNOSTICS 1

page

ELECTRONIC CONTROL MODULES - SERVICE INFORMATION 100

ELECTRONIC CONTROL MODULES - ELECTRICAL DIAGNOSTICS

TABLE OF CONTENTS

page

ELECTRONIC CONTROL MODULES - ELECTRICAL DIAGNOSTICS
DIAGNOSIS AND TESTING
BATTERY VOLTAGE OPEN (FCM) 3
BATTERY 1 VOLTAGE OPEN (FCM) 5
BATTERY 2 VOLTAGE OPEN (FCM) 8
BUS SHORTED TO BATTERY (FCM) 11
BUS SHORTED TO GROUND (FCM) 12
EEPROM CHECKSUM FAILURE (FCM) 13
INTERNAL BOOTLOADER CHECKSUM FAILURE (FCM) 14
INTERNAL FLASH MEMORY CHECKSUM FAILURE (FCM) 15
MIC MESSAGES NOT RECEIVED (FCM) 16
PCI BUS INTERNAL - LOOPBACK FAILURE (FCM) 17
PCM MESSAGES NOT RECEIVED (FCM) . . . 18
VIN NOT LEARNED CORRECTLY (FCM) 20
*NO RESPONSE FROM ANTILOCK BRAKE MODULE 21
*NO RESPONSE FROM AMPLIFIER 24
*NO RESPONSE FROM CLUSTER 27
*NO RESPONSE FROM ENGINE CONTROL MODULE (PCI BUS) - DIESEL 31
*NO RESPONSE FROM ENGINE CONTROL MODULE (SCI ONLY) - DIESEL 34
*NO RESPONSE FROM FRONT CONTROL MODULE 38
*NO RESPONSE FROM FINAL DRIVE CONTROL MODULE 41

page

*NO RESPONSE FROM HANDS FREE MODULE 45
*NO RESPONSE FROM HVAC 49
*NO RESPONSE FROM OCCUPANT RESTRAINT CONTROL MODULE 52
*NO RESPONSE FROM OVERHEAD CONSOLE 55
*NO RESPONSE FROM PCM (PCI BUS) - JTEC 59
*NO RESPONSE FROM PCM (SCI ONLY) - JTEC 62
*NO RESPONSE FROM PCM (PCI BUS) - NGC 66
*NO RESPONSE FROM PCM (PCM SCI ONLY) - NGC 69
*NO RESPONSE FROM RADIO 73
*NO RESPONSE FROM SATELLITE RECEIVER 77
*NO RESPONSE FROM SENTRY KEY IMMOBILIZER MODULE (SKIM) 80
*NO RESPONSE FROM TRANSFER CASE CONTROL MODULE 84
*NO RESPONSE FROM TRANSMISSION CONTROL MODULE - NGC 87
*PCI BUS COMMUNICATION FAILURE 91
C2100–BATTERY VOLTAGE LOW (FDCM) . . . 95
C2101–BATTERY VOLTAGE HIGH (FDCM) . . 97
C2201-FDCM ECU INTERNAL (FDCM) 99

ELECTRONIC CONTROL MODULES - ELECTRICAL DIAGNOSTICS

DIAGNOSIS AND TESTING

BATTERY VOLTAGE OPEN (FCM)

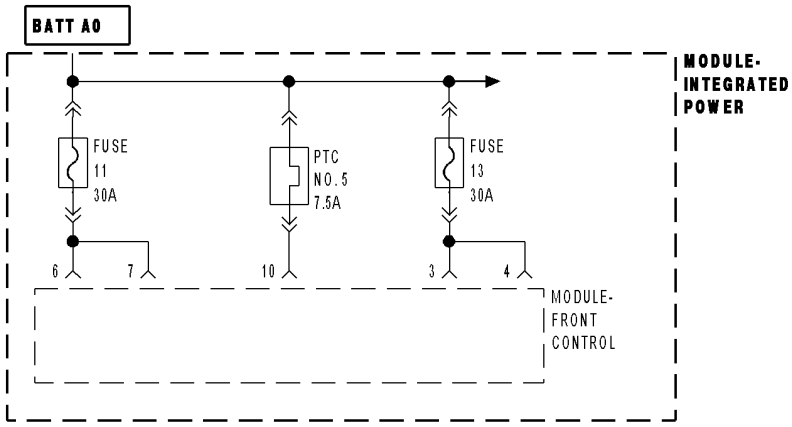

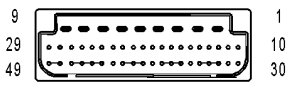

MODULE-
FRONT
CONTROL IPM

81314213

BATTERY VOLTAGE OPEN (FCM) (CONTINUED)

For a complete wiring diagram **Refer to Section 8W**.

- **When Monitored:**
  With the ignition on.
- **Set Condition:**
  The FCM detects a low voltage condition.

Possible Causes
POWER DISTRIBUTION CENTER
FRONT CONTROL MODULE

Diagnostic Test

1. CHECK FOR AN ACTIVE DTC

Turn the ignition on.

With the DRB, erase the FCM DTC's.

Turn the ignition off then turn the ignition on and wait approximately 1 minute.

With the DRB, read the FCM DTC's.

Did this DTC reset?

Yes >> Go To 2

No >> The condition that set this DTC is no longer present. Using the wiring diagram/schematic as a guide, inspect the wiring for chafed, pierced, pinched, and partially broken wires and the wiring harness connectors for broken, bent, pushed out, and corroded terminals.

---

2. CHECK THE FUSED B+ CIRCUIT

Turn the ignition off.

Remove the FCM from the IPM.

Using a 12-volt test light connected to ground, probe the Fused B+ circuit (cavity 10).

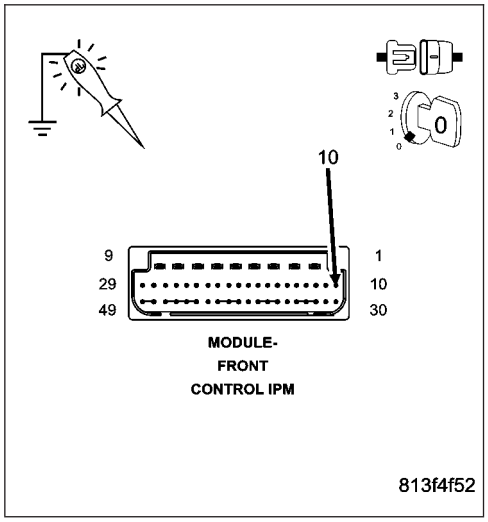

Is the test light illuminated?

Yes >> Replace the Front Control Module in accordance with the service information.
Perform BODY VERIFICATION TEST - VER 1. (Refer to BODY VERIFICATION TEST - VER 1.)

No >> Replace the Power Distribution Center in accordance with the service information.
Perform BODY VERIFICATION TEST - VER 1. (Refer to BODY VERIFICATION TEST - VER 1.)

BATTERY 1 VOLTAGE OPEN (FCM)

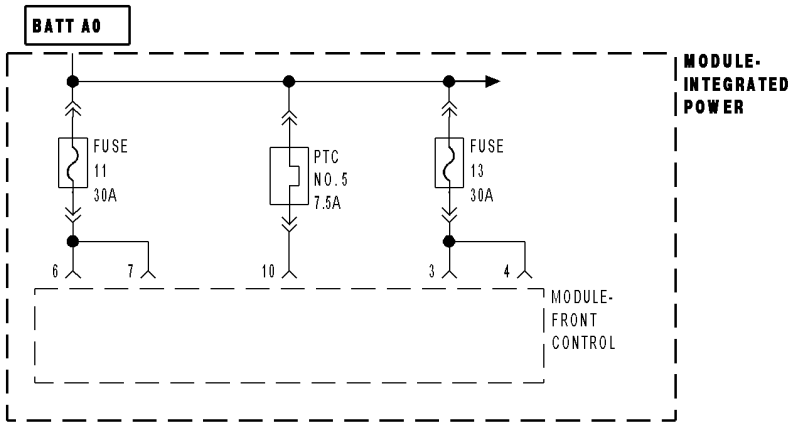

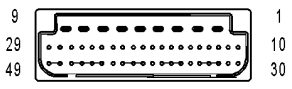

MODULE-
FRONT
CONTROL IPM

81314213

BATTERY 1 VOLTAGE OPEN (FCM) (CONTINUED)

For a complete wiring diagram **Refer to Section 8W**.

- **When Monitored:**
  With the ignition on.
- **Set Condition:**
  The FCM detects low voltage on battery input 1.

Possible Causes
FUSE #13
POWER DISTRIBUTION CENTER
FRONT CONTROL MODULE

Diagnostic Test

1. CHECK FOR AN ACTIVE DTC

Turn the ignition on.
With the DRB, erase the FCM DTC's.
Turn the ignition off then turn the ignition on and wait approximately 1 minute.
With the DRB, read the FCM DTC's.

Did this DTC reset?

Yes >> Go To 2

No >> The condition that set this DTC is no longer present. Using the wiring diagram/schematic as a guide, inspect the wiring for chafed, pierced, pinched, and partially broken wires and the wiring harness connectors for broken, bent, pushed out, and corroded terminals.

---

2. CHECK FUSE #13

Turn the ignition off.
Check fuse #13 in the IPM.

Is the fuse open?

Yes >> Replace the fuse and check for a possible intermittent short to ground condition.
Perform BODY VERIFICATION TEST - VER 1. (Refer to BODY VERIFICATION TEST - VER 1.)

No >> Go To 3

BATTERY 1 VOLTAGE OPEN (FCM) (CONTINUED)

3. CHECK THE FUSED B+ CIRCUITS

Remove the FCM from the IPM.

NOTE: Ensure fuse #13 is installed in the IPM.
Using a 12-volt test light connected to ground, probe both Fused B+ circuits (cavities 3 and 4).

Is the test light illuminated for both circuits?

Yes >> Replace the Front Control Module in accordance with the service information.
Perform BODY VERIFICATION TEST - VER 1. (Refer to BODY VERIFICATION TEST - VER 1.)

No >> Replace the Power Distribution Center in accordance with the service information.
Perform BODY VERIFICATION TEST - VER 1. (Refer to BODY VERIFICATION TEST - VER 1.)

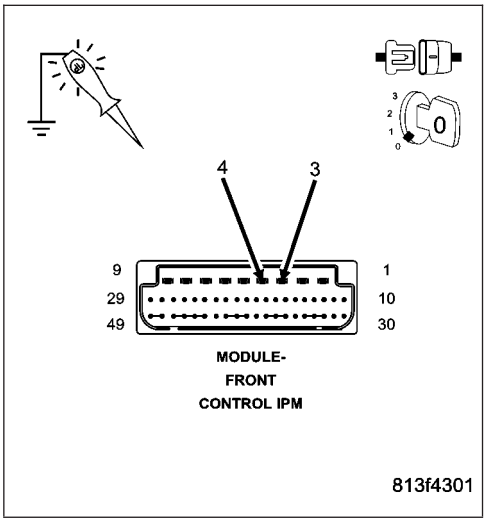

BATTERY 2 VOLTAGE OPEN (FCM)

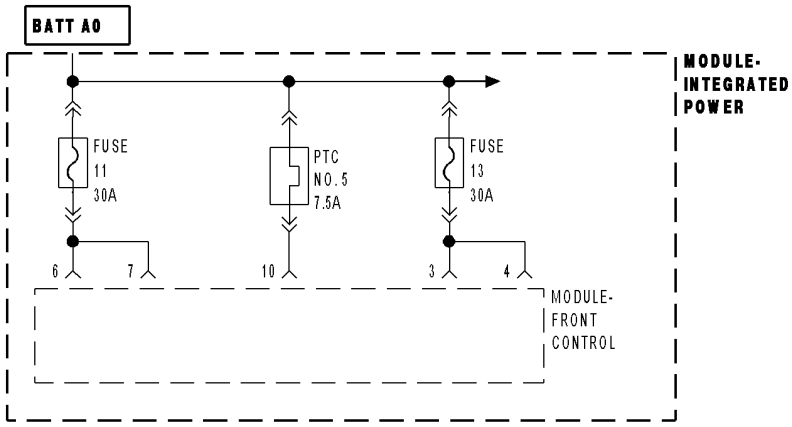

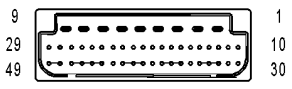

MODULE-
FRONT
CONTROL IPM

81314213

BATTERY 2 VOLTAGE OPEN (FCM) (CONTINUED)

For a complete wiring diagram **Refer to Section 8W**.

- **When Monitored:**
  With the ignition on.
- **Set Condition:**
  The FCM detects low voltage on battery input 2.

Possible Causes
FUSE #11
POWER DISTRIBUTION CENTER
FRONT CONTROL MODULE

Diagnostic Test

1. CHECK FOR AN ACTIVE DTC

Turn the ignition on.
With the DRB, erase the FCM DTC's.
Turn the ignition off then turn the ignition on and wait approximately 1 minute.
With the DRB, read the FCM DTC's.

Did this DTC reset?

Yes >> Go To 2

No >> The condition that set this DTC is no longer present. Using the wiring diagram/schematic as a guide, inspect the wiring for chafed, pierced, pinched, and partially broken wires and the wiring harness connectors for broken, bent, pushed out, and corroded terminals.

---

2. CHECK FUSE #11

Turn the ignition off.
Check fuse #11 in the IPM.

Is the fuse open?

Yes >> Replace the fuse and check for a possible intermittent short to ground condition.
Perform BODY VERIFICATION TEST - VER 1. (Refer to BODY VERIFICATION TEST - VER 1.)

No >> Go To 3

BATTERY 2 VOLTAGE OPEN (FCM) (CONTINUED)

3. CHECK THE FUSED B+ CIRCUITS

Remove the FCM from the IPM.

NOTE: Ensure fuse #11 is installed in the IPM.
Using a 12-volt test light connected to ground, probe both Fused B+ circuits (cavities 6 and 7).

Is the test light illuminated for both circuits?

Yes >> Replace the Front Control Module in accordance with the service information.
Perform BODY VERIFICATION TEST - VER 1. (Refer to BODY VERIFICATION TEST - VER 1.)

No >> Replace the Power Distribution Center in accordance with the service information.
Perform BODY VERIFICATION TEST - VER 1. (Refer to BODY VERIFICATION TEST - VER 1.)

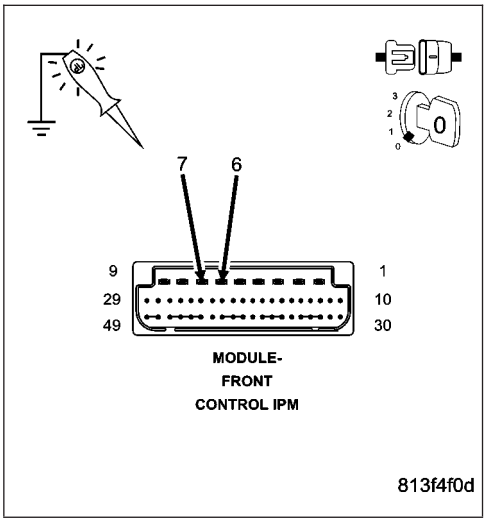

BUS SHORTED TO BATTERY (FCM)

For a complete wiring diagram **Refer to Section 8W**.

- **When Monitored:**
  Continuously
- **Set Condition:**
  Anytime the FCM detects a short to battery on the PCI Bus circuit.

Possible Causes
INTERMITTENT SHORT TO BATTERY ON THE (D25) PCI BUS CIRCUIT

Diagnostic Test

1. INTERMITTENT CONDITION

NOTE: For this code to be active, the DRB will not be able to communicate with any modules on the vehicle (except the PCM/ECM).

NOTE: Clear the code. If this code continues to set and the DRB can still communicate with the FCM, it will be necessary to replace the FCM.

WARNING: WHEN THE ENGINE IS OPERATING, DO NOT STAND IN A DIRECT LINE WITH THE FAN. DO NOT PUT YOUR HANDS NEAR THE PULLEYS, BELTS OR FAN. DO NOT WEAR LOOSE CLOTHING.

NOTE: The conditions that set the DTC are not present at this time. The following list may help in identifying the intermittent condition.

With the engine running at normal operating temperature, wiggle the wiring harnesses. This is to try and duplicate the complete bus failure condition.

Refer to any Technical Service Bulletins (TSB) that may apply.

Visually inspect the related wiring harness. Look for any chafed, pierced, pinched, or partially broken wires.

Visually inspect the related wiring harness connectors. Look for broken, bent, pushed out, or corroded terminals.

Were any of the above conditions present?

Yes >> Repair as necessary.
Perform BODY VERIFICATION TEST - VER 1. (Refer to BODY VERIFICATION TEST - VER 1.)

No >> Test Complete.

BUS SHORTED TO GROUND (FCM)

For a complete wiring diagram **Refer to Section 8W**.

- **When Monitored:**
  Continuously
- **Set Condition:**
  Anytime the FCM detects a short to ground on the PCI Bus circuit.

Possible Causes
INTERMITTENT SHORT TO GROUND ON THE (D25) PCI BUS CIRCUIT

Diagnostic Test

1. INTERMITTENT CONDITION

NOTE: For this code to be active, the DRB will not be able to communicate with any modules on the vehicle (except the PCM/ECM).

NOTE: Clear the code. If this code continues to set and the DRB can still communicate with the FCM, it will be necessary to replace the FCM.

WARNING: WHEN THE ENGINE IS OPERATING, DO NOT STAND IN A DIRECT LINE WITH THE FAN. DO NOT PUT YOUR HANDS NEAR THE PULLEYS, BELTS OR FAN. DO NOT WEAR LOOSE CLOTHING.

NOTE: The conditions that set the DTC are not present at this time. The following list may help in identifying the intermittent condition.

With the engine running at normal operating temperature, wiggle the wiring harnesses. This is to try and duplicate the complete bus failure condition.

Refer to any Technical Service Bulletins (TSB) that may apply.

Visually inspect the related wiring harness. Look for any chafed, pierced, pinched, or partially broken wires.

Visually inspect the related wiring harness connectors. Look for broken, bent, pushed out, or corroded terminals.

Were any of the above conditions present?

Yes >> Repair as necessary.
Perform BODY VERIFICATION TEST - VER 1. (Refer to BODY VERIFICATION TEST - VER 1.)

No >> Test Complete.

EEPROM CHECKSUM FAILURE (FCM)

For a complete wiring diagram **Refer to Section 8W**.

- **When Monitored:**
  Continuously
- **Set Condition:**
  When the EEPROM memory checksum is determined to be incorrect.

Possible Causes
FRONT CONTROL MODULE

Diagnostic Test

1. ACTIVE DTC

Turn the ignition on.
With the DRB, erase the FCM DTC's.
Turn the ignition off then turn the ignition on and wait approximately 1 minute.
With the DRB, read the FCM DTC's.

Did this DTC reset?

Yes >> Replace the Front Control Module in accordance with the service information.
Perform BODY VERIFICATION TEST - VER 1. (Refer to BODY VERIFICATION TEST - VER 1.)

No >> Test Complete.

INTERNAL BOOTLOADER CHECKSUM FAILURE (FCM)

For a complete wiring diagram **Refer to Section 8W**.

- **When Monitored:**
  Continuously
- **Set Condition:**
  When the bootloader checksum is determined to be incorrect.

Possible Causes
FRONT CONTROL MODULE

Diagnostic Test

1. ACTIVE DTC

Turn the ignition on.
With the DRB, erase the FCM DTC's.
Turn the ignition off then turn the ignition on and wait approximately 1 minute.
With the DRB, read the FCM DTC's.

Did this DTC reset?

Yes >> Replace the Front Control Module in accordance with the service information.
Perform BODY VERIFICATION TEST - VER 1. (Refer to BODY VERIFICATION TEST - VER 1.)

No >> Test Complete.

INTERNAL FLASH MEMORY CHECKSUM FAILURE (FCM)

For a complete wiring diagram **Refer to Section 8W**.

- **When Monitored:**
  Continuously
- **Set Condition:**
  When the flash memory checksum is determined to be incorrect.

Possible Causes
FRONT CONTROL MODULE

Diagnostic Test

1. ACTIVE DTC

Turn the ignition on.
With the DRB, erase the FCM DTC's.
Turn the ignition off then turn the ignition on and wait approximately 1 minute.
With the DRB, read the FCM DTC's.

Did this DTC reset?

Yes >> Replace the Front Control Module in accordance with the service information.
Perform BODY VERIFICATION TEST - VER 1. (Refer to BODY VERIFICATION TEST - VER 1.)

No >> Test Complete.

MIC MESSAGES NOT RECEIVED (FCM)

For a complete wiring diagram **Refer to Section 8W**.

- **When Monitored:**
  With the ignition on.
- **Set Condition:**
  The FCM does not receive any messages from the MIC for at least 5 seconds.

Possible Causes
(D25) PCI BUS CIRCUIT OPEN
INSTRUMENT CLUSTER POWER AND GROUND
FRONT CONTROL MODULE

Diagnostic Test

1. ATTEMPT TO COMMUNICATE WITH THE INSTRUMENT CLUSTER (MIC)

Turn the ignition on.
With the DRB, enter Body then Electro/Mech Cluster.

Was the DRB able to I/D or communicate with the Instrument Cluster (MIC)?

Yes >> Go To 2

No >> Refer to the table of contents and perform the related symptom.
Perform BODY VERIFICATION TEST - VER 1. (Refer to BODY VERIFICATION TEST - VER 1.)

---

2. FRONT CONTROL MODULE

With the DRB, erase DTC's.
Turn the ignition on and wait approximately 1 minute.
With the DRB, read DTC's.

Did this DTC reset?

Yes >> Replace the Front Control Module in accordance with the service information.
Perform BODY VERIFICATION TEST - VER 1. (Refer to BODY VERIFICATION TEST - VER 1.)

No >> The condition that set this DTC is no longer present. Using the wiring diagram/schematic as a guide, inspect the wiring for chafed, pierced, pinched, and partially broken wires and the wiring harness connectors for broken, bent, pushed out, and corroded terminals.

PCI BUS INTERNAL - LOOPBACK FAILURE (FCM)

For a complete wiring diagram **Refer to Section 8W**.

- **When Monitored:**
  Continuously
- **Set Condition:**
  When the loopback test has failed.

Possible Causes
FRONT CONTROL MODULE

Diagnostic Test

1. ACTIVE DTC

Turn the ignition on.
With the DRB, erase the FCM DTC's.
Turn the ignition off then turn the ignition on and wait approximately 1 minute.
With the DRB, read the FCM DTC's.

Did this DTC reset?

Yes >> Replace the Front Control Module in accordance with the service information.
Perform BODY VERIFICATION TEST - VER 1. (Refer to BODY VERIFICATION TEST - VER 1.)

No >> Test Complete.

PCM MESSAGES NOT RECEIVED (FCM)

For a complete wiring diagram **Refer to Section 8W**.

- **When Monitored:**
  With the ignition on.
- **Set Condition:**
  The FCM does not receive any messages from the PCM for at least 5 seconds.

Possible Causes
(D25) PCI BUS CIRCUIT OPEN
POWERTRAIN CONTROL MODULE POWER AND GROUND
FRONT CONTROL MODULE

Diagnostic Test

1. CHECK THE STATUS OF THE PCM ON THE PCI BUS NETWORK

Turn the ignition on.
With the DRB, enter System Monitors then J1850 Module Scan.

Is the PCM active on the bus?

Yes >> Erase the DTC, if the DTC resets replace the Front Control Module in accordance with the service information.
Perform BODY VERIFICATION TEST - VER 1. (Refer to BODY VERIFICATION TEST - VER 1.)

No >> Go To 2

---

2. ATTEMPT TO COMMUNICATE WITH THE PCM

With the DRB, attempt to communicate with the PCM.

Was the DRB able to communicate with the PCM?

Yes >> Go To 3

No >> Refer to the table of contents and perform the related symptom.
Perform BODY VERIFICATION TEST - VER 1. (Refer to BODY VERIFICATION TEST - VER 1.)

PCM MESSAGES NOT RECEIVED (FCM) (CONTINUED)

3. CHECK THE (D25) PCI BUS CIRCUIT FOR AN OPEN

Turn the ignition off.

Disconnect the PCM harness connector.

CAUTION: If the vehicle is equipped with an NGC controller, do not probe the PCM harness connectors. Probing the PCM harness connectors will damage the PCM terminals resulting in poor terminal to pin connection. Install miller special tool #8815 to perform diagnosis.

Disconnect the DRB from the DLC.

Measure the resistance of the PCI Bus circuit between the PCM connector (from special tool #8815 if NGC) and the DLC.

Is the resistance below 5.0 ohms?

Yes >> Replace and program the PCM in accordance with the service information.
Perform the appropriate VERIFICATION TEST.

No >> Repair the PCI Bus circuit for an open.
Perform BODY VERIFICATION TEST - VER 1. (Refer to BODY VERIFICATION TEST - VER 1.)

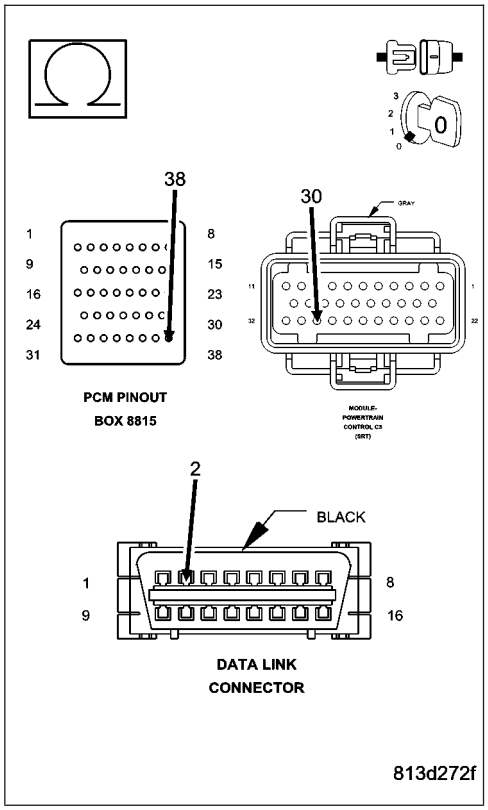

VIN NOT LEARNED CORRECTLY (FCM)

For a complete wiring diagram **Refer to Section 8W**.

- **When Monitored:**
  With the ignition on.
- **Set Condition:**
  The VIN is programmed into the FCM via a PCI bus message from the PCM/ECM. When learning the VIN, the FCM computes a check digit to verify that the VIN learned was valid. If not valid, the DTC will set and the VIN will not be learned.

Possible Causes
FRONT CONTROL MODULE

Diagnostic Test

1. ACTIVE DTC

Turn the ignition on.
With the DRB, erase the FCM DTC's.
Turn the ignition off then turn the ignition on and wait approximately 1 minute.
With the DRB, read the FCM DTC's.

Did this DTC reset?

Yes >> Replace the Front Control Module in accordance with the service information.
Perform BODY VERIFICATION TEST - VER 1. (Refer to BODY VERIFICATION TEST - VER 1.)

No >> Test Complete.

*NO RESPONSE FROM ANTILOCK BRAKE MODULE

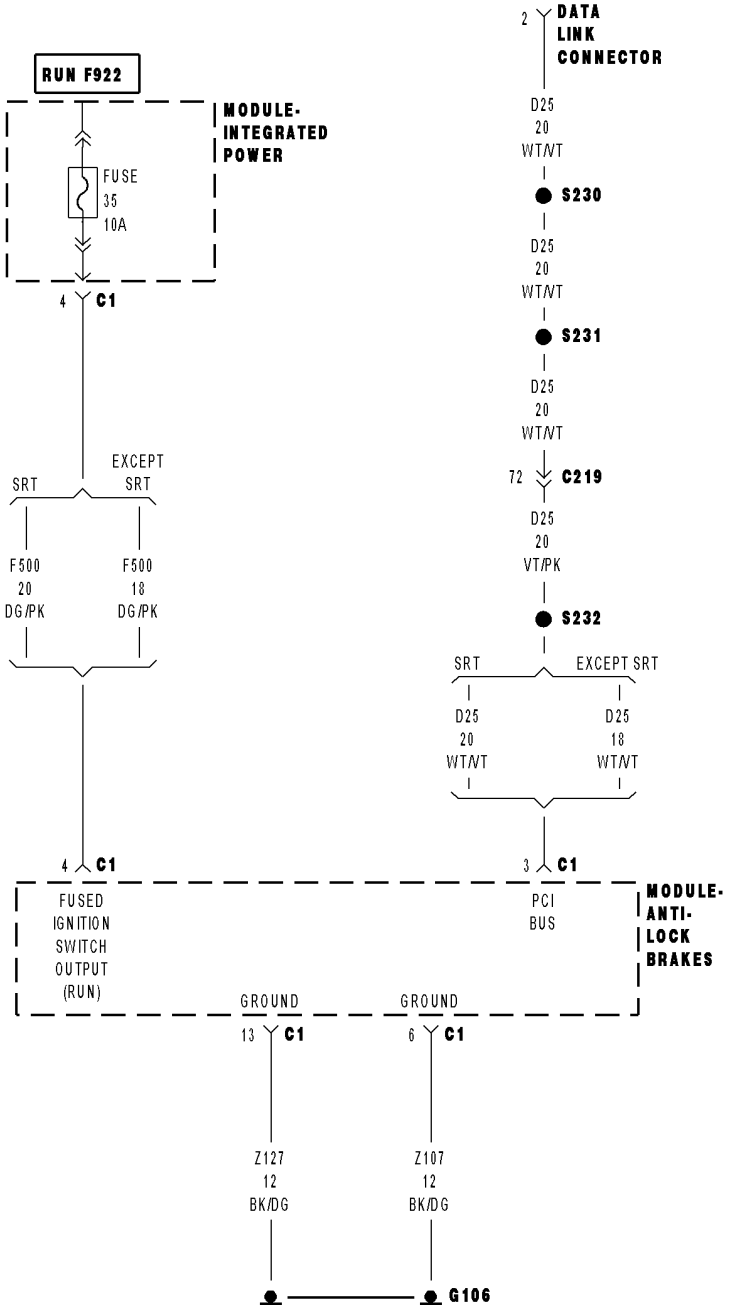

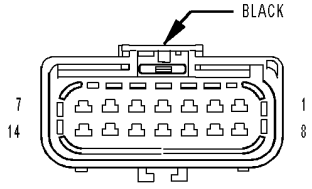

MODULE-
ANTI-LOCK
BRAKES C1

813d5bb0

***NO RESPONSE FROM ANTILOCK BRAKE MODULE (CONTINUED)**

For a complete wiring diagram **Refer to Section 8W**.

Possible Causes
(Z107) (Z127) GROUND CIRCUIT OPEN
(F500) FUSED IGNITION SWITCH OUTPUT CIRCUIT OPEN
(D25) PCI BUS CIRCUIT OPEN
ANTILOCK BRAKE MODULE

Diagnostic Test

1. ESTABLISH COMMUNICATIONS WITH OTHER PCI BUS MODULES

Turn the ignition on.

NOTE: As soon as one or more modules communicates with the DRB, answer the question.

NOTE: Ensure there is PCI bus communication with other modules. If not, refer to the PCI Bus Communication Failure symptom and repair as necessary.

With the DRB, attempt to communicate with the ORC.

With the DRB, attempt to communicate with the Instrument Cluster.

Was the DRB able to I/D or communicate with either of the modules?

Yes >> Go To 2

No >> Refer to the table of contents and perform the related symptom. Perform ABS VERIFICATION TEST - VER 1.

---

2. (Z107) (Z127) GROUND CIRCUIT OPEN

Turn the ignition off.

Disconnect the Antilock Brake Module C1 harness connector.

Using a 12-volt test light connected to 12-volts, probe each (Z107) (Z127, if equipped) ground circuit.

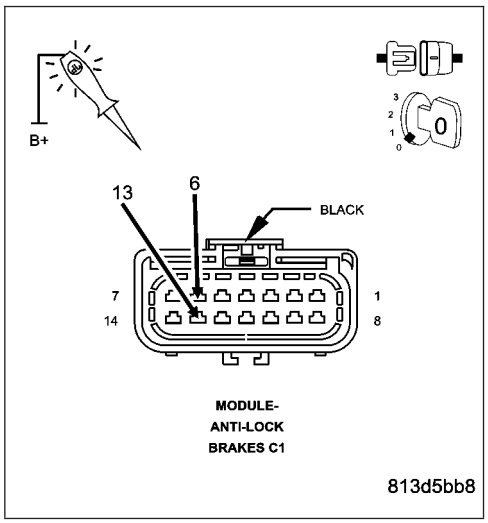

Is the test light illuminated for each circuit?

Yes >> Go To 3

No >> Repair the (Z107) or (Z127) Ground circuit for an open. Perform ABS VERIFICATION TEST - VER 1.

***NO RESPONSE FROM ANTILOCK BRAKE MODULE (CONTINUED)**

3. (F500) FUSED IGNITION SWITCH OUTPUT CIRCUIT OPEN

Turn the ignition on.

Using a 12-volt test light connected to ground, probe the (F500) Fused Ignition Switch Output circuit.

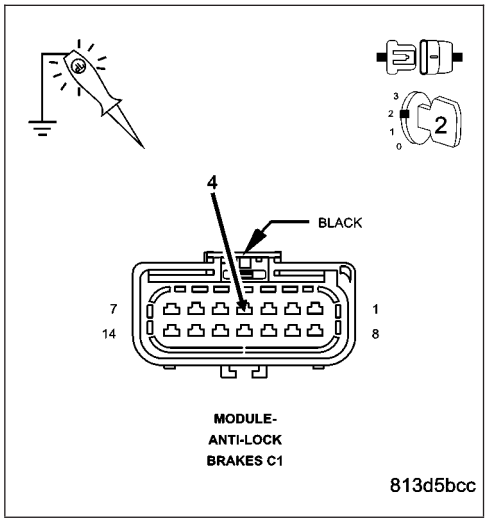

Is the test light illuminated?

Yes >> Go To 4

No >> Repair the (F500) Fused Ignition Switch Output circuit for an open.
Perform ABS VERIFICATION TEST - VER 1.

4. (D25) PCI BUS CIRCUIT OPEN

Use Scope input cable CH7058, Cable to Probe adapter CH7062, and the red and black test probes.

Connect the scope input cable to the channel one connector on the DRB. Attach the red and black leads and the cable to probe adapter to the scope input cable.

With the DRBIII® select Pep Module Tools.

Select lab scope.

Select Live Data.

Select 12 volt square wave.

Press F2 for Scope.

Press F2 and use the down arrow to set voltage range to 20 volts. Press F2 again when complete.

Connect the Black lead to the chassis ground. Connect the Red lead to the PCI Bus circuit in the Antilock Brake Module connector.

Observe the voltage display on the DRB Lab Scope.

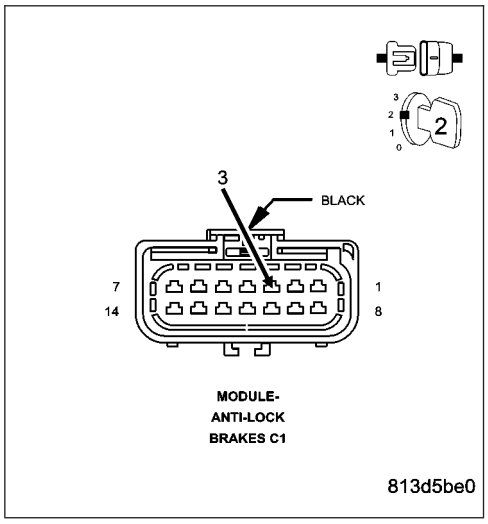

Does the voltage pulse from 0 to approximately 7.5 volts?

Yes >> Replace the Antilock Brake Module in accordance with the service information.
Perform ABS VERIFICATION TEST - VER 1.

No >> Repair the (D25) PCI Bus circuit for an open.
Perform ABS VERIFICATION TEST - VER 1.

*NO RESPONSE FROM AMPLIFIER

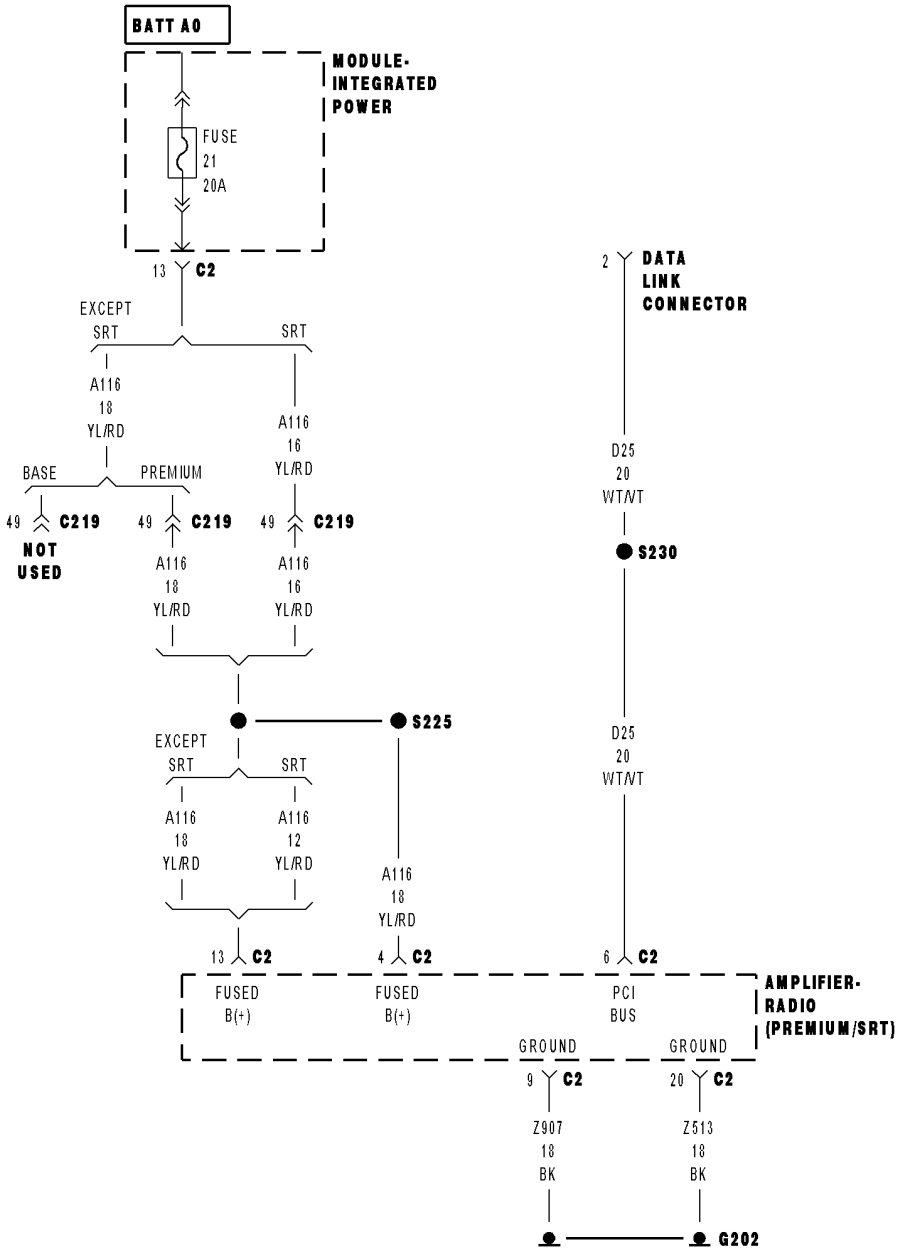

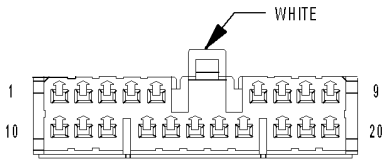

AMPLIFIER-
RADIO C2
(PREMIUM/SRT)

813d466d

***NO RESPONSE FROM AMPLIFIER (CONTINUED)**
For a complete wiring diagram **Refer to Section 8W**.

Possible Causes
(Z513) (Z907) GROUND CIRCUIT OPEN
(A116) FUSED B+ CIRCUIT OPEN
(D25) PCI BUS CIRCUIT OPEN
AMPLIFIER

Diagnostic Test

1. ESTABLISH COMMUNICATIONS WITH THE RADIO

Turn the ignition on.

NOTE: Ensure there is PCI bus communication with other modules. If not, refer to the PCI Bus Communication Failure symptom and repair as necessary.

NOTE: The radio must be turned on for the DRB to get a response from the amplifier.
With the DRB, attempt to communicate with the radio.

Was the DRB able to I/D or communicate with the radio?

Yes >> Go To 2

No >> Refer to the table of contents and perform the related symptom.
Perform BODY VERIFICATION TEST - VER 1. (Refer to BODY VERIFICATION TEST - VER 1.)

---

2. (Z513) (Z907) GROUND CIRCUIT OPEN

Turn the ignition off.
Disconnect the Amplifier C2 harness connector.
Using a 12-volt test light connected to 12-volts, probe each (Z513) (Z907) ground circuit.

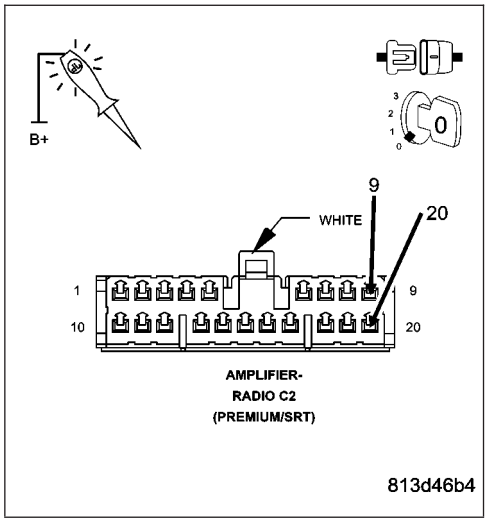

Is the test light illuminated for each circuit?

Yes >> Go To 3

No >> Repair the (Z513) or (Z907) Ground circuit for an open.
Perform BODY VERIFICATION TEST - VER 1. (Refer to BODY VERIFICATION TEST - VER 1.)

***NO RESPONSE FROM AMPLIFIER (CONTINUED)**

3. (A116) FUSED B+ CIRCUIT OPEN

Using a 12-volt test light connected to ground, probe each (A116) Fused B+ circuit.

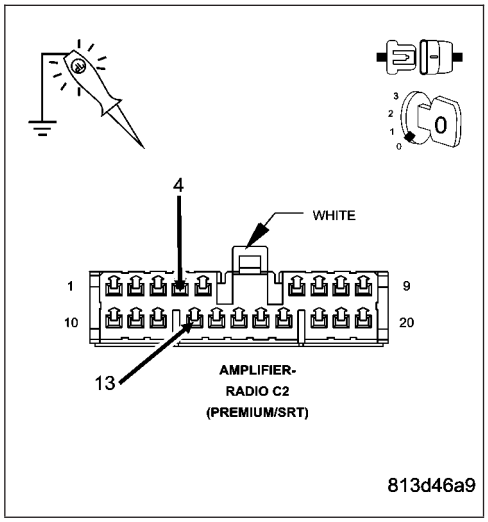

Is the test light illuminated for each circuit?

Yes >> Go To 4

No >> Repair the (A116) Fused B+ circuit for an open.
Perform BODY VERIFICATION TEST - VER 1. (Refer to BODY VERIFICATION TEST - VER 1.)

4. (D25) PCI BUS CIRCUIT OPEN

Turn the ignition on.

Use Scope input cable CH7058, Cable to Probe adapter CH7062, and the red and black test probes.

Connect the scope input cable to the channel one connector on the DRB. Attach the red and black leads and the cable to probe adapter to the scope input cable.

With the DRBIII® select Pep Module Tools.

Select lab scope.

Select Live Data.

Select 12 volt square wave.

Press F2 for Scope.

Press F2 and use the down arrow to set voltage range to 20 volts. Press F2 again when complete.

Connect the Black lead to the chassis ground. Connect the Red lead to the PCI Bus circuit in the Amplifier connector.

Observe the voltage display on the DRB Lab Scope.

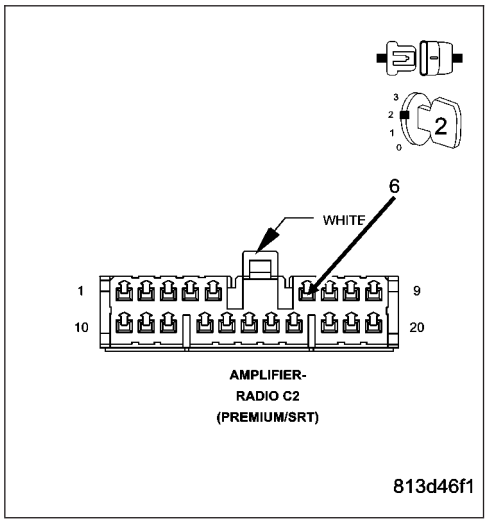

Does the voltage pulse from 0 to approximately 7.5 volts?

Yes >> Replace the Amplifier in accordance with the service information.
Perform BODY VERIFICATION TEST - VER 1. (Refer to BODY VERIFICATION TEST - VER 1.)

No >> Repair the (D25) PCI Bus circuit for an open.
Perform BODY VERIFICATION TEST - VER 1. (Refer to BODY VERIFICATION TEST - VER 1.)

*NO RESPONSE FROM CLUSTER

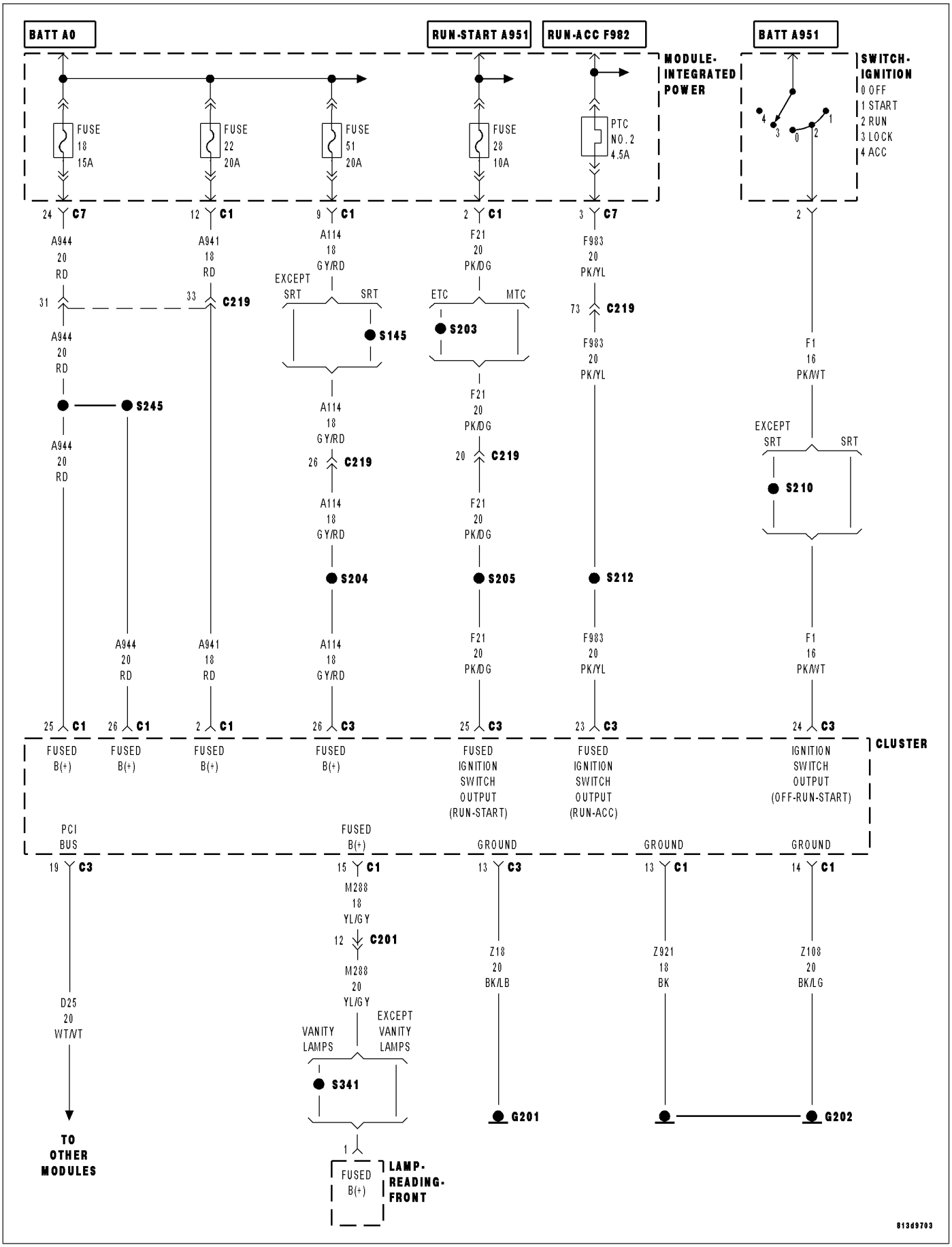

***NO RESPONSE FROM CLUSTER (CONTINUED)**

For a complete wiring diagram **Refer to Section 8W**.

Possible Causes
(Z921) (Z108) (Z18) GROUND CIRCUIT OPEN
(A944) (M288) (A941) (A114) FUSED B+ CIRCUIT OPEN
(F21) (F1) (F983) FUSED IGNITION SWITCH OUTPUT CIRCUIT OPEN
(D25) PCI BUS CIRCUIT OPEN
CLUSTER

Diagnostic Test

1. ESTABLISH COMMUNICATIONS WITH OTHER PCI BUS MODULES

Turn the ignition on.

NOTE: Ensure there is PCI bus communication with other modules. If not, refer to the PCI Bus Communication Failure symptom and repair as necessary.

With the DRB, attempt to communicate with the ORC.

With the DRB, attempt to communicate with the ABS.

Was the DRB able to I/D or communicate with either module?

Yes >> Go To 2

No >> Refer to the table of contents and perform the related symptom.
Perform BODY VERIFICATION TEST - VER 1. (Refer to BODY VERIFICATION TEST - VER 1.)

---

2. (Z921) (Z108) (Z18) GROUND CIRCUIT OPEN

Turn the ignition off.

Disconnect the Cluster harness connectors.

Using a 12-volt test light connected to 12-volts, probe each (Z921) (Z108) (Z18) ground circuit.

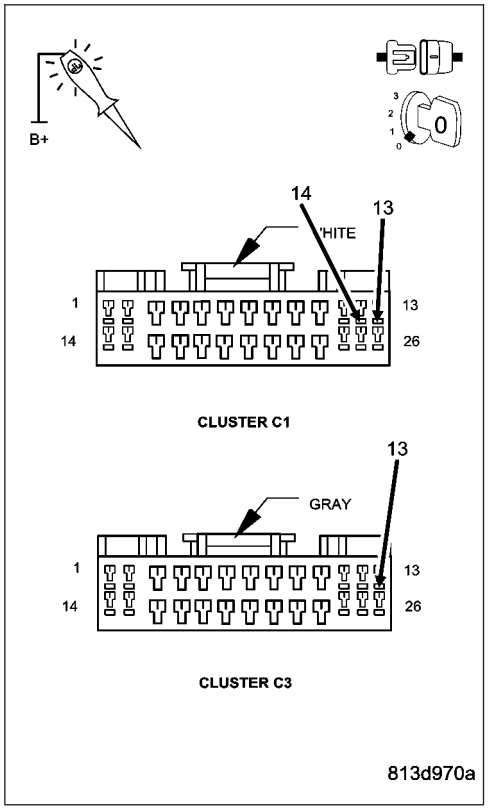

Is the test light illuminated for each circuit?

Yes >> Go To 3

No >> Repair the (Z921) (Z108) (Z18) Ground circuit for an open.
Perform BODY VERIFICATION TEST - VER 1. (Refer to BODY VERIFICATION TEST - VER 1.)

***NO RESPONSE FROM CLUSTER (CONTINUED)**

3. (A944) (M288) (A941) (A114) FUSED B+ CIRCUIT OPEN

Using a 12-volt test light connected to ground, probe each (A944) (M288) (A941) (A114) Fused B+ circuit.

Is the test light illuminated for each circuit?

Yes >> Go To 4

No >> Repair the (A944) (M288) (A941) (A114) Fused B+ circuit for an open.
Perform BODY VERIFICATION TEST - VER 1. (Refer to BODY VERIFICATION TEST - VER 1.)

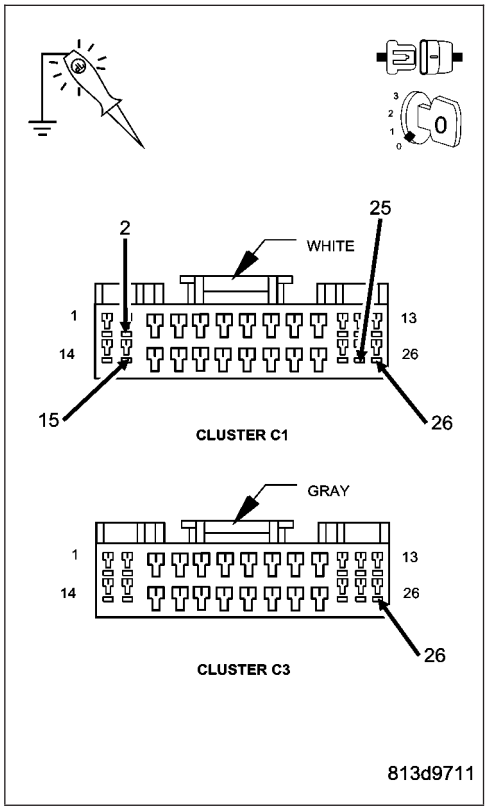

4. (F21) (F1) (F983) FUSED IGNITION SWITCH OUTPUT CIRCUIT OPEN

Turn the ignition on.

Using a 12-volt test light connected to ground, probe each (F21) (F1) (F983) Fused Ignition Switch Output circuit.

Is the test light illuminated?

Yes >> Go To 5

No >> Repair the (F21) (F1) (F983) Fused Ignition Switch Output circuit for an open.
Perform BODY VERIFICATION TEST - VER 1. (Refer to BODY VERIFICATION TEST - VER 1.)

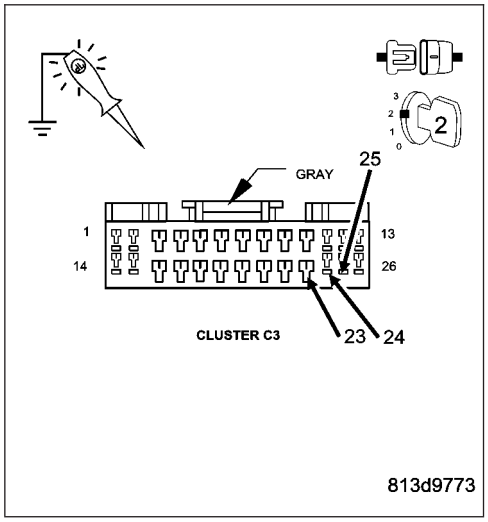

***NO RESPONSE FROM CLUSTER (CONTINUED)**

5. (D25) PCI BUS CIRCUIT OPEN

Use Scope input cable CH7058, Cable to Probe adapter CH7062, and the red and black test probes.

Connect the scope input cable to the channel one connector on the DRB. Attach the red and black leads and the cable to probe adapter to the scope input cable.

With the DRBIII® select Pep Module Tools.

Select lab scope.

Select Live Data.

Select 12 volt square wave.

Press F2 for Scope.

Press F2 and use the down arrow to set voltage range to 20 volts. Press F2 again when complete.

Connect the Black lead to the chassis ground. Connect the Red lead to the PCI Bus circuit in the Cluster connector.

Observe the voltage display on the DRB Lab Scope.

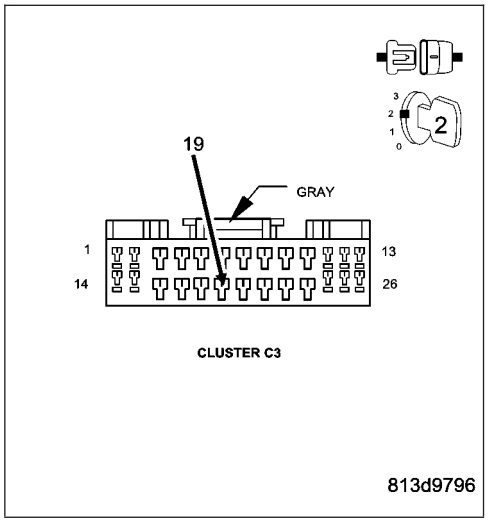

Does the voltage pulse from 0 to approximately 7.5 volts?

Yes >> Replace the Cluster in accordance with the service information.
Perform BODY VERIFICATION TEST - VER 1. (Refer to BODY VERIFICATION TEST - VER 1.)

No >> Repair the (D25) PCI Bus circuit for an open.
Perform BODY VERIFICATION TEST - VER 1. (Refer to BODY VERIFICATION TEST - VER 1.)

*NO RESPONSE FROM ENGINE CONTROL MODULE (PCI BUS) - DIESEL

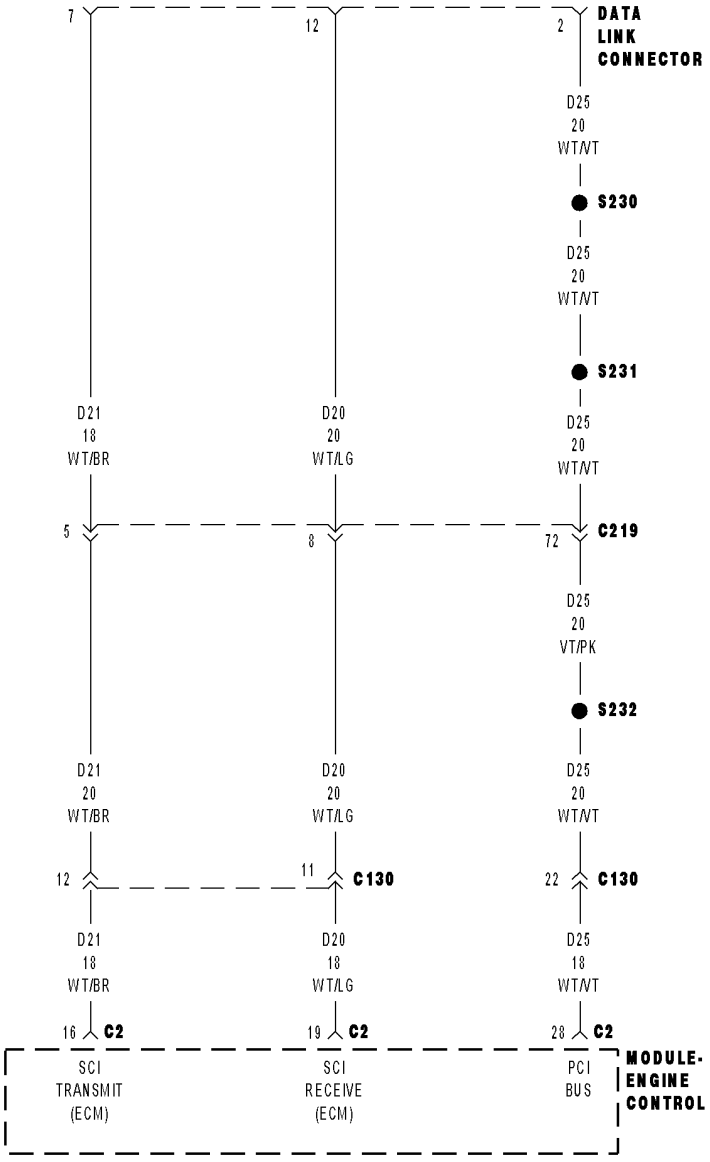

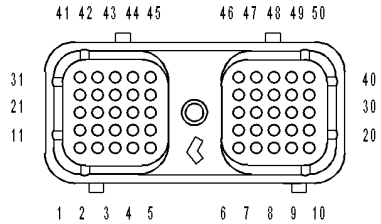

MODULE-ENGINE CONTROL C2

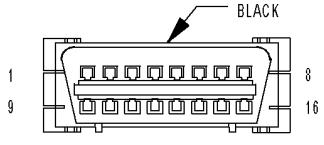

DATA LINK CONNECTOR

813d5e80

***NO RESPONSE FROM ENGINE CONTROL MODULE (PCI BUS) - DIESEL (CONTINUED)**

For a complete wiring diagram **Refer to Section 8W**.

Possible Causes
ENGINE CONTROL MODULE POWER AND GROUND
(D25) PCI BUS CIRCUIT OPEN
ENGINE CONTROL MODULE

Diagnostic Test

1. ESTABLISH COMMUNICATIONS WITH OTHER PCI BUS MODULES

Turn the ignition on.

NOTE: Ensure there is PCI bus communication with other modules. If not, refer to the PCI Bus Communication Failure symptom and repair as necessary.

NOTE: As soon as one or more modules communicates with the DRB, answer the question.

With the DRB, attempt to communicate with the ORC.

With the DRB, attempt to communicate with the Instrument Cluster.

Was the DRB able to I/D or communicate with either of the modules?

Yes >> Go To 2

No >> Refer to the table of contents and perform the related symptom.
Perform POWERTRAIN VERIFICATION TEST - VER 1 (DIESEL).

***NO RESPONSE FROM ENGINE CONTROL MODULE (PCI BUS) - DIESEL (CONTINUED)**

2. (D25) PCI BUS CIRCUIT OPEN

With the DRB, read Engine Control Module DTC's. This is to ensure power and ground to the ECM are operational.

NOTE: If the DRB will not read ECM DTC's, follow the NO RESPONSE TO ECM (SCI ONLY) symptom.

NOTE: If the vehicle will not start and the DRB displays a no response message, refer to the appropriate symptom in the Engine Electrical Diagnostics - Diesel category.

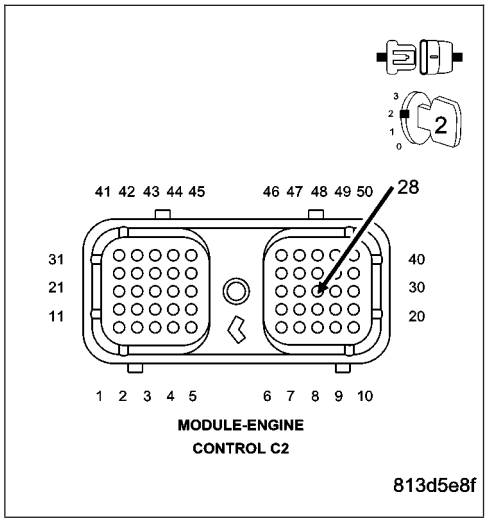

Turn the ignition off.

Disconnect the Engine Control Module C2 harness connector.

Turn the ignition on.

Use Scope input cable CH7058, Cable to Probe adapter CH7062, and the red and black test probes.

Connect the scope input cable to the channel one connector on the DRB. Attach the red and black leads and the cable to probe adapter to the scope input cable.

With the DRBIII® select Pep Module Tools.

Select lab scope.

Select Live Data.

Select 12 volt square wave.

Press F2 for Scope.

Press F2 and use the down arrow to set voltage range to 20 volts. Press F2 again when complete.

Connect the Black lead to the chassis ground. Connect the Red lead to the PCI Bus circuit in the Engine Control Module connector.

Observe the voltage display on the DRB Lab Scope.

Does the voltage pulse from 0 to approximately 7.5 volts?

Yes >> Replace the Engine Control Module in accordance with the service information.
Perform POWERTRAIN VERIFICATION TEST - VER 1 (DIESEL).

No >> Repair the (D25) PCI Bus circuit for an open.
Perform POWERTRAIN VERIFICATION TEST - VER 1 (DIESEL).

*NO RESPONSE FROM ENGINE CONTROL MODULE (SCI ONLY) - DIESEL

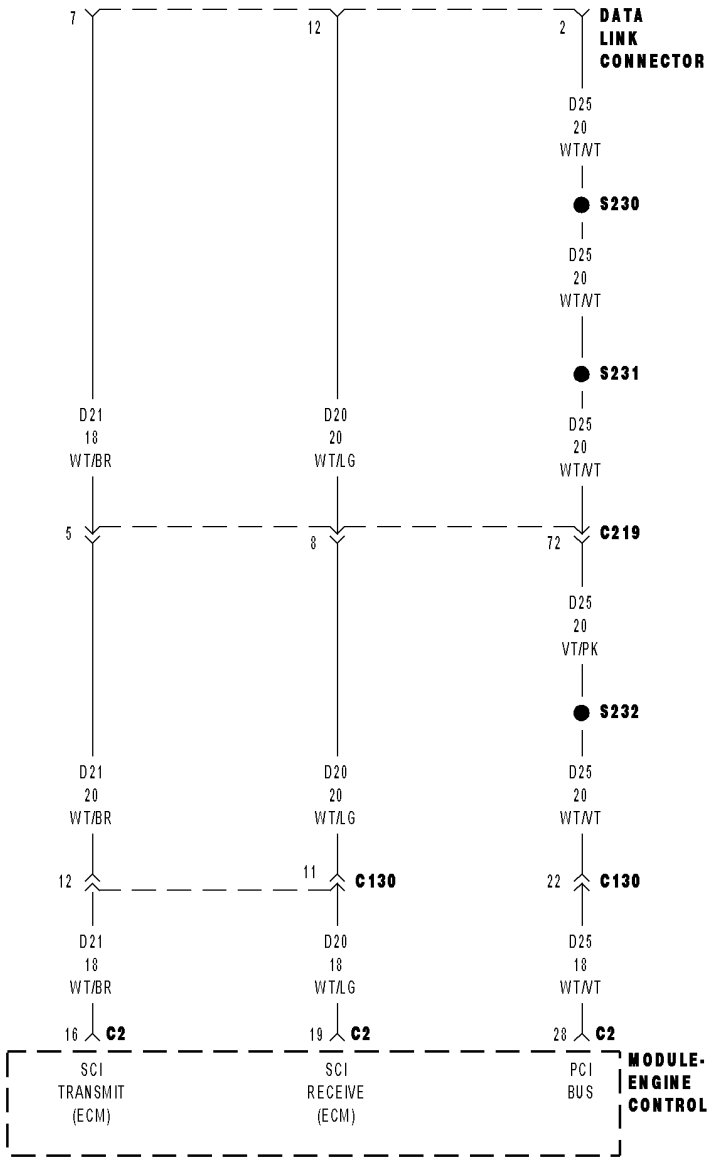

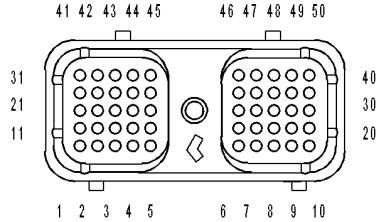

MODULE-ENGINE CONTROL C2

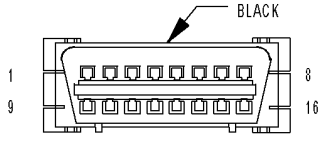

DATA LINK CONNECTOR

813d5e80

***NO RESPONSE FROM ENGINE CONTROL MODULE (SCI ONLY) - DIESEL (CONTINUED)**

For a complete wiring diagram **Refer to Section 8W**.

Possible Causes
(D21) SCI TRANSMIT CIRCUIT SHORTED TO GROUND
(D20) SCI RECEIVE CIRCUIT SHORTED TO GROUND
(D21) SCI TRANSMIT CIRCUIT SHORTED TO VOLTAGE
(D20) SCI RECEIVE CIRCUIT SHORTED TO VOLTAGE
(D21) SCI TRANSMIT CIRCUIT OPEN
(D20) SCI RECEIVE CIRCUIT OPEN
(D21) SCI TRANSMIT CIRCUIT SHORTED TO THE (D20) SCI RECEIVE CIRCUIT
ENGINE CONTROL MODULE

Diagnostic Test

1. CHECK ENGINE CONTROL MODULE POWER AND GROUND

Refer to the Engine Electrical Diagnostics - Diesel and perform the symptom Checking ECM Power and Ground Circuits.

Did the vehicle pass this test?

Yes >> Go To 2

No >> Repair as necessary.
Perform POWERTRAIN VERIFICATION TEST - VER 1 (DIESEL).

---

2. SCI CIRCUITS SHORTED TO GROUND

Turn the ignition off.

Disconnect the DRB from the DLC.

Disconnect the Engine Control Module C2 harness connector.

Measure the resistance between ground and the (D21) SCI Transmit circuit.

Measure the resistance between ground and the (D20) SCI Receive circuit.

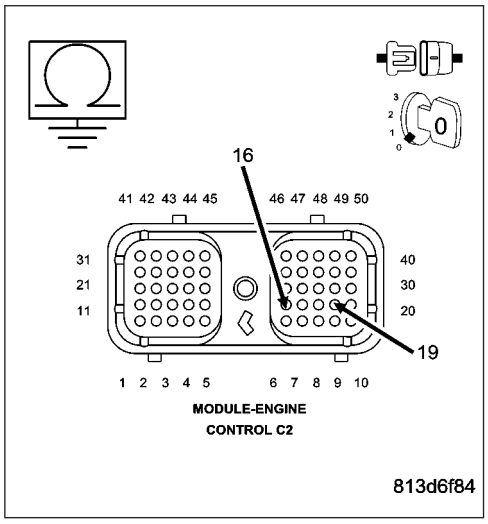

Is the resistance below 10.0 ohms for either circuit?

Yes >> Repair the SCI Circuit that measured below 10.0 ohms for a short to ground.
Perform POWERTRAIN VERIFICATION TEST - VER 1 (DIESEL).

No >> Go To 3

***NO RESPONSE FROM ENGINE CONTROL MODULE (SCI ONLY) - DIESEL (CONTINUED)**

3. SCI CIRCUITS SHORTED TO VOLTAGE

Turn the ignition on.

Measure the voltage of the (D21) SCI Transmit circuit.

Measure the voltage of the (D20) SCI Receive circuit.

Is the voltage above 1.0 volt for either circuit?

Yes >> Repair the SCI Circuit that measured above 1.0 volt for a short to voltage.
Perform POWERTRAIN VERIFICATION TEST - VER 1 (DIESEL).

No >> Go To 4

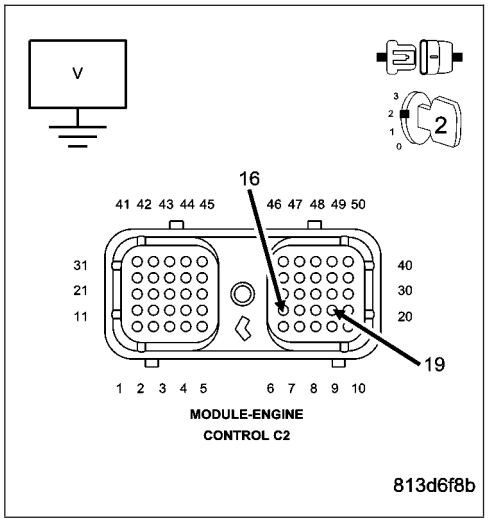

4. (D21) SCI TRANSMIT CIRCUIT OPEN

Turn the ignition off.

Measure the resistance of the (D21) SCI Transmit circuit between the ECM harness connector and the DLC.

Is the resistance below 5.0 ohms?

Yes >> Go To 5

No >> Repair the (D21) SCI Transmit circuit for an open.
Perform POWERTRAIN VERIFICATION TEST - VER 1 (DIESEL).

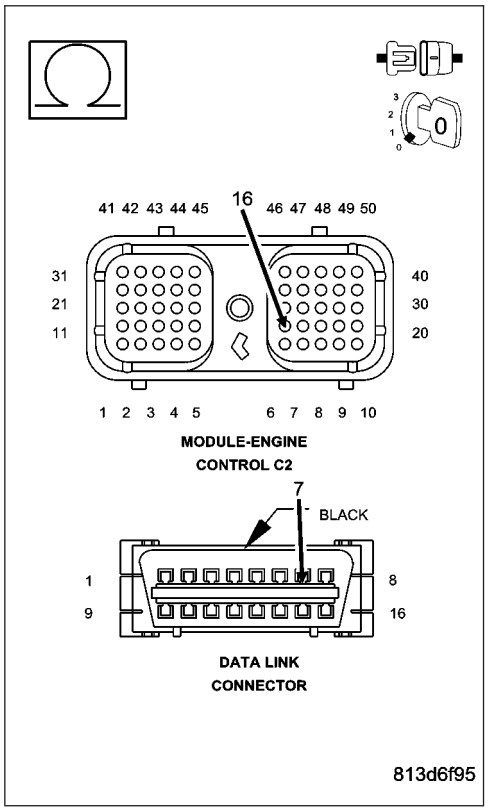

***NO RESPONSE FROM ENGINE CONTROL MODULE (SCI ONLY) - DIESEL (CONTINUED)**

5. (D20) SCI RECEIVE CIRCUIT OPEN

Measure the resistance of the (D20) SCI Receive circuit between the ECM harness connector and the DLC.

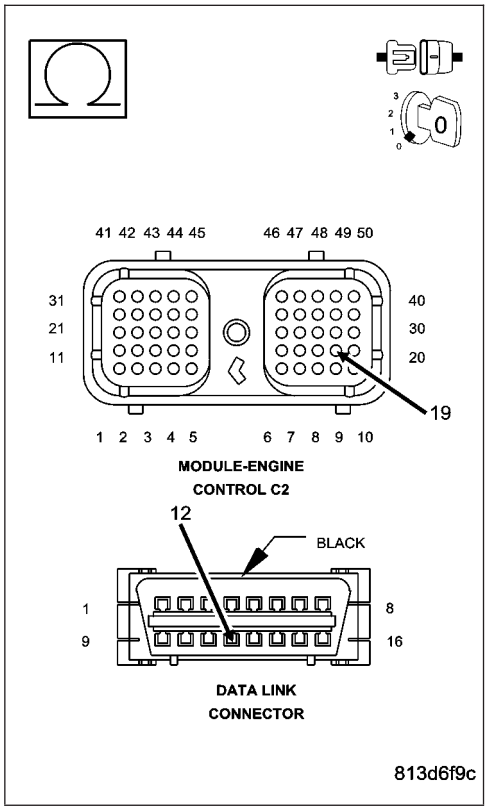

Is the resistance below 5.0 ohms?

Yes >> Go To 6

No >> Repair the (D20) SCI Receive circuit for an open.
Perform POWERTRAIN VERIFICATION TEST - VER 1 (DIESEL).

6. (D21) SCI TRANSMIT CIRCUIT SHORTED TO THE (D20) SCI RECEIVE CIRCUIT

Measure the resistance between the (D21) SCI Transmit and the (D20) SCI Receive circuits.

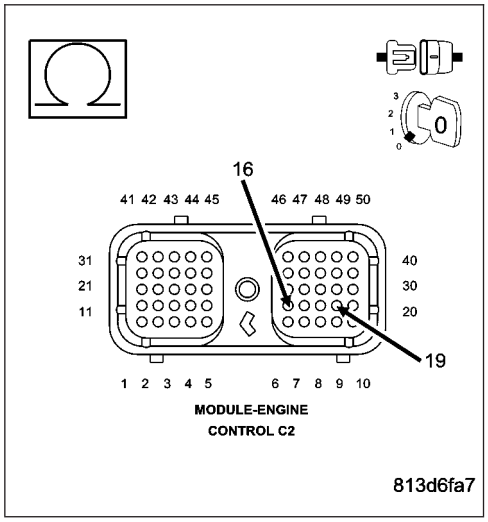

Is the resistance below 5.0 ohms?

Yes >> Repair the (D21) SCI Transmit circuit for a short to the (D20) SCI Receive circuit.
Perform POWERTRAIN VERIFICATION TEST - VER 1 (DIESEL).

No >> Replace the Engine Control Module in accordance with the service information.
Perform POWERTRAIN VERIFICATION TEST - VER 1 (DIESEL).

*NO RESPONSE FROM FRONT CONTROL MODULE

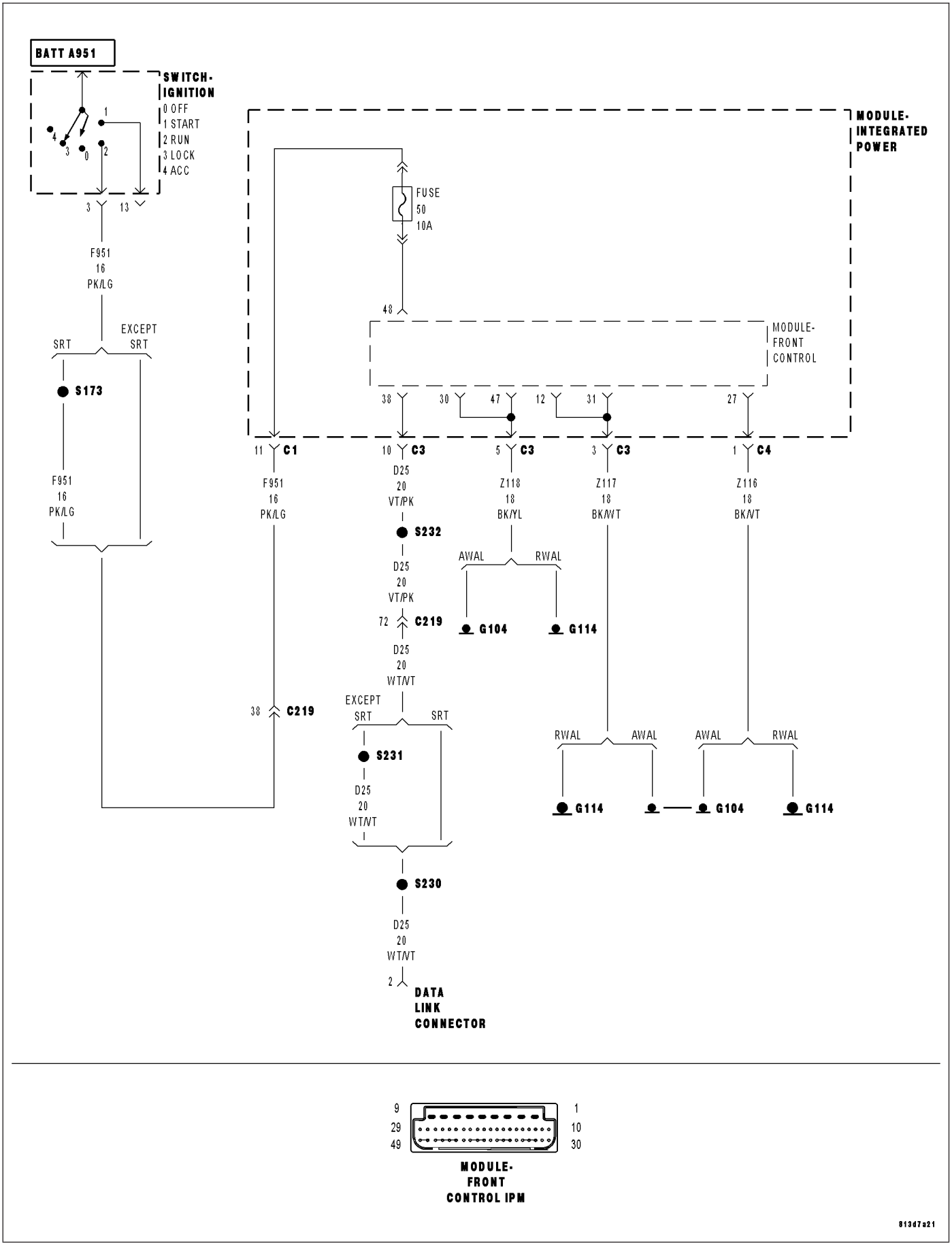

***NO RESPONSE FROM FRONT CONTROL MODULE (CONTINUED)**

For a complete wiring diagram **Refer to Section 8W**.

Possible Causes
(Z117) (Z118) GROUND CIRCUIT OPEN
FUSED IGNITION SWITCH OUTPUT CIRCUIT OPEN
(D25) PCI BUS CIRCUIT OPEN
FRONT CONTROL MODULE

Diagnostic Test

1. ESTABLISH COMMUNICATIONS WITH OTHER PCI BUS MODULES

Turn the ignition on.

NOTE: Check all fuses before beginning.

NOTE: As soon as one or more modules communicates with the DRB, answer the question.

NOTE: Ensure there is PCI bus communication with other modules. If not, refer to the PCI Bus Communication Failure symptom and repair as necessary.

With the DRB, attempt to communicate with the ORC.

With the DRB, attempt to communicate with the Instrument Cluster.

Was the DRB able to I/D or communicate with either of the modules?

Yes >> Go To 2

No >> Refer to the table of contents and perform the related symptom.
Perform BODY VERIFICATION TEST - VER 1. (Refer to BODY VERIFICATION TEST - VER 1.)

---

2. (Z117) (Z118) GROUND CIRCUIT OPEN

Turn the ignition off.

Remove the Front Control Module from the IPM.

Using a 12-volt test light connected to 12-volts, probe each (Z117) and (Z118) ground circuits.

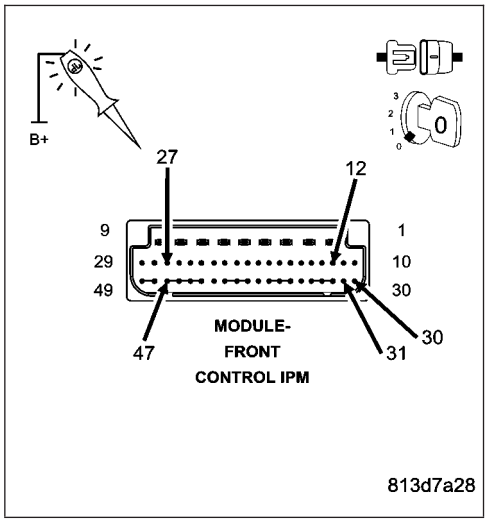

Is the test light illuminated for each circuit?

Yes >> Go To 3

No >> Repair the (Z117) or (Z118) Ground circuit for an open between the IPM connector and the grounding point. If OK, replace the power distribution center in accordance with the service information.
Perform BODY VERIFICATION TEST - VER 1. (Refer to BODY VERIFICATION TEST - VER 1.)

***NO RESPONSE FROM FRONT CONTROL MODULE (CONTINUED)**

3. FUSED IGNITION SWITCH OUTPUT CIRCUIT OPEN

Turn the ignition on.

Using a 12-volt test light connected to ground, probe the Fused Ignition Switch Output circuit.

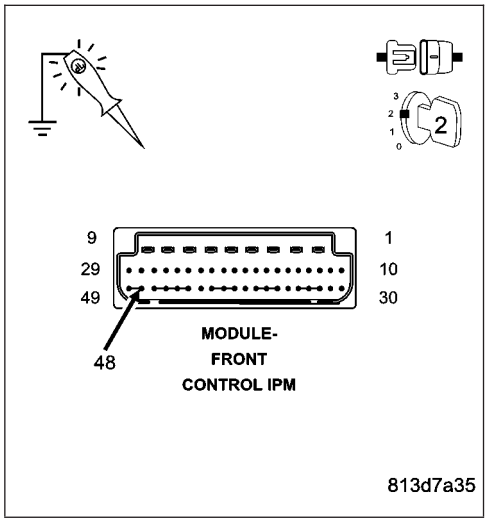

Is the test light illuminated?

Yes >> Go To 4

No >> Check all IPM fuses. If OK, replace the power distribution center in accordance with the service information.

Perform BODY VERIFICATION TEST - VER 1. (Refer to BODY VERIFICATION TEST - VER 1.)

4. (D25) PCI BUS CIRCUIT OPEN

Use Scope input cable CH7058, Cable to Probe adapter CH7062, and the red and black test probes.

Connect the scope input cable to the channel one connector on the DRB. Attach the red and black leads and the cable to probe adapter to the scope input cable.

With the DRBIII® select Pep Module Tools.

Select lab scope.

Select Live Data.

Select 12 volt square wave.

Press F2 for Scope.

Press F2 and use the down arrow to set voltage range to 20 volts. Press F2 again when complete.

Connect the Black lead to the chassis ground. Connect the Red lead to the PCI Bus circuit in the IPM FCM connector.

Observe the voltage display on the DRB Lab Scope.

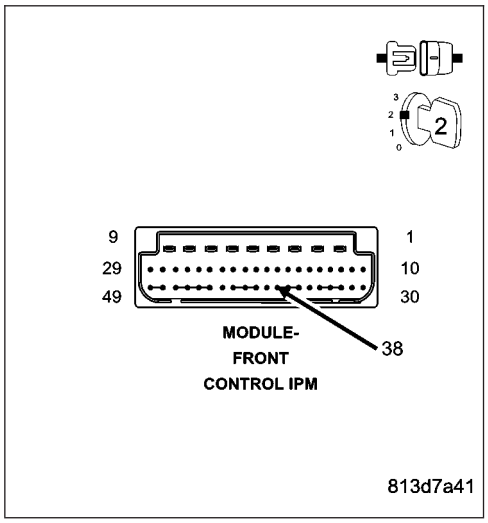

Does the voltage pulse from 0 to approximately 7.5 volts?

Yes >> Replace the Front Control Module in accordance with the service information.

Perform BODY VERIFICATION TEST - VER 1. (Refer to BODY VERIFICATION TEST - VER 1.)

No >> Repair the (D25) PCI Bus circuit for an open. If OK, replace the power distribution center in accordance with the service information.

Perform BODY VERIFICATION TEST - VER 1. (Refer to BODY VERIFICATION TEST - VER 1.)

*NO RESPONSE FROM FINAL DRIVE CONTROL MODULE

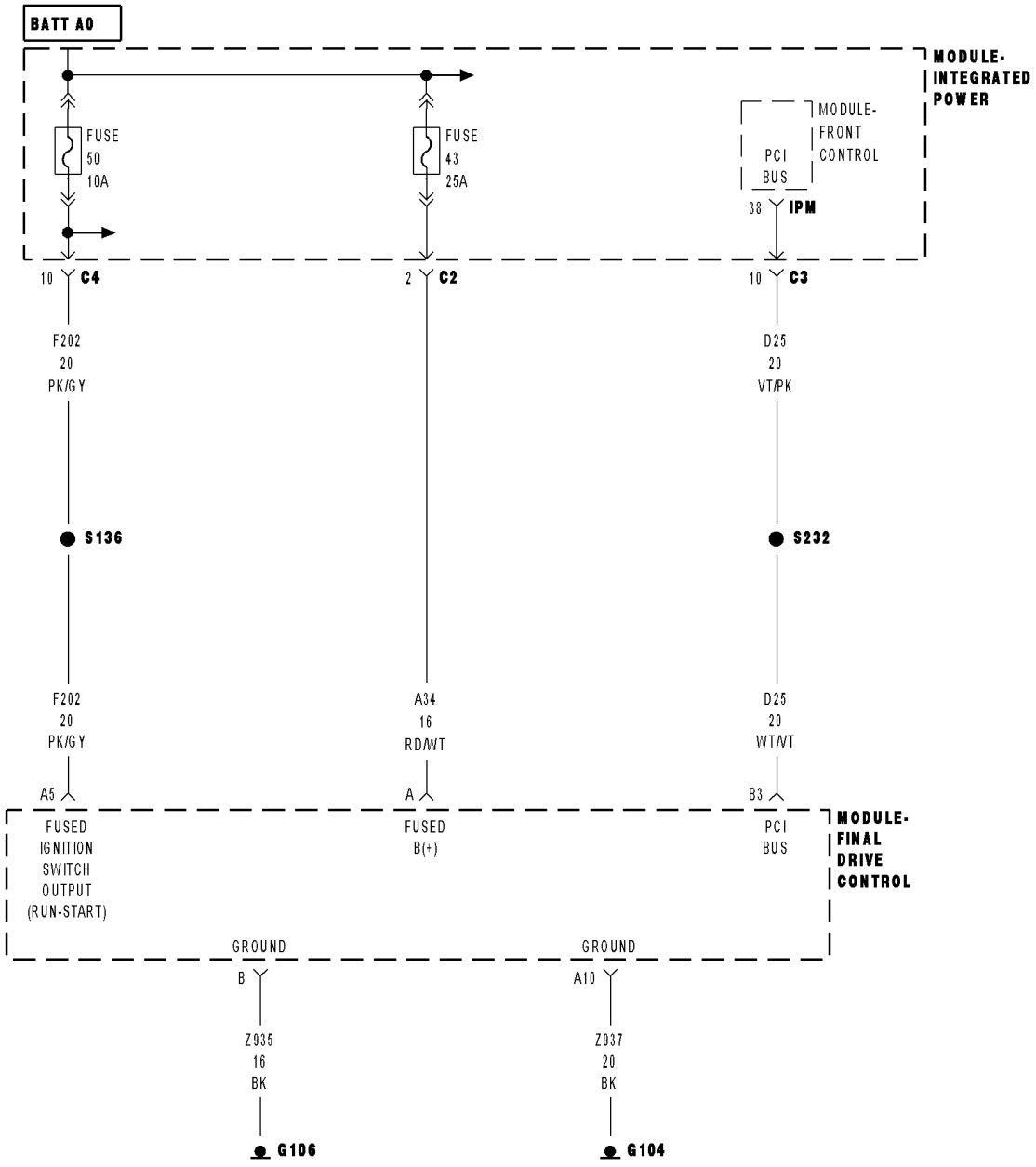

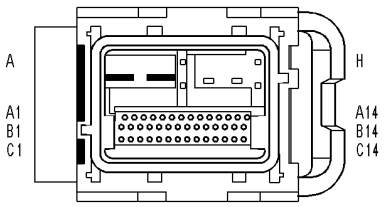

MODULE-
FINAL
DRIVE
CONTROL
(5.7L HD)

81450a82

***NO RESPONSE FROM FINAL DRIVE CONTROL MODULE (CONTINUED)**
For a complete wiring diagram **Refer to Section 8W**.

Possible Causes
(Z935) (Z937) GROUND CIRCUIT OPEN
(A34) FUSED B+ CIRCUIT OPEN
(F202) FUSED IGNITION SWITCH OUTPUT CIRCUIT OPEN
(D25) PCI BUS CIRCUIT OPEN
FINAL DRIVE CONTROL MODULE

Diagnostic Test

1. ESTABLISH COMMUNICATIONS WITH THE INSTRUMENT CLUSTER (MIC)

Turn the ignition on.

NOTE: Ensure there is PCI bus communication with other modules. If not, refer to the PCI Bus Communication Failure symptom and repair as necessary.
With the DRB, attempt to communicate with the MIC.

Was the DRB able to I/D or communicate with the MIC?

Yes >> Go To 2

No >> Refer to the table of contents and perform the related symptom.
Perform FDCM VERIFICATION TEST

---

2. (Z935) (Z937) GROUND CIRCUIT OPEN

Turn the ignition off.
Disconnect the Final Drive Control Module harness connector.
Using a 12-volt test light connected to 12-volts, probe each (Z935) and (Z937) ground circuit.

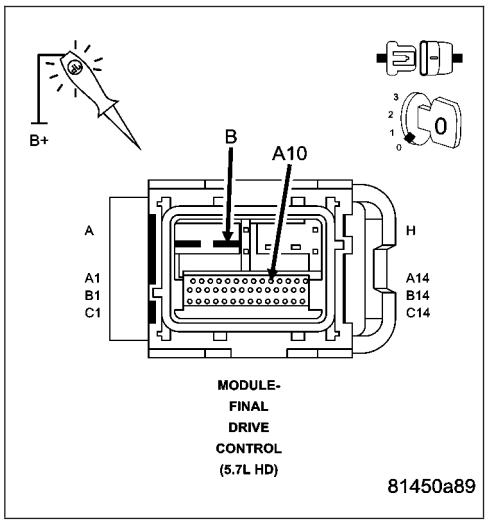

Is the test light illuminated for each circuit?

Yes >> Go To 3

No >> Repair the (Z935) or (Z937) Ground circuit for an open.
Perform FDCM VERIFICATION TEST

***NO RESPONSE FROM FINAL DRIVE CONTROL MODULE (CONTINUED)**

3. (A34) FUSED B+ CIRCUIT OPEN

Using a 12-volt test light connected to ground, probe the (A34) Fused B+ circuit.

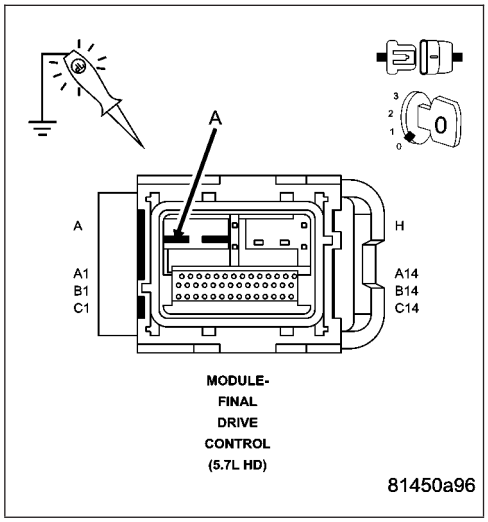

Is the test light illuminated?

Yes >> Go To 4

No >> Repair the (A34) Fused B+ circuit for an open.
Perform FDCM VERIFICATION TEST

4. (F202) FUSED IGNITION SWITCH OUTPUT CIRCUIT OPEN

Turn the ignition on.

Using a 12-volt test light connected to ground, probe the (F202) Fused Ignition Switch Output circuit.

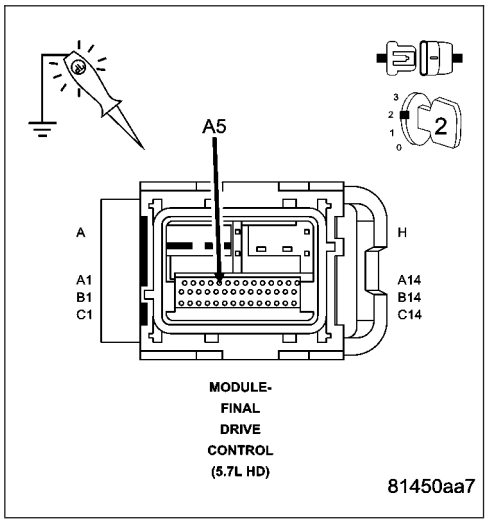

Is the test light illuminated?

Yes >> Go To 5

No >> Repair the (F202) Fused Ignition Switch Output circuit for an open.
Perform FDCM VERIFICATION TEST

***NO RESPONSE FROM FINAL DRIVE CONTROL MODULE (CONTINUED)**

5. (D25) PCI BUS CIRCUIT OPEN

Use Scope input cable CH7058, Cable to Probe adapter CH7062, and the red and black test probes.

Connect the scope input cable to the channel one connector on the DRB. Attach the red and black leads and the cable to probe adapter to the scope input cable.

With the DRBIII® select Pep Module Tools.

Select lab scope.

Select Live Data.

Select 12 volt square wave.

Press F2 for Scope.

Press F2 and use the down arrow to set voltage range to 20 volts. Press F2 again when complete.

Connect the Black lead to the chassis ground. Connect the Red lead to the PCI Bus circuit in the FDCM connector.

Observe the voltage display on the DRB Lab Scope.

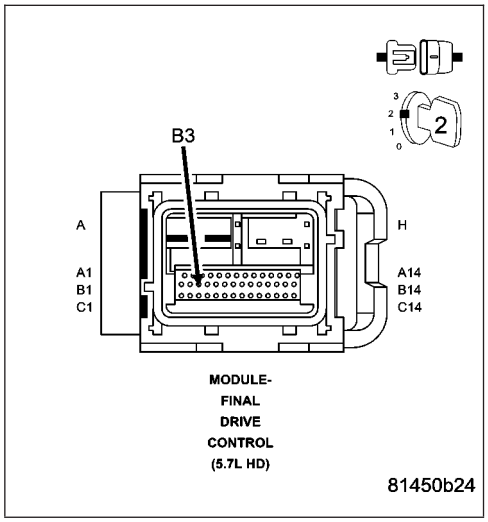

Does the voltage pulse from 0 to approximately 7.5 volts?

Yes >> Replace the Final Drive Control Module in accordance with the service information.
Perform FDCM VERIFICATION TEST

No >> Repair the (D25) PCI Bus circuit for an open.
Perform FDCM VERIFICATION TEST

*NO RESPONSE FROM HANDS FREE MODULE

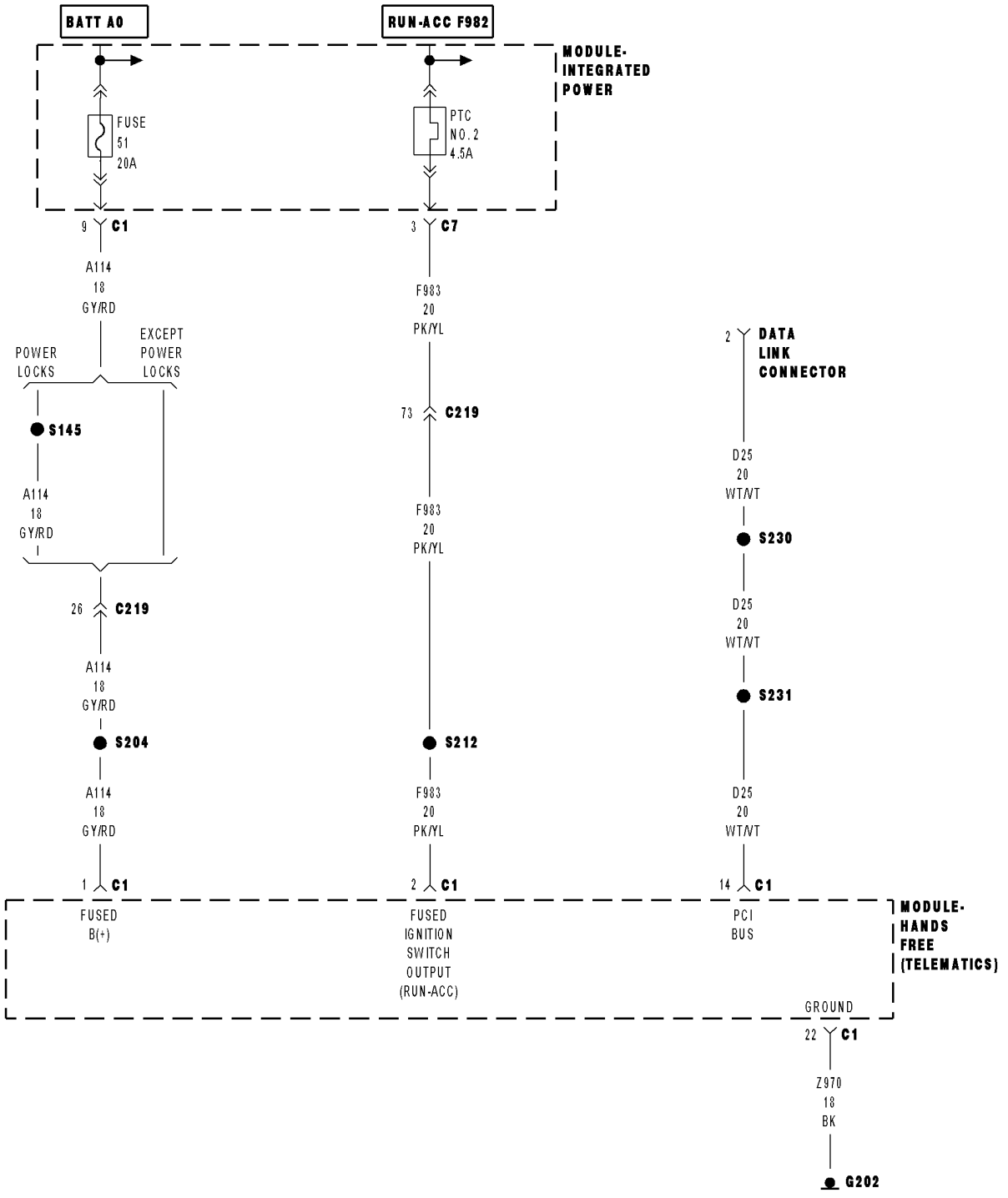

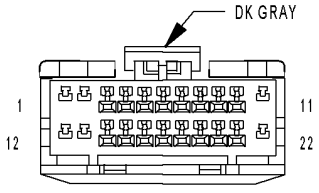

MODULE-
HANDS FREE C1
(TELEMATICS)

813d8f2e

***NO RESPONSE FROM HANDS FREE MODULE (CONTINUED)**
For a complete wiring diagram **Refer to Section 8W**.

Possible Causes
(Z970) GROUND CIRCUIT OPEN
(A114) FUSED B+ CIRCUIT OPEN
(F983) FUSED IGNITION SWITCH OUTPUT CIRCUIT OPEN
(D25) PCI BUS CIRCUIT OPEN
HANDS FREE MODULE

Diagnostic Test

1. ESTABLISH COMMUNICATIONS WITH THE INSTRUMENT CLUSTER (MIC)

Turn the ignition on.

NOTE: Ensure there is PCI bus communication with other modules. If not, refer to the PCI Bus Communication Failure symptom and repair as necessary.
With the DRB, attempt to communicate with the MIC.

Was the DRB able to I/D or communicate with the MIC?

Yes >> Go To 2

No >> Refer to the table of contents and perform the related symptom.
Perform BODY VERIFICATION TEST - VER 1. (Refer to BODY VERIFICATION TEST - VER 1.)

---

2. (Z970) GROUND CIRCUIT OPEN

Turn the ignition off.
Disconnect the Hands Free Module C1 harness connector.
Using a 12-volt test light connected to 12-volts, probe the (Z970) ground circuit.

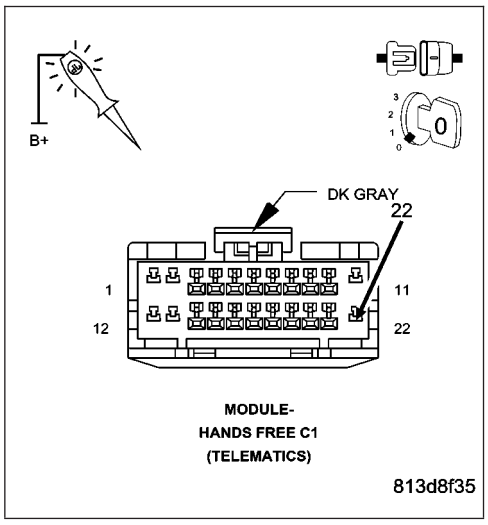

Is the test light illuminated?

Yes >> Go To 3

No >> Repair the (Z970) Ground circuit for an open.
Perform BODY VERIFICATION TEST - VER 1. (Refer to BODY VERIFICATION TEST - VER 1.)

***NO RESPONSE FROM HANDS FREE MODULE (CONTINUED)**

3. (A114) FUSED B+ CIRCUIT OPEN

Using a 12-volt test light connected to ground, probe the (A114) Fused B+ circuit.

Is the test light illuminated?

Yes >> Go To 4

No >> Repair the (A114) Fused B+ circuit for an open.
Perform BODY VERIFICATION TEST - VER 1. (Refer to BODY VERIFICATION TEST - VER 1.)

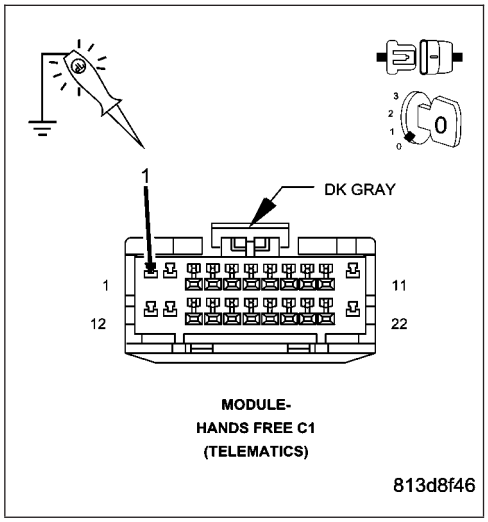

4. (F983) FUSED IGNITION SWITCH OUTPUT CIRCUIT OPEN

Turn the ignition on.

Using a 12-volt test light connected to ground, probe the (F983) Fused Ignition Switch Output circuit.

Is the test light illuminated?

Yes >> Go To 5

No >> Repair the (F983) Fused Ignition Switch Output circuit for an open.
Perform BODY VERIFICATION TEST - VER 1. (Refer to BODY VERIFICATION TEST - VER 1.)

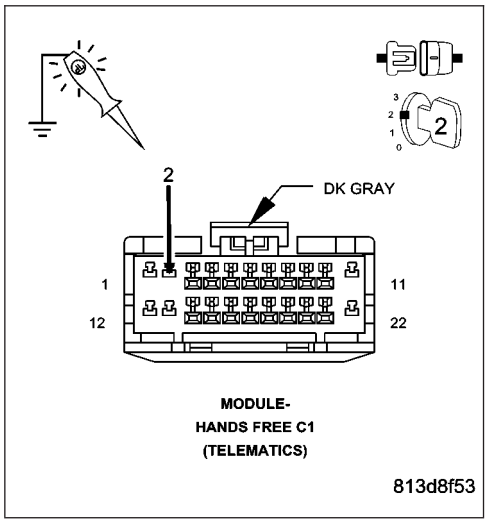

***NO RESPONSE FROM HANDS FREE MODULE (CONTINUED)**

5. (D25) PCI BUS CIRCUIT OPEN

Use Scope input cable CH7058, Cable to Probe adapter CH7062, and the red and black test probes.

Connect the scope input cable to the channel one connector on the DRB. Attach the red and black leads and the cable to probe adapter to the scope input cable.

With the DRBIII® select Pep Module Tools.

Select lab scope.

Select Live Data.

Select 12 volt square wave.

Press F2 for Scope.

Press F2 and use the down arrow to set voltage range to 20 volts. Press F2 again when complete.

Connect the Black lead to the chassis ground. Connect the Red lead to the PCI Bus circuit in the HFM connector.

Observe the voltage display on the DRB Lab Scope.

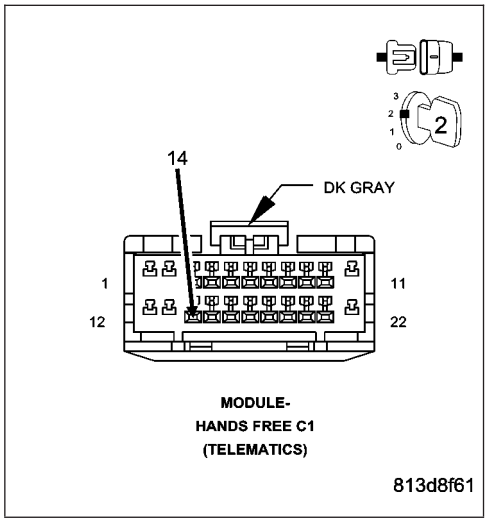

Does the voltage pulse from 0 to approximately 7.5 volts?

Yes >> Replace the Hands Free Module in accordance with the service information.
Perform BODY VERIFICATION TEST - VER 1. (Refer to BODY VERIFICATION TEST - VER 1.)

No >> Repair the (D25) PCI Bus circuit for an open.
Perform BODY VERIFICATION TEST - VER 1. (Refer to BODY VERIFICATION TEST - VER 1.)

*NO RESPONSE FROM HVAC

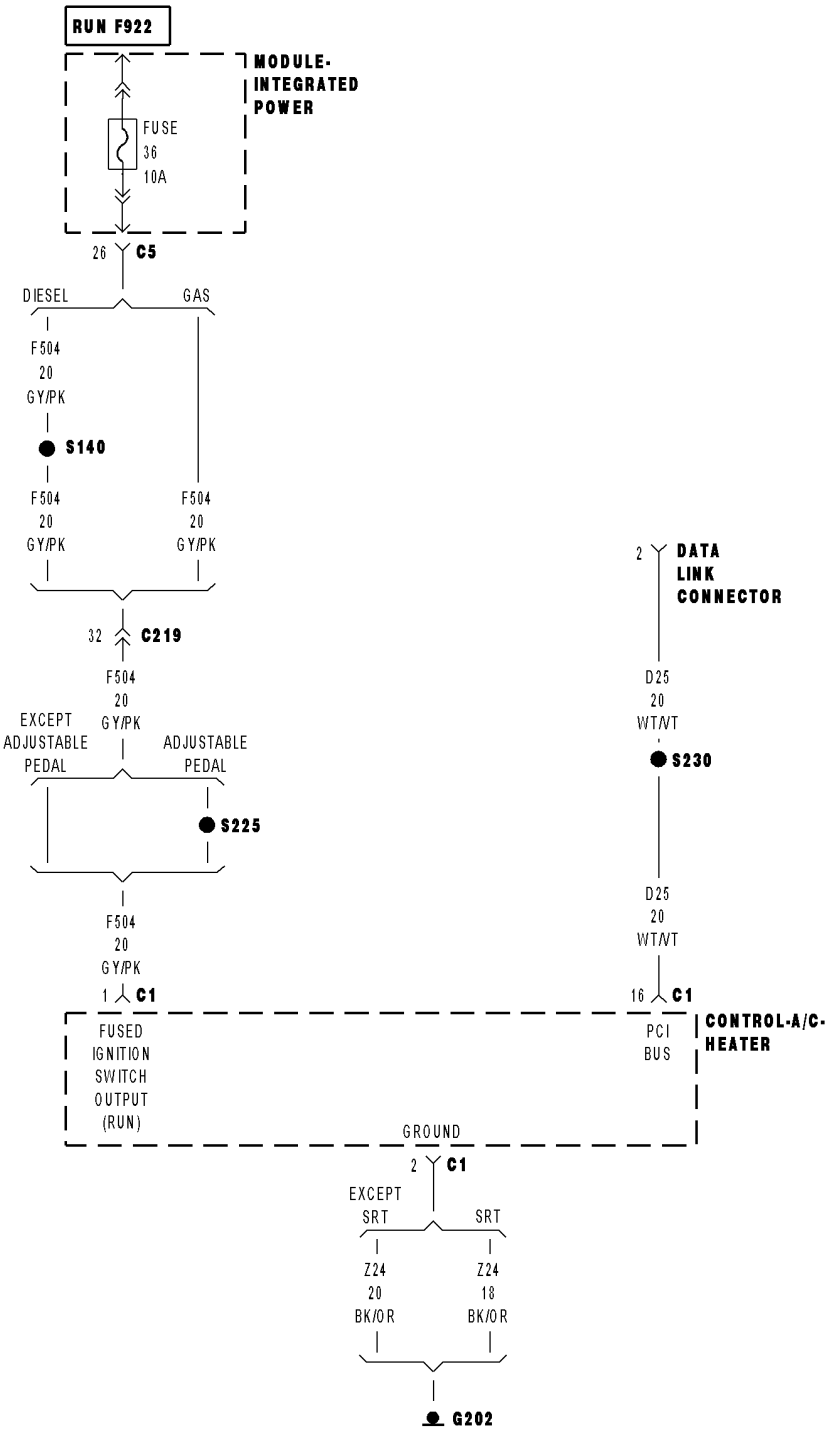

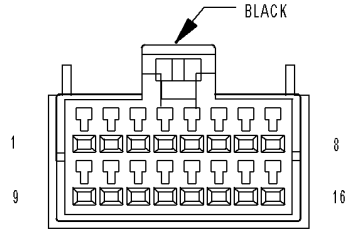

CONTROL-A/C-
HEATER C1

813d90de

***NO RESPONSE FROM HVAC (CONTINUED)**

For a complete wiring diagram **Refer to Section 8W**.

Possible Causes
(Z24) GROUND CIRCUIT OPEN
(F504) FUSED IGNITION SWITCH OUTPUT CIRCUIT OPEN
(D25) PCI BUS CIRCUIT OPEN
A/C HEATER CONTROL

Diagnostic Test

1. ESTABLISH COMMUNICATIONS WITH OTHER PCI BUS MODULES

Turn the ignition on.

NOTE: As soon as one or more modules communicates with the DRB, answer the question.

NOTE: Ensure there is PCI bus communication with other modules. If not, refer to the PCI Bus Communication Failure symptom and repair as necessary.

With the DRB, attempt to communicate with the ORC.

With the DRB, attempt to communicate with the Instrument Cluster.

Was the DRB able to I/D or communicate with either of the modules?

Yes >> Go To 2

No >> Refer to the table of contents and perform the related symptom.
Perform BODY VERIFICATION TEST - VER 1. (Refer to BODY VERIFICATION TEST - VER 1.)

---

2. (Z24) GROUND CIRCUIT OPEN

Turn the ignition off.

Disconnect the A/C Heater Control C1 harness connector.

Using a 12-volt test light connected to 12-volts, probe the (Z24) ground circuit.

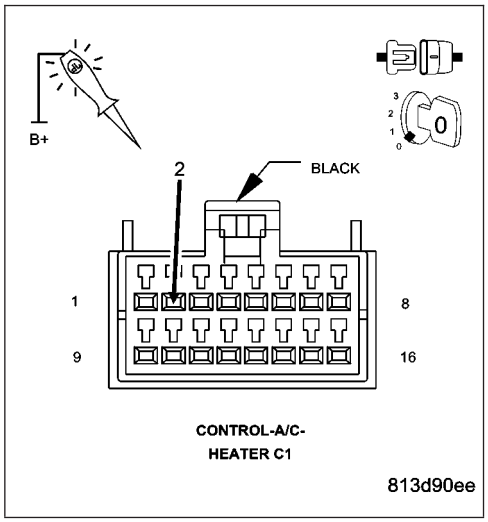

Is the test light illuminated?

Yes >> Go To 3

No >> Repair the (Z24) Ground circuit for an open.
Perform BODY VERIFICATION TEST - VER 1. (Refer to BODY VERIFICATION TEST - VER 1.)

***NO RESPONSE FROM HVAC (CONTINUED)**

3. (F504) FUSED IGNITION SWITCH OUTPUT CIRCUIT OPEN

Turn the ignition on.

Using a 12-volt test light connected to ground, probe the (F504) Fused Ignition Switch Output circuit.

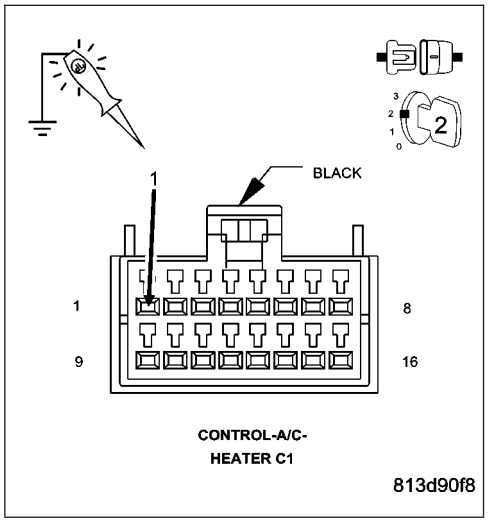

Is the test light illuminated?

Yes >> Go To 4

No >> Repair the (F504) Fused Ignition Switch Output circuit for an open.
Perform BODY VERIFICATION TEST - VER 1. (Refer to BODY VERIFICATION TEST - VER 1.)

---

4. (D25) PCI BUS CIRCUIT OPEN

Use Scope input cable CH7058, Cable to Probe adapter CH7062, and the red and black test probes.

Connect the scope input cable to the channel one connector on the DRB. Attach the red and black leads and the cable to probe adapter to the scope input cable.

With the DRBIII® select Pep Module Tools.

Select lab scope.

Select Live Data.

Select 12 volt square wave.

Press F2 for Scope.

Press F2 and use the down arrow to set voltage range to 20 volts. Press F2 again when complete.

Connect the Black lead to the chassis ground. Connect the Red lead to the PCI Bus circuit in the A/C Heater Control connector.

Observe the voltage display on the DRB Lab Scope.

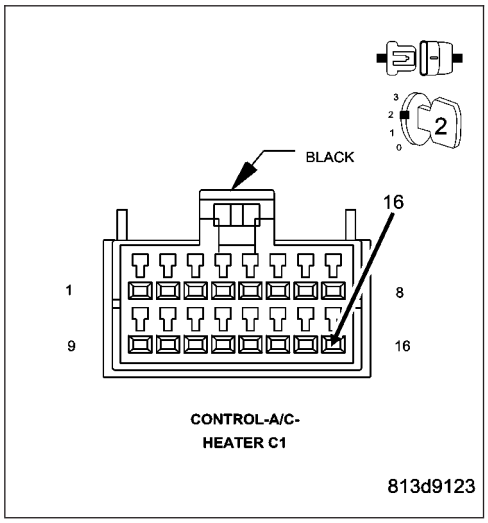

Does the voltage pulse from 0 to approximately 7.5 volts?

Yes >> Replace the A/C Heater Control in accordance with the service information.
Perform BODY VERIFICATION TEST - VER 1. (Refer to BODY VERIFICATION TEST - VER 1.)

No >> Repair the (D25) PCI Bus circuit for an open.
Perform BODY VERIFICATION TEST - VER 1. (Refer to BODY VERIFICATION TEST - VER 1.)

*NO RESPONSE FROM OCCUPANT RESTRAINT CONTROL MODULE

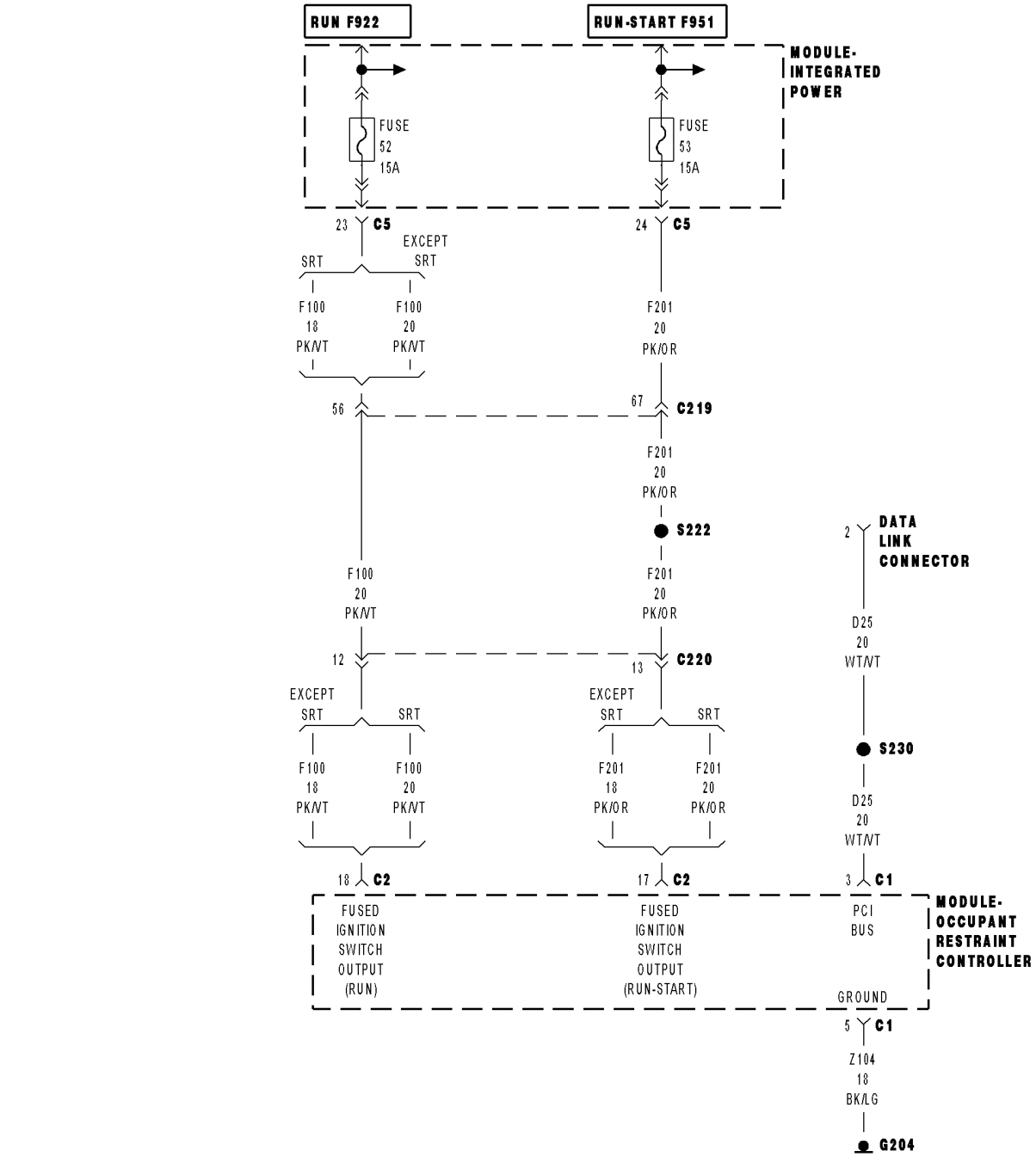

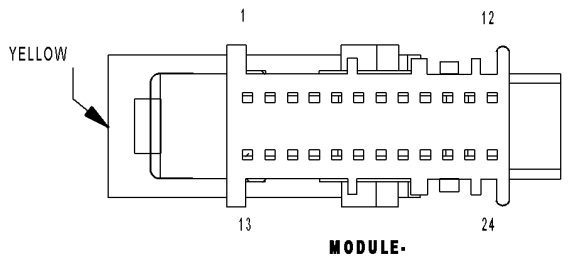

MODULE-
OCCUPANT
RESTRAINT
CONTROLLER C1

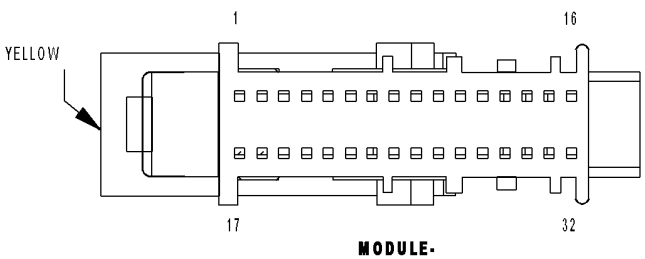

MODULE-
OCCUPANT
RESTRAINT
CONTROLLER C2

813d4021

***NO RESPONSE FROM OCCUPANT RESTRAINT CONTROL MODULE (CONTINUED)**

For a complete wiring diagram **Refer to Section 8W**.

Possible Causes
(F201) FUSED IGNITION SWITCH OUTPUT (RUN-START) CIRCUIT OPEN
(F100) FUSED IGNITION SWITCH OUTPUT (RUN) CIRCUIT OPEN
(Z104) GROUND CIRCUIT OPEN
(D25) PCI BUS CIRCUIT OPEN
OCCUPANT RESTRAINT CONTROL MODULE

Diagnostic Test

1. CHECKING FOR VOLTAGE AT ORC

NOTE: Ensure that the battery is fully charged.

NOTE: Ensure there is PCI bus communication with other modules. If not, refer to the PCI Bus Communication Failure symptom and repair as necessary.

WARNING: TO AVOID PERSONAL INJURY OR DEATH, TURN THE IGNITION OFF, DISCONNECT THE BATTERY AND WAIT TWO MINUTES BEFORE PROCEEDING.

Disconnect the ORC harness connectors.

Connect the appropriate Load Tool ORC Adapter to the ORC connector.

Turn the ignition on and then reconnect the Battery.

Using a 12-volt test light connected to ground, probe the (F100) Fused Ignition Switch Output (Run) Circuit and the (F201) Fused Ignition Switch Output (Run-Start) Circuit.

NOTE: One open circuit will not cause a NO RESPONSE condition.

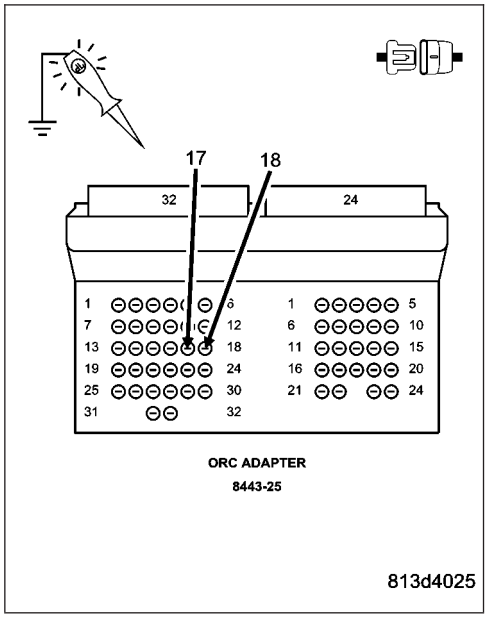

Is the test light illuminated on both circuits?

Yes >> Go To 2

No >> Repair the (F100) Fused Ignition Switch Output (Run) and (F201) Fused Ignition Switch Output (Run/Start) circuits for an open.

Perform AIRBAG VERIFICATION TEST - VER 1.

***NO RESPONSE FROM OCCUPANT RESTRAINT CONTROL MODULE (CONTINUED)**

2. (Z104) GROUND CIRCUIT OPEN

Turn the ignition off.

Using a 12-volt test light connected to 12-volts, probe the (Z104) ground circuit.

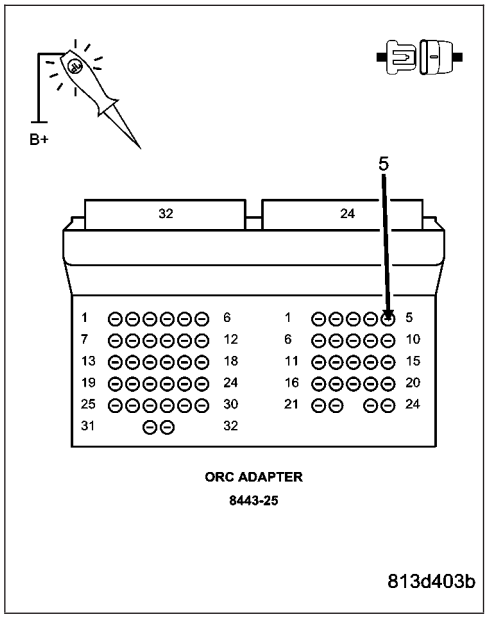

Is the test light illuminated?

Yes >> Go To 3

No >> Repair the (Z104) Ground circuit for an open.
Perform AIRBAG VERIFICATION TEST - VER 1.

3. (D25) PCI BUS CIRCUIT OPEN

Turn the ignition on.

Use Scope input cable CH7058, Cable to Probe adapter CH7062, and the red and black test probes.

Connect the scope input cable to the channel one connector on the DRB. Attach the red and black leads and the cable to probe adapter to the scope input cable.

With the DRBIII® select Pep Module Tools.

Select lab scope.

Select Live Data.

Select 12 volt square wave.

Press F2 for Scope.

Press F2 and use the down arrow to set voltage range to 20 volts. Press F2 again when complete.

Connect the Black lead to the chassis ground. Connect the Red lead to the PCI Bus circuit in the ORC connector.

Observe the voltage display on the DRB Lab Scope.

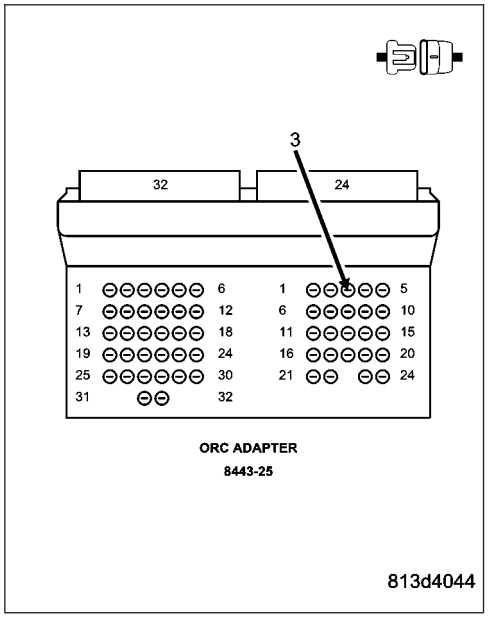

Does the voltage pulse from 0 to approximately 7.5 volts?

Yes >> Replace the Occupant Restraint Control Module in accordance with the service information.
Perform AIRBAG VERIFICATION TEST - VER 1.

No >> Repair the (D25) PCI Bus circuit for an open.
Perform AIRBAG VERIFICATION TEST - VER 1.

*NO RESPONSE FROM OVERHEAD CONSOLE

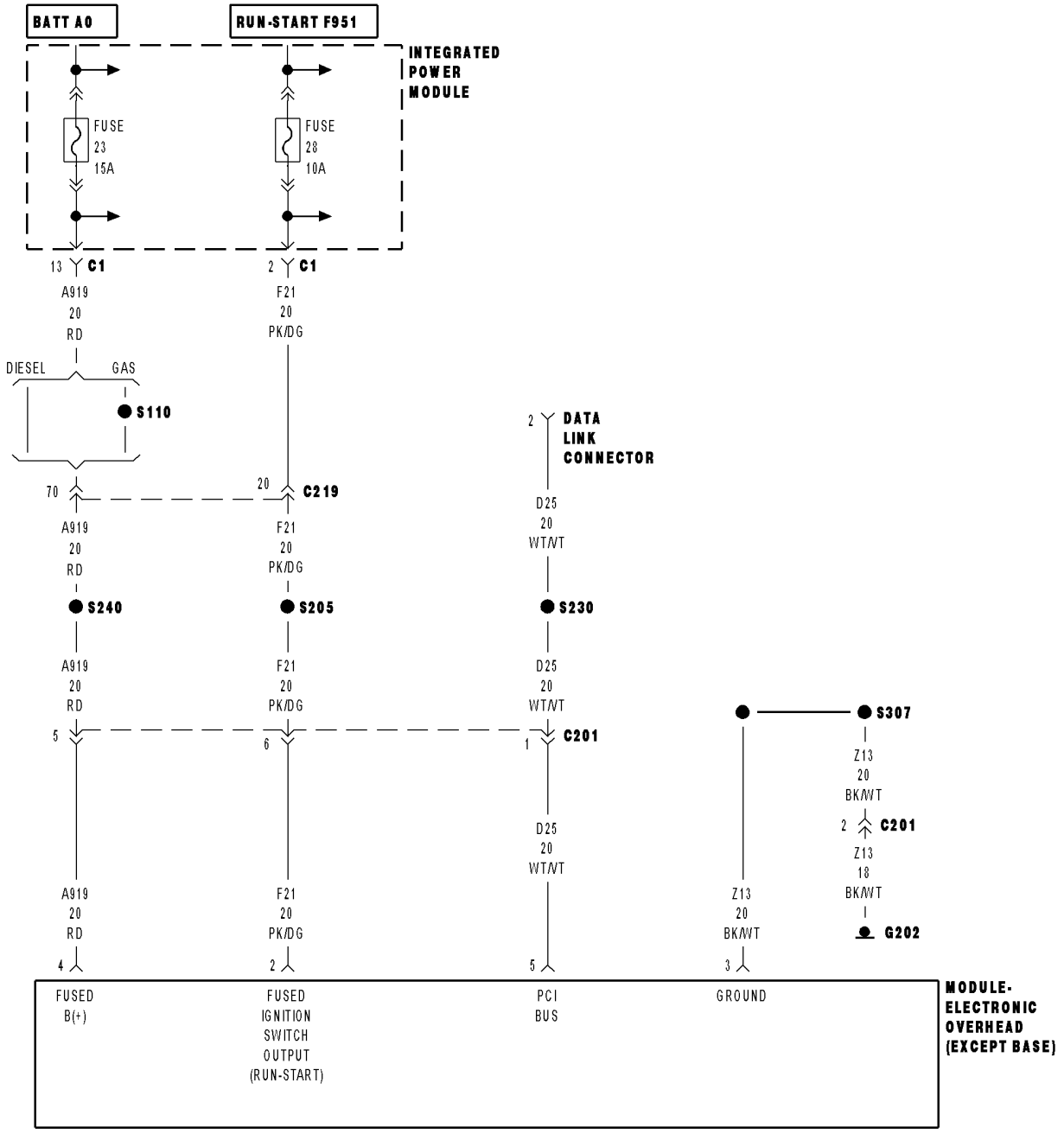

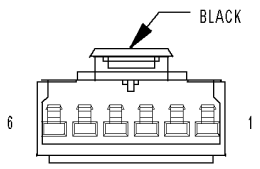

MODULE-ELECTRONIC OVERHEAD (EXCEPT BASE)

813d5127

***NO RESPONSE FROM OVERHEAD CONSOLE (CONTINUED)**

For a complete wiring diagram **Refer to Section 8W**.

Possible Causes
(Z13) GROUND CIRCUIT OPEN
(A919) FUSED B+ CIRCUIT OPEN
(F21) FUSED IGNITION SWITCH OUTPUT CIRCUIT OPEN
(D25) PCI BUS CIRCUIT OPEN
ELECTRONIC OVERHEAD MODULE

Diagnostic Test

1. ESTABLISH COMMUNICATIONS WITH THE INSTRUMENT CLUSTER (MIC)

Turn the ignition on.

NOTE: Ensure there is PCI bus communication with other modules. If not, refer to the PCI Bus Communication Failure symptom and repair as necessary.

With the DRB, attempt to communicate with the MIC.

Was the DRB able to I/D or communicate with the MIC?

Yes >> Go To 2

No >> Refer to the table of contents and perform the related symptom.
Perform BODY VERIFICATION TEST - VER 1. (Refer to BODY VERIFICATION TEST - VER 1.)

---

2. (Z13) GROUND CIRCUIT OPEN

Turn the ignition off.

Disconnect the Electronic Overhead Module harness connector.

Using a 12-volt test light connected to 12-volts, probe the (Z13) ground circuit.

Is the test light illuminated?

Yes >> Go To 3

No >> Repair the (Z13) Ground circuit for an open.
Perform BODY VERIFICATION TEST - VER 1. (Refer to BODY VERIFICATION TEST - VER 1.)

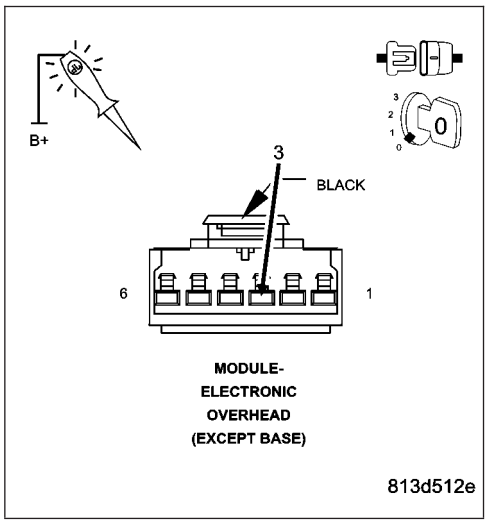

***NO RESPONSE FROM OVERHEAD CONSOLE (CONTINUED)**

3. (A919) FUSED B+ CIRCUIT OPEN

Using a 12-volt test light connected to ground, probe the (A919) Fused B+ circuit.

Is the test light illuminated?

Yes >> Go To 4

No >> Repair the (A919) Fused B+ circuit for an open.
Perform BODY VERIFICATION TEST - VER 1. (Refer to BODY VERIFICATION TEST - VER 1.)

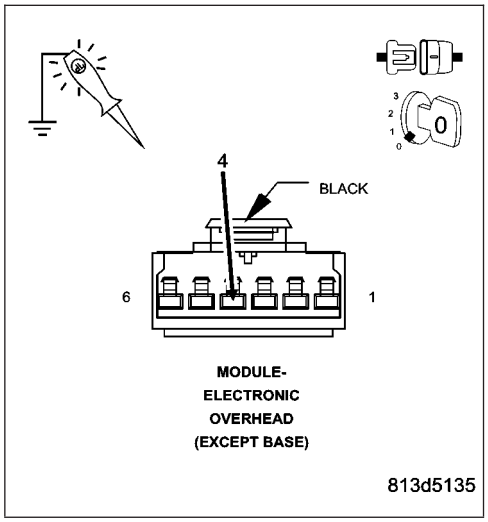

4. (F21) FUSED IGNITION SWITCH OUTPUT CIRCUIT OPEN

Turn the ignition on.

Using a 12-volt test light connected to ground, probe the (F21) Fused Ignition Switch Output circuit.

Is the test light illuminated?

Yes >> Go To 5

No >> Repair the (F21) Fused Ignition Switch Output circuit for an open.
Perform BODY VERIFICATION TEST - VER 1. (Refer to BODY VERIFICATION TEST - VER 1.)

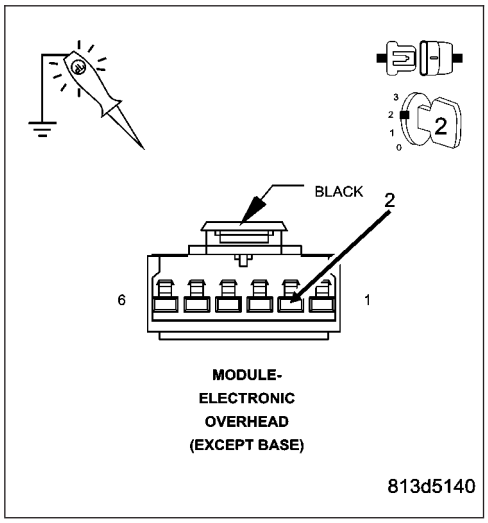

***NO RESPONSE FROM OVERHEAD CONSOLE (CONTINUED)**

5. (D25) PCI BUS CIRCUIT OPEN

Use Scope input cable CH7058, Cable to Probe adapter CH7062, and the red and black test probes.

Connect the scope input cable to the channel one connector on the DRB. Attach the red and black leads and the cable to probe adapter to the scope input cable.

With the DRBIII® select Pep Module Tools.

Select lab scope.

Select Live Data.

Select 12 volt square wave.

Press F2 for Scope.

Press F2 and use the down arrow to set voltage range to 20 volts. Press F2 again when complete.

Connect the Black lead to the chassis ground. Connect the Red lead to the PCI Bus circuit in the Electronic Overhead Module connector.

Observe the voltage display on the DRB Lab Scope.

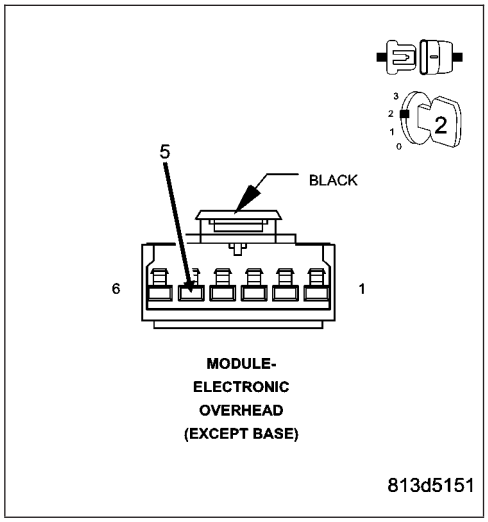

Does the voltage pulse from 0 to approximately 7.5 volts?

Yes >> Replace the Electronic Overhead Module in accordance with the service information.
Perform BODY VERIFICATION TEST - VER 1. (Refer to BODY VERIFICATION TEST - VER 1.)

No >> Repair the (D25) PCI Bus circuit for an open.
Perform BODY VERIFICATION TEST - VER 1. (Refer to BODY VERIFICATION TEST - VER 1.)

*NO RESPONSE FROM PCM (PCI BUS) - JTEC

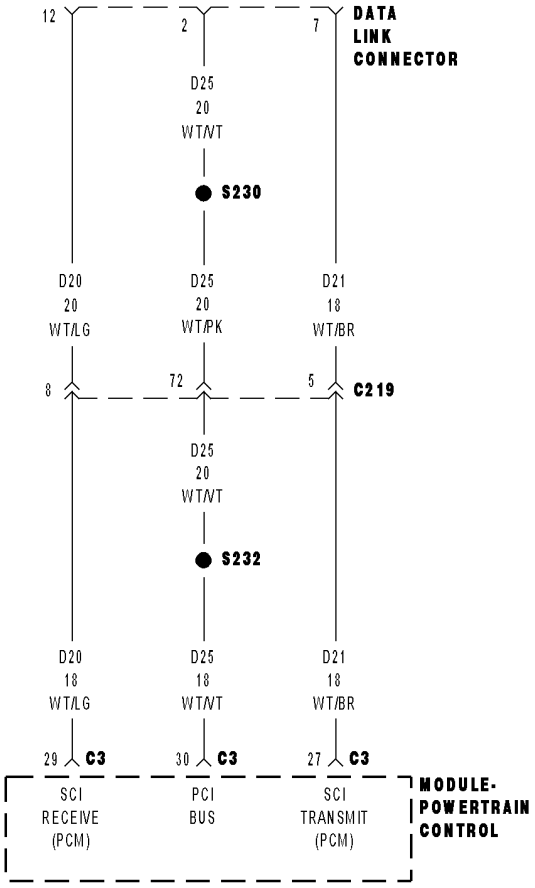

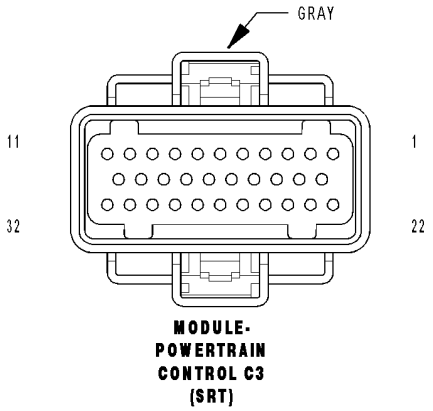

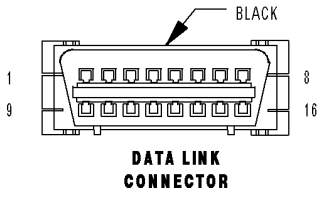

813d9dcf

***NO RESPONSE FROM PCM (PCI BUS) - JTEC (CONTINUED)**

For a complete wiring diagram **Refer to Section 8W**.

Possible Causes
POWERTRAIN CONTROL MODULE POWER AND GROUND
(D25) PCI BUS CIRCUIT OPEN
POWERTRAIN CONTROL MODULE

Diagnostic Test

1. ESTABLISH COMMUNICATIONS WITH OTHER PCI BUS MODULES

Turn the ignition on.

NOTE: Ensure there is PCI bus communication with other modules. If not, refer to the PCI Bus Communication Failure symptom and repair as necessary.

NOTE: As soon as one or more modules communicates with the DRB, answer the question.

With the DRB, attempt to communicate with the ORC.

With the DRB, attempt to communicate with the Instrument Cluster.

Was the DRB able to I/D or communicate with either of the modules?

Yes >> Go To 2

No >> Refer to the table of contents and perform the related symptom. Perform POWERTRAIN VERIFICATION TEST - VER 1.

***NO RESPONSE FROM PCM (PCI BUS) - JTEC (CONTINUED)**

2. (D25) PCI BUS CIRCUIT OPEN

With the DRB, read PCM DTC's. This is to ensure power and ground to the PCM are operational.

NOTE: If the DRB will not read PCM DTC's, follow the NO RESPONSE TO PCM (SCI ONLY) - JTEC symptom.

NOTE: If the vehicle will not start and the DRB displays a no response message, refer to the appropriate symptom in the Engine Electrical Diagnostics category.

Turn the ignition off.

Disconnect the PCM C3 harness connector.

Turn the ignition on.

Use Scope input cable CH7058, Cable to Probe adapter CH7062, and the red and black test probes.

Connect the scope input cable to the channel one connector on the DRB. Attach the red and black leads and the cable to probe adapter to the scope input cable.

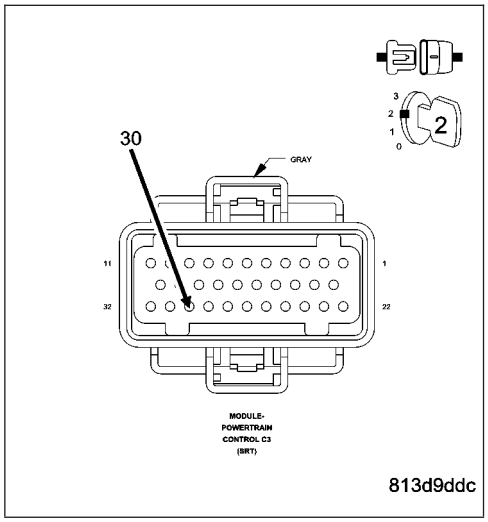

With the DRBIII® select Pep Module Tools.

Select lab scope.

Select Live Data.

Select 12 volt square wave.

Press F2 for Scope.

Press F2 and use the down arrow to set voltage range to 20 volts. Press F2 again when complete.

Connect the Black lead to the chassis ground. Connect the Red lead to the PCI Bus circuit in the PCM connector. Observe the voltage display on the DRB Lab Scope.

Does the voltage pulse from 0 to approximately 7.5 volts?

Yes >> Replace the Powertrain Control Module in accordance with the service information.
Perform POWERTRAIN VERIFICATION TEST - VER 1.

No >> Repair the (D25) PCI Bus circuit for an open.
Perform POWERTRAIN VERIFICATION TEST - VER 1.

*NO RESPONSE FROM PCM (SCI ONLY) - JTEC

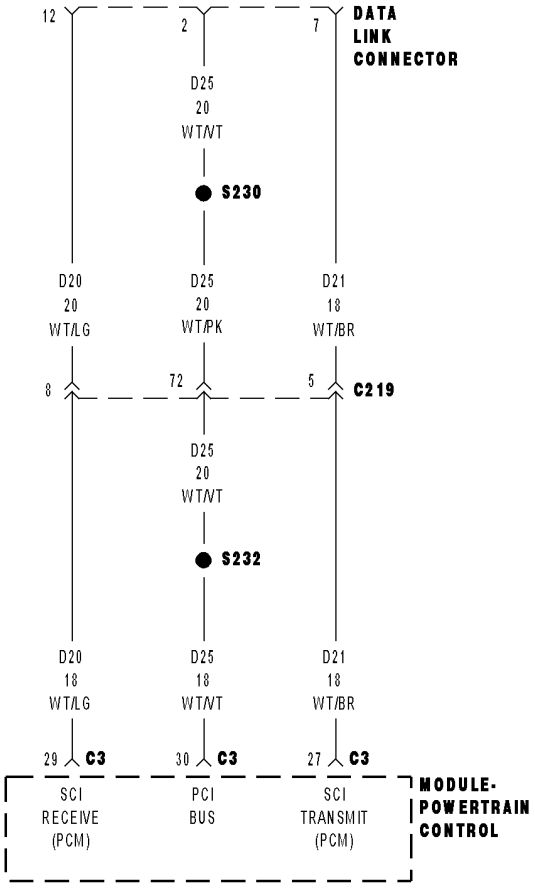

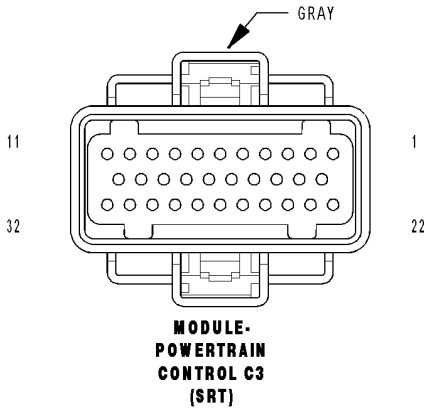

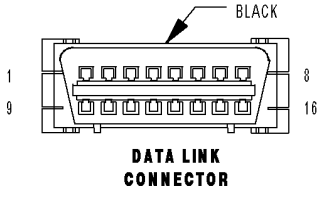

813d9dcf

***NO RESPONSE FROM PCM (SCI ONLY) - JTEC (CONTINUED)**

For a complete wiring diagram **Refer to Section 8W**.

Possible Causes
(D21) SCI TRANSMIT (PCM) CIRCUIT SHORTED TO GROUND
(D20) SCI RECEIVE (PCM) CIRCUIT SHORTED TO GROUND
(D21) SCI TRANSMIT (PCM) CIRCUIT SHORTED TO VOLTAGE
(D20) SCI RECEIVE (PCM) CIRCUIT SHORTED TO VOLTAGE
(D21) SCI TRANSMIT (PCM) CIRCUIT OPEN
(D20) SCI RECEIVE (PCM) CIRCUIT OPEN
(D21) SCI TRANSMIT (PCM) CIRCUIT SHORTED TO THE (D20) SCI RECEIVE (PCM) CIRCUIT
POWERTRAIN CONTROL MODULE

Diagnostic Test

1. CHECK POWERTRAIN CONTROL MODULE POWER AND GROUND

Refer to the Engine Electrical Diagnostics and perform the symptom Checking PCM Power and Ground Circuits.

NOTE: With the DRB in the generic scan tool mode, attempt to communicate with the PCM. If the DRB can communicate with the PCM in the generic scan tool mode, it may not be necessary to perform this step.

Did the vehicle pass this test?

Yes >> Go To 2

No >> Repair as necessary.
Perform POWERTRAIN VERIFICATION TEST - VER 1.

---

2. SCI CIRCUITS SHORTED TO GROUND

Turn the ignition off.

Disconnect the DRB from the DLC.

Disconnect the Powertrain Control Module C3 harness connector.

Measure the resistance between ground and the (D21) SCI Transmit (PCM) circuit.

Measure the resistance between ground and the (D20) SCI Receive (PCM) circuit.

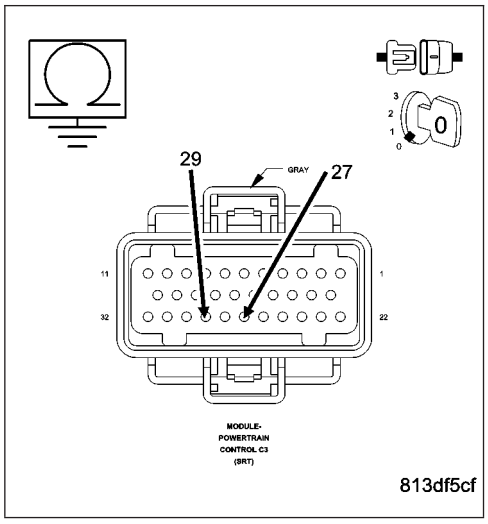

Is the resistance below 10.0 ohms for either circuit?

Yes >> Repair the SCI Circuit that measured below 10.0 ohms for a short to ground.
Perform POWERTRAIN VERIFICATION TEST - VER 1.

No >> Go To 3

***NO RESPONSE FROM PCM (SCI ONLY) - JTEC (CONTINUED)**

3. SCI CIRCUITS SHORTED TO VOLTAGE

Turn the ignition on.

Measure the voltage of the (D21) SCI Transmit (PCM) circuit.

Measure the voltage of the (D20) SCI Receive (PCM) circuit.

Is the voltage above 1.0 volt for either circuit?

Yes >> Repair the SCI Circuit that measured above 1.0 volt for a short to voltage.
Perform POWERTRAIN VERIFICATION TEST - VER 1.

No >> Go To 4

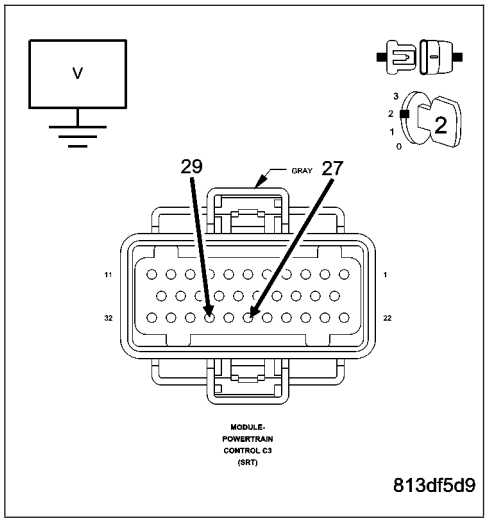

4. (D21) SCI TRANSMIT (PCM) CIRCUIT OPEN

Turn the ignition off.

Measure the resistance of the (D21) SCI Transmit (PCM) circuit between the DLC and the PCM connector.

Is the resistance below 5.0 ohms?

Yes >> Go To 5

No >> Repair the (D21) SCI Transmit (PCM) circuit for an open.
Perform POWERTRAIN VERIFICATION TEST - VER 1.

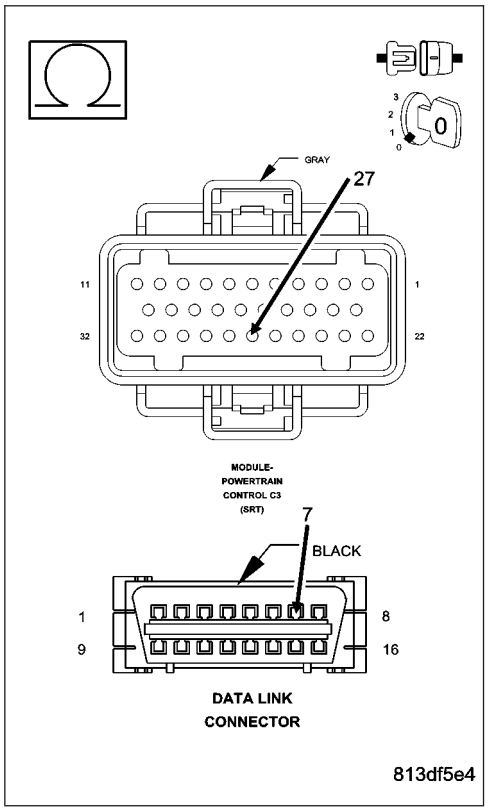

***NO RESPONSE FROM PCM (SCI ONLY) - JTEC (CONTINUED)**

5. (D20) SCI RECEIVE (PCM) CIRCUIT OPEN

Measure the resistance of the (D20) SCI Receive (PCM) circuit between the DLC and the PCM connector.

Is the resistance below 5.0 ohms?

Yes >> Go To 6

No >> Repair the (D20) SCI Receive (PCM) circuit for an open. Perform POWERTRAIN VERIFICATION TEST - VER 1.

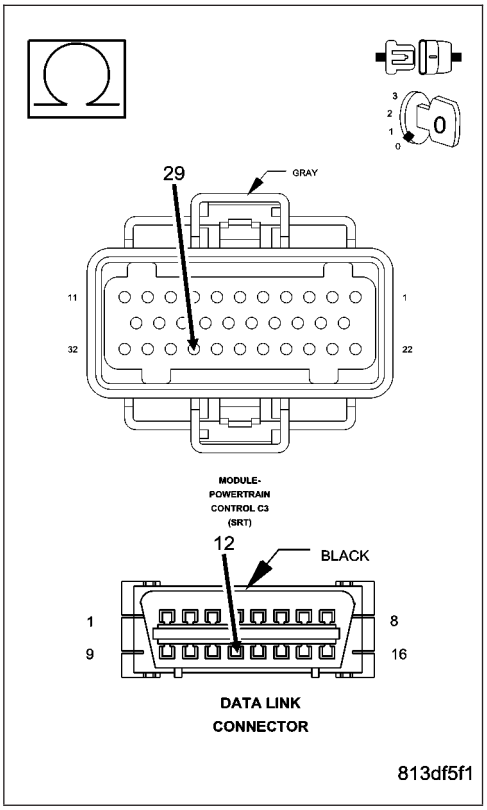

6. (D21) SCI TRANSMIT (PCM) CIRCUIT SHORTED TO THE (D20) SCI RECEIVE (PCM) CIRCUIT

Measure the resistance between the (D21) SCI Transmit (PCM) and the (D20) SCI Receive (PCM) circuits.

Is the resistance below 5.0 ohms?

Yes >> Repair the (D21) SCI Transmit (PCM) circuit for a short to the (D20) SCI Receive (PCM) circuit.
Perform POWERTRAIN VERIFICATION TEST - VER 1.

No >> Replace the Powertrain Control Module in accordance with the service information.
Perform POWERTRAIN VERIFICATION TEST - VER 1.

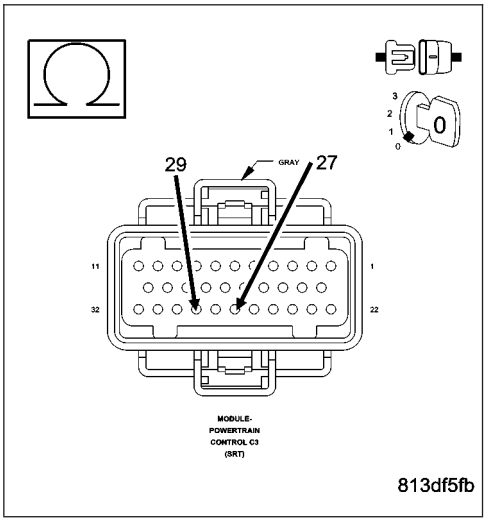

*NO RESPONSE FROM PCM (PCI BUS) - NGC

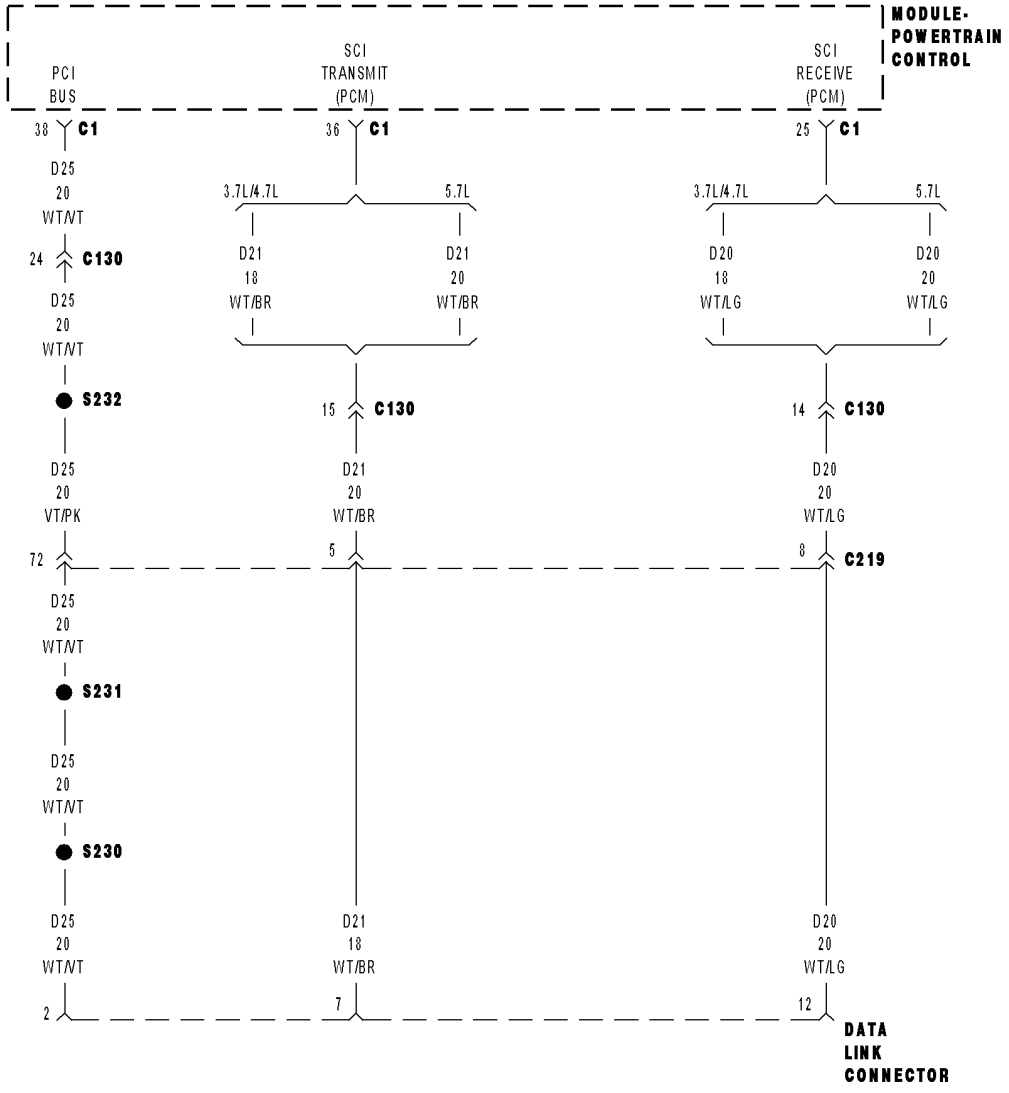

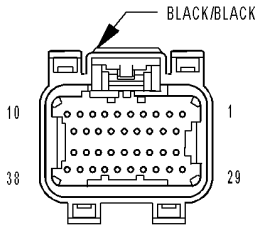

MODULE-
POWERTRAIN
CONTROL C1
(NGC)

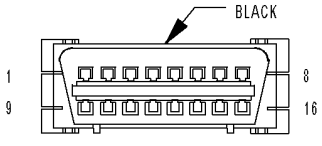

DATA LINK
CONNECTOR

813da227

***NO RESPONSE FROM PCM (PCI BUS) - NGC (CONTINUED)**
For a complete wiring diagram **Refer to Section 8W**.

Possible Causes
POWERTRAIN CONTROL MODULE POWER AND GROUND
(D25) PCI BUS CIRCUIT OPEN
POWERTRAIN CONTROL MODULE

Diagnostic Test

1. ESTABLISH COMMUNICATIONS WITH OTHER PCI BUS MODULES

Turn the ignition on.

NOTE: Ensure there is PCI bus communication with other modules. If not, refer to the PCI Bus Communication Failure symptom and repair as necessary.

NOTE: As soon as one or more modules communicates with the DRB, answer the question.
With the DRB, attempt to communicate with the ORC.
With the DRB, attempt to communicate with the Instrument Cluster.

Was the DRB able to I/D or communicate with either of the modules?

Yes >> Go To 2

No >> Refer to the table of contents and perform the related symptom.
Perform (NGC) POWERTRAIN VERIFICATION TEST - VER 1.

*NO RESPONSE FROM PCM (PCI BUS) - NGC (CONTINUED)

2. (D25) PCI BUS CIRCUIT OPEN

With the DRB, read PCM DTC's. This is to ensure power and ground to the PCM are operational.

NOTE: If the DRB will not read PCM DTC's, follow the NO RESPONSE TO PCM (SCI ONLY) - NGC symptom.

NOTE: If the vehicle will not start and the DRB displays a no response message, refer to the appropriate symptom in the Engine Electrical Diagnostics category.

Turn the ignition off.

Disconnect the PCM C1 harness connector.

CAUTION: Do not probe the PCM harness connectors. Probing the PCM harness connectors will damage the PCM terminals resulting in poor terminal to pin connection. Install Miller Special Tool #8815 to perform diagnosis.

Use Scope input cable CH7058, Cable to Probe adapter CH7062, and the red and black test probes.

Connect the scope input cable to the channel one connector on the DRB. Attach the red and black leads and the cable to probe adapter to the scope input cable.

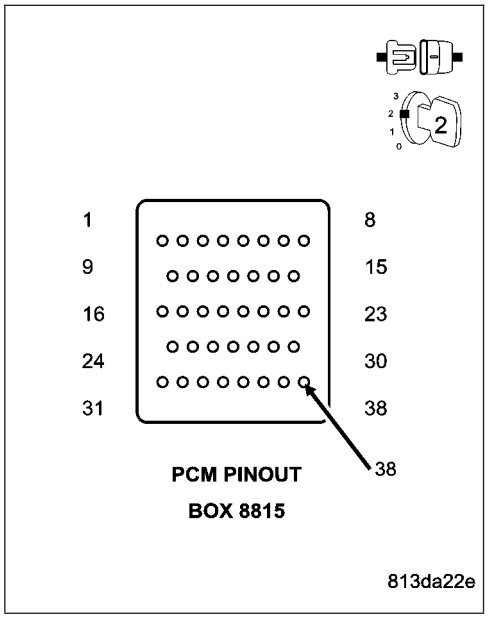

With the DRBIII® select Pep Module Tools.

Select lab scope.

Select Live Data.

Select 12 volt square wave.

Press F2 for Scope.

Press F2 and use the down arrow to set voltage range to 20 volts. Press F2 again when complete.

Connect the Black lead to the chassis ground. Connect the Red lead to the PCI Bus circuit in the appropriate terminal of special tool #8815.

Turn the ignition on.

Observe the voltage display on the DRB Lab Scope.

Does the voltage pulse from 0 to approximately 7.5 volts?

Yes >> Replace the Powertrain Control Module in accordance with the service information.
Perform (NGC) POWERTRAIN VERIFICATION TEST - VER 1.

No >> Repair the (D25) PCI Bus circuit for an open.
Perform (NGC) POWERTRAIN VERIFICATION TEST - VER 1.

*NO RESPONSE FROM PCM (PCM SCI ONLY) - NGC

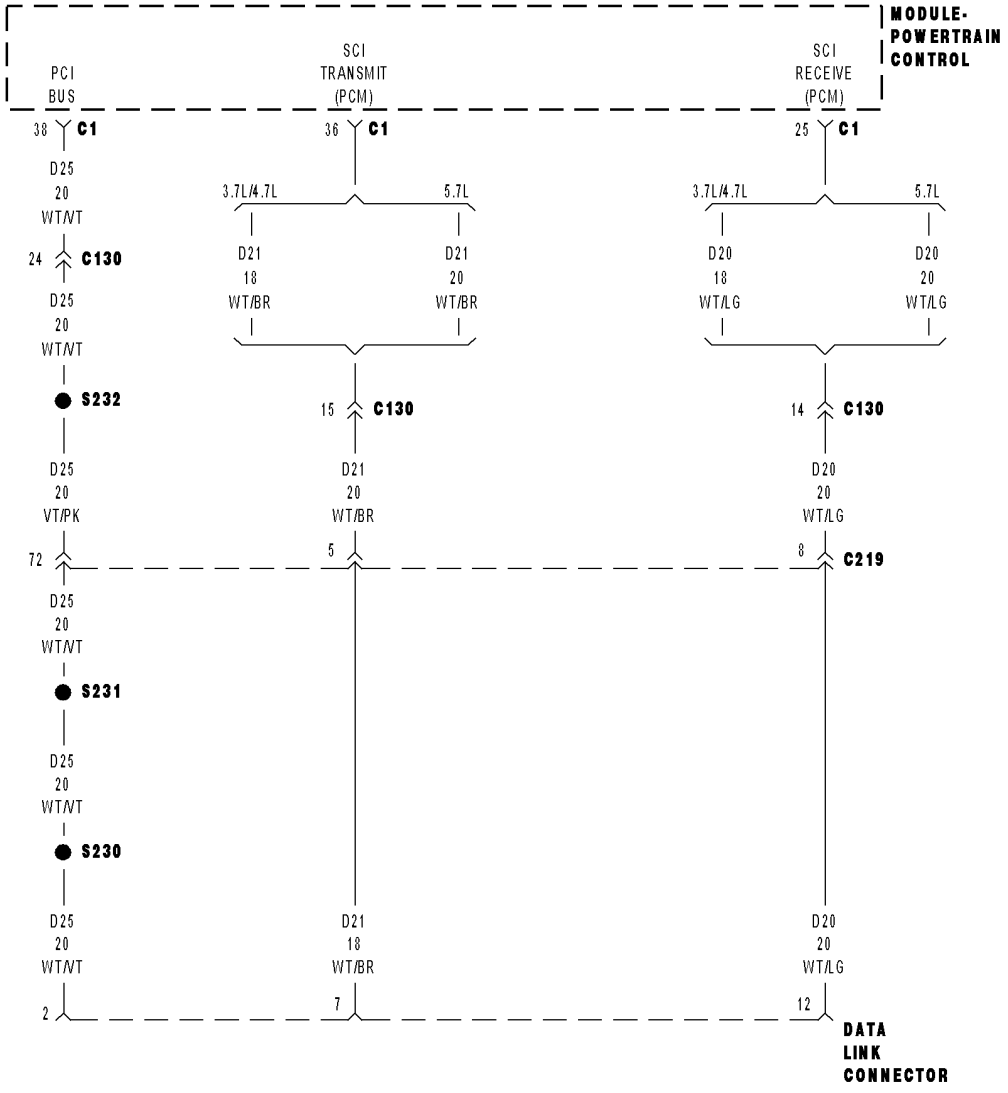

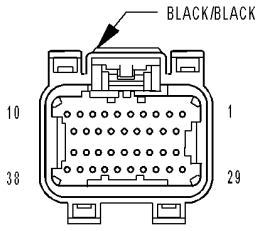

MODULE-
POWERTRAIN
CONTROL C1
(NGC)

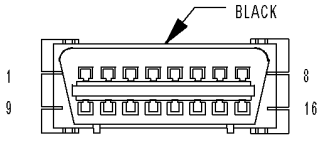

DATA LINK
CONNECTOR

813da227

***NO RESPONSE FROM PCM (PCM SCI ONLY) - NGC (CONTINUED)**

For a complete wiring diagram **Refer to Section 8W**.

Possible Causes
(D21) SCI TRANSMIT (PCM) CIRCUIT SHORTED TO GROUND
(D20) SCI RECEIVE (PCM) CIRCUIT SHORTED TO GROUND
(D21) SCI TRANSMIT (PCM) CIRCUIT SHORTED TO VOLTAGE
(D20) SCI RECEIVE (PCM) CIRCUIT SHORTED TO VOLTAGE
(D21) SCI TRANSMIT (PCM) CIRCUIT OPEN
(D20) SCI RECEIVE (PCM) CIRCUIT OPEN
(D21) SCI TRANSMIT (PCM) CIRCUIT SHORTED TO THE (D20) SCI RECEIVE (PCM) CIRCUIT
POWERTRAIN CONTROL MODULE

Diagnostic Test

1. CHECK POWERTRAIN CONTROL MODULE POWER AND GROUND

Refer to the Engine Electrical Diagnostics and perform the symptom Checking PCM Power and Ground Circuits.

NOTE: With the DRB in the generic scan tool mode, attempt to communicate with the PCM. If the DRB can communicate with the PCM in the generic scan tool mode, it may not be necessary to perform this step.

Did the vehicle pass this test?

Yes >> Go To 2

No >> Repair as necessary.
Perform (NGC) POWERTRAIN VERIFICATION TEST - VER 1.

---

2. SCI CIRCUITS SHORTED TO GROUND

Turn the ignition off.

Disconnect the DRB from the DLC.

Disconnect the Powertrain Control Module C1 harness connector.

Measure the resistance between ground and the (D21) SCI Transmit (PCM) circuit.

Measure the resistance between ground and the (D20) SCI Receive (PCM) circuit.

Is the resistance below 10.0 ohms for either circuit?

Yes >> Repair the SCI Circuit that measured below 10.0 ohms for a short to ground.
Perform (NGC) POWERTRAIN VERIFICATION TEST - VER 1.

No >> Go To 3

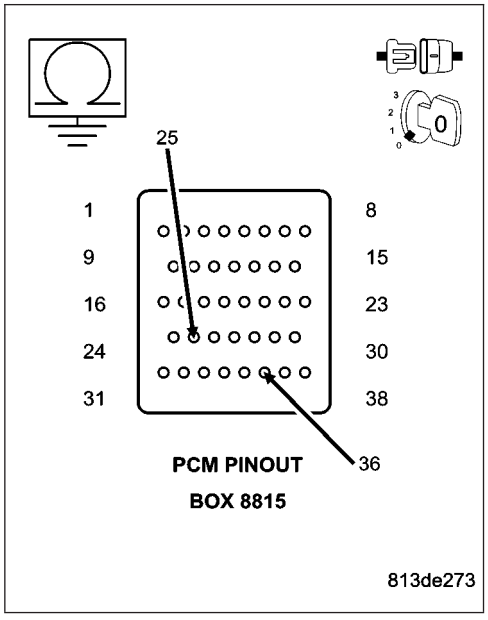

***NO RESPONSE FROM PCM (PCM SCI ONLY) - NGC (CONTINUED)**

3. SCI CIRCUITS SHORTED TO VOLTAGE

Turn the ignition on.
Measure the voltage of the (D21) SCI Transmit (PCM) circuit.
Measure the voltage of the (D20) SCI Receive (PCM) circuit.

Is the voltage above 1.0 volt for either circuit?

Yes >> Repair the SCI Circuit that measured above 1.0 volt for a short to voltage.
Perform (NGC) POWERTRAIN VERIFICATION TEST - VER 1.

No >> Go To 4

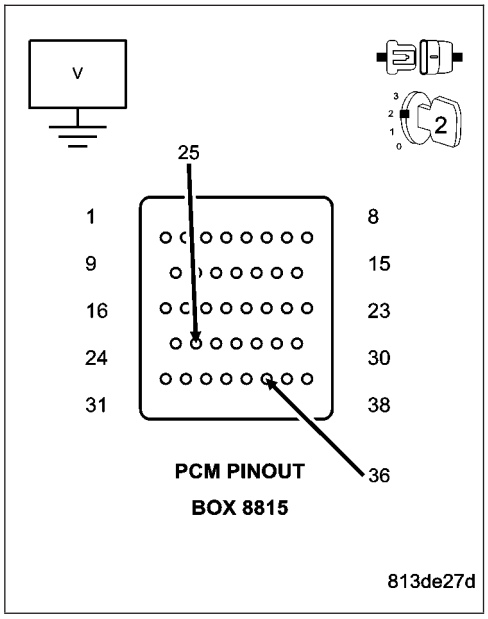

4. (D21) SCI TRANSMIT (PCM) CIRCUIT OPEN

Turn the ignition off.

CAUTION: Do not probe the PCM harness connectors. Probing the PCM harness connectors will damage the PCM terminals resulting in poor terminal to pin connection. Install Miller Special Tool #8815 to perform diagnosis.
Measure the resistance of the (D21) SCI Transmit (PCM) circuit between the DLC and the appropriate terminal of special tool #8815.

Is the resistance below 5.0 ohms?

Yes >> Go To 5

No >> Repair the (D21) SCI Transmit (PCM) circuit for an open.
Perform (NGC) POWERTRAIN VERIFICATION TEST - VER 1.

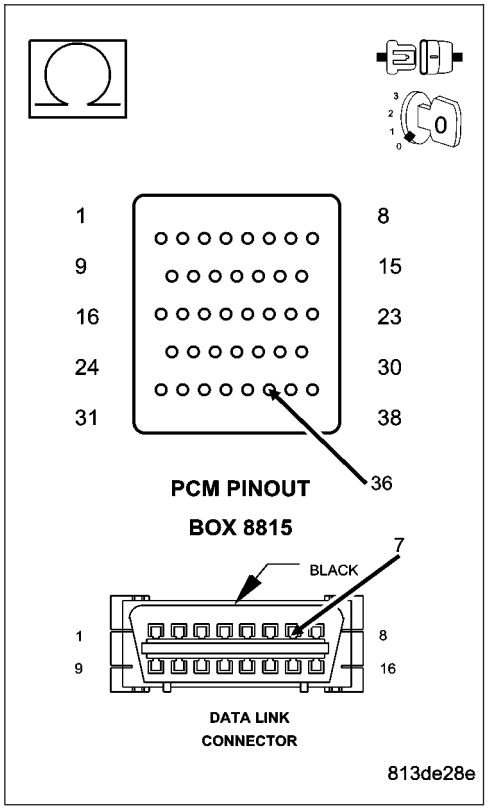

***NO RESPONSE FROM PCM (PCM SCI ONLY) - NGC (CONTINUED)**

5. (D20) SCI RECEIVE (PCM) CIRCUIT OPEN

CAUTION: Do not probe the PCM harness connectors. Probing the PCM harness connectors will damage the PCM terminals resulting in poor terminal to pin connection. Install Miller Special Tool #8815 to perform diagnosis.

Measure the resistance of the (D20) SCI Receive (PCM) circuit between the DLC and the appropriate terminal of special tool #8815.

Is the resistance below 5.0 ohms?

Yes >> Go To 6

No >> Repair the (D20) SCI Receive (PCM) circuit for an open.
Perform (NGC) POWERTRAIN VERIFICATION TEST - VER 1.

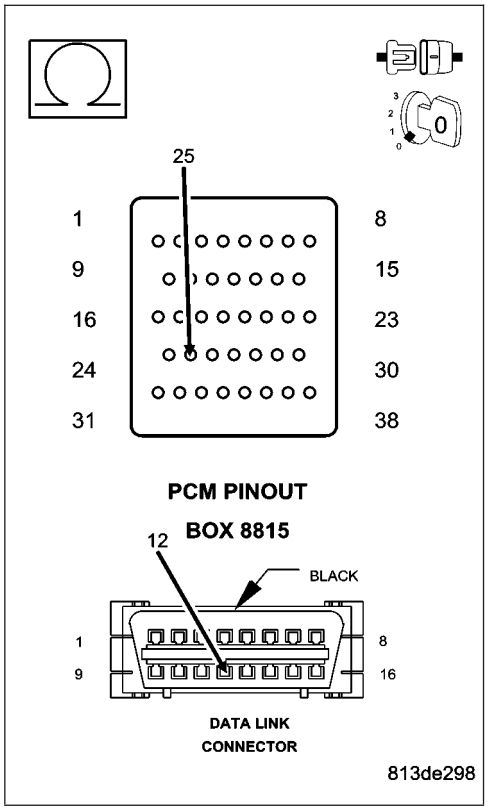

6. (D21) SCI TRANSMIT (PCM) CIRCUIT SHORTED TO THE (D20) SCI RECEIVE (PCM) CIRCUIT

Measure the resistance between the (D21) SCI Transmit (PCM) and the (D20) SCI Receive (PCM) circuits.

Is the resistance below 5.0 ohms?

Yes >> Repair the (D21) SCI Transmit (PCM) circuit for a short to the (D20) SCI Receive (PCM) circuit.
Perform (NGC) POWERTRAIN VERIFICATION TEST - VER 1.

No >> Replace the Powertrain Control Module in accordance with the service information.
Perform (NGC) POWERTRAIN VERIFICATION TEST - VER 1.

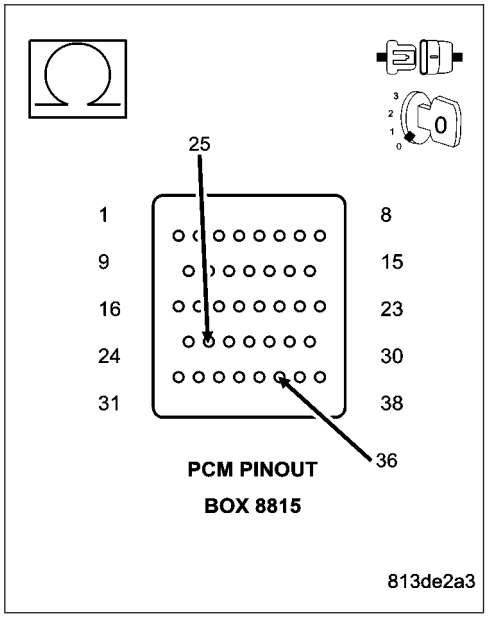

*NO RESPONSE FROM RADIO

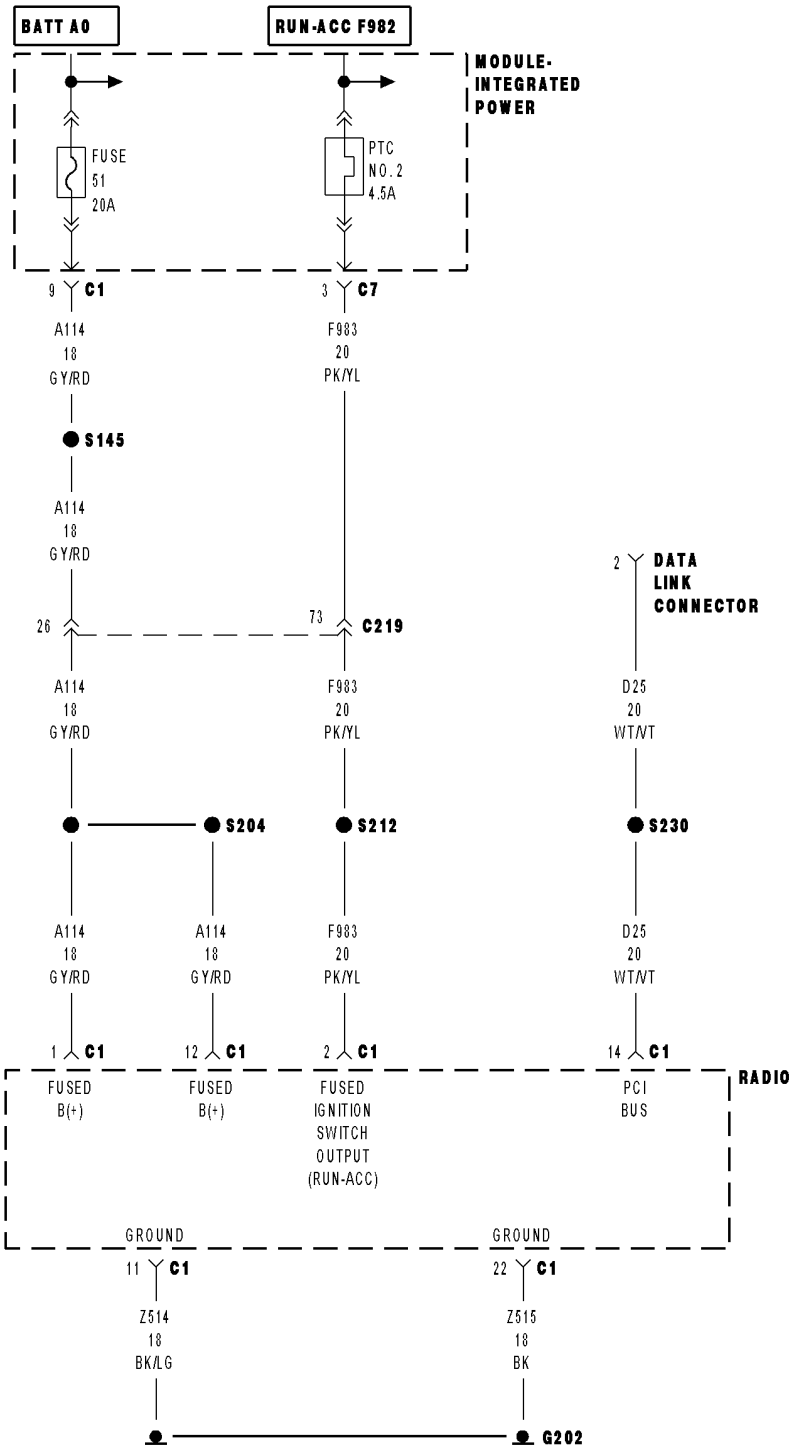

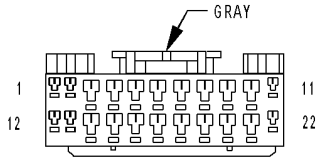

RADIO C1

813dfcd6

***NO RESPONSE FROM RADIO (CONTINUED)**

For a complete wiring diagram **Refer to Section 8W**.

Possible Causes
(Z514) (Z515) GROUND CIRCUIT OPEN
(A114) FUSED B+ CIRCUIT OPEN
(F983) FUSED IGNITION SWITCH OUTPUT CIRCUIT OPEN
(D25) PCI BUS CIRCUIT OPEN
RADIO

Diagnostic Test

1. ESTABLISH COMMUNICATIONS WITH THE INSTRUMENT CLUSTER (MIC)

Turn the ignition on.

NOTE: Ensure there is PCI bus communication with other modules. If not, refer to the PCI Bus Communication Failure symptom and repair as necessary.

With the DRB, attempt to communicate with the MIC.

Was the DRB able to I/D or communicate with the MIC?

Yes >> Go To 2

No >> Refer to the table of contents and perform the related symptom.
Perform BODY VERIFICATION TEST - VER 1. (Refer to BODY VERIFICATION TEST - VER 1.)

---

2. (Z514) (Z515) GROUND CIRCUIT OPEN

Turn the ignition off.

Disconnect the Radio C1 harness connector.

Using a 12-volt test light connected to 12-volts, probe each (Z514) (Z515) ground circuit.

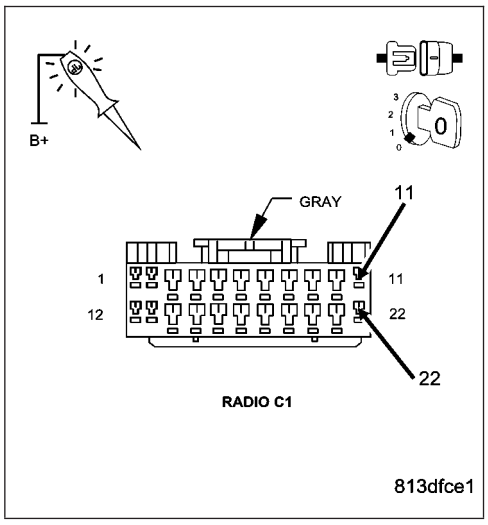

Is the test light illuminated for each circuit?

Yes >> Go To 3

No >> Repair the (Z514) (Z515) Ground circuit for an open.
Perform BODY VERIFICATION TEST - VER 1. (Refer to BODY VERIFICATION TEST - VER 1.)

***NO RESPONSE FROM RADIO (CONTINUED)**

3. (A114) FUSED B+ CIRCUIT OPEN

Using a 12-volt test light connected to ground, probe each (A114) Fused B+ circuit.

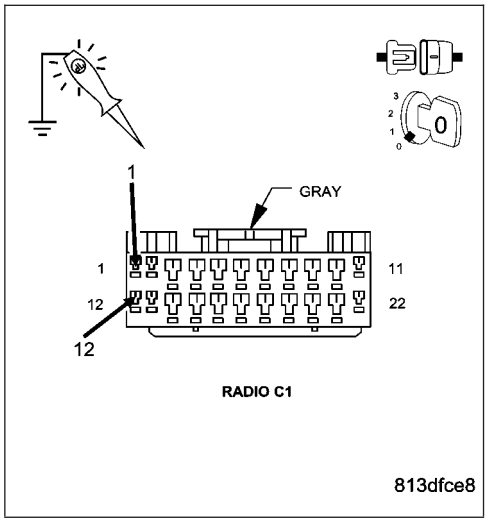

Is the test light illuminated for each circuit?

Yes >> Go To 4

No >> Repair the (A114) Fused B+ circuit for an open.
Perform BODY VERIFICATION TEST - VER 1. (Refer to BODY VERIFICATION TEST - VER 1.)

4. (F983) FUSED IGNITION SWITCH OUTPUT CIRCUIT OPEN

Turn the ignition on.

Using a 12-volt test light connected to ground, probe the (F983) Fused Ignition Switch Output circuit.

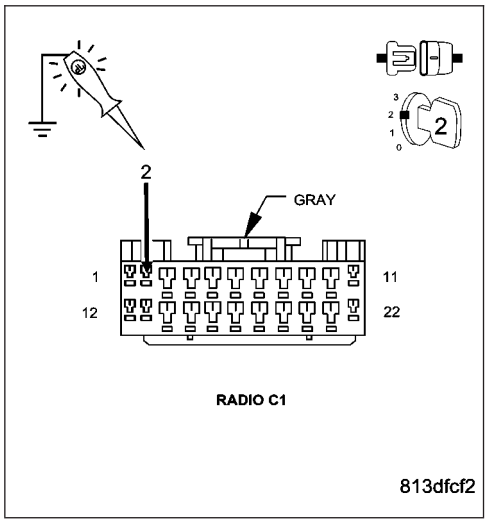

Is the test light illuminated?

Yes >> Go To 5

No >> Repair the (F983) Fused Ignition Switch Output circuit for an open.
Perform BODY VERIFICATION TEST - VER 1. (Refer to BODY VERIFICATION TEST - VER 1.)

***NO RESPONSE FROM RADIO (CONTINUED)**

5. (D25) PCI BUS CIRCUIT OPEN

Use Scope input cable CH7058, Cable to Probe adapter CH7062, and the red and black test probes.

Connect the scope input cable to the channel one connector on the DRB. Attach the red and black leads and the cable to probe adapter to the scope input cable.

With the DRBIII® select Pep Module Tools.

Select lab scope.

Select Live Data.

Select 12 volt square wave.

Press F2 for Scope.

Press F2 and use the down arrow to set voltage range to 20 volts. Press F2 again when complete.

Connect the Black lead to the chassis ground. Connect the Red lead to the PCI Bus circuit in the Radio connector.

Observe the voltage display on the DRB Lab Scope.

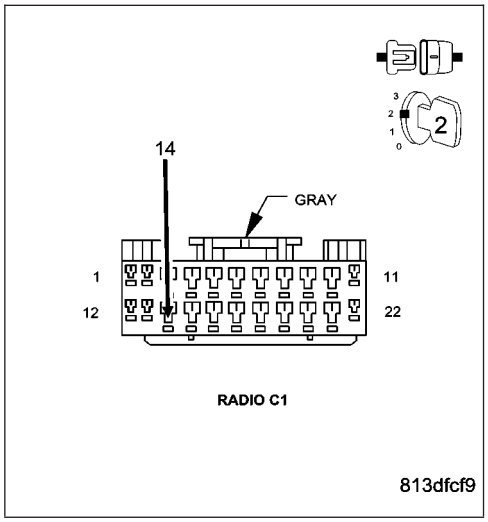

Does the voltage pulse from 0 to approximately 7.5 volts?

Yes >> Replace the Radio in accordance with the service information.
Perform BODY VERIFICATION TEST - VER 1. (Refer to BODY VERIFICATION TEST - VER 1.)

No >> Repair the (D25) PCI Bus circuit for an open.
Perform BODY VERIFICATION TEST - VER 1. (Refer to BODY VERIFICATION TEST - VER 1.)

*NO RESPONSE FROM SATELLITE RECEIVER

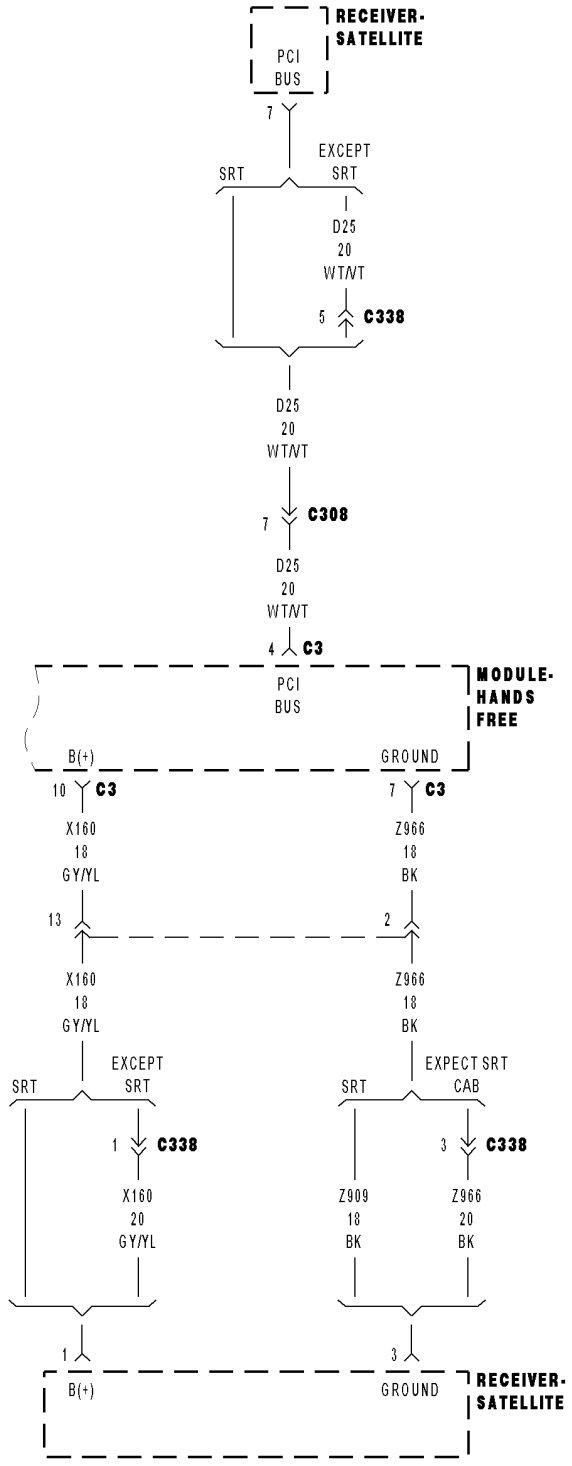

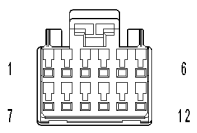

RECEIVER-SATELLITE

81450cfd

***NO RESPONSE FROM SATELLITE RECEIVER (CONTINUED)**

For a complete wiring diagram **Refer to Section 8W**.

Possible Causes
(Z909) (Z966) GROUND CIRCUIT OPEN
(X160) B+ CIRCUIT OPEN
(D25) PCI BUS CIRCUIT OPEN
SATELLITE RECEIVER

Diagnostic Test

1. ESTABLISH COMMUNICATIONS WITH THE RADIO

Turn the ignition on.

NOTE: Ensure there is PCI bus communication with other modules. If not, refer to the PCI Bus Communication Failure symptom and repair as necessary.

With the DRB, attempt to communicate with the radio.

With the DRB, attempt to communicate with the Hands Free Module (if equipped).

Was the DRB able to I/D or communicate with either module?

Yes >> Go To 2

No >> Refer to the table of contents and perform the related symptom.
Perform BODY VERIFICATION TEST - VER 1. (Refer to BODY VERIFICATION TEST - VER 1.)

---

2. (Z909) (Z966) GROUND CIRCUIT OPEN

Turn the ignition off.

Disconnect the Satellite Receiver harness connectors.

NOTE: The Satellite Receiver circuits pass thru the Hands Free Module (if equipped) or the Radio. Ensure all connections are proper. Refer to the wiring diagrams for additional information.

Using a 12-volt test light connected to 12-volts, probe each (Z909) and (Z966) ground circuit.

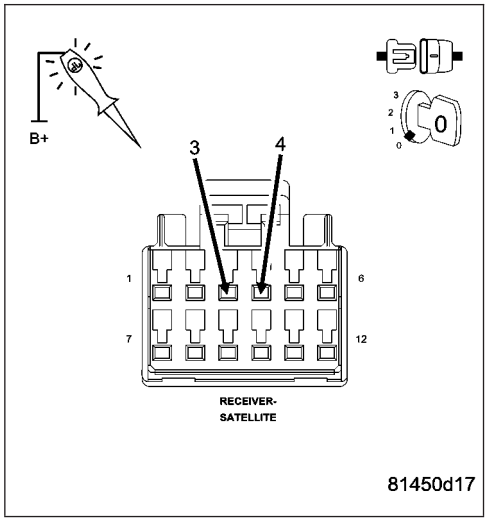

Is the test light illuminated for each circuit?

Yes >> Go To 3

No >> Repair the (Z909) or (Z966) Ground circuit for an open.
Perform BODY VERIFICATION TEST - VER 1. (Refer to BODY VERIFICATION TEST - VER 1.)

***NO RESPONSE FROM SATELLITE RECEIVER (CONTINUED)**

3. (X160) B+ CIRCUIT OPEN

Using a 12-volt test light connected to ground, probe the (X160) B+ circuit.

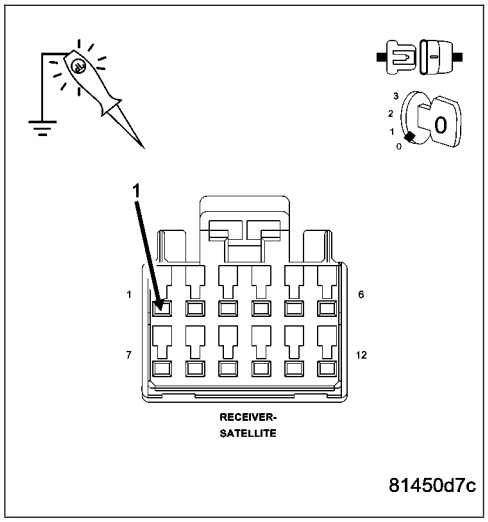

Is the test light illuminated?

Yes >> Go To 4

No >> Repair the (X160) B+ circuit for an open.
Perform BODY VERIFICATION TEST - VER 1. (Refer to BODY VERIFICATION TEST - VER 1.)

4. (D25) PCI BUS CIRCUIT OPEN

Turn the ignition on.

Use Scope input cable CH7058, Cable to Probe adapter CH7062, and the red and black test probes.

Connect the scope input cable to the channel one connector on the DRB. Attach the red and black leads and the cable to probe adapter to the scope input cable.

With the DRBIII® select Pep Module Tools.

Select lab scope.

Select Live Data.

Select 12 volt square wave.

Press F2 for Scope.

Press F2 and use the down arrow to set voltage range to 20 volts. Press F2 again when complete.

Connect the Black lead to the chassis ground. Connect the Red lead to the PCI Bus circuit in the Satellite Receiver connector.

Observe the voltage display on the DRB Lab Scope.

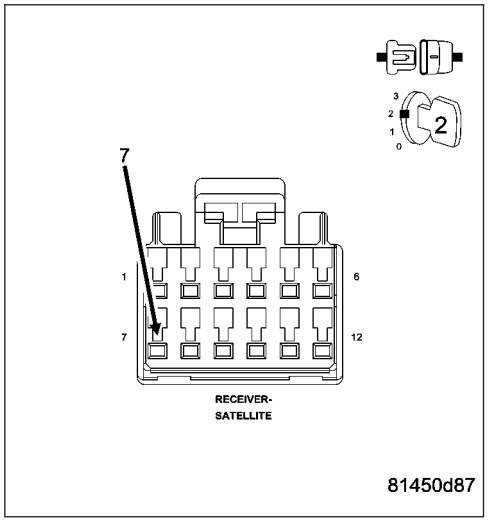

Does the voltage pulse from 0 to approximately 7.5 volts?

Yes >> Replace the Satellite Receiver in accordance with the service information.
Perform BODY VERIFICATION TEST - VER 1. (Refer to BODY VERIFICATION TEST - VER 1.)

No >> Repair the (D25) PCI Bus circuit for an open.
Perform BODY VERIFICATION TEST - VER 1. (Refer to BODY VERIFICATION TEST - VER 1.)

*NO RESPONSE FROM SENTRY KEY IMMOBILIZER MODULE (SKIM)

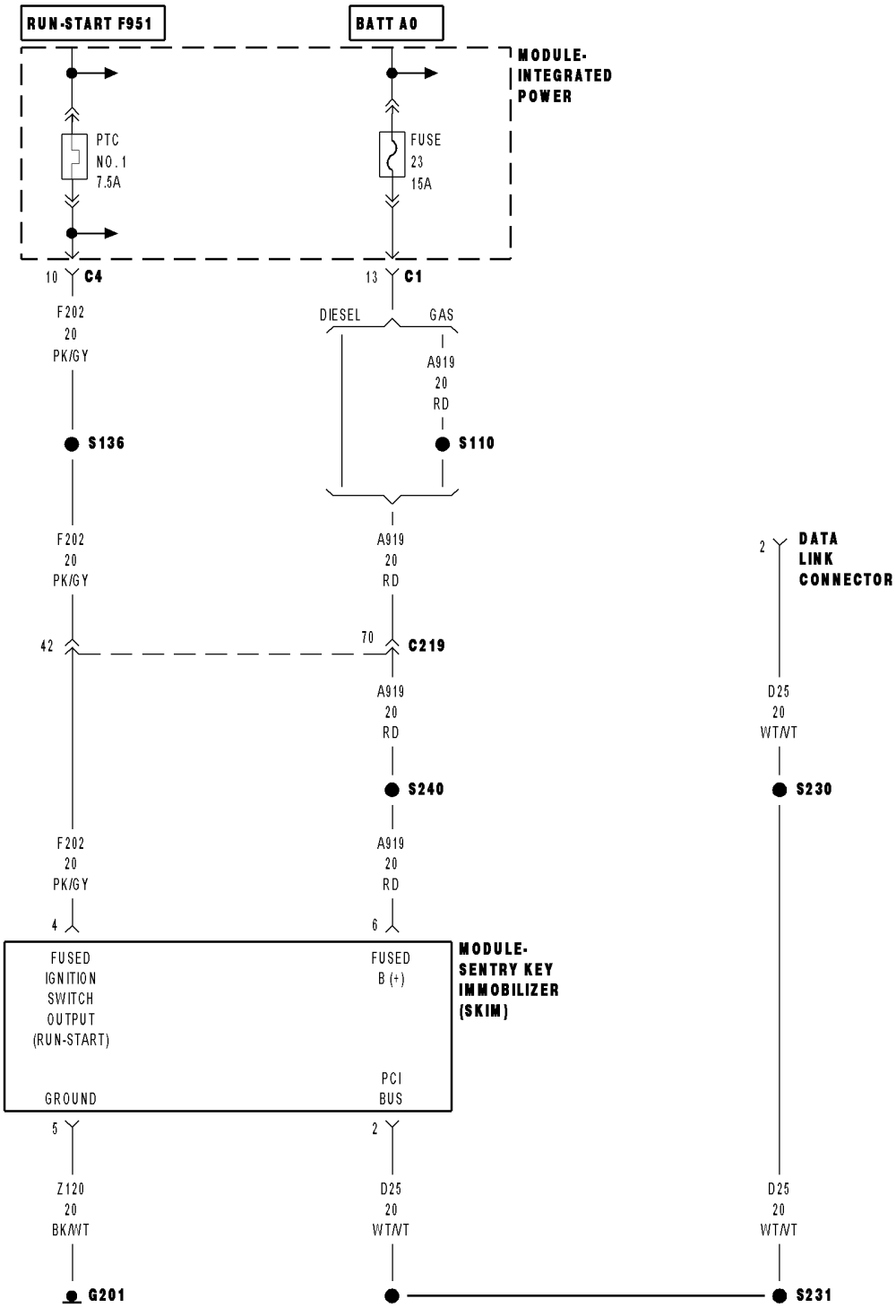

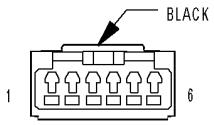

MODULE-
SENTRY KEY
IMMOBILIZER
(SKIM)

813e0693

***NO RESPONSE FROM SENTRY KEY IMMOBILIZER MODULE (SKIM) (CONTINUED)**
For a complete wiring diagram **Refer to Section 8W**.

Possible Causes
(Z120) GROUND CIRCUIT OPEN
(A919) FUSED B+ CIRCUIT OPEN
(F202) FUSED IGNITION SWITCH OUTPUT CIRCUIT OPEN
(D25) PCI BUS CIRCUIT OPEN
SENTRY KEY IMMOBILIZER MODULE (SKIM)

Diagnostic Test

1. ESTABLISH COMMUNICATIONS WITH THE INSTRUMENT CLUSTER (MIC)

Turn the ignition on.

NOTE: Ensure there is PCI bus communication with other modules. If not, refer to the PCI Bus Communication Failure symptom and repair as necessary.
With the DRB, attempt to communicate with the MIC.

Was the DRB able to I/D or communicate with the MIC?

Yes >> Go To 2

No >> Refer to the table of contents and perform the related symptom.
Perform SKIS VERIFICATION TEST

---

2. (Z120) GROUND CIRCUIT OPEN

Turn the ignition off.
Disconnect the SKIM harness connector.
Using a 12-volt test light connected to 12-volts, probe the (Z120) ground circuit.

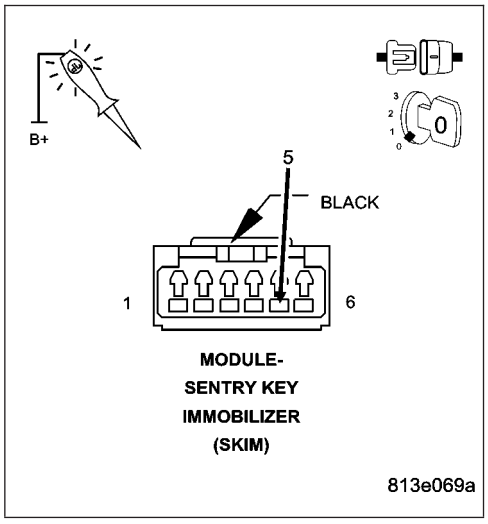

Is the test light illuminated?

Yes >> Go To 3

No >> Repair the (Z120) Ground circuit for an open.
Perform SKIS VERIFICATION TEST

***NO RESPONSE FROM SENTRY KEY IMMOBILIZER MODULE (SKIM) (CONTINUED)**

3. (A919) FUSED B+ CIRCUIT OPEN

Using a 12-volt test light connected to ground, probe the (A919) Fused B+ circuit.

Is the test light illuminated?

Yes >> Go To 4

No >> Repair the (A919) Fused B+ circuit for an open.
Perform SKIS VERIFICATION TEST

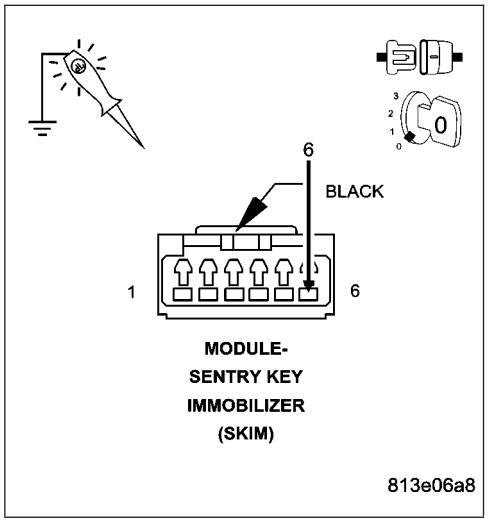

4. (F202) FUSED IGNITION SWITCH OUTPUT CIRCUIT OPEN

Turn the ignition on.

Using a 12-volt test light connected to ground, probe the (F202) Fused Ignition Switch Output circuit.

Is the test light illuminated?

Yes >> Go To 5

No >> Repair the (F202) Fused Ignition Switch Output circuit for an open.
Perform SKIS VERIFICATION TEST

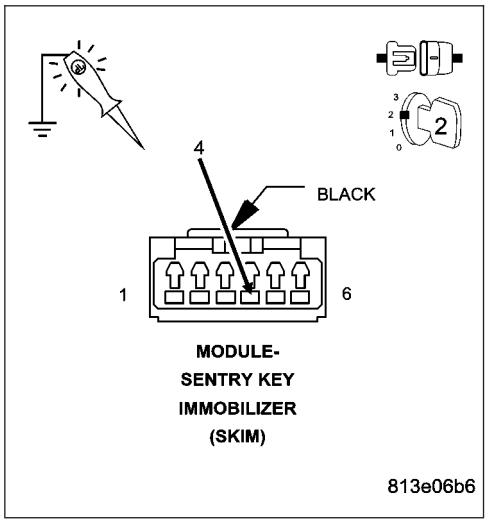

***NO RESPONSE FROM SENTRY KEY IMMOBILIZER MODULE (SKIM) (CONTINUED)**

5. (D25) PCI BUS CIRCUIT OPEN

Use Scope input cable CH7058, Cable to Probe adapter CH7062, and the red and black test probes.

Connect the scope input cable to the channel one connector on the DRB. Attach the red and black leads and the cable to probe adapter to the scope input cable.

With the DRBIII® select Pep Module Tools.

Select lab scope.

Select Live Data.

Select 12 volt square wave.

Press F2 for Scope.

Press F2 and use the down arrow to set voltage range to 20 volts. Press F2 again when complete.

Connect the Black lead to the chassis ground. Connect the Red lead to the PCI Bus circuit in the SKIM connector.

Observe the voltage display on the DRB Lab Scope.

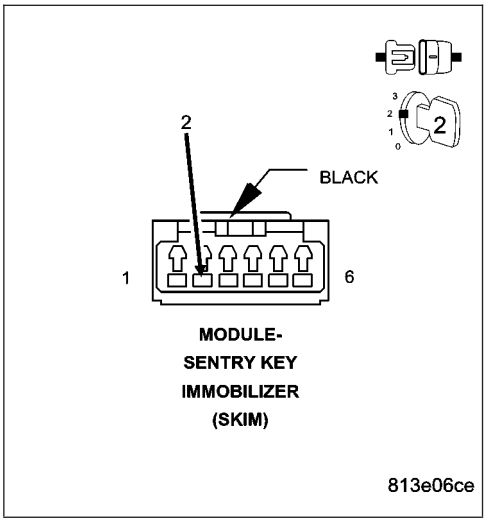

Does the voltage pulse from 0 to approximately 7.5 volts?

Yes >> Replace the Sentry Key Immobilizer Module (SKIM) in accordance with the service information.
Perform SKIS VERIFICATION TEST

No >> Repair the (D25) PCI Bus circuit for an open.
Perform SKIS VERIFICATION TEST

*NO RESPONSE FROM TRANSFER CASE CONTROL MODULE

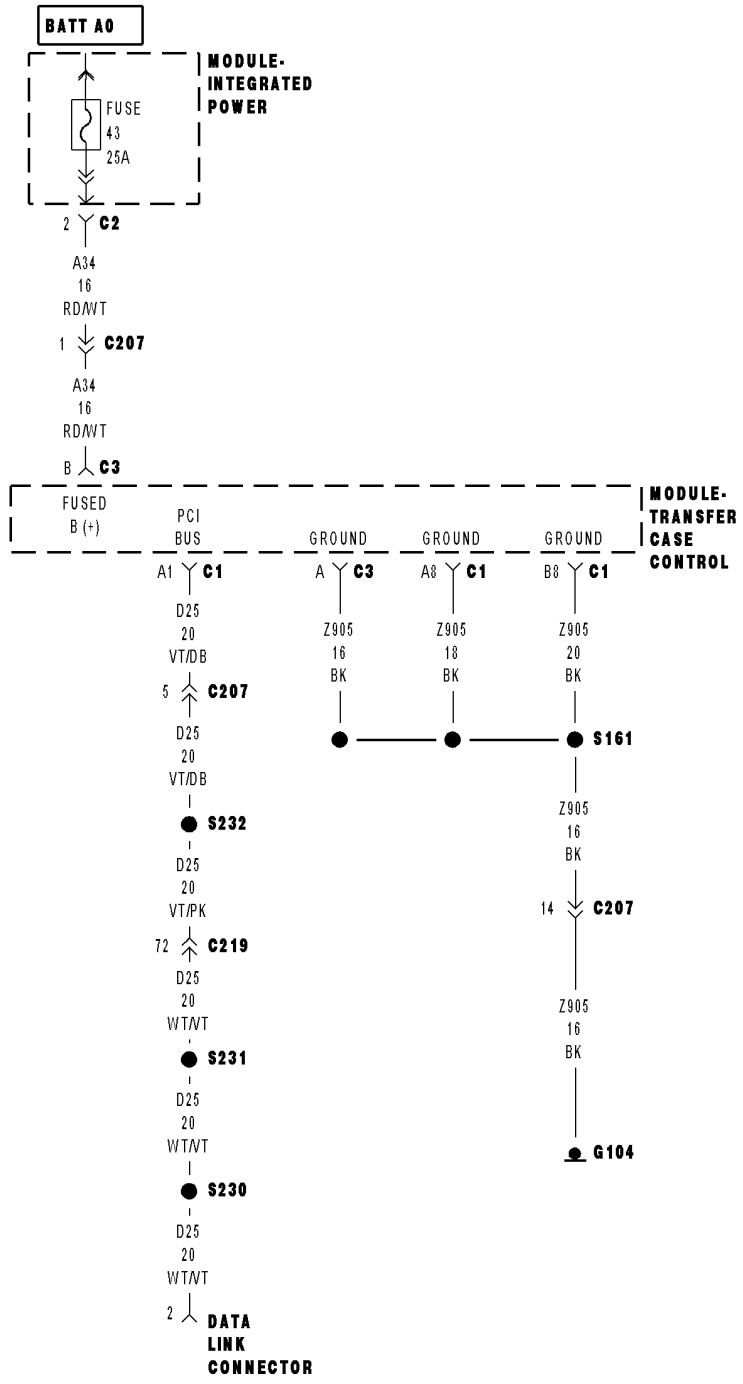

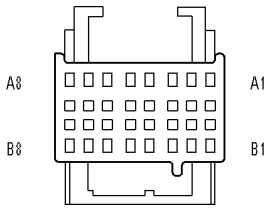

MODULE-
TRANSFER CASE
CONTROL C1
(ELECTRIC 4x4)

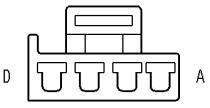

MODULE-
TRANSFER CASE
CONTROL C3
(ELECTRIC 4x4)

813e0ca3

***NO RESPONSE FROM TRANSFER CASE CONTROL MODULE (CONTINUED)**
For a complete wiring diagram **Refer to Section 8W**.

Possible Causes
(Z905) GROUND CIRCUIT OPEN
(A34) FUSED B+ CIRCUIT OPEN
(D25) PCI BUS CIRCUIT OPEN
TRANSFER CASE CONTROL MODULE

Diagnostic Test

1. ESTABLISH COMMUNICATIONS WITH THE INSTRUMENT CLUSTER (MIC)

Turn the ignition on.

NOTE: Ensure there is PCI bus communication with other modules. If not, refer to the PCI Bus Communication Failure symptom and repair as necessary.
With the DRB, attempt to communicate with the Instrument Cluster.

Was the DRB able to I/D or communicate with the Cluster?

Yes >> Go To 2

No >> Refer to the table of contents and perform the related symptom.
Perform TRANSFER CASE VERIFICATION TEST

---

2. (Z905) GROUND CIRCUIT OPEN

Turn the ignition off.
Disconnect the Transfer Case Control Module harness connectors.
Using a 12-volt test light connected to 12-volts, probe each (Z905) ground circuit.

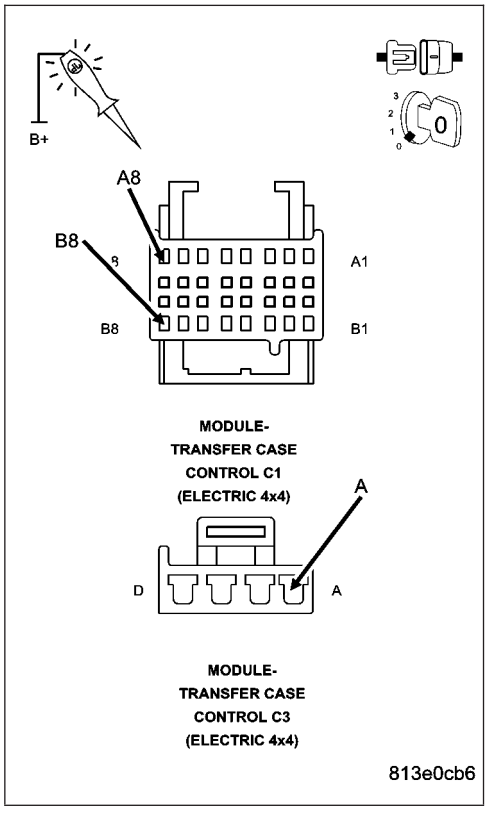

Is the test light illuminated for each circuit?

Yes >> Go To 3

No >> Repair the (Z905) Ground circuit for an open.
Perform TRANSFER CASE VERIFICATION TEST

***NO RESPONSE FROM TRANSFER CASE CONTROL MODULE (CONTINUED)**

3. (A34) FUSED B+ CIRCUIT OPEN

Using a 12-volt test light connected to ground, probe the (A34) Fused B+ circuit.

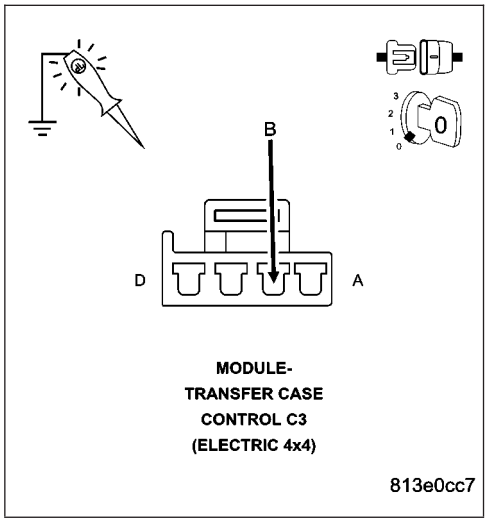

Is the test light illuminated?

Yes >> Go To 4

No >> Repair the (A34) Fused B+ circuit for an open.
Perform TRANSFER CASE VERIFICATION TEST

4. (D25) PCI BUS CIRCUIT OPEN

Turn the ignition on.

Use Scope input cable CH7058, Cable to Probe adapter CH7062, and the red and black test probes.

Connect the scope input cable to the channel one connector on the DRB. Attach the red and black leads and the cable to probe adapter to the scope input cable.

With the DRBIII® select Pep Module Tools.

Select lab scope.

Select Live Data.

Select 12 volt square wave.

Press F2 for Scope.

Press F2 and use the down arrow to set voltage range to 20 volts. Press F2 again when complete.

Connect the Black lead to the chassis ground. Connect the Red lead to the PCI Bus circuit in the TCCM connector.

Observe the voltage display on the DRB Lab Scope.

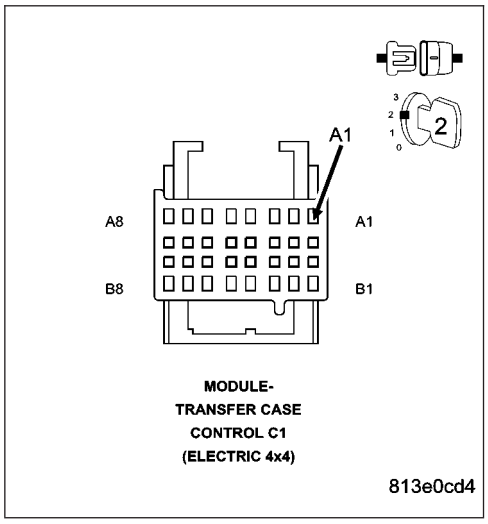

Does the voltage pulse from 0 to approximately 7.5 volts?

Yes >> Replace the Transfer Case Control Module in accordance with the service information.
Perform TRANSFER CASE VERIFICATION TEST

No >> Repair the (D25) PCI Bus circuit for an open.
Perform TRANSFER CASE VERIFICATION TEST

*NO RESPONSE FROM TRANSMISSION CONTROL MODULE - NGC

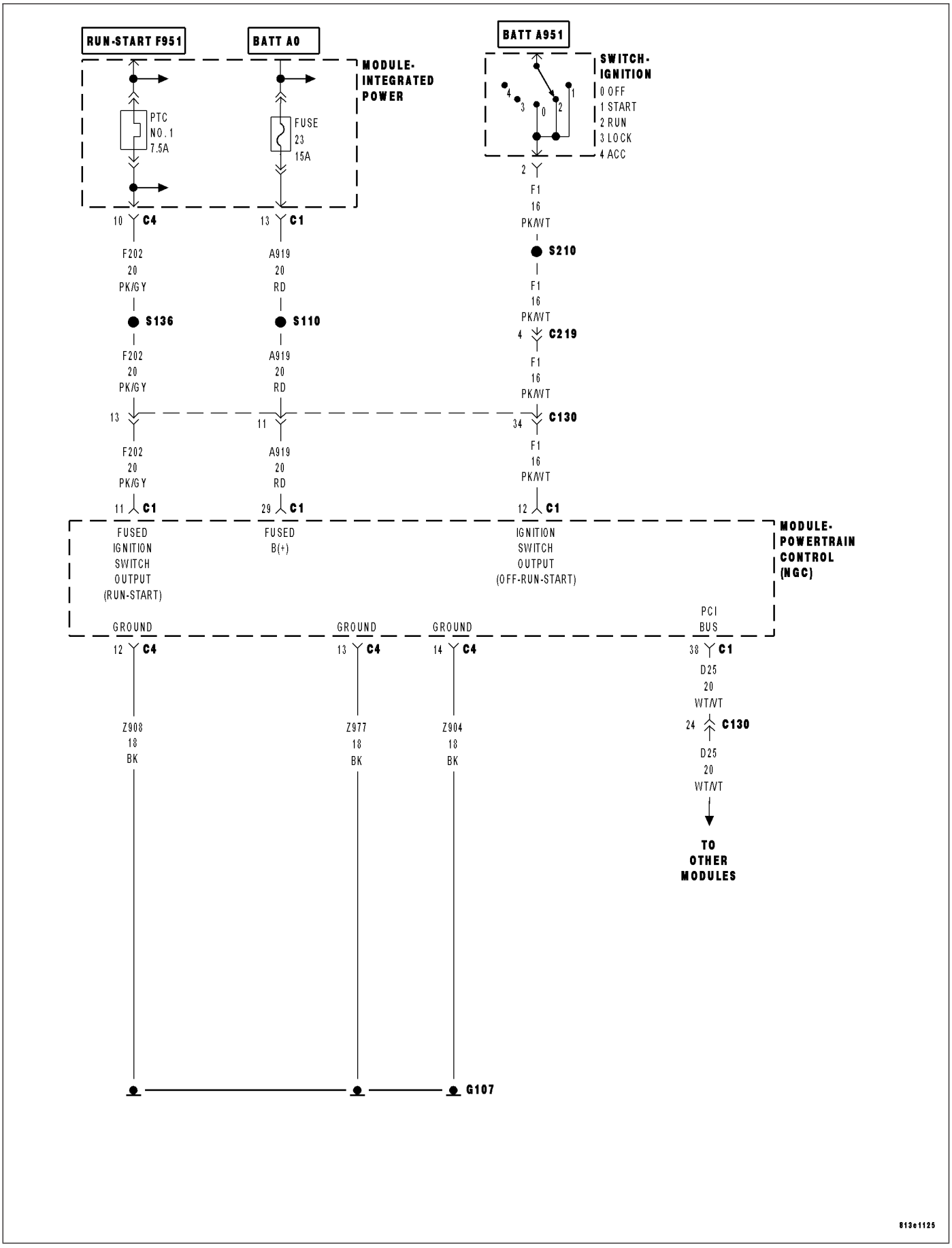

***NO RESPONSE FROM TRANSMISSION CONTROL MODULE - NGC (CONTINUED)**
For a complete wiring diagram **Refer to Section 8W**.

Possible Causes
(Z908) (Z977) (Z904) GROUND CIRCUIT OPEN
(A919) FUSED B+ CIRCUIT OPEN
(F202) (F1) FUSED IGNITION SWITCH OUTPUT CIRCUIT OPEN
(D25) PCI BUS CIRCUIT OPEN
POWERTRAIN CONTROL MODULE

Diagnostic Test

1. ESTABLISH COMMUNICATIONS WITH THE INSTRUMENT CLUSTER (MIC)

Turn the ignition on.

NOTE: Ensure there is PCI bus communication with other modules. If not, refer to the PCI Bus Communication Failure symptom and repair as necessary.
With the DRB, attempt to communicate with the MIC.

Was the DRB able to I/D or communicate with the MIC?

Yes >> Go To 2

No >> Refer to the table of contents and perform the related symptom.
Perform (NGC) 45RFE/545RFE TRANSMISSION VERIFICATION TEST VER 1.

---

2. (Z908) (Z977) (Z904) GROUND CIRCUIT OPEN

Turn the ignition off.
Disconnect the PCM C4 harness connector.

CAUTION: Do not probe the PCM harness connectors. Probing the PCM harness connectors will damage the PCM terminals resulting in poor terminal to pin connection. Install Miller Special Tool #8815 to perform diagnosis.
Using a 12-volt test light connected to 12-volts, probe each (Z908) (Z977) (Z904) ground circuit in the appropriate terminal of special tool #8815.

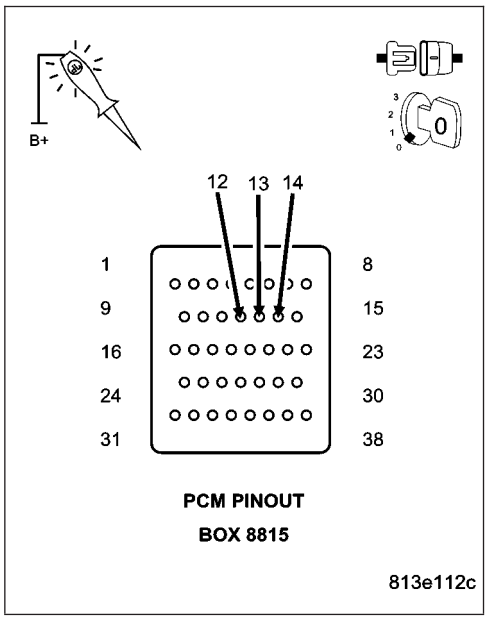

Is the test light illuminated for each circuit?

Yes >> Go To 3

No >> Repair the (Z908) (Z977) (Z904) Ground circuit for an open.
Perform (NGC) 45RFE/545RFE TRANSMISSION VERIFICATION TEST VER 1.

***NO RESPONSE FROM TRANSMISSION CONTROL MODULE - NGC (CONTINUED)**

3. (A919) FUSED B+ CIRCUIT OPEN

Disconnect the PCM C1 harness connector.

CAUTION: Do not probe the PCM harness connectors. Probing the PCM harness connectors will damage the PCM terminals resulting in poor terminal to pin connection. Install Miller Special Tool #8815 to perform diagnosis.

Using a 12-volt test light connected to ground, probe the (A919) Fused B+ circuit in the appropriate terminal of special tool #8815.

Is the test light illuminated?

Yes >> Go To 4

No >> Repair the (A919) Fused B+ circuit for an open.
Perform (NGC) 45RFE/545RFE TRANSMISSION VERIFICATION TEST VER 1.

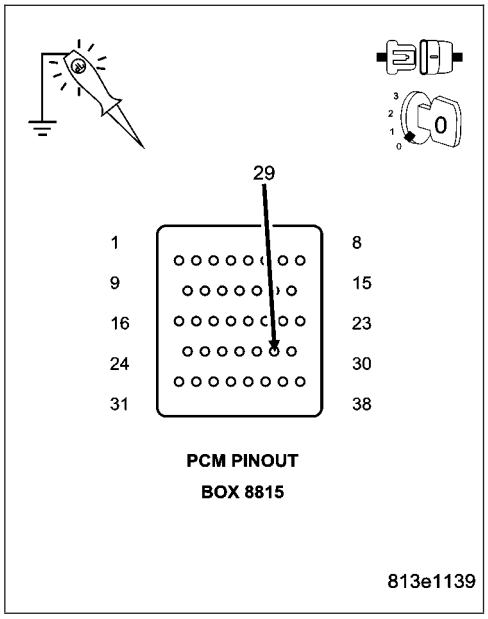

4. (F202) (F1) FUSED IGNITION SWITCH OUTPUT CIRCUIT OPEN

Turn the ignition on.

CAUTION: Do not probe the PCM harness connectors. Probing the PCM harness connectors will damage the PCM terminals resulting in poor terminal to pin connection. Install Miller Special Tool #8815 to perform diagnosis.

Using a 12-volt test light connected to ground, probe the (F202) and (F1) Fused Ignition Switch Output circuits in the appropriate terminal of special tool #8815.

Is the test light illuminated for each circuit?

Yes >> Go To 5

No >> Repair the (F202) (F1) Fused Ignition Switch Output circuit for an open.
Perform (NGC) 45RFE/545RFE TRANSMISSION VERIFICATION TEST VER 1.

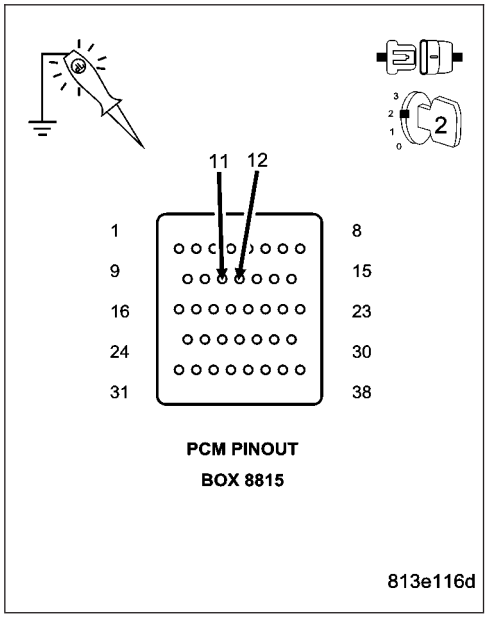

***NO RESPONSE FROM TRANSMISSION CONTROL MODULE - NGC (CONTINUED)**

5. (D25) PCI BUS CIRCUIT OPEN

CAUTION: Do not probe the PCM harness connectors. Probing the PCM harness connectors will damage the PCM terminals resulting in poor terminal to pin connection. Install Miller Special Tool #8815 to perform diagnosis.

Use Scope input cable CH7058, Cable to Probe adapter CH7062, and the red and black test probes.

Connect the scope input cable to the channel one connector on the DRB. Attach the red and black leads and the cable to probe adapter to the scope input cable.

With the DRBIII® select Pep Module Tools.

Select lab scope.

Select Live Data.

Select 12 volt square wave.

Press F2 for Scope.

Press F2 and use the down arrow to set voltage range to 20 volts. Press F2 again when complete.

Connect the Black lead to the chassis ground. Connect the Red lead to the PCI Bus circuit in the appropriate terminal of special tool #8815.

Observe the voltage display on the DRB Lab Scope.

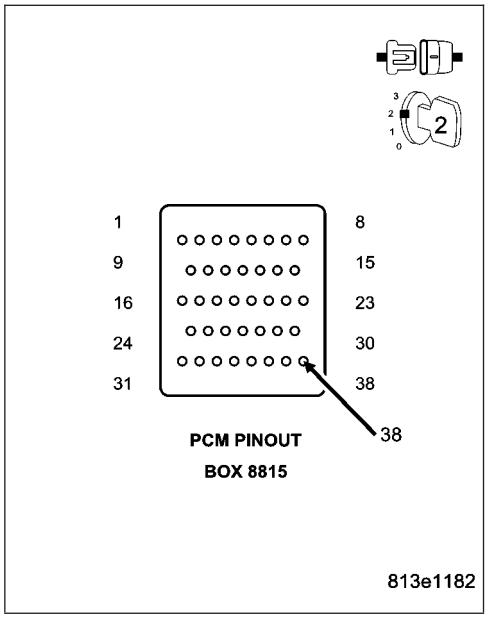

Does the voltage pulse from 0 to approximately 7.5 volts?

Yes >> Replace the Powertrain Control Module in accordance with the service information. With the DRB perform Quick Learn.
Perform (NGC) 45RFE/545RFE TRANSMISSION VERIFICATION TEST VER 1.

No >> Repair the (D25) PCI Bus circuit for an open.
Perform (NGC) 45RFE/545RFE TRANSMISSION VERIFICATION TEST VER 1.

*PCI BUS COMMUNICATION FAILURE

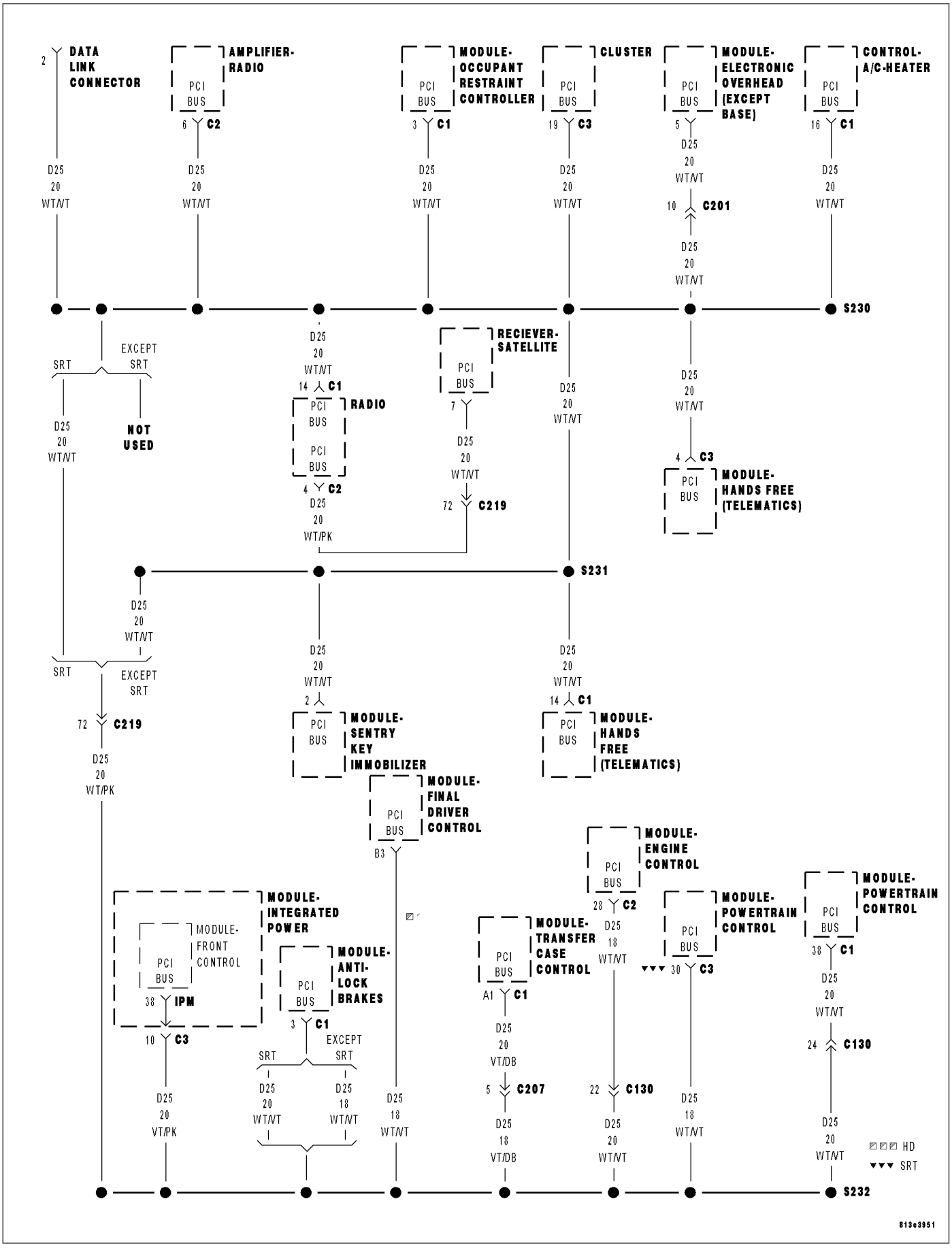

***PCI BUS COMMUNICATION FAILURE (CONTINUED)**

For a complete wiring diagram **Refer to Section 8W**.

Possible Causes
(D25) PCI BUS CIRCUIT OPEN AT DATA LINK CONNECTOR (DLC)
(D25) PCI BUS CIRCUIT SHORTED TO GROUND
(D25) PCI BUS CIRCUIT SHORTED TO VOLTAGE
ANY PCI BUS MODULE INTERNALLY SHORTED TO GROUND
ANY PCI BUS MODULE INTERNALLY SHORTED TO VOLTAGE

Diagnostic Test

1. ATTEMPT TO COMMUNICATION WITH ANY PCI BUS MODULE

NOTE: Determine which modules this vehicle is equipped with before beginning.

NOTE: When attempting to communicate with any PCI Bus module on this vehicle, the DRB can display 1 of 2 different communication errors: a NO RESPONSE message or a BUS +/- SIGNALS OPEN message.

Turn the ignition on.

Using the DRB, attempt to communicate with the Instrument Cluster (MIC).

Using the DRB, attempt to communicate with the Front Control Module (FCM).

Using the DRB, attempt to communicate with the Occupant Restraint Controller (ORC).

Was the DRB able to communicate with one or more modules?

Yes >> Go To 2

No >> Go To 3

---

2. CHECK FOR A INTERMITTENT CONDITION

Turn the ignition off.

NOTE: Visually inspect the related wiring harness. Look for any chafed, pierced, pinched, or partially broken wires.

NOTE: Visually inspect the related wire harness connectors. Look for broken, bent, pushed out, or corroded terminals.

NOTE: If the DRB can NOT communicate with a single module, refer to the table of contents in this section for a no response condition symptom.

Were any problems found?

Yes >> Repair the wiring harness/connectors as necessary.
Perform BODY VERIFICATION TEST - VER 1. (Refer to BODY VERIFICATION TEST - VER 1.)

No >> Test Complete.

***PCI BUS COMMUNICATION FAILURE (CONTINUED)**

3. (D25) PCI BUS CIRCUIT OPEN AT THE DLC

Turn the ignition off.

Disconnect the negative battery cable

Disconnect the DRB from the DLC.

Disconnect the PCM/ECM harness connectors. If equipped with NGC follow the caution below

CAUTION: Do not probe the PCM harness connectors. Probing the PCM harness connectors will damage the PCM terminals resulting in poor terminal to pin connection. Install Miller Special Tool #8815 to perform diagnosis.

Measure the resistance of the (D25) PCI Bus circuit between the DLC and the PCM/ECM harness connector.

Is the resistance below 5.0 ohms?

Yes >> Go To 4

No >> Repair the (D25) PCI Bus circuit for an open.
Perform BODY VERIFICATION TEST - VER 1. (Refer to BODY VERIFICATION TEST - VER 1.)

---

4. CHECK THE (D25) PCI BUS CIRCUIT FOR A SHORT TO VOLTAGE

NOTE: Reconnect the PCM/ECM harness connector and the negative battery cable.

Turn the ignition on.

Measure the voltage of the (D25) PCI Bus circuit at the DLC.

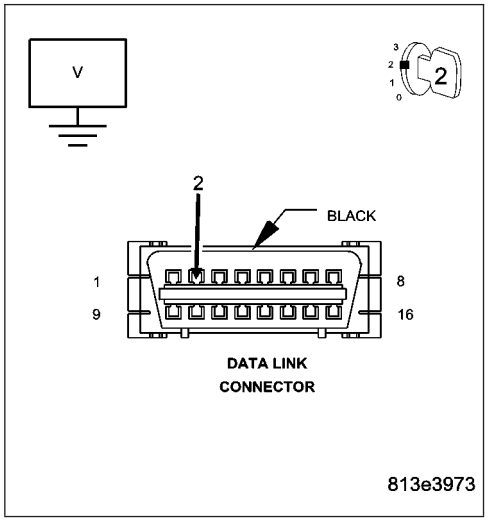

Is the voltage steadily above 7.0 volts?

Yes >> Go To 5

No >> Go To 6

---

*PCI BUS COMMUNICATION FAILURE (CONTINUED)

5. (D25) PCI BUS CIRCUIT SHORTED TO VOLTAGE

Turn the ignition off.

Using a voltmeter, connect one end to the (D25) PCI Bus circuit at the DLC and the other end to ground.

NOTE: When performing the next step, turn the ignition off and wait one minute before disconnecting any module. When the module is disconnected, turn the ignition on to check for a short to voltage.

Turn the ignition on.

While monitoring the voltmeter, disconnect each module the vehicle is equipped with one at a time.

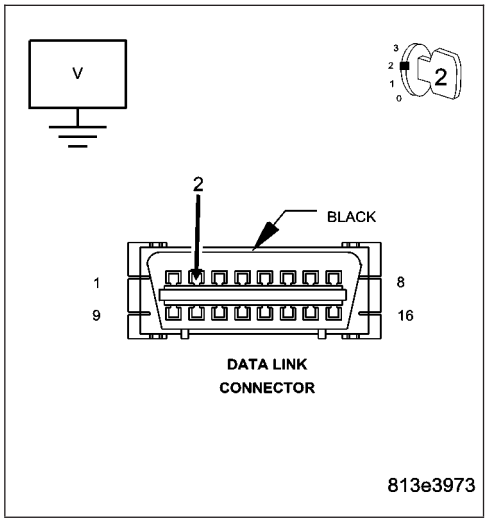

Is the voltage steadily above 7.0 volts with all the modules disconnected?

Yes >> Repair the (D25) PCI Bus circuit for a short to voltage.
Perform BODY VERIFICATION TEST - VER 1. (Refer to BODY VERIFICATION TEST - VER 1.)

No >> Replace the module that when disconnected the short to voltage was eliminated.
Perform BODY VERIFICATION TEST - VER 1. (Refer to BODY VERIFICATION TEST - VER 1.)

---

6. (D25) PCI BUS CIRCUIT SHORTED TO GROUND

Turn the ignition off.

Disconnect the negative battery cable.

Using a ohmmeter, connect one end to the (D25) PCI Bus circuit at the DLC and the other end to ground.

While monitoring the ohmmeter, disconnect each module the vehicle is equipped with one at a time.

NOTE: Total bus resistance to ground thru all of the modules is typically between 350 to 1000 ohms. The more modules on the PCI Bus, the lower the total resistance will be.

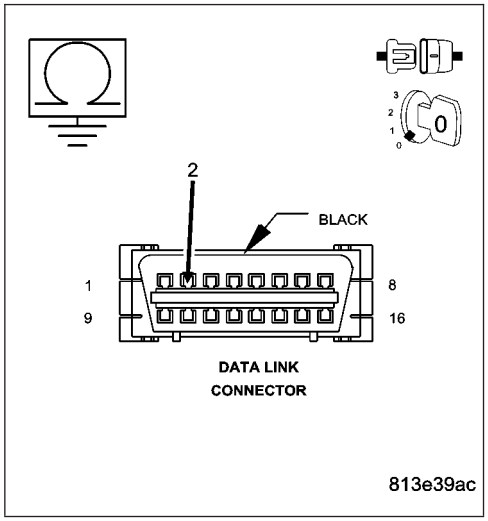

Is the resistance below 150.0 ohms with all the modules disconnected?

Yes >> Repair the (D25) PCI Bus circuit for a short to ground.
Perform BODY VERIFICATION TEST - VER 1. (Refer to BODY VERIFICATION TEST - VER 1.)

No >> Replace the module that when disconnected the short to ground was eliminated.
Perform BODY VERIFICATION TEST - VER 1. (Refer to BODY VERIFICATION TEST - VER 1.)

C2100–BATTERY VOLTAGE LOW (FDCM)

For a complete wiring diagram **Refer to Section 8W**

- **When Monitored:**
  Continuously.
- **Set Condition:**
  The Final Drive Control Module detects that system voltage is below 9.0 volts for 60 seconds.

Possible Causes
INTERMITTENT BATTERY VOLTAGE LOW
CHARGING SYSTEM DTCS PRESENT
FINAL DRIVE CONTROL MODULE POWER CIRCUITS OPEN OR HIGH RESISTANCE
FINAL DRIVE CONTROL MODULE

Diagnostic Test

1. CHARGING SYSTEM DTCS PRESENT

Ignition on.

With the scan tool, select View DTCs in the Powertrain Control Module.

Are there any Charging System or related voltage DTCs present?

Yes >> Refer to the symptom list and perform any Charging System DTC diagnostic procedures before continuing with this test.

No >> Go to 2

---

2. DTC IS ACTIVE

With the scan tool, select View DTCs in the Final Drive Control Module.

Is the status Active for this DTC?

Yes >> Go to 3

No >> Go to 5

C2100–BATTERY VOLTAGE LOW (FDCM) (CONTINUED)

3. (A34) FUSED B+ CIRCUIT OPEN OR HIGH RESISTANCE

Turn the ignition off.

Disconnect the Final Drive Control Module harness connector.

Turn the ignition on.

With a 12–volt test light connected to ground, check the (A34) Fused B+ circuit in the Final Drive Control Module harness connector.

NOTE: The test light must illuminate brightly. Compare the brightness to that of a direct connection to the battery.

Does the test light illuminate brightly?

Yes >> Go to 4

No >> Repair the (A34) Fused B+ circuit for an open circuit or high resistance.

Perform the FDCM VERIFICATION TEST. (Refer to 3 - DIFFERENTIAL & DRIVELINE - DIAGNOSIS AND TESTING)

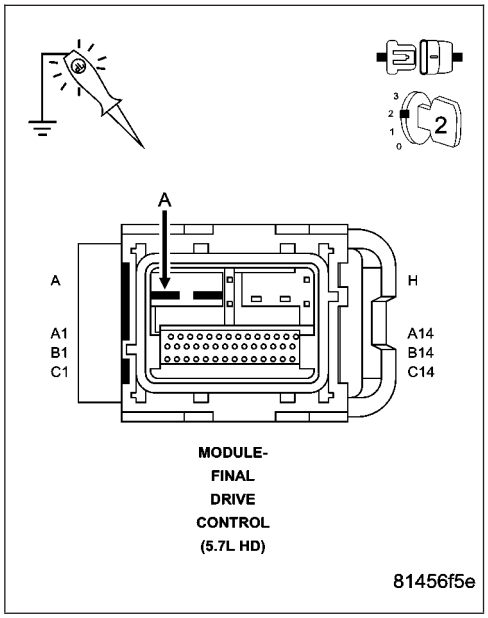

4. FINAL DRIVE CONTROL MODULE

View repair.

Repair

Replace the Final Drive Control Module in accordance with the Service information.

Perform the FDCM VERIFICATION TEST. (Refer to 3 - DIFFERENTIAL & DRIVELINE - DIAGNOSIS AND TESTING)

5. INTERMITTENT WIRING AND CONNECTORS

The conditions necessary to set this DTC are not present at this time.

Using the wiring diagram/schematic as a guide, inspect the wiring and connectors.

While monitoring the scan tool data relative to this circuit, wiggle test the wiring and connectors.

Look for the data to change or for the DTC to reset during the wiggle test.

Were any problems found?

Yes >> Repair as necessary.

Perform the FDCM VERIFICATION TEST. (Refer to 3 - DIFFERENTIAL & DRIVELINE - DIAGNOSIS AND TESTING)

No >> Test complete.

C2101–BATTERY VOLTAGE HIGH (FDCM)

For a complete wiring diagram **Refer to Section 8W**

- **When Monitored:**
  Continuously.
- **Set Condition:**
  The Final Drive Control Module detects that system voltage is above 16.0 volts for 10 seconds with engine RPM greater than 350.

Possible Causes
INTERMITTENT BATTERY VOLTAGE HIGH
CHARGING SYSTEM DTCS PRESENT
FINAL DRIVE CONTROL MODULE GROUND CIRCUITS OPEN OR HIGH RESISTANCE
FINAL DRIVE CONTROL MODULE

Diagnostic Test

1. CHARGING SYSTEM DTCS PRESENT

Ignition on.
With the scan tool, select View DTCs in the Powertrain Control Module.

Are there any Charging System or related voltage DTCs present?

Yes >> Refer to the symptom list and perform any Charging System DTC diagnostic procedures before continuing with this test.

No >> Go to 2

---

2. DTC IS ACTIVE

With the scan tool, select View DTCs in the Final Drive Control Module.

Is the status Active for this DTC?

Yes >> Go to 3

No >> Go to 5

C2101–BATTERY VOLTAGE HIGH (FDCM) (CONTINUED)

3. FINAL DRIVE CONTROL MODULE GROUND CIRCUITS OPEN OR HIGH RESISTANCE

Turn the ignition off.

Disconnect the Final Drive Control Module harness connector.

Turn the ignition on.

With a 12–volt test light connected to B+, check the Ground circuits in the Final Drive Control Module harness connector.

NOTE: The test light must illuminate brightly. Compare the brightness to that of a direct connection to the battery.

Does the test light illuminate brightly for each of the Ground circuits?

Yes >> Go to 4

No >> Repair the Ground circuit(s) for an open circuit or high resistance.

Perform the FDCM VERIFICATION TEST. (Refer to 3 - DIFFERENTIAL & DRIVELINE - DIAGNOSIS AND TESTING)

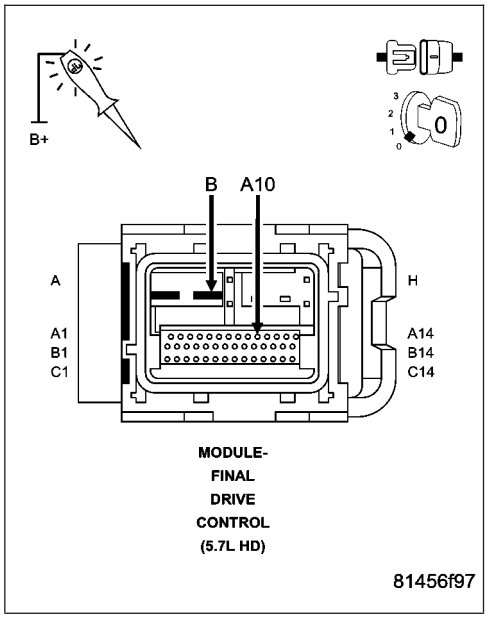

---

4. FINAL DRIVE CONTROL MODULE

View repair.

Repair

Replace the Final Drive Control Module in accordance with the Service information.

Perform the FDCM VERIFICATION TEST. (Refer to 3 - DIFFERENTIAL & DRIVELINE - DIAGNOSIS AND TESTING)

---

5. INTERMITTENT WIRING AND CONNECTORS

The conditions necessary to set this DTC are not present at this time.

Using the wiring diagram/schematic as a guide, inspect the wiring and connectors.

While monitoring the scan tool data relative to this circuit, wiggle test the wiring and connectors.

Look for the data to change or for the DTC to reset during the wiggle test.

Were any problems found?

Yes >> Repair as necessary.

Perform the FDCM VERIFICATION TEST. (Refer to 3 - DIFFERENTIAL & DRIVELINE - DIAGNOSIS AND TESTING)

No >> Test complete.

C2201-FDCM ECU INTERNAL (FDCM)

For a complete wiring diagram **Refer to Section 8W**

- **When Monitored:**
  With the ignition on.
- **Set Condition:**
  The Final Drive Control Module has detected a failure internal to the controller.

Possible Causes
FINAL DRIVE CONTROL MODULE

1. FINAL DRIVE CONTROL MODULE

The Final Drive Control Module has detected an internal failure.

View repair

Repair

Replace the Final Drive Control Module in accordance with the Service Information.

Perform the FDCM VERIFICATION TEST. (Refer to 3 - DIFFERENTIAL & DRIVELINE - DIAGNOSIS AND TESTING)

ELECTRONIC CONTROL MODULES - SERVICE INFORMATION

TABLE OF CONTENTS

page

ELECTRONIC CONTROL MODULES - SERVICE INFORMATION
STANDARD PROCEDURE
PCM/ECM/SKIM PROGRAMMING 101
COMMUNICATION
DESCRIPTION 102
OPERATION 102
MODULE-ANTI-LOCK BRAKES
DESCRIPTION 103
OPERATION 103
REMOVAL 104
INSTALLATION 104
DATA LINK CONNECTOR
DESCRIPTION 104
OPERATION 104
MODULE-ENGINE CONTROL - DIESEL
DESCRIPTION - ECM 105
OPERATION - ECM 105
DIAGNOSIS AND TESTING
POWERTRAIN VERIFICATION TEST VER - 1 (DIESEL) 108
POWERTRAIN VERIFICATION TEST VER - 2 (DIESEL) 109
POWERTRAIN VERIFICATION TEST VER - 4 (DIESEL) 110
POWERTRAIN VERIFICATION TEST VER - 5 (DIESEL) 112
REMOVAL 113
INSTALLATION 114
MODULE-FRONT CONTROL
DESCRIPTION 115
OPERATION 115
DIAGNOSIS AND TESTING
FRONT CONTROL MODULE 115
BODY VERIFICATION TEST - VER 1 116
REMOVAL 117
INSTALLATION 117
MODULE-HEATED SEATS
DESCRIPTION 118
OPERATION 118
DIAGNOSIS AND TESTING
HEATED SEAT MODULE 119
REMOVAL 119
INSTALLATION 119
MODULE-POWERTRAIN CONTROL
DESCRIPTION
DESCRIPTION - PCM 120
DESCRIPTION - MODES OF OPERATION . . 120
DESCRIPTION - 5 VOLT SUPPLIES 123
DESCRIPTION - IGNITION CIRCUIT SENSE 123
DESCRIPTION - POWER GROUNDS 124
DESCRIPTION - SENSOR RETURN 124
OPERATION
OPERATION - PCM 124
OPERATION - 5 VOLT SUPPLIES 125
OPERATION - IGNITION CIRCUIT SENSE . . 126
REMOVAL 126
INSTALLATION 127
MODULE-SENTRY KEY IMMOBILIZER
DESCRIPTION 128
OPERATION 129
REMOVAL 130
INSTALLATION 131
MODULE-TRANSFER CASE CONTROL
DESCRIPTION 134
OPERATION 134
DIAGNOSIS AND TESTING
TRANSFER CASE VERIFICATION TEST VER 1 139
MODULE-TRANSMISSION CONTROL
DESCRIPTION 140
OPERATION 140
DIAGNOSIS AND TESTING
PRE-DIAGNOSTIC CHECK OUT 144
PRE-DIAGNOSTIC CHECKOUT (DIESEL) . . 145
TRANSMISSION VERIFICATION TEST VER - 1 (GAS) 146
TRANSMISSION VERIFICATION TEST VER - 1 (DIESEL) 147
45RFE/545RFE TRANSMISSION VERIFICATION TEST - VER 1 148
STANDARD PROCEDURE
TCM QUICK LEARN 149
DRIVE LEARN 149

ELECTRONIC CONTROL MODULES - SERVICE INFORMATION

STANDARD PROCEDURE

PCM/ECM/SKIM PROGRAMMING

NOTE: Before replacing the Powertrain Control Module (PCM) or Engine Control Module (ECM), be certain to check the related component/circuit integrity for failures not detected due to a double fault in the circuit. Most PCM/ECM driver/control circuit failures are caused by internal component failures (i.e. relays and solenoids) and shorted circuits (i.e. pull-ups, drivers, and switched circuits). These failures are difficult to detect when a double fault has occurred and only one DTC has been set.

When a Powertrain Control Module (PCM) for a gasoline engine, or a Engine Control Module for a diesel engine and the Sentry Key Immobilizer Module (SKIM) on vehicles equipped with the Sentry Key Immobilizer System (SKIS) are replaced at the same time, perform the following steps in order:

1. Program the new PCM/ECM.
2. Program the new SKIM.
3. Replace all ignition keys and program them into the new SKIM.

PROGRAMMING THE PCM/ECM/SKIM

The SKIS Secret Key is an ID code that is unique to each SKIM. This code is programmed and stored in the SKIM, the PCM/ECM, and each ignition key transponder chip. When the PCM/ECM or SKIM is replaced, it is necessary to program the Secret Key into the new modules using a diagnostic scan tool. Follow the programming steps outlined in the diagnostic scan tool menu for the module being replaced as appropriate.

NOTE: Be certain to enter the correct country code for the SKIM. If the incorrect country code is programmed into the SKIM, it cannot be changed and the SKIM must be replaced.

NOTE: If the PCM/ECM and the SKIM are replaced at the same time, all vehicle ignition keys will need to be replaced and the new keys programmed into the new SKIM.

NOTE: Programming the PCM/ECM or SKIM is done using a diagnostic scan tool and a PIN to enter secure access mode. If three attempts are made to enter secure access mode using an incorrect PIN, secure access mode will be locked out for one hour. To exit this lockout mode, turn the ignition to the RUN position for one hour then enter the correct PIN. (Ensure all accessories are turned OFF. Also monitor the battery state and connect a battery charger if necessary).

PROGRAMMING IGNITION KEYS TO THE SKIM

Each ignition key transponder also has a unique ID code that is assigned at the time the key is manufactured. When a key is programmed into the SKIM, the transponder ID code is learned by the module and the transponder acquires the unique Secret Key ID code from the SKIM. To program ignition keys into the SKIM, follow the programming steps outlined in the diagnostic scan tool for “Program Ignition Keys or Key FOBs” under the “SKIM” menu item.

NOTE: A maximum of eight keys can be learned to each SKIM. Once a key is learned to a SKIM, that key has acquired the Secret Key for that SKIM and cannot be transferred to any other SKIM or vehicle.

If ignition key programming is unsuccessful, the scan tool will display one of the following error messages:

- **Programming Not Attempted** - The scan tool attempts to read the programmed key status and there are no keys programmed into SKIM memory.
- **Programming Key Failed (Possible Used Key From Wrong Vehicle)** - SKIM is unable to program an ignition key transponder due to one of the following:
  - The ignition key transponder is faulty.
  - The ignition key transponder is or has been already programmed to another vehicle.
- **8 Keys Already Learned, Programming Not Done** - The SKIM transponder ID memory is full.

- **Learned Key In Ignition** - The ID for the ignition key transponder currently in the ignition lock cylinder is already programmed into SKIM memory.

COMMUNICATION

DESCRIPTION

The DaimlerChrysler Programmable Communication Interface (PCI) data bus system is a single wire multiplex system used for vehicle communications on many DaimlerChrysler Corporation vehicles. Multiplexing is a system that enables the transmission of several messages over a single channel or circuit. All DaimlerChrysler vehicles use this principle for communication between various microprocessor-based electronic control modules. The PCI data bus exceeds the Society of Automotive Engineers (SAE) J1850 Standard for Class B Multiplexing.

Many of the electronic control modules in a vehicle require information from the same sensing device. In the past, if information from one sensing device was required by several controllers, a wire from each controller needed to be connected in parallel to that sensor. In addition, each controller utilizing analog sensors required an Analog/Digital (A/D) converter in order to ″read″ these sensor inputs. Multiplexing reduces wire harness complexity, sensor current loads and controller hardware because each sensing device is connected to only one controller, which reads and distributes the sensor information to the other controllers over the data bus. Also, because each controller on the data bus can access the controller sensor inputs to every other controller on the data bus, more function and feature capabilities are possible.

In addition to reducing wire harness complexity, component sensor current loads and controller hardware, multiplexing offers a diagnostic advantage. A multiplex system allows the information flowing between controllers to be monitored using a diagnostic scan tool. The DaimlerChrysler system allows an electronic control module to broadcast message data out onto the bus where all other electronic control modules can ″hear″ the messages that are being sent. When a module hears a message on the data bus that it requires, it relays that message to its microprocessor. Each module ignores the messages on the data bus that are being sent to other electronic control modules.

OPERATION

Data exchange between modules is achieved by serial transmission of encoded data over a single wire broadcast network. The wire colors used for the PCI data bus circuits are yellow with a violet tracer, or violet with a yellow tracer, depending upon the application. The PCI data bus messages are carried over the bus in the form of Variable Pulse Width Modulated (VPWM) signals. The PCI data bus speed is an average 10.4 Kilo-bits per second (Kbps). By comparison, the prior two-wire Chrysler Collision Detection (CCD) data bus system is designed to run at 7.8125 Kbps.

The voltage network used to transmit messages requires biasing and termination. Each module on the PCI data bus system provides its own biasing and termination. Each module (also referred to as a node) terminates the bus through a terminating resistor and a terminating capacitor. There are two types of nodes on the bus. The dominant node terminates the bus through a 1 KW resistor and a 3300 pF capacitor. The Powertrain Control Module (PCM) is the only dominant node for the PCI data bus system. A standard node terminates the bus through an 11 KW resistor and a 330 pF capacitor.

The modules bias the bus when transmitting a message. The PCI bus uses low and high voltage levels to generate signals. Low voltage is around zero volts and the high voltage is about seven and one-half volts. The low and high voltage levels are generated by means of variable-pulse width modulation to form signals of varying length. The Variable Pulse Width Modulation (VPWM) used in PCI bus messaging is a method in which both the state of the bus and the width of the pulse are used to encode bit information. A ″zero″ bit is defined as a short low pulse or a long high pulse. A ″one″ bit is defined as a long low pulse or a short high pulse. A low (passive) state on the bus does not necessarily mean a zero bit. It also depends upon pulse width. If the width is short, it stands for a zero bit. If the width is long, it stands for a one bit. Similarly, a high (active) state does not necessarily mean a one bit. This too depends upon pulse width. If the width is short, it stands for a one bit. If the width is long, it stands for a zero bit.

In the case where there are successive zero or one data bits, both the state of the bus and the width of the pulse are changed alternately. This encoding scheme is used for two reasons. First, this ensures that only one symbol per transition and one transition per symbol exists. On each transition, every transmitting module must decode the symbol on the bus and begin timing of the next symbol. Since timing of the next symbol begins with the last transition detected on the bus, all of the modules are re-synchronized with each symbol. This ensures that there are no accumulated timing errors during PCI data bus communication.

The second reason for this encoding scheme is to guarantee that the zero bit is the dominant bit on the bus. When two modules are transmitting simultaneously on the bus, there must be some form of arbitration to determine which module will gain control. A data collision occurs when two modules are transmitting different messages at the same time. When a module is transmitting on the bus, it is reading the bus at the same time to ensure message integrity. When a collision is detected, the module that transmitted the one bit stops sending messages over the bus until the bus becomes idle.

Each module is capable of transmitting and receiving data simultaneously. The typical PCI bus message has the following four components:

- **Message Header** - One to three bytes in length. The header contains information identifying the message type and length, message priority, target module(s) and sending module.
- **Data Byte(s)** - This is the actual message that is being sent.
- **Cyclic Redundancy Check (CRC) Byte** - This byte is used to detect errors during a message transmission.
- **In-Frame Response (IFR) byte(s)** - If a response is required from the target module(s), it can be sent during this frame. This function is described in greater detail in the following paragraph.

The IFR consists of one or more bytes, which are transmitted during a message. If the sending module requires information to be received immediately, the target module(s) can send data over the bus during the original message. This allows the sending module to receive time-critical information without having to wait for the target module to access the bus. After the IFR is received, the sending module broadcasts an End of Frame (EOF) message and releases control of the bus.

The PCI data bus can be monitored using a diagnostic scan tool. It is possible, however, for the bus to pass all diagnostic scan tool tests and still be faulty if the voltage parameters are all within the specified range and false messages are being sent.

MODULE-ANTI-LOCK BRAKES

DESCRIPTION

The Antilock Brake Module (ABM) is mounted to the Hydraulic Control Unit (HCU) and operates the ABS system.

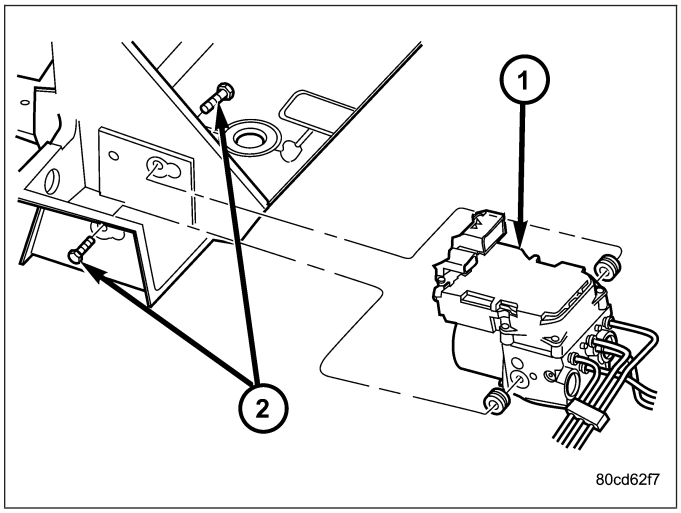

OPERATION

The ABM voltage source is through the ignition switch in the RUN position. The ABM contains a self check program that illuminates the ABS warning light when a system fault is detected. Faults are stored in a diagnostic program memory and are accessible with the DRB III scan tool. ABS faults remain in memory until cleared, or until after the vehicle is started approximately 50 times. Stored faults are **not** erased if the battery is disconnected.

NOTE: If the ABM is being replaced with a new ABM is must be reprogrammed with the use of a DRB III.

REMOVAL

1. Remove the negative battery cable from the battery.
2. Pull up on the ABM harness connector release and remove connector.
3. Remove the ABM mounting bolts.
4. Remove the pump connector from the ABM.
5. Remove the ABM from the HCU.

INSTALLATION

NOTE: If the ABM is being replaced with a new ABM is must be reprogrammed with the use of a DRB III.

1. Install ABM to the HCU.
2. Install the pump connector to the ABM.
3. Install mounting bolts. Tighten to 2 N·m (16 in. lbs.).
4. Install the wiring harness connector to the ABM and push down on the release to secure the connector.
5. Install negative battery cable to the battery.

DATA LINK CONNECTOR

DESCRIPTION

The Data Link Connector (DLC) (3) is a 16-way molded plastic connector insulator on a dedicated take out of the instrument panel wire harness. This connector is located at the lower edge of the instrument panel, outboard of the steering column. The connector insulator is retained by integral snap features within a rectangular cutout in the stamped metal lower instrument panel reinforcement (2), just below the lower edge of the instrument panel steering column opening cover (1).

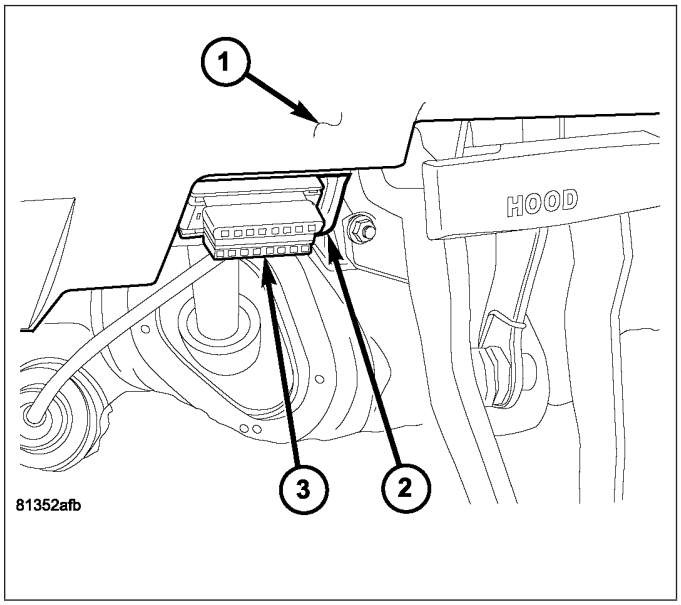

OPERATION

The Data Link Connector (DLC) is an industry-standard 16-way connector that permits the connection of a diagnostic scan tool to the Programmable Communications Interface (PCI) data bus for interfacing with, configuring, and retrieving Diagnostic Trouble Code (DTC) data from the electronic modules that reside on the data bus network within the vehicle.

MODULE-ENGINE CONTROL - DIESEL

DESCRIPTION - ECM

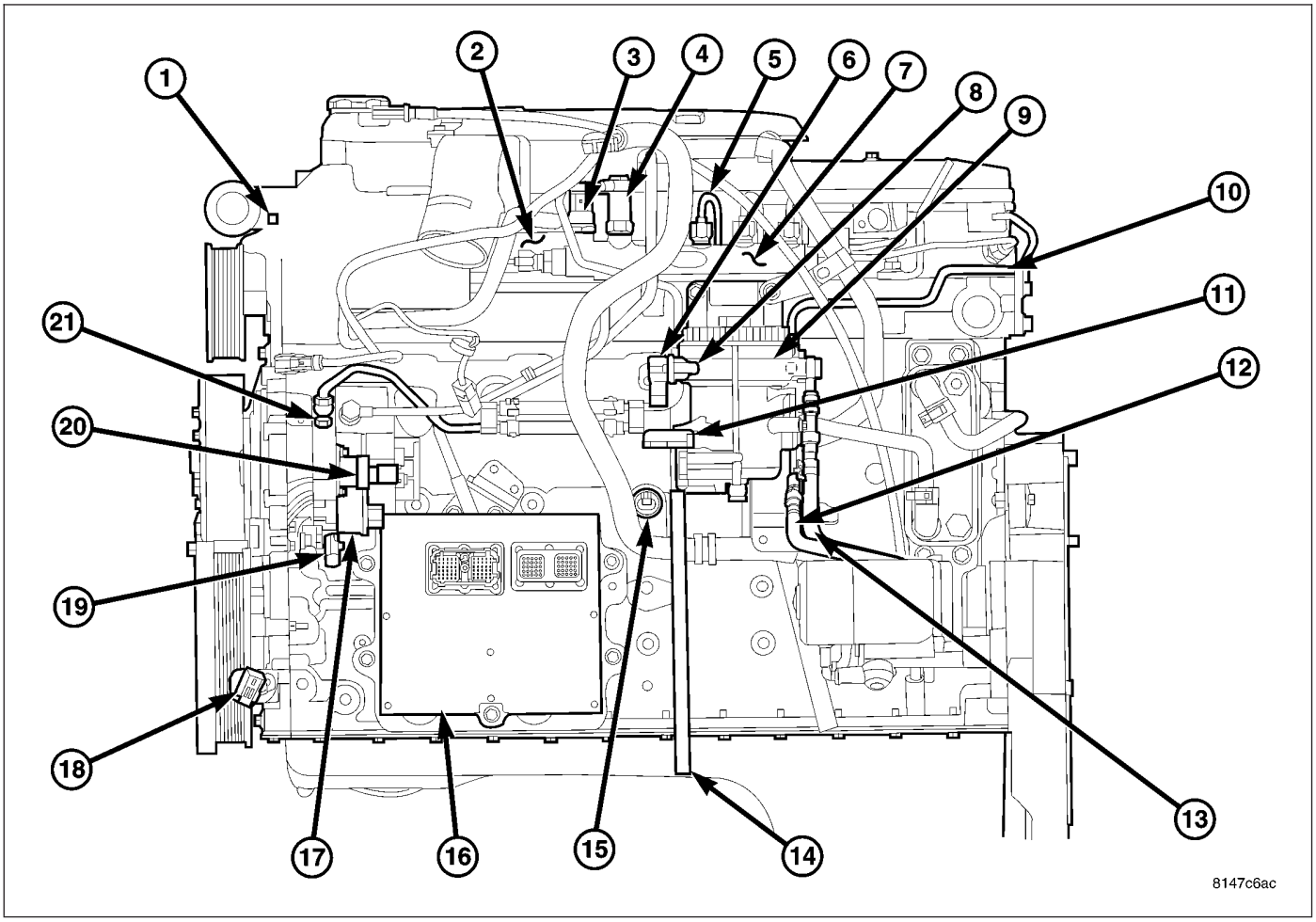

CUMMINS FUEL SYSTEM COMPONENTS

1 - ENGINE COOLANT TEMPERATURE (ECT) SENSOR
2 - INTAKE MANIFOLD AIR HEATER/ELEMENTS
3 - FUEL PRESSURE SENSOR
4 - FUEL PRESSURE LIMITING VALVE
5 - HIGH-PRESSURE FUEL LINES
6 - FUEL HEATER
7 - HIGH-PRESSURE FUEL RAIL
8 - FUEL HEATER TEMPERATURE SENSOR (THERMOSTAT)
9 - FUEL FILTER/WATER SEPARATOR
10 - FUEL DRAIN MANIFOLD (CYLINDER HEAD FUEL RETURN LINE)
11 - DRAIN VALVE
12 - FUEL RETURN LINE CONNECTION (TO FUEL TANK)
13 - FUEL SUPPLY LINE (LOW-PRESSURE, TO ENGINE)
14 - FUEL DRAIN TUBE
15 - OIL PRESSURE SWITCH
16 - ENGINE CONTROL MODULE (ECM)
17 - FUEL INJECTION PUMP
18 - CRANKSHAFT POSITION (ENGINE SPEED) SENSOR
19 - CAMSHAFT POSITION SENSOR (CMP)
20 - FUEL CONTROL ACTUATOR (FCA)
21 - CASCADE OVERFLOW VALVE

The Engine Control Module (ECM) for the 5.9L diesel engine (16) is bolted to the left side of the engine below the intake manifold.

OPERATION - ECM

The main function of the Engine Control Module (ECM) is to electrically control the fuel system. The ECM also controls certain transmission and other functions previously controlled by the Powertrain Control Module (PCM).

The ECM can adapt its programming to meet changing operating conditions.

The ECM receives input signals from various switches and sensors. Based on these inputs, the ECM regulates various engine and vehicle operations through different system components. These components are referred to as **ECM Outputs.** The sensors and switches that provide inputs to the ECM are considered **ECM Inputs.**

NOTE: ECM Inputs:

- Accelerator Pedal Position Sensor (APPS) Signals #1 and #2
- AC system pressure
- Auto shutdown (ASD) sense
- Battery temperature
- Battery temperature sensor
- Battery voltage
- Brake switch
- Camshaft Position Sensor (CMP)
- Crankshaft Position Sensor (CKP)
- Data link connection for DRB scan tool
- Engine Coolant Temperature (ECT) sensor
- EATX module (if equipped)
- Fuel level
- Fuel pressure sensor
- Fan speed (engine cooling fan)
- Generator (battery voltage) output
- Governor pressure (Auto. trans.)
- Ground circuits
- Inlet air temperature sensor/pressure sensor
- Intake air temperature sensor/MAP sensor
- J1850 bus (+) circuits
- J1850 bus (-) circuits
- Key switch (ignition)
- Oil Pressure switch
- Overdrive switch (automatic transmission only)
- Park/neutral switch (auto. trans. only)
- Power ground
- SCI datalink bus (+) circuits
- SCI datalink bus (-) circuits
- Sensor return
- Signal ground
- Speed control multiplexed single wire input
- Transfer case switch (4WD range position)
- Transmission governor psi (automatic transmission only)
- Transmission OSS (automatic transmission only)
- Transmission oil pressure (automatic transmission only)
- Transmission oil temperature (automatic transmission only)
- Transmission throttle valve position (automatic transmission only)
- Vehicle speed signal
- Water-In-Fuel (WIF) sensor

NOTE: ECM Outputs:

After inputs are received by the ECM, certain sensors, switches and components are controlled or regulated by the ECM. These are considered **ECM Outputs.** These outputs are for:

- A/C clutch relay
- Auto shutdown (ASD) relay
- Data link connection for DRB scan tool
- Fan clutch PWM
- Five volt sensor supply (primary)
- Five volt sensor supply (secondary)
- Fuel control actuator
- Fuel injector driver circuits
- Fuel transfer (lift) pump
- Generator field driver (-)
- Generator field driver (+)
- Governor pressure (VFS solenoid)
- Intake manifold air heater relays #1 and #2 control circuits
- J1850 bus (+/-) circuits for: speedometer, voltmeter, fuel gauge, oil pressure gauge/lamp, engine temp. gauge and speed control warn. lamp
- Malfunction indicator lamp (Check engine lamp). Driven through J1850 circuits.
- Oil pressure switch/warning lamp (databus)
- Overdrive/3–4 shift solenoid (automatic transmission only)
- SC source
- SCI datalink bus (+) circuits
- SCI datalink bus (-) circuits
- Speed control vacuum solenoid
- Speed control vent solenoid
- Tachometer (if equipped). Driven through J1850 circuits.
- TCC solenoid (automatic transmission only)
- Transmission battery relay (automatic transmission only)
- Transmission throttle valve actuator (automatic transmission only)
- Transmission governor psi solenoid (automatic transmission only)
- Wait-to-start warning lamp (databus)
- Turbo wastegate solenoid
- Water-In-Fuel (WIF) warning lamp (databus)

DIAGNOSIS AND TESTING

POWERTRAIN VERIFICATION TEST VER - 1 (DIESEL)

Diagnostic Test

1. POWERTRAIN VERIFICATION TEST VER - 1 (DIESEL)

1. Clear the DTC before continuing.
2. Check if any of the following conditions exist.
3. The ECM has been disconnected or replaced.
4. The battery power has been disconnected.
5. If the ECM has been replaced, do the following: (Other go to step 12).

NOTE: 8. If the Engine Control Module has been replaced and the correct VIN and mileage have not been programmed, a DTC will be set in the ABS, Airbag Modules and SKIM module.

6. For ABS and Airbag Systems: Action: Enter correct VIN and Mileage in PCM. Erase ABS and Airbag Module codes.
7. If the ECM has not been replaced, do the following.
8. Inspect the vehicles to ensure that all engine components are connected. Reassemble and reconnect components as necessary.
9. Attempt to start the engine.
10. If the engine is unable to start, look for any Technical Service Bulletins that may relate to this condition. Return to Symptom list if necessary.
11. If the there are no DTCs present and all components are functional, the repair is complete.

Are any DTC(s) present?

Yes >> Repair is not complete, refer to appropriate symptom.

No >> Repair is complete.

POWERTRAIN VERIFICATION TEST VER - 2 (DIESEL)

Diagnostic Test

1. POWERTRAIN VERIFICATION TEST VER - 2 (DIESEL)

1. Check if any of the following conditions exist.
2. The ECM has been disconnected or replace.
3. The Battery power has been disconnected.
4. If the PCM has been replaced, do the following: (Otherwise go to step 12)

NOTE: 5. If the Engine Control Module has been changed and the correct VIN andmileage have not been programmed, a DTC will be set in the ABS and Airbag Module.

6. For ABS and Airbag Systems: Action: Enter correct VIN and Mileage in the ECM. Erase ABS and Airbag Module codes.
7. If the ECM has been replace, do the following.
8. If this verification procedure is being performed after a No Trouble Code repair, do the following.
9. Check to see if the initial symptom still exists. If the initial or another symptom exists, the repair is not complete. Check all pertinent Technical Service Bulletins and return to the Symptom list if necessary.
10. If this verification procedure is being performed after a Trouble Code repair, do the following.
11. Connect the scan tool to the data link connector and erase trouble codes.
12. With the scan tool, reset all memory values.
13. If this test is for an A/C trouble code, ensure it is operating during the following road test.
14. Drive the vehicle for at least five minutes, For some of the drive, go at least 40 MPH; at some point stop the vehicle and turn the engine off for 10 seconds or more; then restart and continue. Ensure the transmission shifts through all gears.
15. Upon completion of the road test, turn the engine off and read trouble codes with the scan tool. If a trouble code has been set, return to the Symptom list and follow the path specified.

Is there any DTC(s) present?

Yes >> Repair is not complete, refer to appropriate symptom.

No >> Repair is complete.

POWERTRAIN VERIFICATION TEST VER - 4 (DIESEL)

1. POWERTRAIN VERIFICATION TEST VER - 4 (DIESEL)

1. Check if any of the following conditions exist.

2. The ECM has been disconnected or replace.

3. The Battery power has been disconnected.

4. Inspect the vehicle to ensure that all engine components are properly installed and connected. Reassemble and reconnect components as necessary.

5. With the DRBIII®, erase DTCs.

6. If the ECM has been replaced, perform steps 11 through 13, then continue with the verification.

7. If ECM has been changed and correct VIN and mileage have not been programmed, a DTC will be set in ABS and Air bag modules. In addition, if vehicle is equipped with a Sentry Key Immobilizer Module (SKIM), Secret Key data must be updated to enable start.

8. For ABS and Air Bag systems: Enter correct VIN and Mileage in ECM. Erase codes in ABS and Air Bag modules.

9. For SKIM theft alarm: Connect DRBIII® to data link conn. Go to Theft Alarm, SKIM, Misc. and place SKIM in secured access mode, by using the appropriate PIN code for this vehicle. Select Update the Secret Key data. Data will be transferred from SKIM to PCM

10. Turn the speed control ON (if equipped, cruise light will be on).

11. Depress and release the SET Switch. If the speed control did not engage, the repair is not complete. Check for TSBs that pertain to speed control problem and then, if necessary, return to Symptom List.

12. Depress and hold the RESUME/ACCEL Switch. If the vehicle speed did not increase by at least 2 mph, the repair is not complete. Check for TSBs that pertain to speed control problem and then, if necessary, return to Symptom List.

13. Press and hold the COAST switch. The vehicle speed should decrease. If it did not decrease, the repair is not complete. Check for TSBs that pertain to speed control problem and then, if necessary, return to Symptom List.

14. Using caution, depress and release the brake pedal. If the speed control did not disengage, the repair is not complete. Check for TSBs that pertain to speed control problem and then, if necessary, return to Symptom List.

15. Bring the vehicle speed back up to 35 MPH.

16. Depress the RESUME/ACCEL switch. If the speed control did not resume the previously set speed, the repair is not complete. Check for TSBs that pertain to speed control problem and then, if necessary, return to Symptom List.

17. Hold down the SET switch. If the vehicle did not decelerate, the repair is not complete. Check for TSBs that pertain to speed control problem and then, if necessary, return to Symptom List.

18. Ensure vehicle speed is greater than 35 mph and release the SET Switch. If vehicle did not adjust and set a new vehicle speed, the repair is not complete. Check for TSBs that pertain to speed control problem and then, if necessary, return to Symptom List.

19. Depress and release the CANCEL switch. If the speed control did not disengage, the repair is not complete. Check for TSBs that pertain to speed control problem and then, if necessary, return to Symptom List.

20. Bring the vehicle speed back up above 35 mph and engage speed control.

21. Depress the OFF switch to turn OFF, (Cruise light will be off). If the speed control did not disengage, the repair is not complete. Check for TSBs that pertain to speed control problem and then, if necessary, return to Symptom List.

22. If the vehicle successfully passed all of the previous tests, the speed control system is now functioning as designed. The repair is now complete.

23. NOTE: OVERSHOOT/UNDERSHOOT FOLLOWING SPEED CONTROL SET.

24. If the vehicle operator repeatedly presses and releases the SET button with their foot off of the accelerator (referred to as ″lift foot set″), the vehicle may accelerate and exceed the desired set speed by up to 5 mph (8 km/h).

25. It may also decelerate to less than the desired set speed, before finally achieving the desired set speed.

26. The Speed Control System has an adaptive strategy that compensates for vehicle-to-vehicle variations in speed control cable lengths.

POWERTRAIN VERIFICATION TEST VER - 4 (DIESEL) (CONTINUED)

27. When the speed control is set with the vehicles operators foot off of the accelerator pedal, the speed control thinks there is excessive speed control cable slack and adapts accordingly.

28. If the ″lift foot sets″ are continually used, a speed control overshoot/undershoot condition will develop.

29. To ″unlearn″ the overshoot/undershoot condition, the vehicle operator has to press and release the set button while maintaining the desired set speed using the accelerator pedal (not decelerating or accelerating).

30. Then turning the cruise control switch to the OFF position (or press the CANCEL button if equipped) after waiting 10 seconds.

31. This procedure must be performed approximately 10-15 times to completely unlearn the overshoot/undershoot condition.

Did the Speed Control pass the above test?

Yes >> Repair is not complete, refer to appropriate symptom.

No >> Repair is complete.

POWERTRAIN VERIFICATION TEST VER - 5 (DIESEL)

Diagnostic Test

1. POWERTRAIN VERIFICATION TEST VER - 5 (DIESEL)

1. Check if any of the following conditions exist.
2. The ECM has been disconnected or replace.
3. The Battery power has been disconnected.
4. Inspect the vehicle to ensure that all engine components are properly installed and connected. Reassemble and reconnect components as necessary.
5. If any existing diagnostic trouble codes have not been repaired, go to Symptom List and follow path specified.
6. Connect the scan tool to the data link connector.
7. Ensure the fuel tank has at least a quarter tank of fuel. Turn off all accessories.
8. Perform steps 15 through 17 if the PCM has been replaced. Then proceed with the verification. If the ECM has not been replaced skip those steps and continue verification.
9. If ECM has been changed and correct VIN and mileage have not been programmed, a DTC will be set in ABS and Air bag modules. In addition, if vehicle is equipped with a Sentry Key Immobilizer Module (SKIM), Secret Key data must be updated to enable start.
10. For ABS and Air Bag systems: Enter correct VIN and Mileage in ECM. Erase codes in ABS and Air Bag modules.
11. For SKIM theft alarm: Connect scan tool to data link connector to Theft Alarm, SKIM, Misc. and place SKIM in secured access mode by using appropriate PIN code for this vehicle. Select Update the Secret Key data. Data will be transferred from SKIM to PCM.
12. If a Comprehensive Component DTC was repaired, perform steps 10-13. If a Major OBDII Monitor DTC was repaired skip those steps and continue verification.
13. After the ignition has been off for at least 10 seconds, restart the vehicle and run 2 minutes.
14. If there are no new DTC's, the repair was successful and is now complete. Erase DTC's and disconnect the scan tool.
15. If the repaired DTC has reset, the repair is not complete. Check for any related TSB's or flash updates and return to the Symptom list.
16. If another DTC has set, return to the Symptom List and follow the path specified for that DTC.
17. With the scan tool, monitor the appropriate pre-test enabling conditions until all conditions have been met. Once the conditions have been met, switch screen to the appropriate OBDII monitor, (Audible beeps when the monitor is running).
18. If the monitor ran, the repair was successful and is now complete. Erase DTC's and disconnect the scan tool.
19. If the repaired OBDII trouble code has reset or was seen in the monitor while on the road test, the repair is not complete. Check for any related technical service bulletins or flash updates and return to Symptom List.
20. If another DTC has set, return to the Symptom List and follow the path specified for that DTC.

Is any DTC(s) present?

Yes >> Repair is not complete, refer to appropriate symptom.

No >> Repair is complete.

REMOVAL

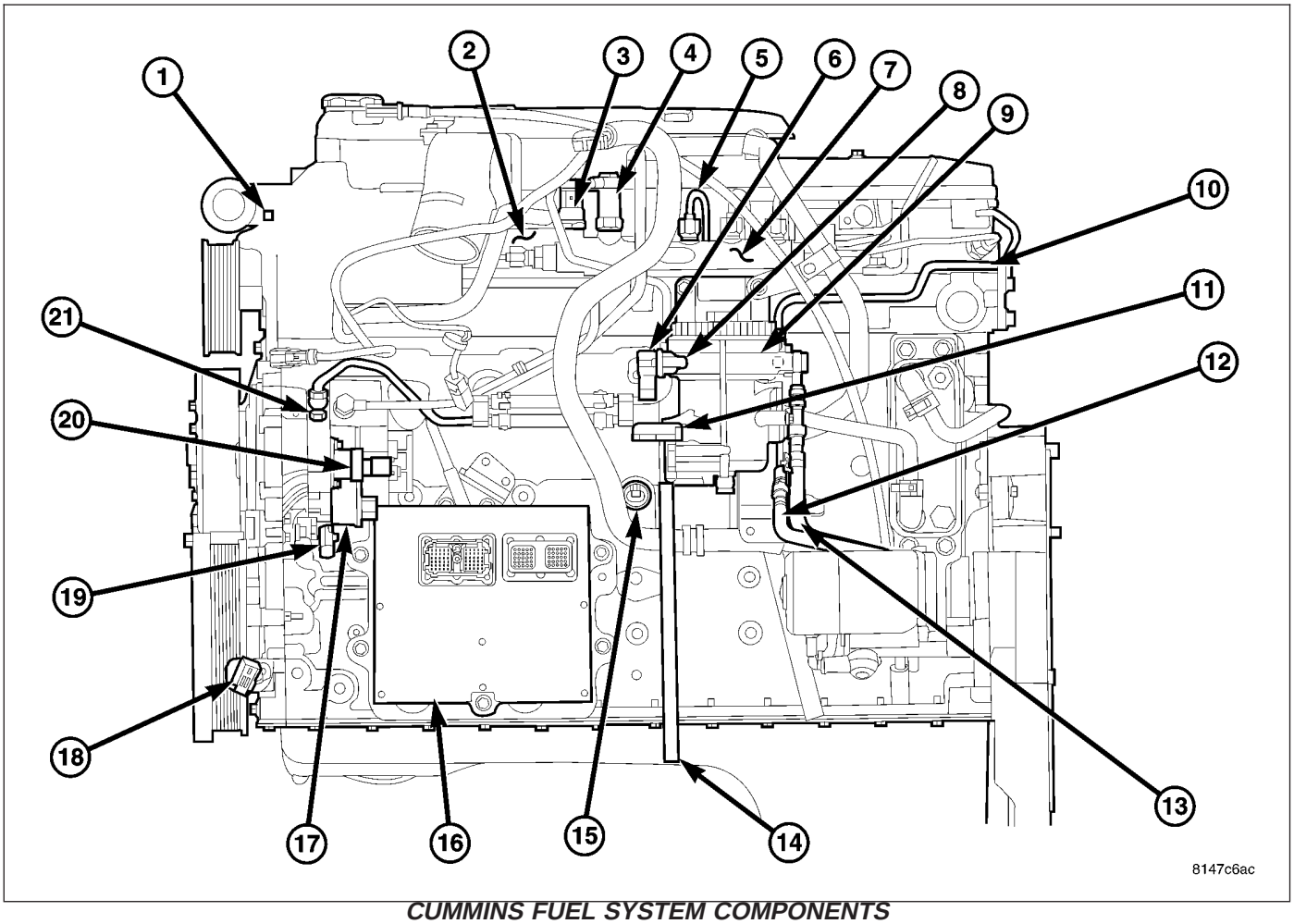

CUMMINS FUEL SYSTEM COMPONENTS

1 - ENGINE COOLANT TEMPERATURE (ECT) SENSOR
2 - INTAKE MANIFOLD AIR HEATER/ELEMENTS
3 - FUEL PRESSURE SENSOR
4 - FUEL PRESSURE LIMITING VALVE
5 - HIGH-PRESSURE FUEL LINES
6 - FUEL HEATER
7 - HIGH-PRESSURE FUEL RAIL
8 - FUEL HEATER TEMPERATURE SENSOR (THERMOSTAT)
9 - FUEL FILTER/WATER SEPARATOR
10 - FUEL DRAIN MANIFOLD (CYLINDER HEAD FUEL RETURN LINE)
11 - DRAIN VALVE
12 - FUEL RETURN LINE CONNECTION (TO FUEL TANK)
13 - FUEL SUPPLY LINE (LOW-PRESSURE, TO ENGINE)
14 - FUEL DRAIN TUBE
15 - OIL PRESSURE SWITCH
16 - ENGINE CONTROL MODULE (ECM)
17 - FUEL INJECTION PUMP
18 - CRANKSHAFT POSITION (ENGINE SPEED) SENSOR
19 - CAMSHAFT POSITION SENSOR (CMP)
20 - FUEL CONTROL ACTUATOR (FCA)
21 - CASCADE OVERFLOW VALVE

The Engine Control Module (ECM) (16) is bolted to a support bracket near the fuel filter. The support bracket mounts to the block with four capscrews and vibration isolators. A ground wire is fastened to the bracket. The other end of the wire is fastened to the engine block.

1. Record any Diagnostic Trouble Codes (DTC's) found in the ECM.

To avoid possible voltage spike damage to the ECM, ignition key must be off, and both negative battery cables must be disconnected before unplugging ECM connectors.

2. Disconnect both negative battery cables at both batteries.
3. Remove the 50–way and 60–way connector bolts at the ECM. Note: The connector bolt is a female allen head. As bolt is being removed, very carefully remove connectors from the ECM.
4. Remove five ECM mounting bolts and remove ECM from vehicle.

INSTALLATION

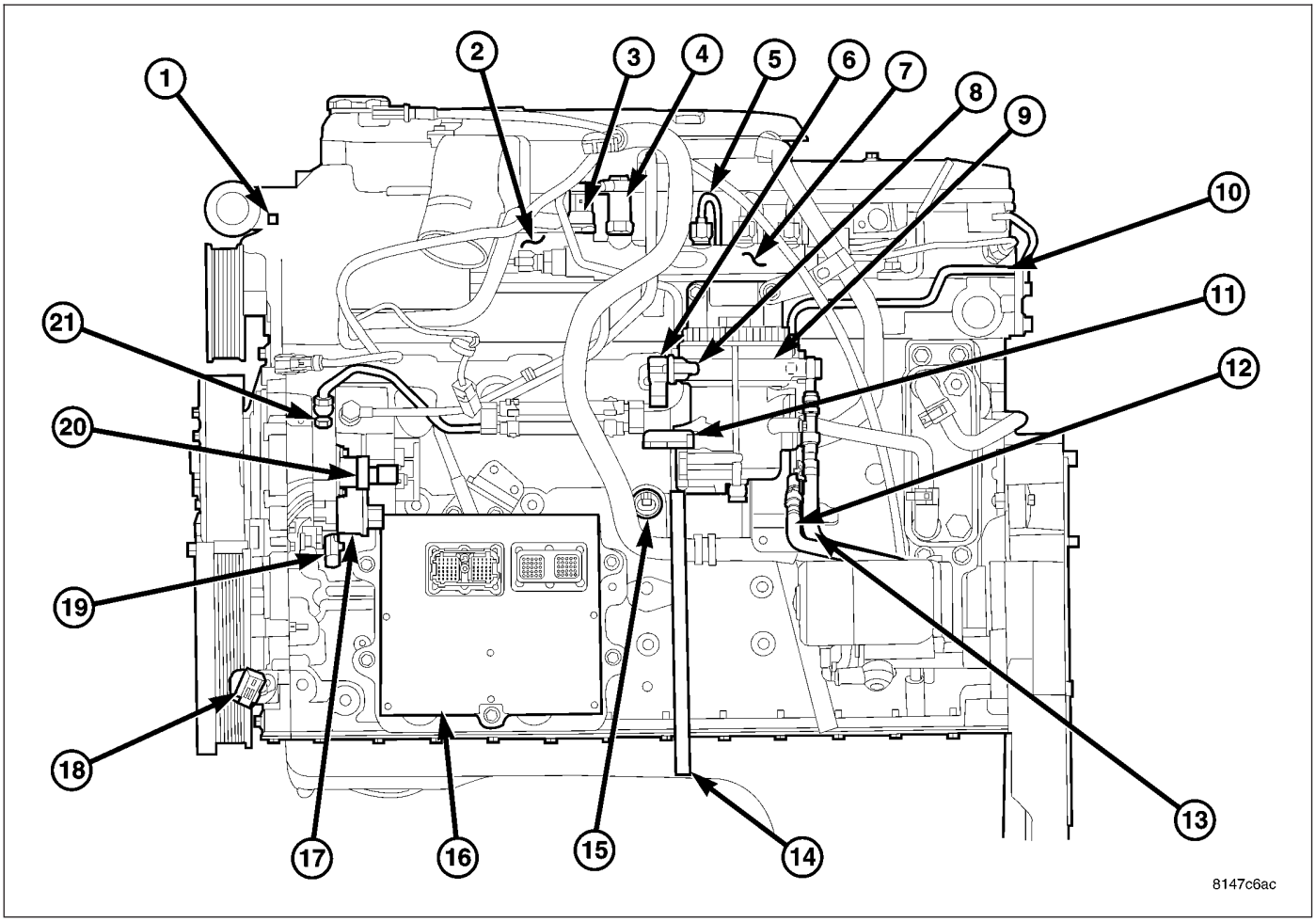

CUMMINS FUEL SYSTEM COMPONENTS

1 - ENGINE COOLANT TEMPERATURE (ECT) SENSOR
2 - INTAKE MANIFOLD AIR HEATER/ELEMENTS
3 - FUEL PRESSURE SENSOR
4 - FUEL PRESSURE LIMITING VALVE
5 - HIGH-PRESSURE FUEL LINES
6 - FUEL HEATER
7 - HIGH-PRESSURE FUEL RAIL
8 - FUEL HEATER TEMPERATURE SENSOR (THERMOSTAT)
9 - FUEL FILTER/WATER SEPARATOR
10 - FUEL DRAIN MANIFOLD (CYLINDER HEAD FUEL RETURN LINE)
11 - DRAIN VALVE
12 - FUEL RETURN LINE CONNECTION (TO FUEL TANK)
13 - FUEL SUPPLY LINE (LOW-PRESSURE, TO ENGINE)
14 - FUEL DRAIN TUBE
15 - OIL PRESSURE SWITCH
16 - ENGINE CONTROL MODULE (ECM)
17 - FUEL INJECTION PUMP
18 - CRANKSHAFT POSITION (ENGINE SPEED) SENSOR
19 - CAMSHAFT POSITION SENSOR (CMP)
20 - FUEL CONTROL ACTUATOR (FCA)
21 - CASCADE OVERFLOW VALVE

Do not apply paint to ECM or a poor ground will result.

1. Position the ECM (16) to the ECM support bracket and install the five mounting bolts. Tighten bolts to 24 N·m (18 ft. lbs.).
2. Check pin connectors in ECM, 50–way and 60–way connectors for corrosion or damage. Repair as necessary.
3. Clean pins in the 50–way and 60–way electrical connectors with a electrical contact cleaner.
4. Install the 50–way and 60–way connectors to ECM. Tighten connector bolts to 3 N·m (27 in. lbs.).
5. Reconnect both negative battery cables.
6. Use a diagnostic scan tool to erase any Diagnostic Trouble Codes (DTC's) from ECM.

MODULE-FRONT CONTROL

DESCRIPTION

The Front Control Module (FCM) is a micro controller located in the left front corner of the engine compartment. It is necessary to position the Integrated Power Module (IPM) aside in order to access the front control module on this vehicle. The FCM mates to the Power Distribution Center (PDC) to form the IPM. The IPM connects directly to the battery and provides the primary means of circuit protection and power distribution for all vehicle electrical systems. The FCM controls power to some of the vehicle systems electrical and electromechanical loads based on inputs received from hard wired switch inputs and data received on the PCI bus circuit.

(Refer to 8 - ELECTRICAL/POWER DISTRIBUTION/INTELLIGENT POWER MODULE - DESCRIPTION) for additional information on the IPM.

OPERATION

As messages are sent over the Programmable Communications Interface (PCI) data bus circuit, the Front Control Module (FCM) reads these messages and controls power to some of the vehicles electrical systems by completing the circuit to ground (low side driver) or completing the circuit to 12 volt power (high side driver). The following functions are **Controlled** by the FCM:

- Headlamp Power with Voltage Regulation
- Windshield Wiper “ON/OFF” Relay Actuation
- Windshield Wiper “HI/LO” Relay Actuation
- Windshield Washer Pump Motor
- Fog Lamp Relay Actuation
- Park Lamp Relay Actuation
- Horn Relay Actuation

The following inputs are **Received/Monitored** by the FCM:

- B+ Connection Detection
- Power Ground
- Ambient Temperature Sensing
- Ignition Switch Run
- Washer Fluid Level Switch
- Windshield Wiper Park Switch
- PCI Data Bus Circuit

DIAGNOSIS AND TESTING

FRONT CONTROL MODULE

The Front Control Module (FCM) is a printed circuit board based module with a on-board micro-processor. The FCM interfaces with other electronic modules in the vehicle via the Programmable Communications Interface (PCI) data bus. In order to obtain conclusive testing the PCI data bus network and all of the electronic modules that provide inputs to, or receive outputs from the FCM must be checked. All PCI communication faults must be resolved prior to further diagnosing any FCM related issues.

The FCM was designed to be diagnosed with an appropriate diagnostic scan tool. The most reliable, efficient, and accurate means to diagnose the FCM requires the use of an appropriate scan tool and the proper Diagnostic Procedures manual.

Before any testing of the FCM is attempted, the battery should be fully charged and all wire harness and ground connections inspected around the affected areas on the vehicle.

BODY VERIFICATION TEST - VER 1

Diagnostic Test

1. PERFORM BODY VERIFICATION TEST

NOTE: If the SKIM, PCM or FCM was replaced, refer to the service information for proper programming procedures.

1. Disconnect all jumper wires and reconnect all previously disconnected components and connectors.
2. Ensure that all accessories are turned off.
3. Ensure that the battery is fully charged.
4. If the Instrument Cluster was replaced, disconnect the negative battery cable for 5 seconds to power down the FCM. Then, reconnect the battery negative cable and turn the ignition on for 15 seconds to allow the Instrument Cluster to learn the VIN.
5. If the Instrument Cluster was replaced and the vehicle is equipped with VTSS, cycle the key in the driver door cylinder lock switch to enable VTSS.
6. Program the tire size, the country code, the radio EQ setting, all of the RKE transmitters (if RKE Module was replaced), and all other options as necessary.
7. If any HVAC door actuator circuits were repaired, run the Actuator Circuit Test by selecting the following from the DRBIII® menu: Select HVAC, System Tests, and Actuator Circuit Test. Allow the test to run to completion before proceeding.
8. If any HVAC door actuators were replaced/door linkage was repaired, run the HVAC Door Recalibration by selecting the following from the DRBIII® menu: Select HVAC, System Tests, and HVAC Door Recalibration. Allow the test to run to completion before proceeding.
9. With the DRBIII®, record and erase all DTC's from ALL modules.
10. Start and run the engine for 2 minutes while operating all functions of the system that caused the original concern.
11. Turn the ignition off, wait 5 seconds, then turn the ignition on. Using the DRBIII®, read DTC's from ALL modules.

Are DTCs present in any module or is the original condition still present?

Yes >> The repair is not complete. Refer to the related category for the DTC or symptom that is still present.

No >> The repair is complete.

REMOVAL

1. Disconnect and isolate the battery negative cable (3).
2. Partially remove the Integrated Power Module (IPM) (4) from the engine compartment (Refer to 8 - ELECTRICAL/POWER DISTRIBUTION/INTEGRATED POWER MODULE - REMOVAL).
3. Remove the Front Control Module (FCM) retaining screws.
4. Using both hands, separate the FCM from the IPM assembly disengaging the 49-way electrical connector and remove the FCM from the vehicle.

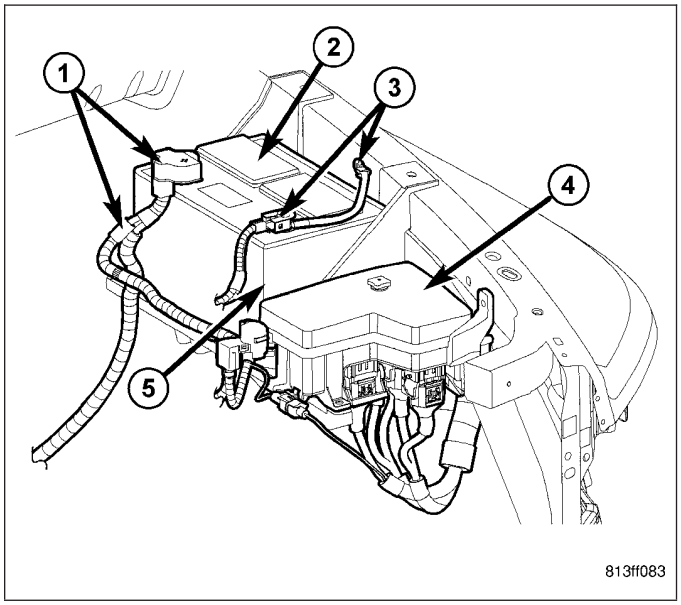

INSTALLATION

1. Install the Front Control Module (FCM) onto the Integrated Power Module (IPM) (4) by pushing the 49-way electrical connector straight in.
2. Install the FCM retaining screws. Torque the screws to 7 in. lbs.
3. Install the IPM (Refer to 8 - ELECTRICAL/POWER DISTRIBUTION/INTEGRATED POWER MODULE - INSTALLATION).
4. Connect the battery negative cable.
5. Verify normal vehicle operation.

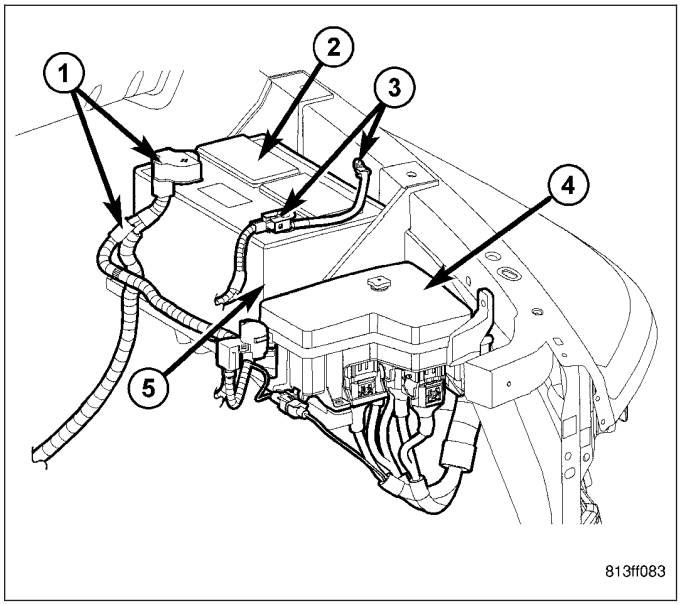

MODULE-HEATED SEATS

DESCRIPTION

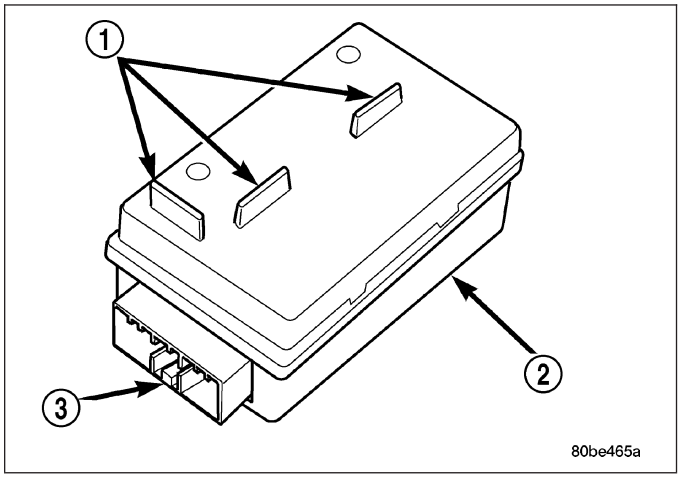

The heated seat module (2) is also known as the Seat Heat Interface Module. The heated seat module is located under the drivers front seat cushion, where it is secured to a mounting bracket. The heated seat module has a single connector receptacle (3) that allows the module to be connected to all of the required inputs and outputs through the seat wire harness.

The heated seat module is an electronic microprocessor controlled device designed and programmed to use inputs from the battery, the two heated seat switches and the two heated seat sensors to operate and control the heated seat elements in both front seats and the two heated seat indicator lamp Light-Emitting Diodes (LEDs) in each heated seat switch. The heated seat module is also programmed to perform self-diagnosis of certain heated seat system functions and provide feedback of that diagnosis through the heated seat switch indicator lamps.

The heated seat module cannot be repaired. If the heated seat module is damaged or faulty, the entire module must be replaced.

OPERATION

The heated seat module operates on fused battery current received from the integrated power module. Inputs to the module include a resistor multiplexed heated seat switch request circuit for each of the two heated seat switches and the heated seat sensor inputs from the seat cushions of each front seat. In response to those inputs the heated seat module controls battery current feeds to the heated seat elements and sensors, and controls the ground for the heated seat switch indicator lamps.

When a heated seat switch (Driver or Passenger) is depressed a signal is received by the heated seat module, the module energizes the proper indicator LED (Low or High) in the switch by grounding the indicator lamp circuit to indicate that the heated seat system is operating. At the same time, the heated seat module energizes the selected heated seat sensor circuit and the sensor provides the module with an input indicating the surface temperature of the selected seat cushion.

The Low heat set point is about 36° C (96.8° F), and the High heat set point is about 42° C (107.6° F). If the seat cushion surface temperature input is below the temperature set point for the selected temperature setting, the heated seat module energizes an N-channel Field Effect Transistor (N-FET) within the module which energizes the heated seat elements in the selected seat cushion and back. When the sensor input to the module indicates the correct temperature set point has been achieved, the module de-energizes the N-FET which de-energizes the heated seat elements. The heated seat module will continue to cycle the N-FET as needed to maintain the selected temperature set point.

If the heated seat module detects a heated seat sensor value input that is out of range or a shorted or open heated seat element circuit, it will notify the vehicle operator or the repair technician of this condition by flashing the High and/or Low indicator lamps in the affected heated seat switch. (Refer to 8 - ELECTRICAL/HEATED SEATS - DIAGNOSIS AND TESTING) for flashing LED diagnosis and testing procedures. (Refer to 8 - ELECTRICAL/ELECTRONIC CONTROL MODULES/MEMORY HEATED SEAT/MIRROR MODULE - DIAGNOSIS AND TESTING) for heated seat module diagnosis and testing procedures.

DIAGNOSIS AND TESTING

HEATED SEAT MODULE

If a heated seat fails to heat and one or both of the indicator lamps on a heated seat switch flash, (Refer to 8 - ELECTRICAL/HEATED SEATS - DIAGNOSIS AND TESTING) for flashing LED diagnosis and testing procedures. If a heated seat heats but one or both indicator lamps on the heated seat switch fail to operate, test the heated seat switch. (Refer to 8 - ELECTRICAL/HEATED SEATS/DRIVER HEATED SEAT SWITCH - DIAGNOSIS AND TESTING) for heated seat switch diagnosis and testing procedures. If the heated seat switch checks OK, proceed as follows.

1. Check the heated seat element (Refer to 8 - ELECTRICAL/HEATED SEATS/HEATED SEAT ELEMENT - DIAGNOSIS AND TESTING).
2. Check the heated seat sensor (Refer to 8 - ELECTRICAL/HEATED SEATS/HEATED SEAT SENSOR - DIAGNOSIS AND TESTING).
3. Check the heated seat switch (Refer to 8 - ELECTRICAL/HEATED SEATS/DRIVER HEATED SEAT SWITCH - DIAGNOSIS AND TESTING).

NOTE: Refer to Wiring for the location of complete heated seat system wiring diagrams and connector pin-out information.

4. Using a voltmeter, backprobe the heated seat module connector, do not disconnect. Check for voltage at the appropriate pin cavities. 12v should be present. If OK go to Step 5, if Not, Repair the open or shorted voltage supply circuit as required.
5. Using a ohmmeter, backprobe the appropriate heated seat module connector, do not disconnect. Check for proper continuity to ground on the ground pin cavities. Continuity should be present. If OK replace the heated seat module with a known good unit and retest system, if Not OK, Repair the open or shorted ground circuit as required.

REMOVAL

1. Position the driver seat to the full rearward and inclined position.
2. Working under the driver front seat, remove the two heated seat module retaining screws. Due to the fact that the retaining screws are installed with the seat cushion pan removed, a small right angle screwdriver will be required to access and remove the screws.
3. Disconnect the seat wire harness connector from the connector receptacle on the back of the heated seat module. Depress the connector retaining tab and pull straight apart.
4. Remove the heated seat module from under the front seat.

INSTALLATION

1. Position the heated seat module under the front seat.
2. Connect the seat wire harness connector on the connector receptacle on the back of the heated seat module.
3. Working under the driver front seat, install the heated seat module retaining screws.
4. Re-position the driver seat.

MODULE-POWERTRAIN CONTROL

DESCRIPTION

DESCRIPTION - PCM

The Powertrain Control Module (PCM) is located in the right-rear section of the engine compartment under the cowl.

Two different PCM's are used (JTEC and NGC). These can be easily identified. JTEC's use three 32–way connectors, NGC's use four 38–way connectors

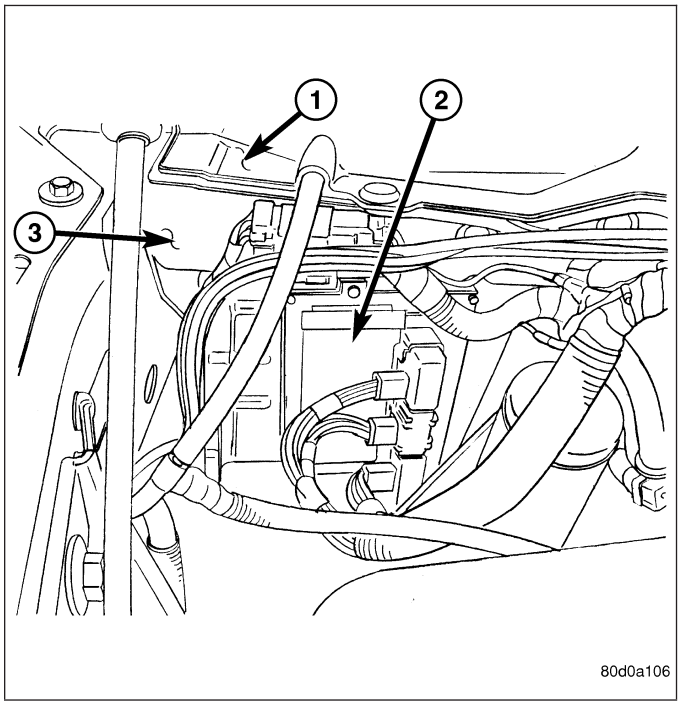

DESCRIPTION - MODES OF OPERATION

As input signals to the Powertrain Control Module (PCM) change, the PCM adjusts its response to the output devices. For example, the PCM must calculate different injector pulse width and ignition timing for idle than it does for wide open throttle (WOT).

The PCM will operate in two different modes: **Open Loop and Closed Loop**.

During Open Loop modes, the PCM receives input signals and responds only according to preset PCM programming. Input from the oxygen (O2S) sensors is not monitored during Open Loop modes.

During Closed Loop modes, the PCM will monitor the oxygen (O2S) sensors input. This input indicates to the PCM whether or not the calculated injector pulse width results in the ideal air-fuel ratio. This ratio is 14.7 parts air-to-1 part fuel. By monitoring the exhaust oxygen content through the O2S sensor, the PCM can fine tune the injector pulse width. This is done to achieve optimum fuel economy combined with low emission engine performance.

The fuel injection system has the following modes of operation:

- Ignition switch ON
- Engine start-up (crank)
- Engine warm-up
- Idle
- Cruise
- Acceleration
- Deceleration
- Wide open throttle (WOT)
- Ignition switch OFF

The ignition switch On, engine start-up (crank), engine warm-up, acceleration, deceleration and wide open throttle modes are Open Loop modes. The idle and cruise modes, (with the engine at operating temperature) are Closed Loop modes.

IGNITION SWITCH (KEY-ON) MODE

This is an Open Loop mode. When the fuel system is activated by the ignition switch, the following actions occur:

- The PCM pre-positions the idle air control (IAC) motor.
- The PCM determines atmospheric air pressure from the MAP sensor input to determine basic fuel strategy.
- The PCM monitors the engine coolant temperature sensor input. The PCM modifies fuel strategy based on this input.
- Intake manifold air temperature sensor input is monitored.
- Throttle position sensor (TPS) is monitored.
- The auto shutdown (ASD) relay is energized by the PCM for approximately three seconds.
- The fuel pump is energized through the fuel pump relay by the PCM. The fuel pump will operate for approximately three seconds unless the engine is operating or the starter motor is engaged.
- The O2S sensor heater element is energized via the ASD or O2S heater relay. The O2S sensor input is not used by the PCM to calibrate air-fuel ratio during this mode of operation.

ENGINE START-UP MODE

This is an Open Loop mode. The following actions occur when the starter motor is engaged.

The PCM receives inputs from:

- Battery voltage
- Engine coolant temperature sensor
- Crankshaft position sensor
- Intake manifold air temperature sensor
- Manifold absolute pressure (MAP) sensor
- Throttle position sensor (TPS)
- Camshaft position sensor signal

The PCM monitors the crankshaft position sensor. If the PCM does not receive a crankshaft position sensor signal within 3 seconds of cranking the engine, it will shut down the fuel injection system.

The fuel pump is activated by the PCM through the fuel pump relay.

Voltage is applied to the fuel injectors with the ASD relay via the PCM. The PCM will then control the injection sequence and injector pulse width by turning the ground circuit to each individual injector on and off.

The PCM determines the proper ignition timing according to input received from the crankshaft position sensor.

ENGINE WARM-UP MODE

This is an Open Loop mode. During engine warm-up, the PCM receives inputs from:

- Battery voltage
- Crankshaft position sensor
- Engine coolant temperature sensor
- Intake manifold air temperature sensor
- Manifold absolute pressure (MAP) sensor
- Throttle position sensor (TPS)
- Camshaft position sensor signal
- Park/neutral switch (gear indicator signal—auto. trans. only)
- Air conditioning select signal (if equipped)
- Air conditioning request signal (if equipped)

Based on these inputs the following occurs:

- Voltage is applied to the fuel injectors with the ASD relay via the PCM. The PCM will then control the injection sequence and injector pulse width by turning the ground circuit to each individual injector on and off.
- The PCM adjusts engine idle speed through the idle air control (IAC) motor and adjusts ignition timing.
- The PCM operates the A/C compressor clutch through the A/C compressor clutch relay. This is done if A/C has been selected by the vehicle operator and specified pressures are met at the high and low–pressure A/C switches. Refer to Heating and Air Conditioning for additional information.

- When engine has reached operating temperature, the PCM will begin monitoring O2S sensor input. The system will then leave the warm-up mode and go into closed loop operation.

IDLE MODE

When the engine is at operating temperature, this is a Closed Loop mode. At idle speed, the PCM receives inputs from:

- Air conditioning select signal (if equipped)
- Air conditioning request signal (if equipped)
- Battery voltage
- Crankshaft position sensor
- Engine coolant temperature sensor
- Intake manifold air temperature sensor
- Manifold absolute pressure (MAP) sensor
- Throttle position sensor (TPS)
- Camshaft position sensor signal
- Battery voltage
- Park/neutral switch (gear indicator signal—auto. trans. only)
- Oxygen sensors

Based on these inputs, the following occurs:

- Voltage is applied to the fuel injectors with the ASD relay via the PCM. The PCM will then control injection sequence and injector pulse width by turning the ground circuit to each individual injector on and off.
- The PCM monitors the O2S sensor input and adjusts air-fuel ratio by varying injector pulse width. It also adjusts engine idle speed through the idle air control (IAC) motor.
- The PCM adjusts ignition timing by increasing and decreasing spark advance.
- The PCM operates the A/C compressor clutch through the A/C compressor clutch relay. This is done if A/C has been selected by the vehicle operator and specified pressures are met at the high and low–pressure A/C switches. Refer to Heating and Air Conditioning for additional information.

CRUISE MODE

When the engine is at operating temperature, this is a Closed Loop mode. At cruising speed, the PCM receives inputs from:

- Air conditioning select signal (if equipped)
- Air conditioning request signal (if equipped)
- Battery voltage
- Engine coolant temperature sensor
- Crankshaft position sensor
- Intake manifold air temperature sensor
- Manifold absolute pressure (MAP) sensor
- Throttle position sensor (TPS)
- Camshaft position sensor signal
- Park/neutral switch (gear indicator signal—auto. trans. only)
- Oxygen (O2S) sensors

Based on these inputs, the following occurs:

- Voltage is applied to the fuel injectors with the ASD relay via the PCM. The PCM will then adjust the injector pulse width by turning the ground circuit to each individual injector on and off.
- The PCM monitors the O2S sensor input and adjusts air-fuel ratio. It also adjusts engine idle speed through the idle air control (IAC) motor.
- The PCM adjusts ignition timing by turning the ground path to the coil(s) on and off.
- The PCM operates the A/C compressor clutch through the clutch relay. This happens if A/C has been selected by the vehicle operator and requested by the A/C thermostat.

ACCELERATION MODE

This is an Open Loop mode. The PCM recognizes an abrupt increase in throttle position or MAP pressure as a demand for increased engine output and vehicle acceleration. The PCM increases injector pulse width in response to increased throttle opening.

DECELERATION MODE

When the engine is at operating temperature, this is an Open Loop mode. During hard deceleration, the PCM receives the following inputs.

- Air conditioning select signal (if equipped)
- Air conditioning request signal (if equipped)
- Battery voltage
- Engine coolant temperature sensor
- Crankshaft position sensor
- Intake manifold air temperature sensor
- Manifold absolute pressure (MAP) sensor
- Throttle position sensor (TPS)
- Camshaft position sensor signal
- Park/neutral switch (gear indicator signal—auto. trans. only)
- Vehicle speed

If the vehicle is under hard deceleration with the proper rpm and closed throttle conditions, the PCM will ignore the oxygen sensor input signal. The PCM will enter a fuel cut-off strategy in which it will not supply a ground to the injectors. If a hard deceleration does not exist, the PCM will determine the proper injector pulse width and continue injection.

Based on the above inputs, the PCM will adjust engine idle speed through the idle air control (IAC) motor.

The PCM adjusts ignition timing by turning the ground path to the coil on and off.

WIDE OPEN THROTTLE MODE

This is an Open Loop mode. During wide open throttle operation, the PCM receives the following inputs.

- Battery voltage
- Crankshaft position sensor
- Engine coolant temperature sensor
- Intake manifold air temperature sensor
- Manifold absolute pressure (MAP) sensor
- Throttle position sensor (TPS)
- Camshaft position sensor signal

During wide open throttle conditions, the following occurs:

- Voltage is applied to the fuel injectors with the ASD relay via the PCM. The PCM will then control the injection sequence and injector pulse width by turning the ground circuit to each individual injector on and off. The PCM ignores the oxygen sensor input signal and provides a predetermined amount of additional fuel. This is done by adjusting injector pulse width.
- The PCM adjusts ignition timing by turning the ground path to the coil(s) on and off.

IGNITION SWITCH OFF MODE

When ignition switch is turned to OFF position, the PCM stops operating the injectors, ignition coil, ASD relay and fuel pump relay.

DESCRIPTION - 5 VOLT SUPPLIES

Two different Powertrain Control Module (PCM) five volt supply circuits are used; primary and secondary.

DESCRIPTION - IGNITION CIRCUIT SENSE

This circuit ties the ignition switch to the Powertrain Control Module (PCM).

DESCRIPTION - POWER GROUNDS

The Powertrain Control Module (PCM) has 2 main grounds. Both of these grounds are referred to as power grounds. All of the high-current, noisy, electrical devices are connected to these grounds as well as all of the sensor returns. The sensor return comes into the sensor return circuit, passes through noise suppression, and is then connected to the power ground.

The power ground is used to control ground circuits for the following PCM loads:

- Generator field winding
- Fuel injectors
- Ignition coil(s)
- Certain relays/solenoids
- Certain sensors

DESCRIPTION - SENSOR RETURN

The Sensor Return circuits are internal to the Powertrain Control Module (PCM).

Sensor Return provides a low–noise ground reference for all engine control system sensors. Refer to Power Grounds for more information.

OPERATION

OPERATION - PCM

The PCM operates the fuel system. The PCM is a pre-programmed, triple microprocessor digital computer. It regulates ignition timing, air-fuel ratio, emission control devices, charging system, certain transmission features, speed control, air conditioning compressor clutch engagement and idle speed. The PCM can adapt its programming to meet changing operating conditions.

The PCM receives input signals from various switches and sensors. Based on these inputs, the PCM regulates various engine and vehicle operations through different system components. These components are referred to as Powertrain Control Module (PCM) Outputs. The sensors and switches that provide inputs to the PCM are considered Powertrain Control Module (PCM) Inputs.

The PCM adjusts ignition timing based upon inputs it receives from sensors that react to: engine rpm, manifold absolute pressure, engine coolant temperature, throttle position, transmission gear selection (automatic transmission), vehicle speed, power steering pump pressure, and the brake switch.

The PCM adjusts idle speed based on inputs it receives from sensors that react to: throttle position, vehicle speed, transmission gear selection, engine coolant temperature and from inputs it receives from the air conditioning clutch switch and brake switch.

Based on inputs that it receives, the PCM adjusts ignition coil dwell. The PCM also adjusts the generator charge rate through control of the generator field and provides speed control operation.

NOTE: PCM Inputs:

- ABS module (if equipped)
- A/C request (if equipped with factory A/C)
- A/C select (if equipped with factory A/C)
- A/C pressure transducer
- Auto shutdown (ASD) sense
- Battery temperature sensor
- Battery voltage
- Brake switch
- J1850 bus (+) circuits
- J1850 bus (-) circuits
- Camshaft position sensor signal
- Crankshaft position sensor
- Data link connection for DRB scan tool

- EATX module (if equipped)
- Engine coolant temperature sensor
- Fuel level (through J1850 circuitry)
- Generator (battery voltage) output
- Ignition circuit sense (ignition switch in on/off/crank/run position)
- Intake manifold air temperature sensor
- Knock sensors (2 on 3.7L engine)
- Leak detection pump (switch) sense (if equipped)
- Manifold absolute pressure (MAP) sensor
- Oil pressure
- Oxygen sensors
- Park/neutral switch (auto. trans. only)
- Power ground
- Power steering pressure switch (if equipped)
- Sensor return
- Signal ground
- Speed control multiplexed single wire input
- Throttle position sensor
- Transfer case switch (4WD range position)
- Vehicle speed signal

NOTE: PCM Outputs:

- A/C clutch relay
- Auto shutdown (ASD) relay
- J1850 bus (+/-) circuits for: speedometer, voltmeter, fuel gauge, oil pressure gauge/lamp, engine temp. gauge and speed control warn. lamp
- Data link connection for DRB scan tool
- EGR valve control solenoid (if equipped)
- EVAP canister purge solenoid
- Five volt sensor supply (primary)
- Five volt sensor supply (secondary)
- Fuel injectors
- Fuel pump relay
- Generator field driver (-)
- Generator field driver (+)
- Idle air control (IAC) motor
- Ignition coil(s)
- Leak detection pump (if equipped)
- Malfunction indicator lamp (Check engine lamp). Driven through J1850 circuits.
- Oxygen sensor heater relays
- Oxygen sensors (pulse width modulated)
- Radiator cooling fan relay (pulse width modulated)
- Speed control vacuum solenoid
- Speed control vent solenoid
- Tachometer (if equipped). Driven through J1850 circuits.
- Transmission convertor clutch circuit. Driven through J1850 circuits.

OPERATION - 5 VOLT SUPPLIES

Primary 5–volt supply:

- supplies the required 5 volt power source to the Crankshaft Position (CKP) sensor.
- supplies the required 5 volt power source to the Camshaft Position (CMP) sensor.

- supplies a reference voltage for the Manifold Absolute Pressure (MAP) sensor.
- supplies a reference voltage for the Throttle Position Sensor (TPS) sensor.

Secondary 5–volt supply:

- supplies the required 5 volt power source to the oil pressure sensor.
- supplies the required 5 volt power source for the Vehicle Speed Sensor (VSS) (if equipped).
- supplies the 5 volt power source to the transmission pressure sensor (certain automatic transmissions).

OPERATION - IGNITION CIRCUIT SENSE

The ignition circuit sense input tells the PCM the ignition switch has energized the ignition circuit.

Battery voltage is also supplied to the PCM through the ignition switch when the ignition is in the RUN or START position. This is referred to as the ″ignition sense″ circuit and is used to ″wake up″ the PCM. Voltage on the ignition input can be as low as 6 volts and the PCM will still function. Voltage is supplied to this circuit to power the PCM's 8-volt regulator and to allow the PCM to perform fuel, ignition and emissions control functions.

REMOVAL

CAUTION: Certain ABS systems rely on having the Powertrain Control Module (PCM) broadcast the Vehicle Identification Number (VIN) over the bus network. To prevent problems of DTCs and other items related to the VIN broadcast, it is recommend that you disconnect the ABS CAB (controller) temporarily when replacing the PCM. Once the PCM is replaced, write the VIN to the PCM using the DRB scan tool. This is done from the engine main menu. Arrow over to the second page to "1. Miscellaneous". Select "Check VIN" from the choices. Make sure it has the correct VIN entered before continuing. When the VIN is complete, turn off the ignition key and reconnect the ABS module connector. This will prevent the setting of DTCs and other items associated with the lack of a VIN detected when you turn the key ON after replacing the PCM.

CAUTION: Use the DRB scan tool to reprogram the new PCM with the vehicles original identification number (VIN) and the vehicles original mileage. If this step is not done, a Diagnostic Trouble Code (DTC) may be set.

The PCM (1) is located in the engine compartment attached to the dash panel (3).

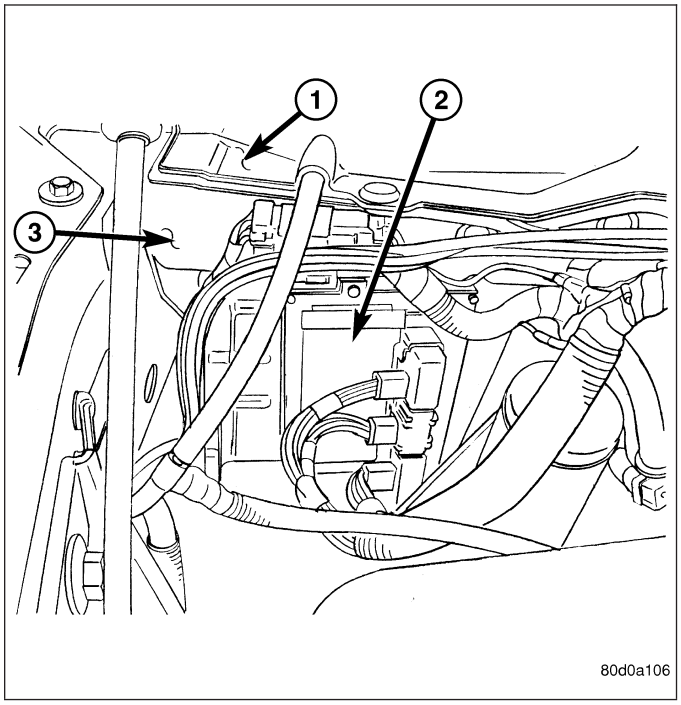

To avoid possible voltage spike damage to the PCM, ignition key must be off, and negative battery cable must be disconnected before unplugging PCM connectors.

1. Disconnect negative battery cable at battery.
2. Remove cover over electrical connectors. Cover snaps onto PCM.
3. Carefully unplug the three 32–way connectors (four 38–way connectors if equipped with NGC) from PCM (1).
4. Remove three PCM mounting bolts (3) and remove PCM from vehicle.

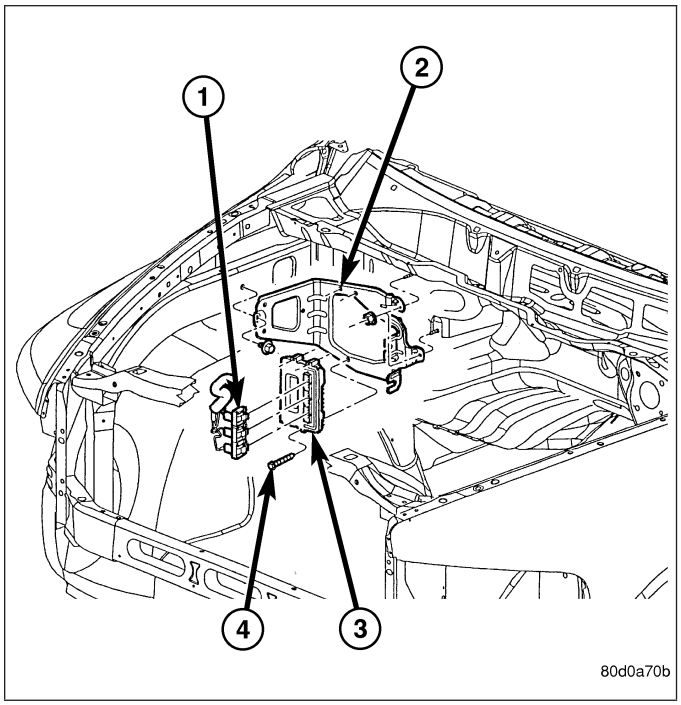

INSTALLATION

CAUTION: Certain ABS systems rely on having the Powertrain Control Module (PCM) broadcast the Vehicle Identification Number (VIN) over the bus network. To prevent problems of DTCs and other items related to the VIN broadcast, it is recommend that you disconnect the ABS CAB (controller) temporarily when replacing the PCM. Once the PCM is replaced, write the VIN to the PCM using the DRB scan tool. This is done from the engine main menu. Arrow over to the second page to "1. Miscellaneous". Select "Check VIN" from the choices. Make sure it has the correct VIN entered before continuing. When the VIN is complete, turn off the ignition key and reconnect the ABS module connector. This will prevent the setting of DTCs and other items associated with the lack of a VIN detected when you turn the key ON after replacing the PCM.

CAUTION: Use the DRB scan tool to reprogram the new PCM with the vehicles original identification number (VIN) and the vehicles original mileage. If this step is not done, a Diagnostic Trouble Code (DTC) may be set.

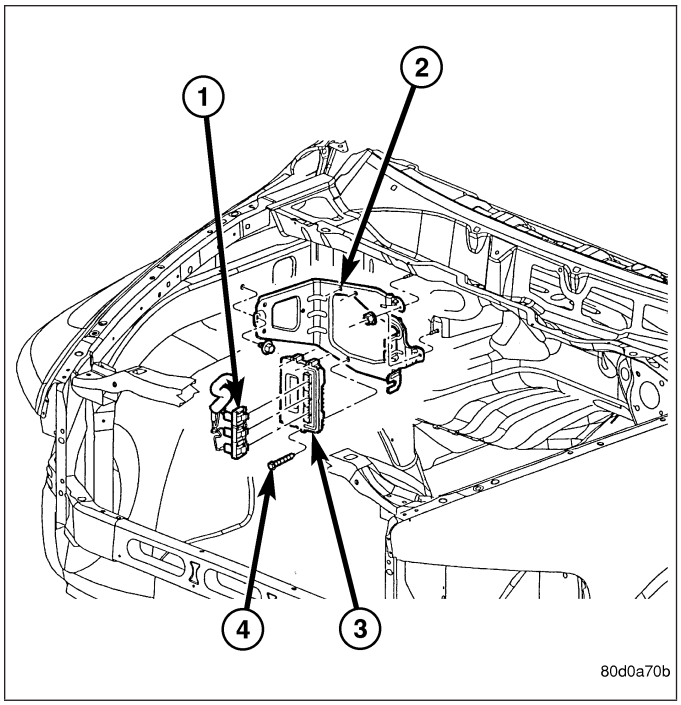

1. Install PCM (3) and 3 mounting bolts (4) to vehicle.
2. Tighten bolts. Refer to torque specifications.
3. Check pin connectors in the PCM and the three 32–way connectors (four 38–way connectors if equipped with NGC) for corrosion or damage. Also, the pin heights in connectors should all be same. Repair as necessary before installing connectors.
4. Install three 32–way connectors (four 38–way connectors if equipped with NGC).
5. Install cover over electrical connectors. Cover snaps onto PCM.
6. Install negative battery cable.
7. **The 5.7L V-8 engine is equipped with a fully electronic accelerator pedal position sensor. If equipped with a 5.7L, also perform the following 3 steps:**
   a. Connect negative battery cable to battery.
   b. Turn ignition switch ON, but do not crank engine.
   c. Leave ignition switch ON for a minimum of 10 seconds. This will allow PCM to learn electrical parameters.
   d. The DRB III® Scan Tool may also be used to learn electrical parameters. Go to the Miscellaneous menu, and then select ETC Learn.
8. If the previous step is not performed, a Diagnostic Trouble Code (DTC) will be set.
9. If necessary, use DRB III® Scan Tool to erase any Diagnostic Trouble Codes (DTC's) from PCM. Also use the DRB scan tool to reprogram new PCM with vehicles original Vehicle Identification Number (VIN) and original vehicle mileage.

MODULE-SENTRY KEY IMMOBILIZER

DESCRIPTION

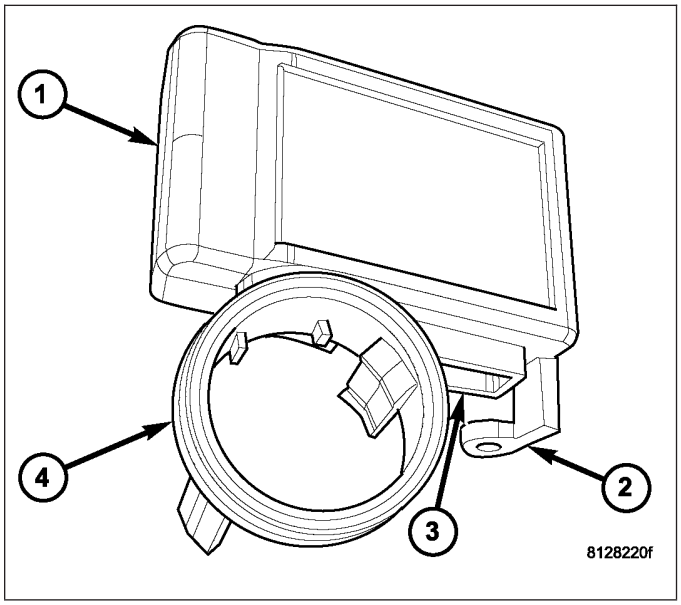

The Sentry Key Immobilizer Module (SKIM) (1) is the primary component of the Sentry Key Immobilizer System (SKIS). This module contains a Radio Frequency (RF) transceiver and a central processing unit, which includes the Sentry Key Immobilizer System (SKIS) program logic. The SKIM is located on the right side of the steering column, near the ignition lock cylinder housing and is concealed beneath the steering column shrouds. The molded black plastic housing for the SKIM has an integral molded plastic halo-like antenna ring (4) that extends from the bottom. When the SKIM is properly installed on the steering column, the antenna ring is oriented around the circumference of the ignition lock cylinder housing.

A single integral connector receptacle (3) is located just behind the antenna ring on the bottom of the SKIM housing. An integral molded plastic mounting tab (2) on the rear corner of the SKIM housing has a hole in the center through which a screw passes to secure the unit to the steering column. The SKIM is

connected to the vehicle electrical system through a single take out and connector of the instrument panel wire harness.

OPERATION

The Sentry Key Immobilizer Module (SKIM) transmits Radio Frequency (RF) signals to, and receives RF signals from the Sentry Key transponder through a tuned antenna enclosed within the molded plastic antenna ring. If this antenna ring is not mounted properly around the ignition lock cylinder housing, communication problems between the SKIM and the transponder may arise. These communication problems will result in Sentry Key transponder-related faults. The SKIM also communicates over the Programmable Communications Interface (PCI) data bus with the Powertrain Control Module (PCM) for gasoline engines or the Engine Control Module (ECM) for diesel engines, the ElectroMechanical Instrument Cluster (EMIC) and/or a diagnostic scan tool.

The SKIM and the PCM/ECM both use software that includes a rolling code algorithm strategy, which helps to reduce the possibility of unauthorized Sentry Key Immobilizer System (SKIS) disarming. The rolling code algorithm ensures security by preventing an override of the SKIS through the unauthorized substitution of the SKIM or the PCM/ECM. However, the use of this strategy also means that replacement of either the SKIM or the PCM/ECM units will require a system initialization procedure to restore system operation.

The SKIM retains in memory the ID numbers of any Sentry Key transponder that is programmed into it. A maximum of eight Sentry Key transponders can be programmed into the SKIM. For added system security, each SKIM is programmed with a unique Secret Key code. This code is stored in memory, sent over the PCI data bus to the PCM or ECM, and is encoded to the transponder of every Sentry Key that is programmed into the SKIM. Therefore, the Secret Key code is a common element that is found in every component of the SKIS.

Another security code called a PIN, is used to gain access to the SKIM Secured Access Mode. The Secured Access Mode is required during service to perform the SKIS initialization and Sentry Key transponder programming procedures. The SKIM also stores the Vehicle Identification Number (VIN) in its memory, which it learns through a PCI data bus message from the PCM or ECM during SKIS initialization.

In the event that a SKIM replacement is required, the Secret Key code can be transferred to the new SKIM from the PCM using a diagnostic scan tool and the SKIS initialization procedure. Proper completion of the SKIS initialization will allow the existing Sentry Keys to be programmed into the new SKIM so that new keys will not be required. In the event that the original Secret Key code cannot be recovered, SKIM replacement will also require new Sentry Keys. The diagnostic scan tool will alert the technician during the SKIS initialization procedure if new Sentry Keys are required.

When the ignition switch is turned to the On or Start positions, the SKIM transmits an RF signal to excite the transponder in the ignition key. The SKIM then listens for a return RF signal from the transponder. If the SKIM receives an RF signal with a valid “Secret Key” and transponder identification codes, the SKIM sends a “valid key” message to the PCM/ECM over the PCI bus. If the SKIM receives an invalid RF signal or no response, it sends “invalid key” messages to the PCM/ECM. The PCM/ECM will enable or disable engine operation based upon the status of the SKIM messages. It is important to note that the default condition in the PCM or ECM is an invalid key. Therefore, if no message is received from the SKIM by the PCM or ECM, the engine will be disabled and the vehicle immobilized after two seconds of running.

The SKIM also sends electronic messages to the EMIC which control the VTSS indicator. The SKIM sends messages to the EMIC to turn the indicator on for about three seconds when the ignition switch is turned to the On position as a bulb test. After completion of the bulb test, the SKIM sends bus messages to keep the indicator off for a duration of about one second. Then the SKIM sends messages to turn the indicator on or off based upon the results of the SKIS self-tests. If the VTSS indicator comes on and stays on after the bulb test, it indicates that the SKIM has detected a system malfunction and/or that the SKIS has become inoperative.

If the SKIM detects an invalid key when the ignition switch is turned to the On position, it sends messages to flash the VTSS indicator. The SKIM can also send messages to flash the indicator and to generate a single audible chime whenever the Customer Learn programming mode is being utilized. (Refer to 8 - ELECTRICAL/VEHICLE THEFT SECURITY - STANDARD PROCEDURE - SENTRY KEY TRANSPONDER PROGRAMMING).

The SKIS will store fault information in the form of Diagnostic Trouble Codes (DTC’s) in SKIM memory if a system malfunction is detected. For diagnosis or initialization of the SKIM and the PCM/ECM, a diagnostic scan tool is required. Refer to the appropriate diagnostic information.

REMOVAL

WARNING: To avoid personal injury or death, on vehicles equipped with airbags, disable the supplemental restraint system before attempting any steering wheel, steering column, airbag, seat belt tensioner, impact sensor, or instrument panel component diagnosis or service. Disconnect and isolate the battery negative (ground) cable, then wait two minutes for the system capacitor to discharge before performing further diagnosis or service. This is the only sure way to disable the supplemental restraint system. Failure to take the proper precautions could result in accidental airbag deployment.

1. Disconnect and isolate the battery negative cable.
2. Grasp the tilt steering column knob (2) firmly and pull it straight rearward to remove it from the tilt adjuster lever (1) on the left side of the column.

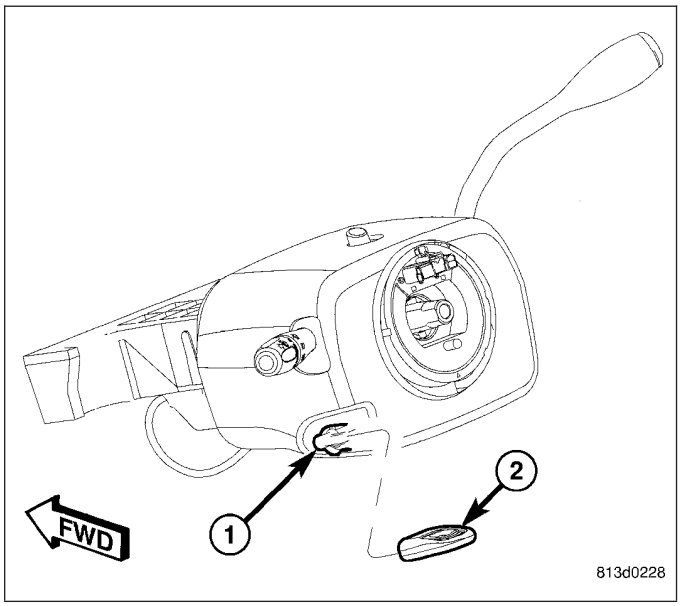

3. From below the steering column, remove the two outboard screws that secure the upper column shroud (1) to the lower shroud (3).
4. Using hand pressure, push inward on both sides of the upper shroud above the parting line of the lower shroud to release the snap features that secure the two shroud halves to each other.
5. Remove the upper shroud from the lower shroud and the steering column.
6. Remove the one center screw that secures the lower shroud to the steering column (4).
7. Remove the lower shroud from the steering column.

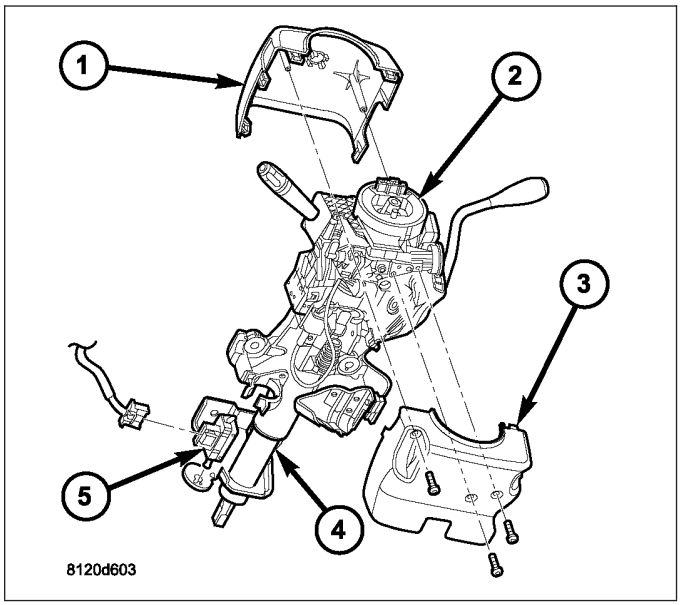

8. Disconnect the wire harness connector (2) from the Sentry Key Immobilizer Module (SKIM) (1).

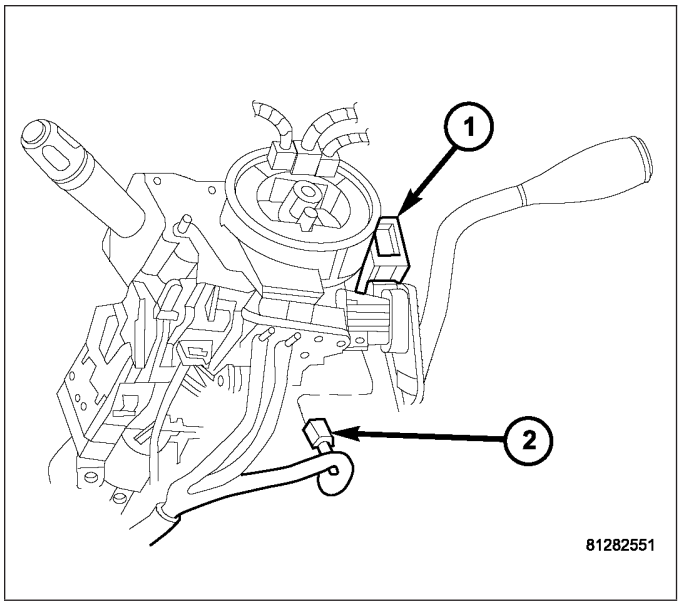

9. Remove the screw (3) that secures the SKIM (1) to the steering column (2).
10. Disengage the antenna ring from around the ignition lock cylinder housing and remove the SKIM.

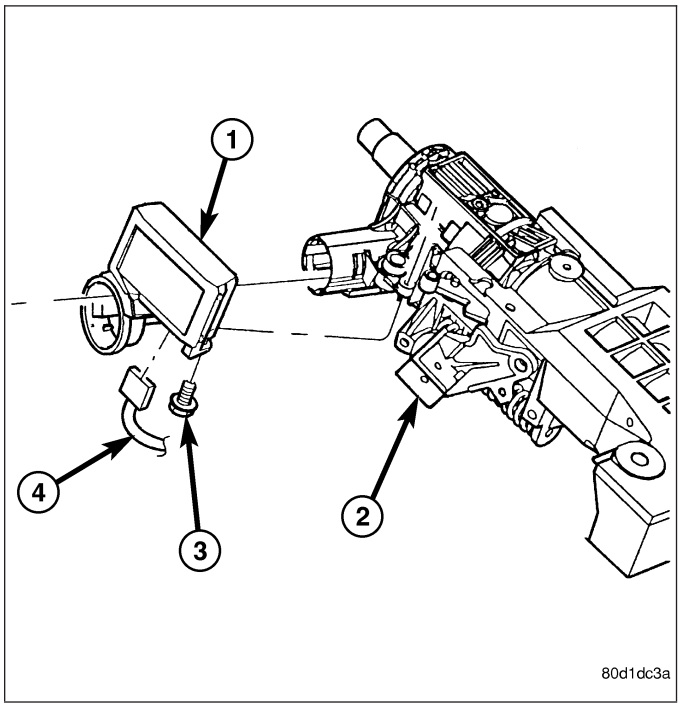

INSTALLATION

WARNING: To avoid personal injury or death, on vehicles equipped with airbags, disable the supplemental restraint system before attempting any steering wheel, steering column, airbag, seat belt tensioner, impact sensor, or instrument panel component diagnosis or service. Disconnect and isolate the battery negative (ground) cable, then wait two minutes for the system capacitor to discharge before performing further diagnosis or service. This is the only sure way to disable the supplemental restraint system. Failure to take the proper precautions could result in accidental airbag deployment.

1. Position the Sentry Key Immobilizer Module (SKIM) (1) onto the steering column (2) with the antenna ring oriented around the ignition lock cylinder housing.
2. Install and tighten the screw (3) that secures the SKIM to the steering column housing. Tighten the screw to 2 N·m (20 in. lbs.).

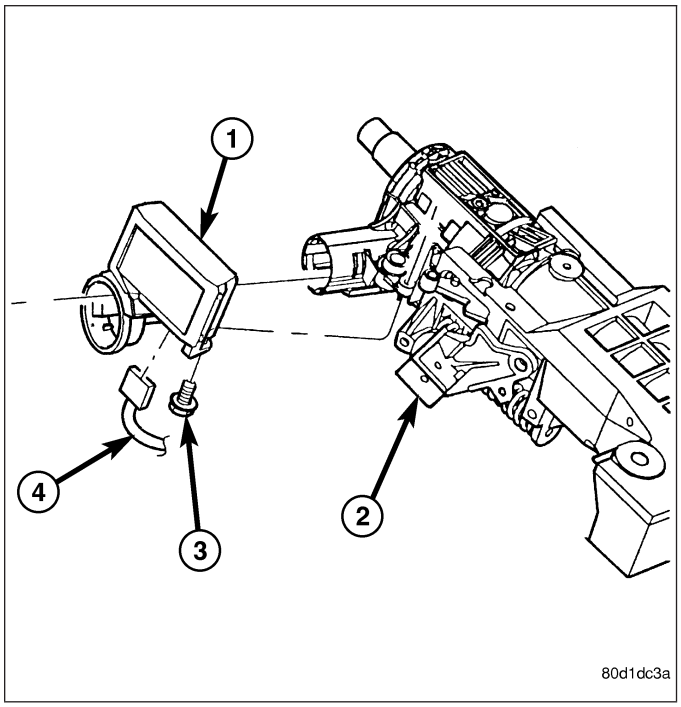

3. Reconnect the wire harness connector (2) to the SKIM (1).

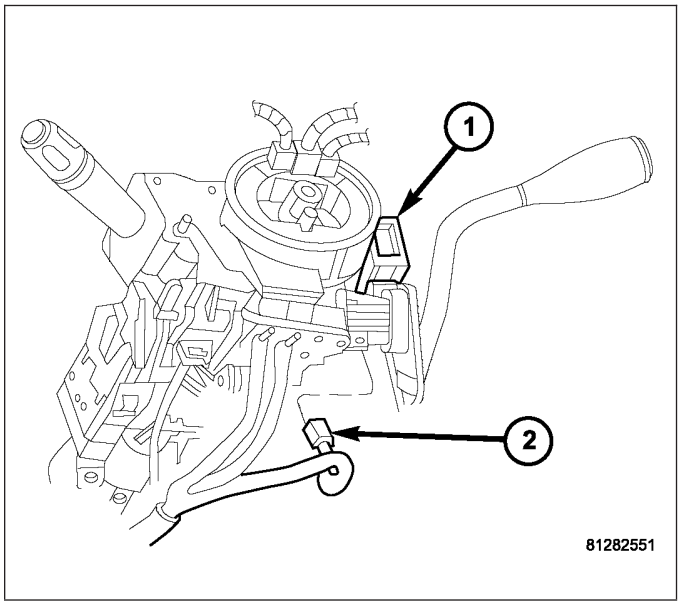

4. Position the lower shroud (3) onto the steering column (4).
5. From below the steering column, install and tighten the one center screw that secures the lower shroud to the steering column. Tighten the screw to 2 N·m (20 in. lbs.).
6. Position the upper shroud (1) onto the steering column over the lower shroud. On vehicles equipped with an automatic transmission, be certain to engage the gearshift lever gap hider into the opening in the right side of both shroud halves.
7. Align the snap features on the upper shroud with the receptacles in the lower shroud and apply hand pressure to snap them together.
8. Install and tighten the two outboard screws that secure the upper shroud to the lower shroud. Tighten the screws to 2 N·m (20 in. lbs.).

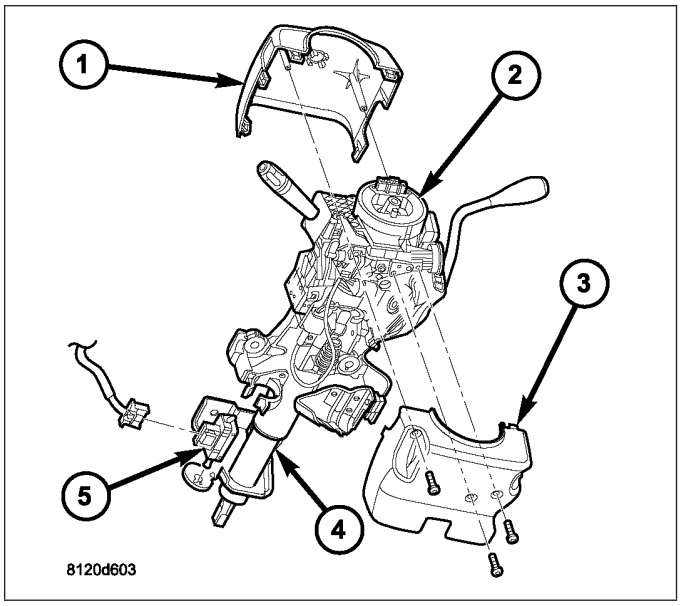

9. Align the tilt steering column knob (2) with the tilt adjuster lever (1) on the left side of the steering column and use hand pressure to snap it back into place.
10. Reconnect the battery negative cable.

NOTE: If the SKIM is replaced with a new unit, a diagnostic scan tool MUST be used to initialize the new SKIM and to program at least two Sentry Key transponders before the vehicle can be operated. (Refer to 8 - ELECTRICAL/VEHICLE THEFT SECURITY - STANDARD PROCEDURE - SKIS INITIALIZATION).

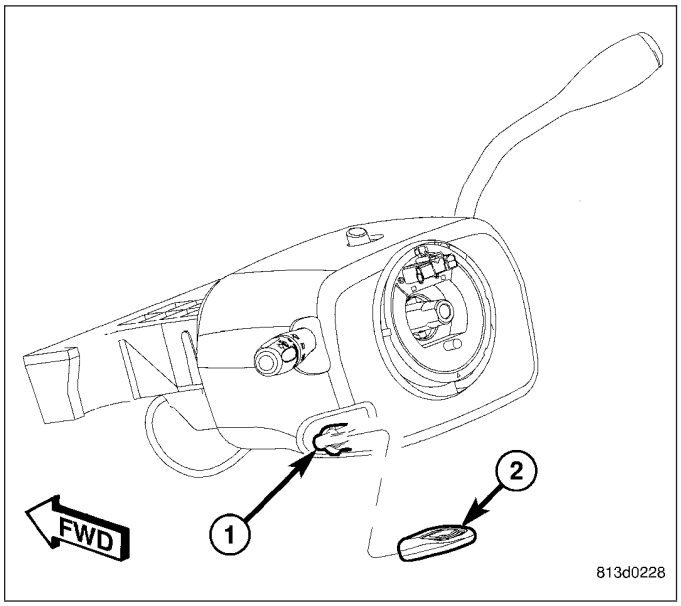

MODULE-TRANSFER CASE CONTROL

DESCRIPTION

The Transfer Case Control Module (TCCM) (2) is a microprocessor-based assembly, controlling the 4X4 transfer case shift functions via the actuation of a shift motor and utilizing the feedback of a mode sensor assembly. Communication is via the PCI serial bus. Inputs include user selectable 4X4 modes that include 2WD, AWD, 4HI, 4LO, and Neutral. The logic and driver circuitry is contained in a molded plastic housing with an embedded heat-sink and is located behind the left side of the lower instrument panel (1).

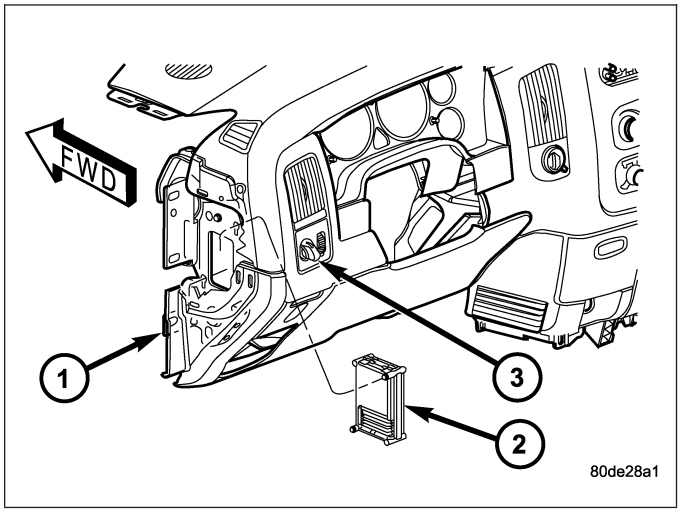

OPERATION

The Transfer Case Control Module (TCCM) utilizes the input from the transfer case mounted mode sensor, the instrument panel mounted selector switch, and the following information from the vehicle's PCI serial bus to determine if a shift is allowed.

- Engine RPM and Vehicle Speed
- Diagnostic Requests
- Manual Transmission and Brake Applied
- PRNDL
- Ignition Status
- ABS Messages

Once the TCCM determines that a requested shift is allowed, it actuates the bi-directional shift motor as necessary to achieve the desired transfer case operating mode. The TCCM also monitors the mode sensor while controlling the shift motor to determine the status of the shift attempt.

Several items can cause the requested shift not to be completed. If the TCCM has recognized a fault (DTC) of some variety, it will begin operation in one of four Functionality Levels. These levels are:

- **Level Zero** - Normal Operation.
- **Level One** - Only Mode Shifts Are Allowed.
- **Level Two** - Only Mode Shifts and Shifts Into LOW Are Allowed (No Neutral Shifts Are Allowed).
- **Level Three** - No Shifts Are Allowed

The TCCM can also be operating in one of three possible power modes. These power modes are:

- **Full Power Mode** is the normal operational mode of the module. This mode is achieved by normal PCI bus traffic being present and the ignition being in the RUN position.
- **Reduced Power Mode** will be entered when the ignition has been powered off. In this state, the module will shut down power supplied to external devices, and to electronic interface inputs and outputs. From this state the module can enter either Sleep Mode or Full Power Mode. To enter this mode, the module must receive an ignition message denoting that the ignition is off, or not receive any messages for 5 ±0.5 seconds. To exit this mode, the module must receive one ignition message that denotes that the ignition is in the RUN position.
- **Sleep Mode** will be entered, from the Reduced Power Mode, when no PCI traffic has been sensed for 20 ±1 seconds. If during Sleep Mode the module detects PCI bus traffic, it will revert to the Reduced Power mode while monitoring for ignition messages. It will remain in this state as long as there is traffic other than run or start messages, and will return to Sleep mode if the bus goes without traffic for 20 ±1 seconds.

SHIFT REQUIREMENTS

If the TCCM is in full power mode and at functionality level zero, it uses the following criteria to determine if a shift is allowed.

If any of the driver controllable conditions are not met once the shift request is recognized, the TCCM will solidly illuminate the source position's LED and flash the desired position's LED for all shifts except NEUTRAL. The NEUTRAL shift LED strategy will be discussed later.

Mode shifts will be allowed regardless of transmission gear or vehicle speed, whenever the following conditions are met:

- Front and rear wheel speed are within 21 km/hr (13 mph).
- A change in the Selector switch state indicates that a mode shift has been requested.
- A valid mode sensor signal is being sensed by the TCCM.
- Proper transmit/receive messages are occurring on the PCI bus.
- Ignition key switch is in the RUN position.

Range shifts will be allowed only if all of the following conditions are met:

- Front and rear wheel speed are within 21 km/hr (13 mph).
- A change in the Selector Switch state indicating a range shift has been requested.
- Transmission in NEUTRAL signal must be recognized for at least 1.5 seconds ±100 msec. (Automatic transmissions only)
- Proper transmit/receive messages are occurring on the PCI bus.
- Clutch signal is recognized for 500 msec ± 50 msec (Manual transmissions only).
- Vehicle speed is less than or equal to 4.8 km/hr (3 miles per hour).
- Ignition key switch is in the RUN position.
- A valid mode sensor signal is being sensed by the TCCM.

A **shift into transfer case Neutral** will be allowed only if all of the following conditions are met:

- Front and rear wheel speed are within 21 km/hr (13 mph).
- The recessed Neutral Selection switch has been depressed continuously for 4.0 seconds ±100 msec while all shift conditions have been continuously met.
- Transmission in NEUTRAL signal recognized from the bus. (Automatic transmissions only)
- Clutch signal is recognized from the bus (Manual transmissions only).
- Proper message transmissions/receptions are occurring on the PCI bus.
- Vehicle speed is less than or equal to 4.8 km/hr (3 miles per hour).
- Ignition key switch is in the RUN position, engine off.
- Foot Brake is applied.
- A valid mode sensor signal is being sensed by the TCCM.

A **shift out of transfer case Neutral** will be allowed only if all of the following conditions are met:

- Front and rear wheel speed are within 21 km/hr (13 mph).
- The recessed Neutral Selection switch has been depressed continuously for 1.0 seconds ±100 msec while all shift conditions have been continuously met.
- Transmission in NEUTRAL signal recognized from the bus.(Automatic transmissions only)
- Clutch signal is recognized from the bus (Manual transmissions only).
- Proper message transmissions/receptions are occurring on the PCI bus.
- Vehicle speed is less than or equal to 4.8 km/hr (3 miles per hour).
- Ignition key switch is in the RUN position.
- Foot Brake is applied.
- A valid mode sensor signal is being sensed by the TCCM.

SHIFT SEQUENCES

Once all the driver controllable conditions for the requested shift have been met, the TCCM begins a shift timer with a maximum duration of 1 second per 'D' channel transition. If the shift timer expires before the TCCM recognizes to correct mode sensor code, the shift is considered to have been blocked. The blocked shift will increment the blocked shift counter by one. The TCCM strategy for handling blocked shifts will be described later. The process the TCCM performs for the various shifts will be described first.

RANGE AND MODE SHIFTS

The process for performing all the range and mode shifts are the same. The following steps describe the process.

- Allow time for Selector Switch debounce; 250 msec ±50 msec.
- Extinguish the source gear's LED while flashing desired transfer case position's LED.
- Engage the shift motor for a maximum of 1 second ±100 msec per 'D' channel transition in the destination gear's direction while monitoring the mode sensor channel transitions.
- Disengage the shift motor when the correct mode sensor code is recognized.
- Solidly illuminate the selected gear's LED.
- Transmit a bus message that the transfer case shift is complete.
- If the desired mode sensor code is not received after the shift timer expires (ie. a blocked or other condition exists), stop driving the motor and wait for 200 msec ±50 msec. The shift motor is then reversed in the direction back toward the source gear for up to 1.0 seconds ±100 msec. per 'D' channel. The TCCM waits for 2.0 seconds ±50 msec. and repeats the attempt to shift to the desired position.

The exception to the preceding sequence is when a shift from 4L to 2WD/AWD is requested. If 2WD/AWD is requested from the 4L position, the transfer case is first driven to the 4H position. If the 4H position is reached, the transfer case is then driven back to the 2WD/AWD position and the shift is considered complete. If the transfer case does not reach any the 4H position, but is in the 2WD/AWD 'D' channel, or the 2WD/AWD between gear position on the 4H side of 2WD/AWD, the shift is also considered complete.

SHIFT OUT OF NEUTRAL

The following steps describe the process for a shift out of NEUTRAL.

- Extinguish the Neutral LED.
- Engage the shift motor for a maximum of 1 second ±100 msec toward the transfer case 4H mode position while monitoring the mode sensor channel transitions.
- Disengage the shift motor when the correct mode sensor code is recognized.
- Extinguish the Neutral LED.
- Transmit a bus message that the transfer case shift is complete.
- If the desired mode sensor code is not received after the shift timer expires (ie. a blocked or other condition exists), stop driving the motor and wait for 200 msec ±50 msec. The shift motor is then reversed in the direction back toward the source gear for up to 1.0 seconds 100 msec. The TCCM waits for 2.0 seconds ±50 msec. and repeats the attempt to shift to the desired position.
- When the Neutral button is released, if the 4H position is the desired position, the shift is complete. Illuminate the 4H LED.
- Otherwise when the Neutral button is released, if all of the shift requirements are being met then engage the shift motor towards the desired position for 1 second ±100 msec per 'D' channel. (if requirements for shifting are not met, illuminate the 4H LED and flash the destination LED as an indication to the driver that all of the driver controllable shift conditions are not being met). If this requires another range or mode shift, begin the range/mode shift process.
- If the desired mode sensor code is not received after the shift timer expires (i.e. a blocked or other condition exists), refer to the section on Blocked Shift Strategy.

BLOCKED SHIFT STRATEGY

When a shift is commanded, the shift motor will be driven towards its destination position, except in the case of shifting out of Neutral if 4L was selected (the transfer case will shift to the 4H position first, before proceeding to 4L). If the shift is blocked on the way to the destination, the TCCM may attempt to drive the motor back to the original position. This process will be allowed to occur 5 times. If the transfer case has reached a non-NEUTRAL 'D' channel during the shift re-attempts, the LED for the achieved gear position is illuminated and the shift attempts are

stopped. To re-attempt the desired shift, the selector switch will need to be rotated to the current position until the switch debounce timer expires then a shift will need to be requested again.

At the end of the 5th blocked attempt, the shift motor is driven towards the last known 'D' channel position. If this motor drive allows the transfer case to reach the 2WD/AWD 'D' channel, or the 2WD/AWD between gear position on the 4H side of 2WD/AWD, the shift is considered complete and the shift attempts are ended.

If the mode sensor is in the NEUTRAL region at the expiration of the shift timer, the TCCM will continue to make the shift attempts according to the blocked shift strategy independent of whether or not the driver controlled conditions are met.

For shifts from NEUTRAL, if all 5 attempts fail to reach the desired position (which by default is 4H), the motor will be driven to stall in the direction of 4H or 4L, depending on the achieved position. If the transfer case has reached the 2WD/AWD or 4L between gear position nearest the NEUTRAL positions and the shift conditions are no longer being met, the transfer case will be driven toward the corresponding 'D' channel. Otherwise, the transfer case will be driven in the direction opposite the last attempt with the desired target being 4H or 4L.

If the transfer case reaches the 2WD/AWD 'D' channel when being driven in the 4H direction, then one final 1.0 second drive toward 4H is attempted. If the transfer case then reaches any of the 4H positions, the shift is considered complete and the 4H LED is illuminated. If the transfer case is still the 2WD/AWD position, the shift is considered complete and the 2WD/AWD LED is illuminated.

NOTE: If after the 5th blocked shift and reversal attempt, if the transfer case position is in the NEUTRAL region, shift attempts will continue until a non-NEUTRAL 'D' channel is reached.

SHIFT REVERSAL TARGETS

If the shift timer expires (1 second per 'D' channel) and the transfer case has not reached the desired position, all shifts will attempt to return to their original position with the exceptions of:

- If the intended shift is going to the High rail from Low and can't make it, but it can make the 2WD/AWD position, the motor stops at that position. The TCCM will not attempt to cross back over NEUTRAL if it does not have to. This means that there was a block on the first attempt to go to 4H and the transfer case has made it through NEUTRAL to a known good position, then the motor will go back only to the 2WD/4WD position and execute the remainder of the attempts from there.
- For shifts out of NEUTRAL, any time a shift is commanded out of NEUTRAL, the system needs to get out. The TCCM should never go to NEUTRAL unless the driver is commanding it and all required conditions are being met

ENCODER DRIFT CORRECTION

Whenever a shift is completed, the TCCM stores the position in memory as the transfer case's intended position. The TCCM continuously monitors the mode sensor and if the mode sensor drifts toward into a NEUTRAL region sensor position for 2.0 seconds, the TCCM will perform a motor drive to correct the drift. The transfer case will be driven toward the intended position for 1.0 seconds 100 msec. The TCCM will wait for 2.0 seconds ±50 msec. and repeat the attempt to shift to the desired position. This will continue until the intended position is reached.

SHIFT MOTOR BRAKING

Two modes of shift motor braking are employed to improve shift performance, static and dynamic. Static shift motor braking is utilized under the following conditions:

- Whenever the transfer case is in the 2WD/AWD or 4L 'D' channel position.
- Whenever an invalid mode sensor code is present.

Static motor braking is achieved by applying +12V on both shift motor wires.

NOTE: Static Shift Motor Braking is independent of ignition key position.

SHIFT ATTEMPT LIMIT

To protect the transfer case system, the TCCM will impose a limit on the number of shifts that can occur over a calibrated time period. The system will monitor the number of 'D' channel segment transitions that occur in any 30 second time period. If the number of segment transitions is 30 or greater, the system will go into a default mode. The default mode of operation for shifting is that the number of allowed 'D' channel transitions permitted to occur will be 3 over each 15 second ±100 msec calibrated window of time. After 5 minutes ±100 msec, the motor can be assumed to have cooled down and the system will revert to normal operation. The following rules also apply to the shift limit:

- The attempt limit will not prevent shifts coming out of NEUTRAL, they will be allowed regardless of the counter/timer.
- Any shift that is in progress when the counter reaches a maximum count in time will be allowed to complete before the default mode is entered. D-channel transitions during this period will not be counted towards the default mode limit.
- A block, regardless of the direction, whether towards destination or back towards reversal target (shift timer expiring), will count as a value of 2 transitions towards the 30 segment transitions to go into default mode as defined above. Current attempt limit values are 30 transitions in 30 seconds and default mode values are 3 transitions every 15 seconds for 5 minutes.

DIAGNOSIS AND TESTING

TRANSFER CASE VERIFICATION TEST VER 1

Diagnostic Test

1. TRANSFER CASE VERIFICATION TEST— VER 1

Disconnect all jumper wires and reconnect all previously disconnected components and connectors.

With the scan tool, Clear DTCs.

Make sure that all accessories are turned off and that the battery is fully charged.

Move the Transfer Case Selector Switch to the desired position.

Test drive the vehicle in each Transfer Case range and verify proper operation in each range.

NOTE: To select or deselect 2WD, AWD or 4HI mode, vehicle speed must be below 55 MPH (88 KM/H) with all wheels at vehicle speed.

NOTE: Shifts will not take place with a wheel speed difference of greater than 13 MPH between the front and rear wheels.

NOTE: To select or deselect 4LO (if equipped), vehicle speed must be below 3 MPH (5 KM/H) with the ignition ON and the transmission in neutral (auto trans) or the clutch pedal pressed (man trans).

NOTE: To select or deselect Transfer Case Neutral, vehicle speed must be 0 MPH with the ignition ON, engine OFF, the brake pedal applied, and the transmission in neutral (auto trans) or the clutch pedal pressed (man trans). Press the Neutral button (if equipped) on the Transfer Case Selector Switch until the Neutral Indicator is illuminated.

WARNING: Apply the parking brake. The vehicle may roll with the Transfer Case in neutral.

NOTE: To verify that the Transfer Case is in Neutral, shift the automatic transmission into reverse and release the brake pedal for three seconds or shift the manual transmission into gear and slowly release the clutch pedal. There should be no vehicle movement if the Transfer Case is in Neutral.

With the scan tool, read DTCs in the Front Control Module (FCM) and the Instrument Cluster Module (CCN).

Are there any Transfer Case DTCs present in the Front Control Module (FCM) or the Instrument Cluster Module (CCN)?

Yes >> Return to the symptom list and perform the appropriate diagnostic test.

No >> Repair is complete.

MODULE-TRANSMISSION CONTROL

DESCRIPTION

The Transmission Control Module (TCM) (2) may be sub-module within the Powertrain Control Module (PCM) (3).

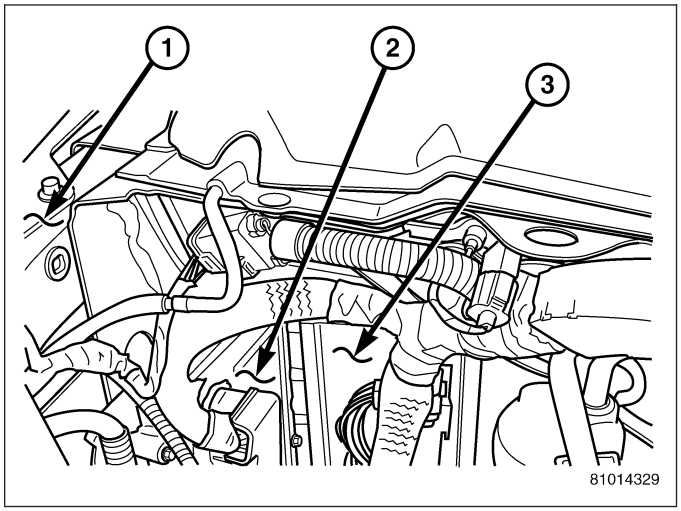

Or, for vehicles with a diesel engine, the Engine Control Module (ECM) (1). The PCM, and TCM when equipped, is located at the right rear of the engine compartment, near the right inner fender.

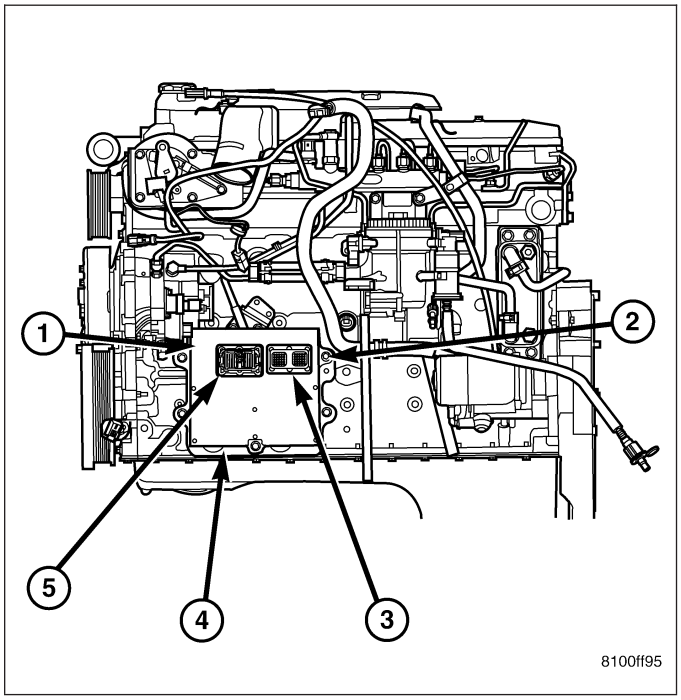

OPERATION

The Transmission Control Module (TCM) controls all electronic operations of the transmission. The TCM receives information regarding vehicle operation from both direct and indirect inputs, and selects the operational mode of the transmission. Direct inputs are hard wired to, and used specifically by the TCM. Indirect inputs are shared with the TCM via the vehicle communication bus.

Some examples of **direct inputs** to the TCM are:

- Battery (B+) voltage
- Ignition “ON” voltage
- Transmission Control Relay (Switched B+)
- Throttle Position Sensor
- Crankshaft Position Sensor

- Transmission Range Sensor
- Pressure Switches
- Transmission Temperature Sensor
- Input Shaft Speed Sensor
- Output Shaft Speed Sensor
- Line Pressure Sensor

Some examples of **indirect inputs** to the TCM are:

- Engine/Body Identification
- Manifold Pressure
- Target Idle
- Torque Reduction Confirmation
- Engine Coolant Temperature
- Ambient/Battery Temperature
- Scan Tool Communication

Based on the information received from these various inputs, the TCM determines the appropriate shift schedule and shift points, depending on the present operating conditions and driver demand. This is possible through the control of various direct and indirect outputs.

Some examples of TCM **direct outputs** are:

- Transmission Control Relay
- Solenoids
- Torque Reduction Request

Some examples of TCM **indirect outputs** are:

- Transmission Temperature (to PCM)
- PRNDL Position (to cluster/CCN)

In addition to monitoring inputs and controlling outputs, the TCM has other important responsibilities and functions:

- Storing and maintaining Clutch Volume Indexes (CVI)
- Storing and selecting appropriate Shift Schedules
- System self-diagnostics
- Diagnostic capabilities (with scan tool)

NOTE: If the TCM has been replaced, the "Quick Learn Procedure" must be performed. (Refer to 8 - ELECTRICAL/ELECTRONIC CONTROL MODULES/TRANSMISSION CONTROL MODULE - STANDARD PROCEDURE)

BATTERY FEED

A fused, direct battery feed to the TCM is used for continuous power. This battery voltage is necessary to retain memory in the TCM. When the battery (B+) is disconnected, this memory is lost. When the battery (B+) is restored, this memory loss is detected by the TCM and a Diagnostic Trouble Code (DTC) is set.

CLUTCH VOLUME INDEXES (CVI)

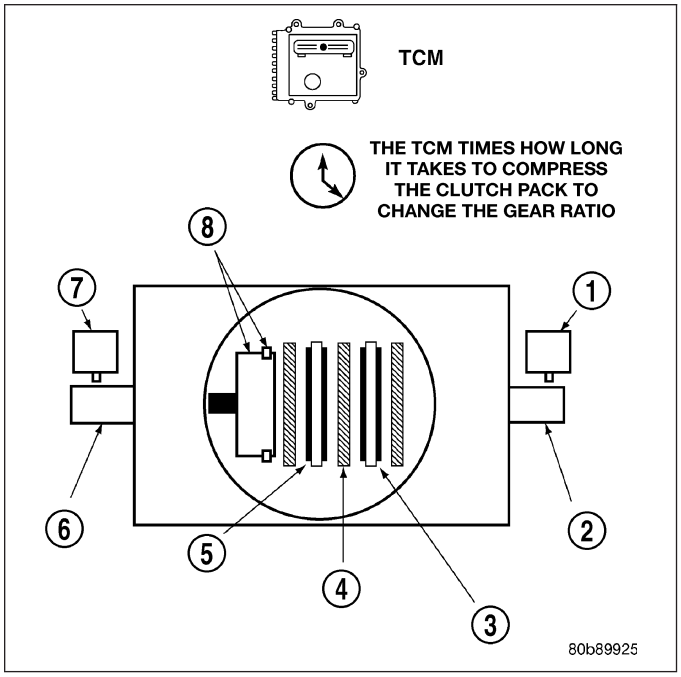

An important function of the TCM is to monitor Clutch Volume Indexes (CVI). CVIs represent the volume of fluid needed to compress a clutch pack.

The TCM monitors gear ratio changes by monitoring the Input and Output Speed Sensors. The Input, or Turbine Speed Sensor sends an electrical signal to the TCM that represents input shaft rpm. The Output Speed Sensor provides the TCM with output shaft speed information.

By comparing the two inputs, the TCM can determine transmission gear position. This is important to the CVI calculation because the TCM determines CVIs by monitoring how long it takes for a gear change to occur.

Gear ratios can be determined by using the Scan Tool and reading the Input/Output Speed Sensor values in the “Monitors” display. Gear ratio can be obtained by dividing the Input Speed Sensor value by the Output Speed Sensor value.

For example, if the input shaft is rotating at 1000 rpm and the output shaft is rotating at 500 rpm, then the TCM can determine that the gear ratio is 2:1. In direct drive (3rd gear), the gear ratio changes to 1:1. The gear ratio changes as clutches are applied and released. By monitoring the length of time it takes for the gear ratio to change following a shift request, the TCM can determine the volume of fluid used to apply or release a friction element.

The volume of transmission fluid needed to apply the friction elements are continuously updated for adaptive controls. As friction material wears, the volume of fluid need to apply the element increases.

Certain mechanical problems within the input clutch assembly can cause inadequate or out-of-range element volumes. Also, defective Input/Output Speed Sensors and wiring can cause these conditions. The following chart identifies the appropriate clutch volumes and when they are monitored/updated:

CLUTCH VOLUMES		
Clutch	**When Updated**	**Proper Clutch Volume**
L/R	2-1 or 3-1 downshift	45 to 134
2C	3-2 kickdown shift	25 to 85
OD	2-3 upshift	30 to 100
4C	3-4 upshift	30 to 85
UD	4-3 kickdown shift	30 to 100

SHIFT SCHEDULES

As mentioned earlier, the TCM has programming that allows it to select a variety of shift schedules. Shift schedule selection is dependent on the following:

- Shift lever position
- Throttle position
- Engine load
- Fluid temperature
- Software level

As driving conditions change, the TCM appropriately adjusts the shift schedule. Refer to the following chart to determine the appropriate operation expected, depending on driving conditions.

Schedule	Condition	Expected Operation
Extreme Cold	Oil temperature below -16° F	-Park, Reverse, Neutral and 1st and 3rd gear only in D position, 2nd gear only in Manual 2 or L -No EMCC
Super Cold	Oil temperature between -12° F and 10° F	- Delayed 2-3 upshift - Delayed 3-4 upshift - Early 4-3 coastdown shift - High speed 4-2, 3-2, 2-1 kickdown shifts are prevented -Shifts at high throttle openings willl be early. - No EMCC
Cold	Oil temperature between 10° F and 36° F	-Shift schedule is the same as Super Cold except that the 2-3 upshifts are not delayed.
Warm	Oil temperature between 40° F and 80° F	- Normal operation (upshift, kickdowns, and coastdowns) - No EMCC
Hot	Oil temperature between 80° F and 240° F	- Normal operation (upshift, kickdowns, and coastdowns) - Normal EMCC operation
Overheat	Oil temperature above 240° F or engine coolant temperature above 244° F	- Delayed 2-3 upshift - Delayed 3-4 upshift - 3rd gear FEMCC from 30-48 mph - 3rd gear PEMCC above 35 mph - Above 25 mph the torque converter will not unlock unless the throttle is closed or if a wide open throttle 2nd PEMCC to 1 kickdown is made

DIAGNOSIS AND TESTING

PRE-DIAGNOSTIC CHECK OUT

Always perform the Pre-Diagnostic Troubleshooting procedure before proceeding. (Refer to 21 - TRANSMISSION/TRANSAXLE/AUTOMATIC - 45RFE/545RFE - DIAGNOSIS AND TESTING).

For a complete wiring diagram **Refer to Section 8W**.

Diagnostic Test

1. PRE-DIAGNOSTIC CHECK OUT

NOTE: Low fluid level can be the cause of many transmission problems. If the fluid level is low locate and repair the leak then check and adjust the fluid level per the service information.

NOTE: Always perform diagnostics with a fully charged battery to avoid false symptoms.
With the scan tool, read the engine DTC's. Check and repair all Engine DTC's prior to performing Transmission symptom diagnostics.

With the scan tool, read Transmission DTC's. Record all DTC's and 1 Trip Failures.

NOTE: Diagnose 1 Trip Failures as a fully matured DTC.
Using the wiring diagram/schematic as a guide, inspect the wiring and connectors. Repair as necessary.

Perform the Shift Lever Position Test. If the test does not pass, refer to Symptom test for P0706 Check Shifter Signal.

For Gear Ratio DTC's, check and record all CVI's.

Most DTC's set on start up but some must be set by driving the vehicle to ensure that all diagnostic monitors have run.

NOTE: Verify flash level of Powertrain Controller. Some problems are corrected by software upgrades to the Transmission and Engine Systems.

NOTE: Due to the integration of the Powertrain and Transmission control modules - if a controller flash is performed it is necessary to perform Quick Learn and the Drive Learn procedures with the scan tool. Failure to do so may result in shift quality complaints.

NOTE: Check for applicable Service Bulletins that may apply.

Were any repairs made that fixed the customer's complaint?

Yes >> Testing complete.

No >> Refer to the diagnostic test procedure related to the DTC.

PRE-DIAGNOSTIC CHECKOUT (DIESEL)

For a complete wiring diagram **Refer to Section 8W**

1. PRE-DIAGNOSTIC CHECKOUT

NOTE: Always perform diagnostics with a fully charged battery to avoid false symptoms.

NOTE: Low fluid level can be the cause of many transmission problems. If the fluid level is low locate and repair the leak then check and adjust the fluid level per the Service Information.

With the scan tool, read engine DTC's. Check and repair all engine DTCs prior to performing transmission symptom diagnostics.

Using the wiring diagram/schematic as a guide, inspect the wiring and connectors. Repair as necessary.

Verify the flash level of the Engine Control Module. Some problems are corrected by software upgrades.

Check for any Service Information Tune-ups or Technical Service Bulletins that may apply.

Did any of the above checks or procedures correct the symptom?

Yes >> Refer to the Transmission category and perform the appropriate symptom(s). (Refer to 21 - TRANSMISSION/TRANSAXLE/AUTOMATIC - 48RE - DIAGNOSIS AND TESTING)

No >> Repair is complete.

Perform RE TRANSMISSION VERIFICATION TEST VER - 1 (DIESEL). (Refer to 8 - ELECTRICAL/ELECTRONIC CONTROL MODULES/TRANSMISSION CONTROL MODULE - DIAGNOSIS AND TESTING)

TRANSMISSION VERIFICATION TEST VER - 1 (GAS)

1.

1. Inspect the vehicle to ensure that all engine and transmission components are properly installed and connected. Reassemble and reconnect components as necessary.
2. If any existing diagnostic trouble codes have not been repaired, go to Symptom List and follow path specified.
3. Connect a scan tool to the data link connector.
4. Ensure the fuel tank has at least a quarter tank of fuel. Turn off all accessories.
5. Start and run the engine until the transmission temperature is above 43°C (110°F).
6. Check the transmission fluid level per the Service Information. Adjust if necessary.
7. Road test the vehicle. Make 15 to 20 1-2, 2-3 and 3-4 up shifts. Perform these shifts from a standing start to 72 km/h (45 MPH) with a constant throttle opening of 20-25%.
8. Below 40 km/h (25 MPH), make 5 to 8 wide open throttle kick downs to 1st gear. Allow at least 5 seconds each in 2nd and 3rd between each kick down.
9. For a specific DTC, drive the vehicle in accordance with the Symptom's When Monitored and Set Conditions to verify the repair.
10. If a DTC sets during the road test, return to the Symptom List and follow the path. If no DTC sets, the repair is complete.

Are there any DTCs or symptoms remaining?

Yes >> Repair is not complete, refer to appropriate symptom.

No >> Repair is complete.

TRANSMISSION VERIFICATION TEST VER - 1 (DIESEL)

1.

1. Inspect the vehicle to ensure that all engine and transmission components are properly installed and connected. Reassemble and reconnect components as necessary.
2. If any existing diagnostic trouble codes have not been repaired, go to Symptom List and follow path specified.
3. Connect a scan tool to the data link connector.
4. Ensure the fuel tank has at least a quarter tank of fuel. Turn off all accessories.
5. Start and run the engine until the transmission temperature is above 43°C (110°F).
6. Check the transmission fluid level per the Service Information. Adjust if necessary.
7. Road test the vehicle. Make 15 to 20 1-2, 2-3 and 3-4 up shifts. Perform these shifts from a standing start to 72 km/h (45 MPH) with a constant throttle opening of 20-25%.
8. Below 40 km/h (25 MPH), make 5 to 8 wide open throttle kick downs to 1st gear. Allow at least 5 seconds each in 2nd and 3rd between each kick down.
9. For a specific DTC, drive the vehicle in accordance with the Symptom's When Monitored and Set Conditions to verify the repair.
10. If a DTC sets during the road test, return to the Symptom List and follow the path. If no DTC sets, the repair is complete.

Are there any DTCs or symptoms remaining?

Yes >> Repair is not complete, refer to appropriate symptom.

No >> Repair is complete.

45RFE/545RFE TRANSMISSION VERIFICATION TEST - VER 1

For the Transmission circuit diagram (Refer to)(Refer to 21 - TRANSMISSION/TRANSAXLE/AUTOMATIC - 45RFE/ 545RFE - SCHEMATICS AND DIAGRAMS).

For a complete wiring diagram **Refer to Section 8W**.

45RFE/545RFE TRANSMISSION VERIFICATION TEST - VER 1

1. 45RFE/545RFE TRANSMISSION VERIFICATION TEST - VER 1

NOTE: 1. After completion of the Transmission Verification Test, the Powertrain Verification Test must be performed.

2. Connect the scan tool to the Data Link Connector (DLC).

3. Reconnect any disconnected components.

NOTE: 4. If the PCM has been replaced or if the transmission has been repaired or replaced it is necessary to perform the scan tool Quick Learn Procedure.

5. With the scan tool, erase all Transmission and Engine DTC's.

6. With the scan tool, display Transmission Temperature. Start and run the engine until the Transmission Temperature is HOT, above 43° C or 110° F.

7. Check the Transmission fluid level and adjust if necessary. Refer to the Service Information for the Fluid Fill procedure.

8. Road test the vehicle.

9. Perform the following shifts from a standing start with a constant throttle opening of 20 to 25 degrees to the speeds of 97 Km/h or 60 MPH; make fifteen to twenty 1 to 2, 2 to 3, 3 to 4 upshifts and for 545RFE, 4 to 4-prime.

10. Perform the following shifts with speeds below 40 Km/h or 25 MPH; make five to eight wide open throttle kickdowns to 1st gear. Allow at least 5 seconds each in 2nd and 3rd gear between each kickdown.

11. Check for DTC's during the road test.

NOTE: 12. Use the EATX OBDII task manager to run Good Trip time in each gear, this will confirm the repair and to ensure that the DTC has not re-matured.

13. With the scan tool, perform a BATTERY DISCONNECT, this will clear the EATX DTC EVENT DATA

Were there any Diagnostic Trouble Codes (DTCs) set during the road test?

Yes >> Refer to the Symptom List for the appropriate diagnostic tests.

No >> Repair is complete.

STANDARD PROCEDURE

TCM QUICK LEARN

The quick learn procedure requires the use of the scan tool.

This program allows the electronic transmission system to recalibrate itself. This will provide the proper transmission operation. The quick learn procedure should be performed if any of the following procedures are performed:

- Transmission Assembly Replacement
- Transmission Control Module Replacement
- Solenoid Pack Replacement
- Clutch Plate and/or Seal Replacement
- Valve Body Replacement or Recondition

To perform the Quick Learn Procedure, the following conditions must be met:

- The brakes must be applied
- The engine speed must be above 500 rpm
- The throttle angle (TPS) must be less than 3 degrees
- The shift lever position must stay in PARK until prompted to shift to overdrive
- The shift lever position must stay in overdrive after the Shift to Overdrive prompt until the scan tool indicates the procedure is complete.
- The calculated oil temperature must be above 60° and below 200°

DRIVE LEARN

When a transmission is repaired and a Quick Learn procedure has been performed on the Transmission Control Module (TCM), the following Drive Learn procedure can be performed to fine tune any shifts which are particularly objectionable.

NOTE: It is not necessary to perform the complete Drive Learn procedure every time the TCM is Quick Learned. Perform only the portions which target the objectionable shift.

LEARN A SMOOTH 1ST NEUTRAL TO DRIVE SHIFT

Perform this procedure only if the complaint is for a delayed or harsh shift the first time the transmission is put into gear after the vehicle is allowed to set with the engine not running for at least 10 minutes. Use the following steps to have the TCM learn the 1st N-D UD CVI.

NOTE: The transmission oil temperature must be between 80 - 110°F (27 - 43°C).

1. Start the engine only when the engine and ignition have been off for at least ten (10) minutes.
2. With the vehicle at a stop and the service brake applied, record the 1st N-D UD CVI while performing a Neutral to Drive shift. The 1st N-D UD CVI accounts for air entrapment in the UD clutch that may occur after the engine has been off for a period of time.
3. Repeat Step 1 and Step 2 until the recorded 1st N-D UD CVI value stabilizes.

NOTE: It is important that this procedure be performed when the transmission temperature is between 80 - 110°F (27 - 43°C). If this procedure takes too long to complete fully for the allowed transmission oil temperature, the vehicle may be returned to the customer with an explanation that the shift will improve daily during normal vehicle usage. The TCM also learns at higher oil temperatures, but these values (line pressure correction values) are not available for viewing on the scan tool.

LEARN A SMOOTH NEUTRAL TO DRIVE GARAGE SHIFT

Perform this procedure if the complaint is for a delayed or harsh shift when the transmission is put into gear after the vehicle has had its first shift. Use the following steps to have the TCM learn the Norm N-D UD CVI.

NOTE: The transmission oil temperature must be between 80 - 110°F (27 - 43°C) to learn the UD CVI. Additional learning occurs at temperatures as low as 0°F and as high as 200°F. This procedure may be performed at any temperature that experiences poor shift quality. Although the UD CVI may not change, shift quality should improve.

1. Start the vehicle engine and shift to drive.

2. Move the vehicle forward to a speed of at least 16 km/h (10 MPH) and come to a stop. This ensures no air is present in the UD hydraulic circuit.
3. Perform repeated N-D shifts at a stop while pausing in Neutral for at least 2-3 seconds and monitor Norm N-D UD CVI volume until the value stabilizes. The value will change during the N-D shift. This is normal since the UD value is different for the N-D shift then the normal value shown which is used for 4-3 coastdown and kickdowns. Perform repeated shifts in this temperature range until the Norm N-D UD CVI value stabilizes and the N-D shifts become smooth.

LEARN THE 1ST 2-3 SHIFT AFTER A RESTART OR SHIFT TO REVERSE

Use the following steps to have the TCM learn the 1st 2-3 shift OD CVI.

NOTE: The transmission oil temperature must be above 80°F (27°C).

1. With the vehicle engine running, select reverse gear for over 2 seconds.
2. Shift the transmission to Drive and accelerate the vehicle from a stop at a steady 15 degree throttle opening and perform a 2-3 shift while noting the 1st 2-3 OD CVI.
3. Repeat Step 1 and Step 2 until the 1st 2-3 upshift becomes smooth and the 1st 2-3 OD CVI stabilizes.

LEARN A SMOOTH 2-3 AND 3-4 UPSHIFT

NOTE: The transmission oil temperature must be above 110°F (43°C).

Use the following steps to have the TCM learn the OD and 4C CVI's.

1. Accelerate the vehicle from a stop at a steady 15 degree throttle opening and perform multiple 1-2, 2-3, and 3-4 upshifts. The 2nd 2-3 shift following a restart or shift to reverse will be shown during the shift as a value between the 1st 2-3 OD CVI and the normal OD CVI. Updates to the normal OD CVI will occur after the 2nd shift into 3rd gear, following a restart or shift to reverse.
2. Repeat Step 1 until the 2-3 and 3-4 shifts become smooth and the OD and 4C CVI become stable.

LEARN A SMOOTH 4-3 COASTDOWN AND PART THROTTLE 4-3 KICKDOWN

NOTE: The transmission oil temperature must be above 110°F (43°C).

Use the following steps to have the TCM learn the UD shift volume.

1. At a vehicle speed between 64-97 km/h (40-60 MPH), perform repeated 4-3 kickdown shifts.
2. Repeat Step 1 until the UD volume becomes somewhat stable and the shift becomes smooth.

LEARN A SMOOTH 1-2 UPSHIFT AND 3-2 KICKDOWN

Use the following steps to have the TCM learn the 2C shift volume.

NOTE: The transmission oil temperature must be above 110°F (43°C).

1. With a vehicle speed below 48 km/h (30 MPH) and the transmission in 3rd gear, perform multiple 3-2 kickdowns.
2. Repeat Step 1 until the 3-2 kickdowns become smooth and the 2C CVI becomes stable.

LEARN A SMOOTH MANUAL 2-1 PULLDOWN SHIFT AS WELL AS A NEUTRAL TO REVERSE SHIFT

NOTE: The transmission oil temperature must be above 110°F (43°C).

Use the following steps to have the TCM learn the LR volume.

1. With the vehicle speed around 40-48 km/h (25-30 MPH) in Manual 2nd, perform manual pulldowns to Low or 1st gear at closed throttle.
2. Repeat Step 1 until the LR CVI becomes stable and the manual 2-1 becomes smooth.

LEARN A SMOOTH NEUTRAL TO REVERSE SHIFT

NOTE: The transmission oil temperature must be above 110°F (43°C).

1. With the vehicle at a stop, perform Neutral to Reverse shifts until the shift is smooth. An unlearned Neutral to Reverse shift may be harsh or exhibit a double bump.
2. If any of the shifts are still not smooth after the clutch volume stabilizes, an internal transmission problem may be present.

LEARN A SMOOTH 4-5 UPSHIFT

NOTE: The transmission oil temperature must be above 110°F (43°C).

Use the following steps to have the TCM learn the Alt 2C CVI.

1. Accelerate the vehicle through 88 km/h (55mph) at a steady 10-15 degree throttle opening and perform multiple 4-5 upshifts.
2. Repeat Step 1 until the 4-5 shift become smooth and theAlt 2C CVI become stable. There is a separate 2C volume used and learned for 4-5 shifts, 2CA. It is independent of the 2C CVI learned on 3-2 kickdowns.

ENGINE SYSTEMS

TABLE OF CONTENTS

page

BATTERY SYSTEM 1
CHARGING 40
STARTING 52

BATTERY SYSTEM

TABLE OF CONTENTS

page

BATTERY SYSTEM
DESCRIPTION 2
OPERATION 3
DIAGNOSIS AND TESTING
BATTERY SYSTEM 3
CLEANING 5
INSPECTION 7
SPECIFICATIONS 8
SPECIAL TOOLS
BATTERY SYSTEM SPECIAL TOOLS 9
BATTERY
DESCRIPTION 10
OPERATION 10
DIAGNOSIS AND TESTING
BATTERY 11
STANDARD PROCEDURE
BATTERY CHARGING 11
USING MICRO 420 BATTERY TESTER 14
BUILT-IN INDICATOR TEST 15
OPEN-CIRCUIT VOLTAGE TEST 16
IGNITION-OFF DRAW TEST 16
REMOVAL 18
INSTALLATION 18
BATTERY HOLDDOWN
REMOVAL 19
INSTALLATION 19
BATTERY CABLES
DESCRIPTION 20
OPERATION 20
DIAGNOSIS AND TESTING - BATTERY
CABLES 20
REMOVAL 22
INSTALLATION 29
BATTERY TRAY
DESCRIPTION 36
REMOVAL 36
INSTALLATION 38

BATTERY SYSTEM

DESCRIPTION

GASOLINE ENGINE

Vehicles with a gasoline engine are equipped with a single 12-volt battery. All of the components of the battery system are located within the engine compartment. The battery system for this vehicle, covers the following related components:

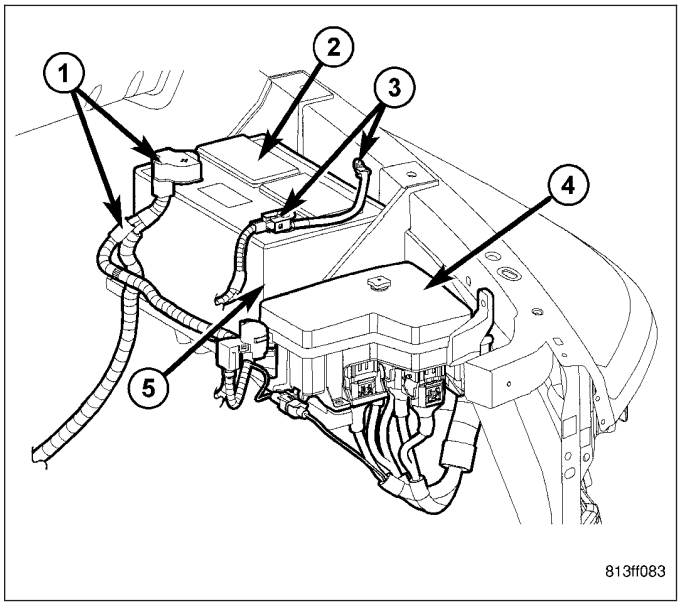

- **Battery (2)** - The storage battery provides a reliable means of storing a renewable source of electrical energy within the vehicle.
- **Positive Battery cable (1)** - The positive battery cable connects the battery positive terminal post to the vehicle electrical system, starter and alternator.
- **Negative Battery Cable (3)** - The negative battery cable connects the battery negative terminal post to the vehicle electrical system through body, chassis and engine grounding points.
- **Battery Thermal Guard (5)** - A thermal guard wraps around the battery case to enclose the sides of the battery. The thermal guard consists of a heavy black plastic outer skin and two lighter plies of plastic that have been formed into a sheet with hundreds of small air pockets entrapped between them.
- **Battery Holddown** - The battery holddown hardware secures the battery in the battery tray in the engine compartment.
- **Battery Tray** - The battery tray provides a secure mounting location in the vehicle for the battery and an anchor point for the battery holddown hardware.

DIESEL ENGINE

Vehicles with a diesel engine utilize two 12-volt batteries connected in parallel. All of the components of the battery system are located within the engine compartment. The battery system for this vehicle, covers the following related components:

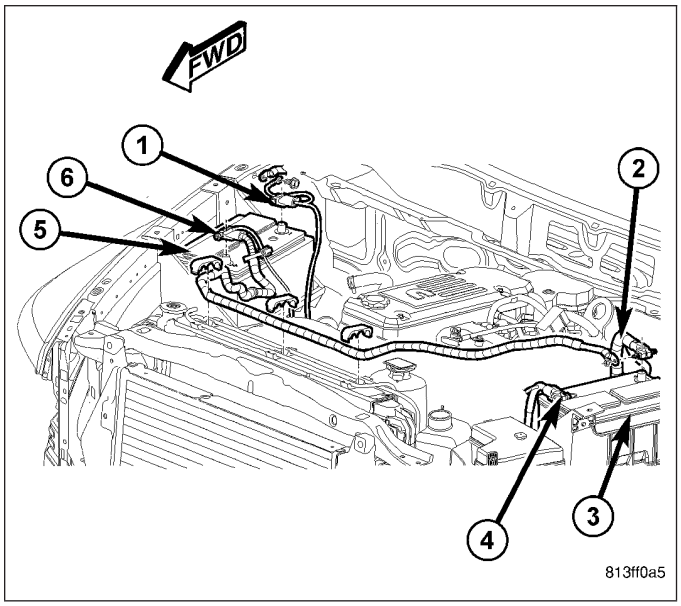

- **Left Battery (3)** - The Left storage battery provides a reliable means of storing a renewable source of electrical energy within the vehicle.
- **Right Battery (5)** - The Right storage battery provides a reliable means of storing a renewable source of electrical energy within the vehicle as well as the additional required electrical energy due to high demands of the diesel system.
- **Positive Battery cables (2 & 6)** - The positive battery cables connect the battery positive terminal posts to the vehicle electrical system, starter and alternator as well as connecting the two batteries together.
- **Negative Battery Cables (1 & 4)** - The negative battery cables connect the battery negative terminal posts to the vehicle electrical system through body, chassis and engine grounding points.

- **Battery Thermal Guard** - A thermal guard wraps around the battery case to enclose the sides of the battery. The thermal guard consists of a heavy black plastic outer skin and two lighter plies of plastic that have been formed into a sheet with hundreds of small air pockets entrapped between them.
- **Battery Holddown** - The battery holddown hardware secures the battery in the battery tray in the engine compartment.
- **Battery Tray** - The battery tray provides a secure mounting location in the vehicle for the battery and an anchor point for the battery holddown hardware.

For battery system maintenance schedules, (Refer to LUBRICATION & MAINTENANCE/MAINTENANCE SCHEDULES - DESCRIPTION). For the proper battery jump starting procedure, (Refer to LUBRICATION & MAINTENANCE/JUMP STARTING - STANDARD PROCEDURE). The battery must be fully-charged before any battery system diagnosis or testing procedures can be performed.

OPERATION

The battery system is designed to provide a safe, efficient, reliable and mobile means of delivering and storing electrical energy. This electrical energy is required to operate the engine starting system, as well as many of the other vehicle accessory systems for limited durations while the engine and/or the charging system are not operating. The battery system is also designed to provide a reserve of electrical energy to supplement the charging system for short durations while the engine is running and the electrical current demands of the vehicle exceed the output of the charging system. In addition to delivering, and storing electrical energy for the vehicle, the battery system serves as a capacitor and voltage stabilizer for the vehicle electrical system. It absorbs most abnormal or transient voltages caused by the switching of any of the electrical components or circuits in the vehicle.

DIAGNOSIS AND TESTING

BATTERY SYSTEM

The battery, starting, and charging systems in the vehicle operate with one another and must be tested as a complete system. In order for the engine to start and the battery to maintain its charge properly, all of the components that are used in these systems must perform within specifications. It is important that the battery, starting, and charging systems be thoroughly tested and inspected any time a battery needs to be charged or replaced. The cause of abnormal battery discharge, overcharging or early battery failure must be diagnosed and corrected before a battery is replaced and before a vehicle is returned to service. The service information for these systems has been separated within this service manual to make it easier to locate the specific information you are seeking. However, when attempting to diagnose any of these systems, it is important that you keep their interdependency in mind.

The diagnostic procedures used for the battery, starting, and charging systems include the most basic conventional diagnostic methods, to the more sophisticated On-Board Diagnostics (OBD) built into the Powertrain Control Module (PCM). Use of an induction-type milliampere ammeter, a volt/ohmmeter, a battery charger, a carbon pile rheostat (load tester) and a 12-volt test lamp may be required. All OBD-sensed systems are monitored by the PCM. Each monitored circuit is assigned a Diagnostic Trouble Code (DTC). The PCM will store a DTC in electronic memory for any inoperative system it detects. (Refer to 8 - ELECTRICAL/CHARGING - DIAGNOSIS AND TESTING) for the proper charging system on-board diagnostic test procedures.

MICRO 420 BATTERY TESTER

The Micro 420 automotive battery system tester is designed to help diagnose the cause of a defective battery. (Refer to 8 - ELECTRICAL/BATTERY SYSTEM/BATTERY - STANDARD PROCEDURE - USING MICRO 420 BATTERY TESTER) for directions on using the Micro 420 battery tester.

BATTERY SYSTEM DIAGNOSIS		
CONDITION	POSSIBLE CAUSES	CORRECTION
THE BATTERY SEEMS WEAK OR DEAD WHEN ATTEMPTING TO START THE ENGINE.	1. The electrical system ignition-off draw is excessive.	1. (Refer to 8 - ELECTRICAL/BATTERY SYSTEM/BATTERY - STANDARD PROCEDURE - IGNITION-OFF DRAW TEST) for the proper test procedures. Repair the excessive ignition-off draw, as required.
	2. The charging system is inoperative.	2. Determine if the charging system is performing to specifications. Repair the inoperative charging system, as required.
	3. The battery is discharged.	3. Determine the battery state-of-charge using the Micro 420 battery tester, (Refer to 8 - ELECTRICAL/BATTERY SYSTEM/BATTERY - STANDARD PROCEDURE - USING MICRO 420 BATTERY TESTER). Charge the inoperative battery as required.
	4. The battery terminal connections are loose or corroded.	4. (Refer to 8 - ELECTRICAL/BATTERY SYSTEM - CLEANING). Clean and tighten the battery terminal connections, as required.
	5. The battery has an incorrect size or rating for this vehicle.	5. (Refer to 8 - ELECTRICAL/BATTERY SYSTEM - SPECIFICATIONS) for the proper size and rating. Replace an incorrect battery, as required.
	6. The battery is inoperative.	6. Determine the battery cranking capacity using the Micro 420 battery tester, (Refer to 8 - ELECTRICAL/BATTERY SYSTEM/BATTERY - STANDARD PROCEDURE - USING MICRO 420 BATTERY TESTER). Replace the inoperative battery, as required.
	7. The starting system is inoperative.	7. Determine if the starting system is performing to specifications. Repair the inoperative starting system, as required.
	8. The battery is physically damaged.	8. Inspect the battery for loose terminal posts or a cracked and leaking case. Replace the damaged battery, as required.

BATTERY SYSTEM DIAGNOSIS		
CONDITION	POSSIBLE CAUSES	CORRECTION
THE BATTERY STATE OF CHARGE CANNOT BE MAINTAINED.	1. The battery has an incorrect size or rating for this vehicle.	1. (Refer to 8 - ELECTRICAL/BATTERY SYSTEM - SPECIFICATIONS) for the proper size and rating. Replace an incorrect battery, as required.
	2. The battery terminal connections are loose or corroded.	2. (Refer to 8 - ELECTRICAL/BATTERY SYSTEM - CLEANING). Clean and tighten the battery terminal connections, as required.
	3. The electrical system ignition-off draw is excessive.	3. (Refer to 8 - ELECTRICAL/BATTERY SYSTEM/BATTERY - STANDARD PROCEDURE - IGNITION-OFF DRAW TEST) for the proper test procedures. Repair the inoperative electrical system, as required.
	4. The battery is inoperative.	4. Test the battery using the Micro 420 battery tester, (Refer to 8 - ELECTRICAL/BATTERY SYSTEM/BATTERY - STANDARD PROCEDURE - USING MICRO 420 BATTERY TESTER). Replace the inoperative battery, as required.
	5. The starting system is inoperative.	5. Determine if the starting system is performing to specifications. Repair the inoperative starting system, as required.
	6. The charging system is inoperative.	6. Determine if the charging system is performing to specifications. Repair the inoperative charging system, as required.
	7. Electrical loads exceed the output of the charging system.	7. Inspect the vehicle for aftermarket electrical equipment which might cause excessive electrical loads.
	8. Slow driving or prolonged idling with high-amperage draw systems in use.	8. Advise the vehicle operator, as required.
THE BATTERY WILL NOT ACCEPT A CHARGE.	1. The battery is inoperative.	1. Test the battery using the Micro 420 battery tester, (Refer to 8 - ELECTRICAL/BATTERY SYSTEM/BATTERY - STANDARD PROCEDURE - USING MICRO 420 BATTERY TESTER). Replace the inoperative battery, as required.

CLEANING

The following information details the recommended cleaning procedures for the battery and related components. In addition to the maintenance schedules, (Refer to LUBRICATION & MAINTENANCE/MAINTENANCE SCHEDULES - DESCRIPTION) for gasoline engines or (Refer to LUBRICATION & MAINTENANCE/MAINTENANCE SCHEDULES - DESCRIPTION) for diesel engines, it is recommended that these procedures be performed any time the battery or related components must be removed for vehicle service.

1. Clean the battery cable terminal clamps (2) of all corrosion. Remove any corrosion using a wire brush or a post and terminal cleaning tool (1), and a sodium bicarbonate (baking soda) and warm water cleaning solution.
2. Clean the battery tray and battery holddown hardware of all corrosion. Remove any corrosion using a wire brush and a sodium bicarbonate (baking soda) and warm water cleaning solution. Paint any exposed bare metal.

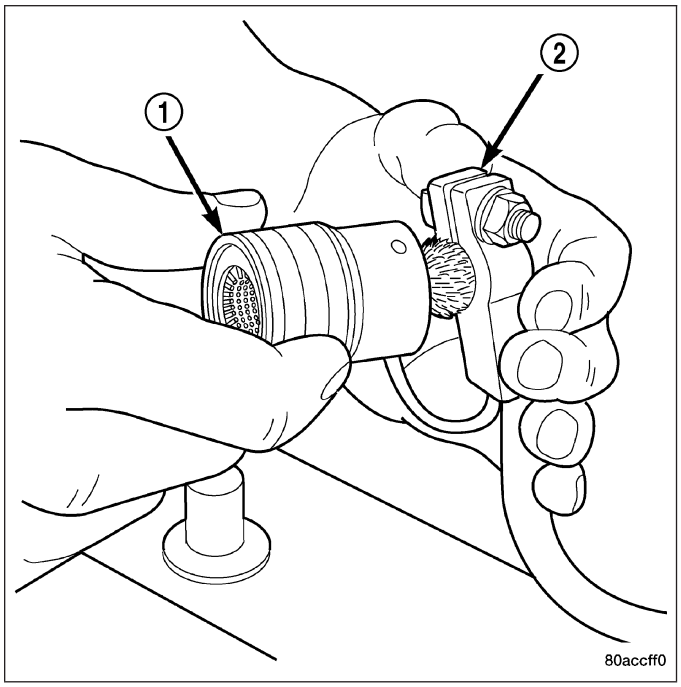

3. If the removed battery is to be reinstalled, clean the outside of the battery case (3) and the top cover with a sodium bicarbonate (baking soda) and warm water cleaning solution (2) using a stiff bristle parts cleaning brush (1) to remove any acid film. Rinse the battery with clean water. Ensure that the cleaning solution does not enter the battery cells through the vent holes. If the battery is being replaced, (Refer to 8 - ELECTRICAL/BATTERY SYSTEM - SPECIFICATIONS) for the factory-installed battery specifications. Confirm that the replacement battery is the correct size and has the correct ratings for the vehicle.
4. Clean the battery thermal guard with a sodium bicarbonate (baking soda) and warm water cleaning solution using a stiff bristle parts cleaning brush to remove any acid film.

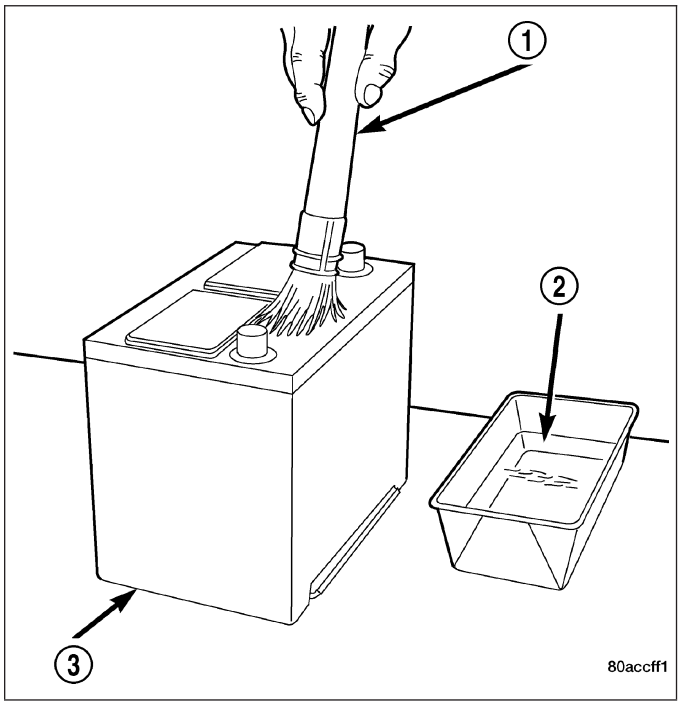

5. Clean any corrosion from the battery terminal posts with a wire brush or a post and terminal cleaner (1), and a sodium bicarbonate (baking soda) and warm water cleaning solution.

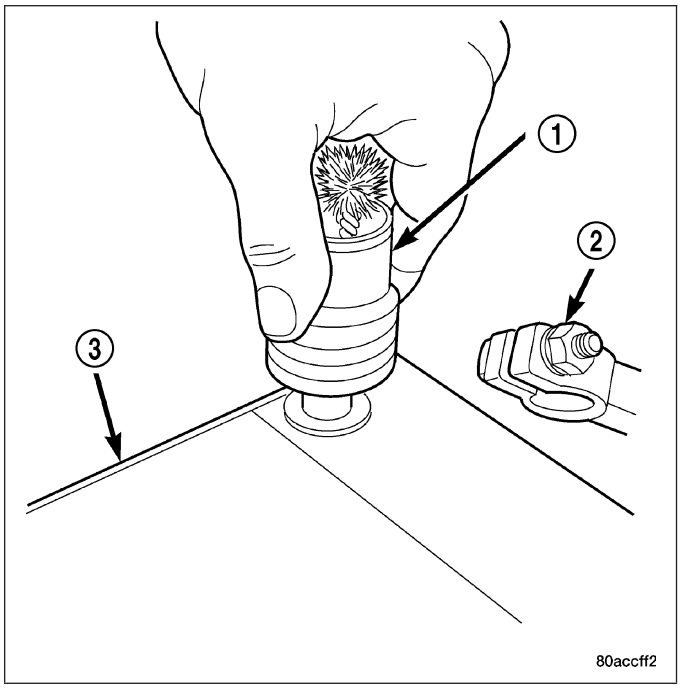

INSPECTION

The following information details the recommended inspection procedures for the battery and related components. In addition to the maintenance schedules, (Refer to LUBRICATION & MAINTENANCE/MAINTENANCE SCHEDULES - DESCRIPTION) for gasoline engines or (Refer to LUBRICATION & MAINTENANCE/MAINTENANCE SCHEDULES - DESCRIPTION) for diesel engines, it is recommended that these procedures be performed any time the battery or related components must be removed for vehicle service.

1. Inspect the battery cable terminal clamps for damage. Replace any battery cable that has a damaged or deformed terminal clamp.
2. Inspect the battery tray and battery holddown hardware for damage. Replace any damaged parts.
3. Slide the thermal guard off of the battery case (if equipped). Inspect the battery case for cracks or other damage that could result in electrolyte leaks. Also, check the battery terminal posts for looseness. Batteries with damaged cases or loose terminal posts must be replaced.
4. Inspect the battery thermal guard (if equipped) for tears, cracks, deformation or other damage. Replace any battery thermal guard that has been damaged.
5. Inspect the battery built-in test indicator sight glass (if equipped) for an indication of the battery condition, (Refer to 8 - ELECTRICAL/BATTERY SYSTEM/BATTERY - STANDARD PROCEDURE - BUILT-IN INDICATOR TEST) for the proper battery built-in indicator test procedures. If the battery is discharged, charge as required, (Refer to 8 - ELECTRICAL/BATTERY SYSTEM/BATTERY - STANDARD PROCEDURE - BATTERY CHARGING) for the proper battery charging procedures.

SPECIFICATIONS

The battery Group Size number, the Cold Cranking Amperage (CCA) rating, and the Reserve Capacity (RC) rating or Ampere-Hours (AH) rating can be found on the original equipment battery label. Be certain that a replacement battery has the correct Group Size number, as well as CCA, and RC or AH ratings that equal or exceed the original equipment specification for the vehicle being serviced. Battery sizes and ratings are discussed in more detail below.

- **Group Size** - The outside dimensions and terminal placement of the battery conform to standards established by the Battery Council International (BCI). Each battery is assigned a BCI Group Size number to help identify a correctly-sized replacement.
- **Cold Cranking Amperage** - The Cold Cranking Amperage (CCA) rating specifies how much current (in amperes) the battery can deliver for thirty seconds at -18° C (0° F). Terminal voltage must not fall below 7.2 volts during or after the thirty second discharge period. The CCA required is generally higher as engine displacement increases, depending also upon the starter current draw requirements.
- **Reserve Capacity** - The Reserve Capacity (RC) rating specifies the time (in minutes) it takes for battery terminal voltage to fall below 10.5 volts, at a discharge rate of 25 amperes. RC is determined with the battery fully-charged at 26.7° C (80° F). This rating estimates how long the battery might last after a charging system failure, under minimum electrical load.
- **Ampere-Hours** - The Ampere-Hours (AH) rating specifies the current (in amperes) that a battery can deliver steadily for twenty hours, with the voltage in the battery not falling below 10.5 volts. This rating is also sometimes identified as the twenty-hour discharge rating.

BATTERY CLASSIFICATIONS & RATINGS					
Part Number	BCI Group Size Classification	Cold Cranking Amperage	Reserve Capacity	Ampere - Hours	Load Test Amperage
56029449AB	65	600	120 Minutes	66	300
56029451AB	65	750	150 Minutes	75	375
56028450AA	65	600	120 Minutes	66	300
56028452AA	65	750	150 Minutes	75	375
56028452AB	65	700	130 Minutes	70	350
56029396AA	65	700	130 Minutes	70	350
56029382AA	65	700	130 Minutes	70	350

SPECIAL TOOLS

BATTERY SYSTEM SPECIAL TOOLS

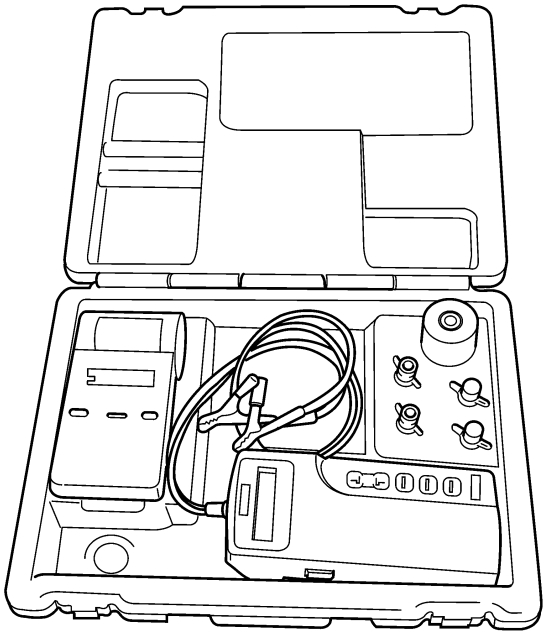

80c91c8d

BATTERY

DESCRIPTION

This vehicle is equipped with a large capacity, low-maintenance storage battery (11). Vehicles equipped with a diesel engine must utilize two 12-volt batteries connected in parallel. The battery is comprised of the following components:

- Positive Post (1)
- Vent (2)
- Cell Cap (3)
- Vent (4)
- Cell Cap (5)
- Vent (6)
- Negative Post (7)
- Indicator Eye (8) if equipped
- Electrolyte Level (9)
- Plate Groups (10)
- Maintenance Free Battery assembly (11)

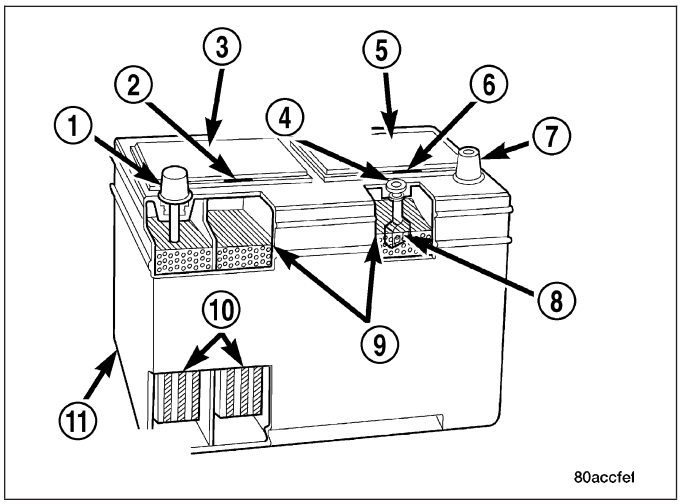

This battery is designed to provide a safe, efficient and reliable means of storing electrical energy in a chemical form. This means of energy storage allows the battery to produce the electrical energy required to operate the engine starting system, as well as to operate many of the other vehicle accessory systems for limited durations while the engine and/or the charging system are not operating. The battery is made up of six individual cells that are connected in series. Each cell contains positively charged plate groups that are connected with lead straps to the positive terminal post, and negatively charged plate groups that are connected with lead straps to the negative terminal post. Each plate consists of a stiff mesh framework or grid coated with lead dioxide (positive plate) or sponge lead (negative plate). Insulators or plate separators made of a non-conductive material are inserted between the positive and negative plates to prevent them from contacting or shorting against one another. These dissimilar metal plates are submerged in a sulfuric acid and water solution called an electrolyte.

The battery Group Size number, the Cold Cranking Amperage (CCA) rating, and the Reserve Capacity (RC) rating or Ampere-Hours (AH) rating can be found on the original equipment battery label. Be certain that a replacement battery has the correct Group Size number, as well as CCA, and RC or AH ratings that equal or exceed the original equipment specification for the vehicle being serviced. (Refer to 8 - ELECTRICAL/BATTERY SYSTEM - SPECIFICATIONS) for the proper factory-installed battery specifications.

OPERATION

The battery is designed to store electrical energy in a chemical form. When an electrical load is applied to the terminals of the battery, an electrochemical reaction occurs. This reaction causes the battery to discharge electrical current from its terminals. As the battery discharges, a gradual chemical change takes place within each cell. The sulfuric acid in the electrolyte combines with the plate materials, causing both plates to slowly change to lead sulfate. At the same time, oxygen from the positive plate material combines with hydrogen from the sulfuric acid, causing the electrolyte to become mainly water. The chemical changes within the battery are caused by the movement of excess or free electrons between the positive and negative plate groups. This movement of electrons produces a flow of electrical current through the load device attached to the battery terminals.

As the plate materials become more similar chemically, and the electrolyte becomes less acid, the voltage potential of each cell is reduced. However, by charging the battery with a voltage higher than that of the battery itself, the battery discharging process is reversed. Charging the battery gradually changes the sulfated lead plates back into sponge lead and lead dioxide, and the water back into sulfuric acid. This action restores the difference in the electron charges deposited on the plates, and the voltage potential of the battery cells. For a battery to remain useful, it must be able to produce high-amperage current over an extended period. A battery must also be able to accept a charge, so that its voltage potential may be restored.

The battery is vented to release excess hydrogen gas that is created when the battery is being charged or discharged. However, even with these vents, hydrogen gas can collect in or around the battery. If hydrogen gas is

exposed to flame or sparks, it may ignite. If the electrolyte level is low, the battery may arc internally and explode. If the battery cell caps cannot be removed, the battery must be replaced if the electrolyte level becomes low.

DIAGNOSIS AND TESTING

BATTERY

The battery must be completely charged and the terminals should be properly cleaned and inspected before diagnostic procedures are performed. (Refer to 8 - ELECTRICAL/BATTERY SYSTEM - CLEANING) and (Refer to 8 - ELECTRICAL/BATTERY SYSTEM - INSPECTION) for the proper battery cleaning and inspection procedures. (Refer to 8 - ELECTRICAL/BATTERY SYSTEM/BATTERY - STANDARD PROCEDURE - BATTERY CHARGING) for the proper battery charging procedures.

MICRO 420 BATTERY TESTER

The Micro 420 automotive battery tester is designed to help diagnose the cause of an inoperative battery. (Refer to 8 - ELECTRICAL/BATTERY SYSTEM/BATTERY - STANDARD PROCEDURE - USING MICRO 420 BATTERY TESTER) for instructions on the use of the Micro 420 battery tester.

WARNING: IF THE BATTERY SHOWS SIGNS OF FREEZING, LEAKING OR LOOSE POSTS, DO NOT TEST, ASSIST-BOOST, OR CHARGE. THE BATTERY MAY ARC INTERNALLY AND EXPLODE. PERSONAL INJURY AND/OR VEHICLE DAMAGE MAY RESULT.

WARNING: EXPLOSIVE HYDROGEN GAS FORMS IN AND AROUND THE BATTERY. DO NOT SMOKE, USE FLAME, OR CREATE SPARKS NEAR THE BATTERY. PERSONAL INJURY AND/OR VEHICLE DAMAGE MAY RESULT.

WARNING: THE BATTERY CONTAINS SULFURIC ACID, WHICH IS POISONOUS AND CAUSTIC. AVOID CONTACT WITH THE SKIN, EYES, OR CLOTHING. IN THE EVENT OF CONTACT, FLUSH WITH WATER AND CALL A PHYSICIAN IMMEDIATELY. KEEP OUT OF THE REACH OF CHILDREN.

A battery that will not accept a charge is inoperative, and must be replaced. Further testing is not required. A fully-charged battery must be load tested to determine its cranking capacity. A battery that is fully-charged, but does not pass the load test, is inoperative and must be replaced.

NOTE: Completely discharged batteries may take several hours to accept a charge. (Refer to 8 - ELECTRICAL/BATTERY SYSTEM/BATTERY - STANDARD PROCEDURE - BATTERY CHARGING) for the proper battery charging procedures.

STANDARD PROCEDURE

BATTERY CHARGING

Battery charging is the means by which the battery can be restored to its full voltage potential. A battery is fully-charged when:

- Micro 420 electrical system tester indicates battery is OK.
- All of the battery cells are gassing freely during battery charging.
- Open-circuit voltage of the battery is 12.4 volts or above.

WARNING: NEVER EXCEED TWENTY AMPERES WHEN CHARGING A COLD (-1° C [30° F] OR LOWER) BATTERY. THE BATTERY MAY ARC INTERNALLY AND EXPLODE. PERSONAL INJURY AND/OR VEHICLE DAMAGE MAY RESULT.

WARNING: IF THE BATTERY SHOWS SIGNS OF FREEZING, LEAKING, LOOSE POSTS, DO NOT TEST, ASSIST-BOOST, OR CHARGE. THE BATTERY MAY ARC INTERNALLY AND EXPLODE. PERSONAL INJURY AND/OR VEHICLE DAMAGE MAY RESULT.

WARNING: EXPLOSIVE HYDROGEN GAS FORMS IN AND AROUND THE BATTERY. DO NOT SMOKE, USE FLAME, OR CREATE SPARKS NEAR THE BATTERY. PERSONAL INJURY AND/OR VEHICLE DAMAGE MAY RESULT.

WARNING: THE BATTERY CONTAINS SULFURIC ACID, WHICH IS POISONOUS AND CAUSTIC. AVOID CONTACT WITH THE SKIN, EYES, OR CLOTHING. IN THE EVENT OF CONTACT, FLUSH WITH WATER AND CALL A PHYSICIAN IMMEDIATELY. KEEP OUT OF THE REACH OF CHILDREN.

WARNING: IF THE BATTERY IS EQUIPPED WITH REMOVABLE CELL CAPS, BE CERTAIN THAT EACH OF THE CELL CAPS IS IN PLACE AND TIGHT BEFORE THE BATTERY IS RETURNED TO SERVICE. PERSONAL INJURY AND/OR VEHICLE DAMAGE MAY RESULT FROM LOOSE OR MISSING CELL CAPS.

CAUTION: Always disconnect and isolate the battery negative cable before charging a battery. Do not exceed sixteen volts while charging a battery. Damage to the vehicle electrical system components may result.

CAUTION: Battery electrolyte will bubble inside the battery case during normal battery charging. Electrolyte boiling or being discharged from the battery vents indicates a battery overcharging condition. Immediately reduce the charging rate or turn off the charger to evaluate the battery condition. Damage to the battery may result from overcharging.

CAUTION: The battery should not be hot to the touch. If the battery feels hot to the touch, turn off the charger and let the battery cool before continuing the charging operation. Damage to the battery may result.

NOTE: Models equipped with the diesel engine are equipped with two 12-volt batteries, connected in parallel (positive-to-positive and negative-to-negative). In order to ensure proper charging of each battery, these batteries MUST be disconnected from each other, as well as from the vehicle electrical system while being charged.

Some battery chargers are equipped with polarity-sensing circuitry. This circuitry protects the battery charger and the battery from being damaged if they are improperly connected. If the battery state-of-charge is too low for the polarity-sensing circuitry to detect, the battery charger will not operate. This makes it appear that the battery will not accept charging current. See the instructions provided by the manufacturer of the battery charger for details on how to bypass the polarity-sensing circuitry.

After the battery has been charged to 12.4 volts or greater, perform a load test to determine the battery cranking capacity. (Refer to 8 - ELECTRICAL/BATTERY SYSTEM/BATTERY - STANDARD PROCEDURE - USING MICRO 420 BATTERY TESTER) for the proper battery load test procedures. If the battery will endure a load test, return the battery to service. If the battery will not endure a load test, it is inoperative and must be replaced.

Clean and inspect the battery hold downs, tray, terminals, posts, and top before completing battery service. (Refer to 8 - ELECTRICAL/BATTERY SYSTEM - CLEANING) and (Refer to 8 - ELECTRICAL/BATTERY SYSTEM - INSPECTION) for the proper battery system cleaning and inspection procedures.

CHARGING A COMPLETELY DISCHARGED BATTERY

The following procedure should be used to recharge a completely discharged battery. Unless this procedure is properly followed, a good battery may be needlessly replaced.

1. Measure the voltage at the battery posts with a voltmeter, accurate to 1/10 (0.10) volt. If the reading is below ten volts, the battery charging current will be low. It could take some time before the battery accepts a current greater than a few milliamperes. Such low current may not be detectable on the ammeters built into many battery chargers.
2. Disconnect and isolate the battery negative cable. Connect the battery charger leads. Some battery chargers are equipped with polarity-sensing circuitry. This circuitry protects the battery charger and the battery from being damaged if they are improperly connected. If the battery state-of-charge is too low for the polarity-sensing circuitry to detect, the battery charger will not operate. This makes it appear that the battery will not accept charg-

ing current. See the instructions provided by the manufacturer of the battery charger for details on how to bypass the polarity-sensing circuitry.

3. Battery chargers vary in the amount of voltage and current they provide. The amount of time required for a battery to accept measurable charging current at various voltages is shown in the Charge Rate Table. If the charging current is still not measurable at the end of the charging time, the battery is inoperative and must be replaced. If the charging current is measurable during the charging time, the battery may be good and the charging should be completed in the normal manner.

CHARGE RATE TABLE	
Voltage	Hours
16.0 volts maximum	up to 4 hours
14.0 to 15.9 volts	up to 8 hours
13.9 volts or less	up to 16 hours

CHARGING TIME REQUIRED

The time required to charge a battery will vary, depending upon the following factors:

- **Battery Capacity** - A completely discharged heavy-duty battery requires twice the charging time of a small capacity battery.
- **Temperature** - A longer time will be needed to charge a battery at -18° C (0° F) than at 27° C (80° F). When a fast battery charger is connected to a cold battery, the current accepted by the battery will be very low at first. As the battery warms, it will accept a higher charging current rate (amperage).
- **Charger Capacity** - A battery charger that supplies only five amperes will require a longer charging time. A battery charger that supplies twenty amperes or more will require a shorter charging time.
- **State-Of-Charge** - A completely discharged battery requires more charging time than a partially discharged battery. Electrolyte is nearly pure water in a completely discharged battery. At first, the charging current (amperage) will be low. As the battery charges, the specific gravity of the electrolyte will gradually rise.

The Battery Charging Time Table gives an indication of the time required to charge a typical battery at room temperature based upon the battery state-of-charge and the charger capacity.

BATTERY CHARGING TIME TABLE			
Charging Amperage	5 Amps	10 Amps	20 Amps
Open Circuit Voltage	Hours Charging @ 21° C (70° F)		
12.25 to 12.49	6 hours	3 hours	1.5 hours
12.00 to 12.24	10 hours	5 hours	2.5 hours
10.00 to 11.99	14 hours	7 hours	3.5 hours
Below 10.00	18 hours	9 hours	4.5 hours

USING MICRO 420 BATTERY TESTER

Always use the Micro 420 Instruction Manual that was supplied with the tester as a reference. If the Instruction Manual is not available the following procedure can be used:

WARNING: ALWAYS WEAR APPROPRIATE EYE PROTECTION AND USE EXTREME CAUTION WHEN WORKING WITH BATTERIES.

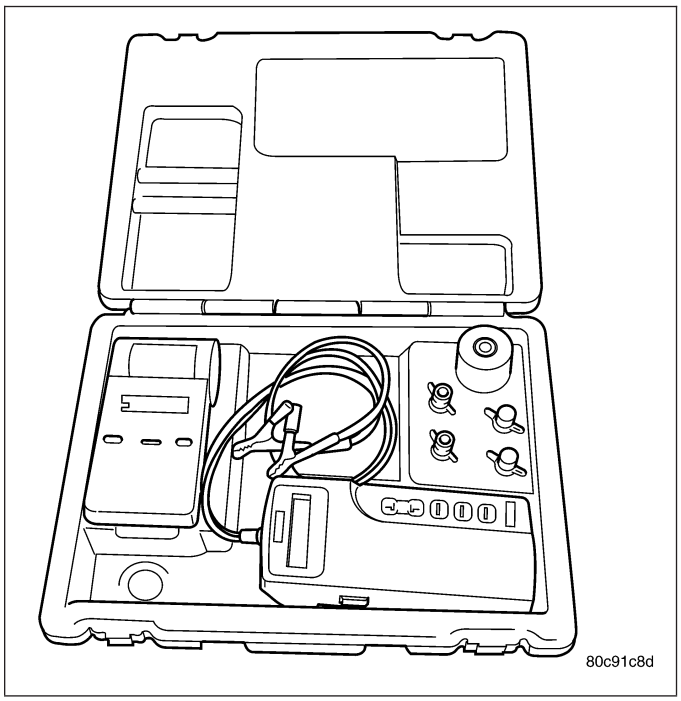

BATTERY TESTING

1. If testing the battery OUT-OF-VEHICLE, clean the battery terminals with a wire brush before testing, (Refer to 8 - ELECTRICAL/BATTERY SYSTEM - CLEANING).
2. If testing the battery IN-THE-VEHICLE, make certain all of the vehicle accessory loads are OFF, including the ignition. **The preferred test position is at the battery terminals**. If the battery is not accessible, you may test using both the positive and negative jumper posts. Select TESTING AT JUMPER POST when connecting to that location.
3. Connect the tester to the battery or jumper posts, the red clamp to positive (+) and the black clamp to negative (–).

NOTE: Multiple batteries connected in parallel must have the ground cable disconnected to perform a battery test. Failure to disconnect may result in false battery test readings.

4. Using the ARROW key select **in** or **out** of vehicle testing and press ENTER to make a selection.
5. If not selected, choose the Cold Cranking Amp (CCA) battery rating. Or select the appropriate battery rating for your area (see menu). The tester will then run its self programmed test of the battery and display the results. Refer to the test result table noted below.

CAUTION: If REPLACE BATTERY is the result of the test, this may mean a poor connection between the vehicle's cables and battery exists. After disconnecting the vehicle's battery cables from the battery, retest the battery using the OUT-OF-VEHICLE test before replacing.

6. While viewing the battery test result, press the CODE button and the tester will prompt you for the last 4 digits of the VIN. Use the UP/DOWN arrow buttons to scroll to the correct character; then press ENTER to select and move to the next digit. Then press the ENTER button to view the SERVICE CODE. Pressing the CODE button a second time will return you to the test results.

BATTERY TEST RESULTS	
GOOD BATTERY	Return to service
GOOD - RECHARGE	Fully charge battery and return to service
CHARGE & RETEST	Fully charge battery and retest battery
REPLACE BATTERY	Replace the battery and retest complete system
BAD-CELL REPLACE	Replace the battery and retest complete system

NOTE: The SERVICE CODE is required on every warranty claim submitted for battery replacement.

BUILT-IN INDICATOR TEST

If equipped, an indicator (hydrometer) built into the top of the battery case (2) provides visual information for battery testing. Like a hydrometer, the built-in indicator measures the specific gravity of the battery electrolyte. The specific gravity of the electrolyte reveals the battery state-of-charge; however, it will not reveal the cranking capacity of the battery. A load test must be performed to determine the battery cranking capacity. (Refer to 8 - ELECTRICAL/BATTERY SYSTEM/BATTERY - STANDARD PROCEDURE - USING MICRO 420 BATTERY TESTER) for the proper battery load test procedures.

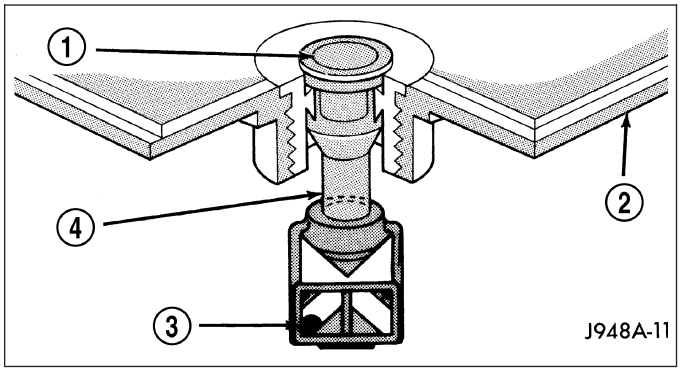

Before testing, visually inspect the battery for any damage (a cracked case or cover, loose posts, etc.) that would cause the battery to be inoperative. In order to obtain correct indications from the built-in indicator, it is important that the battery be level and have a clean sight glass (1). Additional light may be required to view the indicator. **Do not use open flame as a source of additional light.**

To read the built-in indicator, look into the sight glass and note the color of the indication. The battery condition that each color indicates is described in the following list:

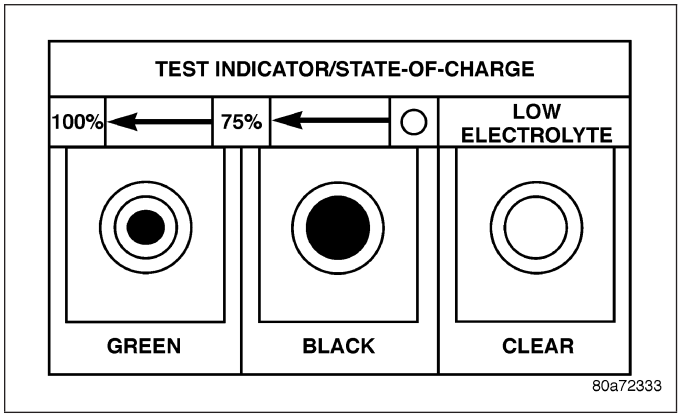

- **Green** - Indicates 75% to 100% battery state-of-charge. The battery is adequately charged for further testing or return to service. If the starter will not crank for a minimum of fifteen seconds with a fully-charged battery, the battery must be load tested. (Refer to 8 - ELECTRICAL/BATTERY SYSTEM/BATTERY - STANDARD PROCEDURE - USING MICRO 420 BATTERY TESTER) for the proper battery load test procedures.
- **Black or Dark** - Indicates 0% to 75% battery state-of-charge. The battery is inadequately charged and must be charged until a green indication is visible in the sight glass (12.4 volts or more), before the battery is tested further or returned to service. (Refer to 8 - ELECTRICAL/BATTERY SYSTEM/BATTERY - STANDARD PROCEDURE - BATTERY CHARGING) for the proper battery charging procedures. Also (Refer to 8 - ELECTRICAL/BATTERY SYSTEM - DIAGNOSIS AND TESTING) for more information on the possible causes of the discharged battery condition.
- **Clear or Bright** - Indicates a low battery electrolyte level. The electrolyte level in the battery is below the built-in indicator. A maintenance-free battery with non-removable cell caps must be replaced if the electrolyte level is low. A low electrolyte level may be caused by an overcharging condition. (Refer to 8 - ELECTRICAL/CHARGING - DIAGNOSIS AND TESTING) for the proper charging system diagnosis and testing procedures.

OPEN-CIRCUIT VOLTAGE TEST

A battery open-circuit voltage (no load) test will show the approximate state-of-charge of a battery. This test can be used in place of the hydrometer test when a hydrometer is not available, or for maintenance-free batteries with non-removable cell caps.

Before proceeding with this test, completely charge the battery (Refer to 8 - ELECTRICAL/BATTERY SYSTEM/BATTERY - STANDARD PROCEDURE - BATTERY CHARGING).

1. Before measuring the open-circuit voltage, the surface charge must be removed from the battery. Turn on the headlamps for fifteen seconds, then allow up to five minutes for the battery voltage to stabilize.
2. Disconnect and isolate both battery cables, negative cable first.
3. Using a voltmeter connected to the battery posts measure the open-circuit voltage.

See the Open-Circuit Voltage Table. This voltage reading will indicate the battery state-of-charge, but will not reveal its cranking capacity. If a battery has an open-circuit voltage reading of 12.4 volts or greater, it may be load tested to reveal its cranking capacity (Refer to 8 - ELECTRICAL/BATTERY SYSTEM/BATTERY - STANDARD PROCEDURE - USING MICRO 420 BATTERY TESTER).

OPEN CIRCUIT VOLTAGE TABLE	
Open Circuit Voltage	Charge Percentage
11.7 volts or less	0%
12.0 volts	25%
12.2 volts	50%
12.4 volts	75%
12.6 volts or more	100%

IGNITION-OFF DRAW TEST

The term Ignition-Off Draw (IOD) identifies a normal condition where power is being drained from the battery with the ignition switch in the Off position. A normal vehicle electrical system will draw from five to thirty-five milliamperes (0.005 to 0.035 ampere) with the ignition switch in the Off position, and all non-ignition controlled circuits in proper working order. Up to thirty-five milliamperes are needed to enable the memory functions for the Powertrain Control Module (PCM), digital clock, electronically tuned radio, and other modules which may vary with the vehicle equipment.

A vehicle that has not been operated for approximately twenty days, may discharge the battery to an inadequate level. When a vehicle will not be used for twenty days or more (stored), remove the IOD fuse from the Junction Block (JB). This will reduce battery discharging.

Excessive IOD can be caused by:

- Electrical items left on.
- Inoperative or improperly adjusted switches.
- Inoperative or shorted electronic modules and components.
- An internally shorted generator.
- Intermittent shorts in the wiring.

If the IOD is over thirty-five milliamperes, the problem must be found and corrected before replacing a battery. In most cases, the battery can be charged and returned to service after the excessive IOD condition has been corrected.

1. Verify that all electrical accessories are off. Turn off all lamps, remove the ignition key, and close all doors. If the vehicle is equipped with an illuminated entry system or an electronically tuned radio, allow the electronic timer function of these systems to automatically shut off (time out). This may take up to three minutes. See the Electronic Module Ignition-Off Draw Table for more information.

ELECTRONIC MODULE IGNITION-OFF DRAW (IOD) TABLE			
Module	Time Out? (If Yes, Interval And Wake-Up Input)	IOD	IOD After Time Out
Radio	No	1 to 3 milliamperes	N/A
Audio Power Amplifier	No	up to 1 milliampere	N/A
Central Timer Module (CTM)	No	4.75 milliamperes (max.)	N/A
Powertrain Control Module (PCM)	No	0.95 milliampere	N/A
ElectroMechanical Instrument Cluster (EMIC)	No	0.44 milliampere	N/A
Combination Flasher	No	0.08 milliampere	N/A

2. Determine that the underhood lamp is operating properly, then disconnect the lamp wire harness connector or remove the lamp bulb.
3. Disconnect the battery negative cable.
4. Set an electronic digital multi-meter to its highest amperage scale. Connect the multi-meter between the disconnected battery negative cable terminal clamp and the battery negative terminal post. Make sure that the doors remain closed so that the illuminated entry system is not activated. The multi-meter amperage reading may remain high for up to three minutes, or may not give any reading at all while set in the highest amperage scale, depending upon the electrical equipment in the vehicle. The multi-meter leads must be securely clamped to the battery negative cable terminal clamp and the battery negative terminal post. If continuity between the battery negative terminal post and the negative cable terminal clamp is lost during any part of the IOD test, the electronic timer function will be activated and all of the tests will have to be repeated.
5. After about three minutes, the high-amperage IOD reading on the multi-meter should become very low or nonexistent, depending upon the electrical equipment in the vehicle. If the amperage reading remains high, remove and replace each fuse or circuit breaker in the Power Distribution Center (PDC) and then in the Junction Block (JB), one at a time until the amperage reading becomes very low, or nonexistent. Refer to the appropriate wiring information for complete PDC and JB fuse, circuit breaker, and circuit identification. This will isolate each circuit and identify the circuit that is the source of the high-amperage IOD. If the amperage reading remains high after removing and replacing each fuse and circuit breaker, disconnect the wire harness from the generator. If the amperage reading now becomes very low or nonexistent, diagnose and repair the Charging System as necessary. After the high-amperage IOD has been corrected, switch the multi-meter to progressively lower amperage scales and, if necessary, repeat the fuse and circuit breaker remove-and-replace process to identify and correct all sources of excessive IOD. It is now safe to select the lowest milliampere scale of the multi-meter to check the low-amperage IOD.

CAUTION: Do not open any doors, or turn on any electrical accessories with the lowest milliampere scale selected, or the multi-meter may be damaged.

6. Observe the multi-meter reading. The low-amperage IOD should not exceed thirty-five milliamperes (0.035 ampere). If the current draw exceeds thirty-five milliamperes, isolate each circuit using the fuse and circuit breaker remove-and-replace process in Step 5. The multi-meter reading will drop to within the acceptable limit when the source of the excessive current draw is disconnected. Repair this circuit as required; whether a wiring short, incorrect switch adjustment, or an inoperative component is the cause.

REMOVAL

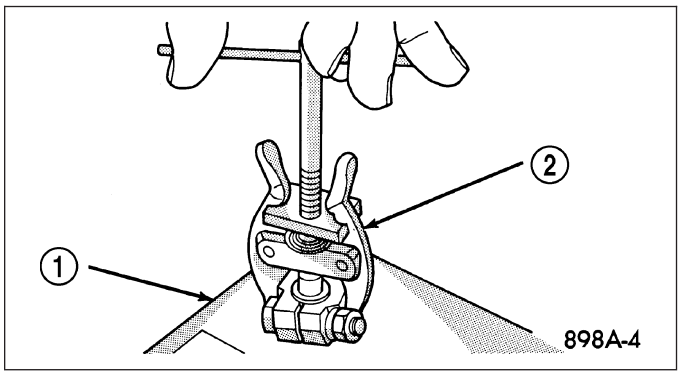

1. Turn the ignition switch to the Off position. Be certain that all electrical accessories are turned off.
2. Loosen the battery negative cable terminal clamp pinch-bolt hex nut.
3. Disconnect the battery negative cable terminal clamp from the battery negative terminal post. If necessary, use a battery terminal puller (2) to remove the terminal clamp from the battery post.
4. Loosen the battery positive cable terminal clamp pinch-bolt hex nut.
5. Disconnect the battery positive cable terminal clamp from the battery positive terminal post. If necessary, use a battery terminal puller (2) to remove the terminal clamp from the battery post.
6. Remove the battery hold down retaining bolt (6) and battery hold down (5).

WARNING: WEAR A SUITABLE PAIR OF RUBBER GLOVES (NOT THE HOUSEHOLD TYPE) WHEN REMOVING A BATTERY BY HAND. SAFETY GLASSES SHOULD ALSO BE WORN. IF THE BATTERY IS CRACKED OR LEAKING, THE ELECTROLYTE CAN BURN THE SKIN AND EYES.

7. Remove the battery (2) from the battery tray.

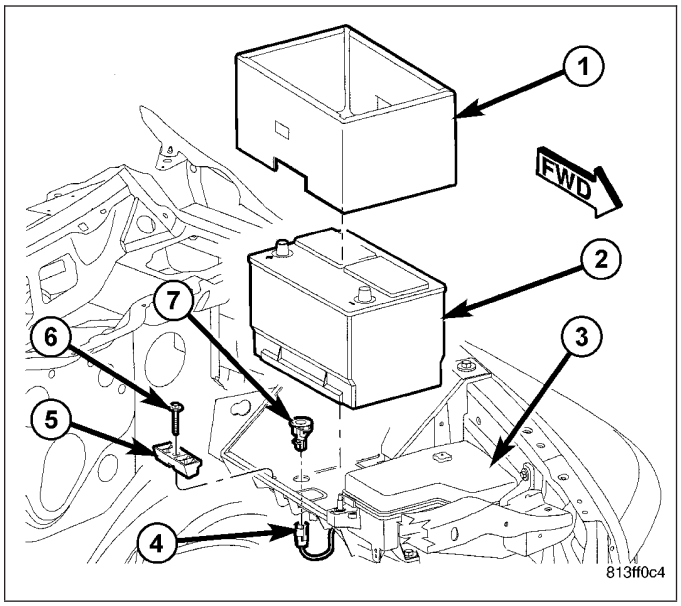

INSTALLATION

1. Clean and inspect the battery (2), (Refer to 8 - ELECTRICAL/BATTERY SYSTEM - CLEANING) and (Refer to 8 - ELECTRICAL/BATTERY SYSTEM - INSPECTION) for the proper procedures.

CAUTION: Be certain that the battery cable terminal clamps are connected to the correct battery terminal posts. Reversed battery polarity may damage electrical components of the vehicle.

2. Position the battery into the battery tray. Ensure that the battery positive and negative terminal posts are correctly positioned. The battery cable terminal clamps must reach the correct battery terminal post without stretching the cables.
3. Position the battery hold down (5) and install the retaining bolt (6).

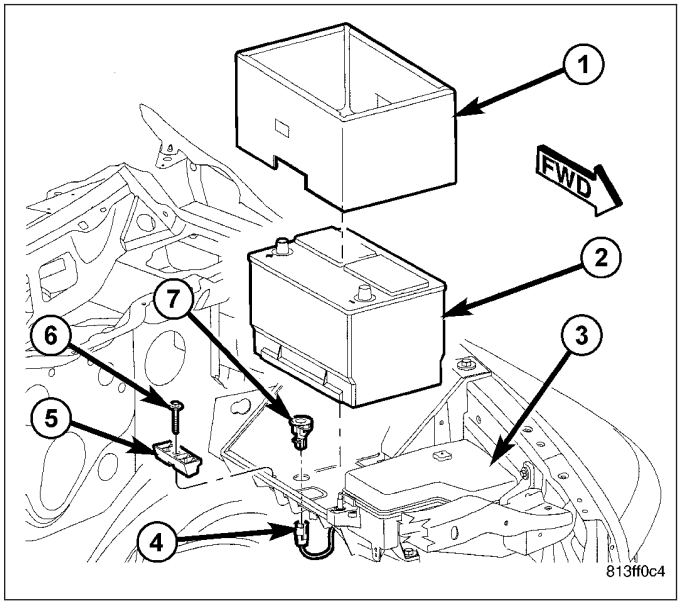

4. Clean the battery cable terminal clamps and the battery terminal posts, (Refer to 8 - ELECTRICAL/BATTERY SYSTEM - CLEANING) for the proper procedures.
5. Reconnect the battery positive cable terminal clamp to the battery positive terminal post. Tighten the terminal clamp pinch-bolt hex nut to 4 N·m (35 in. lbs.).
6. Reconnect the battery negative cable terminal clamp to the battery negative terminal post. Tighten the terminal clamp pinch-bolt hex nut to 4 N·m (35 in. lbs.).
7. Apply a thin coating of petroleum jelly or chassis grease to the exposed surfaces of the battery cable terminal clamps and the battery terminal posts.
8. Obtain an appropriate scan tool and check the PCM for any stored battery disconnect trouble codes. Clear codes if required.

BATTERY HOLDDOWN

REMOVAL

CAUTION: Never operate a vehicle without a battery hold down device properly installed. Damage to the vehicle, components and battery could result.

1. Verify that the ignition switch and all accessories are OFF.
2. Disconnect and isolate the battery negative cable.
3. Remove the bolt (6) from the battery hold down bracket (5) and remove the bracket from the vehicle.

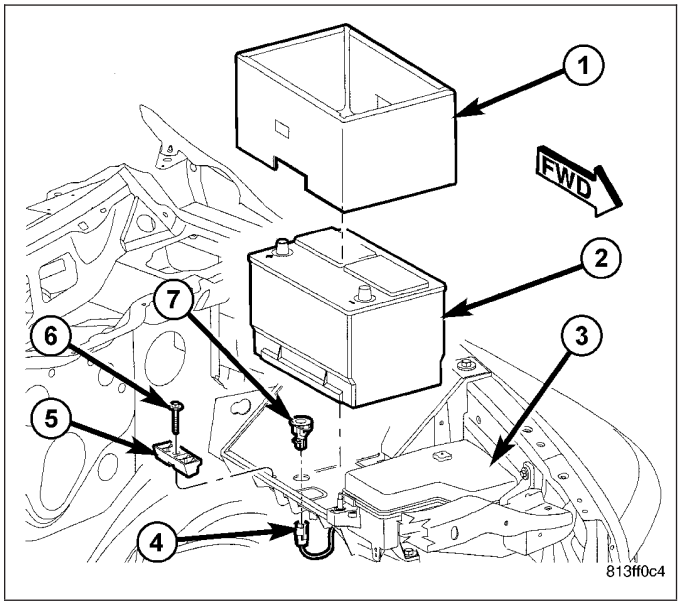

INSTALLATION

1. Clean and inspect the battery hold down bracket (5) and bolt (6) (Refer to 8 - ELECTRICAL/BATTERY SYSTEM - CLEANING).
2. Position the battery hold down bracket in the battery tray.

CAUTION: Be certain that the hold down bracket is properly positioned in the battery tray before tightening the hold down bolt or damage to the battery and tray may result.

3. Install and tighten the battery hold down retaining bolt.

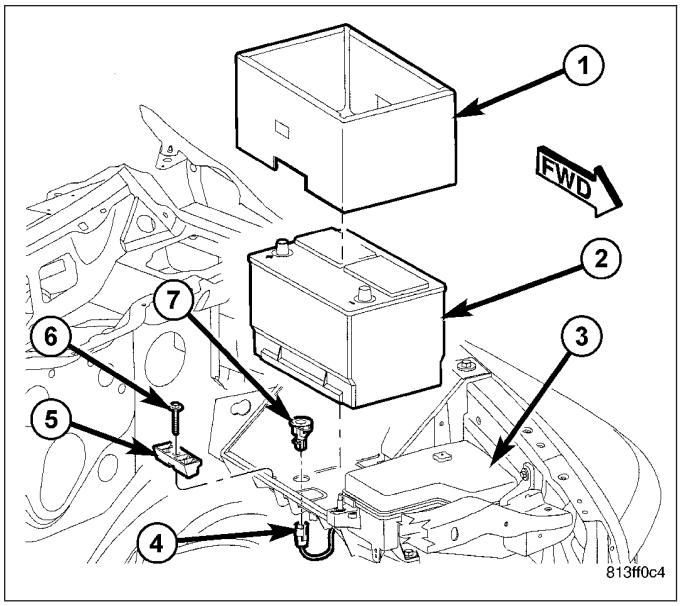

BATTERY CABLES

DESCRIPTION

The battery cables (1) and (3) are large gauge, stranded copper wires sheathed within a heavy plastic or synthetic rubber insulating jacket. The wire used in the battery cables combines excellent flexibility and reliability with high electrical current carrying capacity. The battery cables feature a stamped brass clamping type female battery terminal crimped onto one end of the battery cable wire and then solder-dipped. A square headed pinch-bolt and hex nut are installed at the open end of the female battery terminal clamp. Large eyelet type terminals are crimped onto the opposite end of the battery cable wire and then solder-dipped. The battery positive cable wires (1) have a red insulating jacket to provide visual identification and feature a larger female battery terminal clamp to allow connection to the larger battery positive terminal post. The battery negative cable wires (3) have a black insulating jacket and a smaller female battery terminal clamp.

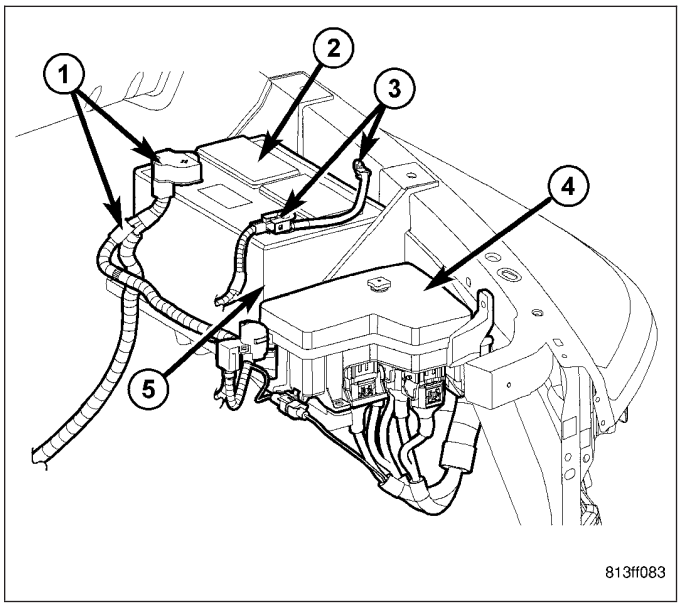

The battery cables cannot be repaired and, if damaged or inoperative they must be replaced. Both the battery positive and negative cables are available for service replacement. **Refer to the appropriate wiring information for the location of the proper battery cable wire harness diagrams.** The wiring information also includes proper wire and connector repair procedures, further details on wire harness routing and retention, as well as pin-out and location views for the various wire harness connectors, splices and grounds.

OPERATION

The battery cables connect the battery terminal posts to the vehicle electrical system. These cables also provide a path back to the battery for electrical current generated by the charging system for restoring the voltage potential of the battery. The female battery terminal clamps on the ends of the battery cable wires provide a strong and reliable connection of the battery cable to the battery terminal posts. The terminal pinch bolts allow the female terminal clamps to be tightened around the male terminal posts on the top of the battery. The eyelet terminals secured to the opposite ends of the battery cable wires provide secure and reliable connection of the battery cables to the vehicle electrical system.

DIAGNOSIS AND TESTING - BATTERY CABLES

A voltage drop test will determine if there is excessive resistance in the battery cable terminal connections or the battery cables. If excessive resistance is found in the battery cable connections, the connection point should be disassembled, cleaned of all corrosion or foreign material, then reassembled. Following reassembly, check the voltage drop for the battery cable connection and the battery cable again to confirm repair.

When performing the voltage drop test, it is important to remember that the voltage drop is giving an indication of the resistance between the two points at which the voltmeter probes are attached. **EXAMPLE:** When testing the resistance of the battery positive cable, touch the voltmeter leads to the battery positive cable terminal clamp and to the battery positive cable eyelet terminal at the starter solenoid B(+) terminal stud. If you probe the battery positive terminal post and the battery positive cable eyelet terminal at the starter solenoid B(+) terminal stud, you are reading the combined voltage drop in the battery positive cable terminal clamp-to-terminal post connection and the battery positive cable.

VOLTAGE DROP TEST

WARNING: MODELS EQUIPPED WITH A DIESEL ENGINE HAVE AN AUTOMATIC SHUTDOWN (ASD) RELAY LOCATED IN THE POWER DISTRIBUTION CENTER (PDC). REMOVAL OF THE ASD RELAY MAY NOT PREVENT THE DIESEL ENGINE FROM STARTING. BE CERTAIN TO DISCONNECT THE FUEL SHUTDOWN SOLENOID WIRE HARNESS CONNECTOR TO PREVENT THE ENGINE FROM STARTING. FAILURE TO DO SO MAY RESULT IN PERSONAL INJURY.

The following operation will require a voltmeter accurate to 1/10 (0.10) volt. Before performing this test, be certain that the following procedures are accomplished:

- The battery is fully-charged and tested, (Refer to 8 - ELECTRICAL/BATTERY SYSTEM/BATTERY - STANDARD PROCEDURE - USING MICRO 420 BATTERY TESTER).
- Fully engage the parking brake.
- If the vehicle is equipped with an automatic transmission, place the gearshift selector lever in the Park position. If the vehicle is equipped with a manual transmission, place the gearshift selector lever in the Neutral position and block the clutch pedal in the fully depressed position.
- Verify that all lamps and accessories are turned off.
- To prevent a gasoline engine from starting, remove the Automatic ShutDown (ASD) relay. The ASD relay is located in the Integrated Power Module (IPM), in the engine compartment. See the fuse and relay layout label on the underside of the IPM cover for ASD relay identification and location.

1. Connect the positive lead of the voltmeter (1) to the battery negative terminal post. Connect the negative lead of the voltmeter to the battery negative cable terminal clamp. Rotate and hold the ignition switch in the Start position. Observe the voltmeter. If voltage is detected, correct the poor connection between the battery negative cable terminal clamp and the battery negative terminal post.

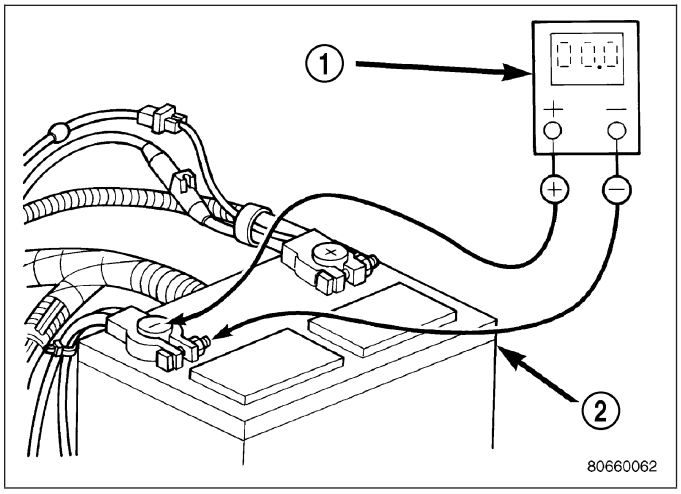

NOTE: If the vehicle is equipped with two 12v batteries, step #1 must be performed twice, once for each battery.

2. Connect the positive lead of the voltmeter (1) to the battery positive terminal post. Connect the negative lead of the voltmeter to the battery positive cable terminal clamp. Rotate and hold the ignition switch in the Start position. Observe the voltmeter. If voltage is detected, correct the poor connection between the battery positive cable terminal clamp and the battery positive terminal post.

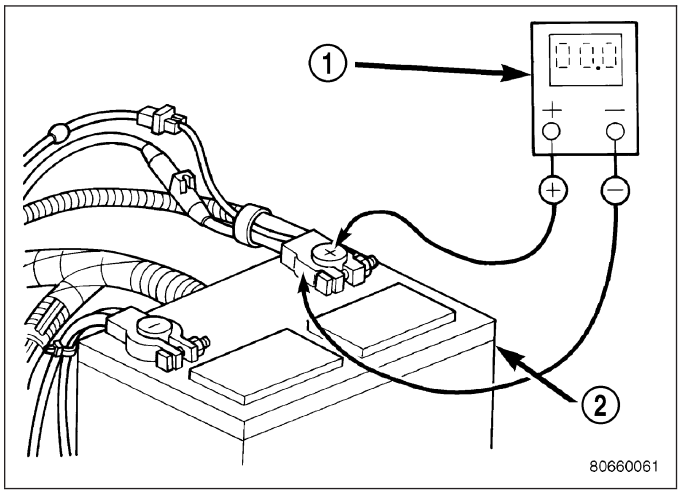

NOTE: If the vehicle is equipped with two 12v batteries, step #2 must be performed twice, once for each battery.

3. Connect the voltmeter (2) to measure between the battery positive cable terminal clamp (1) and the starter solenoid (3) B(+) terminal stud. Rotate and hold the ignition switch in the Start position. Observe the voltmeter. If the reading is above 0.2 volt, clean and tighten the battery positive cable eyelet terminal connection at the starter solenoid B(+) terminal stud. Repeat the test. If the reading is still above 0.2 volt, replace the faulty battery positive cable.

NOTE: If the vehicle is equipped with two 12v batteries, step #3 must be performed twice, once for each battery.

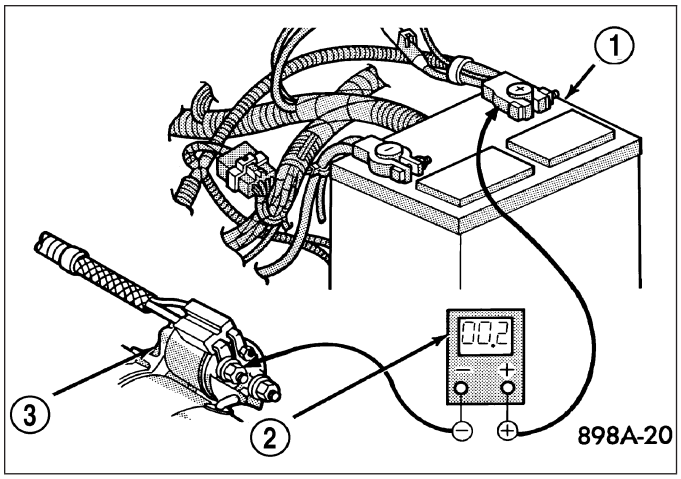

4. Connect the voltmeter (1) to measure between the battery (2) negative cable terminal clamp and a good clean ground on the engine block (3). Rotate and hold the ignition switch in the Start position. Observe the voltmeter. If the reading is above 0.2 volt, clean and tighten the battery negative cable eyelet terminal connection to the engine block. Repeat the test. If the reading is still above 0.2 volt, replace the faulty battery negative cable.

NOTE: If the vehicle is equipped with two 12v batteries, step #4 must be performed twice, once for each battery.

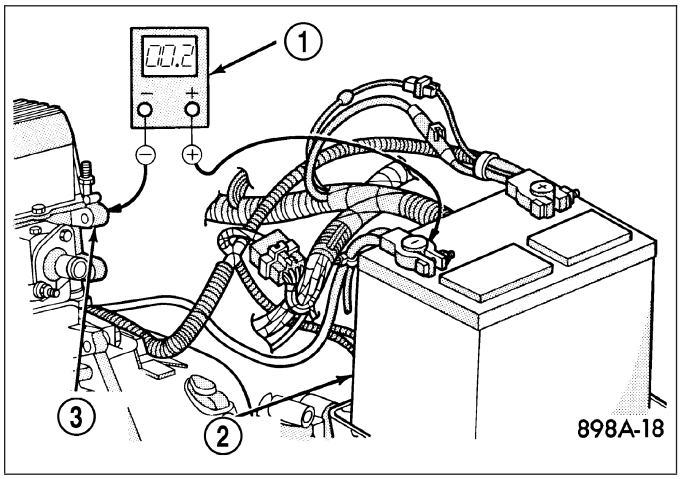

REMOVAL

NEGATIVE - GASOLINE ENGINE

1. Turn the ignition switch to the Off position. Be certain that all electrical accessories are turned off.
2. Disconnect and isolate the battery negative cable terminal clamp (3).
3. Remove the bolt (4) securing the negative cable to the left front fender.

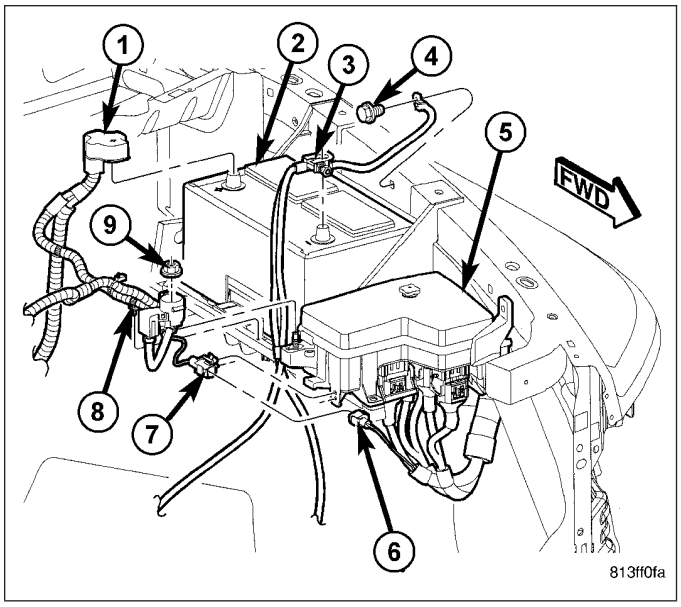

4. One at a time, trace the battery cable retaining pushpins (3) , fasteners and routing clips until the cable is free from the vehicle.
5. Remove the bolt (4) securing the negative cable to the engine.
6. Remove the bolt (6) securing the negative cable to the left frame rail.
7. Remove the battery negative cable from the vehicle.

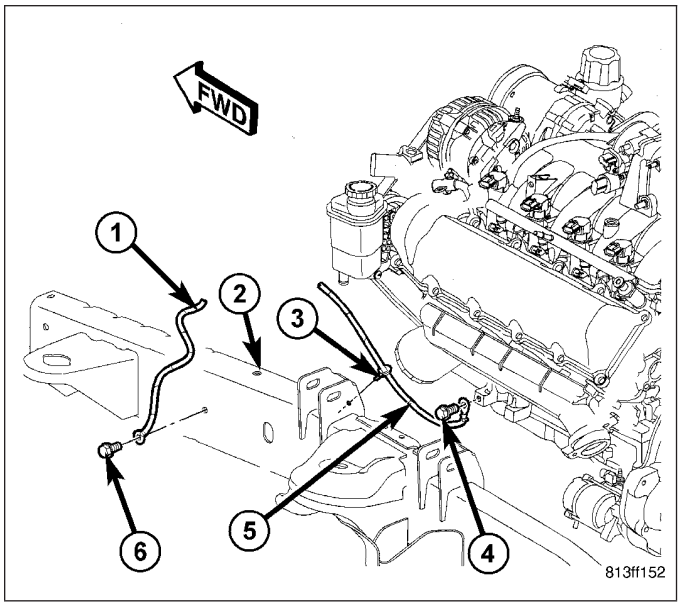

POSITIVE - GASOLINE ENGINE

1. Turn the ignition switch to the Off position. Be certain that all electrical accessories are turned off.
2. Disconnect and isolate the battery negative cable terminal clamp (3).
3. Disconnect the battery positive cable terminal clamp (1).
4. Remove the nut (9) securing the cable to the Integrated Power Module (IPM) (5).
5. Disconnect the wire harness connector (6) at the IPM.
6. Disconnect the wire harness connector (7) pushpin from the IPM housing.
7. Disconnect the battery cable retaining pushpin (8) securing the cable to the battery tray.

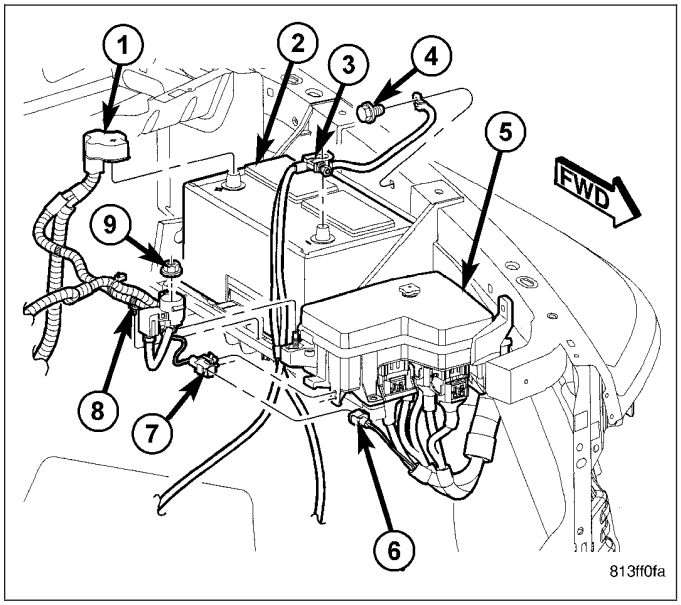

8. Raise the vehicle on a hoist, (Refer to LUBRICATION & MAINTENANCE/HOISTING - STANDARD PROCEDURE).
9. Disconnect the battery cable retaining pushpins (1) securing the cable to the left frame rail.

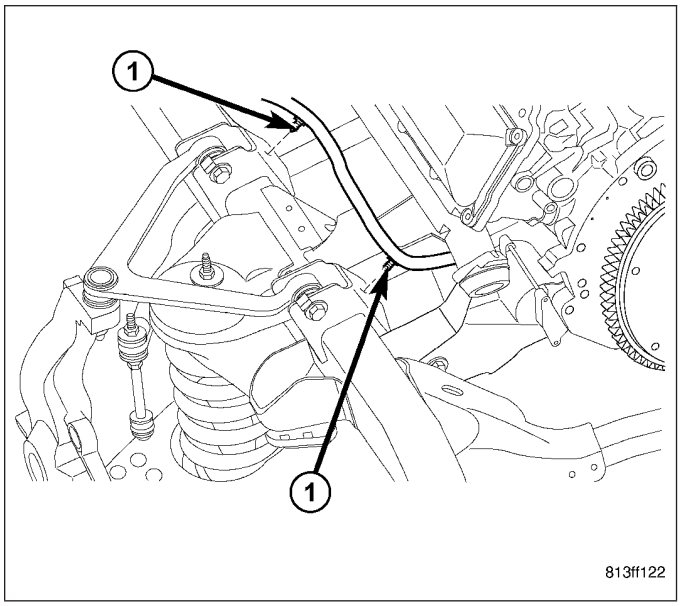

10. Remove the nut (5) securing the cable to the starter solenoid (6).
11. Lower the vehicle.
12. Lift the terminal cap (4) and remove the nut (3) securing the cable (1) to the alternator (2).
13. Disconnect any remaining pushpins securing the cable to the vehicle.
14. Remove the battery positive cable from the vehicle.

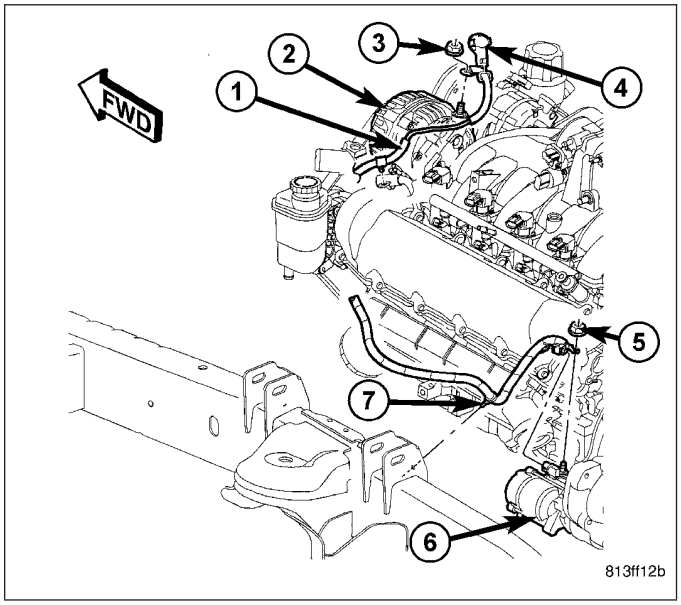

NEGATIVE - DIESEL ENGINE - LEFT

1. Turn the ignition switch to the Off position. Be certain that all electrical accessories are turned off.
2. Disconnect and isolate the battery negative cable terminal clamps (1 and 9).

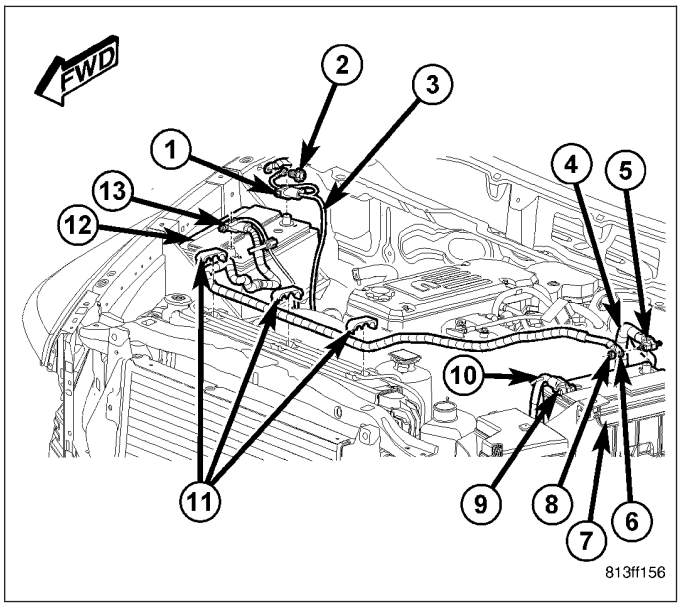

3. Remove the bolt (4) securing the negative cable to the left front fender.

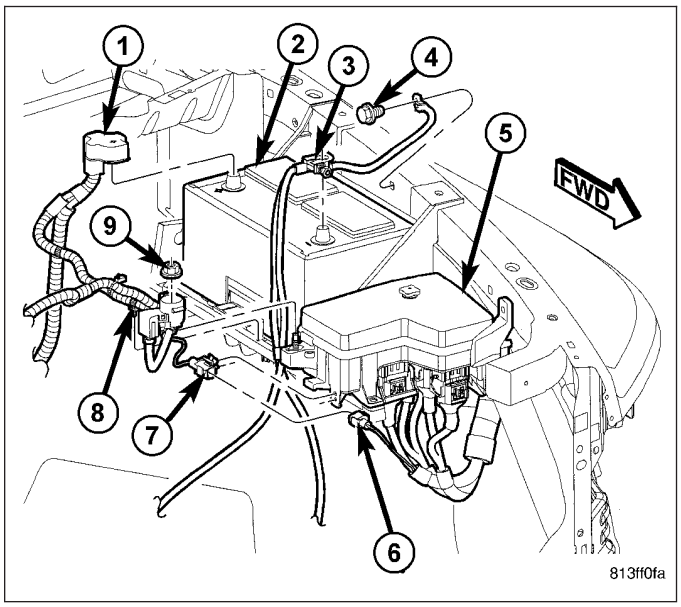

4. Remove the bolt (6) securing the negative cable (2) to the engine.
5. Remove the bolt (7) securing the negative cable (2) to the left frame rail (1).
6. One at a time, trace the battery cable retaining pushpins, fasteners and routing clips until the cable is free from the vehicle.
7. Remove the battery negative cable from the vehicle.

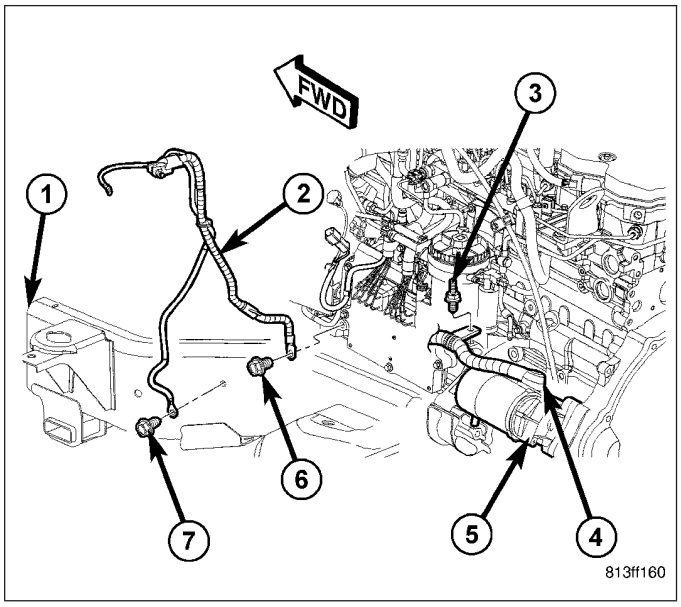

NEGATIVE - DIESEL ENGINE - RIGHT

1. Turn the ignition switch to the Off position. Be certain that all electrical accessories are turned off.
2. Disconnect and isolate the battery negative cable terminal clamps (1 and 9).
3. Remove the bolt (2) securing the negative cable (3) to the right front fender.

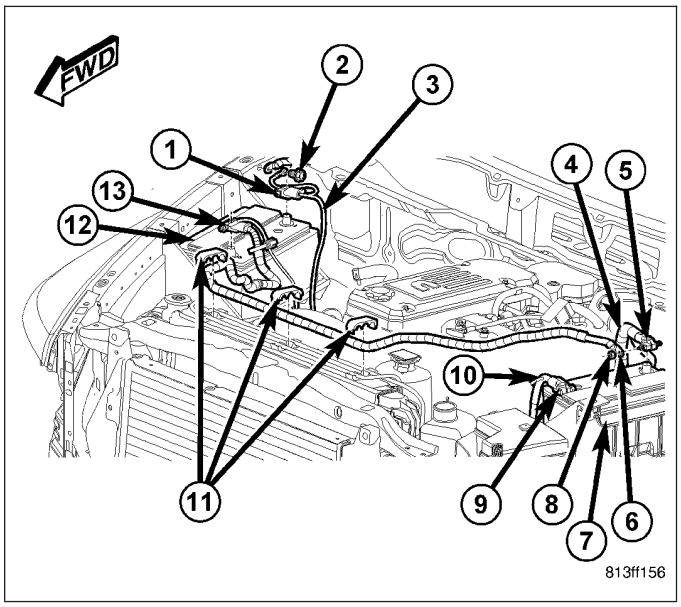

4. Remove the bolt (4) securing the negative cable (5) to the engine (6).
5. One at a time, trace the battery cable retaining pushpins, fasteners and routing clips until the cable is free from the vehicle.
6. Remove the battery negative cable from the vehicle.

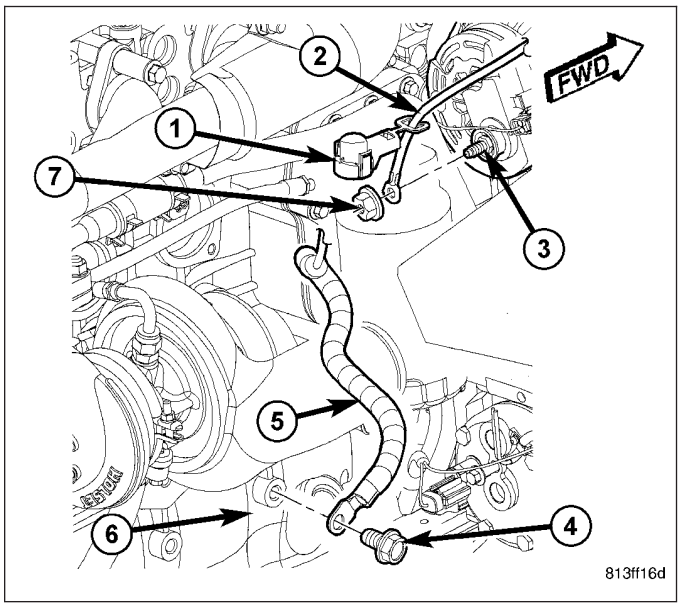

POSITIVE - DIESEL ENGINE - LEFT

1. Turn the ignition switch to the Off position. Be certain that all electrical accessories are turned off.
2. Disconnect and isolate the battery negative cable terminal clamps (1 and 9).
3. Remove the nut (8) securing the right battery positive cable terminal (6) to the left battery positive cable terminal clamp (5).
4. Remove the right cable terminal from the left cable terminal clamp.
5. Disconnect the battery positive cable terminal clamp (5).

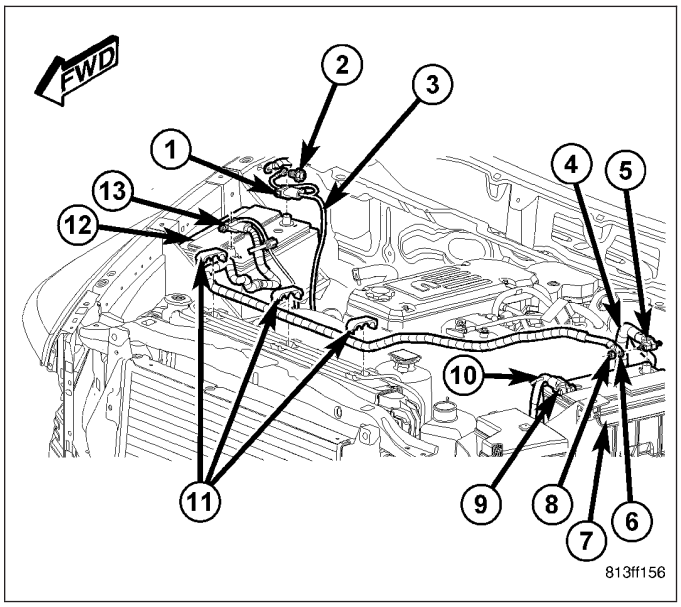

6. Raise the vehicle on a hoist, (Refer to LUBRICATION & MAINTENANCE/HOISTING - STANDARD PROCEDURE).
7. Remove the stud bolt (3) securing the cable to the engine.
8. Lift the terminal cover (4) and remove the nut securing the cable to the starter solenoid (5).
9. Lower the vehicle.
10. One at a time, trace the battery cable retaining pushpins, fasteners and routing clips until the cable is free from the vehicle.
11. Remove the battery positive cable from the vehicle.

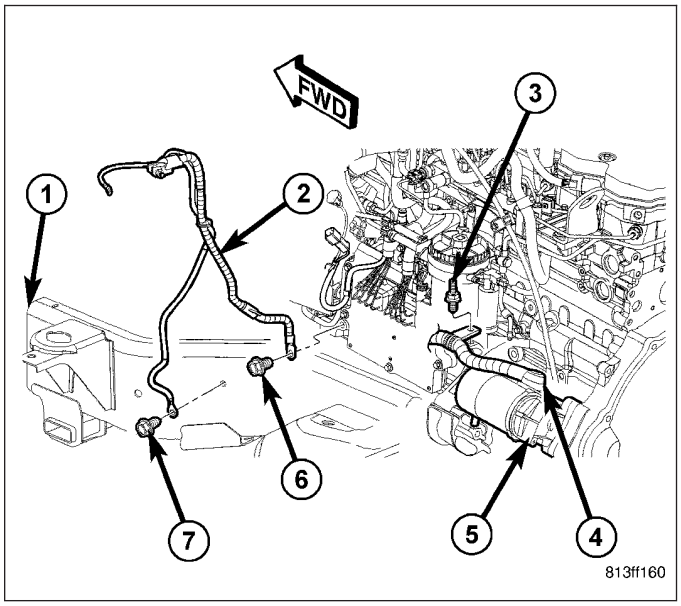

POSITIVE - DIESEL ENGINE - RIGHT

1. Turn the ignition switch to the Off position. Be certain that all electrical accessories are turned off.
2. Disconnect and isolate the battery negative cable terminal clamps (1 and 9).
3. Remove the nut (8) securing the right battery positive cable terminal (6) to the left battery positive cable terminal clamp (5).
4. Remove the right cable terminal from the left cable terminal clamp.
5. Remove the battery cable fastener clips (11) to free the cable from the vehicle.
6. Disconnect the right battery positive cable terminal clamp (13).

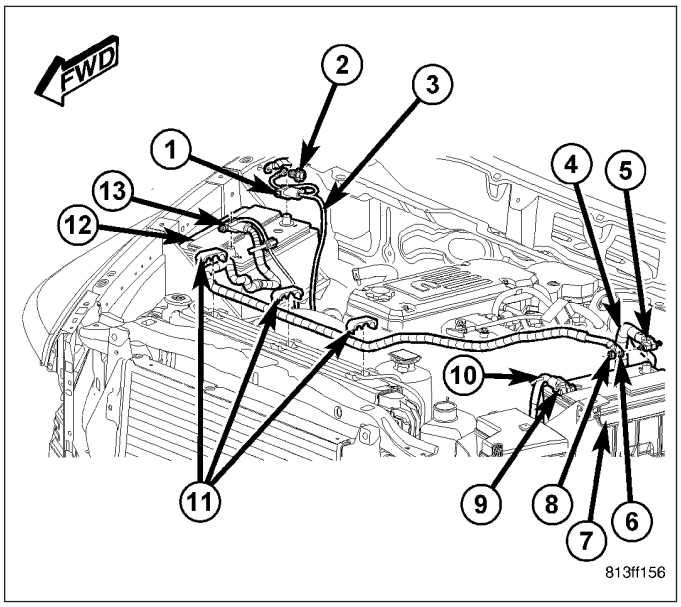

7. Lift the terminal cover (1) and remove the nut (7) securing the cable (2) to the alternator (3).
8. One at a time, trace the battery cable retaining pushpins, fasteners and routing clips until the cable is free from the vehicle.
9. Remove the battery positive cable from the vehicle.

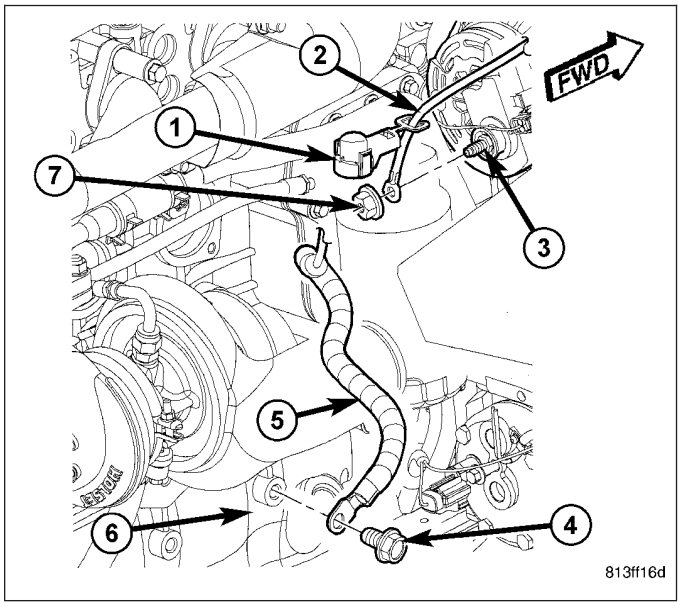

INSTALLATION

NEGATIVE - GASOLINE ENGINE

1. Position the battery negative cable (5) in the vehicle.
2. One at a time, install the battery cable retaining pushpins (3) , fasteners and routing clips until the cable is secure in the vehicle.
3. Install the bolt (6) securing the negative cable (1) to the left frame rail.
4. Install the bolt (4) securing the negative cable (5) to the engine.

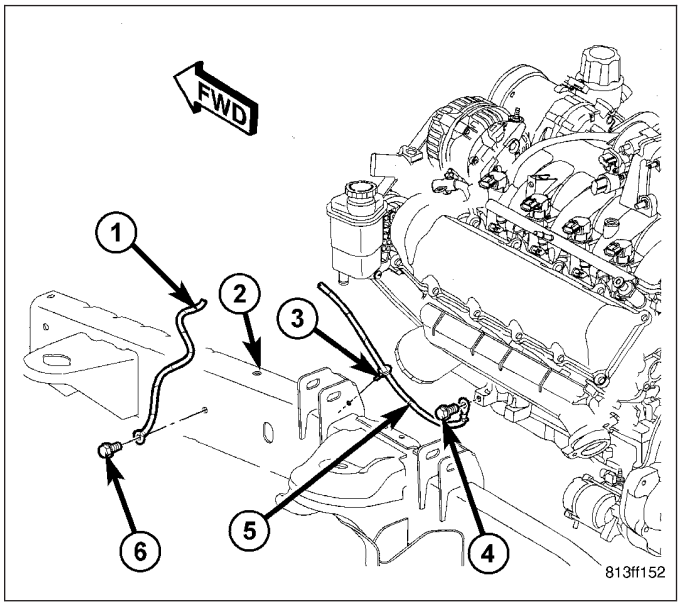

5. Install the bolt (4) securing the negative cable (3) to the left front fender.
6. Connect the battery negative cable terminal clamp (3).
7. Check the vehicle for normal operation.

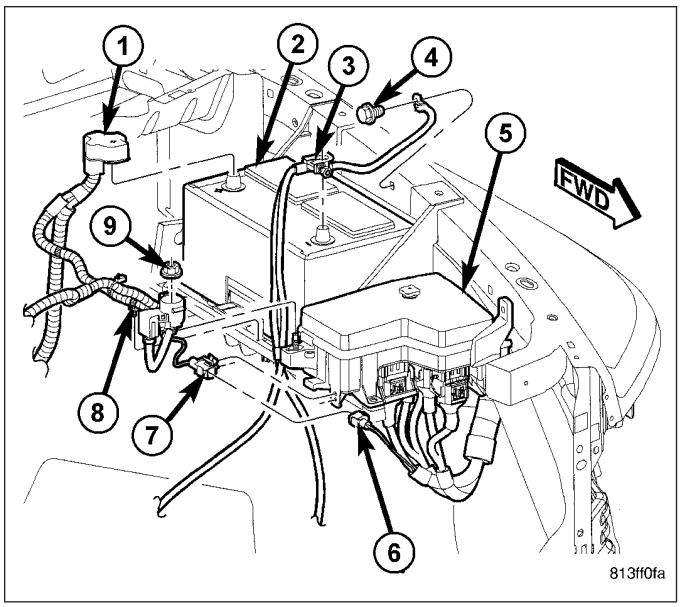

POSITIVE - GASOLINE ENGINE

1. Position the battery positive cable (1) in the vehicle.

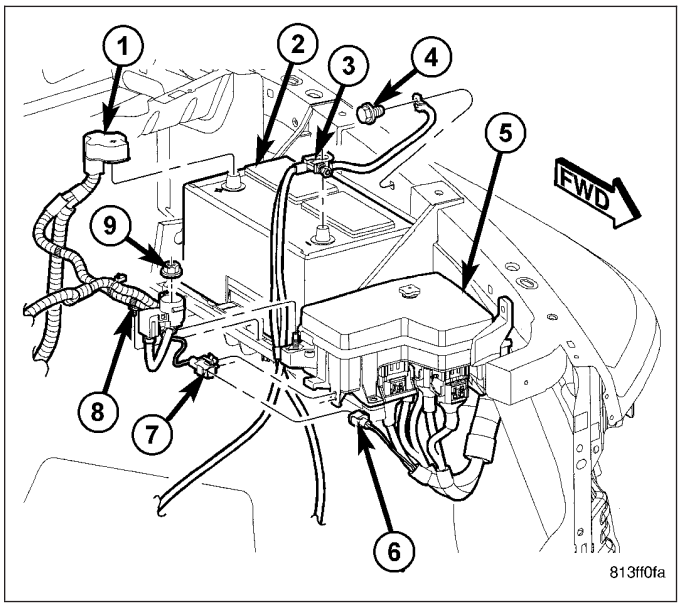

2. Install the nut (3) securing the cable (1) to the alternator (2).
3. Secure the terminal cap (4) to the alternator stud.
4. Install the cable (1) pushpin into the bracket to the left of the alternator.
5. Raise the vehicle on a hoist, (Refer to LUBRICATION & MAINTENANCE/HOISTING - STANDARD PROCEDURE).
6. Install the nut (5) securing the cable to the starter solenoid (6).

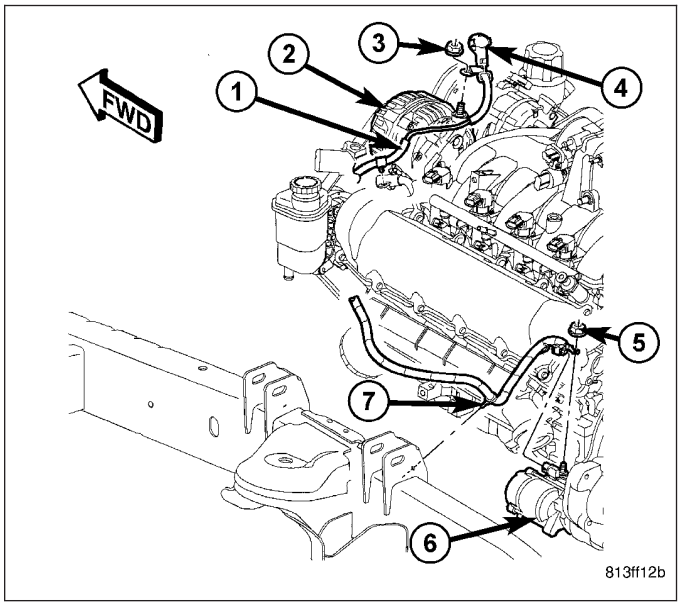

7. Connect the battery cable retaining pushpins (1) securing the cable to the left frame rail.
8. Lower the vehicle.

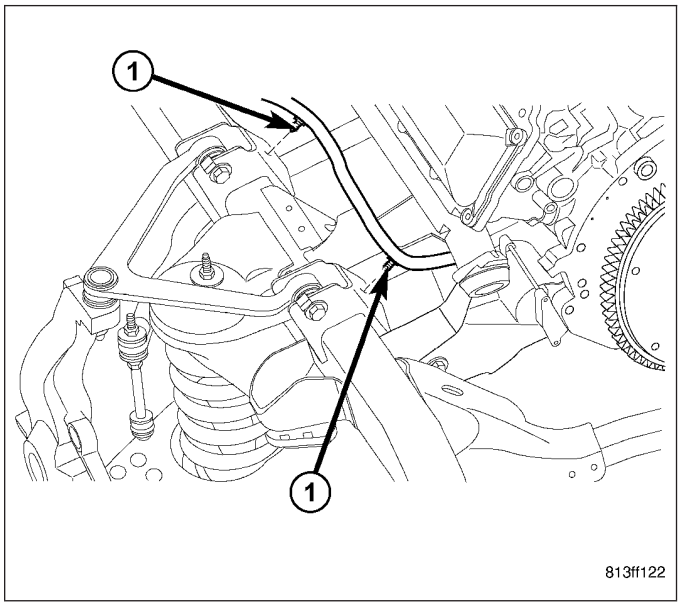

9. Install the battery cable retaining pushpin (8) securing the cable to the battery tray.
10. Install the wire harness connector (7) pushpin into the Integrated Power Module (IPM) (5) housing.
11. Connect the wire harness connector (6) at the IPM.
12. Install the nut (9) securing the cable to the IPM.
13. Connect the battery positive cable terminal clamp (1).
14. Connect the battery negative cable terminal clamp (3).
15. Check the vehicle for normal operation.

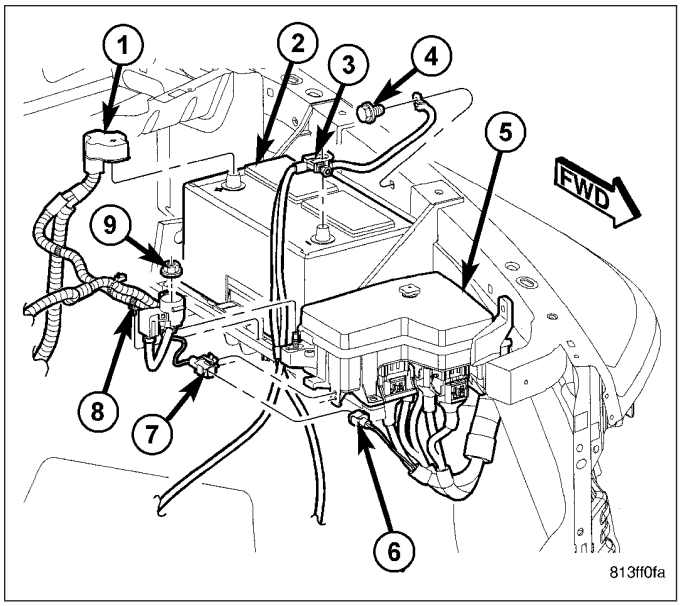

NEGATIVE - DIESEL ENGINE - LEFT

1. Position the battery negative cable (2) in the vehicle.
2. One at a time, install the battery cable retaining pushpins, fasteners and routing clips until the cable is secure in the vehicle.
3. Install the bolt (7) securing the negative cable (2) to the left frame rail (1).
4. Install the bolt (6) securing the negative cable (2) to the engine.

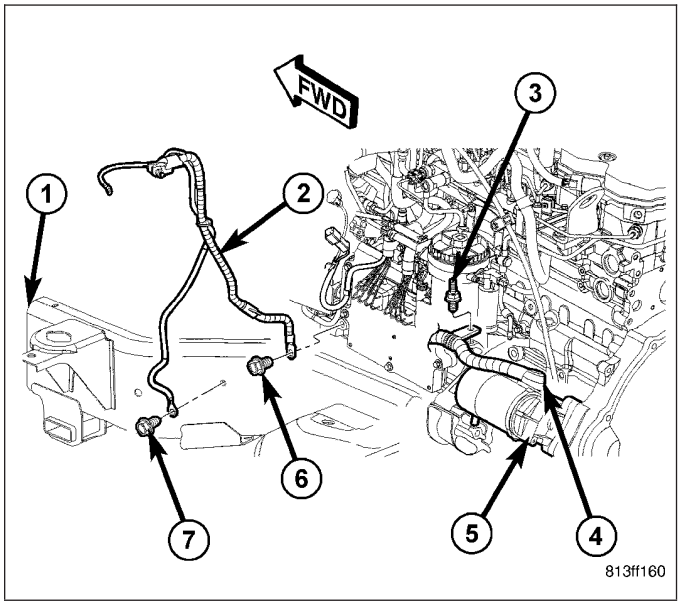

5. Install the bolt (4) securing the negative cable to the left front fender.

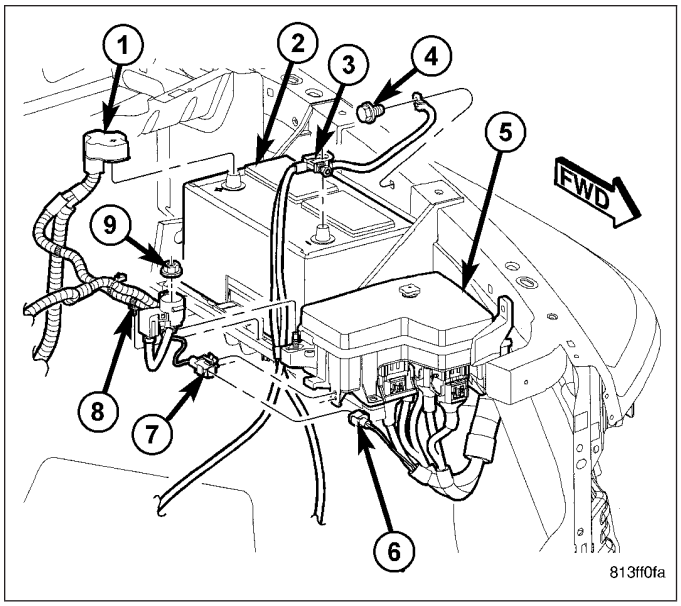

6. Connect the battery negative cable terminal clamps (1 and 9).
7. Check the vehicle for normal operation.

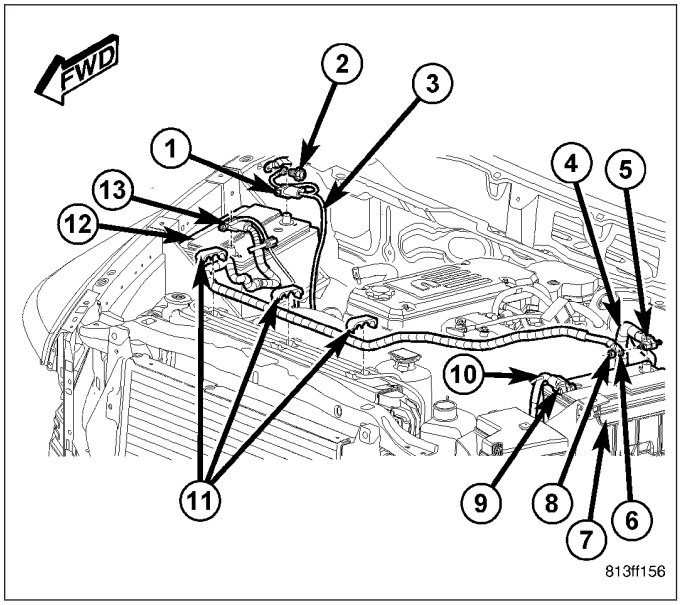

NEGATIVE - DIESEL ENGINE - RIGHT

1. Position the battery negative cable (3) in the vehicle.
2. One at a time, install the battery cable retaining pushpins, fasteners and routing clips until the cable is secure in the vehicle.
3. Install the bolt (2) securing the negative cable to the right front fender.

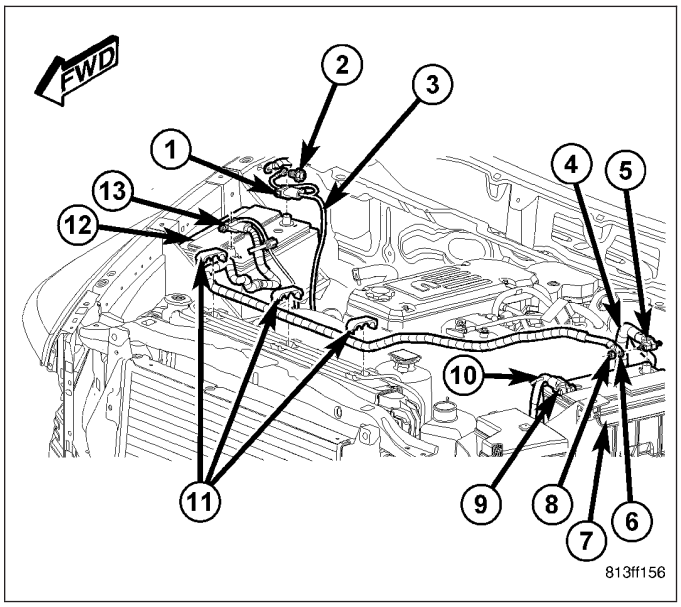

4. Install the bolt (4) securing the negative cable (5) to the engine (6).

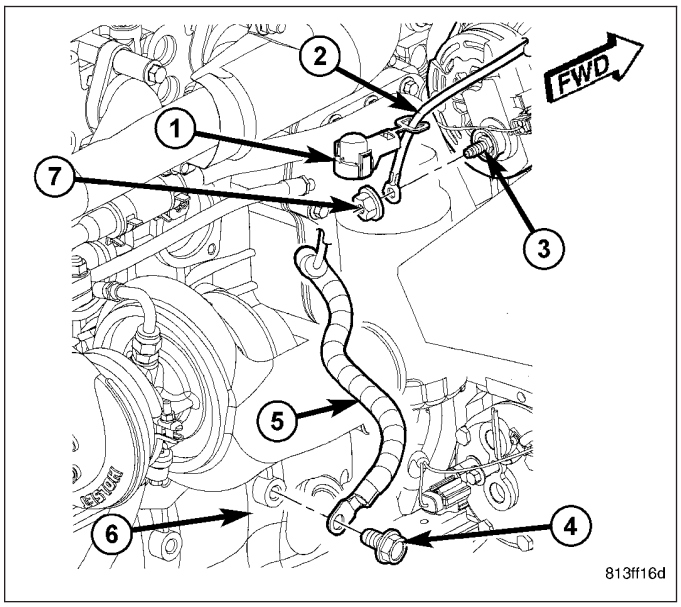

5. Connect the battery negative cable terminal clamps (1 and 9).
6. Check the vehicle for normal operation.

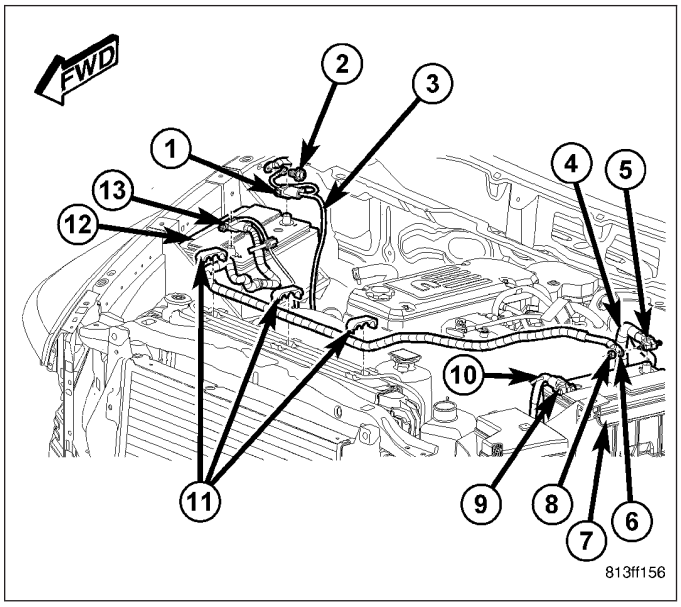

POSITIVE - DIESEL ENGINE - LEFT

1. Position the battery positive cable (4) in the vehicle.
2. One at a time, install the battery cable retaining pushpins, fasteners and routing clips until the cable is secure in the vehicle.

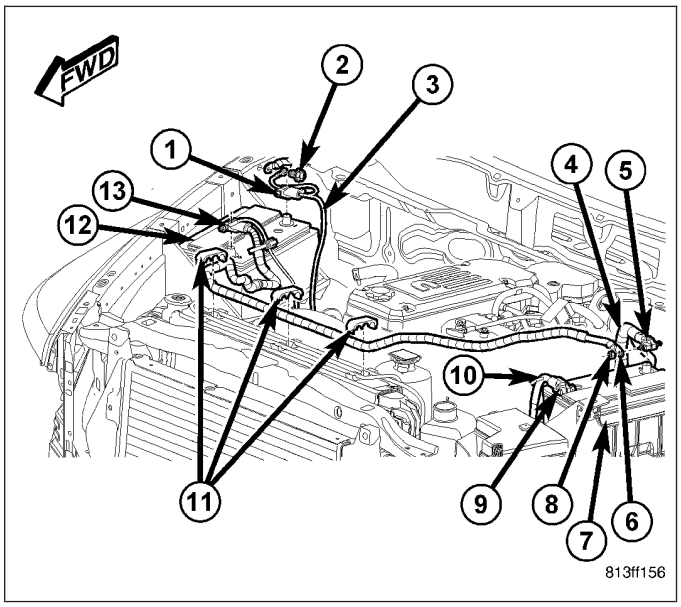

3. Raise the vehicle on a hoist, (Refer to LUBRICATION & MAINTENANCE/HOISTING - STANDARD PROCEDURE).
4. Install the nut securing the cable to the starter solenoid (5) and secure the terminal cover (4) in place.
5. Install the stud bolt (3) securing the cable to the engine.
6. Lower the vehicle.

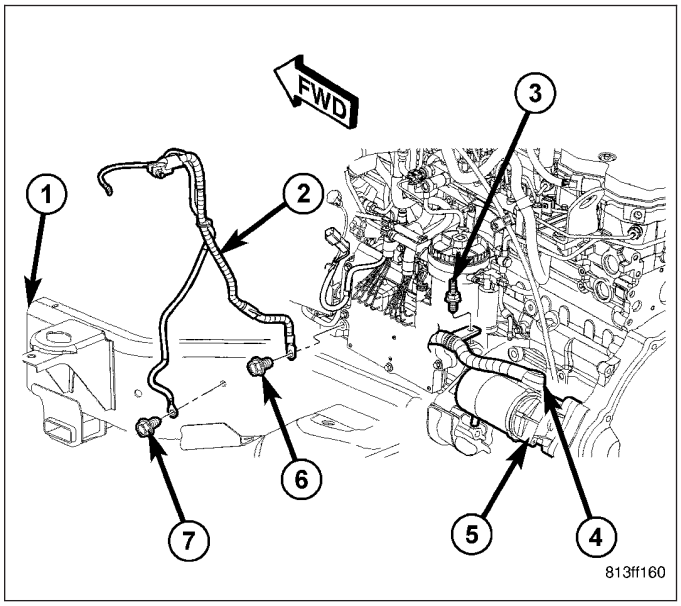

7. Install the battery positive cable terminal clamp (5).
8. Install the right battery positive cable terminal (6) onto the left cable terminal clamp (5).
9. Install the nut (8) securing the right cable terminal (6) to the left positive battery cable terminal clamp (5).
10. Connect the battery negative cable terminal clamps (1 and 9).
11. Check the vehicle for normal operation.

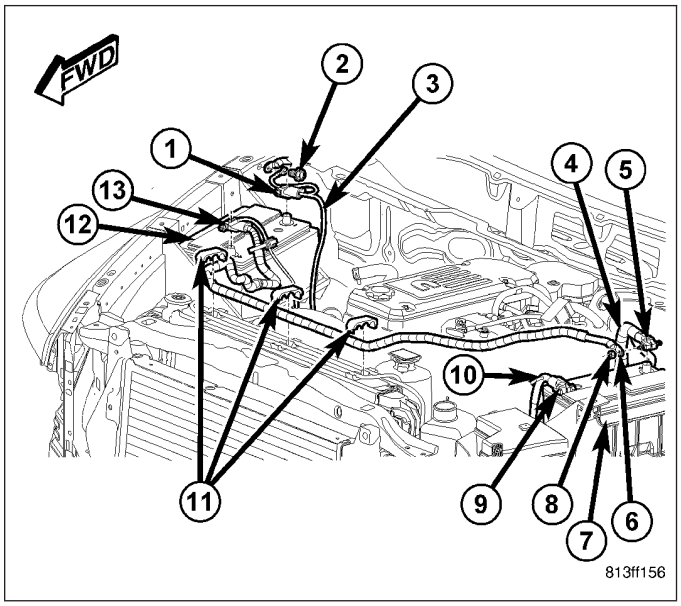

POSITIVE - DIESEL ENGINE - RIGHT

1. Position the right battery positive cable (13) in the vehicle.
2. After positioning the cable install the battery cable fastener clips (11) to the vehicle.
3. Install the right battery positive cable terminal (6) to the left battery positive cable terminal clamp (5).
4. Install the nut (8) securing the right cable terminal (6) to the left cable terminal clamp (5).
5. Connect the right battery positive cable terminal clamp (13).

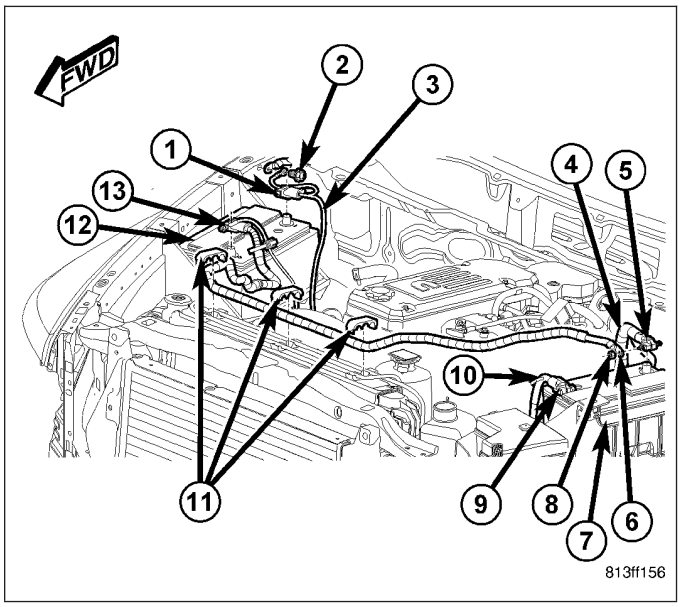

6. Lift the terminal cover (1) and install the nut (7) securing the cable (2) to the alternator (3). Secure the terminal cover to the alternator.

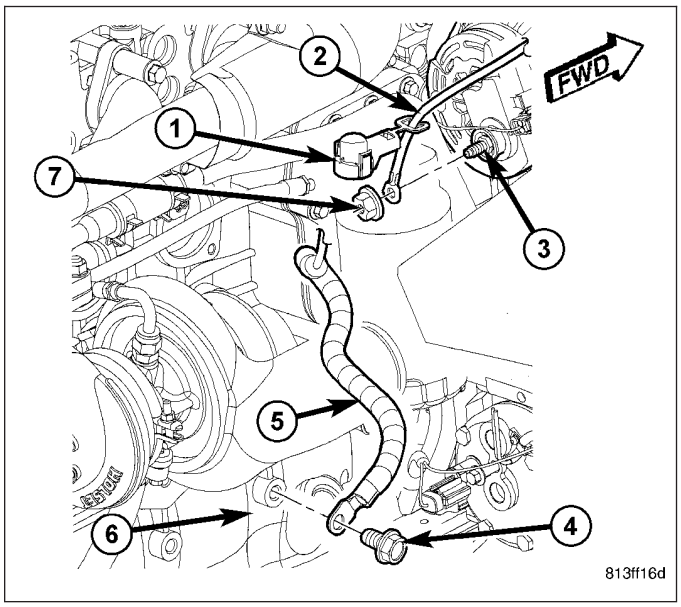

7. Connect the battery negative cable terminal clamps (1 and 9).
8. Check the vehicle for normal operation.

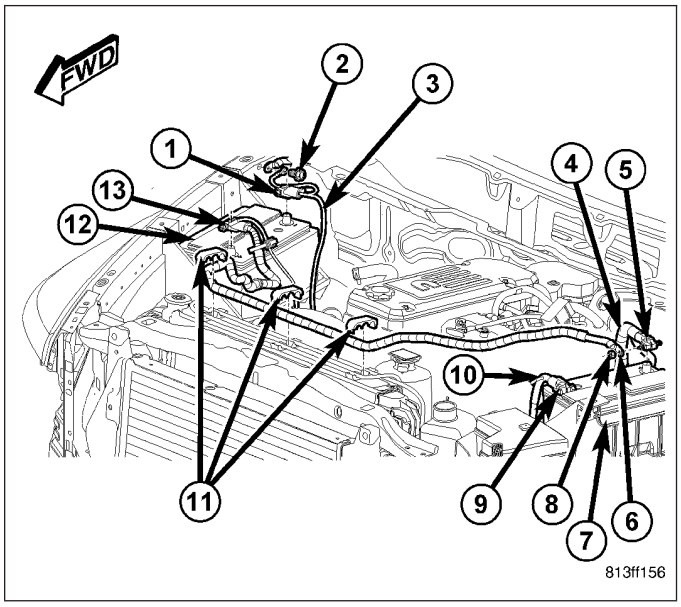

BATTERY TRAY

DESCRIPTION

The molded plastic battery tray (1) is located in the left front corner of the engine compartment. On this vehicle, the battery tray also provides an anchor point for the anti-lock brake controller (3), cruise control servo (if equipped) and the integrated power module (4). The battery hold down hardware is contained within the battery tray. A hole in the bottom of the battery tray (2) is fitted with a battery temperature sensor. (Refer to 8 - ELECTRICAL/CHARGING - DIAGNOSIS AND TESTING) for additional information on the battery temperature sensor.

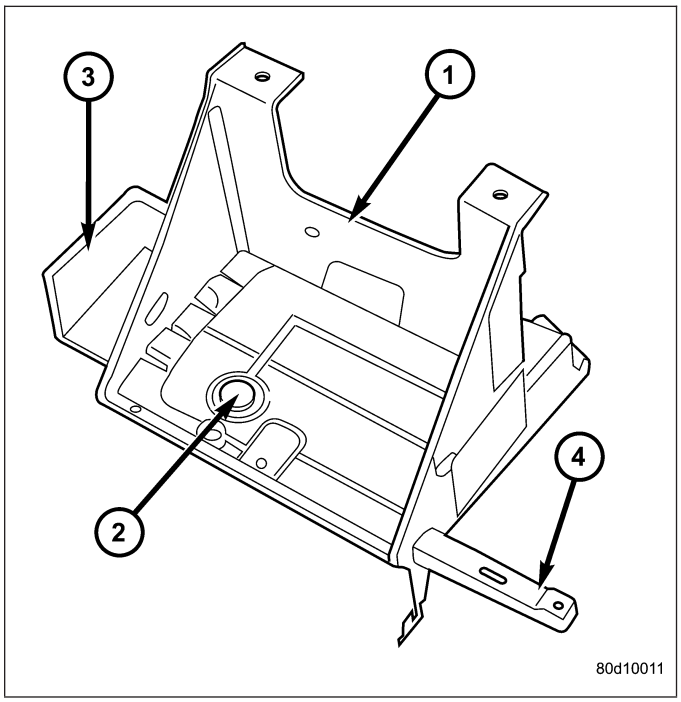

REMOVAL

LEFT SIDE

1. Remove the battery (3) from the battery tray (Refer to 8 - ELECTRICAL/BATTERY SYSTEM/BATTERY - REMOVAL).
2. Remove the Integrated Power Module (IPM) (5) (Refer to 8 - ELECTRICAL/POWER DISTRIBUTION/INTELLIGENT POWER MODULE - REMOVAL).
3. Disconnect the wire harness retainers from the battery tray assembly.
4. Disconnect the purge solenoid (6) from its mounting bracket.
5. Remove the anti-lock brake controller (if equipped) retaining bolts and support the brake controller with mechanics wire. It is not necessary to completely remove the anti-lock brake control unit.
6. Remove the left front wheelhouse splash shield (Refer to 23 - BODY/EXTERIOR/LF WHEELHOUSE SPLASH SHIELD - REMOVAL).

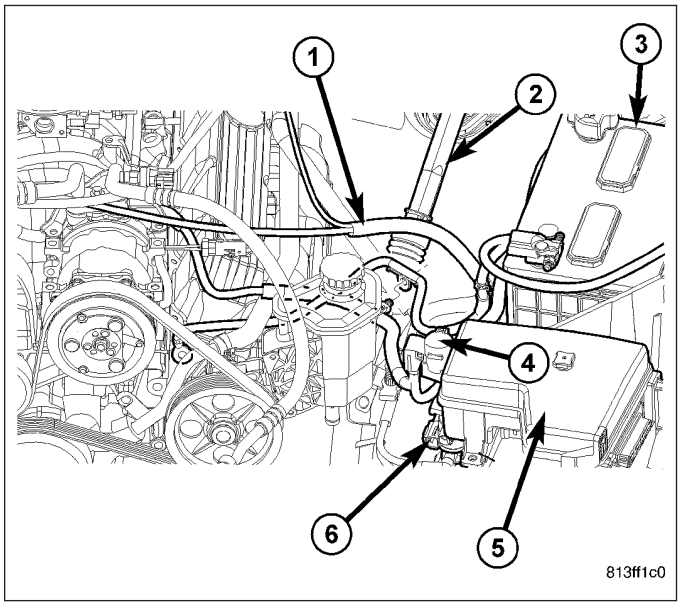

7. Mark the location of the cruise servo (3) (if equipped) and remove the retaining screws. Position the servo out of the way.
8. Remove the battery temperature sensor from the battery tray (Refer to 8 - ELECTRICAL/CHARGING/BATTERY TEMPERATURE SENSOR - REMOVAL).
9. Disconnect the left front fender ground wire.
10. Remove the remaining battery tray retaining bolts (2).
11. Remove the battery tray from the vehicle.

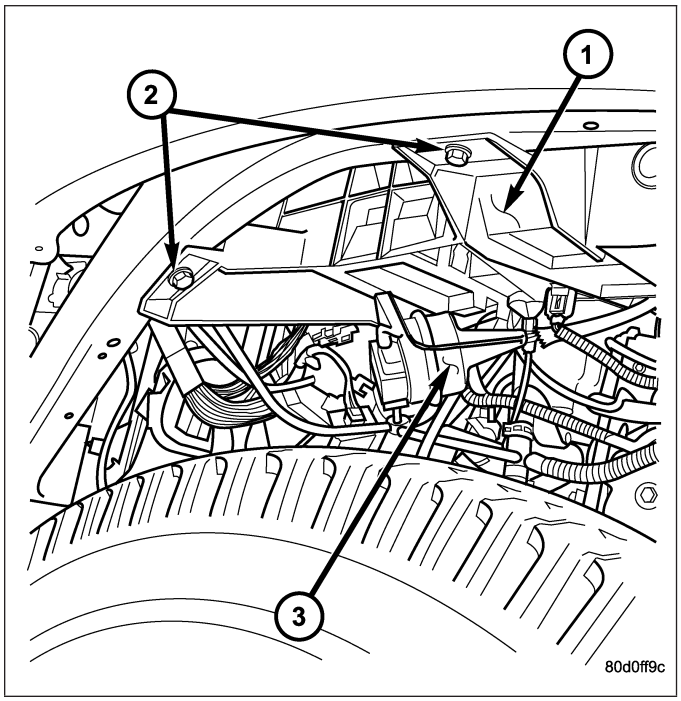

RIGHT SIDE

1. Remove the battery from the battery tray (Refer to 8 - ELECTRICAL/BATTERY SYSTEM/BATTERY - REMOVAL).
2. Remove the right front wheelhouse splash shield, (Refer to 23 - BODY/EXTERIOR/LF WHEELHOUSE SPLASH SHIELD - REMOVAL).
3. Disconnect the right front fender ground wire.
4. Remove fasteners from grid heater relay bracket.
5. Remove air box.
6. Remove the remaining battery tray retaining bolts.
7. Remove the battery tray from the vehicle.

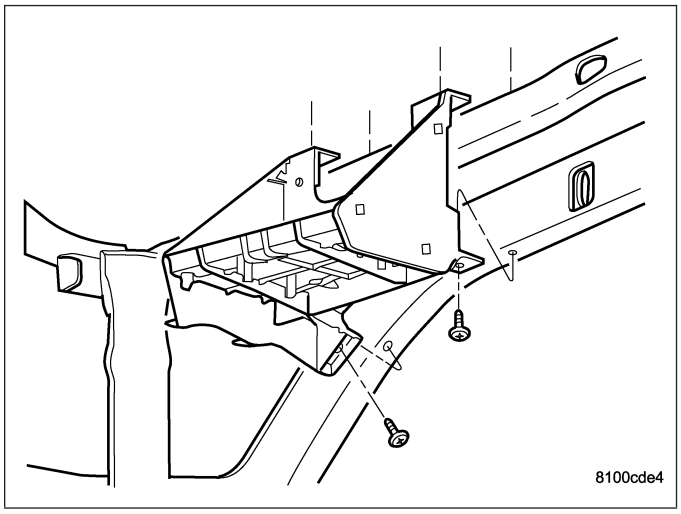

INSTALLATION

LEFT SIDE

1. Position the battery tray assembly (1) and install the retaining bolts (2).
2. Connect the left front fender ground wire.
3. Install the battery temperature sensor in the battery tray (Refer to 8 - ELECTRICAL/CHARGING/BATTERY TEMPERATURE SENSOR - INSTALLATION).
4. Install the cruise servo (3) (if equipped) and retaining screws.
5. Install the left front wheelhouse splash shield (Refer to 23 - BODY/EXTERIOR/LF WHEELHOUSE SPLASH SHIELD - INSTALLATION).

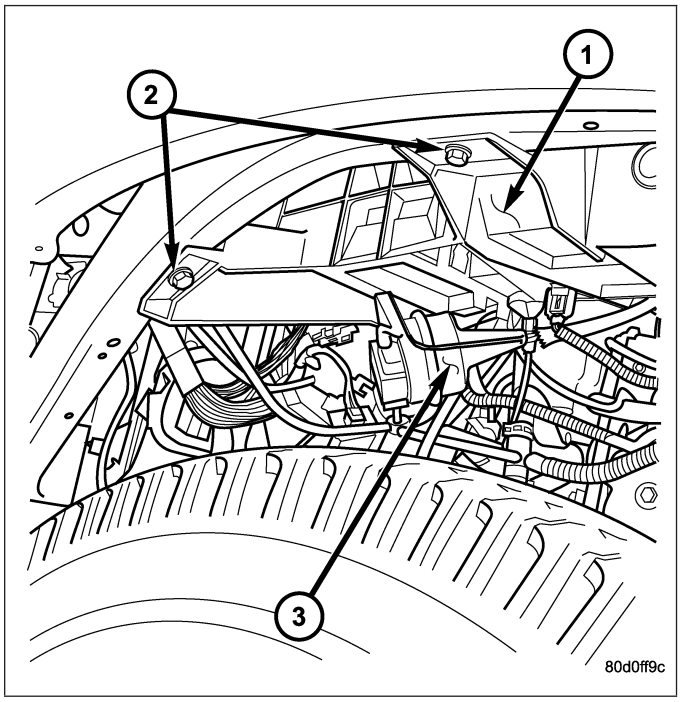

6. Install the anti-lock brake controller (if equipped).
7. Install the purge solenoid (6) on its mounting bracket.
8. Connect the wire harness retainers on the battery tray assembly.
9. Install the Integrated Power Module (IPM) (5) (Refer to 8 - ELECTRICAL/POWER DISTRIBUTION/INTELLIGENT POWER MODULE - INSTALLATION).
10. Install the battery (3) (Refer to 8 - ELECTRICAL/BATTERY SYSTEM/BATTERY - INSTALLATION).

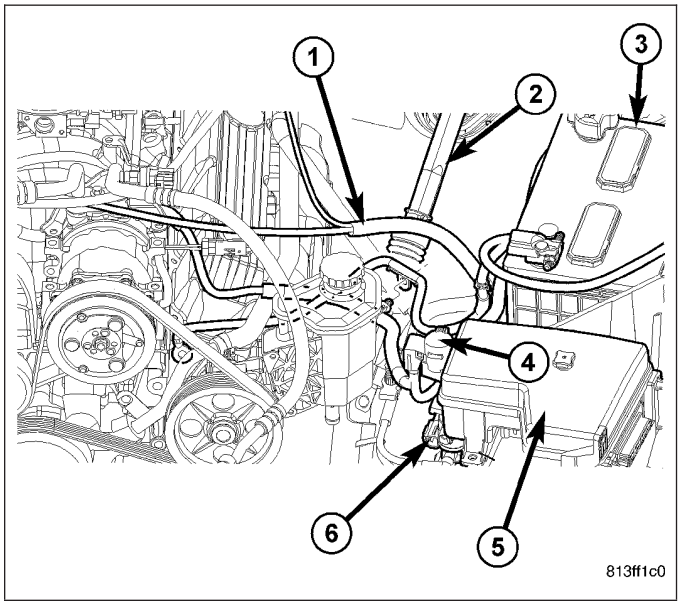

RIGHT SIDE

1. Position the battery tray assembly and install the retaining bolts.
2. Connect the right front fender ground wire.
3. Install the air box.
4. Install the grid heater relay bracket.
5. Install the right front wheelhouse splash shield (Refer to 23 - BODY/EXTERIOR/LF WHEELHOUSE SPLASH SHIELD - INSTALLATION).
6. Install the battery (Refer to 8 - ELECTRICAL/BATTERY SYSTEM/BATTERY - INSTALLATION).

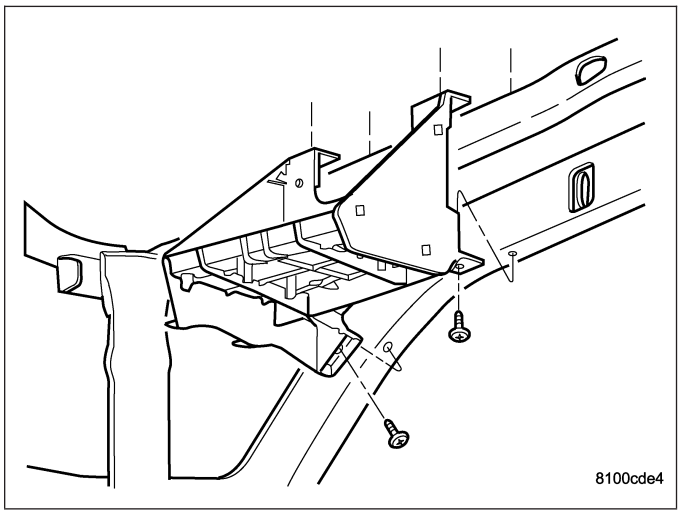

CHARGING

TABLE OF CONTENTS

	page
CHARGING	
DESCRIPTION	40
OPERATION	40
DIAGNOSIS AND TESTING - CHARGING SYSTEM	41
SPECIFICATIONS	
GENERATOR RATINGS	41
TORQUE - GENERATOR / CHARGING SYSTEM	42
BATTERY TEMPERATURE SENSOR	
DESCRIPTION	42
OPERATION	42
REMOVAL	43
INSTALLATION	43
GENERATOR	
DESCRIPTION	44
OPERATION	44
REMOVAL	45
INSTALLATION	49
VOLTAGE REGULATOR	
DESCRIPTION	51
OPERATION	51

CHARGING

DESCRIPTION

The charging system consists of:

- Generator
- Electronic Voltage Regulator (EVR) circuitry within the Powertrain Control Module (PCM). Electronic Control Module (ECM) for diesel engines.
- Ignition switch
- Battery (refer to 8, Battery for information)
- Battery temperature sensor
- Check Gauges Lamp (if equipped)
- Voltmeter (refer to 8, Instrument Panel and Gauges for information)
- Wiring harness and connections (refer to 8, Wiring Diagrams for information)

OPERATION

The charging system is turned on and off with the ignition switch. The system is on when the engine is running and the ASD relay is energized. When the ASD relay is on, voltage is supplied to the ASD relay sense circuit at the PCM (ECM Diesel). This voltage is connected through the PCM (ECM Diesel) and supplied to one of the generator field terminals (Gen. Source +) at the back of the generator.

The amount of direct current produced by the generator is controlled by the EVR (field control) circuitry contained within the PCM (ECM Diesel). This circuitry is connected in series with the second rotor field terminal and ground.

A battery temperature sensor, located in the battery tray housing, is used to sense battery temperature. This temperature data, along with data from monitored line voltage, is used by the PCM (ECM Diesel) to vary the battery charging rate. This is done by cycling the ground path to control the strength of the rotor magnetic field. The PCM then compensates and regulates generator current output accordingly.

All vehicles are equipped with On-Board Diagnostics (OBD). All OBD-sensed systems, including EVR (field control) circuitry, are monitored by the PCM (ECM Diesel). Each monitored circuit is assigned a Diagnostic Trouble Code (DTC). The PCM will store a DTC in electronic memory for certain failures it detects.

The Check Gauges Lamp (if equipped) monitors: **charging system voltage,** engine coolant temperature and engine oil pressure. If an extreme condition is indicated, the lamp will be illuminated. This is done as reminder to check the three gauges. The signal to activate the lamp is sent via the CCD bus circuits. The lamp is located on the instrument panel. Refer to 8, Instrument Panel and Gauges for additional information.

DIAGNOSIS AND TESTING - CHARGING SYSTEM

The following procedures may be used to diagnose the charging system if:

- the check gauges lamp (if equipped) is illuminated with the engine running
- the voltmeter (if equipped) does not register properly
- an undercharged or overcharged battery condition occurs.

Remember that an undercharged battery is often caused by:

- accessories being left on with the engine not running
- a faulty or improperly adjusted switch that allows a lamp to stay on. Refer to Ignition-Off Draw Test in 8, Battery for more information.

INSPECTION

The PCM (Powertrain Control Module), or ECM (Diesel) monitors critical input and output circuits of the charging system, making sure they are operational. A Diagnostic Trouble Code (DTC) is assigned to each input and output circuit monitored by the On-Board Diagnostic (OBD) system. Some charging system circuits are checked continuously, and some are checked only under certain conditions.

Refer to Diagnostic Trouble Codes in; Powertrain Control Module; Electronic Control Modules for more DTC information. This will include a complete list of DTC's including DTC's for the charging system.

To perform a complete test of the charging system, refer to the appropriate Powertrain Diagnostic Procedures service manual and the DRB® scan tool. Perform the following inspections before attaching the scan tool.

1. Inspect the battery condition. Refer to 8, Battery for procedures.
2. Inspect condition of battery cable terminals, battery posts, connections at engine block, starter solenoid and relay. They should be clean and tight. Repair as required.
3. Inspect all fuses in both the fuseblock and Power Distribution Center (PDC) for tightness in receptacles. They should be properly installed and tight. Repair or replace as required.
4. Inspect generator mounting bolts for tightness. Replace or tighten bolts if required. Refer to the Generator Removal/Installation section of this group for torque specifications.
5. Inspect generator drive belt condition and tension. Tighten or replace belt as required. Refer to Belt Tension Specifications in 7, Cooling System.
6. Inspect automatic belt tensioner (if equipped). Refer to 7, Cooling System for information.
7. Inspect generator electrical connections at generator field, battery output, and ground terminal (if equipped). Also check generator ground wire connection at engine (if equipped). They should all be clean and tight. Repair as required.

SPECIFICATIONS

GENERATOR RATINGS

TYPE	PART NUMBER	RATED SAE AMPS	ENGINES
DENSO	56029700AA	136	3.7L / 4.7L
BOSCH	56041120AC	136	3.7L / 4.7L
DENSO	56028696AA	136	5.7L Gas/5.9L Diesel
BOSCH	56028699AA	136	5.7L Gas/5.9L Diesel

TORQUE - GENERATOR / CHARGING SYSTEM

DESCRIPTION	N·m	Ft. Lbs.	In. Lbs.
Generator Mounting Bolts - 5.7L	41	30	-
Generator Support Bracket Bolt/Nuts - 5.7L	41	30	-
Generator Upper Mounting Bolt - 5.9L Diesel Engine	41	30	-
Generator Vertical Mounting Bolt - 3.7L / 4.7L Engines	55	40	-
Generator (long) Horizontal Mounting Bolt - 3.7L / 4.7L Engines	55	40	-
Generator (short) Horizontal Mounting Bolt - 3.7L / 4.7L Engines	74	55	-
Generator Upper & Lower Mounting Bolt - 8.3L Engine	55	41	-
Generator B+ Output Cable Terminal Nut	12	-	108

BATTERY TEMPERATURE SENSOR

DESCRIPTION

The Battery Temperature Sensor (BTS) is attached to the battery tray located under the battery.

OPERATION

The BTS is used to determine the battery temperature and control battery charging rate. This temperature data, along with data from monitored line voltage, is used by the PCM (ECM Diesel) to vary the battery charging rate. System voltage will be higher at colder temperatures and is gradually reduced at warmer temperatures.

The PCM sends 5 volts to the sensor and is grounded through the sensor return line. As temperature increases, resistance in the sensor decreases and the detection voltage at the PCM increases.

The BTS is also used for OBD II diagnostics. Certain faults and OBD II monitors are either enabled or disabled, depending upon BTS input (for example, disable purge and enable Leak Detection Pump (LDP) and O2 sensor heater tests). Most OBD II monitors are disabled below 20°F.

REMOVAL

The battery temperature sensor (1) is located under the vehicle battery and is attached (snapped into) a mounting hole on battery tray (4).

1. Remove battery. Refer to 8, Battery for procedures.
2. Pry sensor (1) straight up from battery tray mounting hole to gain access to electrical connector (3).
3. Disconnect sensor from engine wire harness electrical connector.

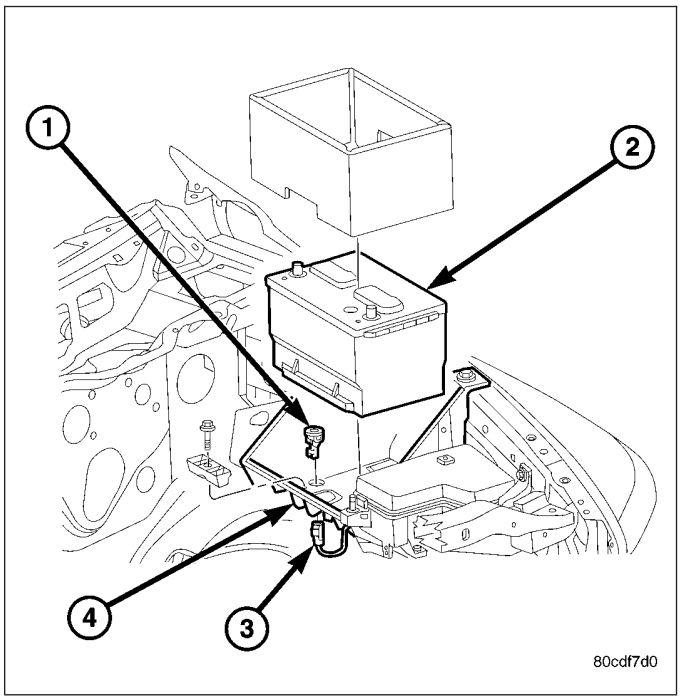

INSTALLATION

NOTE: The battery temperature sensor (1) is located under the vehicle battery and is attached (snapped into) a mounting hole on battery tray (4).

1. Pull electrical connector (3) up through mounting hole in top of battery tray.
2. Connect sensor.
3. Snap sensor into battery tray.
4. Install battery. Refer to 8, Battery for procedures.

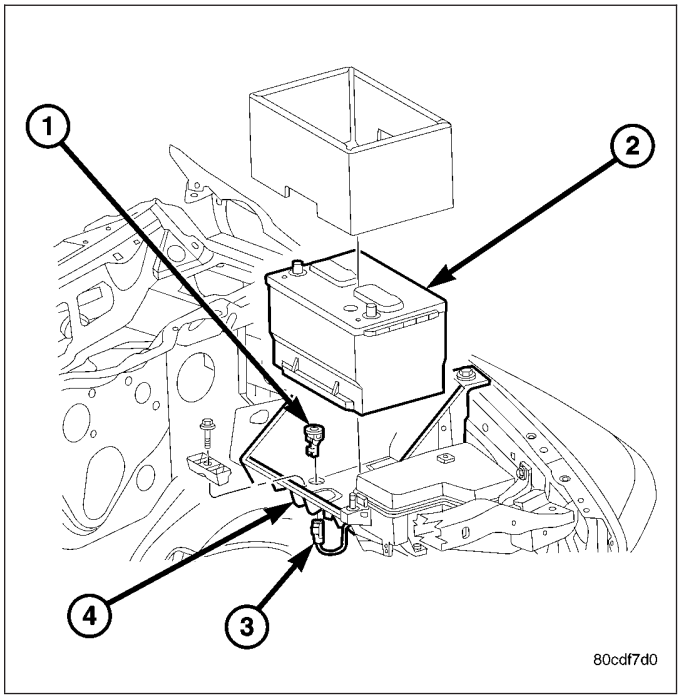

GENERATOR

DESCRIPTION

The generator is belt-driven by the engine using a serpentine type drive belt. It is serviced only as a complete assembly. If the generator fails for any reason, the entire assembly must be replaced.

OPERATION

As the energized rotor begins to rotate within the generator, the spinning magnetic field induces a current into the windings of the stator coil. Once the generator begins producing sufficient current, it also provides the current needed to energize the rotor.

The stator winding connections deliver the induced alternating current to 3 positive and 3 negative diodes for rectification. From the diodes, rectified direct current is delivered to the vehicle electrical system through the generator battery terminal.

Although the generators appear the same externally, different generators with different output ratings are used on this vehicle. Be certain that the replacement generator has the same output rating and part number as the original unit. Refer to Generator Ratings in the Specifications section at the back of this group for amperage ratings and part numbers.

Noise emitting from the generator may be caused by: worn, loose or defective bearings; a loose or defective drive pulley; incorrect, worn, damaged or misadjusted fan drive belt; loose mounting bolts; a misaligned drive pulley or a defective stator or diode.

REMOVAL

3.7L / 4.7L

WARNING: DISCONNECT NEGATIVE CABLE FROM BATTERY BEFORE REMOVING BATTERY OUTPUT WIRE (B+ WIRE) FROM GENERATOR. FAILURE TO DO SO CAN RESULT IN INJURY OR DAMAGE TO ELECTRICAL SYSTEM.

1. Disconnect negative battery cable at battery.
2. Remove generator drive belt. Refer to 7, Cooling System for procedure.
3. Unsnap plastic insulator cap from B+ output terminal (3).
4. Remove B+ terminal mounting nut at rear of generator (2). Disconnect terminal from generator.
5. Disconnect field wire connector at rear of generator (4) by pushing on connector tab.
6. Remove 1 rear vertical generator mounting bolt (2).
7. Remove 2 front horizontal generator mounting bolts (1).
8. Remove generator from vehicle.

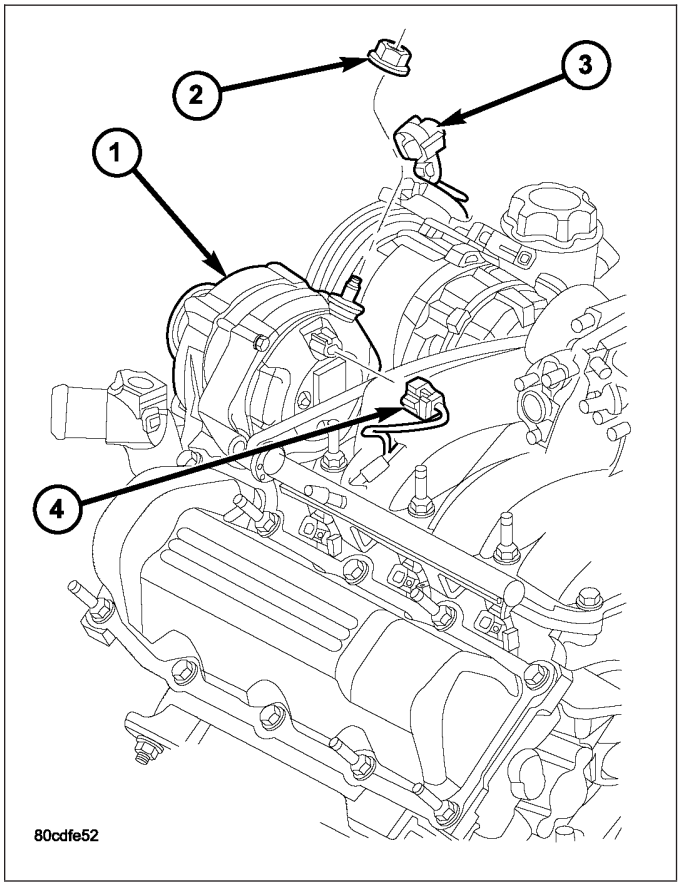

5.7L

WARNING: DISCONNECT NEGATIVE CABLE FROM BATTERY BEFORE REMOVING BATTERY OUTPUT WIRE (B+ WIRE) FROM GENERATOR. FAILURE TO DO SO CAN RESULT IN INJURY OR DAMAGE TO ELECTRICAL SYSTEM.

1. Disconnect negative battery cable at battery.
2. Remove generator drive belt. Refer to 7, Cooling System for procedure.
3. Unsnap plastic insulator cap from B+ output terminal.
4. Remove B+ terminal mounting nut at rear of generator. Disconnect terminal from generator.
5. Disconnect field wire connector at rear of generator by pushing on connector tab.
6. Remove generator support bracket nuts (3) and bolt (4) and remove support bracket.
7. Remove 2 generator mounting bolts (1) and (3).
8. Remove generator from vehicle.

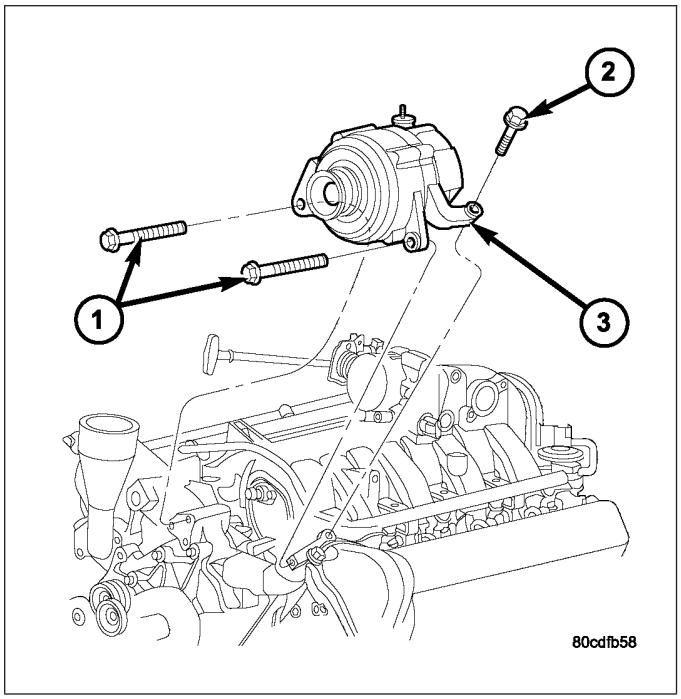

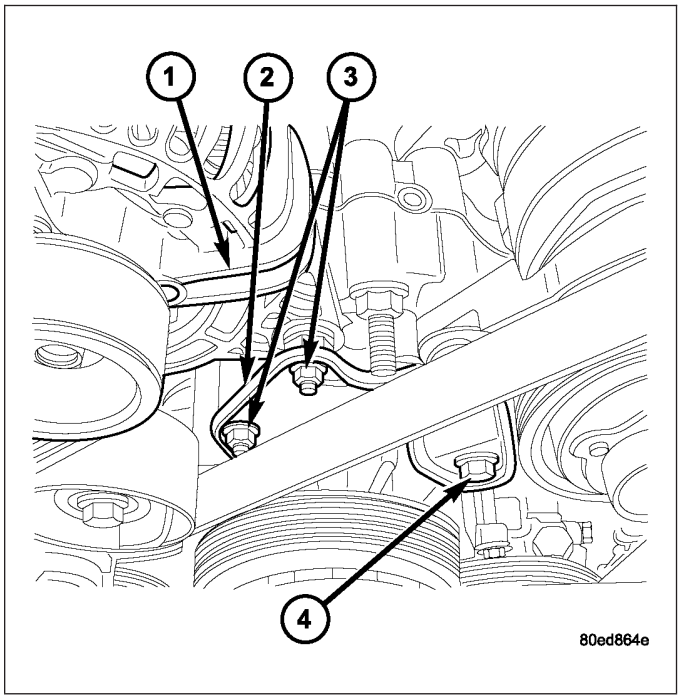

5.9L Diesel

WARNING: DISCONNECT BOTH NEGATIVE CABLES FROM BOTH BATTERIES BEFORE REMOVING BATTERY OUTPUT WIRE (B+ WIRE) FROM GENERATOR. FAILURE TO DO SO CAN RESULT IN INJURY OR DAMAGE TO ELECTRICAL SYSTEM.

1. Disconnect both negative battery cables at both batteries.
2. Remove generator drive belt. Refer to 7, Cooling System for procedure.
3. Unsnap plastic insulator cap from B+ output terminal.
4. Remove B+ terminal mounting nut at rear of generator. Disconnect terminal from generator.
5. Disconnect field wire connector at rear of generator by pushing on connector tab.
6. Remove upper mounting bracket bolt (2).
7. Remove lower mounting bracket bolt and nut (2).
8. Remove generator from vehicle.

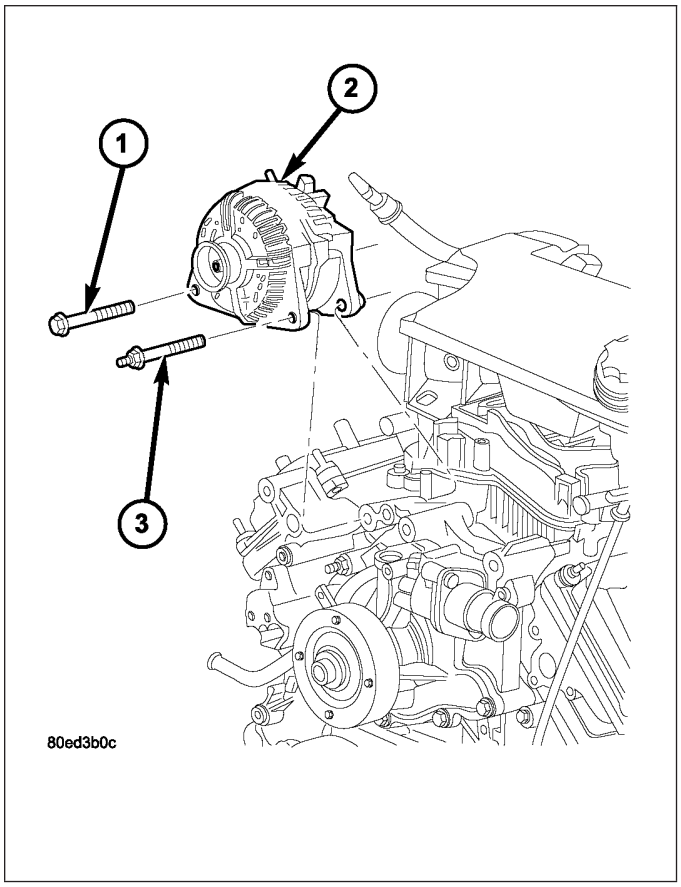

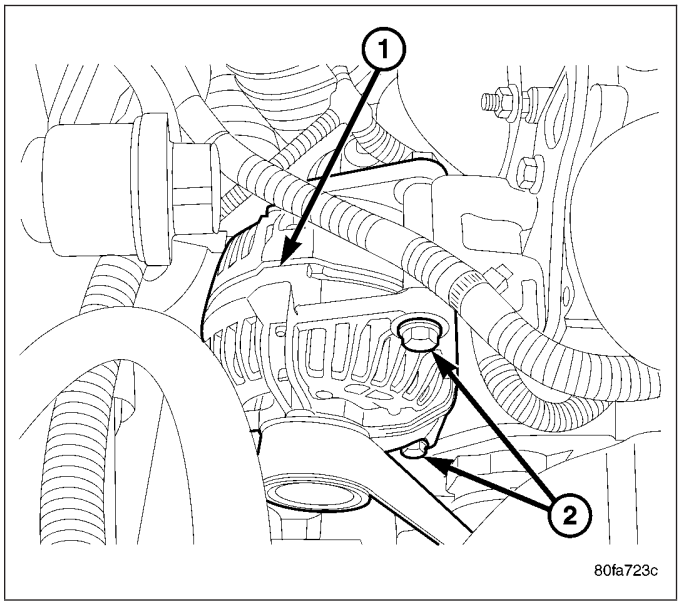

8.3L - SRT-10

1. Disconnect the negative battery cable.
2. Remove air cleaner assembly, refer to the Engine/ air Intake System for more information.
3. Remove the accessory drive belt , refer to the Cooling section for more information.

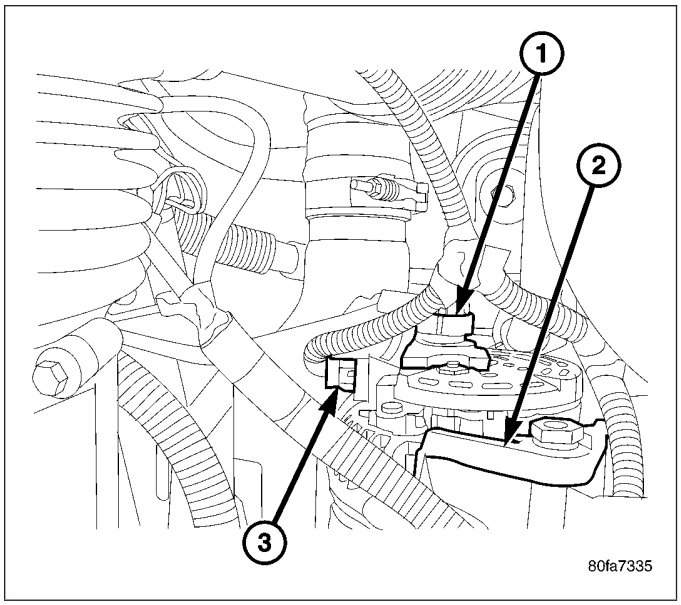

4. Disconnect the field connector.

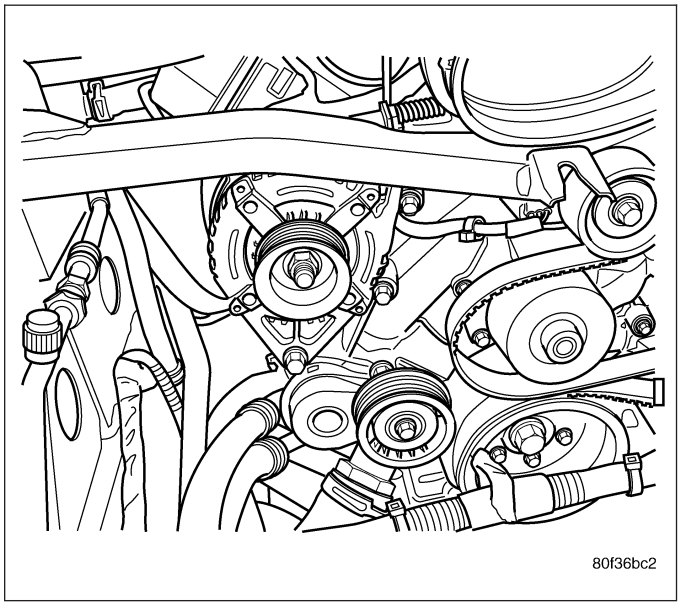

5. Disconnect the battery positive cable from the generator first disconnect the B+ cap on the wiring harness side.

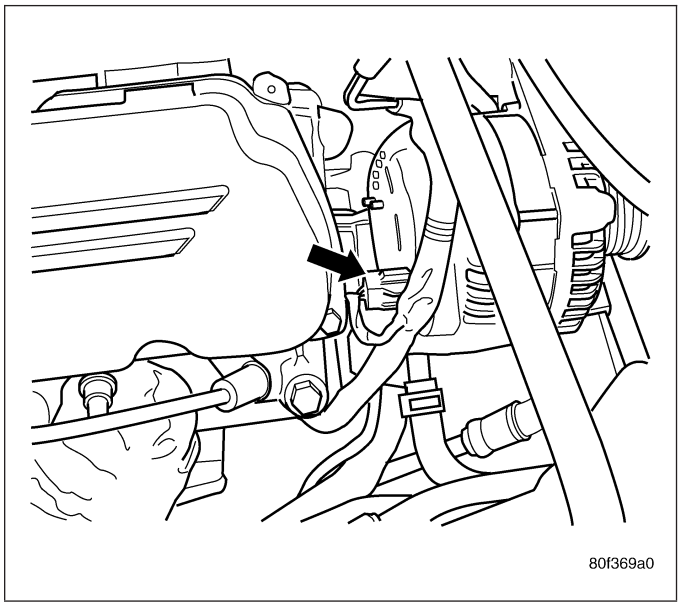

6. Remove the upper mounting bolt (1).
7. Remove the lower mounting bolt and nut (2).

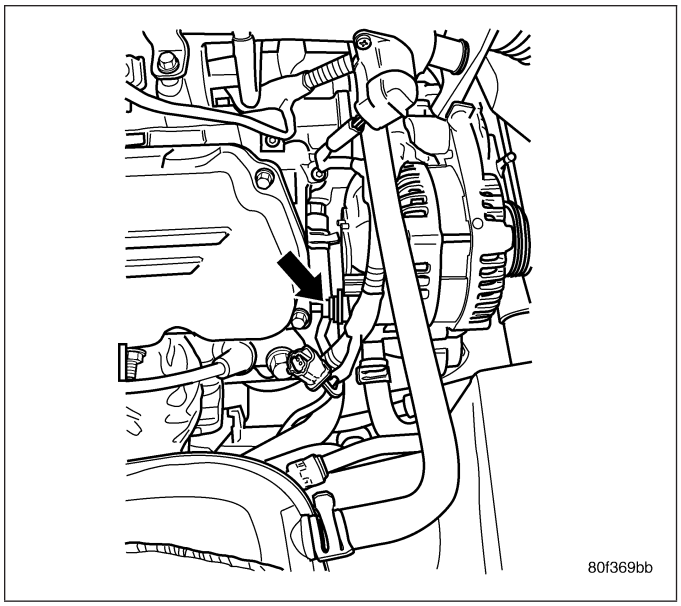

8. Remove generator.

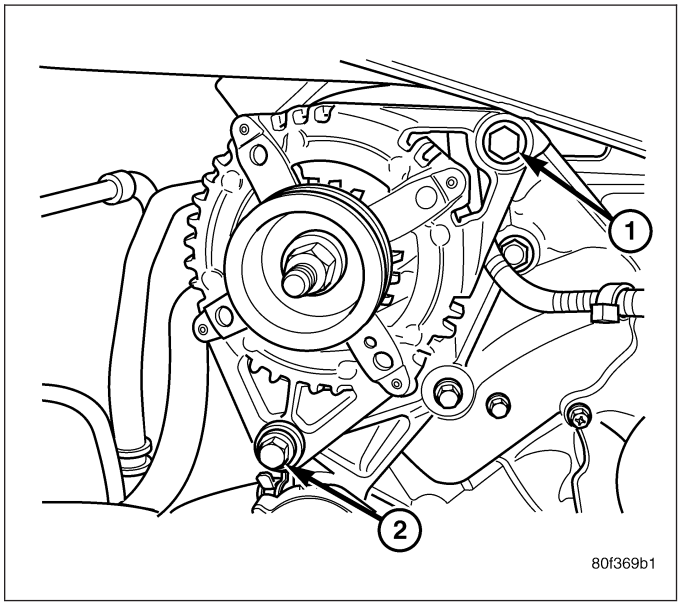

INSTALLATION

3.7L / 4.7L

1. Position generator to engine and install 2 horizontal bolts and 1 vertical bolt.
2. Tighten all 3 bolts. Refer to Torque Specifications.
3. Snap field wire connector into rear of generator.
4. Install B+ terminal eyelet to generator output stud. Tighten mounting nut. Refer to Torque Specifications.

CAUTION: Never force a belt over a pulley rim using a screwdriver. The synthetic fiber of the belt can be damaged.

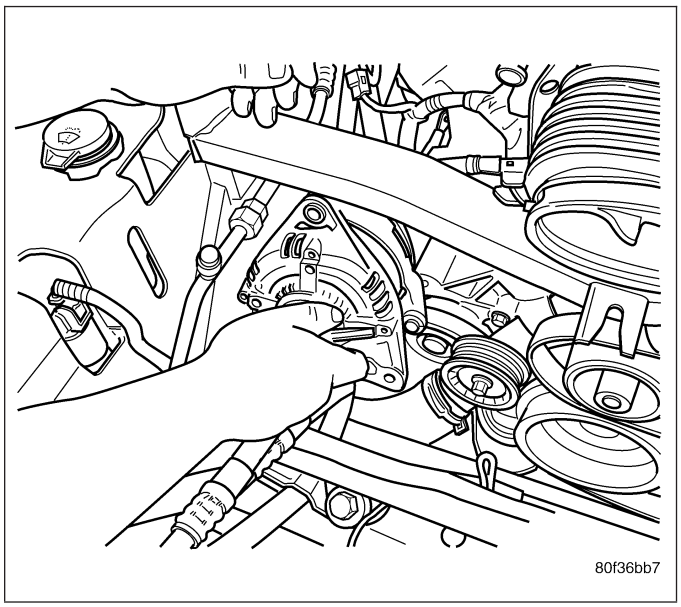

CAUTION: When installing a serpentine accessory drive belt, the belt MUST be routed correctly. The water pump may be rotating in the wrong direction if the belt is installed incorrectly, causing the engine to overheat. Refer to belt routing label in engine compartment, or refer to Belt Schematics in 7, Cooling System.

5. Install generator drive belt. Refer to 7, Cooling System for procedure.
6. Install negative battery cable to battery.

5.7L

1. Position generator to engine and install 2 mounting bolts.
2. Tighten bolts. Refer to Torque Specifications.
3. Position support bracket to front of generator and install bolt and nuts. Tighten bolt / nuts. Refer to Torque Specifications.
4. Snap field wire connector into rear of generator.
5. Install B+ terminal eyelet to generator output stud. Tighten mounting nut. Refer to Torque Specifications.

CAUTION: Never force a belt over a pulley rim using a screwdriver. The synthetic fiber of the belt can be damaged.

CAUTION: When installing a serpentine accessory drive belt, the belt MUST be routed correctly. The water pump may be rotating in the wrong direction if the belt is installed incorrectly, causing the engine to overheat. Refer to belt routing label in engine compartment, or refer to Belt Schematics in 7, Cooling System.

6. Install generator drive belt. Refer to 7, Cooling System for procedure.
7. Install negative battery cable to battery.

5.9L Diesel

1. Position generator to upper and lower mounting brackets and install upper bolt and lower bolt / nut.
2. Tighten all bolts / nut. Refer to Torque Specifications.
3. Snap field wire connector into rear of generator.
4. Install B+ terminal eyelet to generator output stud. Tighten mounting nut. Refer to Torque Specifications.

CAUTION: Never force a belt over a pulley rim using a screwdriver. The synthetic fiber of the belt can be damaged.

CAUTION: When installing a serpentine accessory drive belt, the belt MUST be routed correctly. The water pump may be rotating in the wrong direction if the belt is installed incorrectly, causing the engine to overheat. Refer to belt routing label in engine compartment, or refer to Belt Schematics in 7, Cooling System.

5. Install generator drive belt. Refer to 7, Cooling System for procedure.
6. Install both negative battery cables to both batteries.

8.3L - SRT-10

1. Install generator.
2. Install lower mounting bolt and nut.
3. Install upper mounting bolt.
4. Tighten bolts to 55 N·m (41 ft. lbs).
5. Connect battery positive cable to generator , and install B+ stud cap..
6. Connect field connector.
7. Install accessory drive belt , refer to Cooling section for more information.
8. Install air cleaner assembly, refer to Engine/air Intake System for more information.
9. Connect negative battery cable, tighten nut to 14.2 N·m (125 in. lbs.).

VOLTAGE REGULATOR

DESCRIPTION

The Electronic Voltage Regulator (EVR) is not a separate component. It is actually a voltage regulating circuit located within the PCM (Powertrain Control Module) (within the ECM for diesel engines). The EVR is not serviced separately. If replacement is necessary, the PCM must be replaced.

OPERATION

The amount of direct current produced by the generator is controlled by EVR circuitry contained within the PCM. This circuitry is connected in series with the generators second rotor field terminal and its ground.

Voltage is regulated by cycling the ground path to control the strength of the rotor magnetic field. The EVR circuitry monitors system line voltage (B+) and battery temperature (refer to Battery Temperature Sensor for more information). It then determines a target charging voltage. If sensed battery voltage is 0.5 volts or lower than the target voltage, the PCM grounds the field winding until sensed battery voltage is 0.5 volts above target voltage. A circuit in the PCM cycles the ground side of the generator field up to 100 times per second (100Hz), but has the capability to ground the field control wire 100% of the time (full field) to achieve the target voltage. If the charging rate cannot be monitored (limp-in), a duty cycle of 25% is used by the PCM in order to have some generator output. Also refer to Charging System Operation for additional information.

STARTING

TABLE OF CONTENTS

	page
STARTING	
DESCRIPTION	52
OPERATION	52
DIAGNOSIS AND TESTING	
STARTING SYSTEM	53
SPECIFICATIONS	
STARTING SYSTEM	58
STARTER - 8.3L - SRT-10	58
TORQUE	59
STARTER MOTOR	
DIAGNOSIS AND TESTING - STARTER MOTOR	59
REMOVAL	
REMOVAL	60
8.3L - SRT-10	63
INSTALLATION	
INSTALLATION	64
8.3L - SRT-10	65
STARTER MOTOR RELAY	
DESCRIPTION	65
OPERATION	65
DIAGNOSIS AND TESTING	
STARTER RELAY	66
REMOVAL	67
INSTALLATION	67

STARTING

DESCRIPTION

The starting system consists of:

- Starter relay
- Starter motor (including an integral starter solenoid)

Other components to be considered as part of starting system are:

- Battery
- Battery cables
- Ignition switch and key lock cylinder
- Clutch pedal position switch (manual transmission)
- Park/neutral position switch (automatic transmission)
- Wire harnesses and connections.

The Battery, Starting, and Charging systems operate in conjunction with one another, and must be tested as a complete system. For correct operation of starting/charging systems, all components used in these 3 systems must perform within specifications. When attempting to diagnose any of these systems, it is important that you keep their interdependency in mind.

The diagnostic procedures used in each of these groups include the most basic conventional diagnostic methods, to the more sophisticated On-Board Diagnostics (OBD) built into the Powertrain Control Module (PCM). Use of an induction-type milliampere ammeter, volt/ohmmeter, battery charger, carbon pile rheostat (load tester), and 12-volt test lamp may be required.

Certain starting system components are monitored by the PCM and may produce a Diagnostic Trouble Code (DTC).

OPERATION

The starting system components form two separate circuits. A high-amperage feed circuit that feeds the starter motor between 150 and 350 amperes (700 amperes - diesel engine), and a low-amperage control circuit that operates on less than 20 amperes. The high-amperage feed circuit components include the battery, the battery cables, the contact disc portion of the starter solenoid, and the starter motor. The low-amperage control circuit components include the ignition switch, the clutch pedal position switch (manual transmission), the park/neutral position switch (automatic transmission), the starter relay, the electromagnetic windings of the starter solenoid, and the connecting wire harness components.

If the vehicle is equipped with a manual transmission, it has a clutch pedal position switch installed in series between the ignition switch and the coil battery terminal of the starter relay. This normally open switch prevents the starter relay from being energized when the ignition switch is turned to the Start position, unless the clutch pedal is depressed. This feature prevents starter motor operation while the clutch disc and the flywheel are engaged. The starter relay coil ground terminal is always grounded on vehicles with a manual transmission.

If the vehicle is equipped with an automatic transmission, battery voltage is supplied through the low-amperage control circuit to the coil battery terminal of the starter relay when the ignition switch is turned to the Start position. The park/neutral position switch is installed in series between the starter relay coil ground terminal and ground. This normally open switch prevents the starter relay from being energized and the starter motor from operating unless the automatic transmission gear selector is in the Neutral or Park positions.

When the starter relay coil is energized, the normally open relay contacts close. The relay contacts connect the relay common feed terminal to the relay normally open terminal. The closed relay contacts energize the starter solenoid coil windings.

The energized solenoid pull-in coil pulls in the solenoid plunger. The solenoid plunger pulls the shift lever in the starter motor. This engages the starter overrunning clutch and pinion gear with the starter ring gear.

As the solenoid plunger reaches the end of its travel, the solenoid contact disc completes the high-amperage starter feed circuit and energizes the solenoid plunger hold-in coil. Current now flows between the solenoid battery terminal and the starter motor, energizing the starter.

Once the engine starts, the overrunning clutch protects the starter motor from damage by allowing the starter pinion gear to spin faster than the pinion shaft. When the ignition switch is released to the On position, the starter relay coil is de-energized. This causes the relay contacts to open. When the relay contacts open, the starter solenoid plunger hold-in coil is de-energized.

When the solenoid plunger hold-in coil is de-energized, the solenoid plunger return spring returns the plunger to its relaxed position. This causes the contact disc to open the starter feed circuit, and the shift lever to disengage the overrunning clutch and pinion gear from the starter ring gear.

DIAGNOSIS AND TESTING

STARTING SYSTEM

The battery, starting, and charging systems operate in conjunction with one another, and must be tested as a complete system. For correct starting/charging system operation, all of the components involved in these 3 systems must perform within specifications.

Starting System Diagnosis		
CONDITION	POSSIBLE CAUSE	CORRECTION
STARTER FAILS TO OPERATE.	1. Battery discharged or faulty.	1. Refer to Battery. Charge or replace battery, if required.
	2. Starting circuit wiring faulty.	2. Refer to 8, Wiring Diagrams. Test and repair starter feed and/or control circuits, if required.
	3. Starter relay faulty.	3. Refer to Starter Relay in Diagnosis and Testing. Replace starter relay if required.
	4. Ignition switch faulty.	4. Refer to Ignition Switch and Key Lock Cylinder. Replace ignition switch if required.
	5. Clutch pedal position switch faulty.	5. Refer to Clutch Pedal Position Switch.
	6. Park/Neutral position switch faulty or misadjusted.	6. Refer to Park/Neutral Position Switch. Replace park/neutral position switch if required.
	7. Starter solenoid faulty.	7. Refer to Starter Motor. Replace starter motor assembly if required.
	8. Starter motor faulty.	8. If all other starting system components and circuits test OK, replace starter motor.

Starting System Diagnosis		
CONDITION	POSSIBLE CAUSE	CORRECTION
STARTER ENGAGES, FAILS TO TURN ENGINE.	1. Battery discharged or faulty.	1. Refer to Battery. Charge or replace battery if required.
	2. Starting circuit wiring faulty.	2. Refer to 8, Wiring Diagrams. Test and repair starter feed and/or control circuits if required.
	3. Starter motor faulty.	3. If all other starting system components and circuits test OK, replace starter motor assembly.
	4. Engine seized.	4. Refer to Engine Diagnosis in the Diagnosis and Testing section of 9, Engine.
STARTER ENGAGES, SPINS OUT BEFORE ENGINE STARTS.	1. Starter ring gear faulty.	1. Refer to Starter Motor Removal and Installation. Remove starter motor to inspect starter ring gear. Replace starter ring gear if required.
	2. Starter motor faulty.	2. If all other starting system components and circuits test OK, replace starter motor assembly.
STARTER DOES NOT DISENGAGE.	1. Starter motor improperly installed.	1. Refer to Starter Motor Removal and Installation. Tighten starter mounting hardware to correct torque specifications.
	2. Starter relay faulty.	2. Refer to Starter Relay Diagnosis and Testing. Replace starter relay if required.
	3. Ignition switch faulty.	3. Refer to Ignition Switch and Key Lock Cylinder. Replace ignition switch if required.
	4. Starter motor faulty.	4. If all other starting system components and circuits test OK, replace starter motor.

INSPECTION

For complete starter wiring circuit diagrams, refer to 8, Wiring Diagrams. Before removing any unit from starting system for repair or diagnosis, perform the following inspections:

WARNING: ON VEHICLES EQUIPPED WITH AIRBAGS, REFER TO 8, PASSIVE RESTRAINT SYSTEMS, BEFORE ATTEMPTING ANY STEERING WHEEL, STEERING COLUMN, OR INSTRUMENT PANEL COMPONENT DIAGNOSIS OR SERVICE. FAILURE TO TAKE THE PROPER PRECAUTIONS COULD RESULT IN ACCIDENTAL AIRBAG DEPLOYMENT AND POSSIBLE PERSONAL INJURY.

- **Battery** - Visually inspect battery for indications of physical damage and loose or corroded cable connections. Determine state-of-charge and cranking capacity of battery. Charge or replace battery if required. Refer to **Battery** in 8, Battery. **Note: If equipped with diesel engine, a dual battery system may be used, and both batteries must be inspected.**
- **Ignition Switch** - Visually inspect ignition switch for indications of physical damage and loose or corroded wire harness connections. Refer to **Ignition Switch and Key Lock Cylinder.**
- **Clutch Pedal Position Switch** - If equipped with manual transmission, visually inspect clutch pedal position switch for indications of physical damage and loose or corroded wire harness connections. Refer to **Clutch Pedal Position Switch** in 6, Clutch.
- **Park/Neutral Position Switch** - If equipped with automatic transmission, visually inspect park/neutral position switch for indications of physical damage and loose or corroded wire harness connections. Refer to **Park/Neutral Position Switch** in 21, Transmission.
- **Starter Relay** - Visually inspect starter relay for indications of physical damage and loose or corroded wire harness connections.
- **Starter Motor** - Visually inspect starter motor for indications of physical damage and loose or corroded wire harness connections.
- **Starter Solenoid** - Visually inspect starter solenoid for indications of physical damage and loose or corroded wire harness connections.
- **Wiring** - Visually inspect wire harnesses for damage. Repair or replace any faulty wiring, as required. Refer to 8, Wiring Diagrams.

TESTING

COLD CRANKING TEST

NOTE: For complete starter wiring circuit diagrams, refer to 8, Wiring Diagrams. The battery must be fully-charged and load-tested before proceeding. Refer to Battery in 8, Battery.

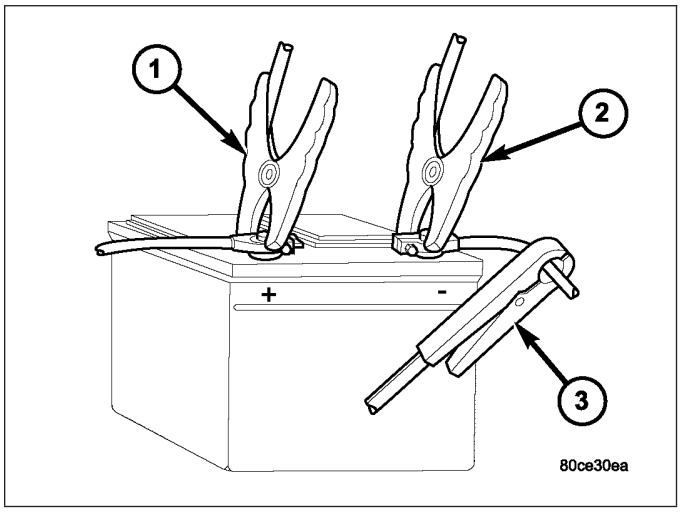

1. Connect volt-ampere tester (1) and (2) to battery terminals. See instructions provided by manufacturer of volt-ampere tester being used. **Note: Certain diesel equipped models use dual batteries. If equipped with dual battery system, tester should be connected to battery on left side of vehicle only. Also, tester current reading must be taken from positive battery cable lead that connects to starter motor.**
2. Fully engage parking brake.
3. If equipped with manual transmission, place gearshift selector lever in Neutral position and block clutch pedal in fully depressed position. If equipped with automatic transmission, place gearshift selector lever in Park position.
4. Verify that all lamps and accessories are turned off.
5. To prevent a gasoline engine from starting, remove Automatic ShutDown (ASD) relay. To prevent a diesel engine from starting, remove Fuel Pump Relay. These relays are located in Power Distribution Center (PDC). Refer to label on PDC cover for relay location.

WARNING: IF EQUIPPED WITH DIESEL ENGINE, ATTEMPT TO START ENGINE A FEW TIMES BEFORE PROCEEDING WITH FOLLOWING STEP.

NOTE: A cold engine will increase starter current (amperage) draw reading, and reduce battery voltage reading.

6. Rotate and hold ignition switch in Start position. Note cranking voltage and current (amperage) draw readings shown on volt-ampere tester.
   a. If voltage reads below 9.6 volts, refer to **Starter Motor** in Diagnosis and Testing. If starter motor is OK, refer to **Engine Diagnosis** in 9, Engine for further testing of engine. If starter motor is not OK, replace faulty starter motor.
   b. If voltage reads above 9.6 volts and current (amperage) draw reads below specifications, refer to **Feed Circuit Test** in this section.
   c. If voltage reads 12.5 volts or greater and starter motor does not turn, refer to **Control Circuit Testing** in this section.
   d. If voltage reads 12.5 volts or greater and starter motor turns very slowly, refer to **Feed Circuit Test** in this section.

FEED CIRCUIT TEST

The starter feed circuit test (voltage drop method) will determine if there is excessive resistance in high-amperage feed circuit. For complete starter wiring circuit diagrams, refer 8, Wiring Diagrams.

When performing these tests, it is important to remember that voltage drop is giving an indication of resistance between two points at which voltmeter probes are attached.

Example: When testing resistance of positive battery cable, touch voltmeter leads to positive battery cable clamp and cable connector at starter solenoid. If you probe positive battery terminal post and cable connector at starter

solenoid, you are reading combined voltage drop in positive battery cable clamp-to-terminal post connection and positive battery cable.

The following operation will require a voltmeter accurate to 1/10 (0.10) volt. Before performing tests, be certain that following procedures are accomplished:

- Battery is fully-charged and load-tested. Refer to **Battery** in 8, Battery.
- Fully engage parking brake.
- If equipped with manual transmission, place gearshift selector lever in Neutral position and block clutch pedal in fully depressed position. If equipped with automatic transmission, place gearshift selector lever in Park position.
- Verify that all lamps and accessories are turned off.
- To prevent a gasoline engine from starting, remove Automatic ShutDown (ASD) relay. To prevent a diesel engine from starting, remove Fuel Pump Relay. These relays are located in Power Distribution Center (PDC). Refer to label on PDC cover for relay location.

1. Connect positive lead of voltmeter (1) to negative battery cable terminal post. Connect negative lead of voltmeter to negative battery cable clamp. Rotate and hold ignition switch in Start position. Observe voltmeter. If voltage is detected, correct poor contact between cable clamp and terminal post. **Note: Certain diesel equipped models use dual batteries. If equipped with dual battery system, procedure must be performed twice, once for each battery.**

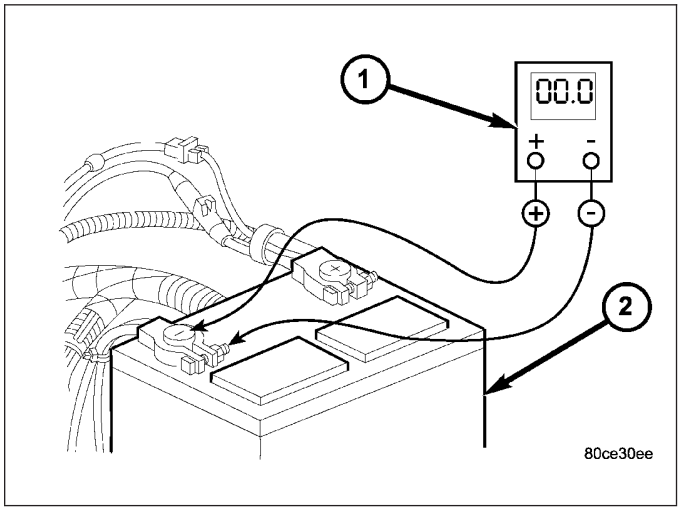

2. Connect positive lead of voltmeter to positive battery terminal post. Connect negative lead of voltmeter to battery positive cable clamp. Rotate and hold ignition switch in Start position. Observe voltmeter. If voltage is detected, correct poor contact between cable clamp and terminal post. **Note: Certain diesel equipped models use dual batteries. If equipped with dual battery system, this procedure must be performed twice, once for each battery.**

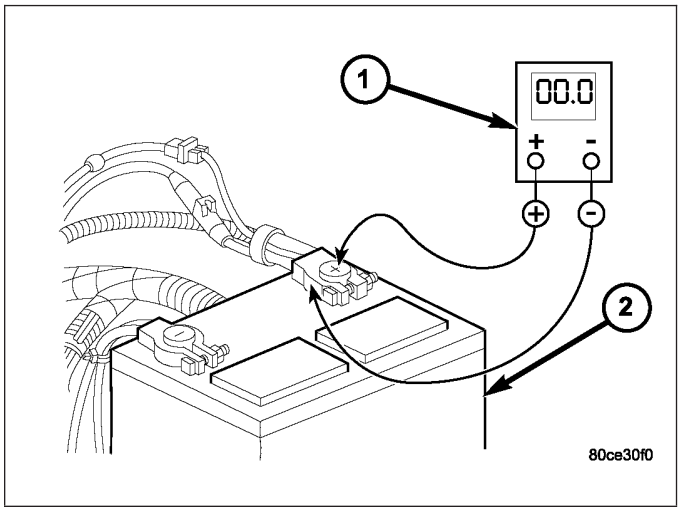

3. Connect voltmeter to measure between battery positive terminal post and starter solenoid battery terminal stud. Rotate and hold ignition switch in Start position. Observe voltmeter. If reading is above 0.2 volt, clean and tighten battery cable connection at solenoid. Repeat test. If reading is still above 0.2 volt, replace faulty positive battery cable. **Note: Certain diesel equipped models use dual batteries. If equipped with dual battery system, this procedure must be performed on driver side battery only.**

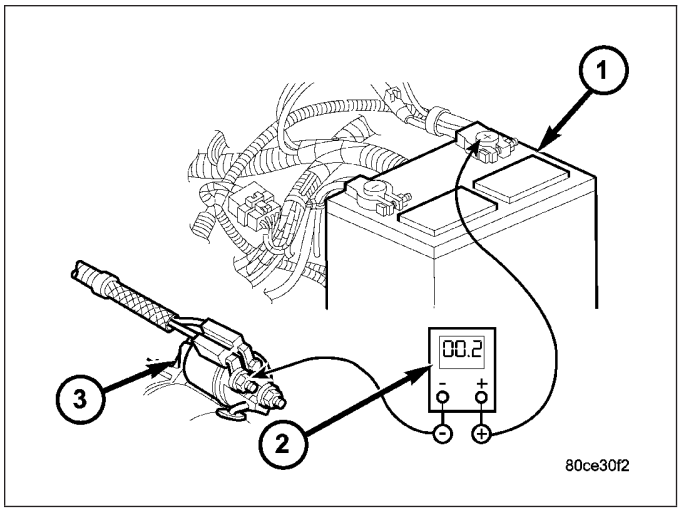

4. Connect voltmeter to measure between negative battery terminal post and a good clean ground on engine block. Rotate and hold ignition switch in Start position. Observe voltmeter. If reading is above 0.2 volt, clean and tighten negative battery cable attachment on engine block. Repeat test. If reading is still above 0.2 volt, replace faulty negative battery cable. **Note: Certain diesel equipped models use dual batteries. If equipped with dual battery system, this procedure must be performed twice, once for each battery.**

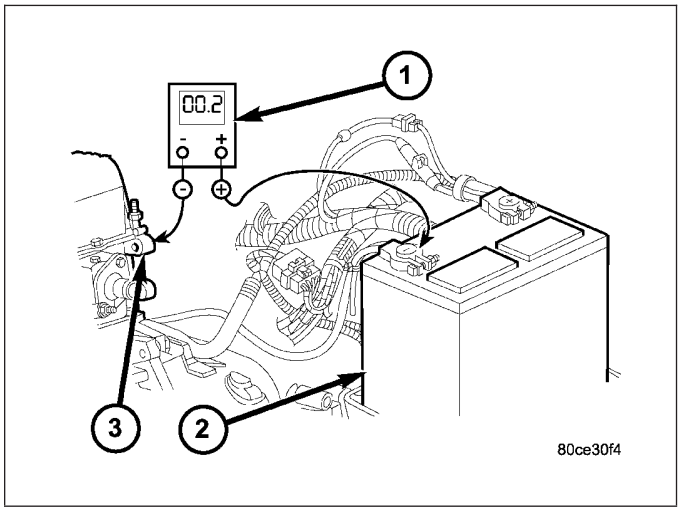

5. Connect positive lead of voltmeter to starter housing. Connect negative lead of voltmeter to negative battery terminal post. Rotate and hold ignition switch in Start position. Observe voltmeter. If reading is above 0.2 volt, correct poor starter to engine block ground contact. **Note: Certain diesel equipped models use dual batteries. If equipped with dual battery system, this procedure must be performed on driver side battery only.**
6. If equipped with dual battery system (certain diesel equipped models), connect positive lead of voltmeter to positive battery cable clamp on battery located on left side of vehicle. Connect negative lead of voltmeter to positive battery terminal post on battery located on right side of vehicle. Rotate and hold ignition switch in Start position. Observe voltmeter. If reading is above 0.2 volt, clean and tighten battery cables at both batteries. Repeat test. If reading is still above 0.2 volt, replace faulty positive battery cable.

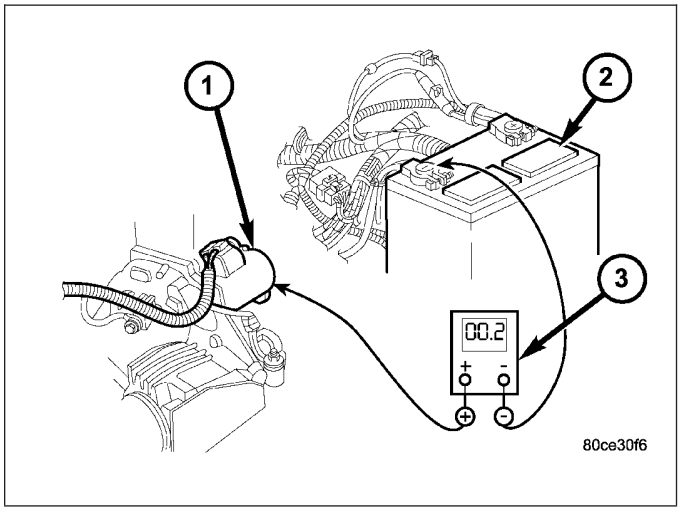

If resistance tests detect no feed circuit problems, refer to **Starter Motor** in the Diagnosis and Testing.

CONTROL CIRCUIT TESTING

The starter control circuit components should be tested in the order in which they are listed, as follows:

- **Starter Relay** - Refer to **Starter Relay** Diagnosis and Testing.
- **Starter Solenoid** - Refer to **Starter Motor** Diagnosis and Testing.
- **Ignition Switch** - Refer to **Ignition Switch and Key Lock Cylinder**
- **Clutch Pedal Position Switch** - If equipped with manual transmission, refer to **Clutch Pedal Position Switch** in 6, Clutch.
- **Park/Neutral Position Switch** - If equipped with automatic transmission, refer to **Park/Neutral Position Switch** in 21, Transmission.
- **Wire harnesses and connections** - Refer to 8, Wiring Diagrams.

SPECIFICATIONS

STARTING SYSTEM

Starter Motor and Solenoid		
Manufacturer	Denso	Denso
Part Number	56028715AD	4741012
Engine Application	3.7L / 4.7L / 5.7L	5.9L Diesel
Power Rating	1.4 Kilowatt / 1.9 Horsepower	2.7 Kilowatt / 3.6 Horsepower
Voltage	12 Volts	12 Volts
Number of Brushes	4	4
Drive Type	Gear Reduction	Conventional
Free Running Test Voltage	11 Volts	11 Volts
Free Running Test Amperage Draw	73 Amperes	200 Amperes
Free Running Test Minimum Speed	3601 rpm	3000
Solenoid Closing Maximum Voltage Required	7.5 Volts	8.0 Volts
* Cranking Amperage Draw Test	125 - 250 Amperes	450 - 700 Amperes
* Test at operating temperature. Cold engine, tight (new) engine, or heavy oil will increase starter amperage draw.		

STARTER - 8.3L - SRT-10

Engine Application	8.3L (V 10)
Power rating	2.0 Kw
Voltage	12 VOLTS
No. of Fields	4
No. of Poles	4
Brushes	4
Drive	Offset Reduction Gear
Cranking Amperage Draw test	150 - 280 Amps.

Engine should be up to operating temperature. Extremely heavy oil or tight engine will increase starter amperage draw.

TORQUE

DESCRIPTION	N·m	Ft. Lbs.	In. Lbs.
Battery Cable Eyelet Nut at Solenoid (large nut - gas engines)	25	19	221
Battery Cable Eyelet Nut at Solenoid (large nut - diesel engine)	14	-	120
Starter Solenoid Nut (small nut - diesel engine)	6	-	55
Starter Mounting Bolts - Gas Engines	68	50	-
Starter Mounting Nut - Gas Engines	68	50	-
Starter Mounting Bolts - Diesel	43	32	-
Starter Mounting Bolts 8.3L	40	30	-
Starter Battery Cable Nut 8.3L	10	-	90

STARTER MOTOR

DIAGNOSIS AND TESTING - STARTER MOTOR

Correct starter motor operation can be confirmed by performing the following free running bench test. This test can only be performed with starter motor removed from vehicle. Refer to Specifications for starter motor specifications.

1. Remove starter motor from vehicle. Refer to Starter Motor Removal and Installation.
2. Mount starter motor securely in a soft-jawed bench vise. The vise jaws should be clamped on the mounting flange of starter motor. Never clamp on starter motor by field frame.
3. Connect a suitable volt-ampere tester and a 12-volt battery to starter motor in series, and set ammeter to 100 ampere scale. See instructions provided by manufacturer of volt-ampere tester being used.
4. Install jumper wire from solenoid terminal to solenoid battery terminal. The starter motor should operate. If starter motor fails to operate, replace faulty starter motor assembly.
5. Adjust carbon pile load of tester to obtain free running test voltage. Refer to Specifications for starter motor free running test voltage specifications.
6. Note reading on ammeter and compare reading to free running test maximum amperage draw. Refer to Specifications for starter motor free running test maximum amperage draw specifications.
7. If ammeter reading exceeds maximum amperage draw specification, replace faulty starter motor assembly.

STARTER SOLENOID

This test can only be performed with starter motor removed from vehicle.

1. Remove starter motor from vehicle. Refer to Starter Motor Removal and Installation.

2. Disconnect wire from solenoid field coil terminal.
3. Check for continuity between solenoid terminal and solenoid field coil terminal with a continuity tester (1). There should be continuity. If OK, go to Step 4. If not OK, replace faulty starter motor assembly.

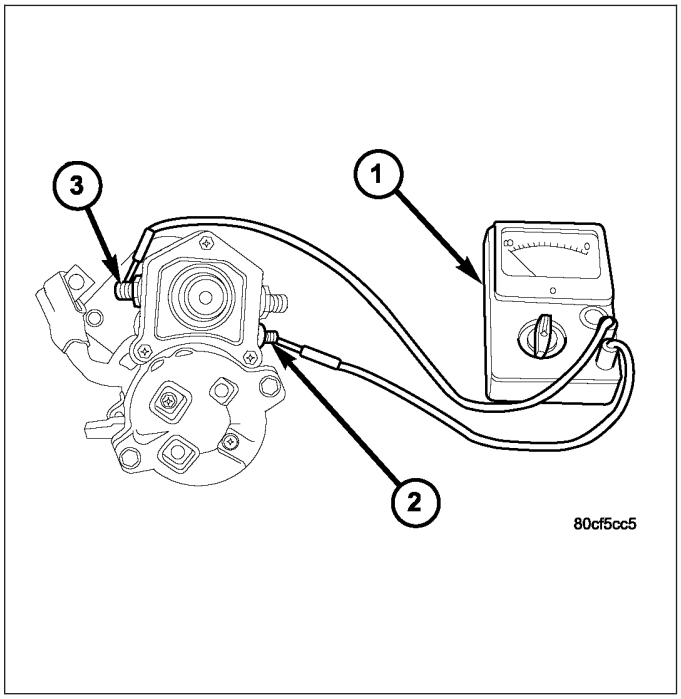

4. Check for continuity (2) between solenoid terminal and solenoid case. There should be continuity. If not OK, replace faulty starter motor assembly.

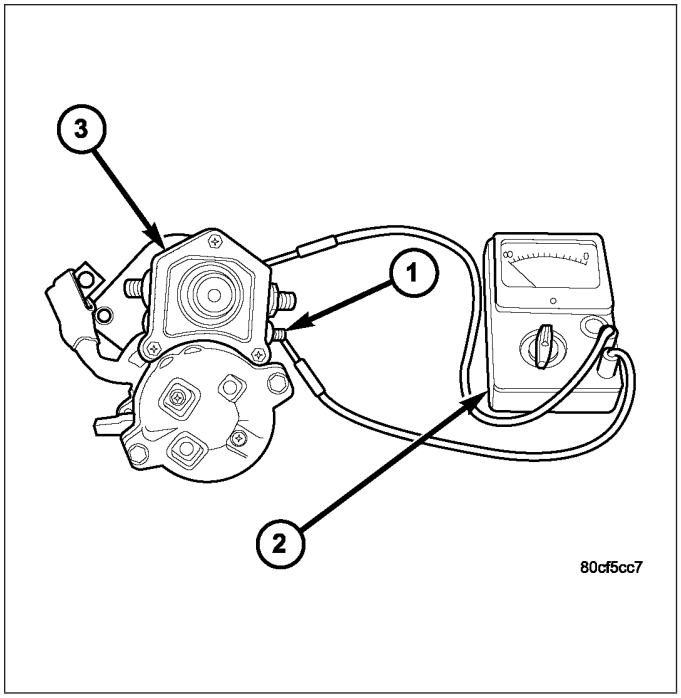

REMOVAL

REMOVAL

3.7L / 4.7L

1. Disconnect and isolate negative battery cable.
2. Raise and support vehicle.

3. Note: If equipped with 4WD and certain transmissions, a support bracket is used between front axle and side of transmission. Remove 2 support bracket bolts at transmission. Pry support bracket slightly to gain access to lower starter mounting bolt.
4. Remove 1 bolt and 1 nut if equipped with a manual transmission.

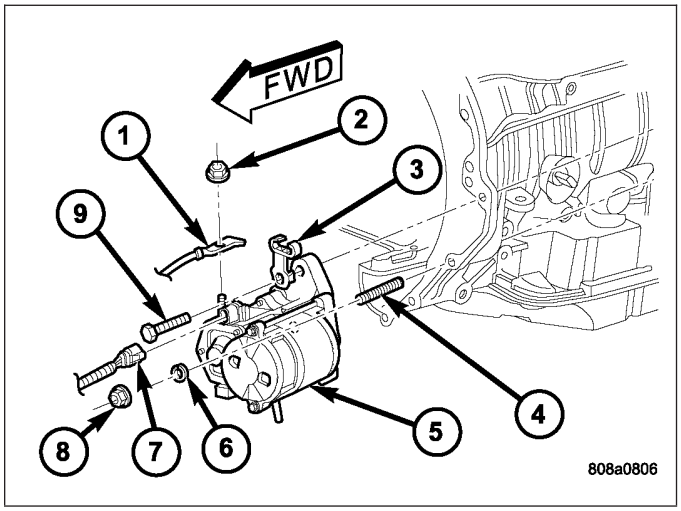

5. Remove 2 bolts if equipped with an automatic transmission.

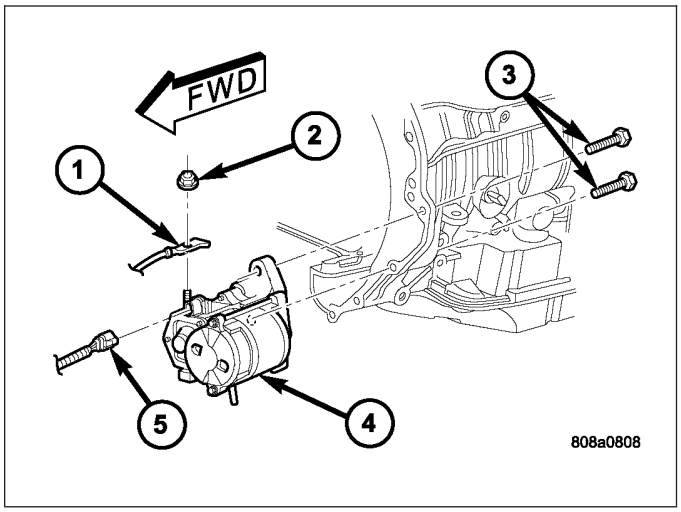

6. Move starter motor towards front of vehicle far enough for nose of starter pinion housing to clear housing. Always support starter motor during this process, do not let starter motor hang from wire harness.
7. Tilt nose downwards and lower starter motor far enough to access and remove nut that secures battery positive cable wire harness connector eyelet to solenoid battery terminal stud. Do not let starter motor hang from wire harness.
8. Remove battery positive cable wire harness connector eyelet from solenoid battery terminal stud.
9. Disconnect battery positive cable wire harness connector from solenoid terminal connector receptacle.
10. Remove starter motor.

5.7L Gas

1. Disconnect and isolate negative battery cable.
2. Raise and support vehicle.
3. Note: If equipped with 4WD and certain transmissions, a support bracket is used between front axle and side of transmission. Remove 2 support bracket bolts at transmission. Pry support bracket slightly to gain access to lower starter mounting bolt.

4. Remove 2 mounting bolts.
5. Move starter motor towards front of vehicle far enough for nose of starter pinion housing to clear housing. Always support starter motor during this process, do not let starter motor hang from wire harness.
6. Tilt nose downwards and lower starter motor far enough to access and remove nut that secures battery positive cable wire harness connector eyelet to solenoid battery terminal stud. Do not let starter motor hang from wire harness.
7. Remove battery positive cable wire harness connector eyelet from solenoid battery terminal stud.
8. Disconnect battery positive cable wire harness connector from solenoid terminal connector receptacle.
9. Remove starter motor.

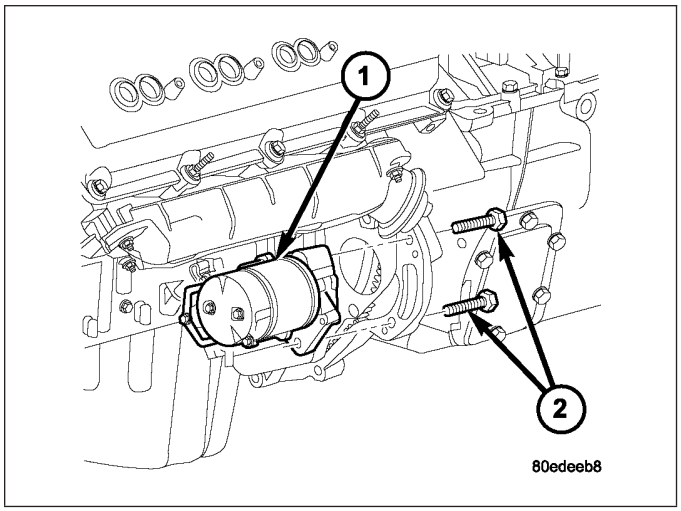

5.9L Diesel

1. Disconnect and isolate both negative battery cables at both batteries.
2. Raise and support vehicle.
3. Remove 3 starter mounting bolts.

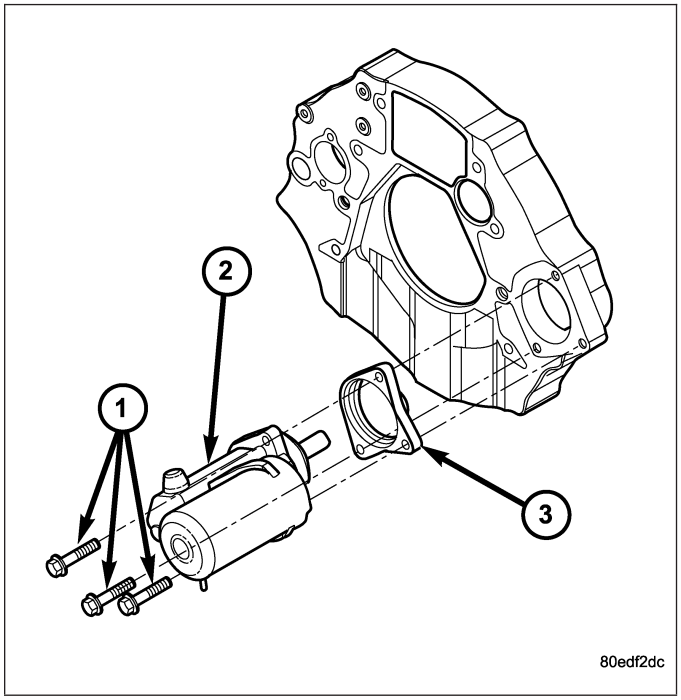

4. Move starter motor towards front of vehicle far enough for nose of starter pinion housing to clear housing. Always support starter motor during this process. Do not let starter motor hang from wire harness.
5. Tilt nose downwards and lower starter motor far enough to access and remove nuts securing starter wiring harness to starter. Do not let starter motor hang from wire harness.

6. Remove starter motor from engine. Note: Certain diesel engines use an aluminum spacer. Note position and orientation of spacer before removal.

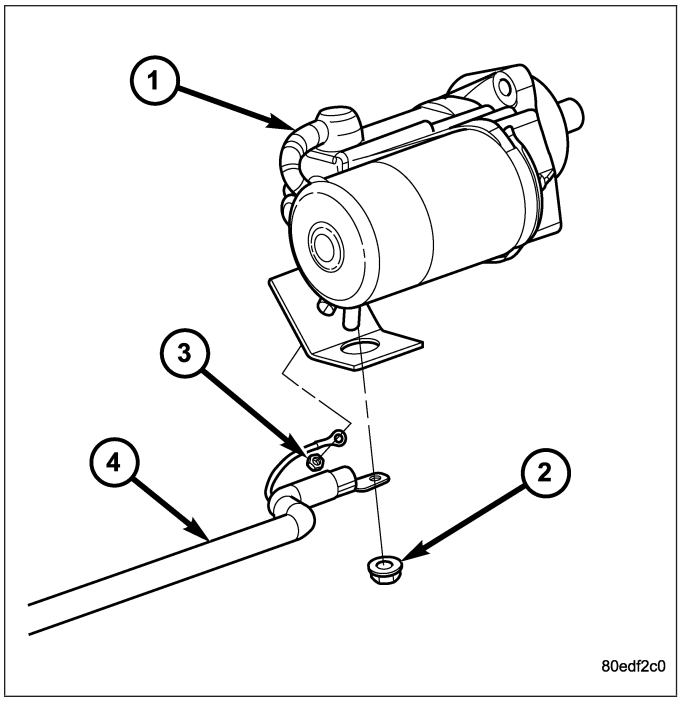

8.3L - SRT-10

1. Disconnect the negative battery cable.
2. Raise vehicle and support.

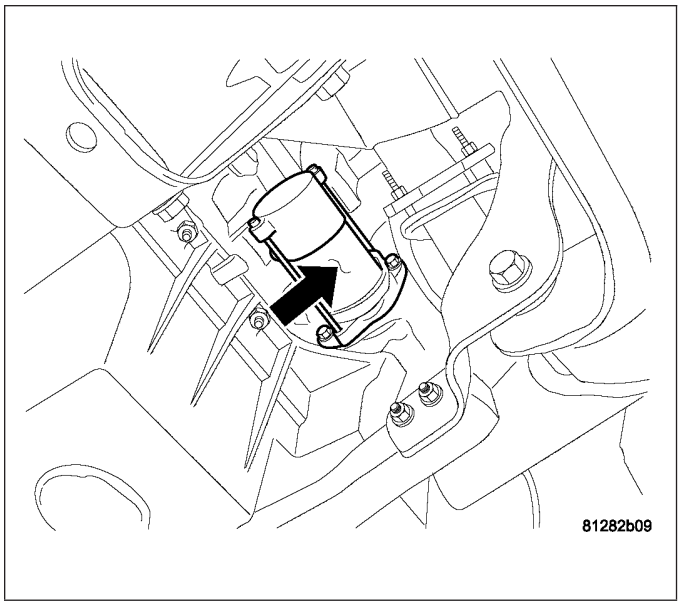

3. Disconnect the solenoid connector.
4. Remove the positive battery cable.

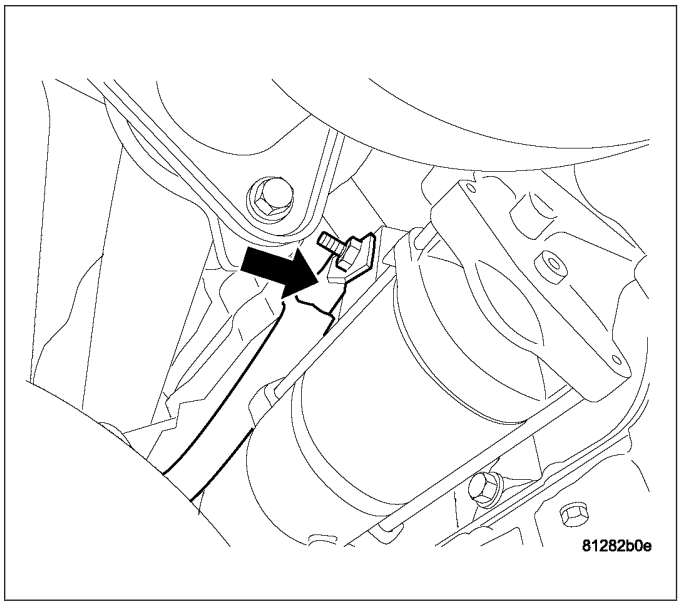

5. Remove the upper bolt.

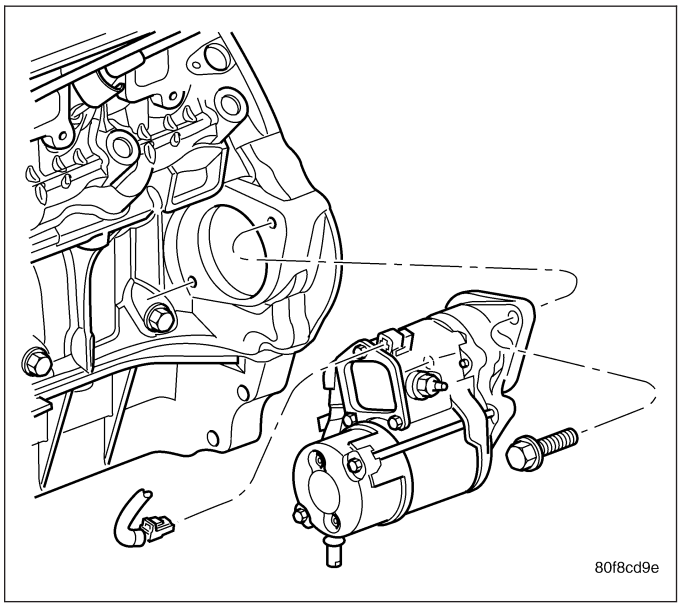

6. Remove the lower bolt.
7. Remove the starter.

INSTALLATION

INSTALLATION

3.7L / 4.7L

1. Connect solenoid wire to starter motor (snaps on).
2. Position battery cable to solenoid stud. Install and tighten battery cable eyelet nut. Refer to Torque Specifications. Do not allow starter motor to hang from wire harness.
3. Position starter motor to transmission.
4. If equipped with automatic transmission, slide cooler tube bracket into position.
5. Install and tighten both bolts (auto. trans.), or 1 nut and 1 bolt (man. trans.). Refer to Torque Specifications.
6. Lower vehicle.
7. Connect negative battery cable.

5.7L

1. Connect solenoid wire to starter motor (snaps on).
2. Position battery cable to solenoid stud. Install and tighten battery cable eyelet nut. Refer to Torque Specifications. Do not allow starter motor to hang from wire harness.
3. Position starter motor to engine.
4. If equipped with automatic transmission, slide cooler tube bracket into position.
5. Install and tighten both mounting bolts. Refer to Torque Specifications.
6. Lower vehicle.
7. Connect negative battery cable.

5.9L Diesel

1. **If Equipped:** Position and hold aluminum spacer to rear of starter while positioning starter to engine.
2. Connect solenoid wire to starter motor. Tighten nut.
3. Position battery cable to starter stud. Install and tighten battery cable nut. Refer to Torque Specifications. Do not allow starter motor to hang from wire harness.
4. Position starter motor to transmission.
5. If equipped with automatic transmission, slide cooler tube bracket into position.
6. Install and tighten 3 starter mounting bolts. Refer to Torque Specifications.
7. Lower vehicle.
8. Connect both negative battery cables to both batteries.

8.3L - SRT-10

1. Install starter.
2. Install lower bolt.
3. Install upper bolt.
4. Install positive battery cable.
5. Connect solenoid connector.
6. Lower vehicle.
7. Connect negative battery cable.

STARTER MOTOR RELAY

DESCRIPTION

The starter relay is an electromechanical device that switches battery current to the pull-in coil of the starter solenoid when ignition switch is turned to Start position. The starter relay is located in the Power Distribution Center (PDC) in the engine compartment. See PDC cover for relay identification and location.

The starter relay is a International Standards Organization (ISO) relay. Relays conforming to ISO specifications have common physical dimensions, current capacities, terminal patterns, and terminal functions.

The starter relay cannot be repaired or adjusted. If faulty or damaged, it must be replaced.

OPERATION

The ISO relay consists of an electromagnetic coil, a resistor or diode, and three (two fixed and one movable) electrical contacts. The movable (common feed) relay contact is held against one of the fixed contacts (normally closed) by spring pressure. When electromagnetic coil is energized, it draws the movable contact away from normally closed fixed contact, and holds it against the other (normally open) fixed contact.

When electromagnetic coil is de-energized, spring pressure returns movable contact to normally closed position. The resistor or diode is connected in parallel with electromagnetic coil within relay, and helps to dissipate voltage spikes produced when coil is de-energized.

DIAGNOSIS AND TESTING

STARTER RELAY

The starter relay is located in Power Distribution Center (PDC). Refer to PDC cover for relay identification and location. For complete starter relay wiring circuit diagrams, refer to 8, Wiring Diagrams.

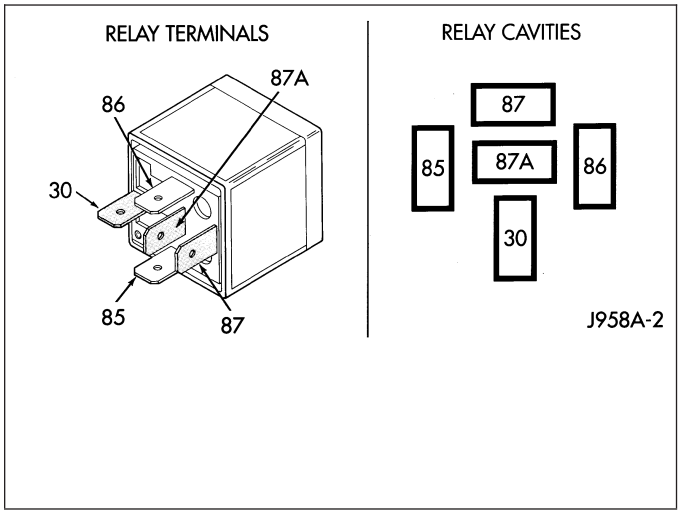

1. Remove starter relay from PDC.
2. A relay in de-energized position should have continuity between terminals 87A and 30, and no continuity between terminals 87 and 30. If OK, go to Step 3. If not OK, replace faulty relay.
3. Resistance between terminals 85 and 86 (electromagnet) should be 75 ± 5 ohms. If OK, go to Step 4. If not OK, replace faulty relay.
4. Connect 12V battery to terminals 85 and 86. There should now be continuity between terminals 30 and 87, and no continuity between terminals 87A and 30. If OK, perform Relay Circuit Test that follows. If not OK, replace faulty relay.

RELAY CIRCUIT TEST

1. The relay common feed terminal cavity (30) is connected to battery voltage and should be hot at all times. If OK, go to Step 2. If not OK, repair open circuit to fuse in PDC as required.
2. The relay normally closed terminal (87A) is connected to terminal 30 in the de-energized position, but is not used for this application. Go to Step 3.
3. The relay normally open terminal (87) is connected to common feed terminal (30) in the energized position. This terminal supplies battery voltage to starter solenoid field coils. There should be continuity between cavity for relay terminal 87 and starter solenoid terminal at all times. If OK, go to Step 4. If not OK, repair open circuit to starter solenoid as required.
4. The coil battery terminal (86) is connected to electromagnet in relay. It is energized when ignition switch is held in Start position. On vehicles with manual transmission, clutch pedal must be fully depressed for this test. Check for battery voltage at cavity for relay terminal 86 with ignition switch in Start position, and no voltage when ignition switch is released to On position. If OK, go to Step 5. If not OK with automatic transmission, check for open or short circuit to ignition switch and repair, if required. If circuit to ignition switch is OK, refer to **Ignition Switch and Key Lock Cylinder**. If not OK with a manual transmission, check circuit between relay and clutch pedal position switch for open or a short. If circuit is OK, refer to **Clutch Pedal Position Switch** in 6 , Clutch.
5. The coil ground terminal (85) is connected to the electromagnet in the relay. On vehicles with manual transmission, it is grounded at all times. On vehicles with automatic transmission, it is grounded through park/neutral position switch only when gearshift selector lever is in Park or Neutral positions. Check for continuity to ground at cavity for relay terminal 85. If not OK with manual transmission, repair circuit to ground as required. If not OK with automatic transmission, check for pen or short circuit to park/neutral position switch and repair, if required. If circuit to park/neutral position switch is OK, refer to **Park/Neutral Position Switch** in 21, Transmission.

REMOVAL

The starter relay is located in the Power Distribution Center (PDC). Refer to label on PDC cover for relay location.

1. Disconnect and isolate negative battery cable.
2. Remove cover (2) from Power Distribution Center (PDC) for relay identification and location.
3. Remove starter relay from PDC.
4. Check condition of relay terminals and PDC connector terminals for damage or corrosion. Repair if necessary before installing relay.
5. Check for pin height (pin height should be the same for all terminals within the PDC connector). Repair if necessary before installing relay.

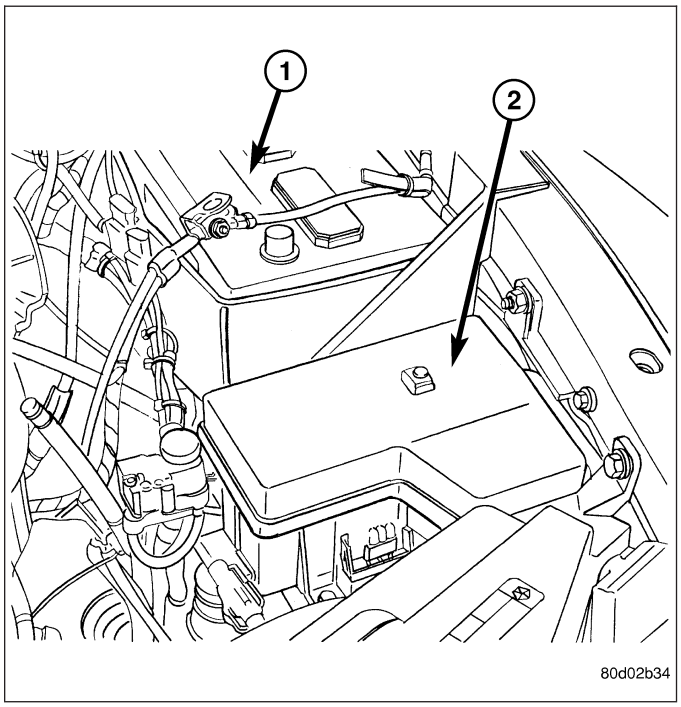

INSTALLATION

1. Push down firmly on starter relay until terminals are fully seated into PDC receptacle.
2. Install PDC cover.
3. Connect battery cable.

HEATED SYSTEMS

TABLE OF CONTENTS

page

HEATED GLASS - ELECTRICAL DIAGNOSTICS . . . 1
HEATED GLASS - SERVICE INFORMATION 6
HEATED MIRRORS - SERVICE INFORMATION . . 13
HEATED SEATS - SERVICE INFORMATION 17

HEATED GLASS - ELECTRICAL DIAGNOSTICS

TABLE OF CONTENTS

page

HEATED GLASS - ELECTRICAL DIAGNOSTICS
DIAGNOSIS AND TESTING
DEFOG RELAY CONTROL CKT SHORTED TO BATT 2
SCHEMATICS AND DIAGRAMS 5

HEATED GLASS - ELECTRICAL DIAGNOSTICS

DIAGNOSIS AND TESTING

DEFOG RELAY CONTROL CKT SHORTED TO BATT

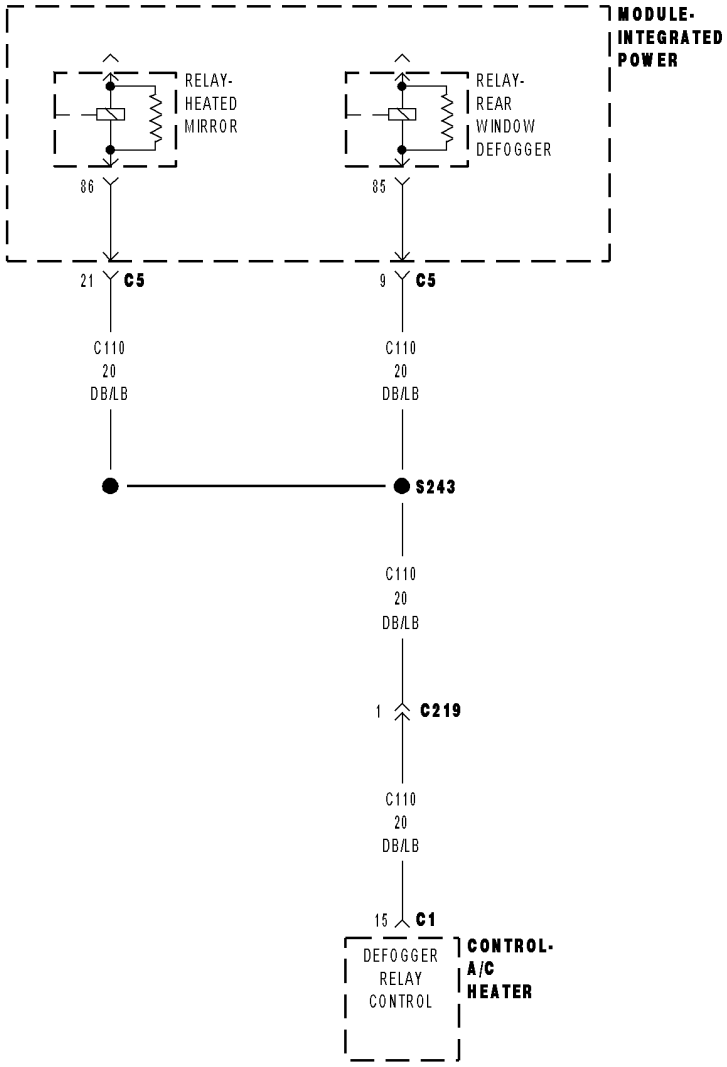

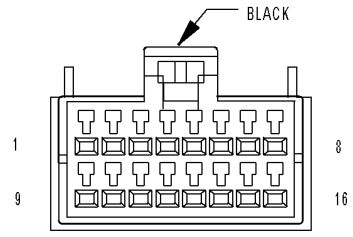

CONTROL-A/C-
HEATER C1

81f73d5

DEFOG RELAY CONTROL CKT SHORTED TO BATT (CONTINUED)

For the Heated Mirror/Rear Defogger circuit diagram **(Refer to 8 - ELECTRICAL/HEATED GLASS - SCHEMATICS AND DIAGRAMS)** .

For a complete wiring diagram **Refer to Section 8W**.

- **When Monitored:**
  With the Ignition on and the EBL (Rear Defogger) switch depressed.
- **Set Condition:**
  This DTC will set if the A/C Heater Control senses excessive current on the (C110) Defogger Relay Control circuit.

Possible Causes
HVAC DTCS
RELAY SHORTED
(C110) DEFOGGER RELAY CONTROL CIRCUIT SHORTED TO BATTERY
A/C HEATER CONTROL SHORTED TO BATTERY
INTEGRATED POWER MODULE

Diagnostic Test

1. CHECK FOR HVAC DTC'S

Turn the ignition on.
With the DRBIII®, record and erase DTCs.
Depress the EBL Switch on the A/C Heater Control.
With the DRBIII®, read the active DTCs.

Does the DRBIII® display DEFOG RELAY CONTROL CKT SHORTED TO BATT?

Yes >> Go To 2

No >> Using the wiring diagram/schematic as a guide, inspect the wiring and connectors. Refer to any Hotline letters or Technical Service Bulletins that may apply.
Perform BODY VERIFICATION TEST - VER 1. (Refer to BODY VERIFICATION TEST - VER 1).

---

2. CHECK THE RELAY FOR A SHORT TO BATTERY

Turn the ignition off.
One at a time remove and install a known good relay in place of the Heated Mirror Relay and then the EBL relay if equipped.

NOTE: Do the following steps for each relay.
Turn the ignition on.
With the DRBIII®, record and erase DTCs.
Depress the EBL Switch on the A/C Heater Control.
With the DRBIII®, read the active DTCs.

Does the DRBIII® display DEFOG RELAY CONTROL CKT SHORTED TO BATT?

Yes >> Go To 3

No >> Replace the Relay that set the DTC.
Perform BODY VERIFICATION TEST - VER 1. (Refer to BODY VERIFICATION TEST - VER 1).

DEFOG RELAY CONTROL CKT SHORTED TO BATT (CONTINUED)

3. CHECK FOR A SHORTED A/C HEATER CONTROL

Turn the ignition off.

Remove the Heated Mirror Relay and the EBL relay if equipped from the Integrated Power Module.

Disconnect the A/C Heater Control C1 harness connector.

Turn the ignition on.

Measure the voltage of the (C110) Defogger Relay Control circuit at the A/C Heater Control C1 harness connector.

Is there any voltage present?

Yes >> Go To 4

No >> Replace the A/C Heater Control in accordance with the Service Information.

Perform BODY VERIFICATION TEST - VER 1. (Refer to BODY VERIFICATION TEST - VER 1).

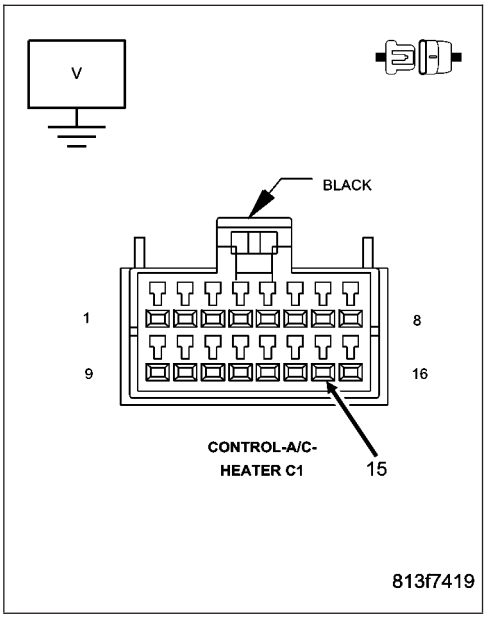

4. CHECK THE (C110) DEFOGGER RELAY CONTROL CIRCUIT FOR A SHORT TO BATTERY

Turn the ignition off.

Disconnect the Integrated Power Module C5 harness connector.

Turn the ignition on.

Measure the voltage of the (C110) Defogger Relay Control circuit at the A/C Heater Control C1 harness connector.

Is there any voltage present?

Yes >> Repair the (C110) Defogger Relay Control circuit for a short to battery.

Perform BODY VERIFICATION TEST - VER 1. (Refer to BODY VERIFICATION TEST - VER 1).

No >> Replace the Integrated Power Module in accordance with the Service Information.

Perform BODY VERIFICATION TEST - VER 1. (Refer to BODY VERIFICATION TEST - VER 1).

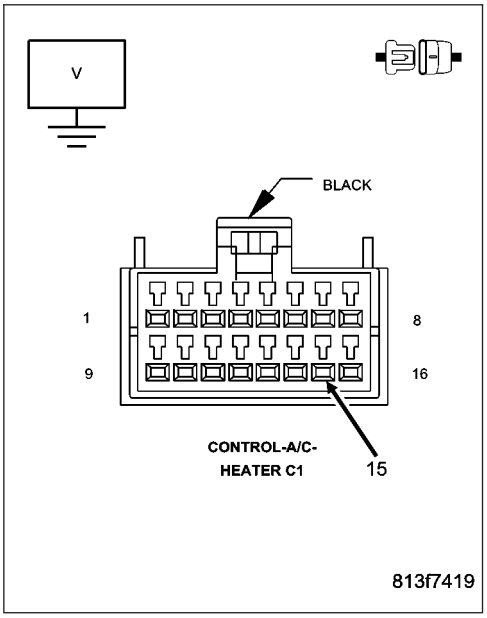

SCHEMATICS AND DIAGRAMS

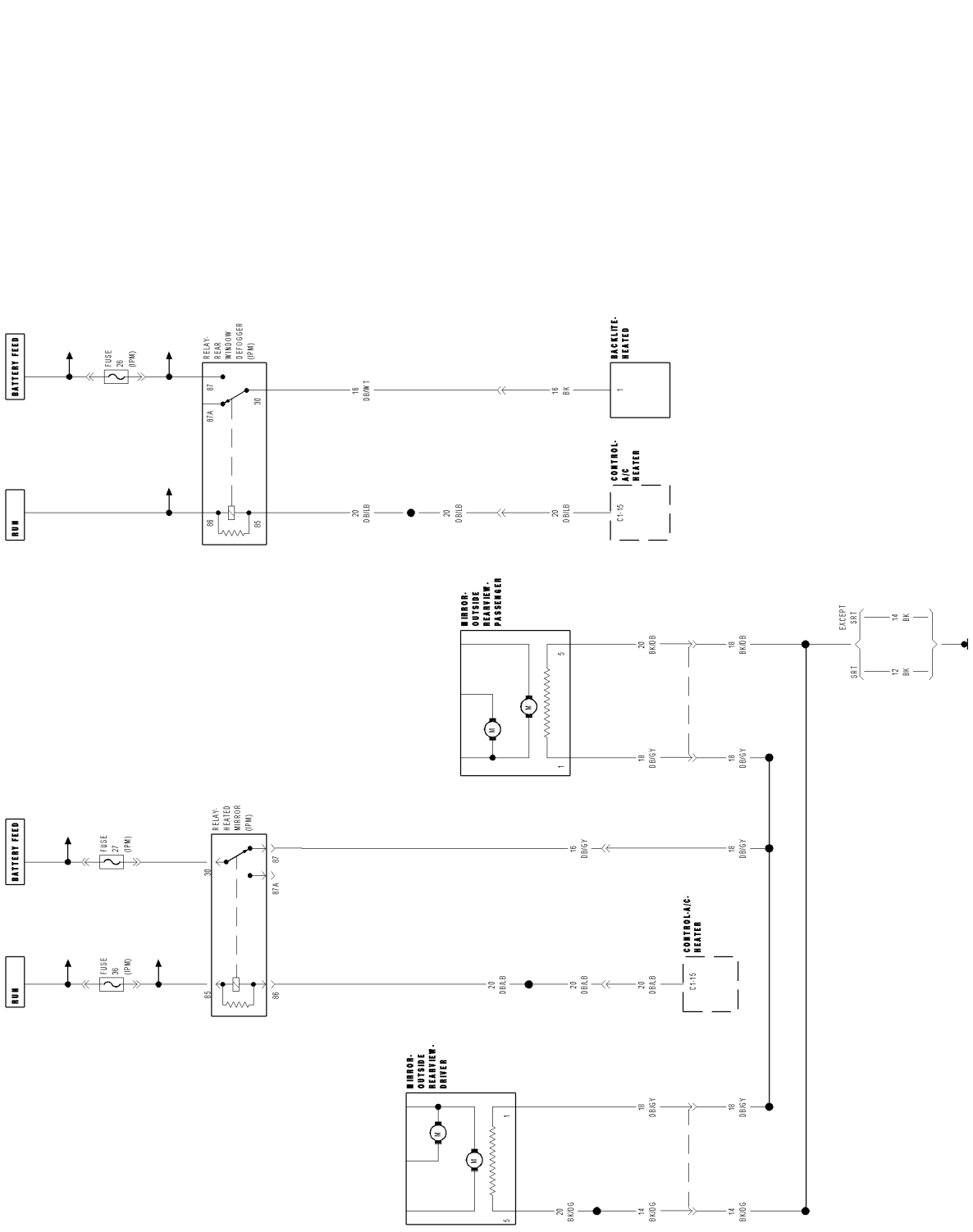

HEATED GLASS - SERVICE INFORMATION

TABLE OF CONTENTS

page

HEATED GLASS - SERVICE INFORMATION
DESCRIPTION 6
OPERATION 7
DIAGNOSIS AND TESTING
ELECTRIC BACKLIGHT (EBL) AND HEATED MIRROR SYSTEM 7
SWITCH-REAR WINDOW DEFOGGER
DESCRIPTION 9
OPERATION 9

page

RELAY-REAR WINDOW DEFOGGER
DESCRIPTION 10
OPERATION 10
REMOVAL 11
INSTALLATION 11
GRID-REAR WINDOW DEFOGGER
STANDARD PROCEDURE
GRID LINE AND TERMINAL REPAIR 12

HEATED GLASS - SERVICE INFORMATION

DESCRIPTION

CAUTION: Grid lines can be damaged or scraped off with sharp instruments. Care should be taken in cleaning glass or removing foreign materials, decals or stickers. Normal glass cleaning solvents or hot water used with rags or toweling is recommended.

The rear window defogger system, also known as electric backlight (EBL), consists of two vertical bus bars (1) linked by a series of grid lines (2) fired onto the inside surface of the rear window (3).

The EBL system is turned On or Off by a switch and a timing circuit integral to the A/C-heater control located at the center of the instrument panel.

Circuit protection is provided by two cartridge fuses located in the integrated power module (IPM). One fuse is for the control circuit and the other fuse is for the heated grid circuit.

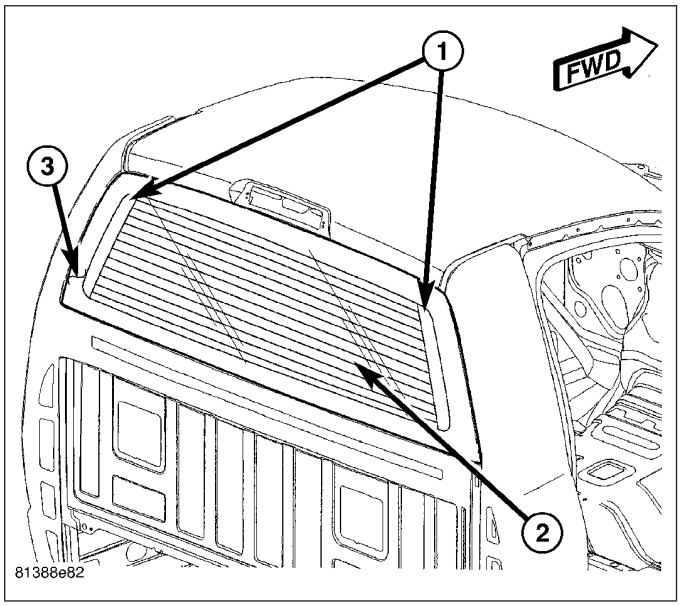

OPERATION

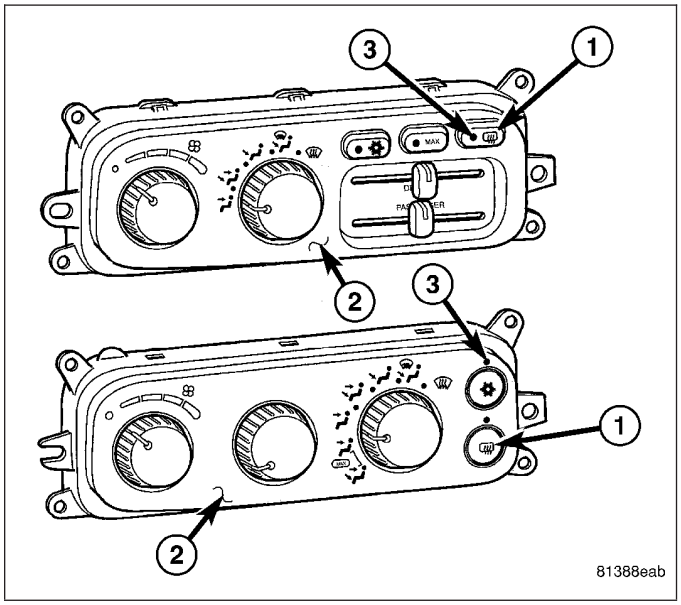

The electric backlight (EBL) system is controlled by a momentary switch (1) located in the A/C-heater control (2) on the instrument panel. When the rear window defogger switch is pressed to the On position, the A/C-heater control energizes the rear window defogger (EBL) relay and the heated mirror relay, which then directs battery current to the rear defogger grid lines and to the heated side view mirrors. The grid lines heat the glass to help clear the rear window and side mirror surfaces of fog or frost.

An amber indicator (3) in the rear window defogger switch will illuminate to indicate when the EBL system is turned on. The A/C-heater control contains the EBL system control circuitry including the timer logic.

NOTE: The EBL system turns off automatically after approximately ten minutes of operation.

The EBL system will be automatically turned off after a programmed time interval of about ten minutes each time the rear window defogger switch is pressed. The EBL system will automatically shut off if the ignition switch is turned to the Off position, or it can be turned off manually by pressing the rear window defogger switch a second time.

Repair of the rear window defogger grid lines, bus bars, terminals or pigtail wires can be accomplished using the Mopar Rear Window Defogger Repair Kit (Part Number 04549275) or equivalent (Refer to 8 - ELECTRICAL/ HEATED GLASS/REAR WINDOW DEFOGGER GRID - STANDARD PROCEDURE - GRID LINE AND TERMINAL REPAIR).

DIAGNOSIS AND TESTING

ELECTRIC BACKLIGHT (EBL) AND HEATED MIRROR SYSTEM

NOTE: Illumination of the defogger switch indicator lamp does not necessary mean that electrical current is reaching the rear window glass and/or the outside rear view mirror heating grids.

NOTE: For circuit descriptions and diagrams of the rear window defogger (EBL) and heated mirror systems, refer to 8W - WIRING DIAGRAM INFORMATION.

Operation of the electrical backlight (EBL) and heated mirror systems can be confirmed by the following:

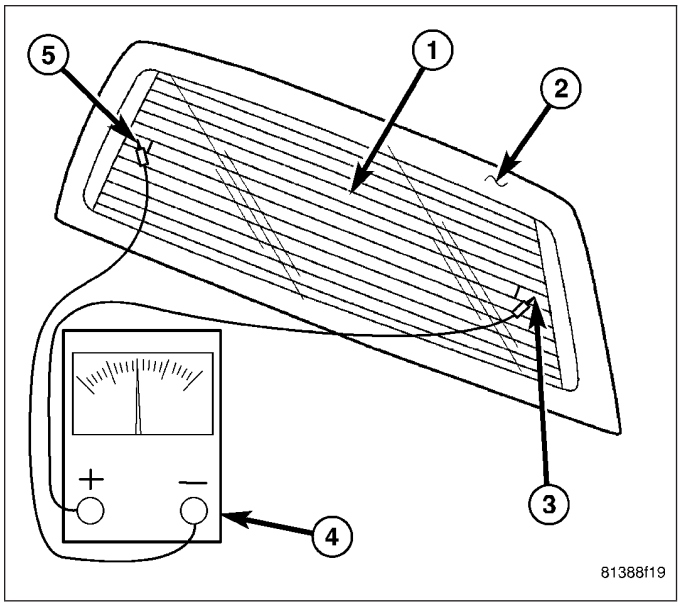

1. Use a scan tool and check for diagnostic trouble codes (DTCs) related to the A/C-heater control. If no DTCs are found, go to Step 2. If any DTCs are found, repair as required, then proceed to Step 2
2. Turn the ignition switch to the On position. Set the rear window defogger switch in the On position. The rear window defogger and heated outside rear view mirror operation can be checked by feeling the glass surfaces of the rear window or outside rear view mirrors. A distinct difference in temperature between the grid lines (1) and the adjacent clear glass (2) or the mirror glass should be detected within three to four minutes of operation.
3. If a rear window glass temperature difference is not detected, use a 12-volt DC voltmeter (4) and contact the rear glass heating grid power feed terminal A (3) with the positive lead, and the ground terminal B (5) with the negative lead. The voltmeter should read battery voltage. If the voltmeter does not read battery voltage, check the following:
   - Confirm that the ignition switch is in the On position.
   - Make sure that the rear glass heating grid feed wire and ground wire are connected to the terminals. Confirm that the ground wire has continuity to ground.
   - Check the EBL relay and fuses located in the integrated power module (IPM) in the engine compartment. The relay and fuses must be tight in their receptacles and all electrical connections must be secure. Refer to the appropriate wiring information for diagnosis and testing of the ISO-standard relay.

When the above steps have been completed and the rear glass heating grid is still inoperative, one or more of the following is faulty:

- Rear window defogger switch in the A/C-heater control.
- Rear window defogger grid lines (all grid lines would have to be broken, or the power feed or the ground wire disconnected, for the entire heating grid to be inoperative).

4. If a heated outside rear view mirror glass temperature difference is not detected, use a 12-volt DC voltmeter (4) and contact the rear view mirror glass heating grid power feed terminal 1 with the positive lead, and the ground terminal 5 with the negative lead. The voltmeter should read battery voltage. If the voltmeter does not read battery voltage, check the following:
   - Confirm that the ignition switch is in the On position.
   - Make sure that the rear view mirror glass heating grid feed wire and ground wire are fully connected to the terminals. Confirm that the ground wire has continuity to ground.
   - Check the heated mirror relay and fuse located in the integrated power module (IPM) in the engine compartment. The relay and fuse must be tight in their receptacles and all electrical connections must be secure. Refer to the appropriate wiring information for diagnosis and testing of the ISO-standard relay.

When the above steps have been completed and the rear view mirror glass heating grid is still inoperative, one or more of the following is faulty:

- Rear window defogger switch in the A/C-heater control.
- Rear view mirror grids (both the left and right mirror grids would have to had to fail or the power feed or the ground wire disconnected, for the both mirror grids to be inoperative).

5. If the operation of the EBL system and/or the heated mirror system has been verified but the defogger LED indicator does not illuminate, replace the A/C-heater control (Refer to 24 - HEATING & AIR CONDITIONING/ CONTROLS/A/C HEATER CONTROL - REMOVAL).

SWITCH-REAR WINDOW DEFOGGER

DESCRIPTION

The switch for the rear window defogger (EBL) system (1) is integrated into the A/C-heater control (2), which is located in the center of the instrument panel. When the rear window defogger switch is activated, the timing circuit integral to the A/C-heater control operates the rear window defogger (EBL) relay and the heated mirror relay.

When the relays are activated, current is directed to the rear window defogger and the outside rear view mirror grids. The grids heat the rear window and rear wiew mirror glass to help clear the surfaces of fog or frost.

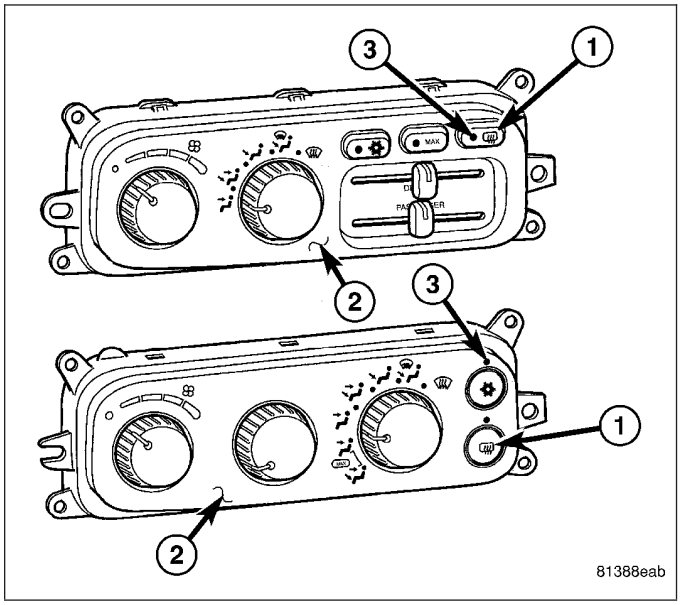

OPERATION

An LED indicator will illuminate when the rear window defogger switch is activated. When the switch is activated, it energizes the timing circuit integral to the A/C-heater control, which then activates the rear window defogger (EBL) relay and the heated mirror relay. The EBL relay controls the current flow to the grids of the rear window defogger.

The EBL system will be on for approximately ten minutes or until the rear window defogger switch or the ignition switch is turned off.

The rear window defogger switch and the rear window defogger LED indicator cannot be repaired and, if faulty or damaged, the A/C-heater control must be replaced (Refer to 24 - HEATING & AIR CONDITIONING/CONTROLS/ CONTROL-A/C HEATER - REMOVAL).

RELAY-REAR WINDOW DEFOGGER

DESCRIPTION

The rear window defogger (EBL) relay (1) is a International Standards Organization (ISO)-type relay. Relays conforming to the ISO specifications have common physical dimensions, current capacities, terminal functions and patterns (2). The EBL relay is a electromechanical device that switches battery current through a fuse in the integrated power module (IPM) to the rear window defogger grid. The EBL relay is energized when the relay coil is provided a ground path by the control circuitry within the A/C-heater control.

The EBL relay is located in the IPM in the engine compartment.

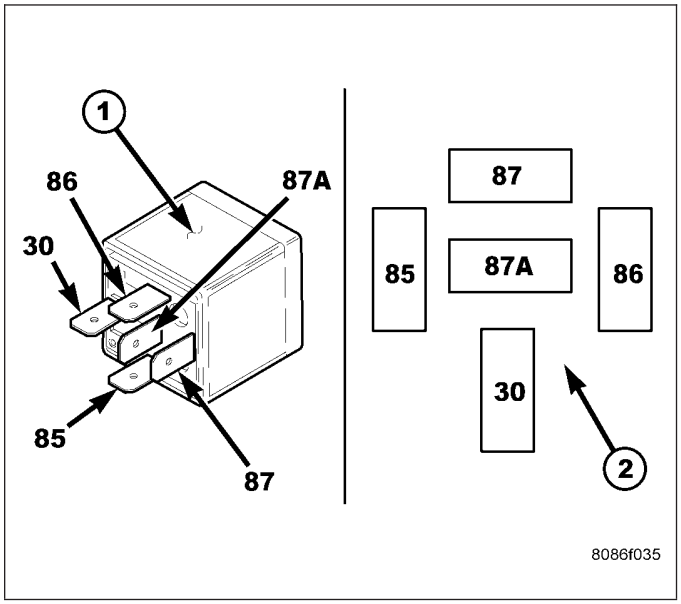

OPERATION

The ISO-standard rear window defogger (EBL) relay is an electromechanical switch that uses a low current input controlled by the A/C-heater control to control the high current output to the rear window defogger grid lines. The movable, common feed relay contact is held against the fixed, normally closed relay contact by spring pressure. When the electromagnetic relay coil is energized, it draws the movable common feed relay contact away from the fixed, normally closed relay contact and, holds it against the fixed, normally open relay contact. This action allows high current to flow to the rear window defogger grid lines.

When the relay coil is de-energized, spring pressure returns the movable relay contact back against the fixed, normally closed contact point. The resistor or diode is connected in parallel with the relay coil, and helps to dissipate voltage spikes and electromagnetic interference that can be generated as the electromagnetic field of the relay coil collapses.

The EBL relay terminals are connected to the vehicle electrical system through a receptacle in the integrated power module (IPM). The inputs and outputs of the EBL relay include:

- Terminal (30) receives battery current through a fuse in the IPM only when the EBL relay coil is energized.
- Terminal (85) receives a ground through the EBL relay control circuit only when the A/C-heater control electronically pulls the circuit to ground.
- Terminal (86) receives battery current through a fused ignition switch output circuit only when the ignition switch is in the Run position.
- Terminal (87) provides battery current to the rear window defogger grid lines through the EBL relay only when the EBL relay coil is energized.
- Terminal (87A) is not connected to any circuit in this application.

The EBL relay cannot be repaired and, if faulty or damaged, it must be replaced. Refer to the appropriate wiring information for diagnosis and testing of the ISO-standard relay and for complete rear window defogger (EBL) wiring diagrams.

REMOVAL

1. Disconnect and isolate the negative battery cable (1).
2. Remove the cover from the integrated power module (IPM) (2) located in the engine compartment.

NOTE: Refer to the fuse and relay layout map on the inside of the IPM cover for EBL relay location.

3. Remove the EBL relay from the IPM.

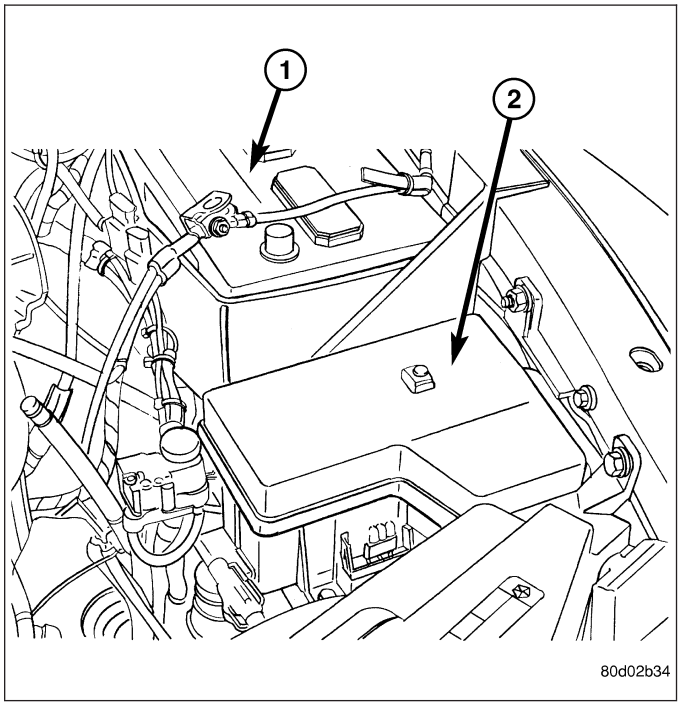

INSTALLATION

NOTE: Refer to the fuse and relay layout map on the inside of the IPM cover for EBL relay location.

1. Position the EBL relay into the proper receptacle of the integrated power module (IPM) (2).
2. Align the EBL relay terminals with the terminal cavities in the IPM receptacle and push down firmly on the relay until the terminals are fully seated.
3. Install the cover onto the IPM.
4. Reconnect the negative battery cable (1).

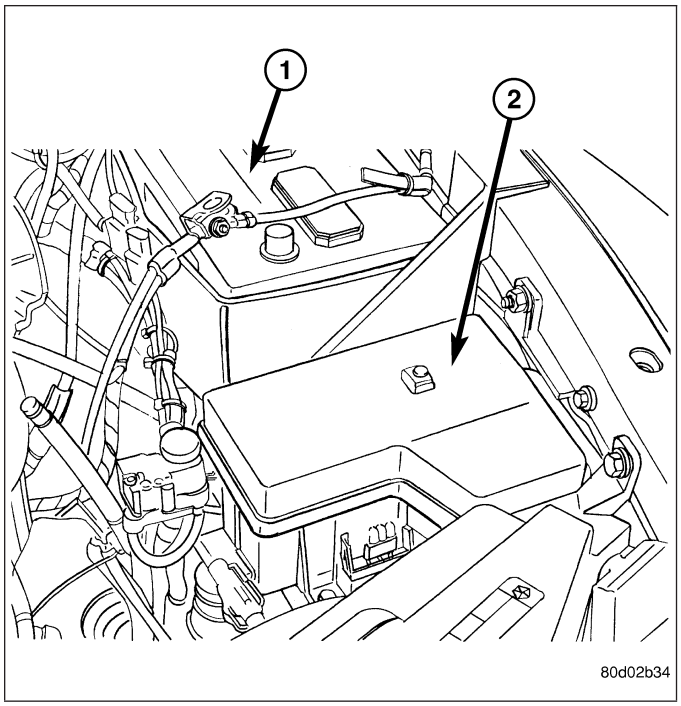

GRID-REAR WINDOW DEFOGGER

STANDARD PROCEDURE

GRID LINE AND TERMINAL REPAIR

WARNING: Materials contained in the Repair Kit (Part Number 04549275) may cause skin or eye irritation. The kit contains epoxy resin and amine type hardener, which are harmful if swallowed. Avoid contact with the skin and eyes. For skin contact, wash the affected areas with soap and water. For contact with the eyes, flush with plenty of water. Do not take internally. If taken internally, induce vomiting and call a physician immediately. Use with adequate ventilation. Do not use near fire or flame. Contains flammable solvents. Keep out of the reach of children. Failure to follow the warnings could result in possible personal injury or death.

Repair of the rear glass heating grid lines, bus bars, terminals or pigtail wires can be accomplished using the Mopar Rear Window Defogger Repair Kit (Part Number 04549275) or equivalent.

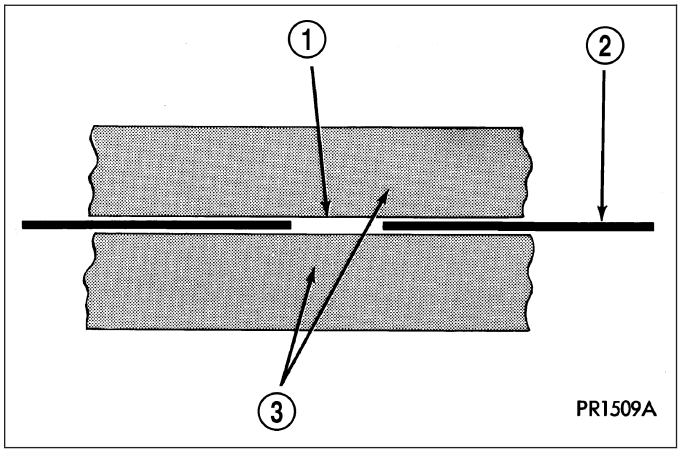

1. Mask the repair area with masking tape (3) so that the conductive epoxy can be applied neatly. Extend the epoxy application onto the grid line (2) or the bus bar on each side of the break (1).
2. Follow the instructions in the repair kit for preparing the damaged area.
3. Remove the package separator clamp and mix the two conductive epoxy components thoroughly within the packaging. Fold the package in half and cut the center corner to dispense the epoxy.
4. For grid line repairs, mask the area to be repaired with masking tape or use a template.
5. Apply the epoxy through the slit in the masking tape or template. Overlap both ends of the break by at least 19 millimeters (0.75 inch).
6. For a terminal or pigtail wire replacement, mask the adjacent areas so the epoxy can be extended onto the adjacent grid line as well as the bus bar. Apply a thin layer of epoxy to the area where the terminal or pigtail wire was fastened and onto the adjacent grid line.
7. Apply a thin layer of conductive epoxy to the terminal or bare wire end of the pigtail and place it in the proper location on the bus bar. To prevent the terminal or pigtail wire from moving while the epoxy is curing, it must be wedged or clamped.
8. Carefully remove the masking tape or template.

CAUTION: Do not allow the glass surface to exceed 204° C (400° F) when using a heat gun, or the glass may fracture.

9. Allow the epoxy to cure 24 hours at room temperature, or carefully use a heat gun for fifteen minutes. When using a heat gun, hold it approximately 25.4 centimeters (10 inches) from the repair and do not allow the glass surface to exceed 204° C (400° F).
10. After the conductive epoxy is properly cured, remove the wedge or clamp from the terminal or pigtail wire.
11. Connect the wire harness leads to the grid terminals or pigtail wires and verify EBL operation.

HEATED MIRRORS - SERVICE INFORMATION

TABLE OF CONTENTS

page

HEATED MIRRORS - SERVICE INFORMATION
DESCRIPTION 13
OPERATION 14
RELAY-HEATED MIRROR
DESCRIPTION 14
OPERATION 15
REMOVAL 15
INSTALLATION 16

HEATED MIRRORS - SERVICE INFORMATION

DESCRIPTION

Electrically heated outside rear view mirrors (1) are a factory-installed option on models that are equipped with factory-installed dual power mirrors. Vehicles with this option can be visually identified by the International Control and Display Symbol icon for rear window defogger (2), which appears on the lower inboard corner of each outside rear view mirror glass.

The EBL system operates in concert with the heated mirror system. For more information, refer to 8 - ELECTRICAL/HEATED GLASS - DESCRIPTION.

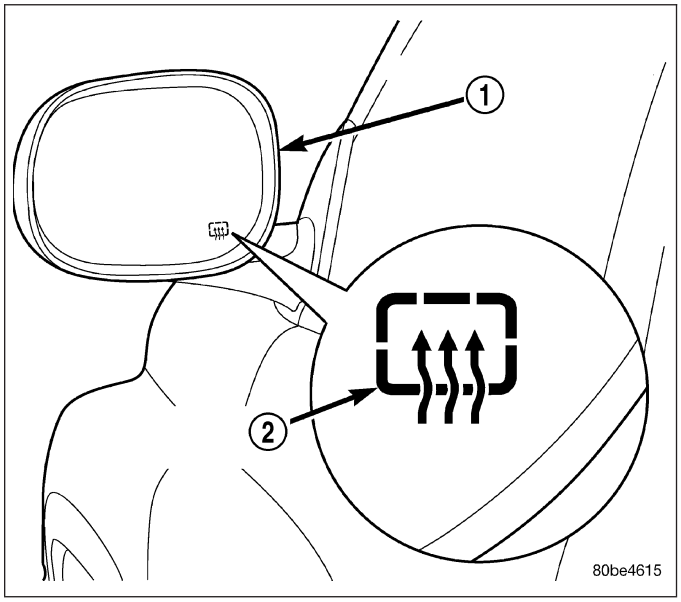

OPERATION

When the rear window defogger switch (1) located on the A/C-heater control (2) is pressed, the heated mirror relay located in the integrated power module (IPM) is energized and supplies battery current to the electric heating grid behind the glass of each outside rear view mirror (Refer to 8 - ELECTRICAL/HEATED MIRRORS/RELAY-HEATED MIRROR - DESCRIPTION). When energized, the heating grids produce heat to help clear the outside rear view mirror glass surfaces of ice, snow, or fog.

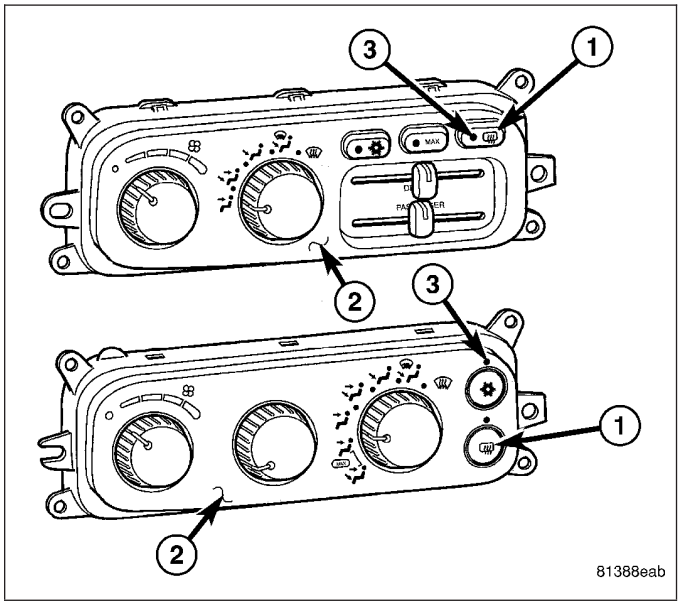

An amber indicator (3) in the defogger switch will illuminate to indicate when the heated mirror system is turned on. The A/C-heater control contains the heated mirror system control circuitry.

NOTE: The heated mirror system turns off automatically after approximately ten minutes of operation.

The heated mirror system will be automatically turned off after a programmed time interval of about ten minutes each time the defogger switch is pressed. The heated mirror system will automatically shut off if the ignition switch is turned to the Off position, or it can be shut off manually by pressing the rear window defogger switch a second time.

If the EBL system and outside mirror heating grids are both inoperative, refer to 8 - ELECTRICAL/HEATED GLASS - DIAGNOSIS AND TESTING in this group. If only one of the outside mirror heating grids is inoperative, refer to 8 - ELECTRICAL/POWER MIRRORS - DIAGNOSIS AND TESTING.

The heating grid behind each outside mirror glass cannot be repaired and, if faulty or damaged, the mirror glass must be replaced (Refer to 23 - BODY/EXTERIOR/OUTSIDE REARVIEW MIRROR GLASS - REMOVAL).

RELAY-HEATED MIRROR

DESCRIPTION

The heated mirror relay (1) is a International Standards Organization (ISO)-type relay. Relays conforming to the ISO specifications have common physical dimensions, current capacities, terminal functions and patterns (2). The heated mirror relay is a electromechanical device that switches battery current through a fuse in the integrated power module (IPM) to the outside rear view mirror heating grids. The heated mirror relay is energized when the relay coil is provided a ground path by the control circuitry within the A/C-heater control.

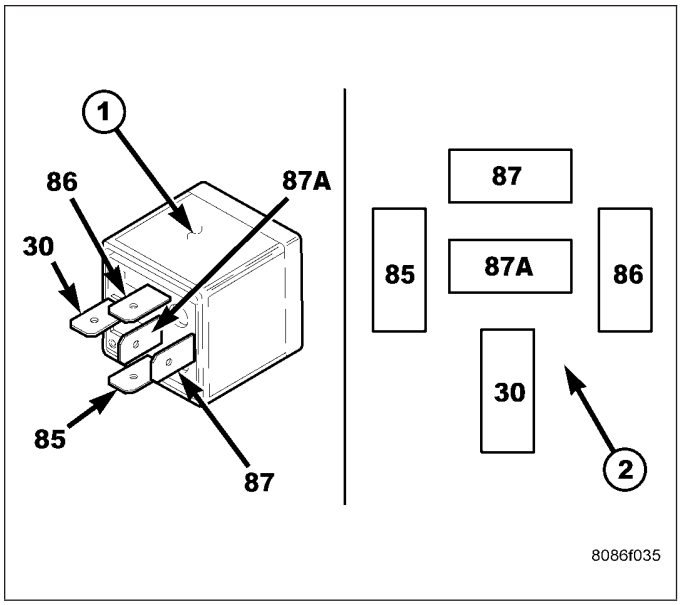

The heated mirror relay is located in the IPM in the engine compartment.

OPERATION

The ISO-standard heated mirror relay is an electromechanical switch that uses a low current input controlled by the A/C-heater control to control the high current output to the outside rear view mirror heating grids. The movable, common feed relay contact is held against the fixed, normally closed relay contact by spring pressure. When the electromagnetic relay coil is energized, it draws the movable common feed relay contact away from the fixed, normally closed relay contact and, holds it against the fixed, normally open relay contact. This action allows high current to flow to the outside rear view mirror heating grids.

When the relay coil is de-energized, spring pressure returns the movable relay contact back against the fixed, normally closed contact point. The resistor or diode is connected in parallel with the relay coil, and helps to dissipate voltage spikes and electromagnetic interference that can be generated as the electromagnetic field of the relay coil collapses.

The heated mirror relay terminals are connected to the vehicle electrical system through a receptacle in the integrated power module (IPM). The inputs and outputs of the heated mirror relay include:

- Terminal (30) receives fused battery current at all times.
- Terminal (86) receives a ground through the defogger relay control circuit only when the A/C-heater control electronically pulls the circuit to ground.
- Terminal (85) receives fused battery current through an ignition switch output circuit only when the ignition switch is in the Run position.
- Terminal (87) provides battery current to the heated outside rear view mirror grids through the heated mirror relay output circuit only when the heated mirror relay coil is energized.
- Terminal (87A) is not connected to any circuit in this application, but provides a battery current output only when the heated mirror relay coil is de-energized.

The heated mirror relay cannot be repaired and, if faulty or damaged, it must be replaced. Refer to the appropriate wiring information for diagnosis and testing of the ISO-standard relay and for complete heated mirror system wiring diagrams.

REMOVAL

1. Disconnect and isolate the negative battery cable (1).
2. Remove the cover from the integrated power module (IPM) (2) located in the engine compartment.

NOTE: Refer to the fuse and relay layout map on the inside of the IPM cover for heated mirror relay location.

3. Remove the heated mirror relay from the IPM.

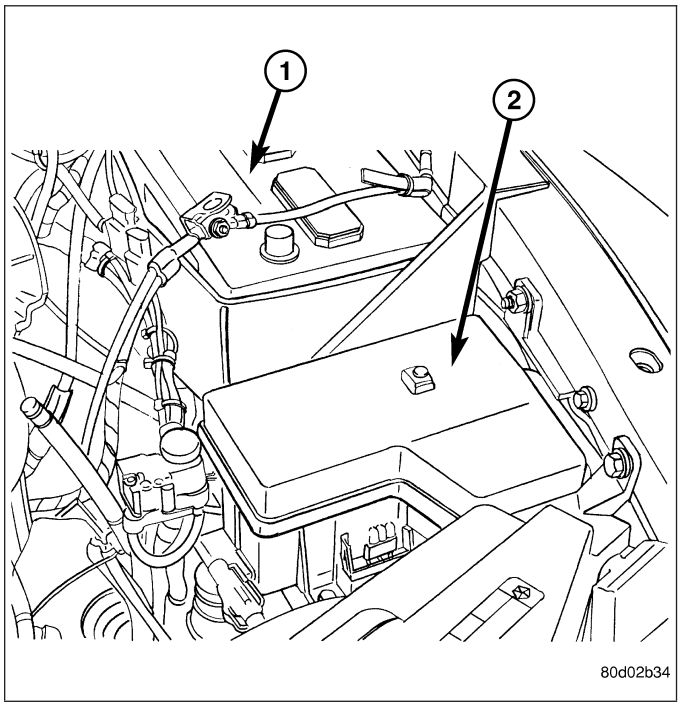

INSTALLATION

NOTE: Refer to the fuse and relay layout map on the inside of the IPM cover for heated mirror relay location.

1. Position the heated mirror relay into the proper receptacle of the integrated power module (IPM) (2).
2. Align the heated mirror relay terminals with the terminal cavities in the IPM receptacle and push down firmly on the relay until the terminals are fully seated.
3. Install the cover onto the IPM.
4. Reconnect the negative battery cable (1).

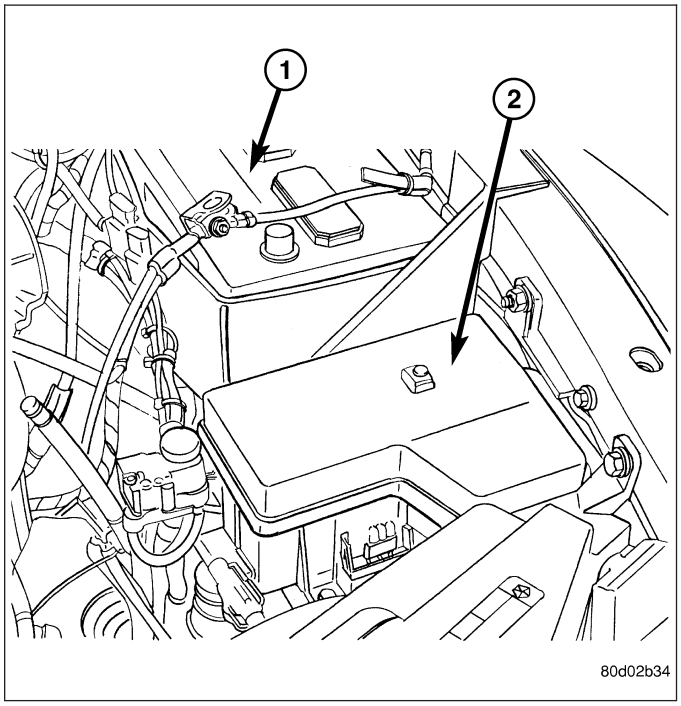

HEATED SEATS - SERVICE INFORMATION

TABLE OF CONTENTS

page

HEATED SEATS - SERVICE INFORMATION
DESCRIPTION 17
OPERATION 18
DIAGNOSIS AND TESTING
HEATED SEAT SYSTEM 18
HEATED SEAT ELEMENT
DESCRIPTION 20
OPERATION 20
DIAGNOSIS AND TESTING
HEATED SEAT ELEMENT 20
REMOVAL 21
INSTALLATION 21
HEATED SEAT SENSOR
DESCRIPTION 22
OPERATION 22
DIAGNOSIS AND TESTING
HEATED SEAT SENSOR 22
REMOVAL 22
SWITCH-HEATED SEAT
DESCRIPTION 23
OPERATION 23
DIAGNOSIS AND TESTING
HEATED SEAT SWITCH 24
REMOVAL 24
INSTALLATION 25
MODULE-HEATED SEATS
DESCRIPTION 25
OPERATION 25
DIAGNOSIS AND TESTING
HEATED SEAT MODULE 26
REMOVAL 26
INSTALLATION 27

HEATED SEATS - SERVICE INFORMATION

DESCRIPTION

WARNING: The front passenger seat assembly contains critical components that affect the front passenger airbag deployment. Correctly functioning front passenger seat components are critical for the Occupant Classification System (OCS) to properly classify the front passenger and calculate the proper airbag deployment. Unapproved modifications or service procedures to the front passenger seat assembly, its related components, or trim cover may inadvertently change the airbag deployment in case of a frontal crash. This could result in death or serious injury to the front seat passenger if the vehicle is involved in an accident. The following requirements must be strictly adhered to:

- **Do not modify the front passenger seat assembly or components in any way.**
- **Do not modify the front seat center console or center position seat in any way.**
- **Do not use prior or future model year seat trim covers not designated for the specific model being repaired. Always use the correct seat trim cover specified for the vehicle.**
- **Do not replace the seat trim cover with an aftermarket trim cover.**
- **Do not add a secondary trim cover other than those approved by DaimlerChrysler/Mopar.**
- **At no time should any Supplemental Restraint System (SRS) component or SRS related component or fastener be modified or replaced with any part except those which are approved by DaimlerChrysler/Mopar.**

Vehicles with the heated seat option can be visually identified by the two heated seat switches located in the center stack of the instrument panel. The heated seat system allows the driver and front seat passenger to select from two different levels of electrical seat heating (HI/LO). The heated seat system for this vehicle includes the following major components, which are described in further detail later in this section:

- **Heated Seat Switches** - Two heated seat switches are used per vehicle. One switch is used for each front seat. The switches are mounted in the instrument panel, below the radio. Each switch also includes two Light-Emitting Diode (LED) indicator lamps and an incandescent back lighting bulb.
- **Heated Seat Module** - This module contains the solid state electronic control and diagnostic logic circuitry for the heated seat system. One heated seat module is used per vehicle and is mounted under the drivers front seat cushion. (Refer to 8 - ELECTRICAL/ELECTRONIC CONTROL MODULES/MEMORY HEATED SEAT/MIRROR MODULE - DESCRIPTION) for additional heated seat module information.

- **Heated Seat Elements** - Four heated seat elements are used per vehicle. One element is used for each front seat back and one element and sensor assembly is used for each front seat cushion. The heating elements are integral to the individual front seat and seat back cushions and cannot be removed once installed at the factory. Replacement seat heating elements are available, without having to replace the entire seat cushion or trim cover. (Refer to 8 - ELECTRICAL/HEATED SEATS/HEATED SEAT ELEMENT - REMOVAL) for the detailed procedure.
- **Heated Seat Sensors** - Two heated seat sensors are used per vehicle. One heated seat temperature sensor is used for each front seat cushion. The sensors are integral to the individual front seat cushion heating elements and cannot be removed once installed at the factory. Replacement seat heating elements with the sensors are available, without having to replace the entire seat cushion or trim cover. (Refer to 8 - ELECTRICAL/HEATED SEATS/HEATED SEAT ELEMENT - REMOVAL) for the detailed procedure.

OPERATION

The heated seat module receives fused battery current through the Integrated Power Module. The heated seat switches receive battery current from the Cab Compartment Node (CCN) only when the ignition switch is in the On position and the engine is running. The heated seat module shares a common ground circuit with each of the heated seat elements. The heated seat system will control the surface temperature of the seat cushion to within the designed temperature set points of the system.

The heated seat system will also automatically turn off whenever the ignition switch is turned to any position except On, or if the engine quits running. If the ignition switch is turned to the Off position or if the engine quits running while a heated seat is ON, the heated seat will remain Off after the engine is restarted until a heated seat switch is depressed again. This helps prevent the vehicles battery from being drained by the heated seat system.

The heated seat module monitors inputs from the heated seat sensors and the heated seat switches. In response to these inputs the heated seat module uses its internal programming to control 12v to the heated seat elements in both front seats and to control the heated seat LED indicator lamps located in both of the heated seat switches. The heated seat module is also programmed to provide self-diagnostics, if a problem with the heated seat system is detected. If the module detects certain failures within the heated seat system, it will provide a visual indication of the failure by flashing the indicator lamps in the appropriate heated seat switch. The heated seat module will automatically turn off the heated seat elements if it detects a short or open in the heated seat element circuit or a heated seat sensor value that is out of range.

DIAGNOSIS AND TESTING

HEATED SEAT SYSTEM

HEATED SEAT SYSTEM SELF-DIAGNOSIS

The heated seat system is capable of performing some self-diagnostics. The following table depicts the various monitored conditions which will be reported to the vehicle operator or technician by flashing the individual heated seat switch Light Emitting Diode (LED) indicator lamps. Refer to the HEATED SEAT SYSTEM SELF-DIAGNOSIS table for condition identification. The driver heated seat switch indicator lamps will flash if a malfunction occurs in the driver heated seat, and the passenger heated seat switch indicator lamps will flash for a passenger heated seat malfunction. If a monitored heated seat system malfunction occurs, the switch indicator lamps will flash at a pulse rate of about one-half second on, followed by about one-half second off for a duration of about one minute after the switch for the inoperative heated seat is depressed in either the Low or High direction. This process will repeat every time the inoperative heated seat switch is actuated until the problem has been corrected.

HEATED SEAT SYSTEM SELF-DIAGNOSIS

Monitored condition	Switch High Indicator Lamp	Switch Low Indicator Lamp
Heated Seat Element Shorted	Flashing	Flashing
Heated Seat Element Open	Flashing	Off
Heated Seat Sensor Value Out of Range	Off	Flashing

Diagnostic logic is built into the heated seat module to help locate the problem by the most efficient means possible. Anytime a problem is suspected, locate the diagnosis and testing procedure for the component in question and follow the steps until the specific problem is located and resolved. Once the problem is thought to be corrected, verify correct system operation. If the heated seat system is functioning correctly return the vehicle to service.

If a problem could not be verified such as not finding anything wrong when following the diagnostic procedure, this is a good indication that an INTERMITTENT problem may be present. You must then attempt to find the intermittent problem, such as moving the heating element within the seat while testing continuity or wiggling the wire harness's/ electrical connectors under the seat while testing continuity. Always, eliminate all other potential problems before attempting to replace the heated seat module.

PRELIMINARY TEST

Refer to **Wiring** for the location of complete heated seat system wiring diagrams. Before testing the individual components in the heated seat system, perform the following preliminary checks:

WARNING: DISABLE THE AIRBAG SYSTEM BEFORE ATTEMPTING ANY STEERING WHEEL, STEERING COLUMN, OR INSTRUMENT PANEL COMPONENT DIAGNOSIS OR SERVICE. DISCONNECT AND ISOLATE THE BATTERY NEGATIVE CABLE, THEN WAIT TWO MINUTES FOR THE AIRBAG SYSTEM CAPACITOR TO DISCHARGE BEFORE PERFORMING FURTHER DIAGNOSIS OR SERVICE. THIS IS THE ONLY SURE WAY TO DISABLE THE AIRBAG SYSTEM. FAILURE TO TAKE THE PROPER PRECAUTIONS COULD RESULT IN ACCIDENTAL AIRBAG DEPLOYMENT AND POSSIBLE PERSONAL INJURY.

- If the heated seat switch back lighting and the cluster illumination lamps do not illuminate with the headlamps or park lamps turned On, refer to the **Instrument Cluster** section of the service manual for the location of cluster illumination lamp diagnosis and testing procedures. If the heated seat switch back lighting does not illuminate, but the cluster illumination lamps do illuminate with the headlamps or park lamps turned On, (Refer to 8 - ELECTRICAL/HEATED SEATS/DRIVER HEATED SEAT SWITCH - DIAGNOSIS AND TESTING) for the heated seat switch diagnosis and testing procedures.
- If a single LED indicator lamp for one heated seat switch does not operate and the heated seat elements do heat, (Refer to 8 - ELECTRICAL/HEATED SEATS/DRIVER HEATED SEAT SWITCH - DIAGNOSIS AND TESTING) for the heated seat switch diagnosis and testing procedures.
- If both LED indicator lamps for a heated seat switch operate, but the heated seat elements do not heat, (Refer to 8 - ELECTRICAL/ELECTRONIC CONTROL MODULES/MEMORY HEATED SEAT/MIRROR MODULE - DIAGNOSIS AND TESTING) for heated seat module diagnosis and testing procedures.
- If the indicator lamp on either heated seat switch remains illuminated after the heated seat has been turned Off, (Refer to 8 - ELECTRICAL/ELECTRONIC CONTROL MODULES/MEMORY HEATED SEAT/MIRROR MODULE - DIAGNOSIS AND TESTING) for heated seat module diagnosis and testing procedures.

HEATED SEAT ELEMENT

DESCRIPTION

Vehicles equipped with the optional heated seat system have two sets of electrically operated heating element grids located in each front seat, one set for the seat cushion and the other set for the seat back. Each of the heated seat element grids consists of a single length of resistor wire that is routed in a zigzag pattern and captured between a covering and the adhesive foam rubber backing. Short pigtail wires with connectors are soldered to each end of each resistor wire element grid, which connect all of the element grids to the heated seat module through the seat wire harness.

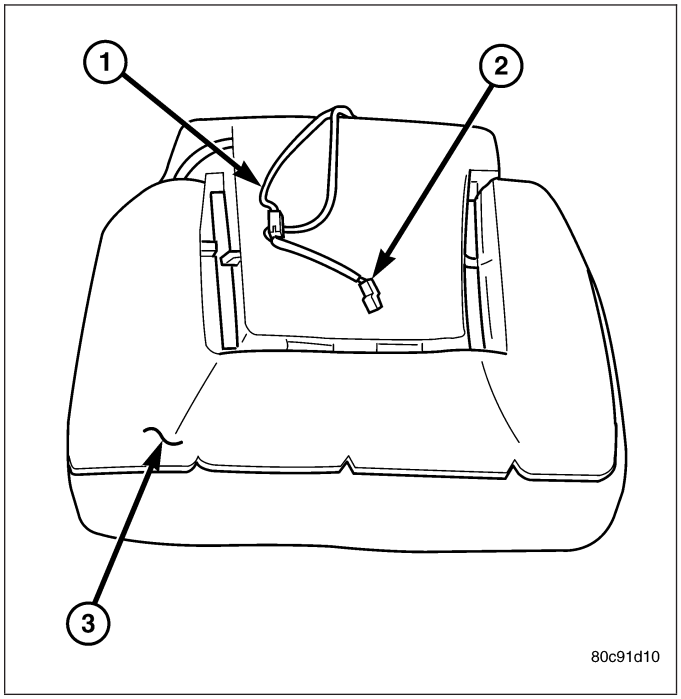

One temperature sensor is used for each front seat, and it is located in the center insert area of the seat cushion element. The heated seat sensors and their pigtail wires are also captured between a covering and the adhesive foam rubber backing. The heated seat sensors are Negative Thermal Coefficient (NTC) thermistors. The sensors for both front seats receive a voltage feed from a single output of the heated seat module, but the module receives individual sensor inputs from the driver side and passenger side sensors.

The heated seat elements and sensors should not be repaired. If damaged or faulty, the heated seat element assembly must be replaced.

OPERATION

One end of the heated seat element resistor wire is connected to ground at all times through a splice in the heated seat module ground circuit. Battery current is directed to the other end of the heated seat element resistor wire by the energized N-channel Field Effect Transistor (N-FET) located within the heated seat module. The heated seat module will energize the N-FET only when the heated seat switch is in the Low or High position and the heated seat sensor indicates that the seat cushion surface temperature is below the selected (Low or High) temperature set point. As electrical current passes through the heating element grid, the resistance of the wire used in the element disperses some of that electrical current in the form of heat. The heat produced by the heated seat element grid then radiates through the seat trim cover, warming its occupant.

The resistance of the heated seat sensor increases and decreases as the surface temperature of the seat cushion cover changes. The heated seat module supplies each sensor with a 5v voltage feed, then uses the sensor resistance to determine when the heated seat element grids need to be cycled on or off in order to maintain the selected temperature set point.

DIAGNOSIS AND TESTING

HEATED SEAT ELEMENT

The heated seat module will self-diagnose shorted or open heated seat element circuits and sensor circuits. (Refer to 8 - ELECTRICAL/HEATED SEATS - DIAGNOSIS AND TESTING) for additional diagnosis and testing procedures. To manually check the heated seat element, proceed as follows. The wire harness connectors for the seat cushion and seat back heating elements and sensor are located on the right side of the seat, near the edge of the seat cushion frame. The proper connector can be identified by the foam wrapping.

NOTE: When checking heated seat elements for continuity, be certain to move the heating element being checked. Moving the element, such as sitting in the seat will eliminate the possibility of an intermittent open in the element which would only be evident if the element was in a certain position. Failure to check the element in various positions could result in an incomplete test.

1. Position the appropriate seat in the full forward position.
2. Make certain the ignition switch is in the OFF position.
3. Disconnect the heated seat element connector which requires testing. Check for continuity between the two heated seat element circuit cavities while moving the appropriate seat cushion. **Refer to the appropriate wiring information** for the location of complete heated seat system wiring diagrams. There should be continuity. If OK, the elements within the seat assembly test OK, go to Step 4. If not OK, replace the inoperative seat heating element, (Refer to 8 - ELECTRICAL/HEATED SEATS/HEATED SEAT ELEMENT - REMOVAL).
4. Test the seat wire harness between the heated seat module connector and the appropriate heated seat wire harness connector for shorted or open circuits. If OK, element is OK, proceed with testing the heated seat sensor and module. If not OK, repair the shorted or open seat wire harness as required.

REMOVAL

CAUTION:
Do not remove the heating element from the seat or seat back cushion. The original element is permanently attached to the seat cushions and cannot be removed without damaging the cushion. The replacement heating element is designed to be applied directly over the original seat heating element.

1. Disconnect and isolate the negative battery cable.
2. Remove the appropriate seat cushion or seat back trim cover. Refer to the Body section of this manual for the procedures.
3. Disconnect the inoperative heated seat cushion or seat back element electrical connectors.
4. Locate the wires leading from the inoperative heating element and cut them off flush with the edge of the original heating element.

INSTALLATION

1. Peel off the adhesive backing on the back of the replacement heating element (2) and stick directly over the original heating element (1).

CAUTION: During the installation of the replacement heating element, be careful not to fold or crease the element assembly. Folds or creases will cause premature failure.

2. Connect the new heating element electrical connectors.
3. Connect the battery negative cable.
4. Verify heated seat system operation.
5. Install the appropriate seat cushion or seat back trim cover. Make certain the seat wire harness is correctly routed through the seat and seat back.

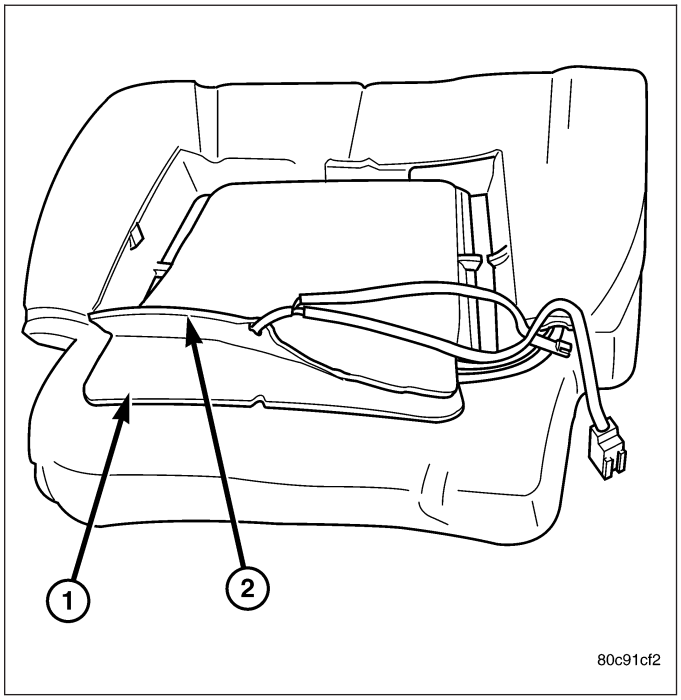

HEATED SEAT SENSOR

DESCRIPTION

The heated seat temperature sensor is a Negative Temperature Coefficient (NTC) thermistor. One temperature sensor is used for each seat. This temperature sensor is located in the seat cushion heating element on all models.

The heated seat temperature sensor cannot be repaired or adjusted and must be replaced if inoperative. The heated seat temperature sensor is part of the heated seat cushion element and must be replaced as an assembly. (Refer to 8 - ELECTRICAL/HEATED SEATS/HEATED SEAT ELEMENT - REMOVAL) for the appropriate procedure.

OPERATION

When the temperature of the seat cushion cover rises, the resistance of the sensor decreases. The heated seat module supplies five-volts to one side of each sensor, and monitors the voltage drop through the sensor on a return circuit. The heated seat module uses this temperature sensor input to monitor the temperature of the seat, and regulates the current flow to the seat heating elements accordingly.

DIAGNOSIS AND TESTING

HEATED SEAT SENSOR

NOTE: Any resistance values (OHMS Ω) given in the following text are supplied using the automatic range generated by a FLUKE® automotive meter. If another type of measuring device is used, the values generated may not be the same as the results shown here, or may have to be converted to the range used here.

1. Position the driver seat in the full rearward position.
2. Unclip the heated seat module from the bottom of the drivers seat cushion pan.
3. Back-probe the heated seat module wire harness connector, do not disconnect. Check cavity (#7 for passenger, #8 for driver seat) for a range in voltage from approx. 1.72 – 3.0 volts. It should be within this range, If OK check the heated seat element. If NOT OK, check for the proper 5 volt supply to the heated seat sensor, from the module. **Refer to the appropriate wiring information** for the complete heated seat system wiring diagrams. If 5 volts is not being supplied to the sensor from the module, replace the heated seat module.
4. Test the seat wire harness between the heated seat module connector and the heated seat wire harness connector for shorted or open circuits. If OK, (Refer to 8 - ELECTRICAL/ELECTRONIC CONTROL MODULES/MEMORY HEATED SEAT/MIRROR MODULE - DIAGNOSIS AND TESTING) for the proper heated seat module diagnosis and testing procedures. If not OK, repair the shorted or open heated seat wire harness as required.

REMOVAL

1. For heated seat sensor replacement procedure (Refer to 8 - ELECTRICAL/HEATED SEATS/HEATED SEAT ELEMENT - REMOVAL).

SWITCH-HEATED SEAT

DESCRIPTION

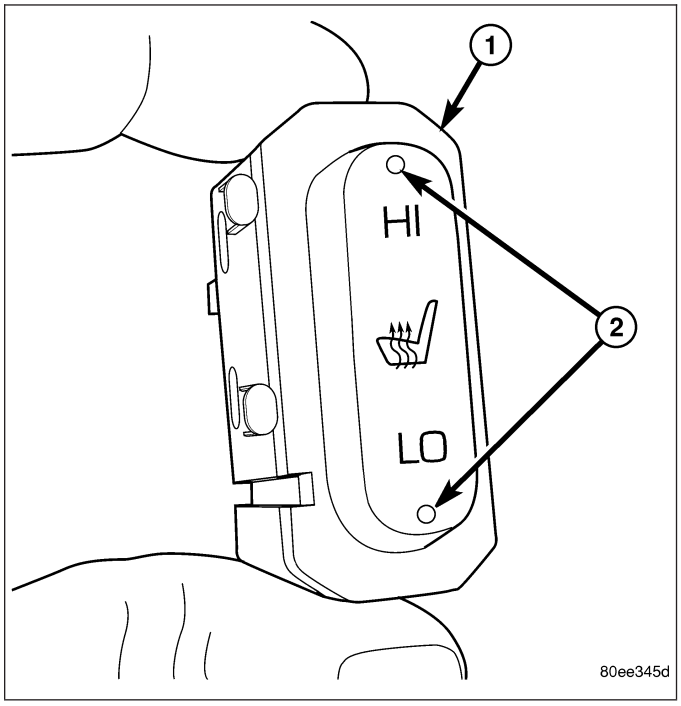

The momentary, bidirectional rocker-type heated seat switch (1) provides a resistor-multiplexed signal to the heated seat module via a mux circuit. Each switch has a center neutral position and momentary Low and High positions so that both the driver and the front seat passenger can select a preferred level of seat heating. Each heated seat switch has two Light-Emitting Diode (LED) indicator lamps (2), which indicate the selected mode (Low or High) of the seat heater. These indicator lamps also provide diagnostic feedback for the heated seat system. Each switch also has an incandescent bulb, which provides dimmer controlled back lighting of the switch when the headlamps or park lamps are on.

The heated seat switches are both mounted in the instrument panel center bezel, located in the lower center of the instrument panel. The two switches are snapped into the mounting holes of the heated seat switch bezel, and the heated seat switch bezel is secured with screws to the instrument panel center bezel. The heated seat switches are differentiated by the keyway in the connector receptacle on the backs of the switches and keyway on the switch housing. The instrument panel wire harness connectors for the heated seat switches are keyed to match the connector receptacles on the switches so that the two heated seat switches can only be connected to the proper heated seat electrical.

The two LED indicator lamps and the incandescent bulb in each heated seat switch cannot be repaired. If the indicator lamps or back lighting bulb are faulty or damaged, the individual heated seat switch must be replaced.

OPERATION

The heated seat switches receive battery current through a fused ignition switch output (run) circuit when the ignition switch is in the On position. Depressing the heated seat switch rocker to its momentary High or Low position provides a hard-wired resistance signal to the heated seat module. This signal tells the module to energize the heated seat element of the selected seat and maintain the requested temperature setting. If the heated seat switch is depressed to a different position (Low or High) than the currently selected state, the heated seat module will change states to support the new selection. If a heated seat switch is depressed a second time, the heated seat module interprets the second input as a request to turn the seat heater OFF.

The High and Low LED indicator lamps in the heated seat switches receive battery current through a fused ignition switch output (run) circuit when the ignition switch is in the On position. The ground side of each indicator lamp is controlled by the heated seat module. This control of the switch indicator lamps also allows the module to provide diagnostic feedback to the vehicle operator or technician to indicate heated seat system faults by flashing the indicator lamps on and off. One side of the incandescent back lighting bulb in each heated seat switch is connected to ground at all times. The other side of the incandescent bulb is connected to the fused panel lamps dimmer switch signal circuit. These bulbs are energized when the park lamps or headlamps are turned on, and their illumination intensity is controlled by the panel lamps dimmer switch.

DIAGNOSIS AND TESTING

HEATED SEAT SWITCH

For complete circuit diagrams, refer to the appropriate wiring information. The wiring information includes wiring diagrams, proper wire and connector repair procedures, details of wire harness routing and retention, connector pin-out information and location views for the various wire harness connectors, splices and grounds.

WARNING: DISABLE THE AIRBAG SYSTEM BEFORE ATTEMPTING ANY STEERING WHEEL, STEERING COLUMN, OR INSTRUMENT PANEL COMPONENT DIAGNOSIS OR SERVICE. DISCONNECT AND ISOLATE THE BATTERY NEGATIVE (GROUND) CABLE, THEN WAIT TWO MINUTES FOR THE AIRBAG SYSTEM CAPACITOR TO DISCHARGE BEFORE PERFORMING FURTHER DIAGNOSIS OR SERVICE. THIS IS THE ONLY SURE WAY TO DISABLE THE AIRBAG SYSTEM. FAILURE TO TAKE THE PROPER PRECAUTIONS COULD RESULT IN ACCIDENTAL AIRBAG DEPLOYMENT AND POSSIBLE PERSONAL INJURY.

1. If the problem being diagnosed involves inoperative heated seat switch back lighting and the cluster illumination lamps operate, go to Step 2. If the problem being diagnosed involves inoperative heated seat switch back lighting and the cluster illumination lamps are also inoperative, (Refer to 8 - ELECTRICAL/INSTRUMENT CLUSTER - DIAGNOSIS AND TESTING). If the problem being diagnosed involves inoperative heated seat switch indicator lamps and the heated seat elements do not heat, proceed. If the problem being diagnosed involves inoperative heated seat switch indicator lamps and the heated seat elements do heat, go to Step 6. If the problem being diagnosed involves a heated seat switch indicator lamp that remains illuminated after the heated seat has been turned Off, (Refer to 8 - ELECTRICAL/ELECTRONIC CONTROL MODULES/MEMORY HEATED SEAT/MIRROR MODULE - DIAGNOSIS AND TESTING).
2. Disconnect and isolate the battery negative cable. Remove the heated seat switch and bezel unit from the instrument panel. Disconnect the heated seat switch to be tested. Check for continuity between the ground circuit cavity of the heated seat switch and a good ground. There should be continuity. If OK, go to Step 3. If not OK, repair the open ground circuit to ground as required.
3. Reconnect the battery negative cable. Turn the park lamps on with the headlamp switch. Rotate the panel lamps dimmer thumb wheel on the headlamp switch upward to just before the interior lamps detent. Check for battery voltage at the fused panel lamps dimmer circuit cavity of the heated seat switch. If OK, go to Step 4. If not OK, repair the open fused panel lamps dimmer switch signal circuit to the fuse in the Integrated Power Module as required.
4. Turn the ignition switch to the On position. Check for battery voltage at the fused ignition switch output (run) circuit cavity of the heated seat switch. If OK, go to Step 5. If not OK, repair the open fused ignition switch output (run) circuit as required.
5. Check the continuity and resistance values of the heated seat switch in the Neutral, Low and High positions as shown in the Heated Seat Switch Continuity chart. If OK, refer to Step 6. If not OK, replace the faulty heated seat switch.

HEATED SEAT SWITCH CONTINUITY

Switch Position	Continuity Between	Resistance
Neutral	4 & 6	2.2 Kilohms
Low	4 & 6	.415 Kilohms
High	4 & 6	33 Ohms

6. Replace the inoperative heated seat switch with a known good unit and test the operation of the switch indicator lamps. If OK, discard the faulty heated seat switch. If not OK, (Refer to 8 - ELECTRICAL/ELECTRONIC CONTROL MODULES/MEMORY HEATED SEAT/MIRROR MODULE - DIAGNOSIS AND TESTING).

REMOVAL

1. Disconnect and isolate the negative battery cable.
2. Wait two minutes for the system reserve capacitor to discharge before beginning any airbag or instrument panel service.

3. Remove the center bezel from the instrument panel (Refer to 23 - BODY/INSTRUMENT PANEL/INSTRUMENT PANEL CENTER BEZEL - REMOVAL).
4. Remove the screws that secure the heated seat switch bezel to the instrument panel center bezel.
5. Remove the heated seat switch bezel and both switches from the instrument panel as a unit.
6. From the back of the heated seat switch bezel, gently pry the switch free and push the heated seat switch out through the front of the bezel.

INSTALLATION

NOTE: When installing the heated seat switches, be certain they are installed in the proper mounting holes of the heated seat switch bezel. The heated seat switches are differentiated by the keyway in the connector receptacle on the backs of the switches and keyway on the switch housing.

1. From the back of the heated seat switch bezel, gently push the heated seat switch in through the front of the bezel.
2. Position the heated seat switch bezel to the instrument panel center bezel and install the retaining screws.
3. Install the center bezel on the instrument panel (Refer to 23 - BODY/INSTRUMENT PANEL/INSTRUMENT PANEL CENTER BEZEL - INSTALLATION).
4. Connect the battery negative cable.
5. Verify vehicle and system operation.

MODULE-HEATED SEATS

DESCRIPTION

The heated seat module (2) is also known as the Seat Heat Interface Module. The heated seat module is located under the drivers front seat cushion, where it is secured to a mounting bracket. The heated seat module has a single connector receptacle (3) that allows the module to be connected to all of the required inputs and outputs through the seat wire harness.

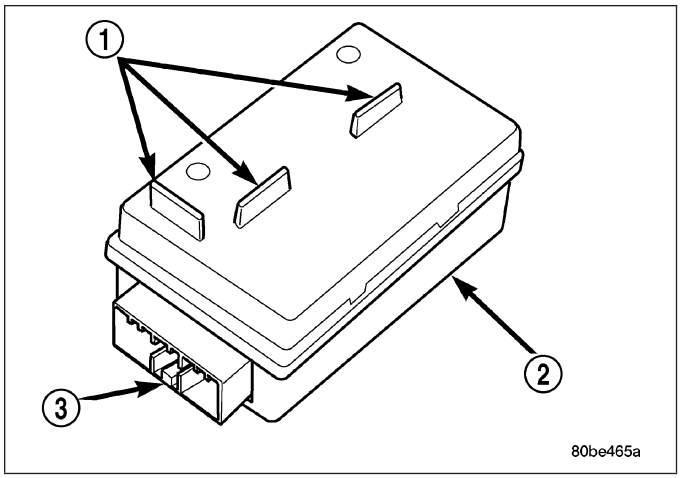

The heated seat module is an electronic microprocessor controlled device designed and programmed to use inputs from the battery, the two heated seat switches and the two heated seat sensors to operate and control the heated seat elements in both front seats and the two heated seat indicator lamp Light-Emitting Diodes (LEDs) in each heated seat switch. The heated seat module is also programmed to perform self-diagnosis of certain heated seat system functions and provide feedback of that diagnosis through the heated seat switch indicator lamps.

The heated seat module cannot be repaired. If the heated seat module is damaged or faulty, the entire module must be replaced.

OPERATION

The heated seat module operates on fused battery current received from the integrated power module. Inputs to the module include a resistor multiplexed heated seat switch request circuit for each of the two heated seat switches and the heated seat sensor inputs from the seat cushions of each front seat. In response to those inputs the heated seat module controls battery current feeds to the heated seat elements and sensors, and controls the ground for the heated seat switch indicator lamps.

When a heated seat switch (Driver or Passenger) is depressed a signal is received by the heated seat module, the module energizes the proper indicator LED (Low or High) in the switch by grounding the indicator lamp circuit to

indicate that the heated seat system is operating. At the same time, the heated seat module energizes the selected heated seat sensor circuit and the sensor provides the module with an input indicating the surface temperature of the selected seat cushion.

The Low heat set point is about 36° C (96.8° F), and the High heat set point is about 42° C (107.6° F). If the seat cushion surface temperature input is below the temperature set point for the selected temperature setting, the heated seat module energizes an N-channel Field Effect Transistor (N-FET) within the module which energizes the heated seat elements in the selected seat cushion and back. When the sensor input to the module indicates the correct temperature set point has been achieved, the module de-energizes the N-FET which de-energizes the heated seat elements. The heated seat module will continue to cycle the N-FET as needed to maintain the selected temperature set point.

If the heated seat module detects a heated seat sensor value input that is out of range or a shorted or open heated seat element circuit, it will notify the vehicle operator or the repair technician of this condition by flashing the High and/or Low indicator lamps in the affected heated seat switch. (Refer to 8 - ELECTRICAL/HEATED SEATS - DIAGNOSIS AND TESTING) for flashing LED diagnosis and testing procedures. (Refer to 8 - ELECTRICAL/ELECTRONIC CONTROL MODULES/MEMORY HEATED SEAT/MIRROR MODULE - DIAGNOSIS AND TESTING) for heated seat module diagnosis and testing procedures.

DIAGNOSIS AND TESTING

HEATED SEAT MODULE

If a heated seat fails to heat and one or both of the indicator lamps on a heated seat switch flash, (Refer to 8 - ELECTRICAL/HEATED SEATS - DIAGNOSIS AND TESTING) for flashing LED diagnosis and testing procedures. If a heated seat heats but one or both indicator lamps on the heated seat switch fail to operate, test the heated seat switch. (Refer to 8 - ELECTRICAL/HEATED SEATS/DRIVER HEATED SEAT SWITCH - DIAGNOSIS AND TESTING) for heated seat switch diagnosis and testing procedures. If the heated seat switch checks OK, proceed as follows.

1. Check the heated seat element (Refer to 8 - ELECTRICAL/HEATED SEATS/HEATED SEAT ELEMENT - DIAGNOSIS AND TESTING).
2. Check the heated seat sensor (Refer to 8 - ELECTRICAL/HEATED SEATS/HEATED SEAT SENSOR - DIAGNOSIS AND TESTING).
3. Check the heated seat switch (Refer to 8 - ELECTRICAL/HEATED SEATS/DRIVER HEATED SEAT SWITCH - DIAGNOSIS AND TESTING).

NOTE: Refer to Wiring for the location of complete heated seat system wiring diagrams and connector pin-out information.

4. Using a voltmeter, backprobe the heated seat module connector, do not disconnect. Check for voltage at the appropriate pin cavities. 12v should be present. If OK go to Step 5, if Not, Repair the open or shorted voltage supply circuit as required.
5. Using a ohmmeter, backprobe the appropriate heated seat module connector, do not disconnect. Check for proper continuity to ground on the ground pin cavities. Continuity should be present. If OK replace the heated seat module with a known good unit and retest system, if Not OK, Repair the open or shorted ground circuit as required.

REMOVAL

1. Position the driver seat to the full rearward and inclined position.
2. Working under the driver front seat, remove the two heated seat module retaining screws. Due to the fact that the retaining screws are installed with the seat cushion pan removed, a small right angle screwdriver will be required to access and remove the screws.
3. Disconnect the seat wire harness connector from the connector receptacle on the back of the heated seat module. Depress the connector retaining tab and pull straight apart.
4. Remove the heated seat module from under the front seat.

INSTALLATION

1. Position the heated seat module under the front seat.
2. Connect the seat wire harness connector on the connector receptacle on the back of the heated seat module.
3. Working under the driver front seat, install the heated seat module retaining screws.
4. Re-position the driver seat.

HORN

TABLE OF CONTENTS

page

HORN SYSTEM - ELECRICAL DIAGNOSTICS 1

HORN SYSTEM - SERVICE INFORMATION 19

HORN SYSTEM - ELECRICAL DIAGNOSTICS

TABLE OF CONTENTS

page

HORN SYSTEM - ELECRICAL DIAGNOSTICS
DIAGNOSIS AND TESTING
HORN RELAY CONTROL CIRCUIT HIGH 2
HORN RELAY CONTROL CIRCUIT LOW 5
HORN RELAY CONTROL CIRCUIT OPEN 8
*HORNS INOPERATIVE 11
SCHEMATICS AND DIAGRAMS 18

HORN SYSTEM - ELECRICAL DIAGNOSTICS

DIAGNOSIS AND TESTING

HORN RELAY CONTROL CIRCUIT HIGH

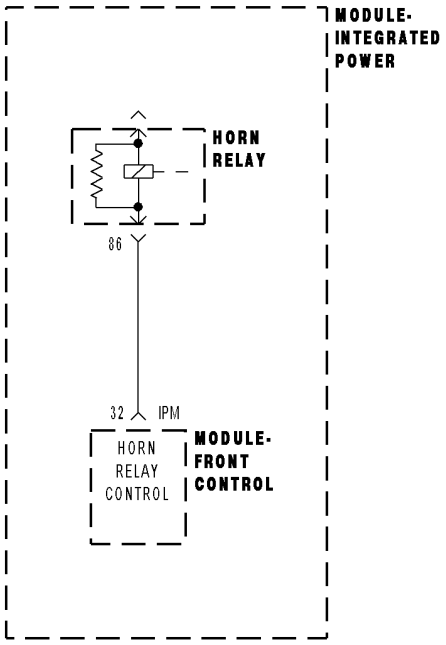

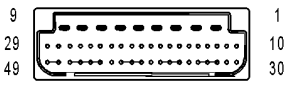

MODULE-
FRONT
CONTROL IPM

81318230

HORN RELAY CONTROL CIRCUIT HIGH (CONTINUED)

For the Horn System circuit diagram (Refer to 8 - ELECTRICAL/HORN - SCHEMATICS AND DIAGRAMS)

For a complete wiring diagram **Refer to Section 8W**.

- **When Monitored:**
  With the ignition ON.
- **Set Condition:**
  When the Front Control Module detects excessive current on the Horn Relay Control circuit.

Possible Causes
INTERMITTENT DTC
INTEGRATED POWER MODULE
FRONT CONTROL MODULE

Diagnostic Test

1. HORN RELAY CONTROL CIRCUIT DTC ACTIVE

Turn the ignition on.
With the DRBIII®, record and erase FCM DTC's.
With the DRBIII®, actuate the Horn Relay.
With the DRBIII®, read FCM DTC's.

Does the DRBIII® display a HORN RELAY CONTROL CIRCUIT DTC active?

Yes >> Go To 2

No >> Go To 3

---

2. INTEGRATED POWER MODULE

Turn the ignition off.
Remove the Front Control Module from the Integrated Power Module.

NOTE: NOTE: Check connectors - Clean/repair as necessary.
Use a fused jumper wire for the next step.

Momentarily jumper the Horn Relay Control circuit to ground at the FCM connector.

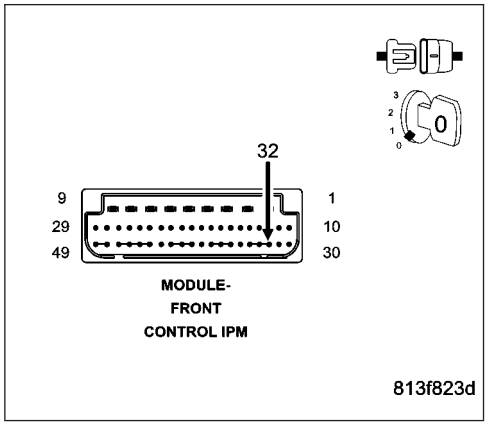

Does the Horn sound?

Yes >> Replace the Front Control Module in accordance with the Service Information.
Perform BODY VERIFICATION TEST - VER 1. (Refer to 8 - ELECTRICAL/ELECTRONIC CONTROL MODULES/ FRONT CONTROL MODULE - DIAGNOSIS AND TESTING)

No >> Replace the Integrated Power Module in accordance with the Service Information.
Perform BODY VERIFICATION TEST - VER 1. (Refer to 8 - ELECTRICAL/ELECTRONIC CONTROL MODULES/FRONT CONTROL MODULE - DIAGNOSIS AND TESTING)

HORN RELAY CONTROL CIRCUIT HIGH (CONTINUED)

3. WIRING HARNESS INSPECTION

Turn the ignition off.

Visually inspect the related circuit connectors. Look for broken, bent, pushed out, or corroded terminals.

Refer to any Hotline letters or Technical Service Bulletins that may apply.

Were any problems found?

Yes >> Repair as necessary.
Perform BODY VERIFICATION TEST - VER 1. (Refer to 8 - ELECTRICAL/ELECTRONIC CONTROL MODULES/FRONT CONTROL MODULE - DIAGNOSIS AND TESTING)

No >> Test Complete.

HORN RELAY CONTROL CIRCUIT LOW

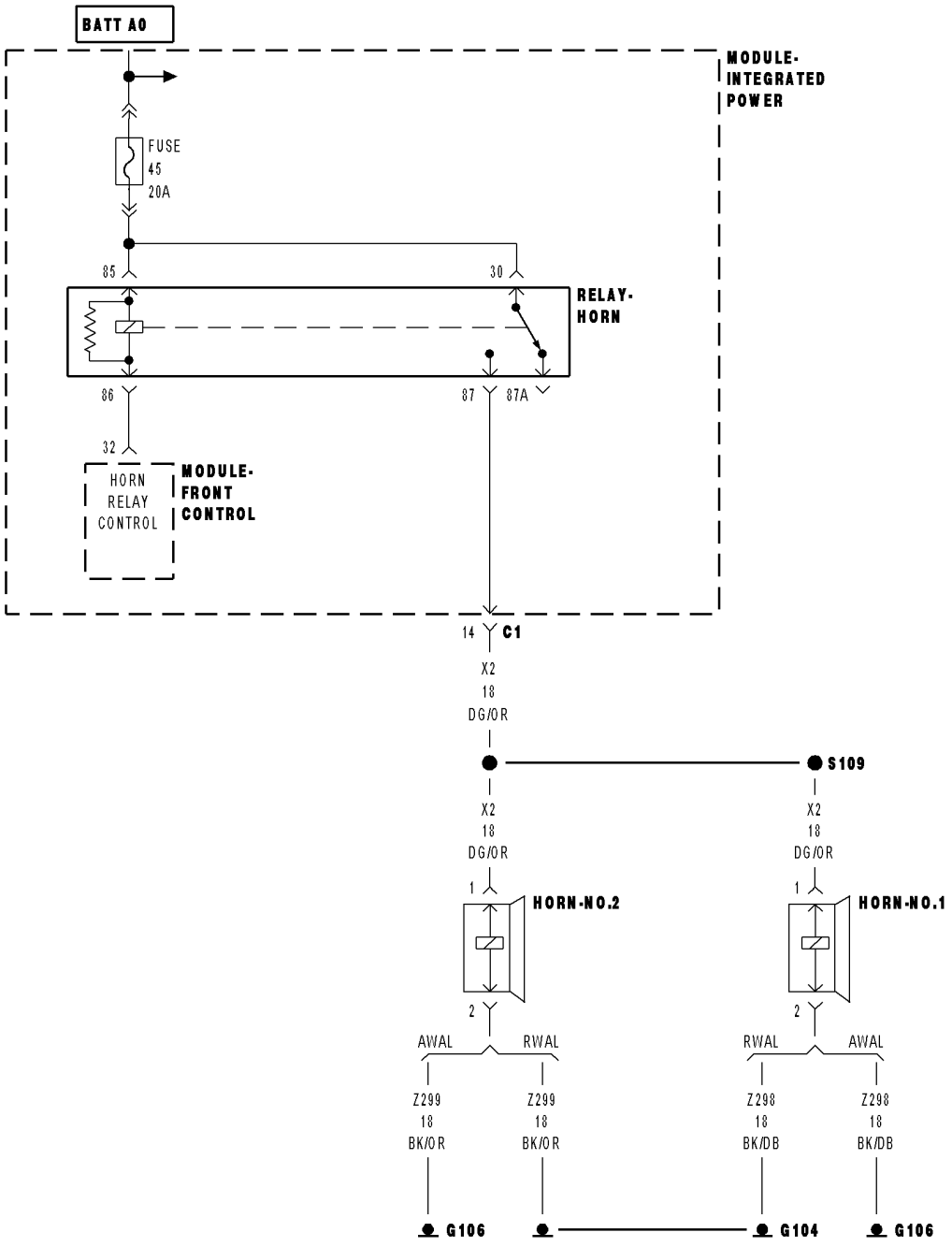

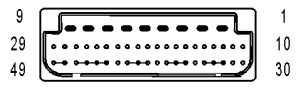

MODULE-
FRONT
CONTROL IPM

81319112

HORN RELAY CONTROL CIRCUIT LOW (CONTINUED)

For the Horn System circuit diagram (Refer to 8 - ELECTRICAL/HORN - SCHEMATICS AND DIAGRAMS)

For a complete wiring diagram **Refer to Section 8W**.

- **When Monitored:**
  With the ignition ON.
- **Set Condition:**
  When the Front Control Module detects a short on the Horn Relay Control circuit.

Possible Causes
INTERMITTENT DTC
FUSE #45
INTEGRATED POWER MODULE
FRONT CONTROL MODULE

Diagnostic Test

1. HORN RELAY CONTROL CIRCUIT DTC ACTIVE

Turn the ignition on.
With the DRBIII®, record and erase FCM DTC's.
With the DRBIII®, read FCM DTC's.

Does the DRBIII® display a HORN RELAY CONTROL CIRCUIT DTC active?

Yes >> Go To 2

No >> Go To 4

---

2. CHECK FUSE #45

Turn the ignition off.
Check fuse #45 in the IPM.

Is the fuse open?

Yes >> Replace the fuse. Check for a short to ground in the Horn Relay Output circuit from the IPM to the horns.

Perform BODY VERIFICATION TEST - VER 1. (Refer to 8 - ELECTRICAL/ELECTRONIC CONTROL MODULES/FRONT CONTROL MODULE - DIAGNOSIS AND TESTING)

No >> Go To 3

HORN RELAY CONTROL CIRCUIT LOW (CONTINUED)

3. INTEGRATED POWER MODULE

Reinstall the fuse if previously removed.

Remove the Front Control Module from the Integrated Power Module.

NOTE: Check connectors - Clean/repair as necessary.

Turn the ignition on.

Measure the voltage of the Horn Relay Control circuit.

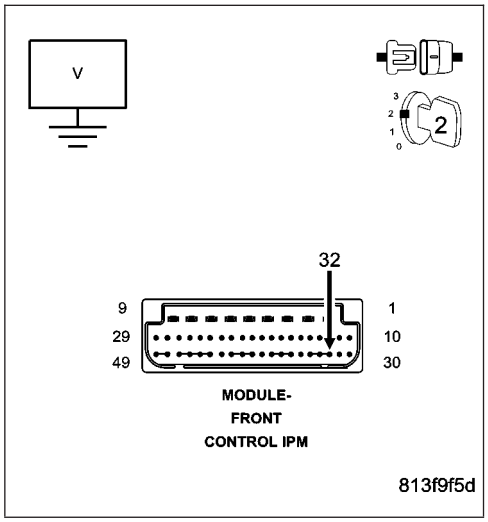

Is the voltage above 11.0 volts?

Yes >> Replace the Front Control Module in accordance with the Service Information.
Perform BODY VERIFICATION TEST - VER 1.

No >> Replace the Integrated Power Module in accordance with the Service Information.
Perform BODY VERIFICATION TEST - VER 1. (Refer to 8 - ELECTRICAL/ELECTRONIC CONTROL MODULES/ FRONT CONTROL MODULE - DIAGNOSIS AND TESTING)

---

4. WIRING HARNESS INSPECTION

Turn the ignition off.

Visually inspect the related circuit connectors. Look for broken, bent, pushed out, or corroded terminals.

Refer to any Hotline letters or Technical Service Bulletins that may apply.

Were any problems found?

Yes >> Repair as necessary.
Perform BODY VERIFICATION TEST - VER 1. (Refer to 8 - ELECTRICAL/ELECTRONIC CONTROL MODULES/FRONT CONTROL MODULE - DIAGNOSIS AND TESTING)

No >> Test Complete.

HORN RELAY CONTROL CIRCUIT OPEN

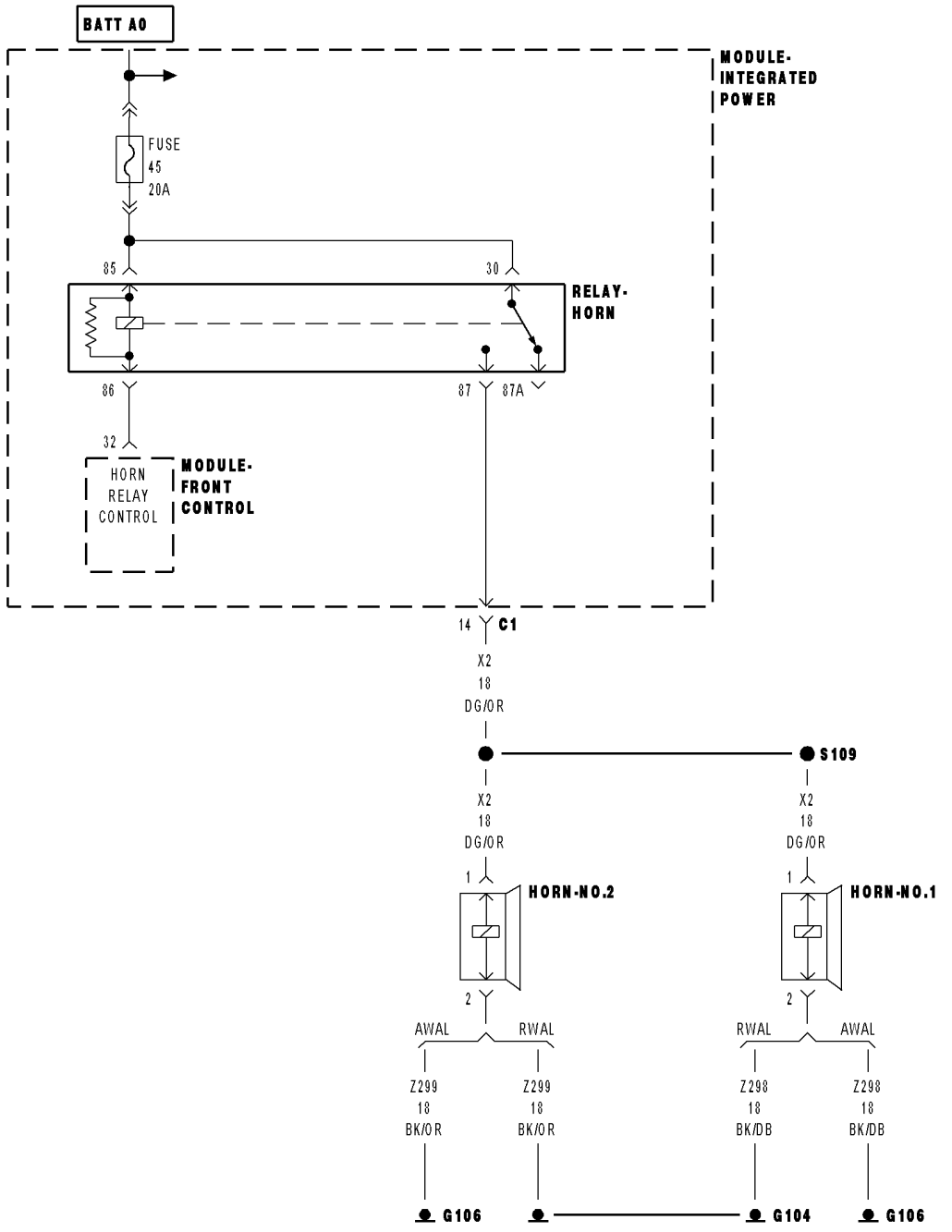

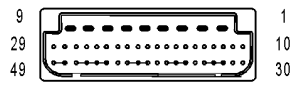

MODULE-
FRONT
CONTROL IPM

81319112

HORN RELAY CONTROL CIRCUIT OPEN (CONTINUED)

For the Horn System circuit diagram (Refer to 8 - ELECTRICAL/HORN - SCHEMATICS AND DIAGRAMS)

For a complete wiring diagram **Refer to Section 8W**.

- **When Monitored:**
  With the ignition ON.
- **Set Condition:**
  When the Front Control Module detects a short on the Horn Relay Control circuit.

Possible Causes
INTERMITTENT DTC
FUSE #45
INTEGRATED POWER MODULE
FRONT CONTROL MODULE

Diagnostic Test

1. HORN RELAY CONTROL CIRCUIT DTC ACTIVE

Turn the ignition on.
With the DRBIII®, record and erase FCM DTC's.
With the DRBIII®, read FCM DTC's.

Does the DRBIII® display a HORN RELAY CONTROL CIRCUIT DTC active?

Yes >> Go To 2

No >> Go To 4

---

2. CHECK FUSE #45

Turn the ignition off.
Check fuse #45 in the IPM.

Is the fuse open?

Yes >> Replace the fuse. Check for a short to ground in the Horn Relay Output circuit from the IPM to the horns.

Perform BODY VERIFICATION TEST - VER 1. (Refer to 8 - ELECTRICAL/ELECTRONIC CONTROL MODULES/FRONT CONTROL MODULE - DIAGNOSIS AND TESTING)

No >> Go To 3

HORN RELAY CONTROL CIRCUIT OPEN (CONTINUED)

3. INTEGRATED POWER MODULE

Reinstall the fuse if previously removed.

Remove the Front Control Module from the Integrated Power Module.

NOTE: Check connectors - Clean/repair as necessary.

Turn the ignition on.

Measure the voltage of the Horn Relay Control circuit.

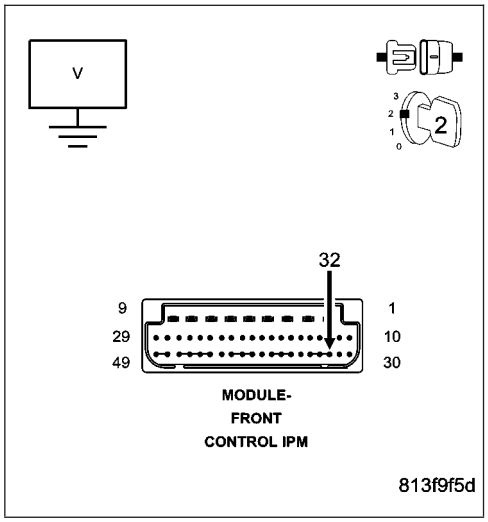

Is the voltage above 11.0 volts?

Yes >> Replace the Front Control Module in accordance with the Service Information.
Perform BODY VERIFICATION TEST - VER 1.

No >> Replace the Integrated Power Module in accordance with the Service Information.
Perform BODY VERIFICATION TEST - VER 1. (Refer to 8 - ELECTRICAL/ELECTRONIC CONTROL MODULES/ FRONT CONTROL MODULE - DIAGNOSIS AND TESTING)

---

4. WIRING HARNESS INSPECTION

Turn the ignition off.

Visually inspect the related circuit connectors. Look for broken, bent, pushed out, or corroded terminals.

Refer to any Hotline letters or Technical Service Bulletins that may apply.

Were any problems found?

Yes >> Repair as necessary.
Perform BODY VERIFICATION TEST - VER 1. (Refer to 8 - ELECTRICAL/ELECTRONIC CONTROL MODULES/FRONT CONTROL MODULE - DIAGNOSIS AND TESTING)

No >> Test Complete.

---

*HORNS INOPERATIVE

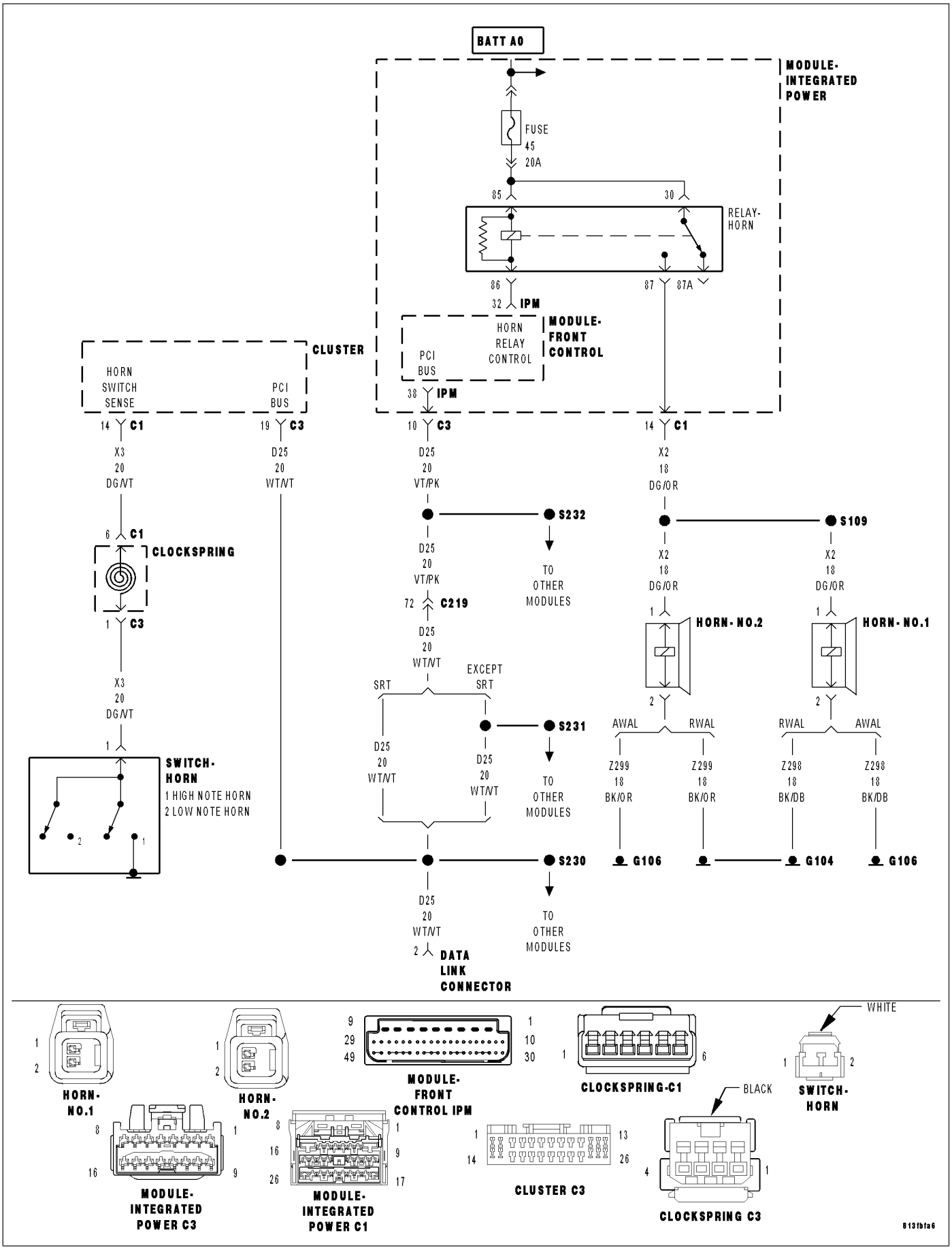

***HORNS INOPERATIVE (CONTINUED)**

For the Horn System circuit diagram (Refer to 8 - ELECTRICAL/HORN - SCHEMATICS AND DIAGRAMS)

For a complete wiring diagram **Refer to Section 8W**.

Possible Causes
DTC PRESENT
FUSE #45
HORNS
HORN GROUND CIRCUIT OPEN
HORN RELAY OUTPUT CIRCUIT OPEN
HORN SWITCH
HORN SWITCH GROUND
CLOCKSPRING
HORN SWITCH SENSE OPEN
INTEGRATED POWER MODULE
INSTRUMENT CLUSTER
FRONT CONTROL MODULE

Diagnostic Test

1. HORN RELAY CONTROL CIRCUIT DTC ACTIVE

Turn the ignition on.

With the DRBIII®, read FCM DTC's.

Does the DRBIII® display a HORN RELAY CONTROL CIRCUIT DTC active?

Yes >> Refer to symptom list.
Perform BODY VERIFICATION TEST - VER 1.

No >> Go To 2

---

2. ACTUATE HORN RELAY

With the DRBIII®, actuate the Horn Relay.

Do the horns operate?

Yes >> Go To 3

No >> Go To 7

***HORNS INOPERATIVE (CONTINUED)**

3. HORN SWITCH

WARNING: TURN THE IGNITION OFF, DISCONNECT THE BATTERY AND WAIT TWO MINUTES BEFORE PROCEEDING.

CAUTION: DO NOT PLACE AN INTACT UNDEPLOYED AIRBAG FACE DOWN ON A HARD SURFACE, THE AIRBAG WILL PROPEL INTO THE AIR IF ACCIDENTALLY DEPLOYED, AND COULD RESULT IN SERIOUS OR FATAL INJURY.

Gain access to the horn switch.

Measure the resistance of the Horn Switch ground circuit.

Is the resistance below 5.0 ohms?

Yes >> Go To 4

No >> Repair the horn switch ground as necessary.

Perform BODY VERIFICATION TEST - VER 1. (Refer to 8 - ELECTRICAL/ELECTRONIC CONTROL MODULES/FRONT CONTROL MODULE - DIAGNOSIS AND TESTING)

---

4. HORN SWITCH

WARNING: TURN THE IGNITION OFF, DISCONNECT THE BATTERY AND WAIT TWO MINUTES BEFORE PROCEEDING.

CAUTION: DO NOT PLACE AN INTACT UNDEPLOYED AIRBAG FACE DOWN ON A HARD SURFACE, THE AIRBAG WILL PROPEL INTO THE AIR IF ACCIDENTALLY DEPLOYED, AND COULD RESULT IN SERIOUS OR FATAL INJURY.

Gain access to the horn switch connector.

WARNING: TURN THE IGNITION ON, THEN RECONNECT THE BATTERY.

Momentarily connect a jumper wire between the Horn Switch Sense circuit at the Horn switch connector and ground.

Did the horns sound?

Yes >> Replace the horn switch.

Perform BODY VERIFICATION TEST - VER 1. (Refer to 8 - ELECTRICAL/ELECTRONIC CONTROL MODULES/FRONT CONTROL MODULE - DIAGNOSIS AND TESTING)

No >> Go To 5

***HORNS INOPERATIVE (CONTINUED)**

5. CLOCKSPRING

Turn the ignition off.

Disconnect the clockspring C1 connector.

Momentarily connect a jumper wire between the Horn Switch Sense circuit at the clockspring connector and ground.

Did the horns sound?

Yes >> Replace the clockspring.
Perform BODY VERIFICATION TEST - VER 1. (Refer to 8 - ELECTRICAL/ELECTRONIC CONTROL MODULES/ FRONT CONTROL MODULE - DIAGNOSIS AND TESTING)

No >> Go To 6

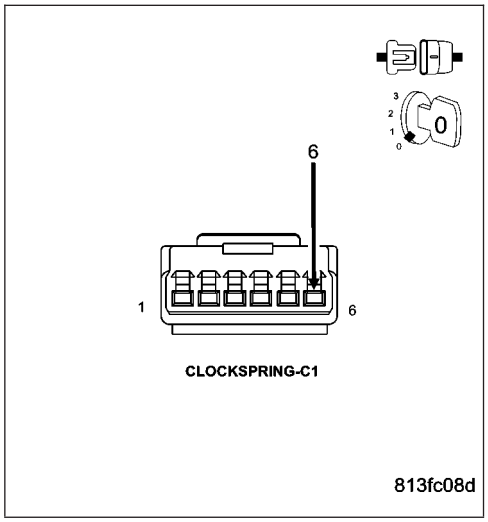

6. HORN SWITCH SENSE

Turn the ignition off.

Disconnect the clockspring C1 connector.

Disconnect the Instrument Cluster C3 connector.

NOTE: Check connectors - Clean/repair as necessary.
Measure the resistance of the Horn Switch Sense circuit between the clockspring C1 connector and the Instrument Cluster C3 connector.

Is the resistance below 5.0 ohms?

Yes >> Replace the Instrument Cluster in accordance with the service information.
Perform BODY VERIFICATION TEST - VER 1. (Refer to 8 - ELECTRICAL/ELECTRONIC CONTROL MODULES/ FRONT CONTROL MODULE - DIAGNOSIS AND TESTING)

No >> Repair the Horn Switch Sense circuit for an open.
Perform BODY VERIFICATION TEST - VER 1.

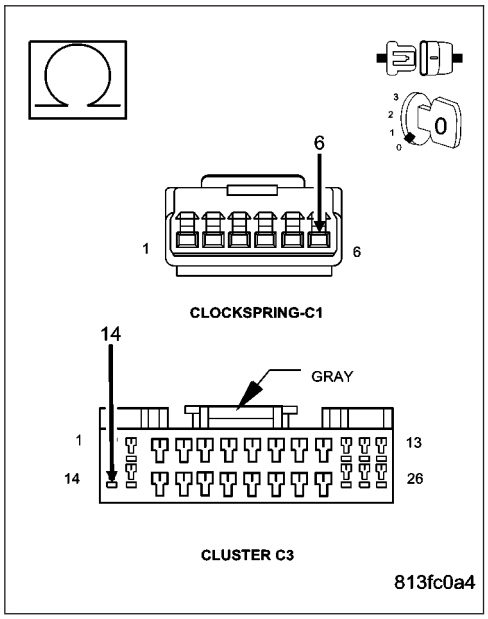

***HORNS INOPERATIVE (CONTINUED)**

7. CHECK FUSE #45

Turn the ignition off.

Using a 12-volt test light connected to ground, check the Horn fuse #45 in the IPM.

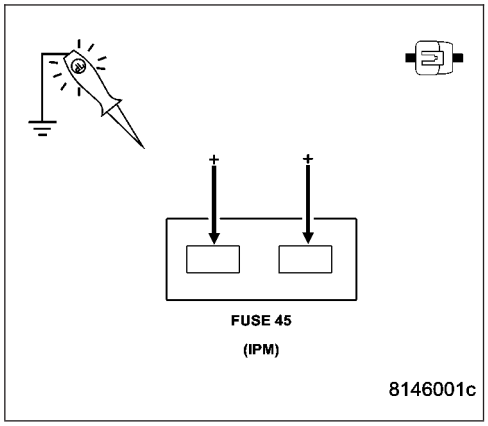

Is the fuse open?

Yes >> Replace the fuse. Check for a short to ground in the Horn Relay Output circuit from the IPM to the horns.

Perform BODY VERIFICATION TEST - VER 1. (Refer to 8 - ELECTRICAL/ELECTRONIC CONTROL MODULES/ FRONT CONTROL MODULE - DIAGNOSIS AND TESTING)

No >> Go To 8

8. HORN RELAY OUTPUT

Disconnect a horn connector.

With the DRBIII®, actuate the Horn Relay.

Using a 12-volt test light connected to ground, check the Horn Relay Output circuit.

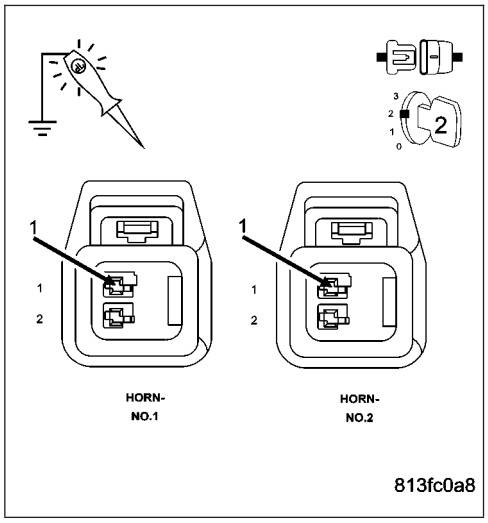

Does the test light illuminate brightly?

Yes >> Go To 9

No >> Go To 10

***HORNS INOPERATIVE (CONTINUED)**

9. HORN GROUND CIRCUIT OPEN

Turn the ignition off.

Disconnect the Horn connector.

Using a 12-volt test light connected to 12-volts, check the Ground circuit in the horn connector.

Does the test light illuminate brightly?

Yes >> Replace the Horns.
Perform BODY VERIFICATION TEST - VER 1. (Refer to 8 - ELECTRICAL/ELECTRONIC CONTROL MODULES/ FRONT CONTROL MODULE - DIAGNOSIS AND TESTING)

No >> Repair the Ground circuit for an open.
Perform BODY VERIFICATION TEST - VER 1.

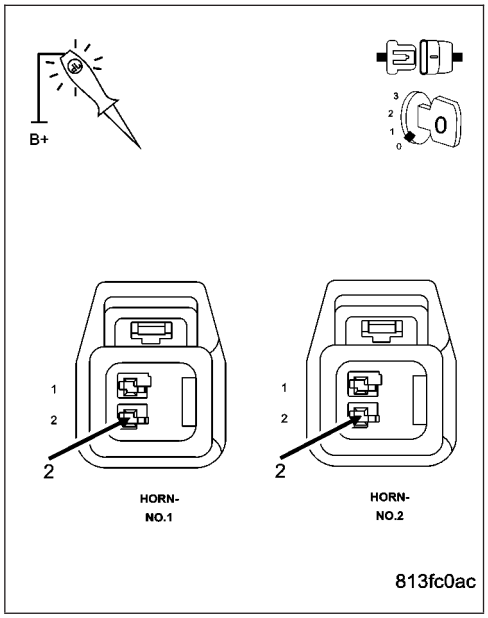

10. HORN RELAY OUTPUT CIRCUIT OPEN

Gain access to the IPM C1 connector.

Using a 12-volt test light connected to ground, back probe the Horn Relay Output circuit in the IPM C1 connector.

Turn the ignition on.

With the DRBIII®, the actuate the horn relay.

Does the test light illuminate brightly?

Yes >> Repair the Horn Relay Output circuit for an open.
Perform BODY VERIFICATION TEST - VER 1. (Refer to 8 - ELECTRICAL/ELECTRONIC CONTROL MODULES/ FRONT CONTROL MODULE - DIAGNOSIS AND TESTING)

No >> Go To 11

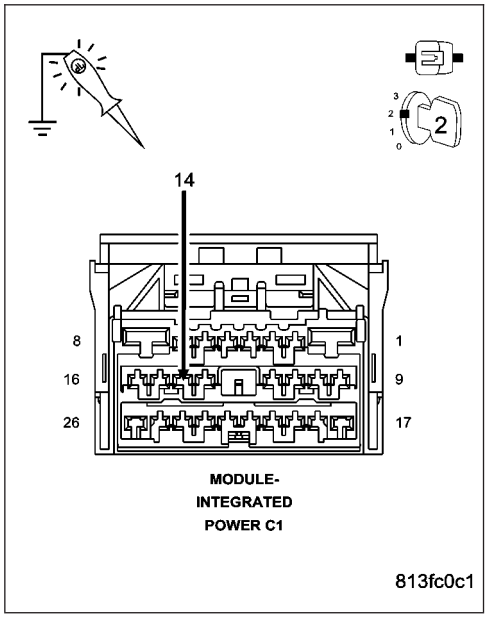

***HORNS INOPERATIVE (CONTINUED)**

11. INTEGRATED POWER MODULE

Turn the ignition off.

Remove the Front Control Module from the Integrated Power Module.

NOTE: Check connectors - Clean/repair as necessary.

NOTE: The test light is still connected to the C1 connector.

Momentarily jumper the Horn Relay Control circuit to ground at the FCM connector.

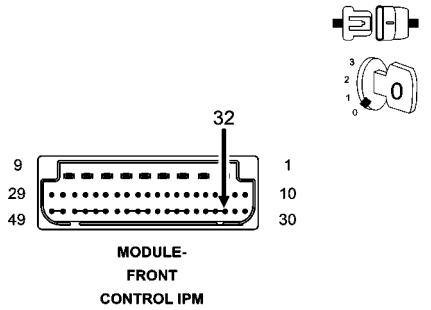

Does the test light illuminate brightly?

Yes >> Replace the Front Control Module in accordance with the Service Information.

Perform BODY VERIFICATION TEST - VER 1. (Refer to 8 - ELECTRICAL/ELECTRONIC CONTROL MODULES/ FRONT CONTROL MODULE - DIAGNOSIS AND TESTING)

No >> Replace the Integrated Power Module in accordance with the Service Information.

Perform BODY VERIFICATION TEST - VER 1. (Refer to 8 - ELECTRICAL/ELECTRONIC CONTROL MODULES/FRONT CONTROL MODULE - DIAGNOSIS AND TESTING)

SCHEMATICS AND DIAGRAMS

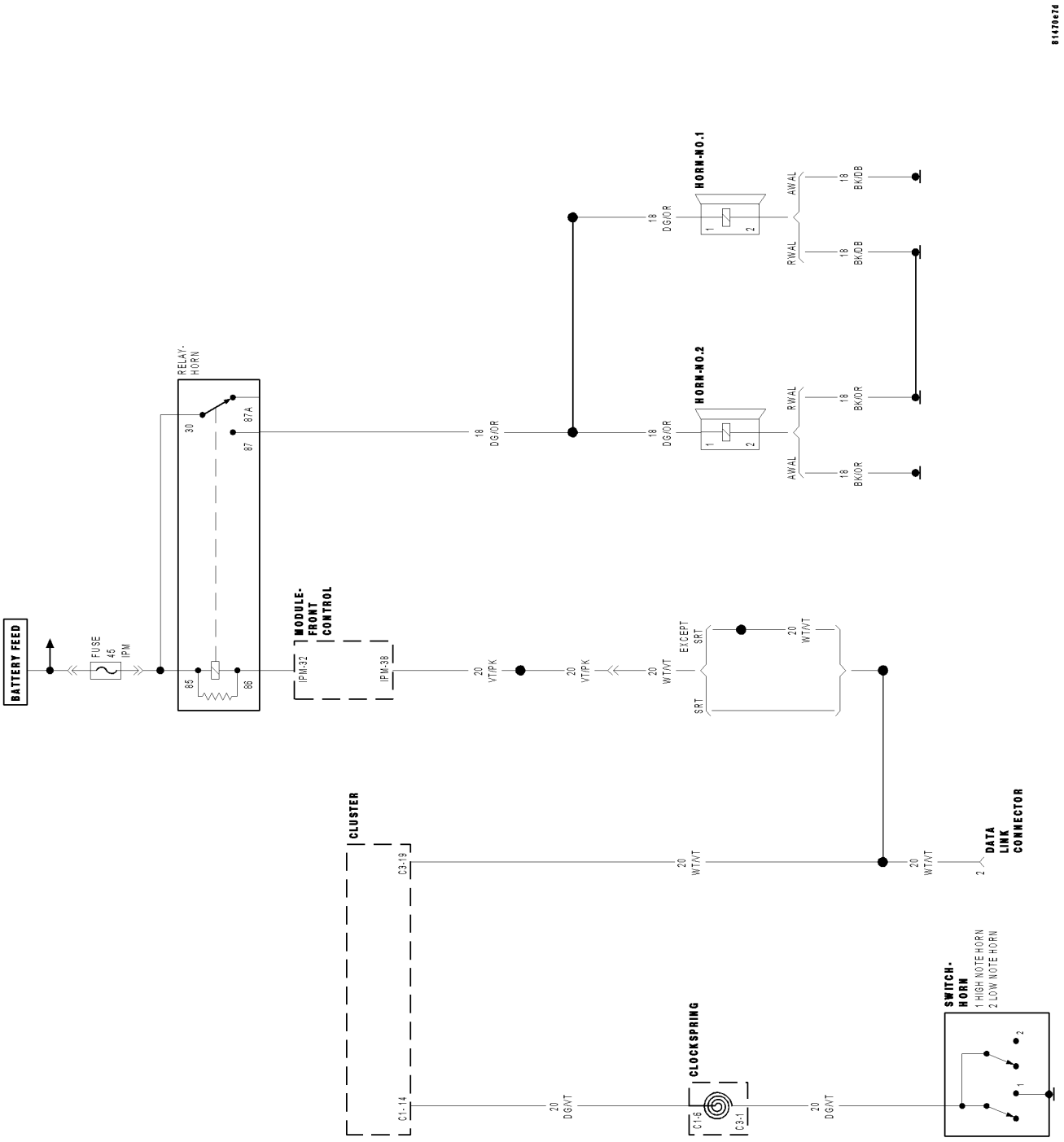

HORN SYSTEM - SERVICE INFORMATION

TABLE OF CONTENTS

page

HORN SYSTEM - SERVICE INFORMATION
DESCRIPTION 19
OPERATION 19
DIAGNOSIS AND TESTING
HORN SYSTEM 19
HORN
DIAGNOSIS AND TESTING
HORN 20
REMOVAL 20
INSTALLATION 20
SWITCH-HORN
DESCRIPTION 21
DIAGNOSIS AND TESTING
HORN SWITCH 21

HORN SYSTEM - SERVICE INFORMATION

DESCRIPTION

The dual-note horn system features two electromagnetic horn units. The horn system includes the following major components:

- **Horn** - The two horns are located on the left side of the engine compartment below the Integrated Power Module (IPM).
- **Horn Switch** - The horn switch is molded into the driver airbag trim cover.

OPERATION

The horn system operates on battery current received through a fuse in the Integrated Power Module (IPM). The horn system circuit is designed so that the system will remain operational, regardless of the ignition switch position.

DIAGNOSIS AND TESTING

HORN SYSTEM

The most reliable, efficient, and accurate means to diagnose the horn system requires the use of a scan tool and the proper Diagnostic Procedures information.

Refer to the appropriate wiring information.

In most cases, any problem involving continually sounding horns can be quickly alleviated by removing the horn fuse from the Integrated Power Module (IPM).

WARNING: DISABLE THE AIRBAG SYSTEM BEFORE ATTEMPTING ANY STEERING WHEEL, STEERING COLUMN, SEAT BELT TENSIONER, SIDE AIRBAG, OR INSTRUMENT PANEL COMPONENT DIAGNOSIS OR SERVICE. DISCONNECT AND ISOLATE THE BATTERY NEGATIVE (GROUND) CABLE, THEN WAIT TWO MINUTES FOR THE AIRBAG SYSTEM CAPACITOR TO DISCHARGE BEFORE PERFORMING FURTHER DIAGNOSIS OR SERVICE. THIS IS THE ONLY SURE WAY TO DISABLE THE AIRBAG SYSTEM. FAILURE TO TAKE THE PROPER PRECAUTIONS COULD RESULT IN ACCIDENTAL AIRBAG DEPLOYMENT AND POSSIBLE PERSONAL INJURY.

HORN

DIAGNOSIS AND TESTING

HORN

The most reliable, efficient, and accurate means to diagnose the horn system requires the use of a scan tool and the proper Diagnostic Procedures information.

Refer to the appropriate wiring information.

WARNING: DISABLE THE AIRBAG SYSTEM BEFORE ATTEMPTING ANY STEERING WHEEL, STEERING COLUMN, SEAT BELT TENSIONER, SIDE AIRBAG, OR INSTRUMENT PANEL COMPONENT DIAGNOSIS OR SERVICE. DISCONNECT AND ISOLATE THE BATTERY NEGATIVE (GROUND) CABLE, THEN WAIT TWO MINUTES FOR THE AIRBAG SYSTEM CAPACITOR TO DISCHARGE BEFORE PERFORMING FURTHER DIAGNOSIS OR SERVICE. THIS IS THE ONLY SURE WAY TO DISABLE THE AIRBAG SYSTEM. FAILURE TO TAKE THE PROPER PRECAUTIONS COULD RESULT IN ACCIDENTAL AIRBAG DEPLOYMENT AND POSSIBLE PERSONAL INJURY.

REMOVAL

1. Disconnect and isolate the battery negative cable.
2. Disconnect the wire harness connectors (1) from the horns (2).
3. Remove mounting bolt (3) and remove horns.

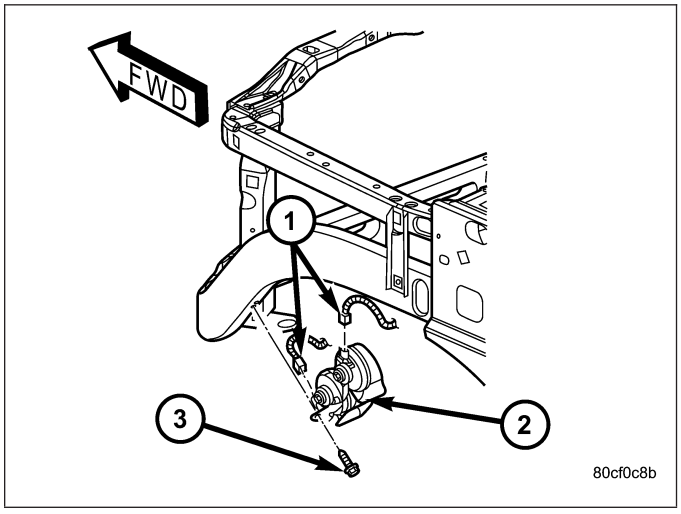

INSTALLATION

1. Position horns (2). Install and tighten mounting bolt (2).
2. Connect wire harness connectors (1).
3. Connect battery negative cable.

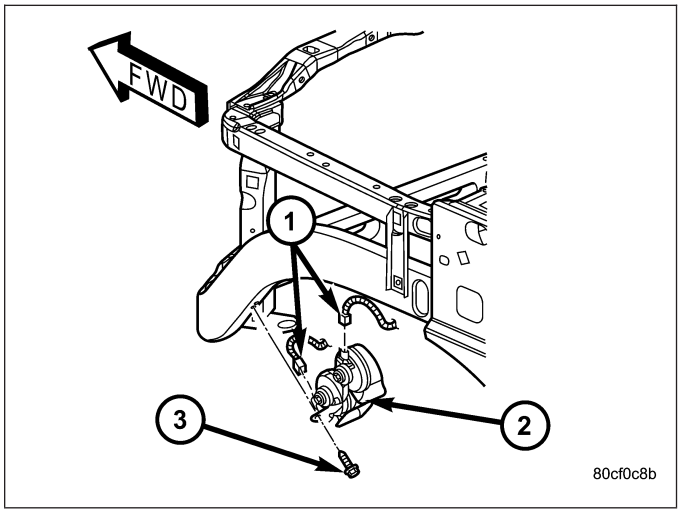

SWITCH-HORN

DESCRIPTION

The horn switch is molded into the driver airbag. The horn switch can not be serviced separately. For service procedures, (Refer to 8 - ELECTRICAL/RESTRAINTS/DRIVER AIRBAG - REMOVAL).

DIAGNOSIS AND TESTING

HORN SWITCH

The most reliable, efficient, and accurate means to diagnose the horn system requires the use of a scan tool and the proper Diagnostic Procedures information.

For complete circuit diagrams, refer to the appropriate wiring information.

WARNING: DISABLE THE AIRBAG SYSTEM BEFORE ATTEMPTING ANY STEERING WHEEL, STEERING COLUMN, SEAT BELT TENSIONER, SIDE AIRBAG, OR INSTRUMENT PANEL COMPONENT DIAGNOSIS OR SERVICE. DISCONNECT AND ISOLATE THE BATTERY NEGATIVE (GROUND) CABLE, THEN WAIT TWO MINUTES FOR THE AIRBAG SYSTEM CAPACITOR TO DISCHARGE BEFORE PERFORMING FURTHER DIAGNOSIS OR SERVICE. THIS IS THE ONLY SURE WAY TO DISABLE THE AIRBAG SYSTEM. FAILURE TO TAKE THE PROPER PRECAUTIONS COULD RESULT IN ACCIDENTAL AIRBAG DEPLOYMENT AND POSSIBLE PERSONAL INJURY.

IGNITION CONTROL

TABLE OF CONTENTS

page

IGNITION CONTROL - ELECTRICAL DIAGNOSTICS 1

page

IGNITION CONTROL - SERVICE INFORMATION . . 5

IGNITION CONTROL - ELECTRICAL DIAGNOSTICS

TABLE OF CONTENTS

page

IGNITION CONTROL - ELECTRICAL DIAGNOSTICS
DIAGNOSIS AND TESTING
IGNITION RUN/START MISMATCH (FCM) 2

IGNITION CONTROL - ELECTRICAL DIAGNOSTICS

DIAGNOSIS AND TESTING

IGNITION RUN/START MISMATCH (FCM)

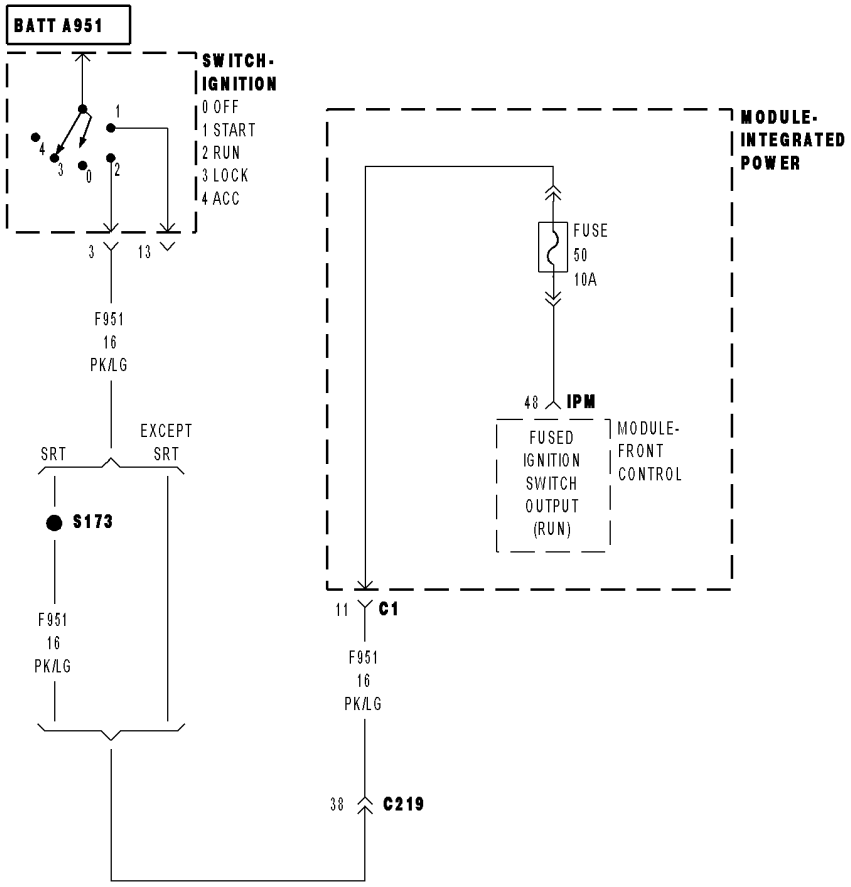

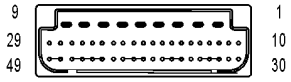

MODULE-
FRONT
CONTROL IPM

81316859

IGNITION RUN/START MISMATCH (FCM) (CONTINUED)

For a complete wiring diagram **Refer to Section 8W**.

- **When Monitored:**
  With the ignition on.
- **Set Condition:**
  The FCM detects an ignition run/start mismatch.

Possible Causes
INSTRUMENT CLUSTER
POWER DISTRIBUTION CENTER
FRONT CONTROL MODULE

Diagnostic Test

1. CHECK FOR AN ACTIVE DTC

Turn the ignition on.
With the DRB, erase the FCM DTC's.
Turn the ignition off then turn the ignition on and wait approximately 1 minute.
With the DRB, read the FCM DTC's.

Did this DTC reset?

Yes >> Go To 2

No >> The condition that set this DTC is no longer present. Using the wiring diagram/schematic as a guide, inspect the wiring for chafed, pierced, pinched, and partially broken wires and the wiring harness connectors for broken, bent, pushed out, and corroded terminals.

---

2. CHECK THE STATUS OF THE INSTRUMENT CLUSTER

NOTE: Ensure the battery is fully charged before proceeding with this test.

NOTE: Diagnose and repair any Airbag, Instrument Cluster, or PCM DTCs before proceeding with this test.
With the DRB, select MIC, Monitors and observe the ignition state.
While observing the ignition state, start the vehicle.

Does the DRB display run and start when the ignition switch is in those positions?

Yes >> Go To 3

No >> Replace and program the Instrument Cluster in accordance with the service information.
Perform BODY VERIFICATION TEST - VER 1. (Refer to BODY VERIFICATION TEST - VER 1.)

IGNITION RUN/START MISMATCH (FCM) (CONTINUED)

3. CHECK THE FUSED IGNITION SWITCH OUTPUT CIRCUIT

NOTE: Check IPM fuse #50 for an open before proceeding with this test.

Turn the ignition off.

Remove the FCM from the IPM.

Turn the ignition on.

Using a 12-volt test light connected to ground, probe the Fused Ignition Switch Output circuit (cavity 48).

Is the test light illuminated?

Yes >> Replace the Front Control Module in accordance with the service information.

Perform BODY VERIFICATION TEST - VER 1. (Refer to BODY VERIFICATION TEST - VER 1.)

No >> Replace the Power Distribution Center in accordance with the service information.

Perform BODY VERIFICATION TEST - VER 1. (Refer to BODY VERIFICATION TEST - VER 1.)

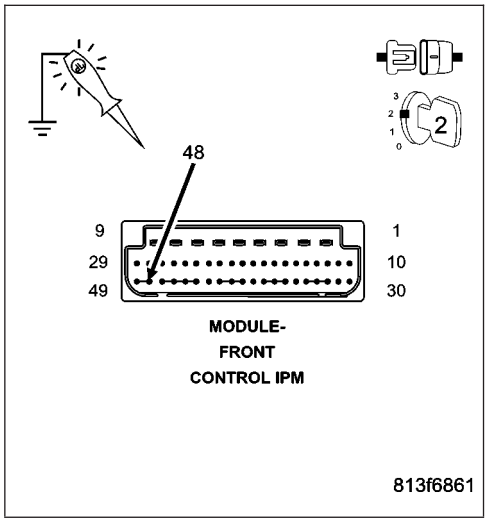

IGNITION CONTROL - SERVICE INFORMATION

TABLE OF CONTENTS

page

IGNITION CONTROL - SERVICE INFORMATION
DESCRIPTION 5
SPECIFICATIONS
TORQUE 7
ENGINE FIRING ORDER - 3.7L V-6 8
ENGINE FIRING ORDER – 4.7L V-8 8
FIRING ORDER / CABLE ROUTING – 5.7L V-8 ENGINE 8
8.3L - FIRING ORDER 9
SPARK PLUG CABLE RESISTANCE 10
SPARK PLUGS 10
IGNITION COIL RESISTANCE - 3.7L V-6 10
IGNITION COIL RESISTANCE - 4.7L V-8 10
IGNITION COIL RESISTANCE - 5.7L V-8 11
IGNITION COIL RESISTANCE - 8.3L V-10 . . . 11
IGNITION TIMING 11
RELAY-AUTO SHUT DOWN
DESCRIPTION - PCM OUTPUT 11
OPERATION
OPERATION - PCM OUTPUT 11
OPERATION - ASD SENSE - PCM INPUT . . . 11
DIAGNOSIS AND TESTING - ASD AND FUEL PUMP RELAYS 11
REMOVAL 13
INSTALLATION 13
SENSOR-CAMSHAFT POSITION
DESCRIPTION 13
OPERATION
OPERATION 14
8.3L V-10 16
REMOVAL
REMOVAL 17
8.3L - REPLACING WITH NEW SENSOR 19
8.3 L - REPLACING OLD SENSOR WITH ORIGINAL 20
INSTALLATION
INSTALLATION 20
8.3L - INSTALLATION - WITH NEW SENSOR . 21
8.3L - REPLACING OLD SENSOR WITH ORIGINAL 21

page

IGNITION COIL
DESCRIPTION 23
OPERATION 25
REMOVAL
REMOVAL 26
8.3L - SRT-10 29
INSTALLATION
INSTALLATION 30
8.3L - SRT-10 31
SENSOR-KNOCK
DESCRIPTION 31
OPERATION 31
REMOVAL 32
INSTALLATION 33
SPARK PLUG
DESCRIPTION 34
REMOVAL 34
CLEANING
CLEANING AND ADJUSTMENT 35
INSTALLATION 35
IGNITION COIL CAPACITOR
DESCRIPTION 36
OPERATION 36
REMOVAL 36
INSTALLATION 37
SPARK PLUG CABLE
DESCRIPTION 37
OPERATION 37
REMOVAL
REMOVAL 37
8.3L - SRT-10 38
INSTALLATION
INSTALLATION 38
8.3L - SRT-10 39
PUSH-BUTTON STARTER SWITCH
DESCRIPTION 40
REMOVAL 41
INSTALLATION 41

IGNITION CONTROL - SERVICE INFORMATION

DESCRIPTION

The ignition system is controlled by the Powertrain Control Module (PCM) on all engines.

3.7L V-6 ENGINE

The 3.7L V-6 engine uses a separate ignition coil for each cylinder. The one-piece coil bolts directly to the cylinder head. Rubber boots seal the secondary terminal ends of the coils to the top of all 6 spark plugs. A separate electrical connector is used for each coil.

Because of coil design, spark plug cables (secondary cables) are not used. A distributor is not used with the 3.7L engine.

Two knock sensors (one for each cylinder bank) are used to help control spark knock.

The Auto Shutdown (ASD) relay provides battery voltage to each ignition coil.

The ignition system consists of:

- 6 Spark Plugs
- 6 Separate Ignition Coils
- 2 Knock Sensors
- Powertrain Control Module (PCM)
- Also to be considered part of the ignition system are certain inputs from the Crankshaft Position, Camshaft Position, Throttle Position, 2 knock and MAP Sensors

4.7L V-8 ENGINE

The 4.7L V-8 engine uses a separate ignition coil for each cylinder. The one-piece coil bolts directly to the cylinder head. Rubber boots seal the secondary terminal ends of the coils to the top of all 8 spark plugs. A separate electrical connector is used for each coil.

Because of coil design, spark plug cables (secondary cables) are not used. A distributor is not used with the 4.7L engine.

Two knock sensors (one for each cylinder bank) are used to help control spark knock.

The Auto Shutdown (ASD) relay provides battery voltage to each ignition coil.

The ignition system consists of:

- 8 Spark Plugs
- 8 Separate Ignition Coils
- 2 Knock Sensors
- Powertrain Control Module (PCM)
- Also to be considered part of the ignition system are certain inputs from the Crankshaft Position, Camshaft Position, Throttle Position, 2 knock and MAP Sensors

5.7L V-8 ENGINE

For additional information, also refer to Ignition Coil Description and Operation.

The 5.7L V-8 engine is equipped with 16 spark plugs. Two plugs are used for each cylinder. The 5.7L is also equipped with 8 separate and independent ignition coils. The one-piece coil bolts directly to the cylinder head cover and attaches the coils secondary output terminal directly to a spark plug using a rubber boot seal. Each coil is also equipped with a second output terminal. This second terminal connects a conventional spark plug cable directly to a spark plug on the opposite cylinder bank. A separate primary electrical connector is used for each coil.

Eight conventional spark plug cables are used with the 5.7L. These cables connect a coil on one cylinder bank, directly to a spark plug on the opposite cylinder bank. The cables are placed and routed in a special plastic loom to keep them separated. This loom is clipped to the intake manifold. To prevent a miss-match of cables, a corresponding spark plug / coil number is displayed on each plug cable: 1/6, 2/3, 4/7 and 5/8. These numbers can also be found on the top of the intake manifold to the right of the throttle body.

Two knock sensors (one for each cylinder bank) are used to help control spark knock.

The 5.7L engine will not use a conventional distributor.

The ignition system consists of:

- 16 Spark Plugs (2 per cylinder)
- 8 Separate, Dual-Secondary Output, Ignition Coils
- 2 Knock Sensors
- 8 Secondary Ignition Cables
- Powertrain Control Module (PCM)
- Also to be considered part of the ignition system are certain inputs from the Crankshaft Position, Camshaft Position, Throttle Position, 2 knock and MAP Sensors

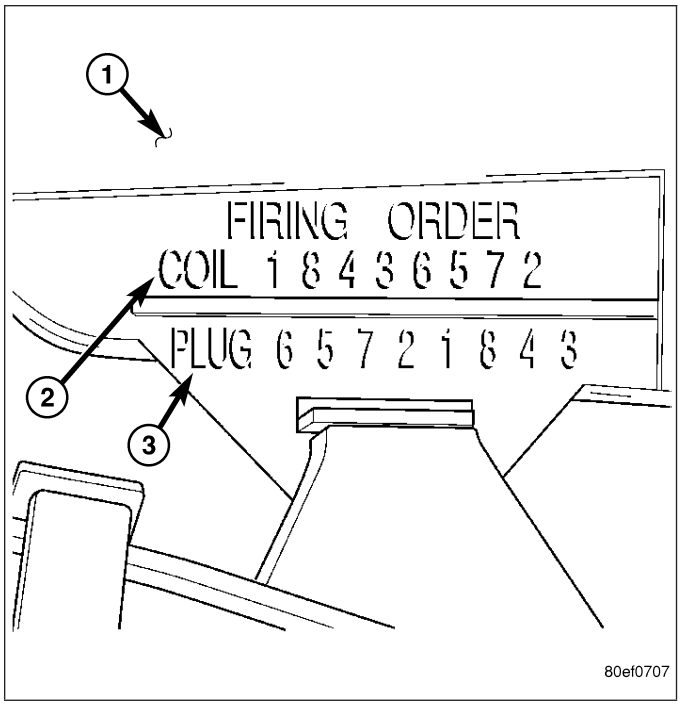

SPECIFICATIONS

TORQUE

DESCRIPTION	N·m	Ft. Lbs.	In. Lbs.
Camshaft Position Sensor - 3.7L V-6 Engine	12	-	106
Camshaft Position Sensor - 4.7L V-8 Engine	12	-	106
Camshaft Position Sensor - 5.7L V-8 Engine	12	9	105
Camshaft Position Sensor - 8.3L Engine	10.7	-	95
Crankshaft Position Sensor - 3.7L V-6 Engine	28	21	205
Crankshaft Position Sensor - 4.7L V-8 Engine	28	21	205
Crankshaft Position Sensor - 5.7L V-8 Engine	12	9	105
Crankshaft Position Sensor - 8.3L Engine	10.7	-	95
Ignition Coil Mounting - 3.7L V-6 Engine	8	-	70
Ignition Coil Mounting - 4.7L V-8 Engine	8	-	70
Ignition Coil Mounting - 5.7L V-8 Engine	12	9	105 (± 20)
Ignition Coil to Cyl. Head Screws 8.3L Engine	10.7	-	95
* Knock Sensor - 3.7L V-6 Engine	20	15	176

DESCRIPTION	N·m	Ft. Lbs.	In. Lbs.
* Knock Sensor - 4.7L V-8 Engine	20	15	176
* Knock Sensor - 5.7L V-8 Engine	20	15	176
Spark Plugs - 3.7L V-6 Engine	27	20	-
Spark Plugs - 4.7L V-8 Engine	27	20	-
** Spark Plugs - 5.7L V-8 Engine	18 (± 3)	13 (± 2)	-
Spark Plugs - 8.3L Engine	27	20	-
* Do not apply any sealant, thread-locker or adhesive to bolts. Poor sensor performance may result.			
** Torque critical tapered design. Do not exceed 15 ft. lbs.			

ENGINE FIRING ORDER - 3.7L V-6

1 - 6 - 5 - 4 - 3 - 2

ENGINE FIRING ORDER – 4.7L V-8

FIRING ORDER / CABLE ROUTING – 5.7L V-8 ENGINE

Eight conventional spark plug cables are used with the 5.7L. These cables connect a coil on one cylinder bank, directly to a spark plug on the opposite cylinder bank. The cables are placed and routed in a special plastic loom to keep them separated. This loom is clipped to the intake manifold. To prevent a miss-match of cables, a corresponding spark plug / coil number is displayed on each plug cable: 1/6, 2/3, 4/7 and 5/8. These numbers can also be found on the top of the intake manifold to the right of the throttle body.

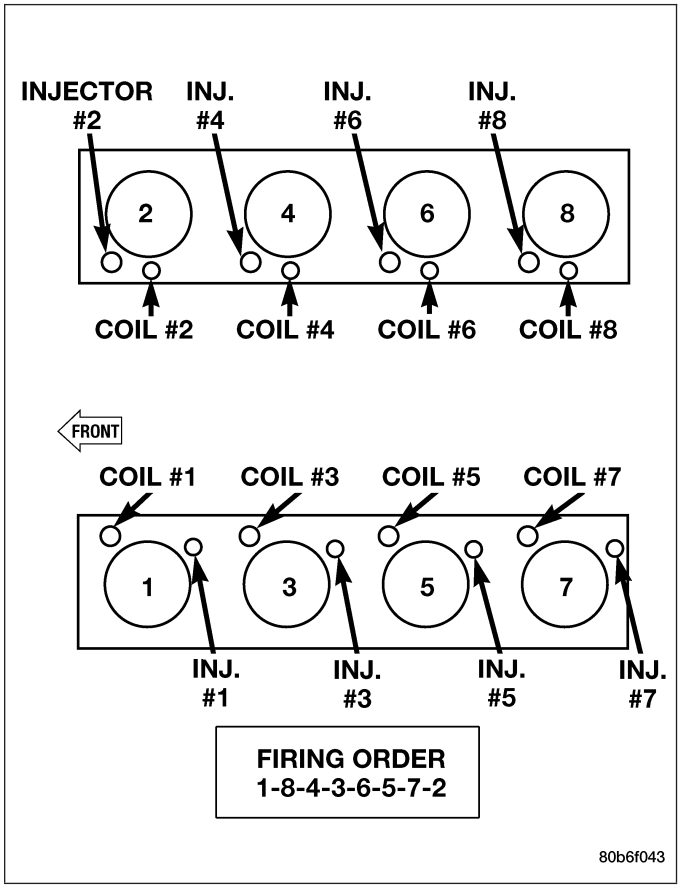

8.3L - FIRING ORDER

1-10-9-4-3-6-5-8-7-2

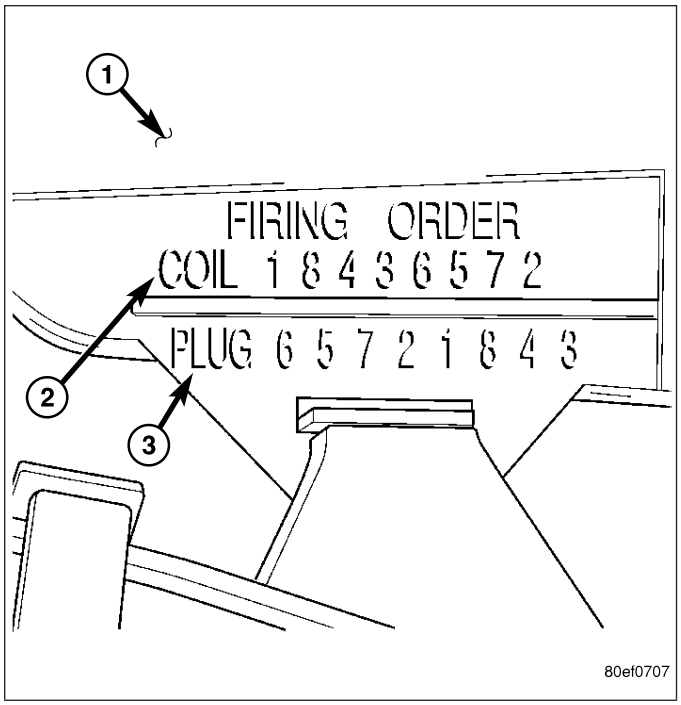

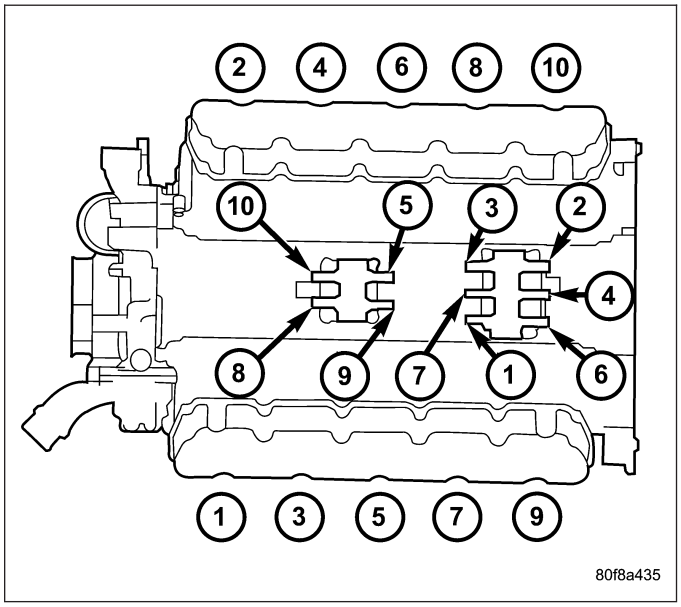

SPARK PLUG CABLE RESISTANCE

Except 8.3L V-10

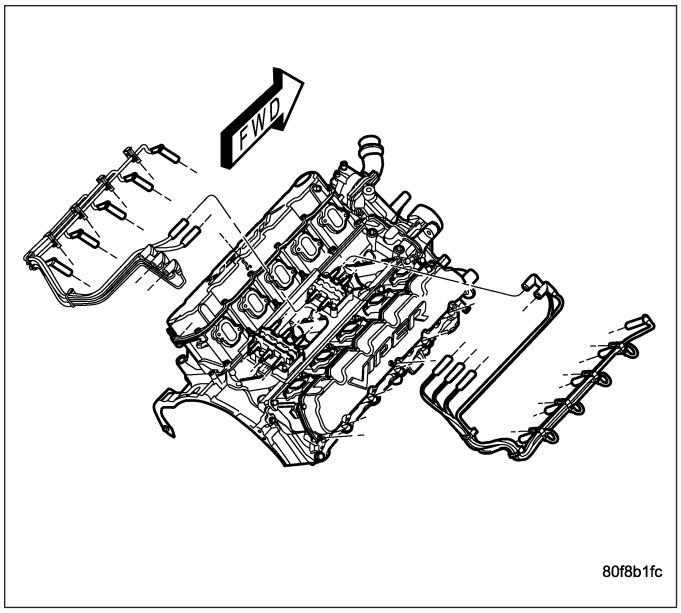

MINIMUM	MAXIMUM
250 Ohms Per Inch	1000 Ohms Per Inch
3000 Ohms Per Foot	12,000 Ohms Per Foot

8.3L V - 10

MINIMUM	MAXIMUM
250 Ohms Per Inch	750 Ohms Per Inch
3000 Ohms Per Foot	9,000 Ohms Per Foot

SPARK PLUGS

ENGINE	PLUG TYPE	ELECTRODE GAP
3.7L V-6	ZFR6F - 11G (NGK)	1.1 (0.042 in.)
4.7L V-8	RC12MCC4	1.01 mm (.040 in.)
5.7L V-8	Champion - RE14MCC4	1.14 mm (.045 in.)
8.3L V-10	RC12ECC	0.033 to 0.038

IGNITION COIL RESISTANCE - 3.7L V-6

PRIMARY RESISTANCE 21-27°C (70-80°F)	SECONDARY RESISTANCE 21-27°C (70-80°F)
0.6 - 0.9 Ohms	6,000 - 9,000 Ohms

IGNITION COIL RESISTANCE - 4.7L V-8

PRIMARY RESISTANCE 21-27°C (70-80°F)	SECONDARY RESISTANCE 21-27°C (70-80°F)
0.6 - 0.9 Ohms	6,000 - 9,000 Ohms

IGNITION COIL RESISTANCE - 5.7L V-8

PRIMARY RESISTANCE @ 21-27°C (70-80°F)
0.558 - 0.682 Ohms (Plus or Minus 10% @ 70-80° F)

IGNITION COIL RESISTANCE - 8.3L V-10

Coil Manufacture	Primary Resistance at 21°C-27°C (70°F-80°F)	Secondary Resistance at 21°C-27°C (70°F-80°F)
Diamond	0.53 to 0.65 Ohms	10,900 to 14,700 Ohms

IGNITION TIMING

Ignition timing is not adjustable on any engine.

RELAY-AUTO SHUT DOWN

DESCRIPTION - PCM OUTPUT

The 5–pin, 12–volt, Automatic Shutdown (ASD) relay is located in the Power Distribution Center (PDC). Refer to label on PDC cover for relay location.

OPERATION

OPERATION - PCM OUTPUT

The ASD relay supplies battery voltage (12+ volts) to the fuel injectors and ignition coil(s). With certain emissions packages it also supplies 12–volts to the oxygen sensor heating elements.

The ground circuit for the coil within the ASD relay is controlled by the Powertrain Control Module (PCM). The PCM operates the ASD relay by switching its ground circuit on and off.

The ASD relay will be shut–down, meaning the 12–volt power supply to the ASD relay will be de-activated by the PCM if:

- the ignition key is left in the ON position. This is if the engine has not been running for approximately 1.8 seconds.
- there is a crankshaft position sensor signal to the PCM that is lower than pre-determined values.

OPERATION - ASD SENSE - PCM INPUT

A 12 volt signal at this input indicates to the PCM that the ASD has been activated. The relay is used to connect the oxygen sensor heater element, ignition coil and fuel injectors to 12 volt + power supply.

This input is used only to sense that the ASD relay is energized. If the Powertrain Control Module (PCM) does not see 12 volts at this input when the ASD should be activated, it will set a Diagnostic Trouble Code (DTC).

DIAGNOSIS AND TESTING - ASD AND FUEL PUMP RELAYS

The following description of operation and tests apply only to the Automatic Shutdown (ASD) and fuel pump relays. The terminals on the bottom of each relay are numbered. Two different types of relays may be used, or.

- Terminal number 30 is connected to battery voltage. For both the ASD and fuel pump relays, terminal 30 is connected to battery voltage at all times.
- The PCM grounds the coil side of the relay through terminal number 85.
- Terminal number 86 supplies voltage to the coil side of the relay.
- When the PCM de-energizes the ASD and fuel pump relays, terminal number 87A connects to terminal 30. This is the Off position. In the off position, voltage is not supplied to the rest of the circuit. Terminal 87A is the center terminal on the relay.
- When the PCM energizes the ASD and fuel pump relays, terminal 87 connects to terminal 30. This is the On position. Terminal 87 supplies voltage to the rest of the circuit.

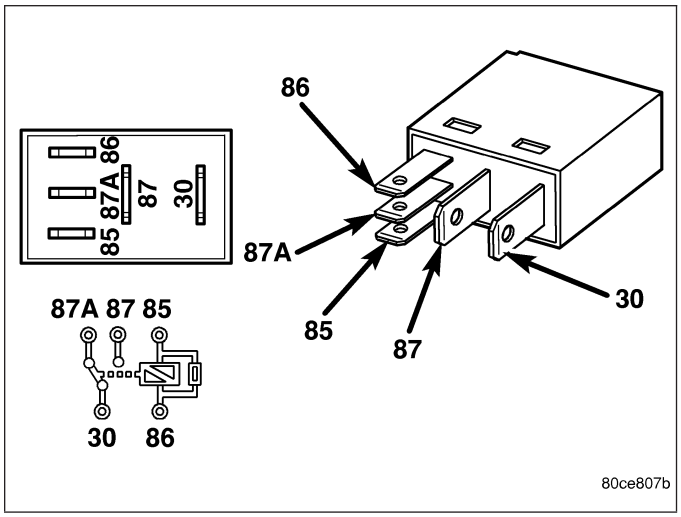

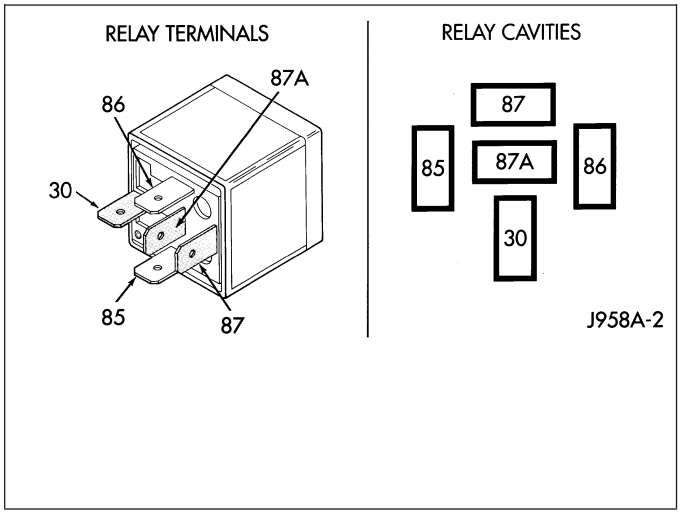

The following procedure applies to the ASD and fuel pump relays.

1. Remove relay from connector before testing.
2. With the relay removed from the vehicle, use an ohmmeter to check the resistance between terminals 85 and 86. The resistance should be 75 ohms +/- 5 ohms.
3. Connect the ohmmeter between terminals 30 and 87A. The ohmmeter should show continuity between terminals 30 and 87A.
4. Connect the ohmmeter between terminals 87 and 30. The ohmmeter should not show continuity at this time.
5. Connect one end of a jumper wire (16 gauge or smaller) to relay terminal 85. Connect the other end of the jumper wire to the ground side of a 12 volt power source.
6. Connect one end of another jumper wire (16 gauge or smaller) to the power side of the 12 volt power source. **Do not attach the other end of the jumper wire to the relay at this time.**

WARNING: DO NOT ALLOW OHMMETER TO CONTACT TERMINALS 85 OR 86 DURING THIS TEST. DAMAGE TO OHMMETER MAY RESULT.

7. Attach the other end of the jumper wire to relay terminal 86. This activates the relay. The ohmmeter should now show continuity between relay terminals 87 and 30. The ohmmeter should not show continuity between relay terminals 87A and 30.
8. Disconnect jumper wires.
9. Replace the relay if it did not pass the continuity and resistance tests. If the relay passed the tests, it operates properly. Check the remainder of the ASD and fuel pump relay circuits. Refer to 8, Wiring Diagrams.

REMOVAL

The ASD relay is located in the Power Distribution Center (PDC) (2) . Refer to label on PDC cover for relay location.

1. Remove PDC cover.
2. Remove relay from PDC.
3. Check condition of relay terminals and PDC connector terminals for damage or corrosion. Repair if necessary before installing relay.
4. Check for pin height (pin height should be the same for all terminals within the PDC connector). Repair if necessary before installing relay.

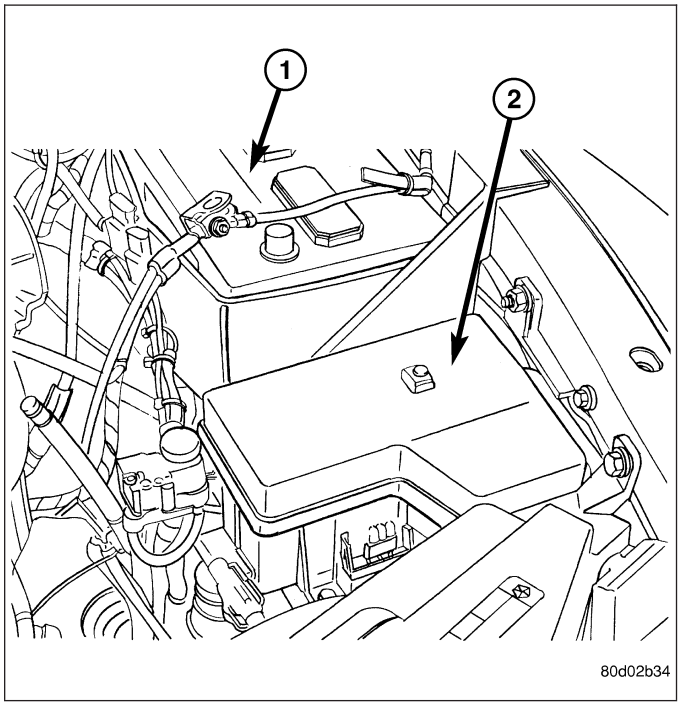

INSTALLATION

The ASD relay is located in the Power Distribution Center (PDC). Refer to label on PDC cover for relay location.

1. Install relay to PDC.
2. Install cover to PDC.

SENSOR-CAMSHAFT POSITION

DESCRIPTION

3.7L V-6

The Camshaft Position Sensor (CMP) on the 3.7L 6-cylinder engine is bolted to the right-front side of the right cylinder head.

4.7L V-8

The Camshaft Position Sensor (CMP) on the 4.7L V-8 engine is bolted to the right-front side of the right cylinder head.

5.7L V-8

The Camshaft Position Sensor (CMP) on the 5.7L V-8 engine is located below the generator on the timing chain / case cover on the right/front side of engine.

5.9L Diesel

The Camshaft Position Sensor (CMP) on the 5.9L diesel engine is located below the fuel injection pump. It is bolted to the back of the timing gear cover.

OPERATION

OPERATION

3.7L V-6

The Camshaft Position Sensor (CMP) sensor (3) on the 3.7L V-6 engine contains a hall effect device referred to as a sync signal generator. A rotating target wheel (tonewheel) for the CMP is located at the front of the camshaft for the right cylinder head. This sync signal generator detects notches (1) located on a tonewheel. As the tonewheel rotates, the notches pass through the sync signal generator. The signal from the CMP sensor is used in conjunction with the Crankshaft Position Sensor (CKP) to differentiate between fuel injection and spark events. It is also used to synchronize the fuel injectors with their respective cylinders.

When the leading edge of the tonewheel notch enters the tip of the CMP, the interruption of magnetic field causes the voltage to switch high, resulting in a sync signal of approximately 5 volts.

When the trailing edge of the tonewheel notch leaves then tip of the CMP, the change of the magnetic field causes the sync signal voltage to switch low to 0 volts.

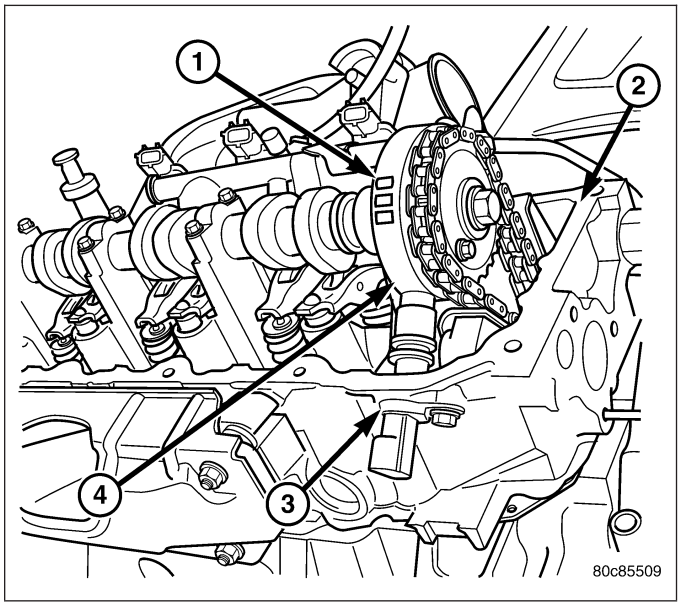

4.7L V-8

The CMP sensor (3) on the 4.7L engine contains a hall effect device called a sync signal generator to generate a fuel sync signal. This sync signal generator detects notches (1) located on a tonewheel. The tonewheel is located at the front of the camshaft for the right cylinder head. As the tonewheel rotates, the notches pass through the sync signal generator. The pattern of the notches (viewed counter-clockwise from front of engine) is: 1 notch, 2 notches, 3 notches, 3 notches, 2 notches 1 notch, 3 notches and 1 notch. The signal from the CMP sensor is used in conjunction with the crankshaft position sensor to differentiate between fuel injection and spark events. It is also used to synchronize the fuel injectors with their respective cylinders.

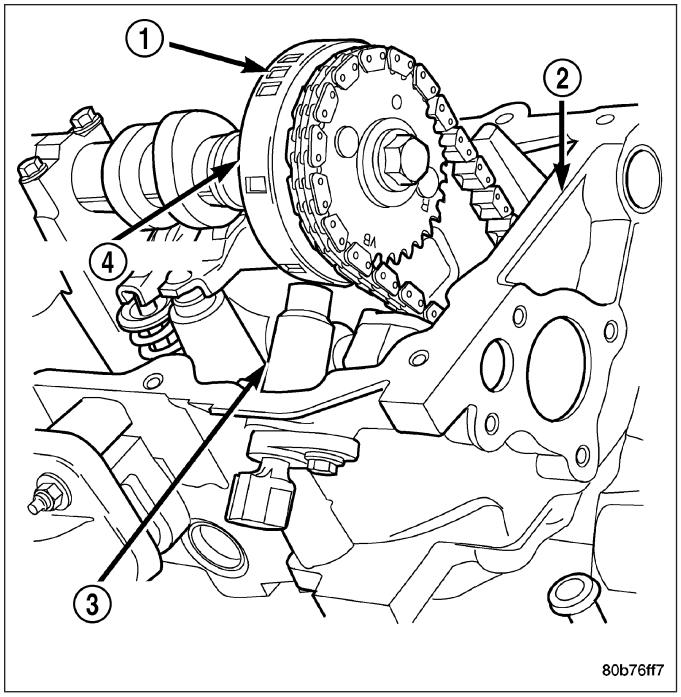

5.7L V-8

The CMP sensor is used in conjunction with the crankshaft position sensor to differentiate between fuel injection and spark events. It is also used to synchronize the fuel injectors with their respective cylinders. The sensor generates electrical pulses. These pulses (signals) are sent to the Powertrain Control Module (PCM). The PCM will then determine crankshaft position from both the camshaft position sensor and crankshaft position sensor.

The tonewheel (2) is located at the front of the camshaft. As the tonewheel rotates, notches (3) pass through the sync signal generator.

When the cam gear is rotating, the sensor will detect the notches. Input voltage from the sensor to the PCM will then switch from a low (approximately 0.3 volts) to a high (approximately 5 volts). When the sensor detects a notch has passed, the input voltage switches back low to approximately 0.3 volts.

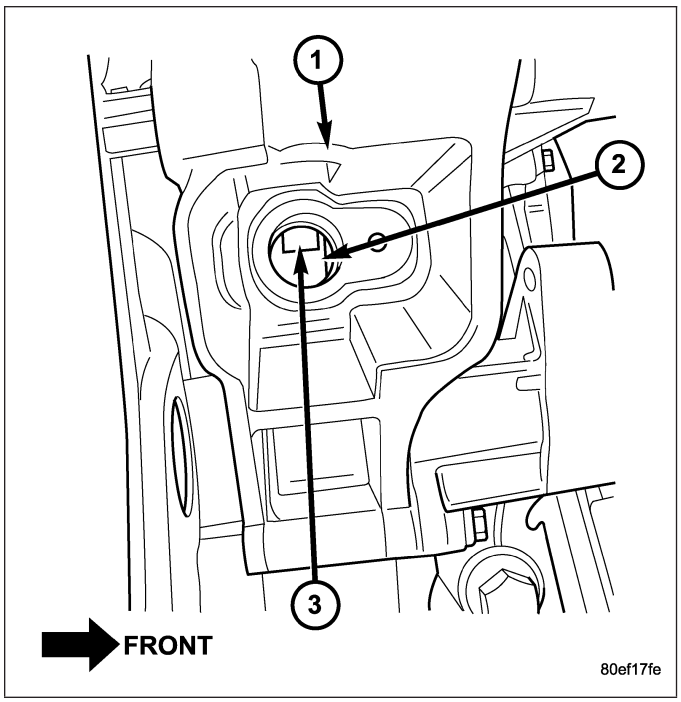

5.9L Diesel

The Camshaft Position Sensor (CMP) (1) contains a hall effect device. A rotating target wheel (tonewheel) for the CMP is located on the front timing gear. This hall effect device detects notches located on the tonewheel. As the tonewheel rotates, the notches pass the tip of the CMP.

When the leading edge of the tonewheel notch passes the tip of the CMP, the following occurs: The interruption of magnetic field causes the voltage to switch high resulting in a signal of approximately 5 volts.

When the trailing edge of the tonewheel notch passes the tip of the CMP, the following occurs: The change of the magnetic field causes the signal voltage to switch low to 0 volts.

The CMP provides a signal to the Engine Control Module (ECM) at all times when the engine is running. The ECM uses the CMP information primarily on engine start-up. Once the engine is running, the ECM uses the CMP as a backup sensor for engine speed. The Crankshaft Position Sensor (CKP) is the primary engine speed indicator for the engine after the engine is running.

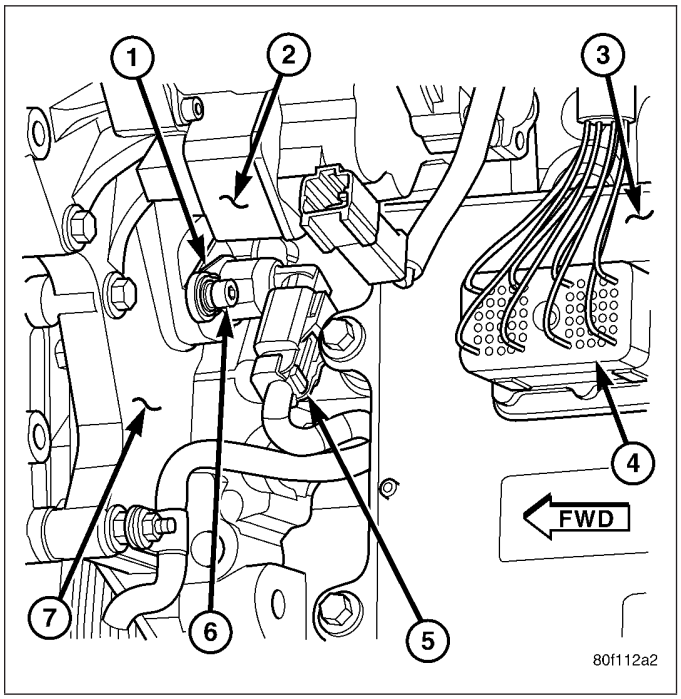

8.3L V-10

The Camshaft Position Sensor is located above the water pump and under the throttle body.

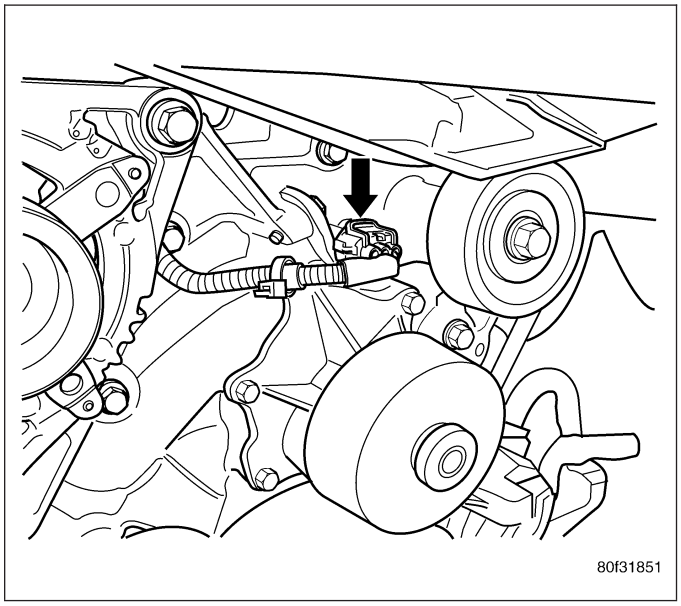

The camshaft position sensor (1) provides cylinder identification to the Powertrain Control Module (PCM). The sensor generates pulses. The PCM determines crankshaft position from the camshaft position sensor and crankshaft position sensor inputs. The PCM uses the input to determine fuel injection synchronization and to determine which ignition coil to energize.

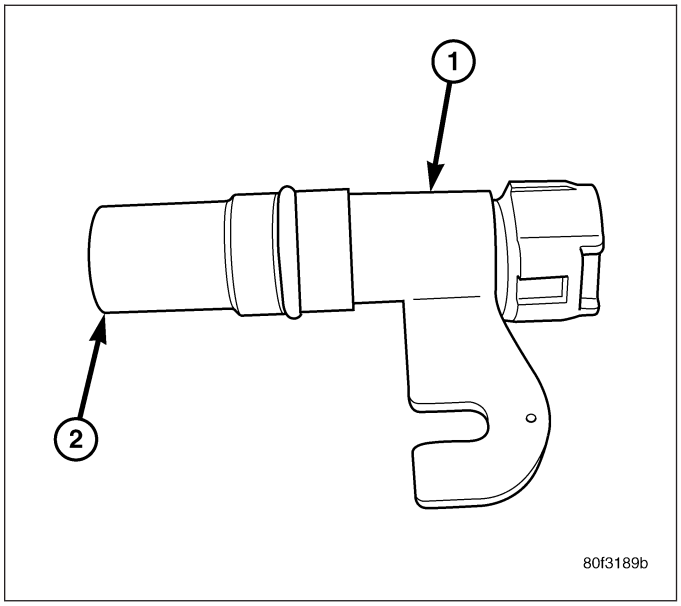

The camshaft position sensor detects when a step down (1) in the camshaft sprocket passes beneath it. When the sensor detects the step down, the input voltage from the sensor to the PCM switches from low (0.3 volts) to high (5 volts). As the step up returns to the sensor, the input voltage switches back to low (0.3 volts). **The paper spacer is not used on 8.3L motors. Don't use at all. It plugs up the oil pickup screen.**.

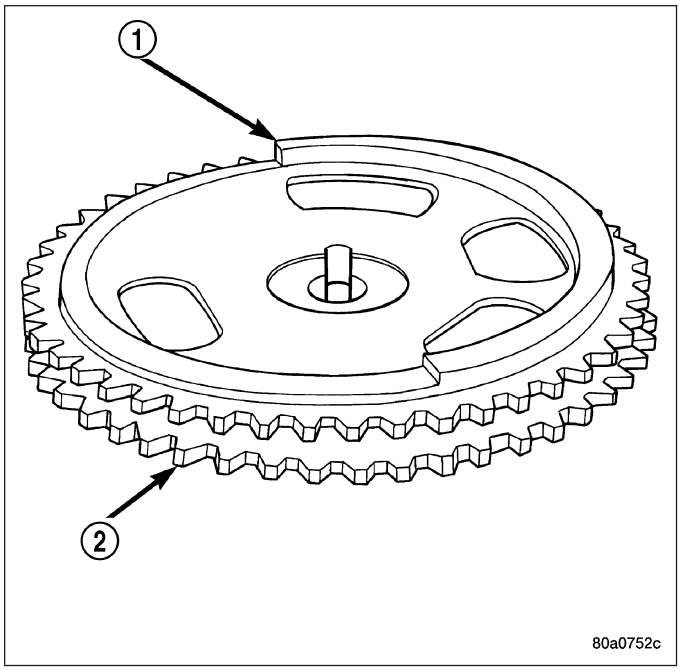

REMOVAL

REMOVAL

3.7L V-6

The Camshaft Position Sensor (CMP) on the 3.7L V-6 engine is bolted to the front/top of the right cylinder head (3).

1. Disconnect electrical connector at CMP sensor.
2. Remove sensor mounting bolt (2).
3. Carefully twist sensor from cylinder head.
4. Check condition of sensor o-ring.

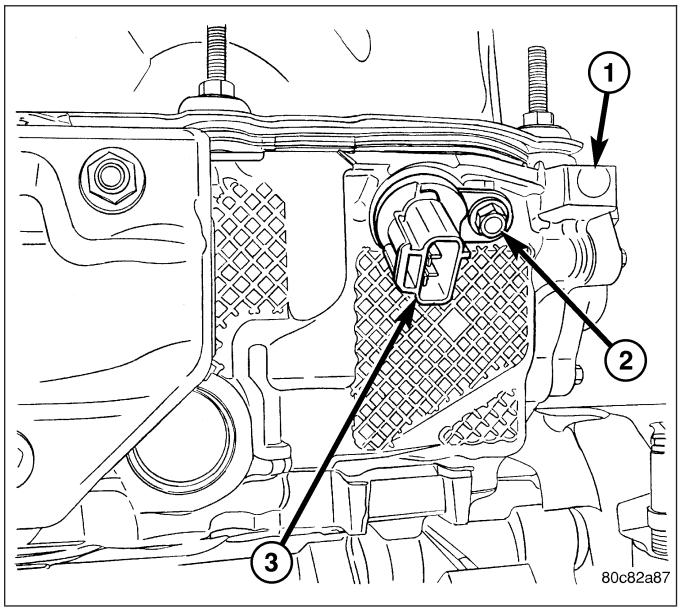

4.7L V-8

The Camshaft Position Sensor (CMP) (2) on the 4.7L V–8 engine is bolted to the front/top of the right cylinder head.

1. Raise and support vehicle.
2. Disconnect electrical connector at CMP sensor.
3. Remove sensor mounting bolt (3).
4. Carefully twist sensor from cylinder head.
5. Check condition of sensor o-ring.

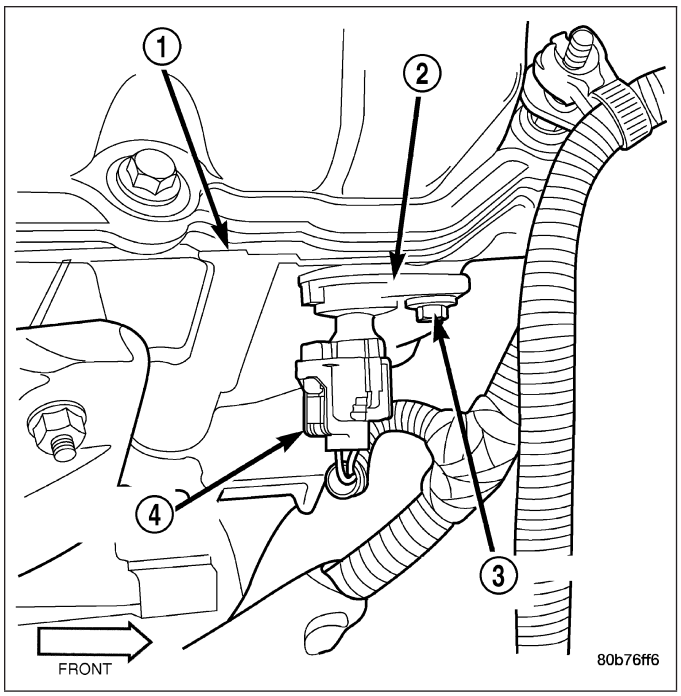

5.7L V-8

The Camshaft Position Sensor (CMP) (2) on the 5.7L V-8 engine is located on right side of timing chain cover below generator (1).

1. Disconnect electrical connector (3) at CMP sensor.

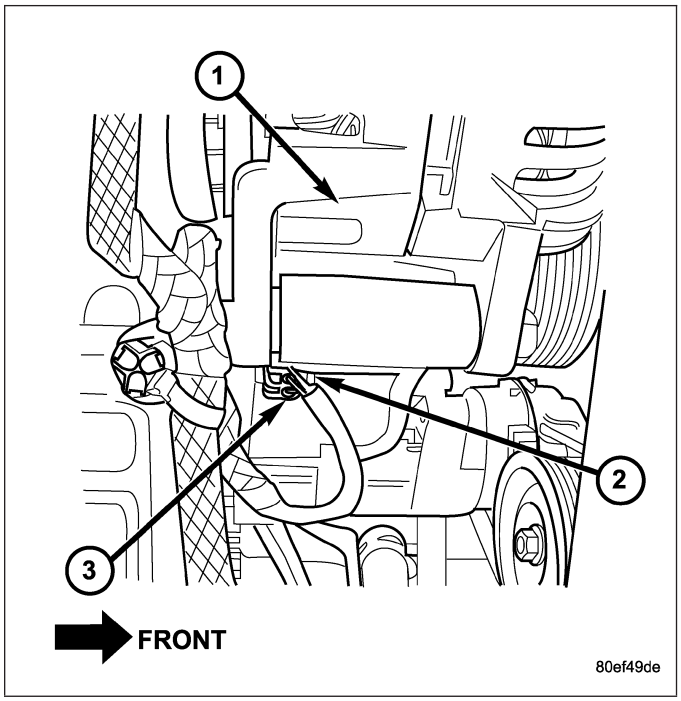

2. Remove sensor mounting bolt (3).
3. Carefully twist sensor from cylinder head.
4. Check condition of sensor o-ring.

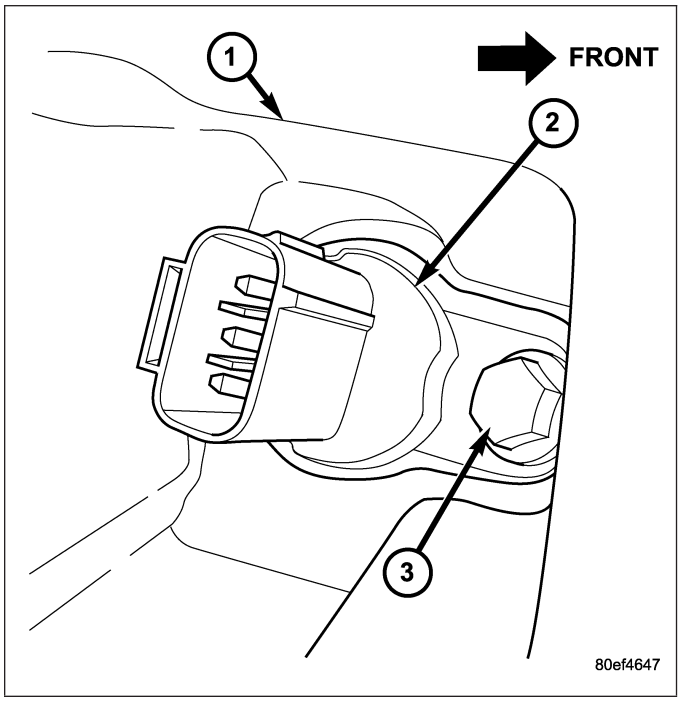

5.9L Diesel

The Camshaft Position Sensor (CMP) on the 5.9L diesel engine is located below the fuel injection pump (1). It is bolted to the back of the timing gear cover.

1. Disconnect electrical connector (5) at CMP sensor.
2. Remove sensor mounting bolt (6).
3. Carefully twist sensor from timing gear cover.
4. Check condition of sensor o-ring.

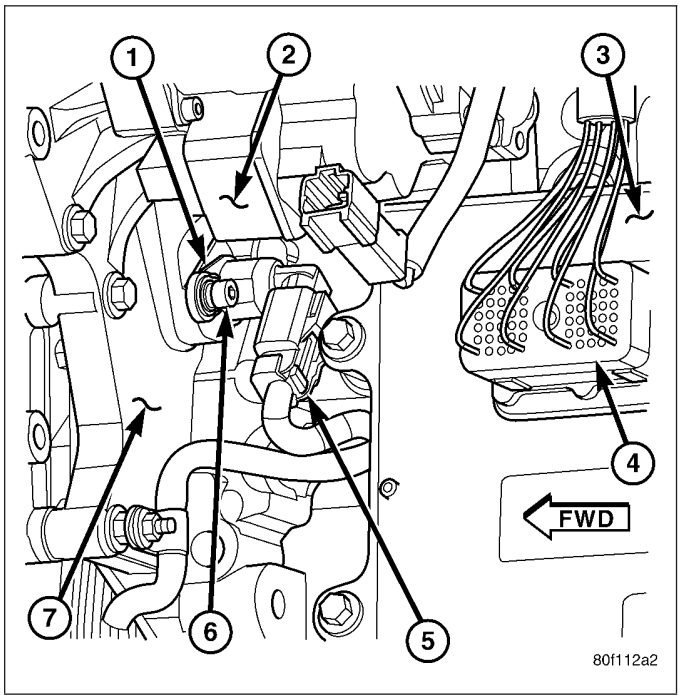

8.3L - REPLACING WITH NEW SENSOR

The camshaft position sensor is located on the timing chain case above the water pump and under the throttle body.

If a new replacement camshaft position sensor is to be installed, use this procedure.

1. Disconnect the sensor wiring harness connector from sensor.
2. Remove the sensor mounting bolt.
3. Carefully pry the sensor from the timing chain case/cover in a rocking action with two small screwdrivers.
4. Remove the sensor from vehicle.

8.3 L - REPLACING OLD SENSOR WITH ORIGINAL

The camshaft position sensor is located on the timing chain case above the water pump and under the throttle body.

If the original camshaft position sensor is to be removed and installed, such as when servicing the timing chain, timing gears or timing chain cover, use this procedure.

1. Disconnect the sensor harness connector from the sensor.
2. Scribe the sensor for location depth.
3. Remove the sensor mounting bolt.
4. Carefully pry the sensor from the timing chain case/cover in a rocking action with two small screwdrivers.
5. Remove the sensor from vehicle.
6. Check condition of sensor o-ring.

INSTALLATION

INSTALLATION

3.7L V-6

The Camshaft Position Sensor (CMP) on the 3.7L V-6 engine is bolted to the front/top of the right cylinder head.

1. Clean out machined hole in cylinder head.
2. Apply a small amount of engine oil to sensor o-ring.
3. Install sensor into cylinder head with a slight rocking and twisting action.

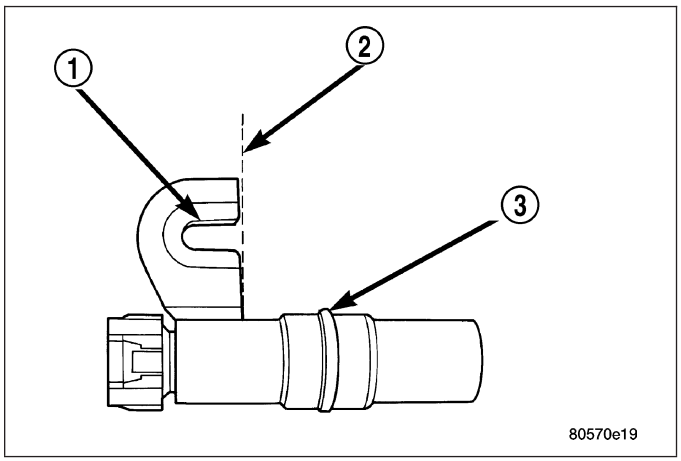

CAUTION: Before tightening sensor mounting bolt, be sure sensor is completely flush to cylinder head. If sensor is not flush, damage to sensor mounting tang may result.

4. Install mounting bolt and tighten. Refer to torque specifications.
5. Connect electrical connector to sensor.

4.7L V-8

The Camshaft Position Sensor (CMP) on the 4.7L V-8 engine is bolted to the front/top of the right cylinder head.

1. Clean out machined hole in cylinder head.
2. Apply a small amount of engine oil to sensor o-ring.
3. Install sensor into cylinder head with a slight rocking action. Do not twist sensor into position as damage to o-ring may result.

CAUTION: Before tightening sensor mounting bolt, be sure sensor is completely flush to cylinder head. If sensor is not flush, damage to sensor mounting tang may result.

4. Install mounting bolt and tighten. Refer to Torque Specifications.
5. Connect electrical connector to sensor.

5.7L V-8

The Camshaft Position Sensor (CMP) on the 5.7L V-8 engine is bolted to the right / front side of the timing chain cover or.

1. Clean out machined hole in cylinder head.
2. Apply a small amount of engine oil to sensor o-ring.
3. Install sensor into cylinder head with a slight rocking action. Do not twist sensor into position as damage to o-ring may result.

CAUTION: Before tightening sensor mounting bolt, be sure sensor is completely flush to timing chain cover. If sensor is not flush, damage to sensor mounting tang may result.

4. Install mounting bolt and tighten. Refer to Torque Specifications.
5. Connect electrical connector to sensor.

5.9L Diesel

The CMP is located on the back of the timing gear cover.

1. Clean out machined hole in back of timing gear cover.
2. Apply a small amount of engine oil to sensor o-ring.
3. Install sensor into timing gear cover with a slight rocking action. Do not twist sensor into position as damage to o-ring may result.

CAUTION: Before tightening sensor mounting bolt, be sure sensor is completely flush to back of timing chain cover. If sensor is not flush, damage to sensor mounting tang may result.

4. Install mounting bolt and tighten. Refer to Torque Specifications.
5. Connect electrical connector to sensor.

8.3L - INSTALLATION - WITH NEW SENSOR

The camshaft position sensor is located on the timing chain case above the water pump and under the throttle body.

1. Apply a small amount of engine oil to the sensor o-ring.

A low (step down) and high (step up) area are machined into the camshaft drive gear. The sensor is positioned in the timing gear cover so that a small air gap exists between the face of sensor and the high machined area of cam gear.

Before the sensor is installed, the cam gear may have to be rotated. This is to allow the high machined area (step up) on the gear to be directly in front of the sensor mounting hole opening on the timing gear cover.

Do not install sensor with gear positioned at low area. When the engine is started, the sensor will be broken.

2. Using a 1/2 in. wide metal ruler, measure the distance from the cam gear to the face of the sensor mounting hole opening on the timing gear cover.
3. If the dimension is approximately 1–15/32 inches or less, it is OK to install sensor.
4. If the dimension is approximately 1–5/8 inches or more, the cam gear will have to be rotated.
5. Attach a socket to the vibration damper mounting bolt and rotate engine until the 1–15/32 inch dimension is attained.
6. Install the sensor into the timing case/cover with a slight rocking action. Do not twist the sensor into position as damage to the o-ring may result. Push the sensor all the way into the cover until the rib material on the sensor contacts the camshaft gear.
7. Install the mounting bolt and tighten to 10.7 N·m (95 in. lbs.) torque.
8. Connect sensor wiring harness to engine harness.

When the engine is started, the rib material will be sheared off the face of sensor. This will automatically set sensor air gap.

8.3L - REPLACING OLD SENSOR WITH ORIGINAL

The camshaft position sensor is located on the timing chain case above the water pump and under the throttle body.

When installing a used camshaft position sensor, the sensor depth must be adjusted to prevent contact with the camshaft gear (sprocket).

1. Apply a small amount of engine oil to the sensor o-ring.

A low and high area are machined into the camshaft drive gear. The sensor is positioned in the timing gear cover so that a small air gap exists between the face of sensor and the high machined area of cam gear.

Before the sensor is installed, the cam gear may have to be rotated. This is to allow the high machined area on the gear to be directly in front of the sensor mounting hole opening on the timing gear cover.

Do not install sensor with gear positioned at low area. When the engine is started, the sensor will be broken.

2. Using a 1/2 in. wide metal ruler, measure the distance from the cam gear to the face of the sensor mounting hole opening on the timing gear cover.
3. If the dimension is approximately 1–15/32 inches or less, it is OK to install sensor.
4. If the dimension is approximately 1–5/8 inches or more, the cam gear will have to be rotated.
5. Attach a socket to the vibration damper mounting bolt and rotate engine until the 1–15/32 inch dimension is attained.
6. Install the sensor into the timing case/cover with a slight rocking action until the sensor is aligned to scribe line. The paper spacer can be used if reinstalling a used sensor.
7. Install sensor mounting bolt and tighten to 10.7 N·m (95 in. lbs.) torque.
8. Connect engine wiring harness to sensor.

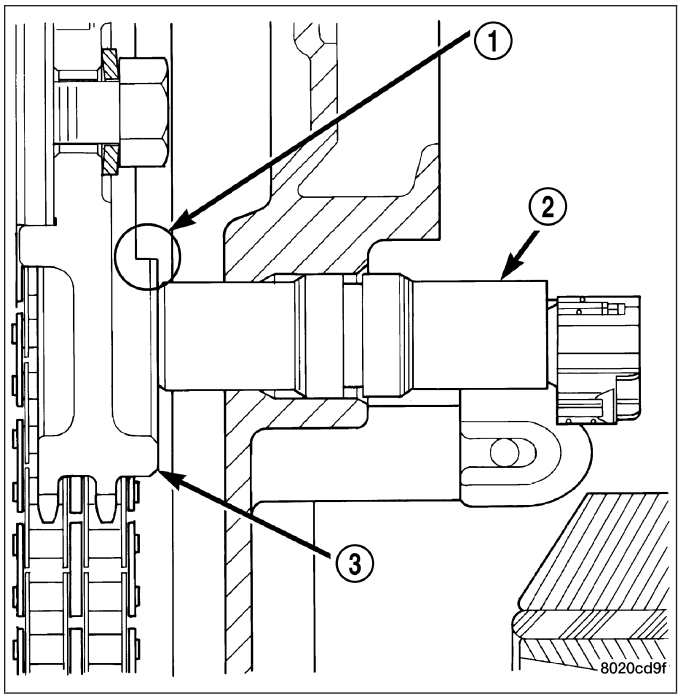

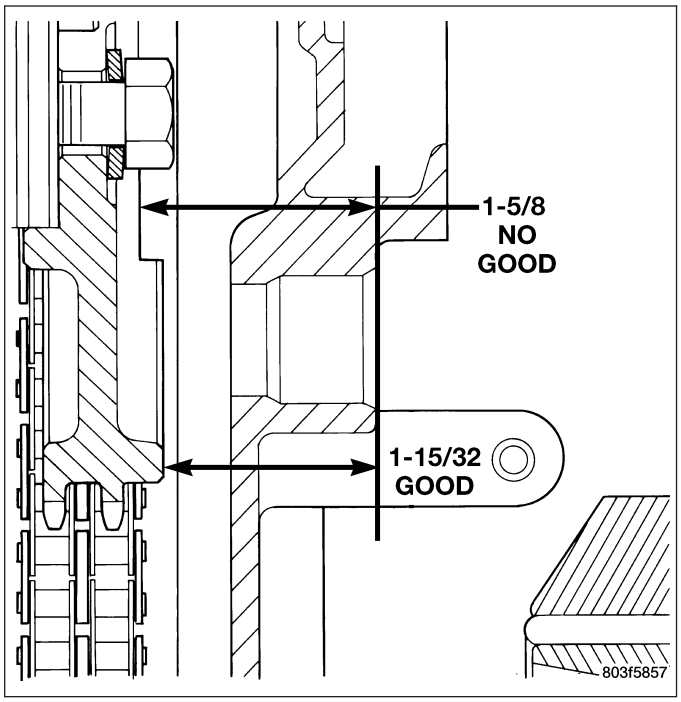

IGNITION COIL

DESCRIPTION

3.7L V-6

The 3.7L V-6 engine uses 6 dedicated, and individually fired coil (1) for each spark plug.

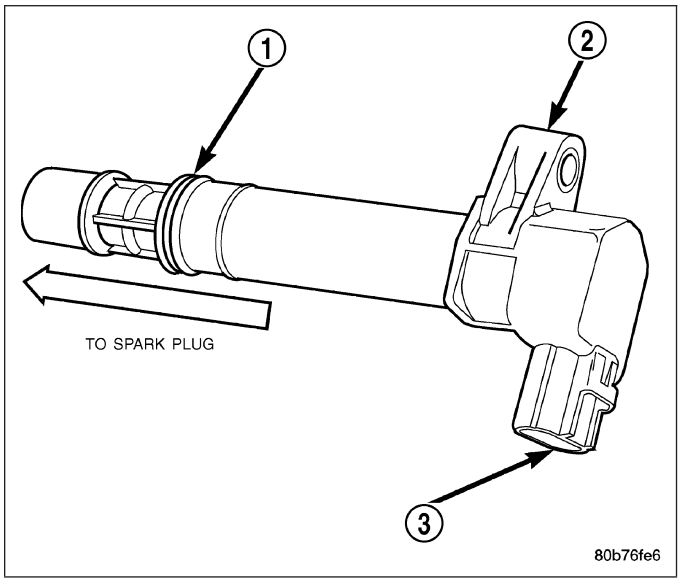

Each coil (1) is mounted directly into the cylinder head and onto the top of each spark plug.

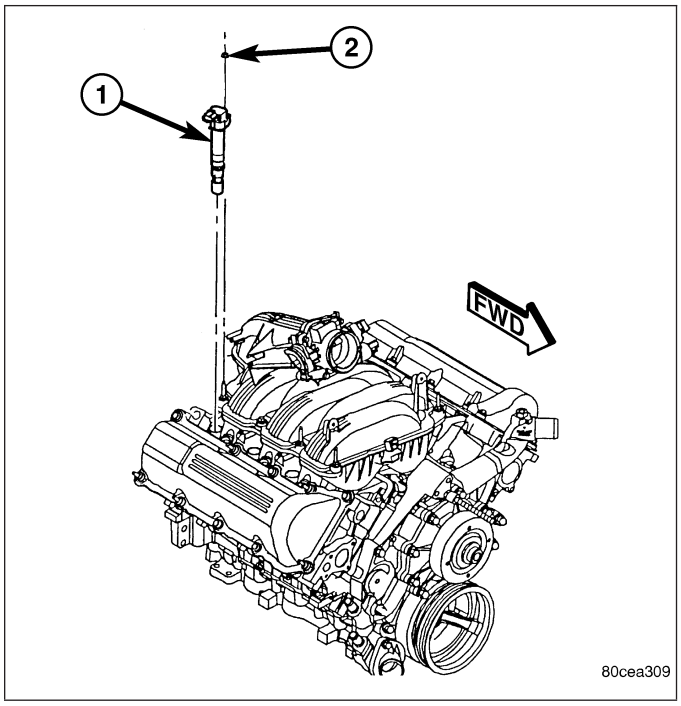

4.7L V-8

The 4.7L V–8 engine uses 8 dedicated, and individually fired coil for each spark plug (1). Each coil is mounted directly to the top of each spark plug.

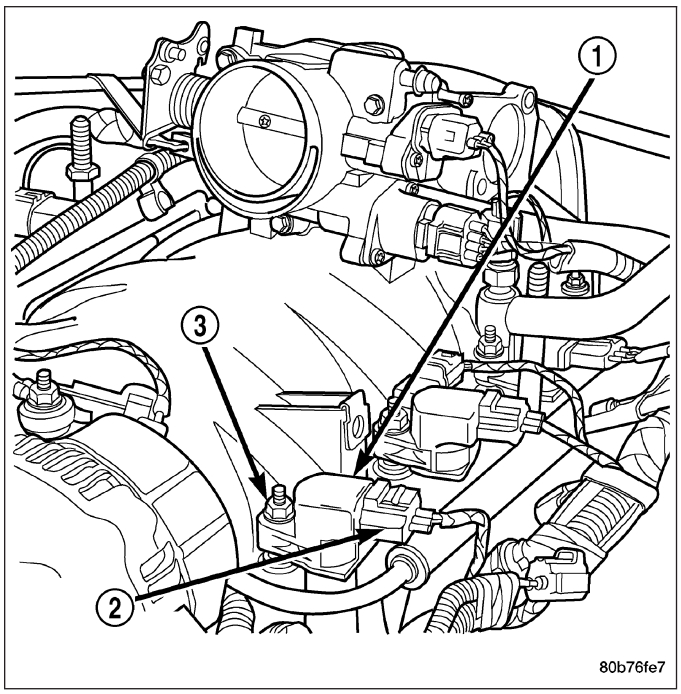

5.7L V-8

The 5.7L V–8 engine uses 8 dedicated, and individually fired coil (1) for each pair of spark plugs.

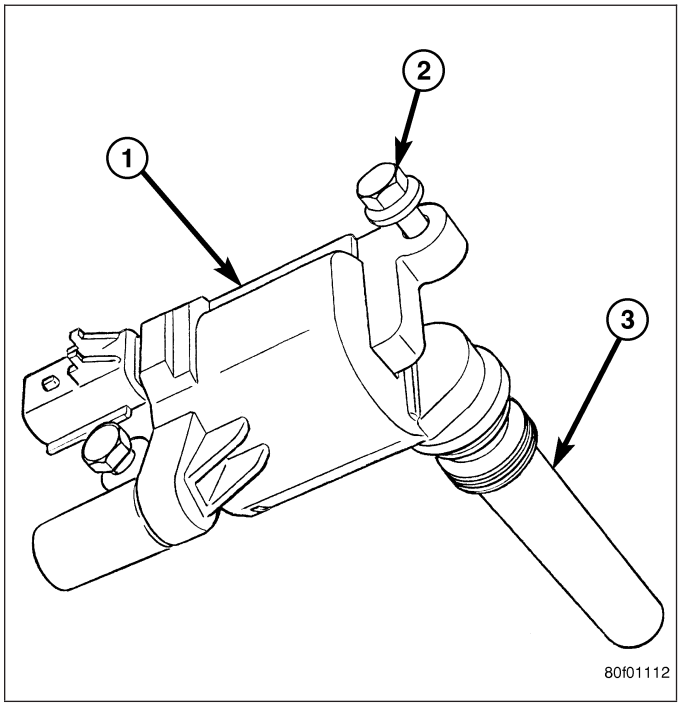

Each coil (5) is mounted directly to the top of each spark plug. Each coil is bolted (6) to the valve cover.

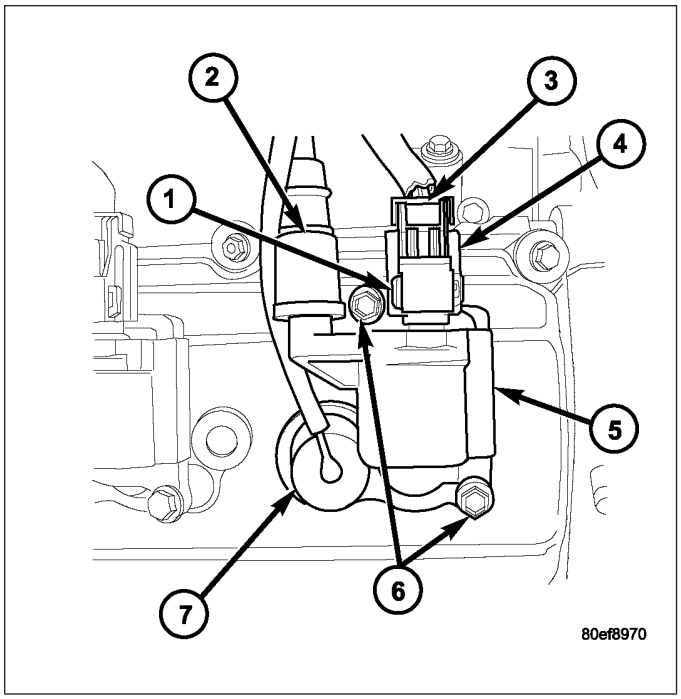

OPERATION

3.7L V-6

Battery voltage is supplied to the 6 individual ignition coils from the ASD relay. The Powertrain Control Module (PCM) opens and closes each ignition coil ground circuit at a determined time for ignition coil operation.

Base ignition timing is not adjustable. By controlling the coil ground circuit, the PCM is able to set the base timing and adjust the ignition timing advance. This is done to meet changing engine operating conditions.

The ignition coil is not oil filled. The windings are embedded in an epoxy compound. This provides heat and vibration resistance that allows the ignition coil to be mounted on the engine.

Because of coil design, spark plug cables (secondary cables) are not used with the 3.7L V-6 engine.

4.7L V-8

Battery voltage is supplied to the 8 individual ignition coils from the ASD relay. The Powertrain Control Module (PCM) opens and closes each ignition coil ground circuit at a determined time for ignition coil operation.

Base ignition timing is not adjustable. By controlling the coil ground circuit, the PCM is able to set the base timing and adjust the ignition timing advance. This is done to meet changing engine operating conditions.

The ignition coil is not oil filled. The windings are embedded in an epoxy compound. This provides heat and vibration resistance that allows the ignition coil to be mounted on the engine.

Because of coil design, spark plug cables (secondary cables) are not used with the 4.7L V-8 engine.

5.7L V-8

The ignition system is controlled by the Powertrain Control Module (PCM) on all engines.

A “wasted spark” system is used on the 5.7L engine combining paired, or dual-firing coils, and 2 spark plugs per cylinder. The coils and spark plugs are connected with paired, secondary high-voltage cables.

Each cylinder is equipped with 1 dual-output coil. Meaning one coil mounts directly over one of the dual spark plugs for 1 high-voltage output. A second high-voltage output is supplied directly from the same coil (using a plug cable) to one of the dual spark plugs on a corresponding (paired) cylinder on the opposite cylinder bank.

Each coil fires 2 spark plugs simultaneously on each of the cylinder banks (one cylinder on compression stroke and one cylinder on exhaust stroke). **EXAMPLE :** When the #1 cylinder is on compression stroke and ready for spark, the #1 coil will fire one of the dual spark plugs on the #1 cylinder (directly below the coil). The other dual spark plug on the #1 cylinder will be fired by the #6 coil. At the same time, the #1 coil will fire a “wasted spark” to one of the

dual spark plugs at the #6 cylinder as coil #6 also fires a “wasted spark” to one of the dual spark plugs at the #6 cylinder.

The firing order is paired at cylinders 1/6, 2/3, 4/7, 5/8. Basic cylinder firing order is 1–8–4–3–6–5–7–2.

Battery voltage is supplied to all of the ignition coils positive terminals from the ASD relay. If the PCM does not see a signal from the crankshaft and camshaft sensors (indicating the ignition key is ON but the engine is not running), it will shut down the ASD circuit.

Base ignition timing is not adjustable on the 5.7L V-8 engine. By controlling the coil ground circuits, the PCM is able to set the base timing and adjust the ignition timing advance. This is done to meet changing engine operating conditions.

The PCM adjusts ignition timing based on inputs it receives from:

- The engine coolant temperature sensor
- The crankshaft position sensor (engine speed)
- The camshaft position sensor (crankshaft position)
- The manifold absolute pressure (MAP) sensor
- The throttle position sensor
- Transmission gear selection

REMOVAL

REMOVAL

3.7L V-6

An individual ignition coil (2) is used for each spark plug. The coil fits into machined holes in the cylinder head. A mounting stud/nut secures each coil to the top of the intake manifold. The bottom of the coil is equipped with a rubber boot to seal the spark plug to the coil. Inside each rubber boot is a spring. The spring is used for a mechanical contact between the coil and the top of the spark plug. These rubber boots and springs are a permanent part of the coil and are not serviced separately. An o-ring is used to seal the coil at the opening into the cylinder head.

1. Depending on which coil is being removed, the throttle body air intake tube or intake box may need to be removed to gain access to coil.

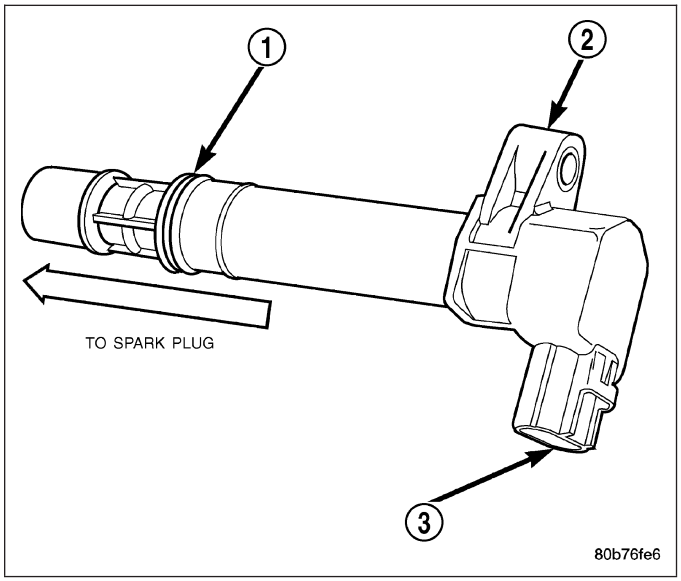

2. Disconnect electrical connector from coil by pushing downward on release lock on top of connector and pull connector from coil.
3. Clean area at base of coil with compressed air before removal.
4. Remove coil mounting nut (2) from mounting stud.
5. Carefully pull up coil (1) from cylinder head opening with a slight twisting action.
6. Remove coil from vehicle.

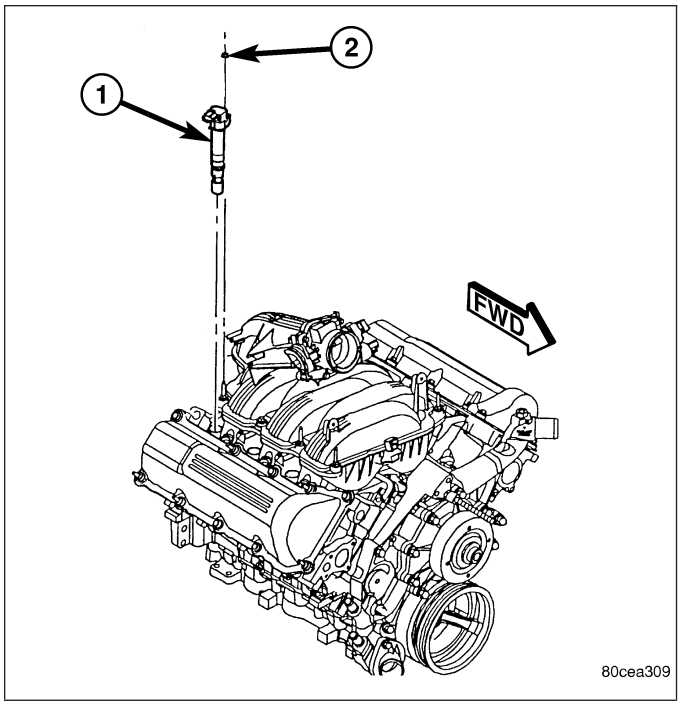

4.7L V-8

An individual ignition coil (1) is used for each spark plug. The coil fits into machined holes in the cylinder head. A mounting stud/nut secures each coil to the top of the intake manifold. The bottom of the coil is equipped with a rubber boot to seal the spark plug to the coil. Inside each rubber boot is a spring. The spring is used for a mechanical contact between the coil and the top of the spark plug. These rubber boots and springs are a permanent part of the coil and are not serviced separately. An o-ring is used to seal the coil at the opening into the cylinder head.

1. Depending on which coil is being removed, the throttle body air intake tube or intake box may need to be removed to gain access to coil.
2. Disconnect electrical connector (2) from coil by pushing downward on release lock on top of connector and pull connector from coil.
3. Clean area at base of coil with compressed air before removal.
4. Remove coil mounting nut (3) from mounting stud.
5. Carefully pull up coil from cylinder head opening with a slight twisting action.
6. Remove coil from vehicle.

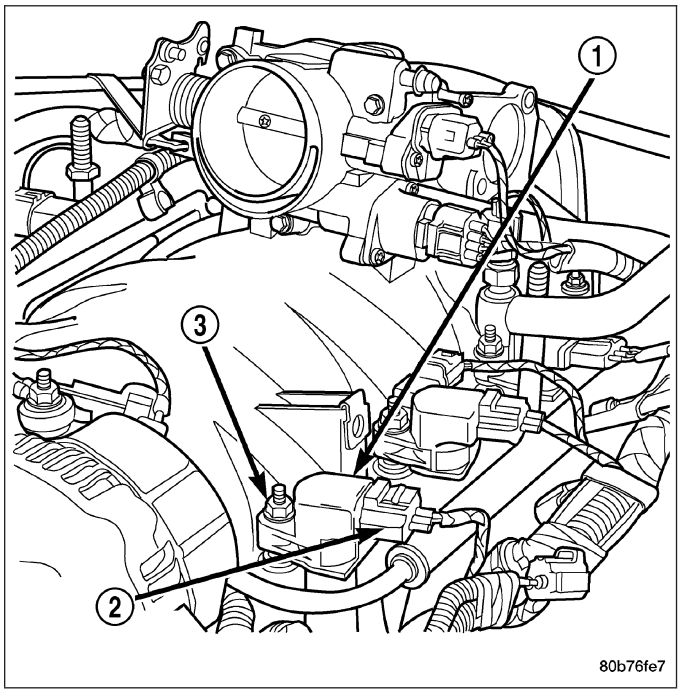

5.7L V-8

Before removing or disconnecting any spark plug cables, note their original position. Remove cables one-at-a-time. To prevent ignition crossfire, spark plug cables **MUST** be placed in cable tray (routing loom) into their original position.

An individual ignition coil (1) is used at each cylinder. The coil mounts to the top of the valve cover with 2 bolts (2). The bottom of the coil is equipped with a rubber boot to seal the spark plug to the coil. Inside each rubber boot is a spring. The spring is used for a mechanical contact between the coil and the top of the spark plug.

1. Depending on which coil is being removed, the throttle body air intake tube or intake box may need to be removed to gain access to coil.

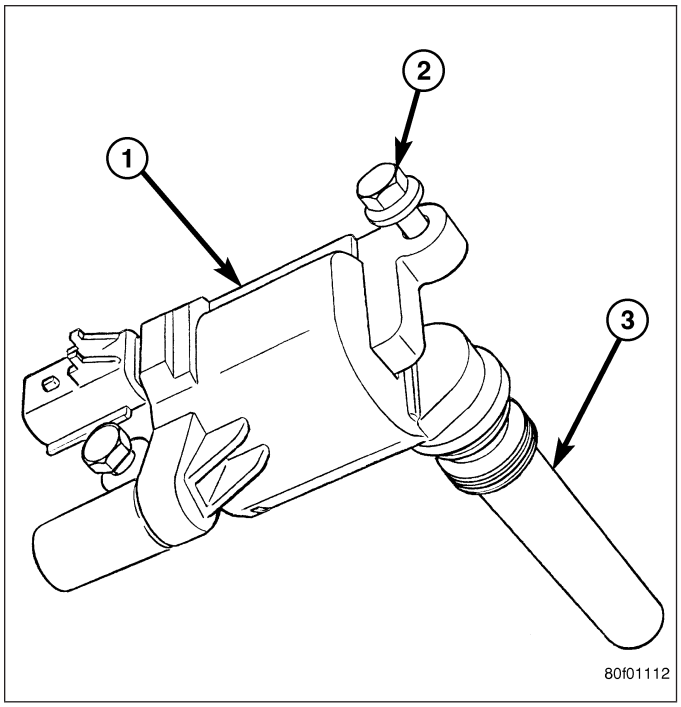

2. Unlock electrical connector by moving slide lock first (1). Press on release lock (3) while pulling electrical connector from coil.
3. Disconnect secondary high-voltage cable (2) from coil with a twisting action.
4. Clean area at base of coil with compressed air before removal.
5. Remove two mounting bolts (6) (note that mounting bolts are retained to coil).
6. Carefully pull up coil from cylinder head opening with a slight twisting action.
7. Remove coil from vehicle.
8. Before installing spark plug cables to either the spark plugs or coils, or before installing a coil to a spark plug, apply dielectric grease to inside of boots.

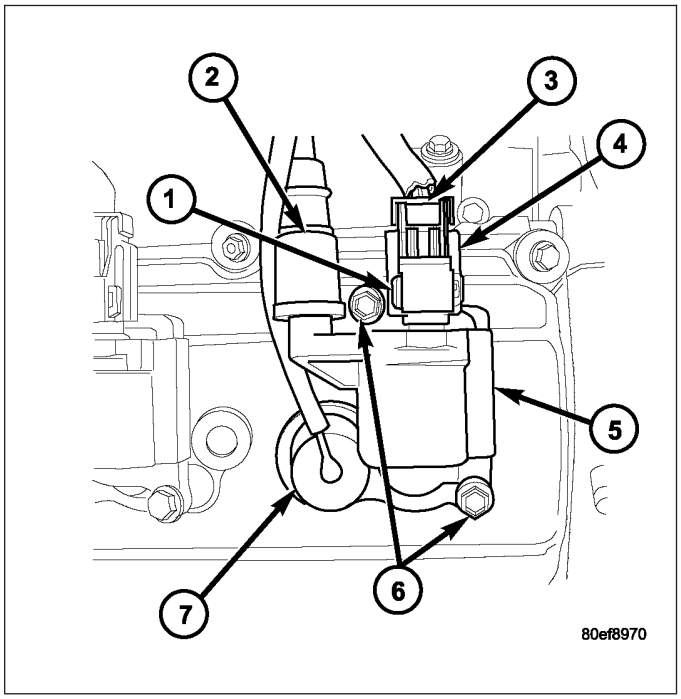

8.3L - SRT-10

1. Release the fuel pressure, refer to the Fuel Pressure Release procedure in the Fuel Section.
2. Disconnect the negative battery cable.
3. Remove the air cleaner assembly, refer to the Engine/Air Intake section for more information.
4. Remove the Intake Manifold, refer to the Engine/Manifolds/Intake Manifold for more information.
5. Unlock and disconnect the electrical connector at the ignition coils and.

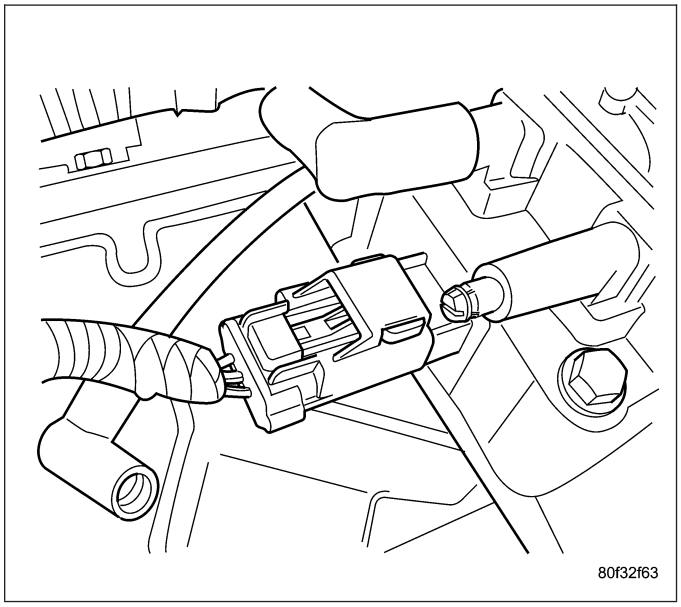

6. Twist and remove the ignition cables from the ignition coil.

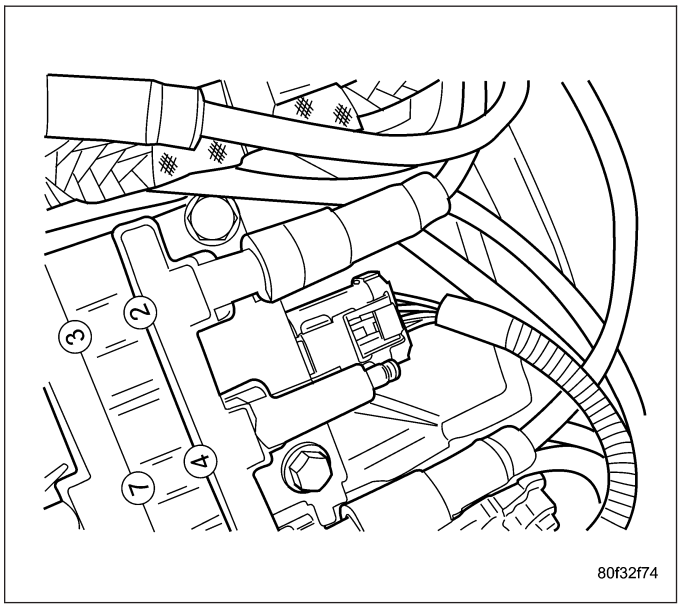

7. Remove the 4 bolts.
8. Remove ignition coil.

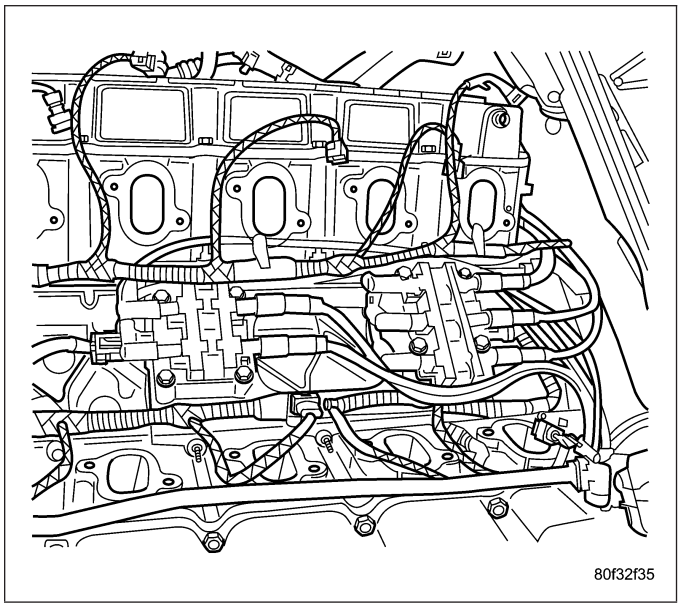

INSTALLATION

INSTALLATION

3.7L V-6

1. Using compressed air, blow out any dirt or contaminants from around top of spark plug.
2. Check condition of coil o-ring and replace as necessary. To aid in coil installation, apply silicone to coil o-ring.
3. Position ignition coil into cylinder head opening and push onto spark plug. Do this while guiding coil base over mounting stud.
4. Install coil mounting stud nut. Refer to torque specifications.
5. Connect electrical connector to coil by snapping into position.
6. If necessary, install throttle body air tube.

4.7L V-8

1. Using compressed air, blow out any dirt or contaminants from around top of spark plug.
2. Check condition of coil o-ring and replace as necessary. To aid in coil installation, apply silicone to coil o-ring.
3. Position ignition coil into cylinder head opening and push onto spark plug. Do this while guiding coil base over mounting stud.
4. Install coil mounting stud nut. Refer to torque specifications.
5. Connect electrical connector to coil by snapping into position.
6. If necessary, install throttle body air tube.

5.7L V-8

1. Using compressed air, blow out any dirt or contaminants from around top of spark plug.
2. Before installing spark plug cables to either the spark plugs or coils, or before installing a coil to a spark plug, apply dielectric grease to inside of boots.
3. Position ignition coil into cylinder head opening and push onto spark plug. Twist coil into position.
4. Install 2 coil mounting bolts. Refer to torque specifications.
5. Connect electrical connector to coil by snapping into position.
6. Install cable to coil. To prevent ignition crossfire, spark plug cables **MUST** be placed in cable tray (routing loom) into their original position. Refer to Spark Plug Cable Removal for a graphic.
7. If necessary, install throttle body air tube.

8.3L - SRT-10

The system uses two epoxy filled coil packs mounted on engine block post under the intake manifold. The rear coil pack, contains 3 separate coils and fires cylinders 1, 2, 3, 4, 6, and 7. The front coil pack, contains 2 individual coils and fires cylinders 5, 8, 9, and 10.

1. Install coil packs. Tighten mounting screws to 11 N·m (95 in. lbs.) torque.
2. Install ignition cables to ignition coil.
3. Connect and lock the electrical connector at the ignition coils and.
4. Install Intake Manifold, refer to the Engine/Manifolds/Intake Manifold for more information.
5. Install Air Cleaner Assembly, refer to the Engine/Air Intake section for more information.
6. Connect the negative battery cable.
7. Use a diagnostic scan tool to pressurize the fuel system. Check for leaks.

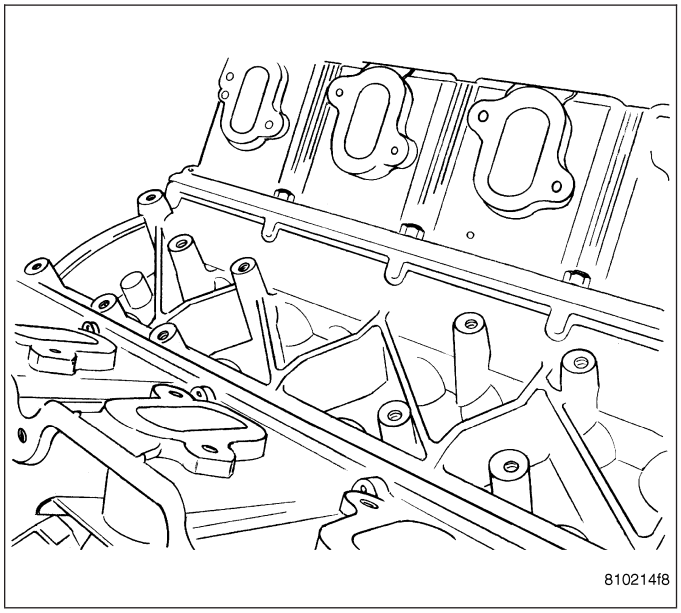

SENSOR-KNOCK

DESCRIPTION

The sensors are used only with 3.7L V-6, 4.7L V-8 and 5.7L V-8 engines. On 3.7L V-6 and 4.7L V-8 engines, the 2 knock sensors are bolted into the cylinder block under the intake manifold.

On 5.7L V-8 engines, 2 knock sensors are also used. These are bolted into each side of the cylinder block (outside) under the exhaust manifold.

OPERATION

3.7L V-6 / 4.7L V-8 / 5.7L V-8 Engines Only

Two knock sensors are used; one for each cylinder bank. When the knock sensor detects a knock in one of the cylinders on the corresponding bank, it sends an input signal to the Powertrain Control Module (PCM). In response, the PCM retards ignition timing for all cylinders by a scheduled amount.

Knock sensors contain a piezoelectric material which constantly vibrates and sends an input voltage (signal) to the PCM while the engine operates. As the intensity of the crystal's vibration increases, the knock sensor output voltage also increases.

The voltage signal produced by the knock sensor increases with the amplitude of vibration. The PCM receives the knock sensor voltage signal as an input. If the signal rises above a predetermined level, the PCM will store that value in memory and retard ignition timing to reduce engine knock. If the knock sensor voltage exceeds a preset value, the PCM retards ignition timing for all cylinders. It is not a selective cylinder retard.

The PCM ignores knock sensor input during engine idle conditions. Once the engine speed exceeds a specified value, knock retard is allowed.

Knock retard uses its own short term and long term memory program.

Long term memory stores previous detonation information in its battery-backed RAM. The maximum authority that long term memory has over timing retard can be calibrated.

Short term memory is allowed to retard timing up to a preset amount under all operating conditions (as long as rpm is above the minimum rpm) except at Wide Open Throttle (WOT). The PCM, using short term memory, can respond quickly to retard timing when engine knock is detected. Short term memory is lost any time the ignition key is turned off.

NOTE: Over or under tightening the sensor mounting bolts will affect knock sensor performance, possibly causing improper spark control. Always use the specified torque when installing the knock sensors.

REMOVAL

3.7L V-6 / 4.7L V-8

The 2 knock sensors (1) are bolted into the cylinder block under the intake manifold. or.

NOTE: The left sensor is identified by an identification tag (LEFT). It is also identified by a larger bolt head. The Powertrain Control Module (PCM) must have and know the correct sensor left/right positions. Do not mix the sensor locations.

1. Disconnect knock sensor dual pigtail harness from engine wiring harness. This connection is made near rear of engine.

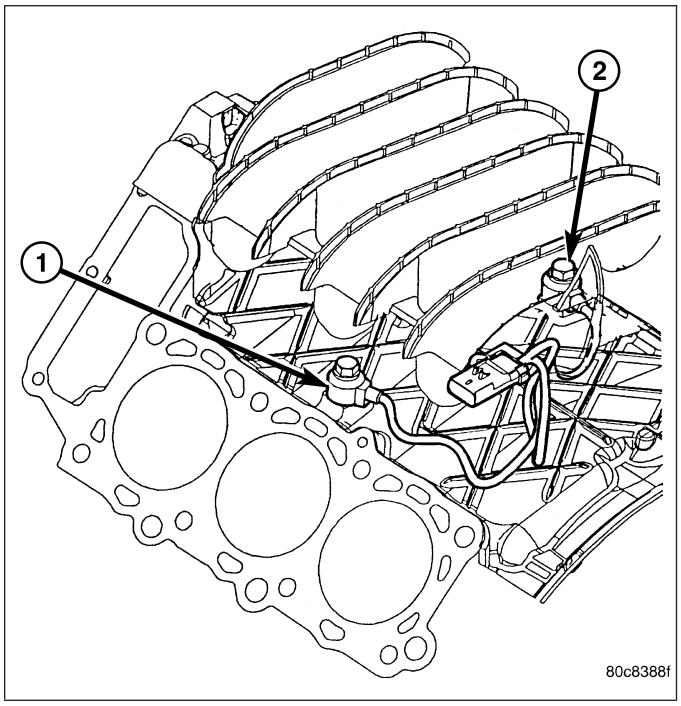

2. Remove intake manifold. Refer to Engine section.
3. Remove sensor mounting bolts (2) , or. Note foam strip on bolt threads. This foam is used only to retain the bolts to sensors for plant assembly. It is not used as a sealant. Do not apply any adhesive, sealant or thread locking compound to these bolts.
4. Remove sensors from engine.

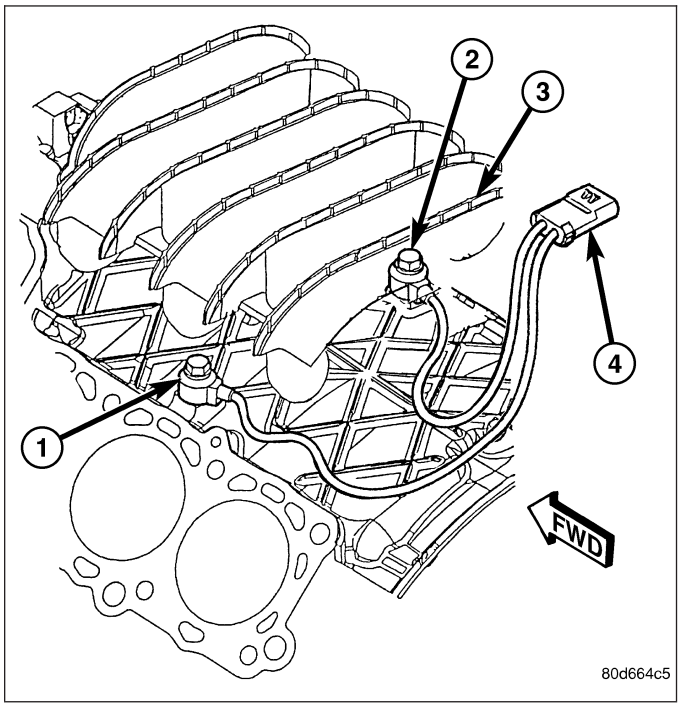

5.7L V8

Two sensors are used. Each sensor (1) is bolted into the outside of cylinder block below the exhaust manifold.

1. Raise vehicle.
2. Disconnect knock sensor electrical connector (5).
3. Remove sensor mounting bolt (2). Note foam strip on bolt threads. This foam is used only to retain the bolts to sensors for plant assembly. It is not used as a sealant. Do not apply any adhesive, sealant or thread locking compound to these bolts.
4. Remove sensor from engine.

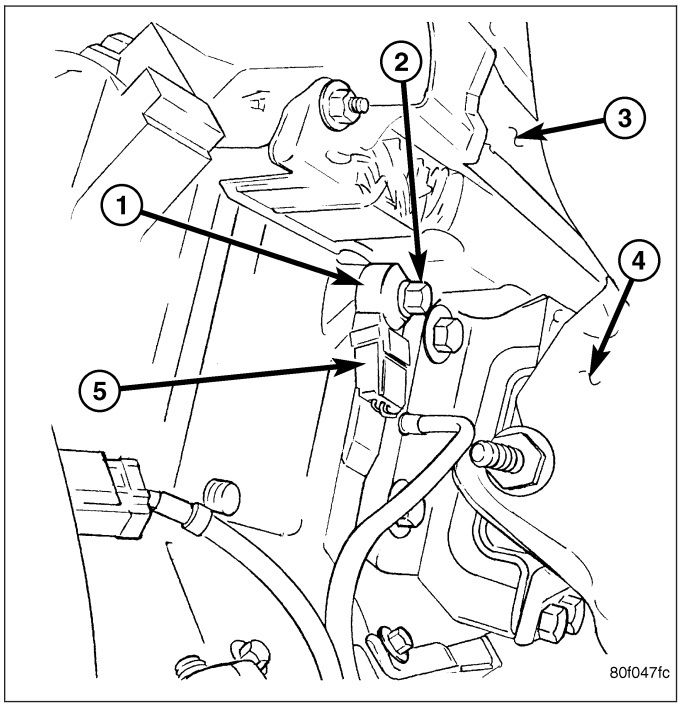

INSTALLATION

3.7L V-6 / 4.7L V-8

NOTE: The left sensor is identified by an identification tag (LEFT). It is also identified by a larger bolt head. The Powertrain Control Module (PCM) must have and know the correct sensor left/right positions. Do not mix the sensor locations.

1. Thoroughly clean knock sensor mounting holes.
2. Install sensors into cylinder block.

NOTE: Over or under tightening the sensor mounting bolts will affect knock sensor performance, possibly causing improper spark control. Always use the specified torque when installing the knock sensors. The torque for the knock senor bolt is relatively light for an 8mm bolt.

NOTE: Note foam strip on bolt threads. This foam is used only to retain the bolts to sensors for plant assembly. It is not used as a sealant. Do not apply any adhesive, sealant or thread locking compound to these bolts.

3. Install and tighten mounting bolts. Refer to torque specification.
4. Install intake manifold. Refer to Engine section.
5. Connect knock sensor wiring harness to engine harness at rear of intake manifold.

5.7L V-8

1. Thoroughly clean knock sensor mounting hole.
2. Install sensor into cylinder block.

NOTE: Over or under tightening the sensor mounting bolts will affect knock sensor performance, possibly causing improper spark control. Always use the specified torque when installing the knock sensors. The torque for the knock senor bolt is relatively light for an 8mm bolt.

NOTE: Note foam strip on bolt threads. This foam is used only to retain the bolts to sensors for plant assembly. It is not used as a sealant. Do not apply any adhesive, sealant or thread locking compound to these bolts.

3. Install and tighten mounting bolt. Refer to torque specification.
4. Install electrical connector to sensor.

SPARK PLUG

DESCRIPTION

Resistor type spark plugs are used on all engines.

Sixteen spark plugs (2 per cylinder) are used with 5.7L V-8 engines.

REMOVAL

3.7L V-6

Each individual spark plug is located under each ignition coil. Each individual ignition coil must be removed to gain access to each spark plug. Refer to Ignition Coil Removal/Installation.

1. Remove necessary air filter tubing at throttle body.
2. Prior to removing ignition coil, spray compressed air around coil base at cylinder head.
3. Prior to removing spark plug, spray compressed air into cylinder head opening. This will help prevent foreign material from entering combustion chamber.
4. Remove spark plug from cylinder head using a quality socket with a rubber or foam insert. Also check condition of ignition coil o-ring and replace as necessary.
5. Inspect spark plug condition. Refer to Diagnostics and Testing - Spark Plug Conditions.

4.7L V-8

Each individual spark plug is located under each ignition coil. Each individual ignition coil must be removed to gain access to each spark plug. Refer to Ignition Coil Removal/Installation.

1. Remove necessary air filter tubing at throttle body.
2. Prior to removing ignition coil, spray compressed air around coil base at cylinder head.
3. Prior to removing spark plug, spray compressed air into cylinder head opening. This will help prevent foreign material from entering combustion chamber.
4. Remove spark plug from cylinder head using a quality socket with a rubber or foam insert. Also check condition of ignition coil o-ring and replace as necessary.
5. Inspect spark plug condition. Refer to Diagnostics and Testing - Spark Plug Conditions.

5.7L V-8

Eight of the 16 spark plugs are located under an ignition coil; the other 8 are not. If spark plug being removed is under coil, coil must be removed to gain access to spark plug. Refer to Ignition Coil Removal/Installation and observe all CAUTIONS and WARNINGS.

Before removing or disconnecting any spark plug cables, note their original position. Remove cables one-at-a-time. To prevent ignition crossfire, spark plug cables **MUST** be placed in cable tray (routing loom) into their original position. Refer to Spark Plug Cable Removal for a graphic.

Before installing spark plug cables to either the spark plugs or coils, apply dielectric grease to inside of boots.

1. Remove necessary air filter tubing at throttle body.
2. Prior to removing ignition coil (if coil removal is necessary), spray compressed air around coil base at cylinder head cover.
3. Prior to removing spark plug, spray compressed air into cylinder head opening. This will help prevent foreign material from entering combustion chamber.
4. Remove spark plug from cylinder head using a quality socket with a rubber or foam insert.

5. Inspect spark plug condition. Refer to Diagnostics and Testing - Spark Plug Conditions.

CLEANING

CLEANING AND ADJUSTMENT

The plugs may be cleaned using commercially available spark plug cleaning equipment. After cleaning, file center electrode flat with a small point file or jewelers file before adjusting gap.

CAUTION: Never use a motorized wire wheel brush to clean spark plugs. Metallic deposits will remain on spark plug insulator and will cause plug misfire.

Adjust spark plug gap with a gap gauging tool.

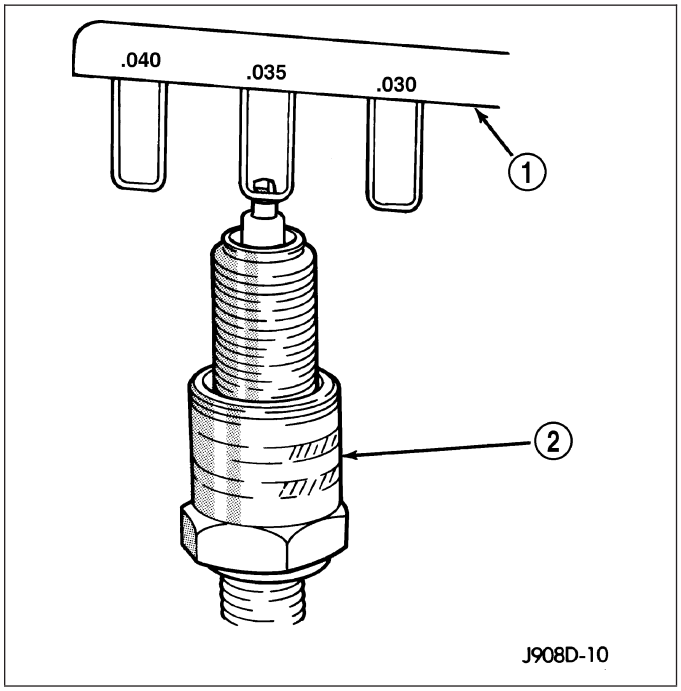

INSTALLATION

3.7L V-6

Special care should be taken when installing spark plugs into the cylinder head spark plug wells. Be sure the plugs do not drop into the plug wells as electrodes can be damaged.

Always tighten spark plugs to the specified torque. Over tightening can cause distortion resulting in a change in the spark plug gap or a cracked porcelain insulator.

1. Start the spark plug into the cylinder head by hand to avoid cross threading.
2. Tighten spark plugs. Refer to torque specifications.
3. Before installing ignition coil(s), check condition of coil o-ring and replace as necessary. To aid in coil installation, apply silicone to coil o-ring.
4. Install ignition coil(s). Refer to Ignition Coil Removal/Installation.

4.7L V-8

CAUTION: The 4.7L V–8 engine is equipped with copper core ground electrode spark plugs. They must be replaced with the same type/number spark plug as the original. If another spark plug is substituted, pre-ignition will result.

Special care should be taken when installing spark plugs into the cylinder head spark plug wells. Be sure the plugs do not drop into the plug wells as electrodes can be damaged.

Always tighten spark plugs to the specified torque. Over tightening can cause distortion resulting in a change in the spark plug gap or a cracked porcelain insulator.

1. Start the spark plug into the cylinder head by hand to avoid cross threading.
2. Tighten spark plugs. Refer to torque specifications.

3. Before installing ignition coil(s), check condition of coil o-ring and replace as necessary. To aid in coil installation, apply silicone to coil o-ring.
4. Install ignition coil(s). Refer to Ignition Coil Removal/Installation.

5.7L V-8

1. Special care should be taken when installing spark plugs into the cylinder head spark plug wells. Be sure the plugs do not drop into the plug wells as electrodes can be damaged.
2. Start the spark plug into cylinder head by hand to avoid cross threading aluminum threads. To aid in installation, attach a piece of rubber hose, or an old spark plug boot to spark plug.
3. The 5.7L V-8 is equipped with torque critical design spark plugs. Do not exceed 15 ft. lbs. torque. Tighten spark plugs. Refer to torque specifications.
4. Before installing spark plug cables to either the spark plugs or coils, apply dielectric grease to inside of boots.
5. To prevent ignition crossfire, spark plug cables **MUST** be placed in cable tray (routing loom) into their original position. Refer to Spark Plug Cable Removal for a graphic.
6. Install ignition coil(s) to necessary spark plugs. Refer to Ignition Coil Installation.
7. Install spark plug cables to remaining spark plugs. Remember to apply dielectric grease to inside of boots.

IGNITION COIL CAPACITOR

DESCRIPTION

One coil capacitor is used. It is located in the right-rear section of the engine compartment.

OPERATION

The coil capacitor(s) help dampen the amount of conducted electrical noise to the camshaft position sensor, crankshaft position sensor, and throttle position sensor. This noise is generated on the 12V supply wire to the ignition coils and fuel injectors.

REMOVAL

The coil capacitor is located in the right-rear section of the engine compartment. It is attached with a mounting stud and nut.

1. Disconnect electrical connector (5) at capacitor.
2. Remove mounting nut and remove ground strap.
3. Remove capacitor.

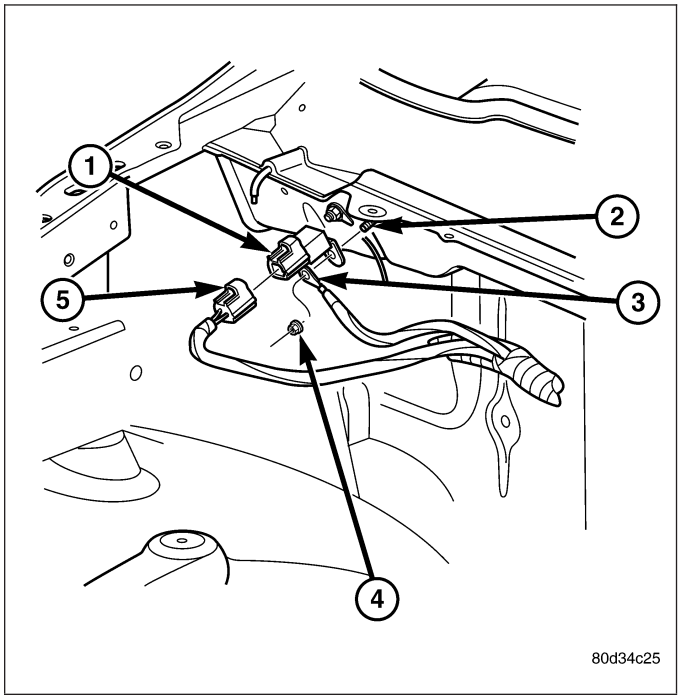

INSTALLATION

1. Position capacitor to mounting stud.
2. Position ground strap to mounting stud.
3. Tighten nut to 7 N·m (60 in. lbs.) torque.
4. Connect electrical connector to coil capacitor.

SPARK PLUG CABLE

DESCRIPTION

Spark plug cables are sometimes referred to as secondary ignition wires, or secondary ignition cables.

Plug cables are used only on the 5.7L V-8 engine.

OPERATION

The spark plug cables transfer electrical current from the ignition coil(s) and/or distributor, to individual spark plugs at each cylinder. The resistive spark plug cables are of nonmetallic construction. The cables provide suppression of radio frequency emissions from the ignition system.

Plug cables are used only on the 5.7L V-8 engine.

REMOVAL

REMOVAL

5.7L V-8

Spark plug cables on the 5.7L engine are paired on cylinders 1/6, 2/3, 4/7 and 5/8. Before removing or disconnecting any spark plug cables, note their original position. Remove cables one-at-a-time. To prevent ignition crossfire, spark plug cables **MUST** be placed in cable tray (routing loom) into their original position. The cable retention clips must also be securly locked.

Before installing spark plug cables to either the spark plugs or coils, apply dielectric grease to inside of boots.

If cable tray removal is necessary, release the 4 tray-to-manifold retention clips.

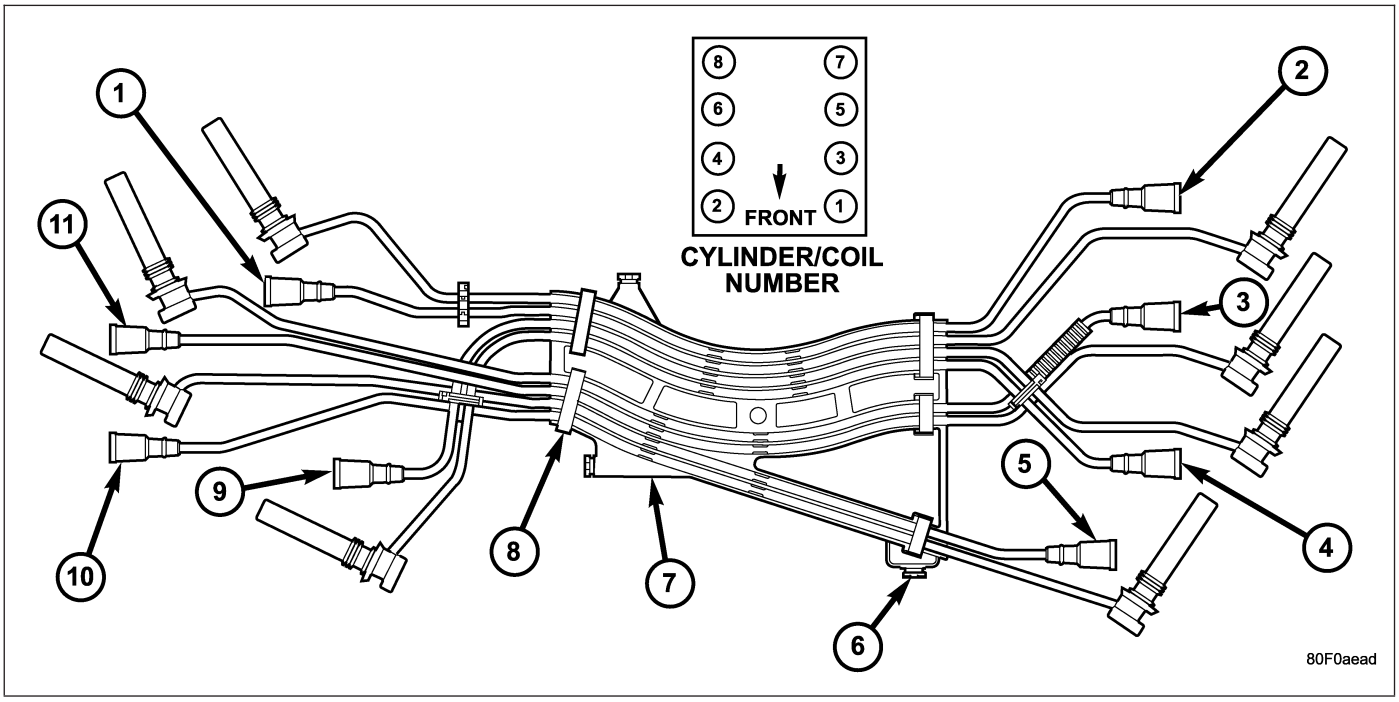

1 - #8 COIL-TO- #5 SPARK PLUG (MARKED 5/8)
2 - #5 COIL-TO- #8 SPARK PLUG (MARKED 5/8)
3 - #7 COIL-TO- #4 SPARK PLUG (MARKED 4/7)
4 - #3 COIL-TO- #2 SPARK PLUG (MARKED 2/3)
5 - #1 COIL-TO- #6 SPARK PLUG (MARKED 1/6)
6 - CLIPS (TRAY-TO-MANIFOLD RETENTION)
7 - CABLE TRAY
8 - CLIPS (SPARK PLUG CABLE-TO-TRAY- RETENTION)
9 - #2 COIL-TO- #3 SPARK PLUG (MARKED 2/3)
10 - #6 COIL-TO- #1 SPARK PLUG (MARKED 1/6)
11 - #4 COIL-TO- #7 SPARK PLUG (MARKED 4/7)

8.3L - SRT-10

Failure to route the cables properly could cause the radio to reproduce ignition noise, cross ignition of the spark plugs or short circuit the cables to ground.

1. Release the fuel pressure, refer to the Fuel Pressure Release procedure in the Fuel Delivery section.
2. Disconnect the negative battery cable.
3. Remove the air cleaner assembly, refer to the Engine/Air Intake section for more information.
4. Remove the Intake Manifold, refer to the Engine/Manifolds/Intake Manifold for more information.
5. Use the following procedure when removing the high tension cable from the spark plug. Grasp the terminal as close as possible to the spark plug. Rotate the cover boot 1/2 turn slightly and pull straight up in a steady motion.**Do not use pliers and do not pull the cable at an angle.** Doing so will damage the insulation, cable terminal or the spark plug insulator. **Wipe spark plug insulator clean before reinstalling cable.**
6. Remove spark plug cable from coil first.
7. Always remove the spark plug cable by grasping the top of the spark plug insulator, turning the boot 1/2 turn and pulling straight up in a steady motion.

INSTALLATION

INSTALLATION

Install cables into the proper engine cylinder firing order sequence. Refer to Specifications.

When replacing the spark plug and coil cables, route the cables correctly and secure them in the proper retainers. Failure to route the cables properly may cause the radio to reproduce ignition noise. It could also cause cross-ignition of the plugs, or, may short-circuit the cables to ground.

When installing new cables, make sure a positive connection is made. A snap should be felt when a good connection is made.

5.7L V-8

Refer to Spark Plug Cable Removal for information.

8.3L - SRT-10

Failure to route the cables properly could cause the radio to reproduce ignition noise, cross ignition of the spark plugs or short circuit the cables to ground.

The system uses two epoxy filled coil packs mounted on engine block post in the valley under the intake manifold. The rear coil pack, contains 3 separate coils and fires cylinders 1, 2, 3, 4, 6, and 7. The front coil pack, contains 2 individual coils and fires cylinders 5, 8, 9, and 10.

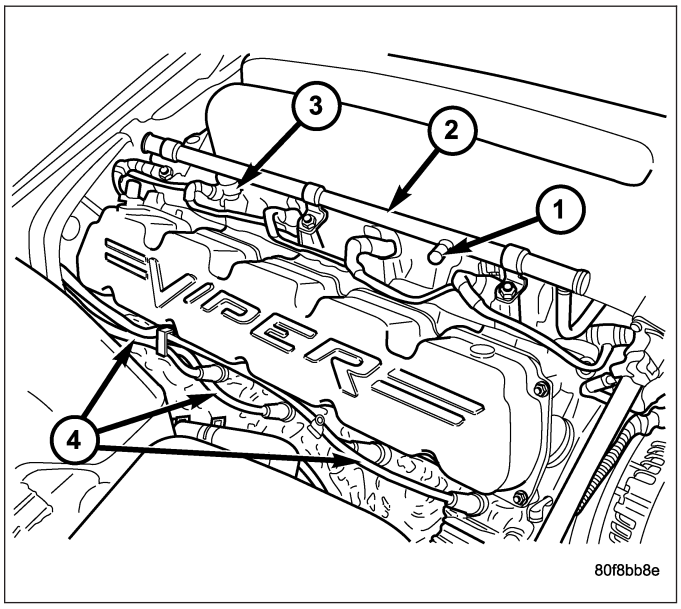

NOTE: When replacing the spark plug and coil cables, route the cables correctly and secure them in the proper retainers. Failure to route the cables properly may cause the radio to reproduce ignition noise. It could also cause cross-ignition of the plugs, or, may short-circuit the cables to ground.

1. Install wire separator clip on double ended stud on rear of engine block first. This is the wire separator clip closest to the ignition coil insulator boots.
2. Connector coil insulator boots over respective ignition coil side post. Take care to match cylinder number on ignition coil with cylinder number on ignition cables. Also, make sure to hear the audible click while making the connection to the coil post.
3. Sequentially install wires into separators clips mounted on double ended studs mounted on the outer side of valve cover and and. Start from the rear and work forward to the front of the engine.

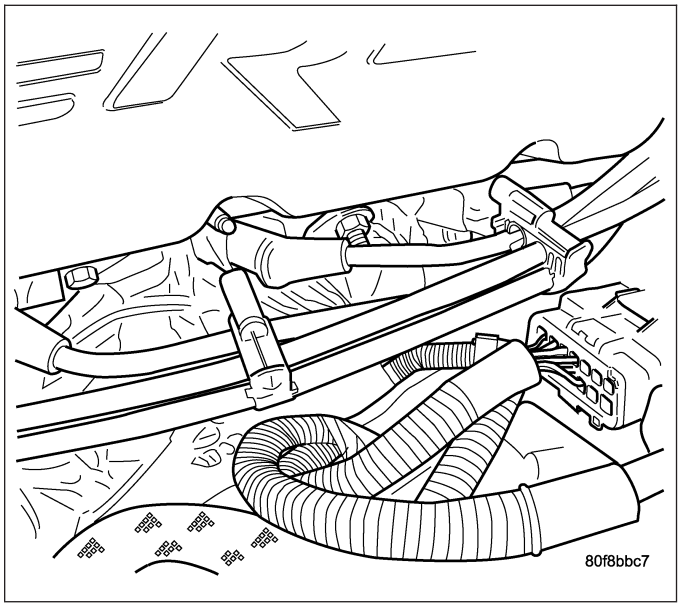

4. After installing all wires into separator clips, install spark plug insulator boots over respective spark plugs sequentially from back of engine towards the front of engine. Make sure to hear the audible click during installation of spark plug boots.

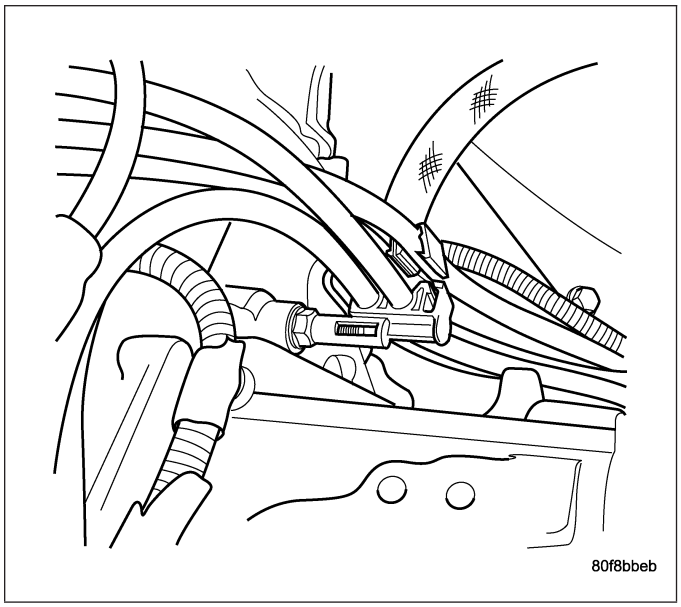

5. Install Intake Manifold, refer to the Engine/Manifolds/Intake Manifold for more information.
6. Install Air Cleaner Assembly, refer to the Engine/Air Intake section for more information.
7. Connect the negative battery cable.
8. Use a diagnostic scan tool to pressurize the fuel system. Check for leaks.

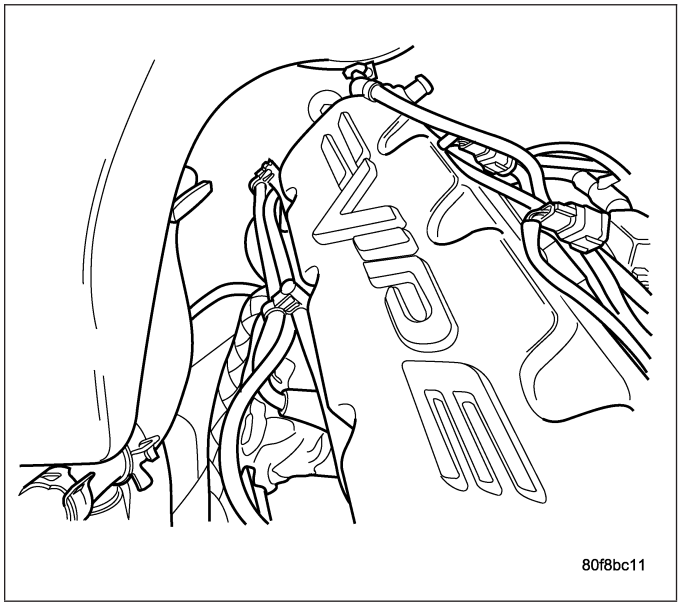

PUSH-BUTTON STARTER SWITCH

DESCRIPTION

A remote push-button switch to engage the starter solenoid is used only on SRT models equipped with a V-10 engine.

REMOVAL

Two screws are used to retain the push-button starter switch to the back of the instrument panel.

1. Remove plastic panel below push-button switch.
2. Remove electrical connector from back of switch.
3. Remove two switch retaining screws.
4. Remove switch from instrument panel.

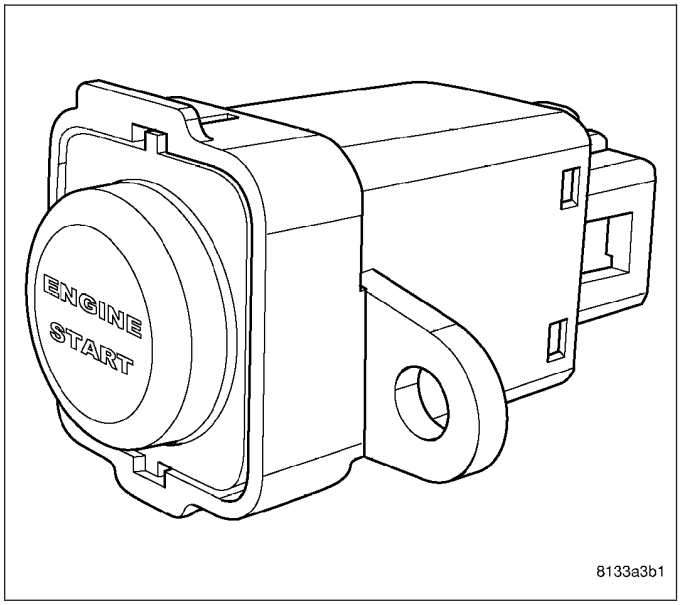

INSTALLATION

1. Position switch into instrument panel opening.
2. Install and tighten two switch retaining screws.
3. Install electrical connector to back of switch.
4. Install plastic panel below push-button switch.

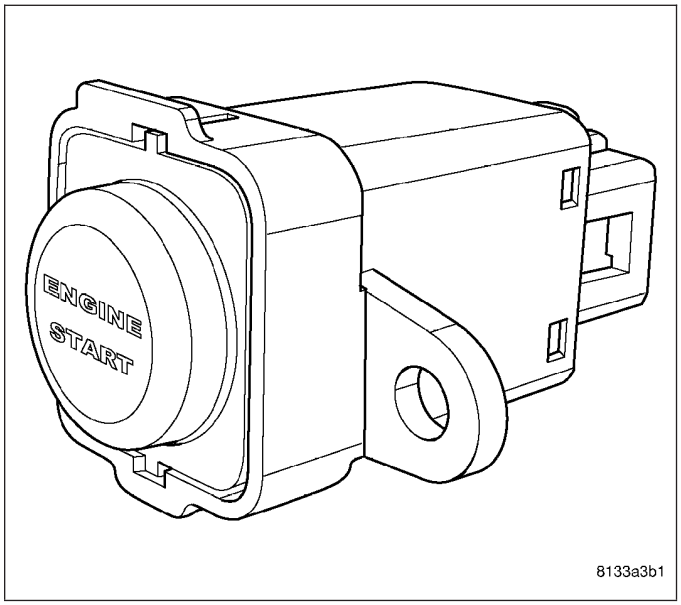

INSTRUMENT CLUSTER

TABLE OF CONTENTS

page

INSTRUMENT CLUSTER - ELECTRICAL DIAGNOSTICS 1

page

INSTRUMENT CLUSTER -SERVICE INFORMATION 97

INSTRUMENT CLUSTER - ELECTRICAL DIAGNOSTICS

TABLE OF CONTENTS

page

INSTRUMENT CLUSTER - ELECTRICAL DIAGNOSTICS
DIAGNOSIS AND TESTING
ABS INDICATOR OUTPUT CIRCUIT OPEN OR SHORT TO GROUND 3
ABS INDICATOR OUTPUT CIRCUIT OVERLOAD OR SHORT TO BATTERY 4
AIRBAG INDICATOR OUTPUT CIRCUIT OPEN OR SHORT TO GROUND 5
AIRBAG WARNING INDICATOR OUTPUT CIRCUIT OVERLOAD OR SHORT TO BATTERY 6
BRAKE INDICATOR OUTPUT CIRCUIT OPEN OR SHORT TO GROUND 7
BRAKE INDICATOR OUTPUT CIRCUIT OVERLOAD OR SHORT TO BATT 8
CARGO LAMP INDICATOR OUTPUT CIRCUIT OPEN OR SHORT TO GROUND 9
CARGO LAMP INDICATOR OUTPUT CIRCUIT OVERLOAD SHORT TO BATT 10
CHECK GAUGES INDICATOR OUTPUT CIRCUIT OPEN OR SHORT TO GROUND . . . 11
CHECK GAUGES INDICATOR OUTPUT CIRCUIT OVERLOAD OR SHORT BATT 12
DOOR AJAR INDICATOR OUTPUT CIRCUIT OPEN OR SHORT TO GROUND 13
DOOR AJAR INDICATOR OUTPUT CIRCUIT OVERLOAD SHORT TO BATT 14
ETC INDICATIOR OUTPUT CIRCUIT OVERLOAD OR SHORT TO BATT 15
ETC INDICATOR OUTPUT CIRCUIT OPEN OR SHORT TO GROUND 16
FUEL INDICATOR CIRCUIT OPEN OR SHORT TO GROUND 17
FUEL INDICATOR CIRCUIT OVERLOAD SHORT TO BATT 18

page

HIGH BEAM INDICATOR CIRCUIT OPEN SHORT TO GROUND 19
HIGH BEAM INDICATOR CIRCUIT OVERLOAD OR SHORT TO BATT 20
MIL INDICATOR OUTPUT CIRCUIT OPEN OR SHORT TO GROUND 21
MIL INDICATOR OUTPUT CIRCUIT OVERLOAD OR SHORT TO BATTERY 22
SEATBELT INDICATOR OUTPUT CIRCUIT OVERLOAD SHORT TO BATT 23
SEATBELT INDICATOR OUTPUT CIRCUIT OPEN SHORT TO GROUND 24
TRANS TEMP INDICATOR OUTPUT CIRCUIT OPEN OR SHORT TO GROUND . . . 25
TRANS TEMP INDICATOR OUTPUT CIRCUIT OVERLOAD OR SHORT TO BATT . . 26
WAIT TO START INDICATOR OUTPUT CIRCUIT OPEN OR SHORT TO GROUND . . . 27
WAIT TO START INDICATOR OUTPUT CIRCUIT OVERLOAD OR SHORT TO BATTERY 28
WATER IN FUEL INDICATOR OUTPUT CIRCUIT OPEN OR SHORT TO GROUND . . . 29
WATER IN FUEL INDICATOR OUTPUT CIRCUIT OVERLOAD OR SHORT TO BATT . . 30
ABS MESSAGES NOT RECEIVED 31
ACM MESSAGES NOT RECEIVED 32
FCM MESSAGES NOT RECEIVED 33
SKIM MMESSAGES NOT RECEIVED 34
TCCM MESSAGES NOT RECEIVED 35
TCM MESSAGES NOT RECEIVED 36
BATTERY VOLTAGE OPEN 37
BTSI OUTPUT CIRCUIT HIGH 40
BTSI OUTPUT CIRCUIT SHORTED OR OPEN 43

IGNITION RUN-START CIRCUIT RATIONALITY CHECK 47
IGNITION UNLOCK CIRCUIT RATIONALITY CHECK 48
INCORRECT ODOMETER VALUE FOUND . . . 49
INTERNAL MODULE BOOTLOADER FAILURE 50
INTERNAL MODULE FLASH MEMORY CHECKSUM FAILURE 51
PCI BUS INTERNAL FAILURE 52
PCM MESSAGES NOT RECEIVED 53
PRNDL SWITCH INPUT CIRCUIT OPEN (DIESEL ONLY) 56
PRNDL SWITCH INPUT CIRCUIT SHORTED (DIESEL ONLY) 59
VIN CHECKSUM ERROR 62
VIN PREVIOUSLY STORED 63
*ALL GAUGES INOPERATIVE 64
*ANY PCI INDICATOR INOPERATIVE 69
*BRAKE WARNING INDICATOR ALWAYS ON . 71
*BRAKE WARNING INDICATOR INOPERATIVE 75
*FUEL GAUGE INACCURATE 80
*ONE GAUGE INOPERATIVE - GAS ENGINES 83
*PRNDL NOT DISPLAYING CORRECT POSITION (EATX VEHICLES) 84
*SEAT BELT WARNING INDICATOR ALWAYS OFF 85
*SEAT BELT WARNING INDICATOR ALWAYS OFF - STANDARD CAB 87
*SEAT BELT WARNING INDICATOR ALWAYS ON 89
*SEAT BELT WARNING INDICATOR ALWAYS ON - STANDARD CAB 92
SCHEMATICS AND DIAGRAMS 96

INSTRUMENT CLUSTER - ELECTRICAL DIAGNOSTICS

DIAGNOSIS AND TESTING

ABS INDICATOR OUTPUT CIRCUIT OPEN OR SHORT TO GROUND

For a complete wiring diagram **Refer to Section 8W**.

Possible Causes
INSTRUMENT CLUSTER

1. INSTRUMENT CLUSTER

NOTE: Diagnose and repair any PCM (ECM if diesel equipped), or Communication DTCs before proceeding with this test.

The Instrument Cluster indicator LEDs are not replaceable, view repair.

Repair

Replace and configure the Instrument Cluster in accordance with the Service Information.
Perform BODY VERIFICATION TEST - VER 1. (Refer to BODY VERIFICATION TEST - VER 1.)

ABS INDICATOR OUTPUT CIRCUIT OVERLOAD OR SHORT TO BATTERY

For a complete wiring diagram **Refer to Section 8W**.

Possible Causes
INSTRUMENT CLUSTER

1. INSTRUMENT CLUSTER

NOTE: Diagnose and repair any PCM (ECM if diesel equipped), or Communication DTCs before proceeding with this test.

The Instrument Cluster indicator LEDs are not replaceable, view repair.

Repair

Replace and configure the Instrument Cluster in accordance with the Service Information.
Perform BODY VERIFICATION TEST - VER 1. (Refer to BODY VERIFICATION TEST - VER 1.)

AIRBAG INDICATOR OUTPUT CIRCUIT OPEN OR SHORT TO GROUND

For a complete wiring diagram **Refer to Section 8W**.

Possible Causes
INSTRUMENT CLUSTER

1. INSTRUMENT CLUSTER

NOTE: Diagnose and repair any PCM (ECM if diesel equipped), or Communication DTCs before proceeding with this test.

The Instrument Cluster indicator LEDs are not replaceable, view repair.

Repair

Replace and configure the Instrument Cluster in accordance with the Service Information.
Perform BODY VERIFICATION TEST - VER 1. (Refer to BODY VERIFICATION TEST - VER 1.)

AIRBAG WARNING INDICATOR OUTPUT CIRCUIT OVERLOAD OR SHORT TO BATTERY

For a complete wiring diagram **Refer to Section 8W**.

Possible Causes
INSTRUMENT CLUSTER

1. INSTRUMENT CLUSTER

NOTE: Diagnose and repair any PCM (ECM if diesel equipped), or Communication DTCs before proceeding with this test.

The Instrument Cluster indicator LEDs are not replaceable, view repair.

Repair

Replace and configure the Instrument Cluster in accordance with the Service Information.
Perform BODY VERIFICATION TEST - VER 1. (Refer to BODY VERIFICATION TEST - VER 1.)

BRAKE INDICATOR OUTPUT CIRCUIT OPEN OR SHORT TO GROUND

For a complete wiring diagram **Refer to Section 8W**.

Possible Causes
INSTRUMENT CLUSTER

1. INSTRUMENT CLUSTER

NOTE: Diagnose and repair any PCM (ECM if diesel equipped), or Communication DTCs before proceeding with this test.

The Instrument Cluster indicator LEDs are not replaceable, view repair.

Repair

Replace and configure the Instrument Cluster in accordance with the Service Information.
Perform BODY VERIFICATION TEST - VER 1. (Refer to BODY VERIFICATION TEST - VER 1.)

BRAKE INDICATOR OUTPUT CIRCUIT OVERLOAD OR SHORT TO BATT

For a complete wiring diagram **Refer to Section 8W**.

Possible Causes
INSTRUMENT CLUSTER

1. INSTRUMENT CLUSTER

NOTE: Diagnose and repair any PCM (ECM if diesel equipped), or Communication DTCs before proceeding with this test.

The Instrument Cluster indicator LEDs are not replaceable, view repair.

Repair

Replace and configure the Instrument Cluster in accordance with the Service Information.
Perform BODY VERIFICATION TEST - VER 1. (Refer to BODY VERIFICATION TEST - VER 1.)

CARGO LAMP INDICATOR OUTPUT CIRCUIT OPEN OR SHORT TO GROUND

For a complete wiring diagram **Refer to Section 8W**.

Possible Causes
INSTRUMENT CLUSTER

1. INSTRUMENT CLUSTER

NOTE: Diagnose and repair any PCM (ECM if diesel equipped), or Communication DTCs before proceeding with this test.

The Instrument Cluster indicator LEDs are not replaceable, view repair.

Repair

Replace and configure the Instrument Cluster in accordance with the Service Information.
Perform BODY VERIFICATION TEST - VER 1. (Refer to BODY VERIFICATION TEST - VER 1.)

CARGO LAMP INDICATOR OUTPUT CIRCUIT OVERLOAD SHORT TO BATT

For a complete wiring diagram **Refer to Section 8W**.

Possible Causes
INSTRUMENT CLUSTER

1. INSTRUMENT CLUSTER

NOTE: Diagnose and repair any PCM (ECM if diesel equipped), or Communication DTCs before proceeding with this test.

The Instrument Cluster indicator LEDs are not replaceable, view repair.

Repair

Replace and configure the Instrument Cluster in accordance with the Service Information.
Perform BODY VERIFICATION TEST - VER 1. (Refer to BODY VERIFICATION TEST - VER 1.)

CHECK GAUGES INDICATOR OUTPUT CIRCUIT OPEN OR SHORT TO GROUND

For a complete wiring diagram **Refer to Section 8W**.

Possible Causes
INSTRUMENT CLUSTER

1. INSTRUMENT CLUSTER

NOTE: Diagnose and repair any PCM (ECM if diesel equipped), or Communication DTCs before proceeding with this test.

The Instrument Cluster indicator LEDs are not replaceable, view repair.

Repair

Replace and configure the Instrument Cluster in accordance with the Service Information.
Perform BODY VERIFICATION TEST - VER 1. (Refer to BODY VERIFICATION TEST - VER 1.)

CHECK GAUGES INDICATOR OUTPUT CIRCUIT OVERLOAD OR SHORT BATT

For a complete wiring diagram **Refer to Section 8W**.

Possible Causes
INSTRUMENT CLUSTER

1. INSTRUMENT CLUSTER

NOTE: Diagnose and repair any PCM (ECM if diesel equipped), or Communication DTCs before proceeding with this test.

The Instrument Cluster indicator LEDs are not replaceable, view repair.

Repair

Replace and configure the Instrument Cluster in accordance with the Service Information.
Perform BODY VERIFICATION TEST - VER 1. (Refer to BODY VERIFICATION TEST - VER 1.)

DOOR AJAR INDICATOR OUTPUT CIRCUIT OPEN OR SHORT TO GROUND

For a complete wiring diagram **Refer to Section 8W**.

Possible Causes
INSTRUMENT CLUSTER

1. INSTRUMENT CLUSTER

NOTE: Diagnose and repair any PCM (ECM if diesel equipped), or Communication DTCs before proceeding with this test.

The Instrument Cluster indicator LEDs are not replaceable, view repair.

Repair

Replace and configure the Instrument Cluster in accordance with the Service Information.
Perform BODY VERIFICATION TEST - VER 1. (Refer to BODY VERIFICATION TEST - VER 1.)

DOOR AJAR INDICATOR OUTPUT CIRCUIT OVERLOAD SHORT TO BATT

For a complete wiring diagram **Refer to Section 8W**.

Possible Causes
INSTRUMENT CLUSTER

1. INSTRUMENT CLUSTER

NOTE: Diagnose and repair any PCM (ECM if diesel equipped), or Communication DTCs before proceeding with this test.

The Instrument Cluster indicator LEDs are not replaceable, view repair.

Repair

Replace and configure the Instrument Cluster in accordance with the Service Information.
Perform BODY VERIFICATION TEST - VER 1. (Refer to BODY VERIFICATION TEST - VER 1.)

ETC INDICATIOR OUTPUT CIRCUIT OVERLOAD OR SHORT TO BATT

For a complete wiring diagram **Refer to Section 8W**.

Possible Causes
INSTRUMENT CLUSTER

1. INSTRUMENT CLUSTER

NOTE: Diagnose and repair any PCM (ECM if diesel equipped), or Communication DTCs before proceeding with this test.

The Instrument Cluster indicator LEDs are not replaceable, view repair.

Repair

Replace and configure the Instrument Cluster in accordance with the Service Information.
Perform BODY VERIFICATION TEST - VER 1. (Refer to BODY VERIFICATION TEST - VER 1.)

ETC INDICATOR OUTPUT CIRCUIT OPEN OR SHORT TO GROUND

For a complete wiring diagram **Refer to Section 8W**.

Possible Causes
INSTRUMENT CLUSTER

1. INSTRUMENT CLUSTER

NOTE: Diagnose and repair any PCM (ECM if diesel equipped), or Communication DTCs before proceeding with this test.

The Instrument Cluster indicator LEDs are not replaceable, view repair.

Repair

Replace and configure the Instrument Cluster in accordance with the Service Information.
Perform BODY VERIFICATION TEST - VER 1. (Refer to BODY VERIFICATION TEST - VER 1.)

FUEL INDICATOR CIRCUIT OPEN OR SHORT TO GROUND

For a complete wiring diagram **Refer to Section 8W**.

Possible Causes
INSTRUMENT CLUSTER

1. INSTRUMENT CLUSTER

NOTE: Diagnose and repair any PCM (ECM if diesel equipped), or Communication DTCs before proceeding with this test.

The Instrument Cluster indicator LEDs are not replaceable, view repair.

Repair

Replace and configure the Instrument Cluster in accordance with the Service Information.
Perform BODY VERIFICATION TEST - VER 1. (Refer to BODY VERIFICATION TEST - VER 1.)

FUEL INDICATOR CIRCUIT OVERLOAD SHORT TO BATT

For a complete wiring diagram **Refer to Section 8W**.

Possible Causes
INSTRUMENT CLUSTER

1. INSTRUMENT CLUSTER

NOTE: Diagnose and repair any PCM (ECM if diesel equipped), or Communication DTCs before proceeding with this test.

The Instrument Cluster indicator LEDs are not replaceable, view repair.

Repair

Replace and configure the Instrument Cluster in accordance with the Service Information.
Perform BODY VERIFICATION TEST - VER 1. (Refer to BODY VERIFICATION TEST - VER 1.)

HIGH BEAM INDICATOR CIRCUIT OPEN SHORT TO GROUND

For a complete wiring diagram **Refer to Section 8W**.

Possible Causes
INSTRUMENT CLUSTER

1. INSTRUMENT CLUSTER

NOTE: Diagnose and repair any PCM (ECM if diesel equipped), or Communication DTCs before proceeding with this test.

The Instrument Cluster indicator LEDs are not replaceable, view repair.

Repair

Replace and configure the Instrument Cluster in accordance with the Service Information.
Perform BODY VERIFICATION TEST - VER 1. (Refer to BODY VERIFICATION TEST - VER 1.)

HIGH BEAM INDICATOR CIRCUIT OVERLOAD OR SHORT TO BATT

For a complete wiring diagram **Refer to Section 8W**.

Possible Causes
INSTRUMENT CLUSTER

1. INSTRUMENT CLUSTER

NOTE: Diagnose and repair any PCM (ECM if diesel equipped), or Communication DTCs before proceeding with this test.

The Instrument Cluster indicator LEDs are not replaceable, view repair.

Repair

Replace and configure the Instrument Cluster in accordance with the Service Information.
Perform BODY VERIFICATION TEST - VER 1. (Refer to BODY VERIFICATION TEST - VER 1.)

MIL INDICATOR OUTPUT CIRCUIT OPEN OR SHORT TO GROUND

For a complete wiring diagram **Refer to Section 8W**.

Possible Causes
INSTRUMENT CLUSTER

1. INSTRUMENT CLUSTER

NOTE: Diagnose and repair any PCM (ECM if diesel equipped), or Communication DTCs before proceeding with this test.

The Instrument Cluster indicator LEDs are not replaceable, view repair.

Repair

Replace and configure the Instrument Cluster in accordance with the Service Information.
Perform BODY VERIFICATION TEST - VER 1. (Refer to BODY VERIFICATION TEST - VER 1.)

MIL INDICATOR OUTPUT CIRCUIT OVERLOAD OR SHORT TO BATTERY

For a complete wiring diagram **Refer to Section 8W**.

Possible Causes
INSTRUMENT CLUSTER

1. INSTRUMENT CLUSTER

NOTE: Diagnose and repair any PCM (ECM if diesel equipped), or Communication DTCs before proceeding with this test.

The Instrument Cluster indicator LEDs are not replaceable, view repair.

Repair

Replace and configure the Instrument Cluster in accordance with the Service Information.
Perform BODY VERIFICATION TEST - VER 1. (Refer to BODY VERIFICATION TEST - VER 1.)

SEATBELT INDICATOR OUTPUT CIRCUIT OVERLOAD SHORT TO BATT

For a complete wiring diagram **Refer to Section 8W**.

Possible Causes
INSTRUMENT CLUSTER

1. INSTRUMENT CLUSTER

NOTE: Diagnose and repair any PCM (ECM if diesel equipped), or Communication DTCs before proceeding with this test.

The Instrument Cluster indicator LEDs are not replaceable, view repair.

Repair

Replace and configure the Instrument Cluster in accordance with the Service Information.
Perform BODY VERIFICATION TEST - VER 1. (Refer to BODY VERIFICATION TEST - VER 1.)

SEATBELT INDICATOR OUTPUT CIRCUIT OPEN SHORT TO GROUND

For a complete wiring diagram **Refer to Section 8W**.

Possible Causes
INSTRUMENT CLUSTER

1. INSTRUMENT CLUSTER

NOTE: Diagnose and repair any PCM (ECM if diesel equipped), or Communication DTCs before proceeding with this test.

The Instrument Cluster indicator LEDs are not replaceable, view repair.

Repair

Replace and configure the Instrument Cluster in accordance with the Service Information.
Perform BODY VERIFICATION TEST - VER 1. (Refer to BODY VERIFICATION TEST - VER 1.)

TRANS TEMP INDICATOR OUTPUT CIRCUIT OPEN OR SHORT TO GROUND

For a complete wiring diagram **Refer to Section 8W**.

Possible Causes
INSTRUMENT CLUSTER

1. INSTRUMENT CLUSTER

NOTE: Diagnose and repair any PCM (ECM if diesel equipped), or Communication DTCs before proceeding with this test.

The Instrument Cluster indicator LEDs are not replaceable, view repair.

Repair

Replace and configure the Instrument Cluster in accordance with the Service Information.
Perform BODY VERIFICATION TEST - VER 1. (Refer to BODY VERIFICATION TEST - VER 1.)

TRANS TEMP INDICATOR OUTPUT CIRCUIT OVERLOAD OR SHORT TO BATT

For a complete wiring diagram **Refer to Section 8W**.

Possible Causes
INSTRUMENT CLUSTER

1. INSTRUMENT CLUSTER

NOTE: Diagnose and repair any PCM (ECM if diesel equipped), or Communication DTCs before proceeding with this test.

The Instrument Cluster indicator LEDs are not replaceable, view repair.

Repair

Replace and configure the Instrument Cluster in accordance with the Service Information.
Perform BODY VERIFICATION TEST - VER 1. (Refer to BODY VERIFICATION TEST - VER 1.)

WAIT TO START INDICATOR OUTPUT CIRCUIT OPEN OR SHORT TO GROUND

For a complete wiring diagram **Refer to Section 8W**.

Possible Causes
INSTRUMENT CLUSTER

1. INSTRUMENT CLUSTER

NOTE: Diagnose and repair any PCM (ECM if diesel equipped), or Communication DTCs before proceeding with this test.

The Instrument Cluster indicator LEDs are not replaceable, view repair.

Repair

Replace and configure the Instrument Cluster in accordance with the Service Information.
Perform BODY VERIFICATION TEST - VER 1. (Refer to BODY VERIFICATION TEST - VER 1.)

WAIT TO START INDICATOR OUTPUT CIRCUIT OVERLOAD OR SHORT TO BATTERY

For a complete wiring diagram **Refer to Section 8W**.

Possible Causes
INSTRUMENT CLUSTER

1. INSTRUMENT CLUSTER

NOTE: Diagnose and repair any PCM (ECM if diesel equipped), or Communication DTCs before proceeding with this test.

The Instrument Cluster indicator LEDs are not replaceable, view repair.

Repair

Replace and configure the Instrument Cluster in accordance with the Service Information.
Perform BODY VERIFICATION TEST - VER 1. (Refer to BODY VERIFICATION TEST - VER 1.)

WATER IN FUEL INDICATOR OUTPUT CIRCUIT OPEN OR SHORT TO GROUND

For a complete wiring diagram **Refer to Section 8W**.

Possible Causes
INSTRUMENT CLUSTER

1. INSTRUMENT CLUSTER

NOTE: Diagnose and repair any PCM (ECM if diesel equipped), or Communication DTCs before proceeding with this test.

The Instrument Cluster indicator LEDs are not replaceable, view repair.

Repair

Replace and configure the Instrument Cluster in accordance with the Service Information.
Perform BODY VERIFICATION TEST - VER 1. (Refer to BODY VERIFICATION TEST - VER 1.)

WATER IN FUEL INDICATOR OUTPUT CIRCUIT OVERLOAD OR SHORT TO BATT

For a complete wiring diagram **Refer to Section 8W**.

Possible Causes
INSTRUMENT CLUSTER

1. INSTRUMENT CLUSTER

NOTE: Diagnose and repair any PCM (ECM if diesel equipped), or Communication DTCs before proceeding with this test.

The Instrument Cluster indicator LEDs are not replaceable, view repair.

Repair

Replace and configure the Instrument Cluster in accordance with the Service Information.
Perform BODY VERIFICATION TEST - VER 1. (Refer to BODY VERIFICATION TEST - VER 1.)

ABS MESSAGES NOT RECEIVED

For a complete wiring diagram **Refer to Section 8W**.

- **When Monitored:**
  With the ignition on.
- **Set Condition:**
  The Instrument Cluster does not receive any messages from the ABS (CAB) module for at least 5 seconds.

Possible Causes
BUS MESSAGE NOT RECEIVED DTC PRESENT
INSTRUMENT CLUSTER

1. BUS MESSAGE NOT RECEIVED DTC PRESENT

With the DRBIII®, attempt to communicate with the module that corresponds to the DTC that is set.

Was the DRBIII® able to I/D or communicate with the Module in question?

Yes >> Go To 2

No >> Refer to Communication category for the related symptom(s).
Perform BODY VERIFICATION TEST - VER 1. (Refer to BODY VERIFICATION TEST - VER 1.)

---

2. INSTRUMENT CLUSTER

NOTE: If this is an active DTC, answer yes to the question.
With the DRBIII®, erase DTCs.
Cycle the ignition, wait approximately 1 minute.
With the DRBIII®, read DTCs.

Did the DTC reset?

Yes >> Replace the Instrument Cluster in accordance with the Service Information.
Perform BODY VERIFICATION TEST - VER 1. (Refer to BODY VERIFICATION TEST - VER 1.)

No >> The condition is not present at this time. Monitor DRBIII® parameters while wiggling the related wire harness. Refer to any Technical Service Bulletins (TSB) that may apply. Visually inspect the related wiring harness and connector terminals.
Perform BODY VERIFICATION TEST - VER 1. (Refer to BODY VERIFICATION TEST - VER 1.)

ACM MESSAGES NOT RECEIVED

For a complete wiring diagram **Refer to Section 8W**.

- **When Monitored:**
  With the ignition on.
- **Set Condition:**
  The Instrument Cluster does not receive any messages from the ACM for at least 5 seconds.

Possible Causes
BUS MESSAGE NOT RECEIVED DTC PRESENT
INSTRUMENT CLUSTER

1. BUS MESSAGE NOT RECEIVED DTC PRESENT

With the DRBIII®, attempt to communicate with the module that corresponds to the DTC that is set.

Was the DRBIII® able to I/D or communicate with the Module in question?

Yes >> Go To 2

No >> Refer to Communication category for the related symptom(s).
Perform BODY VERIFICATION TEST - VER 1. (Refer to BODY VERIFICATION TEST - VER 1.)

---

2. INSTRUMENT CLUSTER

NOTE: If this is an active DTC, answer yes to the question.
With the DRBIII®, erase DTCs.
Cycle the ignition, wait approximately 1 minute.
With the DRBIII®, read DTCs.

Did the DTC reset?

Yes >> Replace the Instrument Cluster in accordance with the Service Information.
Perform BODY VERIFICATION TEST - VER 1. (Refer to BODY VERIFICATION TEST - VER 1.)

No >> The condition is not present at this time. Monitor DRBIII® parameters while wiggling the related wire harness. Refer to any Technical Service Bulletins (TSB) that may apply. Visually inspect the related wiring harness and connector terminals.
Perform BODY VERIFICATION TEST - VER 1. (Refer to BODY VERIFICATION TEST - VER 1.)

FCM MESSAGES NOT RECEIVED

For a complete wiring diagram **Refer to Section 8W**.

- **When Monitored:**
  With the ignition on.
- **Set Condition:**
  The Instrument Cluster does not receive any messages from the FCM for at least 5 seconds.

Possible Causes
BUS MESSAGE NOT RECEIVED DTC PRESENT
INSTRUMENT CLUSTER

1. BUS MESSAGE NOT RECEIVED DTC PRESENT

With the DRBIII®, attempt to communicate with the module that corresponds to the DTC that is set.

Was the DRBIII® able to I/D or communicate with the Module in question?

Yes >> Go To 2

No >> Refer to Communication category for the related symptom(s).
Perform BODY VERIFICATION TEST - VER 1. (Refer to BODY VERIFICATION TEST - VER 1.)

---

2. INSTRUMENT CLUSTER

NOTE: If this is an active DTC, answer yes to the question.
With the DRBIII®, erase DTCs.
Cycle the ignition, wait approximately 1 minute.
With the DRBIII®, read DTCs.

Did the DTC reset?

Yes >> Replace the Instrument Cluster in accordance with the Service Information.
Perform BODY VERIFICATION TEST - VER 1. (Refer to BODY VERIFICATION TEST - VER 1.)

No >> The condition is not present at this time. Monitor DRBIII® parameters while wiggling the related wire harness. Refer to any Technical Service Bulletins (TSB) that may apply. Visually inspect the related wiring harness and connector terminals.
Perform BODY VERIFICATION TEST - VER 1. (Refer to BODY VERIFICATION TEST - VER 1.)

SKIM MMESSAGES NOT RECEIVED

For a complete wiring diagram **Refer to Section 8W**.

- **When Monitored:**
  With the ignition on.
- **Set Condition:**
  The Instrument Cluster does not receive any messages from the SKIM for at least 5 seconds.

Possible Causes
BUS MESSAGE NOT RECEIVED DTC PRESENT
INSTRUMENT CLUSTER

1. BUS MESSAGE NOT RECEIVED DTC PRESENT

With the DRBIII®, attempt to communicate with the module that corresponds to the DTC that is set.

Was the DRBIII® able to I/D or communicate with the Module in question?

Yes >> Go To 2

No >> Refer to Communication category for the related symptom(s).
Perform BODY VERIFICATION TEST - VER 1. (Refer to BODY VERIFICATION TEST - VER 1.)

---

2. INSTRUMENT CLUSTER

NOTE: If this is an active DTC, answer yes to the question.
With the DRBIII®, erase DTCs.
Cycle the ignition, wait approximately 1 minute.
With the DRBIII®, read DTCs.

Did the DTC reset?

Yes >> Replace the Instrument Cluster in accordance with the Service Information.
Perform BODY VERIFICATION TEST - VER 1. (Refer to BODY VERIFICATION TEST - VER 1.)

No >> The condition is not present at this time. Monitor DRBIII® parameters while wiggling the related wire harness. Refer to any Technical Service Bulletins (TSB) that may apply. Visually inspect the related wiring harness and connector terminals.
Perform BODY VERIFICATION TEST - VER 1. (Refer to BODY VERIFICATION TEST - VER 1.)

TCCM MESSAGES NOT RECEIVED

For a complete wiring diagram **Refer to Section 8W**.

- **When Monitored:**
  With the ignition on.
- **Set Condition:**
  The Instrument Cluster does not receive any messages from the SKIM for at least 5 seconds.

Possible Causes
BUS MESSAGE NOT RECEIVED DTC PRESENT
INSTRUMENT CLUSTER

1. BUS MESSAGE NOT RECEIVED DTC PRESENT

With the DRBIII®, attempt to communicate with the module that corresponds to the DTC that is set.

Was the DRBIII® able to I/D or communicate with the Module in question?

Yes >> Go To 2

No >> Refer to Communication category for the related symptom(s).
Perform BODY VERIFICATION TEST - VER 1. (Refer to BODY VERIFICATION TEST - VER 1.)

---

2. INSTRUMENT CLUSTER

NOTE: If this is an active DTC, answer yes to the question.
With the DRBIII®, erase DTCs.
Cycle the ignition, wait approximately 1 minute.
With the DRBIII®, read DTCs.

Did the DTC reset?

Yes >> Replace the Instrument Cluster in accordance with the Service Information.
Perform BODY VERIFICATION TEST - VER 1. (Refer to BODY VERIFICATION TEST - VER 1.)

No >> The condition is not present at this time. Monitor DRBIII® parameters while wiggling the related wire harness. Refer to any Technical Service Bulletins (TSB) that may apply. Visually inspect the related wiring harness and connector terminals.
Perform BODY VERIFICATION TEST - VER 1. (Refer to BODY VERIFICATION TEST - VER 1.)

TCM MESSAGES NOT RECEIVED

For a complete wiring diagram **Refer to Section 8W**.

- **When Monitored:**
  With the ignition on.
- **Set Condition:**
  The Instrument Cluster does not receive any messages from the SKIM for at least 5 seconds.

Possible Causes
BUS MESSAGE NOT RECEIVED DTC PRESENT
INSTRUMENT CLUSTER

1. BUS MESSAGE NOT RECEIVED DTC PRESENT

With the DRBIII®, attempt to communicate with the module that corresponds to the DTC that is set.

Was the DRBIII® able to I/D or communicate with the Module in question?

Yes >> Go To 2

No >> Refer to Communication category for the related symptom(s).
Perform BODY VERIFICATION TEST - VER 1. (Refer to BODY VERIFICATION TEST - VER 1.)

---

2. INSTRUMENT CLUSTER

NOTE: If this is an active DTC, answer yes to the question.
With the DRBIII®, erase DTCs.
Cycle the ignition, wait approximately 1 minute.
With the DRBIII®, read DTCs.

Did the DTC reset?

Yes >> Replace the Instrument Cluster in accordance with the Service Information.
Perform BODY VERIFICATION TEST - VER 1. (Refer to BODY VERIFICATION TEST - VER 1.)

No >> The condition is not present at this time. Monitor DRBIII® parameters while wiggling the related wire harness. Refer to any Technical Service Bulletins (TSB) that may apply. Visually inspect the related wiring harness and connector terminals.
Perform BODY VERIFICATION TEST - VER 1. (Refer to BODY VERIFICATION TEST - VER 1.)

BATTERY VOLTAGE OPEN

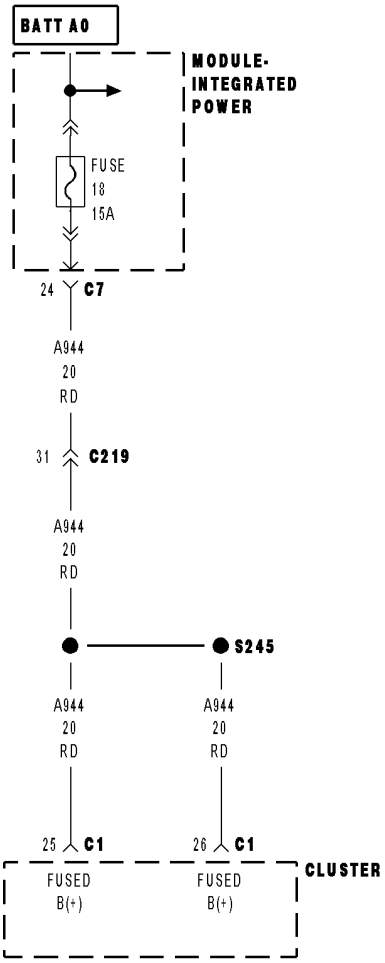

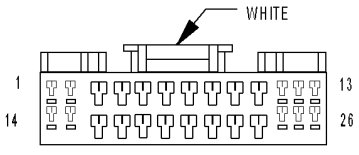

CLUSTER C1

81402dc3

BATTERY VOLTAGE OPEN (CONTINUED)

For the Instrument Cluster circuit diagram (Refer to 8 - ELECTRICAL/INSTRUMENT CLUSTER - SCHEMATICS AND DIAGRAMS).

For a complete wiring diagram **Refer to Section 8W**.

- **When Monitored:**
  Continuously.
- **Set Condition:**
  If the Battery Voltage Feed indicates OFF for 1 second, then fault is written directly to EEPROM. If the battery voltage feed is restored in under 36 miles, then the EEPROM is cleared.

Possible Causes
IOD FUSE NOT INSTALLED
IOD FUSE OPEN
(A944) BATTERY VOLTAGE FEED OPEN
INSTRUMENT CLUSTER

1. IOD FUSE NOT INSTALLED

Inspect the IOD Fuse.

Is the IOD fuse installed?

Yes >> Go To 2

No >> Install the IOD fuse.
Perform BODY VERIFICATION TEST - VER 1. (Refer to BODY VERIFICATION TEST - VER 1.)

---

2. IOD FUSE OPEN

Turn the ignition off.
Inspect the IOD fuse in the PDC.

Is the IOD fuse open?

Yes >> Using the wiring diagram/schematic as a guide, inspect the wiring and connectors for a short to ground condition.
Perform BODY VERIFICATION TEST - VER 1. (Refer to BODY VERIFICATION TEST - VER 1.)

No >> Go To 3

BATTERY VOLTAGE OPEN (CONTINUED)

3. CHECK THE (A944) BATTERY VOLTAGE FEED FOR AN OPEN

Disconnect the Instrument Cluster C1 harness connector.

Turn the ignition on.

Measure the voltage of the (A944) Battery Voltage Feed circuit.

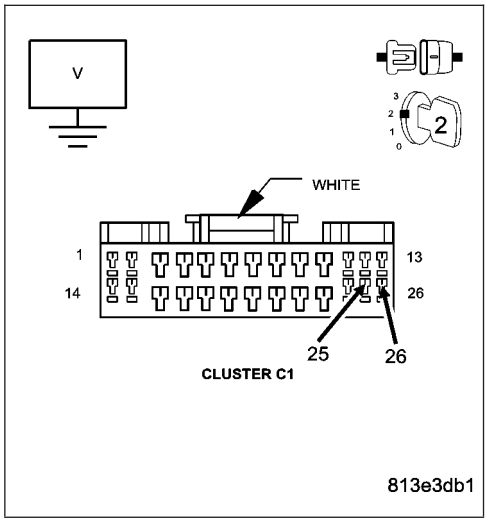

Is the voltage above 10 volts?

Yes >> Replace the Instrument Cluster in accordance with the service information.
Perform BODY VERIFICATION TEST - VER 1. (Refer to BODY VERIFICATION TEST - VER 1.)

No >> Using the wiring diagram/schematic as a guide, repair the (A944) Battery Voltage feed circuit for an open.
Perform BODY VERIFICATION TEST - VER 1. (Refer to BODY VERIFICATION TEST - VER 1.)

BTSI OUTPUT CIRCUIT HIGH

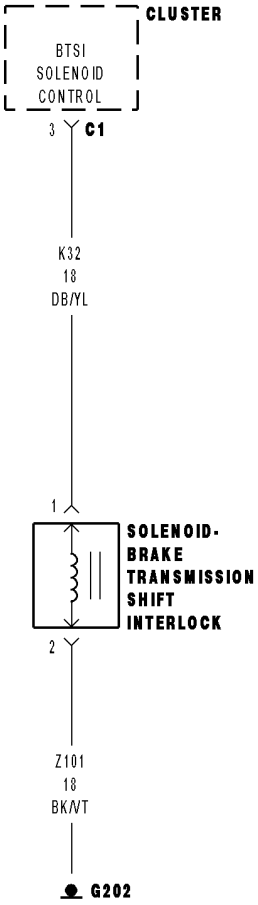

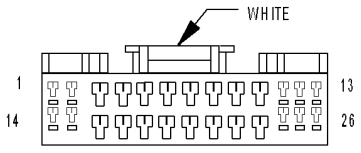

CLUSTER C1

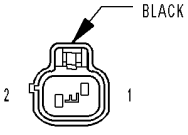

SOLENOID-BRAKE
TRANSMISSION
SHIFT INTERLOCK

81402dca

BTSI OUTPUT CIRCUIT HIGH (CONTINUED)

For the Instrument Cluster circuit diagram (Refer to 8 - ELECTRICAL/INSTRUMENT CLUSTER - SCHEMATICS AND DIAGRAMS).

For a complete wiring diagram **Refer to Section 8W**.

- **When Monitored:**
  With the ignition in the Unlock or Run position and the driver's foot applied to the brake pedal.
- **Set Condition:**
  The instrument cluster detects a high value on the BTSI Solenoid Control Circuit.

Possible Causes
(K32) BTSI CONTROL CIRCUIT OPEN
(Z101) BTSI GROUND CIRCUIT OPEN
BTSI SOLENOID
INSTRUMENT CLUSTER

1. BTSI SOLENOID

Turn the ignition on.

Disconnect the BTSI Solenoid.

Using a 12-volt test light connected to ground, check for voltage on the (K32) BTSI Solenoid control circuit.

With the DRBIII®, actuate the BTSI Solenoid.

Does the test light illuminate brightly?

Yes >> Go To 2

No >> Go To 3

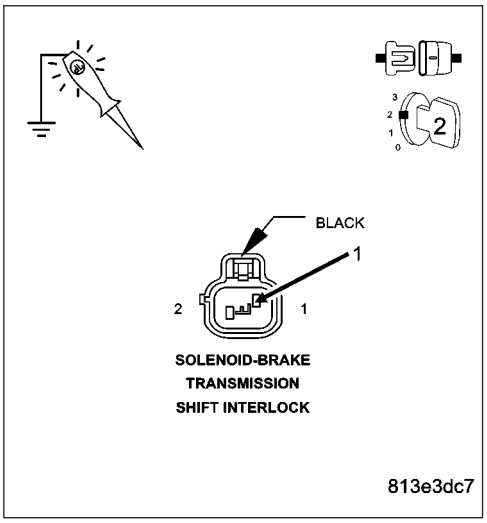

BTSI OUTPUT CIRCUIT HIGH (CONTINUED)

2. CHECK THE (Z101) BTSI GROUND CIRCUIT FOR AN OPEN

Turn the ignition off.

Connect a 12-volt test light between the (K32) BTSI Solenoid Control circuit and the (Z101) BTSI Solenoid Ground circuit.

Turn the ignition on.

With the DRBIII®, actuate the BTSI Solenoid.

Does the test light illuminate brightly?

Yes >> Replace the BTSI Solenoid in accordance with the service information.
Perform BODY VERIFICATION TEST - VER 1. (Refer to BODY VERIFICATION TEST - VER 1.)

No >> Repair the (Z101) BTSI Solenoid ground circuit for an open.
Perform BODY VERIFICATION TEST - VER 1. (Refer to BODY VERIFICATION TEST - VER 1.)

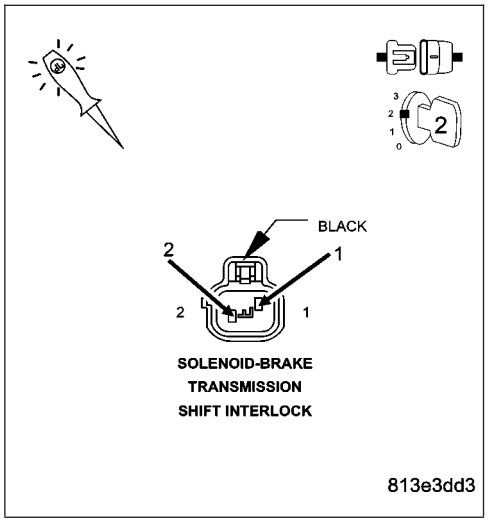

3. CHECK THE (K32) BTSI CONTROL CIRCUIT FOR AN OPEN

Turn the ignition off.

Disconnect the BTSI Solenoid harness connector.

Disconnect the Instrument Cluster C1 harness connector.

Measure the resistance of the (K32) BTSI Solenoid control circuit between the BTSI Solenoid harness connector and the Instrument Cluster C1 harness connector.

Is the resistance above 5.0 ohms?

Yes >> Repair the (K32) BTSI Solenoid control circuit for an open.
Perform BODY VERIFICATION TEST - VER 1. (Refer to BODY VERIFICATION TEST - VER 1.)

No >> Replace the Instrument Cluster in accordance with the service information.
Perform BODY VERIFICATION TEST - VER 1. (Refer to BODY VERIFICATION TEST - VER 1.)

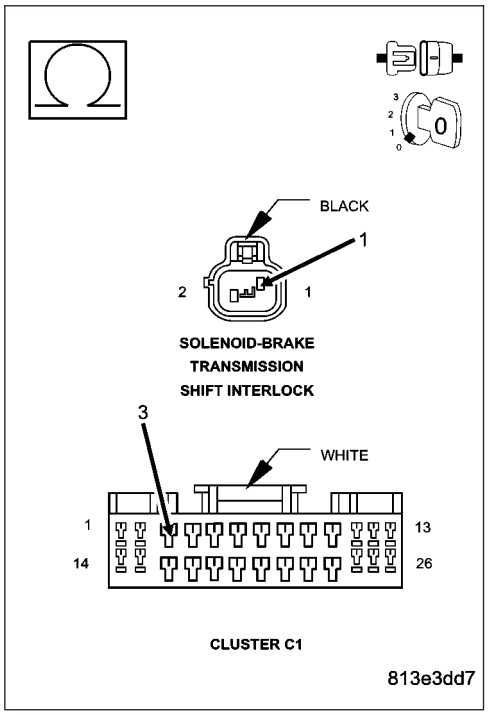

BTSI OUTPUT CIRCUIT SHORTED OR OPEN

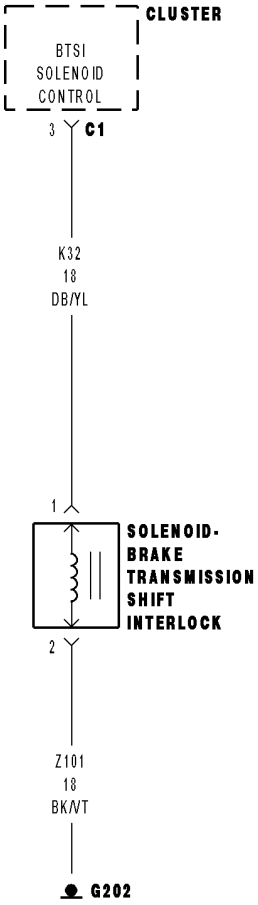

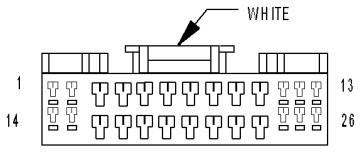

CLUSTER C1

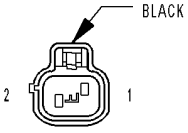

SOLENOID-BRAKE
TRANSMISSION
SHIFT INTERLOCK

81402dca

BTSI OUTPUT CIRCUIT SHORTED OR OPEN (CONTINUED)

For the Instrument Cluster circuit diagram (Refer to 8 - ELECTRICAL/INSTRUMENT CLUSTER - SCHEMATICS AND DIAGRAMS).

For a complete wiring diagram **Refer to Section 8W**.

- **When Monitored:**
  With the ignition in the Unlock or On position and the operator's foot applied to the brake pedal. (Customer Complaint: Vehicle can be shifted out of Park without pressing the brake pedal.)
- **Set Condition:**
  The Instrument Cluster detects a ″0″ or low value on the input circuit for the BTSI when ON.

Possible Causes
(Z101) BTSI SOLENOID GROUND CIRCUIT OPEN
(K32) BTSI SOLENOID CONTROL CIRCUIT SHORTED TO THE (Z101) BTSI SOLENOID GROUND CIRCUIT
(K32) BTSI SOLENOID CONTROL CIRCUIT SHORT TO GROUND
(K32) BTSI SOLENOID CONTROL CIRCUIT OPEN
BTSI SOLENOID
INSTRUMENT CLUSTER

Diagnostic Test

1. TCM DTC PRESENT

Turn the ignition on.

With the DRBIII®, read DTCs.

Does the DRBIII® display any TCM DTCs?

Yes >> Refer to Transmission for the related symptom(s).
Perform BODY VERIFICATION TEST - VER 1. (Refer to BODY VERIFICATION TEST - VER 1.)

No >> Go To 2

---

2. CHECK THE (Z101) BTSI SOLENOID GROUND CIRCUIT FOR AN OPEN

Turn the ignition off.

Disconnect the BTSI Solenoid harness connector.

Measure the resistance between ground and the (Z101) BTSI Solenoid Ground circuit.

Is the resistance above 5.0 ohms?

Yes >> Repair the (Z101) BTSI Solenoid Ground circuit for an open.
Perform BODY VERIFICATION TEST - VER 1. (Refer to BODY VERIFICATION TEST - VER 1.)

No >> Go To 3

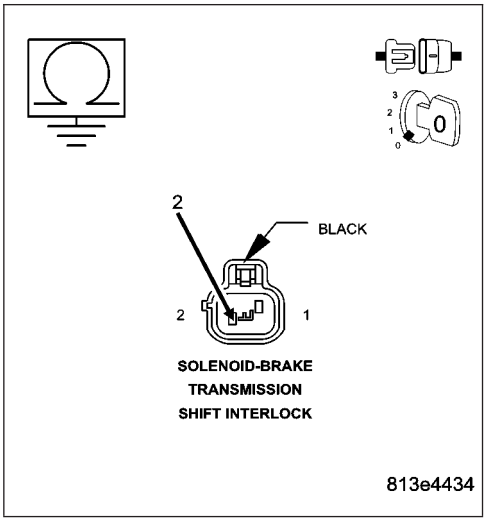

BTSI OUTPUT CIRCUIT SHORTED OR OPEN (CONTINUED)

3. CHECK THE (K32) BTSI SOLENOID CONTROL CIRCUIT FOR A SHORT TO THE (Z101) BTSI SOLENOID GROUND CIRCUIT

Disconnect the Instrument Cluster C1 harness connector.

Measure the resistance between the (K32) BTSI Solenoid Control circuit and the (Z101) BTSI Solenoid Ground circuit.

Is the resistance below 5.0 ohms?

Yes >> Repair the (K32) BTSI Solenoid Control circuit for a short to the (Z101) BTSI Solenoid Ground circuit.
Perform BODY VERIFICATION TEST - VER 1. (Refer to BODY VERIFICATION TEST - VER 1.)

No >> Go To 4

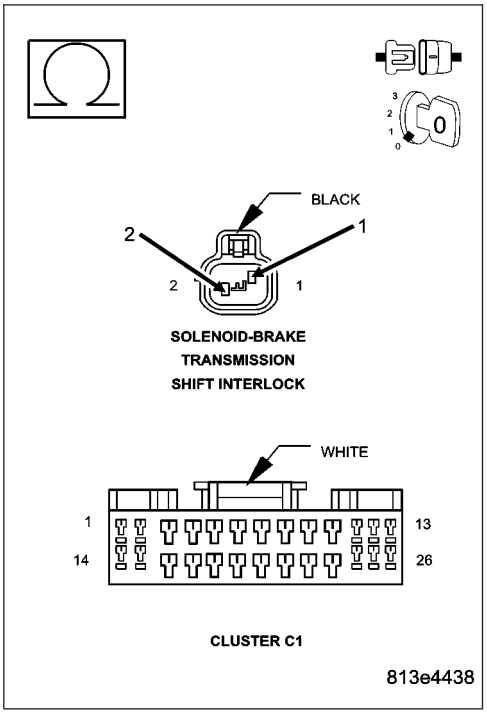

4. CHECK THE (K32) BTSI SOLENOID CONTROL CIRCUIT FOR A SHORT TO GROUND

Measure the resistance between ground and the (K32) BTSI Solenoid Control circuit.

Is the resistance below 5.0 ohms?

Yes >> Repair the (K32) BTSI Solenoid Control circuit for a short to ground.
Perform BODY VERIFICATION TEST - VER 1. (Refer to BODY VERIFICATION TEST - VER 1.)

No >> Go To 5

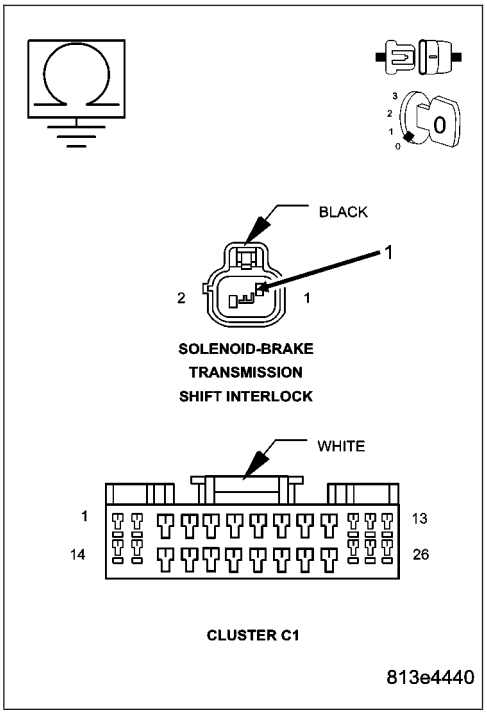

BTSI OUTPUT CIRCUIT SHORTED OR OPEN (CONTINUED)

5. CHECK THE (K32) BTSI SOLENOID CONTROL CIRCUIT FOR AN OPEN

Measure the resistance of the (K32) BTSI Solenoid Control circuit between the Solenoid connector and the Instrument Cluster C1 connector.

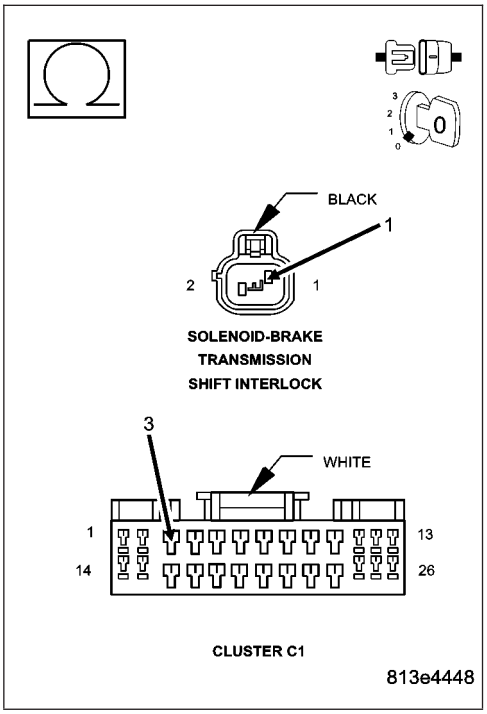

Is the resistance above 5.0 ohms?

Yes >> Repair the (K32) BTSI Solenoid Control circuit for an open.
Perform BODY VERIFICATION TEST - VER 1. (Refer to BODY VERIFICATION TEST - VER 1.)

No >> Go To 6

6. BTSI SOLENOID

Reconnect the Instrument Cluster C1 harness connector.

Turn the ignition on.

With the DRBIII®, actuate the BTSI Solenoid.

Using a 12-volt test light connected to ground, check for voltage on the (K32) BTSI Solenoid Control circuit.

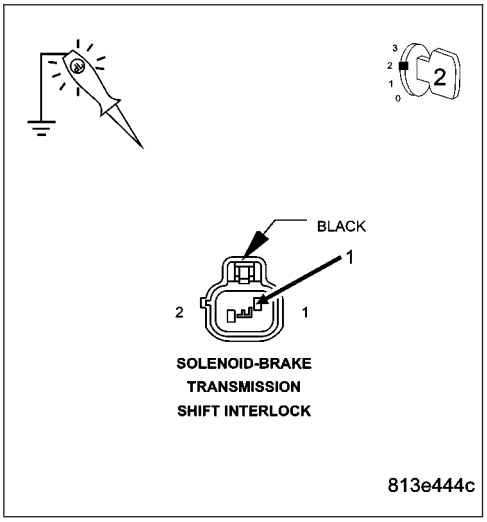

Does the test light illuminate brightly?

Yes >> Replace the BTSI Solenoid in accordance with the Service Information.
Perform BODY VERIFICATION TEST - VER 1. (Refer to BODY VERIFICATION TEST - VER 1.)

No >> Replace and configure the Instrument Cluster in accordance with the Service Information.
Perform BODY VERIFICATION TEST - VER 1. (Refer to BODY VERIFICATION TEST - VER 1.)

IGNITION RUN-START CIRCUIT RATIONALITY CHECK

For the Instrument Cluster circuit diagram (Refer to 8 - ELECTRICAL/INSTRUMENT CLUSTER - SCHEMATICS AND DIAGRAMS).

For a complete wiring diagram **Refer to Section 8W**.

- **When Monitored:**
  Continuously.
- **Set Condition:**
  Ignition RUN/START Voltage below 5 volts while the RUN/ACC and UNLOCK voltage status is logic high.

Possible Causes
IGNITION RUN-START FUSE OPEN
(F21) IGNITION RUN-START CIRCUIT OPEN
INSTRUMENT CLUSTER

Diagnostic Test

1. IGNITION RUN-START FUSE OPEN

Turn the ignition off.

Inspect the Ignition Run-Start fuse in the PDC.

Is the fuse open?

Yes >> Using the wiring diagram/schematic as a guide, inspect the wiring and connectors for a short to ground condition.
Perform BODY VERIFICATION TEST - VER 1. (Refer to BODY VERIFICATION TEST - VER 1.)

No >> Go To 2

---

2. CHECK THE (F1) IGNITION RUN-START CIRCUIT FOR AN OPEN

Disconnect the Instrument Cluster C3 harness connector.

Turn the ignition on.

Measure the voltage of the (F21) Ignition Run-Start circuit.

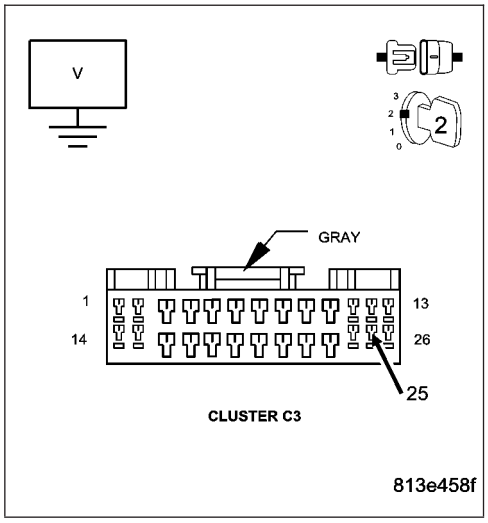

Is the voltage above 5.0 volts?

Yes >> Replace the Instrument Cluster in accordance with the service information.
Perform BODY VERIFICATION TEST - VER 1. (Refer to BODY VERIFICATION TEST - VER 1.)

No >> Repair the (F21) Ignition Run-Start circuit for an open.
Perform BODY VERIFICATION TEST - VER 1. (Refer to BODY VERIFICATION TEST - VER 1.)

IGNITION UNLOCK CIRCUIT RATIONALITY CHECK

For the Instrument Cluster circuit diagram (Refer to 8 - ELECTRICAL/INSTRUMENT CLUSTER - SCHEMATICS AND DIAGRAMS).

For a complete wiring diagram **Refer to Section 8W**.

- **When Monitored:**
  Continuously.
- **Set Condition:**
  One second of Run/Start above 5 Volts, Unlock Status Low, and Run/ACC Status High.

Possible Causes
IGNITION UNLOCK-RUN-START FUSE OPEN
(F21) IGNITION UNLOCK-RUN-START CIRCUIT OPEN
INSTRUMENT CLUSTER

Diagnostic Test

1. IGNITION UNLOCK-RUN-START FUSE OPEN

Turn the ignition off.

Inspect the Ignition Unlock-Run-Start fuse in the PDC.

Is the fuse open?

Yes >> Using the wiring diagram/schematic as a guide, inspect the wiring and connectors for a short to ground condition.
Perform BODY VERIFICATION TEST - VER 1. (Refer to BODY VERIFICATION TEST - VER 1.)

No >> Go To 2

---

2. INSTRUMENT CLUSTER

Turn the ignition off.

Disconnect the Instrument Cluster C3 harness connector.

Turn the ignition on.

Measure the voltage of the (F1) Ignition Unlock-Run-Start circuit.

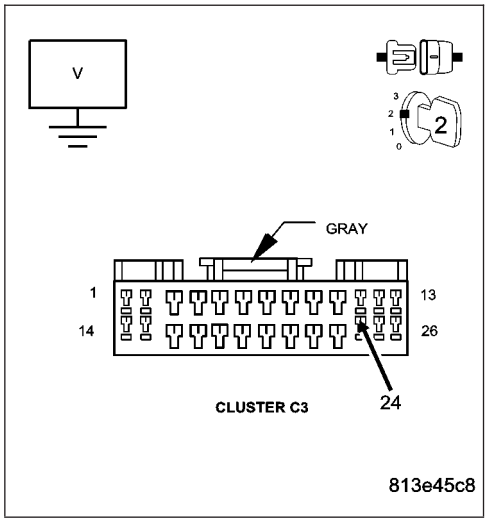

Is the voltage above 10 volts?

Yes >> Replace the Instrument Cluster in accordance with the service information.
Perform BODY VERIFICATION TEST - VER 1. (Refer to BODY VERIFICATION TEST - VER 1.)

No >> Repair the (F1) Ignition Unlock-Run-Start circuit for an open.
Perform BODY VERIFICATION TEST - VER 1. (Refer to BODY VERIFICATION TEST - VER 1.)

INCORRECT ODOMETER VALUE FOUND

For a complete wiring diagram **Refer to Section 8W**.

- **When Monitored:**
  During power up.
- **Set Condition:**
  If the Instrument Cluster detects the odometer value memory is corrupted, this code will set. When this code is set the VF Odometer displays [- -].

Possible Causes
INSTRUMENT CLUSTER

Diagnostic Test

1. INSTRUMENT CLUSTER

CAUTION: Do not attempt to exchange or ″swap″ an Instrument Cluster from one vehicle to another. Module memory/configuration damage may occur. Refer to the Instrument Cluster Caution in the Service Information.

NOTE: When this code is set the VF Odometer will display dashes (- -).

NOTE: If the PCM has been replaced, program the new module with the correct VIN.

Ensure that the Instrument Cluster has not been damaged or previously installed in a different vehicle.

With the DRBIII®, erase DTCs.

Cycle the ignition.

With the DRBIII®, read DTCs.

Did this DTC reset?

Yes >> Replace and configure the Instrument Cluster in accordance with the Service Information.
Perform BODY VERIFICATION TEST - VER 1. (Refer to BODY VERIFICATION TEST - VER 1.)

No >> Test Complete.

INTERNAL MODULE BOOTLOADER FAILURE

For a complete wiring diagram **Refer to Section 8W**.

- **When Monitored:**
  At power up for the module.
- **Set Condition:**
  If the checksum value does not equate to the calculated value.

Possible Causes
INSTRUMENT CLUSTER

1. INSTRUMENT CLUSTER

When this code is set, the Instrument Cluster must be replaced.

Repair

Replace and configure the Instrument Cluster in accordance with the Service Information.
Perform BODY VERIFICATION TEST - VER 1. (Refer to BODY VERIFICATION TEST - VER 1.)

INTERNAL MODULE FLASH MEMORY CHECKSUM FAILURE

For a complete wiring diagram **Refer to Section 8W**.

- **When Monitored:**
  At power up for the module.
- **Set Condition:**
  If the checksum value does not equate to the calculated value. Indicates that the Instrument Cluster internal memory is corrupted.

Possible Causes
INSTRUMENT CLUSTER

1. INSTRUMENT CLUSTER

When this code is set, the Instrument Cluster must be replaced.

Repair

Replace and configure the Instrument Cluster in accordance with the Service Information.
Perform BODY VERIFICATION TEST - VER 1. (Refer to BODY VERIFICATION TEST - VER 1.)

PCI BUS INTERNAL FAILURE

For a complete wiring diagram **Refer to Section 8W**.

- **When Monitored:**
  Continuously.
- **Set Condition:**
  The Instrument Cluster fails the loopback test on the PCI Bus.

Possible Causes
INSTRUMENT CLUSTER

Diagnostic Test

1. INSTRUMENT CLUSTER

NOTE: If this is an active DTC, answer yes to the question.
With the DRBIII®, erase DTCs.
Cycle the ignition and wait approximately 1 minute.
With the DRBIII®, read DTCs.

Did this DTC reset?

Yes >> Replace the Instrument Cluster in accordance with the Service Information.
Perform BODY VERIFICATION TEST - VER 1. (Refer to BODY VERIFICATION TEST - VER 1.)

No >> Test Complete.

PCM MESSAGES NOT RECEIVED

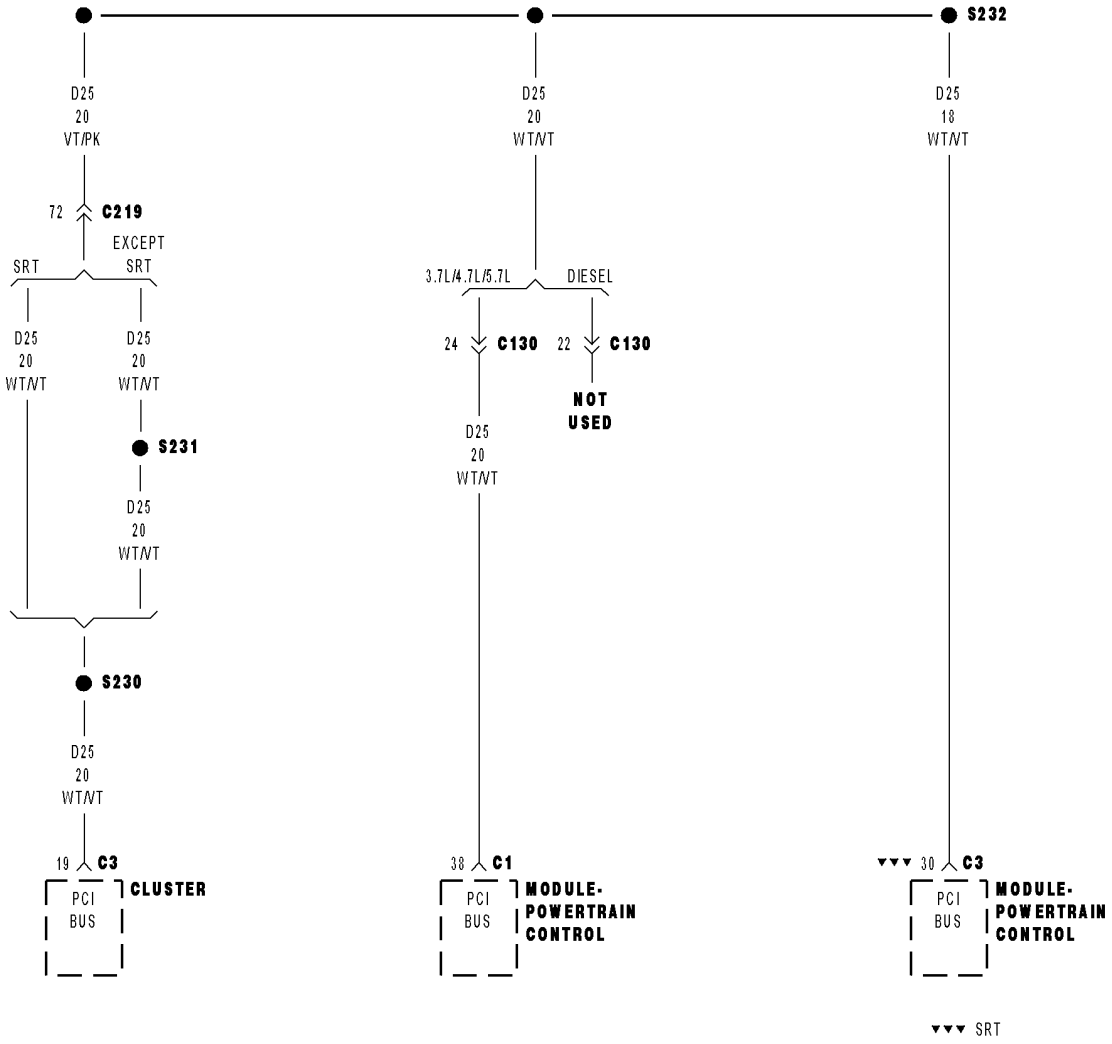

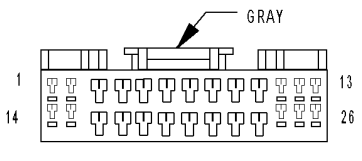

CLUSTER C3

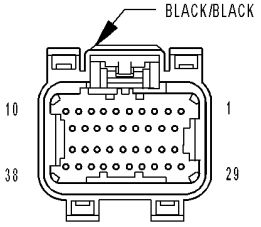

MODULE-
POWERTRAIN
CONTROL C1
(NGC)

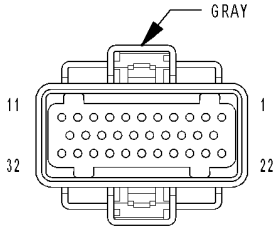

MODULE-
POWERTRAIN
CONTROL C3
(SRT)

81405d82

PCM MESSAGES NOT RECEIVED (CONTINUED)

For the Instrument Cluster circuit diagram (Refer to 8 - ELECTRICAL/INSTRUMENT CLUSTER - SCHEMATICS AND DIAGRAMS).

For a complete wiring diagram **Refer to Section 8W**.

- **When Monitored:**
  With the ignition on.
- **Set Condition:**
  The MIC does not receive any messages from the PCM for at least 5 seconds.

Possible Causes
(D25) PCI BUS CIRCUIT OPEN
POWERTRAIN CONTROL MODULE

1. PCM MESSAGES NOT RECEIVED

Turn the ignition on.

NOTE: To proceed in this test, the DTC must be active.
With the DRB, enter SYSTEM MONITORS then J1850 MODULE SCAN.

Is the PCM active on the BUS?

Yes >> Check the condition of the J1850 Bus circuit wiring. Erase DTC, if DTC resets replace the Instrument Cluster in accordance with the service information.
Perform BODY VERIFICATION TEST - VER 1. (Refer to BODY VERIFICATION TEST - VER 1.)

No >> Go To 2

---

2. ATTEMPT TO COMMUNICATE WITH THE PCM

Turn the ignition on.
With the DRB, attempt to communicate with the PCM.

Was the DRB able to communicate with the PCM?

Yes >> Go To 3

No >> Refer to the communication category and perform the appropriate symptom.
Perform BODY VERIFICATION TEST - VER 1. (Refer to BODY VERIFICATION TEST - VER 1.)

PCM MESSAGES NOT RECEIVED (CONTINUED)

3. CHECK THE (D25) PCI BUS CIRCUIT FOR AN OPEN

Turn the ignition off.

Disconnect the PCM harness connector.

CAUTION: If NGC, DO NOT PROBE THE PCM HARNESS CONNECTORS. PROBING THE PCM HARNESS CONNECTORS WILL DAMAGE THE PCM TERMINALS RESULTING IN POOR TERMINAL TO PIN CONNECTION. INSTALL MILLER SPECIAL TOOL #8815 TO PERFORM DIAGNOSIS.

Disconnect the DRBIII® from the DLC.

Measure the resistance of the (D25) PCI Bus circuit between the PCM connector (from special tool #8815 if NGC) and the DLC.

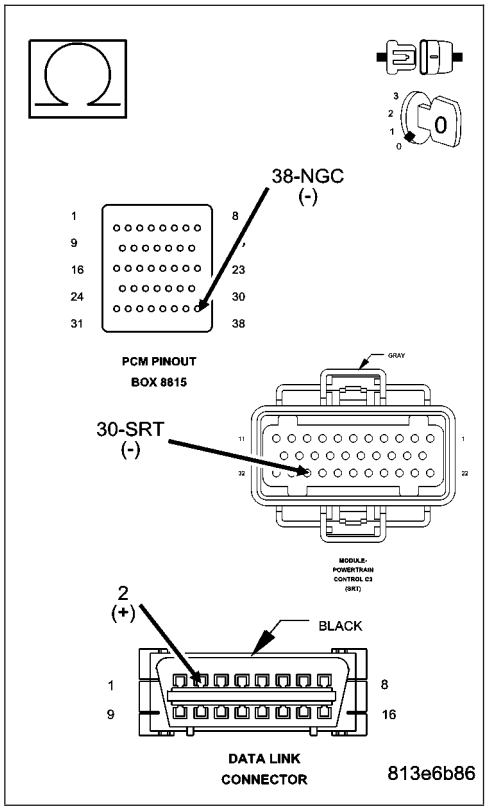

Is the resistance below 5.0 ohms?

Yes >> Replace and program the Powertrain Control Module in accordance with the service information.
Perform BODY VERIFICATION TEST - VER 1. (Refer to BODY VERIFICATION TEST - VER 1.)

No >> Repair the (D25) PCI Bus circuit for an open.
Perform BODY VERIFICATION TEST - VER 1. (Refer to BODY VERIFICATION TEST - VER 1.)

PRNDL SWITCH INPUT CIRCUIT OPEN (DIESEL ONLY)

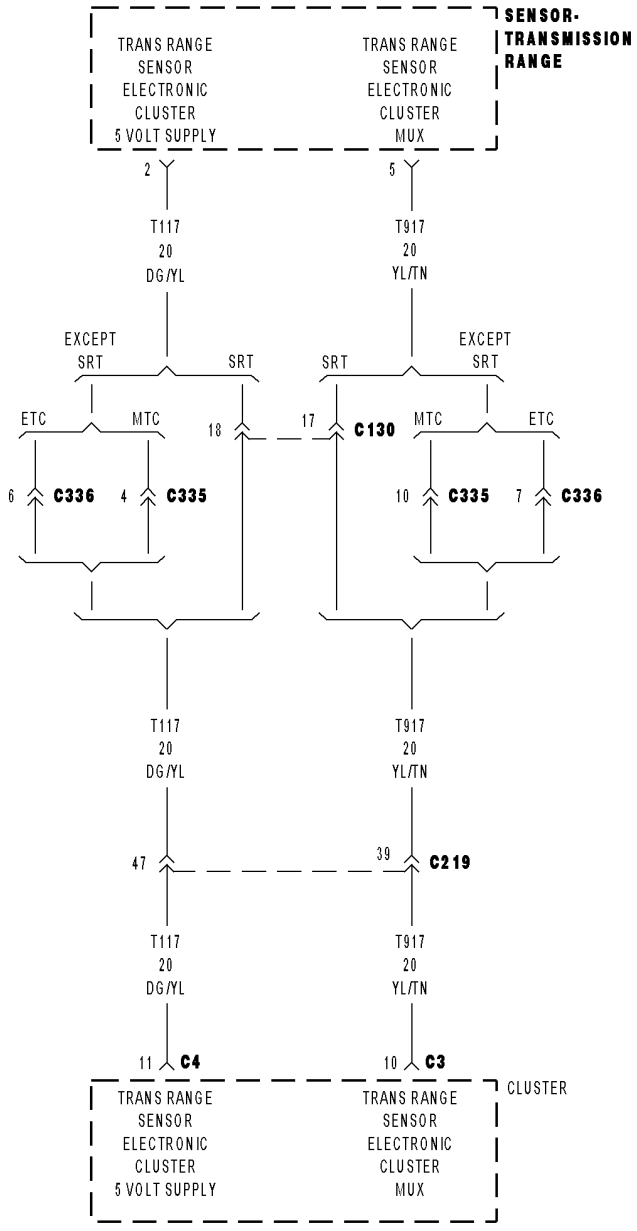

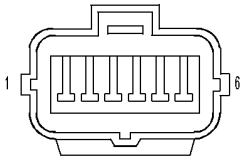

SENSOR-
TRANSMISSION RANGE
(RE)

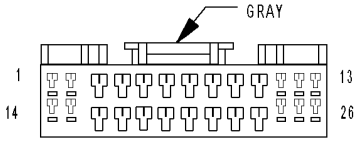

CLUSTER C3

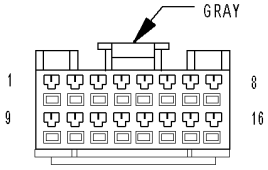

CLUSTER C4

81405d96

PRNDL SWITCH INPUT CIRCUIT OPEN (DIESEL ONLY) (CONTINUED)

For the Instrument Cluster circuit diagram (Refer to 8 - ELECTRICAL/INSTRUMENT CLUSTER - SCHEMATICS AND DIAGRAMS).

For a complete wiring diagram **Refer to Section 8W**.

- **When Monitored:**
  With the ignition on.
- **Set Condition:**
  The instrument Cluster detects that an open condition exists in the PRNDL circuit.

Possible Causes
(T917) TRANSMISSION RANGE SENSOR ELECTRONIC CLUSTER MUX CIRCUIT OPEN
(T117) TRANSMISSION RANGE SENSOR ELECTRONIC CLUSTER 5 VOLT SUPPLY CIRCUIT OPEN
TRANSMISSION RANGE SENSOR
INSTRUMENT CLUSTER

Diagnostic Test

1. TRANSMISSION RANGE SENSOR

NOTE: Ensure that the correct Instrument Cluster is installed and is correctly configured for the vehicle.

Turn the ignition off.

Disconnect the Transmission Range Sensor harness connector.

Connect a jumper wire between cavity 2 and cavity 5.

Turn the ignition on.

With the DRBIII®, read DTCs.

Does the DRBIII® display PRNDL Switch Input Circuit Shorted?

Yes >> Replace the Transmission Range Sensor in accordance with the Service Information.
Perform BODY VERIFICATION TEST - VER 1. (Refer to BODY VERIFICATION TEST - VER 1.)

No >> Go To 2

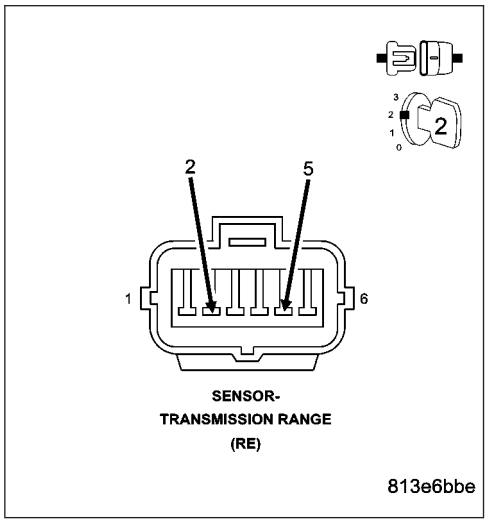

PRNDL SWITCH INPUT CIRCUIT OPEN (DIESEL ONLY) (CONTINUED)

2. CHECK THE (T917) TRANSMISSION RANGE SENSOR ELECTRONIC CLUSTER MUX CIRCUIT FOR AN OPEN

Turn the ignition off.

Disconnect the Transmission Range Sensor harness connector.

Disconnect the Instrument Cluster C3 harness connector.

Measure the resistance of the (T917) Transmission Range Sensor Electronic Cluster MUX circuit.

Is the resistance above 5.0 ohms?

Yes >> Repair the (T917) Transmission Range Sensor Electronic Cluster MUX circuit for an open.
Perform BODY VERIFICATION TEST - VER 1. (Refer to BODY VERIFICATION TEST - VER 1.)

No >> Go To 3

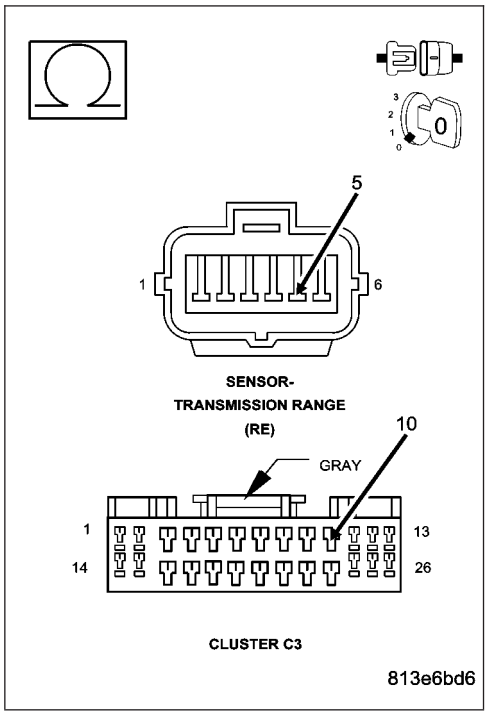

3. CHECK THE (T117) TRANSMISSION RANGE SENSOR ELECTRONIC CLUSTER 5 VOLT SUPPLY CIRCUIT FOR AN OPEN

Disconnect the Instrument Cluster C4 harness connector.

Measure the resistance of the (T117) Transmission Range Sensor Electronic Cluster 5 Volt Supply circuit.

Is the resistance above 5.0 ohms?

Yes >> Repair the (T117) Transmission Range Sensor Electronic Cluster 5 Volt Supply circuit for an open.
Perform BODY VERIFICATION TEST - VER 1. (Refer to BODY VERIFICATION TEST - VER 1.)

No >> Replace and configure the Instrument Cluster in accordance with the Service Information.
Perform BODY VERIFICATION TEST - VER 1. (Refer to BODY VERIFICATION TEST - VER 1.)

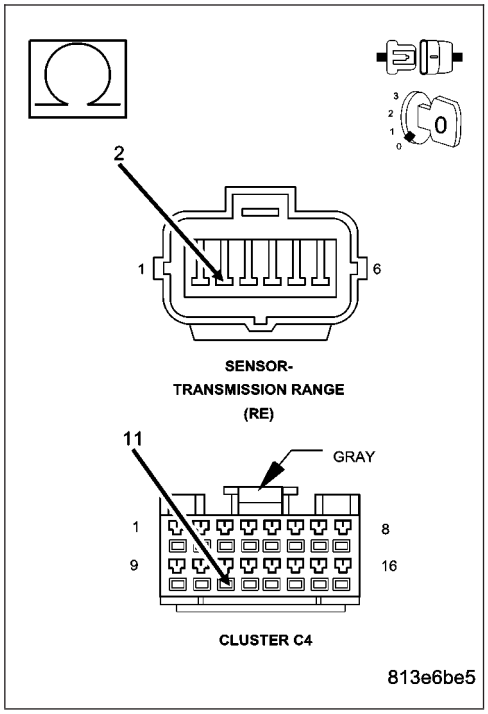

PRNDL SWITCH INPUT CIRCUIT SHORTED (DIESEL ONLY)

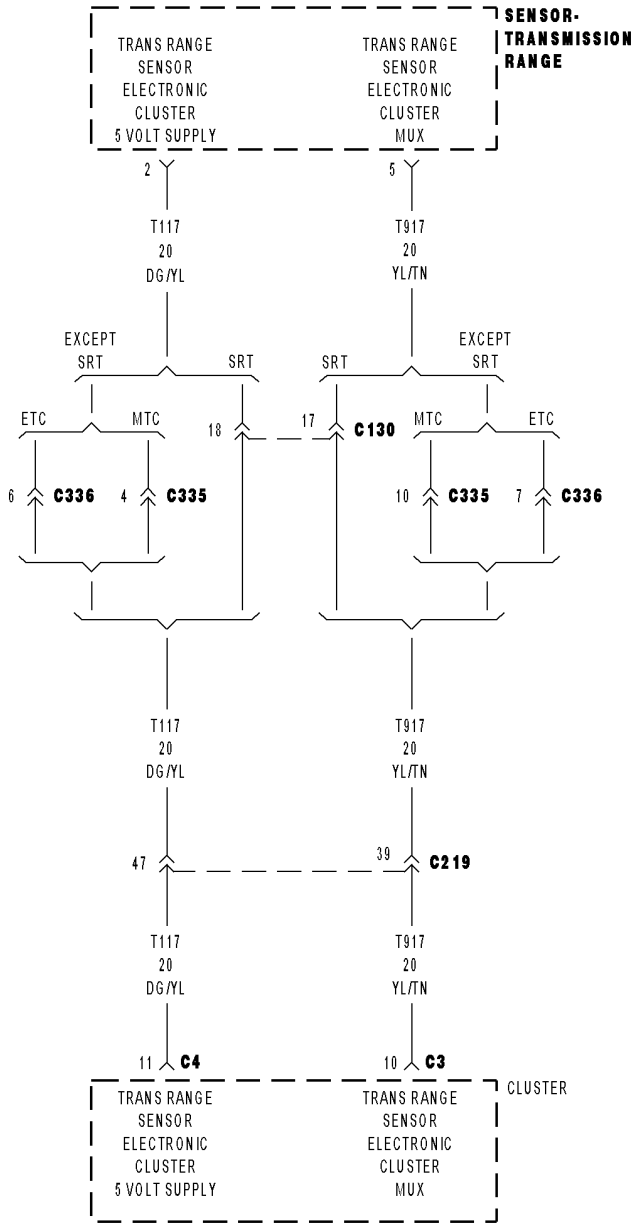

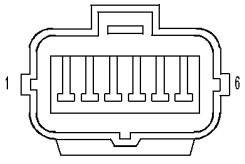

SENSOR-
TRANSMISSION RANGE
(RE)

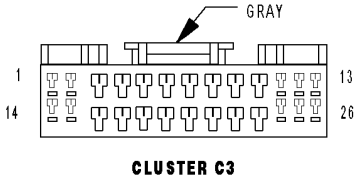

CLUSTER C3

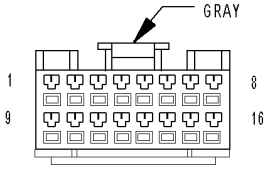

CLUSTER C4

81405d96

PRNDL SWITCH INPUT CIRCUIT SHORTED (DIESEL ONLY) (CONTINUED)

For the Instrument Cluster circuit diagram (Refer to 8 - ELECTRICAL/INSTRUMENT CLUSTER - SCHEMATICS AND DIAGRAMS).

For a complete wiring diagram **Refer to Section 8W**.

- **When Monitored:**
  With the ignition on.
- **Set Condition:**
  The instrument Cluster detects that a short condition exists in the PRNDL circuit.

Possible Causes
(T117) TRANSMISSION RANGE SENSOR ELECTRONIC CLUSTER 5 VOLT SUPPLY CIRCUIT SHORT TO THE (T917) TRANSMISSION RANGE SENSOR ELECTRONIC CLUSTER MUX CIRCUIT
(T117) TRANSMISSION RANGE SENSOR ELECTRONIC CLUSTER 5 VOLT SUPPLY CIRCUIT SHORT TO GROUND
TRANSMISSION RANGE SENSOR
INSTRUMENT CLUSTER

Diagnostic Test

1. TRANSMISSION RANGE SENSOR

NOTE: Ensure that the correct Instrument Cluster is installed and is correctly configured for the vehicle.
Turn the ignition off.

Disconnect the Transmission Range Sensor harness connector.

Turn the ignition on.

With the DRBIII®, read DTCs.

Does the DRBIII® display PRNDL Input Circuit Open?

Yes >> Replace the Transmission Range Sensor in accordance with the Service Information.
Perform BODY VERIFICATION TEST - VER 1. (Refer to BODY VERIFICATION TEST - VER 1.)

No >> Go To 2

PRNDL SWITCH INPUT CIRCUIT SHORTED (DIESEL ONLY) (CONTINUED)

2. (T117) TRANSMISSION RANGE SENSOR ELECTRONIC CLUSTER 5 VOLT SUPPLY CIRCUIT SHORT TO THE (T917) TRANSMISSION RANGE SENSOR ELECTRONIC CLUSTER MUX CIRCUIT

Turn the ignition off.

Disconnect the Transmission Range Sensor harness connector.

Disconnect the Instrument Cluster C3 and C4 harness connectors.

Measure the resistance between the (T117) Transmission Range Sensor Electronic Cluster 5 Volt Supply circuit and the (T917) Transmission Range Sensor Electronic Cluster MUX circuit.

Is the resistance below 5.0 ohms?

Yes >> Repair the (T117) Transmission Range Sensor Electronic Cluster 5 Volt Supply circuit for a short to the (T917) Transmission Range Sensor Electronic Cluster MUX circuit.

Perform BODY VERIFICATION TEST - VER 1. (Refer to BODY VERIFICATION TEST - VER 1.)

No >> Go To 3

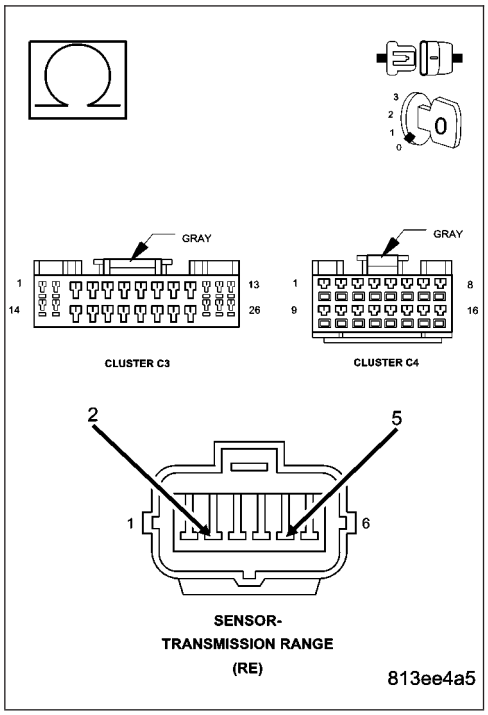

3. (T117) TRANSMISSION RANGE SENSOR ELECTRONIC CLUSTER 5 VOLT SUPPLY CIRCUIT SHORT TO GROUND

Measure the resistance between ground and the (T117) Transmission Range Sensor Electronic Cluster 5 Volt Supply circuit.

Is the resistance below 5.0 ohms?

Yes >> Repair the (T117) Transmission Range Sensor Electronic Cluster 5 Volt Supply circuit for a short to ground.

Perform BODY VERIFICATION TEST - VER 1. (Refer to BODY VERIFICATION TEST - VER 1.)

No >> Replace and configure the Instrument Cluster in accordance with the Service Information.

Perform BODY VERIFICATION TEST - VER 1. (Refer to BODY VERIFICATION TEST - VER 1.)

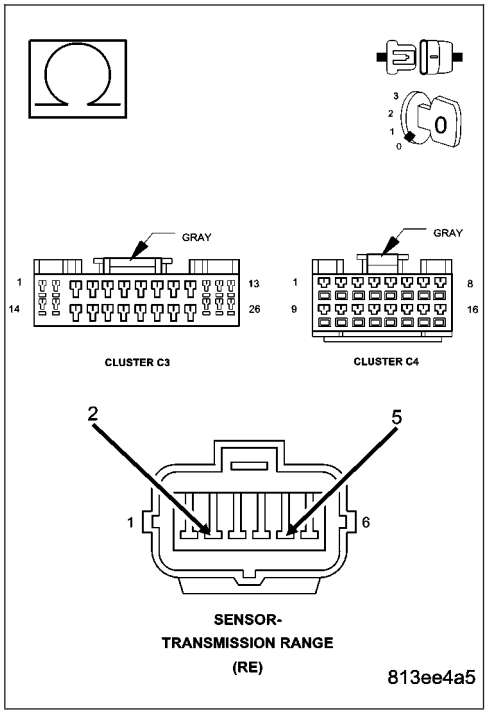

VIN CHECKSUM ERROR

For a complete wiring diagram **Refer to Section 8W**.

- **When Monitored:**
  With the ignition on.
- **Set Condition:**
  Once the Instrument Cluster learns a valid VIN and another valid VIN is transmitted on the bus. The Instrument Cluster decodes the VIN that is transmitted on the bus by the PCM. If the VIN is valid the Instrument Cluster stores the information. If the VIN information does not equate to the encrypted value then the fault is set.

Possible Causes
POWERTRAIN CONTROL MODULE

1. POWERTRAIN CONTROL MODULE

NOTE: The V.I.N. is embedded into the Instrument Cluster memory during production and can not be modified. Do not attempt to ″swap″ a cluster from one vehicle to another. Refer to the Instrument Cluster Caution in the Service Information.

NOTE: This code will only be set if the PCM has been exchanged or ″swapped″ into this vehicle from another.

If any components have been exchanged or ″swapped″, reinstall the original parts.

With the DRBIII®, erase DTCs.

Cycle the ignition.

With the DRBIII®, read DTCs.

If this code resets, view repair.

Repair

Replace and program the Powertrain Control Module in accordance with the Service Information.

Perform BODY VERIFICATION TEST - VER 1. (Refer to BODY VERIFICATION TEST - VER 1.)

VIN PREVIOUSLY STORED

For a complete wiring diagram **Refer to Section 8W**.

- **When Monitored:**
  With the ignition on.
- **Set Condition:**
  Once the Instrument Cluster learns a valid VIN and another VIN is transmitted on the bus. This code can only be set if a PCM or MIC has been exchanged or ″swapped″ from another vehicle. The VIN is embedded in both the cluster and the PCM and cannot be used in any other vehicle.

Possible Causes
POWERTRAIN CONTROL MODULE

Diagnostic Test

1. POWERTRAIN CONTROL MODULE

NOTE: The V.I.N. is embedded into the Instrument Cluster memory during production and can not be modified. Do not attempt to ″swap″ a cluster from one vehicle to another. Refer to the Instrument Cluster Caution in the Service Information.

NOTE: This code will only be set if the PCM has been exchanged or ″swapped″ into this vehicle from another.

If any components have been exchanged or ″swapped″, reinstall the original parts.

With the DRBIII®, erase DTCs.

Cycle the ignition.

With the DRBIII®, read DTCs.

If this code resets, view repair.

Repair

Replace and program the Powertrain Control Module in accordance with the Service Information.

Perform BODY VERIFICATION TEST - VER 1. (Refer to BODY VERIFICATION TEST - VER 1.)

*ALL GAUGES INOPERATIVE

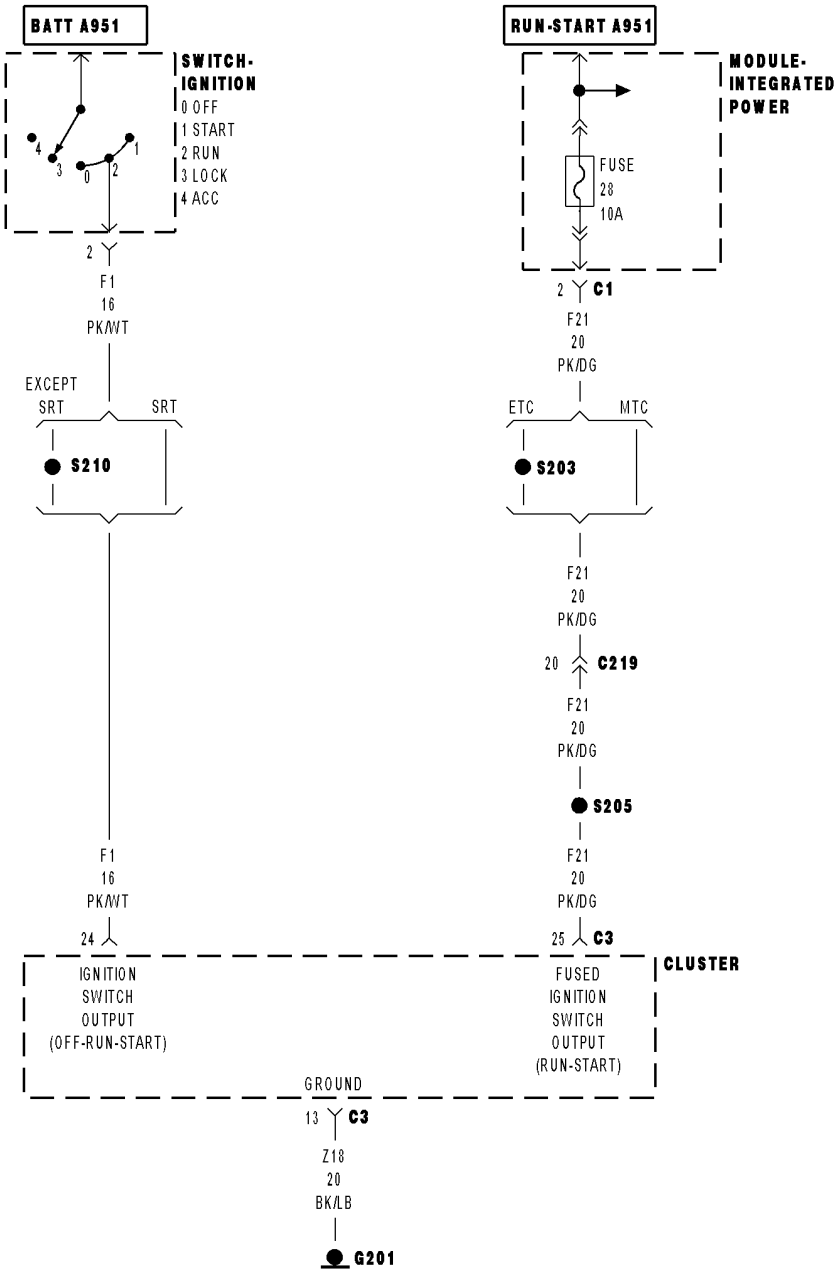

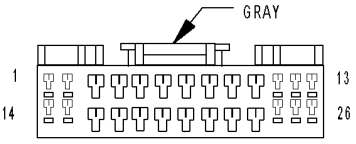

CLUSTER C3

81455485

***ALL GAUGES INOPERATIVE (CONTINUED)**

For a complete wiring diagram **Refer to Section 8W**.

Possible Causes
NO RESPONSE - PCI BUS
NO RESPONSE - PCI BUS - POWERTRAIN CONTROL MODULE
PCI BUS - INSTRUMENT CLUSTER
(F21) FUSED IGNITION SWITCH OUTPUT (RUN/START) CIRCUIT SHORT TO GROUND
(F1) FUSED IGNITION SWITCH OUTPUT (OFF/RUN/START) CIRCUIT SHORT TO GROUND
(F21) FUSED IGNITION SWITCH OUTPUT (RUN/START) CIRCUIT OPEN
(F1) FUSED IGNITION SWITCH OUTPUT (OFF/RUN/START) CIRCUIT OPEN
(Z18) INSTRUMENT CLUSTER GROUND CIRCUIT FOR AN OPEN
INSTRUMENT CLUSTER

Diagnostic Test

1. NO RESPONSE - PCI BUS

NOTE: NOTE: Diagnose and repair any MIC, PCM (ECM if diesel equipped), or Communication DTCs before proceeding with this test.

Turn the ignition on.

With the DRBIII®, select System Monitors, then J1850 Module Scan.

Does the DRBIII® display MIC PRESENT on the BUS?

Yes >> Go To 2

No >> Refer to the COMMUNICATION category and perform the appropriate symptom.
Perform BODY VERIFICATION TEST - VER 1. (Refer to BODY VERIFICATION TEST - VER 1.)

---

2. NO RESPONSE - PCI BUS - POWERTRAIN CONTROL MODULE

Turn the ignition on.

With the DRBIII®, select Body, MIC, SYSTEM TESTS, PCM Monitor.

Does the DRBIII® display PCM INACTIVE on the BUS?

Yes >> Refer to the COMMUNICATION category and perform the appropriate symptom.
Perform BODY VERIFICATION TEST - VER 1. (Refer to BODY VERIFICATION TEST - VER 1.)

No >> Go To 3

---

3. PCI BUS - INSTRUMENT CLUSTER

Turn the ignition on.

With the DRBIII®, select Body, MIC, MODULE DISPLAY.

Does the DRBIII® display NO RESPONSE from MIC?

Yes >> Refer to the COMMUNICATION category and perform the appropriate symptom.
Perform BODY VERIFICATION TEST - VER 1. (Refer to BODY VERIFICATION TEST - VER 1.)

No >> Go To 4

***ALL GAUGES INOPERATIVE (CONTINUED)**

4. CHECK THE (F21) FUSED IGNITION SWITCH OUTPUT (RUN/START) CIRCUIT FOR A SHORT TO GROUND

Turn the ignition off.
Inspect the #20 Fuse in the PDC.
If the fuse is open, replace with proper rated fuse.
Turn the ignition on for one minute.
Turn the ignition off.
Inspect the #20 Fuse in the PDC.

Is the fuse open?

Yes >> Repair the (F21) Fused Ignition Switch Output (Unlock/Run) circuit for a short to ground.
Perform BODY VERIFICATION TEST - VER 1. (Refer to BODY VERIFICATION TEST - VER 1.)

No >> Go To 5

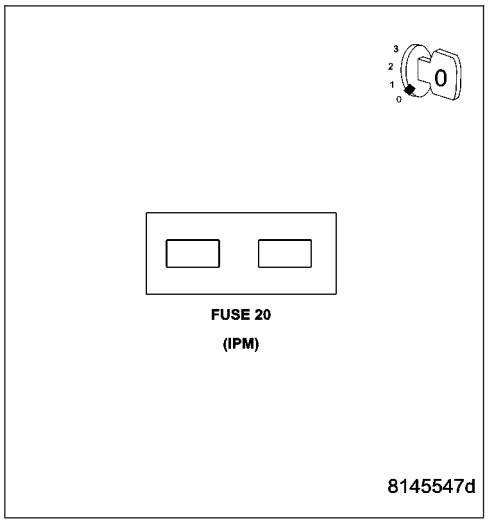

5. CHECK THE (F1) FUSED IGNITION SWITCH OUTPUT (OFF/RUN/START) CIRCUIT FOR A SHORT TO GROUND

Turn the ignition off.
Remove and inspect the #29 Fuse in the PDC.
If the fuse is open, replace with the proper rated fuse.
Turn the ignition on for 1 minute.
Turn the ignition off.
Remove and inspect the #29 Fuse in the PDC.

Is the fuse open?

Yes >> Repair the (F1) Fused Ignition Switch Output (Run/Start) circuit for a short to ground.
Perform BODY VERIFICATION TEST - VER 1. (Refer to BODY VERIFICATION TEST - VER 1.)

No >> Go To 6

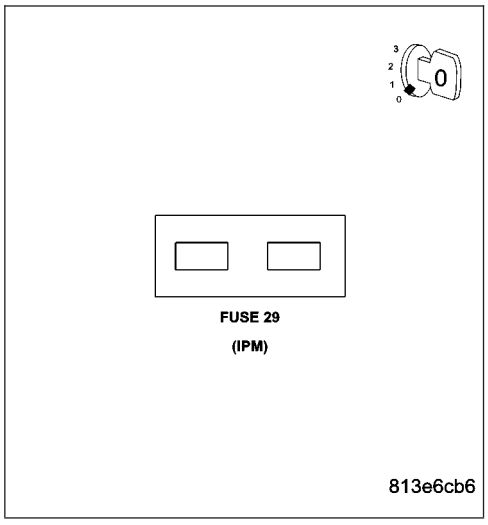

***ALL GAUGES INOPERATIVE (CONTINUED)**

6. CHECK THE (F21) FUSED IGNITION SWITCH OUTPUT (RUN/START) CIRCUIT FOR AN OPEN

Turn the ignition off.

Disconnect the Instrument Cluster C3 harness connector.

Turn the ignition on.

Measure the voltage between the (F21) Fused Ignition Switch Output (Run/Start) circuit and ground.

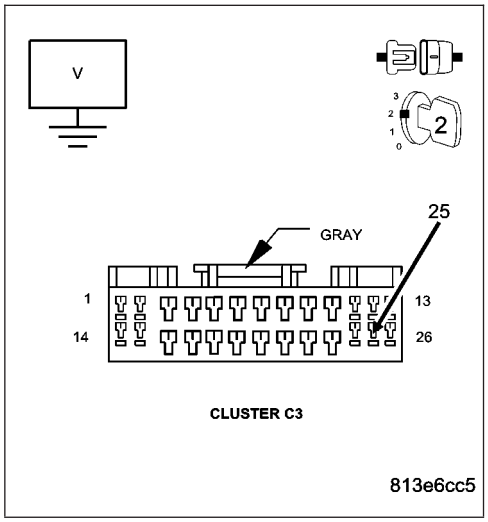

Is the voltage below 10.5 volts?

Yes >> Repair the (F21) Fused Ignition Switch Output (Run/Start) circuit for an open.

Perform BODY VERIFICATION TEST - VER 1. (Refer to BODY VERIFICATION TEST - VER 1.)

No >> Go To 7

7. CHECK THE (F1) FUSED IGNITION SWITCH OUTPUT (OFF/RUN/START) CIRCUIT FOR AN OPEN

Turn the ignition off.

Disconnect the Instrument Cluster C3 harness connector.

Turn the ignition on.

Measure the voltage between the (F1) Fused Ignition Switch Output (Off/Run/Start) circuit and ground.

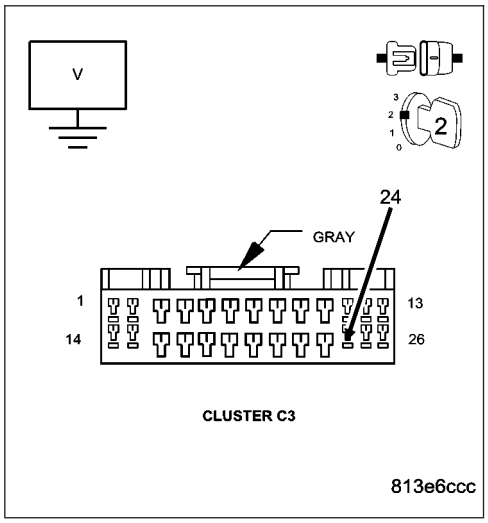

Is the voltage below 10.5 volts?

Yes >> Repair the (F1) Fused Ignition Switch Output (Off/Run/Start) circuit for an open.

Perform BODY VERIFICATION TEST - VER 1. (Refer to BODY VERIFICATION TEST - VER 1.)

No >> Go To 8

*ALL GAUGES INOPERATIVE (CONTINUED)

8. CHECK THE (Z18) INSTRUMENT CLUSTER GROUND CIRCUIT FOR AN OPEN

Turn the ignition off.

Disconnect the Instrument Cluster C3 harness connector.

Measure the resistance between ground and the (Z18) Instrument Cluster Ground circuit.

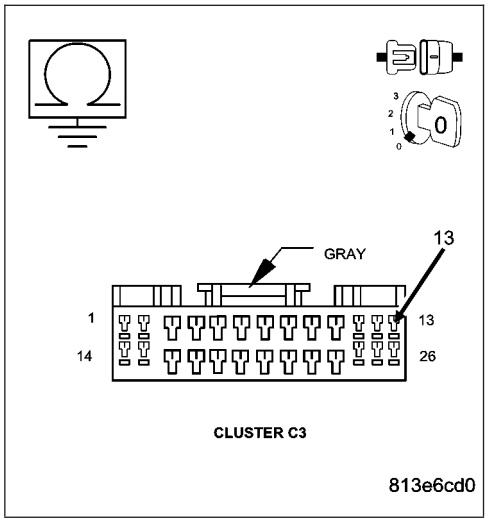

Is the resistance below 5.0 ohms?

Yes >> Replace and configure the Instrument Cluster in accordance with the Service Information.

Perform BODY VERIFICATION TEST - VER 1. (Refer to BODY VERIFICATION TEST - VER 1.)

No >> Repair the (Z18) Instrument Cluster Ground circuit for an open.

Perform BODY VERIFICATION TEST - VER 1. (Refer to BODY VERIFICATION TEST - VER 1.)

*ANY PCI INDICATOR INOPERATIVE

For the Instrument Cluster circuit diagram (Refer to 8 - ELECTRICAL/INSTRUMENT CLUSTER - SCHEMATICS AND DIAGRAMS).

For a complete wiring diagram **Refer to Section 8W**.

Possible Causes
NO RESPONSE - PCI BUS
NO RESPONSE - INSTRUMENT CLUSTER
INDICATOR MESSAGE NOT RECEIVED
INSTRUMENT CLUSTER

Diagnostic Test

1. NO RESPONSE - PCI BUS

Turn the ignition on.

With the DRBIII®, select System Monitors, then J1850 Module Scan.

Does the DRBIII® display MIC PRESENT on the BUS?

Yes >> Go To 2

No >> Refer to the COMMUNICATION category and perform the appropriate symptom.
Perform BODY VERIFICATION TEST - VER 1. (Refer to BODY VERIFICATION TEST - VER 1.)

---

2. NO RESPONSE - INSTRUMENT CLUSTER

With the DRBIII®, select MIC, then MODULE DISPLAY.

Does the DRBIII® display NO RESPONSE from MIC?

Yes >> Refer to the symptom list for problems related to *NO RESPONSE FROM THE INSTRUMENT CLUSTER.
Perform BODY VERIFICATION TEST - VER 1. (Refer to BODY VERIFICATION TEST - VER 1.)

No >> Go To 3

---

3. NO RESPONSE - PCI BUS

With the DRBIII®, select Body, MIC, MONITORS, PCI BUS MONITORS.

Does the DRBIII® display PCM INACTIVE on the BUS?

Yes >> Refer to the symptom list for problems related to *NO RESPONSE FROM THE POWERTRAIN CONTROL MODULE.
Perform BODY VERIFICATION TEST - VER 1. (Refer to BODY VERIFICATION TEST - VER 1.)

No >> Go To 4

***ANY PCI INDICATOR INOPERATIVE (CONTINUED)**

4. INDICATOR MESSAGE NOT RECEIVED

NOTE: NOTE: Diagnose and repair any PCM or BCM DTCs before proceeding with this test.
Perform the Instrument Cluster Self Test.
Depress and hold the Trip Odometer button while turning the ignition from the off to the on position.
Observe the indicator in question.

Did the indicator illuminate?

Yes >> Refer to the appropriate Service Information category to diagnose the related system.
Perform BODY VERIFICATION TEST - VER 1. (Refer to BODY VERIFICATION TEST - VER 1.)

No >> Replace and configure the Instrument Cluster in accordance with the Service Information.
Perform BODY VERIFICATION TEST - VER 1. (Refer to BODY VERIFICATION TEST - VER 1.)

*BRAKE WARNING INDICATOR ALWAYS ON

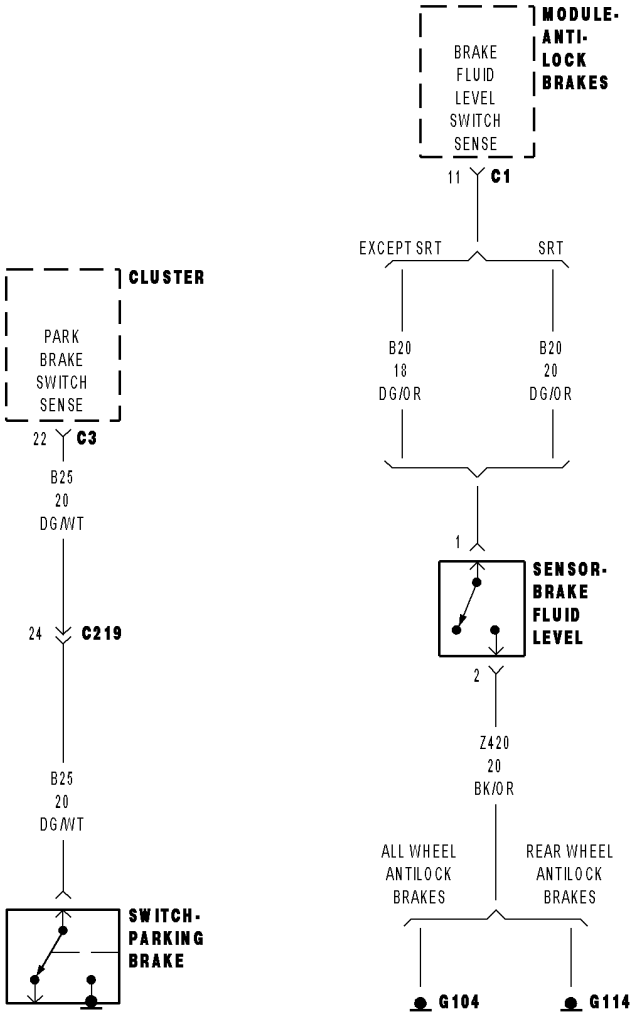

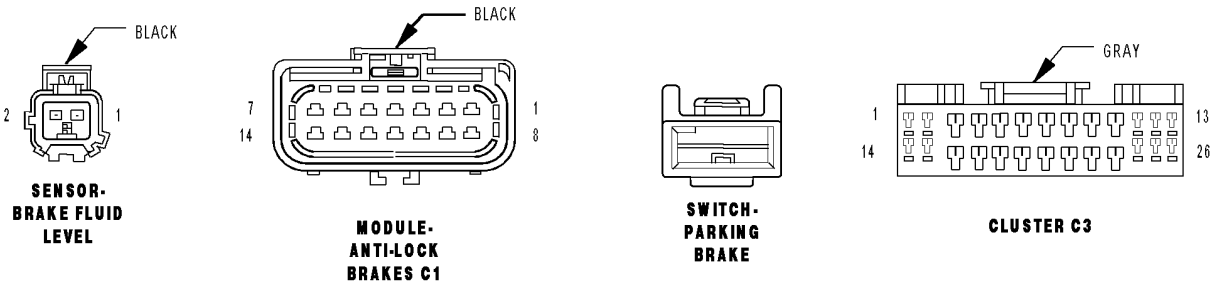

81408d43

***BRAKE WARNING INDICATOR ALWAYS ON (CONTINUED)**

For the Instrument Cluster circuit diagram (Refer to 8 - ELECTRICAL/INSTRUMENT CLUSTER - SCHEMATICS AND DIAGRAMS).

For a complete wiring diagram **Refer to Section 8W**.

Possible Causes
(B20) BRAKE FLUID LEVEL SENSOR SENSE CIRCUIT SHORT TO GROUND
(B25) PARK BRAKE SWITCH SENSE CIRCUIT SHORT TO GROUND
BRAKE FLUID LEVEL SENSOR
PARK BRAKE SWITCH
ANTI-LOCK BRAKES MODULE
INSTRUMENT CLUSTER

Diagnostic Test

1. BRAKE FLUID LEVEL SENSOR

NOTE: Diagnose and repair any MIC, Brake, or Communication DTCs before proceeding with this test.

Disconnect the Brake Fluid Level Sensor harness connector.

Measure the resistance of the Brake Fluid Level Sensor between pin 1 and pin 2.

Does the resistance measure less than 900 ohms?

Yes >> Replace the Brake Fluid Level Sensor in accordance with the Service Information.

Perform BODY VERIFICATION TEST - VER 1. (Refer to BODY VERIFICATION TEST - VER 1.)

No >> Go To 2

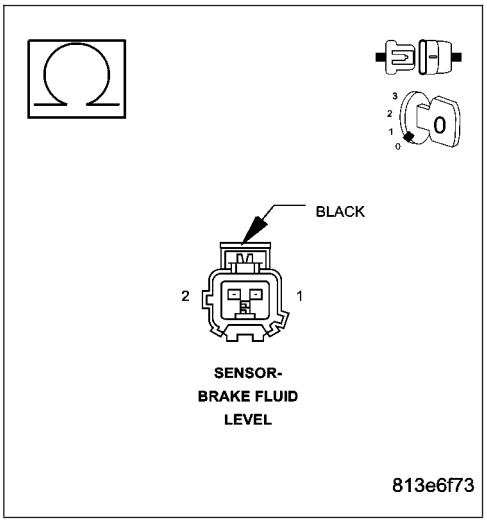

***BRAKE WARNING INDICATOR ALWAYS ON (CONTINUED)**

2. (B20) BRAKE FLUID LEVEL SENSOR SENSE CIRCUIT SHORT TO GROUND

Turn the ignition off.

Disconnect the Brake Fluid Level Sensor harness connector.

Disconnect the Anti-lock Brakes Module harness connector.

Measure the resistance between ground and the (B20) Brake Fluid Level Sensor Sense circuit.

Is the resistance below 5.0 ohms?

Yes >> Repair the (B20) Brake Fluid Level Sensor Sense circuit for a short to ground.

Perform BODY VERIFICATION TEST - VER 1. (Refer to BODY VERIFICATION TEST - VER 1.)

No >> Go To 3

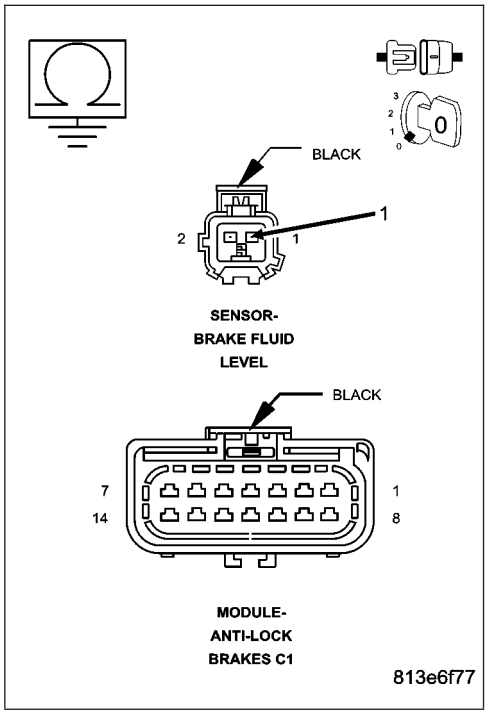

3. PARK BRAKE SWITCH

Turn the ignition off.

Disconnect the Park Brake Switch harness connector.

Turn the ignition on.

Observe the Brake warning indicator.

Did the Brake warning indicator illuminate briefly and then turn off?

Yes >> Replace the Park Brake Switch in accordance with the Service Information.

Perform BODY VERIFICATION TEST - VER 1. (Refer to BODY VERIFICATION TEST - VER 1.)

No >> Go To 4

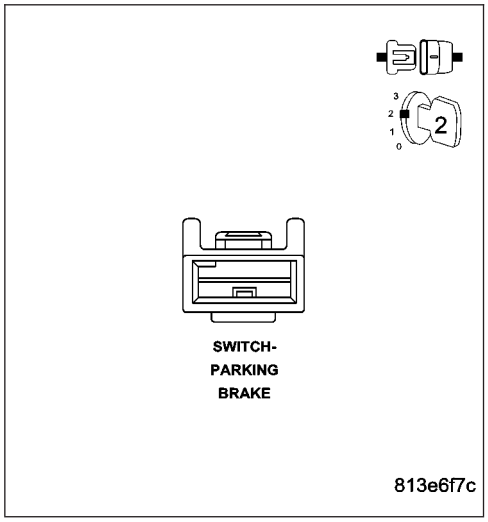

***BRAKE WARNING INDICATOR ALWAYS ON (CONTINUED)**

4. (B25) PARK BRAKE SWITCH SENSE CIRCUIT SHORT TO GROUND

Turn the ignition off.

Disconnect the Park Brake Switch harness connector.

Disconnect the Instrument Cluster C3 harness connector.

Measure the resistance between ground and the (B25) Park Brake Switch Sense circuit.

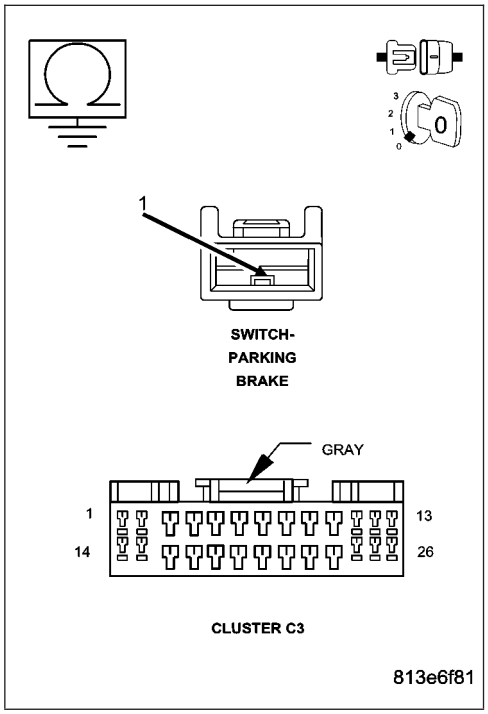

Is the resistance below 5.0 ohms?

Yes >> Repair the (B25) Park Brake Switch Sense circuit for a short to ground.
Perform BODY VERIFICATION TEST - VER 1. (Refer to BODY VERIFICATION TEST - VER 1.)

No >> Go To 5

5. ANTI-LOCK BRAKES MODULE

Turn the ignition off.

Reconnect any harness connector(s) that were previously disconnected.

Turn the ignition on.

With the DRBIII® in Inputs/Outputs, read the Brake Fluid Level Sensor state.

Does the DRBIII® display ″Closed″?

Yes >> Replace the Anti-lock Brakes Module in accordance with the Service Information.
Perform BODY VERIFICATION TEST - VER 1. (Refer to BODY VERIFICATION TEST - VER 1.)

No >> Replace and configure the Instrument Cluster in accordance with the Service Information.
Perform BODY VERIFICATION TEST - VER 1. (Refer to BODY VERIFICATION TEST - VER 1.)

*BRAKE WARNING INDICATOR INOPERATIVE

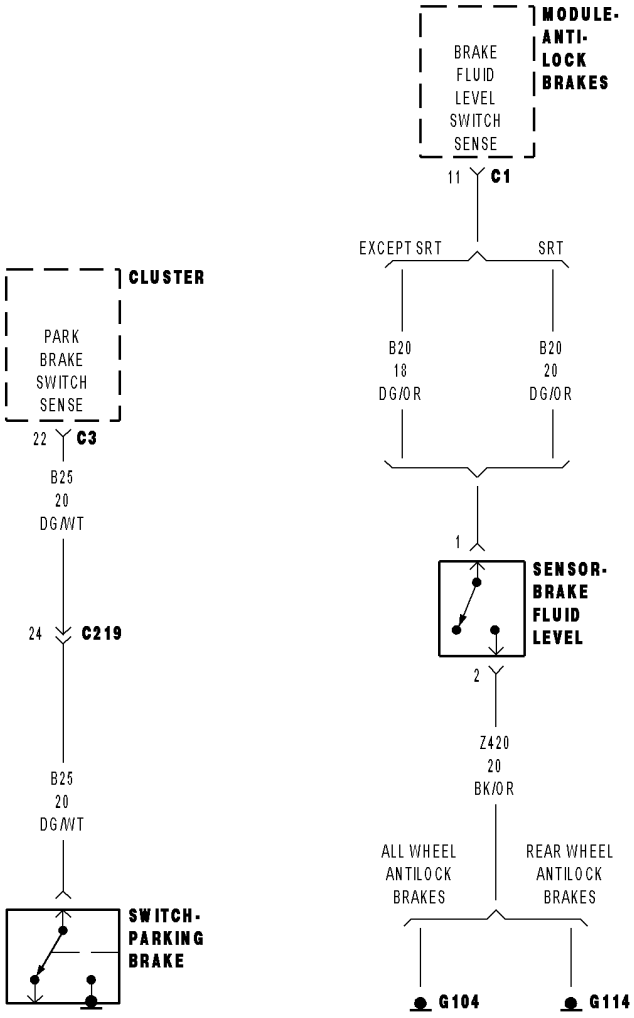

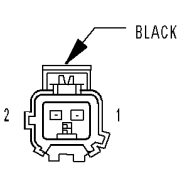

SENSOR-
BRAKE FLUID
LEVEL

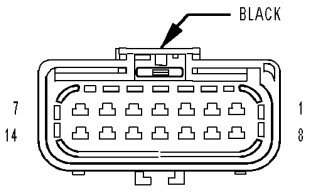

MODULE-
ANTI-LOCK
BRAKES C1

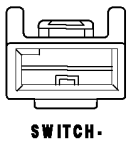

SWITCH-
PARKING
BRAKE

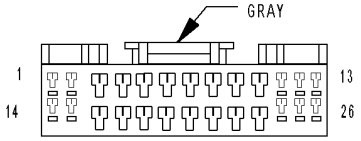

CLUSTER C3

81408d43

***BRAKE WARNING INDICATOR INOPERATIVE (CONTINUED)**

For the Instrument Cluster circuit diagram (Refer to 8 - ELECTRICAL/INSTRUMENT CLUSTER - SCHEMATICS AND DIAGRAMS).

For a complete wiring diagram **Refer to Section 8W**.

Possible Causes
(Z420) BRAKE FLUID LEVEL SENSOR GROUND CIRCUIT OPEN
(B25) PARK BRAKE SWITCH SENSE CIRCUIT OPEN
(B20) BRAKE FLUID LEVEL SENSE CIRCUIT OPEN
PARK BRAKE SWITCH
BRAKE FLUID LEVEL SENSOR
ANTI-LOCK BRAKES MODULE
INSTRUMENT CLUSTER

Diagnostic Test

1. FAULT LOCATION

NOTE: Diagnose and repair any MIC, ABS, or Communication DTCs before proceeding with this test.

Is the Brake warning indicator only inoperative using the Park Brake?

Yes >> Go To 2

No >> Go To 4

---

2. PARK BRAKE SWITCH

Disconnect the Park Brake Switch harness connector.

Connect a jumper wire between the (B25) Park Brake Switch Sense circuit and ground.

Turn the ignition on.

Observe the BRAKE indicator.

Did the BRAKE indicator illuminate?

Yes >> Replace the Park Brake Switch in accordance with the Service Information.

Perform BODY VERIFICATION TEST - VER 1. (Refer to BODY VERIFICATION TEST - VER 1.)

No >> Go To 3

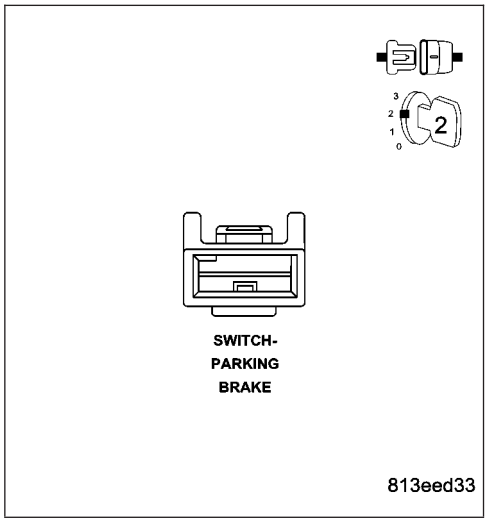

***BRAKE WARNING INDICATOR INOPERATIVE (CONTINUED)**

3. (B25) PARK BRAKE SWITCH SENSE CIRCUIT OPEN

Turn the ignition off.
Disconnect the (B25) Park Brake Switch harness connector.
Disconnect the Instrument Cluster C3 harness connector.
Measure the resistance of the (B25) Park Brake Switch Sense circuit.

Is the resistance above 5.0 ohms?

Yes >> Repair the (B25) Park Brake Switch Sense circuit for an open.
Perform BODY VERIFICATION TEST - VER 1. (Refer to BODY VERIFICATION TEST - VER 1.)

No >> Replace and configure the Instrument Cluster in accordance with the Service Information.
Perform BODY VERIFICATION TEST - VER 1. (Refer to BODY VERIFICATION TEST - VER 1.)

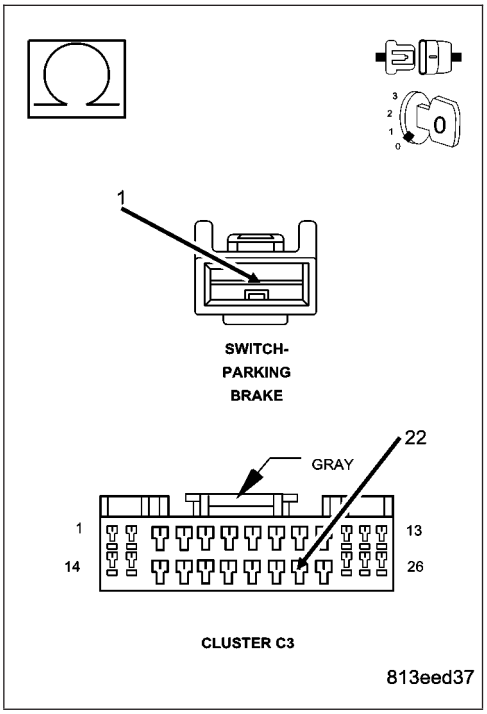

4. BRAKE FLUID LEVEL SENSOR

Turn the ignition off.
Disconnect the Brake Fluid Level Sensor harness connector.
Connect a jumper wire between cavity 1 and cavity 2.
Turn the ignition on.

Does the Brake warning indicator illuminate?

Yes >> Replace the Brake Fluid Level Sensor in accordance with the Service Information.
Perform BODY VERIFICATION TEST - VER 1. (Refer to BODY VERIFICATION TEST - VER 1.)

No >> Go To 5

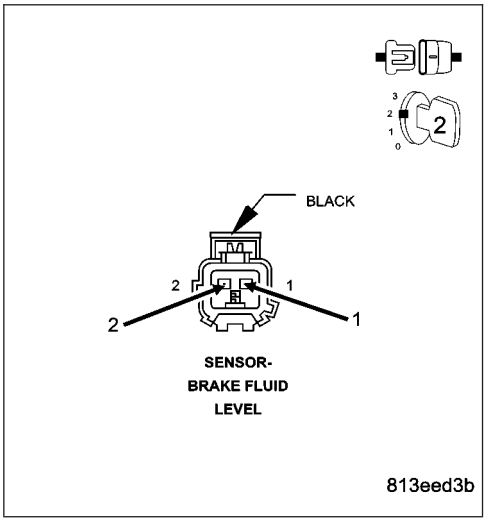

***BRAKE WARNING INDICATOR INOPERATIVE (CONTINUED)**

5. (Z420) BRAKE FLUID LEVEL SENSOR GROUND CIRCUIT OPEN

Turn the ignition off.

Disconnect the Brake Fluid Level Sensor harness connector.

Measure the resistance between ground and the (Z420) Brake Fluid Level Sensor Ground circuit.

Is the resistance above 5.0 ohms?

Yes >> Repair the (Z420) Brake Fluid Level Sensor Ground circuit for an open.
Perform BODY VERIFICATION TEST - VER 1. (Refer to BODY VERIFICATION TEST - VER 1.)

No >> Go To 6

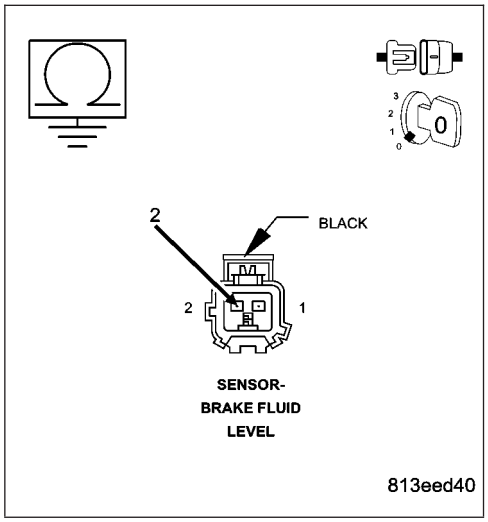

6. (B20) BRAKE FLUID LEVEL SENSE CIRCUIT OPEN

Turn the ignition off.

Disconnect the Brake Fluid Level Sensor harness connector.

Disconnect the Anti-lock Brakes Module harness connector.

Measure the resistance of the (B20) Brake Fluid Level Sensor Sense circuit.

Is the resistance above 5.0 ohms?

Yes >> Repair the (B20) Brake Fluid Level Sensor Sense circuit for an open.
Perform BODY VERIFICATION TEST - VER 1. (Refer to BODY VERIFICATION TEST - VER 1.)

No >> Go To 7

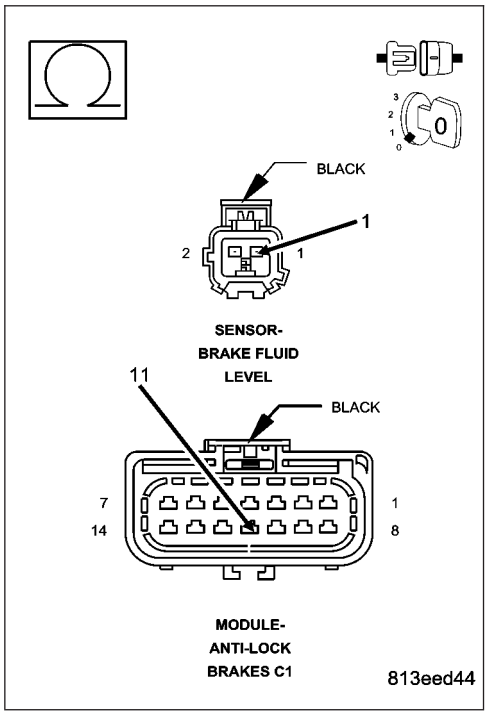

***BRAKE WARNING INDICATOR INOPERATIVE (CONTINUED)**

7. INSTRUMENT CLUSTER

Turn the ignition off.

Disconnect the Anti-lock Brakes Module harness connector.

Connect a jumper wire between the (B25) Brake Fluid Level Sensor Sense circuit and ground.

With the DRBIII® in Inputs/Outputs, read the Brake Fluid Level Sensor state.

Does the DRBIII® display ″Closed″?

Yes >> Replace and configure the Instrument Cluster in accordance with the Service Information.
Perform BODY VERIFICATION TEST - VER 1. (Refer to BODY VERIFICATION TEST - VER 1.)

No >> Replace the Anti-lock Brakes Module in accordance with the Service Information.
Perform BODY VERIFICATION TEST - VER 1. (Refer to BODY VERIFICATION TEST - VER 1.)

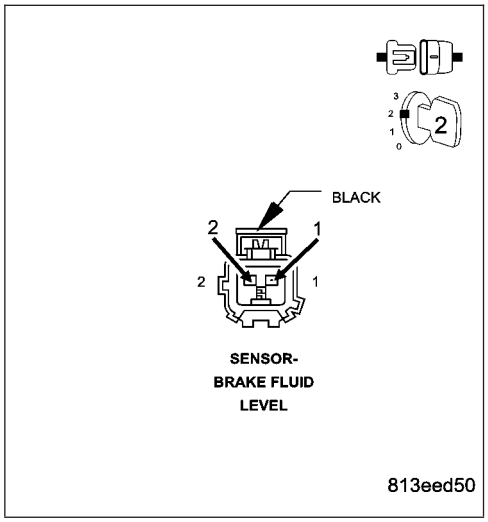

*FUEL GAUGE INACCURATE

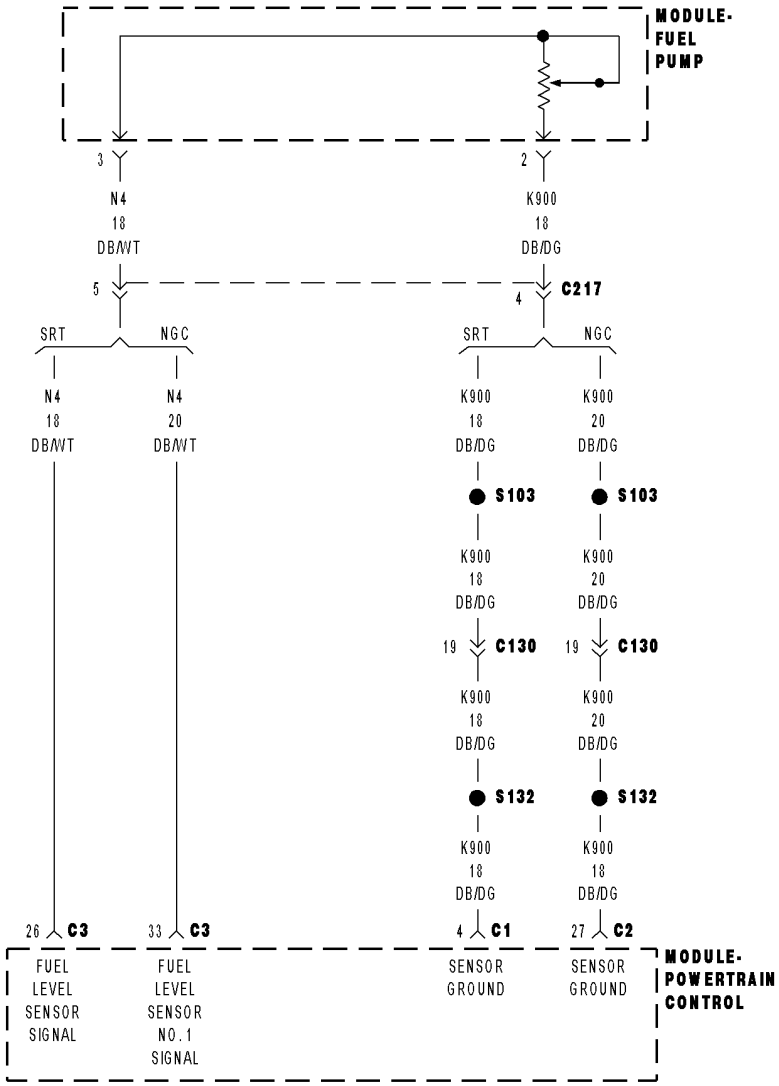

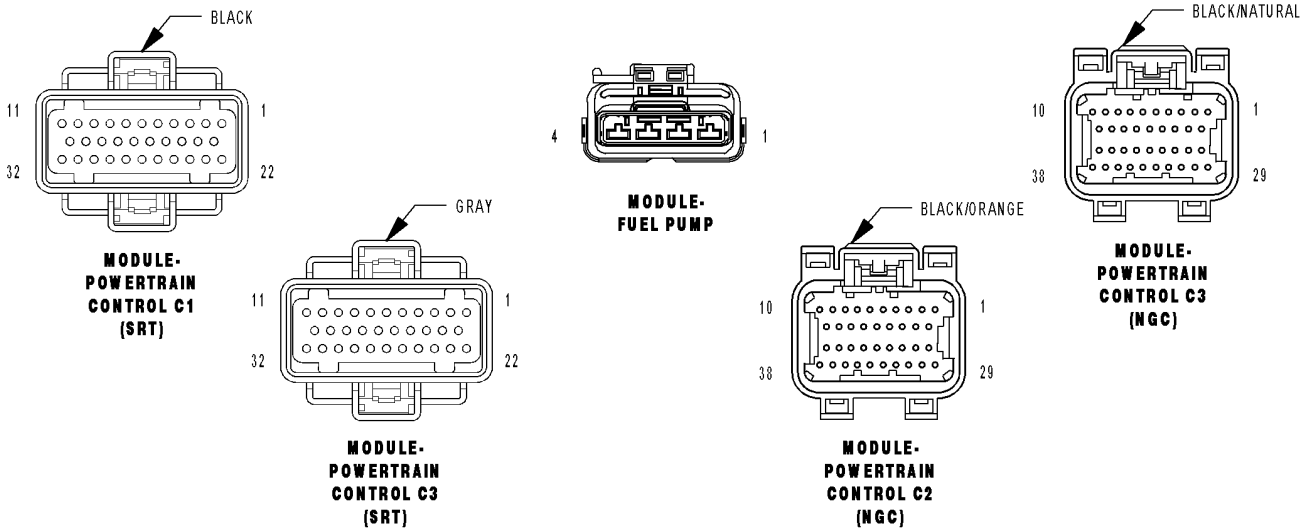

81408d58

***FUEL GAUGE INACCURATE (CONTINUED)**

For the Instrument Cluster circuit diagram (Refer to 8 - ELECTRICAL/INSTRUMENT CLUSTER - SCHEMATICS AND DIAGRAMS).

For a complete wiring diagram **Refer to Section 8W**.

Possible Causes
FUEL LEVEL SENSOR WIRING
INSTRUMENT CLUSTER

Diagnostic Test

1. DTC PRESENT

NOTE: Diagnose and repair any PCI Bus problems before proceeding with this test.

Turn the ignition on.

With the DRBIII®, read the PCM DTCs.

Does the DRBIII® display any Fuel Level Sensor related DTC?

Yes >> Refer to the Powertrain Diagnostic Information for the related symptom(s). Perform (NGC) POWERTRAIN VERIFICATION TEST VER - 5.

No >> Go To 2

---

2. INSTRUMENT CLUSTER

Perform the Instrument Cluster Self Test as follows:

Turn the ignition off.

Press and hold the Trip/Reset button.

Turn the ignition on.

Observe the Fuel Gauge during the Self Test.

The Fuel Gauge pointer should pause at each of these following positions: E, 1/4, 1/2, 3/4, Full, and back to E.

Does the Fuel Gauge function as described above?

Yes >> Go To 3

No >> Replace the Instrument Cluster in accordance with the Service Information. Perform BODY VERIFICATION TEST - VER 1. (Refer to BODY VERIFICATION TEST - VER 1.)

---

*FUEL GAUGE INACCURATE (CONTINUED)

3. FUEL LEVEL SENSOR WIRING

Turn the ignition off.

Disconnect the Fuel Pump Module harness connector.

Disconnect the PCM C2 and C3 harness connectors.

Measure the resistance of the (N4) Fuel Level Sensor Signal circuit between the Fuel Pump Module harness connector and the PCM harness connector.

Measure the resistance of the (K900) Sensor Ground circuit between the Fuel Pump Module harness connector and the PCM harness connector.

Is the resistance below 5.0 ohms on both circuits.

Yes >> Replace the Fuel Level Sensor in accordance with the Service Information.

Perform BODY VERIFICATION TEST - VER 1. (Refer to BODY VERIFICATION TEST - VER 1.)

No >> Repair the circuits with a resistance above 5.0 ohms for an open.

Perform BODY VERIFICATION TEST - VER 1. (Refer to BODY VERIFICATION TEST - VER 1.)

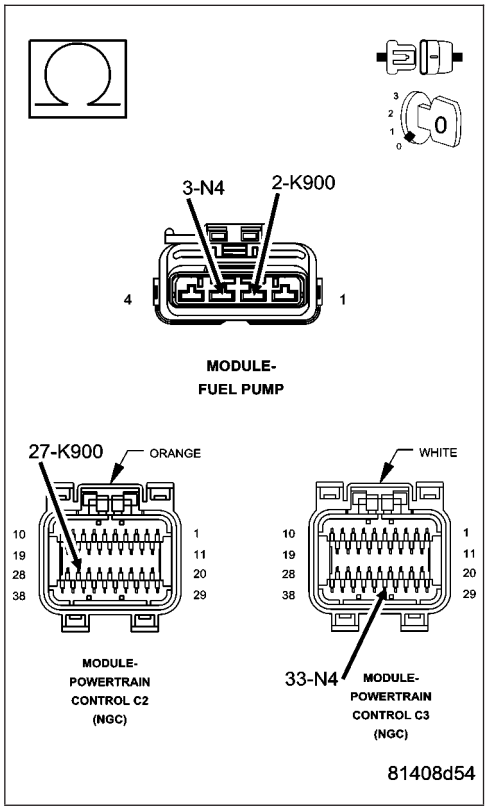

*ONE GAUGE INOPERATIVE - GAS ENGINES

For a complete wiring diagram **Refer to Section 8W**.

Possible Causes
POWERTRAIN CONTROL MODULE
INSTRUMENT CLUSTER

Diagnostic Test

1. POWERTRAIN CONTROL MODULE

Turn the ignition on.
With the DRBIII®, read DTCs.

Does the DRBIII® display any PCM DTCs?

Yes >> Refer to the DRIVEABILITY category and perform the appropriate symptom.
Perform BODY VERIFICATION TEST - VER 1. (Refer to BODY VERIFICATION TEST - VER 1.)

No >> Go To 2

---

2. INSTRUMENT CLUSTER

Turn the ignition off.
Perform the Instrument Cluster Self Test.

NOTE: NOTE: The Self Test can be initiated manually by depressing and holding the Trip Reset button while turning the ignition on, or by using the DRBIII®.
Observe the gauge in question while the Instrument Cluster performs the Self Test.
The gauges should position at the following calibrations points:
Speedometer MPH: 0, 20, 60, 90
Tachometer Gas: 0, 1000, 3000, 6000
Fuel: E, 1/4, 1/2, 3/4, F
Coolant: Cold, 1/4, 1/2, 3/4, HI
Volts: 6, 9, 12, 15, 17

Did the gauge in question operate properly?

Yes >> The condition is not present at this time. Monitor DRBIII® parameters while wiggling the related wire harness. Refer to any Technical Service Bulletins (TSB) that may apply. Visually inspect the related wiring harness and connector terminals.
Perform BODY VERIFICATION TEST - VER 1. (Refer to BODY VERIFICATION TEST - VER 1.)

No >> Replace and configure the Instrument Cluster in accordance with the Service Information.
Perform BODY VERIFICATION TEST - VER 1. (Refer to BODY VERIFICATION TEST - VER 1.)

---

*PRNDL NOT DISPLAYING CORRECT POSITION (EATX VEHICLES)

For a complete wiring diagram **Refer to Section 8W**.

Possible Causes
DTC PRESENT
INSTRUMENT CLUSTER

Diagnostic Test

1. DTC PRESENT

NOTE: Ensure that the correct Instrument Cluster is installed and is correctly configured for the vehicle.

NOTE: Ensure that there is communication between the Cluster and PCM before proceeding with this test.

NOTE: Diagnose and repair any DTCs before proceeding with this test.

NOTE: Ensure that the PCM passes the Shift Lever Test with the DRBIII® before proceeding with this test.

Turn the ignition on.

With the DRBIII®, read DTCs.

Does the DRBIII® display any MIC or PCM DTCs?

Yes >> Refer to the correct symptom list for problems related to DTCs.
Perform BODY VERIFICATION TEST - VER 1. (Refer to BODY VERIFICATION TEST - VER 1.)

No >> Go To 2

---

2. INSTRUMENT CLUSTER

Perform the Instrument Cluster Self Test.

Turn the ignition off.

Press and hold the Trip/Reset button.

Turn the ignition on.

Observe the PRNDL display during the Self Test.

Did any part of the VF display fail to illuminate?

Yes >> Replace and program the Instrument Cluster in accordance with the Service Information.
Perform BODY VERIFICATION TEST - VER 1. (Refer to BODY VERIFICATION TEST - VER 1.)

No >> The condition is not present at this time. Monitor DRBIII® parameters while wiggling the related wiring harness. refer to any Technical Service Bulletins (TSB) that may apply. Visually inspect the related wiring harness and connector terminals.
Perform BODY VERIFICATION TEST - VER 1. (Refer to BODY VERIFICATION TEST - VER 1.)

---

*SEAT BELT WARNING INDICATOR ALWAYS OFF

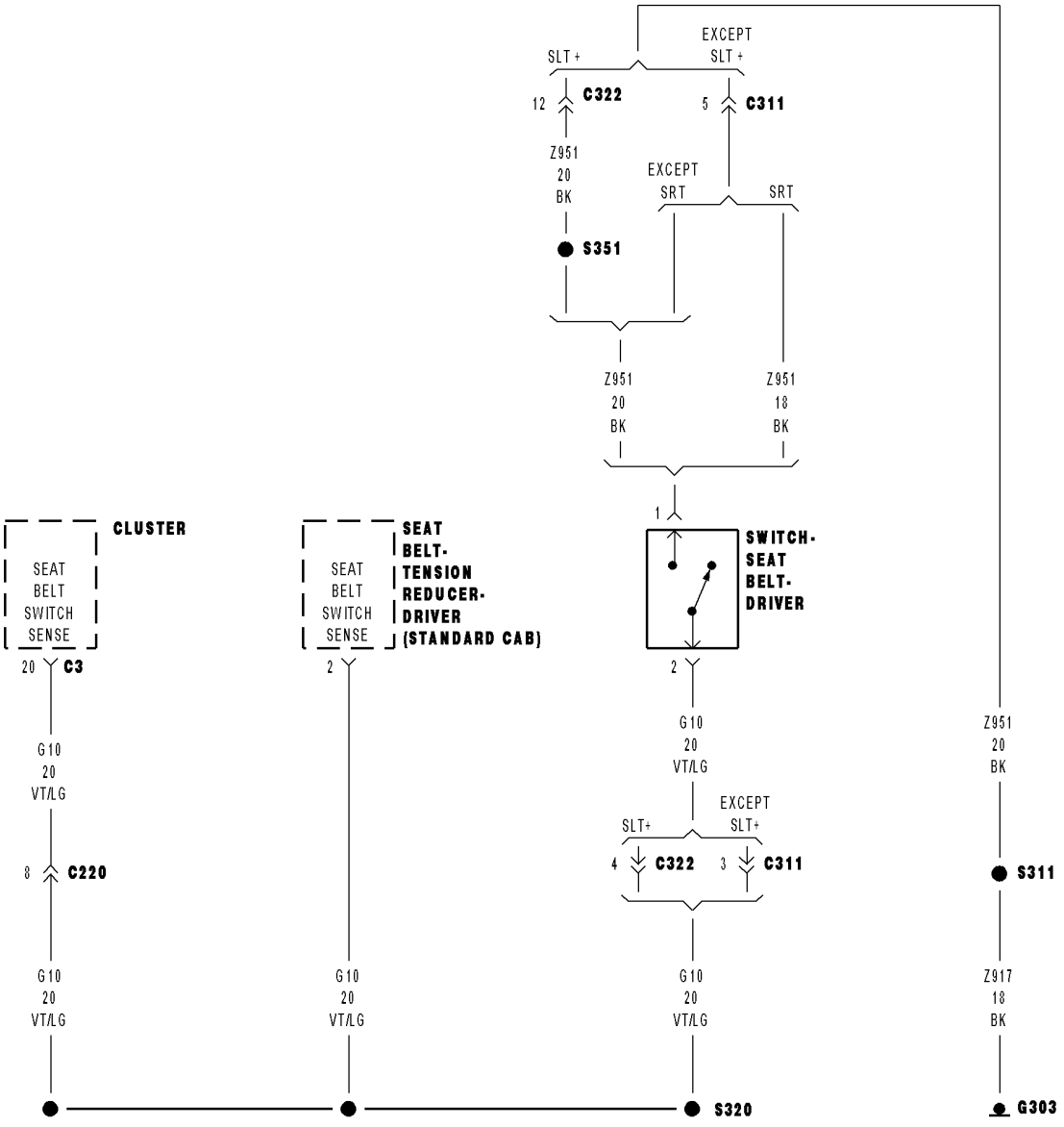

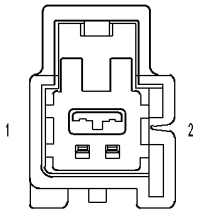

SWITCH-SEAT-
BELT-DRIVER

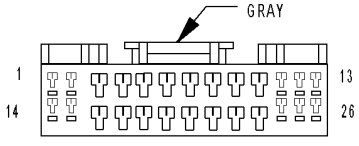

CLUSTER C3

B13ff465

***SEAT BELT WARNING INDICATOR ALWAYS OFF (CONTINUED)**

For the Instrument Cluster circuit diagram (Refer to 8 - ELECTRICAL/INSTRUMENT CLUSTER - SCHEMATICS AND DIAGRAMS).

For a complete wiring diagram **Refer to Section 8W**.

Possible Causes
(G10) SEAT BELT SWITCH SENSE CIRCUIT SHORT TO GROUND
INSTRUMENT CLUSTER

Diagnostic Art

1. CHECK THE (G10) SEAT BELT SWITCH SENSE CIRCUIT FOR A SHORT TO GROUND

Turn the ignition off.

Disconnect the Seat Belt Switch harness connector.

Disconnect the Instrument Cluster C3 harness connector.

Measure the resistance between ground and the (G10) Seat Belt Switch Sense circuit.

Is the resistance below 5.0 ohms?

Yes >> Repair the (G10) Seat Belt Switch Sense circuit for a short to ground.
Perform BODY VERIFICATION TEST - VER 1. (Refer to BODY VERIFICATION TEST - VER 1.)

No >> Replace and configure the Instrument Cluster in accordance with the Service Information.
Perform BODY VERIFICATION TEST - VER 1. (Refer to BODY VERIFICATION TEST - VER 1.)

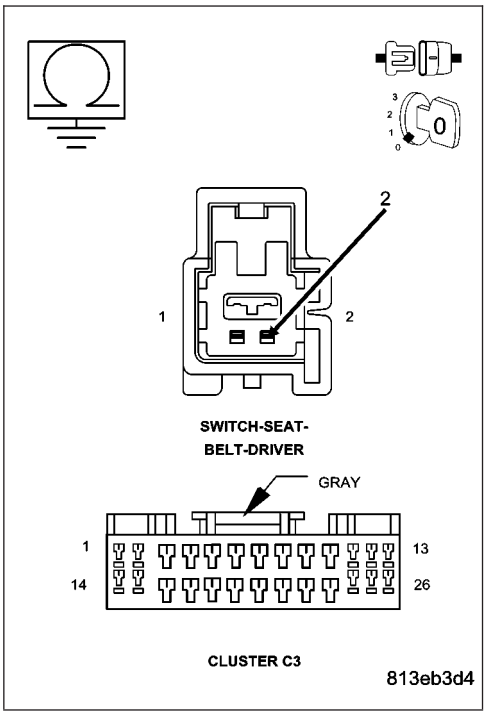

*SEAT BELT WARNING INDICATOR ALWAYS OFF - STANDARD CAB

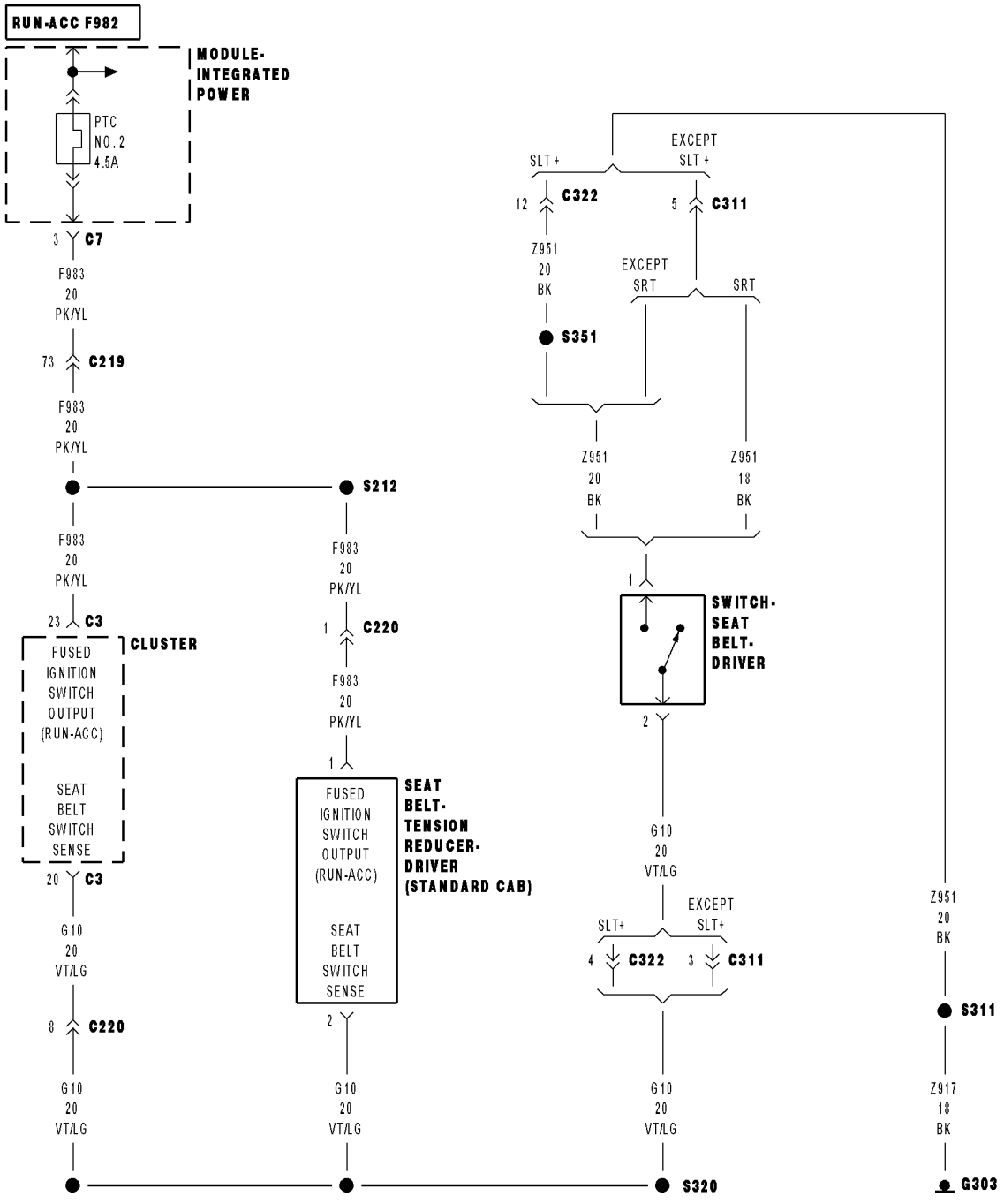

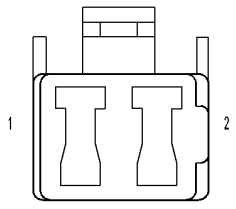

SEAT BELT-TENSIONER REDUCER-DRIVER (STANDARD CAB)

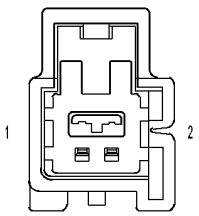

SWITCH-SEAT-BELT-DRIVER

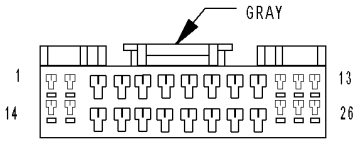

CLUSTER C3

813ff13

***SEAT BELT WARNING INDICATOR ALWAYS OFF - STANDARD CAB (CONTINUED)**

For the Instrument Cluster circuit diagram (Refer to 8 - ELECTRICAL/INSTRUMENT CLUSTER - SCHEMATICS AND DIAGRAMS).

For a complete wiring diagram **Refer to Section 8W**.

Possible Causes
(G10) SEAT BELT SWITCH SENSE CIRCUIT SHORT TO GROUND
INSTRUMENT CLUSTER

Diagnostic Test

1. (G10) SEAT BELT SWITCH SENSE CIRCUIT SHORT TO GROUND

Turn the ignition off.

Disconnect the Seat Belt Switch harness connector.

Disconnect the Instrument Cluster C3 harness connector.

Measure the resistance between ground and the (G10) Seat Belt Switch Sense circuit.

Is the resistance below 5.0 ohms?

Yes >> Repair the (G10) Seat Belt Switch Sense circuit for a short to ground.

Perform BODY VERIFICATION TEST - VER 1. (Refer to BODY VERIFICATION TEST - VER 1.)

No >> Replace and configure the Instrument Cluster in accordance with the Service Information.

Perform BODY VERIFICATION TEST - VER 1. (Refer to BODY VERIFICATION TEST - VER 1.)

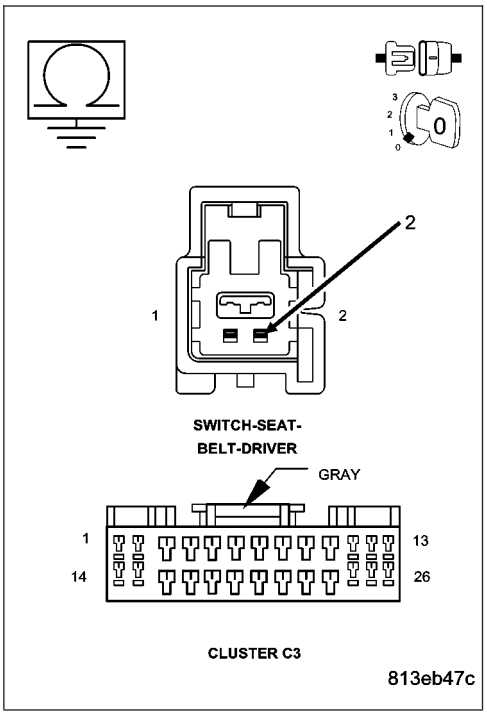

*SEAT BELT WARNING INDICATOR ALWAYS ON

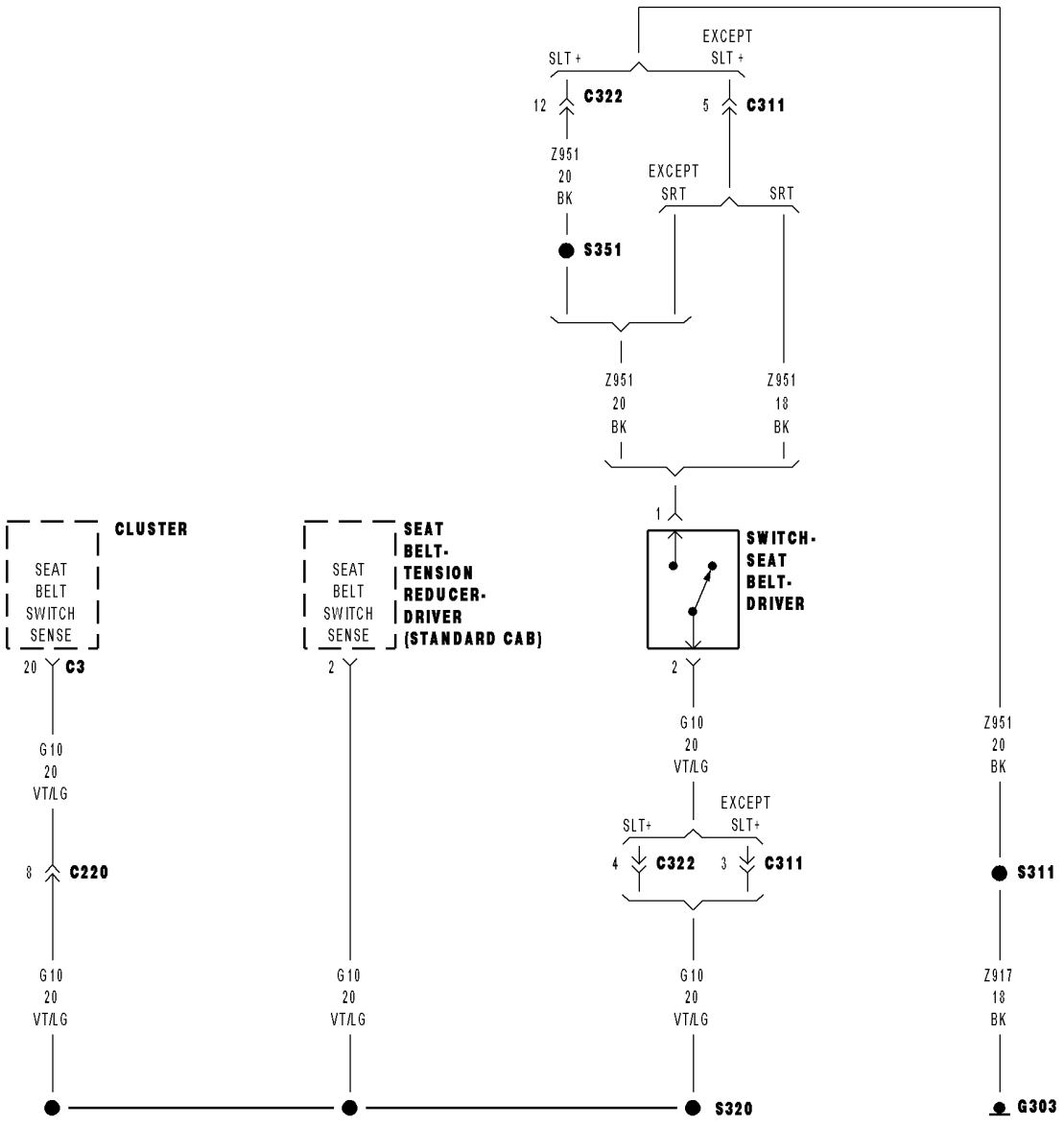

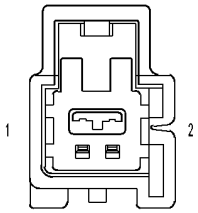

SWITCH-SEAT-BELT-DRIVER

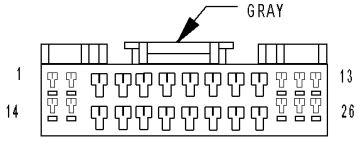

CLUSTER C3

B13ff465

***SEAT BELT WARNING INDICATOR ALWAYS ON (CONTINUED)**

For the Instrument Cluster circuit diagram (Refer to 8 - ELECTRICAL/INSTRUMENT CLUSTER - SCHEMATICS AND DIAGRAMS).

For a complete wiring diagram **Refer to Section 8W**.

Possible Causes
(Z951) SEAT BELT SWITCH GROUND CIRCUIT FOR AN OPEN
(G10) SEAT BELT SWITCH SENSE CIRCUIT OPEN
SEAT BELT SWITCH
INSTRUMENT CLUSTER

Diagnostic Test

1. CHECK THE OPERATION OF THE SEAT BELT SWITCH

Turn the ignition off.
Disconnect the Seat Belt Switch harness connector.
Connect a jumper wire between cavity 1 and cavity 2.
Turn the ignition on.
Observe the Seat Belt Warning Indicator.

Did the Seat Belt Warning Indicator illuminate for approximately 4 seconds and then turn off?

Yes >> Replace the Seat Belt Switch in accordance with the Service Information.
Perform BODY VERIFICATION TEST - VER 1. (Refer to BODY VERIFICATION TEST - VER 1.)

No >> Go To 2

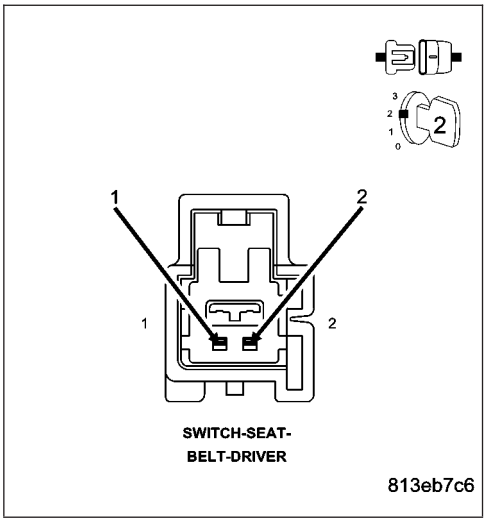

2. CHECK THE (Z951) SEAT BELT SWITCH GROUND CIRCUIT FOR AN OPEN

Turn the ignition off.
Disconnect the Seat Belt Switch harness connector.
Measure the resistance between ground and the (Z951) Seat Belt Switch Ground circuit.

Is the resistance above 5.0 ohms?

Yes >> Repair the (Z951) Seat Belt Switch Ground circuit for an open.
Perform BODY VERIFICATION TEST - VER 1. (Refer to BODY VERIFICATION TEST - VER 1.)

No >> Go To 3

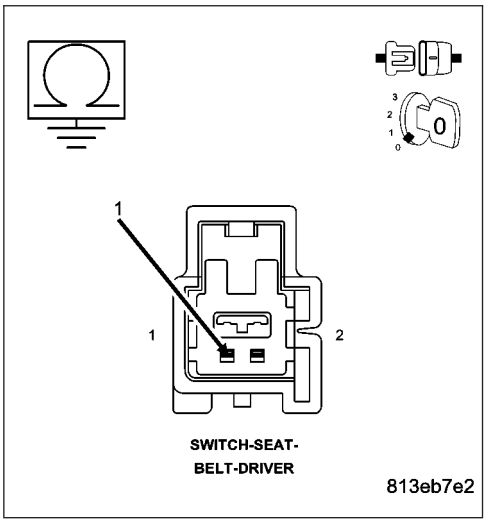

***SEAT BELT WARNING INDICATOR ALWAYS ON (CONTINUED)**

3. CHECK THE (G10) SEAT BELT SWITCH SENSE CIRCUIT FOR AN OPEN

Measure the resistance of the (G10) Seat Belt Switch Sense circuit between the Seat Belt Switch connector and the Instrument Cluster C3 connector.

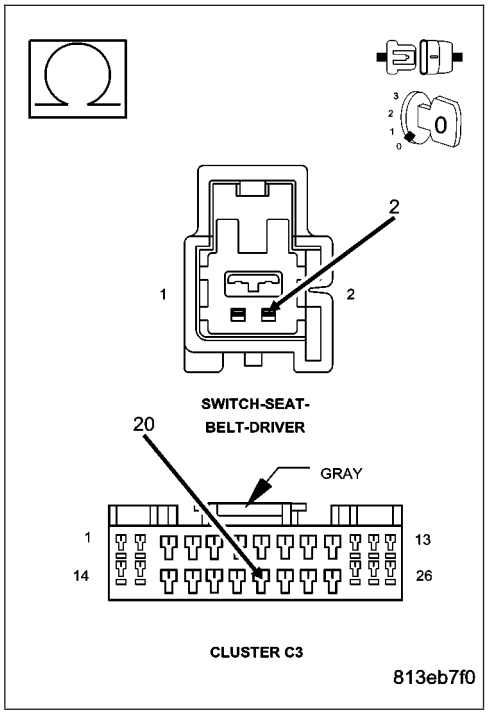

Is the resistance above 5.0 ohms?

Yes >> Repair the (G10) Seat Belt Switch Sense circuit for an open.

Perform BODY VERIFICATION TEST - VER 1. (Refer to BODY VERIFICATION TEST - VER 1.)

No >> Replace and configure the Instrument Cluster in accordance with the Service Information.

Perform BODY VERIFICATION TEST - VER 1. (Refer to BODY VERIFICATION TEST - VER 1.)

*SEAT BELT WARNING INDICATOR ALWAYS ON - STANDARD CAB

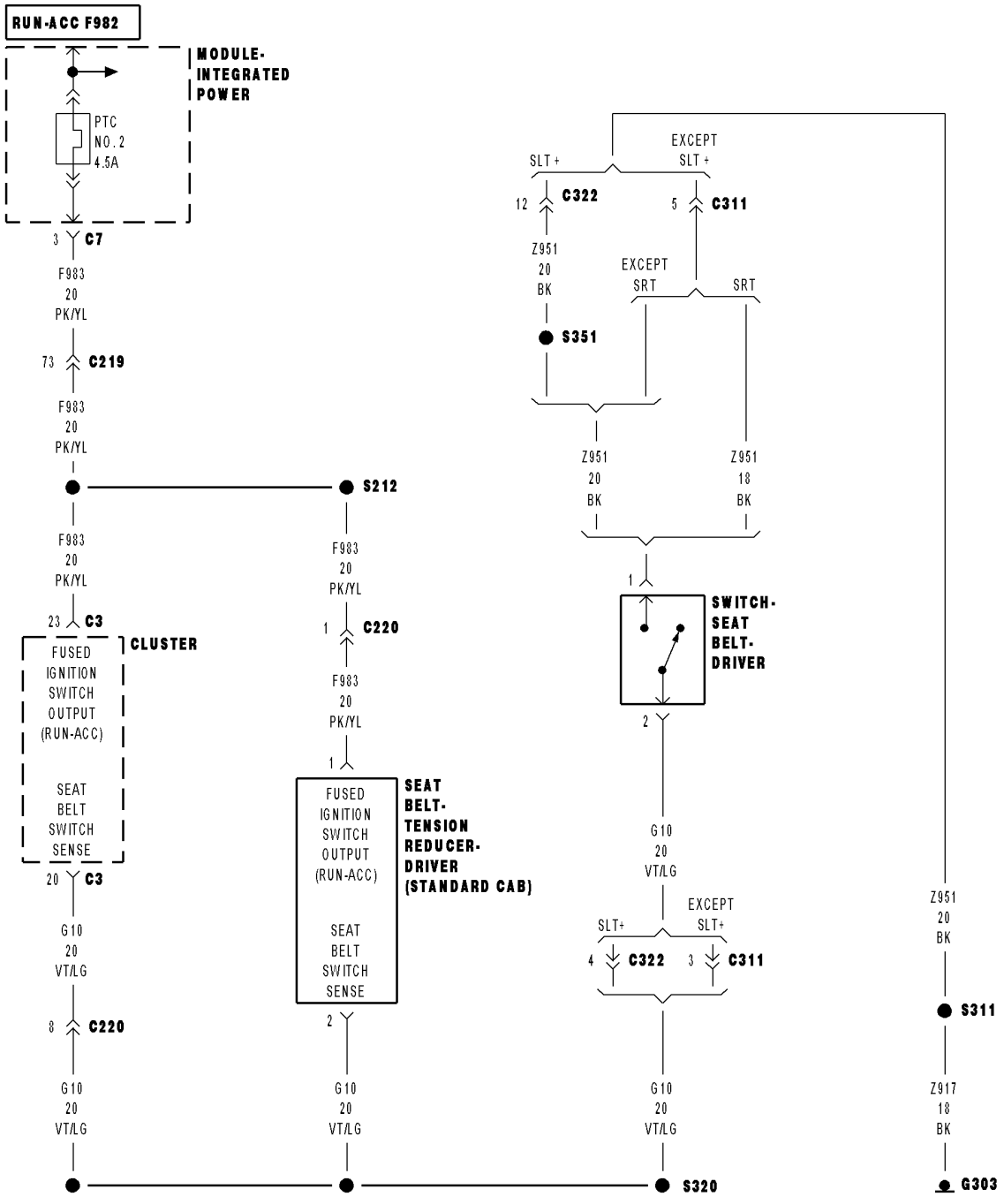

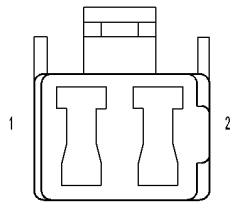

SEAT BELT-TENSIONER REDUCER-DRIVER (STANDARD CAB)

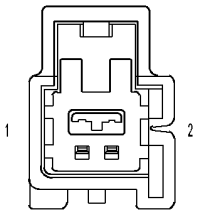

SWITCH-SEAT-BELT-DRIVER

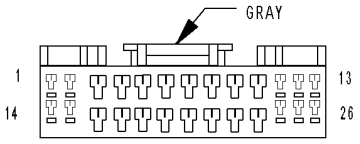

CLUSTER C3

813ff13

***SEAT BELT WARNING INDICATOR ALWAYS ON - STANDARD CAB (CONTINUED)**

For the Instrument Cluster circuit diagram (Refer to 8 - ELECTRICAL/INSTRUMENT CLUSTER - SCHEMATICS AND DIAGRAMS).

For a complete wiring diagram **Refer to Section 8W**.

Possible Causes
(F983) FUSED IGNITION SWITCH OUTPUT (RUN-ACC) CIRCUIT OPEN
(Z951) SEAT BELT SWITCH GROUND CIRCUIT OPEN
(G10) SEAT BELT SWITCH SENSE CIRCUIT OPEN
SEAT BELT TENSIONER REDUCER
SEAT BELT SWITCH
INSTRUMENT CLUSTER

1. (F983) FUSED IGNITION SWITCH OUTPUT (RUN-ACC) CIRCUIT OPEN

Turn the ignition off.

Disconnect the Seat Belt Tensioner Reducer harness connector.

Turn the ignition on.

Measure the voltage between the (F983) Fused Ignition Switch Output (Run-Acc) circuit and ground in the Tensioner Reducer harness connector.

Is the voltage above 10.5 volts?

Yes >> Go To 2

No >> Repair the (F983) Fused Ignition Switch Output (Run-Acc) circuit for an open.
Perform BODY VERIFICATION TEST - VER 1. (Refer to BODY VERIFICATION TEST - VER 1.)

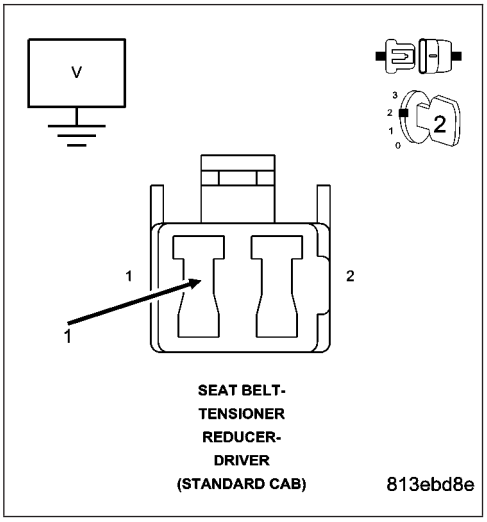

*SEAT BELT WARNING INDICATOR ALWAYS ON - STANDARD CAB (CONTINUED)

2. SEAT BELT TENSIONER REDUCER

Ensure that the Seat Belt Tensioner Reducer harness connector is connected.

Measure the voltage between the (G10) Seat Belt Switch Sense circuit and ground in the Seat Belt Tensioner Reducer harness connector (cavity 2).

Is there any voltage present?

Yes >> Go To 3

No >> Replace the Seat Belt Tensioner Reducer in accordance with the Service Information.
Perform BODY VERIFICATION TEST - VER 1. (Refer to BODY VERIFICATION TEST - VER 1.)

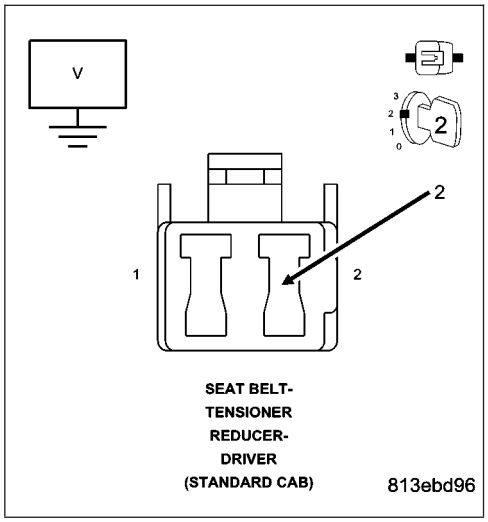

3. SEAT BELT SWITCH

Turn the ignition off.

Disconnect the Seat Belt Switch harness connector.

Connect a jumper wire between cavity 1 and cavity 2.

Turn the ignition on.

Observe the Seat Belt Warning Indicator.

Did the Seat Belt Warning Indicator illuminate?

Yes >> Replace the Seat Belt Switch in accordance with the Service Information.
Perform BODY VERIFICATION TEST - VER 1. (Refer to BODY VERIFICATION TEST - VER 1.)

No >> Go To 4

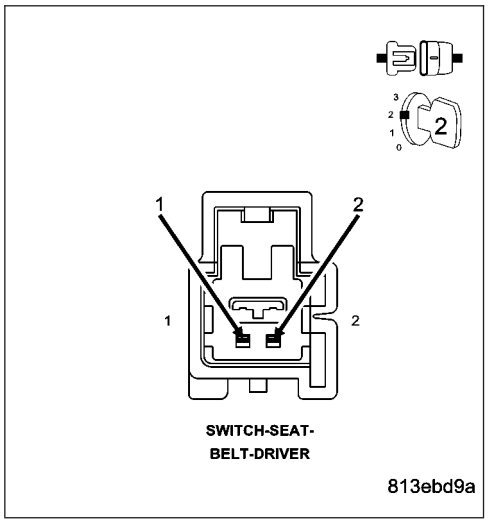

***SEAT BELT WARNING INDICATOR ALWAYS ON - STANDARD CAB (CONTINUED)**

4. CHECK THE (Z951) SEAT BELT SWITCH GROUND CIRCUIT FOR AN OPEN

Turn the ignition off.

Measure the resistance between ground and the (Z951) Seat Belt Switch circuit.

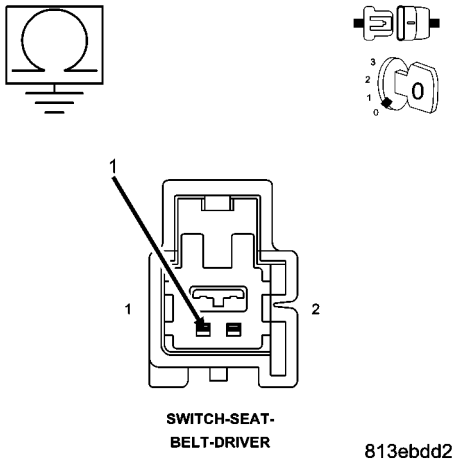

Is the resistance below 5.0 ohms?

Yes >> Go To 5

No >> Repair the (Z951) Seat Belt Switch Ground circuit for an open.

Perform BODY VERIFICATION TEST - VER 1. (Refer to BODY VERIFICATION TEST - VER 1.)

5. CHECK THE (G10) SEAT BELT SWITCH SENSE CIRCUIT FOR AN OPEN

Disconnect the Instrument Cluster C3 harness connector.

Measure the resistance of the (G10) Seat Belt Switch Sense circuit between the Seat Belt Switch connector and the Instrument Cluster C3 connector.

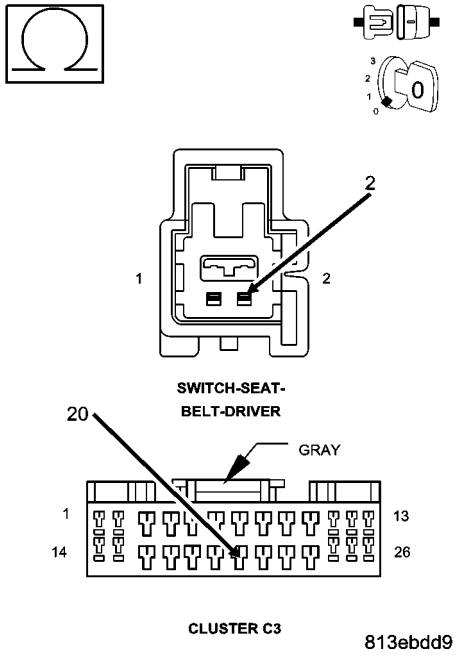

Is the resistance above 5.0 ohms?

Yes >> Repair the (G10) Seat Belt Switch Sense circuit for an open.

Perform BODY VERIFICATION TEST - VER 1. (Refer to BODY VERIFICATION TEST - VER 1.)

No >> Replace and configure the Instrument Cluster in accordance with the Service Information.

Perform BODY VERIFICATION TEST - VER 1. (Refer to BODY VERIFICATION TEST - VER 1.)

SCHEMATICS AND DIAGRAMS

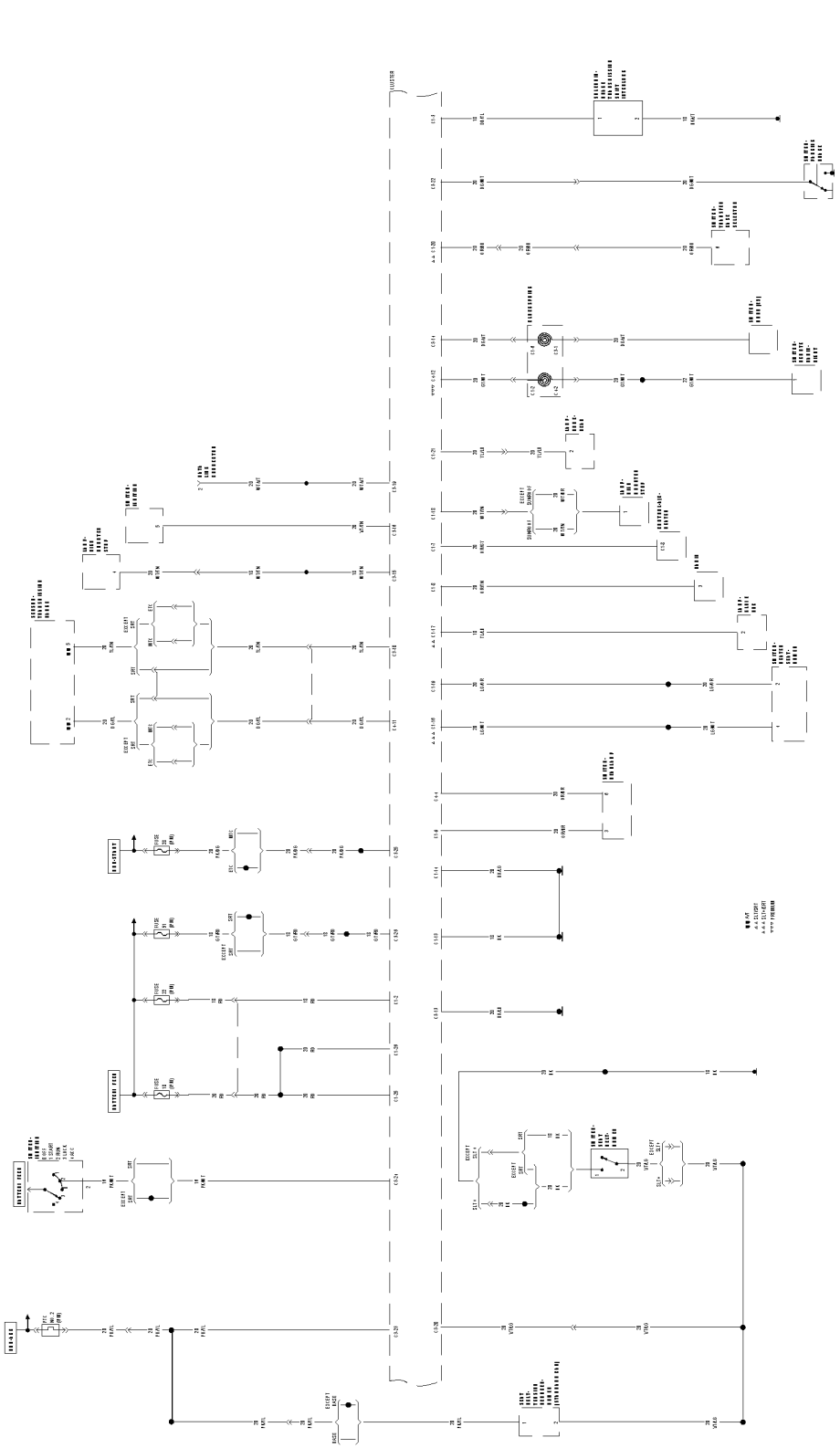

INSTRUMENT CLUSTER SYSTEM SCHEMATIC

INSTRUMENT CLUSTER -SERVICE INFORMATION

TABLE OF CONTENTS

page

INSTRUMENT CLUSTER -SERVICE INFORMATION
DESCRIPTION 98
OPERATION 104
DIAGNOSIS AND TESTING
INSTRUMENT CLUSTER 108
REMOVAL 113
DISASSEMBLY 113
ASSEMBLY 114
INSTALLATION 116
ABS INDICATOR
DESCRIPTION 116
OPERATION 117
AIRBAG INDICATOR
DESCRIPTION 117
OPERATION 118
BRAKE/PARK BRAKE INDICATOR
DESCRIPTION 118
OPERATION 118
DIAGNOSIS AND TESTING
BRAKE INDICATOR 119
CARGO LAMP INDICATOR
DESCRIPTION 120
OPERATION 120
CHECK GAUGES INDICATOR
DESCRIPTION 120
OPERATION 121
CRUISE INDICATOR
DESCRIPTION 122
OPERATION 122
DOOR AJAR INDICATOR
DESCRIPTION 123
OPERATION 123
ENGINE TEMPERATURE GAUGE
DESCRIPTION 123
OPERATION 124
ETC INDICATOR
DESCRIPTION 125
OPERATION 125
FUEL GAUGE
DESCRIPTION 126
OPERATION 126
GEAR SELECTOR INDICATOR
DESCRIPTION 127
OPERATION 127
HIGH BEAM INDICATOR
DESCRIPTION 128
OPERATION 128
LAMP OUT INDICATOR
DESCRIPTION 129
OPERATION 129

page

LOW FUEL INDICATOR
DESCRIPTION 130
OPERATION 130
MALFUNCTION INDICATOR LAMP (MIL)
DESCRIPTION 131
OPERATION 131
ODOMETER
DESCRIPTION 132
OPERATION 133
OIL PRESSURE GAUGE
DESCRIPTION 133
OPERATION 134
GAUGE-ENGINE OIL TEMPERATURE
DESCRIPTION 135
OPERATION 136
DIAGNOSIS AND TESTING
OIL TEMPERATURE GAUGE 137
OIL TEMPERATURE SENSOR 138
REMOVAL 138
INSTALLATION 139
SEATBELT INDICATOR
DESCRIPTION 140
OPERATION 140
STANDARD PROCEDURE
ENHANCED SEATBELT REMINDER PROGRAMMING 141
SECURITY INDICATOR
DESCRIPTION 141
OPERATION 141
SERVICE 4WD INDICATOR
DESCRIPTION 142
OPERATION 143
SPEEDOMETER
DESCRIPTION 143
OPERATION 144
TACHOMETER
DESCRIPTION 144
OPERATION 145
TOW/HAUL INDICATOR
DESCRIPTION 145
OPERATION 146
TRANS TEMP INDICATOR
DESCRIPTION 146
OPERATION 146
TURN SIGNAL INDICATOR
DESCRIPTION 147
OPERATION 147
UPSHIFT INDICATOR
DESCRIPTION 148
OPERATION 149

VOLTAGE GAUGE
DESCRIPTION 149
OPERATION 150
WAIT-TO-START INDICATOR
DESCRIPTION 151
OPERATION 151
WASHER FLUID INDICATOR
DESCRIPTION 151
OPERATION 152
WATER-IN-FUEL INDICATOR
DESCRIPTION 152
OPERATION 152

INSTRUMENT CLUSTER -SERVICE INFORMATION

DESCRIPTION

The instrument cluster (2) for this model is an Electro-Mechanical Instrument Cluster (EMIC) that is located in the instrument panel (1) above the steering column opening, directly in front of the driver. The remainder of the EMIC, including the mounts and the electrical connections, are concealed within the instrument panel behind the cluster bezel. Besides analog gauges and indicators, the EMIC module incorporates two blue-green digital Vacuum Fluorescent Display (VFD) units for displaying odometer/trip odometer information, engine hours, automatic transmission gear selector position (PRNDL), several warning or reminder indications and certain diagnostic information. The instrument cluster for this model also includes the hardware and software necessary to serve as the electronic body control module and is sometimes referred to as the Cab Compartment Node or CCN.

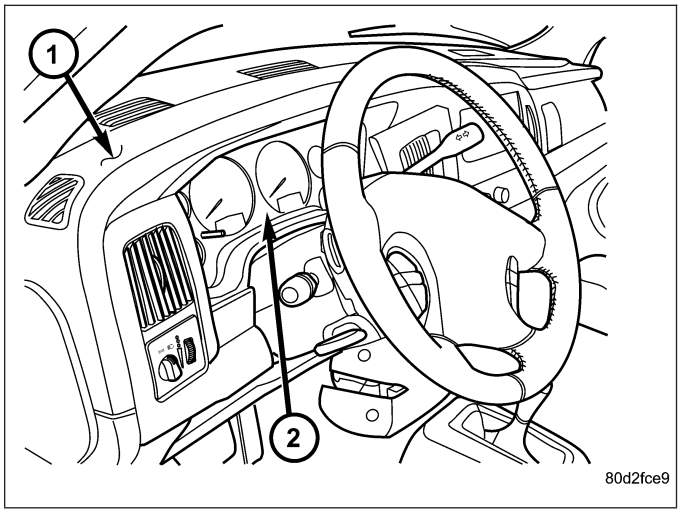

The EMIC gauges and indicators are visible through a dedicated opening in the cluster bezel on the instrument panel and are protected by a clear plastic cluster lens that is integral to a cluster lens, hood and mask unit (4). Just behind the cluster lens is the cluster hood and an integral cluster mask, which are constructed of molded black plastic. The cluster hood serves as a visor and shields the face of the cluster from ambient light and reflections to reduce glare, while the cluster mask serves to separate and define the individual gauges and indicators of the EMIC. A black plastic odometer/trip odometer switch button protrudes through dedicated holes in the cluster mask and the cluster lens, located near the lower edge of the cluster just to the left of the tachometer. The molded plastic EMIC lens, hood and mask unit has four integral mounting tabs, one each on the upper and lower outboard corners of the unit. These mounting tabs are used to secure the EMIC to the molded plastic instrument panel cluster carrier with four screws.

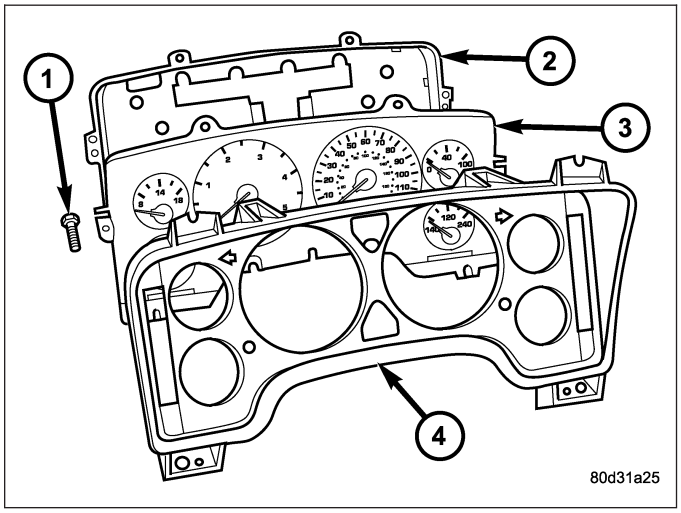

The rear of the cluster housing and the EMIC electronic circuitry are protected by a molded plastic rear cover (2), which is secured to the cluster housing with a single screw (1), while eight screws installed around the outside perimeter of the rear cover secure it to the cluster lens, hood and mask unit. The rear cover includes clearance holes for service access to each of the eleven incandescent bulb and bulb holder units installed on the cluster circuit board for general illumination lighting and for the cluster connector receptacles. The connector receptacles on the back of the cluster electronic circuit board connect the EMIC to the vehicle electrical system through three take outs with connectors from the instrument panel wire harness. The EMIC also has an integral interface connector on the

back of the cluster circuit board that joins it to the optional external Remote Keyless Entry (RKE) module through a connector receptacle that is integral to that unit. The rear cover includes a molded receptacle and two latch features to secure the RKE module on vehicles that are so equipped.

Sandwiched between the rear cover and the lens, hood and mask unit is the cluster housing (3). The molded plastic cluster housing serves as the carrier for the cluster circuit board and circuitry, the cluster connector receptacles, the RKE interface connector, the gauges, a Light Emitting Diode (LED) for each cluster indicator, two VFD units, an audible tone transducer, the cluster overlay, the gauge pointers, the odometer/trip odometer switch and the switch button.

The cluster overlay is a laminated plastic unit. The dark, visible, outer surface of the overlay is marked with all of the gauge dial faces and graduations, but this layer is also translucent. The darkness of this outer layer prevents the cluster from appearing cluttered or busy by concealing the cluster indicators that are not illuminated, while the translucence of this layer allows those indicators and icons that are illuminated to be readily visible. The underlying layer of the overlay is opaque and allows light from the LED for each of the various indicators and the incandescent illumination lamps behind it to be visible through the outer layer of the overlay only through predetermined stencil-like cutouts. A rectangular opening in the overlay at the base of both the speedometer and the tachometer dial faces has a smoked clear lens through which the illuminated VFD units can be viewed.

Several versions of the EMIC module are offered on this model. These versions accommodate all of the variations of optional equipment and regulatory requirements for the various markets in which the vehicle will be offered. The microprocessor-based EMIC utilizes integrated circuitry and information carried on the Programmable Communications Interface (PCI) data bus along with several hard wired analog and multiplexed inputs to monitor sensors and switches throughout the vehicle. In response to those inputs, the internal circuitry and programming of the EMIC allow it to control and integrate many electronic functions and features of the vehicle through both hard wired outputs and the transmission of electronic message outputs to other electronic modules in the vehicle over the PCI data bus. (Refer to 8 - ELECTRICAL/ELECTRONIC CONTROL MODULES/COMMUNICATION - DESCRIPTION - PCI BUS).

Besides typical instrument cluster gauge and indicator support, the electronic functions and features that the EMIC supports or controls include the following:

- **Audible Warnings** - The EMIC electronic circuit board is equipped with an audible tone transducer and programming that allows it to provide various audible alerts to the vehicle operator, including chime tones and beep tones. An electromechanical relay is also soldered onto the circuit board to produce audible clicks that emulate the sound of a conventional turn signal or hazard warning flasher. (Refer to 8 - ELECTRICAL/CHIME/BUZZER - DESCRIPTION).
- **Audio System Cabin Equalization** - The EMIC stores the cabin equalization curves for various optional speaker system architectures for use by the radio. The EMIC provides this information when requested by the radio over the PCI data bus. Changing the cabin equalization settings of the EMIC requires the use of a diagnostic scan tool. Refer to the appropriate diagnostic information.
- **Brake Lamp Control** - The EMIC provides electronic brake lamp request messages to the Front Control Module (FCM) located on the Integrated Power Module (IPM) for brake lamp control, excluding control of the Center High Mounted Stop Lamp (CHMSL), which remains controlled by a direct hard wired output of the brake lamp switch.
- **Brake Transmission Shift Interlock Control** - On vehicles with an optional automatic transmission the EMIC monitors inputs from the brake lamp switch, ignition switch, and the Transmission Range Sensor (TRS), then controls a high-side driver output to operate the Brake Transmission Shift Interlock (BTSI) solenoid that locks and unlocks the automatic transmission gearshift selector lever on the steering column.
- **Cargo Lamp Control** - The EMIC provides direct control of cargo lamp operation with a load shedding (battery saver) feature which will automatically turn off the cargo lamp if it remains on after a timed interval.
- **Central Locking** - The EMIC provides support for the central locking feature of the power lock system. This feature will lock or unlock all doors based upon the input from the door cylinder lock switch on the driver side front door. A door cylinder lock switch is used only on models equipped with the optional Vehicle Theft Security System (VTSS).
- **Enhanced Accident Response** - The EMIC monitors an input from the Airbag Control Module (ACM) and, following an airbag deployment, will immediately disable the power lock output, unlock all doors by activating the power unlock output, then enables the power lock output if the power lock switch input remains inactive for two seconds. The EMIC also monitors an input from the Powertrain Control Module (PCM) to automatically turn on the interior lighting after an airbag deployment event, ten seconds after the vehicle speed is zero. The interior lighting remains illuminated until the ignition switch is turned to the Off position, at which time the inte-

rior lighting returns to normal operation and control. These Enhanced Accident Response System (EARS) features are each dependent upon a functional vehicle electrical system following the vehicle impact event.

- **Exterior Lighting Control** - The EMIC provides electronic head lamp and/or park lamp request messages to the Front Control Module (FCM) located on the Integrated Power Module (IPM) for the appropriate exterior lamp control of standard head and park lamps, as well as optional front fog lamps. This includes support for headlamp beam selection and the optical horn feature, also known as flash-to-pass.
- **Exterior Lighting Fail-safe** - In the absence of a headlamp switch input, the EMIC will turn on the cluster illumination lamps and provide electronic headlamp low beam and park lamp request messages to the Front Control Module (FCM) located on the Integrated Power Module (IPM) for default exterior lamp operation. The FCM will also provide default park lamp and headlamp low beam operation and the EMIC will turn on the cluster illumination lamps at full intensity if there is a failure of the electronic data bus communication between the EMIC and the FCM.
- **Heated Seat Control** - The EMIC monitors inputs from the ignition switch and electronic engine speed messages from the Powertrain Control Module (PCM) to control a high side driver output to the heated seat switch Light Emitting Diode (LED) indicators. This input allows the heated seat switches to wake up the heated seat module if the switch is actuated. The EMIC will de-energize the heated seat switch LED indicators, which deactivates the heated seat system, if the ignition switch is turned to any position except On or Start, or if the engine speed message indicates zero. (Refer to 8 - ELECTRICAL/HEATED SEATS - DESCRIPTION).
- **Horn Control** - The EMIC monitors an input from the horn switch and provides electronic horn request messages to the Front Control Module (FCM) located on the Integrated Power Module (IPM) for horn relay control. The EMIC also controls horn relay operation in this manner to provide the horn features of the optional Remote Keyless Entry (RKE) or Vehicle Theft Security System (VTSS).
- **Interior Lamp Load Shedding** - The EMIC provides a battery saver feature which will automatically turn off all interior lamps and the cargo lamps if they remain on after a timed interval of about five minutes.
- **Interior Lighting Control** - The EMIC monitors inputs from the interior lighting switch, the door ajar switches, the cargo lamp switch, the reading lamp switches, and the Remote Keyless Entry (RKE) module to provide courtesy lamp control. This includes support for timed illuminated entry with theater-style fade-to-off and courtesy illumination defeat features.
- **Lamp Out Indicator Control** - The EMIC monitors electronic lamp outage messages from the Front Control Module (FCM) located on the Integrated Power Module (IPM) in order to provide lamp out indicator control for the headlamps (low and high beams), turn signal lamps, and the brake lamps (excluding CHMSL).
- **Panel Lamps Dimming Control** - The EMIC monitors hard wired multiplexed inputs from the headlamp switch on the instrument panel, then provides a hard wired 12-volt Pulse-Width Modulated (PWM) output that synchronizes the dimming level of all panel lamps dimmer controlled lamps with that of the cluster illumination lamps.
- **Power Locks** - The EMIC monitors inputs from the power lock switches and the Remote Keyless Entry (RKE) module (optional) to provide control of the power lock motors through high side driver outputs to the motors. This includes support for rolling door locks (also known as automatic door locks), automatic door unlock, a door lock inhibit mode, and central locking (with the optional Vehicle Theft Security System only). (Refer to 8 - ELECTRICAL/POWER LOCKS - DESCRIPTION).
- **Remote Keyless Entry** - The EMIC supports the optional Remote Keyless Entry (RKE) system features, including support for the RKE Lock, Unlock (with optional driver-door-only unlock, and unlock-all-doors), Panic, audible chirp, optical chirp, illuminated entry modes, an RKE programming mode, as well as optional Vehicle Theft Security System (VTSS) arming (when the proper VTSS arming conditions are met) and disarming.
- **Remote Radio Switch Interface** - The EMIC monitors inputs from the optional remote radio switches and then provides the appropriate electronic data bus messages to the radio to select the radio operating mode, volume control, preset station scan and station seek features.
- **Turn Signal & Hazard Warning Lamp Control** - The EMIC monitors hard wired multiplexed inputs from the multi-function switch on the steering column, then provides electronic turn and hazard lamp request messages to the Front Control Module (FCM) located on the Integrated Power Module (IPM) for turn and hazard lamp control. The EMIC also provides an audible click at one of two rates to emulate normal and bulb out turn or hazard flasher operation based upon electronic lamp outage messages from the FCM, and provides an audible turn signal on chime warning if a turn is signalled continuously for more than about 1.6 kilometers (one mile) and the vehicle speed remains greater than about twenty-four kilometers-per-hour (fifteen miles-per-hour).
- **Vacuum Fluorescent Display Synchronization** - The EMIC monitors hard wired multiplexed inputs from the headlamp switch on the instrument panel, then transmits electronic panel lamp dimming level messages which allows all other electronic modules on the PCI data bus with Vacuum Fluorescent Display (VFD) units to coor-

dinate their illumination intensity with that of the EMIC VFD units. This includes a parade mode (also known as funeral mode) that allows all VFD units in the vehicle to be illuminated at full (daytime) intensity while driving during daylight hours with the exterior lamps turned On.

- **Vehicle Theft Security System** - The EMIC monitors inputs from the door cylinder lock switch, the door ajar switches, the ignition switch, and the Remote Keyless Entry (RKE) module, then provides electronic horn and lighting request messages to the Front Control Module (FCM) located on the Integrated Power Module (IPM) for the appropriate VTSS alarm output features.
- **Wiper/Washer System Control** - The EMIC monitors both hard wired multiplexed inputs from the front wiper and washer switches in the multi-function switch on the steering column, then provides electronic wiper and/or washer request messages to the Front Control Module (FCM) located on the Integrated Power Module (IPM) for the appropriate wiper and washer system features. (Refer to 8 - ELECTRICAL/WIPERS/WASHERS - DESCRIPTION).

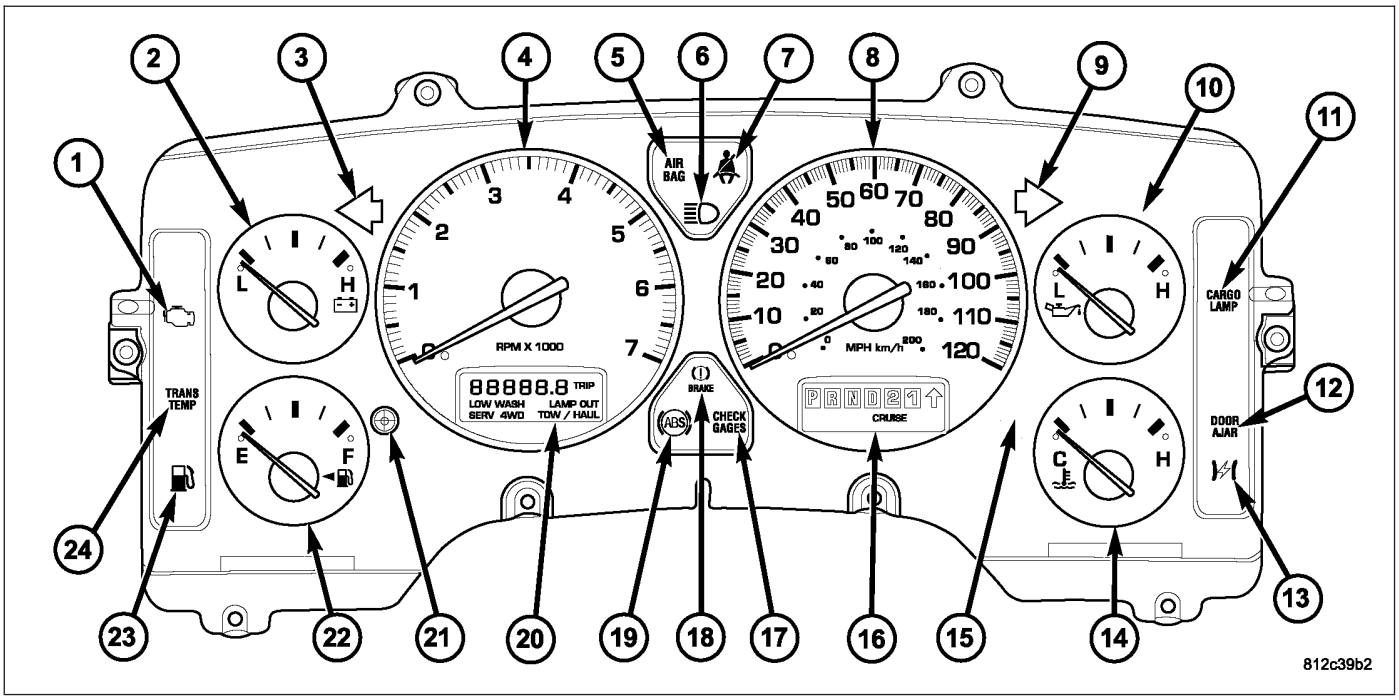

Gasoline Engine except SRT-10

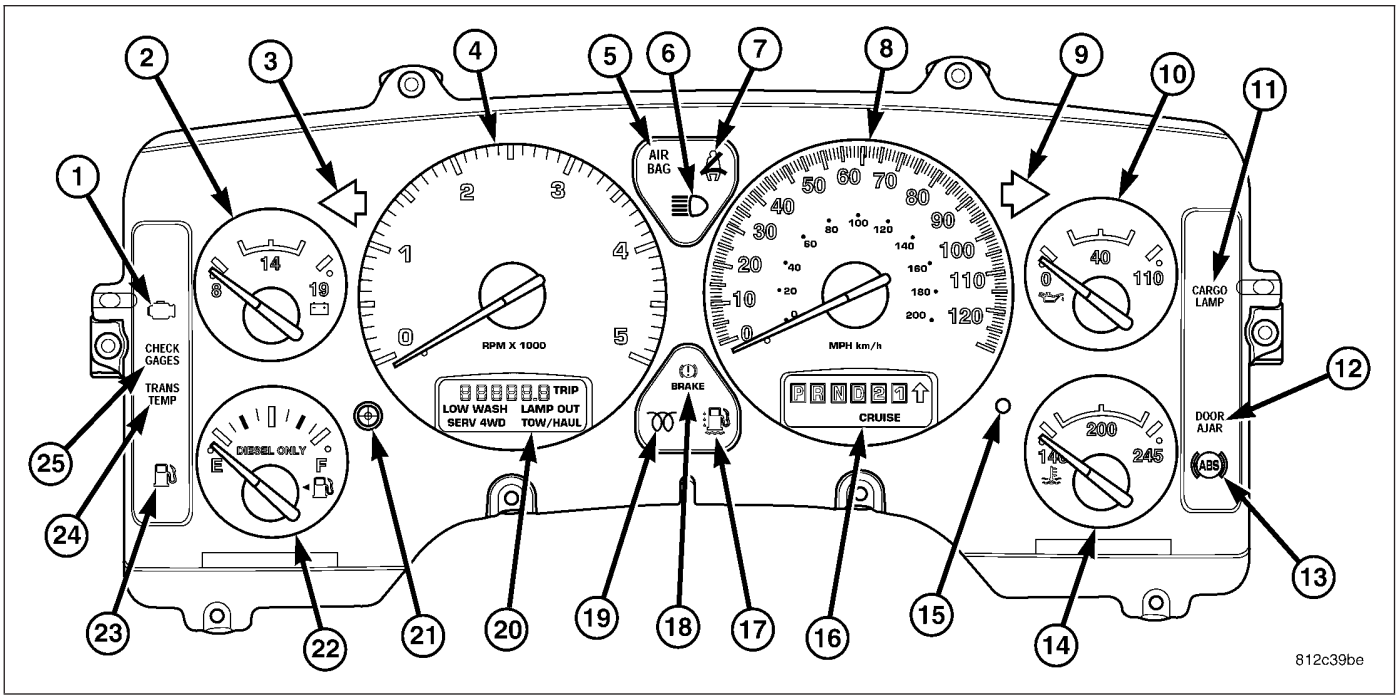

Diesel Engine

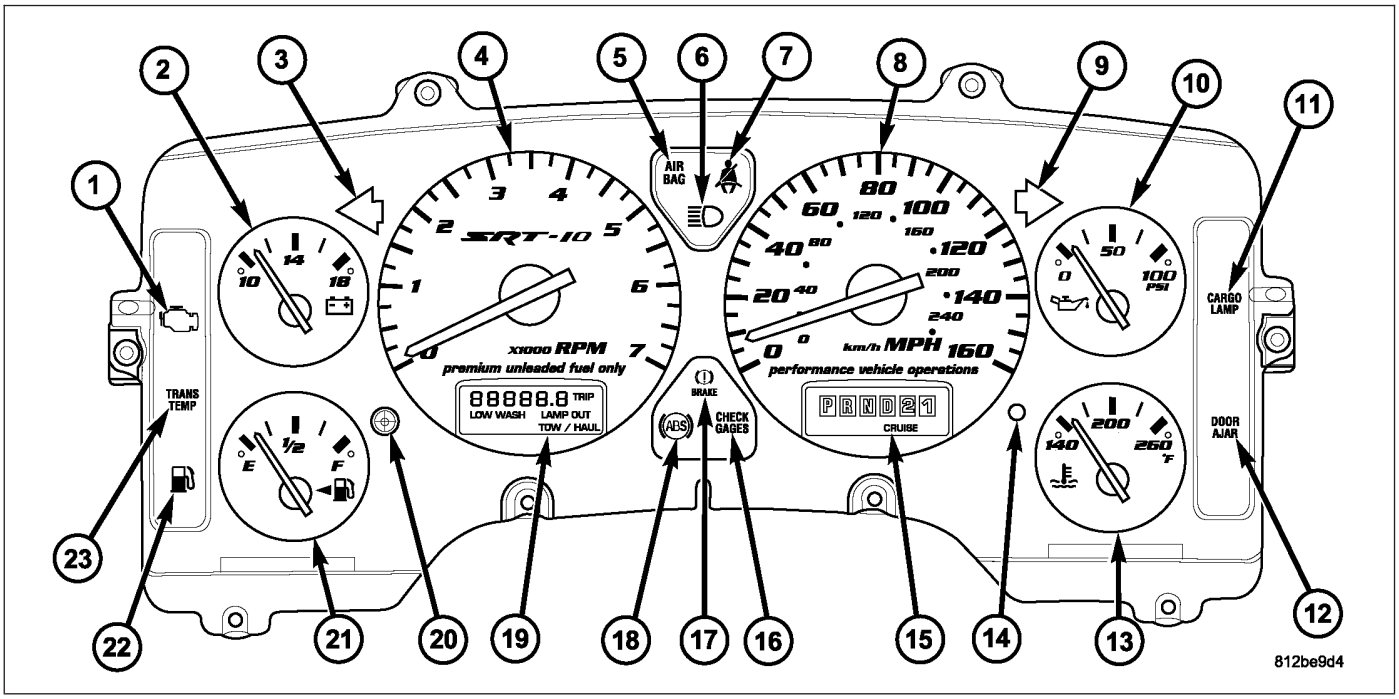

SRT-10

The EMIC houses six analog gauges and has provisions for up to twenty-three indicators. Some of the EMIC indicators are automatically configured when the EMIC is connected to the vehicle electrical system for compatibility with certain optional equipment or equipment required for regulatory purposes in certain markets. While each EMIC may have provisions for indicators to support every available option, the configurable indicators will not be functional in a vehicle that does not have the equipment that an indicator supports.

The EMIC includes the following analog gauges:

- **Coolant Temperature Gauge (13 - SRT-10 or 14 - except SRT-10)**
- **Fuel Gauge (21 - SRT-10 or 22 - except SRT-10)**
- **Oil Pressure Gauge (10)**
- **Speedometer (8)**

- **Tachometer (4)**
- **Voltage Gauge (2)**

The EMIC includes the following VFD units:

- **Gear Selector Indicator (15 - SRT-10 or 16 - except SRT-10)**
- **Odometer/Trip Odometer (19 - SRT-10 or 20 - except SRT-10)**

The EMIC includes provisions for the following indicators:

- **Airbag Indicator (with Airbag System only) (5)**
- **Antilock Brake System (ABS) Indicator (with ABS or Rear Wheel Anti-Lock [RWAL] brakes only) (13 - Diesel, 18 - SRT-10 or 19 - Gas except SRT-10)**
- **Brake Indicator (17 - SRT-10 or 18 - except SRT-10)**
- **Cargo Lamp Indicator (11)**
- **Check Gauges Indicator (16 - SRT-10, 17 - Gas except SRT-10 or 25 - Diesel)**
- **Cruise Indicator (in Gear Selector Indicator VFD)**
- **Door Ajar Indicator (12)**
- **Electronic Throttle Control (ETC) Indicator (13 - 5.7L Gasoline Engine only)**
- **High Beam Indicator (6)**
- **Lamp Out Indicator (in Odometer/Trip Odometer VFD)**
- **Low Fuel Indicator (22 - SRT-10 or 23 - except SRT-10)**
- **Malfunction Indicator Lamp (MIL) (1)**
- **Seatbelt Indicator (7)**
- **Security Indicator (with Sentry Key Immobilizer & Vehicle Theft Security Systems only) (14 - SRT-10 or 15 - except SRT-10)**
- **Service Four-Wheel Drive Indicator (with Four-Wheel Drive only) (in Odometer/Trip Odometer VFD)**
- **Tow/Haul Indicator (with Automatic Transmission only) (in Odometer/Trip Odometer VFD)**
- **Transmission Overtemp Indicator (with Automatic Transmission only) (23 - SRT-10 or 24 - except SRT-10)**
- **Turn Signal (Right and Left) Indicators (3 & 9)**
- **Upshift Indicator (with Manual Transmission only in certain markets where required) (in Gear Selector Indicator VFD)**
- **Washer Fluid Indicator (in Odometer/Trip Odometer VFD)**
- **Wait-To-Start Indicator (19 - with Diesel only)**
- **Water-In-Fuel Indicator (17 - with Diesel only)**

Each indicator in the EMIC, except those located within one of the VFD units, is illuminated by a dedicated LED that is soldered onto the EMIC electronic circuit board. The LED units are not available for service replacement and, if damaged or faulty, the entire EMIC must be replaced. Cluster illumination is accomplished by dimmable incandescent back lighting, which illuminates the gauges for visibility when the exterior lighting is turned on. Each of the incandescent bulbs is secured by an integral bulb holder to the electronic circuit board from the back of the cluster housing.

Hard wired circuitry connects the EMIC to the electrical system of the vehicle. These hard wired circuits are integral to several wire harnesses, which are routed throughout the vehicle and retained by many different methods. These circuits may be connected to each other, to the vehicle electrical system and to the EMIC through the use of a combination of soldered splices, splice block connectors, and many different types of wire harness terminal connectors and insulators. Refer to the appropriate wiring information. The wiring information includes wiring diagrams, proper wire and connector repair procedures, further details on wire harness routing and retention, as well as pin-out and location views for the various wire harness connectors, splices and grounds.

The EMIC modules for this model are serviced only as complete units. The EMIC module cannot be adjusted or repaired. If a gauge, an LED indicator, a VFD unit, the electronic circuit board, the circuit board hardware, the cluster overlay, or the EMIC housing are damaged or faulty, the entire EMIC module must be replaced. The cluster lens, hood and mask unit and the individual incandescent lamp bulbs with holders are available for separate service replacement.

OPERATION

The ElectroMechanical Instrument Cluster (EMIC) in this model also includes the hardware and software necessary to serve as the electronic body control module and is sometimes referred to as the Cab Compartment Node or CCN. The following information deals primarily with the instrument cluster functions of this unit. Additional details of the electronic body control functions of this unit may be found within the service information for the system or component that the EMIC controls. For example: Additional details of the audible warning functions of the EMIC are found within the Chime/Buzzer service information.

The EMIC is designed to allow the vehicle operator to monitor the conditions of many of the vehicle components and operating systems. The gauges and indicators in the EMIC provide valuable information about the various standard and optional powertrains, fuel and emissions systems, cooling systems, lighting systems, safety systems and many other convenience items. The EMIC is installed in the instrument panel so that all of these monitors can be easily viewed by the vehicle operator when driving, while still allowing relative ease of access for service.

The microprocessor-based EMIC hardware and software uses various inputs to control the gauges and indicators visible on the face of the cluster. Some of these inputs are hard wired, but most are in the form of electronic messages that are transmitted by other electronic modules over the Programmable Communications Interface (PCI) data bus. (Refer to 8 - ELECTRICAL/ELECTRONIC CONTROL MODULES/COMMUNICATION - OPERATION).

The EMIC microprocessor smooths the input data using algorithms to provide gauge readings that are accurate, stable and responsive to operating conditions. These algorithms are designed to provide gauge readings during normal operation that are consistent with customer expectations. However, when abnormal conditions exist such as high coolant temperature, the algorithm can drive the gauge pointer to an extreme position and the microprocessor can sound a chime through the on-board audible tone transducer to provide distinct visual and audible indications of a problem to the vehicle operator. The EMIC may also produce audible warnings for other electronic modules in the vehicle based upon electronic tone request messages received over the PCI data bus. Each audible warning is intended to provide the vehicle operator with an audible alert to supplement a visual indication.

The EMIC circuitry operates on battery current received through a fused B(+) fuse on a non-switched fused B(+) circuit, and on battery current received through a fused ignition switch output (run-start) fuse on a fused ignition switch output (run-start) circuit. This arrangement allows the EMIC to provide some features regardless of the ignition switch position, while other features will operate only with the ignition switch in the On or Start positions. The EMIC circuitry is grounded through a ground circuit and take out of the instrument panel wire harness with an eyelet terminal connector that is secured by a ground screw to a ground location near the center of the instrument panel structural support.

The EMIC also has a self-diagnostic actuator test capability, which will test each of the PCI bus message-controlled functions of the cluster by lighting the appropriate indicators, positioning the gauge needles at several predetermined calibration points across the gauge faces, and illuminating all segments of the odometer/trip odometer and gear selector indicator Vacuum-Fluorescent Display (VFD) units. (Refer to 8 - ELECTRICAL/INSTRUMENT CLUSTER - DIAGNOSIS AND TESTING).

GAUGES

All gauges receive battery current through the EMIC circuitry only when the ignition switch is in the On or Start positions. With the ignition switch in the Off position battery current is not supplied to any gauges, and the EMIC circuitry is programmed to move all of the gauge needles back to the low end of their respective scales. Therefore, the gauges do not accurately indicate any vehicle condition unless the ignition switch is in the On or Start positions.

All of the EMIC gauges are air core magnetic units. Two fixed electromagnetic coils are located within each gauge. These coils are wrapped at right angles to each other around a movable permanent magnet. The movable magnet is suspended within the coils on one end of a pivot shaft, while the gauge needle is attached to the other end of the shaft. One of the coils has a fixed current flowing through it to maintain a constant magnetic field strength. Current flow through the second coil changes, which causes changes in its magnetic field strength. The current flowing through the second coil is changed by the EMIC circuitry in response to messages received over the PCI data bus. The gauge needle moves as the movable permanent magnet aligns itself to the changing magnetic fields created around it by the electromagnets.

The gauges are diagnosed using the EMIC self-diagnostic actuator test. (Refer to 8 - ELECTRICAL/INSTRUMENT CLUSTER - DIAGNOSIS AND TESTING). Proper testing of the PCI data bus and the electronic data bus message inputs to the EMIC that control each gauge require the use of a diagnostic scan tool. Refer to the appropriate diagnostic information. Specific operation details for each gauge may be found elsewhere in this service information.

VACUUM-FLUORESCENT DISPLAYS

The Vacuum-Fluorescent Display (VFD) units are soldered to the EMIC electronic circuit board. With the ignition switch in the Off or Accessory positions, the odometer display is activated when the driver door is opened (Rental Car mode) and is deactivated when the driver door is closed. Otherwise, both display units are active when the ignition switch is in the On or Start positions, and inactive when the ignition switch is in the Off or Accessory positions.

The illumination intensity of the VFD units is controlled by the EMIC circuitry based upon an input from the headlamp switch and a dimming level input received from the panel dimmer switch. The EMIC synchronizes the illumination intensity of other VFD units with that of the units in the EMIC by sending electronic dimming level messages to other electronic modules in the vehicle over the PCI data bus.

The EMIC VFD units have several display capabilities including odometer, trip odometer, engine hours (except SRT-10), gear selector indication (PRNDL) for models with an automatic transmission, several warning or reminder indications, and various diagnostic information when certain fault conditions exist. An odometer/trip odometer switch on the EMIC circuit board is used to control some of the display modes. This switch is actuated manually by depressing the odometer/trip odometer switch button that extends through the lower edge of the cluster lens, just left of the tachometer. Actuating this switch momentarily with the ignition switch in the On position will toggle the VFD between the odometer and trip odometer modes. Depressing the switch button for about two seconds while the VFD is in the trip odometer mode will reset the trip odometer value to zero.

While in the odometer mode with the ignition switch in the On position and the engine not running, depressing the odometer/trip odometer switch for about six seconds will display the engine hours information. The engine hours feature is disabled for SRT-10 models. Holding this switch depressed while turning the ignition switch from the Off position to the On position will initiate the EMIC self-diagnostic actuator test. Refer to the instrument cluster diagnosis and testing service information for additional details on this cluster function. The EMIC microprocessor remembers which display mode is active when the ignition switch is turned to the Off position, and returns the VFD display to that mode when the ignition switch is turned On again.

The VFD units are diagnosed using the EMIC self-diagnostic actuator test. (Refer to 8 - ELECTRICAL/INSTRUMENT CLUSTER - DIAGNOSIS AND TESTING). Proper testing of the PCI data bus and the electronic data bus message inputs to the EMIC that control some of the VFD functions requires the use of a diagnostic scan tool. Refer to the appropriate diagnostic information. Specific operation details for the odometer, the trip odometer, the gear selector indicator and the various warning and reminder indicator functions of the VFD may be found elsewhere in this service information.

INDICATORS

Indicators are located in various positions within the EMIC and are all connected to the EMIC electronic circuit board. The cargo lamp indicator, door ajar indicator, high beam indicator, and turn signal indicators operate based upon hard wired inputs to the EMIC. The brake indicator is controlled by PCI data bus messages from the Controller Antilock Brake (CAB) as well as by hard wired park brake switch inputs to the EMIC. The seatbelt indicator is controlled by the EMIC programming, PCI data bus messages from the Airbag Control Module (ACM), and a hard wired seat belt switch input to the EMIC. The Malfunction Indicator Lamp (MIL) is normally controlled by PCI data bus messages from the Powertrain Control Module (PCM); however, if the EMIC loses PCI data bus communication, the EMIC circuitry will automatically turn the MIL on until PCI data bus communication is restored. The EMIC uses PCI data bus messages from the Front Control Module (FCM), the PCM, the diesel engine only Engine Control Module (ECM), the ACM, the CAB, and the Sentry Key Immobilizer Module (SKIM) to control all of the remaining indicators.

The various EMIC indicators are controlled by different strategies; some receive fused ignition switch output from the EMIC circuitry and have a switched ground, while others are grounded through the EMIC circuitry and have a switched battery feed. However, all indicators are completely controlled by the EMIC microprocessor based upon various hard wired and electronic message inputs. The tow/haul indicator and those located within the VFD units are dimmable. All other indicators are illuminated at a fixed intensity, which is not affected by the selected illumination intensity of the EMIC general illumination lamps. The illumination intensity of the dimmable indicators is synchronized with that of the EMIC general illumination lamps.

In addition, certain indicators in this instrument cluster are automatically configured or self-configured. This feature allows the configurable indicators to be enabled by the EMIC circuitry for compatibility with certain optional equipment. The EMIC defaults for the ABS indicator and airbag indicator are enabled, and these configuration settings must be programmatically disabled in the EMIC using a diagnostic scan tool for vehicles that do not have this equipment. The automatically configured or self-configured indicators remain latent in each EMIC at all times and will be active only when the EMIC receives the appropriate PCI message inputs for that optional system or equipment.

The hard wired indicator inputs may be diagnosed using conventional diagnostic methods. However, the EMIC circuitry and PCI bus message controlled indicators are diagnosed using the EMIC self-diagnostic actuator test. (Refer to 8 - ELECTRICAL/INSTRUMENT CLUSTER - DIAGNOSIS AND TESTING). Proper testing of the PCI data bus and the electronic message inputs to the EMIC that control an indicator requires the use of a diagnostic scan tool. Refer to the appropriate diagnostic information. Specific details of the operation for each indicator may be found elsewhere in this service information.

CLUSTER ILLUMINATION

The EMIC has several illumination lamps that are illuminated whenever the exterior lighting is turned On. The illumination intensity of these lamps is adjusted when the interior lighting thumbwheel on the headlamp switch is rotated (down to dim, up to brighten) to one of six available minor detent positions. The EMIC monitors a resistor multiplexed input from the headlamp switch on a dimmer input circuit. In response to that input, the EMIC electronic circuitry converts a fused 12-volt input it receives on a hard wired panel lamps dimmer switch signal circuit into a 12-volt Pulse Width Modulated (PWM) output.

The EMIC uses this PWM output to control the illumination intensity of the cluster illumination lamps and the VFD units on the EMIC circuit board, then provides a synchronized PWM output on the various hard wired fused panel lamps dimmer switch signal circuits to control and synchronize the illumination intensity of other incandescent illumination lamps in the vehicle. The EMIC also transmits electronic dimming level messages over the PCI data bus to other electronic modules in the vehicle to control and synchronize the illumination intensity of their VFD units to that of the EMIC VFD units.

In addition, the thumbwheel on the headlamp switch has a Parade Mode position to provide a parade or funeral mode. The EMIC monitors the request for this mode from the headlamp switch, then transmits an electronic dimming level message to illuminate all VFD units in the vehicle at full (daytime) intensity for easier visibility when driving in daylight with the exterior lighting turned on.

The hard wired headlamp switch and panel lamps dimmer inputs to and outputs from the EMIC may be diagnosed using conventional diagnostic methods. However, proper testing of the PWM processing of the EMIC and the electronic dimming level messages sent by the EMIC over the PCI data bus requires the use of a diagnostic scan tool. Refer to the appropriate diagnostic information.

INPUT AND OUTPUT CIRCUITS

HARD WIRED INPUTS

The hard wired inputs to the EMIC include the following:

- **Brake Lamp Switch Output**
- **Driver Cylinder Lock Switch Sense**
- **Driver Door Ajar Switch Sense**
- **Driver Door Lock Switch MUX - with Power Locks**
- **Fused B(+) - Ignition-Off Draw**
- **Fused B(+) - Power Lock Feed - with Power Locks**
- **Fused Ignition Switch Output (Accessory-Run)**
- **Fused Ignition Switch Output (Off-Run-Start)**
- **Fused Ignition Switch Output (Run-Start)**
- **Headlamp Dimmer Switch MUX**
- **Headlamp Switch MUX**
- **Horn Relay Control**
- **Key-In Ignition Switch Sense**
- **Left Rear Door Ajar Switch Sense**
- **Panel Lamps Dimmer Switch Signal**
- **Park Brake Switch Sense**
- **Passenger Door Ajar Switch Sense**
- **Passenger Door Lock Switch MUX - with Power Locks**
- **Radio Control MUX**
- **Right Rear Door Ajar Switch Sense**

- **RKE Supply - with RKE**
- **Seat Belt Switch Sense**
- **Transmission Range Sensor MUX - with Auto Trans**
- **Turn/Hazard Switch MUX**
- **Washer/Beam Select Switch MUX**
- **Wiper Switch MUX**

Refer to the appropriate wiring information for additional details.

HARD WIRED OUTPUTS

The hard wired outputs of the EMIC include the following:

- **Accessory Switch Bank Illumination Driver**
- **BTSI Driver - with Auto Trans**
- **Cargo Lamp Driver**
- **Dome/Overhead Lamp Driver**
- **Driver Door Unlock Driver - with Power Locks**
- **Headlamp Switch Illumination Driver**
- **Heated Seat Switch Indicator Driver - with Heated Seats**
- **Heater-A/C Control Illumination Driver**
- **Left Door Lock Driver - with Power Locks**
- **Left Rear Door Unlock Driver - with Power Locks**
- **Map/Glove Box Lamp Driver**
- **Oil Temperature Gauge Illumination Driver - SRT-10 only**
- **Radio Illumination Driver**
- **Right Door Lock Driver - with Power Locks**
- **Right Door Unlock Driver - with Power Locks**
- **Transfer Case Switch Illumination Driver - with Four-Wheel Drive**

Refer to the appropriate wiring information for additional details.

GROUNDS

The EMIC receives and supplies a ground path to several switches and sensors through the following hard wired circuits:

- **Ground - Illumination (2 Circuits)**
- **Ground - Power Lock - with Power Locks**
- **Ground - Signal**
- **Headlamp Switch Return**
- **Multi-Function Switch Return**
- **Transmission Range Sensor Return - with Auto Trans**

Refer to the appropriate wiring information for additional details.

COMMUNICATION

The EMIC has provisions for the following communication circuits:

- **PCI Data Bus**
- **RKE Program Serial Data - with RKE**
- **RKE Transmit Serial Data - with RKE**

Refer to the appropriate wiring information for additional details.

DIAGNOSIS AND TESTING

INSTRUMENT CLUSTER

WARNING: To avoid personal injury or death, on vehicles equipped with airbags, disable the supplemental restraint system before attempting any steering wheel, steering column, airbag, seat belt tensioner, impact sensor, or instrument panel component diagnosis or service. Disconnect and isolate the battery negative (ground) cable, then wait two minutes for the system capacitor to discharge before performing further diagnosis or service. This is the only sure way to disable the supplemental restraint system. Failure to take the proper precautions could result in accidental airbag deployment.

If all of the instrument cluster gauges and indicators are inoperative, be certain to check the instrument cluster fused B(+) fuse and the instrument cluster fused B(+) and ground circuits for shorts or opens. Refer to the appropriate wiring information. The wiring information includes wiring diagrams, proper wire and connector repair procedures, details of wire harness routing and retention, connector pin-out information and location views for the various wire harness connectors, splices and grounds.

If an individual hard wired gauge or indicator is inoperative, refer to the diagnosis and testing service information for that specific gauge or indicator. If an individual Programmable Communications Interface (PCI) data bus message-controlled gauge or indicator is inoperative, perform the Actuator Test as follows:

CAUTION: Instrument clusters used in this model automatically configure themselves for compatibility with the features and optional equipment in the vehicle in which they are initially installed. The instrument cluster is programmed to do this by embedding the Vehicle Identification Number (VIN) and other information critical to proper cluster operation into electronic memory. This embedded information is learned through electronic messages received from other electronic modules in the vehicle over the Programmable Communications Interface (PCI) data bus, and through certain hard wired inputs received when the cluster is connected to the vehicle electrically. Once configured, the instrument cluster memory may be irreparably damaged and certain irreversible configuration errors may occur if the cluster is connected electrically to another vehicle; or, if an electronic module from another vehicle is connected that provides data to the instrument cluster (including odometer values) that conflicts with that which was previously learned and stored. Therefore, the practice of exchanging (swapping) instrument clusters and other electronic modules in this vehicle with those removed from another vehicle must always be avoided. Failure to observe this caution may result in instrument cluster damage, which is not reimbursable under the terms of the product warranty. Service replacement instrument clusters are provided with the correct VIN, and the certified odometer and engine hours values embedded into cluster memory, but will otherwise be automatically configured for compatibility with the features and optional equipment in the vehicle in which they are initially installed.

NOTE: Certain indicators in this instrument cluster are automatically configured. This feature allows those indicators to be activated or deactivated for compatibility with certain optional equipment. If the problem being diagnosed involves improper illumination of the cruise indicator, the electronic throttle control indicator, the tow/haul indicator, the service four-wheel drive indicator, the transmission overtemp indicator, the upshift indicator, the security indicator or the gear selector indicator, disconnect and isolate the battery negative cable. After about five minutes, reconnect the battery negative cable and turn the ignition switch to the On position. The instrument cluster should automatically relearn the equipment in the vehicle and properly configure the configurable indicators accordingly.

ACTUATOR TEST

The instrument cluster actuator test will put the instrument cluster into its self-diagnostic mode. In this mode the instrument cluster can perform a self-diagnostic test that will confirm that the instrument cluster circuitry, the gauges, and the indicators are capable of operating as designed. During the actuator test the instrument cluster circuitry will position each of the gauge needles at various calibration points, illuminate all of the segments in the Vacuum Fluorescent Display (VFD) units, turn all of the indicators on and off again, display any Diagnostic Trouble Code (DTC) information, and display the number of ignition key cycles that have occurred since the DTC was detected. It is suggested that a note pad and pencil be used to write down any fault information that is displayed during the test for reference.

Successful completion of the actuator test will confirm that the instrument cluster is operational. However, there may still be a problem with the PCI data bus, the Powertrain Control Module (PCM), the Engine Control Module (ECM), the Front Control Module (FCM), the Transmission Control Module (TCM), the Transfer Case Control Module (TCCM), the Airbag Control Module (ACM), the Controller Anti-lock Brake (CAB), or the hard wired inputs to one of these electronic control modules. Use a diagnostic scan tool to diagnose these components. Refer to the appropriate diagnostic information.

1. Begin the test with the ignition switch in the Off position.
2. Depress the odometer/trip odometer switch button.
3. While still holding the odometer/trip odometer switch button depressed, turn the ignition switch to the On position, but do not start the engine.
4. Release the odometer/trip odometer switch button.
5. The instrument cluster will simultaneously begin to illuminate all of the operational segments in both VFD units and perform a bulb check of each operational LED indicator. The VFD segments and LED indicators remain illuminated as each gauge needle is swept to several calibration points and back. If a VFD segment or an LED indicator fails to illuminate, or if a gauge needle fails to sweep through the calibration points and back during this test, the instrument cluster must be replaced. Following these tests, the actuator test will proceed as described in Step 6.
6. The text “C Code” is displayed in the odometer VFD for about three seconds. If there is no stored fault information, the display will show two pairs of zeroes in the format “00” “00”, which indicate that the display of fault information is done. If there is stored fault information, two sets of two-digit alpha and alpha-numeric fault codes will appear in the odometer display for a three second interval. The first pair of digits represents a Diagnostic Trouble Code (DTC), or fault code for the instrument cluster. The second pair of digits is a counter for the number of ignition key cycles that have occurred since the displayed DTC was set. The instrument cluster will continue to display additional sets of two pairs of digits at three second intervals until all of the stored codes have been displayed, which is again signaled by a code of “00” “00”. Refer to the Instrument Cluster Failure Message table for a description of each fault code that the instrument cluster displays. If an instrument cluster fault is displayed, use a diagnostic scan tool to diagnose the problem. Refer to the appropriate diagnostic information.

INSTRUMENT CLUSTER FAILURE MESSAGE		
FAULT CODE	**DESCRIPTION**	**CORRECTION**
01	Cargo lamp LED output circuit open load/short to ground.	Refer to the appropriate diagnostic information.
02	Cargo lamp LED output circuit overload/short to battery.	Refer to the appropriate diagnostic information.
03	Door ajar LED output circuit open load/short to ground.	Refer to the appropriate diagnostic information.
04	Door ajar LED output circuit overload/ short to battery.	Refer to the appropriate diagnostic information.
05	ETC LED output circuit open load/short to ground.	Refer to the appropriate diagnostic information.
06	ETC LED output circuit overload/short to battery.	Refer to the appropriate diagnostic information.
07	Seatbelt LED output circuit open load/short to ground.	Refer to the appropriate diagnostic information.
08	Seatbelt LED output circuit overload/short to battery.	Refer to the appropriate diagnostic information.
09	Air Bag LED output circuit open load/short to ground.	Refer to the appropriate diagnostic information.
0A	Air Bag LED output circuit overload/short to battery.	Refer to the appropriate diagnostic information.
0B	BTSI output circuit shorted or open.	Refer to the appropriate diagnostic information.

INSTRUMENT CLUSTER FAILURE MESSAGE		
FAULT CODE	**DESCRIPTION**	**CORRECTION**
0C	PRNDL switch input circuit low.	Refer to the appropriate diagnostic information.
0D	PRNDL switch input circuit high.	Refer to the appropriate diagnostic information.
0E	DTCM switch input circuit low.	Refer to the appropriate diagnostic information.
0F	DTCM switch input circuit high.	Refer to the appropriate diagnostic information.
20	Panel dimmer input circuit low.	Refer to the appropriate diagnostic information.
21	Panel dimmer input circuit high.	Refer to the appropriate diagnostic information.
22	Headlamp switch input circuit shorted.	Refer to the appropriate diagnostic information.
23	Headlamp switch input circuit open.	Refer to the appropriate diagnostic information.
24	Turn hazard switch input circuit shorted.	Refer to the appropriate diagnostic information.
25	Turn hazard swiitch inpot circuit open.	Refer to the appropriate diagnostic information.
26	Panel illumination output circuit low/high fault.	Refer to the appropriate diagnostic information.
27	Courtesy/dome output circuit shorted or open.	Refer to the appropriate diagnostic information.
28	Glovebox/map lamp output circuit shorted or open.	Refer to the appropriate diagnostic information.
29	Cargo lamp output circuit shorted or open.	Refer to the appropriate diagnostic information.
2B	High Beam LED output circuit open load/short to ground.	Refer to the appropriate diagnostic information.
2C	High Beam LED output circuit overload/short to battery.	Refer to the appropriate diagnostic information.
2D	Brake LED output circuit open load/short to ground.	Refer to the appropriate diagnostic information.
2E	Brake LED output circuit overload/short to battery.	Refer to the appropriate diagnostic information.
2F	Check Gages LED output circuit open load/short to ground.	Refer to the appropriate diagnostic information.
30	Check Gages LED output circuit overload/short to battery.	Refer to the appropriate diagnostic information.
31	ABS LED output circuit open load/short to ground.	Refer to the appropriate diagnostic information.
32	ABS LED output circuit overload/short to battery.	Refer to the appropriate diagnostic information.
33	MIL LED output circuit open load/short to ground.	Refer to the appropriate diagnostic information.
34	MIL LED output circuit overload/short to battery.	Refer to the appropriate diagnostic information.

INSTRUMENT CLUSTER FAILURE MESSAGE		
FAULT CODE	**DESCRIPTION**	**CORRECTION**
35	Water in Fuel LED output circuit open load/short to ground.	Refer to the appropriate diagnostic information.
36	Water in Fuel LED output circuit overload/short to battery.	Refer to the appropriate diagnostic information.
37	Wait to Start LED output circuit open load/short to ground.	Refer to the appropriate diagnostic information.
38	Wait to Start LED output circuit overload/short to battery.	Refer to the appropriate diagnostic information.
39	Trans Temp LED output circuit open load/short to ground.	Refer to the appropriate diagnostic information.
3A	Trans Temp LED output circuit overload/short to battery.	Refer to the appropriate diagnostic information.
3B	Low Fuel LED output circuit open load/short to ground.	Refer to the appropriate diagnostic information.
3C	Low Fuel LED output circuit overload/short to battery.	Refer to the appropriate diagnostic information.
3D	BTSI output circuit high fault.	Refer to the appropriate diagnostic information.
40	Wiper switch input circuit shorted.	Refer to the appropriate diagnostic information.
41	Wiper switch input circuit open.	Refer to the appropriate diagnostic information.
42	Wash/beam input circuit shorted.	Refer to the appropriate diagnostic information.
60	Passenger door lock switch input circuit shorted.	Refer to the appropriate diagnostic information.
61	Passenger door lock switch input circuit open.	Refer to the appropriate diagnostic information.
62	Passenger door lock switch input circuit stuck.	Refer to the appropriate diagnostic information.
63	Driver door lock switch input circuit shorted.	Refer to the appropriate diagnostic information.
64	Driver door lock switch input circuit open.	Refer to the appropriate diagnostic information.
65	Driver door lock switch input circuit stuck.	Refer to the appropriate diagnostic information.
66	All door lock output circuit shorted to ground or voltage.	Refer to the appropriate diagnostic information.
67	All door unlock output circuit shorted to ground or voltage.	Refer to the appropriate diagnostic information.
68	Driver door unlock output circuit shorted to ground or voltage.	Refer to the appropriate diagnostic information.
6C	Driver cylinder lock switch input circuit shorted.	Refer to the appropriate diagnostic information.
6E	Driver cylinder lock switch input circuit stuck.	Refer to the appropriate diagnostic information.
80	Incorrect odometer value found.	Refer to the appropriate diagnostic information.

INSTRUMENT CLUSTER FAILURE MESSAGE		
FAULT CODE	**DESCRIPTION**	**CORRECTION**
81	Remote radio switch input circuit high.	Refer to the appropriate diagnostic information.
82	Remote radio switch stuck.	Refer to the appropriate diagnostic information.
A0	Internal module FLASH memory checksum failure.	Refer to the appropriate diagnostic information.
A1	Internal module bootloader failure.	Refer to the appropriate diagnostic information.
A3	Battery voltage open.	Refer to the appropriate diagnostic information.
A4	Ignition Run/Start circuit rationality.	Refer to the appropriate diagnostic information.
A5	TCCM messages not received.	Refer to the appropriate diagnostic information.
A6	Ignition Unlock circuit rationality.	Refer to the appropriate diagnostic information.
A7	VIN checksum error.	Refer to the appropriate diagnostic information.
A8	VIN previously stored.	Refer to the appropriate diagnostic information.
A9	PCI bus internal failure.	Refer to the appropriate diagnostic information.
AA	PCM messages not received.	Refer to the appropriate diagnostic information.
AB	TCM messages not received.	Refer to the appropriate diagnostic information.
AC	ABS messages not received.	Refer to the appropriate diagnostic information.
AD	FCM messages not received.	Refer to the appropriate diagnostic information.
AE	ACM messages not received.	Refer to the appropriate diagnostic information.
AF	SKIM messages not received.	Refer to the appropriate diagnostic information.
B0	RKE fob batteries low.	Refer to the appropriate diagnostic information.
B1	RKE module communication link.	Refer to the appropriate diagnostic information.
B2	Left Turn LED open circuit.	Refer to the appropriate diagnostic information.
B3	Left Turn LED short circuit/overtemp condition.	Refer to the appropriate diagnostic information.
B4	Right Turn LED open circuit.	Refer to the appropriate diagnostic information.
B5	Right Turn LED sshort circuit/overtemp condition.	Refer to the appropriate diagnostic information.
B6	Panel illumination open circuit.	Refer to the appropriate diagnostic information.

INSTRUMENT CLUSTER FAILURE MESSAGE		
FAULT CODE	**DESCRIPTION**	**CORRECTION**
B7	Dome lamp open circuit.	Refer to the appropriate diagnostic information.
B8	Cargo lamp open circuit.	Refer to the appropriate diagnostic information.
B9	Door Unlock to Lock all shorted to ground.	Refer to the appropriate diagnostic information.
00	Done	All Diagnostic Trouble Codes (DTC) have been displayed.

7. The actuator test is now completed. The instrument cluster will automatically exit the self-diagnostic mode and return to normal operation at the completion of the test, if the ignition switch is turned to the Off position during the test, or if a vehicle speed message indicating that the vehicle is moving is received from the PCM over the PCI data bus during the test.
8. Go back to Step 1 to repeat the test, if necessary.

REMOVAL

WARNING: To avoid personal injury or death, on vehicles equipped with airbags, disable the supplemental restraint system before attempting any steering wheel, steering column, airbag, seat belt tensioner, impact sensor, or instrument panel component diagnosis or service. Disconnect and isolate the battery negative (ground) cable, then wait two minutes for the system capacitor to discharge before performing further diagnosis or service. This is the only sure way to disable the supplemental restraint system. Failure to take the proper precautions could result in accidental airbag deployment.

1. Disconnect and isolate the battery negative cable.
2. Remove the cluster bezel from the instrument panel. (Refer to 23 - BODY/INSTRUMENT PANEL/ CLUSTER BEZEL - REMOVAL).
3. Remove the four screws (3) that secure the instrument cluster (2) to the instrument panel structural support (4).
4. Pull the instrument cluster rearward far enough to access and disconnect the three instrument panel wire harness connectors (1) from the connector receptacles on the back of the cluster housing.
5. Remove the instrument cluster from the instrument panel.

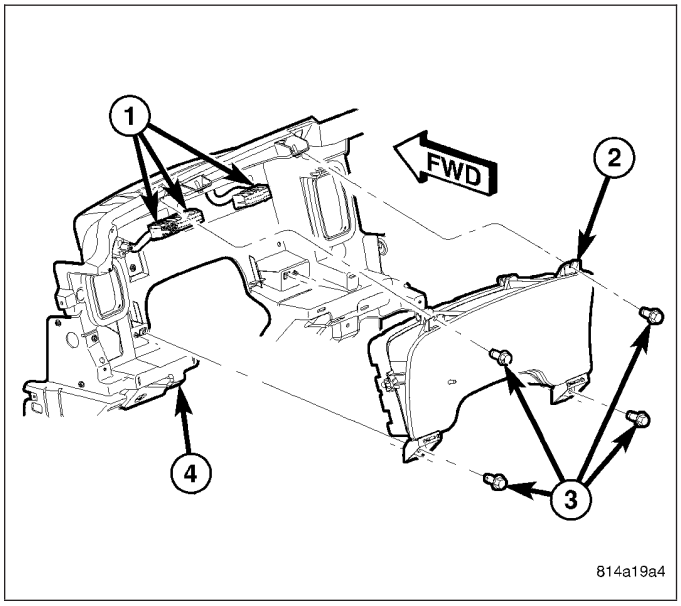

DISASSEMBLY

WARNING: To avoid personal injury or death, on vehicles equipped with airbags, disable the supplemental restraint system before attempting any steering wheel, steering column, airbag, seat belt tensioner, impact sensor, or instrument panel component diagnosis or service. Disconnect and isolate the battery negative (ground) cable, then wait two minutes for the system capacitor to discharge before performing further diagnosis or service. This is the only sure way to disable the supplemental restraint system. Failure to take the proper precautions could result in accidental airbag deployment.

NOTE: Some of the components for the instrument cluster used in this vehicle are serviced individually. The serviced components include the incandescent instrument cluster illumination lamp bulbs (including the integral bulb holders), and the cluster lens, hood and mask unit. Following are the procedures for disassembling these components from the instrument cluster.

CLUSTER BULB

NOTE: This procedure applies to each of the incandescent cluster illumination lamp bulb and bulb holder units. If the vehicle is equipped with the optional Remote Keyless Entry (RKE) system, the RKE module must be removed from the instrument cluster rear cover to access the lower center cluster illumination lamp, which is located on the circuit board directly behind the RKE module. (Refer to 8 - ELECTRICAL/ POWER LOCKS/REMOTE KEYLESS ENTRY MODULE - REMOVAL).

1. Disconnect and isolate the battery negative cable.
2. Remove the instrument cluster from the instrument panel. (Refer to 8 - ELECTRICAL/INSTRUMENT CLUSTER - REMOVAL).
3. From the back of the instrument cluster (1), turn the bulb holder counterclockwise about 30 degrees on the cluster electronic circuit board.
4. Pull the bulb and bulb holder unit straight out from the keyed opening in the cluster electronic circuit board.

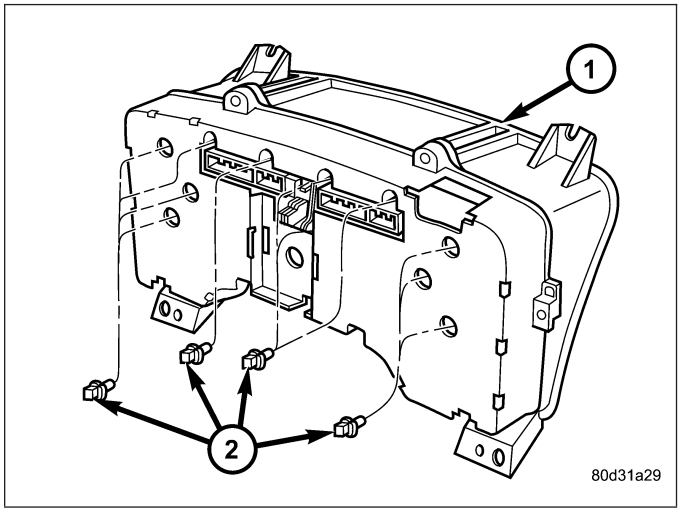

CLUSTER LENS, HOOD, AND MASK

1. Disconnect and isolate the battery negative cable.
2. Remove the instrument cluster from the instrument panel. (Refer to 8 - ELECTRICAL/INSTRUMENT CLUSTER - REMOVAL).
3. From the back of the instrument cluster, remove the eight screws (1) around the outer perimeter of the rear cover (2) that secure the lens, hood, and mask unit (4) to the cluster housing (3).
4. Remove the lens, hood, and mask unit from the face of the instrument cluster.

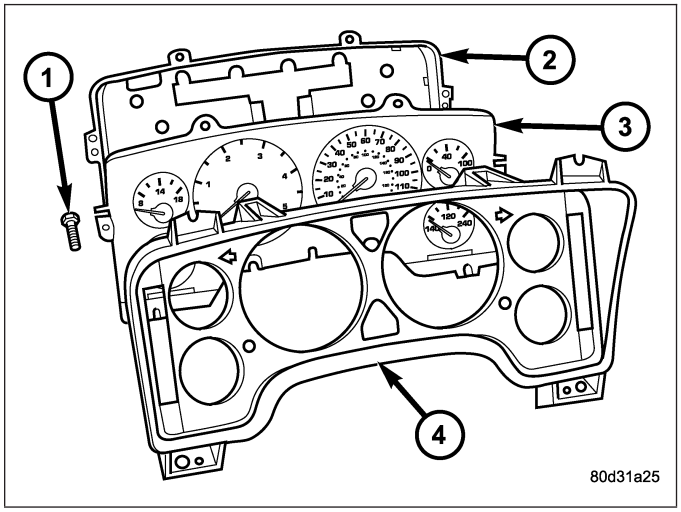

ASSEMBLY

WARNING: To avoid personal injury or death, on vehicles equipped with airbags, disable the supplemental restraint system before attempting any steering wheel, steering column, airbag, seat belt tensioner, impact sensor, or instrument panel component diagnosis or service. Disconnect and isolate the battery negative (ground) cable, then wait two minutes for the system capacitor to discharge before performing further diagnosis or service. This is the only sure way to disable the supplemental restraint system. Failure to take the proper precautions could result in accidental airbag deployment.

NOTE: Some of the components for the instrument cluster used in this vehicle are serviced individually. The serviced components include the incandescent instrument cluster illumination lamp bulbs (including the integral bulb holders), and the cluster lens, hood and mask unit. Following are the procedures for assembling these components to the instrument cluster.

CLUSTER BULB

CAUTION: Always use the correct bulb size and type for replacement. An incorrect bulb size or type may overheat and cause damage to the instrument cluster, the electronic circuit board and/or the gauges.

NOTE: This procedure applies to each of the incandescent cluster illumination lamp bulb and bulb holder units. If the vehicle is equipped with the optional Remote Keyless Entry (RKE) system, and the RKE receiver module was removed from the instrument cluster rear cover to access the lower center cluster illumination lamp, reinstall the RKE module after the bulb is replaced on the circuit board. (Refer to 8 - ELECTRICAL/ POWER LOCKS/REMOTE KEYLESS ENTRY MODULE - INSTALLATION).

1. Align the bulb and bulb holder unit with the keyed opening on the back of the cluster electronic circuit board.
2. Insert the bulb and bulb holder into the cluster electronic circuit board until the bulb holder is firmly seated.
3. Rotate the bulb holder clockwise about 30 degrees to lock it into place.
4. Reinstall the instrument cluster onto the instrument panel. (Refer to 8 - ELECTRICAL/INSTRUMENT CLUSTER - INSTALLATION).
5. Reconnect the battery negative cable.

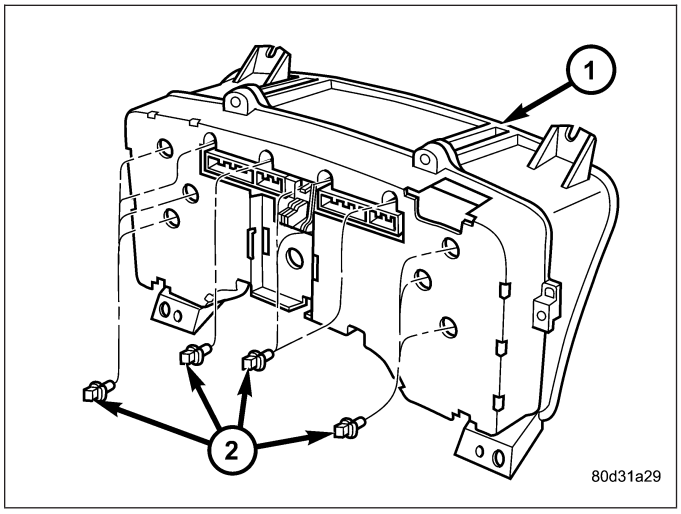

CLUSTER LENS, HOOD, AND MASK

1. Position the cluster lens, hood, and mask unit (4) over the face of the instrument cluster (3). Be certain that the odometer/trip odometer switch button is inserted through the proper clearance holes in the mask and the lens.
2. From the back of the instrument cluster, install and tighten the eight screws (1) around the outer perimeter of the rear cover (2) that secure the lens, hood, and mask unit to the cluster housing. Tighten the screws to 1 N·m (10 in. lbs.).
3. Reinstall the instrument cluster onto the instrument panel. (Refer to 8 - ELECTRICAL/INSTRUMENT CLUSTER - INSTALLATION).
4. Reconnect the battery negative cable.

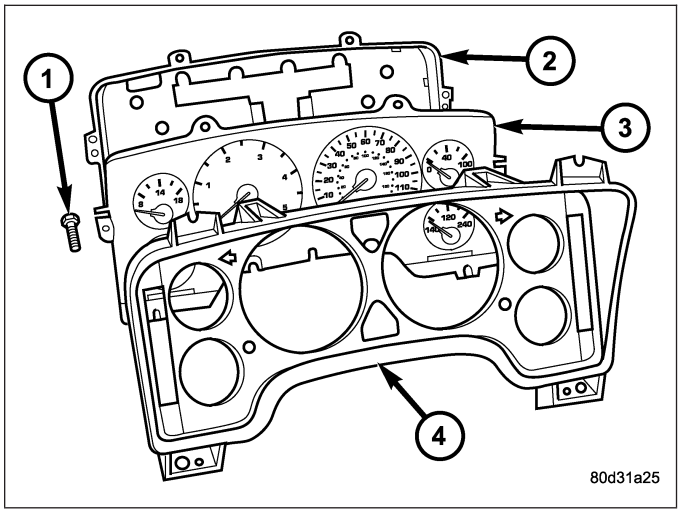

INSTALLATION

WARNING: To avoid personal injury or death, on vehicles equipped with airbags, disable the supplemental restraint system before attempting any steering wheel, steering column, airbag, seat belt tensioner, impact sensor, or instrument panel component diagnosis or service. Disconnect and isolate the battery negative (ground) cable, then wait two minutes for the system capacitor to discharge before performing further diagnosis or service. This is the only sure way to disable the supplemental restraint system. Failure to take the proper precautions could result in accidental airbag deployment.

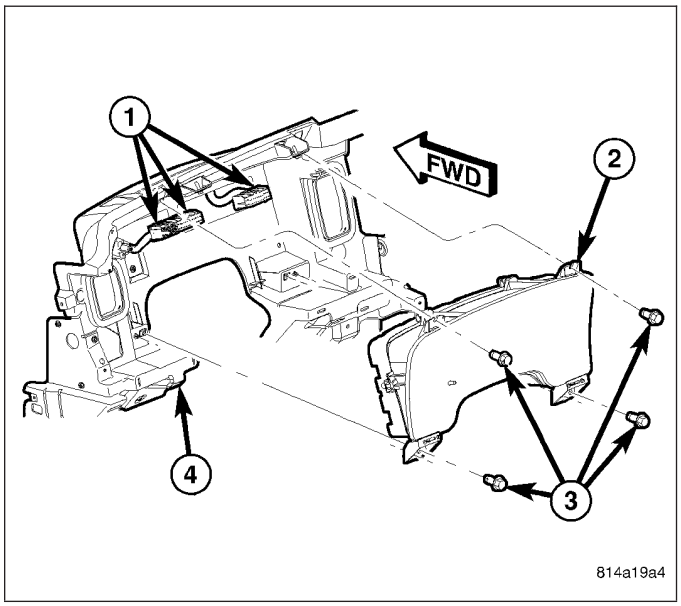

1. Position the instrument cluster close enough to the instrument panel to reconnect the three instrument panel wire harness connectors (1) to the connector receptacles on the back of the cluster housing (2).
2. Position the instrument cluster into the instrument panel (4).
3. Install and tighten the four screws (3) that secure the instrument cluster to the instrument panel structural support. Tighten the screws to 4 N·m (31 in. lbs.).
4. Reinstall the cluster bezel onto the instrument panel. (Refer to 23 - BODY/INSTRUMENT PANEL/ CLUSTER BEZEL - INSTALLATION).
5. Reconnect the battery negative cable.

NOTE: Certain indicators in this instrument cluster are automatically configured. This feature allows those indicators to be activated or deactivated for compatibility with certain optional equipment. If a problem is noted that involves improper illumination of the cruise indicator, the electronic throttle control indicator, the service four-wheel drive indicator, the tow/haul indicator, the transmission overtemp indicator, the upshift indicator, the security indicator or the gear selector indicator, disconnect and isolate the battery negative cable. After about five minutes, reconnect the battery negative cable and turn the ignition switch to the On position. The instrument cluster should automatically relearn the equipment in the vehicle and properly configure the configurable indicators accordingly.

ABS INDICATOR

DESCRIPTION



An Antilock Brake System (ABS) indicator is standard equipment on all instrument clusters. However, the instrument cluster can be programmed to disable this indicator on vehicles that are not equipped with the ABS or Rear Wheel Anti-Lock (RWAL) brake systems, which are not available in some markets. On vehicles equipped with a gasoline engine, the ABS indicator is located near the lower edge of the instrument cluster, between the tachometer and the speedometer. On vehicles equipped with a diesel engine, the ABS indicator is located on the right side of the instrument cluster, to the right of the engine temperature gauge.

The ABS indicator consists of a stencil-like cutout of the International Control and Display Symbol icon for “Failure of Anti-lock Braking System” in the opaque layer of the instrument cluster overlay. The dark outer layer of the overlay prevents the indicator from being clearly visible when it is not illuminated. An amber Light Emitting Diode (LED) behind the cutout in the opaque layer of the overlay causes the icon to appear in amber through the translucent outer layer of the overlay when the indicator is illuminated from behind by the LED, which is soldered onto the instrument cluster electronic circuit board. The ABS indicator is serviced as a unit with the instrument cluster.

OPERATION

The ABS indicator gives an indication to the vehicle operator when the ABS system is faulty or inoperative. This indicator is controlled by a transistor on the instrument cluster circuit board based upon cluster programming and electronic messages received by the cluster from the Controller Antilock Brake (CAB) over the Programmable Communications Interface (PCI) data bus.

The ABS indicator Light Emitting Diode (LED) is completely controlled by the instrument cluster logic circuit, and that logic will only allow this indicator to operate when the instrument cluster receives a battery current input on the fused ignition switch output (run-start) circuit. Therefore, the LED will always be off when the ignition switch is in any position except On or Start. The LED only illuminates when it is provided a path to ground by the instrument cluster transistor. The instrument cluster will turn on the ABS indicator for the following reasons:

- **Bulb Test** - Each time the ignition switch is turned to the On position the ABS indicator is illuminated for about four seconds as a bulb test. The entire bulb test is a function of the CAB.
- **ABS Lamp-On Message** - Each time the cluster receives a lamp-on message from the CAB, the ABS indicator will be illuminated. The indicator remains illuminated until the cluster receives a lamp-off message from the CAB, or until the ignition switch is turned to the Off position, whichever occurs first.
- **Communication Error** - If the cluster receives no lamp-on or lamp-off messages from the CAB for five consecutive message cycles, the ABS indicator is illuminated. The indicator remains illuminated until the cluster receives a valid message from the CAB, or until the ignition switch is turned to the Off position, whichever occurs first.
- **Actuator Test** - Each time the instrument cluster is put through the actuator test, the ABS indicator will be turned on, then off again during the bulb check portion of the test to confirm the functionality of the LED and the cluster control circuitry.
- **ABS Diagnostic Test** - The ABS indicator is blinked on and off by lamp-on and lamp-off messages from the CAB during the performance of the ABS diagnostic tests.

The CAB continually monitors the ABS circuits and sensors to decide whether the system is in good operating condition. The CAB then sends the proper lamp-on or lamp-off messages to the instrument cluster. If the CAB sends a lamp-on message after the bulb test, it indicates that the CAB has detected a system malfunction and/or that the ABS system has become inoperative. The CAB will store a Diagnostic Trouble Code (DTC) for any malfunction it detects. Each time the ABS indicator fails to light due to an open or short in the cluster ABS indicator circuit, the cluster sends a message notifying the CAB of the condition, then the instrument cluster and the CAB will each store a DTC.

For proper diagnosis of the antilock brake system, the CAB, the PCI data bus, or the electronic message inputs to the instrument cluster that control the ABS indicator, a diagnostic scan tool is required. Refer to the appropriate diagnostic information.

AIRBAG INDICATOR

DESCRIPTION

An airbag indicator is standard equipment on all instrument clusters. However, the instrument cluster can be programmed to disable this indicator on vehicles that are not equipped with the airbag system, which is not available in some markets. The airbag indicator is located near the upper edge of the instrument cluster, between the tachometer and the speedometer.



The airbag indicator consists of a stencil-like cutout of the words “AIR BAG” in the opaque layer of the instrument cluster overlay. The dark outer layer of the overlay prevents the indicator from being clearly visible when it is not illuminated. A red Light Emitting Diode (LED) behind the cutout in the opaque layer of the overlay causes the “AIR BAG” text to appear in red through the translucent outer layer of the overlay when the indicator is illuminated from behind by the LED, which is soldered onto the instrument cluster electronic circuit board. The airbag indicator is serviced as a unit with the instrument cluster.

OPERATION

The airbag indicator gives an indication to the vehicle operator when the airbag system is faulty or inoperative. The airbag indicator is controlled by a transistor on the instrument cluster circuit board based upon cluster programming and electronic messages received by the cluster from the Airbag Control Module (ACM) over the Programmable Communications Interface (PCI) data bus.

The airbag indicator Light Emitting Diode (LED) is completely controlled by the instrument cluster logic circuit, and that logic will only allow this indicator to operate when the instrument cluster receives a battery current input on the fused ignition switch output (run-start) circuit. Therefore, the LED will always be off when the ignition switch is in any position except On or Start. The LED only illuminates when it is provided a path to ground by the instrument cluster transistor. The instrument cluster will turn on the airbag indicator for the following reasons:

- **Bulb Test** - Each time the ignition switch is turned to the On position the airbag indicator is illuminated for about six seconds. The entire bulb test is a function of the ACM.
- **ACM Lamp-On Message** - Each time the cluster receives a lamp-on message from the ACM, the airbag indicator will be illuminated. The indicator remains illuminated for about twelve seconds or until the cluster receives a lamp-off message from the ACM, whichever is longer.
- **Communication Error** - If the cluster receives no airbag messages for three consecutive seconds, the airbag indicator is illuminated. The indicator remains illuminated until the cluster receives a single lamp-off message from the ACM.
- **Actuator Test** - Each time the cluster is put through the actuator test, the airbag indicator will be turned on, then off again during the bulb check portion of the test to confirm the functionality of the LED and the cluster control circuitry. The actuator test illumination of the airbag indicator is a function of the instrument cluster.

The ACM continually monitors the airbag system circuits and sensors to decide whether the system is in good operating condition. The ACM then sends the proper lamp-on or lamp-off messages to the instrument cluster. If the ACM sends a lamp-on message after the bulb test, it indicates that the ACM has detected a system malfunction and/or that the airbags and seat belt tensioners may not deploy when required, or may deploy when not required. The ACM will store a Diagnostic Trouble Code (DTC) for any malfunction it detects. Each time the airbag indicator fails to illuminate due to an open or short in the cluster airbag indicator circuit, the cluster sends a message notifying the ACM of the condition, the instrument cluster and the ACM will each store a DTC, and the cluster will flash the seatbelt indicator on and off as a backup to notify the vehicle operator.

For proper diagnosis of the airbag system, the ACM, the PCI data bus, or the electronic message inputs to the instrument cluster that control the airbag indicator, a diagnostic scan tool is required. Refer to the appropriate diagnostic information.

BRAKE/PARK BRAKE INDICATOR

DESCRIPTION

A brake indicator is standard equipment on all instrument clusters. This indicator is located near the lower edge of the instrument cluster, between the tachometer and the speedometer.



The brake indicator consists of a stencil-like cutout of the word “BRAKE” and the International Control and Display Symbol icon for “Brake Failure” in the opaque layer of the instrument cluster overlay. The dark outer layer of the overlay prevents the indicator from being clearly visible when it is not illuminated. A red Light Emitting Diode (LED) behind the cutout in the opaque layer of the overlay causes the “BRAKE” text and icon to appear in red through the translucent outer layer of the overlay when the indicator is illuminated from behind by the LED, which is soldered onto the instrument cluster electronic circuit board. The brake indicator is serviced as a unit with the instrument cluster.

OPERATION

The brake indicator gives an indication to the vehicle operator when the parking brake is applied, when there are certain brake hydraulic system malfunctions as indicated by a low brake hydraulic fluid level condition, or when the brake fluid level switch is disconnected. The brake indicator can also give an indication when certain faults are detected in the Antilock Brake System (ABS). This indicator is controlled by a transistor on the instrument cluster circuit board based upon cluster programming, electronic messages received by the cluster from the Controller

Antilock Brake (CAB) over the Programmable Communications Interface (PCI) data bus, and a hard wired input from the park brake switch.

The brake indicator Light Emitting Diode (LED) is completely controlled by the instrument cluster logic circuit, and that logic will only allow this indicator to operate when the instrument cluster receives a battery current input on the fused ignition switch output (run-start) circuit. Therefore, the LED will always be off when the ignition switch is in any position except On or Start. The LED only illuminates when it is provided a path to ground by the instrument cluster transistor. The instrument cluster will turn on the brake indicator for the following reasons:

- **Bulb Test** - Each time the ignition switch is turned to the On position the brake indicator is illuminated by the instrument cluster for about two seconds as a bulb test.
- **Brake Lamp-On Message** - Each time the cluster receives a lamp-on message from the CAB, the brake indicator will be illuminated. The CAB can also send brake lamp-on messages as feedback during ABS diagnostic procedures. The indicator remains illuminated until the cluster receives a lamp-off message from the CAB, or until the ignition switch is turned to the Off position, whichever occurs first.
- **Park Brake Switch Input** - Each time the cluster detects ground on the park brake switch sense circuit (park brake switch closed = park brake applied or not fully released) while the ignition switch is in the On position, the brake indicator flashes on and off. The indicator continues to flash until the park brake switch sense input to the cluster is an open circuit (park brake switch open = park brake fully released), or until the ignition switch is turned to the Off position, whichever occurs first.
- **Actuator Test** - Each time the instrument cluster is put through the actuator test, the brake indicator will be turned on, then off again during the bulb check portion of the test to confirm the functionality of the LED and the cluster control circuitry.

The park brake switch on the park brake pedal mechanism provides a hard wired ground input to the instrument cluster circuitry through the park brake switch sense circuit whenever the park brake is applied or not fully released. The CAB continually monitors the ABS system circuits and sensors, including the brake fluid level switch on the brake master cylinder reservoir, to decide whether the system is in good operating condition. The CAB then sends the proper lamp-on or lamp-off messages to the instrument cluster. If the CAB sends a lamp-on message after the bulb test, it indicates that the CAB has detected a brake hydraulic system malfunction and/or that the ABS system has become inoperative. The CAB will store a Diagnostic Trouble Code (DTC) for any malfunction it detects.

For further diagnosis of the brake indicator or the instrument cluster circuitry that controls the LED, (Refer to 8 - ELECTRICAL/INSTRUMENT CLUSTER - DIAGNOSIS AND TESTING). The park brake switch input to the instrument cluster can be diagnosed using conventional diagnostic tools and methods. Refer to the appropriate wiring information. For proper diagnosis of the brake fluid level switch, the ABS, the CAB, the PCI data bus, or the electronic message inputs to the instrument cluster that control the brake indicator, a diagnostic scan tool is required. Refer to the appropriate diagnostic information.

DIAGNOSIS AND TESTING

BRAKE INDICATOR

WARNING: To avoid personal injury or death, on vehicles equipped with airbags, disable the supplemental restraint system before attempting any steering wheel, steering column, airbag, seat belt tensioner, impact sensor, or instrument panel component diagnosis or service. Disconnect and isolate the battery negative (ground) cable, then wait two minutes for the system capacitor to discharge before performing further diagnosis or service. This is the only sure way to disable the supplemental restraint system. Failure to take the proper precautions could result in accidental airbag deployment.

The hard wired park brake switch input to the EMIC may be diagnosed and tested using conventional diagnostic tools and procedures. Refer to the appropriate wiring information. The wiring information includes wiring diagrams, proper wire and connector repair procedures, details of wire harness routing and retention, connector pin-out information and location views for the various wire harness connectors, splices and grounds.

However, conventional diagnostic methods may not prove conclusive in the diagnosis of the EMIC, the Controller Antilock Brake (CAB), the Programmable Communications Interface (PCI) data bus, or the electronic message inputs also used by the EMIC to provide brake indicator operation. The most reliable, efficient, and accurate means to diagnose the EMIC, the CAB, the PCI data bus, and the electronic message inputs for the brake indicator operation requires the use of a diagnostic scan tool. Refer to the appropriate diagnostic information.

CARGO LAMP INDICATOR

DESCRIPTION

A cargo lamp indicator is standard equipment on all instrument clusters. The cargo lamp indicator is located on the right side of the instrument cluster, to the right of the oil pressure gauge.



The cargo lamp indicator consists of a stencil-like cutout of the words “CARGO LAMP” in the opaque layer of the instrument cluster overlay. The dark outer layer of the overlay prevents the indicator from being clearly visible when it is not illuminated. An amber Light Emitting Diode (LED) behind the cutout in the opaque layer of the overlay causes the “CARGO LAMP” text to appear in amber through the translucent outer layer of the overlay when the indicator is illuminated from behind by the LED, which is soldered onto the instrument cluster electronic circuit board. The cargo lamp indicator is serviced as a unit with the instrument cluster.

OPERATION

The cargo lamp indicator gives an indication to the vehicle operator when the exterior cargo lamp is illuminated. This indicator is controlled by a transistor on the instrument cluster circuit board based upon cluster programming, a hard wired multiplex input received by the cluster from the panel lamps dimmer switch on the headlamp dimmer switch mux circuit, and electronic unlock request messages received from the optional Remote Keyless Entry (RKE) module.

The cargo lamp indicator Light Emitting Diode (LED) is completely controlled by the instrument cluster logic circuit, and that logic will only allow this indicator to operate whenever the instrument cluster receives a battery current input on the fused ignition switch output (run-start) circuit. Therefore, the LED will always be off when the ignition switch is in any position except On or Start. The LED only illuminates when it is provided a path to ground by the instrument cluster transistor. The instrument cluster will turn on the cargo lamp indicator for the following reasons:

- **Cargo Lamp-On Input** - Each time the cluster detects a cargo lamp-on input from the headlamp switch on the headlamp dimmer switch mux circuit, the cargo lamp and the cargo lamp indicator will be illuminated. The cargo lamp and indicator remain illuminated until the cluster receives a cargo lamp-off input from the headlamp switch, until the cluster has completed an interior lamps load shed (about five minutes), or until the ignition switch is turned to the Off position, whichever occurs first.
- **Actuator Test** - Each time the cluster is put through the actuator test, the cargo lamp indicator will be turned on, then off again during the bulb check portion of the test to confirm the functionality of the LED and the cluster control circuitry.

The instrument cluster continually monitors the headlamp dimmer switch circuit to determine the proper interior lamps features and panel lamps illumination levels to provide. The cluster then energizes and de-energizes a low side driver circuit to control the exterior cargo lamp. Each time the instrument cluster energizes the cargo lamp driver and the ignition switch is in the On or Start positions, the cluster also turns on the cargo lamp indicator. For further diagnosis of the cargo lamp indicator or the instrument cluster circuitry that controls the indicator, (Refer to 8 - ELECTRICAL/INSTRUMENT CLUSTER - DIAGNOSIS AND TESTING).

For proper diagnosis of the cargo lamp or the headlamp switch inputs to the instrument cluster that control the cargo lamp indicator, a diagnostic scan tool is required. Refer to the appropriate diagnostic information.

CHECK GAUGES INDICATOR

DESCRIPTION

A check gauges indicator is standard equipment on all instrument clusters. On vehicles equipped with a gasoline engine, the check gauges indicator is located near the lower edge of the instrument cluster, between the tachometer and the speedometer. On vehicles equipped



with a diesel engine, the check gauges indicator is located on the left side of the instrument cluster, to the left of the voltage gauge.

The check gauges indicator consists of a stencil-like cutout of the words “CHECK GAGES” in the opaque layer of the instrument cluster overlay. The dark outer layer of the overlay prevents the indicator from being clearly visible when it is not illuminated. A red Light Emitting Diode (LED) behind the cutout in the opaque layer of the overlay causes the “CHECK GAGES” text to appear in red through the translucent outer layer of the overlay when the indicator is illuminated from behind by the LED, which is soldered onto the instrument cluster electronic circuit board. The check gauges indicator is serviced as a unit with the instrument cluster.

OPERATION

The check gauges indicator gives an indication to the vehicle operator when certain instrument cluster gauge readings reflect a condition requiring immediate attention. This indicator is controlled by a transistor on the instrument cluster circuit board based upon cluster programming and electronic messages received by the cluster from the Powertrain Control Module (PCM) on vehicles equipped with a gasoline engine, or from the Engine Control Module (ECM) on vehicles equipped with a diesel engine over the Programmable Communications Interface (PCI) data bus.

The check gauges indicator Light Emitting Diode (LED) is completely controlled by the instrument cluster logic circuit, and that logic will only allow this indicator to operate when the instrument cluster receives a battery current input on the fused ignition switch output (run-start) circuit. Therefore, the LED will always be off when the ignition switch is in any position except On or Start. The LED only illuminates when it is provided a path to ground by the instrument cluster transistor. The instrument cluster will turn on the check gauges indicator for the following reasons:

- **Bulb Test** - Each time the ignition switch is turned to the On position the check gauges indicator is illuminated for about two seconds as a bulb test.
- **Engine Temperature High Message** - Each time the cluster receives three consecutive bus messages from the PCM or ECM indicating the engine coolant temperature of a gasoline engine is about 122° C (252° F) or higher, or of a diesel engine is about 112° C (233° F) or higher, the check gauges indicator will be illuminated and a single chime is sounded. The indicator remains illuminated until the cluster receives a message from the PCM or ECM indicating that the engine coolant temperature of a gasoline engine is below about 122° C (252° F), or of a diesel engine is below about 112° C (233° F), or until the ignition switch is turned to the Off position, whichever occurs first.
- **Engine Oil Pressure Low Message** - Each time the cluster receives three consecutive bus messages from the PCM or ECM indicating the engine oil pressure is about 41 kPa (6 psi) or lower, the check gauges indicator will be illuminated and a single chime is sounded. The indicator remains illuminated until the cluster receives a message from the PCM or ECM indicating that the engine oil pressure is above about 41 kPa (6 psi), or until the ignition switch is turned to the Off position, whichever occurs first. The cluster will only turn the indicator on in response to an engine oil pressure low message if the engine speed is greater than zero.
- **System Voltage Low (Charge Fail) Message** - Each time the cluster receives three consecutive messages from the PCM or ECM indicating the electrical system voltage is less than about 9.0 volts (charge fail condition) or that the battery temperature sensor input is an open circuit, the check gauges indicator will be illuminated and a single chime is sounded. The indicator remains illuminated until the cluster receives a single message from the PCM or ECM indicating the electrical system voltage is greater than about 9.5 volts (but less than about 15.5 volts), or until the ignition switch is turned to the Off position, whichever occurs first.
- **System Voltage High Message** - Each time the cluster receives three consecutive messages from the PCM or ECM indicating the electrical system voltage is greater than about 15.5 volts, the check gauges indicator will be illuminated and a single chime is sounded. The indicator remains illuminated until the cluster receives a single message from the PCM or ECM indicating the electrical system voltage is less than about 15.0 volts (but greater than about 9.5 volts), or until the ignition switch is turned to the Off position, whichever occurs first.
- **Actuator Test** - Each time the cluster is put through the actuator test, the check gauges indicator will be turned on, then off again during the bulb check portion of the test to confirm the functionality of the LED and the cluster control circuitry.

On vehicles with a gasoline engine, the PCM continually monitors the engine temperature, oil pressure, and electrical system voltage, then sends the proper messages to the instrument cluster. On vehicles with a diesel engine, the ECM continually monitors the engine temperature, oil pressure, and electrical system voltage, then sends the proper messages to the instrument cluster. For further diagnosis of the check gauges indicator or the instrument cluster circuitry that controls the LED, (Refer to 8 - ELECTRICAL/INSTRUMENT CLUSTER - DIAGNOSIS AND TESTING).

For proper diagnosis of the PCM, the ECM, the PCI data bus, or the electronic message inputs to the instrument cluster that control the check gauges indicator, a diagnostic scan tool is required. Refer to the appropriate diagnostic information.

CRUISE INDICATOR

DESCRIPTION

A cruise indicator is standard equipment on all instrument clusters. However, on vehicles not equipped with the optional speed control system, this indicator is electronically disabled. The cruise indicator consists of the word “CRUISE”, which appears in the lower portion of the gear selector indicator Vacuum-Fluorescent Display (VFD) unit.



The gear selector indicator VFD is soldered onto the cluster electronic circuit board and is visible through a window with a smoked clear lens located on the lower edge of the speedometer gauge dial face of the cluster overlay. The dark lens over the VFD prevents the indicator from being clearly visible when it is not illuminated. The “CRUISE” text appears in a blue-green color and at the same lighting level as the gear selector indicator information when it is illuminated by the instrument cluster electronic circuit board. The cruise indicator is serviced as a unit with the VFD in the instrument cluster.

OPERATION

The cruise indicator gives an indication to the vehicle operator when the speed control system is turned On, regardless of whether the speed control is engaged. This indicator is controlled by the instrument cluster circuit board based upon cluster programming and electronic messages received by the cluster from the Powertrain Control Module (PCM) over the Programmable Communications Interface (PCI) data bus.

The cruise indicator is completely controlled by the instrument cluster logic circuit, and that logic will only allow this indicator to operate when the instrument cluster receives a battery current input on the fused ignition switch output (run-start) circuit. Therefore, the indicator will always be off when the ignition switch is in any position except On or Start. The indicator only illuminates when it is switched to ground by the instrument cluster circuitry. The instrument cluster will turn on the cruise indicator for the following reasons:

- **Cruise Lamp-On Message** - Each time the cluster receives a cruise lamp-on message from the PCM indicating the speed control system has been turned On, the cruise indicator is illuminated. The indicator remains illuminated until the cluster receives a cruise lamp-off message from the PCM or until the ignition switch is turned to the Off position, whichever occurs first.
- **Actuator Test** - Each time the cluster is put through the actuator test, the cruise indicator will be turned on, then off again during the VFD portion of the test to confirm the functionality of the VFD and the cluster control circuitry.

The PCM continually monitors the speed control switches to determine the proper outputs to the speed control servo. The PCM then sends the proper cruise indicator lamp-on and lamp-off messages to the instrument cluster. For further diagnosis of the cruise indicator or the instrument cluster circuitry that controls the indicator, (Refer to 8 - ELECTRICAL/INSTRUMENT CLUSTER - DIAGNOSIS AND TESTING).

For proper diagnosis of the speed control system, the PCM, the PCI data bus, or the electronic message inputs to the instrument cluster that control the cruise indicator, a diagnostic scan tool is required. Refer to the appropriate diagnostic information.

DOOR AJAR INDICATOR

DESCRIPTION

A door ajar indicator is standard equipment on all instrument clusters. The door ajar indicator is located on the right side of the instrument cluster, to the right of the engine temperature gauge.



The door ajar indicator consists of a stencil-like cutout of the words “DOOR AJAR” in the opaque layer of the instrument cluster overlay. The dark outer layer of the overlay prevents the indicator from being clearly visible when it is not illuminated. A red Light Emitting Diode (LED) behind the cutout in the opaque layer of the overlay causes the “DOOR AJAR” text to appear in red through the translucent outer layer of the overlay when the indicator is illuminated from behind by the LED, which is soldered onto the instrument cluster electronic circuit board. The door ajar indicator is serviced as a unit with the instrument cluster.

OPERATION

The door ajar indicator gives an indication to the vehicle operator that one or more of the passenger compartment doors may be open or not completely latched. This indicator is controlled by a transistor on the instrument cluster circuit board based upon cluster programming and hard wired inputs received by the cluster from the door ajar switches located in each door latch unit.

The door ajar indicator Light Emitting Diode (LED) is completely controlled by the instrument cluster logic circuit, and that logic will allow this indicator to operate whenever the instrument cluster receives a battery current input on the fused ignition switch output (run-start) circuit. Therefore, the LED will always be off when the ignition switch is in any position except On or Start. The LED only illuminates when it is provided a path to ground by the instrument cluster transistor. The instrument cluster will turn on the door ajar indicator for the following reasons:

- **Door Ajar Switch Input** - Each time the cluster detects ground on any one of the door ajar switch sense circuits (door ajar switch closed = door is open or not completely latched) the door ajar indicator will be illuminated. The indicator remains illuminated until all of the door ajar switch sense inputs to the cluster are an open circuit (door ajar switch open = door fully closed), until the cluster has completed an interior lamps load shed (about five minutes), or until the ignition switch is turned to the Off position, whichever occurs first.
- **Actuator Test** - Each time the cluster is put through the actuator test, the door ajar indicator will be turned on, then off again during the bulb check portion of the test to confirm the functionality of the LED and the cluster control circuitry.

The instrument cluster continually monitors the door ajar switches to determine the status of the doors. For further diagnosis of the door ajar indicator or the instrument cluster circuitry that controls the indicator, (Refer to 8 - ELECTRICAL/INSTRUMENT CLUSTER - DIAGNOSIS AND TESTING). For proper diagnosis of the door ajar switches and circuits, (Refer to 8 - ELECTRICAL/LAMPS/LIGHTING - INTERIOR/DOOR AJAR SWITCH - DIAGNOSIS AND TESTING).

ENGINE TEMPERATURE GAUGE

DESCRIPTION

An engine coolant temperature gauge is standard equipment on all instrument clusters. The engine coolant temperature gauge is located in the lower right quadrant of the instrument cluster, below the oil pressure gauge. The engine coolant temperature gauge consists of a movable gauge needle or pointer controlled by the instrument cluster circuitry and a fixed 90 degree scale on the cluster overlay that reads left-to-right from “C” (or Cold) to “H” (or Hot) for gasoline engines except SRT-10. On SRT-10 models, the scale reads from “60”° C to “120”° C in markets where a metric instrument cluster is specified, or from “140”° F to “260”° F in all other markets. On vehicles with a diesel engine, the scale reads from “60”° C to “120”° C in markets where a metric instrument cluster



is specified, or from “140”° F to “245”° F in all other markets. An International Control and Display Symbol icon for “Engine Coolant Temperature” is located on the cluster overlay, directly below the left end of the gauge scale.

On all models except SRT-10 the engine coolant temperature gauge graphics are black against a white field except for two red graduations at the high end of the gauge scale. On SRT-10 the gauge graphics are black against a silver field except for a single red zone at the high end of the gauge scale. In either case, the gauge graphics are clearly visible within the instrument cluster in daylight.

When illuminated from behind by the panel lamps dimmer controlled cluster illumination lighting with the exterior lamps turned On, the black gauge graphics appear blue-green and the red graphics still appear red. The gauge needle has internal optical illumination. Gauge illumination is provided by replaceable incandescent bulb and holder units located on the instrument cluster electronic circuit board. The engine coolant temperature gauge is serviced as a unit with the instrument cluster.

OPERATION

The engine coolant temperature gauge gives an indication to the vehicle operator of the engine coolant temperature. This gauge is controlled by the instrument cluster circuit board based upon cluster programming and electronic messages received by the cluster from the Powertrain Control Module (PCM) on vehicles equipped with a gasoline engine, or from the Engine Control Module (ECM) on vehicles equipped with a diesel engine over the Programmable Communications Interface (PCI) data bus.

The engine coolant temperature gauge is an air core magnetic unit that receives battery current on the instrument cluster electronic circuit board through the fused ignition switch output (run-start) circuit whenever the ignition switch is in the On or Start positions. The cluster is programmed to move the gauge needle back to the low end of the scale after the ignition switch is turned to the Off position. The instrument cluster circuitry controls the gauge needle position and provides the following features:

- **Engine Temperature Message** - Each time the cluster receives a message from the PCM or ECM indicating the engine coolant temperature is between the low end of normal [about 54° C (130° F) for gasoline engines except SRT-10, or about 60° C (140° F) for SRT-10 and diesel engines] and the high end of normal [about 122° C (252° F) for gasoline engines, about or about 116° C (240° F) for diesel engines], the gauge needle is moved to the actual relative temperature position on the gauge scale.
- **Engine Temperature Low Message** - Each time the cluster receives a message from the PCM or ECM indicating the engine coolant temperature is below the low end of normal [about 54° C (130° F) for gasoline engines except SRT-10, or about 60° C (140° F) for SRT-10 and diesel engines], the gauge needle is held at the graduation on the far left end of the gauge scale. The gauge needle remains at the left end of the gauge scale until the cluster receives a message from the PCM or ECM indicating that the engine temperature is above about 54° C (130° F) for gasoline engines except SRT-10, or about 60° C (140° F) for SRT-10 and diesel engines, or until the ignition switch is turned to the Off position, whichever occurs first.
- **Engine Temperature High Message** - Each time the cluster receives three consecutive bus messages from the PCM or ECM indicating the engine coolant temperature is above about 122° C (252° F) for gasoline engines, or about 116° C (240° F) for diesel engines, the gauge needle is moved into the red zone at the far right end of gauge scale, the check gauges indicator is illuminated, and a single chime tone is sounded. The gauge needle remains in the red zone and the check gauges indicator remains illuminated until the cluster receives a message from the PCM or ECM indicating that the engine temperature is below about 122° C (252° F) for gasoline engines, or about 116° C (240° F) for diesel engines, or until the ignition switch is turned to the Off position, whichever occurs first. The chime tone feature will only repeat during the same ignition cycle if the check gauges indicator is cycled off and then on again by the appropriate engine temperature messages from the PCM or ECM.
- **Communication Error** - If the cluster fails to receive an engine temperature message, it will hold the gauge needle at the last indication for about ten seconds, or until the ignition switch is turned to the Off position, whichever occurs first. After ten seconds, the cluster will move the gauge needle to the low end of the gauge scale.
- **Actuator Test** - Each time the cluster is put through the actuator test, the engine coolant temperature gauge needle will be swept to several calibration points on the gauge scale in a prescribed sequence in order to confirm the functionality of the gauge and the cluster control circuitry.

On vehicles with a gasoline engine, the PCM continually monitors the engine coolant temperature sensor to determine the engine operating temperature. On vehicles with a diesel engine, the ECM continually monitors the engine coolant temperature sensor to determine the engine operating temperature. The PCM or ECM then sends the

proper engine coolant temperature messages to the instrument cluster. For further diagnosis of the engine coolant temperature gauge or the instrument cluster circuitry that controls the gauge, (Refer to 8 - ELECTRICAL/INSTRUMENT CLUSTER - DIAGNOSIS AND TESTING). If the instrument cluster turns on the check gauges indicator due to a high engine temperature gauge reading, it may indicate that the engine or the engine cooling system requires service.

For proper diagnosis of the engine coolant temperature sensor, the PCM, the ECM, the PCI data bus, or the electronic message inputs to the instrument cluster that control the engine coolant temperature gauge, a diagnostic scan tool is required. Refer to the appropriate diagnostic information.

ETC INDICATOR

DESCRIPTION



An Electronic Throttle Control (ETC) indicator is standard equipment on all gasoline engine instrument clusters. However, on vehicles not equipped with the optional 5.7 liter gasoline engine, this indicator is electronically disabled. The ETC indicator is located on the right side of the instrument cluster, to the right of the engine temperature gauge.

The ETC indicator consists of a stencil-like cutout of the International Control and Display Symbol icon for “Electronic Throttle Control” in the opaque layer of the instrument cluster overlay. The dark outer layer of the overlay prevents the indicator from being clearly visible when it is not illuminated. A red Light Emitting Diode (LED) behind the cutout in the opaque layer of the overlay causes the icon to appear in red through the translucent outer layer of the overlay when the indicator is illuminated from behind by the LED, which is soldered onto the instrument cluster electronic circuit board. The ETC indicator is serviced as a unit with the instrument cluster.

OPERATION

The Electronic Throttle Control (ETC) indicator gives an indication to the vehicle operator when the ETC system is faulty or inoperative. The ETC indicator is controlled by a transistor on the instrument cluster circuit board based upon cluster programming and electronic messages received by the cluster from the Powertrain Control Module (PCM) over the Programmable Communications Interface (PCI) data bus.

The ETC indicator Light Emitting Diode (LED) is completely controlled by the instrument cluster logic circuit, and that logic will only allow this indicator to operate when the instrument cluster receives a battery current input on the fused ignition switch output (run-start) circuit. Therefore, the LED will always be off when the ignition switch is in any position except On or Start. The LED only illuminates when it is provided a path to ground by the instrument cluster transistor. The instrument cluster will turn on the ETC indicator for the following reasons:

- **Bulb Test** - Each time the ignition switch is turned to the On position the ETC indicator is illuminated for about six seconds. The entire six second bulb test is a function of the PCM.
- **ETC Lamp-On Message** - Each time the cluster receives a lamp-on message from the PCM, the ETC indicator will be illuminated. The indicator can be flashed on and off, or illuminated solid, as dictated by the PCM message. The indicator remains illuminated solid or continues to flash for about twelve seconds or until the cluster receives a lamp-off message from the PCM, whichever is longer. If the indicator is illuminated solid with the engine running the vehicle will usually remain drivable. If the indicator is flashing with the engine running the vehicle may require towing. A flashing indicator means the ETC system requires immediate service.
- **Communication Error** - If the cluster receives no ETC lamp messages for three consecutive seconds, the ETC indicator is illuminated. The indicator remains illuminated until the cluster receives a single lamp-off message from the PCM.
- **Actuator Test** - Each time the cluster is put through the actuator test, the ETC indicator will be turned on, then off again during the bulb check portion of the test to confirm the functionality of the LED and the cluster control circuitry. The actuator test illumination of the ETC indicator is a function of the PCM.

The PCM continually monitors the ETC system circuits and sensors to decide whether the system is in good operating condition. The PCM then sends the proper lamp-on or lamp-off messages to the instrument cluster. If the PCM sends a lamp-on message after the bulb test, it indicates that the PCM has detected a system malfunction and/or that the ETC system is inoperative. The PCM will store a Diagnostic Trouble Code (DTC) for any malfunction it

detects. Each time the ETC indicator fails to illuminate due to an open or short in the cluster ETC indicator circuit, the cluster sends a message notifying the PCM of the condition, the instrument cluster and the PCM will each store a DTC.

For proper diagnosis of the ETC system, the PCM, the PCI data bus, or the electronic message inputs to the instrument cluster that control the ETC indicator, a diagnostic scan tool is required. Refer to the appropriate diagnostic information.

FUEL GAUGE

DESCRIPTION

A fuel gauge is standard equipment on all instrument clusters. This gauge is located in the lower left quadrant of the instrument cluster, below the voltage gauge. The fuel gauge consists of a movable gauge needle or pointer controlled by the instrument cluster circuitry and a fixed 90 degree scale on the cluster overlay that reads left-to-right from “E” (or Empty) to “F” (or Full).



An International Control and Display Symbol icon for “Fuel” is located on the cluster overlay, directly below the right end of the gauge scale. An arrowhead pointed to the left side of the vehicle is imprinted on the cluster overlay next to the “Fuel” icon in the fuel gauge to provide the driver with a reminder as to the location of the fuel filler access. On vehicles equipped with a diesel engine, text that specifies “DIESEL ONLY” is located across the fuel gauge below the gauge scale, but above the hub of the gauge needle.

On all models except SRT-10 the fuel gauge graphics are black against a white field. On SRT-10 the gauge graphics are black against a silver field except for a single red graduation at the low end of the gauge scale. In either case, the gauge graphics are clearly visible within the instrument cluster in daylight.

When illuminated from behind by the panel lamps dimmer controlled cluster illumination lighting with the exterior lamps turned On, the black gauge graphics appear blue-green and the red graphics still appear red. The gauge needle has internal optical illumination. Gauge illumination is provided by replaceable incandescent bulb and holder units located on the instrument cluster electronic circuit board. The fuel gauge is serviced as a unit with the instrument cluster.

OPERATION

The fuel gauge gives an indication to the vehicle operator of the level of fuel in the fuel tank. This gauge is controlled by the instrument cluster circuit board based upon cluster programming and electronic messages received by the cluster from the Powertrain Control Module (PCM) on vehicles equipped with a gasoline engine, or from the Engine Control Module (ECM) on vehicles equipped with a diesel engine over the Programmable Communications Interface (PCI) data bus.

The fuel gauge is an air core magnetic unit that receives battery current on the instrument cluster electronic circuit board through the fused ignition switch output (run-start) circuit whenever the ignition switch is in the On or Start positions. The cluster is programmed to move the gauge needle back to the low end of the scale after the ignition switch is turned to the Off position. The instrument cluster circuitry controls the gauge needle position and provides the following features:

- **Percent Tank Full Message** - Each time the cluster receives a message from the PCM or ECM indicating the percent tank full, the cluster programming applies an algorithm to calculate the proper gauge needle position, then moves the gauge needle to the proper relative position on the gauge scale. The algorithm is used to dampen gauge needle movement against the negative effect that fuel sloshing within the fuel tank can have on accurate inputs from the fuel tank sending unit to the PCM or ECM.
- **Less Than Fifteen Percent Tank Full Message** - Each time the cluster receives messages from the PCM or ECM indicating the percent tank full is about fifteen percent or less for ten consecutive seconds and the vehicle speed is zero, or for sixty consecutive seconds and the vehicle speed is greater than zero, the gauge needle is moved to between the one-sixteenth and one-eighth graduations or below on the gauge scale, the low fuel indicator is illuminated, and a single chime tone is sounded. The low fuel indicator remains illuminated until the cluster receives messages from the PCM or ECM indicating that the percent tank full is greater than about fifteen percent for ten consecutive seconds and the vehicle speed is zero, or for sixty consecutive sec-

onds and the vehicle speed is greater than zero, or until the ignition switch is turned to the Off position, whichever occurs first. The chime tone feature will only repeat during the same ignition cycle if the low fuel indicator is cycled off and then on again by the appropriate percent tank full messages from the PCM or ECM.

- **Less Than Empty Percent Tank Full Message** - Each time the cluster receives a message from the PCM or ECM indicating the percent tank full is less than empty, the gauge needle is moved to the far left end of the gauge scale and the low fuel indicator is illuminated immediately. This message would indicate that the fuel tank sender input to the PCM or ECM is a short circuit.
- **More Than Full Percent Tank Full Message** - Each time the cluster receives a message from the PCM or ECM indicating the percent tank full is more than full, the gauge needle is moved to the far left end of the gauge scale and the low fuel indicator is illuminated immediately. This message would indicate that the fuel tank sender input to the PCM or ECM is an open circuit.
- **Communication Error** - If the cluster fails to receive a percent tank full message, it will hold the gauge needle at the last indication for about ten seconds, or until the ignition switch is turned to the Off position, whichever occurs first. After ten seconds, the cluster will move the gauge needle to the low end of the gauge scale.
- **Actuator Test** - Each time the cluster is put through the actuator test, the fuel gauge needle will be swept to several calibration points on the gauge scale in a prescribed sequence in order to confirm the functionality of the gauge and the cluster control circuitry.

On vehicles with a gasoline engine, the PCM continually monitors the fuel tank sending unit to determine the level of the fuel in the fuel tank. On vehicles with a diesel engine, the ECM continually monitors the fuel tank sending unit to determine the level of the fuel in the fuel tank. The PCM or ECM then sends the proper fuel level messages to the instrument cluster. For further diagnosis of the fuel gauge or the instrument cluster circuitry that controls the gauge, (Refer to 8 - ELECTRICAL/INSTRUMENT CLUSTER - DIAGNOSIS AND TESTING).

For proper diagnosis of the fuel tank sending unit, the PCM, the ECM, the PCI data bus, or the electronic message inputs to the instrument cluster that control the fuel gauge, a diagnostic scan tool is required. Refer to the appropriate diagnostic information.

GEAR SELECTOR INDICATOR

DESCRIPTION

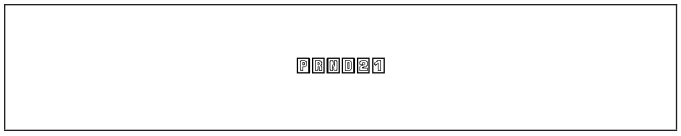

An electronic automatic transmission gear selector indicator is standard factory-installed equipment on this model. However, on vehicles not equipped with an optional automatic transmission, this indicator is electronically disabled. The gear selector indicator information is displayed in an electronic, blue-green Vacuum-Fluorescent Display (VFD) unit. The VFD unit is soldered onto the cluster electronic circuit board and is visible through a window with a smoked clear lens located on the lower edge of the speedometer gauge dial face of the cluster overlay. The dark lens over the VFD prevents the indicator from being clearly visible when it is not illuminated.

The gear selector indicator VFD displays the following characters from left to right: “P,” “R,” “N,” “D,” “2,” and “1”. Respectively, these characters represent the park, reverse, neutral, drive, second gear, and first gear positions of the transmission gear selector lever on the steering column. The VFD illuminates a rectangular box around the character that represents the currently selected lever position.

During daylight hours (exterior lamps Off) the gear selector VFD is illuminated at full brightness for clear visibility. At night (exterior lamps are On), the VFD lighting level is adjusted with the other cluster illumination lamps using the panel lamps dimmer thumbwheel on the headlamp switch. However, a “Parade” mode position of the panel lamps dimmer thumbwheel allows the VFD to be illuminated at full brightness if the exterior lamps are turned On during daylight hours. The gear selector indicator VFD is serviced as a unit with the instrument cluster.

OPERATION

The electronic gear selector indicator gives an indication to the vehicle operator of the transmission gear that has been selected with the automatic transmission gear selector lever. This indicator is controlled by the instrument cluster circuit board based upon cluster programming. The cluster circuitry automatically configures itself for the proper

transmission and automatic transmission model based upon the hard wired transmission range sensor mux circuit input to the cluster.

The gear selector indicator information is displayed by a dedicated Vacuum Fluorescent Display (VFD) unit soldered onto the instrument cluster electronic circuit board, and the VFD will not display the gear selector indicator information after the ignition switch is turned to the Off position. Each time the cluster is disconnected from battery current for more than about five minutes, it must configure itself for the automatic transmission model that is in the vehicle once it is reconnected to battery current. The instrument cluster circuitry configures the gear selector indicator VFD based upon the following inputs from the transmission range sensor:

- **Open Circuit** - If the cluster is configured for an automatic transmission and the transmission range sensor mux circuit is open, the cluster circuitry controls the gear selector indicator display based upon electronic messages received from the electronic Transmission Control Module (TCM) over the Programmable Communications Interface (PCI) data bus. If the transmission range sensor mux circuit is open and no electronic messages are received from the TCM within two seconds, the instrument cluster circuitry will not display any gear selector position until the condition is resolved or until the ignition switch is turned to the Off position, whichever occurs first.
- **Resolved Circuit** - If the transmission range sensor mux circuit is resolved, the cluster circuitry controls the gear selector indicator display based upon the resistance value of the hard wired input from the transmission range sensor. If the cluster is configured for an automatic transmission with a transmission range sensor input and detects a short to ground or an open in the transmission range sensor mux input, the instrument cluster circuitry will not display any gear selector position in the VFD. The VFD display for the short-to-ground and open circuit conditions will continue until the condition is resolved or until the ignition switch is turned to the Off position, whichever occurs first.
- **Actuator Test** - Each time the cluster is put through the actuator test, the gear selector indicator VFD will display all of its characters at once during the VFD portion of the test to confirm the functionality of the VFD and the cluster control circuitry.

On models with a TCM, the TCM continually monitors the transmission range sensor, then sends the proper gear selector indicator position messages to the instrument cluster. On models without a TCM, the instrument cluster continually monitors the hard wired transmission range sensor multiplexed input. For further diagnosis of the gear selector indicator or the instrument cluster circuitry that controls this function, (Refer to 8 - ELECTRICAL/INSTRUMENT CLUSTER - DIAGNOSIS AND TESTING). For further diagnosis of the transmission range sensor on models without a TCM, (Refer to 21 - TRANSMISSION/TRANSAXLE/AUTOMATIC - 42RE/TRANSMISSION RANGE SENSOR - DIAGNOSIS AND TESTING) or (Refer to 21 - TRANSMISSION/TRANSAXLE/AUTOMATIC - 46RE/TRANSMISSION RANGE SENSOR - DIAGNOSIS AND TESTING).

On models with a TCM, for proper diagnosis of the transmission range sensor, the TCM, the PCI data bus, or the electronic message inputs to the instrument cluster that control the gear selector indicator, a diagnostic scan tool is required. Refer to the appropriate diagnostic information.

HIGH BEAM INDICATOR

DESCRIPTION

A high beam indicator is standard equipment on all instrument clusters. This indicator is located near the upper edge of the instrument cluster, between the tachometer and the speedometer.



The high beam indicator consists of a stencil-like cutout of the International Control and Display Symbol icon for “High Beam” in the opaque layer of the instrument cluster overlay. The dark outer layer of the overlay prevents the indicator from being clearly visible when it is not illuminated. A blue Light Emitting Diode (LED) behind the cutout in the opaque layer of the overlay causes the icon to appear in blue through the translucent outer layer of the overlay when the indicator is illuminated from behind by the LED, which is soldered onto the instrument cluster electronic circuit board. The high beam indicator is serviced as a unit with the instrument cluster.

OPERATION

The high beam indicator gives an indication to the vehicle operator whenever the headlamp high beams are illuminated. This indicator is controlled by a transistor on the instrument cluster circuit board based upon cluster pro-

gramming and a hard wired multiplex input received by the cluster from the headlamp beam select switch circuitry of the multi-function switch on the washer/beam select switch mux circuit.

The high beam indicator Light Emitting Diode (LED) is completely controlled by the instrument cluster logic circuit, and that logic will allow this indicator to operate whenever the instrument cluster receives a battery current input on the fused B(+) circuit. Therefore, the LED can be illuminated regardless of the ignition switch position. The LED only illuminates when it is provided a path to ground by the instrument cluster transistor. The instrument cluster will turn on the high beam indicator for the following reasons:

- **High Beam Headlamps-On Input** - Each time the cluster detects a high beam headlamps-on input from the headlamp beam select switch circuitry of the multi-function switch on the washer/beam select switch mux circuit, the headlamp high beams and the high beam indicator will be illuminated. The headlamp high beams and the high beam indicator remain illuminated until the cluster receives a high beam headlamps-off input from the multi-function switch, or until the exterior lamp load shedding (battery saver) timed interval expires, whichever occurs first.
- **Actuator Test** - Each time the cluster is put through the actuator test, the high beam indicator will be turned on, then off again during the bulb check portion of the test to confirm the functionality of the LED and the cluster control circuitry.

The instrument cluster continually monitors the headlamp switch and the multi-function switch to determine the proper headlamp low beam and high beam control. The instrument cluster then sends the proper low beam and high beam lamp-on and lamp-off messages to the Front Control Module (FCM) over the Programmable Communications Interface (PCI) data bus and turns the high beam indicator on or off accordingly. For further diagnosis of the high beam indicator or the instrument cluster circuitry that controls the indicator, (Refer to 8 - ELECTRICAL/INSTRUMENT CLUSTER - DIAGNOSIS AND TESTING).

For proper diagnosis of the headlamps, or the headlamp switch and multi-function switch inputs to the instrument cluster that control the high beam indicator, a diagnostic scan tool is required. Refer to the appropriate diagnostic information.

LAMP OUT INDICATOR

DESCRIPTION

A lamp out indicator is standard equipment on all instrument clusters. The lamp out indicator consists of the words “LAMP OUT”, which appear in the lower portion of the odometer/trip odometer Vacuum-Fluorescent Display (VFD) unit.

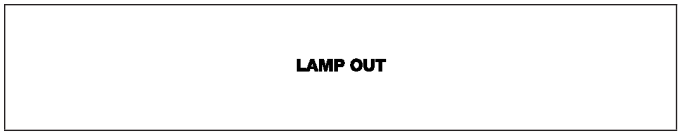

The odometer/trip odometer VFD unit is soldered onto the cluster electronic circuit board and is visible through a window with a smoked clear lens located on the lower edge of the tachometer gauge dial face of the cluster overlay. The dark lens over the VFD prevents the lamp out indicator from being clearly visible when it is not illuminated. The words “LAMP OUT” appear in an amber color and at the same lighting level as the odometer/trip odometer information when they are illuminated by the instrument cluster electronic circuit board. The lamp out indicator is serviced as a unit with the VFD in the instrument cluster.

OPERATION

The lamp out indicator gives an indication to the vehicle operator when an exterior lamp has failed. This indicator is controlled by the instrument cluster circuit board based upon cluster programming and electronic messages received by the cluster from the Front Control Module (FCM) over the Programmable Communications Interface (PCI) data bus.

The lamp out indicator is completely controlled by the instrument cluster logic circuit, and that logic will only allow this indicator to operate when the instrument cluster receives a battery current input on the fused ignition switch output (run-start) circuit. Therefore, the indicator will always be off when the ignition switch is in any position except On or Start. The indicator only illuminates when it is switched to ground by the instrument cluster circuitry. The instrument cluster will turn on the lamp out indicator for the following reasons:

- **Lamp Out Indicator Lamp-On Message** - Each time the cluster receives a lamp out indicator lamp-on message from the FCM indicating that an inoperative headlamp (low or high beam), turn signal lamp, or brake

lamp (excluding Center High Mounted Stop Lamp [CHMSL]) circuit has been detected with the ignition switch in the On position, the lamp out indicator is illuminated solid. The indicator remains illuminated until the cluster receives a lamp out indicator lamp-off message from the FCM or until the ignition switch is turned to the Off position, whichever occurs first. If the lamp-on message is received when the ignition is first turned to the On position, the lamp out indicator is flashed at a fast rate (1 Hertz) for about thirty seconds before illuminating solid.

- **Actuator Test** - Each time the cluster is put through the actuator test, the lamp out indicator will be turned on, then off again during the VFD portion of the test to confirm the functionality of the VFD and the cluster control circuitry.

The FCM monitors each of the headlamp, turn signal lamp, and brake lamp (except CHMSL) circuits to determine the condition of these exterior lamps. The FCM then sends the proper lamp out indicator lamp-on and lamp-off messages to the instrument cluster. For further diagnosis of the lamp out indicator or the instrument cluster circuitry that controls the indicator, (Refer to 8 - ELECTRICAL/INSTRUMENT CLUSTER - DIAGNOSIS AND TESTING).

For proper diagnosis of the exterior lighting system circuits, the FCM, the PCI data bus, or the electronic message inputs to the instrument cluster that control the lamp out indicator, a diagnostic scan tool is required. Refer to the appropriate diagnostic information.

LOW FUEL INDICATOR

DESCRIPTION

A low fuel indicator is standard equipment on all instrument clusters. This indicator is located on the left side of the instrument cluster, to the left of the fuel gauge.



The low fuel indicator consists of a stencil-like cutout of the International Control and Display Symbol icon for “Fuel” in the opaque layer of the instrument cluster overlay. The dark outer layer of the overlay prevents the indicator from being clearly visible when it is not illuminated. An amber Light Emitting Diode (LED) behind the cutout in the opaque layer of the overlay causes the icon to appear in amber through the translucent outer layer of the overlay when the indicator is illuminated from behind by the LED, which is soldered onto the instrument cluster electronic circuit board. The low fuel indicator is serviced as a unit with the instrument cluster.

OPERATION

The low fuel indicator gives an indication to the vehicle operator when the level of fuel in the fuel tank becomes low. This indicator is controlled by a transistor on the instrument cluster circuit board based upon cluster programming and electronic messages received by the cluster from the Powertrain Control Module (PCM) on vehicles equipped with a gasoline engine, or from the Engine Control Module (ECM) on vehicles equipped with a diesel engine over the Programmable Communications Interface (PCI) data bus.

The low fuel indicator Light Emitting Diode (LED) is completely controlled by the instrument cluster logic circuit, and that logic will only allow this indicator to operate when the instrument cluster receives a battery current input on the fused ignition switch output (run-start) circuit. Therefore, the LED will always be off when the ignition switch is in any position except On or Start. The LED only illuminates when it is provided a path to ground by the instrument cluster transistor. The instrument cluster will turn on the low fuel indicator for the following reasons:

- **Bulb Test** - Each time the ignition switch is turned to the On position the low fuel indicator is illuminated for about two seconds as a bulb test.
- **Less Than Fifteen Percent Tank Full Message** - Each time the cluster receives messages from the PCM or ECM indicating the percent tank full is about fifteen percent or less for ten consecutive seconds and the vehicle speed is zero, or for sixty consecutive seconds and the vehicle speed is greater than zero, the fuel gauge needle is moved to between the one-sixteenth and one-eighth graduations or below on the gauge scale, the low fuel indicator is illuminated and a single chime tone is sounded. The low fuel indicator remains illuminated until the cluster receives messages from the PCM or ECM indicating that the percent tank full is greater than about fifteen percent for ten consecutive seconds and the vehicle speed is zero, or for sixty consecutive seconds and the vehicle speed is greater than zero, or until the ignition switch is turned to the Off position, whichever occurs first. The chime tone feature will only repeat during the same ignition cycle if the low fuel indicator is cycled off and then on again by the appropriate percent tank full messages from the PCM or ECM.

- **Less Than Empty Percent Tank Full Message** - Each time the cluster receives a message from the PCM or ECM indicating the percent tank full is less than empty, the low fuel indicator is illuminated immediately. This message would indicate that the fuel tank sender input to the PCM or ECM is a short circuit.
- **More Than Full Percent Tank Full Message** - Each time the cluster receives a message from the PCM or ECM indicating the percent tank full is more than full, the low fuel indicator is illuminated immediately. This message would indicate that the fuel tank sender input to the PCM or ECM is an open circuit.
- **Actuator Test** - Each time the cluster is put through the actuator test, the low fuel indicator will be turned on, then off again during the bulb check portion of the test to confirm the functionality of the LED and the cluster control circuitry.

On vehicles with a gasoline engine, the PCM continually monitors the fuel tank sending unit to determine the level of fuel in the fuel tank. On vehicles with a diesel engine, the ECM continually monitors the fuel tank sending unit to determine the level of fuel in the fuel tank. The PCM or ECM then sends the proper fuel level messages to the instrument cluster. For further diagnosis of the low fuel indicator or the instrument cluster circuitry that controls the LED, (Refer to 8 - ELECTRICAL/INSTRUMENT CLUSTER - DIAGNOSIS AND TESTING).

For proper diagnosis of the fuel tank sending unit, the PCM, the ECM, the PCI data bus, or the electronic message inputs to the instrument cluster that control the low fuel indicator, a diagnostic scan tool is required. Refer to the appropriate diagnostic information.

MALFUNCTION INDICATOR LAMP (MIL)

DESCRIPTION

A Malfunction Indicator Lamp (MIL) is standard equipment on all instrument clusters. This indicator is located on the left side of the instrument cluster, to the left of the voltage gauge.

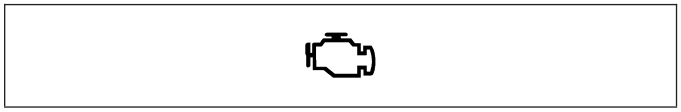

The MIL consists of a stencil-like cutout of the International Control and Display Symbol icon for “Engine” in the opaque layer of the instrument cluster overlay. The dark outer layer of the overlay prevents the indicator from being clearly visible when it is not illuminated. An amber Light Emitting Diode (LED) behind the cutout in the opaque layer of the overlay causes the icon to appear in amber through the translucent outer layer of the overlay when the indicator is illuminated from behind by the LED, which is soldered onto the instrument cluster electronic circuit board. The MIL is serviced as a unit with the instrument cluster.

OPERATION

The Malfunction Indicator Lamp (MIL) gives an indication to the vehicle operator when the Powertrain Control Module (PCM) on vehicles with a gasoline engine, or the Engine Control Module (ECM) on vehicles with a diesel engine has recorded a Diagnostic Trouble Code (DTC) for an On-Board Diagnostics II (OBDII) emissions-related circuit or component malfunction. The MIL is controlled by a transistor on the instrument cluster circuit board based upon cluster programming and electronic messages received by the cluster from the PCM or ECM over the Programmable Communications Interface (PCI) data bus.

The MIL Light Emitting Diode (LED) is completely controlled by the instrument cluster logic circuit, and that logic will only allow this indicator to operate when the instrument cluster receives a battery current input on the fused ignition switch output (run-start) circuit. Therefore, the LED will always be off when the ignition switch is in any position except On or Start. The LED only illuminates when it is provided a path to ground by the instrument cluster transistor. The instrument cluster will turn on the MIL for the following reasons:

- **Bulb Test** - Each time the ignition switch is turned to the On position the indicator is illuminated for about two seconds as a bulb test. The entire bulb test is a function of the PCM or ECM.
- **MIL Lamp-On Message** - Each time the cluster receives a MIL lamp-on message from the PCM or ECM, the indicator will be illuminated. The indicator can be flashed on and off, or illuminated solid, as dictated by the PCM or ECM message. For some DTC’s, if a problem does not recur, the PCM or ECM will send a lamp-off message automatically. Other DTC’s may require that a fault be repaired and the PCM or ECM be reset before a lamp-off message will be sent. For more information on the PCM, the ECM, and the DTC set and reset parameters, (Refer to 25 - EMISSIONS CONTROL - OPERATION).

- **Communication Error** - If the cluster receives no messages from the PCM or ECM for about ten seconds, the MIL is illuminated by the instrument cluster to indicate a loss of bus communication. The indicator remains controlled and illuminated by the cluster until a valid message is received from the PCM or ECM.
- **Actuator Test** - Each time the cluster is put through the actuator test, the MIL indicator will be turned on during the bulb check portion of the test to confirm the functionality of the LED and the cluster control circuitry.

On vehicles with a gasoline engine, the PCM continually monitors the fuel and emissions system circuits and sensors to decide whether the system is in good operating condition. On vehicles with a diesel engine, the ECM continually monitors the fuel and emissions system circuits and sensors to decide whether the system is in good operating condition. The PCM or ECM then sends the proper lamp-on or lamp-off messages to the instrument cluster. For further diagnosis of the MIL or the instrument cluster circuitry that controls the LED, (Refer to 8 - ELECTRICAL/INSTRUMENT CLUSTER - DIAGNOSIS AND TESTING). If the instrument cluster turns on the MIL after the bulb test, it may indicate that a malfunction has occurred and that the fuel and emissions systems may require service.

For proper diagnosis of the fuel and emissions systems, the PCM, the ECM, the PCI data bus, or the electronic message inputs to the instrument cluster that control the MIL, a diagnostic scan tool is required. Refer to the appropriate diagnostic information.

ODOMETER

DESCRIPTION



An odometer and trip odometer are standard equipment in all instrument clusters. The odometer, trip odometer, and engine hours information are displayed in a common electronic, blue-green Vacuum-Fluorescent Display (VFD) unit. This VFD unit is soldered onto the cluster electronic circuit board and is visible through a window with a smoked lens located on the lower edge of the tachometer gauge dial face of the cluster overlay. The dark lens over the VFD prevents it from being clearly visible when it is not illuminated.

The odometer, trip odometer, and engine hours information are not displayed simultaneously. The trip odometer reset switch on the instrument cluster circuit board toggles the display between odometer and trip odometer modes by depressing the odometer/trip odometer switch button that extends through the lower edge of the cluster lens, just left of the odometer VFD. When the trip odometer information is displayed, the word “TRIP” is also illuminated in the upper right corner of the VFD in a blue-green color and at the same lighting level as the trip odometer information. On all models except SRT-10, the engine hours information replaces the selected odometer or trip odometer information whenever the ignition switch is in the On position and the engine is not running. The engine hours feature is disabled on all SRT-10 models.

The odometer, trip odometer, and engine hours information is stored in the instrument cluster memory. This information can be increased when the proper inputs are provided to the instrument cluster, but the information cannot be decreased. The odometer can display values up to 999,999 kilometers (999,999 miles). The odometer latches at these values, and will not roll over to zero. The trip odometer can display values up to 9,999.9 kilometers (9,999.9 miles) before it rolls over to zero. Engine hours are displayed in the format, “hr9999”. The cluster will accumulate values up to 9,999 hours before the display rolls over to zero.

The odometer display does not have a decimal point and will not show values less than a full unit (kilometer or mile), while the trip odometer display does have a decimal point and will show tenths of a unit (kilometer or mile). The unit of measure (kilometers or miles) for the odometer and trip odometer display is not shown in the VFD. The unit of measure for the instrument cluster odometer/trip odometer is selected at the time that it is manufactured, and cannot be changed. The odometer also has a “Rental Car” mode, which will illuminate the odometer information in the VFD whenever the driver side front door is opened with the ignition switch in the Off or Accessory positions.

During daylight hours (exterior lamps are Off) the odometer VFD is illuminated at full brightness for clear visibility. At night (exterior lamps are On), the VFD lighting level is adjusted with the other cluster illumination lamps using the panel lamps dimmer thumbwheel on the headlamp switch. However, a “Parade” mode position of the panel lamps dimmer thumbwheel allows the VFD to be illuminated at full brightness if the exterior lamps are turned On during daylight hours.

The odometer/trip odometer VFD, the trip odometer switch, and the trip odometer switch button are serviced as a unit with the instrument cluster.

OPERATION

The odometer and trip odometer give an indication to the vehicle operator of the distance the vehicle has traveled. On all models except SRT-10, the engine hours give an indication of the cumulative engine-on time. The engine hours feature is disabled on SRT-10 models. This indicator is controlled by the instrument cluster circuitry based upon cluster programming and electronic messages received by the cluster from the Powertrain Control Module (PCM) or Engine Control Module (ECM) over the Programmable Communications Interface (PCI) data bus.

The odometer, trip odometer and engine hours information is displayed by the instrument cluster odometer Vacuum Fluorescent Display (VFD). The odometer VFD will display the odometer information whenever the driver side front door is opened with the ignition switch in the Off or Accessory positions, and will display the last previously selected odometer or trip odometer information when the ignition switch is turned to the On or Start positions. The instrument cluster circuitry controls the VFD and provides the following features:

- **Odometer/Trip Odometer Display Toggling** - Actuating the trip odometer reset switch button momentarily with the VFD illuminated will toggle the display between the odometer and trip odometer information. Each time the VFD is illuminated with the ignition switch in the On or Start positions, the display will automatically return to the last mode previously selected (odometer or trip odometer).
- **Engine Hours Display Toggling** - When the trip odometer reset switch button is pressed and held for longer than about six seconds with the ignition switch in the On position and the engine speed message from the PCM is zero, the trip odometer information will be momentarily displayed, then the engine hours information will be displayed. The VFD must be displaying the odometer information when the trip odometer reset switch button is pressed in order to toggle to the engine hours display. The engine hours will remain displayed for about thirty seconds, until the engine speed message is greater than zero, or until the ignition switch is turned to the Off position, whichever occurs first.
- **Trip Odometer Reset** - When the trip odometer reset switch button is pressed and held for longer than about two seconds with the ignition switch in the On or Start position, the trip odometer will be reset to 0.0 kilometers (miles). The VFD must be displaying the trip odometer information in order for the trip odometer information to be reset.
- **Communication Error** - If the cluster fails to receive a distance message during normal operation, it will hold and display the last data received until the ignition switch is turned to the Off position. If the cluster does not receive a distance message within one second after the ignition switch is turned to the On position, it will display the last distance message stored in the cluster memory. If the cluster is unable to display distance information due to an error internal to the cluster, the VFD will display all dashes.
- **Actuator Test** - Each time the cluster is put through the actuator test, the odometer VFD will display all of its segments simultaneously during the VFD portion of the test to confirm the functionality of each of the VFD segments and the cluster control circuitry.

The PCM continually monitors the vehicle speed pulse information received from the vehicle speed sensor or the Controller Anti-lock Brake (CAB) and engine speed pulse information received from the crankshaft position sensor, then sends the proper distance and engine speed messages to the instrument cluster. For further diagnosis of the odometer/trip odometer or the instrument cluster circuitry that controls these functions, (Refer to 8 - ELECTRICAL/ INSTRUMENT CLUSTER - DIAGNOSIS AND TESTING).

For proper diagnosis of the vehicle speed sensor, the crankshaft position sensor, the CAB, the PCM, the PCI data bus, or the electronic message inputs to the instrument cluster that control the odometer/trip odometer, a diagnostic scan tool is required. Refer to the appropriate diagnostic information.

OIL PRESSURE GAUGE

DESCRIPTION

An oil pressure gauge is standard equipment on all instrument clusters. The oil pressure gauge is located in the upper right quadrant of the instrument cluster, above the coolant temperature gauge.



The oil pressure gauge consists of a movable gauge needle or pointer controlled by the instrument cluster circuitry and a fixed 90 degree scale on the cluster overlay that reads left-to-right from “L” (or Low) to “H” (or High) for gasoline engines except SRT-10. On SRT-10 models, the scale reads from “0” kPa to “700” kPa in markets where a metric instrument cluster is specified, or from “0” psi to “100” psi in all other markets. On vehicles with a diesel engine the scale reads from “0” kPa to “760” kPa in markets where a metric instrument cluster is specified, or from “0” psi to “110” psi in all other markets.

An International Control and Display Symbol icon for “Engine Oil” is located on the cluster overlay, directly below the left end of the gauge scale. On all models except SRT-10 the oil pressure gauge graphics are black against a white field except for two red graduations at the low end of the gauge scale. On SRT-10 the gauge graphics are black against a silver field except for a single red zone at the low end of the gauge scale. In either case, the gauge graphics are clearly visible within the instrument cluster in daylight.

When illuminated from behind by the panel lamps dimmer controlled cluster illumination lighting with the exterior lamps turned On, the black graphics appear blue-green and the red graphics still appear red. The gauge needle has internal optical illumination. Gauge illumination is provided by replaceable incandescent bulb and holder units located on the instrument cluster electronic circuit board. The oil pressure gauge is serviced as a unit with the instrument cluster.

OPERATION

The oil pressure gauge gives an indication to the vehicle operator of the engine oil pressure. This gauge is controlled by the instrument cluster circuit board based upon cluster programming and electronic messages received by the cluster from the Powertrain Control Module (PCM) on vehicles with a gasoline engine, or from the Engine Control Module (ECM) on vehicles equipped with a diesel engine over the Programmable Communications Interface (PCI) data bus.

The oil pressure gauge is an air core magnetic unit that receives battery current on the instrument cluster electronic circuit board through the fused ignition switch output (run-start) circuit whenever the ignition switch is in the On or Start positions. The cluster is programmed to move the gauge needle back to the low end of the scale after the ignition switch is turned to the Off position. The instrument cluster circuitry controls the gauge needle position and provides the following features:

- **Engine Oil Pressure Message** - The instrument cluster circuitry restricts the oil pressure gauge needle operation in order to provide readings that are consistent with customer expectations. For all models except SRT-10, each time the cluster receives a message from the PCM or ECM indicating the engine oil pressure is above about 41 kPa (6 psi) the cluster holds the gauge needle at a point near the middle increment within the normal range on the gauge scale. For SRT-10 models, each time the cluster receives a message from the PCM indicating the engine oil pressure is above about 41 kPa (6 psi) the cluster moves the gauge needle in a linear fashion to the proper relative pressure position of the gauge scale.
- **Engine Oil Pressure Low Message** - Each time the cluster receives three consecutive bus messages from the PCM or ECM indicating the engine oil pressure is below about 41 kPa (6 psi), the gauge needle is moved to the red graduations (except SRT-10) or to the red zone (SRT-10) at the far left end of the gauge scale, the check gauges indicator is illuminated, and a single chime tone is generated. The gauge needle remains at the left end of the gauge scale and the check gauges indicator remains illuminated until the cluster receives a message from the PCM or ECM indicating that the engine oil pressure is above about 41 kPa (6 psi), or until the ignition switch is turned to the Off position, whichever occurs first. The cluster will only turn the check gauges indicator on in response to an engine oil pressure low message if the engine speed message is greater than zero.
- **Communication Error** - If the cluster fails to receive an engine oil pressure message, it will hold the gauge needle at the last indication for about ten seconds, or until the ignition switch is turned to the Off position, whichever occurs first. After ten seconds, the cluster will move the gauge needle to the low end of the gauge scale.
- **Actuator Test** - Each time the cluster is put through the actuator test, the oil pressure gauge needle will be swept to several calibration points on the gauge scale in a prescribed sequence in order to confirm the functionality of the gauge and the cluster control circuitry.

On vehicles with a gasoline engine, the PCM continually monitors the engine oil pressure sensor to determine the engine oil pressure. On vehicles with a diesel engine, the ECM continually monitors the engine oil pressure sensor to determine the engine oil pressure. The PCM or ECM then sends the proper engine oil pressure messages to the instrument cluster. For further diagnosis of the oil pressure gauge or the instrument cluster circuitry that controls the gauge, (Refer to 8 - ELECTRICAL/INSTRUMENT CLUSTER - DIAGNOSIS AND TESTING). If the instrument cluster

turns on the check gauges indicator due to a low oil pressure gauge reading, it may indicate that the engine or the engine oiling system requires service.

For proper diagnosis of the engine oil pressure sensor, the PCM, the ECM, the PCI data bus, or the electronic message inputs to the instrument cluster that control the oil pressure gauge, a diagnostic scan tool is required. Refer to the appropriate diagnostic information.

GAUGE-ENGINE OIL TEMPERATURE

DESCRIPTION

An oil temperature gauge (1) is standard equipment on all SRT-10 models. This electronic, analog gauge is located in the lower end of the left A-pillar trim molding below the grab handle (2), in clear view of the vehicle operator. The gauge dial face is visible through a clear plastic lens, which is secured to the gauge housing with a silver anodized trim ring. The remainder of the gauge, including the mounting provisions and the electrical connections, are concealed behind the left A-pillar trim molding.

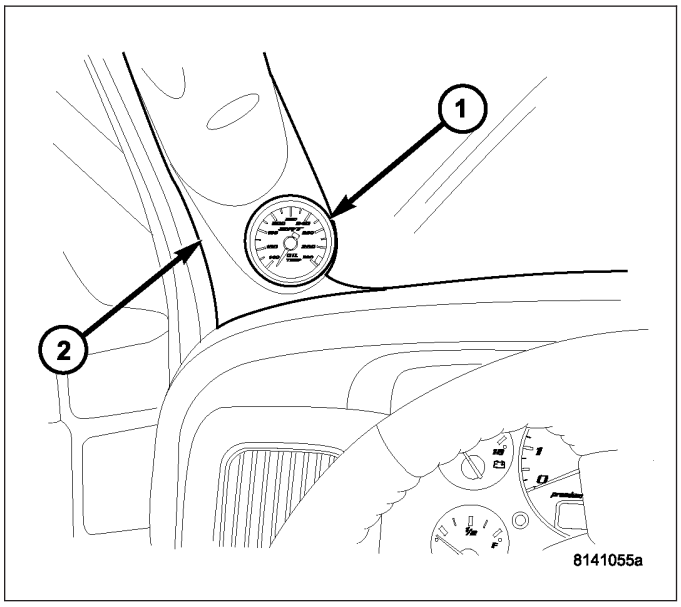

The molded plastic housing at the rear of the gauge protects the electronic circuitry of the gauge and has two mounting studs, which are secured by nuts to a molded plastic mounting bracket screwed to the back of the A-pillar trim molding. A short pigtail wire with a connector extends from the back of the gauge housing and connects the gauge to the vehicle electrical system through a take out and connector of the instrument panel wire harness.

The oil temperature gauge consists of a movable gauge needle or pointer with a 270 degree sweep that is controlled by the electronic gauge circuitry. The gauge overlay reads left-to-right from “60” to “150” with “°C” indicated directly below the low (left) end of the scale in markets where a metric instrument cluster is specified, or from “140” to “300” with “°F” indicated directly below the left end of the scale for all other markets. The text “OIL TEMP” is imprinted on the center of the gauge overlay below the hub of the gauge needle, while the text “SRT” is imprinted above the hub of the gauge needle. The gauge graphics are black against a silver field except for a single red zone at the high (right) end of the gauge scale and are clearly visible in daylight.

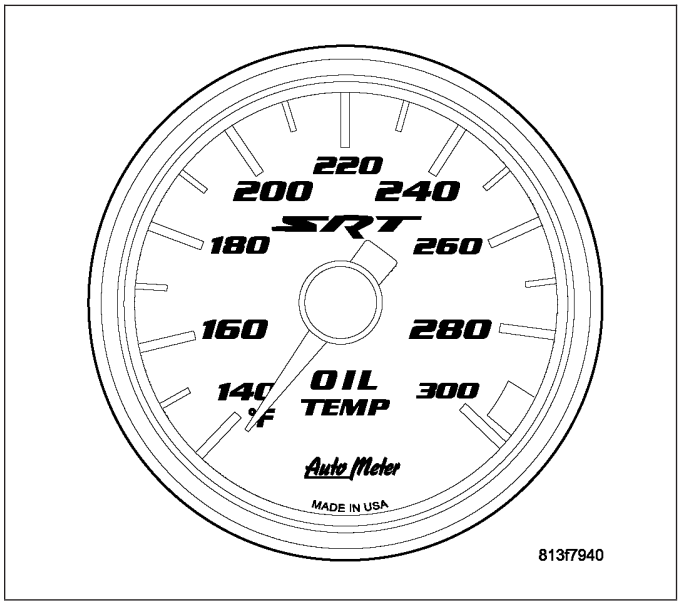

General illumination lighting for the gauge is provided by a Light Emitting Diode (LED) that is soldered onto the gauge circuit board. The gauge overlay is a laminated plastic unit. The dark, visible, outer surface of the overlay is marked with the gauge dial face and graduations, but this layer is also translucent. The underlying layer of the overlay is opaque and allows light from the LED on the circuit board behind it to be visible through the outer layer of the overlay only through predetermined stencil-like cutouts. When illuminated from behind by the panel lamps

dimmer controlled gauge lighting with the exterior lamps turned On, the black graphics appear blue-green and the red graphics still appear red. The gauge needle has internal optical illumination.

The oil temperature gauge cannot be repaired or adjusted and, if damaged or faulty, it must be replaced. The gauge illumination LED unit is not available for service replacement and, if damaged or faulty, the entire gauge must be replaced.

OPERATION

The oil temperature gauge gives an indication to the vehicle operator of the engine oil temperature. This gauge is controlled by its own internal electronic circuit board based upon a hard wired input received by the gauge from an oil temperature sensor (4) installed in a tapped hole that penetrates an oil passage on the right side of the engine block (2) just behind the oil pressure sensor (3).

The oil temperature sensor is a Negative Temperature Coefficient (NTC) thermistor that changes its internal resistance with changes in temperature. The sensor has two terminals. One terminal receives a hard wired ground path through a take out and connector of the engine wire harness (1), and the second terminal provides a variable output to the gauge through the same take out and connector. As the oil temperature increases the resistance of the sensor decreases, and as the oil temperature decreases the resistance of the sensor increases.

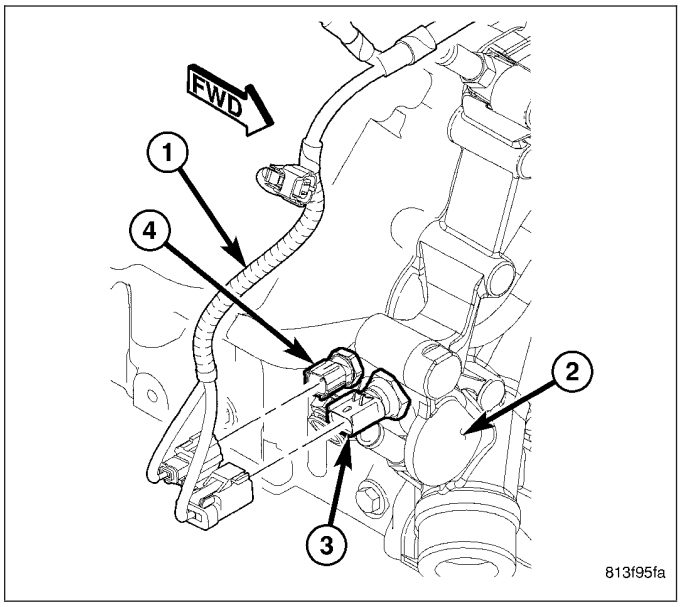

The oil temperature gauge is an air core magnetic unit. The gauge pigtail wire and connector provides the gauge electronic circuit board with a hard wired ground path, battery current through a fused ignition switch output (run-start) circuit, a Pulse Width Modulated (PWM) panel lamps dimmer input from the instrument cluster for general illumination, and the input from the oil temperature sensor. This gauge is only operational when the ignition switch is in the On or Start positions. The gauge electronic circuit board reads the input from the oil temperature sensor, then provides linear positioning of the gauge needle on the gauge scale based upon that input. The gauge electronics will move the gauge needle back to the low end of the scale after the ignition switch is turned to the Off position.

The oil temperature gauge and the oil temperature sensor may be diagnosed using conventional diagnostic tools and methods. Refer to the appropriate diagnostic information.

DIAGNOSIS AND TESTING

OIL TEMPERATURE GAUGE

WARNING: To avoid personal injury or death, on vehicles equipped with airbags, disable the supplemental restraint system before attempting any steering wheel, steering column, airbag, seat belt tensioner, impact sensor, or instrument panel component diagnosis or service. Disconnect and isolate the battery negative (ground) cable, then wait two minutes for the system capacitor to discharge before performing further diagnosis or service. This is the only sure way to disable the supplemental restraint system. Failure to take the proper precautions could result in accidental airbag deployment.

The hard wired oil temperature gauge and gauge lighting circuits may be diagnosed and tested using conventional diagnostic tools and procedures. Refer to the appropriate wiring information. The wiring information includes wiring diagrams, proper wire and connector repair procedures, details of wire harness routing and retention, connector pin-out information and location views for the various wire harness connectors, splices and grounds.

NOTE: When testing the oil temperature gauge by alternately opening and shorting the oil temperature sensor signal circuit, the gauge pointer may rotate in either direction (clockwise or counterclockwise) to reach the objective point on the gauge scale. This is a normal condition as the gauge electronics are programmed to move the pointer from its current position to the objective position in the direction that provides the shortest pointer travel distance.

CONDITION	POSSIBLE CAUSES	CORRECTION
OIL TEMPERATURE GAUGE DOES NOT ILLUMINATE WITH EXTERIOR LIGHTING TURNED ON	1. Faulty panel lamps dimmer circuit.	1. Test and repair open oil temperature gauge panel lamps dimmer circuit as required.
	2. Faulty ground circuit.	2. Test and repair open oil temperature gauge ground circuit as required.
	3. Faulty Light Emitting Diode (LED) in gauge.	3. Replace the faulty oil temperature gauge as required.
OIL TEMPERATURE GAUGE NEEDLE DOES NOT GIVE ANY INDICATION WITH ENGINE AT OPERATING TEMPERATURE AND IGNITION SWITCH ON.	1. Faulty signal circuit.	1. Test and repair shorted oil temperature sensor signal circuit as required.
	2. Faulty supply circuit.	2. Test and repair open oil temperature gauge fused ignition switch output (run/start) circuit as required.
	3. Faulty sensor.	3. Test and replace faulty oil temperature sensor as required.
	4. Faulty gauge.	4. Replace the faulty oil temperature gauge as required.
OIL TEMPERATURE GAUGE NEEDLE ALWAYS INDICATES HIGH WITH IGNITION SWITCH ON.	1. Disconnected sensor.	1. Reconnect oil temperature sensor as required.
	2. Faulty signal circuit.	2. Test and repair open oil temperature sensor signal circuit as required.
	3. Faulty sensor ground.	3. Test and repair open oil temperature sensor ground circuit as required.
	4. Faulty sensor.	4. Test and replace faulty oil temperature sensor as required.
	5. Faulty gauge.	5. Replace the faulty oil temperature gauge as required.

OIL TEMPERATURE SENSOR

1. Disconnect the engine wire harness connector from the oil temperature sensor.
2. Using an ohmmeter and a test thermometer, test the resistance versus the oil temperature relationship of the sensor between the two terminals of the sensor as shown in the Oil Temperature Sensor Tests table.

OIL TEMPERATURE SENSOR TESTS		
TEMPERATURE		RESISTANCE RANGE (KILOHMS)
°C	°F	
(40)	(40)	291.49 - 381.71
(20)	(4)	85.85 - 108.39
(10)	14	49.25 - 61.43
0	32	29.33 - 35.99
10	50	17.99 - 21.81
20	68	11.37 - 13.61
25	77	9.12 - 10.88
30	86	7.37 - 8.75
40	104	4.90 - 5.75
50	122	3.33 - 3.88
60	140	2.31 - 2.67
70	158	1.63 - 1.87
80	176	1.17 - 1.34
90	194	0.86 - 0.97
100	212	0.64 - 0.72
110	230	0.48 - 0.54
120	248	0.37 - 0.41
130	266	0.28 - 0.32

3. If the sensor fails any of these tests, replace the faulty oil temperature sensor as required.

REMOVAL

WARNING: To avoid personal injury or death, on vehicles equipped with airbags, disable the supplemental restraint system before attempting any steering wheel, steering column, airbag, seat belt tensioner, impact sensor, or instrument panel component diagnosis or service. Disconnect and isolate the battery negative (ground) cable, then wait two minutes for the system capacitor to discharge before performing further diagnosis or service. This is the only sure way to disable the supplemental restraint system. Failure to take the proper precautions could result in accidental airbag deployment.

1. Disconnect and isolate the battery negative cable.
2. Remove the trim molding (5) from the inside of the left A-pillar. (Refer to 23 - BODY/INTERIOR/A-PILLAR TRIM - REMOVAL).
3. Remove the two nuts (2) that secure the oil temperature gauge (4) mounting studs to the mounting bracket (1) on the back of the A-pillar trim.
4. Remove the four screws (3) that secure the mounting bracket to the back of the A-pillar trim.
5. Remove the mounting bracket from the back of the A-pillar trim.
6. Push the gauge and the gauge pigtail wire (6) and connector out through the mounting hole on the face of the A-pillar trim.

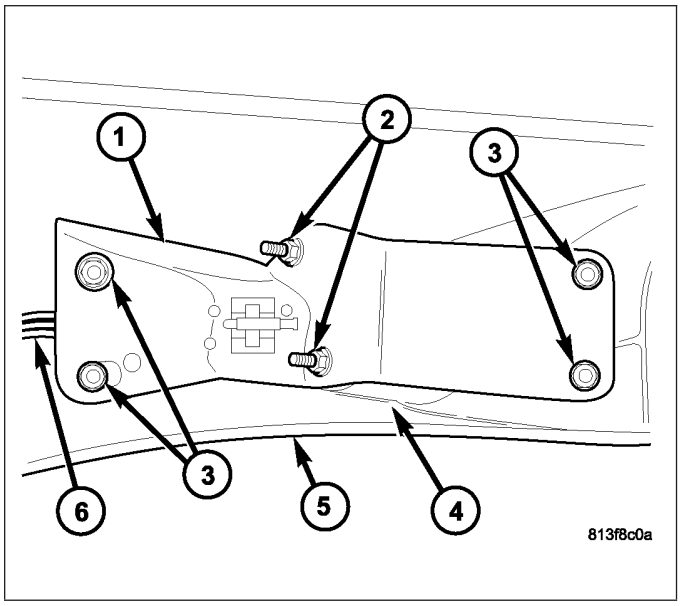

INSTALLATION

WARNING: To avoid personal injury or death, on vehicles equipped with airbags, disable the supplemental restraint system before attempting any steering wheel, steering column, airbag, seat belt tensioner, impact sensor, or instrument panel component diagnosis or service. Disconnect and isolate the battery negative (ground) cable, then wait two minutes for the system capacitor to discharge before performing further diagnosis or service. This is the only sure way to disable the supplemental restraint system. Failure to take the proper precautions could result in accidental airbag deployment.

1. Position the oil temperature gauge (4) into the mounting hole on the face of the A-pillar trim (5).
2. Position the mounting bracket (1) to the back of the A-pillar trim with the gauge pigtail wire (6) and connector routed between the two lower mounting bracket screw bosses on the back of the A-pillar trim.
3. Install and tighten the four screws (3) that secure the mounting bracket to the back of the A-pillar trim. Tighten the screws to 1 N·m (9 in. lbs.).
4. Align and insert the two mounting studs on the back of the gauge housing through the appropriate holes in the mounting bracket.
5. Install and tighten the two nuts that secure the gauge mounting studs to the mounting bracket. Tighten the nuts to 0.5 N·m (5 in. lbs.).
6. Reinstall the trim molding onto the inside of the left A-pillar. (Refer to 23 - BODY/INTERIOR/A-PILLAR TRIM - INSTALLATION).
7. Reconnect the battery negative cable.

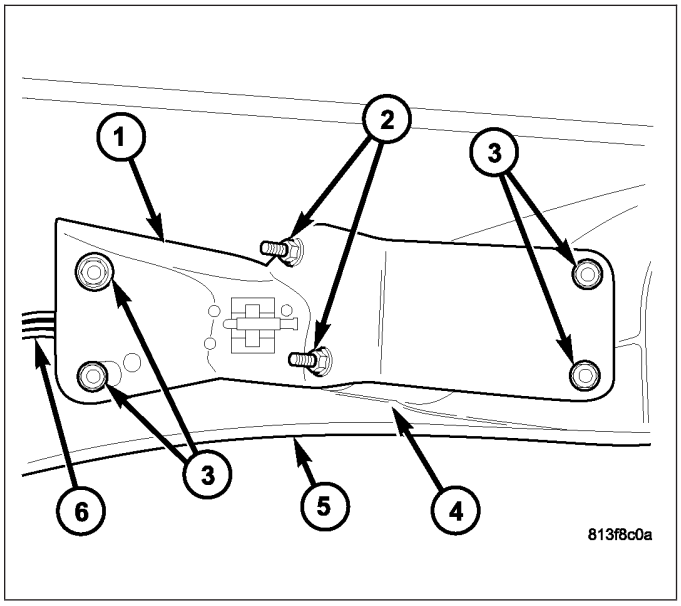

SEATBELT INDICATOR

DESCRIPTION

A seatbelt indicator is standard equipment on all instrument clusters. The seatbelt indicator is located near the upper edge of the instrument cluster, between the tachometer and the speedometer.



The seatbelt indicator consists of a stencil-like cutout of the International Control and Display Symbol icon for “Seat Belt” in the opaque layer of the instrument cluster overlay. The dark outer layer of the overlay prevents the indicator from being clearly visible when it is not illuminated. A red Light Emitting Diode (LED) behind the cutout in the opaque layer of the overlay causes the icon to appear in red through the translucent outer layer of the overlay when the indicator is illuminated from behind by the LED, which is soldered onto the instrument cluster electronic circuit board. The seatbelt indicator is serviced as a unit with the instrument cluster.

OPERATION

The seatbelt indicator gives an indication to the vehicle operator of the status of the driver side front seatbelt. This indicator is controlled by a transistor on the instrument cluster circuit board based upon cluster programming and a hard wired input from the seatbelt switch in the driver side front seatbelt buckle through the seat belt indicator driver circuit.

The seatbelt indicator also includes a programmable enhanced seatbelt reminder or “beltminder” feature that is enabled when the vehicle is shipped from the factory. This beltminder feature can be disabled and enabled by the customer using a specific programming event sequence, or by the dealer using a diagnostic scan tool.

The seatbelt indicator Light Emitting Diode (LED) is completely controlled by the instrument cluster logic circuit, and that logic will only allow this indicator to operate when the instrument cluster receives a battery current input on the fused ignition switch output (run-start) circuit. Therefore, the LED will always be off when the ignition switch is in any position except On or Start. The LED only illuminates when it is provided a path to ground by the instrument cluster transistor. The instrument cluster will turn on the seatbelt indicator for the following reasons:

- **Seatbelt Reminder Function** - Each time the cluster receives a battery current input on the fused ignition switch output (run-start) circuit, the indicator will be illuminated as a seatbelt reminder for about six seconds, or until the ignition switch is turned to the Off position, whichever occurs first. This reminder function will occur regardless of the status of the seatbelt switch input to the cluster.
- **Driver Side Front Seatbelt Not Buckled - Beltminder Active** - Following the seatbelt reminder function, each time the cluster detects an open circuit on the seat belt indicator driver circuit (seatbelt switch open = seatbelt unbuckled) with the ignition switch in the Start or On positions, the indicator will be illuminated. In addition, if the driver side front seat belt remains unbuckled about sixty seconds after the conclusion of the seatbelt reminder function with the vehicle speed greater than about 13 kilometers-per-hour (8 miles-per-hour), the seatbelt indicator will begin to cycle between flashing on and off for five seconds, then lighting solid for three seconds. The seatbelt indicator will continue to cycle between flashing and solid illumination for twelve complete cycles, until the seat belt indicator driver input to the cluster is closed to ground (seatbelt switch closed = seatbelt buckled), or until the ignition switch is turned to the Off position, whichever occurs first.
- **Driver Side Front Seatbelt Not Buckled - Beltminder Inactive** - Following the seatbelt reminder function, each time the cluster detects an open circuit on the seat belt indicator driver circuit (seatbelt switch open = seatbelt unbuckled) with the ignition switch in the Start or On positions, the indicator will be illuminated. The seatbelt indicator remains illuminated until the seat belt indicator driver input to the cluster is closed to ground (seatbelt switch closed = seatbelt buckled), or until the ignition switch is turned to the Off position, whichever occurs first.
- **Airbag Indicator Backup** - If the instrument cluster detects a fault in the airbag indicator circuit it will send a message indicating the fault to the Airbag Control Module (ACM), store a Diagnostic Trouble Code (DTC) in the cluster memory, then flash the seatbelt indicator on and off. The cluster will continue to flash the seatbelt indicator until the airbag indicator circuit fault is resolved, or until the ignition switch is turned to the Off position, whichever occurs first.
- **Actuator Test** - Each time the cluster is put through the actuator test, the seatbelt indicator will be turned on, then off again during the bulb check portion of the test to confirm the functionality of the LED and the cluster control circuitry.

The seatbelt switch is connected in series between ground and the seat belt indicator driver input to the instrument cluster. The seatbelt switch input to the instrument cluster circuitry may be diagnosed using conventional diagnostic tools and methods.

For further diagnosis of the seatbelt indicator or the instrument cluster circuitry that controls the LED, (Refer to 8 - ELECTRICAL/INSTRUMENT CLUSTER - DIAGNOSIS AND TESTING).

STANDARD PROCEDURE

ENHANCED SEATBELT REMINDER PROGRAMMING

The seatbelt indicator also includes a programmable enhanced seatbelt reminder or “beltminder” feature that is enabled when the vehicle is shipped from the factory. This beltminder feature provides extended and modified visual seatbelt indicator and audible chime warning responses to an unbuckled driver side front seat belt. The beltminder feature may be disabled or enabled by the customer using the programming sequence that follows, or by the dealer using a diagnostic scan tool.

CUSTOMER PROGRAMMING SEQUENCE

NOTE: The following sequence of events must occur within sixty (60) seconds of the ignition switch being placed in the On position in order for the programming to be completed successfully.

1. With the ignition switch in any position except On or Start, buckle the driver side front seat belt.
2. Turn the ignition switch to the On position and wait for the seatbelt indicator reminder function to conclude (about six seconds).
3. Unbuckle and buckle the driver side front seat belt three or more times, ending with the belt buckled.
4. Turn the ignition switch to any position except On or Start to toggle the beltminder feature from its current setting (from active to inactive, or from inactive to active). A single chime tone will provide an audible confirmation that the programming sequence has been successfully completed.

SECURITY INDICATOR

DESCRIPTION

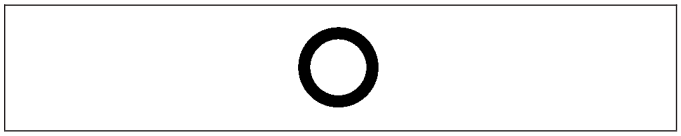

A security indicator is standard equipment on all instrument clusters. However, on vehicles not equipped with the optional Vehicle Theft Security System (VTSS), this indicator is electronically disabled. This indicator is located in the lower right quadrant of the instrument cluster, between the speedometer and the coolant temperature gauge.

The security indicator consists of a small round cutout in the opaque layer of the instrument cluster overlay. The dark outer layer of the overlay prevents the indicator from being clearly visible when it is not illuminated. A red Light Emitting Diode (LED) behind the cutout in the opaque layer of the overlay causes the indicator to appear in red through the translucent outer layer of the overlay when it is illuminated from behind by the LED, which is soldered onto the instrument cluster electronic circuit board. The security indicator is serviced as a unit with the instrument cluster.

OPERATION

The security indicator gives an indication to the vehicle operator when the Vehicle Theft Security System (VTSS) is arming or is armed. On models equipped with the Sentry Key Immobilizer System (SKIS), the security indicator also gives an indication to the vehicle operator of the status of the SKIS. This indicator is controlled by a transistor on the instrument cluster circuit board based upon cluster programming, hard wired inputs to the cluster from the various security system components, electronic messages received by the cluster from the Remote Keyless Entry (RKE) module over a dedicated serial bus, and electronic messages received by the cluster from the Sentry Key Immobilizer Module (SKIM) over the Programmable Communications Interface (PCI) data bus.

The security indicator Light Emitting Diode (LED) is completely controlled by the instrument cluster logic circuit, and that logic will allow this indicator to operate whenever the instrument cluster receives a battery current input on the fused B(+) circuit. Therefore, the LED can be illuminated regardless of the ignition switch position. The LED only illuminates when it is provided a path to ground by the instrument cluster transistor. Depending upon the programmed condition he indicator can be illuminated solid, flashed at a slow rate (0.5 Hertz, 12.5 percent duty cycle), or flashed at a fast rate (1 Hertz, 50 percent duty cycle). The instrument cluster will turn on the security indicator for the following reasons:

- **Bulb Test** - On vehicles equipped with the optional SKIS, each time the ignition switch is turned to the On position the SKIM tells the cluster to illuminate the security indicator for about two seconds as a bulb test.
- **VTSS Indication** - During the sixteen second VTSS arming function, the cluster will flash the security indicator on and off repeatedly at a steady, fast rate to indicate that the VTSS is in the process of arming. Following successful VTSS arming, the cluster flashes the security indicator on and off continuously at a slower rate to indicate that the VTSS is armed. The security indicator continues flashing at the slower rate until the VTSS is disarmed or triggered. The security indicator will also flash at the fast rate to indicate that the VTSS has been triggered and is currently alarming. If the VTSS has alarmed until the alarm timed out and then rearmed itself, the cluster will flash the security indicator at a steady, slow rate for about thirty seconds after the VTSS is disarmed.
- **SKIS Lamp-On Message** - Each time the cluster receives a lamp-on message from the SKIM, the security indicator will be illuminated. The indicator can be flashed on and off, or illuminated solid, as dictated by the SKIM message. The indicator remains illuminated solid or continues to flash until the cluster receives a SKIS lamp-off message from the SKIM, or until the ignition switch is turned to the Off position, whichever occurs first. For more information on the SKIS and the security indicator control parameters, (Refer to 8 - ELECTRICAL/VEHICLE THEFT SECURITY/SENTRY KEY IMMOBILIZER SYSTEM - OPERATION).
- **Communication Error** - On vehicles equipped with the optional SKIS, if the cluster receives no SKIS lamp-on or lamp-off messages from the SKIM for twenty consecutive seconds, the security indicator is illuminated by the instrument cluster. The indicator remains controlled and illuminated by the cluster until a valid SKIS lamp-on or lamp-off message is received from the SKIM.
- **Actuator Test** - Each time the instrument cluster is put through the actuator test, the security indicator will be turned on, then off again during the bulb check portion of the test to confirm the functionality of the LED and the cluster control circuitry.

The instrument cluster circuitry controls the security indicator whenever the ignition switch is in the Off position and the VTSS is arming, armed, or alarming. Whenever the ignition switch is in the On or Start positions, the SKIM performs a self-test to decide whether the SKIS is in good operating condition and whether a valid key is present in the ignition lock cylinder. The SKIM then sends the proper lamp-on or lamp-off messages to the instrument cluster. For further diagnosis of the security indicator or the instrument cluster circuitry that controls the indicator, (Refer to 8 - ELECTRICAL/INSTRUMENT CLUSTER - DIAGNOSIS AND TESTING). If the instrument cluster flashes the security indicator upon ignition On, or turns on the security indicator solid after the bulb test, it indicates that a SKIS malfunction has occurred or that the SKIS is inoperative.

For proper diagnosis of the VTSS, the SKIS, the SKIM, the PCI data bus, or the electronic message inputs to the instrument cluster that control the security indicator, a diagnostic scan tool is required. Refer to the appropriate diagnostic information.

SERVICE 4WD INDICATOR

DESCRIPTION

A service 4WD indicator is standard equipment on all instrument clusters. However, on vehicles not equipped with the optional four-wheel drive system and electronically shifted transfer case, this indicator is electronically disabled. The service 4WD indicator consists of the text “SERV 4WD”, which appears in the lower portion of the odometer/trip odometer Vacuum Fluorescent Display (VFD) unit.



The odometer/trip odometer VFD is soldered onto the cluster electronic circuit board and is visible through a window with a smoked clear lens located on the lower edge of the tachometer gauge dial face of the cluster overlay. The

dark lens over the VFD prevents the indicator from being clearly visible when it is not illuminated. The text “SERV 4WD” appears in an amber color and at the same lighting level as the odometer/trip odometer information when it is illuminated by the instrument cluster electronic circuit board. The service 4WD indicator is serviced as a unit with the VFD in the instrument cluster.

OPERATION

The service 4WD indicator gives an indication to the vehicle operator when the Transfer Case Control Module (TCCM) has recorded a Diagnostic Trouble Code (DTC) for an electronic transfer case circuit or component malfunction. This indicator is controlled by the instrument cluster circuit board based upon cluster programming and electronic messages received by the cluster from the TCCM over the Programmable Communications Interface (PCI) data bus.

The service 4WD indicator is completely controlled by the instrument cluster logic circuit, and that logic will only allow this indicator to operate when the instrument cluster receives a battery current input on the fused ignition switch output (run-start) circuit. Therefore, the indicator will always be off when the ignition switch is in any position except On or Start. The indicator only illuminates when it is switched to ground by the instrument cluster circuitry. The instrument cluster will turn on the service 4WD indicator for the following reasons:

- **Service 4WD Lamp-On Message** - Each time the cluster receives a service 4WD lamp-on message from the TCCM, the indicator will be illuminated. The indicator remains illuminated until the cluster receives a service 4WD lamp-off message from the TCCM, or until the ignition switch is turned to the Off position, whichever occurs first.
- **Communication Error** - If the cluster receives no messages from the TCCM for five seconds, the service 4WD indicator is illuminated by the instrument cluster to indicate a loss of TCCM communication. The indicator remains controlled and illuminated by the cluster until a valid message is received from the TCCM.
- **Actuator Test** - Each time the cluster is put through the actuator test, the service 4WD indicator will be turned on, then off again during the VFD portion of the test to confirm the functionality of the VFD and the cluster control circuitry.

The TCCM continually monitors the electronic transfer case switch and circuits to determine the condition of the system. The TCCM then sends the proper lamp-on or lamp-off messages to the instrument cluster. For further diagnosis of the service 4WD indicator or the instrument cluster circuitry that controls the VFD, (Refer to 8 - ELECTRICAL/INSTRUMENT CLUSTER - DIAGNOSIS AND TESTING).

For proper diagnosis of the TCCM, the PCI data bus, or the electronic message inputs to the instrument cluster that control the service 4WD indicator, a diagnostic scan tool is required. Refer to the appropriate diagnostic information.

SPEEDOMETER

DESCRIPTION

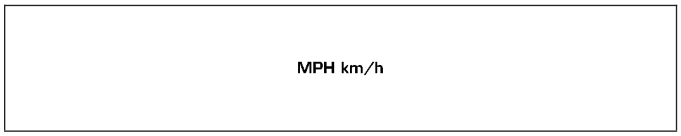

A speedometer is standard equipment on all instrument clusters. The speedometer is located next to the tachometer, just to the right of center in the instrument cluster. The speedometer consists of a movable gauge needle or pointer controlled by the instrument cluster circuitry and a fixed 210 degree primary scale on the gauge dial face. For all models except SRT-10 the speedometer reads left-to-right either from “0” to “120” mph, or from “0” to “200” km/h, depending upon the market for which the vehicle is manufactured. On SRT-10 the speedometer reads left-to-right either from “0” to “160” mph, or from “0” to “280” km/h, depending upon the market for which the vehicle is manufactured. Each version also has a secondary inner scale on the gauge dial face that provides the equivalent opposite units from the primary scale.

Text appearing on the cluster overlay just below the hub of the speedometer needle abbreviates the unit of measure for the primary scale (i.e.: MPH or km/h), followed by the unit of measure for the secondary scale. The speedometer graphics for all models except SRT-10 are black (primary scale) and blue (secondary scale) against a white field. On SRT-10 the gauge graphics are black (primary scale) and gray (secondary scale) against a silver field and also includes a line of text identifying this as a “Performance Vehicle Operations” product. In either case, the gauge graphics are clearly visible within the instrument cluster in daylight.

When illuminated from behind by the panel lamps dimmer controlled cluster illumination lighting with the exterior lamps turned On, the black graphics appear blue-green and the blue or gray graphics appear light blue. The gauge needle has internal optical illumination. Gauge illumination is provided by replaceable incandescent bulb and holder units located on the instrument cluster electronic circuit board. The speedometer is serviced as a unit with the instrument cluster.

OPERATION

The speedometer gives an indication to the vehicle operator of the relative vehicle road speed. This gauge is controlled by the instrument cluster circuit board based upon cluster programming and electronic messages received by the cluster from the Powertrain Control Module (PCM) over the Programmable Communications Interface (PCI) data bus.

The speedometer is an air core magnetic unit that receives battery current on the instrument cluster electronic circuit board through the fused ignition switch output (run-start) circuit whenever the ignition switch is in the On or Start positions. The cluster is programmed to move the gauge needle back to the low end of the scale after the ignition switch is turned to the Off position. The instrument cluster circuitry controls the gauge needle position and provides the following features:

- **Vehicle Speed Message** - Each time the cluster receives a vehicle speed message from the PCM it will calculate the correct vehicle speed reading and position the gauge needle at that relative speed position on the gauge scale. The cluster will receive a new vehicle speed message and reposition the gauge pointer accordingly about every 88 milliseconds. The gauge needle will continually be positioned at the relative vehicle speed position on the gauge scale until the vehicle stops moving, or until the ignition switch is turned to the Off position, whichever occurs first.
- **Communication Error** - If the cluster fails to receive a speedometer message, it will hold the gauge needle at the last indication for about ten seconds, or until the ignition switch is turned to the Off position, whichever occurs first. After ten seconds, the gauge needle will return to the left end of the gauge scale.
- **Actuator Test** - Each time the cluster is put through the actuator test, the speedometer needle will be swept to several calibration points on the gauge scale in a prescribed sequence in order to confirm the functionality of the gauge and the cluster control circuitry.

The PCM continually monitors the vehicle speed sensor or the Controller Anti-lock Brake (CAB) to determine the vehicle road speed. The PCM then sends the proper vehicle speed messages to the instrument cluster. For further diagnosis of the speedometer or the instrument cluster circuitry that controls the gauge, (Refer to 8 - ELECTRICAL/ INSTRUMENT CLUSTER - DIAGNOSIS AND TESTING).

For proper diagnosis of the vehicle speed sensor, the CAB, the PCM, the PCI data bus, or the electronic message inputs to the instrument cluster that control the speedometer, a diagnostic scan tool is required. Refer to the appropriate diagnostic information.

TACHOMETER

DESCRIPTION

A tachometer is standard equipment on all instrument clusters. The tachometer is located to the left of the speedometer, just to the left of center in the instrument cluster. The tachometer consists of a movable gauge needle or pointer controlled by the instrument cluster circuitry and a fixed 210 degree scale on the gauge dial face. The tachometer reads left-to-right from “0” to “7” for gasoline engines. On vehicles with a diesel engine, the scale reads from “0” to “5”.

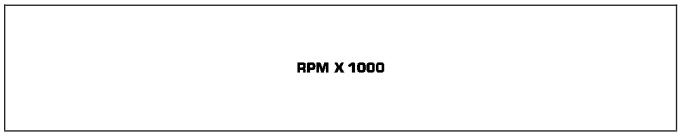

On all models except SRT-10, the text “RPM X 1000” is imprinted on the cluster overlay directly below the hub of the tachometer needle. On SRT-10 models the text “X 1000 RPM” is imprinted on the cluster overlay directly below the hub of the tachometer needle. This text identifies that each number on the tachometer scale is to be multiplied by 1000 rpm.

On all models except SRT-10 the tachometer graphics are black against a white field, making them clearly visible within the instrument cluster in daylight. On SRT-10 the tachometer graphics are black against a silver field except for red graduations beginning at the “6” increment and at each 250 rpm increment to the “7” at the high end of the

scale. The SRT-10 tachometer also includes the text, “Premium Unleaded Fuel Only.” In either case, the gauge graphics are clearly visible within the instrument cluster in daylight.

When illuminated from behind by the panel lamps dimmer controlled cluster illumination lighting with the exterior lamps turned On, the black graphics appear blue-green and the red graphics still appear red. The gauge needle has internal optical illumination. Gauge illumination is provided by a replaceable incandescent bulb and holder unit located on the instrument cluster electronic circuit board. The tachometer is serviced as a unit with the instrument cluster.

OPERATION

The tachometer gives an indication to the vehicle operator of the engine speed. This gauge is controlled by the instrument cluster circuit board based upon cluster programming and electronic messages received by the cluster from the Powertrain Control Module (PCM) on vehicles with a gasoline engine, or from the Engine Control Module (ECM) on vehicles equipped with a diesel engine over the Programmable Communications Interface (PCI) data bus.

The tachometer is an air core magnetic unit that receives battery current on the instrument cluster electronic circuit board through the fused ignition switch output (run-start) circuit whenever the ignition switch is in the On or Start positions. The cluster is programmed to move the gauge needle back to the low end of the scale after the ignition switch is turned to the Off position. The instrument cluster circuitry controls the gauge needle position and provides the following features:

- **Engine Speed Message** - Each time the cluster receives an engine speed message from the PCM or ECM it will calculate the correct engine speed reading and position the gauge needle at that relative engine speed position on the gauge scale. The cluster will receive a new engine speed message and reposition the gauge pointer accordingly about every 88 milliseconds. The gauge needle will continually be repositioned at the relative engine speed position on the gauge scale until the engine stops running, or until the ignition switch is turned to the Off position, whichever occurs first.
- **Communication Error** - If the cluster fails to receive an engine speed message, it will hold the gauge needle at the last indication for about ten seconds, or until the ignition switch is turned to the Off position, whichever occurs first. After ten seconds, the gauge needle will return to the left end of the gauge scale.
- **Actuator Test** - Each time the cluster is put through the actuator test, the tachometer needle will be swept to several calibration points on the gauge scale in a prescribed sequence in order to confirm the functionality of the gauge and the cluster control circuitry.

On vehicles with a gasoline engine, the PCM continually monitors the crankshaft position sensor to determine the engine speed. On vehicles with a diesel engine, the ECM continually monitors the engine speed sensor to determine the engine speed. The PCM or ECM then sends the proper engine speed messages to the instrument cluster. For further diagnosis of the tachometer or the instrument cluster circuitry that controls the gauge, (Refer to 8 - ELECTRICAL/INSTRUMENT CLUSTER - DIAGNOSIS AND TESTING).

For proper diagnosis of the crankshaft position sensor, the engine speed sensor, the PCM, the ECM, the PCI data bus, or the electronic message inputs to the instrument cluster that control the tachometer, a diagnostic scan tool is required. Refer to the appropriate diagnostic information.

TOW/HAUL INDICATOR

DESCRIPTION

A tow/haul indicator is standard equipment on all instrument clusters. However, on vehicles not equipped with the optional overdrive automatic transmission, this indicator is electronically disabled. The tow/haul indicator consists of the text “TOW/HAUL”, which appears in the lower portion of the odometer/trip odometer indicator Vacuum Fluorescent Display (VFD) unit.



The odometer/trip odometer VFD is soldered onto the cluster electronic circuit board and is visible through a window with a smoked clear lens located on the lower edge of the tachometer gauge dial face of the cluster overlay. The dark lens over the VFD prevents the indicator from being clearly visible when it is not illuminated. The text “TOW/HAUL” appears in an amber color and at the same lighting level as the odometer/trip odometer information when it

is illuminated by the instrument cluster electronic circuit board. The tow/haul indicator is serviced as a unit with the VFD in the instrument cluster.

OPERATION

The tow/haul indicator gives an indication to the vehicle operator when the Off position of the tow/haul switch has been selected, disabling the electronically controlled overdrive feature of the automatic transmission. This indicator is controlled by the instrument cluster circuit board based upon cluster programming and electronic messages received by the cluster from the Powertrain Control Module (PCM) over the Programmable Communications Interface (PCI) data bus.

The tow/haul indicator is completely controlled by the instrument cluster logic circuit, and that logic will only allow this indicator to operate when the instrument cluster receives a battery current input on the fused ignition switch output (run-start) circuit. Therefore, the indicator will always be off when the ignition switch is in any position except On or Start. The indicator only illuminates when it is switched to ground by the instrument cluster circuitry. The instrument cluster will turn on the tow/haul indicator for the following reasons:

- **Tow/Haul Lamp-On Message** - Each time the cluster receives a tow/haul lamp-on message from the PCM indicating that the Off position of the tow/haul switch has been selected, the tow/haul indicator will be illuminated. The indicator remains illuminated until the cluster receives a tow/haul lamp-off message from the PCM, or until the ignition switch is turned to the Off position, whichever occurs first.
- **Actuator Test** - Each time the cluster is put through the actuator test, the tow/haul indicator will be turned on, then off again during the VFD portion of the test to confirm the functionality of the VFD and the cluster control circuitry.

The PCM continually monitors the tow/haul switch to determine the proper outputs to the automatic transmission. The PCM then sends the proper tow/haul lamp-on and lamp-off messages to the instrument cluster. For further diagnosis of the tow/haul indicator or the instrument cluster circuitry that controls the indicator, (Refer to 8 - ELECTRICAL/INSTRUMENT CLUSTER - DIAGNOSIS AND TESTING).

For proper diagnosis of the overdrive control system, the PCM, the PCI data bus, or the electronic message inputs to the instrument cluster that control the tow/haul indicator, a diagnostic scan tool is required. Refer to the appropriate diagnostic information.

TRANS TEMP INDICATOR

DESCRIPTION

A transmission over-temperature indicator is standard equipment on all instrument clusters. However, on vehicles not equipped with an optional automatic transmission, this indicator is electronically disabled. This indicator is located on the left side of the instrument cluster, to the left of the fuel gauge.

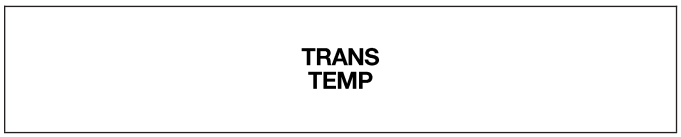

The transmission over-temperature indicator consists of a stencil-like cutout of the text “TRANS TEMP” in the opaque layer of the instrument cluster overlay. The dark outer layer of the overlay prevents the indicator from being clearly visible when it is not illuminated. A red Light Emitting Diode (LED) behind the cutout in the opaque layer of the overlay causes the “TRANS TEMP” text to appear in red through the translucent outer layer of the overlay when the indicator is illuminated from behind by the LED, which is soldered onto the instrument cluster electronic circuit board. The transmission over-temperature indicator is serviced as a unit with the instrument cluster.

OPERATION

The transmission over-temperature indicator gives an indication to the vehicle operator when the transmission fluid temperature is excessive, which may lead to accelerated transmission component wear or failure. This indicator is controlled by a transistor on the instrument cluster circuit board based upon cluster programming and electronic messages received by the cluster from the Powertrain Control Module (PCM) over the Programmable Communications Interface (PCI) data bus.

The transmission over-temperature indicator Light Emitting Diode (LED) is completely controlled by the instrument cluster logic circuit, and that logic will only allow this indicator to operate when the instrument cluster receives a

battery current input on the fused ignition switch output (run-start) circuit. Therefore, the LED will always be off when the ignition switch is in any position except On or Start. The LED only illuminates when it is provided a path to ground by the instrument cluster transistor. The instrument cluster will turn on the transmission over-temperature indicator for the following reasons:

- **Bulb Test** - Each time the ignition switch is turned to the On position the transmission over-temperature indicator is illuminated for about two seconds as a bulb test.
- **Trans Over-Temp Lamp-On Message** - Each time the cluster receives a trans over-temp lamp-on message from the PCM indicating that the transmission fluid temperature is 135° C (275° F) or higher, the indicator will be illuminated and a single chime tone is sounded. The indicator remains illuminated until the cluster receives a trans over-temp lamp-off message from the PCM, or until the ignition switch is turned to the Off position, whichever occurs first. The chime tone feature will only repeat during the same ignition cycle if the transmission over-temperature indicator is cycled off and then on again by the appropriate trans over-temp messages from the PCM.
- **Actuator Test** - Each time the cluster is put through the actuator test, the transmission over-temperature indicator will be turned on, then off again during the bulb check portion of the test to confirm the functionality of the LED and the cluster control circuitry.

The PCM continually monitors the transmission temperature sensor to determine the transmission operating condition. The PCM then sends the proper trans over-temp lamp-on or lamp-off messages to the instrument cluster. If the instrument cluster turns on the transmission over-temperature indicator due to a high transmission oil temperature condition, it may indicate that the transmission and/or the transmission cooling system are being overloaded or that they require service. For further diagnosis of the transmission over-temperature indicator or the instrument cluster circuitry that controls the LED, (Refer to 8 - ELECTRICAL/INSTRUMENT CLUSTER - DIAGNOSIS AND TESTING).

For proper diagnosis of the transmission temperature sensor, the PCM, the PCI data bus, or the electronic message inputs to the instrument cluster that control the transmission over-temperature indicator, a diagnostic scan tool is required. Refer to the appropriate diagnostic information.

TURN SIGNAL INDICATOR

DESCRIPTION

Two turn signal indicators, one right and one left, are standard equipment on all instrument clusters. The turn signal indicators are located near the upper edge of the instrument cluster, between the speedometer and the tachometer.

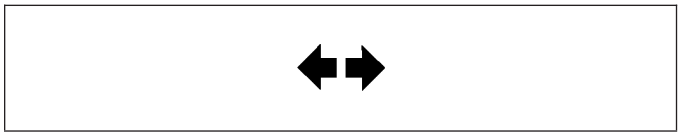

Each turn signal indicator consists of a stencil-like cutout of the International Control and Display Symbol icon for “Turn Warning” in the opaque layer of the instrument cluster overlay. The dark outer layer of the overlay prevents these icons from being clearly visible when they are not illuminated. A green Light Emitting Diode (LED) behind each cutout in the opaque layer of the overlay causes the icon to appear in green through the translucent outer layer of the overlay when the indicator is illuminated from behind by the LED, which is soldered onto the instrument cluster electronic circuit board. The turn signal indicators are serviced as a unit with the instrument cluster.

OPERATION

The turn signal indicators give an indication to the vehicle operator that the turn signal (left or right indicator flashing) or hazard warning (both left and right indicators flashing) have been selected and are operating. These indicators are controlled by transistors on the instrument cluster electronic circuit board based upon the cluster programming, a hard wired multiplex input received by the cluster from the turn signal and hazard warning switch circuitry of the multi-function switch on the turn/hazard switch mux circuit, and electronic messages received from the Front Control Module (FCM) (also known as the Integrated Power Module/IPM) over the Programmable Communications Interface (PCI) data bus.

Each turn signal indicator Light Emitting Diode (LED) is completely controlled by the instrument cluster logic circuit, and that logic will allow this indicator to operate whenever the instrument cluster receives a battery current input on the fused B(+) circuit. Therefore, each LED can be illuminated regardless of the ignition switch position. The LED only illuminates when it is provided a path to ground by the instrument cluster transistor. The instrument cluster will turn on the turn signal indicators for the following reasons:

- **Turn Signal-On Input** - Each time the cluster detects a turn signal-on input from the turn signal switch circuitry of the multi-function switch on the turn/hazard switch mux circuit, it sends the appropriate electronic turn signal switch status messages to the FCM over the PCI data bus. The FCM responds to these messages by controlling a battery voltage output and the flash rate for either the right or left turn signal lamps. The FCM also sends the appropriate electronic messages back to the EMIC to control the illumination and flash rate of the right or left turn signal indicators, as well as to control the click rate of an electromechanical relay soldered onto the EMIC electronic circuit board that emulates the sound emitted by a conventional turn signal flasher. The turn signals and the turn signal indicators continue to flash on and off until the cluster receives a turn signal-off input from the multi-function switch, or until the ignition switch is turned to the Off position, whichever occurs first.
- **Hazard Warning-On Input** - Each time the cluster detects a hazard warning-on input from the hazard warning switch circuitry of the multi-function switch on the turn/hazard switch mux circuit, it sends the appropriate electronic hazard switch status messages to the FCM over the PCI data bus. The FCM responds to these messages by controlling a battery voltage output and the flash rate for each of the right and left turn signal lamps. The FCM also sends the appropriate electronic messages back to the EMIC to control the illumination and flash rate of the right and left turn signal indicators, as well as to control the click rate of an electromechanical relay soldered onto the EMIC electronic circuit board that emulates the sound emitted by a conventional hazard warning flasher. The turn signals and the turn signal indicators continue to flash on and off until the cluster receives a hazard warning-off input from the multi-function switch.
- **Lamp Out Mode** - The instrument cluster also sends electronic turn signal on and off messages to the FCM over the PCI data bus, and the FCM flashes the appropriate exterior turn signal lamps. If the FCM detects an inoperative turn signal lamp or circuit, it increases the flash rate for the remaining operative turn signals and sends an electronic message back to the instrument cluster. The instrument cluster then increases the flash rate of the turn signal indicator(s) and the clicking rate of the electromechanical relay to provide an indication of the problem to the vehicle operator.
- **Actuator Test** - Each time the cluster is put through the actuator test, the turn signal indicators will be turned on, then off again during the bulb check portion of the test to confirm the functionality of each LED and the cluster control circuitry.

The instrument cluster continually monitors the multi-function switch and electronic messages from the FCM to determine the proper turn signal and hazard warning system control. For further diagnosis of the turn signal indicators or the instrument cluster circuitry that controls the indicators, (Refer to 8 - ELECTRICAL/INSTRUMENT CLUSTER - DIAGNOSIS AND TESTING).

For proper diagnosis of the turn signal and hazard warning system, the multi-function switch, the FCM, the PCI data bus, or the electronic message inputs to the instrument cluster that control the turn signal indicators, a diagnostic scan tool is required. Refer to the appropriate diagnostic information.

UPSHIFT INDICATOR

DESCRIPTION

An upshift indicator is standard equipment on all instrument clusters. However, on vehicles not equipped with a manual transmission, or on vehicles equipped with a manual transmission but sold in a market where this is not required equipment, this indicator is electronically disabled.

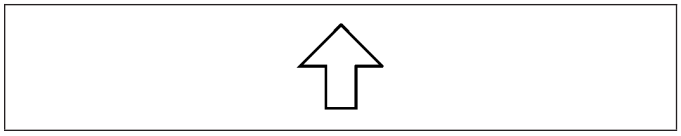

The upshift indicator consists of an upward pointed arrow icon, which appears on the right side of the electronic gear selector indicator Vacuum Fluorescent Display (VFD) unit. The VFD is soldered onto the cluster electronic circuit board and is visible through a window with a smoked clear lens located on the lower edge of the speedometer gauge dial face of the cluster overlay. The dark lens over the VFD prevents the indicator from being clearly visible when it is not illuminated. The icon appears in a blue-green color and at the same lighting level as the odometer/trip odometer information when it is illuminated by the instrument cluster electronic circuit board. The upshift indicator is serviced as a unit with the instrument cluster.

OPERATION

The upshift indicator gives an indication to the vehicle operator when the manual transmission should be shifted to the next highest gear in order to achieve the best fuel economy. This indicator is controlled by the instrument cluster circuit board based upon cluster programming and electronic messages received by the cluster from the Powertrain Control Module (PCM) on vehicles with a gasoline engine, or from the Engine Control Module (ECM) on vehicles with a diesel engine over the Programmable Communications Interface (PCI) data bus.

The upshift indicator is completely controlled by the instrument cluster logic circuit, and that logic will only allow this indicator to operate when the instrument cluster receives a battery current input on the fused ignition switch output (run-start) circuit. Therefore, the indicator will always be off when the ignition switch is in any position except On or Start. The indicator only illuminates when it is switched to ground by the instrument cluster circuitry. The instrument cluster will turn on the upshift indicator for the following reasons:

- **Upshift Lamp-On Message** - Each time the cluster receives an upshift lamp-on message from the PCM or ECM indicating the engine speed and load conditions are right for a transmission upshift to occur, the upshift indicator is illuminated. The indicator remains illuminated until the cluster receives an upshift lamp-off message from the PCM or ECM, or until the ignition switch is turned to the Off position, whichever occurs first. The PCM or ECM will normally send an upshift lamp-off message three to five seconds after a lamp-on message, if an upshift is not performed. The indicator will then remain off until the vehicle stops accelerating and is brought back into the range of indicator operation, or until the transmission is shifted into another gear.
- **Actuator Test** - Each time the cluster is put through the actuator test, the upshift indicator will be turned on, then off again during the VFD portion of the test to confirm the functionality of the VFD and the cluster control circuitry.

On vehicles with a gasoline engine, the PCM continually monitors the engine speed and load conditions to determine the proper fuel and ignition requirements. On vehicles with a diesel engine, the ECM continually monitors the engine speed and load conditions to determine the proper fuel requirements. The PCM or ECM then sends the proper upshift indicator lamp-on and lamp-off messages to the instrument cluster. For further diagnosis of the upshift indicator or the instrument cluster circuitry that controls the indicator, (Refer to 8 - ELECTRICAL/INSTRUMENT CLUSTER - DIAGNOSIS AND TESTING).

For proper diagnosis of the PCM, the ECM, the PCI data bus, or the electronic message inputs to the instrument cluster that control the upshift indicator, a diagnostic scan tool is required. Refer to the appropriate diagnostic information.

VOLTAGE GAUGE

DESCRIPTION

A voltage gauge is standard equipment on all instrument clusters. The voltage gauge is located in the upper left quadrant of the instrument cluster, above the fuel gauge.



The voltage gauge consists of a movable gauge needle or pointer controlled by the instrument cluster circuitry and a fixed 90 degree scale on the cluster overlay that reads left-to-right from “L” (or Low) to “H” (or High) for gasoline engines except SRT-10. On SRT-10 models, the scale reads from “10” to “18” volts. On vehicles with a diesel engine, the scale reads from “8” to “18” volts.

An International Control and Display Symbol icon for “Battery Charging Condition” is located on the cluster overlay, directly below the right end of the gauge scale. On all models except SRT-10 the voltage gauge graphics are black against a white field except for a single red graduation at each end of the gauge scale. On SRT-10 the gauge graphics are black against a silver field except for a single red graduation at the left end of the gauge scale and two red graduations at the right end of the gauge scale. In either case, the gauge graphics are clearly visible within the instrument cluster in daylight.

When illuminated from behind by the panel lamps dimmer controlled cluster illumination lighting with the exterior lamps turned On, the black graphics appear blue-green and the red graphics still appear red. The gauge needle has internal optical illumination. Gauge illumination is provided by a replaceable incandescent bulb and holder unit located on the instrument cluster electronic circuit board. The voltage gauge is serviced as a unit with the instrument cluster.

OPERATION

The voltage gauge gives an indication to the vehicle operator of the electrical system voltage. This gauge is controlled by the instrument cluster circuit board based upon cluster programming and electronic messages received by the cluster from the Powertrain Control Module (PCM) on vehicles equipped with a gasoline engine, or from the Engine Control Module (ECM) on vehicles equipped with a diesel engine over the Programmable Communications Interface (PCI) data bus.

The voltage gauge is an air core magnetic unit that receives battery current on the instrument cluster electronic circuit board through the fused ignition switch output (run-start) circuit whenever the ignition switch is in the On or Start positions. The cluster is programmed to move the gauge needle back to the left end of the scale after the ignition switch is turned to the Off position. The instrument cluster circuitry controls the gauge needle position and provides the following features:

- **System Voltage Message** - Each time the cluster receives a system voltage message from the PCM or ECM indicating the system voltage is between about 9.5 volts and about 15 volts, the gauge needle is moved to the relative voltage position on the gauge scale.
- **System Voltage Low (Charge Fail) Message** - Each time the cluster receives three consecutive messages from the PCM or ECM indicating the electrical system voltage is less than about 9 volts (charge fail condition) or that the battery temperature sensor input is an open circuit, the gauge needle is moved to the graduation on the far left end of the gauge scale and the check gauges indicator is illuminated. The gauge needle remains at the far left end of the gauge scale and the check gauges indicator remains illuminated until the cluster receives a single message from the PCM or ECM indicating the electrical system voltage is greater than about 9.5 volts (but less than about 15.5 volts), or until the ignition switch is turned to the Off position, whichever occurs first. On vehicles equipped with the optional diesel engine, the ECM is programmed to restrict the voltage gauge needle to a position above the graduation on the far left end of the gauge scale and suppress the check engine indicator operation until after the engine intake manifold air heater has completed a pre-heat or post-heat cycle.
- **System Voltage High Message** - On all models except SRT-10, each time the cluster receives three consecutive messages from the PCM or ECM indicating the electrical system voltage is greater than about 15.5 volts, the gauge needle is moved to the graduation on the far right end of the gauge scale and the check gauges indicator is illuminated. The gauge needle remains at the right end of the gauge scale and the check gauges indicator remains illuminated until the cluster receives a message from the PCM or ECM indicating the electrical system voltage is less than about 15.0 volts (but greater than about 9.5 volts), or until the ignition switch is turned to the Off position, whichever occurs first. On SRT-10, each time the cluster receives three consecutive messages from the PCM indicating the electrical system voltage is greater than about 15.5 volts, the gauge needle is moved to the 16 volt graduation of the gauge scale and the check gauges indicator is illuminated. The gauge needle remains at or above the 16 volt graduation of the gauge scale and the check gauges indicator remains illuminated until the cluster receives a message from the PCM indicating the electrical system voltage is less than about 15.0 volts (but greater than about 9.5 volts), or until the ignition switch is turned to the Off position, whichever occurs first.
- **Communication Error** - If the cluster fails to receive a system voltage message, it will hold the gauge needle at the last indication for about ten seconds, or until the ignition switch is turned to the Off position, whichever occurs first. After ten seconds, the cluster will move the gauge needle to the far left end of the gauge scale.
- **Actuator Test** - Each time the cluster is put through the actuator test, the voltage gauge needle will be swept to several calibration points on the gauge scale in a prescribed sequence in order to confirm the functionality of the gauge and the cluster control circuitry.

On vehicles with a gasoline engine, the PCM continually monitors the system voltage to control the generator output. On vehicles with a diesel engine, the ECM continually monitors the system voltage to control the generator output. The PCM or ECM then sends the proper system voltage messages to the instrument cluster. For further diagnosis of the voltage gauge or the instrument cluster circuitry that controls the gauge, (Refer to 8 - ELECTRICAL/INSTRUMENT CLUSTER - DIAGNOSIS AND TESTING). If the instrument cluster turns on the check gauges indicator due to a charge fail or voltage high condition, it may indicate that the charging system requires service.

For proper diagnosis of the charging system, the PCM, the ECM, the PCI data bus, or the electronic message inputs to the instrument cluster that control the voltage gauge, a diagnostic scan tool is required. Refer to the appropriate diagnostic information.

WAIT-TO-START INDICATOR

DESCRIPTION

A wait-to-start indicator is only found in the instrument clusters for vehicles equipped with an optional diesel engine. The wait-to-start indicator is located near the lower edge of the instrument cluster, between the tachometer and the speedometer.



The wait-to-start indicator consists of stencil-like cutout of the International Control and Display Symbol icon for “Diesel Preheat” in the opaque layer of the instrument cluster overlay. The dark outer layer of the overlay prevents the indicator from being clearly visible when it is not illuminated. An amber Light Emitting Diode (LED) behind the cutout in the opaque layer of the overlay causes the icon to appear in amber through the translucent outer layer of the overlay when the indicator is illuminated from behind by the LED, which is soldered onto the instrument cluster electronic circuit board. The wait-to-start indicator is serviced as a unit with the instrument cluster.

OPERATION

The wait-to-start indicator gives an indication to the vehicle operator when the air temperature within the diesel engine intake manifold is too cool for efficient and reliable engine starting, and that the intake air heater grids are energized in their pre-heat operating mode. This indicator is controlled by a transistor on the instrument cluster circuit board based upon cluster programming and electronic messages received by the cluster from the Engine Control Module (ECM) over the Programmable Communications Interface (PCI) data bus.

The wait-to-start indicator Light Emitting Diode (LED) is completely controlled by the instrument cluster logic circuit, and that logic will only allow this indicator to operate when the instrument cluster receives a battery current input on the fused ignition switch output (run-start) circuit. Therefore, the LED will always be off when the ignition switch is in any position except On or Start. The LED only illuminates when it is provided a path to ground by the instrument cluster transistor. The instrument cluster will turn on the wait-to-start indicator for the following reasons:

- **Wait-To-Start Lamp-On Message** - Each time the cluster receives a wait-to-start lamp-on message from the ECM indicating that the air temperature within the intake manifold is too cool for efficient and reliable engine starting, the wait-to-start indicator will be illuminated. The indicator remains illuminated until the cluster receives a wait-to-start lamp-off message, until the ECM detects that the engine is running or until the ignition switch is turned to the Off position, whichever occurs first.
- **Actuator Test** - Each time the cluster is put through the actuator test, the wait-to-start indicator will be turned on, then off again during the bulb check portion of the test to confirm the functionality of the LED and the cluster control circuitry.

The ECM continually monitors the engine intake air temperature sensor to determine when the intake air heater grids should be energized in their pre-heat operating mode. The ECM then sends the proper wait-to-start lamp-on and lamp-off messages to the instrument cluster. For further diagnosis of the wait-to-start indicator or the instrument cluster circuitry that controls the indicator, (Refer to 8 - ELECTRICAL/INSTRUMENT CLUSTER - DIAGNOSIS AND TESTING).

For proper diagnosis of the engine intake air temperature sensor, the intake air heater grid control circuits, the ECM, the PCI data bus, or the electronic message inputs to the instrument cluster that control the wait-to-start indicator, a diagnostic scan tool is required. Refer to the appropriate diagnostic information.

WASHER FLUID INDICATOR

DESCRIPTION

A washer fluid indicator is standard equipment on all instrument clusters. The washer fluid indicator consists of the text “LOW WASH”, which appears in the lower portion of the odometer Vacuum-Fluorescent Display (VFD) unit.



The odometer VFD is soldered onto the cluster electronic circuit board and is visible through a window with a smoked clear lens located on the lower edge of the tachometer gauge dial face of the cluster overlay. The dark lens over the VFD prevents the indicator from being clearly visible when it is not illuminated. The “LOW WASH” text appears in an amber color and at the same lighting level as the odometer/trip odometer information when it is illuminated by the instrument cluster electronic circuit board. The washer fluid indicator is serviced as a unit with the VFD in the instrument cluster.

OPERATION

The washer fluid indicator gives an indication to the vehicle operator that the fluid level in the washer reservoir is low. This indicator is controlled by the instrument cluster circuit board based upon cluster programming and electronic messages received by the cluster from the Front Control Module (FCM) (also known as the Integrated Power Module/IPM or Power Distribution Center/PDC) over the Programmable Communications Interface (PCI) data bus.

The washer fluid indicator is completely controlled by the instrument cluster logic circuit, and that logic will only allow this indicator to operate when the instrument cluster receives a battery current input on the fused ignition switch output (run-start) circuit. Therefore, the indicator will always be off when the ignition switch is in any position except On or Start. The indicator only illuminates when it is switched to ground by the instrument cluster circuitry. The instrument cluster will turn on the washer fluid indicator for the following reasons:

- **Washer Fluid Indicator Lamp-On Message** - Each time the cluster receives a washer fluid indicator lamp-on message from the FCM indicating that a low washer condition has been detected for sixty consecutive seconds, the washer fluid indicator is illuminated and a single chime tone is sounded. The indicator remains illuminated until the cluster receives a washer fluid indicator lamp-off message for sixty consecutive seconds from the FCM or until the ignition switch is turned to the Off position, whichever occurs first. The chime tone feature will only repeat during the same ignition cycle if the washer fluid indicator is cycled off and then on again by the appropriate washer fluid lamp messages from the FCM.
- **Actuator Test** - Each time the cluster is put through the actuator test, the washer fluid indicator will be turned on, then off again during the VFD portion of the test to confirm the functionality of the VFD and the cluster control circuitry.

The FCM continually monitors the washer fluid level switch in the washer reservoir to determine the level of the washer fluid. The FCM then sends the proper washer fluid indicator lamp-on and lamp-off messages to the instrument cluster. For further diagnosis of the washer fluid indicator or the instrument cluster circuitry that controls the indicator, (Refer to 8 - ELECTRICAL/INSTRUMENT CLUSTER - DIAGNOSIS AND TESTING).

For proper diagnosis of the washer fluid level switch, the FCM, the PCI data bus, or the electronic message inputs to the instrument cluster that control the washer fluid indicator, a diagnostic scan tool is required. Refer to the appropriate diagnostic information.

WATER-IN-FUEL INDICATOR

DESCRIPTION

A water-in-fuel indicator is only found in the instrument clusters for vehicles equipped with an optional diesel engine. The water-in-fuel indicator is located near the lower edge of the instrument cluster, between the tachometer and the speedometer.



The water-in-fuel indicator consists of stencil-like cutout of the International Control and Display Symbol icon for “Water In Fuel” in the opaque layer of the instrument cluster overlay. The dark outer layer of the overlay prevents the indicator from being clearly visible when it is not illuminated. A red Light Emitting Diode (LED) behind the cutout in the opaque layer of the overlay causes the icon to appear in red through the translucent outer layer of the overlay when the indicator is illuminated from behind by the LED, which is soldered onto the instrument cluster electronic circuit board. The water-in-fuel indicator is serviced as a unit with the instrument cluster.

OPERATION

The water-in-fuel indicator gives an indication to the vehicle operator when there is excessive water in the fuel system. This indicator is controlled by a transistor on the instrument cluster circuit board based upon the cluster pro-

gramming and electronic messages received by the cluster from the Engine Control Module (ECM) over the Programmable Communications Interface (PCI) data bus.

The water-in-fuel indicator Light Emitting Diode (LED) is completely controlled by the instrument cluster logic circuit, and that logic will only allow this indicator to operate when the instrument cluster receives a battery current input on the fused ignition switch output (run-start) circuit. Therefore, the LED will always be off when the ignition switch is in any position except On or Start. The LED only illuminates when it is provided a path to ground by the instrument cluster transistor. The instrument cluster will turn on the water-in-fuel indicator for the following reasons:

- **Bulb Test** - Each time the ignition switch is turned to the On position the water-in-fuel indicator is illuminated for about two seconds as a bulb test.
- **Water-In-Fuel Lamp-On Message** - Each time the cluster receives a water-in-fuel lamp-on message from the ECM indicating that there is excessive water in the diesel fuel system, the water-in-fuel indicator will be illuminated. The indicator remains illuminated until the cluster receives a water-in-fuel lamp-off message, or until the ignition switch is turned to the Off position, whichever occurs first.
- **Actuator Test** - Each time the cluster is put through the actuator test, the water-in-fuel indicator will be turned on, then off again during the bulb check portion of the test to confirm the functionality of the LED and the cluster control circuitry.

The ECM continually monitors the water-in-fuel sensor to determine whether there is excessive water in the diesel fuel system. The ECM then sends the proper water-in-fuel lamp-on and lamp-off messages to the instrument cluster. For further diagnosis of the water-in-fuel indicator or the instrument cluster circuitry that controls the indicator, (Refer to 8 - ELECTRICAL/INSTRUMENT CLUSTER - DIAGNOSIS AND TESTING).

For proper diagnosis of the water-in-fuel sensor, the ECM, the PCI data bus, or the electronic message inputs to the instrument cluster that control the water-in-fuel indicator, a diagnostic scan tool is required. Refer to the appropriate diagnostic information.

LAMPS

TABLE OF CONTENTS

page

LAMPS/LIGHTING - EXTERIOR - ELECTRICAL DIAGNOSTICS 1
LAMPS/LIGHTING - EXTERIOR - SERVICE INFORMATION 107

page

LAMPS/LIGHTING - INTERIOR - ELECTRICAL DIAGNOSTICS 174
LAMPS/LIGHTING - INTERIOR - SERVICE INFORMATION 205

LAMPS/LIGHTING - EXTERIOR - ELECTRICAL DIAGNOSTICS

TABLE OF CONTENTS

page

LAMPS/LIGHTING - EXTERIOR - ELECTRICAL DIAGNOSTICS
DIAGNOSIS AND TESTING
FCM-FRONT FOG LAMP RELAY OUTPUT CIRCUIT HIGH . . . 3
FCM-FRONT FOG LAMP RELAY OUTPUT CIRCUIT LOW . . . 6
FCM-FRONT FOG LAMP RELAY OUTPUT CIRCUIT OPEN . . . 9
FCM-FRONT LEFT TURN OUTPUT CIRCUIT LOW . . . 12
FCM-FRONT LEFT TURN OUTPUT CIRCUIT OPEN . . . 15
FCM-FRONT RIGHT TURN OUTPUT CIRCUIT LOW . . . 18
FCM-FRONT RIGHT TURN OUTPUT CIRCUIT OPEN . . . 21
MIC-HEADLAMP SWITCH INPUT CIRCUIT OPEN . . . 24
MIC-HEADLAMP SWITCH INPUT CIRCUIT SHORTED . . . 27
FCM-LEFT HIGHBEAM OUTPUT CIRCUIT LOW . . . 30
FCM-LEFT HIGHBEAM OUTPUT CIRCUIT OPEN . . . 33
FCM-LEFT LOWBEAM OUTPUT CIRCUIT LOW . . . 36
FCM-LEFT LOWBEAM OUTPUT CIRCUIT OPEN . . . 39
FCM-LEFT STOP LAMP OUTPUT CIRCUIT LOW . . . 42
FCM-LEFT STOP LAMP OUTPUT CIRCUIT OPEN . . . 45

page

FCM-LEFT TRAILER RELAY OUTPUT CIRCUIT HIGH . . . 48
FCM-LEFT TRAILER RELAY OUTPUT CIRCUIT LOW . . . 50
FCM-LEFT TRAILER RELAY OUTPUT CIRCUIT OPEN . . . 52
FCM-PARK LAMP RELAY OUTPUT CIRCUIT HIGH . . . 55
FCM-PARK LAMP RELAY OUTPUT CIRCUIT LOW . . . 58
FCM-PARK LAMP RELAY OUTPUT CIRCUIT OPEN . . . 61
FCM-REAR LEFT TURN OUTPUT CIRCUIT LOW . . . 64
FCM-REAR LEFT TURN OUTPUT CIRCUIT OPEN . . . 67
FCM-REAR RIGHT TURN OUTPUT CIRCUIT LOW . . . 70
FCM-REAR RIGHT TURN OUTPUT CIRCUIT OPEN . . . 73
FCM-RIGHT HIGHBEAM OUTPUT CIRCUIT LOW . . . 76
FCM-RIGHT HIGHBEAM OUTPUT CIRCUIT OPEN . . . 79
FCM-RIGHT LOWBEAM OUTPUT CIRCUIT LOW . . . 82
FCM-RIGHT LOWBEAM OUTPUT CIRCUIT OPEN . . . 85
FCM-RIGHT STOP LAMP OUTPUT CIRCUIT LOW . . . 88
FCM-RIGHT STOP LAMP OUTPUT CIRCUIT OPEN . . . 91
FCM-RIGHT TRAILER RELAY OUTPUT CIRCUIT HIGH . . . 94

FCM-RIGHT TRAILER RELAY OUTPUT CIRCUIT LOW 96
FCM-RIGHT TRAILER RELAY OUTPUT CIRCUIT OPEN 98
MIC-TURN HAZARD SWITCH INPUT CIRCUIT OPEN 101
MIC-TURN HAZARD SWITCH INPUT CIRCUIT SHORTED 104

LAMPS/LIGHTING - EXTERIOR - ELECTRICAL DIAGNOSTICS

DIAGNOSIS AND TESTING

FCM-FRONT FOG LAMP RELAY OUTPUT CIRCUIT HIGH

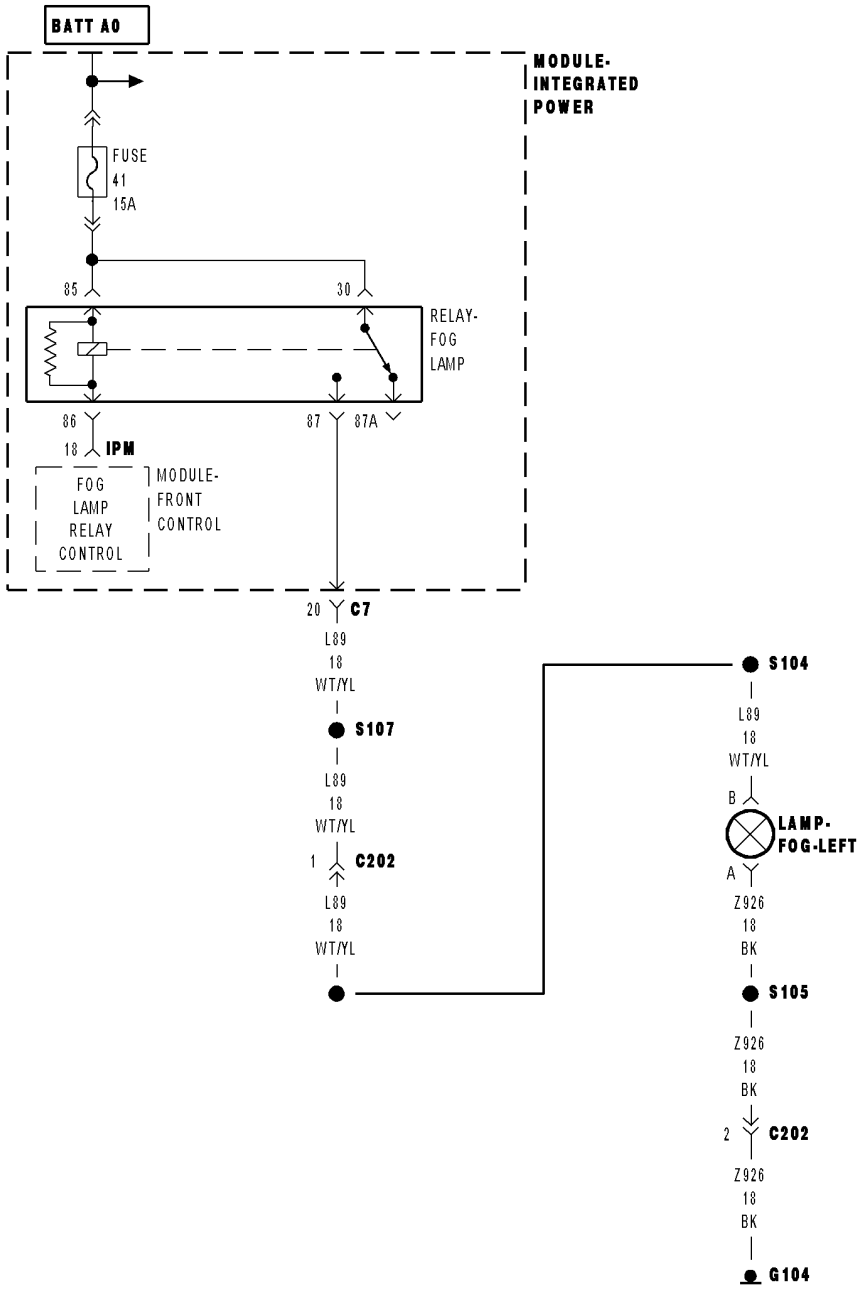

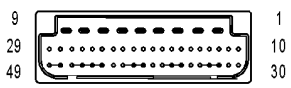

MODULE-
FRONT
CONTROL IPM

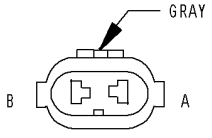

LAMP-
FOG-LEFT

81468422

FCM-FRONT FOG LAMP RELAY OUTPUT CIRCUIT HIGH (CONTINUED)

For the Exterior Lighting system circuit diagram (Refer to 8 - ELECTRICAL/LAMPS/LIGHTING - EXTERIOR - SCHEMATICS AND DIAGRAMS).

For a complete wiring diagram **Refer to Section 8W**.

- **When Monitored:**
  With the ignition on
- **Set Condition:**
  The FCM detects a HIGH condition

Possible Causes
FOG LAMP RELAY
INTEGRATED POWER MODULE
FRONT CONTROL MODULE

1. INTERMITTENT CONDITION

Turn the ignition on.
With the DRBIII®, clear all FCM DTC's.
Turn the Fog Lamps on.
With the DRBIII®, read the DTC information.

Does the DRBIII® read: Front Fog Lamp Relay Output Circuit High?

Yes >> Go To 2

No >> The condition that caused the symptom is currently not present. Inspect the related wiring for a possible intermittent condition. Look for any chafed, pierced,pinched, or partially broken wires.
Perform BODY VERIFICATION TEST - VER 1.

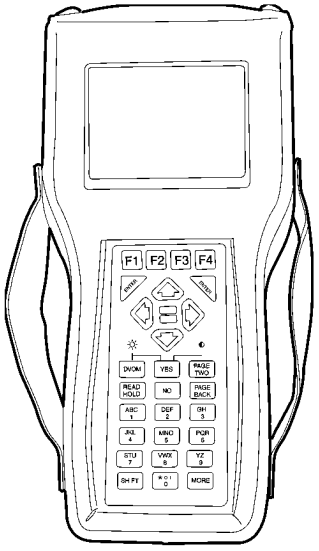

FCM-FRONT FOG LAMP RELAY OUTPUT CIRCUIT HIGH (CONTINUED)

2. FOG LAMP RELAY

Turn the ignition off.

Remove and install a known good relay in place of the Fog Lamp Relay.

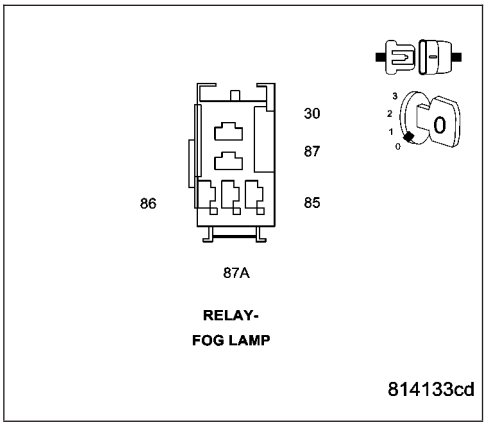

Do the Fog Lamps operate normally?

Yes >> Replace the Fog Lamp Relay.
Perform BODY VERIFICATION TEST - VER 1.

No >> Go To 3

3. FRONT CONTROL MODULE

Turn the ignition off.

Remove the Fog Lamp Relay from the IPM.

Remove the Front Control Module from the IPM.

Measure the voltage of the Fog Lamp Relay Control circuit and ground.

Is the voltage above 1.0 volts?

Yes >> Replace the Integrated Power Module.
Perform BODY VERIFICATION TEST - VER 1.

No >> Replace the Front Control Module.
Perform BODY VERIFICATION TEST - VER 1.

FCM-FRONT FOG LAMP RELAY OUTPUT CIRCUIT LOW

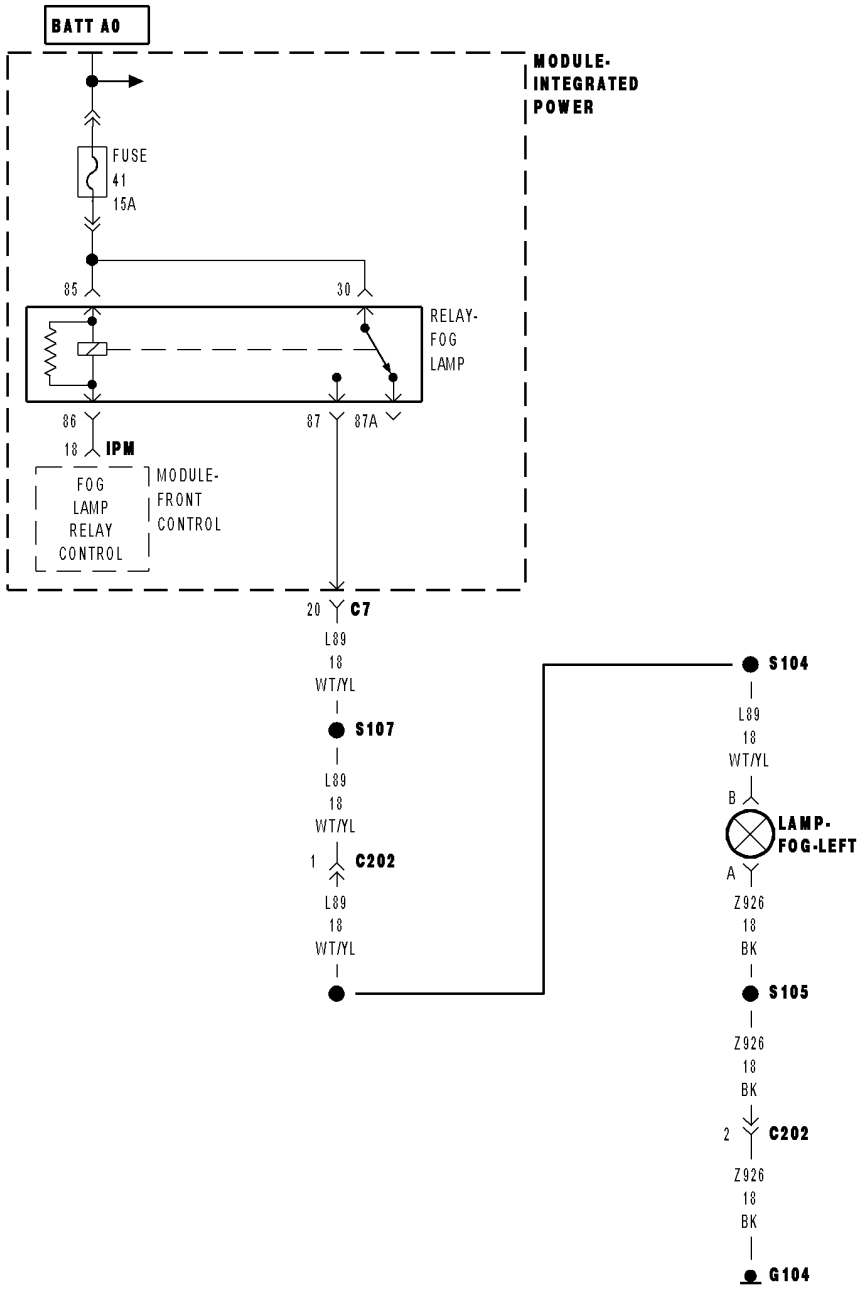

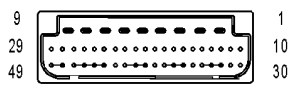

MODULE-
FRONT
CONTROL IPM

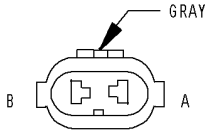

LAMP-
FOG-LEFT

81468422

FCM-FRONT FOG LAMP RELAY OUTPUT CIRCUIT LOW (CONTINUED)

For the Exterior Lighting system circuit diagram (Refer to 8 - ELECTRICAL/LAMPS/LIGHTING - EXTERIOR - SCHEMATICS AND DIAGRAMS).

For a complete wiring diagram **Refer to Section 8W**.

- **When Monitored:**
  With the ignition on
- **Set Condition:**
  The FCM detects a short to ground condition

Possible Causes
FOG LAMP RELAY
POWER DISTRIBUTION CENTER
FRONT CONTROL MODULE

1. INTERMITTENT CONDITION

Turn the ignition on.
With the DRBIII®, clear all FCM DTC's.
Turn the Front Fog Lamps on.
With the DRBIII®, read the DTC information.

Does the DRBIII® read: Front Fog Lamp Relay Output Circuit Low?

Yes >> Go To 2

No >> The condition that caused the symptom is currently not present. Inspect the related wiring for a possible intermittent condition. Look for any chafed, pierced, pinched, or partially broken wires.
Perform BODY VERIFICATION TEST - VER 1.

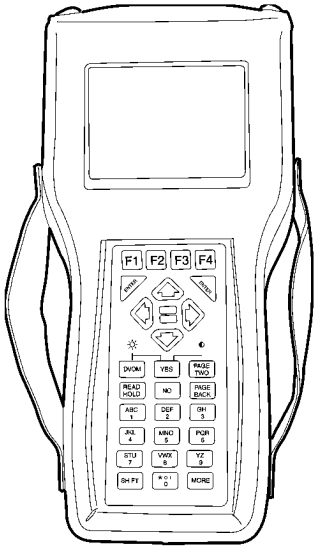

FCM-FRONT FOG LAMP RELAY OUTPUT CIRCUIT LOW (CONTINUED)

2. FOG LAMP RELAY

Turn the ignition off.
Install a know good relay in place of the Fog Lamp Relay.
Turn the ignition on.
Actuate the Fog Lamps.

Do the Fog Lamps operate normally?

Yes >> Go To 3

No >> Replace the Fog Lamp Relay.
Perform BODY VERIFICATION TEST - VER 1.

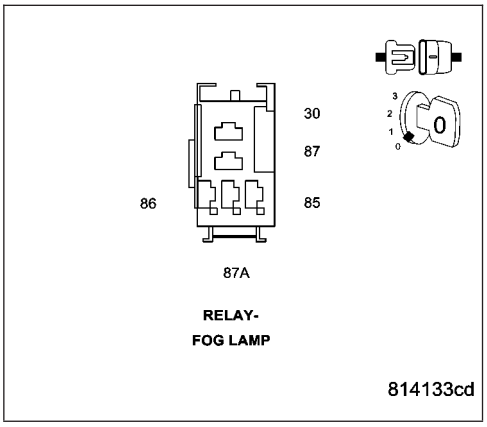

3. FRONT CONTROL MODULE

Turn the ignition off
Remove the Fog Lamp Relay.
Remove the FCM from the IPM.
Measure the resistance between ground and the Fog Lamp Relay control circuit in the IPM.

Is the resistance below 5.0 ohms?

Yes >> Replace the Power Distribution Center(PDC).
Perform BODY VERIFICATION TEST - VER 1.

No >> Replace the Front Control Module.
Perform BODY VERIFICATION TEST - VER 1.

FCM-FRONT FOG LAMP RELAY OUTPUT CIRCUIT OPEN

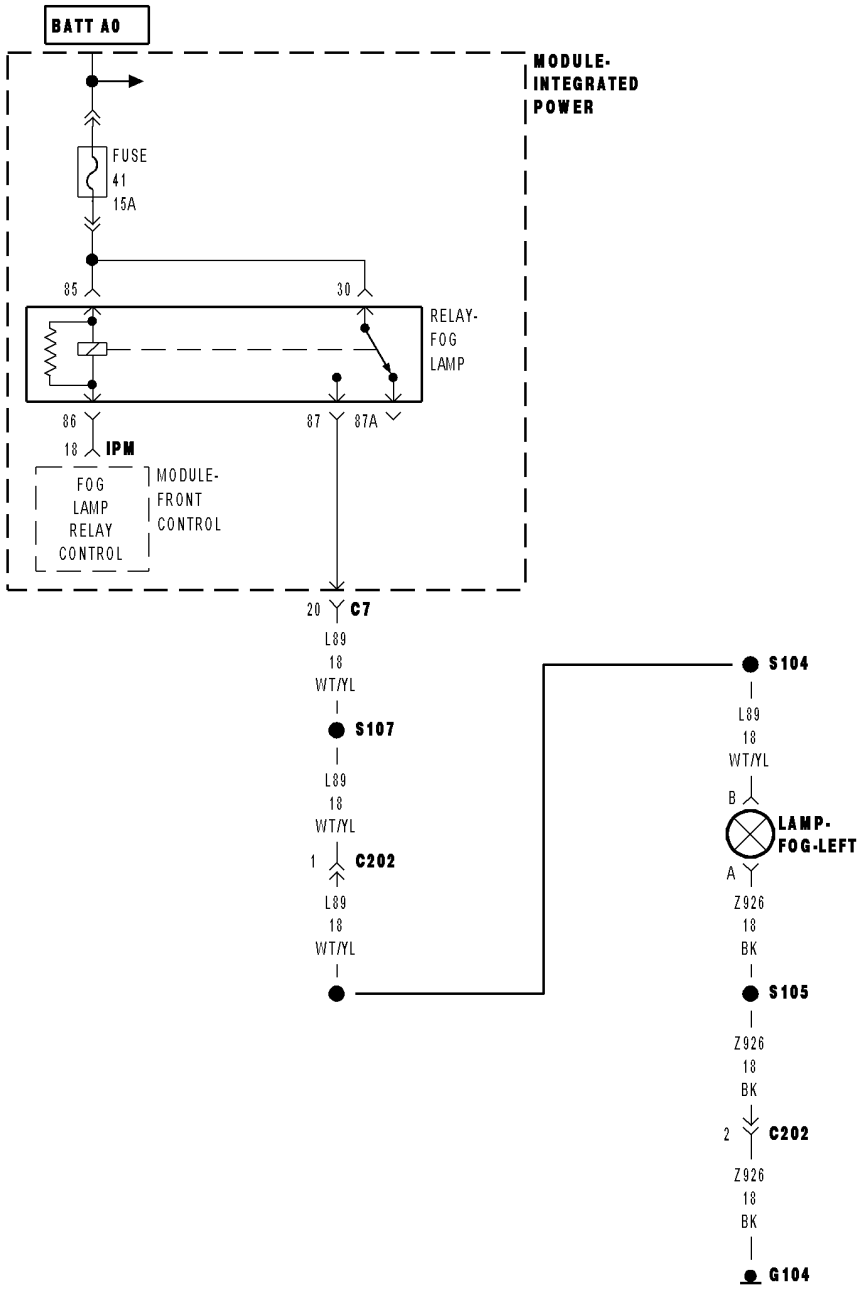

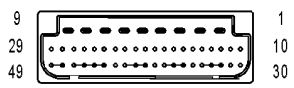

MODULE-
FRONT
CONTROL IPM

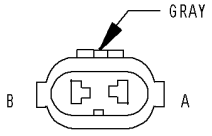

LAMP-
FOG-LEFT

81468422

FCM-FRONT FOG LAMP RELAY OUTPUT CIRCUIT OPEN (CONTINUED)

For the Exterior Lighting system circuit diagram (Refer to 8 - ELECTRICAL/LAMPS/LIGHTING - EXTERIOR - SCHEMATICS AND DIAGRAMS).

For a complete wiring diagram **Refer to Section 8W**.

- **When Monitored:**
  With the ignition on
- **Set Condition:**
  The FCM detects an OPEN condition

Possible Causes
MISSING RELAY
FOG LAMP RELAY OUTPUT CIRCUIT OPEN
FRONT CONTROL MODULE

1. INTERMITTENT CONDITION

Turn the ignition on.
With the DRBIII®, clear all FCM DTC's.
Turn the Front Fog Lamps on.
With the DRBIII®, read the DTC information.

Doe the DRBIII® read: Front Fog Lamp Relay Output Circuit Open.

Yes >> Go To 2

No >> The condition that caused the symptom is currently not present. Inspect the related wiring for a possible intermittent condition. Look for any chafed, pierced, pinched, or partially broken wires.
Perform BODY VERIFICATION TEST - VER 1.

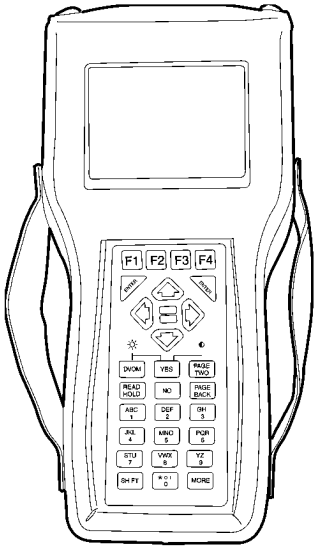

2. MISSING RELAY

Turn the ignition off.
Check the IPM to make certain the Fog Lamp Relay is present.

Is the Fog Lamp Relay present?

Yes >> Go To 3

No >> Replace the missing Fog Lamp Relay.
Perform BODY VERIFICATION TEST - VER 1.

FCM-FRONT FOG LAMP RELAY OUTPUT CIRCUIT OPEN (CONTINUED)

3. FOG LAMP RELAY

Turn the ignition off.
Install a known good relay in place of the fog lamp relay.
Turn the Fog Lamps On.

Do the Fog Lamps operate normally?

Yes >> Replace the Fog Lamp Relay.
Perform BODY VERIFICATION TEST - VER 1.

No >> Go To 4

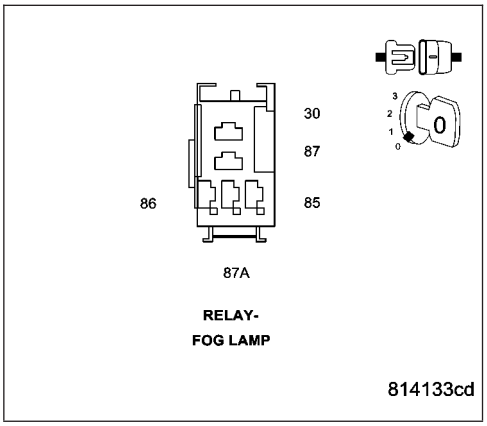

4. FRONT CONTROL MODULE

Turn the ignition off
Remove the Fog Lamp Relay.
Measure the voltage of the Fused B+ circuit of the fog lamp relay.

Is the voltage above 10 volts?

Yes >> Replace the Front Control Module.
Perform BODY VERIFICATION TEST - VER 1.

No >> Repair the Fog Lamp Relay Output Circuit.
Perform BODY VERIFICATION TEST - VER 1.

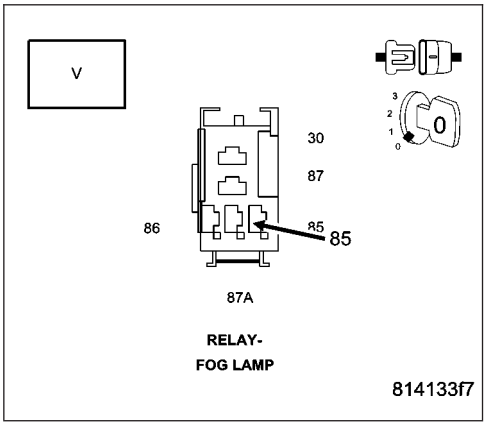

FCM-FRONT LEFT TURN OUTPUT CIRCUIT LOW

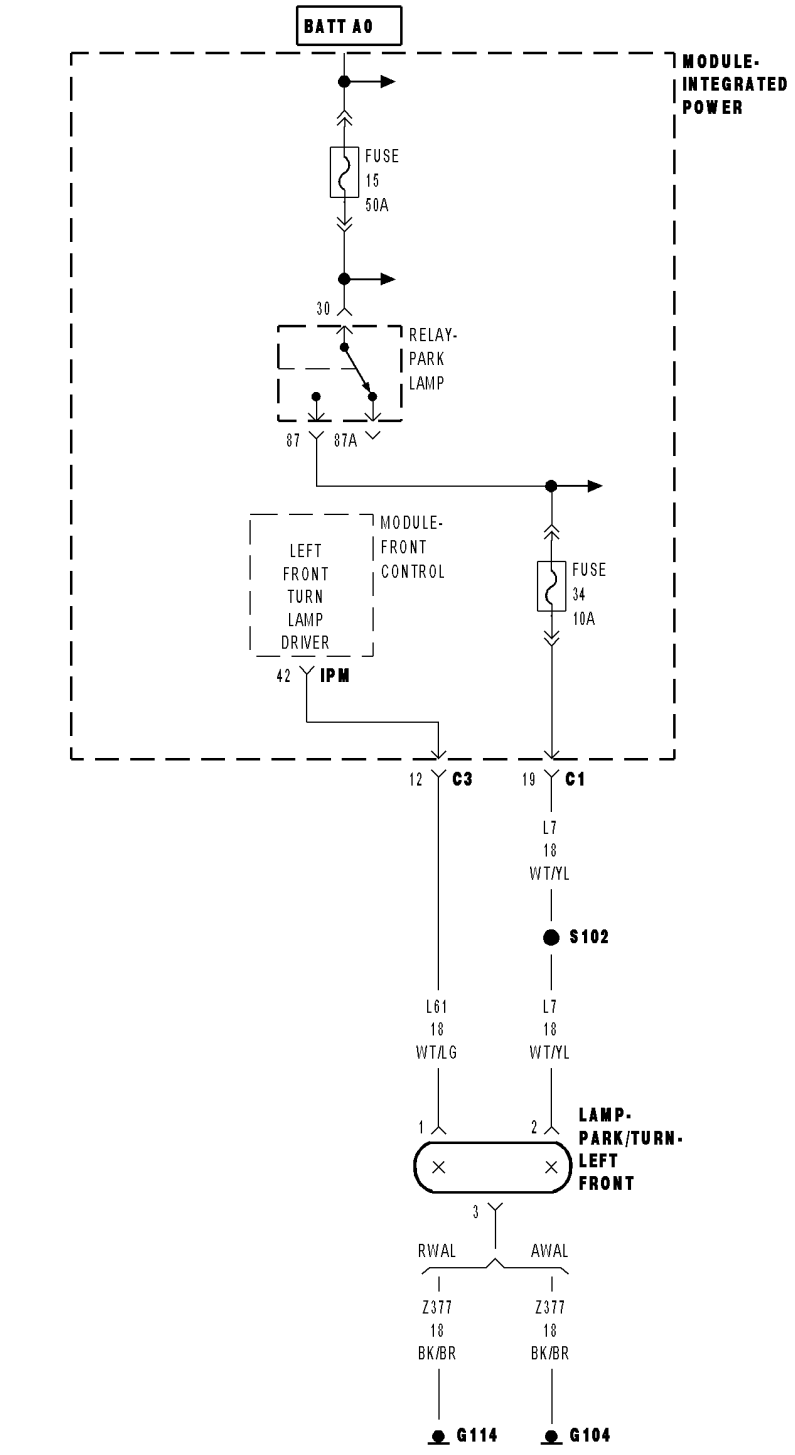

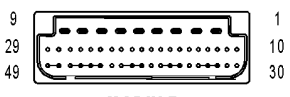

MODULE-
FRONT
CONTROL IPM

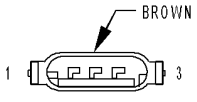

LAMP-
PARK/TURN-
LEFT
FRONT

814684a7

FCM-FRONT LEFT TURN OUTPUT CIRCUIT LOW (CONTINUED)

For the Exterior Lighting system circuit diagram (Refer to 8 - ELECTRICAL/LAMPS/LIGHTING - EXTERIOR - SCHEMATICS AND DIAGRAMS).

For a complete wiring diagram **Refer to Section 8W**.

- **When Monitored:**
  With the ignition on
- **Set Condition:**
  The FCM detects a short to ground condition

Possible Causes
LEFT FRONT TURN LAMP DRIVER CIRCUIT SHORT TO GROUND
POWER DISTRIBUTION CENTER
FRONT CONTROL MODULE

1. INTERMITTENT CONDITION

Turn the ignition on.
With the DRBIII®, clear all FCM DTC's.
Turn the Left Front Turn Signal on.
With the DRBIII®, read the DTC information.

Does the DRBIII® read: Front Left Turn Output Circuit Low?

Yes >> Go To 2

No >> The condition that caused the symptom is currently not present. Inspect the related wiring for a possible intermittent condition. Look for any chafed, pierced, pinched, or partially broken wires.
Perform BODY VERIFICATION TEST - VER 1.

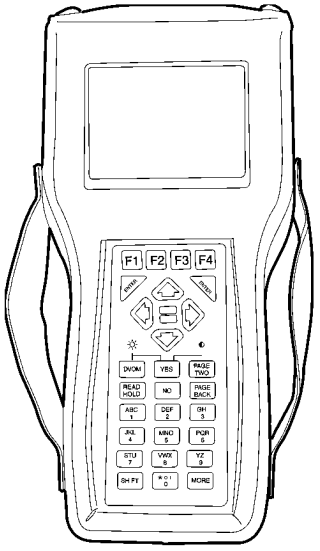

FCM-FRONT LEFT TURN OUTPUT CIRCUIT LOW (CONTINUED)

2. LEFT FRONT TURN LAMP DRIVER CIRCUIT SHORT TO GROUND

Turn the ignition off.

Disconnect the IPM C3 harness connector.

Measure the resistance between ground and the Left Front Turn Lamp Driver circuit.

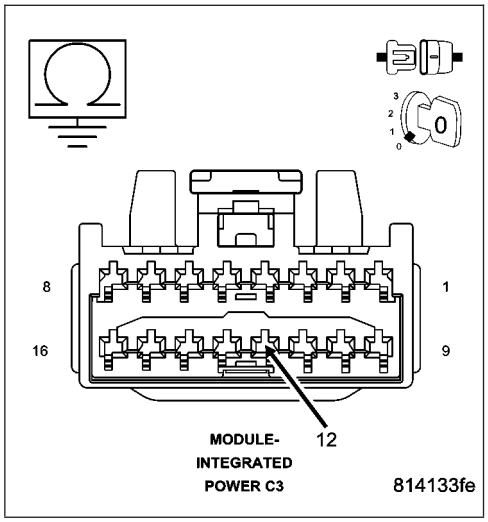

Is the resistance below 5.0 ohms?

Yes >> Go To 3

No >> Repair the Left Front Turn Lamp Driver circuit for a short to ground.
Perform BODY VERIFICATION TEST - VER 1.

---

3. FRONT CONTROL MODULE

Turn the ignition off

Disconnect the FCM connector.

Disconnect the IPM C3 harness connector.

Measure the resistance between ground and the Left Front Turn Lamp Driver circuit in the IPM.

Is the resistance below 5.0 ohms?

Yes >> Replace the Power Distribution Center(PDC).
Perform BODY VERIFICATION TEST - VER 1.

No >> Replace the Front Control Module.
Perform BODY VERIFICATION TEST - VER 1.

FCM-FRONT LEFT TURN OUTPUT CIRCUIT OPEN

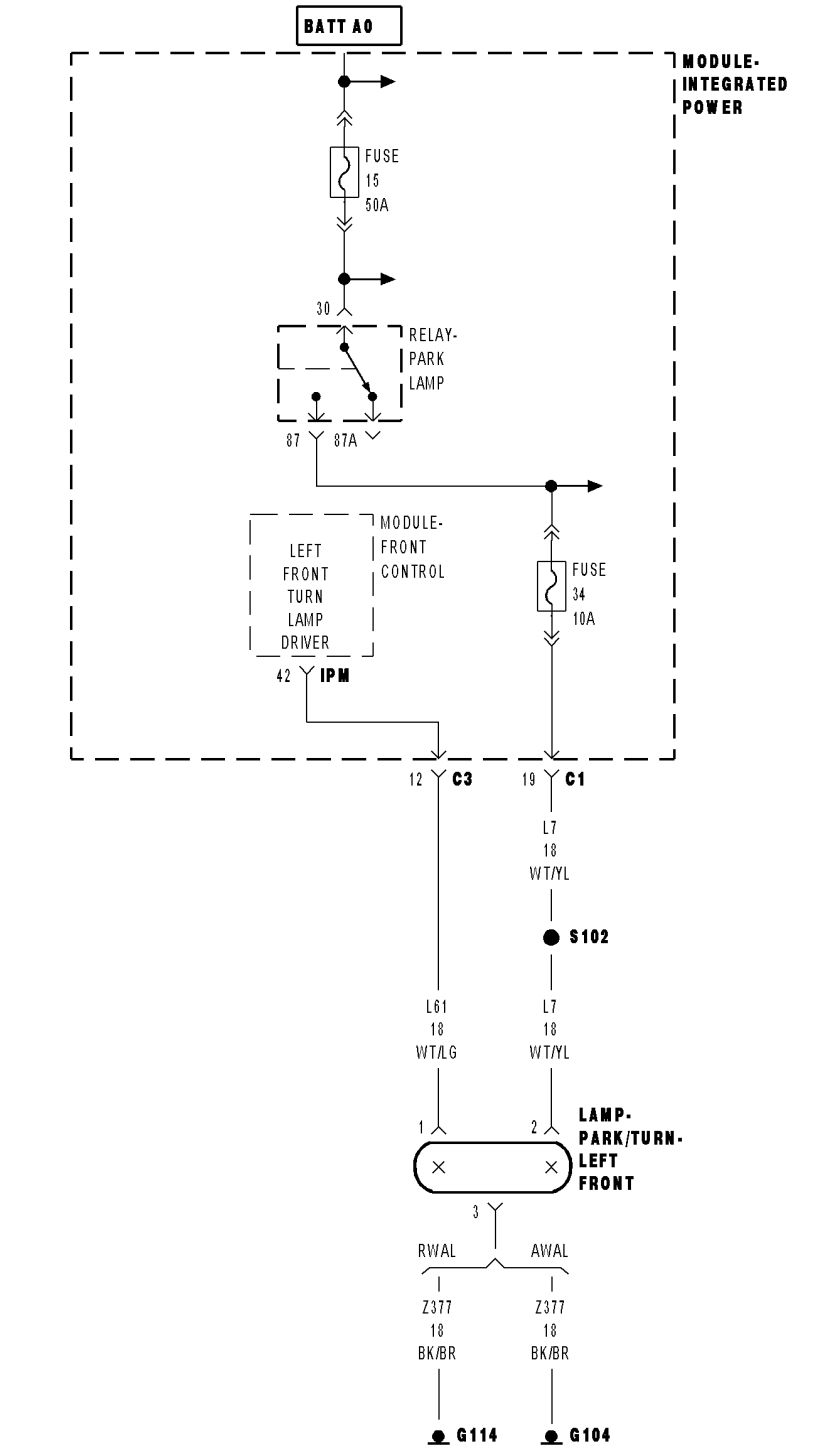

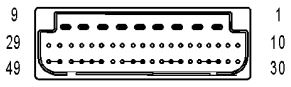

MODULE-
FRONT
CONTROL IPM

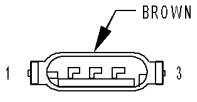

LAMP-
PARK/TURN-
LEFT
FRONT

814684a7

FCM-FRONT LEFT TURN OUTPUT CIRCUIT OPEN (CONTINUED)

For the Exterior Lighting system circuit diagram (Refer to 8 - ELECTRICAL/LAMPS/LIGHTING - EXTERIOR - SCHEMATICS AND DIAGRAMS).

For a complete wiring diagram **Refer to Section 8W**.

- **When Monitored:**
  With the ignition on
- **Set Condition:**
  The FCM detects an OPEN condition

Possible Causes
LEFT FRONT TURN SIGNAL OUTPUT CIRCUIT OPEN
POWER DISTRIBUTION CENTER
FRONT CONTROL MODULE

1. INTERMITTENT CONDITION

Turn the ignition on.
With the DRBIII®, clear all FCM DTC's.
Turn the Left Front Turn Signal on.
With the DRBIII®, read the DTC information.

Does the DRBIII® read: Front Left Turn Output Circuit Open?

Yes >> Go To 2

No >> The condition that caused the symptom is currently not present. Inspect the related wiring for a possible intermittent condition. Look for any chafed, pierced, pinched, or partially broken wires.
Perform BODY VERIFICATION TEST - VER 1.

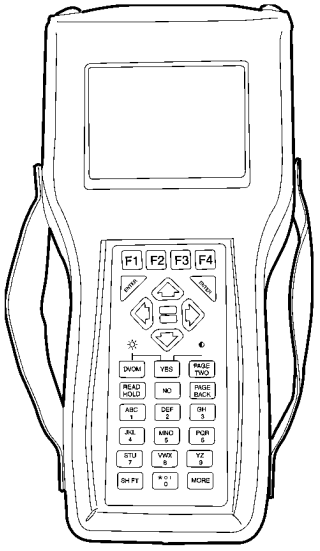

FCM-FRONT LEFT TURN OUTPUT CIRCUIT OPEN (CONTINUED)

2. LEFT FRONT TURN SIGNAL OUTPUT CIRCUIT OPEN

Turn the ignition off.
Disconnect the IPM C3 harness connector
Measure the resistance of the Left Front Turn Signal Output circuit.

Is the resistance above 5.0 ohms?

Yes >> Repair the Left Front Turn Signal Output circuit for an open.
Perform BODY VERIFICATION TEST - VER 1.

No >> Go To 3

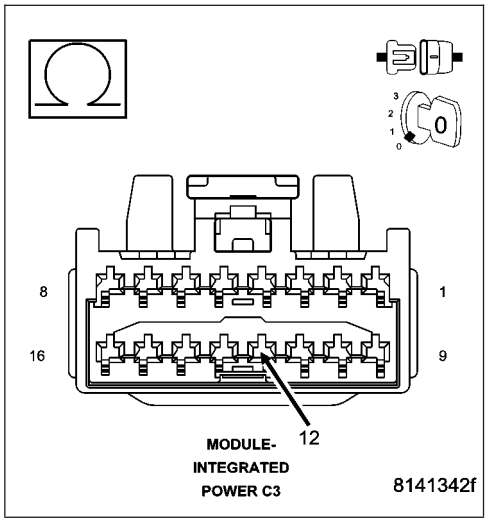

3. FRONT CONTROL MODULE

Turn the ignition off
Disconnect the FCM harness connector.
Disconnect the IPM C3 harness connector.
Measure the resistance between ground and the Left Front Turn Signal Output circuit.

Is the resistance above 5.0 ohms?

Yes >> Replace the Power Distribution Center..
Perform BODY VERIFICATION TEST - VER 1.

No >> Replace the Front Control Module.
Perform BODY VERIFICATION TEST - VER 1.

FCM-FRONT RIGHT TURN OUTPUT CIRCUIT LOW

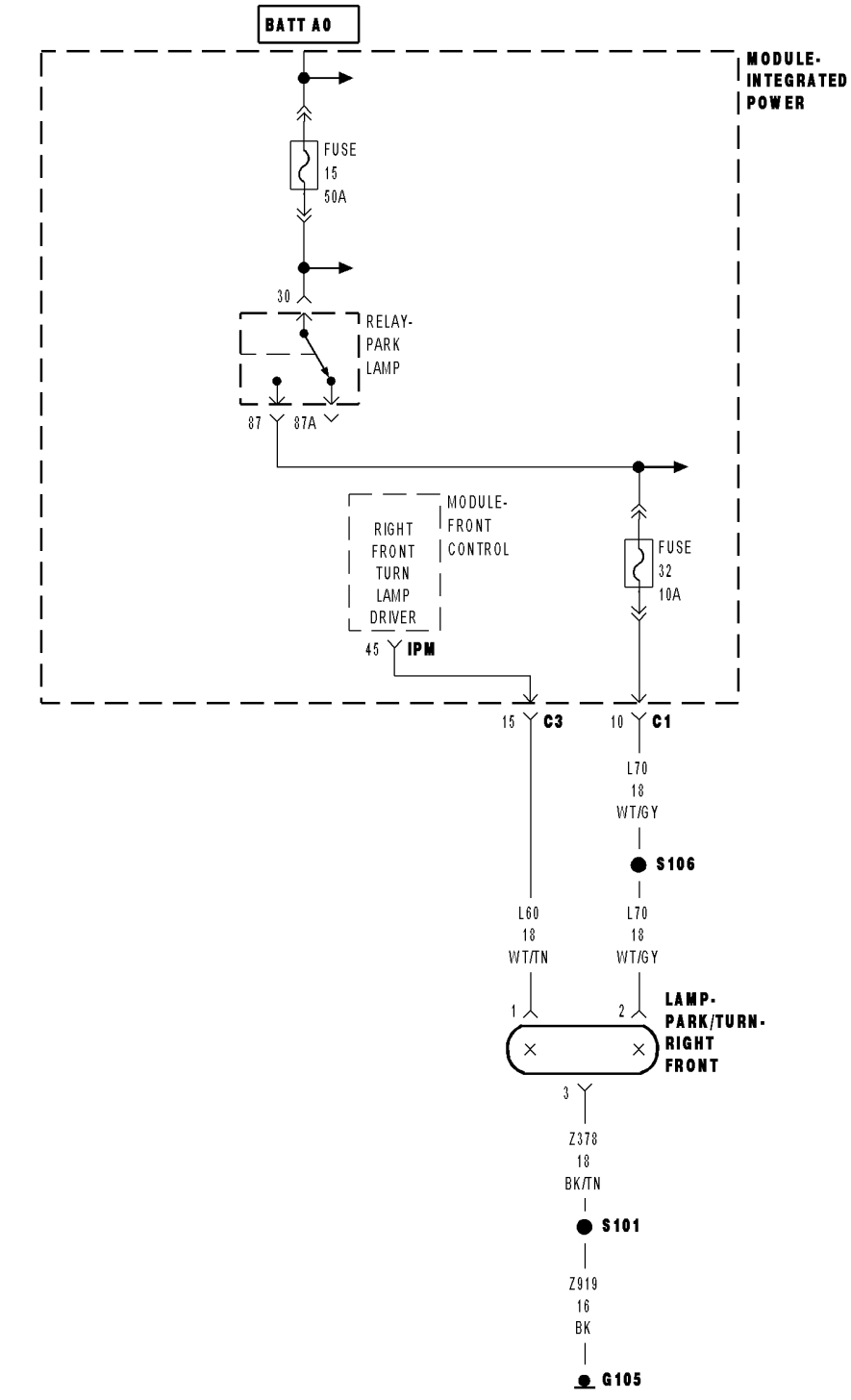

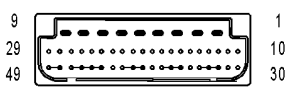

MODULE-
FRONT
CONTROL IPM

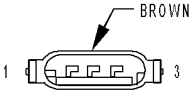

LAMP-
PARK/TURN-
RIGHT
FRONT

8146841d

FCM-FRONT RIGHT TURN OUTPUT CIRCUIT LOW (CONTINUED)

For the Exterior Lighting system circuit diagram (Refer to 8 - ELECTRICAL/LAMPS/LIGHTING - EXTERIOR - SCHEMATICS AND DIAGRAMS).

For a complete wiring diagram **Refer to Section 8W**.

- **When Monitored:**
  With the ignition on
- **Set Condition:**
  The FCM detects a short to ground condition

Possible Causes
RIGHT FRONT TURN LAMP DRIVER CIRCUIT SHORT TO GROUND
POWER DISTRIBUTION CENTER
FRONT CONTROL MODULE

1. INTERMITTENT CONDITION

Turn the ignition on.
With the DRBIII®, clear all FCM DTC's.
Turn the Right Front Turn Signal on.
With the DRBIII®, read the DTC information.

Does the DRBIII® read: Front Right Turn Output Circuit Low?

Yes >> Go To 2

No >> The condition that caused the symptom is currently not present. Inspect the related wiring for a possible intermittent condition. Look for any chafed, pierced, pinched, or partially broken wires.
Perform BODY VERIFICATION TEST - VER 1.

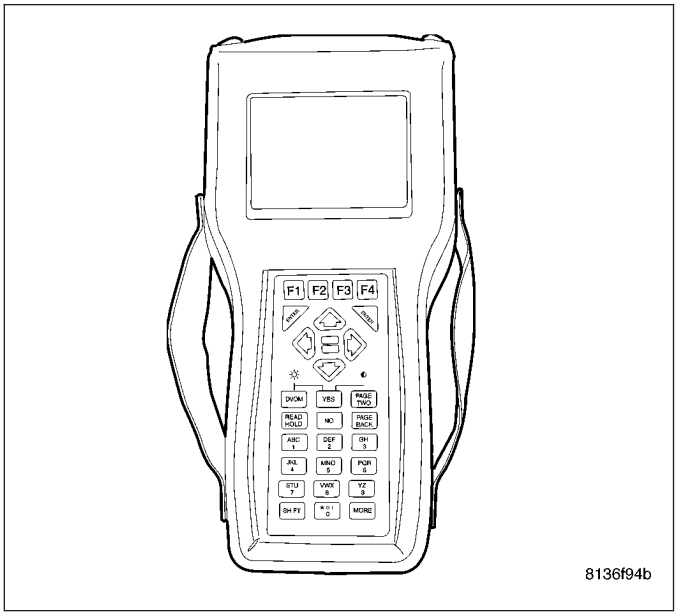

FCM-FRONT RIGHT TURN OUTPUT CIRCUIT LOW (CONTINUED)

2. RIGHT FRONT TURN LAMP DRIVER CIRCUIT SHORT TO GROUND

Turn the ignition off.

Disconnect the IPM C3 harness connector.

Measure the resistance between ground and the Right Front Turn Lamp Driver circuit.

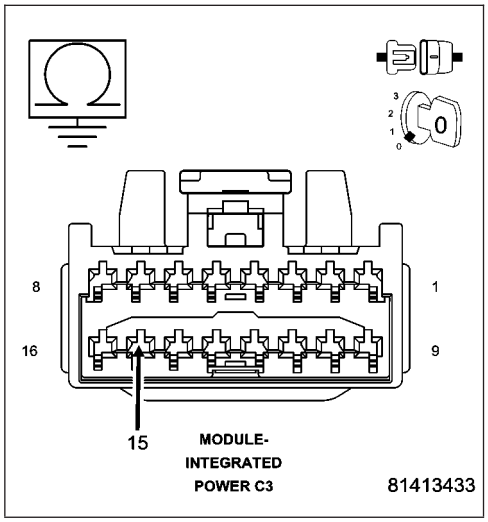

Is the resistance below 5.0 ohms?

Yes >> Go To 3

No >> Repair the Right Front Turn Lamp Driver circuit for a short to ground.
Perform BODY VERIFICATION TEST - VER 1.

---

3. FRONT CONTROL MODULE

Turn the ignition off

Disconnect the FCM connector.

Disconnect the IPM C3 harness connector.

Measure the resistance between ground and the Right Front Turn Lamp Driver circuit in the IPM.

Is the resistance below 5.0 ohms?

Yes >> Replace the Power Distribution Center(PDC).
Perform BODY VERIFICATION TEST - VER 1.

No >> Replace the Front Control Module.
Perform BODY VERIFICATION TEST - VER 1.

FCM-FRONT RIGHT TURN OUTPUT CIRCUIT OPEN

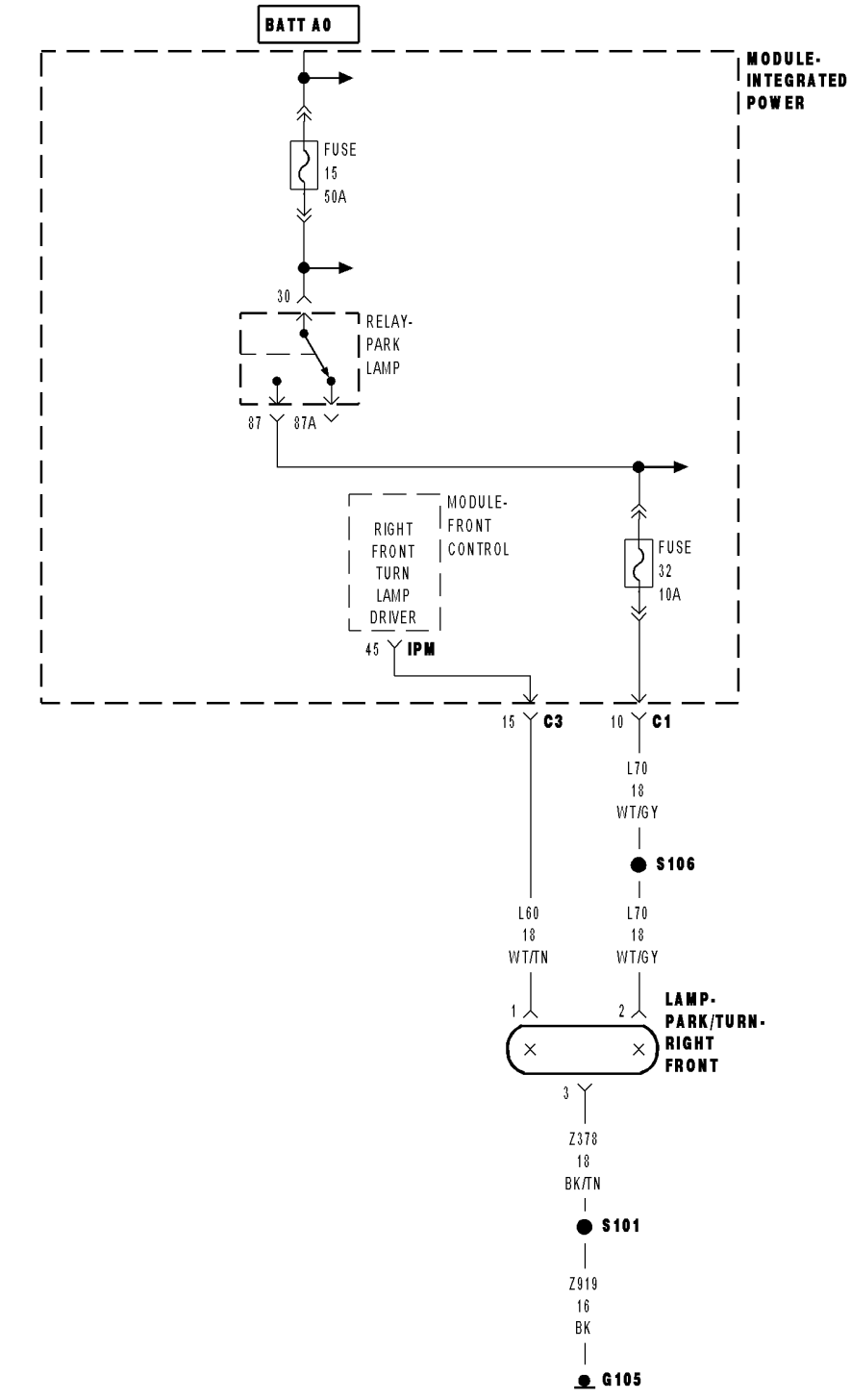

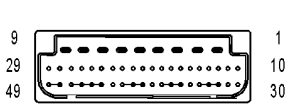

MODULE-
FRONT
CONTROL IPM

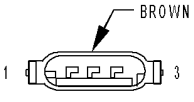

LAMP-
PARK/TURN-
RIGHT
FRONT

8146841d

FCM-FRONT RIGHT TURN OUTPUT CIRCUIT OPEN (CONTINUED)

For the Exterior Lighting system circuit diagram (Refer to 8 - ELECTRICAL/LAMPS/LIGHTING - EXTERIOR - SCHEMATICS AND DIAGRAMS).

For a complete wiring diagram **Refer to Section 8W**.

- **When Monitored:**
  With the ignition on
- **Set Condition:**
  The FCM detects an OPEN condition

Possible Causes
RIGHT FRONT TURN SIGNAL OUTPUT CIRCUIT OPEN
POWER DISTRIBUTION CENTER
FRONT CONTROL MODULE

1. INTERMITTENT CONDITION

Turn the ignition on.
With the DRBIII®, clear all FCM DTC's.
Turn the Right Front Turn Signal on.
With the DRBIII®, read the DTC information.

Does the DRBIII® read: Front Right Turn Output Circuit Open?

Yes >> Go To 2

No >> The condition that caused the symptom is currently not present. Inspect the related wiring for a possible intermittent condition. Look for any chafed, pierced, pinched, or partially broken wires.
Perform BODY VERIFICATION TEST - VER 1.

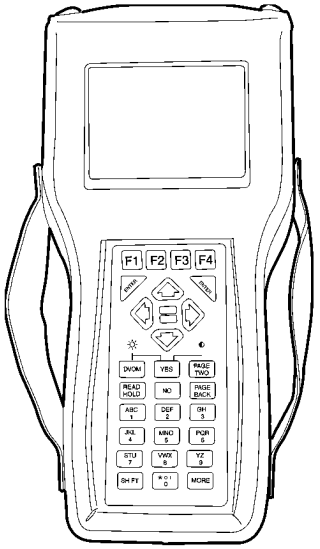

FCM-FRONT RIGHT TURN OUTPUT CIRCUIT OPEN (CONTINUED)

2. RIGHT FRONT TURN SIGNAL OUTPUT CIRCUIT OPEN

Turn the ignition off.
Disconnect the IPM C3 harness connector
Measure the resistance of the Right Front Turn Signal Output circuit.

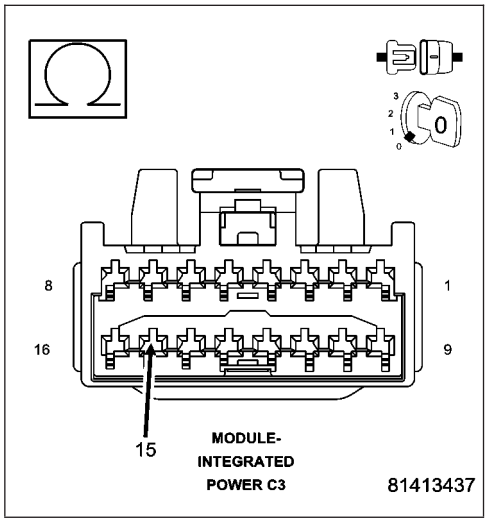

Is the resistance above 5.0 ohms?

Yes >> Repair the Right Front Turn Signal Output circuit for an open.
Perform BODY VERIFICATION TEST - VER 1.

No >> Go To 3

3. FRONT CONTROL MODULE

Turn the ignition off
Disconnect the FCM from the IPM.
Disconnect the IPM C3 harness connector.
Measure the resistance of the Right Front Turn Signal Output circuit.

Is the resistance above 5.0 ohms?

Yes >> Replace the Power Distribution Center..
Perform BODY VERIFICATION TEST - VER 1.

No >> Replace the Front Control Module.
Perform BODY VERIFICATION TEST - VER 1.

MIC-HEADLAMP SWITCH INPUT CIRCUIT OPEN

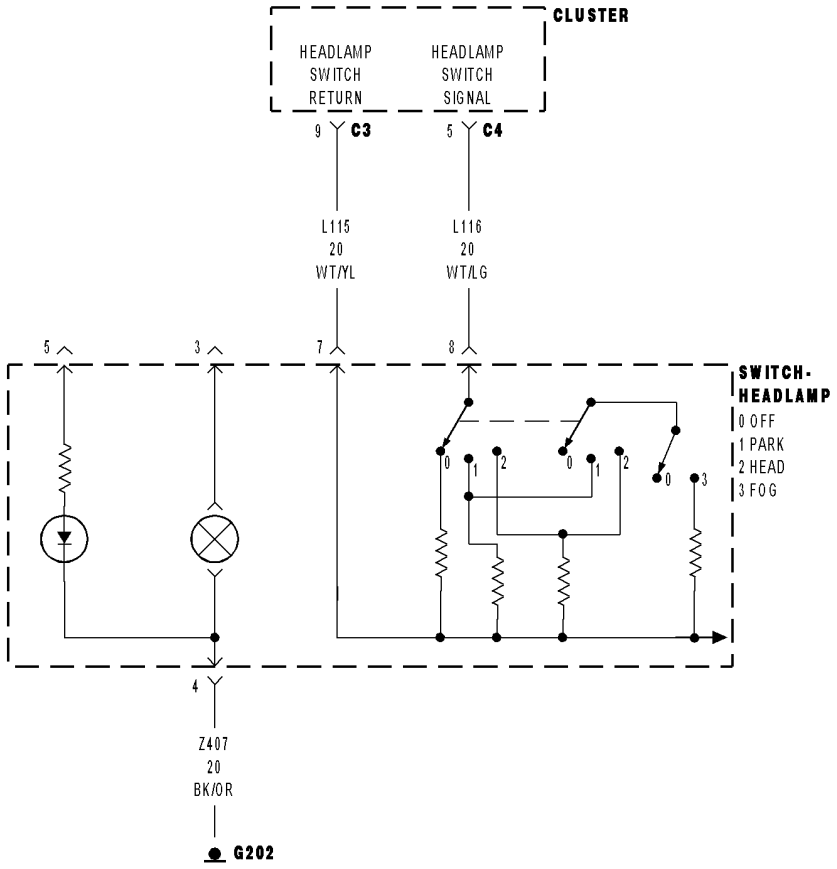

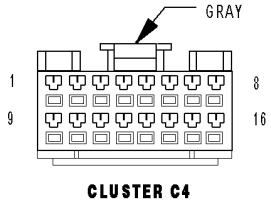

CLUSTER C4

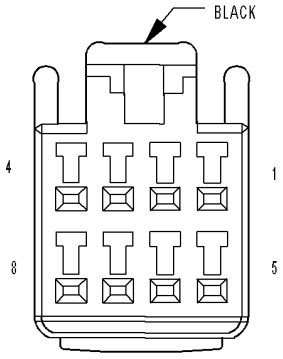

SWITCH-HEADLAMP

8146883c

MIC-HEADLAMP SWITCH INPUT CIRCUIT OPEN (CONTINUED)

For the Exterior Lighting system circuit diagram (Refer to 8 - ELECTRICAL/LAMPS/LIGHTING - EXTERIOR - SCHEMATICS AND DIAGRAMS).

For a complete wiring diagram **Refer to Section 8W**.

- **When Monitored:**
  With the ignition on
- **Set Condition:**
  The CCN detects an open condition

Possible Causes
HEADLAMP SWITCH
HEADLAMP SWITCH MUX CIRCUIT OPEN
HEADLAMP SWITCH SENSE CIRCUIT OPEN
INSTRUMENT CLUSTER

1. INTERMITTENT CONDITION

Turn the ignition on.
With the DRBIII®, clear all MIC DTC's.
Turn the Headlamps on.
With the DRBIII®, read the DTC information.

Does the DRBIII® read: Headlamp Switch Input Circuit Open?

Yes >> Go To 2

No >> The condition that caused the symptom is currently not present. Inspect the related wiring for a possible intermittent condition. Look for any chafed, pierced, pinched, or partially broken wires.
Perform BODY VERIFICATION TEST - VER 1.

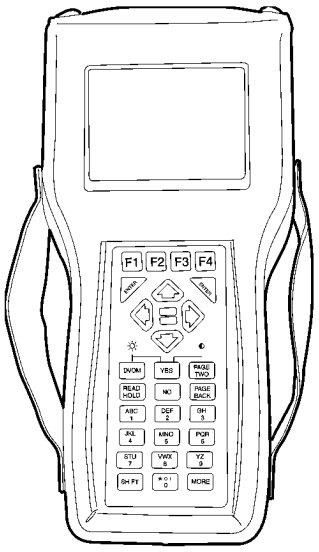

2. HEADLAMP SWITCH

Disconnect the Headlamp Switch connector.
Turn the ignition on.
Connect a jumper between the Headlamp Switch MUX and Sense circuit of the multifunction switch.
With the DRBIII®, read the headlamp switch voltage.

Does the DRBIII® display 0.0 volts?

Yes >> Replace the Headlamp Switch.
Perform BODY VERIFICATION TEST - VER 1.

No >> Go To 3

MIC-HEADLAMP SWITCH INPUT CIRCUIT OPEN (CONTINUED)

3. HEADLAMP SWITCH MUX CIRCUIT OPEN

Turn the ignition off.
Disconnect the left side multifunction switch connector.
Disconnect the instrument cluster C2 connector.
Measure the resistance of the Headlamp Switch MUX circuit.

Is the resistance below 5.0 ohms?

Yes >> Go To 4

No >> Repair the Headlamp Switch MUX circuit for an open condition.
Perform BODY VERIFICATION TEST - VER 1.

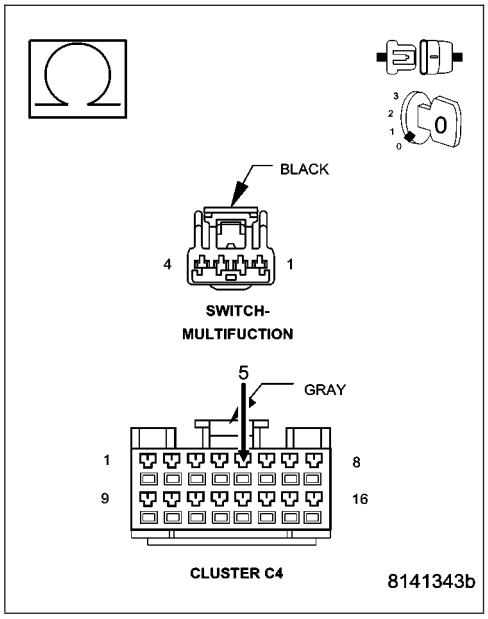

4. INSTRUMENT CLUSTER

Turn the ignition off
Disconnect the left side Multifunction Switch connector.
Disconnect the Instrument Cluster C2 connector.
Measure the resistance of the Headlamp Switch Sense circuit.

Is the resistance below 5.0 ohms?

Yes >> Replace the Instrument Cluster.
Perform BODY VERIFICATION TEST - VER 1.

No >> Repair the Headlamp Switch Sense circuit for an open condition.
Perform BODY VERIFICATION TEST - VER 1.

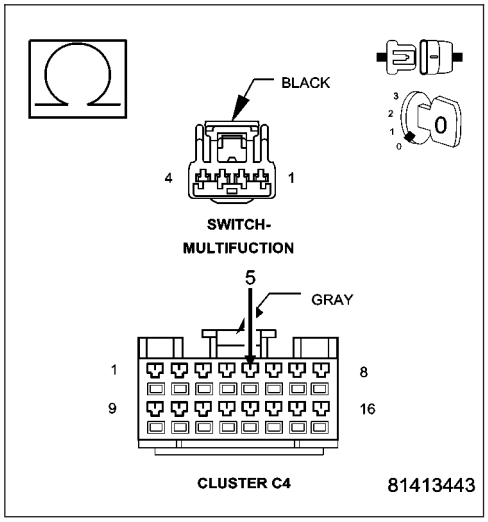

MIC-HEADLAMP SWITCH INPUT CIRCUIT SHORTED

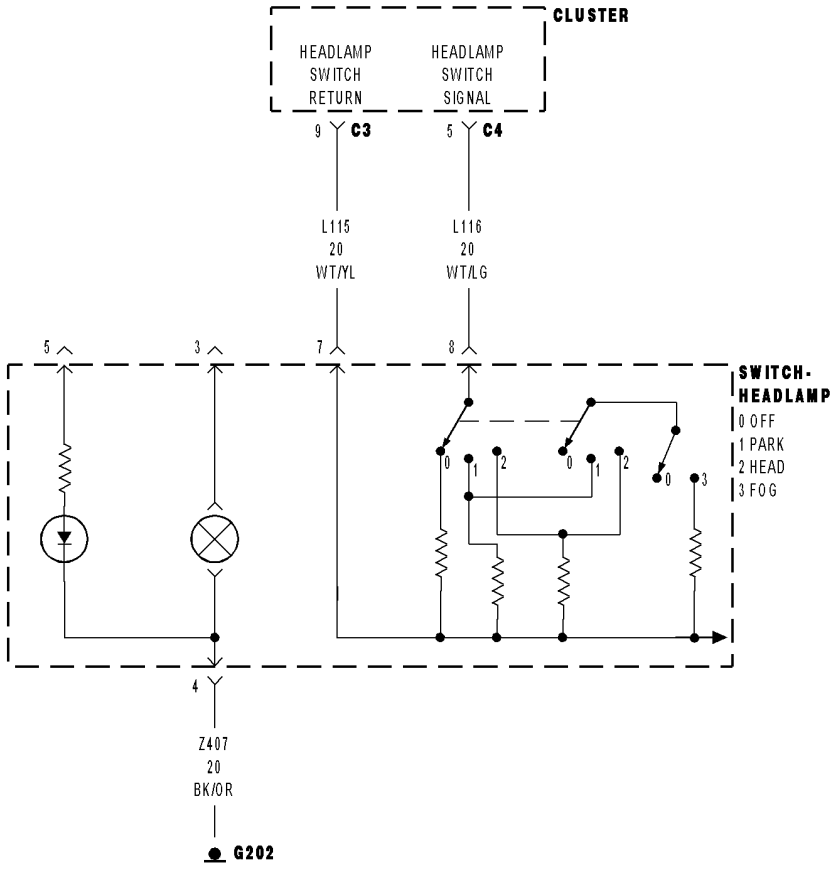

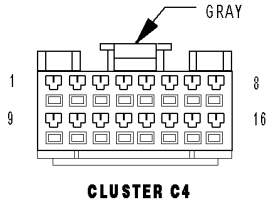

CLUSTER C4

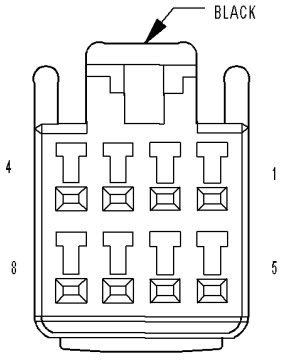

SWITCH-HEADLAMP

8146883c

MIC-HEADLAMP SWITCH INPUT CIRCUIT SHORTED (CONTINUED)

For the Exterior Lighting system circuit diagram (Refer to 8 - ELECTRICAL/LAMPS/LIGHTING - EXTERIOR - SCHEMATICS AND DIAGRAMS).

For a complete wiring diagram **Refer to Section 8W**.

- **When Monitored:**
  With the ignition on
- **Set Condition:**
  The CCN detects a short to ground condition

Possible Causes
HEADLAMP SWITCH
HEADLAMP SWITCH MUX CIRCUIT SHORT TO GROUND
INSTRUMENT CLUSTER

1. INTERMITTENT CONDITION

Turn the ignition on.
With the DRBIII®, clear all MIC DTC's.
Turn the Headlamps on.
With the DRBIII®, read the DTC information.

Does the DRBIII® read: Headlamp Switch Input Circuit Short?

Yes >> Go To 2

No >> The condition that caused the symptom is currently not present. Inspect the related wiring for a possible intermittent condition. Look for any chafed, pierced, pinched, or partially broken wires.
Perform BODY VERIFICATION TEST - VER 1.

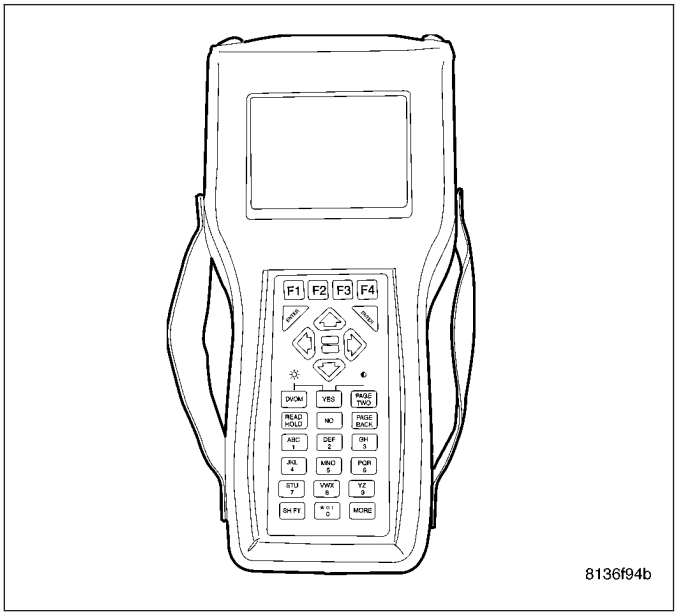

2. HEADLAMP SWITCH

Disconnect the Headlamp Switch connector.
Turn the ignition on.

Does the DRBIII® display Headlamp Switch 5.0 volts?

Yes >> Go To 3

No >> Replace the Headlamp Switch.
Perform BODY VERIFICATION TEST - VER 1.

MIC-HEADLAMP SWITCH INPUT CIRCUIT SHORTED (CONTINUED)

3. HEADLAMP SWITCH MUX CIRCUIT SHORT TO GROUND

Turn the ignition off.

Disconnect the Headlamp Switch connector.

Disconnect the instrument cluster C3 connector.

Measure the resistance of the Headlamp Switch MUX circuit to ground.

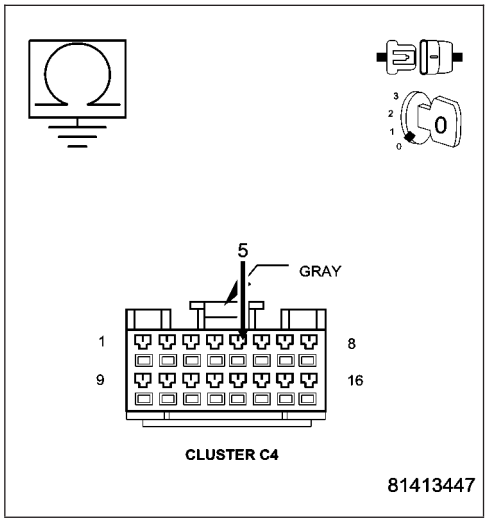

Is the resistance below 5.0 ohms?

Yes >> Repair the Headlamp Switch MUX circuit for a short to ground condition.
Perform BODY VERIFICATION TEST - VER 1.

No >> Replace the Instrument Cluster.
Perform BODY VERIFICATION TEST - VER 1.

FCM-LEFT HIGHBEAM OUTPUT CIRCUIT LOW

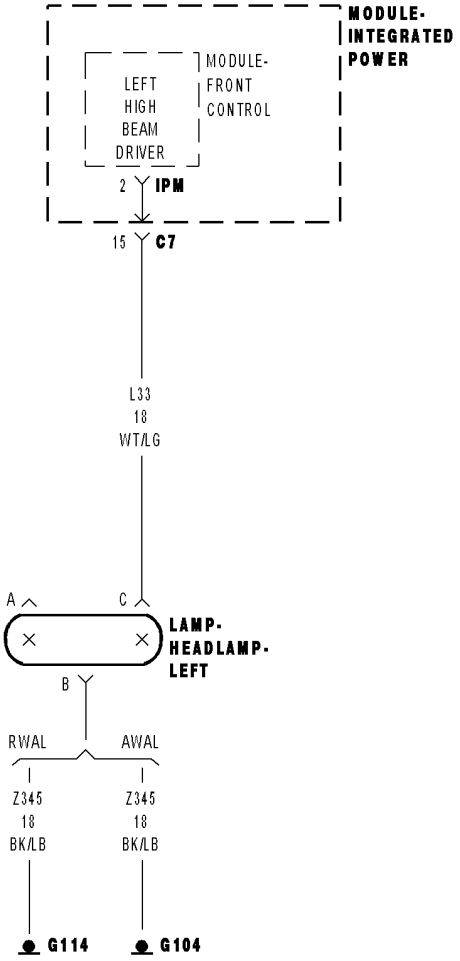

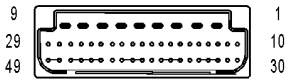

MODULE-
FRONT
CONTROL IPM

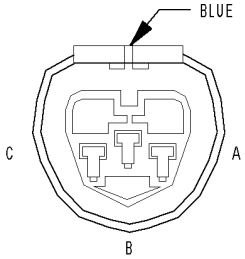

LAMP-
HEADLAMP-
LEFT

81470f9a

FCM-LEFT HIGHBEAM OUTPUT CIRCUIT LOW (CONTINUED)

For the Exterior Lighting system circuit diagram (Refer to 8 - ELECTRICAL/LAMPS/LIGHTING - EXTERIOR - SCHEMATICS AND DIAGRAMS).

For a complete wiring diagram **Refer to Section 8W**.

- **When Monitored:**
  With the ignition on
- **Set Condition:**
  The FCM detects a short to ground condition

Possible Causes
LEFT HIGHBEAM OUTPUT CIRCUIT SHORT TO GROUND
POWER DISTRIBUTION CENTER
FRONT CONTROL MODULE

1. INTERMITTENT CONDITION

Turn the ignition on.
With the DRBIII®, clear all FCM DTC's.
Turn the High Beams Lamps on.
With the DRBIII®, read the DTC information.

Does the DRBIII® read: Left Highbeam Output Circuit Low?

Yes >> Go To 2

No >> The condition that caused the symptom is currently not present. Inspect the related wiring for a possible intermittent condition. Look for any chafed, pierced, pinched, or partially broken wires.
Perform BODY VERIFICATION TEST - VER 1.

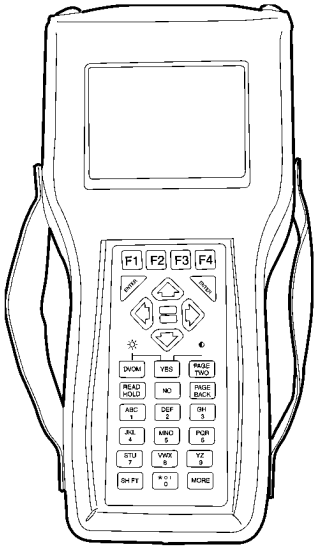

FCM-LEFT HIGHBEAM OUTPUT CIRCUIT LOW (CONTINUED)

2. LEFT HIGHBEAM OUTPUT CIRCUIT SHORT TO GROUND

Turn the ignition off.

Disconnect the IPM C7 harness connector.

Measure the resistance between ground and the Left Highbeam Output circuit.

Is the resistance below 5.0 ohms?

Yes >> Go To 3

No >> Repair the Left Highbeam Output circuit for a short to ground.
Perform BODY VERIFICATION TEST - VER 1.

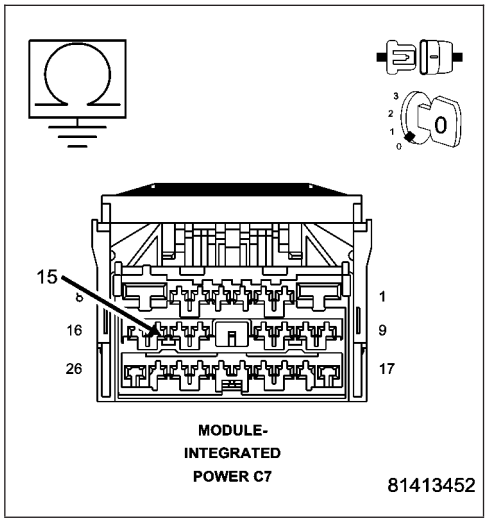

3. FRONT CONTROL MODULE

Turn the ignition off

Disconnect the FCM connector.

Disconnect the IPM C7 harness connector.

Measure the resistance between ground and the Left Highbeam Output circuit in the IPM.

Is the resistance below 5.0 ohms?

Yes >> Replace the Power Distribution Center(PDC).
Perform BODY VERIFICATION TEST - VER 1.

No >> Replace the Front Control Module.
Perform BODY VERIFICATION TEST - VER 1.

FCM-LEFT HIGHBEAM OUTPUT CIRCUIT OPEN

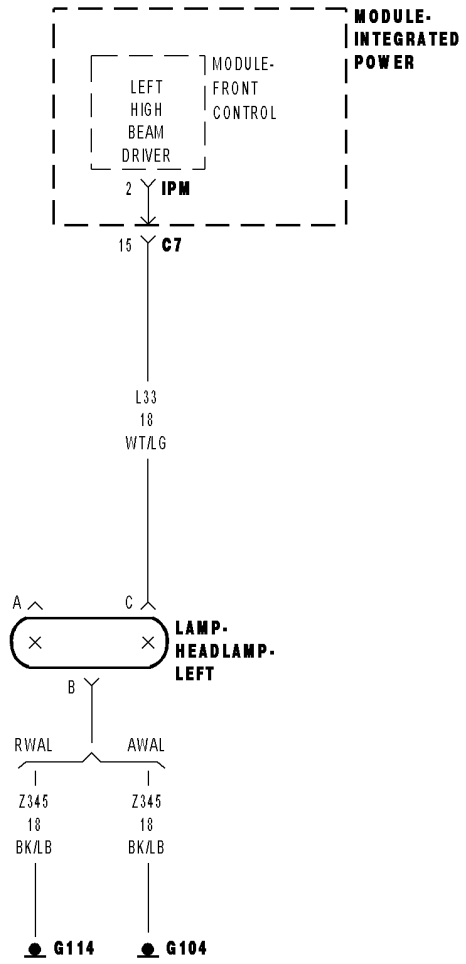

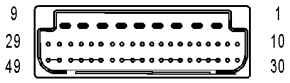

MODULE-
FRONT
CONTROL IPM

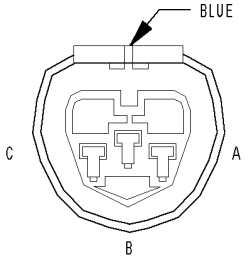

LAMP-
HEADLAMP-
LEFT

81470f9a

FCM-LEFT HIGHBEAM OUTPUT CIRCUIT OPEN (CONTINUED)

For the Exterior Lighting system circuit diagram (Refer to 8 - ELECTRICAL/LAMPS/LIGHTING - EXTERIOR - SCHEMATICS AND DIAGRAMS).

For a complete wiring diagram **Refer to Section 8W**.

- **When Monitored:**
  With the ignition on
- **Set Condition:**
  The FCM detects an OPEN condition

Possible Causes
LEFT HIGHBEAM OUTPUT CIRCUIT OPEN
POWER DISTRIBUTION CENTER
FRONT CONTROL MODULE

1. INTERMITTENT CONDITION

Turn the ignition on.
With the DRBIII®, clear all FCM DTC's.
Turn the Highbeam Lamps on.
With the DRBIII®, read the DTC information.

Does the DRBIII® read: Left Highbeam Output Circuit Open?

Yes >> Go To 2

No >> The condition that caused the symptom is currently not present. Inspect the related wiring for a possible intermittent condition. Look for any chafed, pierced, pinched, or partially broken wires.
Perform BODY VERIFICATION TEST - VER 1.

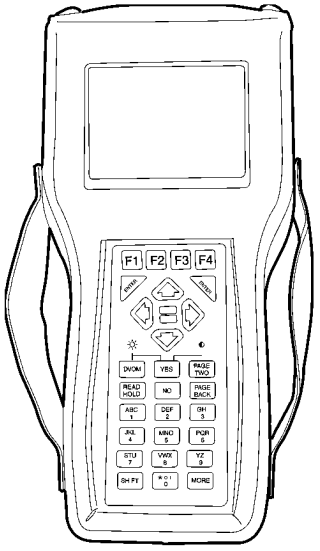

FCM-LEFT HIGHBEAM OUTPUT CIRCUIT OPEN (CONTINUED)

2. LEFT HIGHBEAM OUTPUT CIRCUIT OPEN

Turn the ignition off.
Disconnect the IPM C7 harness connector
Measure the resistance of the Left Highbeam Output circuit.

Is the resistance above 5.0 ohms?

Yes >> Repair the Left Highbeam Output circuit for an open.
Perform BODY VERIFICATION TEST - VER 1.

No >> Go To 3

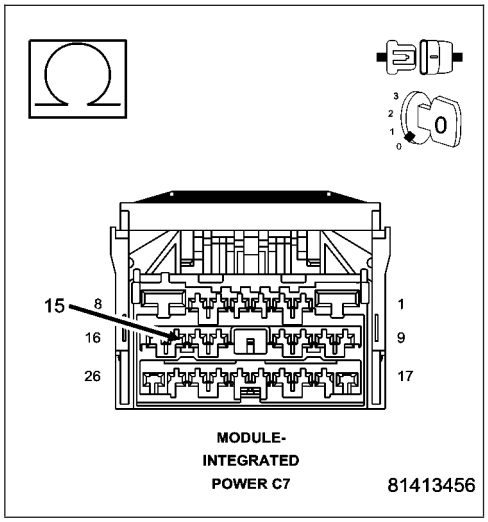

3. FRONT CONTROL MODULE

Turn the ignition off
Disconnect the FCM from the IPM.
Disconnect the IPM C7 harness connector.
Measure the resistance of the Left Highbeam Output circuit.

Is the resistance above 5.0 ohms?

Yes >> Replace the Power Distribution Center..
Perform BODY VERIFICATION TEST - VER 1.

No >> Replace the Front Control Module.
Perform BODY VERIFICATION TEST - VER 1.

FCM-LEFT LOWBEAM OUTPUT CIRCUIT LOW

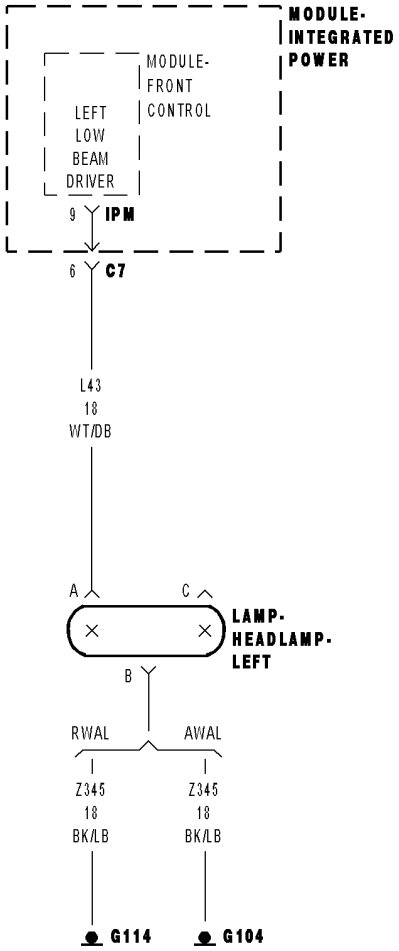

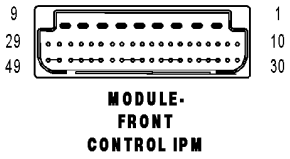

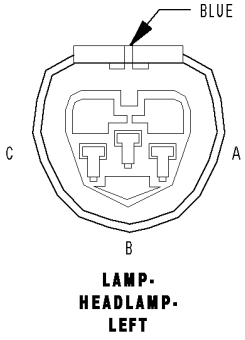

81471077

FCM-LEFT LOWBEAM OUTPUT CIRCUIT LOW (CONTINUED)

For the Exterior Lighting system circuit diagram (Refer to 8 - ELECTRICAL/LAMPS/LIGHTING - EXTERIOR - SCHEMATICS AND DIAGRAMS).

For a complete wiring diagram **Refer to Section 8W**.

- **When Monitored:**
  With the ignition on
- **Set Condition:**
  The FCM detects a short to ground condition

Possible Causes
LEFT LOWBEAM OUTPUT CIRCUIT SHORT TO GROUND
POWER DISTRIBUTION CENTER
FRONT CONTROL MODULE

1. INTERMITTENT CONDITION

Turn the ignition on.
With the DRBIII®, clear all FCM DTC's.
Turn the Lowbeam Lamps on.
With the DRBIII®, read the DTC information.

Does the DRBIII® read: Left Lowbeam Output Circuit Low?

Yes >> Go To 2

No >> The condition that caused the symptom is currently not present. Inspect the related wiring for a possible intermittent condition. Look for any chafed, pierced, pinched, or partially broken wires.
Perform BODY VERIFICATION TEST - VER 1.

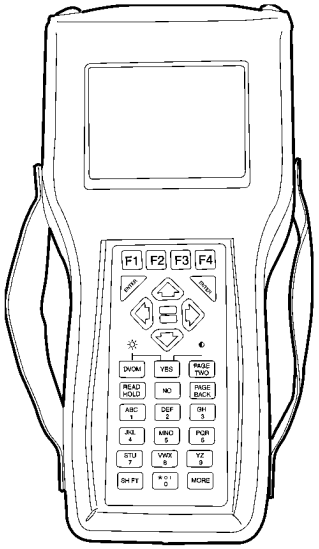

FCM-LEFT LOWBEAM OUTPUT CIRCUIT LOW (CONTINUED)

2. LEFT LOWBEAM OUTPUT CIRCUIT SHORT TO GROUND

Turn the ignition off.

Disconnect the IPM C7 harness connector.

Measure the resistance between ground and the Left Lowbeam Output circuit.

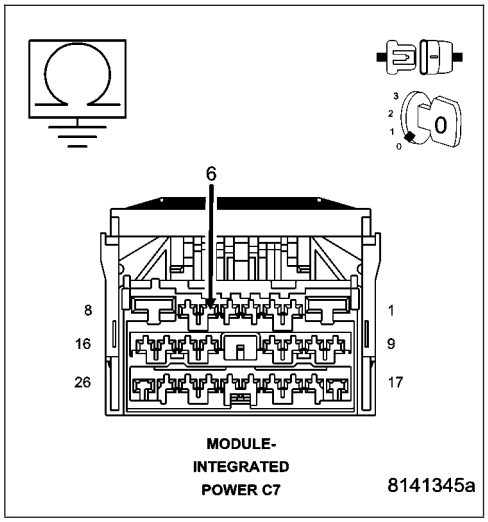

Is the resistance below 5.0 ohms?

Yes >> Go To 3

No >> Repair the Left Lowbeam Output circuit for a short to ground.
Perform BODY VERIFICATION TEST - VER 1.

---

3. FRONT CONTROL MODULE

Turn the ignition off

Disconnect the FCM connector.

Disconnect the IPM C7 harness connector.

Measure the resistance between ground and the Left Lowbeam Output circuit in the IPM.

Is the resistance below 5.0 ohms?

Yes >> Replace the Power Distribution Center(PDC).
Perform BODY VERIFICATION TEST - VER 1.

No >> Replace the Front Control Module.
Perform BODY VERIFICATION TEST - VER 1.

FCM-LEFT LOWBEAM OUTPUT CIRCUIT OPEN

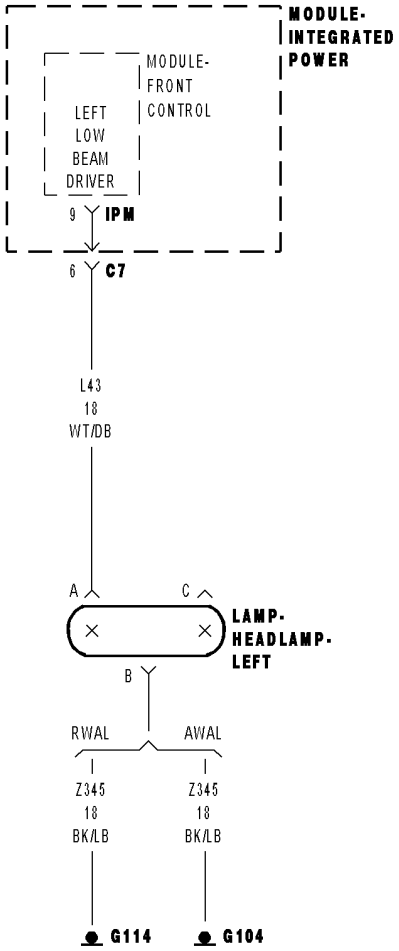

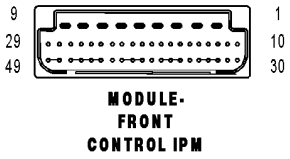

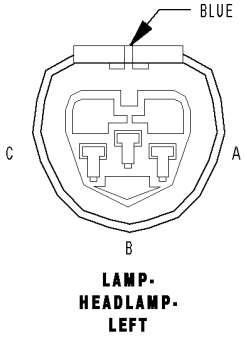

81471077

FCM-LEFT LOWBEAM OUTPUT CIRCUIT OPEN (CONTINUED)

For the Exterior Lighting system circuit diagram (Refer to 8 - ELECTRICAL/LAMPS/LIGHTING - EXTERIOR - SCHEMATICS AND DIAGRAMS).

For a complete wiring diagram **Refer to Section 8W**.

- **When Monitored:**
  With the ignition on
- **Set Condition:**
  The FCM detects an OPEN condition

Possible Causes
LEFT LOWBEAM OUTPUT CIRCUIT OPEN
POWER DISTRIBUTION CENTER
FRONT CONTROL MODULE

1. INTERMITTENT CONDITION

Turn the ignition on.
With the DRBIII®, clear all FCM DTC's.
Turn the Lowbeam Lamps on.
With the DRBIII®, read the DTC information.

Does the DRBIII® read: Left Lowbeam Output Circuit Open?

Yes >> Go To 2

No >> The condition that caused the symptom is currently not present. Inspect the related wiring for a possible intermittent condition. Look for any chafed, pierced, pinched, or partially broken wires.
Perform BODY VERIFICATION TEST - VER 1.

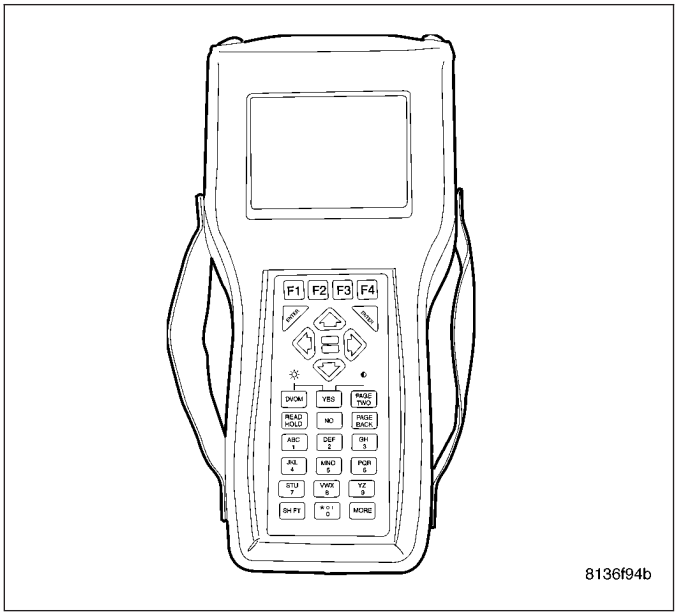

FCM-LEFT LOWBEAM OUTPUT CIRCUIT OPEN (CONTINUED)

2. LEFT LOWBEAM OUTPUT CIRCUIT OPEN

Turn the ignition off.
Disconnect the IPM C7 harness connector
Measure the resistance of the Left Lowbeam Output circuit.

Is the resistance above 5.0 ohms?

Yes >> Repair the Left Lowbeam Output circuit for an open.
Perform BODY VERIFICATION TEST - VER 1.

No >> Go To 3

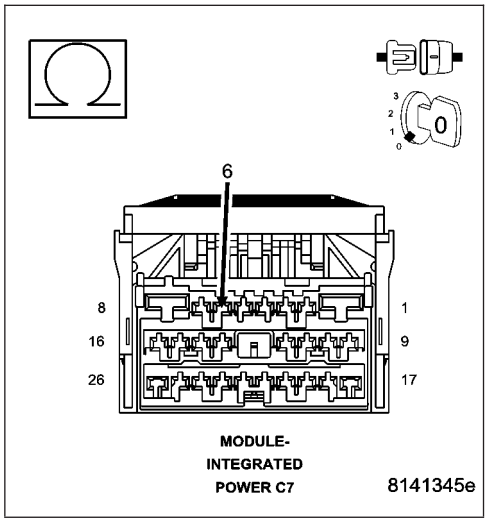

3. FRONT CONTROL MODULE

Turn the ignition off
Disconnect the FCM from the IPM.
Disconnect the IPM C7 harness connector.
Measure the resistance of the Left Lowbeam Output circuit.

Is the resistance above 5.0 ohms?

Yes >> Replace the Power Distribution Center..
Perform BODY VERIFICATION TEST - VER 1.

No >> Replace the Front Control Module.
Perform BODY VERIFICATION TEST - VER 1.

FCM-LEFT STOP LAMP OUTPUT CIRCUIT LOW

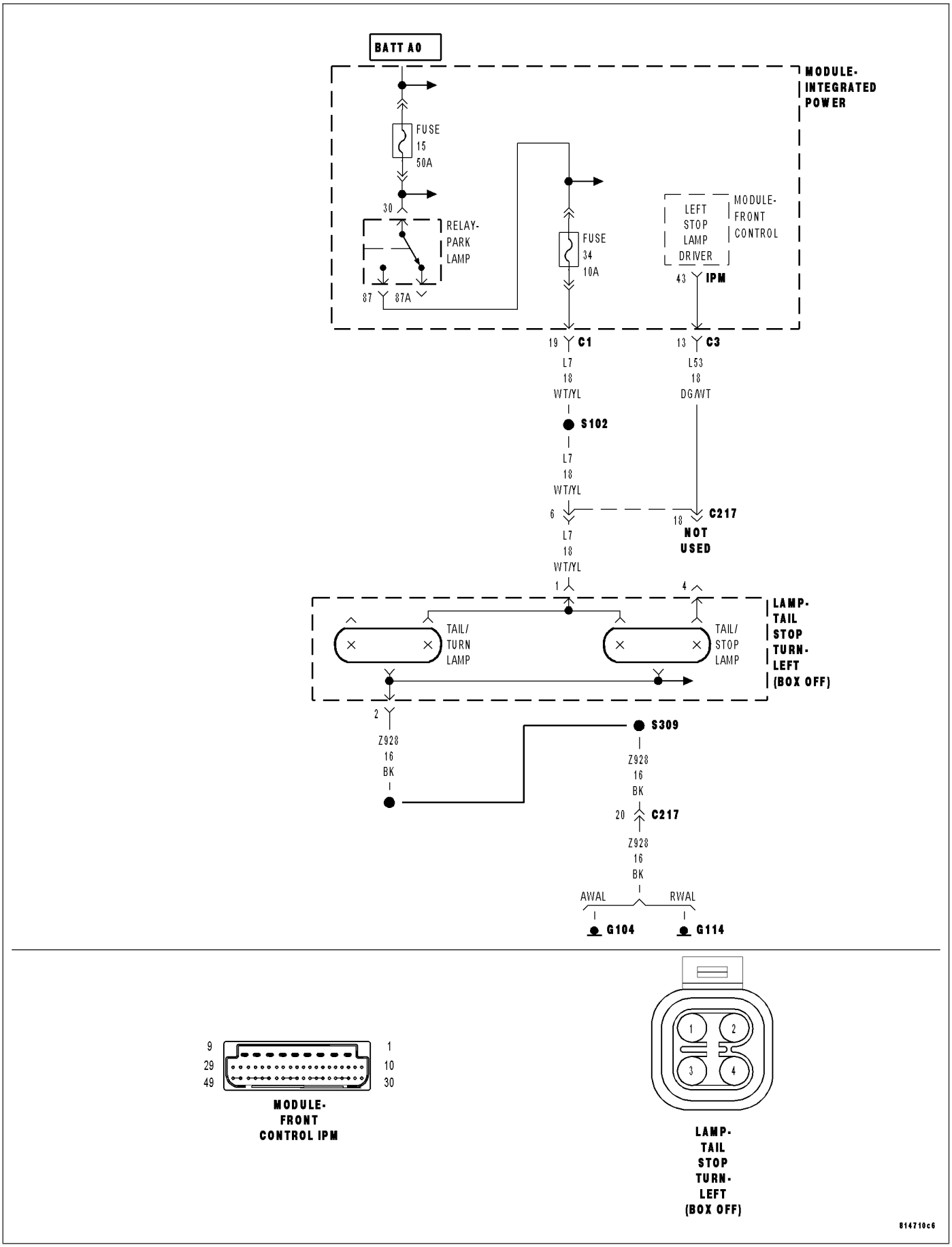

FCM-LEFT STOP LAMP OUTPUT CIRCUIT LOW (CONTINUED)

For the Exterior Lighting system circuit diagram (Refer to 8 - ELECTRICAL/LAMPS/LIGHTING - EXTERIOR - SCHEMATICS AND DIAGRAMS).

For a complete wiring diagram **Refer to Section 8W**.

- **When Monitored:**
  With the ignition on
- **Set Condition:**
  The FCM detects a short to ground condition

Possible Causes
LEFT BRAKE LAMP FEED CIRCUIT SHORT TO GROUND
POWER DISTRIBUTION CENTER
FRONT CONTROL MODULE

1. INTERMITTENT CONDITION

Turn the ignition on.
With the DRBIII®, clear all FCM DTC's.
Actuate the Stop Lamps.
With the DRBIII®, read the DTC information.

Does the DRBIII® read: Left Stop Lamp Output Circuit Low?

Yes >> Go To 2

No >> The condition that caused the symptom is currently not present. Inspect the related wiring for a possible intermittent condition. Look for any chafed, pierced, pinched, or partially broken wires.
Perform BODY VERIFICATION TEST - VER 1.

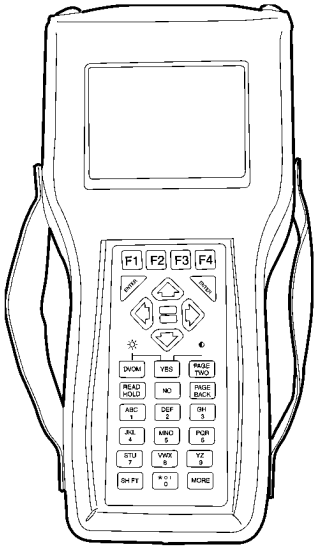

FCM-LEFT STOP LAMP OUTPUT CIRCUIT LOW (CONTINUED)

2. LEFT BRAKE LAMP FEED CIRCUIT SHORT TO GROUND

Turn the ignition off.

Disconnect the IPM C3 harness connector.

Measure the resistance between ground and the Left Brake Lamp Feed circuit.

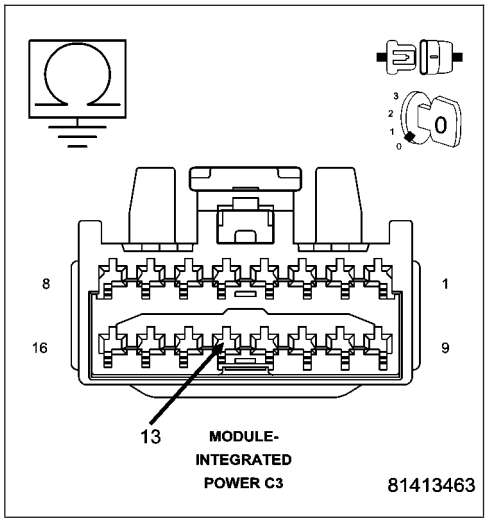

Is the resistance below 5.0 ohms?

Yes >> Go To 3

No >> Repair the Left Brake Lamp Feed circuit for a short to ground.
Perform BODY VERIFICATION TEST - VER 1.

3. FRONT CONTROL MODULE

Turn the ignition off

Disconnect the FCM connector.

Disconnect the IPM C3 harness connector.

Measure the resistance between ground and the Left Brake Lamp Feed circuit in the IPM.

Is the resistance below 5.0 ohms?

Yes >> Replace the Power Distribution Center(PDC).
Perform BODY VERIFICATION TEST - VER 1.

No >> Replace the Front Control Module.
Perform BODY VERIFICATION TEST - VER 1.

FCM-LEFT STOP LAMP OUTPUT CIRCUIT OPEN

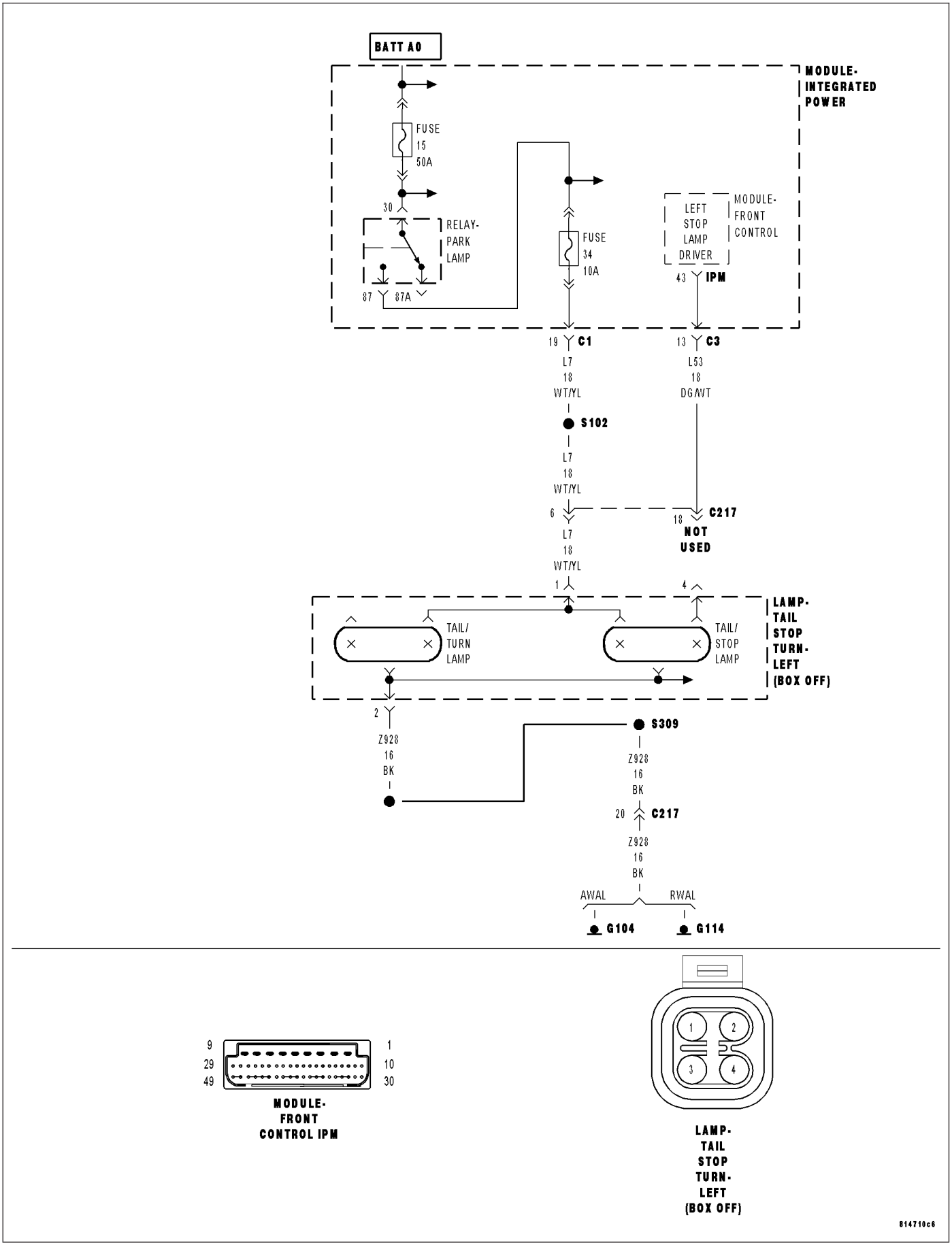

FCM-LEFT STOP LAMP OUTPUT CIRCUIT OPEN (CONTINUED)

For the Exterior Lighting system circuit diagram (Refer to 8 - ELECTRICAL/LAMPS/LIGHTING - EXTERIOR - SCHEMATICS AND DIAGRAMS).

For a complete wiring diagram **Refer to Section 8W**.

- **When Monitored:**
  With the ignition on
- **Set Condition:**
  The FCM detects an OPEN condition

Possible Causes
LEFT BRAKE LAMP FEED CIRCUIT OPEN
POWER DISTRIBUTION CENTER
FRONT CONTROL MODULE

1. INTERMITTENT CONDITION

Turn the ignition on.
With the DRBIII®, clear all FCM DTC's.
Actuate the Stop Lamps.
With the DRBIII®, read the DTC information.

Does the DRBIII® read: Left Stop Lamp Output Circuit Open?

Yes >> Go To 2

No >> The condition that caused the symptom is currently not present. Inspect the related wiring for a possible intermittent condition. Look for any chafed, pierced, pinched, or partially broken wires.
Perform BODY VERIFICATION TEST - VER 1.

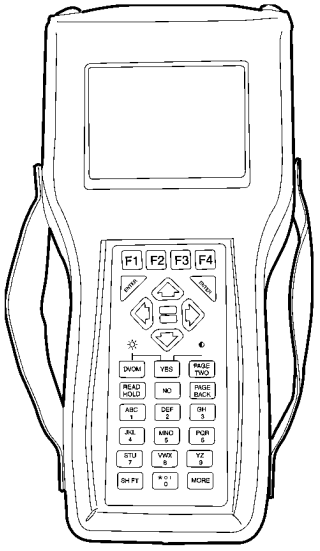

FCM-LEFT STOP LAMP OUTPUT CIRCUIT OPEN (CONTINUED)

2. LEFT BRAKE LAMP FEED CIRCUIT OPEN

Turn the ignition off.
Disconnect the IPM C3 harness connector
Measure the resistance of the Left Brake Lamp Feed circuit.

Is the resistance above 5.0 ohms?

Yes >> Repair the Left Brake Lamp Feed circuit for an open.
Perform BODY VERIFICATION TEST - VER 1.

No >> Go To 3

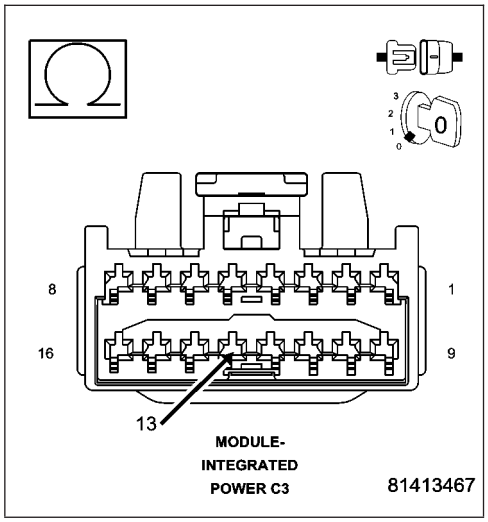

3. FRONT CONTROL MODULE

Turn the ignition off
Disconnect the FCM from the IPM.
Disconnect the IPM C3 harness connector.
Measure the resistance of the Left Brake Lamp Feed circuit.

Is the resistance above 5.0 ohms?

Yes >> Replace the Power Distribution Center..
Perform BODY VERIFICATION TEST - VER 1.

No >> Replace the Front Control Module.
Perform BODY VERIFICATION TEST - VER 1.

FCM-LEFT TRAILER RELAY OUTPUT CIRCUIT HIGH

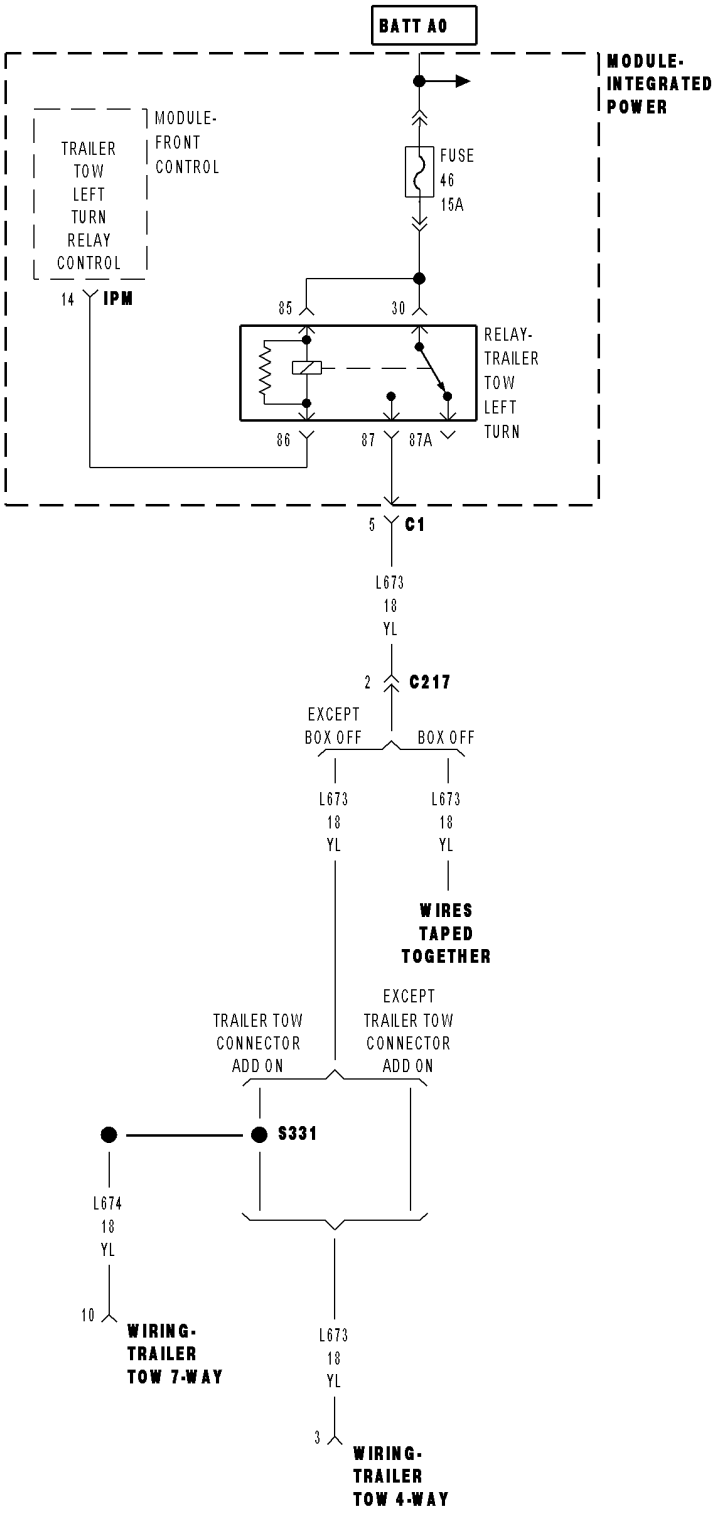

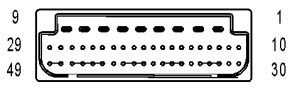

MODULE-
FRONT
CONTROL IPM

814710db

FCM-LEFT TRAILER RELAY OUTPUT CIRCUIT HIGH (CONTINUED)

For the Exterior Lighting system circuit diagram (Refer to 8 - ELECTRICAL/LAMPS/LIGHTING - EXTERIOR - SCHEMATICS AND DIAGRAMS).

For a complete wiring diagram **Refer to Section 8W**.

- **When Monitored:**
  With the ignition on
- **Set Condition:**
  The FCM detects a HIGH condition

Possible Causes
INTEGRATED POWER MODULE
FRONT CONTROL MODULE

1. INTERMITTENT CONDITION

Turn the ignition on.
With the DRBIII®, clear all FCM DTC's.
Actuate the Trailer Tow Lamps.
With the DRBIII®, read the DTC information.

Does the DRBIII® read: Left Trailer Relay Output Circuit High?

Yes >> Go To 2

No >> The condition that caused the symptom is currently not present. Inspect the related wiring for a possible intermittent condition. Look for any chafed, pierced, pinched, or partially broken wires.
Perform BODY VERIFICATION TEST - VER 1.

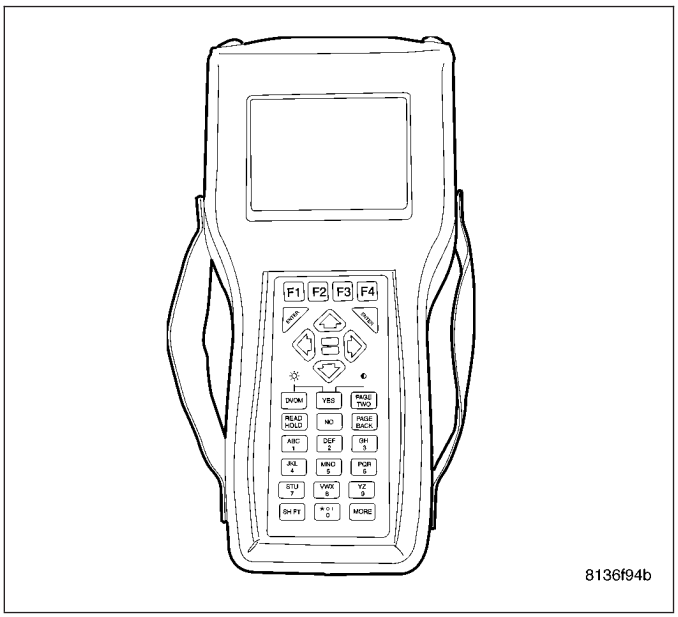

2. FRONT CONTROL MODULE

Turn the ignition off.
Remove the Front Control Module from the IPM.
Measure the voltage of the Trailer Tow Relay Control circuit and ground.

Is the voltage above 1.0 volts?

Yes >> Replace the Integrated Power Module.
Perform BODY VERIFICATION TEST - VER 1.

No >> Replace the Front Control Module.
Perform BODY VERIFICATION TEST - VER 1.

FCM-LEFT TRAILER RELAY OUTPUT CIRCUIT LOW

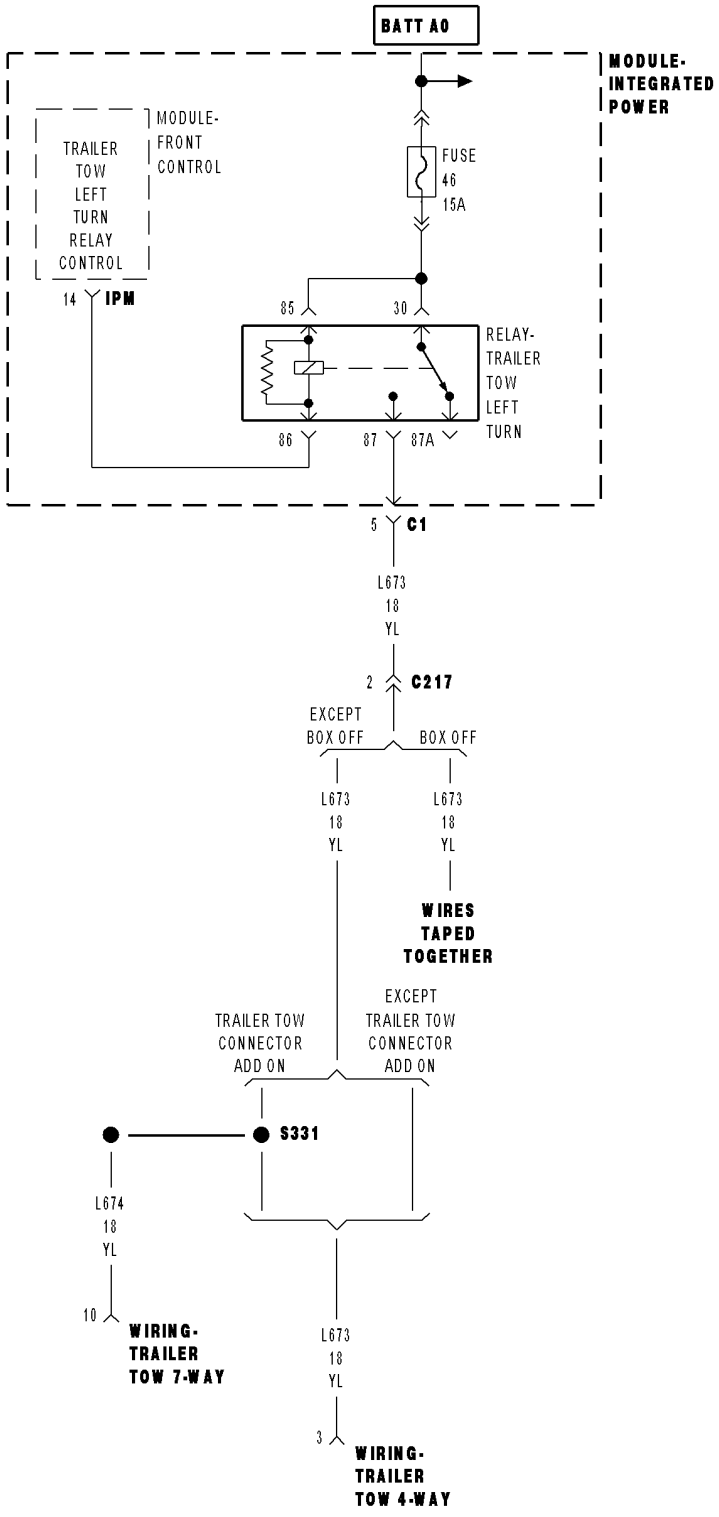

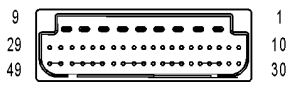

MODULE-
FRONT
CONTROL IPM

814710db

FCM-LEFT TRAILER RELAY OUTPUT CIRCUIT LOW (CONTINUED)

For the Exterior Lighting system circuit diagram (Refer to 8 - ELECTRICAL/LAMPS/LIGHTING - EXTERIOR - SCHEMATICS AND DIAGRAMS).

For a complete wiring diagram **Refer to Section 8W**.

- **When Monitored:**
  With the ignition on
- **Set Condition:**
  The FCM detects a LOW condition

Possible Causes
POWER DISTRIBUTION CENTER
FRONT CONTROL MODULE

1. INTERMITTENT CONDITION

Turn the ignition on.
With the DRBIII®, clear all FCM DTC's.
Actuate the Trailer Tow Lamps.
With the DRBIII®, read the DTC information.

Does the DRBIII® read: Left Trailer Relay Output Circuit Low?

Yes >> Go To 2

No >> The condition that caused the symptom is currently not present. Inspect the related wiring for a possible intermittent condition. Look for any chafed, pierced, pinched, or partially broken wires.
Perform BODY VERIFICATION TEST - VER 1.

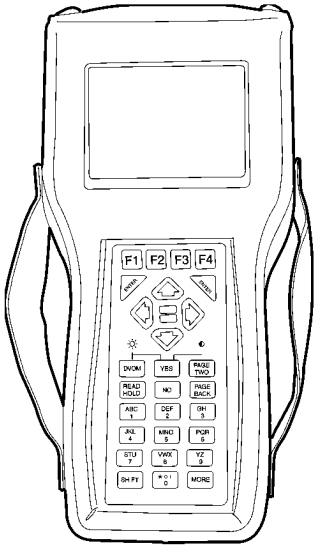

2. FRONT CONTROL MODULE

Turn the ignition off
Remove the FCM from the IPM.
Measure the resistance between ground and the Trailer Tow Relay control circuit in the IPM.

Is the resistance below 5.0 ohms?

Yes >> Replace the Power Distribution Center(PDC).
Perform BODY VERIFICATION TEST - VER 1.

No >> Replace the Front Control Module.
Perform BODY VERIFICATION TEST - VER 1.

FCM-LEFT TRAILER RELAY OUTPUT CIRCUIT OPEN

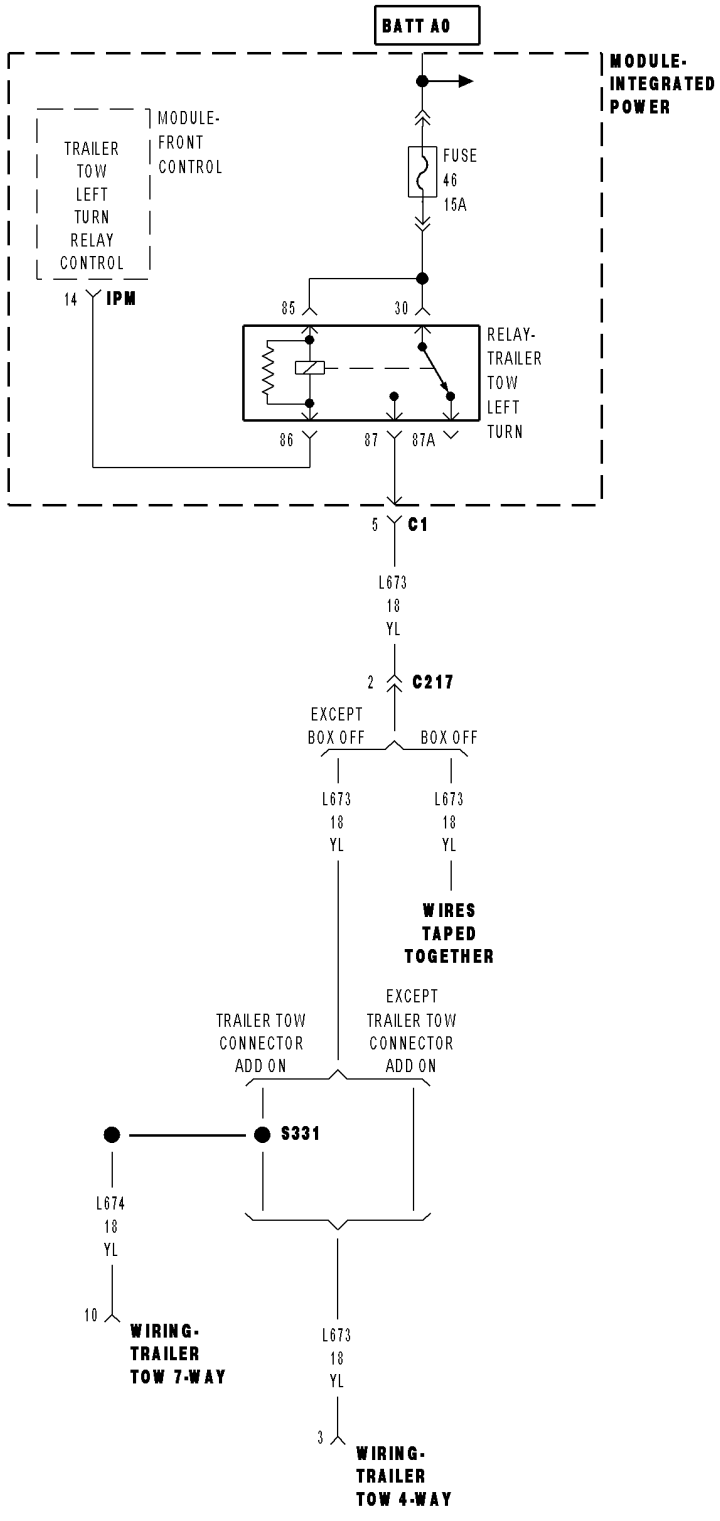

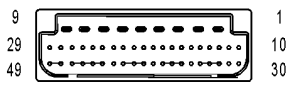

MODULE-
FRONT
CONTROL IPM

814710db

FCM-LEFT TRAILER RELAY OUTPUT CIRCUIT OPEN (CONTINUED)

For the Exterior Lighting system circuit diagram (Refer to 8 - ELECTRICAL/LAMPS/LIGHTING - EXTERIOR - SCHEMATICS AND DIAGRAMS).

For a complete wiring diagram **Refer to Section 8W**.

- **When Monitored:**
  With the ignition on
- **Set Condition:**
  The FCM detects an OPEN condition

Possible Causes
INTEGRATED POWER MODULE
FRONT CONTROL MODULE
TRAILER RELAY OUTPUT CIRCUIT OPEN

1. INTERMITTENT CONDITION

Turn the ignition on.
With the DRBIII®, clear all FCM DTC's.
Actuate the Trailer Tow Lamps.
With the DRBIII®, read the DTC information.

Does the DRBIII® read: Left Trailer Relay Output Circuit Open?

Yes >> Go To 2

No >> The condition that caused the symptom is currently not present. Inspect the related wiring for a possible intermittent condition. Look for any chafed, pierced, pinched, or partially broken wires.
Perform BODY VERIFICATION TEST - VER 1.

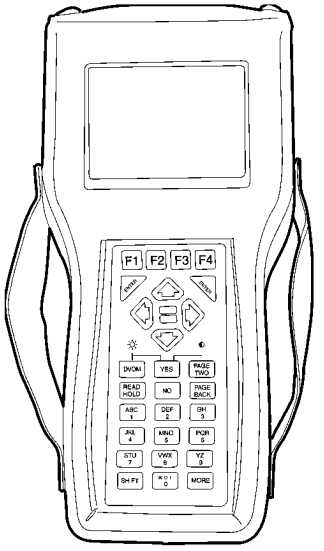

2. INTEGRATED POWER MODULE

Turn the ignition off.
Check the IPM to make certain the Left Trailer Tow Relay is present.

Is the Trailer Tow Relay present?

Yes >> Go To 3

No >> Replace the Integrated Power Module.
Perform BODY VERIFICATION TEST - VER 1.

FCM-LEFT TRAILER RELAY OUTPUT CIRCUIT OPEN (CONTINUED)

3. FRONT CONTROL MODULE

Turn the ignition off

Measure the voltage of the Fused B+ circuit of the Trailer Tow Relay in the IPM.

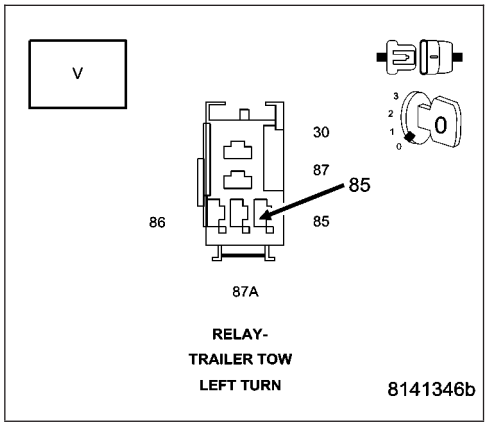

Is the voltage above 10 volts?

Yes >> Replace the Front Control Module.
Perform BODY VERIFICATION TEST - VER 1.

No >> Repair the Trailer Lamp Relay Output Circuit.
Perform BODY VERIFICATION TEST - VER 1.

FCM-PARK LAMP RELAY OUTPUT CIRCUIT HIGH

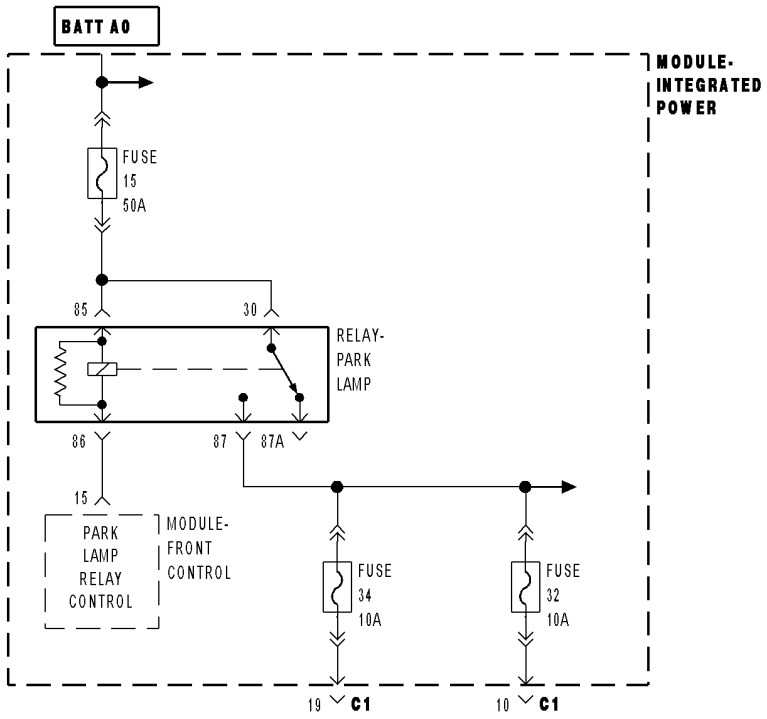

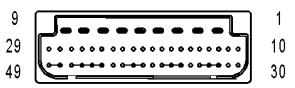

MODULE-
FRONT
CONTROL IPM

81472280

FCM-PARK LAMP RELAY OUTPUT CIRCUIT HIGH (CONTINUED)

For the Exterior Lighting system circuit diagram (Refer to 8 - ELECTRICAL/LAMPS/LIGHTING - EXTERIOR - SCHEMATICS AND DIAGRAMS).

For a complete wiring diagram **Refer to Section 8W**.

- **When Monitored:**
  With the ignition on
- **Set Condition:**
  The FCM detects a HIGH condition

Possible Causes
PARK LAMP RELAY
INTEGRATED POWER MODULE
FRONT CONTROL MODULE

1. INTERMITTENT CONDITION

Turn the ignition on.
With the DRBIII®, clear all FCM DTC's.
Turn the Park Lamps on.
With the DRBIII®, read the DTC information.

Does the DRBIII® read: Park Lamp Relay Output Circuit High?

Yes >> Go To 2

No >> The condition that caused the symptom is currently not present. Inspect the related wiring for a possible intermittent condition. Look for any chafed, pierced, pinched, or partially broken wires.
Perform BODY VERIFICATION TEST - VER 1.

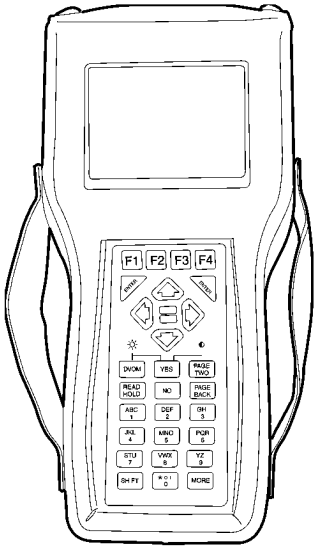

FCM-PARK LAMP RELAY OUTPUT CIRCUIT HIGH (CONTINUED)

2. PARK LAMP RELAY

Turn the ignition off.

Remove and install a known good relay in place of the Park Lamp Relay.

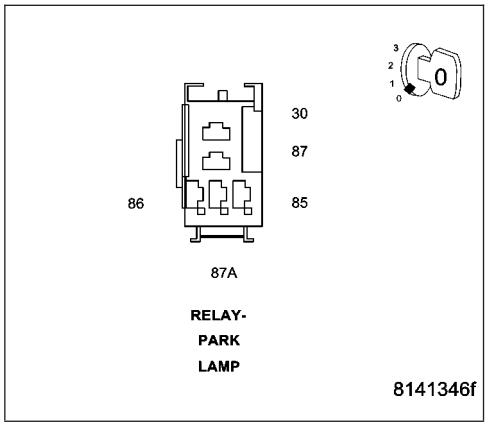

Do the Park Lamps operate normally?

Yes >> Replace the Park Lamp Relay.
Perform BODY VERIFICATION TEST - VER 1.

No >> Go To 3

3. FRONT CONTROL MODULE

Turn the ignition off.

Remove the Park Lamp Relay from the IPM.

Remove the Front Control Module from the IPM.

Measure the voltage of the Park Lamp Relay Control circuit and ground.

Is the voltage above 1.0 volts?

Yes >> Replace the Integrated Power Module.
Perform BODY VERIFICATION TEST - VER 1.

No >> Replace the Front Control Module.
Perform BODY VERIFICATION TEST - VER 1.

FCM-PARK LAMP RELAY OUTPUT CIRCUIT LOW

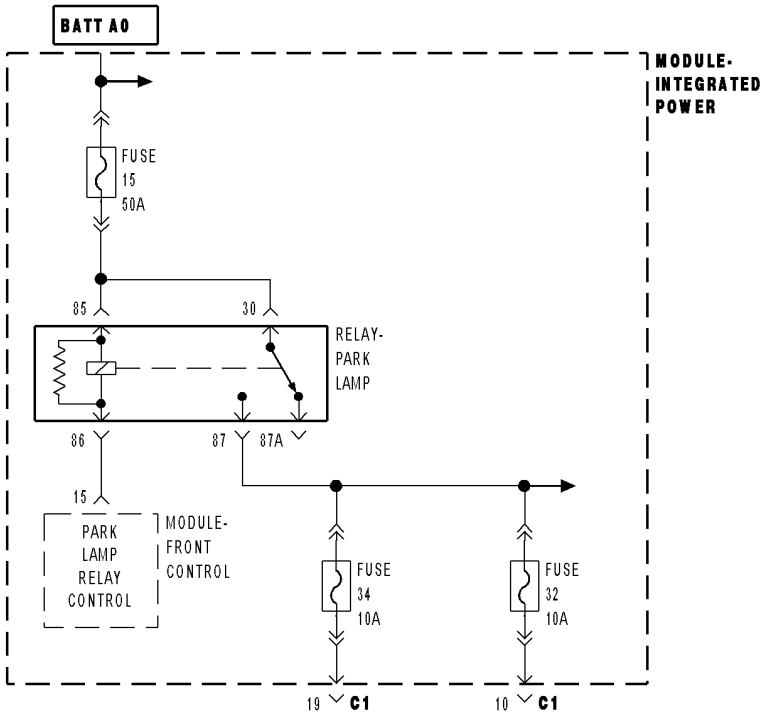

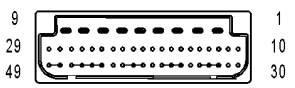

MODULE-
FRONT
CONTROL IPM

81472280

FCM-PARK LAMP RELAY OUTPUT CIRCUIT LOW (CONTINUED)

For the Exterior Lighting system circuit diagram (Refer to 8 - ELECTRICAL/LAMPS/LIGHTING - EXTERIOR - SCHEMATICS AND DIAGRAMS).

For a complete wiring diagram **Refer to Section 8W**.

- **When Monitored:**
  With the ignition on
- **Set Condition:**
  The FCM detects a LOW condition.

Possible Causes
PARK LAMP RELAY
POWER DISTRIBUTION CENTER
FRONT CONTROL MODULE

1. INTERMITTENT CONDITION

Turn the ignition on.
With the DRBIII®, clear all FCM DTC's.
Turn the Park Lamps on.
With the DRBIII®, read the DTC information.

Does the DRBIII® read: Park Lamp Relay Output Circuit Low?

Yes >> Go To 2

No >> The condition that caused the symptom is currently not present. Inspect the related wiring for a possible intermittent condition. Look for any chafed, pierced, pinched, or partially broken wires.
Perform BODY VERIFICATION TEST - VER 1.

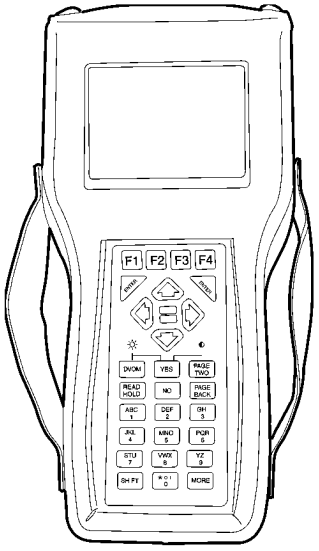

FCM-PARK LAMP RELAY OUTPUT CIRCUIT LOW (CONTINUED)

2. PARK LAMP RELAY

Turn the ignition off.
Install a know good relay in place of the Park Lamp Relay.
Turn the ignition on.
Actuate the Park Lamps.

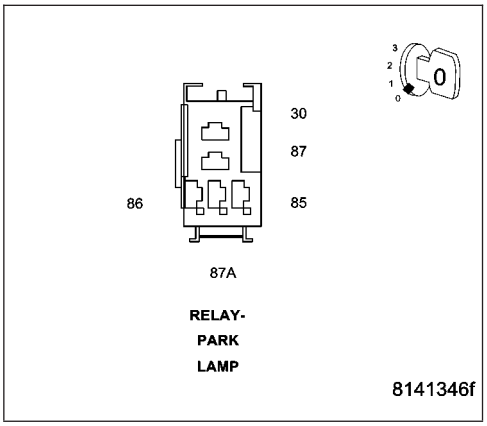

Do the Park Lamps operate normally?

Yes >> Go To 3

No >> Replace the Park Lamp Relay.
Perform BODY VERIFICATION TEST - VER 1.

3. FRONT CONTROL MODULE

Turn the ignition off
Remove the Park Lamp Relay.
Remove the FCM from the IPM.
Measure the resistance between ground and the Park Lamp Relay control circuit in the IPM.

Is the resistance below 5.0 ohms?

Yes >> Replace the Power Distribution Center(PDC).
Perform BODY VERIFICATION TEST - VER 1.

No >> Replace the Front Control Module.
Perform BODY VERIFICATION TEST - VER 1.

FCM-PARK LAMP RELAY OUTPUT CIRCUIT OPEN

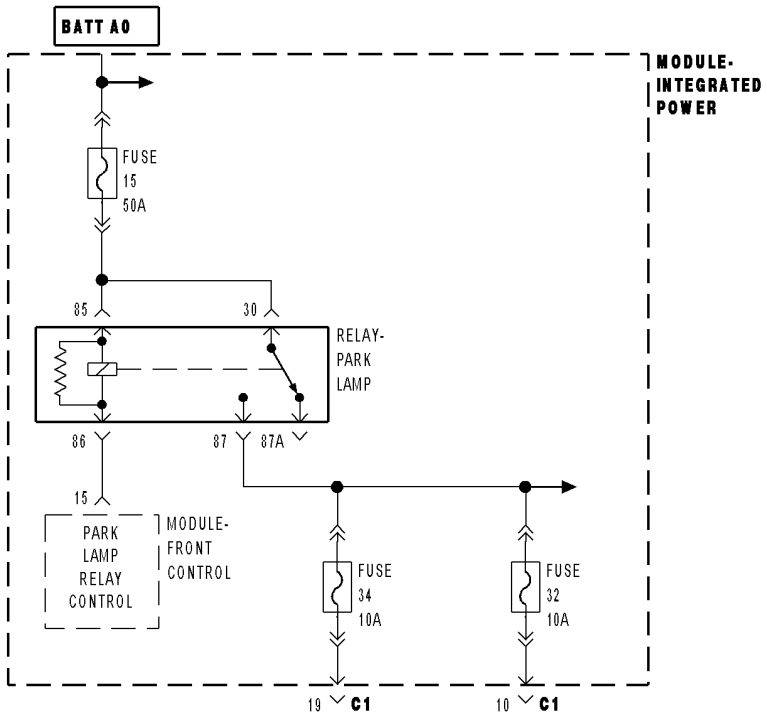

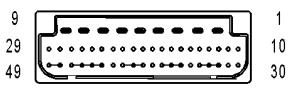

MODULE-
FRONT
CONTROL IPM

81472280

FCM-PARK LAMP RELAY OUTPUT CIRCUIT OPEN (CONTINUED)

For the Exterior Lighting system circuit diagram (Refer to 8 - ELECTRICAL/LAMPS/LIGHTING - EXTERIOR - SCHEMATICS AND DIAGRAMS).

For a complete wiring diagram **Refer to Section 8W**.

- **When Monitored:**
  With the ignition on
- **Set Condition:**
  The FCM detects an open condition

Possible Causes
PARK LAMP RELAY OUTPUT CIRCUIT OPEN
MISSING RELAY
PARK LAMP RELAY
FRONT CONTROL MODULE

1. INTERMITTENT CONDITION

Turn the ignition on.
With the DRBIII®, clear all FCM DTC's.
Turn the Park Lamps on.
With the DRBIII®, read the DTC information.

Does the DRBIII® read: Park Lamp Relay Output Circuit Open?

Yes >> Go To 2

No >> The condition that caused the symptom is currently not present. Inspect the related wiring for a possible intermittent condition. Look for any chafed, pierced, pinched, or partially broken wires.
Perform BODY VERIFICATION TEST - VER 1.

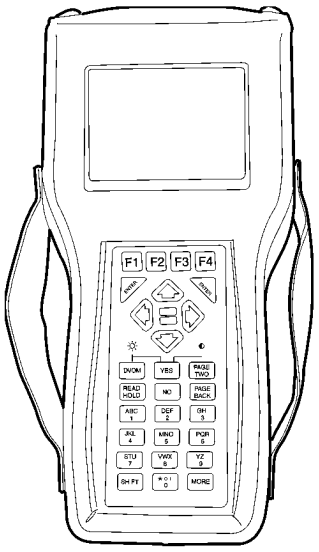

2. MISSING RELAY

Turn the ignition off.
Check the IPM to make certain the Park Lamp Relay is present.

Is the Park Lamp Relay present?

Yes >> Go To 3

No >> Replace the missing Park Lamp Relay.
Perform BODY VERIFICATION TEST - VER 1.

FCM-PARK LAMP RELAY OUTPUT CIRCUIT OPEN (CONTINUED)

3. PARK LAMP RELAY

Turn the ignition off.
Install a known good relay in place of the park lamp relay.
Turn the Park Lamps On.

Do the Park Lamps operate normally?

Yes >> Replace the Park Lamp Relay.
Perform BODY VERIFICATION TEST - VER 1.

No >> Go To 4

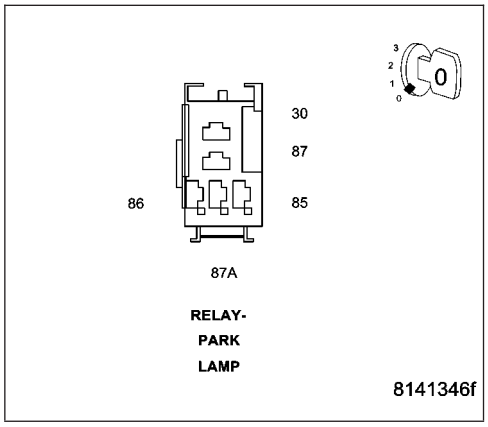

4. FRONT CONTROL MODULE

Turn the ignition off
Remove the Park Lamp Relay.
Measure the voltage of the Fused B+ circuit of the park lamp relay.

Is the voltage above 10 volts?

Yes >> Replace the Front Control Module.
Perform BODY VERIFICATION TEST - VER 1.

No >> Repair the Park Lamp Relay Output Circuit.
Perform BODY VERIFICATION TEST - VER 1.

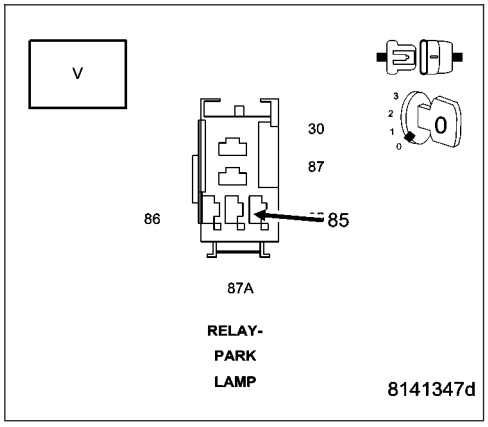

FCM-REAR LEFT TURN OUTPUT CIRCUIT LOW

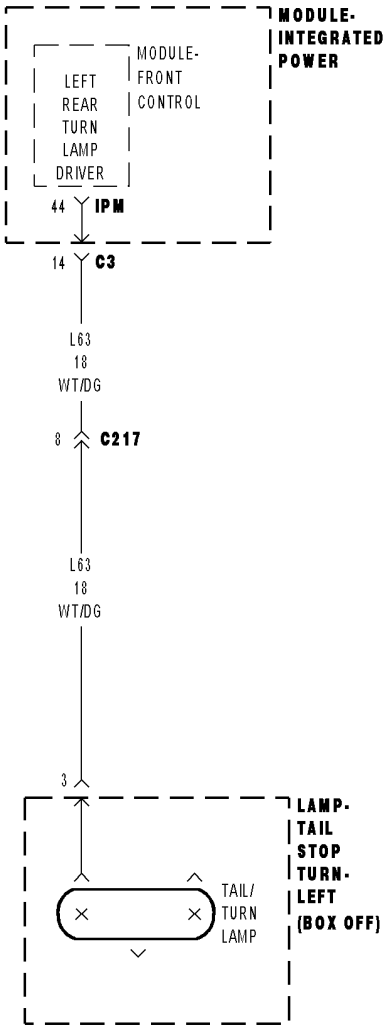

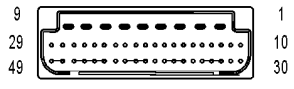

MODULE-
FRONT
CONTROL IPM

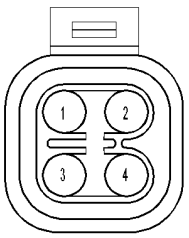

LAMP-
TAIL
STOP
TURN-
LEFT
(BOX OFF)

81472355

FCM-REAR LEFT TURN OUTPUT CIRCUIT LOW (CONTINUED)

For the Exterior Lighting system circuit diagram (Refer to 8 - ELECTRICAL/LAMPS/LIGHTING - EXTERIOR - SCHEMATICS AND DIAGRAMS).

For a complete wiring diagram **Refer to Section 8W**.

- **When Monitored:**
  With the ignition on
- **Set Condition:**
  The FCM detects a short to ground condition

Possible Causes
REAR LEFT TURN LAMP DRIVER CIRCUIT SHORT TO GROUND
POWER DISTRIBUTION CENTER
FRONT CONTROL MODULE

1. INTERMITTENT CONDITION

Turn the ignition on.
With the DRBIII®, clear all FCM DTC's.
Actuate the Left Turn signal lamp.
With the DRBIII®, read the DTC information.

Does the DRBIII® read: Rear Left Turn Output Circuit Low?

Yes >> Go To 2

No >> The condition that caused the symptom is currently not present. Inspect the related wiring for a possible intermittent condition. Look for any chafed, pierced, pinched, or partially broken wires.
Perform BODY VERIFICATION TEST - VER 1.

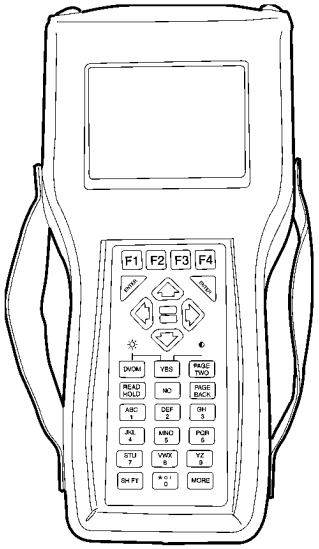

FCM-REAR LEFT TURN OUTPUT CIRCUIT LOW (CONTINUED)

2. REAR LEFT TURN LAMP DRIVER CIRCUIT SHORT TO GROUND

Turn the ignition off.

Disconnect the IPM C3 harness connector.

Measure the resistance between ground and the Rear Left Turn Lamp Driver circuit.

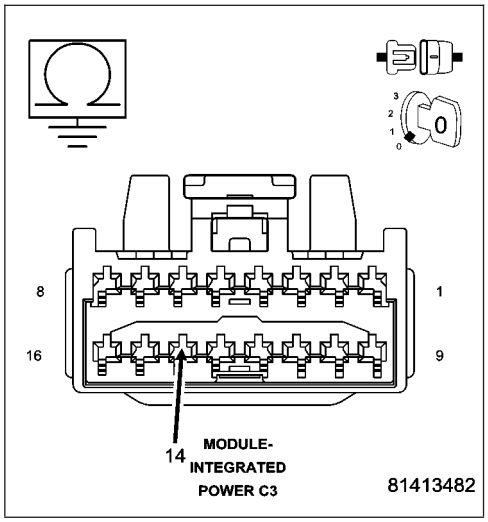

Is the resistance below 5.0 ohms?

Yes >> Go To 3

No >> Repair the Rear Left Turn Lamp Driver circuit for a short to ground.
Perform BODY VERIFICATION TEST - VER 1.

---

3. FRONT CONTROL MODULE

Turn the ignition off

Disconnect the FCM connector.

Disconnect the IPM C3 harness connector.

Measure the resistance between ground and the Rear Left Turn Lamp Driver circuit in the IPM.

Is the resistance below 5.0 ohms?

Yes >> Replace the Power Distribution Center(PDC).
Perform BODY VERIFICATION TEST - VER 1.

No >> Replace the Front Control Module.
Perform BODY VERIFICATION TEST - VER 1.

FCM-REAR LEFT TURN OUTPUT CIRCUIT OPEN

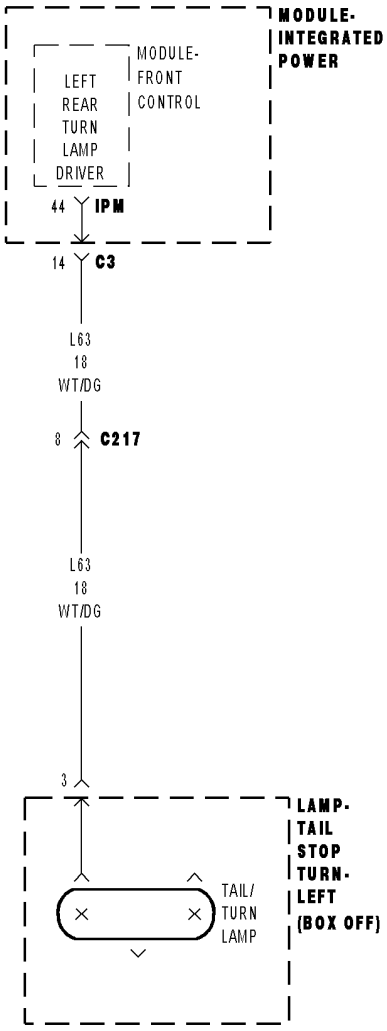

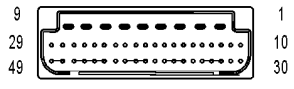

MODULE-
FRONT
CONTROL IPM

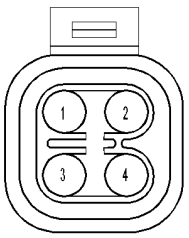

LAMP-
TAIL
STOP
TURN-
LEFT
(BOX OFF)

81472355

FCM-REAR LEFT TURN OUTPUT CIRCUIT OPEN (CONTINUED)

For the Exterior Lighting system circuit diagram (Refer to 8 - ELECTRICAL/LAMPS/LIGHTING - EXTERIOR - SCHEMATICS AND DIAGRAMS).

For a complete wiring diagram **Refer to Section 8W**.

- **When Monitored:**
  With the ignition on
- **Set Condition:**
  The FCM detects an open condition

Possible Causes
REAR LEFT TURN SIGNAL OUTPUT CIRCUIT OPEN
POWER DISTRIBUTION CENTER
FRONT CONTROL MODULE

1. INTERMITTENT CONDITION

Turn the ignition on.
With the DRBIII®, clear all FCM DTC's.
Actuate the Left Rear Turn Signal lamp.
With the DRBIII®, read the DTC information.

Does the DRBIII® read: Rear Left Turn Output Circuit Open?

Yes >> Go To 2

No >> The condition that caused the symptom is currently not present. Inspect the related wiring for a possible intermittent condition. Look for any chafed, pierced, pinched, or partially broken wires.
Perform BODY VERIFICATION TEST - VER 1.

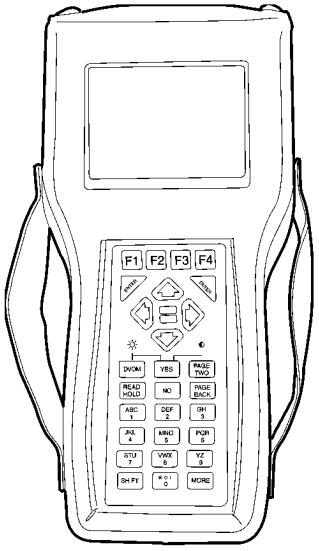

FCM-REAR LEFT TURN OUTPUT CIRCUIT OPEN (CONTINUED)

2. REAR LEFT TURN SIGNAL OUTPUT CIRCUIT OPEN

Turn the ignition off.
Disconnect the IPM C3 harness connector
Measure the resistance of the Rear Left Turn Signal Output circuit.

Is the resistance above 5.0 ohms?

Yes >> Repair the Rear Left Turn Signal Output circuit for an open.
Perform BODY VERIFICATION TEST - VER 1.

No >> Go To 3

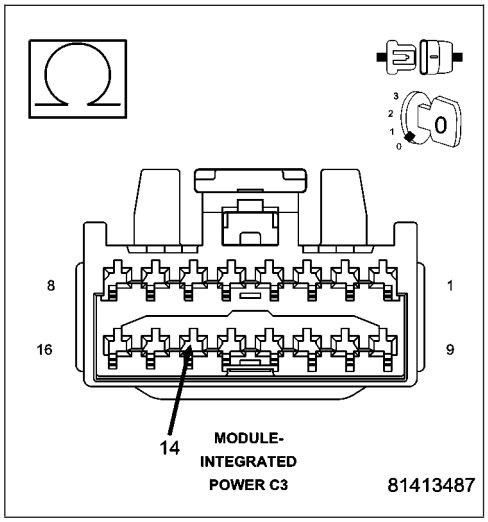

3. FRONT CONTROL MODULE

Turn the ignition off
Disconnect the FCM harness connector.
Disconnect the IPM C3 harness connector.
Measure the resistance between ground and the Rear Left Turn Signal Output circuit.

Is the resistance above 5.0 ohms?

Yes >> Replace the Power Distribution Center..
Perform BODY VERIFICATION TEST - VER 1.

No >> Replace the Front Control Module.
Perform BODY VERIFICATION TEST - VER 1.

FCM-REAR RIGHT TURN OUTPUT CIRCUIT LOW

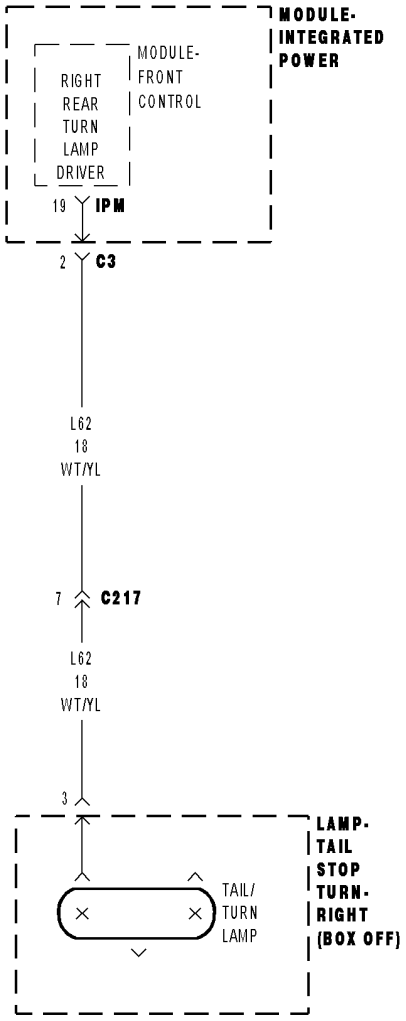

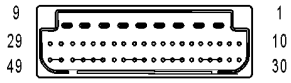

MODULE-
FRONT
CONTROL IPM

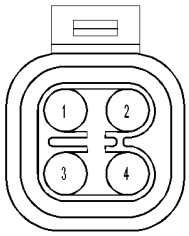

LAMP-
TAIL
STOP
TURN-
RIGHT
(BOX OFF)

81473271

FCM-REAR RIGHT TURN OUTPUT CIRCUIT LOW (CONTINUED)

For the Exterior Lighting system circuit diagram (Refer to 8 - ELECTRICAL/LAMPS/LIGHTING - EXTERIOR - SCHEMATICS AND DIAGRAMS).

For a complete wiring diagram **Refer to Section 8W**.

- **When Monitored:**
  With the ignition on
- **Set Condition:**
  The FCM detectsa short to ground condition

Possible Causes
REAR RIGHT TURN LAMP DRIVER CIRCUIT SHORT TO GROUND
POWER DISTRIBUTION CENTER
FRONT CONTROL MODULE

1. INTERMITTENT CONDITION

Turn the ignition on.
With the DRBIII®, clear all FCM DTC's.
Actuate the Right Rear Turn Signal lamp.
With the DRBIII®, read the DTC information.

Does the DRBIII® read: Rear Right Turn Output Circuit Low?

Yes >> Go To 2

No >> The condition that caused the symptom is currently not present. Inspect the related wiring for a possible intermittent condition. Look for any chafed, pierced, pinched, or partially broken wires.
Perform BODY VERIFICATION TEST - VER 1.

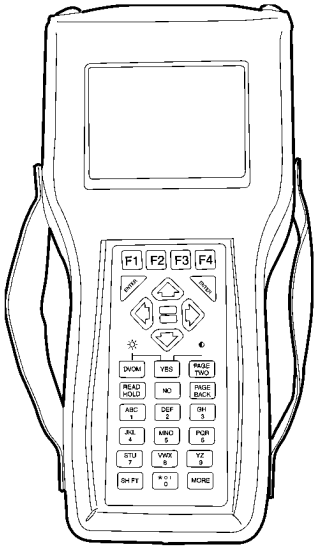

FCM-REAR RIGHT TURN OUTPUT CIRCUIT LOW (CONTINUED)

2. REAR RIGHT TURN LAMP DRIVER CIRCUIT SHORT TO GROUND

Turn the ignition off.

Disconnect the IPM C3 harness connector.

Measure the resistance between ground and the Rear Right Turn Lamp Driver circuit.

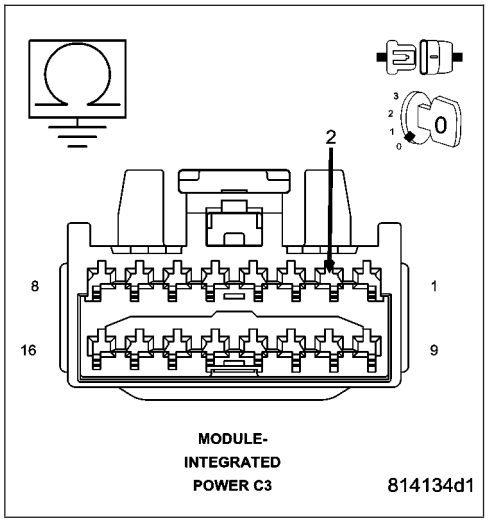

Is the resistance below 5.0 ohms?

Yes >> Go To 3

No >> Repair the Rear Right Turn Lamp Driver circuit for a short to ground.
Perform BODY VERIFICATION TEST - VER 1.

---

3. FRONT CONTROL MODULE

Turn the ignition off

Disconnect the FCM connector.

Disconnect the IPM C3 harness connector.

Measure the resistance between ground and the Rear Right Turn Lamp Driver circuit in the IPM.

Is the resistance below 5.0 ohms?

Yes >> Replace the Power Distribution Center(PDC).
Perform BODY VERIFICATION TEST - VER 1.

No >> Replace the Front Control Module.
Perform BODY VERIFICATION TEST - VER 1.

FCM-REAR RIGHT TURN OUTPUT CIRCUIT OPEN

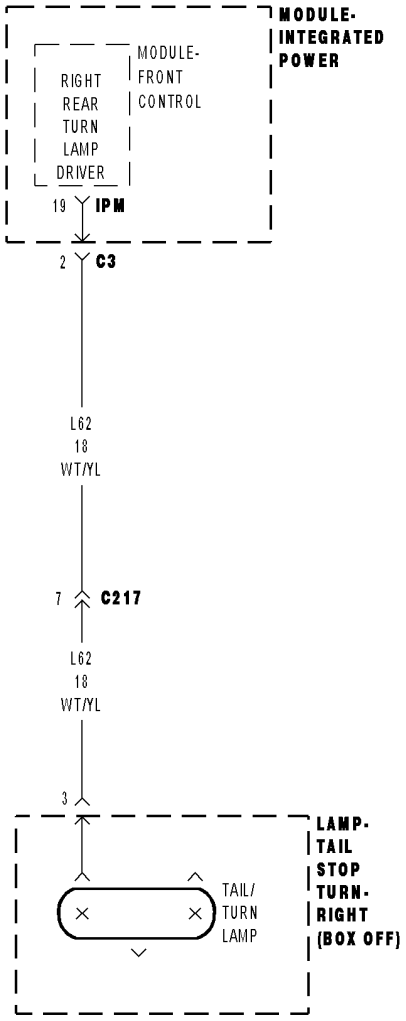

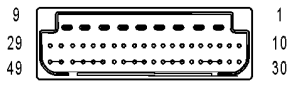

MODULE-
FRONT
CONTROL IPM

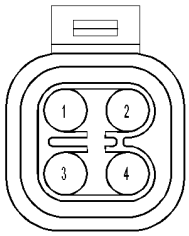

LAMP-
TAIL
STOP
TURN-
RIGHT
(BOX OFF)

81473271

FCM-REAR RIGHT TURN OUTPUT CIRCUIT OPEN (CONTINUED)

For the Exterior Lighting system circuit diagram (Refer to 8 - ELECTRICAL/LAMPS/LIGHTING - EXTERIOR - SCHEMATICS AND DIAGRAMS).

For a complete wiring diagram **Refer to Section 8W**.

- **When Monitored:**
  With the ignition on
- **Set Condition:**
  The FCM detects an open condition

Possible Causes
REAR RIGHT TURN SIGNAL OUTPUT CIRCUIT OPEN
POWER DISTRIBUTION CENTER
FRONT CONTROL MODULE

1. INTERMITTENT CONDITION

Turn the ignition on.
With the DRBIII®, clear all FCM DTC's.
Actuate the Right Rear Turn Signal lamp.
With the DRBIII®, read the DTC information.

Does the DRBIII® read: Rear Right Turn Output Circuit Open?

Yes >> Go To 2

No >> The condition that caused the symptom is currently not present. Inspect the related wiring for a possible intermittent condition. Look for any chafed, pierced, pinched, or partially broken wires.
Perform BODY VERIFICATION TEST - VER 1.

---

2. REAR RIGHT TURN SIGNAL OUTPUT CIRCUIT OPEN

Turn the ignition off.
Disconnect the IPM C3 harness connector
Measure the resistance of the Rear Right Turn Signal Output circuit.

Is the resistance above 5.0 ohms?

Yes >> Repair the Rear Right Turn Signal Output circuit for an open.
Perform BODY VERIFICATION TEST - VER 1.

No >> Go To 3

FCM-REAR RIGHT TURN OUTPUT CIRCUIT OPEN (CONTINUED)

3. **FRONT CONTROL MODULE**

Turn the ignition off
Disconnect the FCM harness connector.
Disconnect the IPM C3 harness connector.
Measure the resistance between ground and the Rear Right Turn Signal Output circuit.

Is the resistance above 5.0 ohms?

Yes >> Replace the Power Distribution Center..
Perform BODY VERIFICATION TEST - VER 1.

No >> Replace the Front Control Module.
Perform BODY VERIFICATION TEST - VER 1.

FCM-RIGHT HIGHBEAM OUTPUT CIRCUIT LOW

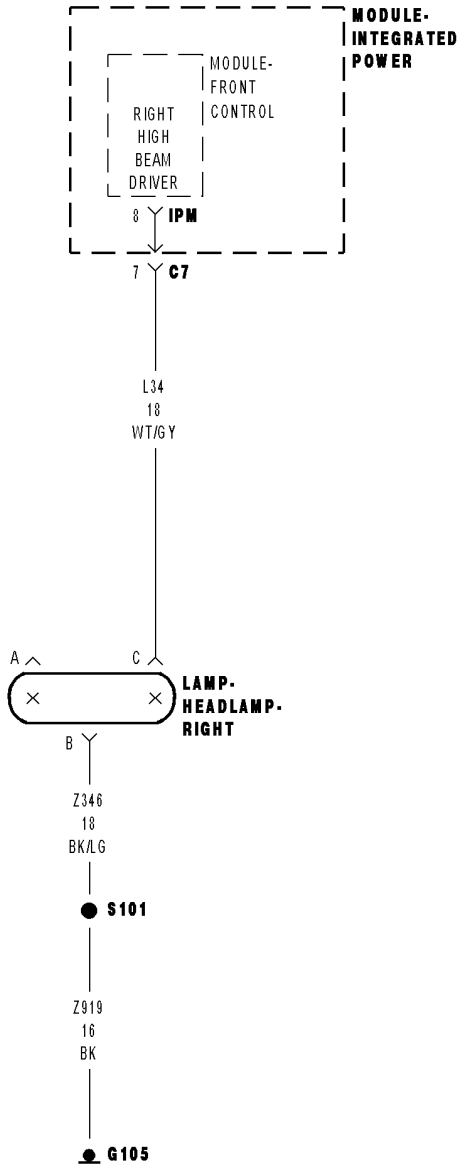

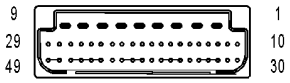

MODULE-
FRONT
CONTROL IPM

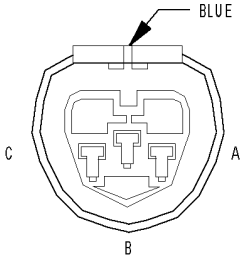

LAMP-
HEADLAMP-
RIGHT

8147342f

FCM-RIGHT HIGHBEAM OUTPUT CIRCUIT LOW (CONTINUED)

For the Exterior Lighting system circuit diagram (Refer to 8 - ELECTRICAL/LAMPS/LIGHTING - EXTERIOR - SCHEMATICS AND DIAGRAMS).

For a complete wiring diagram **Refer to Section 8W**.

- **When Monitored:**
  With the ignition on
- **Set Condition:**
  The FCMK detects a short to ground condition

Possible Causes
RIGHT HIGHBEAM OUTPUT CIRCUIT SHORT TO GROUND
POWER DISTRIBUTION CENTER
FRONT CONTROL MODULE

1. INTERMITTENT CONDITION

Turn the ignition on.
With the DRBIII®, clear all FCM DTC's.
Actuate the Highbeams headlamps.
With the DRBIII®, read the DTC information.

Does the DRBIII® read: Right Highbeam Output Circuit Low?

Yes >> Go To 2

No >> The condition that caused the symptom is currently not present. Inspect the related wiring for a possible intermittent condition. Look for any chafed, pierced, pinched, or partially broken wires.
Perform BODY VERIFICATION TEST - VER 1.

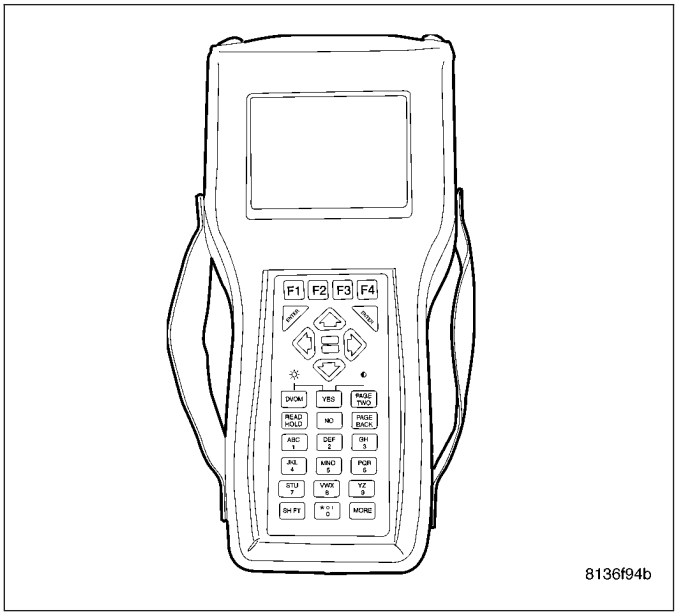

FCM-RIGHT HIGHBEAM OUTPUT CIRCUIT LOW (CONTINUED)

2. RIGHT HIGHBEAM OUTPUT CIRCUIT SHORT TO GROUND

Turn the ignition off.

Disconnect the IPM C7 harness connector.

Measure the resistance between ground and the Right Highbeam Output circuit.

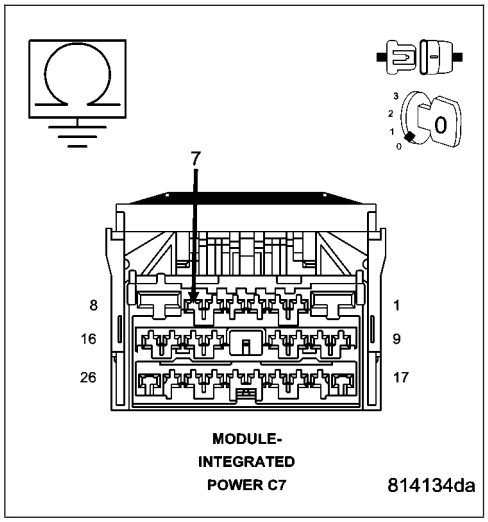

Is the resistance below 5.0 ohms?

Yes >> Go To 3

No >> Repair the Right Highbeam Output circuit for a short to ground.
Perform BODY VERIFICATION TEST - VER 1.

---

3. FRONT CONTROL MODULE

Turn the ignition off

Disconnect the FCM connector.

Disconnect the IPM C7 harness connector.

Measure the resistance between ground and the Right Highbeam Output circuit in the IPM.

Is the resistance below 5.0 ohms?

Yes >> Replace the Power Distribution Center(PDC).
Perform BODY VERIFICATION TEST - VER 1.

No >> Replace the Front Control Module.
Perform BODY VERIFICATION TEST - VER 1.

FCM-RIGHT HIGHBEAM OUTPUT CIRCUIT OPEN

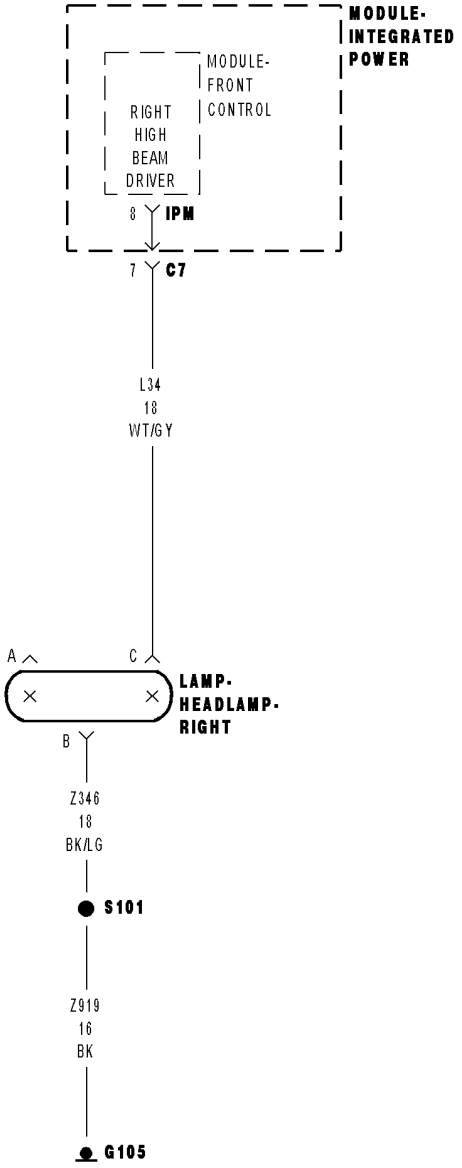

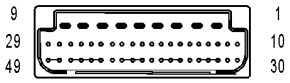

MODULE-
FRONT
CONTROL IPM

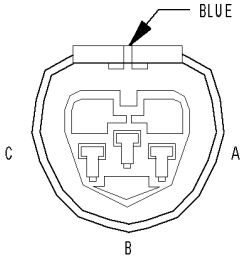

LAMP-
HEADLAMP-
RIGHT

8147342f

FCM-RIGHT HIGHBEAM OUTPUT CIRCUIT OPEN (CONTINUED)

For the Exterior Lighting system circuit diagram (Refer to 8 - ELECTRICAL/LAMPS/LIGHTING - EXTERIOR - SCHEMATICS AND DIAGRAMS).

For a complete wiring diagram **Refer to Section 8W**.

- **When Monitored:**
  With the ignition on
- **Set Condition:**
  The FCM detects an open condition

Possible Causes
RIGHT HIGHBEAM OUTPUT CIRCUIT OPEN
POWER DISTRIBUTION CENTER
FRONT CONTROL MODULE

1. INTERMITTENT CONDITION

Turn the ignition on.
With the DRBIII®, clear all FCM DTC's.
Actuate the Highbeam headlamps.
With the DRBIII®, read the DTC information.

Does the DRBIII® read: Right Highbeam Output Circuit Open?

Yes >> Go To 2

No >> The condition that caused the symptom is currently not present. Inspect the related wiring for a possible intermittent condition. Look for any chafed, pierced, pinched, or partially broken wires.
Perform BODY VERIFICATION TEST - VER 1.

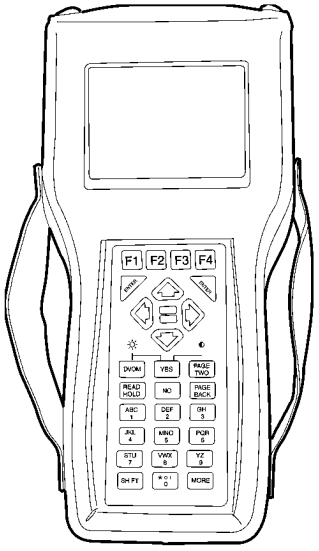

FCM-RIGHT HIGHBEAM OUTPUT CIRCUIT OPEN (CONTINUED)

2. RIGHT HIGHBEAM OUTPUT CIRCUIT OPEN

Turn the ignition off.
Disconnect the IPM C7 harness connector
Measure the resistance of the Right Highbeam Output circuit.

Is the resistance above 5.0 ohms?

Yes >> Repair the Right Highbeam Output circuit for an open.
Perform BODY VERIFICATION TEST - VER 1.

No >> Go To 3

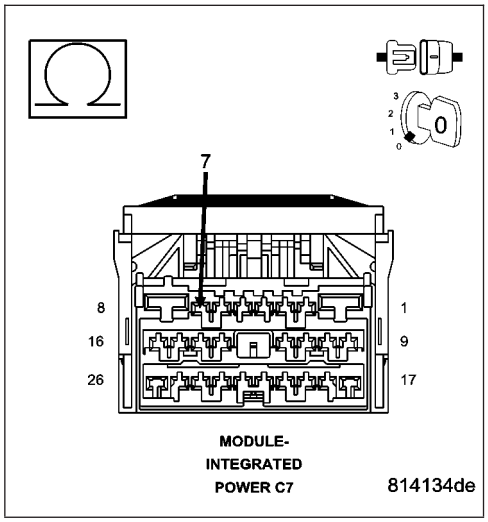

3. FRONT CONTROL MODULE

Turn the ignition off
Disconnect the FCM from the IPM.
Disconnect the IPM C7 harness connector.
Measure the resistance of the Right Highbeam Output circuit.

Is the resistance above 5.0 ohms?

Yes >> Replace the Power Distribution Center..
Perform BODY VERIFICATION TEST - VER 1.

No >> Replace the Front Control Module.
Perform BODY VERIFICATION TEST - VER 1.

FCM-RIGHT LOWBEAM OUTPUT CIRCUIT LOW

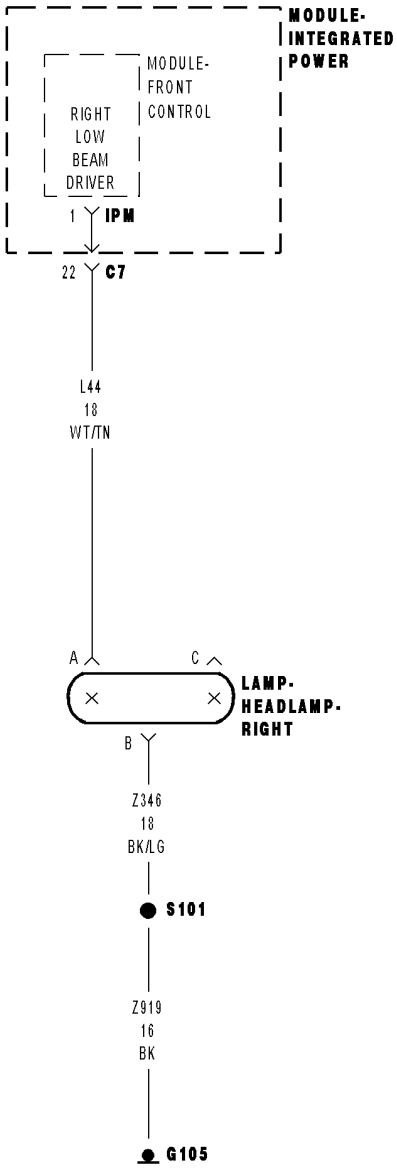

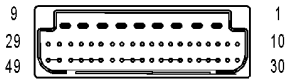

MODULE-
FRONT
CONTROL IPM

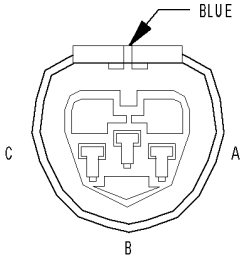

LAMP-
HEADLAMP-
RIGHT

81473440

FCM-RIGHT LOWBEAM OUTPUT CIRCUIT LOW (CONTINUED)

For the Exterior Lighting system circuit diagram (Refer to 8 - ELECTRICAL/LAMPS/LIGHTING - EXTERIOR - SCHEMATICS AND DIAGRAMS).

For a complete wiring diagram **Refer to Section 8W**.

- **When Monitored:**
  With the ignition on
- **Set Condition:**
  The FCM detects a short condition

Possible Causes
RIGHT LOWBEAM OUTPUT CIRCUIT SHORT TO GROUND
POWER DISTRIBUTION CENTER
FRONT CONTROL MODULE

1. INTERMITTENT CONDITION

Turn the ignition on.
With the DRBIII®, clear all FCM DTC's.
Actuate the Lowbeam headlamps.
With the DRBIII®, read the DTC information.

Does the DRBIII® read: Right Lowbeam Output Circuit Low?

Yes >> Go To 2

No >> The condition that caused the symptom is currently not present. Inspect the related wiring for a possible intermittent condition. Look for any chafed, pierced, pinched, or partially broken wires.
Perform BODY VERIFICATION TEST - VER 1.

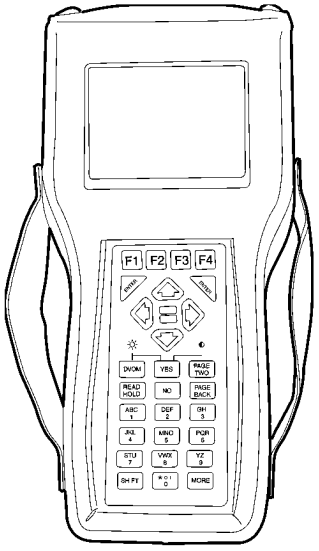

FCM-RIGHT LOWBEAM OUTPUT CIRCUIT LOW (CONTINUED)

2. RIGHT LOWBEAM OUTPUT CIRCUIT SHORT TO GROUND

Turn the ignition off.

Disconnect the IPM C7 harness connector.

Measure the resistance between ground and the Right Lowbeam Output circuit.

Is the resistance below 5.0 ohms?

Yes >> Go To 3

No >> Repair the Right Lowbeam Output circuit for a short to ground.
Perform BODY VERIFICATION TEST - VER 1.

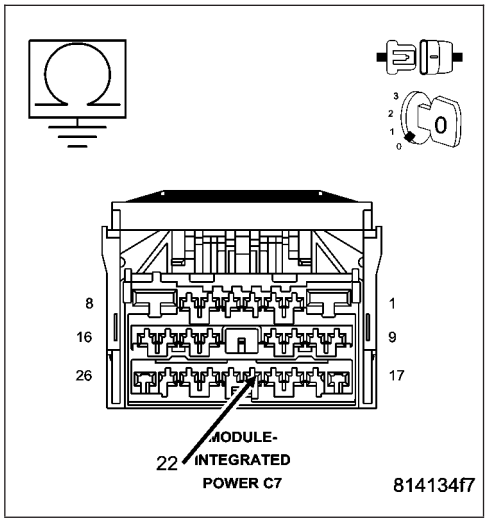

3. FRONT CONTROL MODULE

Turn the ignition off

Disconnect the FCM connector.

Disconnect the IPM C7 harness connector.

Measure the resistance between ground and the Right Lowbeam Output circuit in the IPM.

Is the resistance below 5.0 ohms?

Yes >> Replace the Power Distribution Center(PDC).
Perform BODY VERIFICATION TEST - VER 1.

No >> Replace the Front Control Module.
Perform BODY VERIFICATION TEST - VER 1.

FCM-RIGHT LOWBEAM OUTPUT CIRCUIT OPEN

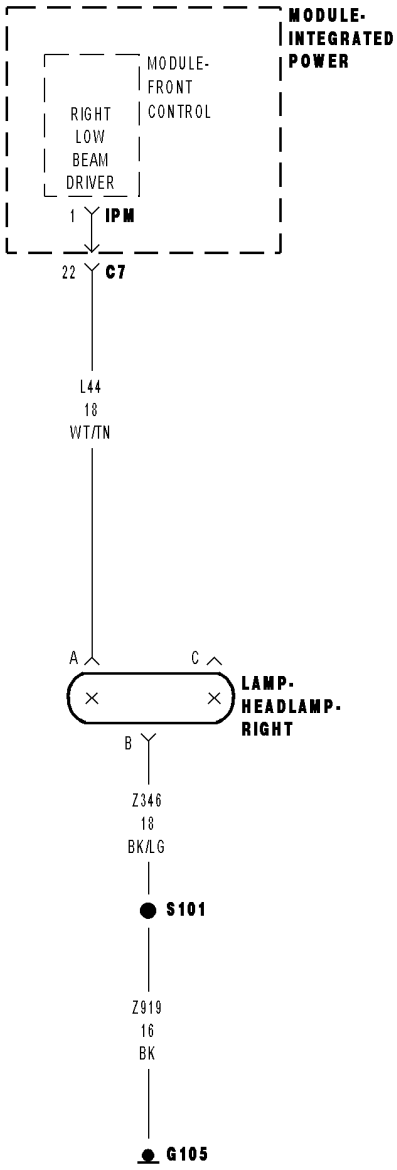

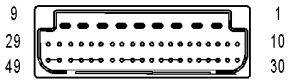

MODULE-
FRONT
CONTROL IPM

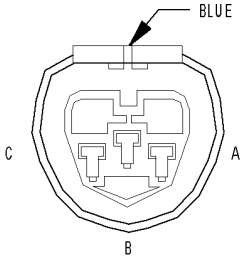

LAMP-
HEADLAMP-
RIGHT

81473440

FCM-RIGHT LOWBEAM OUTPUT CIRCUIT OPEN (CONTINUED)

For the Exterior Lighting system circuit diagram (Refer to 8 - ELECTRICAL/LAMPS/LIGHTING - EXTERIOR - SCHEMATICS AND DIAGRAMS).

For a complete wiring diagram **Refer to Section 8W**.

- **When Monitored:**
  With the ignition on
- **Set Condition:**
  The FCM detects an open condition

Possible Causes
RIGHT LOWBEAM OUTPUT CIRCUIT OPEN
POWER DISTRIBUTION CENTER
FRONT CONTROL MODULE

1. INTERMITTENT CONDITION

Turn the ignition on.
With the DRBIII®, clear all FCM DTC's.
Actuate the Lowbeam headlamps.
With the DRBIII®, read the DTC information.

Does the DRBIII® read: Right Lowbeam Output Circuit Open?

Yes >> Go To 2

No >> The condition that caused the symptom is currently not present. Inspect the related wiring for a possible intermittent condition. Look for any chafed, pierced, pinched, or partially broken wires.
Perform BODY VERIFICATION TEST - VER 1.

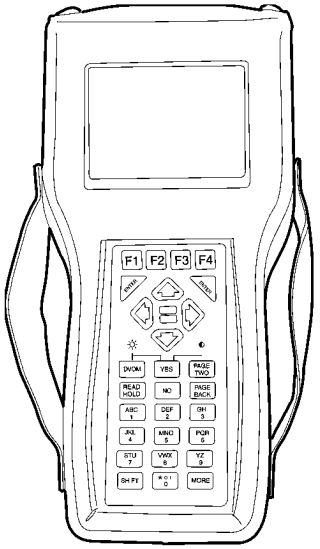

FCM-RIGHT LOWBEAM OUTPUT CIRCUIT OPEN (CONTINUED)

2. RIGHT LOWBEAM OUTPUT CIRCUIT OPEN

Turn the ignition off.
Disconnect the IPM C7 harness connector
Measure the resistance of the Right Lowbeam Output circuit.

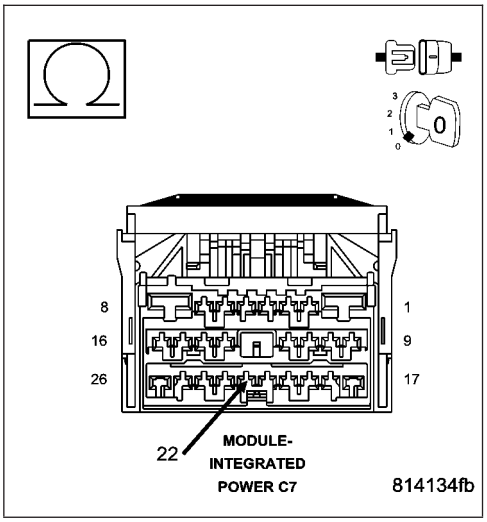

Is the resistance above 5.0 ohms?

Yes >> Repair the Right Lowbeam Output circuit for an open.
Perform BODY VERIFICATION TEST - VER 1.

No >> Go To 3

3. FRONT CONTROL MODULE

Turn the ignition off
Disconnect the FCM from the IPM.
Disconnect the IPM C7 harness connector.
Measure the resistance of the Right Lowbeam Output circuit.

Is the resistance above 5.0 ohms?

Yes >> Replace the Power Distribution Center.
Perform BODY VERIFICATION TEST - VER 1.

No >> Replace the Front Control Module.
Perform BODY VERIFICATION TEST - VER 1.

FCM-RIGHT STOP LAMP OUTPUT CIRCUIT LOW

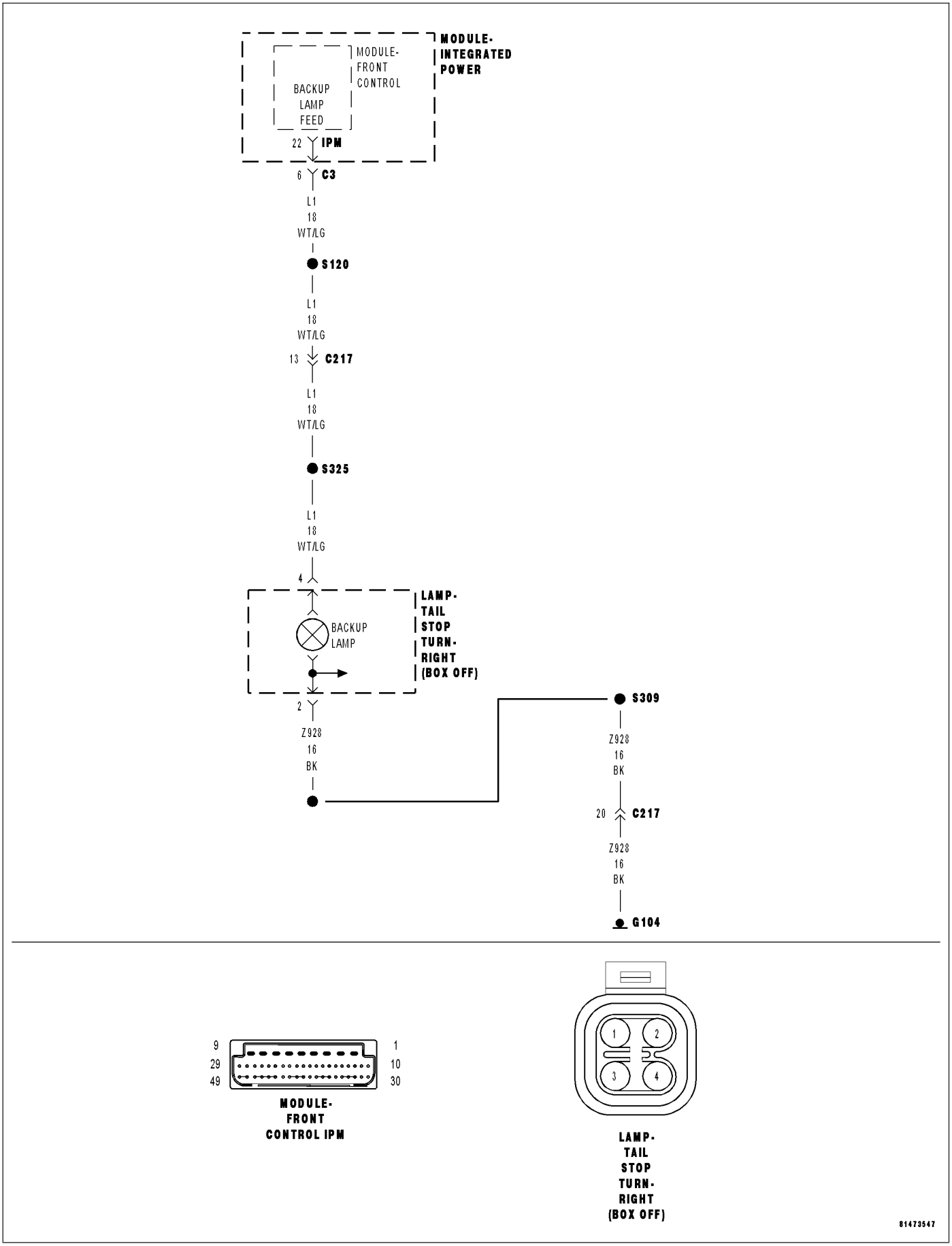

FCM-RIGHT STOP LAMP OUTPUT CIRCUIT LOW (CONTINUED)

For the Exterior Lighting system circuit diagram (Refer to 8 - ELECTRICAL/LAMPS/LIGHTING - EXTERIOR - SCHEMATICS AND DIAGRAMS).

For a complete wiring diagram **Refer to Section 8W**.

- **When Monitored:**
  With the ignition on
- **Set Condition:**
  The FCM detects a short to ground condition

Possible Causes
RIGHT BRAKE LAMP FEED CIRCUIT SHORT TO GROUND
FRONT CONTROL MODULE
POWER DISTRIBUTION CENTER (PDC)

1. INTERMITTENT CONDITION

Turn the ignition on.
With the DRBIII®, clear all FCM DTC's.
Actuate the Stop Lamps.
With the DRBIII®, read the DTC information.

Does the DRBIII® read: Right Stop Lamp Output Circuit Low?

Yes >> Go To 2

No >> The condition that caused the symptom is currently not present. Inspect the related wiring for a possible intermittent condition. Look for any chafed, pierced, pinched, or partially broken wires.
Perform BODY VERIFICATION TEST - VER 1.

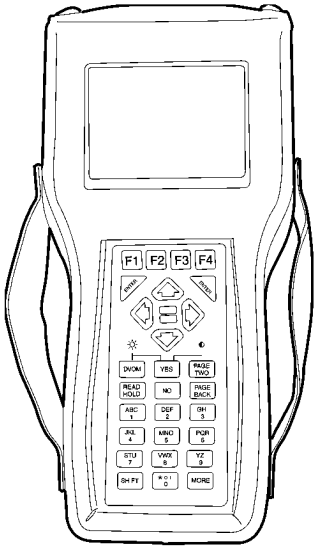

FCM-RIGHT STOP LAMP OUTPUT CIRCUIT LOW (CONTINUED)

2. RIGHT BRAKE LAMP FEED CIRCUIT SHORT TO GROUND

Turn the ignition off.

Disconnect the IPM C4 harness connector.

Measure the resistance between ground and the Right Brake Lamp Feed circuit.

Is the resistance below 5.0 ohms?

Yes >> Go To 3

No >> Repair the Right Brake Lamp Feed circuit for a short to ground.
Perform BODY VERIFICATION TEST - VER 1.

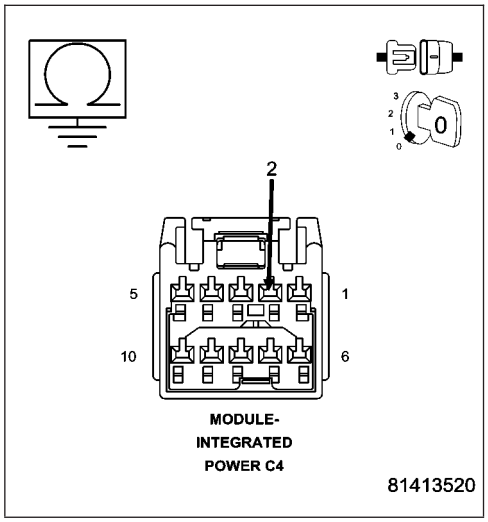

3. FRONT CONTROL MODULE

Turn the ignition off

Disconnect the FCM connector.

Disconnect the IPM C4 harness connector.

Measure the resistance between ground and the Right Brake Lamp Feed circuit in the IPM.

Is the resistance below 5.0 ohms?

Yes >> Replace the Power Distribution Center(PDC).
Perform BODY VERIFICATION TEST - VER 1.

No >> Replace the Front Control Module.
Perform BODY VERIFICATION TEST - VER 1.

FCM-RIGHT STOP LAMP OUTPUT CIRCUIT OPEN

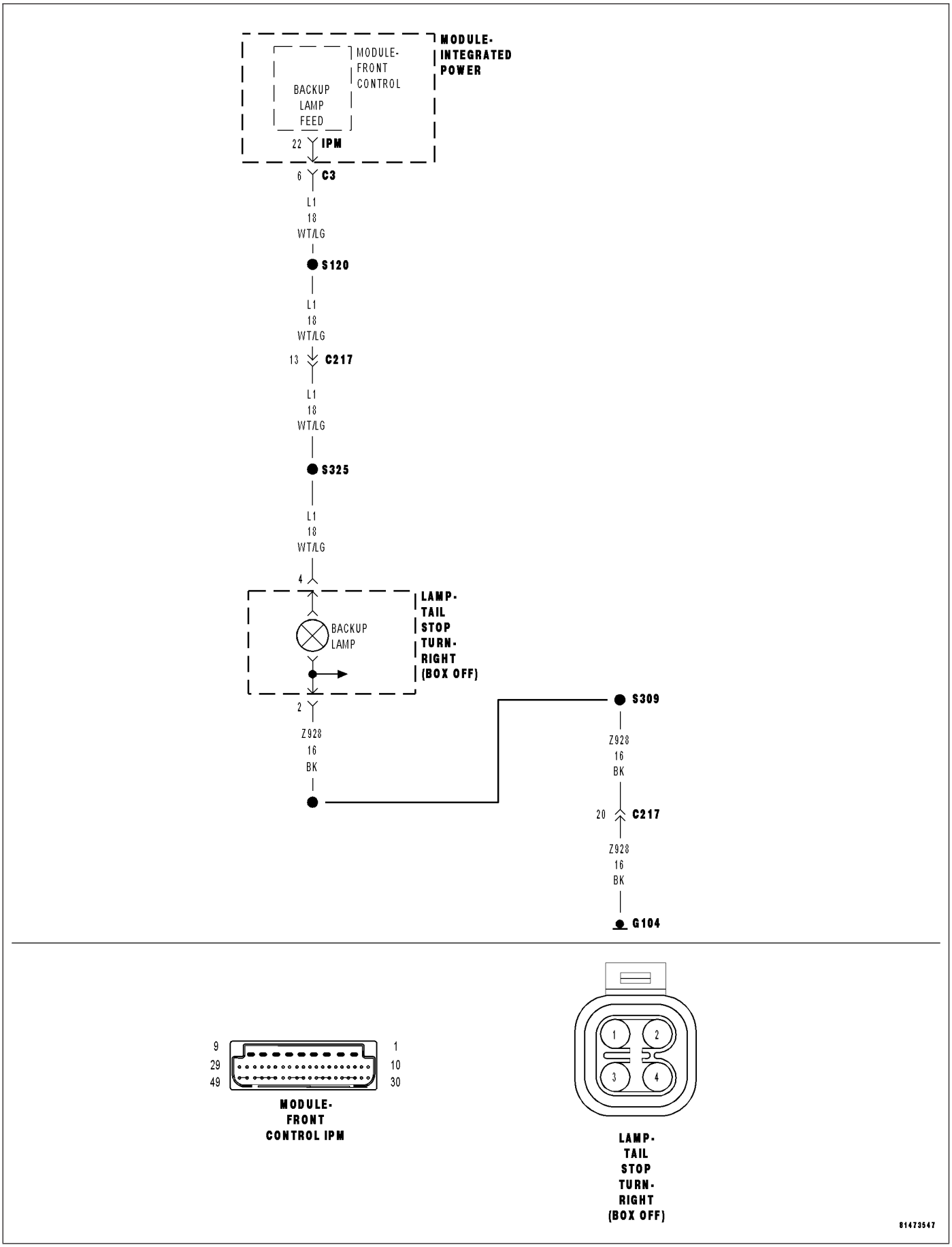

FCM-RIGHT STOP LAMP OUTPUT CIRCUIT OPEN (CONTINUED)

For the Exterior Lighting system circuit diagram (Refer to 8 - ELECTRICAL/LAMPS/LIGHTING - EXTERIOR - SCHEMATICS AND DIAGRAMS).

For a complete wiring diagram **Refer to Section 8W**.

- **When Monitored:**
  With the ignition on
- **Set Condition:**
  The FCM detects an open condition

Possible Causes
RIGHT BRAKE LAMP FEED CIRCUIT OPEN
POWER DISTRIBUTION CENTER
FRONT CONTROL MODULE

1. INTERMITTENT CONDITION

Turn the ignition on.
With the DRBIII®, clear all FCM DTC's.
Actuate the Stop Lamps.
With the DRBIII®, read the DTC information.

Does the DRBIII® read: Right Stop Lamp Output Circuit Open?

Yes >> Go To 2

No >> The condition that caused the symptom is currently not present. Inspect the related wiring for a possible intermittent condition. Look for any chafed, pierced, pinched, or partially broken wires.
Perform BODY VERIFICATION TEST - VER 1.

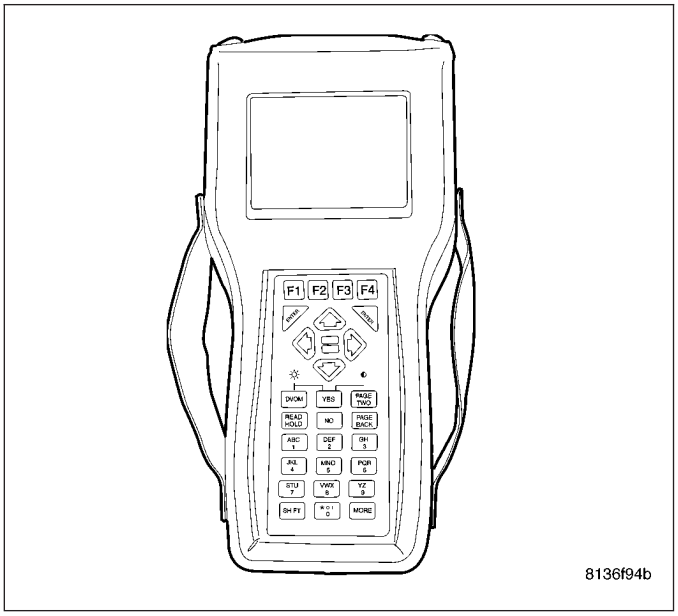

FCM-RIGHT STOP LAMP OUTPUT CIRCUIT OPEN (CONTINUED)

2. RIGHT BRAKE LAMP FEED CIRCUIT OPEN

Turn the ignition off.
Disconnect the IPM C4 harness connector
Measure the resistance of the Right Brake Lamp Feed circuit.

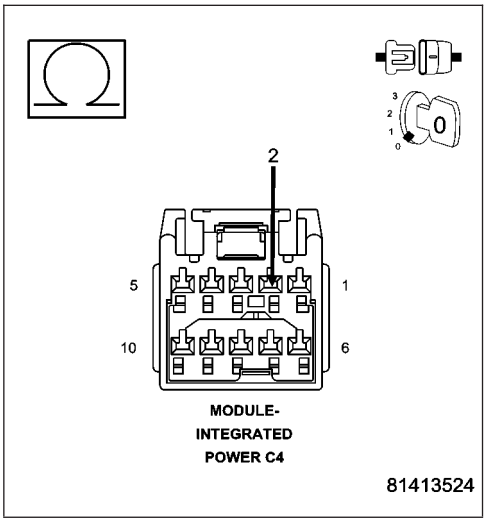

Is the resistance above 5.0 ohms?

Yes >> Repair the Right Brake Lamp Feed circuit for an open.
Perform BODY VERIFICATION TEST - VER 1.

No >> Go To 3

3. FRONT CONTROL MODULE

Turn the ignition off
Disconnect the FCM from the IPM.
Disconnect the IPM C4 harness connector.
Measure the resistance of the Right Brake Lamp Feed circuit.

Is the resistance above 5.0 ohms?

Yes >> Replace the Power Distribution Center.
Perform BODY VERIFICATION TEST - VER 1.

No >> Replace the Front Control Module.
Perform BODY VERIFICATION TEST - VER 1.

FCM-RIGHT TRAILER RELAY OUTPUT CIRCUIT HIGH

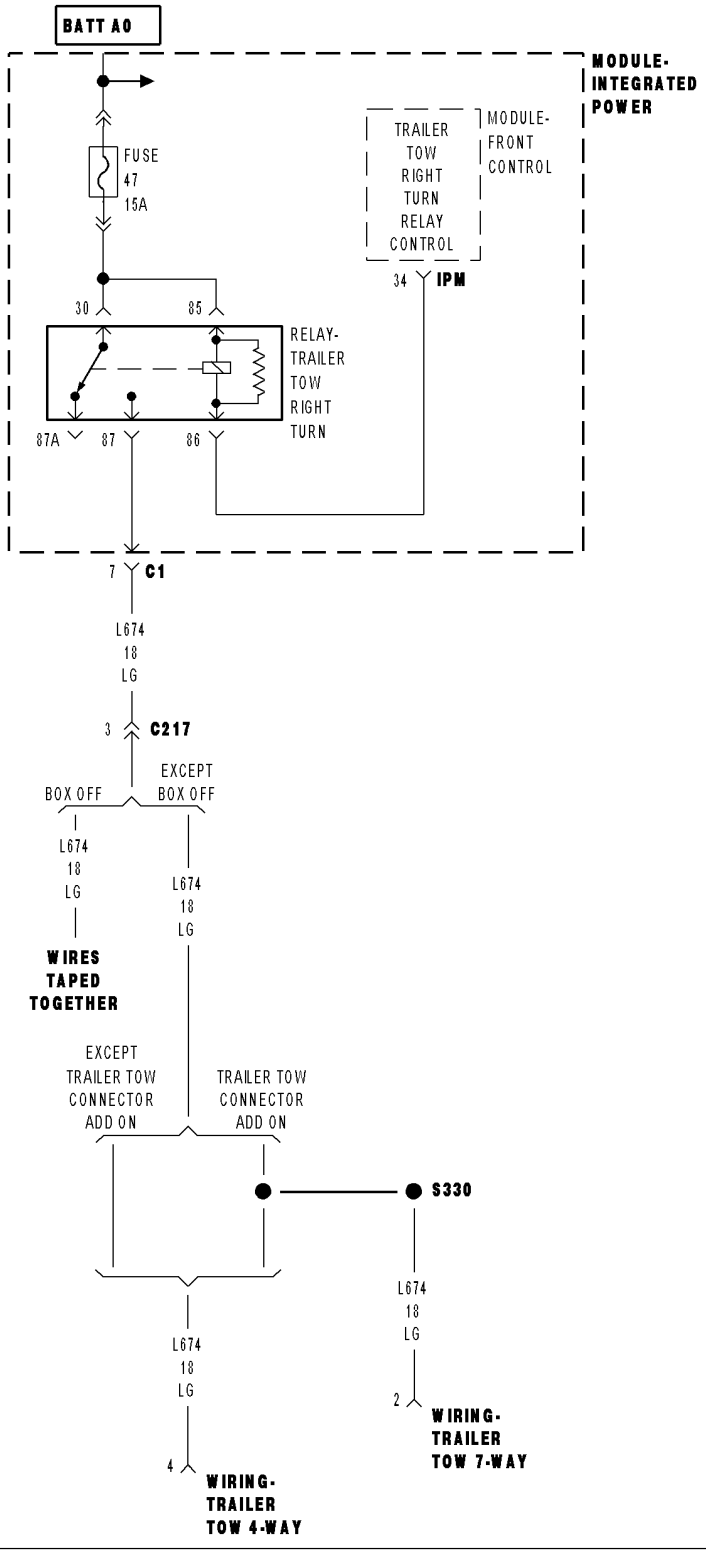

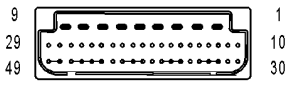

MODULE-
FRONT
CONTROL IPM

814735ba

FCM-RIGHT TRAILER RELAY OUTPUT CIRCUIT HIGH (CONTINUED)

For the Exterior Lighting system circuit diagram (Refer to 8 - ELECTRICAL/LAMPS/LIGHTING - EXTERIOR - SCHEMATICS AND DIAGRAMS).

For a complete wiring diagram **Refer to Section 8W**.

- **When Monitored:**
  With the ignition on
- **Set Condition:**
  The FCM detectsa high condition

Possible Causes
FRONT CONTROL MODULE
INTEGRATED POWER MODULE

1. INTERMITTENT CONDITION

Turn the ignition on.
With the DRBIII®, clear all FCM DTC's.
Actuate the Trailer Tow Lamps.
With the DRBIII®, read the DTC information.

Does the DRBIII® read: Right Trailer Relay Output Circuit High?

Yes >> Go To 2

No >> The condition that caused the symptom is currently not present. Inspect the related wiring for a possible intermittent condition. Look for any chafed, pierced, pinched, or partially broken wires.
Perform BODY VERIFICATION TEST - VER 1.

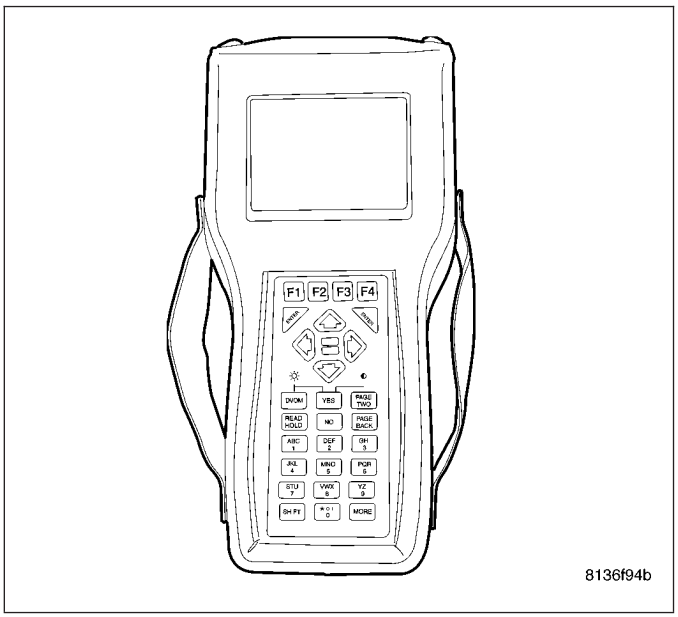

2. FRONT CONTROL MODULE

Turn the ignition off.
Remove the Front Control Module from the IPM.
Measure the voltage of the Accessory Relay Control circuit and ground.

Is the voltage above 1.0 volts?

Yes >> Replace the Integrated Power Module.
Perform BODY VERIFICATION TEST - VER 1.

No >> Replace the Front Control Module.
Perform BODY VERIFICATION TEST - VER 1.

FCM-RIGHT TRAILER RELAY OUTPUT CIRCUIT LOW

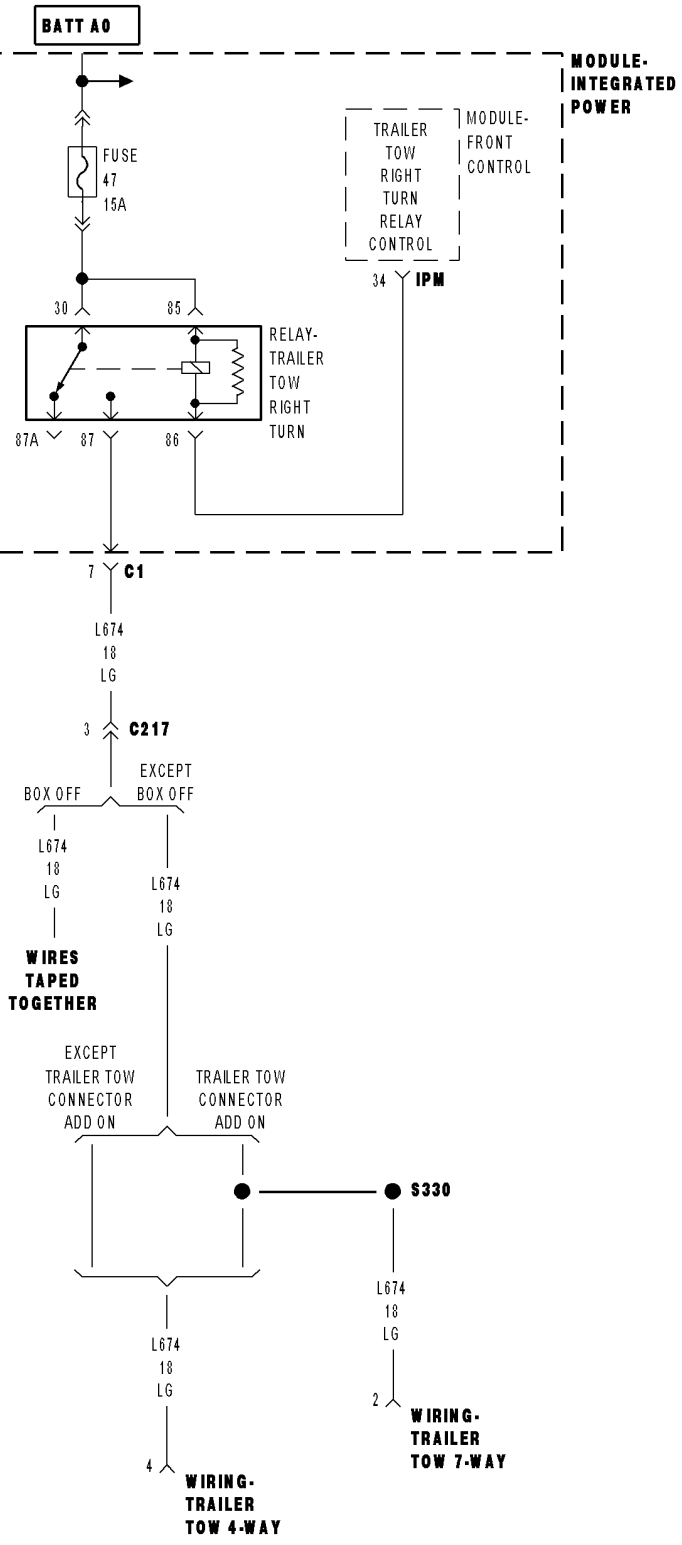

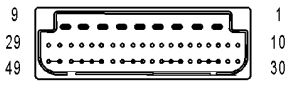

MODULE-
FRONT
CONTROL IPM

814735ba

FCM-RIGHT TRAILER RELAY OUTPUT CIRCUIT LOW (CONTINUED)

For the Exterior Lighting system circuit diagram (Refer to 8 - ELECTRICAL/LAMPS/LIGHTING - EXTERIOR - SCHEMATICS AND DIAGRAMS).

For a complete wiring diagram **Refer to Section 8W**.

- **When Monitored:**
  With the ignition on
- **Set Condition:**
  The FCM detects a low condition

Possible Causes
POWER DISTRIBUTION CENTER (PDC)
FRONT CONTROL MODULE

1. INTERMITTENT CONDITION

Turn the ignition on.
With the DRBIII®, clear all FCM DTC's.
Actuate the Trailer Tow Lamps.
With the DRBIII®, read the DTC information.

Does the DRBIII® read: Right Trailer Relay Output Circuit Low?

Yes >> Go To 2

No >> The condition that caused the symptom is currently not present. Inspect the related wiring for a possible intermittent condition. Look for any chafed, pierced, pinched, or partially broken wires.
Perform BODY VERIFICATION TEST - VER 1.

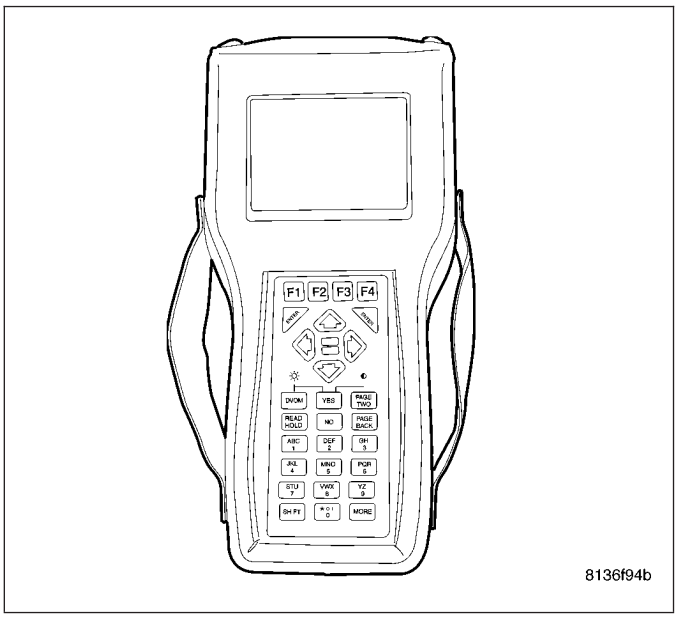

2. FRONT CONTROL MODULE

Turn the ignition off
Remove the FCM from the IPM.
Measure the resistance between ground and the Right Trailer Tow Relay control circuit in the IPM.

Is the resistance below 5.0 ohms?

Yes >> Replace the Power Distribution Center(PDC).
Perform BODY VERIFICATION TEST - VER 1.

No >> Replace the Front Control Module.
Perform BODY VERIFICATION TEST - VER 1.

FCM-RIGHT TRAILER RELAY OUTPUT CIRCUIT OPEN

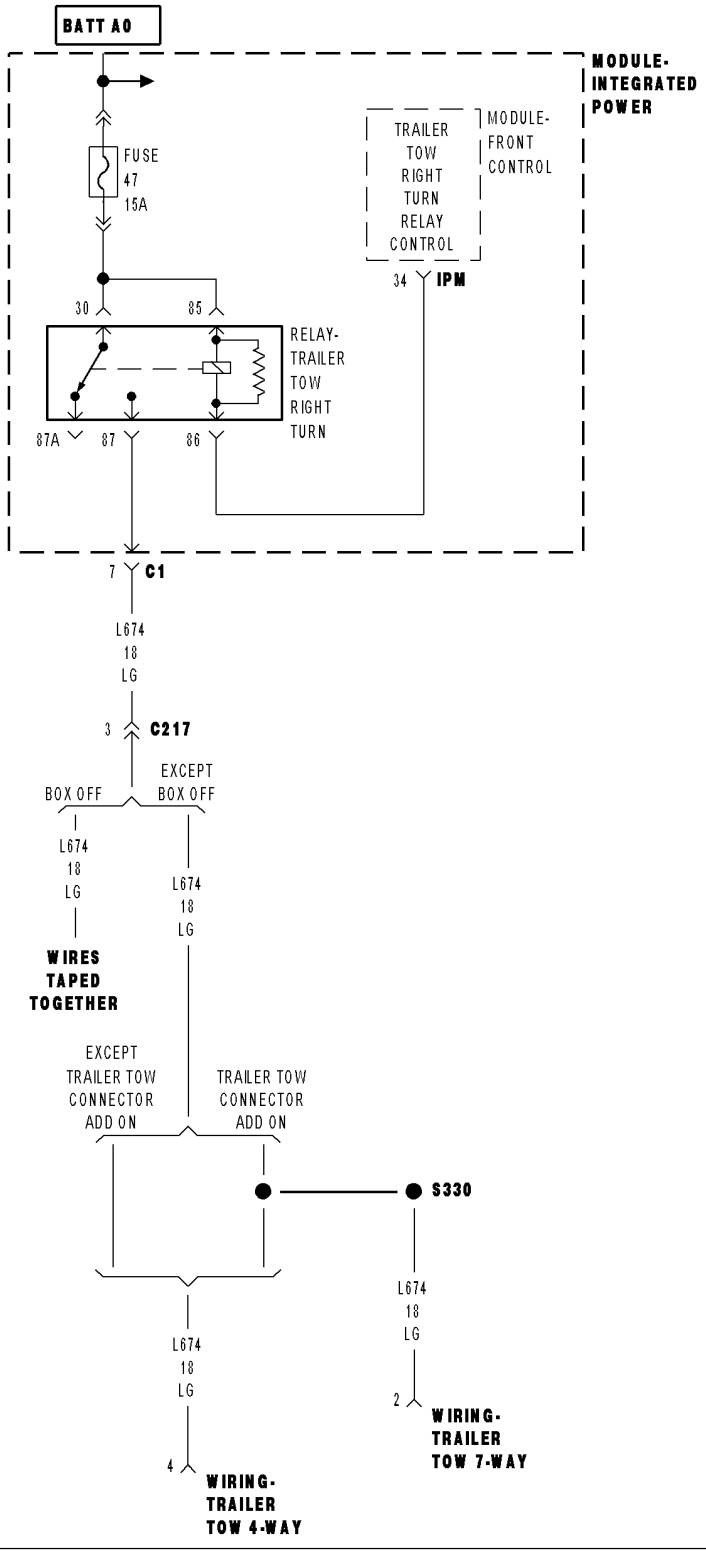

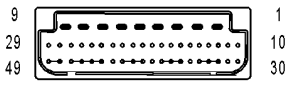

MODULE-
FRONT
CONTROL IPM

814735ba

FCM-RIGHT TRAILER RELAY OUTPUT CIRCUIT OPEN (CONTINUED)

For the Exterior Lighting system circuit diagram (Refer to 8 - ELECTRICAL/LAMPS/LIGHTING - EXTERIOR - SCHEMATICS AND DIAGRAMS).

For a complete wiring diagram **Refer to Section 8W**.

- **When Monitored:**
  With the ignition on
- **Set Condition:**
  The FCM detects an open condition

Possible Causes
INTEGRATED POWER MODULE
FRONT CONTROL MODULE
TRAILER LAMP RELAY OUTPUT CIRCUIT OPEN

1. INTERMITTENT CONDITION

Turn the ignition on.
With the DRBIII®, clear all FCM DTC's.
Actuate the Trailer Tow Lamps.
With the DRBIII®, read the DTC information.

Does the DRBIII® read: Right Trailer Relay Output Circuit Open?

Yes >> Go To 2

No >> The condition that caused the symptom is currently not present. Inspect the related wiring for a possible intermittent condition. Look for any chafed, pierced, pinched, or partially broken wires.
Perform BODY VERIFICATION TEST - VER 1.

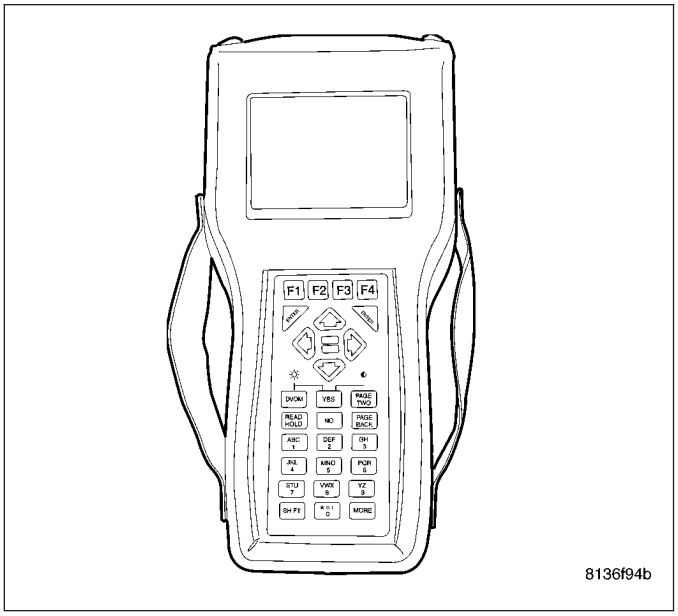

2. INTEGRATED POWER MODULE

Turn the ignition off.
Check the IPM to make certain the Right Trailer Tow Relay is present.

Is the Trailer Tow Relay present?

Yes >> Go To 3

No >> Replace the Integrated Power Module.
Perform BODY VERIFICATION TEST - VER 1.

FCM-RIGHT TRAILER RELAY OUTPUT CIRCUIT OPEN (CONTINUED)

3. FRONT CONTROL MODULE

Turn the ignition off

Measure the voltage of the Fused B+ circuit of the Trailer Tow relay in the IPM.

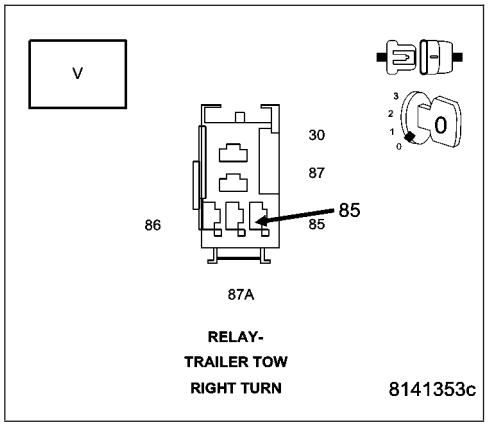

Is the voltage above 10 volts?

Yes >> Replace the Front Control Module.
Perform BODY VERIFICATION TEST - VER 1.

No >> Repair the Trailer Lamp Relay Output Circuit.
Perform BODY VERIFICATION TEST - VER 1.

MIC-TURN HAZARD SWITCH INPUT CIRCUIT OPEN

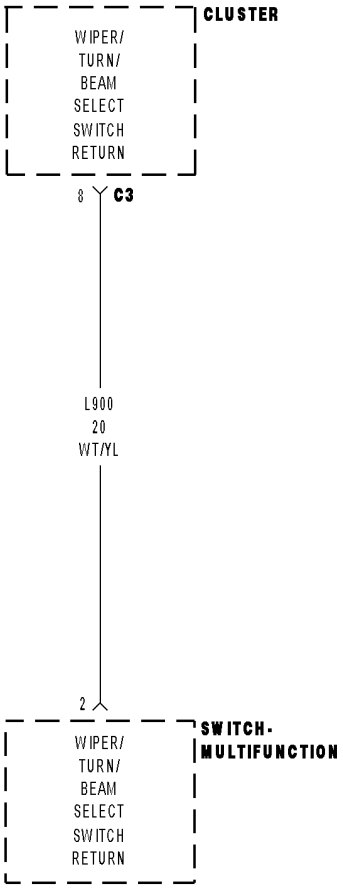

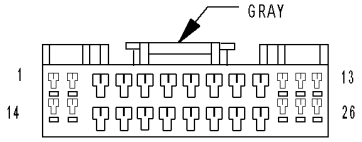

CLUSTER C3

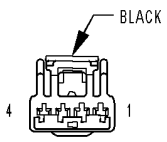

SWITCH-
MULTIFUNCTION

81473633

MIC-TURN HAZARD SWITCH INPUT CIRCUIT OPEN (CONTINUED)

For the Exterior Lighting system circuit diagram (Refer to 8 - ELECTRICAL/LAMPS/LIGHTING - EXTERIOR - SCHEMATICS AND DIAGRAMS).

For a complete wiring diagram **Refer to Section 8W**.

- **When Monitored:**
  With the Ignition on
- **Set Condition:**
  The CCN detects an open condition

Possible Causes
MULTIFUNCTION SWITCH
WIPER/TURN/BEAM SELECT SWITCH SENSE
TURN LAMPS SWITCH FEED CIRCUIT
INSTRUMENT CLUSTER

1. INTERMITTENT CONDITION

Turn the ignition on.
With the DRBIII®, clear all MIC DTC's.
Actuate the Hazard Lamps.
With the DRBIII®, read the DTC information.

Does the DRBIII® read: Turn Hazard Switch Input Circuit Open?

Yes >> Go To 2

No >> The condition that caused the symptom is currently not present. Inspect the related wiring for a possible intermittent condition. Look for any chafed, pierced, pinched, or partially broken wires.
Perform BODY VERIFICATION TEST - VER 1.

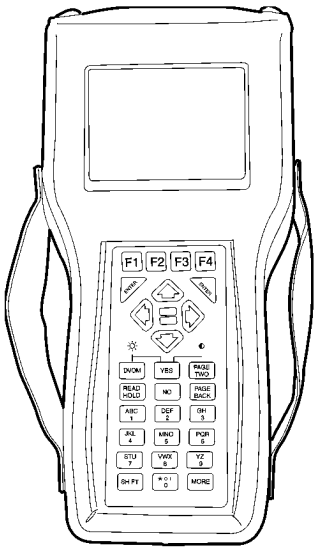

2. MULTIFUNCTION SWITCH

Disconnect the Multifunction Switch connector.
Turn the ignition on.
Measure the voltage of the Multifunction Switch between the Sense circuit and the Feed circuit.

Does the voltage read 0.0volts?

Yes >> Replace the Multifunction Switch.
Perform BODY VERIFICATION TEST - VER 1.

No >> Go To 3

MIC-TURN HAZARD SWITCH INPUT CIRCUIT OPEN (CONTINUED)

3. WIPER/TURN/BEAM SELECT SWITCH SENSE

Turn the ignition off.
Disconnect the Multifunction Switch connector.
Disconnect the Instrument Cluster C4 connector.
Measure the resistance of the Wipe/Turn/Beam select sense circuit.

Is the resistance below 5.0 ohms?

Yes >> Go To 4

No >> Repair the Wiper/Turn/Beam Select Switch Sense circuit.
Perform BODY VERIFICATION TEST - VER 1.

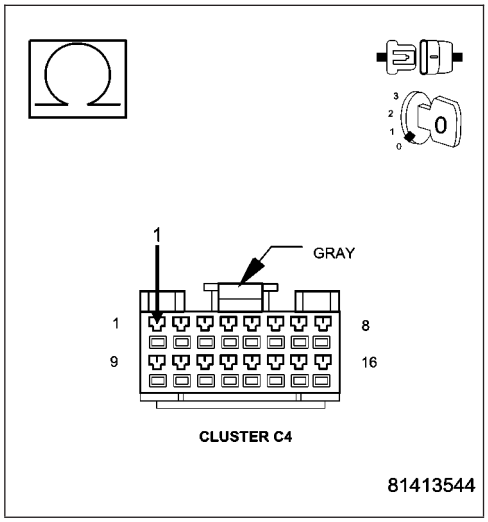

4. INSTRUMENT CLUSTER

Turn the ignition off
Disconnect the Multifunction Switch connector.
Disconnect the Instrument Cluster C4 connector.
Measure the resistance of the Turn Lamps Switch Feed circuit.

Is the resistance below 5.0 ohms?

Yes >> Replace the Instrument Cluster.
Perform BODY VERIFICATION TEST - VER 1.

No >> Repair the Turn Lamps Switch Feed circuit.
Perform BODY VERIFICATION TEST - VER 1.

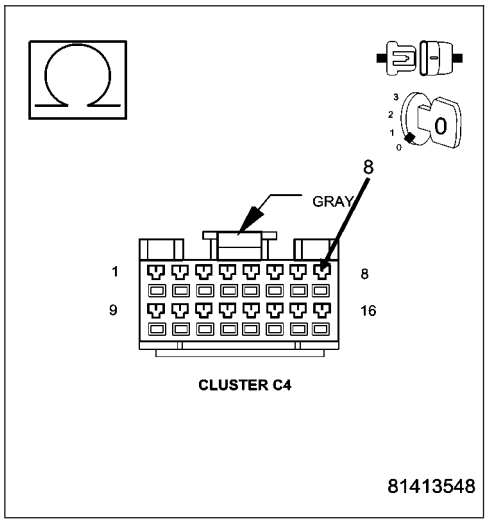

MIC-TURN HAZARD SWITCH INPUT CIRCUIT SHORTED

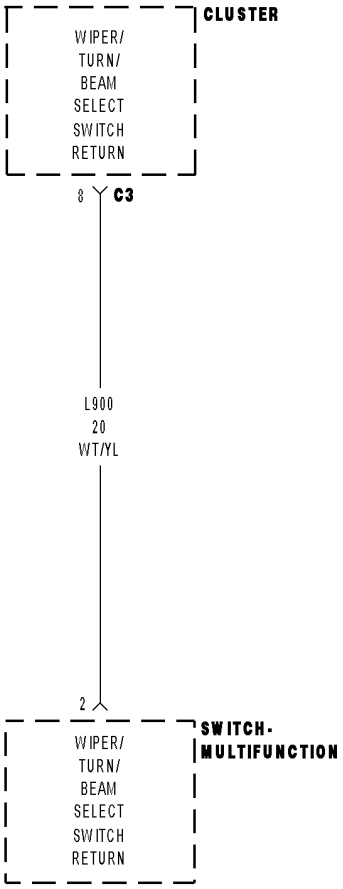

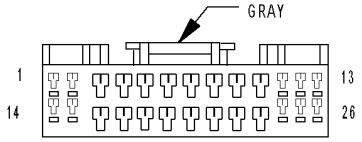

CLUSTER C3

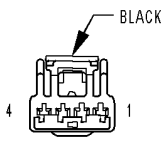

SWITCH-
MULTIFUNCTION

81473633

MIC-TURN HAZARD SWITCH INPUT CIRCUIT SHORTED (CONTINUED)

For the Exterior Lighting system circuit diagram (Refer to 8 - ELECTRICAL/LAMPS/LIGHTING - EXTERIOR - SCHEMATICS AND DIAGRAMS).

For a complete wiring diagram **Refer to Section 8W**.

- **When Monitored:**
  With the Exterior Lights active
- **Set Condition:**
  The CCN detects a short condition

Possible Causes
MULTIFUNCTION SWITCH
WIPER/TURN/BEAM SELECT SWITCH SENSE CIRCUIT SHORT TO GROUND
INSTRUMENT CLUSTER

1. INTERMITTENT CONDITION

Turn the ignition on.
With the DRBIII®, clear all MIC DTC's.
Actuate the Hazard Lamps.
With the DRBIII®, read the DTC information.

Does the DRBIII® read: Turn Hazard Switch Input Circuit Short?

Yes >> Go To 2

No >> The condition that caused the symptom is currently not present. Inspect the related wiring for a possible intermittent condition. Look for any chafed, pierced, pinched, or partially broken wires.
Perform BODY VERIFICATION TEST - VER 1.

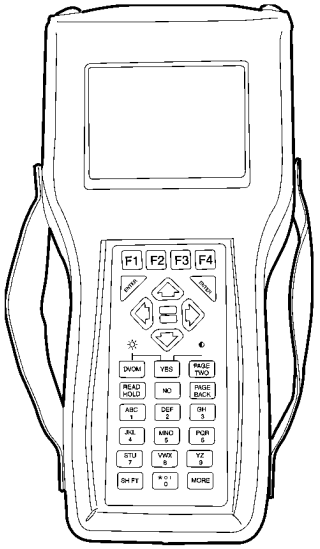

2. MULTIFUNCTION SWITCH

Disconnect the Multifunction Switch connector.
Turn the ignition on.

Does the DRBIII® display Multifunction Switch 5.0 volts?

Yes >> Go To 3

No >> Replace the Multifunction Switch.
Perform BODY VERIFICATION TEST - VER 1.

MIC-TURN HAZARD SWITCH INPUT CIRCUIT SHORTED (CONTINUED)

3. WIPER/TURN/BEAM SELECT SWITCH SENSE CIRCUIT SHORT TO GROUND

Turn the ignition off.

Disconnect the Multifunction Switch connector.

Disconnect the Instrument Cluster C4 connector.

Measure the resistance of the Wiper/Turn/Beam Select Switch Sense circuit to ground.

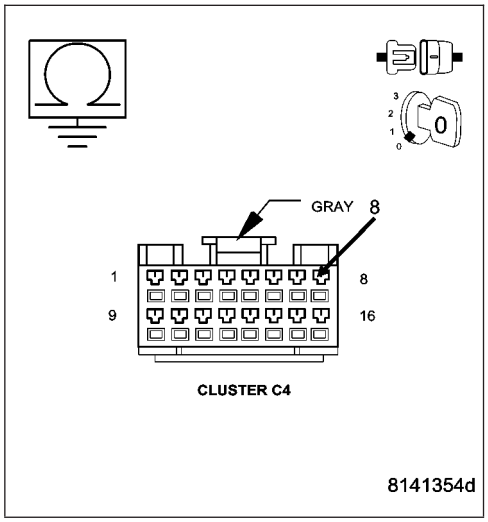

Is the resistance below 5.0 ohms?

Yes >> Repair the Wiper/Turn/Beam select switch sense circuit.. Perform BODY VERIFICATION TEST - VER 1.

No >> Replace the Instrument Cluster. Perform BODY VERIFICATION TEST - VER 1.

LAMPS/LIGHTING - EXTERIOR - SERVICE INFORMATION

TABLE OF CONTENTS

page

LAMPS/LIGHTING - EXTERIOR - SERVICE INFORMATION
DESCRIPTION . . . 109
OPERATION . . . 111
WARNING
WARNINGS - LAMPS/LIGHTING - EXTERIOR . . . 114
DIAGNOSIS AND TESTING
LAMPS/LIGHTING - EXTERIOR . . . 114
STANDARD PROCEDURE
FRONT LAMP AIMING . . . 119
SPECIFICATIONS
LAMPS/LIGHTING - EXTERIOR . . . 121
SWITCH-BACK UP LAMP
DESCRIPTION . . . 122
OPERATION . . . 122
DIAGNOSIS AND TESTING
BACKUP LAMP SWITCH . . . 122
SWITCH-STOP LAMP
DESCRIPTION . . . 123
OPERATION . . . 123
DIAGNOSIS AND TESTING
BRAKE LAMP SWITCH . . . 124
REMOVAL . . . 124
INSTALLATION . . . 125
LAMP-HIGH MOUNTED STOP
REMOVAL
BULB . . . 126
LAMP . . . 126
INSTALLATION
BULB . . . 127
LAMP . . . 127
CLEARANCE LAMP
REMOVAL
BULB . . . 128
LAMP . . . 128
INSTALLATION
BULB . . . 129
LAMP . . . 129
LAMP-FOG
REMOVAL
BULB . . . 130
LAMP . . . 130
INSTALLATION
BULB . . . 131
LAMP . . . 131
RELAY-FOG LAMP
DESCRIPTION . . . 132
OPERATION . . . 132

page

FRONT LAMP UNIT
STANDARD PROCEDURE
FRONT LAMP UNIT MOISTURE CLEARING . 132
REMOVAL
BULB - PARK/TURN SIGNAL . . . 133
BULB - HEADLAMP . . . 133
LAMP . . . 135
INSTALLATION
BULB - PARK/TURN SIGNAL . . . 135
BULB - HEADLAMP . . . 137
LAMP . . . 138
SWITCH-HEADLAMP
DESCRIPTION . . . 139
OPERATION . . . 140
DIAGNOSIS AND TESTING
HEADLAMP SWITCH . . . 140
REMOVAL . . . 141
INSTALLATION . . . 142
LICENSE PLATE LAMP
REMOVAL
BULB . . . 144
LAMP . . . 144
INSTALLATION
BULB . . . 145
LAMP . . . 146
LAMP-MARKER
REMOVAL
BULB - REAR FENDER . . . 147
LAMP - REAR FENDER . . . 147
BULB - TAILGATE . . . 148
LAMP - TAILGATE . . . 148
INSTALLATION
BULB - REAR FENDER . . . 149
LAMP - REAR FENDER . . . 150
BULB - TAILGATE . . . 150
LAMP - TAILGATE . . . 151
SWITCH-MULTIFUNCTION
DESCRIPTION . . . 152
OPERATION . . . 152
DIAGNOSIS AND TESTING
MULTI-FUNCTION SWITCH . . . 153
REMOVAL . . . 154
INSTALLATION . . . 156
PARK BRAKE SWITCH
DESCRIPTION . . . 158
OPERATION . . . 158
DIAGNOSIS AND TESTING
PARK BRAKE SWITCH . . . 158
REMOVAL . . . 159
INSTALLATION . . . 160

RELAY-PARK LAMP
DESCRIPTION 160
OPERATION 160
LAMP-TAIL/STOP/TURN
REMOVAL
BULB - PICK-UP 161
LAMP - PICK-UP 162
BULB - CAB & CHASSIS 163
LAMP - CAB & CHASSIS 163
INSTALLATION
BULB - PICK-UP 163
LAMP - PICK-UP 164
BULB - CAB & CHASSIS 165
LAMP - CAB & CHASSIS 166
TRAILER TOW CONNECTOR
REMOVAL 166
INSTALLATION 167
RELAY-TRAILER TOW
DESCRIPTION 168
OPERATION 168
WIRING-TRAILER TOW
DESCRIPTION 169
OPERATION 170
CAM-TURN SIGNAL CANCEL
DESCRIPTION 170
OPERATION 170
LAMP-UNDERHOOD
REMOVAL
BULB 171
LAMP 172
INSTALLATION
BULB 172
LAMP 173

LAMPS/LIGHTING - EXTERIOR - SERVICE INFORMATION

DESCRIPTION

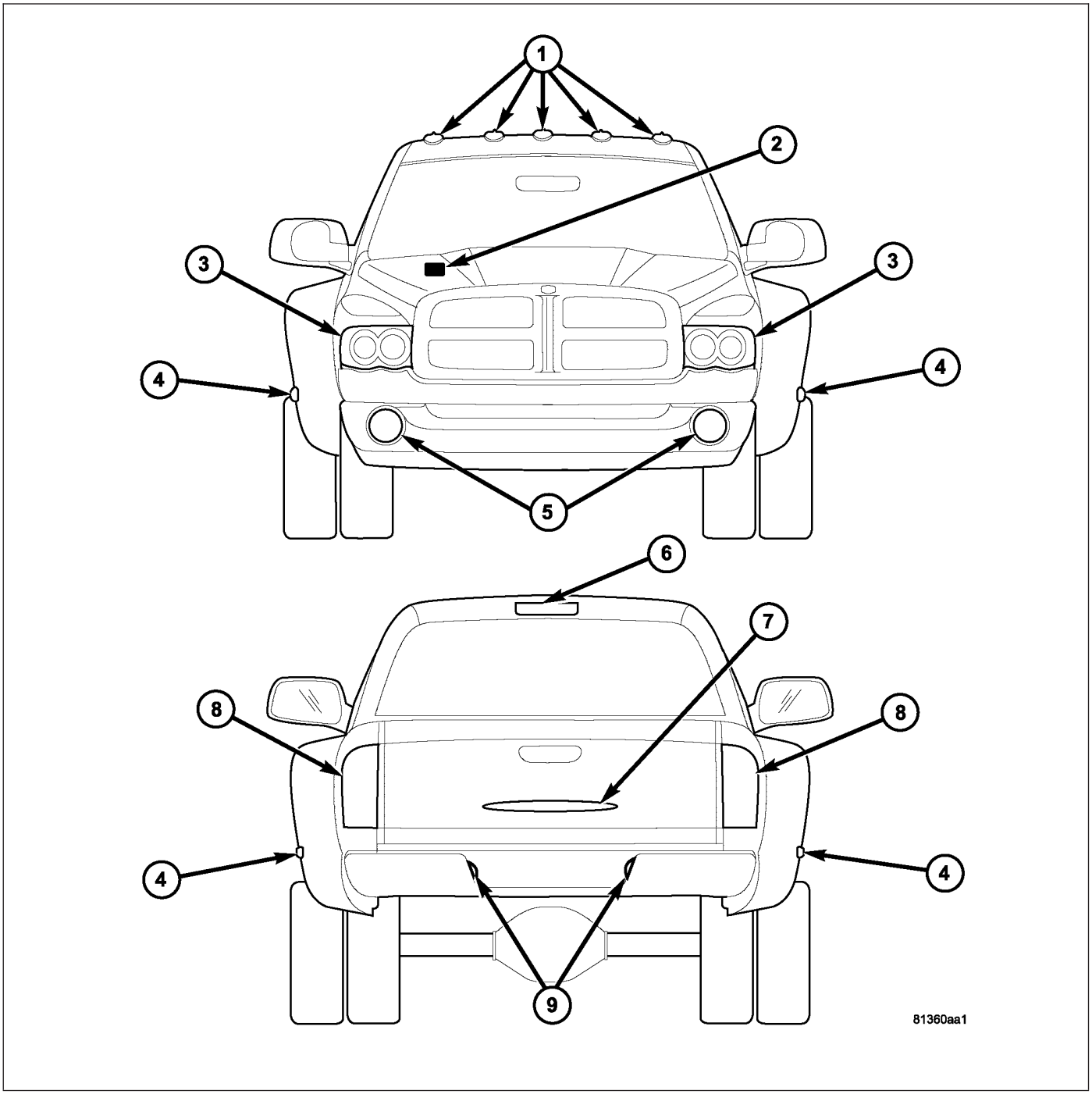

The exterior lighting system for this model includes the following exterior lamp units:

- **Cab Clearance Lamps (1)** - Vehicles equipped with this option have five individual amber clearance lamp units mounted across the roof panel just rearward of the upper windshield header.
- **Center High Mounted Stop Lamp (6)** - A standard equipment Center High Mounted Stop Lamp (CHMSL) is centered on the vertical surface at the rear of the roof panel just above the back glass opening at the rear of the truck cab. This CHMSL also incorporates two integral cargo lamps, one located at each outboard side of the CHMSL.
- **Front Fog Lamps (5)** - Vehicles equipped with this option have a fog lamp unit mounted near each outboard end of the front bumper support, behind the lower portion of the front fascia.

- **Front Lamp Units (3)** - A standard equipment front lamp unit is mounted to the front of each front fender panel on either side of the grille opening.
- **License Plate Lamps (9)** - A standard equipment rear license plate lamp unit is mounted to each outboard vertical surface of the license plate tub formation in the center of the rear bumper on pickup models. On cab and chassis models the license plate lamp function is integral to the rear lamp unit.
- **Rear Fender Marker Lamps (4)** - Vehicles equipped with dual rear wheels have four individual rear fender marker lamp units mounted to the rear fenders. An amber lamp is located forward of each rear wheel opening and a red lamp is located rearward of each rear wheel opening.
- **Rear Lamp Units (8)** - On pick-up models a standard equipment rear lamp unit is mounted to the rear of each quarter panel on either side of the tailgate opening. On cab and chassis models a rear lamp unit is mounted on the outboard side of each frame rail near the rear of the vehicle.
- **Tailgate Marker Lamp (7)** - Vehicles equipped with dual rear wheels have a single red tailgate marker lamp unit mounted to the center of the outer tailgate panel below the tailgate latch release handle.
- **Underhood Lamp (2)** - Vehicles equipped with this option have a single underhood lamp unit with an integral automatic mechanical (non-mercury) switch. The lamp and switch unit is mounted to the underside of the inner hood reinforcement above the right side of the engine compartment.

These exterior lighting lamp units and their controls are combined to provide the following exterior lighting features:

- **Backup Lamps** - The backup (or reverse) lamps include a bulb, reflector and lens that are integral to each rear lamp unit.
- **Brake Lamps** - The brake (or stop) lamps include a bulb, reflector and lens that are integral to each rear lamp unit, and the CHMSL bulb and lens.
- **Daytime Running Lamps** - Vehicles manufactured for sale in Canada illuminate the high beam filament of the headlamp bulb in each front lamp unit to serve as the Daytime Running Lamps (DRL).
- **Exterior Lamp Fail-Safe Operation** - The EMIC provides a fail-safe feature which will automatically turn on all exterior lamps when the ignition switch is in the On position and there is no detected input from the headlamp switch.
- **Exterior Lamp Load Shedding** - The EMIC provides a battery saver feature which will automatically turn off all exterior lamps that remain on with the ignition switch in the Off position after a timed interval of about five minutes.
- **Front Fog Lamps** - The optional front fog lamps include the bulb, reflector and lens of each adjustable front fog lamp unit.
- **Hazard Warning Lamps** - The hazard warning lamps include the right and left turn signal bulbs, reflectors and lenses of each front and rear lamp unit.
- **Headlamp Delay** - On vehicles equipped with this optional feature, the low or high beam headlamps remain illuminated for a dealer-programmable delay period of 30, 60 or 90 seconds when the headlamp switch is turned to the Off position after the ignition switch has been turned to the Off position.
- **Headlamps** - The headlamps include a single, dual filament halogen bulb, an adjustable reflector and a clear lens integral to each front lamp unit.
- **Optical Horn** - Also known as flash-to-pass, the beam selection function of the multi-function switch control stalk has a momentary intermediate position that allows the headlamp high beams to be flashed momentarily, without changing the headlamp beam selection.
- **Park Lamps** - The park lamps include the park and side marker bulbs, reflectors and lenses integral to each front and rear lamp unit as well as the bulbs, reflectors and lenses of the rear license plate lamps. The cab clearance lamps, the dual rear wheel rear fender marker lamps and tailgate marker lamp are also included In the park lamps circuit of vehicles equipped with these optional exterior lamps.
- **Turn Signal Lamps** - The turn signal lamps include the turn signal bulbs, reflectors and lenses that are integral to the right and left front and rear lamp units.

Other components of the exterior lighting system for this model include:

- **Backup Lamp Switch** - A plunger-type backup lamp switch is installed through the transmission housing of vehicles equipped with a manual transmission and is actuated by the shifter mechanism within the transmission when Reverse gear is selected. Depending upon the transmission model, either a stand-alone Transmission Range Sensor (TRS), or a TRS that is integral to the solenoid pack on the valve body performs the backup lamp switch function on vehicles with an automatic transmission.
- **Brake Lamp Switch** - A plunger-type brake lamp switch is located on the steering column support bracket under the instrument panel and is actuated by the brake pedal arm.

- **Front Control Module** - The Front Control Module (FCM) is integral to the Integrated Power Module (IPM). The FCM/IPM is located in the engine compartment, near the battery and the Power Distribution Center (PDC). (Refer to 8 - ELECTRICAL/POWER DISTRIBUTION - DESCRIPTION).
- **Front Fog Lamp Relay** - Vehicles equipped with optional front fog lamps have a front fog lamp relay located in the Power Distribution Center (PDC).
- **Headlamp Switch** - A headlamp switch is located on the left side of the instrument panel, below and outboard of the steering column. The headlamp switch includes a rotary knob for the park lamps and headlamps On or Off. This rotary knob is pulled outward for selecting the optional front fog lamps on vehicles so equipped. The headlamp switch also features a vertical thumbwheel for selecting the panel lamps dimming level, a Parade mode to illuminate all Vacuum Fluorescent Display (VFD) units at full brightness for visibility when driving in daylight with the exterior lighting turned On, for cargo lamp control and for interior lighting control.
- **Instrument Cluster** - The ElectroMechanical Instrument Cluster (EMIC) is also known as the Cab Control Node (CCN) in this vehicle. The EMIC/CCN is located in the instrument panel above the steering column opening, directly in front of the driver. (Refer to 8 - ELECTRICAL/INSTRUMENT CLUSTER - DESCRIPTION).
- **Multi-Function Switch** - The multi-function switch is located on the steering column, just below the steering wheel. A control stalk that extends from the left side of the switch is used to select the turn signal lamps (right or left) and to select the headlamp beam (low, high or optical horn). A push button that extends from the top of the switch is used to select the hazard warning lamps.
- **Park Brake Switch** - A park brake switch is located on the park brake lever mechanism on the cowl side inner panel below the instrument panel, to the left of the steering column.
- **Park Lamp Relay** - A park lamp relay is located in the Power Distribution Center (PDC) of all vehicles.
- **Trailer Tow Relays** - All vehicles are equipped with trailer tow relays installed in the Power Distribution Center (PDC) in the engine compartment, one for the trailer right turn and brake lamps and the other for the trailer left turn and brake lamps.
- **Trailer Tow Wiring** - Standard equipment in all vehicles is a 4-way trailer tow wire harness take out and a 4-pin light duty trailer tow connector that is located behind the rear bumper. An optional factory-installed trailer tow package supplements the 4-way harness and connector with a 7-way trailer tow wire harness and a sealed, heavy duty 7-pin trailer tow connector installed in the left side of the forward vertical surface of the license plate tub formation in the center of the rear bumper. This optional trailer tow package also includes a 4-way electric trailer brake wiring provision and connector located on top of the large body harness connection under the instrument panel to the left of the brake pedal, as well as an electric trailer brake pigtail harness and an instruction card that are stored in the glove box when the vehicle is shipped from the factory.

Hard wired circuitry connects the exterior lighting system components to the electrical system of the vehicle. These hard wired circuits are integral to several wire harnesses, which are routed throughout the vehicle and retained by many different methods. These circuits may be connected to each other, to the vehicle electrical system and to the exterior lighting components through the use of a combination of soldered splices, splice block connectors, and many different types of wire harness terminal connectors and insulators. Refer to the appropriate wiring information. The wiring information includes wiring diagrams, proper wire and connector repair procedures, further details on wire harness routing and retention, as well as pin-out and location views for the various wire harness connectors, splices and grounds.

OPERATION

Following are paragraphs that briefly describe the operation of each of the major exterior lighting systems. The hard wired circuits and components of the exterior lighting systems may be diagnosed and tested using conventional diagnostic tools and methods. Refer to the appropriate wiring information.

However, conventional diagnostic methods may not prove conclusive in the diagnosis of the ElectroMechanical Instrument Cluster (EMIC) (also known as the Cab Control Node/CCN), the Front Control Module (FCM) (also known as the Integrated Power Module/IPM), the Powertrain Control Module (PCM) or the Programmable Communications Interface (PCI) data bus. The most reliable, efficient, and accurate means to diagnose the EMIC, the FCM, the PCM, the PCI data bus or the electronic bus message inputs and outputs related to the various exterior lighting systems requires the use of a diagnostic scan tool. Refer to the appropriate diagnostic information.

BACKUP LAMPS

The backup (or reverse) lamps have a path to ground at all times through a takeout and eyelet terminal of the left headlamp and dash wire harness that is secured by a ground screw to the left inner fender support within the

engine compartment. On vehicles with a manual transmission, the backup lamp switch provides battery voltage to the backup lamps on the backup lamp feed circuit whenever the ignition switch is in the On position and the Reverse position is selected with the transmission shift linkage. On vehicles with an automatic transmission, the Transmission Range Sensor (TRS) provides battery voltage to the backup lamps on the backup lamp feed circuit whenever the ignition switch is in the On position and the Reverse position is selected with the transmission shift linkage.

BRAKE LAMPS

The brake (or stop) lamps each have a path to ground at all times through a takeout and eyelet terminal of the left headlamp and dash wire harness that is secured by a ground screw to the left inner fender support within the engine compartment. The Center High Mounted Stop Lamp (CHMSL) has a path to ground at all times through a takeout and eyelet terminal of the instrument panel wire harness that is secured by a ground screw to the back of the support structure of the instrument panel near the center. The brake lamps receive battery voltage from the Front Control Module (FCM) on the right and left brake lamp feed circuits and the CHMSL receives battery voltage from the brake lamp switch output circuit when the brake lamp switch is closed by the brake pedal arm.

DAYTIME RUNNING LAMPS

Vehicles manufactured for sale in Canada illuminate the high beam filament of both headlamp bulbs at a reduced intensity when the engine is running and the exterior lamps are turned off. The FCM must be programmed with the appropriate country code for this feature to be enabled. Once enabled, anytime the FCM receives electronic messages over the PCI data bus from the PCM indicating the engine is running and from the EMIC indicating the status of the headlamp switch exterior lighting input is Off, the FCM provides a pulse width modulated voltage output to the proper headlamp bulb filaments through the right and left high beam output circuits to produce illumination at a reduced intensity.

FRONT FOG LAMPS

Vehicles equipped with optional front fog lamps include a front fog lamp relay installed in the PDC, and a front fog lamp switch integral to the headlamp switch on the instrument panel. The front fog lamps have a path to ground at all times through their connection to the headlamp and dash wire harness. The left headlamp and dash wire harness has takeouts with eyelet terminals that are secured by ground screws to the left inner fender support within the engine compartment. The EMIC monitors a hard wired multiplex input from the headlamp switch to determine whether the fog lamps are selected, then sends electronic fog lamp switch status messages to the FCM over the PCI data bus.

When the FCM receives a fog lamp status message it then controls front fog lamp operation by energizing or de-energizing the front fog lamp relay control coil. The FCM also sends the appropriate electronic message back to the EMIC to illuminate or extinguish the front fog lamp indicator. When the front fog lamp relay is energized, it provides battery voltage from a fused B(+) fuse in the PDC to the fog lamps through the fog lamp relay output circuit. The FCM will automatically de-energize the front fog lamps relay any time the headlamp high beams are selected. The EMIC also provides a battery saver (load shedding) feature for the front fog lamps, which will turn these lamps off if they are left on for more than about five minutes with the ignition switch in the Off position. Each front fog lamp includes an integral adjustment screw to be used for static aiming of the fog lamp beams.

HAZARD WARNING LAMPS

The hazard warning system includes the EMIC, the FCM and the multi-function switch on the steering column. The EMIC monitors a hard wired multiplex input from the multi-function switch to determine the status of the hazard warning switch, then sends the appropriate electronic hazard switch status messages to the FCM over the PCI data bus. The FCM responds to these messages by controlling a battery voltage output and the flash rate for each of the right and left turn signal lamps. The FCM also sends the appropriate electronic messages back to the EMIC to control the illumination and flash rate of the right and left turn signal indicators, as well as to control the click rate of an electromechanical relay soldered onto the EMIC electronic circuit board that emulates the sound emitted by a conventional hazard warning flasher.

HEADLAMPS

The headlamp system includes the EMIC, the FCM, the multi-function switch on the steering column and the headlamp switch on the instrument panel. The headlamp bulbs have a path to ground at all times through their connection to the headlamp and dash wire harness. The headlamp and dash wire harness has takeouts with eyelet terminals that are secured by ground screws to the right (right headlamp bulb) and left (left headlamp bulb) inner

fender support within the engine compartment. The EMIC monitors a hard wired multiplex input to determine the status of the headlamp switch, and a hard wired multiplex input from the multi-function switch to determine whether the high or low beams are selected. The EMIC then sends the appropriate electronic headlamp switch and headlamp beam select switch status messages to the FCM over the PCI data bus.

The FCM responds to these messages by providing a pulse width modulated voltage output to the proper headlamp bulb through the right and left low and high beam output circuits to illuminate the selected headlamp filaments. The FCM also remembers which beams (low or high) were selected when the headlamps were last turned Off, and energizes those beams again the next time the headlamps are turned On. The EMIC provides a battery saver (load shedding) feature for the headlamps, which will turn these lamps off if they are left on for more than about five minutes with the ignition switch in the Off position. The EMIC provides a fail-safe feature for the headlamps, which will send an electronic message to the FCM to turn the low beam headlamps On automatically if it detects no input from the headlamp switch. Each headlamp includes an integral reflector adjustment screw to be used for static aiming of the headlamps.

PARK LAMPS

The park lamps system includes the EMIC, the FCM, a park lamp relay installed in the PDC, and the headlamp switch on the instrument panel. The front park lamp and side marker lamp bulbs each have a path to ground at all times through their connection to the headlamp and dash wire harness. The headlamp and dash wire harness has takeouts with eyelet terminals that are secured by ground screws to the right (right park lamp and side marker lamp bulbs) and left (left park lamp and side marker lamp bulbs) inner fender support within the engine compartment. The rear park lamp, side marker lamp, license plate lamp and the optional fender and tailgate marker lamp bulbs have a path to ground at all times through a takeout and eyelet terminal of the left headlamp and dash wire harness that is secured by a ground screw to the left inner fender support within the engine compartment. The optional cab clearance lamps each have a path to ground at all times through a takeout and eyelet terminal of the instrument panel wire harness that is secured by a ground screw to the back of the support structure of the instrument panel near the center.

The EMIC monitors a hard wired multiplex input from the headlamp switch, then sends the appropriate electronic headlamp switch status messages to the FCM over the PCI data bus. The FCM responds to these messages by energizing or de-energizing the park lamp relay. When the park lamp relay is energized, it provides battery voltage from a fuse in the PDC through a park lamp relay output circuit to the appropriate lamp bulbs. The FCM provides a battery saver (load shedding) feature for the park lamps, which will turn these lamps off if they are left on for more than about five minutes with the ignition switch in the Off position. The EMIC provides a fail-safe feature for the park lamps, which will send an electronic message to the FCM to turn these lamps on automatically if it detects no input from the headlamp switch.

TRAILER TOW WIRING

In addition to the trailer tow wiring provisions, all vehicles include right and left trailer tow stop/turn relays installed in the PDC. When the FCM receives the appropriate inputs for normal turn signal, hazard warning or brake lamp operation, it responds by also energizing or de-energizing these trailer tow relays. When a trailer tow relay is energized, it provides battery voltage from a fused B(+) fuse to the trailer lamps through the trailer tow wiring to synchronize the illumination and flash rate of the trailer brake and turn signal lamps with those of the tow vehicle.

TURN SIGNAL LAMPS

The turn signal lamps system includes the EMIC, the FCM and the multi-function switch on the steering column. The front turn signal lamp bulbs each have a path to ground at all times through their connection to the headlamp and dash wire harness. The headlamp and dash wire harness has takeouts with eyelet terminals that are secured by ground screws to the right (right front turn signal lamp bulb) and left (left front turn signal lamp bulb) inner fender supports within the engine compartment. The rear turn signal lamp bulbs have a path to ground at all times through a takeout and eyelet terminal of the left headlamp and dash wire harness that is secured by a ground screw to the left inner fender support within the engine compartment.

The EMIC monitors a hard wired multiplex input from the multi-function switch to determine the status of the turn signal switch, then sends the appropriate electronic turn signal switch status messages to the FCM over the PCI data bus. The FCM responds to these messages by controlling a battery voltage output and the flash rate for either the right or left turn signal lamps. The FCM also sends the appropriate electronic messages back to the EMIC to control the illumination and flash rate of the right or left turn signal indicators, as well as to control the click rate of an electromechanical relay soldered onto the EMIC electronic circuit board that emulates the sound emitted by a conventional turn signal flasher.

The EMIC also provides a “turn signal on warning” that will generate repetitive chimes to indicate that a turn signal has been active continuously for 1.6 kilometers (1 mile) with the vehicle speed greater than 22 kilometers-per-hour (15 miles-per hour). Vehicles built for markets other than the United States and Canada have a revised distance threshold of 4 kilometers for this feature. The chime will continue until the turn signal input becomes inactive or until the vehicle speed message indicates that the speed is less than 22 kilometers-per-hour (15 miles-per-hour), whichever occurs first.

WARNING

WARNINGS - LAMPS/LIGHTING - EXTERIOR

WARNING:: To avoid personal injury or death, eye protection should be used when servicing any glass components.

CAUTION: Do not contaminate the glass of halogen bulbs with fingerprints or allow contact with other possibly oily surfaces. Reduced bulb life will result.

CAUTION: Do not use bulbs with higher candle power than indicated in the Bulb Application table (Refer to 8 - ELECTRICAL/LAMPS/LIGHTING - EXTERIOR - SPECIFICATIONS). In addition, do not use fuses, circuit breakers or relays having greater amperage value than indicated on the fuse panel or in the Owner’s Manual. Damage to lamps, lenses, wiring and other related electrical components can result.

DIAGNOSIS AND TESTING

LAMPS/LIGHTING - EXTERIOR

WARNING: To avoid personal injury or death, on vehicles equipped with airbags, disable the supplemental restraint system before attempting any steering wheel, steering column, airbag, seat belt tensioner, impact sensor, or instrument panel component diagnosis or service. Disconnect and isolate the battery negative (ground) cable, then wait two minutes for the system capacitor to discharge before performing further diagnosis or service. This is the only sure way to disable the supplemental restraint system. Failure to take the proper precautions could result in accidental airbag deployment.

NOTE: When diagnosing the exterior lighting circuits, remember that high generator output can burn out bulbs rapidly and repeatedly; and, that dim or flickering bulbs can be caused by low generator output or poor battery condition. If one of these symptoms is a problem on the vehicle, be certain to diagnose the battery and charging system, then repair as necessary.

NOTE: A good ground is necessary for proper lighting operation. If a lighting problem is being diagnosed that involves multiple symptoms, systems, or components, the problem can often be traced to a loose, corroded, or open ground.

The hard wired exterior lamp and lighting circuits may be diagnosed and tested using conventional diagnostic tools and methods. Refer to the appropriate wiring information. The wiring information includes wiring diagrams, proper wire and connector repair procedures, details of wire harness routing and retention, connector pin-out information and location views for the various wire harness connectors, splices and grounds.

However, conventional diagnostic methods may not prove conclusive in the diagnosis of the ElectroMechanical Instrument Cluster (EMIC), the Front Control Module (FCM), the Integrated Power Module (IPM), the Power Distribution Center (PDC), the Powertrain Control Module (PCM), the Programmable Communications Interface (PCI) data bus, or the electronic message inputs used to provide exterior lamp and lighting service or many of the electronic features of the exterior lamp and lighting systems. The most reliable, efficient, and accurate means to diagnose the EMIC, the FCM, the IPM, the PDC, the PCM, the PCI data bus, and the electronic message inputs for the exterior lamps and lighting system requires the use of a diagnostic scan tool. Refer to the appropriate diagnostic information.

BACKUP LAMPS

CONDITION	POSSIBLE CAUSES	CORRECTION
BACKUP LAMP DOES NOT ILLUMINATE	1. Faulty or missing fuse.	1. Test and replace backup lamp fuse as required.
	2. Faulty or missing bulb.	2. Test and replace backup lamp bulb as required.
	3. Faulty ground circuit.	3. Test and repair backup lamp ground circuit as required.
	4. Faulty supply circuit.	4. Test and repair open back-up lamp supply circuit as required.
	5. Faulty switch.	5. Test and replace backup lamp switch (manual transmission) or transmission range sensor (automatic transmission) as required.
BACKUP LAMP DOES NOT EXTINGUISH	1. Faulty supply circuit.	1. Test and repair shorted back-up lamp supply circuit as required.
	2. Faulty switch.	2. Test and replace backup lamp switch (manual transmission) or transmission range sensor (automatic transmission) as required.

BRAKE LAMPS

CONDITION	POSSIBLE CAUSES	CORRECTION
BRAKE LAMP DOES NOT ILLUMINATE	1. Faulty or missing fuse.	1. Test and replace brake lamp fuse as required.
	2. Faulty or missing bulb.	2. Test and replace brake lamp bulb as required.
	3. Faulty ground circuit.	3. Test and repair brake lamp ground circuit as required.
	4. Faulty supply circuit.	4. Test and repair open brake lamp switch output circuit as required.
	5. Faulty switch.	5. Test and replace brake lamp switch as required.
BRAKE LAMP DOES NOT EXTINGUISH	1. Faulty supply circuit.	1. Test and repair shorted brake lamp switch output circuit as required.
	2. Faulty switch.	2. Test and replace brake lamp switch as required.

DAYTIME RUNNING LAMPS

NOTE: Before performing the following tests, determine whether the headlamp low and high beams operate. If the headlamp low and high beams are also inoperative, diagnose and repair that problem before attempting to repair the Daytime Running Lamps.

CONDITION	POSSIBLE CAUSES	CORRECTION
DAYTIME RUNNING LAMPS WILL NOT ILLUMINATE	1. Incorrect FCM programming.	1. Use a diagnostic scan tool to check and program correct country code into FCM as required.
	2. Faulty FCM inputs or outputs.	2. Use a diagnostic scan tool to test the FCM inputs or outputs. Refer to the appropriate diagnostic information.

FRONT FOG LAMPS

CONDITION	POSSIBLE CAUSES	CORRECTION
FRONT FOG LAMP DOES NOT ILLUMINATE	1. Faulty or missing fuse.	1. Test and replace front fog lamp fuse as required.
	2. Faulty or missing bulb.	2. Test and replace front fog lamp bulb as required.
	3. Faulty ground circuit.	3. Test and repair front fog lamp ground circuit as required.
	4. Faulty supply circuit.	4. Test and repair open front fog lamp relay output circuit as required.
	5. Faulty or missing relay.	5. Test and replace front fog lamp relay as required.
	6. Faulty switch.	6. Test and replace headlamp switch as required.
FRONT FOG LAMP DOES NOT EXTINGUISH	1. Faulty supply circuit.	1. Test and repair shorted front fog lamp relay output circuit as required.
	2. Faulty relay.	2. Test and replace front fog lamp relay as required.
	3. Faulty switch.	3. Test and replace headlamp switch as required.

HAZARD WARNING LAMPS

NOTE: Before performing the following tests, confirm whether the left and right turn signals operate satisfactorily. If the turn signals are inoperative or operate improperly, diagnose and repair that problem before attempting to repair the Hazard Warning Lamps.

CONDITION	POSSIBLE CAUSES	CORRECTION
HAZARD WARNING LAMPS DO NOT FLASH	1. Faulty switch.	1. Test and replace multi-function switch as required.
HAZARD WARNING LAMPS DO NOT STOP FLASHING	1. Faulty switch.	1. Test and replace multi-function switch as required.

HEADLAMPS

NOTE: As part of the exterior lighting failsafe feature, upon ignition On all exterior park lamps and the headlamp low beams will illuminate regardless of the headlamp switch position if the instrument cluster cannot detect an input from the headlamp switch, or if there is a loss of data bus communication.

CONDITION	POSSIBLE CAUSES	CORRECTION
HEADLAMP DOES NOT ILLUMINATE	1. Faulty or missing bulb.	1. Test and replace headlamp bulb as required.
	2. Faulty ground circuit.	2. Test and repair open headlamp ground circuit as required.
	3. Faulty supply circuit.	3. Test and repair open headlamp low beam or high beam circuit as required.
	4. Faulty switch.	4. Test and replace headlamp switch as required.
HEADLAMP DOES NOT EXTINGUISH	1. Faulty supply circuit.	1. Test and repair shorted headlamp low beam or high beam circuit as required.
	2. Faulty switch.	2. Test and replace headlamp switch as required.
HEADLAMPS ILLUMINATE WITH IGNITION ON AND HEADLAMP SWITCH OFF (FAIL-SAFE OPERATION)	1. Faulty circuits between headlamp switch and instrument cluster.	1. Test and repair headlamp switch mux and return circuits as required.
	2. Loss of data bus communication.	2. Use a diagnostic scan tool to test the data bus. Refer to the appropriate diagnostic information.
	3. Faulty switch.	3. Test and replace headlamp switch as required.
HEADLAMPS WILL NOT SWITCH FROM HIGH TO LOW BEAMS, OR FROM LOW TO HIGH BEAMS	1. Faulty circuits between multi-function switch and instrument cluster.	1. Test and repair wash/beam select mux and multi-function switch return circuits as required.
	2. Faulty switch.	2. Test and replace multi-function switch as required.

PARK LAMPS

NOTE: As part of the exterior lighting failsafe feature, upon ignition On all exterior park lamps and the headlamp low beams will illuminate regardless of the headlamp switch position if the instrument cluster cannot detect an input from the headlamp switch, or if there is a loss of data bus communication.

CONDITION	POSSIBLE CAUSES	CORRECTION
PARK LAMP DOES NOT ILLUMINATE	1. Faulty or missing fuse.	1. Test and replace park lamp fuse as required.
	2. Faulty or missing bulb.	2. Test and replace park lamp bulb as required.
	3. Faulty or missing relay.	3. Test and replace park lamp relay as required.
	4. Faulty ground circuit.	4. Test and repair open park lamp ground circuit as required.
	5. Faulty supply circuit.	5. Test and repair open park lamp relay output circuit as required.
	6. Faulty switch.	6. Test and replace headlamp switch as required.
PARK LAMP DOES NOT EXTINGUISH	1. Faulty supply circuit.	1. Test and repair shorted park lamp relay output circuit as required.
	2. Faulty relay.	2. Test and replace park lamp relay as required.
	3. Faulty switch.	3. Test and replace headlamp switch as required.

TURN SIGNAL LAMPS

CONDITION	POSSIBLE CAUSES	CORRECTION
ONE TURN SIGNAL LAMP DOES NOT ILLUMINATE	1. Faulty or missing bulb.	1. Test and replace turn signal bulb as required.
	2. Faulty ground circuit.	2. Test and repair open ground circuit as required.
	3. Faulty supply circuit.	3. Test and repair open right or left turn signal circuit as required.
ALL RIGHT SIDE AND/OR ALL LEFT SIDE TURN SIGNAL LAMPS DO NOT FLASH	1. Faulty switch.	1. Test and replace multi-function switch as required.
	2. Faulty signal circuit.	2. Test and repair open right or left turn signal circuit as required.
ALL RIGHT SIDE OR ALL LEFT SIDE TURN SIGNALS FLASH TOO RAPIDLY (MORE THAN 100 FLASHES PER MINUTE)	1. Faulty or missing bulb.	1. Test and replace faulty bulb as required.
	2. Faulty ground circuit.	2. Test and repair open ground circuit as required.
	3. Faulty signal circuit.	3. Test and repair open right or left turn signal circuit as required.

STANDARD PROCEDURE

FRONT LAMP AIMING

VEHICLE PREPARATION FOR LAMP ALIGNMENT

1. Check for and correct any burnt out bulbs.
2. Repair or replace any faulty, worn or damaged body or suspension components that could hinder proper lamp alignment.
3. Verify proper tire inflation pressures.
4. Remove any accumulations of mud, snow or ice from the vehicle underbody and clean the front lamp lenses.
5. Verify that there is no load in the vehicle (cargo or passengers), except for the driver.
6. The fuel tank should be Full. Add 2.94 kilograms (6.5 pounds) of weight over the fuel tank for each estimated gallon of missing fuel.
7. Verify correct vehicle suspension height.

LAMP ALIGNMENT SCREEN PREPARATION

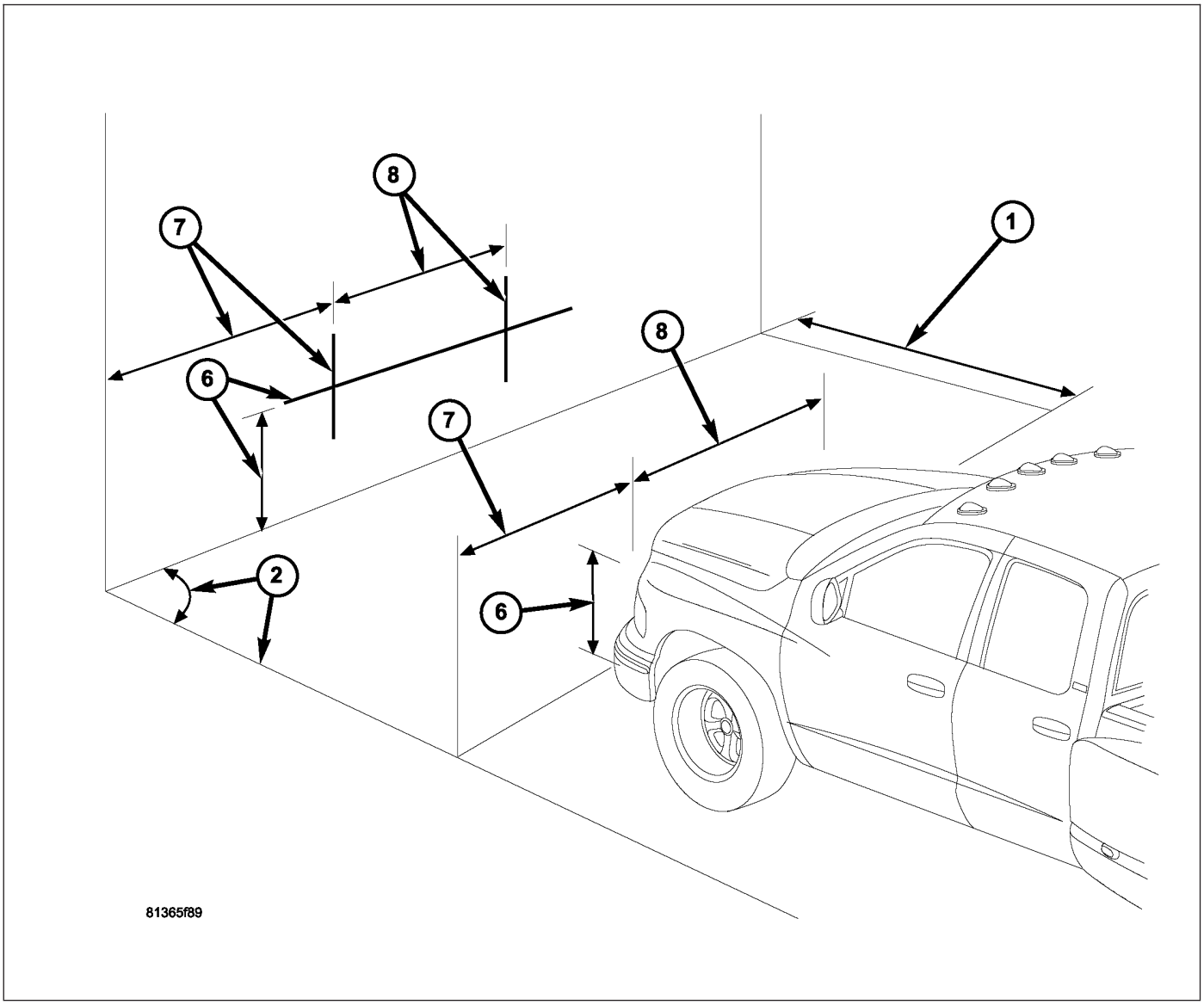

The procedure that follows will prepare a suitable front lamp alignment screen.

1. Tape a line on a level floor 7.62 meters (25 feet) away from and parallel to the flat wall that will be used as the lamp alignment screen. The level floor will be used as the horizontal zero reference.
2. An adjacent wall or floor member that is perpendicular to the alignment screen can be used as the vertical zero reference. If there is no adjacent wall or floor member that is perpendicular to the screen, tape a second line on the floor perpendicular to both the alignment screen and the first line, and outboard of either side of where the vehicle will be positioned. This will be used as the vertical zero reference.
3. Position the vehicle so that the side of the vehicle is parallel to the vertical zero reference, and so that the front of the lamp lenses are in the vertical plane of the parallel line taped on the floor 7.62 meters (25 feet) away from the screen.
4. Rock the vehicle side-to-side three times to allow the suspension to stabilize.
5. Jounce the front suspension three times by pushing downward on the front bumper and releasing.
6. Measure the distance between the optical center of one of the lamps being aimed (head or fog) and the floor (horizontal zero reference). Transfer this measurement to the alignment screen with a piece of tape placed horizontally to the floor. This line will be used as the lamp horizontal reference.
7. Measure the distance between the vertical zero reference and the optical center of the nearest lamp being aimed (head or fog). Transfer this measurement to the alignment screen with a piece of tape placed vertically across the appropriate (head or fog) lamp horizontal reference. This is the centerline reference for the first lamp.
8. Measure the distance on center between the first and the second lamp being aimed. Transfer this measurement to the alignment screen with a second piece of tape placed vertically across the appropriate (head or fog) lamp horizontal reference. This is the centerline reference for the second lamp.

HEADLAMP ALIGNMENT

NOTE: Due to the linear nature of the headlamp cutoff, a properly aimed low beam headlamp will project the top edge of the high intensity pattern on the alignment screen from the horizontal line to 50 millimeters (2 inches) below the horizontal line. No horizontal (right/left) adjustment is required for this headlamp beam pattern. The high beam pattern will be correct when the low beams are properly aimed.

1. Turn the headlamps On and select the Low beams.
2. Rotate the headlamp vertical adjustment screw (2) on each lamp to adjust the beam height as required.

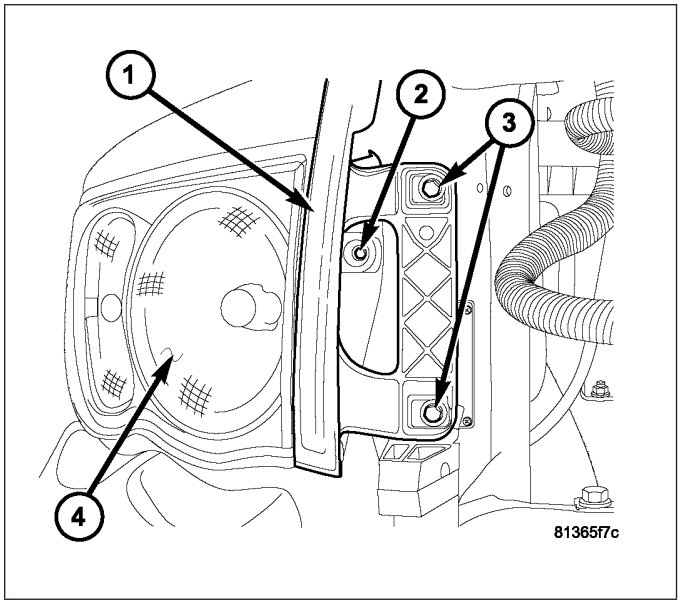

FOG LAMP ALIGNMENT

NOTE: A properly aimed front fog lamp will project a pattern on the alignment screen 100 millimeters (4 inches) below the fog lamp centerline and straight ahead of the lamp.

1. Turn the fog lamps On.
2. Rotate the fog lamp vertical adjustment screw (2) on each lamp to adjust the beam height as required.

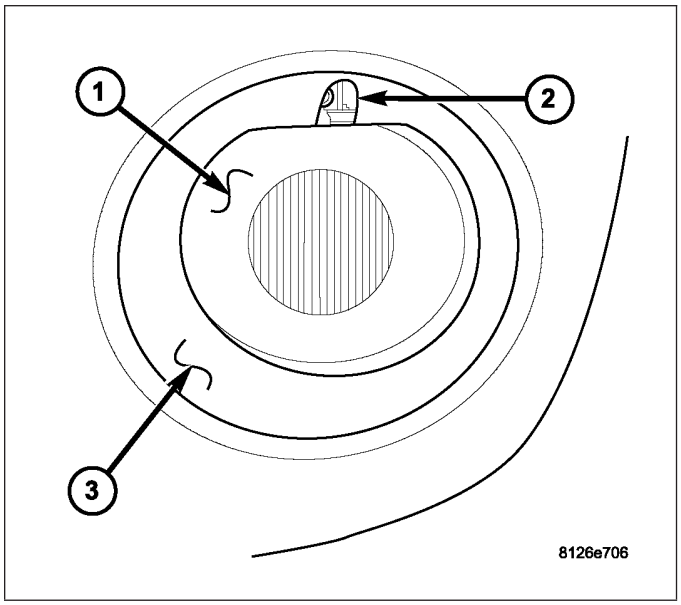

SPECIFICATIONS

LAMPS/LIGHTING - EXTERIOR

BULB APPLICATION TABLE	
LAMP	**BULB**
BACKUP (PICK-UP)	3057K
BACKUP (CAB & CHASSIS)	1156
BRAKE (PICK-UP)	3057K
BRAKE (CAB & CHASSIS)	1157
CAB CLEARANCE	168
CENTER HIGH MOUNTED STOP	912
FRONT FOG	9006LL
FRONT PARK	3157NA
FRONT SIDE MARKER	3157NA
FRONT TURN SIGNAL	3157NA
HEADLAMP	9007QL
LICENSE (PICK-UP)	168
LICENSE (CAB & CHASSIS)	1157
REAR FENDER MARKER (DUAL REAR WHEEL PICK-UP)	168
REAR PARK (PICK-UP)	3057K
REAR PARK (CAB & CHASSIS)	1157
REAR SIDE MARKER (PICK-UP)	3057K
REAR TAIL (PICK-UP BOX)	3057K
REAR TAIL (CAB & CHASSIS)	1157
REAR TURN SIGNAL (PICK-UP)	3057K
REAR TURN SIGNAL (CAB & CHASSIS)	1157
TAILGATE MARKER (DUAL REAR WHEEL PICK-UP)	168
UNDERHOOD	561

SWITCH-BACK UP LAMP

DESCRIPTION

Vehicles equipped with a manual transmission have a normally open, spring-loaded plunger type backup lamp switch (2). Vehicles with an optional electronic automatic transmission have a Transmission Range Sensor (TRS) that is used to perform several functions, including that of the backup lamp switch. The TRS is described in further detail elsewhere in this service information.

The backup lamp switch is located in a threaded hole on the side of the manual transmission housing. The switch has a threaded body and a hex formation near the plunger end of the switch. An integral connector receptacle at the end of the switch opposite the plunger connects the switch to the vehicle electrical system through a take out and connector of the engine wire harness. When installed, only the switch connector and the hex formation are visible on the outside of the transmission housing. The backup lamp switch cannot be adjusted or repaired and, if faulty or damaged, the entire switch unit must be replaced.

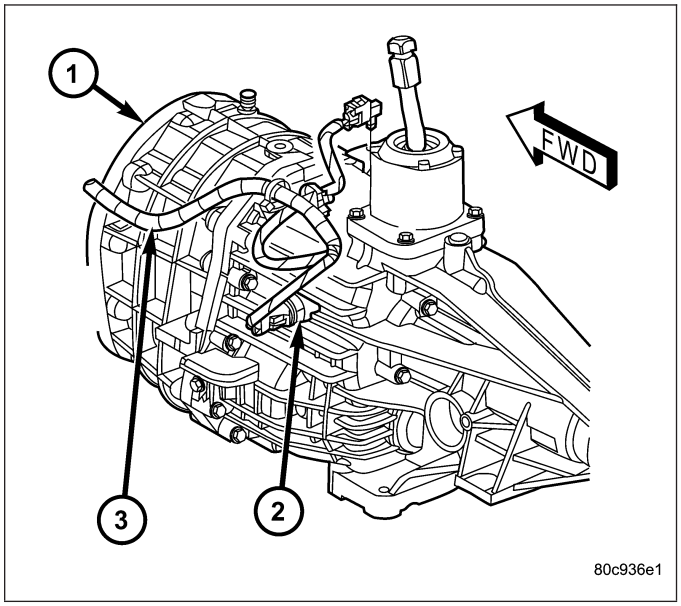

OPERATION

The backup lamp switch controls the flow of battery voltage to the backup lamp bulbs through an output on the backup lamp feed circuit. The switch plunger is mechanically actuated by the gearshift mechanism within the transmission, which will depress the switch plunger and close the switch contacts whenever the reverse gear has been selected. The switch receives battery voltage through a fuse in the Integrated Power Module (IPM) on a fused ignition switch output (run) circuit whenever the ignition switch is in the On position. The backup lamp switch and circuits can be tested using conventional diagnostic tools and methods.

DIAGNOSIS AND TESTING

BACKUP LAMP SWITCH

1. Disconnect and isolate the battery negative cable.
2. Raise and support the vehicle.
3. Locate and disconnect the engine wire harness connector for the backup lamp switch.
4. Check for continuity between the two terminal pins in the backup lamp switch connector receptacle.
   a. With the gear selector lever in the Reverse position, there should be continuity.
   b. With the gear selector lever in any position other than Reverse, there should be no continuity.
5. If the switch fails either of these two continuity tests, replace the faulty backup lamp switch.

SWITCH-STOP LAMP

DESCRIPTION

The brake lamp switch (2) is a three circuit, spring-loaded plunger actuated switch that is secured to the steering column support bracket under the instrument panel on the driver side of the vehicle. The molded plastic switch housing has an integral connector receptacle (1) containing six terminal pins and featuring a Connector Position Assurance (CPA) lock. The switch is connected to the vehicle electrical system through a dedicated take out of the instrument panel wire harness.

The switch plunger (3) extends through a mounting collar (4) on one end of the switch housing. The plunger has a one time telescoping self-adjustment feature that is activated after the switch is installed by moving an adjustment release lever (5) on the opposite end of the switch housing clockwise, until it locks into a position that is horizontal and parallel to the connector receptacle.

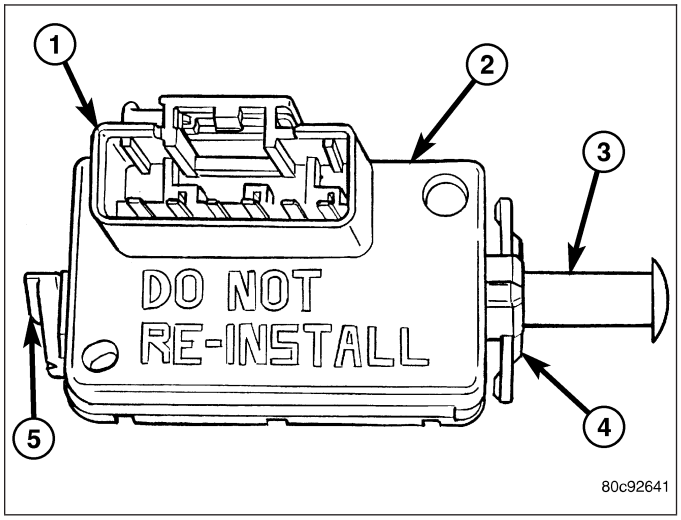

An installed brake lamp switch cannot be readjusted or repaired. If the switch is damaged, faulty, or removed from its mounting position for any reason, it must be replaced with a new unit.

OPERATION

The brake lamp switch controls three independent circuits. These circuits are described as follows:

- **Brake Lamp Switch Circuit** - A normally open brake lamp switch circuit receives a battery voltage input, and supplies this battery voltage to the brake lamps and the Controller Antilock Brake (CAB) on a brake lamp switch output circuit only when the brake pedal is depressed (brake lamp switch plunger released).
- **Brake Lamp Switch Signal Circuit** - A normally closed brake lamp switch signal circuit receives a direct path to ground, and supplies this ground input to the Powertrain Control Module (PCM) on a brake lamp switch sense circuit only when the brake pedal is released (brake lamp switch plunger is depressed).
- **Speed Control Circuit** - A normally closed speed control circuit receives a battery voltage input from the Powertrain Control Module on a speed control supply circuit, and supplies this battery voltage to the speed control servo solenoids (dump, vacuum, and vent) on a speed control brake switch output circuit only when the speed control system is turned On and the brake pedal is released (brake lamp switch plunger is depressed).

The components of the self-adjusting brake switch plunger consist of a two-piece telescoping plunger, a split plunger locking collar, and a release wedge. The release lever has a shaft with a wedge that spreads the plunger locking collar to an open or released position. After the switch is installed and the brake pedal is released, the plunger telescopes to the correct adjustment position. When the release lever is moved to the release position, the wedge is disengaged from the locking collar causing the collar to apply a clamping pressure to the two plunger halves, fixing the plunger length.

The brake lamp switch is diagnosed using conventional diagnostic tools and methods.

DIAGNOSIS AND TESTING

BRAKE LAMP SWITCH

WARNING: To avoid personal injury or death, on vehicles equipped with airbags, disable the supplemental restraint system before attempting any steering wheel, steering column, airbag, seat belt tensioner, impact sensor, or instrument panel component diagnosis or service. Disconnect and isolate the battery negative (ground) cable, then wait two minutes for the system capacitor to discharge before performing further diagnosis or service. This is the only sure way to disable the supplemental restraint system. Failure to take the proper precautions could result in accidental airbag deployment.

1. Disconnect and isolate the battery negative cable.

CAUTION: Do not remove the brake lamp switch from the mounting bracket. The self-adjusting switch plunger is a one time only feature. If the switch is removed from the mounting bracket, it MUST be replaced with a new switch.

2. Disconnect the wire harness connector from the brake lamp switch.
3. Using an ohmmeter, perform the continuity tests at the terminal pins (1) in the brake lamp switch connector receptacle as shown in the Brake Lamp Switch Tests table.

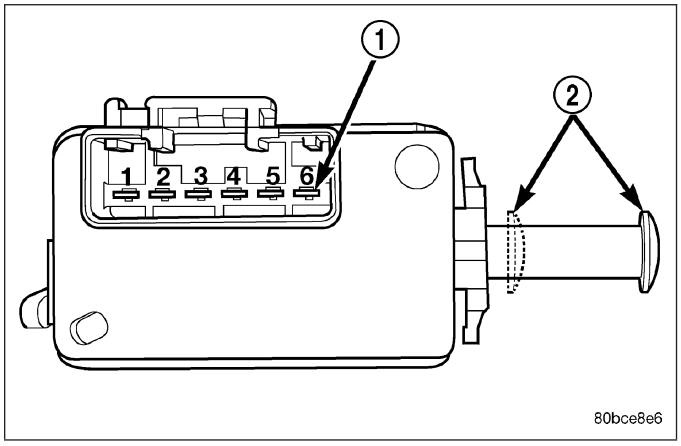

BRAKE LAMP SWITCH TESTS	
PLUNGER POSITION (2)	**CONTINUITY BETWEEN**
Released (Extended)	Pins 1 & 2
Compressed (Depressed)	Pins 3 & 4, 5 & 6

4. If the switch fails any of the continuity tests, replace the faulty brake lamp switch as required.

REMOVAL

WARNING: To avoid personal injury or death, on vehicles equipped with airbags, disable the supplemental restraint system before attempting any steering wheel, steering column, airbag, seat belt tensioner, impact sensor, or instrument panel component diagnosis or service. Disconnect and isolate the battery negative (ground) cable, then wait two minutes for the system capacitor to discharge before performing further diagnosis or service. This is the only sure way to disable the supplemental restraint system. Failure to take the proper precautions could result in accidental airbag deployment.

1. Disconnect and isolate the battery negative cable.
2. Locate the brake lamp switch (1) near the support bracket on the lower steering column (3).
3. Disconnect the wire harness connector (5) from the brake lamp switch.
4. Rotate the brake lamp switch housing clockwise about 30 degrees to align the tabs on the switch locking collar with the keyed hole in the switch mounting bracket (4).
5. Pull the switch straight back from the keyed hole to remove it from the bracket.

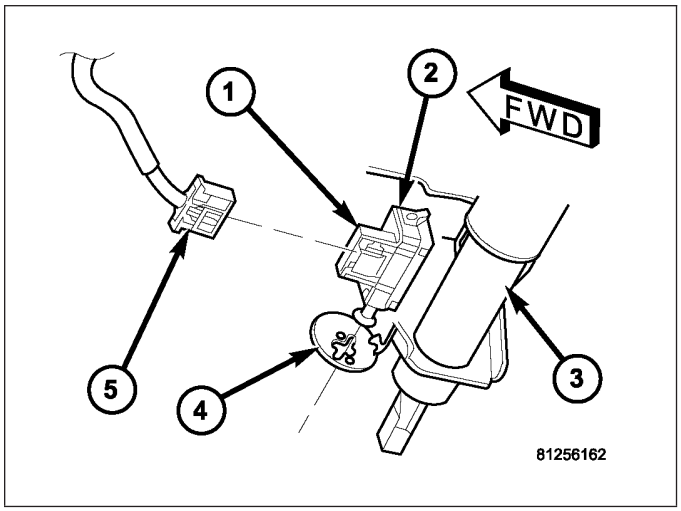

CAUTION: The brake lamp switch self-adjusting switch plunger is a one time only feature. If the switch is removed from the mounting bracket, it MUST be replaced with a new switch.

6. Discard the removed brake lamp switch
.

INSTALLATION

WARNING: To avoid personal injury or death, on vehicles equipped with airbags, disable the supplemental restraint system before attempting any steering wheel, steering column, airbag, seat belt tensioner, impact sensor, or instrument panel component diagnosis or service. Disconnect and isolate the battery negative (ground) cable, then wait two minutes for the system capacitor to discharge before performing further diagnosis or service. This is the only sure way to disable the supplemental restraint system. Failure to take the proper precautions could result in accidental airbag deployment.

CAUTION: The brake lamp switch self-adjusting switch plunger is a one time only feature. If the switch is removed from the mounting bracket, it MUST be replaced with a new switch.

1. Depress and hold the brake pedal in the depressed position.
2. Align the tabs on the brake lamp switch locking collar with the keyed hole in the switch mounting bracket (4) on the lower steering column (3).
3. Insert the tabs on the brake lamp switch locking collar through the keyed hole in the switch mounting bracket until the switch housing (1) is firmly seated against the bracket.
4. Rotate the switch housing counterclockwise about 30 degrees to engage the tabs on the locking collar with the switch mounting bracket.

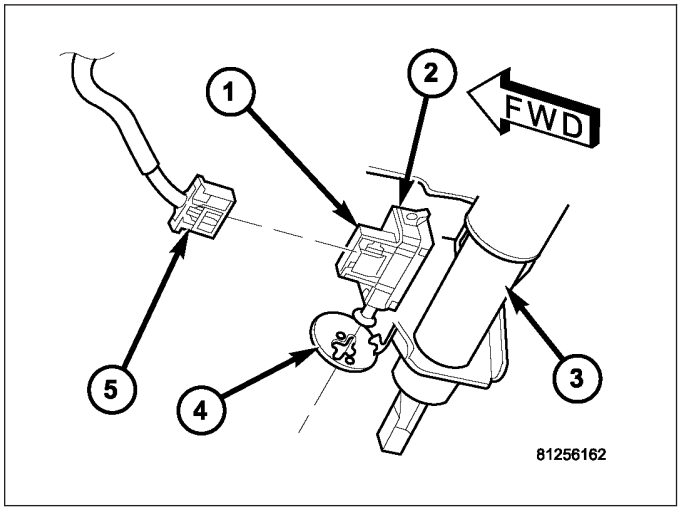

CAUTION: Do not release or pull up on the brake pedal before the switch plunger adjustment has been completed.

5. Release the brake pedal, but do not pull it upward.
6. Rotate the plunger adjustment release lever (2) clockwise until it locks into place. The lever should be parallel to the brake lamp switch connector receptacle. This action will set the switch plunger length to a final adjustment position and cannot be undone. If not performed properly the first time, a new brake lamp switch **must** be installed.
7. Reconnect the wire harness connector (5) to the brake lamp switch.

8. Reconnect the battery negative cable.

LAMP-HIGH MOUNTED STOP

REMOVAL

BULB

NOTE: The Center High Mounted Stop Lamp (CHMSL) houses three bulbs. The center bulb is the CHMSL bulb and illuminates through a red lens, while the two outboard bulbs are for the cargo lamps and illuminate through clear lenses. The bulb types and service procedures are identical for all three of these bulbs.

1. Disconnect and isolate the battery negative cable.
2. Remove the two screws that secure the CHMSL to the rear cab roof header panel.
3. Pull the CHMSL lens and housing (1) away from the header panel far enough to access the lamp wiring and bulb sockets on the back of the lamp.
4. Firmly grasp the socket (3) on the back of the lamp housing and rotate it counterclockwise about 30 degrees to unlock it.
5. Pull the socket and bulb straight out from the keyed opening in the housing.
6. Pull the base of the bulb (2) straight out of the socket.

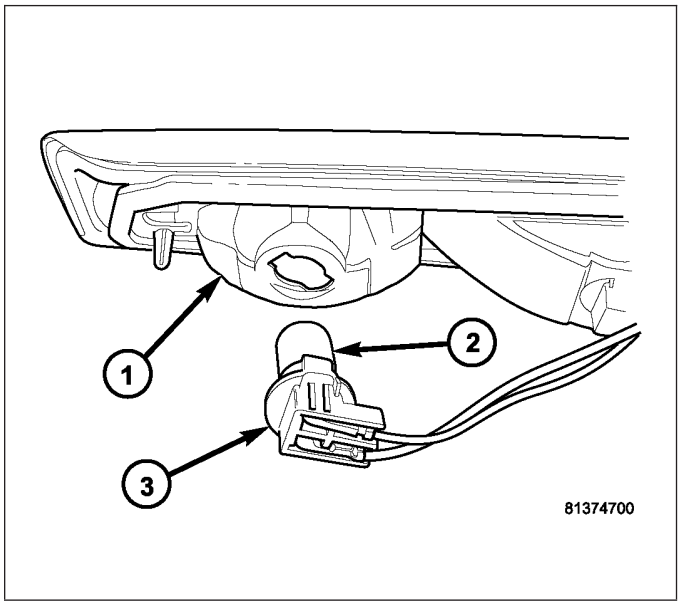

LAMP

NOTE: The Center High Mounted Stop Lamp (CHMSL) for this model incorporates two integral cargo lamps. The center bulb is the CHMSL bulb and illuminates through a red lens, while the two outboard bulbs are for the cargo lamps and illuminate through clear lenses.

1. Disconnect and isolate the battery negative cable.
2. Remove the two screws (3) that secure the Center High Mounted Stop Lamp (CHMSL) (4) to the rear roof header panel.
3. Pull the CHMSL away from the opening in the roof header far enough to access and disconnect the wire harness connector (2) from the pigtail connector on the back of the lamp housing.
4. Remove the CHMSL from the roof header.

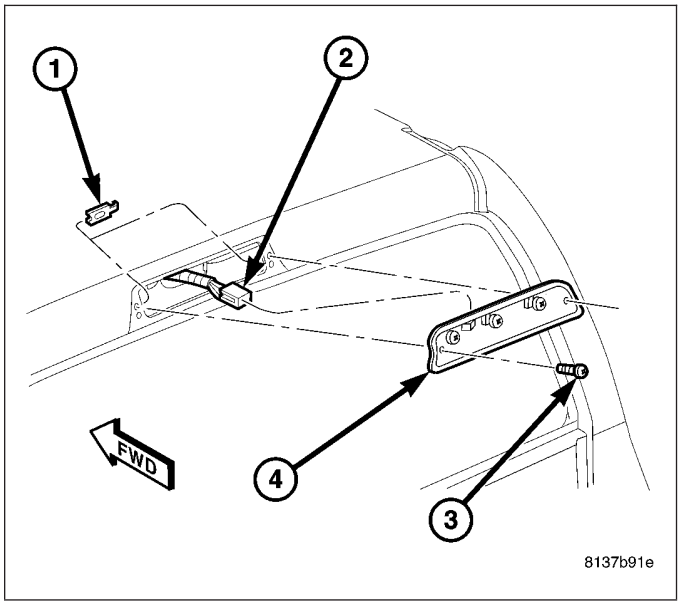

INSTALLATION

BULB

CAUTION: Always use the correct bulb size and type for replacement. An incorrect bulb size or type may overheat and cause damage to the lamp, the socket and/or the lamp wiring.

NOTE: The Center High Mounted Stop Lamp (CHMSL) houses three bulbs. The center bulb is the CHMSL bulb and illuminates through a red lens, while the two outboard bulbs are for the cargo lamps and illuminate through clear lenses. The bulb types and service procedures are identical for all three of these bulbs.

1. Align the base of the bulb (2) with the socket (3).
2. Push the bulb straight into the socket until the base is firmly seated.
3. Align the socket and bulb with the keyed opening on the back of CHMSL housing (1).
4. Insert the socket and bulb into the housing until the socket is firmly seated.
5. Rotate the socket clockwise about 30 degrees to lock it into place.
6. Position the CHMSL into the opening in the rear cab roof header panel.
7. Install and tighten the two screws (passenger side first) that secure the CHMSL to the header panel. Tighten the screws to 2 N·m (20 in. lbs.).
8. Reconnect the battery negative cable.

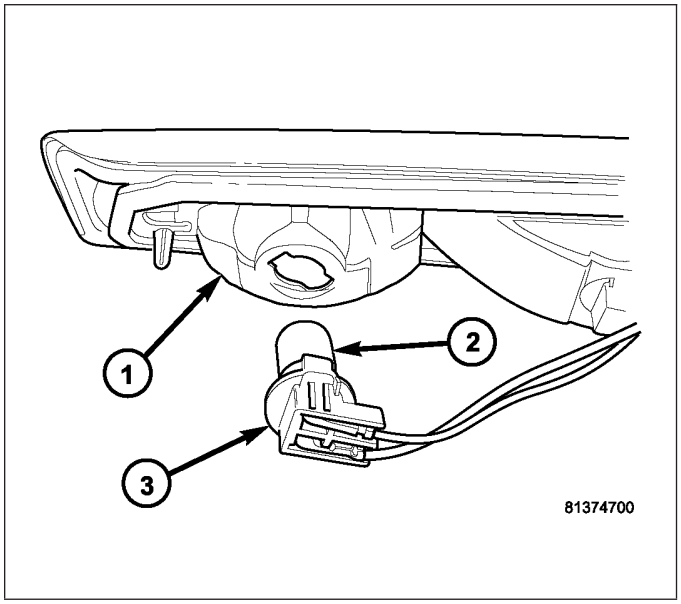

LAMP

NOTE: The Center High Mounted Stop Lamp (CHMSL) for this model incorporates two integral cargo lamps. The center bulb is the CHMSL bulb and illuminates through a red lens, while the two outboard bulbs are for the cargo lamps and illuminate through clear lenses.

1. Check to be certain that the two J-nuts (1) are properly positioned on the rear roof header inner panel.
2. Position the Center High Mounted Stop Lamp (CHMSL) (4) near the rear roof header panel opening.
3. Reconnect the wire harness connector (2) to the pigtail connector on the back of the CHMSL housing.
4. Install and tighten the two screws (3) that secure the CHMSL to the rear roof header inner panel. Install the screw on the right side of the lamp first, followed by the screw on the left side of the lamp. Tighten the screws to 2 N·m (20 in. lbs.).
5. Reconnect the battery negative cable.

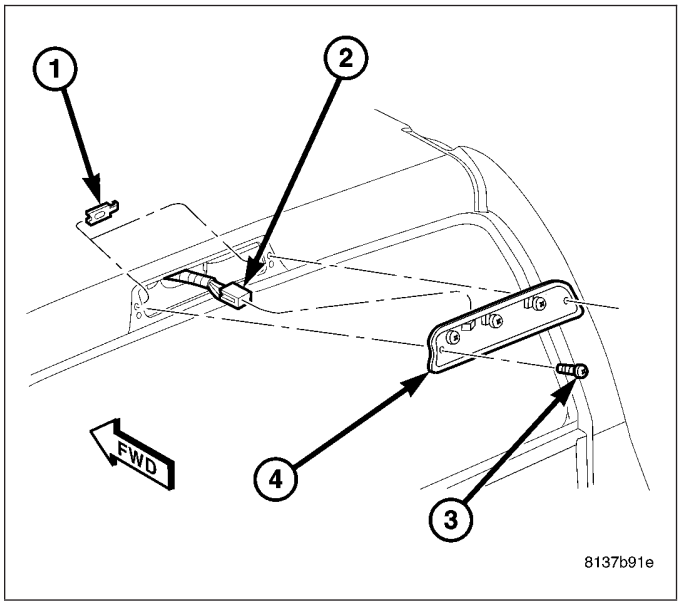

CLEARANCE LAMP

REMOVAL

BULB

1. Disconnect and isolate the battery negative cable.
2. Remove the cab clearance lamp (1) from the roof panel. (Refer to 8 - ELECTRICAL/LAMPS/LIGHTING - EXTERIOR/CAB CLEARANCE LAMP - REMOVAL).
3. Pull the base of the bulb (3) straight out of the socket (2).

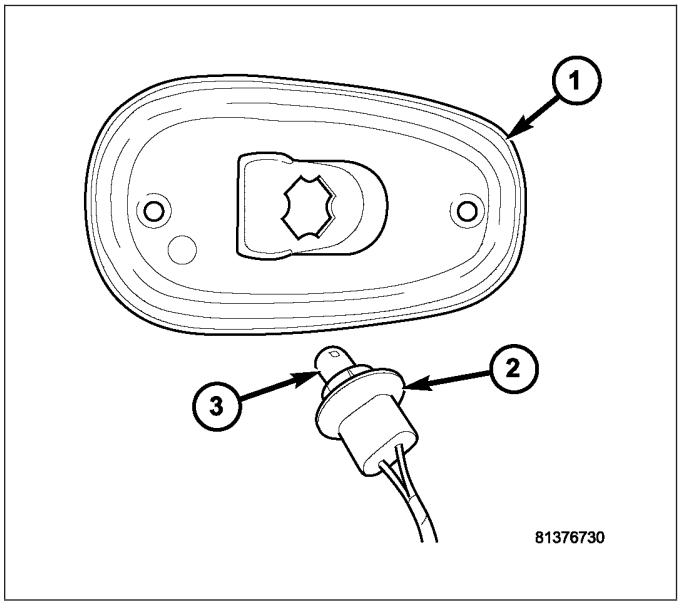

LAMP

1. Disconnect and isolate the battery negative cable.
2. Remove the two screws (2) that secure the cab clearance lamp lens/housing (1) to the outer roof panel.
3. Pull the lamp away from the roof panel far enough to access the socket (3) on the underside of the lamp lens/housing.
4. Firmly grasp the lamp socket on the underside of the lamp housing and rotate it counterclockwise about 30 degrees to unlock it.
5. Pull the socket and bulb straight out from the keyed opening in the housing.
6. Remove the cab clearance lamp lens/housing from the roof panel.

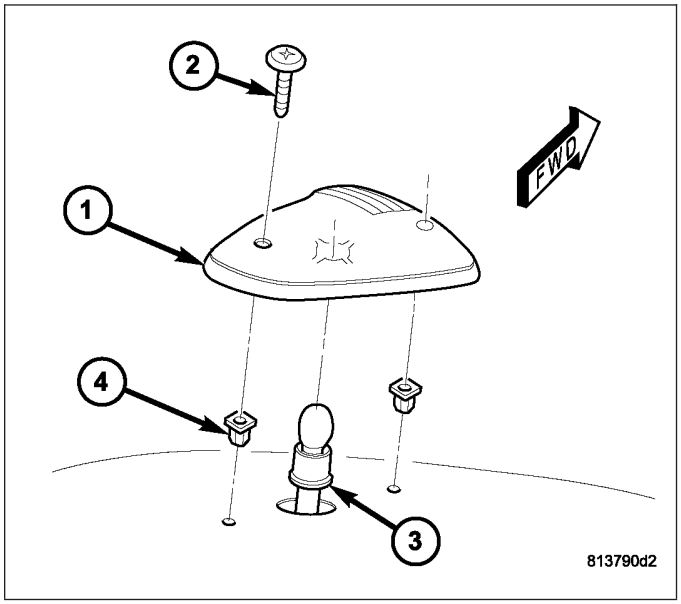

INSTALLATION

BULB

CAUTION: Always use the correct bulb size and type for replacement. An incorrect bulb size or type may overheat and cause damage to the lamp, the socket and/or the lamp wiring.

1. Align the base of the bulb (3) with the socket (2).
2. Push the bulb straight into the socket until the base is firmly seated.
3. Reinstall the cab clearance lamp (1) onto the roof panel. (Refer to 8 - ELECTRICAL/LAMPS/LIGHTING - EXTERIOR/CAB CLEARANCE LAMP - INSTALLATION).
4. Reconnect the battery negative cable.

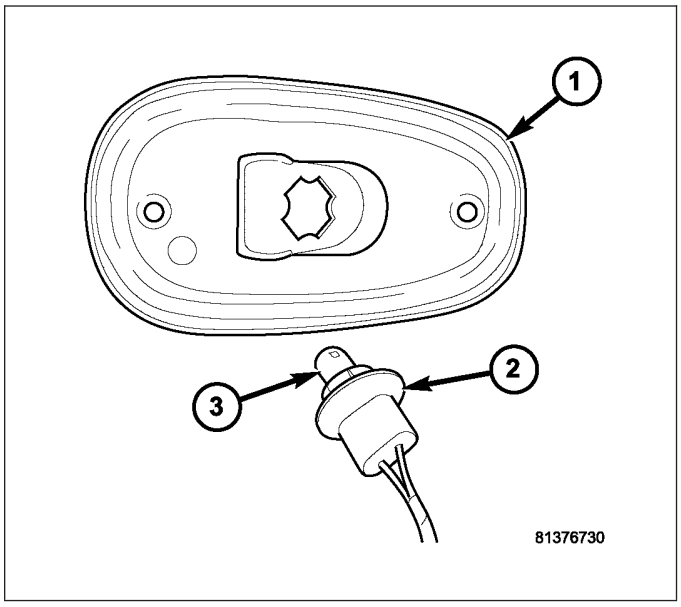

LAMP

CAUTION: Always use the correct bulb size and type for replacement. An incorrect bulb size or type may overheat and cause damage to the lamp, the socket and/or the lamp wiring.

1. Check to be certain that the two plastic nuts (4) are in good condition and properly installed in the roof panel.
2. Align the socket and bulb (3) with the keyed opening on the underside of the cab clearance lamp lens/housing (1).
3. Insert the socket and bulb into the housing until the socket is firmly seated.
4. Rotate the socket clockwise about 30 degrees to lock it into place.
5. Position the cab clearance lamp to the outer roof panel.
6. Install and tighten the two screws (2) that secure the lamp lens/housing to the roof panel. Tighten the screws to 2 N·m (15 in. lbs.).
7. Reconnect the battery negative cable.

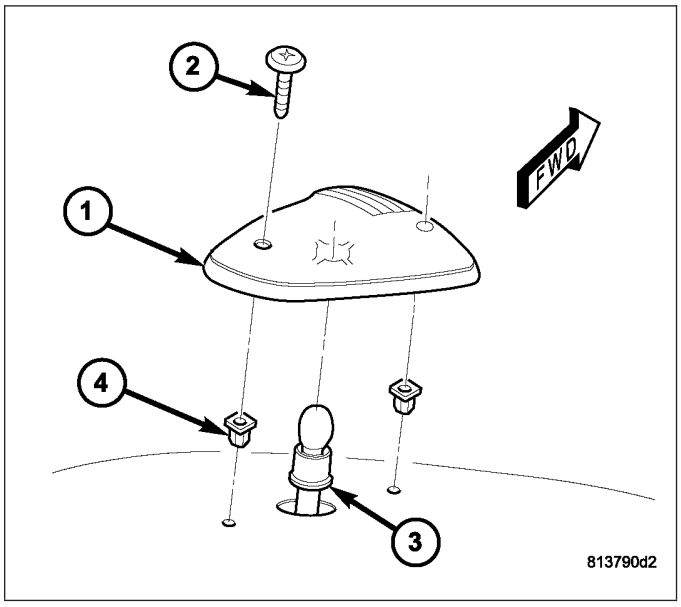

LAMP-FOG

REMOVAL

BULB

CAUTION: Do not contaminate the bulb glass by touching it with your fingers or by allowing it to contact other oily surfaces. Shortened bulb life will result.

1. Disconnect and isolate the battery negative cable.
2. Reach under and behind the front fascia to access the front fog lamp housing (1) on the back of the front bumper (4).
3. Disconnect the wire harness connector (3) from the fog lamp bulb (2).
4. Firmly grasp the bulb on the back of the housing and rotate it counterclockwise about 30 degrees to unlock it.
5. Pull the bulb straight out from the keyed opening in the housing.

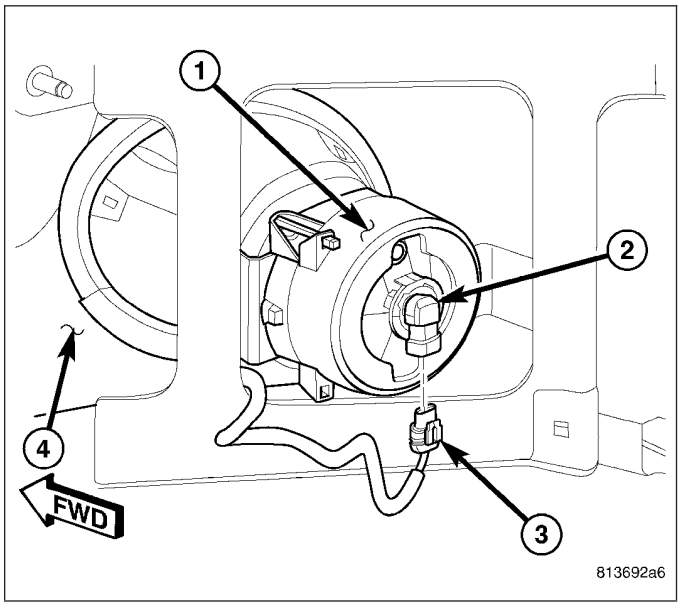

LAMP

1. Disconnect and isolate the battery negative cable.
2. Reach under and behind the front bumper to access and disconnect the headlamp and dash wire harness connector (3) from the front fog lamp socket connector.
3. Remove the three screws (1) that secure the front fog lamp housing (2) to the front bumper support.
4. Remove the front fog lamp from behind the front bumper.

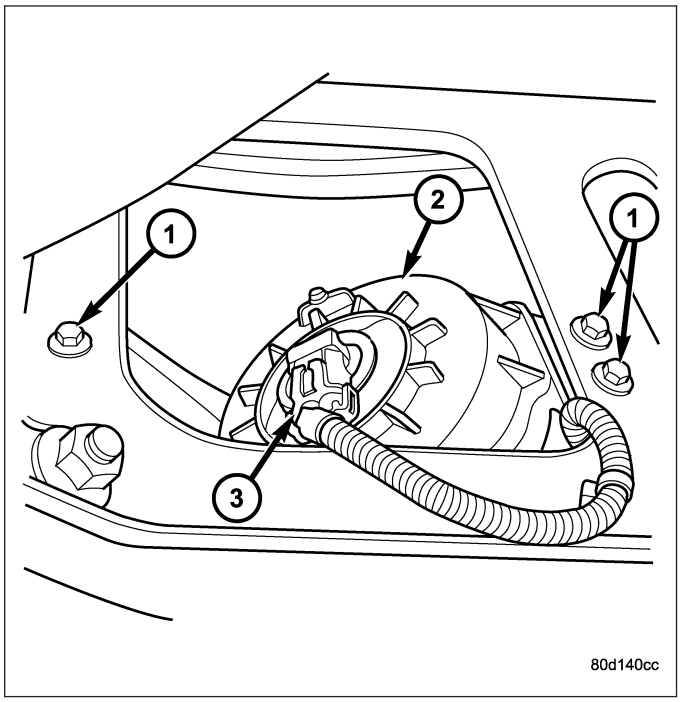

INSTALLATION

BULB

CAUTION: Always use the correct bulb size and type for replacement. An incorrect bulb size or type may overheat and cause damage to the lamp, the socket and/or the lamp wiring.

CAUTION: Do not contaminate the bulb glass by touching it with your fingers or by allowing it to contact other oily surfaces. Shortened bulb life will result.

1. Align the fog lamp bulb (2) with the keyed opening on the back of the front fog lamp housing (1).
2. insert the bulb into the housing until it is firmly seated.
3. Rotate the bulb clockwise about 30 degrees to lock it into place. The bulb connector receptacle should be pointed straight downward.
4. Reconnect the wire harness connector (3) to the bulb.
5. Reconnect the battery negative cable.

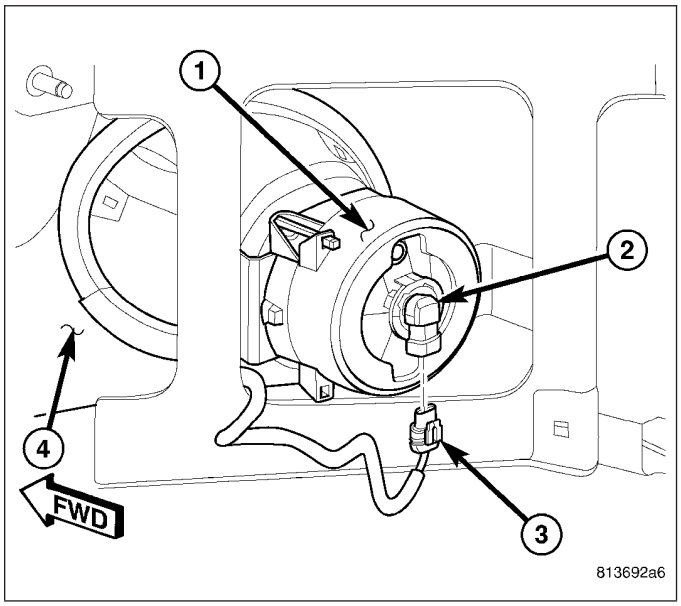

LAMP

1. Reach under and behind the front bumper to position the front fog lamp (2) to the front bumper support.
2. Install and tighten the three screws (1) that secure the front fog lamp housing to the bumper support. Tighten the screws to 5 N·m (40 in. lbs.).
3. Reconnect the headlamp and dash wire harness connector (3) to the front fog lamp socket connector.
4. Reconnect the battery negative cable.
5. Confirm proper front fog lamp alignment. (Refer to 8 - ELECTRICAL/LAMPS/LIGHTING - EXTERIOR - STANDARD PROCEDURE - FRONT LAMP AIMING).

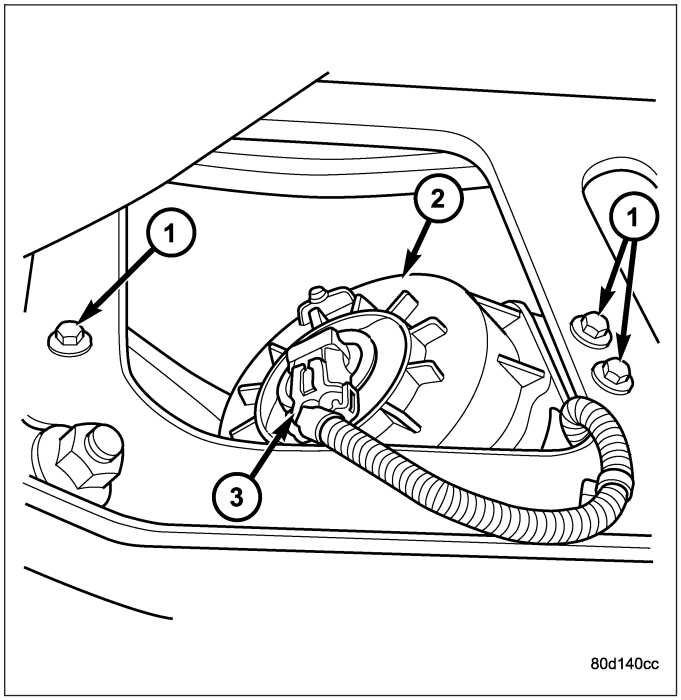

RELAY-FOG LAMP

DESCRIPTION

The front fog lamp relay is a conventional International Standards Organization (ISO) micro relay. Relays conforming to the ISO specifications have common physical dimensions, current capacities, terminal patterns, and terminal functions. The relay is contained within a small, rectangular, molded plastic housing and is connected to all of the required inputs and outputs through five integral male spade-type terminals that extend from the relay base plate.

The front fog lamp relay is located in the Power Distribution Center (PDC) in the engine compartment near the battery. Refer to the layout label on the underside of the PDC cover for specific relay cavity assignment information. The front fog lamp relay cannot be adjusted or repaired and, if faulty or damaged, the unit must be replaced.

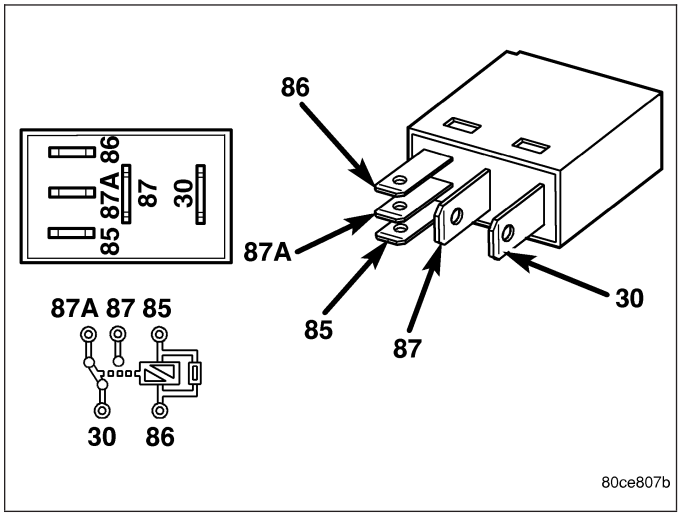

OPERATION

The front fog lamp relay is an electromechanical switch that uses a low current input from the Front Control Module (FCM) (also referred to as the Integrated Power Module/IPM) to control a high current output to the front fog lamps. Within the relay are an electromagnetic coil, a movable contact and two fixed contact points. A resistor is connected in parallel with the coil, and helps to dissipate voltage spikes and electromagnetic interference that can be generated as the field of the relay coil collapses.

The movable common supply contact point is held against the fixed normally closed contact point by spring pressure. When the relay coil is energized, an electromagnetic field is produced by the coil windings. This field draws the movable contact away from the normally closed contact, and holds it against the normally open contact. When the relay coil is de-energized, spring pressure returns the movable contact back against the normally closed contact.

The inputs and outputs of the front fog lamp relay include:

- **Common Supply Terminal (30)** - The common feed terminal is connected to a fused B(+) circuit at all times.
- **Coil Ground Terminal (85)** - The coil ground terminal is connected to a fused B(+) circuit at all times.
- **Coil Battery Terminal (86)** - The coil battery terminal is connected to a control output of the FCM through a fog lamp relay control circuit. The FCM controls front fog lamp operation by controlling a ground path through this circuit.
- **Normally Open Terminal (87)** - The normally open terminal is connected to the front fog lamps through a fog lamp relay output circuit and provides battery voltage to the front fog lamps whenever the relay is energized.
- **Normally Closed Terminal (87A)** - The normally closed terminal is not connected to any circuit in this application, but will have battery voltage present whenever the relay is de-energized.

The front fog lamp relay can be diagnosed using conventional diagnostic tools and methods. Refer to the appropriate wiring information.

FRONT LAMP UNIT

STANDARD PROCEDURE

FRONT LAMP UNIT MOISTURE CLEARING

Some moisture accumulation inside a vented front lamp unit is normal. This normal moisture will appear as a fogging on the inside of the lamp lens, similar to the fog that sometimes appears on the inside of a windshield. This moisture may be removed by activating the headlamps on high beam for 15 minutes.

If water droplets larger than 1 millimeter in size have accumulated on the inside of the lamp lens, the front lamp unit should be replaced.

REMOVAL

BULB - PARK/TURN SIGNAL

NOTE: The front park/turn signal bulb also provides illumination for the front side marker lamp function.

1. Disconnect and isolate the battery negative cable.
2. Remove the front lamp unit (1) from the front fender. (Refer to 8 - ELECTRICAL/LAMPS/LIGHTING - EXTERIOR/FRONT LAMP UNIT - REMOVAL).
3. Firmly grasp the park/turn signal bulb socket (2) on the back of the front lamp unit housing and rotate it counterclockwise about 30 degrees to unlock it.
4. Pull the socket and bulb straight out from the keyed opening in the housing.

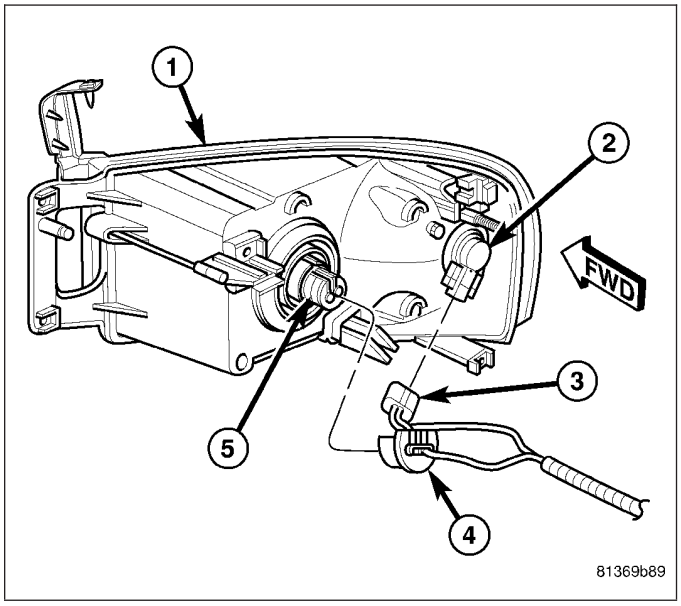

5. Pull the base of the bulb (2) straight out of the socket (1).

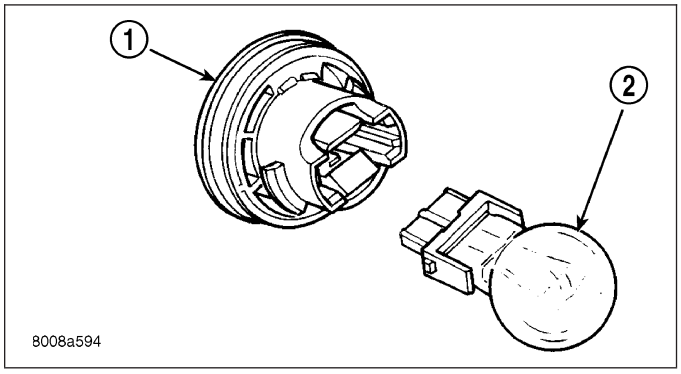

BULB - HEADLAMP

CAUTION: Do not contaminate the bulb glass by touching it with your fingers or by allowing it to contact other oily surfaces. Shortened bulb life will result.

1. Disconnect and isolate the battery negative cable.
2. Remove the front lamp unit (1) from the front fender. (Refer to 8 - ELECTRICAL/LAMPS/LIGHTING - EXTERIOR/FRONT LAMP UNIT - REMOVAL).

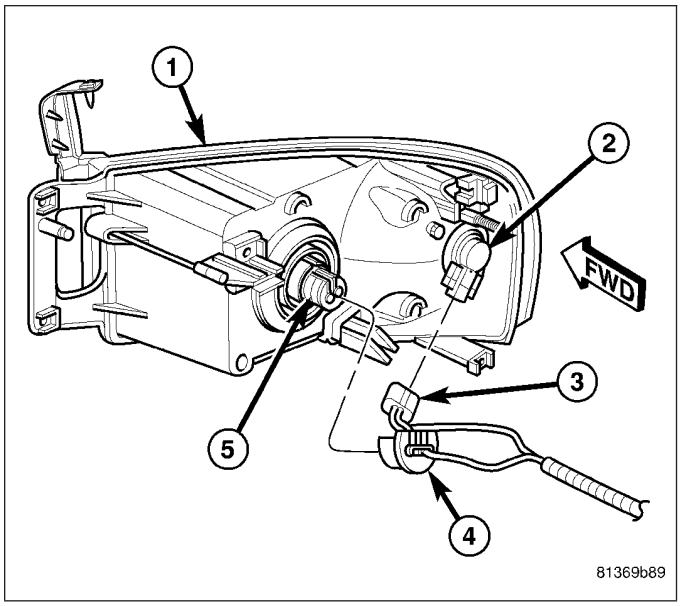

3. Firmly grasp the lock ring (2) that secures the headlamp bulb socket (3) on the back of the front lamp unit housing (1) and rotate it counterclockwise about 30 degrees to unlock it.
4. Pull the lock ring, socket and bulb straight out from the keyed opening in the housing.
5. Remove the socket and bulb from the lock ring.

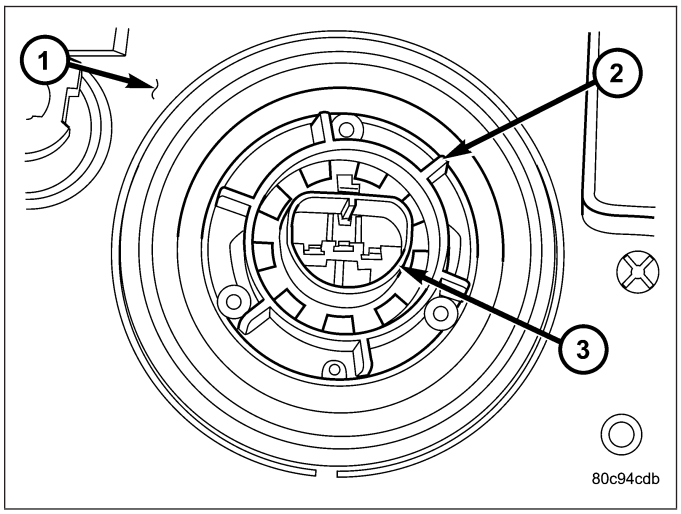

LAMP

1. Disconnect and isolate the battery negative cable.
2. Disengage the three plastic retainers (3) that secure the rubber welt (2) on the inboard side of the front lamp unit (5) to the fender ledge.
3. Remove the three screws (4) that secure the front lamp unit to the fender.
4. Pull the lamp away from the fender far enough to access the wire harness connections (1) on the back of the lamp housing.

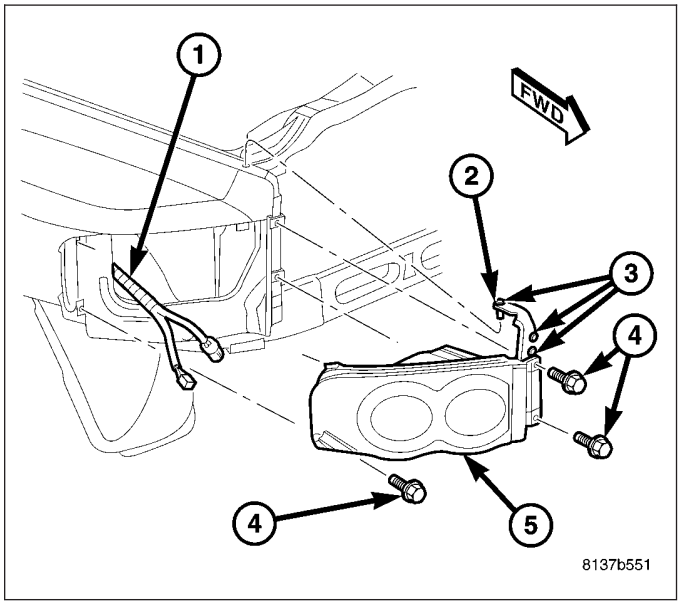

5. Disconnect the headlamp wire harness connector (4) from the headlamp bulb socket (5).
6. Disconnect the park and turn signal lamp wire harness connector (3) from the park and turn signal bulb socket (2).
7. Remove the front lamp unit from the fender.

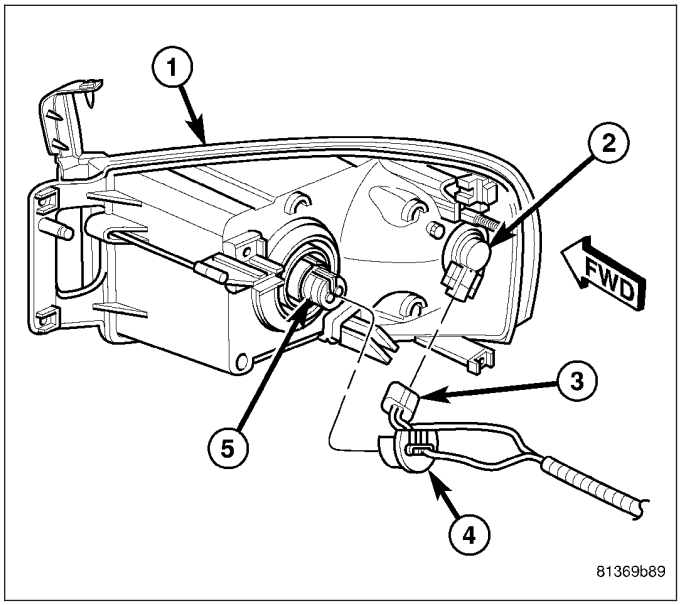

INSTALLATION

BULB - PARK/TURN SIGNAL

CAUTION: Always use the correct bulb size and type for replacement. An incorrect bulb size or type may overheat and cause damage to the lamp, the socket and/or the lamp wiring.

NOTE: The front park/turn signal bulb also provides illumination for the front side marker lamp function.

1. Align the base of the bulb (2) with the park/turn signal bulb socket (1).
2. Push the bulb straight into the socket until the base is firmly seated.

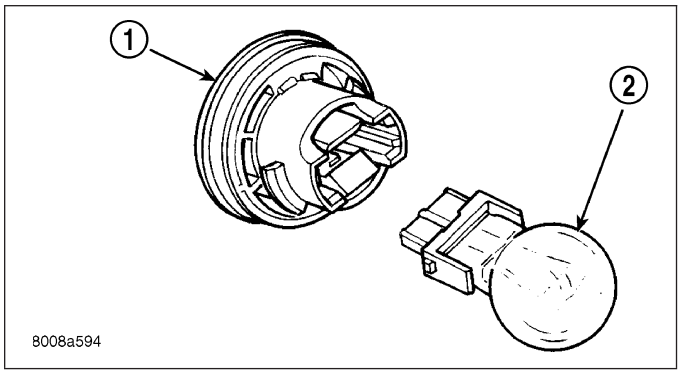

3. Align the socket and bulb (2) with the keyed opening on the back of the front lamp unit housing (1).
4. Insert the socket and bulb into the housing until the socket is firmly seated.
5. Rotate the socket clockwise about 30 degrees to lock it into place.
6. Reinstall the front lamp unit onto the front fender. (Refer to 8 - ELECTRICAL/LAMPS/LIGHTING - EXTERIOR/FRONT LAMP UNIT - INSTALLATION).
7. Reconnect the battery negative cable.

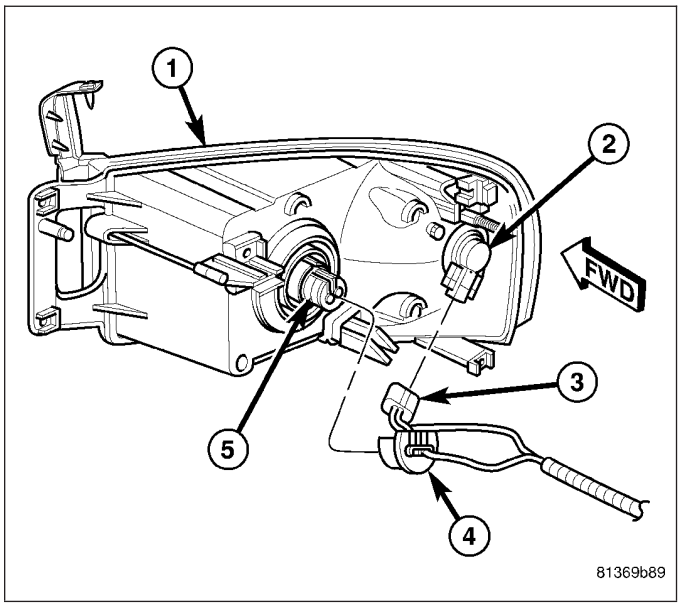

BULB - HEADLAMP

CAUTION: Always use the correct bulb size and type for replacement. An incorrect bulb size or type may overheat and cause damage to the lamp, the socket and/or the lamp wiring.

CAUTION: Do not contaminate the bulb glass by touching it with your fingers or by allowing it to contact other oily surfaces. Shortened bulb life will result.

1. Position the headlamp socket and bulb (3) into the keyed opening on the back of the front lamp unit housing (1) until it is firmly seated.
2. Install the lock ring (2) over the base of the socket and bulb (3).
3. Push the lock ring down over the socket and bulb until it is firmly seated.
4. Rotate the lock ring clockwise about 30 degrees to lock it into place.

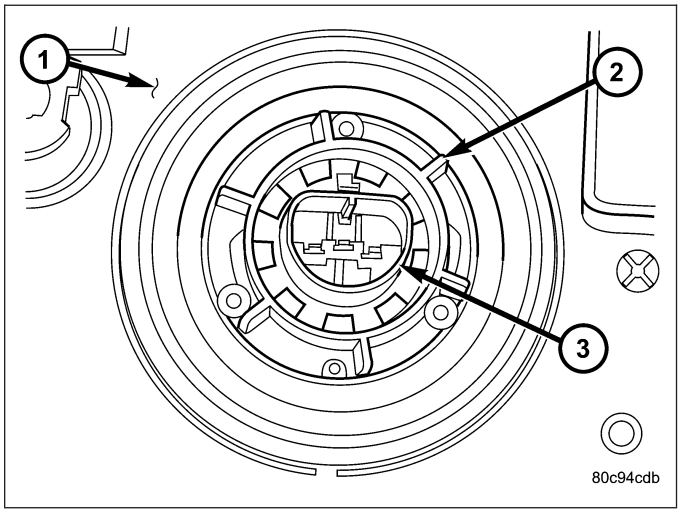

5. Reinstall the front lamp unit (1) onto the front fender. (Refer to 8 - ELECTRICAL/LAMPS/LIGHTING - EXTERIOR/FRONT LAMP UNIT - INSTALLATION).
6. Reconnect the battery negative cable.

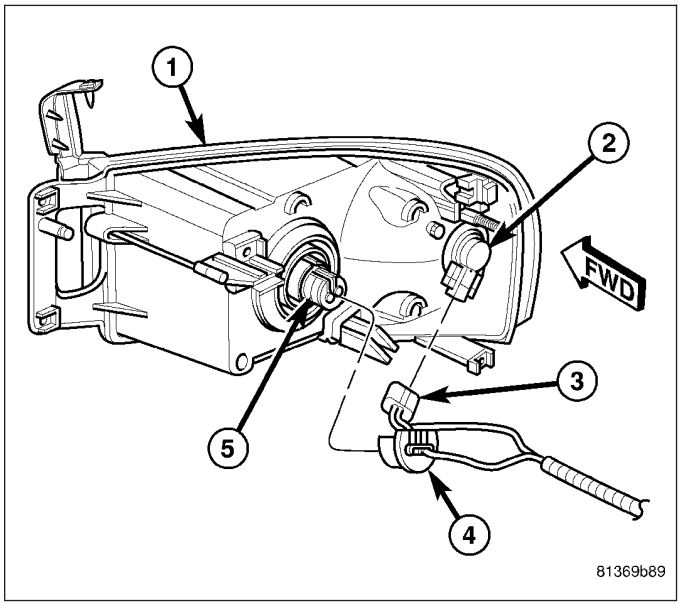

LAMP

1. Check to be certain that the three front lamp unit U-nuts (1) are properly positioned on the fender.

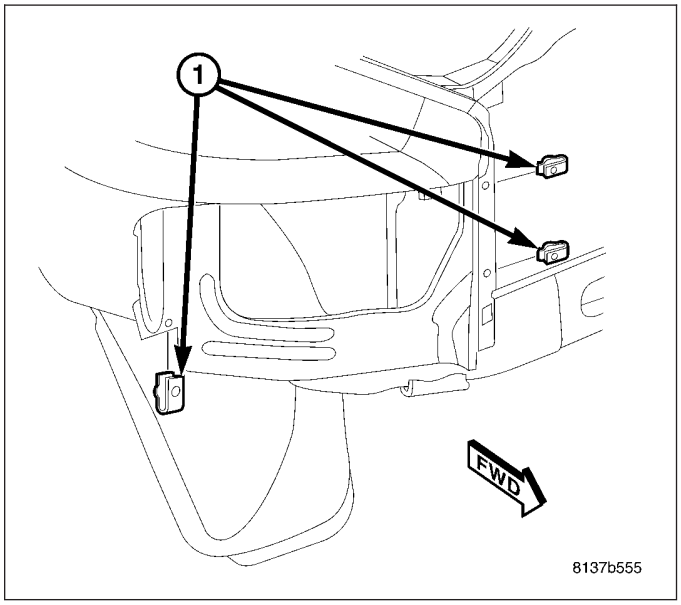

2. Position the front lamp unit (1) close enough to the front fender to access and reconnect the park and turn signal lamp wire harness connection (3) to the park and turn signal bulb socket (2) on the back of the lamp housing.
3. Reconnect the headlamp wire harness connection (4) to the headlamp bulb socket (5) on the back of the lamp housing.

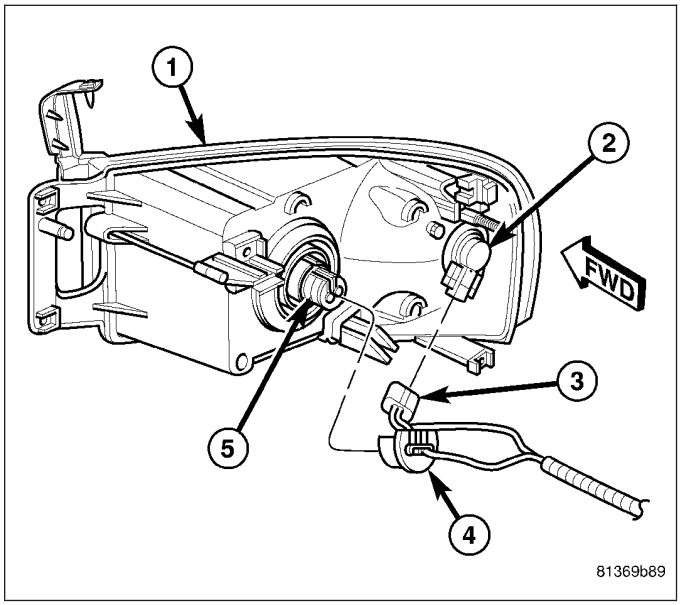

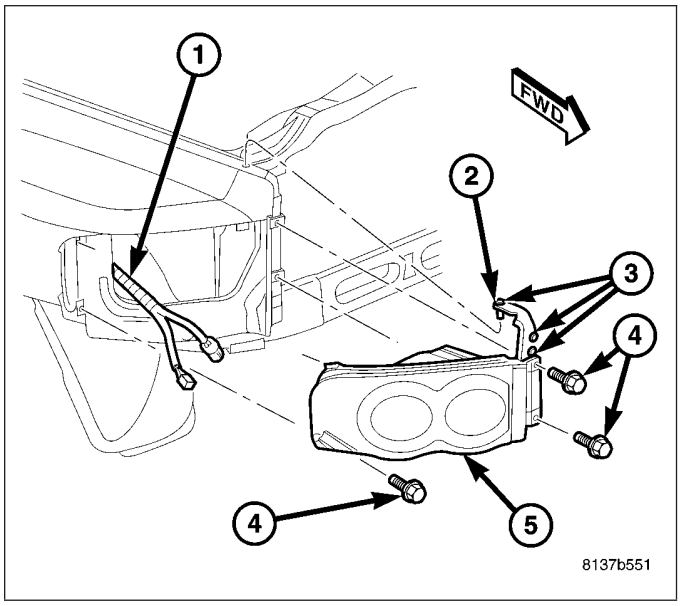

4. Position the front lamp unit (5) to the fender panel opening.
5. Rearrange the wire harness (1) as necessary to prevent it from becoming pinched between the back of the lamp housing and the fender.
6. Insert the two alignment pins on the back of the lamp housing into the two alignment holes in the fender lamp mounting panel and, using hand pressure, push the lamp into the fender until it is fully seated.
7. Install and tighten the three screws (4) that secure the lamp to the U-nuts on the fender ledge in the following sequence: outboard screw, inboard lower screw, inboard upper screw. Tighten the screws to 7 N·m (65 in. lbs.).
8. Engage the three plastic retainers (3) that secure the rubber welt (2) on the inboard side of the lamp to the holes in the fender ledge.
9. Reconnect the battery negative cable.
10. Confirm proper headlamp alignment. (Refer to 8 - ELECTRICAL/LAMPS/LIGHTING - EXTERIOR - STANDARD PROCEDURE - FRONT LAMP AIMING).

SWITCH-HEADLAMP

DESCRIPTION

The headlamp switch (1) is located on the instrument panel, to the left of the steering column. Two different switches are used. The standard switch features a three-position rotary knob (3) for exterior lighting control and a thumbwheel (2) for panel lamps dimming and interior lighting control. An optional switch has the same thumbwheel, but has an additional “Pull” function added to the rotary knob for selecting the optional front fog lamps.

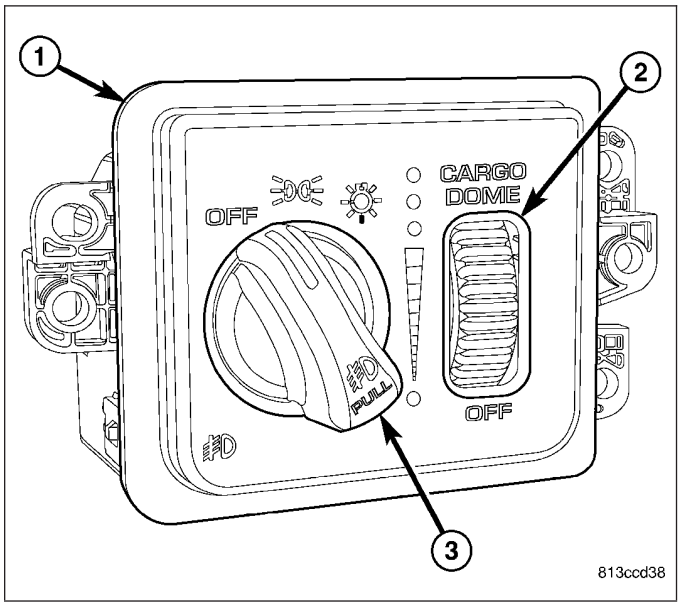

Each of these switches is constructed of molded plastic. The rotary knob is molded plastic and has a raised center lever to ease operator control. The thumbwheel is also plastic and knurled. The optional front fog lamp rotary knob is plastic with a smooth finish and an International Control and Display Symbol icon for “Front Fog Light” applied to it. The switch face plate is also labeled with graphics and icons to clearly identify the many functions of the rotary knob and thumbwheel.

Three screws secure the switch to the back of the cluster bezel through integral mounting flanges that are molded to each side of the switch housing. The back of the switch housing has an integral connector receptacle containing terminal pins that connect the switch to the vehicle electrical system through a dedicated take out and connector of the instrument panel wire harness. A panel dimmer controlled incandescent bulb soldered to the circuit board within the switch provides back lighting for visibility at night, but is not serviceable. The headlamp switch cannot be repaired and, if faulty or damaged, it must be replaced.

OPERATION

The headlamp switch uses two resistor multiplexed outputs to control the many functions and features it provides. The switch receives a clean ground from the ElectroMechanical Instrument Cluster (EMIC) (also sometimes referred to as the Cab Control Node/CCN) on a headlamp switch return circuit. It then provides outputs to the EMIC on a headlamp switch signal circuit to control exterior lighting functions, and on a panel lamps dimmer signal circuit to control panel dimmer and interior lighting functions.

The switch illumination circuit receives a path to ground at all times through the left instrument panel ground circuit. The illumination level is controlled by a Pulse-Width Modulated (PWM) output received from the EMIC on a headlamp switch illumination control circuit. The EMIC controls this output based upon the dimmer signal select mux input from the headlamp switch.

The headlamp switch operates as follows:

- **Front Fog Lamps Control** - For vehicles so equipped, the rotary knob on the headlamp switch is pulled out to activate or pushed in to deactivate the optional front fog lamps. The headlamp switch provides an output to the EMIC, and the EMIC responds by sending electronic fog lamp switch status messages to the Front Control Module (FCM) over the Programmable Communications Interface (PCI) data bus. The FCM responds by energizing or de-energizing the front fog lamp relay in the Power Distribution Center (PDC).
- **Exterior Lighting Control** - The rotary knob on the headlamp switch is rotated to a detent position to activate or deactivate the exterior lighting. The headlamp switch provides an output to the EMIC, and the EMIC responds by sending electronic exterior lighting switch status messages to the FCM over the PCI data bus. The FCM responds by energizing or de-energizing the park lamp relay in the PDC and the high or low beam headlamp circuits. The FCM remembers which headlamp beams were last selected using the multi-function switch, and energizes those beams by default the next time the headlamps are turned On.
- **Interior Lighting Control** - The thumbwheel on the headlamp switch is rotated to the dome defeat, dome on, parade/funeral mode, or one of the six panel dimmer detent positions to control the interior courtesy/dome and panel lamps. The headlamp switch provides an output to the EMIC, and the EMIC responds by providing the appropriate interior lighting control outputs through its internal courtesy lamp driver circuits, electronic dimming level messages to other modules over the PCI data bus, and/or the proper PWM outputs to control dimming levels through several panel dimmer illumination control driver circuits.

The headlamp switch can be diagnosed using conventional diagnostic tools and methods. However, proper testing of the multiplexed inputs to and PWM processing of the EMIC requires the use of a diagnostic scan tool. Refer to the appropriate diagnostic information.

DIAGNOSIS AND TESTING

HEADLAMP SWITCH

WARNING: To avoid personal injury or death, on vehicles equipped with airbags, disable the supplemental restraint system before attempting any steering wheel, steering column, airbag, seat belt tensioner, impact sensor, or instrument panel component diagnosis or service. Disconnect and isolate the battery negative (ground) cable, then wait two minutes for the system capacitor to discharge before performing further diagnosis or service. This is the only sure way to disable the supplemental restraint system. Failure to take the proper precautions could result in accidental airbag deployment.

1. Remove the left bezel and the headlamp switch from the instrument panel as a unit. (Refer to 23 - BODY/INSTRUMENT PANEL/INSTRUMENT PANEL SWITCH BEZEL - REMOVAL).
2. Disconnect the instrument panel wire harness connector from the back of the headlamp switch.
3. Using an ohmmeter, test the resistance or continuity between the terminals of the switch as shown in the Headlamp Switch Tests table.

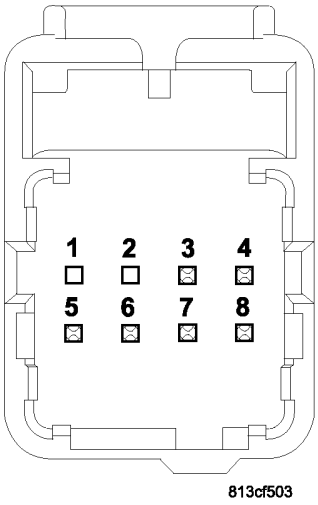

HEADLAMP SWITCH TESTS	
SWITCH POSITION (PINS)	**RESTISTANCE RANGE (OHMS)**
OFF (7 & 8)	4484.70 - 4575.30
HEADLAMP (7 & 8)	1089.00 - 1111.00
PARK (7 & 8)	584.10 - 595.90
FOG LAMP - HEADLAMP (7 & 8)	416.39 - 424.81
FOG LAMP - PARK (7 & 8)	312.94 - 319.26
DOME DEFEAT (6 & 7)	4593.60 - 4686.40
PANEL DIMMER 1 (6 & 7)	1316.70 - 1343.30
PANEL DIMMER 2 (6 & 7)	797.94 - 814.06
PANEL DIMMER 3 (6 & 7)	530.64 - 541.36
PANEL DIMMER 4 (6 & 7)	371.25 - 378.75
PANEL DIMMER 5 (6 & 7)	264.33 - 269.67
PANEL DIMMER 6 (6 & 7)	185.13 - 188.87
PARADE/FUNERAL MODE (6 & 7)	128.70 - 131.30
DOME ON (6 & 7)	85.73 - 87.47
CARGO (6 & 7)	51.78 - 52.82
SWITCH ILLUMINATION (3 & 4)	CONTINUITY AT ALL TIMES
FOG LAMP INDICATOR (4 & 5)	CONTINUITY AT ALL TIMES

4. If the switch fails any of the tests, replace the faulty headlamp switch as required.

REMOVAL

WARNING: To avoid personal injury or death, on vehicles equipped with airbags, disable the supplemental restraint system before attempting any steering wheel, steering column, airbag, seat belt tensioner, impact sensor, or instrument panel component diagnosis or service. Disconnect and isolate the battery negative (ground) cable, then wait two minutes for the system capacitor to discharge before performing further diagnosis or service. This is the only sure way to disable the supplemental restraint system. Failure to take the proper precautions could result in accidental airbag deployment.

1. Disconnect and isolate the battery negative cable.
2. Remove the headlamp switch (4) and the left bezel (1) from the instrument panel (2) as a unit. (Refer to 23 - BODY/INSTRUMENT PANEL/INSTRUMENT PANEL SWITCH BEZEL - REMOVAL).
3. Disconnect the instrument panel wire harness connector (3) from the back of the headlamp switch.

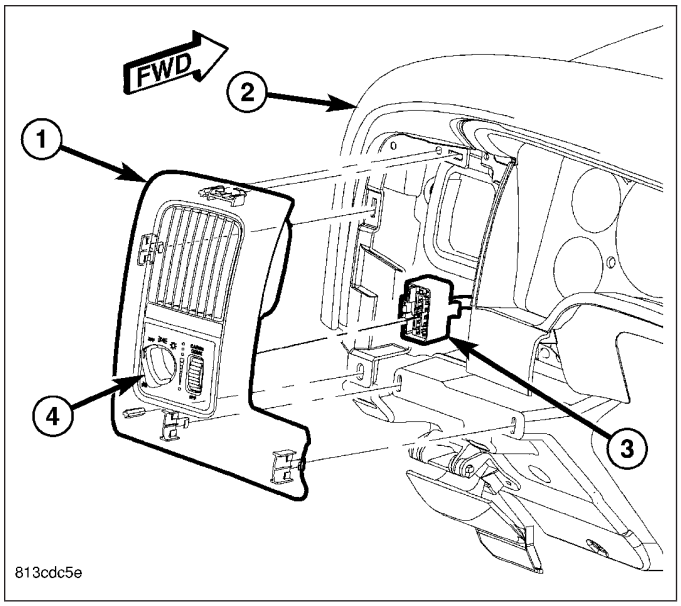

4. Remove the three screws (3) that secure the headlamp switch (2) to the back of the instrument panel bezel (1).
5. Remove the headlamp switch from the instrument panel bezel.

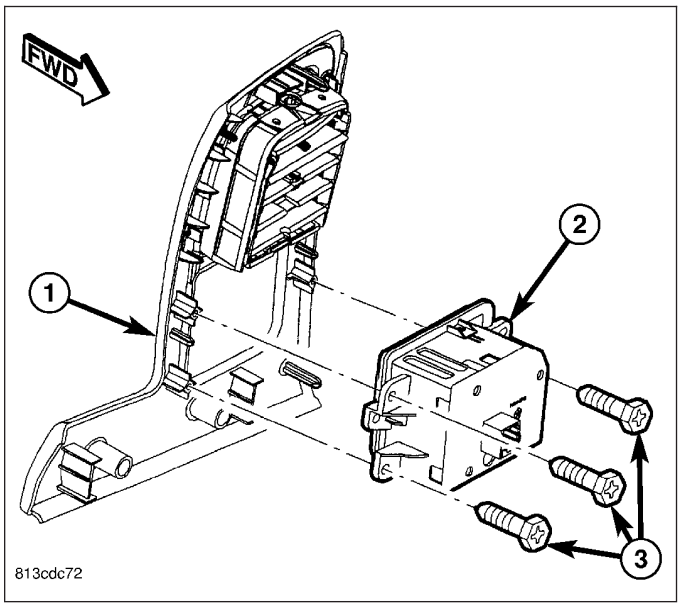

INSTALLATION

WARNING: To avoid personal injury or death, on vehicles equipped with airbags, disable the supplemental restraint system before attempting any steering wheel, steering column, airbag, seat belt tensioner, impact sensor, or instrument panel component diagnosis or service. Disconnect and isolate the battery negative (ground) cable, then wait two minutes for the system capacitor to discharge before performing further diagnosis or service. This is the only sure way to disable the supplemental restraint system. Failure to take the proper precautions could result in accidental airbag deployment.

1. Position the headlamp switch (2) to the back of the left instrument panel bezel (1).
2. Install and tighten the three screws (3) that secure the headlamp switch to the instrument panel bezel. Tighten the screws to 2 N·m (20 in. lbs.).

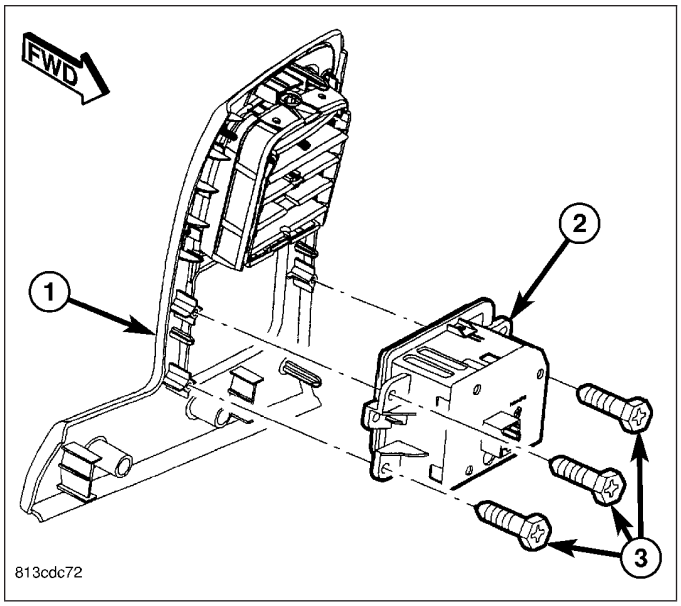

3. Position the left bezel (1) close enough to the instrument panel (2) to reconnect the instrument panel wire harness connector (3) to the back of the headlamp switch (4).
4. Reinstall the left bezel and the headlamp switch onto the instrument panel as a unit. (Refer to 23 - BODY/INSTRUMENT PANEL/INSTRUMENT PANEL SWITCH BEZEL - INSTALLATION).
5. Reconnect the battery negative cable.

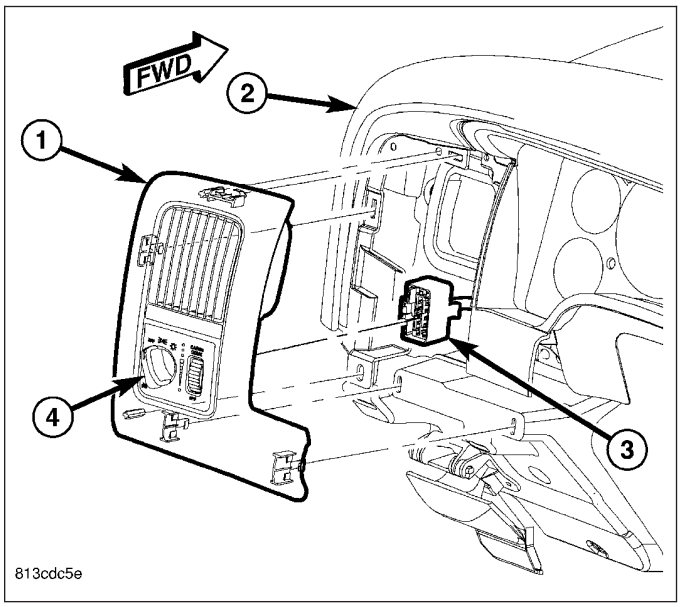

LICENSE PLATE LAMP

REMOVAL

BULB

NOTE: This procedure is for pick-up models only. On cab and chassis models the license plate lamp is integral to the left rear lamp unit. The park/ brake/turn signal bulb within the left rear lamp unit provides illumination for the license plate lamp function on all cab and chassis models.

1. Disconnect and isolate the battery negative cable.
2. Reach under the rear bumper near the center to access the back of either of the two license plate lamp housings (3).
3. Firmly grasp the socket (2) on the back of the housing and rotate it counterclockwise about 30 degrees to unlock it.
4. Pull the socket and bulb (1) straight out from the keyed opening in the housing.
5. Pull the base of the bulb straight out of the socket.

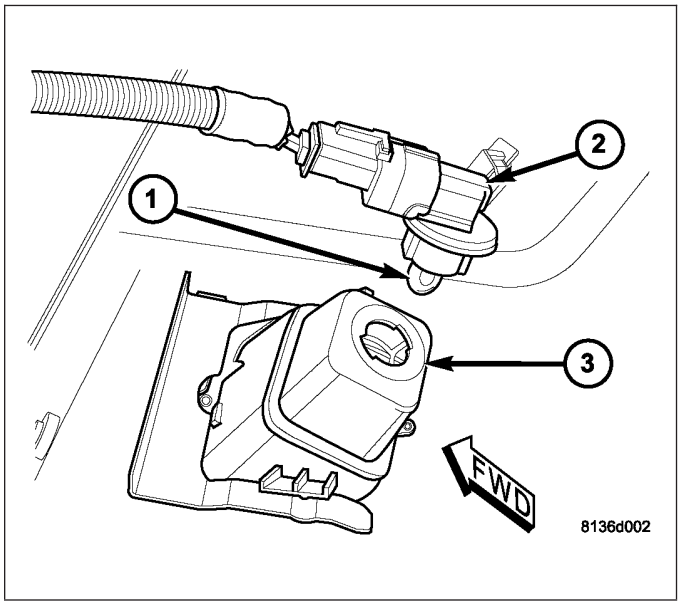

LAMP

NOTE: This procedure is for pick-up models only. On cab and chassis models the license plate lamp is integral to the left rear lamp unit. The park/ brake/turn signal bulb within the left rear lamp unit provides illumination for the license plate lamp function on all cab and chassis models.

1. Disconnect and isolate the battery negative cable.
2. Reach under and behind the rear bumper or fascia (1) near the center to access the back of either of the two license plate lamp housings (4).
3. Disconnect the wire harness connector (2) from the license plate bulb socket (3).

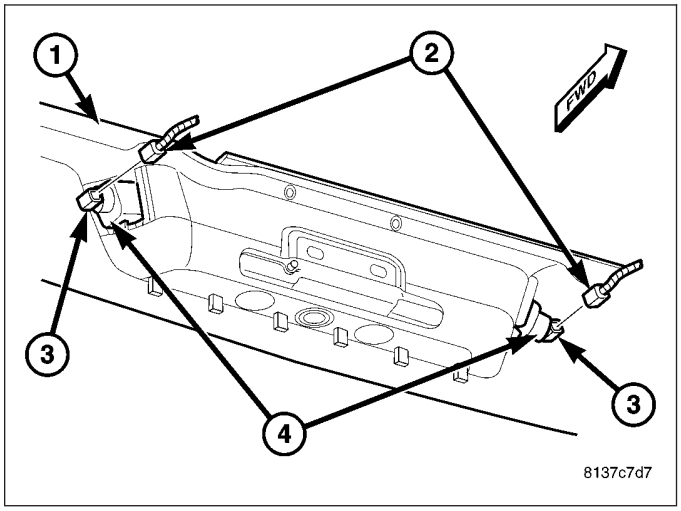

4. Remove the stamped metal retaining clip (2) that secures the license plate lamp housing (3) from the back of the rear bumper or fascia (1).
5. Push the license plate lamp unit out through the mounting hole to the outer face of the rear bumper or fascia.

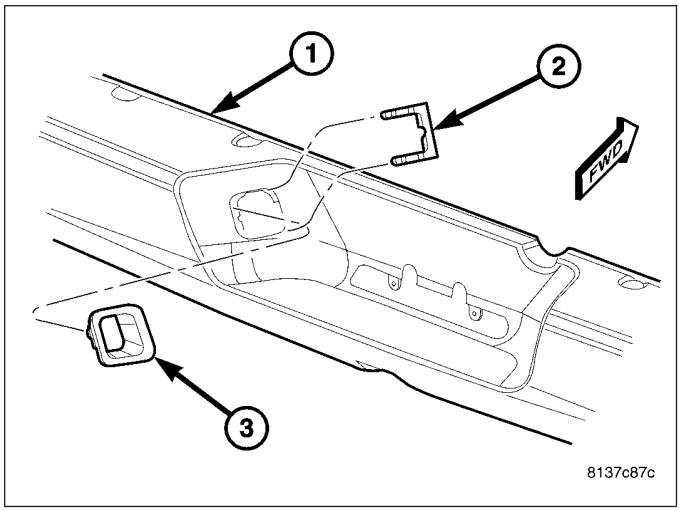

INSTALLATION

BULB

CAUTION: Always use the correct bulb size and type for replacement. An incorrect bulb size or type may overheat and cause damage to the lamp, the socket and/or the lamp wiring.

NOTE: This procedure is for pick-up models only. On cab and chassis models the license plate lamp is integral to the left rear lamp unit. The park/ brake/turn signal bulb within the left rear lamp unit provides illumination for the license plate lamp function on all cab and chassis models.

1. Align the base of the bulb (1) with the license plate lamp socket (2).
2. Push the bulb straight into the socket until the base is firmly seated.
3. Align the socket and bulb with the keyed opening on the back of the license plate lamp housing (3).
4. Insert the socket and bulb into the housing until the socket is firmly seated.
5. Rotate the socket clockwise about 30 degrees to lock it into place.
6. Reconnect the battery negative cable.

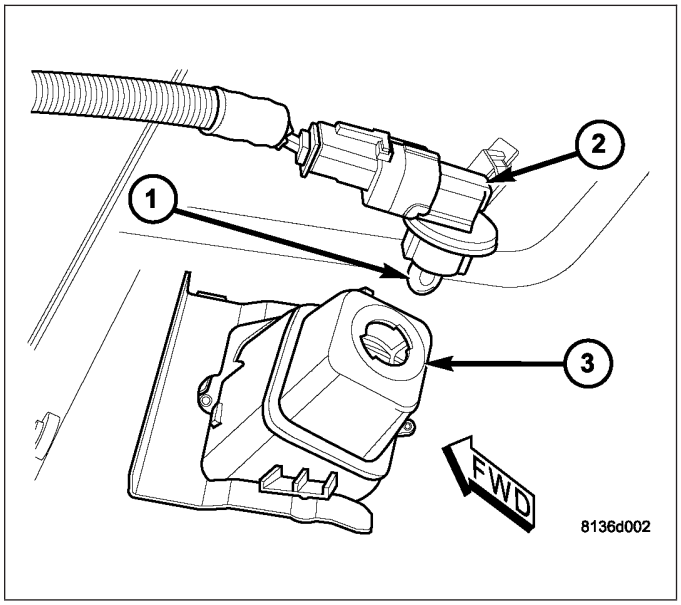

LAMP

NOTE: This procedure is for pick-up models only. On cab and chassis models the license plate lamp is integral to the left rear lamp unit. The park/ brake/turn signal bulb within the left rear lamp unit provides illumination for the license plate lamp function on all cab and chassis models.

1. Position the license plate lamp unit (3) through the mounting hole from the outer face of the rear bumper or fascia (1).
2. Reach under and behind the rear bumper or fascia (1) near the center to install the stamped metal retaining clip (2) that secures the license plate lamp housing to the back of the rear bumper or fascia.

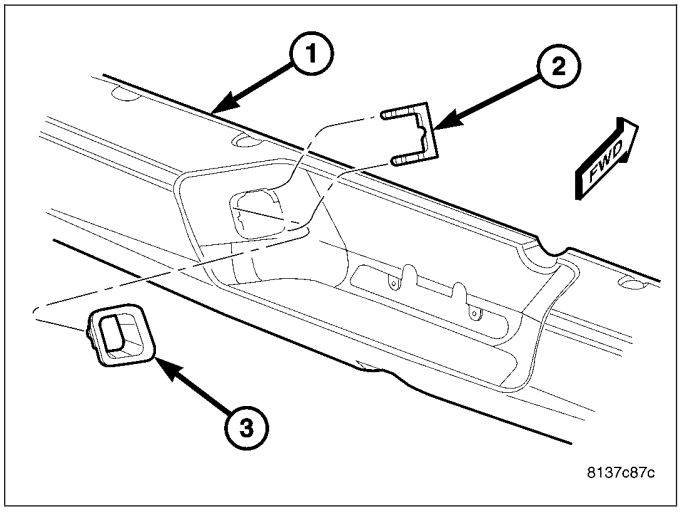

3. Reconnect the wire harness connector (2) to the license plate bulb socket (3).
4. Reconnect the battery negative cable.

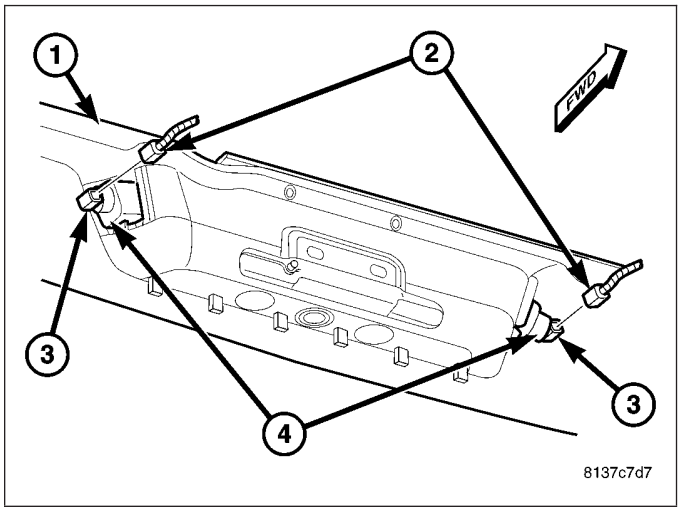

LAMP-MARKER

REMOVAL

BULB - REAR FENDER

NOTE: These lamps are used on pick-up models with dual rear wheels. A lamp with an amber lens is located on the rear fender ahead of each rear wheel opening, and a lamp with a red lens is located on the rear fender behind each rear wheel opening. The bulb types and service procedures are identical for all four of these lamps.

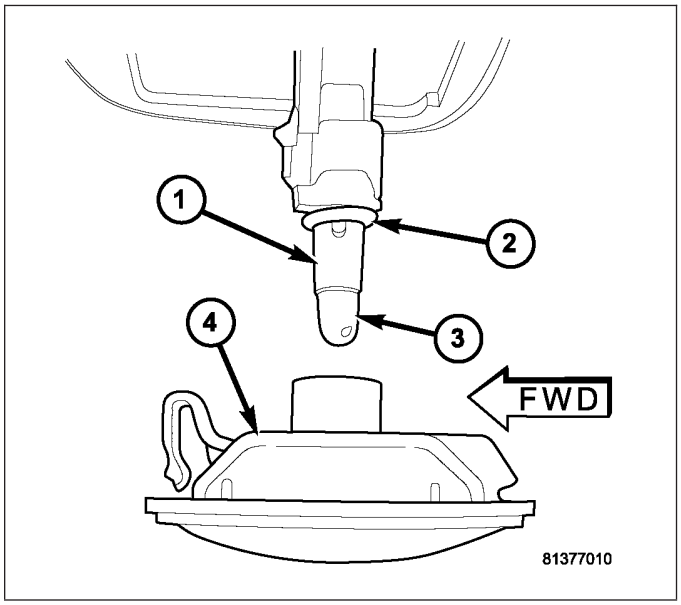

1. Disconnect and isolate the battery negative cable.
2. Using hand pressure, press the rear edge of the rear fender marker lamp lens/housing (4) toward the front of the vehicle against the spring pressure of the retaining clip, then pull the rear edge of the lamp outward to disengage it from the mounting hole in the rear fender.
3. Pull the lamp out from the rear fender far enough to access the bulb socket (1) on the back of the lamp lens/housing.
4. Firmly grasp the bulb socket on the back of the lamp lens/housing and rotate it counterclockwise about 30 degrees to unlock it.
5. Pull the socket and bulb straight out from the keyed opening in the housing.
6. Pull the base of the bulb (3) straight out of the socket.

LAMP - REAR FENDER

NOTE: These lamps are used on pick-up models with dual rear wheels. A lamp with an amber lens is located on the rear fender ahead of each rear wheel opening, and a lamp with a red lens is located on the rear fender behind each rear wheel opening. The service procedures are identical for all four of these lamps.

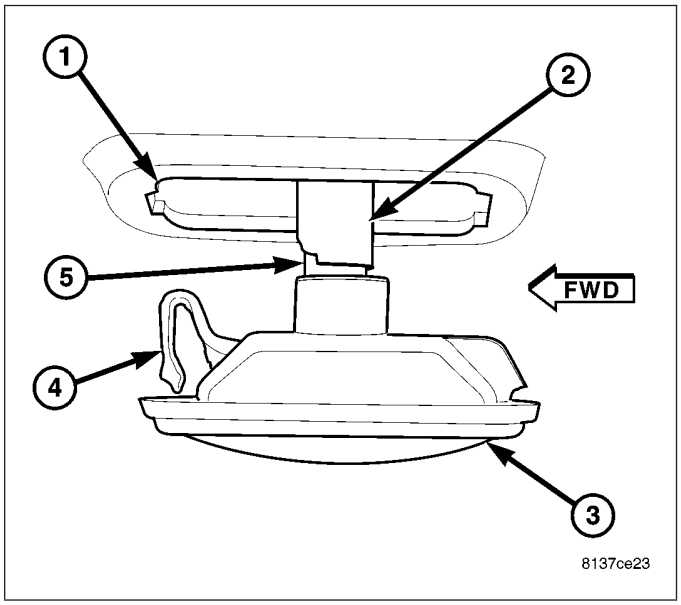

1. Disconnect and isolate the battery negative cable.
2. Using hand pressure, press the rear edge of the rear fender marker lamp lens/housing (3) toward the front of the vehicle against the spring pressure of the retaining clip (4), then pull the rear edge of the lamp outward to disengage it from the mounting hole (1) in the rear fender.
3. Pull the marker lamp out from the rear fender far enough to access and disconnect the wire harness connector (2) from the bulb socket (5) on the back of the lamp lens/housing.
4. Remove the marker lamp from the rear fender.

BULB - TAILGATE

NOTE: This lamp is used on pick-up models with dual rear wheels. A lamp with a red lens and containing three bulbs is located on the outside of the tailgate below the tailgate latch release handle. The bulb types and service procedures are identical for all three of these bulbs.

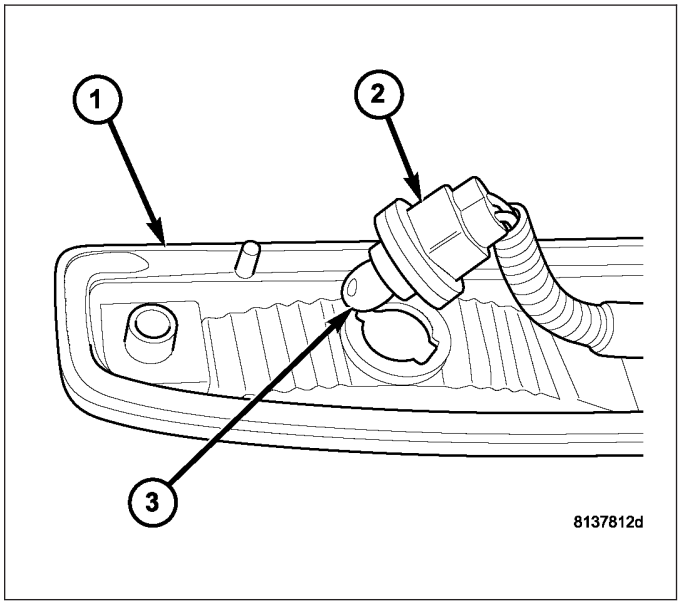

1. Disconnect and isolate the battery negative cable.
2. Remove the two screws that secure the outboard ends of the tailgate marker lamp lens/housing (1) to the outer tailgate panel.
3. Pull the marker lamp out from the tailgate far enough to access the sockets (2) on the back of the lamp housing.
4. Firmly grasp the marker lamp socket on the back of the lamp housing and rotate it counterclockwise about 30 degrees to unlock it.
5. Pull the socket and bulb straight out from the keyed opening in the housing.
6. Pull the base of the bulb (3) straight out of the socket.

LAMP - TAILGATE

NOTE: This lamp is used on pick-up models with dual rear wheels. This lamp has a red lens, contains three bulbs and is located on the outside of the tailgate below the tailgate latch release handle.

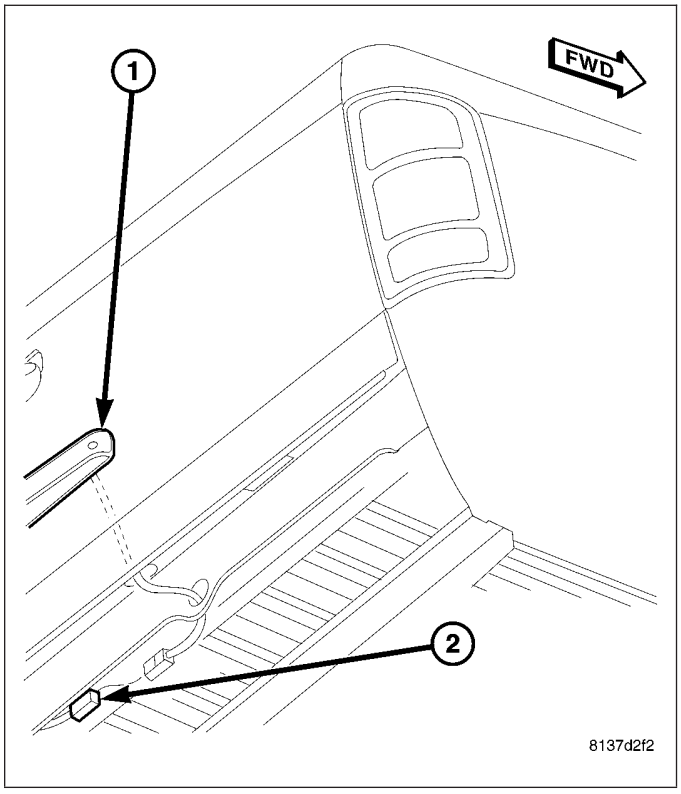

1. Disconnect and isolate the battery negative cable.
2. Reach under and behind the rear bumper near the center to access and disconnect the tailgate marker lamp (1) pigtail wire connector from the wire harness connector (2).
3. Carefully pull the pigtail wire through the routing hole in the valance panel beneath the tailgate.

4. Remove the two screws (4) that secure the tailgate marker lamp (5) to the outer tailgate panel (2).
5. Carefully pull the marker lamp lens/housing away from the tailgate while feeding the pigtail wire (3) through the routing hole on the bottom of the tailgate
6. Remove the lamp from the tailgate.

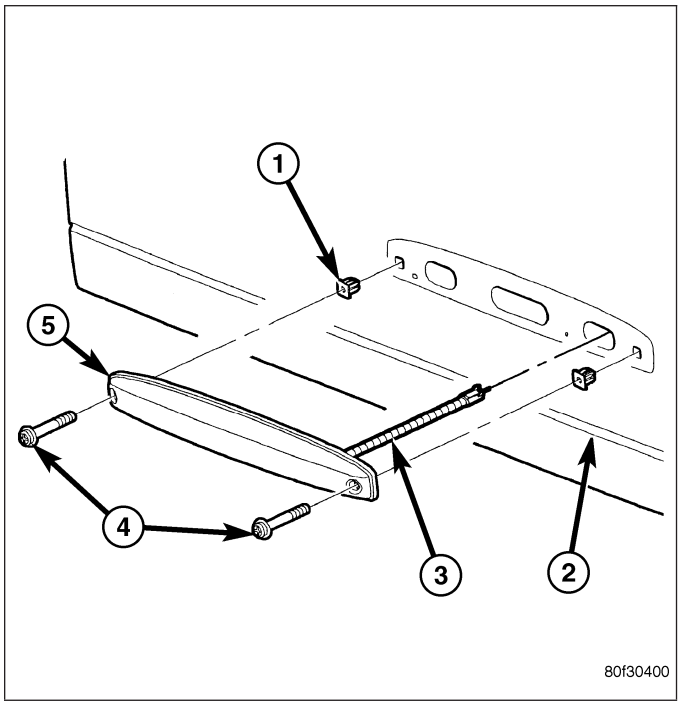

INSTALLATION

BULB - REAR FENDER

CAUTION: Always use the correct bulb size and type for replacement. An incorrect bulb size or type may overheat and cause damage to the lamp, the socket and/or the lamp wiring.

NOTE: These lamps are used on pick-up models with dual rear wheels. A lamp with an amber lens is located on the rear fender ahead of each rear wheel opening, and a lamp with a red lens is located on the rear fender behind each rear wheel opening. The bulb types and service procedures are identical for all four of these lamps.

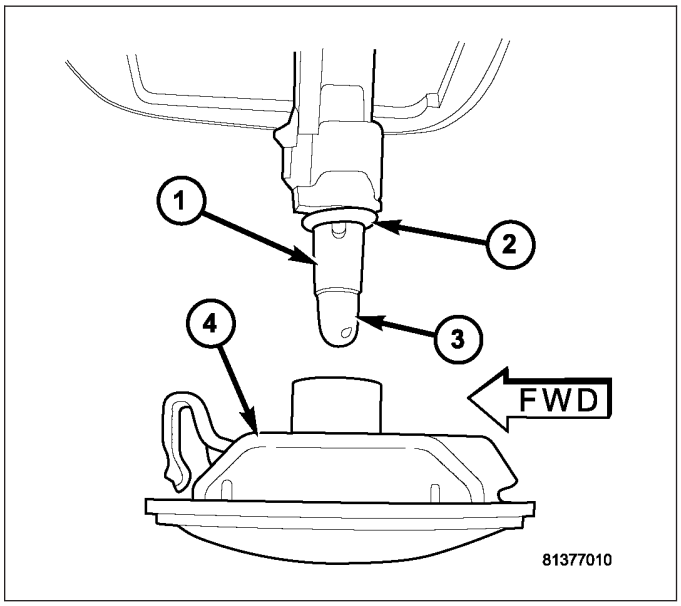

1. Align the base of the bulb (3) with the socket (1).
2. Push the bulb straight into the socket until the base is firmly seated.
3. Be certain that a rubber O-ring seal (2) is properly installed and in good condition around the base of the bulb socket.
4. Align the socket and bulb with the keyed opening on the back of the rear fender marker lamp lens/housing (4).
5. Insert the socket and bulb into the housing until the socket is firmly seated.
6. Rotate the socket clockwise about 30 degrees to lock it into place.
7. Engage the front edge of the marker lamp into the front edge of the mounting hole in the rear fender.
8. Using hand pressure, press the rear edge of the marker lamp lens/housing toward the front of the vehicle against the spring pressure of the retaining clip, then push the rear edge of the lamp into the rear of the mounting hole in the rear fender.
9. Reconnect the battery negative cable.

LAMP - REAR FENDER

NOTE: These lamps are used on pick-up models with dual rear wheels. A lamp with an amber lens is located on the rear fender ahead of each rear wheel opening, and a lamp with a red lens is located on the rear fender behind each rear wheel opening. The service procedures are identical for all four of these lamps.

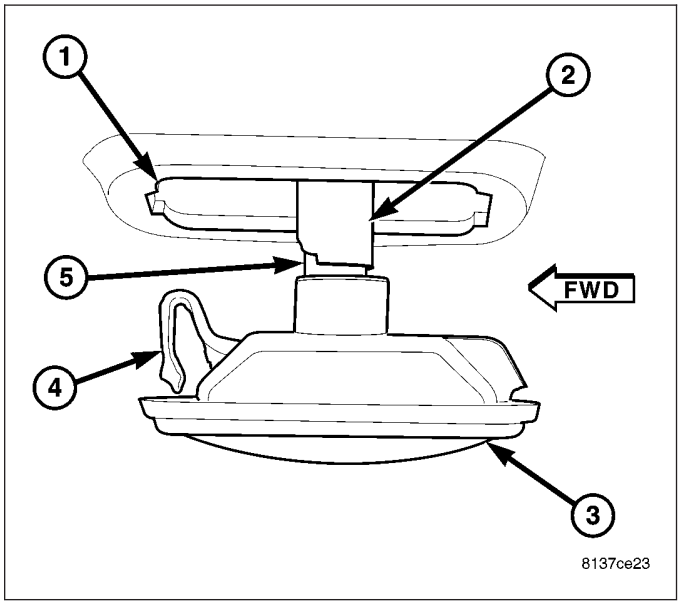

1. Position the marker lamp (3) close enough to the mounting hole (1) to access and reconnect the wire harness connector (2) to the bulb socket (5) on the back of the lamp lens/housing.
2. Engage the retaining clip (4) on the front edge of the marker lamp into the front edge of the mounting hole in the rear fender.
3. Using hand pressure, press the rear edge of the marker lamp lens/housing toward the front of the vehicle against the spring pressure of the retaining clip, then push the rear edge of the lamp into the rear of the mounting hole in the rear fender.
4. Reconnect the battery negative cable.

BULB - TAILGATE

CAUTION: Always use the correct bulb size and type for replacement. An incorrect bulb size or type may overheat and cause damage to the lamp, the socket and/or the lamp wiring.

NOTE: This lamp is used on pick-up models with dual rear wheels. A lamp with a red lens and containing three bulbs is located on the outside of the tailgate below the tailgate latch release handle. The bulb types and service procedures are identical for all three of these bulbs.

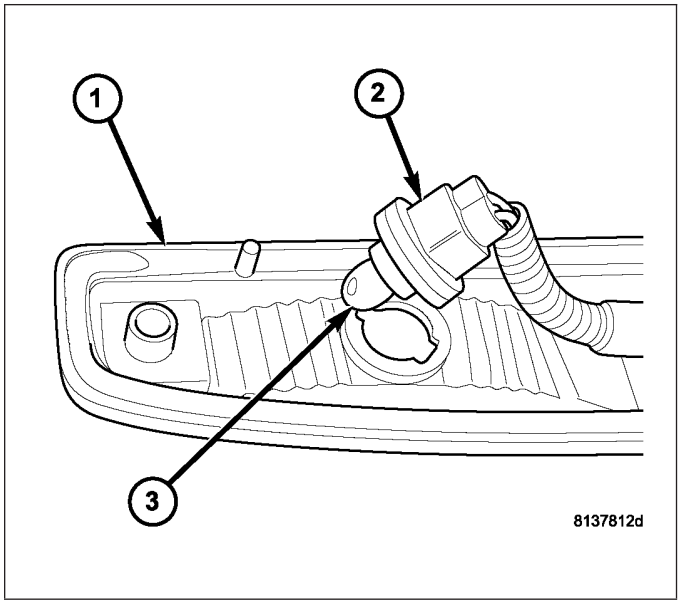

1. Align the base of the bulb (3) with the socket (2).
2. Push the bulb straight into the socket until the base is firmly seated.
3. Align the socket and bulb with the keyed opening on the back of the tailgate marker lamp lens/housing (1).
4. Insert the socket and bulb into the housing until the socket is firmly seated.
5. Rotate the socket clockwise about 30 degrees to lock it into place.
6. Position the marker lamp to the outer tailgate panel.
7. Install and tighten the two screws that secure the marker lamp lens/housing to the tailgate panel. Tighten the screws to 1 N·m (11 in. lbs.).
8. Reconnect the battery negative cable.

LAMP - TAILGATE

NOTE: This lamp is used on pick-up models with dual rear wheels. This lamp has a red lens, contains three bulbs and is located on the outside of the tailgate below the tailgate latch release handle.

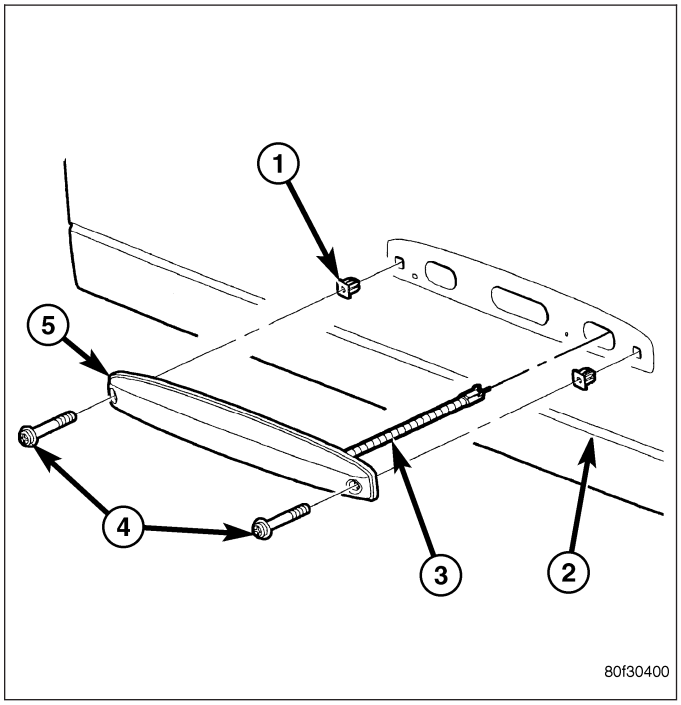

1. Check to be certain that the two plastic nuts (1) are properly installed and in good condition on the tailgate outer panel.
2. Position the marker lamp (5) close enough to the tailgate to feed the pigtail wire (3) through the routing holes on the tailgate outer panel (2) and at the bottom of the tailgate.
3. Position the marker lamp to the tailgate outer panel.
4. Install and tighten the two screws that secure the marker lamp lens/housing to the tailgate panel. Tighten the screws to 1 N·m (11 in. lbs.).

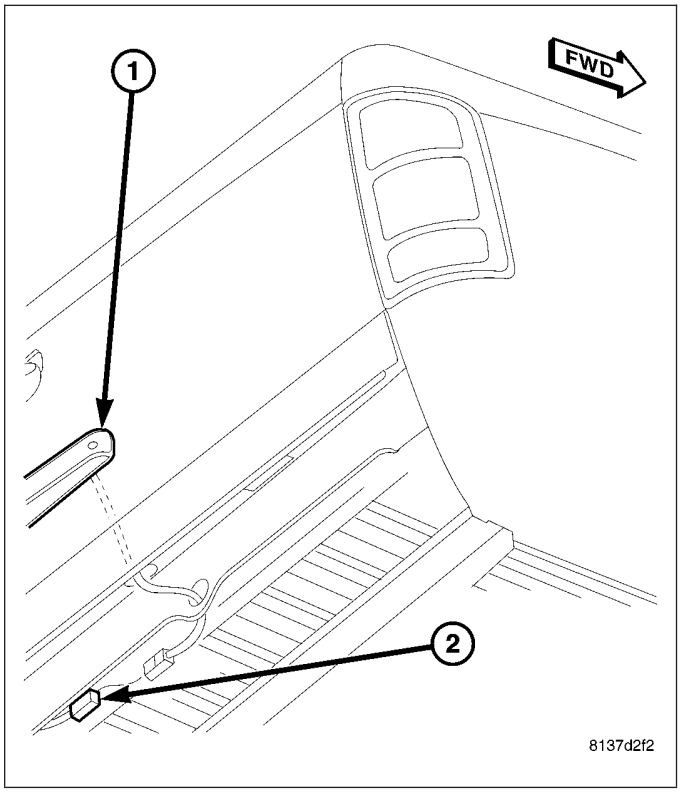

5. Route the tailgate marker lamp (1) pigtail wire through the routing hole in the valance panel beneath the tailgate.
6. Reach under and behind the rear bumper near the center to access and reconnect the tailgate marker lamp pigtail wire connector from the wire harness connector (2).
7. Reconnect the battery negative cable.

SWITCH-MULTIFUNCTION

DESCRIPTION

The multi-function switch (3) is located on the steering column, just below the steering wheel. The only visible components of the multi-function switch are the control stalk (2) and control knob (1) that extend through the steering column shrouds on the left side of the column, and the hazard warning push button (4) that extends through the shroud on the top of the column. The remainder of the switch including its mounting provisions, its electrical connection, and the turn signal cancel actuator (5) are concealed beneath the shrouds.

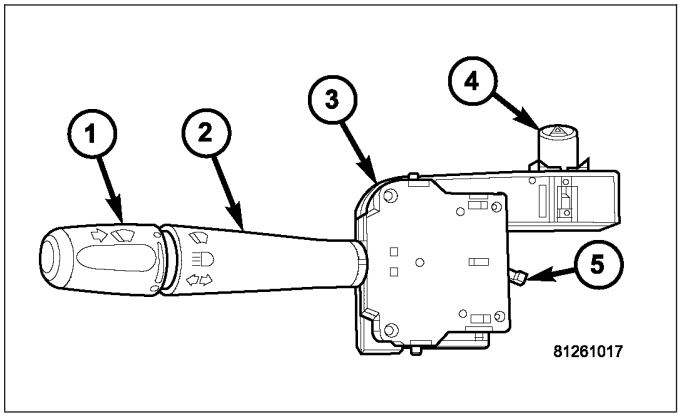

The switch housing and controls are constructed of molded black plastic. Each of the switch controls has white International Control and Display Symbol graphics applied to it, which clearly identify its many functions. Three integral locating posts on the switch housing, one on the top and two on the bottom, slide into channels in a receptacle on the left side of the multi-function switch mounting housing near the top of the steering column to ensure proper positioning of the switch. Then two screws secure the switch to the mounting housing. A single integral connector receptacle containing four terminal pins on the back of the switch housing connects the switch to the vehicle electrical system through a dedicated take out and connector of the instrument panel wire harness.

The multi-function switch provides the vehicle operator with a control interface for the following functions:

- **Hazard Warning Control** - The multi-function switch hazard warning push button provides two detent positions (On and Off) to control the hazard warning lamps.
- **Headlamp Beam Selection** - The multi-function switch control stalk provides detent switching for selection of the headlamp high or low beams. There is also an intermediate momentary position that allows the headlamp high beam circuits to be momentarily flashed to provide an optical horn feature (sometimes referred to as flash-to-pass) as an optical signalling device.
- **Turn Signal Control** - The multi-function switch control stalk provides momentary non-detent (lane change) switching or detent switching with automatic cancellation for both the left and right turn signal lamps.
- **Washer Control** - The multi-function switch control knob provides a momentary position for washer system operation.
- **Wiper Control** - The multi-function switch control knob provides two continuous wipe switch positions, low speed or high speed; and, an intermittent wipe mode with five delay interval positions.

The multi-function switch cannot be adjusted or repaired. If any function of the switch is faulty, or if the switch is damaged, the entire switch must be replaced as a unit.

OPERATION

The multi-function switch uses resistor multiplexing to control the many functions and features it provides using only three hard wired output circuits. The switch receives a clean ground from the ElectroMechanical Instrument Cluster (EMIC) (also sometimes referred to as the Cab Control Node/CCN) on a multi-function switch return circuit. It then provides outputs to the EMIC on a wash/beam select switch signal circuit to control washer and headlamp beam selection, on an intermittent wiper switch signal circuit to control wipers, and on a turn lamps switch signal circuit to control turn signal and hazard warning functions.

The multi-function switch operates as follows:

- **Hazard Warning Control** - The hazard warning push button of the multi-function switch is depressed to activate the hazard warning system, and depressed again to turn the system Off. When the push button is actuated, the multi-function switch provides an output to the EMIC, and the EMIC responds by sending electronic hazard switch status messages to the FCM over the PCI data bus. The FCM then energizes and flashes or de-energizes both the left and right turn signal circuits to provide the visual hazard warning.

- **Headlamp Beam Selection** - The control stalk of the multi-function switch is pulled towards the steering wheel past a detent to actuate the integral beam select switch circuitry, or to an intermediate, momentary position before the detent to actuate the optical horn feature. Each time the control stalk is actuated to a detent position, the opposite headlamp beam from what is currently selected will be energized. Each time the control stalk is actuated to the momentary position with the headlamps turned off, the headlamp high beams will be illuminated for as long as the control stalk is held in this position. The multi-function switch provides an output to the EMIC, and the EMIC responds by sending electronic beam select switch status messages to the FCM over the PCI data bus. The FCM energizes or de-energizes the selected low or high beam circuits.
- **Turn Signal Control** - The control stalk of the multi-function switch is moved upward to activate the right turn signal circuitry, and, downward to activate the left turn signal circuitry. The turn signal switch has a detent position in each direction that provides turn signals with automatic cancellation, and an intermediate, momentary position in each direction that provides turn signals only until the control stalk is released. When the control stalk is moved to a detent turn signal switch position, the cancel actuator extends toward the center of the steering column. A turn signal cancel cam that is integral to the clockspring rotates with the steering wheel and the cam lobes contact the cancel actuator when it is extended from the multi-function switch. When the steering wheel is rotated during a turning maneuver, one of the two turn signal cancel cam lobes will contact the turn signal cancel actuator. The cancel actuator latches against the cancel cam rotation in the direction opposite that which is signaled. If the left turn signal detent is selected, the lobes of the cancel cam will ratchet past the cancel actuator when the steering wheel is rotated to the left, but will unlatch the cancel actuator as the steering wheel rotates to the right and returns to center, which will cancel the turn signal event and release the control stalk from the detent so it returns to the neutral Off position. When a turn signal is activated, the multi-function switch provides an output to the EMIC, and the EMIC responds by sending electronic turn signal switch status messages to the FCM over the PCI data bus. The FCM energizes and flashes or de-energizes the selected left or right turn signal circuits.
- **Washer Control** - The control knob on the end of the multi-function switch control stalk is depressed towards the steering column to momentarily activate the washer pump in the washer mode. The washer pump will continue to operate in the washer mode until the control knob is released. The multi-function switch provides an output to the EMIC, and the EMIC responds by sending electronic washer switch status messages to the Front Control Module (FCM) over the Programmable Communications Interface (PCI) data bus. The FCM responds by energizing or de-energizing the washer pump in the washer mode.
- **Wiper Control** - The control knob on the end of the multi-function switch control stalk is rotated to one of the continuous wiper detents, to one of five intermittent wiper detents, or to the Off position to select the wiper mode. The multi-function switch provides an output to the EMIC, and the EMIC responds by sending electronic wiper switch status messages to the FCM over the PCI data bus. The FCM responds by energizing or de-energizing the wiper on/off and high/low relays in the Power Distribution Center (PDC) for wiper system control.

The multi-function switch can be diagnosed using conventional diagnostic tools and methods. However, proper testing of the multiplexed inputs to the EMIC requires the use of a diagnostic scan tool. Refer to the appropriate diagnostic information.

DIAGNOSIS AND TESTING

MULTI-FUNCTION SWITCH

WARNING: To avoid personal injury or death, on vehicles equipped with airbags, disable the supplemental restraint system before attempting any steering wheel, steering column, airbag, seat belt tensioner, impact sensor, or instrument panel component diagnosis or service. Disconnect and isolate the battery negative (ground) cable, then wait two minutes for the system capacitor to discharge before performing further diagnosis or service. This is the only sure way to disable the supplemental restraint system. Failure to take the proper precautions could result in accidental airbag deployment.

1. Remove the multi-function switch from the switch mounting housing on the steering column. (Refer to 8 - ELECTRICAL/LAMPS/LIGHTING - EXTERIOR/ MULTI-FUNCTION SWITCH - REMOVAL).
2. Disconnect the wire harness connector from the back of the multi-function switch.
3. Using an ohmmeter, test the resistance between the terminals of the switch as shown in the Multi-Function Switch Tests table.

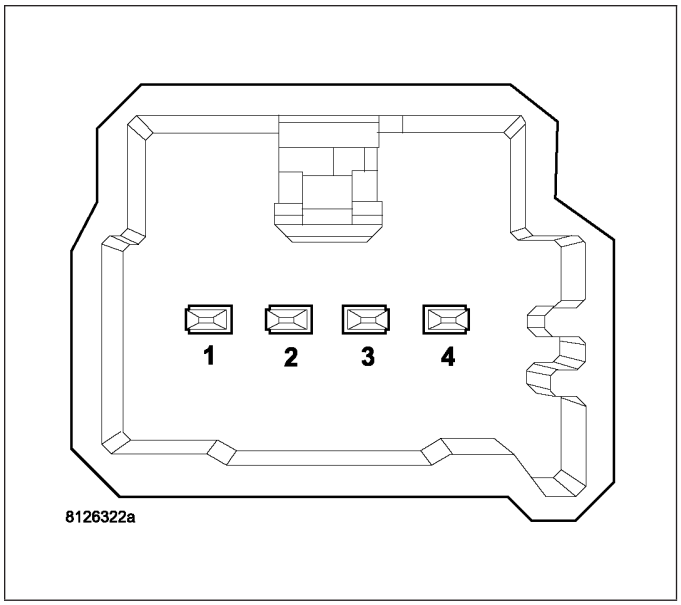

MULTI-FUNCTION SWITCH TESTS	
SWITCH POSITION (PINS)	***RESISTANCE RANGE (OHMS)**
BEAM SELECT/WASHER NEUTRAL (1 & 2)	OPEN CIRCUIT
BEAM SELECT ON (1 & 2)	518 - 575
OPTICAL HORN ON (1 & 2)	1257 - 1397
FRONT WASHER ON (1 & 2)	2584 - 2871
TURN/HAZARD OFF (2 & 3)	2643 - 2937
HAZARD ON (2 & 3)	115 - 128
LEFT TURN SIGNAL ON (2 & 3)	345 - 384
RIGHT TURN SIGNAL ON (2 & 3)	786 - 873
FRONT WIPER OFF (2 & 4)	6910 - 7678
FRONT WIPER DELAY 1 (2 & 4)	2128 - 2365
FRONT WIPER DELAY 2 (2 & 4)	1089 - 1210
FRONT WIPER DELAY 3 (2 & 4)	627 - 697
FRONT WIPER DELAY 4 (2 & 4)	388 - 431
FRONT WIPER DELAY 5 (2 & 4)	234 - 261
FRONT WIPER LOW (2 & 4)	125 - 140
FRONT WIPER HIGH (2 & 4)	50 - 56
*** All Resistance Values Given Are ±10 Percent**	

4. If the switch fails any of the tests, replace the faulty multi-function switch as required.

REMOVAL

WARNING: To avoid personal injury or death, on vehicles equipped with airbags, disable the supplemental restraint system before attempting any steering wheel, steering column, airbag, seat belt tensioner, impact sensor, or instrument panel component diagnosis or service. Disconnect and isolate the battery negative (ground) cable, then wait two minutes for the system capacitor to discharge before performing further diagnosis or service. This is the only sure way to disable the supplemental restraint system. Failure to take the proper precautions could result in accidental airbag deployment.

1. Disconnect and isolate the battery negative cable.
2. Remove the driver airbag from the steering wheel. (Refer to 8 - ELECTRICAL/RESTRAINTS/DRIVER AIRBAG - REMOVAL).
3. Disconnect the steering wheel wire harness connectors from the upper clockspring connector receptacles.

CAUTION: Be certain that the screws that secure the steering wheel puller to the steering wheel are fully engaged in the steering wheel armature without passing through the steering wheel and damaging the clockspring.

4. Remove the steering wheel from the steering column. (Refer to 19 - STEERING/COLUMN/STEERING WHEEL - REMOVAL).
5. Grasp the tilt steering column knob (2) firmly and pull it straight rearward to remove it from the tilt adjuster lever (1) on the left side of the column.

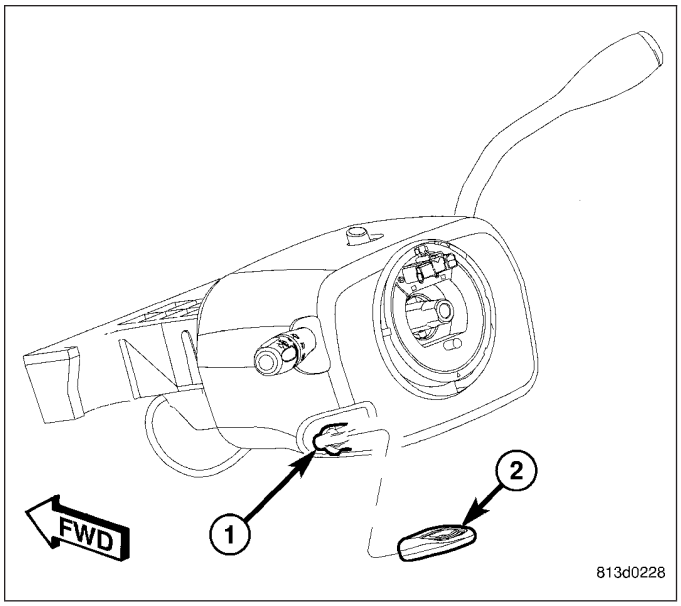

6. From below the steering column, remove the two outboard screws that secure the upper column shroud (1) to the lower shroud (3).
7. Using hand pressure, press inward on both sides of the upper shroud above the parting line of the lower shroud to release the snap features that secure the two shroud halves to each other.
8. Remove the upper shroud from the lower shroud and the steering column.
9. Remove the one center screw that secures the lower shroud to the steering column (4).
10. Remove the lower shroud from the steering column.

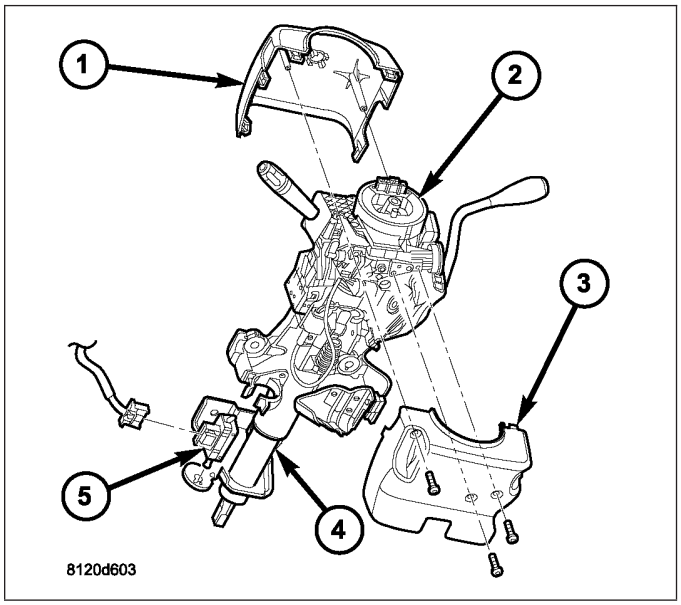

11. Disconnect the wire harness connector (2) from the back of the multi-function switch housing (1).
12. Remove the two screws (4) that secure the switch to the multi-function switch mounting housing (3).
13. Grasp the switch control stalk and pull it toward the left side of the vehicle to remove the switch from the mounting housing.

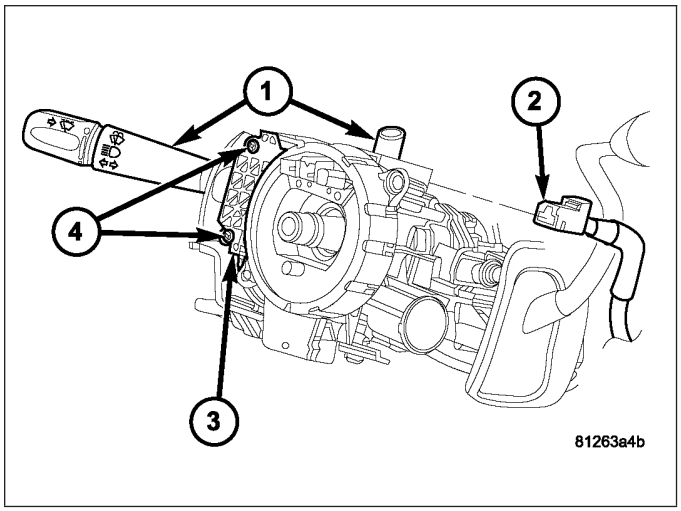

INSTALLATION

WARNING: To avoid personal injury or death, on vehicles equipped with airbags, disable the supplemental restraint system before attempting any steering wheel, steering column, airbag, seat belt tensioner, impact sensor, or instrument panel component diagnosis or service. Disconnect and isolate the battery negative (ground) cable, then wait two minutes for the system capacitor to discharge before performing further diagnosis or service. This is the only sure way to disable the supplemental restraint system. Failure to take the proper precautions could result in accidental airbag deployment.

1. Slide the multi-function switch (1) into the multi-function switch mounting housing (3) from the left side. Be certain that the alignment pins on the top and bottom of the switch are properly engaged in the channels of the mounting housing.
2. Install and tighten the two screws (4) that secure the switch to the mounting housing. Tighten the screws to 2 N·m (20 in. lbs.).
3. Reconnect the wire harness connector (2) to the back of the switch housing.

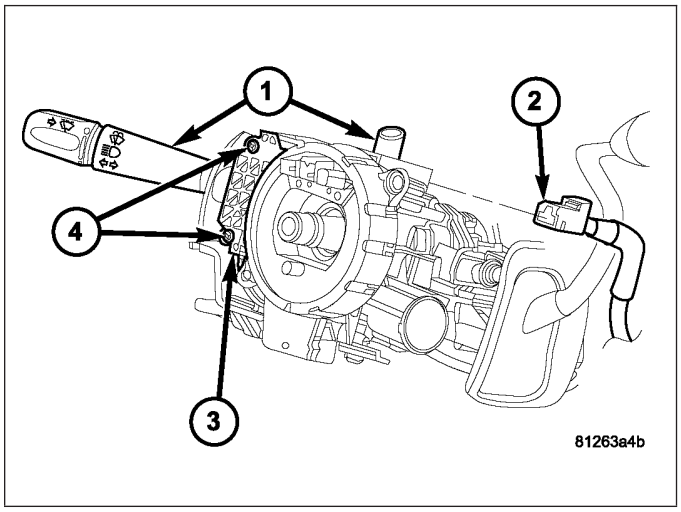

4. Position the lower shroud (3) onto the steering column (4).
5. From below the steering column, install and tighten the one center screw that secures the lower shroud to the steering column. Tighten the screw to 2 N·m (20 in. lbs.).
6. Position the upper shroud (1) onto the steering column over the lower shroud. On vehicles equipped with an automatic transmission, be certain to engage the gearshift lever gap hider into the opening in the right side of both shroud halves.
7. Align the snap features on the upper shroud with the receptacles in the lower shroud and apply hand pressure to snap them together.
8. Install and tighten the two outboard screws that secure the upper shroud to the lower shroud. Tighten the screws to 2 N·m (20 in. lbs.).

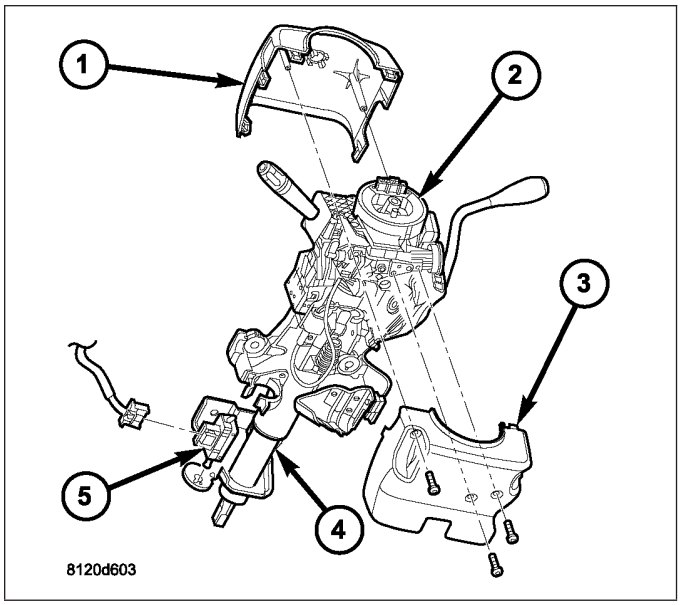

9. Align the tilt steering column knob (2) with the tilt adjuster lever (1) on the left side of the steering column and use hand pressure to snap it back into place.

NOTE: When reinstalling the steering wheel, be certain to index the yellow rubber booted engagement dowel on the upper surface of the clockspring rotor between the two fins cast into the lower surface of the steering wheel armature hub.

10. Reinstall the steering wheel onto the steering column. (Refer to 19 - STEERING/COLUMN/STEERING WHEEL - INSTALLATION).
11. Reconnect the steering wheel wire harness connectors to the upper clockspring connector receptacles. Be certain that the steering wheel wire harness is routed between the steering wheel back trim cover and the steering wheel armature.
12. Reinstall the driver airbag onto the steering wheel. (Refer to 8 - ELECTRICAL/RESTRAINTS/DRIVER AIRBAG - INSTALLATION).
13. Reconnect the battery negative cable.

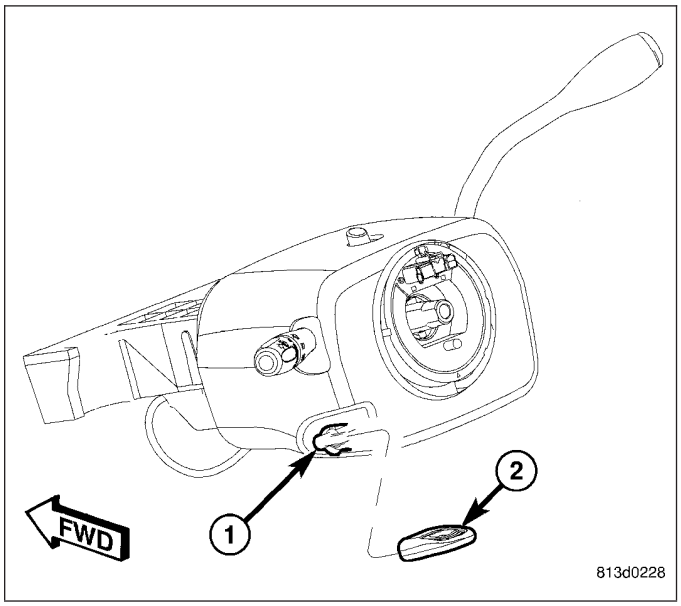

PARK BRAKE SWITCH

DESCRIPTION

The park brake switch (1) is located on the park brake lever mechanism on the cowl side inner panel below the instrument panel, to the left of the steering column. This switch includes a spade-type output terminal (3) that connects the switch to the vehicle electrical system through a dedicated take out and connector of the body wire harness. The output terminal is integral to the stationary contact within a molded plastic insulator.

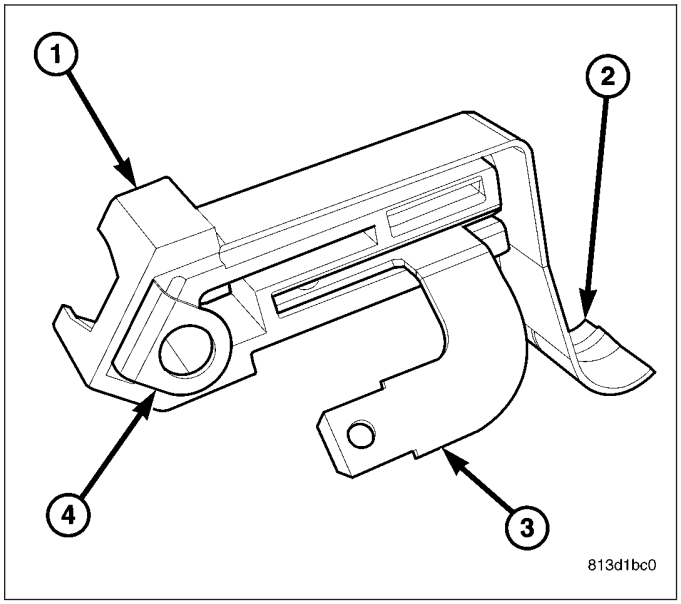

A locating tab on the insulator engages a slot in the park brake lever mechanism for positive switch location. External to the insulator is a movable leaf contact with an integral grounding lug (4) on one end and an integral actuating lever and follower (2) on the opposite end. The switch is secured to and grounded by a single screw to the park brake lever mechanism. The park brake switch cannot be adjusted or repaired and, if faulty or damaged, it must be replaced.

OPERATION

The park brake switch is a normally closed, mechanically actuated leaf contact switch that is operated by the park brake lever mechanism. The switch is grounded through its mounting to the park brake lever mechanism and provides a ground input to the ElectroMechanical Instrument Cluster (EMIC) (also sometimes referred to as the Cab Control Node/CCN) on a park brake switch sense circuit whenever the park brake is applied, and opens this circuit whenever the park brake is released. The park brake switch sense input to the EMIC is used for control of the brake indicator and may also be used as a logic input for other electronic features in the vehicle.

The park brake switch can be diagnosed using conventional diagnostic tools and methods. However, proper testing of the EMIC processing of the park brake switch sense input requires the use of a diagnostic scan tool. Refer to the appropriate diagnostic information.

DIAGNOSIS AND TESTING

PARK BRAKE SWITCH

WARNING: To avoid personal injury or death, on vehicles equipped with airbags, disable the supplemental restraint system before attempting any steering wheel, steering column, airbag, seat belt tensioner, impact sensor, or instrument panel component diagnosis or service. Disconnect and isolate the battery negative (ground) cable, then wait two minutes for the system capacitor to discharge before performing further diagnosis or service. This is the only sure way to disable the supplemental restraint system. Failure to take the proper precautions could result in accidental airbag deployment.

NOTE: If the brake indicator stays on with the ignition switch in the On position and the park brake released, or comes on while driving, the brake system must be diagnosed and repaired prior to performing the following tests. (Refer to 5 - BRAKES - DIAGNOSIS AND TESTING). If no brake system problem is found, the following procedures will help to locate a shorted or open park brake switch sense circuit, or a faulty park brake switch.

INDICATOR ILLUMINATES DURING BULB TEST, BUT DOES NOT WHEN PARK BRAKE APPLIED

1. Disconnect and isolate the battery negative cable. Disconnect the body wire harness connector for the park brake switch from the switch terminal. Apply the parking brake. Check for continuity between the park brake switch terminal and a good ground. There should be continuity. If OK, go to Step 2. If not OK, replace the faulty park brake switch.
2. Disconnect the instrument panel wire harness connector (Connector C1) for the instrument cluster from the cluster connector receptacle. Check for continuity between the park brake switch sense circuit cavities of the body wire harness connector for the park brake switch and the instrument panel wire harness connector for the instrument cluster. There should be continuity. If not OK, repair the open park brake switch sense circuit between the park brake switch and the instrument cluster as required.

INDICATOR REMAINS ILLUMINATED - BRAKE SYSTEM CHECKS OK

1. Disconnect and isolate the battery negative cable. Disconnect the body wire harness connector for the park brake switch from the switch terminal. Check for continuity between the terminal of the park brake switch and a good ground. There should be no continuity with the park brake released, and continuity with the park brake applied. If OK, go to Step 2. If not OK, replace the faulty park brake switch.
2. Disconnect the instrument panel wire harness connector (Connector C1) for the instrument cluster from the cluster connector receptacle. Check for continuity between the park brake switch sense circuit cavity of the body wire harness connector for the park brake switch and a good ground. There should be no continuity. If not OK, repair the shorted park brake switch sense circuit between the park brake switch and the instrument cluster as required.

REMOVAL

WARNING: To avoid personal injury or death, on vehicles equipped with airbags, disable the supplemental restraint system before attempting any steering wheel, steering column, airbag, seat belt tensioner, impact sensor, or instrument panel component diagnosis or service. Disconnect and isolate the battery negative (ground) cable, then wait two minutes for the system capacitor to discharge before performing further diagnosis or service. This is the only sure way to disable the supplemental restraint system. Failure to take the proper precautions could result in accidental airbag deployment.

1. Disconnect and isolate the battery negative cable.
2. Apply the parking brake.
3. Reach under the left end of the instrument panel to access and disconnect the body wire harness connector (2) from the terminal of the park brake switch (4) located on the park brake lever mechanism (1) on the left cowl side inner panel.
4. Remove the screw (3) that secures the park brake switch to the park brake lever mechanism.
5. Remove the switch from the park brake lever mechanism.

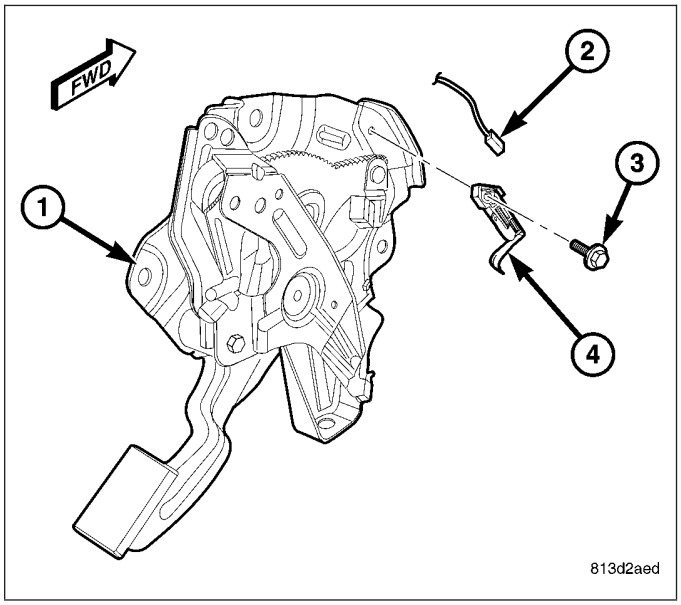

INSTALLATION

WARNING: To avoid personal injury or death, on vehicles equipped with airbags, disable the supplemental restraint system before attempting any steering wheel, steering column, airbag, seat belt tensioner, impact sensor, or instrument panel component diagnosis or service. Disconnect and isolate the battery negative (ground) cable, then wait two minutes for the system capacitor to discharge before performing further diagnosis or service. This is the only sure way to disable the supplemental restraint system. Failure to take the proper precautions could result in accidental airbag deployment.

1. Reach under the left end of the instrument panel to position park brake switch (4) onto the park brake lever mechanism (1) on the left cowl side inner panel. Be certain to engage the locating pin on the back of the switch insulator into the locating slot in the lever mechanism bracket.
2. Install and tighten the screw (3) that secures the park brake switch to the park brake lever mechanism. Tighten the screw to 3 N·m (24 in. lbs.).
3. Reconnect the body wire harness connector (2) to the terminal of the park brake switch.
4. Reconnect the battery negative cable.
5. Turn the ignition switch to the On position and check for proper brake indicator operation with the parking brake applied, then release the parking brake and check that the brake indicator extinguishes.

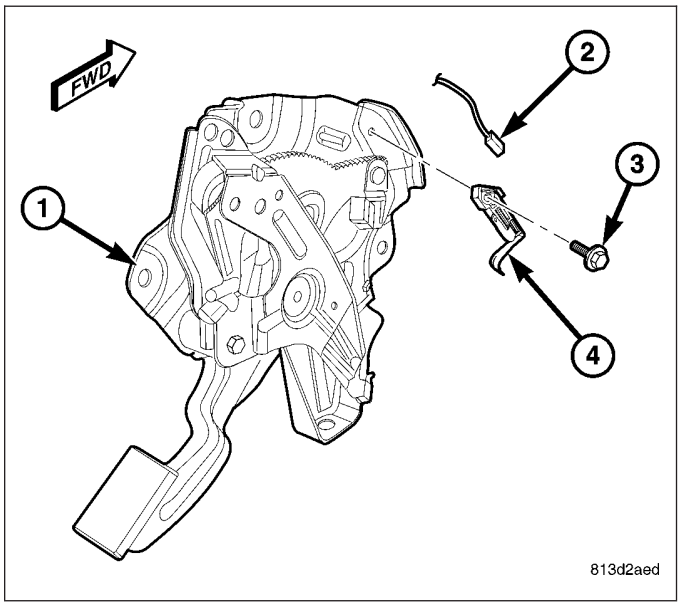

RELAY-PARK LAMP

DESCRIPTION

The park lamp relay is a conventional International Standards Organization (ISO) micro relay. Relays conforming to the ISO specifications have common physical dimensions, current capacities, terminal patterns, and terminal functions. This relay is contained within a small, rectangular, molded plastic housing and is connected to all of the required inputs and outputs through five integral male spade-type terminals that extend from the relay base plate.

The park lamp relay is located in the Power Distribution Center (PDC) in the engine compartment near the battery. Refer to the layout label on the underside of the PDC cover for specific relay cavity assignment information. The park lamp relay cannot be adjusted or repaired and, if faulty or damaged, the unit must be replaced.

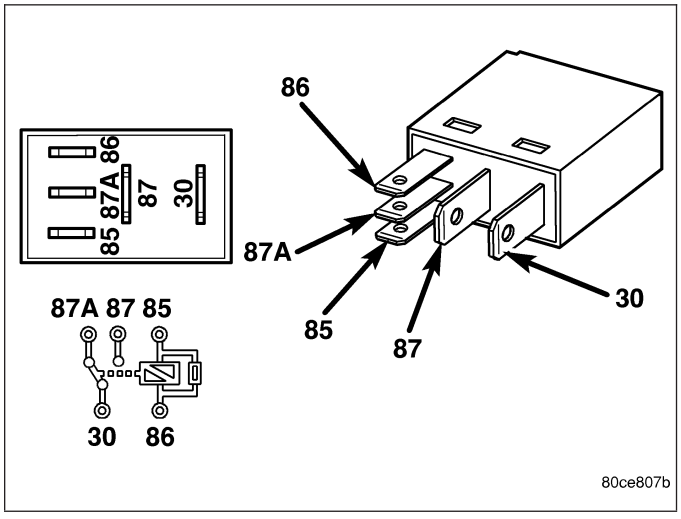

OPERATION

The park lamp relay is an electromechanical switch that uses a low current input from the Front Control Module (FCM) (also referred to as the Integrated Power Module/IPM) to control a high current output to the park lamps. Within the relay are an electromagnetic coil, a movable contact and two fixed contact points. A resistor is connected

in parallel with the coil, and helps to dissipate voltage spikes and electromagnetic interference that can be generated as the field of the relay coil collapses.

The movable common supply contact point is held against the fixed normally closed contact point by spring pressure. When the relay coil is energized, an electromagnetic field is produced by the coil windings. This field draws the movable contact point away from the normally closed contact, and holds it against the normally open contact. When the relay coil is de-energized, spring pressure returns the movable contact back against the normally closed contact.

The inputs and outputs of the park lamp relay include:

- **Common Supply Terminal (30)** - The common feed terminal is connected to a fused B(+) circuit at all times.
- **Coil Ground Terminal (85)** - The coil ground terminal is connected to a fused B(+) circuit at all times.
- **Coil Battery Terminal (86)** - The coil battery terminal is connected to a control output of the FCM through a park lamp relay control circuit. The FCM controls park lamp operation by controlling a ground path through this circuit.
- **Normally Open Terminal (87)** - The normally open terminal is connected to the park lamps through a park lamp relay output circuit and provides battery voltage to the park lamps whenever the relay is energized.
- **Normally Closed Terminal (87A)** - The normally closed terminal is not connected to any circuit in this application, but will have battery voltage present whenever the relay is de-energized.

The park lamp relay can be diagnosed using conventional diagnostic tools and methods. Refer to the appropriate wiring information.

LAMP-TAIL/STOP/TURN

REMOVAL

BULB - PICK-UP

NOTE: The rear lamp unit contains three bulbs: park/turn, park/brake/side marker, and backup. The service procedures for each bulb are the same, only the bulb sizes and types may differ.

1. Disconnect and isolate the battery negative cable.
2. Remove the rear lamp unit (1) from the end of the quarter panel. (Refer to 8 - ELECTRICAL/LAMPS/LIGHTING - EXTERIOR/REAR LAMP - REMOVAL - PICK-UP).
3. Remove the four screws (3) that secure the socket plate (2) to the back of the rear lamp unit housing.
4. Remove the socket plate from the rear lamp unit.

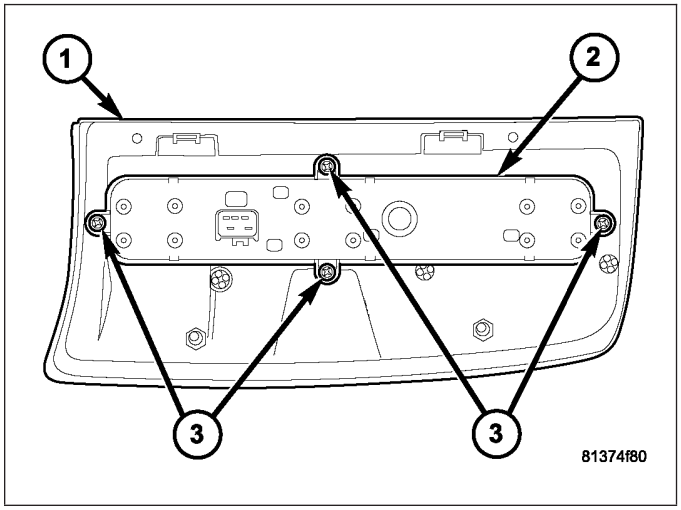

5. Pull the base of the backup (1), park/brake/side marker (2), or park/turn (3) lamp bulb straight out of the appropriate socket in the socket plate (5).

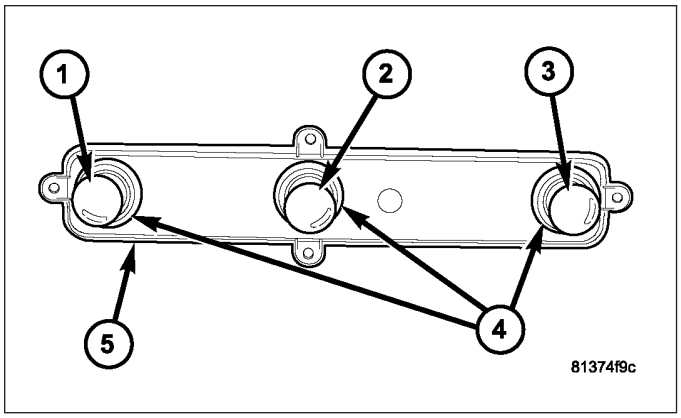

LAMP - PICK-UP

1. Disconnect and isolate the negative battery cable.
2. Lower the tailgate to access and remove the two screws (1) that secure the rear lamp unit (4) to the side jamb of the tailgate opening.
3. Pull the outboard side of the rear lamp unit rearward far enough to unsnap the two snap posts on the outboard side of the lamp housing from the two round clips (3) in the outer box side panel.

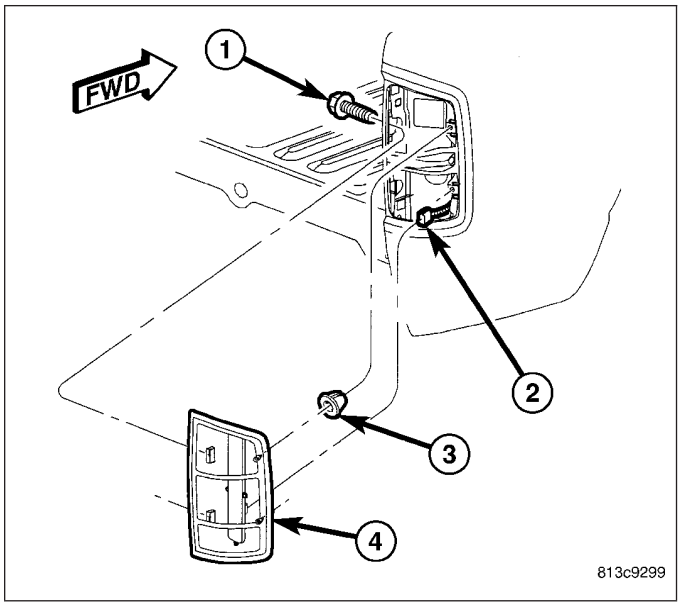

4. Disengage the lock feature and disconnect the wire harness connector (2) from the lamp socket plate connector (1).
5. Remove the lamp from the lamp opening of the outer box side panel.

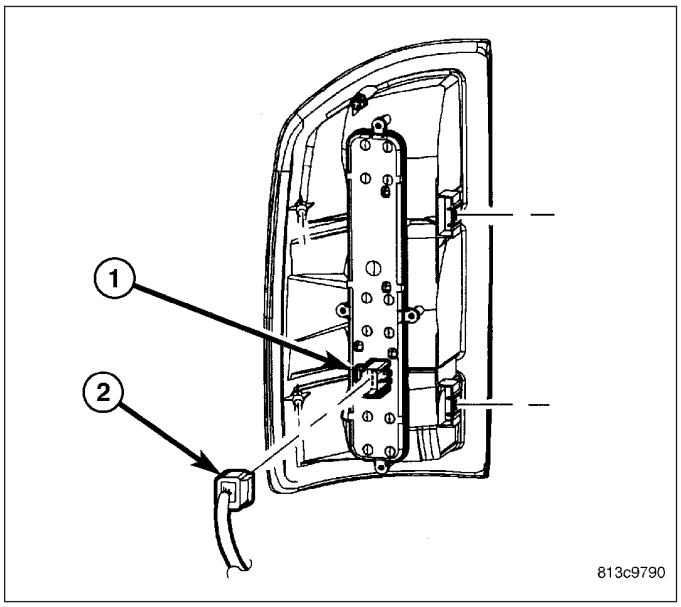

BULB - CAB & CHASSIS

NOTE: The rear lamp unit contains two bulbs: the park/turn/brake/license plate, and the backup. The service procedures for each bulb are the same, only the bulb sizes and types may differ.

1. Disconnect and isolate the battery negative cable.
2. Remove the four screws (1) that secure the lens (2) to the rear lamp unit housing (5).
3. Push the backup lamp bulb (4), or the park/turn/brake/license plate bulb (7) slightly into its socket (3) or (6), then rotate the bulb counterclockwise about 30 degrees to unlock it.
4. Pull the base of the bulb straight out of the socket.

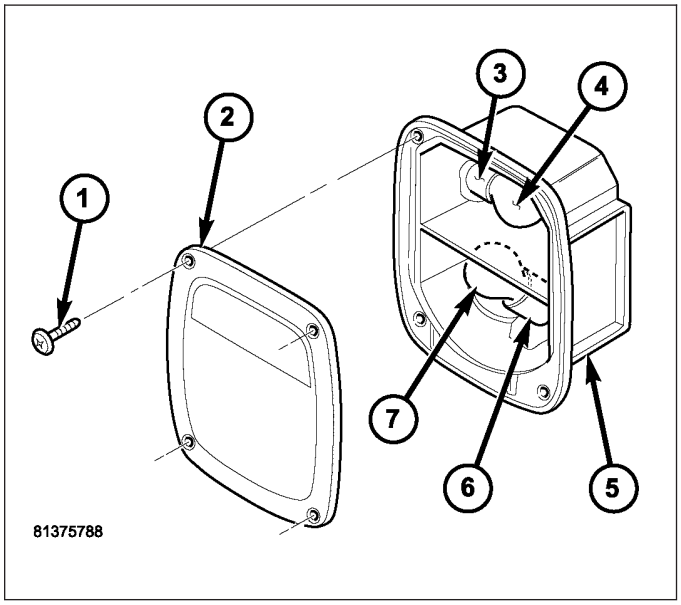

LAMP - CAB & CHASSIS

1. Disconnect and isolate the negative battery cable.
2. Disconnect the rear lamp unit pigtail wire connector (2) from the chassis wire harness connector for the rear lamp.
3. Disengage the rear lamp unit pigtail wire and connector from the rear frame rail.
4. Remove the two nuts (1) that secure the studs (3) on the rear lamp unit housing (4) to the lamp mounting bracket (5) on the rear frame rail.
5. For the left side lamp only, remove the license plate mounting bracket (6) from the rear lamp unit studs.
6. Remove the rear lamp unit from the mounting bracket while feeding the pigtail wire and connector through the bracket.

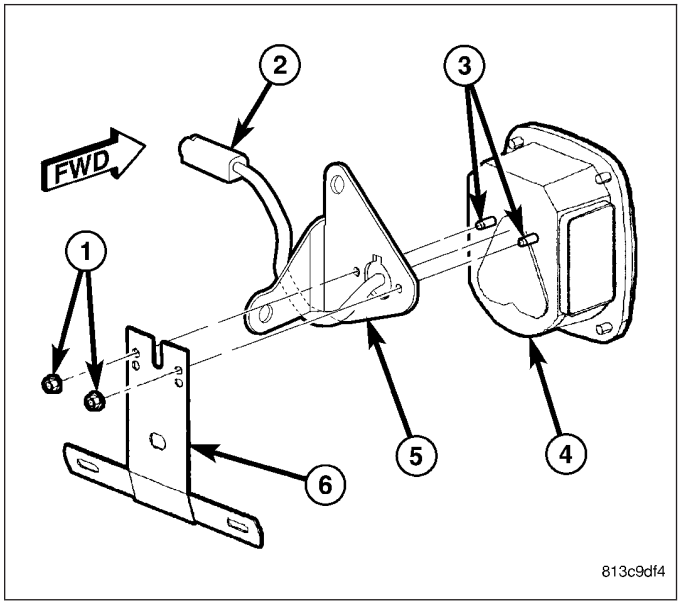

INSTALLATION

BULB - PICK-UP

CAUTION: Always use the correct bulb size and type for replacement. An incorrect bulb size or type may overheat and cause damage to the lamp, the socket and/or the lamp wiring.

NOTE: The rear lamp unit contains three bulbs: park/turn, park/brake/side marker, and backup. The service procedures for each bulb are the same, only the bulb sizes and types may differ.

1. Align the base of the backup (1), park/brake/side marker (2), or park/turn (3) lamp bulb with the appropriate socket in the socket plate (5).
2. Push the bulb straight into the socket until the base is firmly seated.
3. Be certain that a rubber sealing washer (4) is properly installed and in good condition around the base of each bulb on the socket plate.

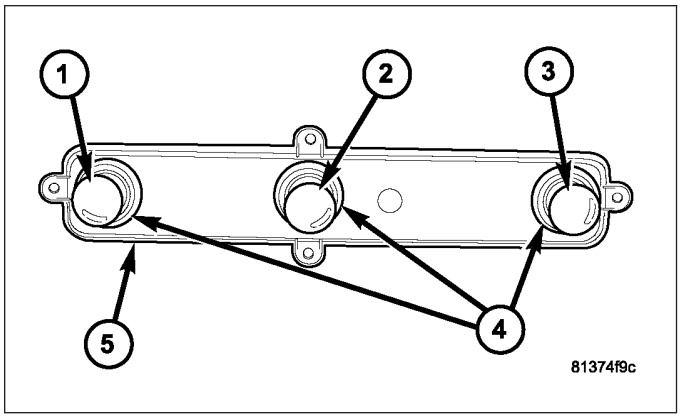

4. Align the socket plate (2) and bulbs with the openings on the back of the rear lamp unit housing (1).
5. Insert the socket plate and bulbs straight into the housing until the plate is firmly seated.
6. Install and tighten the four screws (3) that secure the socket plate to the housing. Tighten the screws to 1 N·m (12 in. lbs.).
7. Reinstall the rear lamp unit onto the end of the quarter panel. (Refer to 8 - ELECTRICAL/LAMPS/LIGHTING - EXTERIOR/REAR LAMP - INSTALLATION - PICK-UP).
8. Reconnect the battery negative cable.

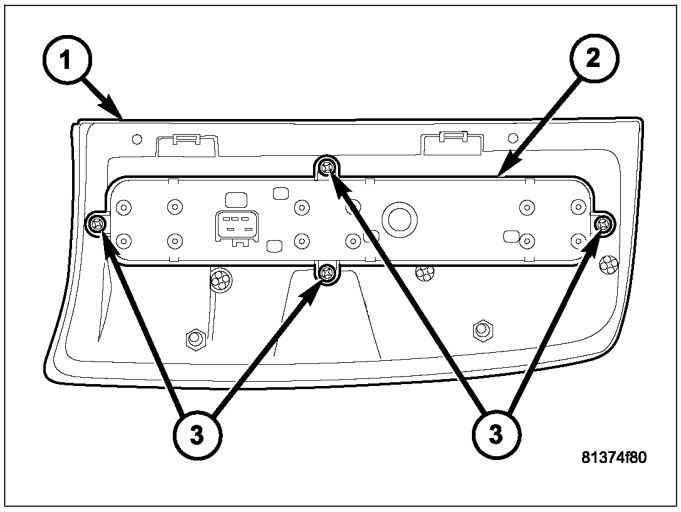

LAMP - PICK-UP

1. Check to be certain that the two round clips (3) are in good condition and properly installed in the outer box side panel.
2. Position the rear lamp unit (4) to the lamp opening of the outer box side panel.

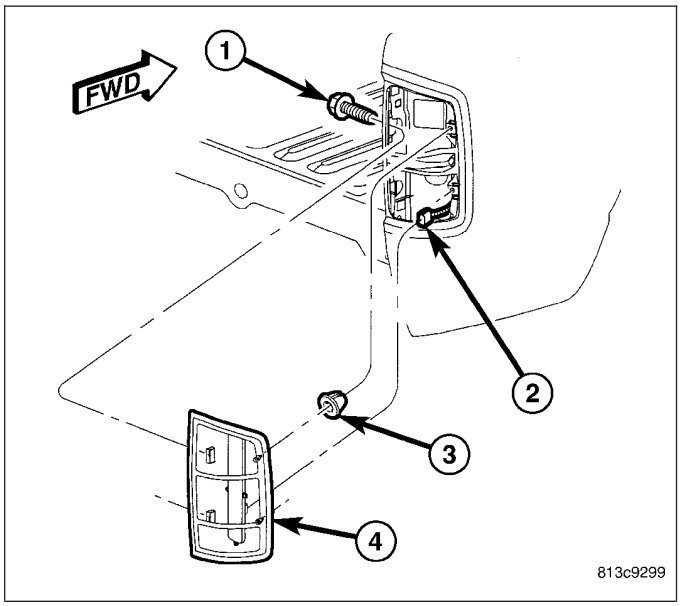

3. Reconnect the wire harness connector (2) to the lamp socket plate connector (1) and engage the lock feature.
4. Align the two snap posts on the outboard side of the rear lamp housing with the two round clips in the outer box side panel.
5. Using hand pressure, push firmly and evenly on the outboard side of the lamp until both snap studs snap into the round clips.
6. Install and tighten the two screws (1) (upper screw first) that secure the rear lamp unit to the side jamb of the tailgate opening. Tighten the screws to 2 N·m (19 in. lbs.).
7. Close the tailgate.
8. Reconnect the battery negative cable.

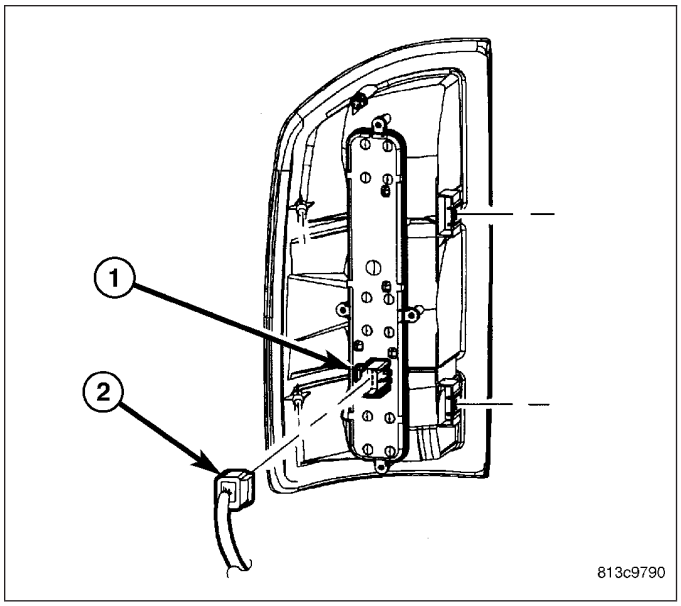

BULB - CAB & CHASSIS

CAUTION: Always use the correct bulb size and type for replacement. An incorrect bulb size or type may overheat and cause damage to the lamp, the socket and/or the lamp wiring.

NOTE: The rear lamp unit contains two bulbs: the park/turn/brake/license plate, and the backup. The service procedures for each bulb are the same, only the bulb sizes and types may differ.

1. Align the base of the backup lamp bulb (4), or the park/turn/brake/license plate lamp bulb (7) with its socket (3) or (6).
2. Push the bulb straight into the socket until the base is firmly seated, then rotate the bulb clockwise about 30 degrees to lock it into place.
3. Position the lens (2) to the rear lamp unit housing (5).
4. Install and tighten the four screws (1) that secure the lens to the housing. Tighten the screws to 2 N·m (20 in. lbs.).
5. Reconnect the battery negative cable.

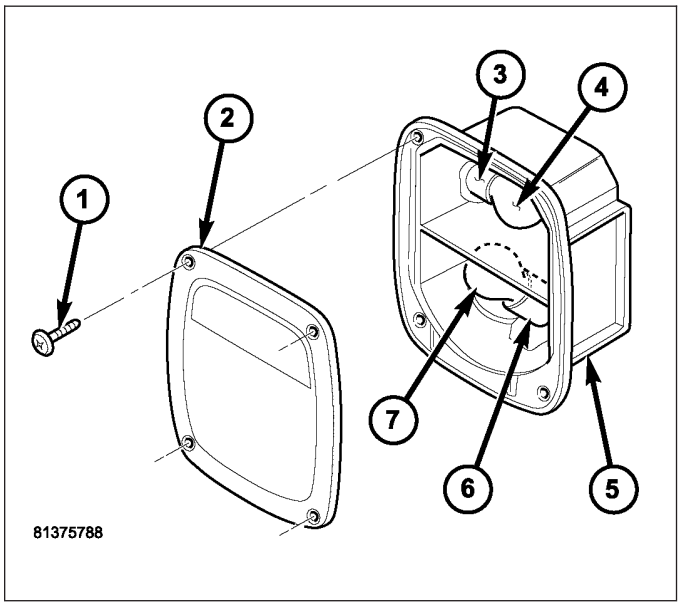

LAMP - CAB & CHASSIS

1. Feed the pigtail wire and connector (2) of the rear lamp unit (4) through the lamp mounting bracket and position the lamp studs (3) through the mounting holes in the bracket.
2. For the left side lamp only, position the license plate mounting bracket (6) onto the rear lamp unit studs.
3. Install and tighten the two nuts (1) that secure the rear lamp unit housing to the mounting bracket. Tighten the nuts to 5 N·m (47 in. lbs.).
4. Reconnect the rear lamp unit pigtail wire connector to the chassis wire harness connector for the rear lamp.
5. Engage the rear lamp connector retainer into the rear frame rail.
6. Reconnect the negative battery cable.

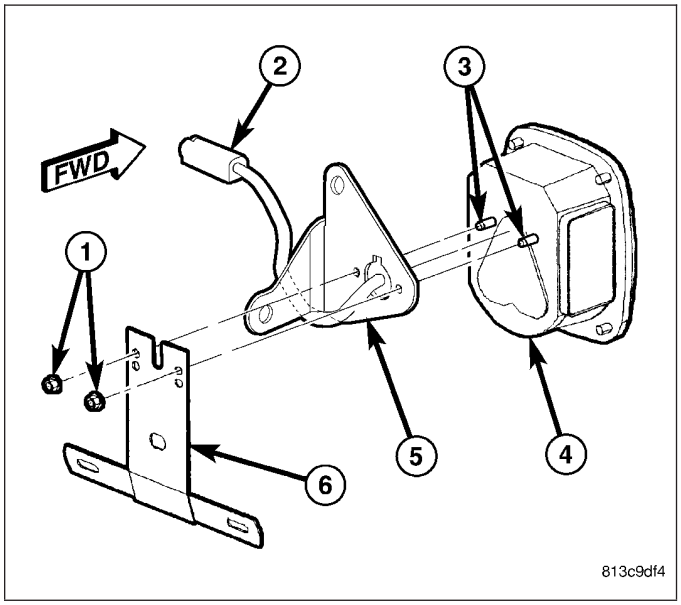

TRAILER TOW CONNECTOR

REMOVAL

1. Disconnect and isolate the battery negative cable.
2. Reach behind the center of the rear bumper to access and disconnect the connector (2) of the body wire harness from the 7-way trailer tow connector (1).

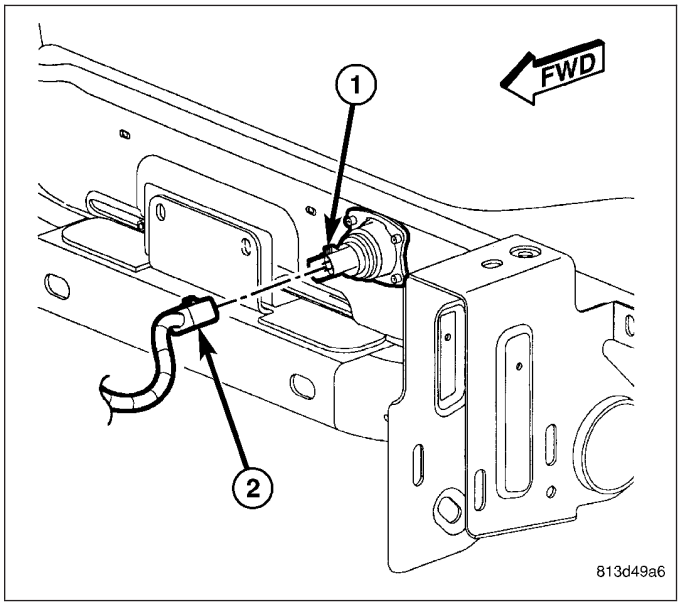

3. Remove the four screws (3) that secure the 7-way trailer tow connector (2) to the tapping plate (4) behind the rear bumper.
4. Remove the 7-way trailer tow connector from the face of the rear bumper and the tapping plate from behind the rear bumper.

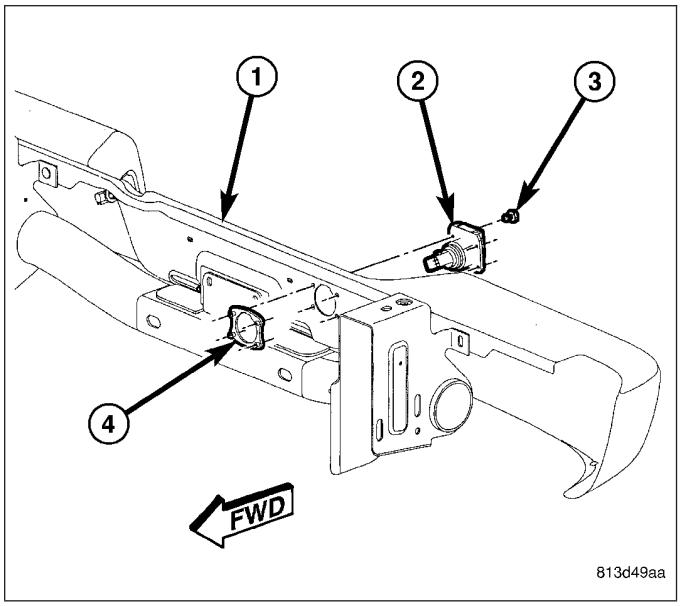

INSTALLATION

1. Position the 7-way trailer tow connector (2) into the mounting hole on the face of the rear bumper (1).
2. Position the tapping plate (4) over the 7-way trailer tow connector on the back of the rear bumper.
3. Install and tighten the four screws (3) that secure the 7-way trailer tow connector to the tapping plate. Tighten the screws to 2 N·m (17 in. lbs.).

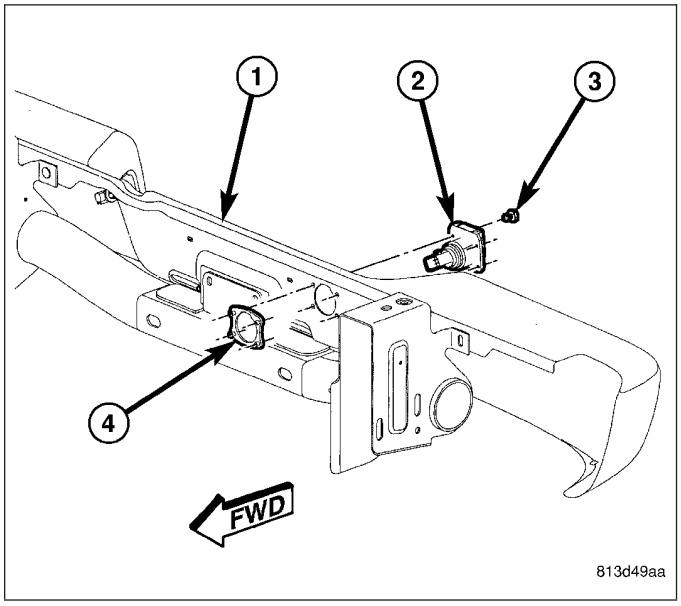

4. Reach behind the center of the rear bumper to access and reconnect the connector (2) of the body wire harness to the 7-way trailer tow connector (1).
5. Reconnect the battery negative cable.

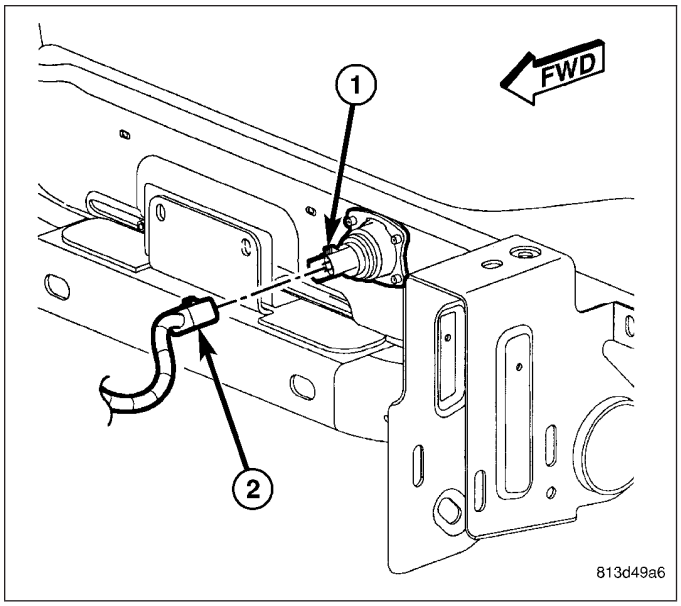

RELAY-TRAILER TOW

DESCRIPTION

All vehicles are equipped with two trailer tow relays, one for the trailer right turn and brake lamps and the other for the trailer left turn and brake lamps. The trailer tow relays are conventional International Standards Organization (ISO) micro relays. Relays conforming to the ISO specifications have common physical dimensions, current capacities, terminal patterns, and terminal functions. Each relay is contained within a small, rectangular, molded plastic housing and is connected to all of the required inputs and outputs through five integral male spade-type terminals that extend from the relay base plate.

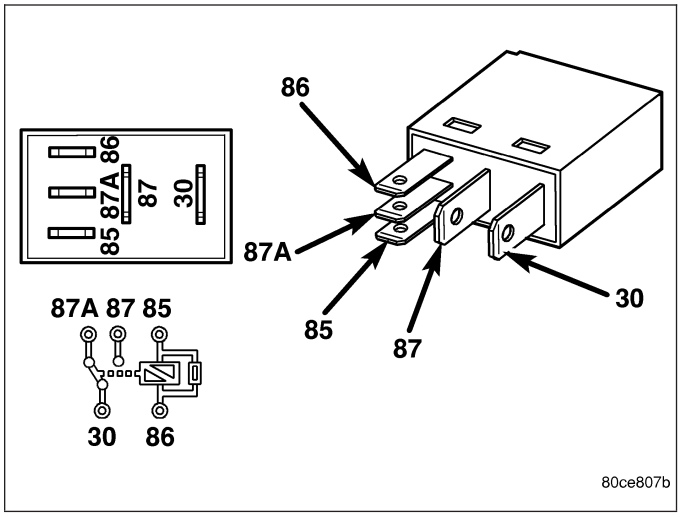

The trailer tow relays are located in the Power Distribution Center (PDC) in the engine compartment near the battery. Refer to the layout label on the underside of the PDC cover for specific relay cavity assignment information. A trailer tow relay cannot be adjusted or repaired and, if faulty or damaged, the unit must be replaced.

OPERATION

The trailer tow relays are electromechanical switches that use a low current input from the Front Control Module (FCM) (also referred to as the Integrated Power Module/IPM) to control a high current output to trailer brake and turn signal lamps. Within each relay are an electromagnetic coil, a movable contact and two fixed contact points. A resistor is connected in parallel with the coil, and helps to dissipate voltage spikes and electromagnetic interference that can be generated as the field of the relay coil collapses.

The movable common supply contact point is held against the fixed normally closed contact point by spring pressure. When the relay coil is energized, an electromagnetic field is produced by the coil windings. This field draws the movable contact away from the normally closed contact, and holds it against the normally open contact. When the relay coil is de-energized, spring pressure returns the movable contact back against the normally closed contact.

The inputs and outputs of the trailer tow relays include:

- **Common Supply Terminal (30)** - The common feed terminal is connected to a fused B(+) circuit at all times.

- **Coil Ground Terminal (85)** - The coil ground terminal is connected to a fused B(+) circuit at all times.
- **Coil Battery Terminal (86)** - The coil battery terminal is connected to a control output of the FCM through a right or left trailer tow turn relay control circuit. The FCM controls trailer brake and turn lamp operation by controlling a ground path through this circuit.
- **Normally Open Terminal (87)** - The normally open terminal is connected to the trailer lamps through a right or left trailer tow turn relay output circuit and provides battery voltage to the right or left trailer brake and turn lamps whenever the relay is energized.
- **Normally Closed Terminal (87A)** - The normally closed terminal is not connected to any circuit in this application, but will have battery voltage present whenever the relay is de-energized.

The trailer tow relays can be diagnosed using conventional diagnostic tools and methods. Refer to the appropriate wiring information.

WIRING-TRAILER TOW

DESCRIPTION

The rear body wire harness on the rear frame (1) of all vehicles is equipped with a take out with a standard, light-duty 4-pin trailer tow connector (2) that is secured to the top of the trailer hitch platform (4) behind the rear bumper. Vehicles equipped with an optional factory-installed trailer towing package have a second take out with a connector (3) that plugs into a receptacle in the back of a heavy duty, sealed, 7-pin trailer tow connector that is located near the center of the rear bumper.

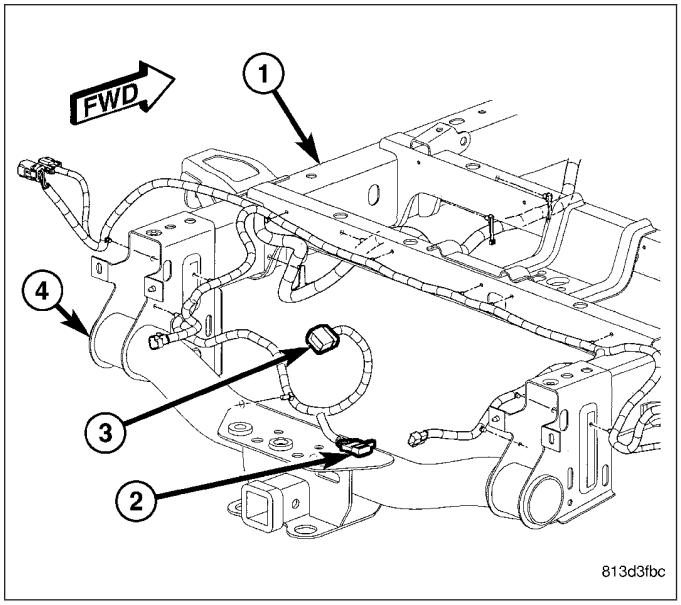

Vehicles equipped with the trailer tow package also include an electric trailer brake wiring provision that terminates at a connector located on top of the large body harness connection under the instrument panel to the left of the brake pedal, as well as an electric trailer brake pigtail harness and an instruction card (1) that are stored in the glove box (2) when the vehicle is shipped from the factory.

Refer to the appropriate wiring information. The wiring information includes wiring diagrams, proper wire and connector repair procedures, further details on wire harness routing and retention, as well as pin-out and location views for the various wire harness connectors, splices and grounds.

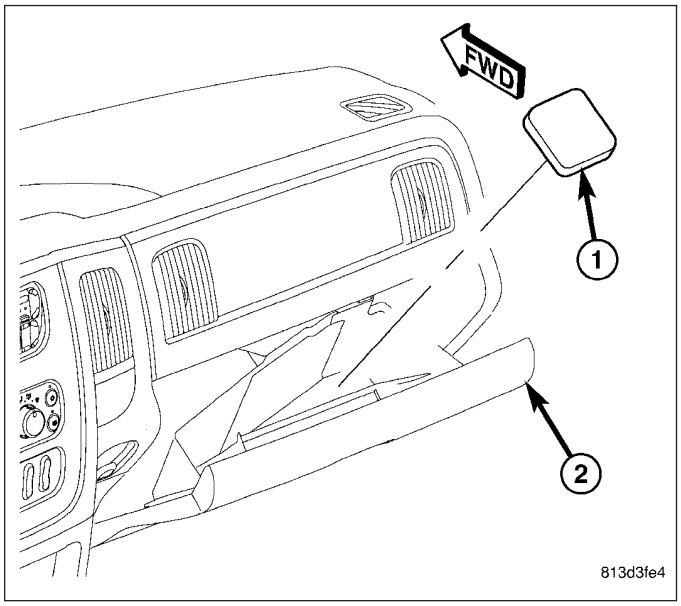

OPERATION

The standard 4-pin trailer tow connector contains the following vehicle circuits: park/tail lamps, left stop/turn lamp, right stop/turn lamp, and ground. The optional trailer towing package 7-way connector contains the same circuits as the 4-pin connector plus the following additional circuits: backup lamp, trailer battery and electric brake.

If an aftermarket electric brake controller is used, the electric brake pigtail harness supplied will make installation easier. The connection (blue 4-way connector) for the harness is located under the instrument panel to the left of the brake pedal on top of the large body harness connection. Refer to the appropriate wiring information.

The battery line of this harness may be used to charge the trailer battery. However, a battery isolation unit is not supplied and the trailer battery may discharge the truck battery while the engine is not running. The battery line is protected by a fuse or a circuit breaker. Refer to the owner's manual in the vehicle glove box for type, location, and ampere rating of the fuse or circuit breaker.

CAM-TURN SIGNAL CANCEL

DESCRIPTION

The turn signal cancel cam (3) is concealed within the steering column. The turn signal cancel cam consists of two lobes on a molded plastic ring that is snapped into the lower hub of the clockspring rotor. The clockspring mechanism provides turn signal cancellation as well as a constant electrical connection between the horn switch, driver airbag, speed control switches, and remote radio switches on the steering wheel and the instrument panel wire harness on the steering column. The housing of the clockspring (2) is secured to the multi-function switch mounting housing on the steering column and remains stationary. The rotor of the clockspring, including the turn signal cancel cam lobes rotate with the steering wheel.

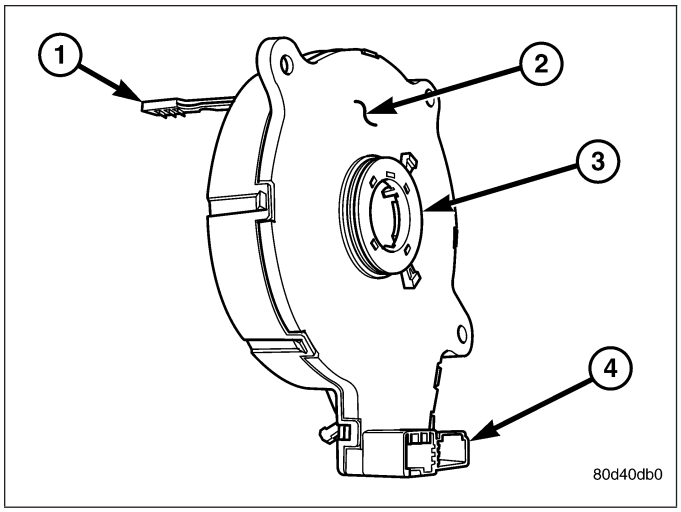

The turn signal cancel cam is serviced as a unit with the clockspring and cannot be repaired. If faulty or damaged, the entire clockspring unit must be replaced. (Refer to 8 - ELECTRICAL/RESTRAINTS/CLOCKSPRING - REMOVAL).

OPERATION

When the multi-function switch control stalk is moved to a latched turn signal position, a turn signal cancel actuator is extended from the inside surface of the switch housing toward the turn signal cancel cam. As the steering wheel is rotated to complete the turn, one of the two cam lobes will contact the actuator, automatically cancelling the turn signal event and releasing the latched multi-function switch control stalk to the neutral position.

LAMP-UNDERHOOD

REMOVAL

BULB

1. Disconnect and isolate the battery negative cable.
2. Insert a small flat bladed tool in the access slot between the underhood lamp housing (1) and the lamp lens (2).
3. Gently pry the lens until it unsnaps from the lamp housing.

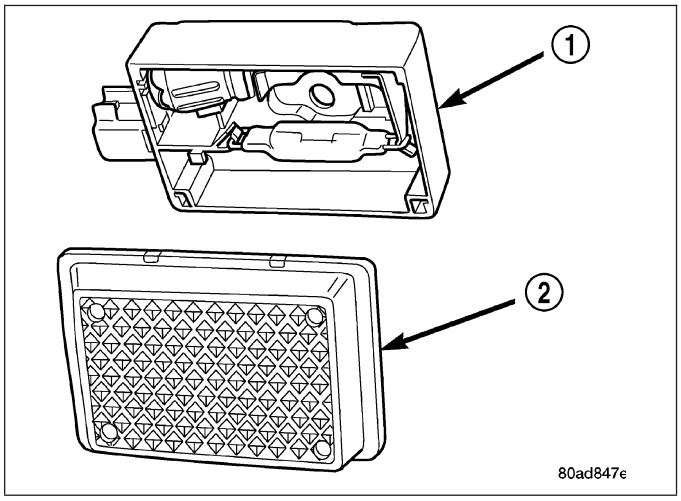

4. Depress the bulb holder (2) inward far enough to disengage the terminals (3) of the bulb (1) and remove the bulb from the lamp housing (4).

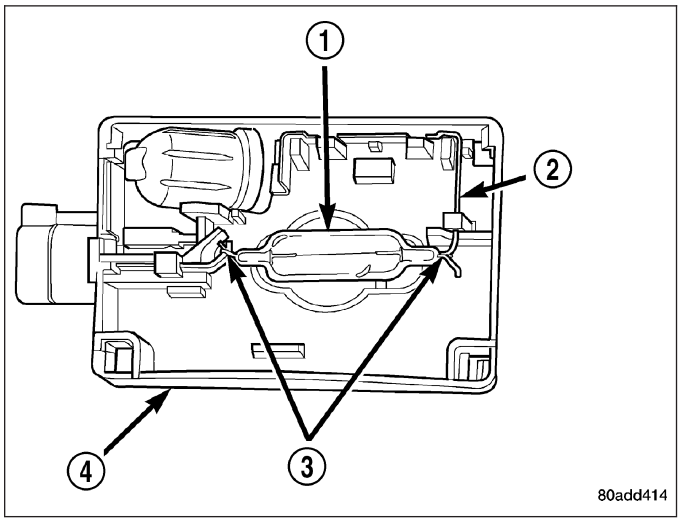

LAMP

1. Disconnect and isolate the battery negative cable.
2. Disconnect the headlamp and dash jumper harness connector (2) from the underhood lamp (3) connector receptacle.
3. Remove the screw (4) that secures the underhood lamp mounting bracket to the inner hood panel (1).
4. Remove the underhood lamp and bracket from the inner hood panel as a unit.

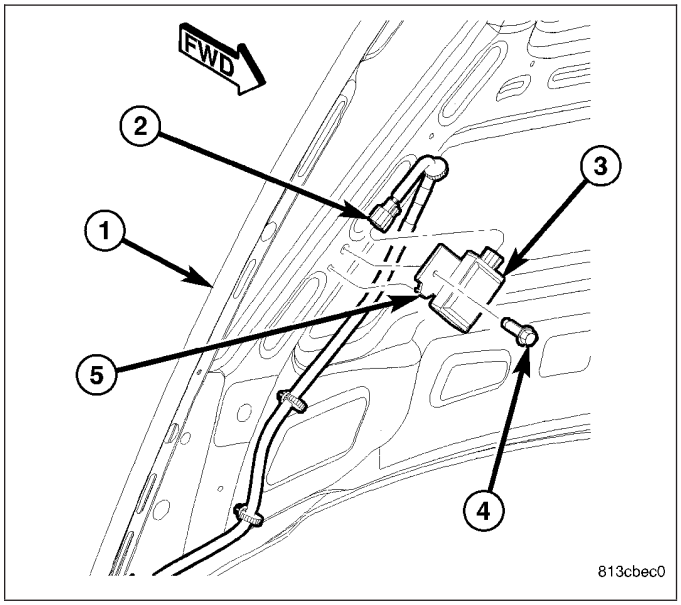

INSTALLATION

BULB

CAUTION: Always use the correct bulb size and type for replacement. An incorrect bulb size or type may overheat and cause damage to the lamp, the socket and/or the lamp wiring.

1. Engage one of the terminals (3) of the bulb (1) over the bulb holder closest to the connector receptacle on the underhood lamp housing (4).
2. Depress the other bulb holder (2) inward far enough to engage the remaining bulb terminal.

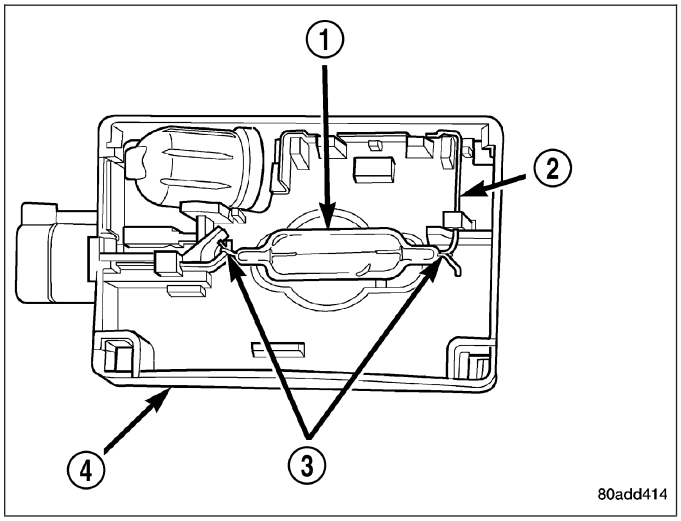

3. Position the lens (2) over the lamp housing and use hand pressure to press the lens firmly and evenly onto the housing until it snaps into place.
4. Reconnect the battery negative cable.

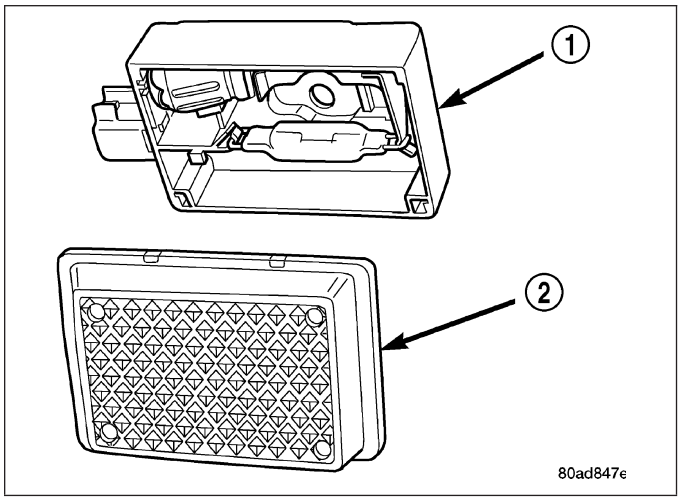

LAMP

1. Position the underhood lamp and bracket (3) to the underside of the hood panel (1) as a unit. Be certain that the locating tab (5) on the bracket is engaged into the locating hole in the hood inner panel.
2. Install the tighten the screw (4) that secures the underhood lamp mounting bracket to the inner hood panel. Tighten the screw to 5 N·m (45 in. lbs.).
3. Reconnect the headlamp and dash jumper harness connector (2) to the underhood lamp connector receptacle.
4. Reconnect the battery negative cable.

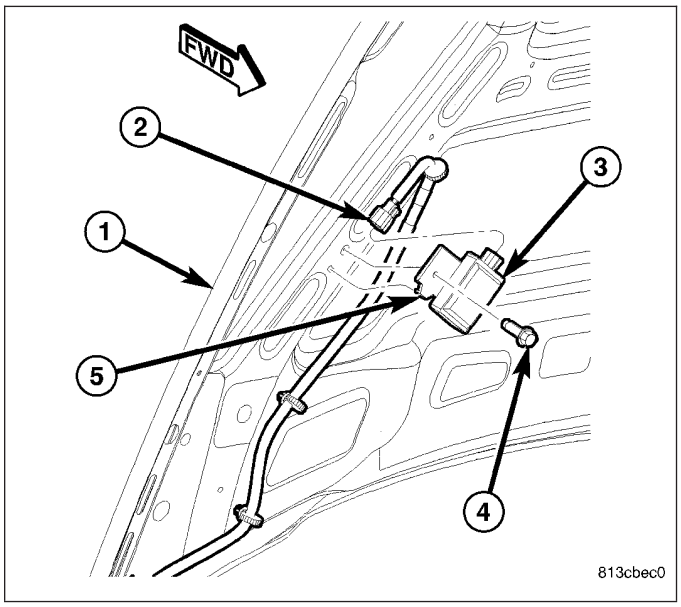

LAMPS/LIGHTING - INTERIOR - ELECTRICAL DIAGNOSTICS

TABLE OF CONTENTS

page

LAMPS/LIGHTING - INTERIOR - ELECTRICAL DIAGNOSTICS
CAUTION
MIC-CARGO LAMP OUTPUT CIRCUIT SHORTED OR OPEN 175
*DRIVER DOOR AJAR CIRCUIT OPEN 178
*DRIVER DOOR AJAR CIRCUIT SHORTED TO GROUND 181
*LEFT REAR DOOR AJAR CIRCUIT OPEN . 183
*LEFT REAR DOOR AJAR CIRCUIT SHORTED TO GROUND 186
*PASSENGER DOOR AJAR CIRCUIT OPEN . 188

page

*PASSENGER DOOR AJAR CIRCUIT SHORTED TO GROUND 191
*RIGHT REAR DOOR AJAR CIRCUIT OPEN 193
*RIGHT REAR DOOR AJAR CIRCUIT SHORTED TO GROUND 196
MIC-COURTESY LAMP OUTPUT CIRCUIT SHORTED OR OPEN 198
MIC-GLOVEBOX-MAP LAMP OUTPUT CIRCUIT SHORTED OR OPEN 201
SCHEMATICS AND DIAGRAMS 204

LAMPS/LIGHTING - INTERIOR - ELECTRICAL DIAGNOSTICS

CAUTION

MIC-CARGO LAMP OUTPUT CIRCUIT SHORTED OR OPEN

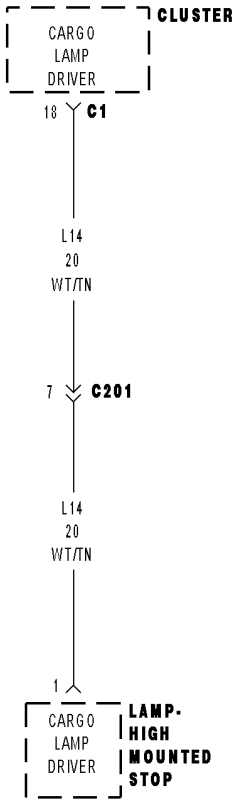

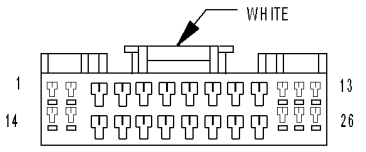

CLUSTER C1

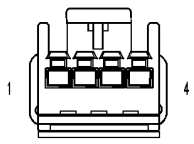

LAMP-HIGH MOUNTED STOP

8131895a

MIC-CARGO LAMP OUTPUT CIRCUIT SHORTED OR OPEN (CONTINUED)

For the Interior Lighting system circuit diagram (Refer to 8 - ELECTRICAL/LAMPS/LIGHTING - INTERIOR - SCHEMATICS AND DIAGRAMS).

For a complete wiring diagram **Refer to Section 8W**.

- **When Monitored:**
  With the ignition on
- **Set Condition:**
  The CCN detects a short condition

Possible Causes
HEADLAMP SWITCH
CARGO LAMP OUTPUT CIRCUIT SHORT TO GROUND
INSTRUMENT CLUSTER

1. INTERMITTENT CONDITION

Turn the ignition on.
With the DRBIII®, clear all MIC DTC's.
Turn the Cargo Lamps on.
With the DRBIII®, read the DTC information.

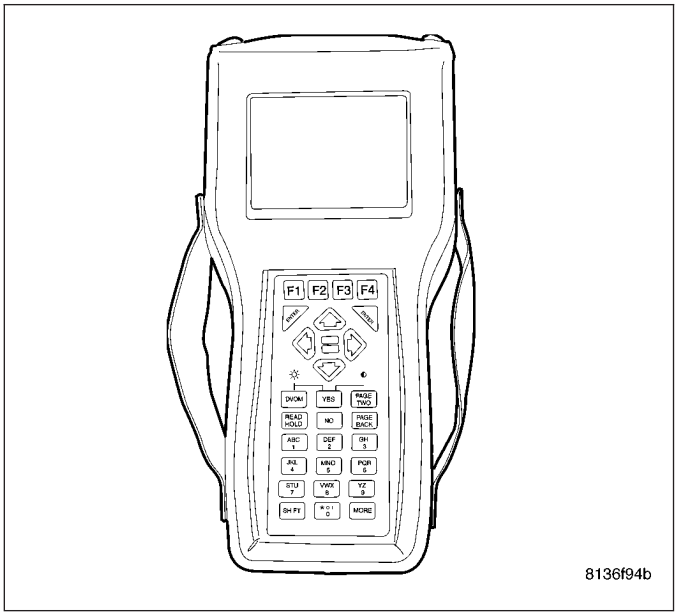

Does the DRBIII® read: Cargo Lamp Output Circuit Short/Open?

Yes >> Go To 2

No >> The condition that caused the symptom is currently not present. Inspect the related wiring for a possible intermittent condition. Look for any chafed, pierced, pinched, or partially broken wires.
Perform BODY VERIFICATION TEST - VER 1.

2. HEADLAMP SWITCH

Disconnect the Headlamp Switch connector.
Turn the ignition on.

Does the DRBIII® display Headlamp Switch 5.0 volts?

Yes >> Replace the Headlamp Switch.
Perform BODY VERIFICATION TEST - VER 1.

No >> Go to 3

MIC-CARGO LAMP OUTPUT CIRCUIT SHORTED OR OPEN (CONTINUED)

3. CARGO LAMP OUTPUT CIRCUIT SHORT TO GROUND

Turn the ignition off.
Disconnect the Headlamp Switch connector.
Disconnect the Instrument Cluster C1 connector.
Measure the resistance of the Cargo Lamp Output circuit to ground.

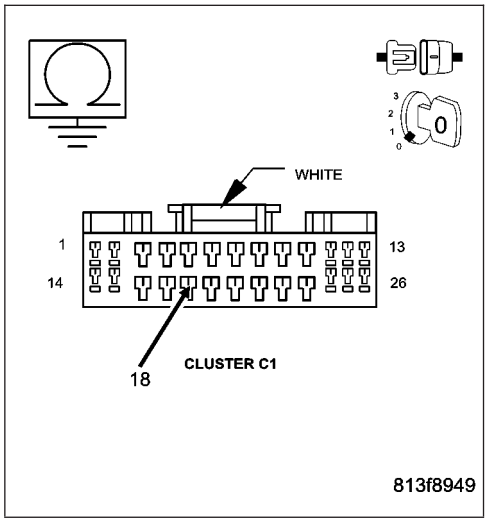

Is the resistance below 5.0 ohms?

Yes >> Repair the Cargo Lamp Output circuit..
Perform BODY VERIFICATION TEST - VER 1.

No >> Replace the Instrument Cluster.
Perform BODY VERIFICATION TEST - VER 1.

*DRIVER DOOR AJAR CIRCUIT OPEN

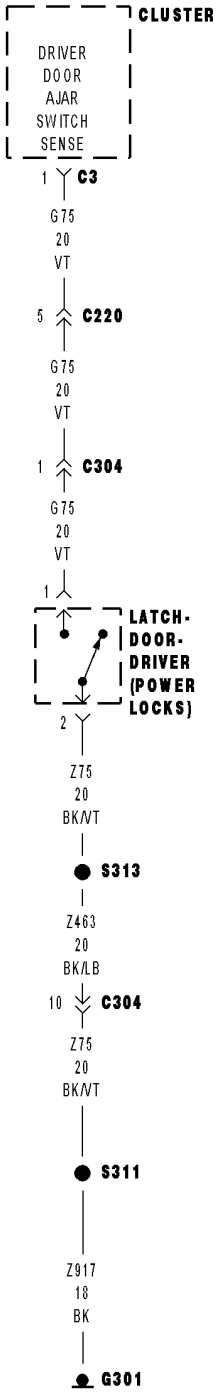

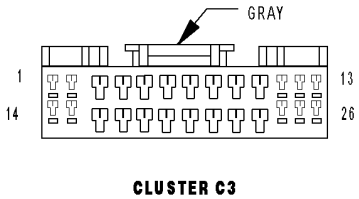

CLUSTER C3

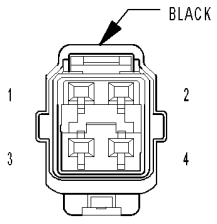

LATCH-DOOR-DRIVER
(POWER LOCKS)

813de728

***DRIVER DOOR AJAR CIRCUIT OPEN (CONTINUED)**

For the Door Ajar System circuit diagram (Refer to 8 - ELECTRICAL/LAMPS/LIGHTING - INTERIOR - SCHEMATICS AND DIAGRAMS).

For a complete wiring diagram **Refer to Section 8W**.

Possible Causes
OPEN (Z75) DRIVER DOOR AJAR SWITCH GROUND CIRCUIT
OPEN (G75) DRIVER DOOR AJAR SWITCH SENSE CIRCUIT
OPEN DRIVER DOOR AJAR SWITCH
INSTRUMENT CLUSTER

Diagnostic Test

1. OPEN DRIVER DOOR AJAR SWITCH

Disconnect the Driver Door Latch connector.

Connect a jumper wire between the (G75) Sense circuit and the (Z75) Ground circuit.

With the DRBIII® in Inputs/Outputs, read the DRV DOOR AJAR SW state.

Does the DRBIII® display CLOSED?

Yes >> Replace the Driver Door Latch.
Perform BODY VERIFICATION TEST - VER 1. (Refer to 8 - ELECTRICAL/ELECTRONIC CONTROL MODULES/ FRONT CONTROL MODULE - DIAGNOSIS AND TESTING)

No >> Go To 2

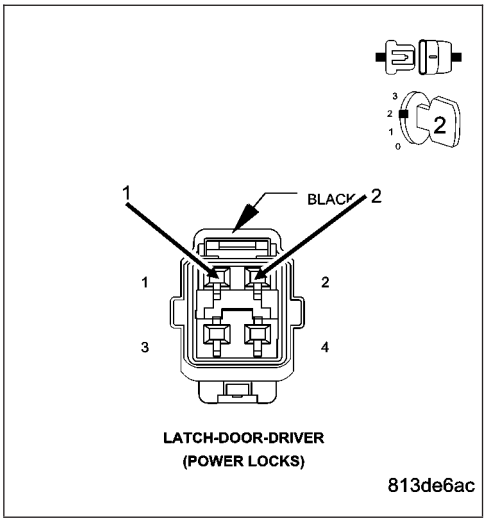

2. OPEN (Z75) DRIVER DOOR AJAR SWITCH GROUND CIRCUIT

Using a 12-volt Test Light connected to 12-volts, test the (Z75) Ground circuit in the Door Latch connector.

Does the test light illuminate brightly?

Yes >> Go To 3

No >> Repair the (Z75) Driver Door Ajar Switch Ground circuit for an open.
Perform BODY VERIFICATION TEST - VER 1. (Refer to 8 - ELECTRICAL/ELECTRONIC CONTROL MODULES/ FRONT CONTROL MODULE - DIAGNOSIS AND TESTING)

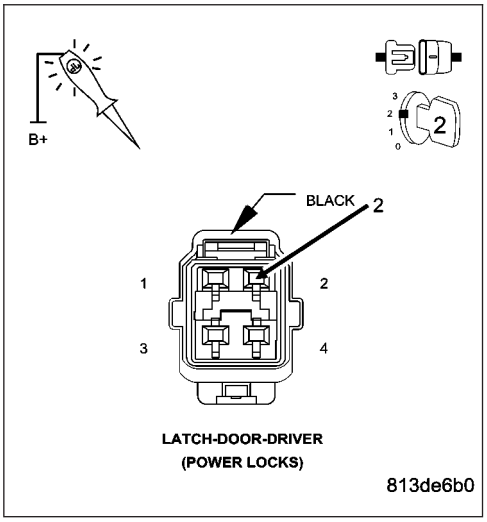

***DRIVER DOOR AJAR CIRCUIT OPEN (CONTINUED)**

3. OPEN (G75) DRIVER DOOR AJAR SWITCH SENSE CIRCUIT

Turn the ignition off.

Disconnect the Instrument Cluster C3 harness connector.

Measure the resistance of the (G75) Driver Door Ajar Switch Sense circuit between the Instrument Cluster connector and the Door Latch connector.

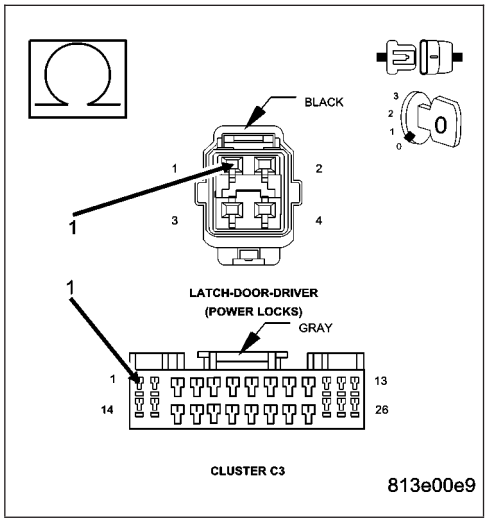

Is the resistance below 5.0 ohms?

Yes >> Replace the Instrument Cluster.
Perform BODY VERIFICATION TEST - VER 1. (Refer to 8 - ELECTRICAL/ELECTRONIC CONTROL MODULES/ FRONT CONTROL MODULE - DIAGNOSIS AND TESTING)

No >> Repair the (G75) Driver Door Ajar Switch Sense circuit for an open.
Perform BODY VERIFICATION TEST - VER 1. (Refer to 8 - ELECTRICAL/ELECTRONIC CONTROL MODULES/ FRONT CONTROL MODULE - DIAGNOSIS AND TESTING)

*DRIVER DOOR AJAR CIRCUIT SHORTED TO GROUND

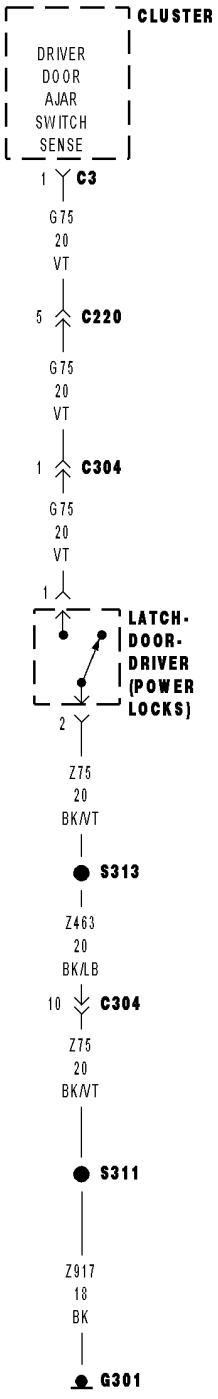

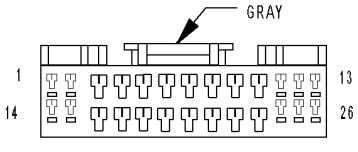

CLUSTER C3

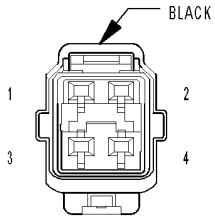

LATCH-DOOR-DRIVER (POWER LOCKS)

813de728

***DRIVER DOOR AJAR CIRCUIT SHORTED TO GROUND (CONTINUED)**

For the Door Ajar System circuit diagram (Refer to 8 - ELECTRICAL/LAMPS/LIGHTING - INTERIOR - SCHEMATICS AND DIAGRAMS).

For a complete wiring diagram **Refer to Section 8W**.

Possible Causes
(G75) DRIVER DOOR AJAR SWITCH SENSE CIRCUIT SHORT TO GROUND
DRIVER DOOR AJAR SWITCH
INSTRUMENT CLUSTER

Diagnostic Test

1. DRIVER DOOR AJAR SWITCH SHORT TO GROUND

With the DRBIII® in Inputs/Outputs, read the DRV DOOR AJAR SW state.

While monitoring the DRBIII®, disconnect the Driver Door Latch connector.

Did the Switch State change from CLOSED to OPEN?

Yes >> Replace the Driver Door Latch.
Perform BODY VERIFICATION TEST - VER 1. (Refer to 8 - ELECTRICAL/ELECTRONIC CONTROL MODULES/ FRONT CONTROL MODULE - DIAGNOSIS AND TESTING.

No >> Go To 2

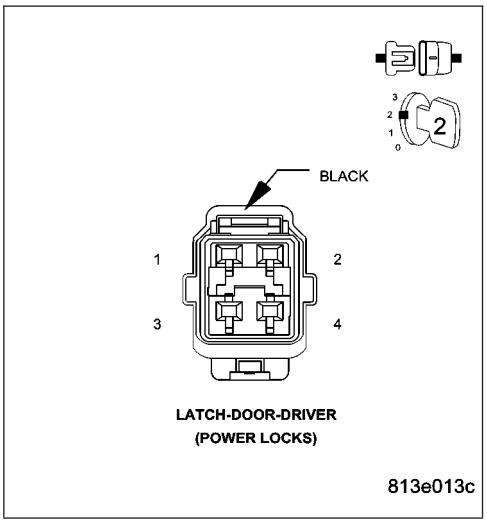

2. (G75) DRIVER DOOR AJAR SWITCH SENSE CIRCUIT SHORT TO GROUND

Turn the ignition off.

Disconnect the Instrument Cluster C3 harness connector.

Using a 12-volt test light connected to 12-volts, probe the (G75) Driver Door Ajar Switch Sense circuit and test for a short to ground.

Turn the ignition on.

Does the test light illuminate brightly?

Yes >> Repair the (G75) Driver Door Ajar Switch Sense circuit for a short to ground.
Perform BODY VERIFICATION TEST - VER 1. (Refer to 8 - ELECTRICAL/ELECTRONIC CONTROL MODULES/ FRONT CONTROL MODULE - DIAGNOSIS AND TESTING)

No >> Replace the Instrument Cluster.
Perform BODY VERIFICATION TEST - VER 1. (Refer to 8 - ELECTRICAL/ELECTRONIC CONTROL MODULES/ FRONT CONTROL MODULE - DIAGNOSIS AND TESTING).

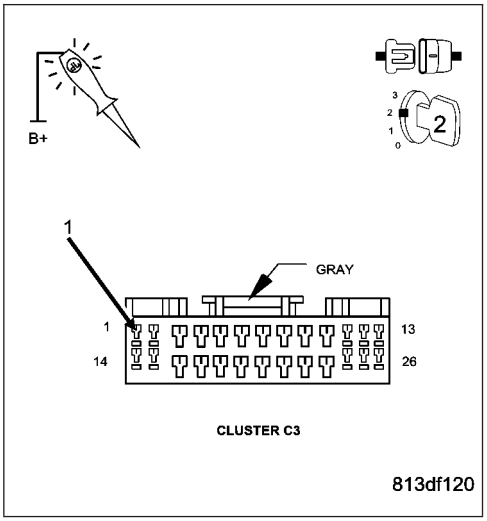

*LEFT REAR DOOR AJAR CIRCUIT OPEN

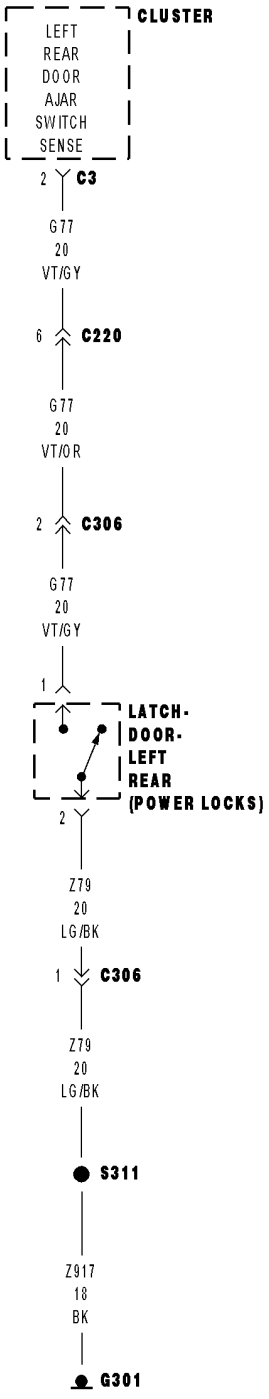

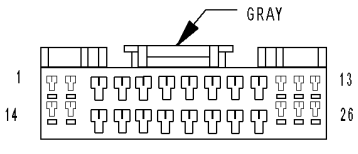

CLUSTER C3

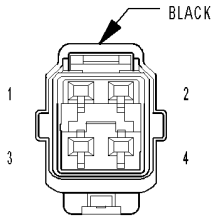

LATCH-DOOR-LEFT REAR (POWER LOCKS)

813de772

***LEFT REAR DOOR AJAR CIRCUIT OPEN (CONTINUED)**

For the Door Ajar System circuit diagram (Refer to 8 - ELECTRICAL/LAMPS/LIGHTING - INTERIOR - SCHEMATICS AND DIAGRAMS).

For a complete wiring diagram **Refer to Section 8W**.

Possible Causes
OPEN (Z79) LEFT REAR DOOR AJAR SWITCH GROUND CIRCUIT
OPEN (G77) LEFT REAR DOOR AJAR SWITCH SENSE CIRCUIT
OPEN LEFT REAR DOOR AJAR SWITCH
INSTRUMENT CLUSTER

Diagnostic Test

1. OPEN LEFT REAR DOOR AJAR SWITCH

Disconnect the Left Rear Door Latch connector.

Connect a jumper wire between the (G77) Sense circuit and the Ground circuit.

With the DRBIII® in Inputs/Outputs, read the L R DOOR AJAR SW state.

Does the DRBIII® display CLOSED?

Yes >> Replace the Left Rear Door Latch.
Perform BODY VERIFICATION TEST - VER 1. (Refer to 8 - ELECTRICAL/ELECTRONIC CONTROL MODULES/ FRONT CONTROL MODULE - DIAGNOSIS AND TESTING)

No >> Go To 2

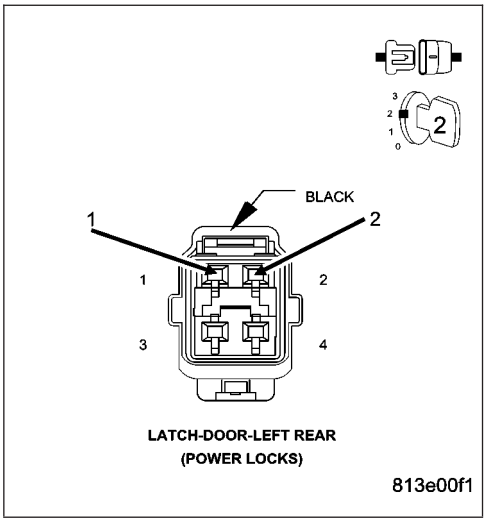

2. OPEN (Z79) LEFT REAR DOOR AJAR SWITCH GROUND CIRCUIT

Using a 12-volt Test Light connected to 12-volts, test the (Z79) Ground circuit in the Door Latch connector.

Does the test light illuminate brightly?

Yes >> Go To 3

No >> Repair the (Z79) Left Rear Door Ajar Switch Ground circuit for an open.
Perform BODY VERIFICATION TEST - VER 1. (Refer to 8 - ELECTRICAL/ELECTRONIC CONTROL MODULES/ FRONT CONTROL MODULE - DIAGNOSIS AND TESTING)

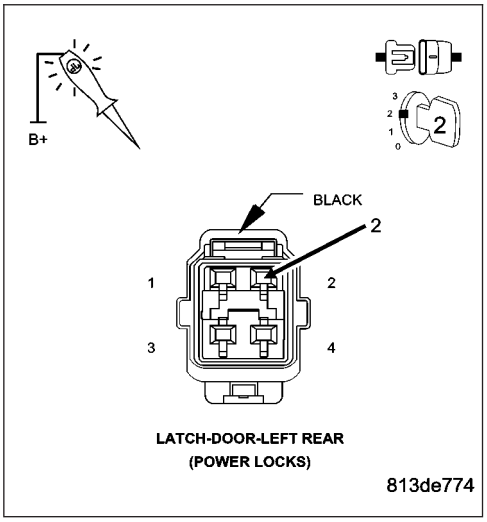

***LEFT REAR DOOR AJAR CIRCUIT OPEN (CONTINUED)**

3. OPEN (G77) LEFT REAR DOOR AJAR SWITCH SENSE CIRCUIT

Turn the ignition off.

Disconnect the Instrument Cluster C3 harness connector.

Measure the resistance of the (G77) Left Rear Door Ajar Switch Sense circuit between the Instrument Cluster connector and the Door Latch connector.

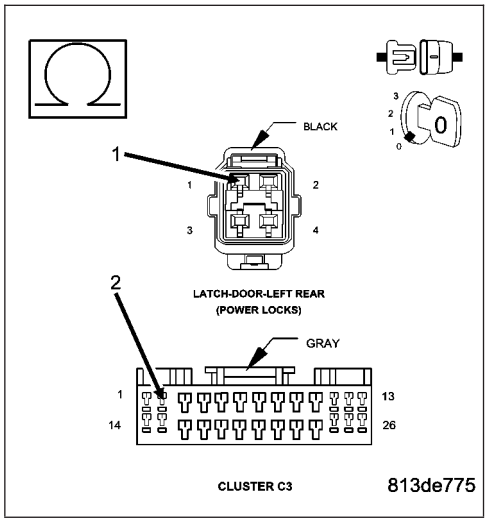

Is the resistance below 5.0 ohms?

Yes >> Replace the Instrument Cluster.
Perform BODY VERIFICATION TEST - VER 1. (Refer to 8 - ELECTRICAL/ELECTRONIC CONTROL MODULES/ FRONT CONTROL MODULE - DIAGNOSIS AND TESTING)

No >> Repair the (G77) Left Rear Door Ajar Switch Sense circuit for an open.
Perform BODY VERIFICATION TEST - VER 1. (Refer to 8 - ELECTRICAL/ELECTRONIC CONTROL MODULES/ FRONT CONTROL MODULE - DIAGNOSIS AND TESTING)

*LEFT REAR DOOR AJAR CIRCUIT SHORTED TO GROUND

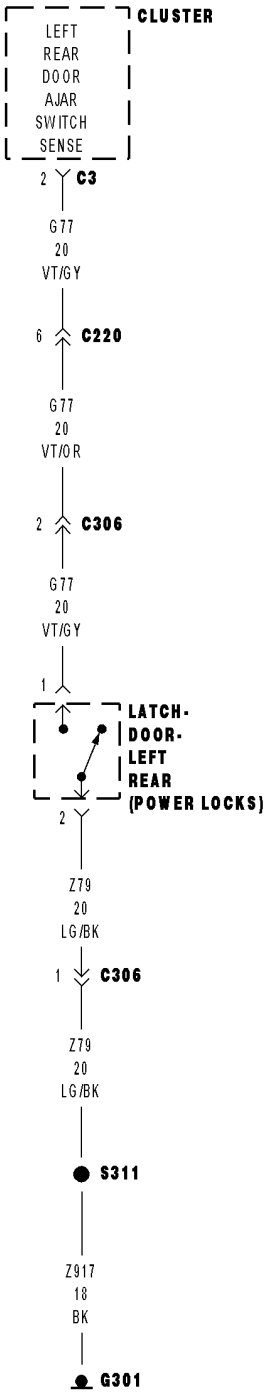

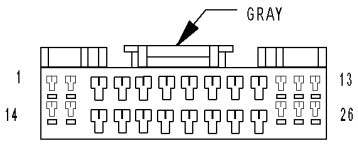

CLUSTER C3

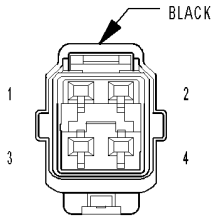

LATCH-DOOR-LEFT REAR (POWER LOCKS)

813de772

***LEFT REAR DOOR AJAR CIRCUIT SHORTED TO GROUND (CONTINUED)**

For the Door Ajar System circuit diagram (Refer to 8 - ELECTRICAL/LAMPS/LIGHTING - INTERIOR - SCHEMATICS AND DIAGRAMS).

For a complete wiring diagram **Refer to Section 8W**.

Possible Causes
(G77) LEFT REAR DOOR AJAR SWITCH SENSE CIRCUIT SHORT TO GROUND
LEFT REAR DOOR AJAR SWITCH
INSTRUMENT CLUSTER

Diagnostic Test

1. LEFT REAR DOOR AJAR SWITCH SHORT TO GROUND

With the DRBIII® in Inputs/Outputs, read the L R DOOR AJAR SW state.

While monitoring the DRBIII®, disconnect the Left Rear Door Latch connector.

Did the Switch State change from CLOSED to OPEN?

Yes >> Replace the Left Rear Door Latch.
Perform BODY VERIFICATION TEST - VER 1. (Refer to 8 - ELECTRICAL/ELECTRONIC CONTROL MODULES/ FRONT CONTROL MODULE - DIAGNOSIS AND TESTING.

No >> Go To 2

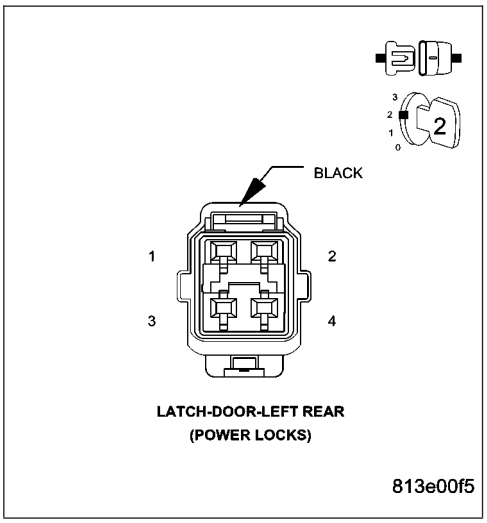

2. (G77) LEFT REAR DOOR AJAR SWITCH SENSE CIRCUIT SHORT TO GROUND

Turn the ignition off.

Disconnect the Instrument Cluster C3 harness connector.

Using a 12-volt test light connected to 12-volts, probe the (G77) Left Rear Door Ajar Switch Sense circuit and test for a short to ground.

Turn the ignition on.

Does the test light illuminate brightly?

Yes >> Repair the (G77) Left Rear Door Ajar Switch Sense circuit for a short to ground.
Perform BODY VERIFICATION TEST - VER 1. (Refer to 8 - ELECTRICAL/ELECTRONIC CONTROL MODULES/ FRONT CONTROL MODULE - DIAGNOSIS AND TESTING)

No >> Replace the Instrument Cluster.
Perform BODY VERIFICATION TEST - VER 1. (Refer to 8 - ELECTRICAL/ELECTRONIC CONTROL MODULES/ FRONT CONTROL MODULE - DIAGNOSIS AND TESTING).

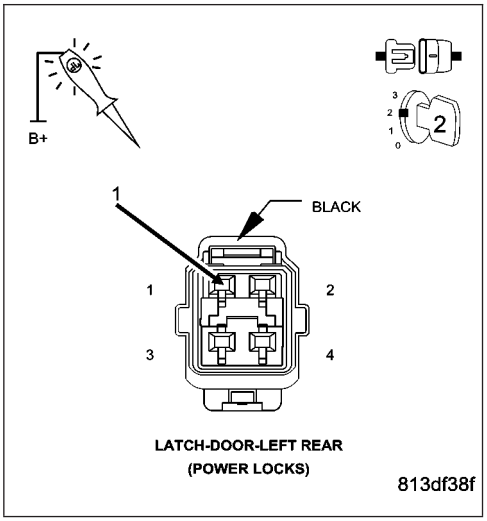

*PASSENGER DOOR AJAR CIRCUIT OPEN

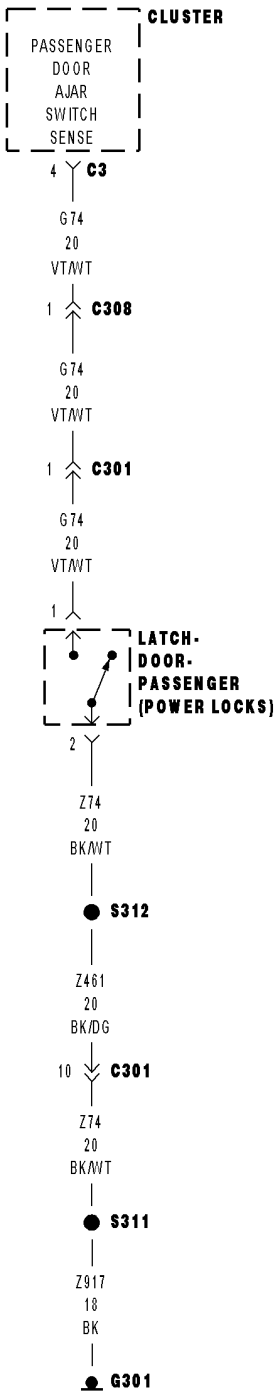

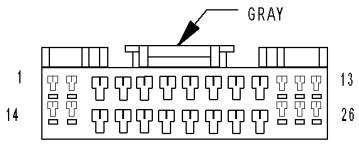

CLUSTER C3

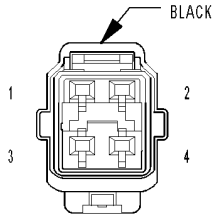

LATCH-DOOR-PASSENGER (POWER LOCKS)

813de814

***PASSENGER DOOR AJAR CIRCUIT OPEN (CONTINUED)**

For the Door Ajar System circuit diagram (Refer to 8 - ELECTRICAL/LAMPS/LIGHTING - INTERIOR - SCHEMATICS AND DIAGRAMS).

For a complete wiring diagram **Refer to Section 8W**.

Possible Causes
OPEN (Z74) PASSENGER DOOR AJAR SWITCH GROUND CIRCUIT
OPEN (G74) PASSENGER DOOR AJAR SWITCH SENSE CIRCUIT
OPEN PASSENGER DOOR AJAR SWITCH
INSTRUMENT CLUSTER

Diagnostic Test

1. OPEN PASSENGER DOOR AJAR SWITCH

Disconnect the Passenger Door Latch connector.

Connect a jumper wire between the (G74) Sense circuit and the (Z74) Ground circuit.

With the DRBIII® in Inputs/Outputs, read the PASS DOOR AJAR SW state.

Does the DRBIII® display CLOSED?

Yes >> Replace the Passenger Door Latch.
Perform BODY VERIFICATION TEST - VER 1. (Refer to 8 - ELECTRICAL/ELECTRONIC CONTROL MODULES/ FRONT CONTROL MODULE - DIAGNOSIS AND TESTING)

No >> Go To 2

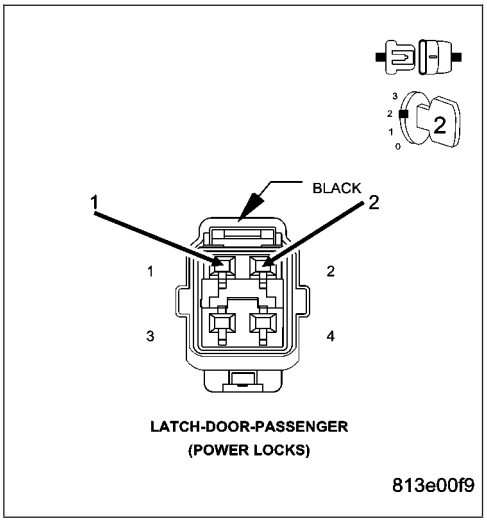

2. OPEN (Z74) PASSENGER DOOR AJAR SWITCH GROUND CIRCUIT

Using a 12-volt Test Light connected to 12-volts, test the (Z74) Ground circuit in the Door Latch connector.

Does the test light illuminate brightly?

Yes >> Go To 3

No >> Repair the (Z74) Passenger Door Ajar Switch Ground circuit for an open.
Perform BODY VERIFICATION TEST - VER 1. (Refer to 8 - ELECTRICAL/ELECTRONIC CONTROL MODULES/ FRONT CONTROL MODULE - DIAGNOSIS AND TESTING)

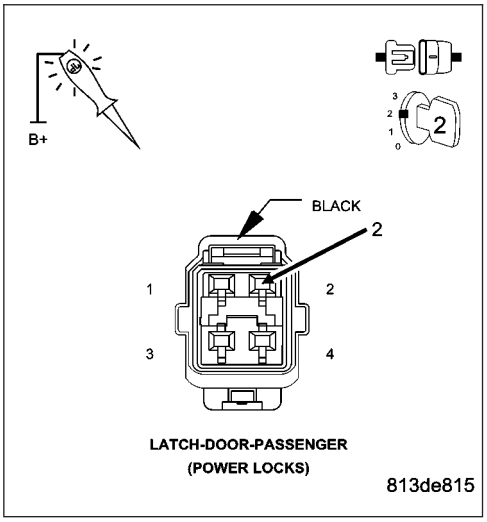

***PASSENGER DOOR AJAR CIRCUIT OPEN (CONTINUED)**

3. OPEN (G74) PASSENGER DOOR AJAR SWITCH SENSE CIRCUIT

Turn the ignition off.

Disconnect the Instrument Cluster C3 harness connector.

Measure the resistance of the (G74) Passenger Door Ajar Switch Sense circuit between the Instrument Cluster connector and the Door Latch connector.

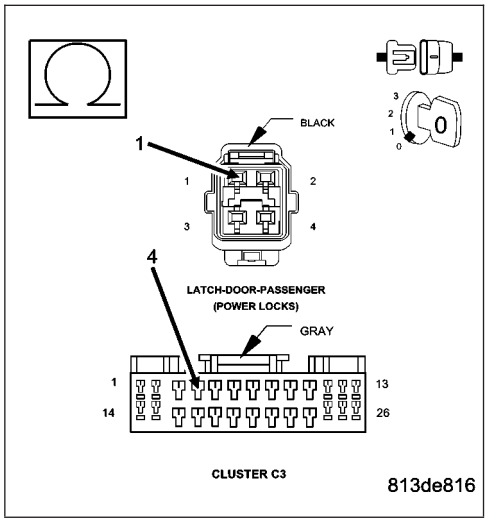

Is the resistance below 5.0 ohms?

Yes >> Replace the Instrument Cluster.
Perform BODY VERIFICATION TEST - VER 1. (Refer to 8 - ELECTRICAL/ELECTRONIC CONTROL MODULES/ FRONT CONTROL MODULE - DIAGNOSIS AND TESTING)

No >> Repair the (G74) Passenger Door Ajar Switch Sense circuit for an open.
Perform BODY VERIFICATION TEST - VER 1. (Refer to 8 - ELECTRICAL/ELECTRONIC CONTROL MODULES/ FRONT CONTROL MODULE - DIAGNOSIS AND TESTING)

*PASSENGER DOOR AJAR CIRCUIT SHORTED TO GROUND

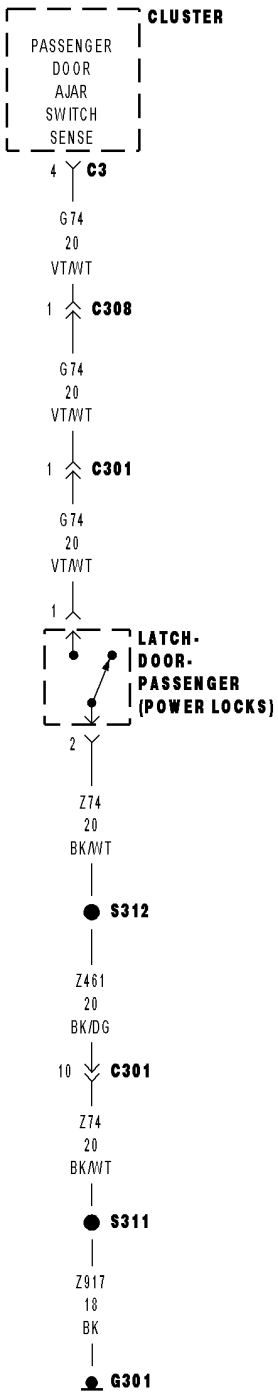

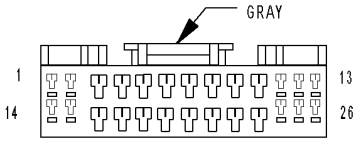

CLUSTER C3

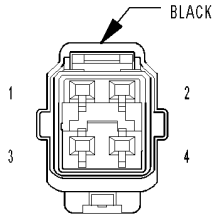

LATCH-DOOR-PASSENGER (POWER LOCKS)

813de814

***PASSENGER DOOR AJAR CIRCUIT SHORTED TO GROUND (CONTINUED)**

For the Door Ajar System circuit diagram (Refer to 8 - ELECTRICAL/LAMPS/LIGHTING - INTERIOR - SCHEMATICS AND DIAGRAMS).

For a complete wiring diagram **Refer to Section 8W**.

Possible Causes
(G74) PASSENGER DOOR AJAR SWITCH SENSE CIRCUIT SHORT TO GROUND
PASSENGER DOOR AJAR SWITCH
INSTRUMENT CLUSTER

Diagnostic Test

1. PASSENGER DOOR AJAR SWITCH SHORT TO GROUND

With the DRBIII® in Inputs/Outputs, read the PASS DOOR AJAR SW state.

While monitoring the DRBIII®, disconnect the Passenger Door Latch connector.

Did the Switch State change from CLOSED to OPEN?

Yes >> Replace the Passenger Door Latch.
Perform BODY VERIFICATION TEST - VER 1. (Refer to 8 - ELECTRICAL/ELECTRONIC CONTROL MODULES/ FRONT CONTROL MODULE - DIAGNOSIS AND TESTING.

No >> Go To 2

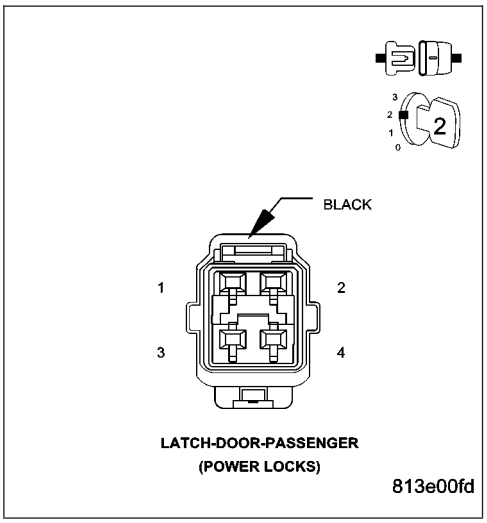

2. (G74) PASSENGER DOOR AJAR SWITCH SENSE CIRCUIT SHORT TO GROUND

Turn the ignition off.

Disconnect the Instrument Cluster C3 harness connector.

Using a 12-volt test light connected to 12-volts, probe the (G74) Passenger Door Ajar Switch Sense circuit and test for a short to ground.

Turn the ignition on.

Does the test light illuminate brightly?

Yes >> Repair the (G74) Passenger Door Ajar Switch Sense circuit for a short to ground.
Perform BODY VERIFICATION TEST - VER 1. (Refer to 8 - ELECTRICAL/ELECTRONIC CONTROL MODULES/ FRONT CONTROL MODULE - DIAGNOSIS AND TESTING)

No >> Replace the Instrument Cluster.
Perform BODY VERIFICATION TEST - VER 1. (Refer to 8 - ELECTRICAL/ELECTRONIC CONTROL MODULES/ FRONT CONTROL MODULE - DIAGNOSIS AND TESTING).

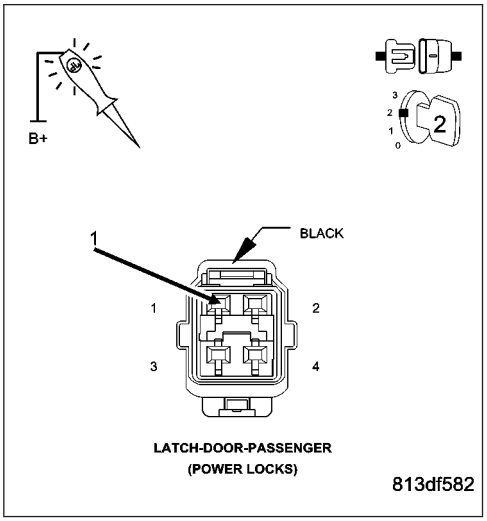

*RIGHT REAR DOOR AJAR CIRCUIT OPEN

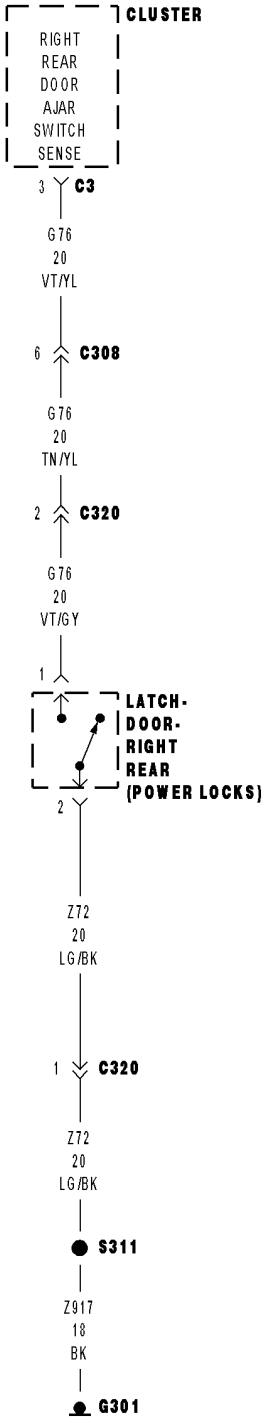

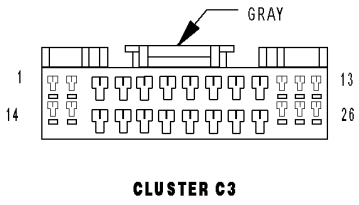

CLUSTER C3

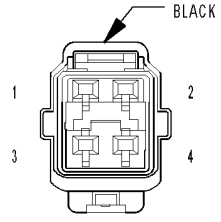

LATCH-DOOR-RIGHT REAR (POWER LOCKS)

813de90d

***RIGHT REAR DOOR AJAR CIRCUIT OPEN (CONTINUED)**

For the Door Ajar System circuit diagram (Refer to 8 - ELECTRICAL/LAMPS/LIGHTING - INTERIOR - SCHEMATICS AND DIAGRAMS).

For a complete wiring diagram **Refer to Section 8W**.

Possible Causes
OPEN (Z72) RIGHT REAR DOOR AJAR SWITCH GROUND CIRCUIT
OPEN (G76) RIGHT REAR DOOR AJAR SWITCH SENSE CIRCUIT
OPEN RIGHT REAR DOOR AJAR SWITCH
INSTRUMENT CLUSTER

Diagnostic Test

1. OPEN RIGHT REAR DOOR AJAR SWITCH

Disconnect the Right Rear Door Latch connector.

Connect a jumper wire between the (G76) Sense circuit and the (Z72) Ground circuit.

With the DRBIII® in Inputs/Outputs, read the R R DOOR AJAR SW state.

Does the DRBIII® display CLOSED?

Yes >> Replace the Right Rear Door Latch.
Perform BODY VERIFICATION TEST - VER 1. (Refer to 8 - ELECTRICAL/ELECTRONIC CONTROL MODULES/ FRONT CONTROL MODULE - DIAGNOSIS AND TESTING)

No >> Go To 2

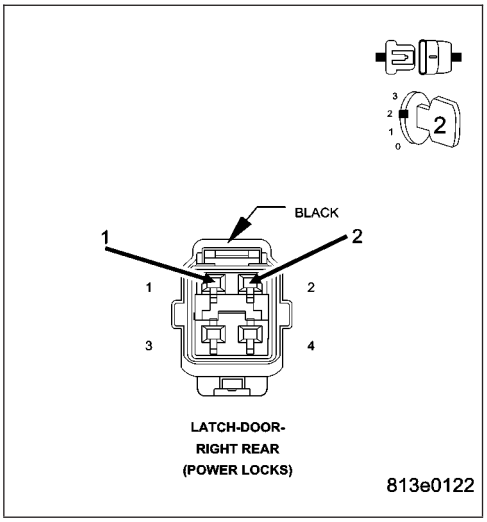

2. OPEN (Z72) RIGHT REAR DOOR AJAR SWITCH GROUND CIRCUIT

Using a 12-volt Test Light connected to 12-volts, test the (Z72) Ground circuit in the Door Latch connector.

Does the test light illuminate brightly?

Yes >> Go To 3

No >> Repair the (Z72) Right Rear Door Ajar Switch Ground circuit for an open.
Perform BODY VERIFICATION TEST - VER 1. (Refer to 8 - ELECTRICAL/ELECTRONIC CONTROL MODULES/ FRONT CONTROL MODULE - DIAGNOSIS AND TESTING)

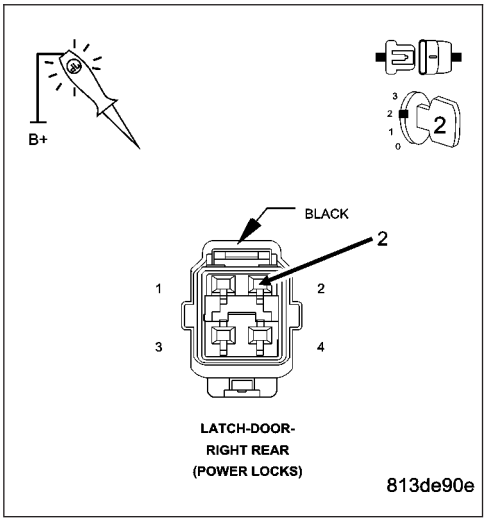

***RIGHT REAR DOOR AJAR CIRCUIT OPEN (CONTINUED)**

3. OPEN (G76) RIGHT REAR DOOR AJAR SWITCH SENSE CIRCUIT

Disconnect the Instrument Cluster C3 harness connector.

Measure the resistance of the (G76) Right Rear Door Ajar Switch Sense circuit between the Instrument Cluster connector and the Door Latch connector.

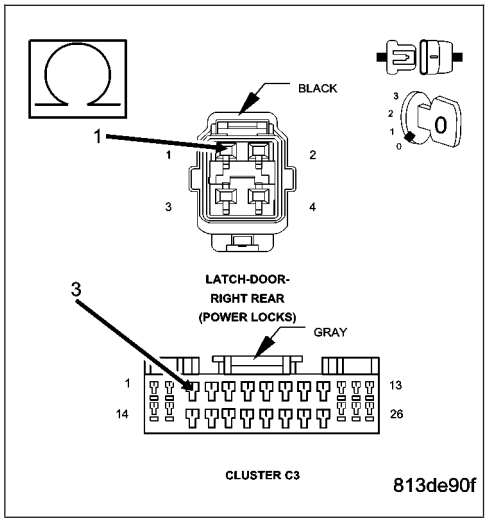

Is the resistance below 5.0 ohms?

Yes >> Replace the Instrument Cluster.

Perform BODY VERIFICATION TEST - VER 1. (Refer to 8 - ELECTRICAL/ELECTRONIC CONTROL MODULES/ FRONT CONTROL MODULE - DIAGNOSIS AND TESTING)

No >> Repair the (G76) Right Rear Door Ajar Switch Sense circuit for an open.

Perform BODY VERIFICATION TEST - VER 1. (Refer to 8 - ELECTRICAL/ELECTRONIC CONTROL MODULES/ FRONT CONTROL MODULE - DIAGNOSIS AND TESTING)

*RIGHT REAR DOOR AJAR CIRCUIT SHORTED TO GROUND

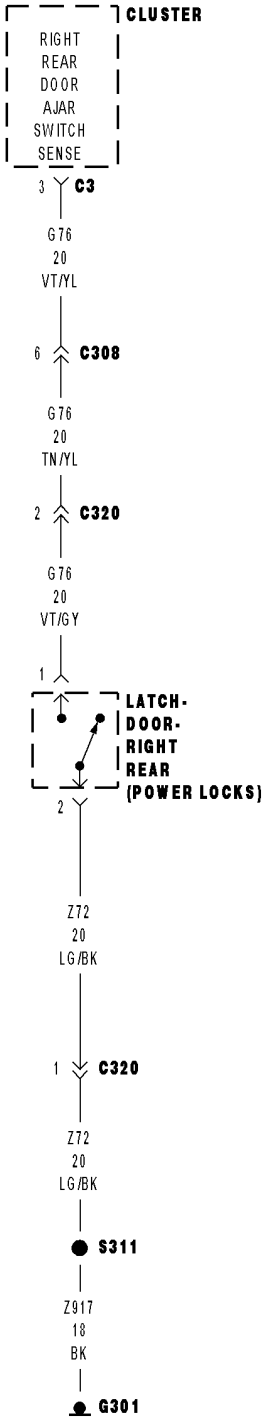

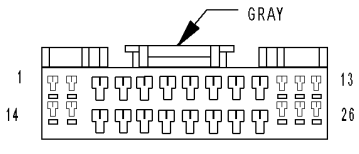

CLUSTER C3

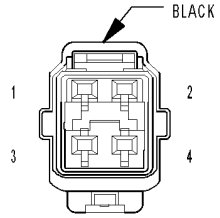

LATCH-DOOR-RIGHT REAR (POWER LOCKS)

813de90d

***RIGHT REAR DOOR AJAR CIRCUIT SHORTED TO GROUND (CONTINUED)**

For the Door Ajar System circuit diagram (Refer to 8 - ELECTRICAL/LAMPS/LIGHTING - INTERIOR - SCHEMATICS AND DIAGRAMS).

For a complete wiring diagram **Refer to Section 8W**.

Possible Causes
(G76) RIGHT REAR DOOR AJAR SWITCH SENSE CIRCUIT SHORT TO GROUND
RIGHT REAR DOOR AJAR SWITCH
INSTRUMENT CLUSTER

Diagnostic Test

1. RIGHT REAR DOOR AJAR SWITCH SHORT TO GROUND

With the DRBIII® in Inputs/Outputs, read the R R DOOR AJAR SW state.

While monitoring the DRBIII®, disconnect the Right Rear Door Latch connector.

Did the Switch State change from CLOSED to OPEN?

Yes >> Replace the Right Rear Door Ajar Switch.
Perform BODY VERIFICATION TEST - VER 1. (Refer to 8 - ELECTRICAL/ELECTRONIC CONTROL MODULES/ FRONT CONTROL MODULE - DIAGNOSIS AND TESTING.

No >> Go To 2

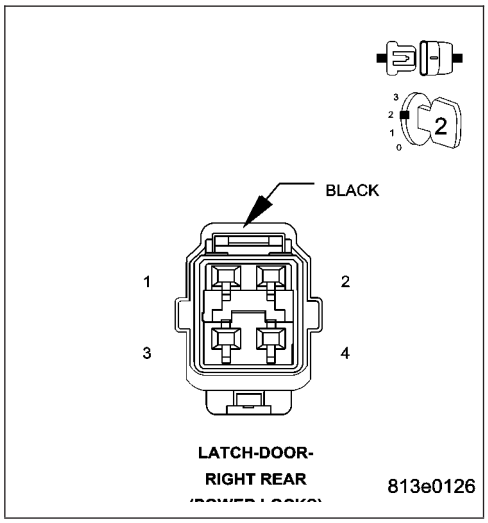

2. (G76) RIGHT REAR DOOR AJAR SWITCH SENSE CIRCUIT SHORT TO GROUND

Disconnect the Instrument Cluster C3 harness connector.

Using a 12-volt test light connected to 12-volts, probe the (G76) Right Rear Door Ajar Switch Sense circuit and test for a short to ground.

Does the test light illuminate brightly?

Yes >> Repair the (G76) Right Rear Door Ajar Switch Sense circuit for a short to ground.
Perform BODY VERIFICATION TEST - VER 1. (Refer to 8 - ELECTRICAL/ELECTRONIC CONTROL MODULES/ FRONT CONTROL MODULE - DIAGNOSIS AND TESTING)

No >> Replace the Instrument Cluster.
Perform BODY VERIFICATION TEST - VER 1 (Refer to 8 - ELECTRICAL/ELECTRONIC CONTROL MODULES/ FRONT CONTROL MODULE - DIAGNOSIS AND TESTING).

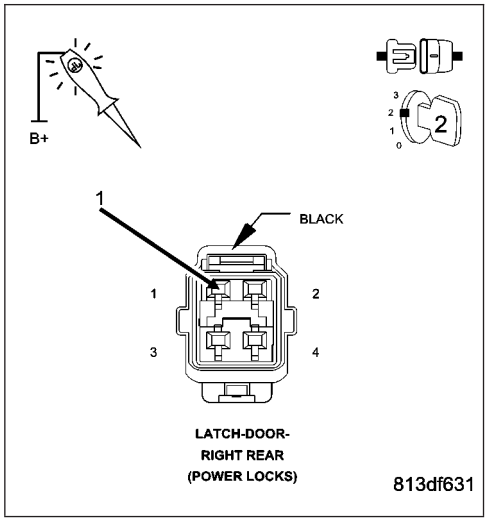

MIC-COURTESY LAMP OUTPUT CIRCUIT SHORTED OR OPEN

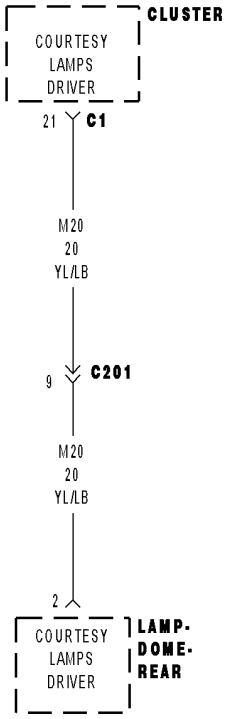

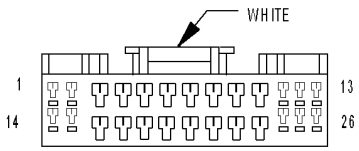

CLUSTER C1

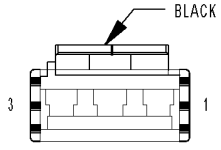

LAMP-DOME-REAR

81f89b4

MIC-COURTESY LAMP OUTPUT CIRCUIT SHORTED OR OPEN (CONTINUED)

For the Interior Lighting system circuit diagram (Refer to 8 - ELECTRICAL/LAMPS/LIGHTING - INTERIOR - SCHEMATICS AND DIAGRAMS).

For a complete wiring diagram **Refer to Section 8W**.

- **When Monitored:**
  Continuously
- **Set Condition:**
  When the CCN detects a short condition

Possible Causes
HEADLAMP SWITCH
COURTESY LAMP OUTPUT CIRCUIT SHORT TO GROUND
INSTRUMENT CLUSTER

1. INTERMITTENT CONDITION

Turn the ignition on.
With the DRBIII®, clear all MIC DTC's.
Turn the Dome Lamps on.
With the DRBIII®, read the DTC information.

Does the DRBIII® read: Courtesy/Dome Lamp Output Circuit Short/Open?

Yes >> Go To 2

No >> The condition that caused the symptom is currently not present. Inspect the related wiring for a possible intermittent condition. Look for any chafed, pierced, pinched, or partially broken wires.
Perform BODY VERIFICATION TEST - VER 1.

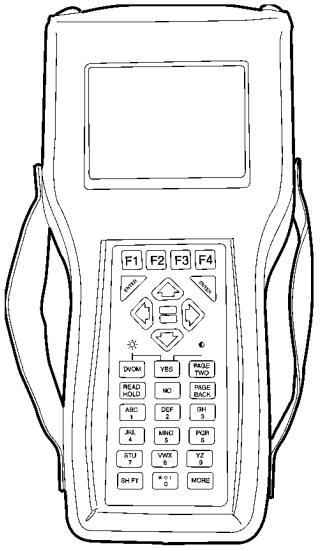

2. HEADLAMP SWITCH

Disconnect the Headlamp Switch connector.
Turn the ignition on.

Does the DRBIII® display Headlamp Switch 5.0 volts?

Yes >> Replace the Headlamp Switch.
Perform BODY VERIFICATION TEST - VER 1.

No >> Go to 3

MIC-COURTESY LAMP OUTPUT CIRCUIT SHORTED OR OPEN (CONTINUED)

3. COURTESY LAMP OUTPUT CIRCUIT SHORT TO GROUND

Turn the ignition off.
Disconnect the Headlamp Switch connector.
Disconnect the Instrument Cluster C1 connector.
Measure the resistance of the Courtesy Lamp Output circuit to ground.

Is the resistance below 5.0 ohms?

Yes >> Repair the Courtesy Lamp Output circuit for a short to ground.
Perform BODY VERIFICATION TEST - VER 1.

No >> Replace the Instrument Cluster in accordance with the service information.
Perform BODY VERIFICATION TEST - VER 1.

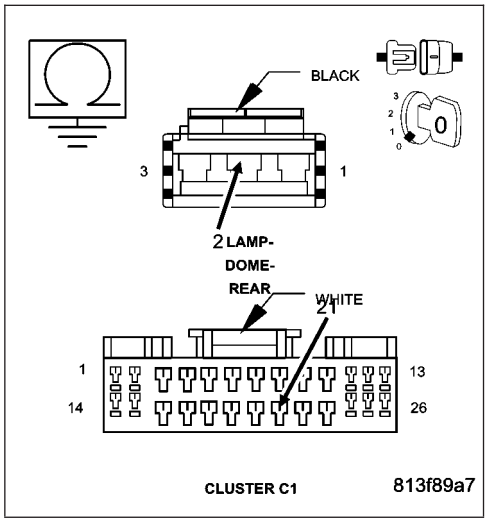

MIC-GLOVEBOX-MAP LAMP OUTPUT CIRCUIT SHORTED OR OPEN

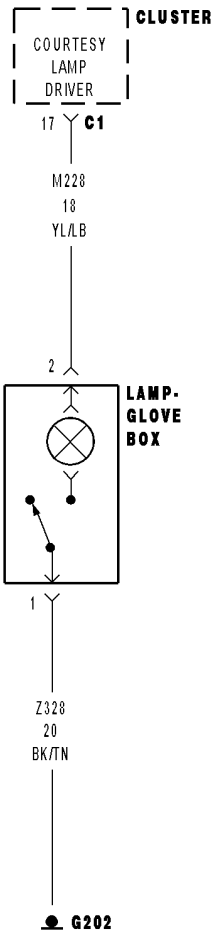

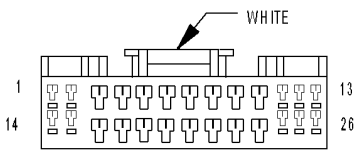

CLUSTER C1

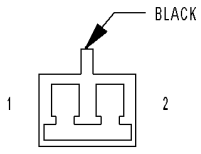

LAMP-
GLOVE
BOX

81f89d4

MIC-GLOVEBOX-MAP LAMP OUTPUT CIRCUIT SHORTED OR OPEN (CONTINUED)

For the Interior Lighting system circuit diagram (Refer to 8 - ELECTRICAL/LAMPS/LIGHTING - INTERIOR - SCHEMATICS AND DIAGRAMS).

For a complete wiring diagram **Refer to Section 8W**.

- **When Monitored:**
  Continuously
- **Set Condition:**
  The CCN detects a short condition

Possible Causes
GLOVEBOX-MAP LAMP OUTPUT CIRCUIT SHORT TO GROUND
INSTRUMENT CLUSTER

1. INTERMITTENT CONDITION

Turn the ignition on.
With the DRBIII®, clear all MIC DTC's.
Turn the Glove Box Lamps on.
With the DRBIII®, read the DTC information.

Does the DRBIII® read: Glove box/Map Lamp Output Circuit Short/Open?

Yes >> Go To 2

No >> The condition that caused the symptom is currently not present. Inspect the related wiring for a possible intermittent condition. Look for any chafed, pierced, pinched, or partially broken wires.

Perform BODY VERIFICATION TEST - VER 1.

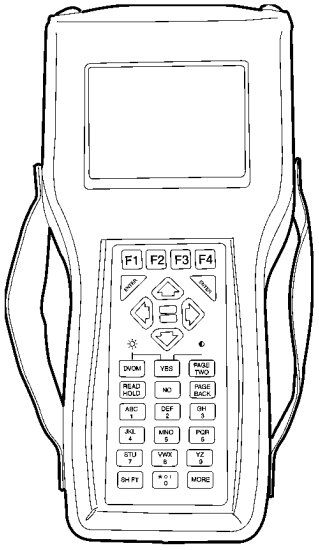

8136f94b

MIC-GLOVEBOX-MAP LAMP OUTPUT CIRCUIT SHORTED OR OPEN (CONTINUED)

2. GLOVEBOX-MAP LAMP OUTPUT CIRCUIT SHORT TO GROUND

Turn the ignition off.

Disconnect the Glovebox Lamp Switch Harness connector.

Disconnect the Instrument Cluster C1 connector.

Measure the resistance of the Glovebox Lamp Output circuit to ground.

Is the resistance below 5.0 ohms?

Yes >> Repair the Glovebox-Map Lamp Output circuit..
Perform BODY VERIFICATION TEST - VER 1.

No >> Replace the Instrument Cluster in accordance with the service information.
Perform BODY VERIFICATION TEST - VER 1.

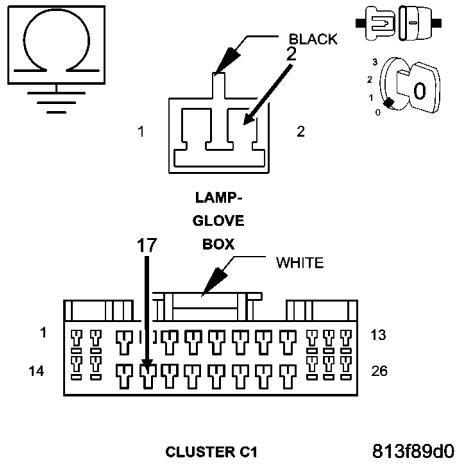

SCHEMATICS AND DIAGRAMS

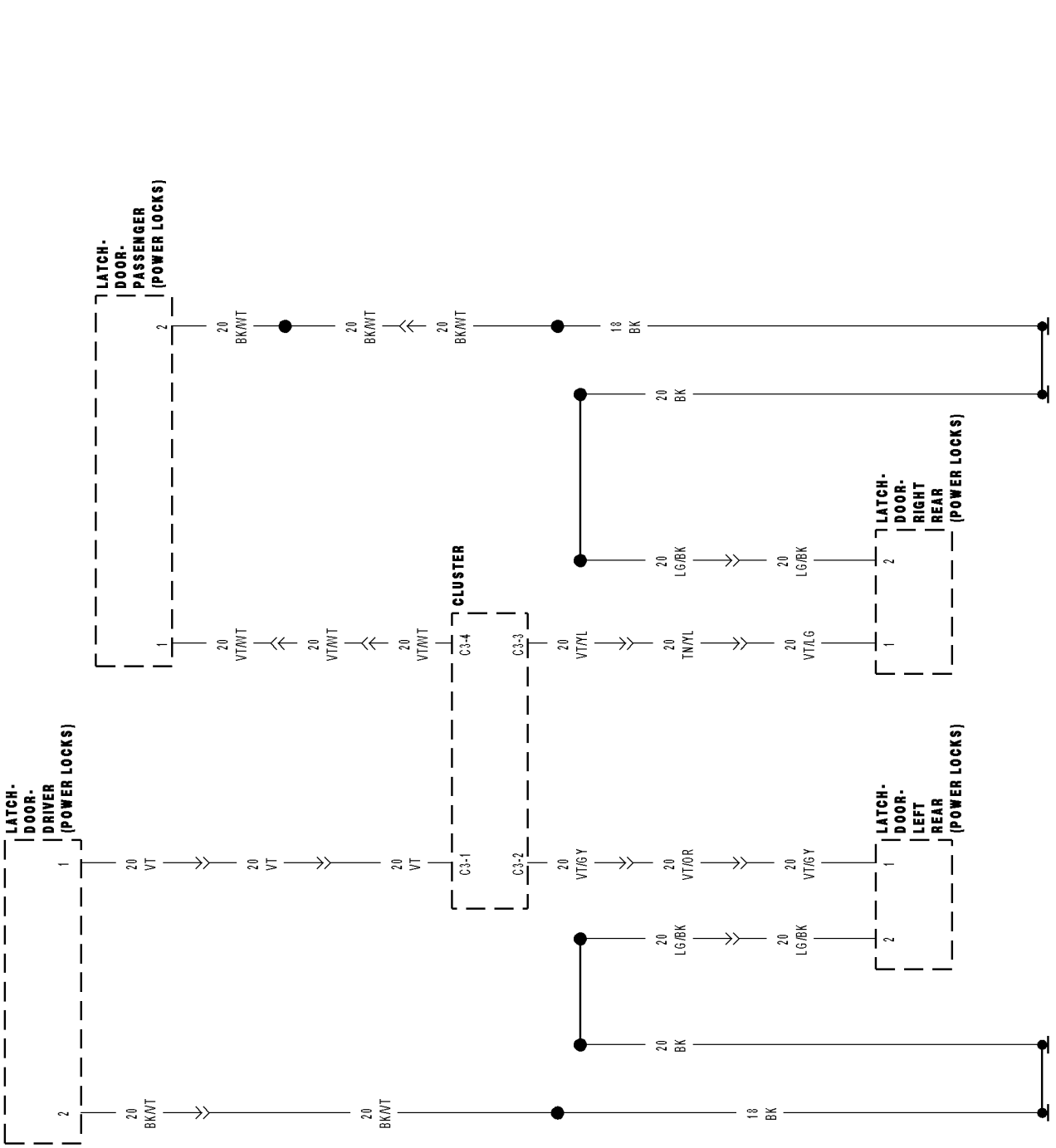

LAMPS/LIGHTING - INTERIOR - SERVICE INFORMATION

TABLE OF CONTENTS

page

LAMPS/LIGHTING - INTERIOR - SERVICE INFORMATION
DESCRIPTION 206
OPERATION 207
WARNING
WARNINGS - LAMPS/LIGHTING - INTERIOR 208
DIAGNOSIS AND TESTING
LAMPS/LIGHTING - INTERIOR 208
SPECIFICATIONS
LAMPS/LIGHTING - INTERIOR 210
CARGO LAMP
REMOVAL 211
INSTALLATION 211
ILLUMINATION LAMP
REMOVAL
BULB - CMTC CONTROL 212
BULB - A/C-HEAT CONTROL 212
INSTALLATION
BULB - CMTC CONTROL 213
BULB - A/C-HEAT CONTROL 214
LAMP-DOME
REMOVAL
BULB 214
LAMP 215
INSTALLATION
BULB 215
LAMP 216
LAMP-READING
REMOVAL
BULB - WITHOUT SUNROOF 217
BULB - WITH SUNROOF 218
INSTALLATION
BULB - WITHOUT SUNROOF 218
BULB - WITH SUNROOF 219
DOOR AJAR SWITCH
DESCRIPTION 220
OPERATION 220
LAMP-GLOVE BOX
REMOVAL
BULB 221
LAMP/SWITCH 221
INSTALLATION
BULB 222
LAMP/SWITCH 223
VANITY LAMP
REMOVAL - BULB 223
INSTALLATION - BULB 224

LAMPS/LIGHTING - INTERIOR - SERVICE INFORMATION

DESCRIPTION

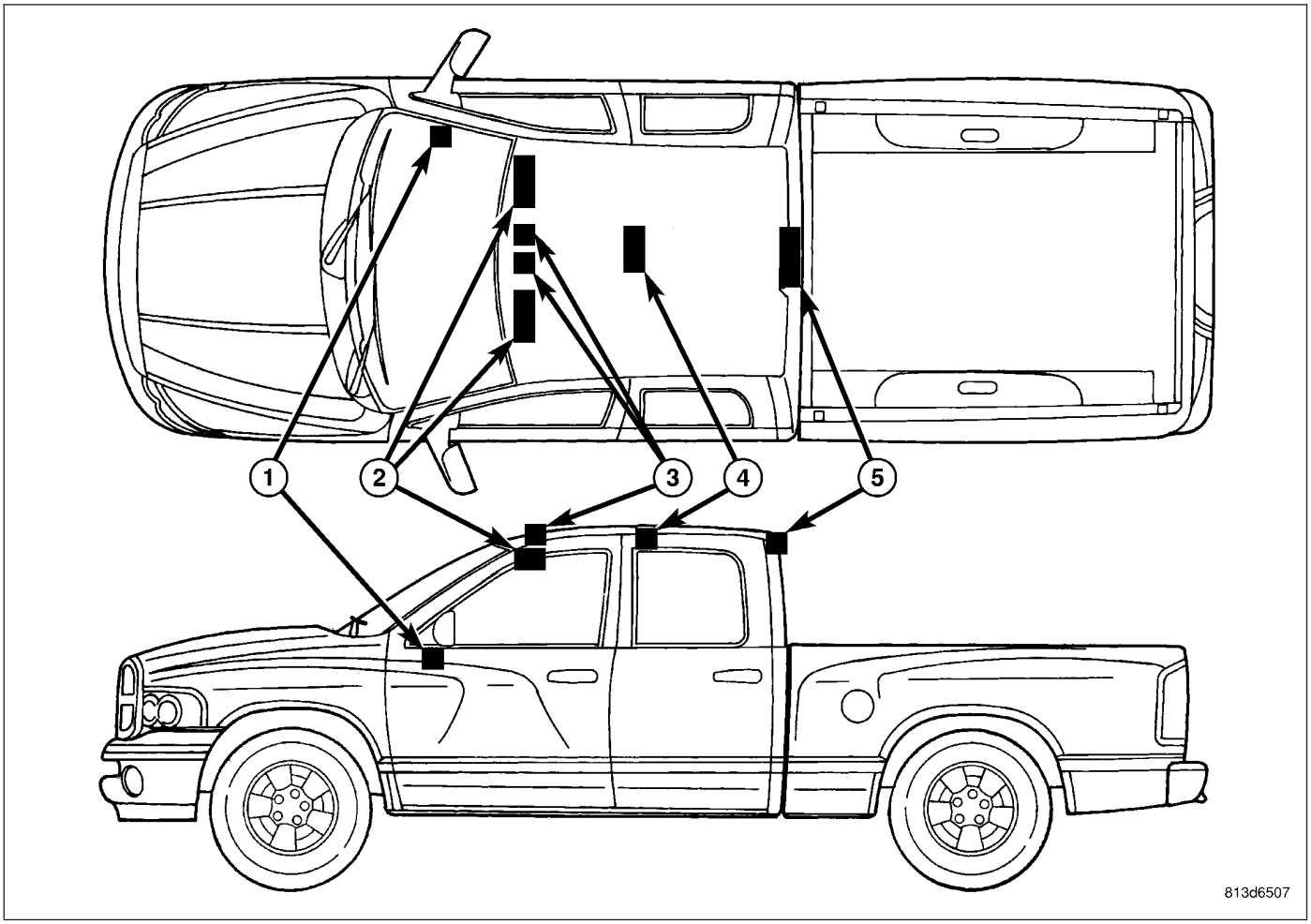

The interior lighting system for this model includes incandescent lighting on two separate circuits: the dome/courtesy lamp circuit and the panel lamps dimmer circuit. The lamps on the dome/courtesy circuit include:

- **Cargo Lamps (5)** - The standard equipment cargo lamps are integral to the Center High Mounted Stop Lamp (CHMSL) located on the roof rear header above the rear glass on the back of the cab. One cargo lamp bulb is behind a clear lens on each outboard side of the center red lens of the CHMSL. The cargo lamps are manually activated by selecting a detent position of the panel lamps dimmer thumbwheel of the headlamp switch on the instrument panel to illuminate the cargo area of the pick-up box.
- **Dome/Reading Lamps (Overhead Console) (3)** - In vehicles equipped with an optional overhead console there are two dome/reading lamps that are integral to the overhead console, which is centered in the headliner near the windshield header. The overhead console lamps have switches that are individually actuated by depressing their respective lamp lenses.
- **Front Dome Lamp (5 - Standard Cab or 3 - Quad Cab)** - On standard cab models the dome lamp is centered in the headliner near the back of the cab. On quad cab models the front dome lamp is centered in the headliner near the windshield header. The standard (base) dome lamp has a single bulb and is switched by the door ajar switches or the interior lighting thumbwheel of the headlamp switch. The optional dome/reading lamps are mounted in the same location but include an integral switch that is actuated by depressing the lamp lens.
- **Glove Box Lamp (1)** - A standard glove box lamp with an integral switch is located at the upper right corner of the instrument panel glove box opening and illuminates whenever the glove box is opened.
- **Rear Dome/Reading Lamp (Quad Cab Only) (4 - Without Sunroof or 5 - With Sunroof)** - The rear dome/reading lamp on quad cab models includes a single bulb and a switch that is actuated by depressing the lamp lens. In vehicles without an optional sunroof the rear dome/reading lamp is located in the center of the head-

liner between the front and rear seating. On vehicles with a sunroof the dome/reading lamp is centered in the headliner near the back of the cab.

- **Vanity Lamps (2)** - Optional single intensity vanity lamps are located on each side of a covered mirror on both the right and left sun visors, and are controlled by an integral vanity mirror cover-actuated switch.

Most controls on the instrument panel and other controls located elsewhere on the interior of the vehicle are illuminated for night visibility. Some have miniature incandescent bulbs or Light-Emitting Diode (LED) units that are soldered to internal circuit boards and are not serviceable. The replaceable incandescent bulbs or bulb/bulb holder units in this vehicle include:

- **Compass Mini-Trip Control Illumination Lamps** - The optional Compass Mini-Trip Computer (CMTC) has three replaceable bulb/bulb holder units to illuminate its controls.
- **Heater-Air Conditioner Control Illumination Lamps** - The heater-air conditioner control panel has two replaceable bulb/bulb holder units to illuminate its controls.

Other components of the interior lighting system for this model include:

- **Door Ajar Switches** - A door ajar switch is integral to the door latch mechanism of each front and rear door.
- **Headlamp Switch** - A headlamp switch is located on the left side of the instrument panel, below and outboard of the steering column. The headlamp switch includes a vertical thumbwheel for selecting the panel lamps dimming level and for interior lighting control. A Parade position of the thumbwheel illuminates all Vacuum Fluorescent Display (VFD) units at full brightness for visibility when driving in daylight with the exterior lighting turned On. There are also detent positions to turn on all interior courtesy lighting, to turn on the rear cargo lamps, and a Defeat position that overrides door ajar switch control of interior lighting. (Refer to 8 - ELECTRICAL/LAMPS/LIGHTING - EXTERIOR/HEADLAMP SWITCH - DESCRIPTION).
- **Instrument Cluster** - The ElectroMechanical Instrument Cluster (EMIC) is also known as the Cab Control Node (CCN) in this vehicle. The EMIC/CCN is located in the instrument panel above the steering column opening, directly in front of the driver. (Refer to 8 - ELECTRICAL/INSTRUMENT CLUSTER - DESCRIPTION).

Hard wired circuitry connects the interior lighting system components to the electrical system of the vehicle. These hard wired circuits are integral to several wire harnesses, which are routed throughout the vehicle and retained by many different methods. These circuits may be connected to each other, to the vehicle electrical system and to the interior lighting components through the use of a combination of soldered splices, splice block connectors, and many different types of wire harness terminal connectors and insulators. Refer to the appropriate wiring information. The wiring information includes wiring diagrams, proper wire and connector repair procedures, further details on wire harness routing and retention, as well as pin-out and location views for the various wire harness connectors, splices and grounds.

OPERATION

The interior lighting systems can be divided into two general classifications based upon the circuit that controls their operation: The courtesy lamp circuit, or the panel lamps dimmer circuit. The hard wired circuits and components of the interior lighting systems may be diagnosed and tested using conventional diagnostic tools and methods. Refer to the appropriate wiring information. However, conventional diagnostic methods may not prove conclusive in the diagnosis of the ElectroMechanical Instrument Cluster (EMIC), or the Programmable Communications Interface (PCI) data bus. The most reliable, efficient, and accurate means to diagnose the EMIC, the PCI data bus, or the electronic bus message inputs and outputs related to the various interior lighting systems requires the use of a diagnostic scan tool. Refer to the appropriate diagnostic information.

COURTESY LAMP CIRCUIT

Depending upon the selected vehicle options the courtesy lamp circuit may include the dome and dome/reading lamps located in the headliner near the windshield and between the front and rear seating, the cargo lamps located near the center of the rear roof header, the glove box lamp in the top of the glove box opening in the instrument panel, and the vanity lamps located in the sun visors. The lamps in the courtesy lamp circuit are provided with a path to ground at all times. The EMIC controls the output of battery voltage for the courtesy lamps in this circuit based upon hard wired inputs from the door ajar switches, the headlamp switch and the ignition switch.

After all of the ajar switch inputs to the EMIC transition to open, the EMIC will keep the courtesy lamps illuminated for about 30 seconds, then fade the lamps to off (theater dimming) over about three seconds. The EMIC also provides courtesy lamp operation based upon a resistor multiplexed input from the vertical thumbwheel on the headlamp switch, and provides an illuminated entry feature in response to certain electronic message inputs received from the Remote Keyless Entry (RKE) module and the Airbag Control Module (ACM) over the PCI data bus. A

resistor multiplexed courtesy lamp defeat input from the vertical thumbwheel of the headlamp switch will cause the EMIC to override normal courtesy lamp operation based upon inputs from all of the ajar switches.

For those lamps on the courtesy lamp circuit with independent switching such as the optional switched dome lamp, the optional dome/reading lamps, the optional vanity lamps, and for the glove box lamp the EMIC provides a battery voltage output to the switches through a separate circuit. The EMIC provides a battery saver (load shedding) feature for all courtesy lamps, which will automatically turn these lamps off if they are left on for more than about eight minutes with the ignition switch in the Off position.

PANEL LAMPS DIMMER CIRCUIT

The panel lamps dimmer circuit actually includes several circuits. These circuits control the illumination and dimming level of the headlamp switch, the heater-air conditioner controls and the four-wheel drive selector switch. All lamps in the panel lamps dimmer circuits are provided a path to ground at all times through a hard wired ground circuit. These lamps illuminate based upon inputs to the EMIC from the rotary control knob and vertical thumbwheel of the headlamp switch. The control knob on the headlamp switch selects the exterior lights, while the thumbwheel selects the panel lamps intensity (dimming) level.

When the exterior lighting is turned On, the EMIC provides electronic dimming level messages to the radio and the Compass Mini-Trip Computer (CMTC) over the PCI data bus. The EMIC also supplies a 12-volt Pulse Width Modulated (PWM) output to all of the incandescent lamps in the panel lamps dimmer circuits through several panel lamps dimmer circuits. This shared PWM output synchronizes the selected illumination intensity level of all of the lamps in the panel lamps dimmer circuit.

The radio and the CMTC each use the dimming level messages to control the illumination intensity of both their Vacuum Fluorescent Display (VFD) units and their control lighting. In addition, when the thumbwheel of the headlamp switch is moved to the Parade/Funeral Mode detent position, all of the VFD units are illuminated at their full intensity levels for increased visibility when the vehicle is driven during daylight hours with the exterior lights turned On.

WARNING

WARNINGS - LAMPS/LIGHTING - INTERIOR

WARNING:: To avoid personal injury or death, eye protection should be used when servicing any glass components.

CAUTION: Do not use bulbs with higher candle power than indicated in the Bulb Application table (Refer to 8 - ELECTRICAL/LAMPS/LIGHTING - INTERIOR - SPECIFICATIONS). In addition, do not use fuses, circuit breakers or relays having greater amperage value than indicated on the fuse panel or in the Owner's Manual. Damage to lamps, lenses, wiring and other related electrical components can result.

DIAGNOSIS AND TESTING

LAMPS/LIGHTING - INTERIOR

WARNING: To avoid personal injury or death, on vehicles equipped with airbags, disable the supplemental restraint system before attempting any steering wheel, steering column, airbag, seat belt tensioner, impact sensor, or instrument panel component diagnosis or service. Disconnect and isolate the battery negative (ground) cable, then wait two minutes for the system capacitor to discharge before performing further diagnosis or service. This is the only sure way to disable the supplemental restraint system. Failure to take the proper precautions could result in accidental airbag deployment.

NOTE: When diagnosing the interior lighting circuits, remember that high generator output can burn out bulbs rapidly and repeatedly; and, that dim or flickering bulbs can be caused by low generator output or poor battery condition. If one of these symptoms is a problem on the vehicle, be certain to diagnose the battery and charging system, then repair as necessary.

NOTE: A good ground is necessary for proper lighting operation. If a lighting problem is being diagnosed that involves multiple symptoms, systems, or components, the problem can often be traced to a loose, corroded, or open ground.

The hard wired interior lamp and lighting circuits may be diagnosed and tested using conventional diagnostic tools and methods. Refer to the appropriate wiring information. The wiring information includes wiring diagrams, proper wire and connector repair procedures, details of wire harness routing and retention, connector pin-out information and location views for the various wire harness connectors, splices and grounds.

However, conventional diagnostic methods may not prove conclusive in the diagnosis of the ElectroMechanical Instrument Cluster (EMIC), the Programmable Communications Interface (PCI) data bus, or the electronic message inputs used to provide interior lamp and lighting service or many of the electronic features of the interior lamp and lighting systems. The most reliable, efficient, and accurate means to diagnose the EMIC, the PCI data bus, and the electronic message inputs for the interior lamps and lighting system requires the use of a diagnostic scan tool. Refer to the appropriate diagnostic information.

COURTESY LAMP CIRCUIT

CONDITION	POSSIBLE CAUSES	CORRECTION
A SINGLE LAMP IN THE COURTESY LAMP CIRCUIT DOES NOT ILLUMINATE	1. Faulty or missing bulb.	1. Test and replace the courtesy lamp bulb as required.
	2. Faulty lamp switch.	2. Test and replace a faulty dome lamp switch, dome/reading lamp switch, glove box lamp switch, or sunvisor (vanity lamp switch) as required.
	3. Faulty ground circuit.	3. Test and repair the open ground circuit as required.
	4. Faulty feed circuit.	4. Test and repair the open feed circuit as required.
ALL LAMPS IN THE COURTESY LAMP CIRCUIT DO NOT ILLUMINATE	1. Faulty or missing fuse.	1. Test and replace the fuse as required.
	2. Faulty ground circuit.	2. Test and repair the open ground circuit as required.
	3. Courtesy defeat feature turned On.	3. Turn courtesy defeat feature Off.
	4. Faulty courtesy lamp control circuit.	4. Test and repair the courtesy lamp control circuit as required.
	5. Faulty headlamp switch.	5. Test and replace the headlamp switch as required.
	6. Faulty ElectroMechanical Instrument Cluster (EMIC), EMIC input, or EMIC output.	6. Use a diagnostic scan tool to test the EMIC, its inputs, and its outputs. Refer to the appropriate diagnostic information.
A SINGLE LAMP IN THE COURTESY LAMP CIRCUIT DOES NOT EXTINGUISH	1. Faulty lamp switch.	1. Test and replace a faulty dome lamp switch, dome/reading lamp switch, glove box lamp switch, or sunvisor (vanity lamp switch) as required.
ALL LAMPS IN THE COURTESY LAMP CIRCUIT DO NOT EXTINGUISH	1. Faulty ajar switch.	1. Test and replace a faulty door ajar switch as required.
	2. Faulty ajar switch sense circuit.	2. Test and repair the shorted ajar switch sense circuit as required.
	3. Faulty ElectroMechanical Instrument Cluster (EMIC), EMIC input, or EMIC output.	3. Use a diagnostic scan tool to test the EMIC, its inputs, and its outputs. Refer to the appropriate diagnostic information.

PANEL LAMPS DIMMER CIRCUIT

NOTE: As part of the exterior lighting failsafe feature, upon ignition On all of the panel lamps dimmer circuit lamps will illuminate at full intensity and the exterior park lamps and headlamp low beams will illuminate regardless of the headlamp switch position if the instrument cluster cannot detect an input from the headlamp switch, or if there is a loss of data bus communication.

CONDITION	POSSIBLE CAUSES	CORRECTION
A SINGLE LAMP DOES NOT ILLUMINATE	1. Faulty or missing bulb.	1. Test and replace lamp bulb as required.
	2. Faulty ground circuit.	2. Test and repair lamp ground circuit as required.
	3. Faulty feed circuit.	3. Test and repair open feed circuit as required.
A SINGLE LAMP DOES NOT EXTINGUISH	1. Faulty feed circuit.	1. Test and repair shorted feed circuit as required.
ALL LAMPS DO NOT ILLUMINATE	1. Faulty headlamp switch.	1. Test and replace the headlamp switch as required.
	2. Faulty ElectroMechanical Instrument Cluster (EMIC), EMIC input, or EMIC output.	2. Use a diagnostic scan tool to test the EMIC, its inputs, and its outputs. Refer to the appropriate diagnostic information.
ALL LAMPS ILLUMINATE AT FULL INTENSITY AT IGNITION ON	1. Loss of data bus communication.	1. Use a diagnostic scan tool to test the data bus. Refer to the appropriate diagnostic information.

SPECIFICATIONS

LAMPS/LIGHTING - INTERIOR

COURTESY LAMPS

BULB APPLICATION TABLE	
LAMP	**BULB**
CARGO LAMP	912
DOME LAMP (NON-SWITCHED OR SWITCHED)	578
FRONT DOME/READING WITH OVERHEAD CONSOLE AND WITHOUT SUNROOF	212-2
FRONT DOME/READING WITH OVERHEAD CONSOLE AND WITH SUNROOF	192
GLOVE BOX LAMP	194
VANITY LAMP	37

PANEL LAMPS

BULB APPLICATION TABLE	
LAMP	**BULB**
COMPASS MINI-TRIP CONTROL	MOPAR 04437661
A/C-HEAT CONTROL	MOPAR 05135537AA

CARGO LAMP

REMOVAL

NOTE: The Center High Mounted Stop Lamp (CHMSL) houses three bulbs. The center bulb is the CHMSL bulb and illuminates through a red lens, while the two outboard bulbs are for the cargo lamps and illuminate through clear lenses. The bulb types and service procedures are identical for all three of these bulbs.

1. Disconnect and isolate the battery negative cable.
2. Remove the two screws that secure the CHMSL to the rear cab roof header panel.
3. Pull the CHMSL lens and housing (1) away from the header panel far enough to access the lamp wiring and bulb sockets on the back of the lamp.
4. Firmly grasp the socket (3) on the back of the lamp housing and rotate it counterclockwise about 30 degrees to unlock it.
5. Pull the socket and bulb straight out from the keyed opening in the housing.
6. Pull the base of the bulb (2) straight out of the socket.

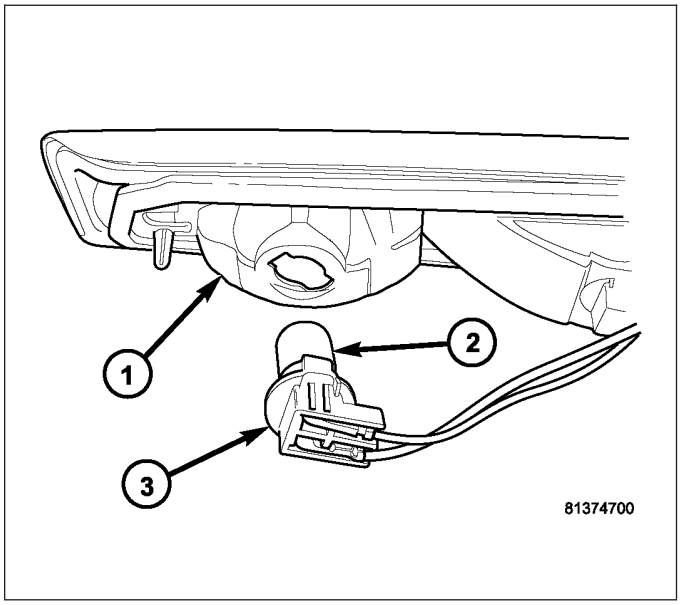

INSTALLATION

CAUTION: Always use the correct bulb size and type for replacement. An incorrect bulb size or type may overheat and cause damage to the lamp, the socket and/or the lamp wiring.

NOTE: The Center High Mounted Stop Lamp (CHMSL) houses three bulbs. The center bulb is the CHMSL bulb and illuminates through a red lens, while the two outboard bulbs are for the cargo lamps and illuminate through clear lenses. The bulb types and service procedures are identical for all three of these bulbs.

1. Align the base of the bulb (2) with the socket (3).
2. Push the bulb straight into the socket until the base is firmly seated.
3. Align the socket and bulb with the keyed opening on the back of CHMSL housing (1).
4. Insert the socket and bulb into the housing until the socket is firmly seated.
5. Rotate the socket clockwise about 30 degrees to lock it into place.
6. Position the CHMSL into the opening in the rear cab roof header panel.
7. Install and tighten the two screws (passenger side first) that secure the CHMSL to the header panel. Tighten the screws to 2 N·m (20 in. lbs.).
8. Reconnect the battery negative cable.

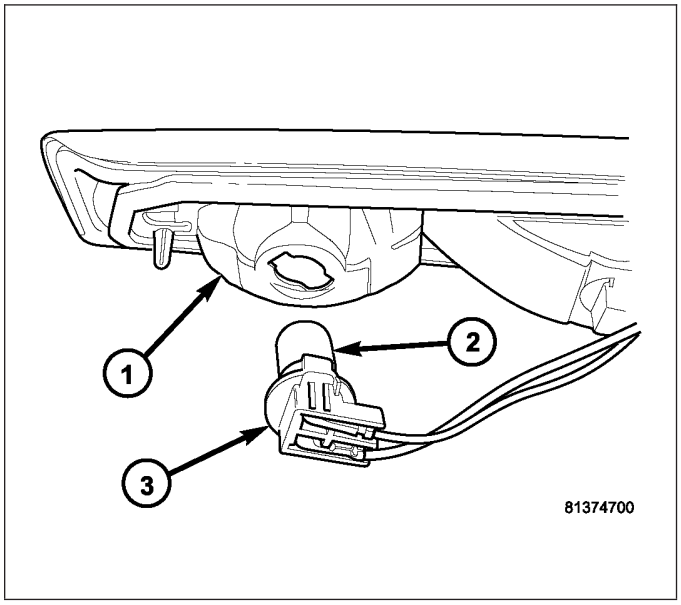

ILLUMINATION LAMP

REMOVAL

BULB - CMTC CONTROL

WARNING: To avoid personal injury or death, on vehicles equipped with airbags, disable the supplemental restraint system before attempting any steering wheel, steering column, airbag, seat belt tensioner, impact sensor, or instrument panel component diagnosis or service. Disconnect and isolate the battery negative (ground) cable, then wait two minutes for the system capacitor to discharge before performing further diagnosis or service. This is the only sure way to disable the supplemental restraint system. Failure to take the proper precautions could result in accidental airbag deployment.

NOTE: There are provisions for three bulb/bulb holder units on the Compass Mini-Trip Computer (CMTC) circuit board. The two outboard bulbs illuminate the CMTC push buttons, while the center bulb illuminates the optional universal transmitter push buttons. Therefore, the center bulb location is only populated on vehicles equipped with the optional universal transmitter.

1. Disconnect and isolate the battery negative cable.
2. Remove the overhead console (1) from the headliner. (Refer to 8 - ELECTRICAL/OVERHEAD CONSOLE - REMOVAL).
3. Use a small thin-bladed screwdriver to rotate the bulb holder (3) counterclockwise about 30 degrees to unlock it from the keyed opening in the Compass Mini-Trip Computer (CMTC) unit (2) circuit board.
4. Pull the bulb holder and bulb straight out of the circuit board.

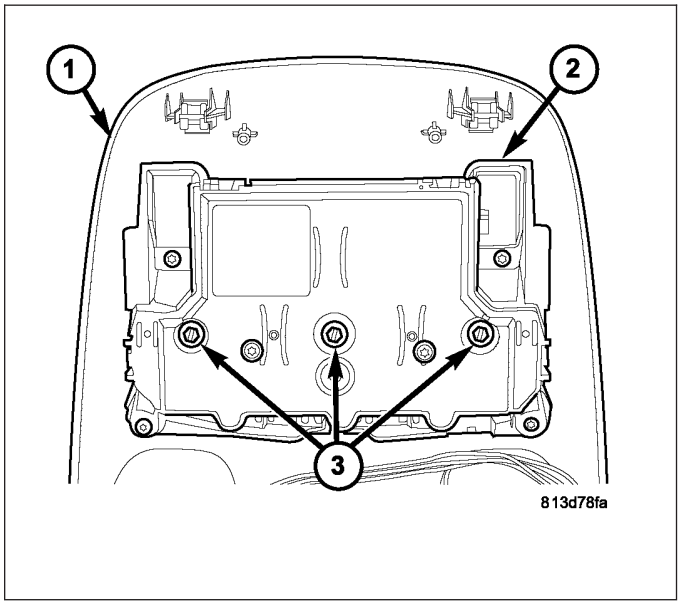

BULB - A/C-HEAT CONTROL

WARNING: To avoid personal injury or death, on vehicles equipped with airbags, disable the supplemental restraint system before attempting any steering wheel, steering column, airbag, seat belt tensioner, impact sensor, or instrument panel component diagnosis or service. Disconnect and isolate the battery negative (ground) cable, then wait two minutes for the system capacitor to discharge before performing further diagnosis or service. This is the only sure way to disable the supplemental restraint system. Failure to take the proper precautions could result in accidental airbag deployment.

NOTE: There may be minor variations in the locations of the bulb/bulb holder units on the back of the A/C-heater control as a result of various optional A/C-heater control units. However, the bulb types and service procedures are identical for all of these bulbs.

1. Disconnect and isolate the battery negative cable.
2. Remove the center bezel from the instrument panel. (Refer to 23 - BODY/INSTRUMENT PANEL/ INSTRUMENT PANEL CENTER BEZEL - REMOVAL).
3. Use a small thin-bladed screwdriver to rotate the bulb holder (2) counterclockwise about 30 degrees to unlock it from the keyed opening in the A/C-heater control (1) circuit board.
4. Pull the bulb holder and bulb straight out of the circuit board.

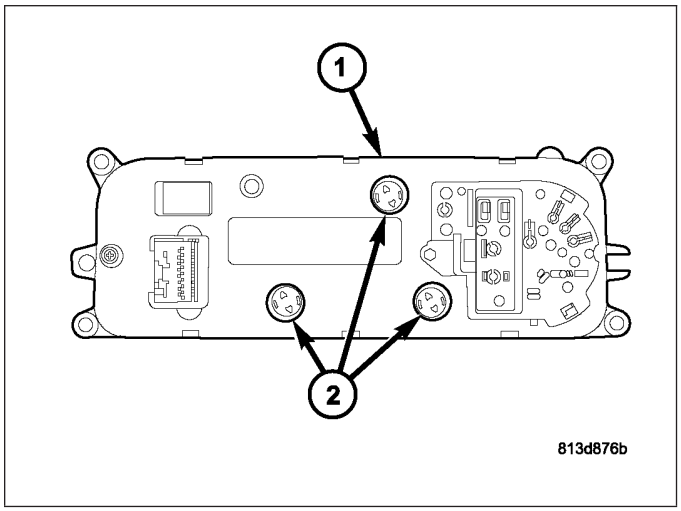

INSTALLATION

BULB - CMTC CONTROL

WARNING: To avoid personal injury or death, on vehicles equipped with airbags, disable the supplemental restraint system before attempting any steering wheel, steering column, airbag, seat belt tensioner, impact sensor, or instrument panel component diagnosis or service. Disconnect and isolate the battery negative (ground) cable, then wait two minutes for the system capacitor to discharge before performing further diagnosis or service. This is the only sure way to disable the supplemental restraint system. Failure to take the proper precautions could result in accidental airbag deployment.

CAUTION: Always use the correct bulb size and type for replacement. An incorrect bulb size or type may overheat and cause damage to the lamp, the socket and/or the lamp wiring.

NOTE: There are provisions for three bulb/bulb holder units on the Compass Mini-Trip Computer (CMTC) circuit board. The two outboard bulbs illuminate the CMTC push buttons, while the center bulb illuminates the optional universal transmitter push buttons. Therefore, the center bulb location is only populated on vehicles equipped with the optional universal transmitter.

1. Align the bulb holder and bulb (3) with the keyed opening in the circuit board of the Compass Mini-Trip Computer (CMTC) (2).
2. Insert the bulb holder and bulb straight into the circuit board until the bulb holder is firmly seated.
3. Using a small thin-bladed screwdriver, rotate the bulb holder clockwise about 30 degrees on the circuit board to lock it into place.
4. Reinstall the overhead console (1) onto the headliner. (Refer to 8 - ELECTRICAL/OVERHEAD CONSOLE - INSTALLATION).
5. Reconnect the battery negative cable.

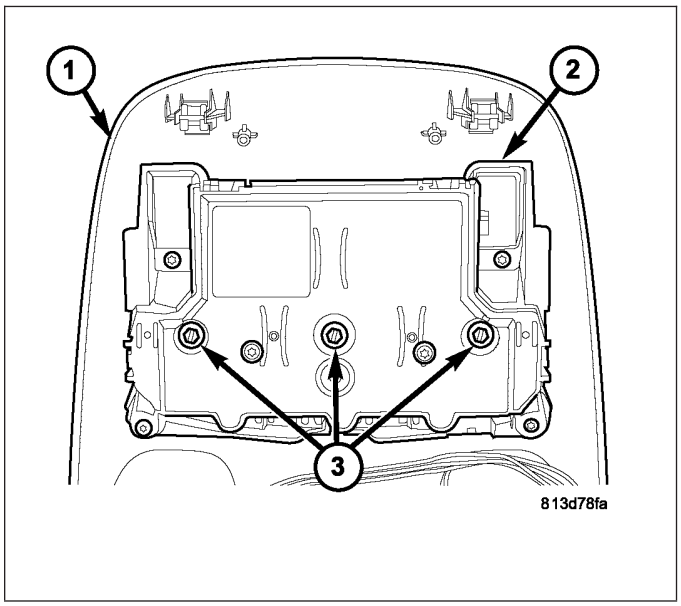

BULB - A/C-HEAT CONTROL

WARNING: To avoid personal injury or death, on vehicles equipped with airbags, disable the supplemental restraint system before attempting any steering wheel, steering column, airbag, seat belt tensioner, impact sensor, or instrument panel component diagnosis or service. Disconnect and isolate the battery negative (ground) cable, then wait two minutes for the system capacitor to discharge before performing further diagnosis or service. This is the only sure way to disable the supplemental restraint system. Failure to take the proper precautions could result in accidental airbag deployment.

CAUTION: Always use the correct bulb size and type for replacement. An incorrect bulb size or type may overheat and cause damage to the lamp, the socket and/or the lamp wiring.

NOTE: There may be minor variations in the locations of the bulb/bulb holder units on the back of the A/C-heater control as a result of various optional A/C-heater control units. However, the bulb types and service procedures are identical for all of these bulbs.

1. Align the bulb holder and bulb (2) with the keyed opening in the circuit board of the A/C-heater control (1).
2. Insert the bulb holder and bulb straight into the circuit board until the bulb holder is firmly seated.
3. Using a small thin-bladed screwdriver, rotate the bulb holder clockwise about 30 degrees on the circuit board to lock it into place.
4. Reinstall the center bezel onto the instrument panel. (Refer to 23 - BODY/INSTRUMENT PANEL/ INSTRUMENT PANEL CENTER BEZEL - INSTALLATION).
5. Reconnect the battery negative cable.

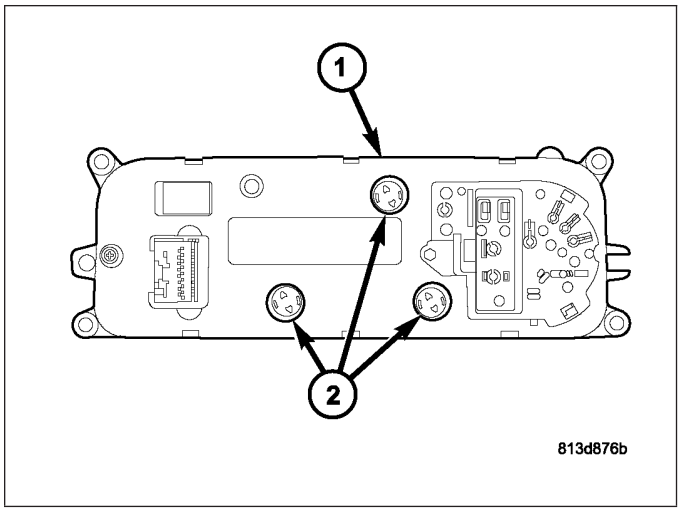

LAMP-DOME

REMOVAL

BULB

NOTE: There are two types of dome lamps available in this model: one with a switch (2) that is activated by depressing the lamp lens, and one without a switch. The bulb types and service procedures are identical for both of these lamps.

1. Disconnect and isolate the battery negative cable.
2. Insert the tip of a small flat-bladed screwdriver into the notch on one side of the dome lamp between the lens (4) and the lamp housing (1).
3. Gently pry the notched edge of the lens downward until it unsnaps from the housing.
4. Swing the notched end of the lens downward far enough to access the bulb (3).
5. Carefully unsnap the bulb from the two bulb holders within the dome lamp housing.

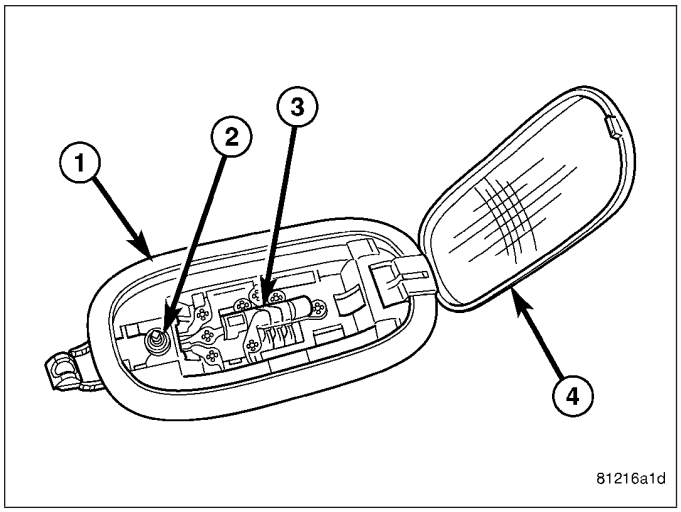

LAMP

NOTE: There are two types of dome lamps available in this model: one with a switch that is activated by depressing the lamp lens, and one without a switch. The bulb types and service procedures are identical for both of these lamps.

1. Disconnect and isolate the battery negative cable.
2. Insert the tip of a small flat bladed screwdriver into the notch (5) between the lens (2) and the housing (1) on one side of the dome lamp unit.
3. Gently pry the end of the lens outward until it unsnaps from the housing.
4. Swing the lens outward until it is perpendicular to the housing.
5. Pull the lens hinge/retainer end (3) of the housing outward slightly from the headliner, then slide the exposed end of the housing away from the mounting hole far enough to disengage the fixed retainer (4) on the notched end from the headliner.
6. Pull the lamp away from the headliner mounting hole far enough to access and disconnect the wire harness connector from the back of the lamp.
7. Remove the lamp from the vehicle.

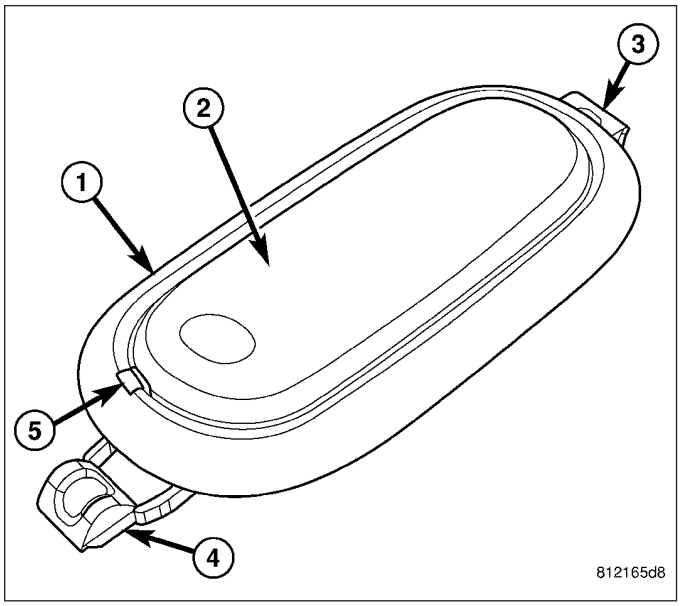

INSTALLATION

BULB

CAUTION: Always use the correct bulb size and type for replacement. An incorrect bulb size or type may overheat and cause damage to the lamp, the socket and/or the lamp wiring.

NOTE: There are two types of dome lamps available in this model: one with a switch (2) that is activated by depressing the lamp lens, and one without a switch. The bulb types and service procedures are identical for both of these lamps.

1. Align the ends of the bulb (3) with the two bulb holders within the dome lamp housing (1).
2. Carefully press the bulb firmly and evenly into the bulb holders until it snaps into place.
3. Swing the notched end of the lens (4) up into position against the housing, then press upward on the lens firmly and evenly until it snaps into the housing.
4. Reconnect the battery negative cable.

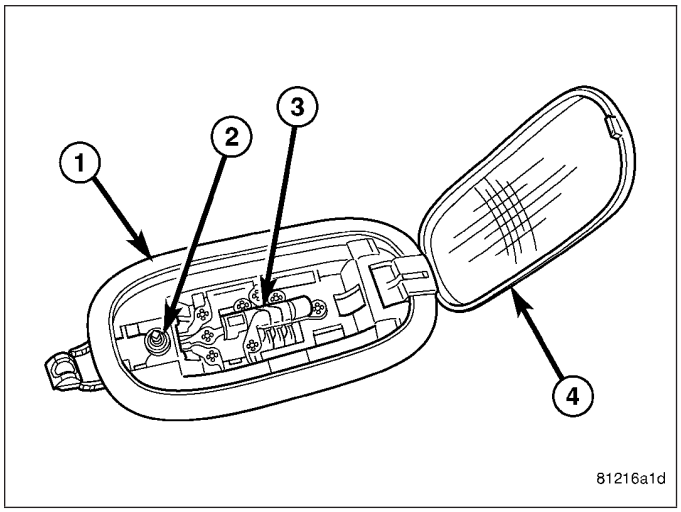

LAMP

NOTE: There are two types of dome lamps available in this model: one with a switch that is activated by depressing the lamp lens, and one without a switch. The bulb types and service procedures are identical for both of these lamps.

1. Position the dome lamp unit (1) to the mounting hole in the headliner.
2. Reconnect the wire harness connector to the connector on the back of the lamp.
3. Insert the fixed retainer on the notched end (4) of the lamp housing up into one side of the mounting hole in the headliner.
4. Slide the notched end of the housing into the mounting hole far enough to engage the lens hinge/retainer (3) into the opposite side of the hole in the headliner.
5. Gently and evenly press the lens hinge/retainer end of the lamp into the mounting hole until the bezel of the lamp housing is flush with the headliner.
6. Swing the notched end of the lamp lens (2) into position against the lamp housing, then press on the lens firmly and evenly until it snaps into the housing.
7. Reconnect the battery negative cable.

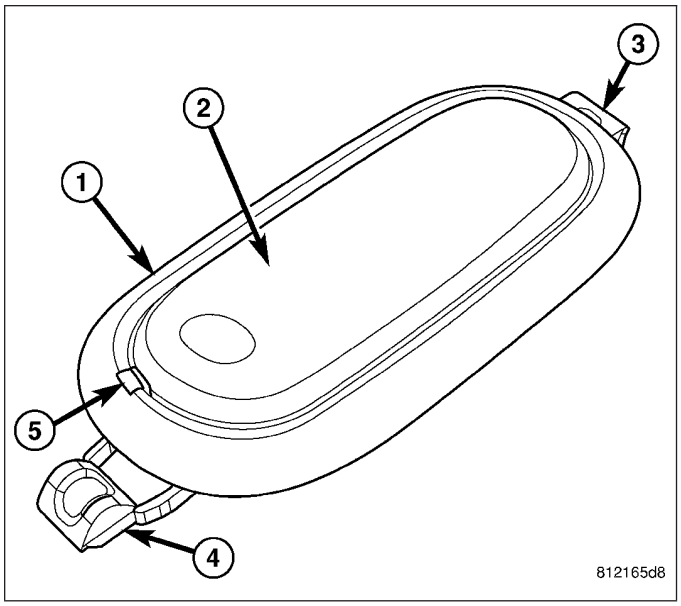

LAMP-READING

REMOVAL

BULB - WITHOUT SUNROOF

NOTE: On vehicles equipped with an optional overhead console the standard front dome lamp is replaced by two combination dome and reading lamps that are integral to the console housing. Each of these lamps is controlled by the door ajar switches on the courtesy lamp circuit, but also are independently controlled by a switch that is activated by depressing the lamp lens. The bulb types and service procedures are identical for both of these lamps.

1. Disconnect and isolate the battery negative cable.
2. Using a small thin-bladed screwdriver, gently pry between each side of the lamp lens and the overhead console housing (1) to unsnap the pivot tabs (3) on the lens from the pivots in the lamp housing.
3. With the lens disengaged from both pivots, pull the front of the lens forward far enough to disengage the tab (2) on the rear edge of the lens from the slot in the rear of the overhead console lamp housing.
4. Remove the lens from the housing.

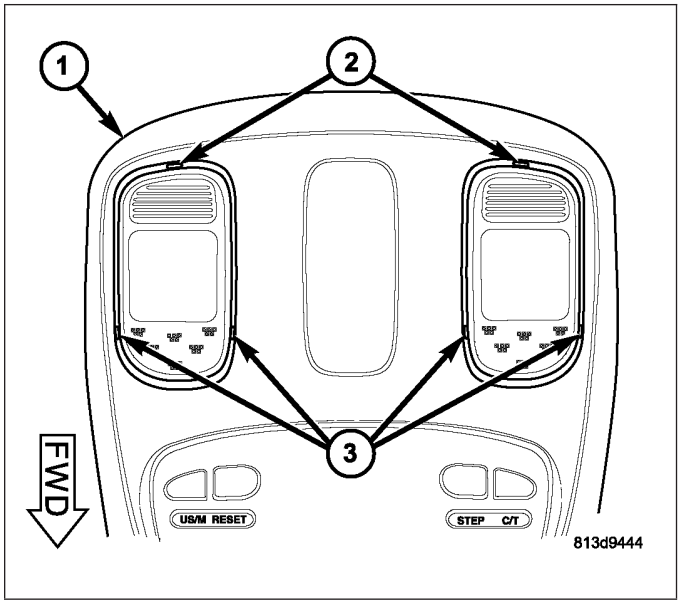

5. Carefully unsnap the bulb (2) from the two bulb holders (1) within the overhead console lamp housing.

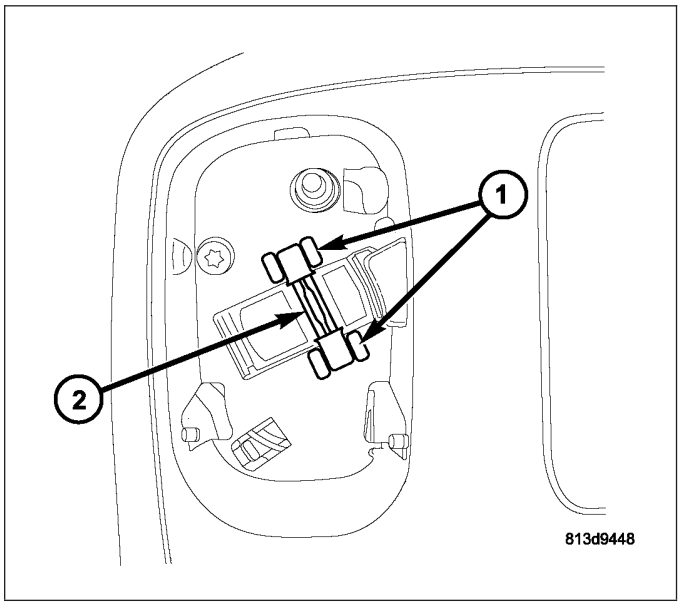

BULB - WITH SUNROOF

NOTE: On vehicles equipped with an optional overhead console the standard front dome lamp is replaced by two combination dome and reading lamps that are integral to the console housing. Each of these lamps is controlled by the door ajar switches on the courtesy lamp circuit, but also are independently controlled by a switch that is activated by depressing the lamp lens. The bulb types and service procedures are identical for both of these lamps.

1. Disconnect and isolate the battery negative cable.
2. Remove the overhead console (3) from the headliner. (Refer to 8 - ELECTRICAL/OVERHEAD CONSOLE - REMOVAL).
3. Firmly grasp the back of the reading lamp bulb socket (1) and unsnap it from the overhead console lamp housing.
4. Pull the socket and bulb (2) straight out from the keyed opening in the lamp housing.
5. Pull the base of the bulb straight out of the socket.

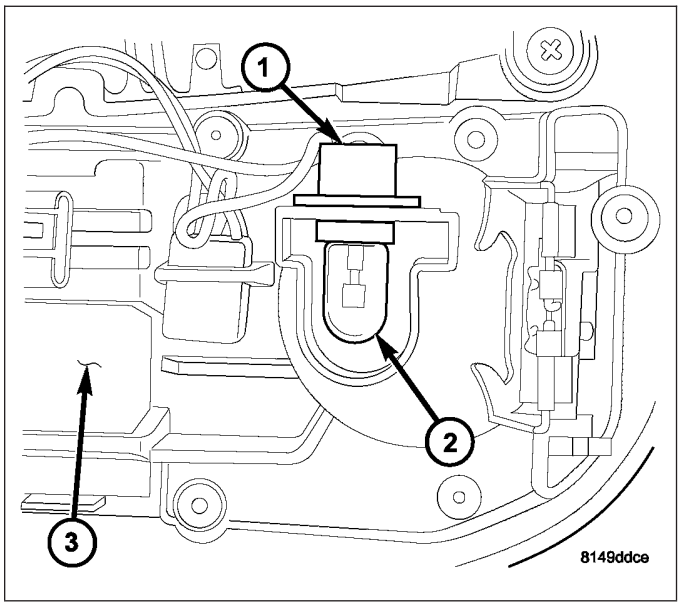

INSTALLATION

BULB - WITHOUT SUNROOF

CAUTION: Always use the correct bulb size and type for replacement. An incorrect bulb size or type may overheat and cause damage to the lamp, the socket and/or the lamp wiring.

NOTE: On vehicles equipped with an optional overhead console the standard front dome lamp is replaced by two combination dome and reading lamps that are integral to the console housing. Each of these lamps is controlled by the door ajar switches on the courtesy lamp circuit, but also are independently controlled by a switch that is activated by depressing the lamp lens. The bulb types and service procedures are identical for both of these lamps.

1. Align the ends of the bulb (2) with the two bulb holders (1) within the overhead console lamp housing.
2. Carefully press the bulb firmly and evenly into the bulb holders until it snaps into place.

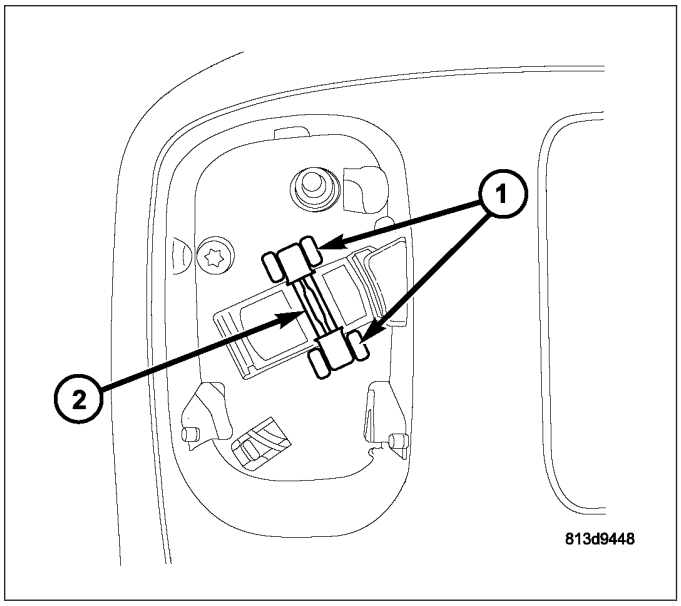

3. Position the lens tab (2) into the slot in the rear of the overhead console (1) lamp housing.
4. Align the pivot tabs (3) on each side of the lens with the pivots within the overhead console lamp housing.
5. Press firmly and evenly on the lens over both pivot locations until both pivot tabs snap back onto the pivots within the housing.
6. Reconnect the battery negative cable.

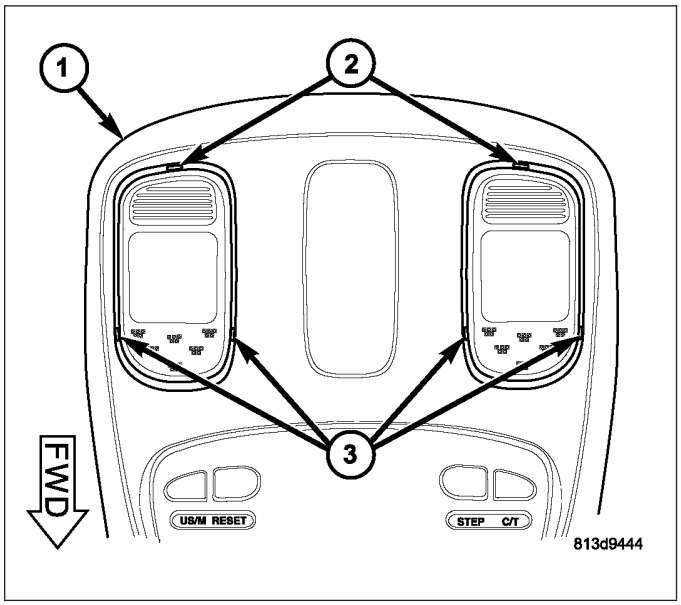

BULB - WITH SUNROOF

CAUTION: Always use the correct bulb size and type for replacement. An incorrect bulb size or type may overheat and cause damage to the lamp, the socket and/or the lamp wiring.

NOTE: On vehicles equipped with an optional overhead console the standard front dome lamp is replaced by two combination dome and reading lamps that are integral to the console housing. Each of these lamps is controlled by the door ajar switches on the courtesy lamp circuit, but also are independently controlled by a switch that is activated by depressing the lamp lens. The bulb types and service procedures are identical for both of these lamps.

1. Align the base of the overhead console reading lamp bulb (2) with the socket (1).
2. Push the bulb straight into the socket until the base is firmly seated.
3. Align the socket and bulb with the keyed opening on the back of lamp housing in the overhead console.
4. Insert the socket and bulb into the housing and press firmly on the back of the socket until it snaps into place and is firmly seated.
5. Reinstall the overhead console onto the headliner. (Refer to 8 - ELECTRICAL/OVERHEAD CONSOLE - INSTALLATION).
6. Reconnect the battery negative cable.

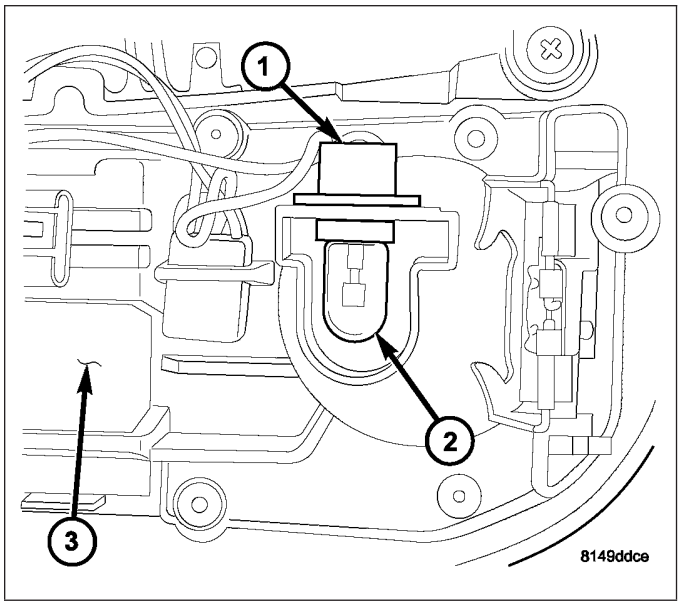

DOOR AJAR SWITCH

DESCRIPTION

This vehicle has up to four door ajar switches, one for each door. Each switch is concealed within and integral to its respective door latch unit. The switches are momentary leaf contact-type units that are actuated by the mechanisms internal to the door latch. A short pigtail wire and connector on each door latch connects the door ajar switch to the vehicle electrical system through its respective door wire harness. The door ajar switches cannot be adjusted or repaired and, if faulty or damaged, the door latch unit must be replaced. (Refer to 23 - BODY/DOOR - FRONT/LATCH - REMOVAL) or (Refer to 23 - BODY/DOOR - REAR/LATCH - REMOVAL).

OPERATION

The door ajar switches are actuated by the mechanisms internal to the door latch. When a door is closed and properly latched, its door ajar switch is an open circuit. When a door is open or only partially latched, the door ajar switch is a closed circuit. The door ajar switches are hard wired in series between a body ground and the Electro-Mechanical Instrument Cluster (EMIC). The EMIC reads the hard wired door ajar switch inputs through internal pull-ups, then uses these inputs to control many electronic functions and features of the vehicle.

The EMIC also sends the proper switch status messages to other electronic modules over the Programmable Communications Interface (PCI) data bus network. The door ajar switches can be diagnosed and tested using conventional diagnostic tools and methods. Refer to the appropriate wiring information. However, conventional diagnostic methods may not prove conclusive in the diagnosis of the EMIC, the PCI data bus, or the electronic messaging used to convey door ajar switch status to other modules in the vehicle. The most reliable, efficient, and accurate means to diagnose the EMIC, the PCI data bus, and both the hard wired and electronic message inputs and outputs affected by the door ajar switch inputs requires the use of a diagnostic scan tool. Refer to the appropriate diagnostic information.

LAMP-GLOVE BOX

REMOVAL

BULB

WARNING: To avoid personal injury or death, on vehicles equipped with airbags, disable the supplemental restraint system before attempting any steering wheel, steering column, airbag, seat belt tensioner, impact sensor, or instrument panel component diagnosis or service. Disconnect and isolate the battery negative (ground) cable, then wait two minutes for the system capacitor to discharge before performing further diagnosis or service. This is the only sure way to disable the supplemental restraint system. Failure to take the proper precautions could result in accidental airbag deployment.

1. Disconnect and isolate the battery negative cable.
2. Open the glove box door.
3. Reach through the window (3) in the instrument panel glove box opening (1) to access the bulb on the side of the glove box lamp and switch unit (2).
4. Pull the base of the bulb straight out of the bulb holder.

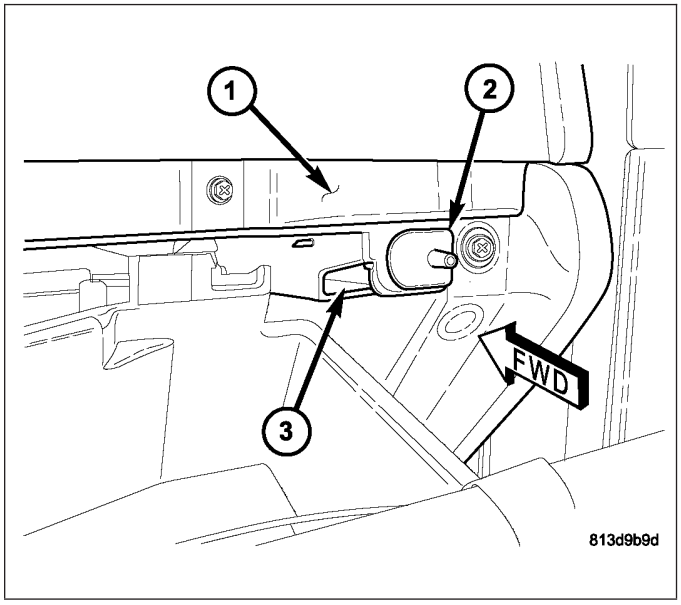

LAMP/SWITCH

WARNING: To avoid personal injury or death, on vehicles equipped with airbags, disable the supplemental restraint system before attempting any steering wheel, steering column, airbag, seat belt tensioner, impact sensor, or instrument panel component diagnosis or service. Disconnect and isolate the battery negative (ground) cable, then wait two minutes for the system capacitor to discharge before performing further diagnosis or service. This is the only sure way to disable the supplemental restraint system. Failure to take the proper precautions could result in accidental airbag deployment.

1. Disconnect and isolate the battery negative cable.
2. Open the glove box door.
3. Reach through the window in the instrument panel (2) glove box opening behind the switch to access and depress the retaining latch on either side of the glove box lamp and switch unit (3).
4. While holding the retaining latch depressed, push the glove box lamp and switch unit out through the mounting hole in the face of the instrument panel.
5. Disconnect the wire harness connector (1) from the glove box lamp and switch.
6. Remove the lamp and switch unit from the instrument panel.

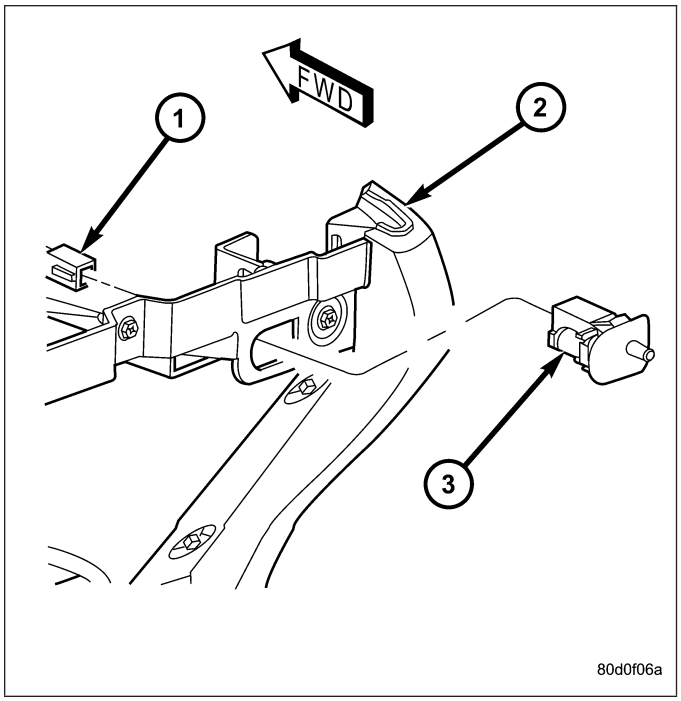

INSTALLATION

BULB

WARNING: To avoid personal injury or death, on vehicles equipped with airbags, disable the supplemental restraint system before attempting any steering wheel, steering column, airbag, seat belt tensioner, impact sensor, or instrument panel component diagnosis or service. Disconnect and isolate the battery negative (ground) cable, then wait two minutes for the system capacitor to discharge before performing further diagnosis or service. This is the only sure way to disable the supplemental restraint system. Failure to take the proper precautions could result in accidental airbag deployment.

CAUTION: Always use the correct bulb size and type for replacement. An incorrect bulb size or type may overheat and cause damage to the lamp, the socket and/or the lamp wiring.

1. Reach through the window (3) in the instrument panel glove box opening (1) to align the base of the bulb with the bulb holder on the side of the glove box lamp and switch unit (2).
2. Push the bulb straight into the bulb holder until the base is firmly seated.
3. Close the glove box door.
4. Reconnect the battery negative cable.

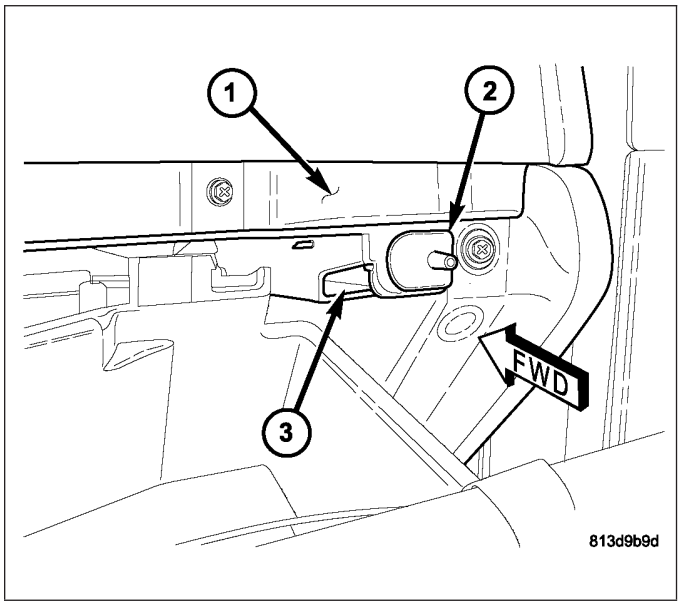

LAMP/SWITCH

WARNING: To avoid personal injury or death, on vehicles equipped with airbags, disable the supplemental restraint system before attempting any steering wheel, steering column, airbag, seat belt tensioner, impact sensor, or instrument panel component diagnosis or service. Disconnect and isolate the battery negative (ground) cable, then wait two minutes for the system capacitor to discharge before performing further diagnosis or service. This is the only sure way to disable the supplemental restraint system. Failure to take the proper precautions could result in accidental airbag deployment.

1. Position the glove box lamp and switch unit (3) to the instrument panel (2) glove box opening.
2. Reconnect the wire harness connector (1) to the lamp and switch unit.
3. Feed the wire harness back through the switch mounting hole.
4. Align the lamp and switch unit with the mounting hole in the instrument panel.
5. Using hand pressure, push the lamp and switch unit firmly and evenly into the mounting hole until it is fully seated.
6. Close the glove box door.
7. Reconnect the battery negative cable.

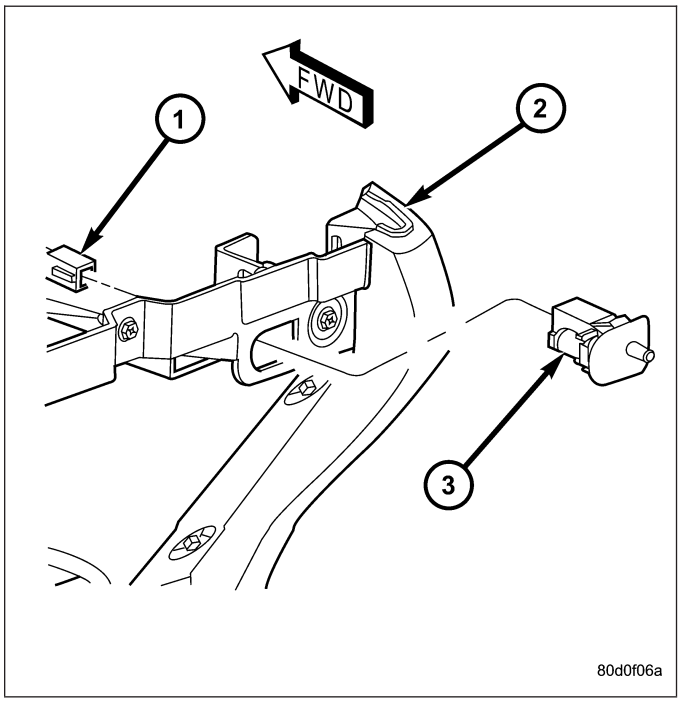

VANITY LAMP

REMOVAL - BULB

NOTE: Vehicles equipped with optional vanity lamps have a mirror with a lamp that is integral to each sun visor. Each lamp is independently controlled by an integral switch that is automatically actuated by the mirror cover. The bulb types and service procedures are identical for both of these lamps.

1. Disconnect and isolate the battery negative cable.
2. Insert a small flat-bladed screwdriver on either side near the top or the bottom between the vanity lamp lens (2) and the lamp housing of the sun visor (1).
3. Carefully pry the lens outward until it unsnaps from the lamp housing.

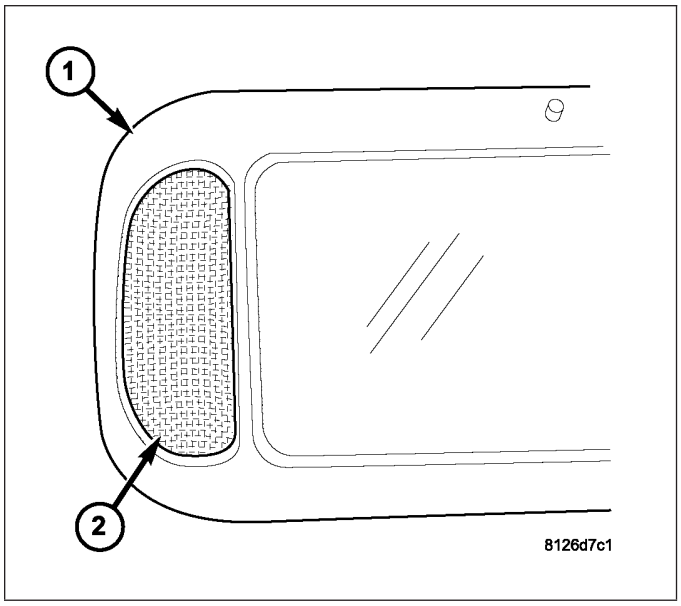

4. Using small needle-nose pliers, carefully grasp the bulb (2) and pull the base out of the lamp socket.

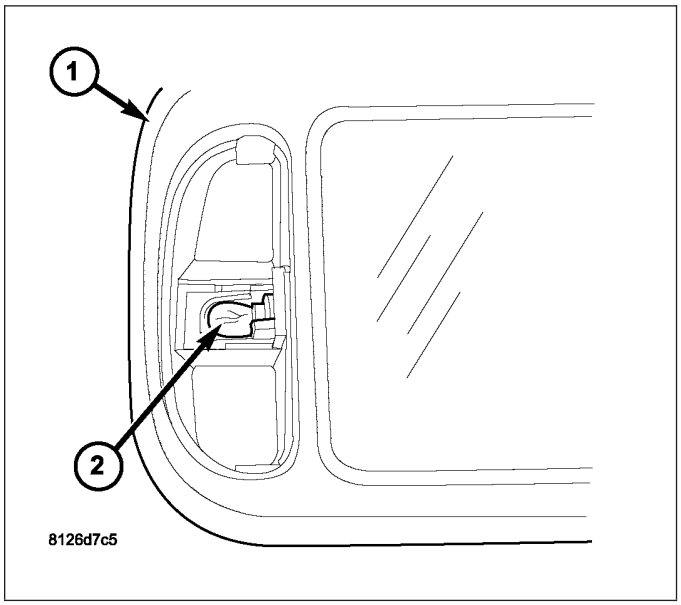

INSTALLATION - BULB

CAUTION: Always use the correct bulb size and type for replacement. An incorrect bulb size or type may overheat and cause damage to the lamp, the socket and/or the lamp wiring.

NOTE: Vehicles equipped with optional vanity lamps have a mirror with a lamp that is integral to each sun visor. Each lamp is independently controlled by an integral switch that is automatically actuated by the mirror cover. The bulb types and service procedures are identical for both of these lamps.

1. Using small needle-nose pliers, carefully grasp the vanity lamp bulb (2) and align the base of the bulb with the socket in the lamp housing of the sun visor (1).
2. Push the bulb straight into the socket until the base is fully seated.

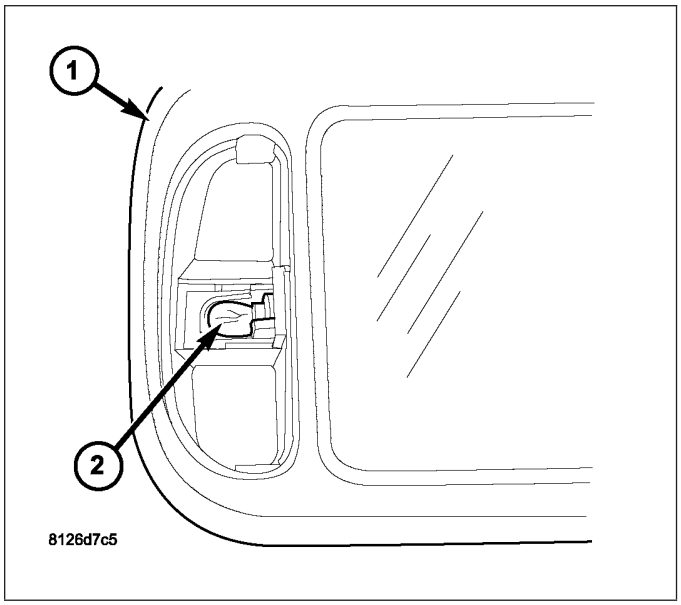

3. Insert one tab on the top or the bottom of the lens (2) into the appropriate slot at the top or bottom of the lamp housing.
4. Flex the lens far enough to engage the loose tab into its slot in the lamp housing.
5. Reconnect the battery negative cable.

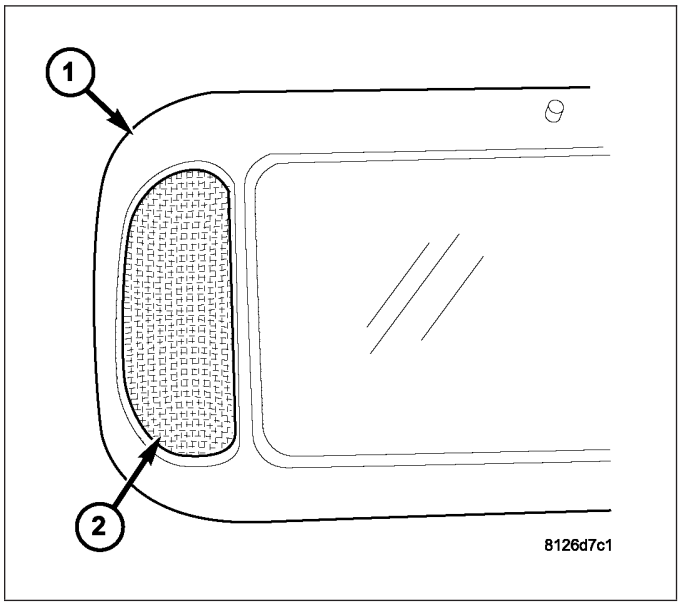

MESSAGE SYSTEMS

TABLE OF CONTENTS

page

OVERHEAD CONSOLE - ELECTRICAL DIAGNOSTICS 1

page

OVERHEAD CONSOLE - SERVICE INFORMATION 22

OVERHEAD CONSOLE - ELECTRICAL DIAGNOSTICS

TABLE OF CONTENTS

page

OVERHEAD CONSOLE - ELECTRICAL DIAGNOSTICS
DIAGNOSIS AND TESTING
BUS MESSAGES MISSING 2
CMTC INTERNAL FAILURE 3
DEMAGNETIZE COMPASS AS PER SERVICE MANUAL 4
FCM - AMBIENT TEMP CONFIGURATION ERROR 5
FCM - AMBIENT TEMP SENSOR INPUT LOW 6
FCM - AMBIENT TEMP SENSOR INPUT OPEN 9
SET COMPASS VARIANCE AS PER SERVICE INFORMATION 12

page

*AVERAGE FUEL ECONOMY INACCURATE OR WRONG 13
*DISTANCE TO EMPTY INACCURATE OR WRONG 14
*ELAPSED IGNITION ON TIME INACCURATE OR WRONG 15
*TRIP ODOMETER INACCURATE OR WRONG 16
*CMTC OR EVIC INOPERATIVE 17
*COMPASS TEST FAILURE 19
*TEMPERATURE DISPLAY INACCURATE OR INOPERATIVE 20
SCHEMATICS AND DIAGRAMS 21

OVERHEAD CONSOLE - ELECTRICAL DIAGNOSTICS

DIAGNOSIS AND TESTING

BUS MESSAGES MISSING

For a complete wiring diagram **Refer to Section 8W**.

Possible Causes
NO RESPONSE - PCI BUS - PCM
NO RESPONSE - PCI BUS - MIC

1. NO RESPONSE - PCI BUS - PCM

Turn the ignition on.
With the DRBIII®, select SYSTEM MONITORS, then J1850 Module Scan..

Does the DRBIII® display PCM Active on the Bus?

Yes >> Go To 2

No >> Refer to COMMUNICATION category for the related symptom.
Perform BODY VERIFICATION TEST - VER 1. (Refer to BODY VERIFICATION TEST - VER 1.)

---

2. NO RESPONSE - PCI BUS - MIC

Turn the ignition on.
With the DRBIII®, select Electro/Mechanical Instrument Cluster.

Is there a response from the Instrument Cluster?

Yes >> Replace and configure the Electronic Overhead Module in accordance with the Service Information.
Perform BODY VERIFICATION TEST - VER 1. (Refer to BODY VERIFICATION TEST - VER 1.)

No >> Refer to COMMUNICATION category for the related symptom.
Perform BODY VERIFICATION TEST - VER 1. (Refer to BODY VERIFICATION TEST - VER 1.)

CMTC INTERNAL FAILURE

For a complete wiring diagram **Refer to Section 8W**.

Possible Causes
ELECTRONIC OVERHEAD MODULE

Diagnostic Test

1. ELECTRONIC OVERHEAD MODULE

Perform the EOM Self Test.
Turn the ignition off.
Press and hold the C/T button and the RESET button.
Turn the ignition on.

NOTE: The EOM Self Test can also be performed using the DRBIII®.
Turn the ignition on.
With the DRBIII®, select body, EOM, System Test, then Self Test.
Observe the DRBIII® or the EOM display following the Self Test.

When the trouble code EOM INTERNAL FAILURE is displayed, View repair.

Repair

Replace and program the Electronic Overhead Module in accordance with the service information.
Perform BODY VERIFICATION TEST - VER 1. (Refer to BODY VERIFICATION TEST - VER 1.)

DEMAGNETIZE COMPASS AS PER SERVICE MANUAL

For a complete wiring diagram **Refer to Section 8W**.

Possible Causes
DEMAGNETIZE COMPASS

Diagnostic Test

1. DEMAGNETIZE COMPASS

NOTE: A blank compass display indicates that vehicle demagnetizing is required.

NOTE: After demagnetizing, the vehicle will enter Auto Fast-Cal when the ignition is turned on.

NOTE: Ensure that the correct compass variance is stored in the compass memory. See ″Setting Compass Variance″ in the Service Information.

Refer to the Service Information for the Demagnetizing Procedure.

View repair for Verification Test.

Repair

When the Demagnetizing Procedure is complete perform the Verification Test.

Perform BODY VERIFICATION TEST - VER 1. (Refer to BODY VERIFICATION TEST - VER 1.)

FCM - AMBIENT TEMP CONFIGURATION ERROR

For a complete wiring diagram **Refer to Section 8W**.

- **When Monitored:**
  During power up.
- **Set Condition:**
  The FCM detects that an Ambient Temperature Sensor is present on the input circuit and has gone through auto-configuration and another module is transmitting a redundant ambient temp message.

Possible Causes
INCORRECT CONFIGURATION

Diagnostic Test

1. INCORRECT CONFIGURATION

NOTE: This code will only set if the FCM detects that another module transmitting a redundant ambient temp message.

NOTE: Diagnose and repair any Communication DTCs before proceeding with this test.

Ensure that the vehicle has only one Ambient Temperature Sensor, and that it is hardwired to the FCM.

With the DRBIII®, erase DTCs.

Cycle the ignition to auto-configure the FCM.

With the DRBIII®, read DTCs.

Did this DTC reset?

Yes >> Ensure that the vehicle is not equipped with multiple Ambient Temperature Sensors. If vehicle is equipped with NGC, disconnect the ambient temp sensor to the FCM and cycle the ignition.
Perform BODY VERIFICATION TEST - VER 1. (Refer to BODY VERIFICATION TEST - VER 1.)

No >> Replace and program the Front Control Module in accordance with the Service Information.
Perform BODY VERIFICATION TEST - VER 1. (Refer to BODY VERIFICATION TEST - VER 1.)

FCM - AMBIENT TEMP SENSOR INPUT LOW

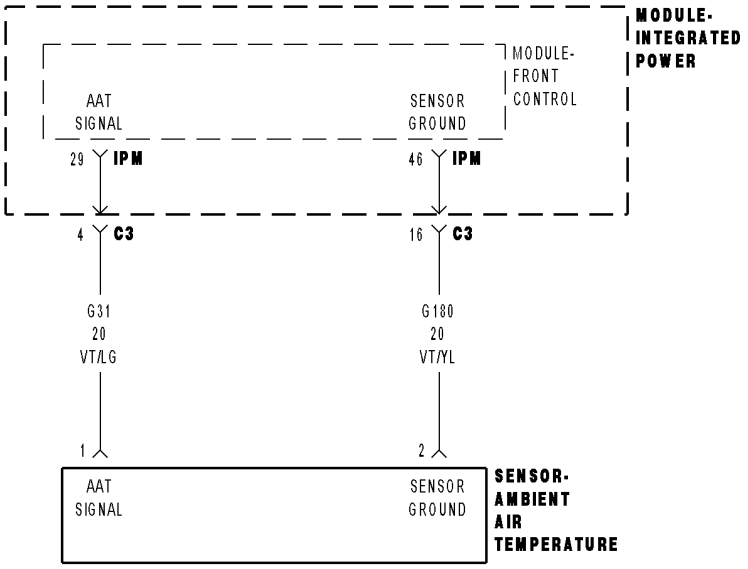

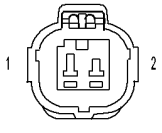

SENSOR-
AMBIENT AIR
TEMPERATURE

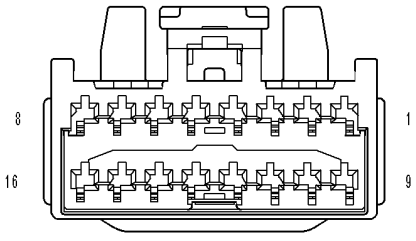

MODULE-
INTEGRATED
POWER C3

81455003

FCM - AMBIENT TEMP SENSOR INPUT LOW (CONTINUED)

For the Electronic Overhead Module circuit diagram (Refer to 8 - ELECTRICAL/OVERHEAD CONSOLE - SCHEMATICS AND DIAGRAMS).

For a complete wiring diagram **Refer to Section 8W**.

- **When Monitored:**
  Continuous with the ignition on.
- **Set Condition:**
  The FCM detects less than 0.5 volts on the Ambient Temperature Sensor Signal circuit.

Possible Causes
(G31) AMBIENT TEMPERATURE SENSOR SIGNAL CIRCUIT SHORTED TO GROUND
(G31) AMBIENT TEMPERATURE SENSOR SIGNAL CIRCUIT SHORTED TO THE (G180) AMBIENT TEMPERATURE SENSOR GROUND CIRCUIT
AMBIENT TEMPERATURE SENSOR

Diagnostic Test

1. AMBIENT TEMPERATURE SENSOR

Disconnect the Ambient Temperature Sensor harness connector.

Close all vehicle doors.

Turn the ignition on.

With the DRBIII® in Sensors, read the Ambient Temperature Sensor voltage.

Is the voltage above 4.8 volts?

Yes >> Replace the Ambient Temperature Sensor.
Perform BODY VERIFICATION TEST - VER 1. (Refer to BODY VERIFICATION TEST - VER 1.)

No >> Go To 2

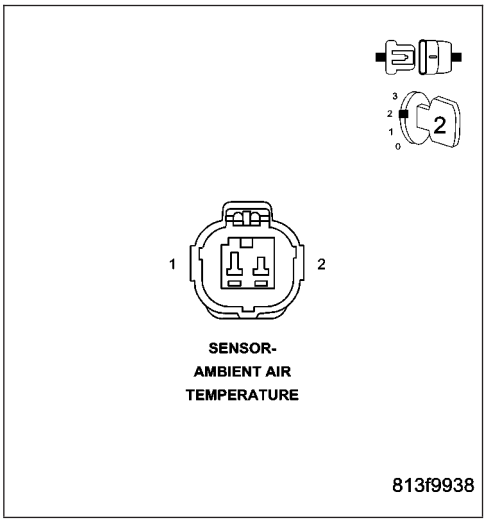

FCM - AMBIENT TEMP SENSOR INPUT LOW (CONTINUED)

2. CHECK THE (G31) AMBIENT TEMPERATURE SENSOR SIGNAL CIRCUIT FOR A SHORT TO GROUND

Turn the ignition off.

Disconnect the IPM C3 harness connector.

Measure the resistance between ground and the (G31) Ambient Temperature Sensor Signal circuit.

Is the resistance below 5.0 ohms?

Yes >> Repair the (G31) Ambient Temperature Sensor Signal circuit for a short to ground.

Perform BODY VERIFICATION TEST - VER 1. (Refer to BODY VERIFICATION TEST - VER 1.)

No >> Go To 3

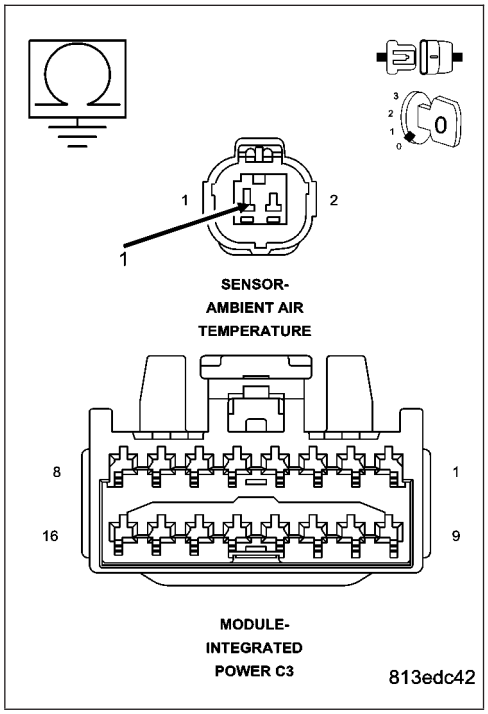

3. CHECK THE (G31) AMBIENT TEMPERATURE SENSOR SIGNAL CIRCUIT FOR A SHORT TO THE (G180) AMBIENT TEMPERATURE SENSOR GROUND CIRCUIT

Measure the resistance between the (G31) Ambient Temperature Sensor Signal circuit and the (G180) Ambient Temperature Sensor Ground circuit.

Is the resistance below 5.0 ohms?

Yes >> Repair the (G31) Ambient Temperature Sensor Signal circuit for a short to the (G180) Ambient Temperature Sensor Ground circuit..

Perform BODY VERIFICATION TEST - VER 1. (Refer to BODY VERIFICATION TEST - VER 1.)

No >> Replace the Front Control Module in accordance with the Service Information.

Perform BODY VERIFICATION TEST - VER 1. (Refer to BODY VERIFICATION TEST - VER 1.)

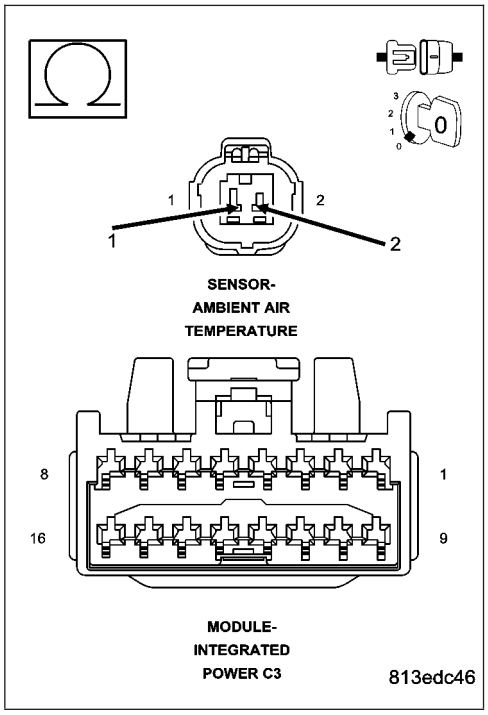

FCM - AMBIENT TEMP SENSOR INPUT OPEN

For the Electronic Overhead Module circuit diagram (Refer to 8 - ELECTRICAL/OVERHEAD CONSOLE - SCHEMATICS AND DIAGRAMS).

For a complete wiring diagram **Refer to Section 8W**.

- **When Monitored:**
  Continuous with the ignition on.
- **Set Condition:**
  The FCM detects more than 5.0 volts on the Ambient Temperature Sensor Signal circuit.

Possible Causes
(G31) AMBIENT TEMPERATURE SENSOR SIGNAL CIRCUIT SHORT TO VOLTAGE
(G930) AMBIENT TEMPERATURE SENSOR GROUND CIRCUIT OPEN
(G31) AMBIENT TEMPERATURE SENSOR SIGNAL CIRCUIT OPEN
AMBIENT TEMPERATURE SENSOR

1. AMBIENT TEMPERATURE SENSOR

Disconnect the Ambient Temperature Sensor harness connector.

Connect a jumper wire between the sensor signal and sensor ground circuits.

Close all vehicle doors.

Turn the ignition on.

With the DRBIII® in Sensors, read the Ambient Temperature Sensor voltage.

Is the voltage below 0.5 volts?

Yes >> Replace the Ambient Temperature Sensor.
Perform BODY VERIFICATION TEST - VER 1. (Refer to BODY VERIFICATION TEST - VER 1.)

No >> Go To 2

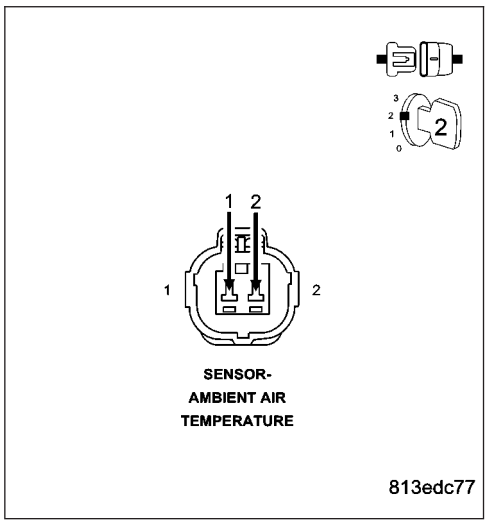

FCM - AMBIENT TEMP SENSOR INPUT OPEN (CONTINUED)

2. CHECK THE (G31) AMBIENT TEMPERATURE SENSOR SIGNAL CIRCUIT FOR A SHORT TO VOLTAGE

Turn the ignition off.

Disconnect the IPM C3 harness connector.

Turn the ignition on.

Measure the voltage between the (G31) Ambient Temperature Sensor Signal circuit and ground.

Is there any voltage present?

Yes >> Repair the (G31) Ambient Temperature Sensor Signal circuit for a short to voltage.
Perform BODY VERIFICATION TEST - VER 1. (Refer to BODY VERIFICATION TEST - VER 1.)

No >> Go To 3

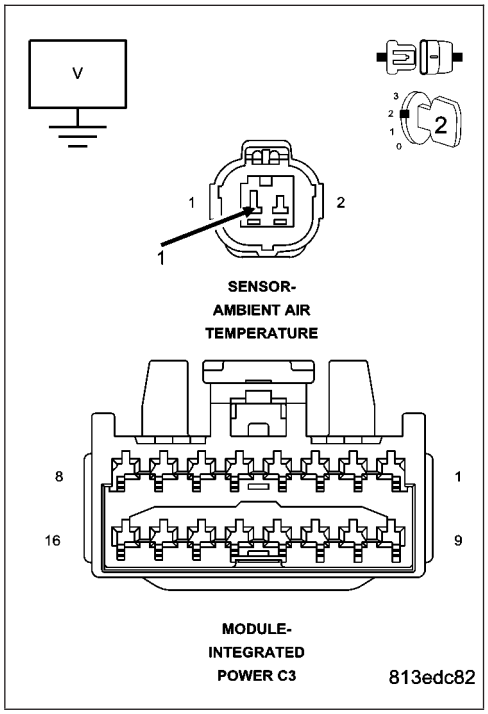

3. CHECK THE (G180) AMBIENT TEMPERATURE SENSOR GROUND CIRCUIT FOR AN OPEN

Turn the ignition off.

Measure the resistance of the (G180) Ambient Temperature Sensor Ground circuit between the IPM C3 harness connector and the Ambient Temperature Sensor harness connector.

Is the resistance above 5.0 ohms?

Yes >> Repair the (G180) Ambient Temperature Sensor Ground circuit for an open.
Perform BODY VERIFICATION TEST - VER 1. (Refer to BODY VERIFICATION TEST - VER 1.)

No >> Go To 4

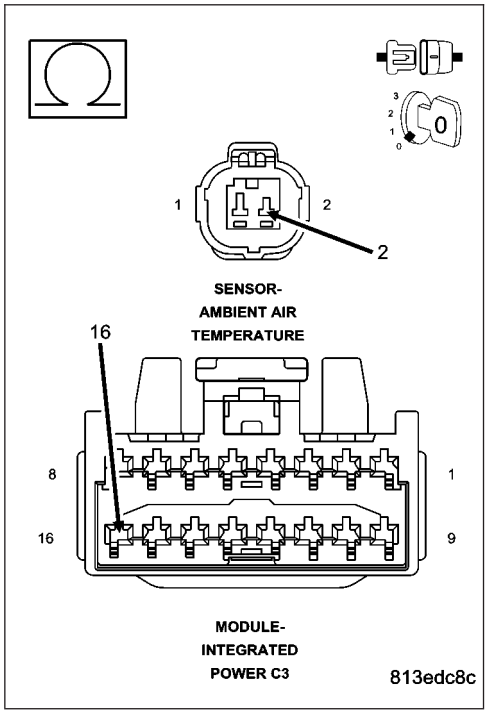

FCM - AMBIENT TEMP SENSOR INPUT OPEN (CONTINUED)

4. CHECK THE (G31) AMBIENT TEMPERATURE SENSOR SIGNAL CIRCUIT FOR AN OPEN

Measure the resistance of the (G31) Ambient Temperature Sensor Signal circuit between the IPM C3 harness connector and the Ambient Temperature Sensor harness connector.

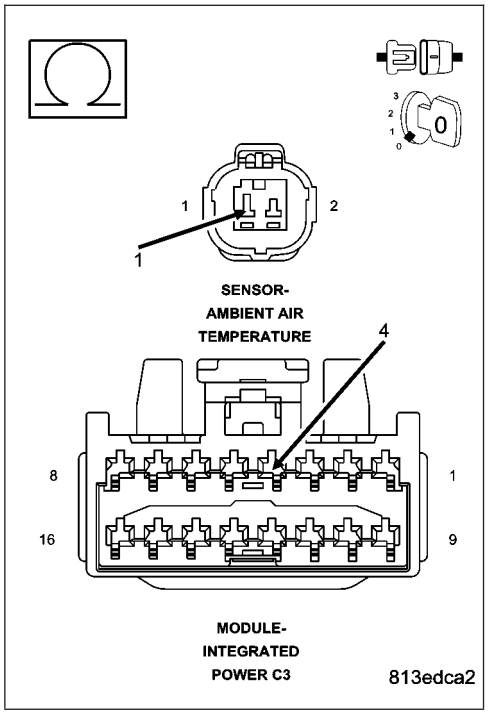

Is the resistance above 5.0 ohms?

Yes >> Repair the (G31) Ambient Temperature Sensor Signal circuit for an open.

Perform BODY VERIFICATION TEST - VER 1. (Refer to BODY VERIFICATION TEST - VER 1.)

No >> Replace the Front Control Module in accordance with the Service Information.

Perform BODY VERIFICATION TEST - VER 1. (Refer to BODY VERIFICATION TEST - VER 1.)

SET COMPASS VARIANCE AS PER SERVICE INFORMATION

For a complete wiring diagram **Refer to Section 8W**.

Possible Causes
SET COMPASS VARIANCE

1. SET COMPASS VARIANCE

Refer to the Service Information for the Compass Variance procedure.

View repair for the Verification Test.

Repair

When the Compass Variance procedure is complete perform the Verification Test.
Perform BODY VERIFICATION TEST - VER 1. (Refer to BODY VERIFICATION TEST - VER 1.)

*AVERAGE FUEL ECONOMY INACCURATE OR WRONG

For a complete wiring diagram **Refer to Section 8W**.

Possible Causes
ELECTRONIC OVERHEAD MODULE

1. ELECTRONIC OVERHEAD MODULE

NOTE: Diagnose and repair any FCM, PCM, or Communication DTCs before proceeding with this test.

NOTE: Ensure that the EOM has been configured for the correct fuel tank size. Use the DRBIII® to verify or modify the fuel tank size configuration.

Perform the EOM Self Test.

The self test can be performed with the DRBIII® or manually using the following procedure:

Turn the ignition off.

Press and hold the RESET and C/T buttons.

Turn the ignition on.

Continue to hold both buttons until the software version is displayed, then release the buttons.

Observe the EOM display when the self test is complete.

Did the EOM display ″FAILED SELF TEST″?

Yes >> Replace and configure the Electronic Overhead Module in accordance with the Service Information. Perform BODY VERIFICATION TEST - VER 1. (Refer to BODY VERIFICATION TEST - VER 1.)

No >> Test Complete.

*DISTANCE TO EMPTY INACCURATE OR WRONG

For a complete wiring diagram **Refer to Section 8W**.

Possible Causes
ELECTRONIC OVERHEAD MODULE

1. ELECTRONIC OVERHEAD MODULE

NOTE: Diagnose and repair any FCM, PCM, or Communication DTCs before proceeding with this test.

NOTE: Ensure that the EOM has been configured for the correct fuel tank size. Use the DRBIII® to verify or modify the fuel tank size configuration.

Perform the EOM Self Test.

The self test can be performed with the DRBIII® or manually using the following procedure:

Turn the ignition off.

Press and hold the RESET and C/T buttons.

Turn the ignition on.

Continue to hold both buttons until the software version is displayed, then release the buttons.

Observe the EOM display when the self test is complete.

Did the EOM display ″FAILED SELF TEST″?

Yes >> Replace and configure the Electronic Overhead Module in accordance with the Service Information. Perform BODY VERIFICATION TEST - VER 1. (Refer to BODY VERIFICATION TEST - VER 1.)

No >> Test Complete.

*ELAPSED IGNITION ON TIME INACCURATE OR WRONG

For a complete wiring diagram **Refer to Section 8W**.

Possible Causes
ELECTRONIC OVERHEAD MODULE

1. ELECTRONIC OVERHEAD MODULE

NOTE: Diagnose and repair any FCM, PCM, or Communication DTCs before proceeding with this test.

NOTE: Ensure that the EOM has been configured for the correct fuel tank size. Use the DRBIII® to verify or modify the fuel tank size configuration.

Perform the EOM Self Test.

The self test can be performed with the DRBIII® or manually using the following procedure:

Turn the ignition off.

Press and hold the RESET and C/T buttons.

Turn the ignition on.

Continue to hold both buttons until the software version is displayed, then release the buttons.

Observe the EOM display when the self test is complete.

Did the EOM display ″FAILED SELF TEST″?

Yes >> Replace and configure the Electronic Overhead module in accordance with the Service Information. Perform BODY VERIFICATION TEST - VER 1. (Refer to BODY VERIFICATION TEST - VER 1.)

No >> Test Complete.

*TRIP ODOMETER INACCURATE OR WRONG

For a complete wiring diagram **Refer to Section 8W**.

Possible Causes
ELECTRONIC OVERHEAD MODULE

1. ELECTRONIC VEHICLE INFORMATION CENTER

NOTE: Diagnose and repair any FCM, PCM, or Communication DTCs before proceeding with this test.

NOTE: Ensure that the EOM has been configured for the correct fuel tank size. Use the DRBIII® to verify or modify the fuel tank size configuration.

Perform the EOM Self Test.

The self test can be performed with the DRBIII® or manually using the following procedure:

Turn the ignition off.

Press and hold the RESET and C/T buttons.

Turn the ignition on.

Continue to hold both buttons until the software version is displayed, then release the buttons.

Observe the EOM display when the self test is complete.

Did the EOM display ″FAILED SELF TEST″?

Yes >> Replace and configure the Electronic Overhead Module in accordance with the Service Information. Perform BODY VERIFICATION TEST - VER 1. (Refer to BODY VERIFICATION TEST - VER 1.)

No >> Test Complete.

*CMTC OR EVIC INOPERATIVE

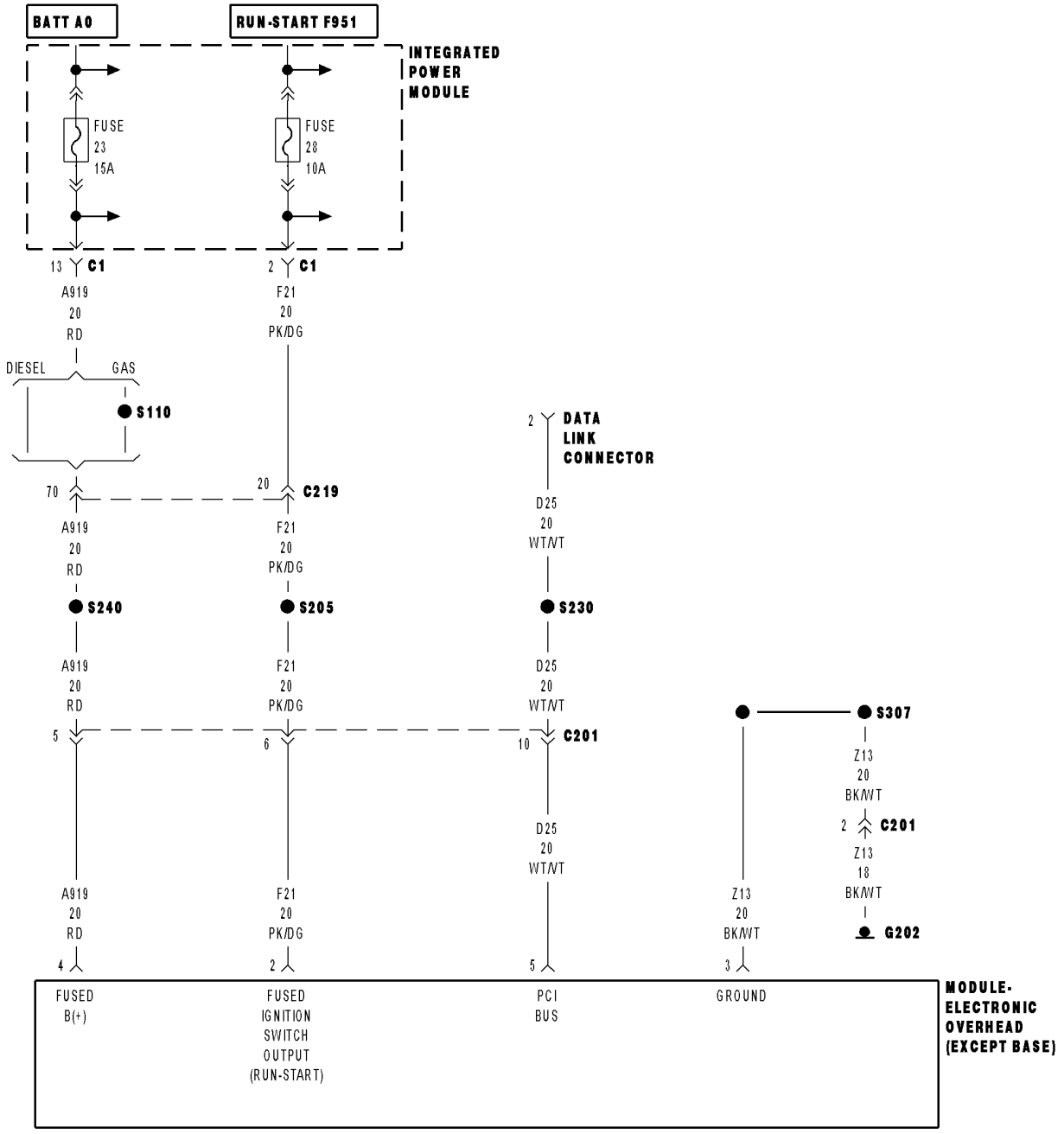

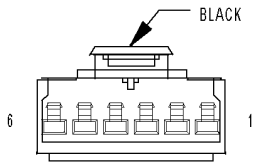

MODULE-ELECTRONIC OVERHEAD (EXCEPT BASE)

8131a38a

***CMTC OR EVIC INOPERATIVE (CONTINUED)**

For the Electronic Overhead Module circuit diagram (Refer to 8 - ELECTRICAL/OVERHEAD CONSOLE - SCHEMATICS AND DIAGRAMS).

For a complete wiring diagram **Refer to Section 8W**.

Possible Causes
(F21) FUSED IGNITION SWITCH OUTPUT (RUN/START) CIRCUIT OPEN
(Z13) ELECTRONIC OVERHEAD MODULE GROUND CIRCUIT OPEN
ELECTRONIC OVERHEAD MODULE

1. (F21) FUSED IGNITION RUN/START CIRCUIT OPEN

NOTE: Diagnose and repair any MIC, FCM, PCM, or Communication DTCs before proceeding.

Turn the ignition off.

Disconnect the Electronic Overhead Module harness connector.

Turn the ignition on.

Measure the voltage between the (F21) Fused Ignition Switch Output (Run/Start) circuit and ground.

Is the voltage below 10.5 volts?

Yes >> Repair the (F21) Fused Ignition Switch Output (Run/Start) circuit for an open.
Perform BODY VERIFICATION TEST - VER 1. (Refer to BODY VERIFICATION TEST - VER 1.)

No >> Go To 2

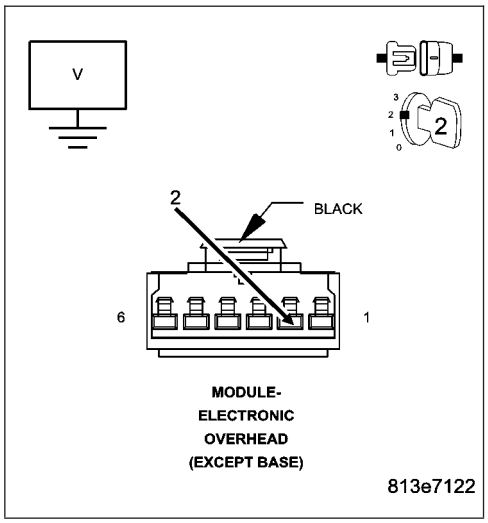

2. (Z13) ELECTRONIC OVERHEAD MODULE GROUND CIRCUIT OPEN

Trun the ignition off.

Measure the resistance between ground and the (Z13) Electronic Overhead Module Ground circuit.

Is the resistance above 5.0 ohms?

Yes >> Repair the (Z13) Electronic Overhead Module Ground circuit for an open.
Perform BODY VERIFICATION TEST - VER 1. (Refer to BODY VERIFICATION TEST - VER 1.)

No >> Replace the Electronic Overhead Module in accordance with the Service Information.
Perform BODY VERIFICATION TEST - VER 1. (Refer to BODY VERIFICATION TEST - VER 1.)

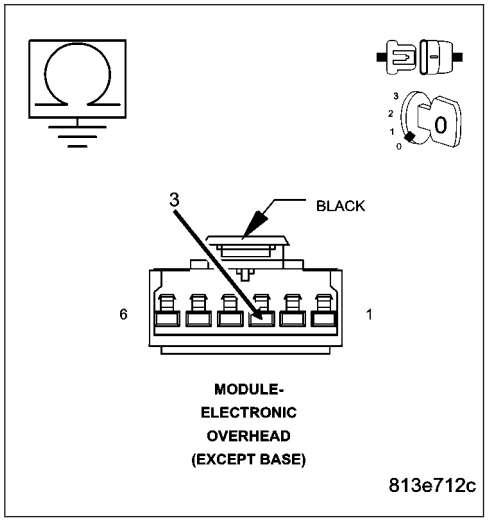

*COMPASS TEST FAILURE

For a complete wiring diagram **Refer to Section 8W**.

- **When Monitored:**
  With the ignition on.
- **Set Condition:**
  The Electronic Overhead Module (EOM) display reads “FAILED SELF TEST.”

Possible Causes
ELECTRONIC OVERHEAD MODULE

1. ELECTRONIC OVERHEAD MODULE

Perform the EOM self test.

Turn the ignition off.

Depress and hold the RESET and C/T buttons while turning the ignition on.

NOTE: This test may also be performed using the DRBIII®.

Does the EOM or DRBIII® display ″FAILED SELF TEST″?

Yes >> Replace the EOM in accordance with the Service Information.
Perform BODY VERIFICATION TEST - VER 1. (Refer to BODY VERIFICATION TEST - VER 1.)

No >> Test Complete.

*TEMPERATURE DISPLAY INACCURATE OR INOPERATIVE

For the Electronic Overhead Module circuit diagram (Refer to 8 - ELECTRICAL/OVERHEAD CONSOLE - SCHEMATICS AND DIAGRAMS).

For a complete wiring diagram **Refer to Section 8W**.

Possible Causes
AMBIENT TEMPERATURE SENSOR
ELECTRONIC OVERHEAD MODULE

1. AMBIENT TEMPERATURE SENSOR

NOTE: Diagnose and repair any FCM, EOM, PCM, or Communication DTCs before proceeding with this test.

NOTE: The Ambient Temperature Sensor is hardwired to the FCM (Diesel), or to the PCM. Ambient temperature information is transmitted to the EOM via the PCI Bus.

Turn the ignition off.

Disconnect the Ambient Temperature Sensor harness connector.

Measure the resistance of the Ambient Temperature Sensor using the following temperature/resistance values:

10°C (50°F) Sensor Resistance = 17.99 - 21.81 Kilohms

20°C (68°F) Sensor Resistance = 11.37 - 13.61 Kilohms

25°C (77°F) Sensor Resistance = 9.12 - 10.88 Kilohms

30°C (86°F) Sensor Resistance = 7.37 - 8.75 Kilohms

40°C (104°F) Sensor Resistance = 4.90 - 5.75 Kilohms

50°C (122°F) Sensor Resistance = 3.33 - 3.88 Kilohms

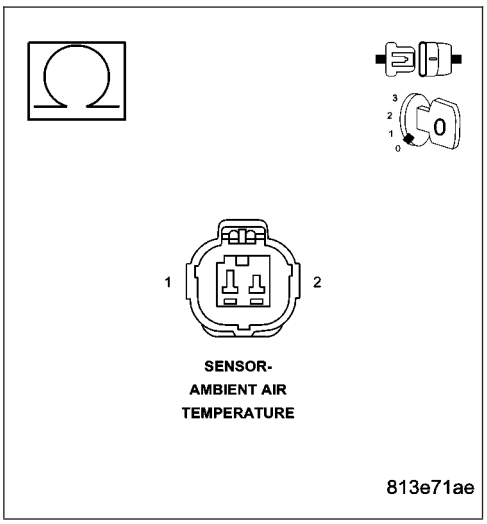

Is the Ambient Temperature Sensor resistance measurement within the min/max specifications?

Yes >> Go To 2

No >> Replace the Ambient Temperature Sensor.
Perform BODY VERIFICATION TEST - VER 1. (Refer to BODY VERIFICATION TEST - VER 1.)

---

2. ELECTRONIC OVERHEAD MODULE

Perform the EOM self test.

Turn the ignition off.

Press and hold the C/T and Reset buttons.

Turn the ignition on.

NOTE: NOTE: The self test can also be performed using the DRBIII®.

Observe the EOM display at the conclusion of the self test.

Does the EOM display "Passed Self Test"?

Yes >> Test Complete.

No >> Replace and configure the EOM in accordance with the Service Information.
Perform BODY VERIFICATION TEST - VER 1. (Refer to BODY VERIFICATION TEST - VER 1.)

SCHEMATICS AND DIAGRAMS

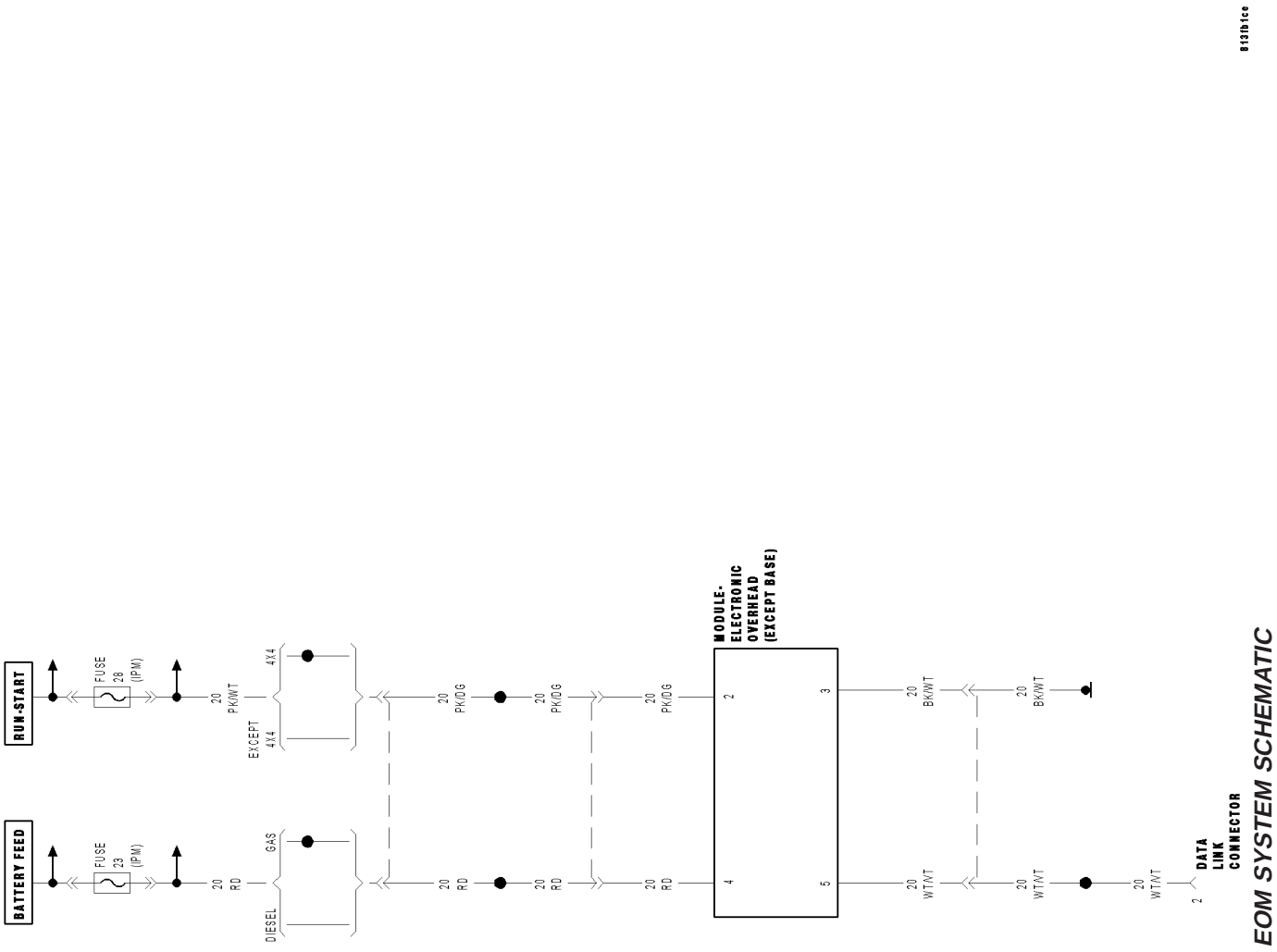

OVERHEAD CONSOLE - SERVICE INFORMATION

TABLE OF CONTENTS

page

OVERHEAD CONSOLE - SERVICE INFORMATION
DESCRIPTION 22
DIAGNOSIS AND TESTING
OVERHEAD CONSOLE 23
STANDARD PROCEDURE
READING/COURTESY LAMP REPLACEMENT 25
MODULE LENS REPLACEMENT 25
MODULE LAMP REPLACEMENT 25
REMOVAL
OVERHEAD CONSOLE REMOVAL 25
INSTALLATION 26
MODULE-COMPASS TEMPERATURE
DESCRIPTION 26
OPERATION 27
DIAGNOSIS AND TESTING
COMPASS MINI-TRIP COMPUTER 28
STANDARD PROCEDURE
COMPASS CALIBRATION 29

page

COMPASS DEMAGNETIZING 30
COMPASS VARIATION ADJUSTMENT 32
REMOVAL 33
INSTALLATION 33
UNIVERSAL TRANSMITTER
DESCRIPTION 34
OPERATION 34
DIAGNOSIS AND TESTING
UNIVERSAL TRANSMITTER 35
STANDARD PROCEDURE
PROGRAMMING TRANSMITTER CODES . . . 35
ERASING TRANSMITTER CODES 36
REPROGRAMMING TRANSMITTER CODES . 36
SENSOR-AMBIENT AIR TEMPERATURE
DESCRIPTION 37
OPERATION 37
DIAGNOSIS AND TESTING
AMBIENT TEMPERATURE SENSOR 37
REMOVAL 38
INSTALLATION 38

OVERHEAD CONSOLE - SERVICE INFORMATION

DESCRIPTION

An overhead console is available on this vehicle and includes the following components:

- Front map/reading lamps
- A blue-green vacuum-fluorescent display screen - if equipped with trip computer
- Universal transmitter - if equipped
- Electronic Overhead Module (EOM)

The overhead console assembly is mounted by two snap clips and screws securing it to a molded plastic retainer bracket located above the headliner. The EOM is accessed by removing the overhead console from the bracket and pulling it away from the headliner.



80ee9652

COMPASS DISPLAY

All the available overhead consoles on this model include Compass information. While in the compass/temperature mode, the compass will display the direction in which the vehicle is pointed using the eight major compass headings (Examples: north is N, northeast is NE). The self-calibrating compass unit requires no adjusting in normal use. The only calibration that may prove necessary is to drive the vehicle at 5 to 8 kilometers-per-hour (3 to 5 miles-per-hour), on level ground in a square shaped pattern. This will reorient the compass unit to its vehicle.

The compass unit also will compensate for magnetism the body of the vehicle may acquire during normal use. However, avoid placing anything magnetic directly on the roof of the vehicle. Magnetic mounts for an antenna, a repair order hat, or a funeral procession flag can exceed the compensating ability of the compass unit if placed on the roof panel. Magnetic bit drivers used on the fasteners that hold the overhead console assembly to the roof header can also affect compass operation. If the vehicle roof should become magnetized, the demagnetizing procedure may be required to restore proper compass operation. (Refer to 8 - ELECTRICAL/OVERHEAD CONSOLE - STANDARD PROCEDURE - COMPASS DEMAGNETIZING) for the appropriate procedure.

TEMPERATURE DISPLAY

All the available overhead consoles on this model include Temperature information. The temperature displays the outside ambient temperature in whole degrees. The temperature display can be toggled from Fahrenheit to Celsius by selecting the desired U.S./Metric option from the customer programmable features. The displayed temperature is not an instant reading of conditions, but an average temperature. It may take the temperature display several minutes to respond to a major temperature change, such as driving out of a heated garage into winter temperatures.

When the ignition switch is turned to the Off position, the last displayed temperature reading stays in the electronic control modules, (CMTC, EVIC) memory. When the ignition switch is turned to the On position again, the electronic module will display the memory temperature for one minute; then update the display to the current average temperature reading within five minutes.

The temperature function is supported by an ambient temperature sensor. This sensor is mounted outside the passenger compartment near the front and center of the vehicle, and is hard wired to the Front Control Module (FCM). The FCM sends temperature status messages to the module over the Programmable Communications Interface (PCI) data bus circuit. For more information on the ambient temperature sensor, (Refer to 8 - ELECTRICAL/OVERHEAD CONSOLE/AMBIENT TEMP SENSOR - DESCRIPTION).

DIAGNOSIS AND TESTING

OVERHEAD CONSOLE

If the problem with the overhead console is an inaccurate or scrambled display, refer to SELF- DIAGNOSTIC TEST . If the problem with the overhead console is incorrect Vacuum Fluorescent Display (VFD) dimming levels, use a scan tool and the proper Diagnostic Procedures Information to test for the correct dimming message inputs being received from the Body Control Module (BCM) or Front Control Module (FCM) over the Programmable Communications Interface (PCI) data bus circuit. If the problem is a no-display condition, use the following procedure.

For complete circuit diagrams, refer to the appropriate wiring information. The wiring information includes wiring diagrams, proper wire and connector repair procedures, details of wire harness routing and retention, connector pin-out information and location views for the various wire harness connectors, splices and grounds.

1. Remove the overhead console from the headliner (Refer to 8 - ELECTRICAL/OVERHEAD CONSOLE - REMOVAL).
2. Check for battery voltage at the overhead console electrical connector. If OK, go to Step 3. If not OK, Check for battery voltage at the appropriate B(+) fuse in the Integrated Power Module (IPM), repair the open fused B(+) circuit as required.
3. Turn the ignition switch to the On position. Check the fused ignition switch output circuit(s) at the overhead console electrical connector. If OK, go to Step 4. If not OK, repair the open or shorted circuit as required.
4. Turn the ignition switch to the Off position. Disconnect and isolate the battery negative cable. Check for continuity between the ground circuit cavity of the overhead console electrical connector and a good ground. There should be continuity. If OK, refer to SELF- DIAGNOSTIC TEST for further diagnosis of the electronics module and the PCI data bus circuit. If not OK, repair the open ground circuit as required.

SELF- DIAGNOSTIC TEST

A self-diagnostic test is used to determine that the EOM is operating properly electrically. Initiate the self-diagnostic test as follows:

NOTE: The compass mini-trip computer self - test can also be performed using a scan tool. Refer to Auto Self Test under the System Tests.

1. With the ignition switch in the Off position, simultaneously depress and hold the STEP and RESET buttons while rotating the ignition switch to the Run/On position.
2. Continue to hold both buttons depressed until the EOM enters the display segment test. In this test, all of the Vacuum Fluorescent Display (VFD) segments are lighted while the EOM performs the following checks:
   - Non-Volatile Memory Status (NVM)
   - RAM Status
   - ROM Status
   - ASIC Communication Test Status
   - Compass Test Status
   - DC Status
   - PCI data bus Communications Test

NOTE: If module is equipped with the Universal Transmitter, the module also checks "Universal Transmitter Communication Test Status"

3. Following completion of these tests, the compass mini-trip computer will display one of two messages: "FAIL" or "PASS." Press RESET or STEP to exit and enter normal mode. Respond to these test results as follows:
   - If no test result message is displayed, but compass mini-trip computer operation is still improper, the use of a scan tool and the proper Diagnostic Procedures Information are required for further diagnosis.
   - If the "FAIL" message is displayed, the EOM is inoperative and must be replaced.
   - If the "PASS" message is displayed, the EOM is OK, no faults are present.
   - If any VFD segment does not light during the display segment test, the EOM is inoperative and must be replaced.
4. If the first seven tests pass, the compass mini-trip computer shall verify that all the required PCI bus messages are present on the PCI bus. If all required messages are present on the PCI bus, or if the ignition switch is turned to the Off position, the EOM will automatically return to normal operation. The required PCI bus messages are:
   - Dimming message
   - Fuel Used message
   - Distance Pulses message
   - Percentage Fuel Tank Full message
   - Fuel Type message
   - VIN (Vehicle Identification Number)
   - Vehicle Speed message
   - Last Engine Off Duration message
   - Ambient Air Temperature message

NOTE: The Fuel Used message shall be ignored if the engine type is Diesel or Compressed Natural Gas.

NOTE: Pressing the STEP or RESET switches during any portion of the testing procedure will cause the compass mini-trip computer to exit diagnostics and return to compass/temperature mode.

NOTE: If the compass functions, but accuracy is suspect, it may be necessary to perform a variation adjustment. This procedure allows the compass unit to accommodate variations in the earth's magnetic field strength, based on geographic location.

NOTE: If the compass reading has blanked out, and only "CAL" appears in the display, demagnetizing may be necessary to remove excessive residual magnetic fields from the vehicle.

STANDARD PROCEDURE

READING/COURTESY LAMP REPLACEMENT

1. Disconnect and isolate the battery negative cable.
2. Remove the reading/courtesy lamp lens. Using a trim stick, gently pry the forward edge of the reading/courtesy lamp lens outward.
3. Remove the reading/courtesy lamp socket from the overhead console. Rotate the reading/courtesy lamp socket one quarter turn counter clockwise.
4. Remove the lamp and socket assembly.
5. Reverse the above procedure to install.

MODULE LENS REPLACEMENT

1. Remove the overhead console, (Refer to 8 - ELECTRICAL/OVERHEAD CONSOLE - REMOVAL).
2. Remove the electronic overhead module from the overhead console, (Refer to 8 - ELECTRICAL/OVERHEAD CONSOLE/COMPASS/MINI-TRIP COMPUTER - REMOVAL).
3. Unsnap the lens from the module and replace lens as necessary.

MODULE LAMP REPLACEMENT

1. Remove the overhead console (Refer to 8 - ELECTRICAL/OVERHEAD CONSOLE - REMOVAL).
2. Using a flat blade screwdriver twist out socket/lamp (3).
3. Replace lamp(s) as necessary.

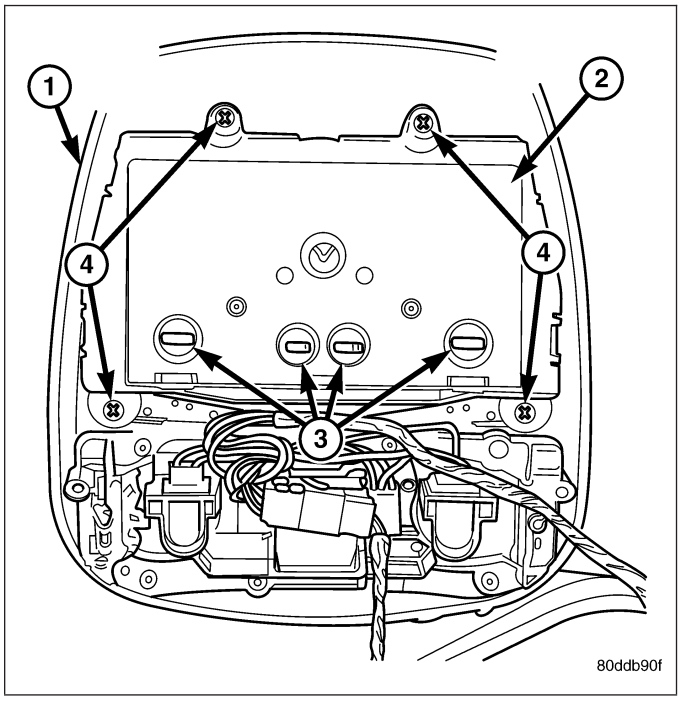

REMOVAL

OVERHEAD CONSOLE REMOVAL

1. Disconnect and isolate the battery negative cable.
2. Remove the overhead console retaining screws, located in the sunglass storage bin.
3. Using your fingertips, grasp the sides of the overhead console and pull straight down evenly to disengage the two snap clips at the front of the unit.
4. Lower the overhead console far enough to access the wire harness connectors.
5. Disconnect the Electronic Overhead Module and the reading/courtesy lamps electrical connectors.

6. Remove the overhead console from the vehicle.

INSTALLATION

1. Position the overhead console in the vehicle.
2. Connect the Electronic Overhead Module and the reading/courtesy lamps electrical connectors.
3. Grasp the sides of the overhead console and push straight up evenly to engage the two snap clips at the rear of the unit.
4. Install the overhead console retaining screws, located in the sunglass storage bin. Torque the screws to 1.2 N·m (10 in. lbs.).
5. Connect the battery negative cable.

MODULE-COMPASS TEMPERATURE

DESCRIPTION

The compass mini-trip computer is located in the overhead console (7) on models equipped with this option. The compass mini-trip computer includes a Vacuum-Fluorescent Display (VFD) (6), an Electronic Overhead Module (EOM) and push button function switches (1, 2, 4 and 5).

The compass mini-trip computer module contains a central processing unit and interfaces with other electronic modules in the vehicle on the Programmable Communications Interface (PCI) data bus. The PCI data bus allows the sharing of sensor information. This helps to reduce wire harness complexity, reduce internal controller hardware, and reduce component sensor current loads. At the same time, this system provides increased reliability, enhanced diagnostics, and allows the addition of many new feature capabilities.

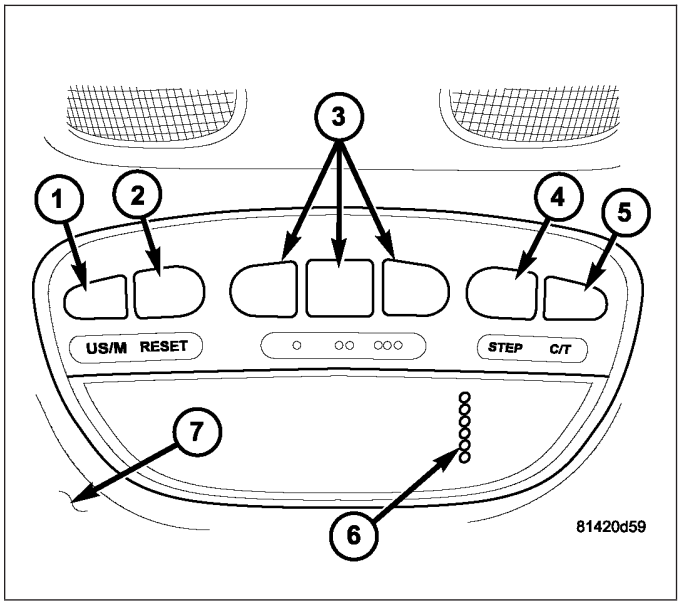

The compass mini-trip computer provides several electronic functions and features. Some of the functions and features that the compass mini-trip computer supports and/or controls, include the following display options:

- **Compass and temperature** - provides the outside temperature and one of eight compass readings to indicate the direction the vehicle is facing.
- **Trip odometer (TRIP ODO)** - shows the distance travelled since the last trip computer reset.
- **Average fuel economy (AVG ECO)** - shows the average fuel economy since the last trip computer reset.
- **Distance to empty (DTE)** - shows the estimated distance that can be travelled with the fuel remaining in the fuel tank. This estimated distance is computed using the level of the fuel in the tank and a weighted average of long term and recent Average Fuel Economy.
- **Elapsed time (ET)** - shows the accumulated ignition-on time since the last trip computer reset.
- **Blank screen** - the compass mini-trip VFD is turned off.

The ambient temperature sensor is hard wired to the Front Control Module (FCM). Data input for all other compass mini-trip computer functions, including VFD dimming level, is received through PCI data bus messages. The compass mini-trip computer uses its internal programming and all of these inputs to calculate and display the requested data. If the data displayed is incorrect, perform the self-diagnostic tests. (Refer to 8 - ELECTRICAL/OVERHEAD CONSOLE - DIAGNOSIS AND TESTING) for the appropriate test procedure. If these tests prove inconclusive, the use of a scan tool and the proper Diagnostic Procedures Information are recommended for further testing of the EOM and the PCI data bus.

The EOM cannot be repaired, and is available for service only as a unit. This unit includes the push button switches, the Universal Garage Door Transmitter and the plastic module and display lens. If any of these components is inoperative or damaged, the complete EOM must be replaced.

COMPASS

While in the compass/temperature mode, the compass will display the direction in which the vehicle is pointed using the eight major compass headings (Examples: north is N, northeast is NE). The self-calibrating compass unit requires no adjusting in normal use. The only calibration that may prove necessary is to drive the vehicle in one or two complete circles, on level ground, in not less than 16 seconds. This will reorient the compass unit to its vehicle.

The compass unit also will compensate for magnetism the body of the vehicle may acquire during normal use. However, avoid placing anything magnetic directly on the roof of the vehicle. Magnetic mounts for an antenna, a repair order hat, or a funeral procession flag can exceed the compensating ability of the compass unit if placed on the roof panel. Magnetic bit drivers used on the fasteners that hold the overhead console assembly to the roof header can also affect compass operation. If the vehicle roof should become magnetized, (Refer to 8 - ELECTRICAL/OVERHEAD CONSOLE/COMPASS/MINI-TRIP COMPUTER - STANDARD PROCEDURE - COMPASS DEMAGNETIZING) to restore proper compass operation.

TEMPERATURE

The temperature displays the outside ambient temperature in whole degrees. The temperature display can be changed from Fahrenheit to Celsius using the U.S./Metric push button. The displayed temperature is not an instant reading of conditions, but an average temperature. It may take the temperature display several minutes to respond to a major temperature change, such as driving out of a heated garage into winter temperatures.

When the ignition switch is turned to the Off position, the last displayed temperature reading stays in the temperature unit memory. When the ignition switch is turned to the On position again, the temperature will display the memory temperature if the engine OFF time is less than 90 minutes. If the engine OFF time is more than 90 minutes, the temperature will display the actual temperature sensed by the ambient temperature sensor. The temperature display update interval varies with the vehicle speed.

The temperature function is supported by an ambient temperature sensor. The sensor is mounted outside the passenger compartment near the front and center of the vehicle, and is hard wired to the FCM, which sends temperature over the PCI data bus circuit. The ambient temperature sensor is available as a separate service item, (Refer to 8 - ELECTRICAL/OVERHEAD CONSOLE/AMBIENT TEMP SENSOR - DESCRIPTION).

NOTE: The compass mini-trip computer will display min and max temperatures of -40° C (-40° F) and 54°C (130° F).

OPERATION

The compass mini-trip computer only operates with the ignition switch in the On position. When the ignition switch is turned to the On position, all of the segments in the compass mini-trip computer Vacuum-Fluorescent Display (VFD) will be turned off for one second, then the display will return to the last function being displayed before the ignition was turned to the Off position. With the ignition switch in the On position, momentarily depressing and releasing the Step push button (4) will cause the compass-mini-trip computer to change its mode of operation. Momentarily depressing and releasing the U.S./Metric push button (1) will cause the unit to toggle between U.S. and Metric measurements. Momentarily depressing and releasing the C/T (compass/temperature) push button (5) will cause the compass mini-trip computer to return to the compass/temperature display mode from any other mode.

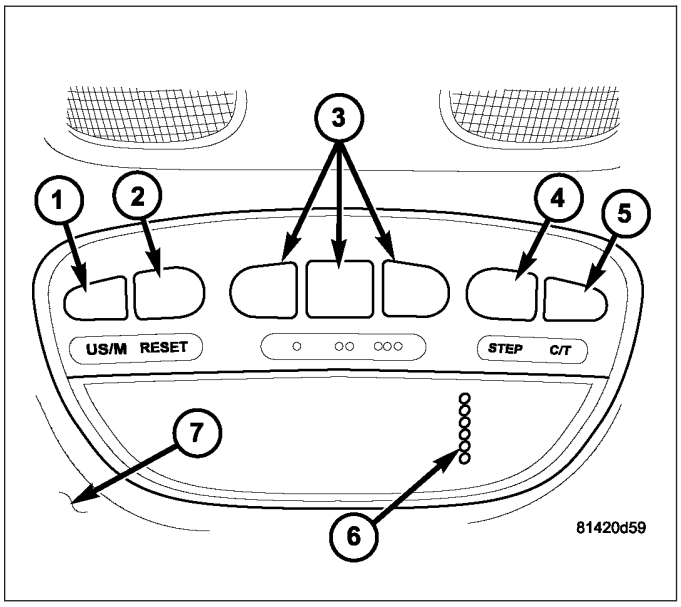

This compass mini-trip computer features several functions that can be reset. If the RESET push button

(2) is depressed for more than one second with the ignition switch in the On position, the trip computer information that can be reset is reset. However, the reset will only occur if the function currently displayed is a function that can be reset. The functions that can be reset are: TRIP ODO, AVG ECO, and ET. All three of these functions can be reset at once by pressing the RESET button twice within 3 seconds while any one of the three functions is selected.

DIAGNOSIS AND TESTING

COMPASS MINI-TRIP COMPUTER

If the problem with the compass mini-trip computer is an inaccurate or scrambled display, refer to SELF- DIAGNOSTIC TEST . If the problem with the compass mini-trip computer is incorrect Vacuum Fluorescent Display (VFD) dimming levels, use a scan tool and the proper Diagnostic Procedures Information to test for the correct dimming message inputs being received from the Body Control Module (BCM) or Front Control Module (FCM) over the Programmable Communications Interface (PCI) data bus circuit. If the problem is a no-display condition, use the following procedure.

For complete circuit diagrams, refer to the appropriate wiring information. The wiring information includes wiring diagrams, proper wire and connector repair procedures, details of wire harness routing and retention, connector pin-out information and location views for the various wire harness connectors, splices and grounds.

1. Remove the overhead console from the headliner (Refer to 8 - ELECTRICAL/OVERHEAD CONSOLE - REMOVAL).
2. Check for battery voltage at the overhead console electrical connector. If OK, go to Step 3. If not OK, Check for battery voltage at the appropriate B(+) fuse in the Integrated Power Module (IPM), repair the open fused B(+) circuit as required.
3. Turn the ignition switch to the On position. Check the fused ignition switch output circuit(s) at the overhead console electrical connector. If OK, go to Step 4. If not OK, repair the open or shorted circuit as required.
4. Turn the ignition switch to the Off position. Disconnect and isolate the battery negative cable. Check for continuity between the ground circuit cavity of the overhead console electrical connector and a good ground. There should be continuity. If OK, refer to SELF- DIAGNOSTIC TEST for further diagnosis of the Electronic Overhead Module and the PCI data bus circuit. If not OK, repair the open ground circuit as required.

SELF- DIAGNOSTIC TEST

A self-diagnostic test is used to determine that the EOM is operating properly electrically. Initiate the self-diagnostic test as follows:

NOTE: The compass mini-trip computer self - test can also be performed using a scan tool. Refer to Auto Self Test under the System Tests.

1. With the ignition switch in the Off position, simultaneously depress and hold the STEP and RESET buttons while rotating the ignition switch to the Run/On position.
2. Continue to hold both buttons depressed until the EOM enters the display segment test. In this test, all of the Vacuum Fluorescent Display (VFD) segments are lighted while the EOM performs the following checks:
   - Non-Volatile Memory Status (NVM)
   - RAM Status
   - ROM Status
   - ASIC Communication Test Status
   - Compass Test Status
   - DC Status
   - PCI data bus Communications Test

NOTE: If module is equipped with the Universal Transmitter, the module also checks “Universal Transmitter Communication Test Status”

3. Following completion of these tests, the compass mini-trip computer will display one of two messages: “FAIL” or “PASS.” Press RESET or STEP to exit and enter normal mode. Respond to these test results as follows:

- If no test result message is displayed, but compass mini-trip computer operation is still improper, the use of a scan tool and the proper Diagnostic Procedures Information are required for further diagnosis.
- If the “FAIL” message is displayed, the EOM is inoperative and must be replaced.
- If the “PASS” message is displayed, the EOM is OK, no faults are present.
- If any VFD segment does not light during the display segment test, the EOM is inoperative and must be replaced.

4. If the first seven tests pass, the compass mini-trip computer shall verify that all the required PCI bus messages are present on the PCI bus. If all required messages are present on the PCI bus, or if the ignition switch is turned to the Off position, the EOM will automatically return to normal operation. The required PCI bus messages are:
   - Dimming message
   - Fuel Used message
   - Distance Pulses message
   - Percentage Fuel Tank Full message
   - Fuel Type message
   - VIN (Vehicle Identification Number)
   - Vehicle Speed message
   - Last Engine Off Duration message
   - Ambient Air Temperature message

NOTE: The Fuel Used message shall be ignored if the engine type is Diesel or Compressed Natural Gas.

NOTE: Pressing the STEP or RESET switches during any portion of the testing procedure will cause the compass mini-trip computer to exit diagnostics and return to compass/temperature mode.

NOTE: If the compass functions, but accuracy is suspect, it may be necessary to perform a variation adjustment. This procedure allows the compass unit to accommodate variations in the earth’s magnetic field strength, based on geographic location.

NOTE: If the compass reading has blanked out, and only “CAL” appears in the display, demagnetizing may be necessary to remove excessive residual magnetic fields from the vehicle.

STANDARD PROCEDURE

COMPASS CALIBRATION

CAUTION: Do not place any external magnets, such as magnetic roof mount antennas, in the vicinity of the compass. Do not use magnetic tools when servicing the overhead console.

The electronic compass unit features a self-calibrating design, which simplifies the calibration procedure. This feature automatically updates the compass calibration while the vehicle is being driven. This allows the compass unit to compensate for small changes in the residual magnetism that the vehicle may acquire during normal use. If the compass readings appear to be erratic or out of calibration, perform the following calibration procedure. Also, new service replacement compass mini-trip computer modules must have their compass calibrated using this procedure. Do not attempt to calibrate the compass near large metal objects such as other vehicles, large buildings, or bridges; or, near overhead or underground power lines.

NOTE: Whenever the compass is calibrated manually, the variation number must also be reset. See Compass Variation Adjustment in the Service Procedures section of this group.

Calibrate the compass manually as follows:

1. Turn the ignition switch to the On position. If the compass/temperature data is not currently being displayed, momentarily depress and release the C/T push button to step through the display options until you have reached the compass/temperature display.

2. Depress and hold the RESET push button. Hold the push buttons down until “CAL” appears in the display. This takes about ten seconds.
3. Drive the vehicle on a level surface, away from large metal objects and power lines, through one or two**complete** circles in not less than 16 seconds. The “CAL” message will disappear from the display to indicate that the compass is now calibrated.

NOTE: A blank compass display indicates that vehicle degaussing (demagnetizing) is necessary.

NOTE: If the “CAL” message remains in the display, either there is excessive magnetism near the compass, or the unit is faulty. Repeat the calibration procedure at least one more time.

NOTE: If the wrong direction is still indicated in the compass display, the area selected for calibration may be too close to a strong magnetic field. Repeat the calibration procedure in another location.

COMPASS DEMAGNETIZING

A degaussing tool (Special Tool 6029) is used to demagnetize, or degauss, the overhead console forward mounting screw and the roof panel above the overhead console. Equivalent units must be rated as continuous duty for 110/115 volts and 60 Hz. They must also have a field strength of over 350 gauss at 7 millimeters (0.25 inch) beyond the tip of the probe.

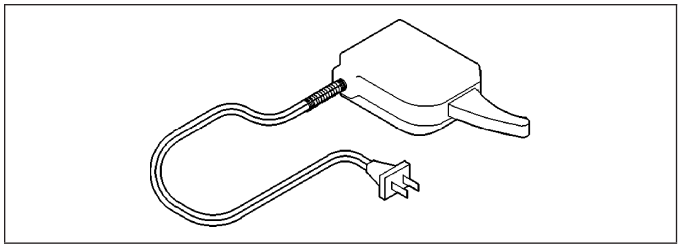

DEGAUSSING TOOL #6029

To demagnetize the roof panel and the overhead console forward mounting screw, proceed as follows:

1. Be certain that the ignition switch is in the Off position, before you begin the demagnetizing procedure.
2. Connect the degaussing tool to an electrical outlet, while keeping the tool at least 61 centimeters (2 feet) away from the compass unit.
3. Slowly approach the head of the overhead console forward mounting screw with the degaussing tool connected.
4. Contact the head of the screw with the plastic coated tip of the degaussing tool for about two seconds.
5. With the degaussing tool still energized, slowly back it away from the screw. When the tip of the tool is at least 61 centimeters (2 feet) from the screw head, disconnect the tool.

6. Place a piece of paper approximately 22 by 28 centimeters (8.5 by 11 inches), oriented on the vehicle lengthwise from front to rear, on the center line of the roof at the windshield header. The purpose of the paper is to protect the roof panel from scratches, and to define the area to be demagnetized.
7. Connect the degaussing tool to an electrical outlet, while keeping the tool at least 61 centimeters (2 feet) away from the compass unit.
8. Slowly approach the center line of the roof panel at the windshield header, with the degaussing tool connected.
9. Contact the roof panel with the plastic coated tip of the degaussing tool. Be sure that the template is in place to avoid scratching the roof panel. Using a slow, back-and-forth sweeping motion, and allowing 13 millimeters (0.50 inch) between passes, move the tool at least 11 centimeters (4 inches) to each side of the roof center line, and 28 centimeters (11 inches) back from the windshield header.
10. With the degaussing tool still energized, slowly back it away from the roof panel. When the tip of the tool is at least 61 centimeters (2 feet) from the roof panel, disconnect the tool.
11. Calibrate the compass, (Refer to 8 - ELECTRICAL/OVERHEAD CONSOLE/COMPASS/MINI-TRIP COMPUTER - STANDARD PROCEDURE - COMPASS CALIBRATION) and adjust the compass variance, (Refer to 8 - ELECTRICAL/OVERHEAD CONSOLE/COMPASS/MINI-TRIP COMPUTER - STANDARD PROCEDURE - COMPASS VARIATION ADJUSTMENT).

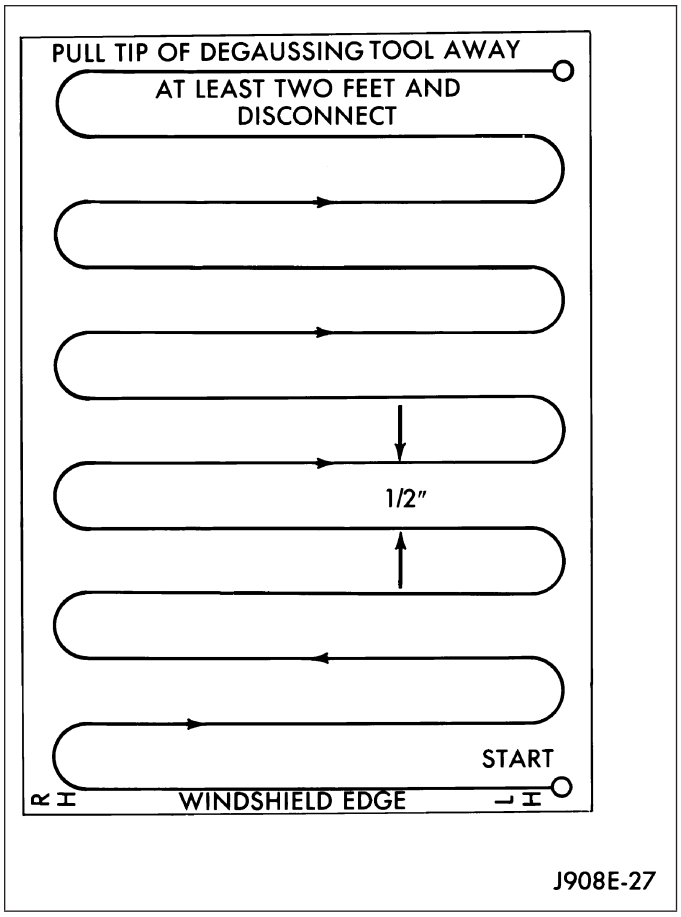

COMPASS VARIATION ADJUSTMENT

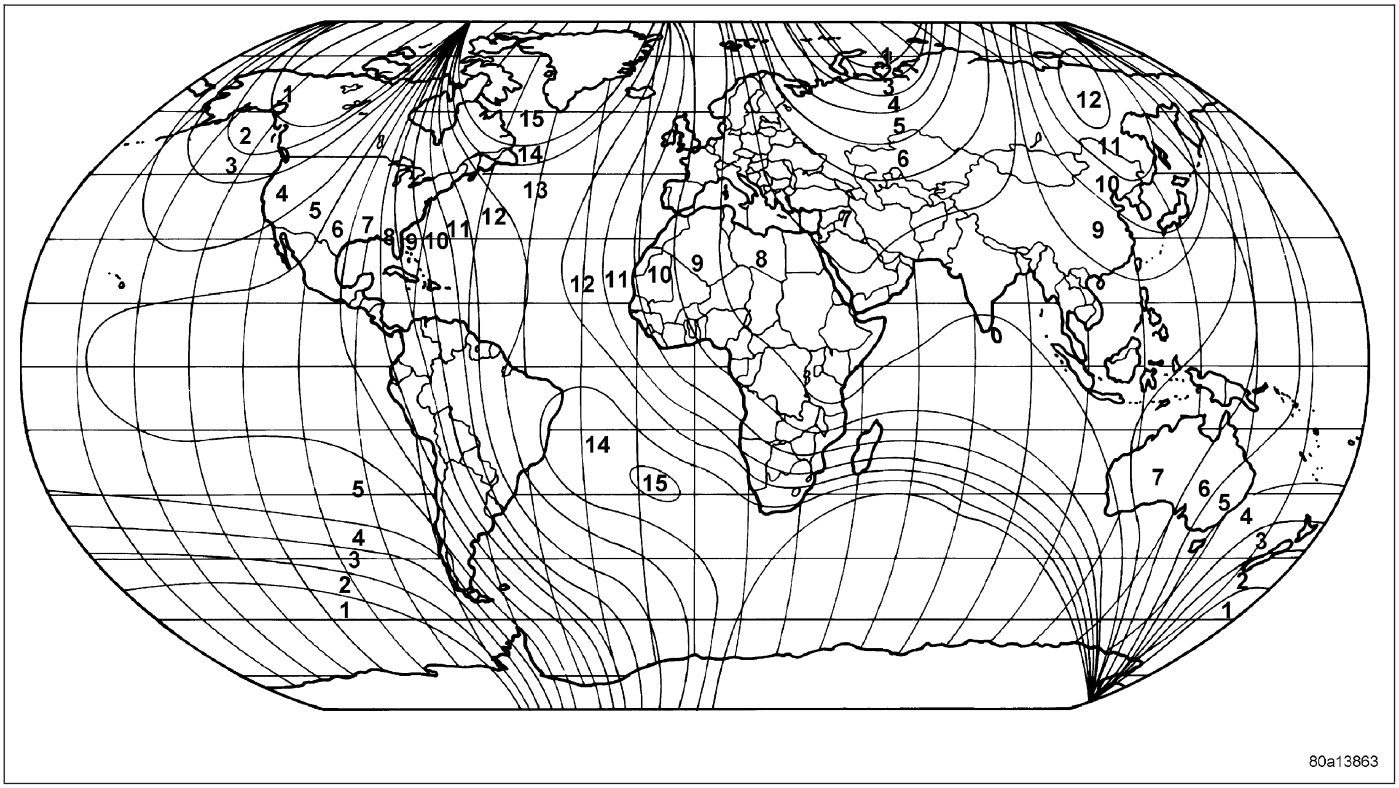

Compass variance, also known as magnetic declination, is the difference in angle between magnetic north and true geographic north. In some geographic locations, the difference between magnetic and geographic north is great enough to cause the compass to give false readings. If this problem occurs, the compass variance must be set.

To set the compass variance:

1. Using the Variance Settings map, find your geographic location and note the zone number.
2. Turn the ignition switch to the On/Run position. If the compass/temperature data is not currently being displayed, momentarily depress and release the C/T push button to step through the display options until you have reached the compass/temperature display.
3. Press and hold the Reset push button down until “VAR” appears in the display. This takes about five seconds.
4. Momentarily depress and release the STEP push button to step through the zone numbers (1-15), until the zone number for your geographic location appears in the display.
5. Momentarily depress and release the Reset push button to enter the displayed zone number into the compass unit memory.
6. Confirm that the correct directions are now indicated by the compass.

REMOVAL

1. Disconnect and isolate the battery negative cable.
2. Remove the overhead console (1) from the headliner (Refer to 8 - ELECTRICAL/OVERHEAD CONSOLE - REMOVAL).
3. Remove the screws (4) that secure the Electronic Overhead Module (EOM) (2) to the overhead console housing (1).
4. Disconnect the overhead console wire harness connector from the EOM connector receptacle.
5. Remove the EOM (2) from the overhead console housing (1).

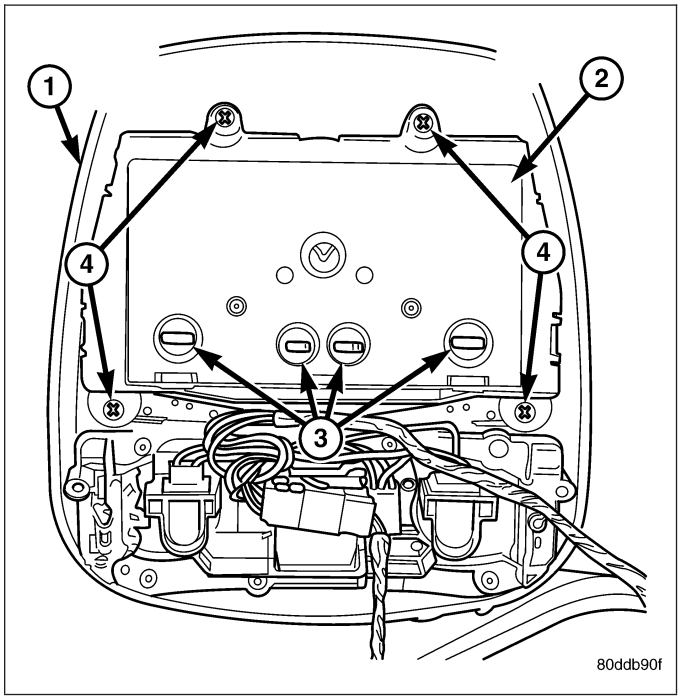

INSTALLATION

NOTE: If a new Electronic overhead Module (EOM) has been installed, the compass will have to be calibrated and the variance set. (Refer to 8 - ELECTRICAL/OVERHEAD CONSOLE/COMPASS/MINI-TRIP COMPUTER - STANDARD PROCEDURE - COMPASS CALIBRATION) and (Refer to 8 - ELECTRICAL/OVERHEAD CONSOLE/COMPASS/MINI-TRIP COMPUTER - STANDARD PROCEDURE - COMPASS VARIATION ADJUSTMENT) for the appropriate procedures.

1. Position the Electronic overhead Module (EOM) (2) onto the overhead console housing (1).
2. Reconnect the overhead console wire harness connector to the EOM connector receptacle.
3. Install the screws (4) that secure the EOM (2) to the overhead console housing (1). Tighten the screws to 2.2 N·m (20 in. lbs.).
4. Install the overhead console (1) onto the headliner (Refer to 8 - ELECTRICAL/OVERHEAD CONSOLE - INSTALLATION).
5. Reconnect the battery negative cable.

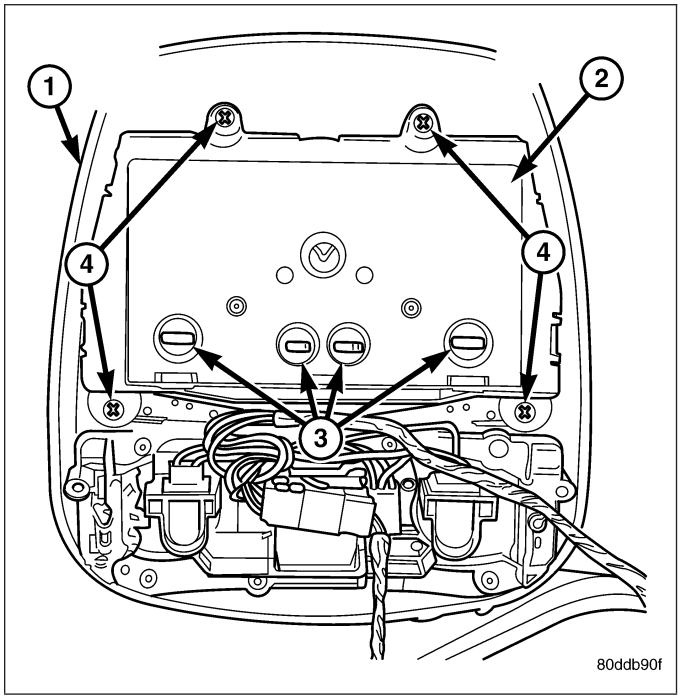

UNIVERSAL TRANSMITTER

DESCRIPTION

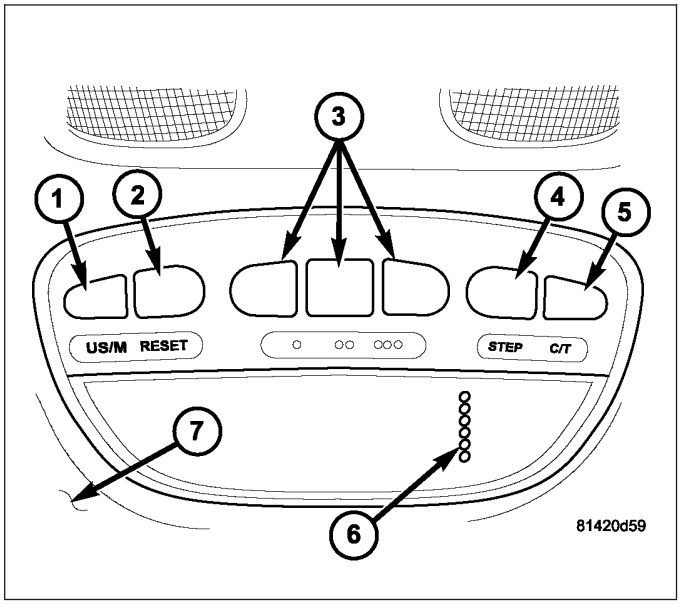

The universal transmitter transceiver is integral to the overhead console (7). The only visible component of the universal transmitter are the three transmitter push buttons (3). The buttons are marked with one, two or three dots, respectively, for identification of each channel.

Each of the three universal transmitter push buttons controls an independent radio transmitter channel. Each of these three channels can be trained to transmit a different radio frequency signal for the remote operation of garage door openers, motorized gate openers, home or office lighting, security systems or just about any other device that can be equipped with a radio receiver in the 286 to 399 MegaHertz (MHz) frequency range for remote operation. The universal transmitter is capable of operating systems using either rolling code or non-rolling code technology.

The universal transmitter cannot be repaired, and is available for service only as part of the Electronic Overhead Module (EOM). This unit includes the push button switches for both the transmitter and compass mini trip computer, The Vacuum-Fluorescent Display (VFD) and the plastic module case. (Refer to 8 - ELECTRICAL/OVERHEAD CONSOLE/COMPASS/MINI-TRIP COMPUTER - REMOVAL) for EOM replacement.

OPERATION

The universal transmitter operates on a non-switched source of battery current so the unit will remain functional, regardless of the ignition switch position. It can learn and store three separate transmitter radio frequency codes to operate garage door openers, security gates and security lighting. The overhead console display provides visual feedback to the driver, showing which transmitter button is pressed. The system will not send operating signals if the vehicle theft security alarm is armed. This prevents a perpetrator from breaking into a vehicle parked outside a home and using the transmitter system to enter the home.

DIAGNOSIS AND TESTING

UNIVERSAL TRANSMITTER

If both the Transmitter and the compass mini trip computer display are inoperative, (Refer to 8 - ELECTRICAL/OVERHEAD CONSOLE/COMPASS/MINI-TRIP COMPUTER - DIAGNOSIS AND TESTING) for further diagnosis. If the Universal Transmitter is inoperative, but the compass mini trip computer display is operating normally, (Refer to 8 - ELECTRICAL/OVERHEAD CONSOLE/UNIVERSAL TRANSMITTER - STANDARD PROCEDURE) for instructions on training the Transmitter. Retrain the Transmitter with a known good transmitter as instructed and test the Transmitter operation again. If the unit is still inoperative, test the universal transmitter with the Radio Frequency Detector special tool as described below:

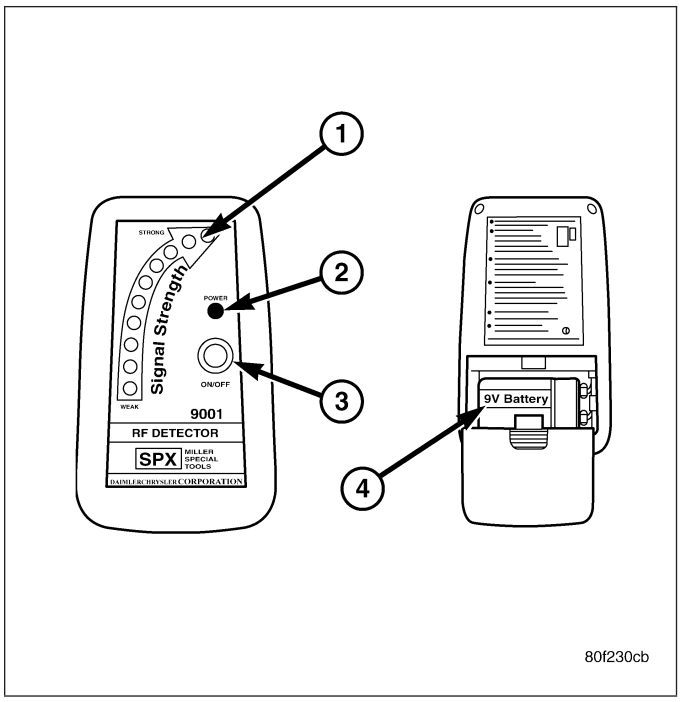

RADIO FREQUENCY DETECTOR #9001

1. Turn the Radio Frequency (RF) Detector ON. A “chirp” will sound and the green power LED will light. If the green LED does not light, replace the battery.
2. Hold the RF detector within one inch of the TRAINED universal transmitter and press any of the transmitters buttons.
3. The red signal detection LEDs will light and the tool will beep if a radio signal is detected. Repeat this test for each button. If any button is inoperative, replace the universal transmitter assembly, (Refer to 8 - ELECTRICAL/OVERHEAD CONSOLE/COMPASS/MINI-TRIP COMPUTER - REMOVAL).

For complete circuit diagrams, refer to the appropriate wiring information. The wiring information includes wiring diagrams, proper wire and connector repair procedures, details of wire harness routing and retention, connector pin-out information and location views for the various wire harness connectors, splices and grounds.

STANDARD PROCEDURE

PROGRAMMING TRANSMITTER CODES

CAUTION: Vehicle exhaust contains carbon monoxide, a dangerous gas. Do not run the vehicle’s exhaust while training the transceiver. Exhaust gas can cause serious injury or death.

CAUTION: Your motorized door or gate will open and close while you are training the Universal Transceiver. Do not train the transceiver if people or pets are in the path of the door or gate. A moving door or gate can cause serious injury or death to people and pets or damage to objects.

1. Press and hold the two outer HomeLink buttons, and release only when the EVIC display shows “Channels Cleared” (after 20 seconds). **Do not** hold the buttons for longer than 30 seconds and **do not** repeat step one to program a second and/or third hand-held transmitter to the remaining two HomeLink buttons.
2. Position the end of your hand-held transmitter 1-3 inches (3-8 cm) away from the HomeLink buttons.
3. Simultaneously press and hold both the HomeLink button that you want to train and the hand-held transmitter buttons. **Do not release the buttons until step 4 has been completed.**
4. The EVIC display will show “Channel X Training” (where X is Channel 1, 2, or 3). Release both buttons after the EVIC display shows “Channel X Trained”.

NOTE: If the EVIC display shows “Did Not Train” repeat steps 2–4.

5. Press and hold the just trained HomeLink button and observe the EVIC display. If the EVIC display shows "Channel X Transmit" (where X is Channel 1, 2, or 3), programming is complete and your device should activate when the HomeLink button is pressed and released.

NOTE: To program the remaining two HomeLink buttons, begin with ″Programming″ step two. Do not repeat step one.

NOTE: If your hand-held transmitter appears to program the universal transceiver, but your garage door does not operate using the transmitter and your garage door opener was manufactured after 1995, your garage door opener may have a multiple security code system (rolling code system). Please proceed to steps 6–8 to complete the programming of a rolling code equipped device (most common garage door openers require this step.

6. At the garage door opener receiver (motor-head unit) in the garage, locate the ″learn″ or ″smart″ button. This can usually be found where the hanging antenna wire is attached to the motor-head unit.
7. Firmly press and release the ″learn″ or ″smart″ button. (The name and color of the button may vary by manufacturer.)

NOTE: There are 30 seconds in which to initiate step eight.

8. Return to the vehicle and firmly **press, hold for two seconds and release** the programmed HomeLink button. Repeat the **″press/hold/release″** sequence a second time, and, depending on the brand of the garage door opener (or other rolling code equipped device), repeat this sequence a third time to complete the programming.
9. HomeLink should now activate your rolling code equipped device.
10. To program the remaining two HomeLink buttons, begin with ″Programming″ **step two. Do not repeat step one.**

ERASING TRANSMITTER CODES

NOTE: Individual channels cannot be erased. Erasing the transmitter codes will erase ALL programmed codes.

To erase programming from the three buttons (individual buttons cannot be erased but can be ″reprogrammed″), follow the step noted:

- Press and hold the two outer HomeLink buttons until the indicator light begins to flash-after 20 seconds. Release both buttons. Do not hold for longer that 30 seconds. HomeLink is now in the train (or learning) mode and can be programmed at any time beginning with ″Programming″ (Refer to 8 - ELECTRICAL/OVERHEAD CONSOLE/UNIVERSAL TRANSMITTER - STANDARD PROCEDURE).

REPROGRAMMING TRANSMITTER CODES

CAUTION: Vehicle exhaust contains carbon monoxide, a dangerous gas. Do not run the vehicle's exhaust while training the transceiver. Exhaust gas can cause serious injury or death.

CAUTION: Your motorized door or gate will open and close while you are training the Universal Transceiver. Do not train the transceiver if people or pets are in the path of the door or gate. A moving door or gate can cause serious injury or death to people and pets or damage to objects.

To program a device to HomeLink using a HomeLink button previously trained, follow these steps:

1. Press and hold the desired HomeLink button. **Do NOT** release the button.
2. The EVIC display will show "Channel X Transmit" (where X is Channel 1, 2, or 3) for 20 seconds and then change to "Channel X Training". Without releasing the HomeLink button, proceed to step 3.
3. Position the end of your hand-held transmitter 1-3 inches (3-8 cm) away from the HomeLink buttons.
4. Simultaneously press and hold both the HomeLink button that you want to train and the hand-held transmitter buttons. **Do not release the buttons until step 4 has been completed.**

5. Press and hold the just trained HomeLink button and observe the EVIC display. If the EVIC display shows “Channel X Transmit” (where X is Channel 1, 2, or 3), programming is complete and your device should activate when the HomeLink button is pressed and released.

NOTE: To program the remaining two HomeLink buttons, begin with ″Programming″ step two. Do not repeat step one.

NOTE: If your hand-held transmitter appears to program the universal transceiver, but your garage door does not operate using the transmitter and your garage door opener was manufactured after 1995, your garage door opener may have a multiple security code system (rolling code system). Please proceed to steps 6–8 to complete the programming of a rolling code equipped device (most common garage door openers require this step.

6. At the garage door opener receiver (motor-head unit) in the garage, locate the ″learn″ or ″smart″ button. This can usually be found where the hanging antenna wire is attached to the motor-head unit.
7. Firmly press and release the ″learn″ or ″smart″ button. (The name and color of the button may vary by manufacturer.)

NOTE: There are 30 seconds in which to initiate step eight.

8. Return to the vehicle and firmly **press, hold for two seconds and release** the programmed HomeLink button. Repeat the **″press/hold/release″** sequence a second time, and, depending on the brand of the garage door opener (or other rolling code equipped device), repeat this sequence a third time to complete the programming.
9. HomeLink should now activate your rolling code equipped device.

SENSOR-AMBIENT AIR TEMPERATURE

DESCRIPTION

The ambient temperature sensor is a variable resistor mounted to a bracket that is secured with a screw to the left side of the radiator yoke, behind the radiator grille and in front of the engine compartment.

The ambient temperature sensor cannot be adjusted or repaired and, if inoperative or damaged, it must be replaced.

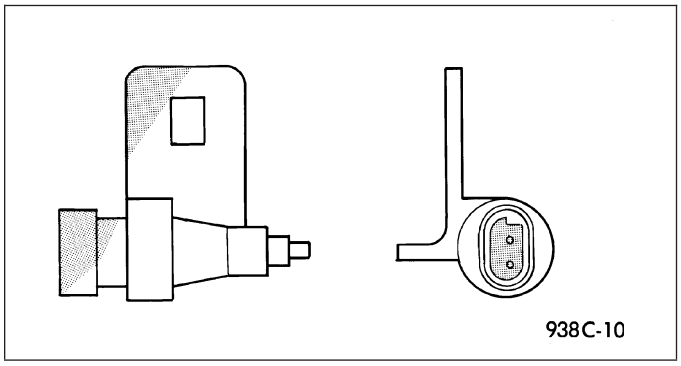

OPERATION

The ambient temperature sensor is a variable resistor that operates on a five-volt reference signal sent by the Front Control Module (FCM). The resistance in the sensor changes as temperature changes, changing the temperature sensor signal circuit voltage to the FCM. Based upon the resistance in the sensor, the FCM senses a specific voltage on the temperature sensor signal circuit. The FCM then translates the voltage into a temperature reading that it sent over the Programmable Communications Interface (PCI) data bus circuit to other modules utilizing temperature information.

DIAGNOSIS AND TESTING

AMBIENT TEMPERATURE SENSOR

The temperature function is supported by the ambient temperature sensor, a wiring circuit, and Front Control Module (FCM). If any portion of the ambient temperature sensor circuit fails or if Programmable Communications Interface (PCI) Data Bus information is missing, a (– –) will appear in the display in place of the temperature. When the

sensor is exposed to temperatures above 55° C (130° F), or if the sensor circuit is shorted, 55° C (130° F) will appear in the display in place of the temperature, when the sensor is exposed to temperatures below - 40° C (- 40° F) or if the sensor circuit is open, - 40° C (- 40° F) will appear in the display.

The ambient temperature sensor circuit can also be diagnosed using the following Sensor Test, and Sensor Circuit Test. If the temperature sensor and circuit are confirmed to be OK, but the temperature display is inoperative or incorrect, test the compass mini-trip computer (Refer to 8 - ELECTRICAL/OVERHEAD CONSOLE/COMPASS/MINI-TRIP COMPUTER - DIAGNOSIS AND TESTING).

SENSOR TEST

1. Turn the ignition switch to the Off position. Disconnect and isolate the battery negative cable. Disconnect the ambient temperature sensor harness connector.
2. Measure the resistance of the ambient temperature sensor. At - 40° C (- 40° F), the sensor resistance is 336 kilohms. At 55° C (130° F), the sensor resistance is 2.488 kilohms. The sensor resistance should read between these two values. If OK, refer to Sensor Circuit Test in this group. If not OK, replace the inoperative ambient temperature sensor.

SENSOR CIRCUIT TEST

For complete circuit diagrams, refer to the appropriate wiring information. The wiring information includes wiring diagrams, proper wire and connector repair procedures, details of wire harness routing and retention, connector pin-out information and location views for the various wire harness connectors, splices and grounds.

1. Turn the ignition switch to the Off position. Disconnect and isolate the battery negative cable. Disconnect the wire harness connectors from the ambient temperature sensor and the FCM.
2. Connect a jumper wire between the two terminals in the body half of the ambient temperature sensor harness connector.
3. Check for continuity between the sensor return circuit and the ambient temperature sensor signal circuit cavities of the FCM harness connector. There should be continuity. If OK, go to Step 4. If not OK, repair the open sensor return circuit or ambient temperature sensor signal circuit to the ambient temperature sensor as required.
4. Check for continuity between the ambient temperature sensor signal circuit cavity of the FCM harness connector and a good ground. There should be no continuity. If OK, test the compass mini-trip computer operation, (Refer to 8 - ELECTRICAL/OVERHEAD CONSOLE/COMPASS/MINI-TRIP COMPUTER - DIAGNOSIS AND TESTING). If not OK, repair the shorted ambient temperature sensor signal circuit as required.

REMOVAL

1. Open the hood.
2. Disconnect and isolate the battery negative cable.
3. Working on the underside of the hood, remove screw holding sensor to hood panel.
4. Disconnect the sensor electrical connector and remove sensor from vehicle.

INSTALLATION

1. Connect the sensor electrical connector.
2. Working on the underside of the hood, install screw holding sensor to hood panel.
3. Connect the battery negative cable.
4. Close the hood.

POWER SYSTEMS

TABLE OF CONTENTS

page

POWER LOCKS - ELECTRICAL DIAGNOSTICS 1
POWER LOCKS - SERVICE INFORMATION 73
POWER MIRRORS - SERVICE INFORMATION . . . 86
POWER SEATS - SERVICE INFORMATION 90
POWER TOP - SUNROOF - SERVICE INFORMATION 96
POWER WINDOWS - SERVICE INFORMATION . 105

POWER LOCKS - ELECTRICAL DIAGNOSTICS

TABLE OF CONTENTS

page

POWER LOCKS - ELECTRICAL DIAGNOSTICS
DIAGNOSIS AND TESTING
ALL DOOR LOCK OUTPUT CIRCUIT SHORT TO GROUND OR VOLTAGE 2
ALL DOOR UNLOCK OUTPUT CIRCUIT SHORT TO GROUND OR VOLTAGE 7
DRIVER DOOR UNLOCK OUTPUT CIRCUIT SHORT TO GROUND OR VOLTAGE 12
DRIVER CYLINDER LOCK SWITCH INPUT CIRCUIT SHORTED (WITH VTSS ONLY) 17
DRIVER CYLINDER LOCK SWITCH INPUT STUCK (WITH VTSS ONLY) 20
DRIVER DOOR LOCK SWITCH INPUT CIRCUIT OPEN OR SHORT TO VOLTAGE . . . 23
DRIVER DOOR LOCK SWITCH INPUT CIRCUIT SHORTED 27
DRIVER DOOR LOCK SWITCH INPUT CIRCUIT STUCK 30
PASSENGER DOOR LOCK SWITCH INPUT CIRCUIT OPEN OR SHORT TO VOLTAGE . . . 33
PASSENGER DOOR LOCK SWITCH INPUT CIRCUIT SHORTED 37
PASSENGER DOOR LOCK SWITCH INPUT CIRCUIT STUCK 40
RKE FOB BATTERY LOW 43
RKE MODULE COMMUNICATION LINK 44
*ALL DOOR LOCKS INOPERATIVE 46
*AUTO (ROLLING) DOOR LOCKS INOPERATIVE 49
*CYLINDER LOCK SWITCH INOPERATIVE . . 51
*DOOR LOCK INHIBIT INOPERATIVE 55
*LEFT REAR DOOR FAILS TO LOCK AND UNLOCK 56
*DRIVER DOOR FAILS TO LOCK AND UNLOCK 60
*ONE DOOR LOCK MOTOR INOPERATIVE . . 64
*RIGHT DOORS FAIL TO LOCK AND UNLOCK – QUAD CAB 65
*RKE INOPERATIVE 69
SCHEMATICS AND DIAGRAMS 72

POWER LOCKS - ELECTRICAL DIAGNOSTICS

DIAGNOSIS AND TESTING

ALL DOOR LOCK OUTPUT CIRCUIT SHORT TO GROUND OR VOLTAGE

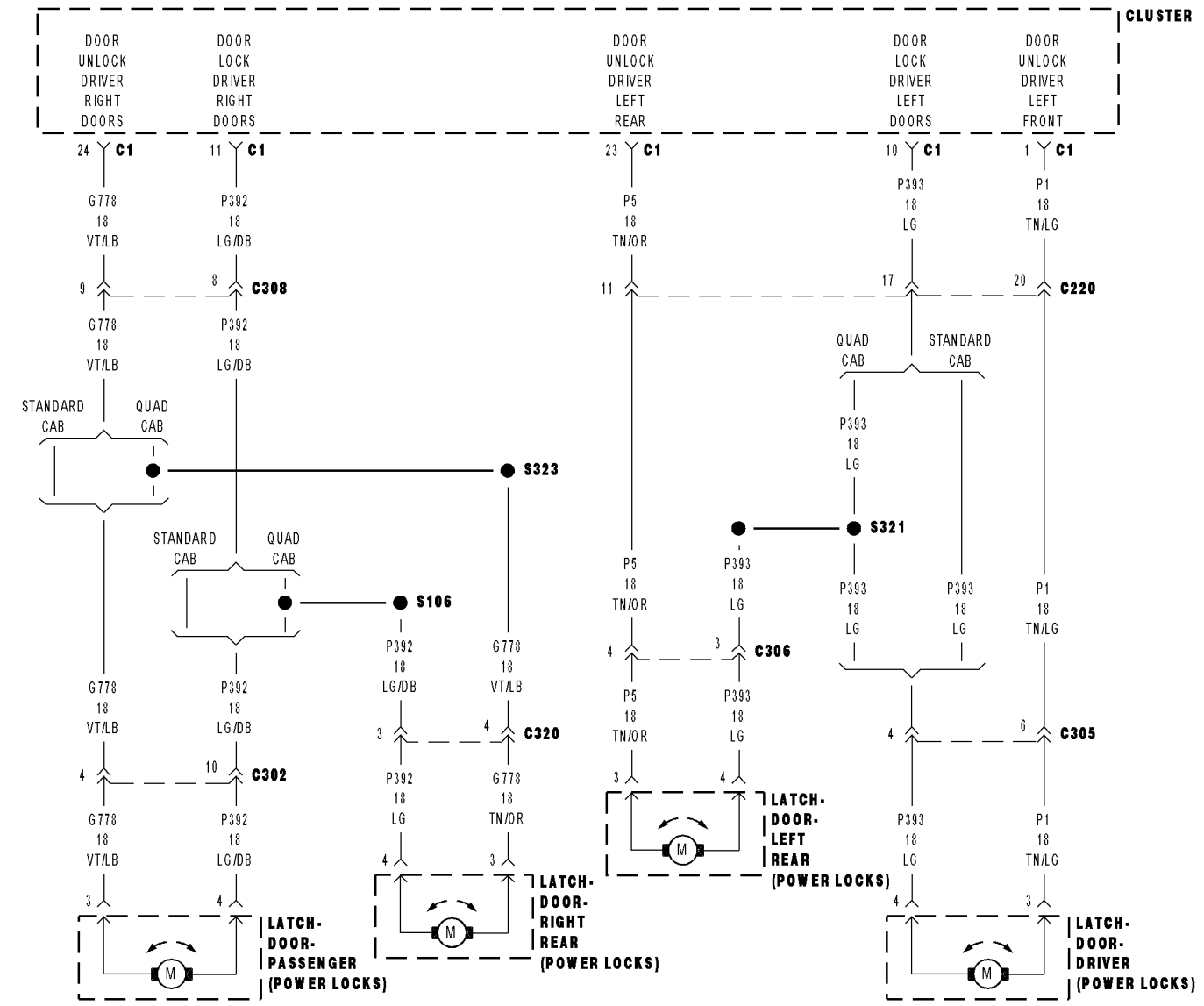

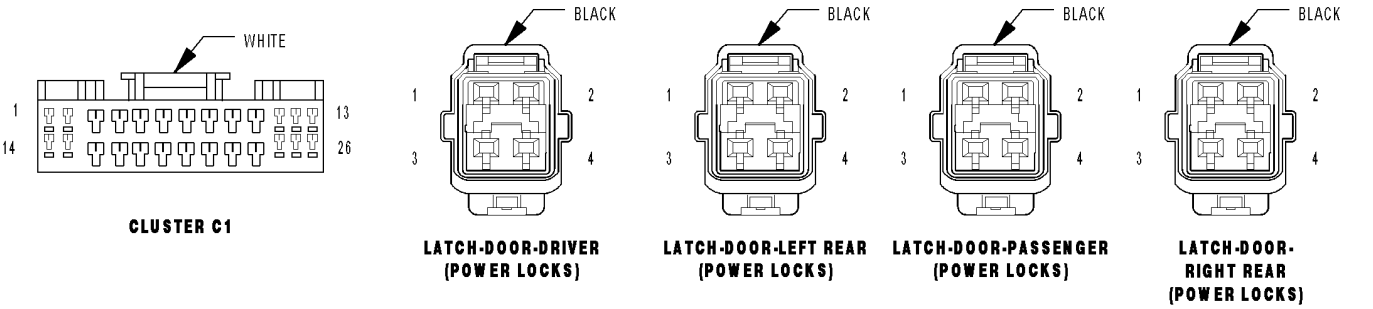

813ccc2b

ALL DOOR LOCK OUTPUT CIRCUIT SHORT TO GROUND OR VOLTAGE (CONTINUED)

For the Power Door Lock circuit diagram (Refer to 8 - ELECTRICAL/POWER LOCKS - SCHEMATICS AND DIAGRAMS).

For a complete wiring diagram **Refer to Section 8W**.

- **When Monitored:**
  Whenever the instrument cluster is awake.
- **Set Condition:**
  The instrument cluster monitors the door lock output circuits and when one of them is shorted to ground or to voltage, this code will set. This code will only set when the door locks are actuated.

Possible Causes
(P392) DOOR LOCK DRIVER RIGHT DOORS SHORTED TO (G778) DOOR UNLOCK DRIVER RIGHT DOORS
(P393) DOOR LOCK DRIVER LEFT DOORS SHORTED TO (P5) DOOR UNLOCK DRIVER LEFT REAR
(P393) DOOR LOCK DRIVER LEFT DOORS SHORT TO GROUND
(P392) DOOR LOCK DRIVER RIGHT DOORS SHORT TO GROUND
(P392) DOOR LOCK DRIVER RIGHT DOORS SHORT TO VOLTAGE
(P393) DOOR LOCK DRIVER LEFT DOORS SHORT TO VOLTAGE
DOOR LATCH
INSTRUMENT CLUSTER

Diagnostic Test

1. DTC PRESENT

Turn the ignition on.

With the DRBIII®, record and erase DTC's.

With the DRBIII®, read DTC's.

Operate the door locks several times from a door lock switch while monitoring the DRBIII®.

Does the DRBIII® display ALL DOOR LOCK OUTPUT SHORT TO GROUND OR VOLTAGE?

Yes >> Go To 2

No >> Using the wiring diagram/schematic as a guide, inspect the wiring and connectors. Check for any possible shorted conditions between the instrument cluster and the door lock motors.

Perform BODY VERIFICATION TEST - VER 1. (Refer to 8 - ELECTRICAL/ELECTRONIC CONTROL MODULES/FRONT CONTROL MODULE - DIAGNOSIS AND TESTING)

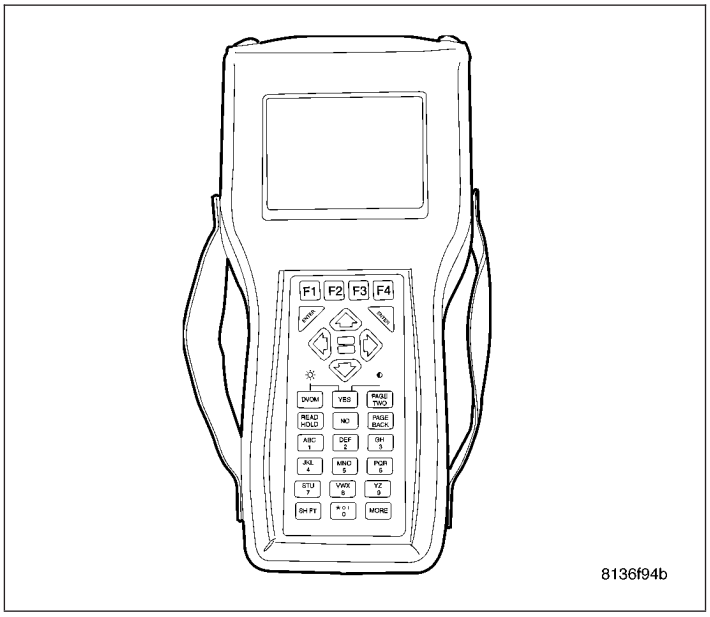

ALL DOOR LOCK OUTPUT CIRCUIT SHORT TO GROUND OR VOLTAGE (CONTINUED)

2. (P392) DOOR LOCK DRIVER RIGHT DOORS SHORTED TO (G778) DOOR UNLOCK DRIVER RIGHT DOORS

NOTE: If only one door motor is inoperative when the door locks are actuated, disconnect that door latch connector and retest to see if the DTC is still active. If it is not, replace that door latch.

Turn the ignition off.

Disconnect the Instrument Cluster C1 connector.

Measure the resistance between the (P392) Door Lock Driver Right Doors circuit and the (G778) Door Unlock Driver Right Doors circuit in the Instrument Cluster connector.

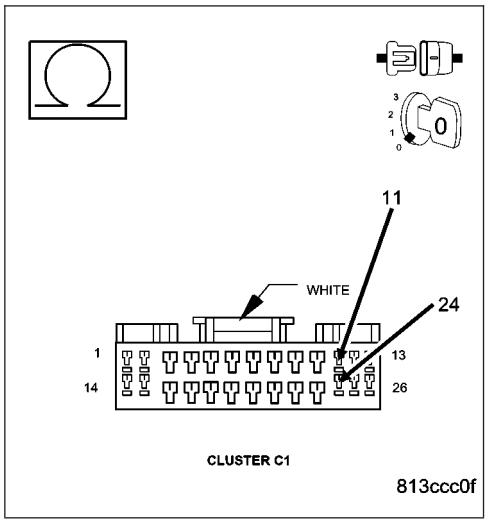

Is the resistance below 1.6 ohms?

Yes >> Repair the (P392) Door Lock Driver Right Doors circuit for a short to the (G778) Door Unlock Driver Right Doors circuit (could be a shorted motor).

Perform BODY VERIFICATION TEST - VER 1. (Refer to 8 - ELECTRICAL/ELECTRONIC CONTROL MODULES/ FRONT CONTROL MODULE - DIAGNOSIS AND TESTING)

No >> Go To 3

---

3. (P393) DOOR LOCK DRIVER LEFT DOORS SHORTED TO THE (P5) DOOR UNLOCK DRIVER LEFT REAR

NOTE: If this is a 2 door vehicle, answer NO to the question and continue.

Measure the resistance between the (P393) Door Lock Driver Left Doors circuit and the (P5) Door Unlock Driver Left Rear circuit in the Instrument Cluster connector.

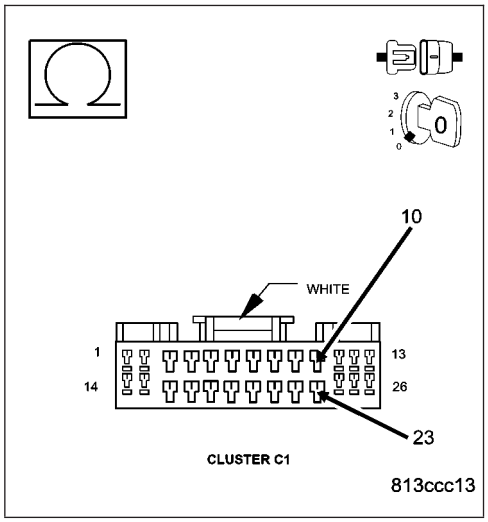

Is the resistance below 2.5 ohms?

Yes >> Repair the (P393) Door Lock Driver Left Doors circuit for a short to the (P5) Door Unlock Driver Left Rear circuit (could be a shorted motor).

Perform BODY VERIFICATION TEST - VER 1. (Refer to 8 - ELECTRICAL/ELECTRONIC CONTROL MODULES/ FRONT CONTROL MODULE - DIAGNOSIS AND TESTING)

No >> Go To 4

ALL DOOR LOCK OUTPUT CIRCUIT SHORT TO GROUND OR VOLTAGE (CONTINUED)

4. (P393) DOOR LOCK DRIVER LEFT DOORS SHORT TO GROUND

Measure the resistance between ground and the (P393) Door Lock Driver Left Doors circuit in the Instrument Cluster C1 connector.

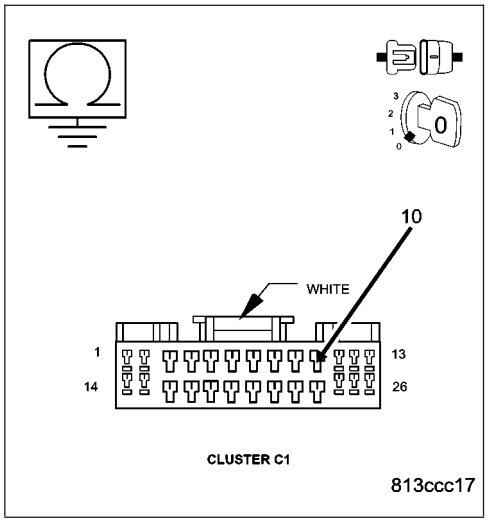

Is the resistance below 1000.0 ohms?

Yes >> Repair the (P393) Door Lock Driver Left Doors circuit for a short to ground. The short may be in the (P393) Door Lock Driver Left Doors wire, the (P5) Door Unlock Driver Left Rear Wire, instrument panel wiring or one of the left side motors.

Perform BODY VERIFICATION TEST - VER 1. (Refer to 8 - ELECTRICAL/ELECTRONIC CONTROL MODULES/ FRONT CONTROL MODULE - DIAGNOSIS AND TESTING)

No >> Go To 5

5. (P392) DOOR LOCK DRIVER RIGHT DOORS SHORT TO GROUND

Measure the resistance between ground and the (P392) Door Lock Driver Right Doors circuit in the Instrument Cluster C1 connector.

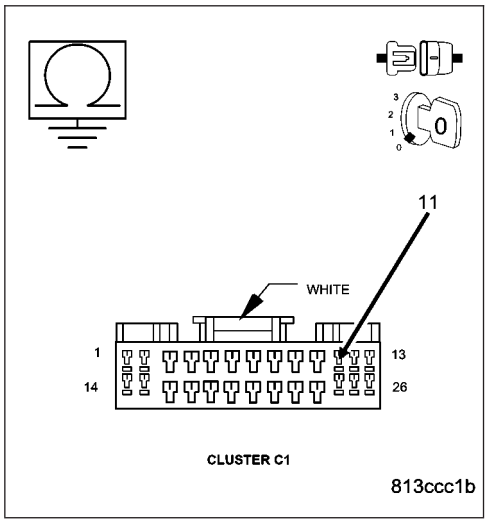

Is the resistance below 1000.0 ohms?

Yes >> Repair the (P392) Door Lock Driver Right Doors circuit for a short to ground. The short may be in the (P392) Door Lock Driver Right Doors wire, the (G778) Door Unlock Driver Right Doors wire or in a right side motor.

Perform BODY VERIFICATION TEST - VER 1. (Refer to 8 - ELECTRICAL/ELECTRONIC CONTROL MODULES/ FRONT CONTROL MODULE - DIAGNOSIS AND TESTING)

No >> Go To 6

ALL DOOR LOCK OUTPUT CIRCUIT SHORT TO GROUND OR VOLTAGE (CONTINUED)

6. (P392) DOOR LOCK DRIVER RIGHT DOORS SHORT TO VOLTAGE

Turn the ignition on.

Measure the voltage between ground and the (P392) Door Lock Driver Right Doors circuit.

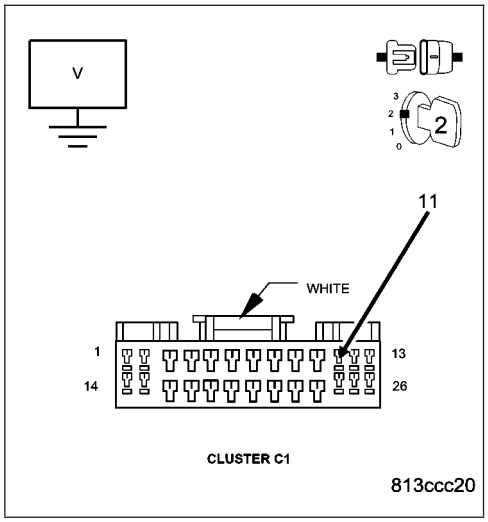

Is there any voltage present?

Yes >> Repair the (P392) Door Lock or (G778) Unlock Driver Right Doors circuit for a short to voltage.

Perform BODY VERIFICATION TEST - VER 1. (Refer to 8 - ELECTRICAL/ELECTRONIC CONTROL MODULES/ FRONT CONTROL MODULE - DIAGNOSIS AND TESTING)

No >> Go To 7

7. (P393) DOOR LOCK DRIVER LEFT DOORS SHORT TO VOLTAGE

Measure the voltage between ground and the (P393) Door Lock Driver Left Doors circuit.

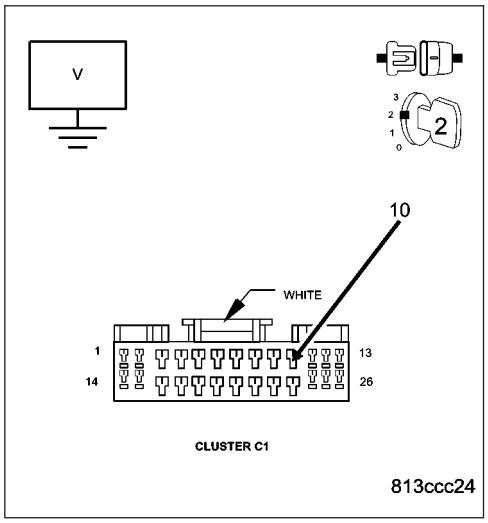

Is there any voltage present?

Yes >> Repair the (P393) Door Lock or (P5) Door Unlock Driver Left Rear or (P1) Door Unlock Driver Left Front circuit for a short to voltage.

Perform BODY VERIFICATION TEST - VER 1. (Refer to 8 - ELECTRICAL/ELECTRONIC CONTROL MODULES/ FRONT CONTROL MODULE - DIAGNOSIS AND TESTING)

No >> Replace the Instrument Cluster.

Perform BODY VERIFICATION TEST - VER 1. (Refer to 8 - ELECTRICAL/ELECTRONIC CONTROL MODULES/ FRONT CONTROL MODULE - DIAGNOSIS AND TESTING)

ALL DOOR UNLOCK OUTPUT CIRCUIT SHORT TO GROUND OR VOLTAGE

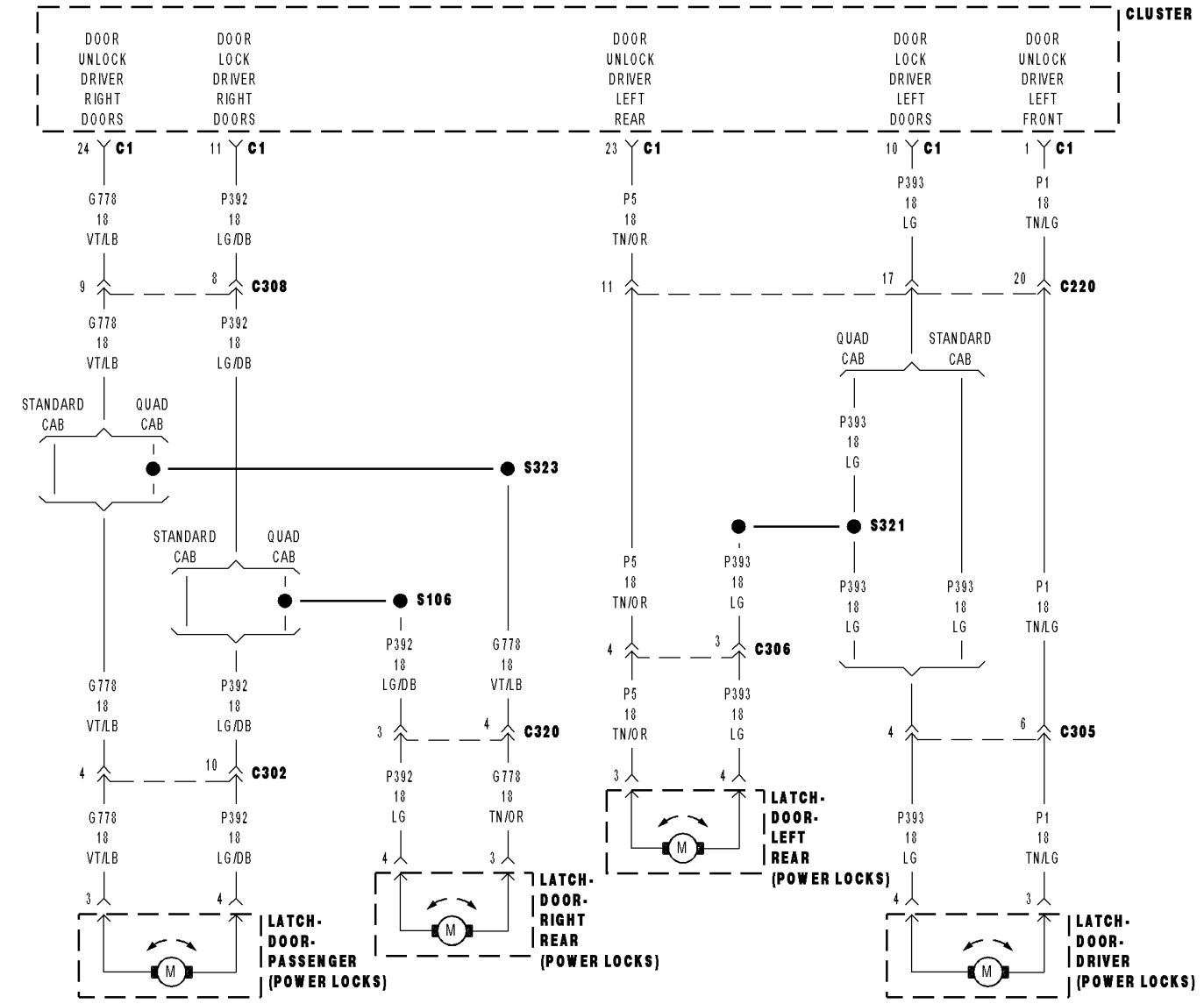

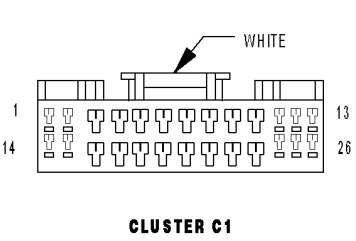

CLUSTER C1

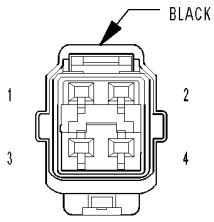

LATCH-DOOR-DRIVER (POWER LOCKS)

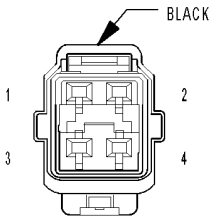

LATCH-DOOR-LEFT REAR (POWER LOCKS)

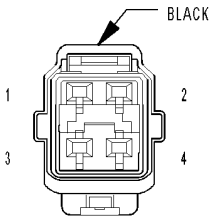

LATCH-DOOR-PASSENGER (POWER LOCKS)

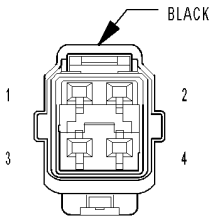

LATCH-DOOR-RIGHT REAR (POWER LOCKS)

813ccc2b

ALL DOOR UNLOCK OUTPUT CIRCUIT SHORT TO GROUND OR VOLTAGE (CONTINUED)

For the Power Door Lock circuit diagram (Refer to 8 - ELECTRICAL/POWER LOCKS - SCHEMATICS AND DIAGRAMS).

For a complete wiring diagram **Refer to Section 8W**.

- **When Monitored:**
  Whenever the instrument cluster is awake.
- **Set Condition:**
  The instrument cluster monitors the door unlock output circuits and when one of them is shorted to ground or to voltage, this code will set. This code will only set when the door locks are actuated.

Possible Causes
(P392) DOOR LOCK DRIVER RIGHT DOORS SHORTED TO (G778) DOOR UNLOCK DRIVER RIGHT DOORS
(P393) DOOR LOCK DRIVER LEFT DOORS SHORTED TO (P5) DOOR UNLOCK DRIVER LEFT REAR
DOOR UNLOCK DRIVER RIGHT DOORS CIRCUIT SHORT TO GROUND
DOOR UNLOCK DRIVER LEFT REAR CIRCUIT SHORT TO GROUND
DOOR UNLOCK DRIVER RIGHT DOORS SHORT TO VOLTAGE
DOOR UNLOCK DRIVER LEFT REAR SHORT TO VOLTAGE
DOOR LATCH
INSTRUMENT CLUSTER

Diagnostic Test

1. DTC PRESENT

Turn the ignition on.

With the DRBIII®, record and erase DTC's.

With the DRBIII®, read DTC's.

Operate the door locks several times from a door lock switch while monitoring the DRBIII®.

Does the DRBIII® display ALL DOOR UNLOCK OUTPUT SHORT TO GROUND OR VOLTAGE?

Yes >> Go To 2

No >> Using the wiring diagram/schematic as a guide, inspect the wiring and connectors. Check for any possible shorted conditions between the instrument cluster and the door lock motors.

Perform BODY VERIFICATION TEST - VER 1. (Refer to 8 - ELECTRICAL/ELECTRONIC CONTROL MODULES/FRONT CONTROL MODULE - DIAGNOSIS AND TESTING)

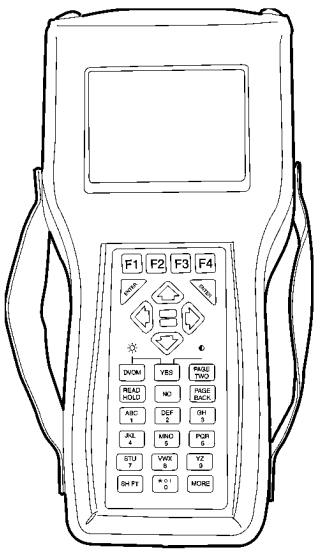

ALL DOOR UNLOCK OUTPUT CIRCUIT SHORT TO GROUND OR VOLTAGE (CONTINUED)

2. (P392) DOOR LOCK DRIVER RIGHT DOORS SHORTED TO (G778) DOOR UNLOCK DRIVER RIGHT DOORS

NOTE: If only one motor is inoperative when the door locks are actuated, disconnect that door latch connector and retest to see if the DTC is still present. If it is not, replace that door latch.

Turn the ignition off.

Disconnect the Instrument Cluster C1 connector.

Measure the resistance between the (P392) Door Lock Driver Right Doors circuit and the (G778) Door Unlock Driver Right Doors circuit in the Instrument Cluster connector.

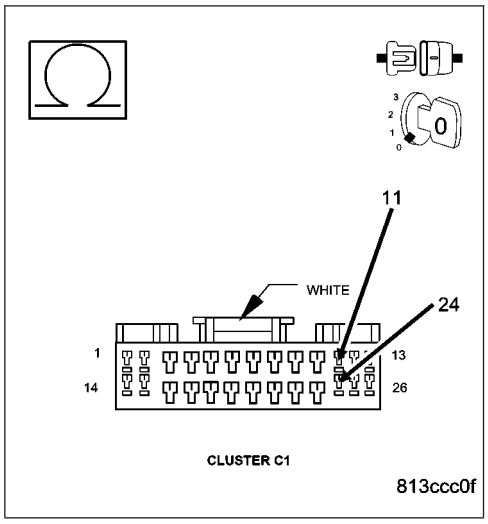

Is the resistance below 1.6 ohms?

Yes >> Repair the (P392) Door Lock Driver Right Doors circuit for a short to the (G778) Door Unlock Driver Right Doors circuit (could be a shorted motor).

Perform BODY VERIFICATION TEST - VER 1. (Refer to 8 - ELECTRICAL/ELECTRONIC CONTROL MODULES/ FRONT CONTROL MODULE - DIAGNOSIS AND TESTING)

No >> Go To 3

---

3. (P393) DOOR LOCK DRIVER LEFT DOORS SHORTED TO (P5) DOOR UNLOCK DRIVER LEFT REAR

NOTE: If this is a 2 door vehicle, answer NO to the question and continue.

Measure the resistance between the (P393) Door Lock Driver Left Doors circuit and the (P5) Door Unlock Driver Left Rear circuit in the Instrument Cluster connector.

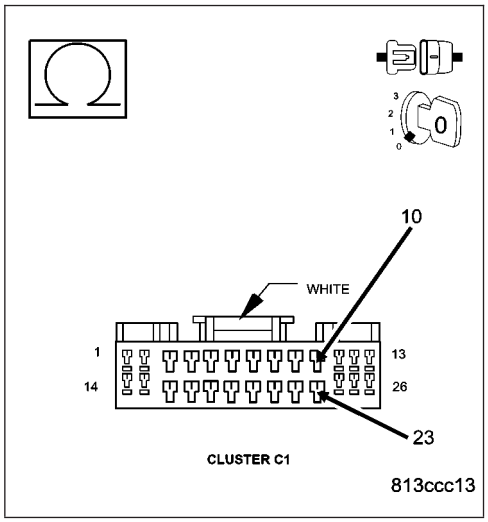

Is the resistance below 2.5 ohms?

Yes >> Repair the (P393) Door Lock Driver Left Doors circuit for a short to the (P5) Door Unlock Driver Left Rear or the (P1) Door Unlock Driver Left Front circuit (could be a shorted motor).

Perform BODY VERIFICATION TEST - VER 1. (Refer to 8 - ELECTRICAL/ELECTRONIC CONTROL MODULES/ FRONT CONTROL MODULE - DIAGNOSIS AND TESTING)

No >> Go To 4

ALL DOOR UNLOCK OUTPUT CIRCUIT SHORT TO GROUND OR VOLTAGE (CONTINUED)

4. (G778) DOOR UNLOCK DRIVER RIGHT DOORS CIRCUIT SHORT TO GROUND

Measure the resistance between ground and the (G778) Door Unlock Driver Right Doors circuit in the Instrument Cluster C1 connector.

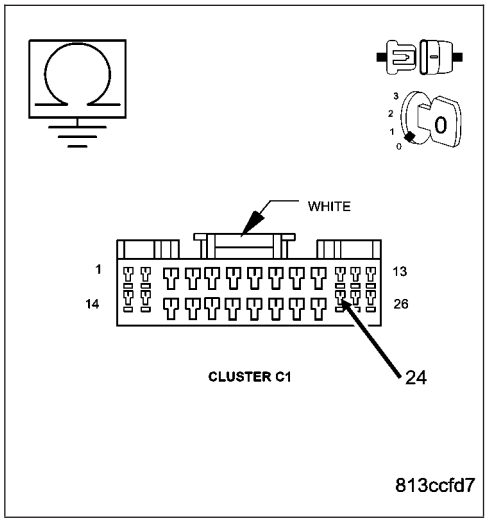

Is the resistance below 1000.0 ohms?

Yes >> Repair the (G778) Door Unlock Driver Right Doors circuit for a short to ground. The short may be in the (G778) Door Unlock Driver Right Doors wire, the (P392) Door Lock Driver Right Doors wire or a right side door lock motor.

Perform BODY VERIFICATION TEST - VER 1. (Refer to 8 - ELECTRICAL/ELECTRONIC CONTROL MODULES/ FRONT CONTROL MODULE - DIAGNOSIS AND TESTING)

No >> Go To 5

5. (P5) DOOR UNLOCK DRIVER LEFT REAR CIRCUIT SHORT TO GROUND

NOTE: If this is a 2 door vehicle, answer NO to the question and continue.

Measure the resistance between ground and the (P5) Door Unlock Driver Left Rear circuit in the Instrument Cluster C1 connector.

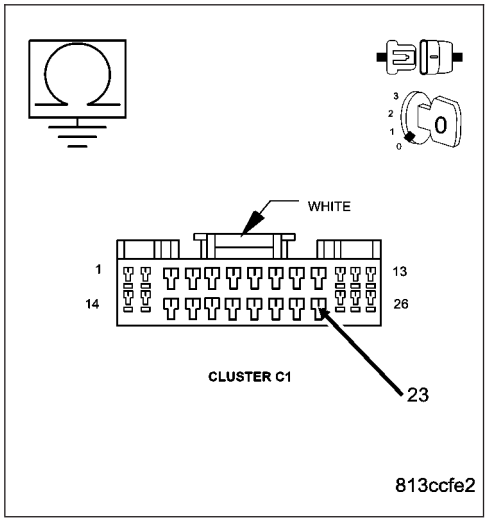

Is the resistance below 1000.0 ohms?

Yes >> Repair the (P5) Door Unlock Driver Left Rear circuit for a short to ground. The short may be in the (P5) Door Unlock Driver Left Rear wire, the (P393) Door Lock Driver Left Doors wire or in a left side door lock motor.

Perform BODY VERIFICATION TEST - VER 1. (Refer to 8 - ELECTRICAL/ELECTRONIC CONTROL MODULES/ FRONT CONTROL MODULE - DIAGNOSIS AND TESTING)

No >> Go To 6

ALL DOOR UNLOCK OUTPUT CIRCUIT SHORT TO GROUND OR VOLTAGE (CONTINUED)

6. (G778) DOOR UNLOCK DRIVER RIGHT DOORS SHORT TO VOLTAGE

Turn the ignition on.

Measure the voltage between ground and the (G778) Door Unlock Driver Right Doors circuit.

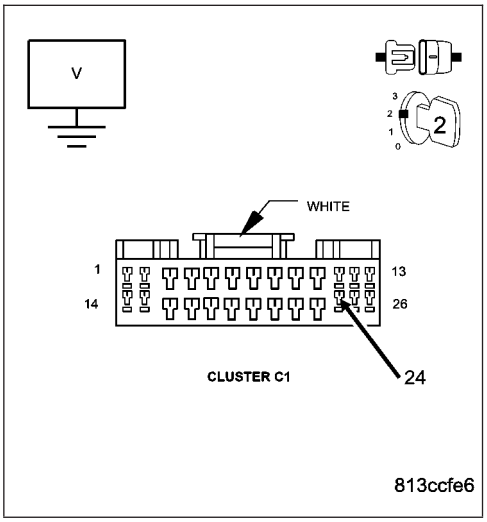

Is there any voltage present?

Yes >> Repair the (P392) Door Lock or (G778) Door Unlock Driver Right Doors circuit for a short to voltage.

Perform BODY VERIFICATION TEST - VER 1. (Refer to 8 - ELECTRICAL/ELECTRONIC CONTROL MODULES/ FRONT CONTROL MODULE - DIAGNOSIS AND TESTING)

No >> Go To 7

---

7. (P5) DOOR UNLOCK DRIVER LEFT REAR SHORT TO VOLTAGE

NOTE: If this a 2 Door vehicle, answer NO to the question and continue.

Measure the voltage between ground and the (P5) Door Unlock Driver Left Rear circuit.

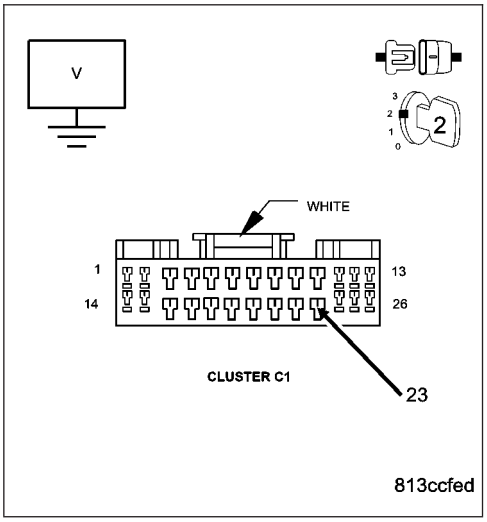

Is there any voltage present?

Yes >> Repair the (P393) Door Lock Driver Left Doors or the (P5) Door Unlock Driver Left Rear circuit for a short to voltage.

Perform BODY VERIFICATION TEST - VER 1. (Refer to 8 - ELECTRICAL/ELECTRONIC CONTROL MODULES/ FRONT CONTROL MODULE - DIAGNOSIS AND TESTING).

No >> Replace the Instrument Cluster.

Perform BODY VERIFICATION TEST - VER 1. (Refer to 8 - ELECTRICAL/ELECTRONIC CONTROL MODULES/ FRONT CONTROL MODULE - DIAGNOSIS AND TESTING)

DRIVER DOOR UNLOCK OUTPUT CIRCUIT SHORT TO GROUND OR VOLTAGE

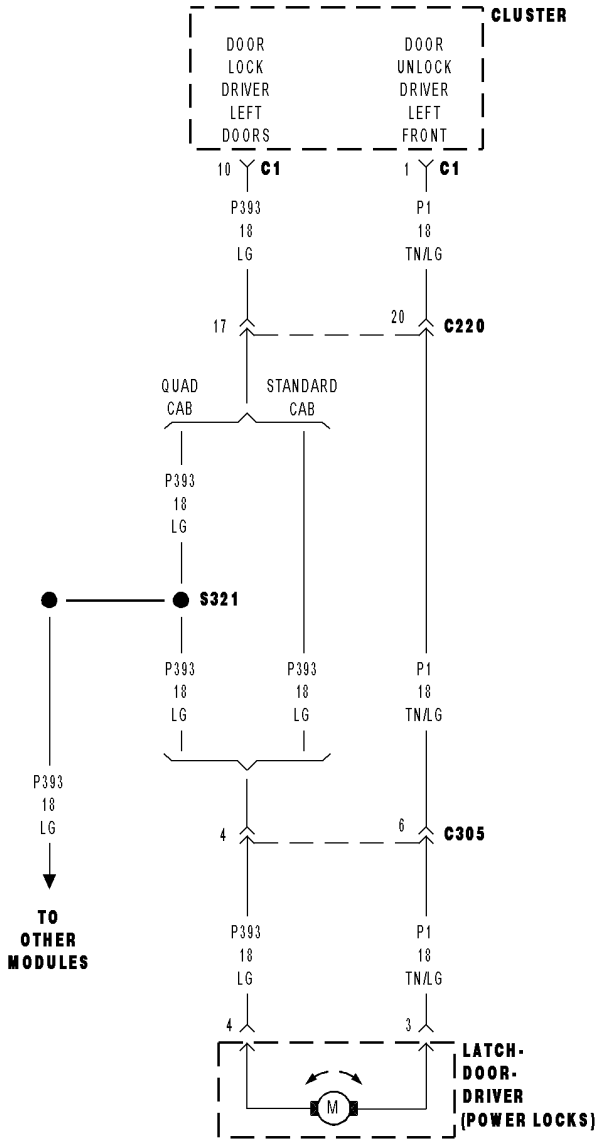

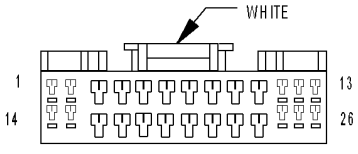

CLUSTER C1

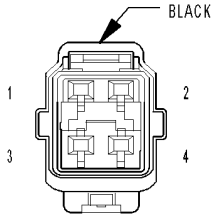

LATCH-DOOR-DRIVER (POWER LOCKS)

813cdc67

DRIVER DOOR UNLOCK OUTPUT CIRCUIT SHORT TO GROUND OR VOLTAGE (CONTINUED)

For the Power Door Lock circuit diagram (Refer to 8 - ELECTRICAL/POWER LOCKS - SCHEMATICS AND DIAGRAMS)

For a complete wiring diagram **Refer to Section 8W**.

- **When Monitored:**
  Whenever the instrument cluster is awake.
- **Set Condition:**
  The instrument cluster monitors the driver door unlock output circuit and when it is shorted to ground or to voltage, this code will set. This code will only set when the door locks are actuated.

Possible Causes
(P393) DOOR LOCK DRIVER LEFT DOORS SHORTED TO (P1) DOOR UNLOCK DRIVER LEFT FRONT
(P1) DOOR UNLOCK DRIVER LEFT FRONT WIRE SHORT TO GROUND
(P393) DOOR LOCK DRIVER LEFT DOORS WIRE SHORT TO GROUND
(P393) DOOR LOCK DRIVER LEFT DOORS WIRE SHORTED TO VOLTAGE
(P1) DOOR LOCK DRIVER LEFT FRONT WIRE SHORTED TO VOLTAGE
DRIVER DOOR LATCH
INSTRUMENT CLUSTER

Diagnostic Test

1. DTC PRESENT

Turn the ignition on.

With the DRBIII®, record and erase DTC's.

With the DRBIII®, read DTC's.

Operate the door locks several times from a door lock switch while monitoring the DRBIII®.

Does the DRBIII® display DRIVER DOOR UNLOCK OUTPUT CIRCUIT SHORT TO GROUND OR VOLTAGE?

Yes >> Go To 2

No >> Using the wiring diagram/schematic as a guide, inspect the wiring and connectors. Check for any possible shorted conditions between the instrument cluster and the driver door lock motor.

Perform BODY VERIFICATION TEST - VER 1. (Refer to 8 - ELECTRICAL/ELECTRONIC CONTROL MODULES/FRONT CONTROL MODULE - DIAGNOSIS AND TESTING)

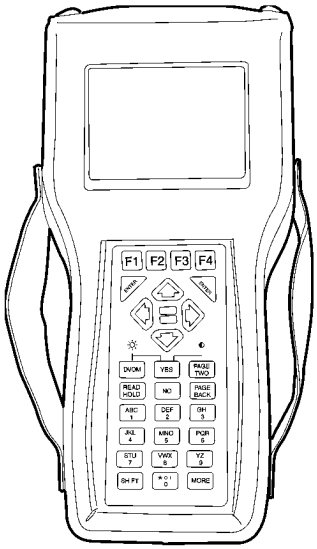

DRIVER DOOR UNLOCK OUTPUT CIRCUIT SHORT TO GROUND OR VOLTAGE (CONTINUED)

2. (P393) DOOR LOCK DRIVER LEFT DOORS SHORTED TO (P1) DOOR UNLOCK DRIVER LEFT FRONT

Turn the ignition off.

Disconnect the Instrument Cluster C1 connector.

Measure the resistance between the (P1) Door Unlock Driver Left Front circuit and the (P393) Door Lock Driver Left Doors circuit in the Instrument Cluster C1 connector.

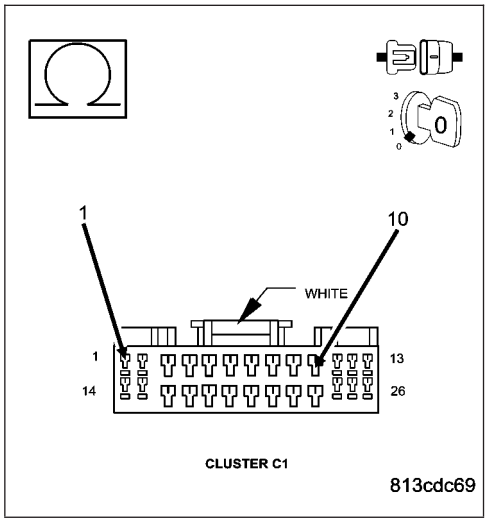

Is the resistance below 3.0 ohms?

Yes >> Repair the (P393) Door Lock Driver Left Doors circuit for a short to the (P1) Door Unlock Driver Left Front circuit (could be a shorted motor).

Perform BODY VERIFICATION TEST - VER 1. (Refer to 8 - ELECTRICAL/ELECTRONIC CONTROL MODULES/ FRONT CONTROL MODULE - DIAGNOSIS AND TESTING)

No >> Go To 3

3. (P1) DOOR UNLOCK DRIVER LEFT FRONT CIRCUIT SHORTED TO GROUND

Measure the resistance between ground and the (P1) Door Unlock Driver Left Front circuit in the Instrument Cluster C1 connector.

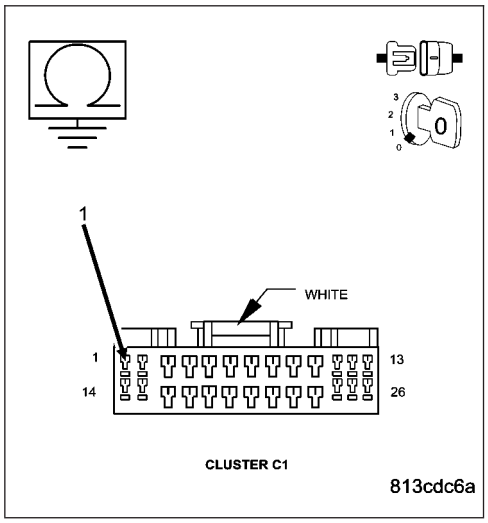

Is the resistance below 1000.0 ohms?

No >> Go To 6

Yes >> Go To 4

DRIVER DOOR UNLOCK OUTPUT CIRCUIT SHORT TO GROUND OR VOLTAGE (CONTINUED)

4. (P1) DOOR UNLOCK DRIVER LEFT FRONT WIRE SHORT TO GROUND

Disconnect the Driver Door Lock Motor connector.

Measure the resistance between ground and the (P1) Door Unlock Driver Left Front wire in the Instrument Cluster C1 connector.

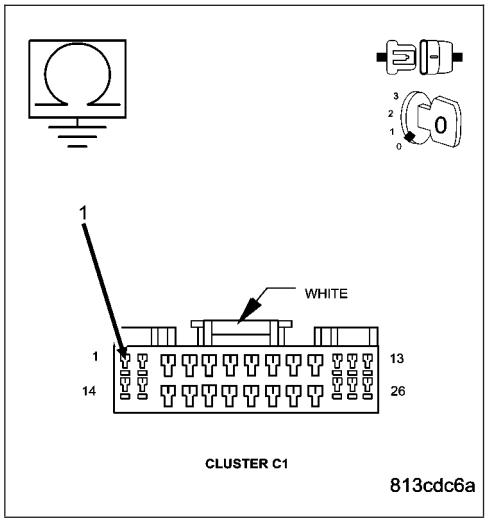

Is the resistance below 1000.0 ohms?

Yes >> Repair the (P1) Door Unlock Driver Left Front wire for a short to ground.

Perform BODY VERIFICATION TEST - VER 1. (Refer to 8 - ELECTRICAL/ELECTRONIC CONTROL MODULES/ FRONT CONTROL MODULE - DIAGNOSIS AND TESTING)

No >> Go To 5

5. (P393) DOOR LOCK DRIVER LEFT DOORS WIRE SHORT TO GROUND

Measure the resistance between ground and the (P393) Door Lock Driver Left Doors circuit in the Instrument Cluster C1 connector.

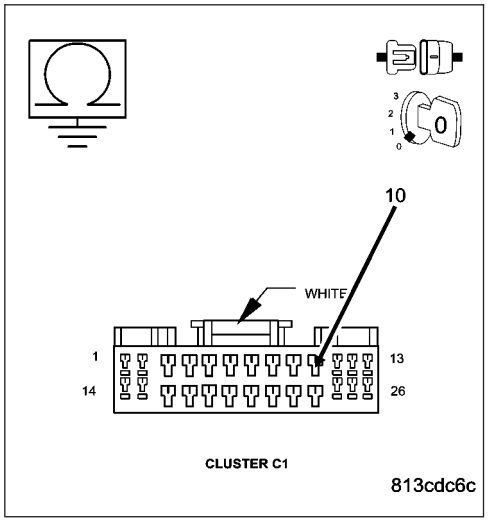

Is the resistance below 1000.0 ohms?

Yes >> Repair the (P393) Door Lock Driver Left Doors wire for a short to ground.

Perform BODY VERIFICATION TEST - VER 1. (Refer to 8 - ELECTRICAL/ELECTRONIC CONTROL MODULES/ FRONT CONTROL MODULE - DIAGNOSIS AND TESTING)

No >> Replace the Driver Door Latch.

Perform BODY VERIFICATION TEST - VER 1. (Refer to 8 - ELECTRICAL/ELECTRONIC CONTROL MODULES/ FRONT CONTROL MODULE - DIAGNOSIS AND TESTING)

DRIVER DOOR UNLOCK OUTPUT CIRCUIT SHORT TO GROUND OR VOLTAGE (CONTINUED)

6. (P1) DOOR UNLOCK DRIVER LEFT FRONT OR (P393) DOOR LOCK DRIVER LEFT DOORS SHORTED TO VOLTAGE

Turn the ignition on.

Measure the voltage between ground and the (P1) Door Unlock Driver Left Front circuit.

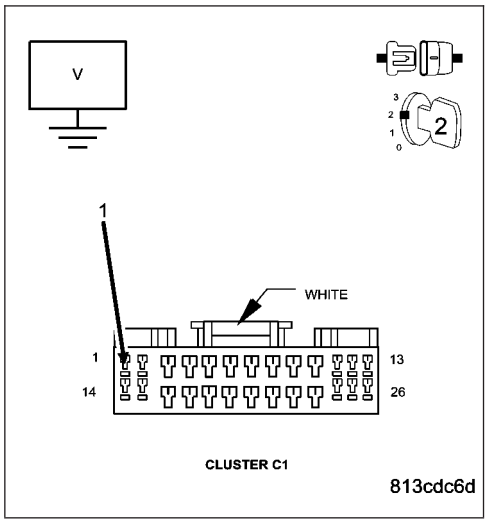

Is there any voltage present?

Yes >> Repair the (P393) Door Lock Driver Left Doors or (P1) Door Unlock Driver Left Front circuit for a short to voltage.
Perform BODY VERIFICATION TEST - VER 1. (Refer to 8 - ELECTRICAL/ELECTRONIC CONTROL MODULES/ FRONT CONTROL MODULE - DIAGNOSIS AND TESTING)

No >> Replace the Instrument Cluster.
Perform BODY VERIFICATION TEST - VER 1 (Refer to 8 - ELECTRICAL/ELECTRONIC CONTROL MODULES/ FRONT CONTROL MODULE - DIAGNOSIS AND TESTING)

DRIVER CYLINDER LOCK SWITCH INPUT CIRCUIT SHORTED (WITH VTSS ONLY)

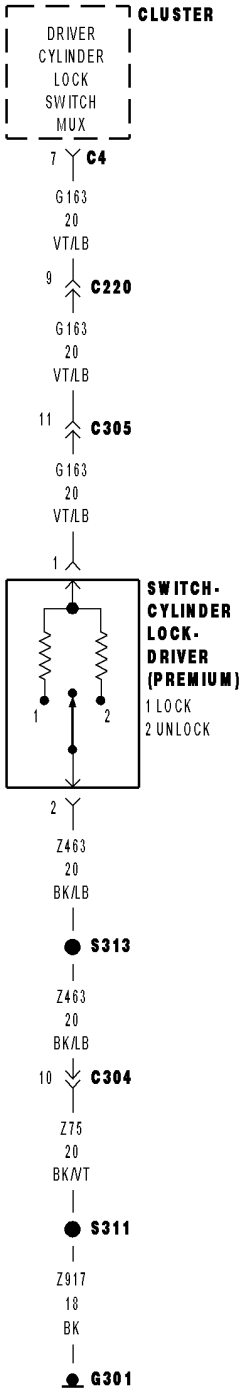

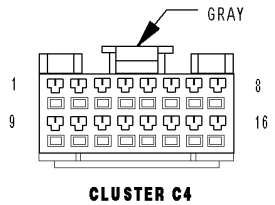

CLUSTER C4

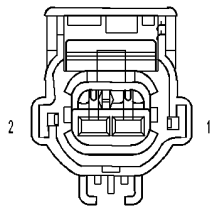

SWITCH- CYLINDER LOCK- DRIVER (PREMIUM)

813cfffe

DRIVER CYLINDER LOCK SWITCH INPUT CIRCUIT SHORTED (WITH VTSS ONLY) (CONTINUED)

For the Power Door Locks circuit diagram (Refer to 8 - ELECTRICAL/POWER LOCKS - SCHEMATICS AND DIAGRAMS).

For a complete wiring diagram **Refer to Section 8W**.

- **When Monitored:**
  At all times when battery power is supplied to the Instrument Cluster.
- **Set Condition:**
  When the Instrument Cluster senses voltage to the driver cylinder lock switch below 0.25 volts for over 10 seconds.

Possible Causes
(G163) DRIVER CYLINDER LOCK SWITCH MUX CIRCUIT SHORT TO GROUND
CYLINDER LOCK SWITCH SHORTED
INSTRUMENT CLUSTER

Diagnostic Test

1. DTC PRESENT

Turn the ignition on.

With the DRBIII®, record and erase DTC's.

With the DRBIII®, read DTC's.

Operate the door locks several times from the Driver Cylinder Lock Switch by cycling the key clockwise while monitoring the DRBIII®.

Does the DRBIII® display DRIVER CYL LOCK SW INPUT CIRCUIT SHORTED?

Yes >> Go To 2

No >> Using the wiring diagram/schematic as a guide, inspect the wiring and connectors.
Perform BODY VERIFICATION TEST - VER 1. (Refer to 8 - ELECTRICAL/ELECTRONIC CONTROL MODULES/FRONT CONTROL MODULE - DIAGNOSIS AND TESTING)

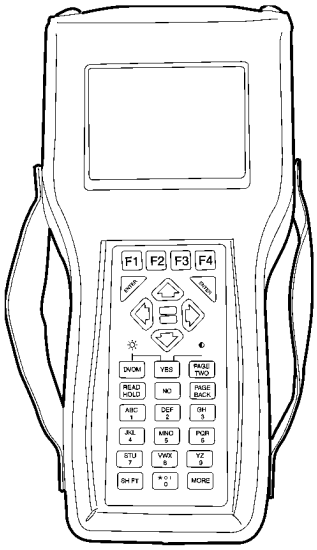

DRIVER CYLINDER LOCK SWITCH INPUT CIRCUIT SHORTED (WITH VTSS ONLY) (CONTINUED)

2. CYLINDER LOCK SWITCH SHORTED

Disconnect the Driver Cylinder Lock Switch connector.

With the DRBIII® in Sensors, read the DRV CYL LOCK SW MUX circuit

Is the voltage above 4.8 volts?

Yes >> Replace the Cylinder Lock Switch.
Perform BODY VERIFICATION TEST - VER 1. (Refer to 8 - ELECTRICAL/ELECTRONIC CONTROL MODULES/ FRONT CONTROL MODULE - DIAGNOSIS AND TESTING)

No >> Go To 3

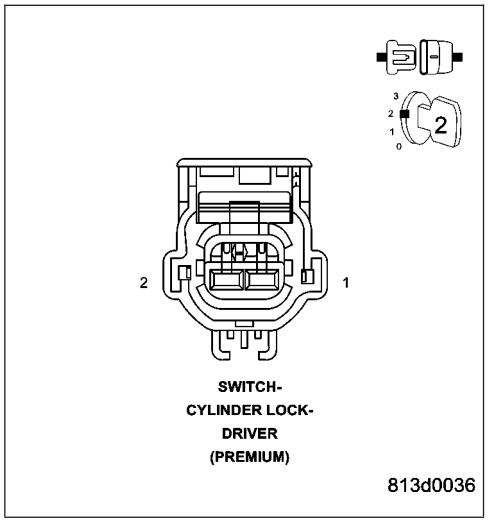

3. (G163) DRIVER CYLINDER LOCK SWITCH MUX SHORTED

Disconnect the Driver Cylinder Lock Switch connector.

Disconnect the Instrument Cluster C2. connector.

Measure the resistance between (G163) Driver Cylinder Lock Switch Mux circuit and ground.

Is the resistance below 1000.0 ohms?

Yes >> Repair the (G163) Driver Cylinder Lock Switch Mux circuit for a short to ground.
Perform BODY VERIFICATION TEST - VER 1. (Refer to 8 - ELECTRICAL/ELECTRONIC CONTROL MODULES/ FRONT CONTROL MODULE - DIAGNOSIS AND TESTING)

No >> Replace the Instrument Cluster. Perform BODY VERIFICATION TEST - VER 1. (Refer to 8 - ELECTRICAL/ELECTRONIC CONTROL MODULES/FRONT CONTROL MODULE - DIAGNOSIS AND TESTING)

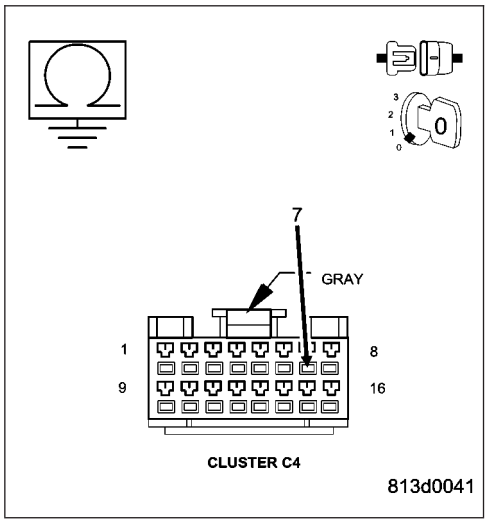

DRIVER CYLINDER LOCK SWITCH INPUT STUCK (WITH VTSS ONLY)

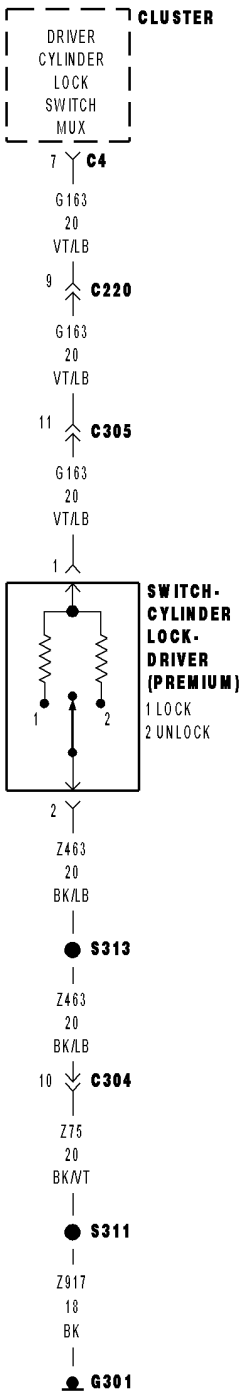

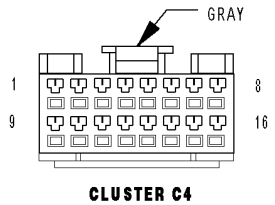

CLUSTER C4

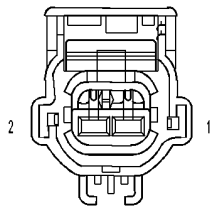

SWITCH- CYLINDER LOCK- DRIVER (PREMIUM)

813cfffe

DRIVER CYLINDER LOCK SWITCH INPUT STUCK (WITH VTSS ONLY) (CONTINUED)

For the Power Door Locks circuit diagram. (Refer to 8 - ELECTRICAL/ELECTRONIC CONTROL MODULES/FRONT CONTROL MODULE - DIAGNOSIS AND TESTING)

For a complete wiring diagram **Refer to Section 8W**.

- **When Monitored:**
  At all times when battery power is supplied to the Instrument Cluster.
- **Set Condition:**
  When the Instrument Cluster senses voltage to the driver cylinder lock switch between 1.3 and 3.75 volts for over 10 seconds.

Possible Causes
DRIVER CYLINDER LOCK SWITCH MUX CIRCUIT PARTIAL SHORT TO GROUND
CYLINDER LOCK SWITCH STUCK
INSTRUMENTT CLUSTER

Diagnosttic Test

1. DTC PRESENT

Turn the ignition on.

With the DRBIII®, record and erase DTC's.

With the DRBIII®, read DTC's.

Operate the door locks several times from the Driver Cylinder Lock Switch by cycling the key in both directions while monitoring the DRBIII®.

Does the DRBIII® display DRV CYL LOCK SW INPUT CIRCUIT STUCK?

Yes >> Go To 2

No >> Using the wiring diagram/schematic as a guide, inspect the wiring and connectors.
Perform BODY VERIFICATION TEST - VER 1. (Refer to 8 - ELECTRICAL/ELECTRONIC CONTROL MODULES/FRONT CONTROL MODULE - DIAGNOSIS AND TESTING)

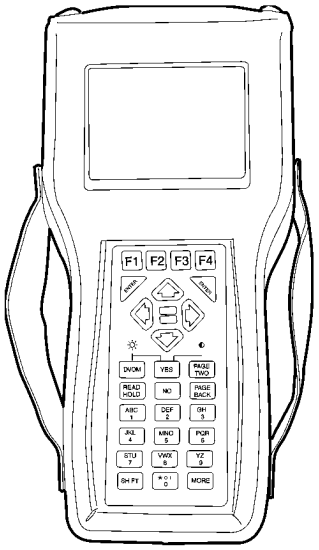

2. CYLINDER LOCK SWITCH SHORTED

With the DRBIII® in Sensors, read the DRV CYL LOCK SW MUX circuit

Does the DRBIII® display voltage between 1.3 and 4.15 volts?

No >> Replace the Instrument Cluster.
Perform BODY VERIFICATION TEST - VER 1. (Refer to 8 - ELECTRICAL/ELECTRONIC CONTROL MODULES/FRONT CONTROL MODULE - DIAGNOSIS AND TESTING)

Yes >> Go To 3

DRIVER CYLINDER LOCK SWITCH INPUT STUCK (WITH VTSS ONLY) (CONTINUED)

3. (G164) DRIVER CYLINDER LOCK SWITCH MUX SHORTED

Disconnect the Driver Cylinder Lock Switch connector.

Measure the voltage between (G163) Driver Cylinder Lock Switch Mux circuit and ground.

Is the voltage above 4.9 volts?

No >> Repair the (G163) Driver Cylinder Lock Switch Mux circuit for a partial short to ground.

Perform BODY VERIFICATION TEST - VER 1. (Refer to 8 - ELECTRICAL/ELECTRONIC CONTROL MODULES/ FRONT CONTROL MODULE - DIAGNOSIS AND TESTING)

Yes >> Replace the Cylinder Lock Switch. Perform BODY VERIFICATION TEST - VER 1. (Refer to 8 - ELECTRICAL/ELECTRONIC CONTROL MODULES/FRONT CONTROL MODULE - DIAGNOSIS AND TESTING)

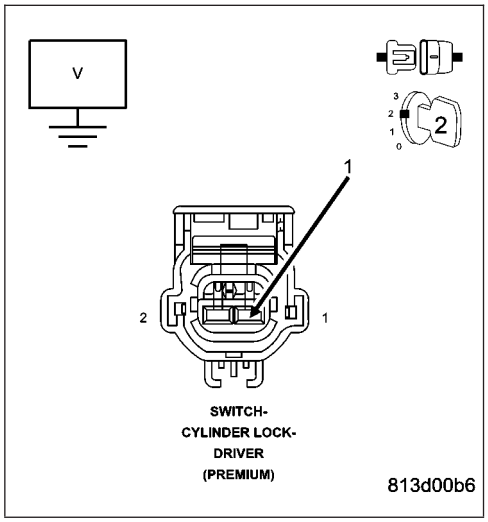

DRIVER DOOR LOCK SWITCH INPUT CIRCUIT OPEN OR SHORT TO VOLTAGE

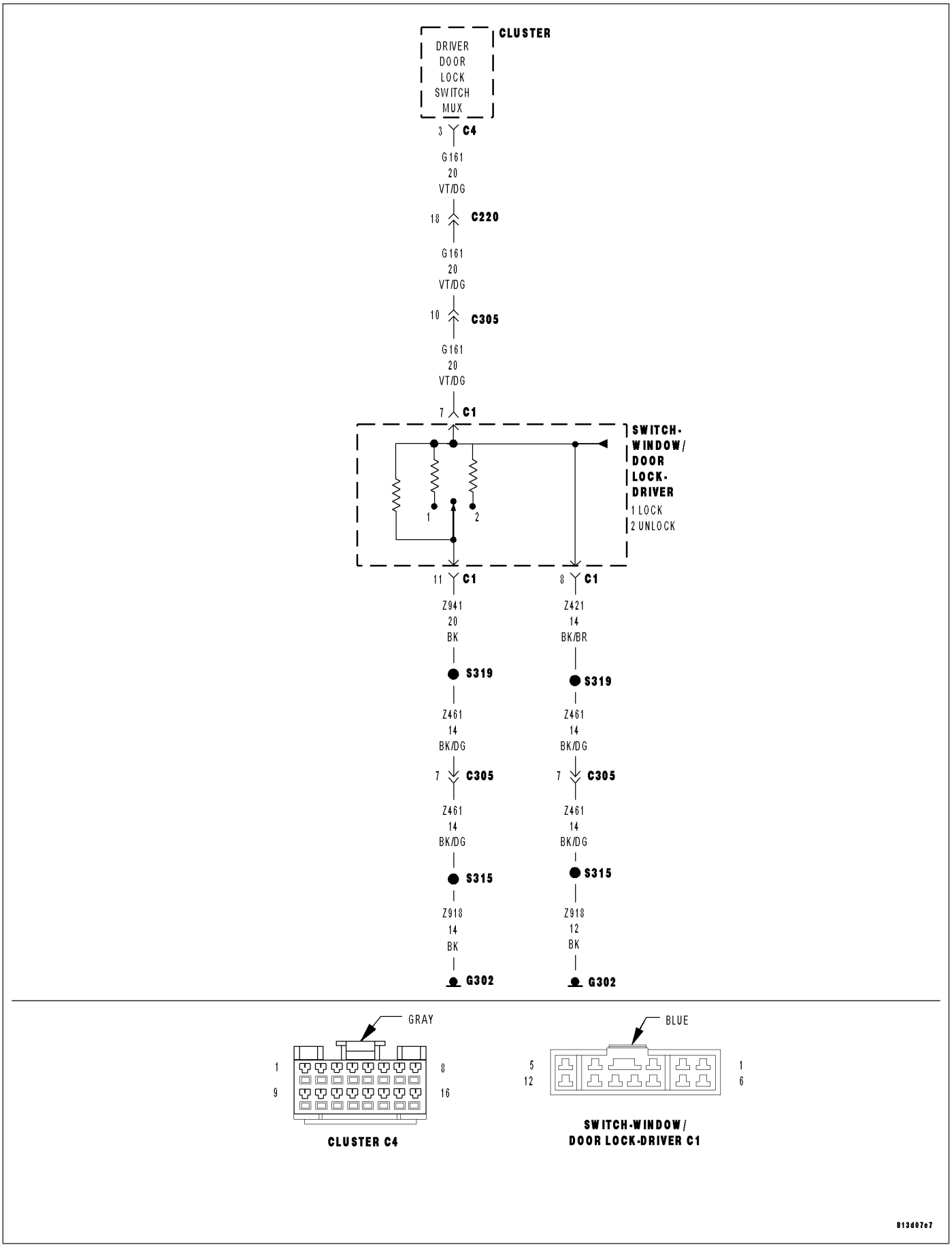

DRIVER DOOR LOCK SWITCH INPUT CIRCUIT OPEN OR SHORT TO VOLTAGE (CONTINUED)

For the Power Door Lock circuit diagram (Refer to 8 - ELECTRICAL/POWER LOCKS - SCHEMATICS AND DIAGRAMS) (Refer to).

For a complete wiring diagram **Refer to Section 8W**.

- **When Monitored:**
  At all times when battery power is supplied to the Instrument Cluster.
- **Set Condition:**
  When the Instrument Cluster senses voltage to the driver door lock switch above 4.85 volts.

Possible Causes
(G161) DRIVER DOOR LOCK SWITCH WIRE SHORT TO VOLTAGE
(G161) DRIVER DOOR LOCK SWITCH MUX CIRCUIT OPEN
DOOR LOCK SWITCH GROUND OPEN
DOOR LOCK SWITCH SHORT TO VOLTAGE
DOOR LOCK SWITCH OPEN
INSTRUMENT CLUSTER - VOLTAGE TO HIGH
INSTRUMENT CLUSTER - DRIVER DOOR LOCK SWITCH VOLTAGE LOW

Diagnostic Test

1. DTC PRESENT

Turn the ignition on.

With the DRBIII®, record and erase DTC's.

With the DRBIII®, read DTC's.

Operate the door locks from the Driver Door Lock Switch while monitoring the DRBIII®.

Does the DRBIII® display DRIVER DOOR LOCK SWITCH INPUT CIRCUIT OPEN OR SHORT TO VOLTAGE?

Yes >> Go To 2

No >> Using the wiring diagram/schematic as a guide, inspect the wiring and connectors. Check for any possible loose connections at the instrument cluster and the door lock switch.

Perform BODY VERIFICATION TEST - VER 1. (Refer to 8 - ELECTRICAL/ELECTRONIC CONTROL MODULES/FRONT CONTROL MODULE - DIAGNOSIS AND TESTING)

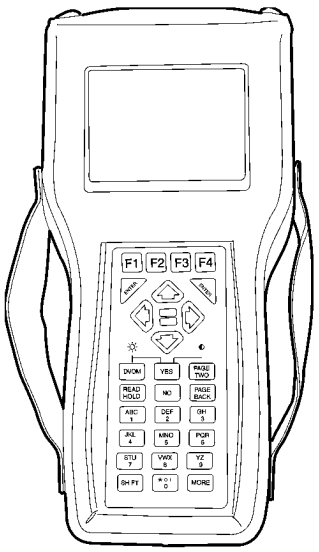

DRIVER DOOR LOCK SWITCH INPUT CIRCUIT OPEN OR SHORT TO VOLTAGE (CONTINUED)

2. INSTRUMENT CLUSTER - DRIVER DOOR LOCK SWITCH VOLTAGE LOW

With the DRBIII® in Sensors, read the DRV DOOR LOCK SW voltage.

Voltage reading is:

Above 5.2 volts
Go To 3

Between 4.9 and 5.1 volts
Go To 5

Below 4.8 volts
Replace the Instrument Cluster.
Perform BODY VERIFICATION TEST - VER 1. (Refer to 8 - ELECTRICAL/ELECTRONIC CONTROL MODULES/FRONT CONTROL MODULE - DIAGNOSIS AND TESTING)

---

3. INSTRUMENT CLUSTER - VOLTAGE TO HIGH

Turn the ignition off.
Disconnect the Instrument Cluster C4 connector.
Turn the ignition on.
Measure the voltage between (G161) Driver Door Lock Switch Mux circuit and ground.

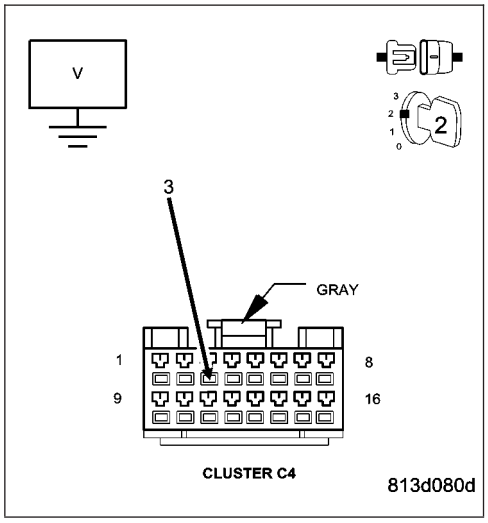

Is there any voltage present?

Yes >> Go To 4

No >> Replace the Instrument Cluster.
Perform BODY VERIFICATION TEST - VER 1. (Refer to 8 - ELECTRICAL/ELECTRONIC CONTROL MODULES/FRONT CONTROL MODULE - DIAGNOSIS AND TESTING)

---

4. (G161) DRIVER DOOR LOCK SWITCH WIRE SHORT TO VOLTAGE

Disconnect the Driver Window/Door Lock Switch C1 connector.
Measure the voltage between the (G161) Driver Door Lock Switch Mux circuit and ground.

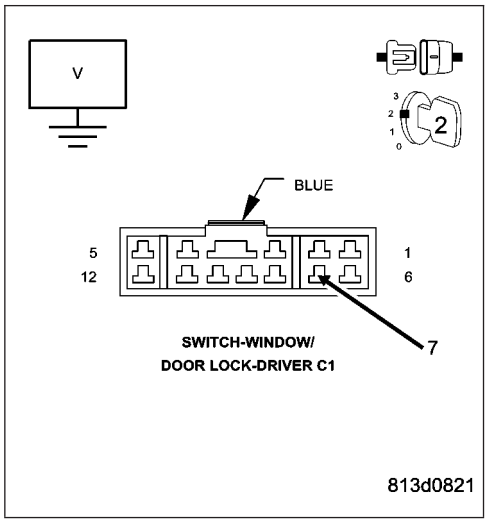

Is there any voltage present?

Yes >> Repair the (G161) Driver Door Lock Switch Mux circuit for a short to voltage.
Perform BODY VERIFICATION TEST - VER 1 (Refer to 8 - ELECTRICAL/ELECTRONIC CONTROL MODULES/FRONT CONTROL MODULE - DIAGNOSIS AND TESTING).

No >> Replace the Window/Door Lock Switch.
Perform BODY VERIFICATION TEST - VER 1. (Refer to 8 - ELECTRICAL/ELECTRONIC CONTROL MODULES/FRONT CONTROL MODULE - DIAGNOSIS AND TESTING)

DRIVER DOOR LOCK SWITCH INPUT CIRCUIT OPEN OR SHORT TO VOLTAGE (CONTINUED)

5. (Z421) and (Z941) DOOR LOCK SWITCH GROUND OPEN

Turn the ignition off.

Disconnect the Driver Window/Door Lock Switch C1 connector.

Using a 12-volt test light connected to 12-volts, check both Ground circuits in the Door Module C1 connector.

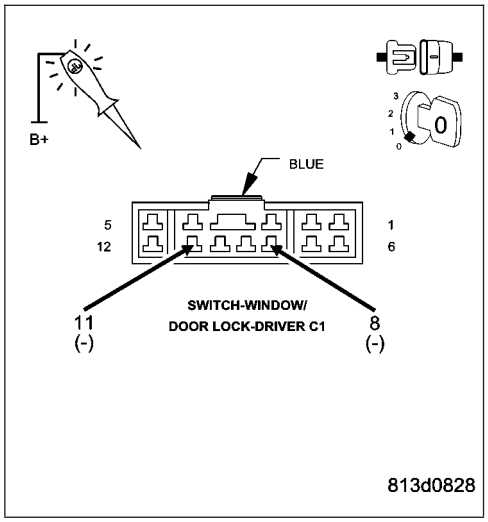

Does the test light illuminate brightly in both terminals?

Yes >> Go To 6

No >> Repair the (Z421) or (Z941) Ground circuit for an open.

Perform BODY VERIFICATION TEST - VER 1. (Refer to 8 - ELECTRICAL/ELECTRONIC CONTROL MODULES/ FRONT CONTROL MODULE - DIAGNOSIS AND TESTING)

6. (G161) DRIVER DOOR LOCK SWITCH MUX OPEN

Turn the ignition on.

Measure the voltage between the (G161) Driver Door Lock Switch Mux circuit and ground.

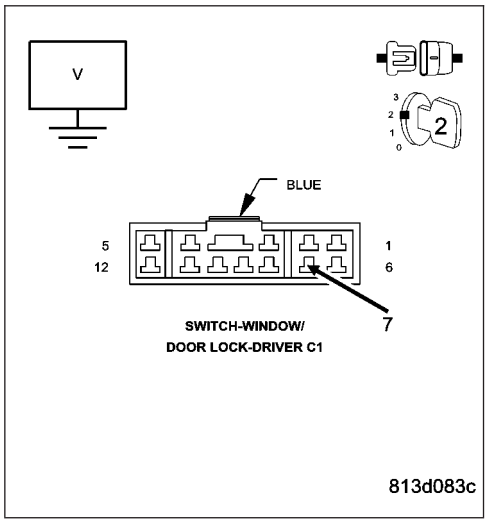

Is the voltage above 4.6 volts?

Yes >> Replace the Driver Window/Door Lock Switch.

Perform BODY VERIFICATION TEST - VER 1. (Refer to 8 - ELECTRICAL/ELECTRONIC CONTROL MODULES/ FRONT CONTROL MODULE - DIAGNOSIS AND TESTING)

No >> Repair the (G161) Driver Door Lock Switch Mux circuit for an open.

Perform BODY VERIFICATION TEST - VER 1. (Refer to 8 - ELECTRICAL/ELECTRONIC CONTROL MODULES/ FRONT CONTROL MODULE - DIAGNOSIS AND TESTING)

DRIVER DOOR LOCK SWITCH INPUT CIRCUIT SHORTED

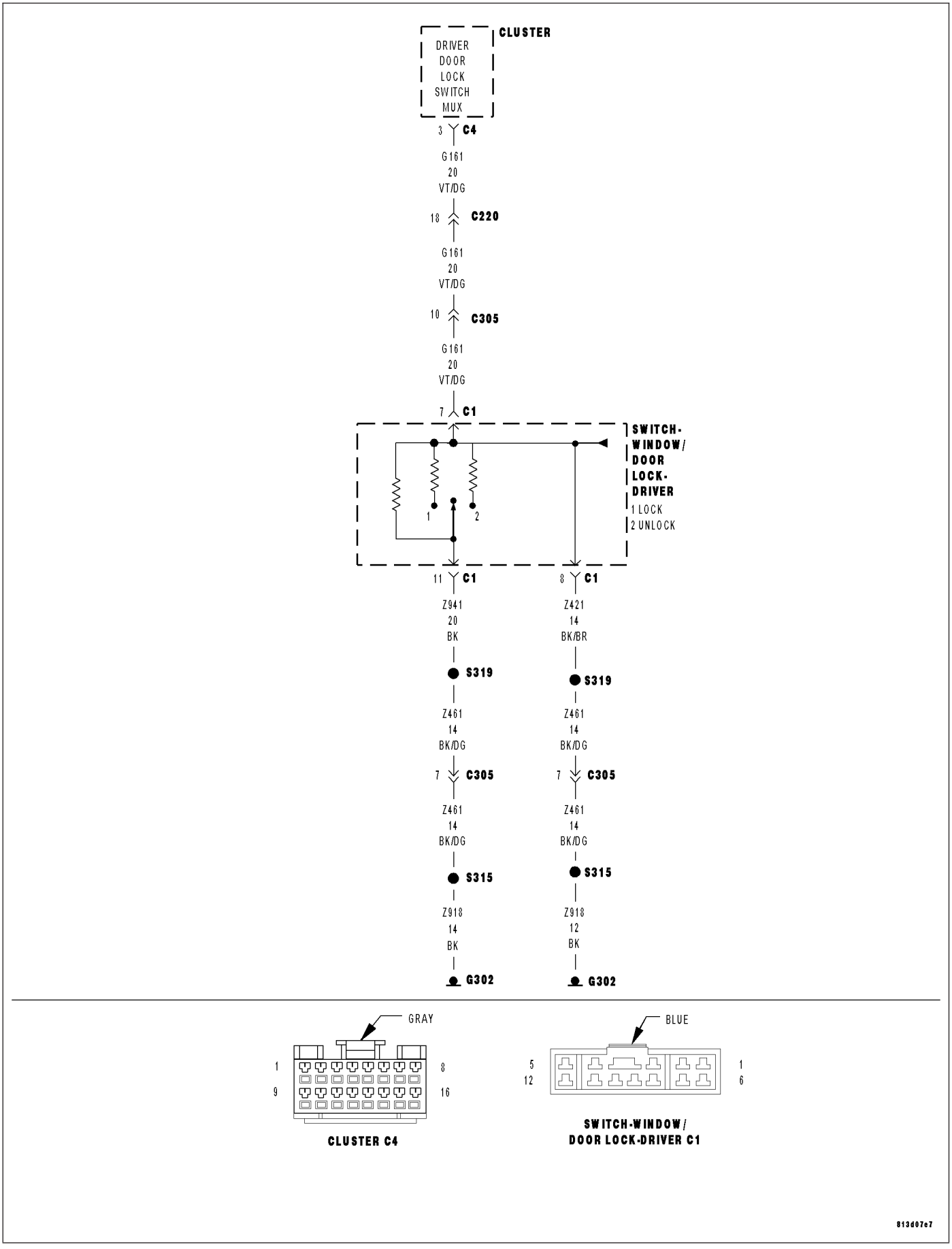

DRIVER DOOR LOCK SWITCH INPUT CIRCUIT SHORTED (CONTINUED)

For the Power Door Lock circuit diagram (Refer to 8 - ELECTRICAL/POWER LOCKS - SCHEMATICS AND DIAGRAMS).

For a complete wiring diagram **Refer to Section 8W**.

- **When Monitored:**
  At all times when battery power is supplied to the Instrument Cluster.
- **Set Condition:**
  When the Instrument Cluster senses voltage to the driver door lock switch below .25 volts, the input circuit is not valid and this code will set.

Possible Causes
(G161) DRIVER DOOR LOCK SWITCH MUX CIRCUIT SHORTED TO GROUND
DOOR LOCK SWITCH SHORTED
INSTRUMENT CLUSTER

Diagnostic Test

1. DTC PRESENT

Turn the ignition on.

With the DRBIII®, record and erase DTC's.

With the DRBIII®, read DTC's.

Operate the door locks several times from the Driver Door Lock Switch while monitoring the DRBIII®.

Does the DRBIII® display DRIVER DOOR LOCK SW INPUT CIRCUIT SHORTED?

Yes >> Go To 2

No >> Using the wiring diagram/schematic as a guide, inspect the wiring and connectors.
Perform BODY VERIFICATION TEST - VER 1. (Refer to 8 - ELECTRICAL/ELECTRONIC CONTROL MODULES/FRONT CONTROL MODULE - DIAGNOSIS AND TESTING)

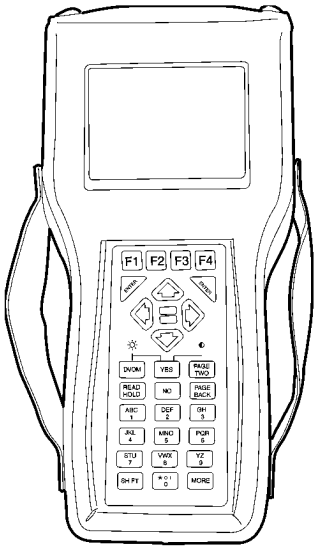

DRIVER DOOR LOCK SWITCH INPUT CIRCUIT SHORTED (CONTINUED)

2. DOOR LOCK SWITCH SHORTED

Disconnect the Driver Window/Door Lock Switch C1 connector.

With the DRBIII® in sensors, read the DRV DOOR LOCK SW MUX circuit.

Is the voltage above 4.6 volts?

Yes >> Replace the Driver Window/Door Lock Switch.
Perform BODY VERIFICATION TEST - VER 1. (Refer to 8 - ELECTRICAL/ELECTRONIC CONTROL MODULES/ FRONT CONTROL MODULE - DIAGNOSIS AND TESTING)

No >> Go To 3

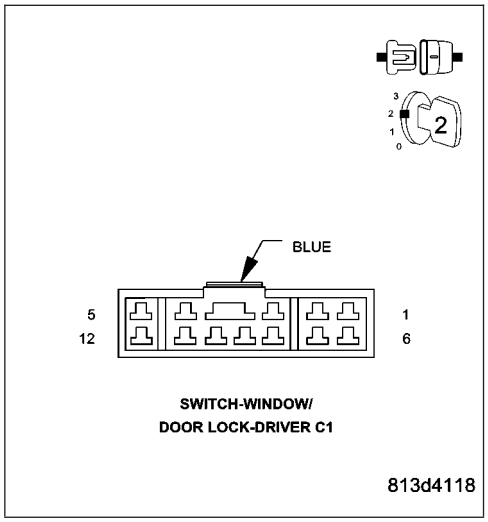

3. (G161) DRIVER DOOR LOCK SWITCH MUX CIRCUIT SHORTED

Turn the ignition off.

Disconnect the Instrument Cluster C4 connector.

Measure the resistance between the (G161) Driver Door Lock Switch Mux circuit and ground.

Is the resistance below 1000.0 ohms?

Yes >> Repair the (G161) Driver Door Lock Switch Mux circuit for a short to ground.
Perform BODY VERIFICATION TEST - VER 1. (Refer to 8 - ELECTRICAL/ELECTRONIC CONTROL MODULES/ FRONT CONTROL MODULE - DIAGNOSIS AND TESTING)

No >> Replace the Instrument Cluster.
Perform BODY VERIFICATION TEST - VER 1. (Refer to 8 - ELECTRICAL/ELECTRONIC CONTROL MODULES/ FRONT CONTROL MODULE - DIAGNOSIS AND TESTING)

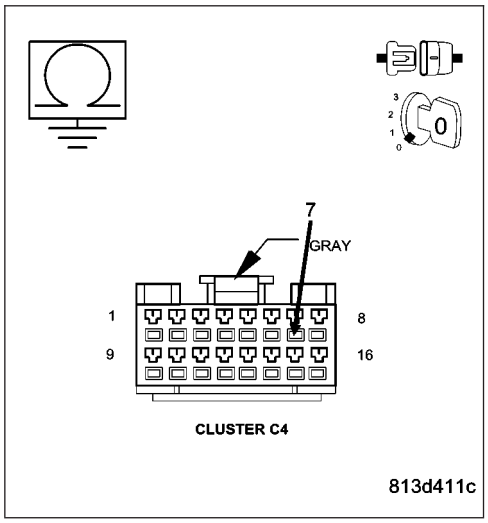

DRIVER DOOR LOCK SWITCH INPUT CIRCUIT STUCK

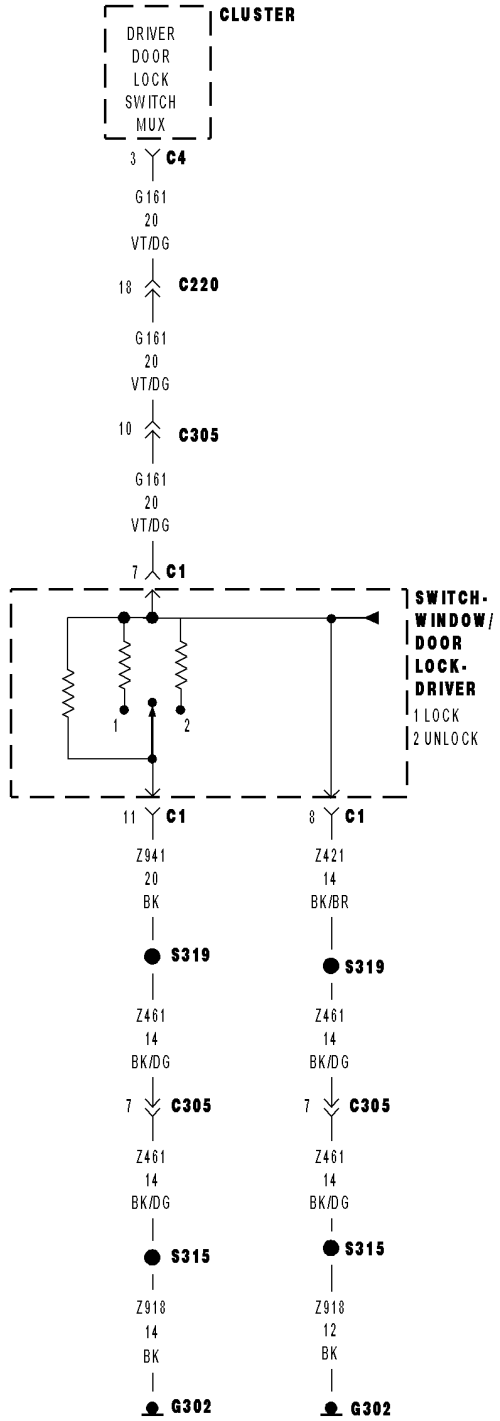

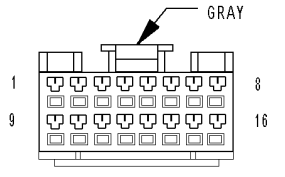

CLUSTER C4

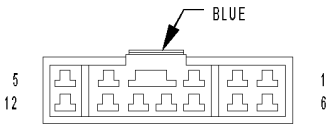

SWITCH-WINDOW/ DOOR LOCK-DRIVER C1

813d07e7

DRIVER DOOR LOCK SWITCH INPUT CIRCUIT STUCK (CONTINUED)

For the Power Door Lock circuit diagram (Refer to 8 - ELECTRICAL/POWER LOCKS - SCHEMATICS AND DIAGRAMS).

For a complete wiring diagram **Refer to Section 8W**.

- **When Monitored:**
  At all times when battery power is supplied to the Instrument Cluster.
- **Set Condition:**
  When the Instrument Cluster senses voltage to the driver door lock switch between 1.3 and 3.75 volts for over 20 seconds, this code will set.

Possible Causes
(G161) DRIVER DOOR LOCK SWITCH MUX CIRCUIT PARTIALLY SHORTED TO GROUND
DOOR LOCK SWITCH SHORTED
INSTRUMENT CLUSTER

Diagnostic Test

1. DTC PRESENT

Turn the ignition on.

With the DRBIII®, record and erase DTC's.

With the DRBIII®, read DTC's.

Operate the door locks several times from the Driver Door Lock Switch while monitoring the DRBIII®.

Does the DRBIII® display DRIVER DOOR LOCK SWITCH INPUT CIRCUIT STUCK?

Yes >> Go To 2

No >> Using the wiring diagram/schematic as a guide, inspect the wiring and connectors. Operate the switch several times and check for an occasional sticking problem.

Perform BODY VERIFICATION TEST - VER 1. (Refer to 8 - ELECTRICAL/ELECTRONIC CONTROL MODULES/FRONT CONTROL MODULE - DIAGNOSIS AND TESTING)

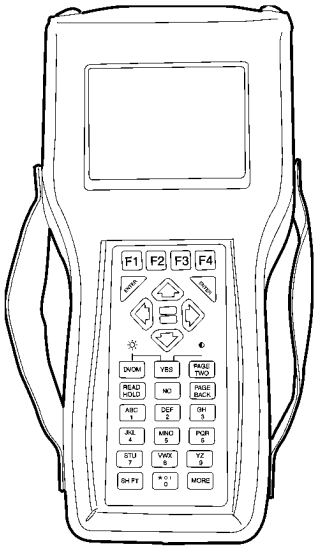

DRIVER DOOR LOCK SWITCH INPUT CIRCUIT STUCK (CONTINUED)

2. DOOR LOCK SWITCH STUCK

Disconnect the Driver Window/Door Lock Switch C1 connector.

With the DRBIII® in sensors, read the DRV DOOR LOCK SW MUX circuit.

Is the voltage above 4.6 volts?

Yes >> Replace the Driver Window/Door Lock Switch.
Perform BODY VERIFICATION TEST - VER 1. (Refer to 8 - ELECTRICAL/ELECTRONIC CONTROL MODULES/ FRONT CONTROL MODULE - DIAGNOSIS AND TESTING)

No >> Go To 3

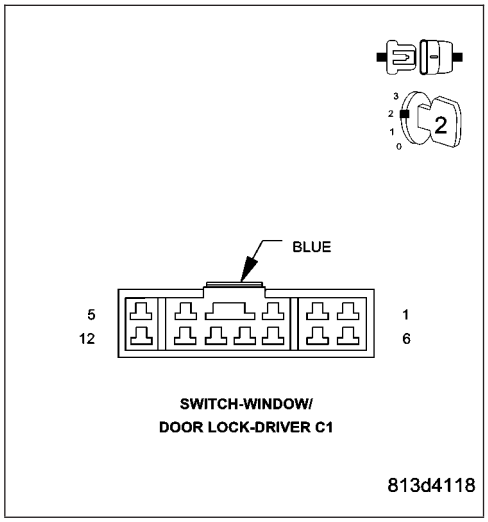

3. (G161) DRIVER DOOR LOCK SWITCH MUX CIRCUIT SHORTED

Turn the ignition off.

Disconnect the Instrument Cluster C4 connector.

Measure the resistance between the (G161) Driver Door Lock Switch Mux circuit and ground.

Is the resistance below 10000.0 ohms?

Yes >> Repair the (G161) Driver Door Lock Switch Mux circuit for a partial short to ground.
Perform BODY VERIFICATION TEST - VER 1 (Refer to 8 - ELECTRICAL/ELECTRONIC CONTROL MODULES/ FRONT CONTROL MODULE - DIAGNOSIS AND TESTING)

No >> Replace the Instrument Cluster
Perform BODY VERIFICATION TEST - VER 1. (Refer to 8 - ELECTRICAL/ELECTRONIC CONTROL MODULES/ FRONT CONTROL MODULE - DIAGNOSIS AND TESTING)

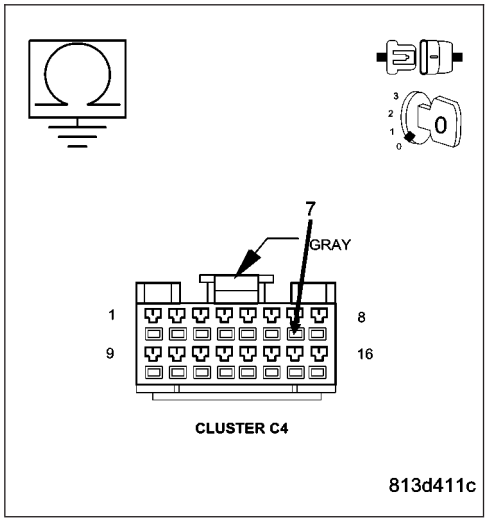

PASSENGER DOOR LOCK SWITCH INPUT CIRCUIT OPEN OR SHORT TO VOLTAGE

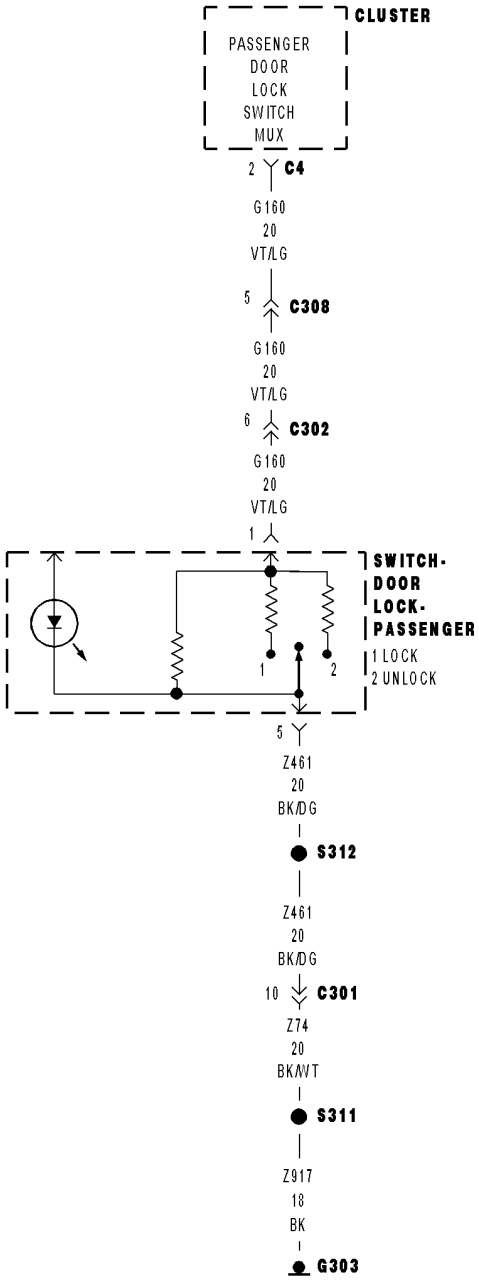

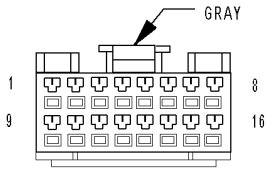

CLUSTER C4

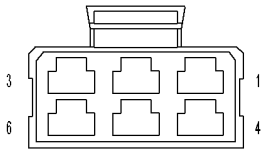

SWITCH-DOOR LOCK-PASSENGER

PASSENGER DOOR LOCK SWITCH INPUT CIRCUIT OPEN OR SHORT TO VOLTAGE (CONTINUED)

For the Power Door Lock circuit diagram (Refer to 8 - ELECTRICAL/POWER LOCKS - SCHEMATICS AND DIAGRAMS) (Refer to).

For a complete wiring diagram **Refer to Section 8W**.

- **When Monitored:**
  At all times when battery power is supplied to the Instrument Cluster.
- **Set Condition:**
  When the Instrument Cluster senses voltage on the passenger door lock switch circuit above 4.85 volts, this will set and the input will not be valid.

Possible Causes
(G160) PASSENGER DOOR LOCK SWITCH WIRE SHORT TO VOLTAGE
(G160) PASSENGER DOOR LOCK SWITCH MUX CIRCUIT OPEN
(Z461) DOOR LOCK SWITCH GROUND OPEN
DOOR LOCK SWITCH SHORT TO VOLTAGE
DOOR LOCK SWITCH OPEN
INSTRUMENT CLUSTER - VOLTAGE TO HIGH
INSTRUMENT CLUSTER - PASSENGER DOOR LOCK SWITCH VOLTAGE LOW

Diagnostic Test

1. DTC PRESENT

With the DRBIII®, record and erase DTC's.

With the DRBIII®, read DTC's.

Operate the door locks from the Passenger Door Lock Switch while monitoring the DRBIII®.

Does the DRBIII® display PASSENGER DOOR LOCK SWITCH INPUT CIRCUIT OPEN OR SHORT TO VOLTAGE?

Yes >> Go To 2

No >> Using the wiring diagram/schematic as a guide, inspect the wiring and connectors. Check for any possible loose connections at the instrument cluster and the door lock switch.

Perform BODY VERIFICATION TEST - VER 1. (Refer to 8 - ELECTRICAL/ELECTRONIC CONTROL MODULES/FRONT CONTROL MODULE - DIAGNOSIS AND TESTING)

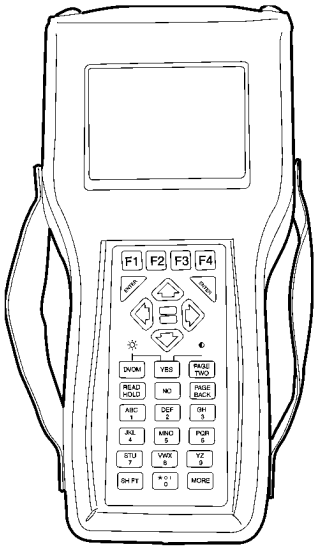

PASSENGER DOOR LOCK SWITCH INPUT CIRCUIT OPEN OR SHORT TO VOLTAGE (CONTINUED)

2. INSTRUMENT CLUSTER - PASSENGER DOOR LOCK SWITCH VOLTAGE LOW

With the DRBIII® in Sensors, read the PASS DOOR LOCK SW voltage.

Voltage reading is:

Above 5.2 volts
Go To 3

Between 4.9 and 5.1 volts
Go To 5

Below 4.8 volts
Replace the Instrument Cluster.
Perform BODY VERIFICATION TEST - VER 1. (Refer to 8 - ELECTRICAL/ELECTRONIC CONTROL MODULES/FRONT CONTROL MODULE - DIAGNOSIS AND TESTING)

---

3. INSTRUMENT CLUSTER - VOLTAGE TO HIGH

Turn ignition off.
Disconnect the Instrument Cluster C4 connector.
Turn ignition on.
Measure the voltage between (G160) Passenger Door Lock Switch Mux circuit and ground.

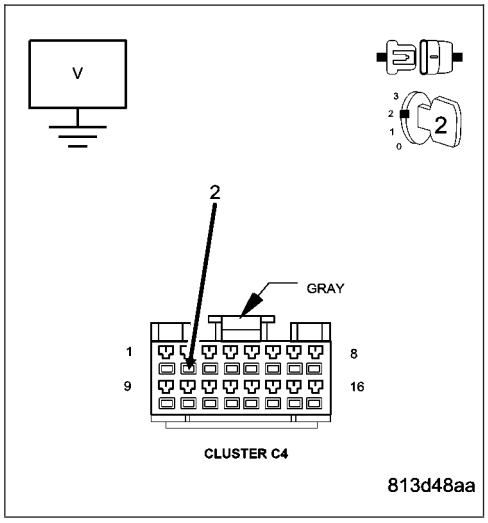

Is there any voltage present?

Yes >> Go To 4

No >> Replace the Instrument Cluster.
Perform BODY VERIFICATION TEST - VER 1. (Refer to 8 - ELECTRICAL/ELECTRONIC CONTROL MODULES/FRONT CONTROL MODULE - DIAGNOSIS AND TESTING)

---

4. (G160) PASSENGER DOOR LOCK SWITCH WIRE SHORT TO VOLTAGE

Disconnect the Passenger Door Lock Switch connector.
Measure the voltage between the (G160) Passenger Door Lock Switch Mux circuit and ground.

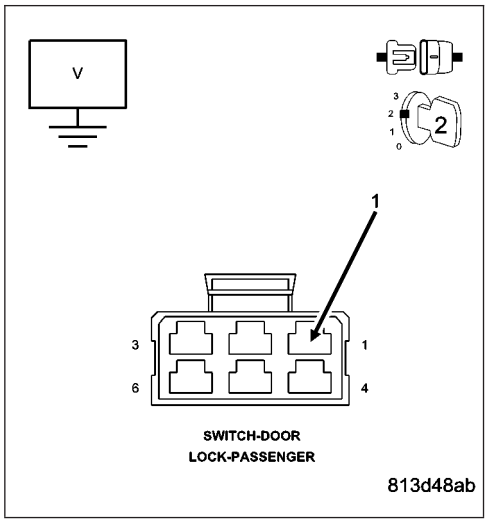

Is there any voltage present?

Yes >> Repair the (G160) Passenger Door Lock Switch Mux circuit for a short to voltage.
Perform BODY VERIFICATION TEST - VER 1. (Refer to 8 - ELECTRICAL/ELECTRONIC CONTROL MODULES/FRONT CONTROL MODULE - DIAGNOSIS AND TESTING)

No >> Replace the Door Lock Switch.
Perform BODY VERIFICATION TEST - VER 1. (Refer to 8 - ELECTRICAL/ELECTRONIC CONTROL MODULES/FRONT CONTROL MODULE - DIAGNOSIS AND TESTING)

PASSENGER DOOR LOCK SWITCH INPUT CIRCUIT OPEN OR SHORT TO VOLTAGE (CONTINUED)

5. (Z461) DOOR LOCK SWITCH GROUND OPEN

Turn ignition off.

Disconnect the Passenger Door Lock Switch connector.

Using a 12-volt test light connected to 12-volts, check the (Z461) Ground circuit in the Door Lock Switch connector.

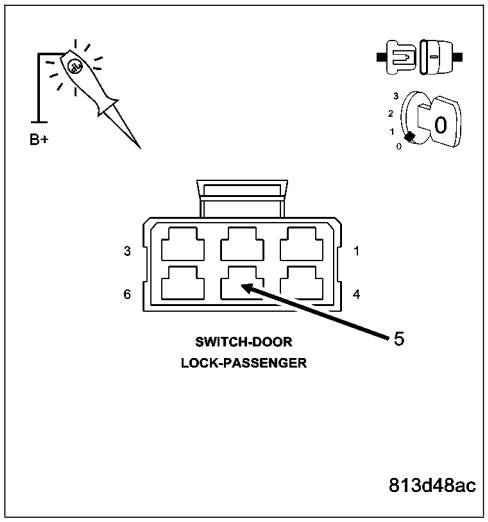

Does the test light illuminate brightly?

Yes >> Go To 6

No >> Repair the (Z461) Ground circuit for an open.

Perform BODY VERIFICATION TEST - VER 1. (Refer to 8 - ELECTRICAL/ELECTRONIC CONTROL MODULES/ FRONT CONTROL MODULE - DIAGNOSIS AND TESTING)

6. (G160) PASSENGER DOOR LOCK SWITCH MUX OPEN

Turn ignition on.

Measure the voltage between the (G160) Passenger Door Lock Switch Mux circuit and ground.

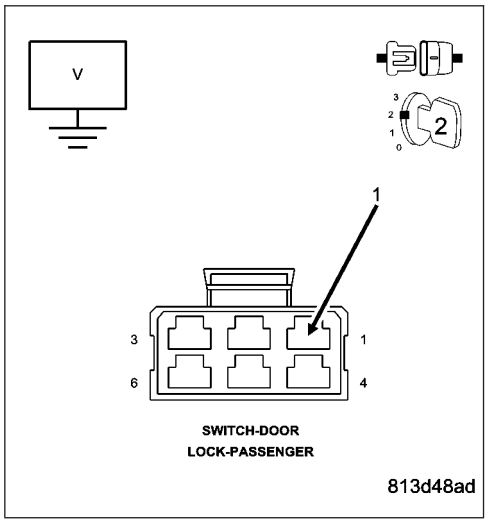

Is the voltage above 4.6 volts?

Yes >> Replace the Passenger Door Lock Switch.

Perform BODY VERIFICATION TEST - VER 1. (Refer to 8 - ELECTRICAL/ELECTRONIC CONTROL MODULES/ FRONT CONTROL MODULE - DIAGNOSIS AND TESTING)

No >> Repair the (G160) Passenger Door Lock Switch Mux circuit for an open.

Perform BODY VERIFICATION TEST - VER 1. (Refer to 8 - ELECTRICAL/ELECTRONIC CONTROL MODULES/ FRONT CONTROL MODULE - DIAGNOSIS AND TESTING)

PASSENGER DOOR LOCK SWITCH INPUT CIRCUIT SHORTED

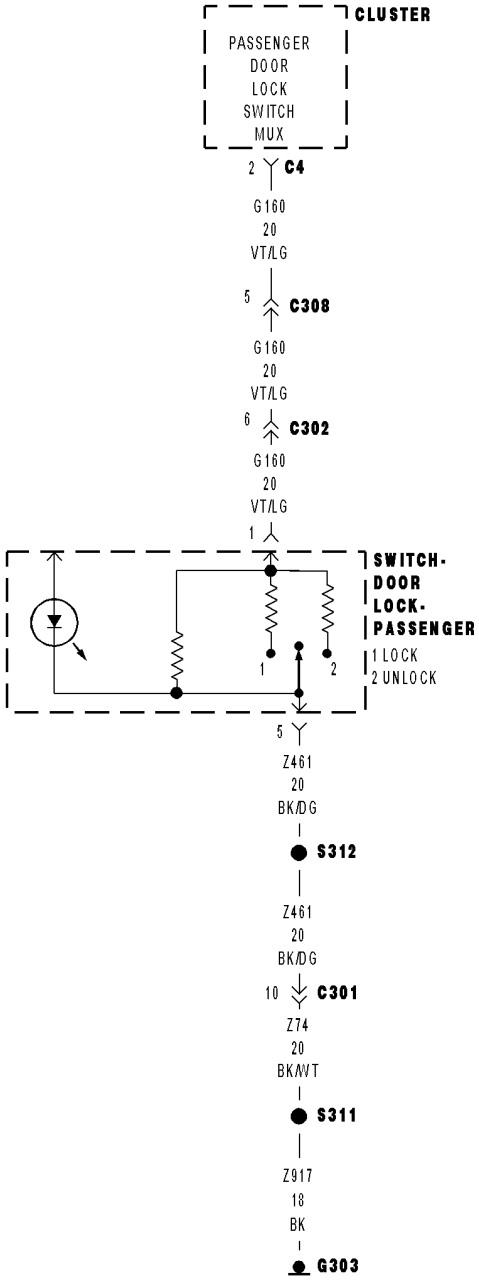

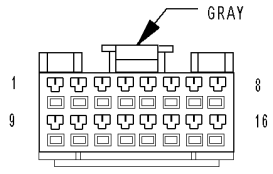

CLUSTER C4

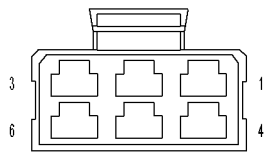

SWITCH-DOOR
LOCK-PASSENGER

813d48a7

PASSENGER DOOR LOCK SWITCH INPUT CIRCUIT SHORTED (CONTINUED)

For the Power Door Lock circuit diagram (Refer to 8 - ELECTRICAL/POWER LOCKS - SCHEMATICS AND DIAGRAMS).

For a complete wiring diagram **Refer to Section 8W**.

- **When Monitored:**
  At all times when battery power is supplied to the Instrument Cluster.
- **Set Condition:**
  When the Instrument Cluster senses voltage to the passenger door lock switch below .25 volts, the input circuit is not valid and this code will set.

Possible Causes
(G160) PASSENGER DOOR LOCK SWITCH MUX CIRCUIT SHORTED TO GROUND
DOOR LOCK SWITCH SHORTED
INSTRUMENT CLUSTER

Diagnostic Test

1. DTC PRESENT

Turn the ignition on.

With the DRBIII®, record and erase DTC's.

With the DRBIII®, read DTC's.

Operate the door locks several times from the Driver Door Lock Switch while monitoring the DRBIII®.

Does the DRBIII® display PASSENGER DOOR LOCK SW INPUT CIRCUIT SHORTED?

Yes >> Go To 2

No >> Using the wiring diagram/schematic as a guide, inspect the wiring and connectors.
Perform BODY VERIFICATION TEST - VER 1. (Refer to 8 - ELECTRICAL/ELECTRONIC CONTROL MODULES/FRONT CONTROL MODULE - DIAGNOSIS AND TESTING)

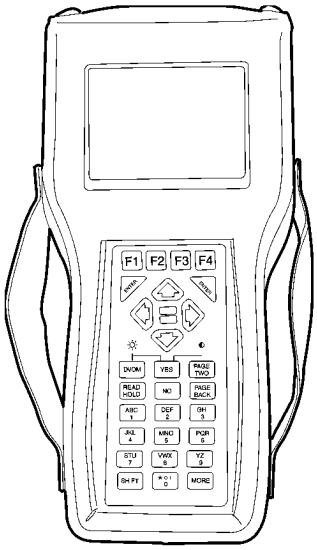

PASSENGER DOOR LOCK SWITCH INPUT CIRCUIT SHORTED (CONTINUED)

2. DOOR LOCK SWITCH SHORTED

Disconnect the Passenger Door Lock Switch connector.

With the DRBIII® in sensors, read the PASS DOOR LOCK SW MUX circuit.

Is the voltage above 4.6 volts?

Yes >> Replace the Passenger Door Lock Switch.
Perform BODY VERIFICATION TEST - VER 1. (Refer to 8 - ELECTRICAL/ELECTRONIC CONTROL MODULES/ FRONT CONTROL MODULE - DIAGNOSIS AND TESTING)

No >> Go To 3

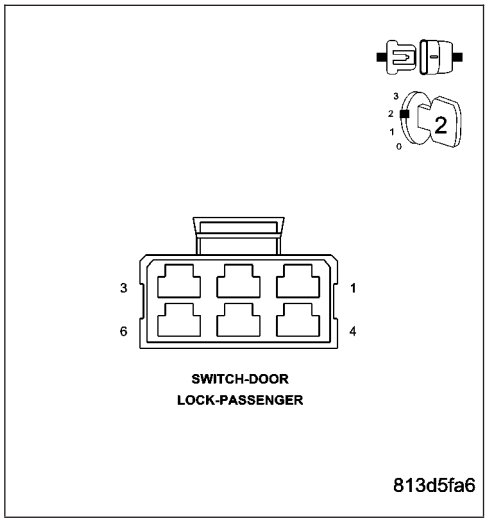

3. (G160) PASSENGER DOOR LOCK SWITCH MUX CIRCUIT SHORTED

Turn the ignition off.

Disconnect the Instrument Cluster C4 connector.

Measure the resistance between the (G160) Passenger Door Lock Switch Mux circuit and ground.

Is the resistance below 1000.0 ohms?

Yes >> Repair the (G160) Passenger Door Lock Switch Mux circuit for a short to ground.
Perform BODY VERIFICATION TEST - VER 1. (Refer to 8 - ELECTRICAL/ELECTRONIC CONTROL MODULES/ FRONT CONTROL MODULE - DIAGNOSIS AND TESTING)

No >> Replace the Instrument Cluster.
Perform BODY VERIFICATION TEST - VER 1. (Refer to 8 - ELECTRICAL/ELECTRONIC CONTROL MODULES/ FRONT CONTROL MODULE - DIAGNOSIS AND TESTING)

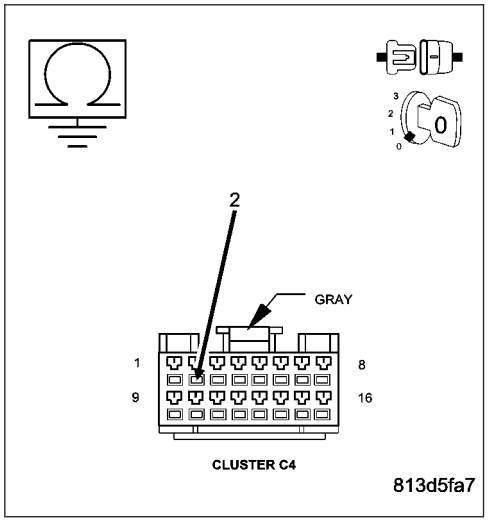

PASSENGER DOOR LOCK SWITCH INPUT CIRCUIT STUCK

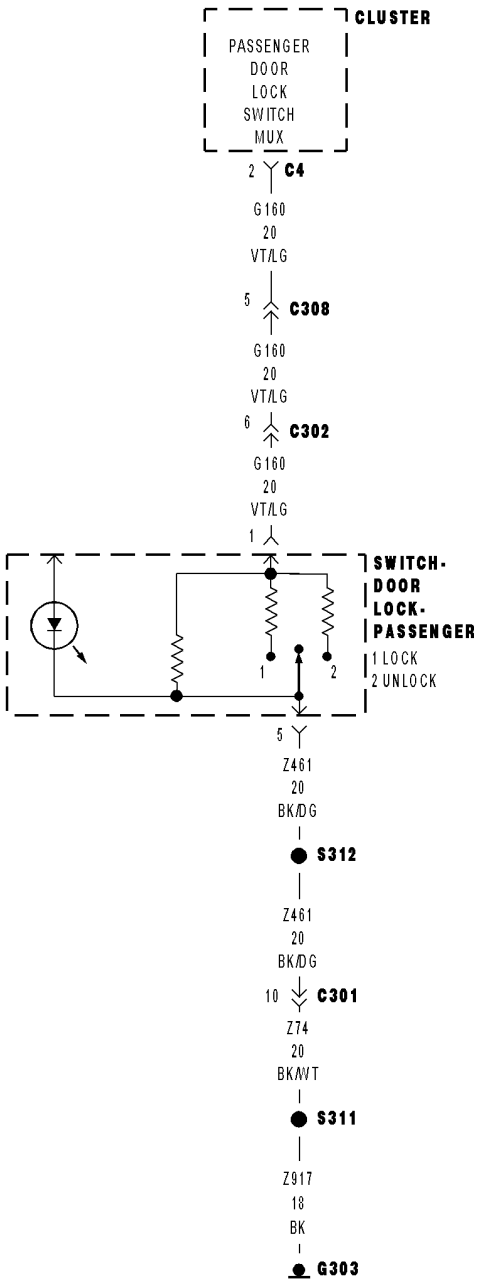

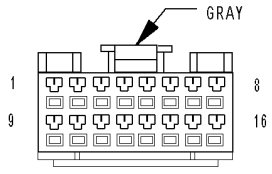

CLUSTER C4

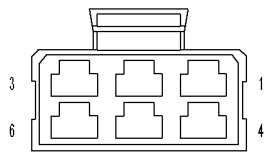

SWITCH-DOOR LOCK-PASSENGER

813d48a7

PASSENGER DOOR LOCK SWITCH INPUT CIRCUIT STUCK (CONTINUED)

For the Power Door Lock circuit diagram (Refer to 8 - ELECTRICAL/POWER LOCKS - SCHEMATICS AND DIAGRAMS).

For a complete wiring diagram **Refer to Section 8W**.

- **When Monitored:**
  At all times when battery power is supplied to the Instrument Cluster.
- **Set Condition:**
  When the Instrument Cluster senses voltage to the passenger door lock switch between 1.3 and 3.95 volts for over 20 seconds, this code will set.

Possible Causes
(G160) PASSENGER DOOR LOCK SWITCH MUX CIRCUIT PARTIALLY SHORTED TO GROUND
DOOR LOCK SWITCH SHORTED
INSTRUMENT CLUSTER

Diagnostic Test

1. DTC PRESENT

Turn the ignition on.

With the DRBIII®, record and erase DTC's.

With the DRBIII®, read DTC's.

Operate the door locks several times from the Passenger Door Lock Switch while monitoring the DRBIII®.

Does the DRBIII® display PASSENGER DOOR LOCK SWITCH INPUT CIRCUIT STUCK?

Yes >> Go To 2

No >> Using the wiring diagram/schematic as a guide, inspect the wiring and connectors. Operate the switch several times and check for an occasional sticking problem.

Perform BODY VERIFICATION TEST - VER 1. (Refer to 8 - ELECTRICAL/ELECTRONIC CONTROL MODULES/FRONT CONTROL MODULE - DIAGNOSIS AND TESTING)

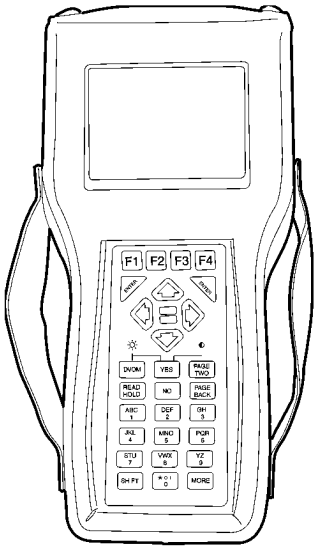

PASSENGER DOOR LOCK SWITCH INPUT CIRCUIT STUCK (CONTINUED)

2. DOOR LOCK SWITCH STUCK

Disconnect the Passenger Door Lock Switch connector.

With the DRBIII® in sensors, read the PASS DOOR LOCK SW MUX circuit.

Is the voltage above 4.6 volts?

Yes >> Replace the Passenger Door Lock Switch.
Perform BODY VERIFICATION TEST - VER 1. (Refer to 8 - ELECTRICAL/ELECTRONIC CONTROL MODULES/ FRONT CONTROL MODULE - DIAGNOSIS AND TESTING)

No >> Go To 3

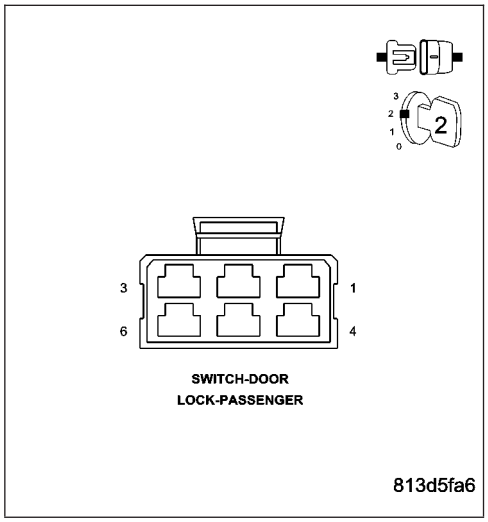

3. (G160) PASSENGER DOOR LOCK SWITCH MUX CIRCUIT SHORTED

Turn the ignition off.

Disconnect the Instrument Cluster C4 connector.

Measure the resistance between the (G160) Passenger Door Lock Switch Mux circuit and ground.

Is the resistance below 10000.0 ohms?

Yes >> Repair the (G160) Passenger Door Lock Switch Mux circuit for a partial short to ground.
Perform BODY VERIFICATION TEST - VER 1. (Refer to 8 - ELECTRICAL/ELECTRONIC CONTROL MODULES/ FRONT CONTROL MODULE - DIAGNOSIS AND TESTING)

No >> Replace the Instrument Cluster.
Perform BODY VERIFICATION TEST - VER 1. (Refer to 8 - ELECTRICAL/ELECTRONIC CONTROL MODULES/ FRONT CONTROL MODULE - DIAGNOSIS AND TESTING)

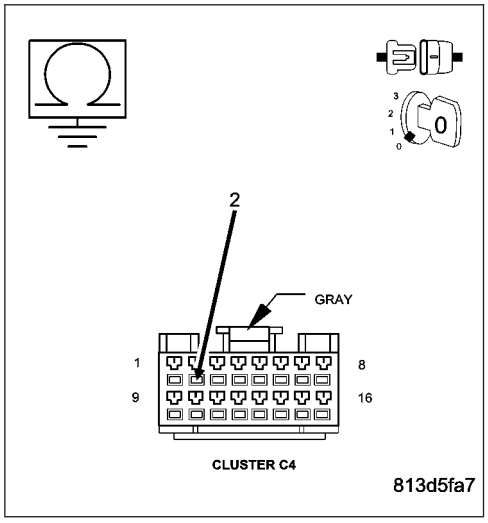

RKE FOB BATTERY LOW

For the Power Door Lock circuit diagram. (Refer to 8 - ELECTRICAL/POWER LOCKS - SCHEMATICS AND DIAGRAMS)

For a complete wiring diagram **Refer to Section 8W**.

- **When Monitored:**
  Upon activation of any button on the Remote Keyless Entry transmitter (fob).
- **Set Condition:**
  The RKE module monitors the input from the fobs and determines if the voltage is within tolerance. If the battery voltage of the RKE fob falls between 2.0 and 3.5 volts the RKE module will communicates this to the Instrument Cluster which in turn will set this code.

Possible Causes
BATTERIES LOW
RKE TTRANSMITER - LOW VOLAGE OUTPUT

Diagnosttic Test

1. CHECK TROUBLE CODE

Turn the ignition on.

Using the RKE transmitter, press the UNLOCK button six times or more.

With the DRBIII®, read DTCs.

Does the DRBIII® display RKE KEY FOB BATTERY LOW?

Yes >> Go To 2

No >> Problem is intermittent and not present at this time. Check the other transmitters used with this vehicle to determine which one set the code. Check the voltage of each battery in FOB and ensure they above 2.9 volts each.

Perform BODY VERIFICATION TEST - VER 1. (Refer to 8 - ELECTRICAL/ELECTRONIC CONTROL MODULES/FRONT CONTROL MODULE - DIAGNOSIS AND TESTING)

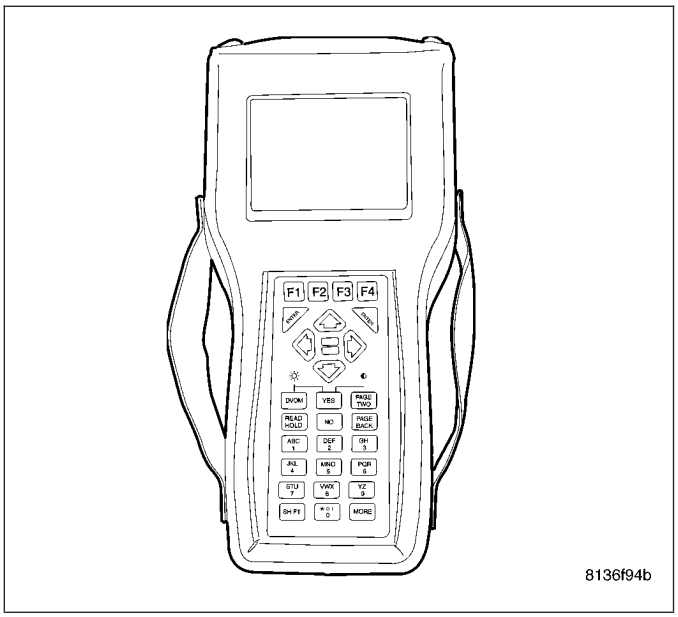

2. BATTERIES LOW

Test the voltage of each battery in the RKE transmitter.

Is the voltage at or above 2.9 in each battery?

Yes >> Replace the RKE Transmitter.

Perform BODY VERIFICATION TEST - VER 1. (Refer to 8 - ELECTRICAL/ELECTRONIC CONTROL MODULES/FRONT CONTROL MODULE - DIAGNOSIS AND TESTING)

No >> Replace the batteries and press the unlock button on the transmitter six times to clear the DTC.

Perform BODY VERIFICATION TEST - VER 1. (Refer to 8 - ELECTRICAL/ELECTRONIC CONTROL MODULES/FRONT CONTROL MODULE - DIAGNOSIS AND TESTING)

RKE MODULE COMMUNICATION LINK

For the Power Door Lock circuit diagram. (Refer to 8 - ELECTRICAL/POWER LOCKS - SCHEMATICS AND DIAGRAMS)

For a complete wiring diagram **Refer to Section 8W**.

- **When Monitored:**
  Whenever battery power is applied the Instrument Cluster.
- **Set Condition:**
  The Instrument Cluster has learned that the vehicle is equipped with Remote Keyless Entry, but then is unable to communicate with that module, this code will set. The Instrument Cluster provides power for the RKE module and communicates by the PCI bus.

Possible Causes
RKE MODULE OPEN
IJNSTRUMENT CLUSTER

Diagnostic Test

1. DTC PRESENT

Turn the ignition on.

With the DRBIII®, record and erase DTC's.

With the DRBIII®, read DTC's.

Operate the door locks several times from the RKE transmitter while observing the DRBIII®.

Does the DRBIII® display RKE MODULE COMM LINK?

Yes >> Go To 2

No >> Using the wiring diagram/schematic as a guide, inspect the wiring and connectors.
Perform BODY VERIFICATION TEST - VER 1. (Refer to 8 - ELECTRICAL/ELECTRONIC CONTROL MODULES/FRONT CONTROL MODULE - DIAGNOSIS AND TESTING)

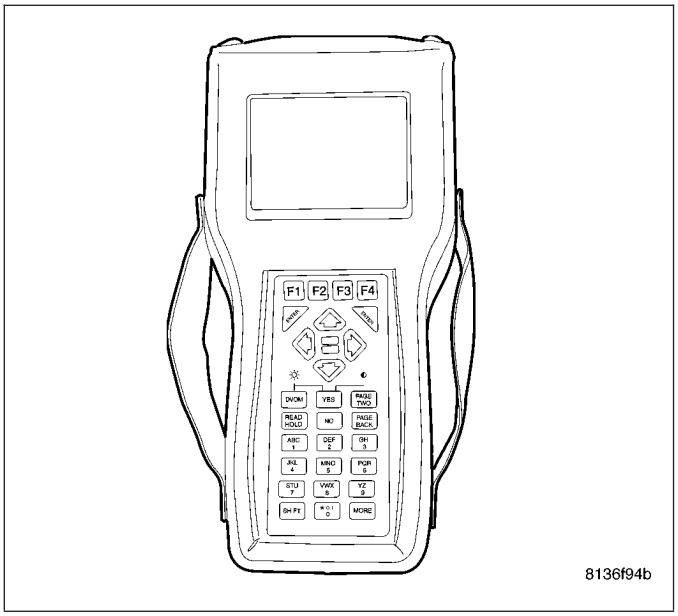

RKE MODULE COMMUNICATION LINK (CONTINUED)

2. RKE MODULE OPEN

Turn the ignition off.

Remove the Instrument Cluster.

Replace the RKE module with a known good module.

Connect all Cluster connectors.

With the DRBIII®, Program the RKE transmitter.

Operate the door locks using the RKE transmitter.

Do the door locks respond correctly with the RKE transmitter?

Yes >> Replace the original RKE module.
Perform BODY VERIFICATION TEST - VER 1. (Refer to 8 - ELECTRICAL/ELECTRONIC CONTROL MODULES/FRONT CONTROL MODULE - DIAGNOSIS AND TESTING)

No >> Replace the Instrument Cluster.
Perform BODY VERIFICATION TEST - VER 1. (Refer to 8 - ELECTRICAL/ELECTRONIC CONTROL MODULES/FRONT CONTROL MODULE - DIAGNOSIS AND TESTING)

*ALL DOOR LOCKS INOPERATIVE

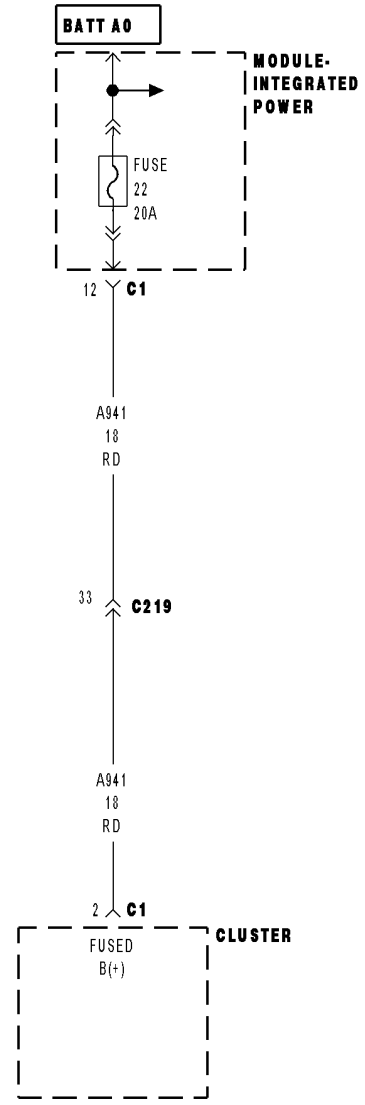

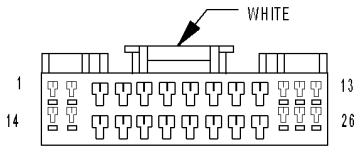

CLUSTER C1

***ALL DOOR LOCKS INOPERATIVE (CONTINUED)**

For the Power Door Locks circuit diagram (Refer to 8 - ELECTRICAL/POWER LOCKS - SCHEMATICS AND DIAGRAMS).

For a complete wiring diagram **Refer to Section 8W**.

Possible Causes
DTC PRESENT
FUSE #22 OPEN
(A941) FUSE B+ CIRCUIT OPEN
INSTRUMENT CLUSTER

Diagnostic Test

1. DTC PRESENT

Turn the ignition on.

With the DRBIII®, read DTC's.

Does the DRBIII® display any Door Lock or Cluster related DTC's?

Yes >> Refer to the Table of Contents in this section.
Perform BODY VERIFICATION TEST - VER 1. (Refer to 8 - ELECTRICAL/ELECTRONIC CONTROL MODULES/FRONT CONTROL MODULE - DIAGNOSIS AND TESTING)

No >> Go To 2

---

2. FUSE #22 OPEN

Test both sides of fuse #22 in the PDC.

Is there 12 volts on both sides of fuse #22?

Yes >> Go To 3

No >> Replace the fuse if open and retry the system. If the fuse blows, locate and repair a short to the Instrument Cluster. The 12 volt supply to the fuse is a bus bar in the PDC.
Perform BODY VERIFICATION TEST - VER 1. (Refer to 8 - ELECTRICAL/ELECTRONIC CONTROL MODULES/FRONT CONTROL MODULE - DIAGNOSIS AND TESTING)

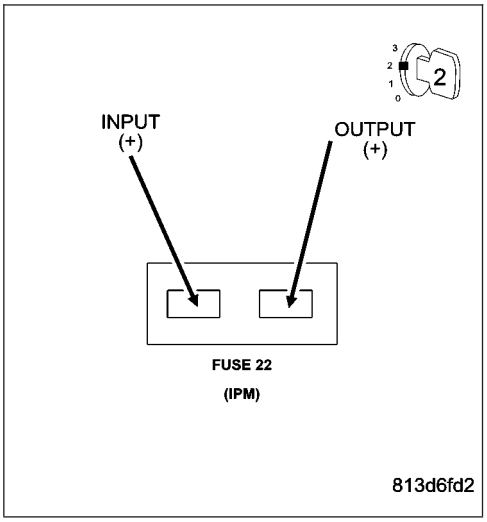

---

*ALL DOOR LOCKS INOPERATIVE (CONTINUED)

3. (A941) FUSED B+ CIRCUIT OPEN

Turn the ignition off.

Remove the instrument cluster.

Measure the voltage between the (A941) Fused B+ circuit and ground (cavity 2 in the C1 connector to ground).

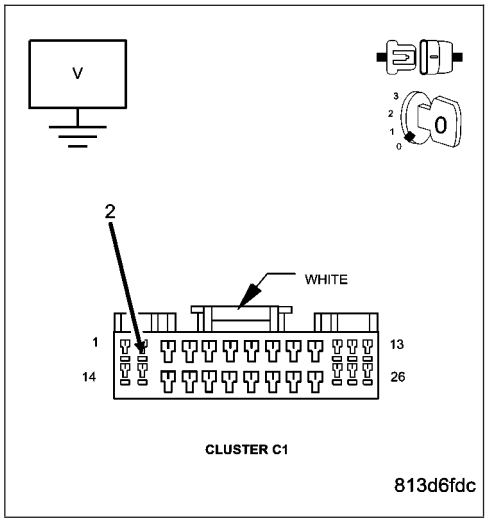

Is the voltage above 10.0 volts on the Fused B+ circuit?

Yes >> Replace the Instrument Cluster.
Perform BODY VERIFICATION TEST - VER 1. (Refer to 8 - ELECTRICAL/ELECTRONIC CONTROL MODULES/ FRONT CONTROL MODULE - DIAGNOSIS AND TESTING)

No >> Repair the Fused B+ circuit for an open.
Perform BODY VERIFICATION TEST - VER 1. (Refer to 8 - ELECTRICAL/ELECTRONIC CONTROL MODULES/ FRONT CONTROL MODULE - DIAGNOSIS AND TESTING)

*AUTO (ROLLING) DOOR LOCKS INOPERATIVE

For the Power Door Lock circuit diagram (Refer to 8 - ELECTRICAL/POWER LOCKS - SCHEMATICS AND DIAGRAMS).

For a complete wiring diagram **Refer to Section 8W**.

Possible Causes
DOOR AJAR SWITCH STATUS INCORRECT
TPS OR VSS DTC's
AUTO DOOR LOCKS NOT ENABLED
INSTRUMENT CLUSTER

Diagnostic Test

1. CHECK THE DOOR AJAR SWITCH STATUS

Ensure all doors are closed.

With the DRBIII, enter ″Electro/Mech Cluster″ then ″Input/Output″ and observe all of the Door Ajar states.

Does the DRBIII display CLOSED for any door ajar state?

Yes >> Select the appropriate Door Ajar Circuit Shorted: (Refer to 8 - ELECTRICAL/LAMPS/LIGHTING - INTERIOR - DIAGNOSIS AND TESTING).

No >> Go To 2

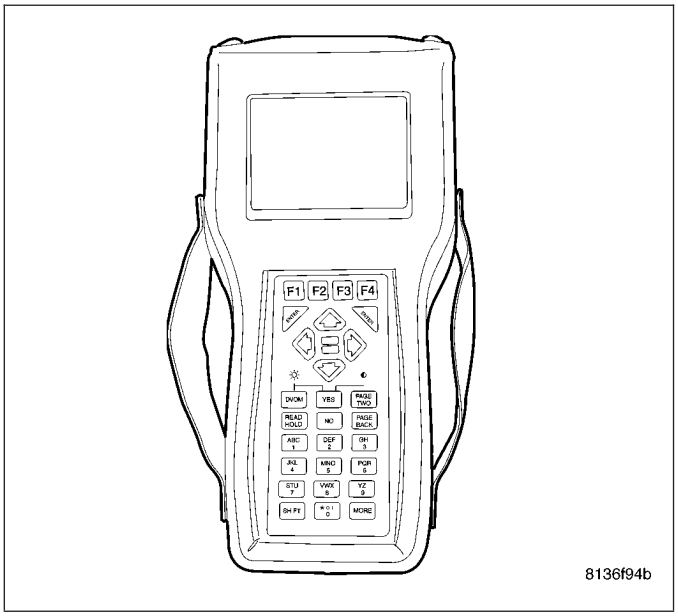

2. ANY TPS OR VSS RELATED DTC's

With the DRBIII read ″Engine″ and "Anti-Lock Brakes" DTC's.

Does the DRBIII display any Throttle Position Sensor or Vehicle Speed Sensor related DTC's?

Yes >> Diagnose and repair the DTC's. For gas engines (Refer to 9 - ENGINE - ELECTRICAL DIAGNOSTICS). For diesel engines (Refer to 9 - ENGINE - ELECTRICAL DIAGNOSTICS). For Anti-Lock Brake (Refer to 5 - BRAKES - DIAGNOSIS AND TESTING)

No >> Go To 3

***AUTO (ROLLING) DOOR LOCKS INOPERATIVE (CONTINUED)**

3. ENABLE AUTO DOOR LOCKS

With the DRBIII, enter ″Electron/Mech Cluster″ then ″Miscellaneous″ and observe the rolling door lock status.

Does the DRBIII display ROLLING DOOR LOCKS: ENABLED

Yes >> Replace the Instrument Cluster.
Perform BODY VERIFICATION TEST - VER 1. (Refer to 8 - ELECTRICAL/ELECTRONIC CONTROL MODULES/FRONT CONTROL MODULE - DIAGNOSIS AND TESTING)

No >> With the DRBIII, enable the Auto Door Locks.
Perform BODY VERIFICATION TEST - VER 1. (Refer to 8 - ELECTRICAL/ELECTRONIC CONTROL MODULES/FRONT CONTROL MODULE - DIAGNOSIS AND TESTING)

*CYLINDER LOCK SWITCH INOPERATIVE

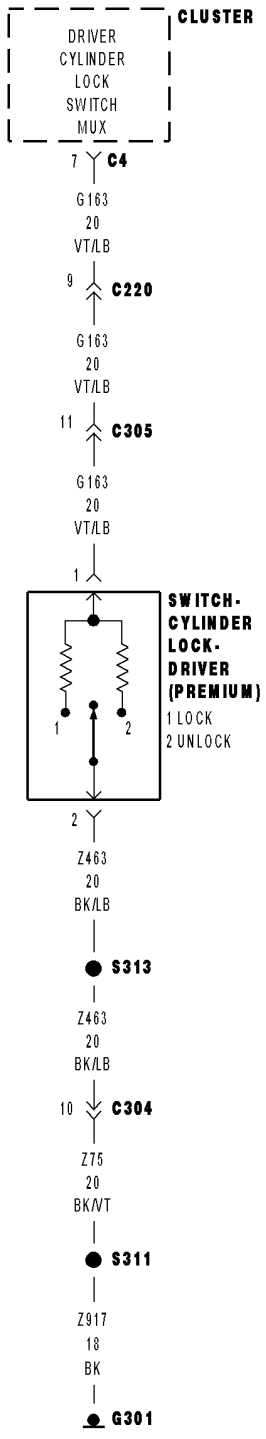

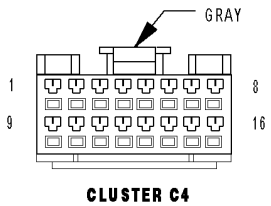

CLUSTER C4

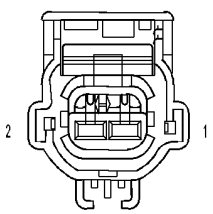

SWITCH- CYLINDER LOCK- DRIVER (PREMIUM)

813e1098

***CYLINDER LOCK SWITCH INOPERATIVE (CONTINUED)**

For the Power Door Lock circuit diagram (Refer to 8 - ELECTRICAL/POWER LOCKS - SCHEMATICS AND DIAGRAMS).

For a complete wiring diagram **Refer to Section 8W**.

Possible Causes
DTC PRESENT
(Z463) CYLINDER LOCK SWITCH GROUND OPEN
(G163) CYLINDER LOCK SWITCH MUX CIRCUIT OPEN
(G163) CYLINDER LOCK SWITCH MUX WIRE SHORT TO GROUND
CYLINDER LOCK SWITCH
INSTRUMENT CLUSTER

Diagnostic Test

1. DTC PRESENT

Turn the ignition on.

With the DRBIII®, read DTC's.

Are there any Power Door Lock related trouble codes?

Yes >> Refer to symptom list for problems related to Power Door Locks.

Perform BODY VERIFICATION TEST - VER 1. (Refer to 8 - ELECTRICAL/ELECTRONIC CONTROL MODULES/FRONT CONTROL MODULE - DIAGNOSIS AND TESTING)

No >> Go To 2

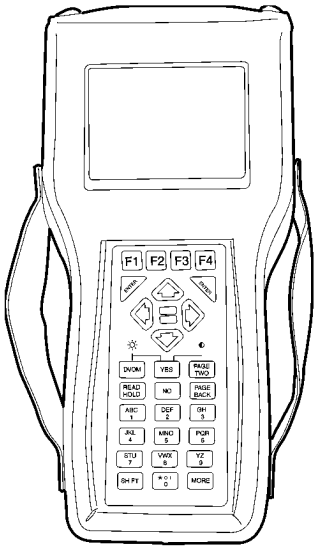

***CYLINDER LOCK SWITCH INOPERATIVE (CONTINUED)**

2. CYLINDER LOCK SWITCH VOLTAGE LOW

Turn the ignition off.

Disconnect the Cylinder Lock Switch connector.

Turn the ignition on.

Measure the voltage between (G163) Cylinder Lock Switch Mux circuit and ground.

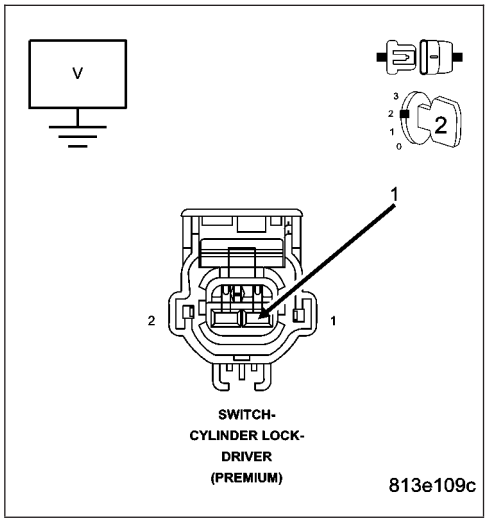

Is the voltage between 4.6 and 5.2 volts?

Yes >> Go To 3

No >> Go To 4

3. (Z463) CYLINDER LOCK SWITCH GROUND OPEN

Using a 12-volt test light connected to 12-volts, check the (Z463) Ground circuit.

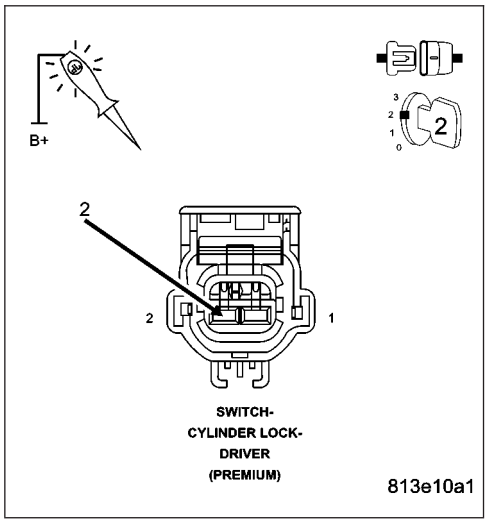

Does the test light illuminate brightly?

Yes >> Replace the Cylinder Lock Switch.
Perform BODY VERIFICATION TEST - VER 1. (Refer to 8 - ELECTRICAL/ELECTRONIC CONTROL MODULES/ FRONT CONTROL MODULE - DIAGNOSIS AND TESTING)

No >> Repair the (Z463) Ground circuit for an open.
Perform BODY VERIFICATION TEST - VER 1. (Refer to 8 - ELECTRICAL/ELECTRONIC CONTROL MODULES/ FRONT CONTROL MODULE - DIAGNOSIS AND TESTING)

*CYLINDER LOCK SWITCH INOPERATIVE (CONTINUED)

4. (G163) CYLINDER LOCK SWITCH MUX OPEN

Turn the ignition off.

Disconnect the Instrument Cluster C4 connector.

Measure the resistance of the (G163) Cylinder Lock Switch Mux circuit between the Switch connector and the Instrument Cluster connector.

Is the resistance below 5.0 ohms?

Yes >> Go To 5

No >> Repair the (G163) Cylinder Lock Switch Mux circuit for an open.

Perform BODY VERIFICATION TEST - VER 1. (Refer to 8 - ELECTRICAL/ELECTRONIC CONTROL MODULES/ FRONT CONTROL MODULE - DIAGNOSIS AND TESTING)

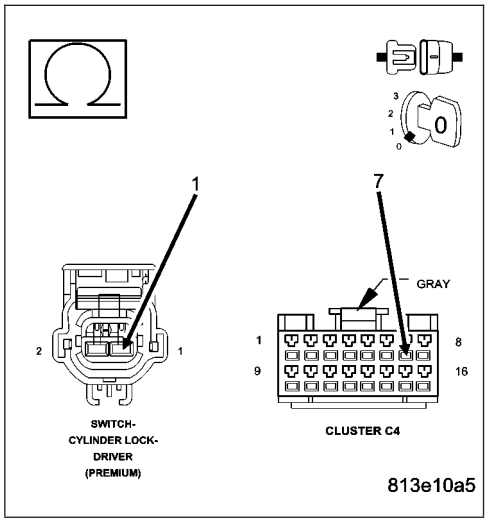

5. (G163) CYLINDER LOCK SWITCH MUX WIRE SHORT TO GROUND

Measure the resistance between Ground and the (G163) Cylinder Lock Switch Mux circuit in the Cluster C4 connector.

Is the resistance below 1000.0 ohms?

No >> Replace the Instrument Cluster.

Perform BODY VERIFICATION TEST - VER 1. (Refer to 8 - ELECTRICAL/ELECTRONIC CONTROL MODULES/ FRONT CONTROL MODULE - DIAGNOSIS AND TESTING)

Yes >> Repair the (G163) Cylinder Lock Switch Mux circuit for a short to ground.

Perform BODY VERIFICATION TEST - VER 1. (Refer to 8 - ELECTRICAL/ELECTRONIC CONTROL MODULES/ FRONT CONTROL MODULE - DIAGNOSIS AND TESTING)

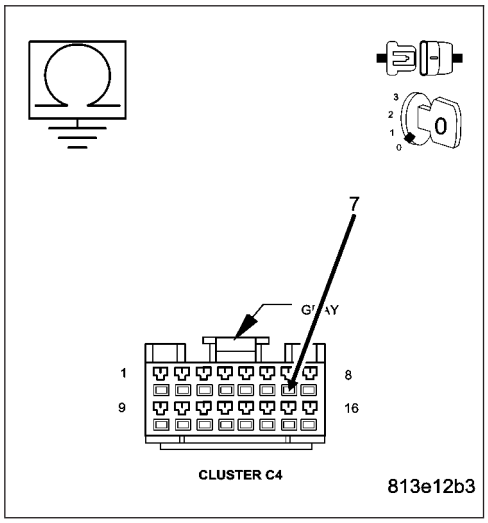

*DOOR LOCK INHIBIT INOPERATIVE

For a complete wiring diagram **Refer to Section 8W**.

Possible Causes
CHIME INOPERATIVE
INSTRUMENT CLUSTER

Diagnostic Test

1. CHIME INOPERATIVE

Turn the ignition off but leave the key in the ignition.
Open the drivers door.

Does the chime sound?

Yes >> Replace the Instrument Cluster.Perform BODY VERIFICATION TEST - VER 1. (Refer to 8 - ELECTRICAL/ELECTRONIC CONTROL MODULES/FRONT CONTROL MODULE - DIAGNOSIS AND TESTING)

No >> Perform the test “*KEY IN IGNITION AND DRIVER’S DOOR OPEN CHIME INOPERATIVE”. (Refer to 8 - ELECTRICAL/CHIME/BUZZER - DIAGNOSIS AND TESTING).

*LEFT REAR DOOR FAILS TO LOCK AND UNLOCK

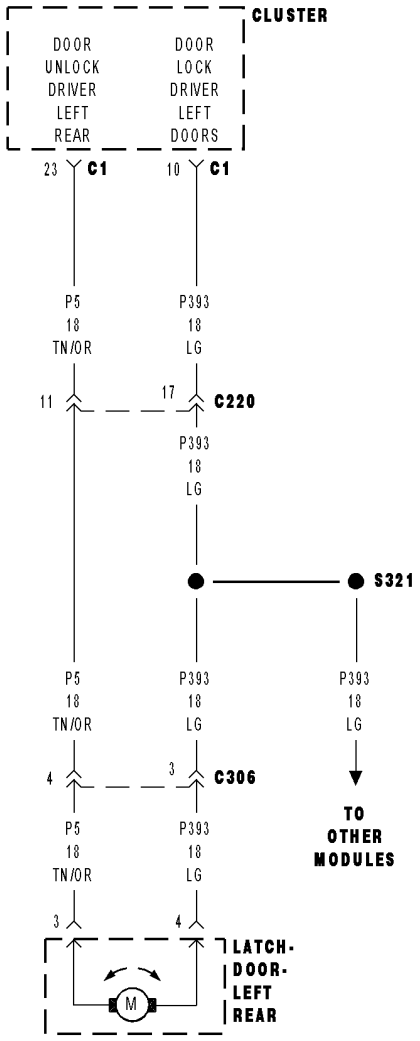

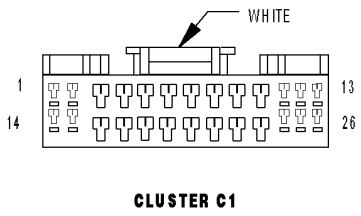

CLUSTER C1

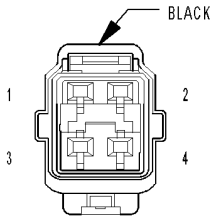

LATCH-DOOR-LEFT REAR (POWER LOCKS)

813e1b27

***LEFT REAR DOOR FAILS TO LOCK AND UNLOCK (CONTINUED)**

For the Power Door Lock circuit diagram (Refer to 8 - ELECTRICAL/POWER LOCKS - SCHEMATICS AND DIAGRAMS)

For a complete wiring diagram **Refer to Section 8W**.

Possible Causes
DTC PRESENT
(P393) DOOR LOCK DRIVER LEFT DOORS WIRE OPEN
(P5) DOOR UNLOCK DRIVER LEFT REAR WIRE OPEN
DOOR LATCH
INSTRUMENT CLUSTER

Diagnostic Test

1. DTC PRESENT

Turn the ignition on.

With the DRBIII®, read DTC's.

Does the DRBIII® display any Door Lock related DTC's?

Yes >> Refer to symptom list for problems related to Power Door Locks to diagnose and repair DTC's.

No >> Go To 2

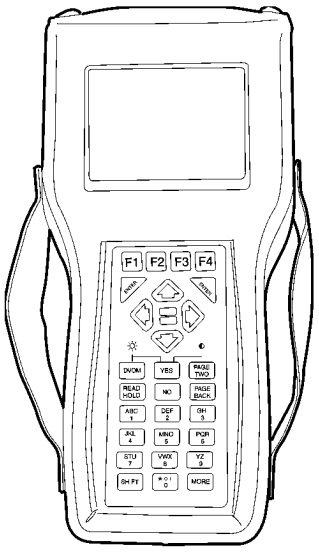

***LEFT REAR DOOR FAILS TO LOCK AND UNLOCK (CONTINUED)**

2. INSTRUMENT CLUSTER

Turn the ignition off.

Disconnect the Instrument Cluster C1 connector.

Connect a jumper wire between the (P5) Door Unlock Driver Left Rear circuit in the Instrument Cluster C1 connector and ground.

Momentarily connect a fused jumper wire between the Fused B+ circuit and the (P393) Door Lock Driver Left Doors circuit in the Instrument Cluster C1 connector.

Reverse the jumper wires to drive the motor in the opposite direction.

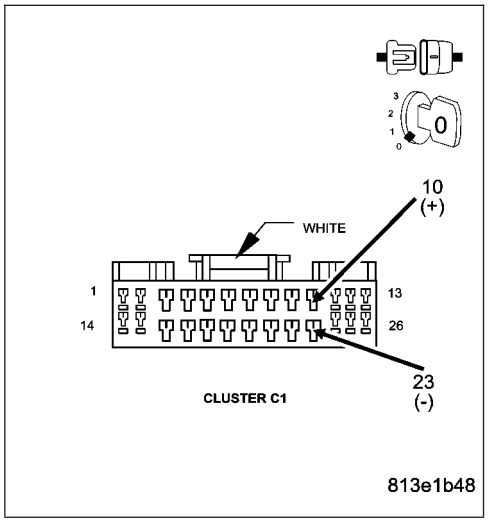

Did the left doors lock and unlock?

Yes >> Replace the Instrument Cluster.
Perform BODY VERIFICATION TEST - VER 1. (Refer to 8 - ELECTRICAL/ELECTRONIC CONTROL MODULES/ FRONT CONTROL MODULE - DIAGNOSIS AND TESTING)

No >> Go To 3

---

3. (P393) DOOR LOCK DRIVER LEFT DOORS WIRE OPEN

Disconnect the Left Rear Door Latch connector.

Measure the resistance of the (P393) Door Lock Driver Left Doors circuit between the Instrument Cluster C1 connector and the Door Latch connector.

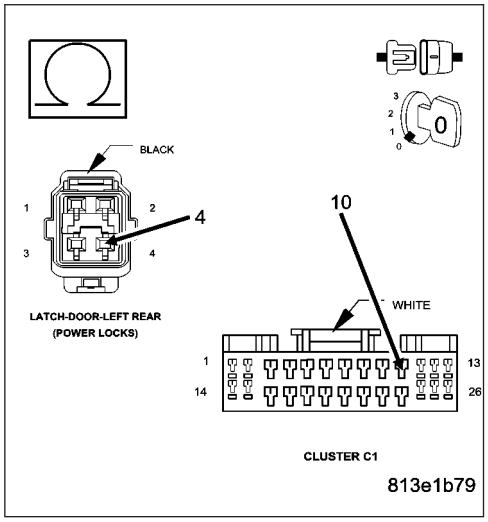

Is the resistance below 5.0 ohms?

Yes >> Go To 4

No >> Repair the (P393) Door Lock Driver Left Doors wire for an open.
Perform BODY VERIFICATION TEST - VER 1. (Refer to 8 - ELECTRICAL/ELECTRONIC CONTROL MODULES/ FRONT CONTROL MODULE - DIAGNOSIS AND TESTING)

***LEFT REAR DOOR FAILS TO LOCK AND UNLOCK (CONTINUED)**

4. (P5) DOOR UNLOCK DRIVER LEFT REAR WIRE OPEN

Measure the resistance of the (P5) Door Unlock Driver Left Rear circuit between the Instrument Cluster C1 connector and the Door Latch connector.

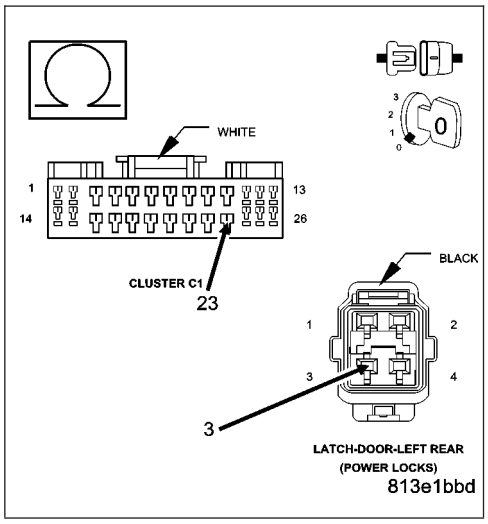

Is the resistance below 5.0 ohms?

Yes >> Replace the Door Latch.

Perform BODY VERIFICATION TEST - VER 1. (Refer to 8 - ELECTRICAL/ELECTRONIC CONTROL MODULES/ FRONT CONTROL MODULE - DIAGNOSIS AND TESTING)

No >> Repair the (P5) Door Unlock Driver Left Rear wire for an open.

Perform BODY VERIFICATION TEST - VER 1. (Refer to 8 - ELECTRICAL/ELECTRONIC CONTROL MODULES/ FRONT CONTROL MODULE - DIAGNOSIS AND TESTING)

*DRIVER DOOR FAILS TO LOCK AND UNLOCK

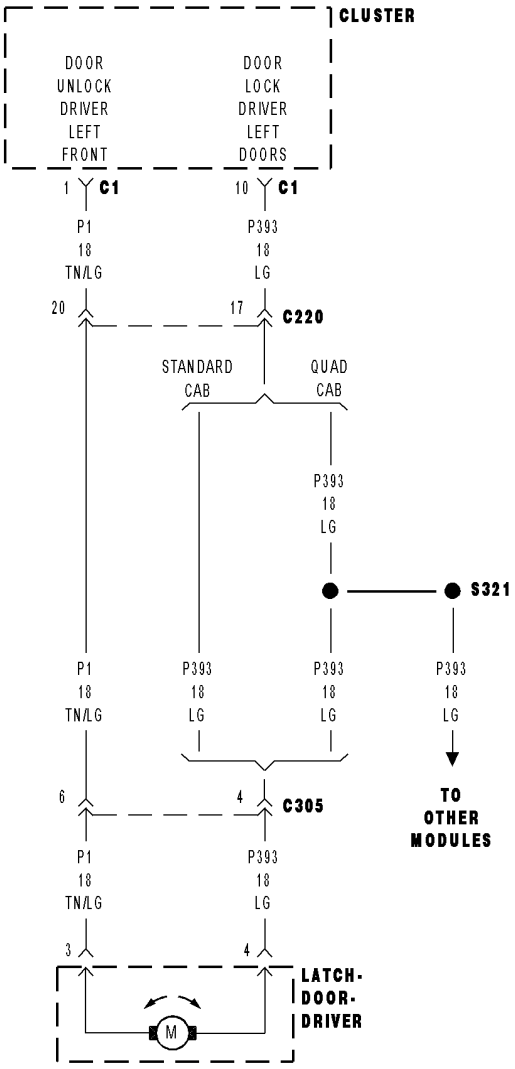

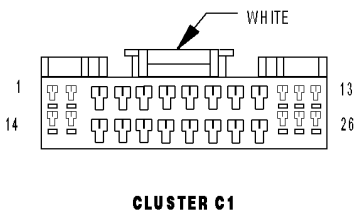

CLUSTER C1

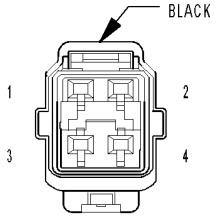

LATCH-DOOR-DRIVER (POWER LOCKS)

813e2144

***DRIVER DOOR FAILS TO LOCK AND UNLOCK (CONTINUED)**

For the Power Door Lock circuit diagram (Refer to 8 - ELECTRICAL/POWER LOCKS - SCHEMATICS AND DIAGRAMS)

For a complete wiring diagram **Refer to Section 8W**.

Possible Causes
DTC PRESENT
(P393) DOOR LOCK DRIVER LEFT DOORS WIRE OPEN
(P1) DOOR UNLOCK DRIVER LEFT FRONT WIRE OPEN
DOOR LATCH
INSTRUMENT CLUSTER

Diagnostic Test

1. DTC PRESENT

Turn the ignition on.

With the DRBIII®, read DTC's.

Does the DRBIII® display any Door Lock related DTC's?

Yes >> Refer to symptom list for problems related to Power Door Locks and diagnose and repair DTC's.

No >> Go To 2

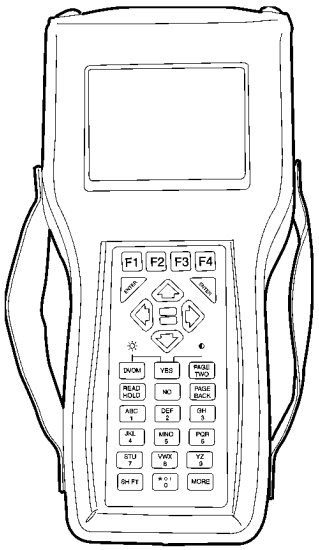

***DRIVER DOOR FAILS TO LOCK AND UNLOCK (CONTINUED)**

2. INSTRUMENT CLUSTER

Turn the ignition off.

Disconnect the Instrument Cluster C1 connector.

Connect a jumper wire between the (P1) Door Unlock Driver Left Front circuit in the Instrument Cluster C1 connector and ground.

Momentarily connect a fused jumper wire between the Fused B+ circuit and the (P393) Door Lock Driver Left Doors circuit in the Instrument Cluster C1 connector.

Reverse the jumper wires to drive the motor in the opposite direction.

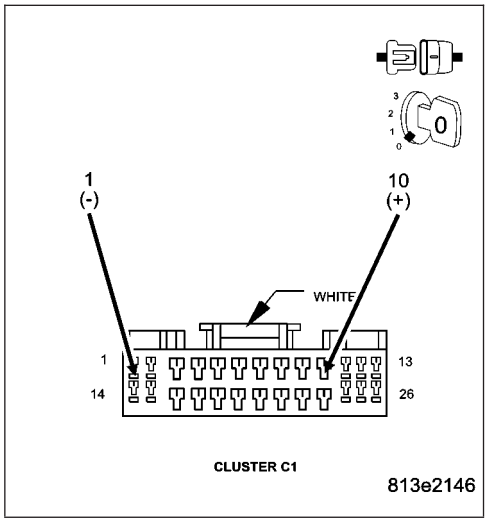

Did the Driver Door lock and unlock?

Yes >> Replace the Instrument Cluster.
Perform BODY VERIFICATION TEST - VER 1. (Refer to 8 - ELECTRICAL/ELECTRONIC CONTROL MODULES/ FRONT CONTROL MODULE - DIAGNOSIS AND TESTING)

No >> Go To 3

3. (P393) DOOR LOCK DRIVER LEFT DOORS WIRE OPEN

Disconnect the Driver Door Latch connector.

Measure the resistance of the (P393) Door Lock Driver Left Doors circuit between the Instrument Cluster C1 connector and the Door Latch connector.

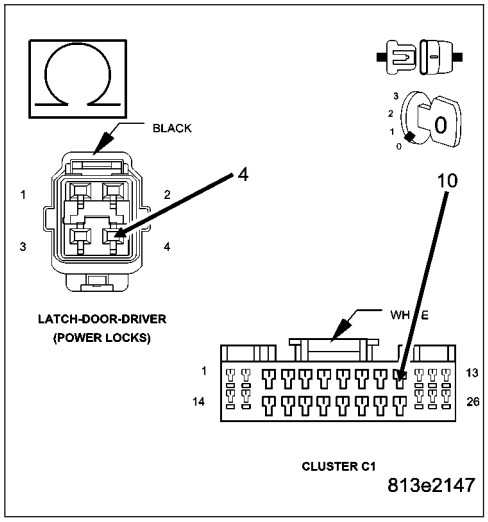

Is the resistance below 5.0 ohms?

Yes >> Go To 4

No >> Repair the (P393) Door Lock Driver Left Doors wire for an open.
Perform BODY VERIFICATION TEST - VER 1. (Refer to 8 - ELECTRICAL/ELECTRONIC CONTROL MODULES/ FRONT CONTROL MODULE - DIAGNOSIS AND TESTING)

***DRIVER DOOR FAILS TO LOCK AND UNLOCK (CONTINUED)**

4. (P1) DOOR UNLOCK DRIVER LEFT FRONT WIRE OPEN

Measure the resistance of the (P1) Door Unlock Driver Left Front circuit between the Instrument Cluster C1 connector and the Door Latch connector.

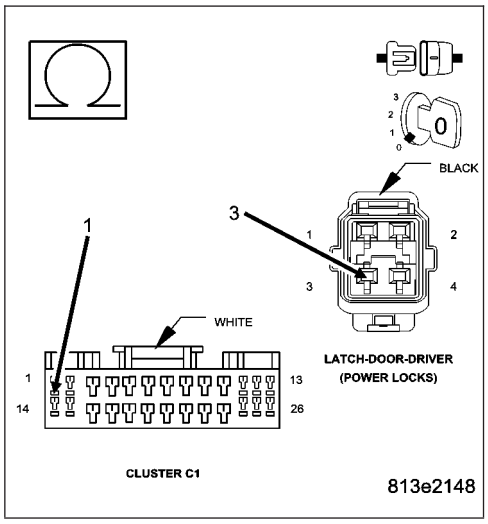

Is the resistance below 5.0 ohms?

Yes >> Replace the Door Latch.

Perform BODY VERIFICATION TEST - VER 1. (Refer to 8 - ELECTRICAL/ELECTRONIC CONTROL MODULES/ FRONT CONTROL MODULE - DIAGNOSIS AND TESTING)

No >> Repair the (P1) Door Unlock Driver Left Front wire for an open.

Perform BODY VERIFICATION TEST - VER 1. (Refer to 8 - ELECTRICAL/ELECTRONIC CONTROL MODULES/ FRONT CONTROL MODULE - DIAGNOSIS AND TESTING)

*ONE DOOR LOCK MOTOR INOPERATIVE

For the Power Door Lock circuit diagram (Refer to 8 - ELECTRICAL/POWER LOCKS - SCHEMATICS AND DIAGRAMS).

For a complete wiring diagram **Refer to Section 8W**.

Possible Causes
DTC's PRESENT
DOOR LOCK DRIVER OR DOOR UNLOCK DRIVER CIRCUIT OPEN
DOOR LATCH

Diagnostic Test

1. CHECK DOOR LOCK MOTOR CIRCUIT

With the DRBIII®, read DTCs. If there are any door lock related DTC's, refer to symptom list for problems related to Power Door Locks and diagnose and repair the DTC's..

Disconnect the inoperative Door Latch connector.

Connect a 12 volt test light between the Door Lock Driver and the Door Unlock Driver circuits in the latch connector.

NOTE: Graphic shows Passenger Latch – all others similar.
Operate the door locks several time in the lock and unlock positions from a door lock switch and observe the test light.

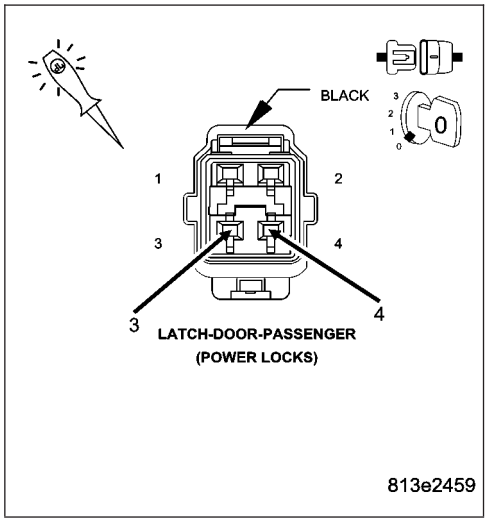

Does the test light illuminate brightly when the locks are actuated in both directions?

Yes >> Replace the Door latch.
Perform BODY VERIFICATION TEST - VER 1. (Refer to 8 - ELECTRICAL/ELECTRONIC CONTROL MODULES/FRONT CONTROL MODULE - DIAGNOSIS AND TESTING)

No >> Repair the appropriate Door Lock Driver or Door Unlock Driver circuit for an open.
Perform BODY VERIFICATION TEST - VER 1. (Refer to 8 - ELECTRICAL/ELECTRONIC CONTROL MODULES/FRONT CONTROL MODULE - DIAGNOSIS AND TESTING)

*RIGHT DOORS FAIL TO LOCK AND UNLOCK – QUAD CAB

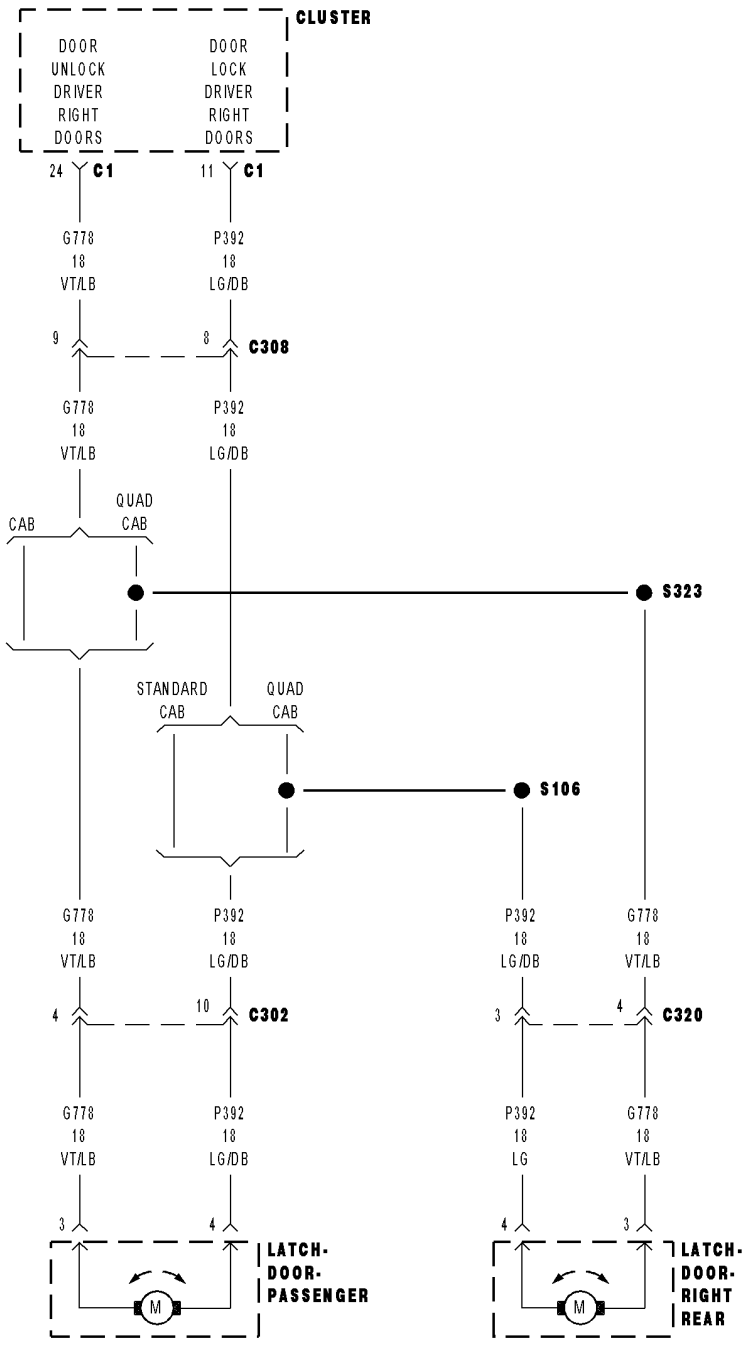

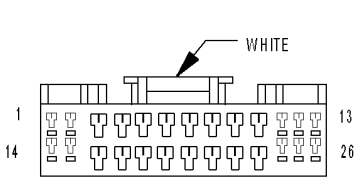

CLUSTER C1

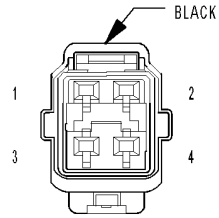

LATCH-DOOR-PASSENGER (POWER LOCKS)

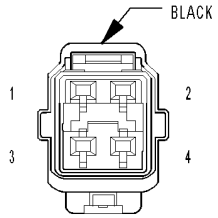

LATCH-DOOR-RIGHT REAR (POWER LOCKS)

813e6b9d

***RIGHT DOORS FAIL TO LOCK AND UNLOCK – QUAD CAB (CONTINUED)**

For the Power Door Lock circuit diagram (Refer to 8 - ELECTRICAL/POWER LOCKS - SCHEMATICS AND DIAGRAMS)

For a complete wiring diagram **Refer to Section 8W**.

Possible Causes
DTC PRESENT
(P392) DOOR LOCK DRIVER RIGHT DOORS WIRE OPEN
(G778) DOOR UNLOCK DRIVER RIGHT DOORS WIRE OPEN
DOOR LATCH
INSTRUMENT CLUSTER

Diagnostic Test

1. DTC PRESENT

Turn the ignition on.

With the DRBIII®, read DTC's.

Does the DRBIII® display any Door Lock related DTC's?

Yes >> Refer to symptom list for problems related to Power Door Locks and diagnose and repair DTC's.

No >> Go To 2

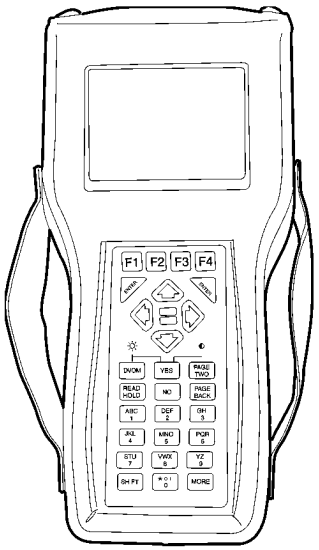

***RIGHT DOORS FAIL TO LOCK AND UNLOCK – QUAD CAB (CONTINUED)**

2. INSTRUMENT CLUSTER

Turn the ignition off.

Disconnect the Instrument Cluster C1 connector.

Connect a jumper wire between the (G778) Door Unlock Driver Right Doors circuit in the Instrument Cluster C1 connector and ground.

Momentarily connect a fused jumper wire between the Fused B+ circuit and the (P392) Door Lock Driver Right Doors circuit in the Instrument Cluster C1 connector.

Reverse the jumper wires to drive the motor in the opposite direction.

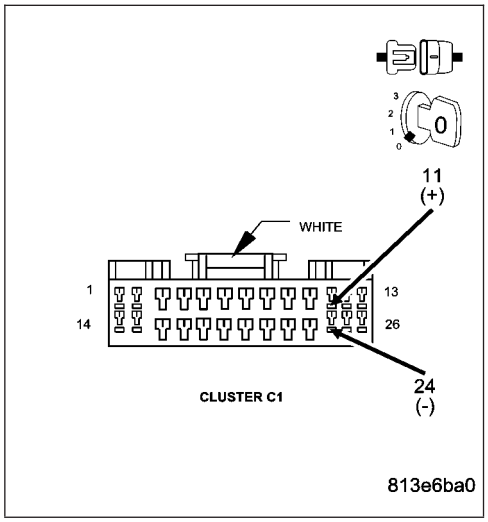

Did the Right Doors lock and unlock?

Yes >> Replace the Instrument Cluster.
Perform BODY VERIFICATION TEST - VER 1. (Refer to 8 - ELECTRICAL/ELECTRONIC CONTROL MODULES/ FRONT CONTROL MODULE - DIAGNOSIS AND TESTING)

No >> Go To 3

3. (P392) DOOR LOCK DRIVER RIGHT DOORS WIRE OPEN

Disconnect the Passenger Door Latch connector.

Measure the resistance of the (P392) Door Lock Driver Right Doors circuit between the Instrument Cluster C1 connector and the Passenger Door Latch connector.

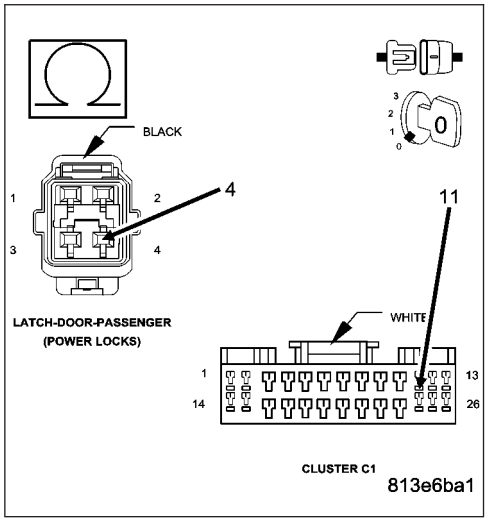

Is the resistance below 5.0 ohms?

Yes >> Go To 4

No >> Repair the (P392) Door Lock Driver Right Doors wire for an open.
Perform BODY VERIFICATION TEST - VER 1. (Refer to 8 - ELECTRICAL/ELECTRONIC CONTROL MODULES/ FRONT CONTROL MODULE - DIAGNOSIS AND TESTING)

*RIGHT DOORS FAIL TO LOCK AND UNLOCK – QUAD CAB (CONTINUED)

4. (G778) DOOR UNLOCK DRIVER RIGHT DOORS WIRE OPEN

Measure the resistance of the (G778) Door Unlock Driver Right Doors circuit between the Instrument Cluster C1 connector and the Passenger Door Latch connector.

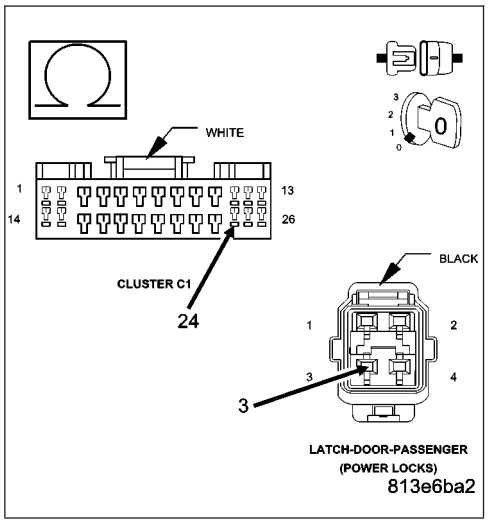

Is the resistance below 5.0 ohms?

Yes >> Replace the Door Latch.

Perform BODY VERIFICATION TEST - VER 1. (Refer to 8 - ELECTRICAL/ELECTRONIC CONTROL MODULES/ FRONT CONTROL MODULE - DIAGNOSIS AND TESTING)

No >> Repair the (G778) Door Unlock Driver Right Doors wire for an open.

Perform BODY VERIFICATION TEST - VER 1. (Refer to 8 - ELECTRICAL/ELECTRONIC CONTROL MODULES/ FRONT CONTROL MODULE - DIAGNOSIS AND TESTING)

*RKE INOPERATIVE

For the Power Door Lock circuit diagram (Refer to 8 - ELECTRICAL/POWER LOCKS - SCHEMATICS AND DIAGRAMS).

For a complete wiring diagram **Refer to Section 8W**.

Possible Causes
DTC PRESENT
TRANSMITTER NOT PROGRAMMED
RKE TRANSMITTER
REMOTE KEYLESS ENTRY MODULE

Diagnostic Test

1. DTC PRESENT

With the DRBIII®, read DTCs.

Attempt to operate the door locks with the RKE transmitter.

Does the DRBIII® display RKE FOB BATTERY LOW?

Yes >> Refer to symptom RKE FOB BATTERY LOW in this category.

No >> Go To 2

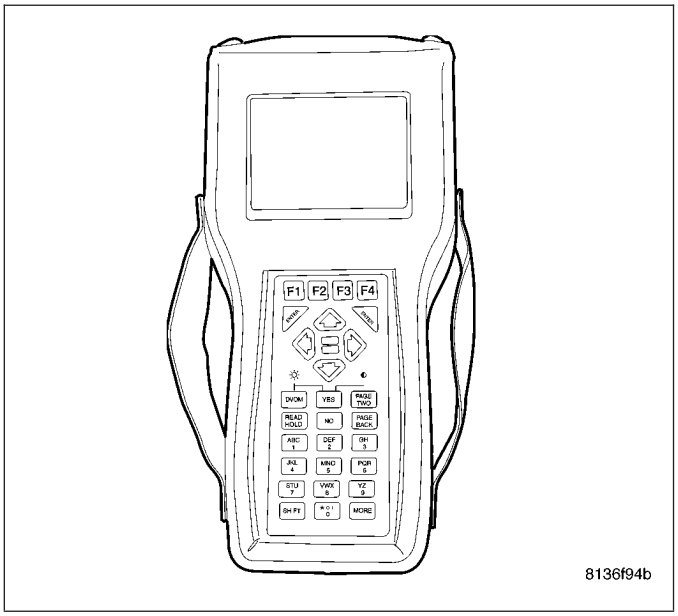

2. 9001 TESTER AVAILABLE

Do you have access to the Miller Special Tool ″9001 RF DETECTOR″?

No >> Go To 3

Yes >> Go To 5

***RKE INOPERATIVE (CONTINUED)**

3. TRANSMITTER NOT PROGRAMMED

Turn the ignition on.
Place transmission in the Park position.
Ensure Vehicle Theft Security System (if equipped) is in Disarmed Mode.
With the DRBIII®, select ELECTRO/MECH CLUSTER, MISCELLANEOUS, PROGRAM New Fob.
Follow the instructions on the DRBIII screen
Programming mode will last for 30 seconds. To get out of Programming Mode sooner, press PAGE BACK.
Try the door locks using the Transmitter.

Does the RKE System operate properly?

Yes >> Repair complete. Check with the customer to see if the other transmitter(s) are operating properly. They may have to be programmed also.
Perform BODY VERIFICATION TEST - VER 1. (Refer to 8 - ELECTRICAL/ELECTRONIC CONTROL MODULES/FRONT CONTROL MODULE - DIAGNOSIS AND TESTING)

No >> Go To 4

---

4. SUBSTITUTE A KNOWN GOOD TRANSMITTER

Secure a known good transmitter.
With the DRBIII®, select ELECTRO/MECH CLUSTER, MISCELLANEOUS, PROGRAM New Fob.
Follow the instructions on the DRBIII screen.
Programming mode will last for 30 seconds. To get out of Programming Mode sooner, press PAGE BACK.
Lock and Unlock the vehicle using the transmitter.

Does the RKE System operate properly?

Yes >> Replace the original transmitter and program all transmitters that will be used with this vehicle.
Perform BODY VERIFICATION TEST - VER 1. (Refer to 8 - ELECTRICAL/ELECTRONIC CONTROL MODULES/FRONT CONTROL MODULE - DIAGNOSIS AND TESTING)

No >> Replace the Remote Keyless Entry Module and reprogram all transmitters used with this vehicle.
Perform BODY VERIFICATION TEST - VER 1. (Refer to 8 - ELECTRICAL/ELECTRONIC CONTROL MODULES/FRONT CONTROL MODULE - DIAGNOSIS AND TESTING)

---

5. TEST TRANSMITTER WITH TESTER

Using the 9001 RF Detector, follow the instructions on the back of the tester and test the transmitter several times.

Does the signal strength measure ″STRONG″?

Yes >> Go To 6
Perform BODY VERIFICATION TEST - VER 1. (Refer to 8 - ELECTRICAL/ELECTRONIC CONTROL MODULES/FRONT CONTROL MODULE - DIAGNOSIS AND TESTING)

No >> Replace the transmitter and program all transmitters that will be used with this vehicle.
Perform BODY VERIFICATION TEST - VER 1. (Refer to 8 - ELECTRICAL/ELECTRONIC CONTROL MODULES/FRONT CONTROL MODULE - DIAGNOSIS AND TESTING)

***RKE INOPERATIVE (CONTINUED)**

6. PROGRAM RKE TRANSMITTER WITH THE DRBIII®

Turn the ignition on

Place transmission in the Park position.

Ensure Vehicle Theft Security System (if equipped) is in Disarm Mode.

With the DRBIII®, select ELECTRO/MECH CLUSTER, MISCELLANEOUS, then PROGRAM New Fob. Follow the instructions on the screen.

Exit PROGRAM RKE.

Activate the Door Locks using the RKE Transmitter.

NOTE: When repairs are complete, ensure all transmitters used with the vehicle have been programmed.

Did the door locks respond properly to the RKE transmitter commands?

Yes >> Repair complete.
Perform BODY VERIFICATION TEST - VER 1. (Refer to 8 - ELECTRICAL/ELECTRONIC CONTROL MODULES/FRONT CONTROL MODULE - DIAGNOSIS AND TESTING)

No >> Replace the Remote Keyless Entry Module and reprogram all transmitters used with this vehicle.
Perform BODY VERIFICATION TEST - VER 1. (Refer to 8 - ELECTRICAL/ELECTRONIC CONTROL MODULES/FRONT CONTROL MODULE - DIAGNOSIS AND TESTING)

SCHEMATICS AND DIAGRAMS

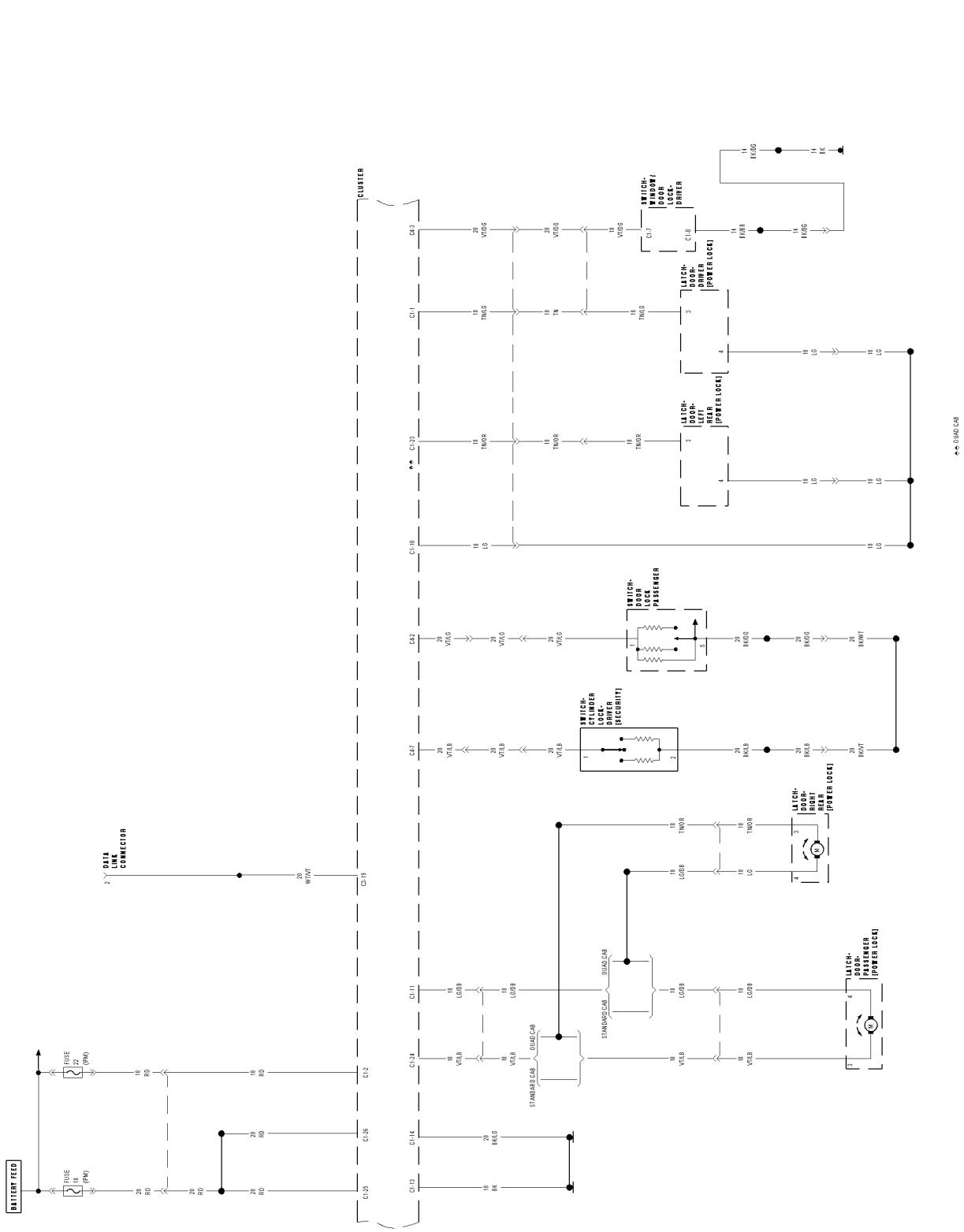

POWER LOCKS - SERVICE INFORMATION

TABLE OF CONTENTS

page

POWER LOCKS - SERVICE INFORMATION
DESCRIPTION 73
OPERATION 74
DIAGNOSIS AND TESTING
POWER LOCKS 75
MOTOR - DOOR LOCK
DESCRIPTION 76
OPERATION 76
DIAGNOSIS AND TESTING
DOOR LOCK MOTOR 76
SWITCH - POWER LOCK
DIAGNOSIS AND TESTING
POWER LOCK SWITCH 77
REMOVAL 77
INSTALLATION 78
MODULE-REMOTE KEYLESS ENTRY
DESCRIPTION 78
OPERATION 78
DIAGNOSIS AND TESTING
REMOTE KEYLESS ENTRY MODULE 78
REMOVAL 79
INSTALLATION 79
SWITCH - WINDOW/DOOR LOCK
DESCRIPTION 79
OPERATION 80
DIAGNOSIS AND TESTING
WINDOW/LOCK SWITCH 80
REMOVAL 82
INSTALLATION 82
TRANSMITTER-REMOTE KEYLESS ENTRY
DIAGNOSIS AND TESTING
REMOTE KEYLESS ENTRY TRANSMITTER . 83
STANDARD PROCEDURE
STANDARD PROCEDURE - RKE
TRANSMITTER BATTERIES 83
STANDARD PROCEDURE - RKE
TRANSMITTER CUSTOMER
PREFERENCES 83
STANDARD PROCEDURE - RKE
TRANSMITTER PROGRAMING 84
SPECIFICATIONS
REMOTE KEYLESS ENTRY TRANSMITTER . 85

POWER LOCKS - SERVICE INFORMATION

DESCRIPTION

POWER LOCKS

The power lock system allows all of the doors to be locked or unlocked electrically by operating a switch on either front door trim panel. The power lock system receives non-switched battery current through a fuse in the Integrated Power Module (IPM), so that the power locks remain operational, regardless of the ignition switch position.

The instrument cluster locks the doors automatically when the vehicle is driven beyond the speed of 25.7 Km/h (15 mph), all doors are closed and the accelerator pedal is depressed. The rolling door lock feature can be disabled if desired.

This vehicle also offers several customer programmable features, which allows the selection of several optional electronic features to suit individual preferences.

The power lock system for this vehicle can also be operated remotely using the available Remote Keyless Entry (RKE) system radio frequency transmitters, if equipped.

Certain functions and features of the power lock system rely upon resources shared with other electronic modules in the vehicle over the Programmable Communications Interface (PCI) data bus network. For proper diagnosis of these electronic modules or of the PCI data bus network, the use of a scan tool and the appropriate diagnostic information are required.

CENTRAL LOCKING/UNLOCKING

The instrument cluster will lock all doors when a cylinder lock switch is activated in the “lock” position. When the instrument cluster receives an unlock command from one of the cylinder lock switches, it will unlock only that door. If the instrument cluster receives a second command within a 5 second period, it will unlock all the remaining doors. The illuminated entry will activate during door unlock.

ENHANCED ACCIDENT RESPONSE

Upon detection of an airbag deployment by way of the PCI bus, the instrument cluster will:

- Immediately disable the power door lock output.
- Unlock all doors by activating the door unlock output for approximately 300 milliseconds.
- After actuating the door unlock output, allow the door lock motors to be activated if the door lock input has been inactive (not erratic) for 2 seconds since the reception of the airbag deployment message.

REMOTE KEYLESS ENTRY

A Radio Frequency (RF) type Remote Keyless Entry (RKE) system is an available factory-installed option on this model. The RKE system allows the use of a remote battery-powered radio transmitter to signal the instrument cluster to actuate the power lock system. The RKE receiver operates on non-switched battery current through a fuse in the Integrated Power Module (IPM), so that the system remains operational, regardless of the ignition switch position.

The RKE transmitters are also equipped with a Panic button. If the Panic button on the RKE transmitter is depressed, the horn will sound and the exterior lights will flash on the vehicle for about three minutes, or until the Panic button is depressed a second time. A vehicle speed of about 25.7 kilometers-per-hour (15 miles-per-hour) will also cancel the panic event.

The RKE system can also perform other functions on this vehicle. If the vehicle is equipped with the optional Vehicle Theft Security System (VTSS), the RKE transmitter will arm the VTSS when the Lock button is depressed, and disarm the VTSS when the Unlock button is depressed.

The RKE system includes two transmitters when the vehicle is shipped from the factory, but the system can retain the vehicle access codes of up to a total of four transmitters. The transmitter codes are retained in the RKE module memory, even if the battery is disconnected. If an RKE transmitter is faulty or lost, new transmitter vehicle access codes can be programmed into the system using a scan tool.

This vehicle also offers several customer programmable features, which allows the selection of several optional electronic features to suit individual preferences. Customer programmable feature options affecting the RKE system include:

- **Remote Unlock Sequence** - Allows the option of having only the driver side front door unlock when the RKE transmitter Unlock button is depressed the first time. The remaining doors unlock when the button is depressed a second time within 5 seconds of the first unlock press. Another option is having all doors unlock upon the first depression of the RKE transmitter Unlock button.
- **Sound Horn on Lock** - Allows the option of having the horn sound a short chirp as an audible verification that the RKE system received a valid Lock request from the RKE transmitter, or having no audible verification.
- **Flash Lights with Lock and Unlock** - Allows the option of having the park lamps flash as an optical verification that the RKE system received a valid Lock request or Unlock request from the RKE transmitter, or having no optical verification.
- **Programming Additional Transmitters** - Allows up to a total of four transmitter vehicle access codes to be stored in the receiver memory.

Certain functions and features of the RKE system rely upon resources shared with other electronic modules in the vehicle over the Programmable Communications Interface (PCI) data bus network. For diagnosis of these electronic modules or of the PCI data bus network, the use of a scan tool and the appropriate diagnostic information are required.

OPERATION

POWER LOCKS

The instrument cluster locks or unlocks the doors when an actuation input signal from a door lock switch or Remote Keyless Entry (RKE) module is received. The instrument cluster turns on the output drivers and provides a voltage level to the door lock motor for a specified time. All passenger doors can be locked or unlocked using a mechanical button mounted on the door trim panel. The drivers door can be locked or unlocked by using the key cylinder.

AUTOMATIC DOOR LOCKS

When the automatic door locks are ENABLED the door locks will lock when the vehicle is moving at about 25.7 Km/h (15 mph), all doors are closed and the accelerator pedal is depressed. This feature can be switched ON or

OFF as desired. When the system is DISABLED the door locks will operate normally, but will not lock automatically when the vehicle is rolling. Once the automatic door locks have been actuated, they will not try to lock the doors again until a door is opened.

DOOR LOCK INHIBIT

If the key is in the ignition, in any position, and either front door is ajar, the doors can not be locked, but the unlock function still operates. Pressing the RKE lock/unlock button under these conditions will result in a normal lock/unlock activation.

After the key is removed from the ignition switch, or the doors are closed, the power door locks will operate normally.

DOOR LOCK CIRCUIT PROTECTION

If the door lock switch is actuated continuously for more than five seconds the instrument cluster will turn the output driver OFF (the instrument cluster would consider the switch stuck). Each lock motor is protected with a Positive Temperature Coefficient device that prevents motor burn out.

REMOTE KEYLESS ENTRY

- **LOCK**: Pressing the LOCK button locks all doors, sounds horn (chirp) once if enabled, flashes the park lamps once if enabled, and arms the Vehicle Theft Security System (VTSS), if enabled. The chirp verifies that the RKE module has sent a message to the instrument cluster for door lock operation. If a door has not been closed before pressing the LOCK button, the vehicle may not be secured and the VTSS (if equipped) will not arm until the door is closed.
- **UNLOCK**: Pressing the UNLOCK button once will unlock the driver's door first if enabled, flashes the park lamps twice if enabled, activates the illuminated entry system, and disarms the Vehicle Theft Security System (VTSS), if equipped. Pressing the UNLOCK button twice within five seconds will unlock all doors, if driver's door first is enabled.
- **PANIC**: Pressing the PANIC button sounds the horns at half second intervals, flashes the exterior lamps, and turns ON the interior lamps. The panic alarm will remain on for three minutes, or until the PANIC button is actuated again or the vehicle speed exceeds 25.7 Km/h (15 mph) will cancel the panic event.

The Remote Keyless Entry Module is capable of retaining the transmitter Vehicle Access Code(s) in its memory even after vehicle power has been interrupted.

DIAGNOSIS AND TESTING

POWER LOCKS

The most reliable, efficient, and accurate means to diagnose the power lock system requires the use of a scan tool and the proper Diagnostic Procedures information.

Refer to the appropriate wiring information.

Following are tests that will help to diagnose the hard wired components and circuits of the power lock system. However, these tests may not prove conclusive in the diagnosis of this system. In order to obtain conclusive testing of the power lock system, the Programmable Communications Interface (PCI) data bus network and all of the electronic modules that provide inputs to, or receive outputs from the power lock system components must be checked.

The instrument cluster will set Diagnostic Trouble Codes (DTC) for the power lock system.

PRELIMINARY DIAGNOSIS

As a preliminary diagnosis for the power lock system, note the system operation while you actuate both the Lock and Unlock functions with the power lock switches and with the Remote Keyless Entry (RKE) transmitter. Then, proceed as follows:

- If the entire power lock system fails to function with either the power lock switches or the RKE transmitter, check the fused B(+) fuse in the Integrated Power Module (IPM).
- If the power lock system functions with both power lock switches, but not with the RKE transmitter, proceed to diagnosis of the Remote Keyless Entry (RKE) system. (Refer to 8 - ELECTRICAL/POWER LOCKS/KEYLESS ENTRY TRANSMITTER - DIAGNOSIS AND TESTING) or (Refer to 8 - ELECTRICAL/POWER LOCKS/REMOTE KEYLESS ENTRY MODULE - DIAGNOSIS AND TESTING).

- If the power lock system functions with the RKE transmitter, but not with one or both power lock switches, proceed to diagnosis of the door lock switches. (Refer to 8 - ELECTRICAL/POWER LOCKS/POWER LOCK SWITCH - DIAGNOSIS AND TESTING).
- If the driver side power lock switch operates only the driver side front door power lock motor, but all other power lock motors operate with the passenger side power lock switch or the RKE transmitter, use a scan tool and the appropriate diagnostic information to diagnose the Programmable Communications Interface (PCI) data bus.
- If only one power lock motor fails to operate with both power lock switches and the RKE transmitter, proceed to diagnosis of the power lock motor. (Refer to 8 - ELECTRICAL/POWER LOCKS/POWER LOCK MOTOR - DIAGNOSIS AND TESTING).

MOTOR - DOOR LOCK

DESCRIPTION

The lock mechanisms are actuated by a reversible electric motor mounted within each door. The power lock motors are integral to the door latch units.

The power lock motors cannot be adjusted or repaired and, if faulty or damaged, the door latch unit must be replaced.

OPERATION

The door lock motors are controlled by the instrument cluster. A positive and negative battery connection to the two motor terminals will cause the motor to move in one direction. Reversing the current will cause the motor to move in the opposite direction.

DIAGNOSIS AND TESTING

DOOR LOCK MOTOR

The most reliable, efficient, and accurate means to diagnose the power lock system requires the use of a scan tool and the proper Diagnostic Procedures information.

Refer to the appropriate wiring information.

SWITCH - POWER LOCK

DIAGNOSIS AND TESTING

POWER LOCK SWITCH

The Light-Emitting Diode (LED) illumination lamp of the power lock switch receives battery current through a fuse in the Integrated Power Module (IPM) on a fused ignition switch output (run) circuit. The power lock switch on the driver side front door trim panel is integral to the window/lock switch (Refer to 8 - ELECTRICAL/POWER LOCKS/ DOOR MODULE - DIAGNOSIS AND TESTING). If the power lock switch operates, but the LED is inoperative, check for battery current at the switch with the ignition switch in the On position. If OK, replace the faulty switch. Refer to the appropriate wiring information.

1. Disconnect and isolate the battery negative cable. Remove the power lock switch from the door trim panel. Disconnect the door wire harness connector for the power lock switch from the switch connector receptacle.
2. Test the power lock switch resistance. See the Power Lock Switch Test chart to determine if the resistance is correct for the switch in each switch position. If not OK, replace the faulty power lock switch as required.

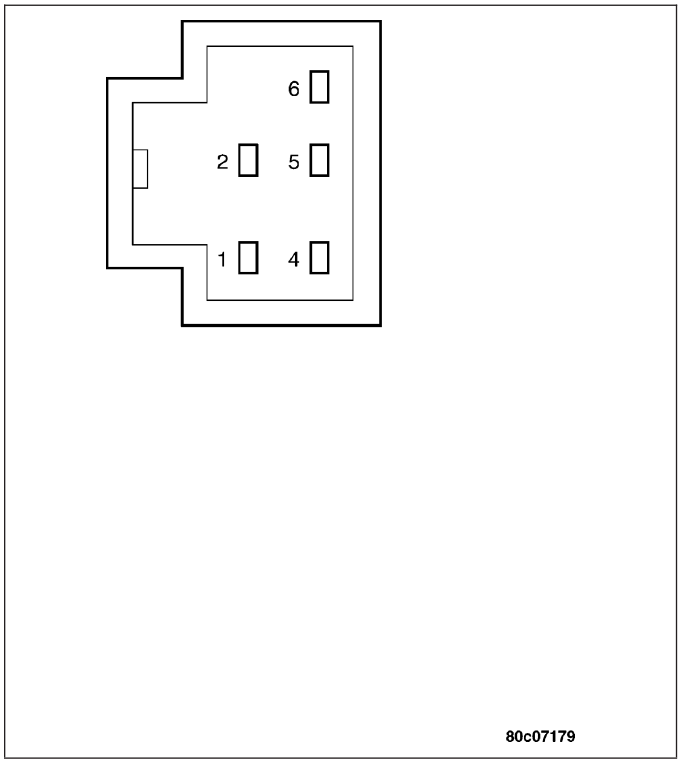

POWER LOCK SWITCH TEST TABLE

SWITCH POSITION	RESISTANCE BETWEEN PINS 1 & 5
NEUTRAL	10 KILOHMS ±1%
LOCK	820 OHMS ±5%
UNLOCK	330 OHMS ±5%

REMOVAL

The power lock switch on the driver side front door trim panel is integral to the window/lock switch. (Refer to 8 - ELECTRICAL/POWER LOCKS/DOOR MODULE - REMOVAL).

1. Disconnect and isolate the battery negative cable.
2. Remove the door trim panel (Refer to 23 - BODY/DOOR - FRONT/TRIM PANEL - REMOVAL).

3. Remove the switch from the trim panel bezel.

INSTALLATION

1. Insert switch to trim panel bezel.
2. Install door trim panel (Refer to 23 - BODY/DOOR - FRONT/TRIM PANEL - INSTALLATION).
3. Connect battery negative cable.

MODULE-REMOTE KEYLESS ENTRY

DESCRIPTION

When an RKE lock message is sent to the instrument cluster, the instrument cluster actuates the door locks, the interior lighting is turned off, the horn chirps (if this feature is enabled), the park lamps flash (if this feature is enabled) and, if the vehicle is so equipped, the Vehicle Theft Security System (VTSS) is armed. When an RKE unlock message is sent to the instrument cluster, the instrument cluster actuates the driver side front door (or all doors if this feature is enabled) unlock, the interior lighting is turned on and, if the vehicle is so equipped, the VTSS is disarmed.

When an RKE panic message is sent to the instrument cluster, the instrument cluster actuates the driver side front door (or all doors if this feature is enabled) unlock, the interior lighting is turned on and, if the vehicle is so equipped, the VTSS is disarmed. The panic message will also cause the exterior lamps (including the headlights) to flash, and the horn to sound for about three minutes, or until a second panic message is sent to the instrument cluster. A vehicle speed of about 25.7 kilometers-per-hour (15 miles-per-hour) will also cancel the panic event.

OPERATION

Whenever the vehicle battery power is interrupted, the Remote Keyless Module (RKE) Module will retain all vehicle access codes in its memory. When replacing or adding a key fob transmitter (maximum of 4) a scan tool is required to program the RKE Module to accept the new Vehicle Access Code if a customer owned transmitter is not available.

If a functioning transmitter is available, (Refer to 8 - ELECTRICAL/POWER LOCKS/KEYLESS ENTRY TRANSMITTER - STANDARD PROCEDURE)

DIAGNOSIS AND TESTING

REMOTE KEYLESS ENTRY MODULE

The most reliable, efficient, and accurate means to diagnose the power lock system requires the use of a scan tool and the proper Diagnostic Procedures information.

Refer to the appropriate wiring information.

REMOVAL

1. Disconnect and isolate the battery negative cable.
2. Remove the instrument cluster (Refer to 8 - ELECTRICAL/INSTRUMENT CLUSTER - REMOVAL).
3. Remove remote keyless entry module (2) from instrument cluster (1).

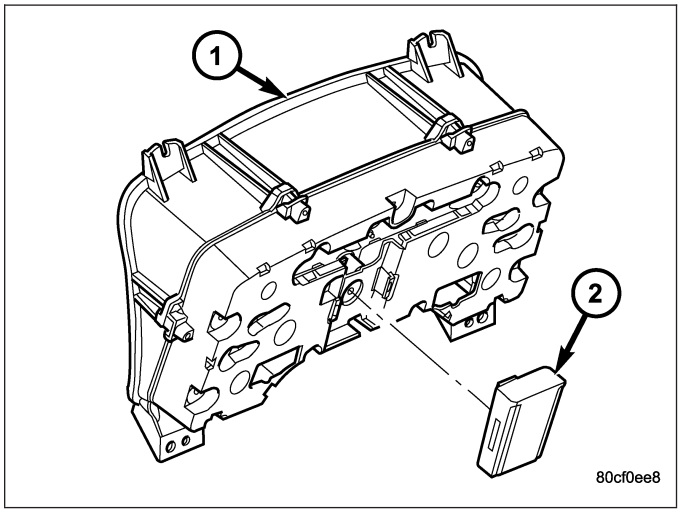

INSTALLATION

1. Install remote keyless entry module (2) to instrument cluster (1).
2. Install instrument cluster (Refer to 8 - ELECTRICAL/INSTRUMENT CLUSTER - INSTALLATION).
3. Connect the battery negative cable.

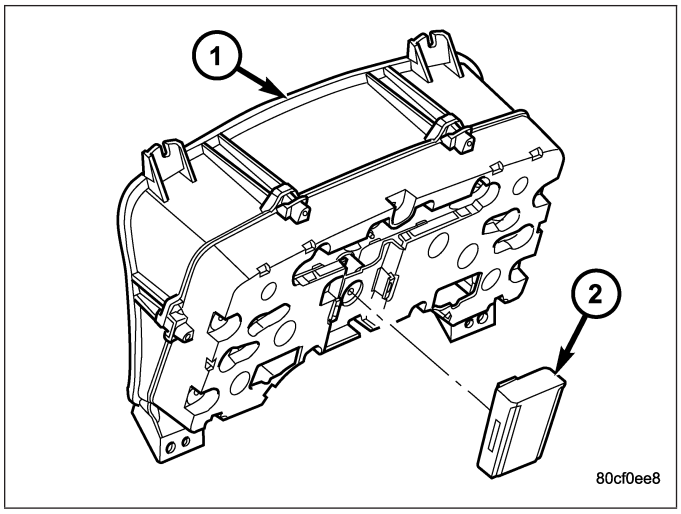

SWITCH - WINDOW/DOOR LOCK

DESCRIPTION

A window/lock switch is used on all models equipped with power locks, power windows, and power mirrors. The window/lock switch houses the following switches:

- **Power Lock Switch** - A two-way, momentary, resistor multiplexed switch to control the power lock system.
- **Power Mirror Selector Switch** - A three-position rocker switch selects the right or left power mirror for adjustment, or turns the power mirror system Off.
- **Power Mirror Adjustment Switches** - Four momentary, arrowhead shaped, directional switches allow the driver to adjust the selected power mirror in the Up, Down, Right, or Left directions.
- **Power Window Lockout Switch** - A two-way, latching, push-button switch allows the vehicle operator to lock out the power window switches on each passenger door so that the passenger door power windows may be operated only from the master switches.
- **Power Window Switches** - A two-way, momentary power window switch for the driver side front door. This switch also has a second detent in the Down direction and internal circuitry to provide an Auto-Down feature for the driver side front door power window. In addition to the power window switch for its own door, there are individual master switches for each passenger door power window.

The window/lock switch also incorporates several green Light-Emitting Diodes (LEDs) that illuminate the power lock and power window switch paddles, and the power mirror switch directional buttons to improve switch visibility.

OPERATION

The window/lock switch combines a power lock switch, a driver power window switch with an Auto-down feature, master switches for each passenger door power window, a power window lockout switch, a power mirror selector switch, and four power mirror adjustment switches in a single unit.

Power Lock Switch

The power lock switch circuitry is connected in series between ground and the driver door switch mux input of the instrument cluster. Each power lock switch position (Lock, Unlock, and Neutral) provides a different resistance value to the instrument cluster input, which allows the instrument cluster to sense the switch position. Based upon the power lock switch input, the instrument cluster controls the battery and ground feed outputs to the individual power lock motors to lock or unlock the door latches. The Light-Emitting Diode (LED) in the power lock switch is connected to battery current through the power window circuit breaker in the Integrated Power Module (IPM) on a fused ignition switch output (run-acc) circuit. The switch will be illuminated whenever the ignition switch is in the On or Accessory positions.

Power Window Switches

The power window switch circuitry is connected to battery current through a circuit breaker in the Integrated Power Module (IPM) on a fused ignition switch output (run-acc) circuit so that the power windows will operate whenever the ignition switch is in the On or Accessory positions. Each two-way, momentary master passenger power window switch provides battery current and ground to the individual power window switches on each passenger door so that the power window switch controls the battery current and ground feeds to its respective power window motor. The switch for the driver side front door power window is labeled “Auto” and includes an auto-down feature. When this switch is depressed to a second momentary detent position and released, the driver door power window is automatically operated through an internal circuit and relay to its fully lowered position. The Auto-down event is cancelled if the switch paddle is depressed a second time in either the Up or Down direction. When the two position window lockout switch is depressed and latched in the lockout position, the battery current feed to each of the individual passenger power window switches is interrupted so that the passenger door power windows can only be operated from the master switches. The window lockout switch also controls the battery current feed for the LED in each passenger power window switch so that the switch will not be illuminated when it is locked out.

Power Mirror Switches

The power mirror switch circuitry is connected to battery current through a fuse in the IPM on a fused B(+) circuit so that the power mirrors remain operational regardless of the ignition switch position. A rocker type selector switch has three positions, one to select the right mirror, one to select the left mirror, and a neutral Off position. After the right or left mirror is selected, one of four directional buttons is depressed to move the selected mirror Up, Down, Right or Left. The power mirror switch circuitry controls the battery current and ground feeds to each of the four (two in each mirror head) power mirror motors. The Light-Emitting Diode (LED) in the power mirror switch is connected to battery current through the power window circuit breaker in the IPM on a fused ignition switch output (run-acc) circuit so that the switch directional buttons will be illuminated whenever the ignition switch is in the On or Accessory positions.

DIAGNOSIS AND TESTING

WINDOW/LOCK SWITCH

The Light-Emitting Diode (LED) illumination lamps for all of the Driver Door Module (DDM) power window, power lock, and power mirror switches receive battery current through the power window circuit breaker in the Integrated Power Module (IPM). If all of the LEDs are inoperative in the DDM, be certain to diagnose the power window system before replacing the switch unit. (Refer to 8 - ELECTRICAL/POWER WINDOWS - DIAGNOSIS AND TESTING). If only one LED in the DDM is inoperative, replace the faulty DDM. If the driver side front door power window operates in a normal manner, but the Auto-Down feature is inoperative, replace the faulty DDM. Refer to the appropriate wiring information.

1. Disconnect and isolate the battery negative cable. Remove the DDM from the door trim panel. Disconnect the door wire harness connectors for the DDM from the DDM connector receptacles.

2. Test the DDM switch continuity. See the Driver Door Module Switch Tests chart to determine if the continuity is correct for the suspect switches in each switch position. If not OK, replace the faulty DDM as required.

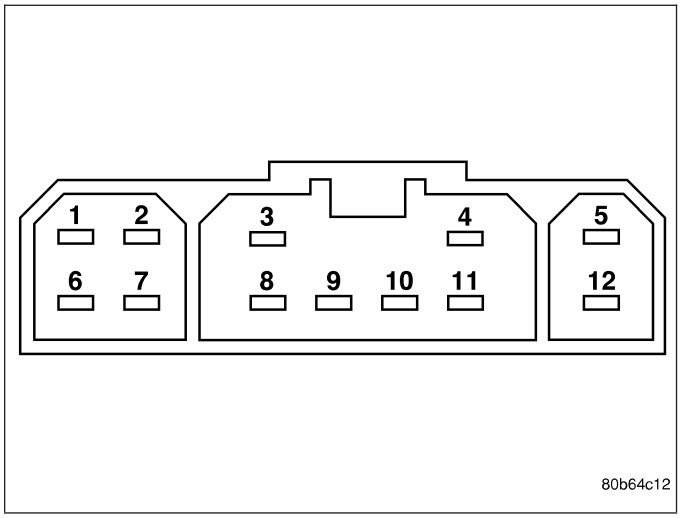

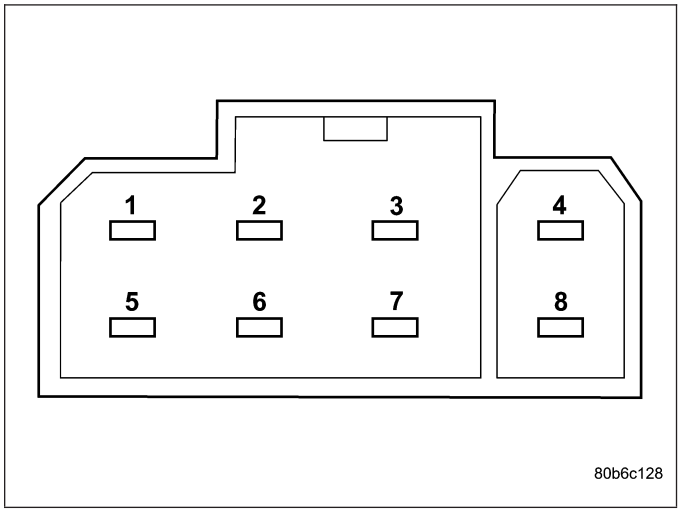

DRIVER DOOR MODULE SWITCH TESTS	
POWER LOCK SWITCH	
SWITCH POSITION	RESISTANCE BETWEEN CONNECTOR C-1 PINS 7 & 11
NEUTRAL	10 KILOHMS ± 1%
LOCK	820 OHMS ± 5%
UNLOCK	330 OHMS ± 5%
POWER MIRROR SWITCH	
SWITCH POSITION	CONTINUITY BETWEEN PINS OF CONNECTOR C-2
LEFT MIRROR SELECTED	
UP	PINS 1 & 3
DOWN	PINS 2 & 3
RIGHT	PINS 2 & 3
LEFT	PINS 3 & 6
RIGHT MIRROR SELECTED	

DRIVER DOOR MODULE SWITCH TESTS	
UP	PINS 3 & 7
DOWN	PINS 2 & 3
RIGHT	PINS 2 & 3
LEFT	PINS 3 & 4
POWER WINDOW SWITCH	
SWITCH POSITION	CONTINUITY BETWEEN PINS OF CONNECTOR C-1
NEUTRAL	PINS 1 & 8, PINS 2 & 8, PINS 3 & 8, PINS 4 & 8, PINS 5 & 8, PINS 6 & 8, PINS 8 & 10, PINS 8 & 12
LEFT FRONT UP	PINS 5 & 9
LEFT FRONT DOWN	PINS 9 & 12
RIGHT FRONT UP	PINS 3 & 9
RIGHT FRONT DOWN	PINS 6 & 9
LEFT REAR UP	PINS 4 & 9
LEFT REAR DOWN	PINS 9 & 10
RIGHT REAR UP	PINS 2 & 9
RIGHT REAR DOWN	PINS 1 & 9
POWER WINDOW LOCKOUT SWITCH	
SWITCH POSITION	CONTINUITY BETWEEN
OFF (SWITCH BUTTON RAISED - NOT DEPRESSED)	PIN 9 OF CONNECTOR C-1 & PIN 8 OF CONNECTOR C-2

REMOVAL

1. Disconnect and isolate the battery negative cable.
2. Remove the door trim panel (Refer to 23 - BODY/DOOR - FRONT/TRIM PANEL - REMOVAL).
3. Remove the switch from the trim panel bezel.

INSTALLATION

1. Install switch to trim panel bezel.
2. Install door trim panel (Refer to 23 - BODY/DOOR - FRONT/TRIM PANEL - INSTALLATION).
3. Connect battery negative cable.

TRANSMITTER-REMOTE KEYLESS ENTRY

DIAGNOSIS AND TESTING

REMOTE KEYLESS ENTRY TRANSMITTER

Using special tool 9001, first test to ensure that the transmitter is functioning. Typical testing distance is 2.5 centimeters (1 inch) for Asian transmitters and 30.5 centimeters (12 inches) for all others. To test, position the transmitter as shown. Press any transmitter button, then test each button individually. The tool will beep if a radio signal strength that lights five or more LED's is detected. Repeat this test three times. If transmitter fails any of the test refer to the Diagnostic Procedures information.

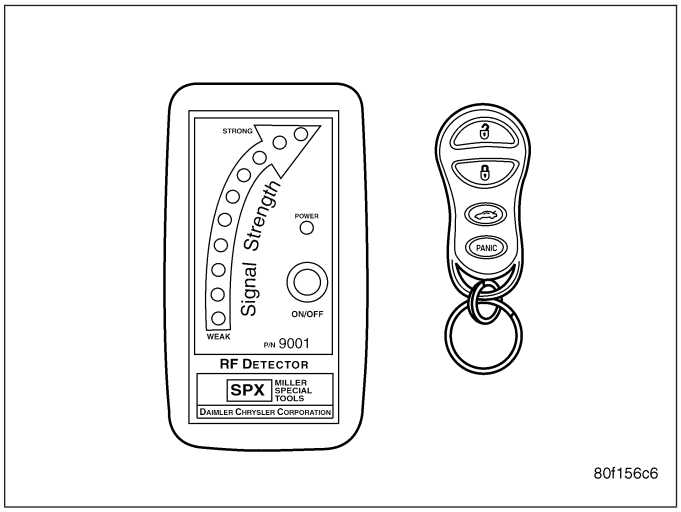

STANDARD PROCEDURE

STANDARD PROCEDURE - RKE TRANSMITTER BATTERIES

NOTE: Do not disturb the metal terminal near the batteries. Avoid touching the new batteries. Skin oils may cause battery deterioration. If batteries are touched, clean with rubbing alcohol.

The Remote Keyless Entry (RKE) transmitter case snaps open and shut for battery access. To replace the RKE transmitter batteries:

1. Using a thin coin, gently pry at the notch in the center seam of the RKE transmitter case halves near the key ring until the two halves unsnap. Be careful not to damage the rubber gasket when separating the case halves.
2. Lift the back half of the transmitter case off of the RKE transmitter.
3. Remove the two batteries from the RKE transmitter.
4. Replace the two batteries with new 3V lithium 2016 cell. Install the batteries with the positive terminal up. Reference the "+ SIDE UP" on the inside of the bottom half of the transmitter case.
5. Align the two RKE transmitter case halves with each other, and squeeze them firmly and evenly together until they snap back into place. Test transmitter operation.

STANDARD PROCEDURE - RKE TRANSMITTER CUSTOMER PREFERENCES

AUTOMATIC (ROLLING) LOCKS

The rolling locks feature can be toggled ON/OFF by using a scan tool only.

HORN CHIRP DISABLING / ENABLING

The horn chirp can be toggled using a scan or by using the Remote Keyless Entry (RKE) transmitter that is already programmed to the vehicle.

To DISABLE (cancel) the horn chirp feature:

1. Enter the vehicle and close all doors.
2. Fasten the seat belt (this will cancel the seat belt chime).
3. Turn the ignition to the ON position.

4. Press and hold the LOCK button for 4 seconds. Within 6 seconds with the LOCK button still depressed, press the UNLOCK button. When a single chime is heard, release both buttons.
5. Turn the ignition OFF.
6. Turn the ignition ON or wait 60 seconds.
7. Test the horn chirp feature by pressing the LOCK button.

If a chime is not heard, program mode was canceled before the feature could be disabled. If necessary, repeat the procedure.

To ENABLE the horn chirp feature, repeat the above procedure.

OPTICAL CHIRP (FLASH) DISABLING / ENABLING

The optical chirp can be toggled using a scan tool or by using the Remote Keyless Entry (RKE) transmitter that is already programmed to the vehicle.

To DISABLE (cancel) the optical chirp feature:

1. Enter the vehicle and close all doors.
2. Fasten the seat belt (this will cancel the seat belt chime).
3. Turn the ignition to the ON position.
4. Press and hold the LOCK button for 4 seconds. Within 6 seconds with the LOCK button still depressed, press the PANIC button. When a single chime is heard, release both buttons.
5. Turn the ignition OFF.
6. Turn the ignition ON or wait 60 seconds.
7. Test the optical chirp feature by pressing the LOCK button.

If a chime is not heard, program mode was canceled before the feature could be disabled. If necessary, repeat the procedure.

To ENABLE the optical chirp feature, repeat the above procedure.

UNLOCK SEQUENCE

The unlock sequence can be toggled using a scan tool or by using the Remote Keyless Entry (RKE) transmitter that is already programmed to the vehicle.

To toggle between Driver door first and Unlock all doors function:

1. Enter the vehicle and close all doors.
2. Fasten the seat belt (this will cancel the seat belt chime).
3. Turn the ignition to the ON position.
4. Press and hold the UNLOCK button for 4 seconds. Within 6 seconds with the UNLOCK button still depressed, press the LOCK button. When a single chime is heard, release both buttons.
5. Turn the ignition OFF.
6. Turn the ignition ON or wait 60 seconds.

If a chime is not heard, program mode was canceled before the feature could be disabled. If necessary, repeat the procedure.

To toggle this feature, repeat the above procedure.

STANDARD PROCEDURE - RKE TRANSMITTER PROGRAMING

New Remote Keyless Entry (RKE) transmitters can be programed using the DRB III® scan tool and the proper Diagnostic Procedures manual. The DRB III® scan tool can provide confirmation that the PCI data bus is functional, and that all of the electronic modules are sending and receiving the proper messages on the PCI data bus.

The following procedure can be used as long as one programmed transmitter is available:

NOTE: When entering program mode using that programmed fob, ALL currently programmed fobs will be erased and they will have to be reprogrammed for the vehicle. If program mode is entered and no action is performed, the previously programmed fobs will continue to function.

1. Enter the vehicle and close all doors.

2. Fasten the seat belt (this will cancel the seat belt chime). Turn the ignition to the RUN position.
3. Press and hold the UNLOCK button on a programmed transmitter for 4 to 10 seconds. Within the 4 to 10 seconds with the UNLOCK button still depressed, press the PANIC button for one second. When a single chime is heard, release both buttons.The chime indicates the system is in program mode.
4. Press and release both the LOCK and UNLOCK buttons simultaneously on a fob to be programmed. A single chime will be heard, this indicates the fob has been recognized.
5. Press and release any button on the same fob. A single chime will be heard, this indicates the fob has been programmed.
6. Repeat steps 4 and 5 for up to a total of 4 fobs.
7. Turn the ignition OFF.
8. Turn the ignition ON or wait 60 seconds.

The vehicle will remain in program mode for up to 60 seconds from when the original chime (step 3) was heard. After 60 seconds, all programmed transmitters will function normally.

SPECIFICATIONS

REMOTE KEYLESS ENTRY TRANSMITTER

RANGE

Normal operation range is up to a distance of 3 to 7 meters (10 to 23 ft.) of the vehicle. Range may be better or worse depending on the environment around the vehicle.

POWER MIRRORS - SERVICE INFORMATION

TABLE OF CONTENTS

page

POWER MIRRORS - SERVICE INFORMATION
DESCRIPTION 86
OPERATION 86
DIAGNOSIS AND TESTING
POWER MIRRORS 86
MIRROR-AUTOMATIC DAY / NIGHT
DESCRIPTION 87
OPERATION 87
DIAGNOSIS AND TESTING
AUTOMATIC DAY / NIGHT MIRROR 88
SWITCH - POWER MIRROR
DIAGNOSIS AND TESTING
POWER MIRROR SWITCH 89
REMOVAL 89

POWER MIRRORS - SERVICE INFORMATION

DESCRIPTION

AUTOMATIC DAY/NIGHT MIRROR

The automatic day/night mirror system is able to automatically change the reflectance of the inside rear view mirror in order to reduce the glare of headlamps approaching the vehicle from the rear. The automatic day/night rear view mirror receives battery current through a fuse in the Integrated Power Module (IPM) only when the ignition switch is in the On position.

OUTSIDE REAR VIEW MIRROR

The power operated outside rear view mirrors allow the driver to adjust both outside mirrors electrically from the driver side front seat position by operating a switch on the driver side front door trim panel. The power mirrors receive a non-switched battery feed through a fuse in the Integrated Power Module (IPM) so that the system will remain operational, regardless of the ignition switch position.

OPERATION

AUTOMATIC DAY/NIGHT MIRROR

A switch located on the bottom of the automatic day/night mirror housing allows the vehicle operator to select whether the automatic dimming feature is operational. When the automatic day/night mirror is turned on, the mirror switch is lighted by an integral Light-Emitting Diode (LED). The mirror will automatically disable its self-dimming feature whenever the vehicle is being driven in reverse.

OUTSIDE REAR VIEW MIRROR

The heated mirrors include an electric heating grid behind the mirror glass in each outside mirror, which can clear the mirror glass of ice, snow, or fog. (Refer to 8 - ELECTRICAL/HEATED MIRRORS - DESCRIPTION) for more information.

DIAGNOSIS AND TESTING

POWER MIRRORS

WIRING VOLTAGE TEST

The following wiring test determines whether or not voltage is continuous through the body harness to switch.

1. Remove the power mirror switch (Refer to 8 - ELECTRICAL/POWER LOCKS/DOOR MODULE - REMOVAL).
2. Disconnect wire harness connector from back of power mirror switch.
3. Connect the clip end of a 12 volt test light to Pin 5 in the mirror switch harness connector. Touch the test light probe to Pin 3.

If the test light illuminates, the wiring circuit between the battery and switch is OK.

If the lamp does not illuminate, first check fuse in the Integrated Power Module (IPM). If fuse is OK, then check for a broken wire.

Refer to the appropriate wiring information.

POWER MIRROR MOTOR TEST

If the power mirror switch is receiving proper current and ground and mirrors do not operate, proceed with power mirror motor test. Refer to the appropriate wiring information.

1. Remove the power mirror switch (Refer to 8 - ELECTRICAL/POWER LOCKS/DOOR MODULE - REMOVAL).
2. Disconnect wire harness connector to power mirror switch.
3. Using two jumper wires:
   - Connect one to a 12 volt source
   - Connect the other to a good body ground
   - Refer to the Mirror Motor Test Chart for proper wire connections at the switch connector

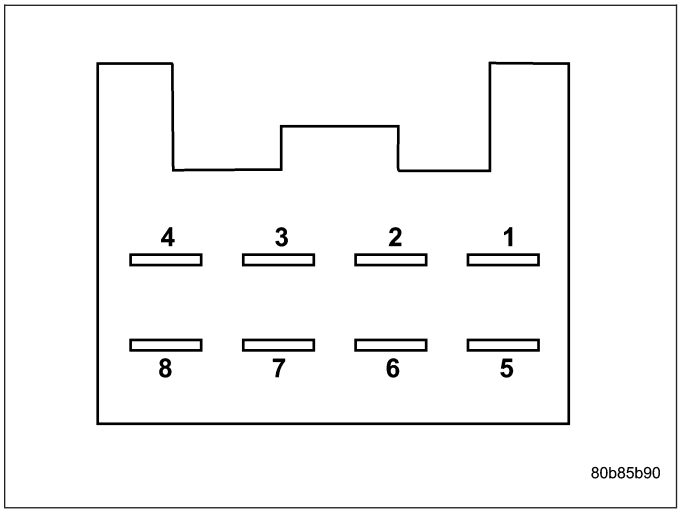

MIRROR MOTOR TEST CHART

12 VOLTS	GROUND	MIRROR REACTION	
SWITCH CONNECTOR		RIGHT	LEFT
PIN 1	PIN 2	-	UP
PIN 6	PIN 2	-	LEFT
PIN 2	PIN 1	-	DOWN
PIN 2	PIN 6	-	RIGHT
PIN 7	PIN 2	UP	-
PIN 4	PIN 2	LEFT	-
PIN 2	PIN 7	DOWN	-
PIN 2	PIN 4	RIGHT	-

4. If results shown in table are not obtained, check for open or shorted circuit. Replace mirror assembly as necessary.

MIRROR-AUTOMATIC DAY / NIGHT

DESCRIPTION

The automatic day/night mirror uses a thin layer of electrochromic material between two pieces of conductive glass to make up the face of the mirror. When the mirror switch is in the On position, two photocell sensors are used by the mirror circuitry to monitor external light levels and adjust the reflectance of the mirror.

OPERATION

The ambient photocell sensor is located on the forward-facing (windshield side) of the rear view mirror housing, and detects the ambient light levels outside of the vehicle. The headlamp photocell sensor is located inside the rear view mirror housing behind the mirror glass and faces rearward, to detect the level of the light being received at the rear window side of the mirror. When the circuitry of the automatic day/night mirror detects that the difference between the two light levels is too great (the light level received at the rear of the mirror is much higher than that at the front of the mirror), it begins to darken the mirror.

The automatic day/night mirror circuitry also monitors the transmission using an input from the backup lamp circuit. The mirror circuitry is programmed to automatically disable its self-dimming feature whenever it senses that the transmission backup lamp circuit is energized.

The automatic day/night mirror is a completely self-contained unit and cannot be repaired. If faulty or damaged, the entire mirror assembly must be replaced.

DIAGNOSIS AND TESTING

AUTOMATIC DAY / NIGHT MIRROR

For complete circuit diagrams, refer to the appropriate wiring information.

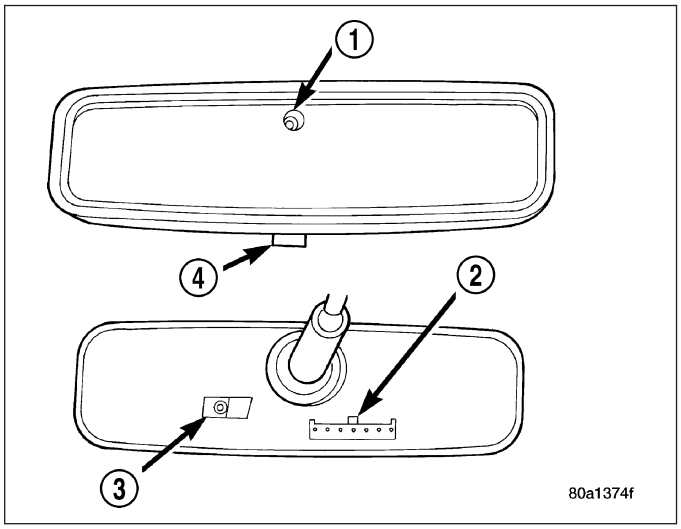

1. Check the fuse in the Integrated Power Module (IPM). If OK, go to Step 2. If not OK, repair the shorted circuit or component as required and replace the faulty fuse.
2. Turn the ignition switch to the On position. Check for battery voltage at the fuse in the IPM. If OK, go to Step 3. If not OK, repair the open circuit to the ignition switch as required.
3. Turn the ignition switch to the Off position. Disconnect and isolate the battery negative cable. Unplug the wire harness connector from the automatic day/night mirror. Connect the battery negative cable. Turn the ignition switch to the On position. Check for battery voltage at the fused ignition switch output (run/start) circuit cavity of the automatic day/night mirror wire harness connector. If OK, go to Step 4. If not OK, repair the open circuit to the IPM as required.
4. Turn the ignition switch to the Off position. Disconnect and isolate the battery negative cable. Check for continuity between the ground circuit cavity of the automatic day/night mirror wire harness connector and a good ground. There should be continuity. If OK, go to Step 5. If not OK, repair the circuit to ground as required.
5. Connect the battery negative cable. Turn the ignition switch to the On position. Set the parking brake. Place the transmission gear selector lever in the Reverse position. Check for battery voltage at the backup lamp switch output circuit cavity of the automatic day/night mirror wire harness connector. If OK, go to Step 6. If not OK, repair the open circuit as required.
6. Turn the ignition switch to the Off position. Disconnect the battery negative cable. Plug in the automatic day/night mirror wire harness connector. Connect the battery negative cable. Turn the ignition switch to the On position. Place the transmission gear selector lever in the Neutral position. Place the mirror switch in the On (the LED in the mirror switch is lighted) position. Cover the forward facing ambient photocell sensor to keep out any ambient light.

NOTE: The ambient photocell sensor must be covered completely, so that no light reaches the sensor. Use a finger pressed tightly against the sensor, or cover the sensor completely with electrical tape.

7. Shine a light into the rearward facing headlamp photocell sensor. The mirror glass should darken. If OK, go to Step 8. If not OK, replace the faulty automatic day/night mirror unit.
8. With the mirror glass darkened, place the transmission gear selector lever in the Reverse position. The mirror should return to its normal reflectance. If not OK, replace the faulty automatic day/night mirror unit.

SWITCH - POWER MIRROR

DIAGNOSIS AND TESTING

POWER MIRROR SWITCH

The power mirror switch is included with the window/lock switch. (Refer to 8 - ELECTRICAL/POWER LOCKS/DOOR MODULE - DIAGNOSIS AND TESTING).

REMOVAL

The power mirror switch is included with the window/lock switch. (Refer to 8 - ELECTRICAL/POWER LOCKS/DOOR MODULE - REMOVAL).

POWER SEATS - SERVICE INFORMATION

TABLE OF CONTENTS

page

POWER SEATS - SERVICE INFORMATION
DESCRIPTION 90
OPERATION 90
DIAGNOSIS AND TESTING
POWER SEAT SYSTEM 90
POWER SEAT TRACK
DESCRIPTION 91
OPERATION 91
DIAGNOSIS AND TESTING
POWER SEAT TRACK 92
REMOVAL 92
INSTALLATION 92
SWITCH-POWER SEAT
DESCRIPTION 93
OPERATION 93
DIAGNOSIS AND TESTING
POWER SEAT SWITCH 94
REMOVAL 95
INSTALLATION 95

POWER SEATS - SERVICE INFORMATION

DESCRIPTION

The power seat system allows the driver and front seat passenger to electrically adjust their seating positions using the power seat switches located on the outboard seat cushion side shield of each front seat. The power seat system allows the seating position to be adjusted forward, rearward, front up, front down, rear up, or rear down. The power seat system receives battery current through a fuse in the Integrated Power Module, regardless of the ignition switch position. The power seat system includes the following components:

- Driver Power Seat Switch
- Passenger Power Seat Switch
- Driver Power Seat Track
- Passenger Power Seat Track

Some models equipped with the power seat option also feature a manually operated lumbar support in the seat back. The lumbar support allows the user to adjust lower seat back pressure to achieve optimum comfort and support in the lower lumbar region of the spinal column. The lumbar support is controlled by a knob on the outboard side of the seat back assembly.

OPERATION

The power seat system receives battery current through a 50 amp fuse in the Power Distribution Center (PDC) so that the power seats remain operational, regardless of the ignition switch position.

When a power seat switch is actuated, a battery feed and a ground path are applied through the power seat switch contacts to the appropriate motor or motors. The motor and drive unit operate to move the seat in the selected direction until the switch is released, or until the travel limit of the power seat track is reached. When the switch is moved in the opposite direction, the battery feed and ground path to the motor is reversed through the switch contacts. This causes the motor to run in the opposite direction.

DIAGNOSIS AND TESTING

POWER SEAT SYSTEM

Before any testing of the power seat system is attempted, the battery should be fully-charged and all wire harness connections and pins checked to ensure proper continuity and grounds. Also ensure that the seat being diagnosed is not jammed by foreign material. With the dome lamp on, apply the power seat switch in the direction of the concern. If the dome lamp dims, the seat may be jamming. Check under and behind the seat for binding or obstructions. If the dome lamp does not dim, proceed with testing of the individual components and circuits.

For complete circuit diagrams, refer to the appropriate wiring information. The wiring information includes wiring diagrams, proper wire and connector repair procedures, details of wire harness routing and retention, connector pin-out information and location views for the various wire harness connectors, splices and grounds.

Operate the power seat switch and move the seat in all directions. The seat should move in each of the selected directions.

If the power seat adjuster fails to operate in more than one direction, proceed as follows:

1. Inspect the power seat adjuster motors to ensure the electrical connectors are fully seated to the motors. If OK, go to Step 2. If not OK, connect the electrical connector to the fully seated position.
2. Check the power seat fuse in the integrated power module. If OK, go to Step 3. If not OK, repair the circuit as necessary and replace the inoperative fuse.
3. Remove the power seat switch from the seat cushion side panel. Check for battery voltage at the fused B(+) circuit cavity of the power seat switch wire harness connector. If OK, go to Step 4. If not OK, repair the open circuit to the integrated power module as required.
4. Check for continuity between the ground circuit cavity of the power seat switch wire harness connector and a good ground. There should be continuity. If OK, go to Step 5. If not OK, repair the open circuit to ground as required.
5. (Refer to 8 - ELECTRICAL/POWER SEATS/SEAT SWITCH - DIAGNOSIS AND TESTING). If the switch tests OK, check the wire harness between the power seat switch and the motor. If the circuits check OK, replace the inoperative power seat adjuster assembly. If the circuits are not OK, repair the wire harness as required.

POWER SEAT TRACK

DESCRIPTION

The eight-way power seat option includes a power seat track assembly (1) located under each front seat. The power seat track assembly replaces the standard manually operated seat tracks. The lower half of the power seat track is secured at the front with two bolts to the floor panel seat cross member, and at the rear with two bolts to the floor panel. Four nuts secure the bottom of the seat cushion frame to the upper half of the power seat track unit.

The power seat track assembly cannot be repaired, and is serviced only as a complete assembly. If any component in this assembly is inoperative or damaged, the entire power seat track must be replaced.

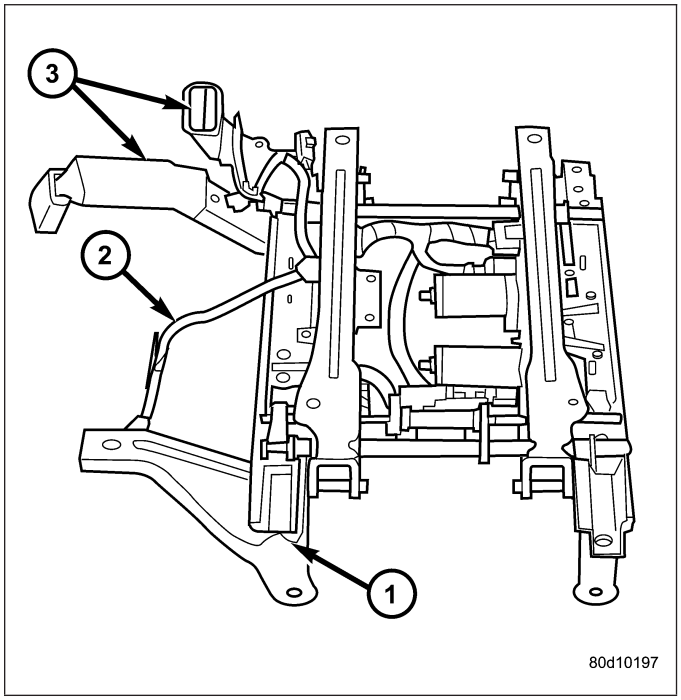

OPERATION

The power seat track unit includes three reversible electric motors that are secured to the upper half of the track unit. Each motor moves the seat adjuster through a combination of worm-drive gearboxes and screw-type drive units.

The front and rear of the seat are operated by two separate vertical adjustment motors. These motors can be operated independently of each other, tilting the entire seat assembly forward or rearward; or, they can be operated in unison by selecting the proper power seat switch functions, which will raise or lower the entire seat assembly. The third motor is the horizontal adjustment motor, which moves the seat track in the forward and rearward directions.

DIAGNOSIS AND TESTING

POWER SEAT TRACK

For complete circuit diagrams, refer to the appropriate wiring information. The wiring information includes wiring diagrams, proper wire and connector repair procedures, details of wire harness routing and retention, connector pin-out information and location views for the various wire harness connectors, splices and grounds.

Operate the power seat switch to move all three seat motors in each direction. The seat should move in each of the selected directions. If the power seat track fails to operate in only one direction, move the seat track a short distance in the opposite direction and test again to be certain that the track is not at its travel limit. If the power seat track still fails to operate in only one direction, (Refer to 8 - ELECTRICAL/POWER SEATS/DRIVER SEAT SWITCH - DIAGNOSIS AND TESTING) for power seat switch diagnosis. If the power seat track fails to operate in more than one direction, proceed as follows:

1. Check the power seat fuse in the integrated power module. If OK, go to Step 2. If not OK, repair the circuit as necessary and replace the inoperative fuse.
2. Remove the power seat switch from the seat. Check for battery voltage at the fused B(+) circuit cavity of the power seat switch wire harness connector. If OK, go to Step 3. If not OK, repair the open circuit to the integrated power module as required.
3. Check for continuity between the ground circuit cavity of the power seat switch wire harness connector and a good ground. There should be continuity. If OK, go to Step 4. If not OK, repair the open circuit to ground as required.
4. Test the power seat switch, (Refer to 8 - ELECTRICAL/POWER SEATS/DRIVER SEAT SWITCH - DIAGNOSIS AND TESTING). If the switch tests OK, check the wire harness between the power seat switch and the motor for shorts or opens. If the circuits check OK, replace the inoperative power seat track (adjuster) assembly. If the circuits are not OK, repair the wire harness as required.

REMOVAL

1. Remove the appropriate seat from the vehicle. (Refer to 23 - BODY/SEATS/SEAT - REMOVAL).
2. Remove the power seat switch from the seat. (Refer to 8 - ELECTRICAL/POWER SEATS/DRIVER SEAT SWITCH - REMOVAL).
3. Remove four seat track mounting nuts from cushion pan.
4. Disconnect the power seat electrical connectors and remove the seat track from the seat cushion.
5. Remove the necessary components that must be transferred to the replacement seat track (seat belt buckles, wire harness, etc.).

INSTALLATION

1. Install the necessary components that must be transferred to the replacement seat track (seat belt buckles, wire harness, etc.).
2. Position the seat track and install the retaining nuts on the seat cushion pan studs. Torque the bolts to 25 N·m.
3. Route and connect the power seat electrical connectors on the seat track and cushion pan.
4. Install the power seat switch on the seat. (Refer to 8 - ELECTRICAL/POWER SEATS/DRIVER SEAT SWITCH - INSTALLATION).
5. Install the seat in the vehicle (Refer to 23 - BODY/SEATS/SEAT - INSTALLATION).
6. Connect the battery negative cable.

SWITCH-POWER SEAT

DESCRIPTION

The power seats on this vehicle can be adjusted in eight different directions, up, down, front up, front down, rear up, rear down, rearward and forward. The power seat switch is located on the outboard side of the seat cushion on the seat cushion side shield.

The individual switches in the power seat switch assembly cannot be repaired. If one switch is damaged or inoperative, the entire power seat switch assembly must be replaced.

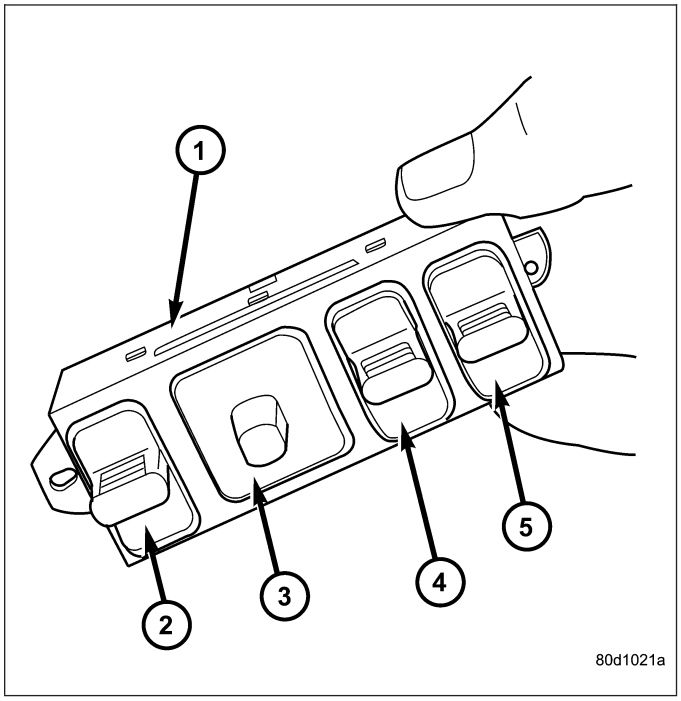

OPERATION

When a power switch control knob or knobs are actuated, a battery feed and a ground path are applied through the switch contacts to the power seat track adjuster motor. The selected adjuster motor operates to move the seat track or recliner through its drive unit in the selected direction until the switch is released, or until the travel limit of the adjuster is reached. When the switch is moved in the opposite direction, the battery feed and ground path to the motor are reversed through the switch contacts. This causes the adjuster motor to run in the opposite direction.

No power seat switch should be held applied in any direction after the adjuster has reached its travel limit. The power seat adjuster motors each contain a self-resetting circuit breaker to protect them from overload. However, consecutive or frequent resetting of the circuit breaker must not be allowed to continue, or the motor may be damaged.

DIAGNOSIS AND TESTING

POWER SEAT SWITCH

For complete circuit diagrams, refer to the appropriate wiring information. The wiring information includes wiring diagrams, proper wire and connector repair procedures, details of wire harness routing and retention, connector pin-out information and location views for the various wire harness connectors, splices and grounds.

1. Disconnect and isolate the battery negative cable.
2. Remove the power seat switch from the power seat.
3. Using an ohmmeter to test the continuity of the power seat switches in each position. Refer to the POWER SEAT SWITCH TEST TABLE. If OK, (Refer to 8 - ELECTRICAL/POWER SEATS/ POWER SEAT TRACK - DIAGNOSIS AND TESTING). If not OK, replace the inoperative power seat switch.

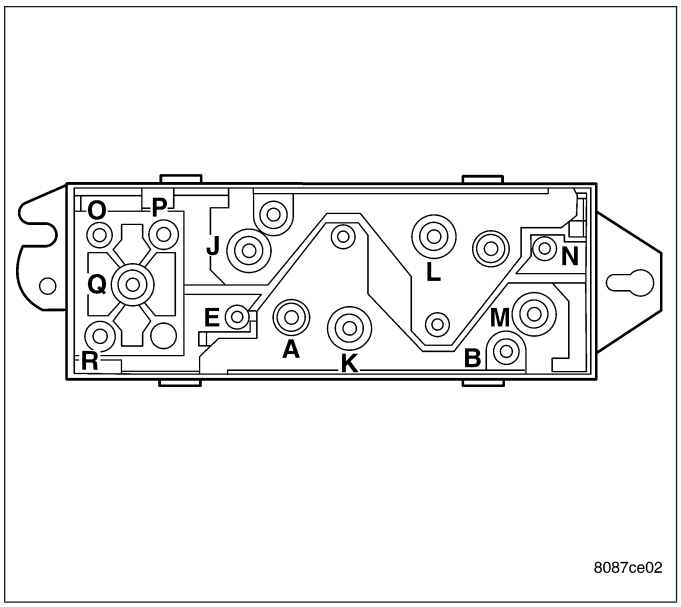

POWER SEAT SWITCH TEST TABLE	
SWITCH POSITION	CONTINUITY BETWEEN
OFF	B-N, B-J, B-M B-E, B-L, B-K
VERTICAL UP (PASSENGER SEAT)	A-J, A-N, B-M, B-E
VERTICAL DOWN(PASSENGER SEAT)	A-E, A-M, B-N, B-E
VERTICAL UP (DRIVER SEAT)	A-E, A-M, B-N, B-J
VERTICAL DOWN (DRIVER SEAT)	A-J, A-N, B-M, B-E
HORIZONTAL FORWARD	A-L, B-K
HORIZONTAL REARWARD	A-K, B-L
FRONT TILT UP	A-M, B-N
FRONT TILT DOWN	A-N, B-M
REAR TILT UP	A-E, B-J
REAR TILT DOWN	A-J, B-E

REMOVAL

1. Disconnect and isolate the battery negative cable.
2. Remove the seat cushion side shield from the seat.
3. Pull the switch bezel or side shield unit (1) out from the seat far enough to access the switch wire harness connector. Gently pry the locking tabs of the switch away from the wire harness connector and carefully unplug the connector from the power seat switch module (2).
4. Remove the screws (3) that secure the power seat switch (2) to the side shield unit (1).

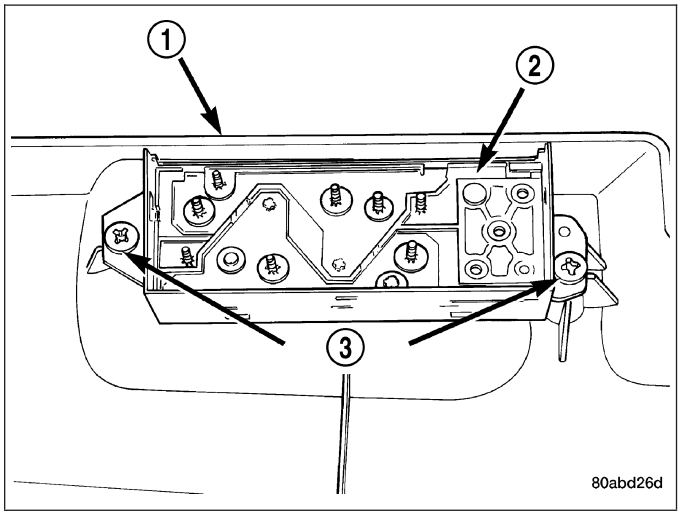

INSTALLATION

1. Position the power seat switch (2) on the seat cushion side shield (1) and install the screws (3).
2. Connect the electrical connector.
3. Install the seat cushion side shield on the seat.
4. Connect the battery negative cable.

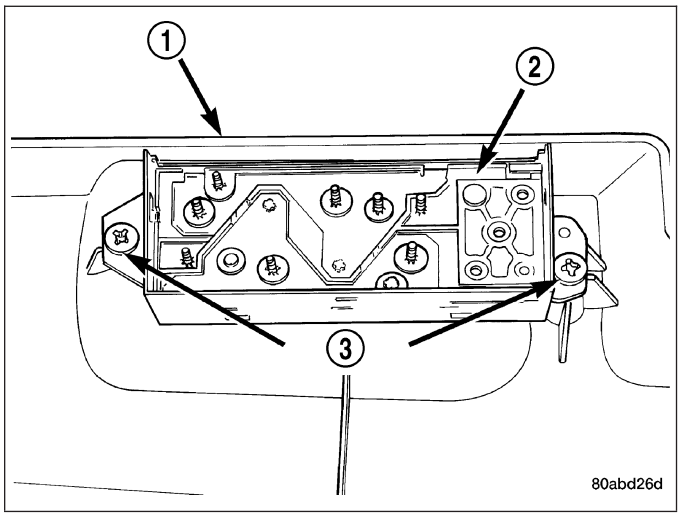

POWER TOP - SUNROOF - SERVICE INFORMATION

TABLE OF CONTENTS

page

POWER TOP - SUNROOF - SERVICE INFORMATION
DESCRIPTION 97
OPERATION 98
DIAGNOSIS AND TESTING
POWER TOP - SUNROOF 98
MOTOR-SUNROOF
DIAGNOSIS AND TESTING
MOTOR/MODULE - SUNROOF 100
STANDARD PROCEDURE
SUNROOF POSITION CALIBRATION 101

page

EXCESSIVE FORCE LIMITATION (EFL) CALIBRATION 101
REMOVAL 102
INSTALLATION 102
SWITCH - SUNROOF
DESCRIPTION 103
OPERATION 103
DIAGNOSIS AND TESTING
SWITCH - POWER SUNROOF 103

POWER TOP - SUNROOF - SERVICE INFORMATION

DESCRIPTION

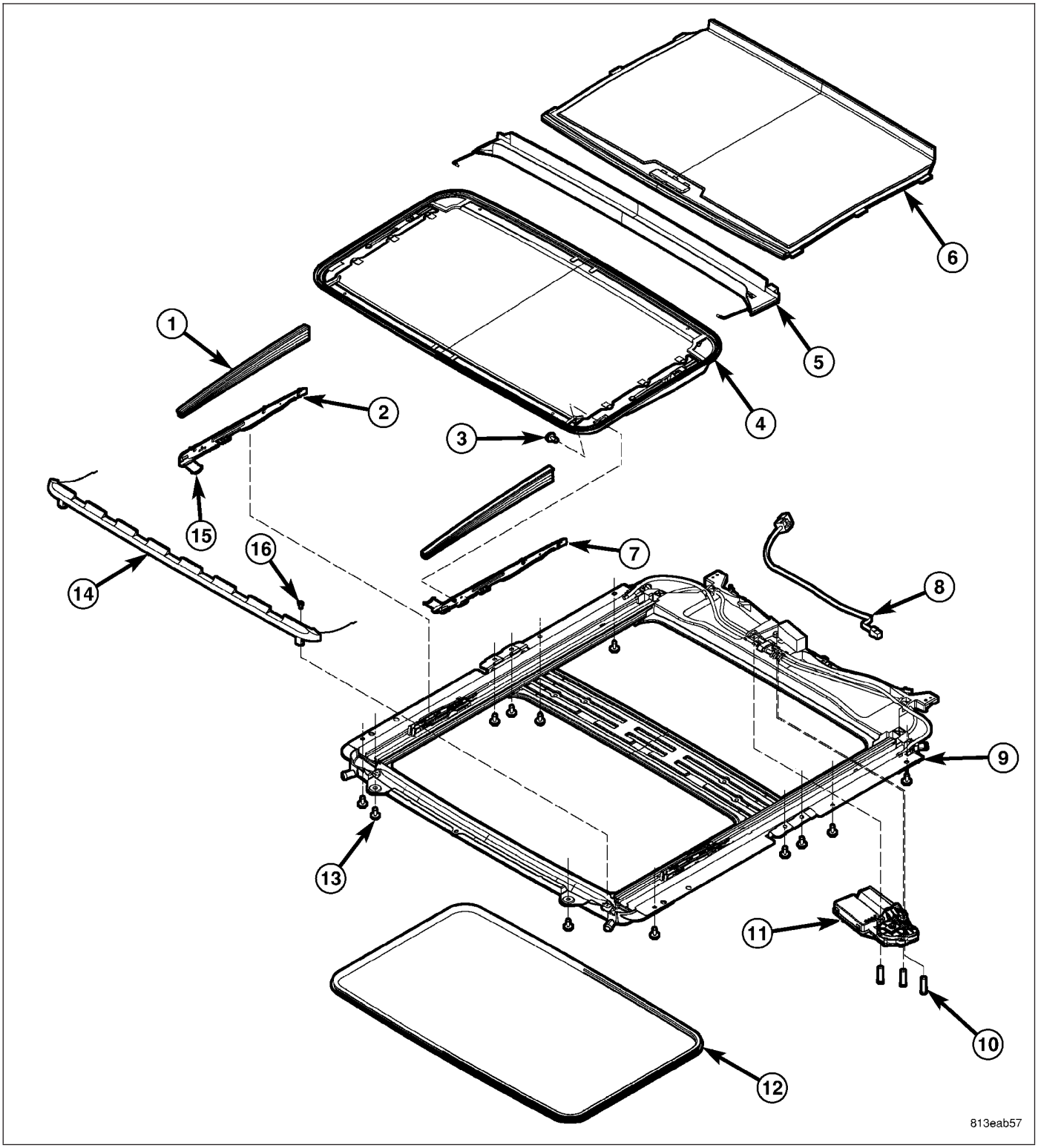

The power sunroof system allows the sunroof to be opened, closed or placed in the vent position electrically by actuating a switch in the overhead console. The sunroof system receives battery feed through a fuse in the Power Distribution Center (PDC). The sunroof will operate normally with the key in any position while the Accessory Delay system is active.

The sunroof glass panel tilts upward at the rear for ventilation and slides rearward under the roof when open. The panel seals flush with the roof in the closed position to eliminate wind noise. The sunroof includes a manual-sliding sunshade to cover the deep-tinted glass panel.

In addition to the standard power sunroof operation, this vehicle offers several additional features. There is an express (one-touch) opening and closing feature as well as Excessive Force Limitation (EFL). The EFL function detects obstacles trapped between the glass and the vehicle roof during a closing motion. Upon sensing an obstacle the EFL function will reverse direction of the glass to allow removal of the obstacle.

The main components of the power sunroof system are:

- The motor/module assembly
- The power sunroof glass and frame assembly
- The power sunroof switch
- The manual-sliding sunshade

OPERATION

This vehicle has a vent, tilt and slide power sunroof system with express (one-touch) open and closing feature. The sunroof system receives constant battery feed through a fuse in the Power Distribution Center (PDC). The sunroof will operate normally with the key in any position while the Accessory Delay system is active. If the sunroof is moving when the key is turned to the START position (crank engine), all motions stop until the key is released, then the previously requested sunroof motion will resume. The sunroof will also complete a requested motion if the Accessory Delay system goes inactive while the motion is in progress.

A combination push-button and rocker switch module mounted in the overhead console controls sunroof operation. The sunroof switch is a rocker design with a push button in the center of the two halves of the rocker. Pressing the rocker towards the front of the car commands the sunroof closed. Pressing the rocker towards the rear of the car commands the sunroof open. Pressing the center push button commands the sunroof up into the vent position (Rear of sunroof glass raises above the vehicle roof with glass still covering the sunroof opening). All switch commands operate with the glass starting in any position. (Refer to 8 - ELECTRICAL/POWER TOP/SWITCH - OPERATION) for additional information.

An electronic control system, integral to the motor/module assembly, provides the express open and close functions. Pressing the ″open″ or ″close″ end of the rocker switch moves the sunroof glass panel to the full open or full closed position, respectively. During express closing, anytime an obstacle is detected in the way of the glass, the motor will stop and reverse travel to avoid pinching an occupant's finger, ice in the track, etc. This function is called Excessive Force Limitation (EFL). There are two methods of overriding the EFL function.

1. When three EFL events occur without the glass being allowed to fully close, the next close attempt will only move while the close switch is continuously actuated. This allows the sunroof to be forced closed if multiple close attempts fail.
2. If the sunroof close switch is continuously actuated during an EFL event, through the reversal, and during a two second wait time, then continuing to hold the close switch will cause the roof to move towards close with the EFL protection disabled. This allows the sunroof to be forced closed if it is known that a reversal will occur.

While in EFL override, the closing motion will cease if the sunroof switch is released at any time.

The motor/module is programmed to learn the speed required to drive the panel based on position and recalibrates itself as needed. If the sunroof becomes uncalibrated, it will only respond to the vent switch. If the vent switch is pressed, the glass will move toward vent; if the switch is released, all motion stops. In the event that the sunroof system becomes uncalibrated perform the sunroof position calibration procedure, (Refer to 8 - ELECTRICAL/POWER TOP/MOTOR - STANDARD PROCEDURE -SUNROOF POSITION CALIBRATION).

DIAGNOSIS AND TESTING

POWER TOP - SUNROOF

NOTE: If there is no sunroof movement when the "OPEN" or "CLOSED" button are pushed but the sunroof operates when the "VENT" button is pushed and held the sunroof motor/module is out of calibration. Complete the sunroof position calibration procedure prior to performing any sunroof diagnostics, (Refer to 8 - ELECTRICAL/POWER TOP/MOTOR - STANDARD PROCEDURE - SUNROOF POSITION CALIBRATION).

Refer to SUNROOF DIAGNOSIS CHART for possible causes. Before beginning sunroof diagnostics verify that all other power accessories are in proper operating condition. If not, a common electrical problem may exist.

Check the condition of the circuit protection and inspect all wiring connector pins for proper engagement and continuity. For complete circuit diagrams, refer to the appropriate wiring information. The wiring information includes wiring diagrams, proper wire and connector repair procedures, details of wire harness routing and retention, connector pin-out information and location views for the various wire harness connectors, splices and grounds.

SUNROOF DIAGNOSIS CHART

SYMPTOM	POSSIBLE CAUSE	CORRECTION
Sunroof completely inoperative.	Inoperative control switch.	Perform sunroof switch diagnostics, (Refer to 8 - ELECTRICAL/POWER TOP/SWITCH - DIAGNOSIS AND TESTING).
	Inoperative circuit ground between sunroof motor/module and body harness.	Inspect ground connections and wiring. Repair as necessary.
	Inoperative power circuit between sunroof motor/module, control switch, and body harness.	Check the condition of the circuit protection and inspect all wiring. Repair as necessary.
	Inoperative sunroof motor/module.	Replace the sunroof motor/module, (Refer to 8 - ELECTRICAL/POWER TOP/MOTOR - REMOVAL).
Audible whine when switch is depressed, sunroof does not operate.	Inoperative sunroof motor/module.	Replace the sunroof motor/module, (Refer to 8 - ELECTRICAL/POWER TOP/MOTOR - REMOVAL).
	Binding cable.	Repair or replace binding cable as necessary.
Audible clicking or ratcheting when switch is pressed, sunroof does not operate.	Broken or worn drive cable.	Repair or replace binding cable as necessary.
	Worn drive motor gear.	Replace the sunroof motor/module, (Refer to 8 - ELECTRICAL/POWER TOP/MOTOR - REMOVAL).
	Sunroof glass panel out of adjustment.	Perform sunroof glass panel adjustment procedure, (Refer to 23 - BODY/SUNROOF/GLASS PANEL - ADJUSTMENTS).
Sunroof vents and opens, but does not close.	Broken or disengaged trough guide.	Repair trough guide as necessary.
	Binding cable.	Repair or replace binding cable as necessary.
	Inoperative sunroof ″CLOSE″ circuit.	Check the condition of the circuit, connections and wiring. Repair as necessary.
	Inoperative control switch.	Perform sunroof switch diagnostics, (Refer to 8 - ELECTRICAL/POWER TOP/SWITCH - DIAGNOSIS AND TESTING).
	Inoperative sunroof motor/module.	Replace the sunroof motor/module, (Refer to 8 - ELECTRICAL/POWER TOP/MOTOR - REMOVAL).

SYMPTOM	POSSIBLE CAUSE	CORRECTION
Sunroof vents, but does not open.	Binding cable or mechanism.	Repair or replace binding cable as necessary.
	Inoperative sunroof ″OPEN″ circuit.	Check the condition of the circuit, connections and wiring. Repair as necessary.
	Inoperative control switch.	Perform sunroof switch diagnostics, (Refer to 8 - ELECTRICAL/POWER TOP/SWITCH - DIAGNOSIS AND TESTING).
	Inoperative sunroof motor/module.	Replace the sunroof motor/module, (Refer to 8 - ELECTRICAL/POWER TOP/MOTOR - REMOVAL).
Sunroof does not vent	Binding cable or mechanism.	Repair or replace binding cable as necessary.
	Inoperative sunroof ″VENT″ circuit.	Check the condition of the circuit, connections and wiring. Repair as necessary.
	Inoperative control switch.	Perform sunroof switch diagnostics, (Refer to 8 - ELECTRICAL/POWER TOP/SWITCH - DIAGNOSIS AND TESTING).
	Inoperative sunroof motor/module.	Replace the sunroof motor/module, (Refer to 8 - ELECTRICAL/POWER TOP/MOTOR - REMOVAL).
Glass movement not consistent or glass does not operate smoothly	Sunroof glass panel out of adjustment.	Perform sunroof glass panel adjustment procedure, (Refer to 23 - BODY/SUNROOF/GLASS PANEL - ADJUSTMENTS).

MOTOR-SUNROOF

DIAGNOSIS AND TESTING

MOTOR/MODULE - SUNROOF

NOTE: If there is no sunroof movement when the “OPEN” or “CLOSED” button are pushed but the sunroof operates when the “VENT” button is pushed and held the sunroof motor/module is out of calibration. Complete the sunroof position calibration procedure prior to performing any sunroof diagnostics, (Refer to 8 - ELECTRICAL/POWER TOP/MOTOR - STANDARD PROCEDURE - SUNROOF POSITION CALIBRATION).

The wire harness connectors for the sunroof motor/module are located above the vehicle headliner. Removal of the headliner may be necessary for access to the connector and proper diagnosis of the motor/module, (Refer to 23 - BODY/INTERIOR/HEADLINER - REMOVAL). **For complete circuit diagrams, refer to the appropriate wiring information.** The wiring information includes wiring diagrams, proper wire and connector repair procedures, details of wire harness routing and retention, connector pin-out information and location views for the various wire harness connectors, splices and grounds.

1. Verify that all other power accessories are in proper operating condition. If not, a common electrical problem may exist.
2. Disconnect the sunroof motor/module. Connect a test light between the harness connector pin 6 and a known good ground. The test light should illuminate brightly. If OK, go to Step 3. If not OK repair the ground circuit as necessary.
3. Connect a test light between the harness connector pin 8 and a known good ground. The test light should illuminate brightly. If OK, go to Step 4. If not OK repair the B+ circuit as necessary.

4. Turn the ignition key to the “RUN” position. Connect a test light between the harness connector pin 9 and a known good ground. The test light should illuminate brightly. If OK, go to Step 5. If not OK repair the Accessory Delay circuit as necessary.
5. Using an ohmmeter check the sunroof switch feed circuit for continuity between the sunroof motor/module and sunroof switch. Continuity should be present. If OK replace the inoperative motor/module, (Refer to 8 - ELECTRICAL/POWER TOP/MOTOR - REMOVAL). If not OK repair the sunroof switch feed circuit as necessary.

STANDARD PROCEDURE

SUNROOF POSITION CALIBRATION

Press the power sunroof switch (Open, Closed, and Vent). If no movement occurs when either the open switch or closed switch is pressed, but the system does move when the vent button is pressed and held, the system is not calibrated. Perform the following procedure to position calibrate the power sunroof system.

1. Turn the ignition to the RUN position.
2. Press the vent button on the power sunroof switch and hold until the sunroof glass panel has moved to the full vent position and the motor movement has stopped for at least 1 second.
3. Press the close switch on the power sunroof switch and hold for a moment (at least 100ms) and release. The sunroof glass panel should continue travel to the full close position. If the sunroof glass panel does not return to the full close position, refer to the appropriate diagnostic information for full system diagnosis.
4. Verify proper system operation.

EXCESSIVE FORCE LIMITATION (EFL) CALIBRATION

NOTE: Verify the battery is in good condition prior to performing this procedure. Do not leave the vehicle on a battery charger while performing this procedure. If the voltage at the sunroof motor/module drops below 11 volts or exceeds 15 volts at anytime while this procedure is being performed, the Excessive Force Limitation (EFL) function will not be properly calibrated.

1. Turn the ignition to the RUN position.
2. Press the vent button on the power sunroof switch and hold until the sunroof glass panel has moved to the full vent position and the motor movement has stopped for at least 1 second.
3. Press the close position on the power sunroof switch and release. The sunroof glass panel should continue travel to the full closed position. **This will be considered the first sunroof closed position in a series of four sunroof closes.**
4. Press the vent button on the power sunroof switch and release. The sunroof glass panel should move to the full vent position. After the sunroof motor/module has stopped, press the close position on the power sunroof switch and release. The sunroof glass panel should continue travel to the full closed position. **This will be considered the second sunroof closed position in a series of four sunroof closes.**
5. Continue to move the sunroof glass to the “vent” then “closed” positions two more times so that the sunroof glass has moved to the closed position a total of four times starting with the first sunroof close in step 3.
6. Press the open position on the power sunroof switch and release. The sunroof glass panel should continue travel to the full open position.
7. Press the close position on the power sunroof switch and release. The sunroof glass panel should continue travel to the full closed position. **This will be considered the first sunroof closed position in a series of five sunroof closes.**
8. Press the open position on the power sunroof switch and release. The sunroof glass panel should move to the full open position. After the sunroof motor/module has stopped, press the close position on the power sunroof switch and release. The sunroof glass panel should continue travel to the full closed position. **Continue to move the sunroof glass to the “open” then “closed” position four more times so that the sunroof glass has moved to the closed position a total of five times starting with the first sunroof close in step 7.**

Verify proper EFL calibration by placing a standard pencil at the front of the sunroof and then moving the sunroof to the full closed position. The sunroof should reverse direction upon contact without damage to the pencil.

REMOVAL

WARNING: The Excessive Force Limitation (EFL) feature must be calibrated any time a sunroof motor/module is replaced with a new component. Failure to perform this procedure could result in vehicle damage and/or personal injury. (Refer to 8 - ELECTRICAL/POWER TOP/MOTOR - STANDARD PROCEDURE - EXCESSIVE FORCE LIMITATION (EFL) CALIBRATION) for the appropriate procedure.

1. Disconnect the battery negative cable.
2. Remove the vehicle headliner, (Refer to 23 - BODY/INTERIOR/HEADLINER - REMOVAL).
3. Remove the power sunroof motor/module electrical connector (2).
4. Remove the retaining screws (3) and remove the motor/module (1) from the vehicle.

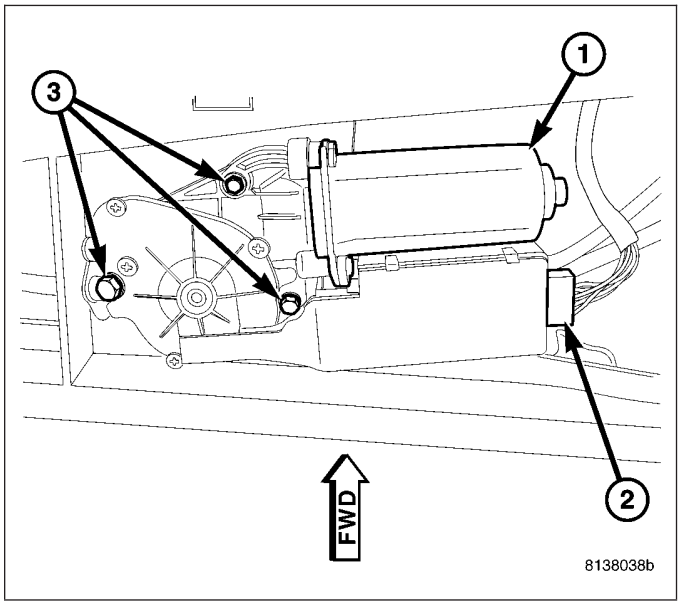

INSTALLATION

WARNING: The Excessive Force Limitation (EFL) feature must be calibrated any time a sunroof motor/module is replaced with a new component. Failure to perform this procedure could result in vehicle damage and/or personal injury. (Refer to 8 - ELECTRICAL/POWER TOP/MOTOR - STANDARD PROCEDURE - EXCESSIVE FORCE LIMITATION (EFL) CALIBRATION) for the appropriate procedure.

1. Position the power sunroof motor/module (1) in the vehicle.
2. Install the motor/module retaining screws (3). Tighten the screws to 4 N·m (35 in. lbs.).
3. Connect the motor/module electrical connector (2).
4. Connect the battery negative cable and move the sunroof through one open and close cycle to confirm proper system operation.
5. Install the vehicle headliner, (Refer to 23 - BODY/INTERIOR/HEADLINER - INSTALLATION).
6. Perform the sunroof position calibration, (Refer to 8 - ELECTRICAL/POWER TOP/MOTOR - STANDARD PROCEDURE - SUNROOF POSITION CALIBRATION).
7. Perform the Excessive Force Limitation (EFL) calibration, (Refer to 8 - ELECTRICAL/POWER TOP/MOTOR - STANDARD PROCEDURE - EXCESSIVE FORCE LIMITATION (EFL) CALIBRATION).

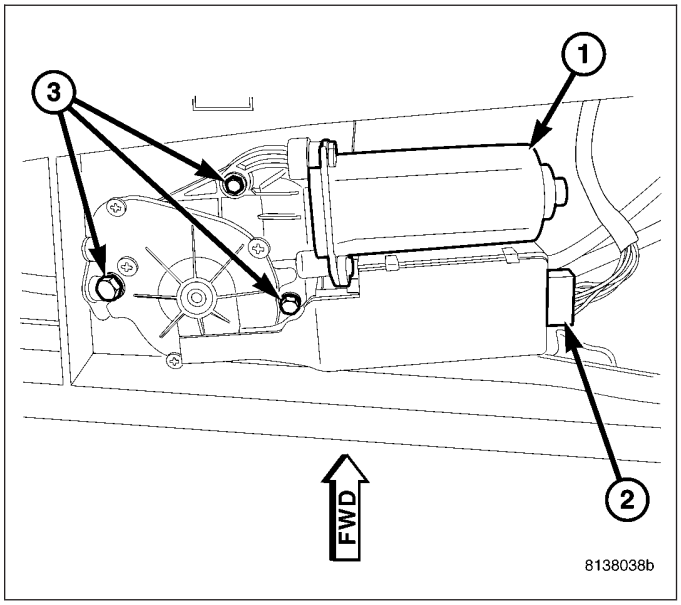

8. Verify proper operation of the power sunroof system.

SWITCH - SUNROOF

DESCRIPTION

The power sunroof switch (3) is a combination push-button and rocker switch module mounted in the overhead console. The sunroof switch is a direct contact unit that is directly wired to the sunroof motor/module assembly. The sunroof switch performs the following functions:

- Power sunroof open (back of switch pushed)
- Power sunroof closed (front of switch pushed)
- Power sunroof vent (switch center button pushed)

The power sunroof switch is part of the overhead console assembly and cannot be replaced separately. If the switch is damaged or inoperative the overhead console must be replaced, (Refer to 8 - ELECTRICAL/OVERHEAD CONSOLE - REMOVAL).

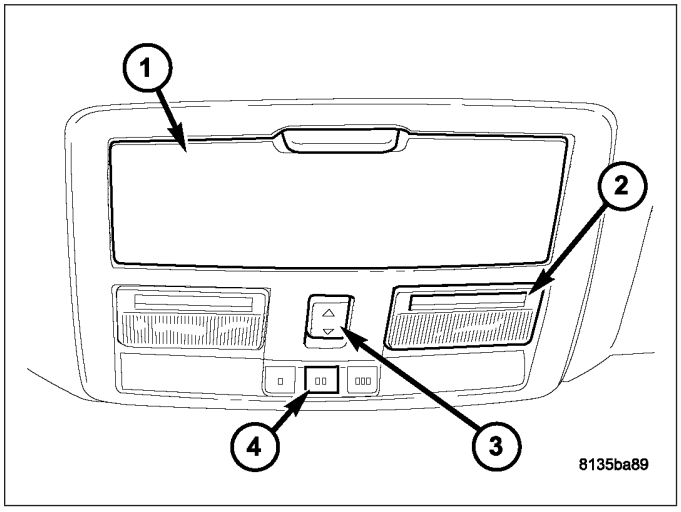

OPERATION

The power sunroof switch is hard wired to the sunroof motor/module assembly. The switch receives battery current from the motor/module when the ignition switch is in the RUN and ACCESSORY positions or the vehicle Accessory Delay System is active. When one of the switch positions is pressed it sends battery current back to the motor/module, signaling it to move the power sunroof to the appropriate position. The motor/module will perform one of the following functions:

- Power sunroof open (back of switch pushed)
- Power sunroof closed (front of switch pushed)
- Power sunroof vent (switch center button pushed)

DIAGNOSIS AND TESTING

SWITCH - POWER SUNROOF

For complete circuit diagrams, refer to the appropriate wiring information. The wiring information includes wiring diagrams, proper wire and connector repair procedures, details of wire harness routing and retention, connector pin-out information and location views for the various wire harness connectors, splices and grounds. If completing the appropriate diagnostic information results in the sunroof switch being inoperative, perform the following test prior to switch replacement.

1. Disconnect and isolate the battery negative cable.
2. Remove the overhead console, (Refer to 8 - ELECTRICAL/OVERHEAD CONSOLE - REMOVAL).
3. Disconnect the power sunroof switch wire harness connector.
4. Using an ohmmeter, test the continuity of the power sunroof switch in each switch position. Refer to the POWER SUNROOF SWITCH CONTINUITY TABLE . If OK, inspect the wiring harness and connectors for damage. Use a scan tool and the proper Diagnostic Procedures Information to complete diagnosis of the power sunroof system. If not OK, replace the overhead console.

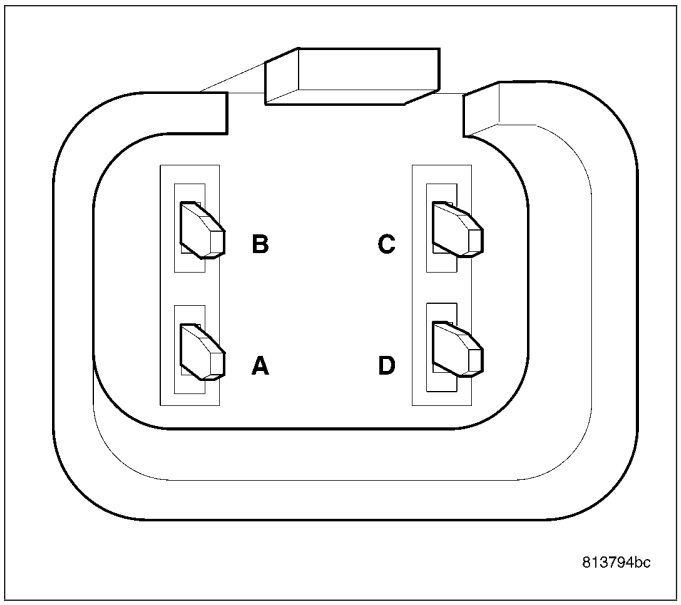

POWER SUNROOF SWITCH CONTINUITY TABLE

SWITCH POSITION	CONTINUITY BETWEEN PINS
OFF	NO CONTINUITY
SUNROOF OPEN	B & D
SUNROOF CLOSED	B & C
SUNROOF VENT	B & A

POWER WINDOWS - SERVICE INFORMATION

TABLE OF CONTENTS

page

POWER WINDOWS - SERVICE INFORMATION
DESCRIPTION 105
OPERATION 105
DIAGNOSIS AND TESTING
POWER WINDOWS 105

page

SWITCH - WINDOW
DIAGNOSIS AND TESTING
WINDOW SWITCH 106
REMOVAL 107
INSTALLATION 107

POWER WINDOWS - SERVICE INFORMATION

DESCRIPTION

The power window system allows each of the door windows to be raised and lowered electrically by actuating a switch on each door panel. A master switch on the drivers door allows the driver to raise or lower each of the passenger door windows and to lock out the individual switches on the passenger doors from operation. The power window system receives battery feed through a fuse in the Integrated Power Module (IPM) and a circuit breaker located in the instrument panel wiring harness near the park brake pedal, only when the ignition switch is in the RUN or ACCESSORY position.

The window motors are replaced with the window regulator assembly. If the window motors require replacement, the window regulator must be replaced.

OPERATION

WINDOW SWITCH

The power window switches control the battery and ground feeds to the power window motors. The passenger door power window switches receive their battery and ground feeds through the circuitry of the drivers window switch. When the power window lockout switch is in the Lock position, the battery feed for the passenger door window switches is interrupted.

WINDOW MOTOR

Window motors use permanent type magnets. The B+ and ground applied at the motor terminal pins will cause the motor to rotate in one direction. Reversing current through the motor terminals will cause the motor to rotate in the opposite direction.

DIAGNOSIS AND TESTING

POWER WINDOWS

WIRING VOLTAGE TEST

The following wiring test determines whether or not voltage is continuous through the body harness to the front switch.

Refer to the appropriate wiring information.

1. Remove the window/lock switch (Refer to 8 - ELECTRICAL/POWER LOCKS/DOOR MODULE - REMOVAL).
2. Disconnect wire connector from back of switch.
3. Switch ignition to the ON position.
4. Connect the clip end of a 12 volt test light to Pin 14 of the window switch harness connector. Touch the test light probe to Pin 10.
   - If the test light illuminates, the wiring circuit between the battery and switch is OK.
   - If the lamp does not illuminate, first check the fuse in the Integrated Power Module (IPM). Check the circuit breaker located near the park brake pedal. If fuse and circuit breaker are OK, then check for a broken wire.

POWER WINDOW MOTOR TEST

If the power window motor is receiving proper current and ground and does not operate, proceed with motor test.

1. Remove front door trim panel as necessary to gain access to power window motor wire connector (Refer to 23 - BODY/DOOR - FRONT/TRIM PANEL - REMOVAL).
2. Disconnect power window motor wire connector from door harness.
3. Using two jumper wires, connect one to a battery (+) source and the other to a good ground (-).
4. Connect the Negative (-) jumper probe to one of the motor connector terminals.
5. Momentarily touch the Positive (+) jumper probe to the other motor connector terminal.

When positive probe is connected the motor should rotate in one direction to either move window up or down. If window is all the way up or down the motor will grunt and the inner door panel will flex when actuated in that one direction.

6. Reverse jumper probes at the motor connector terminals and window should now move in opposite direction. If window does not move or grunt, replace the motor.

If window moved completely up or down, reverse the jumper probes and cycle window to the opposite position to verify full operation.

If motor grunts and does not move, verify that regulator is not binding.

SWITCH - WINDOW

DIAGNOSIS AND TESTING

WINDOW SWITCH

The Light-Emitting Diode (LED) illumination lamps for all of the power window and lock switch and bezel unit switch paddles receive battery current through the power window circuit breaker in the junction block. If all of the LEDs are inoperative in both the power window and lock switch units and the power windows are inoperative, (Refer to 8 - ELECTRICAL/POWER WINDOWS - DIAGNOSIS AND TESTING). If the power windows operate, but any or all of the LEDs are inoperative, the power window and lock switch units with the inoperative LED(s) is faulty and must be replaced. For complete circuit diagrams, refer to the appropriate wiring information.

1. Check the fuse in the Integrated Power Module (IPM) and the circuit breaker located near the park brake pedal. If OK, go to Step 2. If not OK, replace the faulty fuse or circuit breaker.
2. Turn the ignition switch to the On position. Check for battery voltage at the fuse in the Integrated Power Module (IPM). If OK, turn the ignition switch to the Off position and go to Step 3. If not OK, check circuit breaker and repair the circuit to the ignition switch as required.
3. Disconnect and isolate the battery negative cable. Remove the power window switch unit from the door trim panel (passenger doors). The drivers door switch is included with the window/lock switch (Refer to 8 - ELECTRICAL/POWER LOCKS/DOOR MODULE - DIAGNOSIS AND TESTING) for service procedures. Unplug the wire harness connector from the switch unit.
4. Test the power window switch continuity. See the Power Window Switch Continuity charts to determine if the continuity is correct in the Off, Up and Down switch positions. If OK, (Refer to 8 - ELECTRICAL/POWER WINDOWS - DIAGNOSIS AND TESTING). If not OK, replace the faulty switch.

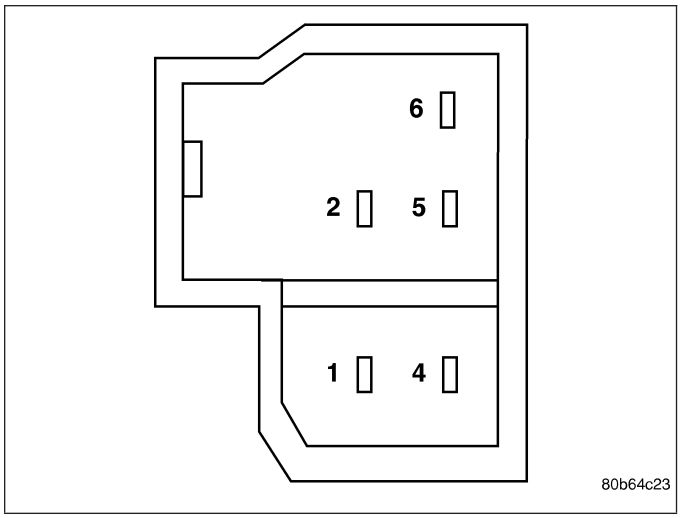

POWER WINDOW SWITCH CONTINUITY CHART

SWITCH POSITION	CONTINUITY BETWEEN
NEUTRAL	PIN 2 AND 5, PIN 4 AND 1
UP (FRONT PASSENGER)	PIN 6 AND 5
UP (REAR PASSENGER)	PIN 6 AND 1
DOWN (FRONT PASSENGER)	PIN 6 AND 1
DOWN (REAR PASSENGER)	PIN 6 AND 5

REMOVAL

FRONT PASSENGER

1. Disconnect and isolate the battery negative cable.
2. Remove the door trim panel (Refer to 23 - BODY/DOOR - FRONT/TRIM PANEL - REMOVAL).
3. Remove the switch from the trim panel bezel.

REAR PASSENGER

1. Disconnect and isolate the battery negative cable.
2. Remove the door trim panel (Refer to 23 - BODY/DOORS - REAR/TRIM PANEL - REMOVAL).
3. Gently pry switch from door trim panel.

INSTALLATION

FRONT PASSENGER

1. Insert switch to trim panel bezel.
2. Install door trim panel (Refer to 23 - BODY/DOOR - FRONT/TRIM PANEL - INSTALLATION).
3. Connect battery negative cable.

REAR PASSENGER

1. Install switch to door trim panel
2. Install door trim panel (Refer to 23 - BODY/DOORS - REAR/TRIM PANEL - INSTALLATION).
3. Connect battery negative cable.

RESTRAINTS

TABLE OF CONTENTS

page

RESTRAINTS - ELECTRICAL DIAGNOSTICS 1

page

RESTRAINTS - SERVICE INFORMATION 245

RESTRAINTS - ELECTRICAL DIAGNOSTICS

TABLE OF CONTENTS

page

RESTRAINTS - ELECTRICAL DIAGNOSTICS
DIAGNOSIS AND TESTING
ACCELEROMETER 1 3
ACCELEROMETER 2 4
AIRBAG WARNING INDICATOR OPEN 5
AIRBAG WARNING INDICATOR SHORT 8
CALIBRATION MISMATCH 11
CLUSTER MESSAGE MISMATCH 12
DEPLOYMENT DATA RECORD FULL 14
DRIVER SEAT BELT TENSIONER CIRCUIT OPEN 15
DRIVER SEAT BELT TENSIONER CIRCUIT SHORT 20
DRIVER SEAT BELT TENSIONER SHORT TO BATTERY 24
DRIVER SEAT BELT TENSIONER SHORT TO GROUND 28
DRIVER SQUIB 1 CIRCUIT OPEN 32
DRIVER SQUIB 1 CIRCUIT SHORT 37
DRIVER SQUIB 1 SHORT TO BATTERY 42
DRIVER SQUIB 1 SHORT TO GROUND 47
DRIVER SQUIB 2 CIRCUIT OPEN 52
DRIVER SQUIB 2 CIRCUIT SHORT 57
DRIVER SQUIB 2 SHORT TO BATTERY 62
DRIVER SQUIB 2 SHORT TO GROUND 67
INTERNAL 1 72
INTERNAL 2 73
LEFT CURTAIN SQUIB 1 CIRCUIT OPEN . . . 74
LEFT CURTAIN SQUIB 1 CIRCUIT SHORT . . 79
LEFT CURTAIN SQUIB 1 SHORT TO BATTERY 84
LEFT CURTAIN SQUIB 1 SHORT TO GROUND 89
LEFT SIDE IMPACT SENSOR 1 INTERNAL 1 . 93
LOSS OF IGNITION RUN - START 99
LOSS OF IGNITION RUN ONLY 105
MISSING CURRENT VIN 110

page

MODULE NOT CONFIGURED FOR PAB OFF SWITCH 114
NO CLUSTER MESSAGE 118
NO LEFT SIDE IMPACT SENSOR 1 COMMUNICATION 120
NO PCI LOOPBACK 126
NO PCI TRANSMISSION 128
NO RIGHT SIDE IMPACT SENSOR 1 COMMUNICATION 130
OCCUPANT CLASSIFICATION MODULE CONFIGURATION MISMATCH 136
OUTPUT DRIVER 1 139
PASSENGER OFF INDICATOR CIRCUIT SHORT TO BATTERY 140
PASSENGER OFF INDICATOR CIRCUIT SHORT TO GROUND 145
PASSENGER AIRBAG ON-OFF SWITCH OPEN 150
PASSENGER AIRBAG ON-OFF SWITCH SHORT TO BATTERY 155
PASSENGER AIRBAG ON-OFF SWITCH SHORT TO GROUND 159
PASSENGER SEAT BELT TENSIONER CIRCUIT OPEN 163
PASSENGER SEAT BELT TENSIONER CIRCUIT SHORT 168
PASSENGER SEAT BELT TENSIONER SHORT TO BATTERY 172
PASSENGER SEAT BELT TENSIONER SHORT TO GROUND 176
PASSENGER SQUIB 1 CIRCUIT OPEN 180
PASSENGER SQUIB 1 CIRCUIT SHORT . . . 185
PASSENGER SQUIB 1 SHORT TO BATTERY 189
PASSENGER SQUIB 1 SHORT TO GROUND 193
PASSENGER SQUIB 2 CIRCUIT OPEN 197

PASSENGER SQUIB 2 CIRCUIT SHORT . . . 202
PASSENGER SQUIB 2 SHORT TO BATTERY 206
PASSENGER SQUIB 2 SHORT TO GROUND 210
RIGHT CURTAIN SQUIB 1 CIRCUIT OPEN . 214
RIGHT CURTAIN SQUIB 1 CIRCUIT SHORT . 219
RIGHT CURTAIN SQUIB 1 SHORT TO BATTERY 223
RIGHT CURTAIN SQUIB 1 SHORT TO GROUND 227
RIGHT SIDE IMPACT SENSOR 1 INTERNAL 1 231
STORED ENERGY FIRING 1 237
VEHICLE BODY STYLE MISMATCH 238
*AIRBAG INDICATOR ON WITHOUT ACTIVE TROUBLE CODES 242
*ORC VERIFICATION TEST - VER 1 243
SCHEMATICS AND DIAGRAMS 244

RESTRAINTS - ELECTRICAL DIAGNOSTICS

DIAGNOSIS AND TESTING

ACCELEROMETER 1

For a complete wiring diagram **Refer to Section 8W**.

- **When Monitored:**
  With the ignition on. The module's on board diagnostics continuously performs internal circuit tests.
- **Set Condition:**
  This DTC will set if the module identifies an out of range internal circuit.

Possible Causes
OCCUPANT RESTRAINT CONTROLLER

Diagnostic Test

1. DETERMINE ACTIVE OR STORED DTC

Turn the ignition on.

NOTE: Ensure the battery is fully charged.

NOTE: When reconnecting airbag system components the Ignition must be turned off and the Battery must be disconnected.

Select ACTIVE or STORED DTC

ORC - ACTIVE DTC
Go To 2

ORC - STORED DTC
Test Complete.

---

2. OCCUPANT RESTRAINT CONTROLLER (ORC)

WARNING: WARNING: TO AVOID PERSONAL INJURY OR DEATH, DISCONNECT THE BATTERY AND WAIT TWO MINUTES BEFORE PROCEEDING.

WARNING: WARNING: IF THE OCCUPANT RESTRAINT CONTROLLER IS DROPPED AT ANY TIME, IT MUST BE REPLACED. FAILURE TO TAKE THE PROPER PRECAUTIONS COULD RESULT IN ACCIDENTAL AIRBAG DEPLOYMENT AND PERSONAL INJURY OR DEATH.

View repair.

Repair
Replace the Occupant Restraint Controller (ORC) in accordance with the Service Information.
Perform ORC VERIFICATION TEST - VER 1.

ACCELEROMETER 2

For a complete wiring diagram **Refer to Section 8W**.

- **When Monitored:**
  With the ignition on. The module's on board diagnostics continuously performs internal circuit tests.
- **Set Condition:**
  This DTC will set if the module identifies an out of range internal circuit.

Possible Causes
OCCUPANT RESTRAINT CONTROLLER

Diagnostic Test

1. DETERMINE ACTIVE OR STORED DTC

Turn the ignition on.

NOTE: Ensure the battery is fully charged.

NOTE: When reconnecting airbag system components the Ignition must be turned off and the Battery must be disconnected.

Select ACTIVE or STORED DTC

ORC - ACTIVE DTC
Go To 2

ORC - STORED DTC
Test Complete.

---

2. OCCUPANT RESTRAINT CONTROLLER (ORC)

WARNING: WARNING: TO AVOID PERSONAL INJURY OR DEATH, DISCONNECT THE BATTERY AND WAIT TWO MINUTES BEFORE PROCEEDING.

WARNING: WARNING: IF THE OCCUPANT RESTRAINT CONTROLLER IS DROPPED AT ANY TIME, IT MUST BE REPLACED. FAILURE TO TAKE THE PROPER PRECAUTIONS COULD RESULT IN ACCIDENTAL AIRBAG DEPLOYMENT AND PERSONAL INJURY OR DEATH.

View repair.

Repair
Replace the Occupant Restraint Controller (ORC) in accordance with the Service Information.
Perform ORC VERIFICATION TEST - VER 1.

AIRBAG WARNING INDICATOR OPEN

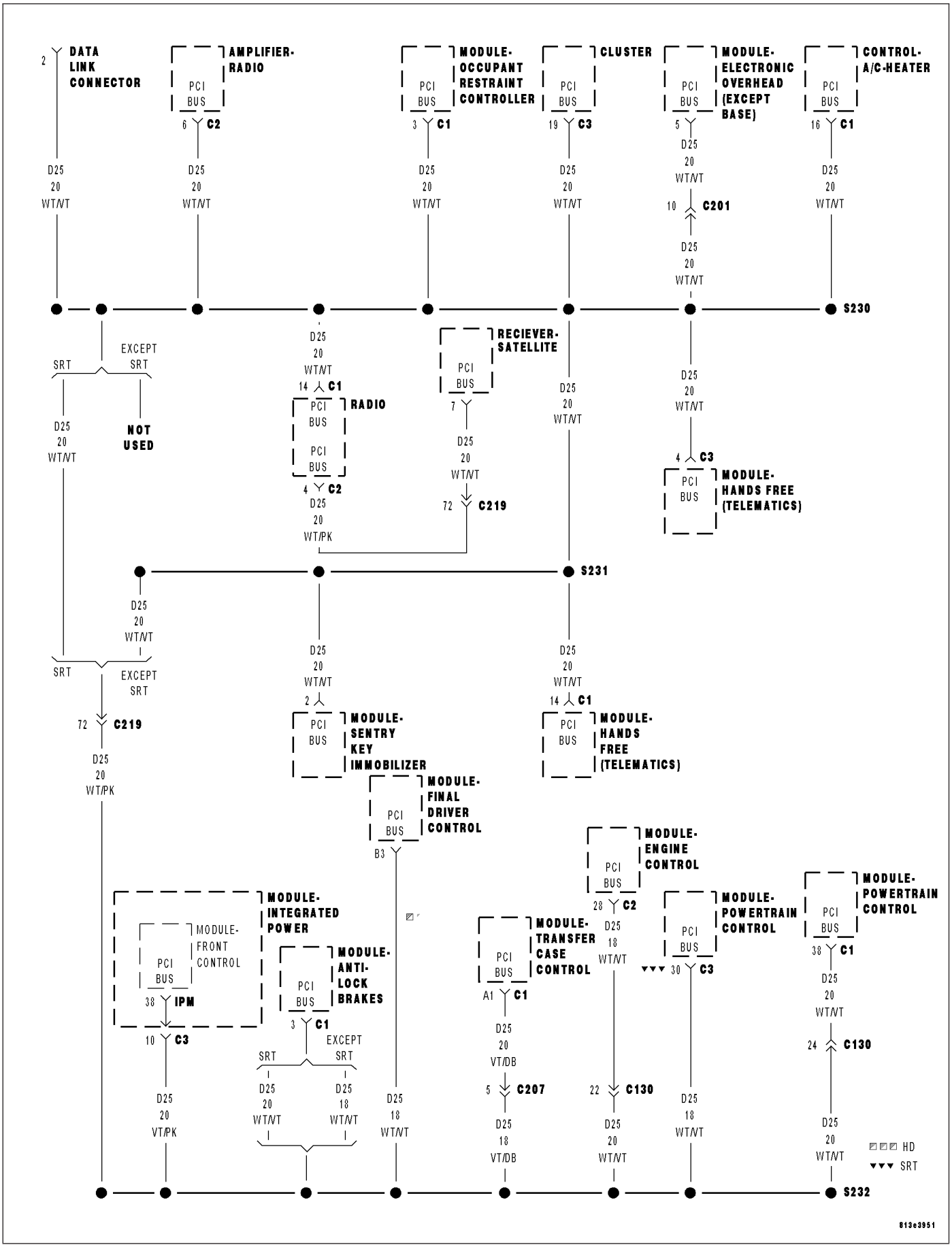

AIRBAG WARNING INDICATOR OPEN (CONTINUED)

For a complete wiring diagram **Refer to Section 8W**.

- **When Monitored:**
  With ignition on the Occupant Restraint Controller (ORC) monitors the PCI Bus for a message from the MIC containing the airbag warning indicator status. The ORC request the warning lamp status from the MIC once every second.
- **Set Condition:**
  This DTC will set immediately if the indicator status is OPEN.

Possible Causes
MIC, COMMUNICATION FAILURE
MIC, WARNING INDICATOR
ORC, WARNING INDICATOR CIRCUITS

Diagnostic Test

1. DETERMINE ACTIVE OR STORED DTC

Turn the ignition on.

NOTE: Ensure that the battery is fully charged.

NOTE: For the purpose of this test, the AECM and ORC modules will be referred to as an ORC.

NOTE: When reconnecting Airbag system components, the ignition must be turned off and the battery must be disconnected.

Select ACTIVE or STORED DTC:

ORC - ACTIVE DTC
Go To 2

ORC - STORED DTC
Go To 5

---

2. MIC COMMUNICATION FAILURE

With the DRBIII®, ensure PCI Bus communications with the Instrument Cluster.

Is the Instrument Cluster communicating on the PCI Bus?

Yes >> Go To 3

No >> (Refer to 8 - ELECTRICAL/ELECTRONIC CONTROL MODULES - DIAGNOSIS AND TESTING) for No Response diagnostic test procedures.
Perform ORC VERIFICATION TEST - VER 1.

AIRBAG WARNING INDICATOR OPEN (CONTINUED)

3. WARNING INDICATOR

With the DRBIII® select PASSIVE RESTRAINTS, AIRBAG, and MONITOR DISPLAY.
Using the DRBIII®, read the WARNING LAMP MONITOR screen.
Select the LAMP STATUS displayed on the DRB monitors screen.
Observe the Lamp Driver State and Actual Lamp State.

Is the LAMP DRIVER and ACTUAL LAMP STATE: OK?

Yes >> Go To 4

No >> Replace the Instrument Cluster in accordance with the Service Information.
Perform ORC VERIFICATION TEST - VER 1.

---

4. ORC, WARNING LAMP CIRCUIT

WARNING: WARNING: TO AVOID PERSONAL INJURY OR DEATH, TURN THE IGNITION OFF, DISCONNECT THE BATTERY AND WAIT TWO MINUTES BEFORE PROCEEDING.

WARNING: WARNING: IF THE OCCUPANT RESTRAINT CONTROLLER IS DROPPED AT ANY TIME, IT MUST BE REPLACED. FAILURE TO TAKE THE PROPER PRECAUTIONS COULD RESULT IN ACCIDENTAL AIRBAG DEPLOYMENT AND PERSONAL INJURY OR DEATH.

If there are no possible causes remaining, view repair.

Repair

Replace the Occupant Restraint Controller (ORC) in accordance with the Service Information.
Perform ORC VERIFICATION TEST - VER 1.

---

5. CHECKING STORED OR INTERMITTENT CODES

With the DRBIII®, record and erase all DTC's from all Airbag modules.
If equipped with Passenger Airbag On - Off switch, read the DTC's in all switch positions.
If any ACTIVE codes are present they must be resolved before diagnosing any stored codes.

WARNING: WARNING: TO AVOID PERSONAL INJURY OR DEATH, TURN THE IGNITION OFF, DISCONNECT THE BATTERY AND WAIT TWO MINUTES BEFORE PROCEEDING.

Using the wiring diagram/schematic as a guide, inspect the wiring and connectors.
Look for chaffed, pierced, pinched, or partially broken wires and broken, bent, pushed out, spread, corroded, or contaminated terminals.
The following additional checks may assist you in identifying a possible intermittent problem.
Reconnect any disconnected components and harness connector.

WARNING: WARNING: TO AVOID PERSONAL INJURY OR DEATH, TURN THE IGNITION ON, THEN RECONNECT THE BATTERY.

With the DRBIII®, monitor active codes as you work through the following steps.

WARNING: WARNING: TO AVOID PERSONAL INJURY OR DEATH, MAINTAIN A SAFE DISTANCE FROM ALL AIRBAGS WHILE PERFORMING THE FOLLOWING STEPS.

Wiggle the wiring harness and connectors of the related airbag circuit or component.
If codes are related to the Driver Airbag circuits, rotate the steering wheel from stop to stop.
If only stored codes return continue the test until the problem area has been isolated.
In the previous steps you have attempted to recreate the conditions responsible for setting active DTC in question.

Are any ACTIVE DTCs present?

Yes >> Select the appropriate diagnostic procedure from the Table of Contents in this section.

No >> No problem found at this time. Erase all codes before returning vehicle to customer.

AIRBAG WARNING INDICATOR SHORT

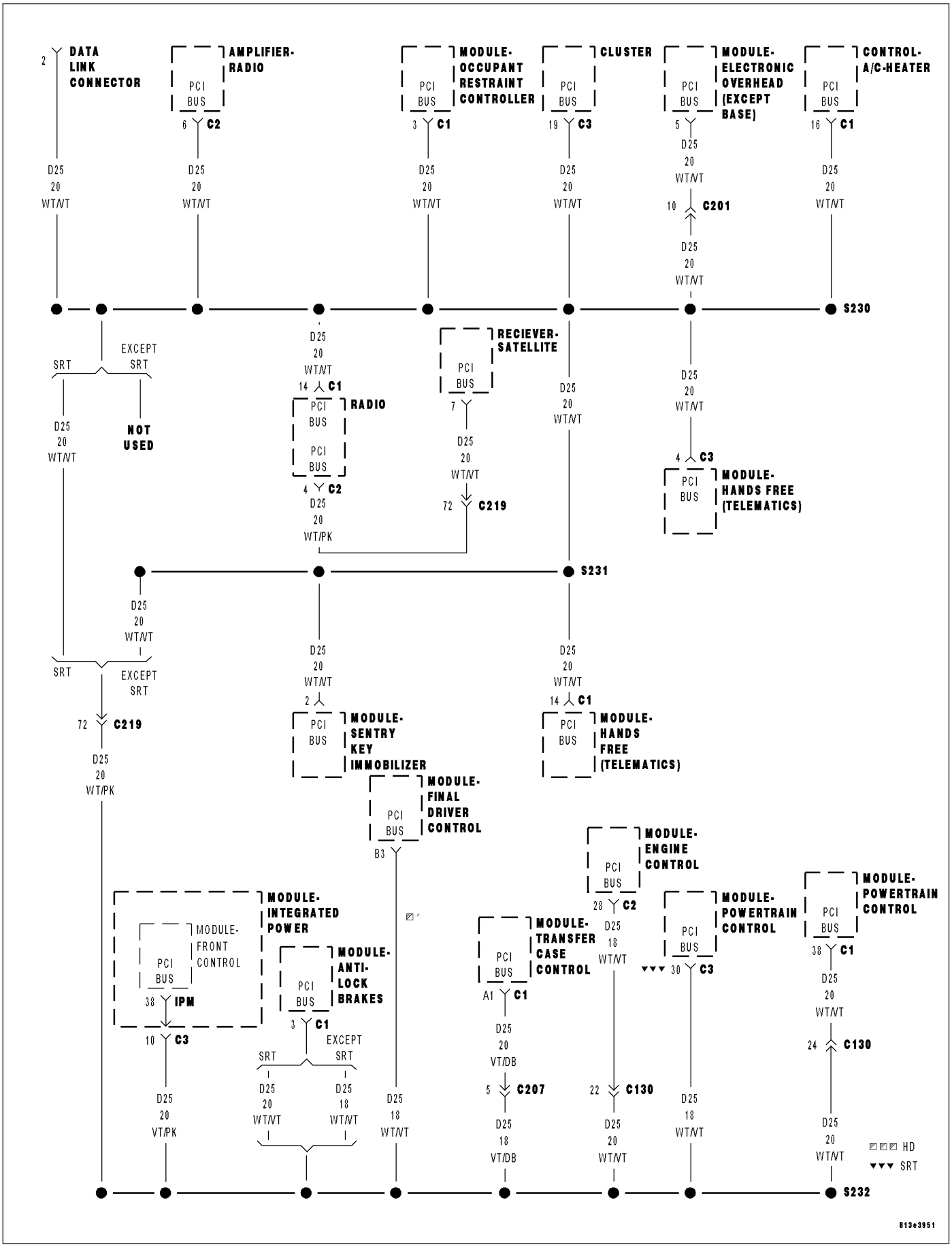

AIRBAG WARNING INDICATOR SHORT (CONTINUED)

For a complete wiring diagram **Refer to Section 8W**.

- **When Monitored:**
  With ignition on the Occupant Restraint Controller (ORC) monitors the PCI Bus for a message from the MIC containing the airbag warning indicator status. The ORC request the warning lamp status from the MIC once every second.
- **Set Condition:**
  This DTC will set immediately if the indicator status is SHORT.

Possible Causes
MIC, COMMUNICATION FAILURE
MIC, WARNING INDICATOR
ORC, WARNING INDICATOR CIRCUITS

Diagnostic Test

1. DETERMINE ACTIVE OR STORED DTC

Turn the ignition on.

NOTE: Ensure that the battery is fully charged.

NOTE: For the purpose of this test, the AECM and ORC modules will be referred to as an ORC.

NOTE: When reconnecting Airbag system components, the ignition must be turned off and the battery must be disconnected.

Select ACTIVE or STORED DTC:

ORC - ACTIVE DTC
Go To 2

ORC - STORED DTC
Go To 5

---

2. MIC COMMUNICATION FAILURE

With the DRBIII®, ensure PCI Bus communications with the Instrument Cluster.

Is the Instrument Cluster communicating on the PCI Bus?

Yes >> Go To 3

No >> (Refer to 8 - ELECTRICAL/ELECTRONIC CONTROL MODULES - DIAGNOSIS AND TESTING) for No Response diagnostic test procedures.
Perform ORC VERIFICATION TEST - VER 1.

AIRBAG WARNING INDICATOR SHORT (CONTINUED)

3. WARNING INDICATOR

With the DRBIII® select PASSIVE RESTRAINTS, AIRBAG, and MONITOR DISPLAY.
Using the DRBIII®, read the WARNING LAMP MONITOR screen.
Select the LAMP STATUS displayed on the DRB monitors screen.
Observe the Lamp Driver State and Actual Lamp State.

Is the LAMP DRIVER and ACTUAL LAMP STATE: OK?

Yes >> Go To 4

No >> Replace the Instrument Cluster in accordance with the Service Information.
Perform ORC VERIFICATION TEST - VER 1.

---

4. ORC, WARNING LAMP CIRCUIT

WARNING: WARNING: TO AVOID PERSONAL INJURY OR DEATH, TURN THE IGNITION OFF, DISCONNECT THE BATTERY AND WAIT TWO MINUTES BEFORE PROCEEDING.

WARNING: WARNING: IF THE OCCUPANT RESTRAINT CONTROLLER IS DROPPED AT ANY TIME, IT MUST BE REPLACED. FAILURE TO TAKE THE PROPER PRECAUTIONS COULD RESULT IN ACCIDENTAL AIRBAG DEPLOYMENT AND PERSONAL INJURY OR DEATH.

If there are no possible causes remaining, view repair.

Repair

Replace the Occupant Restraint Controller (ORC) in accordance with the Service Information.
Perform ORC VERIFICATION TEST - VER 1.

---

5. CHECKING STORED OR INTERMITTENT CODES

With the DRBIII®, record and erase all DTC's from all Airbag modules.
If equipped with Passenger Airbag On - Off switch, read the DTC's in all switch positions.
If any ACTIVE codes are present they must be resolved before diagnosing any stored codes.

WARNING: WARNING: TO AVOID PERSONAL INJURY OR DEATH, TURN THE IGNITION OFF, DISCONNECT THE BATTERY AND WAIT TWO MINUTES BEFORE PROCEEDING.

Using the wiring diagram/schematic as a guide, inspect the wiring and connectors.
Look for chaffed, pierced, pinched, or partially broken wires and broken, bent, pushed out, spread, corroded, or contaminated terminals.
The following additional checks may assist you in identifying a possible intermittent problem.
Reconnect any disconnected components and harness connector.

WARNING: WARNING: TO AVOID PERSONAL INJURY OR DEATH, TURN THE IGNITION ON, THEN RECONNECT THE BATTERY.

With the DRBIII®, monitor active codes as you work through the following steps.

WARNING: WARNING: TO AVOID PERSONAL INJURY OR DEATH, MAINTAIN A SAFE DISTANCE FROM ALL AIRBAGS WHILE PERFORMING THE FOLLOWING STEPS.

Wiggle the wiring harness and connectors of the related airbag circuit or component.
If codes are related to the Driver Airbag circuits, rotate the steering wheel from stop to stop.
If only stored codes return continue the test until the problem area has been isolated.
In the previous steps you have attempted to recreate the conditions responsible for setting active DTC in question.

Are any ACTIVE DTCs present?

Yes >> Select the appropriate diagnostic procedure from the Table of Contents in this section.

No >> No problem found at this time. Erase all codes before returning vehicle to customer.

CALIBRATION MISMATCH

- **When Monitored:**
  With the Ignition on.
- **Set Condition:**
  This DTC will be set when the VIN stored in the PCM does not match the VIN stored in the Occupant Restraint Controller (ORC).

Possible Causes
INCORRECT PCM
OCCUPANT RESTRAINT CONTROLLER (ORC)

Diagnostic Test

1. VERIFY THAT THE DTC IS ACTIVE

Turn the ignition on.

With the scan tool, read ORC DTCs.

NOTE: Ensure the battery is fully charged.

NOTE: When reconnecting Airbag system components, the ignition must be turned off and the battery must be disconnected.

Does the scan tool display active: CALIBRATION MISMATCH?

Yes >> Go To 2

No >> Test Complete.

---

2. CHECK VIN IN PCM

With the scan tool compare the VIN that is programmed into the PCM to the VIN stored in the ORC.

Does the VIN programmed into the PCM match the VIN stored in the ORC?

Yes >> Go To 3

No >> Replace and program the Powertrain Control Module in accordance with the service information. Ensure the PCM is replaced with the correct vehicle line PCM.
Perform POWERTRAIN VERIFICATION TEST.

---

3. REPLACE THE OCCUPANT RESTRAINT CONTROLLER

WARNING: To avoid personal injury or death, turn the ignition off, disconnect the battery and wait two minutes before proceeding.

WARNING: If the occupant restraint controller is dropped at any time, it must be replaced. Failure to take the proper precautions can result in accidental airbag deployment and personal injury or death.

View repair.

Repair

Replace the Occupant Restraint Controller in accordance with the service information.
Perform the ORC VERIFICATION TEST-VER 1.

CLUSTER MESSAGE MISMATCH

For a complete wiring diagram **Refer to Section 8W**.

- **When Monitored:**
  After the Instrument Cluster bulb check is completed, the ORC compares the lamp request by the ORC (On or Off) and the Lamp On request by the Instrument Cluster (On or Off) bus messages. Each message is transmitted one time per second or when a change in the lap state occurs.
- **Set Condition:**
  If the lamp request by the ORC (On or Off), and the Lamp On by the Instrument Cluster (On or Off), messages do not match, this code will set.

Possible Causes
OCCUPANT RESTRAINT CONTROLLER, INSTRUMENT CLUSTER MESSAGE MISMATCH
INSTRUMENT CLUSTER
OCCUPANT RESTRAINT CONTROLLER

Diagnostic Test

1. CHECK FOR AN ACTIVE DTC

NOTE: Ensure the battery is fully charged.

NOTE: When reconnecting Airbag system components, the ignition must be turned off and the battery must be disconnected.

Turn the ignition on, then off, and then on again.

With the scan tool, read Occupant Restraint Controller (ORC) DTCs.

Select DTC type.

Active

Go To 2

Stored

Go To 5

---

2. CHECK FOR ACTIVE INSTRUMENT CLUSTER DTCs

With the scan tool, read Instrument Cluster DTCs.

Does the scan tool display any active Instrument Cluster DTCs?

Yes >> (Refer to 8 - ELECTRICAL/INSTRUMENT CLUSTER - DIAGNOSIS AND TESTING) for the diagnostic test procedures.
Perform the ORC VERIFICATION TEST-VER 1.

No >> Go To 3

CLUSTER MESSAGE MISMATCH (CONTINUED)

3. CHECK THE ORC AND INSTRUMENT CLUSTER FOR LAMP STATUS

With the scan tool view the Instrument Cluster Data Display.

Cycle the ignition key and observe the SRS Indicator Lamp Request status (Set/Not Set) during the Instrument Cluster bulb check.

With the scan tool view the ORC Data Display.

Cycle the ignition key and observe the SRS Indicator Lamp Status (Lamp On/Lamp Off) during the Instrument Cluster bulb check.

Did the Data Display information match the operation of the lamp?

Yes >> Go To 4

No >> Replace the Instrument Cluster in accordance with the service information.
Perform the ORC VERIFICATION TEST-VER 1.

---

4. REPLACE THE OCCUPANT RESTRAINT CONTROLLER

WARNING: To avoid personal injury or death, turn the ignition off, disconnect the battery and wait two minutes before proceeding.

WARNING: If the Occupant Restraint Controller is dropped at any time, it must be replaced. Failure to take the proper precautions could result in accidental airbag deployment and personal injury or death.

If there are no possible causes remaining, view repair.

Repair

Replace the Occupant Restraint Controller in accordance with the service information.
Perform the ORC VERIFICATION TEST-VER 1.

---

5. TEST FOR INTERMITTENT CONDITION

With the scan tool, record and erase all DTCs from all Airbag modules.

If any ACTIVE codes are present they must be resolved before diagnosing any stored codes.

WARNING: To avoid personal injury or death, turn the ignition off, disconnect the battery and wait two minutes before proceeding.

Using the wiring diagram/schematic as a guide, inspect the wiring and connectors.

Look for chaffed, pierced, pinched, or partially broken wires and broken, bent, pushed out, spread, corroded, or contaminated terminals.

The following additional checks may assist you in identifying a possible intermittent problem.

Reconnect any disconnected components and harness connector.

WARNING: To avoid personal injury or death, turn the ignition on, then reconnect the battery.
With the scan tool, monitor active codes as you work through the following steps.

WARNING: To avoid personal injury or death, maintain a safe distance from all airbags while performing the following steps.

Wiggle the wiring harness and connectors of the related airbag circuit or component.

If codes are related to the Driver Airbag circuits, rotate the steering wheel from stop to stop.

If only stored codes return, continue the test until the problem area has been isolated.

In the previous steps you have attempted to recreate the conditions responsible for setting the active DTC in question.

Does the scan tool display any ACTIVE DTCs?

Yes >> Select appropriate symptom from Symptom List.

No >> No problem found at this time. Erase all codes before returning vehicle to customer.

DEPLOYMENT DATA RECORD FULL

For a complete wiring diagram **Refer to Section 8W**.

- **When Monitored:**
  With the ignition on. The module's on board diagnostics continuously performs internal circuit tests.
- **Set Condition:**
  This DTC will set if the module identifies an out of range internal circuit.

Possible Causes
OCCUPANT RESTRAINT CONTROLLER

Diagnostic Test

1. CHECK FOR ACTIVE DTC

Turn the ignition on.
With the scan tool, read ORC DTCs.

Is the Deployment Data Record Full DTC active?

Yes >> Go To 2

No >> Test complete.

---

2. REPLACE THE OCCUPANT RESTRAINT CONTROLLER

WARNING: To avoid personal injury or death, turn the ignition off, disconnect the battery and wait two minutes before proceeding.

WARNING: If the occupant restraint controller is dropped at any time, it must be replaced. Failure to take the proper precautions can result in accidental airbag deployment and personal injury or death.

View repair.

Repair

Replace the Occupant Restraint Controller in accordance with the service information.
Perform the ORC VERIFICATION TEST-VER 1.

DRIVER SEAT BELT TENSIONER CIRCUIT OPEN

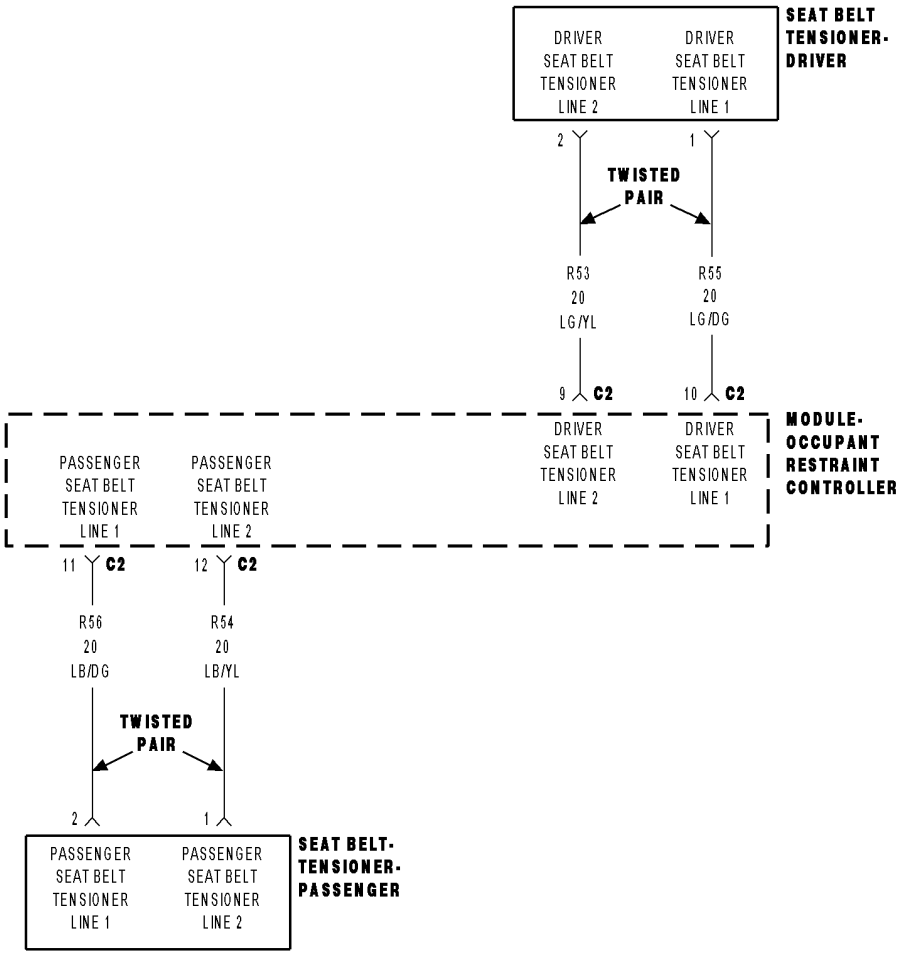

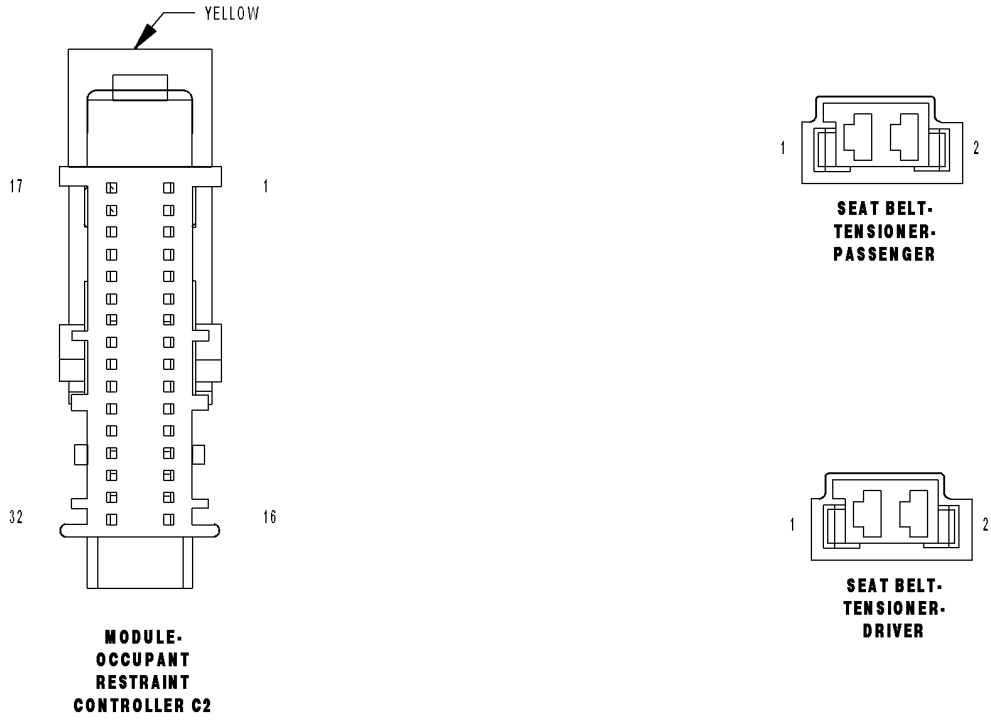

DRIVER SEAT BELT TENSIONER CIRCUIT OPEN (CONTINUED)

For the Air Bag System circuit diagram (Refer to 8 - ELECTRICAL/RESTRAINTS - SCHEMATICS AND DIAGRAMS).

For a complete wiring diagram **Refer to Section 8W**.

- **When Monitored:**
  With the ignition on, the Occupant Restraint Controller (ORC) monitors the resistance of the Driver Seat Belt Tensioner circuits.
- **Set Condition:**
  The ORC has detected an open or high resistance on the Driver Seat Belt Tensioner circuits.

Possible Causes
(R55) DRIVER SEAT BELT TENSIONER LINE 1 CIRCUIT OR (R53) DRIVER SEAT BELT TENSIONER LINE 2 CIRCUIT OPEN
DRIVER SEAT BELT PRETENSIONER
ORC

Diagnostic Test

1. DETERMINE ACTIVE OR STORED DTC

NOTE: Ensure the battery is fully charged.

NOTE: The scan tool, SRS Airbag Load Tool MRL 8443, and DVOM are required to perform the following test.

NOTE: When reconnecting airbag system components the Ignition must be turned off and the Battery must be disconnected.

Select Active or Stored DTC.

Is the DTC active or stored?

ORC - ACTIVE DTC
Go To 2

ORC - STORED DTC
Go To 6

DRIVER SEAT BELT TENSIONER CIRCUIT OPEN (CONTINUED)

2. CHECK FOR OPEN DRIVER SEAT BELT PRETENSIONER

WARNING: To avoid personal injury or death, turn the ignition off, disconnect the battery and wait two minutes before proceeding.
Disconnect the Driver Seat Belt Pretensioner connector.

NOTE: Check connectors - Clean and repair as necessary.
Connect the 8443 Load Tool and appropriate Jumper to the Driver Seat Belt Pretensioner connector.

WARNING: To avoid personal injury or death, turn the ignition on, then reconnect the battery.
With the scan tool, read the active ORC DTC's.

Does the scan tool display: DRIVER SEAT BELT TENSIONER CIRCUIT OPEN?

Yes >> Go To 3

No >> Replace the Driver Seat Belt Pretensioner in accordance with the Service Information.
Perform ORC VERIFICATION TEST - VER 1

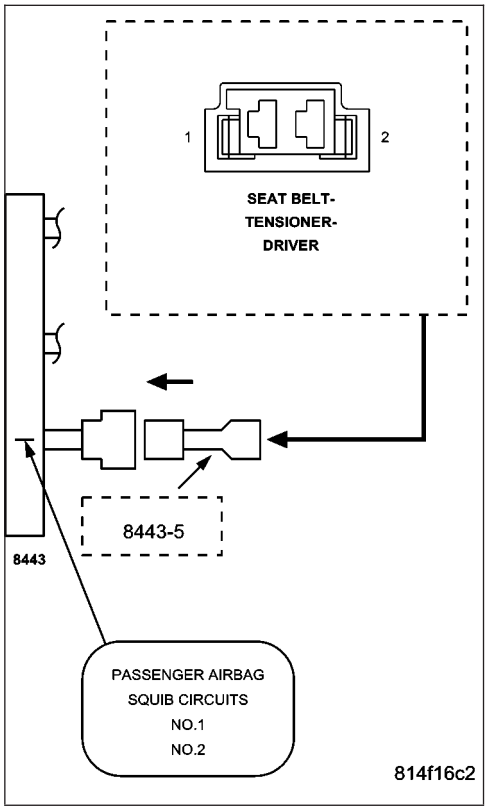

3. CHECK (R55) DRIVER SEAT BELT TENSIONER LINE 1 CIRCUIT FOR AN OPEN

WARNING: To avoid personal injury or death, turn the ignition off, disconnect the battery and wait two minutes before proceeding.
Disconnect the 8443 Load Tool and Jumper from the Driver Seat Belt Pretensioner connector.

Disconnect the ORC connectors.

NOTE: Check connectors - Clean and repair as necessary.
Connect the 8443 Load Tool ORC Adaptor to the ORC connector.

Measure the resistance of the (R55) Driver Seat Belt Tensioner Line 1 circuit between the Driver Seat Belt Pretensioner connector and the 8443 ORC Adaptor.

Is the resistance below 1.0 ohm?

Yes >> Go To 4

No >> Repair the (R55) Driver Seat Belt Tensioner Line 1 circuit for and open. Then Go To 4

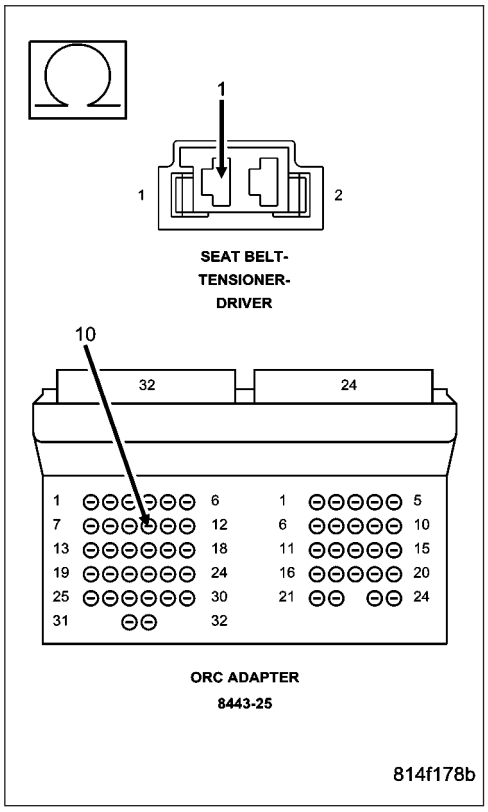

DRIVER SEAT BELT TENSIONER CIRCUIT OPEN (CONTINUED)

4. CHECK (R53) DRIVER SEAT BELT TENSIONER LINE 2 CIRCUIT FOR AN OPEN

Measure the resistance of the (R53) Driver Seat Belt Tensioner Line 2 circuit between the Driver Seat Belt Pretensioner connector and the 8443 ORC Adaptor.

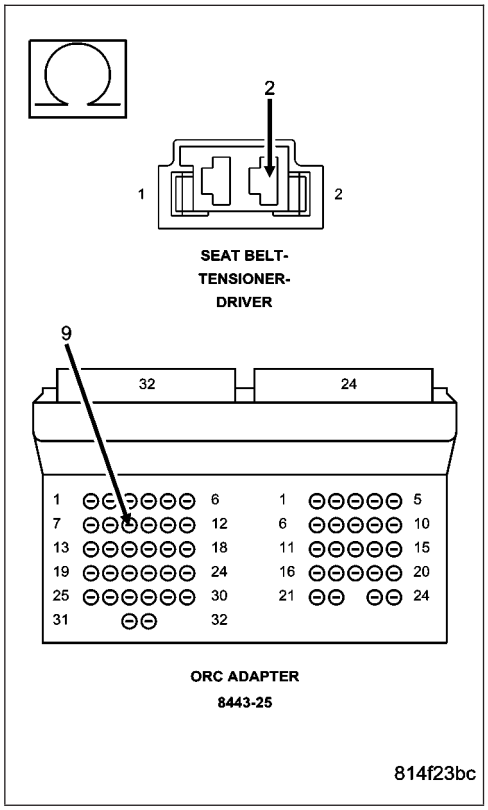

Is the resistance below 1.0 ohm?

Yes >> Go To 5

No >> Repair the (R53) Driver Seat Belt Tensioner Line 2 circuit for and open.
Perform ORC VERIFICATION TEST - VER 1

5. REPLACE THE ORC

WARNING: If the Occupant Restraint Controller (ORC) is dropped at any time, it must be replaced. Failure to take the proper precautions can result in accidental airbag deployment and personal injury or death.

NOTE: When reconnecting airbag system components the Ignition must be turned off and the Battery must be disconnected.

Repair

Replace the ORC in accordance with Service Information.
Perform ORC VERIFICATION TEST - VER 1

DRIVER SEAT BELT TENSIONER CIRCUIT OPEN (CONTINUED)

6. STORED ORC DTC

With the scan tool, record and erase all DTC's from all Airbag System Modules.

If any ACTIVE codes are present they must be resolved before diagnosing any stored codes.

WARNING: TO AVOID PERSONAL INJURY OR DEATH, TURN THE IGNITION OFF, DISCONNECT THE BATTERY AND WAIT TWO MINUTES BEFORE PROCEEDING.

Using the wiring diagram/schematic as a guide, inspect the wiring and connectors.

Look for chaffed, pierced, pinched, or partially broken wires and broken, bent, pushed out, spread, corroded, or contaminated terminals.

The following additional checks may assist you in identifying a possible intermittent problem.

Reconnect any disconnected components and harness connector.

WARNING: TO AVOID PERSONAL INJURY OR DEATH, TURN THE IGNITION ON, THEN RECONNECT THE BATTERY.

With the scan tool monitor active codes as you work through the following steps.

Wiggle the wiring harness and connectors of the related airbag circuit or component.

If codes are related to the Driver Airbag circuits, rotate the steering wheel from stop to stop.

If only stored codes return continue the test until the problem area has been isolated.

In the previous steps you have attempted to recreate the conditions responsible for setting active DTC in question.

Are any ACTIVE DTCs present?

Yes >> Select the appropriate diagnostic procedure from the Table of Contents in this section.

No >> No problem found at this time. Erase all codes before returning vehicle to customer.

DRIVER SEAT BELT TENSIONER CIRCUIT SHORT

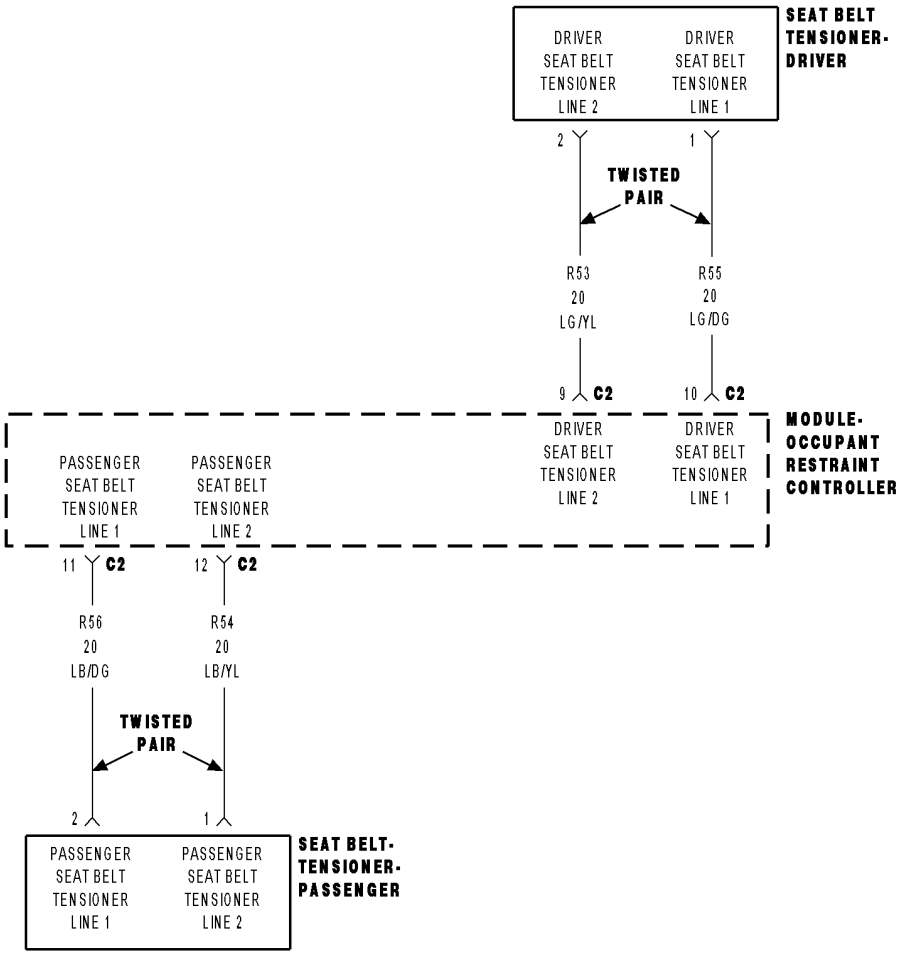

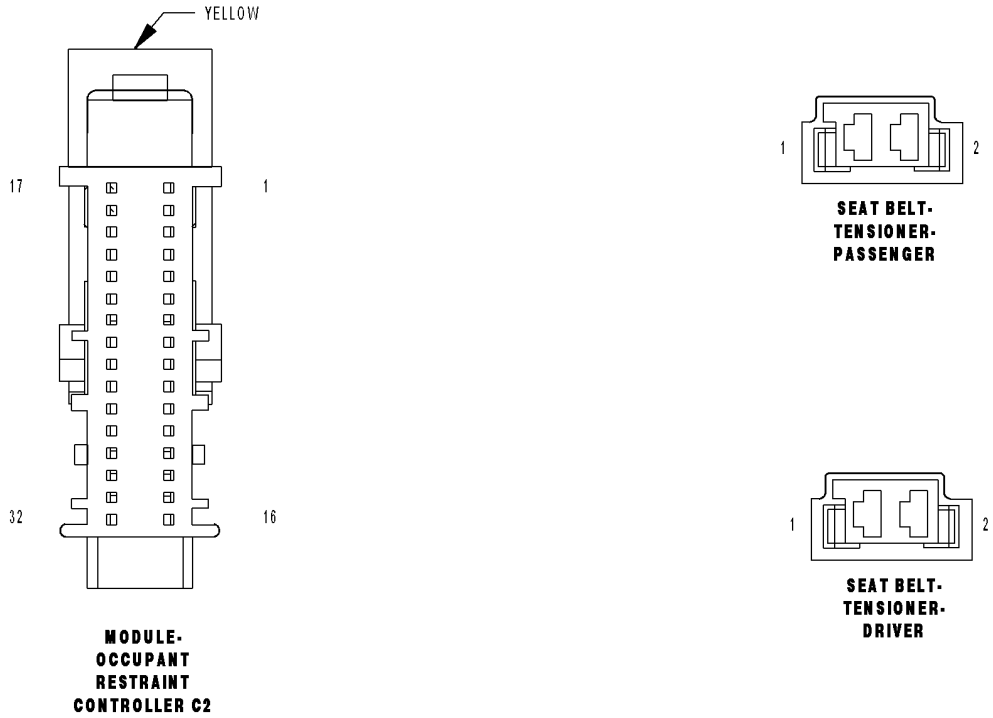

814f09c3

DRIVER SEAT BELT TENSIONER CIRCUIT SHORT (CONTINUED)

For the Air Bag System circuit diagram (Refer to 8 - ELECTRICAL/RESTRAINTS - SCHEMATICS AND DIAGRAMS).

For a complete wiring diagram **Refer to Section 8W**.

- **When Monitored:**
  With the ignition on, the Occupant Restraint Controller (ORC) monitors the resistance of the Driver Seat Belt Tensioner circuits.
- **Set Condition:**
  The ORC has detected low resistance between the Driver Seat Belt Tensioner circuits.

Possible Causes
(R55) DRIVER SEAT BELT TENSIONER LINE 1 CIRCUIT SHORTED TO (R53) DRIVER SEAT BELT TENSIONER LINE 2 CIRCUIT
DRIVER SEAT BELT PRETENSIONER
ORC

Diagnostic Test

1. SELECT ACTIVE OR STORED DTC

NOTE: Ensure the battery is fully charged.

NOTE: The scan tool, SRS Airbag Load Tool MRL 8443, and DVOM are required to perform the following test.

NOTE: When reconnecting airbag system components the Ignition must be turned off and the Battery must be disconnected.

Select Active or Stored DTC.

Is the DTC active or stored?

ORC - ACTIVE DTC
Go To 2

ORC - STORED DTC
Go To 5

DRIVER SEAT BELT TENSIONER CIRCUIT SHORT (CONTINUED)

2. CHECK FOR SHORTED DRIVER SEAT BELT PRETENSIONER

WARNING: To avoid personal injury or death, turn the ignition off, disconnect the battery and wait two minutes before proceeding.
Disconnect the Driver Seatbelt Pretensioner connector.

NOTE: Check connectors - Clean and repair as necessary.
Connect the 8443 Load Tool and appropriate Jumper to the Driver Seat Belt Pretensioner connector.

WARNING: To avoid personal injury or death, turn the ignition on then reconnect the battery.
With the scan tool, read the active ORC DTC's.

Does the scan tool display: DRIVER SEAT BELT TENSIONER CIRCUIT SHORT?

Yes >> Go To 3

No >> Replace the Driver Seat Belt Pretensioner in accordance with the Service Information.
Perform ORC VERIFICATION TEST - VER 1

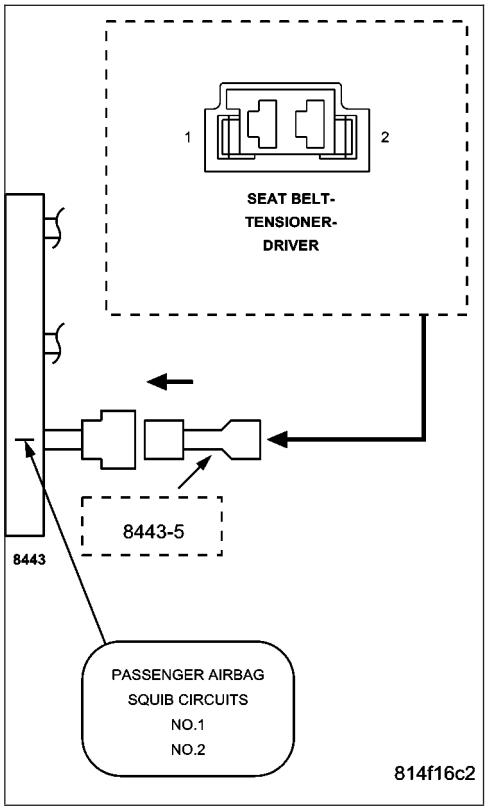

3. CHECK (R55) DRIVER SEAT BELT TENSIONER LINE 1 CIRCUIT FOR A SHORT TO (R53) DRIVER SEAT BELT TENSIONER LINE 2 CIRCUIT

WARNING: To avoid personal injury or death, turn the ignition off, disconnect the battery and wait two minutes before proceeding.
Disconnect the 8443 Load Tool and Jumper from the Driver Seat Belt Pretensioner connector.

Disconnect the ORC connectors.

NOTE: Check connectors - Clean and repair as necessary.
Connect the 8443 Load Tool ORC Adaptor to the ORC connector.

Measure the resistance between the (R55) Driver Seat Belt Tensioner Line 1 circuit and the (R53) Driver Seat Belt Tensioner Line 2 circuit at the Driver Seat Belt Pretensioner connector.

Is the resistance below 10K ohms?

Yes >> Repair the (R55) Driver Seat Belt Tensioner Line 1 circuit for a short to the (R53) Driver Seat Belt Tensioner Line 2 circuit.
Perform ORC VERIFICATION TEST - VER 1

No >> Go To 4

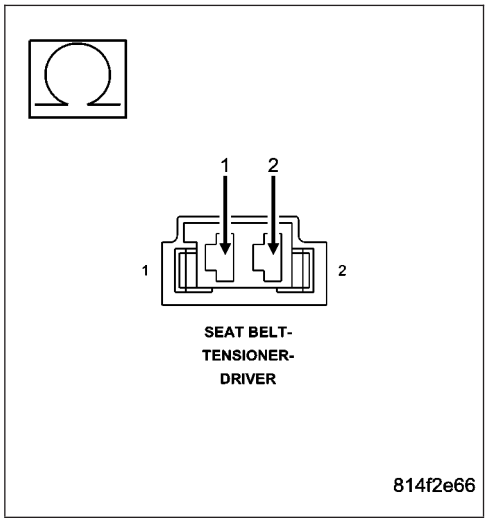

DRIVER SEAT BELT TENSIONER CIRCUIT SHORT (CONTINUED)

4. REPLACE THE ORC

WARNING: If the Occupant Restraint Controller (ORC) is dropped at any time, it must be replaced. Failure to take the proper precautions can result in accidental airbag deployment and personal injury or death.

NOTE: When reconnecting airbag system components the Ignition must be turned off and the Battery must be disconnected.

Repair

Replace the ORC in accordance with the Service Information.
Perform ORC VERIFICATION TEST - VER 1

---

5. STORED ORC DTC

With the scan tool, record and erase all DTC's from all Airbag System Modules.

If any ACTIVE codes are present they must be resolved before diagnosing any stored codes.

WARNING: To avoid personal injury or death, turn the ignition off, disconnect the battery and wait two minutes before proceeding.

Using the wiring diagram/schematic as a guide, inspect the wiring and connectors.

Look for chaffed, pierced, pinched, or partially broken wires and broken, bent, pushed out, spread, corroded, or contaminated terminals.

The following additional checks may assist you in identifying a possible intermittent problem.

Reconnect any disconnected components and harness connector.

WARNING: To avoid personal injury or death, turn the ignition on, then reconnect the battery.

With the scan tool monitor active codes as you work through the following steps.

Wiggle the wiring harness and connectors of the related airbag circuit or component.

If codes are related to the Driver Airbag circuits, rotate the steering wheel from stop to stop.

If only stored codes return continue the test until the problem area has been isolated.

In the previous steps you have attempted to recreate the conditions responsible for setting active DTC in question.

Are any ACTIVE DTC's present?

Yes >> Select the appropriate diagnostic procedure from the Table of Contents in this section.

No >> No problem found at this time. Erase all codes before returning vehicle to customer.

DRIVER SEAT BELT TENSIONER SHORT TO BATTERY

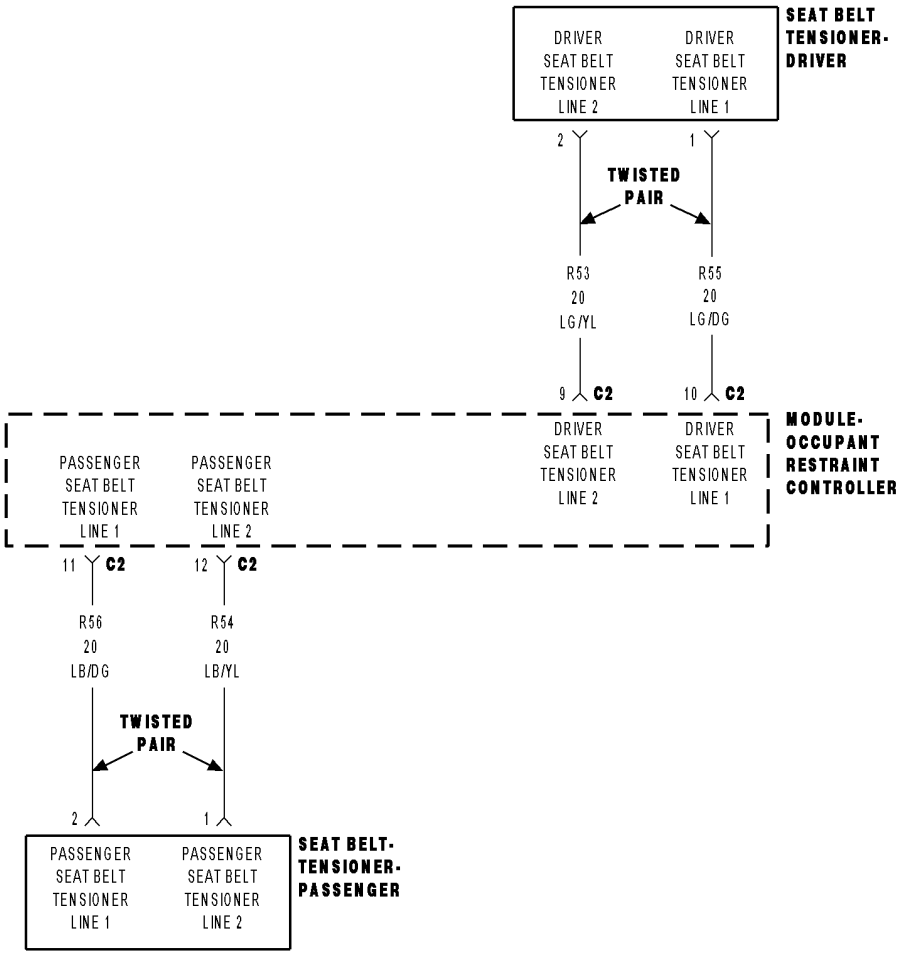

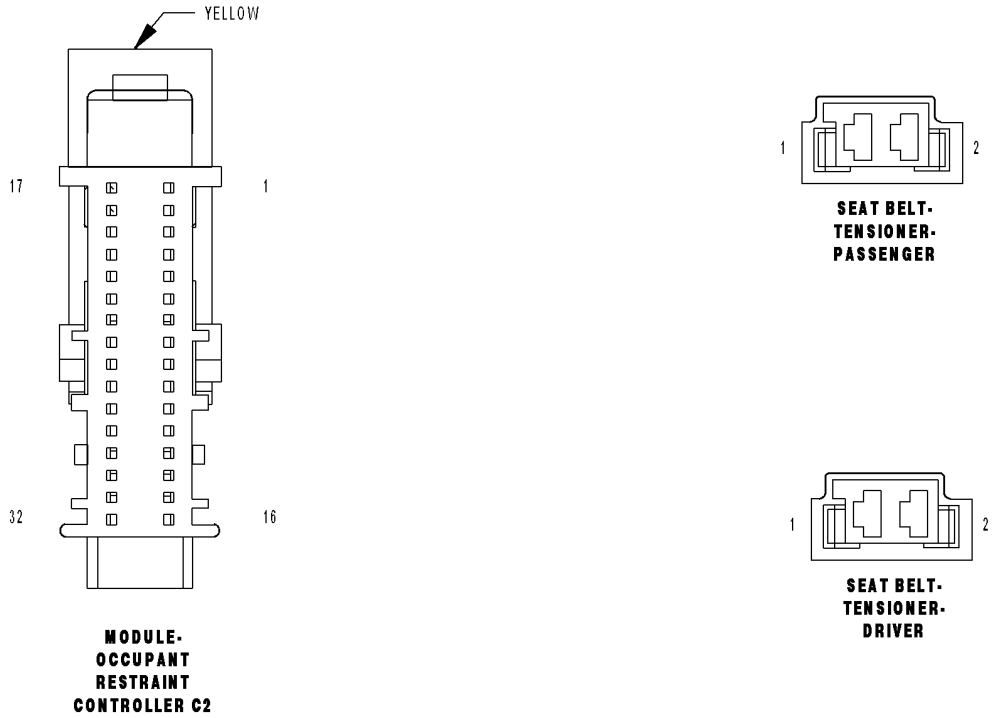

DRIVER SEAT BELT TENSIONER SHORT TO BATTERY (CONTINUED)

For the Air Bag System circuit diagram (Refer to 8 - ELECTRICAL/RESTRAINTS - SCHEMATICS AND DIAGRAMS).

For a complete wiring diagram **Refer to Section 8W**.

- **When Monitored:**
  With the ignition on, the Occupant Restraint Controller (ORC) monitors the voltage on the Driver Seat Belt Tensioner circuits.
- **Set Condition:**
  The ORC detects voltage on the Driver Seat Belt Tensioner circuits.

Possible Causes
(R55) DRIVER SEAT BELT TENSIONER LINE 1 CIRCUIT OR (R53) DRIVER SEAT BELT TENSIONER LINE 2 CIRCUIT SHORTED TO BATTERY
DRIVER SEAT BELT PRETENSIONER
ORC

Diagnostic Test

1. DETERMINE ACTIVE OR STORED DTC

NOTE: Ensure the battery is fully charged.

NOTE: The scan tool, SRS Airbag Load Tool MRL 8443, and DVOM are required to perform the following test.

NOTE: When reconnecting airbag system components the Ignition must be turned off and the Battery must be disconnected.

Select Active or Stored DTC.

Is the DTC active or stored?

ORC - ACTIVE DTC
Go To 2

ORC - STORED DTC
Go To 5

DRIVER SEAT BELT TENSIONER SHORT TO BATTERY (CONTINUED)

2. CHECK FOR SHORTED DRIVER SEAT BELT PRETENSIONER

WARNING: To avoid personal injury or death, turn the ignition off, disconnect the battery and wait two minutes before proceeding.
Disconnect the Driver Seat Belt Pretensioner connector.

NOTE: Check connectors - Clean and repair as necessary.
Connect the 8443 Load Tool and appropriate Jumper to the Driver Seat Belt Pretensioner connector.

WARNING: To avoid personal injury or death, turn the ignition on, then reconnect the battery.
With the scan tool, read the active ORC DTC's.

Does the scan tool display: DRIVER SEAT BELT TENSIONER SHORT TO BATTERY?

Yes >> Go To 3

No >> Replace the Driver Seat Belt Pretensioner in accordance with the Service Information.
Perform ORC VERIFICATION TEST - VER 1

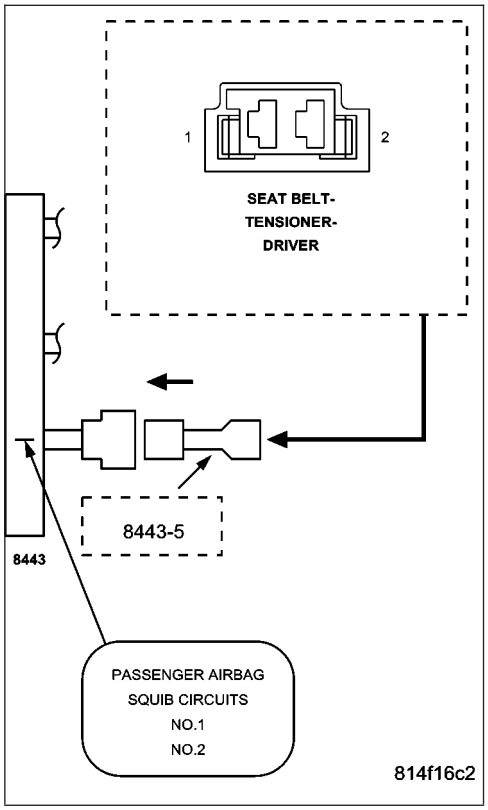

3. CHECK (R55) DRIVER SEAT BELT TENSIONER LINE 1 CIRCUIT AND (R53) DRIVER SEAT BELT TENSIONER LINE 2 CIRCUIT FOR A SHORT TO BATTERY

WARNING: To avoid personal injury or death, turn the ignition off, disconnect the battery and wait two minutes before proceeding.
Disconnect the 8443 Load Tool and Jumper from the Driver Seat Belt Pretensioner connector.

Disconnect the ORC connectors.

NOTE: Check connectors - Clean and repair as necessary.
Connect the 8443 Load Tool ORC Adaptor to the ORC connector.

Measure the voltage of the (R55) Driver Seat Belt Tensioner Line 1 circuit between the Driver Seat Belt Pretensioner connector and ground.

Measure the voltage of the (R53) Driver Seat Belt Tensioner Line 2 circuit between the Driver Seat Belt Pretensioner connector and ground.

Is there any voltage present on either circuit?

Yes >> Repair the Driver Seat Belt Tensioner circuits with voltage present for a short to battery.
Perform ORC VERIFICATION TEST - VER 1

No >> Go To 4

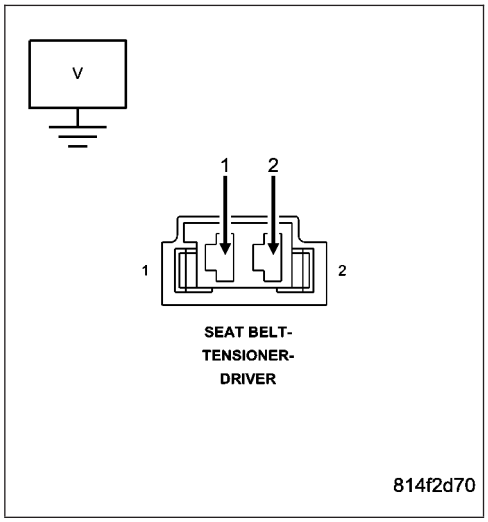

DRIVER SEAT BELT TENSIONER SHORT TO BATTERY (CONTINUED)

4. REPLACE THE ORC

WARNING: To avoid personal injury or death, turn the ignition off, disconnect the battery and wait two minutes before proceeding.

WARNING: If the Occupant Restraint Controller (ORC) is dropped at any time, it must be replaced. Failure to take the proper precautions can result in accidental airbag deployment and personal injury or death.

NOTE: When reconnecting airbag system components the Ignition must be turned off and the Battery must be disconnected.

Repair

Replace the ORC in accordance with the Service Information.
Perform ORC VERIFICATION TEST - VER 1

---

5. STORED ORC DTC

With the scan tool, record and erase all DTC's from all Airbag System Modules.

If any ACTIVE codes are present they must be resolved before diagnosing any stored codes.

WARNING: To avoid personal injury or death, turn the ignition off, disconnect the battery and wait two minutes before proceeding.

Using the wiring diagram/schematic as a guide, inspect the wiring and connectors.

Look for chaffed, pierced, pinched, or partially broken wires and broken, bent, pushed out, spread, corroded, or contaminated terminals.

The following additional checks may assist you in identifying a possible intermittent problem.

Reconnect any disconnected components and harness connector.

WARNING: To avoid personal injury or death, turn the ignition on, then reconnect the battery.

With the scan tool monitor active codes as you work through the following steps.

Wiggle the wiring harness and connectors of the related airbag circuit or component.

If codes are related to the Driver Airbag circuits, rotate the steering wheel from stop to stop.

If only stored codes return continue the test until the problem area has been isolated.

In the previous steps you have attempted to recreate the conditions responsible for setting active DTC in question.

Are any ACTIVE DTCs present?

Yes >> Select the appropriate diagnostic procedure from the Table of Contents in this section.

No >> No problem found at this time. Erase all codes before returning vehicle to customer.

DRIVER SEAT BELT TENSIONER SHORT TO GROUND

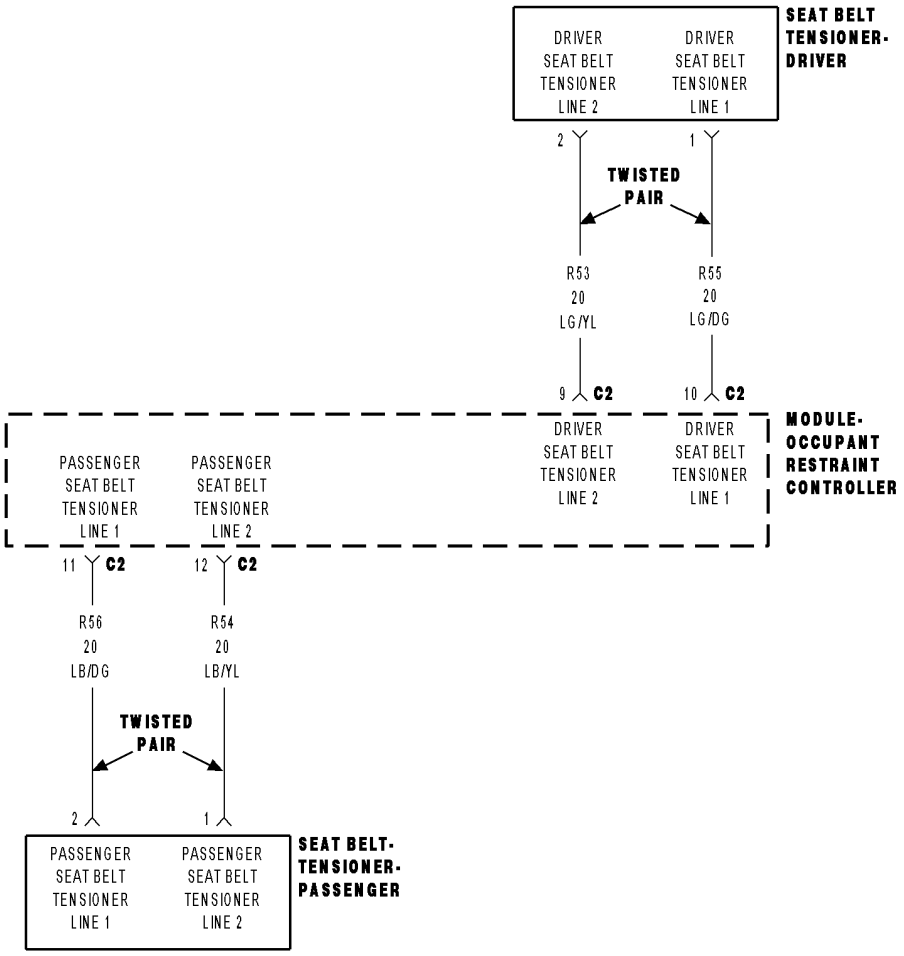

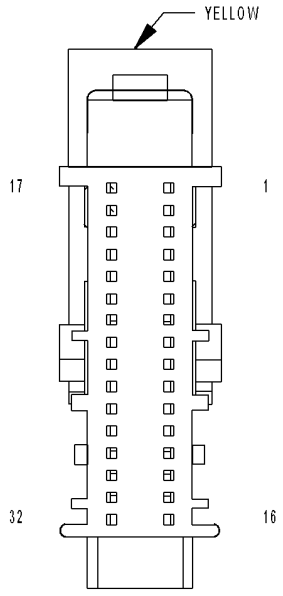

MODULE- OCCUPANT RESTRAINT CONTROLLER C2

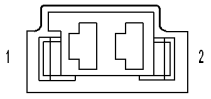

SEAT BELT- TENSIONER- PASSENGER

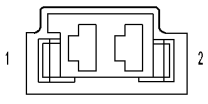

SEAT BELT- TENSIONER- DRIVER

814f09c3

DRIVER SEAT BELT TENSIONER SHORT TO GROUND (CONTINUED)

For the Air Bag System circuit diagram (Refer to 8 - ELECTRICAL/RESTRAINTS - SCHEMATICS AND DIAGRAMS).

For a complete wiring diagram **Refer to Section 8W**.

- **When Monitored:**
  With the ignition on, the Occupant Restraint Controller (ORC) monitors the resistance of the Driver Seat Belt Tensioner circuits.
- **Set Condition:**
  The ORC has detected low resistance on the Driver Seat Belt Tensioner circuits.

Possible Causes
(R55) DRIVER SEAT BELT TENSIONER LINE 1 CIRCUIT OR (R53) DRIVER SEAT BELT TENSIONER LINE 2 CIRCUIT SHORTED TO GROUND
DRIVER SEAT BELT PRETENSIONER
ORC

Diagnostic Test

1. DETERMINE ACTIVE OR STORED DTC

NOTE: Ensure the battery is fully charged.

NOTE: The scan tool, SRS Airbag Load Tool MRL 8443, and DVOM are required to perform the following test.

NOTE: When reconnecting airbag system components the Ignition must be turned off and the Battery must be disconnected.

Select Active or Stored DTC.

Is the DTC active or stored?

ORC - ACTIVE DTC
Go To 2

ORC - STORED DTC
Go To 5

DRIVER SEAT BELT TENSIONER SHORT TO GROUND (CONTINUED)

2. CHECK FOR SHORTED DRIVER SEAT BELT PRETENSIONER

WARNING: To avoid personal injury or death, turn the ignition off, disconnect the battery and wait two minutes before proceeding.
Disconnect the Driver Seat Belt Pretensioner connector.

NOTE: Check connectors - Clean and repair as necessary.
Connect the 8443 Load Tool and appropriate Jumper to the Driver Seat Belt Pretensioner connector.

WARNING: To avoid personal injury or death, turn the ignition on, then reconnect the battery.
With the scan tool, read the active ORC DTC's.

Does the scan tool display: DRIVER SEAT BELT TENSIONER SHORT TO GROUND?

Yes >> Go To 3

No >> Replace the Driver Seat Belt Pretensioner in accordance with the Service Information.
Perform ORC VERIFICATION TEST - VER 1

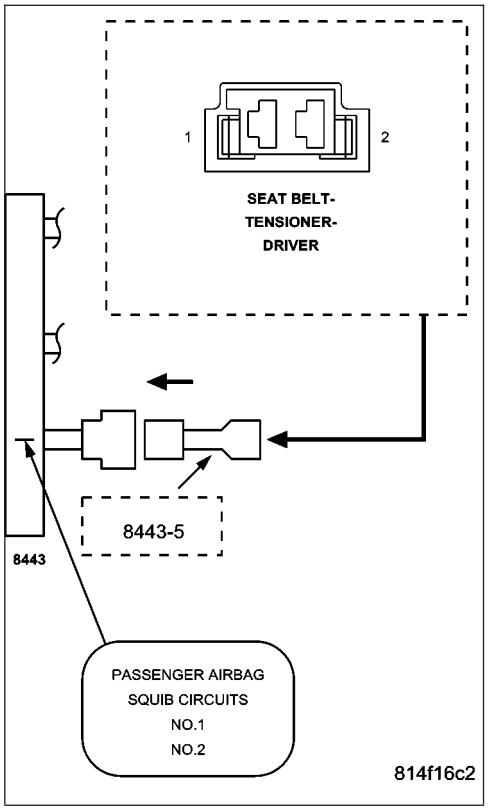

3. CHECK (R55) DRIVER SEAT BELT TENSIONER LINE 1 CIRCUIT AND (R53) DRIVER SEAT BELT TENSIONER LINE 2 CIRCUIT FOR A SHORT TO GROUND

WARNING: To avoid personal injury or death, turn the ignition off, disconnect the battery and wait two minutes before proceeding.
Disconnect the 8443 Load Tool and Jumper from the Driver Seat Belt Pretensioner connector.

Disconnect the ORC connectors.

NOTE: Check connectors - Clean and repair as necessary.
Connect the 8443 Load Tool ORC Adaptor to the ORC connector.

Measure the resistance of the (R55) Driver Seat Belt Tensioner Line 1 circuit between ground and the Driver Seat Belt Pretensioner connector.

Measure the resistance of the (R53) Driver Seat Belt Tensioner Line 2 circuit between ground and the Driver Seat Belt Pretensioner connector.

Is the resistance below 10K ohms on either circuit?

Yes >> Repair the Driver Seat Belt Tensioner circuits with a resistance below 10K ohms for a short to ground.
Perform ORC VERIFICATION TEST - VER 1

No >> Go To 4

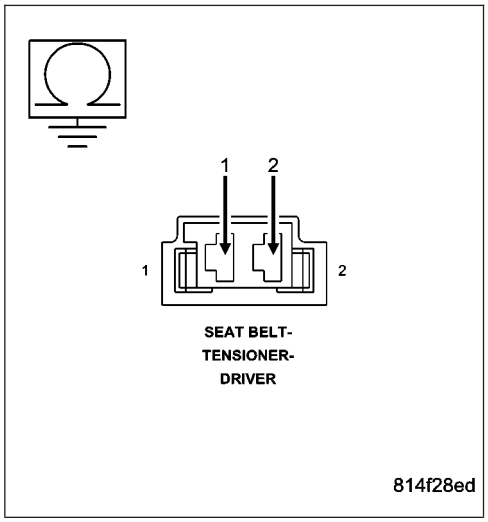

DRIVER SEAT BELT TENSIONER SHORT TO GROUND (CONTINUED)

4. REPLACE THE ORC

WARNING: If the Occupant Restraint Controller (ORC) is dropped at any time, it must be replaced. Failure to take the proper precautions can result in accidental airbag deployment and personal injury or death.

NOTE: When reconnecting airbag system components the Ignition must be turned off and the Battery must be disconnected.

Repair

Replace the ORC in accordance with the Service Information.
Perform ORC VERIFICATION TEST - VER 1

---

5. STORED ORC DTC

With the scan tool, record and erase all DTC's from all Airbag System Modules.

If any ACTIVE codes are present they must be resolved before diagnosing any stored codes.

WARNING: To avoid personal injury or death, turn the ignition off, disconnect the battery and wait two minutes before proceeding.

Using the wiring diagram/schematic as a guide, inspect the wiring and connectors.

Look for chaffed, pierced, pinched, or partially broken wires and broken, bent, pushed out, spread, corroded, or contaminated terminals.

The following additional checks may assist you in identifying a possible intermittent problem.

Reconnect any disconnected components and harness connector.

WARNING: To avoid personal injury or death, turn the ignition on, then reconnect the battery.

With the scan tool monitor active codes as you work through the following steps.

Wiggle the wiring harness and connectors of the related airbag circuit or component.

If codes are related to the Driver Airbag circuits, rotate the steering wheel from stop to stop.

If only stored codes return continue the test until the problem area has been isolated.

In the previous steps you have attempted to recreate the conditions responsible for setting active DTC in question.

Are any ACTIVE DTC's present?

Yes >> Select the appropriate diagnostic procedure from the Table of Contents in this section.

No >> No problem found at this time. Erase all codes before returning vehicle to customer.

DRIVER SQUIB 1 CIRCUIT OPEN

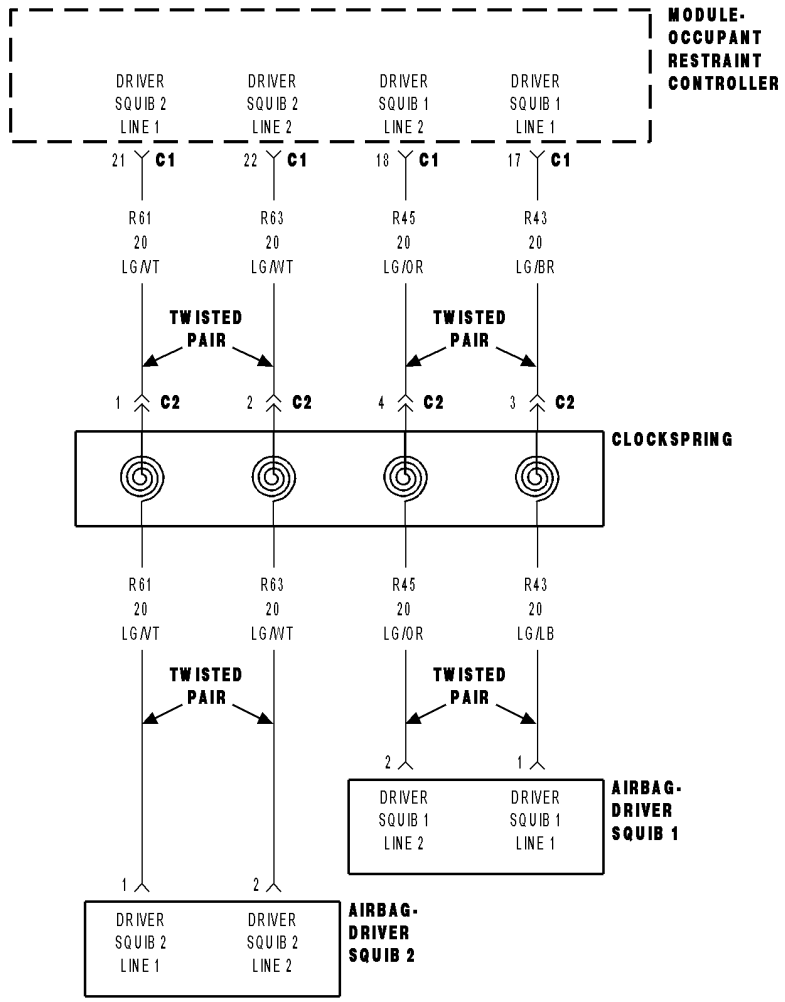

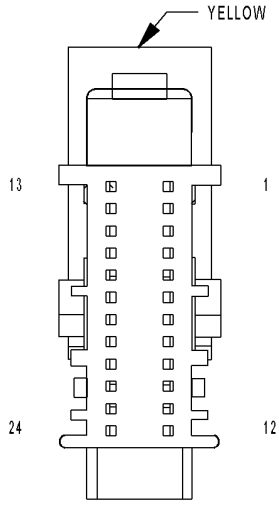

MODULE-
OCCUPANT
RESTRAINT
CONTROLLER C1

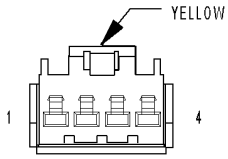

CLOCKSPRING C2

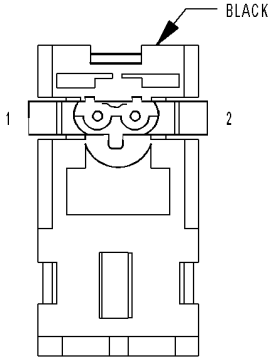

AIRBAG-
DRIVER SQUIB 1

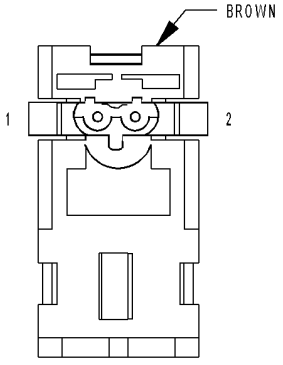

AIRBAG-
DRIVER SQUIB 2

814ec6e6

DRIVER SQUIB 1 CIRCUIT OPEN (CONTINUED)

For the Air Bag System circuit diagram (Refer to 8 - ELECTRICAL/RESTRAINTS - SCHEMATICS AND DIAGRAMS).

For a complete wiring diagram **Refer to Section 8W**.

- **When Monitored:**
  With the ignition on, the Occupant Restraint Controller (ORC) monitors the resistance of the Driver Squib 1 circuits.
- **Set Condition:**
  The ORC has detected an open or high resistance on the Driver Squib 1 circuits.

Possible Causes
DRIVER SQUIB 1 LINE 2 CIRCUIT OPEN
DRIVER SQUIB 1 LINE 1 CIRCUIT OPEN
CLOCKSPRING
DRIVER AIRBAG
ORC

Diagnostic Test

1. DETERMINE ACTIVE OR STORED DTC

NOTE: Ensure the battery is fully charged.

NOTE: The scan tool, SRS Airbag Load Tool MRL 8443, and DVOM are required to perform the following test.

NOTE: When reconnecting airbag system components the Ignition must be turned off and the Battery must be disconnected.

Select Active or Stored DTC.

Is the DTC active or stored?

ORC - ACTIVE DTC
Go To 2

ORC - STORED DTC
Go To 7

DRIVER SQUIB 1 CIRCUIT OPEN (CONTINUED)

2. CHECK FOR OPEN SQUIB CIRCUITS IN DRIVER AIRBAG

WARNING: To avoid personal injury or death, turn the ignition off, disconnect the battery and wait two minutes before proceeding.
Disconnect the Driver Airbag Squib connectors.

WARNING: To avoid personal injury or death, do not place an intact undeployed airbag face down on a hard surface, the airbag will propel into the air if accidentally deployed.

NOTE: Check connectors - Clean and repair as necessary.
Connect the 8443 Load Tool and appropriate Jumper to the Driver Airbag Squib connectors.

WARNING: To avoid personal injury or death, turn the ignition on, then reconnect the battery.
With the scan tool, read the active ORC DTC's.

Does the scan tool display: DRIVER SQUIB 1 CIRCUIT OPEN?

Yes >> Go To 3

No >> Replace the Driver Airbag in accordance with the Service Information.
Perform ORC VERIFICATION TEST - VER 1

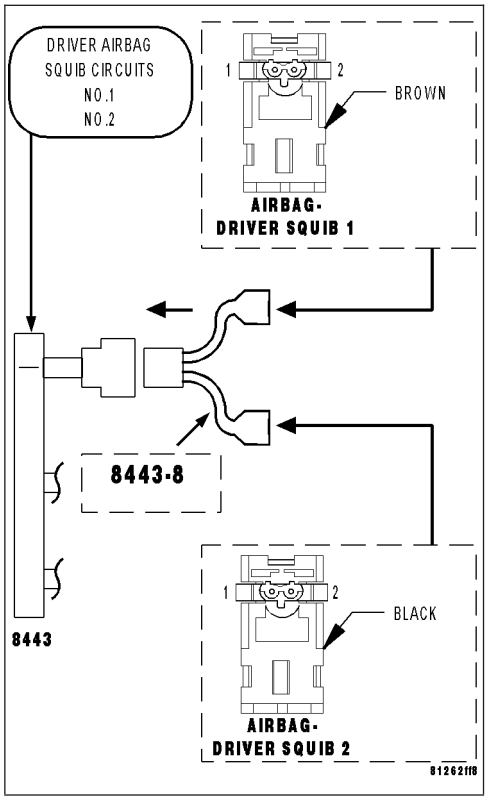

3. CHECK CLOCKSPRING SQUIB CIRCUITS FOR AN OPEN

WARNING: To avoid personal injury or death, turn the ignition off, disconnect the battery and wait two minutes before proceeding.
Disconnect the 8443 Load Tool and Jumper from the Driver Airbag Squib connectors.

Disconnect the Clockspring connector.

NOTE: Check connectors - Clean and repair as necessary.
Connect the 8443 Load Tool and appropriate Jumper to the Clockspring connector.

WARNING: To avoid personal injury or death, turn the ignition on, then reconnect the battery.
With the scan tool, read the active ORC DTC's.

Does the scan tool display: DRIVER SQUIB 1 CIRCUIT OPEN?

Yes >> Go To 4

No >> Replace the Clockspring in accordance with the Service Information.
Perform ORC VERIFICATION TEST - VER 1

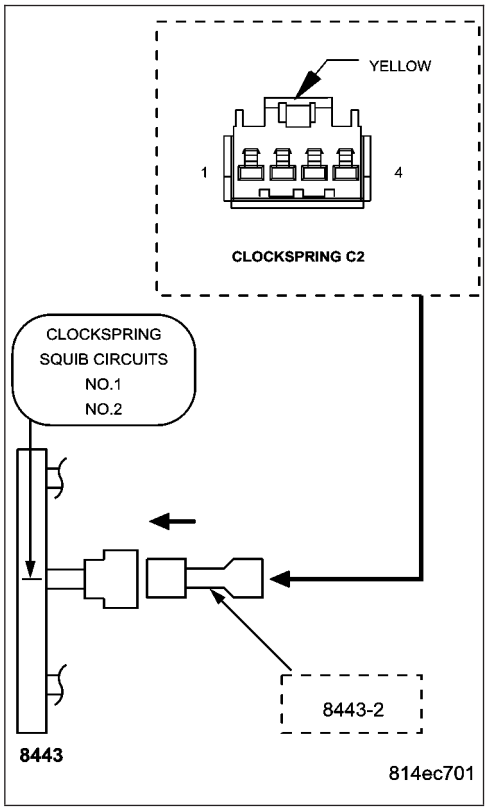

DRIVER SQUIB 1 CIRCUIT OPEN (CONTINUED)

4. CHECK DRIVER SQUIB 1 LINE 2 CIRCUIT FOR AN OPEN

WARNING: To avoid personal injury or death, turn the ignition off, disconnect the battery and wait two minutes before proceeding.
Disconnect the 8443 Load Tool and Jumper from the Clockspring connector.

Disconnect the ORC connectors.

NOTE: Check connectors - Clean and repair as necessary.
Connect the 8443 Load Tool ORC Adaptor to the ORC connector.

Measure the resistance of the Driver Squib 1 Line 2 circuit between the Clockspring connector and the ORC Load Tool Adaptor.

Is the resistance below 1.0 ohm?

Yes >> Go To 5

No >> Repair the Driver Squib 1 Line 2 circuit for an open. Then, Go To 5

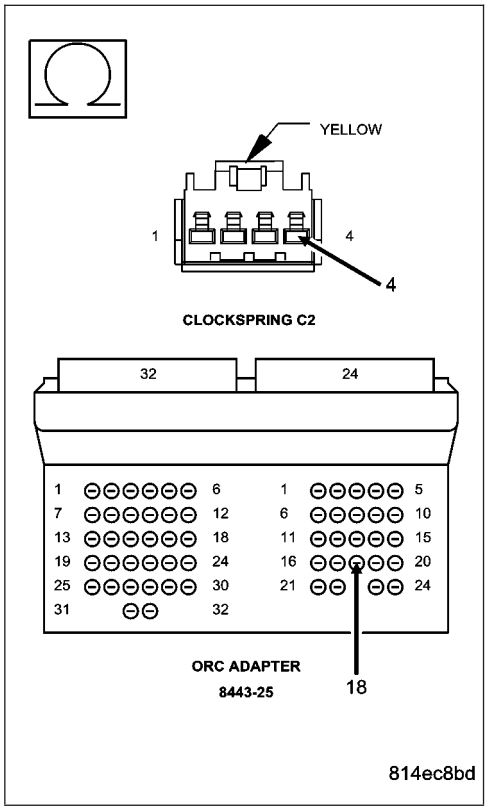

5. CHECK DRIVER SQUIB 1 LINE 1 CIRCUIT FOR AN OPEN

Measure the resistance of the Driver Squib 1 Line 1 circuit between the Clockspring connector and the ORC Load Tool Adaptor.

Is the resistance below 1.0 ohm?

Yes >> Go To 6

No >> Repair the Driver Squib 1 Line 1 circuit for an open. Perform ORC VERIFICATION TEST - VER 1

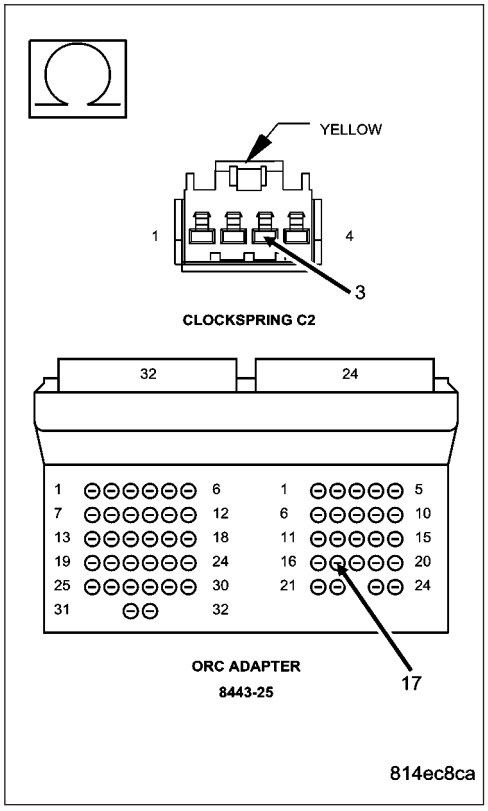

DRIVER SQUIB 1 CIRCUIT OPEN (CONTINUED)

6. REPLACE THE ORC

WARNING: If the Occupant Restraint Controller (ORC) is dropped at any time, it must be replaced. Failure to take the proper precautions can result in accidental airbag deployment and personal injury or death.

NOTE: When reconnecting airbag system components the Ignition must be turned off and the Battery must be disconnected.

Repair

Replace the ORC in accordance with the Service Information.
Perform ORC VERIFICATION TEST - VER 1

---

7. STORED ORC DTC

With the scan tool, record and erase all DTC's from all Airbag System Modules.

If any ACTIVE codes are present they must be resolved before diagnosing any stored codes.

WARNING: To avoid personal injury or death, turn the ignition off, disconnect the battery and wait two minutes before proceeding.

Using the wiring diagram/schematic as a guide, inspect the wiring and connectors.

Look for chaffed, pierced, pinched, or partially broken wires and broken, bent, pushed out, spread, corroded, or contaminated terminals.

The following additional checks may assist you in identifying a possible intermittent problem.

Reconnect any disconnected components and harness connector.

WARNING: To avoid personal injury or death, turn the ignition on, then reconnect the battery.

With the scan tool monitor active codes as you work through the following steps.

Wiggle the wiring harness and connectors of the related airbag circuit or component.

If codes are related to the Driver Airbag circuits, rotate the steering wheel from stop to stop.

If only stored codes return continue the test until the problem area has been isolated.

In the previous steps you have attempted to recreate the conditions responsible for setting active DTC in question.

Are any ACTIVE DTC's present?

Yes >> Select the appropriate diagnostic procedure from the Table of Contents in this section.

No >> No problem found at this time. Erase all codes before returning vehicle to customer.

DRIVER SQUIB 1 CIRCUIT SHORT

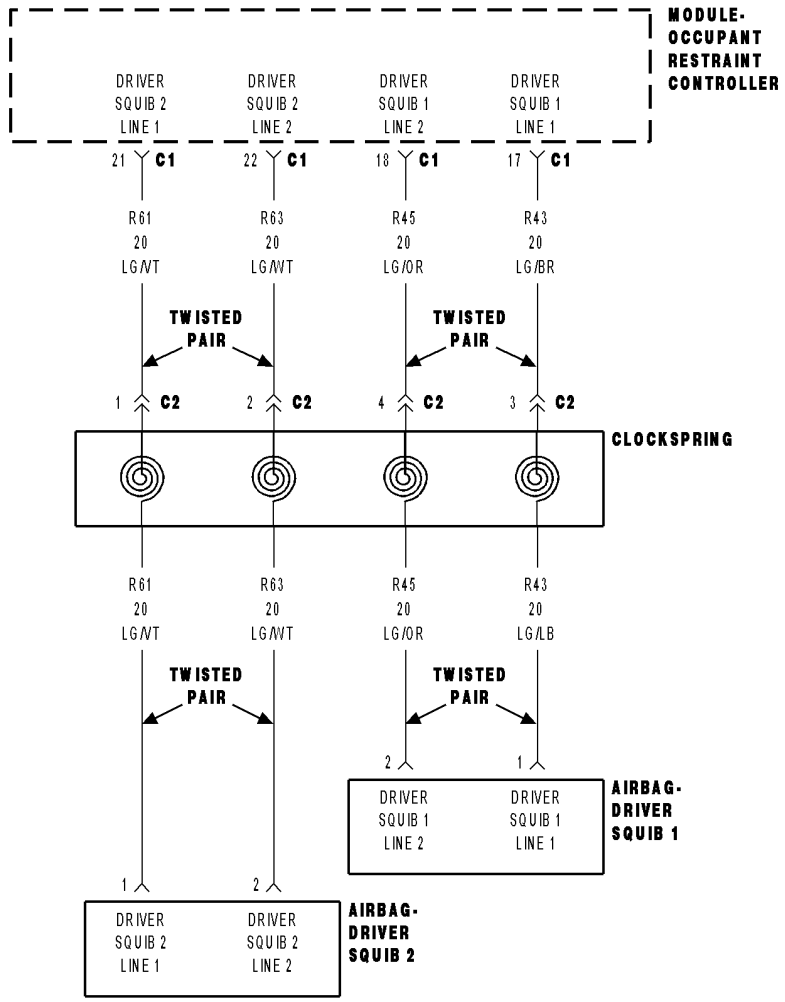

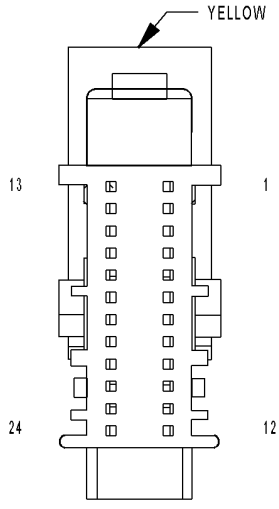

MODULE-
OCCUPANT
RESTRAINT
CONTROLLER C1

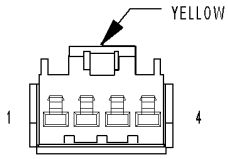

CLOCKSPRING C2

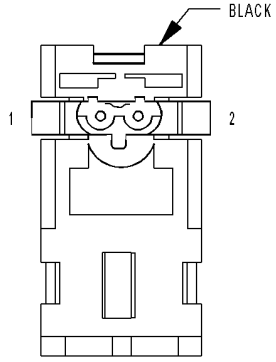

AIRBAG-
DRIVER SQUIB 1

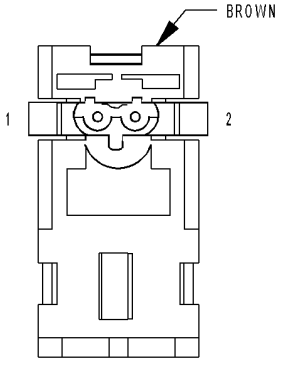

AIRBAG-
DRIVER SQUIB 2

814ec6e6

DRIVER SQUIB 1 CIRCUIT SHORT (CONTINUED)

For the Air Bag System circuit diagram (Refer to 8 - ELECTRICAL/RESTRAINTS - SCHEMATICS AND DIAGRAMS).

For a complete wiring diagram **Refer to Section 8W**.

- **When Monitored:**
  With the ignition on, the Occupant Restraint Controller (ORC) monitors the resistance of the Driver Squib 1 circuits.
- **Set Condition:**
  The ORC has detected low resistance between the Driver Squib 1 circuits.

Possible Causes
DRIVER SQUIB 1 LINE 2 CIRCUIT SHORTED TO DRIVER SQUIB 1 LINE 1 CIRCUIT
CLOCKSPRING
DRIVER AIRBAG
ORC

Diagnostic Test

1. DETERMINE ACTIVE OR STORED DTC

NOTE: Ensure the battery is fully charged.

NOTE: The scan tool, SRS Airbag Load Tool MRL 8443, and DVOM are required to perform the following test.

NOTE: When reconnecting airbag system components the Ignition must be turned off and the Battery must be disconnected.

Select Active or Stored DTC.

Is the DTC active or stored?

ORC - ACTIVE DTC
Go To 2

ORC - STORED DTC
Go To 6

DRIVER SQUIB 1 CIRCUIT SHORT (CONTINUED)

2. CHECK FOR SHORTED SQUIB CIRCUITS IN DRIVER AIRBAG

WARNING: To avoid personal injury or death, turn the ignition off, disconnect the battery and wait two minutes before proceeding.

WARNING: To avoid personal injury or death, do not place an intact undeployed airbag face down on a hard surface, the airbag will propel into the air if accidentally deployed.
Disconnect the Driver Airbag Squib connectors.

NOTE: Check connectors - Clean and repair as necessary.
Connect the 8443 Load Tool and appropriate Jumper to the Driver Airbag Squib connectors.

WARNING: To avoid personal injury or death, turn the ignition on, then reconnect the battery.
With the scan tool, read the active ORC DTC's.

Does the scan tool display: DRIVER SQUIB 1 CIRCUIT SHORT?

Yes >> Go To 3

No >> Replace the Driver Airbag in accordance with the Service Information.
Perform ORC VERIFICATION TEST - VER 1

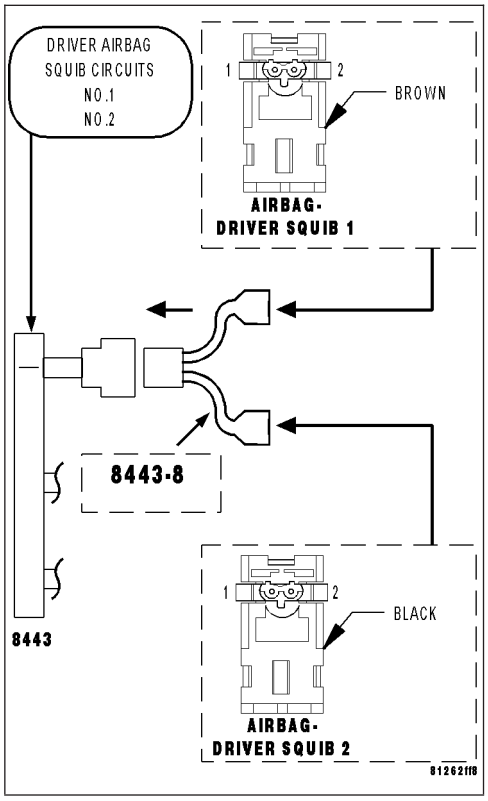

3. CHECK CLOCKSPRING SQUIB CIRCUITS FOR A SHORT TOGETHER

WARNING: To avoid personal injury or death, turn the ignition off, disconnect the battery and wait two minutes before proceeding.
Disconnect the 8443 Load Tool ORC from the Driver Airbag Squib connectors.

Disconnect the Clockspring connector.

NOTE: Check connectors - Clean and repair as necessary.
Connect the 8443 Load Tool and appropriate Jumper to the Clockspring connector.

WARNING: To avoid personal injury or death, turn the ignition on, then reconnect the battery.
With the scan tool, read the active ORC DTC's.

Does the scan tool display: DRIVER SQUIB 1 CIRCUIT SHORT?

Yes >> Go To 4

No >> Replace the Clockspring in accordance with the Service Information.
Perform ORC VERIFICATION TEST - VER 1

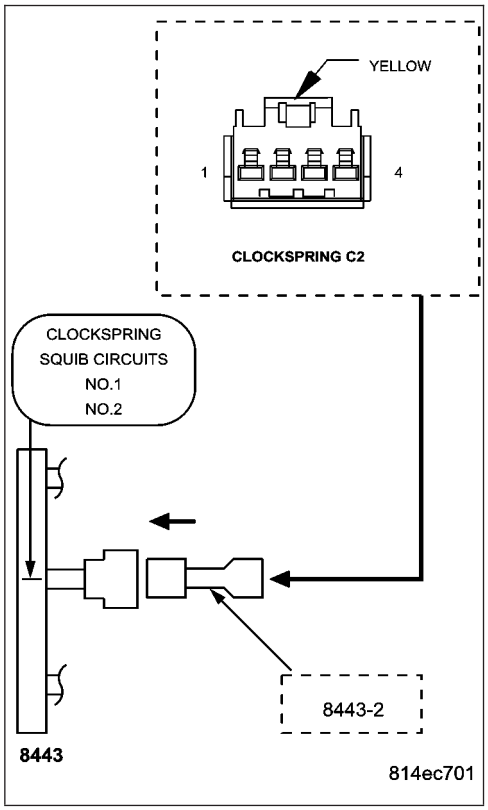

DRIVER SQUIB 1 CIRCUIT SHORT (CONTINUED)

4. CHECK DRIVER SQUIB 1 LINE 2 CIRCUIT FOR A SHORT TO DRIVER SQUIB 1 LINE 1 CIRCUIT

WARNING: To avoid personal injury or death, turn the ignition off, disconnect the battery and wait two minutes before proceeding.
Disconnect the 8443 Load Tool and Jumper from the Clockspring connector.

Disconnect the ORC connectors.

NOTE: Check connectors - Clean and repair as necessary.
Connect the 8443 Load Tool ORC Adaptor to the ORC connector.

Measure the resistance between the Driver Squib 1 Line 2 circuit and the Driver Squib 1 Line 1 circuit at the Clockspring connector.

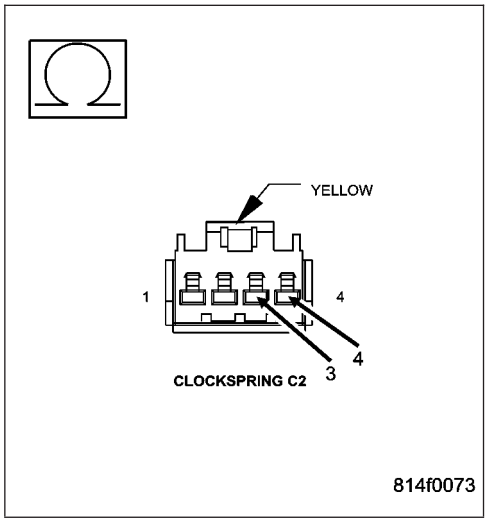

Is the resistance below 10K ohms?

Yes >> Repair the Driver Squib 1 Line 2 circuit for a short to the Driver Squib 1 Line 1 circuit.
Perform ORC VERIFICATION TEST - VER 1

No >> Go To 5

---

5. REPLACE THE ORC

WARNING: If the Occupant Restraint Controller (ORC) is dropped at any time, it must be replaced. Failure to take the proper precautions can result in accidental airbag deployment and personal injury or death.

NOTE: When reconnecting airbag system components the Ignition must be turned off and the Battery must be disconnected.

Repair

Replace the ORC in accordance with the Service Information.
Perform ORC VERIFICATION TEST - VER 1

DRIVER SQUIB 1 CIRCUIT SHORT (CONTINUED)

6. STORED ORC DTC

With the scan tool, record and erase all DTC's from all Airbag System Modules.

If any ACTIVE codes are present they must be resolved before diagnosing any stored codes.

WARNING: To avoid personal injury or death, turn the ignition off, disconnect the battery and wait two minutes before proceeding.

Using the wiring diagram/schematic as a guide, inspect the wiring and connectors.

Look for chaffed, pierced, pinched, or partially broken wires and broken, bent, pushed out, spread, corroded, or contaminated terminals.

The following additional checks may assist you in identifying a possible intermittent problem.

Reconnect any disconnected components and harness connector.

WARNING: To avoid personal injury or death, turn the ignition on, then reconnect the battery.

With the scan tool monitor active codes as you work through the following steps.

Wiggle the wiring harness and connectors of the related airbag circuit or component.

If codes are related to the Driver Airbag circuits, rotate the steering wheel from stop to stop.

If only stored codes return continue the test until the problem area has been isolated.

In the previous steps you have attempted to recreate the conditions responsible for setting active DTC in question.

Are any ACTIVE DTCs present?

Yes >> Select the appropriate diagnostic procedure from the Table of Contents in this section.

No >> No problem found at this time. Erase all codes before returning vehicle to customer.

DRIVER SQUIB 1 SHORT TO BATTERY

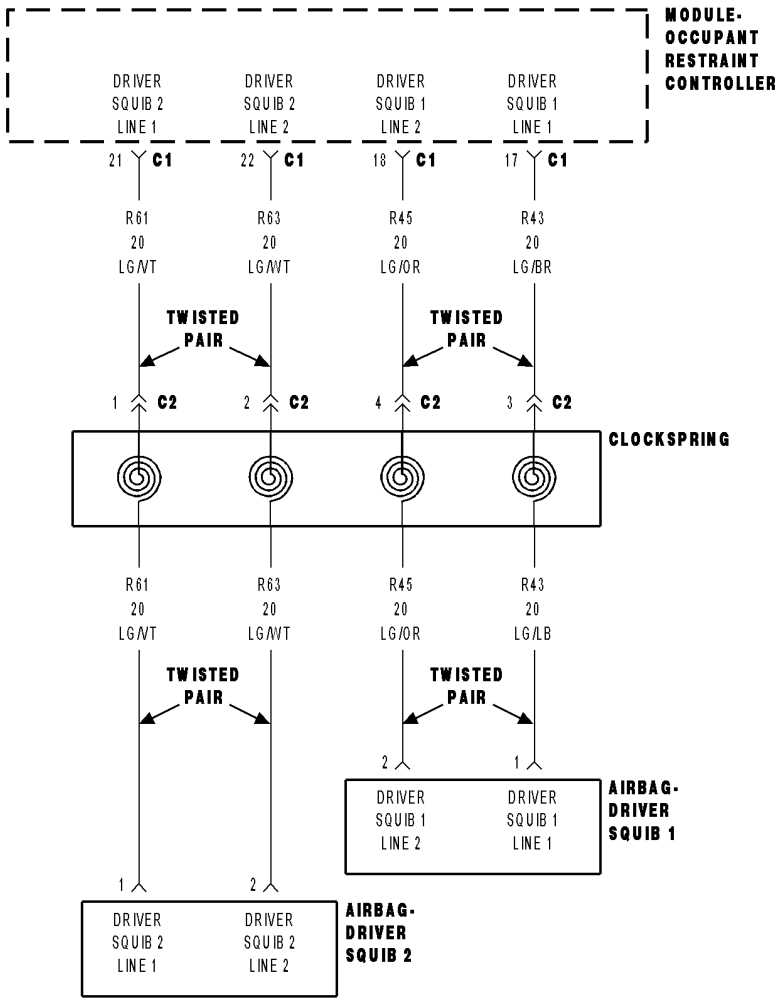

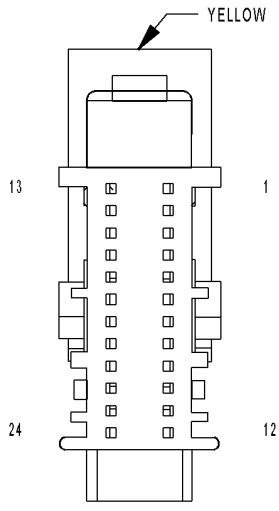

MODULE-
OCCUPANT
RESTRAINT
CONTROLLER C1

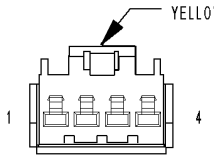

CLOCKSPRING C2

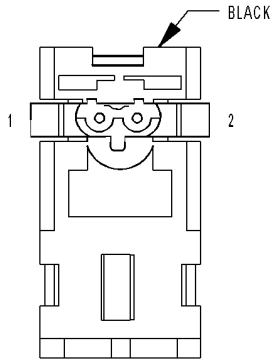

AIRBAG-
DRIVER SQUIB 1

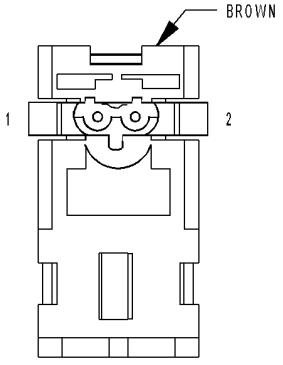

AIRBAG-
DRIVER SQUIB 2

814ec6e6

DRIVER SQUIB 1 SHORT TO BATTERY (CONTINUED)

For the Air Bag System circuit diagram (Refer to 8 - ELECTRICAL/RESTRAINTS - SCHEMATICS AND DIAGRAMS).

For a complete wiring diagram **Refer to Section 8W**.

- **When Monitored:**
  With the ignition on, the Occupant Restraint Controller (ORC) monitors the voltage on the Driver Squib 1 circuits.
- **Set Condition:**
  The ORC has detected voltage on the Driver Squib 1 circuits.

Possible Causes
DRIVER SQUIB 1 LINE 2 CIRCUIT OR DRIVER SQUIB 1 LINE 1 CIRCUIT SHORTED TO BATTERY
CLOCKSPRING
DRIVER AIRBAG
ORC

Diagnostic Test

1. DETERMINE ACTIVE OR STORED DTC

NOTE: Ensure the battery is fully charged.

NOTE: The scan tool, SRS Airbag Load Tool MRL 8443, and DVOM are required to perform the following test.

NOTE: When reconnecting airbag system components the Ignition must be turned off and the Battery must be disconnected.

Select Active or Stored DTC.

Is the DTC active or stored?

ORC - ACTIVE DTC
Go To 2

ORC - STORED DTC
Go To 6

DRIVER SQUIB 1 SHORT TO BATTERY (CONTINUED)

2. CHECK FOR SHORTED SQUIB CIRCUITS IN DRIVER AIRBAG

WARNING: To avoid personal injury or death, turn the ignition off, disconnect the battery and wait two minutes before proceeding.
Disconnect the Driver Airbag Squib connectors.

WARNING: To avoid personal injury or death, do not place an intact undeployed airbag face down on a hard surface, the airbag will propel into the air if accidentally deployed.

NOTE: Check connectors - Clean and repair as necessary.
Connect the 8443 Load Tool and appropriate Jumper to the Driver Airbag Squib connectors.

WARNING: To avoid personal injury or death, turn the ignition on, then reconnect the battery.
With the scan tool, read the active ORC DTC's.

Does the scan tool display: DRIVER SQUIB 1 SHORT TO BATTERY?

Yes >> Go To 3

No >> Replace the Driver Airbag in accordance with the Service Information.
Perform ORC VERIFICATION TEST - VER 1

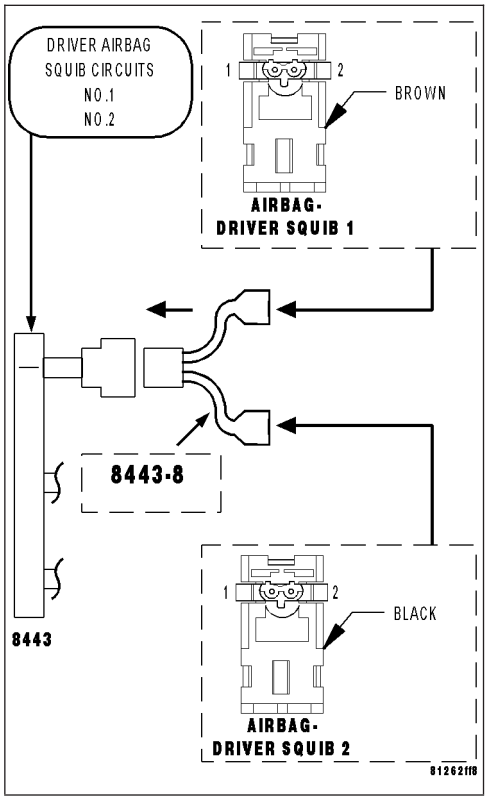

3. CHECK CLOCKSPRING SQUIB CIRCUITS FOR A SHORT TO BATTERY

WARNING: To avoid personal injury or death, turn the ignition off, disconnect the battery and wait two minutes before proceeding.
Disconnect the 8443 Load Tool and Jumper from the Driver Airbag Squib connectors.

Disconnect the Clockspring connector.

NOTE: Check connectors - Clean and repair as necessary.
Connect the 8443 Load Tool and appropriate Jumper to the Clockspring connector.

WARNING: To avoid personal injury or death, turn the ignition on, then reconnect the battery.
With the scan tool, read the active ORC DTC's.

Does the scan tool display: DRIVER SQUIB 1 SHORT TO BATTERY?

Yes >> Go To 4

No >> Replace the Clockspring in accordance with the Service Information.
Perform ORC VERIFICATION TEST - VER 1

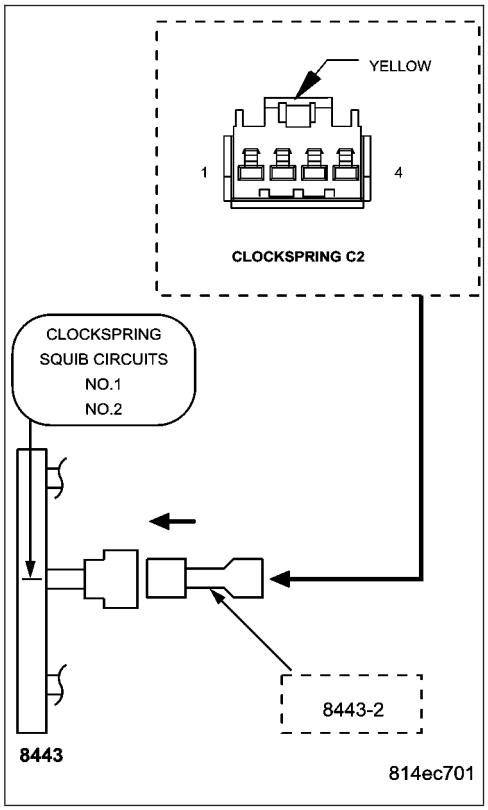

DRIVER SQUIB 1 SHORT TO BATTERY (CONTINUED)

4. CHECK DRIVER SQUIB 1 LINE 2 CIRCUIT AND DRIVER SQUIB 1 LINE 1 CIRCUIT FOR A SHORT TO BATTERY

WARNING: To avoid personal injury or death, turn the ignition off, disconnect the battery and wait two minutes before proceeding.
Disconnect the 8443 Load Tool and Jumper from the Clockspring connector.

Disconnect the ORC connectors.

NOTE: Check connectors - Clean and repair as necessary.
Connect the 8443 Load Tool ORC Adaptor to the ORC connector.

WARNING: To avoid personal injury or death, turn the ignition on, then reconnect the battery.
Measure the voltage of the Driver Squib 1 Line 2 circuit between the Clockspring connector and ground.

Measure the voltage of the Driver Squib 1 Line 1 circuit between the Clockspring connector and ground.

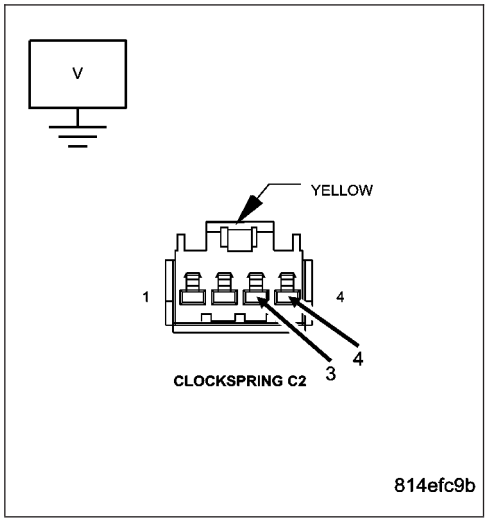

Is there any voltage present for either measurement?

Yes >> Repair the Driver Squib 1 circuits with voltage present for a short to Battery.
Perform ORC VERIFICATION TEST - VER 1

No >> Go To 5

---

5. REPLACE THE ORC

WARNING: To avoid personal injury or death, turn the ignition off, disconnect the battery and wait two minutes before proceeding.

WARNING: If the Occupant Restraint Controller (ORC) is dropped at any time, it must be replaced. Failure to take the proper precautions can result in accidental airbag deployment and personal injury or death.

NOTE: When reconnecting airbag system components the Ignition must be turned off and the Battery must be disconnected.

Repair

Replace the ORC in accordance with the Service Information.
Perform ORC VERIFICATION TEST - VER 1

DRIVER SQUIB 1 SHORT TO BATTERY (CONTINUED)

6. STORED ORC DTC

With the scan tool, record and erase all DTC's from all Airbag System Modules.

If any ACTIVE codes are present they must be resolved before diagnosing any stored codes.

WARNING: To avoid personal injury or death, turn the ignition off, disconnect the battery and wait two minutes before proceeding.

Using the wiring diagram/schematic as a guide, inspect the wiring and connectors.

Look for chaffed, pierced, pinched, or partially broken wires and broken, bent, pushed out, spread, corroded, or contaminated terminals.

The following additional checks may assist you in identifying a possible intermittent problem.

Reconnect any disconnected components and harness connector.

WARNING: To avoid personal injury or death, turn the ignition on, then reconnect the battery.

With the scan tool monitor active codes as you work through the following steps.

Wiggle the wiring harness and connectors of the related airbag circuit or component.

If codes are related to the Driver Airbag circuits, rotate the steering wheel from stop to stop.

If only stored codes return continue the test until the problem area has been isolated.

In the previous steps you have attempted to recreate the conditions responsible for setting active DTC's in question.

Are any ACTIVE DTC's present?

Yes >> Select the appropriate diagnostic procedure from the Table of Contents in this section.

No >> No problem found at this time. Erase all codes before returning vehicle to customer.

DRIVER SQUIB 1 SHORT TO GROUND

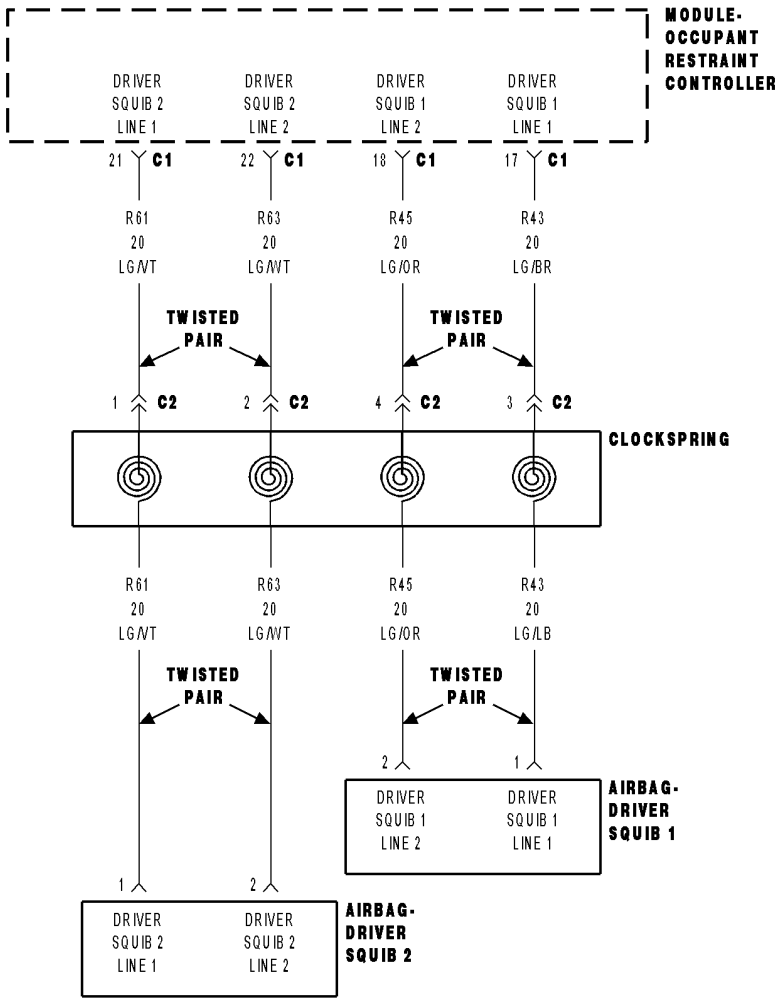

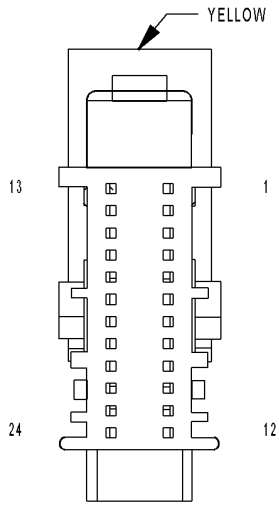

MODULE-
OCCUPANT
RESTRAINT
CONTROLLER C1

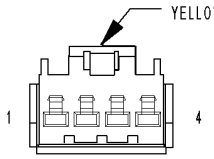

CLOCKSPRING C2

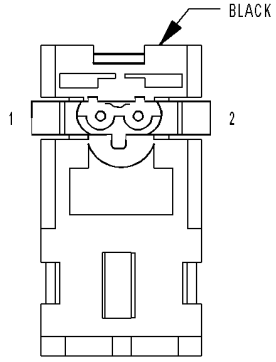

AIRBAG-
DRIVER SQUIB 1

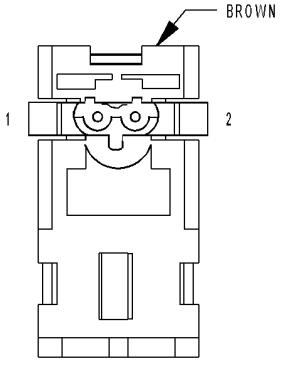

AIRBAG-
DRIVER SQUIB 2

814ec6e6

DRIVER SQUIB 1 SHORT TO GROUND (CONTINUED)

For the Air Bag System circuit diagram (Refer to 8 - ELECTRICAL/RESTRAINTS - SCHEMATICS AND DIAGRAMS).

For a complete wiring diagram **Refer to Section 8W**.

- **When Monitored:**
  With the ignition on, the Occupant Restraint Controller (ORC) monitors the resistance of the Driver Squib 1 circuits.
- **Set Condition:**
  The ORC has detected low resistance on the Driver Squib 1 circuits.

Possible Causes
DRIVER SQUIB 1 LINE 2 CIRCUIT OR DRIVER SQUIB 1 LINE 1 CIRCUIT SHORTED TO GROUND
CLOCKSPRING
DRIVER AIRBAG
ORC

Diagnostic Test

1. DETERMINE ACTIVE OR STORED DTC

NOTE: Ensure the battery is fully charged.

NOTE: The scan tool, SRS Airbag Load Tool MRL 8443, and DVOM are required to perform the following test.

NOTE: When reconnecting airbag system components the Ignition must be turned off and the Battery must be disconnected.

Select Active or Stored DTC.

Is the DTC active or stored?

ORC - ACTIVE DTC
Go To 2

ORC - STORED DTC
Go To 6

DRIVER SQUIB 1 SHORT TO GROUND (CONTINUED)

2. CHECK FOR SHORTED SQUIB CIRCUITS IN DRIVER AIRBAG

WARNING: To avoid personal injury or death, turn the ignition off, disconnect the battery and wait two minutes before proceeding.
Disconnect the Driver Airbag Squib connectors.

WARNING: To avoid personal injury or death, do not place an intact undeployed airbag face down on a hard surface, the airbag will propel into the air if accidentally deployed.

NOTE: Check connectors - Clean and repair as necessary.
Connect the 8443 Load Tool and appropriate Jumper to the Driver Airbag Squib connectors.

WARNING: To avoid personal injury or death, turn the ignition on, then reconnect the battery.
With the scan tool, read the active ORC DTC's.

Does the scan tool display: DRIVER SQUIB 1 SHORT TO GROUND?

Yes >> Go To 3

No >> Replace the Driver Airbag in accordance with the Service Information.
Perform ORC VERIFICATION TEST - VER 1

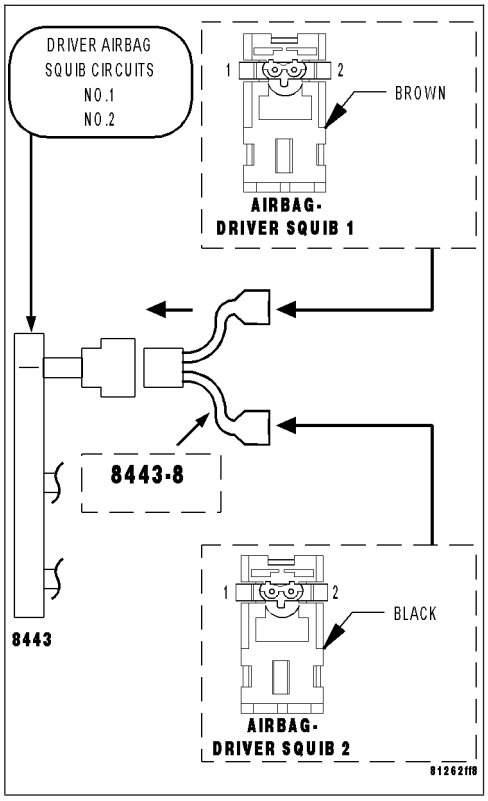

3. CHECK CLOCKSPRING SQUIB CIRCUITS FOR A SHORT TO GROUND

WARNING: To avoid personal injury or death, turn the ignition off, disconnect the battery and wait two minutes before proceeding.
Disconnect the 8443 Load Tool Jumper from the Driver Airbag Squib connectors.

Disconnect the Clockspring connector.

NOTE: Check connectors - Clean and repair as necessary.
Connect the 8443 Load Tool and appropriate Jumper to the Clockspring connector.

WARNING: To avoid personal injury or death, turn the ignition on, then reconnect the battery.
With the scan tool, read the active ORC DTC's.

Does the scan tool display: DRIVER SQUIB 1 SHORT TO GROUND?

Yes >> Go To 4

No >> Replace the Clockspring in accordance with the Service Information.
Perform ORC VERIFICATION TEST - VER 1

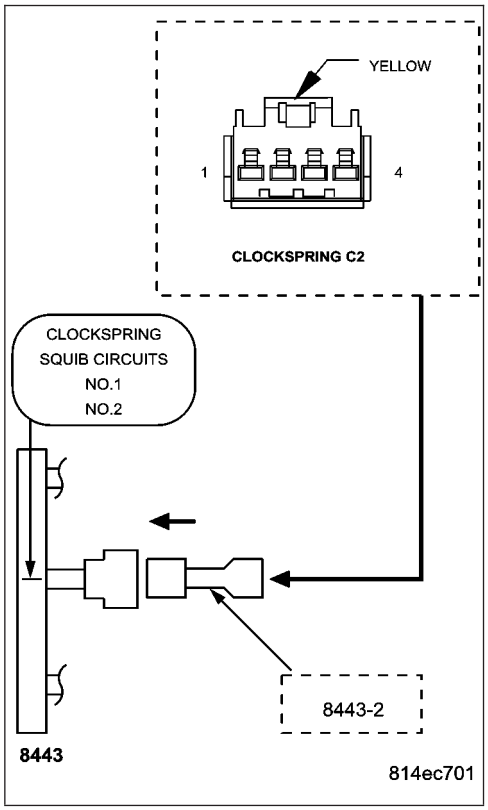

DRIVER SQUIB 1 SHORT TO GROUND (CONTINUED)

4. CHECK DRIVER SQUIB 1 LINE 2 CIRCUIT AND DRIVER SQUIB 1 LINE 1 CIRCUIT FOR A SHORT TO GROUND

WARNING: To avoid personal injury or death, turn the ignition off, disconnect the battery and wait two minutes before proceeding.
Disconnect the 8443 Load Tool and Jumper from the Clockspring connector.

Disconnect the ORC connectors.

NOTE: Check connectors - Clean and repair as necessary.
Connect the 8443 Load Tool ORC Adaptor to the ORC connector.

Measure the resistance of the Driver Squib 1 Line 2 circuit between ground and the Clockspring connector.

Measure the resistance of the Driver Squib 1 Line 1 circuit between ground and the Clockspring connector.

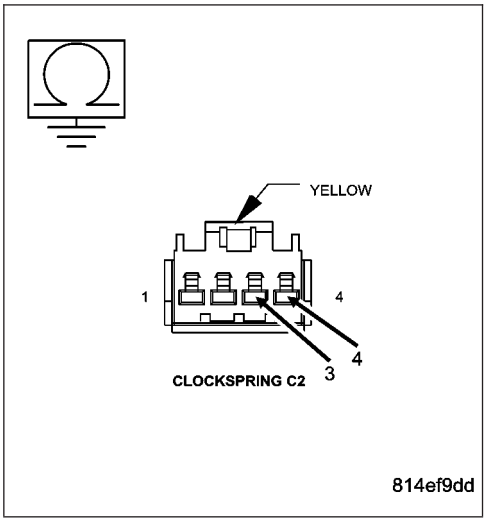

Is the resistance below 10K ohms for either measurement?

Yes >> Repair the Driver Squib 1 circuits with a resistance below 10K ohms for a short to ground.
Perform ORC VERIFICATION TEST - VER 1

No >> Go To 5

---

5. REPLACE THE ORC

WARNING: If the Occupant Restraint Controller (ORC) is dropped at any time, it must be replaced. Failure to take the proper precautions can result in accidental airbag deployment and personal injury or death.

NOTE: When reconnecting airbag system components the Ignition must be turned off and the Battery must be disconnected.

Repair

Replace the ORC in accordance with the Service Information.
Perform ORC VERIFICATION TEST - VER 1

DRIVER SQUIB 1 SHORT TO GROUND (CONTINUED)

6. STORED ORC DTC

With the scan tool, record and erase all DTC's from all Airbag System Modules.

If any ACTIVE codes are present they must be resolved before diagnosing any stored codes.

WARNING: To avoid personal injury or death, turn the ignition off, disconnect the battery and wait two minutes before proceeding.

Using the wiring diagram/schematic as a guide, inspect the wiring and connectors.

Look for chaffed, pierced, pinched, or partially broken wires and broken, bent, pushed out, spread, corroded, or contaminated terminals.

The following additional checks may assist you in identifying a possible intermittent problem.

Reconnect any disconnected components and harness connector.

WARNING: To avoid personal injury or death, turn the ignition on, then reconnect the battery.

With the scan tool monitor active codes as you work through the following steps.

Wiggle the wiring harness and connectors of the related airbag circuit or component.

If codes are related to the Driver Airbag circuits, rotate the steering wheel from stop to stop.

If only stored codes return continue the test until the problem area has been isolated.

In the previous steps you have attempted to recreate the conditions responsible for setting active DTC in question.

Are any ACTIVE DTCs present?

Yes >> Select the appropriate diagnostic procedure from the Table of Contents in this section.

No >> No problem found at this time. Erase all codes before returning vehicle to customer.

DRIVER SQUIB 2 CIRCUIT OPEN

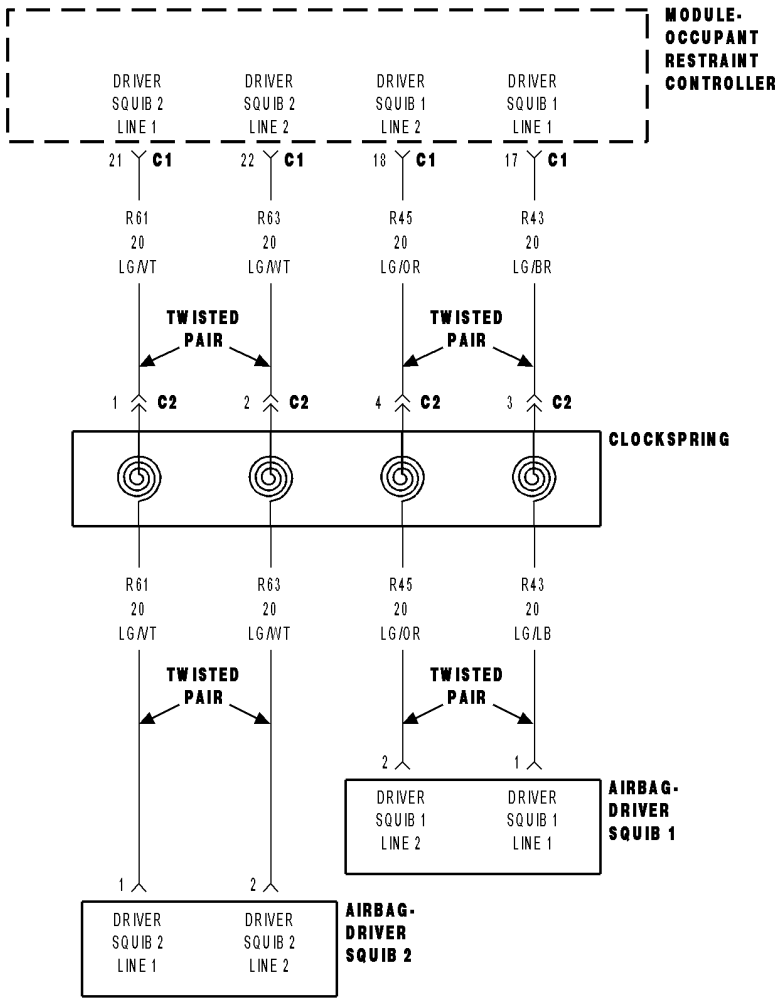

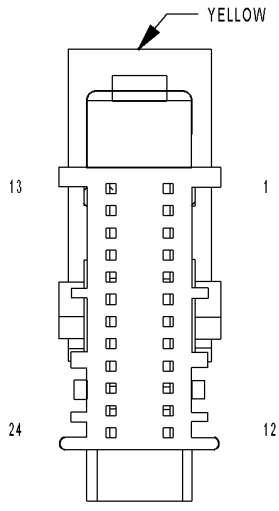

MODULE-
OCCUPANT
RESTRAINT
CONTROLLER C1

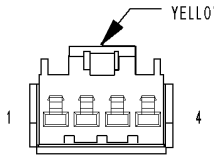

CLOCKSPRING C2

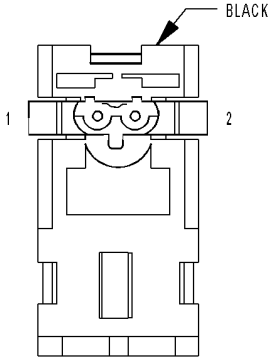

AIRBAG-
DRIVER SQUIB 1

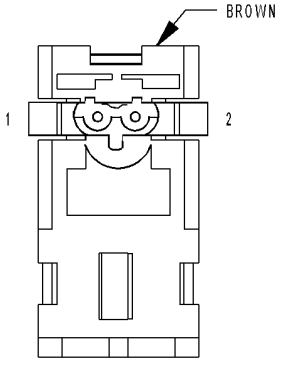

AIRBAG-
DRIVER SQUIB 2

814ec6e6

DRIVER SQUIB 2 CIRCUIT OPEN (CONTINUED)

For the Air Bag System circuit diagram (Refer to 8 - ELECTRICAL/RESTRAINTS - SCHEMATICS AND DIAGRAMS).

For a complete wiring diagram **Refer to Section 8W**.

- **When Monitored:**
  With the ignition on, the Occupant Restraint Controller (ORC) monitors the resistance of the Driver Squib 2 circuits.
- **Set Condition:**
  The ORC has detected an open or high resistance on the Driver Squib 2 circuits.

Possible Causes
DRIVER SQUIB 2 LINE 1 CIRCUIT OPEN
DRIVER SQUIB 2 LINE 2 CIRCUIT OPEN
CLOCKSPRING
DRIVER AIRBAG
ORC

Diagnostic Test

1. DETERMINE ACTIVE OR STORED DTC

NOTE: Ensure the battery is fully charged.

NOTE: The scan tool, SRS Airbag Load Tool MRL 8443, and DVOM are required to perform the following test.

NOTE: When reconnecting airbag system components the Ignition must be turned off and the Battery must be disconnected.

Select Active or Stored DTC.

Is the DTC active or stored?

ORC - ACTIVE DTC
Go To 2

ORC - STORED DTC
Go To 7

DRIVER SQUIB 2 CIRCUIT OPEN (CONTINUED)

2. CHECK FOR OPEN SQUIB CIRCUITS IN DRIVER AIRBAG

WARNING: To avoid personal injury or death, turn the ignition off, disconnect the battery and wait two minutes before proceeding.
Disconnect the Driver Airbag Squib connectors.

WARNING: To avoid personal injury or death, do not place an intact undeployed airbag face down on a hard surface, the airbag will propel into the air if accidentally deployed.

NOTE: Check connectors - Clean and repair as necessary.
Connect the 8443 Load Tool and appropriate Jumper to the Driver Airbag Squib connectors.

WARNING: To avoid personal injury or death, turn the ignition on, then reconnect the battery.
With the scan tool, read the active ORC DTC's.

Does the scan tool display: DRIVER SQUIB 2 CIRCUIT OPEN?

Yes >> Go To 3

No >> Replace the Driver Airbag in accordance with the Service Information.
Perform ORC VERIFICATION TEST - VER 1

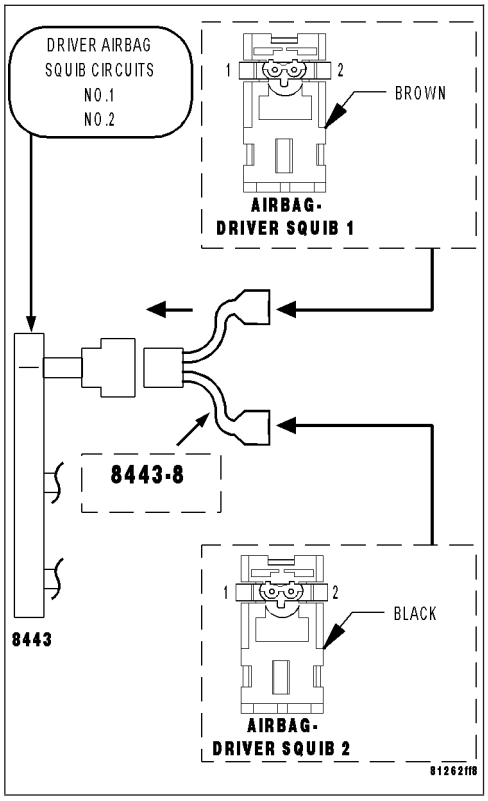

3. CHECK CLOCKSPRING SQUIB CIRCUITS FOR AN OPEN

WARNING: To avoid personal injury or death, turn the ignition off, disconnect the battery and wait two minutes before proceeding.
Disconnect the 8443 Load Tool and Jumper from the Driver Airbag Squib connectors.

Disconnect the Clockspring connector.

NOTE: Check connectors - Clean and repair as necessary.
Connect the 8443 Load Tool and appropriate Jumper to the Clockspring connector.

WARNING: To avoid personal injury or death, turn the ignition on, then reconnect the battery.
With the scan tool, read the active ORC DTC's.

Does the scan tool display: DRIVER SQUIB 2 CIRCUIT OPEN?

Yes >> Go To 4

No >> Replace the Clockspring in accordance with the Service Information.
Perform ORC VERIFICATION TEST - VER 1

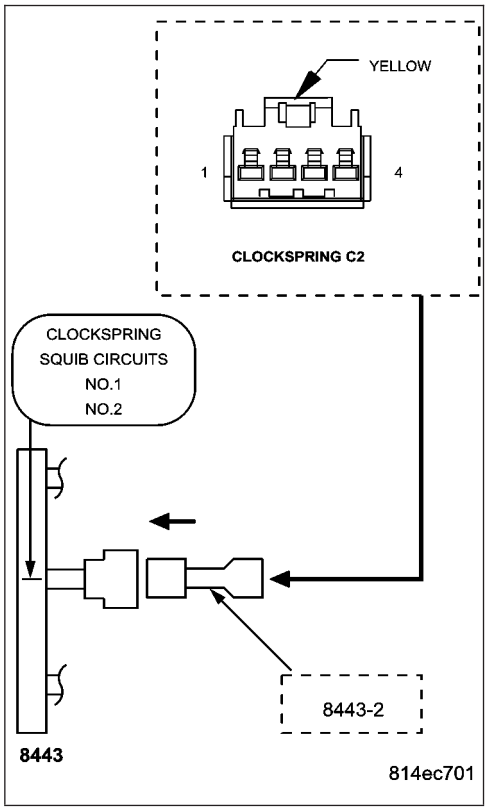

DRIVER SQUIB 2 CIRCUIT OPEN (CONTINUED)

4. CHECK DRIVER SQUIB 2 LINE 1 CIRCUIT FOR AN OPEN

WARNING: To avoid personal injury or death, turn the ignition off, disconnect the battery and wait two minutes before proceeding.
Disconnect the 8443 Load Tool and Jumper from the Clockspring connector.

Disconnect the ORC connectors.

NOTE: Check connectors - Clean and repair as necessary.
Connect the 8443 Load Tool ORC Adaptor to the ORC connector.

Measure the resistance of the Driver Squib 2 Line 1 circuit between the Clockspring connector and the ORC Load Tool Adaptor.

Is the resistance below 1.0 ohm?

Yes >> Go To 5

No >> Repair the Driver Squib 2 Line 1 circuit for an open. Then, Go To 5
Perform ORC VERIFICATION TEST - VER 1

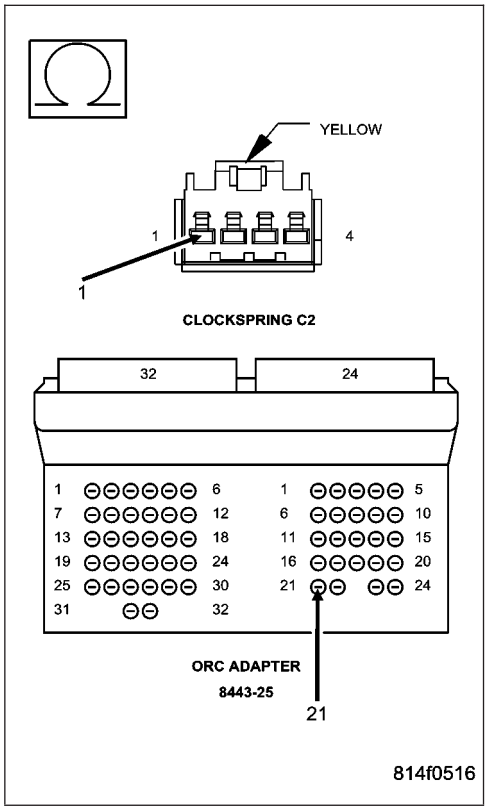

5. CHECK DRIVER SQUIB 2 LINE 2 CIRCUIT FOR AN OPEN

Measure the resistance of the Driver Squib 2 Line 2 circuit between the Clockspring connector and the ORC Load Tool Adaptor.

Is the resistance below 1.0 ohm?

Yes >> Go To 6

No >> Repair the Driver Squib 2 Line 2 circuit for an open.
Perform ORC VERIFICATION TEST - VER 1

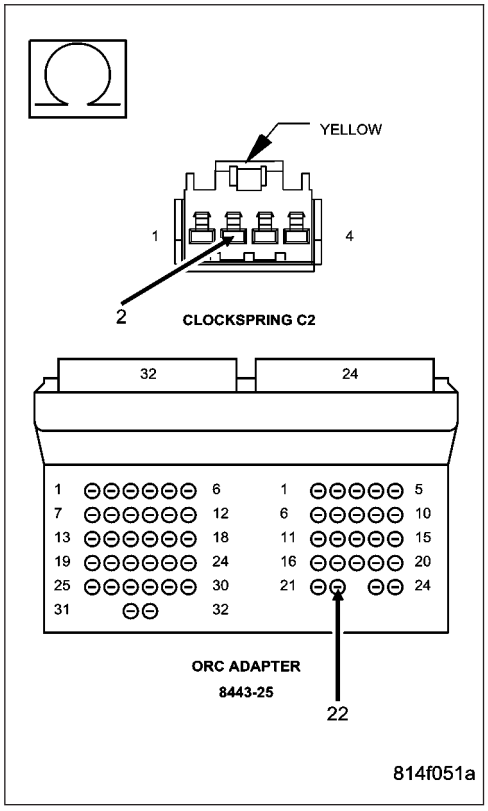

DRIVER SQUIB 2 CIRCUIT OPEN (CONTINUED)

6. REPLACE THE ORC

WARNING: If the Occupant Restraint Controller (ORC) is dropped at any time, it must be replaced. Failure to take the proper precautions can result in accidental airbag deployment and personal injury or death.

NOTE: When reconnecting airbag system components the Ignition must be turned off and the Battery must be disconnected.

Repair

Replace the ORC in accordance with the Service Information.
Perform ORC VERIFICATION TEST - VER 1

---

7. STORED ORC DTC

With the scan tool, record and erase all DTC's from all Airbag System Modules.

If any ACTIVE codes are present they must be resolved before diagnosing any stored codes.

WARNING: To avoid personal injury or death, turn the ignition off, disconnect the battery and wait two minutes before proceeding.

Using the wiring diagram/schematic as a guide, inspect the wiring and connectors.

Look for chaffed, pierced, pinched, or partially broken wires and broken, bent, pushed out, spread, corroded, or contaminated terminals.

The following additional checks may assist you in identifying a possible intermittent problem.

Reconnect any disconnected components and harness connector.

WARNING: To avoid personal injury or death, turn the ignition on, then reconnect the battery.

With the scan tool monitor active codes as you work through the following steps.

Wiggle the wiring harness and connectors of the related airbag circuit or component.

If codes are related to the Driver Airbag circuits, rotate the steering wheel from stop to stop.

If only stored codes return continue the test until the problem area has been isolated.

In the previous steps you have attempted to recreate the conditions responsible for setting active DTC in question.

Are any ACTIVE DTC's present?

Yes >> Select the appropriate diagnostic procedure from the Table of Contents in this section.

No >> No problem found at this time. Erase all codes before returning vehicle to customer.

DRIVER SQUIB 2 CIRCUIT SHORT

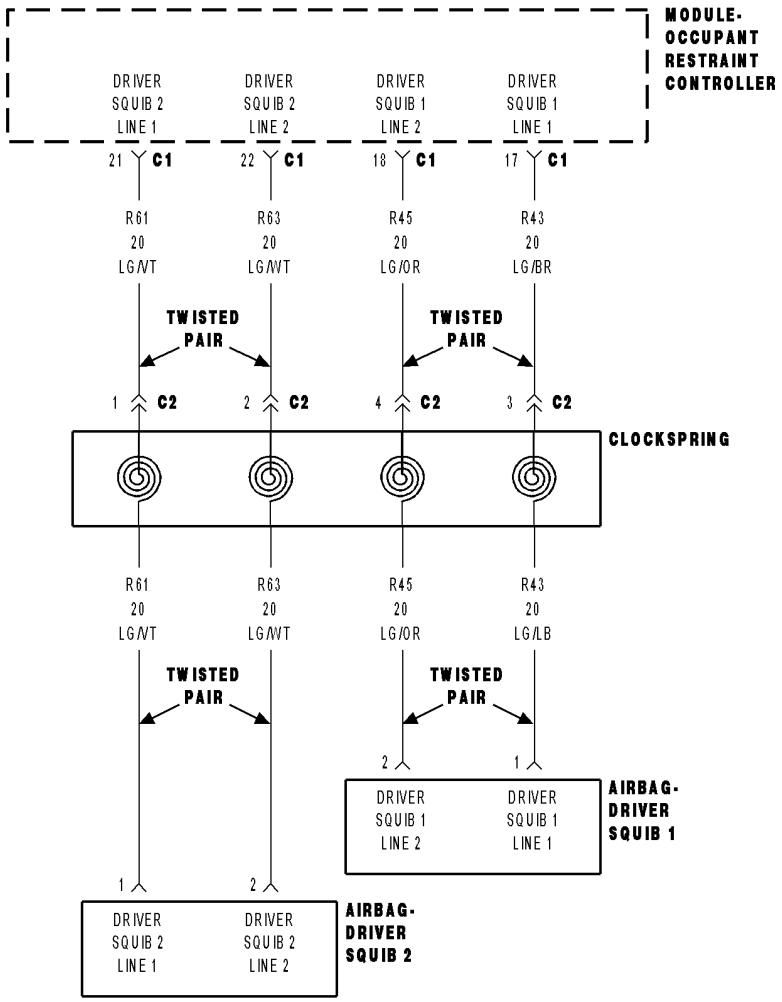

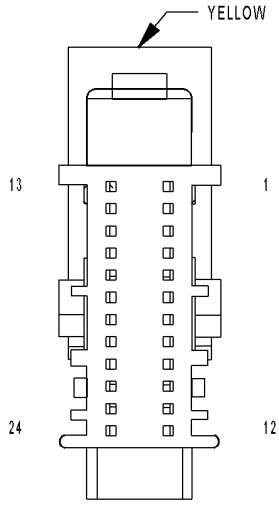

MODULE-
OCCUPANT
RESTRAINT
CONTROLLER C1

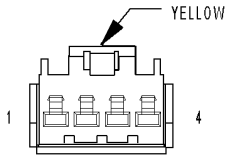

CLOCKSPRING C2

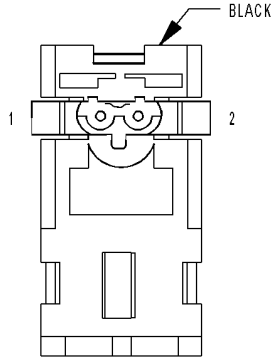

AIRBAG-
DRIVER SQUIB 1

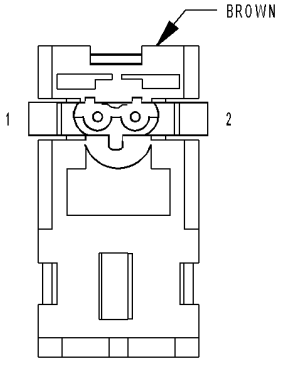

AIRBAG-
DRIVER SQUIB 2

814cc6e6

DRIVER SQUIB 2 CIRCUIT SHORT (CONTINUED)

For the Air Bag System circuit diagram (Refer to 8 - ELECTRICAL/RESTRAINTS - SCHEMATICS AND DIAGRAMS).

For a complete wiring diagram **Refer to Section 8W**.

- **When Monitored:**
  With the ignition on, the Occupant Restraint Controller (ORC) monitors the resistance of the Driver Squib 2 circuits.
- **Set Condition:**
  The ORC has detected low resistance between the Driver Squib 2 circuits.

Possible Causes
DRIVER SQUIB 2 LINE 1 CIRCUIT SHORTED TO DRIVER SQUIB 2 LINE 2 CIRCUIT
CLOCKSPRING
DRIVER AIRBAG
ORC

Diagnostic Test

1. DETERMINE ACTIVE OR STORED DTC

NOTE: Ensure the battery is fully charged.

NOTE: The Scan Tool, SRS Airbag Load Tool MRL 8443 and DVOM are required to perform the following test.

NOTE: When reconnecting airbag system components the Ignition must be turned off and the Battery must be disconnected.

Select Active or Stored DTC.

Is the DTC active or stored?

ORC - ACTIVE DTC
Go To 2

ORC - STORED DTC
Go To 6

DRIVER SQUIB 2 CIRCUIT SHORT (CONTINUED)

2. CHECK FOR SHORTED SQUIB CIRCUITS IN DRIVER AIRBAG

WARNING: To avoid personal injury or death, turn the ignition off, disconnect the battery and wait two minutes before proceeding.

WARNING: To avoid personal injury or death, do not place an intact undeployed airbag face down on a hard surface, the airbag will propel into the air if accidentally deployed.
Disconnect the Driver Airbag Squib connectors.

NOTE: Check connectors - Clean and repair as necessary.
Connect the 8443 Load Tool and appropriate Jumper to the Driver Airbag Squib connectors.

WARNING: To avoid personal injury or death, turn the ignition on, then reconnect the battery.
With the scan tool, read the active ORC DTC's.

Does the scan tool display: DRIVER SQUIB 2 CIRCUIT SHORT?

Yes >> Go To 3

No >> Replace the Driver Airbag in accordance with the Service Information.
Perform ORC VERIFICATION TEST - VER 1

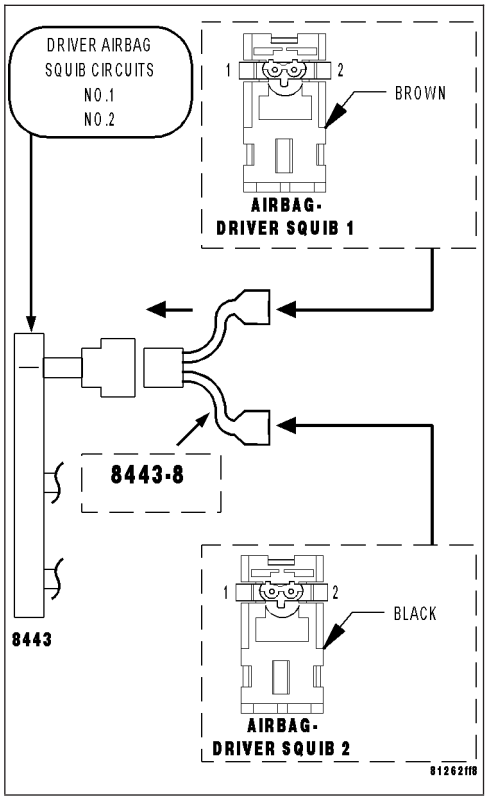

3. CHECK CLOCKSPRING SQUIB CIRCUITS FOR A SHORT TOGETHER

WARNING: To avoid personal injury or death, turn the ignition off, disconnect the battery and wait two minutes before proceeding.
Disconnect the 8443 Load Tool ORC from the Driver Airbag Squib connectors.

Disconnect the Clockspring connector.

NOTE: Check connectors - Clean and repair as necessary.
Connect the 8443 Load Tool and appropriate Jumper to the Clockspring connector.

WARNING: To avoid personal injury or death, turn the ignition on, then reconnect the battery.
With the scan tool, read the active ORC DTC's.

Does the scan tool display: DRIVER SQUIB 2 CIRCUIT SHORT?

Yes >> Go To 4

No >> Replace the Clockspring in accordance with the Service Information.
Perform ORC VERIFICATION TEST - VER 1

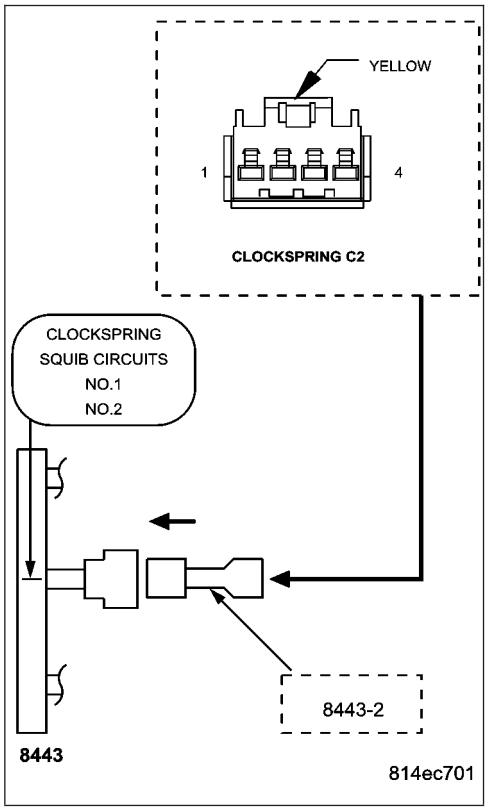

DRIVER SQUIB 2 CIRCUIT SHORT (CONTINUED)

4. CHECK DRIVER SQUIB 2 LINE 1 CIRCUIT FOR A SHORT TO DRIVER SQUIB 2 LINE 2 CIRCUIT

WARNING: To avoid personal injury or death, turn the ignition off, disconnect the battery and wait two minutes before proceeding.
Disconnect the 8443 Load Tool and Jumper from the Clockspring connector.

Disconnect the ORC connectors.

NOTE: Check connectors - Clean and repair as necessary.
Connect the 8443 Load Tool ORC Adaptor to the ORC connector.

Measure the resistance between the Driver Squib 2 Line 1 circuit and the Driver Squib 2 Line 2 circuit at the Clockspring connector.

Is the resistance below 10K ohms?

Yes >> Repair the Driver Squib 2 Line 1 circuit for a short to the Driver Squib 2 Line 2 circuit.
Perform ORC VERIFICATION TEST - VER 1

No >> Go To 5

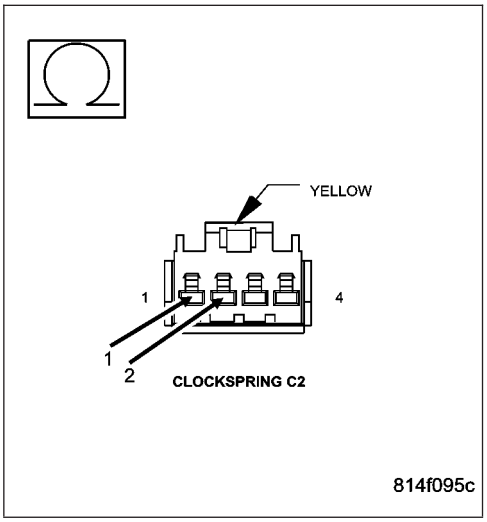

5. REPLACE THE ORC

WARNING: If the Occupant Restraint Controller (ORC) is dropped at any time, it must be replaced. Failure to take the proper precautions can result in accidental airbag deployment and personal injury or death.

NOTE: When reconnecting airbag system components the Ignition must be turned off and the Battery must be disconnected.

Repair

Replace the ORC in accordance with the Service Information.
Perform ORC VERIFICATION TEST - VER 1

DRIVER SQUIB 2 CIRCUIT SHORT (CONTINUED)

6. STORED ORC DTC

With the scan tool, record and erase all DTC's from all Airbag System Modules.

If any ACTIVE codes are present they must be resolved before diagnosing any stored codes.

WARNING: To avoid personal injury or death, turn the ignition off, disconnect the battery and wait two minutes before proceeding.

Using the wiring diagram/schematic as a guide, inspect the wiring and connectors.

Look for chaffed, pierced, pinched, or partially broken wires and broken, bent, pushed out, spread, corroded, or contaminated terminals.

The following additional checks may assist you in identifying a possible intermittent problem.

Reconnect any disconnected components and harness connector.

WARNING: To avoid personal injury or death, turn the ignition on, then reconnect the battery.

With the scan tool monitor active codes as you work through the following steps.

Wiggle the wiring harness and connectors of the related airbag circuit or component.

If codes are related to the Driver Airbag circuits, rotate the steering wheel from stop to stop.

If only stored codes return continue the test until the problem area has been isolated.

In the previous steps you have attempted to recreate the conditions responsible for setting active DTC in question.

Are any ACTIVE DTCs present?

Yes >> Select the appropriate diagnostic procedure from the Table of Contents in this section.

No >> No problem found at this time. Erase all codes before returning vehicle to customer.

DRIVER SQUIB 2 SHORT TO BATTERY

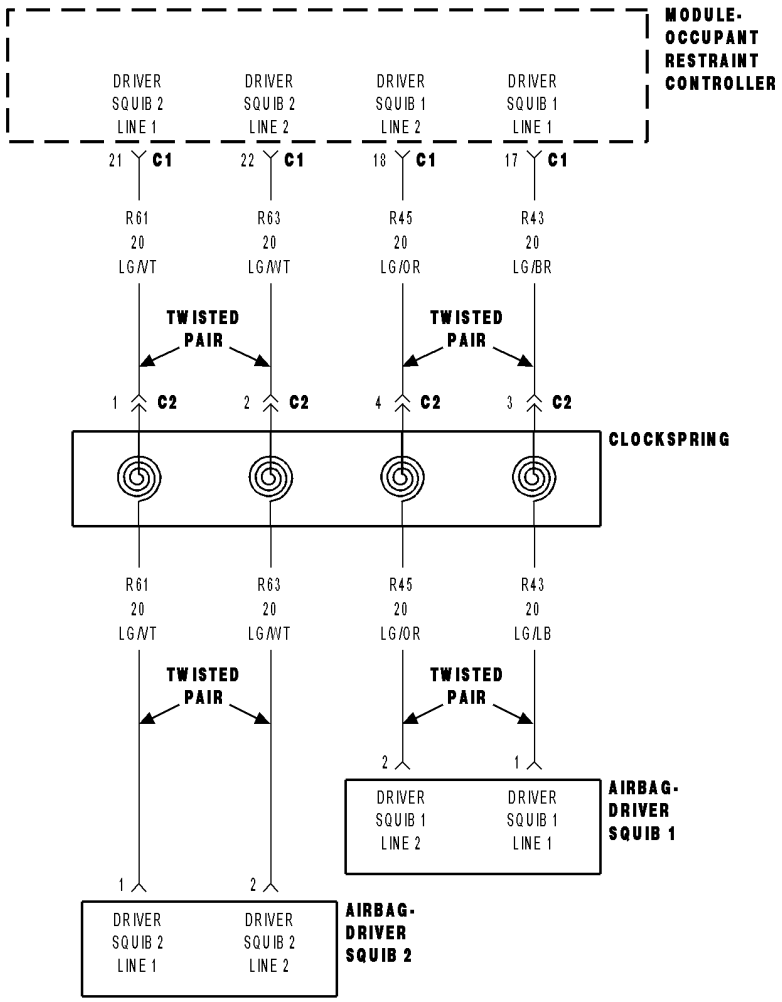

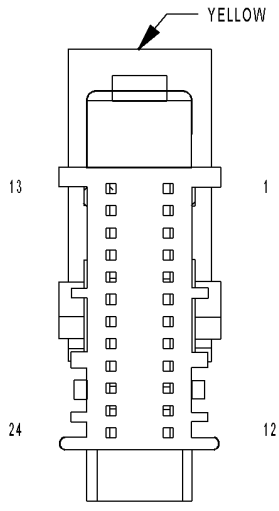

MODULE-
OCCUPANT
RESTRAINT
CONTROLLER C1

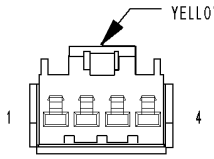

CLOCKSPRING C2

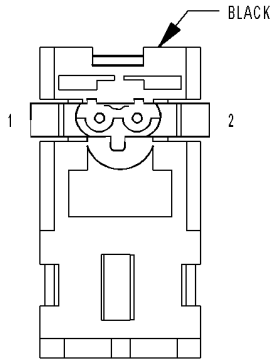

AIRBAG-
DRIVER SQUIB 1

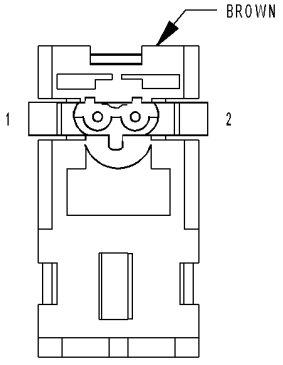

AIRBAG-
DRIVER SQUIB 2

814ec6e6

DRIVER SQUIB 2 SHORT TO BATTERY (CONTINUED)

For the Air Bag System circuit diagram (Refer to 8 - ELECTRICAL/RESTRAINTS - SCHEMATICS AND DIAGRAMS).

For a complete wiring diagram **Refer to Section 8W**.

- **When Monitored:**
  With the ignition on, the Occupant Restraint Controller (ORC) monitors the voltage on the Driver Squib 2 circuits.
- **Set Condition:**
  The ORC has detected voltage on the Driver Squib 2 circuits.

Possible Causes
DRIVER SQUIB 2 LINE 1 CIRCUIT OR DRIVER SQUIB 2 LINE 2 CIRCUIT SHORTED TO BATTERY
CLOCKSPRING
DRIVER AIRBAG
ORC

Diagnostic Test

1. DETERMINE ACTIVE OR STORED DTC

NOTE: Ensure the battery is fully charged.

NOTE: The Scan Tool, SRS Airbag Load Tool MRL 8443 and DVOM are required to perform the following test.

NOTE: When reconnecting airbag system components the Ignition must be turned off and the Battery must be disconnected.

Select Active or Stored DTC.

Is the DTC active or stored?

ORC - ACTIVE DTC
Go To 2

ORC - STORED DTC
Go To 6

DRIVER SQUIB 2 SHORT TO BATTERY (CONTINUED)

2. CHECK FOR SHORTED SQUIB CIRCUITS IN DRIVER AIRBAG

WARNING: To avoid personal injury or death, turn the ignition off, disconnect the battery and wait two minutes before proceeding.
Disconnect the Driver Airbag Squib connectors.

WARNING: To avoid personal injury or death, do not place an intact undeployed airbag face down on a hard surface, the airbag will propel into the air if accidentally deployed.

NOTE: Check connectors - Clean and repair as necessary.
Connect the 8443 Load Tool and appropriate Jumper to the Driver Airbag Squib connectors.

WARNING: To avoid personal injury or death, turn the ignition on, then reconnect the battery.
With the scan tool, read the active ORC DTC's.

Does the scan tool display: DRIVER SQUIB 2 SHORT TO BATTERY?

Yes >> Go To 3

No >> Replace the Driver Airbag in accordance with the Service Information.
Perform ORC VERIFICATION TEST - VER 1

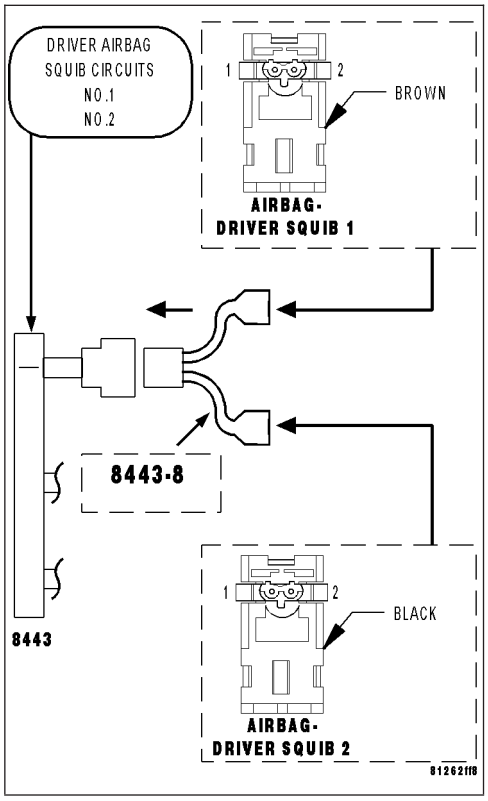

3. CHECK CLOCKSPRING SQUIB CIRCUITS FOR A SHORT TO BATTERY

WARNING: To avoid personal injury or death, turn the ignition off, disconnect the battery and wait two minutes before proceeding.
Disconnect the 8443 Load Tool and Jumper from the Driver Airbag Squib connectors.

Disconnect the Clockspring connector.

NOTE: Check connectors - Clean and repair as necessary.
Connect the 8443 Load Tool and appropriate Jumper to the Clockspring connector.

WARNING: To avoid personal injury or death, turn the ignition on, then reconnect the battery.
With the scan tool, read the active ORC DTC's.

Does the scan tool display: DRIVER SQUIB 2 SHORT TO BATTERY?

Yes >> Go To 4

No >> Replace the Clockspring in accordance with the Service Information.
Perform ORC VERIFICATION TEST - VER 1

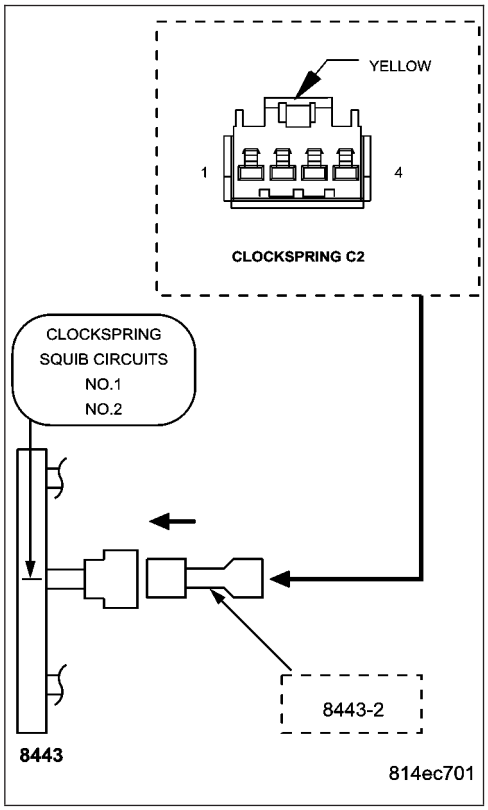

DRIVER SQUIB 2 SHORT TO BATTERY (CONTINUED)

4. CHECK DRIVER SQUIB 2 LINE 1 CIRCUIT AND DRIVER SQUIB 2 LINE 2 CIRCUIT FOR A SHORT TO BATTERY

WARNING: To avoid personal injury or death, turn the ignition off, disconnect the battery and wait two minutes before proceeding.
Disconnect the 8443 Load Tool and Jumper from the Clockspring connector.

Disconnect the ORC connectors.

NOTE: Check connectors - Clean and repair as necessary.
Connect the 8443 Load Tool ORC Adaptor to the ORC C2 connector.

WARNING: To avoid personal injury or death, turn the ignition on, then reconnect the battery.
Measure the voltage of the Driver Squib 2 Line 1 circuit between the Clockspring connector and ground.

Measure the voltage of the Driver Squib 2 Line 2 circuit between the Clockspring connector and ground.

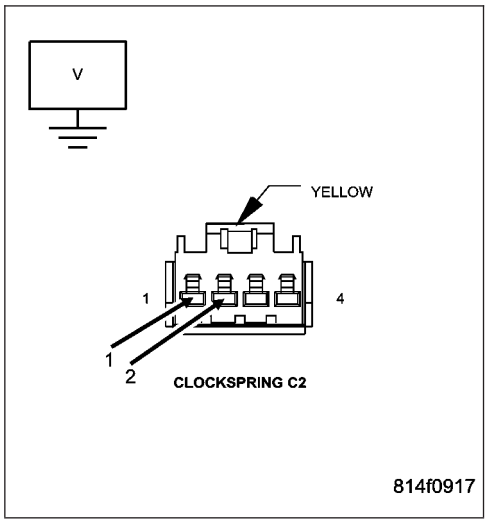

Is there any voltage present for either measurement?

Yes >> Repair the Driver Squib 2 circuits with voltage present for a short to Battery.
Perform ORC VERIFICATION TEST - VER 1

No >> Go To 5

---

5. REPLACE THE ORC

WARNING: To avoid personal injury or death, turn the ignition off, disconnect the battery and wait two minutes before proceeding.

WARNING: If the Occupant Restraint Controller (ORC) is dropped at any time, it must be replaced. Failure to take the proper precautions can result in accidental airbag deployment and personal injury or death.

NOTE: When reconnecting airbag system components the Ignition must be turned off and the Battery must be disconnected.

Repair

Replace the ORC in accordance with the Service Information.
Perform ORC VERIFICATION TEST - VER 1

DRIVER SQUIB 2 SHORT TO BATTERY (CONTINUED)

6. STORED ORC DTC

With the scan tool, record and erase all DTC's from all Airbag System Modules.

If any ACTIVE codes are present they must be resolved before diagnosing any stored codes.

WARNING: To avoid personal injury or death, turn the ignition off, disconnect the battery and wait two minutes before proceeding.

Using the wiring diagram/schematic as a guide, inspect the wiring and connectors.

Look for chaffed, pierced, pinched, or partially broken wires and broken, bent, pushed out, spread, corroded, or contaminated terminals.

The following additional checks may assist you in identifying a possible intermittent problem.

Reconnect any disconnected components and harness connector.

WARNING: To avoid personal injury or death, turn the ignition on, then reconnect the battery.

With the scan tool monitor active codes as you work through the following steps.

Wiggle the wiring harness and connectors of the related airbag circuit or component.

If codes are related to the Driver Airbag circuits, rotate the steering wheel from stop to stop.

If only stored codes return continue the test until the problem area has been isolated.

In the previous steps you have attempted to recreate the conditions responsible for setting active DTC's in question.

Are any ACTIVE DTC's present?

Yes >> Select the appropriate diagnostic procedure from the Table of Contents in this section.

No >> No problem found at this time. Erase all codes before returning vehicle to customer.

DRIVER SQUIB 2 SHORT TO GROUND

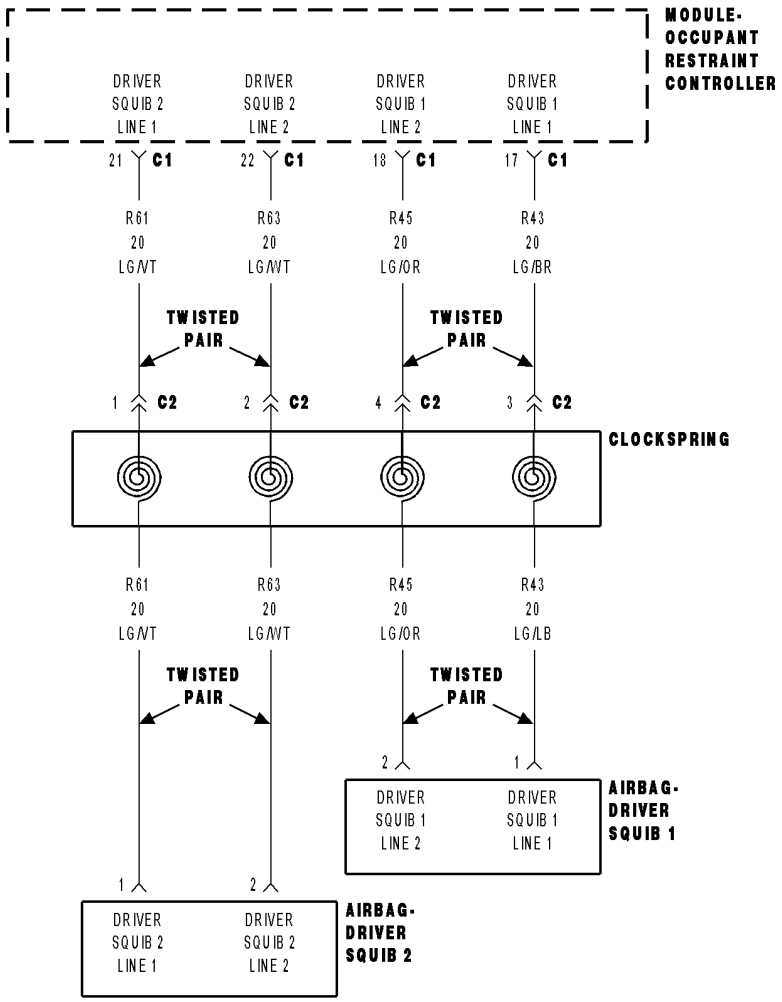

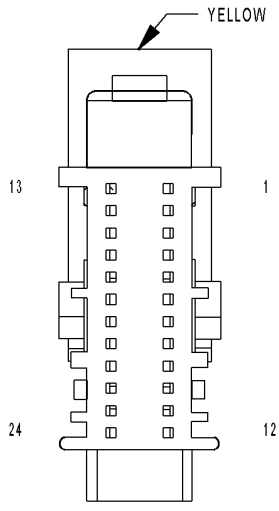

MODULE-
OCCUPANT
RESTRAINT
CONTROLLER C1

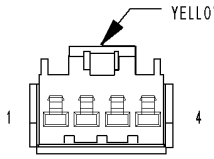

CLOCKSPRING C2

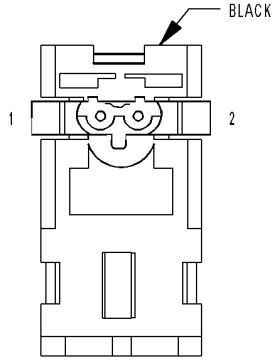

AIRBAG-
DRIVER SQUIB 1

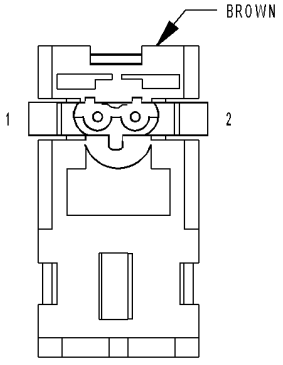

AIRBAG-
DRIVER SQUIB 2

814ec6e6

DRIVER SQUIB 2 SHORT TO GROUND (CONTINUED)

For the Air Bag System circuit diagram (Refer to 8 - ELECTRICAL/RESTRAINTS - SCHEMATICS AND DIAGRAMS).

For a complete wiring diagram **Refer to Section 8W**.

- **When Monitored:**
  With the ignition on, the Occupant Restraint Controller (ORC) monitors the resistance of the Driver Squib 2 circuits.
- **Set Condition:**
  The ORC has detected low resistance on the Driver Squib 2 circuits.

Possible Causes
DRIVER SQUIB 2 LINE 1 CIRCUIT OR DRIVER SQUIB 2 LINE 2 CIRCUIT SHORTED TO GROUND
CLOCKSPRING
DRIVER AIRBAG
ORC

Diagnostic Test

1. DETERMINE ACTIVE OR STORED DTC

NOTE: Ensure the battery is fully charged.

NOTE: The scan tool, SRS Airbag Load Tool MRL 8443, and DVOM are required to perform the following test.

NOTE: When reconnecting airbag system components the Ignition must be turned off and the Battery must be disconnected.

Select Active or Stored DTC.

Is the DTC active or stored?

ORC - ACTIVE DTC
Go To 2

ORC - STORED DTC
Go To 6

DRIVER SQUIB 2 SHORT TO GROUND (CONTINUED)

2. CHECK FOR SHORTED SQUIB CIRCUITS IN DRIVER AIRBAG

WARNING: To avoid personal injury or death, turn the ignition off, disconnect the battery and wait two minutes before proceeding.
Disconnect the Driver Airbag Squib connectors.

WARNING: To avoid personal injury or death, do not place an intact undeployed airbag face down on a hard surface, the airbag will propel into the air if accidentally deployed.

NOTE: Check connectors - Clean and repair as necessary.
Connect the 8443 Load Tool and appropriate Jumper to the Driver Airbag Squib connectors.

WARNING: To avoid personal injury or death, turn the ignition on, then reconnect the battery.
With the scan tool, read the active ORC DTC's.

Does the scan tool display: DRIVER SQUIB 2 SHORT TO GROUND?

Yes >> Go To 3

No >> Replace the Driver Airbag in accordance with the Service Information.
Perform ORC VERIFICATION TEST - VER 1

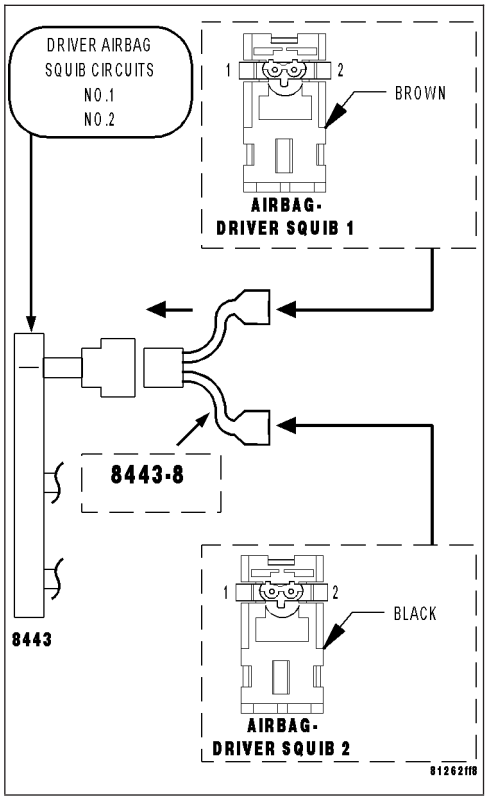

DRIVER SQUIB 2 SHORT TO GROUND (CONTINUED)

3. CHECK CLOCKSPRING SQUIB CIRCUITS FOR A SHORT TO GROUND

WARNING: To avoid personal injury or death, turn the ignition off, disconnect the battery and wait two minutes before proceeding.
Disconnect the 8443 Load Tool Jumper from the Driver Airbag Squib connectors.

Disconnect the Clockspring connector.

NOTE: Check connectors - Clean and repair as necessary.
Connect the 8443 Load Tool and appropriate Jumper to the Clockspring connector.

WARNING: To avoid personal injury or death, turn the ignition on, then reconnect the battery.
With the scan tool, read the active ORC DTC's.

Does the scan tool display: DRIVER SQUIB 2 SHORT TO GROUND?

Yes >> Go To 4

No >> Replace the Clockspring in accordance with the Service Information.
Perform ORC VERIFICATION TEST - VER 1

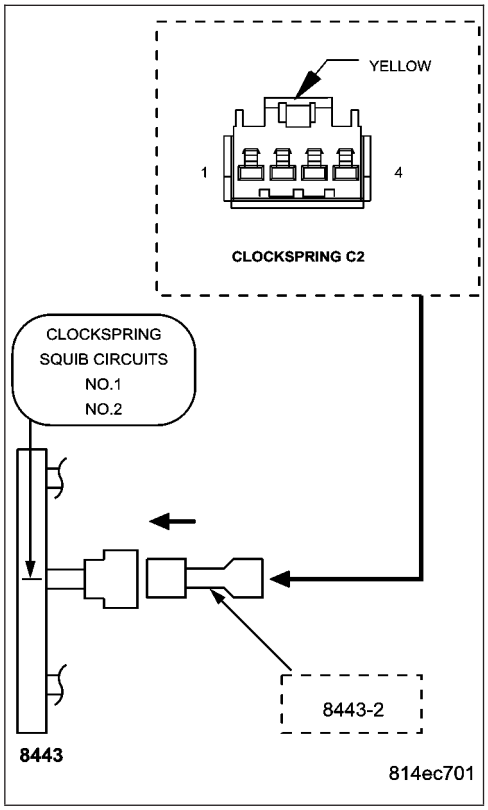

4. CHECK DRIVER SQUIB 2 LINE 1 CIRCUIT AND DRIVER SQUIB 2 LINE 2 CIRCUIT FOR A SHORT TO GROUND

WARNING: To avoid personal injury or death, turn the ignition off, disconnect the battery and wait two minutes before proceeding.
Disconnect the 8443 Load Tool and Jumper from the Clockspring connector.

Disconnect the ORC connectors.

NOTE: Check connectors - Clean and repair as necessary.
Connect the 8443 Load Tool ORC Adaptor to the ORC connector.

Measure the resistance of the Driver Squib 2 Line 1 circuit between ground and the Clockspring connector.

Measure the resistance of the Driver Squib 2 Line 2 circuit between ground and the Clockspring connector.

Is the resistance below 10K ohms for either measurement?

Yes >> Repair the Driver Squib 2 circuits with a resistance below 10K ohms for a short to ground.
Perform ORC VERIFICATION TEST - VER 1

No >> Go To 5

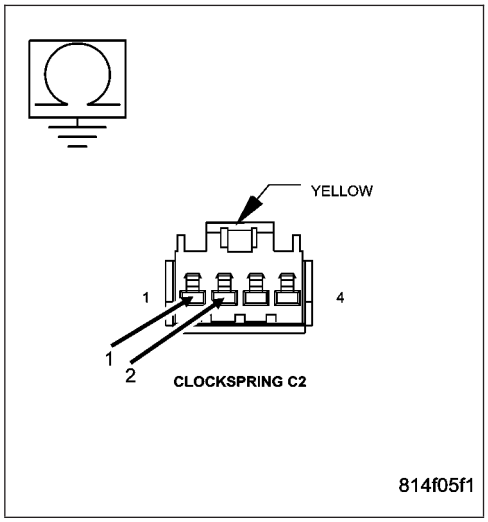

DRIVER SQUIB 2 SHORT TO GROUND (CONTINUED)

5. REPLACE THE ORC

WARNING: If the Occupant Restraint Controller (ORC) is dropped at any time, it must be replaced. Failure to take the proper precautions can result in accidental airbag deployment and personal injury or death.

NOTE: When reconnecting airbag system components the Ignition must be turned off and the Battery must be disconnected.

Repair

Replace the ORC in accordance with the Service Information.
Perform ORC VERIFICATION TEST - VER 1

---

6. STORED ORC DTC

With the scan tool, record and erase all DTC's from all Airbag System Modules.

If any ACTIVE codes are present they must be resolved before diagnosing any stored codes.

WARNING: To avoid personal injury or death, turn the ignition off, disconnect the battery and wait two minutes before proceeding.

Using the wiring diagram/schematic as a guide, inspect the wiring and connectors.

Look for chaffed, pierced, pinched, or partially broken wires and broken, bent, pushed out, spread, corroded, or contaminated terminals.

The following additional checks may assist you in identifying a possible intermittent problem.

Reconnect any disconnected components and harness connector.

WARNING: To avoid personal injury or death, turn the ignition on, then reconnect the battery.

With the scan tool monitor active codes as you work through the following steps.

Wiggle the wiring harness and connectors of the related airbag circuit or component.

If codes are related to the Driver Airbag circuits, rotate the steering wheel from stop to stop.

If only stored codes return continue the test until the problem area has been isolated.

In the previous steps you have attempted to recreate the conditions responsible for setting active DTC in question.

Are any ACTIVE DTCs present?

Yes >> Select the appropriate diagnostic procedure from the Table of Contents in this section.

No >> No problem found at this time. Erase all codes before returning vehicle to customer.

INTERNAL 1

For a complete wiring diagram **Refer to Section 8W**.

- **When Monitored:**
  With the ignition on. The module's on board diagnostics continuously performs internal circuit tests.
- **Set Condition:**
  This DTC will set if the module identifies an out of range internal circuit.

Possible Causes
OCCUPANT RESTRAINT CONTROLLER

Diagnostic Test

1. REPLACE OCCUPANT RESTRAINT CONTROLLER

Turn the ignition on.

With the scan tool, erase and read ORC DTCs.

WARNING: To avoid personal injury or death, turn the ignition off, disconnect the battery and wait two minutes before proceeding.

WARNING: If the Occupant Restraint Controller is dropped at any time, it must be replaced. Failure to take proper precautions could result in accidental airbag deployment and personal injury or death.

When this code is set, view repair.

Repair

Replace the Occupant Restraint Controller in accordance with the Service Information.

Perform the ORC VERIFICATION TEST-VER. 1.

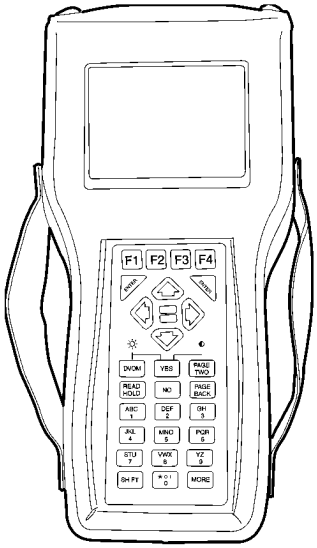

INTERNAL 2

For a complete wiring diagram **Refer to Section 8W**.

- **When Monitored:**
  With the ignition on. The module's on board diagnostics continuously performs internal circuit tests.
- **Set Condition:**
  This DTC will set if the module identifies an out of range internal circuit.

Possible Causes
OCCUPANT RESTRAINT CONTROLLER

Diagnostic Test

1. REPLACE OCCUPANT RESTRAINT CONTROLLER

Turn the ignition on.

With the scan tool, erase and read ORC DTCs.

WARNING: To avoid personal injury or death, turn the ignition off, disconnect the battery and wait two minutes before proceeding.

WARNING: If the Occupant Restraint Controller is dropped at any time, it must be replaced. Failure to take proper precautions could result in accidental airbag deployment and personal injury or death.

When this code is set, view repair.

Repair

Replace the Occupant Restraint Controller in accordance with the Service Information.

Perform the ORC VERIFICATION TEST-VER. 1.

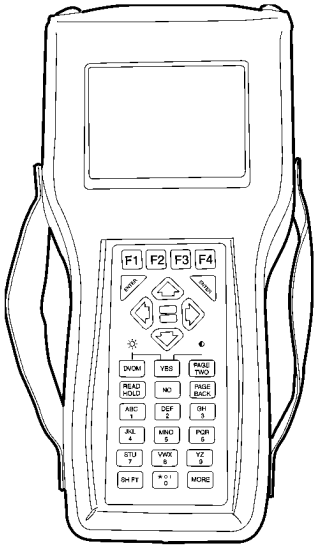

LEFT CURTAIN SQUIB 1 CIRCUIT OPEN

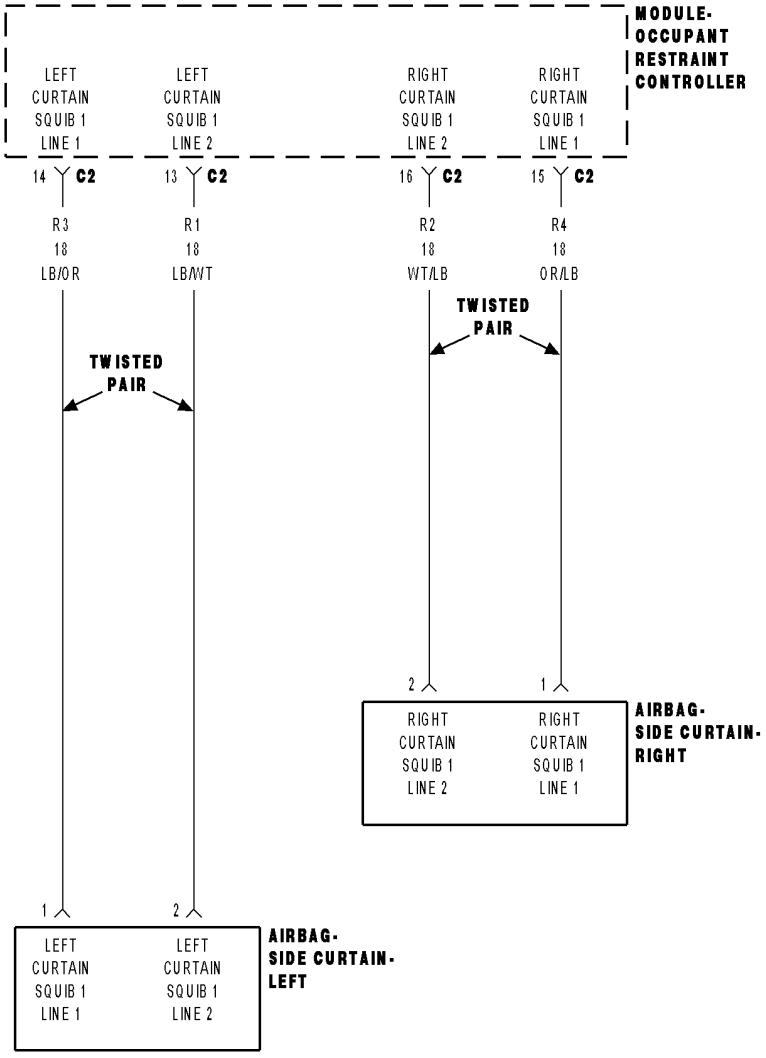

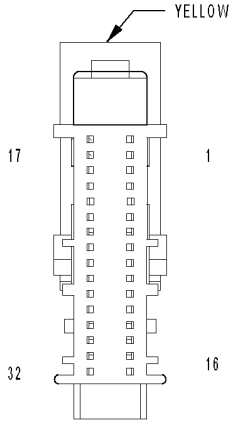

MODULE-
OCCUPANT
RESTRAINT
CONTROLLER C2

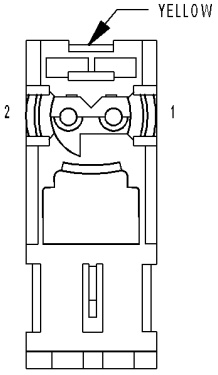

AIRBAG-
SIDE
CURTAIN-
RIGHT

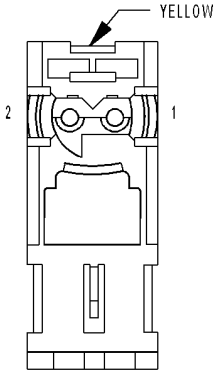

AIRBAG-
SIDE
CURTAIN-
LEFT

814f2ea2

LEFT CURTAIN SQUIB 1 CIRCUIT OPEN (CONTINUED)

For the Air Bag System circuit diagram (Refer to 8 - ELECTRICAL/RESTRAINTS - SCHEMATICS AND DIAGRAMS).

For a complete wiring diagram **Refer to Section 8W**.

- **When Monitored:**
  With the ignition on, the Occupant Restraint Controller (ORC) monitors the resistance of the Left Curtain Squib 1 circuits.
- **Set Condition:**
  The ORC has detected an open or high resistance on the Left Curtain Squib 1 circuits.

Possible Causes
(R3) LEFT CURTAIN SQUIB 1 LINE 1 CIRCUIT OPEN
(R1) LEFT CURTAIN SQUIB 1 LINE 2 CIRCUIT OPEN
LEFT SIDE CURTAIN AIRBAG
ORC

Diagnostic Test

1. DETERMINE ACTIVE OR STORED DTC

NOTE: Ensure the battery is fully charged.

NOTE: The scan tool, SRS Airbag Load Tool MRL 8443, and DVOM are required to perform the following test.

NOTE: When reconnecting airbag system components the Ignition must be turned off and the Battery must be disconnected.

Select Active or Stored DTC.

Is the DTC active or stored?

ORC - ACTIVE DTC
Go To 2

ORC - STORED DTC
Go To 6

LEFT CURTAIN SQUIB 1 CIRCUIT OPEN (CONTINUED)

2. CHECK FOR OPEN SQUIB CIRCUITS IN LEFT SIDE CURTAIN AIRBAG

WARNING: To avoid personal injury or death, turn the ignition off, disconnect the battery and wait two minutes before proceeding.
Disconnect the Left Side Curtain Airbag connector.

WARNING: To avoid personal injury or death, do not place an intact undeployed curtain airbag face down on a hard surface, the airbag will propel into the air if accidentally deployed.

NOTE: Check connectors - Clean and repair as necessary.
Connect the 8443 Load Tool and appropriate Jumper to the Left Side Curtain Airbag connector.

WARNING: To avoid personal injury or death, turn the ignition on, then reconnect the battery.
With the scan tool, read the active ORC DTC's.

Does the scan tool display: LEFT CURTAIN SQUIB 1 CIRCUIT OPEN?

Yes >> Go To 3

No >> Replace the Left Side Curtain Airbag in accordance with the Service Information.
Perform ORC VERIFICATION TEST - VER 1

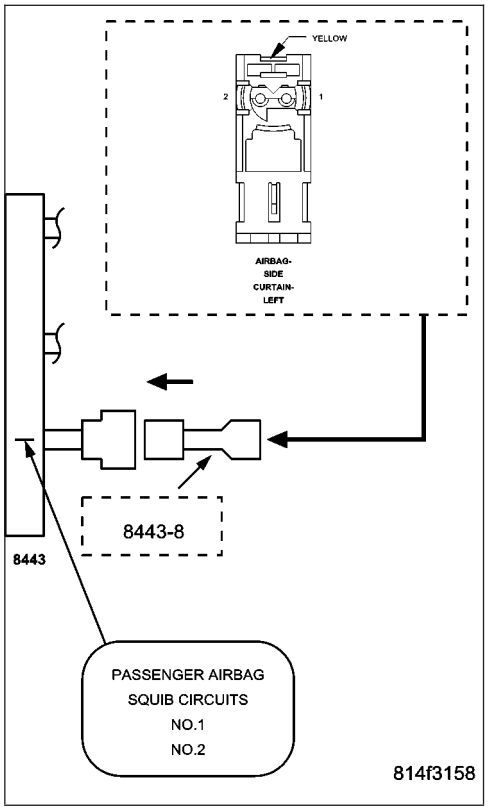

3. CHECK (R3) LEFT CURTAIN SQUIB 1 LINE 1 CIRCUIT FOR AN OPEN

WARNING: To avoid personal injury or death, turn the ignition off, disconnect the battery and wait two minutes before proceeding.
Disconnect the 8443 Load Tool and Jumper from the Left Side Curtain Airbag connector.

Disconnect the ORC connectors.

NOTE: Check connectors - Clean and repair as necessary.
Connect the 8443 Load Tool ORC Adaptor to the ORC connector.

Measure the resistance of the (R3) Left Curtain Squib 1 Line 1 circuit between the Left Side Curtain Airbag connector and the Load Tool ORC Adaptor.

Is the resistance below 1.0 ohm?

Yes >> Go To 4

No >> Repair the (R3) Left Curtain Squib 1 Line 1 circuit for an open. Then, Go To 4

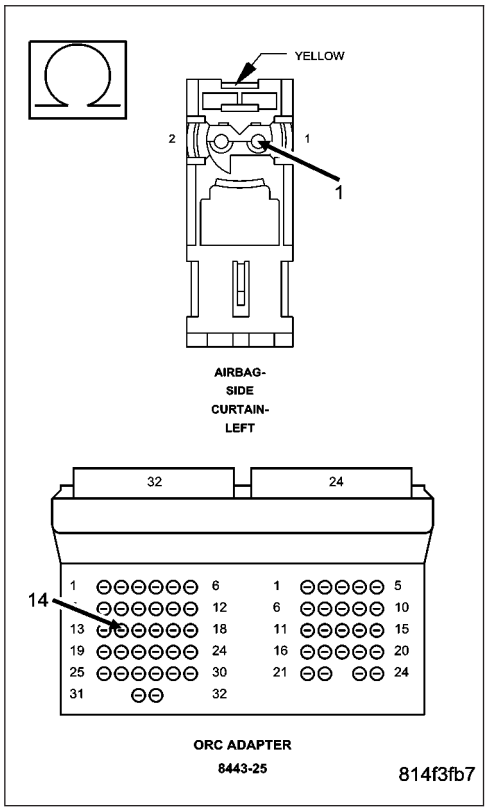

LEFT CURTAIN SQUIB 1 CIRCUIT OPEN (CONTINUED)

4. CHECK (R1) LEFT CURTAIN SQUIB 1 LINE 2 CIRCUIT FOR AN OPEN

Measure the resistance of the (R1) Left Curtain Squib 1 Line 2 circuit between the Left Side Curtain Airbag connector and the Load Tool ORC Adaptor.

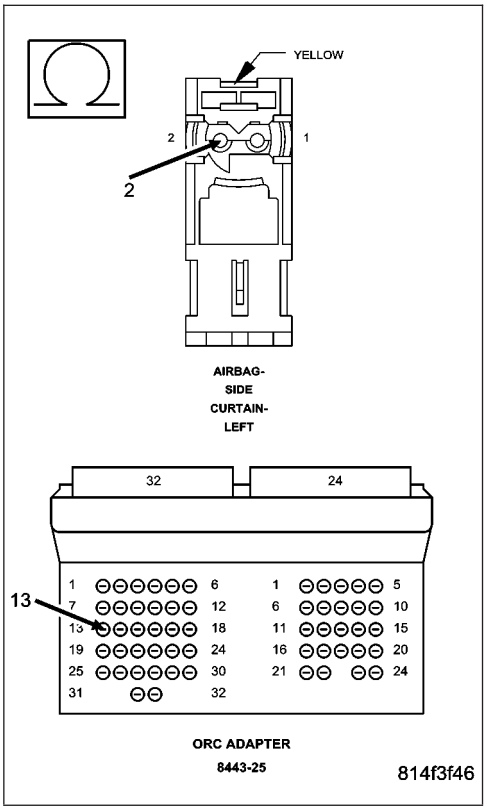

Is the resistance below 1.0 ohm?

Yes >> Go To 5

No >> Repair the (R1) Left Curtain Squib 1 Line 2 circuit for an open.
Perform ORC VERIFICATION TEST - VER 1

---

5. REPLACE THE ORC

WARNING: If the Occupant Restraint Controller (ORC) is dropped at any time, it must be replaced. Failure to take the proper precautions can result in accidental airbag deployment and personal injury or death.

NOTE: When reconnecting airbag system components the Ignition must be turned off and the Battery must be disconnected.

Repair

Replace the ORC in accordance with the Service Information.
Perform ORC VERIFICATION TEST - VER 1

LEFT CURTAIN SQUIB 1 CIRCUIT OPEN (CONTINUED)

6. STORED ORC DTC

With the scan tool, record and erase all DTC's from all Airbag System Modules.

If any ACTIVE codes are present they must be resolved before diagnosing any stored codes.

WARNING: To avoid personal injury or death, turn the ignition off, disconnect the battery and wait two minutes before proceeding.

Using the wiring diagram/schematic as a guide, inspect the wiring and connectors.

Look for chaffed, pierced, pinched, or partially broken wires and broken, bent, pushed out, spread, corroded, or contaminated terminals.

The following additional checks may assist you in identifying a possible intermittent problem.

Reconnect any disconnected components and harness connector.

WARNING: To avoid personal injury or death, turn the ignition on, then reconnect the battery.

With the scan tool monitor active codes as you work through the following steps.

Wiggle the wiring harness and connectors of the related airbag circuit or component.

If codes are related to the Driver Airbag circuits, rotate the steering wheel from stop to stop.

If only stored codes return continue the test until the problem area has been isolated.

In the previous steps you have attempted to recreate the conditions responsible for setting active DTC in question.

Are any ACTIVE DTCs present?

Yes >> Select the appropriate diagnostic procedure from the Table of Contents in this section.

No >> No problem found at this time. Erase all codes before returning vehicle to customer.

LEFT CURTAIN SQUIB 1 CIRCUIT SHORT

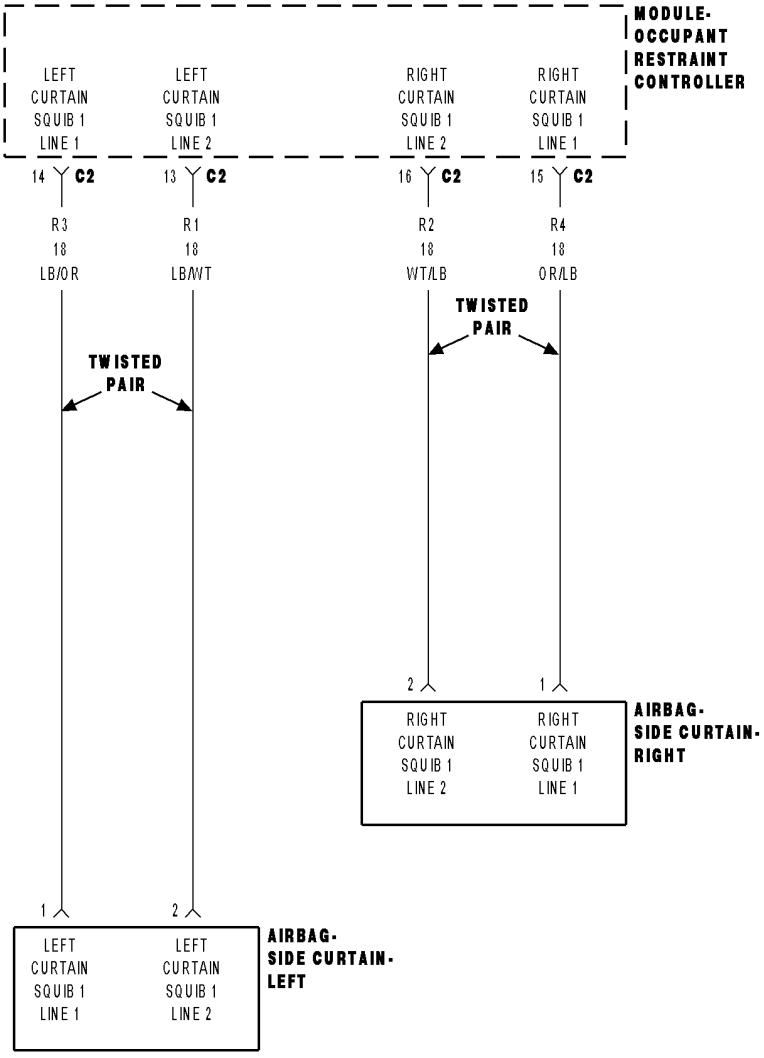

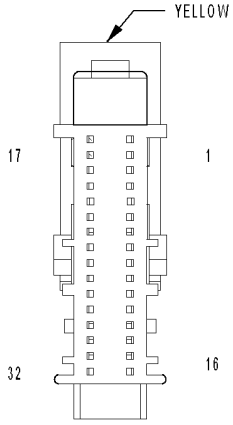

MODULE-
OCCUPANT
RESTRAINT
CONTROLLER C2

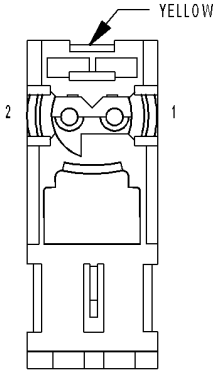

AIRBAG-
SIDE
CURTAIN-
RIGHT

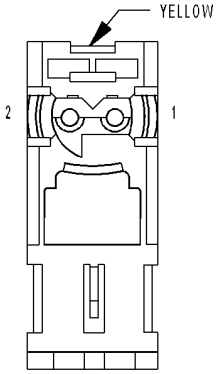

AIRBAG-
SIDE
CURTAIN-
LEFT

814f2ea2

LEFT CURTAIN SQUIB 1 CIRCUIT SHORT (CONTINUED)

For the Air Bag System circuit diagram (Refer to 8 - ELECTRICAL/RESTRAINTS - SCHEMATICS AND DIAGRAMS).

For a complete wiring diagram **Refer to Section 8W**.

- **When Monitored:**
  With the ignition on, the Occupant Restraint Controller (ORC) monitors the resistance of the Left Curtain Squib 1 circuits.
- **Set Condition:**
  The ORC has detected low resistance between the Left Curtain Squib 1 circuits.

Possible Causes
(R3) LEFT CURTAIN SQUIB 1 LINE 1 CIRCUIT SHORTED TO (R1) LEFT CURTAIN SQUIB 1 LINE 2 CIRCUIT
LEFT SIDE CURTAIN AIRBAG
ORC

Diagnostic Test

1. DETERMINE ACTIVE OR STORED DTC

NOTE: Ensure the battery is fully charged.

NOTE: The scan tool, SRS Airbag Load Tool MRL 8443, and DVOM are required to perform the following test.

NOTE: When reconnecting airbag system components the Ignition must be turned off and the Battery must be disconnected.

Select Active or Stored DTC.

Is the DTC active or stored?

ORC - ACTIVE DTC
Go To 2

ORC - STORED DTC
Go To 5

LEFT CURTAIN SQUIB 1 CIRCUIT SHORT (CONTINUED)

2. CHECK FOR SHORTED SQUIB CIRCUITS IN LEFT SIDE CURTAIN AIRBAG

WARNING: To avoid personal injury or death, turn the ignition off, disconnect the battery and wait two minutes before proceeding.
Disconnect the Left Side Curtain Airbag connector.

WARNING: To avoid personal injury or death, do not place an intact undeployed curtain airbag face down on a hard surface, the airbag will propel into the air if accidentally deployed.

NOTE: Check connectors - Clean and repair as necessary.
Connect the 8443 Load Tool and appropriate Jumper to the Left Side Curtain Airbag connector.

WARNING: To avoid personal injury or death, turn the ignition on, then reconnect the battery.
With the scan tool, read the active ORC DTC's.

Does the scan tool display: LEFT CURTAIN SQUIB 1 CIRCUIT SHORT?

Yes >> Go To 3

No >> Replace the Left Side Curtain Airbag in accordance with the Service Information.
Perform ORC VERIFICATION TEST - VER 1

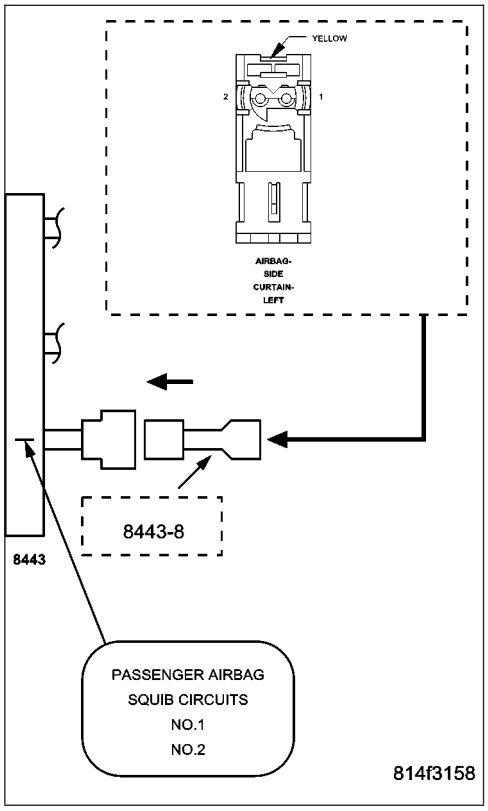

LEFT CURTAIN SQUIB 1 CIRCUIT SHORT (CONTINUED)

3. CHECK (R3) LEFT CURTAIN SQUIB 1 LINE 1 CIRCUIT FOR A SHORT TO (R1) LEFT CURTAIN SQUIB 1 LINE 2 CIRCUIT

WARNING: To avoid personal injury or death, turn the ignition off, disconnect the battery and wait two minutes before proceeding.
Disconnect the 8443 Load Tool and Jumper from the Left Side Curtain Airbag connector.

Disconnect the ORC connectors.

NOTE: Check connectors - Clean and repair as necessary.
Connect the 8443 Load Tool ORC Adaptor to the ORC connector.

Measure the resistance between the (R3) Left Curtain Squib 1 Line 1 circuit and the (R1) Left Curtain Squib 1 Line 2 circuit at the Left Side Curtain Airbag connector.

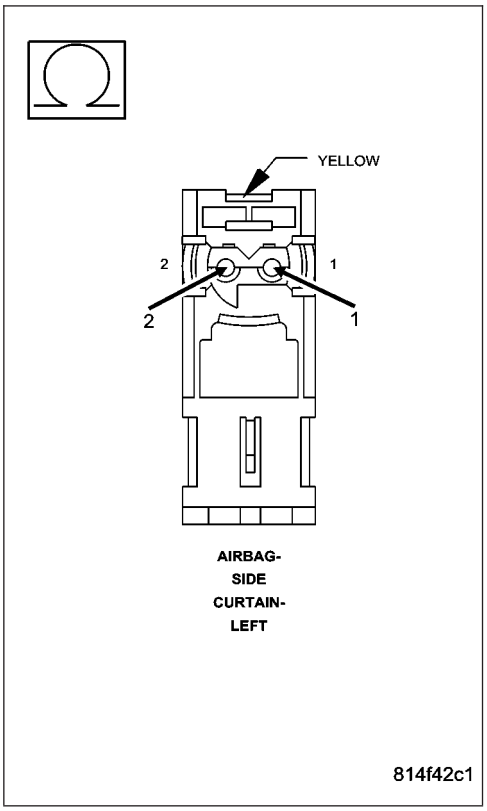

Is the resistance below 10K ohms?

Yes >> Repair the (R3) Left Curtain Squib 1 Line 1 circuit for a short to the (R1) Left Curtain Squib 1 Line 2 circuit.
Perform ORC VERIFICATION TEST - VER 1

No >> Go To 4

---

4. REPLACE THE ORC

WARNING: If the Occupant Restraint Controller (ORC) is dropped at any time, it must be replaced. Failure to take the proper precautions can result in accidental airbag deployment and personal injury or death.

NOTE: When reconnecting airbag system components the Ignition must be turned off and the Battery must be disconnected.

Repair

Replace the ORC in accordance with the Service Information.
Perform ORC VERIFICATION TEST - VER 1

LEFT CURTAIN SQUIB 1 CIRCUIT SHORT (CONTINUED)

5. STORED ORC DTC

With the scan tool, record and erase all DTC's from all Airbag System Modules.

If any ACTIVE codes are present they must be resolved before diagnosing any stored codes.

WARNING: To avoid personal injury or death, turn the ignition off, disconnect the battery and wait two minutes before proceeding.

Using the wiring diagram/schematic as a guide, inspect the wiring and connectors.

Look for chaffed, pierced, pinched, or partially broken wires and broken, bent, pushed out, spread, corroded, or contaminated terminals.

The following additional checks may assist you in identifying a possible intermittent problem.

Reconnect any disconnected components and harness connector.

WARNING: To avoid personal injury or death, turn the ignition on, then reconnect the battery.

With the scan tool monitor active codes as you work through the following steps.

Wiggle the wiring harness and connectors of the related airbag circuit or component.

If codes are related to the Driver Airbag circuits, rotate the steering wheel from stop to stop.

If only stored codes return continue the test until the problem area has been isolated.

In the previous steps you have attempted to recreate the conditions responsible for setting active DTC in question.

Are any ACTIVE DTC's present?

Yes >> Select the appropriate diagnostic procedure from the Table of Contents in this section.

No >> No problem found at this time. Erase all codes before returning vehicle to customer.

LEFT CURTAIN SQUIB 1 SHORT TO BATTERY

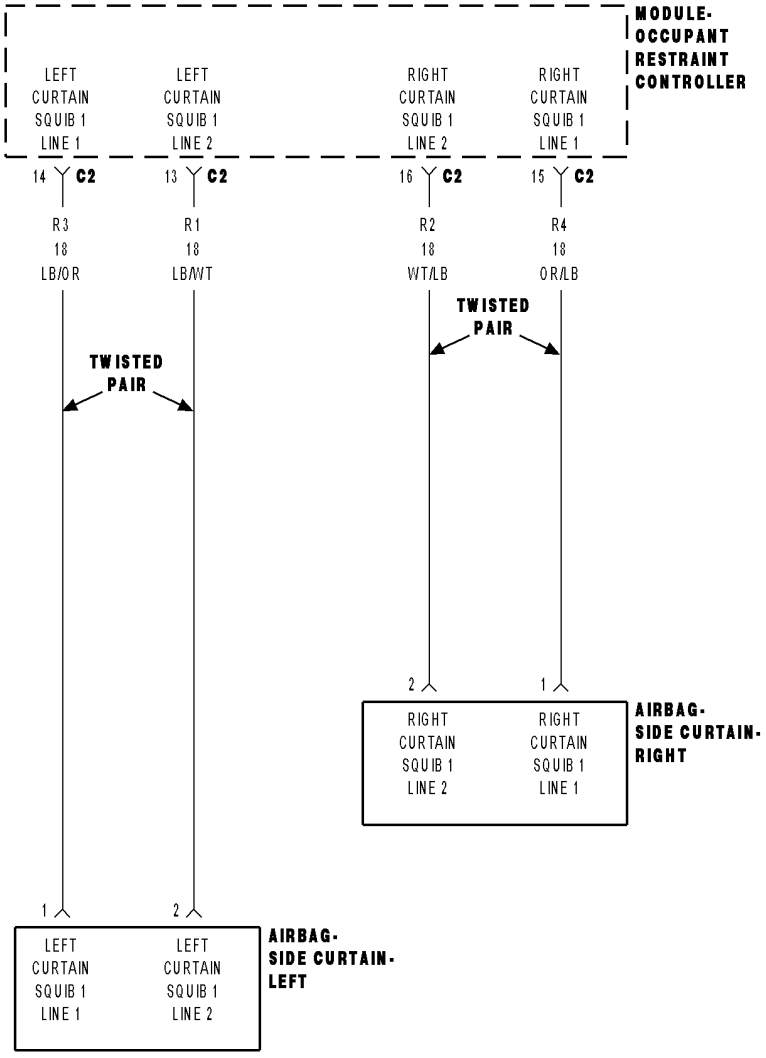

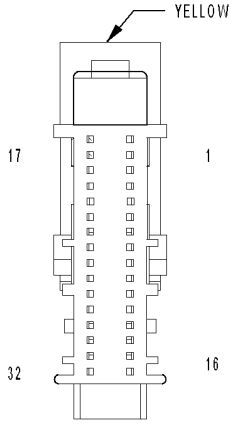

MODULE-
OCCUPANT
RESTRAINT
CONTROLLER C2

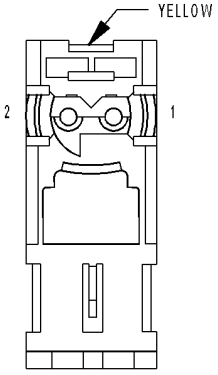

AIRBAG-
SIDE
CURTAIN-
RIGHT

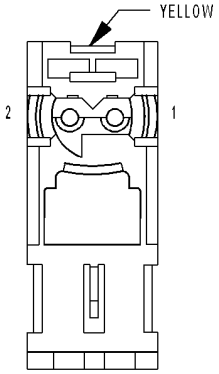

AIRBAG-
SIDE
CURTAIN-
LEFT

814f2ea2

LEFT CURTAIN SQUIB 1 SHORT TO BATTERY (CONTINUED)

For the Air Bag System circuit diagram (Refer to 8 - ELECTRICAL/RESTRAINTS - SCHEMATICS AND DIAGRAMS).

For a complete wiring diagram **Refer to Section 8W**.

- **When Monitored:**
  With the ignition on, the Occupant Restraint Controller (ORC) monitors the voltage on the Left Curtain Squib 1 circuits.
- **Set Condition:**
  The ORC has detected voltage on the Left Curtain Squib 1 circuits.

Possible Causes
(R3) LEFT CURTAIN SQUIB 1 LINE 1 CIRCUIT OR (R1) LEFT CURTAIN SQUIB 1 LINE 2 CIRCUIT SHORTED TO BATTERY
LEFT SIDE CURTAIN AIRBAG
ORC

Diagnostic Test

1. DETERMINE ACTIVE OR STORED DTC

NOTE: Ensure the battery is fully charged.

NOTE: The scan tool, SRS Airbag Load Tool MRL 8443, and DVOM are required to perform the following test.

NOTE: When reconnecting airbag system components the Ignition must be turned off and the Battery must be disconnected.

Select Active or Stored DTC.

Is the DTC active or stored?

ORC - ACTIVE DTC
Go To 2

ORC - STORED DTC
Go To 5

LEFT CURTAIN SQUIB 1 SHORT TO BATTERY (CONTINUED)

2. CHECK FOR SHORTED SQUIB CIRCUITS IN LEFT SIDE CURTAIN AIRBAG

WARNING: To avoid personal injury or death, turn the ignition off, disconnect the battery and wait two minutes before proceeding.
Disconnect the Left Side Curtain Airbag connector.

WARNING: To avoid personal injury or death, do not place an intact undeployed curtain airbag face down on a hard surface, the airbag will propel into the air if accidentally deployed.

NOTE: Check connectors - Clean and repair as necessary.
Connect the 8443 Load Tool and appropriate Jumper to the Left Side Curtain Airbag connector.

WARNING: To avoid personal injury or death, turn the ignition on, then reconnect the battery.
With the scan tool, read the active ORC DTC's.

Does the scan tool display: LEFT CURTAIN SQUIB 1 SHORT TO BATTERY?

Yes >> Go To 3

No >> Replace the Left Side Curtain Airbag in accordance with the Service Information.
Perform ORC VERIFICATION TEST - VER 1

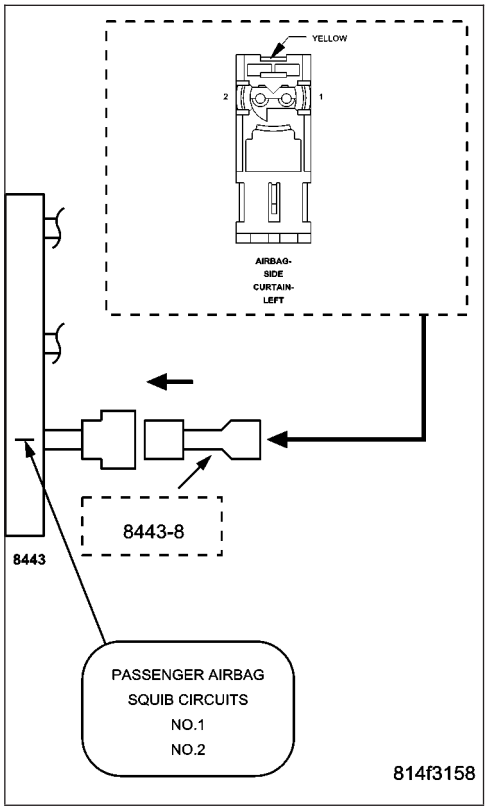

LEFT CURTAIN SQUIB 1 SHORT TO BATTERY (CONTINUED)

3. CHECK (R3) LEFT CURTAIN SQUIB 1 LINE 1 CIRCUIT AND (R1) LEFT CURTAIN SQUIB 1 LINE 2 CIRCUIT FOR A SHORT TO BATTERY

WARNING: To avoid personal injury or death, turn the ignition off, disconnect the battery and wait two minutes before proceeding.
Disconnect the 8443 Load Tool and Jumper from the Left Side Curtain Airbag connector.

Disconnect the ORC connectors.

NOTE: Check connectors - Clean and repair as necessary.
Connect the 8443 Load Tool ORC Adaptor to the ORC connector.

Measure the voltage of the (R3) Left Curtain Squib 1 Line 1 circuit between the Left Side Curtain Airbag connector and ground.

Measure the voltage of the (R1) Left Curtain Squib 1 Line 2 circuit between the Left Side Curtain Airbag connector and ground.

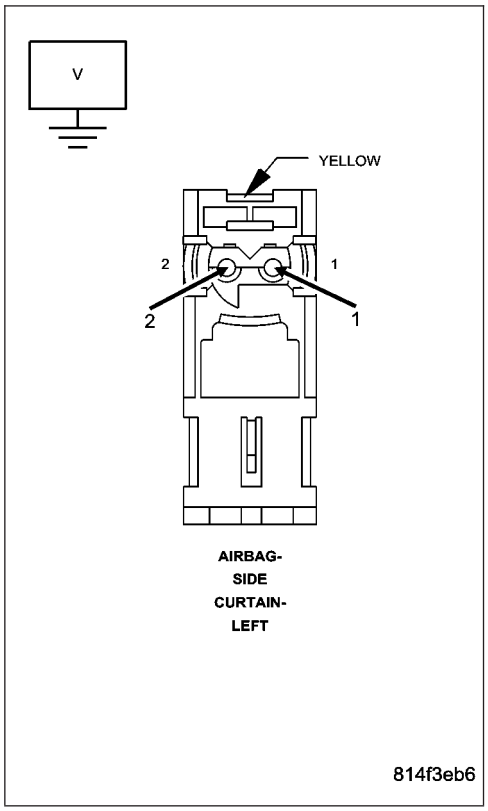

Is there any voltage present on either circuit?

Yes >> Repair the Left Curtain Squib 1 circuits with voltage present for a short to battery.
Perform ORC VERIFICATION TEST - VER 1

No >> Go To 4

---

4. REPLACE THE ORC

WARNING: To avoid personal injury or death, turn the ignition off, disconnect the battery and wait two minutes before proceeding.

WARNING: If the Occupant Restraint Controller (ORC) is dropped at any time, it must be replaced. Failure to take the proper precautions can result in accidental airbag deployment and personal injury or death.

NOTE: When reconnecting airbag system components the Ignition must be turned off and the Battery must be disconnected.

Repair

Replace the ORC in accordance with the Service Information.
Perform ORC VERIFICATION TEST - VER 1

LEFT CURTAIN SQUIB 1 SHORT TO BATTERY (CONTINUED)

5. STORED ORC DTC

With the scan tool, record and erase all DTC's from all Airbag System Modules.

If any ACTIVE codes are present they must be resolved before diagnosing any stored codes.

WARNING: To avoid personal injury or death, turn the ignition off then disconnect the battery and wait two minutes before proceeding.

Using the wiring diagram/schematic as a guide, inspect the wiring and connectors.

Look for chaffed, pierced, pinched, or partially broken wires and broken, bent, pushed out, spread, corroded, or contaminated terminals.

The following additional checks may assist you in identifying a possible intermittent problem.

Reconnect any disconnected components and harness connector.

WARNING: To avoid personal injury or death, turn the ignition on, then reconnect the battery.

With the scan tool monitor active codes as you work through the following steps.

Wiggle the wiring harness and connectors of the related airbag circuit or component.

If codes are related to the Driver Airbag circuits, rotate the steering wheel from stop to stop.

If only stored codes return continue the test until the problem area has been isolated.

In the previous steps you have attempted to recreate the conditions responsible for setting active DTC in question.

Are any ACTIVE DTCs present?

Yes >> Select the appropriate diagnostic procedure from the Table of Contents in this section.

No >> No problem found at this time. Erase all codes before returning vehicle to customer.

LEFT CURTAIN SQUIB 1 SHORT TO GROUND

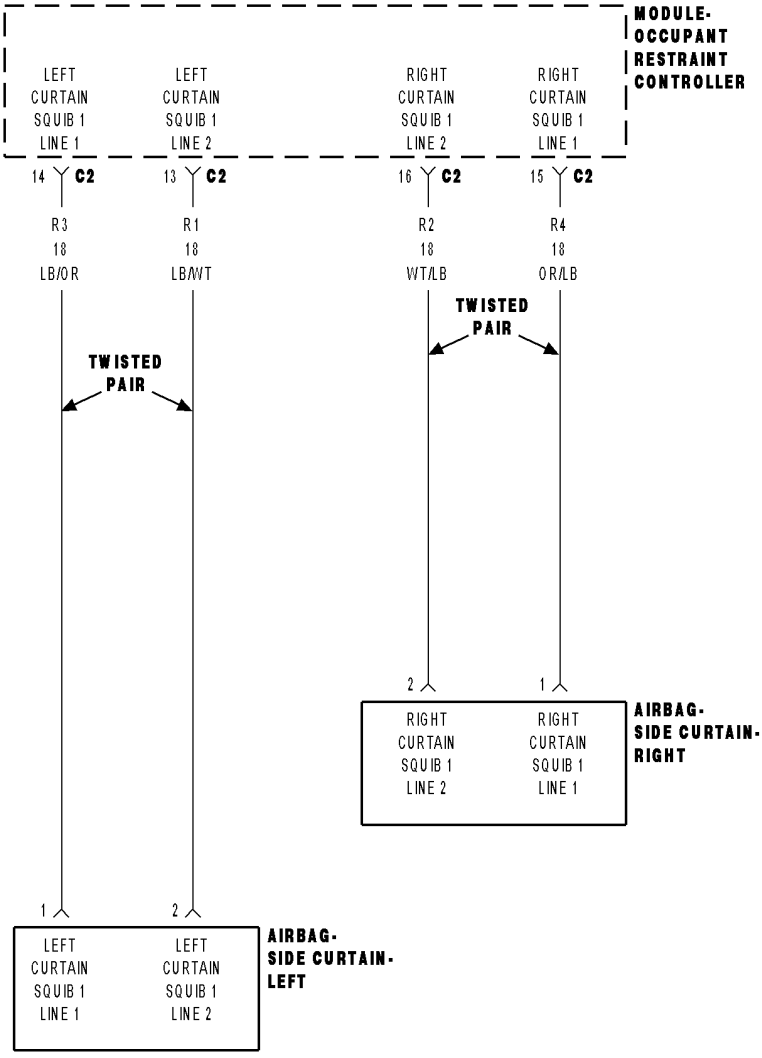

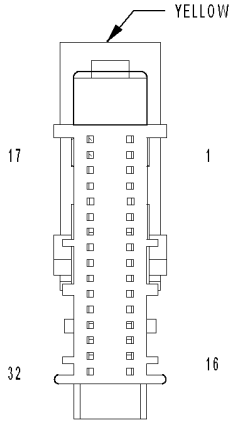

MODULE-
OCCUPANT
RESTRAINT
CONTROLLER C2

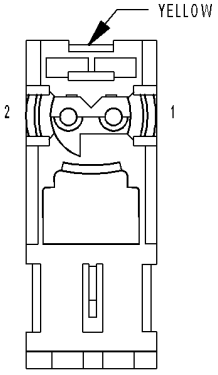

AIRBAG-
SIDE
CURTAIN-
RIGHT

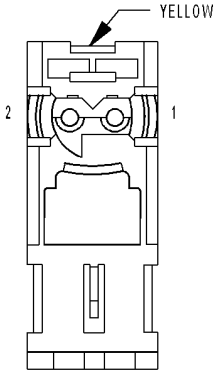

AIRBAG-
SIDE
CURTAIN-
LEFT

814f2ea2

LEFT CURTAIN SQUIB 1 SHORT TO GROUND (CONTINUED)

For the Air Bag System circuit diagram (Refer to 8 - ELECTRICAL/RESTRAINTS - SCHEMATICS AND DIAGRAMS).

For a complete wiring diagram **Refer to Section 8W**.

- **When Monitored:**
  With the ignition on, the Occupant Restraint Controller (ORC) monitors the resistance of the Left Curtain Squib 1 circuits.
- **Set Condition:**
  The ORC has detected low resistance of the Left Curtain Squib 1 circuits.

Possible Causes
(R3) LEFT CURTAIN SQUIB 1 LINE 1 CIRCUIT OR (R1) LEFT CURTAIN SQUIB 1 LINE 2 CIRCUIT SHORTED TO GROUND
LEFT SIDE CURTAIN AIRBAG
ORC

Diagnostic Test

1. DETERMINE ACTIVE OR STORED DTC

NOTE: Ensure the battery is fully charged.

NOTE: The scan tool, SRS Airbag Load Tool MRL 8443, and DVOM are required to perform the following test.

NOTE: When reconnecting airbag system components the Ignition must be turned off and the Battery must be disconnected.

Select Active or Stored DTC.

Is the DTC active or stored?

ORC - ACTIVE DTC
Go To 2

ORC - STORED DTC
Go To 5

LEFT CURTAIN SQUIB 1 SHORT TO GROUND (CONTINUED)

2. CHECK FOR SHORTED SQUIB CIRCUITS IN LEFT SIDE CURTAIN AIRBAG

WARNING: To avoid personal injury or death, turn the ignition off, disconnect the battery and wait two minutes before proceeding.
Disconnect the Left Side Curtain Airbag connector.

WARNING: To avoid personal injury or death, do not place an intact undeployed curtain airbag face down on a hard surface, the airbag will propel into the air if accidentally deployed.

NOTE: Check connectors - Clean and repair as necessary.
Connect the 8443 Load Tool and appropriate Jumper to the Left Side Curtain Airbag connector.

WARNING: To avoid personal injury or death, turn the ignition on, then reconnect the battery.
With the scan tool, read the active ORC DTC's.

Does the scan tool display: LEFT CURTAIN SQUIB 1 SHORT TO GROUND?

Yes >> Go To 3

No >> Replace the Left Side Curtain Airbag in accordance with the Service Information.
Perform ORC VERIFICATION TEST - VER 1

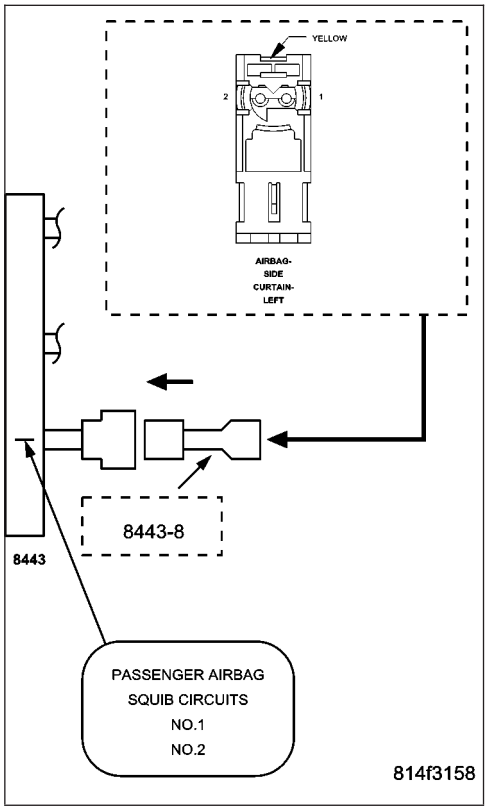

3. CHECK (R3) LEFT CURTAIN SQUIB 1 LINE 1 CIRCUIT AND (R1) LEFT CURTAIN SQUIB 1 LINE 2 CIRCUIT FOR A SHORT TO GROUND

WARNING: To avoid personal injury or death, turn the ignition off, disconnect the battery and wait two minutes before proceeding.
Disconnect the 8443 Load Tool and Jumper from the Left Side Curtain Airbag connector.

Disconnect the ORC connectors.

NOTE: Check connectors - Clean and repair as necessary.
Connect the 8443 Load Tool ORC Adaptor to the ORC connector.

Measure the resistance of the (R3) Left Curtain Squib 1 Line 1 circuit between ground and the Left Side Curtain Airbag connector.

Measure the resistance of the (R1) Left Curtain Squib 1 Line 2 circuit between ground and the Left Side Curtain Airbag connector.

Is the resistance below 10K ohms on either circuit?

Yes >> Repair the Left Curtain Squib 1 circuits with a resistance below 10K ohms for a short to ground.
Perform ORC VERIFICATION TEST - VER 1

No >> Go To 4

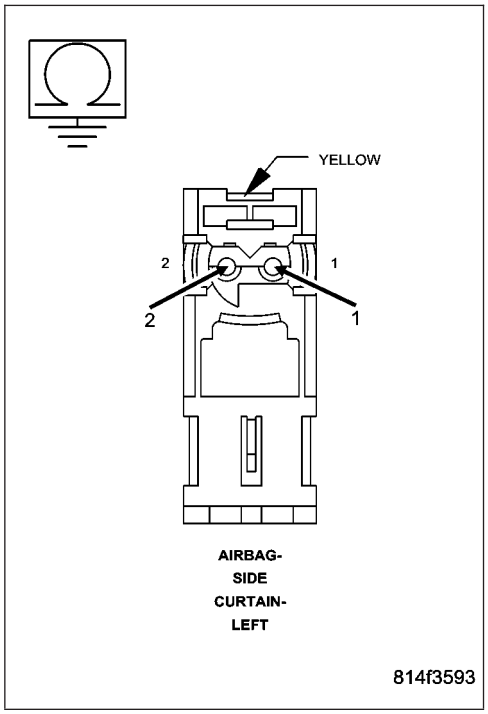

LEFT CURTAIN SQUIB 1 SHORT TO GROUND (CONTINUED)

4. REPLACE THE ORC

WARNING: If the Occupant Restraint Controller (ORC) is dropped at any time, it must be replaced. Failure to take the proper precautions can result in accidental airbag deployment and personal injury or death.

NOTE: When reconnecting airbag system components the Ignition must be turned off and the Battery must be disconnected.

Repair

Replace the ORC in accordance with the Service Information.
Perform ORC VERIFICATION TEST - VER 1

---

5. STORED ORC DTC

With the scan tool, record and erase all DTC's from all Airbag System Modules.

If any ACTIVE codes are present they must be resolved before diagnosing any stored codes.

WARNING: To avoid personal injury or death, turn the ignition off, disconnect the battery and wait two minutes before proceeding.

Using the wiring diagram/schematic as a guide, inspect the wiring and connectors.

Look for chaffed, pierced, pinched, or partially broken wires and broken, bent, pushed out, spread, corroded, or contaminated terminals.

The following additional checks may assist you in identifying a possible intermittent problem.

Reconnect any disconnected components and harness connector.

WARNING: To avoid personal injury or death, turn the ignition on, then reconnect the battery.

With the scan tool monitor active codes as you work through the following steps.

Wiggle the wiring harness and connectors of the related airbag circuit or component.

If codes are related to the Driver Airbag circuits, rotate the steering wheel from stop to stop.

IF only stored codes return continue the test until the problem area has been isolated.

In the previous steps you have attempted to recreate the conditions responsible for setting active DTC in question.

Are any ACTIVE DTC's present?

Yes >> Select the appropriate diagnostic procedure from the Table of Contents in this section.

No >> No problem found at this time. Erase all codes before returning vehicle to customer.

LEFT SIDE IMPACT SENSOR 1 INTERNAL 1

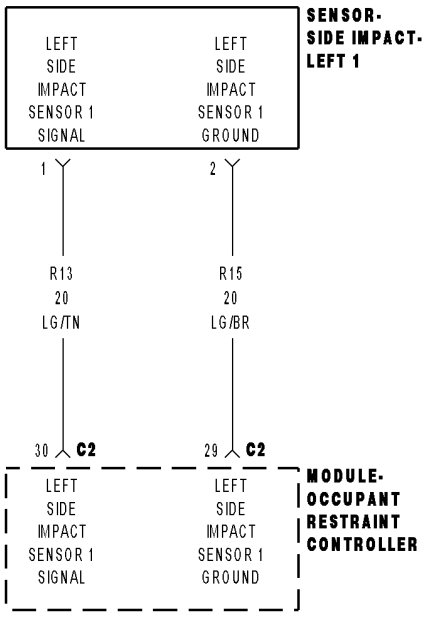

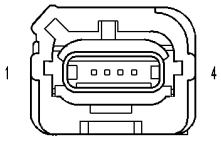

SENSOR-SIDE
IMPACT-LEFT 1

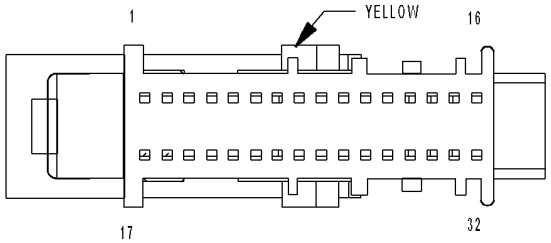

MODULE-
OCCUPANT
RESTRAINT
CONTROLLER C2

81471770

LEFT SIDE IMPACT SENSOR 1 INTERNAL 1 (CONTINUED)

For the Airbag System circuit diagram (Refer to 8 - ELECTRICAL/RESTRAINTS - SCHEMATICS AND DIAGRAMS).

For a complete wiring diagram **Refer to Section 8W**.

- **When Monitored:**
  The Occupant Restraint Controller (ORC) continuously communicates with the Left Side Impact Sensor 1 over the sensor signal circuit. The sensor communication and on board diagnostics are powered by the ORC signal.
- **Set Condition:**
  This code will set, if the ORC and the Left Side Impact Sensor 1 do not establish and maintain valid data communications.

Possible Causes
(R13) LEFT SIDE IMPACT SENSOR 1 SIGNAL CIRCUIT SHORTED TO BATTERY
(R13) LEFT SIDE IMPACT SENSOR 1 SIGNAL CIRCUIT SHORTED TO GROUND
(R13, R15) LEFT SIDE IMPACT SENSOR 1 CIRCUITS SHORTED TOGETHER
(R15) LEFT SIDE IMPACT SENSOR 1 GROUND CIRCUIT OPEN
(R13) LEFT SIDE IMPACT SENSOR 1 SIGNAL CIRCUIT OPEN
ORC, LEFT SIDE IMPACT SENSOR 1

Diagnostic Test

1. VERIFY THAT DTC LEFT SIDE IMPACT SENSOR 1 INTERNAL 1 IS ACTIVE

NOTE: Ensure the battery is fully charged.

NOTE: When reconnecting Airbag system components, the ignition must be turned off and the battery must be disconnected.

Turn the ignition on.

With the scan tool, read ORC DTCs.

Does the scan tool display active: LEFT SIDE IMPACT SENSOR 1 INTERNAL 1?

Yes >> Go To 2

No >> Go To 9

LEFT SIDE IMPACT SENSOR 1 INTERNAL 1 (CONTINUED)

2. CHECK THE (R13, R15) LEFT SIDE IMPACT SENSOR 1 SIGNAL AND GROUND CIRCUITS FOR A SHORT TO BATTERY

WARNING: To avoid personal injury or death, turn the ignition off, disconnect the battery and wait two minutes before proceeding.
Disconnect the Left side Impact Sensor 1 connector.
Disconnect the ORC connector.

WARNING: To avoid personal injury or death, turn the ignition on, then reconnect the battery.
Measure the voltage of the (R13) Left Side Impact Sensor 1 Signal circuit and (R15) Left Side Impact Sensor 1 Ground circuit at the Left Side Impact Sensor 1 connector and ground.

Is there any voltage present?

Yes >> Repair the (R13, R15) Left Side Impact Sensor 1 circuits for a short to battery.
Perform the ORC VERIFICATION TEST - VER 1.

No >> Go To 3

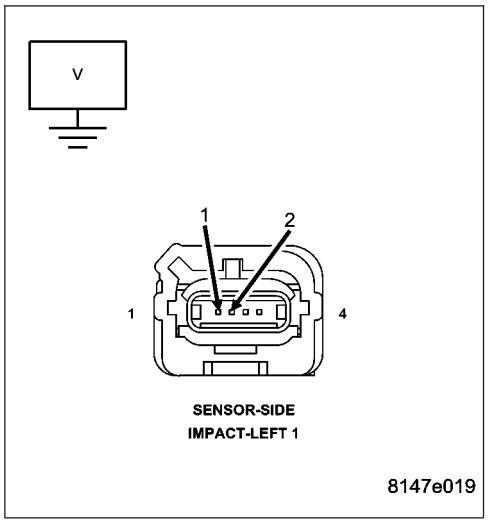

3. CHECK THE (R13) LEFT SIDE IMPACT SENSOR 1 SIGNAL CIRCUIT FOR A SHORT TO GROUND

WARNING: To avoid personal injury or death, turn ignition on, then reconnect the battery.
Measure the resistance of the (R13) Left Side Impact Sensor 1 Signal circuit between the Left Side Impact Sensor 1 connector and ground.

Is the resistance below 100K ohms?

Yes >> Repair the (R13) Left Side Impact Sensor 1 Signal circuit for a short to ground.
Perform the ORC VERIFICATION TEST - VER 1.

No >> Go To 4

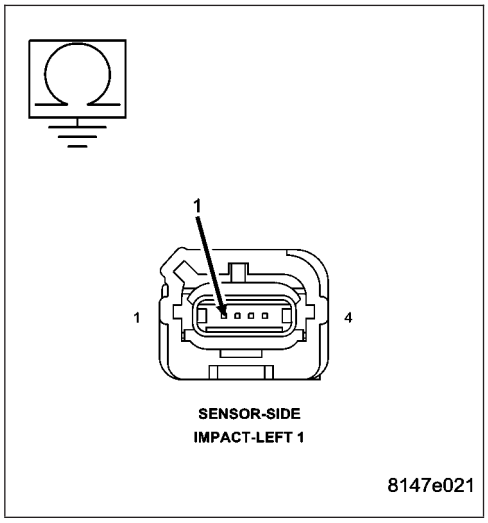

LEFT SIDE IMPACT SENSOR 1 INTERNAL 1 (CONTINUED)

4. CHECK THE (R13, R15) LEFT SIDE IMPACT SENSOR CIRCUITS FOR A SHORT TOGETHER

Measure the resistance between the (R13) Left Side Impact Sensor 1 Signal circuit and (R15) Left Side Impact Sensor 1 Ground circuit at the Left Side Impact Sensor 1 connector.

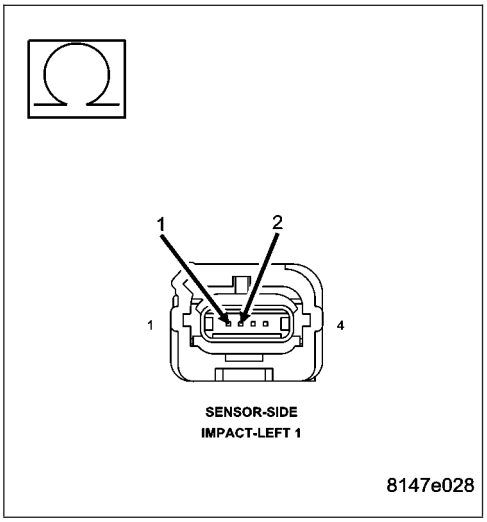

Is the resistance below 100K ohms?

Yes >> Repair the (R13, R15) Left Side Impact Sensor 1 circuits shorted together.
Perform the ORC VERIFICATION TEST - VER 1.

No >> Go To 5

5. CHECK THE (R15) LEFT SIDE IMPACT SENSOR 1 GROUND CIRCUIT FOR AN OPEN OR HIGH RESISTANCE

Connect the 8443 Load Tool ORC Adaptor to the Occupant Control Module connector.

Measure the resistance of the (R15) Left Side Impact Sensor 1 Ground circuit between the Left Side Impact Sensor 1 connector and the 8443 Load Tool ORC Adaptor.

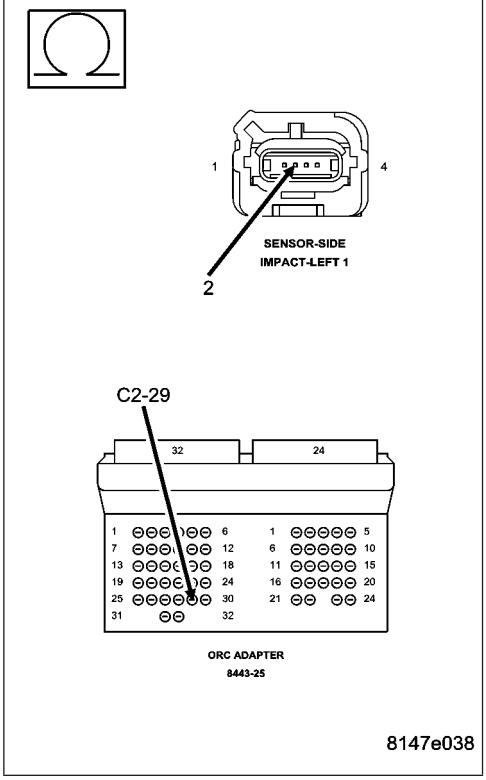

Is the resistance below 1 ohm?

Yes >> Go To 6

No >> Repair the (R15) Left Side Impact Sensor 1 Ground circuit for an open or high resistance.
Perform the ORC VERIFICATION TEST - VER 1.

LEFT SIDE IMPACT SENSOR 1 INTERNAL 1 (CONTINUED)

6. CHECK THE (R13) LEFT SIDE IMPACT SENSOR 1 CIRCUIT FOR AN OPEN OR HIGH RESISTANCE

Measure the resistance of the (R13) Left Side Impact Sensor 1 Signal circuit between the Left Side Impact Sensor 1 connector and the 8443 Load Tool ORC Adaptor.

Is the resistance below 1 ohm?

Yes >> Go To 7

No >> Repair the (R13) Left Side Impact Sensor 1 Signal circuit for an open or high resistance.
Perform the ORC VERIFICATION TEST - VER 1.

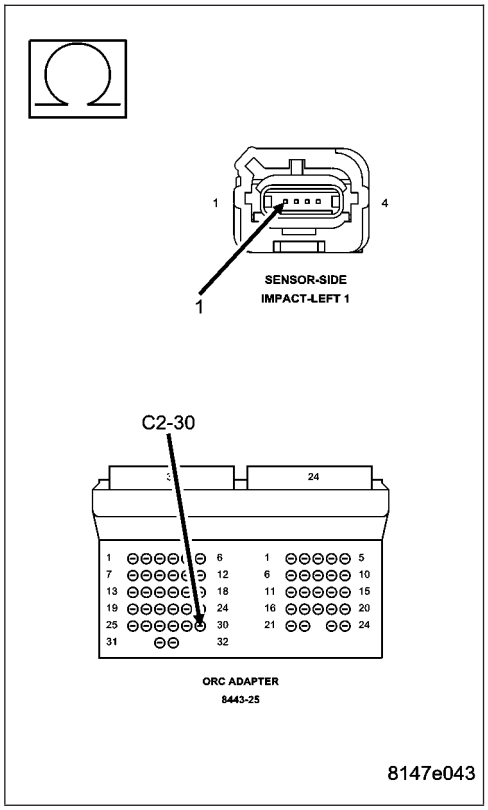

7. CHECK OPERATION OF THE LEFT SIDE IMPACT SENSOR 1

Replace the Left Side Impact Sensor 1.

Reconnect the vehicle body harness to the impact sensor.

Remove any special tools or jumper wires and reconnect all previously disconnected components - except the Battery.

WARNING: To avoid personal injury or death, turn the ignition on, then reconnect the battery.
Connect the scan tool to the Data Link Connector - use the most current software available.

Use the scan tool and erase the stored codes in all airbag system modules.

Turn the Ignition Off, and wait 15 seconds before turning the Ignition On.

Wait one minute, and read active codes and if there are none present read the stored codes.

Did DTC reset and is it active?

Yes >> Go To 8

No >> Repair is complete.
Perform the ORC VERIFICATION TEST - VER 1.

LEFT SIDE IMPACT SENSOR 1 INTERNAL 1 (CONTINUED)

8. REPLACE THE OCCUPANT RESTRAINT CONTROLLER

WARNING: To avoid personal injury or death, turn the ignition off, disconnect the battery and wait two minutes before proceeding.

WARNING: If the occupant restraint controller is dropped at any time, it must be replaced. Failure to take the proper precautions could result in accidental airbag deployment and personal injury or death.

If there are no possible causes remaining, view repair.

Repair

Replace the Occupant Restraint Controller in accordance with Service Instructions.
Perform the ORC VERIFICATION TEST - VER 1.

---

9. TEST FOR AN INTERMITTENT CONDITION

With the scan tool, record and erase all DTC's from all Airbag modules.

If any ACTIVE codes are present they must be resolved before diagnosing any stored codes.

WARNING: To avoid personal injury or death, turn the ignition off, disconnect the battery and wait two minutes before proceeding.

Using the wiring diagram/schematic as a guide, inspect the wiring and connectors.

Look for chaffed, pierced, pinched, or partially broken wires and broken, bent, pushed out, spread, corroded, or contaminated terminals.

The following additional checks may assist you in identifying a possible intermittent problem.

Reconnect any disconnected components and harness connector.

WARNING: To avoid personal injury or death, turn the ignition on, then reconnect the battery.
With the scan tool monitor active codes as you work through the following steps.

WARNING: To avoid personal injury or death, maintain a safe distance from all airbags while performing the following steps.

Wiggle the wiring harness and connectors of the related airbag circuit or component.

If codes are related to the Driver Airbag circuits, rotate the steering wheel from stop to stop.

If only stored codes return continue the test until the problem area has been isolated.

In the previous steps you have attempted to recreate the conditions responsible for setting active DTC in question.

Are any ACTIVE DTCs present?

Yes >> Select the appropriate symptom from Symptom List.

No >> No problem found at this time. Erase all codes before returning vehicle to customer.

LOSS OF IGNITION RUN - START

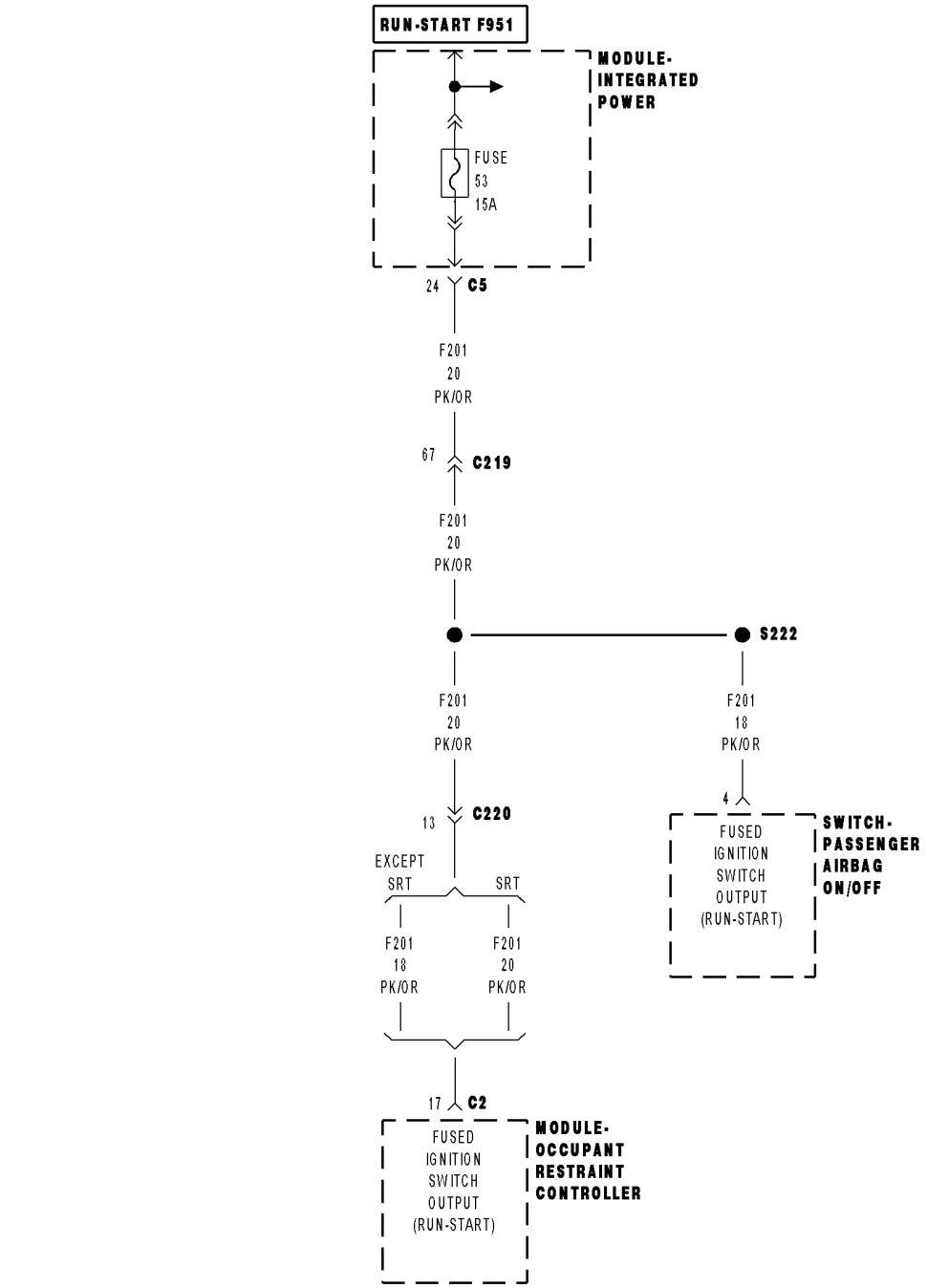

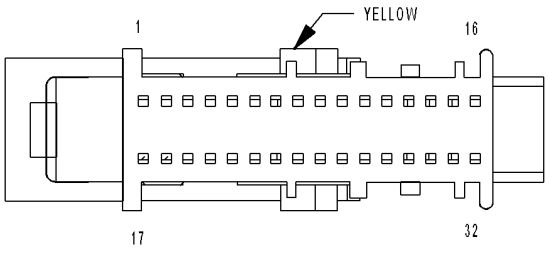

MODULE-
OCCUPANT
RESTRAINT
CONTROLLER C2

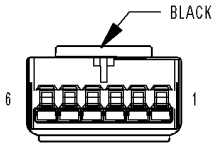

SWITCH-PASSENGER
AIRBAG ON/OFF

8149057b

LOSS OF IGNITION RUN - START (CONTINUED)

For the Airbag System circuit diagram (Refer to 8 - ELECTRICAL/RESTRAINTS - SCHEMATICS AND DIAGRAMS).

For a complete wiring diagram **Refer to Section 8W**.

- **When Monitored:**
  With the ignition in the Run-Start position the Occupant Restraint Controller (ORC) monitors the (F201) Fused Ignition Switch Output (Run-Start) circuit for proper system voltage.
- **Set Condition:**
  If the voltage on the (F201) Fused Ignition Switch Output (Run-Start) circuit drops below approximately 4.5 volts, the code will set.

Possible Causes
(F201) FUSED IGNITION SWITCH OUTPUT (RUN-START) SHORTED TO GROUND
(F201) FUSED IGNITION SWITCH OUTPUT (RUN-START) CIRCUIT OPEN
(F951) IGNITION SWITCH OUTPUT CIRCUIT OPEN
AIRBAG RUN-START CIRCUIT FUSE OPEN
PAB ON - OFF SWITCH SHORTED TO GROUND
ORC, FUSED IGNITION OUTPUT (RUN-START) CIRCUIT SHORTED TO GROUND
ORC, FUSED IGNITION OUTPUT (RUN-START) CIRCUIT OPEN

Diagnostic Test

1. DETERMINE ACTIVE OR STORED DTC

Turn the ignition on.

NOTE: Ensure that the battery is fully charged.

NOTE: For the purpose of this test, the AECM and ACM modules will be referred to as an ORC.

NOTE: When reconnecting Airbag system components, the ignition must be turned off and the battery must be disconnected.

Select ACTIVE or STORED DTC:

ORC - ACTIVE DTC
Go To 2

ORC - STORED DTC
Go To 10

---

2. CHECKING AIRBAG RUN-START CIRCUIT FUSE

Turn the ignition off.

Remove and inspect the Airbag Run-Start circuit fuse.

NOTE: Check connectors - Clean and repair as necessary.

Is the fuse open?

Yes >> Go To 3

No >> Go To 7

LOSS OF IGNITION RUN - START (CONTINUED)

3. CHECKING (F201) FUSED IGNITION SWITCH OUTPUT (RUN-START) CIRCUIT RESISTANCE

WARNING: TO AVOID PERSONAL INJURY OR DEATH, TURN THE IGNITION OFF, DISCONNECT THE BATTERY AND WAIT TWO MINUTES BEFORE PROCEEDING.

Measure the resistance of the (F201) Fused Ignition Switch Output (Run-Start) circuit between ground and the Airbag Run-Start fuse terminal (output side).

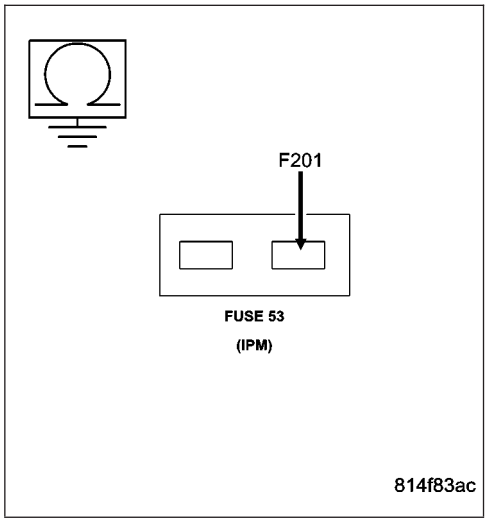

Is the resistance below 100.0 ohms?

Yes >> Go To 4

No >> Using the wiring diagram/schematic as a guide, inspect the related wiring and connectors. Look for chaffed, pierced, pinched, or partially broken wires and broken, bent, pushed out, spread, corroded, or contaminated terminals. Replace the Airbag Run-Start circuit fuse.

Perform ORC VERIFICATION TEST - VER 1.

4. CHECKING EQUIPMENT

Is this vehicle equipped with a Passenger Airbag On - Off Indicator?

Yes >> Go To 5

No >> Go To 6

5. PAB ON - OFF SWITCH SHORTED TO GROUND

Disconnect the Passenger Airbag On - Off Switch.

NOTE: Check connectors - Clean and repair as necessary.

Measure the resistance of the (F201) Fused Ignition Switch Output (Run-Start) circuit between ground and the Passenger Airbag On - Off Switch connector.

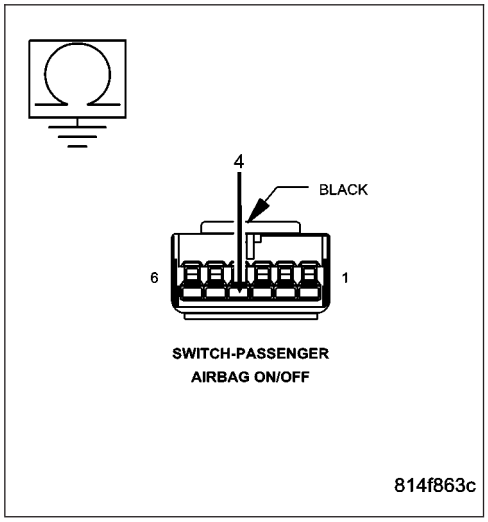

Is the resistance below 100.0 ohms?

Yes >> Go To 6

No >> Replace the Passenger Airbag On - Off Switch and the Airbag Run-Start circuit fuse in accordance with the Service Information.

Perform ORC VERIFICATION TEST - VER 1.

LOSS OF IGNITION RUN - START (CONTINUED)

6. (F201) FUSED IGNITION SWITCH OUTPUT (RUN-START) CIRCUIT SHORTED TO GROUND

WARNING: IF THE OCCUPANT RESTRAINT CONTROLLER IS DROPPED AT ANY TIME, IT MUST BE REPLACED. FAILURE TO TAKE THE PROPER PRECAUTIONS COULD RESULT IN ACCIDENTAL AIRBAG DEPLOYMENT AND PERSONAL INJURY OR DEATH.
Disconnect the Occupant Restraint Controller C2 connector.

NOTE: Check connectors - Clean and repair as necessary.
Connect the appropriate Load Tool Adaptor to the Occupant Restraint Controller connector.

Measure the resistance of the (F201) Fused Ignition Switch Output (Run-Start) circuit between ground and the ORC Adapter.

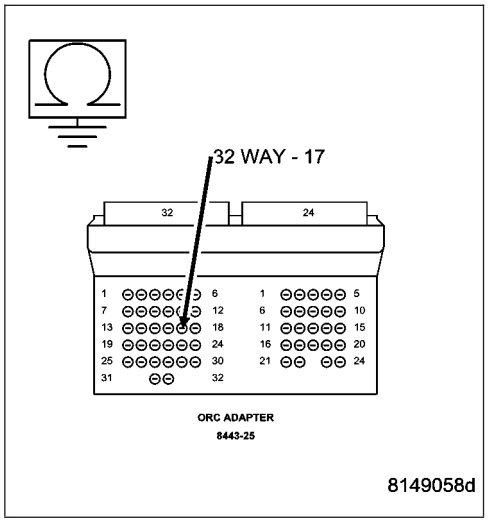

Is the resistance below 100.0 ohms?

Yes >> Repair the (F201) Fused Ignition Switch Output (Run-Start) circuit for a short to ground. Then, replace the Airbag Run-Start circuit fuse.
Perform ORC VERIFICATION TEST - VER 1.

No >> Replace the Occupant Restraint Controller (ORC) and the Airbag Run-Start fuse in accordance with the Service Information.
Perform ORC VERIFICATION TEST - VER 1.

---

7. (F951) IGNITION SWITCH OUTPUT CIRCUIT OPEN

Turn the ignition on.

Measure the voltage of the (F951) Ignition Switch Output circuit at the Airbag Run-Start circuit fuse terminal (input side).

NOTE: Reinstall the fuse after performing this test.

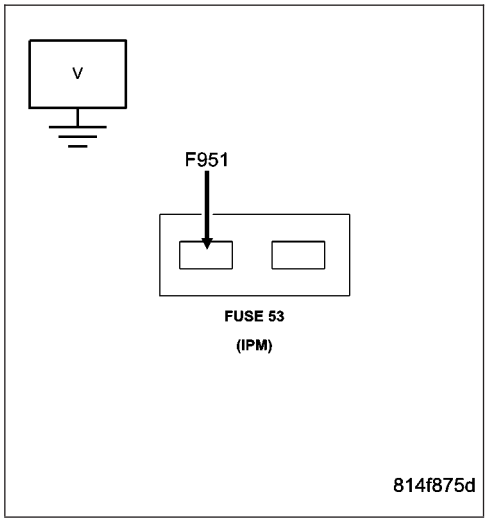

Is the voltage above approximately 6.0 volts?

Yes >> Go To 8

No >> Repair the (F951) Ignition Switch Output circuit for an open. Then, reinstall the Airbag Run-Start circuit fuse.
Perform ORC VERIFICATION TEST - VER 1.

LOSS OF IGNITION RUN - START (CONTINUED)

8. (F201) FUSED IGNITION SWITCH OUTPUT (RUN-START) CIRCUIT OPEN

WARNING: TO AVOID PERSONAL INJURY OR DEATH, TURN THE IGNITION OFF, DISCONNECT THE BATTERY AND WAIT TWO MINUTES BEFORE PROCEEDING.

WARNING: IF THE OCCUPANT RESTRAINT CONTROLLER IS DROPPED AT ANY TIME, IT MUST BE REPLACED. FAILURE TO TAKE THE PROPER PRECAUTIONS COULD RESULT IN ACCIDENTAL AIRBAG DEPLOYMENT AND PERSONAL INJURY OR DEATH.
Disconnect the Occupant Restraint Controller C2 connector.

NOTE: Check connectors - Clean and repair as necessary.
Connect the appropriate Load Tool Adaptor to the Occupant Restraint Controller connector.

NOTE: If not done so previously, reinstall the Airbag Run-Start circuit fuse.

WARNING: TO AVOID PERSONAL INJURY OR DEATH, TURN THE IGNITION ON, THEN RECONNECT THE BATTERY.
Measure the voltage of the (F201) Fused Ignition Switch Output (Run-Start) Circuit.

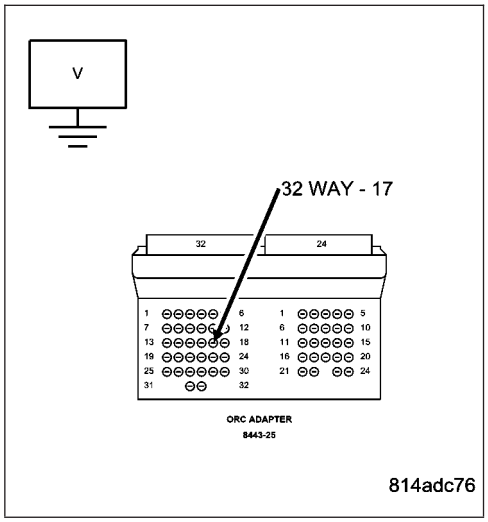

Is the voltage above approximately 4.5 volts?

Yes >> Go To 9

No >> Repair (F201) Fused Ignition Switch Output (Run-Start) circuit for an open.
Perform ORC VERIFICATION TEST - VER 1.

---

9. ORC, FUSED IGNITION OUTPUT (RUN-START) CIRCUIT OPEN

WARNING: TO AVOID PERSONAL INJURY OR DEATH, TURN THE IGNITION OFF, DISCONNECT THE BATTERY AND WAIT TWO MINUTES BEFORE PROCEEDING.

WARNING: IF THE OCCUPANT RESTRAINT CONTROLLER IS DROPPED AT ANY TIME, IT MUST BE REPLACED. FAILURE TO TAKE THE PROPER PRECAUTIONS COULD RESULT IN ACCIDENTAL AIRBAG DEPLOYMENT AND PERSONAL INJURY OR DEATH.

If there are no possible causes remaining, view repair.

Repair

Replace the Occupant Restraint Controller (ORC) in accordance with the Service Information.
Perform ORC VERIFICATION TEST - VER 1.

LOSS OF IGNITION RUN - START (CONTINUED)

10. CHECKING STORED OR INTERMITTENT CODES

With the DRBIII®, record and erase all DTC's from all Airbag modules.

If equipped with Passenger Airbag On - Off switch, read the DTC's in all switch positions.

If any ACTIVE codes are present they must be resolved before diagnosing any stored codes.

WARNING: TO AVOID PERSONAL INJURY OR DEATH, TURN THE IGNITION OFF, DISCONNECT THE BATTERY AND WAIT TWO MINUTES BEFORE PROCEEDING.

Using the wiring diagram/schematic as a guide, inspect the wiring and connectors.

Look for chaffed, pierced, pinched, or partially broken wires and broken, bent, pushed out, spread, corroded, or contaminated terminals.

The following additional checks may assist you in identifying a possible intermittent problem.

Reconnect any disconnected components and harness connector.

WARNING: TO AVOID PERSONAL INJURY OR DEATH, TURN THE IGNITION ON, THEN RECONNECT THE BATTERY.

With the DRBIII®, monitor active codes as you work through the following steps.

WARNING: TO AVOID PERSONAL INJURY OR DEATH, MAINTAIN A SAFE DISTANCE FROM ALL AIRBAGS WHILE PERFORMING THE FOLLOWING STEPS.

Wiggle the wiring harness and connectors of the related airbag circuit or component.

If codes are related to the Driver Airbag circuits, rotate the steering wheel from stop to stop.

If only stored codes return continue the test until the problem area has been isolated.

In the previous steps you have attempted to recreate the conditions responsible for setting active DTC in question.

Are any ACTIVE DTCs present?

Yes >> Select the appropriate diagnostic procedure from the Table of Contents in this section.

No >> No problem found at this time. Erase all codes before returning vehicle to customer.

LOSS OF IGNITION RUN ONLY

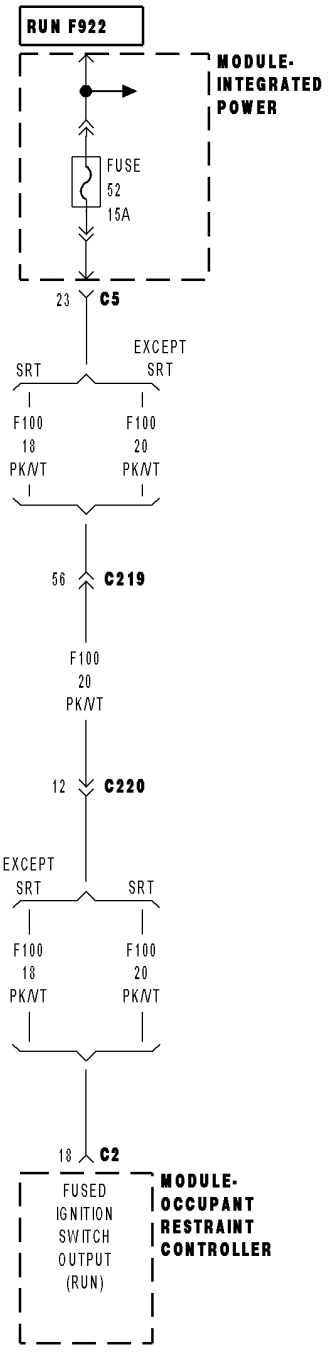

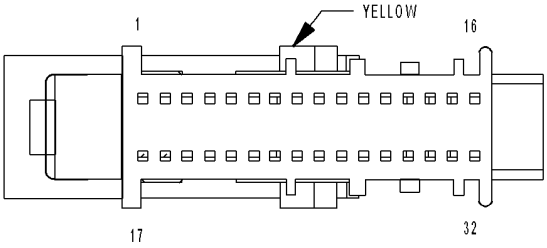

MODULE-
OCCUPANT
RESTRAINT
CONTROLLER C2

8148fe8c

LOSS OF IGNITION RUN ONLY (CONTINUED)

For the Airbag System circuit diagram (Refer to 8 - ELECTRICAL/RESTRAINTS - SCHEMATICS AND DIAGRAMS).

For a complete wiring diagram **Refer to Section 8W**.

- **When Monitored:**
  With the ignition in the Run position the Occupant Restraint Controller (ORC) monitors the (F100) Fused Ignition Switch Output (Run) circuit for proper system voltage.
- **Set Condition:**
  If the voltage on the (F100) Fused Ignition Switch Output (Run) circuit drops below 6.0 volts, the code will set.

Possible Causes
(F100) FUSED IGNITION SWITCH OUTPUT (RUN) CIRCUIT SHORTED TO GROUND
IGNITION SWITCH OUTPUT (RUN) CIRCUIT OPEN
(F100) FUSED IGNITION SWITCH OUTPUT (RUN) CIRCUIT OPEN
AIRBAG RUN ONLY CIRCUIT FUSE OPEN
ORC, FUSED IGNITION SWITCH OUTPUT (RUN) CIRCUIT SHORTED TO GROUND
ORC, FUSED IGNITION SWITCH OUTPUT (RUN) CIRCUIT OPEN

Diagnostic Test

1. DETERMINE ACTIVE OR STORED DTC

Turn the ignition on.

NOTE: Ensure that the battery is fully charged.

NOTE: For the purpose of this test, the AECM and ACM modules will be referred to as an ORC.

NOTE: When reconnecting Airbag system components, the ignition must be turned off and the battery must be disconnected.

Select ACTIVE or STORED DTC:

ORC - ACTIVE DTC:
Go To 2

ORC - STORED DTC
Go To 9

---

2. CHECKING AIRBAG RUN ONLY CIRCUIT FUSE

Turn the ignition off.

Remove and inspect the Airbag Run Only circuit fuse.

NOTE: Check connectors - Clean and repair as necessary.

Is the fuse open?

Yes >> Go To 3

No >> Go To 6

LOSS OF IGNITION RUN ONLY (CONTINUED)

3. CHECKING (F100) FUSED IGNITION SWITCH OUTPUT (RUN) CIRCUIT RESISTANCE

WARNING: TO AVOID PERSONAL INJURY OR DEATH, TURN THE IGNITION OFF, DISCONNECT THE BATTERY AND WAIT TWO MINUTES BEFORE PROCEEDING.

Measure the resistance of the (F100) Fused Ignition Switch Output (Run) circuit between ground and the Airbag Run Only circuit fuse terminal (output side).

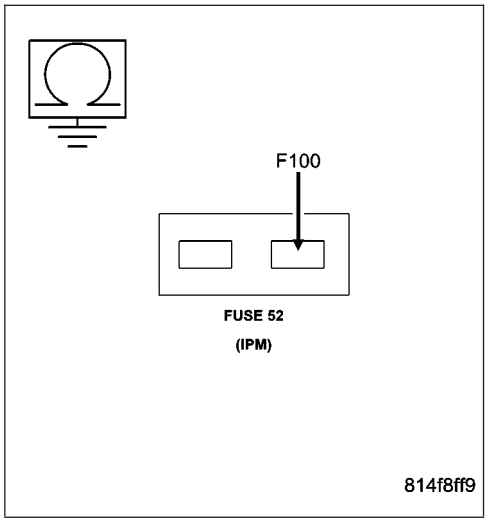

Is the resistance below 100.0 ohms?

Yes >> Go To 4

No >> Using the wiring diagram/schematic as a guide, inspect the related wiring and connectors. Look for chaffed, pierced, pinched, or partially broken wires and broken, bent, pushed out, spread, corroded, or contaminated terminals. Replace the Airbag Run Only circuit fuse.

Perform ORC VERIFICATION TEST - VER 1.

---

4. (F100) FUSED IGNITION SWITCH OUTPUT (RUN) CIRCUIT SHORTED TO GROUND

Disconnect the Occupant Restraint Controller C2 connector.

NOTE: Check connectors - Clean and repair as necessary.

Connect the appropriate Load Tool Adaptor to the Occupant Restraint Controller connector.

Measure the resistance of the (F100) Fused Ignition Switch Output (Run) circuit between ground and the ORC Adapter.

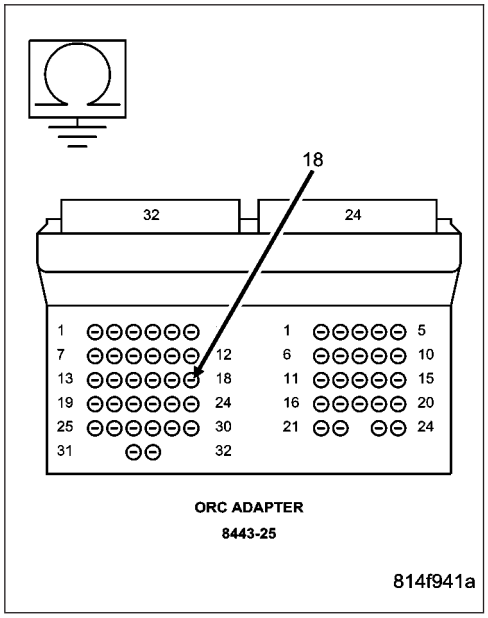

Is the resistance below 100.0 ohms?

Yes >> Repair the (F100) Fused Ignition Switch Output (Run) circuit for a short to ground. Then, replace the Airbag Run Only circuit fuse.

Perform ORC VERIFICATION TEST - VER 1.

No >> Go To 5

---

5. ORC, FUSED IGNITION SWITCH OUTPUT (RUN) CIRCUIT SHORTED TO GROUND

WARNING: WARNING: IF THE OCCUPANT RESTRAINT CONTROLLER IS DROPPED AT ANY TIME, IT MUST BE REPLACED. FAILURE TO TAKE THE PROPER PRECAUTIONS COULD RESULT IN ACCIDENTAL AIRBAG DEPLOYMENT AND PERSONAL INJURY OR DEATH.

If there are no possible causes remaining, view repair.

Repair

Replace the Occupant Restraint Controller (ORC) and the Airbag Run Only circuit fuse in accordance with the Service Information.

Perform ORC VERIFICATION TEST - VER 1.

LOSS OF IGNITION RUN ONLY (CONTINUED)

6. IGNITION SWITCH OUTPUT (RUN) CIRCUIT OPEN

Turn the ignition on.

Measure the voltage of the Ignition Switch Output (Run) circuit at the Airbag Run Only circuit fuse terminal (input side).

NOTE: Reinstall the fuse after performing this test.

Is the voltage above approximately 6.0 volts?

Yes >> Go To 7

No >> Repair the Ignition Switch Output Run circuit for an open. Then, reinstall the Airbag Run Only circuit fuse. Perform ORC VERIFICATION TEST - VER 1.

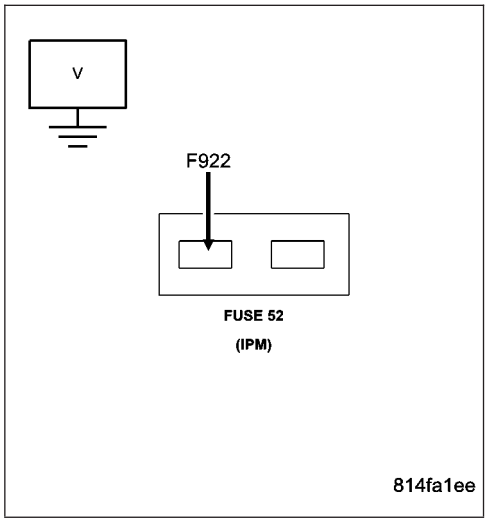

7. (F100) FUSED IGNITION SWITCH OUTPUT (RUN) CIRCUIT OPEN

WARNING: TO AVOID PERSONAL INJURY OR DEATH, TURN THE IGNITION OFF, DISCONNECT THE BATTERY AND WAIT TWO MINUTES BEFORE PROCEEDING.

Disconnect the Occupant Restraint Controller C2 connector.

NOTE: Check connectors - Clean and repair as necessary.

Connect the appropriate Load Tool Adaptor to the Occupant Restraint Controller connector.

NOTE: If not done so previously, reinstall the Airbag Run Only circuit fuse.

WARNING: TO AVOID PERSONAL INJURY OR DEATH, TURN THE IGNITION ON, THEN RECONNECT THE BATTERY.

Measure the voltage of the (F100) Fused Ignition Switch Output (Run) Only circuit.

Is the voltage above approximately 6.0 volts?

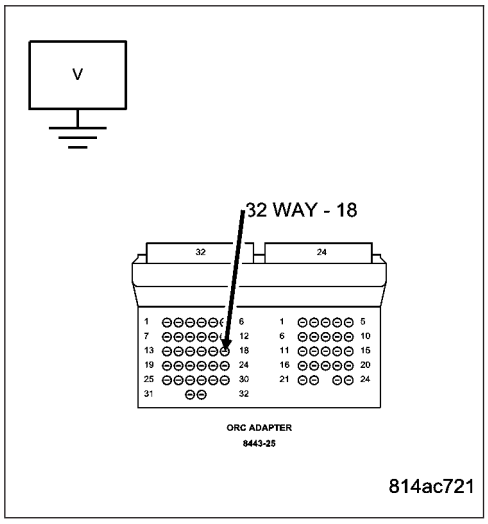

Yes >> Go To 8

No >> Repair the (F100) Fused Ignition Switch Output (Run) circuit for an open or high resistance. Perform ORC VERIFICATION TEST - VER 1.

LOSS OF IGNITION RUN ONLY (CONTINUED)

8. ORC, FUSED IGNITION SWITCH OUTPUT (RUN) CIRCUIT OPEN

WARNING: TO AVOID PERSONAL INJURY OR DEATH, TURN THE IGNITION OFF, DISCONNECT THE BATTERY AND WAIT TWO MINUTES BEFORE PROCEEDING.

WARNING: WARNING: IF THE OCCUPANT RESTRAINT CONTROLLER IS DROPPED AT ANY TIME, IT MUST BE REPLACED. FAILURE TO TAKE THE PROPER PRECAUTIONS COULD RESULT IN ACCIDENTAL AIRBAG DEPLOYMENT AND PERSONAL INJURY OR DEATH.

If there are no possible causes remaining, view repair.

Repair

Replace the Occupant Restraint Controller (ORC) in accordance with the Service Information.
Perform ORC VERIFICATION TEST - VER 1.

---

9. CHECKING STORED OR INTERMITTENT CODES

With the Scan Tool, record and erase all DTC's from all Airbag modules.

If equipped with Passenger Airbag On - Off switch, read the DTC's in all switch positions.

If any ACTIVE codes are present they must be resolved before diagnosing any stored codes.

WARNING: TO AVOID PERSONAL INJURY OR DEATH, TURN THE IGNITION OFF, DISCONNECT THE BATTERY AND WAIT TWO MINUTES BEFORE PROCEEDING.

Using the wiring diagram/schematic as a guide, inspect the wiring and connectors.

Look for chaffed, pierced, pinched, or partially broken wires and broken, bent, pushed out, spread, corroded, or contaminated terminals.

The following additional checks may assist you in identifying a possible intermittent problem.

Reconnect any disconnected components and harness connector.

WARNING: TO AVOID PERSONAL INJURY OR DEATH, TURN THE IGNITION ON, THEN RECONNECT THE BATTERY.

With the Scan Tool, monitor active codes as you work through the following steps.

WARNING: TO AVOID PERSONAL INJURY OR DEATH, MAINTAIN A SAFE DISTANCE FROM ALL AIRBAGS WHILE PERFORMING THE FOLLOWING STEPS.

Wiggle the wiring harness and connectors of the related airbag circuit or component.

If codes are related to the Driver Airbag circuits, rotate the steering wheel from stop to stop.

If only stored codes return continue the test until the problem area has been isolated.

In the previous steps you have attempted to recreate the conditions responsible for setting active DTC in question.

Are any ACTIVE DTCs present?

Yes >> Select the appropriate diagnostic procedure from the Table of Contents in this section.

No >> No problem found at this time. Erase all codes before returning vehicle to customer.

MISSING CURRENT VIN

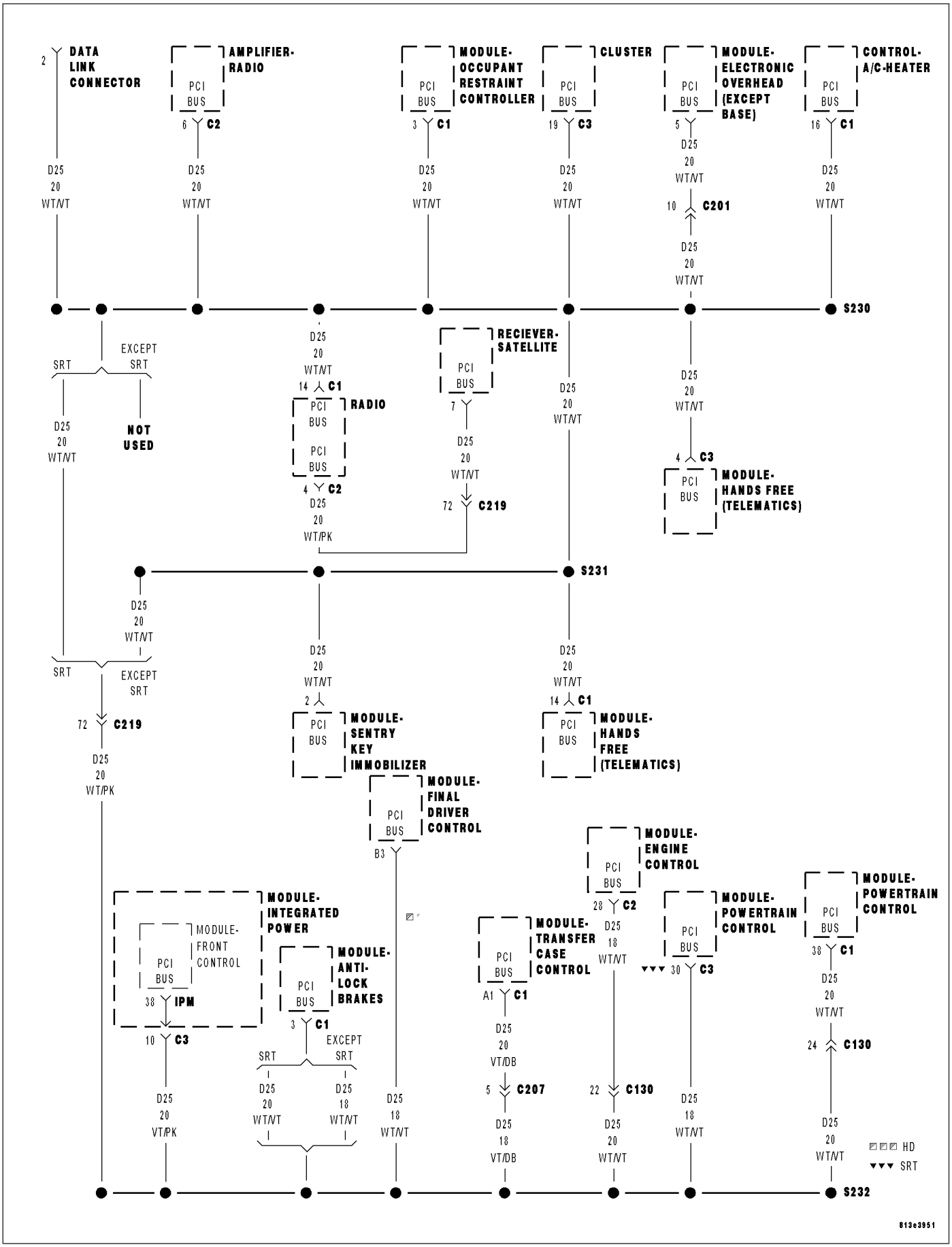

MISSING CURRENT VIN (CONTINUED)

For the Air Bag System circuit diagram (Refer to 8 - ELECTRICAL/RESTRAINTS - SCHEMATICS AND DIAGRAMS).

For a complete wiring diagram **Refer to Section 8W**.

- **When Monitored:**
  During power-up, the Occupant Restraint Controller (ORC) monitors the PCI Bus for the VIN message.
- **Set Condition:**
  This code will set if the VIN data received does not match the stored VIN data.

Possible Causes
PCM, COMMUNICATION FAILURE
PCM, INCORRECT OR MISSING VIN
OCCUPANT RESTRAINT CONTROLLER (ORC)

Diagnostic Test

1. DETERMINE ACTIVE OR STORED DTC

Turn the ignition on.

NOTE: Ensure the battery is fully charged.

NOTE: For the purpose of this test, the ACM and AECM modules will be referred to as an ORC.

NOTE: When reconnecting Airbag system components, the ignition must be turned off and the battery must be disconnected.

Select ACTIVE or STORED DTC:

ORC - ACTIVE DTC
Go To 2

ORC - STORED DTC
Go To 5

---

2. PCM, COMMUNICATION FAILURE

With the Scan Tool, ensure that the PCM is Active on the Bus.

Is the PCM Active on the Bus?

Yes >> Go To 3

No >> (Refer to 8 - ELECTRICAL/ELECTRONIC CONTROL MODULES - DIAGNOSIS AND TESTING) for No Response diagnostic test procedures.
Perform ORC VERIFICATION TEST - VER 1.

MISSING CURRENT VIN (CONTINUED)

3. PCM, INCORRECT OR MISSING VIN

With the Scan Tool select ENGINE, MISCELLANEOUS, MISC FUNCTION, and then CHECK VIN to read the Vehicle Identification Number in the Powertrain Control Module.

Compare the VIN displayed on the Scan Tool screen and the Vehicle VIN plate.

Does the VIN plate and the PCM VIN match?

Yes >> Go To 4

No >> Replace and program the Powertrain Control Module in accordance with the Service Information.
Perform POWERTRAIN VERIFICATION TEST. (Refer to 9 - ENGINE - DIAGNOSIS AND TESTING).
Perform ORC VERIFICATION TEST - VER 1.

---

4. OCCUPANT RESTRAINT CONTROLLER (ORC)

WARNING: TO AVOID PERSONAL INJURY OR DEATH, TURN THE IGNITION OFF, DISCONNECT THE BATTERY AND WAIT TWO MINUTES BEFORE PROCEEDING.

WARNING: IF THE OCCUPANT RESTRAINT CONTROLLER IS DROPPED AT ANY TIME, IT MUST BE REPLACED. FAILURE TO TAKE THE PROPER PRECAUTIONS COULD RESULT IN ACCIDENTAL AIRBAG DEPLOYMENT AND PERSONAL INJURY OR DEATH.

NOTE: When reconnecting airbag system components the Ignition must be turned off and the Battery must be disconnected.

If there are no possible causes remaining, view repair.

Repair

Replace the Occupant Restraint Controller (ORC) in accordance with the Service Information.
Perform ORC VERIFICATION TEST - VER 1.

MISSING CURRENT VIN (CONTINUED)

5. CHECKING STORED OR INTERMITTENT CODES

With the Scan Tool, record and erase all DTC's from all Airbag modules.

If equipped with Passenger Airbag On - Off switch, read the DTC's in all switch positions.

If any ACTIVE codes are present they must be resolved before diagnosing any stored codes.

WARNING: TO AVOID PERSONAL INJURY OR DEATH, TURN THE IGNITION OFF, DISCONNECT THE BATTERY AND WAIT TWO MINUTES BEFORE PROCEEDING.

Using the wiring diagram/schematic as a guide, inspect the wiring and connectors.

Look for chaffed, pierced, pinched, or partially broken wires and broken, bent, pushed out, spread, corroded, or contaminated terminals.

The following additional checks may assist you in identifying a possible intermittent problem.

Reconnect any disconnected components and harness connector.

WARNING: TO AVOID PERSONAL INJURY OR DEATH, TURN THE IGNITION ON, THEN RECONNECT THE BATTERY.

With the Scan Tool, monitor active codes as you work through the following steps.

WARNING: TO AVOID PERSONAL INJURY OR DEATH, MAINTAIN A SAFE DISTANCE FROM ALL AIRBAGS WHILE PERFORMING THE FOLLOWING STEPS.

Wiggle the wiring harness and connectors of the related airbag circuit or component.

If codes are related to the Driver Airbag circuits, rotate the steering wheel from stop to stop.

If only stored codes return continue the test until the problem area has been isolated.

In the previous steps you have attempted to recreate the conditions responsible for setting active DTC in question.

Does the scan tool display any ACTIVE DTCs?

Yes >> Select the appropriate diagnostic procedure from the Table of Contents in this section.

No >> No problem found at this time. Erase all codes before returning vehicle to customer.

MODULE NOT CONFIGURED FOR PAB OFF SWITCH

For the Air Bag System circuit diagram (Refer to 8 - ELECTRICAL/RESTRAINTS - SCHEMATICS AND DIAGRAMS).

For a complete wiring diagram **Refer to Section 8W**.

- **When Monitored:**
  When the Occupant Restraint Controller (ORC) is not configured for a Passenger Airbag ON - OFF switch, the ORC monitors the Passenger Airbag On - Off Switch inputs to determine if a switch is present.
- **Set Condition:**
  The code will set, if the ORC is not configured for a Passenger Airbag ON - OFF switch but detects that a switch is connected to the module.

Possible Causes
ORC NOT CONFIGURED FOR PAB ON - OFF SWITCH
(G104) PAB INDICATOR DRIVER CIRCUIT SHORTED TO GROUND
(R106) PAB MUX SWITCH SENSE CIRCUIT SHORTED TO GROUND
(R106) PAB MUX SWITCH SENSE CIRCUIT SHORTED TO (R104) PAB MUX SWITCH RETURN CIRCUIT
OCCUPANT RESTRAINT CONTROLLER (ORC)

Diagnostic Test

1. DETERMINE ACTIVE OR STORED DTC

Turn the ignition on.

NOTE: Ensure that the battery is fully charged.

NOTE: For the purpose of this test, the AECM and ACM modules will be referred to as an ORC.

NOTE: When reconnecting Airbag system components, the ignition must be turned off and the battery must be disconnected.

SELECT ACTIVE or STORED DTC:

ORC - ACTIVE DTC
Go To 2

ORC - STORED DTC
Go To 9

---

2. CHECKING EQUIPMENT

Inspect the vehicle for a Passenger Airbag On - Off Switch located in the center of the instrument panel.

Is this vehicle equipped with a Passenger Airbag On - Off Switch?

Yes >> Go To 3

No >> Go To 4

MODULE NOT CONFIGURED FOR PAB OFF SWITCH (CONTINUED)

3. ORC NOT CONFIGURED FOR PAB ON - OFF SWITCH

Select Restraints, Airbag, and then Miscellaneous from the DRBIII® menu.

Follow DRBIII® instructions to verify PAB On - Off Switch configuration.

Does the DRBIII® indicate that the ORC is configured for a PAB On - Off Switch?

Yes >> Go To 8

No >> Follow the DRBIII® instructions to configure the Occupant Restraint Controller to support the Passenger Airbag Switch On - Off Switch.
Perform ORC VERIFICATION TEST - VER 1.

---

4. VERIFY CIRCUITS

Inspect vehicle for Passenger Airbag On - Off Switch wiring at the ORC connector.

NOTE: Some vehicles may have the wiring for the Passenger Airbag On - Off Switch but have no switch.

Is this vehicle equipped with Passenger Airbag On - Off Switch wiring?

Yes >> Go To 5

No >> Go To 8

---

5. (G104) PAB INDICATOR DRIVER CIRCUIT SHORTED TO GROUND

WARNING: TO AVOID PERSONAL INJURY OR DEATH, TURN THE IGNITION OFF, DISCONNECT THE BATTERY AND WAIT TWO MINUTES BEFORE PROCEEDING.

Disconnect the Occupant Restraint Controller C1 connector.

NOTE: Check connectors - Clean and repair as necessary.

WARNING: IF THE OCCUPANT RESTRAINT CONTROLLER IS DROPPED AT ANY TIME, IT MUST BE REPLACED. FAILURE TO TAKE THE PROPER PRECAUTIONS COULD RESULT IN ACCIDENTAL AIRBAG DEPLOYMENT AND PERSONAL INJURY OR DEATH.

Connect the appropriate Load Tool Adaptor to the Occupant Restraint Controller connector.

Measure the resistance of the (G104) Passenger Airbag Indicator Driver circuit between ground and the ORC Adaptor.

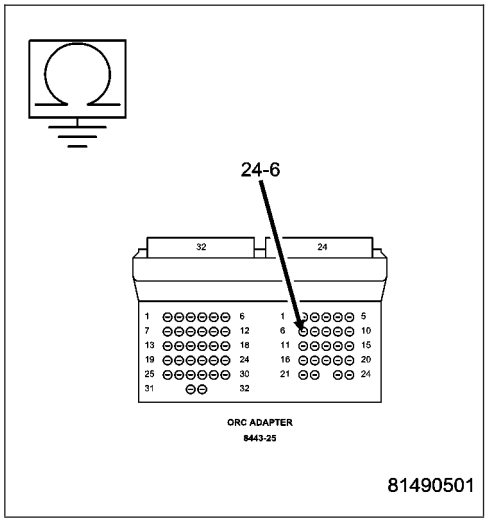

Is the resistance below 10K ohms?

Yes >> Repair the (G104) Passenger Airbag Indicator Driver circuit for a short to ground.
Perform ORC VERIFICATION TEST - VER 1.

No >> Go To 6

MODULE NOT CONFIGURED FOR PAB OFF SWITCH (CONTINUED)

6. (R106) PAB MUX SWITCH SENSE CIRCUIT SHORTED TO GROUND

Measure the resistance of the (R106) Passenger Airbag MUX Switch Sense circuit between ground and the ORC Adaptor.

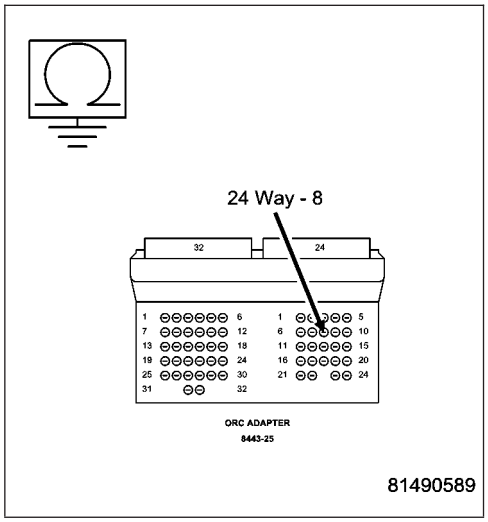

Is the resistance below 10K ohms?

Yes >> Repair the (R106) Passenger Airbag MUX Switch Sense circuit for a short to ground.
Perform ORC VERIFICATION TEST - VER 1.

No >> Go To 7

7. (R106) PAB MUX SWITCH SENSE CIRCUIT SHORTED TO (R104) PAB MUX SWITCH RETURN CIRCUIT

Measure the resistance between the (R106) Passenger Airbag MUX Switch Sense circuit and the (R104) Passenger Airbag MUX Switch Return circuit at the ORC Adaptor.

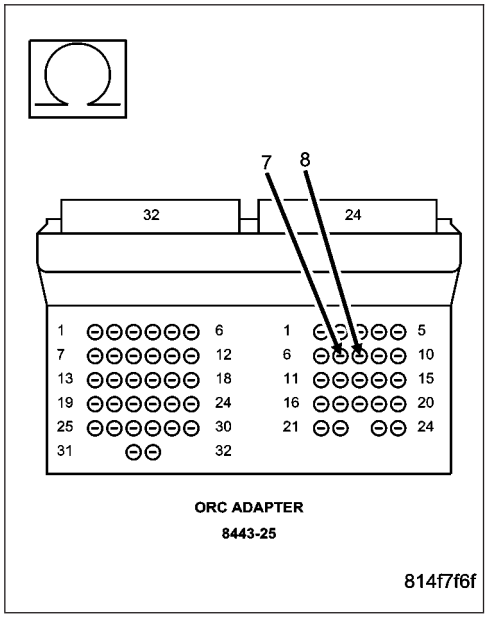

Is the resistance below 10K ohms?

Yes >> Repair the (R106) Passenger Airbag MUX Switch Sense circuit for a short to the (R104) Passenger Airbag MUX Switch Return circuit
Perform ORC VERIFICATION TEST - VER 1.

No >> Go To 8

MODULE NOT CONFIGURED FOR PAB OFF SWITCH (CONTINUED)

8. OCCUPANT RESTRAINT CONTROLLER (ORC)

WARNING: TO AVOID PERSONAL INJURY OR DEATH, TURN THE IGNITION OFF, DISCONNECT THE BATTERY AND WAIT TWO MINUTES BEFORE PROCEEDING.

WARNING: IF THE OCCUPANT RESTRAINT CONTROLLER IS DROPPED AT ANY TIME, IT MUST BE REPLACED. FAILURE TO TAKE THE PROPER PRECAUTIONS COULD RESULT IN ACCIDENTAL AIRBAG DEPLOYMENT AND PERSONAL INJURY OR DEATH.

If there are no possible causes remaining, view repair.

Repair

Replace the Occupant Restraint Controller (ORC) in accordance with the Service Information.
Perform ORC VERIFICATION TEST - VER 1.

---

9. CHECKING STORED OR INTERMITTENT CODES

With the scan tool, record and erase all DTC's from all Airbag Modules.

If any ACTIVE codes are present they must be resolved before diagnosing any stored codes.

WARNING: To avoid personal injury or death, turn the ignition off, disconnect the battery and wait two minutes before proceeding.

Using the wiring diagram/schematic as a guide, inspect the wiring and connectors.

Look for chaffed, pierced, pinched, or partially broken wires and broken, bent, pushed out, spread, corroded, or contaminated terminals.

The following additional checks may assist you in identifying a possible intermittent problem.

Reconnect any disconnected components and harness connector.

WARNING: To avoid personal injury or death, turn the ignition on, then reconnect the battery.

With the scan tool monitor active codes as you work through the following steps.

WARNING: To avoid personal injury or death, maintain a safe distance from all airbags while performing the following steps.

Wiggle the wiring harness and connectors of the related airbag circuit or component.

If codes are related to the Driver Airbag circuits, rotate the steering wheel from stop to stop.

If only stored codes return continue the test until the problem area has been isolated.

In the previous steps you have attempted to recreate the conditions responsible for setting active DTC in question.

Are any ACTIVE DTCs present?

Yes >> Select the appropriate diagnostic procedure from the Table of Contents in this section.

No >> No problem found at this time. Erase all codes before returning vehicle to customer.

NO CLUSTER MESSAGE

For a complete wiring diagram **Refer to Section 8W**.

- **When Monitored:**
  With the ignition on, the ORC monitors the bus for a message from the MIC containing the airbag warning indicator status. The MIC transmits the message one time at ignition on, lamp state change, or in response to the ORC message.
- **Set Condition:**
  If the MIC message is not received for 10 consecutive seconds, the code will set.

Possible Causes
MIC COMMUNICATION FAILURE
ORC, NO CLUSTER MESSAGE
STORED CODE OR INTERMITTENT CONDITION
ACTIVE CODE PRESENT

Diagnostic Test

1. DETERMINE ACTIVE OR STORED DTC

Turn the ignition on.

Ensure the battery is fully charged.

NOTE: NOTE: When reconnecting Airbag system components, the ignition must be turned off and the battery must be disconnected.

SELECT ACTIVE or STORED DTC:

ACM - ACTIVE DTC
Go To 2

ACM - STORED DTC
Go To 4

---

2. ATTEMPT TO COMMUNICATE WITH THE CLUSTER

Turn the ignition on.

With the DRBIII®, attempt to communicate with the Custer.

Was the DRB able to communicate with the Cluster?

Yes >> Go To 3

No >> (Refer to 8 - ELECTRICAL/ELECTRONIC CONTROL MODULES - DIAGNOSIS AND TESTING) for No Response diagnostic test procedures.

---

3. REPLACE THE OCCUPANT RESTRAINT CONTROLLER

WARNING: To avoid personal injury or death, turn the ignition off, disconnect the battery and wait two minutes before proceeding.

WARNING: If the Occupant Restraint Controller is dropped at any time, it must be replaced. Failure to take the proper precautions could result in accidental airbag deployment and personal injury or death.

If there are no possible causes remaining, view repair.

Repair

Replace the Occupant Restraint Controller in accordance with the service information.

Perform the ORC VERIFICATION TEST - VER 1.

NO CLUSTER MESSAGE (CONTINUED)

4. CHECKING STORED OR INTERMITTENT CODES

Using the wiring diagram/schematic as a guide, inspect the wiring and connectors.

Look for chaffed, pierced, pinched, or partially broken wires and broken, bent, pushed out, spread, corroded, or contaminated terminals.

The following additional checks may assist you in identifying a possible intermittent problem.

Reconnect any disconnected components and harness connector.

WARNING: WARNING: TO AVOID PERSONAL INJURY OR DEATH, TURN THE IGNITION ON, THEN RECONNECT THE BATTERY.

With the DRBIII® monitor active codes as you work through the following steps.

WARNING: WARNING: TO AVOID PERSONAL INJURY OR DEATH, MAINTAIN A SAFE DISTANCE FROM ALL AIRBAGS WHILE PERFORMING THE FOLLOWING STEPS.

Wiggle the wiring harness and connectors of the related airbag circuit or component.

If codes are related to the Driver Airbag circuits, rotate the steering wheel from stop to stop.

IF only stored codes return continue the test until the problem area has been isolated

In the previous steps you have attempted to recreate the conditions responsible for setting active DTC in question.

Are any ACTIVE DTCs present?

Yes >> Select appropriate symptom from Symptom List.

No >> No problem found at this time. Erase all codes before returning vehicle to customer.

NO LEFT SIDE IMPACT SENSOR 1 COMMUNICATION

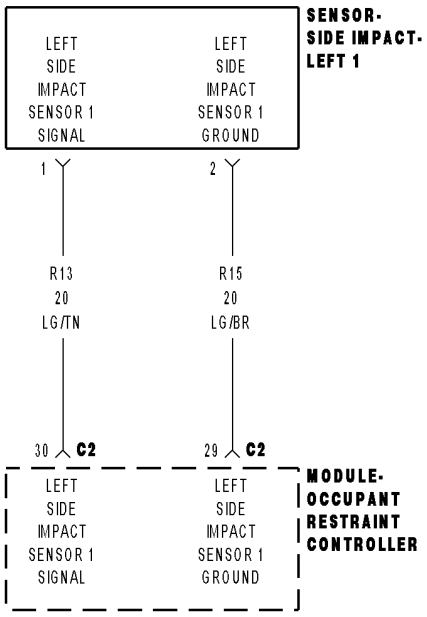

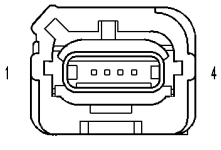

SENSOR-SIDE IMPACT-LEFT 1

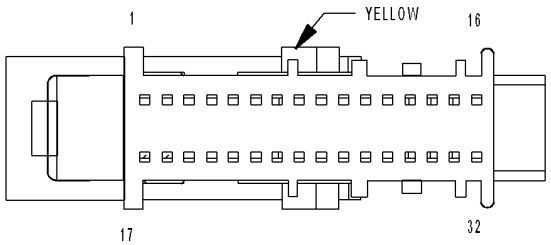

MODULE-OCCUPANT RESTRAINT CONTROLLER C2

81471770

NO LEFT SIDE IMPACT SENSOR 1 COMMUNICATION (CONTINUED)

For the Airbag System circuit diagram (Refer to 8 - ELECTRICAL/RESTRAINTS - SCHEMATICS AND DIAGRAMS).

For a complete wiring diagram **Refer to Section 8W**.

- **When Monitored:**
  The Occupant Restraint Controller (ORC) continuously communicates with the Left Side Impact Sensor 1 over the sensor signal circuit. The sensor communication and on board diagnostics are powered by the ORC signal.
- **Set Condition:**
  This code will set, if the ORC and the Left Side Impact Sensor 1 do not establish and maintain valid data communications.

Possible Causes
(R13) LEFT SIDE IMPACT SENSOR 1 SIGNAL CIRCUIT SHORTED TO BATTERY
(R13) LEFT SIDE IMPACT SENSOR 1 SIGNAL CIRCUIT SHORTED TO GROUND
(R13, R15) LEFT SIDE IMPACT SENSOR 1 CIRCUITS SHORTED TOGETHER
(R15) LEFT SIDE IMPACT SENSOR 1 GROUND CIRCUIT OPEN
(R13) LEFT SIDE IMPACT SENSOR 1 SIGNAL CIRCUIT OPEN
ORC, LEFT SIDE IMPACT SENSOR 1

Diagnostic Test

1. VERIFY THAT DTC NO LEFT SIDE IMPACT SENSOR 1 COMMUNICATION IS ACTIVE

NOTE: Ensure the battery is fully charged.

NOTE: When reconnecting Airbag system components, the ignition must be turned off and the battery must be disconnected.

Turn the ignition on.

With the scan tool, read ORC DTCs.

Does the scan tool display active: NO LEFT SIDE IMPACT SENSOR 1 COMMUNICATION?

Yes >> Go To 2

No >> Go To 9

NO LEFT SIDE IMPACT SENSOR 1 COMMUNICATION (CONTINUED)

2. CHECK THE (R13, R15) LEFT SIDE IMPACT SENSOR 1 SIGNAL AND GROUND CIRCUITS FOR A SHORT TO BATTERY

WARNING: To avoid personal injury or death, turn the ignition off, disconnect the battery and wait two minutes before proceeding.
Disconnect the Left front Impact Sensor 1 connector.

Disconnect the ORC connector.

WARNING: To avoid personal injury or death, turn the ignition on, then reconnect the battery.
Measure the voltage of the (R13) Left Side Impact Sensor 1 Signal circuit and (R15) Left Side Impact Sensor 1 Ground circuit at the Left Side Impact Sensor 1 connector and ground.

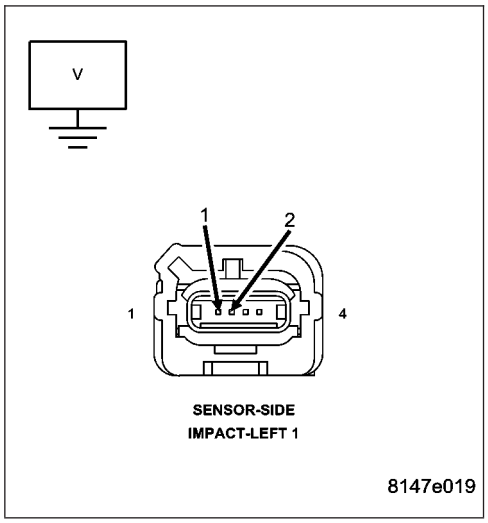

Is there any voltage present?

Yes >> Repair the (R13, R15) Left Side Impact Sensor 1 circuits for a short to battery.
Perform the ORC VERIFICATION TEST - VER 1.

No >> Go To 3

3. CHECK THE (R13) LEFT SIDE IMPACT SENSOR 1 SIGNAL CIRCUIT FOR A SHORT TO GROUND

WARNING: To avoid personal injury or death, turn ignition on, then reconnect the battery.
Measure the resistance of the (R13) Left Side Impact Sensor 1 Signal circuit between the Left Side Impact Sensor 1 connector and ground.

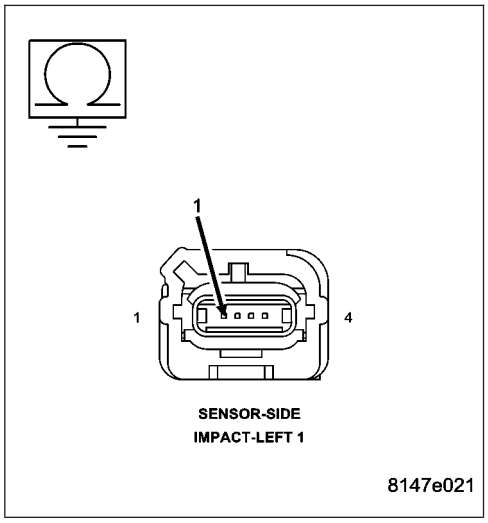

Is the resistance below 100K ohms?

Yes >> Repair the (R13) Left Side Impact Sensor 1 Signal circuit for a short to ground.
Perform the ORC VERIFICATION TEST - VER 1.

No >> Go To 4

NO LEFT SIDE IMPACT SENSOR 1 COMMUNICATION (CONTINUED)

4. CHECK THE (R13, R15) LEFT SIDE IMPACT SENSOR CIRCUITS FOR A SHORT TOGETHER

Measure the resistance between the (R13) Left Side Impact Sensor 1 Signal circuit and (R15) Left Side Impact Sensor 1 Ground circuit at the Left Side Impact Sensor 1 connector.

Is the resistance below 100K ohms?

Yes >> Repair the (R13, R15) Left Side Impact Sensor 1 circuits shorted together.
Perform the ORC VERIFICATION TEST - VER 1.

No >> Go To 5

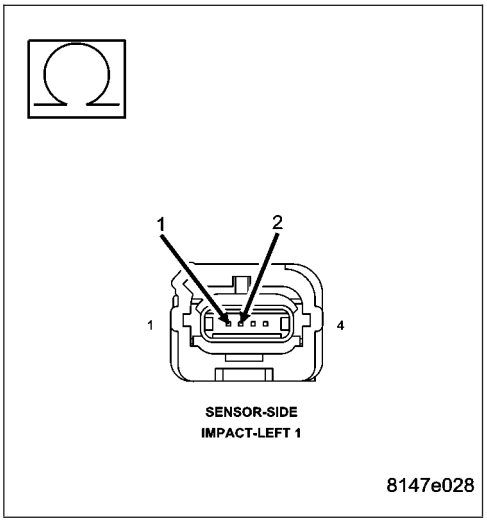

5. CHECK THE (R15) LEFT SIDE IMPACT SENSOR 1 GROUND CIRCUIT FOR AN OPEN OR HIGH RESISTANCE

Connect the 8443 Load Tool ORC Adaptor to the Occupant Controller Module connector.

Measure the resistance of the (R15) Left Side Impact Sensor 1 Ground circuit between the Left Side Impact Sensor 1 connector and the 8443 Load Tool ORC Adaptor.

Is the resistance below 1 ohm?

Yes >> Go To 6

No >> Repair the (R15) Left Side Impact Sensor 1 Ground circuit for an open or high resistance.
Perform the ORC VERIFICATION TEST - VER 1.

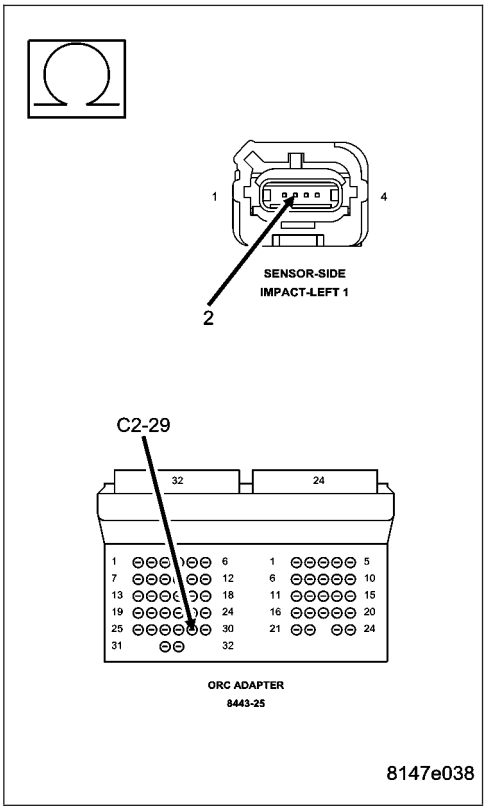

NO LEFT SIDE IMPACT SENSOR 1 COMMUNICATION (CONTINUED)

6. CHECK THE (R13) LEFT SIDE IMPACT SENSOR 1 SIGNAL CIRCUIT FOR AN OPEN OR HIGH RESISTANCE

Measure the resistance of the (R13) Left Side Impact Sensor 1 Signal circuit between the Left Side Impact Sensor 1 connector and the 8443 Load Tool ORC Adaptor.

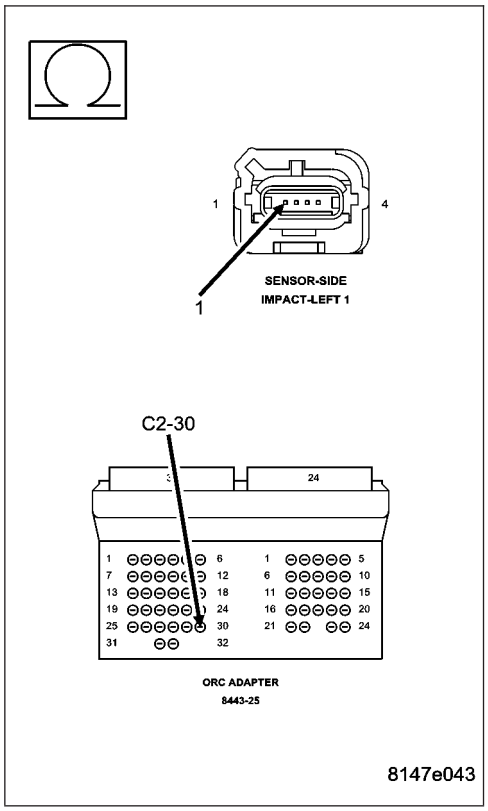

Is the resistance below 1 ohm?

Yes >> Go To 7

No >> Repair the (R13) Left Side Impact Sensor 1 Signal circuit for an open or high resistance.
Perform the ORC VERIFICATION TEST - VER 1.

7. CHECK OPERATION OF THE LEFT SIDE IMPACT SENSOR 1

Replace the Left Side Impact Sensor 1.

Reconnect the vehicle body harness to the impact sensor.

Remove any special tools or jumper wires and reconnect all previously disconnected components - except the Battery.

WARNING: To avoid personal injury or death, turn the ignition on, then reconnect the battery.
Connect the scan tool to the Data Link Connector - use the most current software available.

Use the scan tool and erase the stored codes in all airbag system modules.

Turn the Ignition Off, and wait 15 seconds before turning the Ignition On.

Wait one minute, and read active codes and if there are none present read the stored codes.

Did this DTC reset and is it active?

Yes >> Go To A 8

No >> Repair is complete.
Perform the ORC VERIFICATION TEST - VER 1.

NO LEFT SIDE IMPACT SENSOR 1 COMMUNICATION (CONTINUED)

8. REPLACE THE OCCUPANT RESTRAINT CONTROLLER

WARNING: To avoid personal injury or death, turn the ignition off, disconnect the battery and wait two minutes before proceeding.

WARNING: If the occupant restraint controller is dropped at any time, it must be replaced. Failure to take the proper precautions can result in accidental airbag deployment and personal injury or death.

If there are no possible causes remaining, view repair.

Repair

Replace the Occupant Restraint Controller in accordance with Service Instructions.
Perform the ORC VERIFICATION TEST - VER 1.

---

9. TEST FOR AN INTERMITTENT CONDITION

With the scan tool, record and erase all DTC's from all Airbag modules.

If any ACTIVE codes are present they must be resolved before diagnosing any stored codes.

WARNING: To avoid personal injury or death, turn the ignition off, disconnect the battery and wait two minutes before proceeding.

Using the wiring diagram/schematic as a guide, inspect the wiring and connectors.

Look for chaffed, pierced, pinched, or partially broken wires and broken, bent, pushed out, spread, corroded, or contaminated terminals.

The following additional checks may assist you in identifying a possible intermittent problem.

Reconnect any disconnected components and harness connector.

WARNING: To avoid personal injury or death, turn the ignition on, then reconnect the battery.

With the scan tool monitor active codes as you work through the following steps.

WARNING: To avoid personal injury or death, maintain a safe distance from all airbags while performing the following steps.

Wiggle the wiring harness and connectors of the related airbag circuit or component.

If codes are related to the Driver Airbag circuits, rotate the steering wheel from stop to stop.

If only stored codes return continue the test until the problem area has been isolated.

In the previous steps you have attempted to recreate the conditions responsible for setting active DTC in question.

Are any ACTIVE DTCs present?

Yes >> Select the appropriate symptom from Symptom List.

No >> No problem found at this time. Erase all codes before returning vehicle to customer.

NO PCI LOOPBACK

For the Air Bag System circuit diagram (Refer to 8 - ELECTRICAL/RESTRAINTS - SCHEMATICS AND DIAGRAMS).

For a complete wiring diagram **Refer to Section 8W**.

- **When Monitored:**
  With the ignition on and the module transmitting information on the BUS.
- **Set Condition:**
  The code will set immediately if the on-board diagnostic cannot detect the module transmitting information on the BUS. NOTE: Any Bus Failure may cause a stored code to set.

Possible Causes
OCCUPANT RESTRAINT CONTROLLER (ORC)

Diagnostic Test

1. DETERMINE ACTIVE OR STORED DTC

Turn the ignition on.

NOTE: Ensure the battery is fully charged.

NOTE: When reconnecting airbag system components the Ignition must be turned off and the Battery must be disconnected.

Select ACTIVE or STORED DTC

ORC - ACTIVE DTC
Go To 2

ORC - STORED DTC
Go To 3

---

2. OCCUPANT RESTRAINT CONTROLLER (ORC)

WARNING: WARNING: TO AVOID PERSONAL INJURY OR DEATH, DISCONNECT THE BATTERY AND WAIT TWO MINUTES BEFORE PROCEEDING.

WARNING: WARNING: IF THE OCCUPANT RESTRAINT CONTROLLER IS DROPPED AT ANY TIME, IT MUST BE REPLACED. FAILURE TO TAKE THE PROPER PRECAUTIONS COULD RESULT IN ACCIDENTAL AIRBAG DEPLOYMENT AND PERSONAL INJURY OR DEATH.

If there are no possible causes remaining, view repair.

Repair
Replace the Occupant Restraint Controller (ORC) in accordance with the Service Information.
Perform ORC VERIFICATION TEST - VER 1.

NO PCI LOOPBACK (CONTINUED)

3. CHECKING STORED OR INTERMITTENT CODES

With the DRBIII®, record and erase all DTC's from all Airbag modules.

If equipped with Passenger Airbag On - Off switch, read the DTC's in all switch positions.

If any ACTIVE codes are present they must be resolved before diagnosing any stored codes.

WARNING: WARNING: TO AVOID PERSONAL INJURY OR DEATH, TURN THE IGNITION OFF, DISCONNECT THE BATTERY AND WAIT TWO MINUTES BEFORE PROCEEDING.

Using the wiring diagram/schematic as a guide, inspect the wiring and connectors.

Look for chaffed, pierced, pinched, or partially broken wires and broken, bent, pushed out, spread, corroded, or contaminated terminals.

The following additional checks may assist you in identifying a possible intermittent problem.

Reconnect any disconnected components and harness connector.

WARNING: WARNING: TO AVOID PERSONAL INJURY OR DEATH, TURN THE IGNITION ON, THEN RECONNECT THE BATTERY.

With the DRBIII®, monitor active codes as you work through the following steps.

WARNING: WARNING: TO AVOID PERSONAL INJURY OR DEATH, MAINTAIN A SAFE DISTANCE FROM ALL AIRBAGS WHILE PERFORMING THE FOLLOWING STEPS.

Wiggle the wiring harness and connectors of the related airbag circuit or component.

If codes are related to the Driver Airbag circuits, rotate the steering wheel from stop to stop.

If only stored codes return continue the test until the problem area has been isolated.

In the previous steps you have attempted to recreate the conditions responsible for setting active DTC in question.

Are any ACTIVE DTCs present?

Yes >> Select the appropriate diagnostic procedure from the Table of Contents in this section.

No >> No problem found at this time. Erase all codes before returning vehicle to customer.

NO PCI TRANSMISSION

For the Air Bag System circuit diagram (Refer to 8 - ELECTRICAL/RESTRAINTS - SCHEMATICS AND DIAGRAMS).

For a complete wiring diagram **Refer to Section 8W**.

- **When Monitored:**
  With the ignition on and the module transmitting information on the BUS.
- **Set Condition:**
  The code will set immediately if the on-board diagnostic cannot detect the module transmitting information on the BUS. NOTE: Any Bus Failure may cause a stored code to set.

Possible Causes
OCCUPANT RESTRAINT CONTROLLER (ORC)

Diagnostic Test

1. DETERMINE ACTIVE OR STORED DTC

Turn the ignition on.

NOTE: Ensure the battery is fully charged.

NOTE: When reconnecting airbag system components the Ignition must be turned off and the Battery must be disconnected.

Select ACTIVE or STORED DTC

ORC - ACTIVE DTC
Go To 2

ORC - STORED DTC
Go To 3

---

2. OCCUPANT RESTRAINT CONTROLLER (ORC)

WARNING: WARNING: TO AVOID PERSONAL INJURY OR DEATH, DISCONNECT THE BATTERY AND WAIT TWO MINUTES BEFORE PROCEEDING.

WARNING: WARNING: IF THE OCCUPANT RESTRAINT CONTROLLER IS DROPPED AT ANY TIME, IT MUST BE REPLACED. FAILURE TO TAKE THE PROPER PRECAUTIONS COULD RESULT IN ACCIDENTAL AIRBAG DEPLOYMENT AND PERSONAL INJURY OR DEATH.

If there are no possible causes remaining, view repair.

Repair
Replace the Occupant Restraint Controller (ORC) in accordance with the Service Information.
Perform ORC VERIFICATION TEST - VER 1.

NO PCI TRANSMISSION (CONTINUED)

3. CHECKING STORED OR INTERMITTENT CODES

With the DRBIII®, record and erase all DTC's from all Airbag modules.

If equipped with Passenger Airbag On - Off switch, read the DTC's in all switch positions.

If any ACTIVE codes are present they must be resolved before diagnosing any stored codes.

WARNING: WARNING: TO AVOID PERSONAL INJURY OR DEATH, TURN THE IGNITION OFF, DISCONNECT THE BATTERY AND WAIT TWO MINUTES BEFORE PROCEEDING.

Using the wiring diagram/schematic as a guide, inspect the wiring and connectors.

Look for chaffed, pierced, pinched, or partially broken wires and broken, bent, pushed out, spread, corroded, or contaminated terminals.

The following additional checks may assist you in identifying a possible intermittent problem.

Reconnect any disconnected components and harness connector.

WARNING: WARNING: TO AVOID PERSONAL INJURY OR DEATH, TURN THE IGNITION ON, THEN RECONNECT THE BATTERY.

With the DRBIII®, monitor active codes as you work through the following steps.

WARNING: WARNING: TO AVOID PERSONAL INJURY OR DEATH, MAINTAIN A SAFE DISTANCE FROM ALL AIRBAGS WHILE PERFORMING THE FOLLOWING STEPS.

Wiggle the wiring harness and connectors of the related airbag circuit or component.

If codes are related to the Driver Airbag circuits, rotate the steering wheel from stop to stop.

If only stored codes return continue the test until the problem area has been isolated.

In the previous steps you have attempted to recreate the conditions responsible for setting active DTC in question.

Are any ACTIVE DTCs present?

Yes >> Select the appropriate diagnostic procedure from the Table of Contents in this section.

No >> No problem found at this time. Erase all codes before returning vehicle to customer.

NO RIGHT SIDE IMPACT SENSOR 1 COMMUNICATION

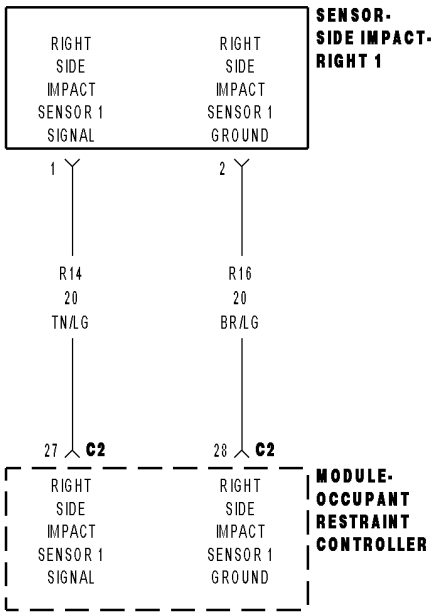

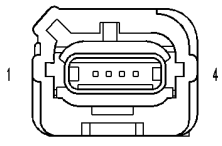

SENSOR-SIDE
IMPACT-RIGHT 1

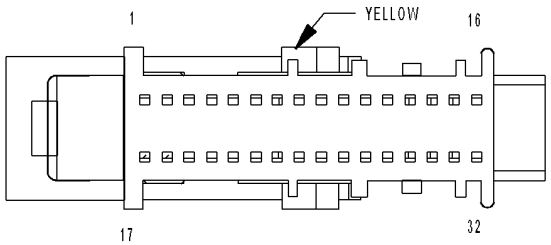

MODULE-
OCCUPANT
RESTRAINT
CONTROLLER C2

81471fc5

NO RIGHT SIDE IMPACT SENSOR 1 COMMUNICATION (CONTINUED)

For the Airbag System circuit diagram (Refer to 8 - ELECTRICAL/RESTRAINTS - SCHEMATICS AND DIAGRAMS).

For a complete wiring diagram **Refer to Section 8W**.

- **When Monitored:**
  The Occupant Restraint Controller (ORC) continuously communicates with the Right Side Impact Sensor 1 over the sensor signal circuit. The sensor communication and on board diagnostics are powered by the ORC signal.
- **Set Condition:**
  This code will set, if the ORC and the Right Side Impact Sensor 1 do not establish and maintain valid data communications.

Possible Causes
(R14) RIGHT SIDE IMPACT SENSOR 1 SIGNAL CIRCUIT SHORTED TO BATTERY
(R14) RIGHT SIDE IMPACT SENSOR 1 SIGNAL CIRCUIT SHORTED TO GROUND
(R14, R16) RIGHT SIDE IMPACT SENSOR 1 CIRCUITS SHORTED TOGETHER
(R16) RIGHT SIDE IMPACT SENSOR 1 GROUND CIRCUIT OPEN
(R14) RIGHT SIDE IMPACT SENSOR 1 SIGNAL CIRCUIT OPEN
ORC, RIGHT SIDE IMPACT SENSOR 1

Diagnostic Test

1. VERIFY THAT DTC NO RIGHT SIDE IMPACT SENSOR 1 COMMUNICATION

NOTE: Ensure the battery is fully charged.

NOTE: When reconnecting Airbag system components, the ignition must be turned off and the battery must be disconnected.

Turn the ignition on.

With the scan tool, read ORC DTCs.

Does the scan tool display active: No Right Side impact Sensor 1 Communication?

Yes >> Go To 2

No >> Go To 9

NO RIGHT SIDE IMPACT SENSOR 1 COMMUNICATION (CONTINUED)

2. CHECK THE (R14, R16) RIGHT SIDE IMPACT SENSOR 1 SIGNAL AND GROUND CIRCUITS FOR A SHORT TO BATTERY

WARNING: To avoid personal injury or death, turn the ignition off, disconnect the battery and wait two minutes before proceeding.
Disconnect the Right side Impact Sensor 1 connector.
Disconnect the ORC connector.

WARNING: To avoid personal injury or death, turn the ignition on, then reconnect the battery.
Measure the voltage of the (R14) Right Side Impact Sensor 1 Signal circuit and (R16) Right Side Impact Sensor 1 Ground circuit at the Right Side Impact Sensor 1 connector and ground.

Is there any voltage present?

Yes >> Repair the (R14, R16) Right Side Impact Sensor 1 circuits for a short to battery.
Perform the ORC VERIFICATION TEST - VER 1.

No >> Go To 3

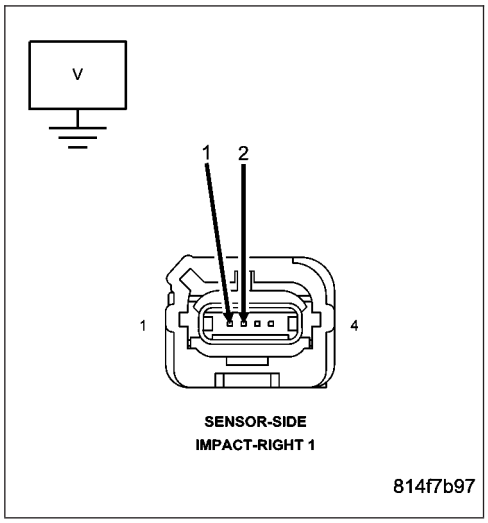

3. CHECK THE (R14) RIGHT SIDE IMPACT SENSOR 1 SIGNAL CIRCUIT FOR A SHORT TO GROUND

WARNING: To avoid personal injury or death, turn ignition on, then reconnect the battery.
Measure the resistance of the (R14) Right Side Impact Sensor 1 Signal circuit between the Right Side Impact Sensor 1 connector and ground.

Is the resistance below 100K ohms?

Yes >> Repair the (R14) Right Side Impact Sensor 1 Signal circuit for a short to ground.
Perform the ORC VERIFICATION TEST - VER 1.

No >> Go To 4

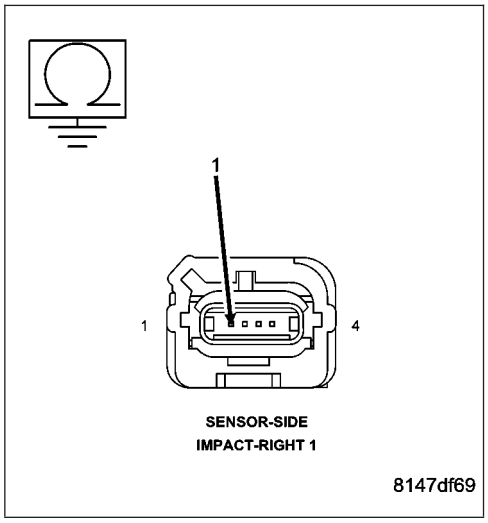

NO RIGHT SIDE IMPACT SENSOR 1 COMMUNICATION (CONTINUED)

4. CHECK THE (R14, R16) RIGHT SIDE IMPACT SENSOR CIRCUITS FOR A SHORT TOGETHER

Measure the resistance between the (R14) Right Side Impact Sensor 1 Signal circuit and (R16) Right Side Impact Sensor 1 Ground circuit at the Right Side Impact Sensor 1 connector.

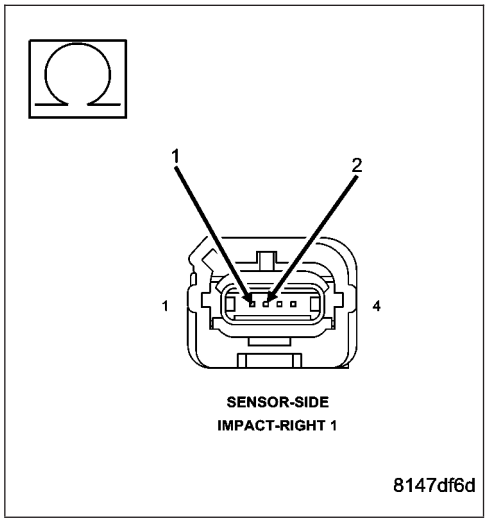

Is the resistance below 100K ohms?

Yes >> Repair the (R14, R16) Right Side Impact Sensor 1 circuits shorted together.
Perform the ORC VERIFICATION TEST - VER 1.

No >> Go To 5

5. CHECK THE (R16) RIGHT SIDE IMPACT SENSOR 1 GROUND CIRCUIT FOR AN OPEN OR HIGH RESISTANCE

Connect the 8443 Load Tool ORC Adaptor to the Occupant Control Module connector.

Measure the resistance of the (R16) Right Side Impact Sensor 1 Ground circuit between the Right Side Impact Sensor 1 connector and the 8443 Load Tool ORC Adaptor.

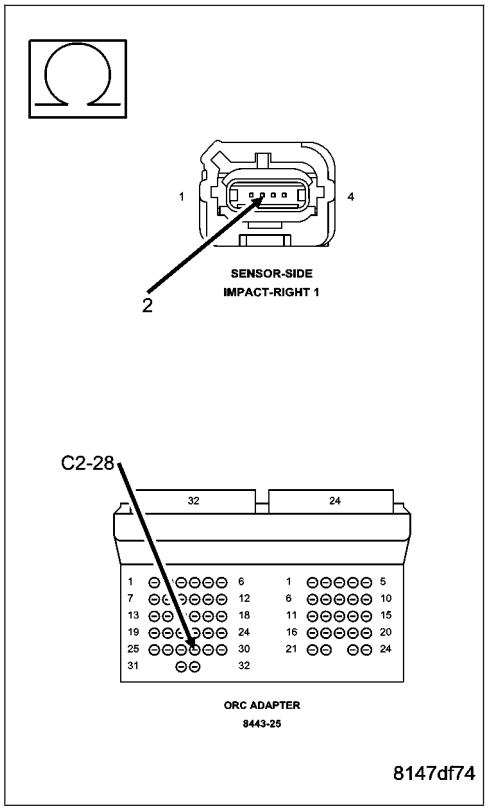

Is the resistance below 1 ohm?

Yes >> Go To 6

No >> Repair the (R16) Right Side Impact Sensor 1 Ground circuit for an open or high resistance.
Perform the ORC VERIFICATION TEST - VER 1.

NO RIGHT SIDE IMPACT SENSOR 1 COMMUNICATION (CONTINUED)

6. CHECK THE (R14) RIGHT SIDE IMPACT SENSOR 1 CIRCUIT FOR AN OPEN OR HIGH RESISTANCE

Measure the resistance of the (R14) Right Side Impact Sensor 1 Signal circuit between the Right Side Impact Sensor 1 connector and the 8443 Load Tool ORC Adaptor.

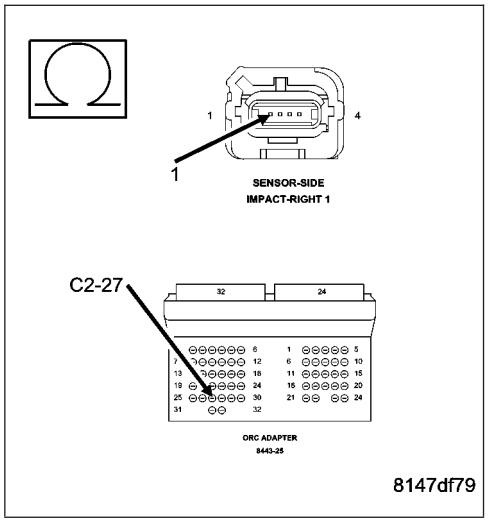

Is the resistance below 1 ohm?

Yes >> Go To 7

No >> Repair the (R14) Right Side Impact Sensor 1 Signal circuit for an open or high resistance.
Perform the ORC VERIFICATION TEST - VER 1.

7. CHECK OPERATION OF THE RIGHT SIDE IMPACT SENSOR 1

Replace the Right Side Impact Sensor 1.

Reconnect the vehicle body harness to the impact sensor.

Remove any special tools or jumper wires and reconnect all previously disconnected components - except the Battery.

WARNING: To avoid personal injury or death, turn the ignition on, then reconnect the battery.

Connect the scan tool to the Data Link Connector - use the most current software available.

Use the scan tool and erase the stored codes in all airbag system modules.

Turn the Ignition Off, and wait 15 seconds before turning the Ignition On.

Wait one minute, and read active codes and if there are none present read the stored codes.

Did DTC reset and is it active?

Yes >> Go To 8

No >> Repair is complete.
Perform the ORC VERIFICATION TEST - VER 1.

8. REPLACE THE OCCUPANT RESTRAINT CONTROLLER

WARNING: To avoid personal injury or death, turn the ignition off, disconnect the battery and wait two minutes before proceeding.

WARNING: If the occupant restraint controller is dropped at any time, it must be replaced. Failure to take the proper precautions could result in accidental airbag deployment and personal injury or death.

If there are no possible causes remaining, view repair.

Repair

Replace the Occupant Restraint Controller in accordance with Service Instructions.
Perform the ORC VERIFICATION TEST - VER 1.

NO RIGHT SIDE IMPACT SENSOR 1 COMMUNICATION (CONTINUED)

9. TEST FOR AN INTERMITTENT CONDITION

With the scan tool, record and erase all DTC's from all Airbag modules.

If any ACTIVE codes are present they must be resolved before diagnosing any stored codes.

WARNING: To avoid personal injury or death, turn the ignition off, disconnect the battery and wait two minutes before proceeding.

Using the wiring diagram/schematic as a guide, inspect the wiring and connectors.

Look for chaffed, pierced, pinched, or partially broken wires and broken, bent, pushed out, spread, corroded, or contaminated terminals.

The following additional checks may assist you in identifying a possible intermittent problem.

Reconnect any disconnected components and harness connector.

WARNING: To avoid personal injury or death, turn the ignition on, then reconnect the battery.

With the scan tool monitor active codes as you work through the following steps.

WARNING: To avoid personal injury or death, maintain a safe distance from all airbags while performing the following steps.

Wiggle the wiring harness and connectors of the related airbag circuit or component.

If codes are related to the Driver Airbag circuits, rotate the steering wheel from stop to stop.

If only stored codes return continue the test until the problem area has been isolated.

In the previous steps you have attempted to recreate the conditions responsible for setting active DTC in question.

Are any ACTIVE DTCs present?

Yes >> Select the appropriate symptom from Symptom List.

No >> No problem found at this time. Erase all codes before returning vehicle to customer.

OCCUPANT CLASSIFICATION MODULE CONFIGURATION MISMATCH

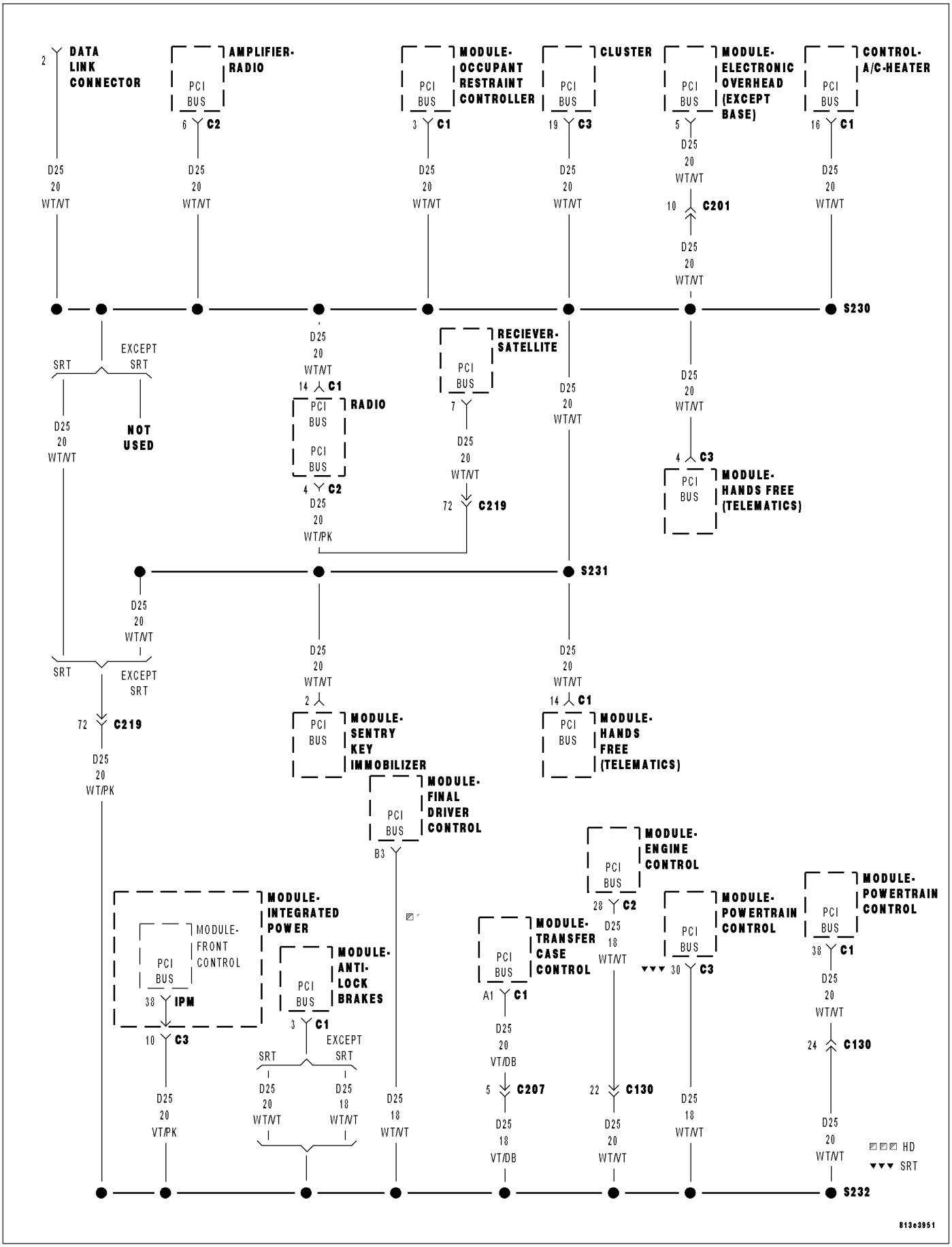

OCCUPANT CLASSIFICATION MODULE CONFIGURATION MISMATCH (CONTINUED)

For the Air Bag System circuit diagram (Refer to 8 - ELECTRICAL/RESTRAINTS - SCHEMATICS AND DIAGRAMS).

For a complete wiring diagram **Refer to Section 8W**.

- **When Monitored:**
  At ignition on, the Occupant Restraint Controller (ORC) monitors the PCI Bus for the Occupant Classification Module (OCM) messages and then compares the messages to the known configuration.
- **Set Condition:**
  This code will set if the ORC is not configured for Passenger Only OCM and OCM messages are being broadcast on the PCI Bus.

Possible Causes
PCM, INCORRECT VIN
OCCUPANT RESTRAINT CONTROLLER (ORC)

Diagnostic Test

1. DETERMINE ACTIVE OR STORED DTC

Turn the ignition on.

NOTE: Ensure the battery is fully charged.

NOTE: For the purpose of this test, the ACM and AECM modules will be referred to as an ORC.

NOTE: When reconnecting Airbag system components, the ignition must be turned off and the battery must be disconnected.

Select ACTIVE or STORED DTC:

ORC - ACTIVE DTC
Go To 2

ORC - STORED DTC
Go To 4

---

2. PCM, INCORRECT VIN

With the Scan Tool select ENGINE, MISCELLANEOUS, MISC FUNCTION, and then CHECK VIN to read the Vehicle Identification Number in the Powertrain Control Module.

Compare the VIN displayed on the Scan Tool screen and the Vehicle VIN plate.

Does the VIN plate and the PCM VIN match?

Yes >> Go To 3

No >> Replace and program the Powertrain Control Module in accordance with the Service Information.
Perform POWERTRAIN VERIFICATION TEST. (Refer to 9 - ENGINE - DIAGNOSIS AND TESTING).
Perform ORC VERIFICATION TEST - VER 1.

OCCUPANT CLASSIFICATION MODULE CONFIGURATION MISMATCH (CONTINUED)

3. OCCUPANT RESTRAINT CONTROLLER (ORC)

WARNING: TO AVOID PERSONAL INJURY OR DEATH, TURN THE IGNITION OFF, DISCONNECT THE BATTERY AND WAIT TWO MINUTES BEFORE PROCEEDING.

WARNING: IF THE OCCUPANT RESTRAINT CONTROLLER IS DROPPED AT ANY TIME, IT MUST BE REPLACED. FAILURE TO TAKE THE PROPER PRECAUTIONS COULD RESULT IN ACCIDENTAL AIRBAG DEPLOYMENT AND PERSONAL INJURY OR DEATH.

NOTE: When reconnecting airbag system components the Ignition must be turned off and the Battery must be disconnected.

If there are no possible causes remaining, view repair.

Repair

Replace the Occupant Restraint Controller (ORC) in accordance with the Service Information.
Perform ORC VERIFICATION TEST - VER 1.

---

4. CHECKING STORED OR INTERMITTENT CODES

With the Scan Tool, record and erase all DTC's from all Airbag modules.

If equipped with Passenger Airbag On - Off switch, read the DTC's in all switch positions.

If any ACTIVE codes are present they must be resolved before diagnosing any stored codes.

WARNING: TO AVOID PERSONAL INJURY OR DEATH, TURN THE IGNITION OFF, DISCONNECT THE BATTERY AND WAIT TWO MINUTES BEFORE PROCEEDING.

Using the wiring diagram/schematic as a guide, inspect the wiring and connectors.

Look for chaffed, pierced, pinched, or partially broken wires and broken, bent, pushed out, spread, corroded, or contaminated terminals.

The following additional checks may assist you in identifying a possible intermittent problem.

Reconnect any disconnected components and harness connector.

WARNING: TO AVOID PERSONAL INJURY OR DEATH, TURN THE IGNITION ON, THEN RECONNECT THE BATTERY.

With the Scan Tool, monitor active codes as you work through the following steps.

WARNING: TO AVOID PERSONAL INJURY OR DEATH, MAINTAIN A SAFE DISTANCE FROM ALL AIRBAGS WHILE PERFORMING THE FOLLOWING STEPS.

Wiggle the wiring harness and connectors of the related airbag circuit or component.

If codes are related to the Driver Airbag circuits, rotate the steering wheel from stop to stop.

If only stored codes return continue the test until the problem area has been isolated.

In the previous steps you have attempted to recreate the conditions responsible for setting active DTC in question.

Does the scan tool display any ACTIVE DTCs?

Yes >> Select the appropriate diagnostic procedure from the Table of Contents in this section.

No >> No problem found at this time. Erase all codes before returning vehicle to customer.

OUTPUT DRIVER 1

For a complete wiring diagram **Refer to Section 8W**.

- **When Monitored:**
  With the ignition on. The module's on board diagnostics continuously performs internal circuit tests.
- **Set Condition:**
  This DTC will set if the module identifies an out of range internal circuit.

Possible Causes
OCCUPANT RESTRAINT CONTROLLER

Diagnostic Test

1. REPLACE OCCUPANT RESTRAINT CONTROLLER

Turn the ignition on.

With the scan tool, erase and read ORC DTCs.

WARNING: To avoid personal injury or death, turn the ignition off, disconnect the battery and wait two minutes before proceeding.

WARNING: If the Occupant Restraint Controller is dropped at any time, it must be replaced. Failure to take proper precautions can result in accidental airbag deployment and personal injury or death.

When this code is set, view repair.

Repair

Replace the Occupant Restraint Controller in accordance with the Service Information.

Perform the ORC VERIFICATION TEST-VER. 1

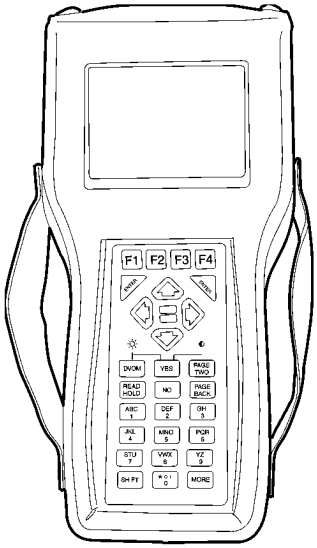

PASSENGER OFF INDICATOR CIRCUIT SHORT TO BATTERY

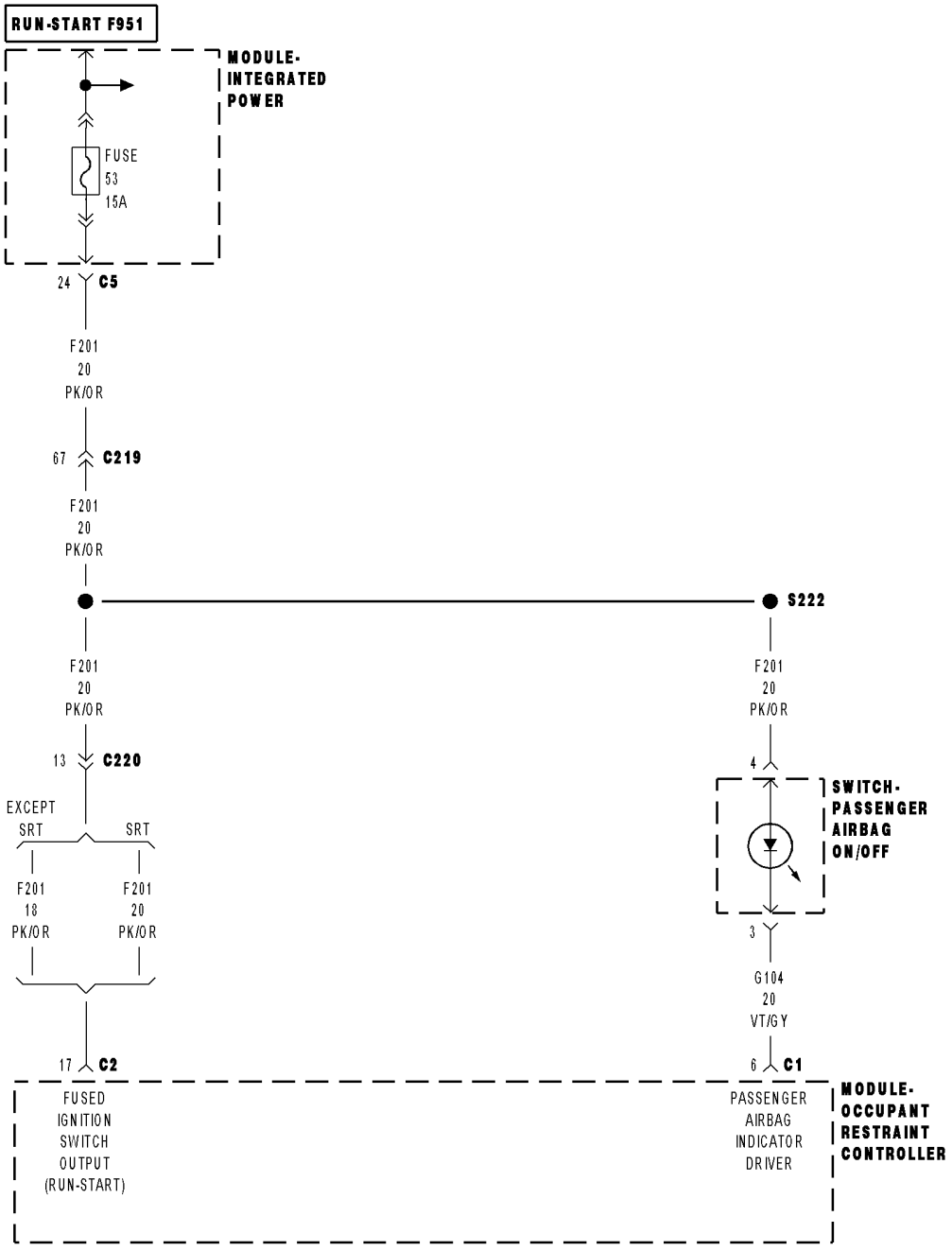

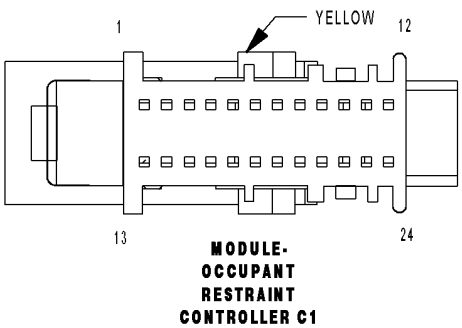

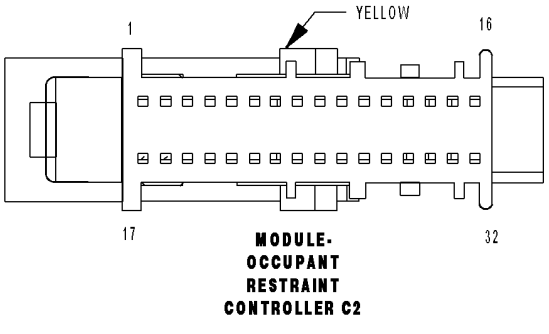

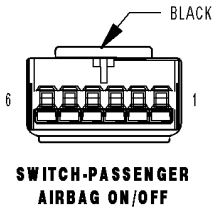

8149041B

PASSENGER OFF INDICATOR CIRCUIT SHORT TO BATTERY (CONTINUED)

For the Air Bag System circuit diagram (Refer to 8 - ELECTRICAL/RESTRAINTS - SCHEMATICS AND DIAGRAMS).

For a complete wiring diagram **Refer to Section 8W**.

- **When Monitored:**
  When the ignition is on, the Occupant Restraint Controller (ORC) monitors the (G104) Passenger Airbag Indicator Driver circuit for voltage.
- **Set Condition:**
  The code will set if the ORC senses battery voltage on the (G104) Passenger Airbag Indicator Driver circuit.

Possible Causes
ORC IMPROPERLY CONFIGURED FOR PAB ON - OFF SWITCH
(G104) PAB INDICATOR DRIVER CIRCUIT SHORTED TO BATTERY
(G104) PAB INDICATOR DRIVER CIRCUIT SHORTED TO (F201) FUSED IGNITION SWITCH OUTPUT (RUN-START) CIRCUIT
PAB ON - OFF INDICATOR SHORTED
ORC, PAB INDICATOR DRIVER CIRCUIT SHORTED TO BATTERY

Diagnostic Test

1. DETERMINE ACTIVE OR STORED DTC

Turn the ignition on.

NOTE: Ensure that the battery is fully charged.

NOTE: For the purpose of this test, the AECM and ACM modules will be referred to as an ORC.

NOTE: When reconnecting Airbag system components, the ignition must be turned off and the battery must be disconnected.

SELECT ACTIVE or STORED DTC:

ORC - ACTIVE DTC
Go To 2

ORC - STORED DTC
Go To 7

---

2. CHECKING EQUIPMENT

Is this vehicle equipped with a Passenger Airbag On - Off Switch?

Yes >> Go To 3

No >> With the Scan Tool in MISCELLANEOUS re-configure the ORC for NO AIRBAG ON/OFF SWITCH. Perform ORC VERIFICATION TEST - VER 1.

PASSENGER OFF INDICATOR CIRCUIT SHORT TO BATTERY (CONTINUED)

3. PAB ON - OFF INDICATOR SHORTED

WARNING: TO AVOID PERSONAL INJURY OR DEATH, TURN THE IGNITION OFF, DISCONNECT THE BATTERY AND WAIT TWO MINUTES BEFORE PROCEEDING.

Disconnect the Passenger Airbag On - Off Switch.

NOTE: Check connectors - Clean and repair as necessary.

Measure the PAB On - Off Switch resistance between terminals 3 and 4.

Is the resistance below 14.0 ohms?

Yes >> Go To 4

No >> Replace the Passenger Airbag On - Off Switch in accordance with the Service Information. Perform ORC VERIFICATION TEST - VER 1.

---

4. (G104) PAB INDICATOR DRIVER CIRCUIT SHORTED TO BATTERY

Disconnect the Occupant Restraint Controller C1 connector.

NOTE: Check connectors - Clean and repair as necessary.

WARNING: IF THE OCCUPANT RESTRAINT CONTROLLER IS DROPPED AT ANY TIME, IT MUST BE REPLACED. FAILURE TO TAKE THE PROPER PRECAUTIONS COULD RESULT IN ACCIDENTAL AIRBAG DEPLOYMENT AND PERSONAL INJURY OR DEATH.

WARNING: TO AVOID PERSONAL INJURY OR DEATH, TURN THE IGNITION ON, THEN RECONNECT THE BATTERY.

Measure the voltage of the (G104) Passenger Airbag Indicator Driver circuit.

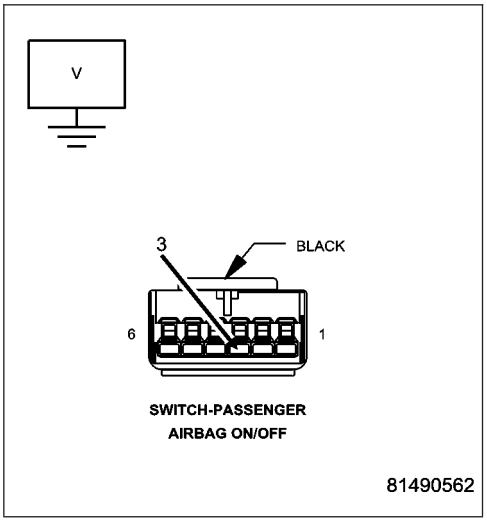

Is there any voltage present?

Yes >> Go To 5

No >> Go To 6

PASSENGER OFF INDICATOR CIRCUIT SHORT TO BATTERY (CONTINUED)

5. (G104) PAB INDICATOR DRIVER CIRCUIT SHORTED TO (F201) FUSED IGNITION SWITCH OUTPUT (RUN-START) CIRCUIT

WARNING: TO AVOID PERSONAL INJURY OR DEATH, TURN THE IGNITION OFF, DISCONNECT THE BATTERY AND WAIT TWO MINUTES BEFORE PROCEEDING.

Remove the (F201) Fused Ignition Switch Output (Run-Start) circuit fuse.

WARNING: TO AVOID PERSONAL INJURY OR DEATH, TURN THE IGNITION ON, THEN RECONNECT THE BATTERY.

Measure the voltage of the (G104) Passenger Airbag Indicator Driver circuit.

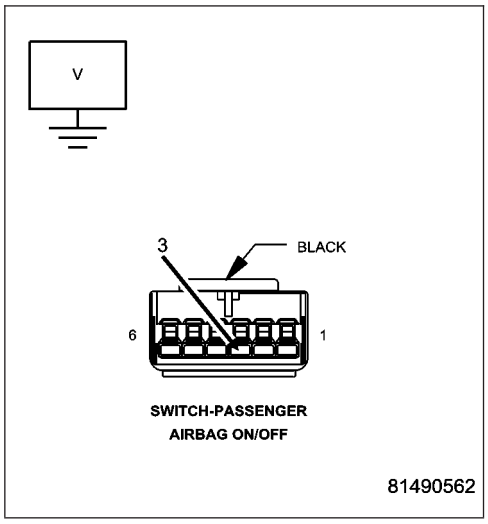

Is there any voltage present?

Yes >> Repair the (G104) Passenger Airbag Indicator Driver circuit for a short to battery.
Perform ORC VERIFICATION TEST - VER 1.

No >> Repair the (G104) Passenger Airbag Indicator Driver circuit for a short to the (F201) Fused ignition Switch Output (Run-Start) circuit.
Perform ORC VERIFICATION TEST - VER 1.

---

6. ORC, PAB INDICATOR DRIVER CIRCUIT SHORTED TO BATTERY

WARNING: TO AVOID PERSONAL INJURY OR DEATH, TURN THE IGNITION OFF, DISCONNECT THE BATTERY AND WAIT TWO MINUTES BEFORE PROCEEDING.

WARNING: IF THE OCCUPANT RESTRAINT CONTROLLER IS DROPPED AT ANY TIME, IT MUST BE REPLACED. FAILURE TO TAKE THE PROPER PRECAUTIONS COULD RESULT IN ACCIDENTAL AIRBAG DEPLOYMENT AND PERSONAL INJURY OR DEATH.

If there are no possible causes remaining, view repair.

Repair

Replace the Occupant Restraint Controller (ORC) in accordance with the Service Information.
Perform ORC VERIFICATION TEST - VER 1.

PASSENGER OFF INDICATOR CIRCUIT SHORT TO BATTERY (CONTINUED)

7. CHECKING STORED OR INTERMITTENT CODES

With the Scan Tool, record and erase all DTC's from all Airbag modules.

If equipped with Passenger Airbag On - Off switch, read the DTC's in all switch positions.

If any ACTIVE codes are present they must be resolved before diagnosing any stored codes.

WARNING: TO AVOID PERSONAL INJURY OR DEATH, TURN THE IGNITION OFF, DISCONNECT THE BATTERY AND WAIT TWO MINUTES BEFORE PROCEEDING.

Using the wiring diagram/schematic as a guide, inspect the wiring and connectors.

Look for chaffed, pierced, pinched, or partially broken wires and broken, bent, pushed out, spread, corroded, or contaminated terminals.

The following additional checks may assist you in identifying a possible intermittent problem.

Reconnect any disconnected components and harness connector.

WARNING: TO AVOID PERSONAL INJURY OR DEATH, TURN THE IGNITION ON, THEN RECONNECT THE BATTERY.

With the Scan Tool, monitor active codes as you work through the following steps.

WARNING: TO AVOID PERSONAL INJURY OR DEATH, MAINTAIN A SAFE DISTANCE FROM ALL AIRBAGS WHILE PERFORMING THE FOLLOWING STEPS.

Wiggle the wiring harness and connectors of the related airbag circuit or component.

If codes are related to the Driver Airbag circuits, rotate the steering wheel from stop to stop.

If only stored codes return continue the test until the problem area has been isolated.

In the previous steps you have attempted to recreate the conditions responsible for setting active DTC in question.

Are any ACTIVE DTCs present?

Yes >> Select the appropriate diagnostic procedure from the Table of Contents in this section.

No >> No problem found at this time. Erase all codes before returning vehicle to customer.

PASSENGER OFF INDICATOR CIRCUIT SHORT TO GROUND

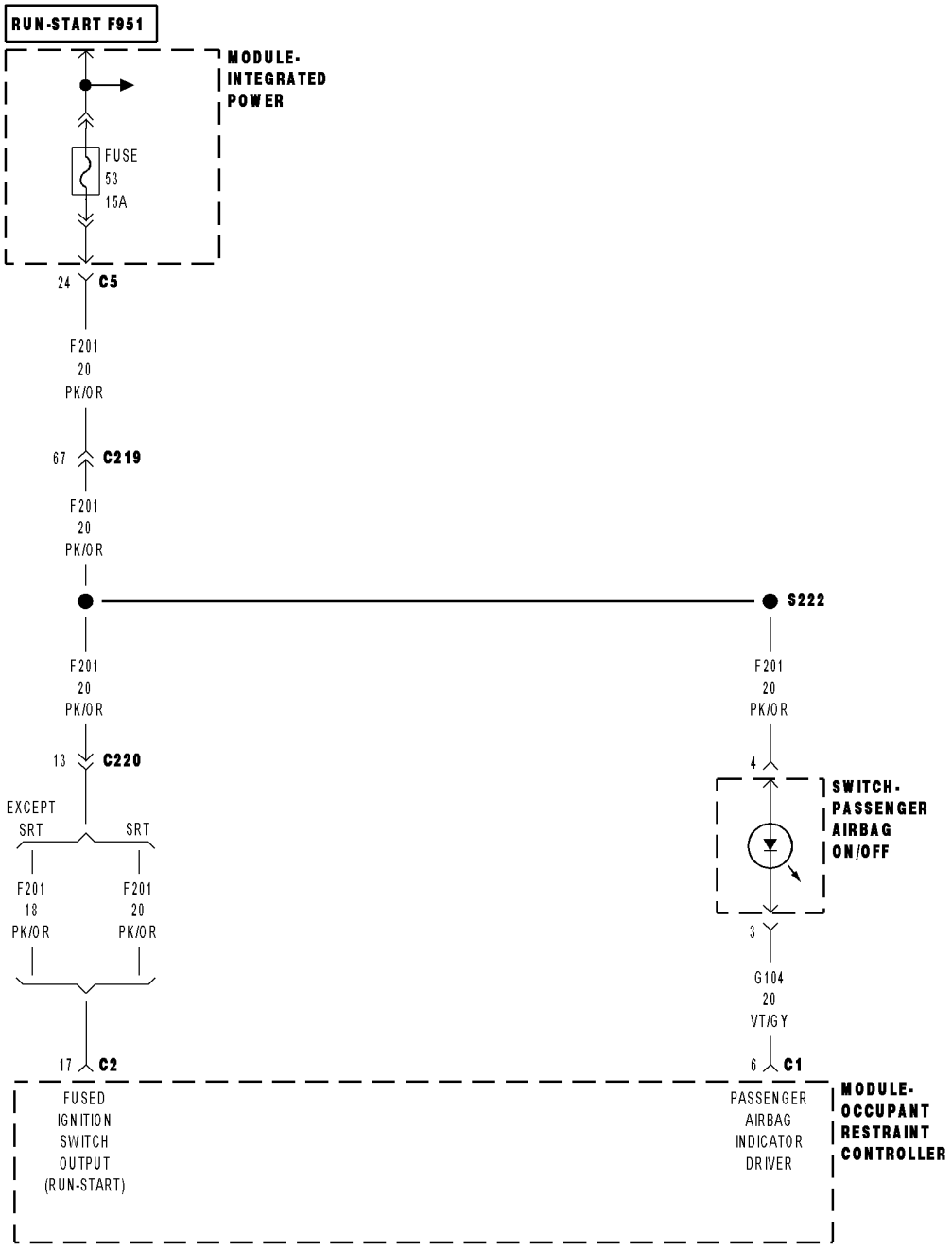

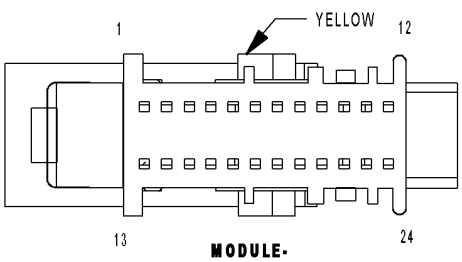

MODULE-
OCCUPANT
RESTRAINT
CONTROLLER C1

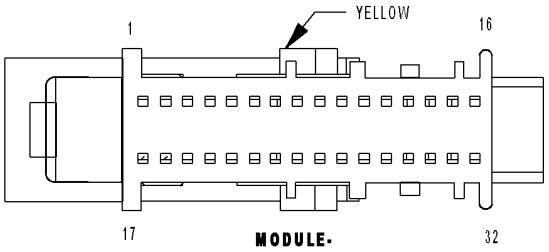

MODULE-
OCCUPANT
RESTRAINT
CONTROLLER C2

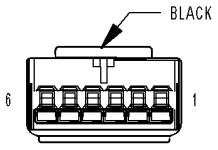

SWITCH-PASSENGER
AIRBAG ON/OFF

8149041B

PASSENGER OFF INDICATOR CIRCUIT SHORT TO GROUND (CONTINUED)

For the Air Bag System circuit diagram (Refer to 8 - ELECTRICAL/RESTRAINTS - SCHEMATICS AND DIAGRAMS).

For a complete wiring diagram **Refer to Section 8W**.

- **When Monitored:**
  When the ignition is on, the Occupant Restraint Controller (ORC) monitors the (G104) Passenger Airbag Indicator Driver circuit for voltage.
- **Set Condition:**
  The code will set if the ORC cannot detect voltage on the (G104) Passenger Airbag Indicator Driver circuit.

Possible Causes
ACTIVE ACM RUN - START CODES
ORC IMPROPERLY CONFIGURED FOR PAB ON - OFF SWITCH
PAB ON - OFF SWITCH DISCONNECTED
(F201) FUSED IGNITION SWITCH OUTPUT (RUN-START) CIRCUIT OPEN
(G104) PAB INDICATOR DRIVER CIRCUIT OPEN
(G104) PAB INDICATOR DRIVER CIRCUIT SHORTED TO GROUND
PAB ON - OFF INDICATOR OPEN
ORC, PAB ON - OFF INDICATOR CIRCUIT OPEN
ORC, PAB ON - OFF INDICATOR CIRCUIT SHORTED TO GROUND

Diagnostic Test

1. DETERMINE ACTIVE OR STORED DTC

Turn the ignition on.

NOTE: Ensure that the battery is fully charged.

NOTE: For the purpose of this test, the AECM and ORC modules will be referred to as an ORC.

NOTE: When reconnecting Airbag system components, the ignition must be turned off and the battery must be disconnected.

SELECT ACTIVE or STORED DTC:

ORC - ACTIVE DTC
Go To 2

ORC - STORED DTC
Go To 10

---

2. ACTIVE ORC RUN - START CODES

With the Scan Tool, read active Occupant Restraint Controller DTC's.

Does the Scan Tool display: LOSS OF IGNITION RUN - START?

Yes >> Diagnose and repair the DTC. Refer to the Table of Contents in this Section for a complete list of Restraint System DTCs.

No >> Go To 3

PASSENGER OFF INDICATOR CIRCUIT SHORT TO GROUND (CONTINUED)

3. CHECKING EQUIPMENT

Is this vehicle equipped with a Passenger Airbag On - Off Switch?

Yes >> Go To 4

No >> With the Scan Tool in MISCELLANEOUS re-configure the ORC for NO AIRBAG ON/OFF SWITCH. Perform ORC VERIFICATION TEST - VER 1.

4. SWITCH DISCONNECTED

Turn the ignition off.

Gain access to the Passenger Airbag On - Off Switch connector.

Is the Passenger Airbag On - Off Switch connected to the dash harness?

Yes >> Go To 5

No >> Connect the Passenger Airbag On - Off switch to the dash harness connector. Perform ORC VERIFICATION TEST - VER 1.

5. (F201) FUSED IGNITION SWITCH OUTPUT (RUN-START) CIRCUIT OPEN

WARNING: TO AVOID PERSONAL INJURY OR DEATH, TURN IGNITION OFF, DISCONNECT THE BATTERY AND WAIT TWO MINUTES BEFORE PROCEEDING.

Disconnect the Passenger Airbag On - Off Switch.

NOTE: Check connectors - Clean and repair as necessary.

WARNING: TO AVOID PERSONAL INJURY OR DEATH, TURN IGNITION ON, THEN RECONNECT THE BATTERY.

Measure the voltage of the (F201) Fused Ignition Switch Output (Run-Start) circuit.

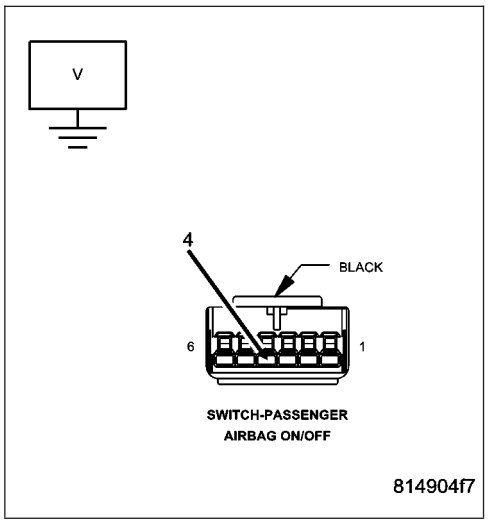

Is the voltage above 10.0 volts?

Yes >> Go To 6

No >> Repair the (F201) Fused ignition Switch Output (Run-Start) circuit for an open. Perform ORC VERIFICATION TEST - VER 1.

6. PAB ON - OFF INDICATOR OPEN

WARNING: TO AVOID PERSONAL INJURY OR DEATH, TURN IGNITION OFF, DISCONNECT THE BATTERY AND WAIT TWO MINUTES BEFORE PROCEEDING.

NOTE: Check connectors - Clean and repair as necessary.

Measure the PAB On - Off Switch resistance between terminals 3 and 4.

Is the resistance approximately 14 ohms?

Yes >> Go To 7

No >> Replace the Passenger Airbag ON - OFF Switch in accordance with the service information. Perform ORC VERIFICATION TEST - VER 1.

PASSENGER OFF INDICATOR CIRCUIT SHORT TO GROUND (CONTINUED)

7. (G104) PAB INDICATOR DRIVER CIRCUIT OPEN

Disconnect the Occupant Restraint Controller C1 connector

NOTE: Check connectors - Clean and repair as necessary.

WARNING: IF THE OCCUPANT RESTRAINT CONTROLLER IS DROPPED AT ANY TIME, IT MUST BE REPLACED. FAILURE TO TAKE THE PROPER PRECAUTIONS COULD RESULT IN ACCIDENTAL AIRBAG DEPLOYMENT AND PERSONAL INJURY OR DEATH.

Connect the appropriate Load Tool Adaptor to the Occupant Restraint Controller connector.

Measure the resistance of the (G104) Passenger Airbag Indicator Driver circuit between the 8443–25 ORC Adaptor and the PAB On - Off Switch connector.

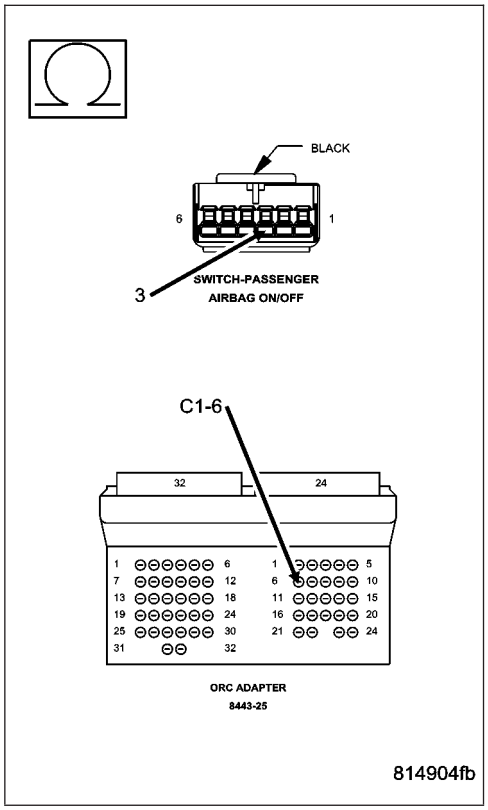

Is the resistance below 5.0 ohms?

Yes >> Go To 8

No >> Repair the (G104) Passenger Airbag Indicator Driver circuit for an open.
Perform ORC VERIFICATION TEST - VER 1.

8. (G104) PAB INDICATOR DRIVER CIRCUIT SHORTED TO GROUND

Measure the resistance of the (G104) Passenger Airbag Indicator Driver circuit between ground and the 8443–25 ORC Adaptor.

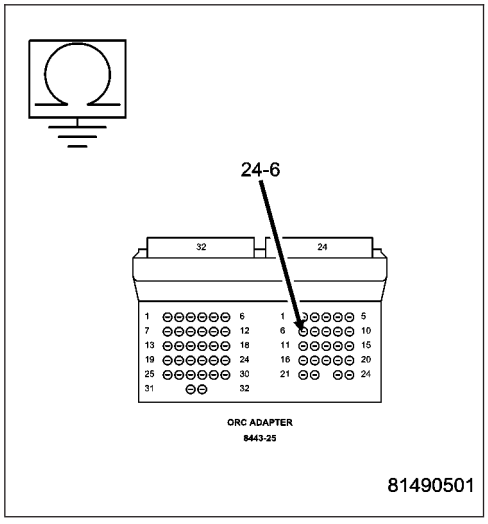

Is the resistance below 10K ohms?

Yes >> Repair the (G104) Passenger Airbag Indicator Driver circuit for a short to ground.
Perform ORC VERIFICATION TEST - VER 1.

No >> Go To 9

PASSENGER OFF INDICATOR CIRCUIT SHORT TO GROUND (CONTINUED)

9. ORC, PAB ON - OFF INDICATOR CIRCUIT OPEN OR SHORTED TO GROUND

Reconnect the Passenger Airbag On - Off Switch.

WARNING: IF THE OCCUPANT RESTRAINT CONTROLLER IS DROPPED AT ANY TIME, IT MUST BE REPLACED. FAILURE TO TAKE THE PROPER PRECAUTIONS COULD RESULT IN ACCIDENTAL AIRBAG DEPLOYMENT AND PERSONAL INJURY OR DEATH.

If there are no possible causes remaining, view repair.

Repair

Replace the Occupant Restraint Controller in accordance with the Service Information.
Perform ORC VERIFICATION TEST - VER 1.

---

10. CHECKING STORED OR INTERMITTENT CODES

With the Scan Tool, record and erase all DTC's from all Airbag modules.

If equipped with Passenger Airbag On - Off switch, read the DTC's in all switch positions.

If any ACTIVE codes are present they must be resolved before diagnosing any stored codes.

WARNING: TO AVOID PERSONAL INJURY OR DEATH, TURN THE IGNITION OFF, DISCONNECT THE BATTERY AND WAIT TWO MINUTES BEFORE PROCEEDING.

Using the wiring diagram/schematic as a guide, inspect the wiring and connectors.

Look for chaffed, pierced, pinched, or partially broken wires and broken, bent, pushed out, spread, corroded, or contaminated terminals.

The following additional checks may assist you in identifying a possible intermittent problem.

Reconnect any disconnected components and harness connector.

WARNING: TO AVOID PERSONAL INJURY OR DEATH, TURN THE IGNITION ON, THEN RECONNECT THE BATTERY.

With the Scan Tool, monitor active codes as you work through the following steps.

WARNING: TO AVOID PERSONAL INJURY OR DEATH, MAINTAIN A SAFE DISTANCE FROM ALL AIRBAGS WHILE PERFORMING THE FOLLOWING STEPS.

Wiggle the wiring harness and connectors of the related airbag circuit or component.

If codes are related to the Driver Airbag circuits, rotate the steering wheel from stop to stop.

If only stored codes return continue the test until the problem area has been isolated.

In the previous steps you have attempted to recreate the conditions responsible for setting active DTC in question.

Are any ACTIVE DTCs present?

Yes >> Select the appropriate diagnostic procedure from the Table of Contents in this section.

No >> No problem found at this time. Erase all codes before returning vehicle to customer.

PASSENGER AIRBAG ON-OFF SWITCH OPEN

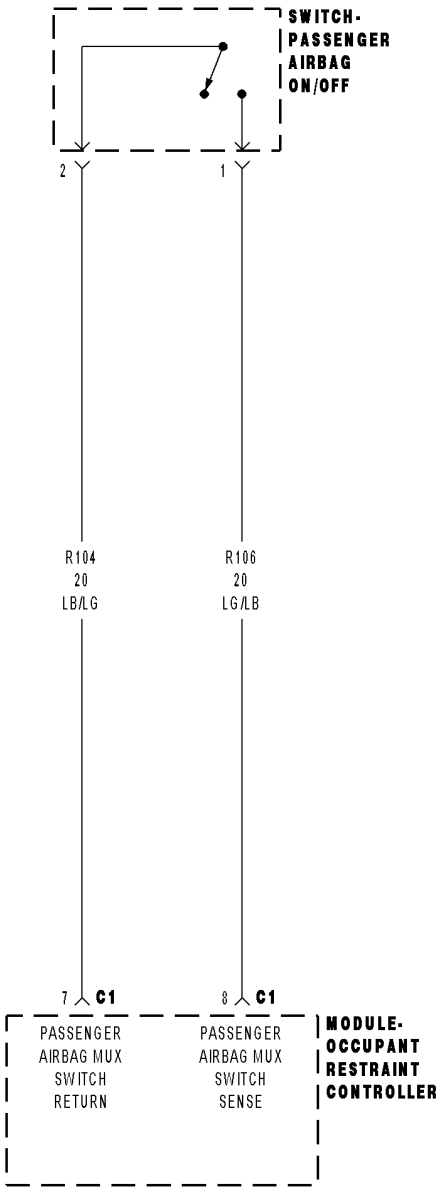

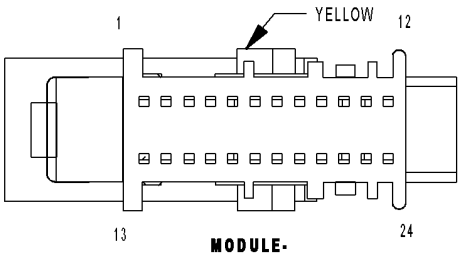

MODULE-
OCCUPANT
RESTRAINT
CONTROLLER C1

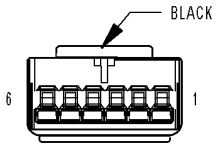

SWITCH-PASSENGER
AIRBAG ON/OFF

81490591

PASSENGER AIRBAG ON-OFF SWITCH OPEN (CONTINUED)

For the Air Bag System circuit diagram (Refer to 8 - ELECTRICAL/RESTRAINTS - SCHEMATICS AND DIAGRAMS).

For a complete wiring diagram **Refer to Section 8W**.

- **When Monitored:**
  When the ignition is on, the (R106) Passenger Airbag MUX Switch Sense circuit supplies a 3 to 10 ms pulse every 100 ms across the On or Off switch resistor to the (R104) Passenger Airbag MUX Switch Return circuit.
- **Set Condition:**
  The code will set if the Occupant Restraint Controller (ORC) senses an open or high resistance on the (R106) Passenger Airbag MUX Switch Sense circuit or (R104) Passenger Airbag MUX Switch Return circuit.

Possible Causes
PAB ON - OFF SWITCH DISCONNECTED
ORC IMPROPERLY CONFIGURED FOR PAB ON - OFF SWITCH
(R106) PAB MUX SWITCH SENSE CIRCUIT OPEN
(R104) PAB MUX SWITCH RETURN CIRCUIT OPEN
PAB ON - OFF SWITCH OPEN
ORC, PAB ON - OFF SWITCH CIRCUIT OPEN

Diagnostic Test

1. DETERMINE ACTIVE OR STORED DTC

Turn the ignition on.

NOTE: Ensure that the battery is fully charged.

NOTE: For the purpose of this test, the AECM and ACM modules will be referred to as an ORC.

NOTE: When reconnecting Airbag system components, the ignition must be turned off and the battery must be disconnected.

SELECT ACTIVE or STORED DTC:

ORC - ACTIVE DTC
Go To 2

ORC - STORED DTC
Go To 8

---

2. CHECKING EQUIPMENT

Is this vehicle equipped with a Passenger Airbag On - Off Switch?

Yes >> Go To 3

No >> With the Scan Tool in MISCELLANEOUS re-configure the ORC for NO AIRBAG ON/OFF SWITCH. Perform ORC VERIFICATION TEST - VER 1.

PASSENGER AIRBAG ON-OFF SWITCH OPEN (CONTINUED)

3. SWITCH DISCONNECTED

Turn the ignition off.

Gain access to the Passenger Airbag On - Off Switch connector.

Is the Passenger Airbag On - Off Switch connected to the dash harness?

Yes >> Go To 4

No >> Connect the Passenger Airbag On - Off switch to the dash harness connector.
Perform ORC VERIFICATION TEST - VER 1.

---

4. PAB ON - OFF SWITCH OPEN

WARNING: TO AVOID PERSONAL INJURY OR DEATH, TURN THE IGNITION OFF, DISCONNECT THE BATTERY AND WAIT TWO MINUTES BEFORE PROCEEDING.

Disconnect the Passenger Airbag On - Off Switch.

NOTE: Check connectors - Clean and repair as necessary.

Measure the PAB On - Off Switch resistance between terminals 1 and 2 in both switch positions.

The switch resistance specifications are: ON position = 175.0 to 190.0 ohms and OFF position = 820.0 to 870.0 ohms.

Is the resistance within the range specified for both switch positions?

Yes >> Go To 5

No >> Replace the Passenger Airbag ON - OFF Switch in accordance with the service information.
Perform ORC VERIFICATION TEST - VER 1.

---

5. (R106) PAB MUX SWITCH SENSE CIRCUIT OPEN

Disconnect the Occupant Restraint Controller C1 connector.

NOTE: Check connectors - Clean and repair as necessary.

WARNING: IF THE OCCUPANT RESTRAINT CONTROLLER IS DROPPED AT ANY TIME, IT MUST BE REPLACED. FAILURE TO TAKE THE PROPER PRECAUTIONS COULD RESULT IN ACCIDENTAL AIRBAG DEPLOYMENT AND PERSONAL INJURY OR DEATH.

Connect the appropriate Load Tool Adaptor to the Occupant Restraint Controller connector.

Measure the resistance of the (R106) Passenger Airbag MUX Switch Sense circuit between the ORC Adaptor and the PAB On - Off Switch connector.

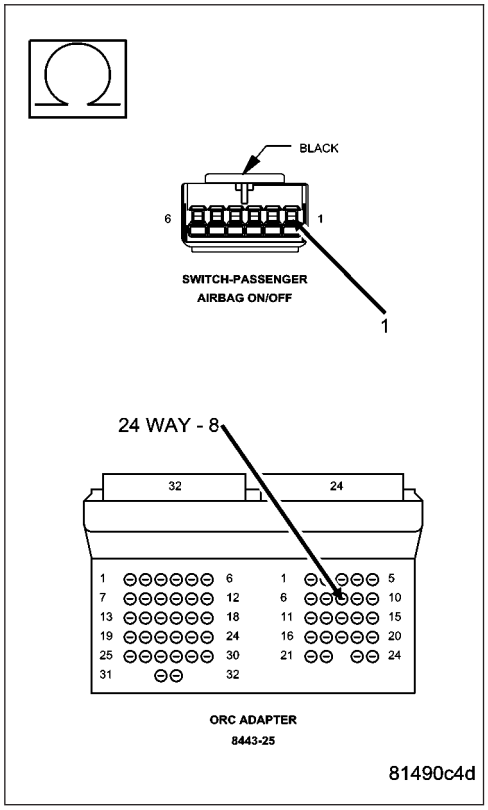

Is the resistance below 5.0 ohms?

Yes >> Go To 6

No >> Repair the (R106) Passenger Airbag MUX Switch Sense circuit for an open.
Perform ORC VERIFICATION TEST - VER 1.

PASSENGER AIRBAG ON-OFF SWITCH OPEN (CONTINUED)

6. (R104) PAB MUX SWITCH RETURN CIRCUIT OPEN

Measure the resistance of the (R104) Passenger Airbag MUX Switch Return circuit between the ORC Adaptor and the PAB On - Off Switch connector.

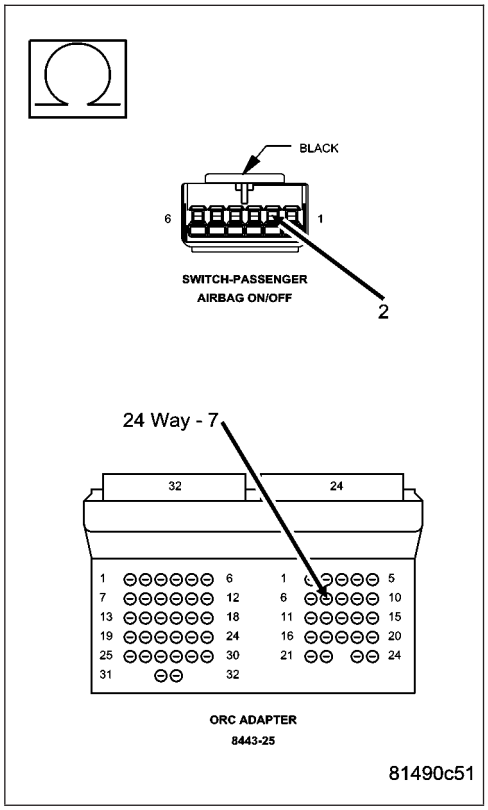

Is the resistance below 5.0 ohms?

Yes >> Go To 7

No >> Repair the (R104) Passenger Airbag MUX Switch Return circuit for an open.
Perform ORC VERIFICATION TEST - VER 1.

7. ORC, PAB ON - OFF SWITCH CIRCUIT OPEN

WARNING: IF THE OCCUPANT RESTRAINT CONTROLLER IS DROPPED AT ANY TIME, IT MUST BE REPLACED. FAILURE TO TAKE THE PROPER PRECAUTIONS COULD RESULT IN ACCIDENTAL AIRBAG DEPLOYMENT AND PERSONAL INJURY OR DEATH.

If there are no possible causes remaining, view repair.

Repair:

Replace the Occupant Restraint Controller (ORC) in accordance with the Service Information.
Perform ORC VERIFICATION TEST - VER 1.

PASSENGER AIRBAG ON-OFF SWITCH OPEN (CONTINUED)

8. CHECKING STORED OR INTERMITTENT CODES

With the Scan Tool, record and erase all DTC's from all Airbag modules.

If equipped with Passenger Airbag On - Off switch, read the DTC's in all switch positions.

If any ACTIVE codes are present they must be resolved before diagnosing any stored codes.

WARNING: TO AVOID PERSONAL INJURY OR DEATH, TURN THE IGNITION OFF, DISCONNECT THE BATTERY AND WAIT TWO MINUTES BEFORE PROCEEDING.

Using the wiring diagram/schematic as a guide, inspect the wiring and connectors.

Look for chaffed, pierced, pinched, or partially broken wires and broken, bent, pushed out, spread, corroded, or contaminated terminals.

The following additional checks may assist you in identifying a possible intermittent problem.

Reconnect any disconnected components and harness connector.

WARNING: TO AVOID PERSONAL INJURY OR DEATH, TURN THE IGNITION ON, THEN RECONNECT THE BATTERY.

With the Scan Tool, monitor active codes as you work through the following steps.

WARNING: TO AVOID PERSONAL INJURY OR DEATH, MAINTAIN A SAFE DISTANCE FROM ALL AIRBAGS WHILE PERFORMING THE FOLLOWING STEPS.

Wiggle the wiring harness and connectors of the related airbag circuit or component.

If codes are related to the Driver Airbag circuits, rotate the steering wheel from stop to stop.

If only stored codes return continue the test until the problem area has been isolated.

In the previous steps you have attempted to recreate the conditions responsible for setting active DTC in question.

Are any ACTIVE DTCs present?

Yes >> Select the appropriate diagnostic procedure from the Table of Contents in this section.

No >> No problem found at this time. Erase all codes before returning vehicle to customer.

PASSENGER AIRBAG ON-OFF SWITCH SHORT TO BATTERY

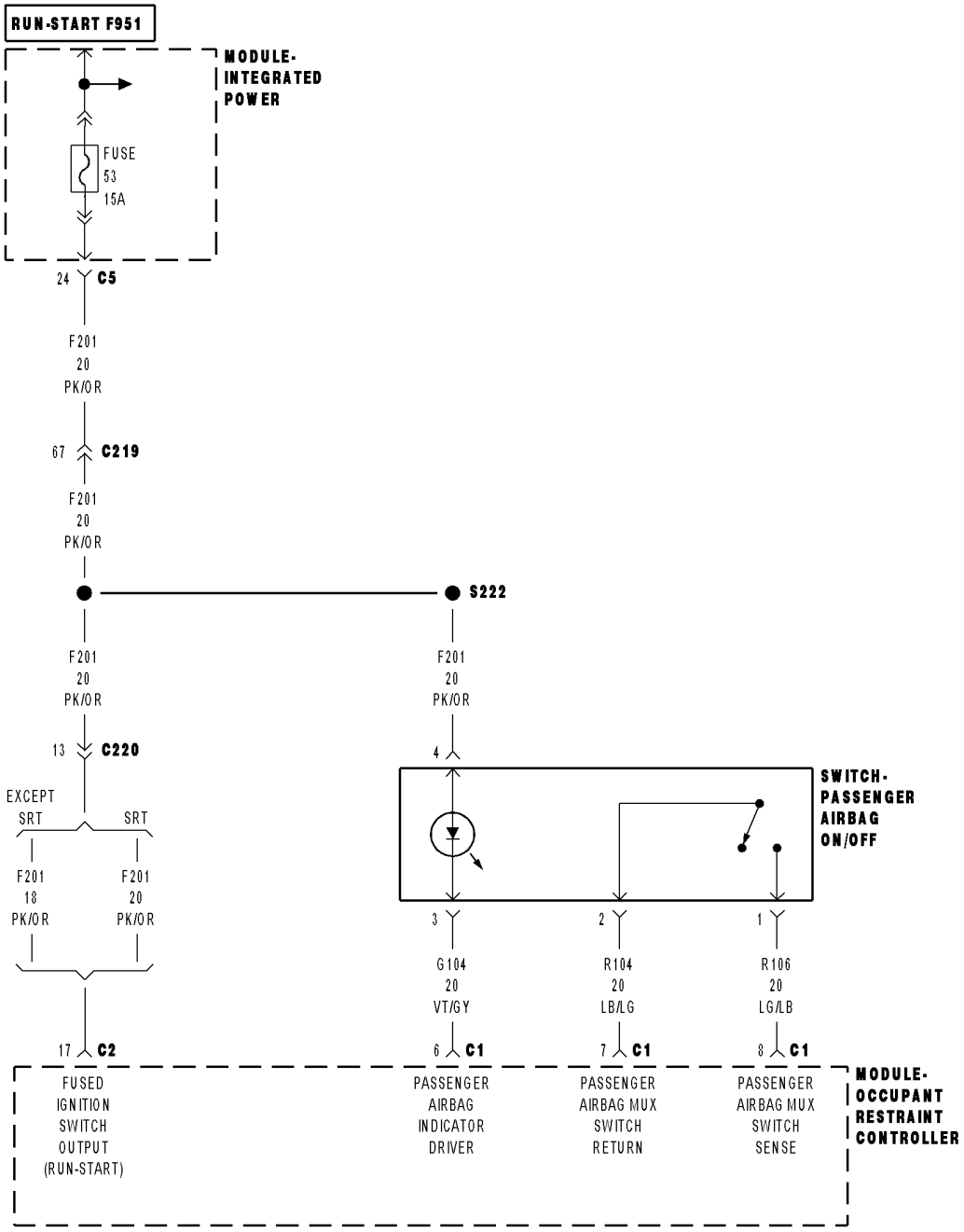

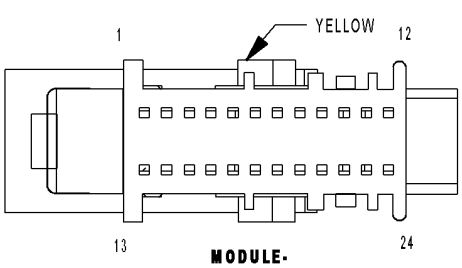

MODULE-
OCCUPANT
RESTRAINT
CONTROLLER C1

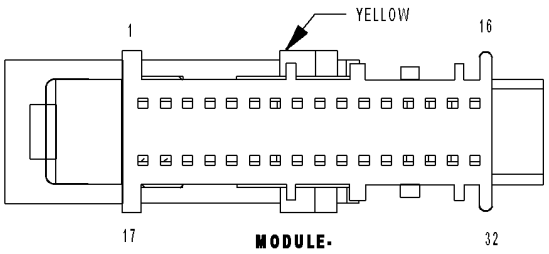

MODULE-
OCCUPANT
RESTRAINT
CONTROLLER C2

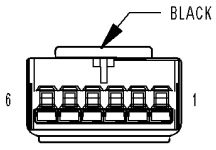

SWITCH-PASSENGER
AIRBAG ON/OFF

81490595

PASSENGER AIRBAG ON-OFF SWITCH SHORT TO BATTERY (CONTINUED)

For the Air Bag System circuit diagram (Refer to 8 - ELECTRICAL/RESTRAINTS - SCHEMATICS AND DIAGRAMS).

For a complete wiring diagram **Refer to Section 8W**.

- **When Monitored:**
  When the ignition is on, the (R106) Passenger Airbag MUX Switch Sense circuit supplies a 3 to 10 ms pulse every 100 ms across the On or Off switch resister to the (R104) Passenger Airbag MUX switch return circuit. Once the code is active, the Occupant Restraint Controller (ORC) will disable the indicator for the duration of the ignition cycle.
- **Set Condition:**
  The code will set if the ORC senses constant voltage over approximately 4.0 volts on the Passenger Airbag MUX Switch circuits.

Possible Causes
ORC IMPROPERLY CONFIGURED FOR PAB ON - OFF SWITCH
(R106) PAB MUX SWITCH SENSE CIRCUIT SHORTED TO BATTERY
(R104) PAB MUX SWITCH RETURN CIRCUIT SHORTED TO BATTERY
PAB ON - OFF SWITCH SHORTED
ORC, PAB ON - OFF SWITCH CIRCUIT SHORTED TO BATTERY

Diagnostic Test

1. DETERMINE ACTIVE OR STORED DTC

Turn the ignition on.

NOTE: Ensure the battery is fully charged.

NOTE: For the purpose of this test, the AECM and ACM modules will be referred to as an ORC.

NOTE: When reconnecting Airbag system components, the ignition must be turned off and the battery must be disconnected.

SELECT ACTIVE or STORED DTC:

ORC - ACTIVE DTC
Go To 2

ORC - STORED DTC
Go To 7

---

2. CHECKING EQUIPMENT

Is this vehicle equipped with a Passenger Airbag On - Off Switch?

Yes >> Go To 3

No >> With the Scan Tool in MISCELLANEOUS re-configure the ORC for NO AIRBAG ON/OFF SWITCH. Perform ORC VERIFICATION TEST - VER 1.

PASSENGER AIRBAG ON-OFF SWITCH SHORT TO BATTERY (CONTINUED)

3. PAB ON - OFF SWITCH SHORTED

WARNING: TO AVOID PERSONAL INJURY OR DEATH, TURN THE IGNITION OFF, DISCONNECT THE BATTERY AND WAIT TWO MINUTES BEFORE PROCEEDING.

Disconnect the Passenger Airbag On - Off Switch.

NOTE: Check connectors - Clean and repair as necessary.

Measure the PAB On - Off Switch resistance between terminals 1 and 4.

Measure the PAB On - Off Switch resistance between terminals 2 and 4.

Is the resistance below 10K ohms on either test?

Yes >> Replace the Passenger Airbag ON - OFF Switch in accordance with the service information.
Perform ORC VERIFICATION TEST - VER 1.

No >> Go To 4

---

4. PAB ON - OFF SWITCH SHORTED

Measure the PAB On - Off Switch resistance between terminals 1 and 2 in both switch positions.

The switch resistance specifications are: ON position = 175.0 to 190.0 ohms and OFF position = 820.0 to 870.0 ohms.

Is the resistance within the range specified for both switch positions?

Yes >> Go To 5

No >> Replace the Passenger Airbag ON - OFF Switch in accordance with the service information.
Perform ORC VERIFICATION TEST - VER 1.

---

5. (R106) PAB MUX SWITCH SENSE CIRCUIT / (R104) PAB MUX SWITCH RETURN CIRCUIT SHORTED TO BATTERY

Disconnect the Occupant Restraint Controller C1 connector.

NOTE: Check connectors - Clean and repair as necessary.

WARNING: IF THE OCCUPANT RESTRAINT CONTROLLER IS DROPPED AT ANY TIME, IT MUST BE REPLACED. FAILURE TO TAKE THE PROPER PRECAUTIONS COULD RESULT IN ACCIDENTAL AIRBAG DEPLOYMENT AND PERSONAL INJURY OR DEATH.

WARNING: TO AVOID PERSONAL INJURY OR DEATH, TURN THE IGNITION ON, THEN RECONNECT THE BATTERY.

Measure the voltage of the (R106) Passenger Airbag MUX Switch Sense circuit.

Measure the voltage of the (R104) Passenger Airbag MUX Switch Return circuit.

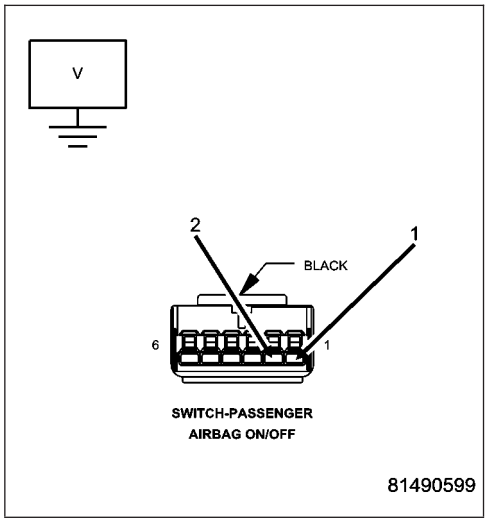

Is there any voltage on either circuit?

Yes >> Repair all circuits with voltage present for a short to battery.
Perform ORC VERIFICATION TEST - VER 1.

No >> Go To 6

PASSENGER AIRBAG ON-OFF SWITCH SHORT TO BATTERY (CONTINUED)

6. ORC, PAB ON - OFF SWITCH CIRCUIT SHORTED TO BATTERY

WARNING: TO AVOID PERSONAL INJURY OR DEATH, TURN THE IGNITION OFF, DISCONNECT THE BATTERY AND WAIT TWO MINUTES BEFORE PROCEEDING.

WARNING: IF THE OCCUPANT RESTRAINT CONTROLLER IS DROPPED AT ANY TIME, IT MUST BE REPLACED. FAILURE TO TAKE THE PROPER PRECAUTIONS COULD RESULT IN ACCIDENTAL AIRBAG DEPLOYMENT AND PERSONAL INJURY OR DEATH.

If there are no possible causes remaining, view repair.

Repair:

Replace the Occupant Restraint Controller (ORC) in accordance with the Service Information.
Perform ORC VERIFICATION TEST - VER 1.

---

7. CHECKING STORED OR INTERMITTENT CODES

With the Scan Tool, record and erase all DTC's from all Airbag modules.

If equipped with Passenger Airbag On - Off switch, read the DTC's in all switch positions.

If any ACTIVE codes are present they must be resolved before diagnosing any stored codes.

WARNING: TO AVOID PERSONAL INJURY OR DEATH, TURN THE IGNITION OFF, DISCONNECT THE BATTERY AND WAIT TWO MINUTES BEFORE PROCEEDING.

Using the wiring diagram/schematic as a guide, inspect the wiring and connectors.

Look for chaffed, pierced, pinched, or partially broken wires and broken, bent, pushed out, spread, corroded, or contaminated terminals.

The following additional checks may assist you in identifying a possible intermittent problem.

Reconnect any disconnected components and harness connector.

WARNING: TO AVOID PERSONAL INJURY OR DEATH, TURN THE IGNITION ON, THEN RECONNECT THE BATTERY.

With the Scan Tool, monitor active codes as you work through the following steps.

WARNING: TO AVOID PERSONAL INJURY OR DEATH, MAINTAIN A SAFE DISTANCE FROM ALL AIRBAGS WHILE PERFORMING THE FOLLOWING STEPS.

Wiggle the wiring harness and connectors of the related airbag circuit or component.

If codes are related to the Driver Airbag circuits, rotate the steering wheel from stop to stop.

If only stored codes return continue the test until the problem area has been isolated.

In the previous steps you have attempted to recreate the conditions responsible for setting active DTC in question.

Are any ACTIVE DTCs present?

Yes >> Select the appropriate diagnostic procedure from the Table of Contents in this section.

No >> No problem found at this time. Erase all codes before returning vehicle to customer.

PASSENGER AIRBAG ON-OFF SWITCH SHORT TO GROUND

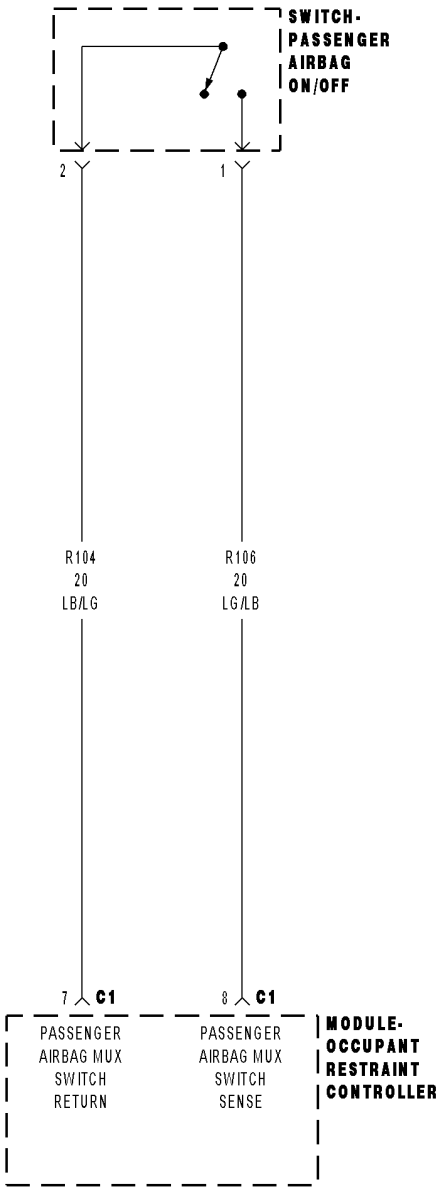

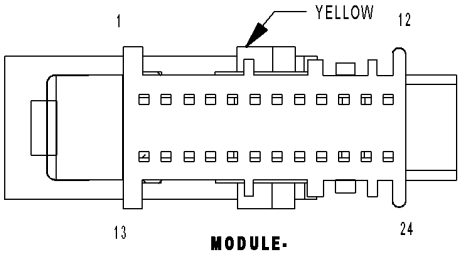

MODULE-
OCCUPANT
RESTRAINT
CONTROLLER C1

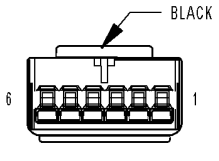

SWITCH-PASSENGER
AIRBAG ON/OFF

81490591

PASSENGER AIRBAG ON-OFF SWITCH SHORT TO GROUND (CONTINUED)

For the Air Bag System circuit diagram (Refer to 8 - ELECTRICAL/RESTRAINTS - SCHEMATICS AND DIAGRAMS).

For a complete wiring diagram **Refer to Section 8W**.

- **When Monitored:**
  When the ignition is on, the (R106) Passenger Airbag MUX Switch Sense circuit supplies a 3 to 10 ms pulse every 100 ms across the On or Off switch resistor to the (R104) Passenger Airbag MUX switch return circuit.
- **Set Condition:**
  The code will set if the Occupant Restraint Controller (ORC) senses low resistance on the (R106) Passenger Airbag MUX Switch Sense circuit.

Possible Causes
ORC IMPROPERLY CONFIGURED FOR PAB ON - OFF SWITCH
(R106) PAB MUX SWITCH SENSE CIRCUIT SHORTED TO GROUND
PAB ON - OFF SWITCH SHORTED
ORC, PAB ON - OFF SWITCH CIRCUIT SHORTED TO GROUND

Diagnostic Test

1. DETERMINE ACTIVE OR STORED DTC

Turn the ignition on.

NOTE: Ensure that the battery is fully charged.

NOTE: For the purpose of this test, the AECM and ACM modules will be referred to as an ORC.

NOTE: When reconnecting Airbag system components, the ignition must be turned off and the battery must be disconnected.

SELECT ACTIVE or STORED DTC:

ORC - ACTIVE DTC
Go To 2

ORC - STORED DTC
Go To 7

---

2. CHECKING EQUIPMENT

Is this vehicle equipped with a Passenger Airbag On - Off Switch?

Yes >> Go To 3

No >> With the Scan Tool in MISCELLANEOUS re-configure the ORC for NO AIRBAG ON/OFF SWITCH. Perform ORC VERIFICATION TEST - VER 1.

PASSENGER AIRBAG ON-OFF SWITCH SHORT TO GROUND (CONTINUED)

3. PAB ON - OFF SWITCH SHORTED

WARNING: TO AVOID PERSONAL INJURY OR DEATH, TURN THE IGNITION OFF, DISCONNECT THE BATTERY AND WAIT TWO MINUTES BEFORE PROCEEDING.

Disconnect the Passenger Airbag On - Off Switch.

NOTE: Check connectors - Clean and repair as necessary.

Measure the PAB On - Off Switch resistance between terminals 1 and 3.

Measure the PAB On - Off Switch resistance between terminals 2 and 3.

Is the resistance below 10K ohms on either test?

Yes >> Replace the Passenger Airbag ON - OFF Switch in accordance with the service information. Perform ORC VERIFICATION TEST - VER 1.

No >> Go To 4

---

4. PAB ON - OFF SWITCH SHORTED

Measure the PAB On - Off Switch resistance between terminals 1 and 2 in both switch positions.

The switch resistance specifications are: ON position = 175.0 to 190.0 ohms and OFF position = 820.0 870.0 ohms.

Is the resistance within the range specified for both switch positions?

Yes >> Go To 5

No >> Replace the Passenger Airbag ON - OFF Switch in accordance with the service information. Perform ORC VERIFICATION TEST - VER 1.

---

5. (R106) PAB MUX SWITCH SENSE CIRCUIT SHORTED TO GROUND

Disconnect the Occupant Restraint Controller C1 connector.

NOTE: Check connectors - Clean and repair as necessary.

WARNING: IF THE OCCUPANT RESTRAINT CONTROLLER IS DROPPED AT ANY TIME, IT MUST BE REPLACED. FAILURE TO TAKE THE PROPER PRECAUTIONS COULD RESULT IN ACCIDENTAL AIRBAG DEPLOYMENT AND PERSONAL INJURY OR DEATH.

Connect the appropriate Load Tool Adaptor to the Occupant Restraint Controller connector.

Measure the resistance of the (R106) Passenger Airbag MUX Switch Sense circuit between ground and the ORC Adaptor.

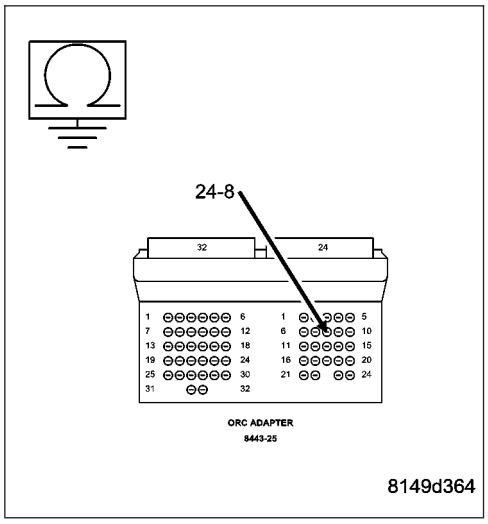

Is the resistance below 10K ohms?

Yes >> Repair the (R106) Passenger Airbag MUX Switch Sense circuit for a short to ground.
Perform ORC VERIFICATION TEST - VER 1.

No >> Go To 6

PASSENGER AIRBAG ON-OFF SWITCH SHORT TO GROUND (CONTINUED)

6. ORC, PAB ON - OFF SWITCH CIRCUIT SHORTED TO GROUND

WARNING: IF THE OCCUPANT RESTRAINT CONTROLLER IS DROPPED AT ANY TIME, IT MUST BE REPLACED. FAILURE TO TAKE THE PROPER PRECAUTIONS COULD RESULT IN ACCIDENTAL AIRBAG DEPLOYMENT AND PERSONAL INJURY OR DEATH.

If there are no possible causes remaining, view repair.

Repair:

Replace the Occupant Restraint Controller (ORC) in accordance with the Service Information.
Perform ORC VERIFICATION TEST - VER 1.

---

7. CHECKING STORED OR INTERMITTENT CODES

With the Scan Tool, record and erase all DTC's from all Airbag modules.

If equipped with Passenger Airbag On - Off switch, read the DTC's in all switch positions.

If any ACTIVE codes are present they must be resolved before diagnosing any stored codes.

WARNING: TO AVOID PERSONAL INJURY OR DEATH, TURN THE IGNITION OFF, DISCONNECT THE BATTERY AND WAIT TWO MINUTES BEFORE PROCEEDING.

Using the wiring diagram/schematic as a guide, inspect the wiring and connectors.

Look for chaffed, pierced, pinched, or partially broken wires and broken, bent, pushed out, spread, corroded, or contaminated terminals.

The following additional checks may assist you in identifying a possible intermittent problem.

Reconnect any disconnected components and harness connector.

WARNING: TO AVOID PERSONAL INJURY OR DEATH, TURN THE IGNITION ON, THEN RECONNECT THE BATTERY.

With the Scan Tool, monitor active codes as you work through the following steps.

WARNING: TO AVOID PERSONAL INJURY OR DEATH, MAINTAIN A SAFE DISTANCE FROM ALL AIRBAGS WHILE PERFORMING THE FOLLOWING STEPS.

Wiggle the wiring harness and connectors of the related airbag circuit or component.

If codes are related to the Driver Airbag circuits, rotate the steering wheel from stop to stop.

If only stored codes return continue the test until the problem area has been isolated.

In the previous steps you have attempted to recreate the conditions responsible for setting active DTC in question.

Are any ACTIVE DTCs present?

Yes >> Select the appropriate diagnostic procedure from the Table of Contents in this section.

No >> No problem found at this time. Erase all codes before returning vehicle to customer.

PASSENGER SEAT BELT TENSIONER CIRCUIT OPEN

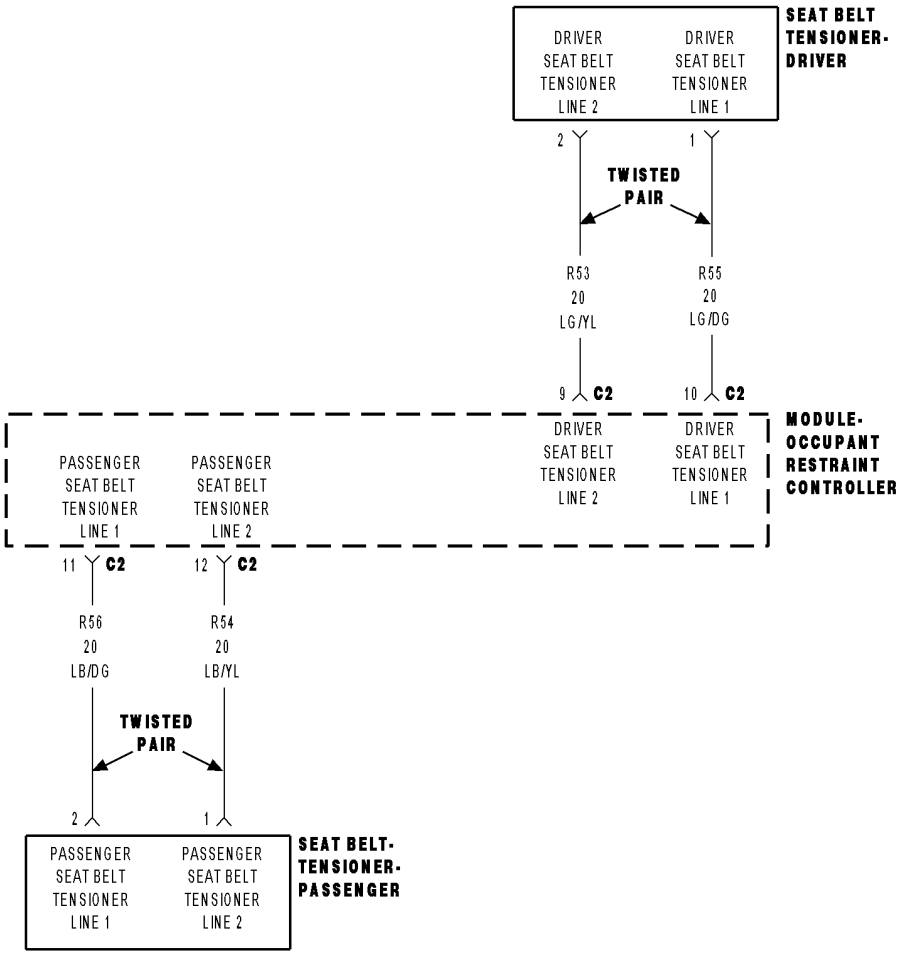

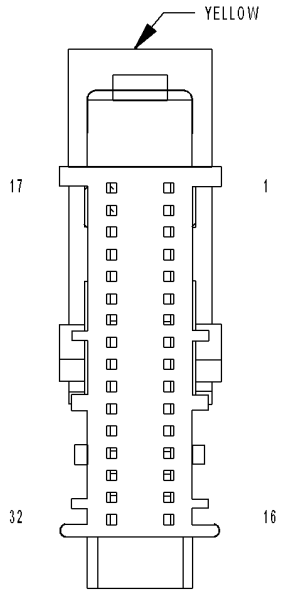

MODULE- OCCUPANT RESTRAINT CONTROLLER C2

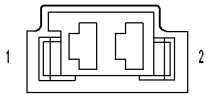

SEAT BELT- TENSIONER- PASSENGER

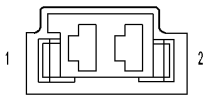

SEAT BELT- TENSIONER- DRIVER

814f09c3

PASSENGER SEAT BELT TENSIONER CIRCUIT OPEN (CONTINUED)

For the Air Bag System circuit diagram (Refer to 8 - ELECTRICAL/RESTRAINTS - SCHEMATICS AND DIAGRAMS).

For a complete wiring diagram **Refer to Section 8W**.

- **When Monitored:**
  With the ignition on, the Occupant Restraint Controller (ORC) monitors the resistance of the Passenger Seat Belt Tensioner circuits.
- **Set Condition:**
  The ORC has detected an open or high resistance on the Passenger Seat Belt Tensioner circuits.

Possible Causes
(R56) PASSENGER SEAT BELT TENSIONER LINE 1 CIRCUIT OR (R54) PASSENGER SEAT BELT TENSIONER LINE 2 CIRCUIT OPEN
PASSENGER SEAT BELT PRETENSIONER
ORC

Diagnostic Test

1. DETERMINE ACTIVE OR STORED DTC

NOTE: Ensure the battery is fully charged.

NOTE: The scan tool, SRS Airbag Load Tool MRL 8443, and DVOM are required to perform the following test.

NOTE: When reconnecting airbag system components the Ignition must be turned off and the Battery must be disconnected.

Select Active or Stored DTC.

Is the DTC active or stored?

ORC - ACTIVE DTC
Go To 2

ORC - STORED DTC
Go To 6

PASSENGER SEAT BELT TENSIONER CIRCUIT OPEN (CONTINUED)

2. CHECK FOR OPEN PASSENGER SEAT BELT PRETENSIONER

WARNING: To avoid personal injury or death, turn the ignition off, disconnect the battery and wait two minutes before proceeding.
Disconnect the Passenger Seat Belt Pretensioner connector.

NOTE: Check connectors - Clean and repair as necessary.
Connect the 8443 Load Tool and appropriate Jumper to the Passenger Seat Belt Pretensioner connector.

WARNING: To avoid personal injury or death, turn the ignition on, then reconnect the battery.
With the scan tool, read the active ORC DTC's.

Does the scan tool display: PASSENGER SEAT BELT TENSIONER CIRCUIT OPEN?

Yes >> Go To 3

No >> Replace the Passenger Seat Belt Pretensioner in accordance with the Service Information.
Perform ORC VERIFICATION TEST - VER 1

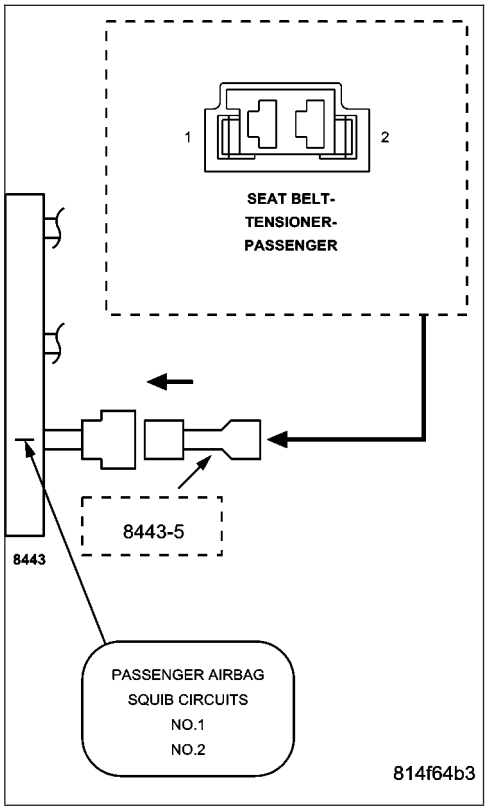

3. CHECK (R56) PASSENGER SEAT BELT TENSIONER LINE 1 CIRCUIT FOR AN OPEN

WARNING: To avoid personal injury or death, turn the ignition off, disconnect the battery and wait two minutes before proceeding.
Disconnect the 8443 Load Tool and Jumper from the Passenger Seat Belt Pretensioner connector.
Disconnect the ORC connectors.

NOTE: Check connectors - Clean and repair as necessary.
Connect the 8443 Load Tool ORC Adaptor to the ORC C1 connector.
Measure the resistance of the (R56) Passenger Seat Belt Tensioner Line 1 circuit between the Passenger Seat Belt Pretensioner connector and the 8443 ORC Adaptor.

Is the resistance below 1.0 ohm?

Yes >> Go To 4

No >> Repair the (R56) Passenger Seat Belt Tensioner Line 1 circuit for an open. Then Go To 4

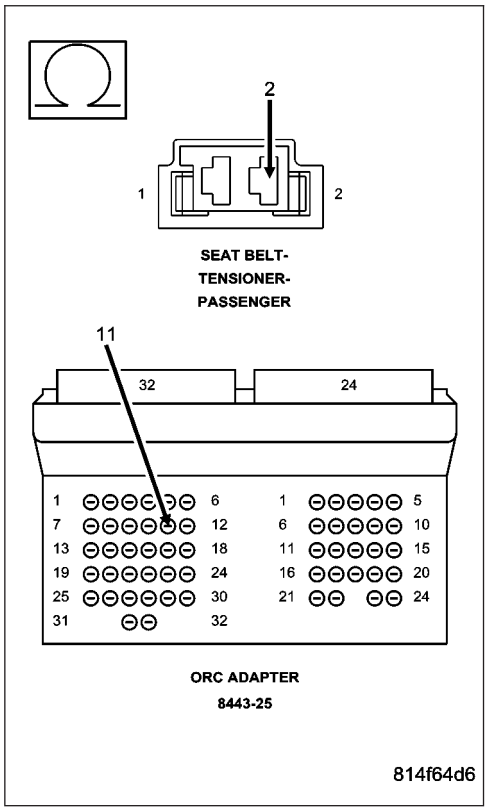

PASSENGER SEAT BELT TENSIONER CIRCUIT OPEN (CONTINUED)

4. CHECK (R54) PASSENGER SEAT BELT TENSIONER LINE 2 CIRCUIT FOR AN OPEN

Measure the resistance of the (R54) Passenger Seat Belt Tensioner Line 2 circuit between the Passenger Seat Belt Pretensioner connector and the 8443 ORC Adaptor.

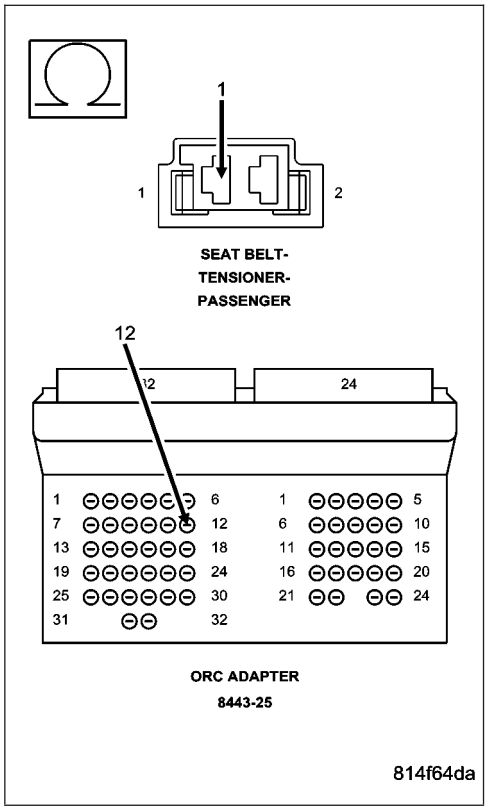

Is the resistance below 1.0 ohm?

Yes >> Go to 5

No >> Repair the (R54) Passenger Seat Belt Tensioner Line 2 circuit for an open.
Perform ORC VERIFICATION TEST - VER 1

5. REPLACE THE ORC

WARNING: If the Occupant Restraint Controller (ORC) is dropped at any time, it must be replaced. Failure to take the proper precautions can result in accidental airbag deployment and personal injury or death.

NOTE: When reconnecting airbag system components the Ignition must be turned off and the Battery must be disconnected.

Repair

Replace the ORC in accordance with Service Information.
Perform ORC VERIFICATION TEST - VER 1

PASSENGER SEAT BELT TENSIONER CIRCUIT OPEN (CONTINUED)

6. STORED ORC DTC

With the scan tool, record and erase all DTC's from all Airbag System Modules.

If any ACTIVE codes are present they must be resolved before diagnosing any stored codes.

WARNING: To avoid personal injury or death, turn the ignition off, disconnect the battery and wait two minutes before proceeding.

Using the wiring diagram/schematic as a guide, inspect the wiring and connectors.

Look for chaffed, pierced, pinched, or partially broken wires and broken, bent, pushed out, spread, corroded, or contaminated terminals.

The following additional checks may assist you in identifying a possible intermittent problem.

Reconnect any disconnected components and harness connector.

WARNING: To avoid personal injury or death, turn the ignition on, then reconnect the battery.

With the scan tool monitor active codes as you work through the following steps.

Wiggle the wiring harness and connectors of the related airbag circuit or component.

If codes are related to the Driver Airbag circuits, rotate the steering wheel from stop to stop.

If only stored codes return continue the test until the problem area has been isolated.

In the previous steps you have attempted to recreate the conditions responsible for setting active DTC in question.

Are any ACTIVE DTCs present?

Yes >> Select the appropriate diagnostic procedure from the Table of Contents in this section.

No >> No problem found at this time. Erase all codes before returning vehicle to customer.

PASSENGER SEAT BELT TENSIONER CIRCUIT SHORT

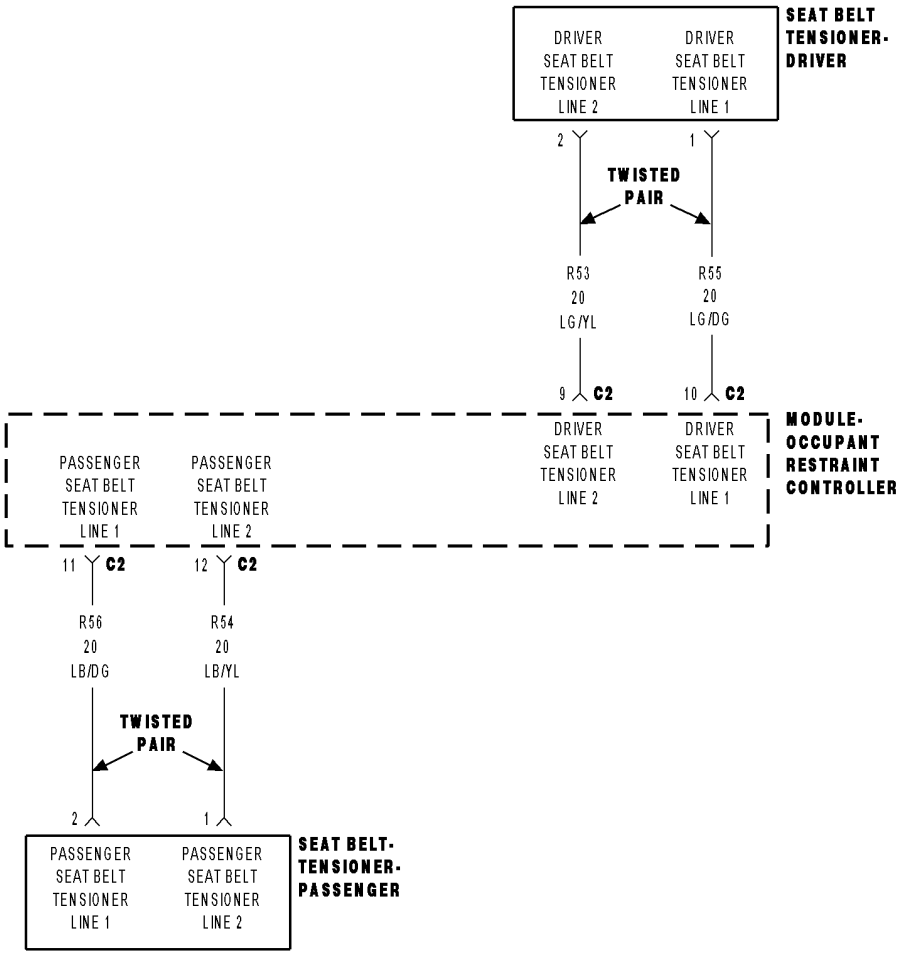

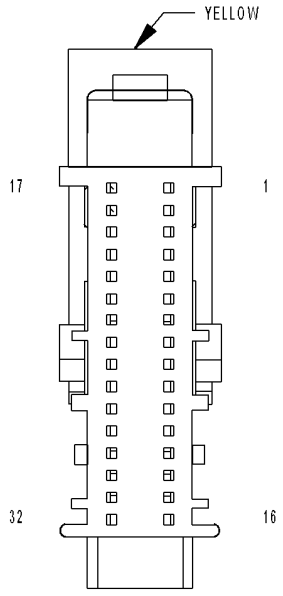

MODULE- OCCUPANT RESTRAINT CONTROLLER C2

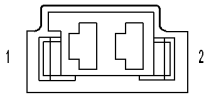

SEAT BELT- TENSIONER- PASSENGER

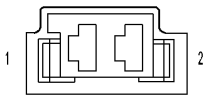

SEAT BELT- TENSIONER- DRIVER

814f09c3

PASSENGER SEAT BELT TENSIONER CIRCUIT SHORT (CONTINUED)

For the Air Bag System circuit diagram (Refer to 8 - ELECTRICAL/RESTRAINTS - SCHEMATICS AND DIAGRAMS).

For a complete wiring diagram **Refer to Section 8W**.

- **When Monitored:**
  With the ignition on, the Occupant Restraint Controller (ORC) monitors the resistance of the Passenger Seat Belt Tensioner circuits.
- **Set Condition:**
  The ORC has detected low resistance between the Passenger Seat Belt Tensioner circuits.

Possible Causes
(R56) PASSENGER SEAT BELT TENSIONER LINE 1 CIRCUIT SHORTED TO (R54) PASSENGER SEAT BELT TENSIONER LINE 2 CIRCUIT
PASSENGER SEAT BELT PRETENSIONER
ORC

Diagnostic Test

1. DETERMINE ACTIVE OR STORED DTC

NOTE: Ensure the battery is fully charged.

NOTE: The scan tool, SRS Airbag Load Tool MRL 8443, and DVOM are required to perform the following test.

NOTE: When reconnecting airbag system components the Ignition must be turned off and the Battery must be disconnected.

Select Active or Stored DTC.

Is the DTC active or stored?

ORC - ACTIVE DTC
Go To 2

ORC - STORED DTC
Go To 5

PASSENGER SEAT BELT TENSIONER CIRCUIT SHORT (CONTINUED)

2. CHECK FOR SHORTED PASSENGER SEAT BELT PRETENSIONER

WARNING: To avoid personal injury or death, turn the ignition off, disconnect the battery and wait two minutes before proceeding.
Disconnect the Passenger Seat Belt Pretensioner connector.

NOTE: Check connectors - Clean and repair as necessary.
Connect the 8443 Load Tool and appropriate Jumper to the Passenger Seat Belt Pretensioner connector.

WARNING: To avoid personal injury or death, turn the ignition on then reconnect the battery.
With the scan tool, read the active ORC DTC's.

Does the scan tool display: PASSENGER SEAT BELT TENSIONER CIRCUIT SHORT?

Yes >> Go To 3

No >> Replace the Passenger Seat Belt Pretensioner in accordance with the Service Information.
Perform ORC VERIFICATION TEST - VER 1

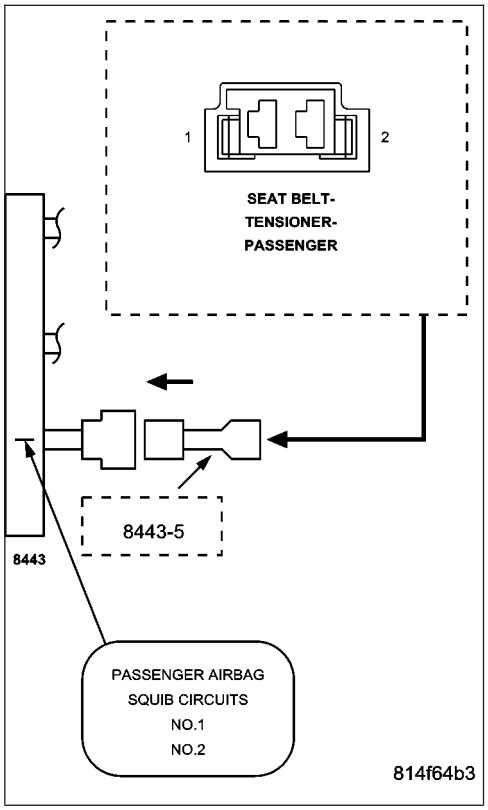

3. CHECK (R56) PASSENGER SEAT BELT TENSIONER LINE 1 CIRCUIT FOR A SHORT TO THE (R54) PASSENGER SEAT BELT TENSIONER LINE 2 CIRCUIT

WARNING: To avoid personal injury or death, turn the ignition off, disconnect the battery and wait two minutes before proceeding.
Disconnect the 8443 Load Tool and Jumper from the Passenger Seat Belt Pretensioner connector.

Disconnect the ORC connectors.

NOTE: Check connectors - Clean and repair as necessary.
Connect the 8443 Load Tool ORC Adaptor to the ORC connector.

Measure the resistance between the (R56) Passenger Seat Belt Tensioner Line 1 circuit and the (R54) Passenger Seat Belt Tensioner Line 2 circuit at the Passenger Seat Belt Pretensioner connector.

Is the resistance below 10K ohms?

Yes >> Repair the (R56) Passenger Seat Belt Tensioner Line 1 circuit for a short to the (R54) Passenger Seat Belt Tensioner Line 2 circuit.
Perform ORC VERIFICATION TEST - VER 1

No >> Go to 4

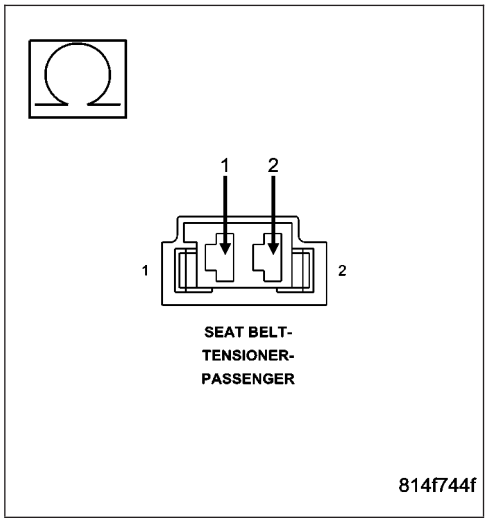

PASSENGER SEAT BELT TENSIONER CIRCUIT SHORT (CONTINUED)

4. REPLACE THE ORC

WARNING: If the Occupant Restraint Controller (ORC) is dropped at any time, it must be replaced. Failure to take the proper precautions can result in accidental airbag deployment and personal injury or death.

NOTE: When reconnecting airbag system components the Ignition must be turned off and the Battery must be disconnected.

Repair

Replace the ORC in accordance with the Service Information.
Perform ORC VERIFICATION TEST - VER 1

---

5. STORED ORC DTC

With the scan tool, record and erase all DTC's from all Airbag System Modules.

If any ACTIVE codes are present they must be resolved before diagnosing any stored codes.

WARNING: To avoid personal injury or death, turn the ignition off, disconnect the battery and wait two minutes before proceeding.

Using the wiring diagram/schematic as a guide, inspect the wiring and connectors.

Look for chaffed, pierced, pinched, or partially broken wires and broken, bent, pushed out, spread, corroded, or contaminated terminals.

The following additional checks may assist you in identifying a possible intermittent problem.

Reconnect any disconnected components and harness connector.

WARNING: To avoid personal injury or death, turn the ignition on, then reconnect the battery.

With the scan tool monitor active codes as you work through the following steps.

Wiggle the wiring harness and connectors of the related airbag circuit or component.

If codes are related to the Driver Airbag circuits, rotate the steering wheel from stop to stop.

If only stored codes return continue the test until the problem area has been isolated.

In the previous steps you have attempted to recreate the conditions responsible for setting active DTC in question.

Are any ACTIVE DTC's present?

Yes >> Select the appropriate diagnostic procedure from the Table of Contents in this section.

No >> No problem found at this time. Erase all codes before returning vehicle to customer.

PASSENGER SEAT BELT TENSIONER SHORT TO BATTERY

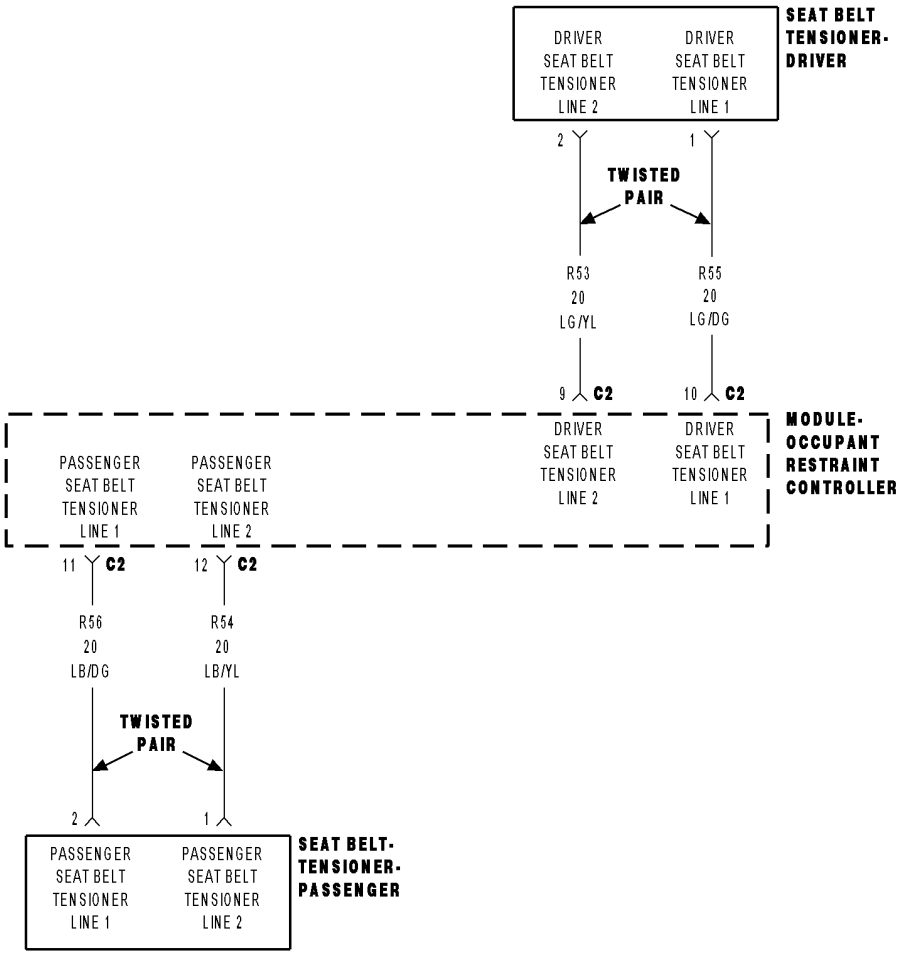

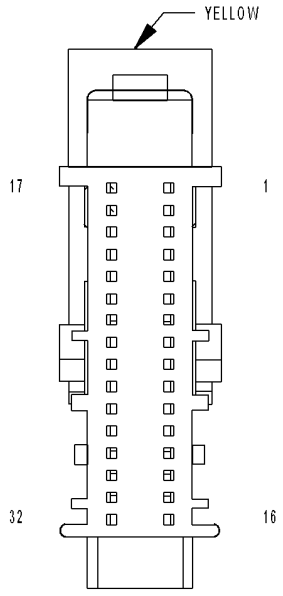

MODULE- OCCUPANT RESTRAINT CONTROLLER C2

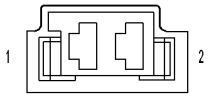

SEAT BELT- TENSIONER- PASSENGER

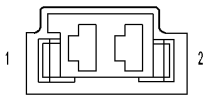

SEAT BELT- TENSIONER- DRIVER

814f09c3

PASSENGER SEAT BELT TENSIONER SHORT TO BATTERY (CONTINUED)

For the Air Bag System circuit diagram (Refer to 8 - ELECTRICAL/RESTRAINTS - SCHEMATICS AND DIAGRAMS).

For a complete wiring diagram **Refer to Section 8W**.

- **When Monitored:**
  With the ignition on, the Occupant Restraint Controller (ORC) monitors the voltage on the Passenger Seat Belt Tensioner circuits.
- **Set Condition:**
  The ORC detects voltage on the Passenger Seat Belt Tensioner circuits.

Possible Causes
(R56) PASSENGER SEAT BELT TENSIONER LINE 1 CIRCUIT OR (R54) PASSENGER SEAT BELT TENSIONER LINE 2 CIRCUIT SHORTED TO BATTERY
PASSENGER SEAT BELT PRETENSIONER
ORC

Diagnostic Test

1. DETERMINE ACTIVE OR STORED DTC

NOTE: Ensure the battery is fully charged.

NOTE: The scan tool, SRS Airbag Load Tool MRL 8443, and DVOM are required to perform the following test.

NOTE: When reconnecting airbag system components the Ignition must be turned off and the Battery must be disconnected.

Select Active or Stored DTC.

Is the DTC active or stored?

ORC - ACTIVE DTC
Go To 2

ORC - STORED DTC
Go To 5

PASSENGER SEAT BELT TENSIONER SHORT TO BATTERY (CONTINUED)

2. CHECK FOR SHORTED PASSENGER SEAT BELT PRETENSIONER

WARNING: To avoid personal injury or death, turn the ignition off, disconnect the battery and wait two minutes before proceeding.
Disconnect the Passenger Seat Belt Pretensioner connector.

NOTE: Check connectors - Clean and repair as necessary.
Connect the 8443 Load Tool and appropriate Jumper to the Passenger Seat Belt Pretensioner connector.

WARNING: To avoid personal injury or death, turn the ignition on, then reconnect the battery.
With the scan tool, read the active ORC DTC's.

Does the scan tool display: PASSENGER SEAT BELT TENSIONER SHORT TO BATTERY?

Yes >> Go To 3

No >> Replace the Passenger Seat Belt Pretensioner in accordance with the Service Information.
Perform ORC VERIFICATION TEST - VER 1

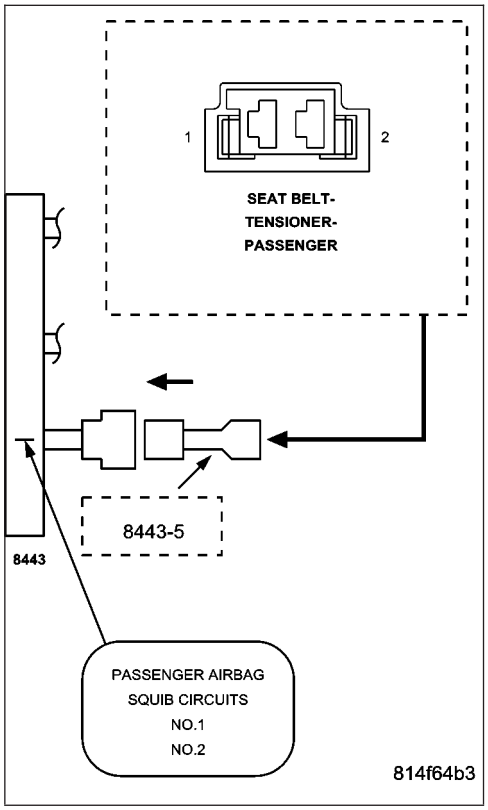

3. CHECK (R56) PASSENGER SEAT BELT TENSIONER LINE 1 CIRCUIT AND (R54) PASSENGER SEAT BELT TENSIONER LINE 2 CIRCUIT FOR A SHORT TO BATTERY

WARNING: To avoid personal injury or death, turn the ignition off, disconnect the battery and wait two minutes before proceeding.
Disconnect the 8443 Load Tool and Jumper from the Passenger Seat Belt Pretensioner connector.

Disconnect the ORC connectors.

NOTE: Check connectors - Clean and repair as necessary.
Connect the 8443 Load Tool ORC Adaptor to the ORC connector.

WARNING: To avoid personal injury or death, turn the ignition on, then reconnect the battery.
Measure the voltage of the (R56) Passenger Seat Belt Tensioner Line 1 circuit between the Passenger Seat Belt Pretensioner connector and ground.

Measure the voltage of the (R54) Passenger Seat Belt Tensioner Line 2 circuit between the Passenger Seat Belt Pretensioner connector and ground.

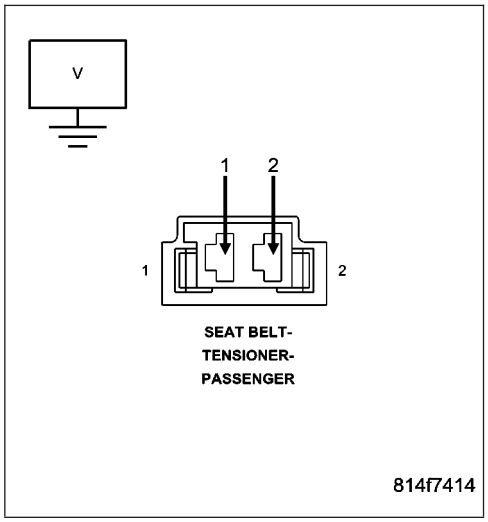

Is there any voltage present on either circuit?

Yes >> Repair the Passenger Seat Belt Tensioner circuits with voltage present for a short to battery.
Perform ORC VERIFICATION TEST - VER 1

No >> Go To 4

PASSENGER SEAT BELT TENSIONER SHORT TO BATTERY (CONTINUED)

4. OCCUPANT RESTRAINT CONTROLLER

WARNING: To avoid personal injury or death, turn the ignition off, disconnect the battery and wait two minutes before proceeding.

WARNING: If the Occupant Restraint Controller (ORC) is dropped at any time, it must be replaced. Failure to take the proper precautions can result in accidental airbag deployment and personal injury or death.

NOTE: When reconnecting airbag system components the Ignition must be turned off and the Battery must be disconnected.

Repair

Replace the ORC in accordance with the Service Information.
Perform ORC VERIFICATION TEST - VER 1

---

5. STORED ORC DTC

With the scan tool, record and erase all DTC's from all Airbag System Modules.

If any ACTIVE codes are present they must be resolved before diagnosing any stored codes.

WARNING: To avoid personal injury or death, turn the ignition off, disconnect the battery and wait two minutes before proceeding.

Using the wiring diagram/schematic as a guide, inspect the wiring and connectors.

Look for chaffed, pierced, pinched, or partially broken wires and broken, bent, pushed out, spread, corroded, or contaminated terminals.

The following additional checks may assist you in identifying a possible intermittent problem.

Reconnect any disconnected components and harness connector.

WARNING: To avoid personal injury or death, turn the ignition on, then reconnect the battery.

With the scan tool monitor active codes as you work through the following steps.

Wiggle the wiring harness and connectors of the related airbag circuit or component.

If codes are related to the Driver Airbag circuits, rotate the steering wheel from stop to stop.

If only stored codes return continue the test until the problem area has been isolated.

In the previous steps you have attempted to recreate the conditions responsible for setting active DTC in question.

Are any ACTIVE DTCs present?

Yes >> Select the appropriate diagnostic procedure from the Table of Contents in this section.

No >> No problem found at this time. Erase all codes before returning vehicle to customer

---

PASSENGER SEAT BELT TENSIONER SHORT TO GROUND

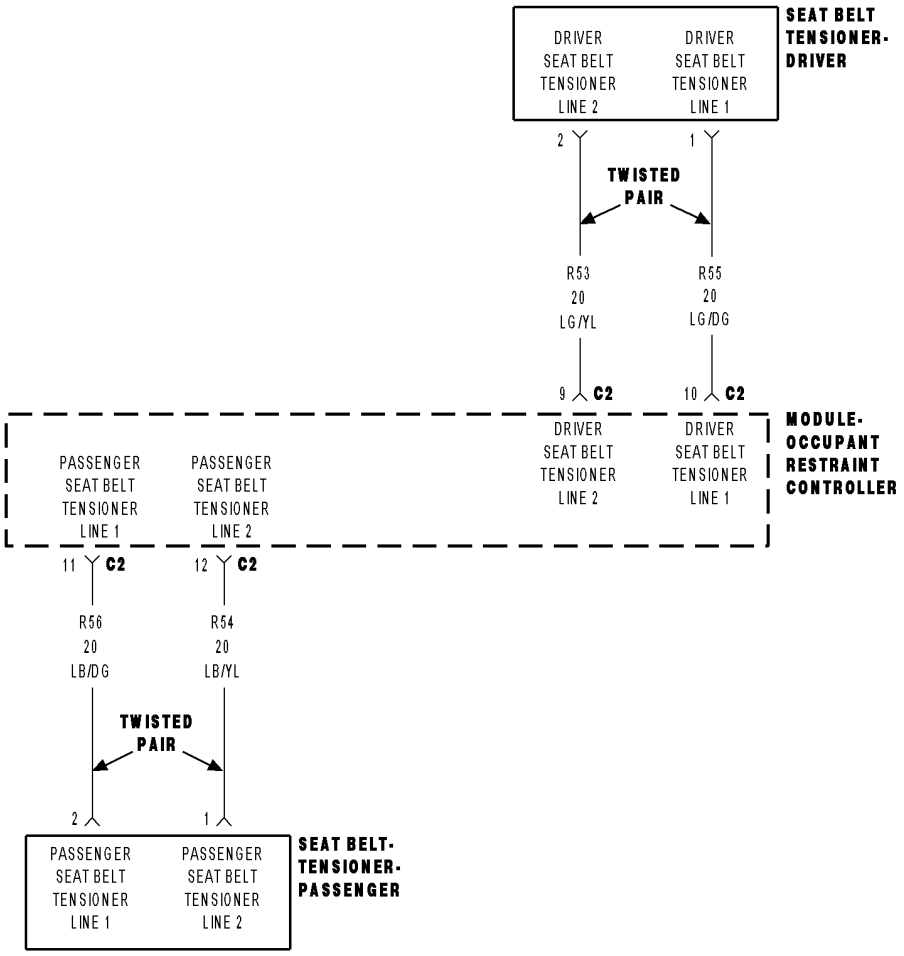

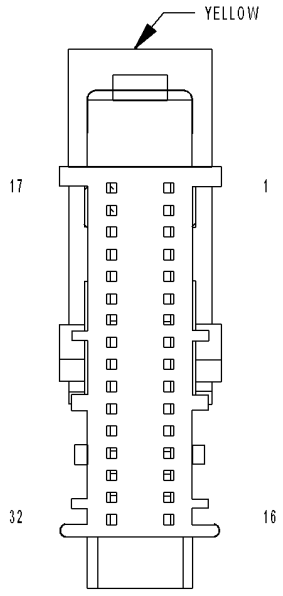

MODULE- OCCUPANT RESTRAINT CONTROLLER C2

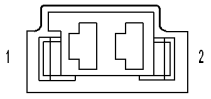

SEAT BELT- TENSIONER- PASSENGER

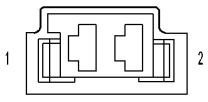

SEAT BELT- TENSIONER- DRIVER

814f09c3

PASSENGER SEAT BELT TENSIONER SHORT TO GROUND (CONTINUED)

For the Air Bag System circuit diagram (Refer to 8 - ELECTRICAL/RESTRAINTS - SCHEMATICS AND DIAGRAMS).

For a complete wiring diagram **Refer to Section 8W**.

- **When Monitored:**
  With the ignition on, the Occupant Restraint Controller (ORC) monitors the resistance of the Passenger Seat Belt Tensioner circuits.
- **Set Condition:**
  The ORC has detected low resistance on the Passenger Seat Belt Tensioner circuits.

Possible Causes
(R56) PASSENGER SEAT BELT TENSIONER LINE 1 CIRCUIT OR (R54) PASSENGER SEAT BELT TENSIONER LINE 2 CIRCUIT SHORTED TO GROUND
PASSENGER SEAT BELT PRETENSIONER
ORC

Diagnostic Test

1. DETERMINE ACTIVE OR STORED DTC

NOTE: Ensure the battery is fully charged.

NOTE: The scan tool, SRS Airbag Load Tool MRL 8443, and DVOM are required to perform the following test.

NOTE: When reconnecting airbag system components the Ignition must be turned off and the Battery must be disconnected.

Select Active or Stored DTC.

Is the DTC active or stored?

ORC - ACTIVE DTC
Go To 2

ORC - STORED DTC
Go To 5

PASSENGER SEAT BELT TENSIONER SHORT TO GROUND (CONTINUED)

2. CHECK FOR SHORTED PASSENGER SEAT BELT PRETENSIONER

WARNING: To avoid personal injury or death, turn the ignition off, disconnect the battery and wait two minutes before proceeding.
Disconnect the Passenger Seat Belt Pretensioner connector.

NOTE: Check connectors - Clean and repair as necessary.
Connect the 8443 Load Tool and appropriate Jumper to the Passenger Seat Belt Pretensioner connector.

WARNING: To avoid personal injury or death, turn the ignition on, then reconnect the battery.
With the scan tool, read the active ORC DTC's.

Does the scan tool display: PASSENGER SEAT BELT TENSIONER SHORT TO GROUND?

Yes >> Go To 3

No >> Replace the Passenger Seat Belt Pretensioner in accordance with the Service Information.
Perform ORC VERIFICATION TEST - VER 1

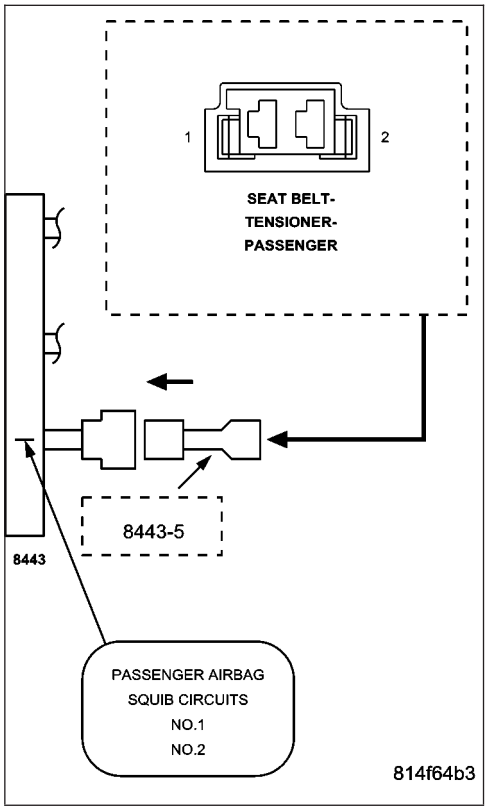

3. CHECK (R56) PASSENGER SEAT BELT TENSIONER LINE 1 CIRCUIT AND (R54) PASSENGER SEAT BELT TENSIONER LINE 2 CIRCUIT FOR A SHORT TO GROUND

WARNING: To avoid personal injury or death, turn the ignition off, disconnect the battery and wait two minutes before proceeding.
Disconnect the 8443 Load Tool and Jumper from the Passenger Seat Belt Pretensioner connector.

Disconnect the ORC connectors.

NOTE: Check connectors - Clean and repair as necessary.
Connect the 8443 Load Tool ORC Adaptor to the ORC connector.

Measure the resistance of the (R56) Passenger Seat Belt Tensioner Line 1 circuit between ground and the Passenger Seat Belt Pretensioner connector.

Measure the resistance of the (R54) Passenger Seat Belt Tensioner Line 2 circuit between ground and the Passenger Seat Belt Pretensioner connector.

Is the resistance below 10K ohms on either circuit?

Yes >> Repair the Passenger Seat Belt Tensioner circuits with a resistance below 10k ohms for a short to ground.
Perform ORC VERIFICATION TEST - VER 1

No >> Go To 4

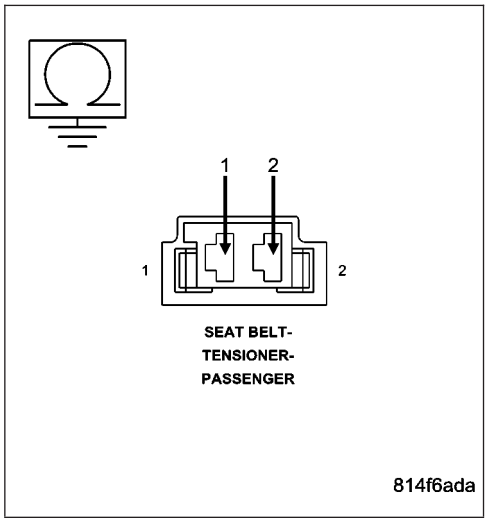

PASSENGER SEAT BELT TENSIONER SHORT TO GROUND (CONTINUED)

4. REPLACE THE ORC

WARNING: If the Occupant Restraint Controller (ORC) is dropped at any time, it must be replaced. Failure to take the proper precautions can result in accidental airbag deployment and personal injury or death.

NOTE: When reconnecting airbag system components the Ignition must be turned off and the Battery must be disconnected.

Repair

Replace the ORC in accordance with the Service Information.
Perform ORC VERIFICATION TEST - VER 1

---

5. STORED ORC DTC

With the scan tool, record and erase all DTC's from all Airbag System Modules.

If any ACTIVE codes are present they must be resolved before diagnosing any stored codes.

WARNING: To avoid personal injury or death, turn the ignition off, disconnect the battery and wait two minutes before proceeding.

Using the wiring diagram/schematic as a guide, inspect the wiring and connectors.

Look for chaffed, pierced, pinched, or partially broken wires and broken, bent, pushed out, spread, corroded, or contaminated terminals.

The following additional checks may assist you in identifying a possible intermittent problem.

Reconnect any disconnected components and harness connector.

WARNING: To avoid personal injury or death, turn the ignition on, then reconnect the battery.

With the scan tool monitor active codes as you work through the following steps.

Wiggle the wiring harness and connectors of the related airbag circuit or component.

If codes are related to the Driver Airbag circuits, rotate the steering wheel from stop to stop.

If only stored codes return continue the test until the problem area has been isolated.

In the previous steps you have attempted to recreate the conditions responsible for setting active DTC in question.

Are any ACTIVE DTC's present?

Yes >> Select the appropriate diagnostic procedure from the Table of Contents in this section.

No >> No problem found at this time. Erase all codes before returning vehicle to customer.

PASSENGER SQUIB 1 CIRCUIT OPEN

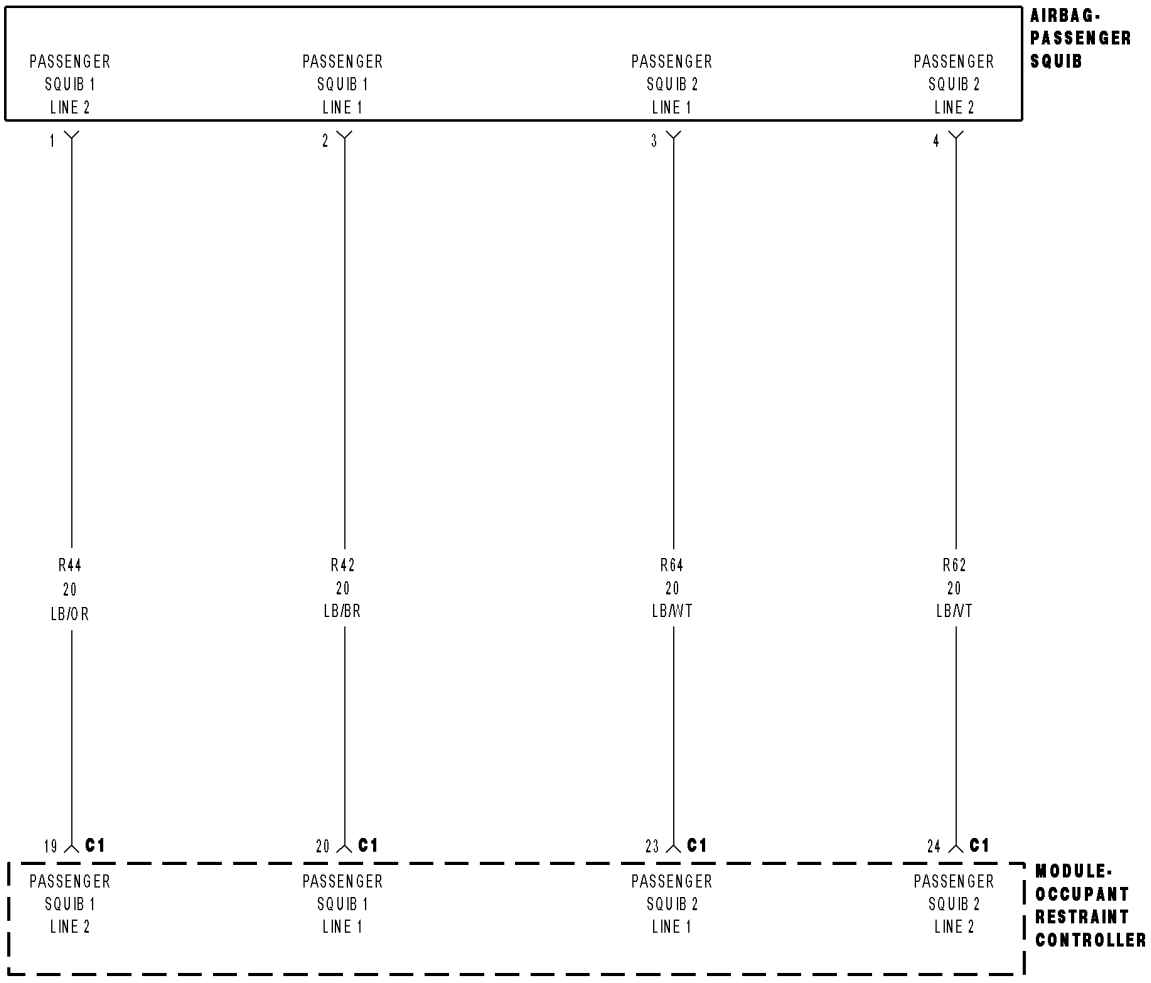

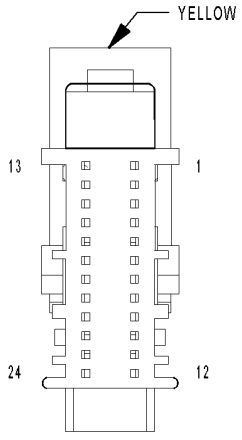

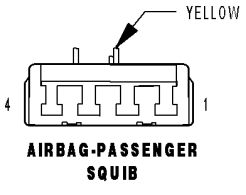

8141618b

PASSENGER SQUIB 1 CIRCUIT OPEN (CONTINUED)

For the Air Bag System circuit diagram (Refer to 8 - ELECTRICAL/RESTRAINTS - SCHEMATICS AND DIAGRAMS).

For a complete wiring diagram **Refer to Section 8W**.

- **When Monitored:**
  With the ignition on, the Occupant Restraint Controller (ORC) monitors the resistance of the Passenger Squib 1 circuits.
- **Set Condition:**
  The ORC has detected an open or high resistance on the Passenger Squib 1 circuits.

Possible Causes
PASSENGER SQUIB 1 LINE 2 CIRCUIT OPEN
PASSENGER SQUIB 1 LINE 1 CIRCUIT OPEN
PASSENGER AIRBAG
ORC

Diagnostic Test

1. DETERMINE ACTIVE OR STORED DTC

NOTE: Ensure the battery is fully charged.

NOTE: The scan tool, SRS Airbag Load Tool MRL 8443, and DVOM are required to perform the following test.

NOTE: When reconnecting airbag system components the Ignition must be turned off and the Battery must be disconnected.

Select Active or Stored DTC.

Is the DTC active or stored?

ORC - ACTIVE DTC
Go To 2

ORC - STORED DTC
Go To 6

PASSENGER SQUIB 1 CIRCUIT OPEN (CONTINUED)

2. CHECK FOR OPEN SQUIB CIRCUITS IN PASSENGER AIRBAG

WARNING: To avoid personal injury or death, turn the ignition off, disconnect the battery and wait two minutes before proceeding.
Disconnect the Passenger Airbag Squib connector.

NOTE: Check connectors - Clean and repair as necessary.
Connect the 8443 Load Tool to the Passenger Airbag Squib connector.

WARNING: To avoid personal injury or death, turn the ignition on, then reconnect the battery.
With the scan tool, read the active ORC DTC's.

Does the scan tool display: PASSENGER SQUIB 1 CIRCUIT OPEN?

Yes >> Go To 3

No >> Replace the Passenger Airbag in accordance with the Service Information.
Perform ORC VERIFICATION TEST - VER 1

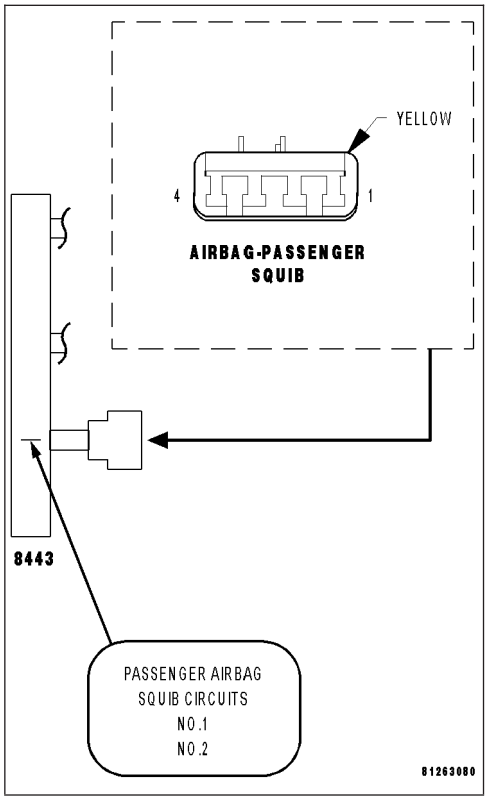

3. CHECK PASSENGER SQUIB 1 LINE 2 CIRCUIT FOR AN OPEN

WARNING: To avoid personal injury or death, turn the ignition off, disconnect the battery and wait two minutes before proceeding.
Disconnect the 8443 Load Tool from the Passenger Airbag Squib connector.

Disconnect the ORC connectors.

NOTE: Check connectors - Clean and repair as necessary.
Connect the 8443 Load Tool ORC Adaptor to the ORC connector.

Measure the resistance of the Passenger Squib 1 Line 2 circuit between the Passenger Airbag Squib connector and the 8443 ORC Adaptor.

Is the resistance below 1.0 ohm?

Yes >> Go To 4

No >> Repair the Passenger Squib 1 Line 2 circuit for and open. Then, Go To 4

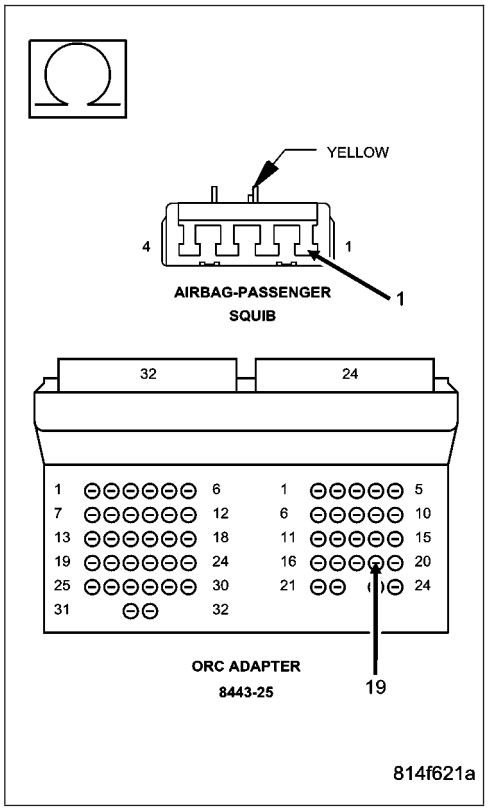

PASSENGER SQUIB 1 CIRCUIT OPEN (CONTINUED)

4. CHECK PASSENGER SQUIB 1 LINE 1 CIRCUIT FOR AN OPEN

Measure the resistance of the Passenger Squib 1 Line 1 circuit between the Passenger Airbag Squib connector and the 8443 ORC Adaptor.

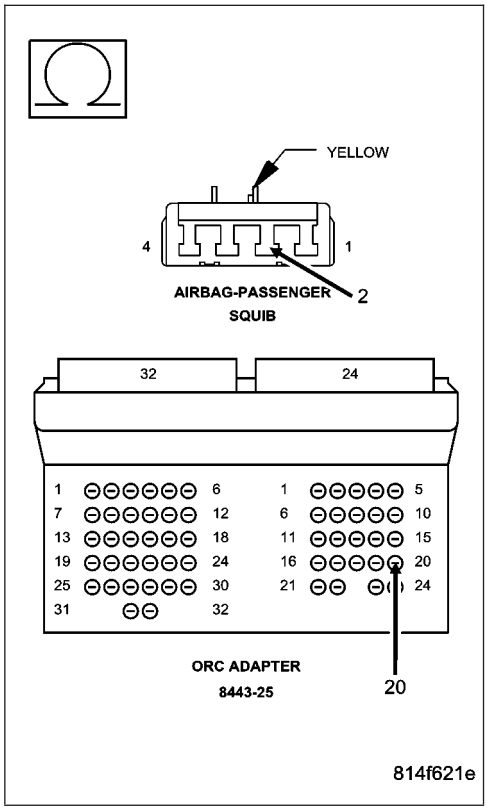

Is the resistance below 1.0 ohm?

Yes >> Go To 5

No >> Repair the Passenger Squib 1 Line 1 circuit for an open. Perform ORC VERIFICATION TEST - VER 1

5. REPLACE THE ORC

WARNING: If the Occupant Restraint Controller (ORC) is dropped at any time, it must be replaced. Failure to take the proper precautions can result in accidental airbag deployment and personal injury or death.

NOTE: When reconnecting airbag system components the Ignition must be turned off and the Battery must be disconnected.

If there are no possible causes remaining, view repair.

Repair

Replace the ORC in accordance with the Service Information.
Perform ORC VERIFICATION TEST - VER 1

PASSENGER SQUIB 1 CIRCUIT OPEN (CONTINUED)

6. STORED ORC DTC

With the scan tool, record and erase all DTC's from all Airbag System Modules.

If any ACTIVE codes are present they must be resolved before diagnosing any stored codes.

WARNING: To avoid personal injury or death, turn the ignition off, disconnect the battery and wait two minutes before proceeding.

Using the wiring diagram/schematic as a guide, inspect the wiring and connectors.

Look for chaffed, pierced, pinched, or partially broken wires and broken, bent, pushed out, spread, corroded, or contaminated terminals.

The following additional checks may assist you in identifying a possible intermittent problem.

Reconnect any disconnected components and harness connector.

WARNING: To avoid personal injury or death, turn the ignition on, then reconnect the battery.

With the scan tool monitor active codes as you work through the following steps.

Wiggle the wiring harness and connectors of the related airbag circuit or component.

If codes are related to the Driver Airbag circuits, rotate the steering wheel from stop to stop.

If only stored codes return continue the test until the problem area has been isolated.

In the previous steps you have attempted to recreate the conditions responsible for setting active DTC in question.

Are any ACTIVE DTCs present?

Yes >> Select the appropriate diagnostic procedure from the Table of Contents in this section.

No >> No problem found at this time. Erase all codes before returning vehicle to customer.

PASSENGER SQUIB 1 CIRCUIT SHORT

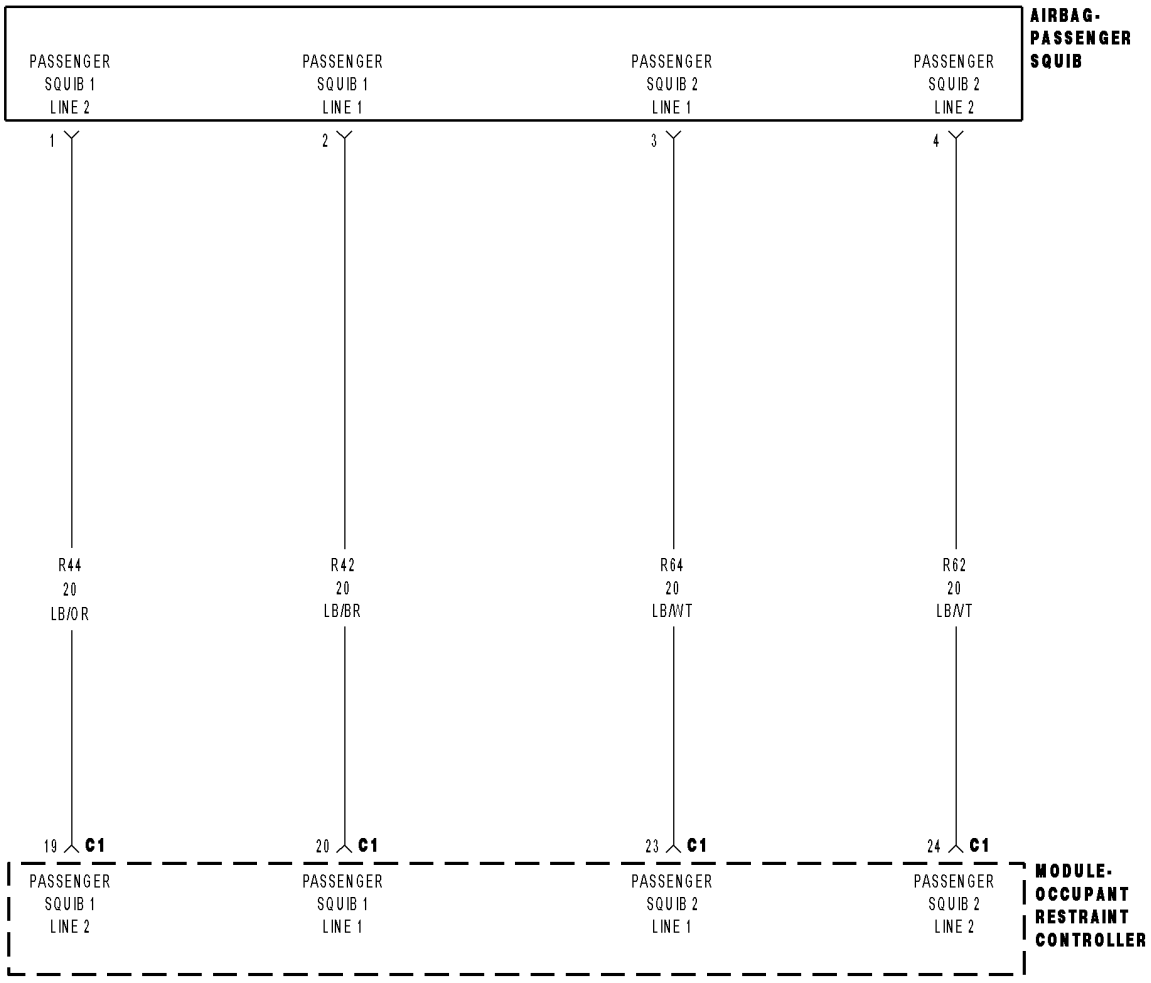

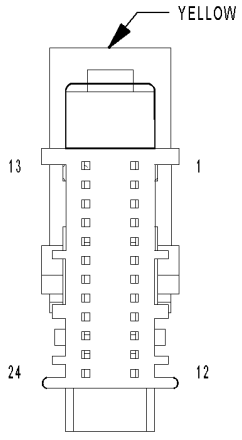

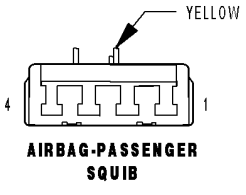

8141618b

PASSENGER SQUIB 1 CIRCUIT SHORT (CONTINUED)

For the Air Bag System circuit diagram (Refer to 8 - ELECTRICAL/RESTRAINTS - SCHEMATICS AND DIAGRAMS).

For a complete wiring diagram **Refer to Section 8W**.

- **When Monitored:**
  With the ignition on, the Occupant Restraint Controller (ORC) monitors the resistance of the Passenger Squib 1 circuits.
- **Set Condition:**
  The ORC has detected low resistance between the Passenger Squib 1 circuits.

Possible Causes
PASSENGER SQUIB 1 LINE 2 CIRCUIT SHORTED TO PASSENGER SQUIB 1 LINE 1 CIRCUIT
PASSENGER AIRBAG
ORC

Diagnostic Test

1. DETERMINE ACTIVE OR STORED DTC

NOTE: Ensure the battery is fully charged.

NOTE: The scan tool, SRS Airbag Load Tool MRL 8443, and DVOM are required to perform the following test.

NOTE: When reconnecting airbag system components the Ignition must be turned off and the Battery must be disconnected.

Select Active or Stored DTC.

Is the DTC active or stored?

ORC - ACTIVE DTC
Go To 2

ORC - STORED DTC
Go To 5

PASSENGER SQUIB 1 CIRCUIT SHORT (CONTINUED)

2. CHECK FOR SHORTED SQUIB CIRCUITS IN PASSENGER AIRBAG

WARNING: To avoid personal injury or death, turn the ignition off, disconnect the battery and wait two minutes before proceeding.
Disconnect the Passenger Airbag Squib connector.

NOTE: Check connectors - Clean and repair as necessary.
Connect the 8443 Load Tool to the Passenger Airbag Squib connector.

WARNING: To avoid personal injury or death, turn the ignition on, then reconnect the battery.
With the scan tool, read the active ORC DTC's.

Does the scan tool display: PASSENGER SQUIB 1 CIRCUIT SHORT?

Yes >> Go To 3

No >> Replace the Passenger Airbag in accordance with the Service Information.
Perform ORC VERIFICATION TEST - VER 1

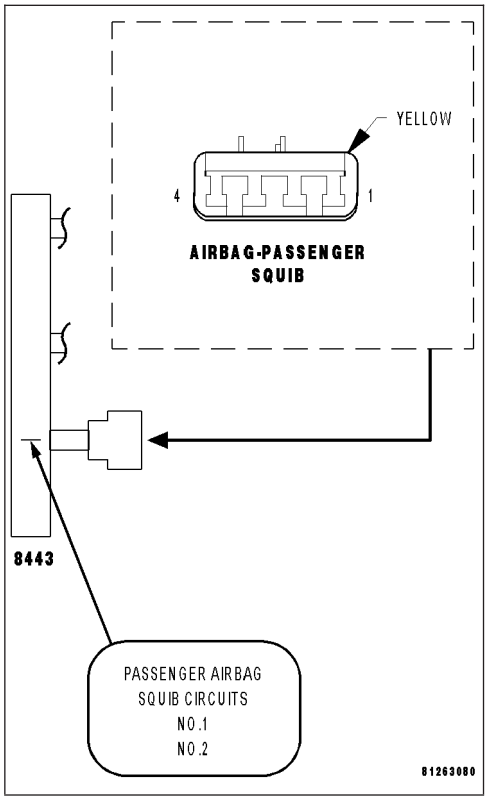

3. CHECK PASSENGER SQUIB 1 LINE 2 CIRCUIT FOR A SHORT TO PASSENGER SQUIB 1 LINE 1 CIRCUIT

WARNING: To avoid personal injury or death, turn the ignition off, disconnect the battery and wait two minutes before proceeding.
Disconnect the 8443 Load Tool from the Passenger Airbag Squib connector.

Disconnect the ORC connectors.

NOTE: Check connectors - Clean and repair as necessary.
Connect the 8443 Load Tool ORC Adaptor to the ORC connector.

Measure the resistance between the Passenger Squib 1 Line 2 circuit and the Passenger Squib 1 Line 1 circuit at the Passenger Airbag Squib connector.

Is the resistance below 10K ohms?

Yes >> Repair the Passenger Squib 1 Line 2 circuit for a short to the Passenger Squib 1 Line 1 circuit.
Perform ORC VERIFICATION TEST - VER 1

No >> Go To 4

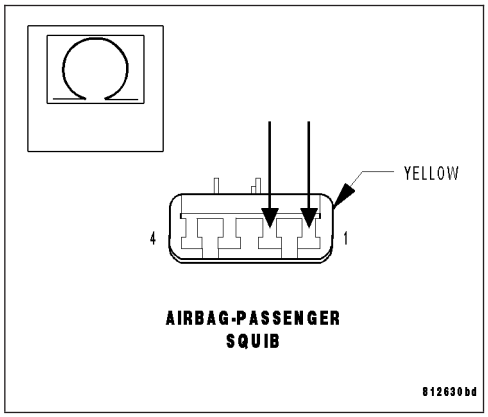

PASSENGER SQUIB 1 CIRCUIT SHORT (CONTINUED)

4. REPLACE THE ORC

WARNING: If the Occupant Restraint Controller (ORC) is dropped at any time, it must be replaced. Failure to take the proper precautions can result in accidental airbag deployment and personal injury or death.

NOTE: When reconnecting airbag system components the Ignition must be turned off and the Battery must be disconnected.

Repair

Replace the ORC in accordance with the Service Information.
Perform ORC VERIFICATION TEST - VER 1

---

5. STORED ORC DTC

With the scan tool, record and erase all DTC's from all Airbag System Modules.

If any ACTIVE codes are present they must be resolved before diagnosing any stored codes.

WARNING: To avoid personal injury or death, turn the ignition off, disconnect the battery and wait two minutes before proceeding.

Using the wiring diagram/schematic as a guide, inspect the wiring and connectors.

Look for chaffed, pierced, pinched, or partially broken wires and broken, bent, pushed out, spread, corroded, or contaminated terminals.

The following additional checks may assist you in identifying a possible intermittent problem.

Reconnect any disconnected components and harness connector.

WARNING: To avoid personal injury or death, turn the ignition on, then reconnect the battery.

With the scan tool monitor active codes as you work through the following steps.

Wiggle the wiring harness and connectors of the related airbag circuit or component.

If codes are related to the Driver Airbag circuits, rotate the steering wheel from stop to stop.

If only stored codes return continue the test until the problem area has been isolated.

In the previous steps you have attempted to recreate the conditions responsible for setting active DTC in question.

Are any ACTIVE DTC's present?

Yes >> Select the appropriate diagnostic procedure from the Table of Contents in this section.

No >> No problem found at this time. Erase all codes before returning vehicle to customer.

PASSENGER SQUIB 1 SHORT TO BATTERY

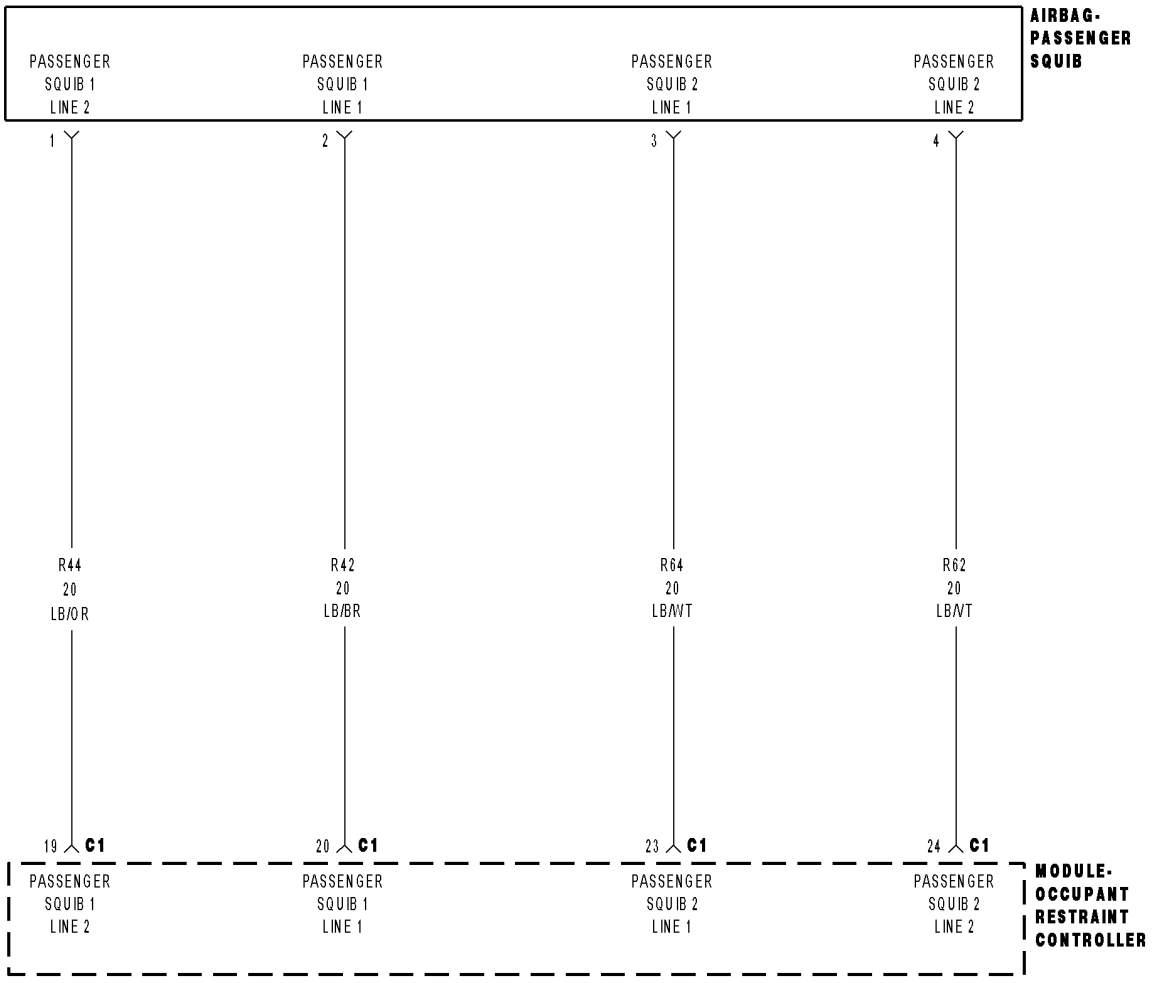

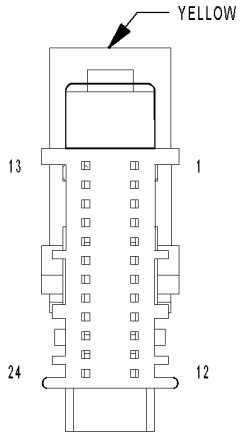

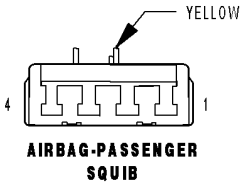

8141618b

PASSENGER SQUIB 1 SHORT TO BATTERY (CONTINUED)

For the Air Bag System circuit diagram (Refer to 8 - ELECTRICAL/RESTRAINTS - SCHEMATICS AND DIAGRAMS).

For a complete wiring diagram **Refer to Section 8W**.

- **When Monitored:**
  With the ignition on, the Occupant Restraint Controller (ORC) monitors the voltage on the Passenger Squib 1 circuits.
- **Set Condition:**
  When the ORC has detected voltage on the Passenger Squib 1 circuits.

Possible Causes
PASSENGER SQUIB 1 LINE 2 CIRCUIT OR PASSENGER SQUIB 1 LINE 1 CIRCUIT SHORTED TO BATTERY
PASSENGER AIRBAG
ORC

Diagnostic Test

1. DETERMINE ACTIVE OR STORED DTC

NOTE: Ensure the battery is fully charged.

NOTE: The scan tool, SRS Airbag Load Tool MRL 8443, and DVOM are required to perform the following test.

NOTE: When reconnecting airbag system components the Ignition must be turned off and the Battery must be disconnected.

Select Active or Stored DTC.

Is the DTC active or stored?

ORC - ACTIVE DTC
Go To 2

ORC - STORED DTC
Go To 5

PASSENGER SQUIB 1 SHORT TO BATTERY (CONTINUED)

2. CHECK FOR SHORTED SQUIB CIRCUITS IN PASSENGER AIRBAG

WARNING: To avoid personal injury or death, turn the ignition off, disconnect the battery and wait two minutes before proceeding.
Disconnect the Passenger Airbag Squib connector.

WARNING: To avoid personal injury or death, do not place an intact undeployed airbag face down on a hard surface, the airbag will propel into the air if accidentally deployed.

NOTE: Check connectors - Clean and repair as necessary.
Connect the 8443 Load Tool to the Passenger Airbag Squib connector.

WARNING: To avoid personal injury or death, turn the ignition on, then reconnect the battery.
With the scan tool, read the active ORC DTC's.

Does the scan tool display: PASSENGER SQUIB 1 SHORT TO BATTERY?

Yes >> Go To 3

No >> Replace the Passenger Airbag in accordance with the Service Information.
Perform ORC VERIFICATION TEST - VER 1

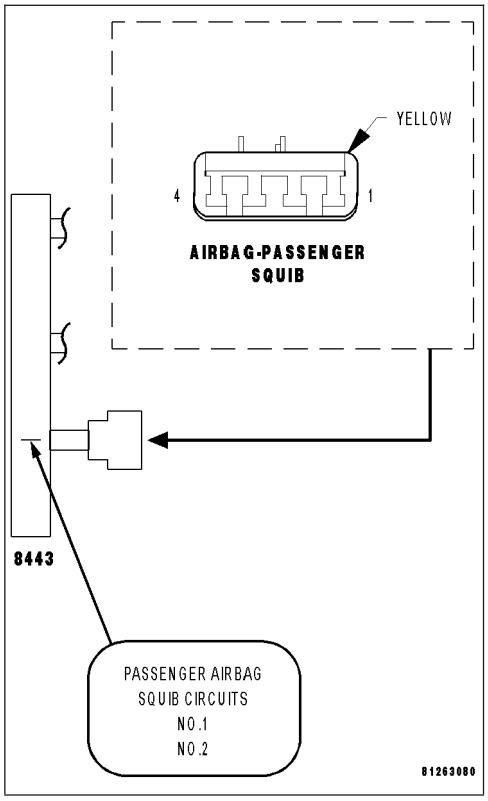

3. CHECK PASSENGER SQUIB 1 LINE 2 CIRCUIT AND PASSENGER SQUIB 1 LINE 1 CIRCUIT FOR A SHORT TO BATTERY

WARNING: To avoid personal injury or death, turn the ignition off, disconnect the battery and wait two minutes before proceeding.
Disconnect the 8443 Load Tool from the Passenger Airbag Squib connector.

Disconnect the ORC connectors.

NOTE: Check connectors - Clean and repair as necessary.
Connect the 8443 Load Tool ORC Adaptor to the ORC connector.

Measure the voltage of the Passenger Squib 1 Line 2 circuit between the Passenger Airbag Squib connector and ground.

Measure the voltage of the Passenger Squib 1 Line 1 circuit between the Passenger Airbag Squib connector and ground.

Is there any voltage present on either circuit?

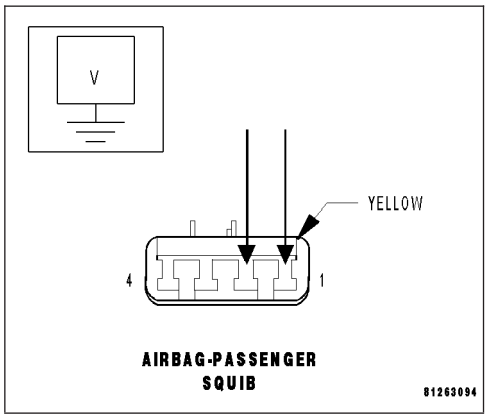

Yes >> Repair the Passenger Squib 1 circuits with voltage present for a short to battery.
Perform ORC VERIFICATION TEST - VER 1

No >> Go To 4

PASSENGER SQUIB 1 SHORT TO BATTERY (CONTINUED)

4. REPLACE THE ORC

WARNING: To avoid personal injury or death, turn the ignition off, disconnect the battery and wait two minutes before proceeding.

WARNING: If the Occupant Restraint Controller (ORC) is dropped at any time, it must be replaced. Failure to take the proper precautions can result in accidental airbag deployment and personal injury or death.

NOTE: When reconnecting airbag system components the Ignition must be turned off and the Battery must be disconnected.

Repair

Replace the ORC in accordance with the Service Information.
Perform ORC VERIFICATION TEST - VER 1

---

5. STORED ORC DTC

With the scan tool, record and erase all DTC's from all Airbag System Modules.

If any ACTIVE codes are present they must be resolved before diagnosing any stored codes.

WARNING: To avoid personal injury or death, turn the ignition off, disconnect the battery and wait two minutes before proceeding.

Using the wiring diagram/schematic as a guide, inspect the wiring and connectors.

Look for chaffed, pierced, pinched, or partially broken wires and broken, bent, pushed out, spread, corroded, or contaminated terminals.

The following additional checks may assist you in identifying a possible intermittent problem.

Reconnect any disconnected components and harness connector.

WARNING: To avoid personal injury or death, turn the ignition on, then reconnect the battery.

With the scan tool monitor active codes as you work through the following steps.

Wiggle the wiring harness and connectors of the related airbag circuit or component.

If codes are related to the Driver Airbag circuits, rotate the steering wheel from stop to stop.

If only stored codes return continue the test until the problem area has been isolated.

In the previous steps you have attempted to recreate the conditions responsible for setting active DTC in question.

Are any ACTIVE DTCs present?

Yes >> Select the appropriate diagnostic procedure from the Table of Contents in this section.

No >> No problem found at this time. Erase all codes before returning vehicle to customer.

PASSENGER SQUIB 1 SHORT TO GROUND

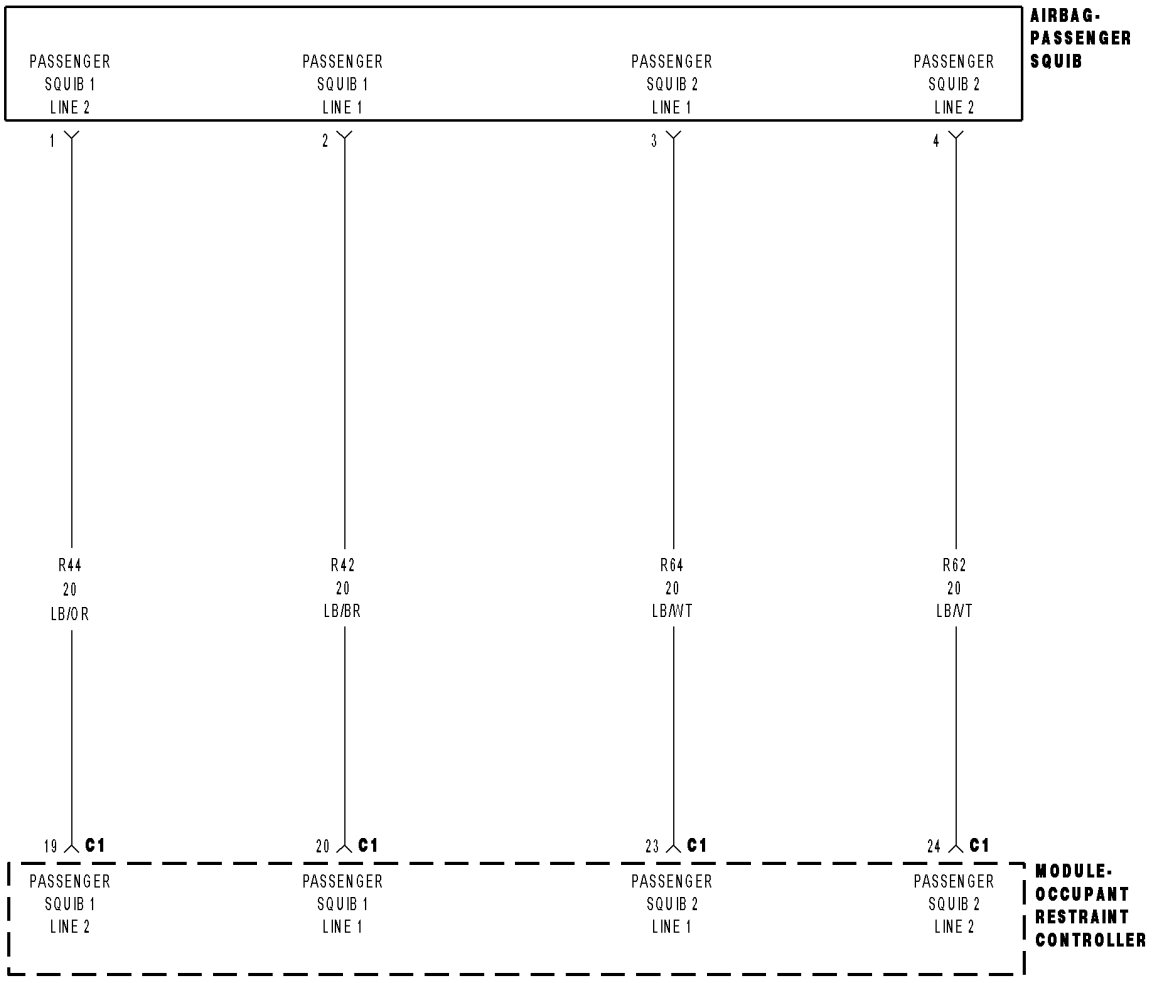

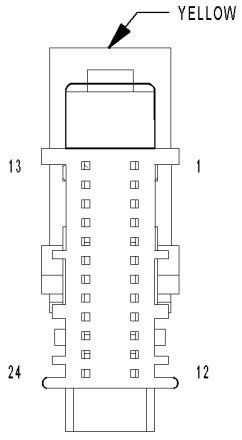

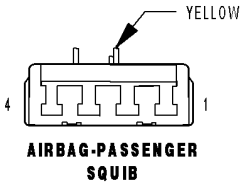

8141618b

PASSENGER SQUIB 1 SHORT TO GROUND (CONTINUED)

For the Air Bag System circuit diagram (Refer to 8 - ELECTRICAL/RESTRAINTS - SCHEMATICS AND DIAGRAMS).

For a complete wiring diagram **Refer to Section 8W**.

- **When Monitored:**
  With the ignition on, the Occupant Restraint Controller (ORC) monitors the resistance of the Passenger Squib 1 circuits.
- **Set Condition:**
  The ORC has detected low resistance on the Passenger Squib 1 circuits.

Possible Causes
PASSENGER SQUIB 1 LINE 2 CIRCUIT OR PASSENGER SQUIB 1 LINE 1 CIRCUIT SHORTED TO GROUND
PASSENGER AIRBAG
ORC

Diagnostic Test

1. DETERMINE ACTIVE OR STORED DTC

NOTE: Ensure the battery is fully charged.

NOTE: The scan tool, SRS Airbag Load Tool MRL 8443, and DVOM are required to perform the following test.

NOTE: When reconnecting airbag system components the Ignition must be turned off and the Battery must be disconnected.

Select Active or Stored DTC.

Is the DTC active or stored?

ORC - ACTIVE DTC
Go To 2

ORC - STORED DTC
Go To 5

PASSENGER SQUIB 1 SHORT TO GROUND (CONTINUED)

2. CHECK FOR SHORTED SQUIB CIRCUITS IN PASSENGER AIRBAG

WARNING: To avoid personal injury or death, turn the ignition off, disconnect the battery and wait two minutes before proceeding.
Disconnect the Passenger Airbag Squib connector.

WARNING: To avoid personal injury or death, do not place an intact undeployed airbag face down on a hard surface, the airbag will propel into the air if accidentally deployed.

NOTE: Check connectors - Clean and repair as necessary.
Connect the 8443 Load Tool to the Passenger Airbag Squib connector.

WARNING: To avoid personal injury or death, turn the ignition on, then reconnect the battery.
With the scan tool, read the active ORC DTC's.

Does the scan tool display: PASSENGER SQUIB 1 SHORT TO GROUND?

Yes >> Go To 3

No >> Replace the Passenger Airbag in accordance with the Service Information.
Perform ORC VERIFICATION TEST - VER 1

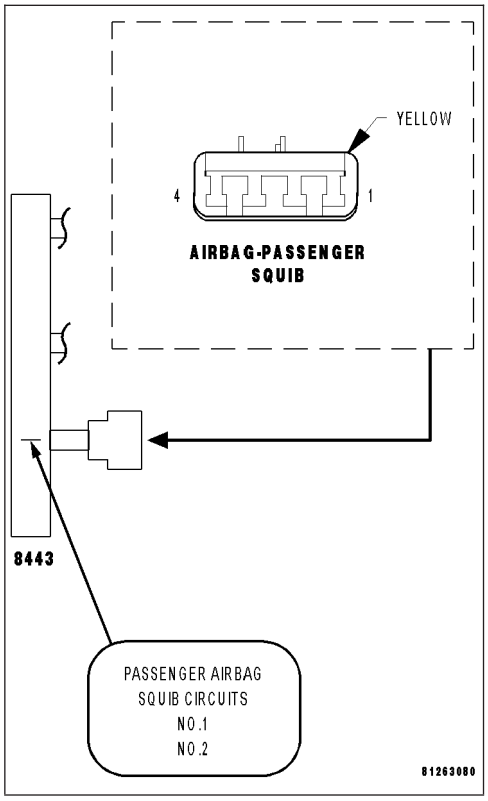

3. CHECK PASSENGER SQUIB 1 LINE 2 CIRCUIT AND PASSENGER SQUIB 1 LINE 1 CIRCUIT FOR A SHORT TO GROUND

WARNING: To avoid personal injury or death, turn the ignition off, disconnect the battery and wait two minutes before proceeding.
Disconnect the 8443 Load Tool from the Passenger Airbag Squib connector.

Disconnect the ORC connectors.

NOTE: Check connectors - Clean and repair as necessary.
Connect the 8443 Load Tool ORC Adaptor to the ORC connector.

Measure the resistance of the Passenger Squib 1 Line 2 circuit between ground and the Passenger Airbag Squib connector.

Measure the resistance of the Passenger Squib 1 Line 1 circuit between ground and the Passenger Airbag Squib connector.

Is the resistance below 10K ohms on either circuit?

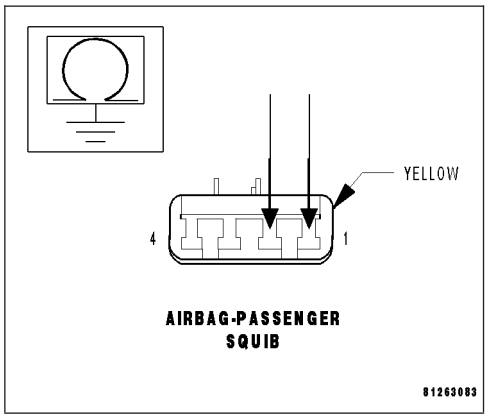

Yes >> Repair the Passenger Squib 1 circuits with a resistance below 10K ohms for a short to ground.
Perform ORC VERIFICATION TEST - VER 1

No >> Go To 4

PASSENGER SQUIB 1 SHORT TO GROUND (CONTINUED)

4. REPLACE THE ORC

WARNING: If the Occupant Restraint Controller (ORC) is dropped at any time, it must be replaced. Failure to take the proper precautions can result in accidental airbag deployment and personal injury or death.

NOTE: When reconnecting airbag system components the Ignition must be turned off and the Battery must be disconnected.

Repair

Replace the ORC in accordance with the Service Information.
Perform ORC VERIFICATION TEST - VER 1

---

5. STORED ORC DTC

With the scan tool, record and erase all DTC's from all Airbag System Modules.

If any ACTIVE codes are present they must be resolved before diagnosing any stored codes.

WARNING: To avoid personal injury or death, turn the ignition off, disconnect the battery and wait two minutes before proceeding.

Using the wiring diagram/schematic as a guide, inspect the wiring and connectors.

Look for chaffed, pierced, pinched, or partially broken wires and broken, bent, pushed out, spread, corroded, or contaminated terminals.

The following additional checks may assist you in identifying a possible intermittent problem.

Reconnect any disconnected components and harness connector.

WARNING: To avoid personal injury or death, turn the ignition on, then reconnect the battery.

With the scan tool monitor active codes as you work through the following steps.

Wiggle the wiring harness and connectors of the related airbag circuit or component.

If codes are related to the Driver Airbag circuits, rotate the steering wheel from stop to stop.

If only stored codes return continue the test until the problem area has been isolated.

In the previous steps you have attempted to recreate the conditions responsible for setting active DTC in question.

Are any ACTIVE DTC's present?

Yes >> Select the appropriate diagnostic procedure from the Table of Contents in this section.

No >> No problem found at this time. Erase all codes before returning vehicle to customer.

PASSENGER SQUIB 2 CIRCUIT OPEN

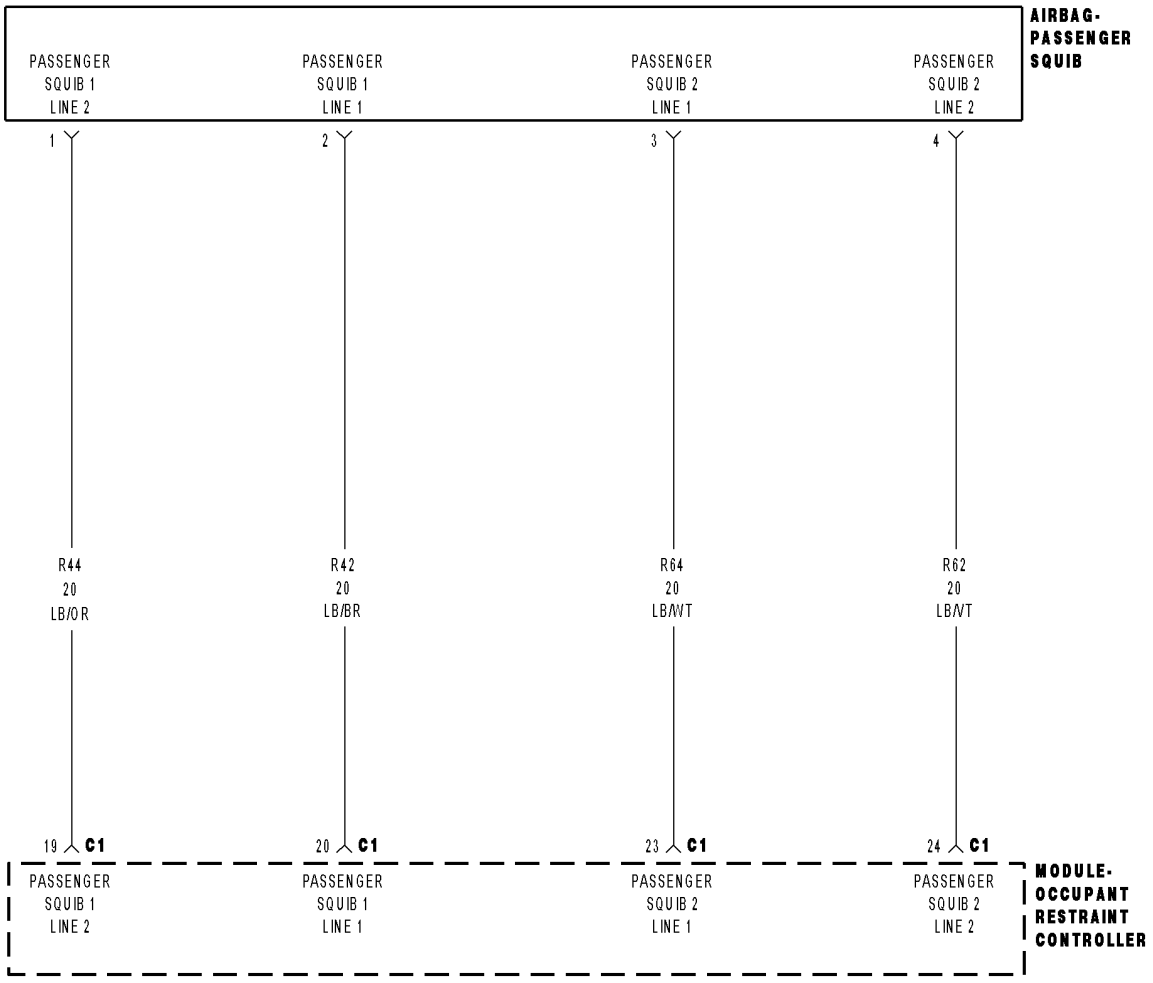

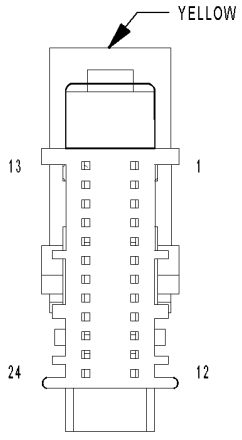

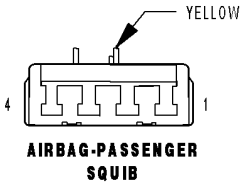

8141618b

PASSENGER SQUIB 2 CIRCUIT OPEN (CONTINUED)

For the Air Bag System circuit diagram (Refer to 8 - ELECTRICAL/RESTRAINTS - SCHEMATICS AND DIAGRAMS).

For a complete wiring diagram **Refer to Section 8W**.

- **When Monitored:**
  With the ignition on, the Occupant Restraint Controller (ORC) monitors the resistance of the Passenger Squib 2 circuits.
- **Set Condition:**
  The ORC has detected an open or high resistance on the Passenger Squib 2 circuits.

Possible Causes
(R64) PASSENGER SQUIB 2 LINE 1 CIRCUIT OPEN
(R62) PASSENGER SQUIB 2 LINE 2 CIRCUIT OPEN
PASSENGER AIRBAG
ORC

Diagnostic Test

1. DETERMINE ACTIVE OR STORED DTC

NOTE: Ensure the battery is fully charged.

NOTE: The scan tool, SRS Airbag Load Tool MRL 8443, and DVOM are required to perform the following test.

NOTE: When reconnecting airbag system components the Ignition must be turned off and the Battery must be disconnected.

Select Active or Stored DTC.

Is the DTC active or stored?

ORC - ACTIVE DTC
Go To 2

ORC - STORED DTC
Go To 6

PASSENGER SQUIB 2 CIRCUIT OPEN (CONTINUED)

2. CHECK FOR OPEN SQUIB CIRCUITS IN PASSENGER AIRBAG

WARNING: To avoid personal injury or death, turn the ignition off, disconnect the battery and wait two minutes before proceeding.
Disconnect the Passenger Airbag Squib connector.

WARNING: To avoid personal injury or death, do not place an intact undeployed airbag face down on a hard surface, the airbag will propel into the air if accidentally deployed.

NOTE: Check connectors - Clean and repair as necessary.
Connect the 8443 Load Tool to the Passenger Airbag Squib connector.

WARNING: To avoid personal injury or death, turn the ignition on, then reconnect the battery.
With the scan tool, read the active ORC DTC's.

Does the scan tool display: PASSENGER SQUIB 2 CIRCUIT OPEN?

Yes >> Go To 3

No >> Replace the Passenger Airbag in accordance with the Service Information.
Perform ORC VERIFICATION TEST - VER 1

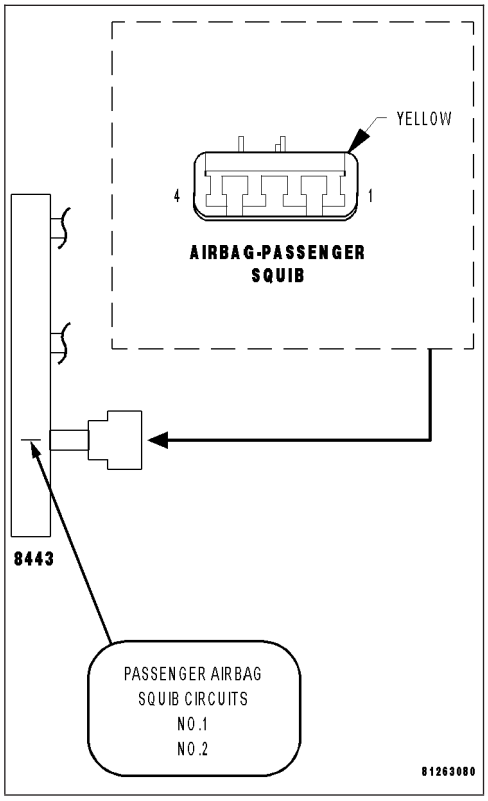

3. CHECK (R64) PASSENGER SQUIB 2 LINE 1 CIRCUIT FOR AN OPEN

WARNING: To avoid personal injury or death, turn the ignition off, disconnect the battery and wait two minutes before proceeding.
Disconnect the 8443 Load Tool from the Passenger Airbag Squib connector.

Disconnect the ORC connectors.

NOTE: Check connectors - Clean and repair as necessary.
Connect the 8443 Load Tool ORC Adaptor to the ORC connector.

Measure the resistance of the (R64) Passenger Squib 2 Line 1 circuit between the Passenger Airbag Squib connector and the 8443 Load Tool ORC Adaptor.

Is the resistance below 1.0 ohm?

Yes >> Go to 4

No >> Repair the (R64) Passenger Squib 2 Line 1 circuit for an open. Then, Go To 4

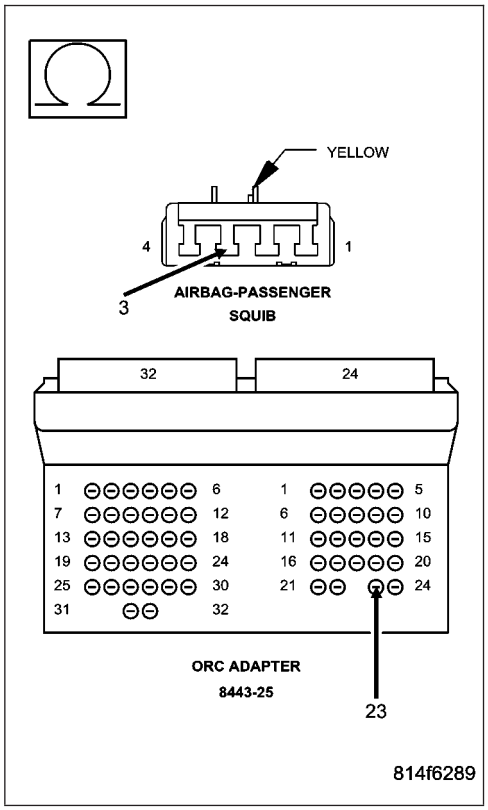

PASSENGER SQUIB 2 CIRCUIT OPEN (CONTINUED)

4. CHECK (R62) PASSENGER SQUIB 2 LINE 2 CIRCUIT FOR AN OPEN

Measure the resistance of the (R62) Passenger Squib 2 Line 2 circuit between the Passenger Airbag Squib connector and the 8443 Load Tool ORC Adaptor.

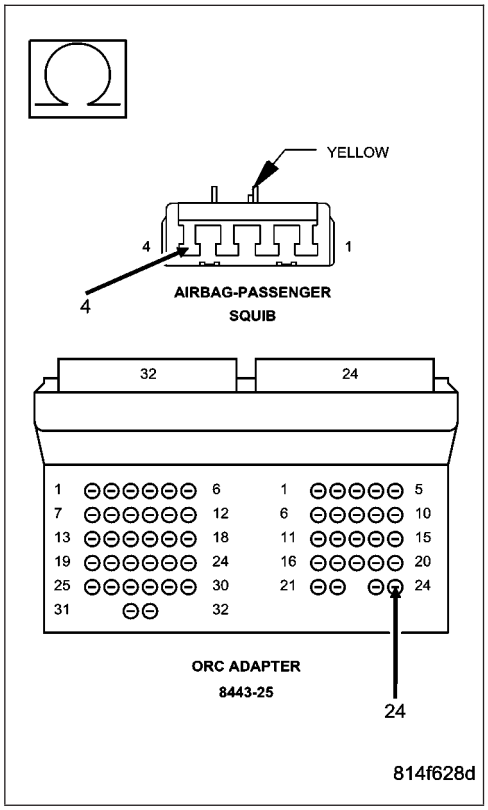

Is the resistance below 1.0 ohm?

Yes >> Go To 5

No >> Repair the (R62) Passenger Squib 2 Line 2 circuit for an open.
Perform ORC VERIFICATION TEST - VER 1

5. REPLACE THE ORC

WARNING: If the Occupant Restraint Controller (ORC) is dropped at any time, it must be replaced. Failure to take the proper precautions can result in accidental airbag deployment and personal injury or death.

NOTE: When reconnecting airbag system components the Ignition must be turned off and the Battery must be disconnected.

Repair

Replace the ORC in accordance with the Service Information.
Perform ORC VERIFICATION TEST - VER 1

PASSENGER SQUIB 2 CIRCUIT OPEN (CONTINUED)

6. STORED ORC DTC

With the scan tool, record and erase all DTC's from all Airbag System Modules.

If any ACTIVE codes are present they must be resolved before diagnosing any stored codes.

WARNING: To avoid personal injury or death, turn the ignition off, disconnect the battery and wait two minutes before proceeding.

Using the wiring diagram/schematic as a guide, inspect the wiring and connectors.

Look for chaffed, pierced, pinched, or partially broken wires and broken, bent, pushed out, spread, corroded, or contaminated terminals.

The following additional checks may assist you in identifying a possible intermittent problem.

Reconnect any disconnected components and harness connector.

WARNING: To avoid personal injury or death, turn the ignition on, then reconnect the battery.

With the scan tool monitor active codes as you work through the following steps.

Wiggle the wiring harness and connectors of the related airbag circuit or component.

If codes are related to the Passenger Airbag circuits, rotate the steering wheel from stop to stop.

If only stored codes return continue the test until the problem area has been isolated.

In the previous steps you have attempted to recreate the conditions responsible for setting active DTC in question.

Are any ACTIVE DTCs present?

Yes >> Select the appropriate diagnostic procedure from the Table of Contents in this section.

No >> No problem found at this time. Erase all codes before returning vehicle to customer.

PASSENGER SQUIB 2 CIRCUIT SHORT

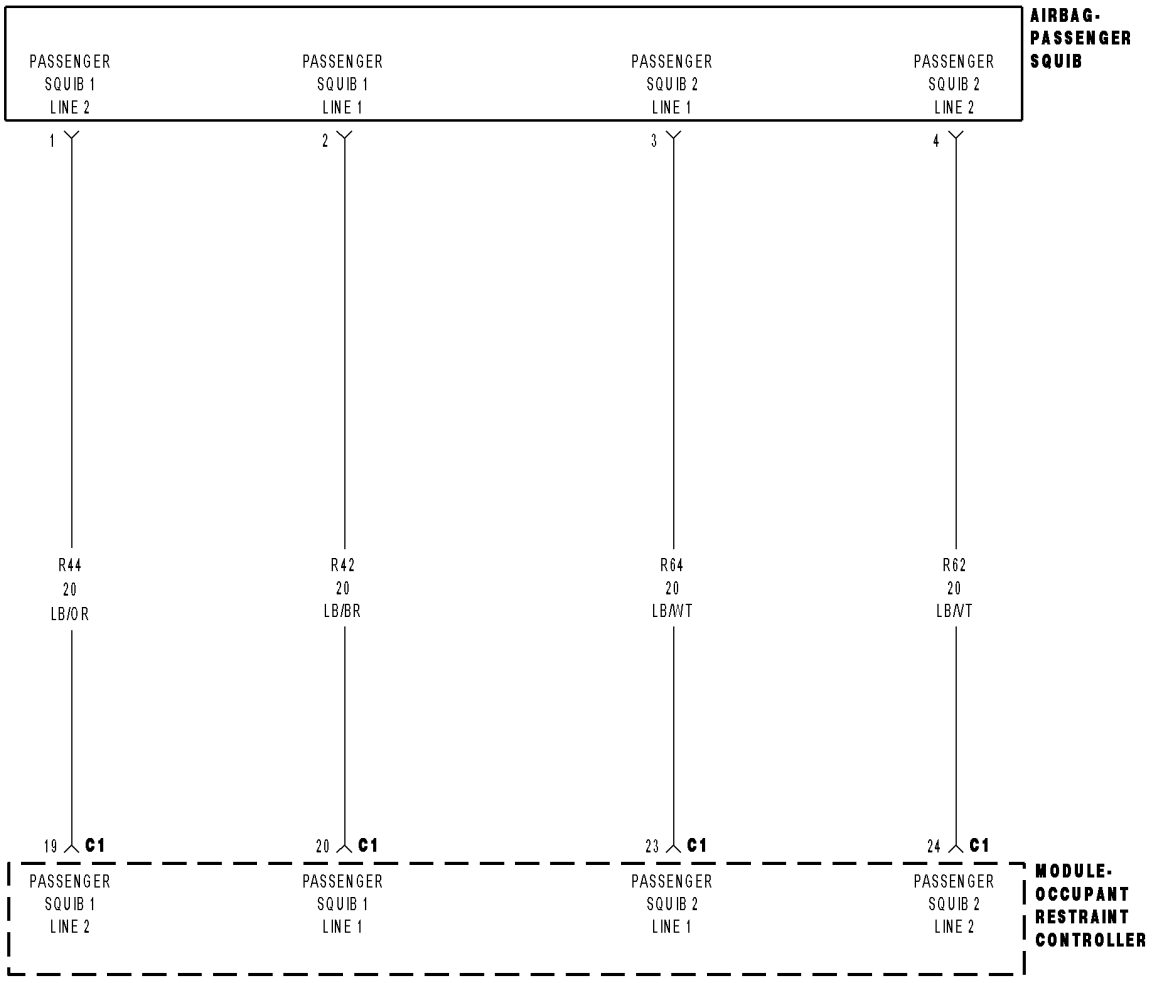

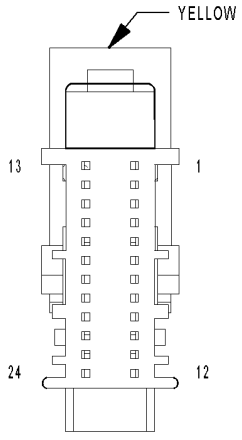

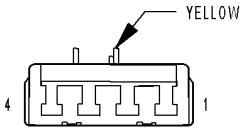

8141618b

PASSENGER SQUIB 2 CIRCUIT SHORT (CONTINUED)

For the Air Bag System circuit diagram (Refer to 8 - ELECTRICAL/RESTRAINTS - SCHEMATICS AND DIAGRAMS).

For a complete wiring diagram **Refer to Section 8W**.

- **When Monitored:**
  With the ignition on, the Occupant Restraint Controller (ORC) monitors the resistance of the Passenger Squib 2 circuits.
- **Set Condition:**
  The ORC has detected low resistance between the Passenger Squib 2 circuits.

Possible Causes
(R64) PASSENGER SQUIB 2 LINE 1 CIRCUIT SHORTED TO (R62) PASSENGER SQUIB 2 LINE 2 CIRCUIT
PASSENGER AIRBAG
ORC

Diagnostic Test

1. DETERMINE ACTIVE OR STORED DTC

NOTE: Ensure the battery is fully charged.

NOTE: The scan tool, SRS Airbag Load Tool MRL 8443, and DVOM are required to perform the following test.

NOTE: When reconnecting airbag system components the Ignition must be turned off and the Battery must be disconnected.

Select Active or Stored DTC.

Is the DTC active or stored?

ORC - ACTIVE DTC
Go To 2

ORC - STORED DTC
Go To 5

PASSENGER SQUIB 2 CIRCUIT SHORT (CONTINUED)

2. CHECK FOR SHORTED SQUIB CIRCUITS IN PASSENGER AIRBAG

WARNING: To avoid personal injury or death, turn the ignition off, disconnect the battery and wait two minutes before proceeding.
Disconnect the Passenger Airbag Squib connector.

WARNING: To avoid personal injury or death, do not place an intact undeployed airbag face down on a hard surface, the airbag will propel into the air if accidentally deployed.

NOTE: Check connectors - Clean and repair as necessary.
Connect the 8443 Load Tool to the Passenger Airbag Squib connector.

WARNING: To avoid personal injury or death, turn the ignition on, then reconnect the battery
With the scan tool, read the active ORC DTC's.

Does the scan tool display: PASSENGER SQUIB 2 CIRCUIT SHORT?

Yes >> Go To 3

No >> Replace the Passenger Airbag in accordance with the Service Information.
Perform ORC VERIFICATION TEST - VER 1

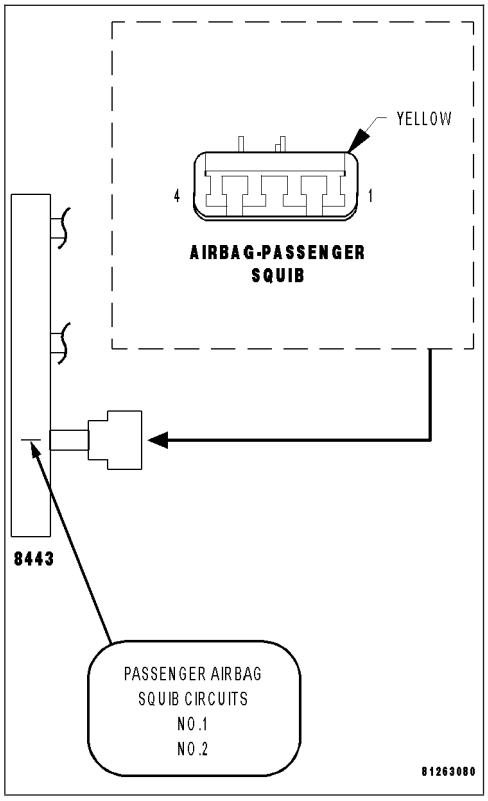

3. CHECK (R64) PASSENGER SQUIB 2 LINE 1 CIRCUIT FOR A SHORT TO (R62) PASSENGER SQUIB 2 LINE 2 CIRCUIT

WARNING: To avoid personal injury or death, turn the ignition off, disconnect the battery and wait two minutes before proceeding.
Disconnect the 8443 Load Tool from the Passenger Airbag Squib connector.

Disconnect the ORC connectors.

NOTE: Check connectors - Clean and repair as necessary.
Connect the 8443 Load Tool ORC Adaptor to the ORC connector.

Measure the resistance between the (R64) Passenger Squib 2 Line 1 circuit and the (R62) Passenger Squib 2 Line 2 circuit at the Passenger Airbag Squib connector.

Is the resistance below 10K ohms?

Yes >> Repair the (R64) Passenger Squib 2 Line 1 circuit for a short to the (R62) Passenger Squib 2 Line 2 circuit.
Perform ORC VERIFICATION TEST - VER 1

No >> Go to 4

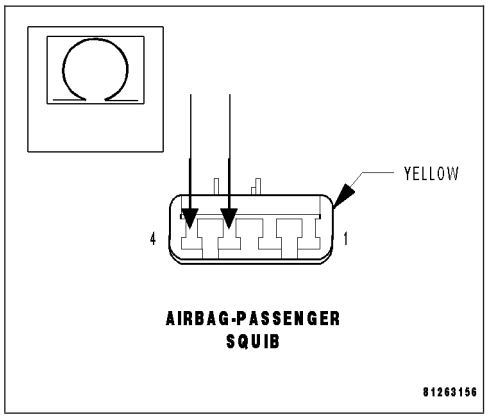

PASSENGER SQUIB 2 CIRCUIT SHORT (CONTINUED)

4. REPLACE THE ORC

WARNING: If the Occupant Restraint Controller (ORC) is dropped at any time, it must be replaced. Failure to take the proper precautions can result in accidental airbag deployment and personal injury or death.

NOTE: When reconnecting airbag system components the Ignition must be turned off and the Battery must be disconnected.

Repair

Replace the ORC in accordance with the Service Information.
Perform ORC VERIFICATION TEST - VER 1

---

5. STORED ORC DTC

With the scan tool, record and erase all DTC's from all Airbag System Modules.

If any ACTIVE codes are present they must be resolved before diagnosing any stored codes.

WARNING: To avoid personal injury or death, turn the ignition off, disconnect the battery and wait two minutes before proceeding.

Using the wiring diagram/schematic as a guide, inspect the wiring and connectors.

Look for chaffed, pierced, pinched, or partially broken wires and broken, bent, pushed out, spread, corroded, or contaminated terminals.

The following additional checks may assist you in identifying a possible intermittent problem.

Reconnect any disconnected components and harness connector.

WARNING: To avoid personal injury or death, turn the ignition on, then reconnect the battery.

With the scan tool monitor active codes as you work through the following steps.

Wiggle the wiring harness and connectors of the related airbag circuit or component.

If codes are related to the Driver Airbag circuits, rotate the steering wheel from stop to stop.

If only stored codes return continue the test until the problem area has been isolated.

In the previous steps you have attempted to recreate the conditions responsible for setting active DTC in question.

Are any ACTIVE DTCs present?

Yes >> Select the appropriate diagnostic procedure from the Table of Contents in this section.

No >> No problem found at this time. Erase all codes before returning vehicle to customer.

PASSENGER SQUIB 2 SHORT TO BATTERY

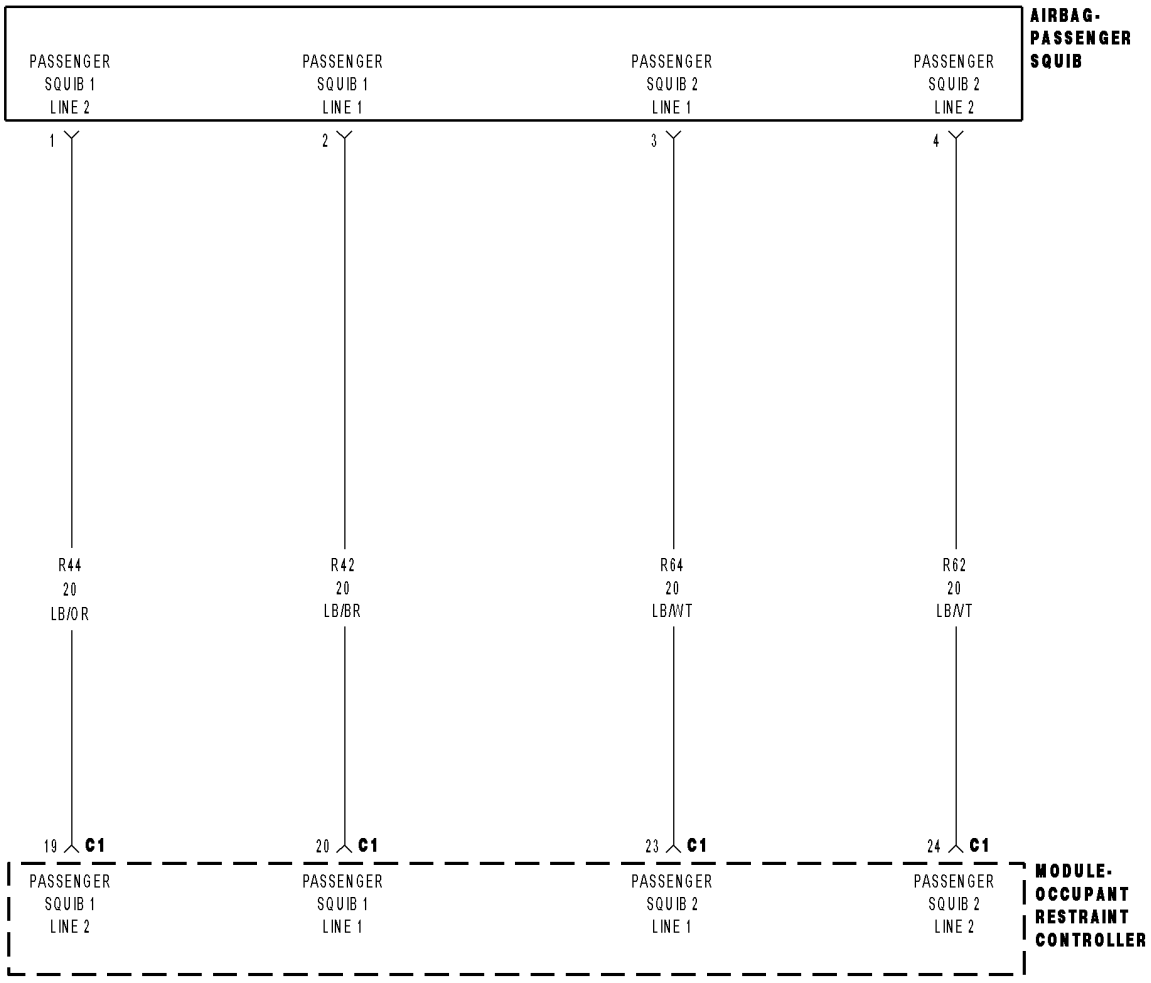

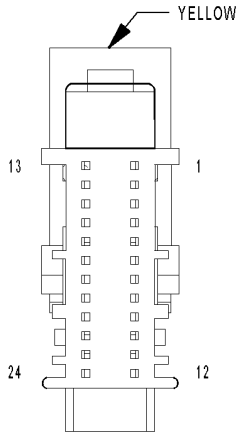

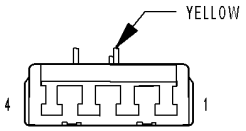

8141618b

PASSENGER SQUIB 2 SHORT TO BATTERY (CONTINUED)

For the Air Bag System circuit diagram (Refer to 8 - ELECTRICAL/RESTRAINTS - SCHEMATICS AND DIAGRAMS).

For a complete wiring diagram **Refer to Section 8W**.

- **When Monitored:**
  With the ignition on, the Occupant Restraint Controller (ORC) monitors the voltage of the Passenger Squib 2 circuits.
- **Set Condition:**
  The ORC has detected voltage on the Passenger Squib 2 circuits.

Possible Causes
(R64) PASSENGER SQUIB 2 LINE 1 CIRCUIT OR (R62) PASSENGER SQUIB 2 LINE 2 CIRCUIT SHORTED TO BATTERY
PASSENGER AIRBAG
ORC

Diagnostic Test

1. DETERMINE ACTIVE OR STORED DTC

NOTE: Ensure the battery is fully charged.

NOTE: The scan tool, SRS Airbag Load Tool MRL 8443, and DVOM are required to perform the following test.

NOTE: When reconnecting airbag system components the Ignition must be turned off and the Battery must be disconnected.

Select Active or Stored DTC.

Is the DTC active or stored?

ORC - ACTIVE DTC
Go To 2

ORC - STORED DTC
Go To 5

PASSENGER SQUIB 2 SHORT TO BATTERY (CONTINUED)

2. CHECK FOR SHORTED SQUIB CIRCUITS IN PASSENGER AIRBAG

WARNING: To avoid personal injury or death, turn the ignition off, disconnect the battery and wait two minutes before proceeding.
Disconnect the Passenger Airbag Squib connector.

WARNING: To avoid personal injury or death, do not place an intact undeployed airbag face down on a hard surface, the airbag will propel into the air if accidentally deployed.

NOTE: Check connectors - Clean and repair as necessary.
Connect the 8443 Load Tool to the Passenger Airbag Squib connector.

WARNING: To avoid personal injury or death, turn the ignition on, then reconnect the battery.
With the scan tool, read the active ORC DTC's.

Does the scan tool display: PASSENGER SQUIB 2 SHORT TO BATTERY?

Yes >> Go To 3

No >> Replace the Passenger Airbag in accordance with the Service Information.
Perform ORC VERIFICATION TEST - VER 1

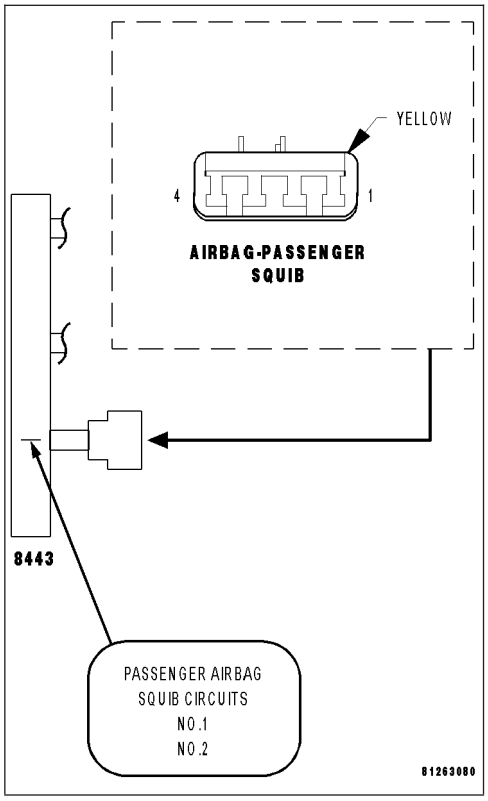

3. CHECK (R64) PASSENGER SQUIB 2 LINE 1 CIRCUIT AND (R62) PASSENGER SQUIB 2 LINE 2 CIRCUIT FOR A SHORT TO BATTERY

WARNING: To avoid personal injury or death, turn the ignition off, disconnect the battery and wait two minutes before proceeding.
Disconnect the 8443 Load Tool from the Passenger Airbag Squib connector.

Disconnect the ORC connectors.

NOTE: Check connectors - Clean and repair as necessary.
Connect the 8443 Load Tool ORC Adaptor to the ORC connector.

Measure the voltage of the (R64) Passenger Squib 2 Line 1 circuit between the Passenger Airbag Squib connector and ground.

Measure the voltage of the (R62) Passenger Squib 2 Line 2 circuit between the Passenger Airbag Squib connector and ground.

Is there any voltage present on either circuit?

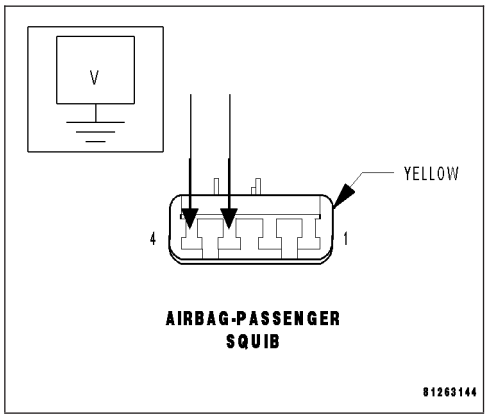

Yes >> Repair the Passenger Squib 2 circuits with voltage present for a short to battery.
Perform ORC VERIFICATION TEST - VER 1

No >> Go To 4

PASSENGER SQUIB 2 SHORT TO BATTERY (CONTINUED)

4. REPLACE THE ORC

WARNING: To avoid personal injury or death, turn the ignition off, disconnect the battery and wait two minutes before proceeding.

WARNING: If the Occupant Restraint Controller (ORC) is dropped at any time, it must be replaced. Failure to take the proper precautions can result in accidental airbag deployment and personal injury or death.

NOTE: When reconnecting airbag system components the Ignition must be turned off and the Battery must be disconnected.

Repair

Replace the ORC in accordance with the Service Information.
Perform ORC VERIFICATION TEST - VER 1

---

5. STORED ORC DTC

With the scan tool, record and erase all DTC's from all Airbag System Modules.

If any ACTIVE codes are present they must be resolved before diagnosing any stored codes.

WARNING: To avoid personal injury or death, turn the ignition off, disconnect the battery and wait two minutes before proceeding.

Using the wiring diagram/schematic as a guide, inspect the wiring and connectors.

Look for chaffed, pierced, pinched, or partially broken wires and broken, bent, pushed out, spread, corroded, or contaminated terminals.

The following additional checks may assist you in identifying a possible intermittent problem.

Reconnect any disconnected components and harness connector.

WARNING: To avoid personal injury or death, turn the ignition on, then reconnect the battery.

With the scan tool monitor active codes as you work through the following steps.

Wiggle the wiring harness and connectors of the related airbag circuit or component.

If codes are related to the Driver Airbag circuits, rotate the steering wheel from stop to stop.

If only stored codes return continue the test until the problem area has been isolated.

In the previous steps you have attempted to recreate the conditions responsible for setting active DTC in question.

Are any ACTIVE DTCs present?

Yes >> Select the appropriate diagnostic procedure from the Table of Contents in this section.

No >> No problem found at this time. Erase all codes before returning vehicle to customer.

PASSENGER SQUIB 2 SHORT TO GROUND

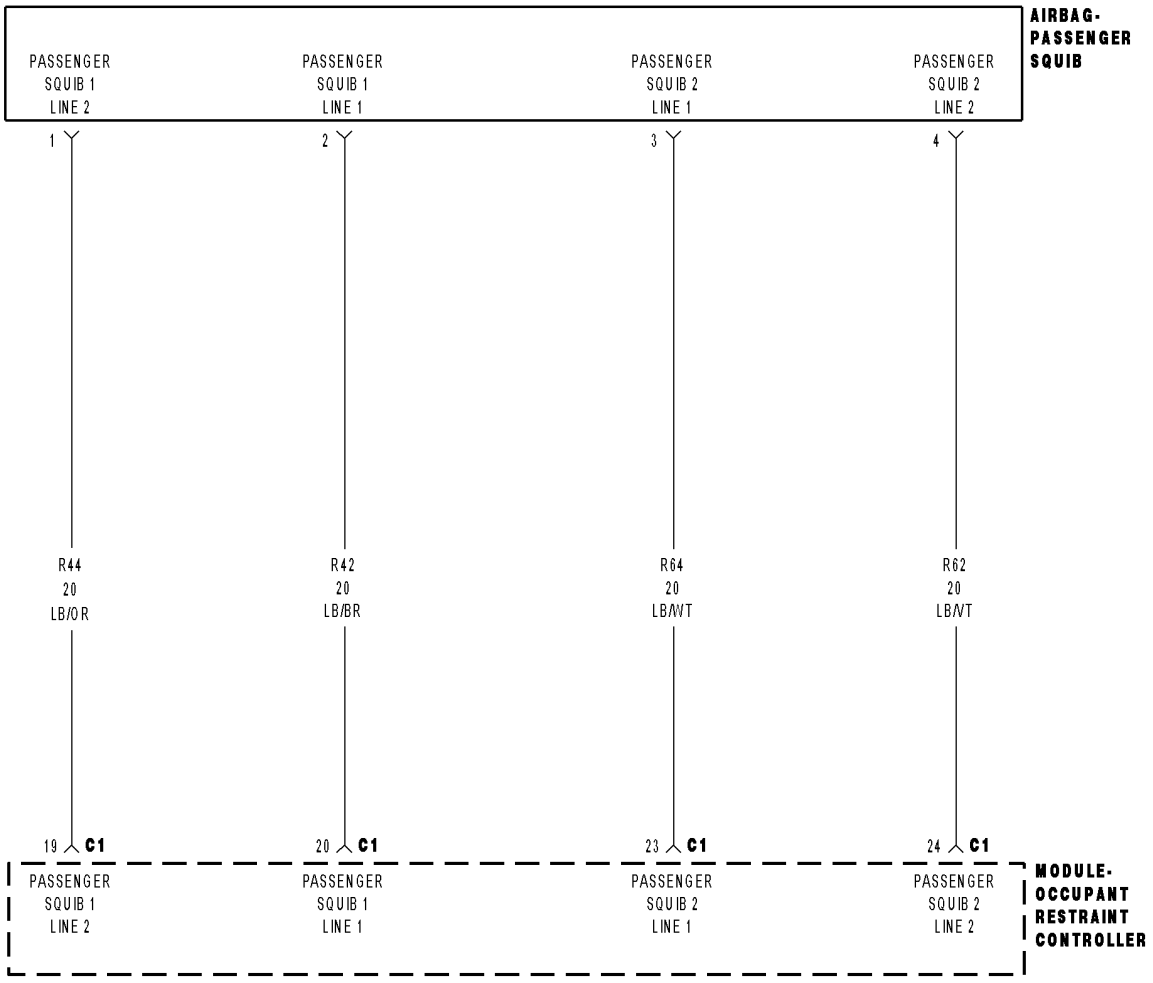

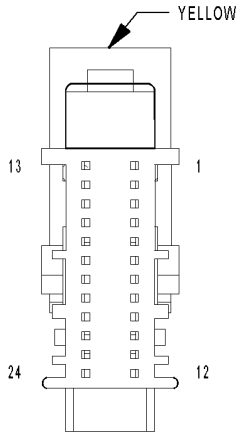

MODULE-
OCCUPANT
RESTRAINT
CONTROLLER C1

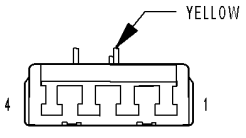

AIRBAG-PASSENGER
SQUIB

8141618b

PASSENGER SQUIB 2 SHORT TO GROUND (CONTINUED)

For the Air Bag System circuit diagram (Refer to 8 - ELECTRICAL/RESTRAINTS - SCHEMATICS AND DIAGRAMS).

For a complete wiring diagram **Refer to Section 8W**.

- **When Monitored:**
  With the ignition on, the Occupant Restraint Controller (ORC) monitors the resistance of the Passenger Squib 2 circuits.
- **Set Condition:**
  The ORC has detected low resistance on the Passenger Squib 2 circuits.

Possible Causes
(R64) PASSENGER SQUIB 2 LINE 1 CIRCUIT OR (R62) PASSENGER SQUIB 2 LINE 2 CIRCUIT SHORTED TO GROUND
PASSENGER AIRBAG
ORC

Diagnostic Test

1. DETERMINE ACTIVE OR STORED DTC

NOTE: Ensure the battery is fully charged.

NOTE: The scan tool, SRS Airbag Load Tool MRL 8443, and DVOM are required to perform the following test.

NOTE: When reconnecting airbag system components the Ignition must be turned off and the Battery must be disconnected.

Select Active or Stored DTC.

Is the DTC active or stored?

ORC - ACTIVE DTC
Go To 2

ORC - STORED DTC
Go To 5

PASSENGER SQUIB 2 SHORT TO GROUND (CONTINUED)

2. CHECK FOR SHORTED SQUIB CIRCUITS IN PASSENGER AIRBAG

WARNING: To avoid personal injury or death, turn the ignition off, disconnect the battery and wait two minutes before proceeding.
Disconnect the Passenger Airbag Squib connector.

WARNING: To avoid personal injury or death, do not place an intact undeployed airbag face down on a hard surface, the airbag will propel into the air if accidentally deployed.

NOTE: Check connectors - Clean and repair as necessary.
Connect the 8443 Load Tool to the Passenger Airbag Squib connector.

WARNING: To avoid personal injury or death, turn the ignition on, then reconnect the battery.
With the scan tool, read the active ORC DTC's.

Does the scan tool display: PASSENGER SQUIB 2 SHORT TO GROUND?

Yes >> Go To 3

No >> Replace the Passenger Airbag in accordance with the Service Information.
Perform ORC VERIFICATION TEST - VER 1

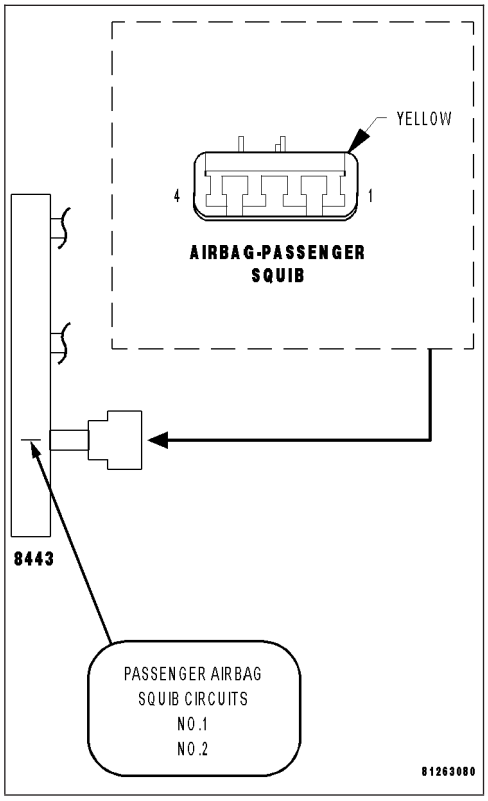

3. CHECK (R64) PASSENGER SQUIB 2 LINE 1 CIRCUIT AND (R62) PASSENGER SQUIB 2 LINE 2 CIRCUIT FOR A SHORT TO GROUND

WARNING: To avoid personal injury or death, turn the ignition off, disconnect the battery and wait two minutes before proceeding.
Disconnect the 8443 Load Tool from the Passenger Airbag Squib connector.

Disconnect the ORC connectors.

NOTE: Check connectors - Clean and repair as necessary.
Connect the 8443 Load Tool ORC Adaptor to the ORC connector.

Measure the resistance of the (R64) Passenger Squib 2 Line 1 circuit between ground and the Passenger Airbag Squib connector.

Measure the resistance of the (R62) Passenger Squib 2 Line 2 circuit between ground and the Passenger Airbag Squib connector.

Is the resistance below 10K ohms on either circuit?

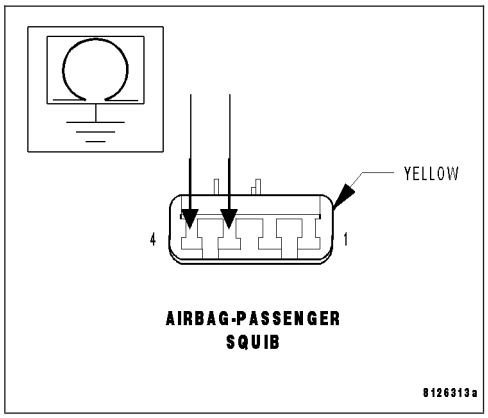

Yes >> Repair the Passenger Squib 2 circuits with a resistance below 10K ohms for a short to ground.
Perform ORC VERIFICATION TEST - VER 1

No >> Go To 4

PASSENGER SQUIB 2 SHORT TO GROUND (CONTINUED)

4. REPLACE THE ORC

WARNING: If the Occupant Restraint Controller (ORC) is dropped at any time, it must be replaced. Failure to take the proper precautions can result in accidental airbag deployment and personal injury or death.

NOTE: When reconnecting airbag system components the Ignition must be turned off and the Battery must be disconnected.

Repair

Replace the ORC in accordance with the Service Information.
Perform ORC VERIFICATION TEST - VER 1

---

5. STORED ORC DTC

With the scan tool, record and erase all DTC's from all Airbag System Modules.

If any ACTIVE codes are present they must be resolved before diagnosing any stored codes.

WARNING: To avoid personal injury or death, turn the ignition off, disconnect the battery and wait two minutes before proceeding.

Using the wiring diagram/schematic as a guide, inspect the wiring and connectors.

Look for chaffed, pierced, pinched, or partially broken wires and broken, bent, pushed out, spread, corroded, or contaminated terminals.

The following additional checks may assist you in identifying a possible intermittent problem.

Reconnect any disconnected components and harness connector.

WARNING: To avoid personal injury or death, turn the ignition on, then reconnect the battery.

With the scan tool monitor active codes as you work through the following steps.

Wiggle the wiring harness and connectors of the related airbag circuit or component.

If codes are related to the Driver Airbag circuits, rotate the steering wheel from stop to stop.

If only stored codes return continue the test until the problem area has been isolated.

In the previous steps you have attempted to recreate the conditions responsible for setting active DTC in question.

Are any ACTIVE DTCs present?

Yes >> Select the appropriate diagnostic procedure from the Table of Contents in this section.

No >> No problem found at this time. Erase all codes before returning vehicle to customer.

RIGHT CURTAIN SQUIB 1 CIRCUIT OPEN

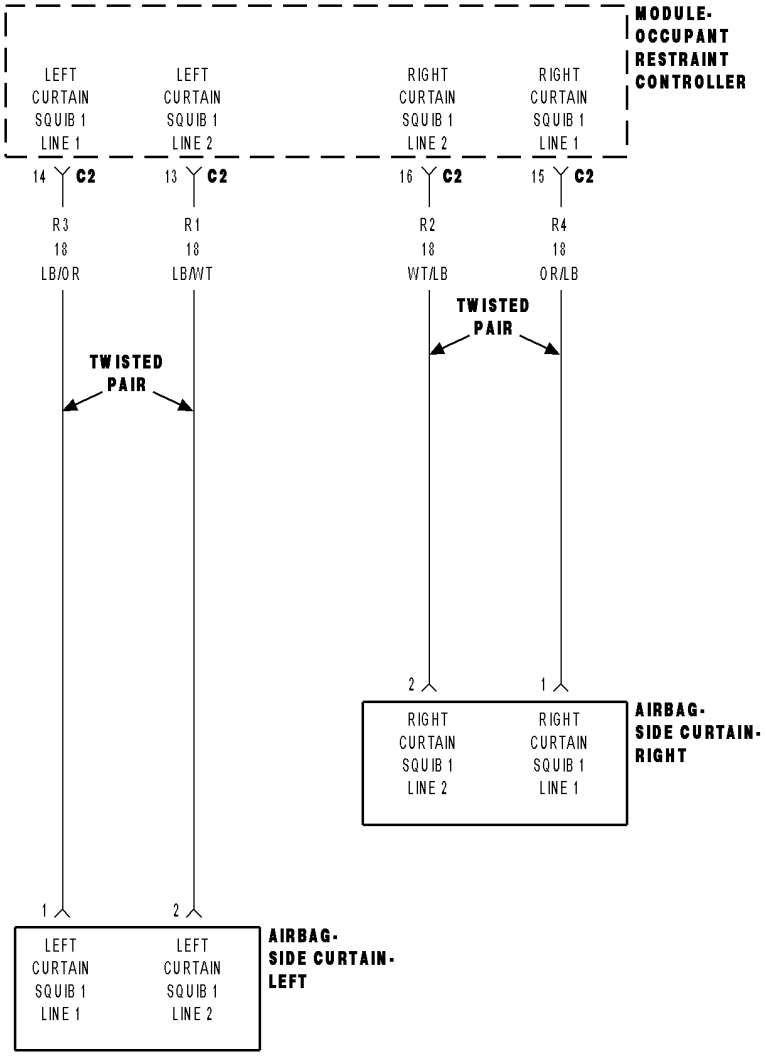

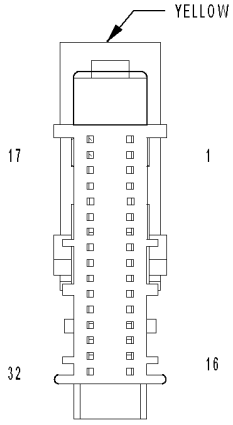

MODULE-
OCCUPANT
RESTRAINT
CONTROLLER C2

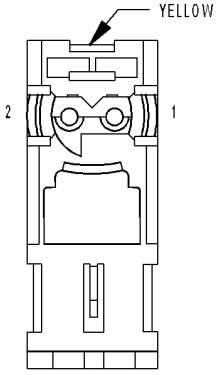

AIRBAG-
SIDE
CURTAIN-
RIGHT

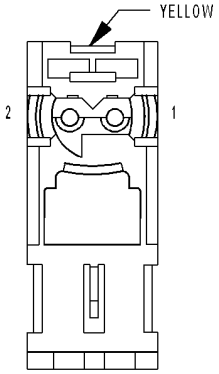

AIRBAG-
SIDE
CURTAIN-
LEFT

814f2ea2

RIGHT CURTAIN SQUIB 1 CIRCUIT OPEN (CONTINUED)

For the Air Bag System circuit diagram (Refer to 8 - ELECTRICAL/RESTRAINTS - SCHEMATICS AND DIAGRAMS).

For a complete wiring diagram **Refer to Section 8W**.

- **When Monitored:**
  With the ignition on, the Occupant Restraint Controller (ORC) monitors the resistance of the Right Curtain Squib 1 circuits.
- **Set Condition:**
  When the ORC has detects an open or high resistance on the Right Curtain Squib 1 circuits.

Possible Causes
(R4) RIGHT CURTAIN SQUIB 1 LINE 1 CIRCUIT OPEN
(R2) RIGHT CURTAIN SQUIB 1 LINE 2 CIRCUIT OPEN
RIGHT SIDE CURTAIN AIRBAG
ORC

Diagnostic Test

1. DETERMINE ACTIVE OR STORED DTC

NOTE: Ensure the battery is fully charged.

NOTE: The scan tool, SRS Airbag Load Tool MRL 8443, and DVOM are required to perform the following test.

NOTE: When reconnecting airbag system components the Ignition must be turned off and the Battery must be disconnected.

Select Active or Stored DTC.

Is the DTC active or stored?

ORC - ACTIVE DTC
Go To 2

ORC - STORED DTC
Go To 6

RIGHT CURTAIN SQUIB 1 CIRCUIT OPEN (CONTINUED)

2. CHECK FOR OPEN SQUIB CIRCUITS IN RIGHT SIDE CURTAIN AIRBAG

WARNING: To avoid personal injury or death, turn the ignition off, disconnect the battery and wait two minutes before proceeding.
Disconnect the Right Side Curtain Airbag connector.

WARNING: To avoid personal injury or death, do not place an intact uncoupled curtain airbag face down on a hard surface, the airbag will propel into the air if accidentally deployed.

NOTE: Check connectors - Clean and repair as necessary.
Connect the 8443 Load Tool and appropriate Jumper to the Right Side Curtain Airbag connector.

WARNING: To avoid personal injury or death, turn the ignition on, then reconnect the battery.
With the scan tool, read the active ORC DTC's.

Does the scan tool display: RIGHT CURTAIN SQUIB 1 CIRCUIT OPEN?

Yes >> Go to 3

No >> Replace the Right Side Curtain Airbag in accordance with the Service Information.
Perform ORC VERIFICATION TEST - VER 1

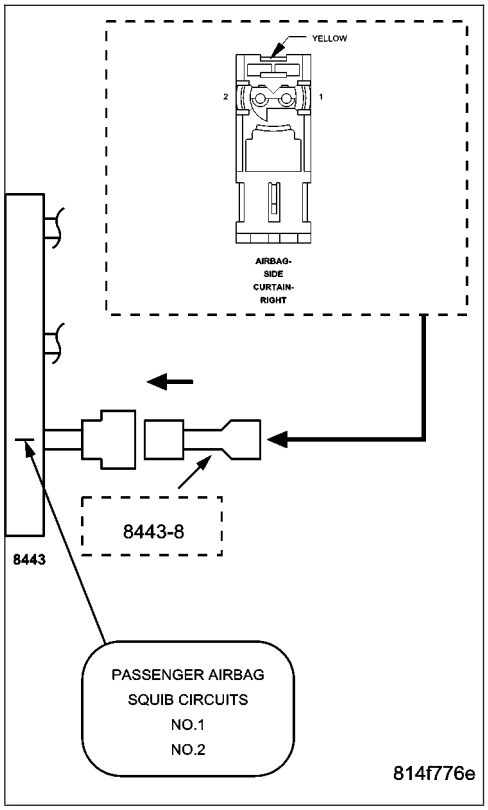

3. CHECK (R4) RIGHT CURTAIN SQUIB 1 LINE 1 CIRCUIT FOR AN OPEN

WARNING: To avoid personal injury or death, turn the ignition off, disconnect the battery and wait two minutes before proceeding.
Disconnect the 8443 Load Tool and Jumper from the Right Side Curtain Airbag connector.

Disconnect the ORC connectors.

NOTE: Check connectors - Clean and repair as necessary.
Connect the 8443 Load Tool ORC Adaptor to the ORC connector.

Measure the resistance of the (R4) Right Curtain Squib 1 Line 1 circuit between the Right Side Curtain Airbag connector and the 8443 ORC Adaptor.

Is the resistance below 1.0 ohm?

Yes >> Go To 4

No >> Repair the (R4) Right Curtain Squib 1 Line 1 circuit for an open. Then, Go To 4

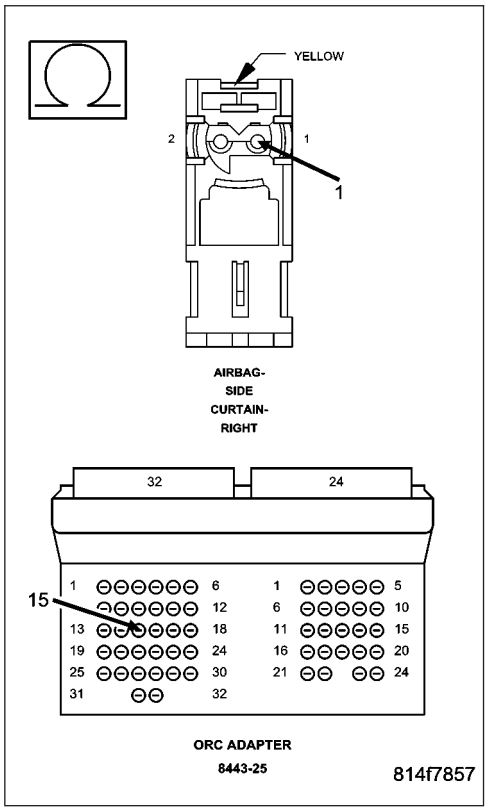

RIGHT CURTAIN SQUIB 1 CIRCUIT OPEN (CONTINUED)

4. CHECK (R2) RIGHT CURTAIN SQUIB 1 LINE 2 CIRCUIT FOR AN OPEN

Measure the resistance of the (R2) Right Curtain Squib 1 Line 2 circuit between the Right Side Curtain Airbag connector and the 8443 ORC Adaptor.

Is the resistance below 1.0 ohm?

Yes >> Go To 5

No >> Repair the (R2) Right Curtain Squib 1 Line 2 circuit for an open.
Perform ORC VERIFICATION TEST - VER 1

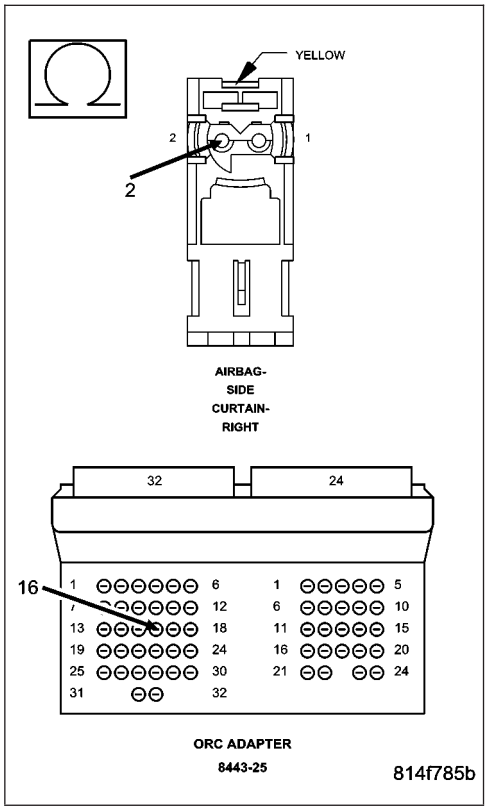

5. REPLACE THE ORC

WARNING: If the Occupant Restraint Controller (ORC) is dropped at any time, it must be replaced. Failure to take the proper precautions can result in accidental airbag deployment and personal injury or death.

NOTE: When reconnecting airbag system components the Ignition must be turned off and the Battery must be disconnected.

Repair

Replace the ORC in accordance with the Service Information.
Perform ORC VERIFICATION TEST - VER 1

RIGHT CURTAIN SQUIB 1 CIRCUIT OPEN (CONTINUED)

6. STORED ORC DTC

With the scan tool, record and erase all DTC's from all Airbag System Modules.

If any ACTIVE codes are present they must be resolved before diagnosing any stored codes.

WARNING: To avoid personal injury or death, turn the ignition off, disconnect the battery and wait two minutes before proceeding.

Using the wiring diagram/schematic as a guide, inspect the wiring and connectors.

Look for chaffed, pierced, pinched, or partially broken wires and broken, bent, pushed out, spread, corroded, or contaminated terminals.

The following additional checks may assist you in identifying a possible intermittent problem.

Reconnect any disconnected components and harness connector.

WARNING: To avoid personal injury or death, turn the ignition on, then reconnect the battery.

With the scan tool monitor active codes as you work through the following steps.

Wiggle the wiring harness and connectors of the related airbag circuit or component.

If codes are related to the Driver Airbag circuits, rotate the steering wheel from stop to stop.

If only stored codes return continue the test until the problem area has been isolated.

In the previous steps you have attempted to recreate the conditions responsible for setting active DTC in question.

Are any ACTIVE DTCs present?

Yes >> Select the appropriate diagnostic procedure from the Table of Contents in this section.

No >> No problem found at this time. Erase all codes before returning vehicle to customer.

RIGHT CURTAIN SQUIB 1 CIRCUIT SHORT

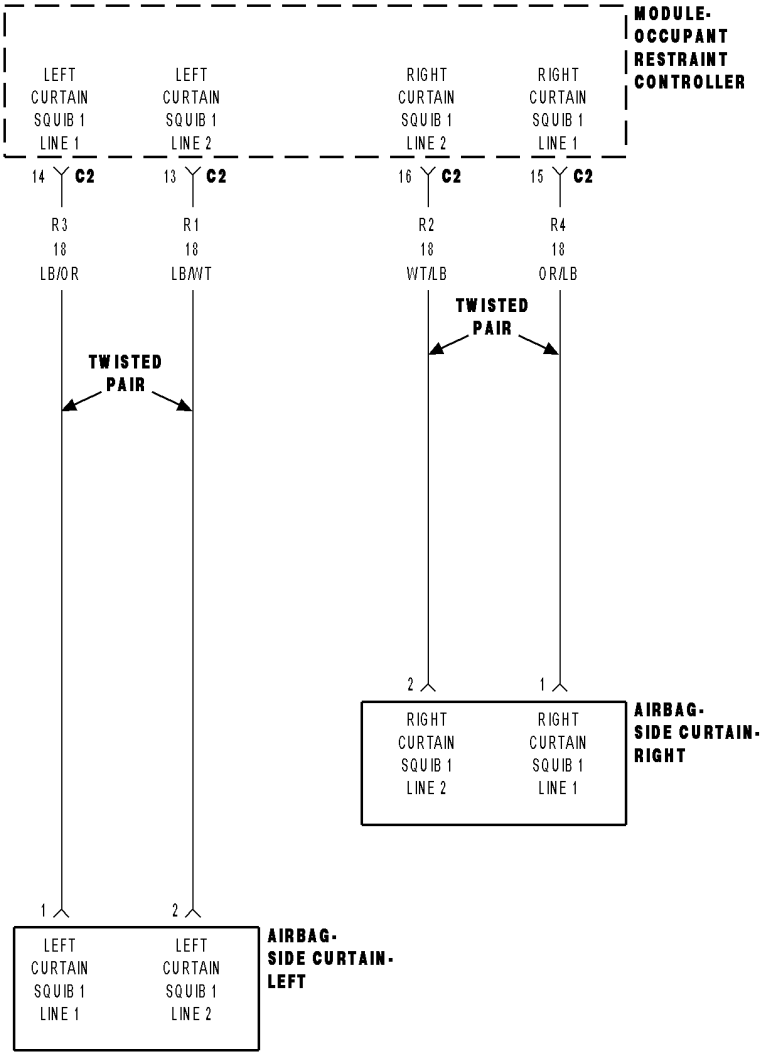

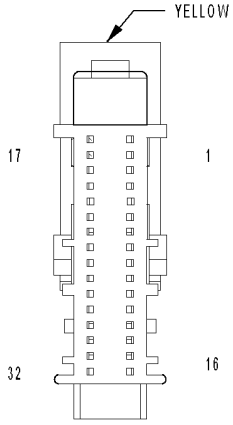

MODULE-
OCCUPANT
RESTRAINT
CONTROLLER C2

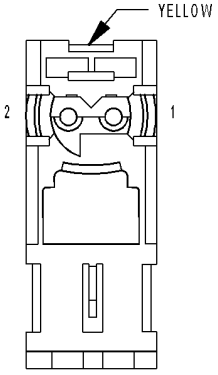

AIRBAG-
SIDE
CURTAIN-
RIGHT

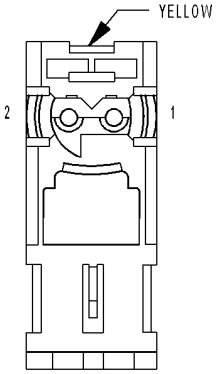

AIRBAG-
SIDE
CURTAIN-
LEFT

814f2ea2

RIGHT CURTAIN SQUIB 1 CIRCUIT SHORT (CONTINUED)

For the Air Bag System circuit diagram (Refer to 8 - ELECTRICAL/RESTRAINTS - SCHEMATICS AND DIAGRAMS).

For a complete wiring diagram **Refer to Section 8W**.

- **When Monitored:**
  With the ignition on, the Occupant Restraint Controller (ORC) monitors the resistance of the Right Curtain Squib 1 circuits.
- **Set Condition:**
  The ORC has detected low resistance between the Right Curtain Squib 1 circuits.

Possible Causes
(R4) RIGHT CURTAIN SQUIB 1 LINE 1 CIRCUIT SHORTED TO (R2) RIGHT CURTAIN SQUIB 1 LINE 2 CIRCUIT
RIGHT SIDE CURTAIN AIRBAG
ORC

Diagnostic Test

1. DETERMINE ACTIVE OR STORED DTC

NOTE: Ensure the battery is fully charged.

NOTE: The scan tool, SRS Airbag Load Tool MRL 8443, and DVOM are required to perform the following test.

NOTE: When reconnecting airbag system components the Ignition must be turned off and the Battery must be disconnected.

Select Active or Stored DTC.

Is the DTC active or stored?

ORC - ACTIVE DTC
Go To 2

ORC - STORED DTC
Go To 5

RIGHT CURTAIN SQUIB 1 CIRCUIT SHORT (CONTINUED)

2. CHECK FOR SHORTED SQUIB CIRCUITS IN RIGHT SIDE CURTAIN AIRBAG

WARNING: To avoid personal injury or death, turn the ignition off, disconnect the battery and wait two minutes before proceeding.
Disconnect the Right Side Curtain Airbag connector.

WARNING: To avoid personal injury or death, do not place an intact uncoupled curtain airbag face down on a hard surface, the airbag will propel into the air if accidentally deployed.

NOTE: Check connectors - Clean and repair as necessary.
Connect the 8443 Load Tool and appropriate Jumper to the Right Side Curtain Airbag connector.

WARNING: To avoid personal injury or death, turn the ignition on, then reconnect the battery.
With the scan tool, read the active ORC DTC's.

Does the scan tool display: RIGHT CURTAIN SQUIB 1 CIRCUIT SHORT?

Yes >> Go to 3

No >> Replace the Right Side Curtain Airbag in accordance with the Service Information.
Perform ORC VERIFICATION TEST - VER 1

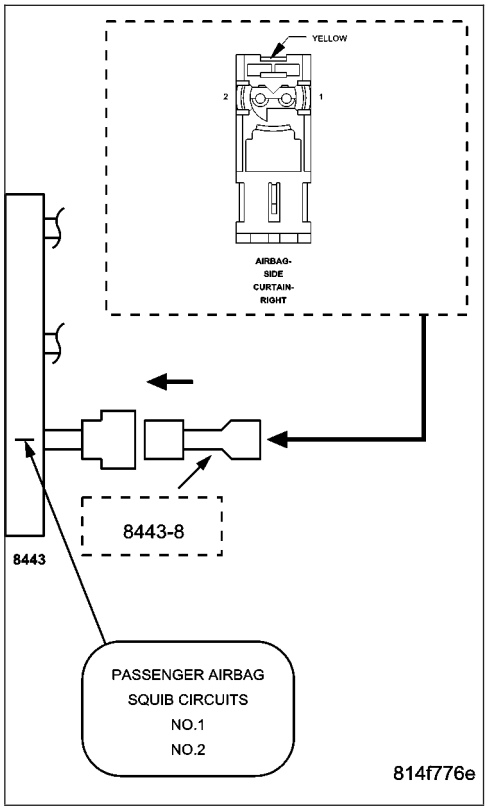

3. CHECK (R4) RIGHT CURTAIN SQUIB 1 LINE 1 CIRCUIT FOR A SHORT TO (R2) RIGHT CURTAIN SQUIB 1 LINE 2 CIRCUIT

WARNING: To avoid personal injury or death, turn the ignition off, disconnect the battery and wait two minutes before proceeding.
Disconnect the 8443 Load Tool and Jumper from the Right Side Curtain Airbag connector.

Disconnect the ORC connectors.

NOTE: Check connectors - Clean and repair as necessary.
Connect the 8443 Load Tool ORC Adaptor to the ORC connector.

Measure the resistance between the (R4) Right Curtain Squib 1 Line 1 circuit and the (R2) Right Curtain Squib 1 Line 2 circuit at the Right Side Curtain Airbag connector.

Is the resistance below 10K ohms?

Yes >> Repair the (R4) Right Curtain Squib 1 Line 1 circuit for a short to the (R2) Right Curtain Squib 1 Line 2 circuit.
Perform ORC VERIFICATION TEST - VER 1

No >> Go to 4

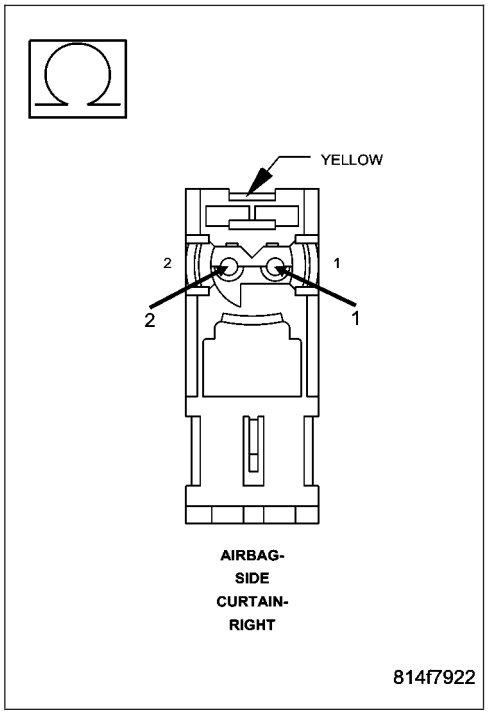

RIGHT CURTAIN SQUIB 1 CIRCUIT SHORT (CONTINUED)

4. REPLACE THE ORC

WARNING: If the Occupant Restraint Controller (ORC) is dropped at any time, it must be replaced. Failure to take the proper precautions can result in accidental airbag deployment and personal injury or death.

NOTE: When reconnecting airbag system components the Ignition must be turned off and the Battery must be disconnected.

Repair

Replace the ORC in accordance with the Service Information.
Perform ORC VERIFICATION TEST - VER 1

---

5. STORED ORC DTC

With the scan tool, record and erase all DTC's from all Airbag System Modules.

If any ACTIVE codes are present they must be resolved before diagnosing any stored codes.

WARNING: To avoid personal injury or death, turn the ignition off, disconnect the battery and wait two minutes before proceeding.

Using the wiring diagram/schematic as a guide, inspect the wiring and connectors.

Look for chaffed, pierced, pinched, or partially broken wires and broken, bent, pushed out, spread, corroded, or contaminated terminals.

The following additional checks may assist you in identifying a possible intermittent problem.

Reconnect any disconnected components and harness connector.

WARNING: To avoid personal injury or death, turn the ignition on, then reconnect the battery.

With the scan tool monitor active codes as you work through the following steps.

Wiggle the wiring harness and connectors of the related airbag circuit or component.

If codes are related to the Driver Airbag circuits, rotate the steering wheel from stop to stop.

If only stored codes return continue the test until the problem area has been isolated.

In the previous steps you have attempted to recreate the conditions responsible for setting active DTC in question.

Are any ACTIVE DTC's present?

Yes >> Select the appropriate diagnostic procedure from the Table of Contents in this section.

No >> No problem found at this time. Erase all codes before returning vehicle to customer.

RIGHT CURTAIN SQUIB 1 SHORT TO BATTERY

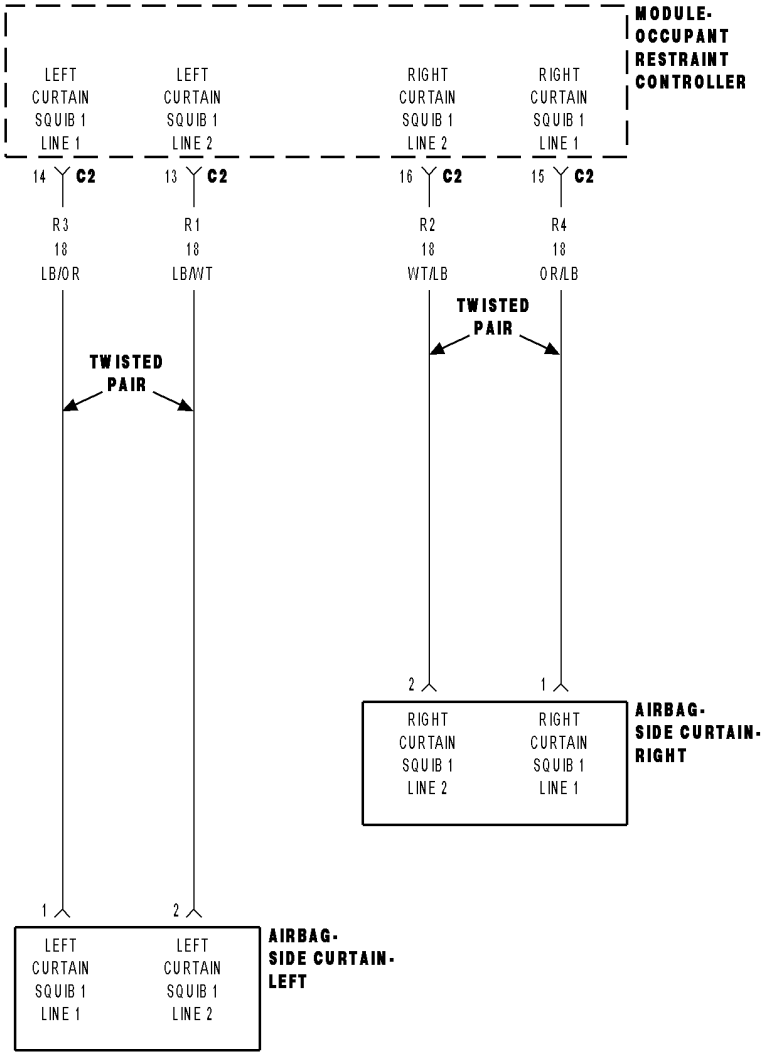

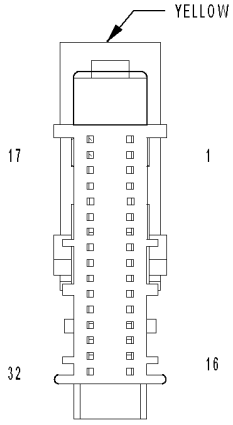

MODULE-
OCCUPANT
RESTRAINT
CONTROLLER C2

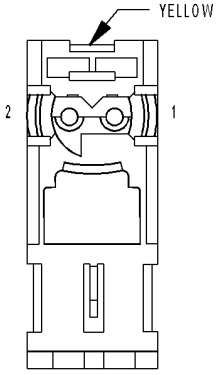

AIRBAG-
SIDE
CURTAIN-
RIGHT

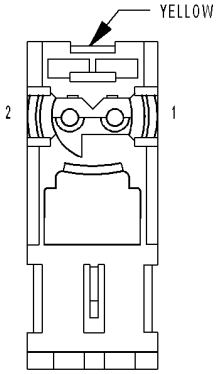

AIRBAG-
SIDE
CURTAIN-
LEFT

814f2ea2

RIGHT CURTAIN SQUIB 1 SHORT TO BATTERY (CONTINUED)

For the Air Bag System circuit diagram (Refer to 8 - ELECTRICAL/RESTRAINTS - SCHEMATICS AND DIAGRAMS).

For a complete wiring diagram **Refer to Section 8W**.

- **When Monitored:**
  With the ignition on, the Occupant Restraint Controller (ORC) monitors the voltage on the Right Curtain Squib 1 circuits.
- **Set Condition:**
  When the ORC detects voltage on the Right Curtain Squib 1 circuits.

Possible Causes
(R4) RIGHT CURTAIN SQUIB 1 LINE 1 CIRCUIT OR (R2) RIGHT CURTAIN SQUIB 1 LINE 2 CIRCUIT SHORTED TO BATTERY
RIGHT SIDE CURTAIN AIRBAG
ORC

Diagnostic Test

1. DETERMINE ACTIVE OR STORED DTC

NOTE: Ensure the battery is fully charged.

NOTE: The scan tool, SRS Airbag Load Tool MRL 8443, and DVOM are required to perform the following test.

NOTE: When reconnecting airbag system components the Ignition must be turned off and the Battery must be disconnected.

Select Active or Stored DTC.

Is the DTC active or stored?

ORC - ACTIVE DTC
Go To 2

ORC - STORED DTC
Go To 5

RIGHT CURTAIN SQUIB 1 SHORT TO BATTERY (CONTINUED)

2. CHECK FOR SHORTED SQUIB CIRCUITS IN RIGHT SIDE CURTAIN AIRBAG

WARNING: To avoid personal injury or death, turn the ignition off, disconnect the battery and wait two minutes before proceeding.
Disconnect the Right Side Curtain Airbag connector.

WARNING: To avoid personal injury or death, do not place an intact uncoupled curtain airbag face down on a hard surface, the airbag will propel into the air if accidentally deployed.

NOTE: Check connectors - Clean and repair as necessary.
Connect the 8443 Load Tool and appropriate Jumper to the Right Side Curtain Airbag connector.

WARNING: To avoid personal injury or death, turn the ignition on, then reconnect the battery.
With the scan tool, read the active ORC DTC's.

Does the scan tool display: RIGHT CURTAIN SQUIB 1 SHORT TO BATTERY?

Yes >> Go To 3

No >> Replace the Right Side Curtain Airbag in accordance with the Service Information.
Perform ORC VERIFICATION TEST - VER 1

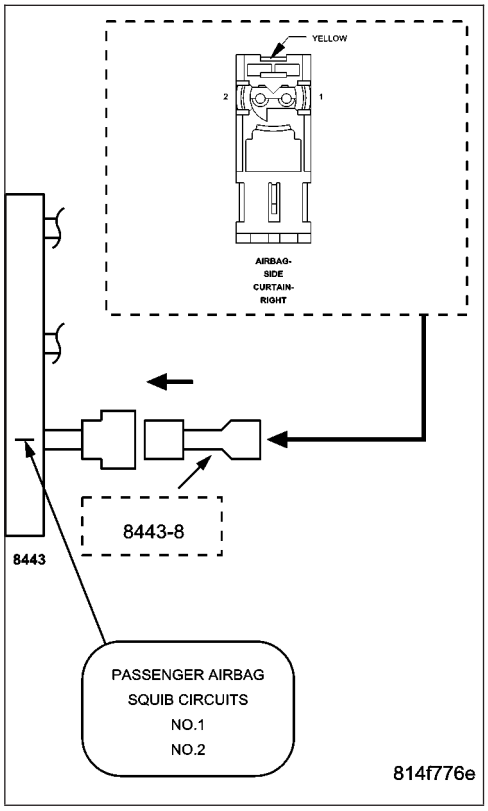

3. CHECK (R4) RIGHT CURTAIN SQUIB 1 LINE 1 CIRCUIT AND (R2) RIGHT CURTAIN SQUIB 1 LINE 2 CIRCUIT FOR A SHORT TO BATTERY

WARNING: To avoid personal injury or death, turn the ignition off, disconnect the battery and wait two minutes before proceeding.
Disconnect the 8443 Load Tool and Jumper from the Right Side Curtain Airbag connector.

Disconnect the ORC connectors.

NOTE: Check connectors - Clean and repair as necessary.
Connect the 8443 Load Tool ORC Adaptor to the ORC connector.

Measure the voltage of the (R4) Right Curtain Squib 1 Line 1 circuit between the Right Side Curtain Airbag connector and ground.

Measure the voltage of the (R2) Right Curtain Squib 1 Line 2 circuit between the Right Side Curtain Airbag connector and ground.

Is there any voltage present on either circuit?

Yes >> Repair the Right Curtain Squib 1 circuits with voltage present for a short to battery.
Perform ORC VERIFICATION TEST - VER 1

No >> Go to 4

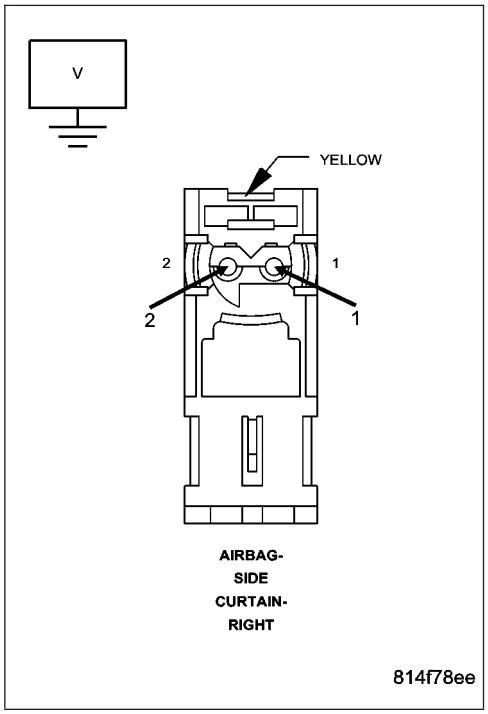

RIGHT CURTAIN SQUIB 1 SHORT TO BATTERY (CONTINUED)

4. REPLACE THE ORC

WARNING: To avoid personal injury or death, turn the ignition off, disconnect the battery and wait two minutes before proceeding.

WARNING: If the Occupant Restraint Controller (ORC) is dropped at any time, it must be replaced. Failure to take the proper precautions can result in accidental airbag deployment and personal injury or death.

NOTE: When reconnecting airbag system components the Ignition must be turned off and the Battery must be disconnected.

Repair

Replace the ORC in accordance with the Service Information.
Perform ORC VERIFICATION TEST - VER 1

---

5. STORED ORC DTC

With the scan tool, record and erase all DTC's from all Airbag System Modules.

If any ACTIVE codes are present they must be resolved before diagnosing any stored codes.

WARNING: To avoid personal injury or death, turn the ignition off, disconnect the battery and wait two minutes before proceeding.

Using the wiring diagram/schematic as a guide, inspect the wiring and connectors.

Look for chaffed, pierced, pinched, or partially broken wires and broken, bent, pushed out, spread, corroded, or contaminated terminals.

The following additional checks may assist you in identifying a possible intermittent problem.

Reconnect any disconnected components and harness connector.

WARNING: To avoid personal injury or death, turn the ignition on, then reconnect the battery.

With the scan tool monitor active codes as you work through the following steps.

Wiggle the wiring harness and connectors of the related airbag circuit or component.

If codes are related to the Driver Airbag circuits, rotate the steering wheel from stop to stop.

If only stored codes return continue the test until the problem area has been isolated.

In the previous steps you have attempted to recreate the conditions responsible for setting active DTC in question.

Are any ACTIVE DTCs present?

Yes >> Select the appropriate diagnostic procedure from the Table of Contents in this section.

No >> No problem found at this time. Erase all codes before returning vehicle to customer

---

RIGHT CURTAIN SQUIB 1 SHORT TO GROUND

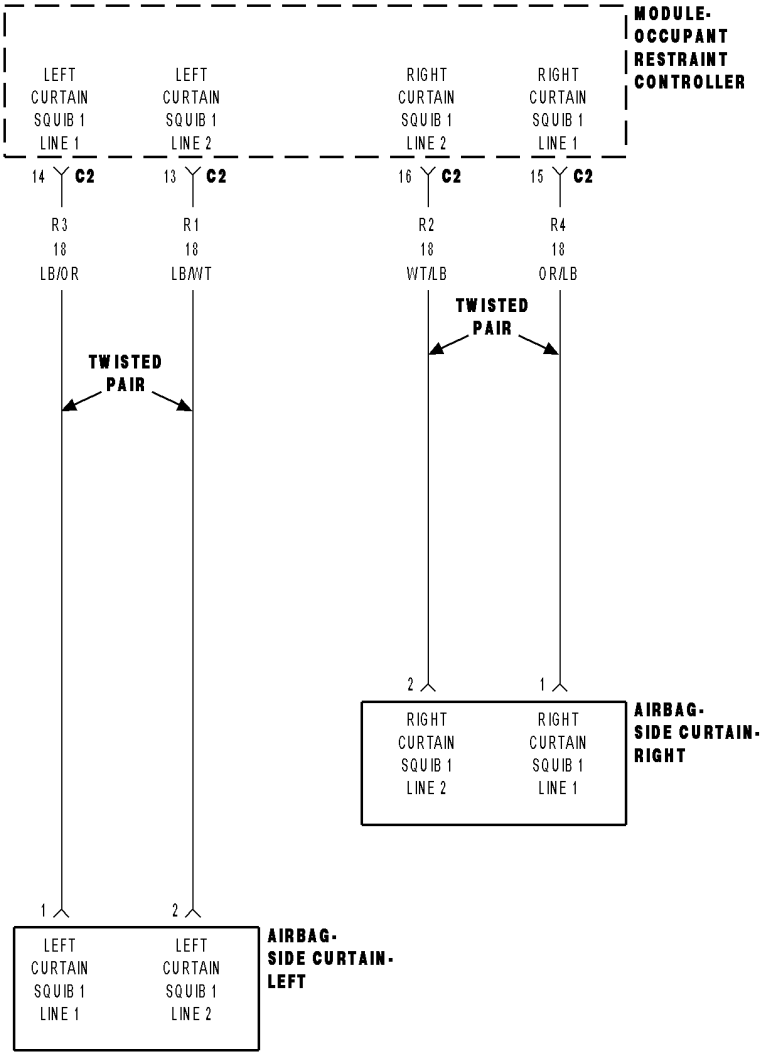

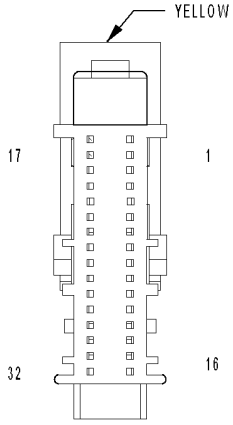

MODULE-
OCCUPANT
RESTRAINT
CONTROLLER C2

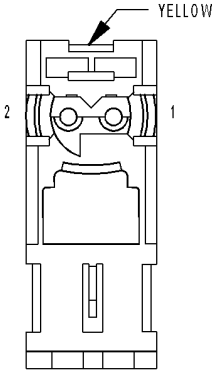

AIRBAG-
SIDE
CURTAIN-
RIGHT

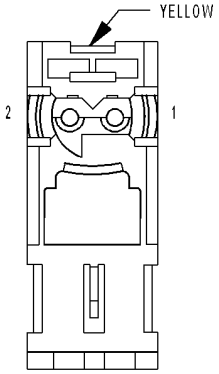

AIRBAG-
SIDE
CURTAIN-
LEFT

814f2ea2

RIGHT CURTAIN SQUIB 1 SHORT TO GROUND (CONTINUED)

For the Air Bag System circuit diagram (Refer to 8 - ELECTRICAL/RESTRAINTS - SCHEMATICS AND DIAGRAMS).

For a complete wiring diagram **Refer to Section 8W**.

- **When Monitored:**
  With the ignition on, the Occupant Restraint Controller (ORC) monitors the resistance of the Right Curtain Squib 1 circuits.
- **Set Condition:**
  The ORC has detected low resistance on the Right Curtain Squib 1 circuits.

Possible Causes
(R4) RIGHT CURTAIN SQUIB 1 LINE 1 CIRCUIT OR (R2) RIGHT CURTAIN SQUIB 1 LINE 2 CIRCUIT SHORTED TO GROUND
RIGHT SIDE CURTAIN AIRBAG
ORC

Diagnostic Test

1. DETERMINE ACTIVE OR STORED DTC

NOTE: Ensure the battery is fully charged.

NOTE: The scan tool, SRS Airbag Load Tool MRL 8443, and DVOM are required to perform the following test.

NOTE: When reconnecting airbag system components the Ignition must be turned off and the Battery must be disconnected.

Select Active or Stored DTC.

Is the DTC active or stored?

ORC - ACTIVE DTC
Go To 2

ORC - STORED DTC
Go To 5

RIGHT CURTAIN SQUIB 1 SHORT TO GROUND (CONTINUED)

2. CHECK FOR SHORTED SQUIB CIRCUITS IN RIGHT SIDE CURTAIN AIRBAG

WARNING: To avoid personal injury or death, turn the ignition off, disconnect the battery and wait two minutes before proceeding.
Disconnect the Right Side Curtain Airbag connector.

WARNING: To avoid personal injury or death, do not place an intact undeployed curtain airbag face down on a hard surface, the airbag will propel into the air if accidentally deployed.

NOTE: Check connectors - Clean and repair as necessary.
Connect the 8443 Load Tool and appropriate Jumper to the Right Side Curtain Airbag connector.

WARNING: To avoid personal injury or death, turn the ignition on, then reconnect the battery.
With the scan tool, read the active ORC DTC's.

Does the scan tool display: RIGHT CURTAIN SQUIB 1 SHORT TO GROUND?

Yes >> Go To 3

No >> Replace the Right Side Curtain Airbag in accordance with the Service Information.
Perform ORC VERIFICATION TEST - VER 1

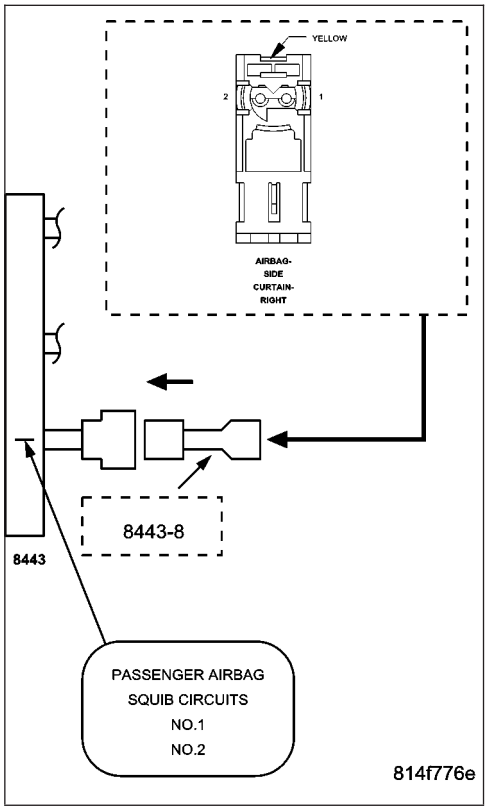

3. CHECK (R4) RIGHT CURTAIN SQUIB 1 LINE 1 CIRCUIT AND (R2) RIGHT CURTAIN SQUIB 1 LINE 2 CIRCUIT FOR A SHORT TO GROUND

WARNING: To avoid personal injury or death, turn the ignition off, disconnect the battery and wait two minutes before proceeding.
Disconnect the 8443 Load Tool and Jumper from the Right Side Curtain Airbag connector.

Disconnect the ORC connectors.

NOTE: Check connectors - Clean and repair as necessary.
Connect the 8443 Load Tool ORC Adaptor to the ORC connector.

Measure the resistance of the (R4) Right Curtain Squib 1 Line 1 circuit between ground and the Right Side Curtain Airbag connector.

Measure the resistance of the (R2) Right Curtain Squib 1 Line 2 circuit between ground and the Right Side Curtain Airbag connector.

Is the resistance below 10K ohms on either circuit?

Yes >> Repair the Right Curtain Squib 1 circuits with a resistance below 10K ohms for a short to ground.
Perform ORC VERIFICATION TEST - VER 1

No >> Go to 4

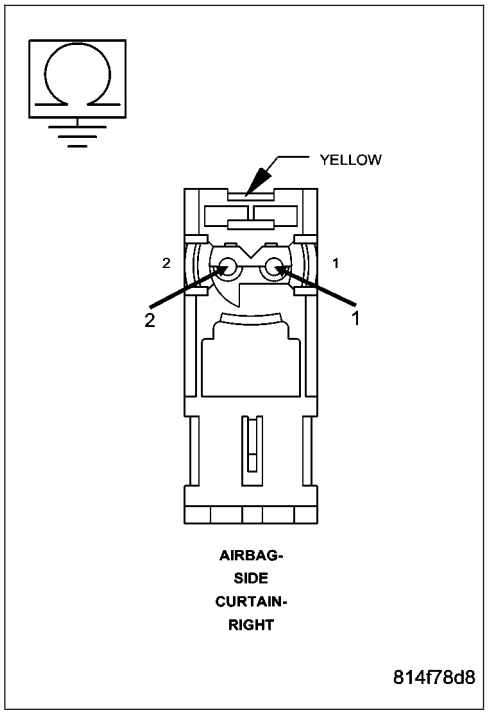

RIGHT CURTAIN SQUIB 1 SHORT TO GROUND (CONTINUED)

4. REPLACE THE ORC

WARNING: If the Occupant Restraint Controller (ORC) is dropped at any time, it must be replaced. Failure to take the proper precautions can result in accidental airbag deployment and personal injury or death.

NOTE: When reconnecting airbag system components the Ignition must be turned off and the Battery must be disconnected.

Repair

Replace the ORC in accordance with the Service Information.
Perform ORC VERIFICATION TEST - VER 1

---

5. STORED ORC DTC

With the scan tool, record and erase all DTC's from all Airbag System Modules.

If any ACTIVE codes are present they must be resolved before diagnosing any stored codes.

WARNING: To avoid personal injury or death, turn the ignition off, disconnect the battery and wait two minutes before proceeding.

Using the wiring diagram/schematic as a guide, inspect the wiring and connectors.

Look for chaffed, pierced, pinched, or partially broken wires and broken, bent, pushed out, spread, corroded, or contaminated terminals.

The following additional checks may assist you in identifying a possible intermittent problem.

Reconnect any disconnected components and harness connector.

WARNING: To avoid personal injury or death, turn the ignition on, then reconnect the battery.

With the scan tool monitor active codes as you work through the following steps.

Wiggle the wiring harness and connectors of the related airbag circuit or component.

If codes are related to the Driver Airbag circuits, rotate the steering wheel from stop to stop.

If only stored codes return continue the test until the problem area has been isolated.

In the previous steps you have attempted to recreate the conditions responsible for setting active DTC in question.

Are any ACTIVE DTC's present?

Yes >> Select the appropriate diagnostic procedure from the Table of Contents in this section.

No >> No problem found at this time. Erase all codes before returning vehicle to customer.

RIGHT SIDE IMPACT SENSOR 1 INTERNAL 1

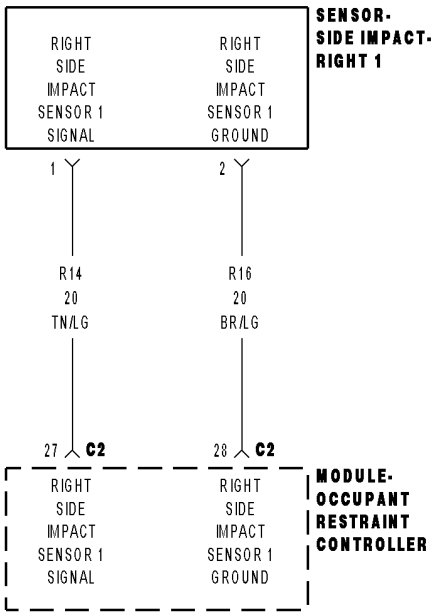

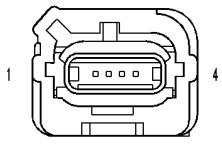

SENSOR-SIDE
IMPACT-RIGHT 1

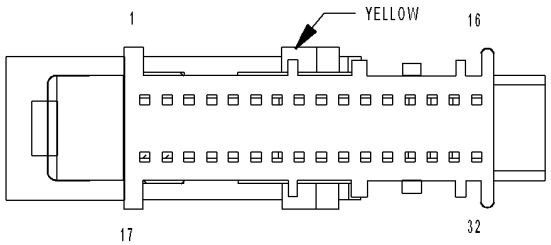

MODULE-
OCCUPANT
RESTRAINT
CONTROLLER C2

81471fc5

RIGHT SIDE IMPACT SENSOR 1 INTERNAL 1 (CONTINUED)

For the Airbag System circuit diagram (Refer to 8 - ELECTRICAL/RESTRAINTS - SCHEMATICS AND DIAGRAMS).

For a complete wiring diagram **Refer to Section 8W**.

- **When Monitored:**
  The Occupant Restraint Controller (ORC) continuously communicates with the Right Side Impact Sensor 1 over the sensor signal circuit. The sensor communication and on board diagnostics are powered by the ORC signal.
- **Set Condition:**
  This code will set, if the ORC and the Right Side Impact Sensor 1 do not establish and maintain valid data communications.

Possible Causes
(R14) RIGHT SIDE IMPACT SENSOR 1 SIGNAL CIRCUIT SHORTED TO BATTERY
(R14) RIGHT SIDE IMPACT SENSOR 1 SIGNAL CIRCUIT SHORTED TO GROUND
(R14, R16) RIGHT SIDE IMPACT SENSOR 1 CIRCUITS SHORTED TOGETHER
(R16) RIGHT SIDE IMPACT SENSOR 1 GROUND CIRCUIT OPEN
(R14) RIGHT SIDE IMPACT SENSOR 1 SIGNAL CIRCUIT OPEN
ORC, RIGHT SIDE IMPACT SENSOR 1

Diagnostic Test

1. VERIFY THAT DTC RIGHT SIDE IMPACT SENSOR 1 INTERNAL 1 IS ACTIVE

NOTE: Ensure the battery is fully charged.

NOTE: When reconnecting Airbag system components, the ignition must be turned off and the battery must be disconnected.

Turn the ignition on.

With the scan tool, read ORC DTCs.

Does the scan tool display active: RIGHT SIDE IMPACT SENSOR 1 INTERNAL 1?

Yes >> Go To 2

No >> Go To 9

RIGHT SIDE IMPACT SENSOR 1 INTERNAL 1 (CONTINUED)

2. CHECK THE (R14, R16) RIGHT SIDE IMPACT SENSOR 1 SIGNAL AND GROUND CIRCUITS FOR A SHORT TO BATTERY

WARNING: To avoid personal injury or death, turn the ignition off, disconnect the battery and wait two minutes before proceeding.
Disconnect the Right side Impact Sensor 1 connector.

Disconnect the ORC connector.

WARNING: To avoid personal injury or death, turn the ignition on, then reconnect the battery.
Measure the voltage of the (R14) Right Side Impact Sensor 1 Signal circuit and (R16) Right Side Impact Sensor 1 Ground circuit at the Right Side Impact Sensor 1 connector and ground.

Is there any voltage present?

Yes >> Repair the (R14, R16) Right Side Impact Sensor 1 circuits for a short to battery.
Perform the ORC VERIFICATION TEST - VER 1.

No >> Go To 3

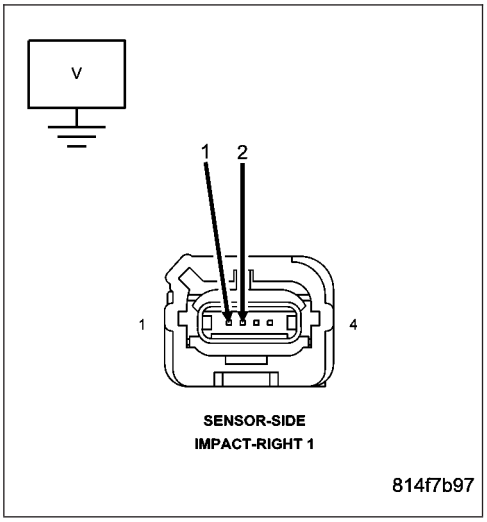

3. CHECK THE (R14) RIGHT SIDE IMPACT SENSOR 1 SIGNAL CIRCUIT FOR A SHORT TO GROUND

WARNING: To avoid personal injury or death, turn ignition on, then reconnect the battery.
Measure the resistance of the (R14) Right Side Impact Sensor 1 Signal circuit between the Right Side Impact Sensor 1 connector and ground.

Is the resistance below 100K ohms?

Yes >> Repair the (R14) Right Side Impact Sensor 1 Signal circuit for a short to ground.
Perform the ORC VERIFICATION TEST - VER 1.

No >> Go To 4

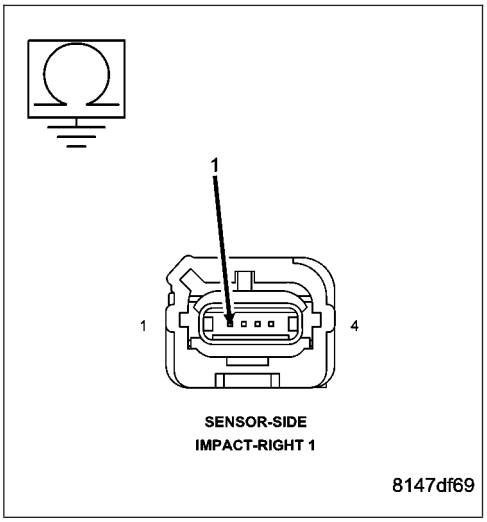

RIGHT SIDE IMPACT SENSOR 1 INTERNAL 1 (CONTINUED)

4. CHECK THE (R14, R16) RIGHT SIDE IMPACT SENSOR CIRCUITS FOR A SHORT TOGETHER

Measure the resistance between the (R14) Right Side Impact Sensor 1 Signal circuit and (R16) Right Side Impact Sensor 1 Ground circuit at the Right Side Impact Sensor 1 connector.

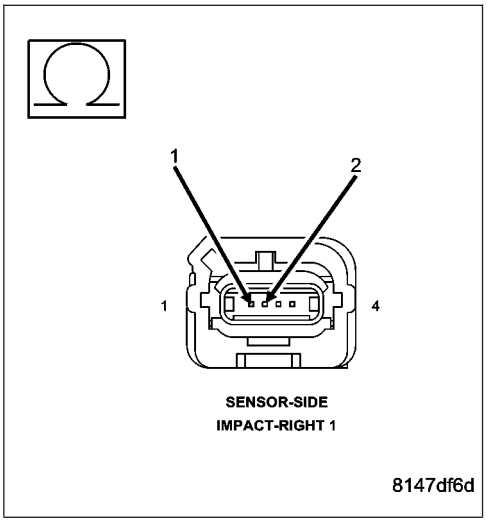

Is the resistance below 100K ohms?

Yes >> Repair the (R14, R16) Right Side Impact Sensor 1 circuits shorted together.
Perform the ORC VERIFICATION TEST - VER 1.

No >> Go To 5

5. CHECK THE (R16) RIGHT SIDE IMPACT SENSOR 1 GROUND CIRCUIT FOR AN OPEN OR HIGH RESISTANCE

Connect the 8443 Load Tool ORC Adaptor to the Occupant Control Module connector.

Measure the resistance of the (R16) Right Side Impact Sensor 1 Ground circuit between the Right Side Impact Sensor 1 connector and the 8443 Load Tool ORC Adaptor.

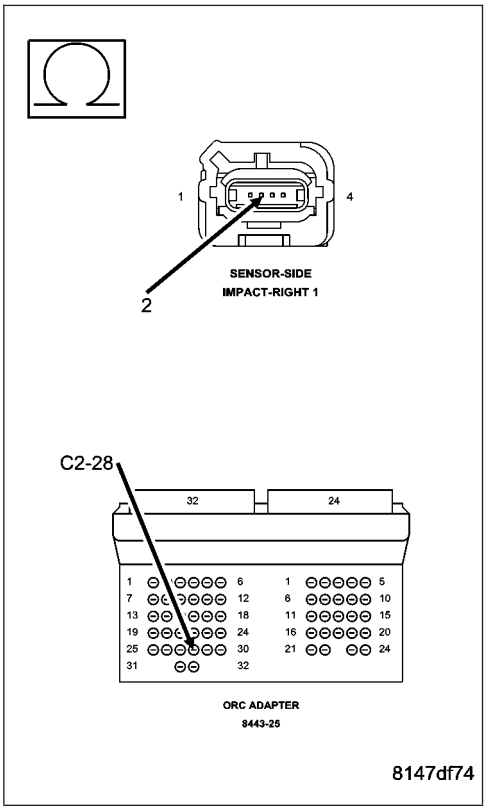

Is the resistance below 1 ohm?

Yes >> Go To 6

No >> Repair the (R16) Right Side Impact Sensor 1 Ground circuit for an open or high resistance.
Perform the ORC VERIFICATION TEST - VER 1.

RIGHT SIDE IMPACT SENSOR 1 INTERNAL 1 (CONTINUED)

6. CHECK THE (R14) RIGHT SIDE IMPACT SENSOR 1 CIRCUIT FOR AN OPEN OR HIGH RESISTANCE

Measure the resistance of the (R14) Right Side Impact Sensor 1 Signal circuit between the Right Side Impact Sensor 1 connector and the 8443 Load Tool ORC Adaptor.

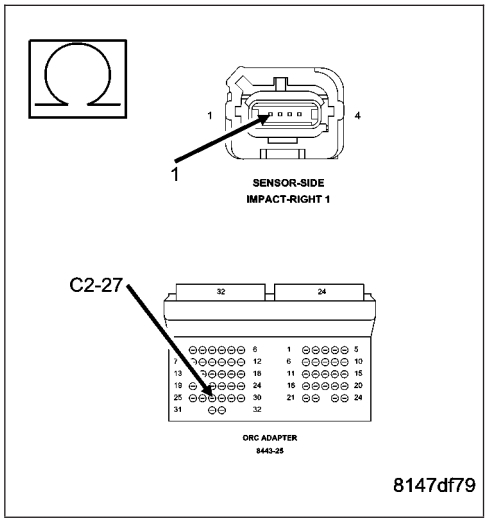

Is the resistance below 1 ohm?

Yes >> Go To 7

No >> Repair the (R14) Right Side Impact Sensor 1 Signal circuit for an open or high resistance.
Perform the ORC VERIFICATION TEST - VER 1.

7. CHECK OPERATION OF THE RIGHT SIDE IMPACT SENSOR 1

Replace the Right Side Impact Sensor 1.

Reconnect the vehicle body harness to the impact sensor.

Remove any special tools or jumper wires and reconnect all previously disconnected components - except the Battery.

WARNING: To avoid personal injury or death, turn the ignition on, then reconnect the battery.

Connect the scan tool to the Data Link Connector - use the most current software available.

Use the scan tool and erase the stored codes in all airbag system modules.

Turn the Ignition Off, and wait 15 seconds before turning the Ignition On.

Wait one minute, and read active codes and if there are none present read the stored codes.

Did DTC reset and is it active?

Yes >> Go To 8

No >> Repair is complete.
Perform the ORC VERIFICATION TEST - VER 1.

8. REPLACE THE OCCUPANT RESTRAINT CONTROLLER

WARNING: To avoid personal injury or death, turn the ignition off, disconnect the battery and wait two minutes before proceeding.

WARNING: If the occupant restraint controller is dropped at any time, it must be replaced. Failure to take the proper precautions could result in accidental airbag deployment and personal injury or death.

If there are no possible causes remaining, view repair.

Repair

Replace the Occupant Restraint Controller in accordance with Service Instructions.
Perform the ORC VERIFICATION TEST - VER 1.

RIGHT SIDE IMPACT SENSOR 1 INTERNAL 1 (CONTINUED)

9. TEST FOR AN INTERMITTENT CONDITION

With the scan tool, record and erase all DTC's from all Airbag modules.

If any ACTIVE codes are present they must be resolved before diagnosing any stored codes.

WARNING: To avoid personal injury or death, turn the ignition off, disconnect the battery and wait two minutes before proceeding.

Using the wiring diagram/schematic as a guide, inspect the wiring and connectors.

Look for chaffed, pierced, pinched, or partially broken wires and broken, bent, pushed out, spread, corroded, or contaminated terminals.

The following additional checks may assist you in identifying a possible intermittent problem.

Reconnect any disconnected components and harness connector.

WARNING: To avoid personal injury or death, turn the ignition on, then reconnect the battery.

With the scan tool monitor active codes as you work through the following steps.

WARNING: To avoid personal injury or death, maintain a safe distance from all airbags while performing the following steps.

Wiggle the wiring harness and connectors of the related airbag circuit or component.

If codes are related to the Driver Airbag circuits, rotate the steering wheel from stop to stop.

If only stored codes return continue the test until the problem area has been isolated.

In the previous steps you have attempted to recreate the conditions responsible for setting active DTC in question.

Are any ACTIVE DTCs present?

Yes >> Select the appropriate symptom from Symptom List.

No >> No problem found at this time. Erase all codes before returning vehicle to customer.

STORED ENERGY FIRING 1

For a complete wiring diagram **Refer to Section 8W**.

- **When Monitored:**
  With the ignition on. The module's on board diagnostics continuously performs internal circuit tests.
- **Set Condition:**
  This DTC will set if the module identifies an out of range internal circuit.

Possible Causes
OCCUPANT RESTRAINT CONTROLLER

Diagnostic Test

1. REPLACE OCCUPANT RESTRAINT CONTROLLER

Turn the ignition on.

With the scan tool, erase and read ORC DTCs.

WARNING: To avoid personal injury or death, turn the ignition off, disconnect the battery and wait two minutes before proceeding.

WARNING: If the Occupant Restraint Controller is dropped at any time, it must be replaced. Failure to take proper precautions can result in accidental airbag deployment and personal injury or death.

When this code is set, view repair.

Repair

Replace the Occupant Restraint Controller in accordance with the Service Information.

Perform the ORC VERIFICATION TEST-VER. 1.

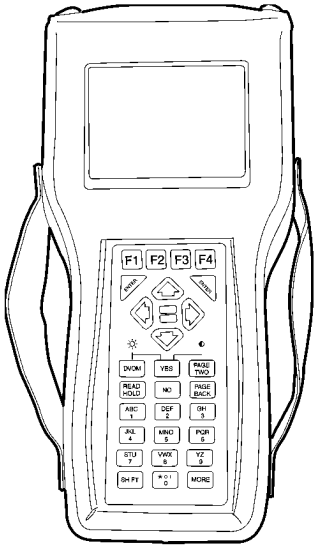

VEHICLE BODY STYLE MISMATCH

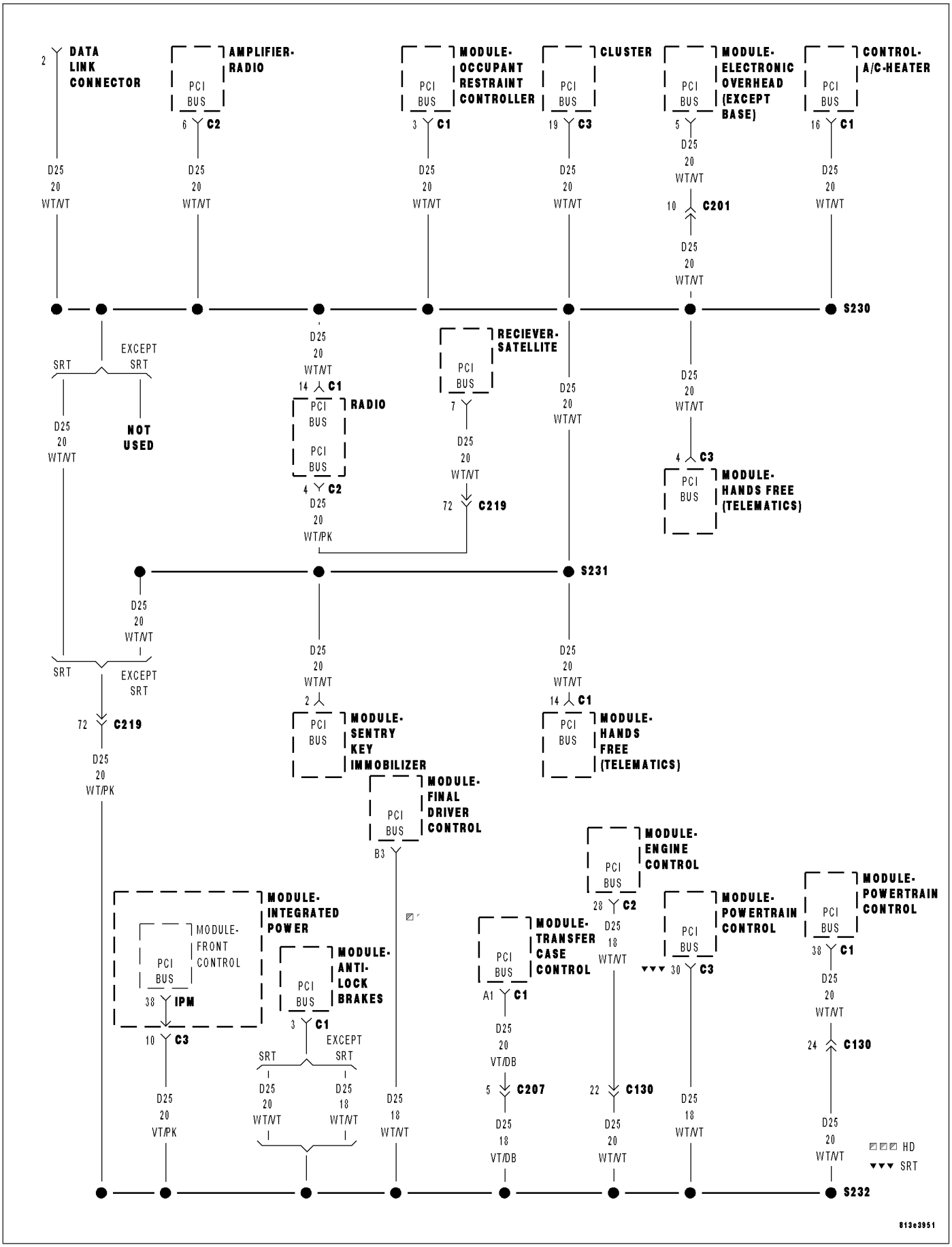

VEHICLE BODY STYLE MISMATCH (CONTINUED)

For the Air Bag System circuit diagram (Refer to 8 - ELECTRICAL/RESTRAINTS - SCHEMATICS AND DIAGRAMS).

For a complete wiring diagram **Refer to Section 8W**.

- **When Monitored:**
  When the ignition is on, the Occupant Restraint Controller (ORC) monitors the PCI Bus for the vehicle body style message from the Powertrain Control Module (PCM).
- **Set Condition:**
  With ignition on, If the ORC does not receive the vehicle Body Style messages on the bus the code will set.

Possible Causes
PCM, COMMUNICATION FAILURE
PCM, INCORRECT OR MISSING VIN
PCM, INCORRECT OR MISSING VEHICLE BODY STYLE MESSAGE
ORC, VEHICLE BODY STYLE MISMATCH

Diagnostic Test

1. DETERMINE ACTIVE OR STORED DTC

Turn the ignition on.

NOTE: Ensure the battery is fully charged.

NOTE: For the purpose of this test, the ACM and AECM modules will be referred to as an ORC.

NOTE: When reconnecting Airbag system components, the ignition must be turned off and the battery must be disconnected.

Select ACTIVE or STORED DTC:

ORC - ACTIVE DTC
Go To 2

ORC - STORED DTC
Go To 6

---

2. PCM, COMMUNICATION FAILURE

With the Scan Tool, ensure that the PCM is Active on the Bus.

Is the PCM Active on the Bus?

Yes >> Go To 3

No >> (Refer to 8 - ELECTRICAL/ELECTRONIC CONTROL MODULES - DIAGNOSIS AND TESTING) for No Response diagnostic test procedures.
Perform ORC VERIFICATION TEST - VER 1.

VEHICLE BODY STYLE MISMATCH (CONTINUED)

3. PCM, INCORRECT OR MISSING VIN

With the Scan Tool select ENGINE, MISCELLANEOUS, MISC FUNCTION, and then CHECK VIN to read the Vehicle Identification Number in the Powertrain Control Module.

Compare the VIN displayed on the Scan Tool screen and the Vehicle VIN plate.

Does the VIN plate and the PCM VIN match?

Yes >> Go To 4

No >> Replace and program the Powertrain Control Module in accordance with the Service Information.
Perform POWERTRAIN VERIFICATION TEST. (Refer to 9 - ENGINE - DIAGNOSIS AND TESTING).
Perform ORC VERIFICATION TEST - VER 1.

---

4. PCM, INCORRECT OR MISSING VEHICLE BODY STYLE MESSAGE

With the Scan Tool, select the PCI BUS INFO to view the Body Style from PCM.

Does the Scan Tool show the correct Body Style?

Yes >> Go To 5

No >> Replace and program the Powertrain Control Module in accordance with the Service Information.
Perform POWERTRAIN VERIFICATION TEST. (Refer to 9 - ENGINE - DIAGNOSIS AND TESTING).
Perform ORC VERIFICATION TEST - VER 1.

---

5. ORC, VEHICLE BODY STYLE MISMATCH

WARNING: TO AVOID PERSONAL INJURY OR DEATH, TURN THE IGNITION OFF, DISCONNECT THE BATTERY AND WAIT TWO MINUTES BEFORE PROCEEDING.

WARNING: IF THE OCCUPANT RESTRAINT CONTROLLER IS DROPPED AT ANY TIME, IT MUST BE REPLACED. FAILURE TO TAKE THE PROPER PRECAUTIONS COULD RESULT IN ACCIDENTAL AIRBAG DEPLOYMENT AND PERSONAL INJURY OR DEATH.

NOTE: When reconnecting airbag system components the Ignition must be turned off and the Battery must be disconnected.

If there are no possible causes remaining, view repair.

Repair

Replace the Occupant Restraint Controller (ORC) in accordance with the Service Information.
Perform ORC VERIFICATION TEST - VER 1.

VEHICLE BODY STYLE MISMATCH (CONTINUED)

6. CHECKING STORED OR INTERMITTENT CODES

With the Scan Tool, record and erase all DTC's from all Airbag modules.

If equipped with Passenger Airbag On - Off switch, read the DTC's in all switch positions.

If any ACTIVE codes are present they must be resolved before diagnosing any stored codes.

WARNING: TO AVOID PERSONAL INJURY OR DEATH, TURN THE IGNITION OFF, DISCONNECT THE BATTERY AND WAIT TWO MINUTES BEFORE PROCEEDING.

Using the wiring diagram/schematic as a guide, inspect the wiring and connectors.

Look for chaffed, pierced, pinched, or partially broken wires and broken, bent, pushed out, spread, corroded, or contaminated terminals.

The following additional checks may assist you in identifying a possible intermittent problem.

Reconnect any disconnected components and harness connector.

WARNING: TO AVOID PERSONAL INJURY OR DEATH, TURN THE IGNITION ON, THEN RECONNECT THE BATTERY.

With the Scan Tool, monitor active codes as you work through the following steps.

WARNING: TO AVOID PERSONAL INJURY OR DEATH, MAINTAIN A SAFE DISTANCE FROM ALL AIRBAGS WHILE PERFORMING THE FOLLOWING STEPS.

Wiggle the wiring harness and connectors of the related airbag circuit or component.

If codes are related to the Driver Airbag circuits, rotate the steering wheel from stop to stop.

If only stored codes return continue the test until the problem area has been isolated.

In the previous steps you have attempted to recreate the conditions responsible for setting active DTC in question.

Does the scan tool display any ACTIVE DTCs?

Yes >> Select the appropriate diagnostic procedure from the Table of Contents in this section.

No >> No problem found at this time. Erase all codes before returning vehicle to customer.

*AIRBAG INDICATOR ON WITHOUT ACTIVE TROUBLE CODES

For a complete wiring diagram **Refer to Section 8W**.

Possible Causes
AIRBAG WARNING INDICATOR ON WITHOUT ACTIVE TROUBLE CODES
INSTRUMENT CLUSTER PROBLEMS

Diagnostic Test

1. AIRBAG WARNING INDICATOR ON WITHOUT ACTIVE TROUBLE CODES

NOTE: Ensure the battery is fully charged.
Turn the ignition on.
Make sure that all active DTC's have been repaired before performing this procedure.
With the DRBIII® read the WARNING LAMP STATES.

With no active DTCs, Does the LAMP REQ by ACM monitor show ON?

Yes >> Go To 2

No >> (Refer to 8 - ELECTRICAL/INSTRUMENT CLUSTER - DIAGNOSIS AND TESTING) for problems related to Instrument Cluster.
Perform ORC VERIFICATION TEST - VER 1.

---

2. REPLACE THE ORC

WARNING: If the Occupant Restraint Controller (ORC) is dropped at any time, it must be replaced. Failure to take the proper precautions can result in accidental airbag deployment and personal injury or death.

NOTE: When reconnecting airbag system components the Ignition must be turned off and the Battery must be disconnected.

Repair

Replace the ORC in accordance with the Service Information.
Perform ORC VERIFICATION TEST - VER 1

NOTE: When reconnecting Airbag system components, the ignition must be turned off and the battery must be disconnected.

---

*ORC VERIFICATION TEST - VER 1

For a complete wiring diagram **Refer to Section 8W**.

1. *ORC VERIFICATION TEST - VER 1

1. Remove any special tools or jumper wires and reconnect all previously disconnected components - except the Battery.

WARNING: TO AVOID PERSONAL INJURY OR DEATH, TURN THE IGNITION ON THEN RECONNECT THE BATTERY.

2. Connect the scan tool to the Data Link Connector - use the most current software available.
3. With the scan tool to erase stored DTCs in all airbag system modules.
4. Turn the ignition off, and wait 15 seconds, then turn the ignition on.
5. Wait one minute, and read active codes and if there are none present read the stored codes.
6. Note: If equipped with Airbag On - Off switch, read the DTC's in all switch positions.
7. Note: Read the DTC's in all airbag system related modules.
8. If the scan tool shows any active or stored codes, return to the Table of Contents and follow path specified for that trouble code. If no active or stored codes are present, the repair is complete.

Are any DTC's present or is the original condition still present?

Yes >> Repair is not complete, refer to appropriate symptom list.

No >> Repair is complete.

SCHEMATICS AND DIAGRAMS

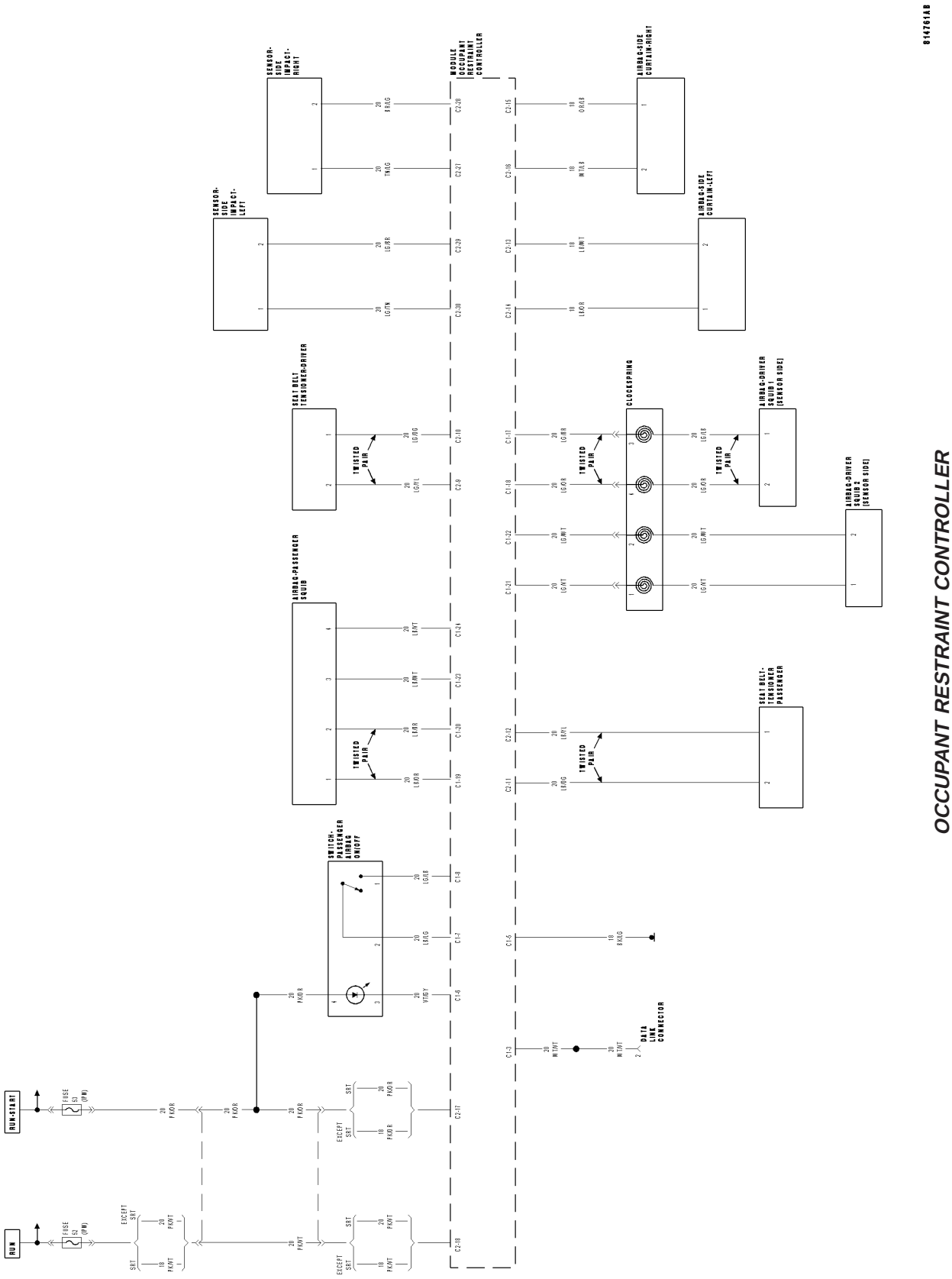

RESTRAINTS - SERVICE INFORMATION

TABLE OF CONTENTS

page

RESTRAINTS - SERVICE INFORMATION
DESCRIPTION 246
OPERATION 249
WARNING
WARNINGS - RESTRAINT SYSTEM 250
DIAGNOSIS AND TESTING
SUPPLEMENTAL RESTRAINT SYSTEM 251
STANDARD PROCEDURE
HANDLING NON-DEPLOYED SUPPLEMENTAL RESTRAINTS 251
SERVICE AFTER A SUPPLEMENTAL RESTRAINT DEPLOYMENT 251
SUPPLEMENTAL RESTRAINTS VERIFICATION TEST 254
MODULE-OCCUPANT RESTRAINT CONTROLLER
DESCRIPTION 255
OPERATION 255
REMOVAL
MODULE 257
COVER 257
INSTALLATION
MODULE 258
COVER 259
CHILD RESTRAINT ANCHOR
DESCRIPTION 260
OPERATION 262
REMOVAL - TETHER STRAP 262
INSTALLATION - TETHER STRAP 263
CLOCKSPRING
DESCRIPTION 264
OPERATION 264
STANDARD PROCEDURE
CLOCKSPRING CENTERING 265
REMOVAL 266
INSTALLATION 267
AIR BAG-SIDE CURTAIN
DESCRIPTION 269
OPERATION 270
REMOVAL 270
INSTALLATION 271
AIR BAG-DRIVER
DESCRIPTION 272
OPERATION 273
REMOVAL 274
DISASSEMBLY 275
ASSEMBLY 276
INSTALLATION 278
SENSOR-SIDE IMPACT
DESCRIPTION 280
OPERATION 280

page

REMOVAL
STANDARD CAB 280
QUAD CAB 281
INSTALLATION
STANDARD CAB 282
QUAD CAB 283
SWITCH-PASSENGER AIRBAG DISARM
DESCRIPTION 284
OPERATION 285
REMOVAL 285
INSTALLATION 286
AIR BAG-PASSENGER
DESCRIPTION 286
OPERATION 288
REMOVAL 288
INSTALLATION 289
SEAT BELT
REMOVAL - FRONT CENTER 291
INSTALLATION - FRONT CENTER 291
SEAT BELT BUCKLE
REMOVAL
FRONT OUTBOARD 292
FRONT CENTER & CENTER ANCHOR 293
REAR CENTER & LEFT OUTBOARD 294
REAR CENTER ANCHOR & RIGHT OUTBOARD 295
INSTALLATION
FRONT OUTBOARD 296
FRONT CENTER & CENTER ANCHOR 297
REAR CENTER & LEFT OUTBOARD 298
REAR CENTER ANCHOR & RIGHT OUTBOARD 299
SEAT BELT & RETRACTOR
DESCRIPTION - AUTOMATIC LOCKING RETRACTOR 301
OPERATION - AUTOMATIC LOCKING RETRACTOR 301
REMOVAL
FRONT CENTER 301
FRONT OUTBOARD - STANDARD CAB 303
FRONT OUTBOARD - QUAD CAB 304
REAR CENTER 306
REAR OUTBOARD 307
INSTALLATION
FRONT CENTER 308
FRONT OUTBOARD - STANDARD CAB 309
FRONT OUTBOARD - QUAD CAB 311
REAR CENTER 313
REAR OUTBOARD 314
SWITCH-SEAT BELT DRIVER
DESCRIPTION 315

OPERATION 316
DIAGNOSIS AND TESTING
SEAT BELT SWITCH 316
SEAT BELT-TENSIONER
DESCRIPTION 317
OPERATION 317
SEAT BELT TENSION REDUCER
DESCRIPTION 318
OPERATION 318
DIAGNOSIS AND TESTING
SEAT BELT TENSION REDUCER 318
SEAT BELT TURNING LOOP ADJUSTER
REMOVAL 319
INSTALLATION 320

RESTRAINTS - SERVICE INFORMATION

DESCRIPTION

An occupant restraint system is standard factory-installed safety equipment on this model. Available occupant restraints for this model include both active and passive types. Active restraints are those which require the vehicle occupants to take some action to employ, such as fastening a seat belt; while passive restraints require no action by the vehicle occupants to be employed.

ACTIVE RESTRAINTS

The active restraints for this model include:

- **Front Seat Belts** - Both outboard front seating positions are equipped with three-point seat belt systems employing a lower B-pillar mounted inertia latch-type emergency locking retractor, height-adjustable upper B-pillar mounted turning loops, a fixed lower seat belt anchor secured to the lower B-pillar (standard cab) or floor panel adjacent to the B-pillar (quad cab), and a traveling end-release seat belt buckle secured to the inboard seat track. The driver side retractor for standard cab models includes an electrically actuated seat belt tension reducer. The passenger side front seat retractor for all models is also switchable from an emergency locking retractor to an automatic locking retractor. The front seat belt buckle for the driver side of all models includes an integral seat belt switch that detects whether its seat belt has been fastened. The center front seating position for standard cab models is also equipped with a three-point seat belt employing a floor panel mounted inertia latch-type retractor, a routing bracket and bezel near the top of the cab back panel, and two fixed end-release buckles secured to the center seat cushion frame. The center front seating position for quad cab models is equipped with a fixed lap belt and an end-release buckle secured to the center seat cushion frame.
- **Rear Seat Belts** - All three rear seating positions are equipped with three-point seat belt systems. The outboard seating position belts employ a lower C-pillar mounted inertia latch-type emergency locking retractor, a fixed position upper C-pillar mounted turning loop, and a fixed lower seat belt anchor secured to the lower C-pillar. The rear seat center seating position belt has a rear floor panel mounted inertia latch-type emergency locking retractor and a routing bracket and bezel on the top of the cab back panel. The end-release buckle units for the right outboard seating position and the center seating position lower anchor are integral to the center retractor mounting bracket on the rear floor panel. The end-release buckle units for the center and left outboard seating positions are individually secured to the rear floor panel on models with the standard equipment rear bench seat, or secured with the rear seat mounting hardware on models with the optional 60/40 split rear bench seat.
- **Child Restraint Anchors** - All standard cab models are equipped with two, fixed-position, child seat upper tether anchors that are integral to the upper cab back panel reinforcement and concealed behind individual trim cover and bezel units that are integral to the cab back trim panel. All quad cab models are equipped with three child seat upper tether anchor straps that are secured to the upper cab back panel reinforcement, behind the upright rear seat back. Two lower anchors are also provided for the front outboard seating position of standard cab models, and for each rear outboard seating position on quad cab models. These lower anchors are accessed from the front of the seat where the seat back meets the seat cushion. The child seat tether and lower anchors for the front seat are deleted on quad cab models.

PASSIVE RESTRAINTS

The passive restraints available for this model include the following:



- **Dual Front Airbags** - Multistage driver and front passenger airbags are available for this model. This airbag system is a passive, inflatable, Supplemental Restraint System (SRS) and vehicles with this equipment can be readily identified by the “SRS - AIRBAG” logo molded into the driver airbag trim cover in the center of the steering wheel and also into the passenger airbag door on the instrument panel above the glove box. Vehicles with the airbag system can also be identified by the airbag indicator, which will illuminate in the instrument cluster for about six seconds as a bulb test each time the ignition switch is turned to the On position. A pyrotechnic-type seat belt tensioner is integral to the front outboard seat belt retractors mounted on each lower B-pillar of all models equipped with dual front airbags.
- **Side Curtain Airbags** - Optional side curtain airbags are available for this model when it is also equipped with dual front airbags. This airbag system is a passive, inflatable, Supplemental Restraint System (SRS) and vehicles with this equipment can be readily identified by a molded identification trim button with the “SRS - AIRBAG” logo located on the headliner above each B-pillar.

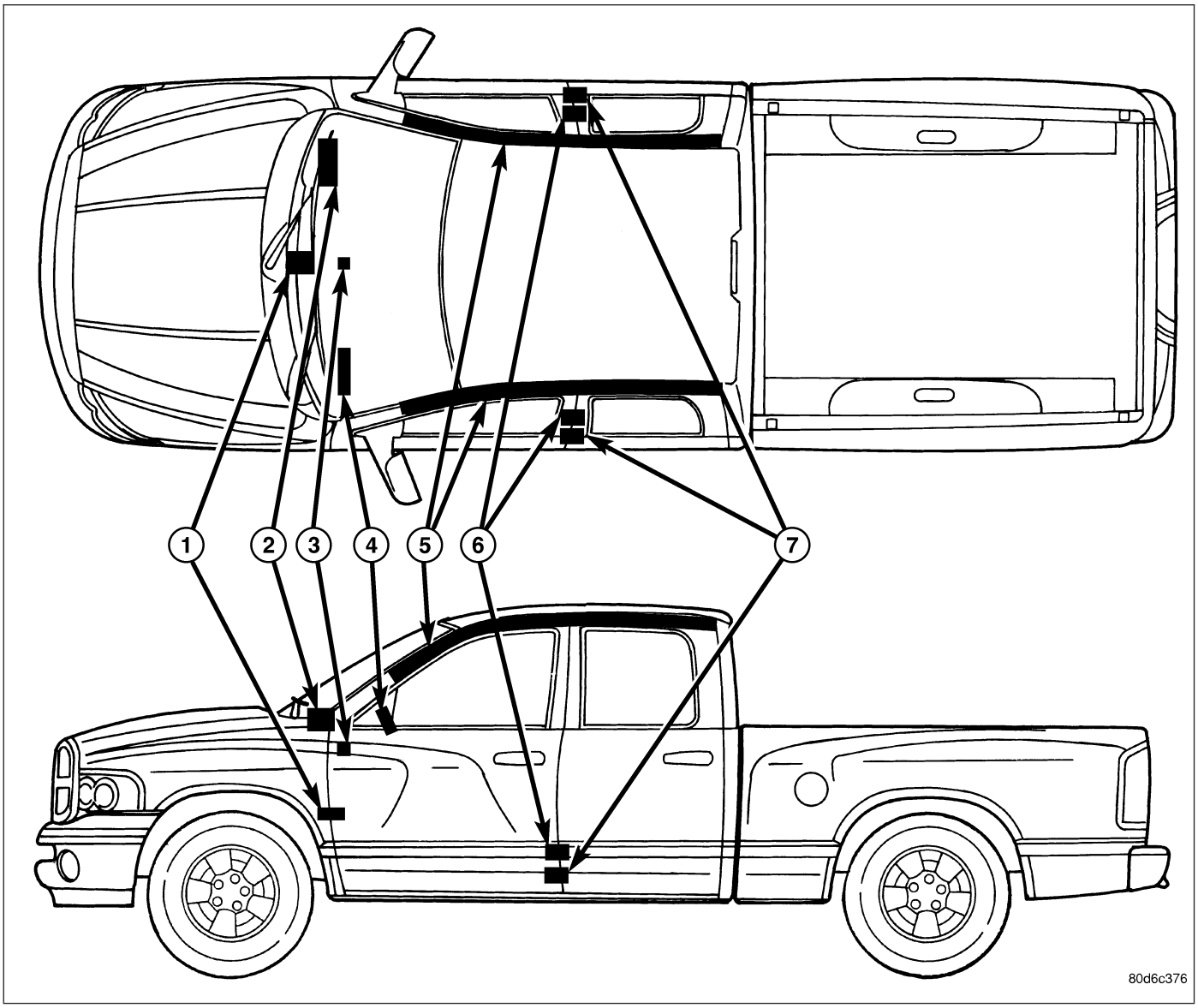

The supplemental restraint system includes the following major components, which are described in further detail elsewhere in this service information:

- **Airbag Control Module (1)** - The Airbag Control Module (ACM) is also sometimes referred to as the Occupant Restraint Controller (ORC). The ACM is located on a mount on the floor panel transmission tunnel, below the center of the instrument panel.
- **Airbag Indicator** - The airbag indicator is integral to the ElectroMechanical Instrument Cluster (EMIC), which is located on the instrument panel in front of the driver.
- **Clockspring** - The clockspring is located near the top of the steering column, directly beneath the steering wheel.
- **Driver Airbag (4)** - The driver airbag is located in the center of the steering wheel, beneath the driver airbag trim cover.
- **Driver Knee Blocker** - The driver knee blocker is a structural unit secured to the back side of and integral to the instrument panel steering column opening cover.
- **Passenger Airbag (2)** - The passenger airbag is located on the instrument panel, beneath the passenger airbag door on the instrument panel above the glove box on the passenger side of the vehicle.
- **Passenger Airbag On/Off Switch (3)** - Standard cab models without a rear seat are equipped with a passenger airbag on/off switch, which is located on the right side of the instrument panel center bezel.
- **Passenger Knee Blocker** - The passenger knee blocker is a structural reinforcement that is integral to and concealed within the glove box door.
- **Seat Belt Tensioner (7)** - The seat belt tensioner is integral to the front outboard seat belt retractor units on vehicles equipped with dual front airbags.

- **Side Impact Sensor (6)** - Two side impact sensors are used on vehicles equipped with the optional side curtain airbags, one left side and one right side. One sensor is located behind the B-pillar trim near the base of each B-pillar.
- **Side Curtain Airbag (5)** - In vehicles equipped with this option, a side curtain airbag is located on each inside roof side rail above the headliner, and extends from the A-pillar to the B-pillar on standard cab models, and from the A-pillar to the C-pillar on quad cab models.

The ACM and the EMIC each contain a microprocessor and programming that allow them to communicate with each other using the Programmable Communications Interface (PCI) data bus. This method of communication is used by the ACM for control of the airbag indicator in the EMIC on all models equipped with dual front airbags. (Refer to 8 - ELECTRICAL/ELECTRONIC CONTROL MODULES/COMMUNICATION - DESCRIPTION).

Hard wired circuitry connects the supplemental restraint system components to each other through the electrical system of the vehicle. These hard wired circuits are integral to several wire harnesses, which are routed throughout the vehicle and retained by many different methods. These circuits may be connected to each other, to the vehicle electrical system, and to the supplemental restraint system components through the use of a combination of soldered splices, splice block connectors, and many different types of wire harness terminal connectors and insulators. Refer to the appropriate wiring information. The wiring information includes wiring diagrams, proper wire and connector repair procedures, further details on wire harness routing and retention, as well as pin-out and location views for the various wire harness connectors, splices and grounds.

OPERATION

ACTIVE RESTRAINTS

The primary passenger restraints in this or any other vehicle are the standard equipment factory-installed seat belts and child restraint anchors. Seat belts and child restraint anchors are referred to as an active restraint because the vehicle occupants are required to physically fasten and properly adjust these restraints in order to benefit from them. See the owner's manual in the vehicle glove box for more information on the features, use and operation of all of the factory-installed active restraints.

PASSIVE RESTRAINTS

The passive restraints are referred to as a supplemental restraint system because they were designed and are intended to enhance the protection for the occupants of the vehicle **only** when used in conjunction with the seat belts. They are referred to as passive restraints because the vehicle occupants are not required to do anything to make them operate; however, the vehicle occupants must be wearing their seat belts in order to obtain the maximum safety benefit from the factory-installed supplemental restraint system.

The supplemental restraint system electrical circuits are continuously monitored and controlled by a microprocessor and software contained within the Airbag Control Module (ACM). An airbag indicator in the ElectroMechanical Instrument Cluster (EMIC) illuminates for about six seconds as a bulb test each time the ignition switch is turned to the On or Start positions. Following the bulb test, the airbag indicator is turned on or off by the ACM to indicate the status of the supplemental restraint system. If the airbag indicator comes on at any time other than during the bulb test, it indicates that there is a problem in the supplemental restraint system electrical circuits. Such a problem may cause airbags not to deploy when required, or to deploy when not required.

Deployment of the supplemental restraints depends upon the angle and severity of an impact. Deployment is not based upon vehicle speed; rather, deployment is based upon the rate of deceleration as measured by the forces of gravity (G force) upon the impact sensors. When an impact is severe enough, the microprocessor in the ACM signals the inflator of the appropriate airbag units to deploy their airbag cushions. The outboard front seat belt tensioners are provided with a deployment signal by the ACM in conjunction with the front airbags.

During a frontal vehicle impact, the knee blockers work in concert with properly fastened and adjusted seat belts to restrain both the driver and the front seat passenger in the proper position for an airbag deployment. The knee blockers also absorb and distribute the crash energy from the driver and the front seat passenger to the structure of the instrument panel. The seat belt tensioners remove the slack from the outboard front seat belts to provide further assurance that the driver and front seat passenger are properly positioned and restrained for an airbag deployment.

Typically, the vehicle occupants recall more about the events preceding and following a collision than they do of an airbag deployment itself. This is because the airbag deployment and deflation occur very rapidly. In a typical 48 kilometer-per-hour (30 mile-per-hour) barrier impact, from the moment of impact until the airbags are fully inflated

takes about 40 milliseconds. Within one to two seconds from the moment of impact, the airbags are almost entirely deflated. The times cited for these events are approximations, which apply only to a barrier impact at the given speed. Actual times will vary somewhat, depending upon the vehicle speed, impact angle, severity of the impact, and the type of collision.

When the ACM monitors a problem in any of the supplemental restraint system circuits or components, including the seat belt tensioners, it stores a fault code or Diagnostic Trouble Code (DTC) in its memory circuit and sends an electronic message to the EMIC to turn on the airbag indicator. Proper testing of the supplemental restraint system components, the Programmable Communications Interface (PCI) data bus, the electronic message inputs to and outputs from the EMIC or the ACM, as well as the retrieval or erasure of a DTC from the ACM or EMIC requires the use of a diagnostic scan tool. Refer to the appropriate diagnostic information.

See the owner's manual in the vehicle glove box for more information on the features, use and operation of all of the factory-installed passive restraints.

WARNING

WARNINGS - RESTRAINT SYSTEM

WARNING: To avoid personal injury or death, during and following any seat belt or child restraint anchor service, carefully inspect all seat belts, buckles, mounting hardware, retractors, tether straps, and anchors for proper installation, operation, or damage. Replace any belt that is cut, frayed, or torn. Straighten any belt that is twisted. Tighten any loose fasteners. Replace any belt that has a damaged or inoperative buckle or retractor. Replace any belt that has a bent or damaged latch plate or anchor plate. Replace any child restraint anchor or the unit to which the anchor is integral that has been bent or damaged. Never attempt to repair a seat belt or child restraint component. Always replace damaged or faulty seat belt and child restraint components with the correct, new and unused replacement parts listed in the DaimlerChrysler Mopar Parts Catalog.

WARNING: To avoid personal injury or death, on vehicles equipped with airbags, disable the supplemental restraint system before attempting any steering wheel, steering column, airbag, seat belt tensioner, impact sensor, or instrument panel component diagnosis or service. Disconnect and isolate the battery negative (ground) cable, then wait two minutes for the system capacitor to discharge before performing further diagnosis or service. This is the only sure way to disable the supplemental restraint system. Failure to take the proper precautions could result in accidental airbag deployment.

WARNING: To avoid personal injury or death on vehicles equipped with airbags, before performing any welding operations disconnect and isolate the battery negative (ground) cable and disconnect all wire harness connectors from the Airbag Control Module (ACM). Failure to take the proper precautions could result in accidental airbag deployment and other possible damage to the supplemental restraint system circuits and components.

WARNING: To avoid personal injury or death, do not attempt to dismantle an airbag unit or tamper with its inflator. Do not puncture, incinerate, or bring into contact with electricity. Do not store at temperatures exceeding 93° C (200° F). An airbag inflator unit may contain sodium azide and potassium nitrate. These materials are poisonous and extremely flammable. Contact with acid, water, or heavy metals may produce harmful and irritating gases (sodium hydroxide is formed in the presence of moisture) or combustible compounds. An airbag inflator unit may also contain a gas canister pressurized to over 2500 psi.

WARNING: To avoid personal injury or death, when handling a seat belt tensioner retractor, proper care should be exercised to keep fingers out from under the retractor cover and away from the seat belt webbing where it exits from the retractor cover.

WARNING: To avoid personal injury or death, replace all restraint system components only with parts specified in the DaimlerChrysler Mopar Parts Catalog. Substitute parts may appear interchangeable, but internal differences may result in inferior occupant protection.

WARNING: To avoid personal injury or death, the fasteners, screws, and bolts originally used for the restraint system components must never be replaced with any substitutes. These fasteners have special coatings and are specifically designed for the restraint system. Any time a new fastener is needed, replace it with the correct fasteners provided in the service package or specified in the DaimlerChrysler Mopar Parts Catalog.

WARNING: To avoid personal injury or death, when a steering column has an airbag unit attached, never place the column on the floor or any other surface with the steering wheel or airbag unit face down.

DIAGNOSIS AND TESTING

SUPPLEMENTAL RESTRAINT SYSTEM

Proper diagnosis and testing of the supplemental restraint system components, the Programmable Communications Interface (PCI) data bus, the data bus electronic message inputs to and outputs from the ElectroMechanical Instrument Cluster (EMIC), the Airbag Control Module (ACM), as well as the retrieval or erasure of a Diagnostic Trouble Code (DTC) from the ACM requires the use of a diagnostic scan tool. Refer to the appropriate diagnostic information.

WARNING: To avoid personal injury or death, on vehicles equipped with airbags, disable the supplemental restraint system before attempting any steering wheel, steering column, airbag, seat belt tensioner, impact sensor, or instrument panel component diagnosis or service. Disconnect and isolate the battery negative (ground) cable, then wait two minutes for the system capacitor to discharge before performing further diagnosis or service. This is the only sure way to disable the supplemental restraint system. Failure to take the proper precautions could result in accidental airbag deployment.

STANDARD PROCEDURE

HANDLING NON-DEPLOYED SUPPLEMENTAL RESTRAINTS

At no time should any source of electricity be permitted near the inflator on the back of a non-deployed airbag or seat belt tensioner. When carrying a non-deployed airbag, the trim cover or airbag cushion side of the unit should be pointed away from the body to minimize injury in the event of an accidental deployment. If the airbag unit is placed on a bench or any other surface, the trim cover or airbag cushion side of the unit should be face up to minimize movement in the event of an accidental deployment.

When handling a non-deployed seat belt tensioner, take proper care to keep fingers out from under the retractor cover and away from the seat belt webbing where it exits from the retractor cover. In addition, the supplemental restraint system should be disarmed whenever any steering wheel, steering column, seat belt tensioner, airbag, impact sensor, or instrument panel components require diagnosis or service. Failure to observe this warning could result in accidental airbag deployment and possible personal injury.

All damaged, faulty or non-deployed airbags and seat belt tensioners which are replaced on vehicles are to be handled and disposed of properly. If an airbag or seat belt tensioner unit is faulty or damaged and non-deployed, refer to the Hazardous Substance Control System for proper disposal. Dispose of all non-deployed and deployed airbags and seat belt tensioners in a manner consistent with state, provincial, local and federal regulations.

SUPPLEMENTAL RESTRAINT STORAGE

Airbags and seat belt tensioners must be stored in their original, special container until they are used for service. Also, they must be stored in a clean, dry environment; away from sources of extreme heat, sparks, and high electrical energy. Always place or store any airbag on a surface with its trim cover or airbag cushion side facing up, to minimize movement in case of an accidental deployment.

SERVICE AFTER A SUPPLEMENTAL RESTRAINT DEPLOYMENT

Any vehicle which is to be returned to use following a supplemental restraint deployment, must have the deployed restraints replaced. In addition, if the driver airbag has been deployed, the clockspring must be replaced. If the passenger airbag is deployed, the passenger airbag door must be replaced. The seat belt tensioners are deployed by the same signal that deploys the driver and passenger airbags and must also be replaced if either front airbag has been deployed. If a side curtain airbag has been deployed, the complete airbag unit, the headliner, as well as

the upper A, B, and C-pillar trim must be replaced. These components are not intended for reuse and will be damaged or weakened as a result of a supplemental restraint deployment, which may or may not be obvious during a visual inspection.

On vehicles with an optional sunroof, the sunroof drain tubes and hoses must be closely inspected following a side curtain airbag deployment. It is also critical that the mounting surfaces and/or mounting brackets for the Airbag Control Module (ACM) and the side impact sensors be closely inspected and restored to their original conditions following any vehicle impact damage. Because the ACM and each impact sensor are used by the supplemental restraint system to monitor or confirm the direction and severity of a vehicle impact, improper orientation or insecure fastening of these components may cause airbags not to deploy when required, or to deploy when not required.

All other vehicle components should be closely inspected following any supplemental restraint deployment, but are to be replaced only as required by the extent of the visible damage incurred.

AIRBAG SQUIB STATUS

Multistage airbags with multiple initiators (squibs) must be checked to determine that all squibs were used during the deployment event. The driver and passenger airbags in this model are deployed by electrical signals generated by the Airbag Control Module (ACM) through the driver or passenger squib 1 and squib 2 circuits to the two initiators in the airbag inflators. Typically, both initiators are used and all potentially hazardous chemicals are burned during an airbag deployment event. However, it is possible for only one initiator to be used due to an airbag system fault; therefore, it is always necessary to confirm that both initiators have been used in order to avoid the improper handling or disposal of potentially live pyrotechnic or hazardous materials. The following procedure should be performed using a diagnostic scan tool to verify the status of both airbag squibs before either deployed airbag is removed from the vehicle for disposal.

CAUTION: Deployed front airbags having two initiators (squibs) in the airbag inflator may or may not have live pyrotechnic material within the inflator. Do not dispose of these airbags unless you are sure of complete deployment. Refer to the Hazardous Substance Control System for proper disposal procedures. Dispose of all non-deployed and deployed airbags and seat belt tensioners in a manner consistent with state, provincial, local, and federal regulations.

1. Be certain that the diagnostic scan tool contains the latest version of the proper diagnostic software. Connect the scan tool to the 16-way Data Link Connector (DLC). The DLC is located on the driver side lower edge of the instrument panel, outboard of the steering column.
2. Turn the ignition switch to the On position.
3. Using the scan tool, read and record the active (current) Diagnostic Trouble Code (DTC) data.

Using the active DTC information, refer to the **Airbag Squib Status** table to determine the status of both driver and/or passenger airbag squibs.

AIRBAG SQUIB STATUS		
IF THE ACTIVE DTC IS:	**CONDITIONS**	**SQUIB STATUS**
Driver or Passenger Squib 1 open Driver or Passenger Squib 2 open	**AND** the stored DTC minutes for both Driver or Passenger squibs are within 15 minutes of each other	Both Squib 1 and 2 were used.
Driver or Passenger Squib 1 open Driver or Passenger Squib 2 open	**AND** the stored DTC minutes for Driver or Passenger Squib 2 open is GREATER than the stored DTC minutes for Driver or Passenger Squib 1 by 15 minutes or more	Squib 1 was used; Squib 2 is live.
Driver or Passenger Squib 1 open Driver or Passenger Squib 2 open	**AND** the stored DTC minutes for Driver or Passenger Squib 1 open is GREATER than the stored DTC minutes for Driver or Passenger Squib 2 by 15 minutes or more	Squib 1 is live; Squib 2 was used.
Driver or Passenger Squib 1 open	**AND** Driver or Passenger Squib 2 open is NOT an active code	Squib 1 was used; Squib 2 is live.
Driver or Passenger Squib 2 open	**AND** Driver or Passenger Squib 1 open is NOT an active code	Squib 1 is live; Squib 2 was used.

NOTE: If none of the Driver or Passenger Squib 1 or 2 open are active codes, the status of the airbag squibs is unknown. In this case the airbag should be handled and disposed of as if the squibs were both live.

CLEANUP PROCEDURE

Following a supplemental restraint deployment, the vehicle interior will contain a powdery residue. This residue consists primarily of harmless particulate by-products of the small pyrotechnic charge that initiates the propellant used to deploy a supplemental restraint. However, this residue may also contain traces of sodium hydroxide powder, a chemical by-product of the propellant material that is used to generate the inert gas that inflates the airbag. Since sodium hydroxide powder can irritate the skin, eyes, nose, or throat, be certain to wear safety glasses, rubber gloves, and a long-sleeved shirt during cleanup.

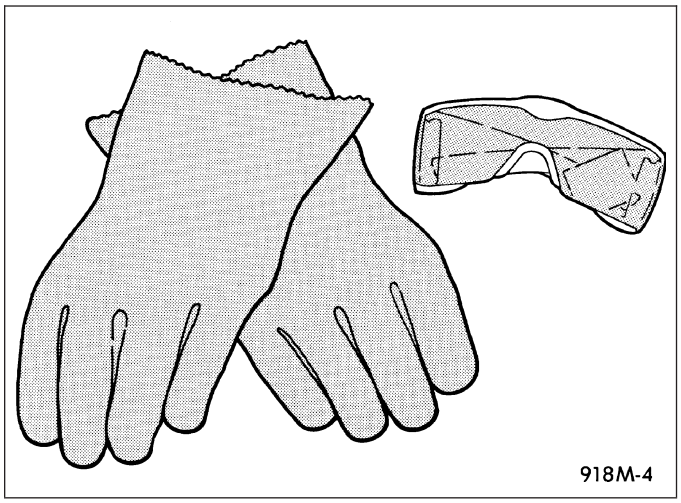

WARNING: To avoid personal injury or death, if you experience skin irritation during cleanup, run cool water over the affected area. Also, if you experience irritation of the nose or throat, exit the vehicle for fresh air until the irritation ceases. If irritation continues, see a physician.

1. Begin the cleanup by using a vacuum cleaner to remove any residual powder from the vehicle interior. Clean from outside the vehicle and work your way inside, so that you avoid kneeling or sitting on a non-cleaned area.
2. Be certain to vacuum the heater and air conditioning outlets as well. Run the heater and air conditioner blower on the lowest speed setting and vacuum any powder expelled from the outlets.

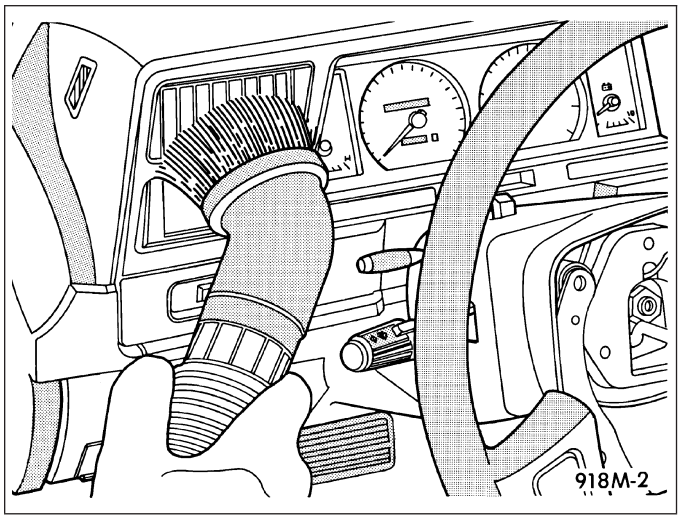

CAUTION: Deployed front airbags having two initiators (squibs) in the airbag inflator may or may not have live pyrotechnic material within the inflator. Do not dispose of these airbags unless you are sure of complete deployment. Refer to AIRBAG SQUIB STATUS . All damaged, faulty, or non-deployed supplemental restraints which are replaced on vehicles are to be handled and disposed of properly. If an airbag or seat belt tensioner unit is faulty or damaged and non-deployed, refer to the Hazardous Substance Control System for proper disposal. Be certain to dispose of all non-deployed and deployed supplemental restraints in a manner consistent with state, provincial, local and federal regulations.

3. Next, remove the deployed supplemental restraints from the vehicle. Refer to the appropriate service removal procedures.
4. You may need to vacuum the interior of the vehicle a second time to recover all of the powder.

SUPPLEMENTAL RESTRAINTS VERIFICATION TEST

NOTE: The following procedure should be performed using a diagnostic scan tool to verify proper supplemental restraint system operation following the service or replacement of any supplemental restraint system component.

WARNING: To avoid personal injury or death, on vehicles equipped with airbags, disable the supplemental restraint system before attempting any steering wheel, steering column, airbag, seat belt tensioner, impact sensor, or instrument panel component diagnosis or service. Disconnect and isolate the battery negative (ground) cable, then wait two minutes for the system capacitor to discharge before performing further diagnosis or service. This is the only sure way to disable the supplemental restraint system. Failure to take the proper precautions could result in accidental airbag deployment.

1. During the following test, the battery negative cable remains disconnected and isolated, as it was during the supplemental restraint system component removal and installation procedures.
2. Be certain that the diagnostic scan tool contains the latest version of the proper diagnostic software. Connect the scan tool to the 16-way Data Link Connector (DLC) (1). The DLC is located on the driver side lower edge of the instrument panel (2), outboard of the steering column.
3. Turn the ignition switch to the On position and exit the vehicle with the scan tool.
4. Check to be certain that nobody is in the vehicle, then reconnect the battery negative cable.
5. Using the scan tool, read and record the active (current) Diagnostic Trouble Code (DTC) data.
6. Next, use the scan tool to read and record any stored (historical) DTC data.

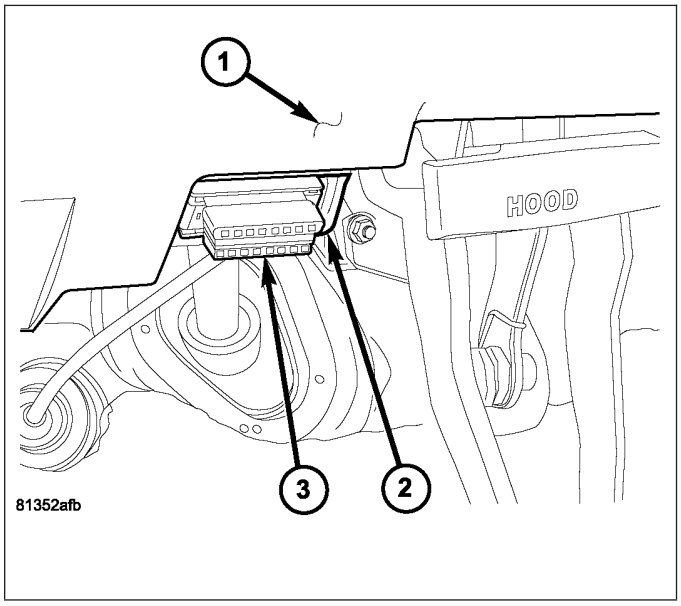

7. If any DTC is found in Step 5 or Step 6, refer to the appropriate diagnostic information.
8. Use the scan tool to erase the stored DTC data. If any problems remain, the stored DTC data will not erase. Refer to the appropriate diagnostic information to diagnose any stored DTC that will not erase. If the stored DTC information is successfully erased, go to Step 9.
9. Turn the ignition switch to the Off position for about fifteen seconds, and then back to the On position. Observe the airbag indicator in the instrument cluster. It should illuminate for six to eight seconds, and then go out. This indicates that the supplemental restraint system is functioning normally and that the repairs are complete. If the airbag indicator fails to light, or lights and stays on, there is still an active supplemental restraint system fault or malfunction. Refer to the appropriate diagnostic information to diagnose the problem.

MODULE-OCCUPANT RESTRAINT CONTROLLER

DESCRIPTION

The Airbag Control Module (ACM) (1) is also sometimes referred to as the Occupant Restraint Controller (ORC). The ACM is located below the instrument panel center stack in the passenger compartment of the vehicle, where it is secured by three screws to a stamped steel mounting bracket welded onto the top of the floor panel transmission tunnel just forward of the instrument panel center support bracket. Concealed within a hollow in the center of the die cast aluminum ACM housing is the electronic circuitry of the ACM which includes a microprocessor, an electronic impact sensor, an electronic safing sensor, and an energy storage capacitor. A stamped metal cover plate is secured to the bottom of the ACM housing with four screws to enclose and protect the internal electronic circuitry and components.

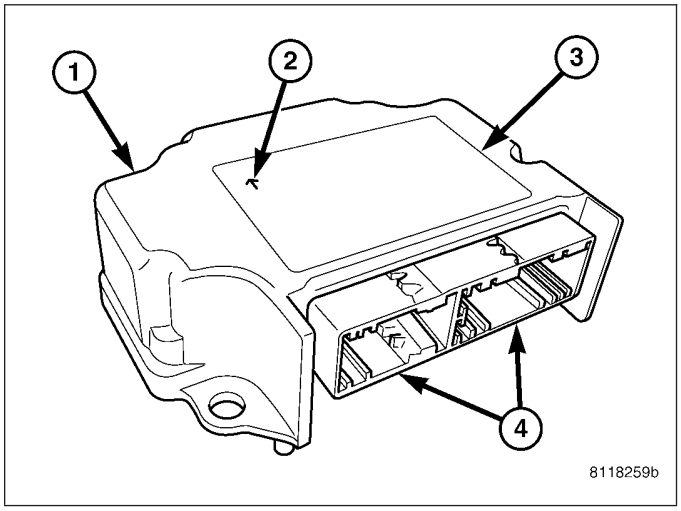

An arrow (2) printed on the label (3) on the top of the ACM housing provides a visual verification of the proper orientation of the unit, and should always be pointed toward the front of the vehicle. The ACM housing has integral mounting flanges on three corners. The mounting flange to the left of the connector receptacle has an integral locating pin on its lower surface. Both left side flanges have round mounting holes, while the flange on the right side has a slotted mounting hole. A molded plastic electrical connector (4) with two receptacles, one containing twenty-four terminal pins and the other containing thirty-two terminal pins, exits the rearward facing side of the ACM housing. These terminal pins connect the ACM to the vehicle electrical system through two dedicated take outs and connectors of the instrument panel wire harness.

The impact sensor and safing sensor internal to the ACM are calibrated for the specific vehicle, and are only serviced as a unit with the ACM. In addition, there are unique versions of the ACM for light and heavy-duty models, and for vehicles with or without the optional side curtain airbags. The ACM cannot be repaired or adjusted and, if damaged or faulty, it must be replaced.

OPERATION

The microprocessor in the Airbag Control Module (ACM) contains the supplemental restraint system logic circuits and controls all of the supplemental restraint system components. The ACM uses On-Board Diagnostics (OBD) and can communicate with other electronic modules in the vehicle as well as with the diagnostic scan tool using the Programmable Communications Interface (PCI) data bus network. This method of communication is used for control of the airbag indicator in the ElectroMechanical Instrument Cluster (EMIC) and for supplemental restraint system diagnosis and testing through the 16-way data link connector located on the driver side lower edge of the instrument panel. (Refer to 8 - ELECTRICAL/INSTRUMENT CLUSTER/AIRBAG INDICATOR - OPERATION).

The ACM microprocessor continuously monitors all of the supplemental restraint system electrical circuits to determine the system readiness. If the ACM detects a monitored system fault, it sets an active and stored Diagnostic

Trouble Code (DTC) and sends electronic messages to the EMIC over the PCI data bus to turn on the airbag indicator. An active fault only remains for the duration of the fault, or in some cases for the duration of the current ignition switch cycle, while a stored fault causes a DTC to be stored in memory by the ACM. For some DTCs, if a fault does not recur for a number of ignition cycles, the ACM will automatically erase the stored DTC. For other internal faults, the stored DTC is latched forever.

In standard cab models, the ACM also monitors a resistor multiplexed input from the passenger airbag on/off switch and provides a control output for the Off indicator in the switch through a passenger airbag indicator driver circuit. If the passenger airbag on/off switch is set to the Off position, the ACM turns on the passenger airbag on/off switch Off indicator and will internally disable the passenger airbag from being deployed. The ACM also turns on the on/off switch Off indicator for about seven seconds each time the ignition switch is turned to the On position as a bulb test. Following the bulb test, the ACM controls the status of the Off indicator based upon the resistance of the input from the on/off switch. The ACM will also set and/or store a DTC for faults it detects in the passenger airbag on/off switch circuits, and will turn on the airbag indicator in the EMIC if a fault has been detected.

The ACM receives battery current through two circuits; a fused ignition switch output (run) circuit through a fuse in the Integrated Power Module (IPM), and a fused ignition switch output (run-start) circuit through a second fuse in the IPM. The ACM receives ground through a ground circuit and take out of the instrument panel wire harness. This take out has a single eyelet terminal connector that is secured by a ground screw to the instrument panel structural support. These connections allow the ACM to be operational whenever the ignition switch is in the Start or On positions.

The ACM also contains an energy-storage capacitor. When the ignition switch is in the Start or On positions, this capacitor is continually being charged with enough electrical energy to deploy the supplemental restraint components for up to one second following a battery disconnect or failure. The purpose of the capacitor is to provide backup supplemental restraint system protection in case there is a loss of battery current supply to the ACM during an impact.

Two sensors are contained within the ACM, an electronic impact sensor and a safing sensor. The electronic impact sensors are accelerometers that sense the rate of vehicle deceleration, which provide verification of the direction and severity of an impact. On models equipped with optional side curtain airbags, the ACM also monitors inputs from two remote side impact sensors located within both the left and right B-pillars to control deployment of the side curtain airbag units.

The safing sensor is an electronic accelerometer sensor within the ACM that provides an additional logic input to the ACM microprocessor. The safing sensor is used to verify the need for a supplemental restraint deployment by detecting impact energy of a lesser magnitude than that of the primary electronic impact sensors, and must exceed a safing threshold in order for the airbags to deploy. Vehicles equipped with optional side curtain airbags feature a second safing sensor within the ACM to provide confirmation to the ACM microprocessor of side impact forces. This second safing sensor is a bi-directional unit that detects impact forces from either side of the vehicle.

Pre-programmed decision algorithms in the ACM microprocessor determine when the deceleration rate as signaled by the impact sensors and the safing sensors indicate an impact that is severe enough to require supplemental restraint system protection and, based upon the severity of the monitored impact and the status of the passenger airbag on/off switch input, determines the level of front airbag deployment force required for each front seating position. When the programmed conditions are met, the ACM sends the proper electrical signals to deploy the dual multistage front airbags at the programmed force levels, the front seat belt tensioners and, if the vehicle is so equipped, either side curtain airbag unit. For vehicles equipped with the passenger airbag on/off switch, the passenger front airbag and seat belt tensioner will be deployed by the ACM only if enabled by the switch (passenger airbag on/off switch indicator Off) at the time of the impact.

The hard wired inputs and outputs for the ACM may be diagnosed and tested using conventional diagnostic tools and methods. However, conventional diagnostic methods will not prove conclusive in the diagnosis of the ACM, the PCI data bus network, or the electronic message inputs to and outputs from the ACM. The most reliable, efficient, and accurate means to diagnose the ACM, the PCI data bus, and the electronic message inputs to and outputs from the ACM requires the use of a diagnostic scan tool. Refer to the appropriate diagnostic information.

REMOVAL

MODULE

WARNING: To avoid personal injury or death, on vehicles equipped with airbags, disable the supplemental restraint system before attempting any steering wheel, steering column, airbag, seat belt tensioner, impact sensor, or instrument panel component diagnosis or service. Disconnect and isolate the battery negative (ground) cable, then wait two minutes for the system capacitor to discharge before performing further diagnosis or service. This is the only sure way to disable the supplemental restraint system. Failure to take the proper precautions could result in accidental airbag deployment.

WARNING: To avoid personal injury or death, never strike or drop the airbag control module, as it can damage the impact sensor or affect its calibration. The airbag control module contains the impact sensor, which enables the system to deploy the supplemental restraints. If an airbag control module is accidentally dropped during service, the module must be scrapped and replaced with a new unit. Failure to observe this warning could result in accidental, incomplete, or improper supplemental restraint deployment.

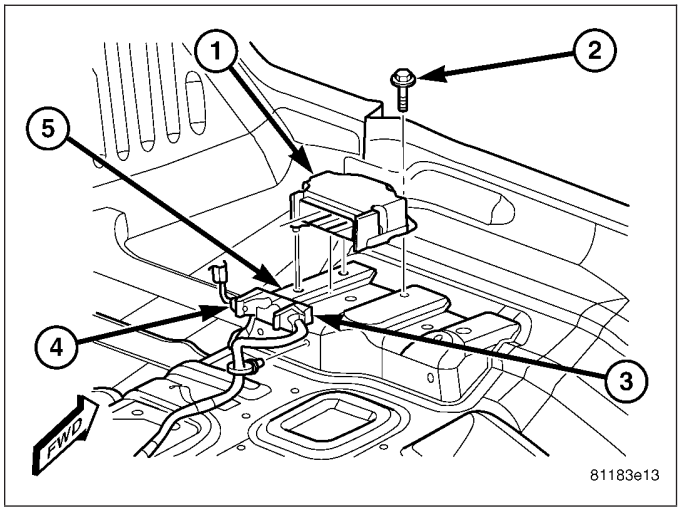

1. Disconnect and isolate the battery negative cable. Wait two minutes for the system capacitor to discharge before further service.
2. On models with a manual transmission, remove the floor console from the top of the floor panel transmission tunnel. (Refer to 23 - BODY/INTERIOR/FLOOR CONSOLE - REMOVAL).
3. On models with an automatic transmission, remove the ACM cover from the instrument panel. (Refer to 8 - ELECTRICAL/RESTRAINTS/ACM COVER - REMOVAL).
4. Reach through the rearward facing opening below the instrument panel center stack support bracket on the top of the floor panel transmission tunnel to access and disconnect the two wire harness connectors (3 & 4) for the Airbag Control Module (ACM) (1) from the ACM connector receptacles located on the rearward facing side of the module. To disconnect the wire harness connectors from the ACM, depress the release tab and lift the lever arm on each connector.
5. From the left side of the floor panel transmission tunnel, reach behind the module to access and loosen the screw (2) that secures the right side of the ACM to the bracket (5) on the floor panel transmission tunnel. Loosen the screw about 7 millimeters (0.25 inch).
6. From the left side of the floor panel transmission tunnel, remove the two screws that secure the left side of the ACM to the bracket on the floor panel transmission tunnel.
7. Still working from the left side of the floor panel transmission tunnel, lift the ACM upward far enough to disengage the locating pin on the bottom of the ACM mounting flange from the locating hole in the mounting bracket, then slide the ACM toward the left far enough to disengage the slotted hole in the right ACM mounting flange from under the head of the previously loosened right mounting screw.
8. Remove the ACM from the left side of the floor panel transmission tunnel.

COVER

WARNING: To avoid personal injury or death, on vehicles equipped with airbags, disable the supplemental restraint system before attempting any steering wheel, steering column, airbag, seat belt tensioner, impact sensor, or instrument panel component diagnosis or service. Disconnect and isolate the battery negative (ground) cable, then wait two minutes for the system capacitor to discharge before performing further diagnosis or service. This is the only sure way to disable the supplemental restraint system. Failure to take the proper precautions could result in accidental airbag deployment.

NOTE: The Airbag Control Module (ACM) cover is used only on models with an automatic transmission. Models with a manual transmission require that the floor console be removed to access the ACM for service. (Refer to 23 - BODY/INTERIOR/FLOOR CONSOLE - REMOVAL).

1. Disconnect and isolate the battery negative cable. Wait two minutes for the system capacitor to discharge before further service.
2. Using a trim stick or another suitable wide flat-bladed tool, gently pry each side of the ACM cover (2) away from the instrument panel at each side of the center bracket on the floor panel transmission tunnel far enough to disengage the two snap clip retainers from the instrument panel receptacles (1).
3. Remove the ACM cover from the instrument panel.

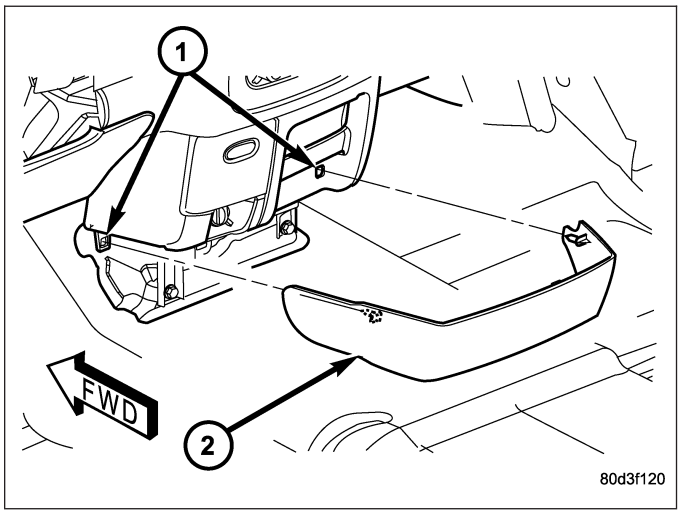

INSTALLATION

MODULE

WARNING: To avoid personal injury or death, on vehicles equipped with airbags, disable the supplemental restraint system before attempting any steering wheel, steering column, airbag, seat belt tensioner, impact sensor, or instrument panel component diagnosis or service. Disconnect and isolate the battery negative (ground) cable, then wait two minutes for the system capacitor to discharge before performing further diagnosis or service. This is the only sure way to disable the supplemental restraint system. Failure to take the proper precautions could result in accidental airbag deployment.

WARNING: To avoid personal injury or death, never strike or drop the airbag control module, as it can damage the impact sensor or affect its calibration. The airbag control module contains the impact sensor, which enables the system to deploy the supplemental restraints. If an airbag control module is accidentally dropped during service, the module must be scrapped and replaced with a new unit. Failure to observe this warning could result in accidental, incomplete, or improper supplemental restraint deployment.

1. Position the Airbag Control Module (ACM) (1) to the left side of the floor panel transmission tunnel near the ACM bracket (5). When the ACM is correctly positioned, the arrow on the ACM label will be pointed forward in the vehicle.
2. From the left side of the floor panel transmission tunnel, slide the ACM toward the right far enough to engage the slotted hole in the right ACM mounting flange under the head of the previously loosened right mounting screw (2), then engage the locating pin on the bottom of the left ACM mounting flange into the locating hole in the bracket.
3. Still working from the left side of the floor panel transmission tunnel, install and tighten the two screws that secure the left ACM mounting flanges to the bracket that is welded onto the floor panel transmission tunnel. Tighten the screws to 12 N·m (9 ft. lbs.).

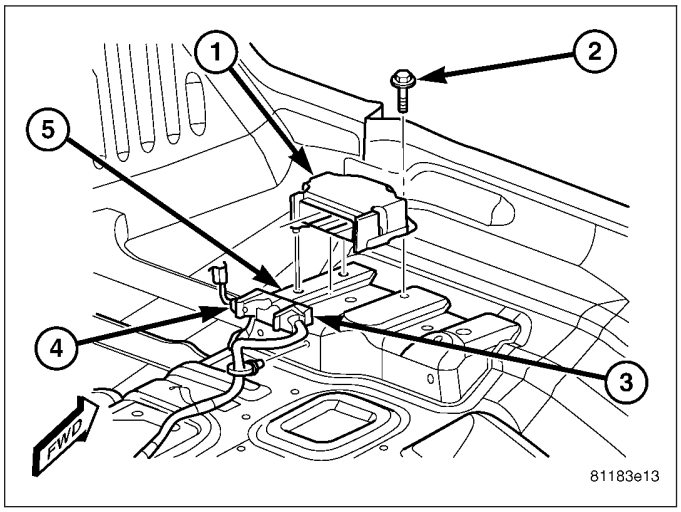

4. From the left side of the floor panel transmission tunnel, reach behind the module to access and tighten the screw that secures the right side of the ACM to the bracket on the floor panel transmission tunnel. Tighten the screw to 12 N·m (9 ft. lbs.).
5. Reach through the rearward facing opening below the instrument panel center stack support bracket on the top of the floor panel transmission tunnel to access and reconnect the two wire harness connectors (3 & 4) for the ACM to the ACM connector receptacle located on the rearward facing side of the module. Be certain that the latches on the connectors are each fully engaged.
6. On models with an automatic transmission, reinstall the ACM cover onto the instrument panel. (Refer to 8 - ELECTRICAL/RESTRAINTS/ACM COVER - INSTALLATION).
7. On models with a manual transmission, reinstall the floor console onto the top of the floor panel transmission tunnel. (Refer to 23 - BODY/INTERIOR/FLOOR CONSOLE - INSTALLATION).
8. Do not reconnect the battery negative cable at this time. The supplemental restraint system verification test procedure should be performed following service of any supplemental restraint system component. (Refer to 8 - ELECTRICAL/RESTRAINTS - STANDARD PROCEDURE - VERIFICATION TEST).

COVER

WARNING: To avoid personal injury or death, on vehicles equipped with airbags, disable the supplemental restraint system before attempting any steering wheel, steering column, airbag, seat belt tensioner, impact sensor, or instrument panel component diagnosis or service. Disconnect and isolate the battery negative (ground) cable, then wait two minutes for the system capacitor to discharge before performing further diagnosis or service. This is the only sure way to disable the supplemental restraint system. Failure to take the proper precautions could result in accidental airbag deployment.

NOTE: The Airbag Control Module (ACM) cover is used only on models with an automatic transmission. Models with a manual transmission require that the floor console be reinstalled following ACM service. (Refer to 23 - BODY/INTERIOR/FLOOR CONSOLE - INSTALLATION).

1. Position the ACM cover (2) to the instrument panel.
2. Align the snap clip retainer on each side of the ACM cover with the instrument panel receptacle (1) at each side of the center bracket on the floor panel transmission tunnel.
3. Using hand pressure, press firmly and evenly on the outside of the ACM cover over each snap clip retainer location until each retainer is fully engaged in its instrument panel receptacle.
4. Reconnect the battery negative cable.

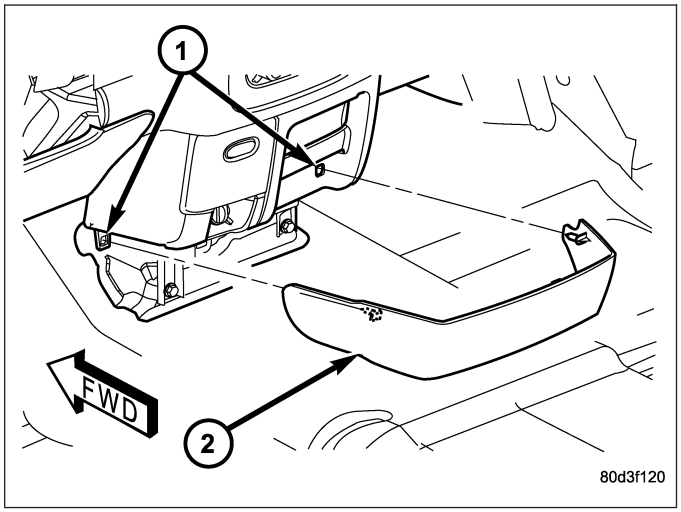

CHILD RESTRAINT ANCHOR

DESCRIPTION

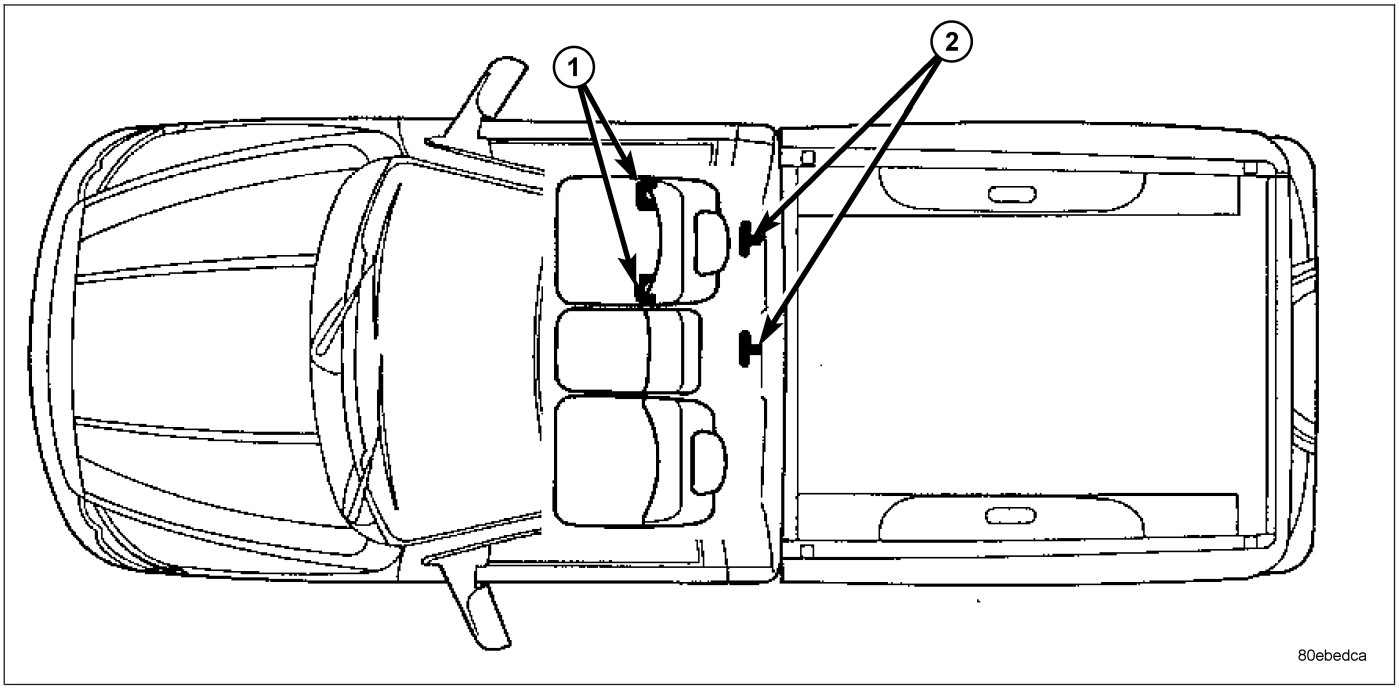

This model is equipped with a Lower Anchors and Tether for CHildren, or LATCH child restraint anchorage system. The LATCH system provides for the installation of suitable child restraints in certain seating positions without using the standard equipment seat belt provided for that seating position. Standard cab models are equipped with a fixed-position child restraint upper tether anchor for the front center and outboard seating positions (2), and child restraint lower anchors for the front outboard seating position (1).

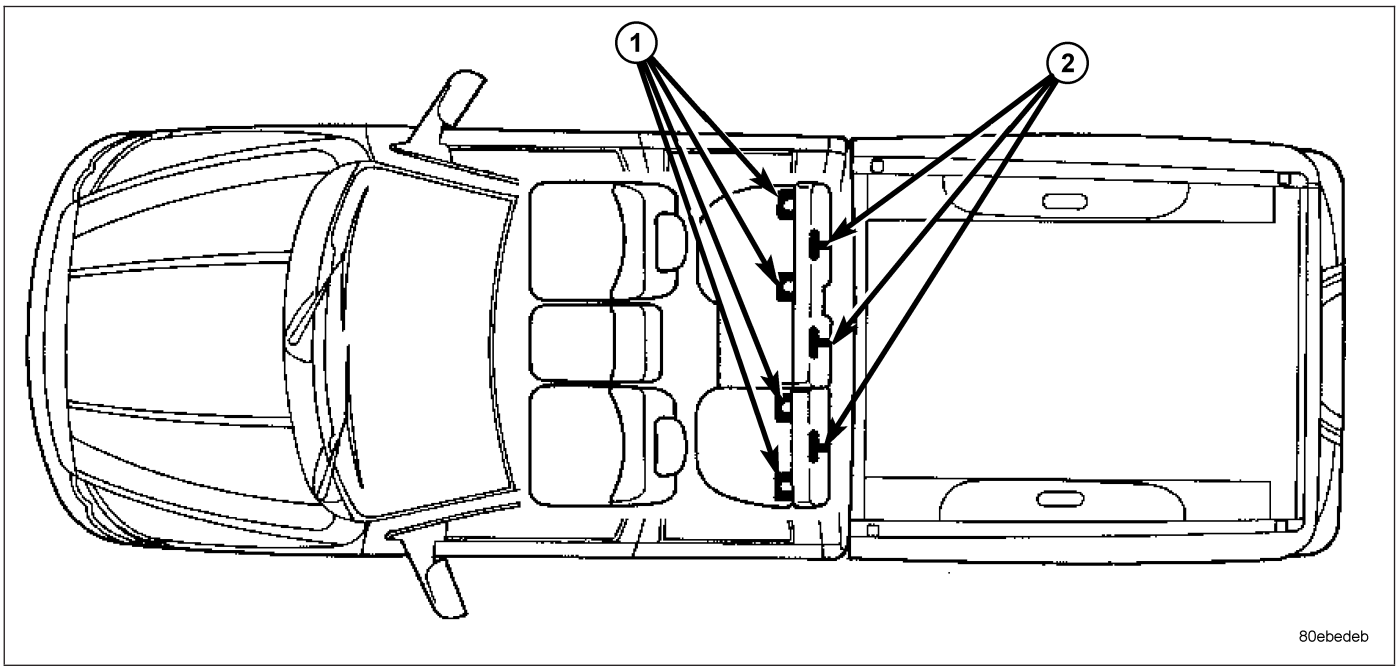

Quad cab models are equipped with a fixed-position child restraint upper tether anchor strap for the rear center and both rear outboard seating positions (2), and child restraint lower anchors for both rear outboard seating positions (1). All front seat child restraint anchors are deleted on quad cab models.

The two upper tether anchors (3) for standard cab models are integral to the upper cab back panel reinforcement and are concealed behind individual trim cover and bezel units (1) that are integral to the cab back trim panel (2). These upper tether anchors cannot be adjusted or repaired and, if faulty or damaged, they must be replaced as a unit with the upper cab back panel reinforcement. The upper tether anchor trim covers and bezels are serviced as a unit with the cab back trim panel.

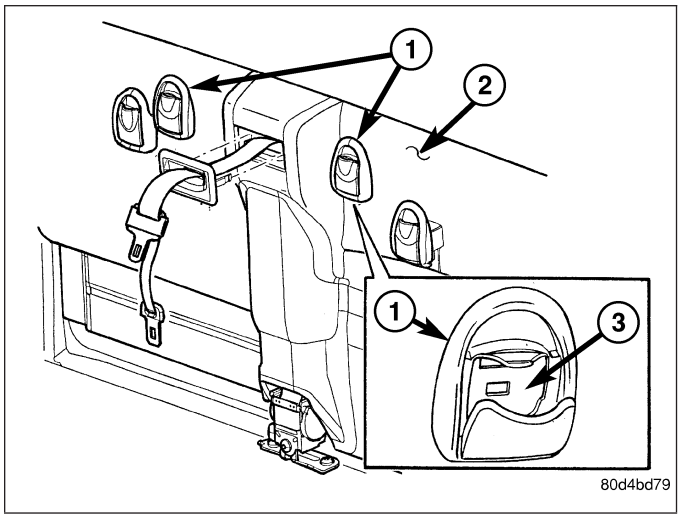

The three upper tether anchor straps (1) for quad cab models are secured to the upper cab back panel (2) reinforcement with screws (3). These anchor straps are concealed behind the upright rear seat back. The upper tether anchor straps are available for individual service replacement.

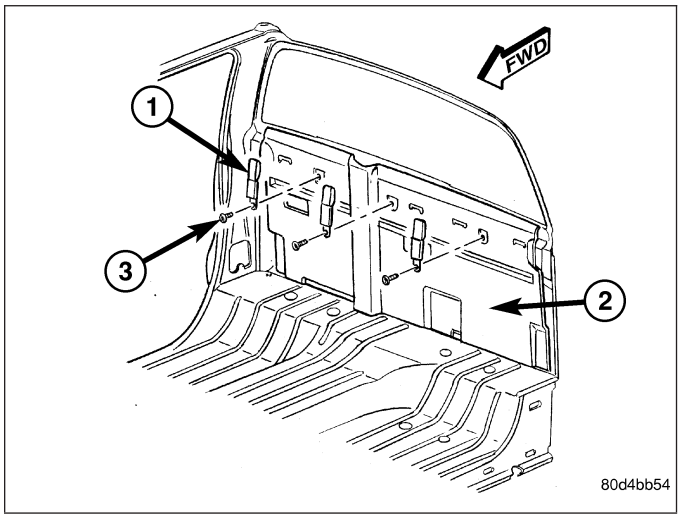

The lower anchors (2) for all models are integral to their respective front or rear seat cushion frame. Round markers (3) with an imprinted child seat icon on the standard cab front seat back trim cover helps identify the anchor locations for that application because they may be otherwise difficult to see with the seat back in the upright position. These lower anchors are each constructed from round steel bar stock that is formed into a U-shape, then securely welded at each end to the seat cushion frame. They are each accessed from the front of their respective seats, at each side where the seat back meets the seat cushion. These lower anchors cannot be adjusted or repaired and, if faulty or damaged, they must be replaced as a unit with the seat cushion frame.

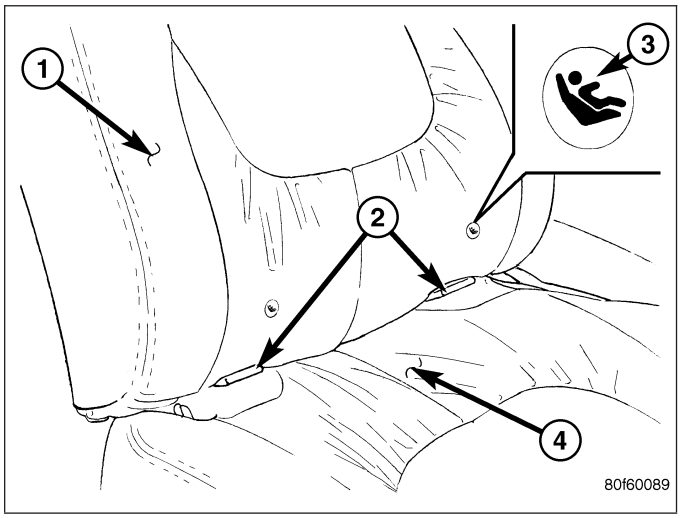

On quad cab models, if the rear seat lower anchors (2) have been bent or broken as a result of a vehicle collision, the latch for the affected rear seat cushion frame unit must also be replaced.

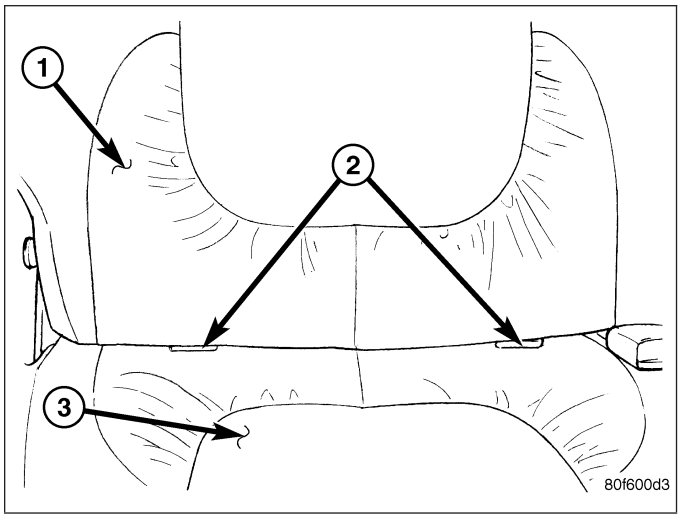

WARNING: During and following any seat belt or child restraint anchor service, carefully inspect all seat belts, buckles, mounting hardware, retractors, tether straps, and anchors for proper installation, operation, or damage. Replace any belt that is cut, frayed, or torn. Straighten any belt that is twisted. Tighten any loose fasteners. Replace any belt that has a damaged or inoperative buckle or retractor. Replace any belt that has a bent or damaged latch plate or anchor plate. Replace any child restraint anchor or the unit to which the anchor is integral that has been bent or damaged. Never attempt to repair a seat belt or child restraint component. Always replace damaged or faulty seat belt and child restraint components with the correct, new and unused replacement parts listed in the DaimlerChrysler Mopar Parts Catalog.

OPERATION

See the owner's manual in the vehicle glove box for more information on the proper use of all of the factory-installed child restraint anchors.

REMOVAL - TETHER STRAP

WARNING: To avoid personal injury or death, during and following any seat belt or child restraint anchor service, carefully inspect all seat belts, buckles, mounting hardware, retractors, tether straps, and anchors for proper installation, operation, or damage. Replace any belt that is cut, frayed, or torn. Straighten any belt that is twisted. Tighten any loose fasteners. Replace any belt that has a damaged or inoperative buckle or retractor. Replace any belt that has a bent or damaged latch plate or anchor plate. Replace any child restraint anchor or the unit to which the anchor is integral that has been bent or damaged. Never attempt to repair a seat belt or child restraint component. Always replace damaged or faulty seat belt and child restraint components with the correct, new and unused replacement parts listed in the DaimlerChrysler Mopar Parts Catalog.

NOTE: The following procedure applies only to the rear seat upper child tether straps used on quad cab models. The child restraint anchors used in other models and locations are integral to other components and cannot be serviced separately.

1. Remove the rear seat from the vehicle. (Refer to 23 - BODY/SEATS/SEAT - REAR - REMOVAL).
2. Remove the screw (3) that secures the child tether strap (1) to the upper cab back panel (2) reinforcement.
3. Remove the child tether strap from the upper cab back panel reinforcement.

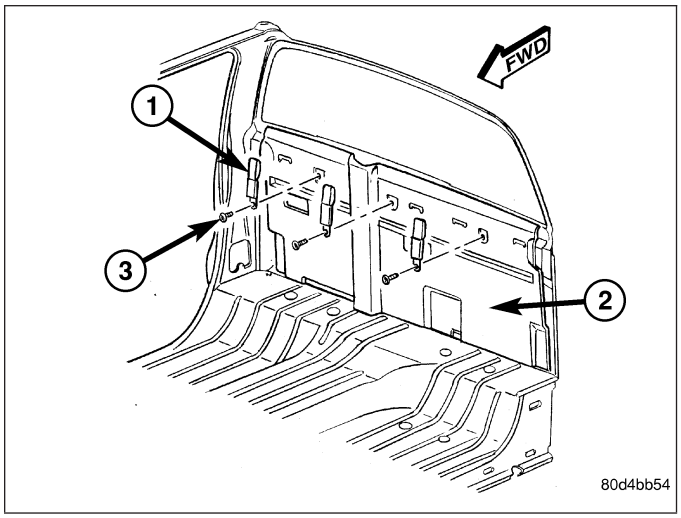

INSTALLATION - TETHER STRAP

WARNING: To avoid personal injury or death, during and following any seat belt or child restraint anchor service, carefully inspect all seat belts, buckles, mounting hardware, retractors, tether straps, and anchors for proper installation, operation, or damage. Replace any belt that is cut, frayed, or torn. Straighten any belt that is twisted. Tighten any loose fasteners. Replace any belt that has a damaged or inoperative buckle or retractor. Replace any belt that has a bent or damaged latch plate or anchor plate. Replace any child restraint anchor or the unit to which the anchor is integral that has been bent or damaged. Never attempt to repair a seat belt or child restraint component. Always replace damaged or faulty seat belt and child restraint components with the correct, new and unused replacement parts listed in the DaimlerChrysler Mopar Parts Catalog.

NOTE: The following procedure applies only to the rear seat upper child tether straps used on quad cab models. The child restraint anchors used in other models and locations are integral to other components and cannot be serviced separately.

1. Position the child tether strap (1) onto the cab back panel (2) upper reinforcement.
2. Install and tighten the screw (3) that secures the child tether strap to the upper cab back panel reinforcement. Tighten the screw to 14 N·m (10 ft. lbs.).
3. Reinstall the rear seat into the vehicle. (Refer to 23 - BODY/SEATS/SEAT - REAR - INSTALLATION).

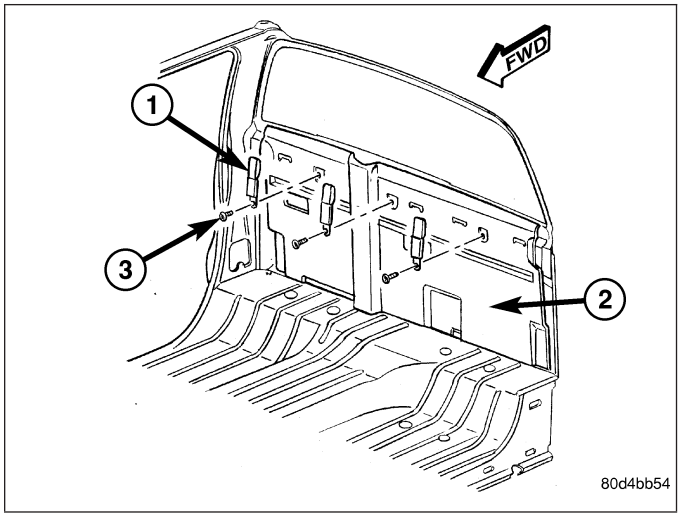

CLOCKSPRING

DESCRIPTION

The clockspring assembly is secured with two screws onto the multi-function switch mounting housing near the top of the steering column behind the steering wheel. The clockspring consists of a flat, round molded plastic case (8) with a stubby tail that hangs below the steering column. The tail contains two connector receptacles that face toward the instrument panel. Within the plastic case is a spool-like molded plastic rotor (10) with a large exposed hub. The upper surface of the rotor hub has a large center hole, two large flats, an engagement dowel with a yellow rubber boot (7), two short pigtail wires with connectors (1), and two connector receptacles (5) that face toward the steering wheel.

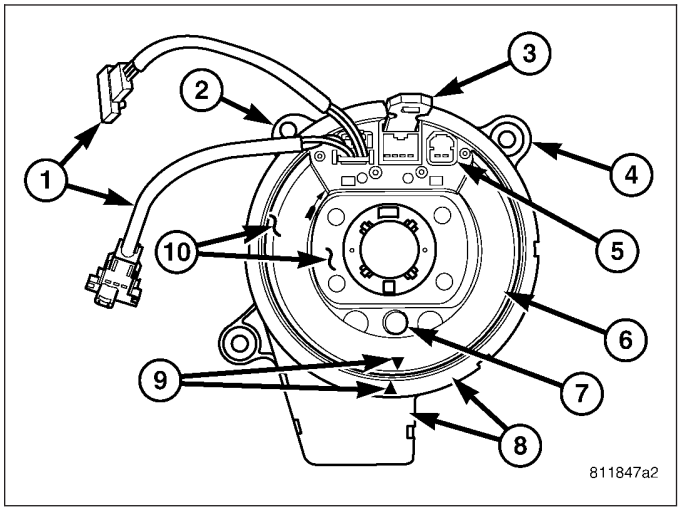

The lower surface of the rotor hub has a molded plastic turn signal cancel cam (3) with two lobes that is keyed to the rotor and is secured there with four integral snap features. Within the plastic case and wound around the rotor spool is a long ribbon-like tape that consists of several thin copper wire leads sandwiched between two thin plastic membranes. The outer end of the tape terminates at the connector receptacles (4) that face the instrument panel, while the inner end of the tape terminates at the pigtail wires and connector receptacles on the hub of the clockspring rotor that face the steering wheel.

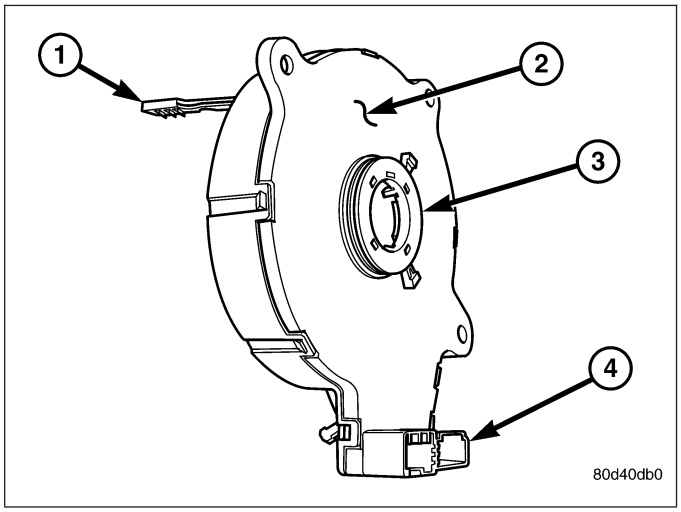

Service replacement clocksprings are shipped pre-centered and with a molded plastic locking pin (1) that snaps into a receptacle on the rotor and is engaged between two tabs on the upper surface of the rotor case. The locking pin secures the centered clockspring rotor to the clockspring case during shipment and handling, but must be removed from the clockspring after it is installed on the steering column. (Refer to 8 - ELECTRICAL/RESTRAINTS/CLOCKSPRING - STANDARD PROCEDURE - CLOCKSPRING CENTERING).

The clockspring cannot be repaired. If the clockspring is faulty, damaged, or if the driver airbag has been deployed, the clockspring must be replaced.

OPERATION

The clockspring is a mechanical electrical circuit component that is used to provide continuous electrical continuity between the fixed instrument panel wire harness and the electrical components mounted on or in the rotating steering wheel. On this model the rotating electrical components include the driver airbag, the horn switch, the speed control switches, and the remote radio switches, if the vehicle is so equipped. The clockspring case is positioned and secured to the multi-function switch mounting housing near the top of the steering column. The connector receptacles on the tail of the fixed clockspring case connect the clockspring to the vehicle electrical system through two take outs with connectors from the instrument panel wire harness.

The clockspring rotor is movable and is keyed by an engagement dowel that is molded onto the rotor hub between two fins that are cast into the lower surface of the steering wheel armature. A yellow rubber boot is installed over the engagement dowel to eliminate contact noise between the dowel and the steering wheel. The two lobes on the turn signal cancel cam on the lower surface of the clockspring rotor hub contact a turn signal cancel actuator of the multi-function switch to provide automatic turn signal cancellation.

Two short, yellow-sleeved pigtail wires on the upper surface of the clockspring rotor connect the clockspring to the driver airbag, while a steering wheel wire harness connects the two connector receptacles on the upper surface of the clockspring rotor to the horn switch feed pigtail wire connector and, if the vehicle is so equipped, to the optional speed control and remote radio switches on the steering wheel.

Like the clockspring in a timepiece, the clockspring tape has travel limits and can be damaged by being wound too tightly during full stop-to-stop steering wheel rotation. To prevent this from occurring, the clockspring is centered when it is installed on the steering column. Centering the clockspring indexes the clockspring tape to the movable steering components so that the tape can operate within its designed travel limits. However, if the clockspring is removed from the steering column or if the steering shaft is disconnected from the steering gear, the clockspring spool can change position relative to the movable steering components. The clockspring must be re-centered following completion of this service or the tape may be damaged.

Service replacement clocksprings are shipped pre-centered and with a plastic locking pin installed. This locking pin should not be removed until the clockspring has been installed on the steering column. If the locking pin is removed before the clockspring is installed on a steering column, the clockspring centering procedure must be performed. (Refer to 8 - ELECTRICAL/RESTRAINTS/CLOCKSPRING - STANDARD PROCEDURE - CLOCKSPRING CENTERING).

STANDARD PROCEDURE

CLOCKSPRING CENTERING

WARNING: To avoid personal injury or death, on vehicles equipped with airbags, disable the supplemental restraint system before attempting any steering wheel, steering column, airbag, seat belt tensioner, impact sensor, or instrument panel component diagnosis or service. Disconnect and isolate the battery negative (ground) cable, then wait two minutes for the system capacitor to discharge before performing further diagnosis or service. This is the only sure way to disable the supplemental restraint system. Failure to take the proper precautions could result in accidental airbag deployment.

NOTE: Before starting this procedure, be certain to turn the steering wheel until the front wheels are in the straight-ahead position.

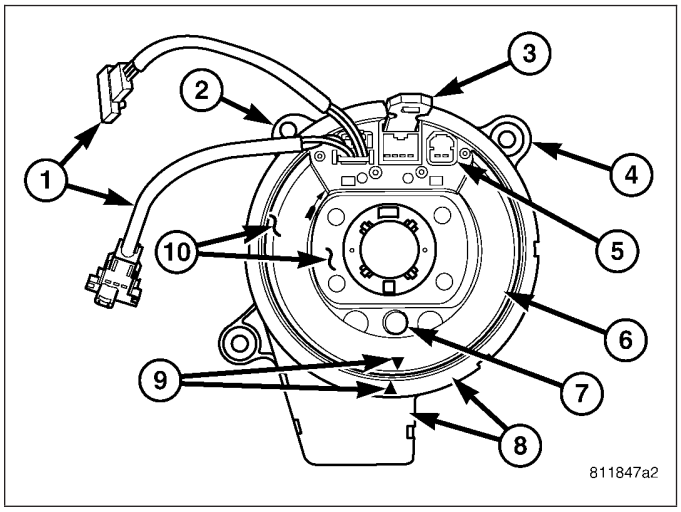

1. Place the front wheels in the straight-ahead position.
2. Remove the clockspring from the steering column. (Refer to 8 - ELECTRICAL/RESTRAINTS/CLOCKSPRING - REMOVAL).
3. Rotate the clockspring rotor (10) clockwise to the end of its travel. **Do not apply excessive torque.**
4. From the end of the clockwise travel, rotate the rotor about two and one-half turns counterclockwise. The engagement dowel and yellow rubber boot (7) should end up at the bottom, and the arrows on the clockspring rotor and case (9) should be in alignment.
5. The clockspring is now centered. Secure the clockspring rotor to the clockspring case to maintain clockspring centering until it is reinstalled on the steering column.
6. The front wheels should still be in the straight-ahead position. Reinstall the clockspring onto the steering column. (Refer to 8 - ELECTRICAL/RESTRAINTS/CLOCKSPRING - INSTALLATION).

REMOVAL

WARNING: To avoid personal injury or death, on vehicles equipped with airbags, disable the supplemental restraint system before attempting any steering wheel, steering column, airbag, seat belt tensioner, impact sensor, or instrument panel component diagnosis or service. Disconnect and isolate the battery negative (ground) cable, then wait two minutes for the system capacitor to discharge before performing further diagnosis or service. This is the only sure way to disable the supplemental restraint system. Failure to take the proper precautions could result in accidental airbag deployment.

NOTE: Before starting this procedure, be certain to turn the steering wheel until the front wheels are in the straight-ahead position.

1. Place the front wheels in the straight ahead position.
2. Disconnect and isolate the battery negative cable.
3. Remove the driver airbag from the steering wheel. (Refer to 8 - ELECTRICAL/RESTRAINTS/DRIVER AIRBAG - REMOVAL).
4. Disconnect the steering wheel wire harness connectors from the upper clockspring connector receptacles.

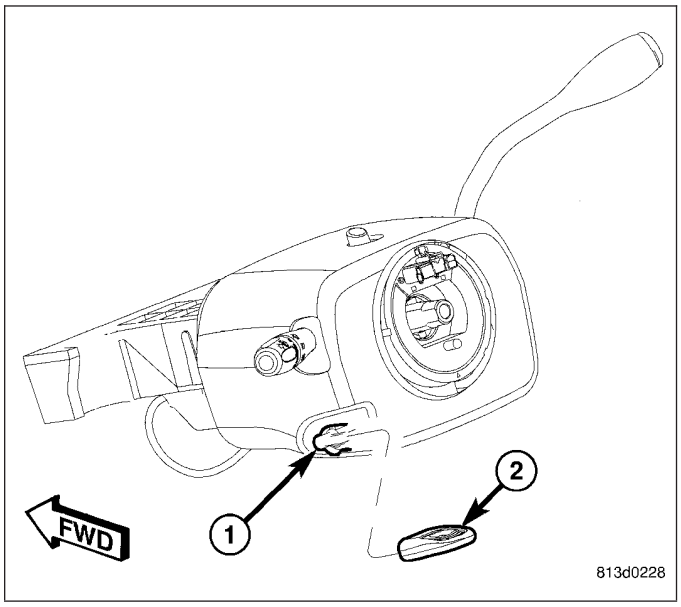

CAUTION: Be certain that the screws that secure the steering wheel puller to the steering wheel are fully engaged in the steering wheel armature without passing through the steering wheel and damaging the clockspring.

5. Remove the steering wheel from the steering column. (Refer to 19 - STEERING/COLUMN/STEERING WHEEL - REMOVAL).
6. Remove the steering column opening cover from the instrument panel. (Refer to 23 - BODY/INSTRUMENT PANEL/STEERING COLUMN OPENING COVER - REMOVAL).
7. Grasp the tilt steering column knob (2) firmly and pull it straight rearward to remove it from the tilt adjuster lever (1) on the left side of the column.
8. From below the steering column, remove the two outboard screws that secure the upper column shroud (1) to the lower shroud (3).
9. Using hand pressure, push gently inward on both sides of the upper shroud near the parting line between the upper and lower shrouds to release the snap features that secure it to the lower shroud.
10. Remove the upper shroud from the lower shroud and the steering column.
11. Remove the one center screw that secures the lower shroud to the steering column (4).
12. Remove the lower shroud from the steering column.

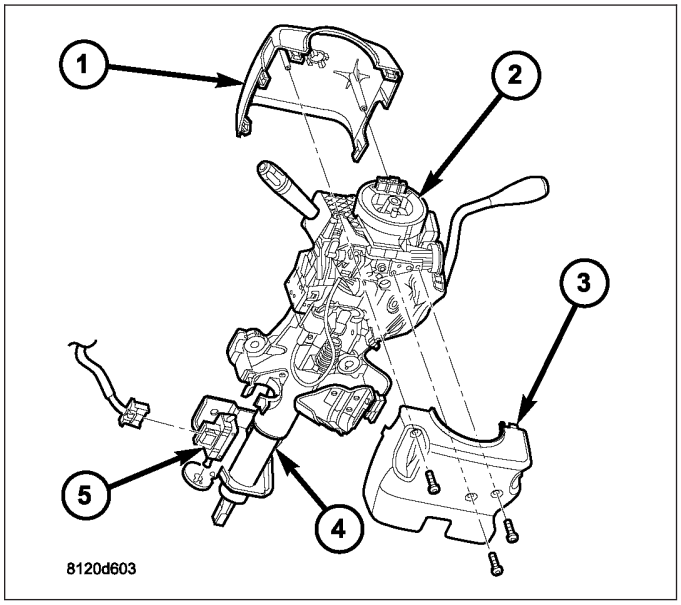

13. Disconnect the two instrument panel wire harness connectors from the two connector receptacles located below the steering column on the back of the clockspring housing.

14. Remove the two screws (3) that secure the clockspring to the multi-function switch mounting housing.
15. Remove the clockspring from the multi-function switch mounting housing. The clockspring cannot be repaired. It must be replaced if faulty or damaged, or if the driver airbag has been deployed.
16. If the removed clockspring is to be reused, be certain to secure the clockspring rotor to the clockspring case to maintain clockspring centering until it is reinstalled on the steering column. If clockspring centering is not maintained, the clockspring must be centered again before it is reinstalled. (Refer to 8 - ELECTRICAL/RESTRAINTS/ CLOCKSPRING - STANDARD PROCEDURE - CLOCKSPRING CENTERING).

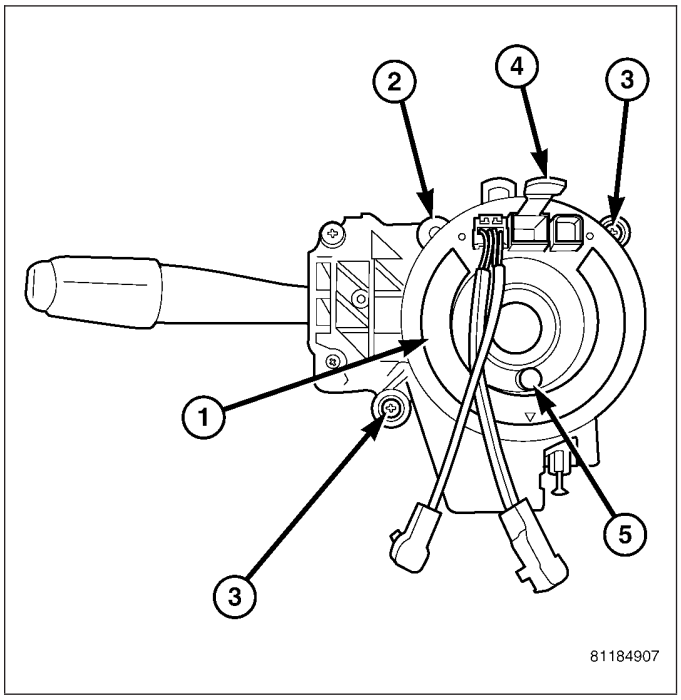

INSTALLATION

WARNING: To avoid personal injury or death, on vehicles equipped with airbags, disable the supplemental restraint system before attempting any steering wheel, steering column, airbag, seat belt tensioner, impact sensor, or instrument panel component diagnosis or service. Disconnect and isolate the battery negative (ground) cable, then wait two minutes for the system capacitor to discharge before performing further diagnosis or service. This is the only sure way to disable the supplemental restraint system. Failure to take the proper precautions could result in accidental airbag deployment.

CAUTION: If the clockspring is not properly centered in relation to the steering wheel, steering shaft and steering gear, it may be damaged. (Refer to 8 - ELECTRICAL/RESTRAINTS/CLOCKSPRING - STANDARD PROCEDURE - CLOCKSPRING CENTERING). Service replacement clocksprings are shipped pre-centered and with a locking pin installed. This locking pin should not be removed until the clockspring has been installed on the steering column. If the locking pin is removed before the clockspring is installed on a steering column, the clockspring centering procedure must be performed.

NOTE: Before starting this procedure, be certain that the front wheels are still in the straight-ahead position.

1. While holding the centered clockspring rotor and case stationary in relation to each other, carefully slide the clockspring down over the steering column upper shaft.
2. Align and seat the hole in the locating tab (2) on the clockspring case over the locating pin on the multi-function switch mounting housing.
3. Install and tighten the two screws (3) that secure the clockspring to the multi-function switch mounting housing. Tighten the screws to 2 N·m (20 in. lbs.).
4. Reconnect the two instrument panel wire harness connectors to the two connector receptacles located below the steering column on the back of the clockspring housing.

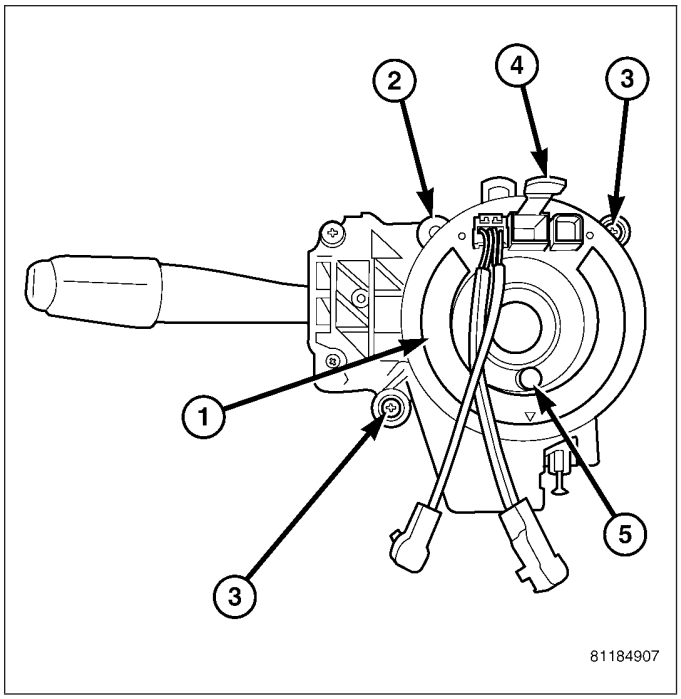

5. Position the lower shroud (3) onto the steering column (4).
6. From below the steering column, install and tighten the one center screw that secures the lower shroud to the steering column lock housing. Tighten the screw to 2 N·m (20 in. lbs.).
7. Position the upper shroud (1) onto the steering column over the lower shroud. If the vehicle is equipped with an automatic transmission, be certain to engage the gearshift lever gap hider into the openings in the right side of the upper and lower shroud halves.
8. Align the snap features on the upper shroud with the receptacles on the lower shroud and apply hand pressure to snap them together.
9. Install and tighten the two outboard screws that secure the upper shroud to the lower shroud. Tighten the screws to 2 N·m (20 in. lbs.).

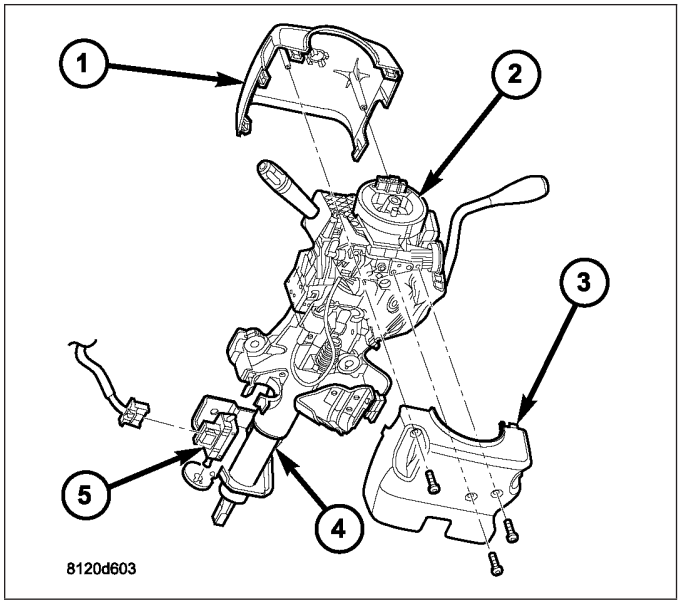

10. Align the tilt steering column knob (2) with the tilt adjuster lever (1) on the left side of the steering column and use hand pressure to snap it back into place.
11. Reinstall the steering column opening cover onto the instrument panel. (Refer to 23 - BODY/INSTRUMENT PANEL/STEERING COLUMN OPENING COVER - INSTALLATION).
12. If a new clockspring has been installed, remove the plastic locking pin that is securing the clockspring rotor to the clockspring case to maintain clockspring centering.

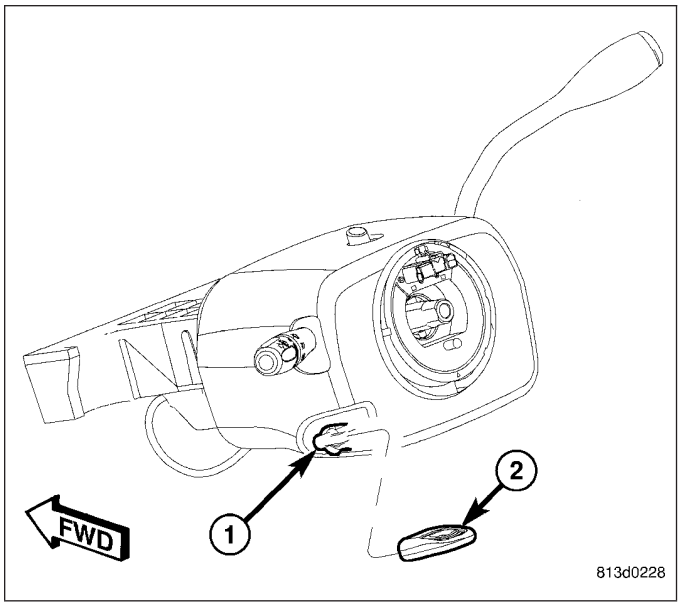

NOTE: When reinstalling the steering wheel, be certain to index the yellow rubber booted engagement dowel on the upper surface of the clockspring rotor between the two fins cast into the lower surface of the steering wheel armature hub.

13. Reinstall the steering wheel onto the steering column. (Refer to 19 - STEERING/COLUMN/STEERING WHEEL - INSTALLATION).
14. Reconnect the steering wheel wire harness connectors to the upper clockspring connector receptacles. Be certain that the steering wheel wire harness is routed between the steering wheel back trim cover and the steering wheel armature.
15. Reinstall the driver airbag onto the steering wheel. (Refer to 8 - ELECTRICAL/RESTRAINTS/DRIVER AIRBAG - INSTALLATION).
16. Reconnect the battery negative cable.

AIR BAG-SIDE CURTAIN

DESCRIPTION

Optional side curtain airbags are available for this model when it is also equipped with dual front airbags. These airbags are passive, inflatable, Supplemental Restraint System (SRS) components, and vehicles with this equipment can be readily identified by a molded identification trim button with the “SRS - AIRBAG” logo located on the headliner above each A-pillar, or above each B-pillar on quad cab models. This system is designed to reduce injuries to the vehicle occupants in the event of a side impact collision.



Vehicles equipped with side curtain airbags have two individually controlled curtain airbag units. These airbag units are concealed and mounted above the headliner where they are each secured to one of the roof side rails (5). Each folded airbag cushion is contained within a long extruded plastic channel (8) that extends along the roof rail from the A-pillar (6) at the front of the vehicle to just behind the B-pillar (2) on standard cab models, and to just behind the C-pillar (2) on quad cab models.

A long tether (7) extends down the A-pillar from the front of the airbag cushion, where it is retained to the pillar with plastic push-in routing clips and it is secured to the base of the A-pillar near the belt line with a screw.

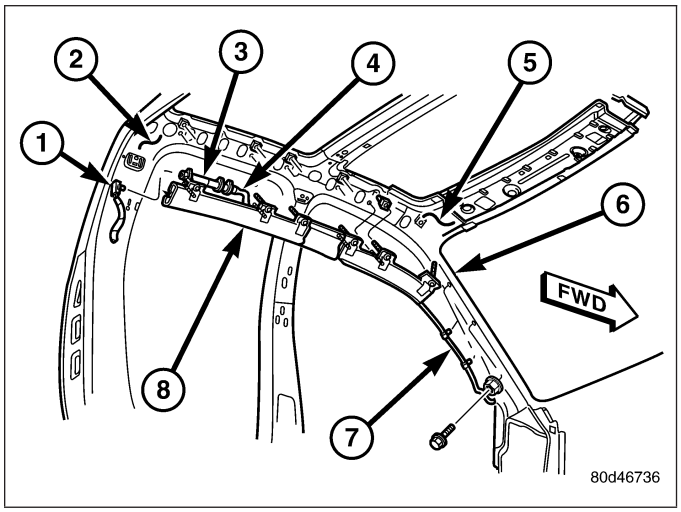

The hybrid-type inflator (3) for each airbag is secured to the roof rail at the rear of the airbag unit behind the B-pillar (standard cab) or C-pillar (quad cab), and is connected to the airbag cushion by a long tubular manifold (4). The inflator bracket and the extruded airbag cushion channel are located with plastic push-in fasteners to the roof rail, then secured with screws to spring nuts located in the roof rail.

A two-wire take out of the body wire harness with a keyed and latched connector insulator (1) on the B-pillar (standard cab) or C-pillar (quad cab) connects directly to an integral receptacle on the inflator initiator. The body wire harness connects the airbag unit to the Airbag Control Module (ACM).

The side curtain airbag unit cannot be adjusted or repaired and must be replaced if deployed, faulty, or in any way damaged. Once a side curtain airbag has been deployed, the complete airbag unit, the headliner, the upper A, B, and C-pillar trim, and all other visibly damaged components must be replaced.

OPERATION

Each side curtain airbag is deployed individually by an electrical signal generated by the Airbag Control Module (ACM) to which it is connected through left or right curtain airbag line 1 and line 2 (or squib) circuits. The hybrid-type inflator assembly for each airbag contains a small canister of highly compressed inert gas. When the ACM sends the proper electrical signal to the airbag inflator, the electrical energy creates enough heat to ignite chemical pellets within the inflator.

Once ignited, these chemicals burn rapidly and produce the pressure necessary to rupture a containment disk in the inert gas canister. The inflator and inert gas canister are sealed and connected to a tubular manifold so that all of the released gas is directed into the folded curtain airbag cushion, causing the cushion to inflate. As the airbag cushion inflates it will drop down from the roof rail between the edge of the headliner and the side glass/body pillars to form a curtain-like cushion to protect the vehicle occupants during a side impact collision.

The front tether keeps the front portion of the side curtain bag taut, thus ensuring that the bag will deploy in the proper position. Following the airbag deployment, the airbag cushion quickly deflates by venting the inert gas through the loose weave of the cushion fabric, and the deflated cushion hangs down loosely from the roof rail.

REMOVAL

WARNING: To avoid personal injury or death, on vehicles equipped with airbags, disable the supplemental restraint system before attempting any steering wheel, steering column, airbag, seat belt tensioner, impact sensor, or instrument panel component diagnosis or service. Disconnect and isolate the battery negative (ground) cable, then wait two minutes for the system capacitor to discharge before performing further diagnosis or service. This is the only sure way to disable the supplemental restraint system. Failure to take the proper precautions could result in accidental airbag deployment.

WARNING: To avoid personal injury or death, when removing a deployed airbag, rubber gloves, eye protection, and a long-sleeved shirt should be worn. There may be deposits on the airbag unit and other interior surfaces. In large doses, these deposits may cause irritation to the skin and eyes.

WARNING: To avoid personal injury or death, use extreme care to prevent any foreign material from entering the side curtain airbag, or becoming entrapped between the side curtain airbag cushion and the headliner. Failure to observe this warning could result in occupant injuries upon airbag deployment.

NOTE: The following procedure is for replacement of a faulty or damaged side curtain airbag. If the airbag is faulty or damaged, but not deployed, review the recommended procedures for handling non-deployed supplemental restraints. (Refer to 8 - ELECTRICAL/RESTRAINTS - STANDARD PROCEDURE - HANDLING NON-DEPLOYED SUPPLEMENTAL RESTRAINTS). If the side curtain airbag has been deployed, review the recommended procedures for service after a supplemental restraint deployment before removing the airbag from the vehicle. (Refer to 8 - ELECTRICAL/RESTRAINTS - STANDARD PROCEDURE - SERVICE AFTER A SUPPLEMENTAL RESTRAINT DEPLOYMENT).

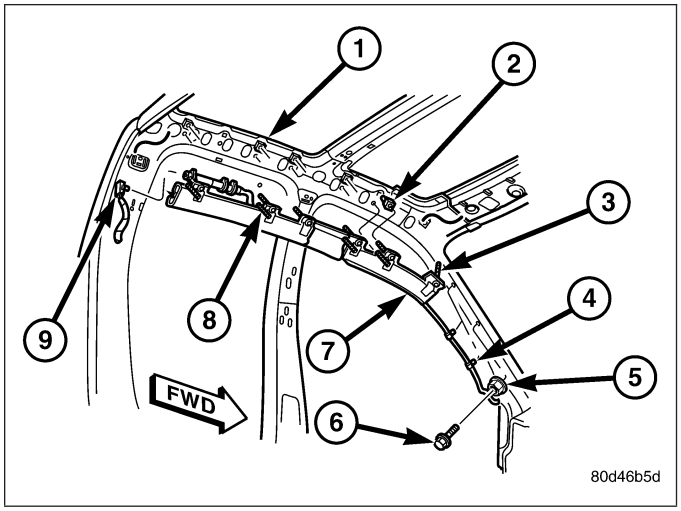

1. Disconnect and isolate the battery negative cable. Wait two minutes for the system capacitor to discharge before further service.
2. Remove the headliner from the vehicle. (Refer to 23 - BODY/INTERIOR/HEADLINER - REMOVAL).
3. Remove the screw (6) that secures the side curtain airbag tether retainer (5) to the base of the A-pillar near the belt line.
4. Disengage the two side curtain airbag tether plastic retainer clips (4) from the A-pillar.
5. Disconnect the body wire harness connector for the side curtain airbag (9) from the connector receptacle at the back of the airbag inflator.
6. Remove the four screws (standard cab) or six screws (quad cab) (3) that secure the side curtain airbag inflator and manifold tube brackets to the spring nuts (2) in the roof rail (1).
7. Grasp the extruded plastic side curtain airbag channel firmly and pull it straight away from the roof rail far enough to disengage all three (standard cab) or five (quad cab) plastic push-in fasteners (8) that secure it.
8. Remove the side curtain airbag (7) from the vehicle as a unit.

INSTALLATION

WARNING: To avoid personal injury or death, on vehicles equipped with airbags, disable the supplemental restraint system before attempting any steering wheel, steering column, airbag, seat belt tensioner, impact sensor, or instrument panel component diagnosis or service. Disconnect and isolate the battery negative (ground) cable, then wait two minutes for the system capacitor to discharge before performing further diagnosis or service. This is the only sure way to disable the supplemental restraint system. Failure to take the proper precautions could result in accidental airbag deployment.

WARNING: To avoid personal injury or death, when removing a deployed airbag, rubber gloves, eye protection, and a long-sleeved shirt should be worn. There may be deposits on the airbag unit and other interior surfaces. In large doses, these deposits may cause irritation to the skin and eyes.

WARNING: To avoid personal injury or death, use extreme care to prevent any foreign material from entering the side curtain airbag, or becoming entrapped between the side curtain airbag cushion and the headliner. Failure to observe this warning could result in occupant injuries upon airbag deployment.

NOTE: The following procedure is for replacement of a faulty or damaged side curtain airbag. If the airbag is faulty or damaged, but not deployed, review the recommended procedures for handling non-deployed supplemental restraints. (Refer to 8 - ELECTRICAL/RESTRAINTS - STANDARD PROCEDURE - HANDLING NON-DEPLOYED SUPPLEMENTAL RESTRAINTS). If the side curtain airbag has been deployed, review the recommended procedures for service after a supplemental restraint deployment before removing the airbag from the vehicle. (Refer to 8 - ELECTRICAL/RESTRAINTS - STANDARD PROCEDURE - SERVICE AFTER A SUPPLEMENTAL RESTRAINT DEPLOYMENT).

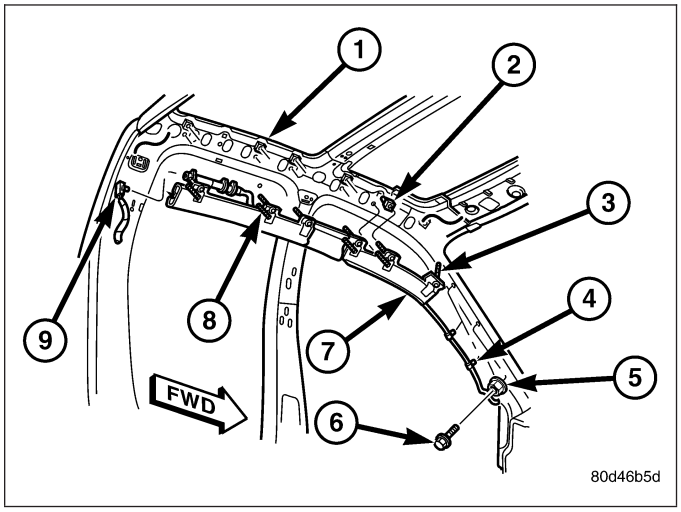

1. Check to be certain that the four (standard cab) or six (quad cab) spring nuts (2) that secure the side curtain airbag inflator and manifold tube brackets are properly installed and in good condition in the roof rail (1).
2. Position the side curtain airbag (7) into the vehicle as a unit.
3. Align all three (standard cab) or five (quad cab) plastic push-in fasteners (8) that secure the extruded plastic side curtain airbag channel with their holes in the roof side rail and push them straight into the roof rail until they are fully seated.
4. Working from the rear of the vehicle to the front, install and tighten the four screws (standard cab) or six screws (quad cab) (3) that secure the side curtain airbag inflator and manifold tube brackets to the nuts in the roof rail. Tighten the screws to 5 N·m (40 in. lbs.).
5. Reconnect the body wire harness connector for the side curtain airbag (9) to the connector receptacle at the back of the airbag inflator. Be certain the connector is fully engaged and latched.
6. Engage the two side curtain airbag tether plastic retainer clips (4) into the A-pillar.
7. Install and tighten the screw (6) that secures the side curtain airbag tether retainer (5) to the base of the A-pillar near the belt line. Tighten the screw to 6 N·m (55 in. lbs.).
8. Reinstall the headliner into the vehicle. (Refer to 23 - BODY/INTERIOR/HEADLINER - INSTALLATION).
9. Do not reconnect the battery negative cable at this time. The supplemental restraint system verification test procedure should be performed following service of any supplemental restraint system component. (Refer to 8 - ELECTRICAL/RESTRAINTS - STANDARD PROCEDURE - VERIFICATION TEST).

AIR BAG-DRIVER

DESCRIPTION

The color-keyed, injection molded, thermoplastic driver airbag protective trim cover (2) is the most visible part of the driver airbag. The driver airbag is located in the center of the steering wheel (1), where it is secured with two screws to the armature of the four-spoke steering wheel. All models have a chrome Dodge Ram emblem in the center of the trim cover. Concealed beneath the driver airbag trim cover are the horn switch, the folded airbag cushion, the airbag cushion retainer, the airbag housing, the airbag inflator, and the retainers that secure the inflator to the airbag

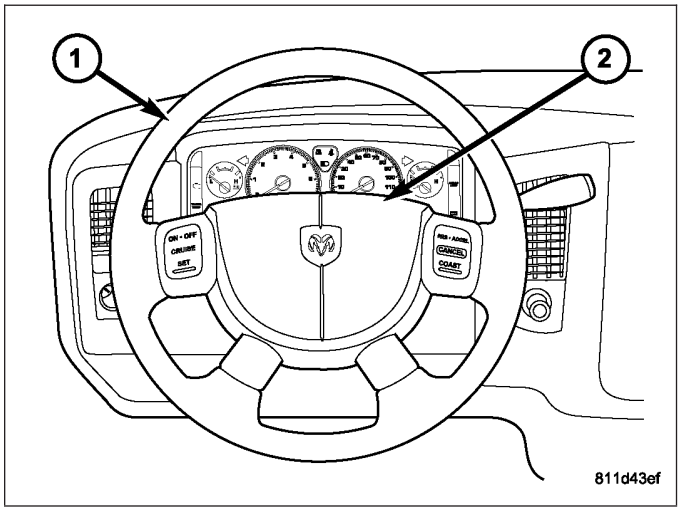

housing.

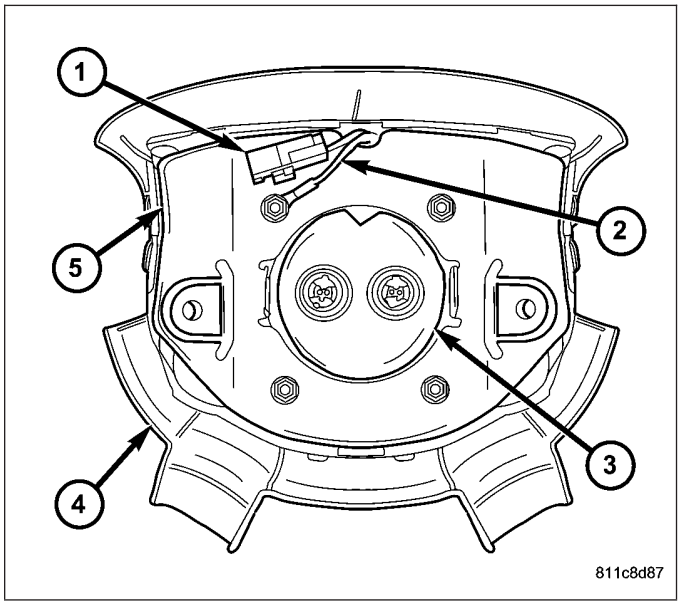

The airbag cushion, housing (5), and inflator (3) are secured within an integral receptacle molded into the back of the trim cover (4). The four vertical walls of this receptacle have a total of twelve small windows with blocking tabs that are engaged by twelve hook formations around the perimeter of the airbag housing. Each hook is inserted through one of the windows and the blocking tab in each window keeps the hook properly engaged with the trim cover, locking the trim cover securely into place on the airbag housing.

The resistive membrane-type horn switch is secured with heat stakes to the inside surface of the driver airbag trim cover, between the trim cover and the folded airbag cushion. The horn switch ground pigtail wire has an eyelet terminal connector that is captured beneath a flanged nut on the upper right inflator mounting stud on the back of the housing. The horn switch feed pigtail wire has a black, molded plastic insulator (1) that is secured by an integral retainer in a locator hole near the upper right corner of the airbag housing and is connected to the vehicle electrical system through a dedicated take out and connector of the steering wheel wire harness. Both horn switch wires are routed through an integral notch in the center of the upper edge of the airbag housing stamping.

The airbag used in this model is a multistage, Next Generation-type that complies with revised federal airbag standards to deploy with less force than those used in some prior models. A 71 centimeter (28 inch) diameter, radial deploying fabric cushion with internal tethers is used. The airbag inflator is a dual-initiator, non-azide, pyrotechnic-type unit with four mounting studs and is secured to the stamped metal airbag housing by four flanged hex nuts. Two keyed and color-coded connector receptacles on the driver airbag inflator connect the two inflator initiators to the vehicle electrical system through two yellow-jacketed, two-wire pigtail harnesses of the clockspring.

The driver airbag unit cannot be repaired, and must be replaced if deployed or in any way damaged. The driver airbag trim cover and horn switch unit may be disassembled from the driver airbag unit, and is available for separate service replacement.

OPERATION

The multistage driver airbag is deployed by electrical signals generated by the Airbag Control Module (ACM) through the driver airbag squib 1 and squib 2 circuits to the two initiators in the airbag inflator. By using two initiators, the airbag can be deployed at multiple levels of force. The force level is controlled by the ACM to suit the monitored impact conditions by providing one of three delay intervals between the electrical signals provided to the two initiators. The longer the delay between these signals, the less forcefully the airbag will deploy.

When the ACM sends the proper electrical signals to each initiator, the electrical energy generates enough heat to initiate a small pyrotechnic charge which, in turn ignites chemical pellets within the inflator. Once ignited, these chemical pellets burn rapidly and produce a large quantity of inert gas. The inflator is sealed to the back of the airbag housing and a diffuser in the inflator directs all of the inert gas into the airbag cushion, causing the cushion to inflate. As the cushion inflates, the driver airbag trim cover will split at predetermined breakout lines, then fold back out of the way along with the horn switch unit. Following an airbag deployment, the airbag cushion quickly deflates by venting the inert gas towards the instrument panel through vent holes within the fabric used to construct the back (steering wheel side) panel of the airbag cushion.

Some of the chemicals used to create the inert gas may be considered hazardous while in their solid state before they are burned, but they are securely sealed within the airbag inflator. Typically, both initiators are used and all potentially hazardous chemicals are burned during an airbag deployment event. However, it is possible for only one initiator to be used during a deployment due to an airbag system fault; therefore, it is necessary to always confirm that both initiators have been used in order to avoid the improper disposal of potentially live pyrotechnic or hazardous materials. (Refer to 8 - ELECTRICAL/RESTRAINTS - STANDARD PROCEDURE - SERVICE AFTER A SUPPLEMENTAL RESTRAINT DEPLOYMENT).

The inert gas that is produced when the chemicals are burned is harmless. However, a small amount of residue from the burned chemicals may cause some temporary discomfort if it contacts the skin, eyes, or breathing passages. If skin or eye irritation is noted, rinse the affected area with plenty of cool, clean water. If breathing passages are irritated, move to another area where there is plenty of clean, fresh air to breath. If the irritation is not alleviated by these actions, contact a physician.

REMOVAL

WARNING: To avoid personal injury or death, on vehicles equipped with airbags, disable the supplemental restraint system before attempting any steering wheel, steering column, airbag, seat belt tensioner, impact sensor, or instrument panel component diagnosis or service. Disconnect and isolate the battery negative (ground) cable, then wait two minutes for the system capacitor to discharge before performing further diagnosis or service. This is the only sure way to disable the supplemental restraint system. Failure to take the proper precautions could result in accidental airbag deployment.

WARNING: To avoid personal injury or death, when removing a deployed airbag, rubber gloves, eye protection, and a long-sleeved shirt should be worn. There may be deposits on the airbag cushion and other interior surfaces. In large doses, these deposits may cause irritation to the skin and eyes.

NOTE: The following procedure is for replacement of a faulty or damaged driver airbag. If the airbag is faulty or damaged, but not deployed, review the recommended procedures for handling non-deployed supplemental restraints. (Refer to 8 - ELECTRICAL/RESTRAINTS - STANDARD PROCEDURE - HANDLING NON-DEPLOYED SUPPLEMENTAL RESTRAINTS). If the driver airbag has been deployed, review the recommended procedures for service after a supplemental restraint deployment before removing the airbag from the vehicle. (Refer to 8 - ELECTRICAL/RESTRAINTS - STANDARD PROCEDURE - SERVICE AFTER A SUPPLEMENTAL RESTRAINT DEPLOYMENT).

1. Disconnect and isolate the battery negative cable. Wait two minutes for the system capacitor to discharge before further service.
2. From the underside of the steering wheel, remove the two screws (3) that secure the driver airbag (1) to the steering wheel armature (2).

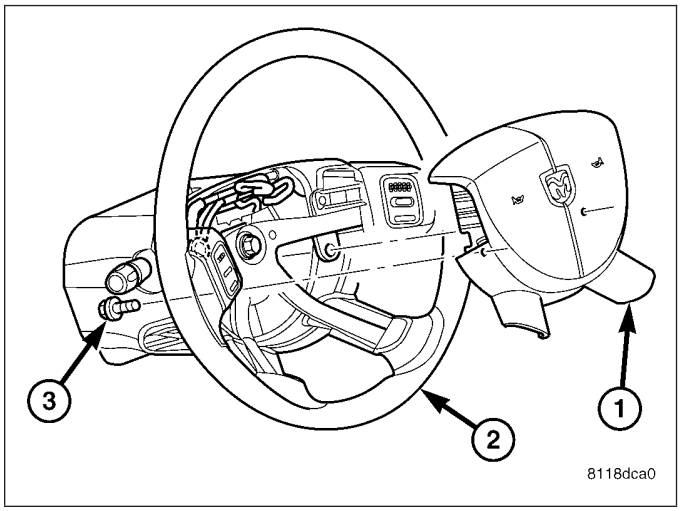

CAUTION: Do not pull on the horn switch feed pigtail wire to disengage the connector from the driver airbag housing or to disconnect the horn switch to steering wheel wire harness connection. Improper pulling on this pigtail wire or connection can result in damage to the horn switch membrane or feed circuit.

3. Pull the driver airbag (1) away from the steering wheel far enough to access the three electrical connections on the back of the airbag housing.
4. Disconnect the steering wheel wire harness connector for the horn switch (2) from the horn switch feed pigtail wire connector (4), which is located on the back of the driver airbag housing.

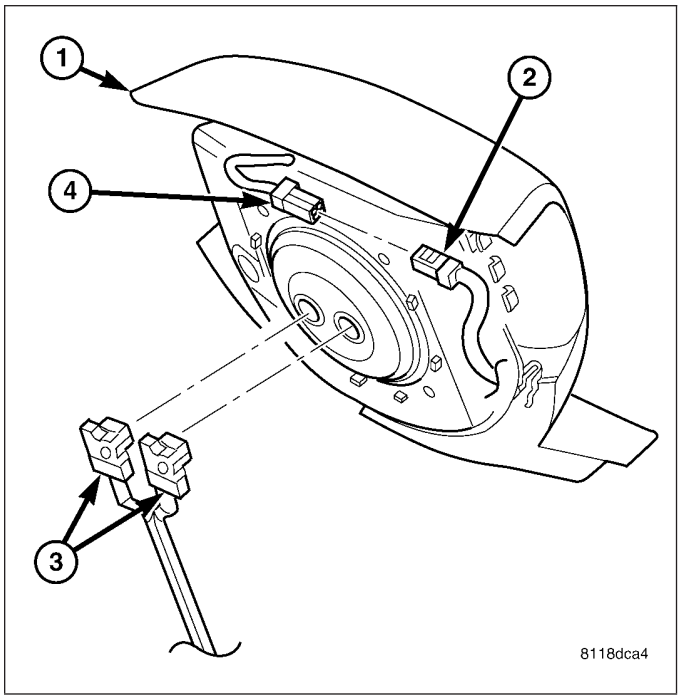

CAUTION: Do not pull on the clockspring pigtail wires or pry on the connector insulator to disengage the connector from the driver airbag inflator connector receptacle. Improper removal of these pigtail wires and their connector insulators can result in damage to the airbag circuits or connector insulators.

5. The clockspring driver airbag pigtail wire connectors (3) are secured by integral latches to the airbag inflator connector receptacles, which are located on the back of the driver airbag housing. Depress the latches on each side of the connector insulator and pull the insulators straight out from the airbag inflator to disconnect them from the connector receptacles.
6. Remove the driver airbag from the steering wheel.
7. If the driver airbag has been deployed, the clockspring must be replaced. (Refer to 8 - ELECTRICAL/RESTRAINTS/CLOCKSPRING - REMOVAL).

DISASSEMBLY

WARNING: To avoid personal injury or death, on vehicles equipped with airbags, disable the supplemental restraint system before attempting any steering wheel, steering column, airbag, seat belt tensioner, impact sensor, or instrument panel component diagnosis or service. Disconnect and isolate the battery negative (ground) cable, then wait two minutes for the system capacitor to discharge before performing further diagnosis or service. This is the only sure way to disable the supplemental restraint system. Failure to take the proper precautions could result in accidental airbag deployment.

WARNING: To avoid personal injury or death, service of this unit should be performed only by Daimler-Chrysler-trained and authorized dealer service technicians. Failure to take the proper precautions or to follow the proper procedures could result in accidental, incomplete, or improper airbag deployment and possible occupant injuries.

WARNING: To avoid personal injury or death, use extreme care to prevent any foreign material from entering the driver airbag, or becoming entrapped between the driver airbag cushion and the driver airbag trim cover. Failure to observe this warning could result in occupant injuries upon airbag deployment.

WARNING: To avoid personal injury or death, the driver airbag trim cover must never be painted. Replacement trim covers are serviced in the original colors. Paint may change the way in which the material of the trim cover responds to an airbag deployment. Failure to observe this warning could result in occupant injuries upon airbag deployment.

NOTE: The following procedures can be used to replace the driver airbag trim cover and horn switch unit for service. If the driver airbag is faulty or deployed, the entire driver airbag, trim cover and horn switch must be replaced as a unit.

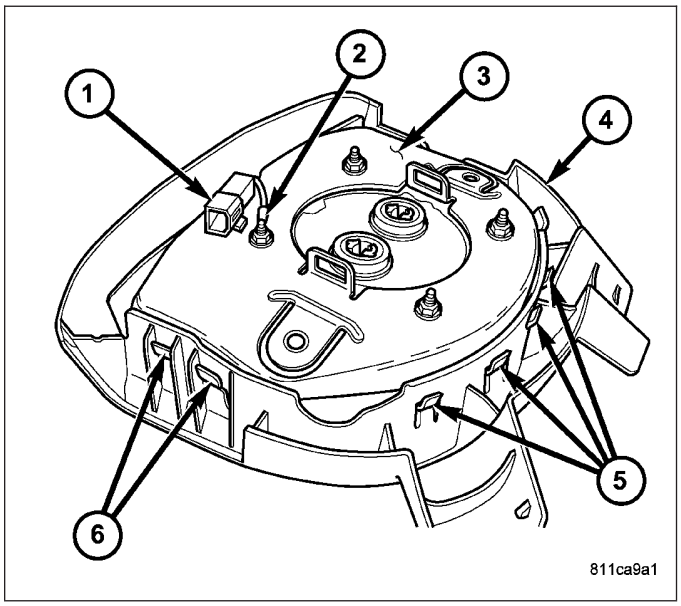

1. Disconnect and isolate the battery negative cable. Wait two minutes for the system capacitor to discharge before further service.
2. Remove the driver airbag from the steering wheel (Refer to 8 - ELECTRICAL/RESTRAINTS/DRIVER AIRBAG - REMOVAL).
3. Place the driver airbag on a suitable clean and dry work surface with the trim cover facing down. If the trim cover will be reused, be certain to take the proper precautions to prevent the trim cover from receiving cosmetic damage during the following procedures.
4. Carefully pry the horn switch feed pigtail wire connector (1) away from the back of the driver airbag housing (3) far enough to disengage the integral connector retainer from the locator hole just above the upper right inflator mounting stud.
5. Remove the nut that secures the horn switch ground pigtail wire eyelet terminal (2) to the upper right inflator stud on the back of the driver airbag housing.
6. Remove the horn switch ground pigtail wire eyelet terminal from the upper right inflator stud on the back of the driver airbag housing.
7. Disengage each of the twelve hooks (5 and 6) of the airbag housing from the twelve windows in the vertical walls of the trim cover (4), one wall at a time. Start by disengaging the upper wall, then do each of the two side walls, and finish with the lower wall. To disengage the hooks, use hand pressure to push the adjacent edge of the airbag housing firmly and evenly downward into the trim cover receptacle, while at the same time pushing outward on the upper edge of the receptacle wall.
8. With all of the hooks disengaged, lift the housing, inflator, and cushion as a unit from the receptacle on the back of the driver airbag trim cover.

ASSEMBLY

WARNING: To avoid personal injury or death, on vehicles equipped with airbags, disable the supplemental restraint system before attempting any steering wheel, steering column, airbag, seat belt tensioner, impact sensor, or instrument panel component diagnosis or service. Disconnect and isolate the battery negative (ground) cable, then wait two minutes for the system capacitor to discharge before performing further diagnosis or service. This is the only sure way to disable the supplemental restraint system. Failure to take the proper precautions could result in accidental airbag deployment.

WARNING: To avoid personal injury or death, service of this unit should be performed only by Daimler-Chrysler-trained and authorized dealer service technicians. Failure to take the proper precautions or to follow the proper procedures could result in accidental, incomplete, or improper airbag deployment and possible occupant injuries.

WARNING: To avoid personal injury or death, use extreme care to prevent any foreign material from entering the driver airbag, or becoming entrapped between the driver airbag cushion and the driver airbag trim cover. Failure to observe this warning could result in occupant injuries upon airbag deployment.

WARNING: To avoid personal injury or death, the driver airbag trim cover must never be painted. Replacement trim covers are serviced in the original colors. Paint may change the way in which the material of the trim cover responds to an airbag deployment. Failure to observe this warning could result in occupant injuries upon airbag deployment.

NOTE: The following procedures can be used to replace the driver airbag trim cover and horn switch unit for service. If the driver airbag is faulty or deployed, the entire driver airbag, trim cover and horn switch must be replaced as a unit.

1. Place the driver airbag on a suitable work surface with the airbag cushion facing up.
2. Fold the two flaps (1) of cushion material up around the sides and over the top of the airbag cushion retainer strap (2).
3. Position the new driver airbag trim cover over the airbag cushion, then push the receptacle of the trim cover down evenly over the cushion. Be certain that the cushion material flaps remain oriented over the cushion retainer strap as they were in Step 2.
4. Turn the driver airbag and the new driver airbag trim cover over as a unit, and place the unit on a suitable clean and dry work surface with the airbag cushion facing down. Be certain to take the proper precautions to prevent the trim cover from receiving cosmetic damage during the following procedures.

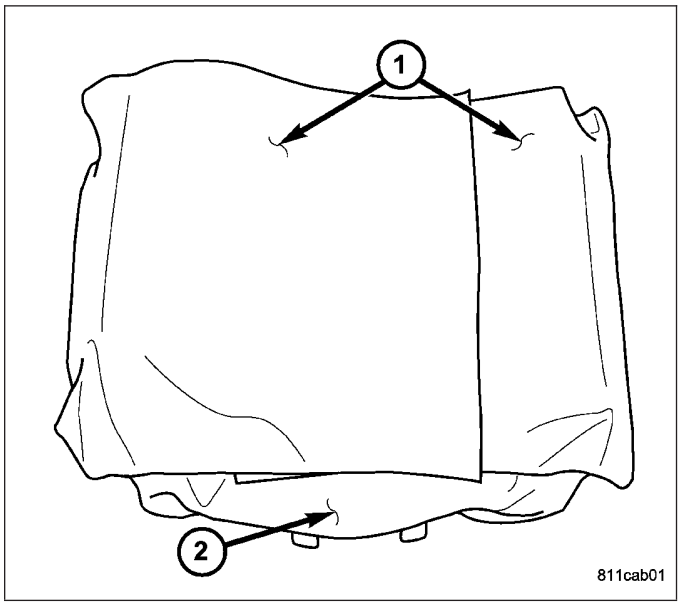

5. Be certain that the horn switch feed and ground pigtail wires are routed through the clearance notch at the top of the airbag housing (3), between the housing and the upper vertical wall of the trim cover receptacle.
6. Work around the perimeter of the unit engaging each of the twelve hooks (5 and 6) on the driver airbag housing through the windows in the walls of the trim cover receptacle.
7. Install the horn switch ground pigtail wire eyelet terminal (2) over the upper right inflator stud on the back of the driver airbag housing.
8. Install and tighten the nut that secures the horn switch ground pigtail wire eyelet terminal to the upper right inflator stud on the back of the driver airbag housing. Tighten the nut to 7 N·m (65 in. lbs.).
9. Using hand pressure, push the integral retainer of the horn switch feed pigtail wire connector (1) into the locator hole just above the upper right inflator mounting stud on the back of the airbag housing.

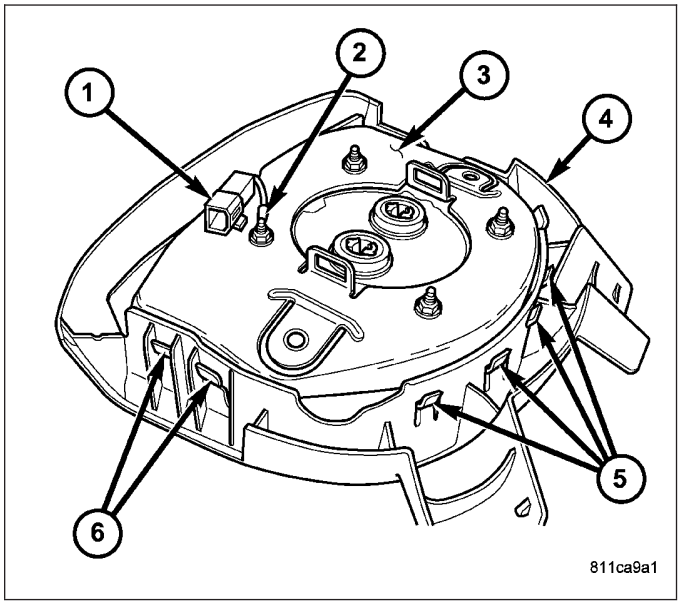

10. After the driver airbag has been assembled, try pulling the trim cover and the airbag housing away from each other. This action will fully seat the edges of the windows into the cradles of the hooks.

11. Before reinstalling the airbag onto the steering wheel, check that the blocking tab (1) in each of the trim cover windows is oriented over the airbag housing hook (4) as shown.
12. Reinstall the driver airbag onto the steering wheel (Refer to 8 - ELECTRICAL/RESTRAINTS/ DRIVER AIRBAG - INSTALLATION).

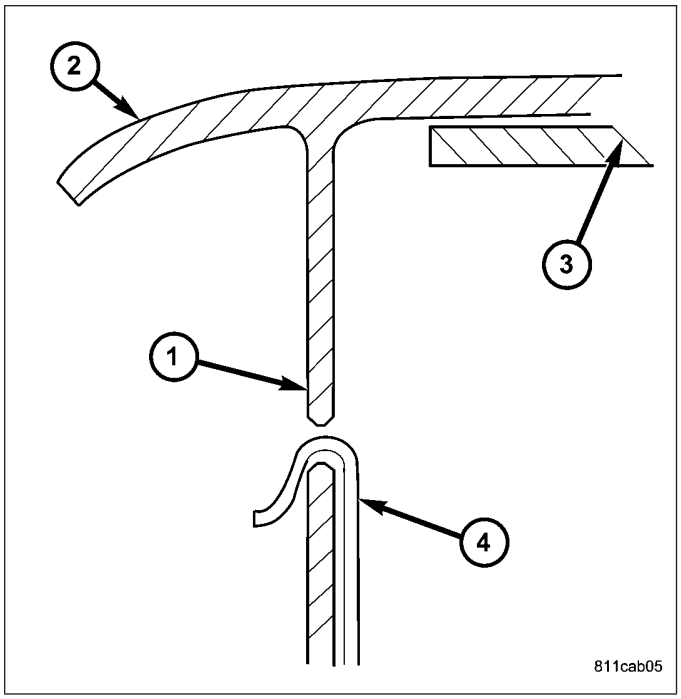

INSTALLATION

WARNING: To avoid personal injury or death, on vehicles equipped with airbags, disable the supplemental restraint system before attempting any steering wheel, steering column, airbag, seat belt tensioner, impact sensor, or instrument panel component diagnosis or service. Disconnect and isolate the battery negative (ground) cable, then wait two minutes for the system capacitor to discharge before performing further diagnosis or service. This is the only sure way to disable the supplemental restraint system. Failure to take the proper precautions could result in accidental airbag deployment.

WARNING: To avoid personal injury or death, use extreme care to prevent any foreign material from entering the driver airbag, or becoming entrapped between the driver airbag cushion and the driver airbag trim cover. Failure to observe this warning could result in occupant injuries upon airbag deployment.

WARNING: To avoid personal injury or death, the driver airbag trim cover must never be painted. Replacement airbags are serviced with trim covers in the original colors. Paint may change the way in which the material of the trim cover responds to an airbag deployment. Failure to observe this warning could result in occupant injuries upon airbag deployment.

NOTE: The following procedure is for replacement of a faulty or damaged driver airbag. If the airbag is faulty or damaged, but not deployed, review the recommended procedures for handling non-deployed supplemental restraints. (Refer to 8 - ELECTRICAL/RESTRAINTS - STANDARD PROCEDURE - HANDLING NON-DEPLOYED SUPPLEMENTAL RESTRAINTS). If the driver airbag has been deployed, review the recommended procedures for service after a supplemental restraint deployment before removing the airbag from the vehicle. (Refer to 8 - ELECTRICAL/RESTRAINTS - STANDARD PROCEDURE - SERVICE AFTER A SUPPLEMENTAL RESTRAINT DEPLOYMENT).

1. Position the driver airbag (1) close enough to the steering wheel to reconnect the three electrical connections on the back of the airbag housing.
2. When installing the driver airbag, reconnect the two clockspring driver airbag pigtail wire connectors (3) to the airbag inflator connector receptacles by pressing straight in on the connector. Be certain to engage each keyed and color-coded connector to the matching connector receptacle. You can be certain that each connector is fully engaged in its receptacle by listening carefully for a distinct, audible click as the connector latches snap into place.
3. Reconnect the steering wheel wire harness connector (2) for the horn switch to the horn switch feed pigtail wire connector (4), which is located on the back of the driver airbag housing.

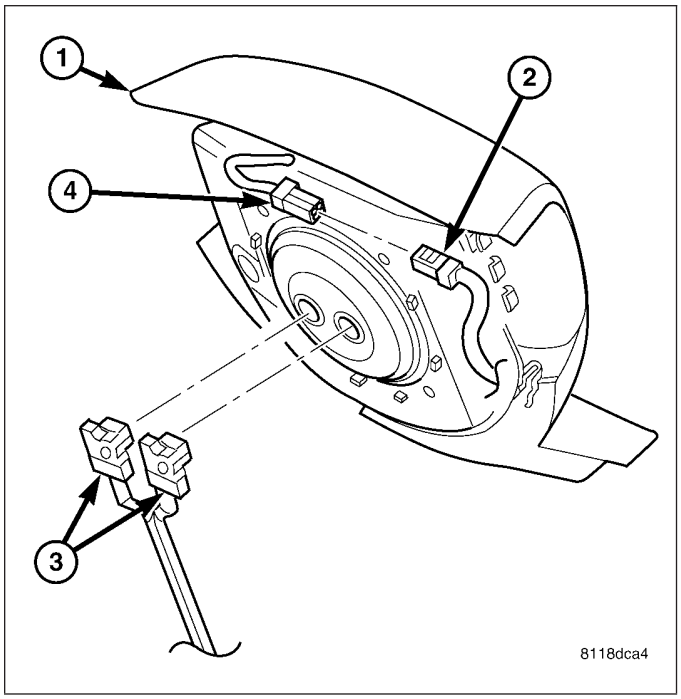

4. Carefully position the driver airbag (1) in the steering wheel (2). Be certain that the clockspring pigtail wires and the steering wheel wire harness in the steering wheel hub area are not pinched between the driver airbag and the steering wheel armature.
5. From the underside of the steering wheel, install and tighten the two screws (3) that secure the driver airbag to the steering wheel armature. Tighten the screws to 10 N·m (90 in. lbs.).
6. Do not reconnect the battery negative cable at this time. The supplemental restraint system verification test procedure should be performed following service of any supplemental restraint system component. (Refer to 8 - ELECTRICAL/RESTRAINTS - STANDARD PROCEDURE - VERIFICATION TEST).

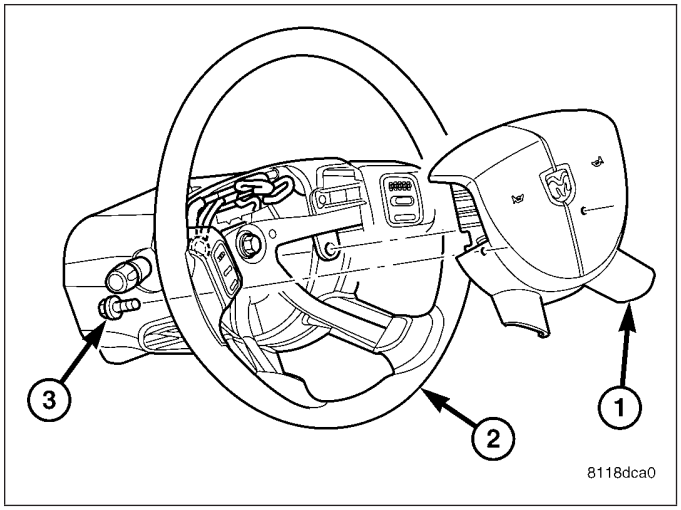

SENSOR-SIDE IMPACT

DESCRIPTION

Two side impact sensors (1) are used on this model when it is equipped with the optional side curtain airbags, one each for the left and right sides of the vehicle. These sensors are mounted remotely from the bi-directional safing sensor that is internal to the Airbag Control Module (ACM). Each side impact sensor is secured with a nut within the right or left B-pillar just above the front seat belt retractors and behind the lower B-pillar trim within the passenger compartment. The sensor housing has an integral connector receptacle (2), an integral mounting stud (3), and an integral anti-rotation pin.

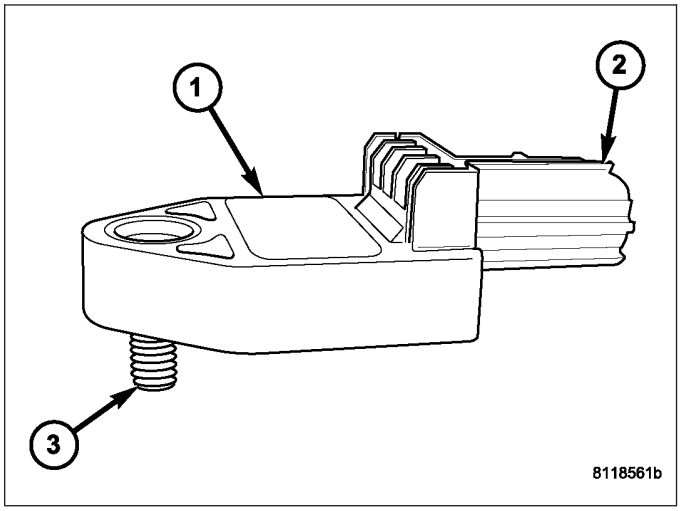

The right and left side impact sensors are identical in construction and calibration. A cavity in the center of the molded black plastic impact sensor housing contains the electronic circuitry of the sensor which includes an electronic communication chip and an electronic impact sensor. Potting material fills the cavity to seal and protect the internal electronic circuitry and components. The side impact sensors are each connected to the vehicle electrical system through a dedicated take out and connector of the body wire harness.

The side impact sensors cannot be repaired or adjusted and, if damaged or faulty, they must be replaced.

OPERATION

The side impact sensors are electronic accelerometers that sense the rate of vehicle deceleration, which provides verification of the direction and severity of an impact. Each sensor also contains an electronic communication chip that allows the unit to communicate the sensor status as well as sensor fault information to the microprocessor in the Airbag Control Module (ACM).

The ACM microprocessor continuously monitors all of the side passive restraint system electrical circuits to determine the system readiness. If the ACM detects a monitored system fault, it sets a Diagnostic Trouble Code (DTC) and controls the airbag indicator operation accordingly. The impact sensors each receive battery current and ground through dedicated left and right sensor plus and minus circuits from the ACM. The impact sensors and the ACM communicate by modulating the voltage in the sensor plus circuit.

The hard wired circuits between the side impact sensors and the ACM may be diagnosed and tested using conventional diagnostic tools and procedures. However, conventional diagnostic methods will not prove conclusive in the diagnosis of the ACM, the impact sensors, or the electronic message inputs to or outputs from the impact sensors. The most reliable, efficient, and accurate means to diagnose the impact sensors, the ACM, and the electronic message communication between the sensors and the ACM requires the use of a diagnostic scan tool. Refer to the appropriate diagnostic information.

REMOVAL

STANDARD CAB

WARNING: To avoid personal injury or death, on vehicles equipped with airbags, disable the supplemental restraint system before attempting any steering wheel, steering column, airbag, seat belt tensioner, impact sensor, or instrument panel component diagnosis or service. Disconnect and isolate the battery negative (ground) cable, then wait two minutes for the system capacitor to discharge before performing further diagnosis or service. This is the only sure way to disable the supplemental restraint system. Failure to take the proper precautions could result in accidental airbag deployment.

WARNING: To avoid personal injury or death, never strike or drop the side impact sensor, as it can damage the impact sensor or affect its calibration. The side impact sensor enables the system to deploy the side curtain airbags. If an impact sensor is accidentally dropped during service, the sensor must be scrapped and replaced with a new unit. Failure to observe this warning could result in accidental, incomplete, or improper supplemental restraint deployment.

1. Adjust the driver or passenger side front seat to its most forward position for easiest access to the B-pillar trim.
2. Disconnect and isolate the battery negative cable. Wait two minutes for the system capacitor to discharge before further service.
3. Remove the front outboard seat belt and retractor from the inside of the B-pillar. (Refer to 8 - ELECTRICAL/RESTRAINTS/FRONT OUTBOARD SEAT BELT & RETRACTOR - REMOVAL - STANDARD CAB).
4. Remove the nut (4) that secures the stud of the side impact sensor (1) to the inner B-pillar.
5. Reach through the retractor mounting hole (3) in the inner B-pillar to access the side impact sensor and disengage the anti-rotation pin and mounting stud from the holes in the inner B-pillar.
6. Pull the side impact sensor out of the B-pillar far enough to access and disconnect the body wire harness connector (2) from the sensor connector receptacle.
7. Remove the sensor from the B-pillar.

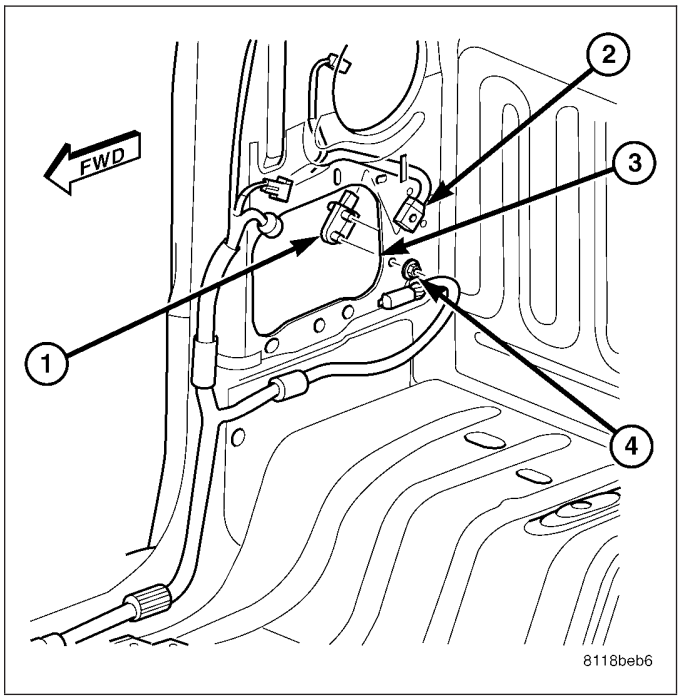

QUAD CAB

WARNING: To avoid personal injury or death, on vehicles equipped with airbags, disable the supplemental restraint system before attempting any steering wheel, steering column, airbag, seat belt tensioner, impact sensor, or instrument panel component diagnosis or service. Disconnect and isolate the battery negative (ground) cable, then wait two minutes for the system capacitor to discharge before performing further diagnosis or service. This is the only sure way to disable the supplemental restraint system. Failure to take the proper precautions could result in accidental airbag deployment.

WARNING: To avoid personal injury or death, never strike or drop the side impact sensor, as it can damage the impact sensor or affect its calibration. The side impact sensor enables the system to deploy the side curtain airbags. If an impact sensor is accidentally dropped during service, the sensor must be scrapped and replaced with a new unit. Failure to observe this warning could result in accidental, incomplete, or improper supplemental restraint deployment.

1. Adjust the front seat to its most forward position for easiest access to the B-pillar trim.
2. Disconnect and isolate the battery negative cable. Wait two minutes for the system capacitor to discharge before further service.
3. Remove the nut (3) that secures the stud of the side impact sensor (2) to the inner B-pillar (1).
4. Reach through the large hole above the retractor mounting hole in the inner B-pillar to access the side impact sensor and disengage the anti-rotation pin and mounting stud from the holes in the inner B-pillar.
5. Pull the side impact sensor out through the large hole in the B-pillar far enough to access and disconnect the body wire harness connector (4) from the sensor connector receptacle.
6. Remove the side impact sensor from the B-pillar.

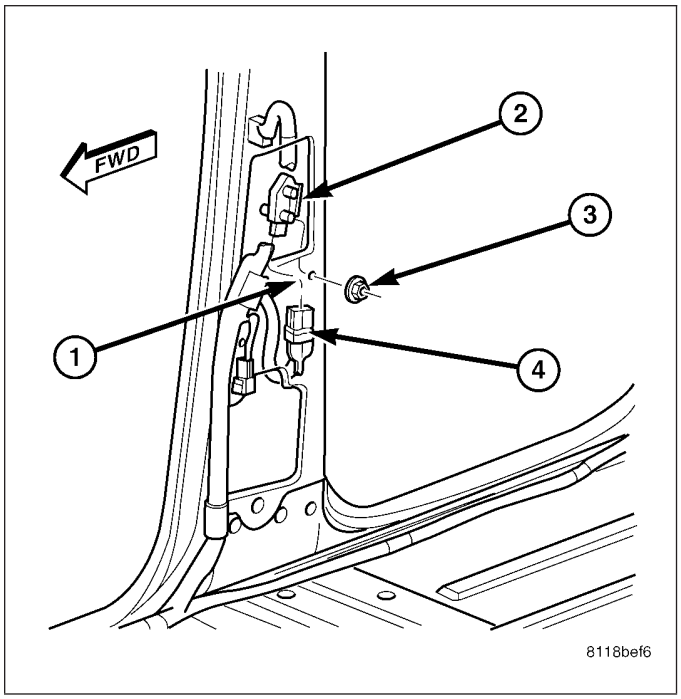

INSTALLATION

STANDARD CAB

WARNING: To avoid personal injury or death, on vehicles equipped with airbags, disable the supplemental restraint system before attempting any steering wheel, steering column, airbag, seat belt tensioner, impact sensor, or instrument panel component diagnosis or service. Disconnect and isolate the battery negative (ground) cable, then wait two minutes for the system capacitor to discharge before performing further diagnosis or service. This is the only sure way to disable the supplemental restraint system. Failure to take the proper precautions could result in accidental airbag deployment.

WARNING: To avoid personal injury or death, never strike or drop the side impact sensor, as it can damage the impact sensor or affect its calibration. The side impact sensor enables the system to deploy the side curtain airbags. If an impact sensor is accidentally dropped during service, the sensor must be scrapped and replaced with a new unit. Failure to observe this warning could result in accidental, incomplete, or improper supplemental restraint deployment.

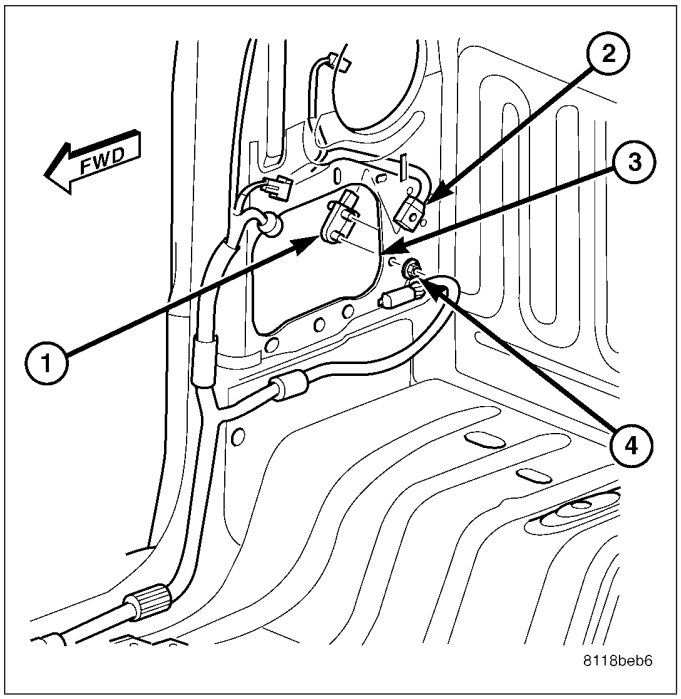

1. Position the side impact sensor (1) to the retractor mounting hole (3) in the inner B-pillar.
2. Reconnect the body wire harness connector (2) to the sensor connector receptacle.
3. Reach through the retractor mounting hole in the inner B-pillar to position and engage the anti-rotation pin and the stud on the side impact sensor to the locating slot and mounting hole from the inside of the B-pillar.
4. Install and tighten the nut (4) that secures the side impact sensor stud to the inner B-pillar. Tighten the nut to 8 N·m (70 in. lbs.).
5. Reinstall the front outboard seat belt and retractor to the inside of the B-pillar. (Refer to 8 - ELECTRICAL/RESTRAINTS/FRONT OUTBOARD SEAT BELT & RETRACTOR - INSTALLATION - STANDARD CAB).
6. Do not reconnect the battery negative cable at this time. The supplemental restraint system verification test procedure should be performed following service of any supplemental restraint system component. (Refer to 8 - ELECTRICAL/RESTRAINTS - STANDARD PROCEDURE - VERIFICATION TEST).

QUAD CAB

WARNING: To avoid personal injury or death, on vehicles equipped with airbags, disable the supplemental restraint system before attempting any steering wheel, steering column, airbag, seat belt tensioner, impact sensor, or instrument panel component diagnosis or service. Disconnect and isolate the battery negative (ground) cable, then wait two minutes for the system capacitor to discharge before performing further diagnosis or service. This is the only sure way to disable the supplemental restraint system. Failure to take the proper precautions could result in accidental airbag deployment.

WARNING: To avoid personal injury or death, never strike or drop the side impact sensor, as it can damage the impact sensor or affect its calibration. The side impact sensor enables the system to deploy the side curtain airbags. If an impact sensor is accidentally dropped during service, the sensor must be scrapped and replaced with a new unit. Failure to observe this warning could result in accidental, incomplete, or improper supplemental restraint deployment.

1. Position the side impact sensor (2) to the large hole above the retractor mounting hole in the inner B-pillar (1).
2. Reconnect the body wire harness connector (4) to the sensor connector receptacle.
3. Reach through the large hole above the retractor mounting hole in the inner B-pillar to position and engage the anti-rotation pin and the stud on the side impact sensor to the locating slot and mounting hole from the inside of the B-pillar.
4. Install and tighten the nut (3) that secures the side impact sensor stud to the inner B-pillar. Tighten the nut to 8 N·m (70 in. lbs.).
5. Do not reconnect the battery negative cable at this time. The supplemental restraint system verification test procedure should be performed following service of any supplemental restraint system component. (Refer to 8 - ELECTRICAL/RESTRAINTS - STANDARD PROCEDURE - VERIFICATION TEST).

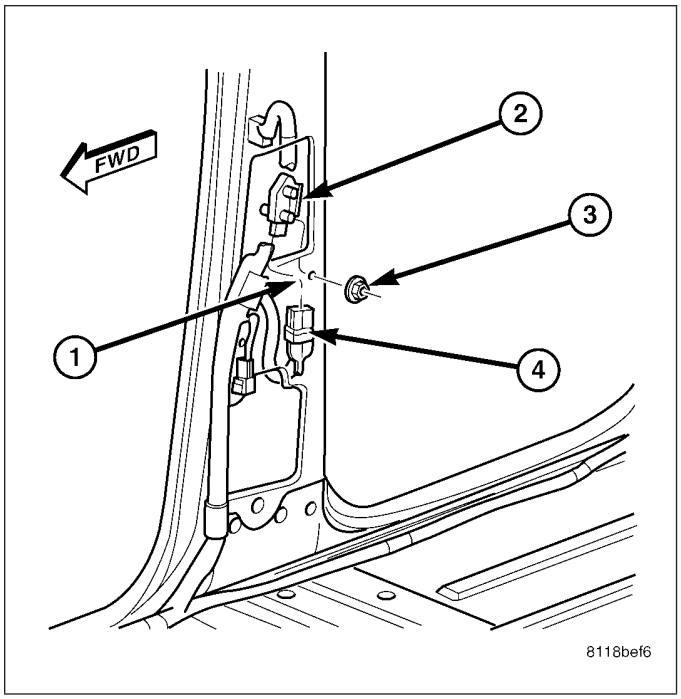

SWITCH-PASSENGER AIRBAG DISARM

DESCRIPTION

The passenger airbag on/off switch (1) is standard equipment on all standard cab versions of this model when they are equipped with the dual front airbag system. This switch is a two-position, resistor multiplexed switch with a single integral red Light-Emitting Diode (LED), and a non-coded key cylinder-type actuator. The switch is located in the lower right corner of instrument panel center bezel, near the center of instrument panel to make the Off indicator (3) visible to all front seat occupants.

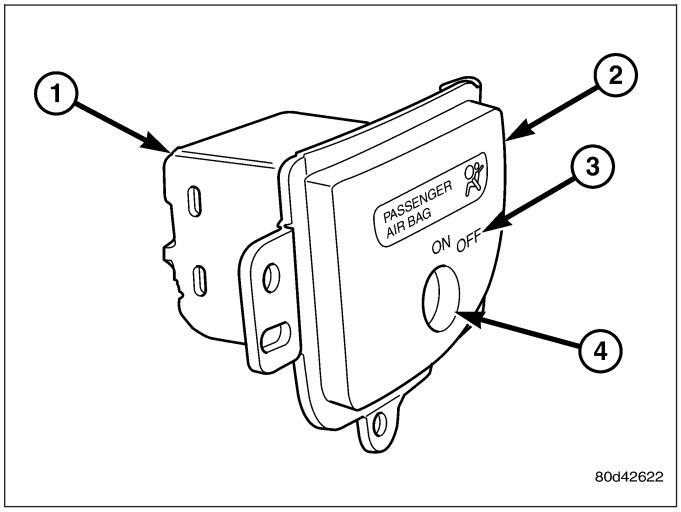

When the switch is in its installed position, the only components visible through the dedicated opening of the cluster bezel are the switch face plate (2) and nomenclature, and the key cylinder actuator (4). The ″Off″ position of the switch is illuminated when this switch position is selected, while the “On” position of the switch is designated by text imprinted upon the face plate of the switch, but is not illuminated. The remainder of the switch is concealed behind the switch face plate and the instrument panel center bezel.

The passenger airbag on/off switch housing is constructed of molded plastic and has three integral mounting tabs. These mounting tabs are used to secure the switch to the back of the molded plastic switch face plate with three small screws. The molded plastic face plate also has three integral mounting tabs that are used to secure the switch and face plate unit to the instrument panel center bezel with three additional screws.

A molded plastic connector receptacle on the back of the switch housing connects the switch to the vehicle electrical system through a dedicated take out and connector of the instrument panel wire harness. The molded plastic harness connector insulator is keyed and latched to ensure proper and secure switch electrical connections. The passenger airbag on/off switch cannot be adjusted or repaired and, if faulty or damaged, the switch must be replaced.

OPERATION

The passenger airbag on/off switch allows the customer to turn the passenger airbag function On or Off to accommodate certain uses of the right front seating position where airbag protection may not be desired. See the owner's manual in the vehicle glove box for specific recommendations on when to enable or disable the passenger airbag. The Off indicator of the switch will be illuminated whenever the switch is turned to the Off position and the ignition switch is in the On position.

The ignition key is the only key or object that should ever be inserted into the key cylinder actuator of the switch. The on/off switch requires only a partial key insertion to fully depress a spring-loaded locking plunger. The spring-loaded locking plunger prevents the user from leaving the key in the switch. The key will be automatically ejected when force is not applied. To actuate the passenger airbag on/off switch, insert the ignition key into the switch key actuator far enough to fully depress the plunger, then rotate the actuator to the desired switch position.

When the switch key actuator is rotated to its clockwise stop (the key actuator slot will be aligned with the Off indicator), the Off indicator is illuminated and the passenger airbag is disabled. When the switch is rotated to its counterclockwise stop (the key actuator slot will be in a vertical position), the Off indicator will be extinguished and the passenger airbag is enabled.

The passenger airbag on/off switch connects one of two internal resistors in series between the passenger airbag mux switch sense and passenger airbag mux switch return circuits of the Airbag Control Module (ACM). The ACM continually monitors the resistance in these circuits to determine the switch position that has been selected.

When the switch is in the Off position, the ACM provides a ground input to the switch through the passenger airbag indicator driver circuit, which energizes the Light-Emitting Diode (LED) that illuminates the Off indicator of the switch. The ACM will also illuminate the Off indicator of the switch for about seven seconds each time the ignition switch is turned to the On position as a bulb test.

The ACM will store a Diagnostic Trouble Code (DTC) for any fault it detects in the passenger airbag on/off switch or Off indicator circuits, and will illuminate the airbag indicator in the instrument cluster if a fault is detected. For proper diagnosis of the passenger airbag on/off switch or the ACM, a diagnostic scan tool is required. Refer to the appropriate diagnostic information.

REMOVAL

WARNING: To avoid personal injury or death, on vehicles equipped with airbags, disable the supplemental restraint system before attempting any steering wheel, steering column, airbag, seat belt tensioner, impact sensor, or instrument panel component diagnosis or service. Disconnect and isolate the battery negative (ground) cable, then wait two minutes for the system capacitor to discharge before performing further diagnosis or service. This is the only sure way to disable the supplemental restraint system. Failure to take the proper precautions could result in accidental airbag deployment.

1. Disconnect and isolate the battery negative cable. Wait two minutes for the system capacitor to discharge before further service.
2. Remove the center bezel (1) from the instrument panel. (Refer to 23 - BODY/INSTRUMENT PANEL/ INSTRUMENT PANEL CENTER BEZEL - REMOVAL).
3. From the back of the center bezel, remove the three screws (2) that secure the passenger airbag on/off switch and face plate unit (3) to the back of the bezel.
4. Remove the passenger airbag on/off switch and face plate from the center bezel as a unit.

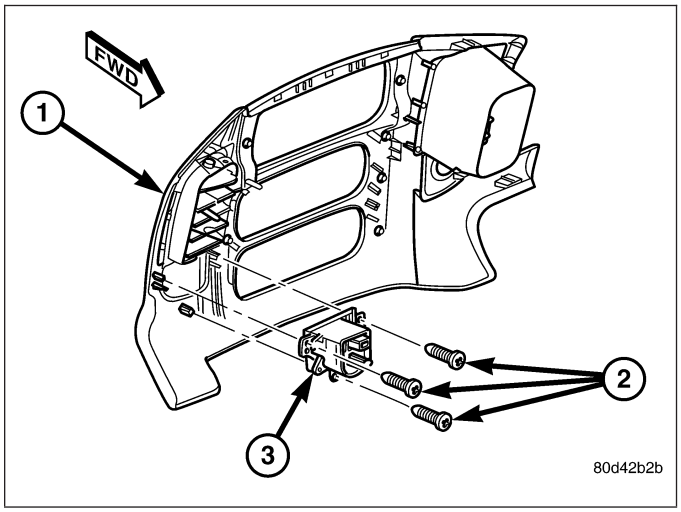

INSTALLATION

WARNING: To avoid personal injury or death, on vehicles equipped with airbags, disable the supplemental restraint system before attempting any steering wheel, steering column, airbag, seat belt tensioner, impact sensor, or instrument panel component diagnosis or service. Disconnect and isolate the battery negative (ground) cable, then wait two minutes for the system capacitor to discharge before performing further diagnosis or service. This is the only sure way to disable the supplemental restraint system. Failure to take the proper precautions could result in accidental airbag deployment.

1. Position the passenger airbag on/off switch and face plate unit (3) to the back of the center bezel (1).
2. Install and tighten the three screws (2) that secure the passenger airbag on/off switch face plate to the back of the center bezel. Tighten the screws to 2 N·m (17 in. lbs.).
3. Reinstall the center bezel onto the instrument panel. (Refer to 23 - BODY/INSTRUMENT PANEL/ INSTRUMENT PANEL CENTER BEZEL - INSTALLATION).
4. Do not reconnect the battery negative cable at this time. The supplemental restraint system verification test procedure should be performed following service of any supplemental restraint system component. (Refer to 8 - ELECTRICAL/RESTRAINTS - STANDARD PROCEDURE - VERIFICATION TEST).

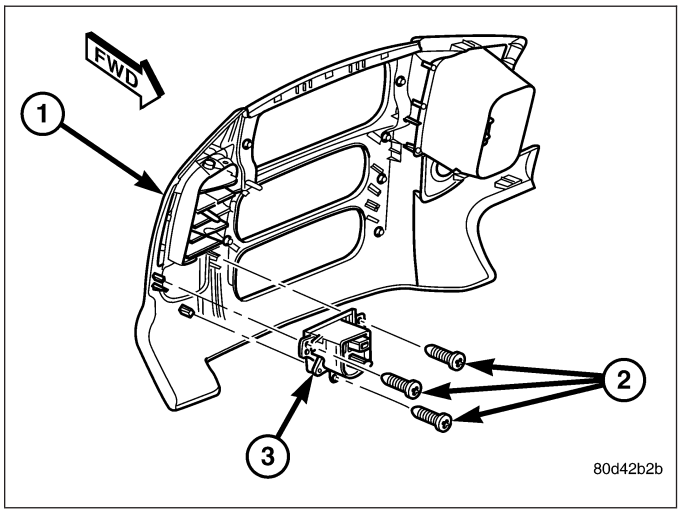

AIR BAG-PASSENGER

DESCRIPTION

The rearward facing surface of the injection molded, thermoplastic passenger airbag door (1) is the most visible part of the passenger airbag. The passenger airbag door is located above the glove box opening on the instrument panel in front of the front seat passenger seating position.

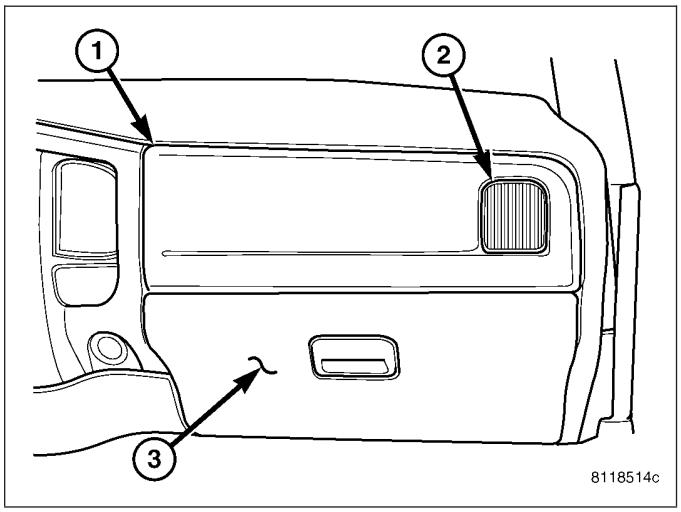

SRT-10 models also have a unique instrument panel trim bezel (3) with the SRT-10 logo secured to the lower edge of the airbag door (1).

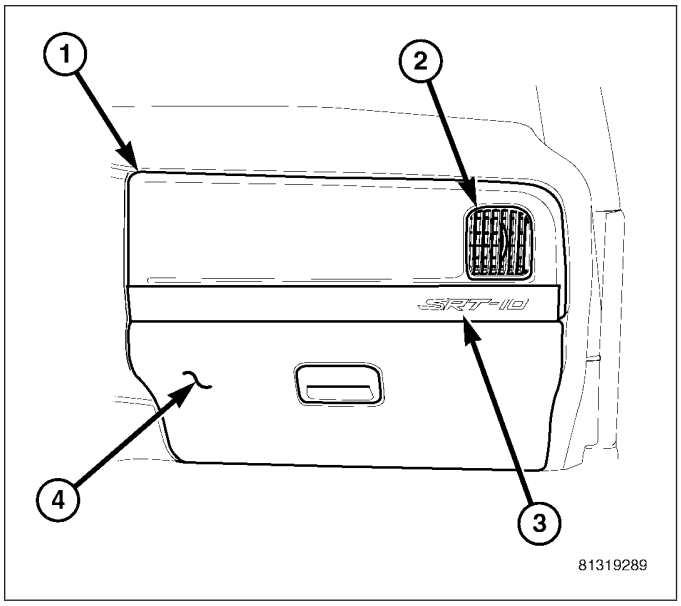

The upper and outboard edges of the airbag door (1) are secured with seven integral snap features (3) to the instrument panel base trim, while two screws secure the integral inboard mounting flange to the base trim, and four screws secure the lower mounting flange to the upper glove box opening reinforcement integral to the instrument panel structural support. The passenger airbag door includes an air conditioning panel outlet and housing (2). The panel outlet housing features four snap features that secure it to the back of the airbag door and a mounting tab that is also secured with one screw to the upper glove box opening reinforcement.

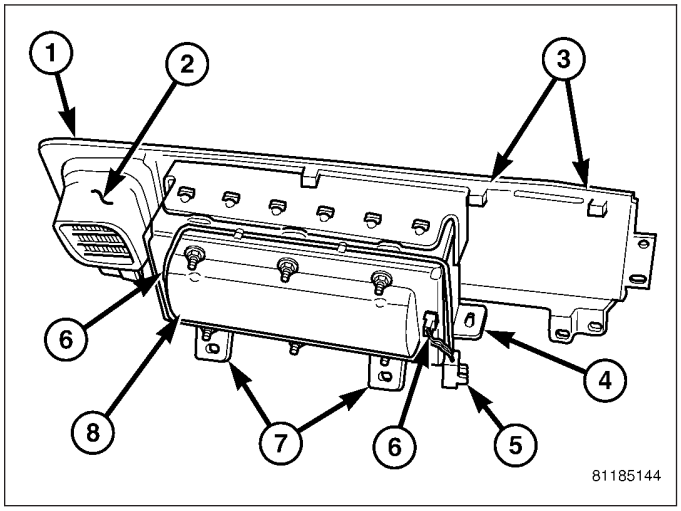

Located behind the passenger airbag door within the instrument panel is the passenger airbag unit. The passenger airbag housing (8) fits into a molded receptacle on the back of the airbag door, where six stamped hook formations on the upper and lower edges of the airbag housing are engaged in six small window openings on the upper and lower flanges of the receptacle to secure the airbag door to the airbag housing. The inboard airbag door fasteners and mounting flange are concealed beneath the instrument panel center bezel, while the lower fasteners and mounting flange are concealed beneath the instrument panel lower surround. The passenger airbag unit is secured by four screws through two front (7) and two rear (4) brackets integral to the base of the airbag housing to the instrument panel structural support.

The passenger airbag unit used in this model is a multistage, Next Generation-type that complies with revised federal airbag standards to deploy with less force than those used in some prior models. The passenger airbag unit consists of a stamped and welded metal housing, the airbag cushion, the airbag inflator initiators (6), and a stamped metal airbag and inflator retainer plate that is secured to the airbag housing with six studs and nuts. The airbag housing contains the airbag inflator and the folded airbag cushion. An approximately 80 centimeter (31.5 inch) wide by 90 centimeter (35.5 inch) high rectangular fabric cushion is used.

The airbag inflator is a non-azide, pyrotechnic-type unit that is secured to and sealed within the airbag housing. A short four-wire pigtail harness with a keyed, yellow connector insulator (5) connects the two inflator initiators to the vehicle electrical system through a dedicated take out and connector of the instrument panel wire harness.

The passenger airbag includes the airbag door, the panel outlet housing and for SRT-10 models only, the instrument panel trim bezel. This unit cannot be repaired, and must be replaced if deployed, faulty, or in any way damaged.

OPERATION

The multistage passenger airbag is deployed by electrical signals generated by the Airbag Control Module (ACM) through the passenger airbag squib 1 and squib 2 circuits to the two initiators in the airbag inflator. By using two initiators, the airbag can be deployed at multiple levels of force. The force level is controlled by the ACM to suit the monitored impact conditions by providing one of four delay intervals between the electrical signals provided to the two initiators. The longer the delay between these signals, the less forcefully the airbag will deploy.

When the ACM sends the proper electrical signals to each initiator, the electrical energy generates enough heat to initiate a small pyrotechnic charge which, in turn ignites chemical pellets within the inflator. Once ignited, these chemical pellets burn rapidly and produce a large quantity of inert gas. The inflator is sealed to the airbag cushion and a diffuser in the inflator directs all of the inert gas into the airbag cushion, causing the cushion to inflate. As the cushion inflates, the passenger airbag door will split at predetermined tear seam lines concealed on the inside surface of the door, then the door will pivot up over the top of the instrument panel and out of the way. Following an airbag deployment, the airbag cushion quickly deflates by venting the inert gas through vent holes within the fabric used to construct the back (instrument panel side) of the airbag cushion.

Typically, both initiators are used during an airbag deployment event. However, it is possible for only one initiator to be used during a deployment due to an airbag system fault; therefore, it is necessary to always confirm that both initiators have been used in order to avoid the improper disposal of potentially live pyrotechnic materials. (Refer to 8 - ELECTRICAL/RESTRAINTS - STANDARD PROCEDURE - SERVICE AFTER A SUPPLEMENTAL RESTRAINT DEPLOYMENT).

REMOVAL

WARNING: To avoid personal injury or death, on vehicles equipped with airbags, disable the supplemental restraint system before attempting any steering wheel, steering column, airbag, seat belt tensioner, impact sensor, or instrument panel component diagnosis or service. Disconnect and isolate the battery negative (ground) cable, then wait two minutes for the system capacitor to discharge before performing further diagnosis or service. This is the only sure way to disable the supplemental restraint system. Failure to take the proper precautions could result in accidental airbag deployment.

WARNING: To avoid personal injury or death, when removing a deployed airbag, rubber gloves, eye protection, and a long-sleeved shirt should be worn. There may be deposits on the airbag unit and other interior surfaces. In large doses, these deposits may cause irritation to the skin and eyes.

NOTE: The following procedure is for replacement of a faulty or damaged passenger airbag. If the airbag is faulty or damaged, but not deployed, review the recommended procedures for handling non-deployed supplemental restraints. (Refer to 8 - ELECTRICAL/RESTRAINTS - STANDARD PROCEDURE - HANDLING NON-DEPLOYED SUPPLEMENTAL RESTRAINTS). If the passenger airbag has been deployed, review the recommended procedures for service after a supplemental restraint deployment before removing the airbag from the vehicle. (Refer to 8 - ELECTRICAL/RESTRAINTS - STANDARD PROCEDURE - SERVICE AFTER A SUPPLEMENTAL RESTRAINT DEPLOYMENT).

1. Disconnect and isolate the battery negative cable. Wait two minutes for the system capacitor to discharge before further service.
2. Remove the lower surround from the instrument panel. (Refer to 23 - BODY/INSTRUMENT PANEL/ LOWER SURROUND - REMOVAL).
3. Remove the screw (2) that secures the mounting tab of the panel outlet housing to the upper glove box opening reinforcement (3).
4. Remove the six screws (4) that secure the inboard and lower flanges of the passenger airbag door (1) to the instrument panel.

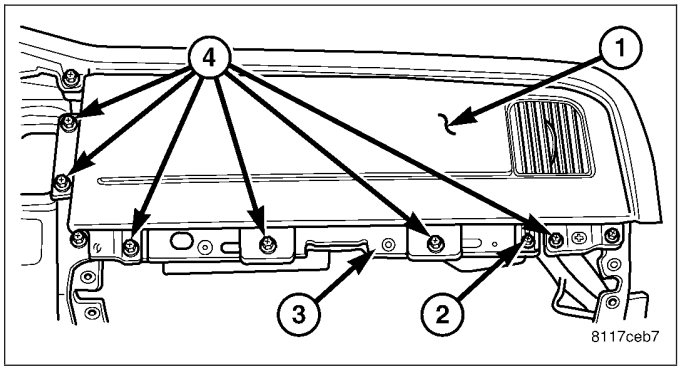

5. Reach through and above the glove box opening to access and remove the two screws (4) that secure the passenger airbag rear brackets to the upper glove box opening reinforcement (2).
6. Reach through and above the glove box opening to access and remove the two screws (3) that secure the passenger airbag front brackets to the instrument panel structural support.

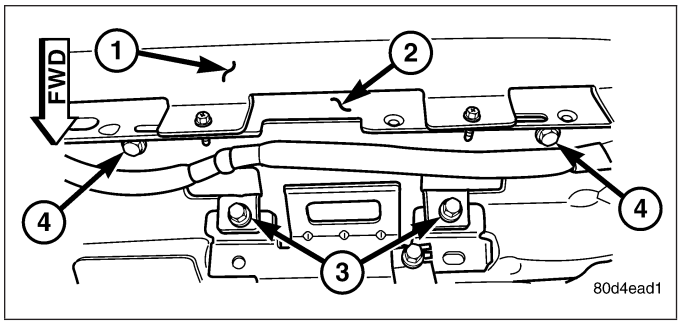

7. Using a trim stick (1) or another suitable wide flat-bladed tool, gently pry the upper and outboard edges of the passenger airbag door (2) away from the instrument panel (3) far enough to disengage the seven snap features on the door from the receptacles in the instrument panel base trim.
8. Pull the passenger airbag housing and door unit straight back from the instrument panel far enough to access the instrument panel wire harness take out and connector for the airbag located on the inboard side of the airbag housing.
9. Disconnect the passenger airbag pigtail wire connector from the instrument panel wire harness connector for the airbag. To disconnect the connector:
   a. Slide the red Connector Position Assurance (CPA) lock on the connector toward the side of the connector.

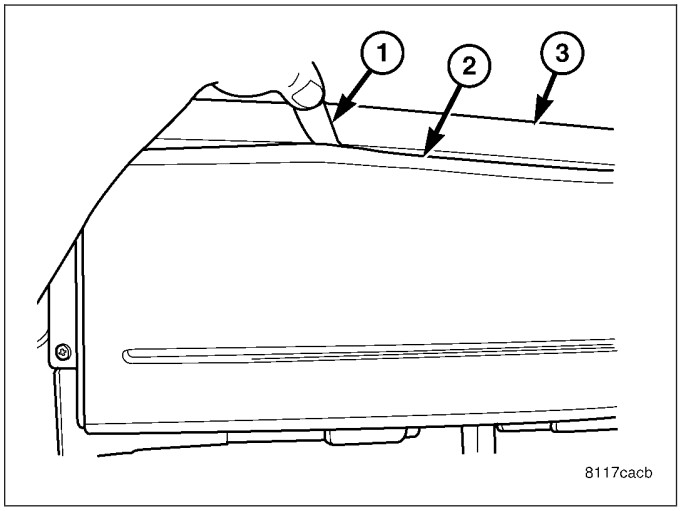

   b. Depress the connector latch tab and pull the two halves of the connector straight away from each other.
10. Remove the passenger airbag and airbag door from the instrument panel as a unit.

INSTALLATION

WARNING: To avoid personal injury or death, on vehicles equipped with airbags, disable the supplemental restraint system before attempting any steering wheel, steering column, airbag, seat belt tensioner, impact sensor, or instrument panel component diagnosis or service. Disconnect and isolate the battery negative (ground) cable, then wait two minutes for the system capacitor to discharge before performing further diagnosis or service. This is the only sure way to disable the supplemental restraint system. Failure to take the proper precautions could result in accidental airbag deployment.

WARNING: To avoid personal injury or death, when removing a deployed airbag, rubber gloves, eye protection, and a long-sleeved shirt should be worn. There may be deposits on the airbag unit and other interior surfaces. In large doses, these deposits may cause irritation to the skin and eyes.

WARNING: To avoid personal injury or death, the passenger airbag door must never be painted. Replacement passenger airbag units are serviced with doors in the original colors. Paint may change the way in which the material of the airbag door responds to an airbag deployment. Failure to observe this warning could result in occupant injuries upon airbag deployment.

WARNING: To avoid personal injury or death, the trim bezel on the lower edge of the passenger airbag door on SRT-10 models must never be removed or transferred to another passenger airbag door. Replacement passenger airbag units are serviced with doors that include a replacement trim bezel. Failure to observe this warning could result in trim bezel separation and occupant injuries upon airbag deployment.

WARNING: To avoid personal injury or death, use extreme care to prevent any foreign material from entering the passenger airbag, or becoming entrapped between the passenger airbag cushion and the passenger airbag door. Failure to observe this warning could result in occupant injuries upon airbag deployment.

NOTE: The following procedure is for replacement of a faulty or damaged passenger airbag. If the airbag is faulty or damaged, but not deployed, review the recommended procedures for handling non-deployed supplemental restraints. (Refer to 8 - ELECTRICAL/RESTRAINTS - STANDARD PROCEDURE - HANDLING NON-DEPLOYED SUPPLEMENTAL RESTRAINTS). If the passenger airbag has been deployed, review the recommended procedures for service after a supplemental restraint deployment before removing the airbag from the vehicle. (Refer to 8 - ELECTRICAL/RESTRAINTS - STANDARD PROCEDURE - SERVICE AFTER A SUPPLEMENTAL RESTRAINT DEPLOYMENT).

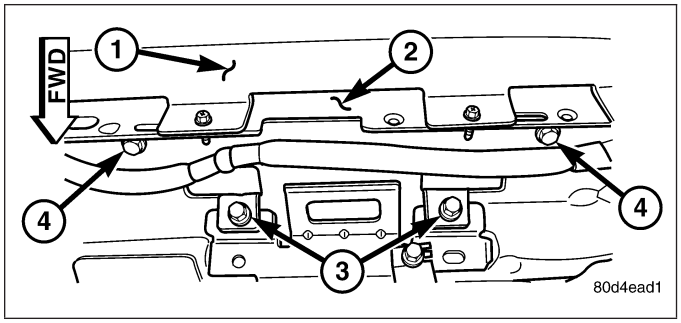

1. Carefully position the passenger airbag and airbag door (1) to the instrument panel as a unit.
2. Reconnect the passenger airbag pigtail wire connector to the instrument panel wire harness connector for the airbag. This connector is secured to the inboard side of the airbag housing. **Be certain that the latch on the connector and the red Connector Position Assurance (CPA) lock are each fully engaged.**
3. Position the passenger airbag housing and door unit into the instrument panel.
4. Using hand pressure, press firmly and evenly over each of the seven snap features on the upper and outboard edges of the passenger airbag door until they snap into their receptacles in the instrument panel base trim.
5. Reach through and above the glove box opening to install and tighten the two screws (3) that secure the passenger airbag front brackets to the instrument panel structural support. Tighten the screws to 6 N·m (55 in. lbs.).
6. Reach through and above the glove box opening to install and tighten the two screws (4) that secure the passenger airbag rear brackets to the upper glove box opening reinforcement (2). Tighten the screws to 6 N·m (55 in. lbs.).

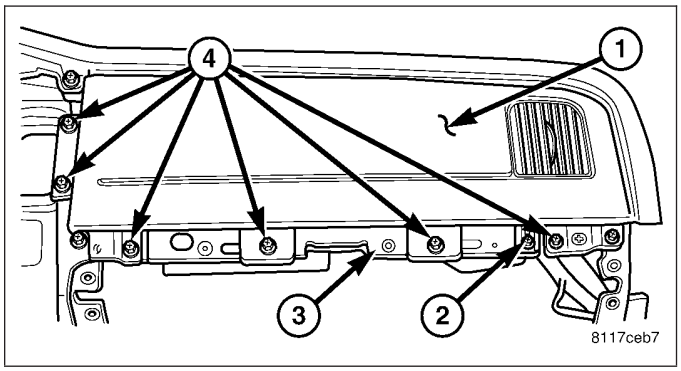

7. Install and tighten the six screws (4) that secure the inboard and lower flanges of the passenger airbag door (1) to the instrument panel. Tighten the screws to 2 N·m (20 in. lbs.).
8. Install and tighten the screw (2) that secures the mounting tab of the panel outlet housing to the upper glove box opening reinforcement (3). Tighten the screw to 2 N·m (20 in. lbs.).
9. Reinstall the lower surround onto the instrument panel. (Refer to 23 - BODY/INSTRUMENT PANEL/ LOWER SURROUND - INSTALLATION).
10. Do not reconnect the battery negative cable at this time. The supplemental restraint system verification test procedure should be performed following service of any supplemental restraint system component. (Refer to 8 - ELECTRICAL/RESTRAINTS - STANDARD PROCEDURE - VERIFICATION TEST).

SEAT BELT

REMOVAL - FRONT CENTER

WARNING: To avoid personal injury or death, during and following any seat belt or child restraint anchor service, carefully inspect all seat belts, buckles, mounting hardware, retractors, tether straps, and anchors for proper installation, operation, or damage. Replace any belt that is cut, frayed, or torn. Straighten any belt that is twisted. Tighten any loose fasteners. Replace any belt that has a damaged or inoperative buckle or retractor. Replace any belt that has a bent or damaged latch plate or anchor plate. Replace any child restraint anchor or the unit to which the anchor is integral that has been bent or damaged. Never attempt to repair a seat belt or child restraint component. Always replace damaged or faulty seat belt and child restraint components with the correct, new and unused replacement parts listed in the DaimlerChrysler Mopar Parts Catalog.

NOTE: A fixed position front center seat belt buckle is located on the left side of the front center seat section (20 percent) used on all models. Standard cab models also have a unique fixed position black, keyed front center seat belt lower anchor buckle for the three-point center seat belt lower anchor located on the right side of the front center seat section. The following procedure also applies to the fixed position front center seat lap belt located on the right side of the front center seat section of all quad cab models. The three-point front center seat belt and retractor unit is only used on standard cab models. (Refer to 8 - ELECTRICAL/RESTRAINTS/FRONT CENTER SEAT BELT & RETRACTOR - REMOVAL).

1. Move the adjacent right or left front outboard seat section (40 percent) to its most forward position for easiest access to the front center seat belt buckle, lap belt lower anchor, or unique black, keyed front center seat belt lower anchor buckle (1).
2. From behind the front seat, remove the screw (5) that secures the front center seat belt buckle, lap belt lower anchor, or unique black, keyed front center seat belt lower anchor buckle to the center seat support bracket (3).
3. From the front of the front seat, reach between the center seat cushion (6) and the adjacent right or left front outboard seat cushion to access and remove the front center seat belt buckle, lap belt unit, or unique black, keyed front center seat belt lower anchor buckle through the elastic strap (2) on the side of the center seat cushion.
4. Remove the front center seat belt buckle, lap belt unit, or unique black, keyed front center seat belt lower anchor buckle from the front seat.

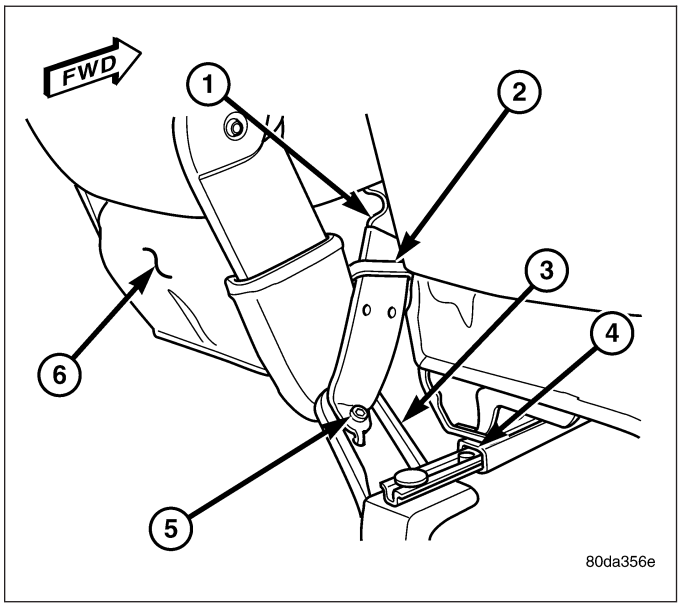

INSTALLATION - FRONT CENTER

WARNING: To avoid personal injury or death, during and following any seat belt or child restraint anchor service, carefully inspect all seat belts, buckles, mounting hardware, retractors, tether straps, and anchors for proper installation, operation, or damage. Replace any belt that is cut, frayed, or torn. Straighten any belt that is twisted. Tighten any loose fasteners. Replace any belt that has a damaged or inoperative buckle or retractor. Replace any belt that has a bent or damaged latch plate or anchor plate. Replace any child restraint anchor or the unit to which the anchor is integral that has been bent or damaged. Never attempt to repair a seat belt or child restraint component. Always replace damaged or faulty seat belt and child restraint components with the correct, new and unused replacement parts listed in the DaimlerChrysler Mopar Parts Catalog.

NOTE: A fixed position front center seat belt buckle is located on the left side of the front center seat section (20 percent) used on all models. Standard cab models also have a unique fixed position black, keyed front center seat belt lower anchor buckle for the three-point center seat belt lower anchor located on the right side of the front center seat section. The following procedure also applies to the fixed position front center seat lap belt located on the right side of the front center seat section of all quad cab models. The three-point front center seat belt and retractor unit is only used on standard cab models. (Refer to 8 - ELECTRICAL/RESTRAINTS/FRONT CENTER SEAT BELT & RETRACTOR - INSTALLATION).

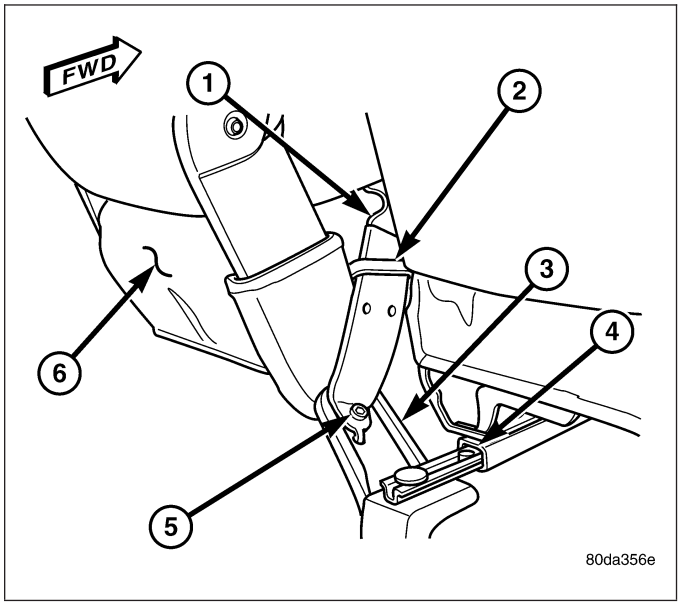

1. From the front of the front seat, position the front center seat belt buckle, lap belt unit, or unique black, keyed front center seat belt lower anchor buckle (1) between the center seat cushion (6) and the adjacent right or left front outboard seat cushion.
2. From the front of the front seat, reach between the center seat cushion and the adjacent right or left front outboard seat cushion to route the front center seat belt buckle, lap belt unit lower anchor, or unique black, keyed front center seat belt lower anchor buckle through the elastic strap (2) on the side of the center seat cushion.
3. From behind the front seat, position the front center seat belt buckle, lap belt lower anchor, or unique black, keyed front center seat belt lower anchor buckle to the center seat support bracket (3). Be certain to engage the anti-rotation tab on the buckle or belt anchor into the corresponding hole in the center seat support bracket.
4. Install and tighten the screw (5) that secures the front center seat belt buckle, lap belt lower anchor, or unique black, keyed front center seat belt lower anchor buckle to the center seat support bracket. Tighten the screw to 40 N·m (29 ft. lbs.).
5. Move the adjacent right or left front outboard seat section (40 percent) back to its rearward position.

SEAT BELT BUCKLE

REMOVAL

FRONT OUTBOARD

WARNING: To avoid personal injury or death, during and following any seat belt or child restraint anchor service, carefully inspect all seat belts, buckles, mounting hardware, retractors, tether straps, and anchors for proper installation, operation, or damage. Replace any belt that is cut, frayed, or torn. Straighten any belt that is twisted. Tighten any loose fasteners. Replace any belt that has a damaged or inoperative buckle or retractor. Replace any belt that has a bent or damaged latch plate or anchor plate. Replace any child restraint anchor or the unit to which the anchor is integral that has been bent or damaged. Never attempt to repair a seat belt or child restraint component. Always replace damaged or faulty seat belt and child restraint components with the correct, new and unused replacement parts listed in the DaimlerChrysler Mopar Parts Catalog.

NOTE: A traveling front outboard seat belt buckle is located on the inboard side of each front outboard seat section (40 percent) used on all models. The seat belt buckle on the driver's side front seat for all models also includes a seat belt switch. (Refer to 8 - ELECTRICAL/RESTRAINTS/SEAT BELT SWITCH - DESCRIPTION).

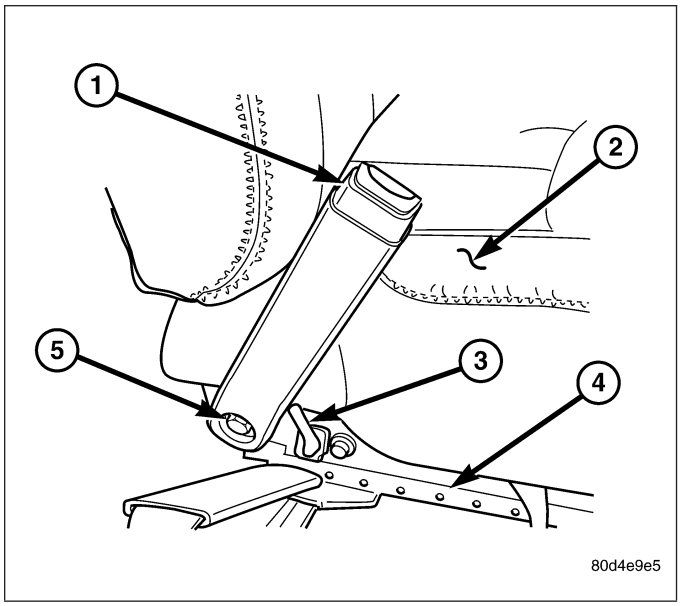

1. Move the right or left front outboard seat section (2) to its most rearward position and tilt the seat back forward for easiest access to the front outboard seat belt buckle lower anchor.
2. For easiest access to the front outboard seat belt buckle lower anchor on standard cab models, also move the outboard seat section opposite the side from which the buckle is to be removed to its most forward position and tilt the seat back forward.
3. On standard cab models only, remove the stowage tray from the rear floor panel behind the seat. (Refer to 23 - BODY/INTERIOR/REAR FLOOR STOWAGE TRAY - REMOVAL).
4. From behind the front seat on the driver side only, disconnect the seat belt switch pigtail wire (3) connector from the seat wire harness take out and connector for the switch located below the inboard edge of the driver side inboard seat track (4) just forward of the buckle lower anchor.
5. From behind the front seat, remove the screw (5) that secures the front outboard seat belt buckle (1) lower anchor to the bracket on the inboard seat track.
6. From the front of the front seat, reach between the center seat cushion and the adjacent right or left front outboard seat cushion to access and remove the front outboard seat belt buckle from the seat.

FRONT CENTER & CENTER ANCHOR

WARNING: To avoid personal injury or death, during and following any seat belt or child restraint anchor service, carefully inspect all seat belts, buckles, mounting hardware, retractors, tether straps, and anchors for proper installation, operation, or damage. Replace any belt that is cut, frayed, or torn. Straighten any belt that is twisted. Tighten any loose fasteners. Replace any belt that has a damaged or inoperative buckle or retractor. Replace any belt that has a bent or damaged latch plate or anchor plate. Replace any child restraint anchor or the unit to which the anchor is integral that has been bent or damaged. Never attempt to repair a seat belt or child restraint component. Always replace damaged or faulty seat belt and child restraint components with the correct, new and unused replacement parts listed in the DaimlerChrysler Mopar Parts Catalog.

NOTE: A fixed position front center seat belt buckle is located on the left side of the front center seat section (20 percent) used on all models. Standard cab models also have a unique fixed position black, keyed front center seat belt lower anchor buckle for the three-point center seat belt lower anchor located on the right side of the front center seat section. The following procedure also applies to the fixed position front center seat lap belt located on the right side of the front center seat section of all quad cab models. The three-point front center seat belt and retractor unit is only used on standard cab models. (Refer to 8 - ELECTRICAL/RESTRAINTS/FRONT CENTER SEAT BELT & RETRACTOR - REMOVAL).

1. Move the adjacent right or left front outboard seat section (40 percent) to its most forward position for easiest access to the front center seat belt buckle, lap belt lower anchor, or unique black, keyed front center seat belt lower anchor buckle (1).
2. From behind the front seat, remove the screw (5) that secures the front center seat belt buckle, lap belt lower anchor, or unique black, keyed front center seat belt lower anchor buckle to the center seat support bracket (3).
3. From the front of the front seat, reach between the center seat cushion (6) and the adjacent right or left front outboard seat cushion to access and remove the front center seat belt buckle, lap belt unit, or unique black, keyed front center seat belt lower anchor buckle through the elastic strap (2) on the side of the center seat cushion.
4. Remove the front center seat belt buckle, lap belt unit, or unique black, keyed front center seat belt lower anchor buckle from the front seat.

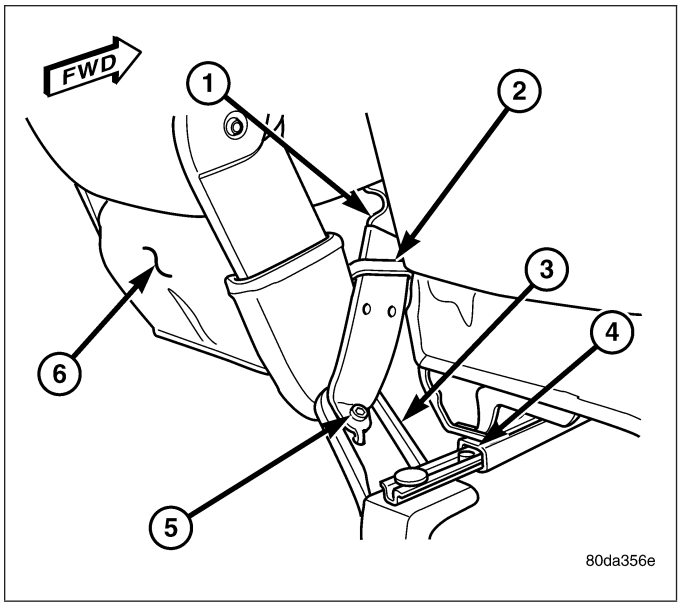

REAR CENTER & LEFT OUTBOARD

WARNING: To avoid personal injury or death, during and following any seat belt or child restraint anchor service, carefully inspect all seat belts, buckles, mounting hardware, retractors, tether straps, and anchors for proper installation, operation, or damage. Replace any belt that is cut, frayed, or torn. Straighten any belt that is twisted. Tighten any loose fasteners. Replace any belt that has a damaged or inoperative buckle or retractor. Replace any belt that has a bent or damaged latch plate or anchor plate. Replace any child restraint anchor or the unit to which the anchor is integral that has been bent or damaged. Never attempt to repair a seat belt or child restraint component. Always replace damaged or faulty seat belt and child restraint components with the correct, new and unused replacement parts listed in the DaimlerChrysler Mopar Parts Catalog.

1. Lift up the rear seat cushion into its stowed position against the rear seat back.
2. Remove the screw (3) that secures either the center (5) or the left outboard (4) occupant buckle unit to the rear floor panel (7) near the base of the cab back panel (1). On models with the optional 60/40 split rear bench, the screw that secures the buckle unit also secures one of the rear seat mounting brackets to the rear floor panel.
3. Remove the center or the left outboard occupant buckle unit from the rear floor panel or from the rear seat mounting bracket.

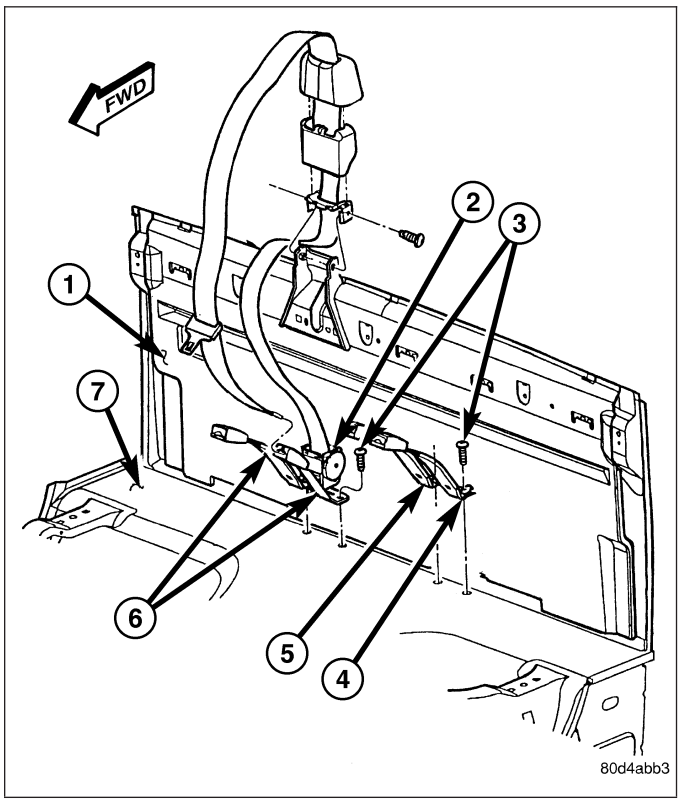

REAR CENTER ANCHOR & RIGHT OUTBOARD

WARNING: To avoid personal injury or death, during and following any seat belt or child restraint anchor service, carefully inspect all seat belts, buckles, mounting hardware, retractors, tether straps, and anchors for proper installation, operation, or damage. Replace any belt that is cut, frayed, or torn. Straighten any belt that is twisted. Tighten any loose fasteners. Replace any belt that has a damaged or inoperative buckle or retractor. Replace any belt that has a bent or damaged latch plate or anchor plate. Replace any child restraint anchor or the unit to which the anchor is integral that has been bent or damaged. Never attempt to repair a seat belt or child restraint component. Always replace damaged or faulty seat belt and child restraint components with the correct, new and unused replacement parts listed in the DaimlerChrysler Mopar Parts Catalog.

NOTE: The unique black, keyed center seat belt lower anchor buckle and the right outboard occupant buckle are serviced as a unit with their mounting bracket. The rear center seat belt retractor is also secured to the mounting bracket with these two buckles, but can be removed from the mounting bracket and is serviced separately from the two buckles. (Refer to 8 - ELECTRICAL/RESTRAINTS/REAR CENTER SEAT BELT & RETRACTOR - REMOVAL).

1. Reach between the rear seat cushion and the rear seat back to access and unbuckle the rear center seat belt lower anchor latch plate from the unique black, keyed lower anchor center buckle (5). Use an ignition key or a small screwdriver to depress the small white release button on the anchor buckle.
2. Remove the rear seat from the vehicle. On models with the optional 60/40 split rear bench, only the 60 percent section (right side) of the rear seat must be removed. (Refer to 23 - BODY/SEATS/SEAT - REAR - REMOVAL).
3. Remove the screw (6) that secures the rear center seat belt retractor (3) to the center anchor and right outboard occupant buckles (1) and mounting bracket (4) unit on the rear floor panel near the cab back panel.
4. Remove the rear center seat belt retractor from the center anchor/right outboard occupant buckle and mounting bracket unit.

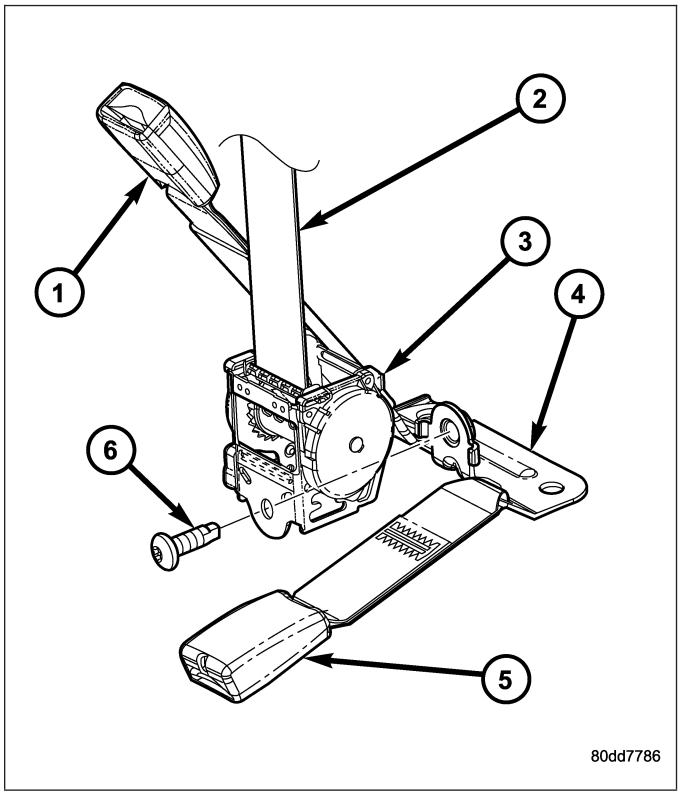

5. Remove the two screws (3) that secure the center anchor/right outboard occupant buckles and mounting bracket unit to the rear floor panel (7) near the base of the cab back panel (1).
6. Remove the center anchor/right outboard occupant buckles and mounting bracket unit from the rear floor panel.

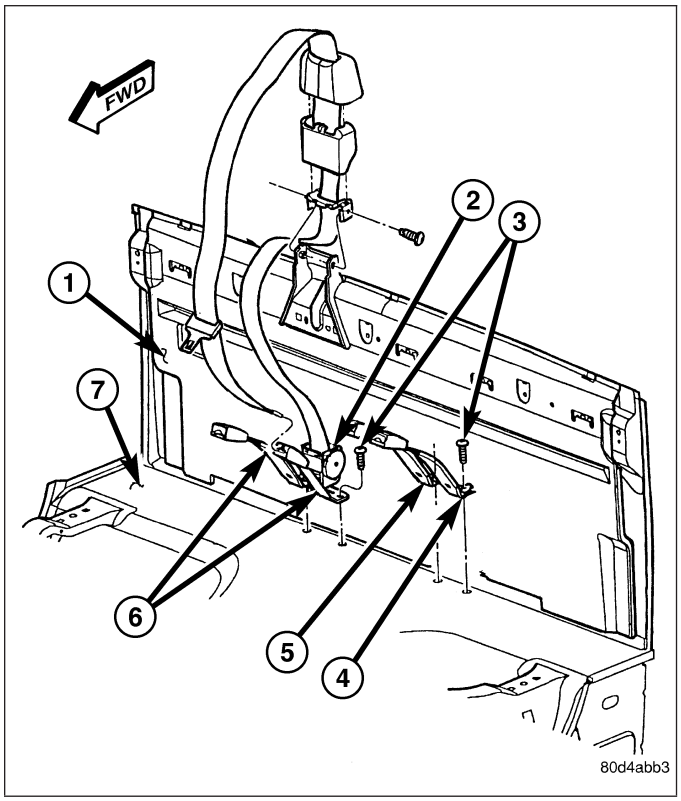

INSTALLATION

FRONT OUTBOARD

WARNING: To avoid personal injury or death, during and following any seat belt or child restraint anchor service, carefully inspect all seat belts, buckles, mounting hardware, retractors, tether straps, and anchors for proper installation, operation, or damage. Replace any belt that is cut, frayed, or torn. Straighten any belt that is twisted. Tighten any loose fasteners. Replace any belt that has a damaged or inoperative buckle or retractor. Replace any belt that has a bent or damaged latch plate or anchor plate. Replace any child restraint anchor or the unit to which the anchor is integral that has been bent or damaged. Never attempt to repair a seat belt or child restraint component. Always replace damaged or faulty seat belt and child restraint components with the correct, new and unused replacement parts listed in the DaimlerChrysler Mopar Parts Catalog.

NOTE: A traveling front outboard seat belt buckle is located on the inboard side of each front outboard seat section (40 percent) used on all models. The seat belt buckle on the driver's side front seat for all models also includes a seat belt switch. (Refer to 8 - ELECTRICAL/RESTRAINTS/SEAT BELT SWITCH - DESCRIPTION).

1. From the front of the front seat, reach between the center seat cushion and the adjacent right or left front outboard seat cushion (2) to position the front outboard seat belt buckle (1) to the seat. Be certain to engage the anti-rotation tab on the buckle anchor into the corresponding hole in the inboard seat track bracket.
2. From behind the front seat, install and tighten the screw (5) that secures the front outboard seat belt buckle lower anchor to the bracket on the inboard seat track (4). Tighten the screw to 25 N·m (18 ft. lbs.).
3. From behind the front seat on the driver side only, reconnect the seat belt switch pigtail wire (3) connector to the seat wire harness take out and connector for the switch located below the inboard edge of the driver side inboard seat track just forward of the buckle lower anchor.

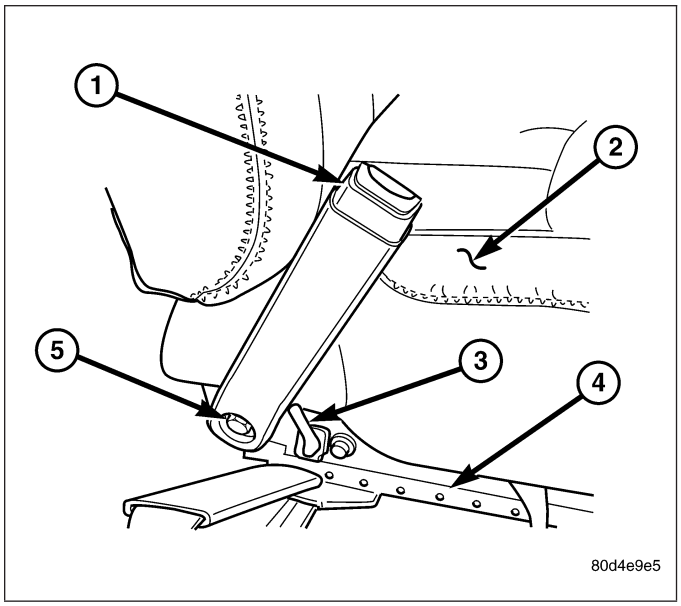

4. On standard cab models only, reinstall the stowage tray onto the rear floor panel behind the seat. (Refer to 23 - BODY/INTERIOR/REAR FLOOR STOWAGE TRAY - INSTALLATION).
5. On standard cab models, move the outboard seat section opposite the side from which the buckle was replaced to its most rearward position and tilt the seat back to its upright position.

FRONT CENTER & CENTER ANCHOR

WARNING: To avoid personal injury or death, during and following any seat belt or child restraint anchor service, carefully inspect all seat belts, buckles, mounting hardware, retractors, tether straps, and anchors for proper installation, operation, or damage. Replace any belt that is cut, frayed, or torn. Straighten any belt that is twisted. Tighten any loose fasteners. Replace any belt that has a damaged or inoperative buckle or retractor. Replace any belt that has a bent or damaged latch plate or anchor plate. Replace any child restraint anchor or the unit to which the anchor is integral that has been bent or damaged. Never attempt to repair a seat belt or child restraint component. Always replace damaged or faulty seat belt and child restraint components with the correct, new and unused replacement parts listed in the DaimlerChrysler Mopar Parts Catalog.

NOTE: A fixed position front center seat belt buckle is located on the left side of the front center seat section (20 percent) used on all models. Standard cab models also have a unique fixed position black, keyed front center seat belt lower anchor buckle for the three-point center seat belt lower anchor located on the right side of the front center seat section. The following procedure also applies to the fixed position front center seat lap belt located on the right side of the front center seat section of all quad cab models. The three-point front center seat belt and retractor unit is only used on standard cab models. (Refer to 8 - ELECTRICAL/RESTRAINTS/FRONT CENTER SEAT BELT & RETRACTOR - INSTALLATION).

1. From the front of the front seat, position the front center seat belt buckle, lap belt unit, or unique black, keyed front center seat belt lower anchor buckle (1) between the center seat cushion (6) and the adjacent right or left front outboard seat cushion.
2. From the front of the front seat, reach between the center seat cushion and the adjacent right or left front outboard seat cushion to route the front center seat belt buckle, lap belt unit lower anchor, or unique black, keyed front center seat belt lower anchor buckle through the elastic strap (2) on the side of the center seat cushion.
3. From behind the front seat, position the front center seat belt buckle, lap belt lower anchor, or unique black, keyed front center seat belt lower anchor buckle to the center seat support bracket (3). Be certain to engage the anti-rotation tab on the buckle or belt anchor into the corresponding hole in the center seat support bracket.

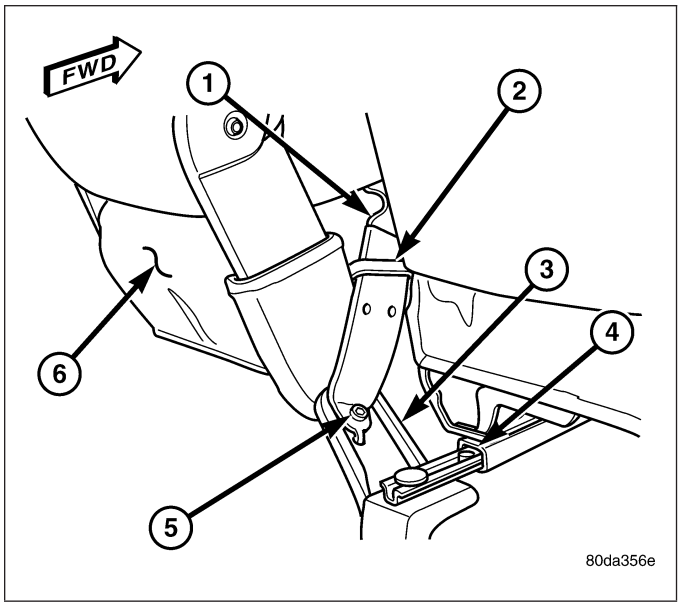

4. Install and tighten the screw (5) that secures the front center seat belt buckle, lap belt lower anchor, or unique black, keyed front center seat belt lower anchor buckle to the center seat support bracket. Tighten the screw to 40 N·m (29 ft. lbs.).
5. Move the adjacent right or left front outboard seat section (40 percent) back to its rearward position.

REAR CENTER & LEFT OUTBOARD

WARNING: To avoid personal injury or death, during and following any seat belt or child restraint anchor service, carefully inspect all seat belts, buckles, mounting hardware, retractors, tether straps, and anchors for proper installation, operation, or damage. Replace any belt that is cut, frayed, or torn. Straighten any belt that is twisted. Tighten any loose fasteners. Replace any belt that has a damaged or inoperative buckle or retractor. Replace any belt that has a bent or damaged latch plate or anchor plate. Replace any child restraint anchor or the unit to which the anchor is integral that has been bent or damaged. Never attempt to repair a seat belt or child restraint component. Always replace damaged or faulty seat belt and child restraint components with the correct, new and unused replacement parts listed in the DaimlerChrysler Mopar Parts Catalog.

1. Position the center (5) or the left outboard (4) occupant buckle unit onto the rear floor panel (7) or onto the rear seat mounting bracket near the base of the cab back panel (1). On models with the optional 60/40 split rear bench, the screw that secures the buckle unit also secures one of the rear seat mounting brackets to the rear floor panel.
2. Install and tighten the screw (3) that secures the center or the left outboard occupant buckle unit to the rear floor panel. Tighten the screw to 40 N·m (29 ft. lbs.).
3. Lower the rear seat cushion back to its normal seating position.

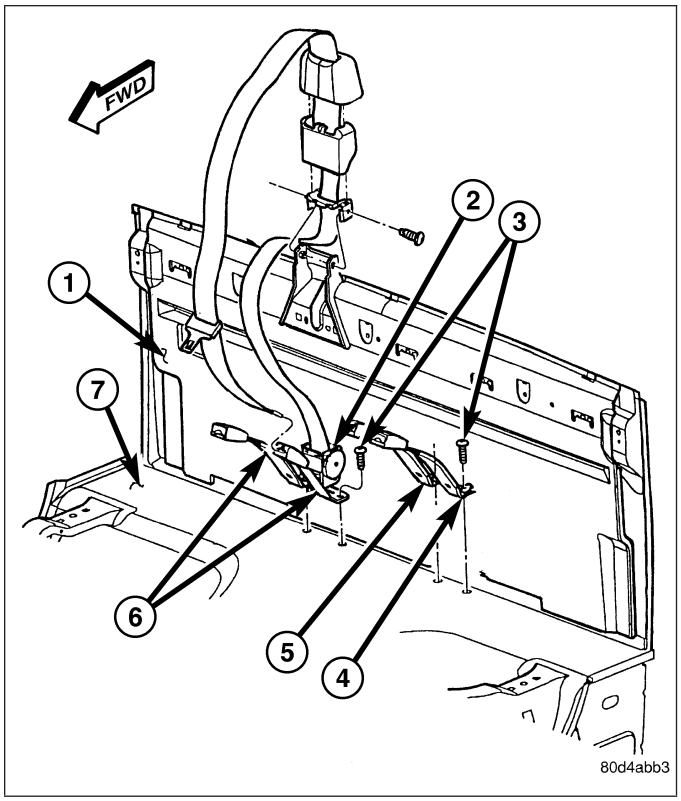

REAR CENTER ANCHOR & RIGHT OUTBOARD

WARNING: To avoid personal injury or death, during and following any seat belt or child restraint anchor service, carefully inspect all seat belts, buckles, mounting hardware, retractors, tether straps, and anchors for proper installation, operation, or damage. Replace any belt that is cut, frayed, or torn. Straighten any belt that is twisted. Tighten any loose fasteners. Replace any belt that has a damaged or inoperative buckle or retractor. Replace any belt that has a bent or damaged latch plate or anchor plate. Replace any child restraint anchor or the unit to which the anchor is integral that has been bent or damaged. Never attempt to repair a seat belt or child restraint component. Always replace damaged or faulty seat belt and child restraint components with the correct, new and unused replacement parts listed in the DaimlerChrysler Mopar Parts Catalog.

NOTE: The unique black, keyed center seat belt lower anchor buckle and the right outboard occupant buckle are serviced as a unit with their mounting bracket. The rear center seat belt retractor is also secured to the mounting bracket with these two buckles, but can be removed from the mounting bracket and is serviced separately from the two buckles. (Refer to 8 - ELECTRICAL/RESTRAINTS/REAR CENTER SEAT BELT & RETRACTOR - INSTALLATION).

1. Position the center anchor and right outboard occupant buckles and mounting bracket unit (6) onto the rear floor panel (7) near the base of the cab back panel (1).
2. Install and tighten the two screws (3) that secure the center anchor and right outboard occupant buckles and mounting bracket unit to the rear floor panel. Tighten the screws to 40 N·m (29 ft. lbs.).

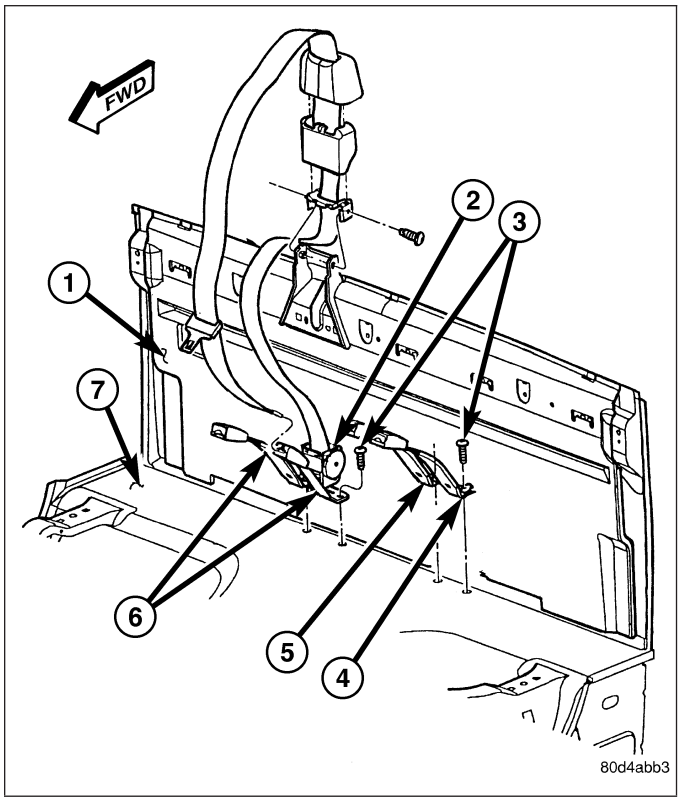

3. Position the rear center seat belt retractor (3) onto the center anchor (5) and right outboard (1) occupant buckles and mounting bracket (4) unit.
4. Install and tighten the screw (6) that secures the rear center seat belt retractor to the center anchor and right outboard occupant buckles and mounting bracket unit. Tighten the screw to 40 N·m (29 ft. lbs.).
5. Reinstall the rear seat into the vehicle. On models with the optional 60/40 split rear bench, only the 60 percent section (right side) of the rear seat must be reinstalled. (Refer to 23 - BODY/SEATS/SEAT - REAR - INSTALLATION).
6. Reach between the rear seat cushion and the rear seat back to access and buckle the rear center seat belt lower anchor latch plate to the unique black, keyed lower anchor buckle.

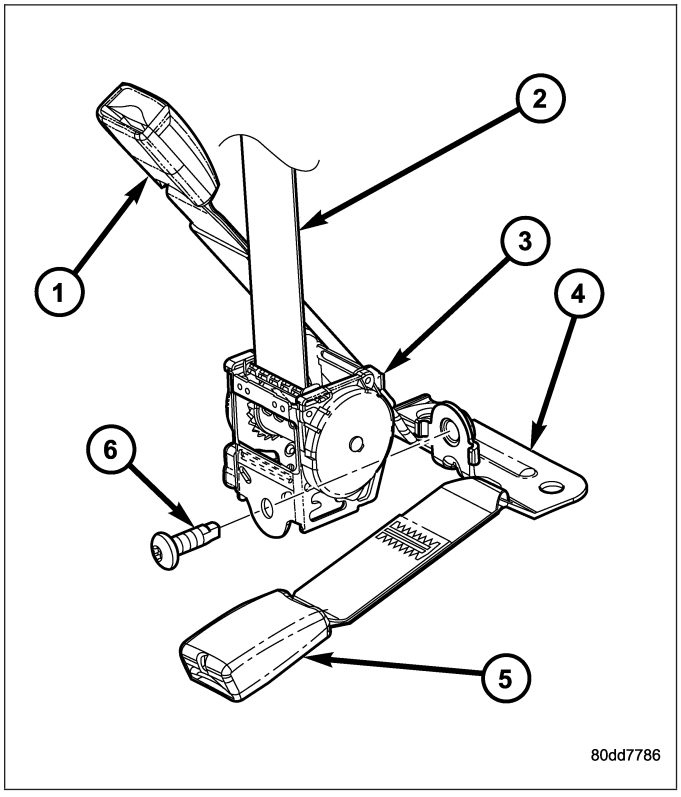

SEAT BELT & RETRACTOR

DESCRIPTION - AUTOMATIC LOCKING RETRACTOR

The seat belt retractors used in all seating positions include an inertia-type, emergency locking mechanism (7) as standard equipment. However, the retractor locking mechanism for the passenger side front seating position is mechanically switchable from an emergency locking retractor to an automatic locking retractor. The primary function of this feature is to securely accommodate a child seat in the passenger side front seating position of the vehicle without the need for a self-cinching seat belt tip half latch plate unit or another supplemental device that would be required to prevent the seat belt webbing from unwinding freely from the retractor spool of an inertia-type emergency locking retractor mechanism.

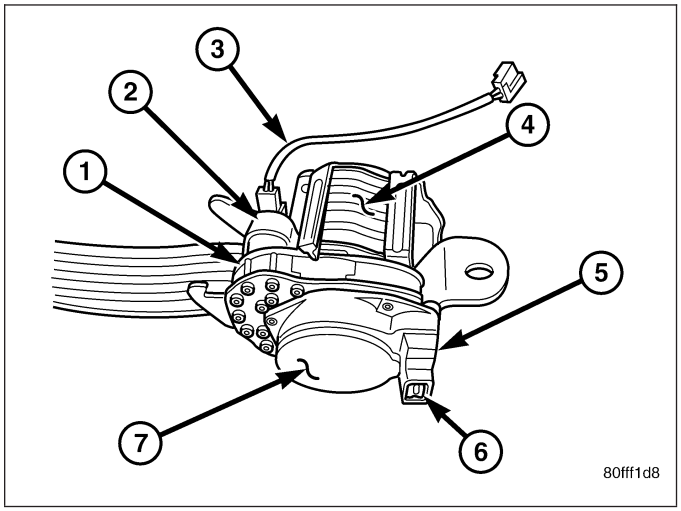

The automatic locking mechanism is integral to the passenger side front seat belt and retractor unit and is concealed beneath a molded plastic cover located on the same side of the retractor spool as the seat belt tensioner housing. The retractor is secured to the inner B-pillar on the right side of the vehicle and is concealed beneath the molded plastic inner B-pillar trim. The automatic locking mechanism cannot be adjusted or repaired and, if faulty or damaged, the entire passenger side front seat belt and retractor unit must be replaced.

OPERATION - AUTOMATIC LOCKING RETRACTOR

The automatic locking mode of the retractor is engaged and the retractor is switched from operating as a standard inertia-type emergency locking retractor by first buckling the combination lap and shoulder belt buckle. Then grasp the shoulder belt and pull all of the webbing out of the retractor. Once all of the belt webbing is extracted from the spool, the retractor will automatically become engaged in the pre-locked automatic locking mode and will make an audible clicking or ratcheting sound as the shoulder belt is allowed to retract to confirm that the automatic locking mode is now engaged. Once the automatic locking mode is engaged, the retractor will remain locked and the belt will remain tight around whatever it is restraining.

The retractor is returned to standard emergency locking mode by unbuckling the combination lap and shoulder belt buckle and allowing the belt webbing to be almost fully retracted onto the retractor spool. The emergency locking mode is confirmed by the absence of the audible clicking or ratcheting sound as the belt webbing retracts. This mode will allow the belt to unwind from and wind onto the retractor spool freely unless and until a predetermined inertia load is sensed, or until the retractor is again switched to the automatic locking mode.

REMOVAL

FRONT CENTER

WARNING: To avoid personal injury or death, during and following any seat belt or child restraint anchor service, carefully inspect all seat belts, buckles, mounting hardware, retractors, tether straps, and anchors for proper installation, operation, or damage. Replace any belt that is cut, frayed, or torn. Straighten any belt that is twisted. Tighten any loose fasteners. Replace any belt that has a damaged or inoperative buckle or retractor. Replace any belt that has a bent or damaged latch plate or anchor plate. Replace any child restraint anchor or the unit to which the anchor is integral that has been bent or damaged. Never attempt to repair a seat belt or child restraint component. Always replace damaged or faulty seat belt and child restraint components with the correct, new and unused replacement parts listed in the DaimlerChrysler Mopar Parts Catalog.

NOTE: A front center seat belt and retractor is used only on standard cab models. Quad cab models have a lap belt in the front center seating position. (Refer to 8 - ELECTRICAL/RESTRAINTS/FRONT CENTER SEAT BELT - REMOVAL).

1. Reach between the center of the front seat cushion and front seat back to access and unbuckle the front center seat belt lower anchor latch plate from the unique black, keyed lower anchor buckle. Use an ignition key or a small screwdriver to depress the small white release button on the anchor buckle.
2. Move the front seat to its most forward position for easiest access to the front center seat belt and retractor unit.
3. Remove the stowage tray from the rear floor panel behind the seat. (Refer to 23 - BODY/INTERIOR/ REAR FLOOR STOWAGE TRAY - REMOVAL).
4. Using a trim stick or another suitable wide flat-bladed tool, gently pry at each side of the front center seat belt bezel (5) on the cab back trim panel (1) to release the snap features that secure the bezel to the panel.
5. Remove the bezel from the webbing of the front center seat belt (4).
6. Remove the trim from the cab back panel. (Refer to 23 - BODY/INTERIOR/REAR CAB BACK PANEL TRIM - REMOVAL).

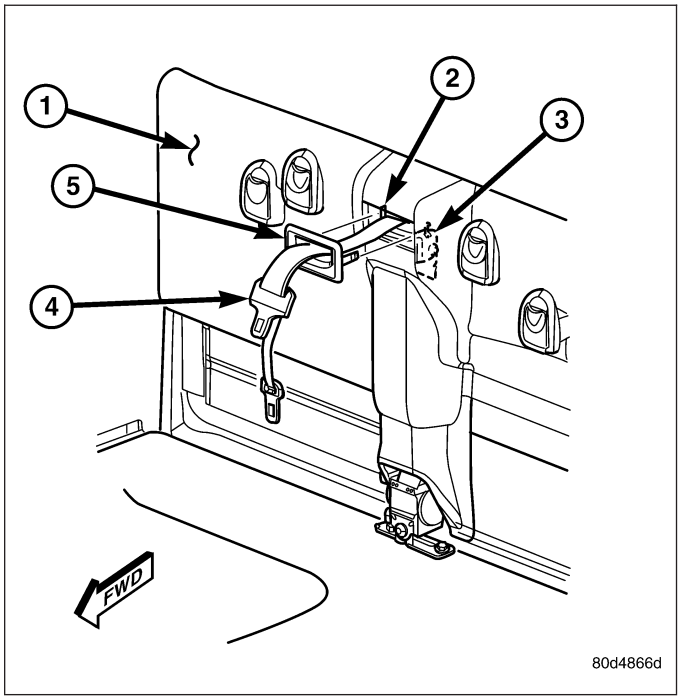

7. Remove the two screws (3) that secure the belt bracket (2) of the front center seat belt (7) to the body bracket (1) on the upper cab back panel (8) reinforcement.
8. Remove the belt bracket of the front center seat belt from the body bracket on the upper cab back panel reinforcement.
9. Remove the two screws (4) that secure the front center seat belt retractor bracket (5) to the floor panel (6) near the base of the cab back panel.
10. Remove the front center seat belt and retractor unit from the floor panel.

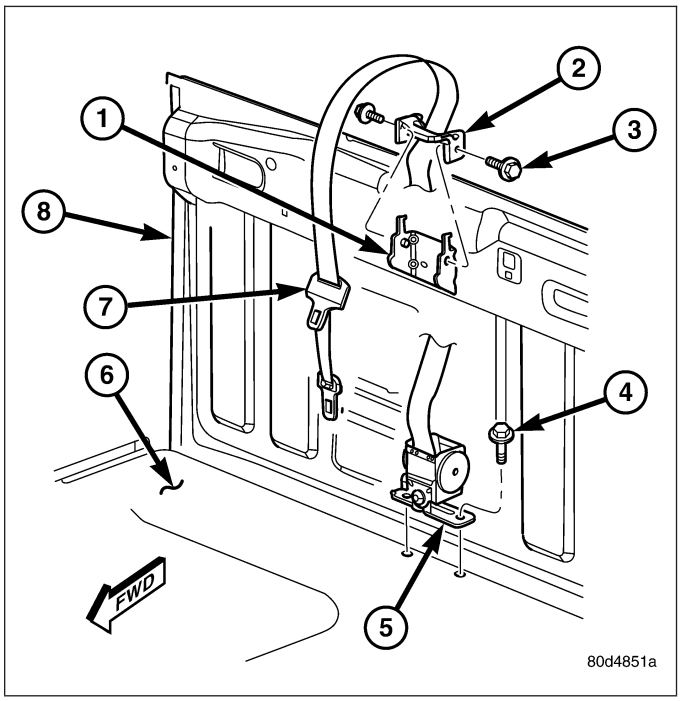

FRONT OUTBOARD - STANDARD CAB

The seat belt retractor on the driver's side of standard cab models only includes a tension reducer. (Refer to 8 - ELECTRICAL/RESTRAINTS/SEAT BELT TENSION REDUCER - DESCRIPTION). The seat belt retractor on the passenger's side of all models includes a switchable automatic locking mechanism. (Refer to 8 - ELECTRICAL/ RESTRAINTS/AUTOMATIC LOCKING RETRACTOR - DESCRIPTION).

WARNING: To avoid personal injury or death, on vehicles equipped with airbags, disable the supplemental restraint system before attempting any steering wheel, steering column, airbag, seat belt tensioner, impact sensor, or instrument panel component diagnosis or service. Disconnect and isolate the battery negative (ground) cable, then wait two minutes for the system capacitor to discharge before performing further diagnosis or service. This is the only sure way to disable the supplemental restraint system. Failure to take the proper precautions could result in accidental airbag deployment.

WARNING: To avoid personal injury or death, during and following any seat belt or child restraint anchor service, carefully inspect all seat belts, buckles, mounting hardware, retractors, tether straps, and anchors for proper installation, operation, or damage. Replace any belt that is cut, frayed, or torn. Straighten any belt that is twisted. Tighten any loose fasteners. Replace any belt that has a damaged or inoperative buckle or retractor. Replace any belt that has a bent or damaged latch plate or anchor plate. Replace any child restraint anchor or the unit to which the anchor is integral that has been bent or damaged. Never attempt to repair a seat belt or child restraint component. Always replace damaged or faulty seat belt and child restraint components with the correct, new and unused replacement parts listed in the DaimlerChrysler Mopar Parts Catalog.

NOTE: The following procedure is for replacement of a faulty or damaged front outboard seat belt and retractor unit, which includes a seat belt tensioner for this model. (Refer to 8 - ELECTRICAL/RESTRAINTS/ SEAT BELT TENSIONER - DESCRIPTION). The only component of this seat belt and retractor unit that is available for individual service replacement is the plastic web stop button that prevents the latch plate from falling to the floor while in the stored position. Refer to the instructions supplied with the service kit for the proper web stop button replacement procedures.

NOTE: If the seat belt or retractor is faulty or damaged, but the seat belt tensioner is not deployed, review the recommended procedures for handling non-deployed supplemental restraints. (Refer to 8 - ELECTRICAL/RESTRAINTS - STANDARD PROCEDURE - HANDLING NON-DEPLOYED SUPPLEMENTAL RESTRAINTS). If the seat belt tensioner has been deployed, review the recommended procedures for service after a supplemental restraint deployment before removing the front outboard seat belt and retractor from the vehicle. (Refer to 8 - ELECTRICAL/RESTRAINTS - STANDARD PROCEDURE - SERVICE AFTER A SUPPLEMENTAL RESTRAINT DEPLOYMENT).

1. Move the front seat to its most forward position for easiest access to the lower seat belt anchor (7) and the B-pillar trim.
2. Disconnect and isolate the battery negative cable. Wait two minutes for the system capacitor to discharge before further service.
3. Remove the stowage tray from the rear floor panel behind the seat. (Refer to 23 - BODY/INTERIOR/REAR FLOOR STOWAGE TRAY - REMOVAL).
4. Remove the screw (8) that secures the lower seat belt anchor to the lower inner B-pillar (14).
5. Remove the lower seat belt anchor from the lower inner B-pillar.
6. Unsnap and remove the trim cover (5) from the front outboard seat belt turning loop (3) to access the screw (4) that secures the turning loop to the height adjuster (1) on the upper inner B-pillar. Discard the removed turning loop trim cover as it is not intended for reuse.
7. Remove the screw that secures the seat belt turning loop to the height adjuster.
8. Remove the seat belt turning loop from the height adjuster.

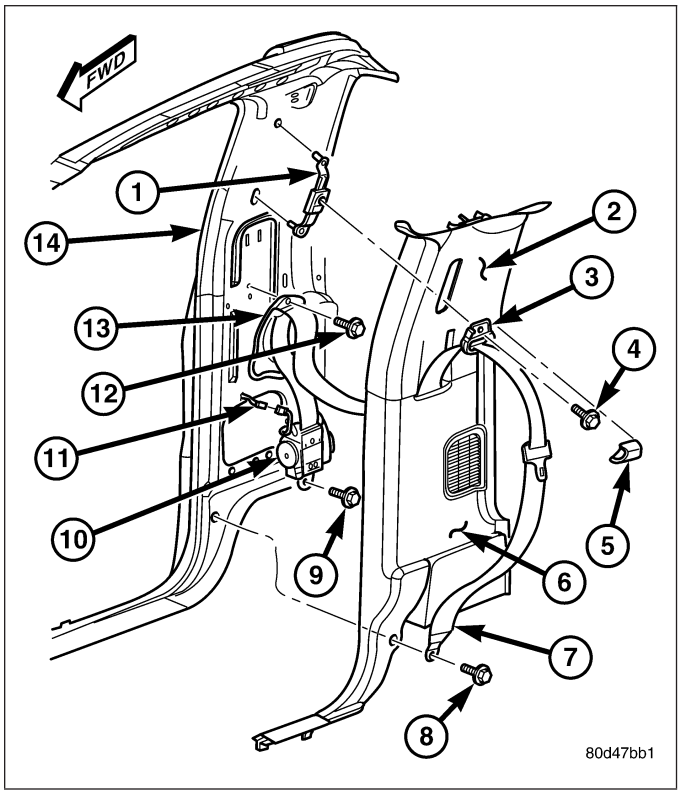

9. Remove the upper (2) and lower (6) trim from the inner B-pillar. (Refer to 23 - BODY/INTERIOR/B-PILLAR UPPER TRIM - REMOVAL) and (Refer to 23 - BODY/INTERIOR/B-PILLAR LOWER TRIM - REMOVAL).
10. Remove the screw (12) that secures the seat belt web guide (13) to the inner B-pillar near the belt line.
11. Remove the seat belt web guide from the inner B-pillar.
12. On the driver side only, disconnect the body wire harness take out and white connector from the connector receptacle for the seat belt tension reducer located near the bottom of the retractor (10).
13. Disengage the seat belt tensioner pigtail wire retainer from the hole in the inner B-pillar sheet metal.
14. Disconnect the yellow seat belt tensioner pigtail wire connector from the body wire harness take out and connector (11) for the tensioner.
15. Remove the screw (9) that secures the lower retractor bracket to the lower inner B-pillar below the retractor mounting hole.
16. Disengage the hooks on the upper retractor bracket from the slots in the lower inner B-pillar above the retractor mounting hole.
17. Remove the front outboard seat belt and retractor from the retractor mounting hole in the lower inner B-pillar.

FRONT OUTBOARD - QUAD CAB

The seat belt retractor on the passenger's side of all models includes a switchable automatic locking mechanism. (Refer to 8 - ELECTRICAL/RESTRAINTS/AUTOMATIC LOCKING RETRACTOR - DESCRIPTION).

WARNING: To avoid personal injury or death, on vehicles equipped with airbags, disable the supplemental restraint system before attempting any steering wheel, steering column, airbag, seat belt tensioner, impact sensor, or instrument panel component diagnosis or service. Disconnect and isolate the battery negative (ground) cable, then wait two minutes for the system capacitor to discharge before performing further diagnosis or service. This is the only sure way to disable the supplemental restraint system. Failure to take the proper precautions could result in accidental airbag deployment.

WARNING: To avoid personal injury or death, during and following any seat belt or child restraint anchor service, carefully inspect all seat belts, buckles, mounting hardware, retractors, tether straps, and anchors for proper installation, operation, or damage. Replace any belt that is cut, frayed, or torn. Straighten any belt that is twisted. Tighten any loose fasteners. Replace any belt that has a damaged or inoperative buckle or retractor. Replace any belt that has a bent or damaged latch plate or anchor plate. Replace any child restraint anchor or the unit to which the anchor is integral that has been bent or damaged. Never attempt to repair a seat belt or child restraint component. Always replace damaged or faulty seat belt and child restraint components with the correct, new and unused replacement parts listed in the DaimlerChrysler Mopar Parts Catalog.

NOTE: The following procedure is for replacement of a faulty or damaged front outboard seat belt and retractor unit, which includes a seat belt tensioner for this model. (Refer to 8 - ELECTRICAL/RESTRAINTS/ SEAT BELT TENSIONER - DESCRIPTION). The only component of this seat belt and retractor unit that is available for individual service replacement is the plastic web stop button that prevents the latch plate from falling to the floor while in the stored position. Refer to the instructions supplied with the service kit for the proper web stop button replacement procedures.

NOTE: If the seat belt or retractor is faulty or damaged, but the seat belt tensioner is not deployed, review the recommended procedures for handling non-deployed supplemental restraints. (Refer to 8 - ELECTRICAL/RESTRAINTS - STANDARD PROCEDURE - HANDLING NON-DEPLOYED SUPPLEMENTAL RESTRAINTS). If the seat belt tensioner has been deployed, review the recommended procedures for service after a supplemental restraint deployment before removing the front outboard seat belt and retractor from the vehicle. (Refer to 8 - ELECTRICAL/RESTRAINTS - STANDARD PROCEDURE - SERVICE AFTER A SUPPLEMENTAL RESTRAINT DEPLOYMENT).

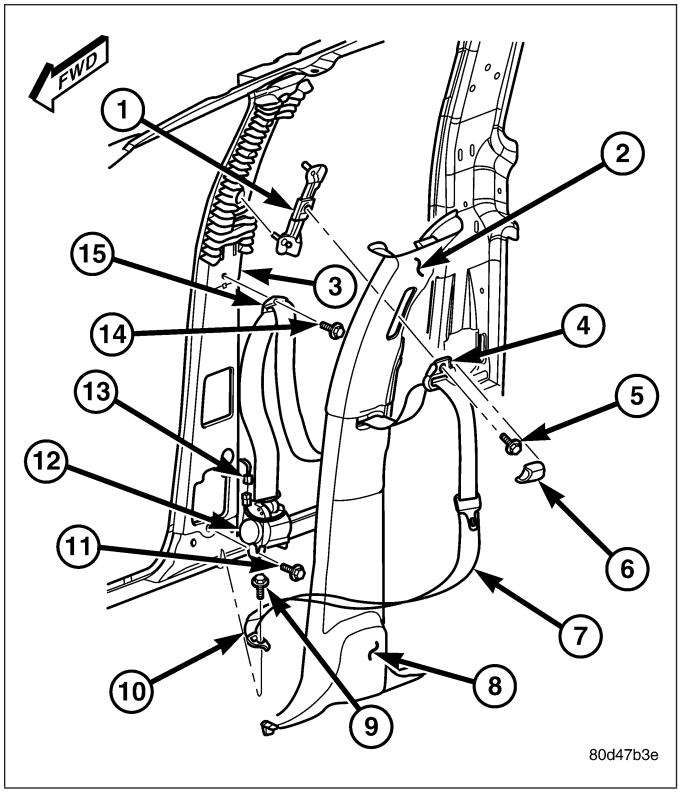

1. Move the front seat to its most forward position for easiest access to the lower seat belt anchor (10) and the B-pillar trim.
2. Disconnect and isolate the battery negative cable. Wait two minutes for the system capacitor to discharge before further service.
3. Remove the screw (9) that secures the lower seat belt anchor to the floor panel near the base of the inner B-pillar (3).
4. Remove the lower seat belt anchor from the floor panel near the base of the inner B-pillar.
5. Unsnap and remove the trim cover (6) from the front outboard seat belt turning loop (4) to access the screw (5) that secures the turning loop to the height adjuster (1) on the upper inner B-pillar. Discard the removed turning loop trim cover as it is not intended for reuse.
6. Remove the screw that secures the seat belt turning loop to the height adjuster.
7. Remove the seat belt turning loop from the height adjuster.
8. Remove the upper (2) and lower (8) trim from the inner B-pillar. (Refer to 23 - BODY/INTERIOR/B-PILLAR UPPER TRIM - REMOVAL) and (Refer to 23 - BODY/INTERIOR/B-PILLAR LOWER TRIM - REMOVAL).
9. Remove the screw (14) that secures the seat belt web guide (15) to the inner B-pillar near the belt line.
10. Remove the seat belt web guide from the inner B-pillar.
11. Disengage the seat belt tensioner pigtail wire retainer from the hole in the inner B-pillar sheet metal.
12. Disconnect the yellow seat belt tensioner pigtail wire connector from the body wire harness take out and connector (13) for the tensioner.

13. Remove the screw (11) that secures the lower retractor (12) bracket to the lower inner B-pillar below the retractor mounting hole.
14. Disengage the hooks on the upper retractor bracket from the slots in the lower inner B-pillar above the retractor mounting hole.
15. Remove the front outboard seat belt and retractor from the retractor mounting hole in the lower inner B-pillar.

REAR CENTER

WARNING: To avoid personal injury or death, during and following any seat belt or child restraint anchor service, carefully inspect all seat belts, buckles, mounting hardware, retractors, tether straps, and anchors for proper installation, operation, or damage. Replace any belt that is cut, frayed, or torn. Straighten any belt that is twisted. Tighten any loose fasteners. Replace any belt that has a damaged or inoperative buckle or retractor. Replace any belt that has a bent or damaged latch plate or anchor plate. Replace any child restraint anchor or the unit to which the anchor is integral that has been bent or damaged. Never attempt to repair a seat belt or child restraint component. Always replace damaged or faulty seat belt and child restraint components with the correct, new and unused replacement parts listed in the DaimlerChrysler Mopar Parts Catalog.

NOTE: The rear center seat belt retractor is secured with a single screw to a mounting bracket that includes the unique black, keyed center seat belt lower anchor buckle and the right outboard occupant buckle, but can be removed from the mounting bracket and is serviced separately from the two buckles. The center anchor buckle and the right outboard occupant buckle are serviced as a unit with their mounting bracket. (Refer to 8 - ELECTRICAL/RESTRAINTS/REAR SEAT BELT BUCKLE - REMOVAL - CENTER ANCHOR & RIGHT OUTBOARD).

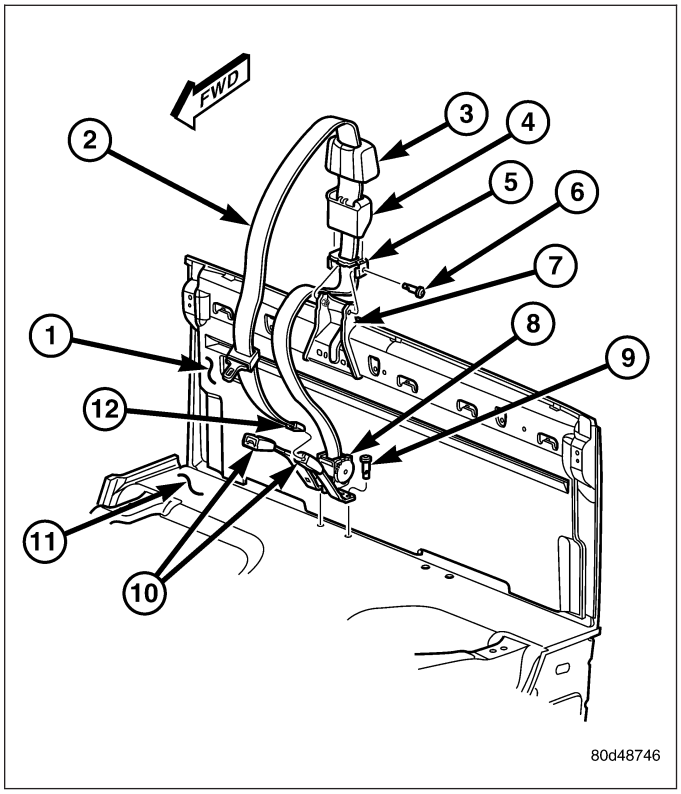

1. Reach between the rear seat cushion and the rear seat back to access and unbuckle the center seat belt lower anchor latch plate (12) from the unique black, keyed center lower anchor buckle (10). Use an ignition key or a small screwdriver to depress the small white release button on the anchor buckle.
2. Remove the rear seat from the vehicle. On models with the optional 60/40 split rear bench, only the 60 percent section (right side) of the rear seat must be removed. (Refer to 23 - BODY/SEATS/SEAT - REAR - REMOVAL).
3. Lift upward on the forward edge of the rear center seat belt bezel (3) at the top of the cab back panel (1) to release the snap features that secure the bezel to the belt bracket (5).
4. Remove the bezel from the webbing of the rear center seat belt (2).
5. Lift the rear center seat belt cover (4) off of the belt bracket at the top of the cab back panel and remove the cover from the webbing of the rear center seat belt.
6. Remove the two screws (6) that secure the belt bracket of the rear center seat belt to the body bracket (7) on the upper cab back panel reinforcement.
7. Remove the belt bracket of the rear center seat belt from the body bracket.

8. Remove the screw (6) that secures the rear center seat belt retractor (3) to the center anchor (5) and right outboard occupant (1) buckles and mounting bracket (4) unit on the rear floor panel near the cab back panel.
9. Remove the rear center seat belt retractor from the center anchor and right outboard occupant buckles and mounting bracket unit.
10. Remove the rear center seat belt and retractor unit from the vehicle.

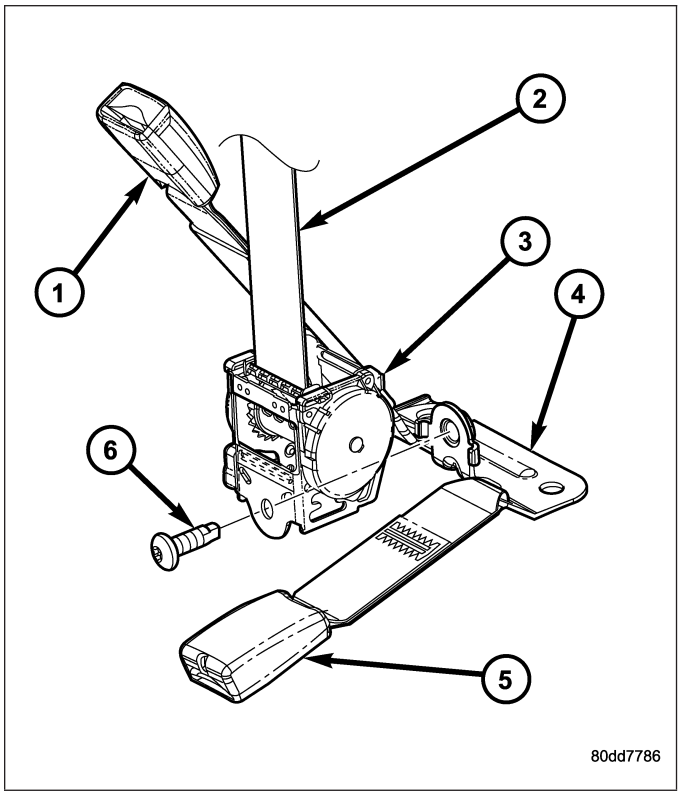

REAR OUTBOARD

WARNING: To avoid personal injury or death, during and following any seat belt or child restraint anchor service, carefully inspect all seat belts, buckles, mounting hardware, retractors, tether straps, and anchors for proper installation, operation, or damage. Replace any belt that is cut, frayed, or torn. Straighten any belt that is twisted. Tighten any loose fasteners. Replace any belt that has a damaged or inoperative buckle or retractor. Replace any belt that has a bent or damaged latch plate or anchor plate. Replace any child restraint anchor or the unit to which the anchor is integral that has been bent or damaged. Never attempt to repair a seat belt or child restraint component. Always replace damaged or faulty seat belt and child restraint components with the correct, new and unused replacement parts listed in the DaimlerChrysler Mopar Parts Catalog.

NOTE: The only component of this seat belt and retractor unit that is available for individual service replacement is the plastic web stop button that prevents the latch plate from falling to the floor while in the stored position. Refer to the instructions supplied with the service kit for the proper web stop button replacement procedures.

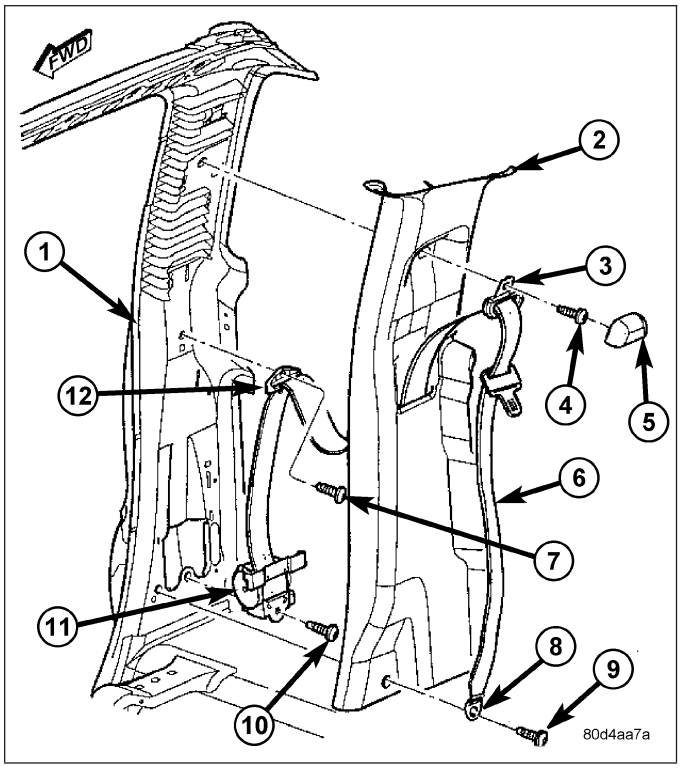

1. Remove the rear seat from the vehicle. (Refer to 23 - BODY/SEATS/SEAT - REAR - REMOVAL).
2. Remove the screw (9) that secures the lower seat belt anchor (8) to the base of the inner C-pillar (1).
3. Remove the lower seat belt anchor from the base of the inner C-pillar.
4. Unsnap and remove the trim cover (5) from the rear outboard seat belt turning loop (3) to access the screw (4) that secures the turning loop to the upper inner C-pillar. Discard the removed turning loop trim cover as it is not intended for reuse.
5. Remove the screw that secures the seat belt turning loop to the C-pillar.
6. Remove the seat belt turning loop from the upper inner C-pillar.
7. Remove the upper and lower trim (2) from the inner C-pillar. (Refer to 23 - BODY/INTERIOR/C-PILLAR UPPER TRIM - REMOVAL) and (Refer to 23 - BODY/INTERIOR/C-PILLAR LOWER TRIM - REMOVAL).
8. Remove the screw (7) that secures the seat belt web guide (12) to the inner C-pillar near the belt line.
9. Remove the seat belt web guide from the inner C-pillar.
10. Remove the screw (10) that secures the lower retractor bracket (11) to the lower inner C-pillar below the retractor mounting hole.
11. Disengage the hook on the upper retractor bracket from the slot in the lower inner C-pillar above the retractor mounting hole.
12. Remove the rear outboard seat belt and retractor from the retractor mounting hole in the lower inner C-pillar.

INSTALLATION

FRONT CENTER

WARNING: To avoid personal injury or death, during and following any seat belt or child restraint anchor service, carefully inspect all seat belts, buckles, mounting hardware, retractors, tether straps, and anchors for proper installation, operation, or damage. Replace any belt that is cut, frayed, or torn. Straighten any belt that is twisted. Tighten any loose fasteners. Replace any belt that has a damaged or inoperative buckle or retractor. Replace any belt that has a bent or damaged latch plate or anchor plate. Replace any child restraint anchor or the unit to which the anchor is integral that has been bent or damaged. Never attempt to repair a seat belt or child restraint component. Always replace damaged or faulty seat belt and child restraint components with the correct, new and unused replacement parts listed in the DaimlerChrysler Mopar Parts Catalog.

NOTE: A front center seat belt and retractor is used only on standard cab models. Quad cab models have a lap belt in the front center seating position. (Refer to 8 - ELECTRICAL/RESTRAINTS/FRONT CENTER SEAT BELT - INSTALLATION).

1. Position the front center seat belt and retractor unit (5) to the floor panel (6) at the base of the cab back panel (8) to the right of center.
2. Install and tighten the two screws (4) that secure the front center seat belt retractor bracket to the floor panel near the base of the cab back panel. Tighten the screws to 40 N·m (29 ft. lbs.).
3. Position the belt bracket (2) of the front center seat belt (7) to the body bracket (1) on the upper cab back panel reinforcement.
4. Install and tighten the two screws (3) that secure the belt bracket of the front center seat belt to the body bracket on the upper cab back panel reinforcement. Tighten the screws to 20 N·m (15 ft. lbs.).

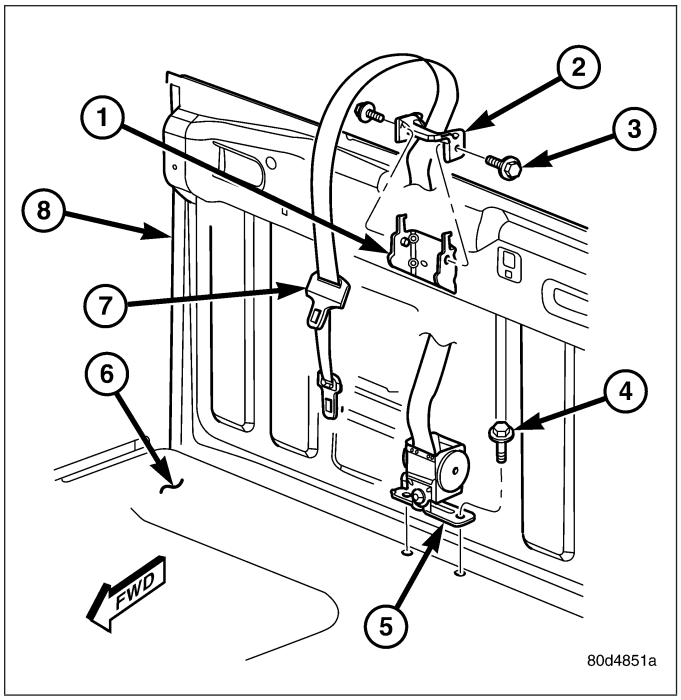

5. Reinstall the trim (1) onto the cab back panel. (Refer to 23 - BODY/INTERIOR/REAR CAB BACK PANEL TRIM - INSTALLATION).
6. Route the webbing of the front center seat belt (4) through the bezel (5) and position the bezel to the belt opening near the top of the cab back trim panel.
7. Using hand pressure, press firmly and evenly on each side of the front center seat belt bezel until it snaps into place on the cab back trim panel.
8. Reinstall the stowage tray onto the rear floor panel behind the seat. (Refer to 23 - BODY/INTERIOR/REAR FLOOR STOWAGE TRAY - INSTALLATION).
9. Move the front seat back to its rearward position.
10. Reach between the center of the front seat cushion and front seat back to access and buckle the front center seat belt lower anchor latch plate to the unique black, keyed lower anchor buckle.

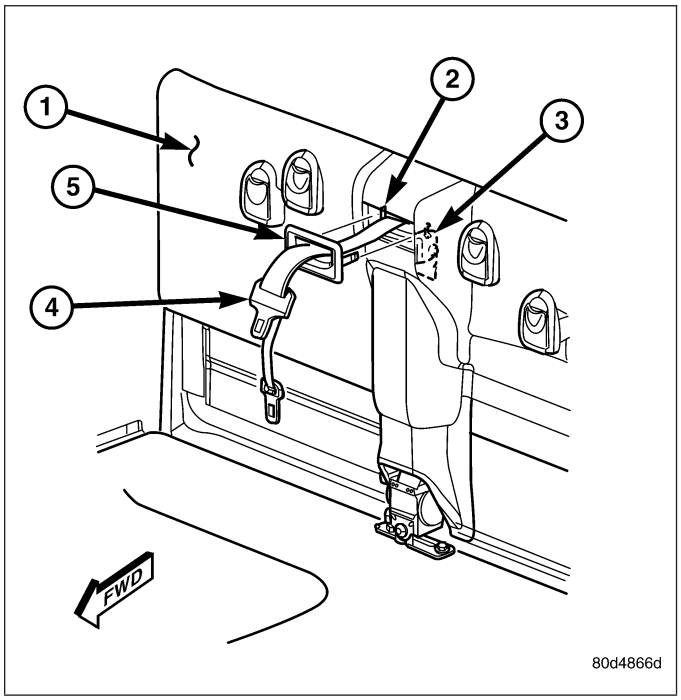

FRONT OUTBOARD - STANDARD CAB

The seat belt retractor on the driver's side of standard cab models only also includes a tension reducer. (Refer to 8 - ELECTRICAL/RESTRAINTS/SEAT BELT TENSION REDUCER - DESCRIPTION). The seat belt retractor on the passenger's side of all models includes a switchable automatic locking mechanism. (Refer to 8 - ELECTRICAL/RESTRAINTS/AUTOMATIC LOCKING RETRACTOR - DESCRIPTION).

WARNING: To avoid personal injury or death, on vehicles equipped with airbags, disable the supplemental restraint system before attempting any steering wheel, steering column, airbag, seat belt tensioner, impact sensor, or instrument panel component diagnosis or service. Disconnect and isolate the battery negative (ground) cable, then wait two minutes for the system capacitor to discharge before performing further diagnosis or service. This is the only sure way to disable the supplemental restraint system. Failure to take the proper precautions could result in accidental airbag deployment.

WARNING: To avoid personal injury or death, during and following any seat belt or child restraint anchor service, carefully inspect all seat belts, buckles, mounting hardware, retractors, tether straps, and anchors for proper installation, operation, or damage. Replace any belt that is cut, frayed, or torn. Straighten any belt that is twisted. Tighten any loose fasteners. Replace any belt that has a damaged or inoperative buckle or retractor. Replace any belt that has a bent or damaged latch plate or anchor plate. Replace any child restraint anchor or the unit to which the anchor is integral that has been bent or damaged. Never attempt to repair a seat belt or child restraint component. Always replace damaged or faulty seat belt and child restraint components with the correct, new and unused replacement parts listed in the DaimlerChrysler Mopar Parts Catalog.

NOTE: The following procedure is for replacement of a faulty or damaged front outboard seat belt and retractor unit, which includes a seat belt tensioner for this model. (Refer to 8 - ELECTRICAL/RESTRAINTS/ SEAT BELT TENSIONER - DESCRIPTION). The only component of this seat belt and retractor unit that is available for individual service replacement is the plastic web stop button that prevents the latch plate from falling to the floor while in the stored position. Refer to the instructions supplied with the service kit for the proper web stop button replacement procedures.

NOTE: If the seat belt or retractor is faulty or damaged, but the seat belt tensioner is not deployed, review the recommended procedures for handling non-deployed supplemental restraints. (Refer to 8 - ELECTRICAL/RESTRAINTS - STANDARD PROCEDURE - HANDLING NON-DEPLOYED SUPPLEMENTAL RESTRAINTS). If the seat belt tensioner has been deployed, review the recommended procedures for service after a supplemental restraint deployment before removing the front outboard seat belt and retractor from the vehicle. (Refer to 8 - ELECTRICAL/RESTRAINTS - STANDARD PROCEDURE - SERVICE AFTER A SUPPLEMENTAL RESTRAINT DEPLOYMENT).

1. Position the front outboard seat belt and retractor (10) to the retractor mounting hole in the lower inner B-pillar (14).
2. Engage the hooks on the upper retractor bracket into the slots in the lower inner B-pillar above the retractor mounting hole.
3. Install and tighten the screw (9) that secures the lower retractor bracket to the lower inner B-pillar below the retractor mounting hole. Tighten the screw to 40 N·m (29 ft. lbs.).
4. Reconnect the yellow seat belt tensioner pigtail wire connector to the body wire harness take out and connector (11) for the tensioner.
5. Engage the seat belt tensioner pigtail wire retainer into the hole in the inner B-pillar sheet metal.
6. On the driver side only, reconnect the body wire harness take out and white connector to the seat belt tension reducer connector receptacle near the bottom of the retractor.
7. Position the seat belt web guide (13) to its mounting location on the inner B-pillar near the belt line.

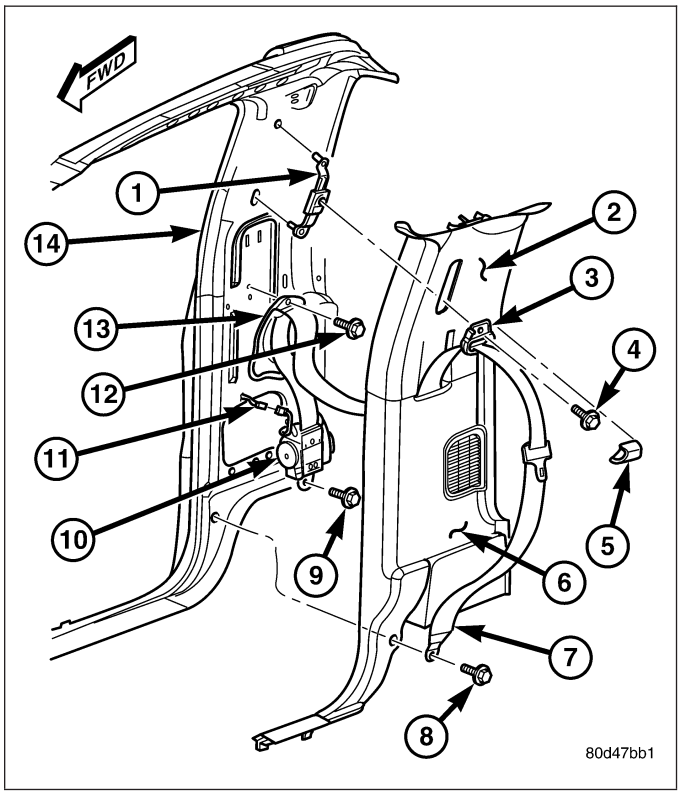

8. Install and tighten the screw (12) that secures the seat belt web guide to the inner B-pillar. Tighten the screw to 2 N·m (20 in. lbs.).
9. Reinstall the upper (2) and lower (6) trim onto the inner B-pillar. (Refer to 23 - BODY/INTERIOR/B-PILLAR UPPER TRIM - INSTALLATION) and (Refer to 23 - BODY/INTERIOR/B-PILLAR LOWER TRIM - INSTALLATION).
10. Position the seat belt turning loop (3) onto the height adjuster (1) on the upper inner B-pillar.
11. Install and tighten the screw (4) that secures the seat belt turning loop to the height adjuster. Tighten the screw to 40 N·m (29 ft. lbs.).
12. Engage the lower snap features of the new trim cover (5) over the front outboard seat belt turning loop and, using hand pressure, press firmly and evenly on the top of the trim cover until it snaps into place.
13. Position the lower seat belt anchor (7) to the lower inner B-pillar.
14. Install and tighten the screw (8) that secures the lower seat belt anchor to the B-pillar. Tighten the screw to 40 N·m (29 ft. lbs.).
15. Reinstall the stowage tray onto the rear floor panel behind the seat. (Refer to 23 - BODY/INTERIOR/REAR FLOOR STOWAGE TRAY - INSTALLATION).
16. Do not reconnect the battery negative cable at this time. The supplemental restraint system verification test procedure should be performed following service of any supplemental restraint system component. (Refer to 8 - ELECTRICAL/RESTRAINTS - STANDARD PROCEDURE - VERIFICATION TEST).
17. Move the front seat back to its rearward position.

FRONT OUTBOARD - QUAD CAB

The seat belt retractor on the passenger's side of all models includes a switchable automatic locking mechanism. (Refer to 8 - ELECTRICAL/RESTRAINTS/AUTOMATIC LOCKING RETRACTOR - DESCRIPTION).

WARNING: To avoid personal injury or death, on vehicles equipped with airbags, disable the supplemental restraint system before attempting any steering wheel, steering column, airbag, seat belt tensioner, impact sensor, or instrument panel component diagnosis or service. Disconnect and isolate the battery negative (ground) cable, then wait two minutes for the system capacitor to discharge before performing further diagnosis or service. This is the only sure way to disable the supplemental restraint system. Failure to take the proper precautions could result in accidental airbag deployment.

WARNING: To avoid personal injury or death, during and following any seat belt or child restraint anchor service, carefully inspect all seat belts, buckles, mounting hardware, retractors, tether straps, and anchors for proper installation, operation, or damage. Replace any belt that is cut, frayed, or torn. Straighten any belt that is twisted. Tighten any loose fasteners. Replace any belt that has a damaged or inoperative buckle or retractor. Replace any belt that has a bent or damaged latch plate or anchor plate. Replace any child restraint anchor or the unit to which the anchor is integral that has been bent or damaged. Never attempt to repair a seat belt or child restraint component. Always replace damaged or faulty seat belt and child restraint components with the correct, new and unused replacement parts listed in the DaimlerChrysler Mopar Parts Catalog.

NOTE: The following procedure is for replacement of a faulty or damaged front outboard seat belt and retractor unit, which includes a seat belt tensioner for this model. (Refer to 8 - ELECTRICAL/RESTRAINTS/SEAT BELT TENSIONER - DESCRIPTION). The only component of this seat belt and retractor unit that is available for individual service replacement is the plastic web stop button that prevents the latch plate from falling to the floor while in the stored position. Refer to the instructions supplied with the service kit for the proper web stop button replacement procedures.

NOTE: If the seat belt or retractor is faulty or damaged, but the seat belt tensioner is not deployed, review the recommended procedures for handling non-deployed supplemental restraints. (Refer to 8 - ELECTRICAL/RESTRAINTS - STANDARD PROCEDURE - HANDLING NON-DEPLOYED SUPPLEMENTAL RESTRAINTS). If the seat belt tensioner has been deployed, review the recommended procedures for service after a supplemental restraint deployment before removing the front outboard seat belt and retractor from the vehicle. (Refer to 8 - ELECTRICAL/RESTRAINTS - STANDARD PROCEDURE - SERVICE AFTER A SUPPLEMENTAL RESTRAINT DEPLOYMENT).

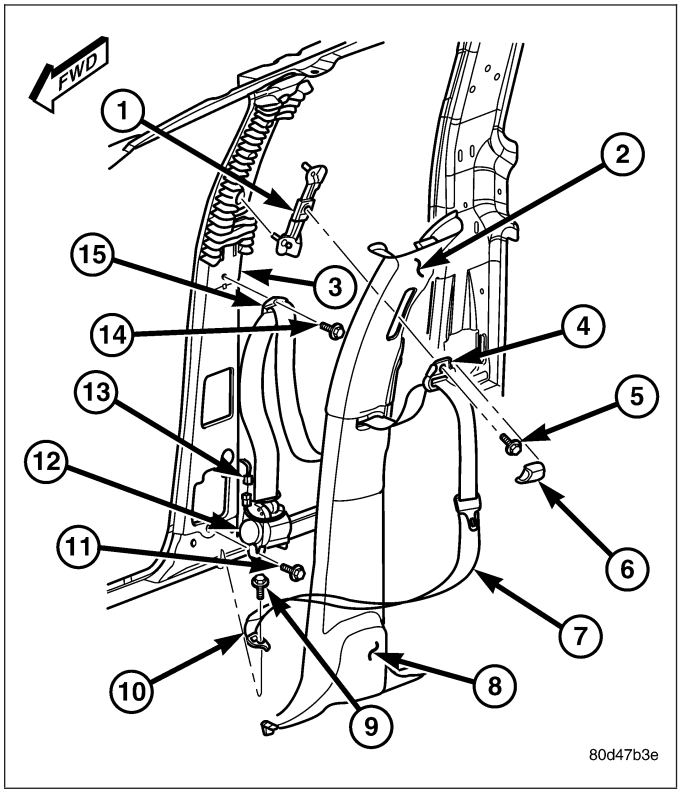

1. Position the front outboard seat belt and retractor (12) to the retractor mounting hole in the lower inner B-pillar (3).
2. Engage the hooks on the upper retractor bracket into the slots in the lower inner B-pillar above the retractor mounting hole.
3. Install and tighten the screw (11) that secures the lower retractor bracket to the lower inner B-pillar below the retractor mounting hole. Tighten the screw to 40 N·m (29 ft. lbs.).
4. Reconnect the yellow seat belt tensioner pigtail wire connector to the body wire harness take out and connector (13) for the tensioner.
5. Engage the seat belt tensioner pigtail wire retainer into the hole in the inner B-pillar sheet metal.
6. Position the seat belt web guide (15) to its mounting location on the inner B-pillar near the belt line.
7. Install and tighten the screw (14) that secures the seat belt web guide to the inner B-pillar. Tighten the screw to 2 N·m (20 in. lbs.).
8. Reinstall the upper (2) and lower (8) trim onto the inner B-pillar. (Refer to 23 - BODY/INTERIOR/B-PILLAR UPPER TRIM - INSTALLATION) and (Refer to 23 - BODY/INTERIOR/B-PILLAR LOWER TRIM - INSTALLATION).
9. Position the seat belt turning loop (4) onto the height adjuster (1) on the upper inner B-pillar.
10. Install and tighten the screw (5) that secures the seat belt turning loop to the height adjuster. Tighten the screw to 40 N·m (29 ft. lbs.).
11. Engage the lower snap features of the new trim cover (6) over the front outboard seat belt turning loop and, using hand pressure, press firmly and evenly on the top of the trim cover until it snaps into place.
12. Position the lower seat belt anchor (10) to the floor panel near the base of the inner B-pillar.
13. Install and tighten the screw (9) that secures the lower seat belt anchor to the floor panel near the base of the inner B-pillar. Tighten the screw to 40 N·m (29 ft. lbs.).
14. Do not reconnect the battery negative cable at this time. The supplemental restraint system verification test procedure should be performed following service of any supplemental restraint system component. (Refer to 8 - ELECTRICAL/RESTRAINTS - STANDARD PROCEDURE - VERIFICATION TEST).
15. Move the front seat back to its rearward position.

REAR CENTER

WARNING: To avoid personal injury or death, during and following any seat belt or child restraint anchor service, carefully inspect all seat belts, buckles, mounting hardware, retractors, tether straps, and anchors for proper installation, operation, or damage. Replace any belt that is cut, frayed, or torn. Straighten any belt that is twisted. Tighten any loose fasteners. Replace any belt that has a damaged or inoperative buckle or retractor. Replace any belt that has a bent or damaged latch plate or anchor plate. Replace any child restraint anchor or the unit to which the anchor is integral that has been bent or damaged. Never attempt to repair a seat belt or child restraint component. Always replace damaged or faulty seat belt and child restraint components with the correct, new and unused replacement parts listed in the DaimlerChrysler Mopar Parts Catalog.

NOTE: The rear center seat belt retractor is secured with a single screw to a mounting bracket that includes the unique black, keyed center seat belt lower anchor buckle and the right outboard occupant buckle, but can be removed from the mounting bracket and is serviced separately from the two buckles. The center anchor buckle and the right outboard occupant buckle are serviced as a unit with their mounting bracket. (Refer to 8 - ELECTRICAL/RESTRAINTS/REAR SEAT BELT BUCKLE - INSTALLATION - CENTER ANCHOR & RIGHT OUTBOARD).

1. Position the rear center seat belt and retractor unit (3) onto the center anchor (5) and right outboard occupant (1) buckles and mounting bracket (4) unit on the rear floor panel near the base of the cab back panel.
2. Install and tighten the screw (6) that secures the rear center seat belt retractor bracket to the center anchor and right outboard occupant buckles and mounting bracket unit. Tighten the screw to 40 N·m (29 ft. lbs.).

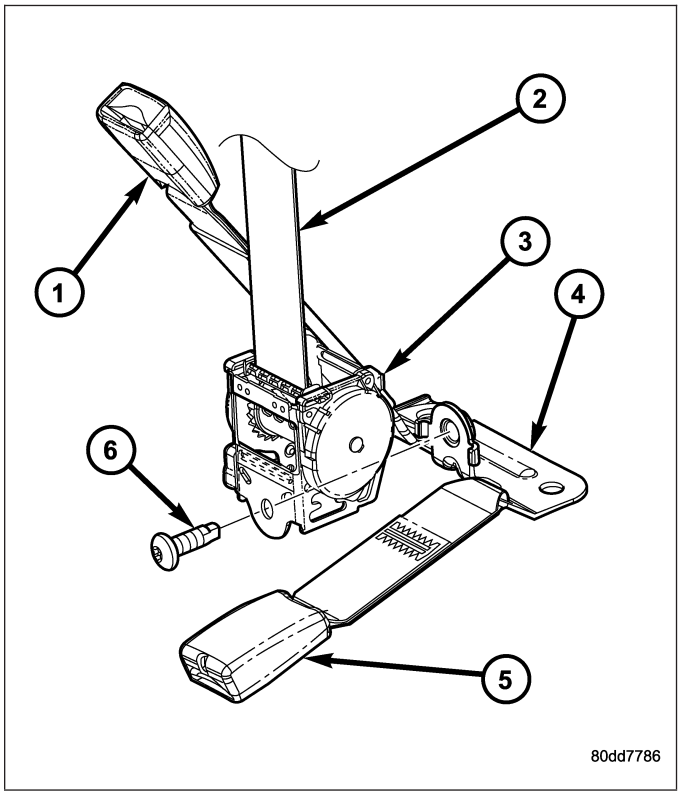

3. Position the belt bracket (5) of the rear center seat belt (2) onto the body bracket (7) on the upper cab back panel (1) reinforcement.
4. Install and tighten the two screws (6) that secure the belt bracket of the rear center seat belt to the body bracket. Tighten the screws to 20 N·m (15 ft. lbs.).
5. Lift the webbing of the rear center seat belt and slide the cover (4) over the belt bracket at the top of the cab back panel until it is fully seated.
6. Route the rear center seat belt bezel (3) over the webbing of the rear center seat belt.
7. Position the rear center seat belt bezel over the cover and belt bracket at the top of the cab back panel and engage the rearward snap features of the bezel with the belt bracket. Using hand pressure, press firmly and evenly downward on the front of the bezel until it snaps into place over the cover and belt bracket.
8. Reinstall the rear seat into the vehicle. On models with the optional 60/40 split rear bench, only the 60 percent section (right side) of the rear seat must be reinstalled. (Refer to 23 - BODY/SEATS/SEAT - REAR - INSTALLATION).

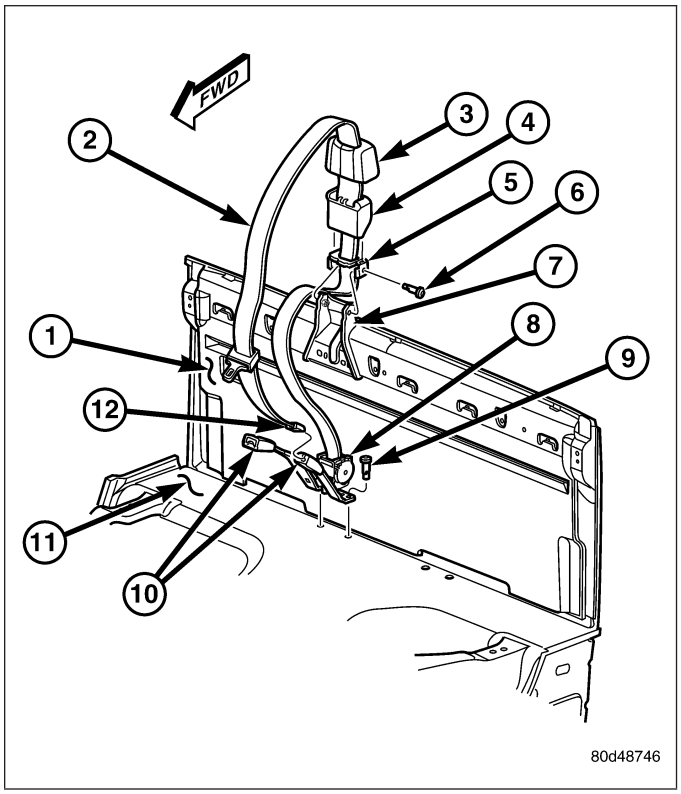

9. Reach between the rear seat cushion and the rear seat back to buckle the rear center seat belt lower anchor latch plate (12) to the unique black, keyed center lower anchor buckle.

REAR OUTBOARD

WARNING: To avoid personal injury or death, during and following any seat belt or child restraint anchor service, carefully inspect all seat belts, buckles, mounting hardware, retractors, tether straps, and anchors for proper installation, operation, or damage. Replace any belt that is cut, frayed, or torn. Straighten any belt that is twisted. Tighten any loose fasteners. Replace any belt that has a damaged or inoperative buckle or retractor. Replace any belt that has a bent or damaged latch plate or anchor plate. Replace any child restraint anchor or the unit to which the anchor is integral that has been bent or damaged. Never attempt to repair a seat belt or child restraint component. Always replace damaged or faulty seat belt and child restraint components with the correct, new and unused replacement parts listed in the DaimlerChrysler Mopar Parts Catalog.

NOTE: The only component of this seat belt and retractor unit that is available for individual service replacement is the plastic web stop button that prevents the latch plate from falling to the floor while in the stored position. Refer to the instructions supplied with the service kit for the proper web stop button replacement procedures.

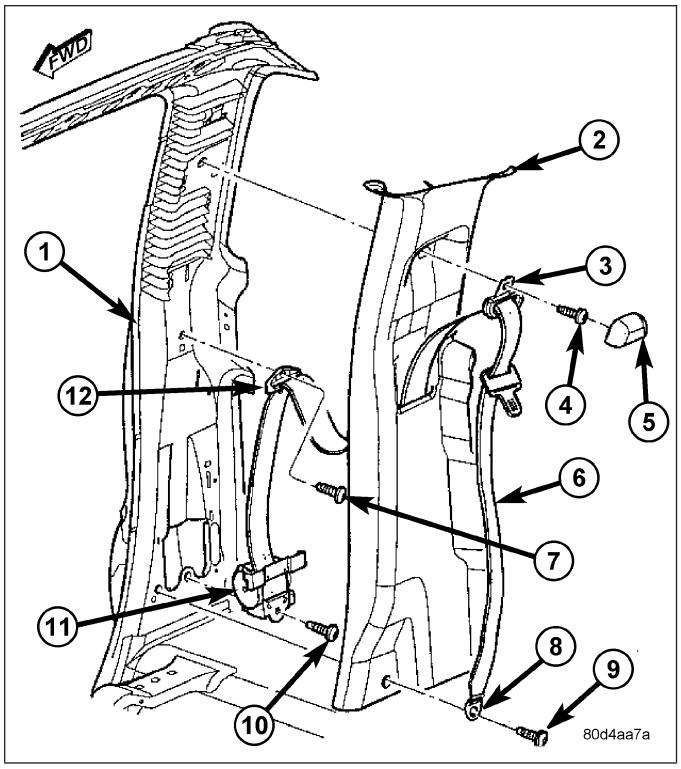

1. Position the rear outboard seat belt and retractor (11) to the retractor mounting hole in the lower inner C-pillar (1).
2. Engage the hook on the upper retractor bracket into the slot in the lower inner C-pillar above the retractor mounting hole.
3. Install and tighten the screw (10) that secures the lower retractor bracket to the lower inner C-pillar below the retractor mounting hole. Tighten the screw to 40 N·m (29 ft. lbs.).
4. Position the seat belt web guide (12) to the inner C-pillar near the belt line.
5. Install and tighten the screw (7) that secures the seat belt web guide to the inner C-pillar. Tighten the screw to 2 N·m (20 in. lbs.).
6. Reinstall the upper and lower trim (2) onto the inner C-pillar. (Refer to 23 - BODY/INTERIOR/C-PILLAR UPPER TRIM - INSTALLATION) and (Refer to 23 - BODY/INTERIOR/C-PILLAR LOWER TRIM - INSTALLATION).
7. Position the seat belt turning loop (3) onto the upper inner C-pillar.
8. Install and tighten the screw (4) that secures the seat belt turning loop to the C-pillar. Tighten the screw to 40 N·m (29 ft. lbs.).
9. Engage the lower snap features of the new trim cover (5) over the rear outboard seat belt turning loop and, using hand pressure, press firmly and evenly on the top of the trim cover until it snaps into place.
10. Position the lower seat belt anchor (8) to the base of the inner C-pillar.
11. Install and tighten the screw (9) that secures the lower seat belt anchor to the base of the inner C-pillar. Tighten the screw to 40 N·m (29 ft. lbs.).
12. Reinstall the rear seat into the vehicle. (Refer to 23 - BODY/SEATS/SEAT - REAR - INSTALLATION).

SWITCH-SEAT BELT DRIVER

DESCRIPTION

The seat belt switch is a small, normally open, single pole, single throw, leaf contact, momentary switch. Only one seat belt switch is installed in the vehicle, and it is integral to the buckle of the driver side front seat belt buckle-half, located on the inboard side of the driver side front seat track (4). The seat belt switch is connected to the vehicle electrical system through a two-wire pigtail wire (3) and connector on the seat belt buckle-half (1), which is connected to a wire harness connector and take out of the seat wire harness routed beneath the driver side front seat cushion (2) in the passenger compartment.

The seat belt switch cannot be adjusted or repaired and, if faulty or damaged, the entire driver side front seat belt buckle-half unit must be replaced.

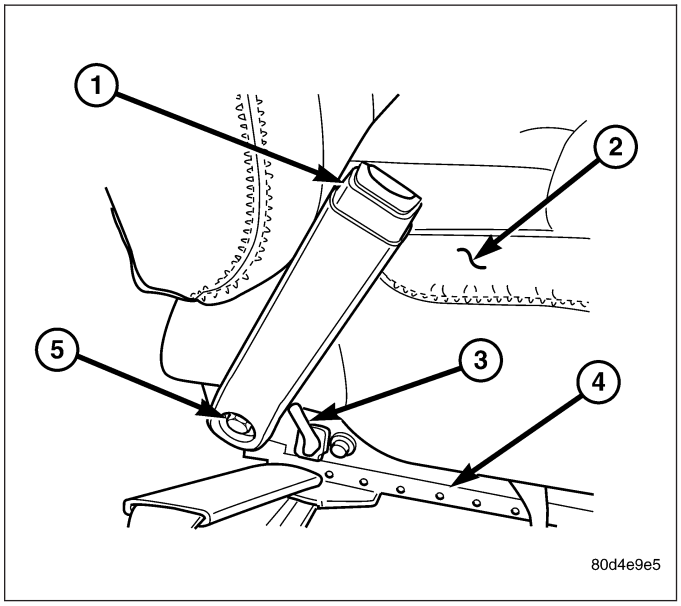

OPERATION

The seat belt switch is designed to control a path to ground for the seat belt switch sense input of the ElectroMechanical Instrument Cluster (EMIC). When the driver side front seat belt tip-half is inserted into the seat belt buckle, the switch closes the path to ground; and, when the driver side front seat belt tip-half is removed from the seat belt buckle, the switch opens the ground path. The switch is actuated by the latch mechanism within the seat belt buckle.

The seat belt switch is connected in series between ground and the seat belt switch sense input of the instrument cluster. The seat belt switch receives ground at all times through its pigtail wire connection to the seat wire harness from a take out of the body wire harness. An eyelet terminal connector on the body wire harness ground take out is secured beneath a ground screw on the left cowl side inner panel, beneath the instrument panel. The seat belt switch may de diagnosed using conventional diagnostic tools and methods.

DIAGNOSIS AND TESTING

SEAT BELT SWITCH

Refer to the appropriate wiring information. The wiring information includes wiring diagrams, proper wire and connector repair procedures, details of wire harness routing and retention, connector pin-out information and location views for the various wire harness connectors, splices and grounds.

WARNING: To avoid personal injury or death, on vehicles equipped with airbags, disable the supplemental restraint system before attempting any steering wheel, steering column, airbag, seat belt tensioner, impact sensor, or instrument panel component diagnosis or service. Disconnect and isolate the battery negative (ground) cable, then wait two minutes for the system capacitor to discharge before performing further diagnosis or service. This is the only sure way to disable the supplemental restraint system. Failure to take the proper precautions could result in accidental airbag deployment.

1. Disconnect and isolate the battery negative cable. Disconnect the seat belt switch pigtail wire connector from the seat wire harness connector for the seat belt switch on the inboard side of the driver side front seat forward of the seat belt buckle-half anchor. Check for continuity between the seat belt switch sense circuit and the ground circuit cavities of the seat belt switch pigtail wire connector. There should be continuity with the seat belt buckled, and no continuity with the seat belt unbuckled. If OK, go to Step 2. If not OK, replace the faulty front seat belt buckle-half assembly.
2. Check for continuity between the ground circuit cavity in the seat wire harness connector for the seat belt switch and a good ground. There should be continuity. If OK, go to Step 3. If not OK, repair the open ground circuit to ground (G301) as required.
3. Remove the instrument cluster from the instrument panel. Check for continuity between the seat belt switch sense circuit cavity of the seat wire harness connector for the seat belt switch and a good ground. There should be no continuity. If OK, go to Step 4. If not OK, repair the shorted seat belt switch sense circuit between the seat belt switch and the instrument cluster as required.
4. Check for continuity between the seat belt switch sense circuit cavities of the seat wire harness connector for the seat belt switch and the instrument panel wire harness connector (Connector C2) for the instrument cluster. There should be continuity. If OK, test and replace the faulty instrument cluster as required. (Refer to 8 - ELECTRICAL/INSTRUMENT CLUSTER - DIAGNOSIS AND TESTING). If not OK, repair the open seat belt switch sense circuit between the seat belt switch and the instrument cluster as required.

SEAT BELT-TENSIONER

DESCRIPTION

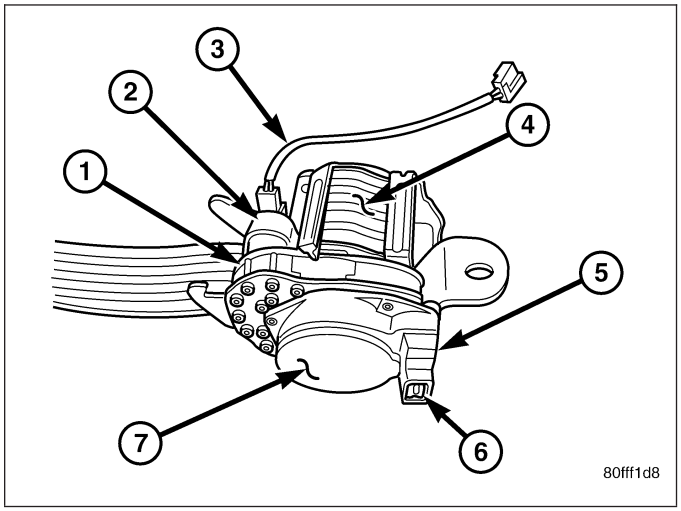

Front outboard seating position seat belt tensioners supplement the driver and passenger airbags for all versions of this model. The seat belt tensioner is integral to the front outboard seat belt and retractor units, which are secured to the inner B-pillar on the right and left sides of the vehicle. The retractor is concealed beneath the molded plastic inner B-pillar trim.

The seat belt tensioner consists primarily of a die cast aluminum tensioner housing or chamber (1), a mechanical clutch unit, a tape-like metal strip, a pair of cutters, a pyrotechnically activated gas generator (2), and a short pigtail wire (3). All of these components are located on one side of the retractor spool on the outside of the retractor housing. The seat belt tensioners are controlled by the Airbag Control Module (ACM) and are connected to the vehicle electrical system through a dedicated take out of the body wire harness by a keyed and latching molded plastic connector insulator to ensure a secure connection.

The seat belt tensioners cannot be repaired and, if faulty or damaged, the entire outboard front seat belt and retractor unit must be replaced. If the front airbags have been deployed, the seat belt tensioners have also been deployed. The seat belt tensioners are not intended for reuse and must be replaced following any front airbag deployment. A locked retractor that will not allow the seat belt webbing to be retracted or extracted is a sure indication that the seat belt tensioner has been deployed and requires replacement. (Refer to 8 - ELECTRICAL/RESTRAINTS/FRONT OUTBOARD SEAT BELT & RETRACTOR - REMOVAL).

OPERATION

The seat belt tensioners are deployed in conjunction with the dual front airbags by a signal generated by the Airbag Control Module (ACM) through the driver or passenger seat belt tensioner line 1 and line 2 (or squib) circuits. When the ACM sends the proper electrical signal to the tensioners, the electrical energy generates enough heat to initiate a small pyrotechnic gas generator.

The gas generator is installed at the top of the tensioner housing which contains a long metal tape that is routed through two chambers within the housing. Each end of the tape is wound around the outer sleeve of a mechanical clutch mechanism secured to one end of the torsion bar upon which the retractor spool is secured. As the gas expands, it is directed against the metal tape within the two chambers of the housing causing the tape to unwind from the clutch sleeve. As the clutch rotates it engages the torsion bar, which drives the seat belt retractor spool causing the slack to be removed from the seat belt.

Once a seat belt tensioning sequence has been completed, the forward momentum of the occupant results in deformation of the torsion bar. As the torsion bar deforms it allows the seat belt webbing to unwind from the retractor spool, which causes the metal tape to be wound back onto the clutch sleeve until it is pulled tight against two cutter blades within the housing, which immediately cut the metal tape.

Removing excess slack from the seat belt not only keeps the occupant properly positioned for an airbag deployment following a frontal impact of the vehicle, but also helps to reduce injuries that the occupant might experience in these situations as a result of a harmful contact with the steering wheel, steering column, instrument panel and/or windshield. Also, the torsion bar is designed to deform in order to control the loading being applied to the occupant by the seat belt during a frontal impact, further reducing the potential for occupant injuries.

The ACM monitors the condition of the seat belt tensioners through circuit resistance, and will illuminate the airbag indicator in the ElectroMechanical Instrument Cluster (EMIC) and store a Diagnostic Trouble Code (DTC) for any fault that is detected. For proper diagnosis of the seat belt tensioners, a diagnostic scan tool is required. Refer to the appropriate diagnostic information.

SEAT BELT TENSION REDUCER

DESCRIPTION

A seat belt tension reducer (5) is standard equipment for the driver side front outboard seat belt on standard cab versions of this model. The tension reducer is integral to the driver side front outboard seat belt and retractor unit, which is secured to the inner B-pillar on the left side of the vehicle. The retractor is concealed beneath the molded plastic inner B-pillar trim.

The seat belt tension reducer consists primarily of a 12-volt Direct Current (DC) solenoid and an integral connector receptacle (6) that is located on the forward facing end housing of the retractor. The seat belt tension reducer is controlled by a battery current output of the ignition switch and a ground path provided by the seat belt switch, and is connected to the vehicle electrical system through a dedicated take out of the body wire harness by a keyed and latching molded plastic connector insulator to ensure a secure connection.

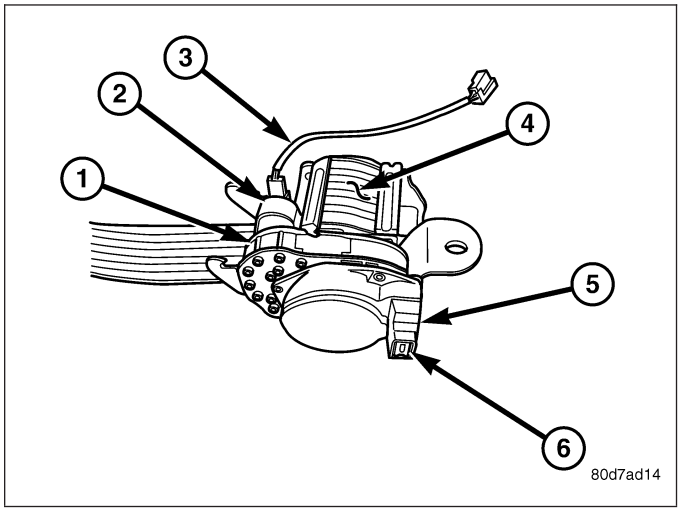

The seat belt tension reducer cannot be repaired and, if faulty or damaged, the entire driver side front outboard seat belt and retractor unit must be replaced. (Refer to 8 - ELECTRICAL/RESTRAINTS/FRONT OUTBOARD SEAT BELT & RETRACTOR - REMOVAL).

OPERATION

The seat belt tension reducer is controlled by a ground signal received from the seat belt switch on the seat belt switch sense circuit and a battery current signal received from the ignition switch on the fused ignition switch output (run-accessory) circuit. When the seat belt switch is closed (the driver side front seat belt is fastened) and the ignition switch is in the On or Accessory positions, the seat belt tension reducer solenoid is energized.

When the solenoid is energized, it actuates a mechanism within the driver side front outboard seat belt retractor to reduce the normal recoil spring tension exerted by the retractor spool, which is designed to reel in the seat belt webbing onto the spool. When the driver side seat belt is unbuckled or if the ignition switch is turned to any position except On or Accessory, the tension reducer solenoid is de-energized and the normal recoil spring tension of the retractor is restored.

The action of the seat belt tension reducer results in improved seat belt comfort for the driver. Reducing the seat belt retractor recoil spring tension is desirable on standard cab models of this vehicle and not on the quad cab model due to the different mounting position required for the seat belt turning loop on the B-pillar relative to the driver's seat position on the standard cab model. The seat belt tension reducer may be diagnosed using conventional diagnostic tools and methods.

DIAGNOSIS AND TESTING

SEAT BELT TENSION REDUCER

Refer to the appropriate wiring information. The wiring information includes wiring diagrams, proper wire and connector repair procedures, details of wire harness routing and retention, connector pin-out information and location views for the various wire harness connectors, splices and grounds.

WARNING: To avoid personal injury or death, on vehicles equipped with airbags, disable the supplemental restraint system before attempting any steering wheel, steering column, airbag, seat belt tensioner, impact sensor, or instrument panel component diagnosis or service. Disconnect and isolate the battery negative (ground) cable, then wait two minutes for the system capacitor to discharge before performing further diagnosis or service. This is the only sure way to disable the supplemental restraint system. Failure to take the proper precautions could result in accidental airbag deployment.

1. Disconnect and isolate the battery negative cable. Disconnect the body wire harness connector for the seat belt tension reducer from the tension reducer connector receptacle on the driver side front outboard seat belt and retractor unit. Using an ohmmeter, measure the resistance between the seat belt switch sense circuit terminal pin and the fused ignition switch output (run-accessory) circuit terminal pin in the tension reducer connector receptacle on the retractor. Resistance through the tension reducer solenoid coil should be 53 ohms at 20° C (68° F). If OK, go to Step 2. If not OK, replace the faulty driver side front outboard seat belt and retractor unit.
2. Check for continuity between the seat belt switch sense circuit cavity of the body wire harness connector for the seat belt tension reducer and a good ground. There should be continuity with the driver side front seat belt buckled, and no continuity with the driver side front seat belt unbuckled. If OK, go to Step 3. If not OK, repair the shorted or open seat belt switch sense circuit between the tension reducer and the seat belt switch as required.
3. Reconnect the battery negative cable. Check for battery current at the fused ignition switch output (run-accessory) circuit of the body wire harness connector for the seat belt tension reducer. There should be battery current with the ignition switch in the On or Accessory positions, and no battery current with the ignition switch in any other position. If not OK, repair the shorted or open fused ignition switch output (run-accessory) circuit between the tension reducer and the ignition switch as required.

SEAT BELT TURNING LOOP ADJUSTER

REMOVAL

WARNING: To avoid personal injury or death, during and following any seat belt or child restraint anchor service, carefully inspect all seat belts, buckles, mounting hardware, retractors, tether straps, and anchors for proper installation, operation, or damage. Replace any belt that is cut, frayed, or torn. Straighten any belt that is twisted. Tighten any loose fasteners. Replace any belt that has a damaged or inoperative buckle or retractor. Replace any belt that has a bent or damaged latch plate or anchor plate. Replace any child restraint anchor or the unit to which the anchor is integral that has been bent or damaged. Never attempt to repair a seat belt or child restraint component. Always replace damaged or faulty seat belt and child restraint components with the correct, new and unused replacement parts listed in the DaimlerChrysler Mopar Parts Catalog.

1. Unsnap and remove the trim cover from the front outboard seat belt turning loop to access the screw that secures the turning loop to the height adjuster (2) on the upper inner B-pillar (1). Discard the removed turning loop trim cover as it is not intended for reuse.
2. Remove the screw that secures the seat belt turning loop to the height adjuster.
3. Remove the front seat belt turning loop from the height adjuster.
4. Remove the upper trim from the inner B-pillar. (Refer to 23 - BODY/INTERIOR/B-PILLAR UPPER TRIM - REMOVAL).
5. Loosen the two screws (3) that secure the seat belt turning loop height adjuster far enough to remove the adjuster from the upper B-pillar.

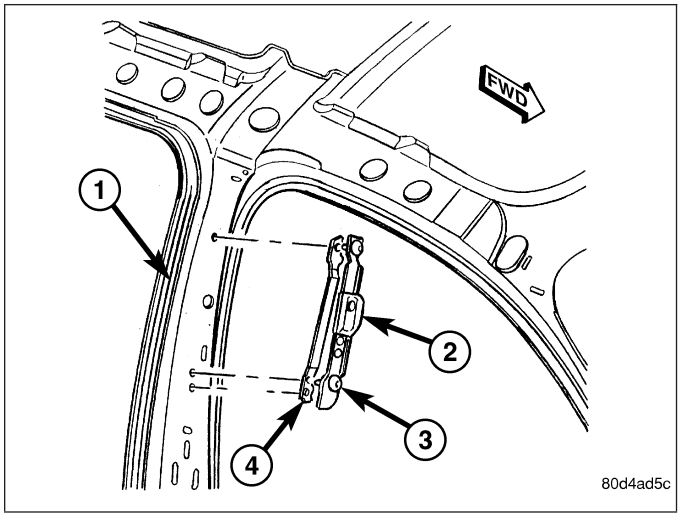

6. Disengage the tab near the lower end of the seat belt turning loop height adjuster from the slot in the sheet metal and remove the adjuster from the inner B-pillar.

INSTALLATION

WARNING: To avoid personal injury or death, during and following any seat belt or child restraint anchor service, carefully inspect all seat belts, buckles, mounting hardware, retractors, tether straps, and anchors for proper installation, operation, or damage. Replace any belt that is cut, frayed, or torn. Straighten any belt that is twisted. Tighten any loose fasteners. Replace any belt that has a damaged or inoperative buckle or retractor. Replace any belt that has a bent or damaged latch plate or anchor plate. Replace any child restraint anchor or the unit to which the anchor is integral that has been bent or damaged. Never attempt to repair a seat belt or child restraint component. Always replace damaged or faulty seat belt and child restraint components with the correct, new and unused replacement parts listed in the DaimlerChrysler Mopar Parts Catalog.

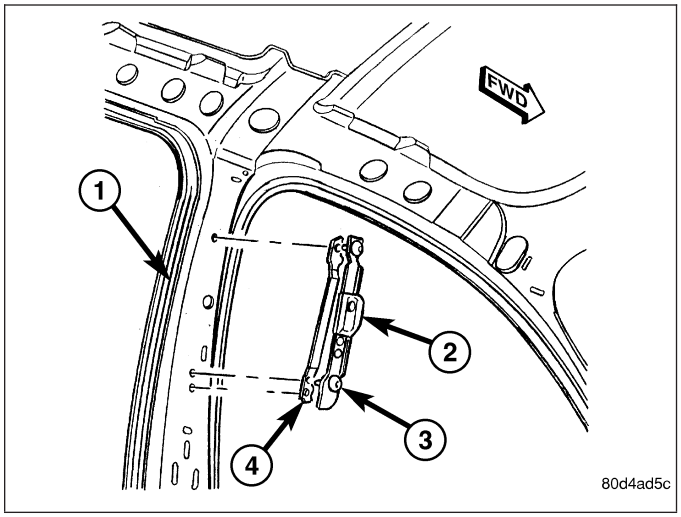

1. Position the front seat belt turning loop adjuster (2) to the inner B-pillar (1).
2. Engage the tab near the lower end of the seat belt turning loop height adjuster into the slot in the sheet metal of the inner B-pillar.
3. Hand tighten the lower of the two screws (3) that secure the seat belt turning loop height adjuster to the upper B-pillar far enough to keep the tab on the lower end of the adjuster engaged in the B-pillar slot.
4. Install the upper screw that secures the seat belt turning loop height adjuster to the upper B-pillar, then tighten both the upper and lower screws to 40 N·m (29 ft. lbs.).
5. Reinstall the upper trim onto the inside of the B-pillar. (Refer to 23 - BODY/INTERIOR/B-PILLAR UPPER TRIM - INSTALLATION).
6. Position the seat belt turning loop onto the height adjuster on the upper inner B-pillar.
7. Install and tighten the screw that secures the seat belt turning loop to the height adjuster. Tighten the screw to 40 N·m (29 ft. lbs.).
8. Engage the lower snap features of the new trim cover over the front outboard seat belt turning loop and, using hand pressure, press firmly and evenly on the top of the trim cover until it snaps into place.

SPEED CONTROL

TABLE OF CONTENTS

page

SPEED CONTROL
DESCRIPTION 1
OPERATION 2
DIAGNOSIS AND TESTING
DIAGNOSIS AND TESTING - VACUUM SUPPLY TEST 2
DIAGNOSIS AND TESTING - ROAD TEST 3
SPECIFICATIONS
TORQUE - SPEED CONTROL 3
CABLE-SPEED CONTROL
DESCRIPTION 4
OPERATION 4
REMOVAL 4
INSTALLATION 5
SERVO
DESCRIPTION 6

page

OPERATION 6
REMOVAL 7
INSTALLATION 7
SWITCH
DESCRIPTION 8
OPERATION 8
REMOVAL 9
INSTALLATION 9
RESERVOIR-VACUUM
DESCRIPTION 10
OPERATION 10
DIAGNOSIS AND TESTING
VACUUM RESERVOIR 10
REMOVAL 11
INSTALLATION 11

SPEED CONTROL

DESCRIPTION

All 3.7L / 4.7LGas Engines

The speed control system is operated by the use of a cable and a vacuum controlled servo. Electronic control of the speed control system is integrated into the Powertrain Control Module (PCM). The controls consist of two steering wheel mounted switches. The switches are labeled: ON/OFF, RES/ACCEL, SET, COAST, and CANCEL.

The system is designed to operate at speeds above 30 mph (50 km/h).

WARNING: THE USE OF SPEED CONTROL IS NOT RECOMMENDED WHEN DRIVING CONDITIONS DO NOT PERMIT MAINTAINING A CONSTANT SPEED, SUCH AS IN HEAVY TRAFFIC OR ON ROADS THAT ARE WINDING, ICY, SNOW COVERED, OR SLIPPERY.

5.7L Gas / 5.9L Diesel

The speed control system is fully electronically controlled by the Powertrain Control Module (PCM). If equipped with a diesel engine, electronic control of the speed control system is integrated into the Engine Control Module (ECM). **A cable and a vacuum controlled servo are not used. This is a servo-less system.** The controls consist of two steering wheel mounted switches. The switches are labeled: ON/OFF, RES/ACCEL, SET, COAST, and CANCEL.

The system is designed to operate at speeds above 30 mph (50 km/h).

WARNING: THE USE OF SPEED CONTROL IS NOT RECOMMENDED WHEN DRIVING CONDITIONS DO NOT PERMIT MAINTAINING A CONSTANT SPEED, SUCH AS IN HEAVY TRAFFIC OR ON ROADS THAT ARE WINDING, ICY, SNOW COVERED, OR SLIPPERY.

OPERATION

When speed control is selected by depressing the ON switch, the PCM (the ECM with a diesel engine) allows a set speed to be stored in its RAM for speed control. To store a set speed, depress the SET switch while the vehicle is moving at a speed between 35 and 85 mph. In order for the speed control to engage, the brakes cannot be applied, nor can the gear selector be indicating the transmission is in Park or Neutral.

The speed control can be disengaged manually by:

- Stepping on the brake pedal
- Depressing the OFF switch
- Depressing the CANCEL switch.
- Depressing the clutch pedal (if equipped).

NOTE: Depressing the OFF switch or turning off the ignition switch will erase the set speed stored in the PCM (the ECM with a diesel engine).

For added safety, the speed control system is programmed to disengage for any of the following conditions:

- An indication of Park or Neutral
- A rapid increase rpm (indicates that the clutch has been disengaged)
- Excessive engine rpm (indicates that the transmission may be in a low gear)
- The speed signal increases at a rate of 10 mph per second (indicates that the coefficient of friction between the road surface and tires is extremely low)
- The speed signal decreases at a rate of 10 mph per second (indicates that the vehicle may have decelerated at an extremely high rate)

Once the speed control has been disengaged, depressing the RES/ACCEL switch (when speed is greater than 30 mph) restores the vehicle to the target speed that was stored in the PCM (the ECM with a diesel engine).

While the speed control is engaged, the driver can increase the vehicle speed by depressing the RES/ACCEL switch. The new target speed is stored in the PCM (the ECM with a diesel engine) when the RES/ACCEL is released. The PCM (the ECM with a diesel engine) also has a ″tap-up″ feature in which vehicle speed increases at a rate of approximately 2 mph for each momentary switch activation of the RES/ACCEL switch.

A “tap down” feature is used to decelerate without disengaging the speed control system. To decelerate from an existing recorded target speed, momentarily depress the COAST switch. For each switch activation, speed will be lowered approximately 1 mph.

DIAGNOSIS AND TESTING

DIAGNOSIS AND TESTING - VACUUM SUPPLY TEST

3.7L / 4.7L Gas Powered Engines

3.7L/4.7L gas powered engines: actual engine vacuum, a vacuum reservoir, a one-way check valve and vacuum lines are used to supply vacuum to the speed control servo.

1. Disconnect vacuum hose at speed control servo and install a vacuum gauge into the disconnected hose.
2. Start engine and observe gauge at idle. Vacuum gauge should read at least ten inches of mercury.
3. If vacuum is less than ten inches of mercury, determine source of leak. Check vacuum line to engine for leaks. Also check actual engine intake manifold vacuum. If manifold vacuum does not meet this requirement, check for poor engine performance and repair as necessary.
4. If vacuum line to engine is not leaking, check for leak at vacuum reservoir. To locate and gain access to reservoir, refer to Vacuum Reservoir Removal/Installation in this group. Disconnect vacuum line at reservoir and connect a hand-operated vacuum pump to reservoir fitting. Apply vacuum. Reservoir vacuum should not bleed off. If vacuum is being lost, replace reservoir.
5. Verify operation of one-way check valve and check it for leaks.
    a. Locate one-way check valve. The valve is located in vacuum line between vacuum reservoir and engine vacuum source. Disconnect vacuum hoses (lines) at each end of valve.

b. Connect a hand-operated vacuum pump to reservoir end of check valve. Apply vacuum. Vacuum should not bleed off. If vacuum is being lost, replace one-way check valve.

c. Connect a hand-operated vacuum pump to vacuum source end of check valve. Apply vacuum. Vacuum should flow through valve. If vacuum is not flowing, replace one-way check valve. Seal the fitting at opposite end of valve with a finger and apply vacuum. If vacuum will not hold, diaphragm within check valve has ruptured. Replace valve.

5.7 Gas

Vacuum is not used for any part of the speed control system if equipped with a 5.7L V-8 engine.

5.9L Diesel

Vacuum is not used for any part of the speed control system if equipped with a diesel engine.

DIAGNOSIS AND TESTING - ROAD TEST

Perform a vehicle road test to verify reports of speed control system malfunction. The road test should include attention to the speedometer. Speedometer operation should be smooth and without flutter at all speeds.

Flutter in the speedometer indicates a problem which might cause surging in the speed control system. The cause of any speedometer problems should be corrected before proceeding. Refer to Instrument Cluster for speedometer diagnosis.

If a road test verifies a system problem and the speedometer operates properly, check for:

- A Diagnostic Trouble Code (DTC). If a DTC exists, conduct tests per the Powertrain Diagnostic Procedures service manual.
- A misadjusted brake (stop) lamp switch. This could also cause an intermittent problem.
- Loose, damaged or corroded electrical connections at the servo (if used). Corrosion should be removed from electrical terminals and a light coating of Mopar MultiPurpose Grease, or equivalent, applied.
- Leaking vacuum reservoir (if used).
- Loose or leaking vacuum hoses or connections (if used).
- Defective one-way vacuum check valve (if used).
- Secure attachment of both ends of the speed control servo cable (if used).
- Smooth operation of throttle linkage (if used) and throttle body air valve.
- Failed speed control servo (if used). Do the servo vacuum test.

CAUTION: When test probing for voltage or continuity at electrical connectors, care must be taken not to damage connector, terminals or seals. If these components are damaged, intermittent or complete system failure may occur.

SPECIFICATIONS

TORQUE - SPEED CONTROL

DESCRIPTION	N-m	Ft. Lbs.	In. Lbs.
Servo Mounting Bracket-to-Servo Nuts	7	-	60
Servo Mounting Bracket-to-Battery Tray Screws	4	-	30
Speed Control Switch Mounting Screws	1.7	-	15
Vacuum Reservoir Mounting Nuts	3	-	20

CABLE-SPEED CONTROL

DESCRIPTION

The speed control servo cable is connected between the speed control vacuum servo diaphragm and the throttle body control linkage. This cable is used only with 3.7L/4.7L gas powered engines only.

A speed control servo cable **is not used** if equipped with either a 5.9L diesel engine, or any 5.7L engine.

OPERATION

This cable causes the throttle control linkage to open or close the throttle valve in response to movement of the vacuum servo diaphragm.

REMOVAL

3.7L / 4.7L GAS

1. Disconnect negative battery cable at battery.
2. Remove air intake tube at top of throttle body.

The accelerator cable must be partially removed to gain access to speed control cable.

3. Hold throttle in wide open position. While held in this position, slide throttle cable pin (1) from throttle body bellcrank.

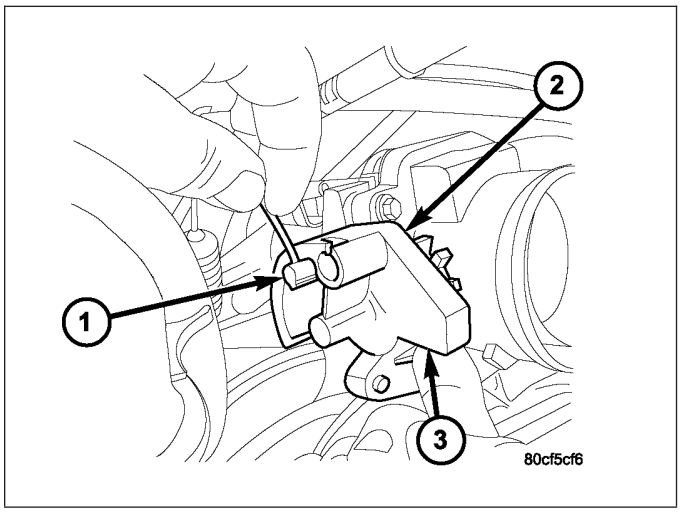

4. Using a pick or small screwdriver (3), press release tab (2) to release plastic cable mount (4) from bracket. **Press on tab only enough to release cable from bracket. If tab is pressed too much, it will be broken.** Slide plastic mount (4) towards right side of vehicle to remove throttle cable from throttle body bracket.

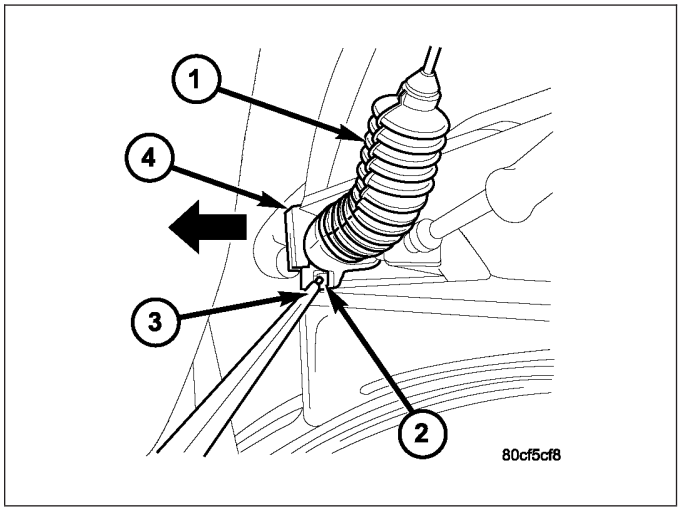

5. Using finger pressure only, disconnect servo cable connector (2) at throttle body bellcrank pin by pushing con-

nector off bellcrank pin towards front of vehicle. **DO NOT try to pull connector off perpendicular to the bellcrank pin. Connector will be broken.**

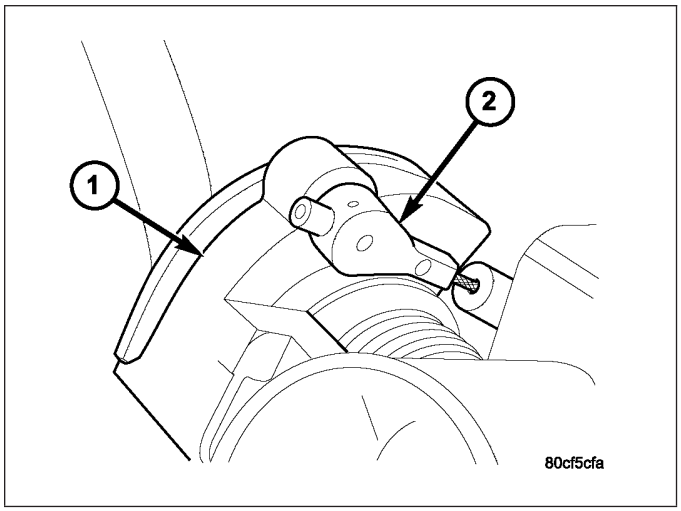

6. Slide speed control cable plastic mount (2) towards right of vehicle to remove cable (3) from throttle body bracket (1).
7. Remove servo cable from servo. Refer to Servo Removal/Installation.

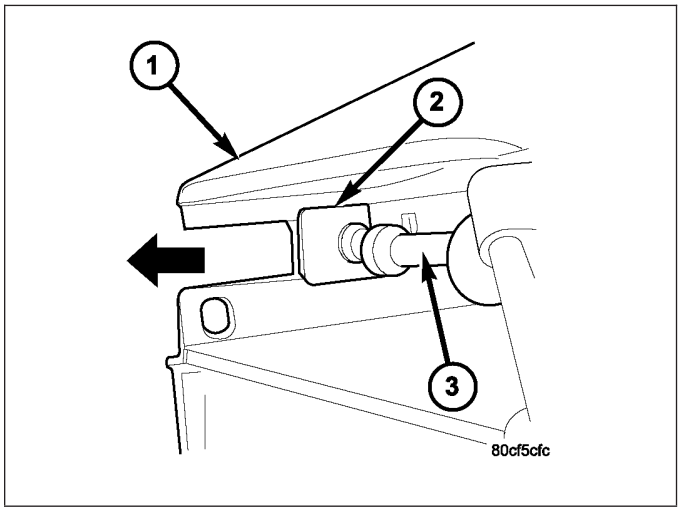

INSTALLATION

3.7L / 4.7L Gas

1. Install end of cable to speed control servo. Refer to Servo Removal/Installation.
2. Slide speed control cable plastic mount into throttle body bracket.
3. Install speed control cable connector onto throttle body bellcrank pin (push rearward to snap into location).
4. Slide throttle (accelerator) cable plastic mount into throttle body bracket. Continue sliding until cable release tab is aligned to hole in throttle body mounting bracket.
5. While holding throttle to wide open position, place throttle cable pin into throttle body bellcrank.
6. Install air intake tube to top of throttle body.
7. Connect negative battery cable at battery.
8. Before starting engine, operate accelerator pedal to check for any binding.

SERVO

DESCRIPTION

A speed control servo is not used with any 5.7L V-8 engine, or with the 5.9L diesel engine.

The speed control servo is attached to the bottom of the battery tray.

The servo unit consists of a solenoid valve body, and a vacuum chamber. The solenoid valve body contains three solenoids:

- Vacuum
- Vent
- Dump

The vacuum chamber contains a diaphragm with a cable attached to control the throttle linkage.

OPERATION

A speed control servo is not used with any 5.7L V-8 engine, or with the 5.9L diesel engine.

The following information applies only to vehicles equipped with a mechanical servo.

When/if a servo is used on gasoline powered vehicles, the Powertrain Control Module (PCM) controls the solenoid valve body. The solenoid valve body controls the application and release of vacuum to the diaphragm of the vacuum servo. The servo unit cannot be repaired and is serviced only as a complete assembly.

Power is supplied to the servo's by the PCM through the brake switch. The PCM controls the ground path for the vacuum and vent solenoids.

The dump solenoid is energized anytime it receives power. If power to the dump solenoid is interrupted, the solenoid dumps vacuum in the servo. This provides a safety backup to the vent and vacuum solenoids.

The vacuum and vent solenoids must be grounded at the PCM to operate. When the PCM grounds the vacuum servo solenoid, the solenoid allows vacuum to enter the servo and pull open the throttle plate using the cable. When the PCM breaks the ground, the solenoid closes and no more vacuum is allowed to enter the servo. The PCM also operates the vent solenoid via ground. The vent solenoid opens and closes a passage to bleed or hold vacuum in the servo as required.

The PCM duty cycles the vacuum and vent solenoids to maintain the set speed, or to accelerate and decelerate the vehicle. To increase throttle opening, the PCM grounds the vacuum and vent solenoids. To decrease throttle opening, the PCM removes the grounds from the vacuum and vent solenoids. When the brake is released, if vehicle speed exceeds 30 mph to resume, 35 mph to set, and the RES/ACCEL switch has been depressed, ground for the vent and vacuum circuits is restored.

REMOVAL

The speed control servo assembly is attached to the bottom of the battery tray (1).

1. Disconnect negative battery cable at battery (both cables at both batteries if diesel).
2. To gain access to servo, remove plastic wheel-house splash shield over left-front wheel.
3. Disconnect vacuum line (7) at servo.
4. Disconnect electrical connector (4) at servo.
5. Remove 3 servo mounting screws (5). Depending on engine application, different sets of mounting lugs (2) are used to support servo to battery tray. While removing, note proper lugs.

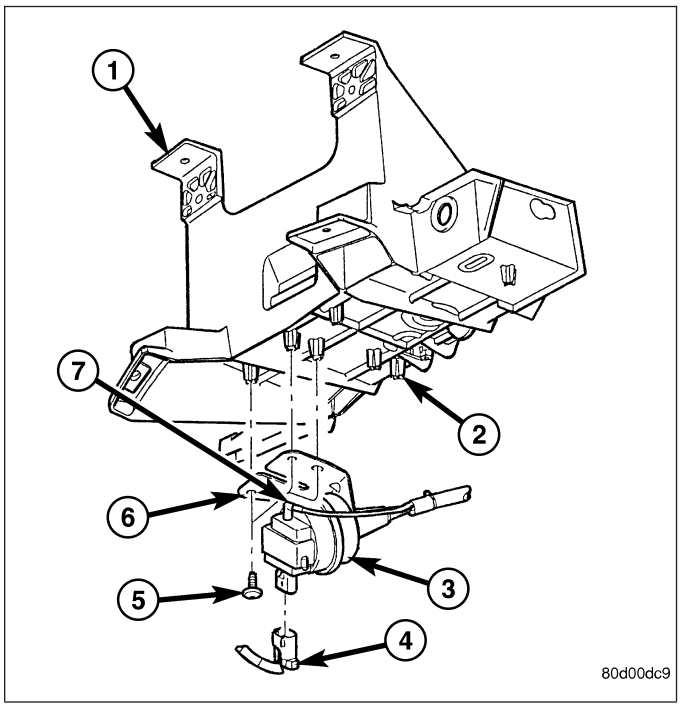

6. Disconnect servo cable at throttle body. Refer to Servo Cable Removal/Installation.
7. Remove 2 mounting nuts (1) holding servo cable sleeve to bracket.
8. Pull speed control cable sleeve and servo away from servo mounting bracket to expose cable retaining clip (3) and remove clip. Note: The servo mounting bracket displayed is a typical bracket and may/may not be applicable to this model vehicle.
9. Remove servo (2) from mounting bracket. While removing, note orientation of servo to bracket.

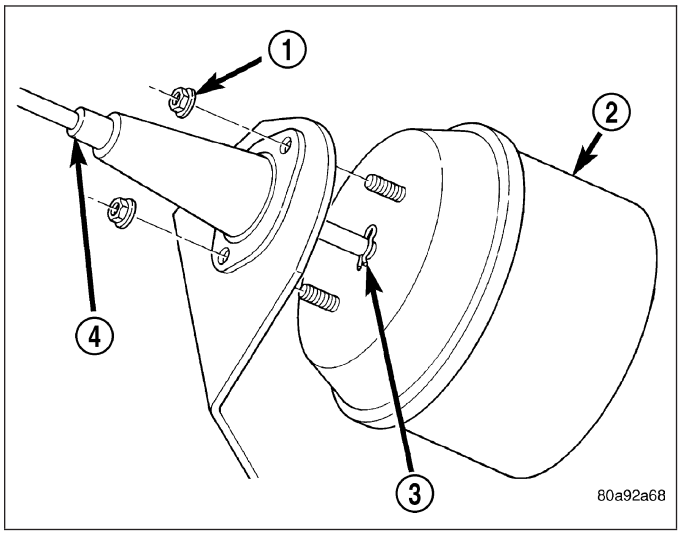

INSTALLATION

1. Position servo to mounting bracket.
2. Align hole in cable connector with hole in servo pin. Install cable-to-servo retaining clip.
3. Insert servo mounting studs through holes in servo mounting bracket.
4. Install 2 servo-to-mounting bracket nuts and tighten. Refer to torque specifications.
5. Position servo assembly to correct mounting lugs on battery tray and install 3 screws. Tighten 3 screws. Refer to torque specifications.
6. Connect vacuum line at servo.
7. Connect electrical connector at servo.
8. Connect servo cable to throttle body. Refer to servo Cable Removal/Installation.
9. Install left-front wheel-well liner.
10. Connect negative battery cable to battery (connect both cables if diesel).
11. Before starting engine, operate accelerator pedal to check for any binding.

SWITCH

DESCRIPTION

Two separate switch pods operate the speed control system. The steering-wheel-mounted switches use multiplexed circuits to provide inputs to the PCM (to the ECM for diesel) for ON, OFF, RESUME, ACCELERATE, SET, DECEL and CANCEL modes. Refer to the owner's manual for more information on speed control switch functions and setting procedures.

The individual switches cannot be repaired. If one switch fails, the entire switch module must be replaced.

Depending on engine control computer (JTEC having a 3– plug connector or NGC having a 4– plug connector), 2 types of switches are used. Both types of switches are internally and externally different. The switch used with the NGC system has an attached pigtail lead. The switch used with the JTEC system does not have an attached pigtail lead.

OPERATION

When speed control is selected by depressing the ON, OFF switch, the PCM **(ECM for diesel)** allows a set speed to be stored in its RAM for speed control. To store a set speed, depress the SET switch while the vehicle is moving at a speed between approximately 35 and 85 mph. In order for the speed control to engage, the brakes cannot be applied, nor can the gear selector be indicating the transmission is in Park or Neutral.

The speed control can be disengaged manually by:

- Stepping on the brake pedal
- Depressing the OFF switch
- Depressing the CANCEL switch.

The speed control can be disengaged also by any of the following conditions:

- An indication of Park or Neutral (auto. trans.)
- The VSS signal increases at a rate of 10 mph per second (indicates that the co-efficient of friction between the road surface and tires is extremely low)
- Depressing the clutch pedal (manual trans.).
- Excessive engine rpm (indicates that the transmission may be in a low gear)
- The VSS signal decreases at a rate of 10 mph per second (indicates that the vehicle may have decelerated at an extremely high rate)
- If the actual speed is not within 20 mph of the set speed

The previous disengagement conditions are programmed for added safety.

Once the speed control has been disengaged, depressing the ACCEL switch restores the vehicle to the target speed that was stored in the PCM's RAM **(ECM for diesel).**

NOTE: Depressing the OFF switch will erase the set speed stored in the PCM's/ECM's RAM.

If, while the speed control is engaged, the driver wishes to increase vehicle speed, the PCM **(ECM for diesel)** is programmed for an acceleration feature. With the ACCEL switch held closed, the vehicle accelerates slowly to the desired speed. The new target speed is stored in the PCM's/ECM's RAM when the ACCEL switch is released. The PCM/ECM also has a ″tap-up″ feature in which vehicle speed increases at a rate of approximately 2 mph for each momentary switch activation of the ACCEL switch.

The PCM/ECM also provides a means to decelerate without disengaging speed control. To decelerate from an existing recorded target speed, depress and hold the COAST switch until the desired speed is reached. Then release the switch. The ON, OFF switch operates two components: the PCM's/ECM's ON, OFF input, and the battery voltage to the brake switch.

REMOVAL

Depending on engine control computer (JTEC having a 3–plug connector or 5.7L V-8 NGC having a 4–plug connector), 2 types of switches are used. Both types of switches are internally and externally different. The switches used with the NGC system have attached pigtail leads. The switch used with the JTEC system does not have an attached pigtail lead.

1. Remove switch mounting screw (2).,

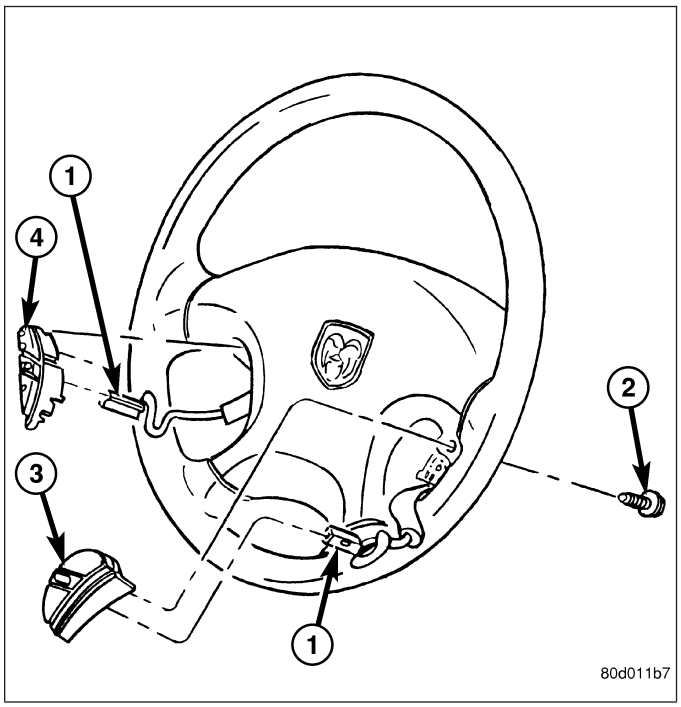

2. Pull switch (2) from steering wheel.
3. Unplug electrical connector from switch , or, switch pigtail wire harness from steering wheel wire harness (4) and remove switch.

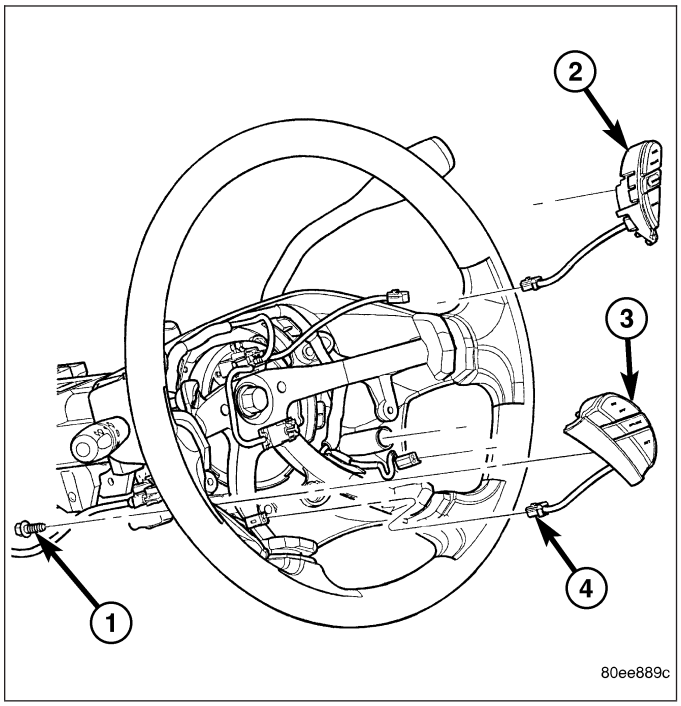

INSTALLATION

1. Plug electrical connector into switch , or connect pigtail wire harness to steering wheel wire harness. Be sure wires are not pinched.
2. Position switch to steering wheel.
3. Install switch mounting screw and tighten. Refer to torque specifications.

RESERVOIR-VACUUM

DESCRIPTION

The vacuum reservoir is a plastic storage tank connected to an engine vacuum source by vacuum lines. A vacuum reservoir is not used with diesel engines or the 5.7L gas powered engine.

OPERATION

The vacuum reservoir is used to supply the vacuum needed to maintain proper speed control operation when engine vacuum drops, such as in climbing a grade while driving. A one-way check valve is used in the vacuum line between the reservoir and the vacuum source. This check valve is used to trap engine vacuum in the reservoir. On certain vehicle applications, this reservoir is shared with the heating/air-conditioning system. The vacuum reservoir cannot be repaired and must be replaced if faulty.

DIAGNOSIS AND TESTING

VACUUM RESERVOIR

1. Disconnect vacuum hose at speed control servo and install a vacuum gauge into the disconnected hose.
2. Start engine and observe gauge at idle. Vacuum gauge should read at least ten inches of mercury.
3. If vacuum is less than ten inches of mercury, determine source of leak. Check vacuum line to engine for leaks. Also check actual engine intake manifold vacuum. If manifold vacuum does not meet this requirement, check for poor engine performance and repair as necessary.
4. If vacuum line to engine is not leaking, check for leak at vacuum reservoir. To locate and gain access to reservoir, refer to Vacuum Reservoir Removal/Installation in this group. Disconnect vacuum line at reservoir and connect a hand-operated vacuum pump to reservoir fitting. Apply vacuum. Reservoir vacuum should not bleed off. If vacuum is being lost, replace reservoir.
5. Verify operation of one-way check valve and check it for leaks. **Certain models may be equipped with 2 check-valves.**
   a. Locate one-way check valve. The valve is located in vacuum line between vacuum reservoir and engine vacuum source. Disconnect vacuum hoses (lines) at each end of valve.
   b. Connect a hand-operated vacuum pump to reservoir end of check valve. Apply vacuum. Vacuum should not bleed off. If vacuum is being lost, replace one-way check valve.
   c. Connect a hand-operated vacuum pump to vacuum source end of check valve. Apply vacuum. Vacuum should flow through valve. If vacuum is not flowing, replace one-way check valve. Seal the fitting at opposite end of valve with a finger and apply vacuum. If vacuum will not hold, diaphragm within check valve has ruptured. Replace valve.

REMOVAL

The vacuum reservoir (1) is located in the engine compartment under the fresh air cowl grill panel.

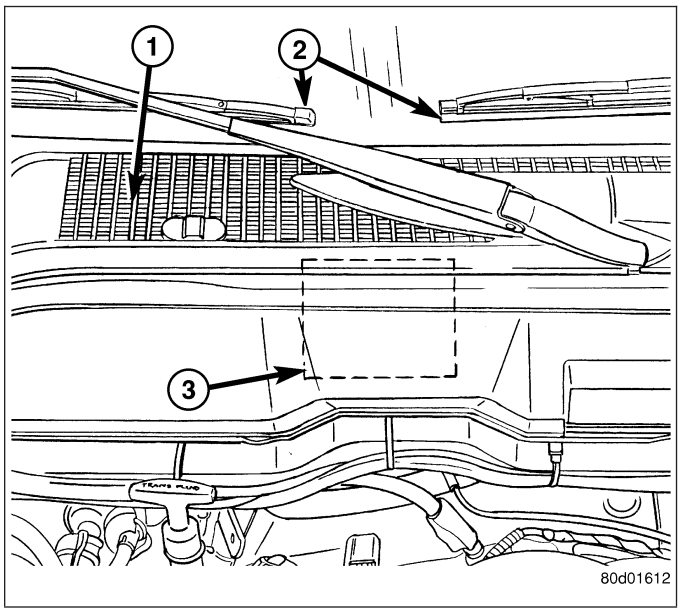

1. Remove wiper blades and arms. Refer to Wiper Arm Removal / Installation in the Wipers / Washers section.
2. Remove fresh air cowl grill. Refer to Cowl Grill Removal / Installation.
3. Disconnect vacuum line (2) at reservoir.
4. Remove 2 reservoir mounting nuts (3).
5. Remove reservoir from cowl.

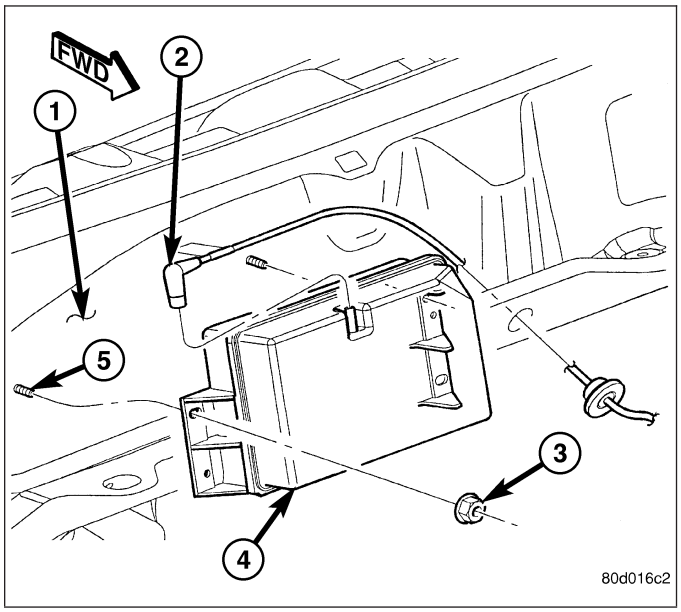

INSTALLATION

1. Position reservoir onto 2 weld studs.
2. Install 2 mounting nuts and tighten. Refer to torque specifications.
3. Connect vacuum line to reservoir fitting.
4. Install cowl grill. Refer to Cowl Grill Removal / Installation.
5. Install wiper arms / blades. Refer to Wiper Arm Removal / Installation.

VEHICLE THEFT SECURITY

TABLE OF CONTENTS

page

VEHICLE THEFT SECURITY - ELECTRICAL DIAGNOSTICS 1

page

VEHICLE THEFT SECURITY - SERVICE INFORMATION 53

VEHICLE THEFT SECURITY - ELECTRICAL DIAGNOSTICS

TABLE OF CONTENTS

page

VEHICLE THEFT SECURITY - ELECTRICAL DIAGNOSTICS
DIAGNOSIS AND TESTING
INTERMITTENT CONDITION 2
ANTENNA FAILURE 3
COP FAILURE 4
EEPROM FAILURE 5
INTERNAL FAULT 6
RAM FAILURE 7
SERIAL LINK INTERNAL FAULT 8
STOCK OVERFLOW FAILURE 9
PCM STATUS FAILURE 10
SERIAL LINK EXTERNAL FAULT 12
ROLLING CODE FAILURE 14
VIN MISMATCH 16
TRANSPONDER CYCLIC REDUNDANCY CHECK (CRC) FAILURE 18
TRANSPONDER COMMUNICATION FAILURE 21
TRANSPONDER ID MISMATCH 24

page

TRANSPONDER RESPONSE MISMATCH . . . 27
SKIS VERIFICATION TEST 30
*ALARM TRIPS ON ITS OWN 31
*CYLINDER LOCK SWITCH INOP 32
*DRIVER DOOR DOES NOT TRIP VTSS 36
*HEADLAMPS FAIL TO FLASH WHEN ALARM IS TRIPPED 38
*HORN FAILS TO SOUND WHEN ALARM IS TRIPPED 39
*LEFT REAR DOOR DOES NOT TRIP VTSS (4 DOOR) 40
*PASSENGER DOOR DOES NOT TRIP VTSS 42
*RIGHT REAR DOOR DOES NOT TRIP VTSS (4 DOOR) 44
*VTSS WILL NOT ARM PROPERLY 46
VTSS VERIFICATION TEST - 1A 50
STANDARD PROCEDURE
SKIS VERIFICATION TEST 51
SCHEMATICS AND DIAGRAMS 52

VEHICLE THEFT SECURITY - ELECTRICAL DIAGNOSTICS

DIAGNOSIS AND TESTING

INTERMITTENT CONDITION

For the Engine circuit diagrams (Refer to 9 - ENGINE - SCHEMATICS AND DIAGRAMS).

For a complete wiring diagram **Refer to Section 8W**.

POSSIBLE CAUSES
INTERMITTENT CONDITION

Diagnostic Test

1. INTERMITTENT CONDITION

NOTE: The conditions that set the DTC are not present at this time. The following list may help in identifying the intermittent condition.

WARNING: When the engine is operating, do not stand in direct line with the fan. Do not put your hands near the pulleys, belts, or fan. Do not wear loose clothing. Failure to follow these instructions can result in personal injury or death.

Refer to any Technical Service Bulletins (TSBs) that may apply.

Review the scan tool Freeze Frame information. If possible, try to duplicate the conditions under which the DTC set.

With the engine running at normal operating temperature, monitor the scan tool parameters related to the DTC while wiggling the wire harness. Look for parameter values to change and/or a DTC to set.

Turn the ignition off.

Visually inspect the related wire harness. Disconnect all the related harness connectors. Look for any chafed, pierced, pinched, partially broken wires and broken, bent, pushed out, or corroded terminals.

Perform a voltage drop test on the related circuits between the suspected faulty component and the PCM.

CAUTION: Do not probe the PCM harness connectors. Probing the PCM harness connectors will damage the PCM terminals resulting in poor terminal to pin connection. Install Miller Special Tool #8815 to perform diagnosis.

Inspect and clean all PCM, engine, and chassis grounds that are related to the most current DTC.

If numerous trouble codes were set, use a wire schematic and look for any common ground or supply circuits.

For any Relay DTCs, actuate the Relay with the scan tool and wiggle the related wire harness to try to interrupt the actuation.

For intermittent Evaporative Emission trouble codes perform a visual and physical inspection of the related parts including hoses and the Fuel Filler cap.

For intermittent Misfire DTC's check for restrictions in the Intake and Exhaust system, proper installation of Sensors, vacuum leaks, and binding components that are run by the accessory drive belt.

Use the scan tool to perform a System Test if one applies to failing component.

A co-pilot, data recorder, and/or lab scope should be used to help diagnose intermittent conditions.

Were any problems found during the above inspections?

Yes >> Perform the necessary repairs.
Perform the POWERTRAIN VERIFICATION TEST. (Refer to 9 - ENGINE - STANDARD PROCEDURE)

No >> Test Complete.

ANTENNA FAILURE

For a complete wiring diagram **Refer to Section 8W**.

- **When Monitored:**
  Every 250 milliseconds with the ignition on.
- **Set Condition:**
  The SKIM's microcontroller determines that an antenna circuit fault has occurred for 2.0 consecutive seconds.

Possible Causes
SKIM INTERNAL DTC FAILURE

Diagnostic Test

1. SKIM INTERNAL DTC PRESENT

NOTE: Note: This trouble code indicates an internal SKIM fault.
With the scan tool, read and record the SKIM DTCs and then erase the SKIM DTCs
Perform 5 ignition key cycles, leaving the ignition key on for a minimum of 90 seconds per cycle.
With the scan tool, read the SKIM DTCs.

Did the same SKIM DTC return?

Yes >> Replace and program the Sentry Key Immobilizer Module in per Service Information.
Perform SKIS VERIFICATION. (Refer to 8 - ELECTRICAL/VEHICLE THEFT SECURITY - STANDARD PROCEDURE)

No >> Test complete, the conditions that set this DTC are not present at this time.

COP FAILURE

For a complete wiring diagram **Refer to Section 8W**.

- **When Monitored:**
  With the ignition on.
- **Set Condition:**
  The COP timer is not reset by the micro controller every 65.5 milliseconds.

Possible Causes
SKIM INTERNAL DTC FAILURE

Diagnostic Test

1. SKIM INTERNAL DTC PRESENT

NOTE: Note: This trouble code indicates an internal SKIM fault.
With the scan tool, read and record the SKIM DTCs and then erase the SKIM DTCs
Perform 5 ignition key cycles, leaving the ignition key on for a minimum of 90 seconds per cycle.
With the scan tool, read the SKIM DTCs.

Did the same SKIM DTC return?

Yes >> Replace and program the Sentry Key Immobilizer Module in per Service Information.
Perform SKIS VERIFICATION. (Refer to 8 - ELECTRICAL/VEHICLE THEFT SECURITY - STANDARD PROCEDURE)

No >> Test complete, the conditions that set this DTC are not present at this time.

EEPROM FAILURE

For a complete wiring diagram **Refer to Section 8W**.

- **When Monitored:**
  With the ignition on.
- **Set Condition:**
  When the value written to EEPROM memory does not equal the value read back after the write operation.

Possible Causes
SKIM INTERNAL DTC FAILURE

Diagnostic Test

1. SKIM INTERNAL DTC PRESENT

NOTE: Note: This trouble code indicates an internal SKIM fault.
With the scan tool, read and record the SKIM DTCs and then erase the SKIM DTCs
Perform 5 ignition key cycles, leaving the ignition key on for a minimum of 90 seconds per cycle.
With the scan tool, read the SKIM DTCs.

Did the same SKIM DTC return?

Yes >> Replace and program the Sentry Key Immobilizer Module in per Service Information.
Perform SKIS VERIFICATION. (Refer to 8 - ELECTRICAL/VEHICLE THEFT SECURITY - STANDARD PROCEDURE)

No >> Test complete, the conditions that set this DTC are not present at this time.

INTERNAL FAULT

For a complete wiring diagram **Refer to Section 8W**.

- **When Monitored:**
  With the ignition on.
- **Set Condition:**
  The SKIM has detected a fault during an internal self test.

Possible Causes
SKIM INTERNAL DTC FAILURE

Diagnostic Test

1. SKIM INTERNAL DTC PRESENT

NOTE: Note: This trouble code indicates an internal SKIM fault.
With the scan tool, read and record the SKIM DTCs and then erase the SKIM DTCs
Perform 5 ignition key cycles, leaving the ignition key on for a minimum of 90 seconds per cycle.
With the scan tool, read the SKIM DTCs.

Did the same SKIM DTC return?

Yes >> Replace and program the Sentry Key Immobilizer Module in per Service Information.
Perform SKIS VERIFICATION. (Refer to 8 - ELECTRICAL/VEHICLE THEFT SECURITY - STANDARD PROCEDURE)

No >> Test complete, the conditions that set this DTC are not present at this time.

RAM FAILURE

For a complete wiring diagram **Refer to Section 8W**.

- **When Monitored:**
  With the ignition on.
- **Set Condition:**
  The RAM fails a test that checks the RAM's ability to retain memory.

Possible Causes
SKIM INTERNAL DTC FAILURE

Diagnostic Test

1. SKIM INTERNAL DTC PRESENT

NOTE: Note: This trouble code indicates an internal SKIM fault.
With the scan tool, read and record the SKIM DTCs and then erase the SKIM DTCs
Perform 5 ignition key cycles, leaving the ignition key on for a minimum of 90 seconds per cycle.
With the scan tool, read the SKIM DTCs.

Did the same SKIM DTC return?

Yes >> Replace and program the Sentry Key Immobilizer Module in per Service Information.
Perform SKIS VERIFICATION. (Refer to 8 - ELECTRICAL/VEHICLE THEFT SECURITY - STANDARD PROCEDURE)

No >> Test complete, the conditions that set this DTC are not present at this time.

SERIAL LINK INTERNAL FAULT

For a complete wiring diagram **Refer to Section 8W**.

- **When Monitored:**
  With the ignition on.
- **Set Condition:**
  The SKIM fails an internal J1850 communication self test.

Possible Causes
SKIM INTERNAL DTC FAILURE

Diagnostic Test

1. SKIM INTERNAL DTC PRESENT

NOTE: Note: This trouble code indicates an internal SKIM fault.
With the scan tool, read and record the SKIM DTCs and then erase the SKIM DTCs
Perform 5 ignition key cycles, leaving the ignition key on for a minimum of 90 seconds per cycle.
With the scan tool, read the SKIM DTCs.

Did the same SKIM DTC return?

Yes >> Replace and program the Sentry Key Immobilizer Module in per Service Information.
Perform SKIS VERIFICATION. (Refer to 8 - ELECTRICAL/VEHICLE THEFT SECURITY - STANDARD PROCEDURE)

No >> Test complete, the conditions that set this DTC are not present at this time.

STOCK OVERFLOW FAILURE

For a complete wiring diagram **Refer to Section 8W**.

- **When Monitored:**
  With the ignition on.
- **Set Condition:**
  The micro controller has exceeded its stack space limit.

Possible Causes
SKIM INTERNAL DTC FAILURE

Diagnostic Test

1. SKIM INTERNAL DTC PRESENT

NOTE: Note: This trouble code indicates an internal SKIM fault.
With the scan tool, read and record the SKIM DTCs and then erase the SKIM DTCs
Perform 5 ignition key cycles, leaving the ignition key on for a minimum of 90 seconds per cycle.
With the scan tool, read the SKIM DTCs.

Did the same SKIM DTC return?

Yes >> Replace and program the Sentry Key Immobilizer Module in per Service Information.
Perform SKIS VERIFICATION. (Refer to 8 - ELECTRICAL/VEHICLE THEFT SECURITY - STANDARD PROCEDURE)

No >> Test complete, the conditions that set this DTC are not present at this time.

PCM STATUS FAILURE

For a complete wiring diagram **Refer to Section 8W**.

- **When Monitored:**
  With the ignition on.
- **Set Condition:**
  This DTC exists when a PCM STATUS message was not received from the PCM for at least 20.0 consecutive seconds.

Possible Causes
WIRE HARNESS FAILURE
SKIM
PCM

Diagnostic Test

1. ACTIVE DTC

NOTE: make sure the PCM has proper power and ground connections before continuing.
With the scan tool, read and record the SKIM DTCs then erase the SKIM DTCs.
Turn the ignition off.
Wait 2 minutes.
Turn the ignition on.
With the scan tool, read the SKIM DTCs.

Is the DTC active at this time?

Yes >> Go To 2

No >> Refer to the INTERMITTENT CONDITION Diagnostic Procedure.

---

2. INTERMITTENT WIRING PROBLEM

Turn the ignition off.

NOTE: Visually inspect the related wiring harness and PCI Bus circuits. Look for any chafed, pierced, pinched, or partially broken wires.

NOTE: Visually inspect the related wiring harness connectors. Look for broken, bent, pushed out, or corroded terminals.

NOTE: Refer to any Technical Service Bulletins (TSB) that may apply.

Were any problems found?

Yes >> Repair as necessary.
Perform SKIS VERIFICATION. (Refer to 8 - ELECTRICAL/VEHICLE THEFT SECURITY - STANDARD PROCEDURE)

No >> Go To 3

PCM STATUS FAILURE (CONTINUED)

3. **SKIM/PCM**

NOTE: NOTE: Before proceeding it will be necessary to obtain the SKIM PIN.

Turn the ignition on.

With the scan tool, display and erase all PCM and SKIM DTC's.

Perform 5 ignition key cycles, leaving the ignition key on for a minimum of 90 seconds per cycle.

With the scan tool, read the SKIM DTCs.

Does the code appear?

Yes >> Replace and program the Powertrain Control Module per Service Information.
Perform SKIS VERIFICATION. (Refer to 8 - ELECTRICAL/VEHICLE THEFT SECURITY - STANDARD PROCEDURE)

No >> Test complete, the conditions that set this DTC are not present at this time.

SERIAL LINK EXTERNAL FAULT

For a complete wiring diagram **Refer to Section 8W**.

- **When Monitored:**
  At ignition on, after ignition on during any rolling code handshake that occurs with the PCM due to a SKIM reset, or during SECRET KEY transfers to the PCM.
- **Set Condition:**
  When the SKIM does not receive an expected PCI BUS message transmission acknowledgement from the PCM after 3 transmit attempts.

Possible Causes
WIRE HARNESS FAILURE
SKIM
PCM

Diagnostic Test

1. ACTIVE DTC

NOTE: make sure the PCM has proper power and ground connections before continuing.
With the scan tool, read and record the SKIM DTCs then erase the SKIM DTCs.
Turn the ignition off.
Wait 2 minutes.
Turn the ignition on.
With the scan tool, read the SKIM DTCs.

Is the DTC active at this time?

Yes >> Go To 2

No >> Refer to the INTERMITTENT CONDITION Diagnostic Procedure.

---

2. INTERMITTENT WIRING PROBLEM

Turn the ignition off.

NOTE: Visually inspect the related wiring harness and PCI Bus circuits. Look for any chafed, pierced, pinched, or partially broken wires.

NOTE: Visually inspect the related wiring harness connectors. Look for broken, bent, pushed out, or corroded terminals.

NOTE: Refer to any Technical Service Bulletins (TSB) that may apply.

Were any problems found?

Yes >> Repair as necessary.
Perform SKIS VERIFICATION. (Refer to 8 - ELECTRICAL/VEHICLE THEFT SECURITY - STANDARD PROCEDURE)

No >> Go To 3

SERIAL LINK EXTERNAL FAULT (CONTINUED)

3. **SKIM/PCM**

NOTE: NOTE: Before proceeding it will be necessary to obtain the SKIM PIN.

Turn the ignition on.

With the scan tool, display and erase all PCM and SKIM DTC's.

Perform 5 ignition key cycles, leaving the ignition key on for a minimum of 90 seconds per cycle.

With the scan tool, read the SKIM DTCs.

Does the code appear?

Yes >> Replace and program the Powertrain Control Module per Service Information.
Perform SKIS VERIFICATION. (Refer to 8 - ELECTRICAL/VEHICLE THEFT SECURITY - STANDARD PROCEDURE)

No >> Test complete, the conditions that set this DTC are not present at this time.

ROLLING CODE FAILURE

For a complete wiring diagram **Refer to Section 8W**.

- **When Monitored:**
  At ignition on, after ignition on during any rolling code handshake that occurs with the PCM due to a SKIM or PCM reset.
- **Set Condition:**
  When a PCM STATUS message with a Valid Key status is not received by the SKIM within 3.5 seconds of transmitting the last Valid Key Code message to the PCM.

Possible Causes
WIRE HARNESS OPEN OR SHORTED
SKIM
PCM

Diagnostic Test

1. ACTIVE DTC

With the scan tool, erase the SKIM DTCs.
Turn the ignition off.
Wait 10 seconds.
Turn the ignition on and wait 2 minutes.
With the scan tool, read the SKIM DTCs.

Is the DTC active at this time?

Yes >> Go To 2

No >> Refer to the INTERMITTENT CONDITION Diagnostic Procedure.
Perform SKIS VERIFICATION. (Refer to 8 - ELECTRICAL/VEHICLE THEFT SECURITY - STANDARD PROCEDURE)

---

2. CORRECT VIN IN THE PCM

Turn the ignition on.
With the scan tool, select Engine system from the main menu.
Display and record the Vehicle Identification Number.

NOTE: Make sure that a VIN has been programmed into the PCM. If a VIN is not displayed, attempt to program the PCM with the correct vehicle VIN before continuing.

Does the VIN recorded from the PCM match the VIN of the vehicle?

Yes >> Go To 3

No >> Perform the PCM replaced to update the VIN in the PCM.
Perform SKIS VERIFICATION. (Refer to 8 - ELECTRICAL/VEHICLE THEFT SECURITY - STANDARD PROCEDURE)

ROLLING CODE FAILURE (CONTINUED)

3. SKIM

Turn the ignition off.

Replace and program the Sentry Key Immobilizer Module in accordance with the Service Information.

Turn the ignition on.

With the scan tool, display and clear all PCM and SKIM DTC's.

Perform 5 ignition key cycles leaving the ignition key on for 90 seconds per cycle.

With the scan tool, check for SKIM DTCs.

Does the scan tool display the same DTC?

Yes >> Replace and program the Powertrain Control Module per Service Information.
Perform SKIS VERIFICATION. (Refer to 8 - ELECTRICAL/VEHICLE THEFT SECURITY - STANDARD PROCEDURE)

No >> The repair is complete.
Perform SKIS VERIFICATION. (Refer to 8 - ELECTRICAL/VEHICLE THEFT SECURITY - STANDARD PROCEDURE)

VIN MISMATCH

For a complete wiring diagram **Refer to Section 8W**.

- **When Monitored:**
  With the ignition on.
- **Set Condition:**
  When the VIN received from the PCM does not match the VIN stored in the SKIM's EEPROM.

Possible Causes
WIRE HARNESS OPEN OR SHORTED
SKIM
PCM

Diagnostic Test

1. ACTIVE DTC

With the scan tool, erase the SKIM DTCs.
Turn the ignition off.
Wait 10 seconds.
Turn the ignition on and wait 2 minutes.
With the scan tool, read the SKIM DTCs.

Is the DTC active at this time?

Yes >> Go To 2

No >> Refer to the INTERMITTENT CONDITION Diagnostic Procedure.
Perform SKIS VERIFICATION. (Refer to 8 - ELECTRICAL/VEHICLE THEFT SECURITY - STANDARD PROCEDURE)

---

2. CORRECT VIN IN THE PCM

Turn the ignition on.
With the scan tool, select Engine system from the main menu.
Display and record the Vehicle Identification Number.

NOTE: Make sure that a VIN has been programmed into the PCM. If a VIN is not displayed, attempt to program the PCM with the correct vehicle VIN before continuing.

Does the VIN recorded from the PCM match the VIN of the vehicle?

Yes >> Go To 3

No >> Perform the PCM replaced to update the VIN in the PCM.
Perform SKIS VERIFICATION. (Refer to 8 - ELECTRICAL/VEHICLE THEFT SECURITY - STANDARD PROCEDURE)

VIN MISMATCH (CONTINUED)

3. SKIM

Turn the ignition off.

Replace and program the Sentry Key Immobilizer Module in accordance with the Service Information.

Turn the ignition on.

With the scan tool, display and clear all PCM and SKIM DTC's.

Perform 5 ignition key cycles leaving the ignition key on for 90 seconds per cycle.

With the scan tool, check for SKIM DTCs.

Does the scan tool display the same DTC?

Yes >> Replace and program the Powertrain Control Module per Service Information.
Perform SKIS VERIFICATION. (Refer to 8 - ELECTRICAL/VEHICLE THEFT SECURITY - STANDARD PROCEDURE)

No >> The repair is complete.
Perform SKIS VERIFICATION. (Refer to 8 - ELECTRICAL/VEHICLE THEFT SECURITY - STANDARD PROCEDURE)

TRANSPONDER CYCLIC REDUNDANCY CHECK (CRC) FAILURE

For a complete wiring diagram **Refer to Section 8W**.

- **When Monitored:**
  At ignition on and during Key Programming Mode.
- **Set Condition:**
  When 5 consecutive transponder signal transmissions are sent to the SKIM with the correct message format but with invalid data.

Possible Causes
IGNITION KEY
SKIM

Diagnostic Test

1. ACTIVE DTC

With the scan tool, read and record the SKIM DTCs.

With the scan tool, erase the SKIM DTCs.

NOTE: Perform the following test several times to make sure the DTC is current.

Turn the ignition off.

Wait 10 seconds.

Turn the ignition on.

With the scan tool, read the SKIM DTCs.

Is the DTC active at this time?

Yes >> Go To 2

No >> Refer to the INTERMITTENT CONDITION Diagnostic Procedure.
Perform SKIS VERIFICATION. (Refer to 8 - ELECTRICAL/VEHICLE THEFT SECURITY - STANDARD PROCEDURE)

---

2. AVAILABILITY OF MULTIPLE KEYS

Are there multiple vehicle ignition keys available?

Yes >> Go To 3

No >> Go To 4

TRANSPONDER CYCLIC REDUNDANCY CHECK (CRC) FAILURE (CONTINUED)

3. CHECKING KEY OPERATION

NOTE: Perform the following steps using one of the vehicle ignition keys. When finished, repeat the procedure using each of the other vehicle keys one at a time.

With the scan tool, erase the SKIM DTCs.
Turn the ignition off.
Wait 10 seconds.
Turn the ignition on.
With the scan tool, read the SKIM DTCs.

Is the DTC present for all ignition keys?

Yes >> Replace and program the Sentry Key Immobilizer Module per Service Information.
Perform SKIS VERIFICATION. (Refer to 8 - ELECTRICAL/VEHICLE THEFT SECURITY - STANDARD PROCEDURE)

No >> Replace the ignition key(s) that cause the SKIM DTC.
Perform SKIS VERIFICATION. (Refer to 8 - ELECTRICAL/VEHICLE THEFT SECURITY - STANDARD PROCEDURE)

---

4. REPROGRAM KEYS

With the scan tool, attempt to reprogram the ignition keys to the SKIM.
With the scan tool, erase the SKIM DTCs.
Wait 10 seconds.
Turn the ignition on.
With the scan tool, read the SKIM DTCs.

Does the DTC set again?

Yes >> Go To 5

No >> Test Complete.

---

5. PROGRAM NEW IGNITION KEY

Replace the ignition key with a new key.
With the scan tool, program the new ignition key to the SKIM.
With the scan tool, erase the SKIM DTCs.
Turn the ignition off.
Wait 10 seconds.
Turn the ignition on.
With the scan tool, read the SKIM DTCs.

Does the DTC set again?

Yes >> Go To 6

No >> Test Complete.

TRANSPONDER CYCLIC REDUNDANCY CHECK (CRC) FAILURE (CONTINUED)

6. **SKIM**

If there are no possible causes remaining, view repair.

Repair

Replace and program the Sentry Key Immobilizer Module per Service Information.

Perform SKIS VERIFICATION. (Refer to 8 - ELECTRICAL/VEHICLE THEFT SECURITY - STANDARD PROCEDURE)

TRANSPONDER COMMUNICATION FAILURE

For a complete wiring diagram **Refer to Section 8W**.

- **When Monitored:**
  At ignition on and during Key Programming Mode.
- **Set Condition:**
  When the SKIM does not receive a transponder response after 8 consecutive transponder read attempts within 2.0 seconds.

Possible Causes
IGNITION KEY
SKIM

Diagnostic Test

1. ACTIVE DTC

With the scan tool, read and record the SKIM DTCs.

With the scan tool, erase the SKIM DTCs.

NOTE: Perform the following test several times to make sure the DTC is current.

Turn the ignition off.

Wait 10 seconds.

Turn the ignition on.

With the scan tool, read the SKIM DTCs.

Is the DTC active at this time?

Yes >> Go To 2

No >> Refer to the INTERMITTENT CONDITION Diagnostic Procedure.
Perform SKIS VERIFICATION. (Refer to 8 - ELECTRICAL/VEHICLE THEFT SECURITY - STANDARD PROCEDURE)

---

2. AVAILABILITY OF MULTIPLE KEYS

Are there multiple vehicle ignition keys available?

Yes >> Go To 3

No >> Go To 4

TRANSPONDER COMMUNICATION FAILURE (CONTINUED)

3. CHECKING KEY OPERATION

NOTE: Perform the following steps using one of the vehicle ignition keys. When finished, repeat the procedure using each of the other vehicle keys one at a time.

With the scan tool, erase the SKIM DTCs.

Turn the ignition off.

Wait 10 seconds.

Turn the ignition on.

With the scan tool, read the SKIM DTCs.

Is the DTC present for all ignition keys?

Yes >> Replace and program the Sentry Key Immobilizer Module per Service Information.
Perform SKIS VERIFICATION. (Refer to 8 - ELECTRICAL/VEHICLE THEFT SECURITY - STANDARD PROCEDURE)

No >> Replace the ignition key(s) that cause the SKIM DTC.
Perform SKIS VERIFICATION. (Refer to 8 - ELECTRICAL/VEHICLE THEFT SECURITY - STANDARD PROCEDURE)

---

4. REPROGRAM KEYS

With the scan tool, attempt to reprogram the ignition keys to the SKIM.

With the scan tool, erase the SKIM DTCs.

Wait 10 seconds.

Turn the ignition on.

With the scan tool, read the SKIM DTCs.

Does the DTC set again?

Yes >> Go To 5

No >> Test Complete.

---

5. PROGRAM NEW IGNITION KEY

Replace the ignition key with a new key.

With the scan tool, program the new ignition key to the SKIM.

With the scan tool, erase the SKIM DTCs.

Turn the ignition off.

Wait 10 seconds.

Turn the ignition on.

With the scan tool, read the SKIM DTCs.

Does the DTC set again?

Yes >> Go To 6

No >> Test Complete.

TRANSPONDER COMMUNICATION FAILURE (CONTINUED)

6. SKIM

If there are no possible causes remaining, view repair.

Repair

Replace and program the Sentry Key Immobilizer Module per Service Information.

Perform SKIS VERIFICATION. (Refer to 8 - ELECTRICAL/VEHICLE THEFT SECURITY - STANDARD PROCEDURE)

TRANSPONDER ID MISMATCH

For a complete wiring diagram **Refer to Section 8W**.

- **When Monitored:**
  At ignition on and during Key Programming Mode.
- **Set Condition:**
  When the transponder ID read by the SKIM does not match any of the transponder ID's stored in the SKIM's memory.

Possible Causes
IGNITION KEY
SKIM

Diagnostic Test

1. ACTIVE DTC

With the scan tool, read and record the SKIM DTCs.

With the scan tool, erase the SKIM DTCs.

NOTE: Perform the following test several times to make sure the DTC is current.

Turn the ignition off.

Wait 10 seconds.

Turn the ignition on.

With the scan tool, read the SKIM DTCs.

Is the DTC active at this time?

Yes >> Go To 2

No >> Refer to the INTERMITTENT CONDITION Diagnostic Procedure.
Perform SKIS VERIFICATION. (Refer to 8 - ELECTRICAL/VEHICLE THEFT SECURITY - STANDARD PROCEDURE)

---

2. AVAILABILITY OF MULTIPLE KEYS

Are there multiple vehicle ignition keys available?

Yes >> Go To 3

No >> Go To 4

TRANSPONDER ID MISMATCH (CONTINUED)

3. CHECKING KEY OPERATION

NOTE: Perform the following steps using one of the vehicle ignition keys. When finished, repeat the procedure using each of the other vehicle keys one at a time.

With the scan tool, erase the SKIM DTCs.
Turn the ignition off.
Wait 10 seconds.
Turn the ignition on.
With the scan tool, read the SKIM DTCs.

Is the DTC present for all ignition keys?

Yes >> Replace and program the Sentry Key Immobilizer Module per Service Information.
Perform SKIS VERIFICATION. (Refer to 8 - ELECTRICAL/VEHICLE THEFT SECURITY - STANDARD PROCEDURE)

No >> Replace the ignition key(s) that cause the SKIM DTC.
Perform SKIS VERIFICATION. (Refer to 8 - ELECTRICAL/VEHICLE THEFT SECURITY - STANDARD PROCEDURE)

---

4. REPROGRAM KEYS

With the scan tool, attempt to reprogram the ignition keys to the SKIM.
With the scan tool, erase the SKIM DTCs.
Wait 10 seconds.
Turn the ignition on.
With the scan tool, read the SKIM DTCs.

Does the DTC set again?

Yes >> Go To 5

No >> Test Complete.

---

5. PROGRAM NEW IGNITION KEY

Replace the ignition key with a new key.
With the scan tool, program the new ignition key to the SKIM.
With the scan tool, erase the SKIM DTCs.
Turn the ignition off.
Wait 10 seconds.
Turn the ignition on.
With the scan tool, read the SKIM DTCs.

Does the DTC set again?

Yes >> Go To 6

No >> Test Complete.

TRANSPONDER ID MISMATCH (CONTINUED)

6. **SKIM**

If there are no possible causes remaining, view repair.

Repair

Replace and program the Sentry Key Immobilizer Module per Service Information.

Perform SKIS VERIFICATION. (Refer to 8 - ELECTRICAL/VEHICLE THEFT SECURITY - STANDARD PROCEDURE)

TRANSPONDER RESPONSE MISMATCH

For a complete wiring diagram **Refer to Section 8W**.

- **When Monitored:**
  At ignition on and during Key Programming Mode.
- **Set Condition:**
  When the transponder's crypt algorithm result fails to match the SKIM's result.

Possible Causes
IGNITION KEY
SKIM

Diagnostic Test

1. ACTIVE DTC

With the scan tool, erase the SKIM DTCs.

NOTE: Perform the following test several times to make sure the DTC is current.
Turn the ignition off.
Wait 10 seconds.
Turn the ignition on.
With the scan tool, read the SKIM DTCs.

Is the DTC active at this time?

Yes >> Go To 2

No >> Refer to the INTERMITTENT CONDITION Diagnostic Procedure.
Perform SKIS VERIFICATION. (Refer to 8 - ELECTRICAL/VEHICLE THEFT SECURITY - STANDARD PROCEDURE)

---

2. AVAILABILITY OF MULTIPLE KEYS

Are there multiple vehicle ignition keys available?

Yes >> Go To 3

No >> Go To 4

TRANSPONDER RESPONSE MISMATCH (CONTINUED)

3. CHECKING KEY OPERATION

NOTE: Perform the following steps using one of the vehicle ignition keys. When finished, repeat the procedure using each of the other vehicle keys one at a time.

With the scan tool, erase the SKIM DTCs.
Turn the ignition off.
Wait 10 seconds.
Turn the ignition on.
With the scan tool, read the SKIM DTCs.

Is the DTC present for all ignition keys?

Yes >> Replace and program the Sentry Key Immobilizer Module per Service Information.
Perform SKIS VERIFICATION. (Refer to 8 - ELECTRICAL/VEHICLE THEFT SECURITY - STANDARD PROCEDURE)

No >> Replace the ignition key(s) that cause the SKIM DTC.
Perform SKIS VERIFICATION. (Refer to 8 - ELECTRICAL/VEHICLE THEFT SECURITY - STANDARD PROCEDURE)

---

4. REPROGRAM KEYS

With the scan tool, attempt to reprogram the ignition keys to the SKIM.
With the scan tool, erase the SKIM DTCs.
Wait 10 seconds.
Turn the ignition on.
With the scan tool, read the SKIM DTCs.

Does the DTC set again?

Yes >> Go To 5

No >> Test Complete.

---

5. PROGRAM NEW IGNITION KEY

Replace the ignition key with a new key.
With the scan tool, program the new ignition key to the SKIM.
With the scan tool, erase the SKIM DTCs.
Turn the ignition off.
Wait 10 seconds.
Turn the ignition on.
With the scan tool, read the SKIM DTCs.

Does the DTC set again?

Yes >> Go To 6

No >> Test Complete.

TRANSPONDER RESPONSE MISMATCH (CONTINUED)

6. **SKIM**

If there are no possible causes remaining, view repair.

Repair

Replace and program the Sentry Key Immobilizer Module per Service Information.

Perform SKIS VERIFICATION. (Refer to 8 - ELECTRICAL/VEHICLE THEFT SECURITY - STANDARD PROCEDURE)

SKIS VERIFICATION TEST

Diagnostic Test

1. SKIS VERIFICATION TEST

1. Reconnect all previously disconnected components and connectors.

2. Obtain the vehicle's unique Personal Identification Number (PIN) assigned to it's original SKIM. This number can be obtained from the vehicle's invoice or Chrysler's Customer Center (1-800-992-1997).

NOTE: 3. When entering the PIN, care should be taken because the SKIM will only allow 3 consecutive attempts to enter the correct PIN. If 3 consecutive incorrect PINs are entered, the SKIM will Lock Out the scan tool for 1 hour.

4. To exit Lock Out mode, the ignition key must remain in the Run position continually for 1 hour. Turn off all accessories and connect a battery charger if necessary.

5. With the scan tool, select Theft Alarm, SKIM and Miscellaneous. Then, select the desired procedure and follow the steps that will be displayed.

6. If the SKIM has been replaced, make sure all of the vehicle ignition keys are programmed to the new SKIM.

NOTE: 7. Prior to returning vehicle to the customer, perform a module scan to be sure that all DTCs are erased. Erase any DTCs that are found.

8. With the scan tool, erase all DTCs. Perform 5 ignition key cycles leaving the key on for at least 90 seconds per cycle.

9. With the scan tool, read the SKIM DTCs.

Are there any SKIM DTCs?

Yes >> Repair is not complete, refer to appropriate diagnostic procedure.

No >> Repair is complete.

*ALARM TRIPS ON ITS OWN

For the Vehicle Theft Security circuit diagram (Refer to 8 - ELECTRICAL/VEHICLE THEFT SECURITY - SCHEMATICS AND DIAGRAMS)

For a complete wiring diagram **Refer to Section 8W**.

Diagnostic Test

1. LAST VTSS CAUSE

With the DRBIII® in Inputs/Outputs, read the Last VTSS Cause state.

Were there any causes displayed?

Yes >> Check for a possible intermittent condition with the circuit indicated by the DRBIII®.
Perform VTSS VERIFICATION TEST - 1A. (Refer to 8 - ELECTRICAL/VEHICLE THEFT SECURITY - DIAGNOSIS AND TESTING)

No >> The condition that caused this symptom is currently not present. Inspect the related wiring harness for a possible intermittent condition. Look for any chafed, pierced, pinched or partially broken wires.
Perform VTSS VERIFICATION TEST - 1A. (Refer to 8 - ELECTRICAL/VEHICLE THEFT SECURITY - DIAGNOSIS AND TESTING)

*CYLINDER LOCK SWITCH INOP

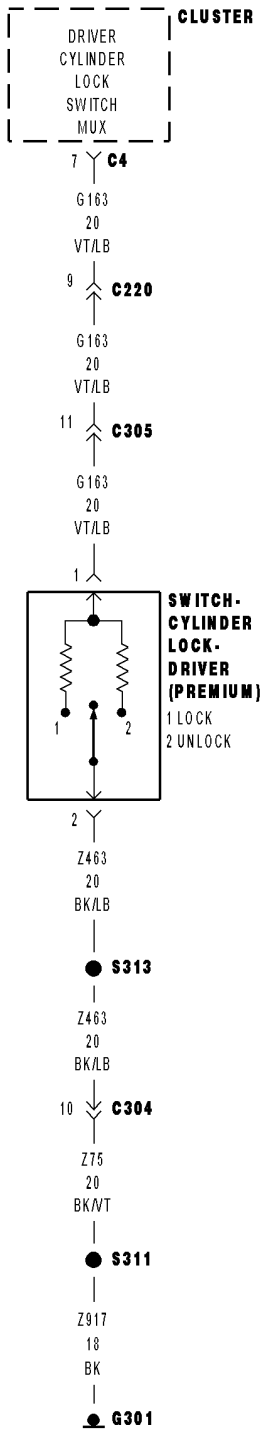

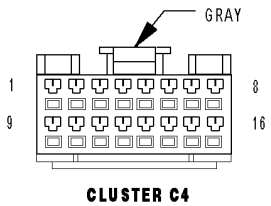

CLUSTER C4

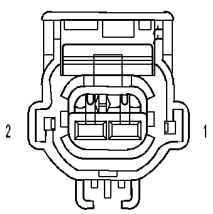

SWITCH- CYLINDER LOCK- DRIVER (PREMIUM)

813e1098

***CYLINDER LOCK SWITCH INOP (CONTINUED)**

For the Power Door Lock circuit diagram (Refer to 8 - ELECTRICAL/POWER LOCKS - SCHEMATICS AND DIAGRAMS).

For a complete wiring diagram **Refer to Section 8W**.

Possible Causes
DTC PRESENT
(Z463) CYLINDER LOCK SWITCH GROUND OPEN
(G163) CYLINDER LOCK SWITCH MUX CIRCUIT OPEN
(G163) CYLINDER LOCK SWITCH MUX WIRE SHORT TO GROUND
CYLINDER LOCK SWITCH
INSTRUMENT CLUSTER

Diagnostic Test

1. DTC PRESENT

Turn the ignition on.

With the DRBIII®, read DTC's.

Are there any Power Door Lock related trouble codes?

Yes >> Refer to symptom list for problems related to Power Door Locks.

Perform BODY VERIFICATION TEST - VER 1. (Refer to 8 - ELECTRICAL/ELECTRONIC CONTROL MODULES/FRONT CONTROL MODULE - DIAGNOSIS AND TESTING)

No >> Go To 2

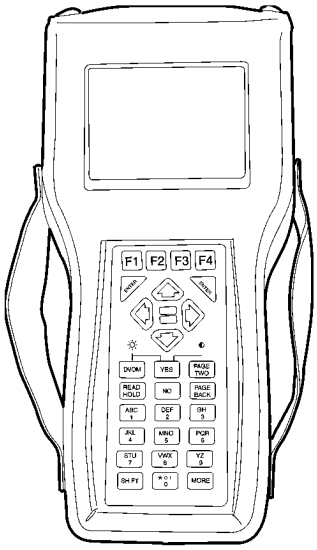

***CYLINDER LOCK SWITCH INOP (CONTINUED)**

2. CYLINDER LOCK SWITCH VOLTAGE LOW

Turn the ignition off.

Disconnect the Cylinder Lock Switch connector.

Measure the voltage between (G163) Cylinder Lock Switch Mux circuit and ground.

Is the voltage between 4.6 and 5.2 volts?

Yes >> Go To 3

No >> Go To 4

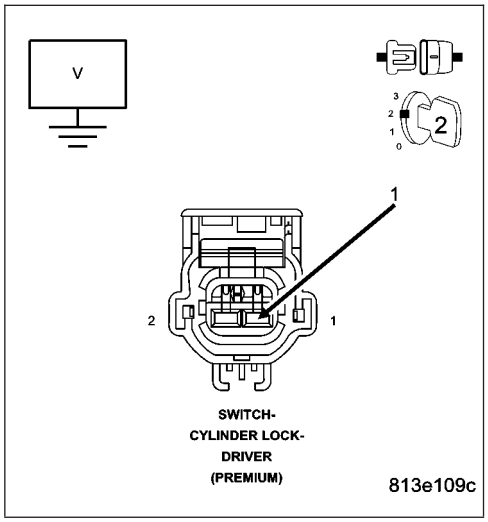

3. (Z463) CYLINDER LOCK SWITCH GROUND OPEN

Using a 12-volt test light connected to 12-volts, check the (Z463) Ground circuit.

Does the test light illuminate brightly?

Yes >> Replace the Cylinder Lock Switch.
Perform BODY VERIFICATION TEST - VER 1. (Refer to 8 - ELECTRICAL/ELECTRONIC CONTROL MODULES/ FRONT CONTROL MODULE - DIAGNOSIS AND TESTING)

No >> Repair the (Z463) Ground circuit for an open.
Perform BODY VERIFICATION TEST - VER 1. (Refer to 8 - ELECTRICAL/ELECTRONIC CONTROL MODULES/ FRONT CONTROL MODULE - DIAGNOSIS AND TESTING)

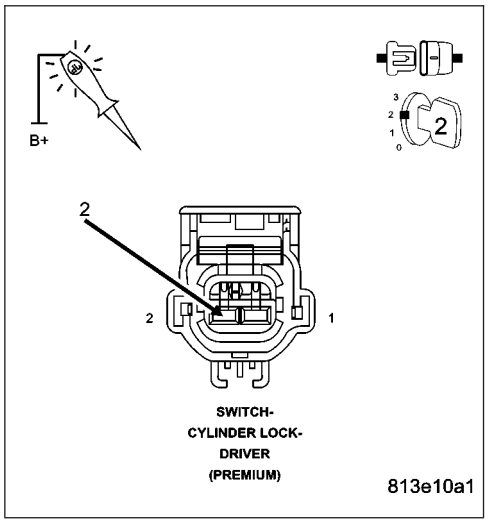

***CYLINDER LOCK SWITCH INOP (CONTINUED)**

4. (G163) CYLINDER LOCK SWITCH MUX OPEN

Turn the ignition off.

Disconnect the Instrument Cluster C4 connector.

Measure the resistance of the (G163) Cylinder Lock Switch Mux circuit between the Switch connector and the Instrument Cluster connector.

Is the resistance below 5.0 ohms?

Yes >> Go To 5

No >> Repair the (G163) Cylinder Lock Switch Mux circuit for an open.

Perform BODY VERIFICATION TEST - VER 1. (Refer to 8 - ELECTRICAL/ELECTRONIC CONTROL MODULES/ FRONT CONTROL MODULE - DIAGNOSIS AND TESTING)

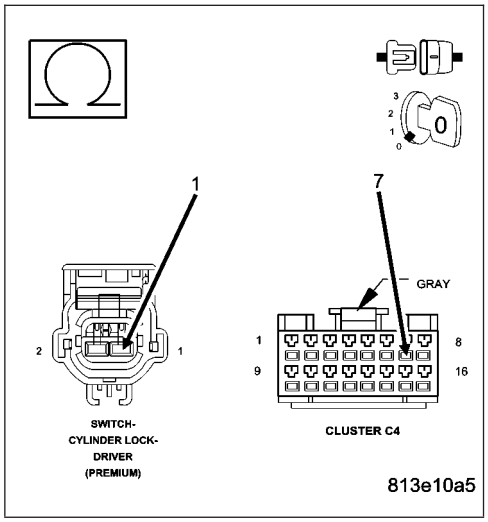

5. (G163) CYLINDER LOCK SWITCH MUX WIRE SHORT TO GROUND

Measure the resistance between Ground and the (G163) Cylinder Lock Switch Mux circuit in the Cluster C4 connector.

Is the resistance below 1000.0 ohms?

No >> Replace the Instrument Cluster.

Perform BODY VERIFICATION TEST - VER 1. (Refer to 8 - ELECTRICAL/ELECTRONIC CONTROL MODULES/ FRONT CONTROL MODULE - DIAGNOSIS AND TESTING)

Yes >> Repair the (G163) Cylinder Lock Switch Mux circuit for a short to ground.

Perform BODY VERIFICATION TEST - VER 1. (Refer to 8 - ELECTRICAL/ELECTRONIC CONTROL MODULES/ FRONT CONTROL MODULE - DIAGNOSIS AND TESTING)

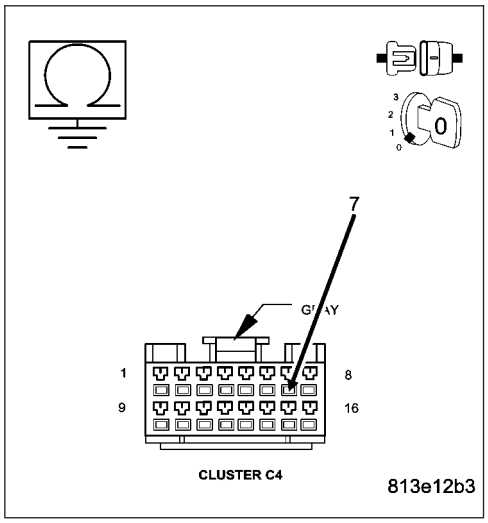

*DRIVER DOOR DOES NOT TRIP VTSS

For the Vehicle Theft Security circuit diagram (Refer to 8 - ELECTRICAL/VEHICLE THEFT SECURITY - SCHEMATICS AND DIAGRAMS)

For a complete wiring diagram **Refer to Section 8W**.

Possible Causes
DRIVER DOOR AJAR CIRCUIT
VERIFY VTSS OPERATION
VTSS NOT ENABLED IN FCM
INSTRUMENT CLUSTER

1. DOOR AJAR STATE

With the DRBIII®, read the DRVR DOOR AJAR SW status.

Open the driver door.

Does the DRBIII® display CLOSED?

Yes >> Go To 2

No >> Refer to symptom DRIVER DOOR AJAR CIRCUIT OPEN in the LAMPS/LIGHTING - INTERIOR section. (Refer to 8 - ELECTRICAL/LAMPS/LIGHTING - INTERIOR - DIAGNOSIS AND TESTING)

Perform VTSS VERIFICATION TEST - 1A. (Refer to 8 - ELECTRICAL/VEHICLE THEFT SECURITY - DIAGNOSIS AND TESTING)

---

2. ATTEMPT TO TRIP VTSS

Open the driver's door window.

Remove key from ignition switch.

Use the RKE or power door lock switch to lock the doors then close all doors.

Wait approximately 15 seconds for the VTSS indicator to flash at a slower rate indicating the Vehicle Theft Security System is armed.

Manually unlock the driver door lock.

Attempt to trip the VTSS by opening the drivers door.

Did the VTSS trip when the door was opened?

Yes >> Test complete.

Perform VTSS VERIFICATION TEST - 1A. (Refer to 8 - ELECTRICAL/VEHICLE THEFT SECURITY - DIAGNOSIS AND TESTING)

No >> Go To 3

***DRIVER DOOR DOES NOT TRIP VTSS (CONTINUED)**

3. DISCONNECT BATTERY TO RESET FCM

Turn the ignition Off to the lock position.

Disconnect the negative battery cable wait 5 seconds then reconnect.

Turn the ignition to the On position for 10 seconds then back Off to the lock position and remove key.

Arm the VTSS and attempt to trip to alarming state by manually unlocking door and opening.

Did the VTSS trip to the alarming state when the door was opened?

Yes >> Test complete.
Perform VTSS VERIFICATION TEST - 1A. (Refer to 8 - ELECTRICAL/VEHICLE THEFT SECURITY - DIAGNOSIS AND TESTING)

No >> Replace and program the Instrument Cluster in accordance with the Service Information.
Perform BODY VERIFICATION TEST - VER 1. (Refer to 8 - ELECTRICAL/ELECTRONIC CONTROL MODULES/FRONT CONTROL MODULE - DIAGNOSIS AND TESTING)

*HEADLAMPS FAIL TO FLASH WHEN ALARM IS TRIPPED

For the Vehicle Theft Security circuit diagram (Refer to 8 - ELECTRICAL/VEHICLE THEFT SECURITY - SCHEMATICS AND DIAGRAMS)

For a complete wiring diagram **Refer to Section 8W**.

Possible Causes
FCM DTCS OR EXTERIOR LAMP OPERATION
INSTRUMENT CLUSTER

1. CHECK FCM DTCS AND HIGH BEAM HEADLAMP OPERATION

Attempt to operate the exterior lamps with the headlamp switch.
With the DRBIII®, read FCM DTCs.

Were there any problems found?

Yes >> Refer to symptom list for problems related to Exterior Lighting.
Perform VTSS VERIFICATION TEST - 1A. (Refer to 8 - ELECTRICAL/VEHICLE THEFT SECURITY - DIAGNOSIS AND TESTING)

No >> Replace and program the Instrument Cluster in accordance with the Service Information.
Perform BODY VERIFICATION TEST - VER 1. (Refer to 8 - ELECTRICAL/ELECTRONIC CONTROL MODULES/FRONT CONTROL MODULE - DIAGNOSIS AND TESTING)

*HORN FAILS TO SOUND WHEN ALARM IS TRIPPED

For the Vehicle Theft Security circuit diagram (Refer to 8 - ELECTRICAL/VEHICLE THEFT SECURITY - SCHEMATICS AND DIAGRAMS)

For a complete wiring diagram **Refer to Section 8W**.

Possible Causes
DTC PRESENT
HORN CIRCUIT
INSTRUMENT CLUSTER

1. HORN RELAY CONTROL CIRCUIT DTC ACTIVE

Turn the ignition on.

With the DRBIII®, read FCM DTC's.

Does the DRBIII® display a HORN RELAY CONTROL CIRCUIT DTC active?

Yes >> Refer to the Ignition, Power, Accessory category for the related symptom(s).
Perform VTSS VERIFICATION TEST - 1A. (Refer to 8 - ELECTRICAL/VEHICLE THEFT SECURITY - DIAGNOSIS AND TESTING)

No >> Go To 2

---

2. HORN CIRCUIT DIAGNOSTICS

Does the horn operate from the horn button?

Yes >> Replace and program the Instrument Cluster in accordance with the Service Information.
Perform BODY VERIFICATION TEST - VER 1. (Refer to 8 - ELECTRICAL/ELECTRONIC CONTROL MODULES/FRONT CONTROL MODULE - DIAGNOSIS AND TESTING)

No >> Refer to symptom Horns Inoperative in the Ignition, Power, Accessory category.
Perform VTSS VERIFICATION TEST - 1A. (Refer to 8 - ELECTRICAL/VEHICLE THEFT SECURITY - DIAGNOSIS AND TESTING)

---

*LEFT REAR DOOR DOES NOT TRIP VTSS (4 DOOR)

For the Vehicle Theft Security circuit diagram (Refer to 8 - ELECTRICAL/VEHICLE THEFT SECURITY - SCHEMATICS AND DIAGRAMS)

For a complete wiring diagram **Refer to Section 8W**.

Possible Causes
PASSENGER DOOR AJAR CIRCUIT
VERIFY VTSS OPERATION
VTSS NOT ENABLED IN FCM
INSTRUMENT CLUSTER

1. DOOR AJAR STATE

With the DRBIII®, read the PASS DOOR AJAR SW status.

Open the Left Rear door.

Does the DRBIII® display CLOSED?

Yes >> Go To 2

No >> Refer to symptom LEFT REAR AJAR CIRCUIT OPEN in the LAMPS/LIGHTING - INTERIOR section. (Refer to 8 - ELECTRICAL/LAMPS/LIGHTING - INTERIOR - DIAGNOSIS AND TESTING)
Perform VTSS VERIFICATION TEST - 1A. (Refer to 8 - ELECTRICAL/VEHICLE THEFT SECURITY - DIAGNOSIS AND TESTING)

---

2. ATTEMPT TO TRIP VTSS

Open the left rear door window.

Remove key from ignition switch.

Use the RKE or power door lock switch to lock the doors then close all doors.

Wait approximately 15 seconds for the VTSS indicator to flash at a slower rate indicating the Vehicle Theft Security System is armed.

Manually unlock the left rear door lock.

Attempt to trip the VTSS by opening the left rear door.

Did the VTSS trip when the door was opened?

Yes >> Test complete.
Perform VTSS VERIFICATION TEST - 1A. (Refer to 8 - ELECTRICAL/VEHICLE THEFT SECURITY - DIAGNOSIS AND TESTING)

No >> Go To 3

***LEFT REAR DOOR DOES NOT TRIP VTSS (4 DOOR) (CONTINUED)**

3. DISCONNECT BATTERY TO RESET FCM

Turn the ignition Off to the lock position.

Disconnect the negative battery cable wait 5 seconds then reconnect.

Turn the ignition to the On position for 10 seconds then back Off to the lock position and remove key.

Arm the VTSS and attempt to trip to alarming state by manually unlocking door and opening.

Did the VTSS trip to the alarming state when the door was opened?

Yes >> Test complete.
Perform VTSS VERIFICATION TEST - 1A. (Refer to 8 - ELECTRICAL/VEHICLE THEFT SECURITY - DIAGNOSIS AND TESTING)

No >> Replace and program the Instrument Cluster in accordance with the Service Information.
Perform BODY VERIFICATION TEST - VER 1. (Refer to 8 - ELECTRICAL/ELECTRONIC CONTROL MODULES/FRONT CONTROL MODULE - DIAGNOSIS AND TESTING)

*PASSENGER DOOR DOES NOT TRIP VTSS

For the Vehicle Theft Security circuit diagram (Refer to 8 - ELECTRICAL/VEHICLE THEFT SECURITY - SCHEMATICS AND DIAGRAMS)

For a complete wiring diagram **Refer to Section 8W**.

Possible Causes
PASSENGER DOOR AJAR CIRCUIT
VERIFY VTSS OPERATION
VTSS NOT ENABLED IN FCM
INSTRUMENT CLUSTER

1. DOOR AJAR STATE

With the DRBIII®, read the PASS DOOR AJAR SW status.

Open the passenger door.

Does the DRBIII® display CLOSED?

Yes >> Go To 2

No >> Refer to symptom PASSENGER DOOR AJAR CIRCUIT OPEN in the LAMPS/LIGHTING - INTERIOR section. (Refer to 8 - ELECTRICAL/LAMPS/LIGHTING - INTERIOR - DIAGNOSIS AND TESTING)

Perform VTSS VERIFICATION TEST - 1A. (Refer to 8 - ELECTRICAL/VEHICLE THEFT SECURITY - DIAGNOSIS AND TESTING)

---

2. ATTEMPT TO TRIP VTSS

Open the passenger door window.

Remove key from ignition switch.

Use the RKE or power door lock switch to lock the doors then close all doors.

Wait approximately 15 seconds for the VTSS indicator to flash at a slower rate indicating the Vehicle Theft Security System is armed.

Manually unlock the passenger door lock.

Attempt to trip the VTSS by opening the passenger door.

Did the VTSS trip when the door was opened?

Yes >> Test complete.

Perform VTSS VERIFICATION TEST - 1A. (Refer to 8 - ELECTRICAL/VEHICLE THEFT SECURITY - DIAGNOSIS AND TESTING)

No >> Go To 3

***PASSENGER DOOR DOES NOT TRIP VTSS (CONTINUED)**

3. DISCONNECT BATTERY TO RESET FCM

Turn the ignition Off to the lock position.

Disconnect the negative battery cable wait 5 seconds then reconnect.

Turn the ignition to the On position for 10 seconds then back Off to the lock position and remove key.

Arm the VTSS and attempt to trip to alarming state by manually unlocking door and opening.

Did the VTSS trip to the alarming state when the door was opened?

Yes >> Test complete.
Perform VTSS VERIFICATION TEST - 1A. (Refer to 8 - ELECTRICAL/VEHICLE THEFT SECURITY - DIAGNOSIS AND TESTING)

No >> Replace and program the Instrument Cluster in accordance with the Service Information.
Perform BODY VERIFICATION TEST - VER 1. (Refer to 8 - ELECTRICAL/ELECTRONIC CONTROL MODULES/FRONT CONTROL MODULE - DIAGNOSIS AND TESTING)

*RIGHT REAR DOOR DOES NOT TRIP VTSS (4 DOOR)

For the Vehicle Theft Security circuit diagram (Refer to 8 - ELECTRICAL/VEHICLE THEFT SECURITY - SCHEMATICS AND DIAGRAMS)

For a complete wiring diagram **Refer to Section 8W**.

Possible Causes
PASSENGER DOOR AJAR CIRCUIT
VERIFY VTSS OPERATION
VTSS NOT ENABLED IN FCM
INSTRUMENT CLUSTER

1. DOOR AJAR STATE

With the DRBIII®, read the PASS DOOR AJAR SW status.

Open the Right Rear door.

Does the DRBIII® display CLOSED?

Yes >> Go To 2

No >> Refer to symptom RIGHT REAR AJAR CIRCUIT OPEN in the LAMPS/LIGHTING - INTERIOR section. (Refer to 8 - ELECTRICAL/LAMPS/LIGHTING - INTERIOR - DIAGNOSIS AND TESTING)

Perform VTSS VERIFICATION TEST - 1A. (Refer to 8 - ELECTRICAL/VEHICLE THEFT SECURITY - DIAGNOSIS AND TESTING)

---

2. ATTEMPT TO TRIP VTSS

Open the right rear door window.

Remove key from ignition switch.

Use the RKE or power door lock switch to lock the doors then close all doors.

Wait approximately 15 seconds for the VTSS indicator to flash at a slower rate indicating the Vehicle Theft Security System is armed.

Manually unlock the right rear door lock.

Attempt to trip the VTSS by opening the right rear door.

Did the VTSS trip when the door was opened?

Yes >> Test complete.

Perform VTSS VERIFICATION TEST - 1A. (Refer to 8 - ELECTRICAL/VEHICLE THEFT SECURITY - DIAGNOSIS AND TESTING)

No >> Go To 3

***RIGHT REAR DOOR DOES NOT TRIP VTSS (4 DOOR) (CONTINUED)**

3. DISCONNECT BATTERY TO RESET FCM

Turn the ignition Off to the lock position.

Disconnect the negative battery cable wait 5 seconds then reconnect.

Turn the ignition to the On position for 10 seconds then back Off to the lock position and remove key.

Arm the VTSS and attempt to trip to alarming state by manually unlocking door and opening.

Did the VTSS trip to the alarming state when the door was opened?

Yes >> Test complete.
Perform VTSS VERIFICATION TEST - 1A. (Refer to 8 - ELECTRICAL/VEHICLE THEFT SECURITY - DIAGNOSIS AND TESTING)

No >> Replace and program the Instrument Cluster in accordance with the Service Information.
Perform BODY VERIFICATION TEST - VER 1. (Refer to 8 - ELECTRICAL/ELECTRONIC CONTROL MODULES/FRONT CONTROL MODULE - DIAGNOSIS AND TESTING)

*VTSS WILL NOT ARM PROPERLY

For the Vehicle Theft Security circuit diagram (Refer to 8 - ELECTRICAL/VEHICLE THEFT SECURITY - SCHEMATICS AND DIAGRAMS)

For a complete wiring diagram **Refer to Section 8W**.

Possible Causes
VTSS NOT ENABLED
CHECK FOR DTCS AND VTSS ARMING INHIBITORS
CHECK FOR SKIM NO RESPONSE
CYLINDER LOCK SWITCH GROUND OPEN
CYLINDER LOCK SWITCH MUX CIRCUIT OPEN
CYLINDER LOCK SWITCH OPEN
INSTRUMENT CLUSTER

1. ATTEMPT TO ENABLE THE VTSS

Turn the ignition Off to the lock position.
Disconnect the battery negative cable wait 5 seconds then reconnect battery cable.
Turn the ignition to the On position for 10 seconds, then back Off to the lock position and remove key.
Close all doors.
Using the key, lock the vehicle with the Driver Door Cylinder Lock Switch and observe the VTSS indicator.

Did the VTSS indicator flash rapidly, then flash at a slower rate indicating the VTSS is armed?

Yes >> Go To 2

No >> Go To 3

---

2. VTSS NOT ENABLED

Unlock the vehicle to disarm the VTSS.
Ensure all doors are closed.
Using the RKE key fob, lock the vehicle and observe the VTSS indicator.

Did the VTSS indicator flash rapidly, then flash at a slower rate indicating the VTSS is armed?

Yes >> Test Complete.
Perform VTSS VERIFICATION TEST - 1A. (Refer to 8 - ELECTRICAL/VEHICLE THEFT SECURITY - DIAGNOSIS AND TESTING)

No >> Replace and program the Instrument Cluster in accordance with the service information.
Perform BODY VERIFICATION TEST - VER 1. (Refer to 8 - ELECTRICAL/ELECTRONIC CONTROL MODULES/FRONT CONTROL MODULE - DIAGNOSIS AND TESTING)

***VTSS WILL NOT ARM PROPERLY (CONTINUED)**

3. USE DRB TO COMMUNICATE WITH THE SKIM

With the DRBIII®, attempt to communicate with the SKIM.

Does the DRBIII® communicate with the SKIM?

Yes >> Go To 4

No >> Refer to communication category for the related symptom(s).
Perform VTSS VERIFICATION TEST - 1A. (Refer to 8 - ELECTRICAL/VEHICLE THEFT SECURITY - DIAGNOSIS AND TESTING)

---

4. DTC OR VTSS INHIBITORS

Ensure the doors are closed.

With the DRBIII®, read the active DTC's and the ajar switch states.

Does the DRBIII® display any closed switches or related DTC's?

Yes >> Refer to the Symptom List and diagnose the appropriate symptom in the DOOR AJAR or related category.
Perform VTSS VERIFICATION TEST - 1A. (Refer to 8 - ELECTRICAL/VEHICLE THEFT SECURITY - DIAGNOSIS AND TESTING)

No >> Go To 5

---

5. CYLINDER LOCK SWITCH CIRCUIT OPEN

Turn the ignition on.

With the DRBIII®, read the Driver Cylinder Lock Switch MUX volts while turning the key in the driver door lock cylinder.

Did the MUX voltage change from approximately 5.0 volts to 4.0 for lock and 2.4 for unlock?

Yes >> Replace and program the Instrument Cluster in accordance with the service information.
Perform BODY VERIFICATION TEST - VER 1. (Refer to 8 - ELECTRICAL/ELECTRONIC CONTROL MODULES/FRONT CONTROL MODULE - DIAGNOSIS AND TESTING)

No >> Go To 6

***VTSS WILL NOT ARM PROPERLY (CONTINUED)**

6. INSTRUMENT CLUSTER CYLINDER LOCK SWITCH VOLTAGE LOW

Disconnect the Cylinder Lock Switch connector.

Measure the voltage between Cylinder Lock Switch Mux circuit and ground.

Is the voltage between 4.6 and 5.2 volts?

Yes >> Go To 7

No >> Go To 8

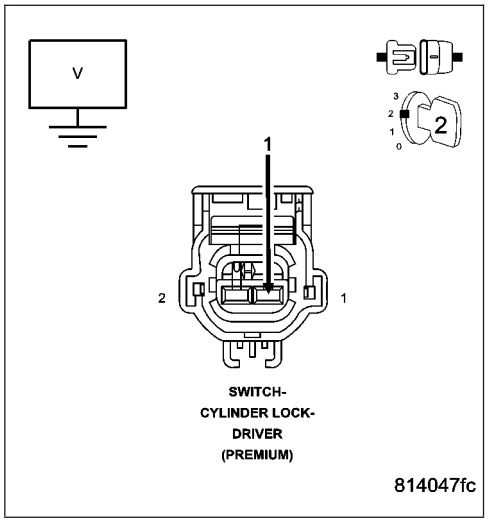

7. CYLINDER LOCK SWITCH GROUND OPEN

Disconnect the Cylinder Lock Switch connector.

Using a 12-volt test light connected to 12-volts, check the Ground circuit.

Does the test light illuminate brightly?

Yes >> Replace the Cylinder Lock Switch.
Perform VTSS VERIFICATION TEST - 1A. (Refer to 8 - ELECTRICAL/VEHICLE THEFT SECURITY - DIAGNOSIS AND TESTING)

No >> Repair the Ground circuit for an open.
Perform VTSS VERIFICATION TEST - 1A. (Refer to 8 - ELECTRICAL/VEHICLE THEFT SECURITY - DIAGNOSIS AND TESTING)

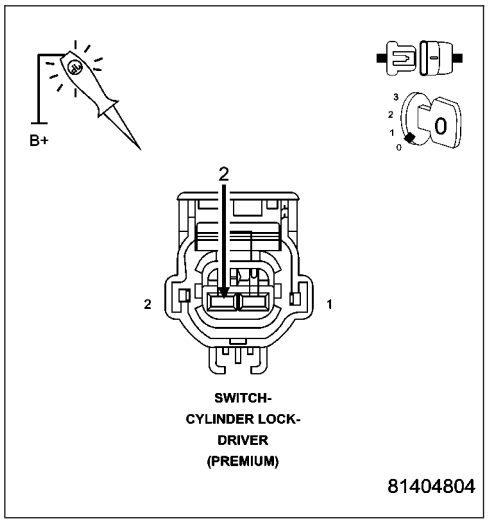

***VTSS WILL NOT ARM PROPERLY (CONTINUED)**

8. CYLINDER LOCK SWITCH MUX OPEN

Disconnect the Cylinder Lock Switch connector.

Disconnect the Instrument Cluster C2 connector.

Measure the resistance of the Cylinder Lock Switch Mux circuit between the Switch connector and the Instrument Cluster connector.

Is the resistance below 5.0 ohms?

Yes >> Replace the Instrument Cluster.
Perform VTSS VERIFICATION TEST - 1A. (Refer to 8 - ELECTRICAL/VEHICLE THEFT SECURITY - DIAGNOSIS AND TESTING)

No >> Repair the Cylinder Lock Switch Mux circuit for an open.
Perform VTSS VERIFICATION TEST - 1A. (Refer to 8 - ELECTRICAL/VEHICLE THEFT SECURITY - DIAGNOSIS AND TESTING)

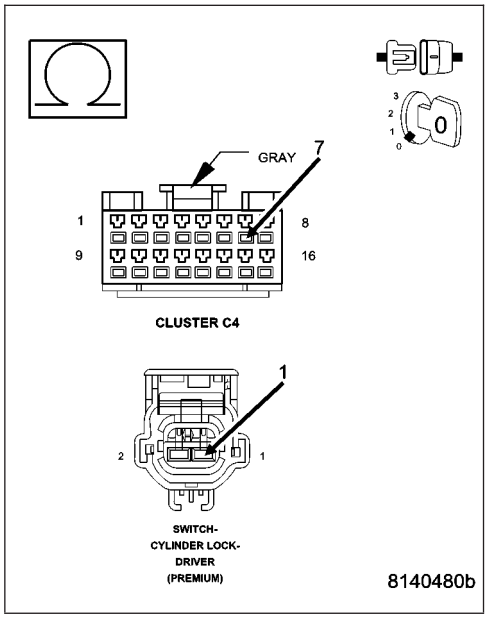

VTSS VERIFICATION TEST - 1A

Diagnostic Test

1. VTSS VERIFICATION TEST - 1A

1. Open the driver door and roll down the window.
2. Remove the ignition key (but keep in hand).
3. Lock the doors with RKE transmitter or power door lock switch.
4. Close all doors and observe the VTSS Indicator lamp.
5. - If the VTSS Indicator Lamp flashes rapidly and then after approximately 15 seconds changes to a slower flash, indicates the system is armed.
6. - If the indicator fails to flash as described, there is a problem with the system. Select the Identifying VTSS symptom from the Symptom List to troubleshoot.
7. - Manually unlock the driver's door and open door to verify the alarm will trip to the alarming state.

Does the VTSS Indicator Lamp flash as specified and does the alarm trip and operate properly?

Yes >> Repair is complete.

No >> Repair is not complete, refer to appropriate symptom.

STANDARD PROCEDURE

SKIS VERIFICATION TEST

Diagnostic Test

1. SKIS VERIFICATION TEST

1. Reconnect all previously disconnected components and connectors.

2. Obtain the vehicle's unique Personal Identification Number (PIN) assigned to it's original SKIM. This number can be obtained from the vehicle's invoice or Chrysler's Customer Center (1-800-992-1997).

NOTE: 3. When entering the PIN, care should be taken because the SKIM will only allow 3 consecutive attempts to enter the correct PIN. If 3 consecutive incorrect PINs are entered, the SKIM will Lock Out the scan tool for 1 hour.

4. To exit Lock Out mode, the ignition key must remain in the Run position continually for 1 hour. Turn off all accessories and connect a battery charger if necessary.

5. With the scan tool, select Theft Alarm, SKIM and Miscellaneous. Then, select the desired procedure and follow the steps that will be displayed.

6. If the SKIM has been replaced, make sure all of the vehicle ignition keys are programmed to the new SKIM.

NOTE: 7. Prior to returning vehicle to the customer, perform a module scan to be sure that all DTCs are erased. Erase any DTCs that are found.

8. With the scan tool, erase all DTCs. Perform 5 ignition key cycles leaving the key on for at least 90 seconds per cycle.

9. With the scan tool, read the SKIM DTCs.

Are there any SKIM DTCs?

Yes >> Repair is not complete, refer to appropriate diagnostic procedure.

No >> Repair is complete.

SCHEMATICS AND DIAGRAMS

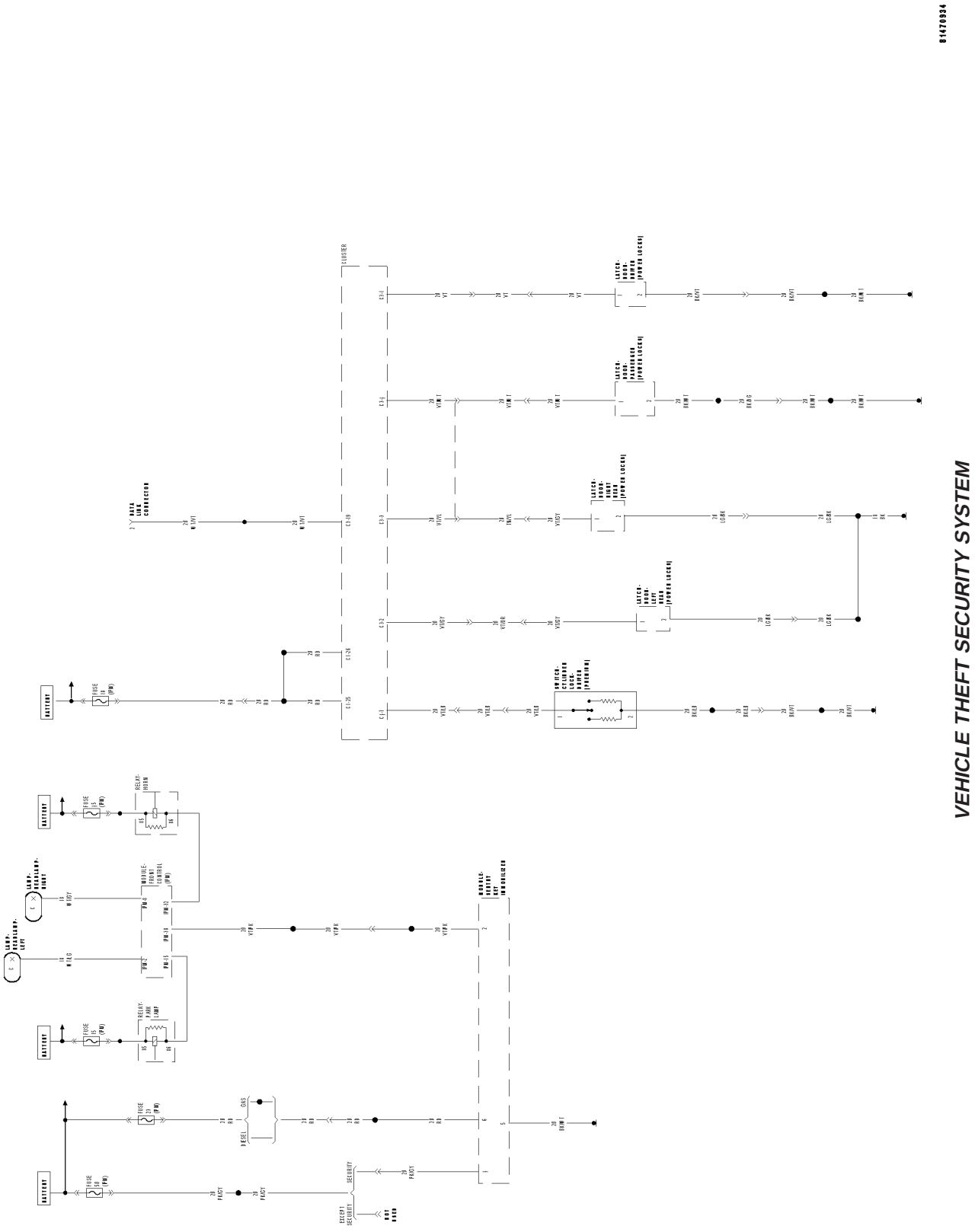

VEHICLE THEFT SECURITY - SERVICE INFORMATION

TABLE OF CONTENTS

page

VEHICLE THEFT SECURITY - SERVICE INFORMATION
DESCRIPTION
VEHICLE THEFT SECURITY SYSTEM 53
SENTRY KEY IMMOBILIZER SYSTEM 55
OPERATION
VEHICLE THEFT SECURITY SYSTEM 55
SENTRY KEY IMMOBILIZER SYSTEM 57
DIAGNOSIS AND TESTING
VEHICLE THEFT SECURITY SYSTEM 57
SENTRY KEY IMMOBILIZER SYSTEM 58
STANDARD PROCEDURE
SKIS INITIALIZATION 59
SENTRY KEY TRANSPONDER PROGRAMMING 59

page

TRANSPONDER KEY
DESCRIPTION 60
OPERATION 60
SWITCH-DOOR KEY POSITION
DESCRIPTION 61
OPERATION 61
DIAGNOSIS AND TESTING
DOOR CYLINDER LOCK SWITCH 61
REMOVAL 62
INSTALLATION 62

VEHICLE THEFT SECURITY - SERVICE INFORMATION

DESCRIPTION

VEHICLE THEFT SECURITY SYSTEM

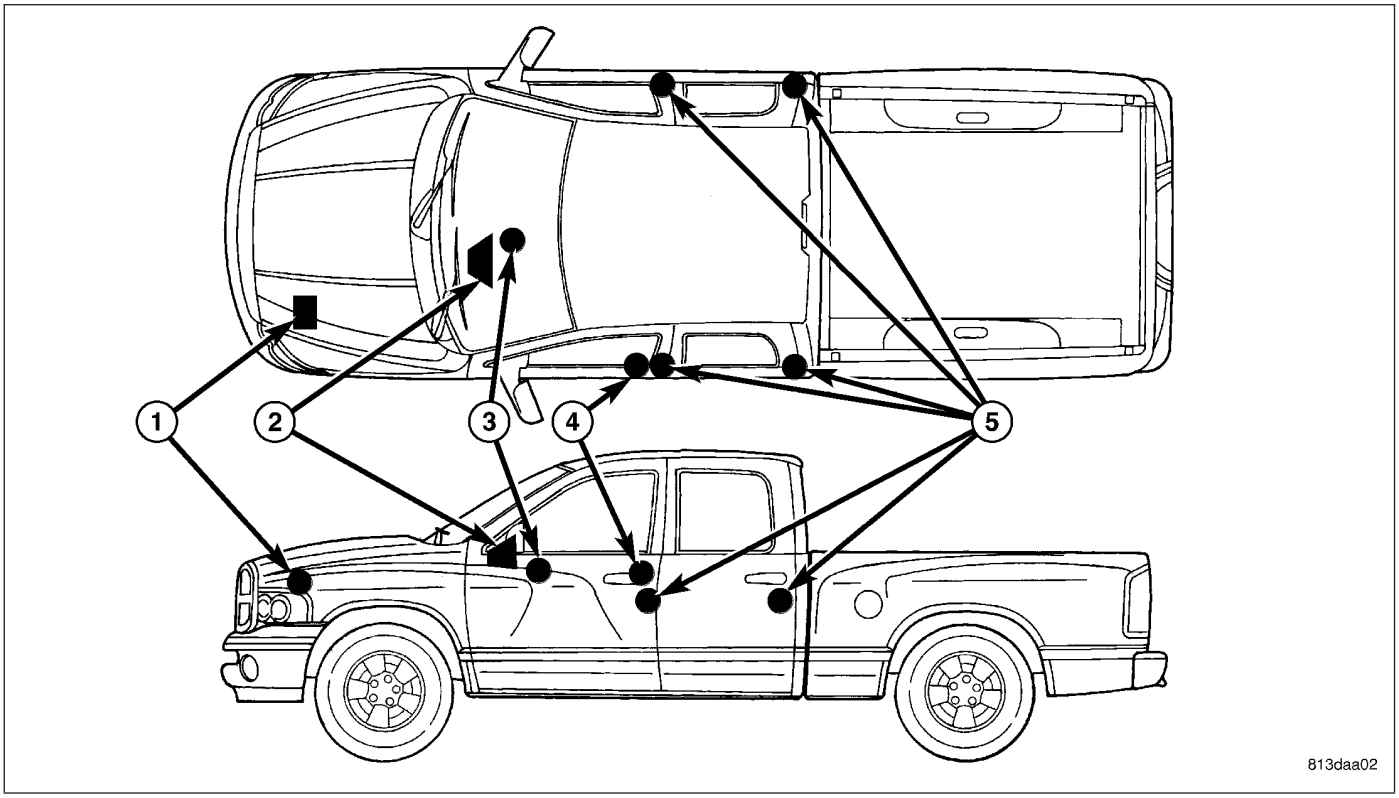

The Vehicle Theft Security System (VTSS) is designed to provide perimeter protection against unauthorized use or tampering by monitoring the vehicle door ajar circuits, the driver side front door cylinder lock switch circuit, the power lock and unlock circuits, and the ignition switch circuit. If unauthorized use or tampering is detected, the system responds by pulsing the horn for up to about three minutes and flashing the hazard warning lamps for up to about eighteen minutes.

The VTSS includes the following major components, which are described in further detail elsewhere in this service information:

- **Door Cylinder Lock Switch (4)** - A cylinder lock switch is located on the back of the lock cylinder on the driver side front door. (Refer to 8 - ELECTRICAL/VEHICLE THEFT SECURITY/DOOR CYLINDER LOCK SWITCH - DESCRIPTION).
- **Door Ajar Switches (5)** - A door ajar switch is integral to the door latch mechanism of each front and rear door. (Refer to 8 - ELECTRICAL/LAMPS/LIGHTING - INTERIOR/DOOR AJAR SWITCH - DESCRIPTION).
- **Front Control Module (1)** - The Front Control Module (FCM) is integral to the Integrated Power Module (IPM). The FCM/IPM is located in the engine compartment, near the battery and the Power Distribution Center (PDC). (Refer to 8 - ELECTRICAL/POWER DISTRIBUTION - DESCRIPTION).
- **Horn Relay** - The horn relay is located in the Power Distribution Center (PDC) in the engine compartment near the battery. (Refer to 8 - ELECTRICAL/HORN/HORN RELAY - DESCRIPTION).
- **Ignition Switch (3)** - The ignition switch is located on the steering column in the passenger compartment. (Refer to 8 - ELECTRICAL/IGNITION CONTROL/IGNITION SWITCH - DESCRIPTION).
- **Instrument Cluster (2)** - The ElectroMechanical Instrument Cluster (EMIC) is also known as the Cab Control Node (CCN) in this vehicle. The EMIC/CCN is located in the instrument panel above the steering column opening, directly in front of the driver. (Refer to 8 - ELECTRICAL/INSTRUMENT CLUSTER - DESCRIPTION).
- **Security Indicator** - The security indicator is integral to the instrument cluster. (Refer to 8 - ELECTRICAL/ INSTRUMENT CLUSTER/SECURITY INDICATOR - DESCRIPTION).

Hard wired circuitry connects the VTSS components to the electrical system of the vehicle. These hard wired circuits are integral to several wire harnesses, which are routed throughout the vehicle and retained by many different methods. These circuits may be connected to each other, to the VTSS components through the use of a combination of soldered splices, splice block connectors, and many different types of wire harness terminal connectors and insulators. Refer to the appropriate wiring information. The wiring information includes wiring diagrams, proper wire and connector repair procedures, further details on wire harness routing and retention, as well as pin-out and location views for the various wire harness connectors, splices and grounds.

SENTRY KEY IMMOBILIZER SYSTEM

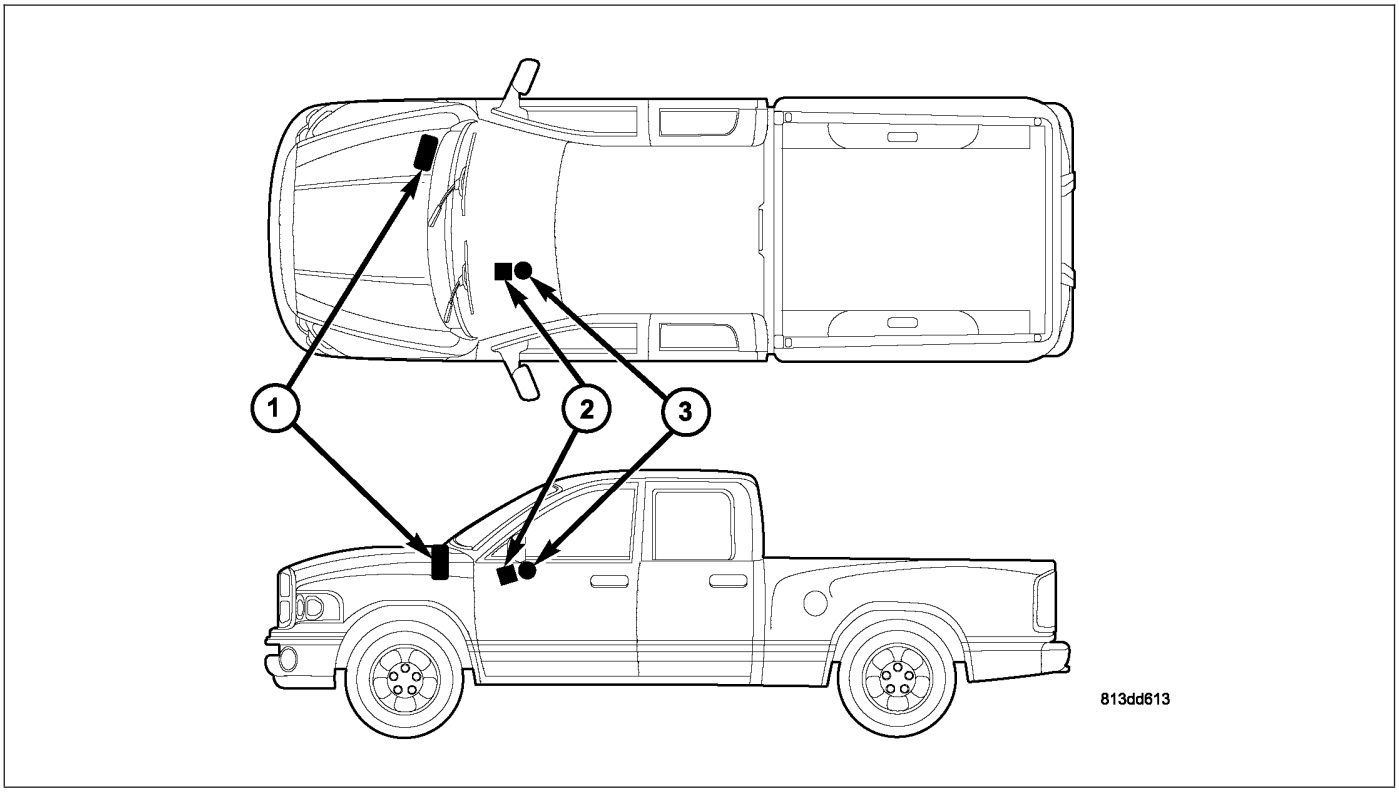

The Sentry Key Immobilizer System (SKIS) is available as a factory-installed option on this model. Vehicles equipped with this option can be readily identified by the illumination of the security indicator in the instrument cluster for about three seconds after the ignition switch is turned to the On position as a SKIS bulb test.

The SKIS includes the following major components, which are described in further detail elsewhere in this service information:

- **Powertrain Control Module (1)** - The Powertrain Control Module (PCM) is located in the engine compartment.
- **Sentry Key Immobilizer Module (2)** - The Sentry Key Immobilizer Module (SKIM) is located on the right side of the steering column near the ignition lock cylinder housing and an integral molded plastic antenna ring circles the ignition lock cylinder like a halo. The SKIM and its antenna are concealed beneath the steering column shrouds.
- **Sentry Key Transponder (3)** - The Sentry Key transponder is molded into the head of the ignition key, where it is concealed beneath the molded rubber cap on the head of the key.
- **Security Indicator** - The security indicator is integral to the ElectroMechanical Instrument Cluster. (Refer to 8 - ELECTRICAL/INSTRUMENT CLUSTER/SECURITY INDICATOR - DESCRIPTION).

Except for the Sentry Key transponders, which rely upon Radio Frequency (RF) communication, hard wired circuitry connects the SKIS components to the electrical system of the vehicle. These hard wired circuits are integral to several wire harnesses, which are routed throughout the vehicle and retained by many different methods. These circuits may be connected to each other, to the vehicle electrical system and to the SKIS components through the use of a combination of soldered splices, splice block connectors, and many different types of wire harness terminal connectors and insulators. Refer to the appropriate wiring information. The wiring information includes wiring diagrams, proper wire and connector repair procedures, further details on wire harness routing and retention, as well as pin-out and location views for the various wire harness connectors, splices and grounds.

OPERATION

VEHICLE THEFT SECURITY SYSTEM

The ElectroMechanical Instrument Cluster (EMIC) is used on this model to control and integrate many of the functions and features included in the Vehicle Theft Security System (VTSS). In the VTSS, the EMIC receives inputs

indicating the status of the door ajar switches, the door cylinder lock switch and the ignition switch. The EMIC will process the information from all of these inputs, internally control the security indicator as appropriate, and send electronic messages to the Front Control Module (FCM) over the Programmable Communications Interface (PCI) data bus. The FCM internally controls the output to the hazard warning lamps and sends a control output to energize or de-energize the horn relay as appropriate.

Following are paragraphs describing the operation of each of the VTSS features.

ENABLING

The EMIC must have the VTSS function electronically enabled in order for the VTSS to perform as designed. The logic in the EMIC keeps its VTSS function dormant until it is enabled using a diagnostic scan tool. The VTSS function of the EMIC is enabled on vehicles equipped with the VTSS option at the factory, but a service replacement EMIC must be VTSS-enabled by the dealer using a diagnostic scan tool. Refer to the appropriate diagnostic information.

ARMING

Passive arming of the VTSS occurs when the vehicle is exited with the key removed from the ignition switch, the headlamps are turned off, and the doors are locked while they are open using the power lock switch, or locked after they are closed by turning the driver side front door lock cylinder to the lock position using the key. Active arming occurs when the “Lock” button on the Remote Keyless Entry (RKE) transmitter is depressed to lock the vehicle. For active arming to occur, the doors must be closed and the ignition switch must be in the Off position when the RKE transmitter “Lock” button is depressed. The power lock switch will not function if the key is in the ignition switch or the headlamps are turned on with the driver side front door open.

Pre-arming of the VTSS is initiated when a door is open when the vehicle is locked using a power door lock switch or when the RKE transmitter “Lock” button is depressed. Pre-arming will not occur if the key is in the ignition switch or the headlamps are turned on with the driver side front door open. When the VTSS is pre-armed, the arming sequence is delayed until all of the doors have been closed. The VTSS will remain in “Pre-Armed” mode for up to seventeen seconds after all of the doors have been closed.

Once the VTSS begins the passive or active arming sequence, the security indicator in the instrument cluster will flash rapidly for about seventeen seconds. This indicates that VTSS arming is in progress. If the ignition switch is turned to the On position, a door is opened, a door is unlocked by any means, or the RKE “Panic” button is depressed during the seventeen second arming process, the security indicator will stop flashing and the arming process will abort. Once the seventeen second arming sequence is successfully completed, the security indicator will flash at a slower rate, indicating that the VTSS is armed.

DISARMING

Passive disarming of the VTSS occurs when the vehicle is unlocked using the key to unlock the driver side front door. If the vehicle is equipped with the optional Sentry Key Immobilizer System (SKIS), passive disarming will also occur by turning the ignition switch to the On position using a valid SKIS key. Active disarming of the VTSS occurs when the vehicle is unlocked by depressing the “Unlock” button of the RKE transmitter. Once the alarm has been activated, either disarming method will also deactivate the alarm. Depressing the “Panic” button on the RKE transmitter will **not** disarm the VTSS.

POWER-UP MODE

When the armed VTSS senses that the battery has been disconnected and reconnected, it enters its power-up mode. In the power-up mode the alarm system remains armed following a battery failure or disconnect. If the VTSS was armed prior to a battery disconnect or failure, the technician or vehicle operator will have to actively or passively disarm the alarm system after the battery is reconnected. The power-up mode will also apply if the battery goes dead while the system is armed, and battery jump-starting is attempted. The VTSS will be armed until the technician or vehicle operator has actively or passively disarmed the alarm system. If the VTSS is in the disarmed mode prior to a battery disconnect or failure, it will remain disarmed after the battery is reconnected or replaced, or if jump-starting is attempted.

TAMPER ALERT

The VTSS tamper alert feature will sound the horn three times upon disarming, if the alarm was triggered and has since timed-out (about eighteen minutes) or if the battery has been disconnected and reconnected. This feature alerts the vehicle operator that the VTSS alarm was activated while the vehicle was unattended.

SENTRY KEY IMMOBILIZER SYSTEM

The Sentry Key Immobilizer System (SKIS) is designed to provide passive protection against unauthorized vehicle use by disabling the engine after about two seconds of running, whenever any method other than a valid Sentry Key is used to start the vehicle. The SKIS is considered a passive protection system because it is always active when the ignition system is energized and does not require any customer intervention. The SKIS uses Radio Frequency (RF) communication to obtain confirmation that the key in the ignition switch is a valid key for operating the vehicle. The microprocessor-based SKIS hardware and software also uses electronic messages to communicate with other electronic modules in the vehicle over the Programmable Communications Interface (PCI) data bus. (Refer to 8 - ELECTRICAL/ELECTRONIC CONTROL MODULES/COMMUNICATION - OPERATION).

Pre-programmed Sentry Key transponders are provided with the vehicle from the factory. Each Sentry Key Immobilizer Module (SKIM) will recognize a maximum of eight Sentry Keys. If the customer would like additional keys other than those provided with the vehicle, they may be purchased from any authorized dealer. These additional keys must be programmed to the SKIM in the vehicle in order for the system to recognize them as valid keys. This can be done by the dealer using a diagnostic scan tool or, if Customer Learn programming is an available SKIS feature in the market where the vehicle was purchased, the customer can program the additional keys, as long as at least two valid Sentry Keys are already available. (Refer to 8 - ELECTRICAL/VEHICLE THEFT SECURITY - STANDARD PROCEDURE - TRANSPONDER PROGRAMMING).

The SKIM performs a self-test of the SKIS each time the ignition switch is turned to the On position, and will store fault information in the form of a Diagnostic Trouble Code (DTC) if a system malfunction is detected. The SKIS can be diagnosed, and any stored DTC can be retrieved using a diagnostic scan tool. Refer to the appropriate diagnostic information.

DIAGNOSIS AND TESTING

VEHICLE THEFT SECURITY SYSTEM

WARNING: To avoid personal injury or death, on vehicles equipped with airbags, disable the supplemental restraint system before attempting any steering wheel, steering column, airbag, seat belt tensioner, impact sensor, or instrument panel component diagnosis or service. Disconnect and isolate the battery negative (ground) cable, then wait two minutes for the system capacitor to discharge before performing further diagnosis or service. This is the only sure way to disable the supplemental restraint system. Failure to take the proper precautions could result in accidental airbag deployment.

The hard wired Vehicle Theft Security System (VTSS) components and circuits may be diagnosed and tested using conventional diagnostic tools and methods. Refer to the appropriate wiring information. The wiring information includes wiring diagrams, proper wire and connector repair procedures, details of wire harness routing and retention, connector pin-out information and location views for the various wire harness connectors, splices and grounds.

However, conventional diagnostic methods may not prove conclusive in the diagnosis of the ElectroMechanical Instrument Cluster (EMIC), the Front Control Module (FCM), the Programmable Communications Interface (PCI) data bus, or the electronic message inputs used to provide the electronic features of the VTSS. The most reliable, efficient, and accurate means to diagnose the EMIC, the FCM, the PCI data bus, and the electronic message inputs for the VTSS requires the use of a diagnostic scan tool. See the “Vehicle Theft Security System” menu item on the scan tool. Refer to the appropriate diagnostic information.

SENTRY KEY IMMOBILIZER SYSTEM

WARNING: To avoid personal injury or death, on vehicles equipped with airbags, disable the supplemental restraint system before attempting any steering wheel, steering column, airbag, seat belt tensioner, impact sensor, or instrument panel component diagnosis or service. Disconnect and isolate the battery negative (ground) cable, then wait two minutes for the system capacitor to discharge before performing further diagnosis or service. This is the only sure way to disable the supplemental restraint system. Failure to take the proper precautions could result in accidental airbag deployment.

The hard wired Sentry Key Immobilizer System (SKIS) components and circuits may be diagnosed and tested using conventional diagnostic tools and methods. Refer to the appropriate wiring information. The wiring information includes wiring diagrams, proper wire and connector repair procedures, details of wire harness routing and retention, connector pin-out information and location views for the various wire harness connectors, splices and grounds.

However, conventional diagnostic methods may not prove conclusive in the diagnosis of the Sentry Key Immobilizer Module (SKIM), the ElectroMechanical Instrument Cluster (EMIC), the Powertrain Control Module (PCM), the Programmable Communications Interface (PCI) data bus, or the electronic message inputs used to provide the electronic features of the SKIS. The most reliable, efficient, and accurate means to diagnose the SKIM, the EMIC, the PCM, the PCI data bus, and the electronic message inputs for the SKIS requires the use of a diagnostic scan tool. Refer to the appropriate diagnostic information.

CONDITION	POSSIBLE CAUSES	CORRECTION
SECURITY INDICATOR FAILS TO LIGHT DURING BULB TEST	1. Light-Emitting Diode (LED) faulty.	1. Perform the instrument cluster actuator test. (Refer to 8 - ELECTRICAL/ INSTRUMENT CLUSTER - DIAGNOSIS AND TESTING - ACTUATOR TEST)..
	2. Fuse faulty.	2. Check the SKIM fused B(+) fuse and the fused ignition switch output (run-start) fuse in the Junction Block (JB). Replace fuses, if required.
	3. Ground path faulty.	3. Check for continuity to ground at the connector for the SKIM. Repair wiring, if required.
	4. Battery feed faulty.	4. Check for battery voltage at the connector for the SKIM. Repair wiring, if required.
	5. Ignition feed faulty.	5. Check for battery voltage at the connector for the SKIM with the ignition switch in the On position. Repair wiring, if required.
SECURITY INDICATOR FLASHES FOLLOWING BULB TEST	1. Invalid key in ignition switch lock cylinder.	1. Replace the key with a known valid key.
	2. Key-related fault.	2. Use a diagnostic scan tool and the appropriate diagnostic information for further diagnosis.
SECURITY INDICATOR LIGHTS SOLID FOLLOWING BULB TEST	1. SKIS system malfunction/ fault detected.	1. Use a diagnostic scan tool and the appropriate diagnostic information for further diagnosis.
	2. SKIS system inoperative.	2. Use a diagnostic scan tool and the appropriate diagnostic information for further diagnosis.

STANDARD PROCEDURE

SKIS INITIALIZATION

The Sentry Key Immobilizer System (SKIS) must be initialized following a Sentry Key Immobilizer Module (SKIM) replacement. SKIS initialization requires the use of a diagnostic scan tool. Initialization will also require that you have access to the unique four-digit PIN code that was assigned to the original SKIM. The PIN code **must** be used to enter the Secured Access Mode in the SKIM. This PIN number may be obtained from the vehicle owner, from the original vehicle invoice, or from the DaimlerChrysler Customer Center. (Refer to 8 - ELECTRICAL/ELECTRONIC CONTROL MODULES - STANDARD PROCEDURE - PCM/SKIM PROGRAMMING).

NOTE: If a Powertrain Control Module (PCM) is replaced on a vehicle equipped with the Sentry Key Immobilizer System (SKIS), the unique Secret Key data must be transferred from the Sentry Key Immobilizer Module (SKIM) to the new PCM using the PCM replacement procedure. This procedure also requires the use of a diagnostic scan tool and the unique four-digit PIN code to enter the Secured Access Mode in the SKIM. Refer to the appropriate diagnostic information for the proper PCM replacement procedures.

SENTRY KEY TRANSPONDER PROGRAMMING

All Sentry Keys included with the vehicle are pre-programmed to work with the Sentry Key Immobilizer System (SKIS) when it is shipped from the factory. The Sentry Key Immobilizer Module (SKIM) can be programmed to recognize up to a total of eight Sentry Keys. When programming a blank Sentry Key transponder, the key must first be cut to match the ignition switch lock cylinder in the vehicle for which it will be used. Once the additional or new key has been cut, the SKIM must be programmed to recognize it as a valid key. There are two possible methods to program the SKIM to recognize a new or additional valid key, the Secured Access Method and the Customer Learn Method. Following are the details of these two programming methods.

SECURED ACCESS METHOD

The Secured Access method applies to all vehicles. This method requires the use of a diagnostic scan tool. This method will also require that you have access to the unique four-digit PIN code that was assigned to the original SKIM. The PIN code **must** be used to enter the Secured Access Mode in the SKIM. This PIN number may be obtained from the vehicle owner, from the original vehicle invoice, or from the DaimlerChrysler Customer Center. Refer to the appropriate diagnostic information for the proper Secured Access method programming procedures.

CUSTOMER LEARN METHOD

NOTE: The Customer Learn feature is only available on domestic vehicles, or those vehicles which have a U.S. country code designator. This programming method also requires access to at least two valid Sentry Keys. If two valid Sentry Keys are not available, or if the vehicle does not have a U.S. country code designator, the Secured Access Method MUST be used to program new or additional valid keys to the SKIM.

The Customer Learn programming method procedures are as follows:

1. Obtain the blank Sentry Key(s) that are to be programmed as valid keys for the vehicle. Cut the blank key(s) to match the ignition switch lock cylinder mechanical key codes.
2. Insert one of the two valid Sentry Keys into the ignition switch and turn the ignition switch to the On position.
3. After the ignition switch has been in the On position for longer than three seconds, but no more than fifteen seconds, cycle the ignition switch back to the Off position. Replace the first valid Sentry Key in the ignition switch lock cylinder with the second valid Sentry Key and turn the ignition switch back to the On position. The second valid Sentry Key must be inserted in the lock cylinder within fifteen seconds of removing the first valid key.
4. About ten seconds after the completion of Step 3, the security indicator in the instrument cluster will start to flash to indicate that the system has entered the Customer Learn programming mode.
5. Within sixty seconds of entering the Customer Learn programming mode, turn the ignition switch to the Off position, replace the valid Sentry Key with a blank Sentry Key transponder, and turn the ignition switch back to the On position.

6. About ten seconds after the completion of Step 5, the security indicator will stop flashing, stay on solid for three seconds, then turn off to indicate that the blank Sentry Key has been successfully programmed. The SKIS will immediately exit the Customer Learn programming mode. After the ignition is cycled the vehicle may be started using the newly programmed valid Sentry Key.

Each of these steps must be repeated and completed in their entirety for each additional Sentry Key that is to be programmed. If the above steps are not completed in the given sequence, or within the allotted time, the SKIM will exit the Customer Learn programming mode and the programming will be unsuccessful. The SKIM will also automatically exit the Customer Learn programming mode if it sees a non-blank Sentry Key transponder when it should see a blank, if it has already programmed eight (8) valid Sentry Keys, or if the ignition switch is turned to the Off position for more than about fifty seconds.

NOTE: If an attempt is made to start the vehicle while in the Customer Learn mode (security indicator flashing), the SKIS will respond as though the vehicle were being started with an invalid key. In other words, the engine will stall after about two seconds of operation. No faults will be set.

NOTE: Once a Sentry Key has been programmed as a valid key to a vehicle, it cannot be programmed as a valid key for use on any other vehicle.

TRANSPONDER KEY

DESCRIPTION

Each ignition key (4) used in the Sentry Key Immobilizer System (SKIS) has an integral transponder chip (2) concealed beneath the molded rubber cap (1), where it is secured within a plastic mount in the head (3) of the metal key. In addition to having to be cut to match the mechanical coding of the ignition lock cylinder, each new Sentry Key has a unique transponder identification code that is permanently programmed into it by the manufacturer, and which must be programmed into the Sentry Key Immobilizer Module (SKIM) to be recognized as a valid key. The Sentry Key transponder cannot be adjusted or repaired. If faulty or damaged, the entire key and transponder unit must be replaced.

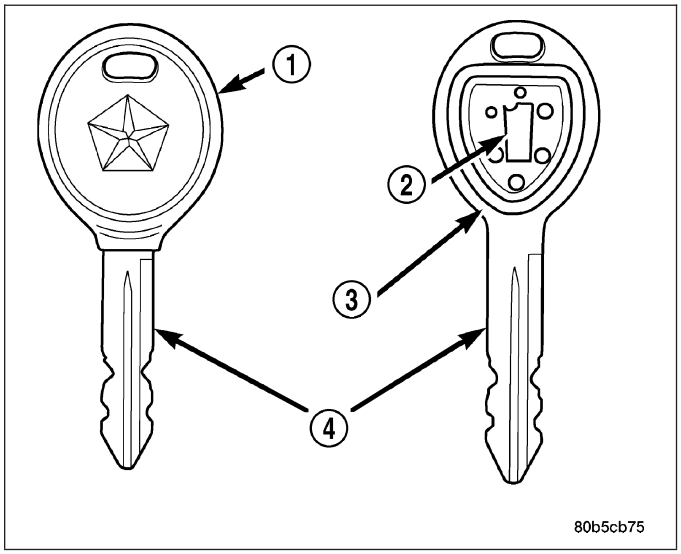

OPERATION

When the ignition switch is turned to the On position, the Sentry Key Immobilizer Module (SKIM) communicates through its antenna with the Sentry Key transponder using a Radio Frequency (RF) signal. The SKIM then listens for a RF response from the transponder through the same antenna. The Sentry Key transponder chip is within the range of the SKIM transceiver antenna ring when it is inserted into the ignition lock cylinder. The SKIM determines whether a valid key is present in the ignition lock cylinder based upon the response from the transponder. If a valid key is detected, that fact is communicated by the SKIM to the Powertrain Control Module (PCM) over the Programmable Communications Interface (PCI) data bus, and the PCM allows the engine to continue running. If the PCM receives an invalid key message, or receives no message from the SKIM over the PCI data bus, the engine will be disabled after about two seconds of operation. The ElectroMechanical Instrument Cluster (EMIC) will also respond to the invalid key message on the PCI data bus by flashing the security indicator on and off.

Each Sentry Key has a unique transponder identification code permanently programmed into it by the manufacturer. Likewise, the SKIM has a unique Secret Key code programmed into it by the manufacturer. When a Sentry Key is programmed into the memory of the SKIM, the SKIM stores the transponder identification code from the Sentry Key, and the Sentry Key learns the Secret Key code from the SKIM. Once the Sentry Key learns the Secret Key code of

the SKIM, it is permanently stored in the memory of the transponder. Therefore, once a Sentry Key has been programmed to a particular vehicle, it cannot be used on any other vehicle. (Refer to 8 - ELECTRICAL/VEHICLE THEFT SECURITY - STANDARD PROCEDURE - TRANSPONDER PROGRAMMING).

The SKIS performs a self-test each time the ignition switch is turned to the On position, and will store key-related fault information in the form of Diagnostic Trouble Code (DTC) in SKIM memory if a Sentry Key transponder problem is detected. The Sentry Key transponder chip can be diagnosed, and any stored DTC can be retrieved using a diagnostic scan tool. Refer to the appropriate diagnostic information.

SWITCH-DOOR KEY POSITION

DESCRIPTION

Vehicles that are equipped with the optional Vehicle Theft Security System (VTSS) have a door cylinder lock switch (1) secured to the back of the key lock cylinder inside the driver side front door. The door cylinder lock switch is a resistor multiplexed momentary switch that is hard wired in series between ground and the cylinder lock switch mux circuit input to the ElectroMechanical Instrument Cluster (EMIC) through a pigtail wire (2) connected to the left front door wire harness. The door cylinder lock switch is driven by the key lock cylinder and contains two internal resistors. One resistor value is used for the Lock position, and one for the Unlock position.

The door cylinder lock switch cannot be adjusted or repaired and, if faulty or damaged, it must be replaced.

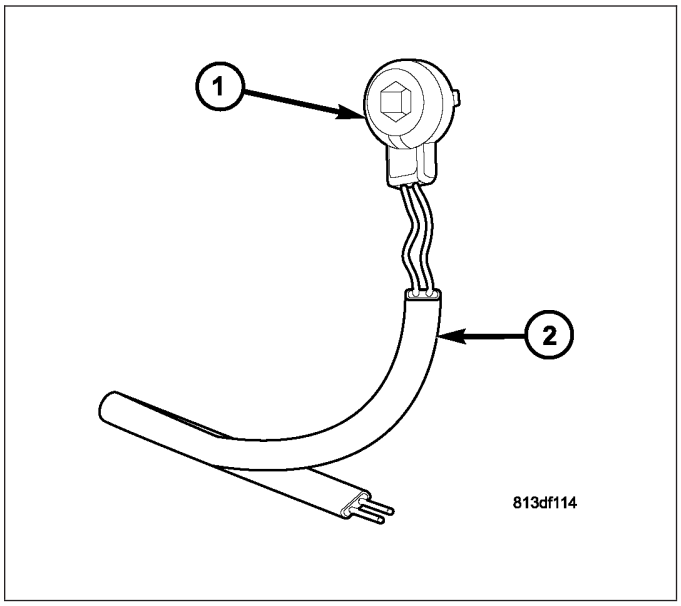

OPERATION

The door cylinder lock switch is actuated by the key lock cylinder when the key is inserted in the lock cylinder and turned to the lock or unlock positions. The door cylinder lock switch closes a circuit between ground and the cylinder lock switch mux circuit through one of two internal resistors for the ElectroMechanical Instrument Cluster (EMIC) when the driver side front door key lock cylinder is in the Lock, or Unlock positions. The EMIC reads the switch status through an internal pull-up, then uses this information as an input for the Vehicle Theft Security System (VTSS) operation, as well as for control of a central locking feature for the power lock system.

The door cylinder lock switch and circuit may be diagnosed using conventional diagnostic tools and methods. Refer to the appropriate wiring information. However, conventional diagnostic methods may not prove conclusive in the diagnosis of the EMIC or its responses to the cylinder lock switch inputs. The most reliable, efficient, and accurate means to diagnose the door cylinder lock switch, the EMIC, and both the hard wired and electronic message inputs and outputs affected by the door cylinder lock switch inputs requires the use of a diagnostic scan tool. Refer to the appropriate diagnostic information.

DIAGNOSIS AND TESTING

DOOR CYLINDER LOCK SWITCH

1. Disconnect and isolate the battery negative cable.
2. Disconnect the door cylinder lock switch pigtail wire connector from the door wire harness connector.
3. Using an ohmmeter, perform the resistance tests between the two pins in the door cylinder lock switch pigtail wire connector. Actuate the switch by rotating the key in the door lock cylinder to test for the proper resistance values in each of the three switch positions, as shown in the Door Cylinder Lock Switch Tests table.

DOOR CYLINDER LOCK SWITCH TESTS	
SWITCH POSITION	**RESISTANCE**
Neutral	12 Kilohms
Lock (Counterclockwise)	644 Ohms
Unlock (Clockwise)	1565 Ohms

4. If the switch fails any of the resistance tests, replace the faulty door cylinder lock switch as required.

REMOVAL

1. Disconnect and isolate the battery negative cable.
2. Remove the exterior handle and lock cylinder (1) from the outside of the driver side front door as a unit. (Refer to 23 - BODY/DOOR - FRONT/EXTERIOR HANDLE - REMOVAL).
3. Remove the bowed clip (3) that secures the lever arm (4) to the shaft on the back of the lock cylinder.
4. Remove the lever arm from the lock cylinder shaft.
5. Remove the door cylinder lock switch (2) from the back of the lock cylinder.

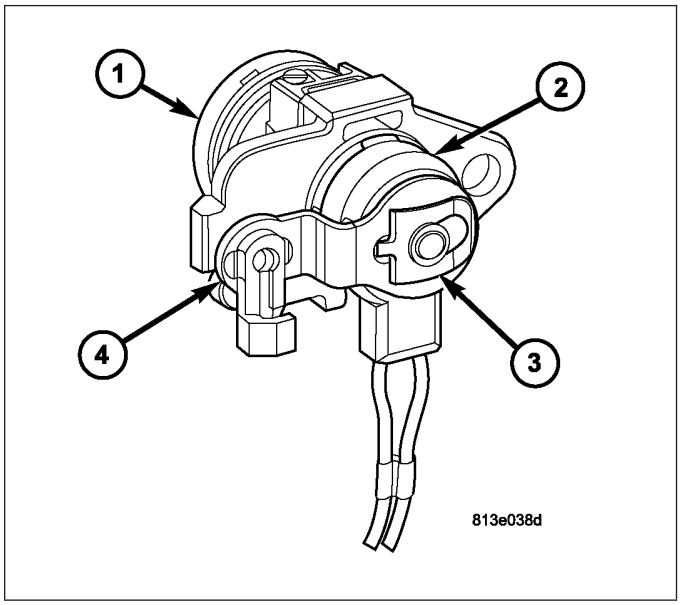

INSTALLATION

1. Position the door cylinder lock switch (2) over the shaft on the back of the lock cylinder (1).
2. Position the lever arm (4) onto the shaft over the switch.
3. Install the bowed clip (3) that secures the lever arm to the shaft.
4. Reinstall the exterior handle and lock cylinder onto the outside of the driver side front door as a unit. (Refer to 23 - BODY/DOOR - FRONT/EXTERIOR HANDLE - INSTALLATION).
5. Reconnect the battery negative cable.

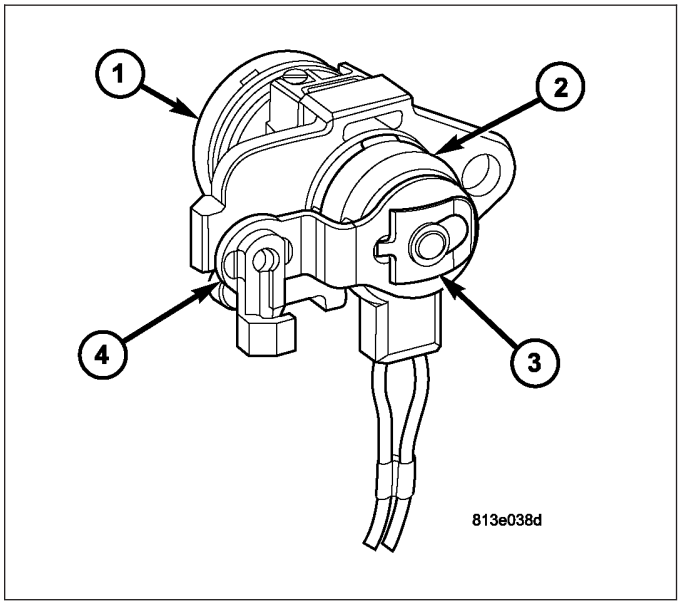

WIPERS/WASHERS

TABLE OF CONTENTS

page

WIPERS/WASHERS - ELECTRICAL DIAGNOSTICS 1

page

WIPERS/WASHERS - SERVICE INFORMATION . . 45

WIPERS/WASHERS - ELECTRICAL DIAGNOSTICS

TABLE OF CONTENTS

page

WIPERS/WASHERS - ELECTRICAL DIAGNOSTICS
DIAGNOSIS AND TESTING
FCM-WASHER FLUID LEVEL SENSOR CIRCUIT FAILURE 2
FCM-WASHER PUMP OUTPUT CIRCUIT LOW 6
FCM-WASHER PUMP OUTPUT CIRCUIT OPEN 9
FCM-WIPER ON-OFF RELAY OUTPUT CIRCUIT HIGH 13
FCM-WIPER ON-OFF RELAY OUTPUT CIRCUIT OPEN 16
FCM-WIPER ON-OFF RELAY OUTPUT CIRCUIT LOW 19

page

FCM-WIPER PARK SWITCH INPUT PERFORMANCE 22
FCM-WIPER SPEED RELAY OUTPUT CIRCUIT HIGH 26
FCM-WIPER SPEED RELAY OUTPUT CIRCUIT LOW 29
FCM-WIPER SPEED RELAY OUTPUT CIRCUIT OPEN 32
MIC-WASH-BEAM INPUT CIRCUIT SHORTED 35
MIC-WIPER SWITCH INPUT CIRCUIT OPEN . 38
MIC-WIPER SWITCH INPUT CIRCUIT SHORTED 41
SCHEMATICS AND DIAGRAMS 44

WIPERS/WASHERS - ELECTRICAL DIAGNOSTICS

DIAGNOSIS AND TESTING

FCM-WASHER FLUID LEVEL SENSOR CIRCUIT FAILURE

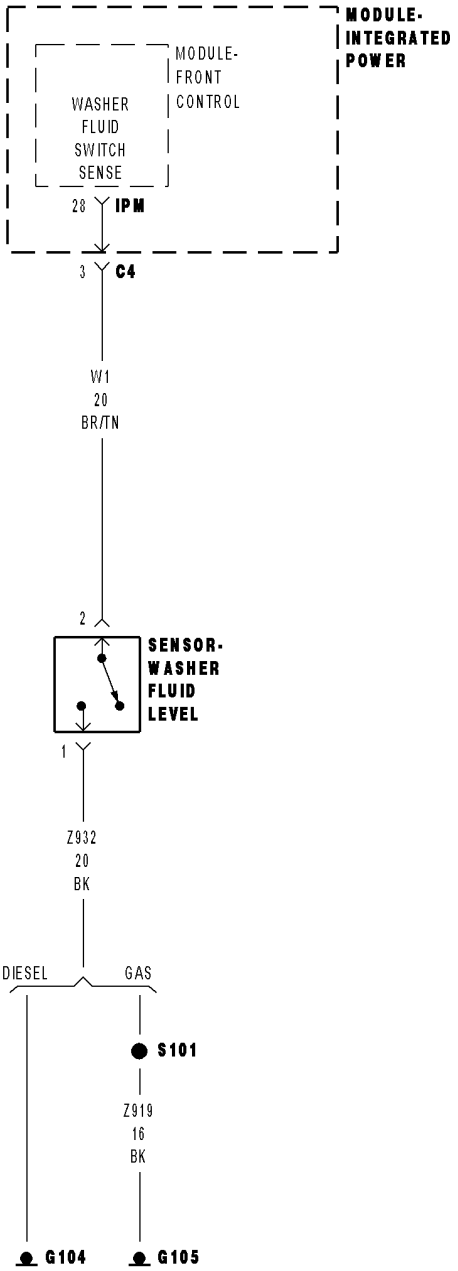

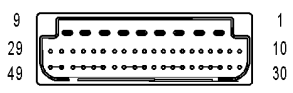

MODULE-
FRONT
CONTROL IPM

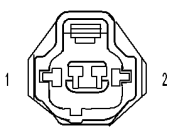

SENSOR- WASHER
FLUID LEVEL

81460fc1

FCM-WASHER FLUID LEVEL SENSOR CIRCUIT FAILURE (CONTINUED)

For the Wiper Washer system circuit diagram (Refer to 8 - ELECTRICAL/WIPERS/WASHERS - SCHEMATICS AND DIAGRAMS).

For a complete wiring diagram **Refer to Section 8W**.

- **When Monitored:**
  Continuous with the ignition on.
- **Set Condition:**
  The FCM detects the Washer Fluid Level Switch circuit voltage is below 0.05 volts or above 5.0 volts.

Possible Causes
WASHER FLUID LEVEL SWITCH
WASHER FLUID LEVEL SENSOR SIGNAL CIRCUIT OPEN
WASHER FLUID LEVEL SWITCH GROUND CIRCUIT OPEN
WASHER FLUID LEVEL SWITCH SIGNAL CIRCUIT SHORT TO GROUND
FRONT CONTROL MODULE

Diagnostic Test

1. WASHER FLUID LEVEL SWITCH

Turn the ignition off.

Disconnect the Washer Fluid Level Switch harness connector.

Connect a jumper wire between cavity 1 and cavity 2.

With the DRBIII®, in Sensors, read the Washer Fluid Level Switch Volts.

Does the DRBIII® read below 1 volt?

Yes >> Replace the Washer Fluid Level Switch in accordance with the Service Information.
Perform BODY VERIFICATION TEST - VER 1.

No >> Go To 2

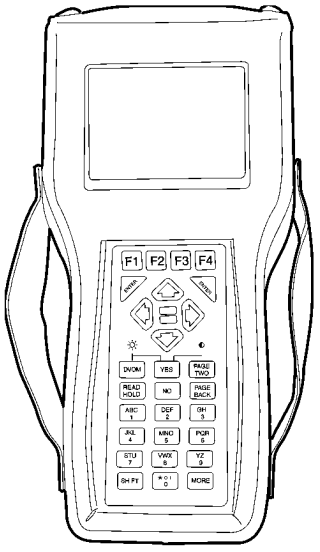

FCM-WASHER FLUID LEVEL SENSOR CIRCUIT FAILURE (CONTINUED)

2. WASHER FLUID LEVEL SWITCH SIGNAL CIRCUIT OPEN

Turn the ignition off.

Disconnect the FCM harness connector.

Disconnect the Washer Fluid Level Switch harness connector.

Measure the resistance of the Washer Fluid Level Switch Signal circuit.

Is the resistance above 5.0 ohms?

Yes >> Repair the Washer Fluid Level Sensor Signal circuit for an open.
Perform BODY VERIFICATION TEST - VER 1.

No >> Go To 3

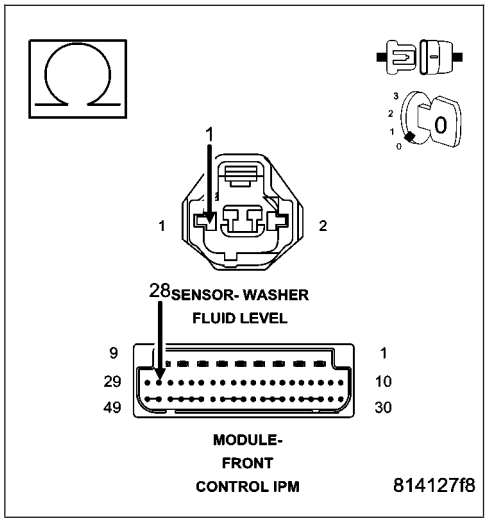

3. WASHER FLUID LEVEL SWITCH GROUND CIRCUIT OPEN

Turn the ignition off.

Disconnect the FCM harness connector.

Disconnect the Washer Fluid Level Switch harness connector.

Measure the resistance of the Washer Fluid Level Switch Ground circuit.

Is the resistance above 5.0 ohms?

Yes >> Repair the Washer Fluid Level Switch Ground circuit for an open.
Perform BODY VERIFICATION TEST - VER 1.

No >> Go To 4

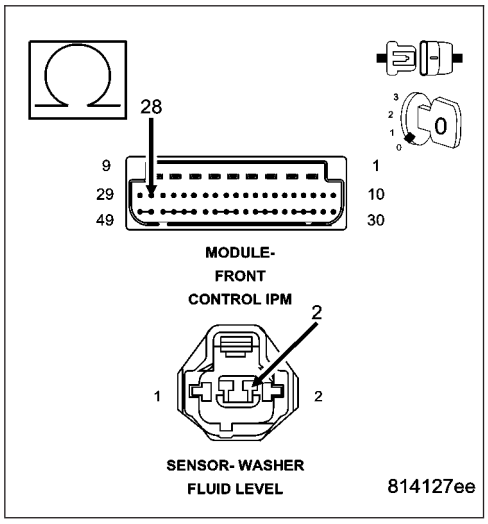

FCM-WASHER FLUID LEVEL SENSOR CIRCUIT FAILURE (CONTINUED)

4. WASHER FLUID LEVEL SWITCH SIGNAL CIRCUIT SHORT TO GROUND

Turn the ignition off.

Disconnect the FCM harness connector.

Disconnect the Washer Fluid Level Switch harness connector.

Measure the resistance between ground and the Washer Fluid Level Switch Signal circuit.

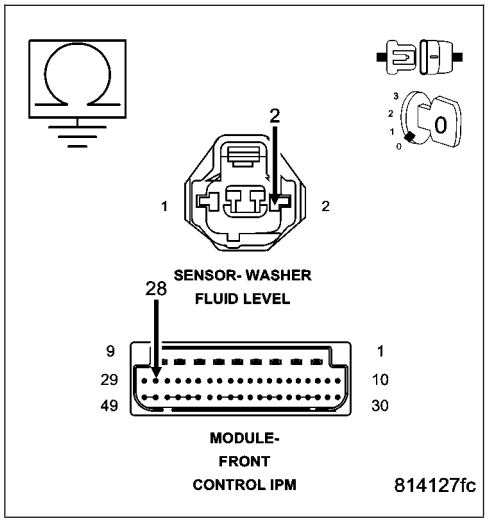

Is the resistance below 5.0 ohms?

Yes >> Repair the Washer Fluid Level Switch Signal circuit for a short to ground.
Perform BODY VERIFICATION TEST - VER 1.

No >> Replace the Front Control Module (FCM) in accordance with the Service Information.
Perform BODY VERIFICATION TEST - VER 1.

FCM-WASHER PUMP OUTPUT CIRCUIT LOW

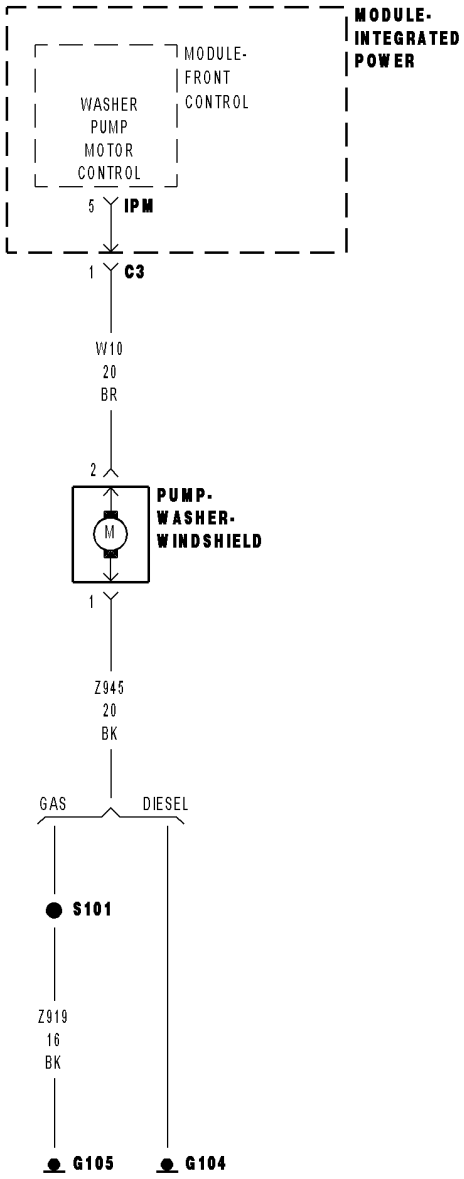

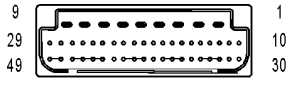

MODULE-
FRONT
CONTROL IPM

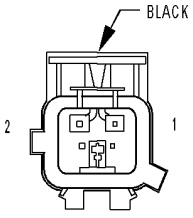

PUMP-
WASHER-
WINDSHIELD

814610c3

FCM-WASHER PUMP OUTPUT CIRCUIT LOW (CONTINUED)

For the Wiper Washer system circuit diagram (Refer to 8 - ELECTRICAL/WIPERS/WASHERS - SCHEMATICS AND DIAGRAMS).

For a complete wiring diagram **Refer to Section 8W**.

- **When Monitored:**
  With the igntion on.
- **Set Condition:**
  The FCM detects less than 0.05 volts on the Washer Pump Motor Control circuit.

Possible Causes
WASHER PUMP MOTOR-FRONT
WASHER PUMP MOTOR CONTROL CIRCUIT SHORT TO GROUND
FRONT CONTROL MODULE
POWER DISTRIBUTION CENTER

1. INTERMITTENT CONDITION

Turn the ignition on.
With the DRBIII®, clear all FCM DTC's.
Actuate the Wiper Washers.
With the DRBIII®, read the DTC information.

Does the DRBIII® read: Washer Pump Output Circuit Low?

Yes >> Go To 2

No >> The condition that caused the symptom is currently not present. Inspect the related wiring for a possible intermittent condition. Look for any chafed, pierced, pinched, or partially broken wires.
Perform BODY VERIFICATION TEST - VER 1.

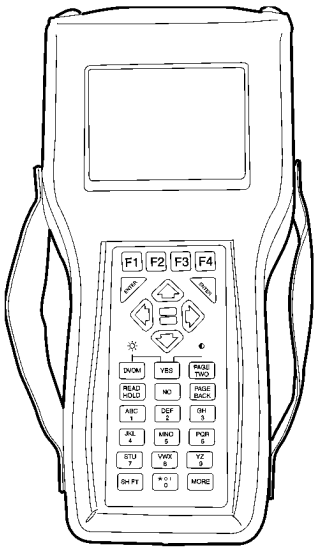

FCM-WASHER PUMP OUTPUT CIRCUIT LOW (CONTINUED)

2. WASHER PUMP MOTOR - FRONT

Turn the ignition off.
Disconnect the Washer Pump Motor - Front harness connector.
Turn the ignition on.
With the DRBIII®, read DTCs.

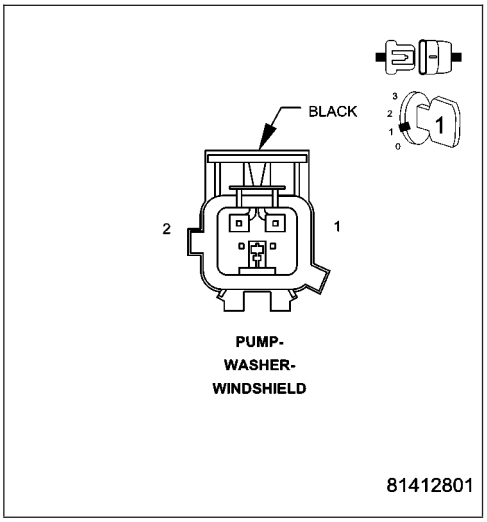

Does the DRBIII® display: Washer Pump Output Circuit Open?

Yes >> Replace the Washer Pump Motor - Front in accordance with the Service Information.
Perform BODY VERIFICATION TEST - VER 1.

No >> Go To 3

3. WASHER PUMP MOTOR CONTROL CIRCUIT SHORT TO GROUND

Turn the ignition off.
Disconnect the Integrated Power Module C3 harness connector.
Disconnect the Washer Pump Motor harness connector.
Measure the resistance between ground and the Washer Pump Motor Control circuit.

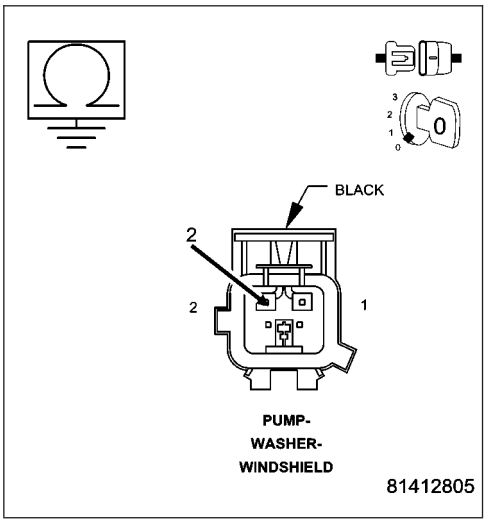

Is the resistance below 5.0 ohms?

Yes >> Repair the Washer Pump Motor Control circuit for a short to ground.
Perform BODY VERIFICATION TEST - VER 1.

No >> Go To 4

4. POWER DISTRIBUTION CENTER

Turn the ignition off.
Disconnect the FCM from the IPM.
Disconnect the IPM C3 harness connector.
Measure the resistance between ground and the IPM Washer Pump Motor Control circuit terminal pin.

Is the resistance below 5.0 ohms?

Yes >> Replace the Power Distribution Center (PDC) in accordance with the Service Information.
Perform BODY VERIFICATION TEST - VER 1.

No >> Replace the Front Control Module (FCM) in accordance with the Service Information.
Perform BODY VERIFICATION TEST - VER 1.

FCM-WASHER PUMP OUTPUT CIRCUIT OPEN

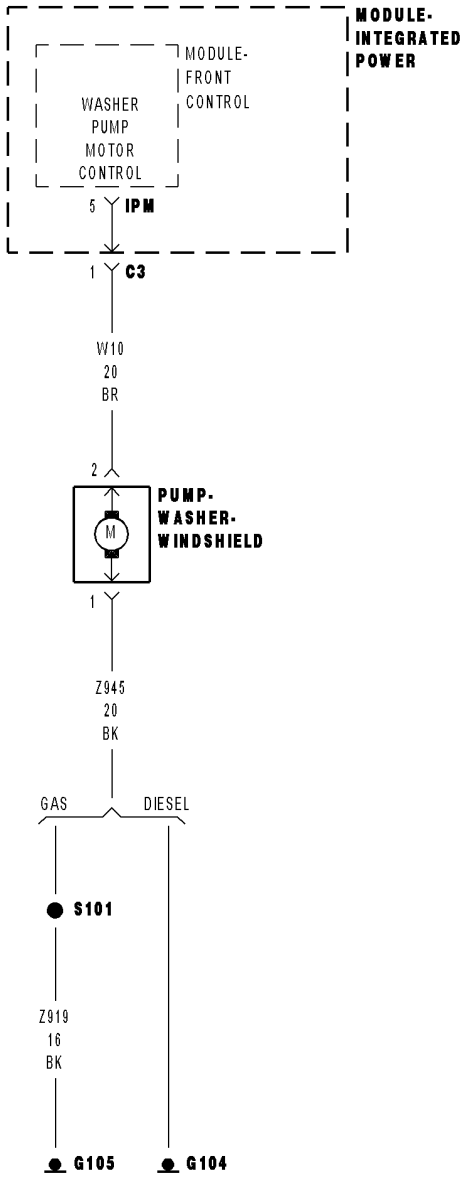

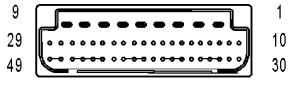

MODULE-
FRONT
CONTROL IPM

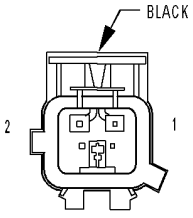

PUMP-
WASHER-
WINDSHIELD

814610c3

FCM-WASHER PUMP OUTPUT CIRCUIT OPEN (CONTINUED)

For the Wiper Washer system circuit diagram (Refer to 8 - ELECTRICAL/WIPERS/WASHERS - SCHEMATICS AND DIAGRAMS).

For a complete wiring diagram **Refer to Section 8W**.

- **When Monitored:**
  With the igntion on.
- **Set Condition:**
  The FCM detects more than 5.0 volts on the Washer Pump Motor Control circuit.

Possible Causes
WASHER PUMP MOTOR-FRONT
WASHER PUMP MOTOR GROUND CIRCUIT OPEN
WASHER PUMP MOTOR CONTROL CIRCUIT OPEN
POWER DISTRIBUTION CENTER
FRONT CONTROL MODULE

1. INTERMITTENT CONDITION

Turn the ignition on.
With the DRBIII®, clear all FCM DTC's.
Actuate the Wiper Washers.
With the DRBIII®, read the DTC information.

Does the DRBIII® read: Washer Pump Output Circuit Open?

Yes >> Go To 2

No >> The condition that caused the symptom is currently not present. Inspect the related wiring for a possible intermittent condition. Look for any chafed, pierced, pinched, or partially broken wires.
Perform BODY VERIFICATION TEST - VER 1.

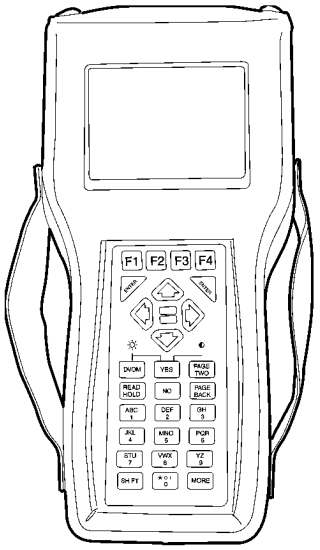

FCM-WASHER PUMP OUTPUT CIRCUIT OPEN (CONTINUED)

2. WASHER PUMP MOTOR - FRONT

Turn the ignition off.
Disconnect the Washer Pump Motor harness connector.
Connect a jumper wire between cavity 1 and cavity 2.
Turn the ignition on.
With the DRBIII®, read DTCs.

Does the DRBIII® display: Washer Pump Output Circuit Low?

Yes >> Replace the Washer Pump Motor - Front in accordance with the Service Information.
Perform BODY VERIFICATION TEST - VER 1.

No >> Go To 3

3. WASHER PUMP MOTOR GROUND CIRCUIT OPEN

Turn the ignition off.
Disconnect the Washer Pump Motor harness connector.
Measure the resistance between ground and the Washer Pump Motor Ground circuit.

Is the resistance above 5.0 ohms?

Yes >> Repair the Washer Pump Motor Ground circuit for an open.
Perform BODY VERIFICATION TEST - VER 1.

No >> Go To 4

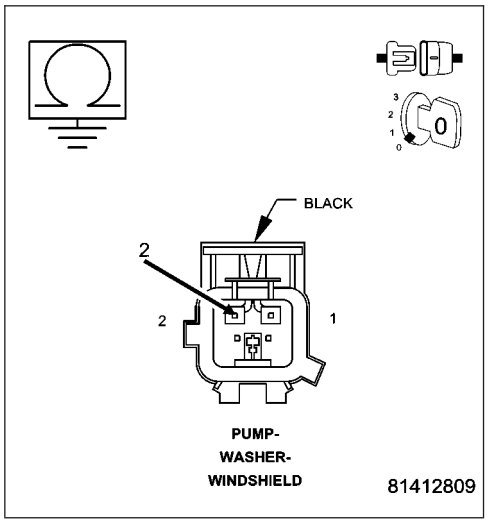

4. WASHER PUMP MOTOR CONTROL CIRCUIT OPEN

Turn the ignition off.
Disconnect the Washer Pump Motor harness connector.
Disconnect the IPM C3 harness connector.
Measure the resistance of the Washer Pump Motor Control circuit.

Is the resistance above 5.0 ohms?

Yes >> Repair the Washer Pump Motor Control circuit for an open.
Perform BODY VERIFICATION TEST - VER 1.

No >> Go To 5

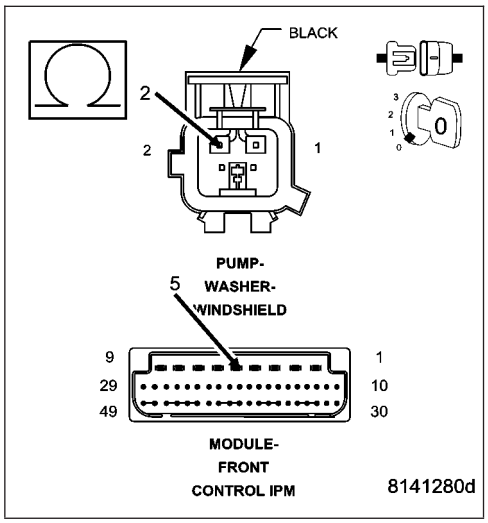

FCM-WASHER PUMP OUTPUT CIRCUIT OPEN (CONTINUED)

5. POWER DISTRIBUTION CENTER

Turn the ignition off.
Disconnect the FCM from the IPM.
Disconnect the IPM C3 harness connector.
Measure the internal resistance of the IPM Washer Pump Motor Control circuit.

Is the resistance above 5.0 ohms?

Yes >> Replace the Power Distribution Center (PDC) in accordance with the Service Information. Perform BODY VERIFICATION TEST - VER 1.

No >> Replace the Front Control Module (FCM) in accordance with the Service Information. Perform BODY VERIFICATION TEST - VER 1.

FCM-WIPER ON-OFF RELAY OUTPUT CIRCUIT HIGH

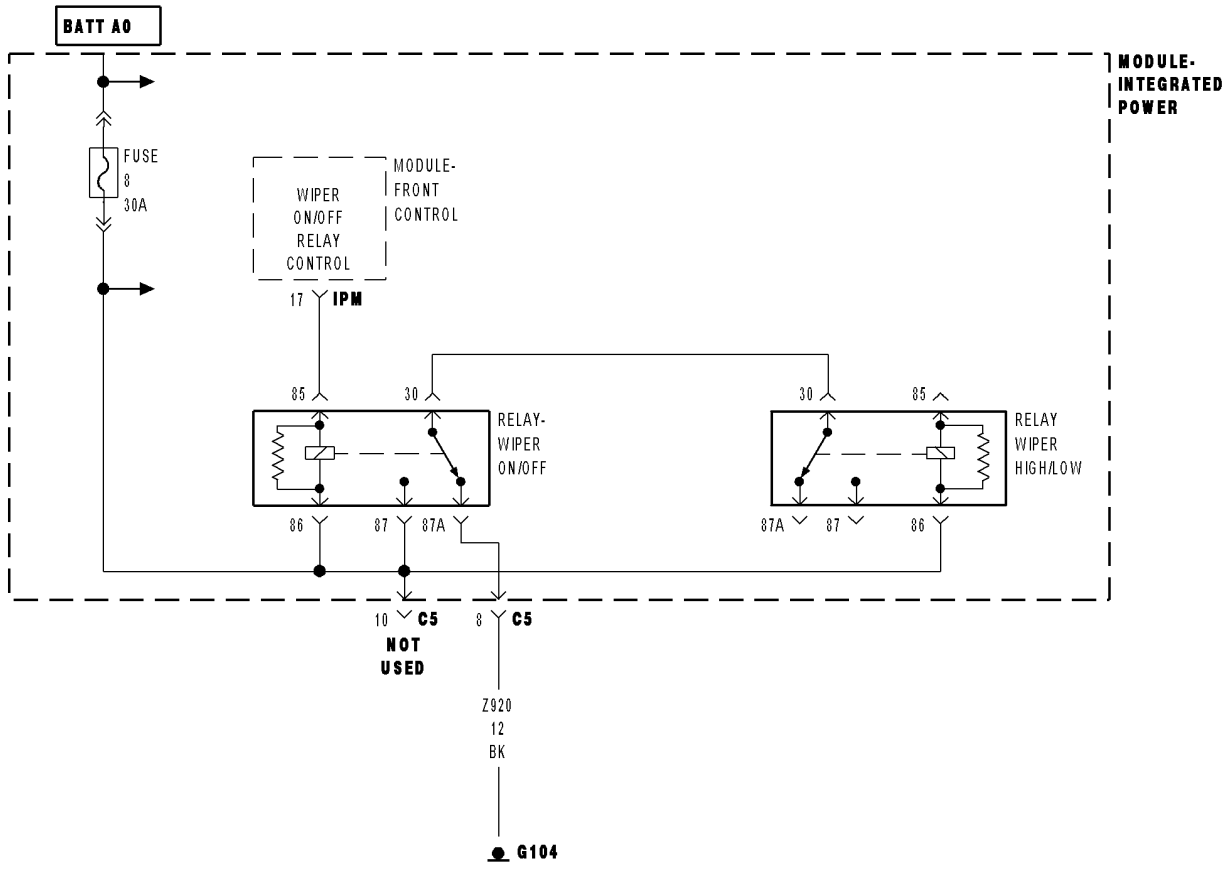

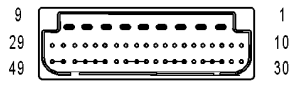

81461109

FCM-WIPER ON-OFF RELAY OUTPUT CIRCUIT HIGH (CONTINUED)

For the Wiper Washer system circuit diagram (Refer to 8 - ELECTRICAL/WIPERS/WASHERS - SCHEMATICS AND DIAGRAMS).

For a complete wiring diagram **Refer to Section 8W**.

- **When Monitored:**
- **Set Condition:**

Possible Causes
WIPER ON/OFF RELAY
FRONT CONTROL MODULE
POWER DISTRIBUTION CENTER

1. INTERMITTENT CONDITION

Turn the ignition on.
With the DRBIII®, clear all FCM DTC's.
Turn the Wipers ON than OFF.
With the DRBIII®, read the DTC information.

Does the DRBIII® read: Wiper ON-OFF Relay Output Circuit High?

Yes >> Go To 2

No >> The condition that caused the symptom is currently not present. Inspect the related wiring for a possible intermittent condition. Look for any chafed, pierced, pinched, or partially broken wires.
Perform BODY VERIFICATION TEST - VER 1.

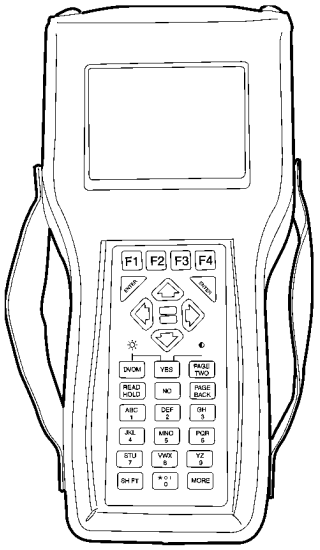

FCM-WIPER ON-OFF RELAY OUTPUT CIRCUIT HIGH (CONTINUED)

2. WIPER ON/OFF RELAY

Turn the ignition off.
Remove the Wiper On/Off Relay from the IPM.
Turn the ignition on.
Activate the Wiper Switch to all speed positions.
With the DRBIII®, read DTCs.

Does the DRBIII® display: Wiper On/Off Relay Output Circuit High?

Yes >> Replace the Wiper On/Off Relay in accordance with the Service Information.
Perform BODY VERIFICATION TEST - VER 1.

No >> Go To 3

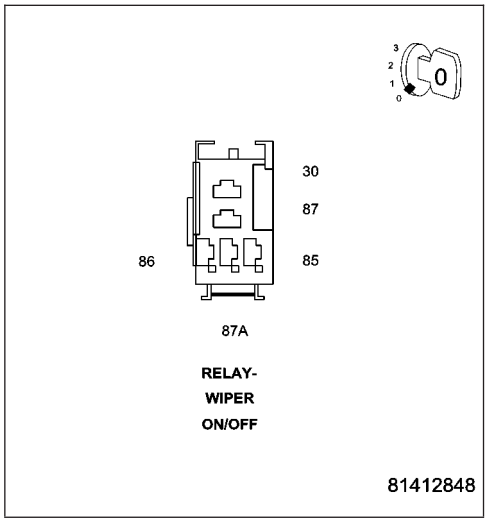

3. POWER DISTRIBUTION CENTER

Turn the ignition off.
Remove the Wiper On/Off Relay from the IPM.
Remove the FCM from the IPM.
Measure the voltage between the Wiper On/Off Relay Control circuit and ground in the IPM.

Is there any voltage present?

Yes >> Replace the Power Distribution Center (PDC) in accordance with the Service Information.
Perform BODY VERIFICATION TEST - VER 1.

No >> Replace the Front Control Module (FCM) in accordance with the Service Information.
Perform BODY VERIFICATION TEST - VER 1.

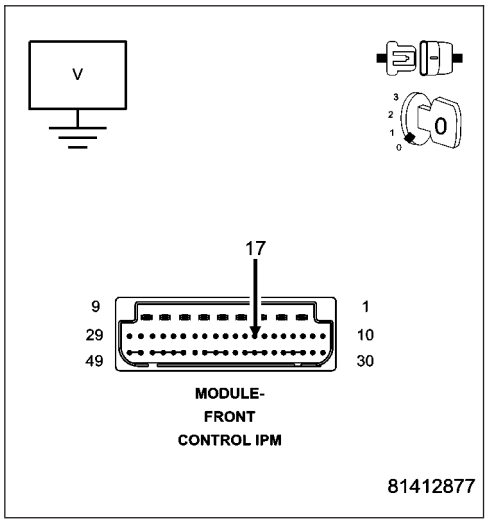

FCM-WIPER ON-OFF RELAY OUTPUT CIRCUIT OPEN

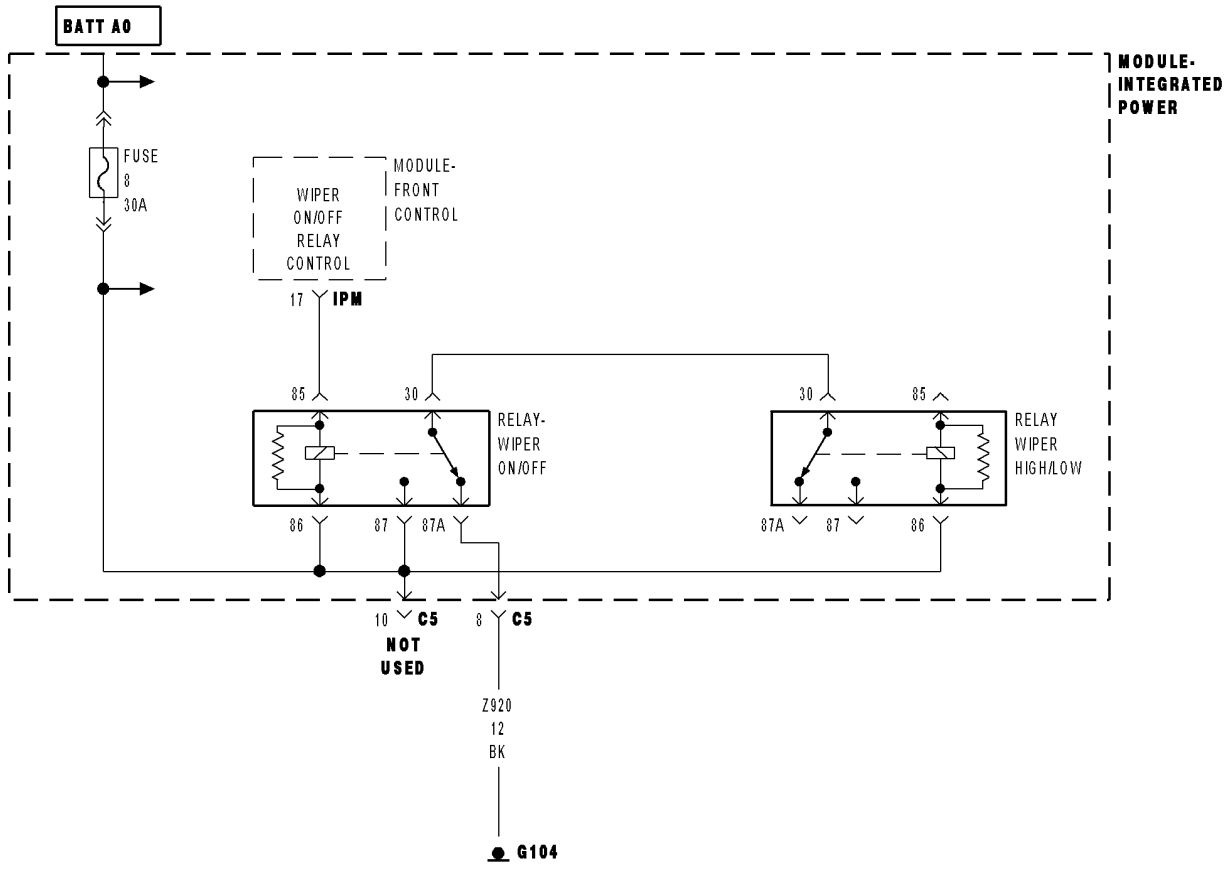

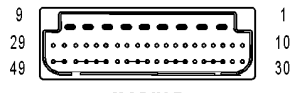

MODULE-
FRONT
CONTROL IPM

81461109

FCM-WIPER ON-OFF RELAY OUTPUT CIRCUIT OPEN (CONTINUED)

For the Wiper Washer system circuit diagram (Refer to 8 - ELECTRICAL/WIPERS/WASHERS - SCHEMATICS AND DIAGRAMS).

For a complete wiring diagram **Refer to Section 8W**.

- **When Monitored:**
  With the ignition on
- **Set Condition:**
  The FCM detects an open condition on the BUS

Possible Causes
WIPER ON/OFF RELAY
FRONT CONTROL MODULE
POWER DISTRIBUTION CENTER

1. INTERMITTENT CONDITION

Turn the ignition on.
With the DRBIII®, clear all FCM DTC's.
Turn the Wipers ON then OFF.
With the DRBIII®, read the DTC information.

Does the DRBIII® read: Wiper ON-OFF Relay Output Circuit Open?

Yes >> Go To 2

No >> The condition that caused the symptom is currently not present. Inspect the related wiring for a possible intermittent condition. Look for any chafed, pierced, pinched, or partially broken wires.
Perform BODY VERIFICATION TEST - VER 1.

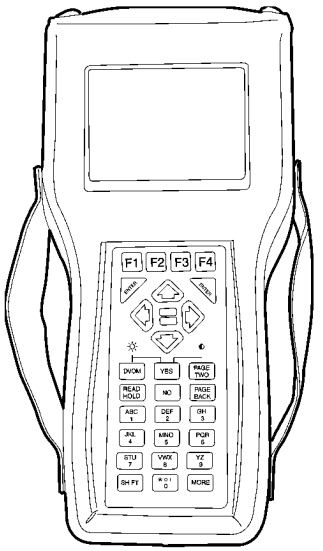

FCM-WIPER ON-OFF RELAY OUTPUT CIRCUIT OPEN (CONTINUED)

2. WIPER ON/OFF RELAY

Turn the ignition off.
Install a substitute relay in place of the Wiper On/Off Relay.
Turn the ignition on.
With the DRBIII®, read DTCs.

Does the DRBIII® display: Wiper On/Off Relay Output Circuit Open?

Yes >> Go To 3

No >> Replace the Wiper On/Off Relay in accordance with the Service Information.
Perform BODY VERIFICATION TEST - VER 1.

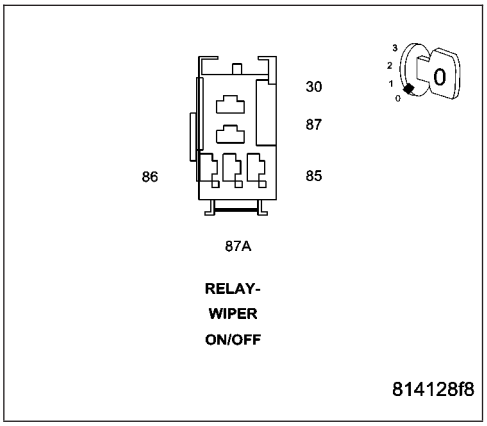

3. POWER DISTRIBUTION CENTER

Turn the ignition off.
Remove the Wiper On/Off Relay from the IPM.
Remove the FCM from the IPM.
Measure the resistance of the Wiper On/Off Control circuit in the IPM.

Is the resistance above 5.0 ohms?

Yes >> Replace the Power Distribution Center (PDC) in accordance with the Service Information.
Perform BODY VERIFICATION TEST - VER 1.

No >> Replace the Front Control Module (FCM) in accordance with the Service Information.
Perform BODY VERIFICATION TEST - VER 1.

FCM-WIPER ON-OFF RELAY OUTPUT CIRCUIT LOW

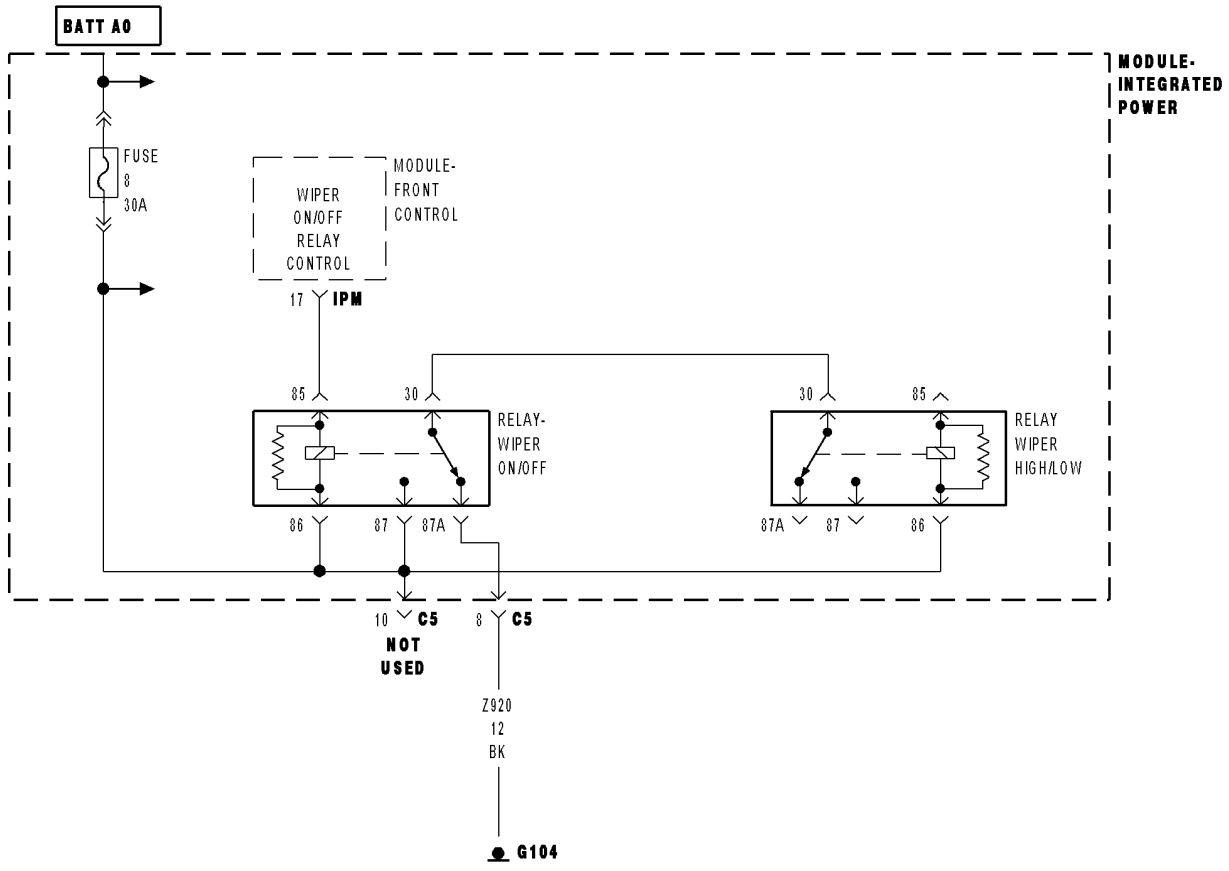

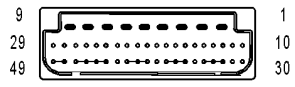

81461109

FCM-WIPER ON-OFF RELAY OUTPUT CIRCUIT LOW (CONTINUED)

For the Wiper Washer system circuit diagram (Refer to 8 - ELECTRICAL/WIPERS/WASHERS - SCHEMATICS AND DIAGRAMS).

For a complete wiring diagram **Refer to Section 8W**.

- **When Monitored:**
  With the ignition on
- **Set Condition:**
  When the FCM detects a low condition in the relay

Possible Causes
WIPER ON/OFF RELAY
FRONT CONTROL MODULE
POWER DISTRIBUTION CENTER

1. INTERMITTENT CONDITION

Turn the ignition on.
With the DRBIII®, clear all FCM DTC's.
Turn the Wipers ON then OFF.
With the DRBIII®, read the DTC information.

Does the DRBIII® read: Wiper On-Off Relay Output Circuit Low?

Yes >> Go To 2

No >> The condition that caused the symptom is currently not present. Inspect the related wiring for a possible intermittent condition. Look for any chafed, pierced, pinched, or partially broken wires.
Perform BODY VERIFICATION TEST - VER 1.

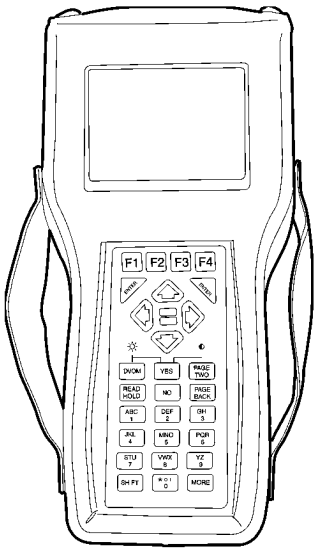

FCM-WIPER ON-OFF RELAY OUTPUT CIRCUIT LOW (CONTINUED)

2. WIPER ON/OFF RELAY

Turn the ignition off.
Install a substitute relay in place of the Wiper On/Off Relay.
Turn the ignition on.
With the DRBIII®, read DTCs.

Does the DRBIII® display: Wiper On/Off Relay Output Circuit Low?

Yes >> Go To 3

No >> Replace the Wiper On/Off Relay in accordance with the Service Information.
Perform BODY VERIFICATION TEST - VER 1.

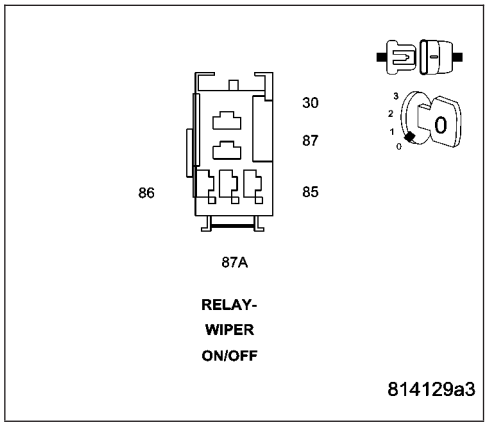

3. POWER DISTRIBUTION CENTER

Turn the ignition off.
Remove the Wiper On/Off Relay.
Remove the FCM from the IPM.
Measure the resistance between ground and the Wiper On/Off Relay Control circuit in the IPM.

Is the resistance below 5.0 ohms?

Yes >> Replace the Power Distribution Center (PDC) in accordance with the Service Information.
Perform BODY VERIFICATION TEST - VER 1.

No >> Replace the Front Control Module (FCM) in accordance with the Service Information.
Perform BODY VERIFICATION TEST - VER 1.

FCM-WIPER PARK SWITCH INPUT PERFORMANCE

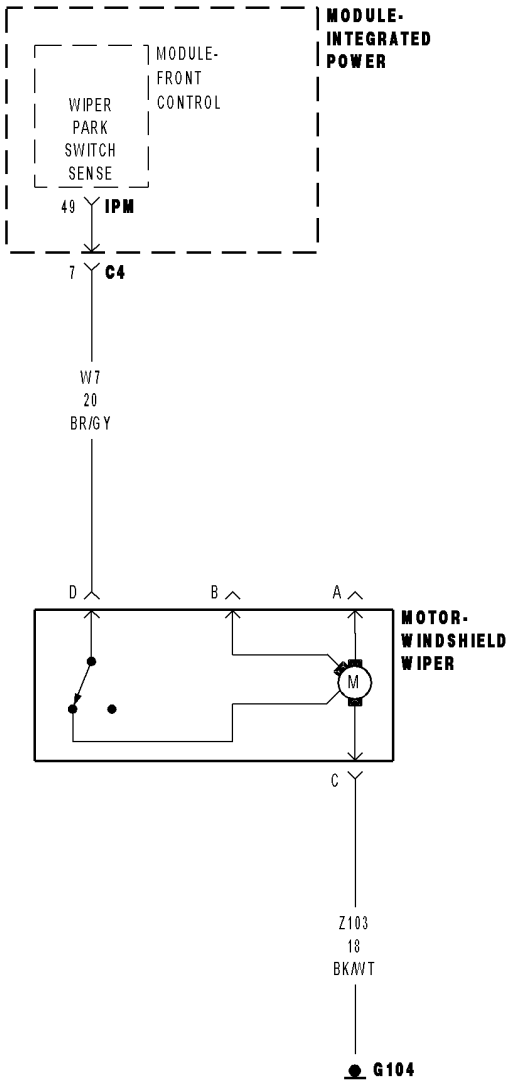

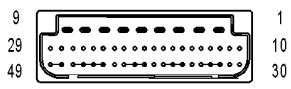

MODULE-
FRONT
CONTROL IPM

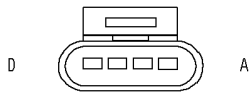

MOTOR-
WINDSHIELD WIPER

81461167

FCM-WIPER PARK SWITCH INPUT PERFORMANCE (CONTINUED)

For the Wiper Washer system circuit diagram (Refer to 8 - ELECTRICAL/WIPERS/WASHERS - SCHEMATICS AND DIAGRAMS).

For a complete wiring diagram **Refer to Section 8W**.

- **When Monitored:**
  With the ignition on
- **Set Condition:**
  The FCM detects a performance condition on the BUS

Possible Causes
WIPER MOTOR PARK SWITCH GROUND CIRCUIT OPEN
WIPER MOTOR
WIPER PARK SWITCH SENSE CIRCUIT SHORT TO VOLTAGE
WIPER PARK SWITCH SENSE CIRCUIT SHORT TO GROUND
WIPER PARK SWITCH SENSE CIRCUIT OPEN
POWER DISTRIBUTION CENTER
FRONT CONTROL MODULE

1. INTERMITTENT CONDITION

Turn the ignition on.
With the DRBIII®, clear all FCM DTC's.
Turn the Wipers ON then OFF.
With the DRBIII®, read the DTC information.

Does the DRBIII® read: Wiper Park Switch Input Performance?

Yes >> Go To 2

No >> The condition that caused the symptom is currently not present. Inspect the related wiring for a possible intermittent condition. Look for any chafed, pierced, pinched, or partially broken wires.
Perform BODY VERIFICATION TEST - VER 1.

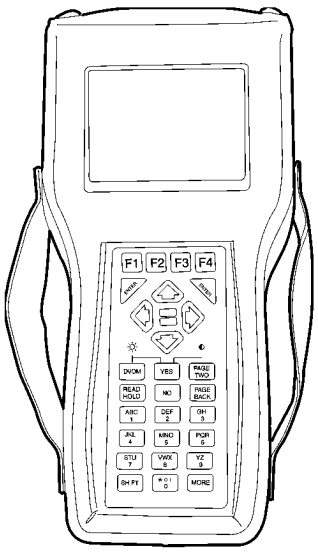

FCM-WIPER PARK SWITCH INPUT PERFORMANCE (CONTINUED)

2. WIPER MOTOR PARK SWITCH GROUND CIRCUIT OPEN

Turn the ignition off.

Disconnect the Wiper Motor harness connector.

Measure the resistance between ground and the Wiper Motor Park Switch Ground circuit.

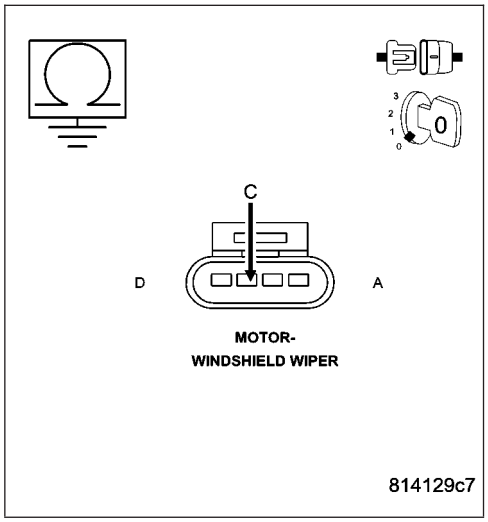

Is the resistance above 5.0 ohms?

Yes >> Repair the Wiper Motor Park Switch Ground circuit for an open.
Perform BODY VERIFICATION TEST - VER 1.

No >> Go To 3

3. WIPER MOTOR

Turn the ignition off.

Disconnect the Wiper Motor harness connector.

Measure the internal resistance of the Wiper Motor between terminal pin 2 and pin 3.

Is the resistance above 5.0 ohms?

Yes >> Replace the Wiper Motor - Front in accordance with the Service Information.
Perform BODY VERIFICATION TEST - VER 1.

No >> Go To 4

4. WIPER PARK SWITCH SENSE CIRCUIT SHORT TO VOLTAGE

Turn the ignition off.

Disconnect the IPM C4 harness connector.

Disconnect the Wiper Motor harness connector.

Measure the voltage between the Wiper Park Switch Sense circuit and ground.

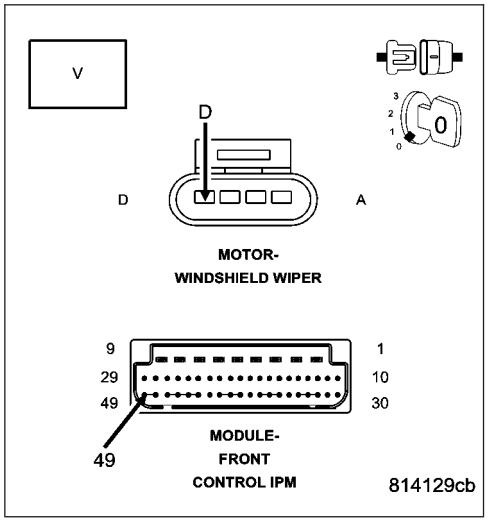

Is there any voltage present?

Yes >> Repair the Wiper Park Switch Sense circuit for a short to voltage.
Perform BODY VERIFICATION TEST - VER 1.

No >> Go To 5

FCM-WIPER PARK SWITCH INPUT PERFORMANCE (CONTINUED)

5. WIPER PARK SWITCH SENSE CIRCUIT SHORT TO GROUND

Turn the ignition off.
Disconnect the IPM C4 harness connector.
Disconnect the Wiper Motor harness connector.
Measure the resistance between ground and the Wiper Park Switch Sense circuit.

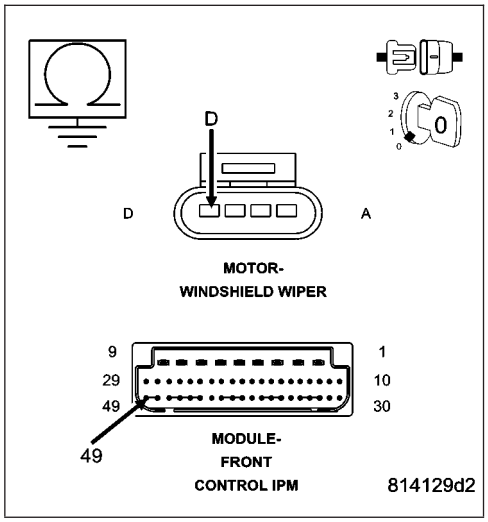

Is the resistance below 5.0 ohms?

Yes >> Repair the Wiper Park Switch Sense circuit for a short to ground.
Perform BODY VERIFICATION TEST - VER 1.

No >> Go To 6

6. WIPER PARK SWITCH SENSE CIRCUIT OPEN

Turn the ignition off.
Disconnect the IPM C4 harness connector.
Disconnect the Wiper Motor harness connector.
Measure the resistance of the Wiper Park Switch Sense circuit.

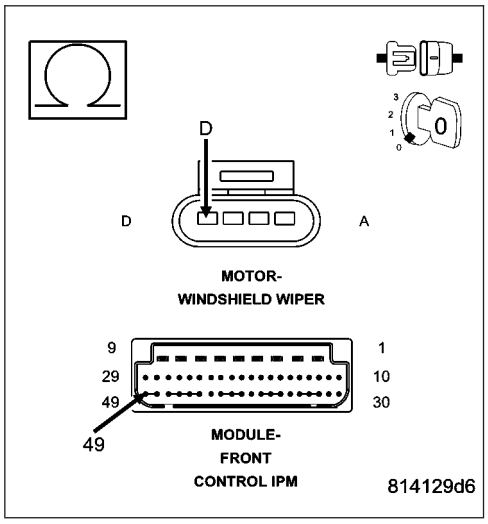

Is the resistance above 5.0 ohms?

Yes >> Repair the Wiper Park Switch Sense circuit for an open.
Perform BODY VERIFICATION TEST - VER 1.

No >> Go To 7

7. POWER DISTRIBUTION CENTER

Turn the ignition off.
Remove the FCM from the IPM.
Disconnect the IPM C4 harness connector.
Measure the internal resistance of the Wiper Park Switch Sense circuit.

Is the resistance above 5.0 ohms?

Yes >> Replace the Power Distribution Center (PDC) in accordance with the Service Information.
Perform BODY VERIFICATION TEST - VER 1.

No >> Replace the Front Control Module (FCM) in accordance with the Service Information.
Perform BODY VERIFICATION TEST - VER 1.

FCM-WIPER SPEED RELAY OUTPUT CIRCUIT HIGH

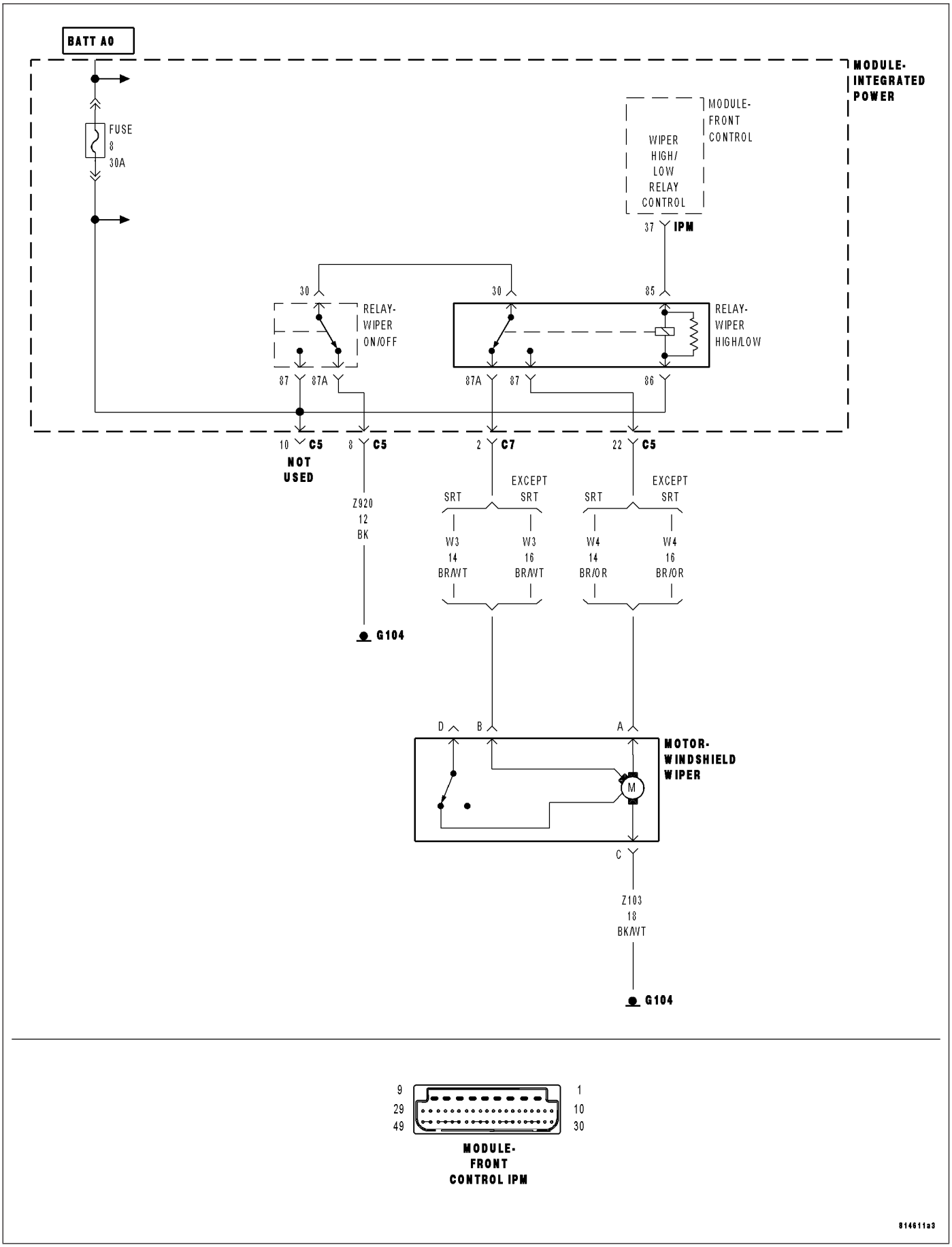

FCM-WIPER SPEED RELAY OUTPUT CIRCUIT HIGH (CONTINUED)

For the Wiper Washer system circuit diagram (Refer to 8 - ELECTRICAL/WIPERS/WASHERS - SCHEMATICS AND DIAGRAMS).

For a complete wiring diagram **Refer to Section 8W**.

- **When Monitored:**
  With the ignition on
- **Set Condition:**
  The FCM detects a HIGH condition the BUS

Possible Causes
WIPER HIGH/LOW RELAY
FRONT CONTROL MODULE
POWER DISTRIBUTION CENTER

1. INTERMITTENT CONDITION

Turn the ignition on.
With the DRBIII®, clear all FCM DTC's.
Actuate the Wipers in all speed positions.
With the DRBIII®, read the DTC information.

Does the DRBIII® read: Wiper Speed Relay Output Circuit High?

Yes >> Go To 2

No >> The condition that caused the symptom is currently not present. Inspect the related wiring for a possible intermittent condition. Look for any chafed, pierced, pinched, or partially broken wires.
Perform BODY VERIFICATION TEST - VER 1.

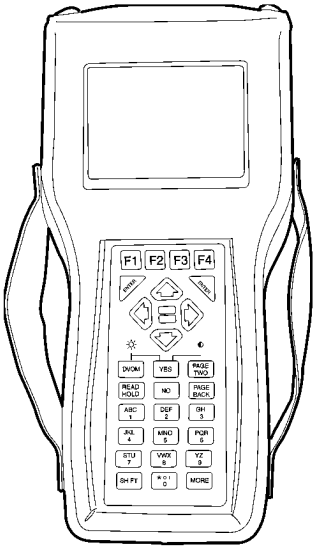

FCM-WIPER SPEED RELAY OUTPUT CIRCUIT HIGH (CONTINUED)

2. WIPER HIGH/LOW RELAY

Turn the ignition off.
Remove the Wiper High/Low Relay from the IPM.
Turn the ignition on.
Activate the Wiper Switch to all speed positions.
With the DRBIII®, read DTCs.

Does the DRBIII® display: Wiper Speed Relay Output Circuit Open?

Yes >> Replace the Wiper High/Low Relay in accordance with the Service Information.
Perform BODY VERIFICATION TEST - VER 1.

No >> Go To 3

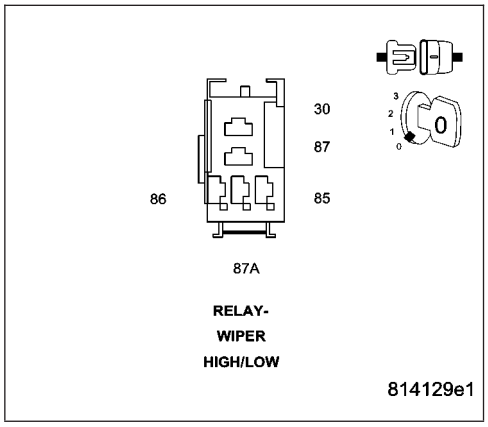

3. POWER DISTRIBUTION CENTER

Turn the ignition off.
Remove the Wiper High/Low Relay from the IPM.
Remove the FCM from the IPM.
Measure the voltage between the Wiper High/Low Relay Control circuit and ground in the IPM.

Is there any voltage present?

Yes >> Replace the Power Distribution Center (PDC) in accordance with the Service Information.
Perform BODY VERIFICATION TEST - VER 1.

No >> Replace the Front Control Module (FCM) in accordance with the Service Information.
Perform BODY VERIFICATION TEST - VER 1.

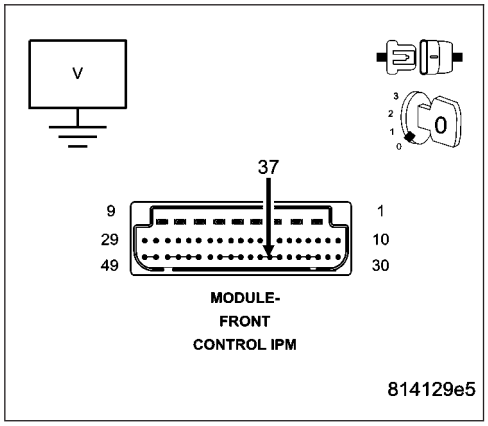

FCM-WIPER SPEED RELAY OUTPUT CIRCUIT LOW

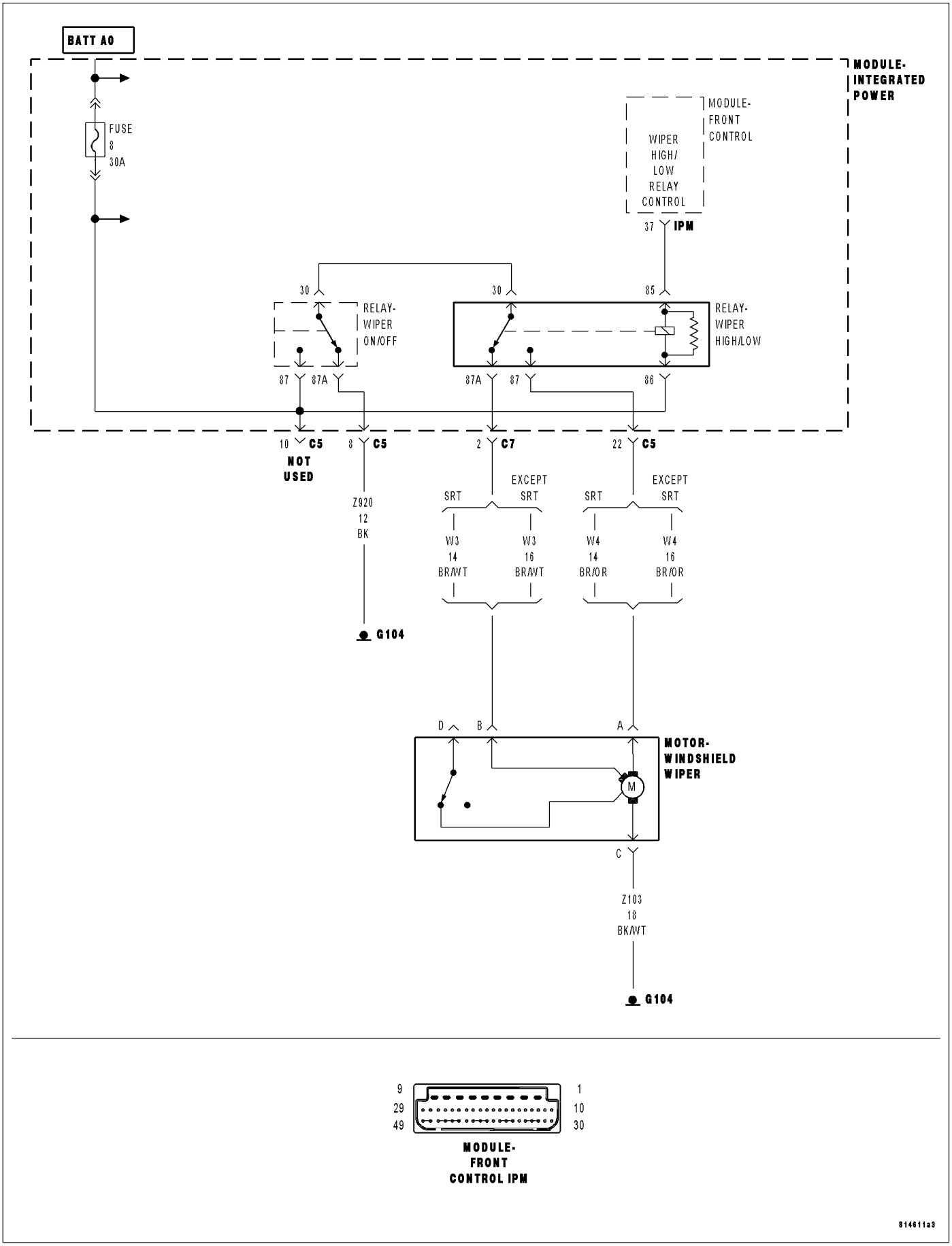

FCM-WIPER SPEED RELAY OUTPUT CIRCUIT LOW (CONTINUED)

For the Wiper Washer system circuit diagram (Refer to 8 - ELECTRICAL/WIPERS/WASHERS - SCHEMATICS AND DIAGRAMS).

For a complete wiring diagram **Refer to Section 8W**.

- **When Monitored:**
  With the ignition on
- **Set Condition:**
  The FCM detects a low condition

Possible Causes
WIPER ON/OFF RELAY
FRONT CONTROL MODULE
POWER DISTRIBUTION CENTER

1. INTERMITTENT CONDITION

Turn the ignition on.
With the DRBIII®, clear all FCM DTC's.
Actuate the Wipers in all speed positions.
With the DRBIII®, read the DTC information.

Does the DRBIII® read: Wiper Speed Relay Output Circuit Low?

Yes >> Go To 2

No >> The condition that caused the symptom is currently not present. Inspect the related wiring for a possible intermittent condition. Look for any chafed, pierced, pinched, or partially broken wires.
Perform BODY VERIFICATION TEST - VER 1.

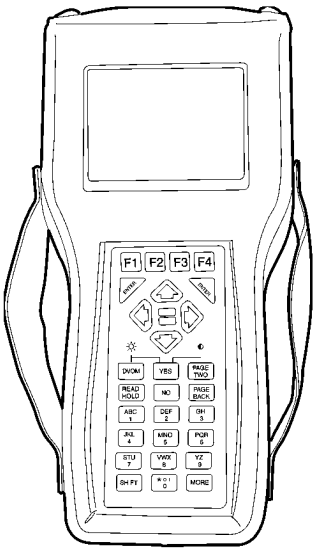

FCM-WIPER SPEED RELAY OUTPUT CIRCUIT LOW (CONTINUED)

2. WIPER HIGH/LOW RELAY

Turn the ignition off.
Install a substitute relay in place of the Wiper High/Low Relay.
Turn the ignition on.
Activate the Wiper Switch to all speed positions.
With the DRBIII®, read DTCs.

Does the DRBIII® display: Wiper Speed Relay Output Circuit Low?

Yes >> Go To 3

No >> Replace the Wiper High/Low Relay in accordance with the Service Information.
Perform BODY VERIFICATION TEST - VER 1.

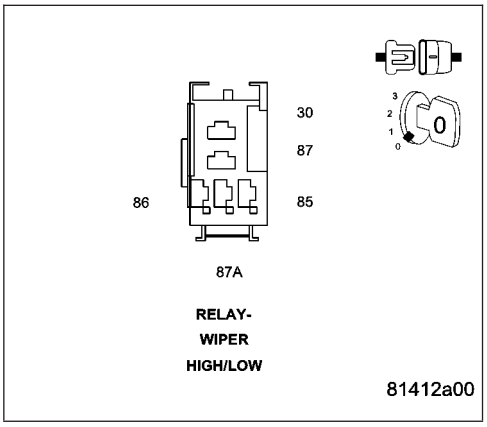

3. POWER DISTRIBUTION CENTER

Turn the ignition off.
Remove the Wiper High/Low Relay.
Remove the FCM from the IPM.
Measure the resistance between ground and the Wiper High/Low Relay Control circuit in the IPM.

Is the resistance below 5.0 ohms?

Yes >> Replace the Power Distribution Center (PDC) in accordance with the Service Information.
Perform BODY VERIFICATION TEST - VER 1.

No >> Replace the Front Control Module (FCM) in accordance with the Service Information.
Perform BODY VERIFICATION TEST - VER 1.

FCM-WIPER SPEED RELAY OUTPUT CIRCUIT OPEN

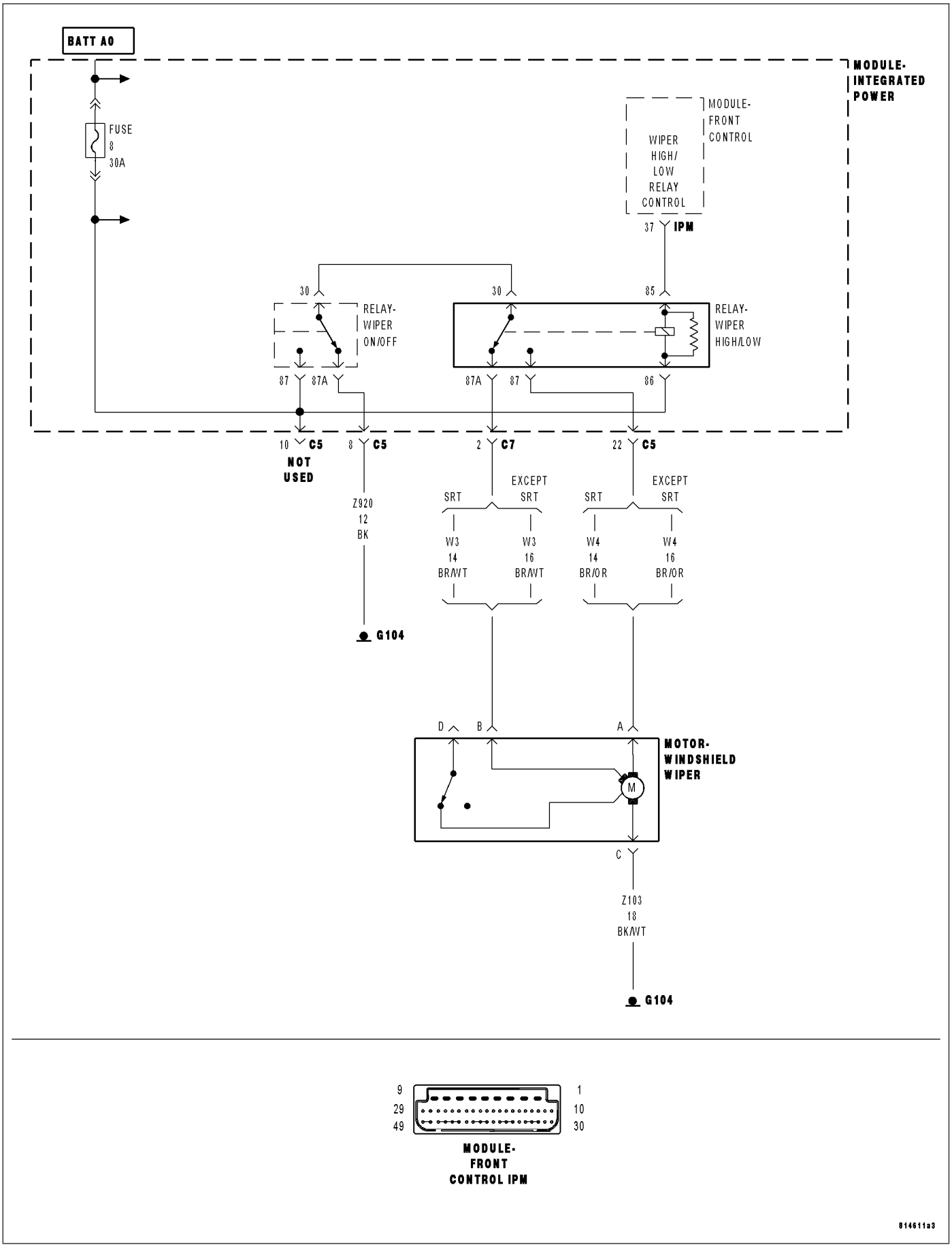

FCM-WIPER SPEED RELAY OUTPUT CIRCUIT OPEN (CONTINUED)

For the Wiper Washer system circuit diagram (Refer to 8 - ELECTRICAL/WIPERS/WASHERS - SCHEMATICS AND DIAGRAMS).

For a complete wiring diagram **Refer to Section 8W**.

- **When Monitored:**
  With the ignition on
- **Set Condition:**
  The FCM detects an open condition

Possible Causes
WIPER HIGH/LOW RELAY
FRONT CONTROL MODULE
POWER DISTRIBUTION CENTER

1. INTERMITTENT CONDITION

Turn the ignition on.
With the DRBIII ®, clear all FCM DTC's.
Actuate the Wipers in all speed positions.
With the DRBIII®, read the DTC information.

Does the DRBIII® read: Wiper Speed Relay Output Circuit Open?

Yes >> Go To 2

No >> The condition that caused the symptom is currently not present. Inspect the related wiring for a possible intermittent condition. Look for any chafed, pierced, pinched, or partially broken wires.
Perform BODY VERIFICATION TEST - VER 1.

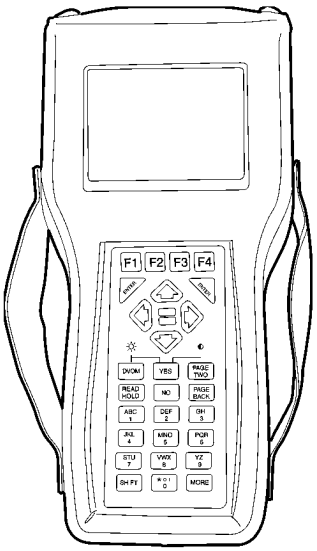

FCM-WIPER SPEED RELAY OUTPUT CIRCUIT OPEN (CONTINUED)

2. WIPER HIGH/LOW RELAY

Turn the ignition off.
Install a substitute relay in place of the Wiper High/Low Relay.
Turn the ignition on.
Activate the Wiper Switch to all speed positions.
With the DRBIII®, read DTCs.

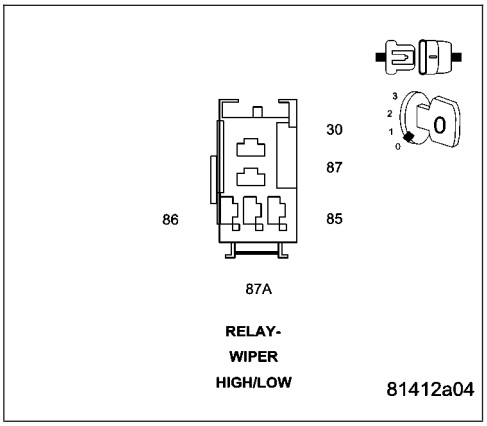

Does the DRBIII® display: Wiper Speed Relay Output Circuit Open?

Yes >> Go To 3

No >> Replace the Wiper High/Low Relay in accordance with the Service Information.
Perform BODY VERIFICATION TEST - VER 1.

3. POWER DISTRIBUTION CENTER

Turn the ignition off.
Remove the Wiper High/Low Relay from the IPM.
Remove the FCM from the IPM.
Measure the resistance of the Wiper High/Low Control circuit in the IPM.

Is the resistance above 5.0 ohms?

Yes >> Replace the Power Distribution Center (PDC) in accordance with the Service Information.
Perform BODY VERIFICATION TEST - VER 1.

No >> Replace the Front Control Module (FCM) in accordance with the Service Information.
Perform BODY VERIFICATION TEST - VER 1.

MIC-WASH-BEAM INPUT CIRCUIT SHORTED

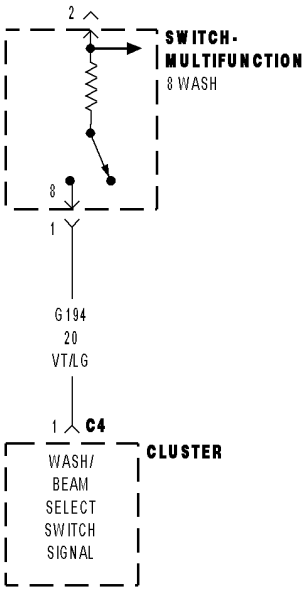

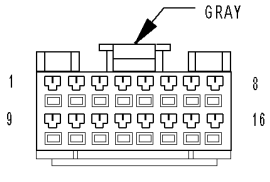

CLUSTER C4

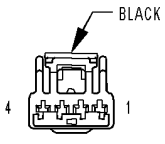

SWITCH-
MULTIFUNCTION

8146123d

MIC-WASH-BEAM INPUT CIRCUIT SHORTED (CONTINUED)

For the Wiper Washer system circuit diagram (Refer to 8 - ELECTRICAL/WIPERS/WASHERS - SCHEMATICS AND DIAGRAMS).

For a complete wiring diagram **Refer to Section 8W**.

- **When Monitored:**
  With the ignition on.
- **Set Condition:**
  The Instrument Cluster detects less than 0.05 volts on the Wash/Beam Select Switch Feed circuit.

Possible Causes
MULTI- FUNCTION SWITCH
INSTRUMENT CLUSTER
(G194) WASH/BEAM SELECT SWITCH FEED CIRCUIT SHORT TO GROUND

1. INTERMITTENT CONDITION

Turn the ignition on.
With the DRBIII®, clear all MIC DTC's.
Turn the Wipers on.
With the DRBIII®, read the DTC information.

Does the DRBIII® read: Wash-Beam Input Circuit Shorted?

Yes >> Go To 2

No >> The condition that caused the symptom is currently not present. Inspect the related wiring for a possible intermittent condition. Look for any chafed, pierced, pinched, or partially broken wires.
Perform BODY VERIFICATION TEST - VER 1.

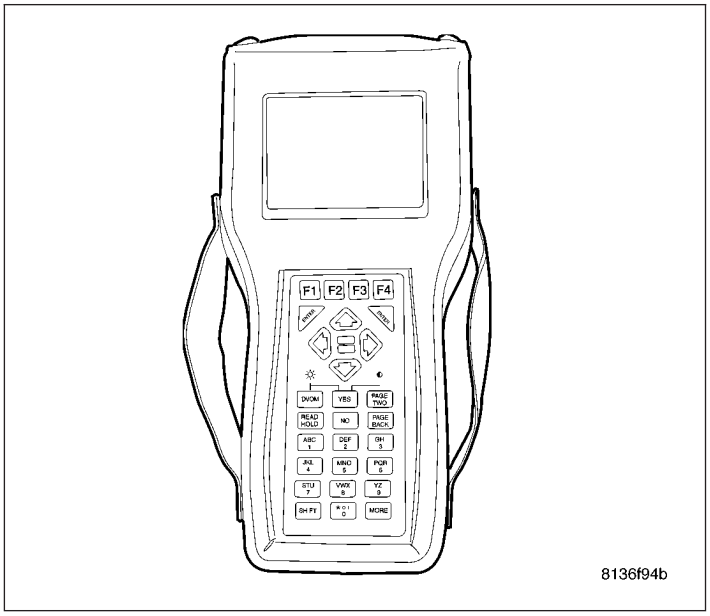

2. MULTI- FUNCTION SWITCH

Turn the ignition off.
Disconnect the Multi- Function Switch harness connector.
Turn the ignition on.
With the DRBIII® in Sensors, read the Wash - Beam SW Volts.

Does the DRBIII® display more than 4.5 volts?

Yes >> Replace the Multi- Function Switch in accordance with the Service Information.
Perform BODY VERIFICATION TEST - VER 1.

No >> Go To 3

MIC-WASH-BEAM INPUT CIRCUIT SHORTED (CONTINUED)

3. WASH/BEAM SELECT SWITCH FEED CIRCUIT SHORT TO GROUND

Turn the ignition off.

Disconnect the Instrument Cluster C4 harness connector.

Disconnect the Multi- Function Switch harness connector.

Measure the resistance between ground and the(G194) Wash/beam Select Switch Feed circuit.

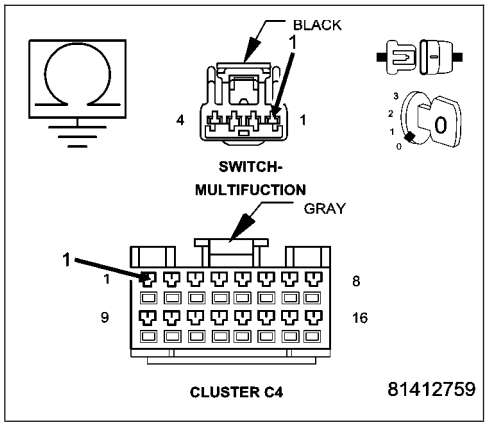

Is the resistance below 5.0 ohms?

Yes >> Repair the (G194) Wash/Beam Select Switch Feed circuit for a short to ground.
Perform BODY VERIFICATION TEST - VER 1.

No >> Replace and configure the Instrument Cluster in accordance with the Service Information.
Perform BODY VERIFICATION TEST - VER 1.

MIC-WIPER SWITCH INPUT CIRCUIT OPEN

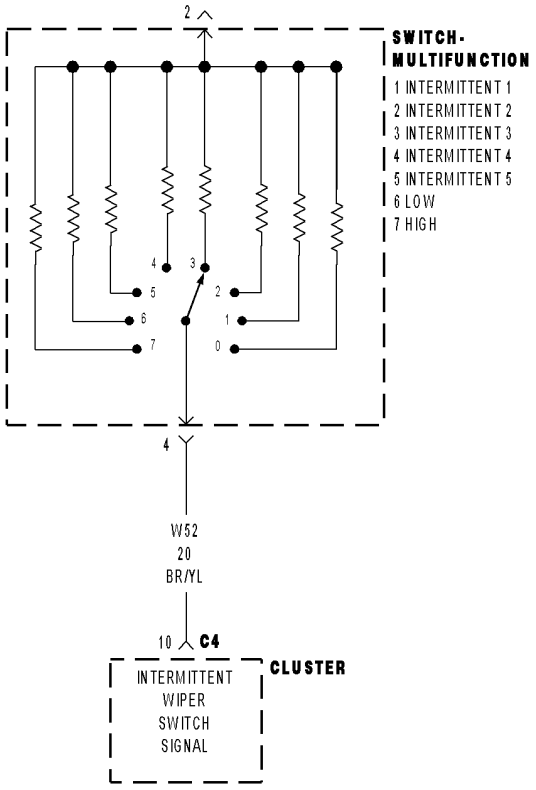

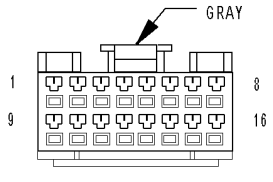

CLUSTER C4

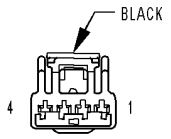

SWITCH-
MULTIFUNCTION

8146125c

MIC-WIPER SWITCH INPUT CIRCUIT OPEN (CONTINUED)

For the Wiper Washer system circuit diagram (Refer to 8 - ELECTRICAL/WIPERS/WASHERS - SCHEMATICS AND DIAGRAMS).

For a complete wiring diagram **Refer to Section 8W**.

- **When Monitored:**
  With the ignition on.
- **Set Condition:**
  The Instrument Cluster detects above 5.0 volts on the multi-function circuit.

Possible Causes
MULTI- FUNCTION SWITCH
INSTRUMENT CLUSTER
(W52) INTERMITTENT WIPER SWITCH SENSE CIRCUIT OPEN

1. INTERMITTENT CONDITION

Turn the ignition on.
With the DRBIII®, clear all MIC DTC's.
Turn the Wipers ON.
With the DRBIII®, read the DTC information.

Does the DRBIII® read: Wiper Switch Input Circuit Open?

Yes >> Go To 2

No >> The condition that caused the symptom is currently not present. Inspect the related wiring for a possible intermittent condition. Look for any chafed, pierced, pinched, or partially broken wires.
Perform BODY VERIFICATION TEST - VER 1.

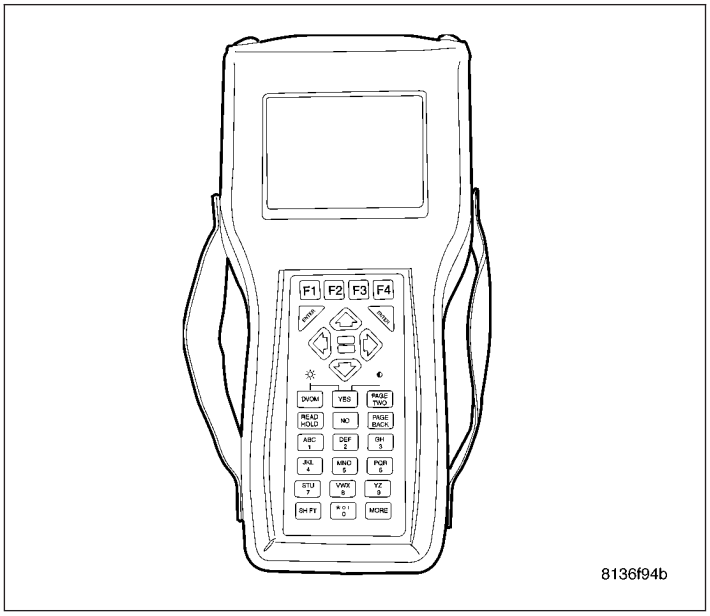

MIC-WIPER SWITCH INPUT CIRCUIT OPEN (CONTINUED)

2. MULTI- FUNCTION SWITCH

Turn the ignition off.

Disconnect the Multi- Function Switch harness connector.

Ensure that the Multi- Function Switch is in the Off position.

Measure the internal resistance of the Multi- Function Switch between cavity 2 and cavity 4.

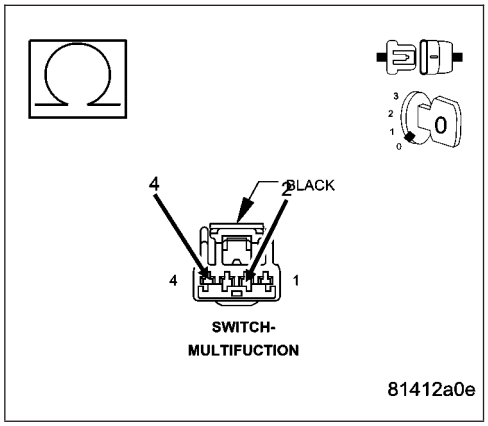

Does the Multi- Function Switch measure more than 5.0 ohms?

Yes >> Replace the Multi- Function Switch in accordance with the Service Information.
Perform BODY VERIFICATION TEST - VER 1.

No >> Go To 3

---

3. INTERMITTENT WIPER SWITCH SENSE CIRCUIT OPEN

Turn the ignition off.

Disconnect the Multi- Function Switch harness connector.

Disconnect the Instrument Cluster C4 harness connector.

Measure the resistance of the (W52) Intermittent Wiper Switch Sense circuit.

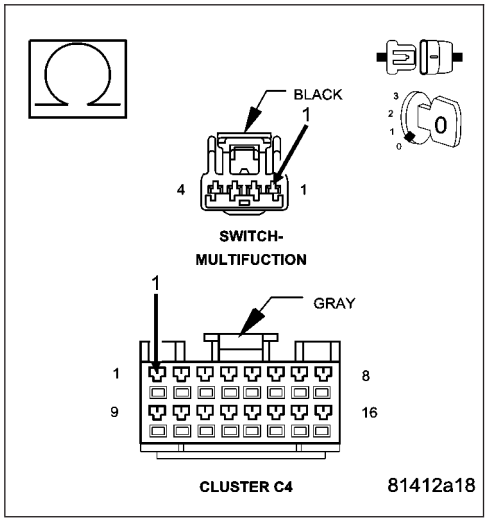

Is the resistance above 5.0 ohms?

Yes >> Repair the (W52) Intermittent Wiper Switch Sense circuit for an open.
Perform BODY VERIFICATION TEST - VER 1.

No >> Replace and configure the Instrument Cluster in accordance with the Service Information.
Perform BODY VERIFICATION TEST - VER 1.

MIC-WIPER SWITCH INPUT CIRCUIT SHORTED

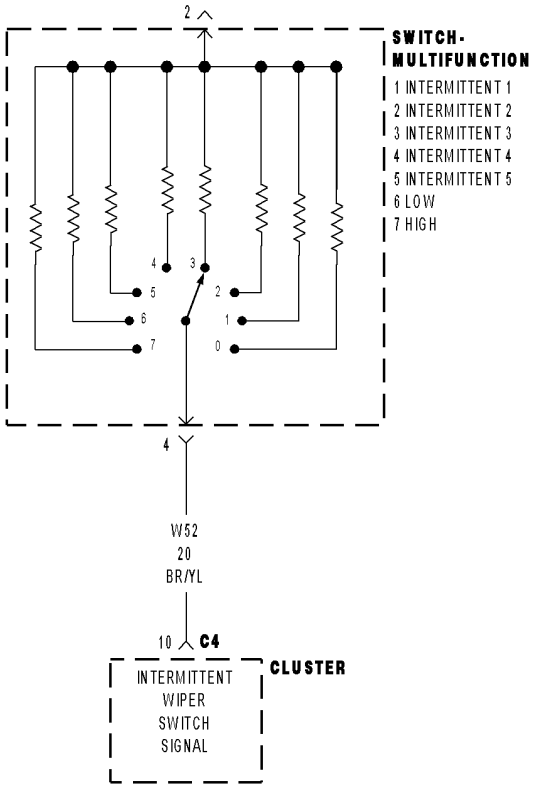

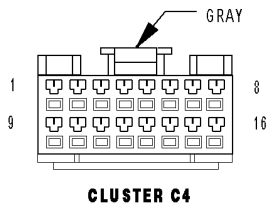

CLUSTER C4

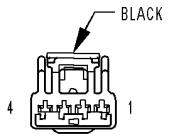

SWITCH-
MULTIFUNCTION

8146125c

MIC-WIPER SWITCH INPUT CIRCUIT SHORTED (CONTINUED)

For the Wiper Washer system circuit diagram (Refer to 8 - ELECTRICAL/WIPERS/WASHERS - SCHEMATICS AND DIAGRAMS).

For a complete wiring diagram **Refer to Section 8W**.

- **When Monitored:**
  With the ignition on.
- **Set Condition:**
  The Instrument Cluster detects the multifunction circuit voltage is below 0.05 volts.

Possible Causes
MULTI- FUNCTION SWITCH
(W52) INTERMITTENT WIPER SWITCH SENSE CIRCUIT SHORT TO GROUND
INSTRUMENT CLUSTER

1. INTERMITTENT CONDITION

Turn the ignition on.
With the DRBIII®, clear all MIC DTC's.
Turn the Wipers ON.
With the DRBIII®, read the DTC information.

Does the DRBIII® read: Wiper Switch Input Circuit Short?

Yes >> Go To 2

No >> The condition that caused the symptom is currently not present. Inspect the related wiring for a possible intermittent condition. Look for any chafed, pierced, pinched, or partially broken wires.
Perform BODY VERIFICATION TEST - VER 1.

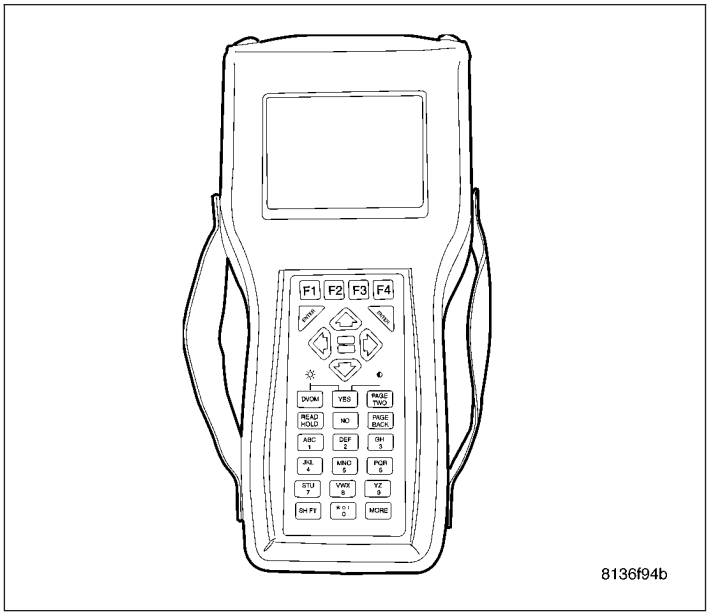

MIC-WIPER SWITCH INPUT CIRCUIT SHORTED (CONTINUED)

2. MULTI- FUNCTION SWITCH

Turn the ignition off.
Disconnect the Multi- Function Switch harness connector.
Turn the ignition on.
With the DRBIII®, read DTCs.

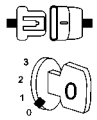

Does the DRBIII® display: Wiper Switch Input Circuit Open?

Yes >> Replace the Multi- Function Switch in accordance with the Service Information.
Perform BODY VERIFICATION TEST - VER 1.

No >> Go To 3

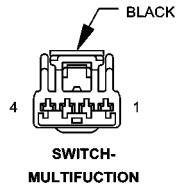

81412a23

3. INTERMITTENT WIPER SWITCH SENSE CIRCUIT SHORT TO GROUND

Turn the ignition off.
Disconnect the Multi- Function Switch harness connector.
Disconnect the Instrument Cluster C4 harness connector.
Measure the resistance between ground and the (W52) Intermittent Wiper Switch Sense circuit.



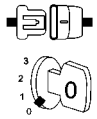

Is the resistance below 5.0 ohms?

Yes >> Repair the (W52) Intermittent Wiper Switch Sense circuit for a short to ground.
Perform BODY VERIFICATION TEST - VER 1.

No >> Replace and configure the Instrument Cluster in accordance with the Service Information.
Perform BODY VERIFICATION TEST - VER 1.

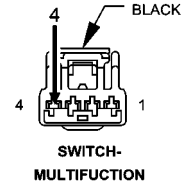

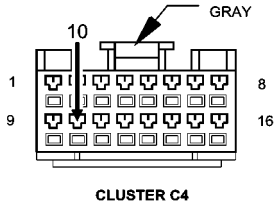

81412a2f

SCHEMATICS AND DIAGRAMS

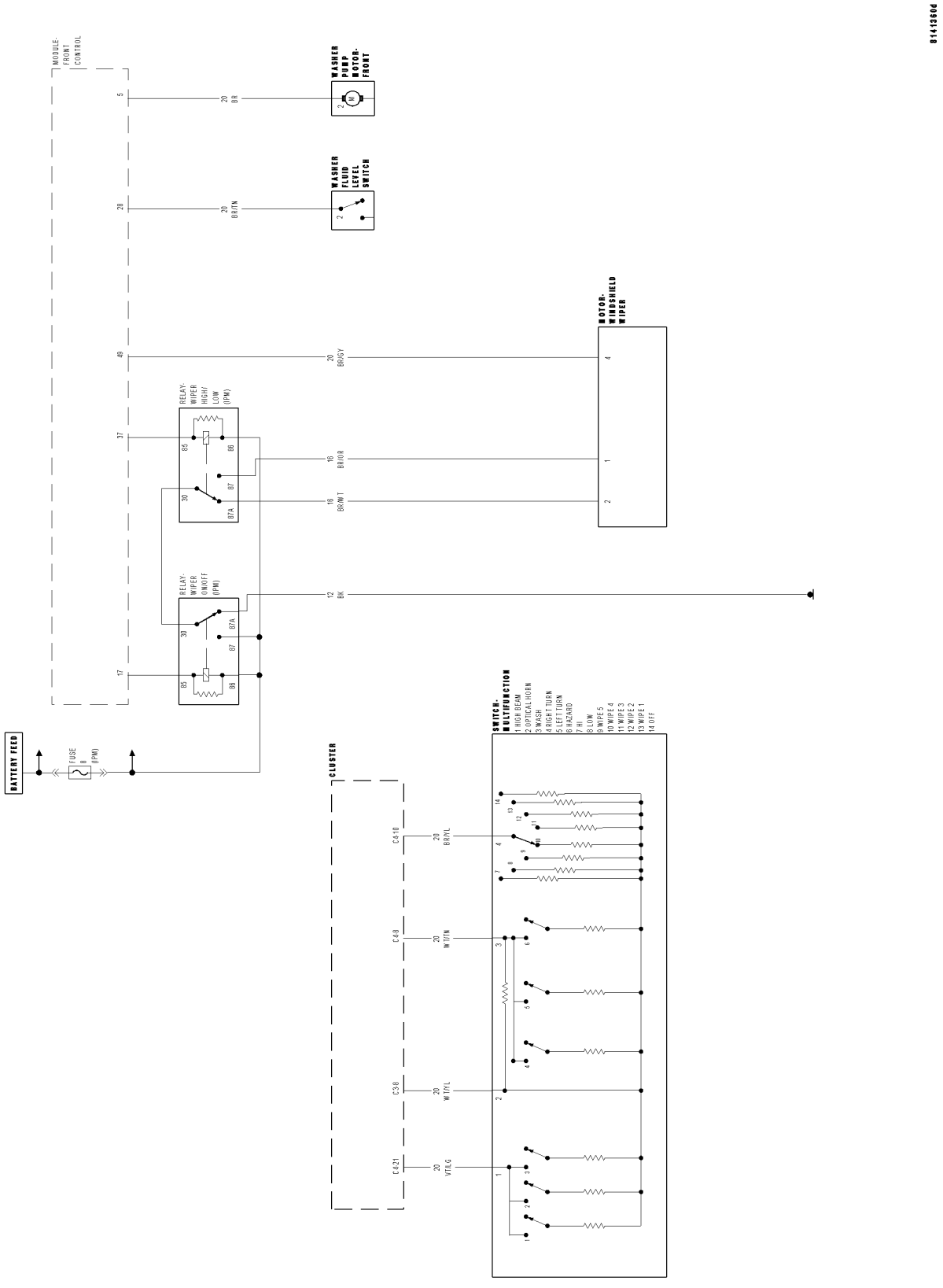

WIPERS/WASHERS - SERVICE INFORMATION

TABLE OF CONTENTS

page

WIPERS/WASHERS - SERVICE INFORMATION
DESCRIPTION 46
OPERATION 48
DIAGNOSIS AND TESTING
WIPER & WASHER SYSTEM 50
CLEANING - WIPER & WASHER SYSTEM 50
INSPECTION - WIPER & WASHER SYSTEM . . 51
CHECK VALVE
DESCRIPTION 52
OPERATION 52
REMOVAL 53
INSTALLATION 53
SENSOR-WASHER FLUID LEVEL
DESCRIPTION 54
OPERATION 54
REMOVAL
EXCEPT SRT-10 OR DIESEL ENGINE 55
SRT-10 OR DIESEL ENGINE ONLY 55
INSTALLATION
EXCEPT SRT-10 OR DIESEL ENGINE 56
SRT-10 OR DIESEL ENGINE ONLY 57
WASHER HOSES/TUBES
DESCRIPTION 57
OPERATION 58
WASHER NOZZLE
DESCRIPTION 58
OPERATION 58
REMOVAL 59
INSTALLATION 59
PUMP-WASHER-WINDSHIELD
DESCRIPTION 60
OPERATION 60
REMOVAL
EXCEPT SRT-10 OR DIESEL ENGINE 61

page

SRT-10 OR DIESEL ENGINE ONLY 61
INSTALLATION
EXCEPT SRT-10 OR DIESEL ENGINE 62
SRT-10 OR DIESEL ENGINE ONLY 63
WASHER RESERVOIR
DESCRIPTION 63
OPERATION 64
REMOVAL
EXCEPT SRT-10 OR DIESEL ENGINE 64
SRT-10 OR DIESEL ENGINE ONLY 65
INSTALLATION
EXCEPT SRT-10 OR DIESEL ENGINE 66
SRT-10 OR DIESEL ENGINE ONLY 66
WIPER ARM
DESCRIPTION 67
OPERATION 68
REMOVAL 68
INSTALLATION 68
WIPER BLADE
DESCRIPTION 69
OPERATION 69
REMOVAL 69
INSTALLATION 70
WIPER HIGH/LOW RELAY
DESCRIPTION 71
OPERATION 71
WIPER MODULE
DESCRIPTION 72
OPERATION 72
REMOVAL 73
INSTALLATION 74
WIPER ON/OFF RELAY
DESCRIPTION 75
OPERATION 75

WIPERS/WASHERS - SERVICE INFORMATION

DESCRIPTION

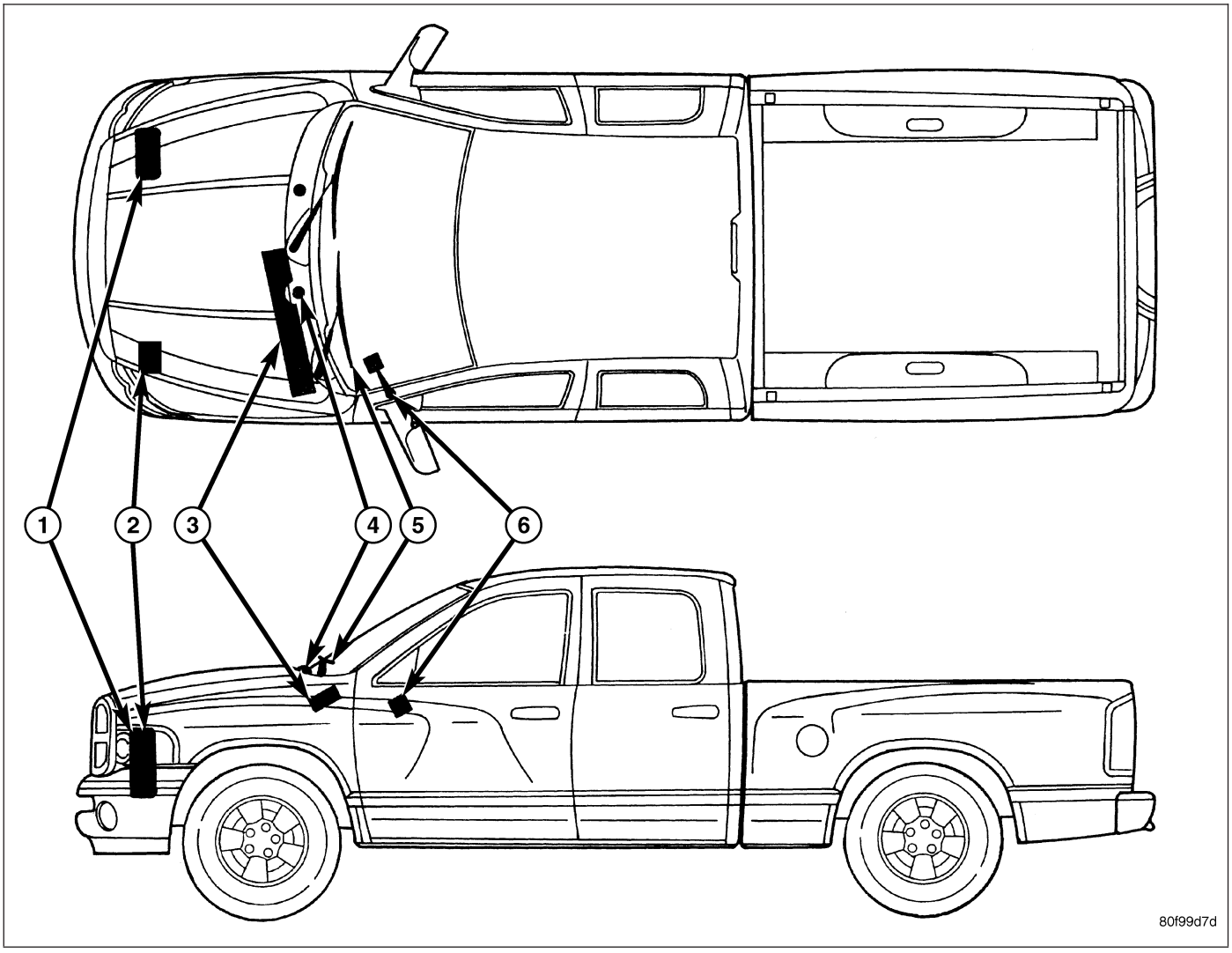

An electrically operated intermittent wiper and washer system is standard factory-installed safety equipment on this model. The wiper and washer system includes the following major components, which are described in further detail elsewhere in this service information:

- **Check Valve** - The washer system check valve is integral to the wye fitting located in the washer plumbing between the cowl plenum washer hose and the washer nozzles, and is concealed beneath the cowl plenum cover/grille panel at the base of the windshield.
- **Front Control Module** - The Front Control Module (FCM) is integral to the Integrated Power Module (IPM)/ Power Distribution Center (PDC). The FCM/IPM/PDC is located in the engine compartment, near the battery. (Refer to 8 - ELECTRICAL/POWER DISTRIBUTION/INTEGRATED POWER MODULE - DESCRIPTION).
- **Instrument Cluster** - The ElectroMechanical Instrument Cluster (EMIC) is also referred to as the Cab Control Node (CCN) in this vehicle. The EMIC/CCN is located in the instrument panel above the steering column opening, directly in front of the driver. (Refer to 8 - ELECTRICAL/INSTRUMENT CLUSTER - DESCRIPTION).
- **Multi-Function Switch (6)** - The multi-function switch is located on the top of the steering column, just below the steering wheel. A control stalk that extends from the left side of the switch has a control knob on the end that is dedicated to providing all of the driver controls for the wiper and washer systems. (Refer to 8 - ELECTRICAL/LAMPS/LIGHTING - EXTERIOR/MULTI-FUNCTION SWITCH - DESCRIPTION).
- **Washer Fluid Level Switch** - The washer fluid level switch is located in a dedicated hole on the lower, rearward facing surface of the washer reservoir in the engine compartment.

- **Washer Nozzle (4)** - Two fluidic washer nozzles are secured with integral latch features to dedicated openings in the cowl plenum cover/grille panel located near the base of the windshield.
- **Washer Plumbing** - The plumbing for the washer system consists of rubber hoses and molded plastic fittings. The plumbing is routed along the right side of the engine compartment from the washer reservoir, and through a trough near the right end of the cowl plenum cover/grille panel into the cowl plenum to the washer nozzle fittings.
- **Washer Pump/Motor** - The electric washer pump/motor unit is located in a dedicated hole on the lower, rearward facing surface of the washer reservoir in the engine compartment.
- **Washer Reservoir (1 or 2)** - On all models except the SRT-10 and those with an optional diesel engine, the washer reservoir is combined with the engine coolant reserve bottle secured by integral mounting tabs and screws to the right side of the cooling module shroud in the engine compartment. This combined reservoir has separate, clearly identified washer fluid and engine coolant filler caps that are accessed from the right front corner of the engine compartment. On SRT-10 models and those with an optional diesel engine, the washer reservoir is separate from the engine coolant reserve bottle and is secured by screws to the back of the upright left vertical member of the radiator support in the engine compartment. This washer reservoir filler cap is accessed from the left front corner of the engine compartment.
- **Wiper Arm & Blade (5)** - The two wiper arms are secured with integral latches to the serrated ends of the two wiper pivot shafts, which extend through the cowl plenum cover/grille panel located near the base of the windshield. The two wiper blades are secured to the two wiper arms with an integral latch, and are parked on the glass near the bottom of the windshield when the wiper system is not in operation.
- **Wiper High/Low Relay** - The wiper high/low relay is an International Standards Organization (ISO) micro relay located in the Integrated Power Module (IPM)/Power Distribution Center (PDC) in the engine compartment near the battery.
- **Wiper Module (3)** - The wiper pivot shafts are the only visible components of the wiper module. The remainder of the module is concealed within the cowl plenum area beneath the cowl plenum cover/grille panel. The wiper module includes the wiper module bracket, three rubber-isolated wiper module mounts, the wiper motor, the wiper motor crank arm, the two wiper drive links, and the two wiper pivots.
- **Wiper On/Off Relay** - The wiper on/off relay is an International Standards Organization (ISO) micro relay located in the Integrated Power Module (IPM)/Power Distribution Center (PDC) in the engine compartment near the battery.

Hard wired circuitry connects the wiper and washer system components to the electrical system of the vehicle. These hard wired circuits are integral to several wire harnesses, which are routed throughout the vehicle and retained by many different methods. These circuits may be connected to each other, to the vehicle electrical system and to the wiper and washer system components through the use of a combination of soldered splices, splice block connectors, and many different types of wire harness terminal connectors and insulators. Refer to the appropriate wiring information. The wiring information includes wiring diagrams, proper wire and connector repair procedures, further details on wire harness routing and retention, as well as pin-out and location views for the various wire harness connectors, splices and grounds.

OPERATION

The wiper and washer system is designed to provide the vehicle operator with a convenient, safe, and reliable means of maintaining visibility through the windshield glass. The various components of this system are designed to convert electrical energy produced by the vehicle electrical system into the mechanical action of the wiper blades to wipe the outside surface of the glass, as well as into the hydraulic action of the washer system to apply washer fluid stored in an on-board reservoir to the area of the glass to be wiped. When combined, these components provide the means to effectively maintain clear visibility for the vehicle operator by removing excess accumulations of rain, snow, bugs, mud, or other minor debris from the outside windshield glass surface that might be encountered while driving the vehicle under numerous types of inclement operating conditions.

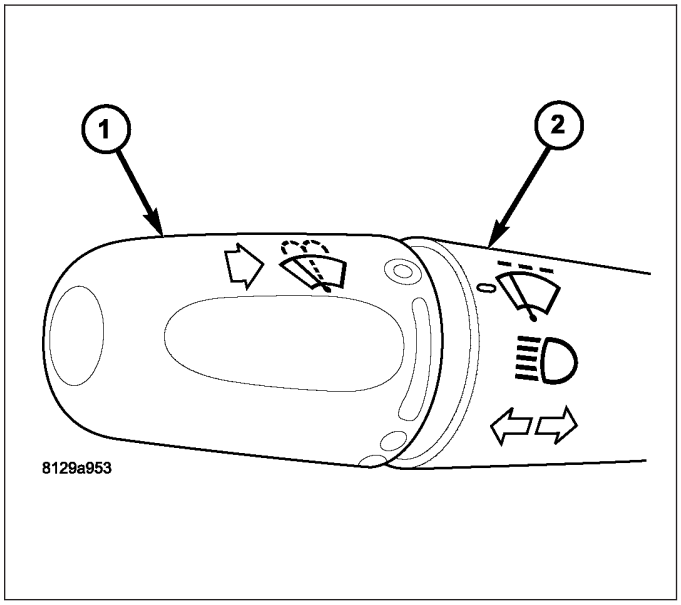

The vehicle operator initiates all wiper and washer system functions with the control knob (1) on the end of the control stalk (2) of the multi-function switch that extends from the left side of the steering column, just below the steering wheel. Rotating the control knob on the end of the control stalk, selects the Off, Delay, Low, or High wiper system operating modes. In the Delay mode, the control knob also allows the vehicle operator to select from one of five intermittent wipe Delay intervals. Depressing the control knob towards the steering column actuates the momentary washer system switch, which selects the Wash, Wipe-After-Wash, and Pulse Wipe Modes depending upon when and how long the switch is held closed. The multi-function switch provides hard wired resistor multiplexed inputs to the ElectroMechanical Instrument Cluster (EMIC) for all of the wiper and washer system functions. The EMIC then sends electronic messages to the Front Control Module (FCM) over the Programmable Communications Interface (PCI) data bus requesting the appropriate wiper and washer system operating modes.

Wiper and washer system operation are completely controlled by the instrument cluster and FCM logic circuits, and that logic will only allow these systems to operate when the ignition switch is in the Accessory or On positions. Battery current is directed from a B(+) fuse in the Integrated Power Module (IPM)/Power Distribution Center (PDC) to the wiper on/off relay and the wiper high/low relay in the IPM/PDC through a fused B(+) circuit. The FCM uses low side drivers to control wiper system operation by energizing or de-energizing the wiper high/low and wiper on/off relays. The FCM uses a high side driver to control the operation of the washer pump motor unit. The multi-function switch circuitry receives a clean ground output from the instrument cluster on a multi-function switch return circuit, then provides resistor multiplexed inputs to the instrument cluster on an intermittent wipe mux circuit to indicate the selected wiper system mode and on a wash/beam select mux circuit to indicate the selected washer system mode.

The hard wired circuits and components of the wiper and washer system may be diagnosed and tested using conventional diagnostic tools and methods. However, conventional diagnostic methods may not prove conclusive in the diagnosis of the EMIC, the FCM, or the electronic message inputs to or outputs from the EMIC or the FCM that control the wiper and washer system operating modes. The most reliable, efficient, and accurate means to diagnose the EMIC or the FCM inputs and outputs related to the various wiper and washer system operating modes requires the use of a diagnostic scan tool. Refer to the appropriate diagnostic information.

OPERATING MODES

Following are paragraphs that briefly describe the operation of each of the wiper and washer system operating modes.

CONTINUOUS WIPE MODE

When the Low position of the control knob on the control stalk of the multi-function switch is selected the EMIC sends an electronic wiper switch low message to the FCM, then the FCM energizes the wiper on/off relay. This directs battery current through the normally open contacts of the energized wiper on/off relay and the normally

closed contacts of the de-energized wiper high/low relay to the low speed brush of the wiper motor, causing the wipers to cycle at low speed.

When the High position of the control knob is selected the EMIC sends an electronic wiper switch high message to the FCM, then the FCM energizes both the wiper on/off relay and the wiper high/low relay. This directs battery current through the normally open contacts of the energized wiper on/off relay and the normally open contacts of the energized wiper high/low relay to the high speed brush of the wiper motor, causing the wipers to cycle at high speed.

When the Off position of the multi-function switch control knob is selected, the EMIC sends an electronic wiper switch off message to the FCM. If the wiper motor was operating at high speed, the FCM immediately de-energizes the wiper high/low relay causing the wiper motor to return to low speed operation. Then one of two events will occur. The event that occurs depends upon the position of the wiper blades on the windshield at the moment that the control knob Off position is selected.

If the wiper blades are in the down position on the windshield when the Off position is selected, the park switch that is integral to the wiper motor is closed to ground and provides a hard wired park switch sense input to the FCM. The FCM then de-energizes the wiper on/off relay and the wiper motor ceases to operate. If the wiper blades are not in the down position on the windshield at the moment the Off position is selected, the park switch is an open circuit and the FCM keeps the wiper on/off relay energized, which causes the wiper motor to continue running at low speed until the wiper blades are in the down position on the windshield and the park switch input to the FCM is again closed to ground.

INTERMITTENT WIPE MODE

When the control knob on the control stalk of the multi-function switch is moved to one of the Delay interval positions the EMIC sends an electronic wiper switch delay message to the FCM, then the FCM electronic intermittent wipe logic circuit responds by calculating the correct length of time between wiper sweeps based upon the selected delay interval input. The FCM monitors the changing state of the wiper motor park switch through a hard wired park switch sense input. This input allows the FCM to determine the proper intervals at which to energize and de-energize the wiper on/off relay to operate the wiper motor intermittently for one low speed cycle at a time.

The FCM logic is also programmed to provide vehicle speed sensitivity to the selected intermittent wipe delay intervals. In order to provide this feature the FCM monitors electronic vehicle speed messages from the Powertrain Control Module (PCM) and doubles the selected delay interval whenever the vehicle speed is about sixteen kilometers-per-hour (ten miles-per-hour) or less.

PULSE WIPE MODE

When the control knob on the control stalk of the multi-function switch is depressed to the momentary Wash position for less than about one-half second, the EMIC sends an electronic washer switch message to the FCM, then the FCM the energizes the wiper on/off relay for one complete wipe cycle. The FCM de-energizes the relay when the state of the park switch sense changes to ground, parking the wiper blades near the base of the windshield.

WASH MODE

When the control knob on the control stalk of the multi-function switch is depressed to the momentary Wash position for more than about one-half second, the EMIC sends an electronic washer switch message to the FCM, then the FCM directs battery current to the washer pump/motor unit. This will cause the washer pump/motor unit to be energized for as long as the Wash switch is held closed up to about thirty seconds, and to de-energize when the front Wash switch is released.

When the control knob is depressed to the momentary Wash position while the wiper system is operating in one of the Delay interval positions, the washer pump/motor operation is the same. However, the FCM also energizes the wiper on/off relay to override the selected delay interval and operate the wiper motor in a continuous low speed mode for as long as the control knob is held depressed, then de-energizes the relay and reverts to the selected delay mode interval several wipe cycles after the control knob is released. If the control knob is held depressed for more than about thirty seconds, the FCM will suspend washer pump/motor operation until the knob is released for about two seconds, then cycled back to the Wash position.

WIPE-AFTER-WASH MODE

When the control knob on the control stalk of the multi-function switch is depressed to the momentary Wash position for more than about one-half second while the wiper system is not operating, the EMIC sends an electronic washer

switch message to the FCM, then the FCM directs battery current to the washer pump/motor unit and energizes the wiper on/off relay. This will cause the washer pump/motor unit to be energized and operate the wiper motor in a continuous low speed mode for as long as the Wash switch is held closed up to about thirty seconds. When the control knob is released, the FCM de-energizes the washer pump/motor unit, but allows the wiper motor to operate for several additional wipe cycles before it de-energizes the wiper on/off relay and parks the wiper blades near the base of the windshield.

If the control knob is held depressed for more than about thirty seconds, the FCM will suspend washer pump/motor operation until the knob is released for about two seconds, then cycled back to the Wash position; however, the wipers will continue to operate for as long as the Wash switch is held closed. The FCM monitors the changing state of the wiper motor park switch through a hard wired wiper park switch sense circuit input. This input allows the FCM to count the number of wipe cycles that occur after the Wash switch is released, and to determine the proper interval at which to de-energize the wiper on/off relay to complete the wipe-after-wash mode cycle.

DIAGNOSIS AND TESTING

WIPER & WASHER SYSTEM

WARNING: To avoid personal injury or death, on vehicles equipped with airbags, disable the supplemental restraint system before attempting any steering wheel, steering column, airbag, seat belt tensioner, impact sensor, or instrument panel component diagnosis or service. Disconnect and isolate the battery negative (ground) cable, then wait two minutes for the system capacitor to discharge before performing further diagnosis or service. This is the only sure way to disable the supplemental restraint system. Failure to take the proper precautions could result in accidental airbag deployment.

If the wiper motor operates, but the wipers do not move on the windshield, replace the faulty wiper module. If the washer pump/motor operates, but no washer fluid is dispensed on the glass; or, if the wipers operate, but chatter, lift, or do not clear the glass, clean and inspect the wiper and washer system components as required. (Refer to 8 - ELECTRICAL/WIPERS/WASHERS - CLEANING) and (Refer to 8 - ELECTRICAL/WIPERS/WASHERS - INSPECTION).

The hard wired wiper and washer system circuits and components may be diagnosed and tested using conventional diagnostic tools and methods. Refer to the appropriate wiring information. The wiring information includes wiring diagrams, proper wire and connector repair procedures, details of wire harness routing and retention, connector pin-out information and location views for the various wire harness connectors, splices and grounds.

However, conventional diagnostic methods may not prove conclusive in the diagnosis of the ElectroMechanical Instrument Cluster (EMIC), the Front Control Module (FCM), the Integrated Power Module (IPM), the Power Distribution Center (PDC), the Programmable Communications Interface (PCI) data bus, or the electronic message inputs or outputs used to provide wiper and washer system service or many of the electronic features of the wiper and washer systems. The most reliable, efficient, and accurate means to diagnose the EMIC, the FCM, the IPM, the PDC, the PCI data bus and the electronic message inputs and outputs for the wiper and washer system requires the use of a diagnostic scan tool. Refer to the appropriate diagnostic information.

CLEANING - WIPER & WASHER SYSTEM

WIPER SYSTEM

The squeegees of wiper blades exposed to the elements for a long time tend to lose their wiping effectiveness. Periodic cleaning of the squeegees is suggested to remove any deposits of salt or road film. The wiper blades, arms, and windshield glass should only be cleaned using a sponge or soft cloth and windshield washer fluid, a mild detergent, or a non-abrasive cleaner. If the wiper blades continue to leave streaks, smears, hazing, or beading on the glass after thorough cleaning of the squeegees and the glass, the entire wiper blade assembly must be replaced.

CAUTION: Protect the rubber squeegees of the wiper blades from any petroleum-based cleaners, solvents, or contaminants. These products can rapidly deteriorate the rubber squeegees.

WASHER SYSTEM

If the washer system is contaminated with foreign material, drain the washer reservoir by removing the washer pump/motor from the reservoir. Clean foreign material from the inside of the washer pump/motor inlet filter screen and the washer reservoir using clean washer fluid, a mild detergent, or a non-abrasive cleaner. Flush foreign material from the washer system plumbing by first disconnecting the washer hoses from the washer nozzles, then running the washer pump/motor to run clean washer fluid or water through the system. Plugged or restricted washer nozzles should be carefully back-flushed using compressed air. If the washer nozzle obstruction cannot be cleared, replace the washer nozzle.

CAUTION: Never introduce petroleum-based cleaners, solvents, or contaminants into the washer system. These products can rapidly deteriorate the rubber seals and hoses of the washer system, as well as the rubber squeegees of the wiper blades.

CAUTION: Never use compressed air to flush the washer system plumbing. Compressed air pressures are too great for the washer system plumbing components and will result in further system damage. Never use sharp instruments to clear a plugged washer nozzle or damage to the nozzle orifice and improper nozzle spray patterns will result.

INSPECTION - WIPER & WASHER SYSTEM

WIPER SYSTEM

The wiper blades and wiper arms should be inspected periodically, not just when wiper performance problems are experienced. This inspection should include the following points:

1. Carefully inspect the wiper blades for any indications of worn or uneven edges (1), foreign material deposits (2), hardening or cracking (3), deformation or fatigue (4), or splitting (5). Inspect the wiper blade support components and the wiper arms for damage (6) or corrosion. If the wiper arms and blades are contaminated with any foreign material, clean them and the glass as required. (Refer to 8 - ELECTRICAL/WIPERS/WASHERS - CLEANING). If a wiper blade or arm is damaged, or if corrosion is evident, replace the affected wiper arm or blade with a new unit. Do not attempt to repair a wiper arm or blade that is damaged or corroded.
2. Carefully lift the wiper blade off of the glass. Note the action of the wiper arm hinge. The wiper arm should pivot freely at the hinge, but with no lateral looseness evident. If there is any binding evident in the wiper arm hinge, or there is evident lateral play in the wiper arm hinge, replace the wiper arm.

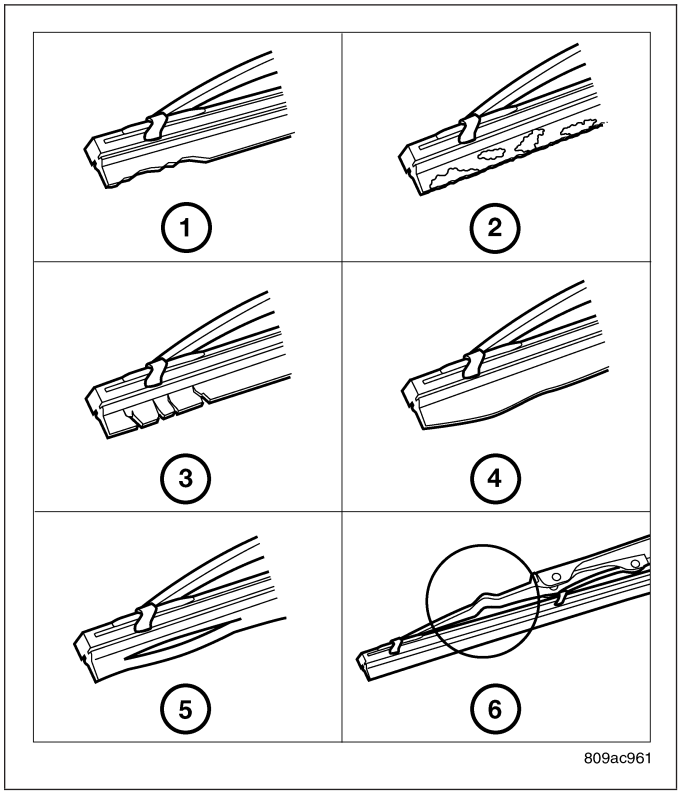

CAUTION: Do not allow the wiper arm to spring back against the glass without the wiper blade in place or the glass may be damaged.

3. Once proper hinge action of the wiper arm is confirmed, check the hinge for proper spring tension. Remove the wiper blade from the wiper arm. Either place a small postal scale between the blade end of the wiper arm and the glass, or carefully lift the blade end of the arm away from the glass using a small fish scale. Compare the scale readings between the right and left wiper arms. Replace a wiper arm if it has comparatively lower spring tension, as evidenced by a lower scale reading.

4. After cleaning and inspecting the wiper components and the glass, if the wiper blade still fails to clear the glass without smearing, streaking, chattering, hazing, or beading, replace the wiper blade.

WASHER SYSTEM

The washer system components should be inspected periodically, not just when washer performance problems are experienced. This inspection should include the following points:

1. Check for ice or other foreign material in the washer reservoir. If contaminated, clean and flush the washer system. (Refer to 8 - ELECTRICAL/WIPERS/WASHERS - CLEANING).
2. Inspect the washer plumbing for pinched, leaking, deteriorated, or incorrectly routed hoses and damaged or disconnected hose fittings. Replace damaged or deteriorated hoses and hose fittings. Leaking washer hoses can sometimes be repaired by cutting the hose at the leak and splicing it back together using an in-line connector fitting. Similarly, sections of deteriorated hose can be cut out and replaced by splicing in new sections of hose using in-line connector fittings. Whenever routing a washer hose or a wire harness containing a washer hose, it must be routed away from hot, sharp, or moving parts. Also, sharp bends that might pinch the washer hose must be avoided.

CHECK VALVE

DESCRIPTION

A single washer system check valve is standard equipment on this model, and is installed in the washer system plumbing. The check valve is integral to the washer nozzle plumbing wye fitting (2) located in the cowl plenum area beneath the cowl plenum cover/grille panel near the base of the windshield. The check valve consists of a molded plastic body with a raised arrowhead (4) molded into its center section that indicates the direction of the flow through the valve, and three barbed hose nipples (1 and 3) formed in a wye configuration on the outside circumference of the center section of the valve body. The check valve cannot be adjusted or repaired and, if faulty or damaged, it must be replaced.

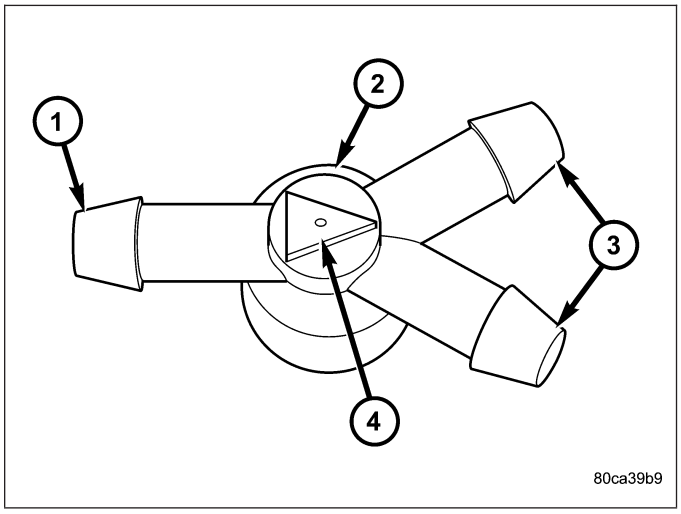

OPERATION

The check valve provides more than one function in this application. It serves as a wye connector fitting between the engine compartment and washer nozzle sections of the washer supply hose. It prevents washer fluid from draining out of the washer supply hoses back to the washer reservoir. This drain-back would result in a lengthy delay from when the washer switch is actuated until washer fluid was dispensed through the washer nozzles, because the washer pump would have to refill the washer plumbing from the reservoir to the nozzles. Such a drain-back condition could also result in water, dirt, or other outside contaminants being siphoned into the washer system through the washer nozzle orifice. This water could subsequently freeze and plug the nozzle, while other contaminants could interfere with proper nozzle operation and cause improper nozzle spray patterns. In

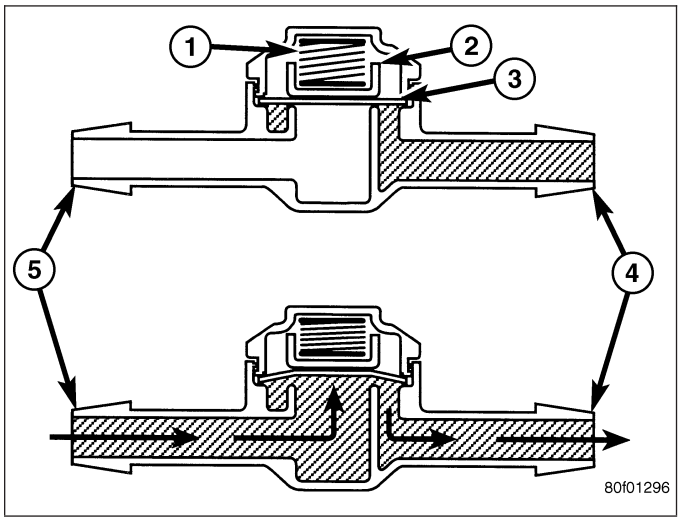

addition, the check valve prevents washer fluid from siphoning through the washer nozzles after the washer system is turned Off.

When the washer pump pressurizes and pumps washer fluid from the reservoir through the washer plumbing, the fluid pressure (5) unseats a diaphragm (3) from over a sump well within the valve by overriding the pressure applied to a piston (2) by a spring (1). With the diaphragm unseated, washer fluid is allowed to flow toward the two washer nozzles (4). When the washer pump stops operating, the spring pressure on the piston seats the diaphragm over the sump well in the valve and fluid flow in either direction within the washer plumbing is prevented. The check valve cannot be adjusted or repaired and, if faulty or damaged, it must be replaced.

REMOVAL

1. Remove both wiper arms from the wiper pivots. (Refer to 8 - ELECTRICAL/WIPERS/WASHERS/ WIPER ARM - REMOVAL).
2. Unlatch and open the hood.
3. Remove the cowl plenum cover/grille panel from over the cowl plenum. (Refer to 23 - BODY/EXTERIOR/COWL GRILLE - REMOVAL).
4. From the underside of the cowl plenum cover/grille panel (5), disconnect the cowl plenum (4) and washer nozzle (1 and 6) hoses from the three barbed nipples of the check valve (2).
5. Remove the check valve from the underside of the cowl plenum cover/grille panel.

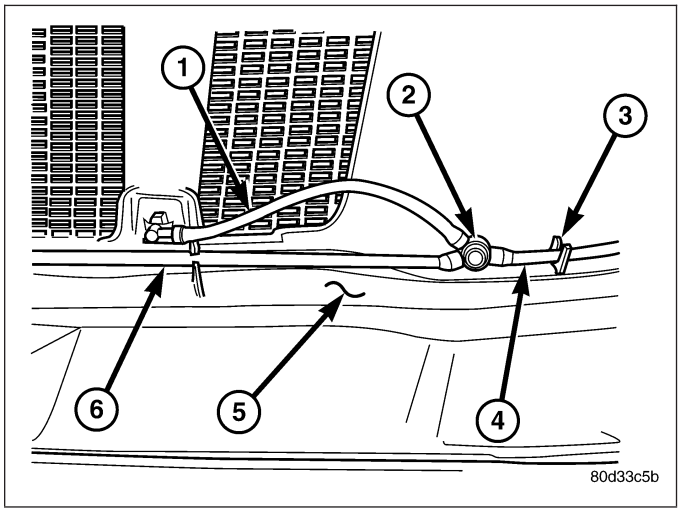

INSTALLATION

1. Position the check valve (2) to the underside of the cowl plenum cover/grille panel (5). Be certain that the flow direction arrow molded into the check valve body is oriented towards the washer nozzles.
2. From the underside of the cowl plenum cover/grille panel, reconnect the cowl plenum (4) and washer nozzle (1 and 6) hoses to the three barbed nipples of the check valve.
3. Reinstall the cowl plenum cover/grille panel over the cowl plenum. (Refer to 23 - BODY/EXTERIOR/ COWL GRILLE - INSTALLATION).
4. Close and latch the hood.
5. Reinstall both wiper arms onto the wiper pivots. (Refer to 8 - ELECTRICAL/WIPERS/WASHERS/ WIPER ARM - INSTALLATION).

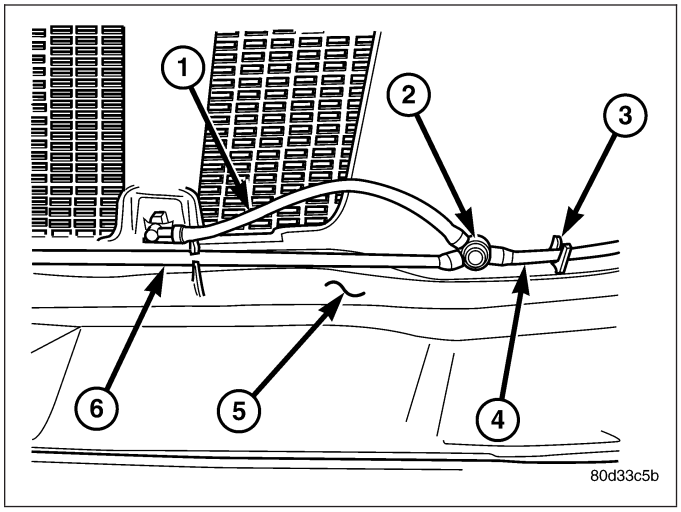

SENSOR-WASHER FLUID LEVEL

DESCRIPTION

The washer fluid level switch is a single pole, single throw reed-type switch mounted on the side of the washer reservoir (4) in the engine compartment. Only the molded plastic switch mounting flange (1) and the integral connector receptacle (8) are visible when the switch is installed in the reservoir. A short nipple formation (2) extends from the inner surface of the switch mounting flange, and a barb on the nipple is pressed through a rubber grommet seal (5) installed in the mounting hole of the reservoir.

A small, molded plastic float (3) has two pivot pins (6) near its center that are snapped into two receptacles near the ends of two stanchions that extend toward the float from the nipple formation. A small magnet (7) is secured within the end of the float nearest the nipple, and a reed switch is concealed within the nipple. A diagnostic resistor is connected between the two switch terminals within the switch mounting flange. The washer fluid level switch cannot be adjusted or repaired. If faulty or damaged, the switch must be replaced.

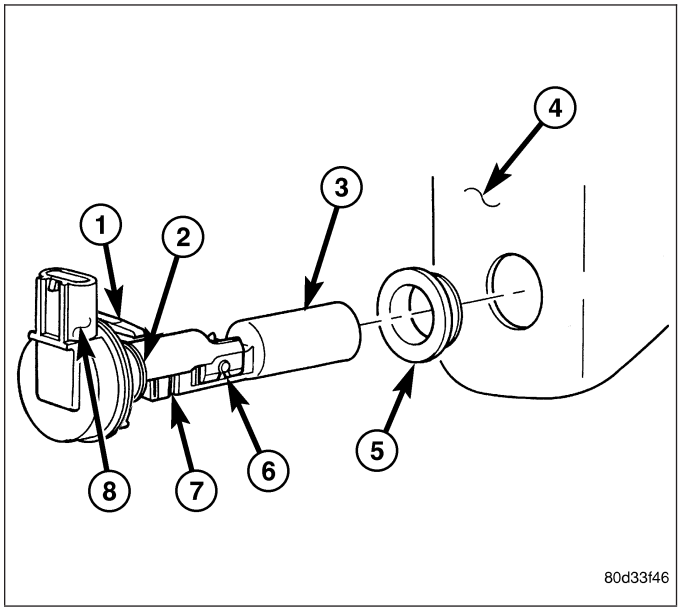

OPERATION

The washer fluid level switch uses a pivoting, oblong float to monitor the level of the washer fluid in the washer reservoir. The float contains a small magnet. When the float pivots, the proximity of this magnet to a stationary reed switch within the nipple formation of the switch changes. When the fluid level in the washer reservoir is at or above the float level, the float moves to a vertical position, the influence of the float magnetic field is removed from the reed switch, and the normally open reed switch contacts open. When the fluid level in the washer reservoir falls below the level of the pivoting float, the float moves to a horizontal position, the influence of the float magnetic field is applied to the reed switch, and the contacts of the normally open reed switch close.

The washer fluid level switch is connected to the vehicle electrical system through a dedicated take out and connector of the right (except SRT-10 and diesel engines) or left (SRT-10 and diesel engines only) headlamp and dash wire harness. The switch is connected in series between a clean ground output of the Front Control Module (FCM) on a sensor return circuit and the washer fluid switch sense input to the FCM. When the switch closes, the FCM senses the ground on the washer fluid switch sense circuit. The FCM is programmed to respond to this input by sending an electronic washer fluid indicator lamp-on message to the instrument cluster over the Programmable Communications Interface (PCI) data bus. The instrument cluster responds to this message by illuminating the washer fluid indicator and by sounding an audible chime tone warning.

The washer fluid level switch may be diagnosed and tested using conventional diagnostic tools and procedures. However, conventional diagnostic methods may not prove conclusive in the diagnosis of the instrument cluster, the FCM, or the electronic message inputs to or outputs from the instrument cluster and the FCM that control the operation of the washer fluid visual and/or audible indicators. The most reliable, efficient, and accurate means to diagnose the washer fluid level indicator, the instrument cluster, the FCM, or the electronic message inputs and outputs related to the washer fluid indicator requires the use of a diagnostic scan tool. Refer to the appropriate diagnostic information.

REMOVAL

EXCEPT SRT-10 OR DIESEL ENGINE

NOTE: The washer fluid level switch can be removed from the washer reservoir without removing the reservoir from the vehicle.

1. Unlatch and open the hood.
2. Disconnect and isolate the battery negative cable.
3. Disconnect the washer hose (1) from the barbed outlet nipple of the washer pump/motor unit (5) and allow the washer fluid to drain into a clean container for reuse.
4. Disconnect the right headlamp and dash wire harness (4) connector for the washer fluid level switch (3) from the switch connector receptacle.

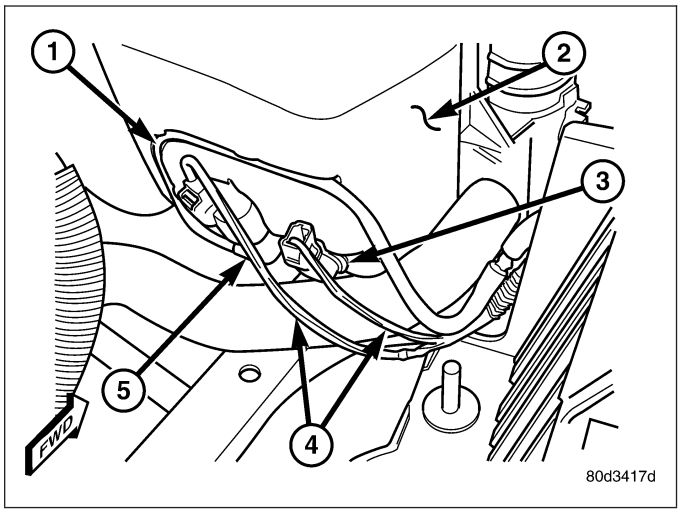

NOTE: The pivoting float of the washer fluid level switch must be in a horizontal position within the reservoir in order to be removed. With the reservoir empty and in an upright position, the pivoting float will orient itself to the horizontal position when the switch connector receptacle is pointed straight upwards.

5. Using a trim stick or another suitable wide flat-bladed tool, gently pry the barbed nipple of the washer fluid level switch out of the rubber grommet seal in the washer reservoir sump (2). Care must be taken not to damage the reservoir.
6. Remove the washer fluid level switch from the washer reservoir.
7. Remove the rubber grommet seal from the washer fluid level switch mounting hole in the washer reservoir and discard.

SRT-10 OR DIESEL ENGINE ONLY

NOTE: The washer fluid level switch can be removed from the washer reservoir without removing the reservoir from the vehicle.

1. Unlatch and open the hood.
2. Disconnect and isolate the battery negative cable.
3. Disconnect the washer hose (4) from the barbed outlet nipple of the washer pump/motor unit (3) and allow the washer fluid to drain into a clean container for reuse.
4. Disconnect the left headlamp and dash wire harness (1) connector for the washer fluid level switch (5) from the switch connector receptacle.

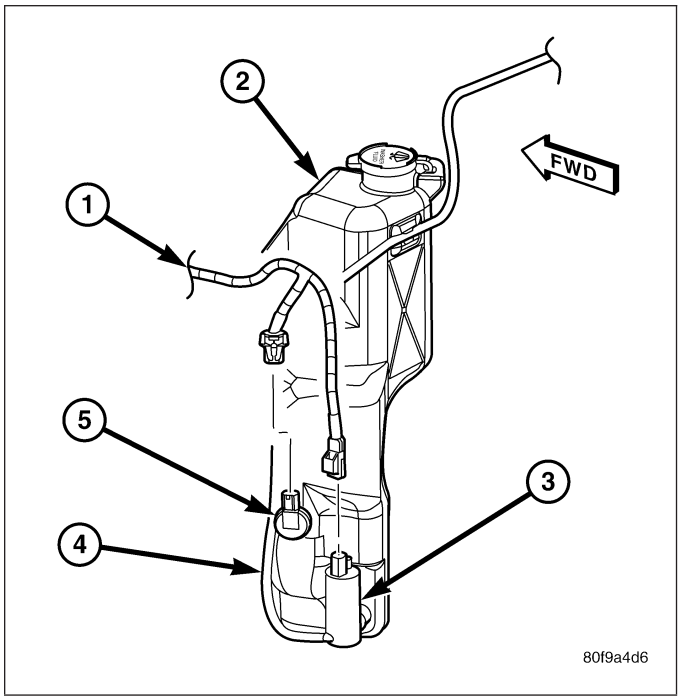

NOTE: The pivoting float of the washer fluid level switch must be in a horizontal position within the reservoir in order to be removed. With the reservoir empty and in an upright position, the pivoting float will orient itself to the horizontal position when the switch connector receptacle is pointed straight upwards.

5. Using a trim stick or another suitable wide flat-bladed tool, gently pry the barbed nipple of the washer fluid level switch out of the rubber grommet seal in the washer reservoir sump (2). Care must be taken not to damage the reservoir.
6. Remove the washer fluid level switch from the washer reservoir.
7. Remove the rubber grommet seal from the washer fluid level switch mounting hole in the washer reservoir and discard.

INSTALLATION

EXCEPT SRT-10 OR DIESEL ENGINE

1. Install a new rubber grommet seal into the washer fluid level switch mounting hole in the washer reservoir (2). Always use a new rubber grommet seal on the reservoir.
2. Insert the float of the washer fluid level switch (3) through the rubber grommet seal and into the washer reservoir. The connector receptacle of the washer fluid level switch should be pointed upward.
3. Using hand pressure, press firmly and evenly on the washer fluid level switch mounting flange until the barbed nipple is fully seated in the rubber grommet seal in the washer reservoir mounting hole.
4. Reconnect the right headlamp and dash wire harness (4) connector for the washer fluid level switch to the switch connector receptacle.

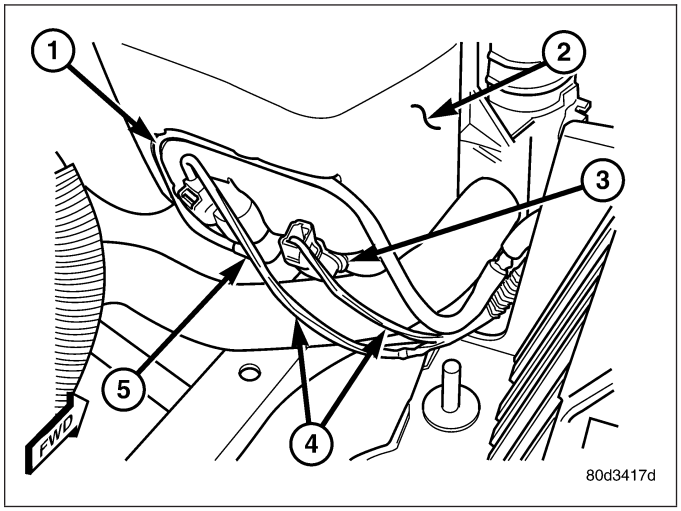

5. Reconnect the removed washer hose (1) to the barbed outlet nipple of the washer pump/motor unit (5).
6. Refill the washer reservoir with the washer fluid drained from the reservoir during the removal procedure.
7. Reconnect the battery negative cable.
8. Close and latch the hood.

SRT-10 OR DIESEL ENGINE ONLY

1. Install a new rubber grommet seal into the washer fluid level switch mounting hole in the washer reservoir (2). Always use a new rubber grommet seal on the reservoir.
2. Insert the float of the washer fluid level switch (5) through the rubber grommet seal and into the washer reservoir. The connector receptacle of the washer fluid level switch should be pointed upward.
3. Using hand pressure, press firmly and evenly on the washer fluid level switch mounting flange until the barbed nipple is fully seated in the rubber grommet seal in the washer reservoir mounting hole.
4. Reconnect the left headlamp and dash wire harness (1) connector for the washer fluid level switch to the switch connector receptacle.
5. Reconnect the removed washer hose (4) to the barbed outlet nipple of the washer pump/motor unit (3).
6. Refill the washer reservoir with the washer fluid drained from the reservoir during the removal procedure.
7. Reconnect the battery negative cable.
8. Close and latch the hood.

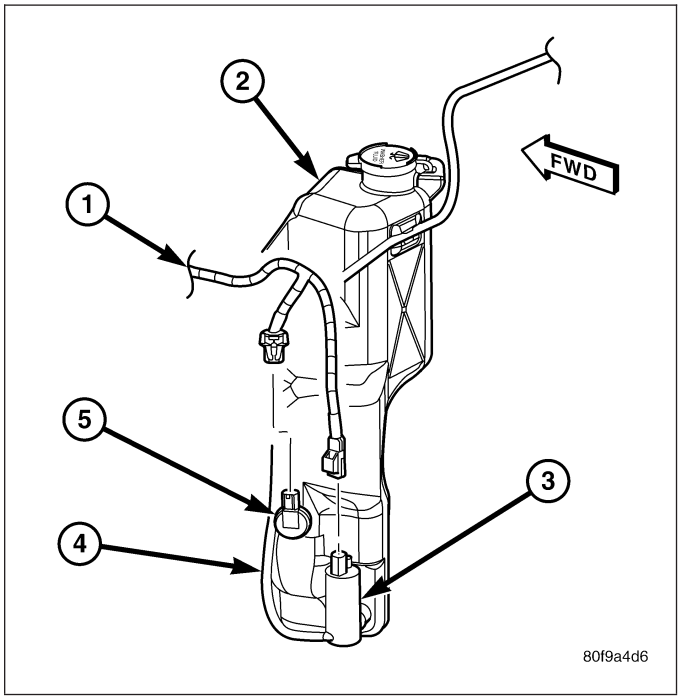

WASHER HOSES/TUBES

DESCRIPTION

The washer plumbing consists of a small diameter rubber reservoir washer hose that is routed from the barbed outlet nipple of the electric washer pump/motor unit on the washer reservoir through a trough molded into the back of the reservoir above the washer pump to the engine compartment washer hose to the right side of the engine cooling module. On SRT-10 models or those equipped with an optional diesel engine, the reservoir washer hose is routed through routing clips on the top of the radiator fan shroud from the washer reservoir on the left side of the radiator to the engine compartment washer hose on the right side of the radiator.

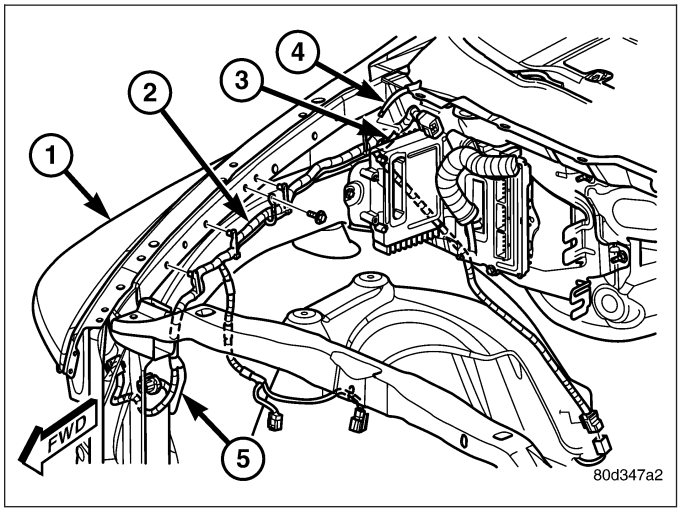

The engine compartment washer hose is contained within the right headlamp and dash wire harness (2), which is routed through the engine compartment along the top of the right front fender wheel house to the dash panel. This hose is connected to the washer reservoir washer hose at one end (5) and to the cowl plenum washer hose at the other end (3) with molded plastic in-line fittings that have a barbed nipple on each end.

The cowl plenum washer hose (4) is routed from the engine compartment into the cowl plenum area through a trough formation located near the right end of the cowl plenum cover/grille panel. The cowl plenum washer hose is

connected to the washer system check valve/wye fitting on the underside of the cowl plenum cover/grille panel. The cowl plenum washer hose and the two washer nozzle hoses are routed through integral routing clips on the underside of the cowl plenum cover/grille panel. The cowl plenum washer hose is connected to one nipple on the wye fitting and the two washer nozzle hoses are connected to the other two nipples. The washer nozzle hoses are then routed along the underside of the cowl plenum cover/grille panel to the two washer nozzles.

Washer hose is available for service only as roll stock, which must then be cut to length. The molded plastic washer hose fittings cannot be repaired. If these fittings are faulty or damaged, they must be replaced.

OPERATION

Washer fluid in the washer reservoir is pressurized and fed by the washer pump/motor through the washer system plumbing and fittings to the two washer nozzles. Whenever routing the washer hose or a wire harness containing a washer hose, it must be routed away from hot, sharp, or moving parts; and, sharp bends that might pinch the hose must be avoided.

WASHER NOZZLE

DESCRIPTION

The fluidic washer nozzles (1) are constructed of molded plastic. Each nozzle has two integral latches (2) and an anti-rotation tab (4) that secure them in dedicated holes in the cowl plenum cover/grille panel located near the base of the windshield The domed upper surface of the washer nozzle is visible on the top of the plenum cover/grille panel, and the nozzle orifice (5) is oriented towards the windshield glass. The washer plumbing fittings (3) for the washer nozzles extend below the cowl plenum cover/grille panel. The cowl plenum cover/grille panel must be removed from the vehicle to access the nozzles for service. The washer nozzles cannot be adjusted or repaired. If faulty or damaged, they must be replaced.

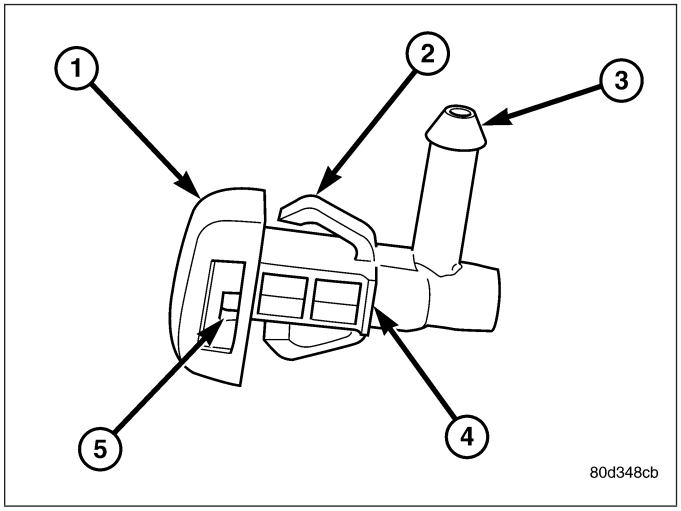

OPERATION

The two washer nozzles are designed to dispense washer fluid into the wiper pattern area on the outside of the windshield glass. Pressurized washer fluid is fed to each nozzle from the washer reservoir by the washer pump/motor unit through a single hose, which is attached to a barbed nipple on each washer nozzle below the cowl plenum cover/grille panel. A fluidic matrix within the washer nozzle causes the pressurized washer fluid to be emitted from the nozzle orifice as an oscillating stream to more effectively cover a larger area of the glass to be cleaned.

REMOVAL

1. Remove both wiper arms from the wiper pivots. (Refer to 8 - ELECTRICAL/WIPERS/WASHERS/WIPER ARM - REMOVAL).
2. Unlatch and open the hood.
3. Remove the cowl plenum cover/grille panel from over the cowl plenum. (Refer to 23 - BODY/EXTERIOR/COWL GRILLE - REMOVAL).
4. From the underside of the cowl plenum cover/grille panel (1), disconnect the washer nozzle hose from the barbed nipple (3) of the washer nozzle.
5. From the underside of the cowl plenum cover/grille panel, release the integral latch features (2) of the washer nozzle and push the nozzle out through the mounting hole toward the top side of the cowl plenum cover/grille panel.
6. Remove the washer nozzle from the top of the cowl plenum cover/grille panel.

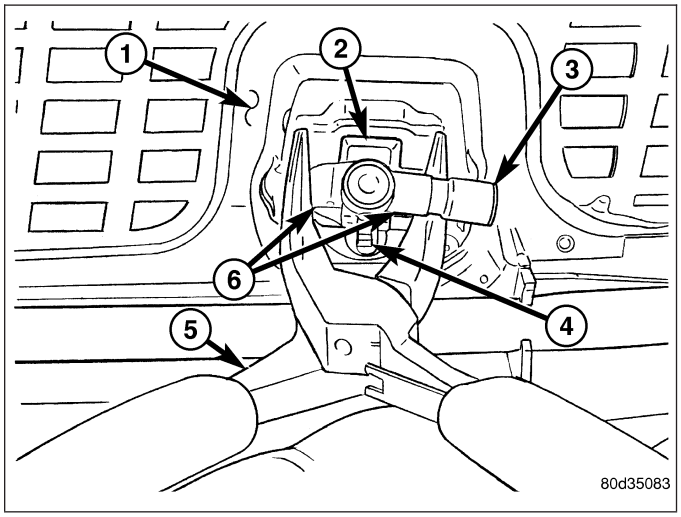

INSTALLATION

1. From the top of the cowl plenum cover/grille panel, position the nipple end of the washer nozzle through the mounting hole and engage the anti-rotation tabs (2 and 4) of the nozzle into the anti-rotation notches in the mounting hole.
2. Using hand pressure, push firmly and evenly on the top of the washer nozzle until the integral latch features (6) lock into place on the underside of the cowl plenum cover/grille panel (1).
3. From the underside of the cowl plenum cover/grille panel, reconnect the washer hose to the barbed nipple (3) of the washer nozzle.
4. Reinstall the washer nozzle hose into its routing clips on the underside of the cowl plenum cover/grille panel.
5. Reinstall the cowl plenum cover/grille panel over the cowl plenum. (Refer to 23 - BODY/EXTERIOR/COWL GRILLE - INSTALLATION).
6. Close and latch the hood.
7. Reinstall both wiper arms onto the wiper pivots. (Refer to 8 - ELECTRICAL/WIPERS/WASHERS/WIPER ARM - INSTALLATION).

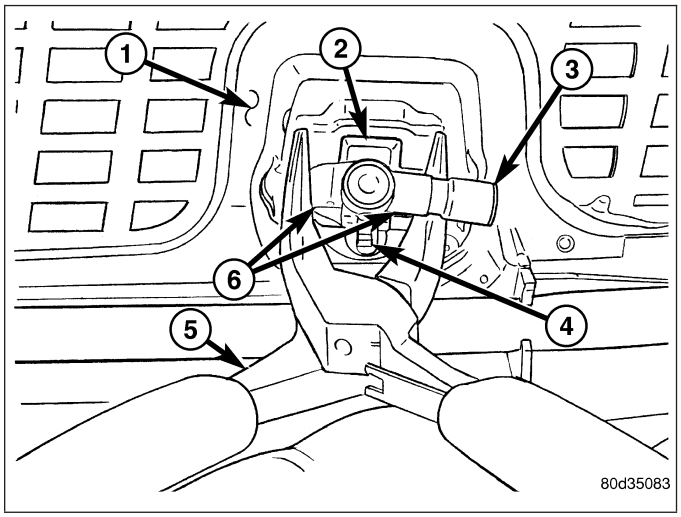

PUMP-WASHER-WINDSHIELD

DESCRIPTION

The washer pump/motor unit (1) is located on the rearward facing surface of the washer reservoir, in the right (except SRT-10 and diesel) or left (SRT-10 and diesel only) front corner of the engine compartment. A small permanently lubricated and sealed electric motor is coupled to the rotor-type washer pump.

A seal flange with a barbed inlet nipple (6) on the pump housing passes through a rubber grommet seal installed in a dedicated mounting hole of the washer reservoir. A removable molded plastic filter screen (7) inserted into the inlet nipple prevents most debris from entering the pump housing. When the pump is installed in the reservoir a barbed outlet nipple (5) on the pump housing connects the unit to the washer system through a short washer reservoir hose.

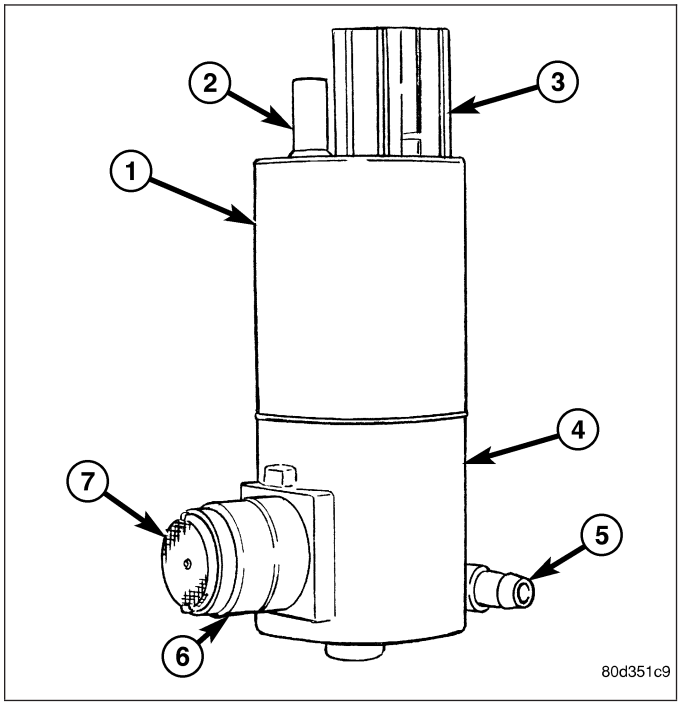

The washer pump/motor unit is retained on the reservoir by the interference fit between the barbed pump inlet nipple and the grommet seal, which is a light press fit. The top of the washer pump is also secured to the washer reservoir by the use of a snap post (2) on the motor housing and a snap post receptacle molded into the reservoir that allows for mounting of the washer pump without the use of fasteners. An integral connector receptacle (3) on the top of the motor housing connects the unit to the vehicle electrical system.

The washer pump/motor unit cannot be repaired. If faulty or damaged, the entire washer pump/motor unit must be replaced.

OPERATION

The washer pump/motor unit features a small Direct Current (DC) electric motor. The motor is connected to the vehicle electrical system through a single take out and two-cavity connector of the right (except SRT-10 and diesel) or left (SRT-10 and diesel only) headlamp and dash wire harness. The motor is grounded at all times through another take out of the right (except SRT-10 and diesel) or left (SRT-10 and diesel only) headlamp and dash wire harness. On models except SRT-10 or diesel, a single eyelet terminal connector is secured by a nut to a ground stud located on the right front fender inner shield in the engine compartment. On SRT-10 or diesel models, an eyelet terminal connector is secured by a ground screw to the left front fender inner shield in the engine compartment.

The motor receives battery current on a washer pump/motor control circuit. The washer pump/motor control circuit is energized through a high side driver within the Front Control Module (FCM) whenever the FCM receives an electronic message requesting washer system operation from the ElectroMechanical Instrument Cluster (EMIC) over the Programmable Communications Interface (PCI) data bus. The EMIC monitors a resistor multiplexed hard wired input from the momentary washer switch contacts within the multi-function switch on the steering column to determine when it should issue the electronic message requesting washer system operation.

Washer fluid is gravity-fed from the washer reservoir to the inlet side of the washer pump. When the pump motor is energized, the motor spins the rotor within the washer pump. The spinning pump rotor pressurizes the washer fluid and forces it through the pump outlet nipple, the washer plumbing, and the washer nozzles onto the windshield glass.

The washer pump/motor unit may be diagnosed using conventional diagnostic tools and methods. However, conventional diagnostic methods may not prove conclusive in the diagnosis of the EMIC, the FCM, the PCI data bus or

the electronic messages used to control the operation of the washer pump/motor unit. The most reliable, efficient, and accurate means to diagnose the washer pump/motor unit, the EMIC, the FCM, the PCI data bus, and the electronic messages for washer pump/motor unit control requires the use of a diagnostic scan tool. Refer to the appropriate diagnostic information.

REMOVAL

EXCEPT SRT-10 OR DIESEL ENGINE

NOTE: The washer pump/motor unit can be removed from the washer reservoir without removing the reservoir from the vehicle.

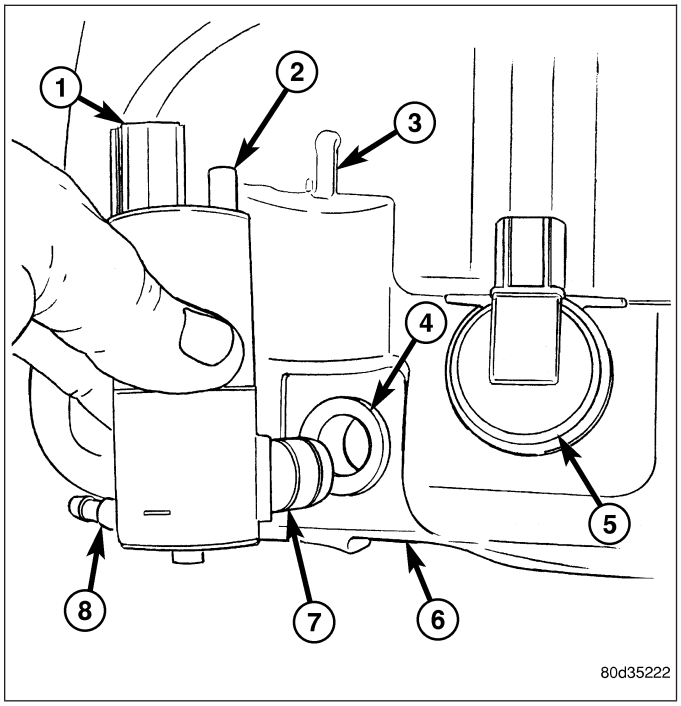

1. Unlatch and open the hood.
2. Disconnect and isolate the battery negative cable.
3. Disconnect the washer hose from the barbed outlet nipple (8) of the washer pump/motor unit and allow the washer fluid to drain into a clean container for reuse.
4. Disconnect the right headlamp and dash wire harness connector for the washer pump/motor unit from the motor connector receptacle (1).
5. Firmly grasp the top of the washer pump/motor housing.
6. Pull lightly outward on the top of the washer pump/motor housing away from the washer reservoir (6) far enough to disengage the snap post (2) on the top of the motor from the receptacle (1) in the reservoir.
7. Pull the washer pump/motor unit straight out from the washer reservoir far enough to disengage the barbed pump inlet nipple (7) from the rubber grommet seal (4) in the reservoir.
8. Remove the washer pump/motor unit from behind the washer reservoir.
9. Remove the rubber grommet seal from the washer reservoir and discard.

SRT-10 OR DIESEL ENGINE ONLY

NOTE: The washer pump/motor unit can be removed from the washer reservoir without removing the reservoir from the vehicle.

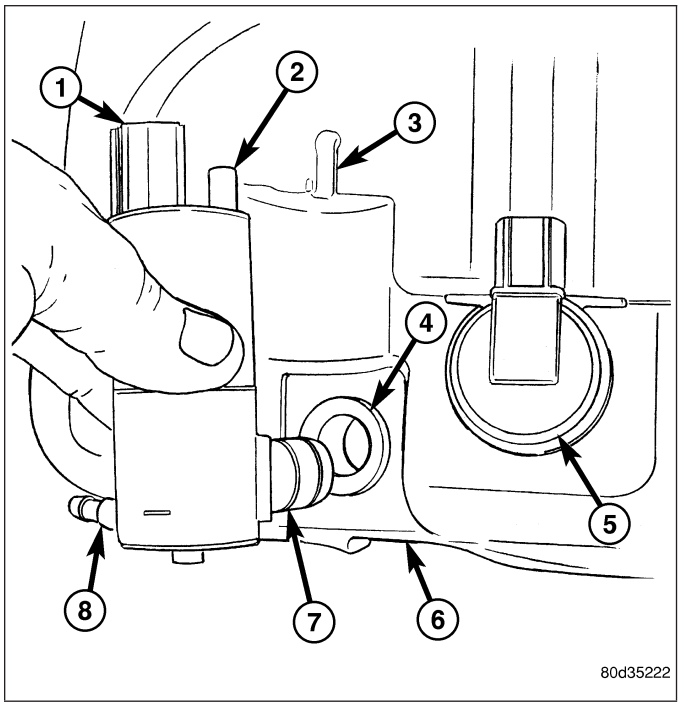

1. Unlatch and open the hood.
2. Disconnect and isolate the battery negative cable.
3. Disconnect the washer hose from the barbed outlet nipple (8) of the washer pump/motor unit and allow the washer fluid to drain into a clean container for reuse.
4. Disconnect the left headlamp and dash wire harness connector for the washer pump/motor unit from the motor connector receptacle (1).
5. Firmly grasp the top of the washer pump/motor housing.
6. Pull lightly outward on the top of the washer pump/motor housing away from the washer reservoir (6) far enough to disengage the snap post (2) on the top of the motor from the receptacle (3) in the reservoir.
7. Pull the washer pump/motor unit straight out from the washer reservoir far enough to disengage the barbed pump inlet nipple (7) from the rubber grommet seal (4) in the reservoir.
8. Remove the washer pump/motor unit from behind the washer reservoir.
9. Remove the rubber grommet seal from the washer reservoir and discard.

INSTALLATION

EXCEPT SRT-10 OR DIESEL ENGINE

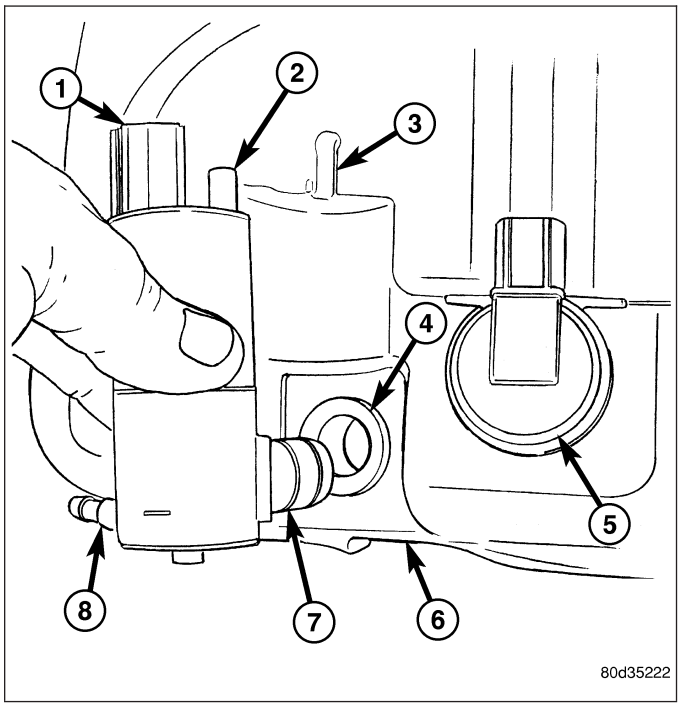

1. Install a new rubber grommet seal (4) into the washer pump mounting hole in the washer reservoir (6). Always use a new rubber grommet seal on the reservoir.
2. Position the barbed inlet nipple (7) of the washer pump to the rubber grommet seal in the washer reservoir.
3. Using hand pressure, press on the washer pump/motor unit firmly and evenly until the barbed inlet nipple is fully seated in the rubber grommet seal in the washer reservoir mounting hole.
4. Align the washer pump/motor snap post (2) on the top of the motor housing with the snap post receptacle (3) in the washer reservoir.
5. Using hand pressure, press firmly and evenly on the top of washer pump/motor unit until the snap post snaps into the washer reservoir receptacle.
6. Reconnect the washer reservoir hose to the barbed outlet nipple (8) of the washer pump.
7. Reconnect the right headlamp and dash wire harness connector for the washer pump/motor unit to the motor connector receptacle (1).
8. Refill the washer reservoir with the washer fluid drained from the reservoir during the removal procedure.
9. Reconnect the battery negative cable.

10. Close and latch the hood.

SRT-10 OR DIESEL ENGINE ONLY

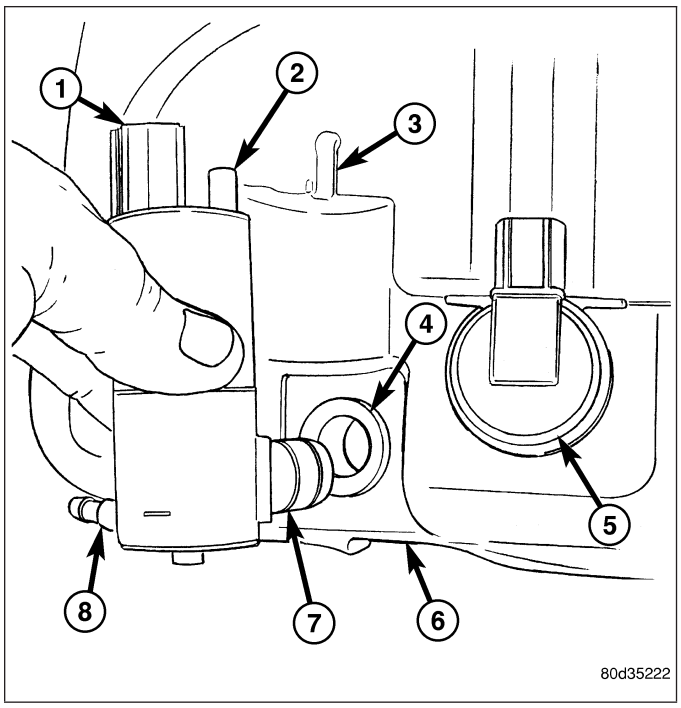

1. Install a new rubber grommet seal (4) into the washer pump mounting hole in the washer reservoir (6). Always use a new rubber grommet seal on the reservoir.
2. Position the barbed inlet nipple (7) of the washer pump to the rubber grommet seal in the washer reservoir.
3. Using hand pressure, press on the washer pump/motor unit firmly and evenly until the barbed inlet nipple is fully seated in the rubber grommet seal in the washer reservoir mounting hole.
4. Align the washer pump/motor snap post (2) on the top of the motor housing with the snap post receptacle (3) in the washer reservoir.
5. Using hand pressure, press firmly and evenly on the top of washer pump/motor unit until the snap post snaps into the washer reservoir receptacle.
6. Reconnect the washer reservoir hose to the barbed outlet nipple (8) of the washer pump.
7. Reconnect the left headlamp and dash wire harness connector for the washer pump/motor unit to the motor connector receptacle (1).
8. Refill the washer reservoir with the washer fluid drained from the reservoir during the removal procedure.
9. Reconnect the battery negative cable.
10. Close and latch the hood.

WASHER RESERVOIR

DESCRIPTION

Except on SRT-10 and diesel models, the molded plastic washer fluid reservoir (1) is integral to the engine coolant overflow bottle (4) located on the right rearward facing surface of the engine cooling module shroud in the right front corner of the engine compartment. On SRT-10 and diesel models, the molded plastic washer fluid reservoir is separate from the engine coolant overflow bottle and is mounted on the rearward facing surface of the left vertical member of the radiator support in the engine compartment. These reservoirs are constructed of a translucent plastic that allows the fluid level to be inspected without removing the reservoir caps.

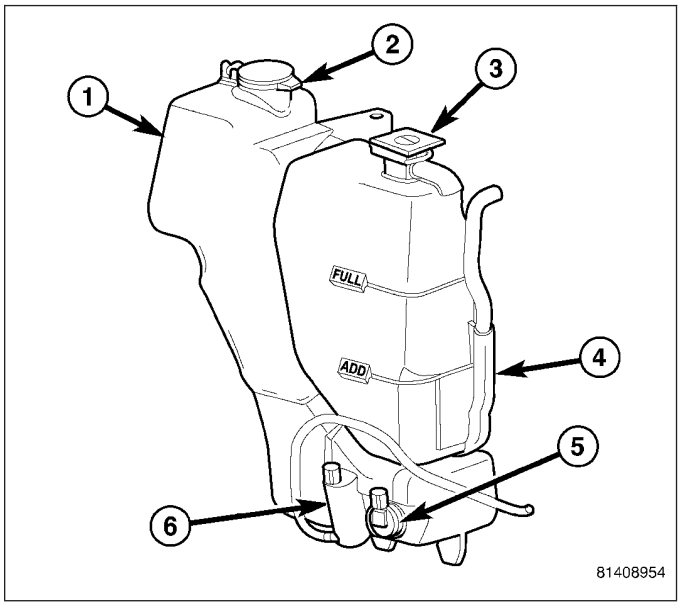

A round bright yellow plastic cap (2) with a rubber seal snaps over the open end of the washer reservoir filler neck and can be easily distinguished from the coolant overflow bottle cap (3) by an International Control and Display Symbol icon for “Windshield Washer” and the text “Washer Fluid Only” molded into it. The cap hinges on and is secured to a molded-in hook formation on the top of the reservoir just behind the filler neck when it is removed for inspecting or adjusting the fluid level in the reservoir.

Except on SRT-10 and diesel models, the washer reservoir is secured to the cooling module radiator shroud with two integral tabs at the bottom, and through two integral mounting brackets with two screws at the top. The two bottom tabs are inserted into two slots near the bottom of the shroud, while the two screws secure the mounting brackets to integral mounting points near the top of the shroud. On SRT-10 and diesel models, the washer reservoir is secured with two screws through integral mounting brackets to the left vertical member of the radiator support.

There are separate, dedicated holes on the lower rearward facing side of either reservoir provided for the mounting of the washer/pump motor unit (6) and the washer fluid level switch (5). A snap post receptacle for the washer pump and a routing trough for the washer hose are molded into both reservoirs to allow for mounting of the washer pump/motor unit without the use of fasteners.

Except on SRT-10 and diesel models, the washer reservoir is serviced only as a unit with the engine coolant reserve bottle. A washer reservoir cannot be repaired and, if faulty or damaged, the unit must be replaced. The washer pump/motor unit, the washer fluid level switch, their rubber grommet seals, as well as the reservoir filler cap are each available for individual service replacement.

OPERATION

The washer fluid reservoir provides a secure, on-vehicle storage location for a large reserve of washer fluid for operation of the washer system. The washer reservoir filler neck provides a clearly marked and readily accessible point from which to add washer fluid to the reservoir.

The washer/pump motor unit is located in a sump area near the bottom of the reservoir to be certain that washer fluid will be available to the pump as the fluid level in the reservoir becomes depleted. The washer fluid level switch is mounted just above the washer pump inlet nipple in the sump area of the reservoir so that there will be adequate warning to the vehicle operator that the washer fluid level is low, well before the washer system will no longer operate.

REMOVAL

EXCEPT SRT-10 OR DIESEL ENGINE

1. Unlatch and open the hood.
2. Disconnect and isolate the battery negative cable.
3. Disconnect the coolant overflow hose (3) from the nipple on the radiator filler neck. It is not necessary to open or drain the engine cooling system. (Refer to 7 - COOLING/ENGINE/COOLANT RECOVERY CONTAINER - REMOVAL).
4. Disconnect the reservoir washer hose (4) from the barbed nipple of the inline fitting at the engine compartment washer hose in the right headlamp and dash wire harness and allow the washer fluid to drain from the reservoir into a clean container for reuse.
5. Disconnect the right headlamp and dash wire harness connector for the washer fluid level switch from the switch connector receptacle (5).
6. Disconnect the right headlamp and dash wire harness connector for the washer pump/motor unit from the motor connector receptacle (7).

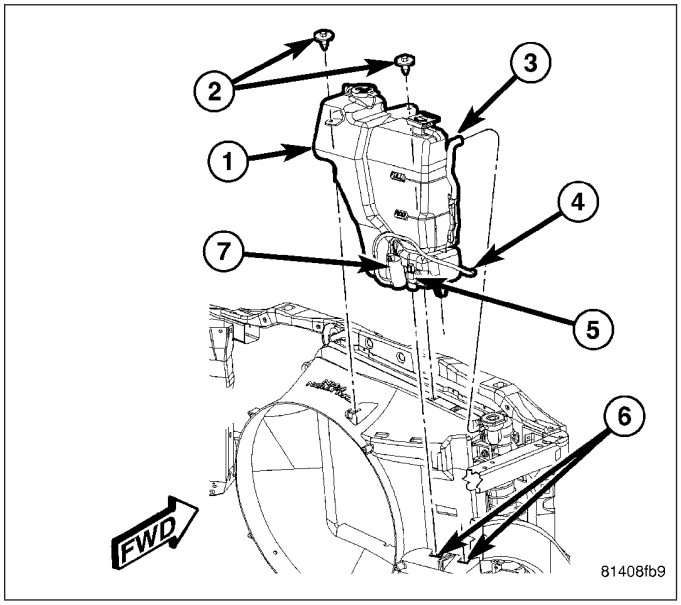

7. Remove the two screws (2) that secure the reservoir mounting brackets to the top of the radiator shroud.
8. Grasp the bottom of the washer reservoir (1) firmly with both hands and pull the unit sharply upward to disengage the locking feature on the washer reservoir from the depression in the radiator shroud.

9. Continue lifting the washer reservoir upward far enough to disengage the two mounting tabs at the bottom from the two slots (6) at the bottom of the radiator shroud.
10. Remove the washer reservoir from the right side of the engine compartment.

SRT-10 OR DIESEL ENGINE ONLY

1. Unlatch and open the hood.
2. Disconnect and isolate the battery negative cable.
3. Disengage the reservoir washer hose (4) from the integral routing clips on the top of the radiator fan shroud.
4. Disconnect the reservoir washer hose from the barbed nipple of the inline fitting at the engine compartment washer hose in the right headlamp and dash wire harness and allow the washer fluid to drain from the reservoir into a clean container for reuse.
5. Disconnect the left headlamp and dash wire harness (1) connector for the washer fluid level switch from the switch connector receptacle (5).
6. Disconnect the left headlamp and dash wire harness connector for the washer pump/motor unit from the motor connector receptacle (3).

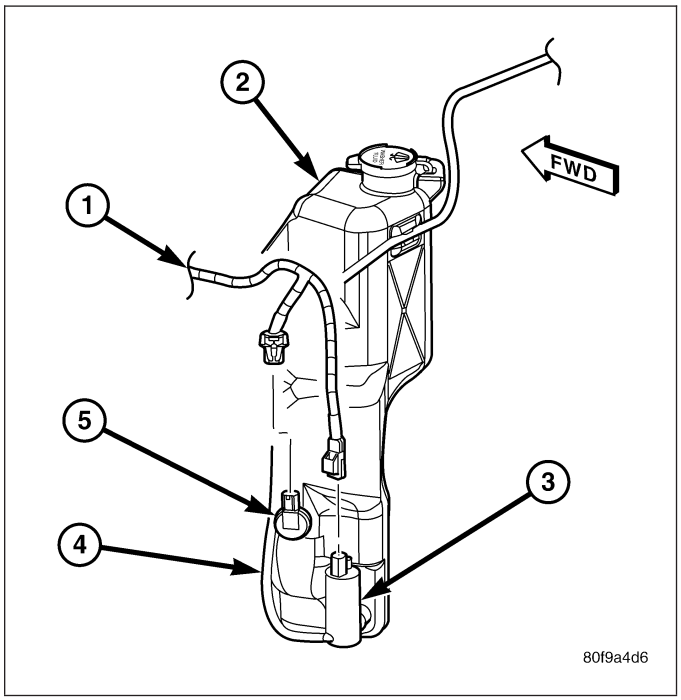

7. Remove the two screws (3) that secure the washer reservoir (4) to the left vertical member of the radiator support (2).
8. Remove the washer reservoir from the left side of the engine compartment.

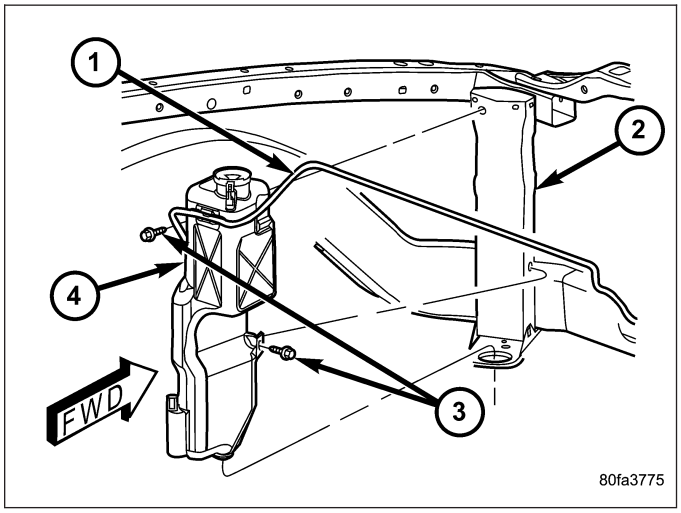

INSTALLATION

EXCEPT SRT-10 OR DIESEL ENGINE

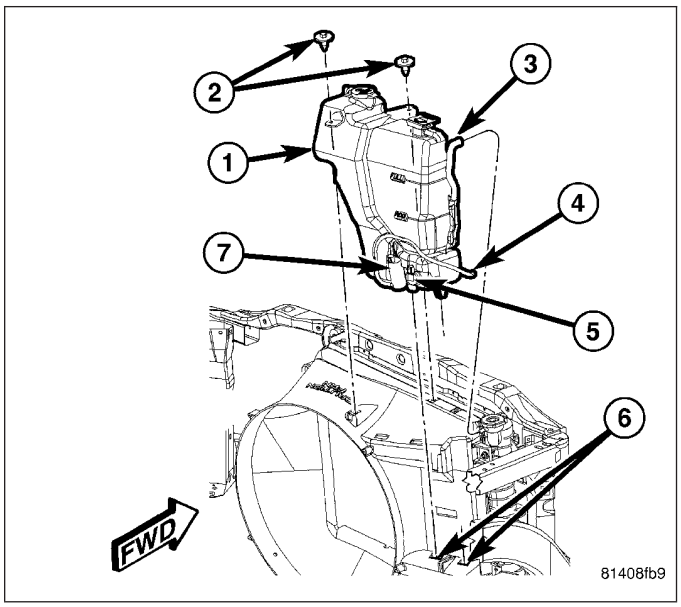

1. Position the washer reservoir (1) into the right side of the engine compartment.
2. Align and insert the two mounting tabs at the bottom of the reservoir into the two slots (6) at the bottom of the radiator shroud.
3. Place both hands on the top of the washer reservoir and push the unit downward far enough for the locking feature on the washer reservoir to snap into the depression in the radiator shroud.
4. Install and tighten the two screws (2) that secure the mounting brackets at the top of the reservoir to the mounting provisions at the top of the radiator shroud. Tighten the screws to 7 N·m (60 in. lbs.).
5. Reconnect the right headlamp and dash wire harness connector for the washer pump/motor unit to the motor connector receptacle (7).
6. Reconnect the right headlamp and dash wire harness connector for the washer fluid level switch to the switch connector receptacle (5).
7. Reconnect the reservoir washer hose (4) to the barbed nipple of the inline fitting at the engine compartment washer hose in the right headlamp and dash wire harness.
8. Reconnect the coolant overflow hose (3) to the nipple on the radiator filler neck. (Refer to 7 - COOLING/ENGINE/COOLANT RECOVERY CONTAINER - INSTALLATION).
9. Refill the washer reservoir with the washer fluid drained from the reservoir during the removal procedure.
10. Reconnect the battery negative cable.
11. Check and adjust the coolant level in the coolant overflow bottle as necessary. (Refer to 7 - COOLING - STANDARD PROCEDURE - REFILLING COOLING SYSTEM).
12. Close and latch the hood.

SRT-10 OR DIESEL ENGINE ONLY

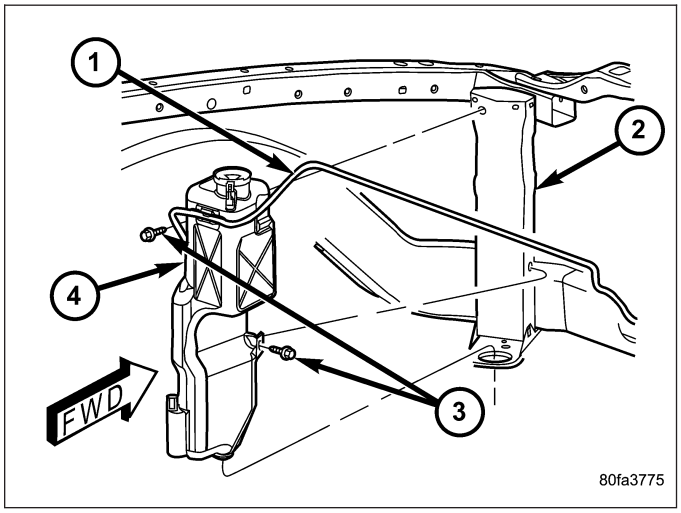

1. Position the washer reservoir (4) to the left vertical member of the radiator support (2) on the left side of the engine compartment.
2. Install and tighten the two screws (3) that secure the washer reservoir to the radiator support. Tighten the screws to 10 N·m (85 in. lbs.).

3. Reconnect the left headlamp and dash wire harness (1) connector for the washer pump/motor unit to the motor connector receptacle (3).
4. Reconnect the left headlamp and dash wire harness connector for the washer fluid level switch to the switch connector receptacle (5).
5. Reconnect the reservoir washer hose (4) to the barbed nipple of the inline fitting at the engine compartment washer hose in the right headlamp and dash wire harness.
6. Engage the reservoir washer hose into the integral routing clips on the top of the radiator fan shroud.
7. Refill the washer reservoir (2) with the washer fluid drained from the reservoir during the removal procedure.
8. Reconnect the battery negative cable.
9. Close and latch the hood.

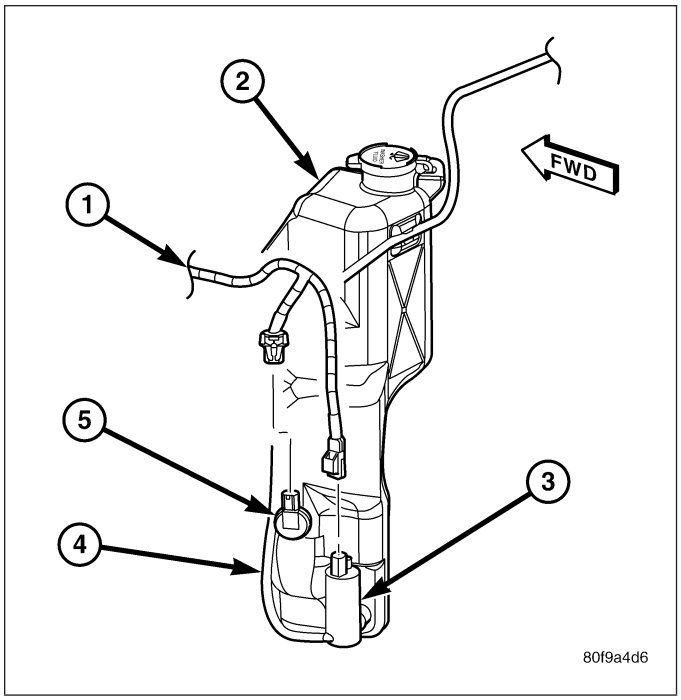

WIPER ARM

DESCRIPTION

The wiper arms are the rigid members located between the wiper pivots protruding from the cowl plenum cover/grille panel near the base of the windshield and the wiper blades on the windshield glass. These wiper arms feature an over-center hinge that allows easy access to the windshield glass for cleaning.

The wiper arms each have a die cast metal pivot end (3) with a large internally serrated socket formation at one end. A key (4) within the socket formation indexes the wiper arm to a keyway in the pivot shaft to provide wiper alignment, and a spring-loaded latch (5) on the underside of the pivot end locks the unit to the pivot shaft when it is fully installed. The right and left wiper arms for this model are not interchangeable, as the right wiper arm is slightly longer than the left one.

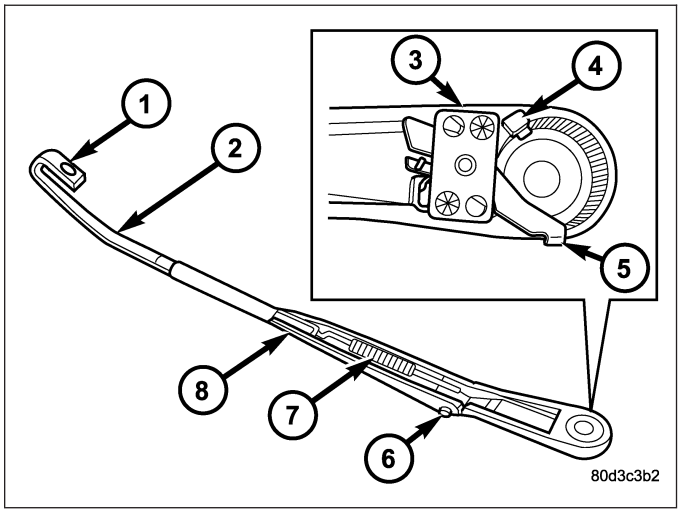

The wide end of a tapered, stamped steel channel (8) hinges on and is secured with a hinge pin (6) to the blade end of both the right and left wiper arm pivot ends. One end of a long, rigid, stamped steel strap (2), with a small hole near its pivot end, is riveted and crimped within the narrow end of the stamped steel channel. The tip of the wiper blade end of this strap is bent back under itself to form a small hook (1). Concealed within the stamped steel channel, one end of a long spring (7) is engaged with a wire hook on the underside of the die cast pivot end, while the other end of the spring is hooked through the small hole in the steel strap. The entire wiper arm has a satin black finish applied to all of its visible surfaces.

A wiper arm cannot be adjusted or repaired. If damaged or faulty, the entire wiper arm unit must be replaced.

OPERATION

The wiper arms are designed to mechanically transmit the motion from the wiper pivots to the wiper blades. The wiper arm must be properly indexed to the wiper pivot in order to maintain the proper wiper blade travel on the glass.

The serrated and keyed socket formation in the wiper arm pivot end interlocks with the serrations and keyway on the outer circumference of the wiper pivot shaft, providing positive engagement and alignment of this connection. The latch positively locks the wiper arm to the wiper pivot shaft when the arm is fully installed. The spring-loaded wiper arm hinge controls the down-force applied through the tip of the wiper arm to the wiper blade on the glass. The hook formation on the tip of the wiper arm provides a cradle for securing and latching the wiper blade pivot block to the wiper arm.

REMOVAL

1. Lift the wiper arm to its over-center position to hold the wiper blade off of the glass and relieve the spring tension on the wiper arm to wiper pivot shaft connection.
2. Pull the latch (2) on the pivot end (1) of the wiper arm outward.
3. Using a slight rocking action, disengage and remove the wiper arm pivot end from the wiper pivot shaft.

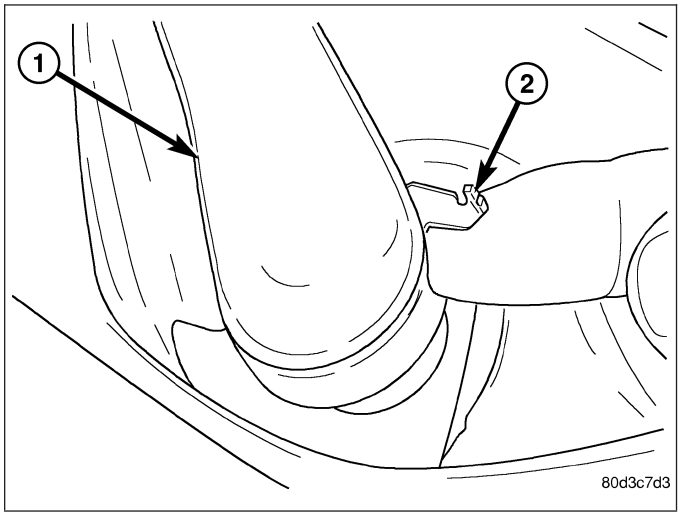

INSTALLATION

NOTE: The right and left wiper arms are not interchangeable. The right wiper arm is slightly longer than the left. Be certain that each wiper arm is installed on the proper wiper pivot.

1. Place the wiper arm hinge in its over-center position prior to attempting installation.
2. The wiper arms are indexed to the wiper pivot shafts with integral keys in the wiper arm pivot ends (1) and keyways in the wiper pivot shafts. Align the key of the wiper arm to the keyway on the wiper pivot shaft.
3. Once the wiper blade is aligned, push the pivot of the wiper arm down firmly and evenly over the wiper pivot shaft until it is fully engaged. When the wiper arm is fully engaged on the wiper pivot, the spring-loaded latch (2) will snap back into place against the wiper arm pivot end.
4. Gently lower the wiper arm until the wiper blade is in position on the windshield glass.

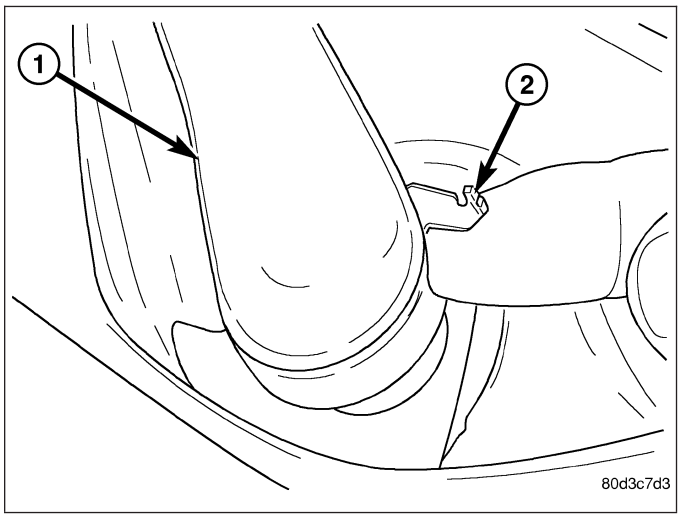

WIPER BLADE

DESCRIPTION

Each wiper blade is secured by an integral latching pivot block (3) to the hook formation on the tip of each wiper arm, and rests on the glass near the base of the windshield when the wipers are not in operation. The wiper blade consists of the following components:

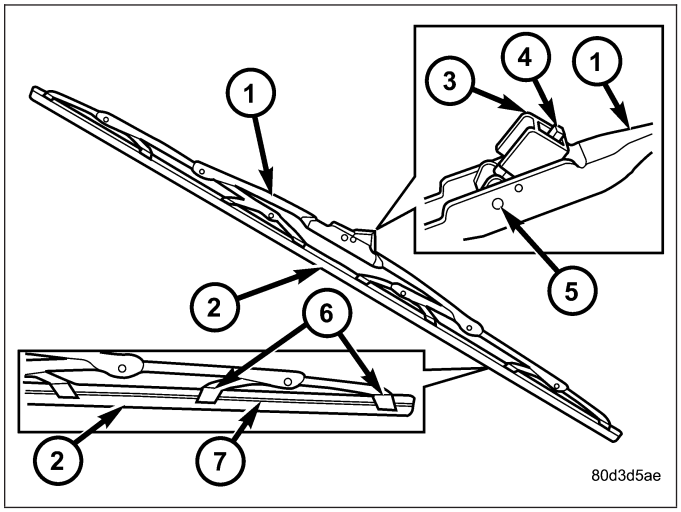

- **Superstructure (1)** - The superstructure includes several stamped steel bridges and links with claw formations that grip the wiper blade element. Also included in this unit is the latching, molded plastic pivot block that secures the superstructure to the wiper arm. All of the metal components of the wiper blade have a satin black finish applied.
- **Element (2)** - The wiper element or squeegee is the resilient rubber member of the wiper blade that contacts the glass.
- **Flexor (7)** - The flexor is a rigid metal component running along the length of each side of the wiper element where it is gripped by the claws (6) of the superstructure.

All models have two 60.00 centimeter (23.62 inch) long wiper blades with non-replaceable rubber elements (squeegees). The wiper blades cannot be adjusted or repaired. If faulty, worn, or damaged the entire wiper blade unit must be replaced.

OPERATION

The wiper blades are moved back and forth across the glass by the wiper arms when the wipers are being operated. The wiper blade superstructure is the flexible frame that grips the wiper blade element and evenly distributes the force of the spring-loaded wiper arm along the length of the element. The combination of the wiper arm force and the flexibility of the superstructure makes the element conform to and maintain proper contact with the glass, even as the blade is moved over the varied curvature that may be encountered across the glass surface.

The wiper element flexor provides the claws of the blade superstructure with a rigid, yet flexible component on the element which can be gripped. The rubber element is designed to be stiff enough to maintain an even cleaning edge as it is drawn across the glass, yet resilient enough to conform to the glass surface and flip from one cleaning edge to the other each time the wiper blade changes directions.

REMOVAL

CAUTION: Do not allow the wiper arm to spring back against the glass without the wiper blade in place or the glass may be damaged.

NOTE: The notched end of the wiper element flexor should always be oriented towards the end of the wiper blade that is nearest to the wiper pivot.

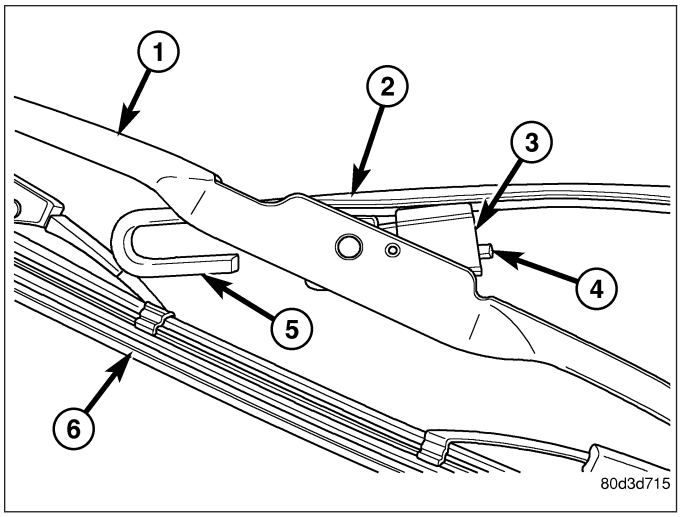

1. Lift the wiper arm (2) to raise the wiper blade and element (6) off of the glass, until the wiper arm hinge is in its over-center position.
2. To remove the blade from the arm, depress the latch release tab (4) on the pivot block (3) under the tip of the arm and slide the blade away from the tip towards the pivot end of the arm far enough to disengage the pivot block from the hook formation (5) on the end of the arm.
3. Extract the hook formation on the tip of the wiper arm through the opening in the wiper blade superstructure (1) just ahead of the pivot block.
4. Gently lower the tip of the wiper arm onto the glass.

INSTALLATION

CAUTION: Do not allow the wiper arm to spring back against the glass without the wiper blade in place or the glass may be damaged.

NOTE: The notched end of the wiper element flexor should always be oriented towards the end of the wiper blade that is nearest to the wiper pivot.

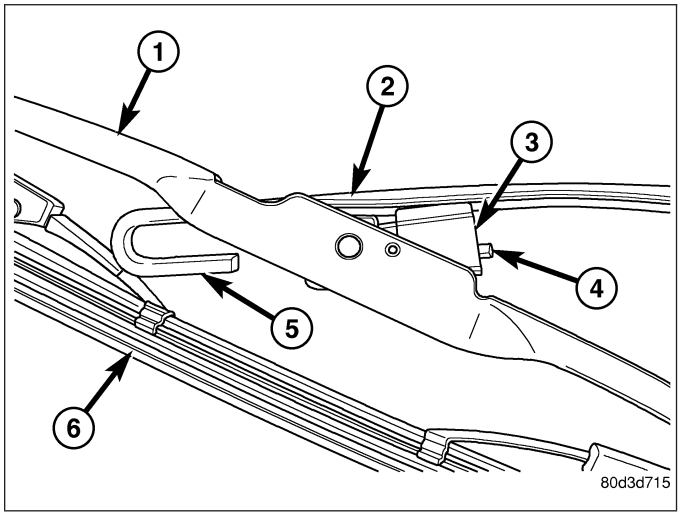

1. Lift the wiper arm (2) off of the windshield glass, until the wiper arm hinge is in its over-center position.
2. Position the wiper blade near the hook formation (5) on the tip of the arm with the notched end of the wiper element flexor oriented towards the end of the wiper arm that is nearest to the wiper pivot.
3. Insert the hook formation on the tip of the arm through the opening in the blade superstructure (1) ahead of the pivot block (3) far enough to engage the pivot block into the hook.
4. Slide the pivot block up into the hook formation on the tip of the wiper arm until the latch release tab (4) snaps into its locked position. Latch engagement will be accompanied by an audible click.
5. Gently lower the wiper blade and element (6) onto the glass.

WIPER HIGH/LOW RELAY

DESCRIPTION

The wiper high/low relay is a conventional International Standards Organization (ISO) micro relay. Relays conforming to the ISO specifications have common physical dimensions, current capacities, terminal patterns, and terminal functions. This relay is contained within a small, rectangular, molded plastic housing and is connected to all of the required inputs and outputs through five integral male spade-type terminals that extend from the relay base plate.

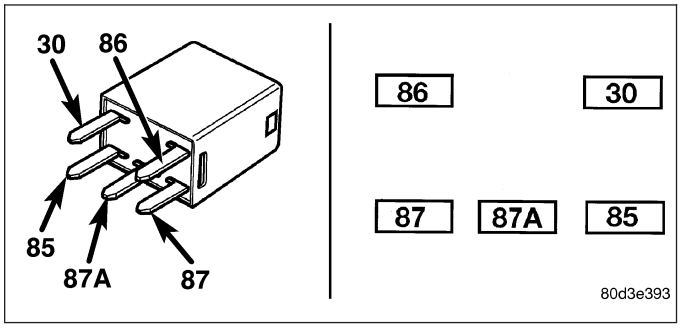

The wiper high/low relay is located in the Power Distribution Center (PDC)/Integrated Power Module (IPM) in the engine compartment near the battery. Refer to the layout label on the underside of the PDC cover for specific relay cavity assignment information. The wiper high/low relay cannot be adjusted or repaired and, if faulty or damaged, the unit must be replaced.

OPERATION

The wiper high/low relay is an electromechanical switch that uses a low current input from the Front Control Module (FCM) to control a high current output to the wiper motor. The movable common feed contact point is held against the fixed normally closed contact point by spring pressure. When the relay coil is energized, an electromagnetic field is produced by the coil windings. This electromagnetic field draws the movable relay contact point away from the fixed normally closed contact point, and holds it against the fixed normally open contact point. When the relay coil is de-energized, spring pressure returns the movable contact point back against the fixed normally closed contact point. A resistor is connected in parallel with the relay coil in the relay, and helps to dissipate voltage spikes and electromagnetic interference that can be generated as the electromagnetic field of the relay coil collapses.

The wiper high/low relay terminals are connected to the vehicle electrical system through a connector receptacle in the Power Distribution Center (PDC)/Integrated Power Module (IPM). The inputs and outputs of the wiper high/low relay include:

- **Common Feed Terminal** - The common feed terminal (30) is connected to the output of the wiper on/off relay at all times through the wiper on/off relay output circuit.
- **Coil Ground Terminal** - The coil ground terminal (85) is connected to a control output of the Front Control Module (FCM) through a wiper high/low relay control circuit. The FCM controls wiper motor operation by controlling a ground path through this circuit.
- **Coil Battery Terminal** - The coil battery terminal (86) receives battery current when the ignition switch is in the On or Accessory positions from a fuse in the PDC/IPM through a fused ignition switch output (run-acc) circuit.
- **Normally Open Terminal** - The normally open terminal (87) is connected to the high speed brush of the wiper motor through a wiper high/low relay high speed output circuit, and is connected to the high speed brush whenever the relay is energized.
- **Normally Closed Terminal** - The normally closed terminal (87A) is connected to the low speed brush of the wiper motor through a wiper high/low relay low speed output circuit, and is connected to the low speed brush whenever the relay is de-energized.

The wiper high/low relay can be diagnosed using conventional diagnostic tools and methods. However, conventional diagnostic methods may not prove conclusive in the diagnosis of the ElectroMechanical Instrument Cluster (EMIC), the FCM, or the electronic message inputs to or outputs from the EMIC and the FCM that control the operation of the wiper high/low relay. The most reliable, efficient, and accurate means to diagnose the wiper high/low relay, the EMIC, the FCM, or the electronic message inputs and outputs related to the wiper high/low relay operation requires the use of a diagnostic scan tool. Refer to the appropriate diagnostic information.

WIPER MODULE

DESCRIPTION

The wiper module is secured with screws through three rubber grommet-type insulators (5) to the cowl plenum panel. The module is concealed beneath the molded plastic cowl plenum cover/grille panel between the base of the windshield and the rear edge of the hood panel. The ends of the pivot shafts protruding through openings in the cowl plenum cover/grille panel to drive the wiper arms and blades are the only visible components of the wiper module. The wiper module consists of the following major components:

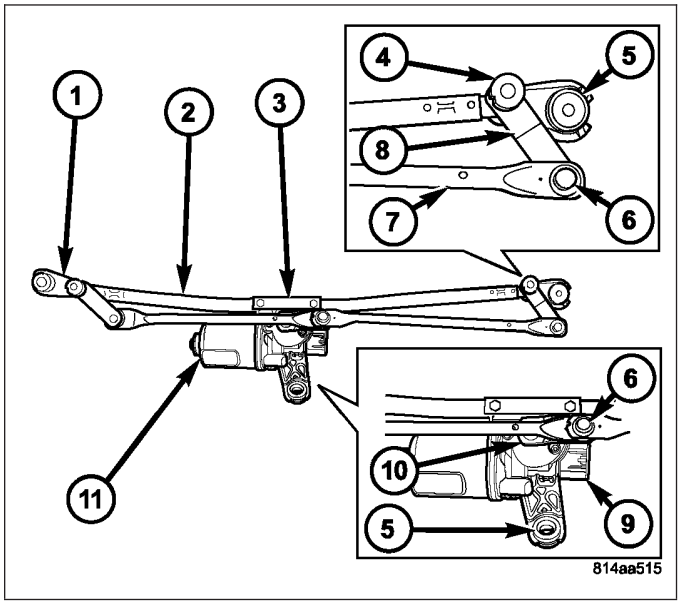

- **Bracket** - The wiper module bracket consists of a long tubular steel main member (2) that has a die cast pivot bracket (1) at each end to which the two wiper pivots are secured. A stamped steel clamp secures the center of the tubular member to the die cast bracket integral to the wiper motor with two screws.
- **Crank Arm (10)** - The wiper motor crank arm is a stamped steel unit with a slotted hole on the driven end that is secured to the wiper motor output shaft with a nut, and has a ball stud secured to the drive end.
- **Linkage (2)** - Two stamped steel drive links connect the wiper motor crank arm to the wiper pivot lever arms. The left side drive link has a plastic socket-type bushing (6) on each end. The right side drive link has a plastic socket-type bushing on one end, and a plastic sleeve-type bushing on the other end. The socket-type bushing on one end of each drive link is snap-fit over the ball stud on the lever arm (8) of its respective pivot. The right side drive link sleeve-type bushing end is then fit over the motor crank arm ball stud, and the other socket-type bushing of the left side drive link is snap-fit over the exposed end of the wiper motor crank arm ball stud.
- **Motor (11)** - The wiper motor features an integral die cast bracket to which the wiper module bracket is secured with a stamped steel clamp and two screws near the top and which has a single rubber insulated mounting ear at the bottom. This die casting also serves as the wiper motor transmission housing from which the wiper motor output shaft exits. A nut secures the wiper motor crank arm to the motor output shaft. The two-speed permanent magnet wiper motor features an integral transmission, an internal park switch, and an internal automatic resetting circuit breaker.
- **Pivots (2)** - The two front wiper pivots are secured within the die cast pivot brackets on the outboard ends of the wiper module main member. The lever arms that extend from the center of the pivot shafts each have a ball stud on their end. The upper end of each pivot shaft where the wiper arms will be fastened each has a serrated driver with a keyway. The lower ends of the pivot shafts are installed through lubricated bushings in the pivot brackets and are secured with snap rings.

The wiper module cannot be adjusted or repaired. If any component of the module is faulty or damaged, the entire wiper module unit must be replaced.

OPERATION

The wiper module operation is controlled by the battery current inputs received by the wiper motor through the wiper on/off and wiper high/low relays. The wiper motor speed is controlled by current flow to either the low speed or the high speed set of brushes. The park switch is a single pole, single throw, momentary switch within the wiper motor that is mechanically actuated by the wiper motor transmission components. The park switch alternately opens and closes the wiper park switch sense circuit to ground, depending upon the position of the wipers on the glass. This feature allows the motor to complete its current wipe cycle after the wiper system has been turned Off, and to park

the wiper blades in the lowest portion of the wipe pattern. The automatic resetting circuit breaker protects the motor from overloads.

The wiper motor crank arm, the two wiper linkage members, and the two wiper pivots mechanically convert the rotary output of the wiper motor to the back and forth wiping motion of the wiper arms and blades on the glass.

REMOVAL

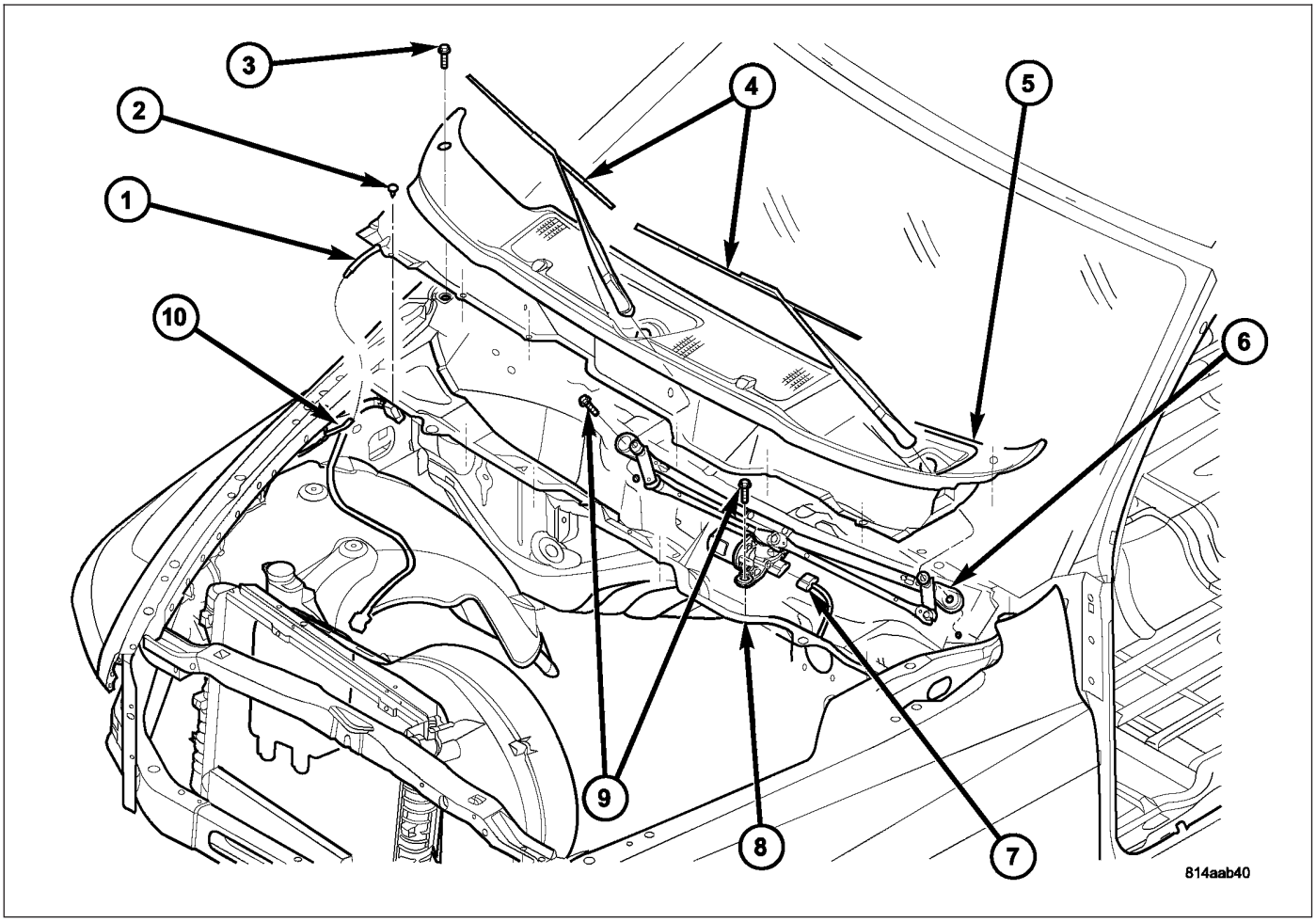

1. Remove both wiper arms (4) from the wiper pivots. (Refer to 8 - ELECTRICAL/WIPERS/WASHERS/WIPER ARM - REMOVAL).
2. Unlatch and open the hood.
3. Disconnect and isolate the battery negative cable.
4. Remove the cowl plenum cover/grille panel (5) from over the cowl plenum (8). (Refer to 23 - BODY/EXTERIOR/ COWL GRILLE - REMOVAL).
5. Disconnect the left headlamp and dash wire harness connector (7) for the wiper motor from the motor pigtail wire connector.
6. Remove the two screws (9) that secure the wiper module (6) to the top of the cowl plenum panel at the pivot brackets.
7. Remove the screw that secures the wiper module to the bottom of the cowl plenum panel.
8. Remove the wiper module from the cowl plenum panel as a unit.

INSTALLATION

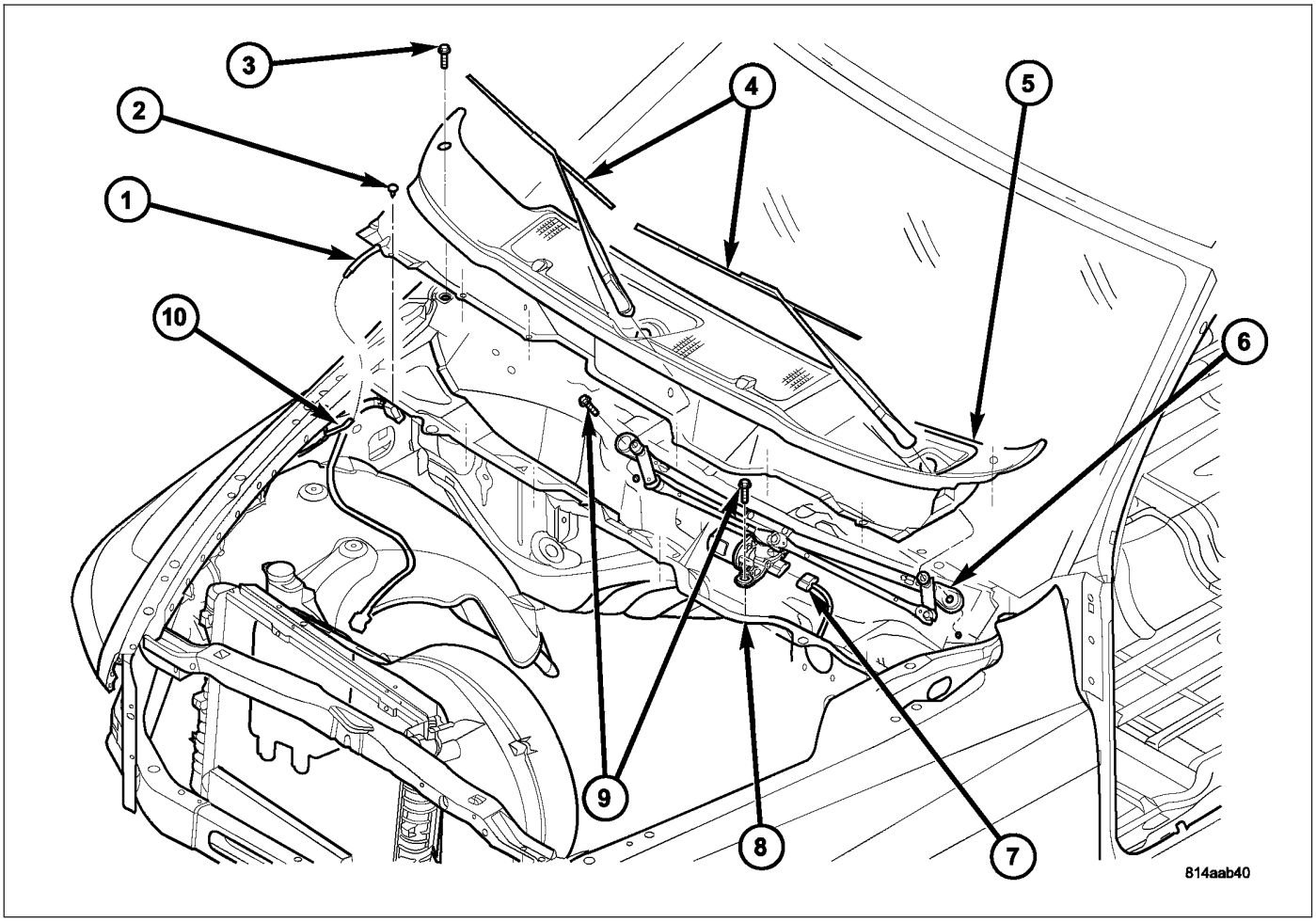

1. Position the wiper module (6) into the cowl plenum (8) as a unit.
2. Install the two screws (9) that secure the wiper module to the top of the cowl plenum panel at the pivot brackets. Tighten the screw on the driver side, followed by the screw on the passenger side. Tighten the screws to 8 N·m (75 in. lbs.).
3. Install and tighten the screw that secures the wiper module to the bottom of the cowl plenum panel. Tighten the screw to 8 N·m (75 in. lbs.).
4. Reconnect the left headlamp and dash wire harness connector (7) for the wiper motor to the motor pigtail wire connector.
5. Reinstall the cowl plenum cover/grille panel (5) over the cowl plenum. (Refer to 23 - BODY/EXTERIOR/COWL GRILLE - INSTALLATION).
6. Reconnect the battery negative cable.
7. Close and latch the hood.
8. Reinstall both wiper arms (4) onto the wiper pivots. (Refer to 8 - ELECTRICAL/WIPERS/WASHERS/WIPER ARMS - INSTALLATION).

WIPER ON/OFF RELAY

DESCRIPTION

The wiper on/off relay is a conventional International Standards Organization (ISO) micro relay. Relays conforming to the ISO specifications have common physical dimensions, current capacities, terminal patterns, and terminal functions. This relay is contained within a small, rectangular, molded plastic housing and is connected to all of the required inputs and outputs through five integral male spade-type terminals that extend from the relay base plate.

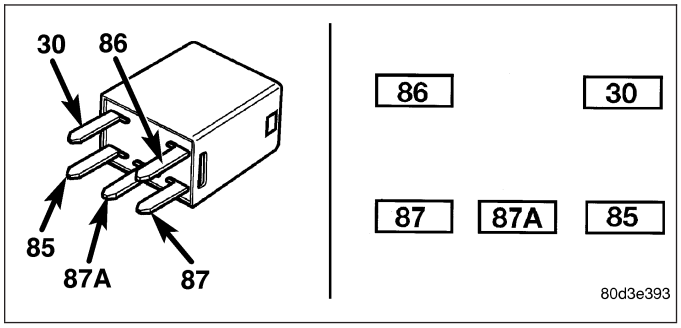

The wiper on/off relay is located in the Power Distribution Center (PDC)/Integrated Power Module (IPM) in the engine compartment near the battery. Refer to the layout label on the underside of the PDC cover for specific relay cavity assignment information. The wiper on/off relay cannot be adjusted or repaired and, if faulty or damaged, the unit must be replaced.

OPERATION

The wiper on/off relay is an electromechanical switch that uses a low current input from the Front Control Module (FCM) to control a high current output to the wiper motor. The movable common feed contact point is held against the fixed normally closed contact point by spring pressure. When the relay coil is energized, an electromagnetic field is produced by the coil windings. This electromagnetic field draws the movable relay contact point away from the fixed normally closed contact point, and holds it against the fixed normally open contact point. When the relay coil is de-energized, spring pressure returns the movable contact point back against the fixed normally closed contact point. A resistor is connected in parallel with the relay coil in the relay, and helps to dissipate voltage spikes and electromagnetic interference that can be generated as the electromagnetic field of the relay coil collapses.

The wiper on/off relay terminals are connected to the vehicle electrical system through a connector receptacle in the Power Distribution Center (PDC)/Integrated Power Module (IPM). The inputs and outputs of the wiper on/off relay include:

- **Common Feed Terminal** - The common feed terminal (30) is connected to the common feed terminal of the wiper high/low relay at all times through the wiper on/off relay output circuit.
- **Coil Ground Terminal** - The coil ground terminal (85) is connected to a control output of the Front Control Module (FCM) through a wiper on/off relay control circuit. The FCM controls wiper motor operation by controlling a ground path through this circuit.
- **Coil Battery Terminal** - The coil battery terminal (86) receives battery current at all times from a fuse in the PDC/IPM through a fused ignition switch output (run-acc) circuit.
- **Normally Open Terminal** - The normally open terminal (87) receives battery current at all times from a fuse in the IPM through a fused ignition switch output (run-acc) circuit, and provides battery current to the wiper on/off relay output circuit whenever the relay is energized.
- **Normally Closed Terminal** - The normally closed terminal (87A) is connected to ground at all times through a take out of the left headlamp and dash wire harness with an eyelet terminal connector that is secured by a screw to the front end sheet metal, and is connected to the wiper on/off relay output circuit whenever the relay is de-energized.

The wiper on/off relay may be diagnosed using conventional diagnostic tools and methods. However, conventional diagnostic methods may not prove conclusive in the diagnosis of the ElectroMechanical Instrument Cluster (EMIC), the FCM, or the electronic message inputs to or outputs from the EMIC and the FCM that control the operation of the wiper on/off relay. The most reliable, efficient, and accurate means to diagnose the wiper on/off relay, the EMIC, the FCM, or the electronic message inputs and outputs related to the wiper on/off relay operation requires the use of a diagnostic scan tool. Refer to the appropriate diagnostic information.

NAVIGATION/TELECOMMUNICATION

TABLE OF CONTENTS

	page
NAVIGATION/TELECOMMUNICATION - ELECTRICAL DIAGNOSTICS	**1**
NAVIGATION/TELECOMMUNICATION - SERVICE INFORMATION	**85**

NAVIGATION/TELECOMMUNICATION - ELECTRICAL DIAGNOSTICS

TABLE OF CONTENTS

	page
NAVIGATION/TELECOMMUNICATION - ELECTRICAL DIAGNOSTICS	
DIAGNOSIS AND TESTING	
AMP MESSAGE NOT RECEIVED	2
AUDIO HARDWARE MESSAGE NOT RECEIVED	3
BLUETOOTH ERROR	4
BODY STYLE MESSAGE NOT RECEIVED	5
FLASH CHECKSUM ERROR	6
FLASH WRITE ERROR	7
GENERAL MICROPHONE FAULT	8
IGNITION POWER MESSAGE NOT RECEIVED	15
INVALID BODY STYLE	16
LEFT AUDIO INPUT SHORT TO GROUND	17
LEFT AUDIO INPUT SHORT TO VOLTAGE	21
LEFT AUDIO OUTPUT 1 SHORT TO GROUND	25
LEFT AUDIO OUTPUT 1 SHORT TO VOLTAGE	29
MIRROR POWER CIRCUIT SHORT TO GROUND	33
MIRROR POWER CIRCUIT SHORT TO VOLTAGE	37
PCI BUS BUSY	41
PCI BUS CIRCUIT OPEN	43
PCI BUS CIRCUIT SHORT TO GROUND	45
PCI BUS CIRCUIT SHORT TO VOLTAGE	47
PCI BUS INTERNAL ERROR	49
PHONE SWITCH STUCK	50
PRNDL MESSAGE NOT RECEIVED	52
RADIO MESSAGE NOT RECEIVED	53
RAM WRITE ERROR	54
RIGHT AUDIO INPUT SHORT TO GROUND	55
RIGHT AUDIO INPUT SHORT TO VOLTAGE	59
RIGHT AUDIO OUTPUT 1 SHORT TO GROUND	63
RIGHT AUDIO OUTPUT 1 SHORT TO VOLTAGE	67
ROM CHECKSUM ERROR	71
RPM MESSAGE NOT RECEIVED	72
VIN MESSAGE NOT RECEIVED	73
VOICE RECOGNITION SWITCH STUCK	74
VOICE RECOGNITION/PHONE SWITCH CIRCUIT RATIONALITY	76
VOICE RECOGNITION/PHONE SWITCH CIRCUIT SHORT TO GROUND	78
VOICE RECOGNITION/PHONE SWITCH CIRCUIT SHORT TO VOLTAGE	81

NAVIGATION/TELECOMMUNICATION - ELECTRICAL DIAGNOSTICS

DIAGNOSIS AND TESTING

AMP MESSAGE NOT RECEIVED

For a complete wiring diagram **Refer to Section 8W**.

- **When Monitored:**
  With the ignition on.
- **Set Condition:**
  The Hands Free Module does not receive the PCI Bus message from the Amplifier.

Possible Causes
LOST COMMUNICATION WITH AMPLIFIER
HANDS FREE MODULE

Diagnostic Test

1. ATTEMPT TO COMMUNICATE WITH THE AMPLIFIER

Turn the ignition on.
With the DRB, attempt to communicate with the Amplifier.

Was the DRB able to communicate with the Amplifier?

Yes >> Go To 2

No >> (Refer to 8 - ELECTRICAL/ELECTRONIC CONTROL MODULES - DIAGNOSIS AND TESTING) and perform the related symptom.

---

2. ERASE DTC AND ATTEMPT TO RESET

With the DRB, erase the HFM DTC's.
Cycle the ignition switch from off to on and wait approximately 1 minute.
With the DRB, read the HFM DTC's.

Did this DTC reset?

Yes >> Replace and program the Hands Free Module in accordance with the service information.
Perform BODY VERIFICATION TEST - VER 1. (Refer to BODY VERIFICATION TEST - VER 1.)

No >> The condition that set this DTC is no longer present. Using the wiring diagram/schematic as a guide, inspect the wiring for chafed, pierced, pinched, and partially broken wires and the wiring harness connectors for broken, bent, pushed out, and corroded terminals.

AUDIO HARDWARE MESSAGE NOT RECEIVED

For a complete wiring diagram **Refer to Section 8W**.

- **When Monitored:**
  With the ignition on.
- **Set Condition:**
  The Hands Free Module does not receive the PCI Bus message from the radio indicating what kind of radio the vehicle is equipped with.

Possible Causes
LOST COMMUNICATION WITH RADIO
HANDS FREE MODULE

Diagnostic Test

1. ATTEMPT TO COMMUNICATE WITH THE RADIO

Turn the ignition on.
Turn the radio on.
With the DRB, attempt to communicate with the radio.

Was the DRB able to communicate with the radio?

Yes >> Go To 2

No >> (Refer to 8 - ELECTRICAL/ELECTRONIC CONTROL MODULES - DIAGNOSIS AND TESTING) and perform the related symptom.

---

2. ERASE DTC AND ATTEMPT TO RESET

With the DRB, erase the HFM DTC's.
Cycle the ignition switch from off to on and wait approximately 1 minute.
With the DRB, read the HFM DTC's.

Did this DTC reset?

Yes >> Replace and program the Hands Free Module in accordance with the service information.
Perform BODY VERIFICATION TEST - VER 1. (Refer to BODY VERIFICATION TEST - VER 1.)

No >> The condition that set this DTC is no longer present. Using the wiring diagram/schematic as a guide, inspect the wiring for chafed, pierced, pinched, and partially broken wires and the wiring harness connectors for broken, bent, pushed out, and corroded terminals.

BLUETOOTH ERROR

For a complete wiring diagram **Refer to Section 8W**.

- **When Monitored:**
  With the ignition on.
- **Set Condition:**
  The Hands Free Module detects a fault during an internal diagnostic check.

Possible Causes
HANDS FREE MODULE

Diagnostic Test

1. ERASE DTC AND ATTEMPT TO RESET

Turn the ignition on.
With the DRB, read and record the HFM DTC's and then erase the DTC's.
Perform 5 ignition key cycles, leaving the ignition key on for a minimum of 90 seconds per cycle.
With the DRB, read the HFM DTC's.

Did this DTC reset?

Yes >> Replace and program the Hands Free Module in accordance with the service information.
Perform BODY VERIFICATION TEST - VER 1. (Refer to BODY VERIFICATION TEST - VER 1.)

No >> The condition that set this DTC is no longer present. Using the wiring diagram/schematic as a guide, inspect the wiring for chafed, pierced, pinched, and partially broken wires and the wiring harness connectors for broken, bent, pushed out, and corroded terminals.

BODY STYLE MESSAGE NOT RECEIVED

For a complete wiring diagram **Refer to Section 8W**.

- **When Monitored:**
  With the ignition on.
- **Set Condition:**
  The Hands Free Module does not receive the body style message from the PCM.

Possible Causes
LOST COMMUNICATION WITH PCM
PCM NOT ACTIVE ON THE PCI BUS
HANDS FREE MODULE

Diagnostic Test

1. ATTEMPT TO COMMUNICATE WITH THE PCM

Turn the ignition on.
With the DRB, attempt to communicate with the PCM.

Was the DRB able to communicate with the PCM?

Yes >> Go To 2

No >> (Refer to 8 - ELECTRICAL/ELECTRONIC CONTROL MODULES - DIAGNOSIS AND TESTING) and perform the related symptom.

---

2. CHECK PCM ACTIVITY ON THE PCI BUS

With the DRB, select System Monitors then J1850 Module Scan.

Does the DRB indicated that the PCM is present or active on the PCI Bus?

Yes >> Go To 3

No >> (Refer to 8 - ELECTRICAL/ELECTRONIC CONTROL MODULES - DIAGNOSIS AND TESTING) and perform the related symptom.

---

3. ERASE DTC AND ATTEMPT TO RESET

With the DRB, erase the HFM DTC's.
Cycle the ignition switch from off to on and wait approximately 1 minute.
With the DRB, read the HFM DTC's.

Did this DTC reset?

Yes >> Replace and program the Hands Free Module in accordance with the service information.
Perform BODY VERIFICATION TEST - VER 1. (Refer to BODY VERIFICATION TEST - VER 1.)

No >> The condition that set this DTC is no longer present. Using the wiring diagram/schematic as a guide, inspect the wiring for chafed, pierced, pinched, and partially broken wires and the wiring harness connectors for broken, bent, pushed out, and corroded terminals.

FLASH CHECKSUM ERROR

For a complete wiring diagram **Refer to Section 8W**.

- **When Monitored:**
  With the ignition on.
- **Set Condition:**
  The Hands Free Module detects a fault during an internal diagnostic check.

Possible Causes
HANDS FREE MODULE

Diagnostic Test

1. ERASE DTC AND ATTEMPT TO RESET

Turn the ignition on.
With the DRB, read and record the HFM DTC's and then erase the DTC's.
Perform 5 ignition key cycles, leaving the ignition key on for a minimum of 90 seconds per cycle.
With the DRB, read the HFM DTC's.

Did this DTC reset?

Yes >> Replace and program the Hands Free Module in accordance with the service information.
Perform BODY VERIFICATION TEST - VER 1. (Refer to BODY VERIFICATION TEST - VER 1.)

No >> The condition that set this DTC is no longer present. Using the wiring diagram/schematic as a guide, inspect the wiring for chafed, pierced, pinched, and partially broken wires and the wiring harness connectors for broken, bent, pushed out, and corroded terminals.

FLASH WRITE ERROR

For a complete wiring diagram **Refer to Section 8W**.

- **When Monitored:**
  With the ignition on.
- **Set Condition:**
  The Hands Free Module detects a fault during an internal diagnostic check.

Possible Causes
HANDS FREE MODULE

Diagnostic Test

1. ERASE DTC AND ATTEMPT TO RESET

Turn the ignition on.
With the DRB, read and record the HFM DTC's and then erase the DTC's.
Perform 5 ignition key cycles, leaving the ignition key on for a minimum of 90 seconds per cycle.
With the DRB, read the HFM DTC's.

Did this DTC reset?

Yes >> Replace and program the Hands Free Module in accordance with the service information.
Perform BODY VERIFICATION TEST - VER 1. (Refer to BODY VERIFICATION TEST - VER 1.)

No >> The condition that set this DTC is no longer present. Using the wiring diagram/schematic as a guide, inspect the wiring for chafed, pierced, pinched, and partially broken wires and the wiring harness connectors for broken, bent, pushed out, and corroded terminals.

GENERAL MICROPHONE FAULT

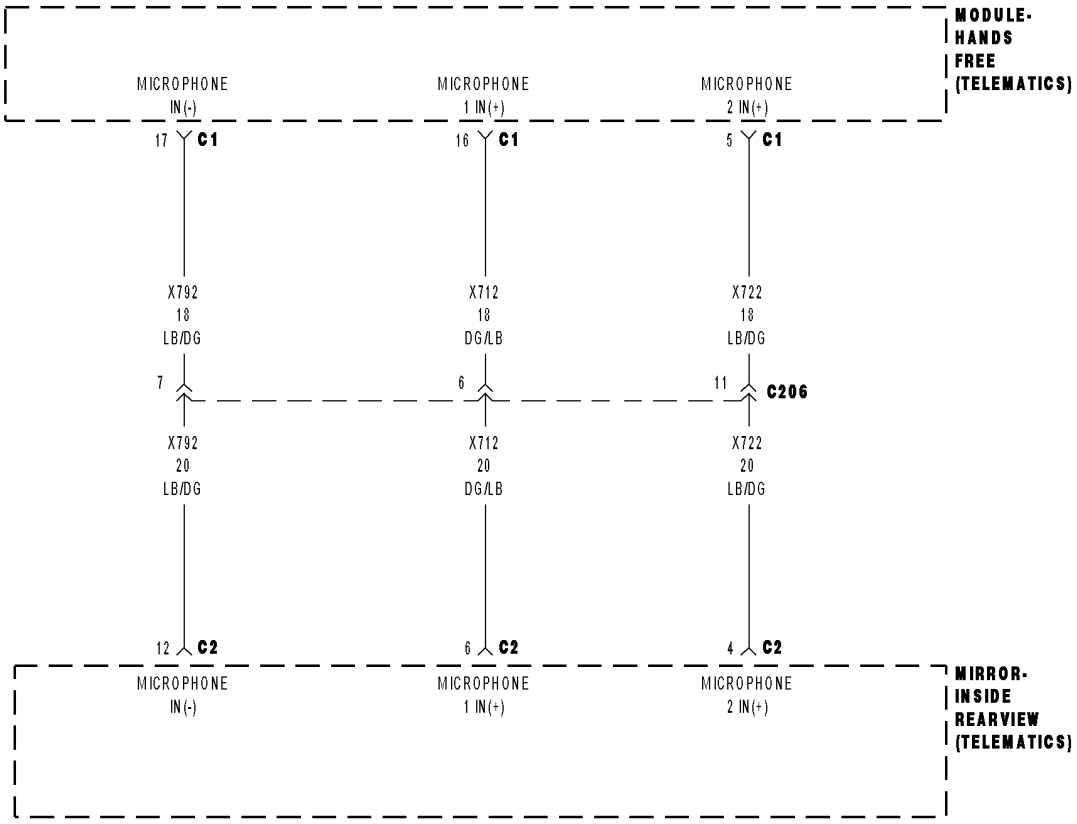

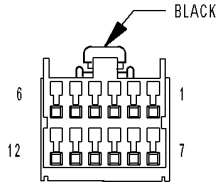

MIRROR-
INSIDE
REARVIEW C2
(TELEMATICS)

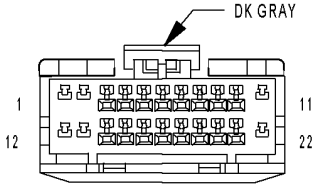

MODULE-
HANDS FREE C1
(TELEMATICS)

813e6b91

GENERAL MICROPHONE FAULT (CONTINUED)

For a complete wiring diagram **Refer to Section 8W**.

- **When Monitored:**
  With the ignition on.
- **Set Condition:**
  The Hands Free Module detects a fault in any of the microphone circuits.

Possible Causes
(X712) MICROPHONE 1 IN (+) CIRCUIT OPEN
(X722) MICROPHONE 2 IN (+) CIRCUIT OPEN
(X792) MICROPHONE IN (-) CIRCUIT OPEN
(X712) (X722) (X792) MICROPHONE CIRCUITS SHORTED TO GROUND
(X712) (X722) (X792) MICROPHONE CIRCUITS SHORTED TO VOLTAGE
(X712) (X722) (X792) MICROPHONE CIRCUITS SHORTED TOGETHER
INSIDE REARVIEW MIRROR
HANDS FREE MODULE

Diagnostic Test

1. CHECK FOR ACTIVE DTC

Turn the ignition on.
With the DRB, read and record the HFM DTC's and then erase the DTC's.
Attempt to make a phone call with the system.
With the DRB, read the HFM DTC's.

Did this DTC reset?

Yes >> Go To 2

No >> The condition that set this DTC is no longer present. Using the wiring diagram/schematic as a guide, inspect the wiring for chafed, pierced, pinched, and partially broken wires and the wiring harness connectors for broken, bent, pushed out, and corroded terminals.

GENERAL MICROPHONE FAULT (CONTINUED)

2. (X712) MICROPHONE 1 IN (+) CIRCUIT OPEN

Turn the ignition off.

Disconnect the Hands Free Module harness connector.

Disconnect the Inside Rearview Mirror C2 harness connector.

Measure the resistance of the (X712) Microphone 1 IN (+) circuit between the HFM connector and the Inside Rearview Mirror connector.

Is the resistance below 5.0 ohms?

Yes >> Go To 3

No >> Repair the (X712) Microphone 1 IN (+) circuit for an open. Perform BODY VERIFICATION TEST - VER 1. (Refer to BODY VERIFICATION TEST - VER 1.)

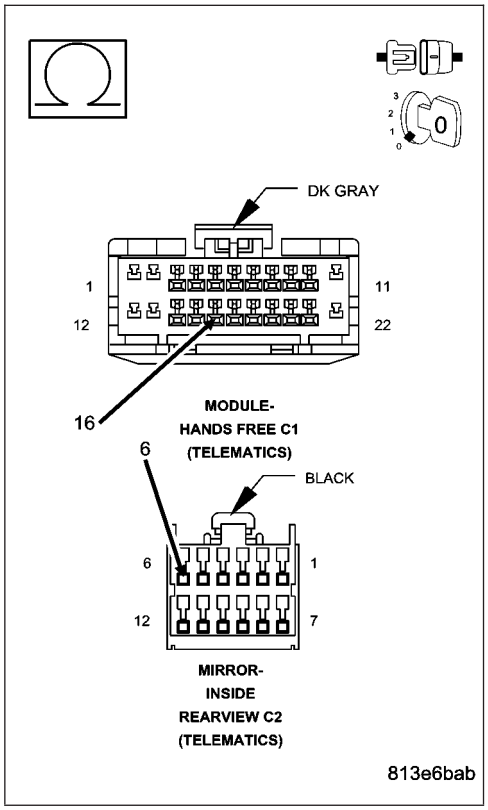

GENERAL MICROPHONE FAULT (CONTINUED)

3. (X722) MICROPHONE 2 IN (+) CIRCUIT OPEN

Measure the resistance of the (X722) Microphone 2 IN (+) circuit between the HFM connector and the Inside Rearview Mirror connector.

Is the resistance below 5.0 ohms?

Yes >> Go To 4

No >> Repair the (X722) Microphone 2 IN (+) circuit for an open. Perform BODY VERIFICATION TEST - VER 1. (Refer to BODY VERIFICATION TEST - VER 1.)

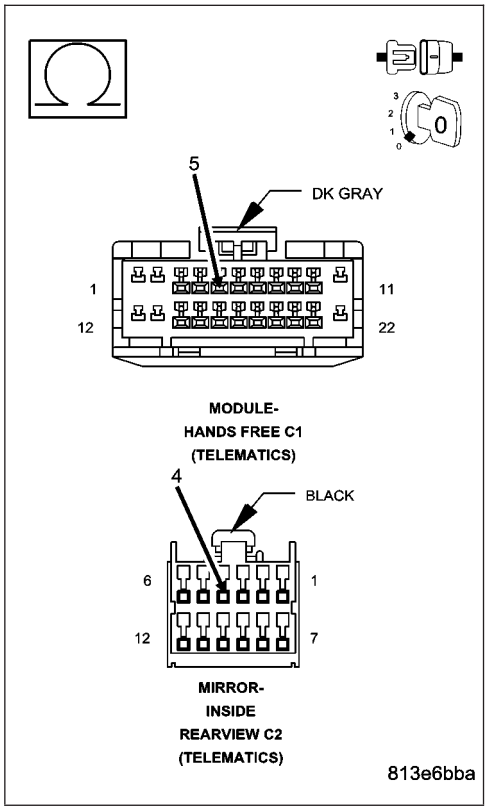

GENERAL MICROPHONE FAULT (CONTINUED)

4. (X792) MICROPHONE IN (-) CIRCUIT OPEN

Measure the resistance of the (X792) Microphone IN (-) circuit between the HFM connector and the Inside Rearview Mirror connector.

Is the resistance below 5.0 ohms?

Yes >> Go To 5

No >> Repair the (X792) Microphone IN (-) circuit for an open.
Perform BODY VERIFICATION TEST - VER 1. (Refer to BODY VERIFICATION TEST - VER 1.)

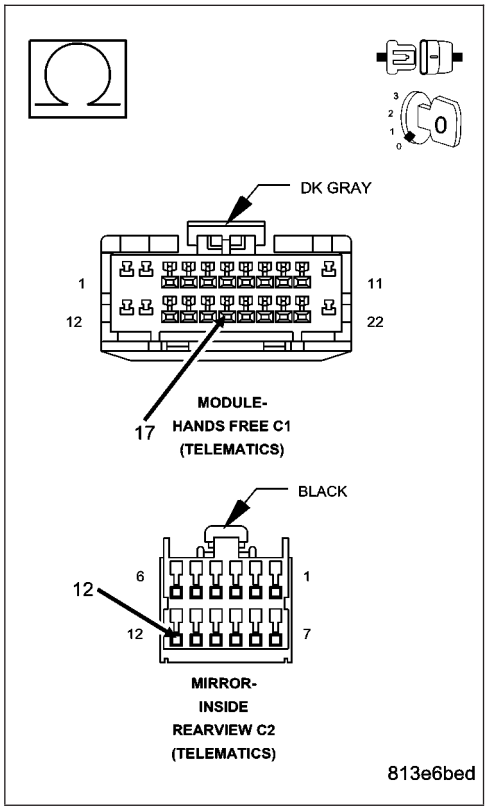

5. (X712) (X722) (X792) MICROPHONE CIRCUITS SHORTED TO GROUND

Measure the resistance between ground and each (X712) (X722) (X792) Microphone circuit.

Is the resistance below 100.0 ohms?

Yes >> Repair the Microphone circuit that measured below 100.0 ohms for short to ground.
Perform BODY VERIFICATION TEST - VER 1. (Refer to BODY VERIFICATION TEST - VER 1.)

No >> Go To 6

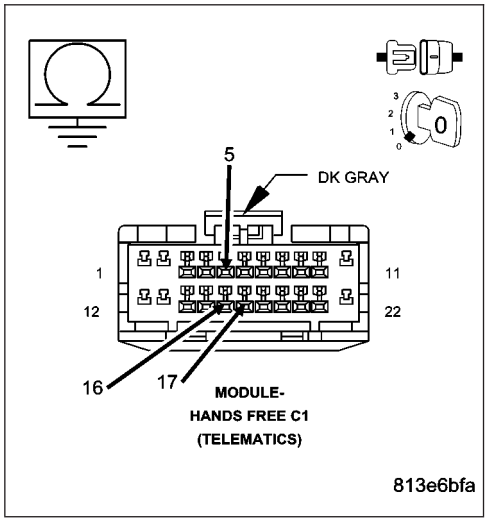

GENERAL MICROPHONE FAULT (CONTINUED)

6. (X712) (X722) (X792) MICROPHONE CIRCUITS SHORTED TO VOLTAGE

Turn the ignition on.

Measure the voltage of each (X712) (X722) (X792) Microphone circuit.

Is the voltage above 1.0 volt?

Yes >> Repair the Microphone circuit that measured above 1.0 volt for short to voltage.

Perform BODY VERIFICATION TEST - VER 1. (Refer to BODY VERIFICATION TEST - VER 1.)

No >> Go To 7

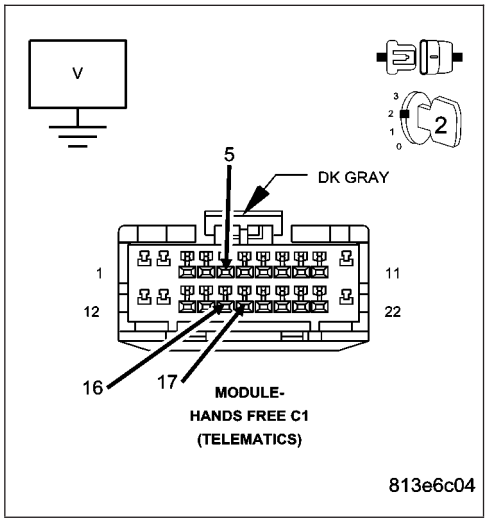

7. (X712) (X722) (X792) MICROPHONE CIRCUITS SHORTED TOGETHER

Turn the ignition off.

Measure the resistance between each (X712) (X722) (X792) Microphone circuit.

Is the resistance below 100.0 ohms?

Yes >> Repair the Microphone circuit that measured below 100.0 ohms for a short together.

Perform BODY VERIFICATION TEST - VER 1. (Refer to BODY VERIFICATION TEST - VER 1.)

No >> Go To 8

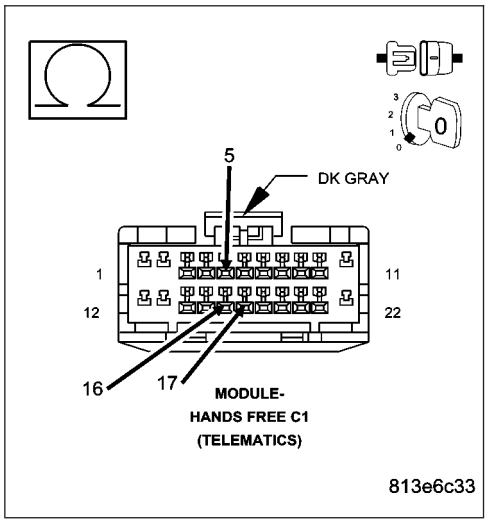

GENERAL MICROPHONE FAULT (CONTINUED)

8. INSIDE REARVIEW MIRROR

Replace the Inside Rearview Mirror in accordance with the service information.

Cycle the ignition switch from off to on at least 5 times, leaving the ignition on for a minimum of 90 seconds per cycle.

Attempt to make a phone call with the system.

With the DRB, read the HFM DTC's.

Did this DTC reset?

Yes >> Inspect the wiring and connectors for damage or shorted circuits. If ok, replace and program the Hands Free Module in accordance with the service information.

Perform BODY VERIFICATION TEST - VER 1. (Refer to BODY VERIFICATION TEST - VER 1.)

No >> Repair is complete.

Perform BODY VERIFICATION TEST - VER 1. (Refer to BODY VERIFICATION TEST - VER 1.)

IGNITION POWER MESSAGE NOT RECEIVED

For a complete wiring diagram **Refer to Section 8W**.

- **When Monitored:**
  With the ignition on.
- **Set Condition:**
  The Hands Free Module does not receive an ignition power status message from the Instrument Cluster (MIC).

Possible Causes
LOST COMMUNICATION WITH INSTRUMENT CLUSTER (MIC)
HANDS FREE MODULE

Diagnostic Test

1. ATTEMPT TO COMMUNICATE WITH THE INSTRUMENT CLUSTER (MIC)

Turn the ignition on.
With the DRB, attempt to communicate with the MIC.

Was the DRB able to communicate with the MIC?

Yes >> Go To 2

No >> (Refer to 8 - ELECTRICAL/ELECTRONIC CONTROL MODULES - DIAGNOSIS AND TESTING) and perform the related symptom.

---

2. ERASE DTC AND ATTEMPT TO RESET

With the DRB, erase the HFM DTC's.
Cycle the ignition switch from off to on and wait approximately 1 minute.
With the DRB, read the HFM DTC's.

Did this DTC reset?

Yes >> Replace and program the Hands Free Module in accordance with the service information.
Perform BODY VERIFICATION TEST - VER 1. (Refer to BODY VERIFICATION TEST - VER 1.)

No >> The condition that set this DTC is no longer present. Using the wiring diagram/schematic as a guide, inspect the wiring for chafed, pierced, pinched, and partially broken wires and the wiring harness connectors for broken, bent, pushed out, and corroded terminals.

INVALID BODY STYLE

For a complete wiring diagram **Refer to Section 8W**.

- **When Monitored:**
  With the ignition on.
- **Set Condition:**
  The Hands Free Module receives an invalid body style message from the PCM.

Possible Causes
LOST COMMUNICATION WITH PCM
PCM NOT ACTIVE ON THE PCI BUS
HANDS FREE MODULE

Diagnostic Test

1. ATTEMPT TO COMMUNICATE WITH THE PCM

Turn the ignition on.
With the DRB, attempt to communicate with the PCM.

Was the DRB able to communicate with the PCM?

Yes >> Go To 2

No >> (Refer to 8 - ELECTRICAL/ELECTRONIC CONTROL MODULES - DIAGNOSIS AND TESTING) and perform the related symptom.

---

2. CHECK PCM ACTIVITY ON THE PCI BUS

With the DRB, select System Monitors then J1850 Module Scan.

Does the DRB indicated that the PCM is present or active on the PCI Bus?

Yes >> Go To 3

No >> (Refer to 8 - ELECTRICAL/ELECTRONIC CONTROL MODULES - DIAGNOSIS AND TESTING) and perform the related symptom.

---

3. ERASE DTC AND ATTEMPT TO RESET

With the DRB, erase the HFM DTC's.
Cycle the ignition switch from off to on and wait approximately 1 minute.
With the DRB, read the HFM DTC's.

Did this DTC reset?

Yes >> Replace and program the Hands Free Module in accordance with the service information.
Perform BODY VERIFICATION TEST - VER 1. (Refer to BODY VERIFICATION TEST - VER 1.)

No >> The condition that set this DTC is no longer present. Using the wiring diagram/schematic as a guide, inspect the wiring for chafed, pierced, pinched, and partially broken wires and the wiring harness connectors for broken, bent, pushed out, and corroded terminals.

LEFT AUDIO INPUT SHORT TO GROUND

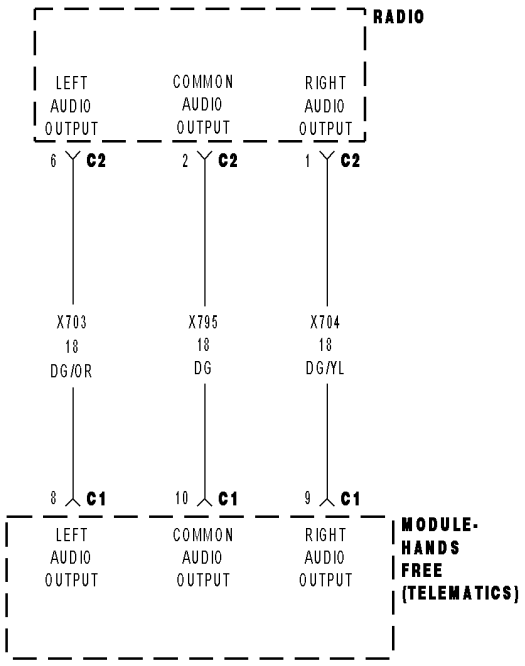

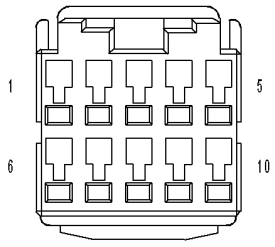

RADIO C2

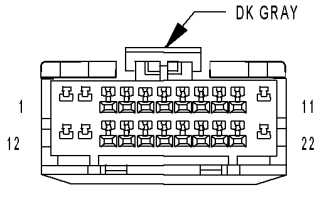

MODULE-HANDS FREE C1 (TELEMATICS)

813eb7cd

LEFT AUDIO INPUT SHORT TO GROUND (CONTINUED)

For a complete wiring diagram **Refer to Section 8W**.

- **When Monitored:**
  With the ignition on.
- **Set Condition:**
  The Hands Free Module detects low voltage on the (X703) Left Audio Output circuit.

Possible Causes
(X703) LEFT AUDIO OUTPUT CIRCUIT OPEN
(X703) LEFT AUDIO OUTPUT CIRCUIT SHORT TO GROUND
(X795) COMMON AUDIO OUTPUT CIRCUIT OPEN
(X703) LEFT AUDIO OUTPUT CIRCUIT SHORT TO (X795) COMMON AUDIO OUTPUT CIRCUIT
HANDS FREE MODULE

Diagnostic Test

1. CHECK FOR ACTIVE DTC

Turn the ignition on.

With the DRB, erase the HFM DTCs.

Attempt to make a phone call using the system.

With the DRB, read the HFM DTCs.

Did this DTC reset?

Yes >> Go To 2

No >> The condition that set this DTC is no longer present. Using the wiring diagram/schematic as a guide, inspect the wiring for chafed, pierced, pinched, and partially broken wires and the wiring harness connectors for broken, bent, pushed out, and corroded terminals.

LEFT AUDIO INPUT SHORT TO GROUND (CONTINUED)

2. (X703) LEFT AUDIO OUTPUT CIRCUIT OPEN

Turn the ignition off.

Disconnect the Hands Free Module harness connector.

Disconnect the Radio C2 harness connector.

Measure the resistance of the (X703) Left Audio Output circuit between the HFM connector and the radio connector.

Is the resistance below 5.0 ohms?

Yes >> Go To 3

No >> Repair the (X703) Left Audio Output circuit for an open
Perform BODY VERIFICATION TEST - VER 1. (Refer to BODY VERIFICATION TEST - VER 1.)

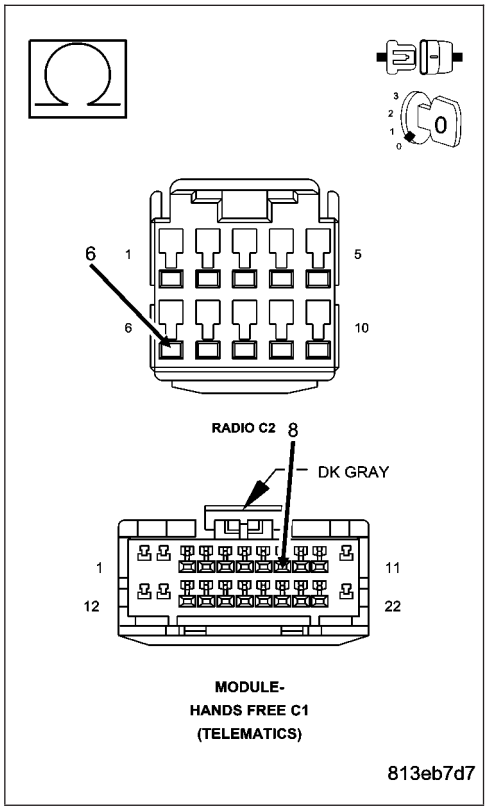

3. (X703) LEFT AUDIO OUTPUT CIRCUIT SHORT TO GROUND

Measure the resistance between ground and the (X703) Left Audio Output circuit.

Is the resistance below 5.0 ohms?

Yes >> Repair the (X703) Left Audio Output circuit for short to ground.
Perform BODY VERIFICATION TEST - VER 1. (Refer to BODY VERIFICATION TEST - VER 1.)

No >> Go To 4

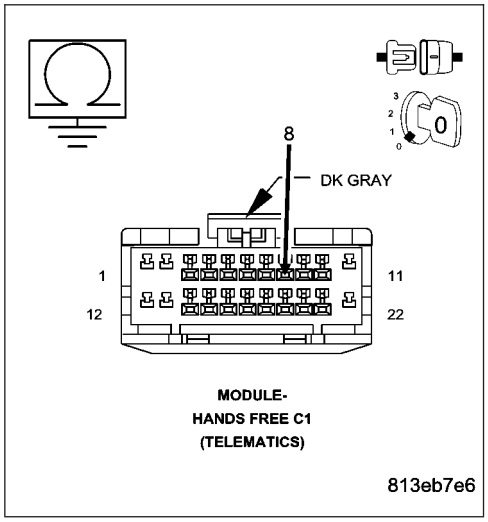

LEFT AUDIO INPUT SHORT TO GROUND (CONTINUED)

4. (X795) COMMON AUDIO OUTPUT CIRCUIT OPEN

Measure the resistance of the (X795) Common Audio Output circuit between the HFM connector and the radio connector.

Is the resistance below 5.0 ohms?

Yes >> Go To 5

No >> Repair the (X795) Common Audio Output circuit for an open.

Perform BODY VERIFICATION TEST - VER 1. (Refer to BODY VERIFICATION TEST - VER 1.)

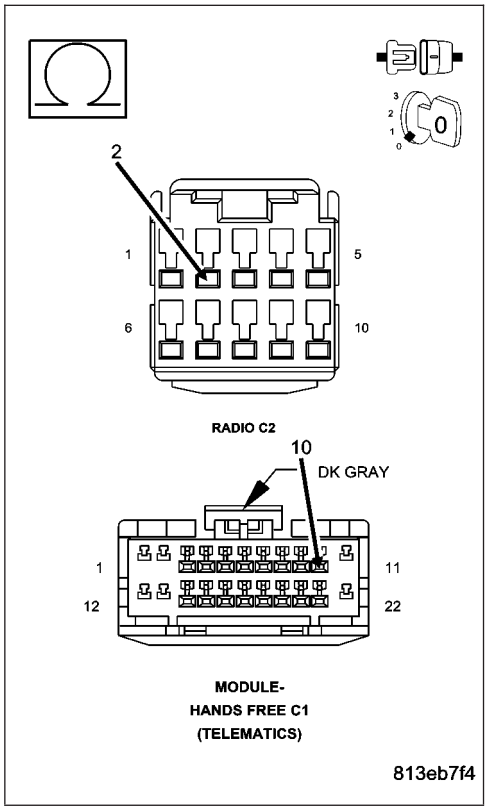

5. (X703) LEFT AUDIO OUTPUT CIRCUIT SHORT TO (X795) COMMON AUDIO OUTPUT CIRCUIT

Measure the resistance between the (X703) Left Audio Output circuit and the (X795) Common Audio Output circuit.

Is the resistance below 5.0 ohms?

Yes >> Repair the (X703) Left Audio Output circuit for a short to the (X795) Common Audio Output circuit.

Perform BODY VERIFICATION TEST - VER 1. (Refer to BODY VERIFICATION TEST - VER 1.)

No >> Inspect the wiring and connectors for damage or shorted circuits. If ok, replace and program the Hands Free Module in accordance with the service information.

Perform BODY VERIFICATION TEST - VER 1. (Refer to BODY VERIFICATION TEST - VER 1.)

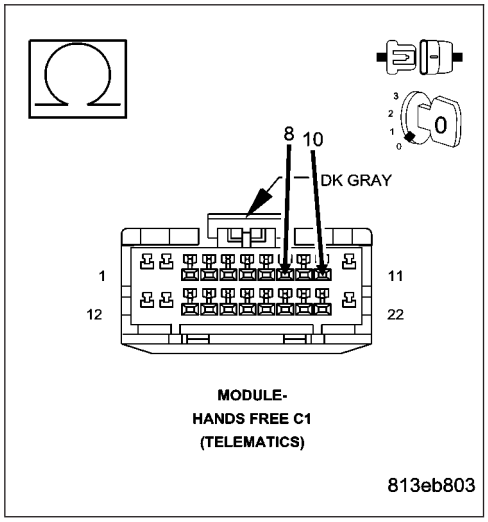

LEFT AUDIO INPUT SHORT TO VOLTAGE

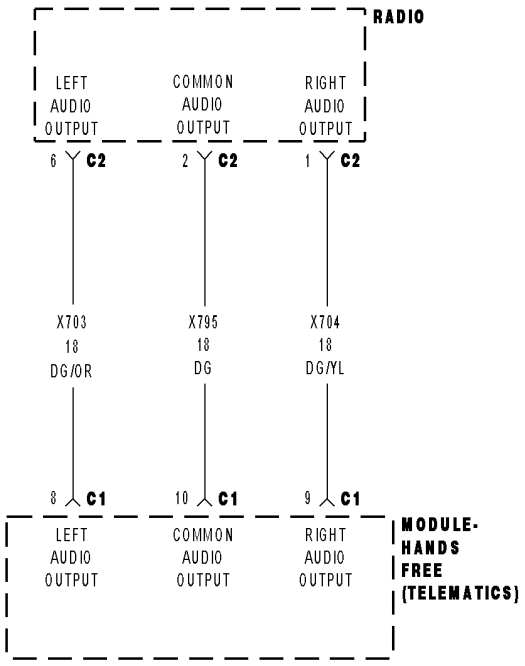

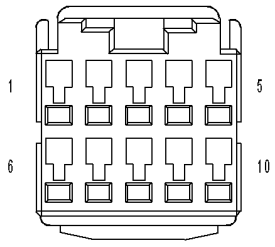

RADIO C2

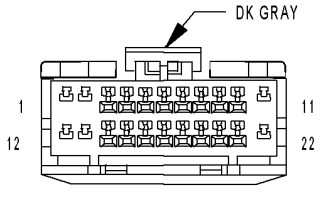

MODULE-HANDS FREE C1 (TELEMATICS)

813eb7cd

LEFT AUDIO INPUT SHORT TO VOLTAGE (CONTINUED)

For a complete wiring diagram **Refer to Section 8W**.

- **When Monitored:**
  With the ignition on.
- **Set Condition:**
  The Hands Free Module detects high voltage on the (X703) Left Audio Output circuit.

Possible Causes
(X703) LEFT AUDIO OUTPUT CIRCUIT OPEN
(X795) COMMON AUDIO OUTPUT CIRCUIT OPEN
(X703) LEFT AUDIO OUTPUT CIRCUIT SHORT TO VOLTAGE
HANDS FREE MODULE

Diagnostic Test

1. CHECK FOR ACTIVE DTC

Turn the ignition on.

With the DRB, erase the HFM DTCs.

Attempt to make a phone call using the system.

With the DRB, read the HFM DTCs.

Did this DTC reset?

Yes >> Go To 2

No >> The condition that set this DTC is no longer present. Using the wiring diagram/schematic as a guide, inspect the wiring for chafed, pierced, pinched, and partially broken wires and the wiring harness connectors for broken, bent, pushed out, and corroded terminals.

LEFT AUDIO INPUT SHORT TO VOLTAGE (CONTINUED)

2. (X703) LEFT AUDIO OUTPUT CIRCUIT OPEN

Turn the ignition off.

Disconnect the Hands Free Module harness connector.

Disconnect the Radio C2 harness connector.

Measure the resistance of the (X703) Left Audio Output circuit between the HFM connector and the radio connector.

Is the resistance below 5.0 ohms?

Yes >> Go To 3

No >> Repair the (X703) Left Audio Output circuit for an open
Perform BODY VERIFICATION TEST - VER 1. (Refer to BODY VERIFICATION TEST - VER 1.)

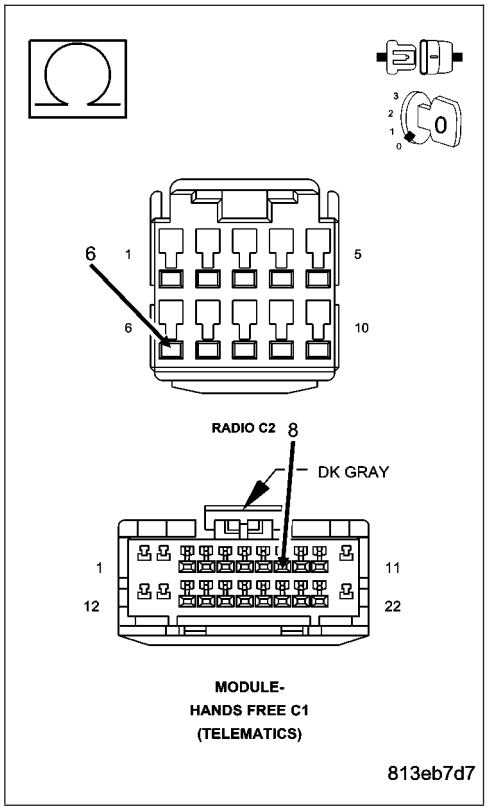

LEFT AUDIO INPUT SHORT TO VOLTAGE (CONTINUED)

3. (X795) COMMON AUDIO OUTPUT CIRCUIT OPEN

Measure the resistance of the (X795) Common Audio Output circuit between the HFM connector and the radio connector.

Is the resistance below 5.0 ohms?

Yes >> Go To 4

No >> Repair the (X795) Common Audio Output circuit for an open.
Perform BODY VERIFICATION TEST - VER 1. (Refer to BODY VERIFICATION TEST - VER 1.)

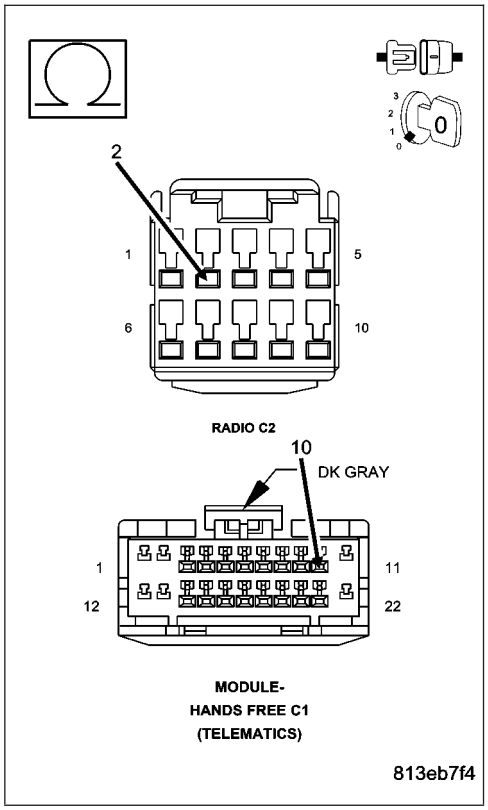

4. (X703) LEFT AUDIO OUTPUT CIRCUIT SHORT TO VOLTAGE

Turn the ignition on.
Measure the voltage of the (X703) Left Audio Output circuit.

Is the voltage above 1.0 volts?

Yes >> Repair the (X703) Left Audio Output circuit for a short to voltage.
Perform BODY VERIFICATION TEST - VER 1. (Refer to BODY VERIFICATION TEST - VER 1.)

No >> Inspect the wiring and connectors for damage or shorted circuits. If ok, replace and program the Hands Free Module in accordance with the service information.
Perform BODY VERIFICATION TEST - VER 1. (Refer to BODY VERIFICATION TEST - VER 1.)

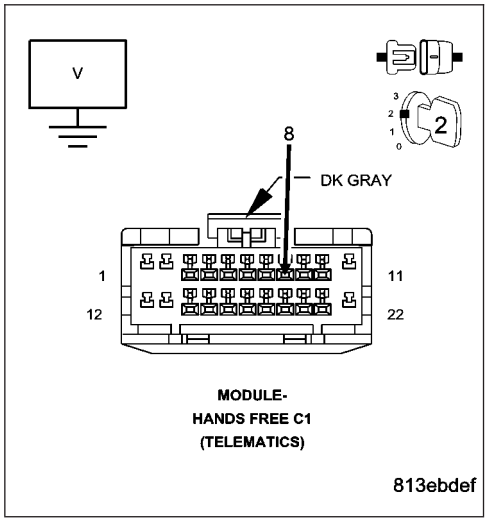

LEFT AUDIO OUTPUT 1 SHORT TO GROUND

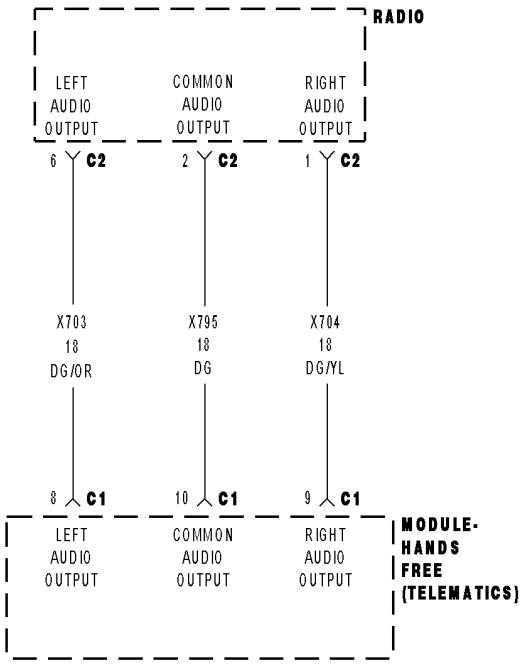

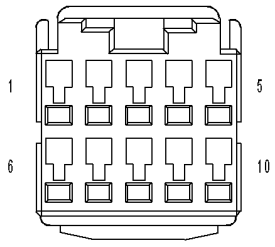

RADIO C2

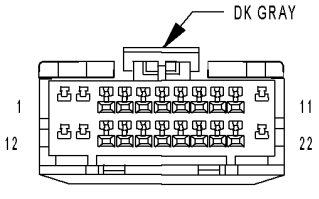

MODULE-HANDS FREE C1 (TELEMATICS)

813eb7cd

LEFT AUDIO OUTPUT 1 SHORT TO GROUND (CONTINUED)

For a complete wiring diagram **Refer to Section 8W**.

- **When Monitored:**
  With the ignition on.
- **Set Condition:**
  The Hands Free Module detects a short to ground on the (X703) Left Audio Output circuit.

Possible Causes
(X703) LEFT AUDIO OUTPUT CIRCUIT OPEN
(X703) LEFT AUDIO OUTPUT CIRCUIT SHORT TO GROUND
(X795) COMMON AUDIO OUTPUT CIRCUIT OPEN
(X703) LEFT AUDIO OUTPUT CIRCUIT SHORT TO (X795) COMMON AUDIO OUTPUT CIRCUIT
HANDS FREE MODULE

Diagnostic Test

1. CHECK FOR ACTIVE DTC

Turn the ignition on.

With the DRB, erase the HFM DTCs.

Attempt to make a phone call using the system.

With the DRB, read the HFM DTCs.

Did this DTC reset?

Yes >> Go To 2

No >> The condition that set this DTC is no longer present. Using the wiring diagram/schematic as a guide, inspect the wiring for chafed, pierced, pinched, and partially broken wires and the wiring harness connectors for broken, bent, pushed out, and corroded terminals.

LEFT AUDIO OUTPUT 1 SHORT TO GROUND (CONTINUED)

2. (X703) LEFT AUDIO OUTPUT CIRCUIT OPEN

Turn the ignition off.

Disconnect the Hands Free Module harness connector.

Disconnect the Radio C2 harness connector.

Measure the resistance of the (X703) Left Audio Output circuit between the HFM connector and the radio connector.

Is the resistance below 5.0 ohms?

Yes >> Go To 3

No >> Repair the (X703) Left Audio Output circuit for an open
Perform BODY VERIFICATION TEST - VER 1. (Refer to BODY VERIFICATION TEST - VER 1.)

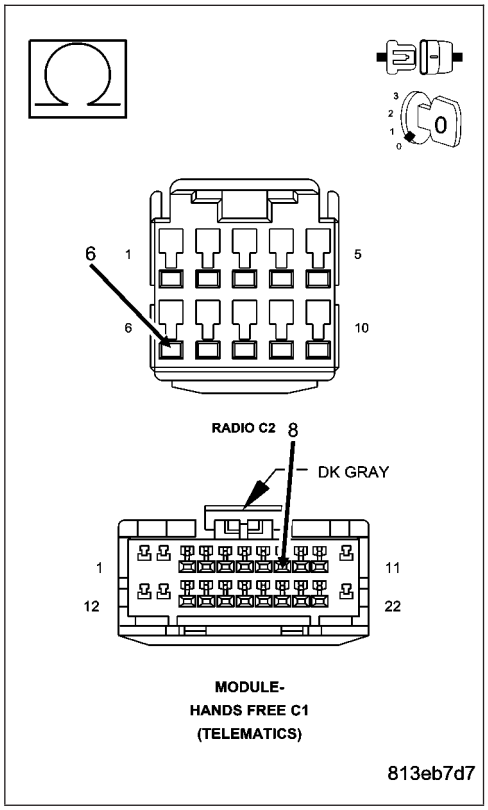

3. (X703) LEFT AUDIO OUTPUT CIRCUIT SHORT TO GROUND

Measure the resistance between ground and the (X703) Left Audio Output circuit.

Is the resistance below 5.0 ohms?

Yes >> Repair the (X703) Left Audio Output circuit for short to ground.
Perform BODY VERIFICATION TEST - VER 1. (Refer to BODY VERIFICATION TEST - VER 1.)

No >> Go To 4

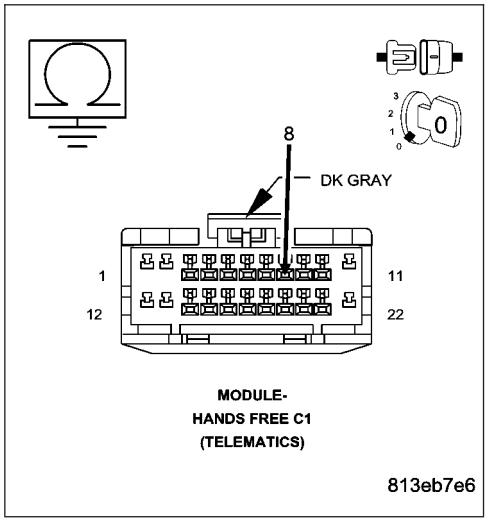

LEFT AUDIO OUTPUT 1 SHORT TO GROUND (CONTINUED)

4. (X795) COMMON AUDIO OUTPUT CIRCUIT OPEN

Measure the resistance of the (X795) Common Audio Output circuit between the HFM connector and the radio connector.

Is the resistance below 5.0 ohms?

Yes >> Go To 5

No >> Repair the (X795) Common Audio Output circuit for an open.

Perform BODY VERIFICATION TEST - VER 1. (Refer to BODY VERIFICATION TEST - VER 1.)

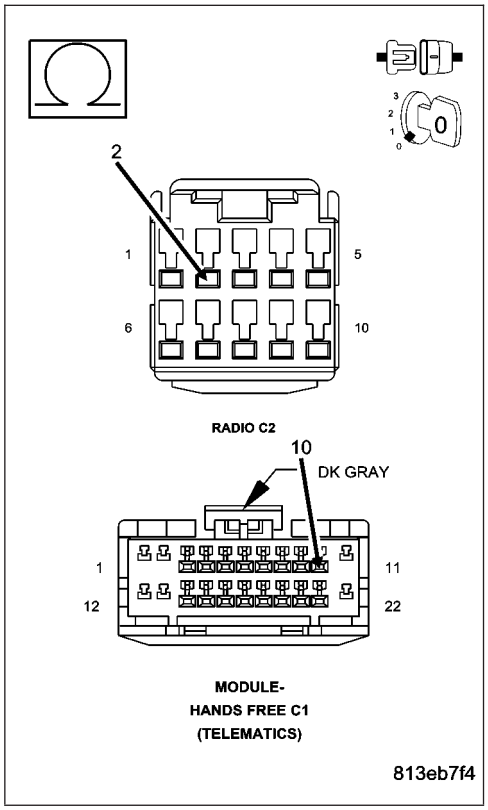

5. (X703) LEFT AUDIO OUTPUT CIRCUIT SHORT TO (X795) COMMON AUDIO OUTPUT CIRCUIT

Measure the resistance between the (X703) Left Audio Output circuit and the (X795) Common Audio Output circuit.

Is the resistance below 5.0 ohms?

Yes >> Repair the (X703) Left Audio Output circuit for a short to the (X795) Common Audio Output circuit.

Perform BODY VERIFICATION TEST - VER 1. (Refer to BODY VERIFICATION TEST - VER 1.)

No >> Inspect the wiring and connectors for damage or shorted circuits. If ok, replace and program the Hands Free Module in accordance with the service information.

Perform BODY VERIFICATION TEST - VER 1. (Refer to BODY VERIFICATION TEST - VER 1.)

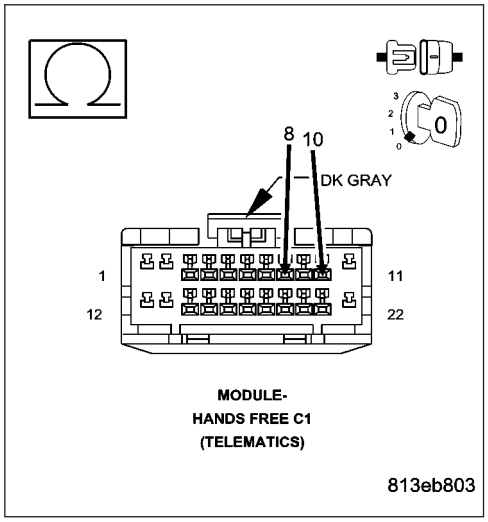

LEFT AUDIO OUTPUT 1 SHORT TO VOLTAGE

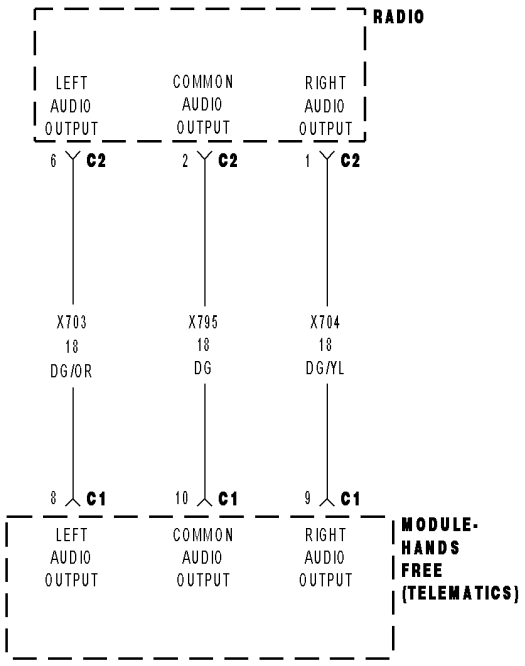

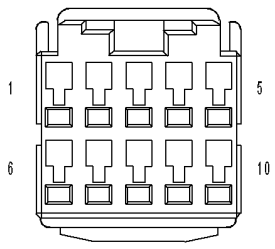

RADIO C2

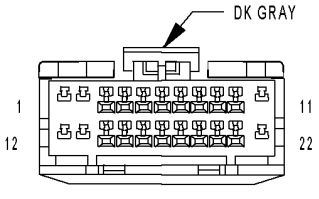

MODULE-HANDS FREE C1 (TELEMATICS)

813eb7cd

LEFT AUDIO OUTPUT 1 SHORT TO VOLTAGE (CONTINUED)

For a complete wiring diagram **Refer to Section 8W**.

- **When Monitored:**
  With the ignition on.
- **Set Condition:**
  The Hands Free Module detects a short to voltage on the (X703) Left Audio Output circuit.

Possible Causes
(X703) LEFT AUDIO OUTPUT CIRCUIT OPEN
(X795) COMMON AUDIO OUTPUT CIRCUIT OPEN
(X703) LEFT AUDIO OUTPUT CIRCUIT SHORT TO VOLTAGE
HANDS FREE MODULE

Diagnostic Test

1. CHECK FOR ACTIVE DTC

Turn the ignition on.

With the DRB, erase the HFM DTCs.

Attempt to make a phone call using the system.

With the DRB, read the HFM DTCs.

Did this DTC reset?

Yes >> Go To 2

No >> The condition that set this DTC is no longer present. Using the wiring diagram/schematic as a guide, inspect the wiring for chafed, pierced, pinched, and partially broken wires and the wiring harness connectors for broken, bent, pushed out, and corroded terminals.

LEFT AUDIO OUTPUT 1 SHORT TO VOLTAGE (CONTINUED)

2. (X703) LEFT AUDIO OUTPUT CIRCUIT OPEN

Turn the ignition off.

Disconnect the Hands Free Module harness connector.

Disconnect the Radio C2 harness connector.

Measure the resistance of the (X703) Left Audio Output circuit between the HFM connector and the radio connector.

Is the resistance below 5.0 ohms?

Yes >> Go To 3

No >> Repair the (X703) Left Audio Output circuit for an open
Perform BODY VERIFICATION TEST - VER 1. (Refer to BODY VERIFICATION TEST - VER 1.)

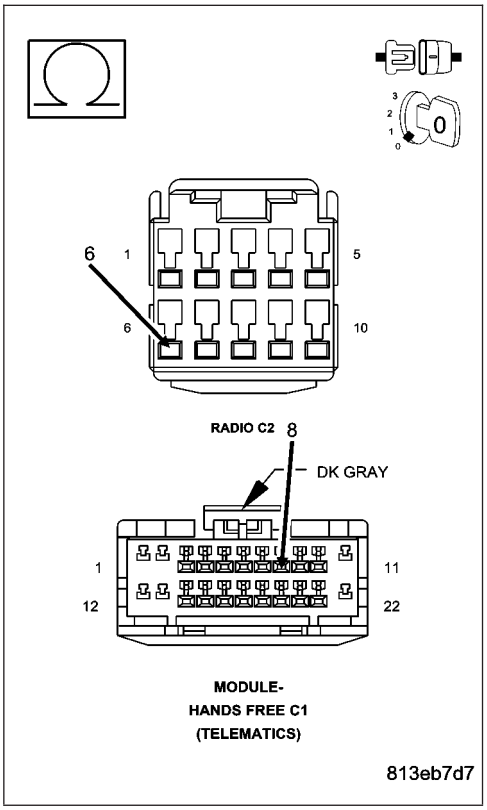

LEFT AUDIO OUTPUT 1 SHORT TO VOLTAGE (CONTINUED)

3. (X795) COMMON AUDIO OUTPUT CIRCUIT OPEN

Measure the resistance of the (X795) Common Audio Output circuit between the HFM connector and the radio connector.

Is the resistance below 5.0 ohms?

Yes >> Go To 4

No >> Repair the (X795) Common Audio Output circuit for an open.
Perform BODY VERIFICATION TEST - VER 1. (Refer to BODY VERIFICATION TEST - VER 1.)

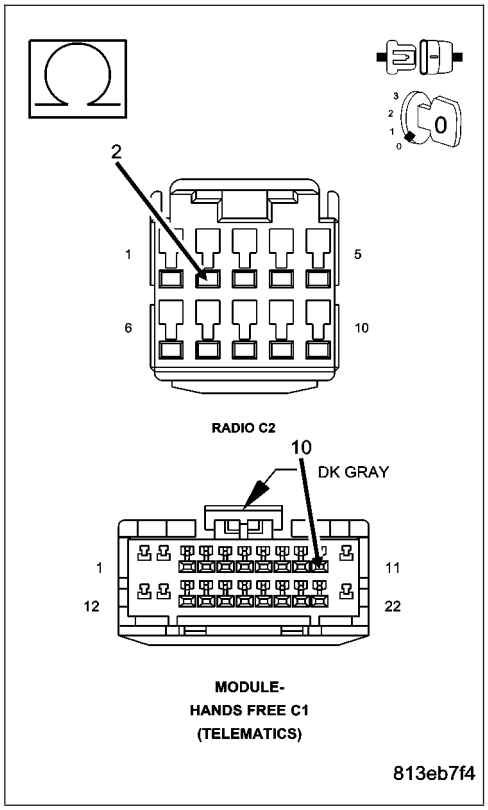

4. (X703) LEFT AUDIO OUTPUT CIRCUIT SHORT TO VOLTAGE

Turn the ignition on.
Measure the voltage of the (X703) Left Audio Output circuit.

Is the voltage above 1.0 volts?

Yes >> Repair the (X703) Left Audio Output circuit for a short to voltage.
Perform BODY VERIFICATION TEST - VER 1. (Refer to BODY VERIFICATION TEST - VER 1.)

No >> Inspect the wiring and connectors for damage or shorted circuits. If ok, replace and program the Hands Free Module in accordance with the service information.
Perform BODY VERIFICATION TEST - VER 1. (Refer to BODY VERIFICATION TEST - VER 1.)

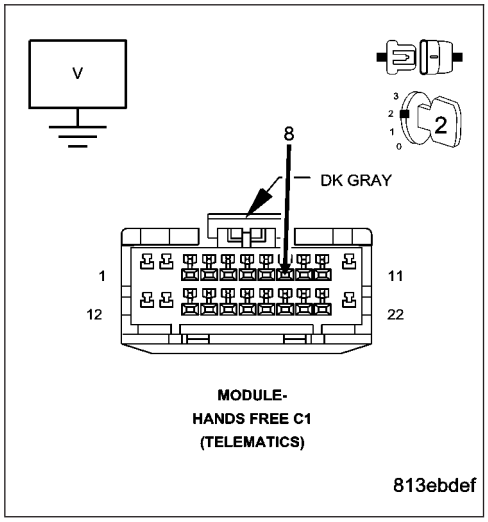

MIRROR POWER CIRCUIT SHORT TO GROUND

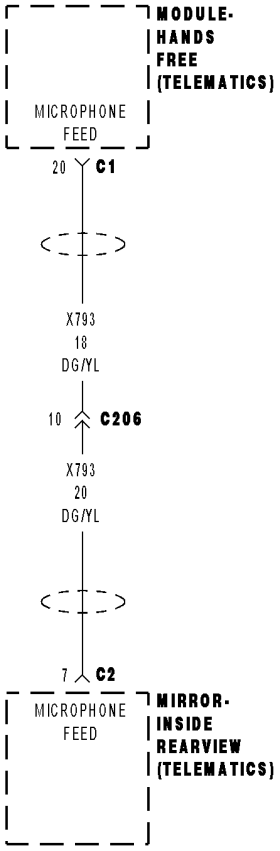

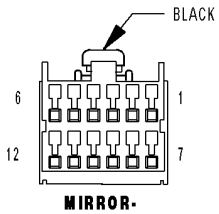

MIRROR-
INSIDE
REARVIEW C2
(TELEMATICS)

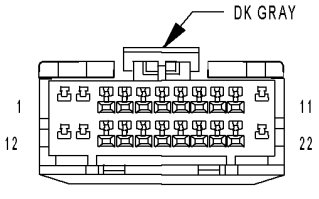

MODULE-
HANDS FREE C1
(TELEMATICS)

813ef5b1

MIRROR POWER CIRCUIT SHORT TO GROUND (CONTINUED)

For a complete wiring diagram **Refer to Section 8W**.

- **When Monitored:**
  With the ignition on.
- **Set Condition:**
  The Hands Free Module detects low voltage on the (X793) Microphone Feed circuit.

Possible Causes
(X793) MICROPHONE FEED CIRCUIT OPEN
(X793) MICROPHONE FEED CIRCUIT SHORT TO GROUND
INSIDE REARVIEW MIRROR
HANDS FREE MODULE

Diagnostic Test

1. CHECK FOR ACTIVE DTC

Turn the ignition on.

With the DRB, erase the HFM DTCs.

Attempt to make a phone call using the system.

With the DRB, read the HFM DTCs.

Did this DTC reset?

Yes >> Go To 2

No >> The condition that set this DTC is no longer present. Using the wiring diagram/schematic as a guide, inspect the wiring for chafed, pierced, pinched, and partially broken wires and the wiring harness connectors for broken, bent, pushed out, and corroded terminals.

MIRROR POWER CIRCUIT SHORT TO GROUND (CONTINUED)

2. (X793) MICROPHONE FEED CIRCUIT OPEN

Turn the ignition off.

Disconnect the Hands Free Module harness connector.

Disconnect the Inside Rearview Mirror C2 harness connector.

Measure the resistance of the (X793) Microphone Feed circuit between the HFM connector and the Inside Rearview Mirror connector.

Is the resistance below 5.0 ohms?

Yes >> Go To 3

No >> Repair the (X793) Microphone Feed circuit for an open.
Perform BODY VERIFICATION TEST - VER 1. (Refer to BODY VERIFICATION TEST - VER 1.)

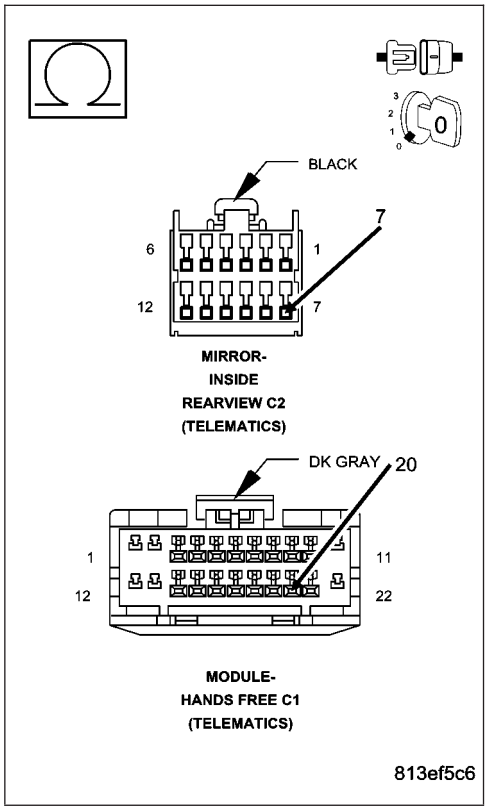

3. (X793) MICROPHONE FEED CIRCUIT SHORT TO GROUND

Measure the resistance between ground and the (X793) Microphone Feed circuit

Is the resistance below 100.0 ohms?

Yes >> Repair the (X793) Microphone Feed circuit for short to ground.
Perform BODY VERIFICATION TEST - VER 1. (Refer to BODY VERIFICATION TEST - VER 1.)

No >> Go To 4

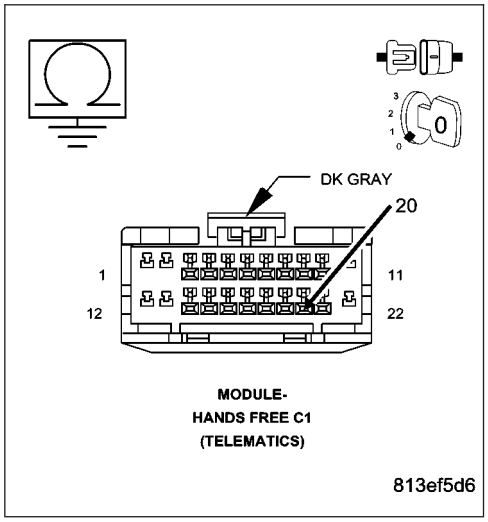

MIRROR POWER CIRCUIT SHORT TO GROUND (CONTINUED)

4. INSIDE REARVIEW MIRROR

Replace the Inside Rearview Mirror in accordance with the service information.
Turn the ignition on.
With the DRB, erase the HFM DTCs.
Attempt to make a phone call using the system.
With the DRB, read the HFM DTCs.

Did this DTC reset?

Yes >> Inspect the wiring and connectors for damage or shorted circuits. If ok, replace and program the Hands Free Module in accordance with the service information.
Perform BODY VERIFICATION TEST - VER 1. (Refer to BODY VERIFICATION TEST - VER 1.)

No >> Repair is complete.
Perform BODY VERIFICATION TEST - VER 1. (Refer to BODY VERIFICATION TEST - VER 1.)

MIRROR POWER CIRCUIT SHORT TO VOLTAGE

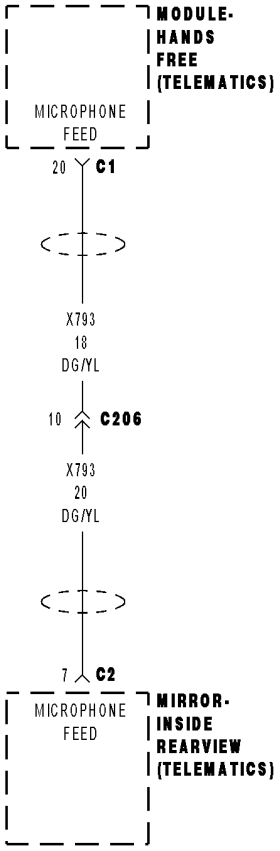

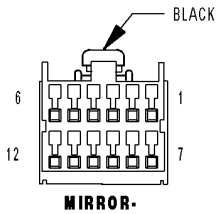

MIRROR-
INSIDE
REARVIEW C2
(TELEMATICS)

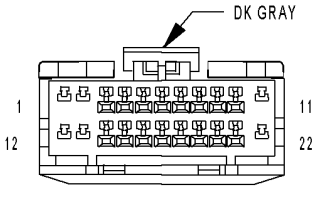

MODULE-
HANDS FREE C1
(TELEMATICS)

813ef5b1

MIRROR POWER CIRCUIT SHORT TO VOLTAGE (CONTINUED)

For a complete wiring diagram **Refer to Section 8W**.

- **When Monitored:**
  With the ignition on.
- **Set Condition:**
  The Hands Free Module detects high voltage on the (X793) Microphone Feed circuit.

Possible Causes
(X793) MICROPHONE FEED CIRCUIT OPEN
(X793) MICROPHONE FEED CIRCUIT SHORT TO VOLTAGE
INSIDE REARVIEW MIRROR
HANDS FREE MODULE

Diagnostic Test

1. CHECK FOR ACTIVE DTC

Turn the ignition on.

With the DRB, erase the HFM DTCs.

Attempt to make a phone call using the system.

With the DRB, read the HFM DTCs.

Did this DTC reset?

Yes >> Go To 2

No >> The condition that set this DTC is no longer present. Using the wiring diagram/schematic as a guide, inspect the wiring for chafed, pierced, pinched, and partially broken wires and the wiring harness connectors for broken, bent, pushed out, and corroded terminals.

MIRROR POWER CIRCUIT SHORT TO VOLTAGE (CONTINUED)

2. (X793) MICROPHONE FEED CIRCUIT OPEN

Turn the ignition off.

Disconnect the Hands Free Module harness connector.

Disconnect the Inside Rearview Mirror C2 harness connector.

Measure the resistance of the (X793) Microphone Feed circuit between the HFM connector and the Inside Rearview Mirror connector.

Is the resistance below 5.0 ohms?

Yes >> Go To 3

No >> Repair the (X793) Microphone Feed circuit for an open.
Perform BODY VERIFICATION TEST - VER 1. (Refer to BODY VERIFICATION TEST - VER 1.)

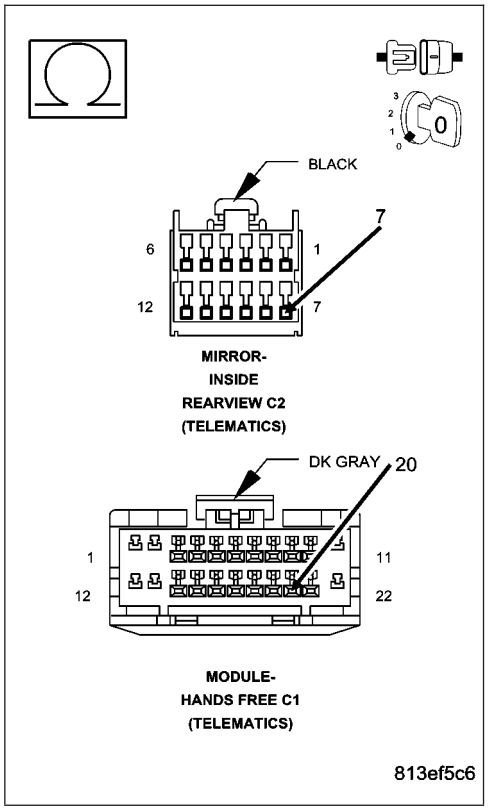

3. (X793) MICROPHONE FEED CIRCUIT SHORT TO VOLTAGE

Turn the ignition on.

Measure the voltage of the (X793) Microphone Feed circuit.

Is the voltage above 1.0 volt?

Yes >> Repair the (X793) Microphone Feed circuit for short to voltage.
Perform BODY VERIFICATION TEST - VER 1. (Refer to BODY VERIFICATION TEST - VER 1.)

No >> Go To 4

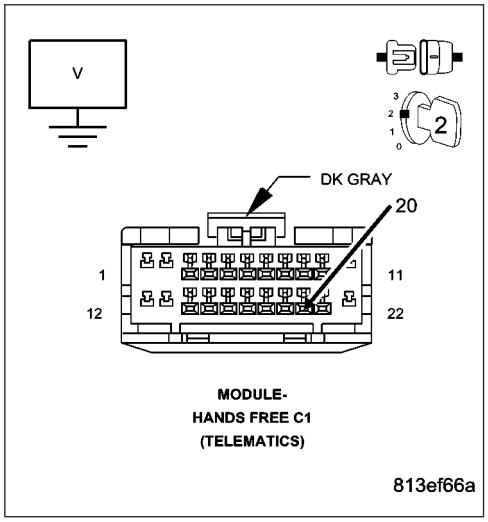

MIRROR POWER CIRCUIT SHORT TO VOLTAGE (CONTINUED)

4. INSIDE REARVIEW MIRROR

Replace the Inside Rearview Mirror in accordance with the service information.
Turn the ignition on.
With the DRB, erase the HFM DTCs.
Attempt to make a phone call using the system.
With the DRB, read the HFM DTCs.

Did this DTC reset?

Yes >> Inspect the wiring and connectors for damage or shorted circuits. If ok, replace and program the Hands Free Module in accordance with the service information.
Perform BODY VERIFICATION TEST - VER 1. (Refer to BODY VERIFICATION TEST - VER 1.)

No >> Repair is complete.
Perform BODY VERIFICATION TEST - VER 1. (Refer to BODY VERIFICATION TEST - VER 1.)

PCI BUS BUSY

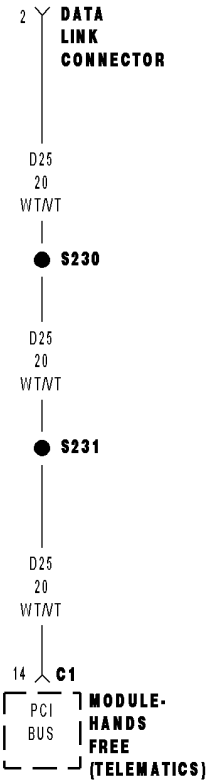

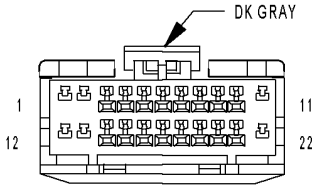

MODULE-
HANDS FREE C1
(TELEMATICS)

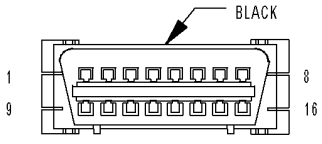

DATA LINK
CONNECTOR

813c9046

PCI BUS BUSY (CONTINUED)

For a complete wiring diagram **Refer to Section 8W**.

- **When Monitored:**
  With the ignition on.
- **Set Condition:**
  The Hands Free Module detected a fault on the (D25) PCI Bus circuit.

Possible Causes
(D25) PCI BUS CIRCUIT FAULT
HANDS FREE MODULE

Diagnostic Test

1. CHECK FOR AN INTERMITTENT CONDITION

NOTE: For this code to be active, the DRBIII® will not be able to communicate with any modules on the vehicle (except the PCM/ECM).

NOTE: Clear the DTC. If this DTC continues to set and the DRBIII® can still communicate with the module, it will be necessary to replace the module.

NOTE: The conditions that set the DTC are not present at this time. The following list may help in identifying the intermittent condition.

With the engine running at normal operating temperature, wiggle the wiring harnesses. This is to try and duplicate the complete bus failure condition.

Refer to any Technical Service Bulletins (TSB) that may apply.

Visually inspect the related wiring harness. Look for any chafed, pierced, pinched, or partially broken wires.

Visually inspect the related wiring harness connectors. Look for broken, bent, pushed out, or corroded terminals.

Were any of the above conditions present?

Yes >> Repair as necessary.
Perform BODY VERIFICATION TEST - VER 1. (Refer to BODY VERIFICATION TEST - VER 1.)

No >> Test complete.

PCI BUS CIRCUIT OPEN

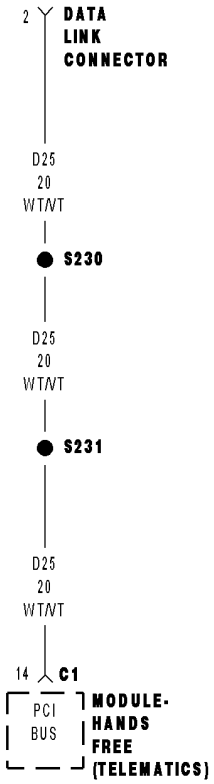

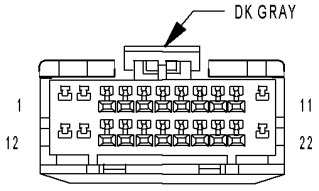

MODULE-
HANDS FREE C1
(TELEMATICS)

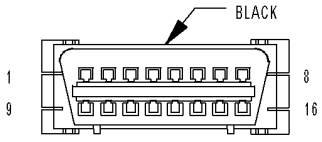

DATA LINK
CONNECTOR

813e9046

PCI BUS CIRCUIT OPEN (CONTINUED)

For a complete wiring diagram **Refer to Section 8W**.

- **When Monitored:**
  With the ignition on.
- **Set Condition:**
  The Hands Free Module detected an open on the (D25) PCI Bus circuit.

Possible Causes
(D25) PCI BUS CIRCUIT OPEN
HANDS FREE MODULE

Diagnostic Test

1. CHECK FOR AN INTERMITTENT CONDITION

NOTE: For this code to be active, the DRBIII® will not be able to communicate with any modules on the vehicle (except the PCM/ECM).

NOTE: Clear the DTC. If this DTC continues to set and the DRBIII® can still communicate with the module, it will be necessary to replace the module.

NOTE: The conditions that set the DTC are not present at this time. The following list may help in identifying the intermittent condition.

With the engine running at normal operating temperature, wiggle the wiring harnesses. This is to try and duplicate the complete bus failure condition.

Refer to any Technical Service Bulletins (TSB) that may apply.

Visually inspect the related wiring harness. Look for any chafed, pierced, pinched, or partially broken wires.

Visually inspect the related wiring harness connectors. Look for broken, bent, pushed out, or corroded terminals.

Were any of the above conditions present?

Yes >> Repair as necessary.
Perform BODY VERIFICATION TEST - VER 1. (Refer to BODY VERIFICATION TEST - VER 1.)

No >> Test complete.

PCI BUS CIRCUIT SHORT TO GROUND

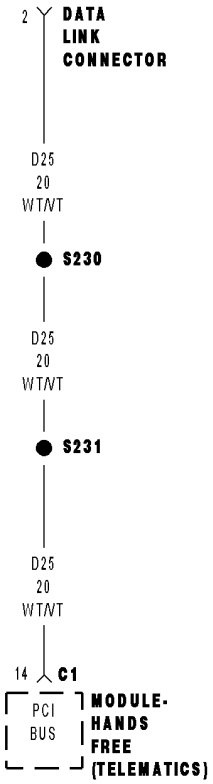

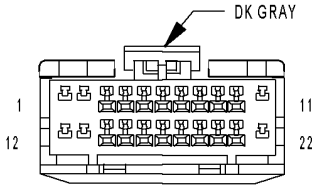

MODULE-
HANDS FREE C1
(TELEMATICS)

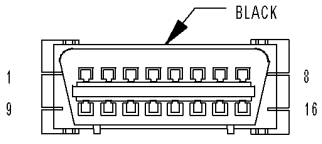

DATA LINK
CONNECTOR

813c9046

PCI BUS CIRCUIT SHORT TO GROUND (CONTINUED)

For a complete wiring diagram **Refer to Section 8W**.

- **When Monitored:**
  With the ignition on.
- **Set Condition:**
  The Hands Free Module detected a short to ground on the (D25) PCI Bus circuit.

Possible Causes
(D25) PCI BUS CIRCUIT SHORTED TO GROUND
HANDS FREE MODULE

Diagnostic Test

1. CHECK FOR AN INTERMITTENT CONDITION

NOTE: For this code to be active, the DRBIII® will not be able to communicate with any modules on the vehicle (except the PCM/ECM).

NOTE: Clear the DTC. If this DTC continues to set and the DRBIII® can still communicate with the module, it will be necessary to replace the module.

NOTE: The conditions that set the DTC are not present at this time. The following list may help in identifying the intermittent condition.

With the engine running at normal operating temperature, wiggle the wiring harnesses. This is to try and duplicate the complete bus failure condition.

Refer to any Technical Service Bulletins (TSB) that may apply.

Visually inspect the related wiring harness. Look for any chafed, pierced, pinched, or partially broken wires.

Visually inspect the related wiring harness connectors. Look for broken, bent, pushed out, or corroded terminals.

Were any of the above conditions present?

Yes >> Repair as necessary.
Perform BODY VERIFICATION TEST - VER 1. (Refer to BODY VERIFICATION TEST - VER 1.)

No >> Test complete.

PCI BUS CIRCUIT SHORT TO VOLTAGE

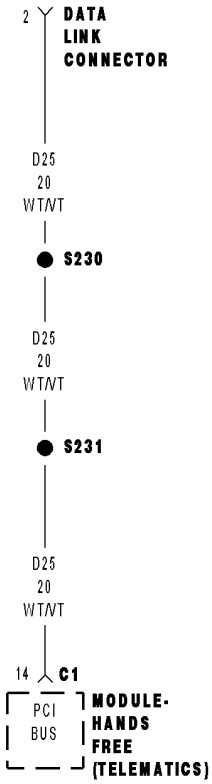

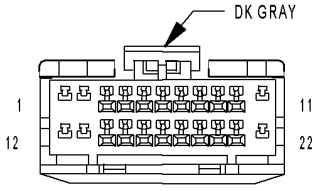

MODULE-
HANDS FREE C1
(TELEMATICS)

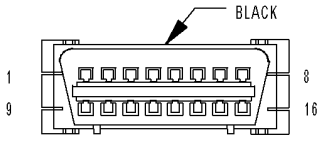

DATA LINK
CONNECTOR

813e9046

PCI BUS CIRCUIT SHORT TO VOLTAGE (CONTINUED)

For a complete wiring diagram **Refer to Section 8W**.

- **When Monitored:**
  With the ignition on.
- **Set Condition:**
  The Hands Free Module detected a short to voltage on the (D25) PCI Bus circuit.

Possible Causes
(D25) PCI BUS CIRCUIT SHORTED TO VOLTAGE
HANDS FREE MODULE

Diagnostic Test

1. CHECK FOR AN INTERMITTENT CONDITION

NOTE: For this code to be active, the DRBIII® will not be able to communicate with any modules on the vehicle (except the PCM/ECM).

NOTE: Clear the DTC. If this DTC continues to set and the DRBIII® can still communicate with the module, it will be necessary to replace the module.

NOTE: The conditions that set the DTC are not present at this time. The following list may help in identifying the intermittent condition.

With the engine running at normal operating temperature, wiggle the wiring harnesses. This is to try and duplicate the complete bus failure condition.

Refer to any Technical Service Bulletins (TSB) that may apply.

Visually inspect the related wiring harness. Look for any chafed, pierced, pinched, or partially broken wires.

Visually inspect the related wiring harness connectors. Look for broken, bent, pushed out, or corroded terminals.

Were any of the above conditions present?

Yes >> Repair as necessary.
Perform BODY VERIFICATION TEST - VER 1. (Refer to BODY VERIFICATION TEST - VER 1.)

No >> Test complete.

PCI BUS INTERNAL ERROR

For a complete wiring diagram **Refer to Section 8W**.

- **When Monitored:**
  With the ignition on.
- **Set Condition:**
  The Hands Free Module detects a fault during an internal diagnostic check.

Possible Causes
HANDS FREE MODULE

Diagnostic Test

1. ERASE DTC AND ATTEMPT TO RESET

Turn the ignition on.

With the DRB, read and record the HFM DTC's and then erase the DTC's.

Perform 5 ignition key cycles, leaving the ignition key on for a minimum of 90 seconds per cycle.

With the DRB, read the HFM DTC's.

Did this DTC reset?

Yes >> Replace and program the Hands Free Module in accordance with the service information.
Perform BODY VERIFICATION TEST - VER 1. (Refer to BODY VERIFICATION TEST - VER 1.)

No >> The condition that set this DTC is no longer present. Using the wiring diagram/schematic as a guide, inspect the wiring for chafed, pierced, pinched, and partially broken wires and the wiring harness connectors for broken, bent, pushed out, and corroded terminals.

PHONE SWITCH STUCK

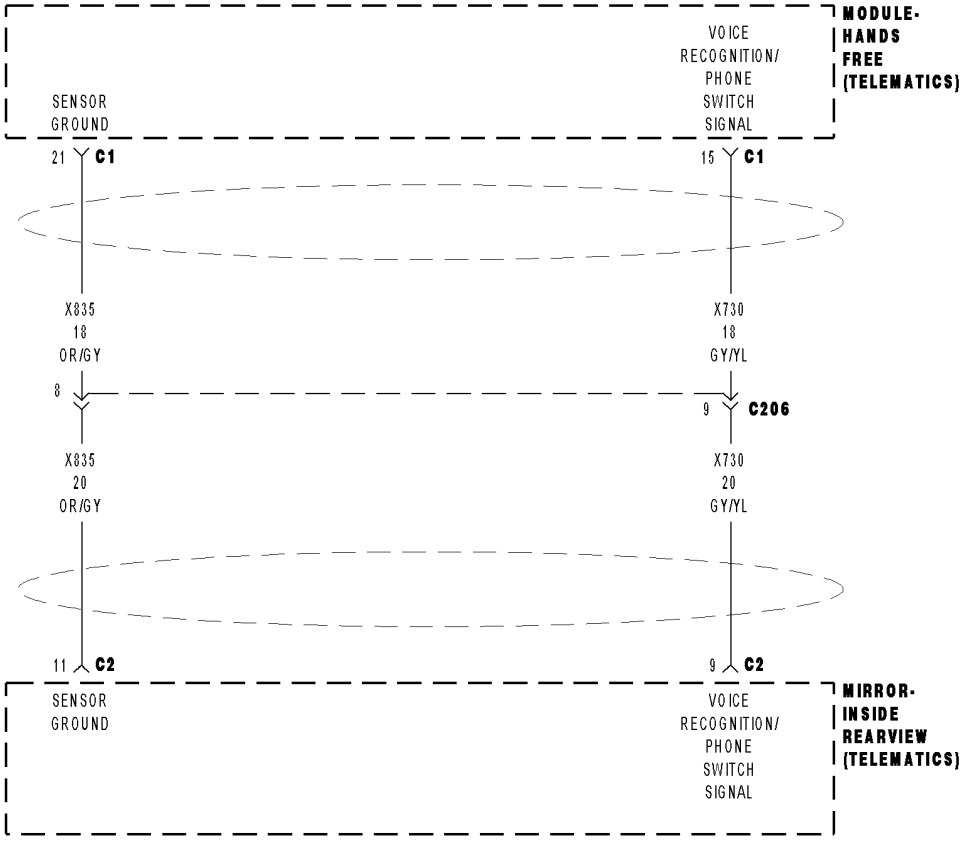

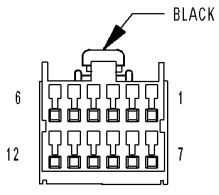

MIRROR-
INSIDE
REARVIEW C2
(TELEMATICS)

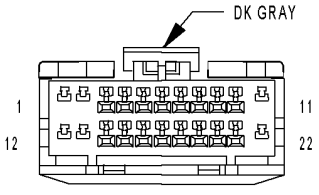

MODULE-
HANDS FREE C1
(TELEMATICS)

81310da8

PHONE SWITCH STUCK (CONTINUED)

For a complete wiring diagram **Refer to Section 8W**.

- **When Monitored:**
  With the ignition on.
- **Set Condition:**
  The Hands Free Module detects voltage between 2.8 volts and 3.3 volts on the (X730) Voice Recognition/ Phone Switch Signal circuit for more than 30 seconds.

Possible Causes
INSIDE REARVIEW MIRROR
HANDS FREE MODULE

Diagnostic Test

1. CHECK FOR ACTIVE DTCS

Turn the ignition on.

With the DRB, erase the HFM DTCs.

Attempt to make a phone call using the system.

With the DRB, read the HFM DTCs.

Did this DTC reset?

Yes >> Go To 2

No >> The condition that set this DTC is no longer present. Using the wiring diagram/schematic as a guide, inspect the wiring for chafed, pierced, pinched, and partially broken wires and the wiring harness connectors for broken, bent, pushed out, and corroded terminals.

---

2. CHECK THE VOLTAGE OF THE (X730) VOICE RECOGNITION/PHONE SWITCH SIGNAL

Turn the ignition off.

Disconnect the Inside Rearview Mirror C2 harness connector.

Turn the ignition on.

With the DRB, monitor the VR Phone Switch voltage.

While monitoring the VR Phone Switch voltage, momentarily connect a jumper wire between (X730) Voice Recognition/Phone Switch Signal circuit and ground.

NOTE: The sensor voltage should switch from above 4.7 volts when the jumper is not connected to below 0.6 volts when the jumper is connected.

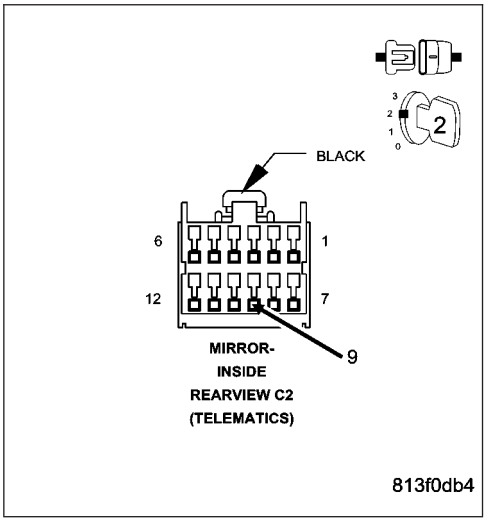

Does the sensor voltage switch from above 4.7 volts to below 0.6 volt as described?

Yes >> Replace the Inside Rearview Mirror in accordance with the service information.
Perform BODY VERIFICATION TEST - VER 1. (Refer to BODY VERIFICATION TEST - VER 1.)

No >> Inspect the wiring and connectors for damage or shorted circuits. If ok, replace and program the Hands Free Module in accordance with the service information.
Perform BODY VERIFICATION TEST - VER 1. (Refer to BODY VERIFICATION TEST - VER 1.)

PRNDL MESSAGE NOT RECEIVED

For a complete wiring diagram **Refer to Section 8W**.

- **When Monitored:**
  With the ignition on.
- **Set Condition:**
  The Hands Free Module does not receive a gear selector message from the TCM

Possible Causes
LOST COMMUNICATION WITH TCM
HANDS FREE MODULE

Diagnostic Test

1. ATTEMPT TO COMMUNICATE WITH THE TCM

Turn the ignition on.
Turn the radio on.
With the DRB, attempt to communicate with the TCM.

Was the DRB able to communicate with the TCM?

Yes >> Go To 2

No >> (Refer to 8 - ELECTRICAL/ELECTRONIC CONTROL MODULES - DIAGNOSIS AND TESTING) and perform the related symptom.

---

2. ERASE DTC AND ATTEMPT TO RESET

With the DRB, erase the HFM DTC's.
Cycle the ignition switch from off to on and wait approximately 1 minute.
With the DRB, read the HFM DTC's.

Did this DTC reset?

Yes >> Replace and program the Hands Free Module in accordance with the service information.
Perform BODY VERIFICATION TEST - VER 1. (Refer to BODY VERIFICATION TEST - VER 1.)

No >> The condition that set this DTC is no longer present. Using the wiring diagram/schematic as a guide, inspect the wiring for chafed, pierced, pinched, and partially broken wires and the wiring harness connectors for broken, bent, pushed out, and corroded terminals.

RADIO MESSAGE NOT RECEIVED

For a complete wiring diagram **Refer to Section 8W**.

- **When Monitored:**
  With the ignition on.
- **Set Condition:**
  The Hands Free Module does not receive a message from the radio.

Possible Causes
LOST COMMUNICATION WITH RADIO
HANDS FREE MODULE

Diagnostic Test

1. ATTEMPT TO COMMUNICATE WITH THE RADIO

Turn the ignition on.
Turn the radio on.
With the DRB, attempt to communicate with the radio.

Was the DRB able to communicate with the radio?

Yes >> Go To 2

No >> (Refer to 8 - ELECTRICAL/ELECTRONIC CONTROL MODULES - DIAGNOSIS AND TESTING) and perform the related symptom.

---

2. ERASE DTC AND ATTEMPT TO RESET

With the DRB, erase the HFM DTC's.
Cycle the ignition switch from off to on and wait approximately 1 minute.
With the DRB, read the HFM DTC's.

Did this DTC reset?

Yes >> Replace and program the Hands Free Module in accordance with the service information.
Perform BODY VERIFICATION TEST - VER 1. (Refer to BODY VERIFICATION TEST - VER 1.)

No >> The condition that set this DTC is no longer present. Using the wiring diagram/schematic as a guide, inspect the wiring for chafed, pierced, pinched, and partially broken wires and the wiring harness connectors for broken, bent, pushed out, and corroded terminals.

RAM WRITE ERROR

For a complete wiring diagram **Refer to Section 8W**.

- **When Monitored:**
  With the ignition on.
- **Set Condition:**
  The Hands Free Module detects a fault during an internal diagnostic check.

Possible Causes
HANDS FREE MODULE

Diagnostic Test

1. ERASE DTC AND ATTEMPT TO RESET

Turn the ignition on.
With the DRB, read and record the HFM DTC's and then erase the DTC's.
Perform 5 ignition key cycles, leaving the ignition key on for a minimum of 90 seconds per cycle.
With the DRB, read the HFM DTC's.

Did this DTC reset?

Yes >> Replace and program the Hands Free Module in accordance with the service information.
Perform BODY VERIFICATION TEST - VER 1. (Refer to BODY VERIFICATION TEST - VER 1.)

No >> The condition that set this DTC is no longer present. Using the wiring diagram/schematic as a guide, inspect the wiring for chafed, pierced, pinched, and partially broken wires and the wiring harness connectors for broken, bent, pushed out, and corroded terminals.

RIGHT AUDIO INPUT SHORT TO GROUND

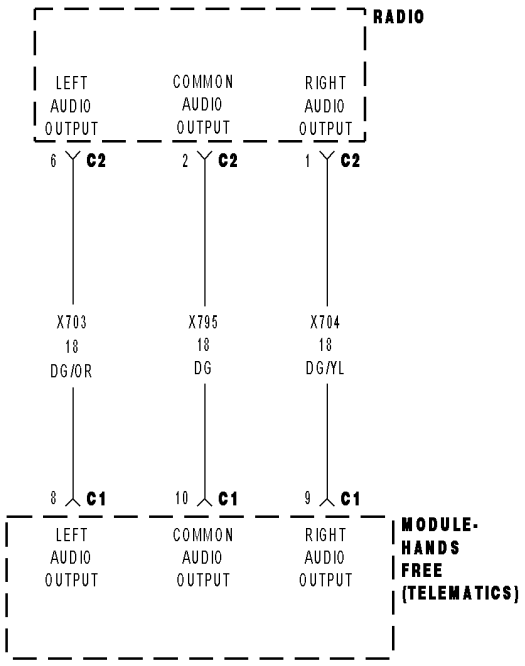

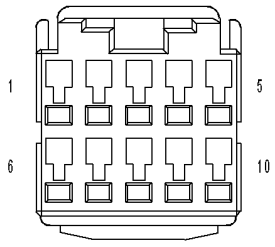

RADIO C2

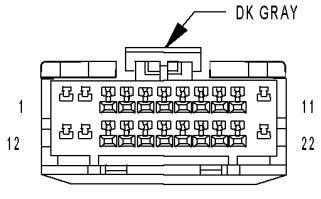

MODULE-HANDS FREE C1 (TELEMATICS)

813eb7cd

RIGHT AUDIO INPUT SHORT TO GROUND (CONTINUED)

For a complete wiring diagram **Refer to Section 8W**.

- **When Monitored:**
  With the ignition on.
- **Set Condition:**
  The Hands Free Module detects low voltage on the (X704) Right Audio Output circuit.

Possible Causes
(X704) RIGHT AUDIO OUTPUT CIRCUIT OPEN
(X704) RIGHT AUDIO OUTPUT CIRCUIT SHORT TO GROUND
(X795) COMMON AUDIO OUTPUT CIRCUIT OPEN
(X704) RIGHT AUDIO OUTPUT CIRCUIT SHORT TO (X795) COMMON AUDIO OUTPUT CIRCUIT
HANDS FREE MODULE

Diagnostic Test

1. CHECK FOR ACTIVE DTC

Turn the ignition on.

With the DRB, erase the HFM DTCs.

Attempt to make a phone call using the system.

With the DRB, read the HFM DTCs.

Did this DTC reset?

Yes >> Go To 2

No >> The condition that set this DTC is no longer present. Using the wiring diagram/schematic as a guide, inspect the wiring for chafed, pierced, pinched, and partially broken wires and the wiring harness connectors for broken, bent, pushed out, and corroded terminals.

RIGHT AUDIO INPUT SHORT TO GROUND (CONTINUED)

2. (X704) RIGHT AUDIO OUTPUT CIRCUIT OPEN

Turn the ignition off.

Disconnect the Hands Free Module harness connector.

Disconnect the Radio C2 harness connector.

Measure the resistance of the (X704) Right Audio Output circuit between the HFM connector and the radio connector.

Is the resistance below 5.0 ohms?

Yes >> Go To 3

No >> Repair the (X704) Right Audio Output circuit for an open.
Perform BODY VERIFICATION TEST - VER 1. (Refer to BODY VERIFICATION TEST - VER 1.)

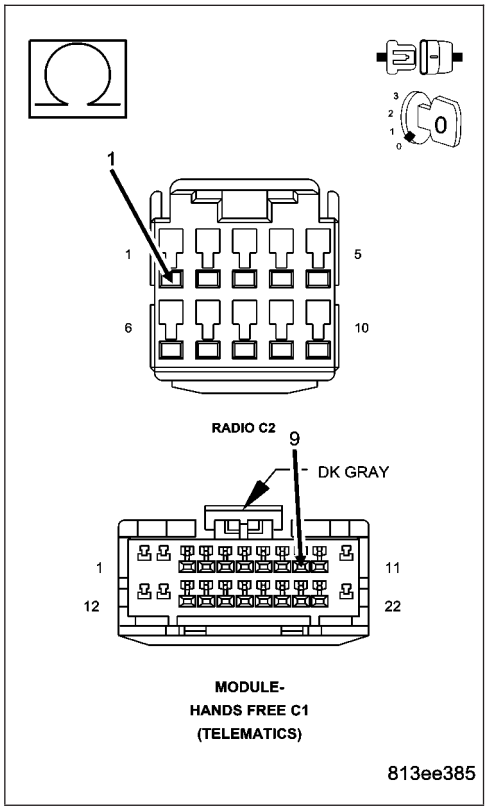

3. (X704) RIGHT AUDIO OUTPUT CIRCUIT SHORT TO GROUND

Measure the resistance between ground and the (X704) Right Audio Output circuit.

Is the resistance below 5.0 ohms?

Yes >> Repair the (X704) Right Audio Output circuit for short to ground.
Perform BODY VERIFICATION TEST - VER 1. (Refer to BODY VERIFICATION TEST - VER 1.)

No >> Go To 4

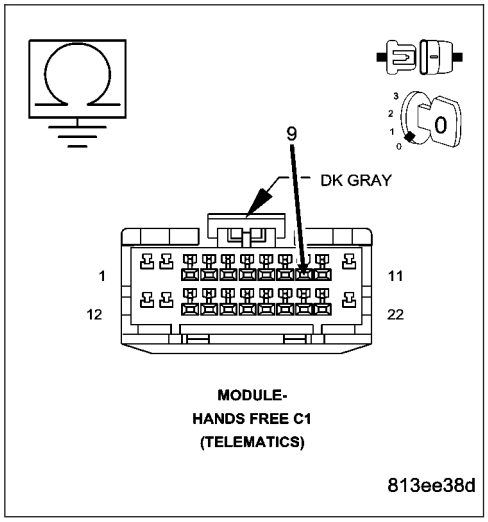

RIGHT AUDIO INPUT SHORT TO GROUND (CONTINUED)

4. (X795) COMMON AUDIO OUTPUT CIRCUIT OPEN

Measure the resistance of the (X795) Common Audio Output circuit between the HFM connector and the radio connector.

Is the resistance below 5.0 ohms?

Yes >> Go To 5

No >> Repair the (X795) Common Audio Output circuit for an open.
Perform BODY VERIFICATION TEST - VER 1. (Refer to BODY VERIFICATION TEST - VER 1.)

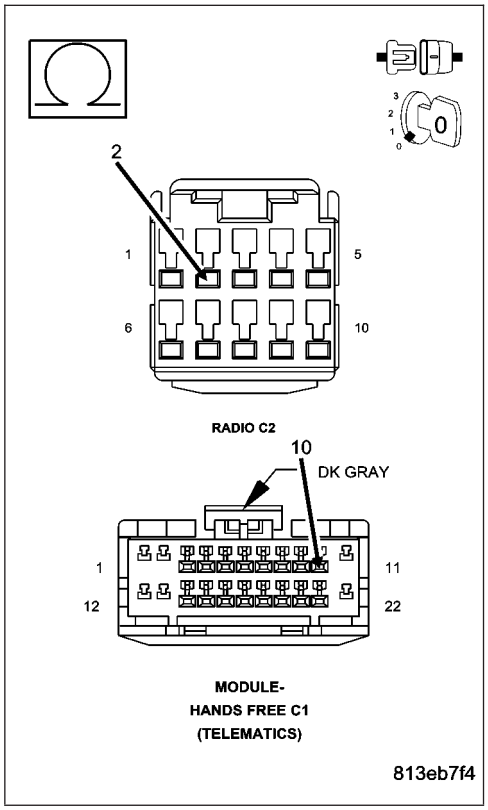

5. (X704) RIGHT AUDIO OUTPUT CIRCUIT SHORT TO (X795) COMMON AUDIO OUTPUT CIRCUIT

Measure the resistance between the (X704) Right Audio Output circuit and the (X795) Common Audio Output circuit.

Is the resistance below 5.0 ohms?

Yes >> Repair the (X704) Right Audio Output circuit for a short to the (X795) Common Audio Output circuit.
Perform BODY VERIFICATION TEST - VER 1. (Refer to BODY VERIFICATION TEST - VER 1.)

No >> Inspect the wiring and connectors for damage or shorted circuits. If ok, replace and program the Hands Free Module in accordance with the service information.
Perform BODY VERIFICATION TEST - VER 1. (Refer to BODY VERIFICATION TEST - VER 1.)

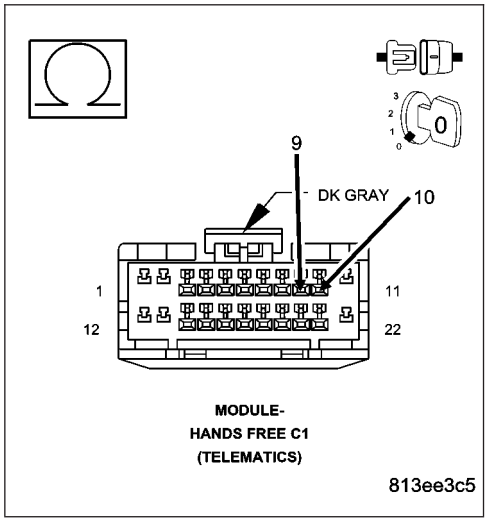

RIGHT AUDIO INPUT SHORT TO VOLTAGE

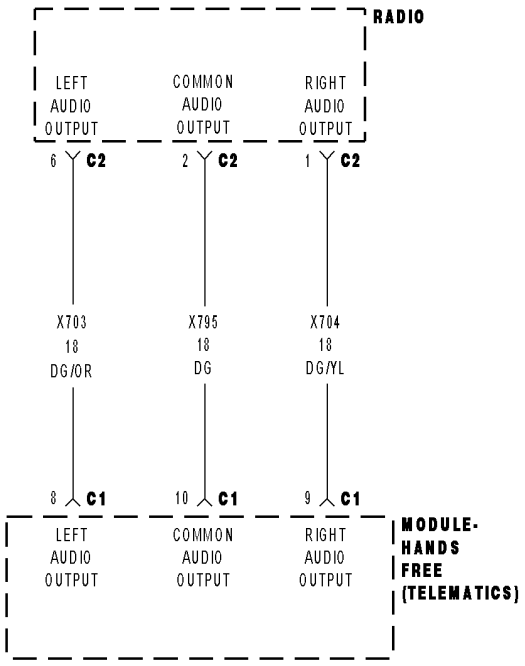

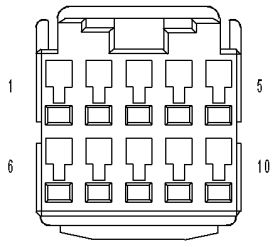

RADIO C2

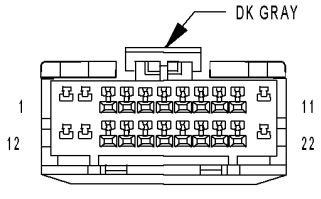

MODULE-HANDS FREE C1 (TELEMATICS)

813eb7cd

RIGHT AUDIO INPUT SHORT TO VOLTAGE (CONTINUED)

For a complete wiring diagram **Refer to Section 8W**.

- **When Monitored:**
  With the ignition on.
- **Set Condition:**
  The Hands Free Module detects high voltage on the (X704) Right Audio Output circuit.

Possible Causes
(X704) RIGHT AUDIO OUTPUT CIRCUIT OPEN
(X795) COMMON AUDIO OUTPUT CIRCUIT OPEN
(X704) RIGHT AUDIO OUTPUT CIRCUIT SHORT TO VOLTAGE
HANDS FREE MODULE

Diagnostic Test

1. CHECK FOR ACTIVE DTC

Turn the ignition on.

With the DRB, erase the HFM DTCs.

Attempt to make a phone call using the system.

With the DRB, read the HFM DTCs.

Did this DTC reset?

Yes >> Go To 2

No >> The condition that set this DTC is no longer present. Using the wiring diagram/schematic as a guide, inspect the wiring for chafed, pierced, pinched, and partially broken wires and the wiring harness connectors for broken, bent, pushed out, and corroded terminals.

RIGHT AUDIO INPUT SHORT TO VOLTAGE (CONTINUED)

2. (X704) RIGHT AUDIO OUTPUT CIRCUIT OPEN

Turn the ignition off.

Disconnect the Hands Free Module harness connector.

Disconnect the Radio C2 harness connector.

Measure the resistance of the (X704) Right Audio Output circuit between the HFM connector and the radio connector.

Is the resistance below 5.0 ohms?

Yes >> Go To 3

No >> Repair the (X704) Right Audio Output circuit for an open
Perform BODY VERIFICATION TEST - VER 1. (Refer to BODY VERIFICATION TEST - VER 1.)

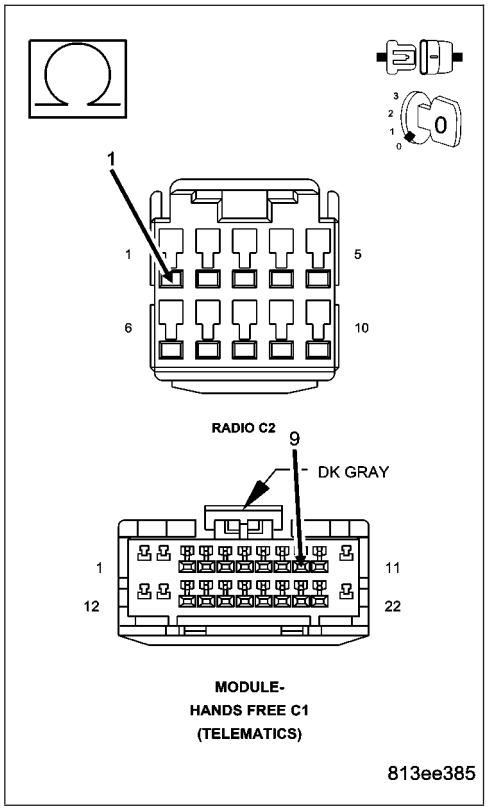

RIGHT AUDIO INPUT SHORT TO VOLTAGE (CONTINUED)

3. (X795) COMMON AUDIO OUTPUT CIRCUIT OPEN

Measure the resistance of the (X795) Common Audio Output circuit between the HFM connector and the radio connector.

Is the resistance below 5.0 ohms?

Yes >> Go To 4

No >> Repair the (X795) Common Audio Output circuit for an open.
Perform BODY VERIFICATION TEST - VER 1. (Refer to BODY VERIFICATION TEST - VER 1.)

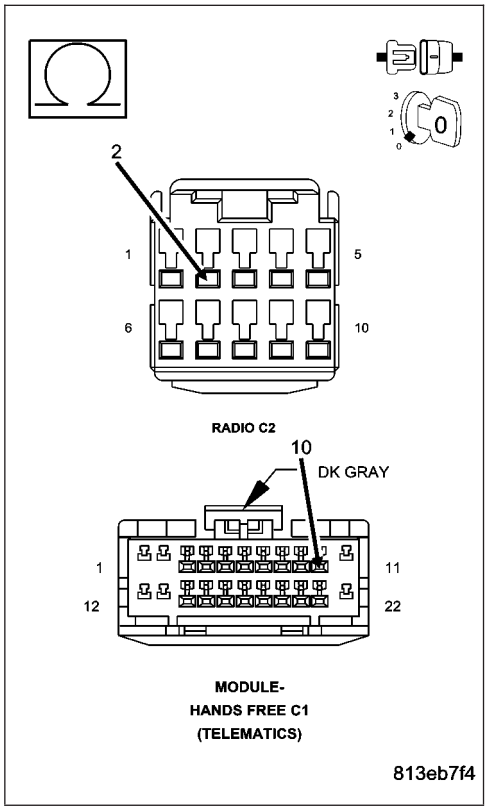

4. (X704) RIGHT AUDIO OUTPUT CIRCUIT SHORT TO VOLTAGE

Turn the ignition on.
Measure the voltage of the (X704) Right Audio Output circuit.

Is the voltage above 1.0 volts?

Yes >> Repair the (X704) Right Audio Output circuit for a short to voltage.
Perform BODY VERIFICATION TEST - VER 1. (Refer to BODY VERIFICATION TEST - VER 1.)

No >> Inspect the wiring and connectors for damage or shorted circuits. If ok, replace and program the Hands Free Module in accordance with the service information.
Perform BODY VERIFICATION TEST - VER 1. (Refer to BODY VERIFICATION TEST - VER 1.)

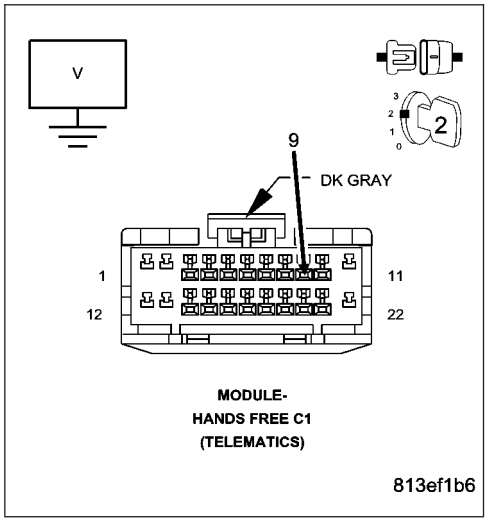

RIGHT AUDIO OUTPUT 1 SHORT TO GROUND

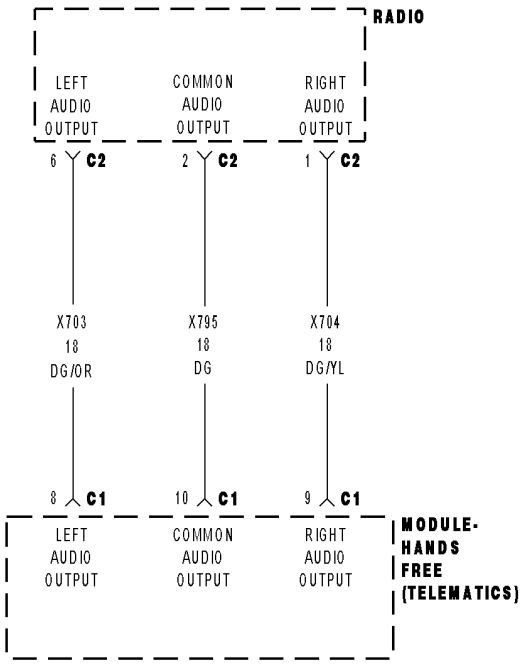

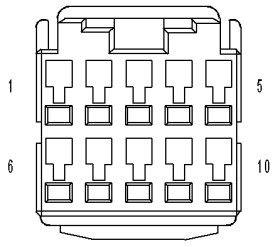

RADIO C2

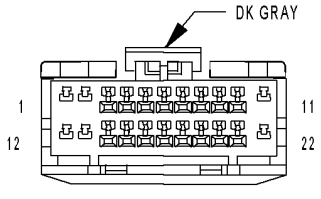

MODULE-HANDS FREE C1 (TELEMATICS)

813eb7cd

RIGHT AUDIO OUTPUT 1 SHORT TO GROUND (CONTINUED)

For a complete wiring diagram **Refer to Section 8W**.

- **When Monitored:**
  With the ignition on.
- **Set Condition:**
  The Hands Free Module detects a short to ground on the (X704) Right Audio Output circuit.

Possible Causes
(X704) RIGHT AUDIO OUTPUT CIRCUIT OPEN
(X704) RIGHT AUDIO OUTPUT CIRCUIT SHORT TO GROUND
(X795) COMMON AUDIO OUTPUT CIRCUIT OPEN
(X704) RIGHT AUDIO OUTPUT CIRCUIT SHORT TO (X795) COMMON AUDIO OUTPUT CIRCUIT
HANDS FREE MODULE

Diagnostic Test

1. CHECK FOR ACTIVE DTC

Turn the ignition on.

With the DRB, erase the HFM DTCs.

Attempt to make a phone call using the system.

With the DRB, read the HFM DTCs.

Did this DTC reset?

Yes >> Go To 2

No >> The condition that set this DTC is no longer present. Using the wiring diagram/schematic as a guide, inspect the wiring for chafed, pierced, pinched, and partially broken wires and the wiring harness connectors for broken, bent, pushed out, and corroded terminals.

RIGHT AUDIO OUTPUT 1 SHORT TO GROUND (CONTINUED)

2. (X704) RIGHT AUDIO OUTPUT CIRCUIT OPEN

Turn the ignition off.

Disconnect the Hands Free Module harness connector.

Disconnect the Radio C2 harness connector.

Measure the resistance of the (X704) Right Audio Output circuit between the HFM connector and the radio connector.

Is the resistance below 5.0 ohms?

Yes >> Go To 3

No >> Repair the (X704) Right Audio Output circuit for an open.
Perform BODY VERIFICATION TEST - VER 1. (Refer to BODY VERIFICATION TEST - VER 1.)

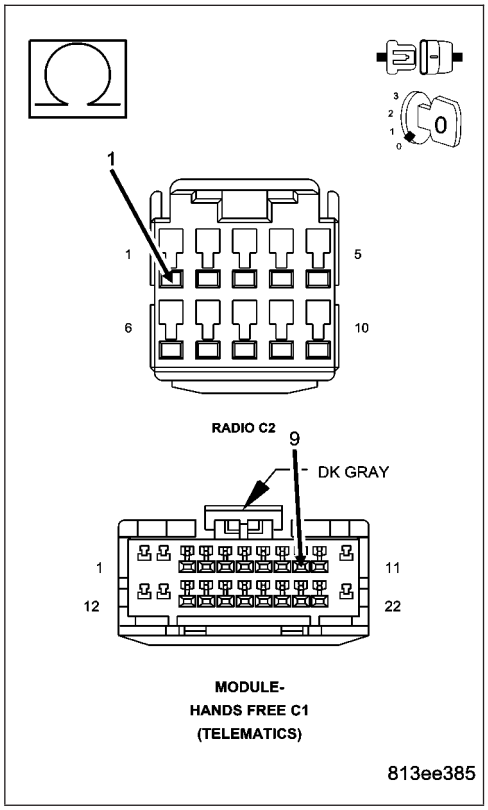

3. (X704) RIGHT AUDIO OUTPUT CIRCUIT SHORT TO GROUND

Measure the resistance between ground and the (X704) Right Audio Output circuit.

Is the resistance below 5.0 ohms?

Yes >> Repair the (X704) Right Audio Output circuit for short to ground.
Perform BODY VERIFICATION TEST - VER 1. (Refer to BODY VERIFICATION TEST - VER 1.)

No >> Go To 4

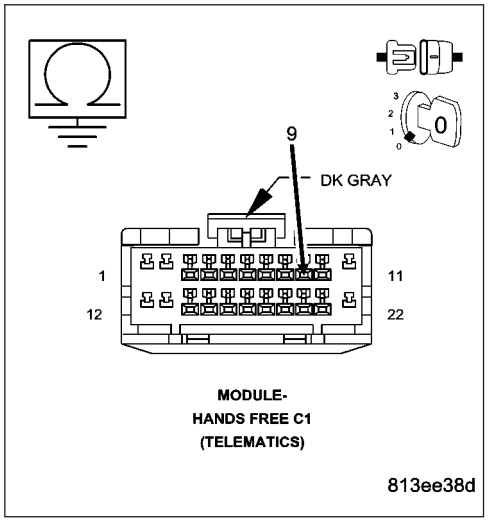

RIGHT AUDIO OUTPUT 1 SHORT TO GROUND (CONTINUED)

4. (X795) COMMON AUDIO OUTPUT CIRCUIT OPEN

Measure the resistance of the (X795) Common Audio Output circuit between the HFM connector and the radio connector.

Is the resistance below 5.0 ohms?

Yes >> Go To 5

No >> Repair the (X795) Common Audio Output circuit for an open.
Perform BODY VERIFICATION TEST - VER 1. (Refer to BODY VERIFICATION TEST - VER 1.)

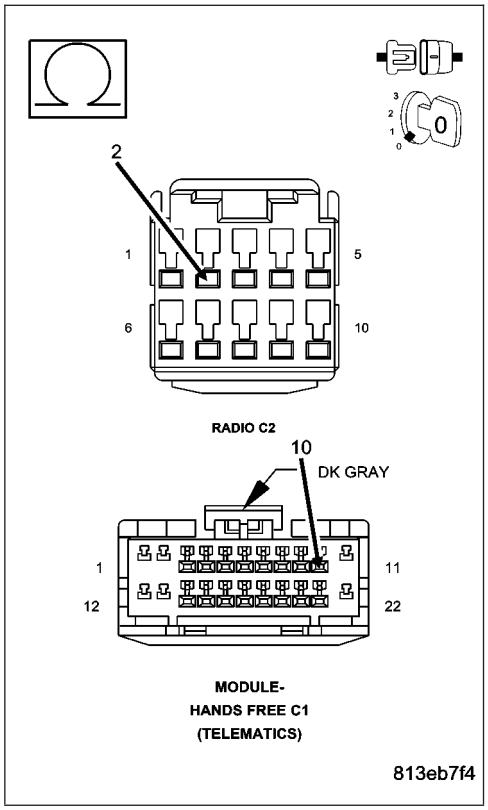

5. (X704) RIGHT AUDIO OUTPUT CIRCUIT SHORT TO (X795) COMMON AUDIO OUTPUT CIRCUIT

Measure the resistance between the (X704) Right Audio Output circuit and the (X795) Common Audio Output circuit.

Is the resistance below 5.0 ohms?

Yes >> Repair the (X704) Right Audio Output circuit for a short to the (X795) Common Audio Output circuit.
Perform BODY VERIFICATION TEST - VER 1. (Refer to BODY VERIFICATION TEST - VER 1.)

No >> Inspect the wiring and connectors for damage or shorted circuits. If ok, replace and program the Hands Free Module in accordance with the service information.
Perform BODY VERIFICATION TEST - VER 1. (Refer to BODY VERIFICATION TEST - VER 1.)

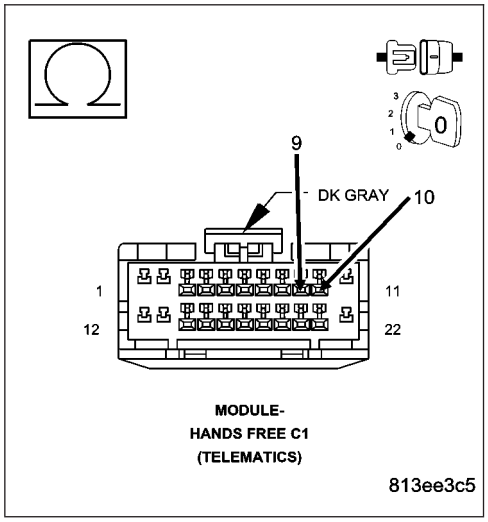

RIGHT AUDIO OUTPUT 1 SHORT TO VOLTAGE

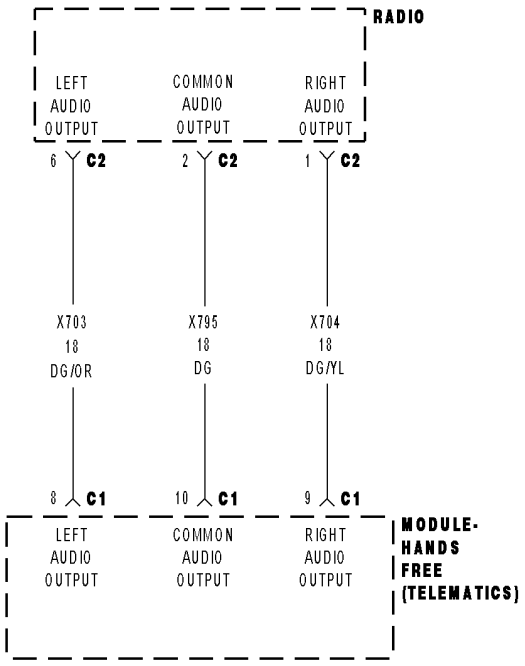

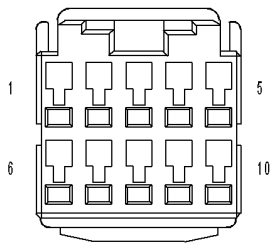

RADIO C2

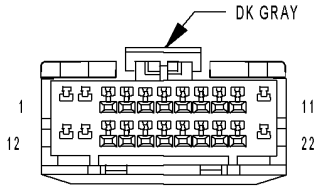

MODULE-HANDS FREE C1 (TELEMATICS)

813eb7cd

RIGHT AUDIO OUTPUT 1 SHORT TO VOLTAGE (CONTINUED)

For a complete wiring diagram **Refer to Section 8W**.

- **When Monitored:**
  With the ignition on.
- **Set Condition:**
  The Hands Free Module detects a short to voltage on the (X704) Right Audio Output circuit.

Possible Causes
(X704) RIGHT AUDIO OUTPUT CIRCUIT OPEN
(X795) COMMON AUDIO OUTPUT CIRCUIT OPEN
(X704) RIGHT AUDIO OUTPUT CIRCUIT SHORT TO VOLTAGE
HANDS FREE MODULE

Diagnostic Test

1. CHECK FOR ACTIVE DTC

Turn the ignition on.

With the DRB, erase the HFM DTCs.

Attempt to make a phone call using the system.

With the DRB, read the HFM DTCs.

Did this DTC reset?

Yes >> Go To 2

No >> The condition that set this DTC is no longer present. Using the wiring diagram/schematic as a guide, inspect the wiring for chafed, pierced, pinched, and partially broken wires and the wiring harness connectors for broken, bent, pushed out, and corroded terminals.

RIGHT AUDIO OUTPUT 1 SHORT TO VOLTAGE (CONTINUED)

2. (X704) RIGHT AUDIO OUTPUT CIRCUIT OPEN

Turn the ignition off.

Disconnect the Hands Free Module harness connector.

Disconnect the Radio C2 harness connector.

Measure the resistance of the (X704) Right Audio Output circuit between the HFM connector and the radio connector.

Is the resistance below 5.0 ohms?

Yes >> Go To 3

No >> Repair the (X704) Right Audio Output circuit for an open
Perform BODY VERIFICATION TEST - VER 1. (Refer to BODY VERIFICATION TEST - VER 1.)

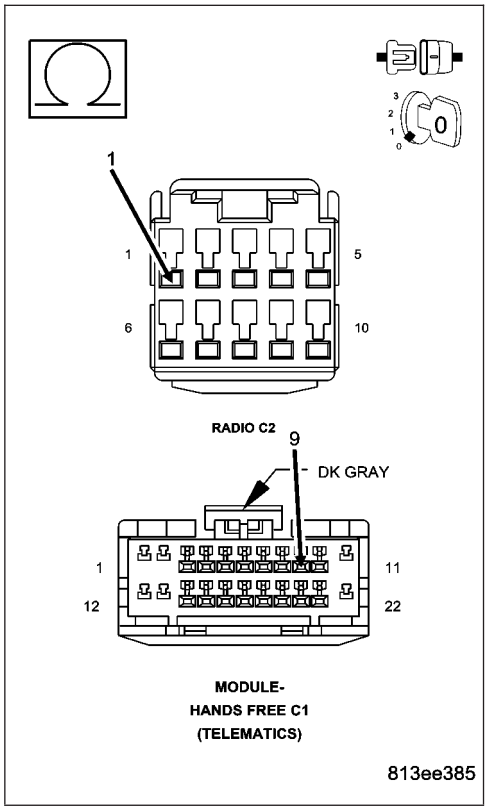

RIGHT AUDIO OUTPUT 1 SHORT TO VOLTAGE (CONTINUED)

3. (X795) COMMON AUDIO OUTPUT CIRCUIT OPEN

Measure the resistance of the (X795) Common Audio Output circuit between the HFM connector and the radio connector.

Is the resistance below 5.0 ohms?

Yes >> Go To 4

No >> Repair the (X795) Common Audio Output circuit for an open.
Perform BODY VERIFICATION TEST - VER 1. (Refer to BODY VERIFICATION TEST - VER 1.)

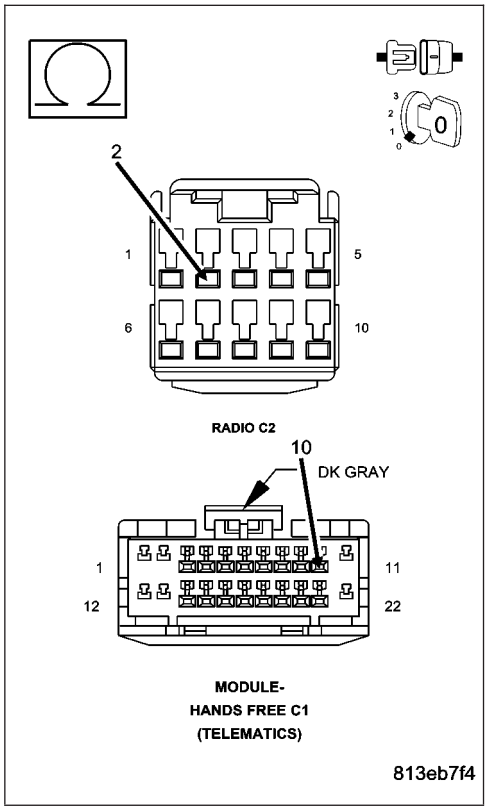

4. (X704) RIGHT AUDIO OUTPUT CIRCUIT SHORT TO VOLTAGE

Turn the ignition on.
Measure the voltage of the (X704) Right Audio Output circuit.

Is the voltage above 1.0 volts?

Yes >> Repair the (X704) Right Audio Output circuit for a short to voltage.
Perform BODY VERIFICATION TEST - VER 1. (Refer to BODY VERIFICATION TEST - VER 1.)

No >> Inspect the wiring and connectors for damage or shorted circuits. If ok, replace and program the Hands Free Module in accordance with the service information.
Perform BODY VERIFICATION TEST - VER 1. (Refer to BODY VERIFICATION TEST - VER 1.)

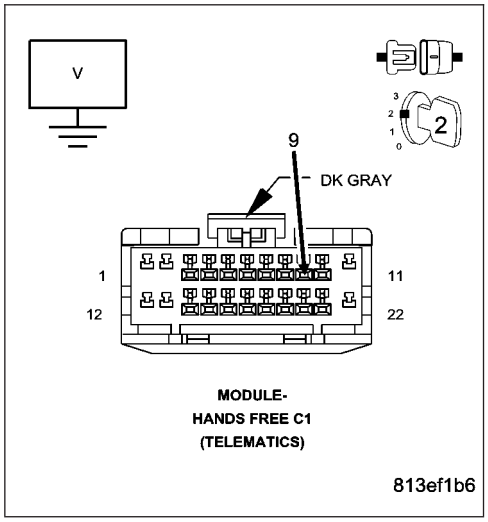

ROM CHECKSUM ERROR

For a complete wiring diagram **Refer to Section 8W**.

- **When Monitored:**
  With the ignition on.
- **Set Condition:**
  The Hands Free Module detects a fault during an internal diagnostic check.

Possible Causes
HANDS FREE MODULE

Diagnostic Test

1. ERASE DTC AND ATTEMPT TO RESET

Turn the ignition on.
With the DRB, read and record the HFM DTC's and then erase the DTC's.
Perform 5 ignition key cycles, leaving the ignition key on for a minimum of 90 seconds per cycle.
With the DRB, read the HFM DTC's.

Did this DTC reset?

Yes >> Replace and program the Hands Free Module in accordance with the service information.
Perform BODY VERIFICATION TEST - VER 1. (Refer to BODY VERIFICATION TEST - VER 1.)

No >> The condition that set this DTC is no longer present. Using the wiring diagram/schematic as a guide, inspect the wiring for chafed, pierced, pinched, and partially broken wires and the wiring harness connectors for broken, bent, pushed out, and corroded terminals.

RPM MESSAGE NOT RECEIVED

For a complete wiring diagram **Refer to Section 8W**.

- **When Monitored:**
  With the ignition on.
- **Set Condition:**
  The Hands Free Module does not detect a PCI Bus message indicating current engine RPM.

Possible Causes
LOST COMMUNICATION WITH PCM
HANDS FREE MODULE

Diagnostic Test

1. ATTEMPT TO COMMUNICATE WITH THE PCM

Start and idle the engine.
With the DRB, select Engine and read the Engine RPM.

Was the DRB able to communicate with the PCM and read engine RPM?

Yes >> Go To 2

No >> (Refer to 8 - ELECTRICAL/ELECTRONIC CONTROL MODULES - DIAGNOSIS AND TESTING) and perform the related symptom.

---

2. ERASE DTC AND ATTEMPT TO RESET

With the DRB, erase the HFM DTC's.
Cycle the ignition switch from off to on and wait approximately 1 minute.
With the DRB, read the HFM DTC's.

Did this DTC reset?

Yes >> Replace and program the Hands Free Module in accordance with the service information.
Perform BODY VERIFICATION TEST - VER 1. (Refer to BODY VERIFICATION TEST - VER 1.)

No >> The condition that set this DTC is no longer present. Using the wiring diagram/schematic as a guide, inspect the wiring for chafed, pierced, pinched, and partially broken wires and the wiring harness connectors for broken, bent, pushed out, and corroded terminals.

VIN MESSAGE NOT RECEIVED

For a complete wiring diagram **Refer to Section 8W**.

- **When Monitored:**
  With the ignition on.
- **Set Condition:**
  The Hands Free Module does not receive the VIN message from the PCM.

Possible Causes
LOST COMMUNICATION WITH PCM
PCM NOT ACTIVE ON THE PCI BUS
HANDS FREE MODULE

Diagnostic Test

1. ATTEMPT TO COMMUNICATE WITH THE PCM

Turn the ignition on.
With the DRB, attempt to communicate with the PCM.

Was the DRB able to communicate with the PCM?

Yes >> Go To 2

No >> (Refer to 8 - ELECTRICAL/ELECTRONIC CONTROL MODULES - DIAGNOSIS AND TESTING) and perform the related symptom.

---

2. CHECK PCM ACTIVITY ON THE PCI BUS

With the DRB, select System Monitors then J1850 Module Scan.

Does the DRB indicated that the PCM is present or active on the PCI Bus?

Yes >> Go To 3

No >> (Refer to 8 - ELECTRICAL/ELECTRONIC CONTROL MODULES - DIAGNOSIS AND TESTING) and perform the related symptom.

---

3. ERASE DTC AND ATTEMPT TO RESET

With the DRB, erase the HFM DTC's.
Cycle the ignition switch from off to on and wait approximately 1 minute.
With the DRB, read the HFM DTC's.

Did this DTC reset?

Yes >> Replace and program the Hands Free Module in accordance with the service information.
Perform BODY VERIFICATION TEST - VER 1. (Refer to BODY VERIFICATION TEST - VER 1.)

No >> The condition that set this DTC is no longer present. Using the wiring diagram/schematic as a guide, inspect the wiring for chafed, pierced, pinched, and partially broken wires and the wiring harness connectors for broken, bent, pushed out, and corroded terminals.

VOICE RECOGNITION SWITCH STUCK

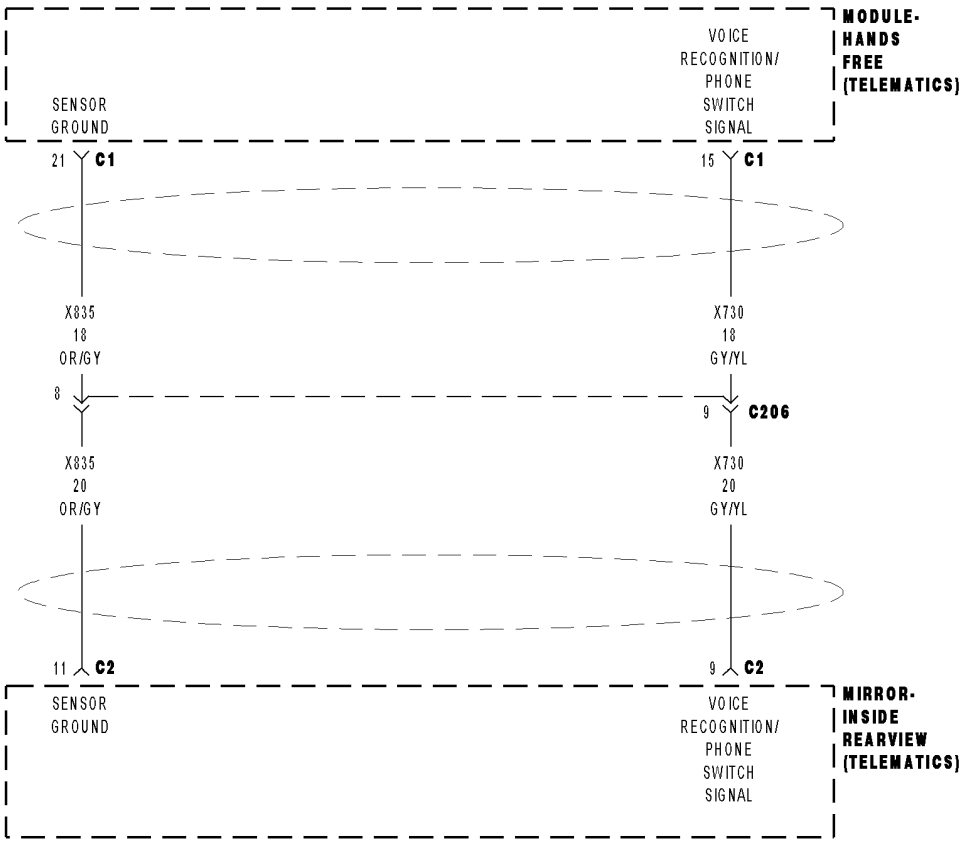

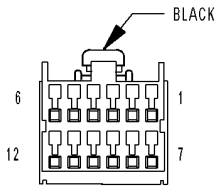

MIRROR-
INSIDE
REARVIEW C2
(TELEMATICS)

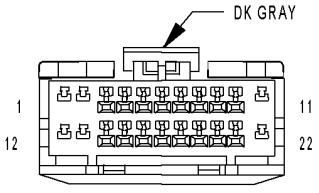

MODULE-
HANDS FREE C1
(TELEMATICS)

81310da8

VOICE RECOGNITION SWITCH STUCK (CONTINUED)

For a complete wiring diagram **Refer to Section 8W**.

- **When Monitored:**
  With the ignition on.
- **Set Condition:**
  The Hands Free Module detects voltage between 3.5 volts and 4.0 volts on the (X730) Voice Recognition/ Phone Switch Signal circuit for more than 30 seconds.

Possible Causes
INSIDE REARVIEW MIRROR
HANDS FREE MODULE

Diagnostic Test

1. CHECK FOR ACTIVE DTCS

Turn the ignition on.

With the DRB, erase the HFM DTCs.

Attempt to make a phone call using the system.

With the DRB, read the HFM DTCs.

Did this DTC reset?

Yes >> Go To 2

No >> The condition that set this DTC is no longer present. Using the wiring diagram/schematic as a guide, inspect the wiring for chafed, pierced, pinched, and partially broken wires and the wiring harness connectors for broken, bent, pushed out, and corroded terminals.

---

2. CHECK THE VOLTAGE OF THE (X730) VOICE RECOGNITION/PHONE SWITCH SIGNAL

Turn the ignition off.

Disconnect the Inside Rearview Mirror C2 harness connector.

Turn the ignition on.

With the DRB, monitor the VR Phone Switch voltage.

While monitoring the VR Phone Switch voltage, momentarily connect a jumper wire between (X730) Voice Recognition/Phone Switch Signal circuit and ground.

NOTE: The sensor voltage should switch from above 4.7 volts when the jumper is not connected to below 0.6 volts when the jumper is connected.

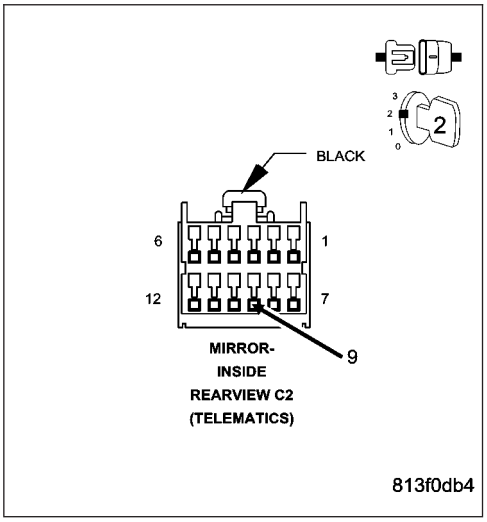

Does the sensor voltage switch from above 4.7 volts to below 0.6 volt as described?

Yes >> Replace the Inside Rearview Mirror in accordance with the service information.
Perform BODY VERIFICATION TEST - VER 1. (Refer to BODY VERIFICATION TEST - VER 1.)

No >> Inspect the wiring and connectors for damage or shorted circuits. If ok, replace and program the Hands Free Module in accordance with the service information.
Perform BODY VERIFICATION TEST - VER 1. (Refer to BODY VERIFICATION TEST - VER 1.)

VOICE RECOGNITION/PHONE SWITCH CIRCUIT RATIONALITY

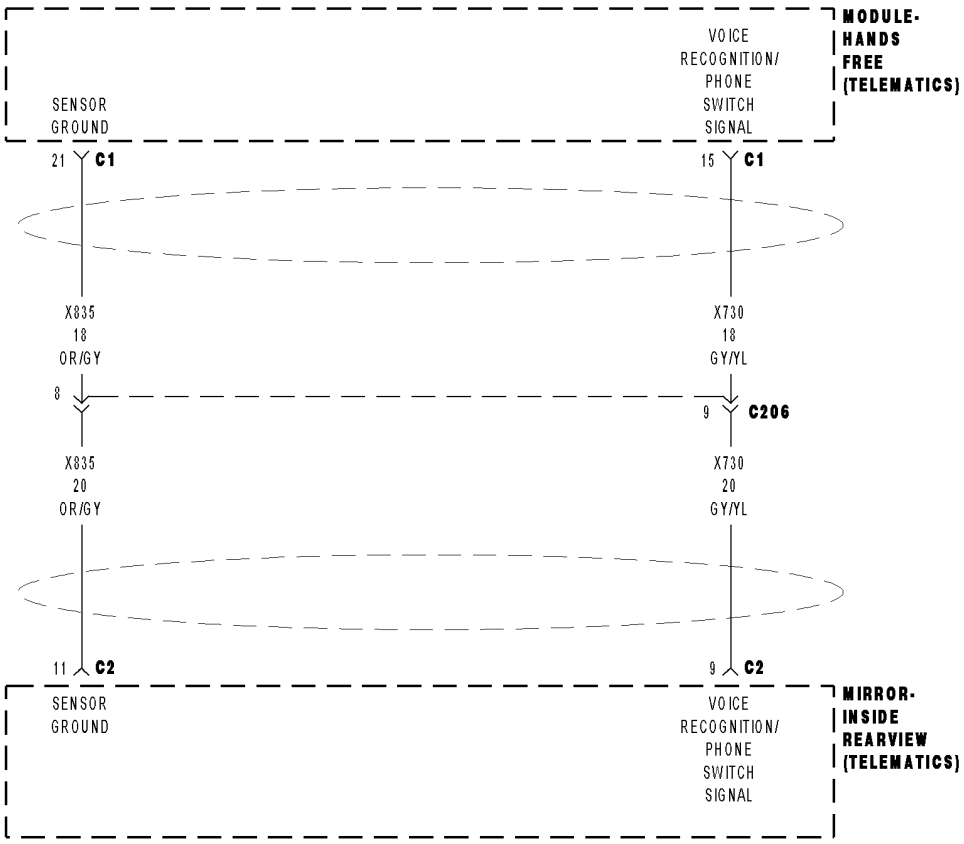

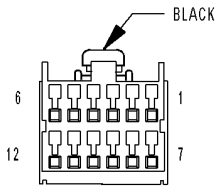

MIRROR-
INSIDE
REARVIEW C2
(TELEMATICS)

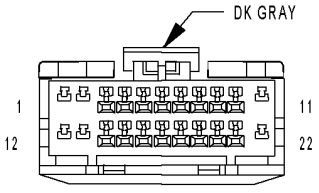

MODULE-
HANDS FREE C1
(TELEMATICS)

81310da8

VOICE RECOGNITION/PHONE SWITCH CIRCUIT RATIONALITY (CONTINUED)

For a complete wiring diagram **Refer to Section 8W**.

- **When Monitored:**
  With the ignition on.
- **Set Condition:**
  The Hands Free Module detects an invalid voltage signal on the (X730) Voice Recognition/Phone Switch Signal circuit.

Possible Causes
INSIDE REARVIEW MIRROR
HANDS FREE MODULE

Diagnostic Test

1. CHECK FOR ACTIVE DTC

Turn the ignition on.

With the DRB, erase the HFM DTCs.

Attempt to make a phone call using the system.

With the DRB, read the HFM DTCs.

Did this DTC reset?

Yes >> Go To 2

No >> The condition that set this DTC is no longer present. Using the wiring diagram/schematic as a guide, inspect the wiring for chafed, pierced, pinched, and partially broken wires and the wiring harness connectors for broken, bent, pushed out, and corroded terminals.

---

2. CHECK THE VOLTAGE OF THE (X730) VOICE RECOGNITION/PHONE SWITCH SIGNAL

Turn the ignition off.

Disconnect the Inside Rearview Mirror C2 harness connector.

Turn the ignition on.

With the DRB, monitor the VR Phone Switch voltage.

While monitoring the VR Phone Switch voltage, momentarily connect a jumper wire between the (X730) Voice Recognition/Phone Switch Signal circuit and ground.

NOTE: The sensor voltage should switch from above 4.7 volts when the jumper is not connected to below 0.6 volts when the jumper is connected.

Does the sensor voltage switch from above 4.7 volts to below 0.6 volt as described?

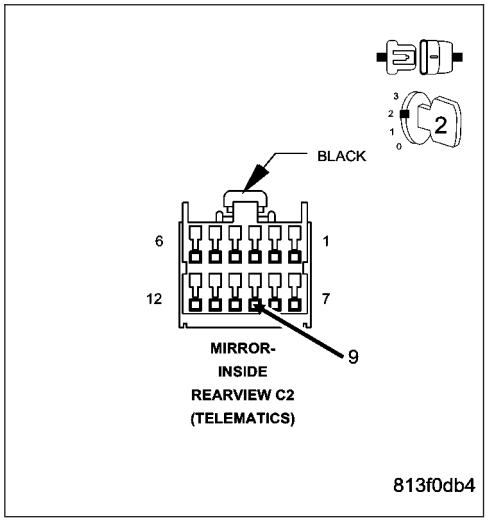

Yes >> Replace the Inside Rearview Mirror in accordance with the service information.
Perform BODY VERIFICATION TEST - VER 1. (Refer to BODY VERIFICATION TEST - VER 1.)

No >> Inspect the wiring and connectors for damage or shorted circuits. If ok, replace and program the Hands Free Module in accordance with the service information.
Perform BODY VERIFICATION TEST - VER 1. (Refer to BODY VERIFICATION TEST - VER 1.)

VOICE RECOGNITION/PHONE SWITCH CIRCUIT SHORT TO GROUND

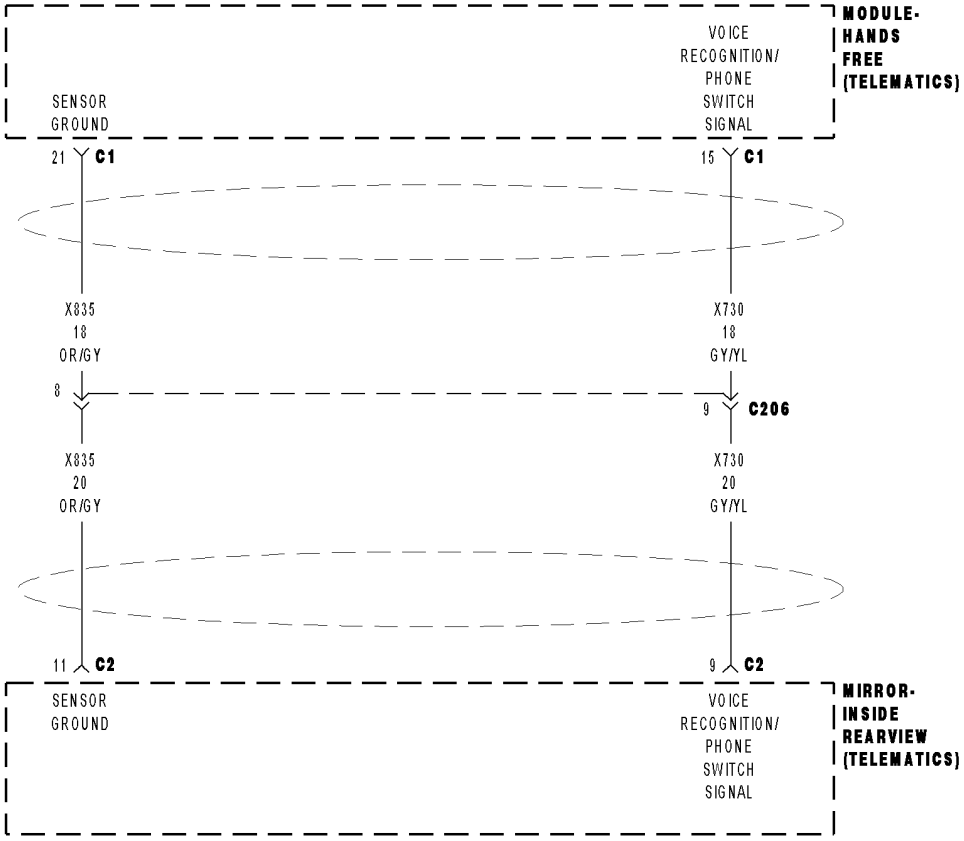

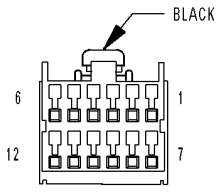

MIRROR-
INSIDE
REARVIEW C2
(TELEMATICS)

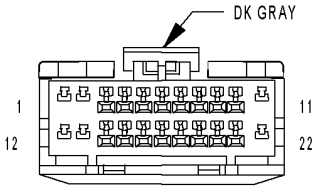

MODULE-
HANDS FREE C1
(TELEMATICS)

81310da8

VOICE RECOGNITION/PHONE SWITCH CIRCUIT SHORT TO GROUND (CONTINUED)

For a complete wiring diagram **Refer to Section 8W**.

- **When Monitored:**
  With the ignition on.
- **Set Condition:**
  The Hands Free Module detects voltage below 0.6 volts on the (X730) Voice Recognition/Phone Switch Signal circuit.

Possible Causes
(X730) VOICE RECOGNITION/PHONE SWITCH SIGNAL CIRCUIT SHORT TO (X835) SENSOR GROUND CIRCUIT
(X730) VOICE RECOGNITION/PHONE SWITCH SIGNAL CIRCUIT SHORT TO GROUND
INSIDE REARVIEW MIRROR
HANDS FREE MODULE

Diagnostic Test

1. CHECK FOR ACTIVE DTC

Turn the ignition on.

With the DRB, erase the HFM DTCs.

Attempt to make a phone call using the system.

With the DRB, read the HFM DTCs.

Did this DTC reset?

Yes >> Go To 2

No >> The condition that set this DTC is no longer present. Using the wiring diagram/schematic as a guide, inspect the wiring for chafed, pierced, pinched, and partially broken wires and the wiring harness connectors for broken, bent, pushed out, and corroded terminals.

2. CHECK THE VOLTAGE OF THE (X730) VOICE RECOGNITION/PHONE SWITCH SIGNAL

Turn the ignition off.

Disconnect the Inside Rearview Mirror C2 harness connector.

Turn the ignition on.

With the DRB, monitor the VR Phone Switch voltage.

Is the voltage above 4.7 volts?

Yes >> Replace the Inside Rearview Mirror in accordance with the service information.
Perform BODY VERIFICATION TEST - VER 1. (Refer to BODY VERIFICATION TEST - VER 1.)

No >> Go To 3

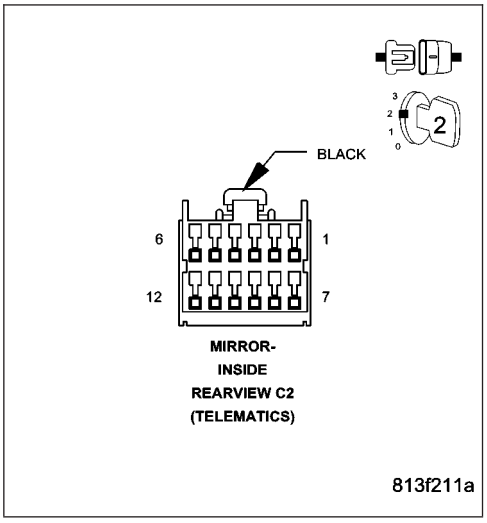

VOICE RECOGNITION/PHONE SWITCH CIRCUIT SHORT TO GROUND (CONTINUED)

3. (X730) VOICE/RECOGNITION/PHONE SWITCH SIGNAL CIRCUIT SHORTED TO THE (X835) SENSOR GROUND CIRCUIT

Turn the ignition off.

Disconnect the Hands Free Module harness connector.

Measure the resistance between the (X730) Voice Recognition/Phone Switch Signal circuit and the (X835) Sensor Ground circuit.

Is the resistance below 100.0 ohms?

Yes >> Repair the (X730) Voice Recognition/Phone Switch Signal circuit for a short to the (X835) Sensor Ground circuit.

Perform BODY VERIFICATION TEST - VER 1. (Refer to BODY VERIFICATION TEST - VER 1.)

No >> Go To 4

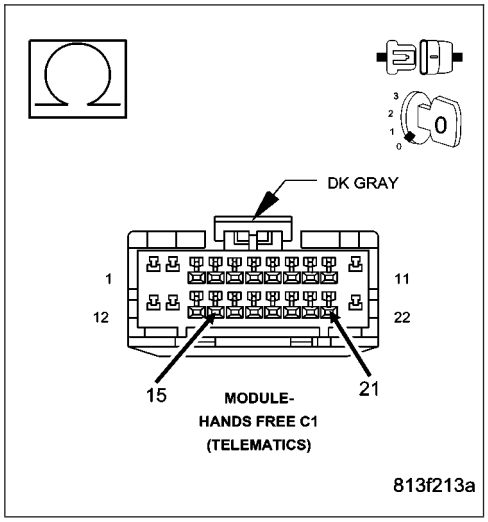

4. (X730) VOICE/RECOGNITION/PHONE SWITCH SIGNAL CIRCUIT SHORTED TO GROUND

Measure the resistance between ground and the (X730) Voice Recognition/Phone Switch Signal circuit.

Is the resistance below 100.0 ohms?

Yes >> Repair the (X730) Voice Recognition/Phone Switch Signal circuit for a short to ground.

Perform BODY VERIFICATION TEST - VER 1. (Refer to BODY VERIFICATION TEST - VER 1.)

No >> Inspect the wiring and connectors for damage or shorted circuits. If ok, replace and program the Hands Free Module in accordance with the service information.

Perform BODY VERIFICATION TEST - VER 1. (Refer to BODY VERIFICATION TEST - VER 1.)

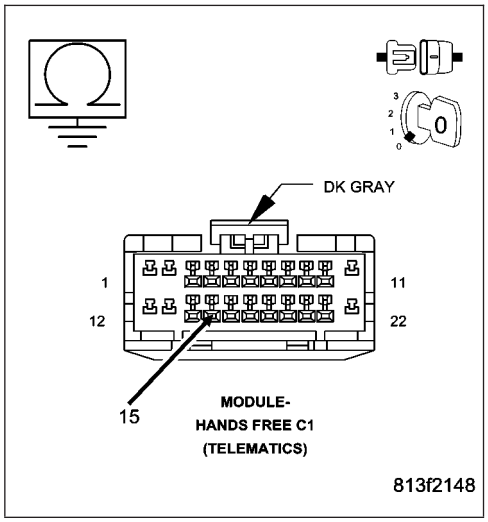

VOICE RECOGNITION/PHONE SWITCH CIRCUIT SHORT TO VOLTAGE

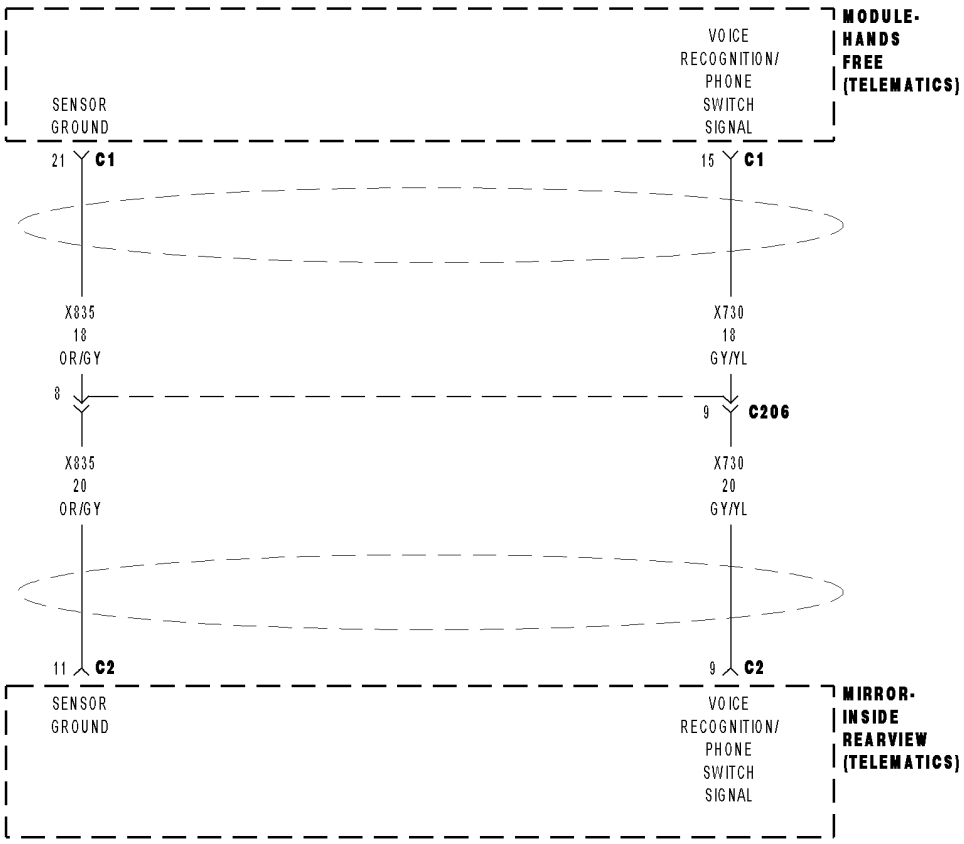

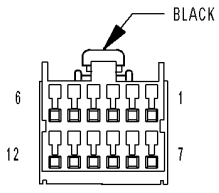

MIRROR-
INSIDE
REARVIEW C2
(TELEMATICS)

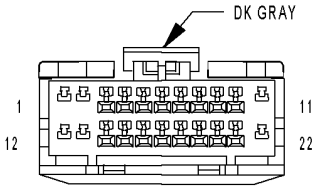

MODULE-
HANDS FREE C1
(TELEMATICS)

81310da8

VOICE RECOGNITION/PHONE SWITCH CIRCUIT SHORT TO VOLTAGE (CONTINUED)

For a complete wiring diagram **Refer to Section 8W**.

- **When Monitored:**
  With the ignition on.
- **Set Condition:**
  The Hands Free Module detects voltage above 4.7 volts on the (X730) Voice Recognition/Phone Switch Signal circuit.

Possible Causes
(X730) VOICE RECOGNITION/PHONE SWITCH SIGNAL CIRCUIT SHORT TO VOLTAGE
(X730) VOICE RECOGNITION/PHONE SWITCH SIGNAL CIRCUIT OPEN
(X835) SENSOR GROUND CIRCUIT OPEN
INSIDE REARVIEW MIRROR
HANDS FREE MODULE

Diagnostic Test

1. CHECK FOR ACTIVE DTC

Turn the ignition on.

With the DRB, erase the HFM DTCs.

Attempt to make a phone call using the system.

With the DRB, read the HFM DTCs.

Did this DTC reset?

Yes >> Go To 2

No >> The condition that set this DTC is no longer present. Using the wiring diagram/schematic as a guide, inspect the wiring for chafed, pierced, pinched, and partially broken wires and the wiring harness connectors for broken, bent, pushed out, and corroded terminals.

---

2. CHECK THE VOLTAGE OF THE (X730) VOICE RECOGNITION/PHONE SWITCH SIGNAL

Turn the ignition off.

Disconnect the Inside Rearview Mirror C2 harness connector.

Turn the ignition on.

Measure the voltage of the (X730) Voice Recognition/Phone Switch Signal circuit.

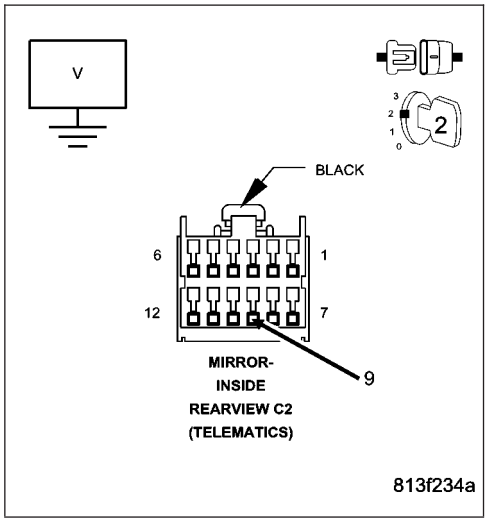

Is the voltage above 5.3 volts?

Yes >> Repair the (X730) Voice Recognition/Phone Switch Signal circuit for a short to voltage.
Perform BODY VERIFICATION TEST - VER 1. (Refer to BODY VERIFICATION TEST - VER 1.)

No >> Go To 3

VOICE RECOGNITION/PHONE SWITCH CIRCUIT SHORT TO VOLTAGE (CONTINUED)

3. INSIDE REARVIEW MIRROR

Turn the ignition off.

Connect a jumper wire between (X730) Voice Recognition/Phone Switch Signal circuit and the (X835) Sensor Ground circuit.

Turn the ignition on.

With the DRB, monitor the VR Phone Switch Voltage.

Is the voltage approximately 0 volts?

Yes >> Replace the Inside Rearview Mirror in accordance with the service information.

Perform BODY VERIFICATION TEST - VER 1. (Refer to BODY VERIFICATION TEST - VER 1.)

No >> Go To 4

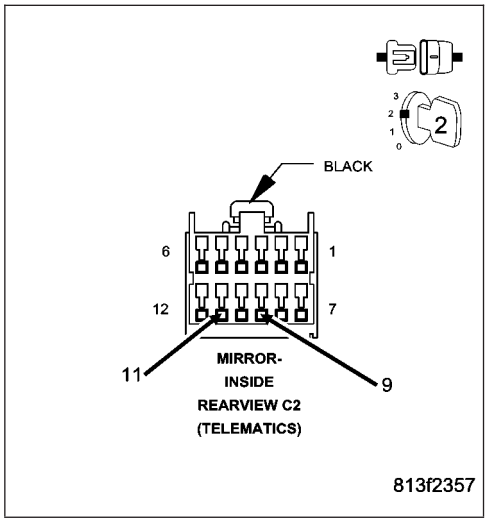

4. (X730) VOICE RECOGNITION/PHONE SWITCH SIGNAL CIRCUIT OPEN

Turn the ignition off.

Disconnect the Hands Free Module harness connector.

Measure the resistance of the (X730) Voice Recognition/Phone Switch Signal circuit between the HFM connector and the Inside Rearview Mirror connector.

Is the resistance below 5.0 ohms?

Yes >> Go To 5

No >> Repair the (X730) Voice Recognition/Phone Switch Signal circuit for an open.

Perform BODY VERIFICATION TEST - VER 1. (Refer to BODY VERIFICATION TEST - VER 1.)

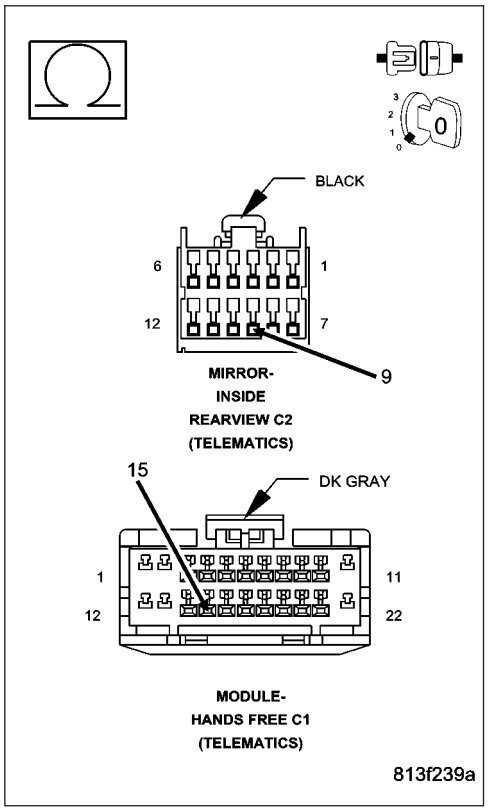

VOICE RECOGNITION/PHONE SWITCH CIRCUIT SHORT TO VOLTAGE (CONTINUED)

5. (X835) SENSOR GROUND CIRCUIT OPEN

Measure the resistance of the (X835) Sensor Ground circuit between the HFM connector and the Inside Rearview Mirror connector.

Is the resistance below 5.0 ohms?

Yes >> Inspect the wiring and connectors for damage or shorted circuits. If ok, replace and program the Hands Free Module in accordance with the service information.
Perform BODY VERIFICATION TEST - VER 1. (Refer to BODY VERIFICATION TEST - VER 1.)

No >> Repair the (X835) Sensor Ground circuit for an open.
Perform BODY VERIFICATION TEST - VER 1. (Refer to BODY VERIFICATION TEST - VER 1.)

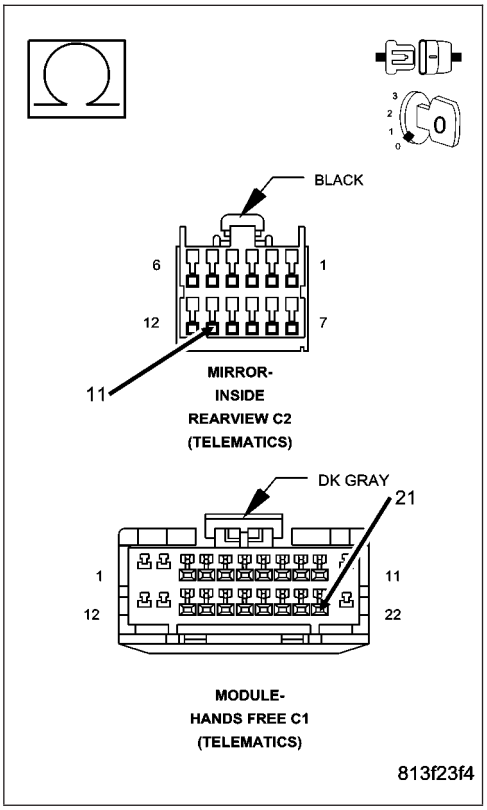

NAVIGATION/TELECOMMUNICATION - SERVICE INFORMATION

TABLE OF CONTENTS

page

NAVIGATION/TELECOMMUNICATION - SERVICE INFORMATION
DESCRIPTION 85
OPERATION 85
DIAGNOSIS AND TESTING TELECOMMUNICATION 86

page

MODULE-HANDS FREE
REMOVAL 88
INSTALLATION 88

NAVIGATION/TELECOMMUNICATION - SERVICE INFORMATION

DESCRIPTION

TELECOMMUNICATIONS

The hands-free cellular system on this vehicle uses Bluetooth™ technology to provide wireless communication between the operator's compatible cellular telephone and the vehicle's on-board receiver.

The system uses voice recognition technology to control operation. The incoming voice is broadcast through the vehicle's radio speakers, automatically overriding any other audio signals on the front speakers when the hands-free system is in use. A microphone in the rearview mirror picks up vehicle occupant's voices. If a call is in progress when the ignition is switched off, the hands-free system will continue to operate for up to 45 seconds as part of the Accessory Relay Delay function. Thereafter, the call can continue on the hand-held telephone.

The system will communicate with a telephone that is anywhere within the vehicle. However, covering the hand held phone or the hands-free phone module with a metal object may block the signal. The system will recognize up to seven telephones, each of which is given a spoken identification by the user during the setup process. The system includes Spanish and French voice recognition in addition to English.

Two buttons on the rearview mirror, identified with ISO icons, control the system: A ″phone″ button turns the system on and off; a ″voice recognition″ (or voice command) button prompts the hands-free system to listen for a voice command.

OPERATION

TELECOMMUNICATION

Two buttons on the rearview mirror, identified with ISO icons, control the system: A ″phone″ button turns the system on and off; a ″voice recognition″ (or voice command) button prompts the hands-free system to listen for a voice command. The system includes the following features:

- Phone book - Stores telephone numbers for later recall by name or other verbal identification, called a voice tag, and memory location.
- Four memory locations - Home, Work, Cellular and Pager. A maximum of 32 unique names or voice tags may be stored at the same time, with a different number in each of the four memory locations.
- Voice tag dialing - Dials the number associated with a voice tag and memory location.
- Digit dialing - Dials the telephone number by recognizing the names of the digits as they are spoken.
- Receiving calls - A voice prompt notifies the user of an incoming call. A voice response accepts or rejects the call without manual intervention.
- Privacy Mode - Switches the call to the handheld telephone and the hands-free system and back again using the "voice recognition" (or "voice command") button and a voice command, if desired.

DIAGNOSIS AND TESTING

TELECOMMUNICATION

Any diagnosis of the Telecommunication system should begin with the use of scan tool. For information on the use of the scan tool, refer to the appropriate Diagnostic Service information.

For complete circuit diagrams, refer to the appropriate wiring information.

WARNING: ON VEHICLES EQUIPPED WITH AIRBAGS, REFER TO ELECTRICAL, RESTRAINTS BEFORE ATTEMPTING ANY STEERING WHEEL, STEERING COLUMN, OR INSTRUMENT PANEL COMPONENT DIAGNOSIS OR SERVICE. FAILURE TO TAKE THE PROPER PRECAUTIONS COULD RESULT IN ACCIDENTAL AIRBAG DEPLOYMENT AND POSSIBLE PERSONAL INJURY.

TELECOMMUNICATION SYSTEM DIAGNOSIS

CONDITION	POSSIBLE CAUSE	CORRECTION
Phone Not Available	1. Bluetooth phone not paired to the system.	1. Ensure that phone(s) are paired to the system.
	2. Bluetooth phone not present or turned OFF.	2. Make sure paired phone is present, turned ON and that the Bluetooth option is enabled on the phone.
	3. Bluetooth phone has low battery.	3. At low battery levels, some phones will turn off Bluetooth functionality. Ensure cellular phone is charged to an adequate level.
Phone Pairing Failed	1. Phone does not support Hands Free Profile	1. The Telecommunication system requires the cellular phone to be Bluetooth™ enabled, as well as supporting the Hands Free Profile. The customer will have to upgrade their phone to one supporting Hands Free Profile. A list of suggested phones is available at: http://www.chrysler.com/uconnect.
	2. Phone not Bluetooth enabled.	2. The Telecommunication system requires the cellular phone to be Bluetooth™ enabled. A list of suggested phones is available at: http://www.chrysler.com/uconnect.
	3. PIN entered on the phone is not the same as PIN spoken to the system.	3. The PIN spoken to the system must be the same PIN entered into the phone.
	4. Phone has reached maximum number of allowed devices paired.	4. Remove one of the previously paired devices from it's list.
Poor Voice Recognition	1. Microphone failure	1. Using a scan tool, check for microphone fault codes.
	2. Customer not waiting for the beep before speaking.	2. Ensure customer is waiting for the system ″beep″ prior to beginning the speech to be recognized.
	3. Customer not speaking in a smooth normal manner.	3. Verify that the customer is attempting to use the system with a smooth consistent voice. The system is designed to accept normal speech spoken at a normal tone, some people tend to speak to a computer loud and slow, which results in reduced performance.
	4. Rear view mirror not properly attached to mounting.	4. Mirror must be firmly mounted to the mounting location. Ensure that mirror is tightened to the specified torque.
	5. High levels of noise in vehicle compartment	5. System performance is increased when noise conditions in the vehicle are lowered. Ideal conditions include windows closed.

CONDITION	POSSIBLE CAUSE	CORRECTION
	6. Object interfering with microphone input	6. Verify that there is no object, hanging from the mirror, that could be obstructing the microphone.
	7. User not saying ″send″ after a pager dialing request	7. User must say ″send″ at the end of a Pager Dialing request.
	8. Other passengers talking while customer is attempting to use the system	8. Although designed for primary use by the driver, the microphone will pick up passengers in any seat of the vehicle. System performance is increased in low noise environments.
Phonebook names not recognized consistently	1. Phonebook names recorded in high noise conditions	1. For increased system performance, it is recommended that the phone book entries are recorded in a low noise environment. That is, vehicle in park, with windows up.
	2. Phonebook name(s) short	2. For increased performance it is recommended that the user use both first and last name as a phonebook entry. Example: ″Daniel Johnson″ as opposed to ″Dan″.
	3. Phonebook names recorded by another user	3. It is recommended that each user of the system record their own phonebook entries. This will increase the recognition performance.
	4. Similar names in phonebook	4. For increased system performance it is recommended that the user do not enter similar sounding names in the phonebook.
	5. Object interfering with microphone input	5. Object interfering with microphone input.
Poor Phone audio quality.	1. Microphone failure	1. Use a scan tool, and check for Microphone faults.
	2. Rear view mirror not properly fixed to mounting button	2. Mirror must be firmly mounted to the mounting location. Tighten mirror to the specified torque.
	3. System being used in high noise conditions	3. System performance is increased when noise conditions in the vehicle are lowered. Ideal conditions include windows closed.
No Phone Audio	1. Phone setting cause phone audio to be routed to handset.	1. Route audio to ″Hands free″ device.

MODULE-HANDS FREE

REMOVAL

1. Disconnect and isolate the battery negative cable.
2. Remove the instrument panel right side end cap.
3. Remove the mounting fasteners.
4. Disconnect the electrical harness connector and remove module.

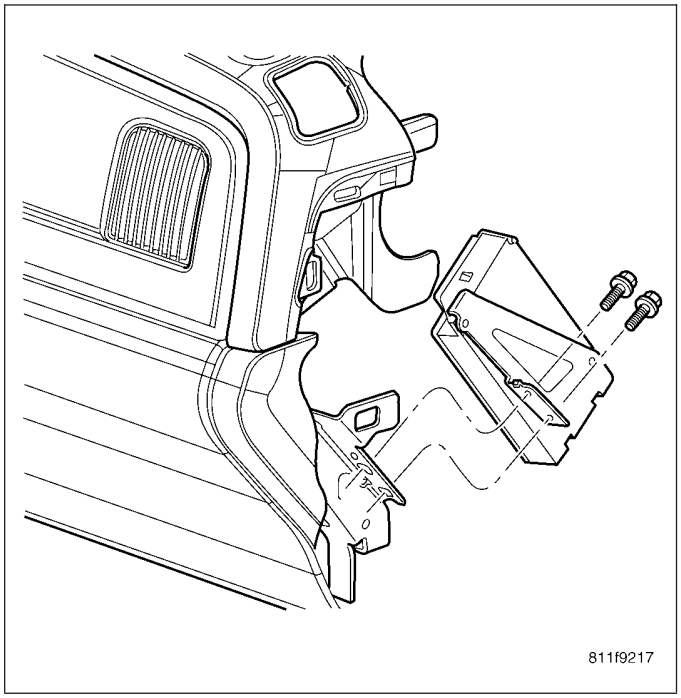

INSTALLATION

1. Connect the electrical harness connector and position module.
2. Install and tighten the mounting fasteners.
3. Install the instrument panel right side end cap.
4. Connect battery negative cable.

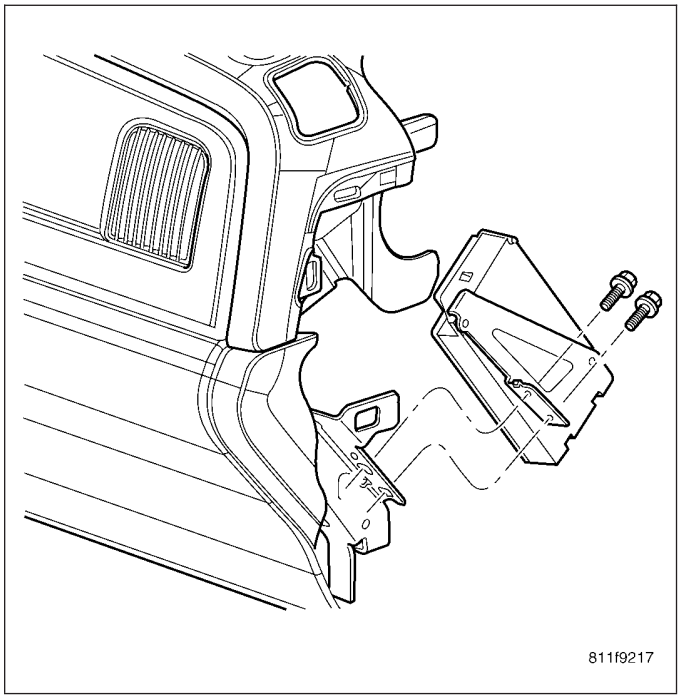

WIRING

TABLE OF CONTENTS

	page		page
WIRING DIAGRAM INFORMATION	8W-01-1	REAR WINDOW DEFOGGER	8W-48-1
COMPONENT INDEX	8W-02-1	OVERHEAD CONSOLE	8W-49-1
INTEGRATED POWER MODULE	8W-13-1	FRONT LIGHTING	8W-50-1
GROUND DISTRIBUTION	8W-15-1	REAR LIGHTING	8W-51-1
BUS COMMUNICATIONS	8W-18-1	TURN SIGNALS	8W-52-1
CHARGING SYSTEM	8W-20-1	WIPERS	8W-53-1
STARTING SYSTEM	8W-21-1	TRAILER TOW	8W-54-1
FUEL/IGNITION SYSTEM	8W-30-1	NAVIGATION/TELECOMMUNICATIONS	8W-55-1
TRANSMISSION CONTROL SYSTEM	8W-31-1	CONVENIENCE SYSTEMS	8W-56-1
VEHICLE SPEED CONTROL	8W-33-1	POWER WINDOWS	8W-60-1
REAR WHEEL ANTILOCK BRAKES	8W-34-1	POWER DOOR LOCKS	8W-61-1
ALL WHEEL ANTILOCK BRAKES	8W-35-1	POWER MIRRORS	8W-62-1
VEHICLE THEFT SECURITY SYSTEM	8W-39-1	POWER SEATS	8W-63-1
INSTRUMENT CLUSTER	8W-40-1	POWER SUNROOF	8W-64-1
HORN/CIGAR LIGHTER/POWER OUTLET	8W-41-1	SPLICE INFORMATION	8W-70-1
AIR CONDITIONING	8W-42-1	CONNECTOR PIN-OUTS	8W-80-1
OCCUPANT RESTRAINT SYSTEM	8W-43-1	CONNECTOR/GROUND/SPLICE LOCATION	8W-91-1
INTERIOR LIGHTING	8W-44-1	POWER DISTRIBUTION	8W-97-1
AUDIO SYSTEM	8W-47-1		

8W-01 WIRING DIAGRAM INFORMATION

TABLE OF CONTENTS

page

WIRING DIAGRAM INFORMATION
DESCRIPTION
DESCRIPTION - HOW TO USE WIRING DIAGRAMS 1
DESCRIPTION - CIRCUIT INFORMATION 5
DESCRIPTION - CIRCUIT FUNCTIONS 6
DESCRIPTION - SECTION IDENTIFICATION AND INFORMATION 6
DESCRIPTION - CONNECTOR, GROUND AND SPLICE INFORMATION 7
WARNING
WARNINGS - GENERAL 7
DIAGNOSIS AND TESTING - WIRING HARNESS 8
STANDARD PROCEDURE
STANDARD PROCEDURE - ELECTROSTATIC DISCHARGE (ESD) SENSITIVE DEVICES 9
STANDARD PROCEDURE - TESTING OF VOLTAGE POTENTIAL 10
STANDARD PROCEDURE - TESTING FOR CONTINUITY 10

page

STANDARD PROCEDURE - TESTING FOR A SHORT TO GROUND 10
STANDARD PROCEDURE - TESTING FOR A SHORT TO GROUND ON FUSES POWERING SEVERAL LOADS 11
STANDARD PROCEDURE - TESTING FOR A VOLTAGE DROP 11
SPECIAL TOOLS
WIRING/TERMINAL 12
CONNECTOR
REMOVAL 13
INSTALLATION 15
DIODE
REMOVAL 16
INSTALLATION 16
TERMINAL
REMOVAL 16
INSTALLATION 16
WIRE
STANDARD PROCEDURE - WIRE SPLICING . . 17

WIRING DIAGRAM INFORMATION

DESCRIPTION

DESCRIPTION - HOW TO USE WIRING DIAGRAMS

DaimlerChrysler Corporation wiring diagrams are designed to provide information regarding the vehicles wiring content. In order to effectively use the wiring diagrams to diagnose and repair DaimlerChrysler Corporation vehicles, it is important to understand all of their features and characteristics.

Diagrams are arranged such that the power (B+) side of the circuit is placed near the top of the page, and the ground (B-) side of the circuit is placed near the bottom of the page.

All switches, components, and modules are shown in the at rest position with the doors closed and the key removed from the ignition.

Components are shown two ways. A solid line around a component indicates that the component is complete. A dashed line around the component indicates that the component is being shown is not complete. Incomplete components have a reference number to indicate the page where the component is shown complete.

It is important to realize that no attempt is made on the diagrams to represent components and wiring as they appear on the vehicle. For example, a short piece of wire is treated the same as a long one. In addition, switches and other components are shown as simply as possible, with regard to function only.

SYMBOLS

International symbols are used throughout the wiring diagrams. These symbols are consistent with those being used around the world.

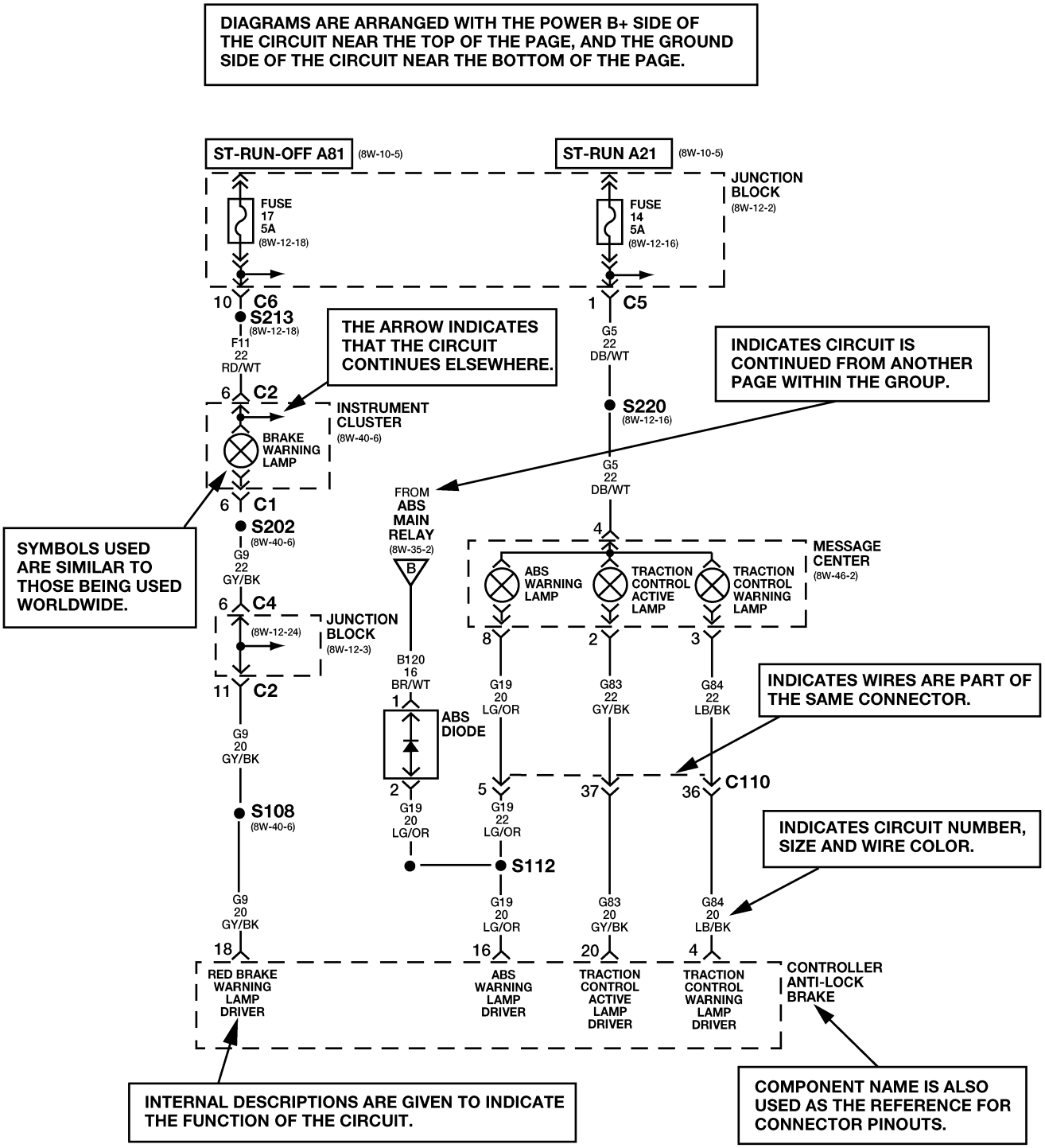

The System shown here is an EXAMPLE ONLY. It does not represent the actual circuit shown in the WIRING DIAGRAM SECTION.

80c06d01

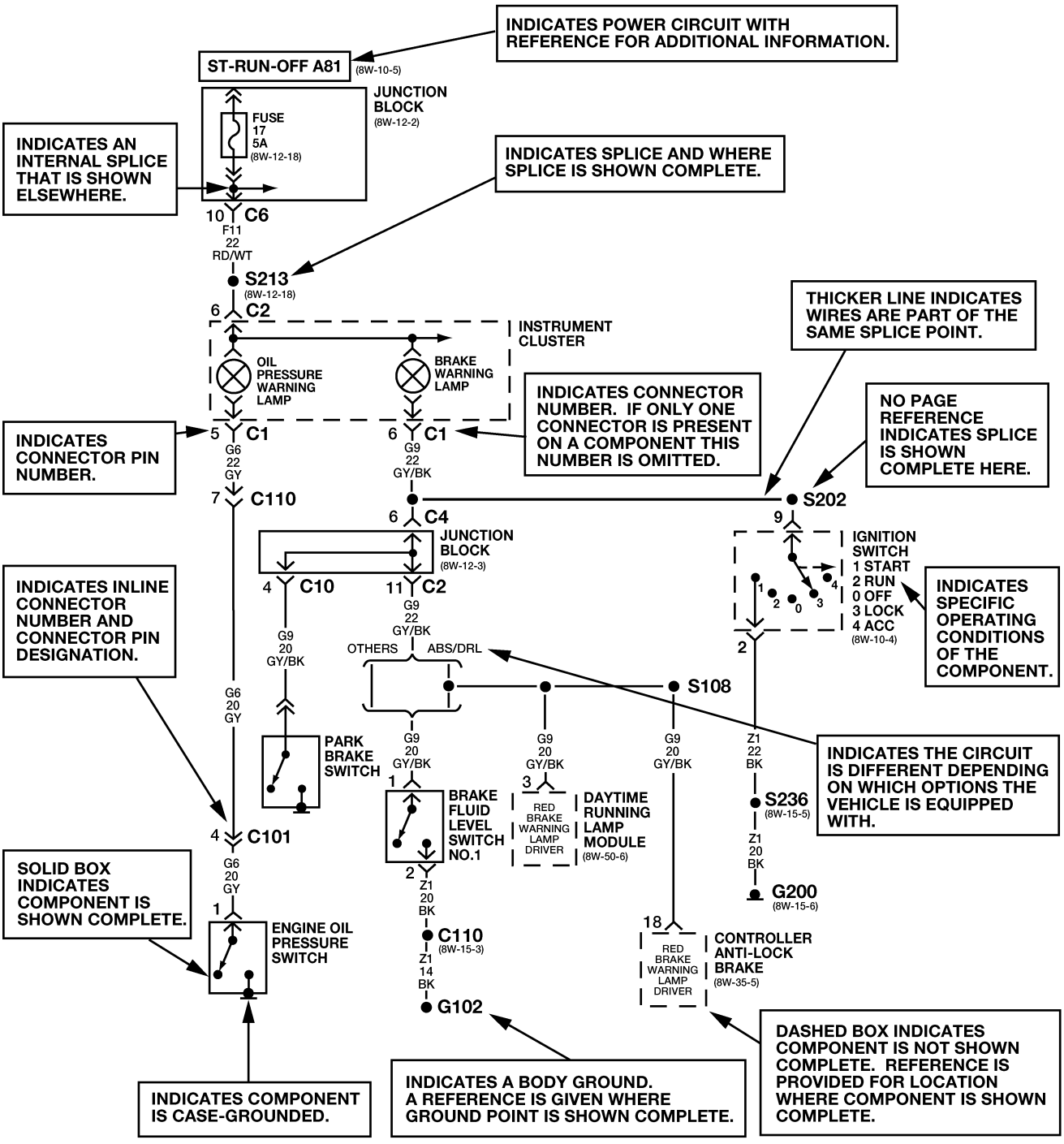

The System shown here is an EXAMPLE ONLY. It does not represent the actual circuit shown in the WIRING DIAGRAM SECTION.

80c06d02

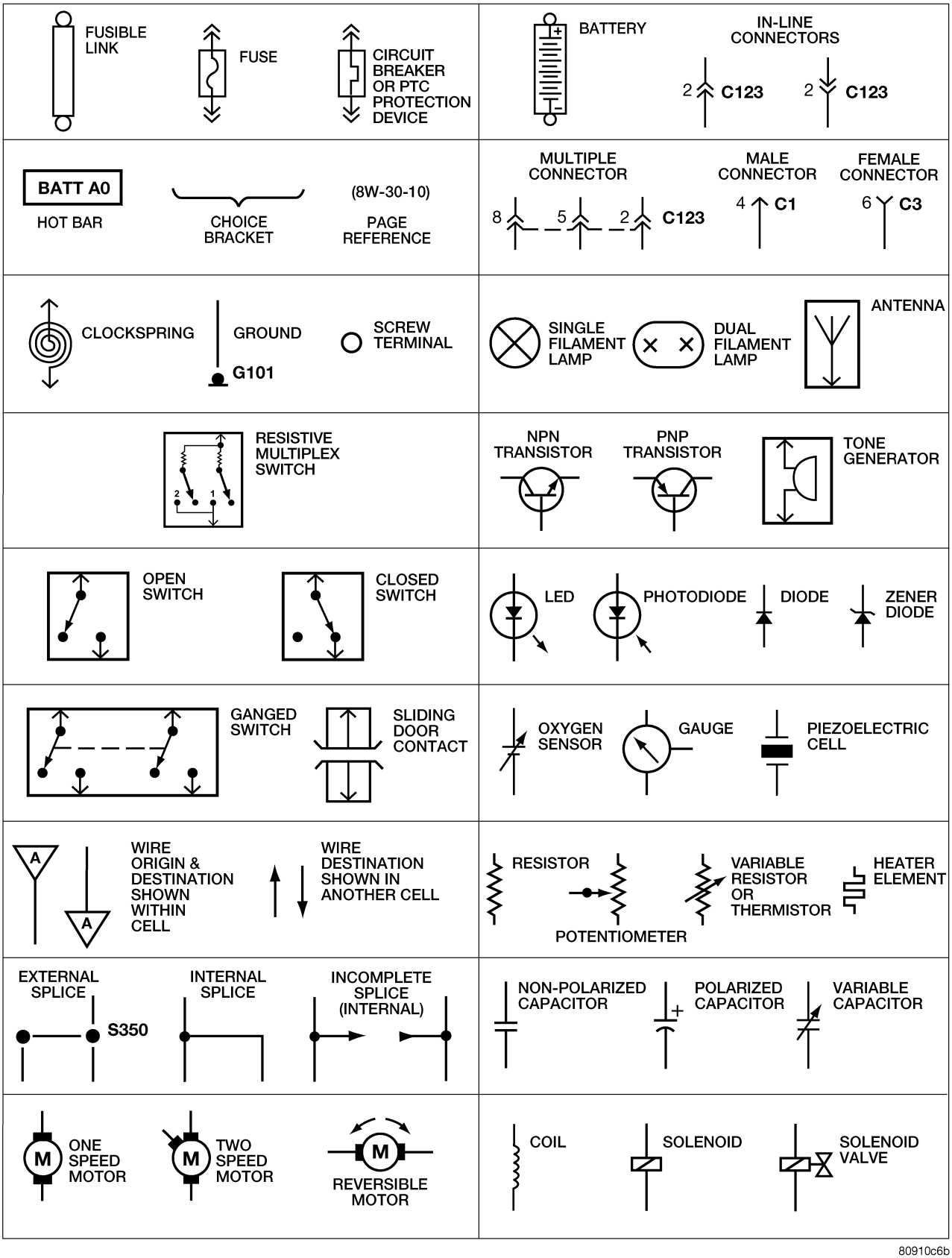
FUSIBLE LINK
FUSE
CIRCUIT BREAKER OR PTC PROTECTION DEVICE
BATTERY
IN-LINE CONNECTORS
2 C123
2 C123
BATT A0
HOT BAR
CHOICE BRACKET
(8W-30-10)
PAGE REFERENCE
MULTIPLE CONNECTOR
8 5 2 C123
MALE CONNECTOR
4 C1
FEMALE CONNECTOR
6 C3
CLOCKSPRING
GROUND
G101
SCREW TERMINAL
SINGLE FILAMENT LAMP
DUAL FILAMENT LAMP
ANTENNA
RESISTIVE MULTIPLEX SWITCH
2
1
NPN TRANSISTOR
PNP TRANSISTOR
TONE GENERATOR
OPEN SWITCH
CLOSED SWITCH
LED
PHOTODIODE
DIODE
ZENER DIODE
GANGED SWITCH
SLIDING DOOR CONTACT
OXYGEN SENSOR
GAUGE
PIEZOELECTRIC CELL
A
A
WIRE ORIGIN & DESTINATION SHOWN WITHIN CELL
WIRE DESTINATION SHOWN IN ANOTHER CELL
RESISTOR
POTENTIOMETER
VARIABLE RESISTOR OR THERMISTOR
HEATER ELEMENT
EXTERNAL SPLICE
S350
INTERNAL SPLICE
INCOMPLETE SPLICE (INTERNAL)
NON-POLARIZED CAPACITOR
POLARIZED CAPACITOR
VARIABLE CAPACITOR
M
ONE SPEED MOTOR
M
TWO SPEED MOTOR
M
REVERSIBLE MOTOR
COIL
SOLENOID
SOLENOID VALVE

80910c6b

TERMINOLOGY

This is a list of terms and definitions used in the wiring diagrams.

LHD . . . . . Left Hand Drive Vehicles
RHD . . . . . Right Hand Drive Vehicles
ATX . . . . . Automatic Transmissions-Front Wheel Drive
MTX . . . . . Manual Transmissions-Front Wheel Drive
AT . . . . . Automatic Transmissions-Rear Wheel Drive
MT . . . . . Manual Transmissions-Rear Wheel Drive
SOHC . . . . . Single Over Head Cam Engine
DOHC . . . . . Double Over Head Cam Engine
Export . . . . . Vehicles Built For Sale In Markets Other Than North America
Except Export . . . . . Vehicles Built For Sale In North America

DESCRIPTION - CIRCUIT INFORMATION

Each wire shown in the diagrams contains a code which identifies the main circuit, a specific part of the main circuit, gage of wire, and color. An example would be **A 2 18 LB/YL**. This is a Battery Feed circuit, level two, eighteen gauge, light blue with a yellow tracer.

WIRE COLOR CODE CHART

COLOR CODE	COLOR
BL	BLUE
BK	BLACK
BR	BROWN
DB	DARK BLUE
DG	DARK GREEN
GY	GRAY
LB	LIGHT BLUE
LG	LIGHT GREEN
OR	ORANGE
PK	PINK
RD	RED
TN	TAN
VT	VIOLET
WT	WHITE
YL	YELLOW
*	WITH TRACER

DESCRIPTION - CIRCUIT FUNCTIONS

All circuits in the diagrams use an alpha/numeric code to identify the wire and it's function. To identify which circuit code applies to a system, refer to the Circuit Identification Code Chart. This chart shows the main circuits only and does not show the secondary codes that may apply to some models.

CIRCUIT IDENTIFICATION CODE CHART

CIRCUIT	FUNCTION
A	BATTERY FEED
B	BRAKE CONTROLS
C	CLIMATE CONTROLS
D	DIAGNOSTIC CIRCUITS
E	DIMMING ILLUMINATION CIRCUITS
F	FUSED CIRCUITS
G	MONITORING CIRCUITS (GAUGES)
H	MULTIPLE
I	NOT USED
J	OPEN
K	POWERTRAIN CONTROL MODULE
L	EXTERIOR LIGHTING
M	INTERIOR LIGHTING
N	MULTIPLE
O	NOT USED
P	POWER OPTION (BATTERY FEED)
Q	POWER OPTIONS (IGNITION FEED)
R	PASSIVE RESTRAINT
S	SUSPENSION/STEERING
T	TRANSMISSION/TRANSAXLE/ TRANSFER CASE
U	OPEN
V	SPEED CONTROL, WIPER/ WASHER
W	WIPERS
X	AUDIO SYSTEMS
Y	TEMPORARY
Z	GROUNDS

DESCRIPTION - SECTION IDENTIFICATION AND INFORMATION

The wiring diagrams are grouped into individual sections. If a component is most likely found in a particular group, it will be shown complete (all wires, connectors, and pins) within that group. For example, the Auto Shutdown Relay is most likely to be found in Group 30, so it is shown there complete. It can, however, be shown partially in another group if it contains some associated wiring.

Splice diagrams in Section 8W-70 show the entire splice and provide references to other sections the splices serves. Section 8W-70 only contains splice diagrams that are not shown in their entirety somewhere else in the wiring diagrams.

Section 8W-80 shows each connector and the circuits involved with that connector. The connectors are identified using the name/number on the diagram pages.

DESCRIPTION - CONNECTOR, GROUND AND SPLICE INFORMATION

CAUTION: Not all connectors are serviced. Some connectors are serviced only with a harness. A typical example might be the Supplemental Restraint System connectors. Always check parts availability before attempting a repair.

IDENTIFICATION

In-line connectors are identified by a number, as follows:

- In-line connectors located in the engine compartment are C100 series numbers.
- In-line connectors located in the instrument panel area are C200 series numbers.
- In-line connectors located in the body are C300 series numbers.
- Jumper harness connectors are C400 series numbers.
- Grounds and ground connectors are identified with a “G” and follow the same series numbering as the in-line connectors.
- Splices are identified with an “S” and follow the same series numbering as the in-line connectors.
- Component connectors are identified by the component name instead of a number. Multiple connectors on a component use a C1, C2, etc. identifier.

LOCATIONS

Section 8W-91 contains connector/ground/splice location illustrations. The illustrations contain the connector name (or number)/ground number/splice number and component identification. Connector/ground/splice location charts in section 8W-91 reference the figure numbers of the illustrations.

The abbreviation T/O is used in the component location section to indicate a point in which the wiring harness branches out to a component. The abbreviation N/S means Not Shown in the illustrations

WARNING

WARNINGS - GENERAL

WARNINGS provide information to prevent personal injury and vehicle damage. Below is a list of general warnings that should be followed any time a vehicle is being serviced.

WARNING: Always wear safety glasses for eye protection.

WARNING: Use safety stands anytime a procedure requires being under a vehicle.

WARNING: Be sure that the ignition switch always is in the off position, unless the procedure requires it to be on.

WARNING: Set the parking brake when working on any vehicle. An automatic transmission should be in park. A manual transmission should be in neutral.

WARNING: Operate the engine only in a well-ventilated area.

WARNING: Keep away from moving parts when the engine is running, especially the fan and belts.

WARNING: To prevent serious burns, avoid contact with hot parts such as the radiator, exhaust manifold(s), tail pipe, catalytic converter and muffler.

WARNING: Do not allow flame or sparks near the battery. Gases are always present in and around the battery.

WARNING: Always remove rings, watches, loose hanging jewelry and avoid loose clothing.

DIAGNOSIS AND TESTING - WIRING HARNESS

TROUBLESHOOTING TOOLS

When diagnosing a problem in an electrical circuit there are several common tools necessary. These tools are listed and explained below.

- Jumper Wire - This is a test wire used to connect two points of a circuit. It can be used to bypass an open in a circuit.

WARNING: Never use a jumper wire across a load, such as a motor, connected between a battery feed and ground.

- Voltmeter - Used to check for voltage on a circuit. Always connect the black lead to a known good ground and the red lead to the positive side of the circuit.

CAUTION: Most of the electrical components used in today's vehicles are Solid State. When checking voltages in these circuits, use a meter with a 10 - megohm or greater impedance rating.

- Ohmmeter - Used to check the resistance between two points of a circuit. Low or no resistance in a circuit means good continuity.

CAUTION: Most of the electrical components used in today's vehicles are Solid State. When checking resistance in these circuits use a meter with a 10 - megohm or greater impedance rating. In addition, make sure the power is disconnected from the circuit. Circuits that are powered up by the vehicle's electrical system can cause damage to the equipment and provide false readings.

- Probing Tools - These tools are used for probing terminals in connectors. Select the proper size tool from Special Tool Package 6807, and insert the probing end (2) into the terminal being tested. Use the other end of the tool (1) to insert the meter probe.

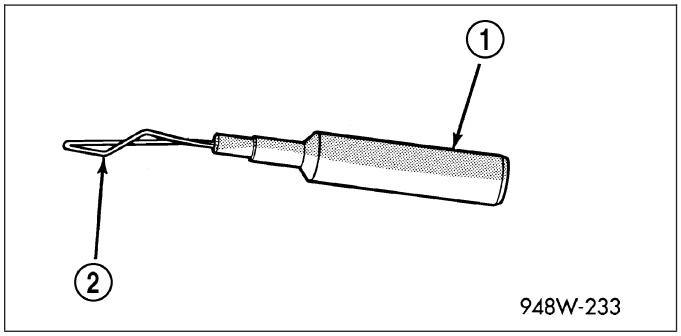

INTERMITTENT AND POOR CONNECTIONS

Most intermittent electrical problems are caused by faulty electrical connections or wiring. It is also possible for a sticking component or relay to cause a problem. Before condemning a component or wiring assembly, check the following items.

- Connectors are fully seated
- Spread terminals, or terminal push out
- Terminals in the wiring assembly are fully seated into the connector/component and locked into position
- Dirt or corrosion on the terminals. Any amount of corrosion or dirt could cause an intermittent problem
- Damaged connector/component casing exposing the item to dirt or moisture
- Wire insulation that has rubbed through causing a short to ground
- Some or all of the wiring strands broken inside of the insulation
- Wiring broken inside of the insulation

TROUBLESHOOTING WIRING PROBLEMS

When troubleshooting wiring problems there are six steps which can aid in the procedure. The steps are listed and explained below. Always check for non-factory items added to the vehicle before doing any diagnosis. If the vehicle is equipped with these items, disconnect them to verify these add-on items are not the cause of the problem.

1. Verify the problem.
2. Verify any related symptoms. Do this by performing operational checks on components that are in the same circuit. Refer to the wiring diagrams.
3. Analyze the symptoms. Use the wiring diagrams to determine what the circuit is doing, where the problem most likely is occurring and where the diagnosis will continue.
4. Isolate the problem area.
5. Repair the problem area.
6. Verify the proper operation. For this step, check for proper operation of all items on the repaired circuit. Refer to the wiring diagrams.

STANDARD PROCEDURE

STANDARD PROCEDURE - ELECTROSTATIC DISCHARGE (ESD) SENSITIVE DEVICES

All ESD sensitive components are solid state and a symbol is used to indicate this. When handling any component with this symbol, comply with the following procedures to reduce the possibility of electrostatic charge build up on the body and inadvertent discharge into the component. If it is not known whether the part is ESD sensitive, assume that it is.

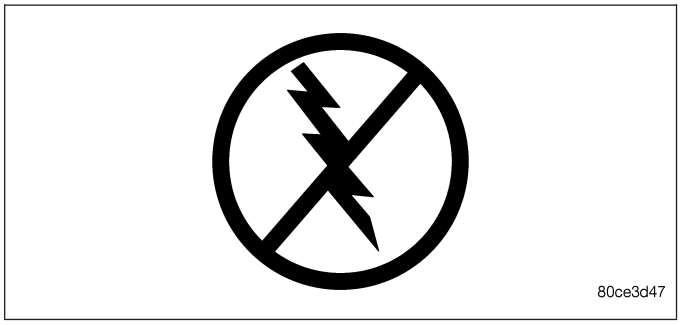

1. Always touch a known good ground before handling the part. This should be repeated while handling the part and more frequently after sliding across a seat, sitting down from a standing position, or walking a distance.
2. Avoid touching electrical terminals of the part, unless instructed to do so by a written procedure.
3. When using a voltmeter, be sure to connect the ground lead first.
4. Do not remove the part form it’s protective packing until it is time to install the part.
5. Before removing the part from it’s pakage, ground the pakage to a known good ground on the vehicle.

STANDARD PROCEDURE - TESTING OF VOLTAGE POTENTIAL

1. Connect the ground lead of a voltmeter to a known good ground.
2. Connect the other lead of the voltmeter to the selected test point. The vehicle ignition may need to be turned ON to check voltage. Refer to the appropriate test procedure.

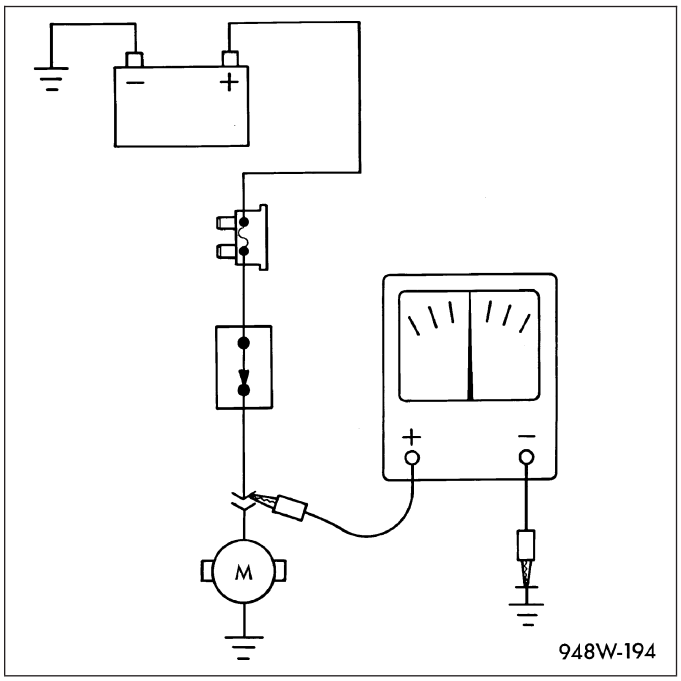

STANDARD PROCEDURE - TESTING FOR CONTINUITY

1. Remove the fuse (1) for the circuit being checked or, disconnect the battery.
2. Connect one lead of the ohmmeter to one side of the circuit being tested
3. Connect the other lead to the other end of the circuit being tested. Low or no resistance means good continuity.

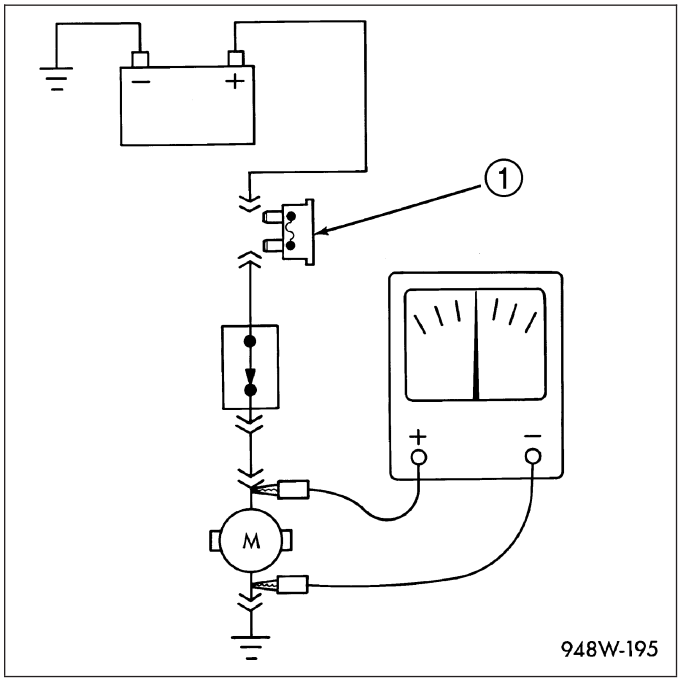

STANDARD PROCEDURE - TESTING FOR A SHORT TO GROUND

1. Remove the fuse and disconnect all items involved with the fuse.
2. Connect a test light or a voltmeter across the terminals of the fuse.
3. Starting at the fuse block, wiggle the wiring harness about six to eight inches apart and watch the voltmeter/test lamp.
4. If the voltmeter registers voltage or the test lamp glows, there is a short to ground in that general area of the wiring harness.

STANDARD PROCEDURE - TESTING FOR A SHORT TO GROUND ON FUSES POWERING SEVERAL LOADS

1. Refer to the wiring diagrams and disconnect or isolate all items on the suspected fused circuits.
2. Replace the blown fuse.
3. Supply power to the fuse by turning ON the ignition switch or re-connecting the battery.
4. Start connecting or energizing the items in the fuse circuit one at a time. When the fuse blows the circuit with the short to ground has been isolated.

STANDARD PROCEDURE - TESTING FOR A VOLTAGE DROP

1. Connect the positive lead of the voltmeter to the side of the circuit closest to the battery.
2. Connect the other lead of the voltmeter to the other side of the switch, component or circuit.
3. Operate the item.
4. The voltmeter will show the difference in voltage between the two points.

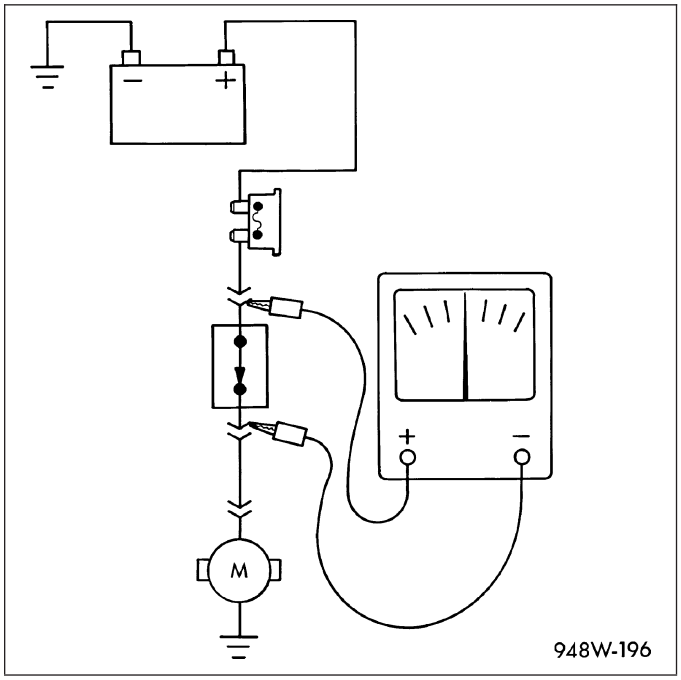

SPECIAL TOOLS

WIRING/TERMINAL

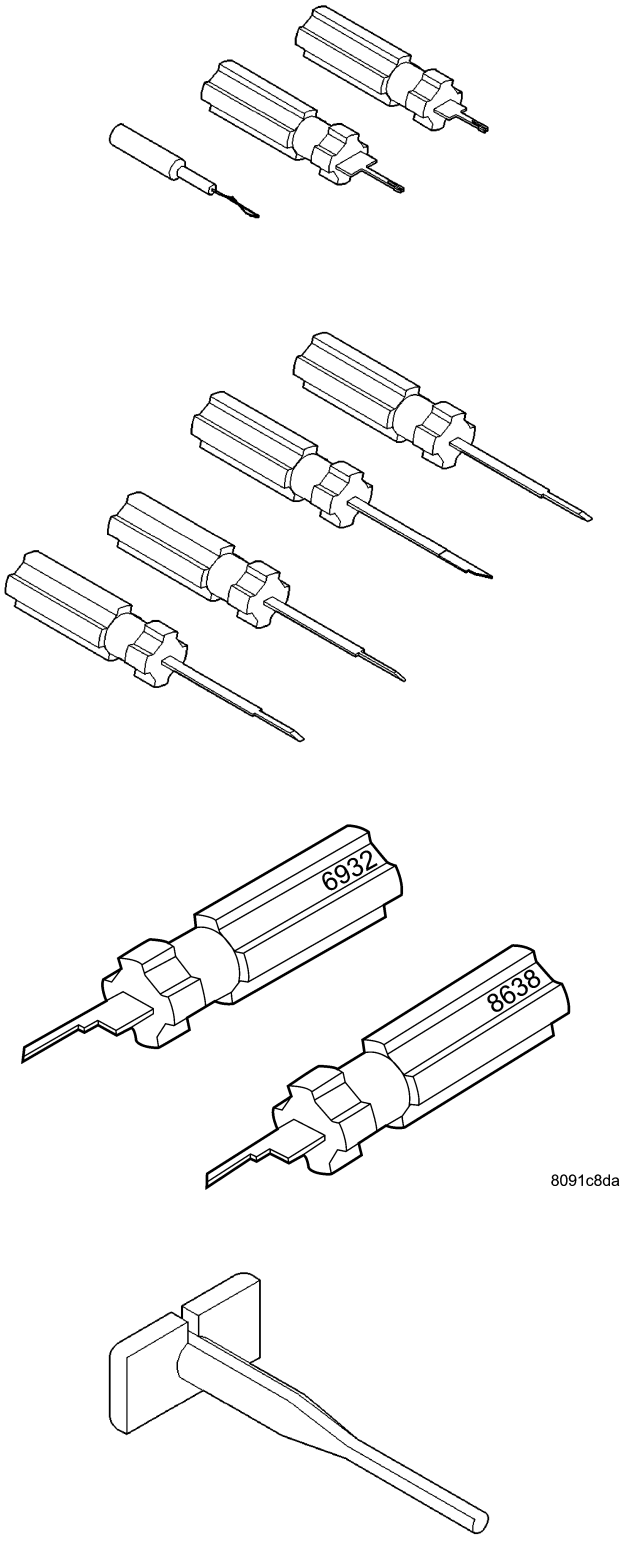

CONNECTOR

REMOVAL

1. Disconnect battery.
2. Release Connector Lock (2).
3. Disconnect the connector (3) being repaired from its mating half/component.
4. Remove the dress cover (if applicable) (1).

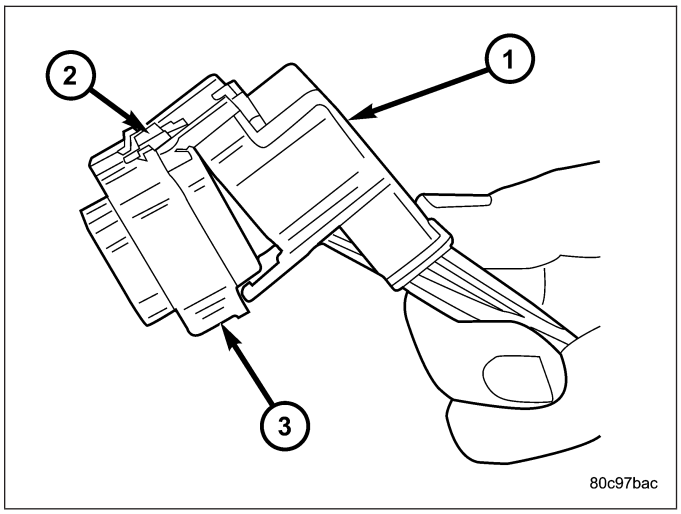

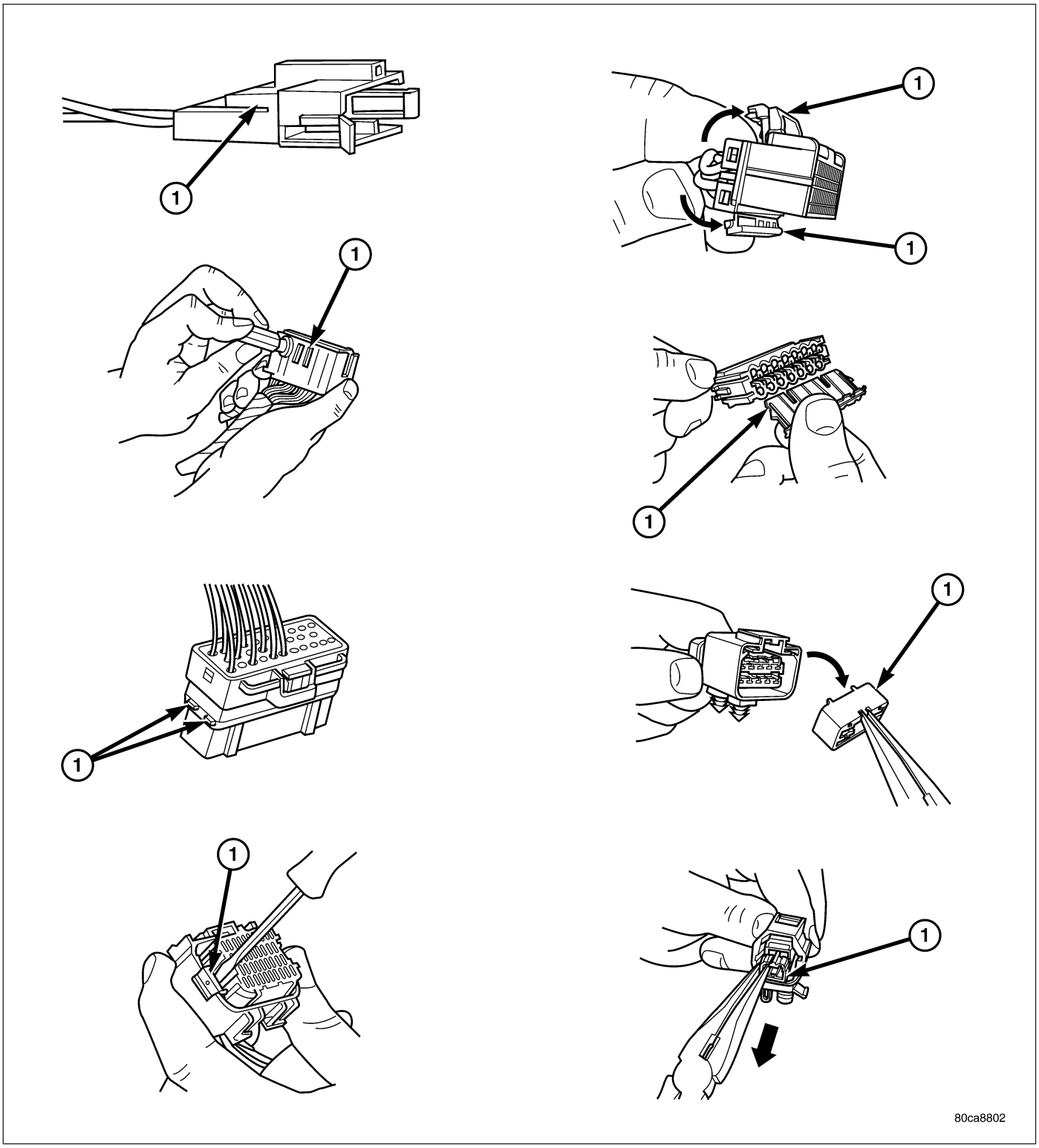

5. Release the Secondary Terminal Lock, if required (1).

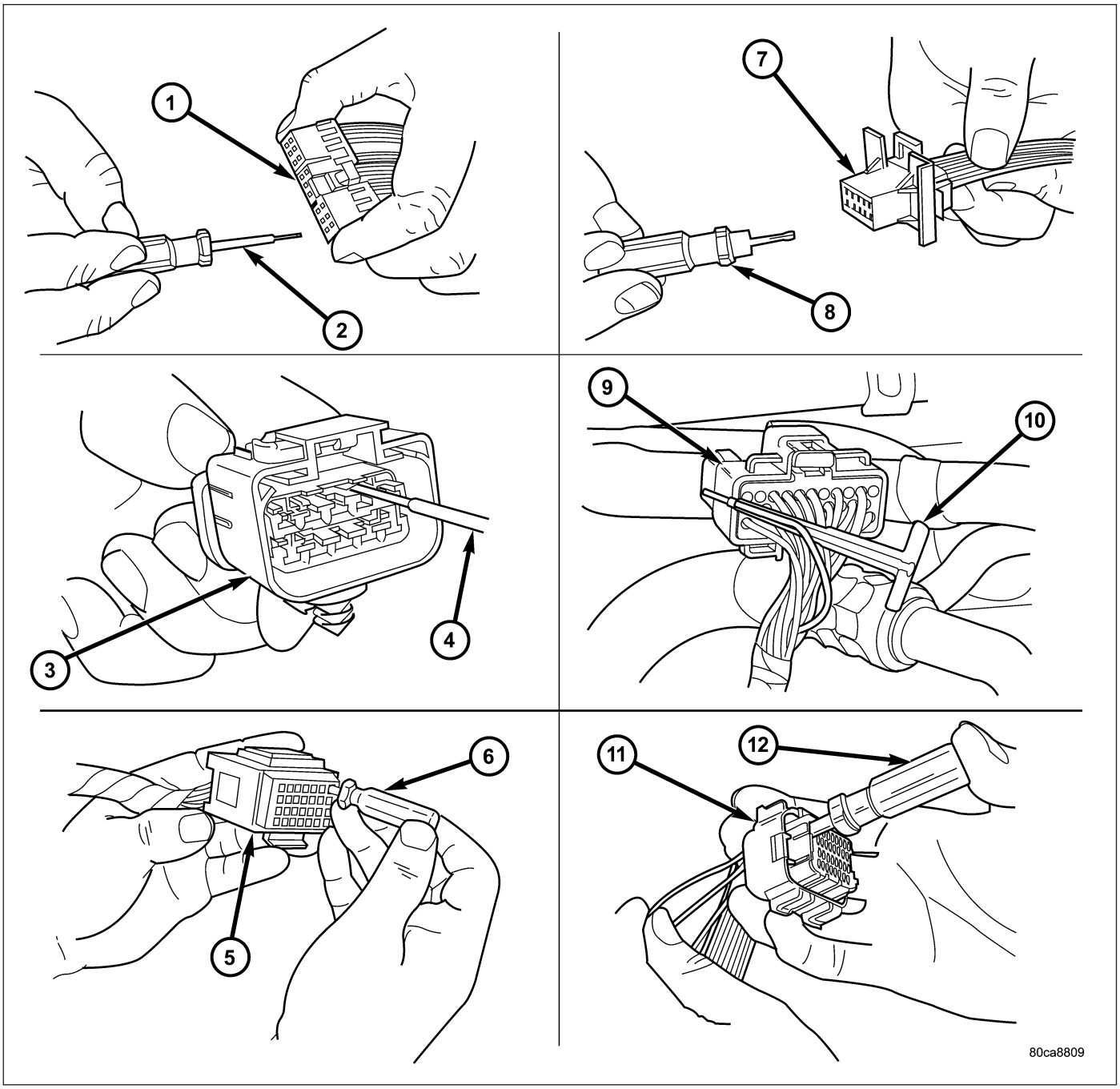

1 - TYPICAL CONNECTOR
2 - PICK FROM SPECIAL TOOL KIT 6680
3 - APEX CONNECTOR
4 - PICK FROM SPECIAL TOOL KIT 6680
5 - AUGAT CONNECTOR
6 - SPECIAL TOOL 6932
7 - MOLEX CONNECTOR
8 - SPECIAL TOOL 6742
9 - THOMAS AND BETTS CONNECTOR
10 - SPECIAL TOOL 6934
11 - TYCO CONNECTOR
12 - SPECIAL TOOL 8638

6. Position the connector locking finger away from the terminal using the proper special tool. Pull on the wire to remove the terminal from the connector.

INSTALLATION

1. Insert the removed terminal in the same cavity on the repair connector.

2. Repeat steps for each terminal in the connector, being sure that all wires are inserted into the proper cavities. For additional connector pin-out identification, refer to the wiring diagrams.
3. When the connector is re-assembled, the secondary terminal lock must be placed in the locked position to prevent terminal push out.
4. Replace dress cover (if applicable).
5. Connect connector to its mating half/component.
6. Connect battery and test all affected systems.

DIODE

REMOVAL

1. Disconnect the battery.
2. Locate the diode in the harness, and remove the protective covering.
3. Remove the diode from the harness, pay attention to the current flow direction (1) (2) (3).

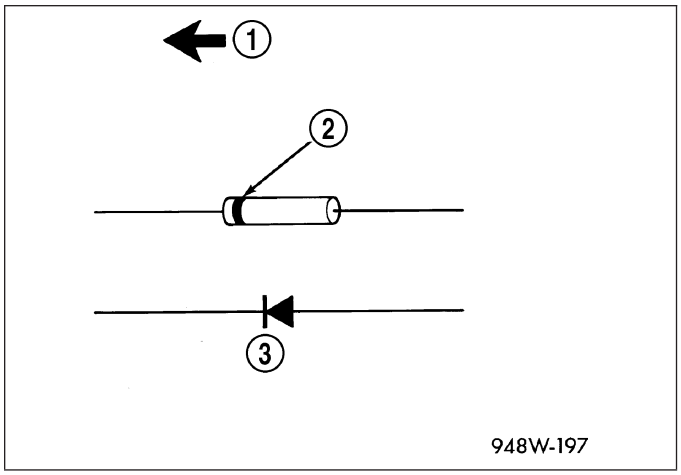

INSTALLATION

1. Remove the insulation from the wires in the harness. Only remove enough insulation to solder in the new diode.
2. Install the new diode in the harness, making sure current flow is correct. If necessary, refer to the appropriate wiring diagram for current flow.
3. Solder the connection together using rosin core type solder only. **Do not use acid core solder.**
4. Tape the diode to the harness using electrical tape. Make sure the diode is completely sealed from the elements.
5. Re-connect the battery and test affected systems.

TERMINAL

REMOVAL

1. Follow steps for removing terminals described in the connector removal section.
2. Cut the wire 6 inches from the back of the connector.

INSTALLATION

1. Select a wire from the terminal repair kit that best matches the color and gage of the wire being repaired.
2. Cut the repair wire to the proper length and remove one–half (1/2) inch of insulation.
3. Splice the repair wire to the wire harness (see wire splicing procedure) .
4. Insert the repaired wire into the connector.
5. Install the connector locking wedge, if required, and reconnect the connector to its mating half/component.
6. Re-tape the wire harness starting at 1–1/2 inches behind the connector and 2 inches past the repair.
7. Connect battery and test all affected systems.

WIRE

STANDARD PROCEDURE - WIRE SPLICING

When splicing a wire, it is important that the correct gage be used as shown in the wiring diagrams.

1. Remove one-half (1/2) inch of insulation from each wire that needs to be spliced.
2. Place a piece of adhesive lined heat shrink tubing on one side of the wire. Make sure the tubing will be long enough to cover and seal the entire repair area.
3. Place the strands of wire overlapping each other inside of the splice clip (1).

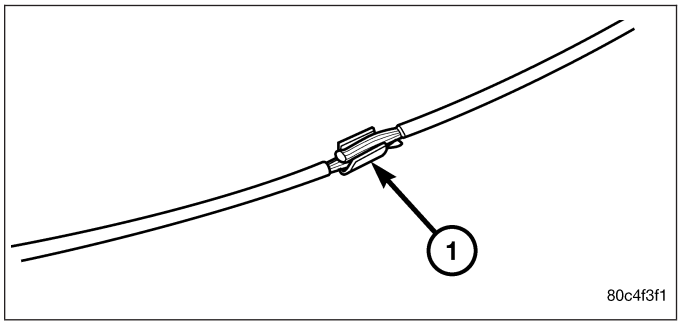

4. Using crimping tool (1), Mopar p/n 05019912AA, crimp the splice clip and wires together.

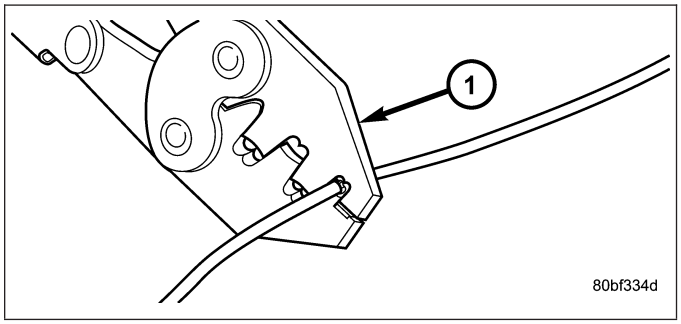

5. Solder (3) the connection (2) together using rosin core type solder (1) only.

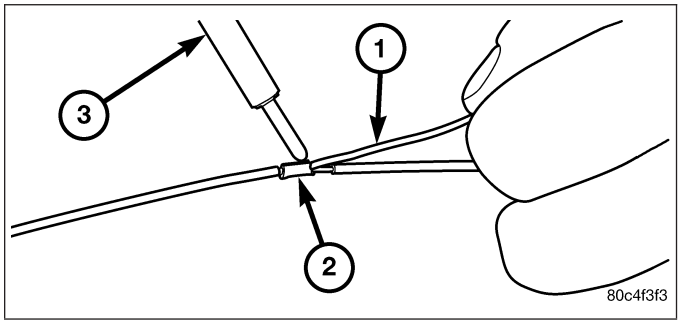

CAUTION: DO NOT USE ACID CORE SOLDER.

6. Center the heat shrink tubing (2) over the joint and heat using a heat gun. Heat the joint until the tubing is tightly sealed and sealant (1) comes out of both ends of the tubing.

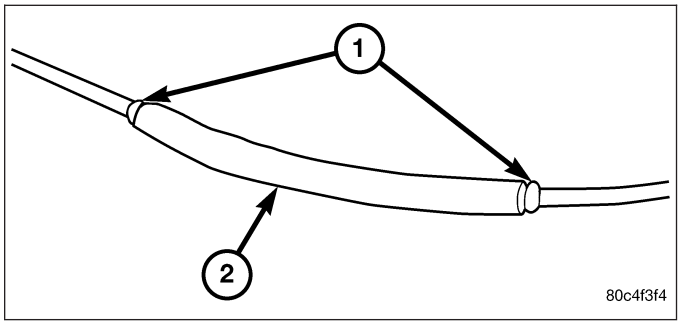

8W-02 COMPONENT INDEX

Component	Page
Actuator-Fuel Control	8W-30
Actuator-Mode Doors	8W-42
Actuator-Recirculation Door	8W-42
Actuators-Blend Door	8W-42
Airbag-Squibs	8W-43
Airbags-Side Curtain	8W-43
Amplifier-Radio	8W-47
Amplifier-Subwoofer	8W-47
Assembly-EGR Valve	8W-30
Assembly-Natural Vacuum Leak Detection	8W-30
Assembly-Shift Motor/Mode Sensor	8W-31
Assembly-Transmission Solenoid/TRS	8W-31
Assembly-Transmission Solenoid	8W-31
Assembly-Transmission Throttle Valve	8W-31
Assembly-Winch	8W-56
Backlite-Heated	8W-48
Battery	8W-13
Battery-Auxiliary	8W-13
Capacitor-Ignition	8W-30
Circuit Breaker-Power Window	8W-13
Clockspring	8W-33, 41, 43, 47
Cluster	8W-40
Clutch-A/C Compressor	8W-42
Coils-Ignition	8W-30
Control-A/C-Heater	8W-42
Data Link Connectors	8W-18
Drive-Fan-Radiator	8W-30
Fuse Holder	8W-13
Fuses	8W-13
Fusible Link	8W-13
Gauge-Engine Oil Temperature	8W-40
Generator	8W-20
Grounds	8W-15
Heater-Fuel	8W-30
Heater-Intake Airs	8W-30
Heaters-Seat Cushion	8W-63
Horns	8W-41
Injectors-Fuel	8W-30
Lamp-Bar-Tailgate	8W-51
Lamp-Center Bezel	8W-44
Lamp-CHMSL-Aftermarket	8W-51
Lamp-Clearances	8W-50
Lamp-Dome-Rear	8W-44
Lamp-Glove Box	8W-44
Lamp-High Mounted Stop	8W-51
Lamp-Reading-Front	8W-44
Lamps-Fender	8W-51
Lamps-Fog	8W-50
Lamps-Headlamp	8W-50
Lamps-License	8W-51
Lamps-Park/Turn	8W-50, 52
Lamps-Tail Stop/Turn	8W-51
Lamps-Tail/Stop	8W-52
Lamps-Vanity	8W-44
Lamp-Underhood	8W-44
Latches-Door	8W-39, 61
Lumbar Motor-Passenger	8W-63
Mirror-Inside Rearview	8W-49, 55
Mirrors-Outside Rearview	8W-62
Module-Anti-Lock Brakes	8W-34, 35
Module-Brake Provision	8W-54
Module-Electronic Overhead	8W-49
Module-Engine Control	8W-30
Module-Final Drive Control	8W-31
Module-Front Controls	8W-13
Module-Fuel Pump	8W-30
Module-Hands Free	8W-55
Module-Heated Seats	8W-63
Module-Integrated Power	8W-13
Module-Occupant Restraint Controller	8W-43
Module-Powertrain Control	8W-30, 31
Module-Sentry Key Immobilizer	8W-39
Module-Transfer Case Control	8W-31
Motor-Adjustable Pedal	8W-56
Motor-Blower	8W-42
Motor-Condenser Fan	8W-42
Motor-IAC	8W-30
Motor-Seat Adjusters	8W-63
Motors-Lumbar	8W-63
Motors-Power Window	8W-60
Motor-Sunroof	8W-64
Motor-Windshield Wiper	8W-53
Power Outlets	8W-41
PTCS	8W-13
PTO Switch	8W-30
Pump-Fuel Injection	8W-30
Pump-Leak Detection	8W-30
Pump-Washer-Windshield	8W-53
Radio	8W-47
Receiver-Satellite	8W-47
Relay-Adjustable Pedals	8W-56
Relay-Auto Shut Down	8W-30
Relay-Blower Motor	8W-42
Relay-Clutch-A/C Compressor	8W-42
Relay-Condenser Fan	8W-42
Relay-Fog Lamp	8W-50
Relay-Fuel Heater	8W-30
Relay-Fuel Pump	8W-30

Component	Page
Relay-Heated Mirror	8W-62
Relay-Horn	8W-41
Relay-Ignition Run-Acc	8W-13
Relay-Intake Air Heaters	8W-30
Relay-Oxygen Sensor Downstream	8W-30
Relay-Park Lamp	8W-50, 52
Relay-Rear Window Defogger	8W-48
Relay-Run	8W-13
Relays-Starter	8W-21
Relays-Trailer Tow	8W-54
Relays-Wiper	8W-53
Relay-Transmission Control	8W-31
Resistor Block-Blower Motor	8W-42
Seat Belts-Tensioner	8W-43
Seat Belt-Tension Reducer-Driver	8W-40, 43
Sensor-Accelerator Pedal Position	8W-30
Sensor-Ambient Air Temperature	8W-49
Sensor-Battery Temperature	8W-30
Sensor-Brake Fluid Level	8W-34, 35
Sensor-Camshaft Position	8W-30
Sensor-Crankshaft Position	8W-30
Sensor-Engine Coolant Temperature	8W-30
Sensor-Engine Oil Pressure	8W-30
Sensor-Engine Oil Temperature	8W-30, 40
Sensor-Evaporator Temperature	8W-42
Sensor-Intake Air Temperature	8W-30
Sensor-Knocks	8W-30
Sensor-Line Pressure	8W-31
Sensor-MAP	8W-30
Sensors-Oxygen	8W-30
Sensors-Side Impact	8W-43
Sensors-Speed	8W-31
Sensors-Wheel Speed	8W-34, 35
Sensor-Temperature/Pressure Intake	8W-30
Sensor-Temperature/Pressure-MAP	8W-30
Sensor-Throttle Position	8W-30
Sensor-Transfer Case Position	8W-31
Sensor-Transmission Range	8W-31
Sensor-Washer Fluid Level	8W-53
Sensor-Water In Fuel	8W-30
Servo-Speed Control	8W-33
Solenoid-Brake Transmission Shift Interlock	8W-40
Solenoid-EVAP/Purge	8W-30
Solenoid-Radiator Fan	8W-30
Solenoid-Reverse Lock-Out	8W-30
Solenoids-Locker	8W-31
Solenoid-Wastegate	8W-30
Speakers	8W-47
Splices	8W-70
Starter	8W-21
Switch-Adjustable Pedals	8W-56
Switch-Axle Lock	8W-31
Switch-Back Up Lamp	8W-51
Switch-Clutch Interlock	8W-21
Switch-Cylinder Lock-Driver	8W-61
Switch-Disconnecting Stabilizer Bar	8W-31
Switch-Door Lock-Passenger	8W-61
Switch-Engine Oil Pressure	8W-30
Switches-Heated Seat	8W-63
Switches-Power Window	8W-60
Switches-Remote Radio	8W-47
Switches-Seat Belt	8W-40
Switches-Speed Control	8W-33
Switch-Headlamp	8W-40
Switch-Heated Seat-Passenger	8W-63
Switch-Horn	8W-41
Switch-Ignition	8W-13
Switch-Multifunction	8W-40
Switch-Oil Pressure	8W-30
Switch-Parking Brake	8W-40
Switch-Passenger Airbag On/Off	8W-43
Switch-Power Steering Pressure	8W-30
Switch-Push-Button Starter	8W-21
Switch-Seat-Driver	8W-63
Switch-Stop Lamp	8W-33
Switch-Sunroof	8W-64
Switch-Tow/Haul Overdrive	8W-31
Switch-Transfer Case Selector	8W-31
Switch-Window/Door Lock-Driver	8W-60, 61, 62
Throttle Body	8W-30
Transducer-A/C Pressure	8W-42
Wiring-Trailer Tow 4-Way	8W-54
Wiring-Trailer Tow 7-Way	8W-54

8W-13 INTEGRATED POWER MODULE

Component	Page
Amplifier-Radio	8W-13-23, 39
Amplifier-Subwoofer	8W-13-23, 40
Assembly-Natural Vacuum Leak Detection	8W-13-28
Assembly-Transmission Solenoid	8W-13-28, 29
Assembly-Transmission Solenoid/TRS	8W-13-27, 41, 48
Assembly-Winch	8W-13-13
Backlite-Heated	8W-13-40
Battery	8W-13-13
Battery-Auxiliary	8W-13-13
Capacitor-Ignition	8W-13-15
Circuit Breaker-Power Window	8W-13-24
Cluster	8W-13-20, 22, 23, 33, 39
Clutch-A/C Compressor	8W-13-38
Coil-Ignition-Left	8W-13-19
Coil-Ignition-No. 1	8W-13-16, 17
Coil-Ignition-No. 2	8W-13-16, 18
Coil-Ignition-No. 3	8W-13-16, 17
Coil-Ignition-No. 4	8W-13-16, 18
Coil-Ignition-No. 5	8W-13-15, 17
Coil-Ignition-No. 6	8W-13-15, 18
Coil-Ignition-No. 7	8W-13-15, 17
Coil-Ignition-No. 8	8W-13-15, 18
Coil-Ignition-Right	8W-13-19
Control-A/C-Heater	8W-13-26, 40
Data Link Connector	8W-13-33, 45
Drive-Fan-Radiator	8W-13-26
Fuse 1	8W-13-14
Fuse 2	8W-13-14
Fuse 3	8W-13-20
Fuse 4	8W-13-20, 25
Fuse 5	8W-13-27, 28, 29
Fuse 6	8W-13-31
Fuse 7	8W-13-31
Fuse 8	8W-13-32
Fuse 9	8W-13-24
Fuse 10	8W-13-20
Fuse 11	8W-13-33
Fuse 12	8W-13-29, 34
Fuse 13	8W-13-33
Fuse 14	8W-13-25, 35
Fuse 15	8W-13-36
Fuse 16	8W-13-38
Fuse 17	8W-13-38
Fuse 18	8W-13-33
Fuse 19	8W-13-39
Fuse 20	8W-13-20
Fuse 21	8W-13-39
Fuse 22	8W-13-39
Fuse 23	8W-13-39
Fuse 24	8W-13-33
Fuse 25	8W-13-39
Fuse 26	8W-13-40
Fuse 27	8W-13-26
Fuse 28	8W-13-21
Fuse 29	8W-13-23
Fuse 30	8W-13-34
Fuse 32	8W-13-36
Fuse 33	8W-13-36
Fuse 34	8W-13-36
Fuse 35	8W-13-41
Fuse 36	8W-13-26
Fuse 38	8W-13-41
Fuse 39	8W-13-38
Fuse 40	8W-13-42
Fuse 41	8W-13-43
Fuse 42	8W-13-42
Fuse 43	8W-13-40
Fuse 45	8W-13-43
Fuse 46	8W-13-44
Fuse 47	8W-13-44
Fuse 48	8W-13-42
Fuse 49	8W-13-14
Fuse 50	8W-13-29, 30
Fuse 51	8W-13-33
Fuse 52	8W-13-41
Fuse 53	8W-13-40
Fuse Holder	8W-13-23, 24
Fuses	8W-13-5, 6
Fusible Link	8W-13-13
G100	8W-13-13
G101	8W-13-13
G102	8W-13-13
G103	8W-13-27, 46, 47
G104	8W-13-24, 25, 27, 29, 32, 38, 46, 47
G106	8W-13-32
G107	8W-13-34
G108	8W-13-13
G109	8W-13-13
G201	8W-13-20
Gauge-Engine Oil Temperature	8W-13-22
Generator	8W-13-13, 28
Heater-Fuel	8W-13-29
Horn-No. 1	8W-13-43
Horn-No. 2	8W-13-43
Injector-Fuel-No. 1	8W-13-16, 17, 19
Injector-Fuel-No. 2	8W-13-16, 18, 19
Injector-Fuel-No. 3	8W-13-16, 17, 19
Injector-Fuel-No. 4	8W-13-16, 18, 19
Injector-Fuel-No. 5	8W-13-16, 17, 19
Injector-Fuel-No. 6	8W-13-16, 18, 19
Injector-Fuel-No. 7	8W-13-15, 17, 19
Injector-Fuel-No. 8	8W-13-15, 18, 19
Injector-Fuel-No. 9	8W-13-19
Injector-Fuel-No. 10	8W-13-19

Component	Page
Lamp-Bar-Tailgate	8W-13-36
Lamp-Center Bezel	8W-13-37
Lamp-Clearance No. 1	8W-13-37
Lamp-Clearance No. 2	8W-13-37
Lamp-Clearance No. 3	8W-13-37
Lamp-Clearance No. 4	8W-13-37
Lamp-Clearance No. 5	8W-13-37
Lamp-Fender-Front Left	8W-13-37
Lamp-Fender-Front Right	8W-13-37
Lamp-Fender-Rear Left	8W-13-37
Lamp-Fender-Rear Right	8W-13-37
Lamp-Fog-Left	8W-13-43
Lamp-Fog-Right	8W-13-43
Lamp-Headlamp-Left	8W-13-45
Lamp-Headlamp-Right	8W-13-45
Lamp-License-Left	8W-13-36
Lamp-License-Right	8W-13-36
Lamp-Park/Turn-Left Front	8W-13-36, 46
Lamp-Park/Turn-Right Front	8W-13-36, 46
Lamp-Tail Stop/Turn-Left	8W-13-36, 45, 46, 47
Lamp-Tail Stop/Turn-Right	8W-13-37, 45, 46, 47
Lamp-Underhood	8W-13-33
Mirror-Inside Rearview	8W-13-22, 47
Mirror-Outside Rearview-Driver	8W-13-26
Mirror-Outside Rearview-Passenger	8W-13-26
Module-Anti-Lock Brakes	8W-13-31, 41
Module-Brake Provision	8W-13-14
Module-Electronic Overhead	8W-13-22, 39
Module-Engine Control	8W-13-13, 29, 30, 35, 38
Module-Final Drive Control	8W-13-30, 40
Module-Front Controls	8W-13-12, 30, 32, 33, 36, 42, 43, 44, 45, 46, 47
Module-Fuel Pump	8W-13-38
Module-Hands Free	8W-13-23, 33
Module-Heated Seats	8W-13-42
Module-Integrated Power	8W-13-3, 4, 13, 14, 15, 20, 21, 23, 24, 25, 26, 27, 28, 29, 30, 31, 32, 33, 34, 35, 36, 38, 39, 40, 41, 42, 43, 44, 45, 46, 47
Module-Occupant Restraint Controller	8W-13-40, 41
Module-Powertrain Control	8W-13-14, 15, 20, 21, 27, 28, 30, 34, 35, 38, 39
Module-Sentry Key Immobilizer	8W-13-30, 39
Module-Transfer Case Control	8W-13-35, 40
Motor-Blower	8W-13-20, 25
Motor-Condenser Fan	8W-13-34
Motor-Sunroof	8W-13-23, 24
Motor-Windshield Wiper	8W-13-32, 47
Power Outlet-Console	8W-13-39, 42
Power Outlet-Instrument Panel	8W-13-23
Power Outlet-Rear	8W-13-23
PTC No. 1	8W-13-38
PTC No. 2	8W-13-23
PTC No. 5	8W-13-33
Pump-Washer-Windshield	8W-13-47
Radio	8W-13-23, 33

Component	Page
Relay-Adjustable Pedals	8W-13-42
Relay-Auto Shut Down	8W-13-14
Relay-Blower Motor	8W-13-25
Relay-Clutch-A/C Compressor	8W-13-38
Relay-Condenser Fan	8W-13-34
Relay-Fog Lamp	8W-13-43
Relay-Fuel Heater	8W-13-29
Relay-Fuel Pump	8W-13-38
Relay-Heated Mirror	8W-13-26
Relay-Horn	8W-13-43
Relay-Ignition Run-Acc	8W-13-24
Relay-Intake Air Heater No. 1	8W-13-13
Relay-Intake Air Heater No. 2	8W-13-13
Relay-Oxygen Sensor Downstream	8W-13-14
Relay-Park Lamp	8W-13-36
Relay-Rear Window Defogger	8W-13-40
Relay-Run	8W-13-25
Relay-Starter	8W-13-23
Relay-Starter Motor	8W-13-35
Relay-Trailer Tow-Left Turn	8W-13-44
Relay-Trailer Tow-Right Turn	8W-13-44
Relay-Transmission Control	8W-13-27, 28, 29
Relay-Wiper High/Low	8W-13-32
Relay-Wiper On/Off	8W-13-32
Seat Belt-Tension Reducer-Driver	8W-13-23
Sensor-Ambient Air Temperature	8W-13-45, 47
Sensor-Oxygen-Left Front	8W-13-14
Sensor-Oxygen-Left Rear	8W-13-14
Sensor-Oxygen-Right Front	8W-13-14
Sensor-Oxygen-Right Rear	8W-13-14
Sensor-Transmission Range	8W-13-35, 41, 48
Sensor-Washer Fluid Level	8W-13-47
Solenoid-EVAP/Purge	8W-13-30
Solenoid-Radiator Fan	8W-13-15
Solenoid-Reverse Lock-Out	8W-13-28
Solenoid-Wastegate	8W-13-26
Starter	8W-13-13, 35
Switch-Adjustable Pedals	8W-13-26, 42
Switch-Back Up Lamp	8W-13-41, 48
Switch-Clutch Interlock	8W-13-34, 35
Switch-Door Lock-Passenger	8W-13-22
Switch-Headlamp	8W-13-43
Switch-Ignition	8W-13-20, 21, 23, 24, 25
Switch-Passenger Airbag On/Off	8W-13-40
Switch-Push-Button Starter	8W-13-21
Switch-Seat-Driver	8W-13-31
Switch-Seat-Passenger	8W-13-31
Switch-Stop Lamp	8W-13-30, 33
Switch-Transfer Case Selector	8W-13-21
Switch-Window/Door Lock-Driver	8W-13-20, 24, 42
Wiring-Trailer Tow 4-Way	8W-13-36, 44
Wiring-Trailer Tow 7-Way	8W-13-36, 39, 44, 47

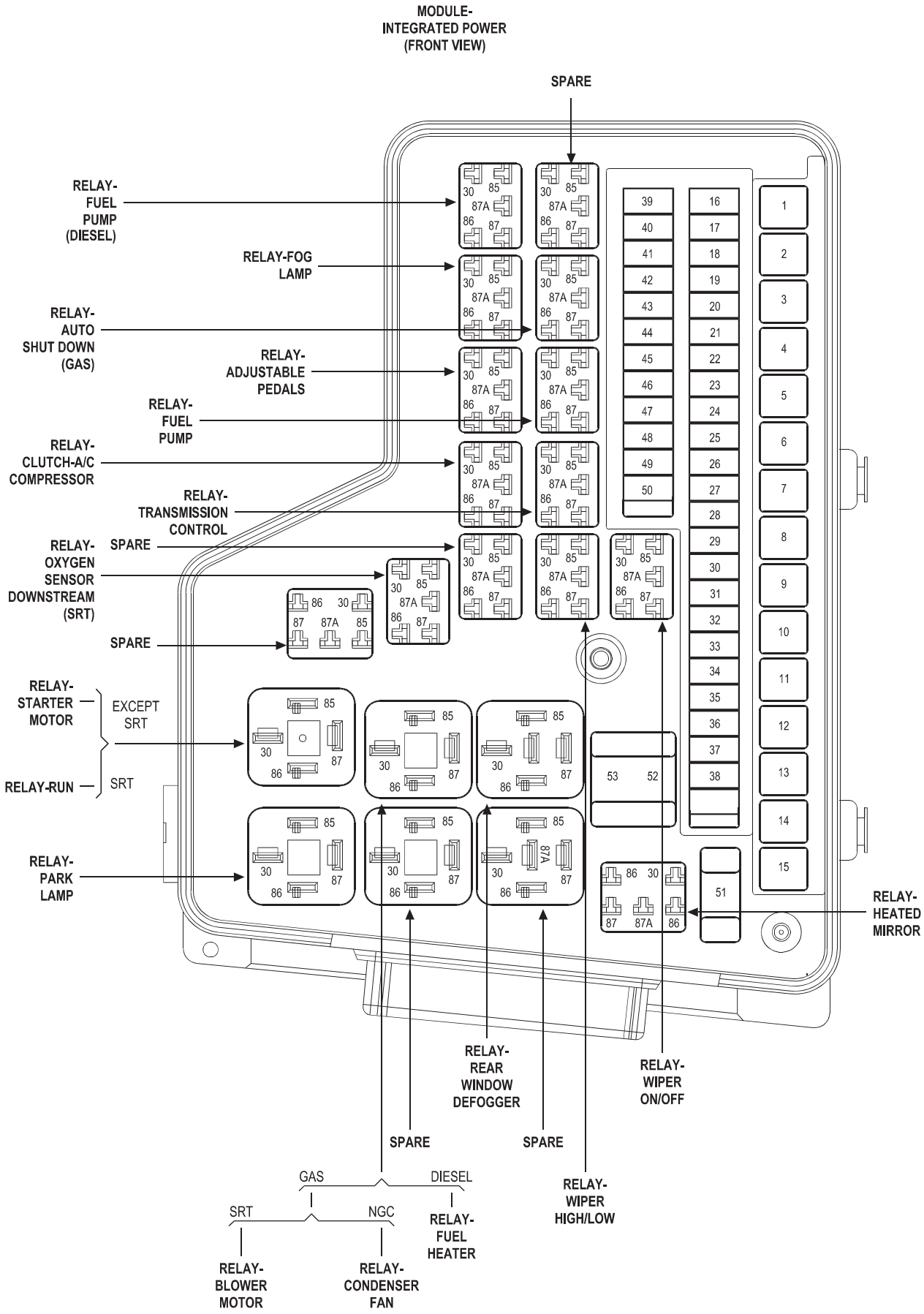
MODULE-
INTEGRATED POWER
(FRONT VIEW)
SPARE
RELAY-
FUEL
PUMP
(DIESEL)
RELAY-FOG
LAMP
RELAY-
AUTO
SHUT DOWN
(GAS)
RELAY-
ADJUSTABLE
PEDALS
RELAY-
FUEL
PUMP
RELAY-
CLUTCH-A/C
COMPRESSOR
RELAY-
TRANSMISSION
CONTROL
SPARE
RELAY-
OXYGEN
SENSOR
DOWNSTREAM
(SRT)
SPARE
RELAY-
STARTER
MOTOR
EXCEPT
SRT
RELAY-RUN
SRT
RELAY-
PARK
LAMP
RELAY-
HEATED
MIRROR
RELAY-
REAR
WINDOW
DEFOGGER
RELAY-
WIPER
ON/OFF
SPARE
SPARE
GAS
DIESEL
SRT
NGC
RELAY-
FUEL
HEATER
RELAY-
WIPER
HIGH/LOW
RELAY-
BLOWER
MOTOR
RELAY-
CONDENSER
FAN

MODULE-
INTEGRATED POWER
(REAR VIEW)

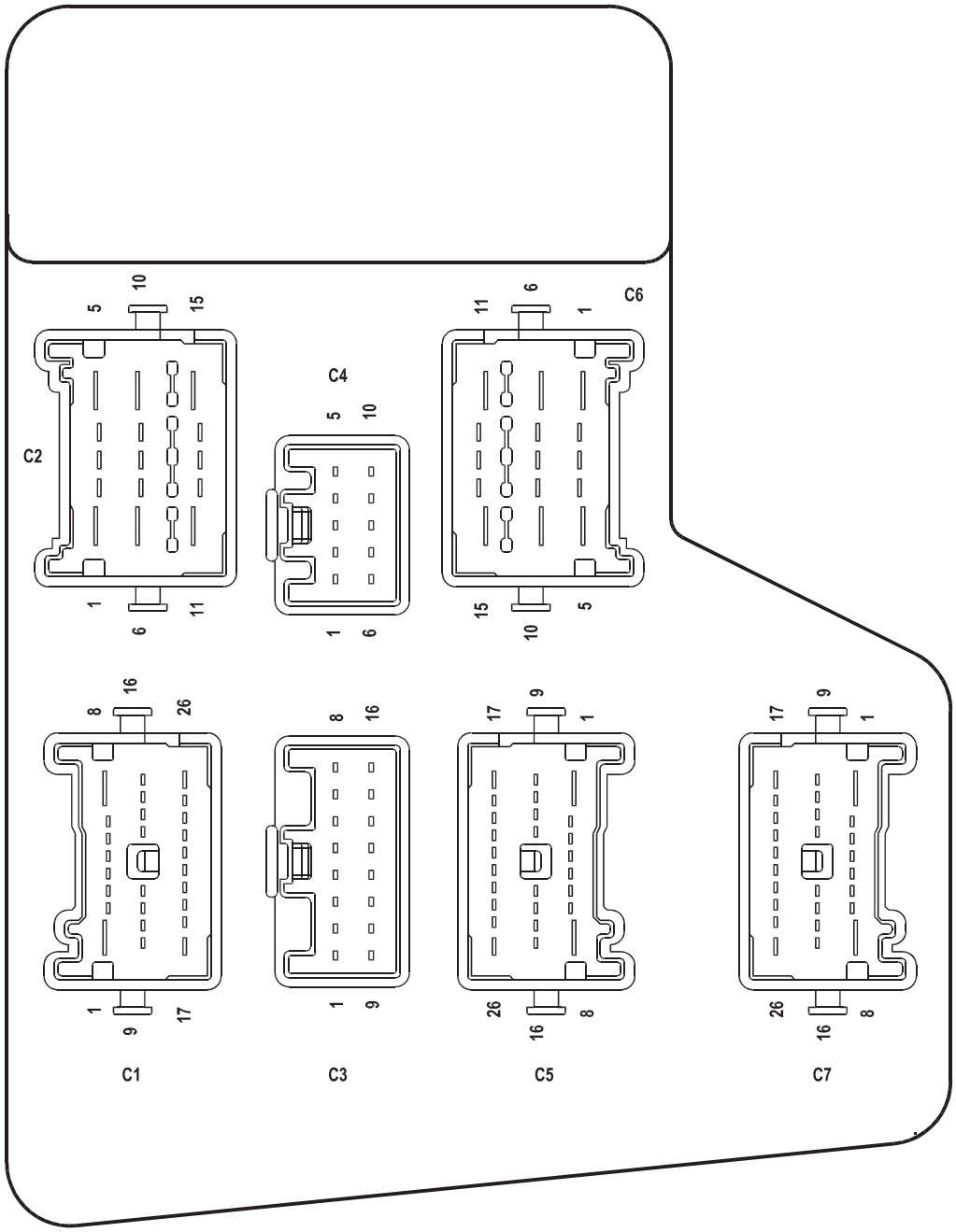

FUSES
(IPM)

FUSE NO.	AMPS	FUSED CIRCUIT	FUNCTION
1	30A	A400 14TN/RD ◆◆◆◆	FUSED B(+)
2	30A	INTERNAL ○	FUSED B(+)
3	30A	A921 16RD ◪◪◪◪	FUSED B(+)
4	40A	A970 10RD	FUSED B(+)
5	20A	INTERNAL	FUSED B(+)
6	40A	A111 14DG/RD	FUSED B(+)
7	50A	A210 10OR/RD ◪◪◪	FUSED B(+)
7	50A	A210 12OR/RD ◪◪◪◪	FUSED B(+)
8	30A	INTERNAL	FUSED B(+)
9	40A	A991 10RD ◪◪◪◪	FUSED B(+)
9	40A	A991 12RD ◪◪◪	FUSED B(+)
10	40A	A981 14RD ◪◪◪◪	FUSED B(+)
10	40A	A981 12RD ◪◪◪	FUSED B(+)
11	30A	INTERNAL	FUSED B(+)
12	40A	A960 14RD ○○	FUSED B(+)
12	30A	A16 16RD/BR ◪	FUSED B(+)
13	30A	INTERNAL	FUSED B(+)
14	30A	INTERNAL	FUSED B(+)
15	50A	INTERNAL	FUSED B(+)
16	10A	INTERNAL	FUSED B(+)
17	20A	INTERNAL ○	FUSED B(+)
18	15A	A944 20RD	FUSED B(+)
19	20A	A100 14RD/VT ◆◆◆	FUSED B(+)
20	25A	A951 16RD	FUSED B(+)
21	20A	A116 18YL/RD ◪◪◪◪	FUSED B(+)
21	20A	A116 16YL/RD ◪◪◪	FUSED B(+)
22	20A	A941 18RD	FUSED B(+)
23	15A	A919 20RD	FUSED B(+)
24	15A	A103 18GY/RD	FUSED B(+)
25	20A	A205 18RD/OR ◪◪◪◪	FUSED B(+)
25	20A	A205 16RD/OR ◪◪◪	FUSED B(+)
26	25A	INTERNAL	FUSED B(+)
27	15A	INTERNAL	FUSED B(+)
28	10A	F21 20PK/DG	FUSED IGNITION SWITCH OUTPUT (RUN-START)
29	20A	F984 18PK/YL ◪◪◪◪	FUSED IGNITION SWITCH OUTPUT (RUN-ACC)
29	20A	F984 16PK/YL ◪◪◪	FUSED IGNITION SWITCH OUTPUT (RUN-ACC)
30	-	-	-
31	-	-	-
32	10A	L70 18WT/GY	FUSED PARK LAMP RELAY OUTPUT
33	20A	L678 18BR ◪◪◪◪	FUSED PARK LAMP RELAY OUTPUT

○ GAS
○○ DIESEL
◆◆◆ OFF ROAD

◪ NGC
◪◪◪ SRT
◪◪◪◪ EXCEPT SRT
◆◆◆◆ TRAILER TOW

FUSES
(IPM)

FUSE NO.	AMPS	FUSED CIRCUIT	FUNCTION
33	20A	L678 16BR ◪◪◪	FUSED PARK LAMP RELAY OUTPUT
34	10A	L7 18WT/YL	FUSED PARK LAMP RELAY OUTPUT
35	10A	F500 20DG/PK	FUSED IGNITION SWITCH OUTPUT (RUN)
36	10A	F504 20GY/PK	FUSED IGNITION SWITCH OUTPUT (RUN)
37	-	-	-
38	15A	L10 18WT/GY	FUSED IGNITION SWITCH OUTPUT (RUN)
39	20A	INTERNAL ○○	FUSED B(+)
40	15A	INTERNAL	FUSED B(+)
41	15A	INTERNAL	FUSED B(+)
42	20A	A405 18RD/DB	FUSED B(+)
43	25A	A34 16RD/WT ▼▼	FUSED B(+)
43	25A	A916 16RD ◪◪◪	FUSED B(+)
44	-	-	-
45	20A	INTERNAL	FUSED B(+)
46	15A	INTERNAL	FUSED B(+)
47	15A	INTERNAL	FUSED B(+)
48	20A	A930 18RD	FUSED B(+)
49	20A	INTERNAL ◪◪◪	FUSED AUTO SHUT DOWN RELAY OUTPUT
50	10A	F202 20PK/GY ◪◪◪◪	FUSED IGNITION SWITCH OUTPUT (RUN-START)
51	20A	A114 18GY/RD	FUSED B(+)
52	15A	F100 18PK/VT ◪◪◪	FUSED IGNITION SWITCH OUTPUT (RUN)
52	15A	F100 20PK/VT ◪◪◪◪	FUSED IGNITION SWITCH OUTPUT (RUN)
53	15A	F201 20PK/OR	FUSED IGNITION SWITCH OUTPUT (RUN)

◪◪◪ SRT ○○ DIESEL
◪◪◪◪ EXCEPT SRT ▼▼ ETC EXCEPT SRT

POSITIVE TEMPERATURE COEFFICIENTS (PTC)

PTC NO.	AMPS	FUSED CIRCUIT	FUNCTION
1	7.5A	INTERNAL	FUSED IGNITION SWITCH OUTPUT (RUN)
2	4.5A	F983 20PK/YL	FUSED IGNITION SWITCH OUTPUT (RUN-ACC)
3	-	-	-
4	-	-	-
5	7.5A	INTERNAL	FUSED B(+)

RELAYS
(IPM)

RELAY-ADJUSTABLE PEDALS

CAVITY	CIRCUIT	FUNCTION
30	INTERNAL	FUSED B(+)
85	INTERNAL	FUSED B(+)
86	INTERNAL	ADJUSTABLE PEDALS RELAY CONTROL
87	-	-
87A	A72 18RD/OR	ADJUSTABLE PEDALS RELAY OUTPUT

RELAY-AUTO SHUT DOWN (GAS)

CAVITY	CIRCUIT	FUNCTION
30	INTERNAL	FUSED B(+)
85	INTERNAL	FUSED B(+)
86	K51 18BR/WT ◪◪◪	ASD RELAY CONTROL
86	K51 20BR/WT ◪◪◪◪	ASD RELAY CONTROL
87	INTERNAL	ASD RELAY OUTPUT
87A	-	-

RELAY-BLOWER MOTOR (SRT)

CAVITY	CIRCUIT	FUNCTION
30	A970 10 RD	FUSED B(+)
85	F102 18PK/DB	FUSED IGNITION SWITCH OUTPUT (RUN)
86	Z1 18BK	GROUND
87	C7 10DB	BLOWER MOTOR FEED
87A	-	-

◪◪◪ SRT
◪◪◪◪ EXCEPT SRT

RELAYS (IPM) (CONTINUED)

RELAY-CLUTCH-A/C COMPRESSOR

CAVITY	CIRCUIT	FUNCTION
30	INTERNAL	FUSED B(+)
85	INTERNAL	FUSED IGNITION SWITCH OUTPUT (RUN-START)
86	C13 18LB/OR ◪◪◪	A/C CLUTCH RELAY CONTROL
86	C13 20LB/OR ◪◪◪◪	A/C CLUTCH RELAY CONTROL
87	C3 18DB/YL ◪◪◪	A/C CLUTCH RELAY OUTPUT
87	C3 20DB/YL ◪◪◪◪	A/C CLUTCH RELAY OUTPUT
87A	-	-

RELAY-CONDENSER FAN (NGC)

CAVITY	CIRCUIT	FUNCTION
30	A16 16RD/BR	FUSED B(+)
85	A16 16RD/BR	FUSED B(+)
86	K173 18BR/VT	CONDENSER FAN RELAY CONTROL
87	C123 16LB/WT	CONDENSER FAN RELAY OUTPUT
87A	-	-

RELAY-FOG LAMP

CAVITY	CIRCUIT	FUNCTION
30	INTERNAL	FUSED B(+)
85	INTERNAL	FUSED B(+)
86	INTERNAL	FOG LAMP RELAY CONTROL
87	L89 18WT/YL	FOG LAMP RELAY OUTPUT
87A	-	-

RELAY-FUEL HEATER (DIESEL)

CAVITY	CIRCUIT	FUNCTION
30	A960 14RD	FUSED B(+)
85	F202 20PK/GY	FUSED IGNITION SWITCH OUTPUT (RUN-START)
86	Z114 20BK/LG	GROUND
87	A961 14RD	FUEL HEATER RELAY OUTPUT
87A	-	-

RELAY-FUEL PUMP

CAVITY	CIRCUIT	FUNCTION
30	INTERNAL	FUSED B(+)
85	INTERNAL ○	FUSED IGNITION SWITCH OUTPUT (RUN-START)
85	Z723 20BK ○○	GROUND
86	K31 18BR ◪◪◪	FUEL PUMP RELAY CONTROL
86	K31 20BR ◪◪◪◪	FUEL PUMP RELAY CONTROL
87	A109 16OR/RD	FUEL PUMP RELAY OUTPUT
87A	-	-

◪◪◪ SRT ○ GAS
◪◪◪◪ EXCEPT SRT ○○ DIESEL

RELAYS
(IPM)
(CONTINUED)

RELAY-HEATED MIRROR

CAVITY	CIRCUIT	FUNCTION
30	INTERNAL	FUSED B(+)
85	INTERNAL	FUSED IGNITION SWITCH OUTPUT (RUN)
86	C110 20DB/LB	DEFOGGER RELAY CONTROL
87	C16 16DB/GY	HEATED MIRROR RELAY OUTPUT
87A	-	-

RELAY-HORN

CAVITY	CIRCUIT	FUNCTION
30	INTERNAL	FUSED B(+)
85	INTERNAL	FUSED B(+)
86	INTERNAL	HORN RELAY CONTROL
87	X2 18DG/OR	HORN RELAY OUTPUT
87A	-	-

RELAY-OXYGEN SENSOR DOWNSTREAM (SRT)

CAVITY	CIRCUIT	FUNCTION
30	INTERNAL	FUSED AUTO SHUT DOWN RELAY OUTPUT
85	INTERNAL	FUSED AUTO SHUT DOWN RELAY OUTPUT
86	K127 18BR/OR	OXYGEN SENSOR DOWNSTREAM RELAY CONTROL
87	K344 18BR/GY	OXYGEN SENSOR DOWNSTREAM RELAY OUTPUT
87A	-	-

RELAY-PARK PUMP

CAVITY	CIRCUIT	FUNCTION
30	INTERNAL	FUSED B(+)
85	INTERNAL	FUSED B(+)
86	INTERNAL	PARK LAMP RELAY CONTROL
87	INTERNAL	PARK LAMP RELAY OUTPUT
87A	-	-

RELAYS (IPM) (CONTINUED)

RELAY-REAR WINDOW DEFOGGER

CAVITY	CIRCUIT	FUNCTION
30	C15 16DB/WT	REAR WINDOW DEFOGGER RELAY OUTPUT
85	C110 20DB/LB	DEFOGGER RELAY CONTROL
86	INTERNAL	FUSED IGNITION SWITCH OUTPUT (RUN)
87	INTERNAL	FUSED B(+)
87A	-	-

RELAY-RUN (SRT)

CAVITY	CIRCUIT	FUNCTION
30	INTERNAL	FUSED B(+)
85	F102 18PK/DB	IGNITION SWITCH OUTPUT (RUN)
86	Z1 18BK	GROUND
87	F922 14PK/YL	FUSED IGNITION SWITCH OUTPUT (RUN)
87A	-	-

RELAY-STARTER MOTOR (EXCEPT SRT)

CAVITY	CIRCUIT		FUNCTION
30	INTERNAL		FUSED B(+)
85	T751 16YL		FUSED IGNITION SWITCH OUTPUT (START)
86	T41 20YL/DB	oo	TRS T41 SENSE
86	T752 20DG/OR	o	STARTER MOTOR RELAY CONTROL
87	T750 14YL/GY		STARTER MOTOR RELAY OUTPUT
87A	-		-

RELAY-TRAILER TOW LEFT TURN

CAVITY	CIRCUIT	FUNCTION
30	INTERNAL	FUSED B(+)
85	INTERNAL	FUSED B(+)
86	INTERNAL	TRAILER TOW LEFT TURN RELAY CONTROL
87	L673 18YL	TRAILER TOW LEFT TURN RELAY OUTPUT
87A	-	-

o GAS
oo DIESEL

RELAYS (IPM) (CONTINUED)

RELAY-TRAILER TOW RIGHT TURN

CAVITY	CIRCUIT	FUNCTION
30	INTERNAL	FUSED B(+)
85	INTERNAL	FUSED B(+)
86	INTERNAL	TRAILER TOW RIGHT TURN RELAY CONTROL
87	L674 18LG	TRAILER TOW RIGHT TURN RELAY OUTPUT
87A	-	-

RELAY-TRANSMISSION CONTROL

CAVITY	CIRCUIT	FUNCTION
30	INTERNAL	FUSED B(+)
85	T515 18YL/DB ◪◪◪	TRANSMISSION CONTROL RELAY CONTROL
85	T515 20YL/DB ◪◪◪◪	TRANSMISSION CONTROL RELAY CONTROL
86	K125 18BR/DG ◪◪◪	GENERATOR SOURCE
86	F941 20PK/LG ○○	FUSED IGNITION SWITCH OUTPUT (RUN-START)
86	Z912 20BK ◪	GROUND
87	T16 18YL/OR	TRANSMISSION CONTROL RELAY OUTPUT
87A	-	-

RELAY-WIPER HIGH/LOW

CAVITY	CIRCUIT	FUNCTION
30	INTERNAL	WIPER CONTROL
85	INTERNAL	WIPER HIGH/LOW RELAY CONTROL
86	INTERNAL	FUSED B(+)
87	W4 14BR/OR ◪◪◪	WIPER RELAY HIGH SPEED OUTPUT
87	W4 16BR/OR ◪◪◪◪	WIPER RELAY HIGH SPEED OUTPUT
87A	W3 14BR/WT ◪◪◪	WIPER RELAY LOW SPEED OUTPUT
87A	W3 16BR/WT ◪◪◪◪	WIPER RELAY LOW SPEED OUTPUT

RELAY-WIPER ON/OFF

CAVITY	CIRCUIT	FUNCTION
30	INTERNAL	WIPER CONTROL
85	INTERNAL	WIPER ON/OFF RELAY CONTROL
86	INTERNAL	FUSED B(+)
87	INTERNAL	FUSED B(+)
87A	Z920 12BK	GROUND

◪ NGC
◪◪◪ SRT
◪◪◪◪ EXCEPT SRT
○○ DIESEL

MODULE-FRONT CONTROL

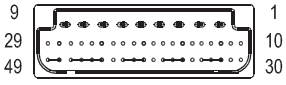

CAV	CIRCUIT	FUNCTION
1	L44 18WT/TN	RIGHT LOW BEAM DRIVER
2	L33 18WT/LG	LEFT HIGH BEAM DRIVER
3	INTERNAL	FUSED B(+)
4	INTERNAL	FUSED B(+)
5	W10 20BR	WASHER PUMP MOTOR CONTROL
6	INTERNAL	FUSED B(+)
7	INTERNAL	FUSED B(+)
8	L34 18WT/GY	RIGHT HIGH BEAM DRIVER
9	L43 18WT/DB	LEFT LOW BEAM DRIVER
10	INTERNAL	FUSED B(+)
11	-	-
12	Z117 18BK/WT	GROUND
13	-	-
14	INTERNAL	TRAILER TOW LEFT TURN RELAY CONTROL
15	INTERNAL	PARK LAMP RELAY CONTROL
16	-	-
17	INTERNAL	WIPER ON/OFF RELAY CONTROL
18	INTERNAL	FOG LAMP RELAY CONTROL
19	L62 18WT/YL	RIGHT REAR TURN LAMP DRIVER
20	-	-
21	-	-
22	L1 18WT/LG	BACKUP LAMP FEED
23	-	-
24	-	-
25	-	-
26	-	-
27	Z116 18BK/VT	GROUND
28	W1 20BR/TN	WASHER FLUID SWITCH SENSE
29	G31 20VT/LG ◪◪	AAT SIGNAL
30	Z118 18BK/YL	GROUND
31	Z117 18BK/WT	GROUND
32	INTERNAL	HORN RELAY CONTROL
33	-	-
34	INTERNAL	TRAILER TOW RIGHT TURN RELAY CONTROL
35	INTERNAL	ADJUSTABLE PEDALS RELAY CONTROL
36	-	-
37	INTERNAL	WIPER HIGH/LOW RELAY CONTROL
38	D25 20VT/PK	PCI BUS
39	-	-
40	-	-
41	L54 18WT/LG	RIGHT STOP LAMP DRIVER
42	L61 18WT/LG	LEFT FRONT TURN LAMP DRIVER
43	L53 18DG/WT	LEFT STOP LAMP DRIVER
44	L63 18WT/DG	LEFT REAR TURN LAMP DRIVER
45	L60 18WT/TN	RIGHT FRONT TURN LAMP DRIVER
46	G180 20VT/YL ◪◪	SENSOR GROUND
47	Z118 18BK/YL	GROUND
48	INTERNAL	FUSED IGNITION SWITCH OUTPUT (RUN-START)
49	W7 20BR/GY	WIPER PARK SWITCH SENSE

◪◪ EXCEPT NGC

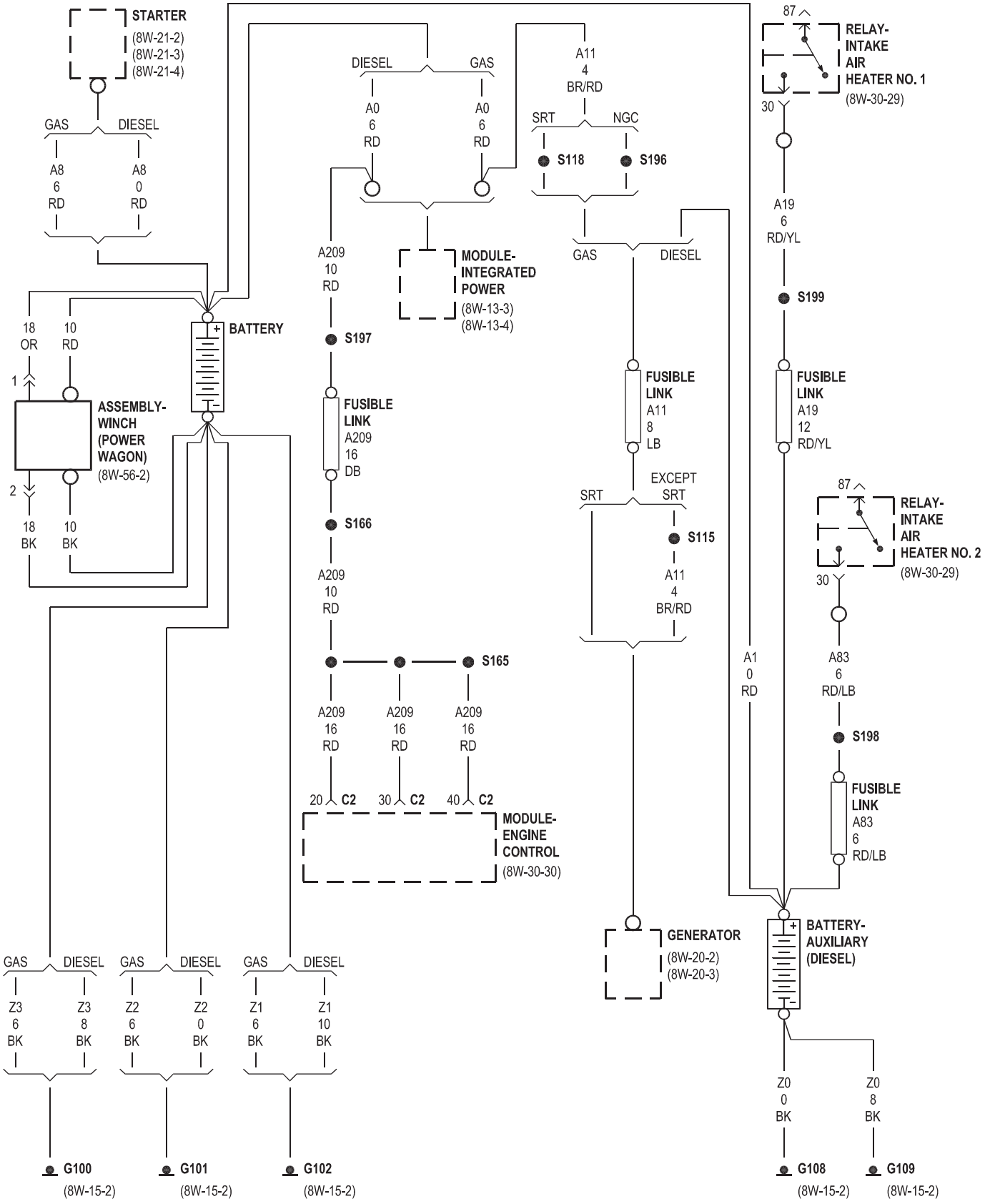
STARTER
(8W-21-2)
(8W-21-3)
(8W-21-4)
GAS
DIESEL
A8 6 RD
A8 0 RD
BATTERY
18 OR
10 RD
1
2
ASSEMBLY-WINCH (POWER WAGON)
(8W-56-2)
18 BK
10 BK
DIESEL
GAS
A0 6 RD
A0 6 RD
A209 10 RD
S197
FUSIBLE LINK A209 16 DB
S166
A209 10 RD
S165
A209 16 RD
A209 16 RD
A209 16 RD
20 C2
30 C2
40 C2
MODULE-ENGINE CONTROL
(8W-30-30)
MODULE-INTEGRATED POWER
(8W-13-3)
(8W-13-4)
A11 4 BR/RD
SRT
NGC
S118
S196
GAS
DIESEL
FUSIBLE LINK A11 8 LB
EXCEPT SRT
SRT
S115
A11 4 BR/RD
GENERATOR
(8W-20-2)
(8W-20-3)
87
RELAY-INTAKE AIR HEATER NO. 1
(8W-30-29)
30
A19 6 RD/YL
S199
FUSIBLE LINK A19 12 RD/YL
A1 0 RD
87
RELAY-INTAKE AIR HEATER NO. 2
(8W-30-29)
30
A83 6 RD/LB
S198
FUSIBLE LINK A83 6 RD/LB
BATTERY-AUXILIARY (DIESEL)
Z0 0 BK
Z0 8 BK
G108
(8W-15-2)
G109
(8W-15-2)
GAS
DIESEL
Z3 6 BK
Z3 8 BK
Z2 6 BK
Z2 0 BK
Z1 6 BK
Z1 10 BK
G100
(8W-15-2)
G101
(8W-15-2)
G102
(8W-15-2)

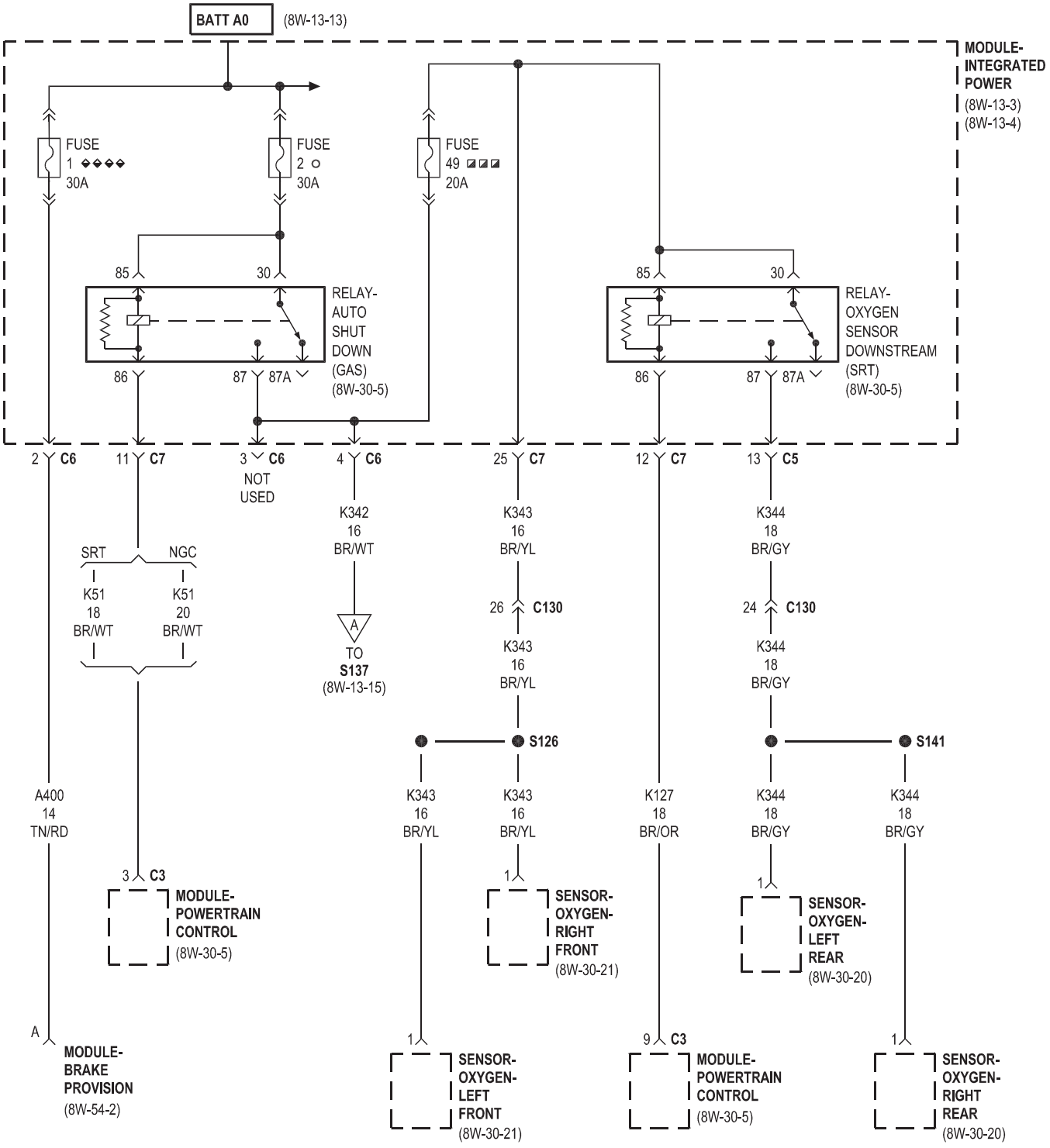
BATT A0
(8W-13-13)
MODULE-
INTEGRATED
POWER
(8W-13-3)
(8W-13-4)
FUSE
1
30A
FUSE
2
30A
FUSE
49
20A
85
30
86
87
87A
RELAY-
AUTO
SHUT
DOWN
(GAS)
(8W-30-5)
RELAY-
OXYGEN
SENSOR
DOWNSTREAM
(SRT)
(8W-30-5)
2 C6
11 C7
3 C6
NOT
USED
4 C6
25 C7
12 C7
13 C5
SRT
NGC
K51
18
BR/WT
K51
20
BR/WT
K342
16
BR/WT
A
TO
S137
(8W-13-15)
K343
16
BR/YL
26 C130
K343
16
BR/YL
K344
18
BR/GY
24 C130
K344
18
BR/GY
S126
S141
A400
14
TN/RD
3 C3
MODULE-
POWERTRAIN
CONTROL
(8W-30-5)
K343
16
BR/YL
K343
16
BR/YL
1
SENSOR-
OXYGEN-
RIGHT
FRONT
(8W-30-21)
K127
18
BR/OR
K344
18
BR/GY
1
SENSOR-
OXYGEN-
LEFT
REAR
(8W-30-20)
K344
18
BR/GY
A
MODULE-
BRAKE
PROVISION
(8W-54-2)
1
SENSOR-
OXYGEN-
LEFT
FRONT
(8W-30-21)
9 C3
MODULE-
POWERTRAIN
CONTROL
(8W-30-5)
1
SENSOR-
OXYGEN-
RIGHT
REAR
(8W-30-20)
GAS
SRT
TRAILER TOW

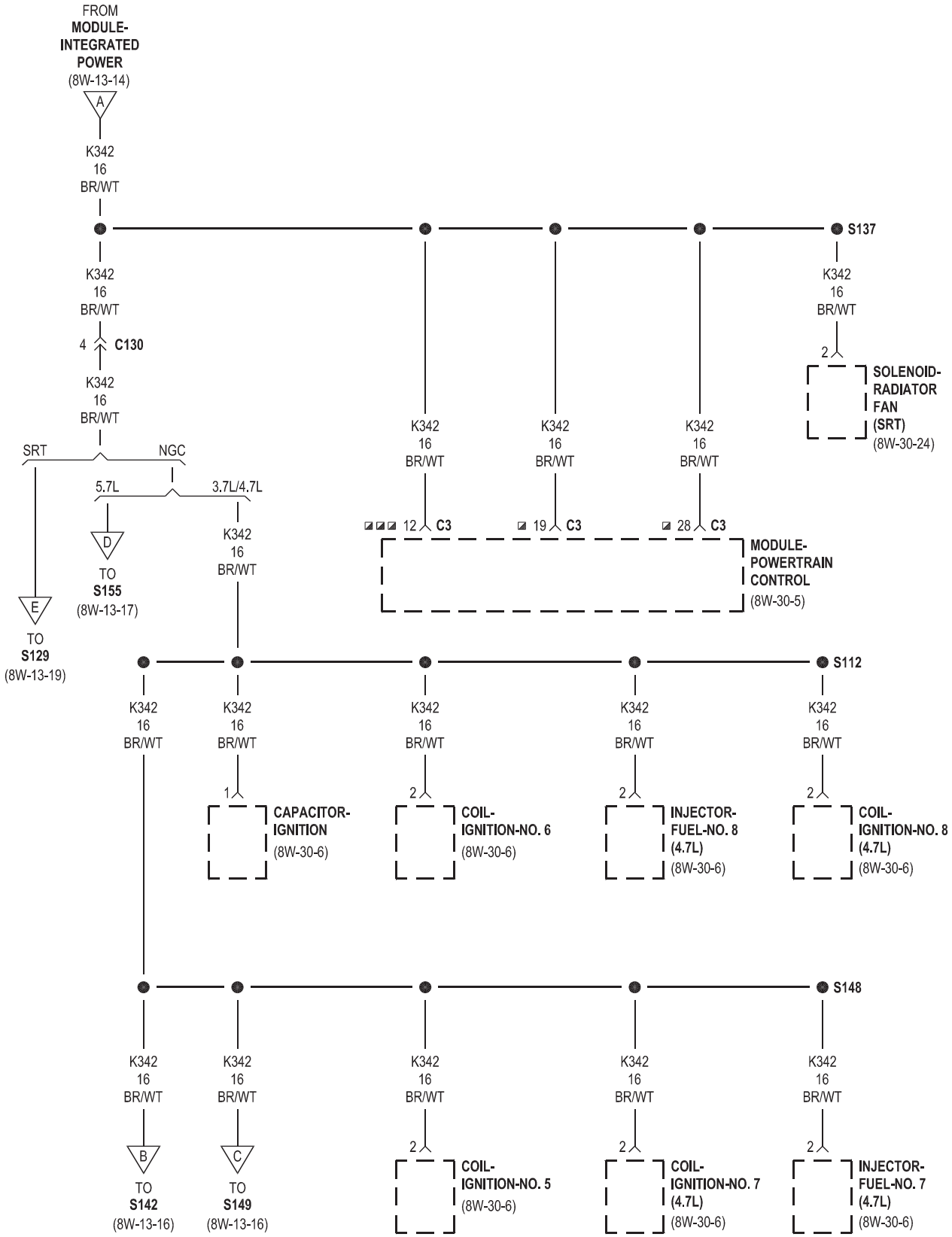
FROM MODULE- INTEGRATED POWER (8W-13-14)
A
K342 16 BR/WT
S137
4 C130
2
SOLENOID- RADIATOR FAN (SRT) (8W-30-24)
SRT
NGC
5.7L
3.7L/4.7L
D
TO S155 (8W-13-17)
E
TO S129 (8W-13-19)
12 C3
19 C3
28 C3
MODULE- POWERTRAIN CONTROL (8W-30-5)
S112
1
CAPACITOR- IGNITION (8W-30-6)
COIL- IGNITION-NO. 6 (8W-30-6)
INJECTOR- FUEL-NO. 8 (4.7L) (8W-30-6)
COIL- IGNITION-NO. 8 (4.7L) (8W-30-6)
S148
B
C
TO S142 (8W-13-16)
TO S149 (8W-13-16)
COIL- IGNITION-NO. 5 (8W-30-6)
COIL- IGNITION-NO. 7 (4.7L) (8W-30-6)
INJECTOR- FUEL-NO. 7 (4.7L) (8W-30-6)

◪ NGC
◪◪◪ SRT

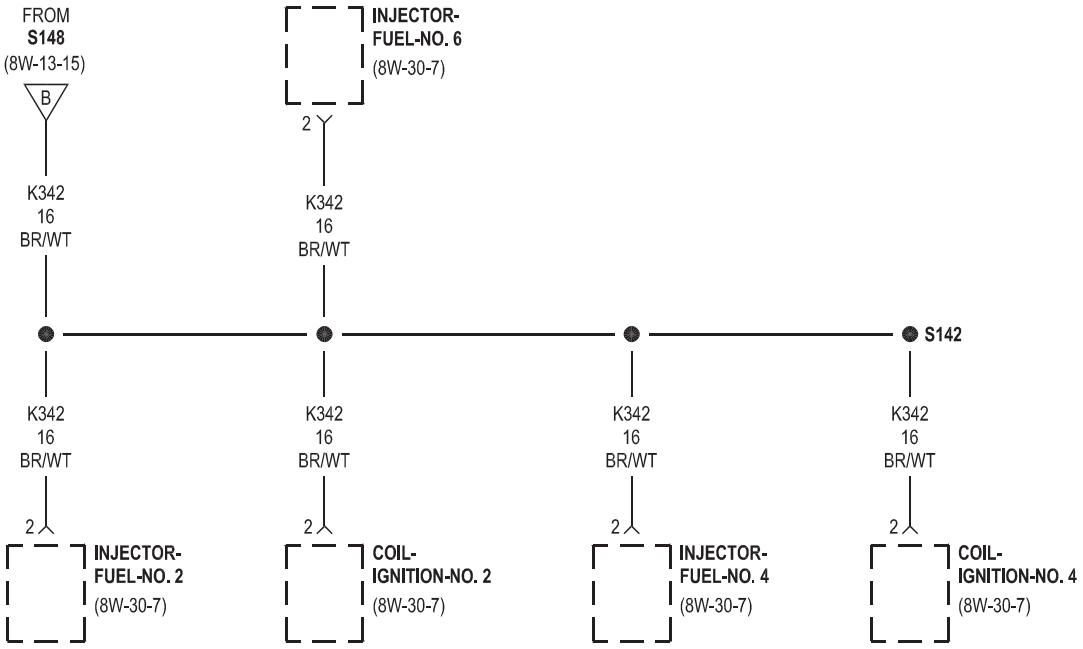
FROM
S148
(8W-13-15)
B
K342
16
BR/WT
2
INJECTOR-
FUEL-NO. 6
(8W-30-7)
2
K342
16
BR/WT
S142
K342
16
BR/WT
2
INJECTOR-
FUEL-NO. 2
(8W-30-7)
K342
16
BR/WT
2
COIL-
IGNITION-NO. 2
(8W-30-7)
K342
16
BR/WT
2
INJECTOR-
FUEL-NO. 4
(8W-30-7)
K342
16
BR/WT
2
COIL-
IGNITION-NO. 4
(8W-30-7)

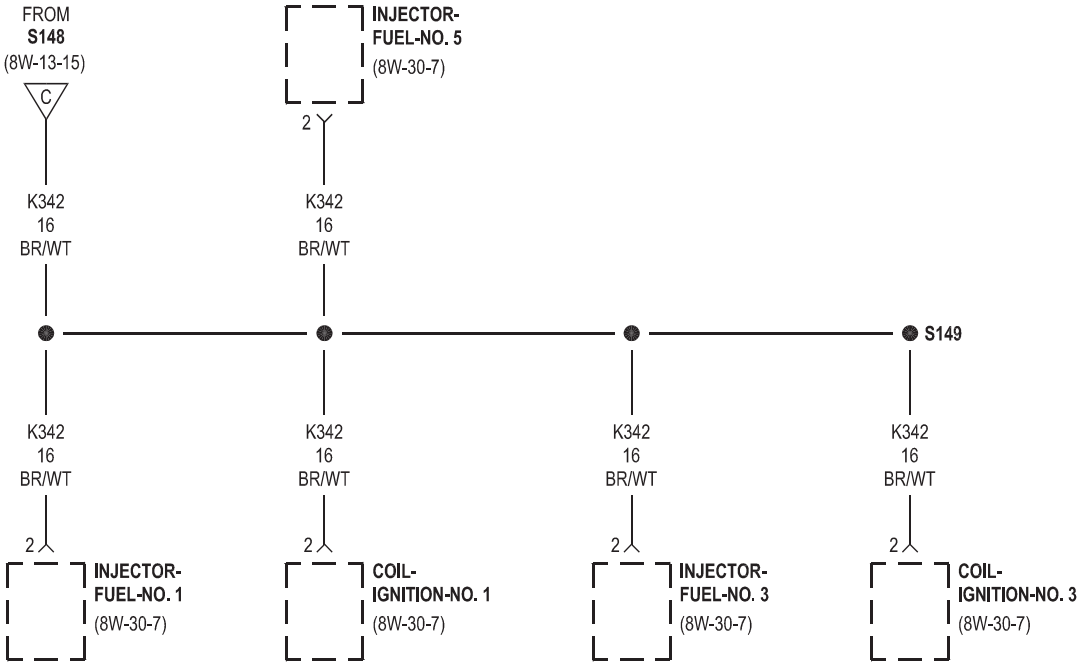
FROM
S148
(8W-13-15)
C
K342
16
BR/WT
2
INJECTOR-
FUEL-NO. 5
(8W-30-7)
2
K342
16
BR/WT
S149
K342
16
BR/WT
2
INJECTOR-
FUEL-NO. 1
(8W-30-7)
K342
16
BR/WT
2
COIL-
IGNITION-NO. 1
(8W-30-7)
K342
16
BR/WT
2
INJECTOR-
FUEL-NO. 3
(8W-30-7)
K342
16
BR/WT
2
COIL-
IGNITION-NO. 3
(8W-30-7)

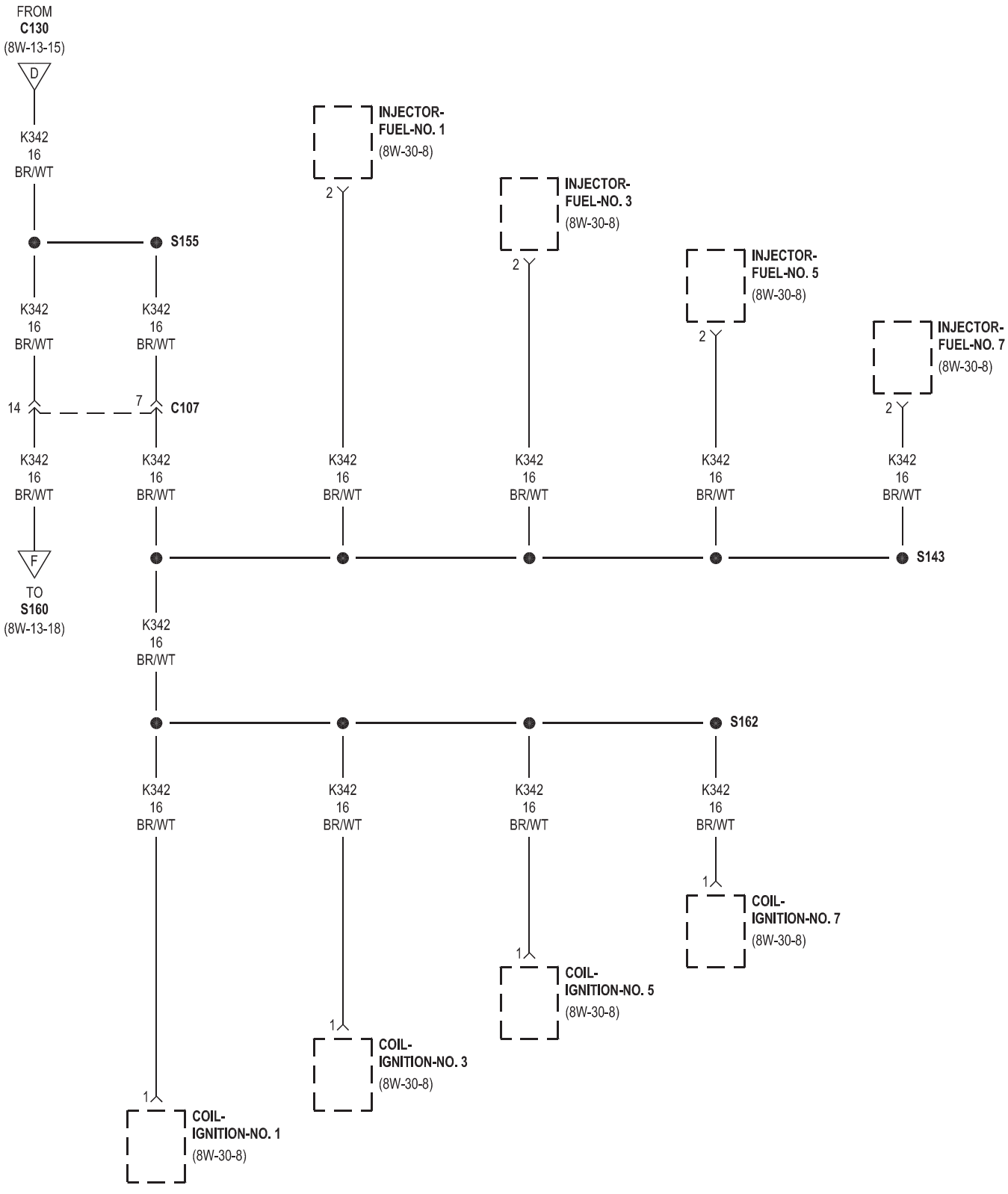
FROM
C130
(8W-13-15)
D
K342
16
BR/WT
S155
K342
16
BR/WT
K342
16
BR/WT
14
7
C107
K342
16
BR/WT
K342
16
BR/WT
F
TO
S160
(8W-13-18)
INJECTOR-
FUEL-NO. 1
(8W-30-8)
2
INJECTOR-
FUEL-NO. 3
(8W-30-8)
2
INJECTOR-
FUEL-NO. 5
(8W-30-8)
2
INJECTOR-
FUEL-NO. 7
(8W-30-8)
2
K342
16
BR/WT
K342
16
BR/WT
K342
16
BR/WT
K342
16
BR/WT
K342
16
BR/WT
S143
K342
16
BR/WT
S162
K342
16
BR/WT
K342
16
BR/WT
K342
16
BR/WT
K342
16
BR/WT
1
COIL-
IGNITION-NO. 1
(8W-30-8)
1
COIL-
IGNITION-NO. 3
(8W-30-8)
1
COIL-
IGNITION-NO. 5
(8W-30-8)
1
COIL-
IGNITION-NO. 7
(8W-30-8)

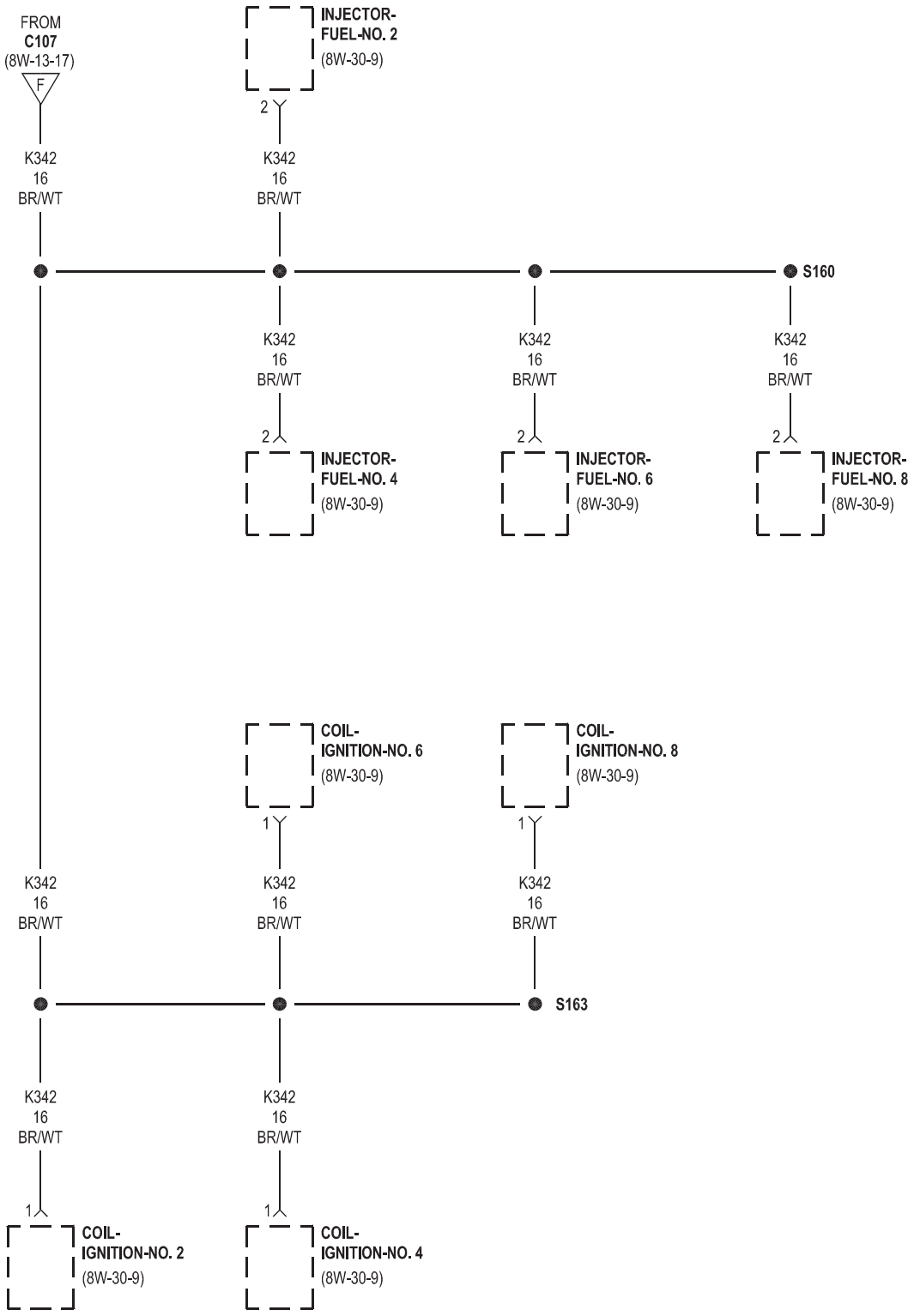
FROM
C107
(8W-13-17)
F
K342
16
BR/WT
INJECTOR-
FUEL-NO. 2
(8W-30-9)
2
K342
16
BR/WT
S160
K342
16
BR/WT
2
INJECTOR-
FUEL-NO. 4
(8W-30-9)
K342
16
BR/WT
2
INJECTOR-
FUEL-NO. 6
(8W-30-9)
K342
16
BR/WT
2
INJECTOR-
FUEL-NO. 8
(8W-30-9)
COIL-
IGNITION-NO. 6
(8W-30-9)
1
K342
16
BR/WT
COIL-
IGNITION-NO. 8
(8W-30-9)
1
K342
16
BR/WT
S163
K342
16
BR/WT
1
COIL-
IGNITION-NO. 2
(8W-30-9)
K342
16
BR/WT
1
COIL-
IGNITION-NO. 4
(8W-30-9)

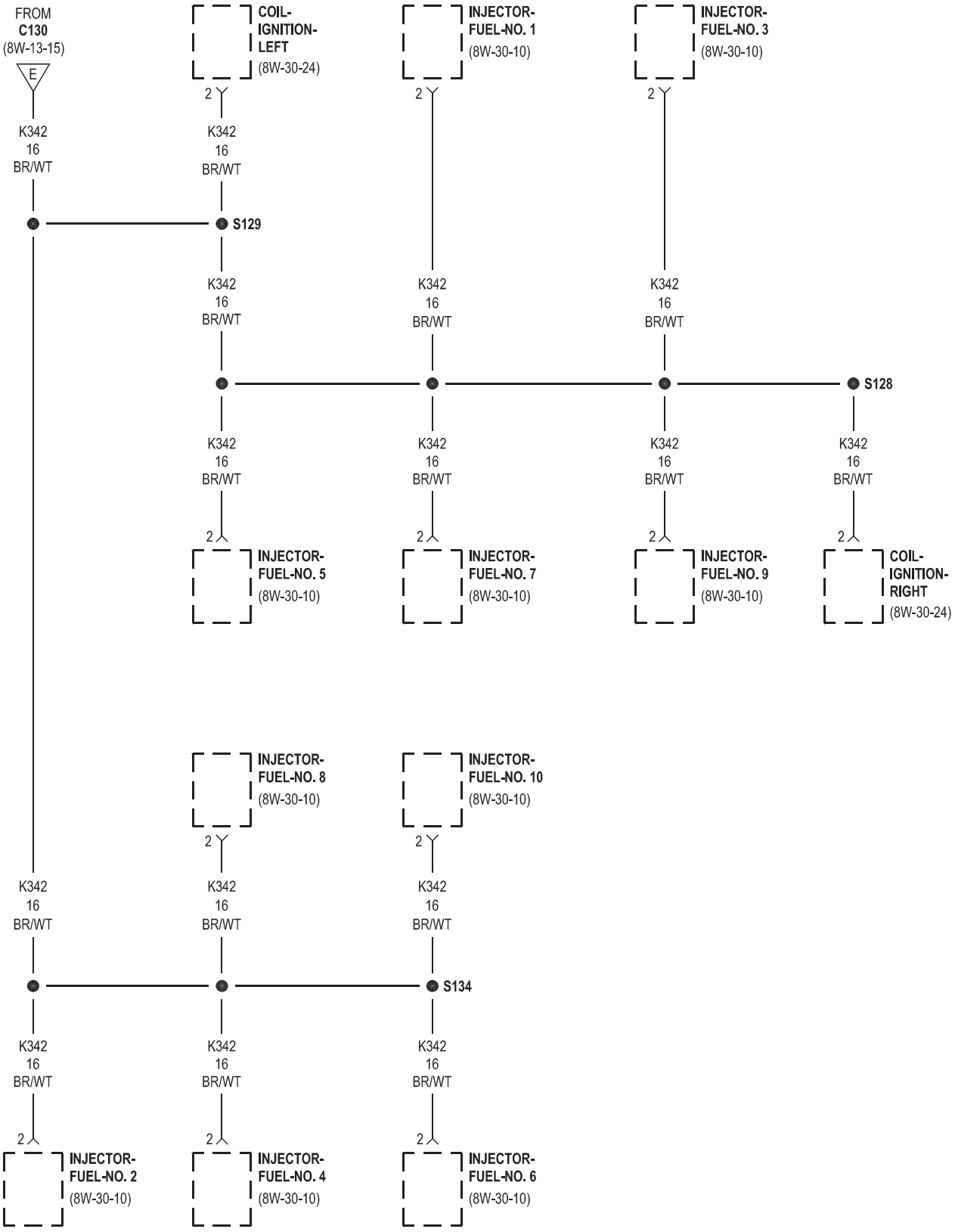
FROM
C130
(8W-13-15)
E
K342
16
BR/WT
COIL-
IGNITION-
LEFT
(8W-30-24)
2
K342
16
BR/WT
INJECTOR-
FUEL-NO. 1
(8W-30-10)
2
K342
16
BR/WT
INJECTOR-
FUEL-NO. 3
(8W-30-10)
2
K342
16
BR/WT
S129
K342
16
BR/WT
K342
16
BR/WT
K342
16
BR/WT
S128
K342
16
BR/WT
K342
16
BR/WT
K342
16
BR/WT
K342
16
BR/WT
2
INJECTOR-
FUEL-NO. 5
(8W-30-10)
2
INJECTOR-
FUEL-NO. 7
(8W-30-10)
2
INJECTOR-
FUEL-NO. 9
(8W-30-10)
2
COIL-
IGNITION-
RIGHT
(8W-30-24)
INJECTOR-
FUEL-NO. 8
(8W-30-10)
2
INJECTOR-
FUEL-NO. 10
(8W-30-10)
2
K342
16
BR/WT
K342
16
BR/WT
K342
16
BR/WT
S134
K342
16
BR/WT
K342
16
BR/WT
K342
16
BR/WT
2
INJECTOR-
FUEL-NO. 2
(8W-30-10)
2
INJECTOR-
FUEL-NO. 4
(8W-30-10)
2
INJECTOR-
FUEL-NO. 6
(8W-30-10)

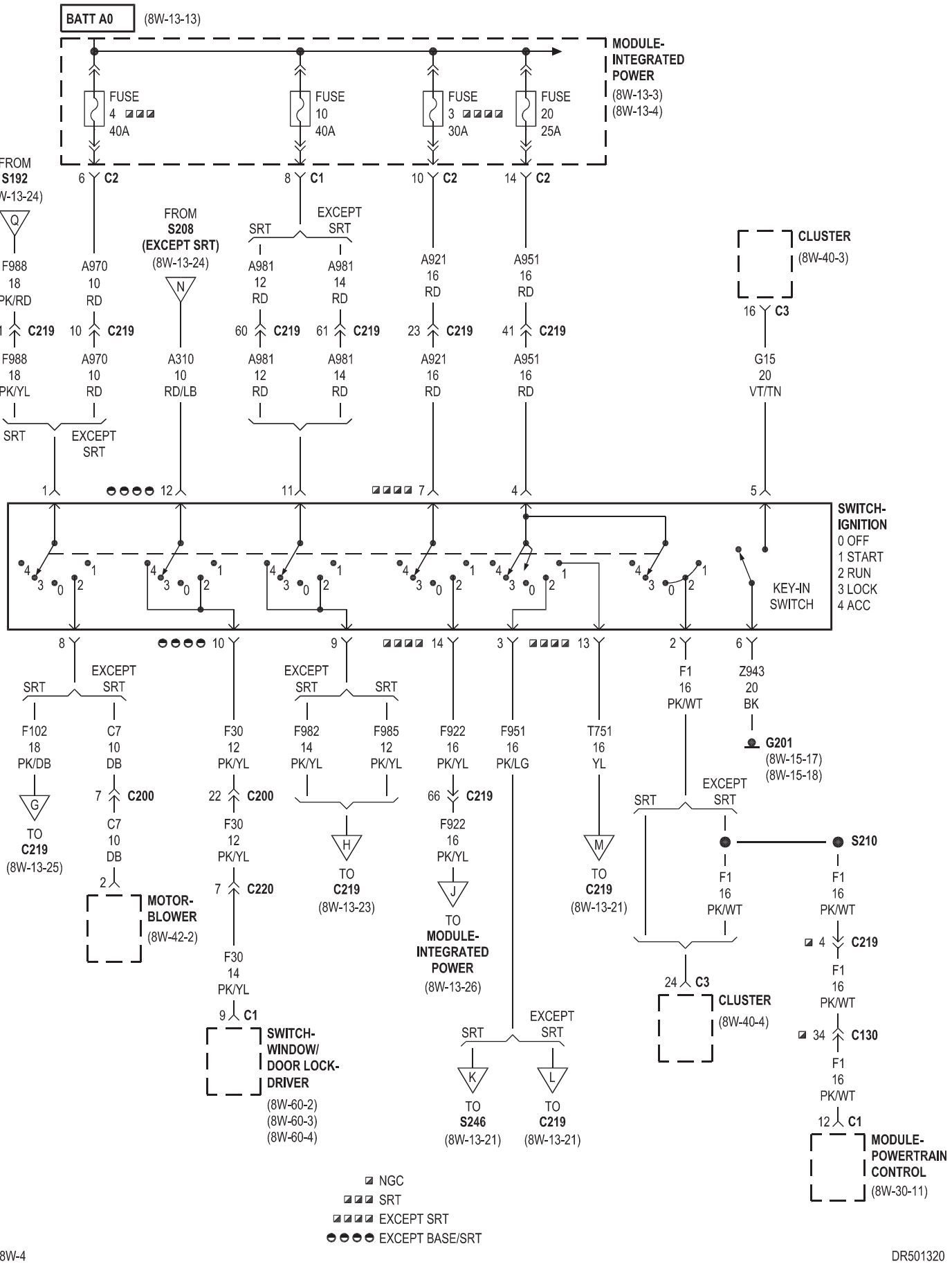
BATT A0
(8W-13-13)
MODULE-INTEGRATED POWER
(8W-13-3)
(8W-13-4)
FUSE 4 40A
FUSE 10 40A
FUSE 3 30A
FUSE 20 25A
FROM S192
(8W-13-24)
FROM S208 (EXCEPT SRT)
(8W-13-24)
CLUSTER
(8W-40-3)
SWITCH-IGNITION
0 OFF
1 START
2 RUN
3 LOCK
4 ACC
KEY-IN SWITCH
SRT
EXCEPT SRT
TO C219 (8W-13-25)
TO C219 (8W-13-23)
TO C219 (8W-13-21)
TO MODULE-INTEGRATED POWER (8W-13-26)
TO S246 (8W-13-21)
TO C219 (8W-13-21)
MOTOR-BLOWER
(8W-42-2)
SWITCH-WINDOW/DOOR LOCK-DRIVER
(8W-60-2)
(8W-60-3)
(8W-60-4)
G201
(8W-15-17)
(8W-15-18)
S210
CLUSTER
(8W-40-4)
MODULE-POWERTRAIN CONTROL
(8W-30-11)
NGC
SRT
EXCEPT SRT
EXCEPT BASE/SRT

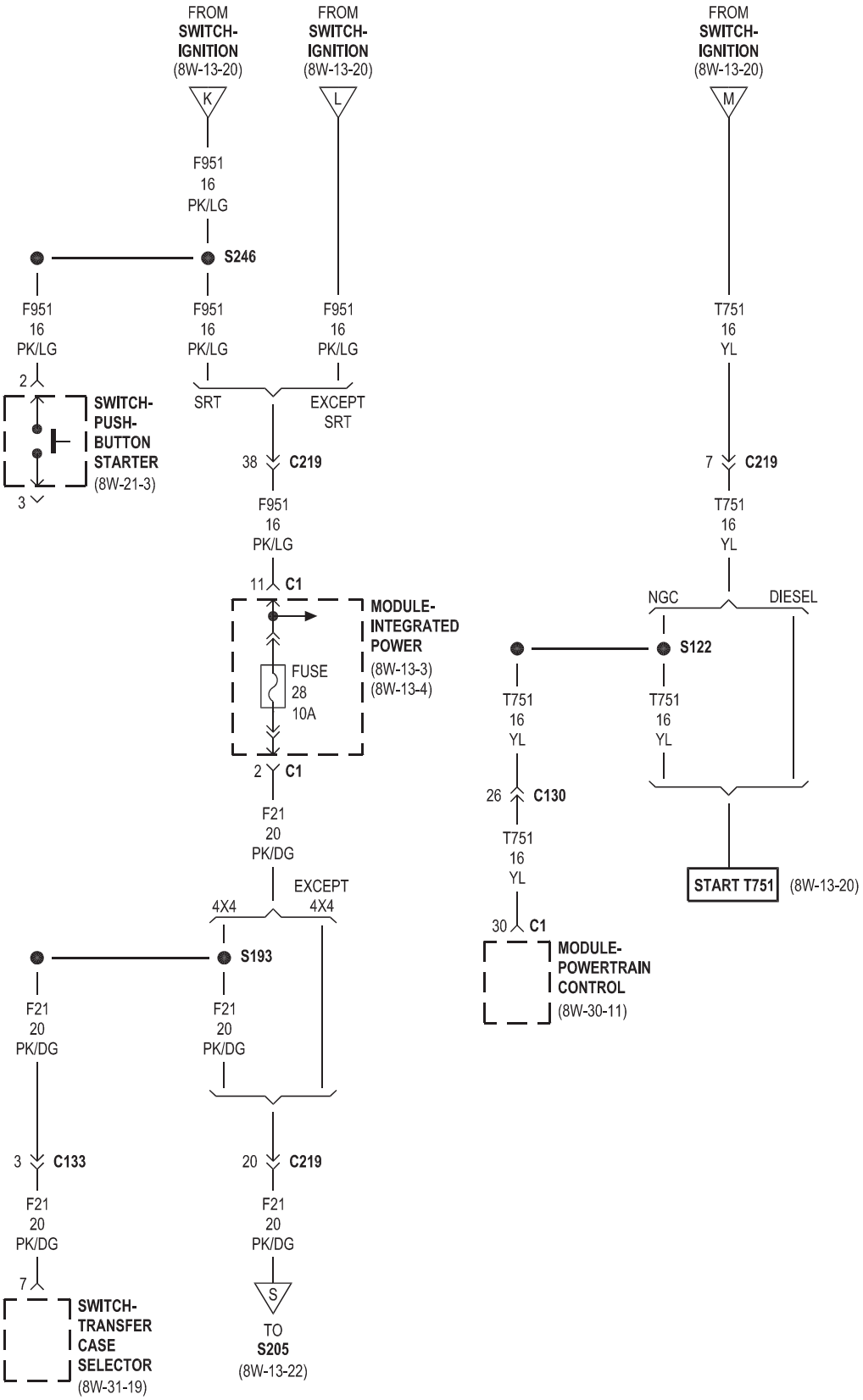
FROM SWITCH-IGNITION (8W-13-20)
K
L
M
F951 16 PK/LG
S246
T751 16 YL
SRT
EXCEPT SRT
NGC
DIESEL
S122
SWITCH-PUSH-BUTTON STARTER (8W-21-3)
C219
MODULE-INTEGRATED POWER (8W-13-3) (8W-13-4)
FUSE 28 10A
C1
F21 20 PK/DG
4X4
EXCEPT 4X4
S193
C133
C130
MODULE-POWERTRAIN CONTROL (8W-30-11)
START T751 (8W-13-20)
SWITCH-TRANSFER CASE SELECTOR (8W-31-19)
S
TO S205 (8W-13-22)

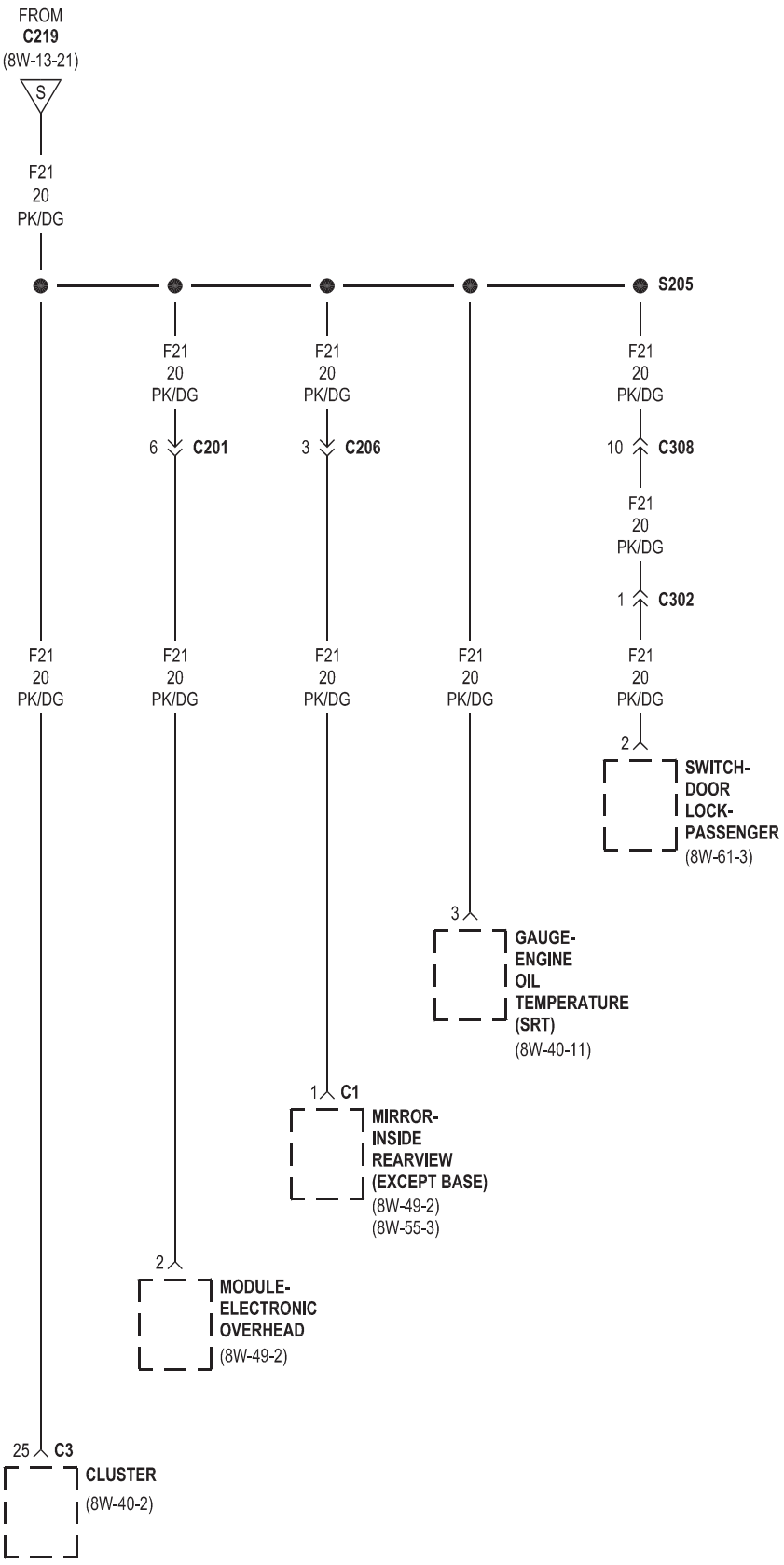
FROM
C219
(8W-13-21)
S
F21
20
PK/DG
S205
F21
20
PK/DG
6 C201
F21
20
PK/DG
3 C206
F21
20
PK/DG
10 C308
F21
20
PK/DG
1 C302
F21
20
PK/DG
F21
20
PK/DG
F21
20
PK/DG
F21
20
PK/DG
F21
20
PK/DG
F21
20
PK/DG
2
SWITCH-
DOOR
LOCK-
PASSENGER
(8W-61-3)
3
GAUGE-
ENGINE
OIL
TEMPERATURE
(SRT)
(8W-40-11)
1 C1
MIRROR-
INSIDE
REARVIEW
(EXCEPT BASE)
(8W-49-2)
(8W-55-3)
2
MODULE-
ELECTRONIC
OVERHEAD
(8W-49-2)
25 C3
CLUSTER
(8W-40-2)

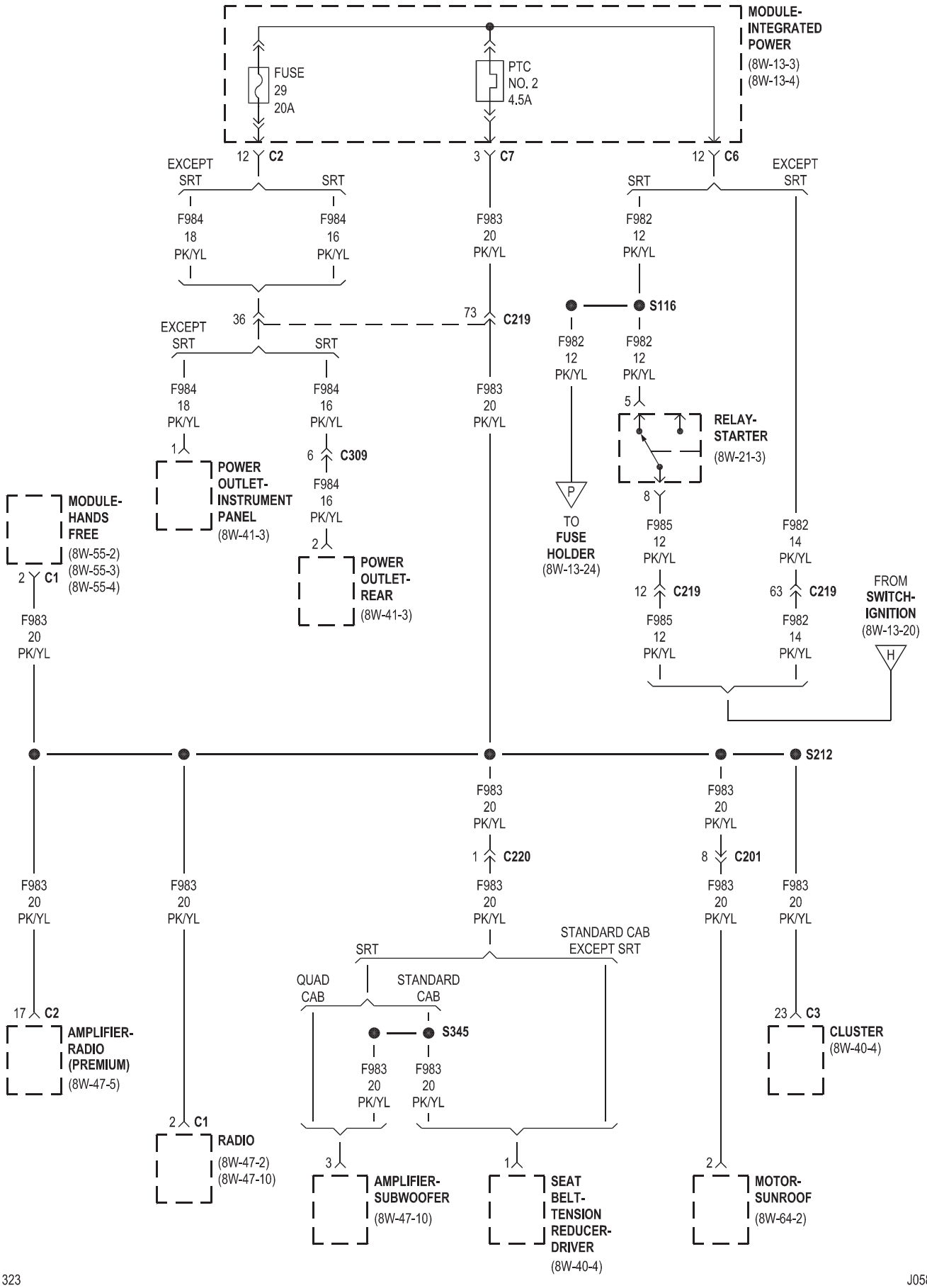
MODULE-
INTEGRATED
POWER
(8W-13-3)
(8W-13-4)
FUSE
29
20A
PTC
NO. 2
4.5A
12 C2
3 C7
12 C6
EXCEPT
SRT
SRT
F984
18
PK/YL
F984
16
PK/YL
F983
20
PK/YL
F982
12
PK/YL
36
73 C219
S116
F982
14
PK/YL
1
POWER
OUTLET-
INSTRUMENT
PANEL
(8W-41-3)
6 C309
2
POWER
OUTLET-
REAR
(8W-41-3)
P
TO
FUSE
HOLDER
(8W-13-24)
5
RELAY-
STARTER
(8W-21-3)
8
F985
12
PK/YL
12 C219
63 C219
MODULE-
HANDS
FREE
(8W-55-2)
(8W-55-3)
(8W-55-4)
2 C1
FROM
SWITCH-
IGNITION
(8W-13-20)
H
S212
1 C220
8 C201
STANDARD CAB
EXCEPT SRT
QUAD
CAB
STANDARD
CAB
S345
17 C2
AMPLIFIER-
RADIO
(PREMIUM)
(8W-47-5)
23 C3
CLUSTER
(8W-40-4)
2 C1
RADIO
(8W-47-2)
(8W-47-10)
3
AMPLIFIER-
SUBWOOFER
(8W-47-10)
1
SEAT
BELT-
TENSION
REDUCER-
DRIVER
(8W-40-4)
2
MOTOR-
SUNROOF
(8W-64-2)

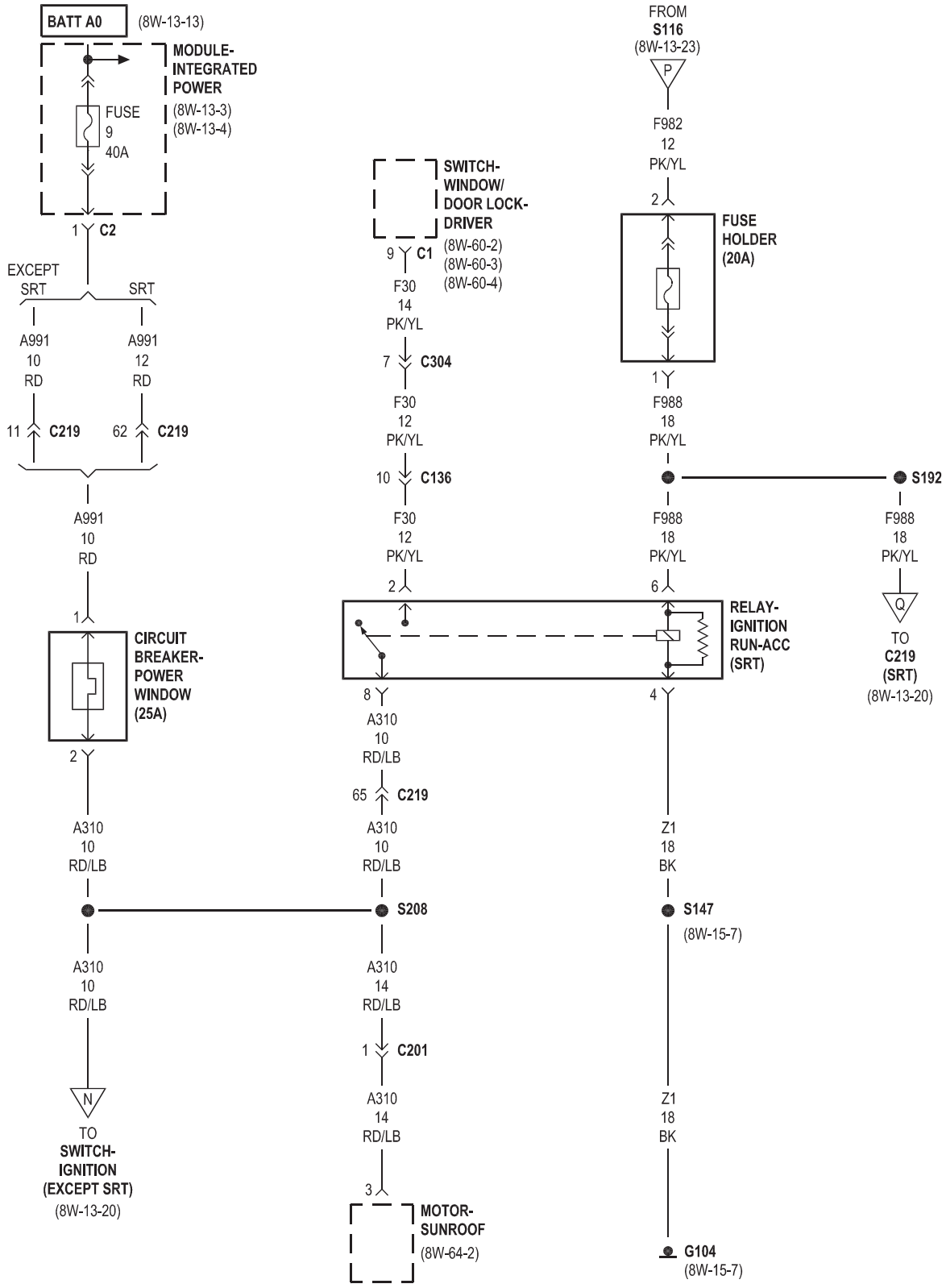
BATT A0
(8W-13-13)
MODULE-INTEGRATED POWER
FUSE 9 40A
(8W-13-3)
(8W-13-4)
1 C2
EXCEPT SRT
SRT
A991 10 RD
A991 12 RD
11 C219
62 C219
A991 10 RD
1
CIRCUIT BREAKER-POWER WINDOW (25A)
2
A310 10 RD/LB
N
TO SWITCH-IGNITION (EXCEPT SRT)
(8W-13-20)
SWITCH-WINDOW/ DOOR LOCK-DRIVER
9 C1
(8W-60-2)
(8W-60-3)
(8W-60-4)
F30 14 PK/YL
7 C304
F30 12 PK/YL
10 C136
F30 12 PK/YL
2
8
A310 10 RD/LB
65 C219
A310 10 RD/LB
S208
A310 10 RD/LB
A310 14 RD/LB
1 C201
A310 14 RD/LB
3
MOTOR-SUNROOF
(8W-64-2)
FROM S116
(8W-13-23)
P
F982 12 PK/YL
2
FUSE HOLDER (20A)
1
F988 18 PK/YL
F988 18 PK/YL
6
4
RELAY-IGNITION RUN-ACC (SRT)
Z1 18 BK
S147
(8W-15-7)
Z1 18 BK
G104
(8W-15-7)
S192
F988 18 PK/YL
Q
TO C219 (SRT)
(8W-13-20)

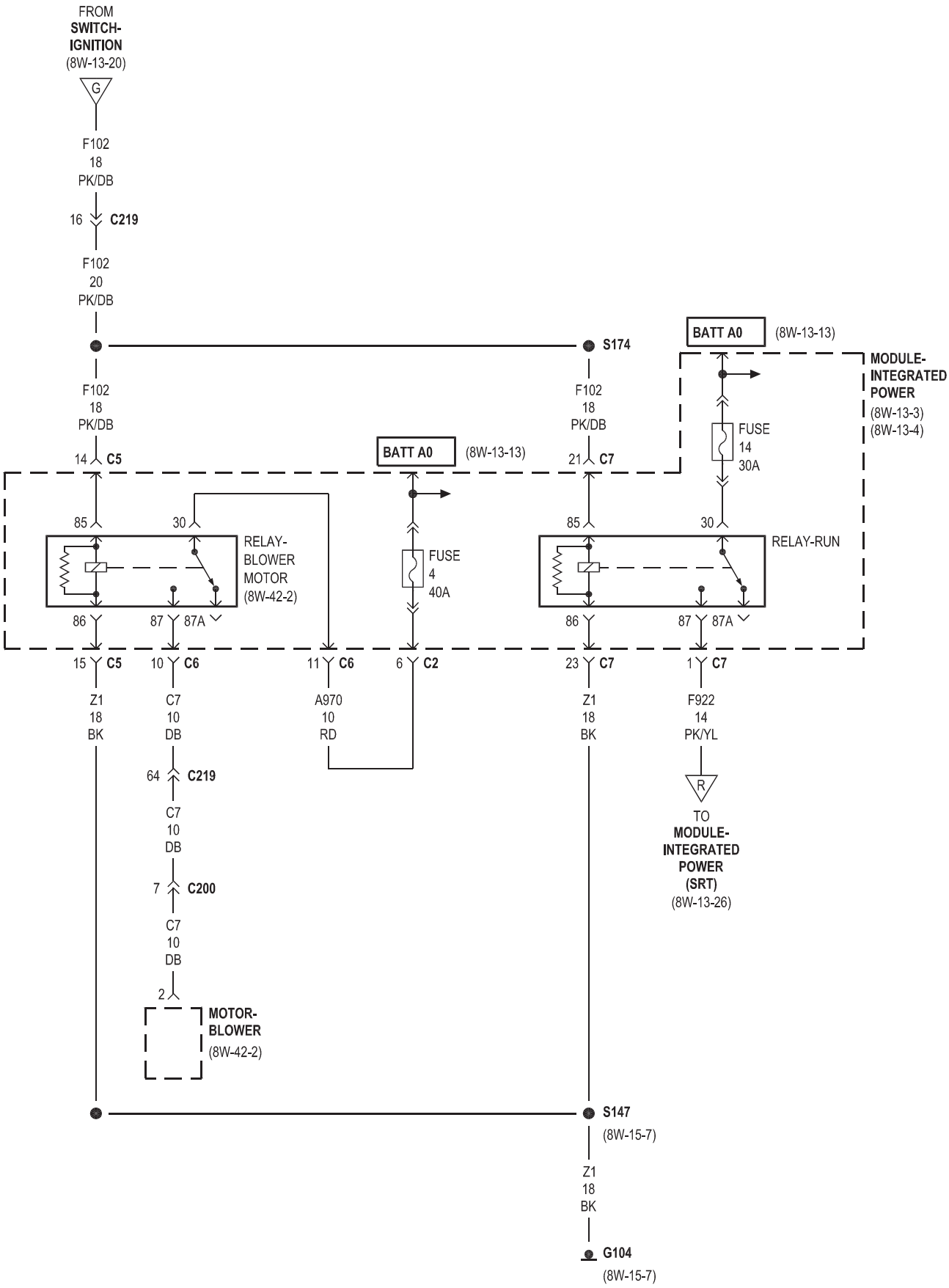
FROM SWITCH-IGNITION (8W-13-20)
G
F102 18 PK/DB
16 C219
F102 20 PK/DB
S174
BATT A0 (8W-13-13)
MODULE-INTEGRATED POWER (8W-13-3) (8W-13-4)
F102 18 PK/DB
14 C5
21 C7
FUSE 14 30A
85
30
RELAY-BLOWER MOTOR (8W-42-2)
FUSE 4 40A
RELAY-RUN
86
87
87A
15 C5
10 C6
11 C6
6 C2
23 C7
1 C7
Z1 18 BK
C7 10 DB
A970 10 RD
F922 14 PK/YL
R
TO MODULE-INTEGRATED POWER (SRT) (8W-13-26)
64 C219
7 C200
2
MOTOR-BLOWER (8W-42-2)
S147 (8W-15-7)
G104 (8W-15-7)

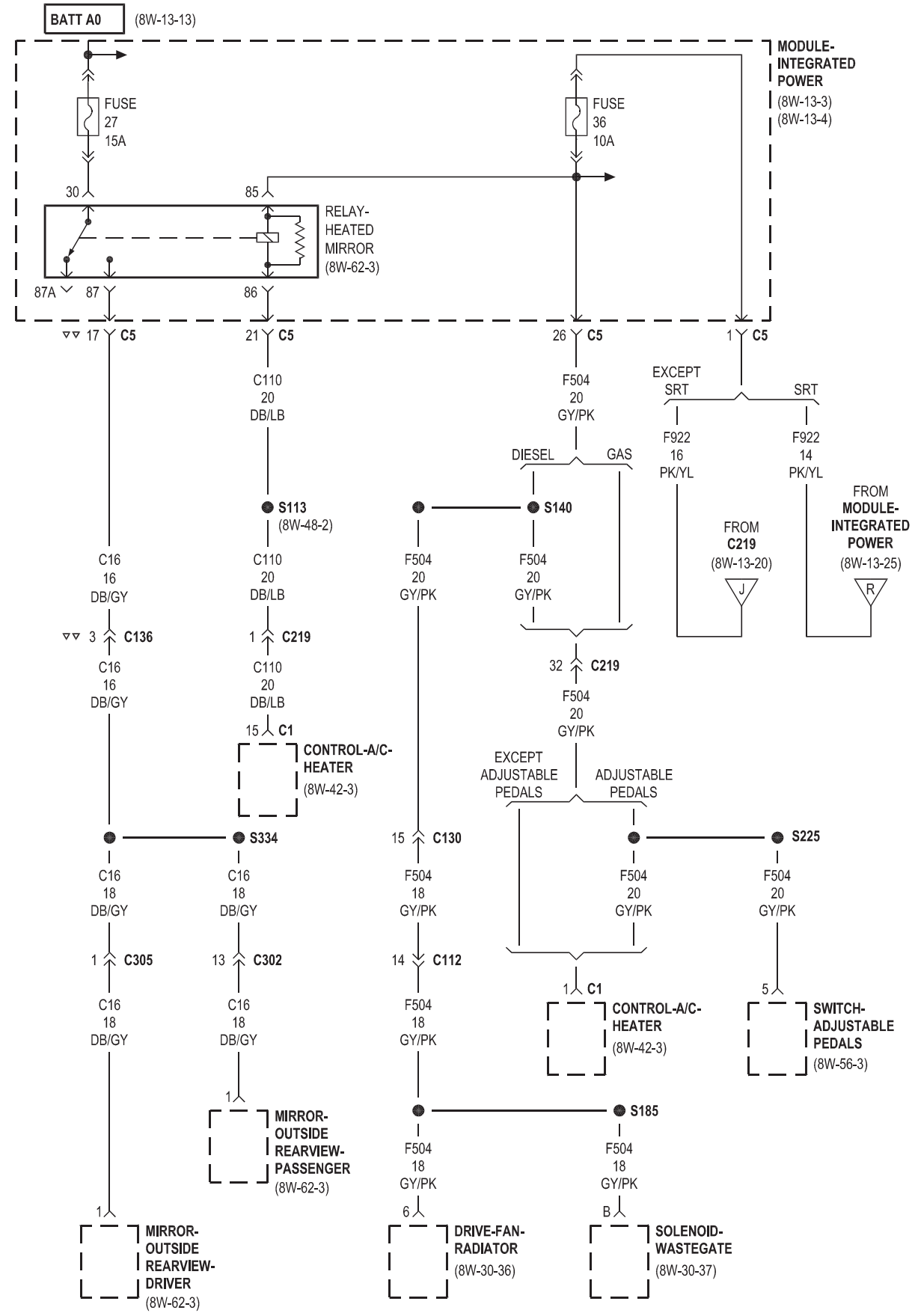
BATT A0
(8W-13-13)
MODULE-INTEGRATED POWER
(8W-13-3)
(8W-13-4)
FUSE 27 15A
FUSE 36 10A
30
85
RELAY-HEATED MIRROR
(8W-62-3)
87A
87
86
17 C5
21 C5
26 C5
1 C5
C110 20 DB/LB
F504 20 GY/PK
EXCEPT SRT
SRT
F922 16 PK/YL
F922 14 PK/YL
DIESEL
GAS
S113
(8W-48-2)
S140
FROM C219
(8W-13-20)
J
FROM MODULE-INTEGRATED POWER
(8W-13-25)
R
C16 16 DB/GY
3 C136
1 C219
32 C219
15 C1
CONTROL-A/C-HEATER
(8W-42-3)
EXCEPT ADJUSTABLE PEDALS
ADJUSTABLE PEDALS
S334
S225
15 C130
C16 18 DB/GY
F504 18 GY/PK
1 C305
13 C302
14 C112
5
SWITCH-ADJUSTABLE PEDALS
(8W-56-3)
MIRROR-OUTSIDE REARVIEW-PASSENGER
(8W-62-3)
S185
6
B
DRIVE-FAN-RADIATOR
(8W-30-36)
SOLENOID-WASTEGATE
(8W-30-37)
MIRROR-OUTSIDE REARVIEW-DRIVER
(8W-62-3)

▽▽ EXCEPT BASE

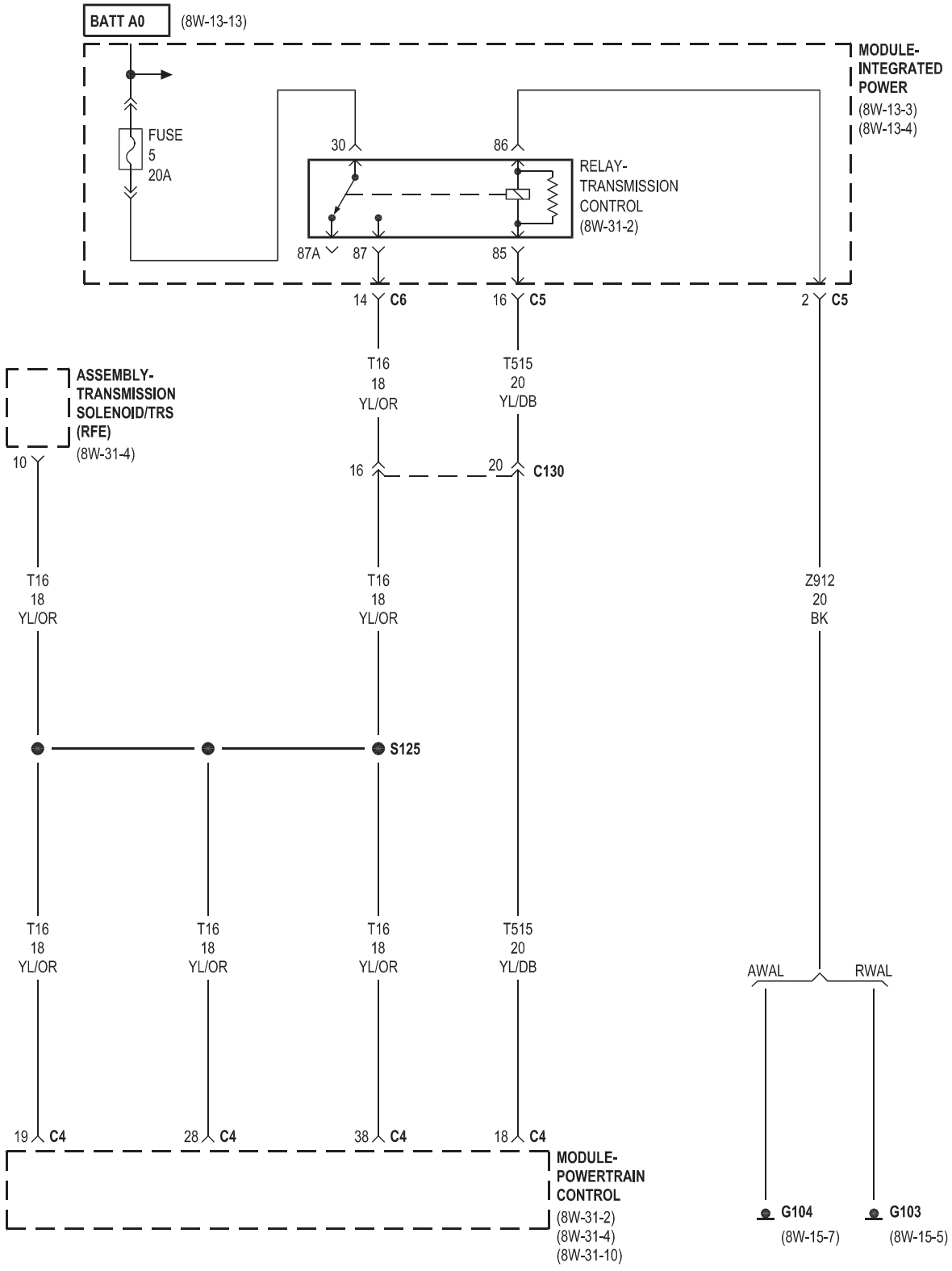
BATT A0
(8W-13-13)
MODULE-
INTEGRATED
POWER
(8W-13-3)
(8W-13-4)
FUSE
5
20A
30
86
RELAY-
TRANSMISSION
CONTROL
(8W-31-2)
87A
87
85
14 C6
16 C5
2 C5
T16
18
YL/OR
T515
20
YL/DB
ASSEMBLY-
TRANSMISSION
SOLENOID/TRS
(RFE)
(8W-31-4)
10
16
20 C130
T16
18
YL/OR
T16
18
YL/OR
Z912
20
BK
S125
T16
18
YL/OR
T16
18
YL/OR
T16
18
YL/OR
T515
20
YL/DB
AWAL
RWAL
19 C4
28 C4
38 C4
18 C4
MODULE-
POWERTRAIN
CONTROL
(8W-31-2)
(8W-31-4)
(8W-31-10)
G104
(8W-15-7)
G103
(8W-15-5)

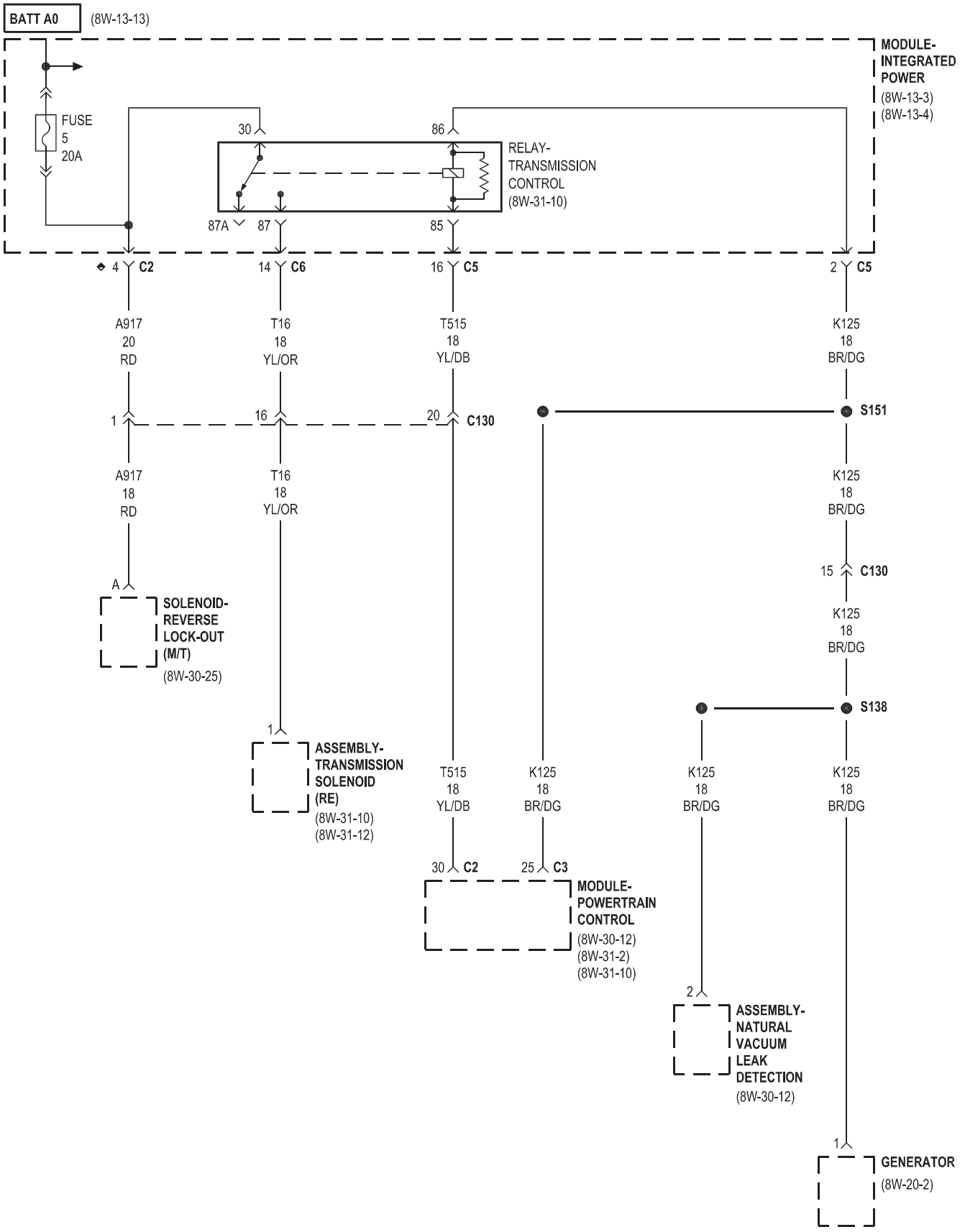
BATT A0
(8W-13-13)
MODULE-
INTEGRATED
POWER
(8W-13-3)
(8W-13-4)
FUSE
5
20A
30
86
RELAY-
TRANSMISSION
CONTROL
(8W-31-10)
87A
87
85
4 C2
14 C6
16 C5
2 C5
A917
20
RD
T16
18
YL/OR
T515
18
YL/DB
K125
18
BR/DG
1
16
20 C130
S151
A917
18
RD
T16
18
YL/OR
K125
18
BR/DG
A
15 C130
K125
18
BR/DG
SOLENOID-
REVERSE
LOCK-OUT
(M/T)
(8W-30-25)
S138
1
ASSEMBLY-
TRANSMISSION
SOLENOID
(RE)
(8W-31-10)
(8W-31-12)
T515
18
YL/DB
K125
18
BR/DG
K125
18
BR/DG
K125
18
BR/DG
30 C2
25 C3
MODULE-
POWERTRAIN
CONTROL
(8W-30-12)
(8W-31-2)
(8W-31-10)
2
ASSEMBLY-
NATURAL
VACUUM
LEAK
DETECTION
(8W-30-12)
1
GENERATOR
(8W-20-2)
◆ STANDARD CAB

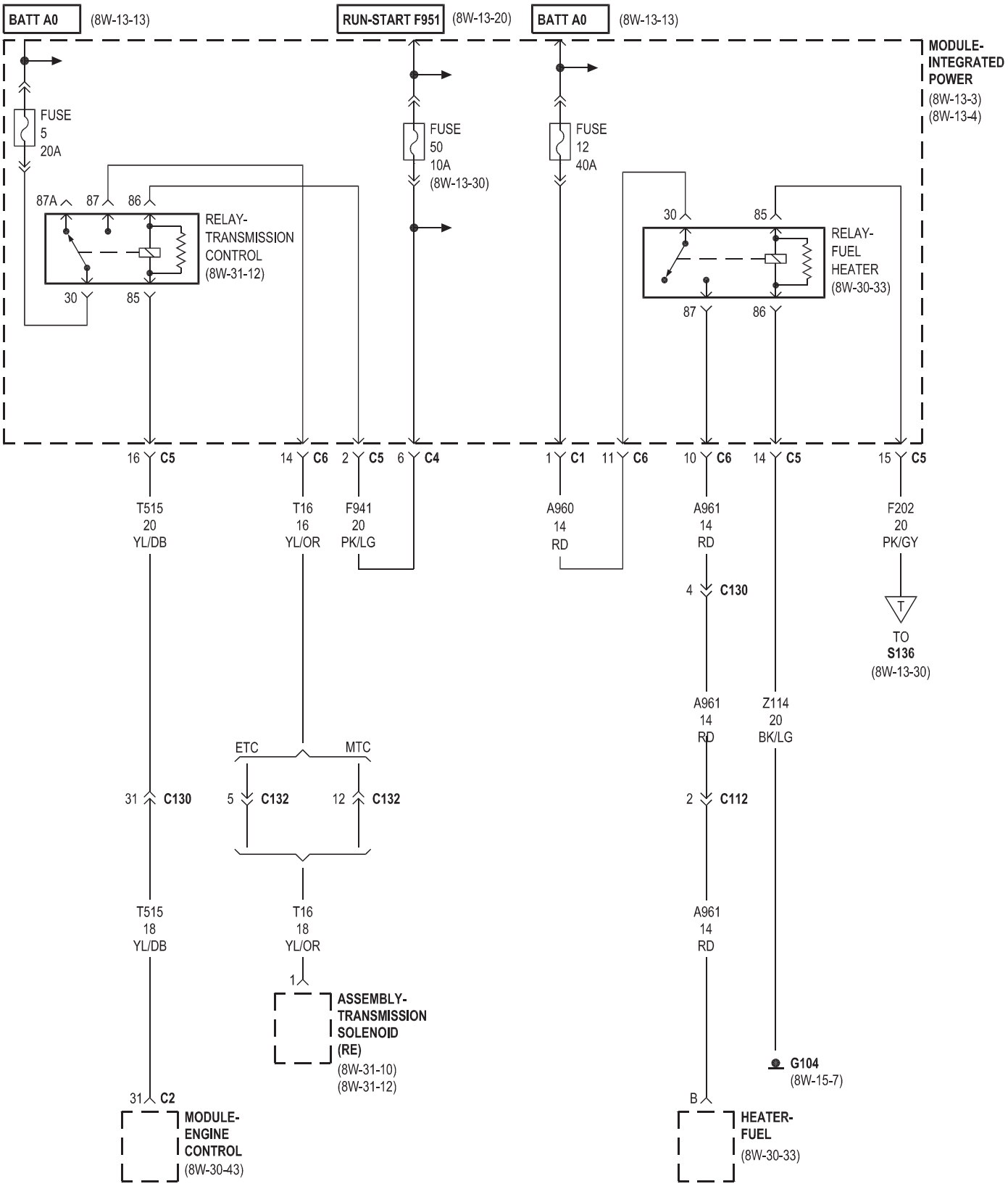
BATT A0
(8W-13-13)
RUN-START F951
(8W-13-20)
BATT A0
(8W-13-13)
MODULE-
INTEGRATED
POWER
(8W-13-3)
(8W-13-4)
FUSE
5
20A
FUSE
50
10A
(8W-13-30)
FUSE
12
40A
87A
87
86
30
85
RELAY-
TRANSMISSION
CONTROL
(8W-31-12)
30
85
87
86
RELAY-
FUEL
HEATER
(8W-30-33)
16 C5
14 C6
2 C5
6 C4
1 C1
11 C6
10 C6
14 C5
15 C5
T515
20
YL/DB
T16
16
YL/OR
F941
20
PK/LG
A960
14
RD
A961
14
RD
F202
20
PK/GY
4 C130
T
TO
S136
(8W-13-30)
A961
14
RD
Z114
20
BK/LG
ETC
MTC
31 C130
5 C132
12 C132
2 C112
T515
18
YL/DB
T16
18
YL/OR
A961
14
RD
1
ASSEMBLY-
TRANSMISSION
SOLENOID
(RE)
(8W-31-10)
(8W-31-12)
G104
(8W-15-7)
31 C2
B
MODULE-
ENGINE
CONTROL
(8W-30-43)
HEATER-
FUEL
(8W-30-33)

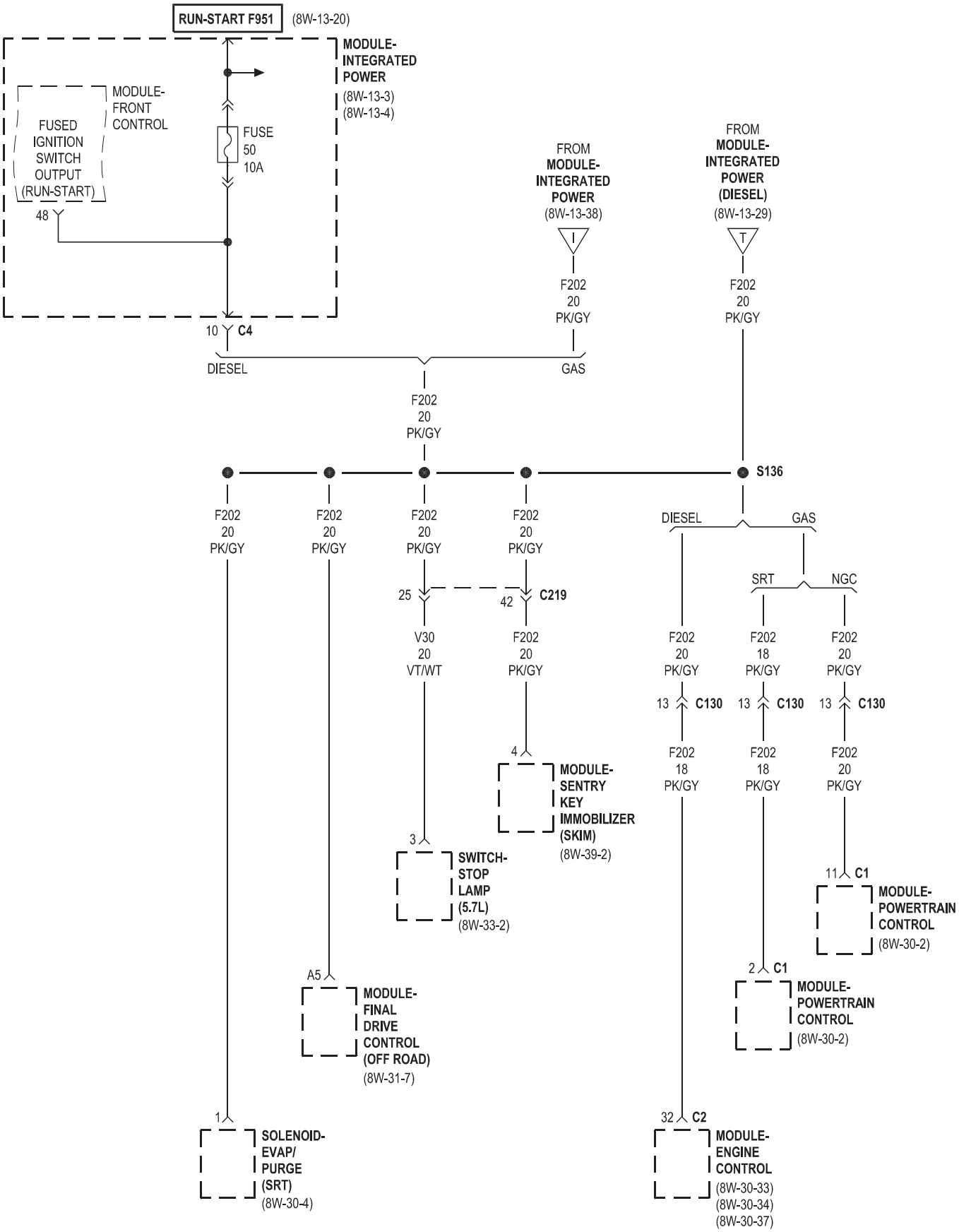
RUN-START F951
(8W-13-20)
MODULE-
INTEGRATED
POWER
(8W-13-3)
(8W-13-4)
MODULE-
FRONT
CONTROL
FUSED
IGNITION
SWITCH
OUTPUT
(RUN-START)
48
FUSE
50
10A
10
C4
DIESEL
FROM
MODULE-
INTEGRATED
POWER
(8W-13-38)
I
F202
20
PK/GY
GAS
FROM
MODULE-
INTEGRATED
POWER
(DIESEL)
(8W-13-29)
T
F202
20
PK/GY
F202
20
PK/GY
S136
F202
20
PK/GY
F202
20
PK/GY
F202
20
PK/GY
F202
20
PK/GY
25
42
C219
V30
20
VT/WT
F202
20
PK/GY
4
MODULE-
SENTRY
KEY
IMMOBILIZER
(SKIM)
(8W-39-2)
3
SWITCH-
STOP
LAMP
(5.7L)
(8W-33-2)
A5
MODULE-
FINAL
DRIVE
CONTROL
(OFF ROAD)
(8W-31-7)
1
SOLENOID-
EVAP/
PURGE
(SRT)
(8W-30-4)
DIESEL
GAS
SRT
NGC
F202
20
PK/GY
F202
18
PK/GY
F202
20
PK/GY
13
C130
13
C130
13
C130
F202
18
PK/GY
F202
18
PK/GY
F202
20
PK/GY
11
C1
MODULE-
POWERTRAIN
CONTROL
(8W-30-2)
2
C1
MODULE-
POWERTRAIN
CONTROL
(8W-30-2)
32
C2
MODULE-
ENGINE
CONTROL
(8W-30-33)
(8W-30-34)
(8W-30-37)

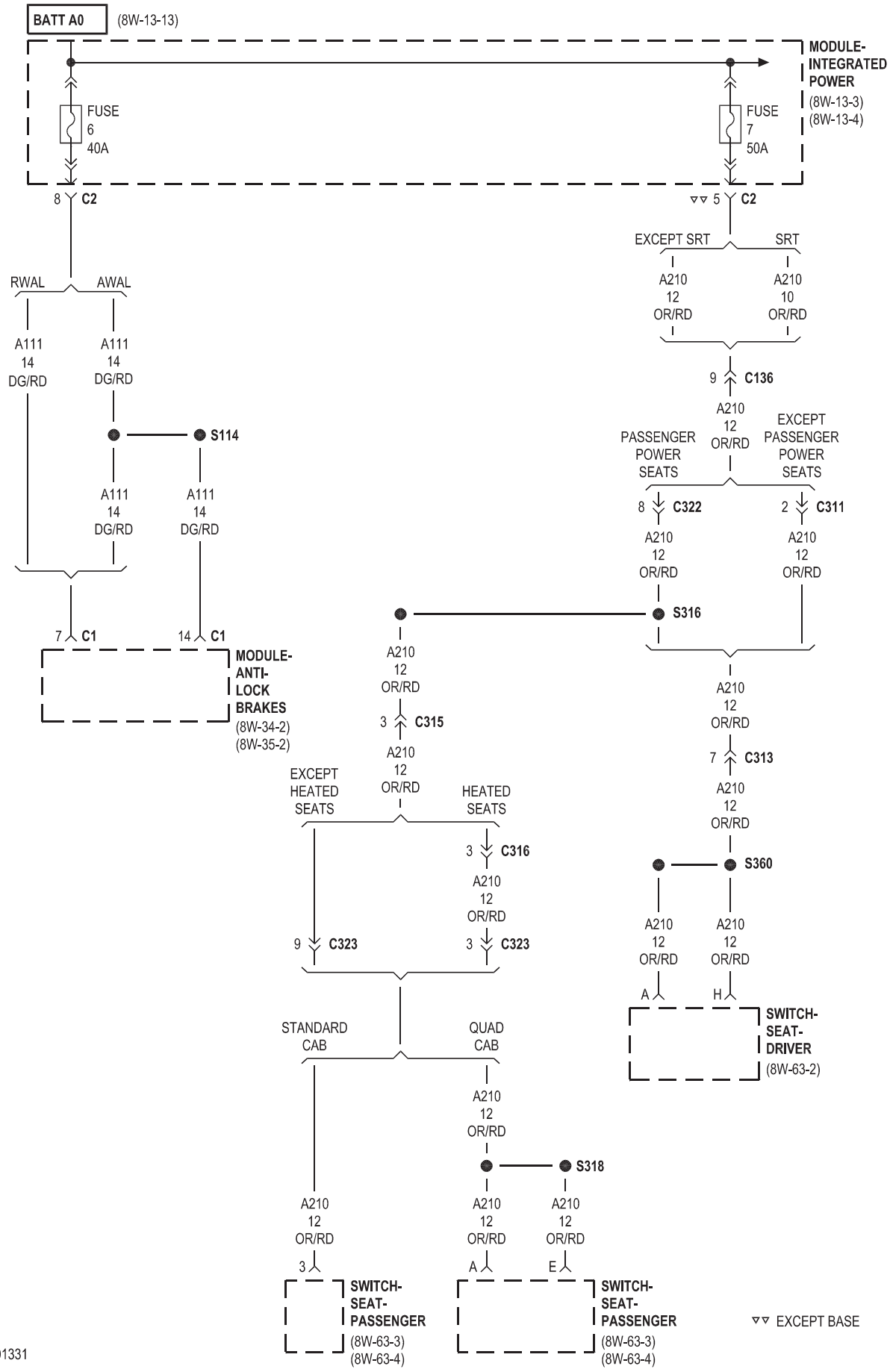
BATT A0
(8W-13-13)
MODULE-INTEGRATED POWER
(8W-13-3)
(8W-13-4)
FUSE 6 40A
FUSE 7 50A
8 C2
5 C2
EXCEPT SRT
SRT
A210 12 OR/RD
A210 10 OR/RD
9 C136
RWAL
AWAL
A111 14 DG/RD
S114
PASSENGER POWER SEATS
EXCEPT PASSENGER POWER SEATS
8 C322
2 C311
S316
7 C1
14 C1
MODULE-ANTI-LOCK BRAKES
(8W-34-2)
(8W-35-2)
3 C315
EXCEPT HEATED SEATS
HEATED SEATS
3 C316
9 C323
3 C323
7 C313
S360
A
H
SWITCH-SEAT-DRIVER
(8W-63-2)
STANDARD CAB
QUAD CAB
S318
3
A
E
SWITCH-SEAT-PASSENGER
(8W-63-3)
(8W-63-4)
EXCEPT BASE

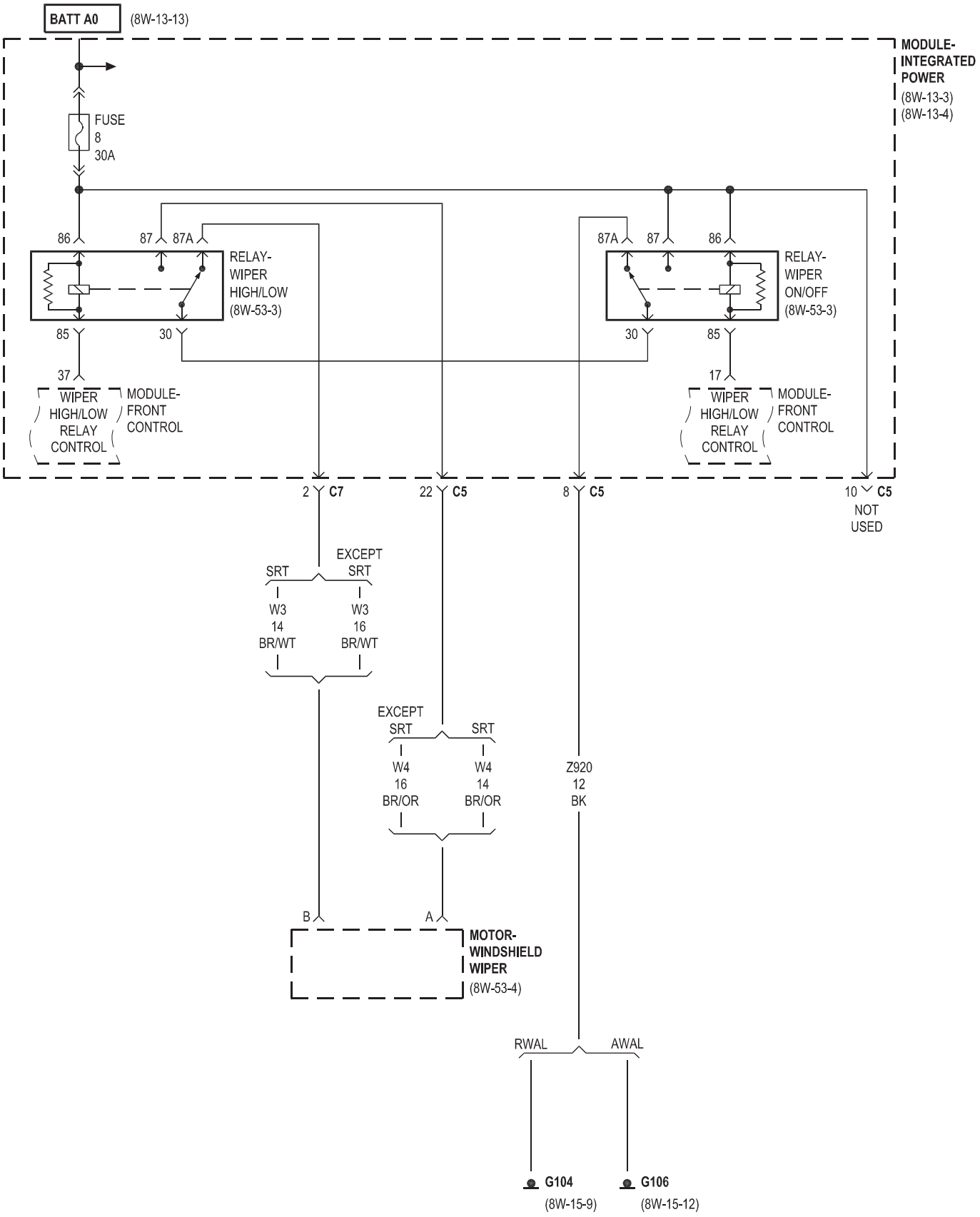
BATT A0
(8W-13-13)
MODULE-
INTEGRATED
POWER
(8W-13-3)
(8W-13-4)
FUSE
8
30A
86
87
87A
RELAY-
WIPER
HIGH/LOW
(8W-53-3)
85
30
37
WIPER
HIGH/LOW
RELAY
CONTROL
MODULE-
FRONT
CONTROL
87A
87
86
RELAY-
WIPER
ON/OFF
(8W-53-3)
30
85
17
WIPER
HIGH/LOW
RELAY
CONTROL
MODULE-
FRONT
CONTROL
2 C7
22 C5
8 C5
10 C5
NOT
USED
EXCEPT
SRT
SRT
W3
14
BR/WT
W3
16
BR/WT
EXCEPT
SRT
SRT
W4
16
BR/OR
W4
14
BR/OR
Z920
12
BK
B
A
MOTOR-
WINDSHIELD
WIPER
(8W-53-4)
RWAL
AWAL
G104
(8W-15-9)
G106
(8W-15-12)

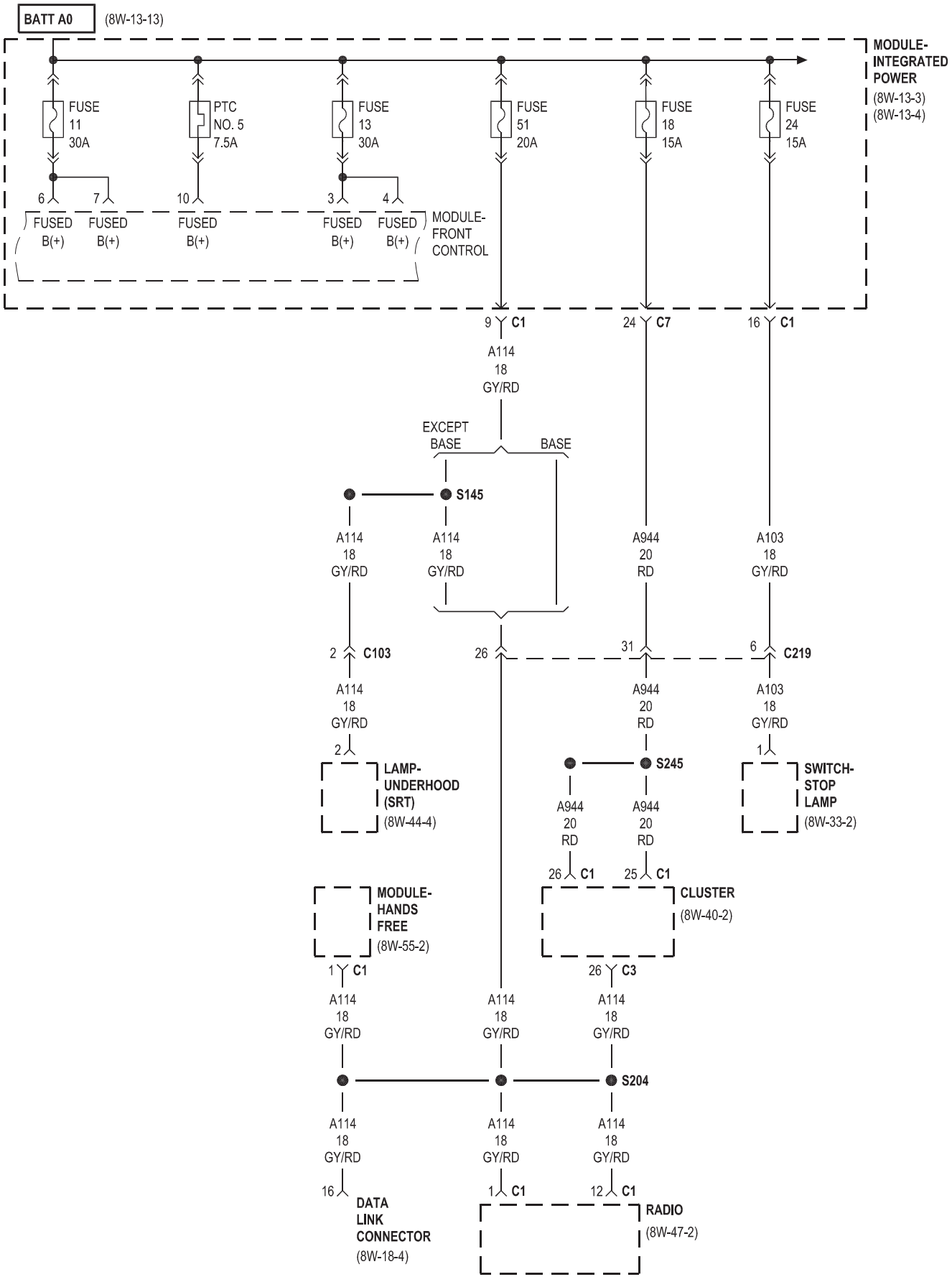
BATT A0
(8W-13-13)
MODULE-INTEGRATED POWER
(8W-13-3)
(8W-13-4)
FUSE 11 30A
PTC NO. 5 7.5A
FUSE 13 30A
FUSE 51 20A
FUSE 18 15A
FUSE 24 15A
6 FUSED B(+)
7 FUSED B(+)
10 FUSED B(+)
3 FUSED B(+)
4 FUSED B(+)
MODULE-FRONT CONTROL
9 C1
24 C7
16 C1
A114 18 GY/RD
EXCEPT BASE
BASE
S145
A114 18 GY/RD
A114 18 GY/RD
A944 20 RD
A103 18 GY/RD
2 C103
26
31
6 C219
A114 18 GY/RD
A944 20 RD
A103 18 GY/RD
2
1
LAMP-UNDERHOOD (SRT)
(8W-44-4)
S245
SWITCH-STOP LAMP
(8W-33-2)
A944 20 RD
A944 20 RD
26 C1
25 C1
MODULE-HANDS FREE
(8W-55-2)
CLUSTER
(8W-40-2)
1 C1
26 C3
A114 18 GY/RD
A114 18 GY/RD
A114 18 GY/RD
S204
A114 18 GY/RD
A114 18 GY/RD
A114 18 GY/RD
16
1 C1
12 C1
DATA LINK CONNECTOR
(8W-18-4)
RADIO
(8W-47-2)

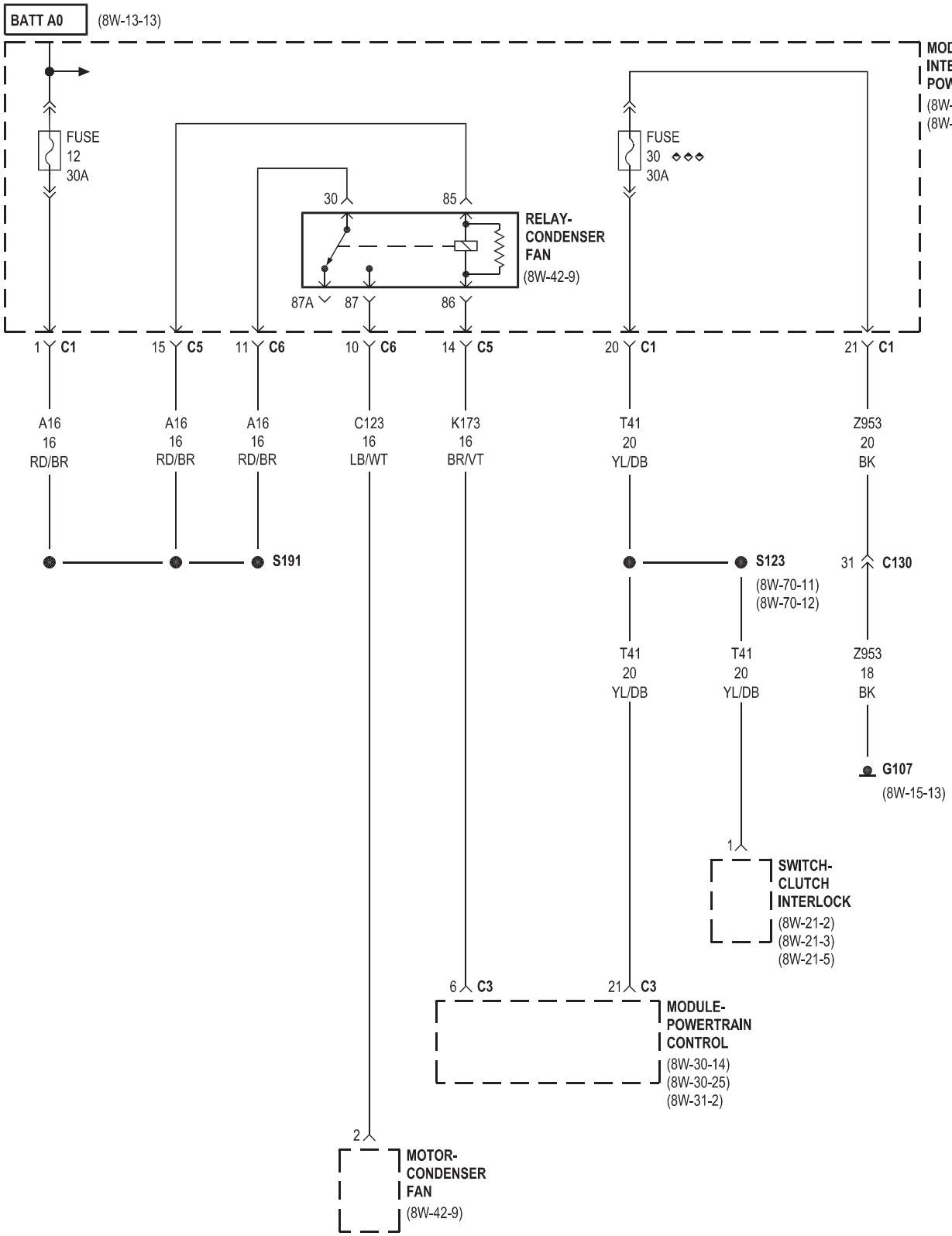
BATT A0
(8W-13-13)
MODULE-
INTEGRATED
POWER
(8W-13-3)
(8W-13-4)
FUSE
12
30A
FUSE
30 ◇◇◇
30A
30
85
RELAY-
CONDENSER
FAN
(8W-42-9)
87A
87
86
1 C1
15 C5
11 C6
10 C6
14 C5
20 C1
21 C1
A16
16
RD/BR
A16
16
RD/BR
A16
16
RD/BR
C123
16
LB/WT
K173
16
BR/VT
T41
20
YL/DB
Z953
20
BK
S191
S123
(8W-70-11)
(8W-70-12)
31 C130
T41
20
YL/DB
T41
20
YL/DB
Z953
18
BK
G107
(8W-15-13)
1
SWITCH-
CLUTCH
INTERLOCK
(8W-21-2)
(8W-21-3)
(8W-21-5)
6 C3
21 C3
MODULE-
POWERTRAIN
CONTROL
(8W-30-14)
(8W-30-25)
(8W-31-2)
2
MOTOR-
CONDENSER
FAN
(8W-42-9)
◇◇◇ OFF ROAD

EXCEPT SRT

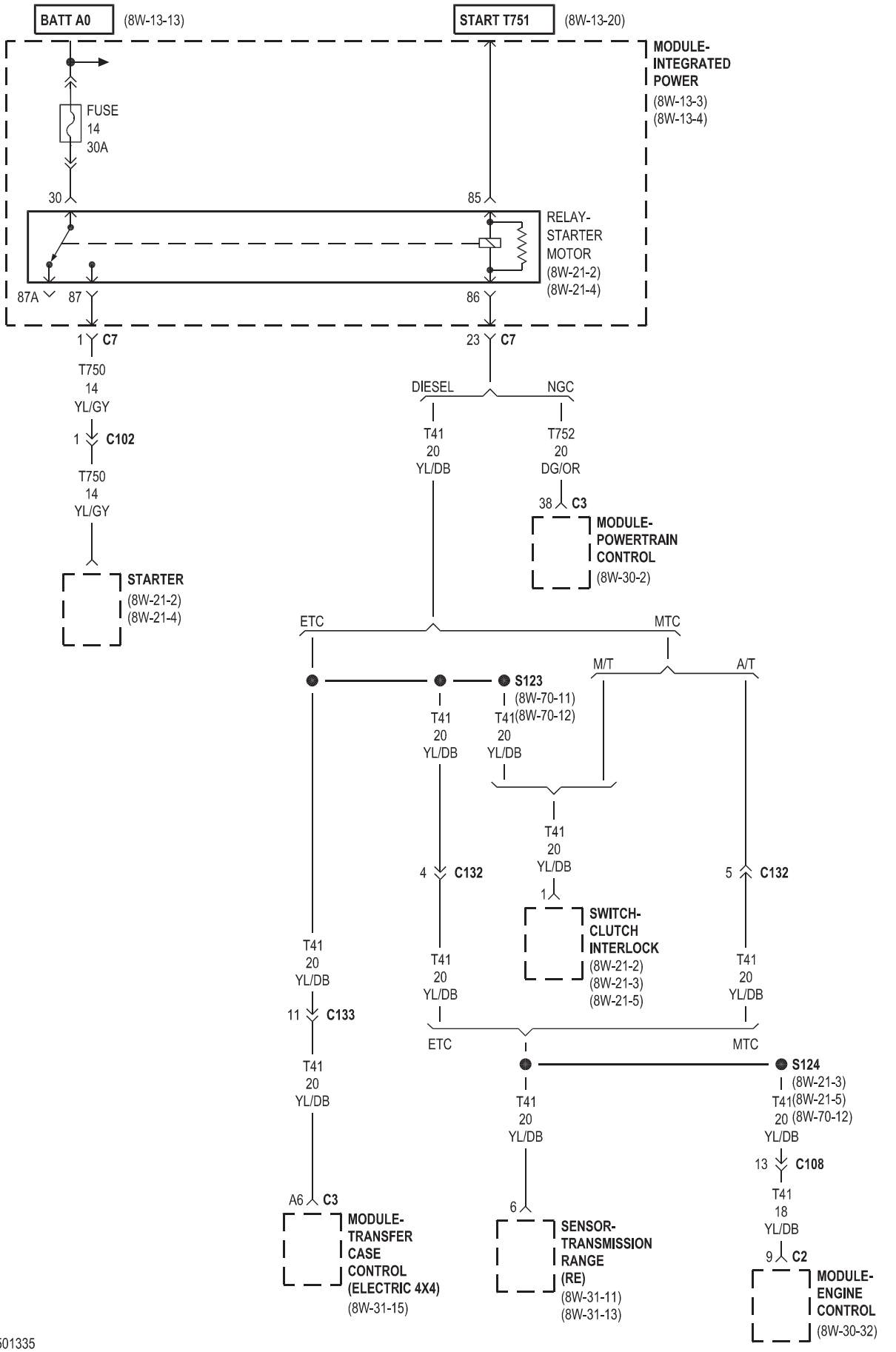
BATT A0
(8W-13-13)
START T751
(8W-13-20)
MODULE-INTEGRATED POWER
(8W-13-3)
(8W-13-4)
FUSE
14
30A
30
85
RELAY-STARTER MOTOR
(8W-21-2)
(8W-21-4)
87A
87
86
1 C7
23 C7
T750
14
YL/GY
1 C102
T750
14
YL/GY
STARTER
(8W-21-2)
(8W-21-4)
DIESEL
NGC
T41
20
YL/DB
T752
20
DG/OR
38 C3
MODULE-POWERTRAIN CONTROL
(8W-30-2)
ETC
MTC
M/T
A/T
S123
(8W-70-11)
(8W-70-12)
T41
20
YL/DB
4 C132
5 C132
1
SWITCH-CLUTCH INTERLOCK
(8W-21-2)
(8W-21-3)
(8W-21-5)
11 C133
A6 C3
MODULE-TRANSFER CASE CONTROL (ELECTRIC 4X4)
(8W-31-15)
6
SENSOR-TRANSMISSION RANGE (RE)
(8W-31-11)
(8W-31-13)
S124
(8W-21-3)
(8W-21-5)
(8W-70-12)
13 C108
T41
18
YL/DB
9 C2
MODULE-ENGINE CONTROL
(8W-30-32)

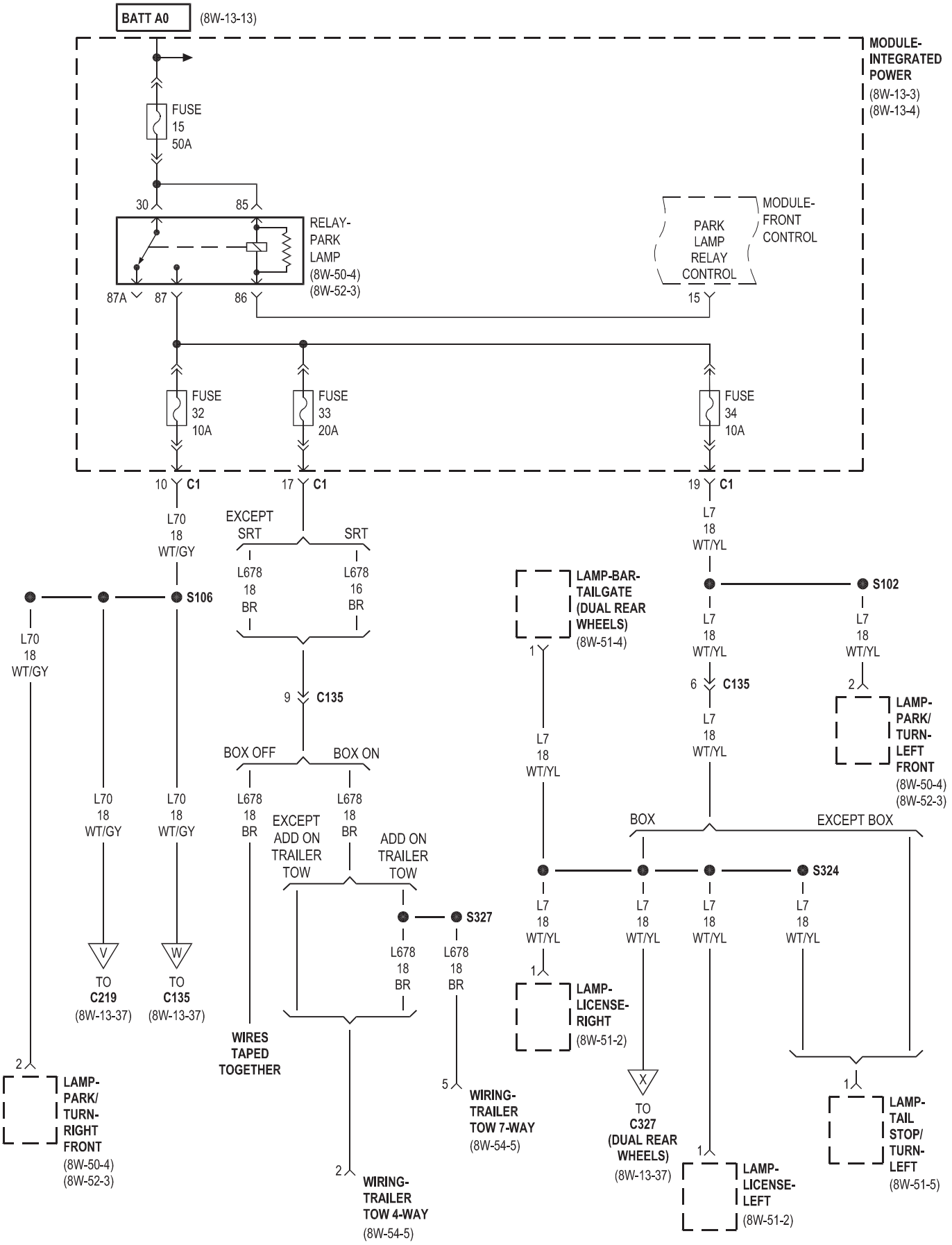
BATT A0
(8W-13-13)
MODULE-INTEGRATED POWER
(8W-13-3)
(8W-13-4)
FUSE 15 50A
30
85
RELAY-PARK LAMP
(8W-50-4)
(8W-52-3)
87A
87
86
PARK LAMP RELAY CONTROL
MODULE-FRONT CONTROL
15
FUSE 32 10A
FUSE 33 20A
FUSE 34 10A
10 C1
17 C1
19 C1
L70 18 WT/GY
EXCEPT SRT
SRT
L678 18 BR
L678 16 BR
S106
L70 18 WT/GY
L70 18 WT/GY
L70 18 WT/GY
9 C135
BOX OFF
BOX ON
L678 18 BR
EXCEPT ADD ON TRAILER TOW
L678 18 BR
ADD ON TRAILER TOW
S327
L678 18 BR
L678 18 BR
V
W
TO C219
(8W-13-37)
TO C135
(8W-13-37)
WIRES TAPED TOGETHER
2
LAMP-PARK/TURN-RIGHT FRONT
(8W-50-4)
(8W-52-3)
2
WIRING-TRAILER TOW 4-WAY
(8W-54-5)
5
WIRING-TRAILER TOW 7-WAY
(8W-54-5)
LAMP-BAR-TAILGATE (DUAL REAR WHEELS)
(8W-51-4)
1
L7 18 WT/YL
L7 18 WT/YL
6 C135
L7 18 WT/YL
S102
L7 18 WT/YL
2
LAMP-PARK/TURN-LEFT FRONT
(8W-50-4)
(8W-52-3)
BOX
EXCEPT BOX
S324
L7 18 WT/YL
L7 18 WT/YL
L7 18 WT/YL
L7 18 WT/YL
1
LAMP-LICENSE-RIGHT
(8W-51-2)
X
TO C327 (DUAL REAR WHEELS)
(8W-13-37)
1
LAMP-LICENSE-LEFT
(8W-51-2)
1
LAMP-TAIL STOP/TURN-LEFT
(8W-51-5)

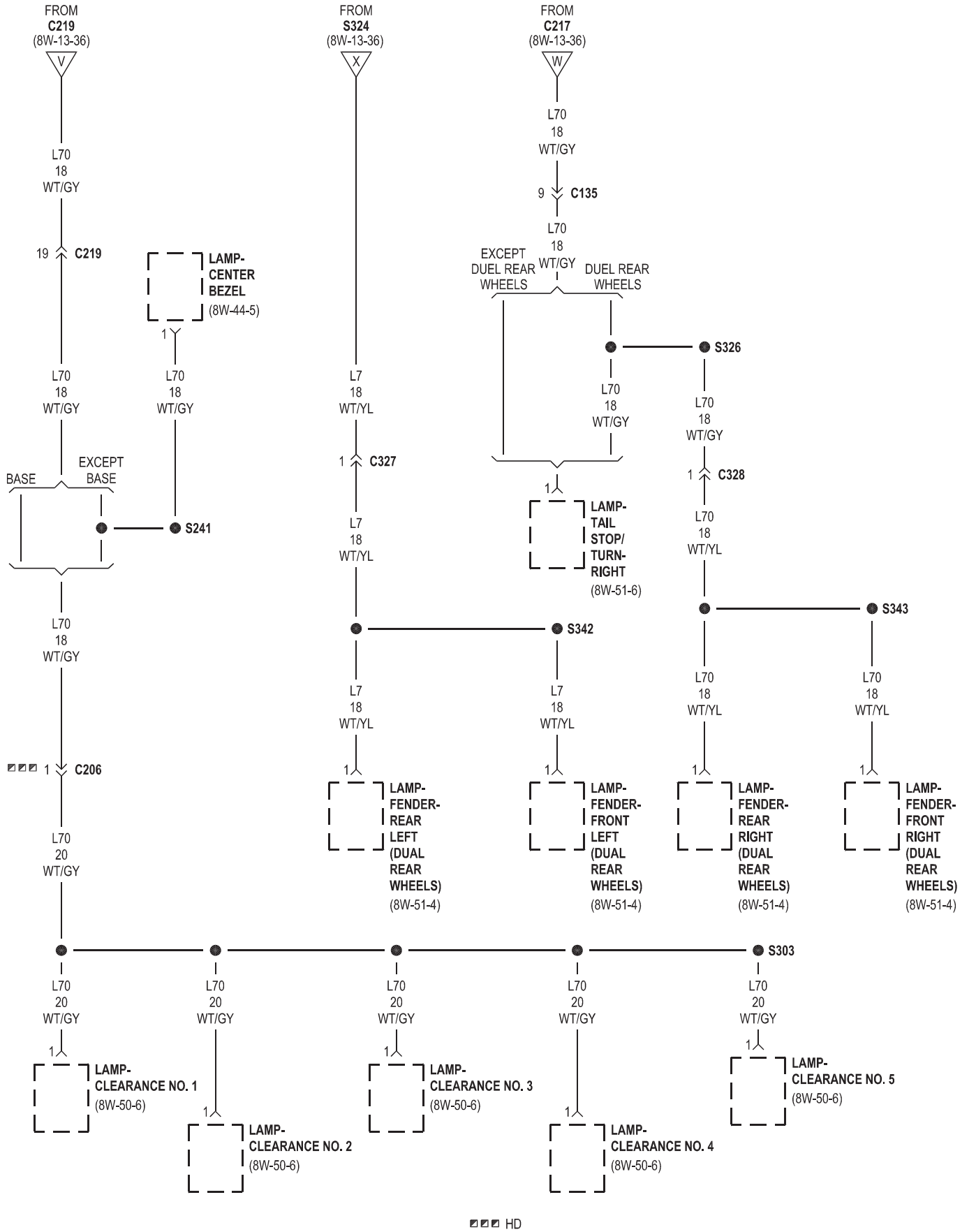
FROM C219 (8W-13-36)
V
L70 18 WT/GY
19 C219
L70 18 WT/GY
BASE
EXCEPT BASE
S241
L70 18 WT/GY
C206
L70 20 WT/GY
LAMP-CENTER BEZEL (8W-44-5)
1
L70 18 WT/GY
FROM S324 (8W-13-36)
X
L7 18 WT/YL
1 C327
L7 18 WT/YL
S342
L7 18 WT/YL
LAMP-FENDER-REAR LEFT (DUAL REAR WHEELS) (8W-51-4)
L7 18 WT/YL
LAMP-FENDER-FRONT LEFT (DUAL REAR WHEELS) (8W-51-4)
FROM C217 (8W-13-36)
W
L70 18 WT/GY
9 C135
L70 18 WT/GY
EXCEPT DUEL REAR WHEELS
DUEL REAR WHEELS
S326
L70 18 WT/GY
LAMP-TAIL STOP/ TURN-RIGHT (8W-51-6)
L70 18 WT/GY
1 C328
L70 18 WT/YL
S343
L70 18 WT/YL
LAMP-FENDER-REAR RIGHT (DUAL REAR WHEELS) (8W-51-4)
L70 18 WT/YL
LAMP-FENDER-FRONT RIGHT (DUAL REAR WHEELS) (8W-51-4)
S303
L70 20 WT/GY
LAMP-CLEARANCE NO. 1 (8W-50-6)
L70 20 WT/GY
LAMP-CLEARANCE NO. 2 (8W-50-6)
L70 20 WT/GY
LAMP-CLEARANCE NO. 3 (8W-50-6)
L70 20 WT/GY
LAMP-CLEARANCE NO. 4 (8W-50-6)
L70 20 WT/GY
LAMP-CLEARANCE NO. 5 (8W-50-6)
HD

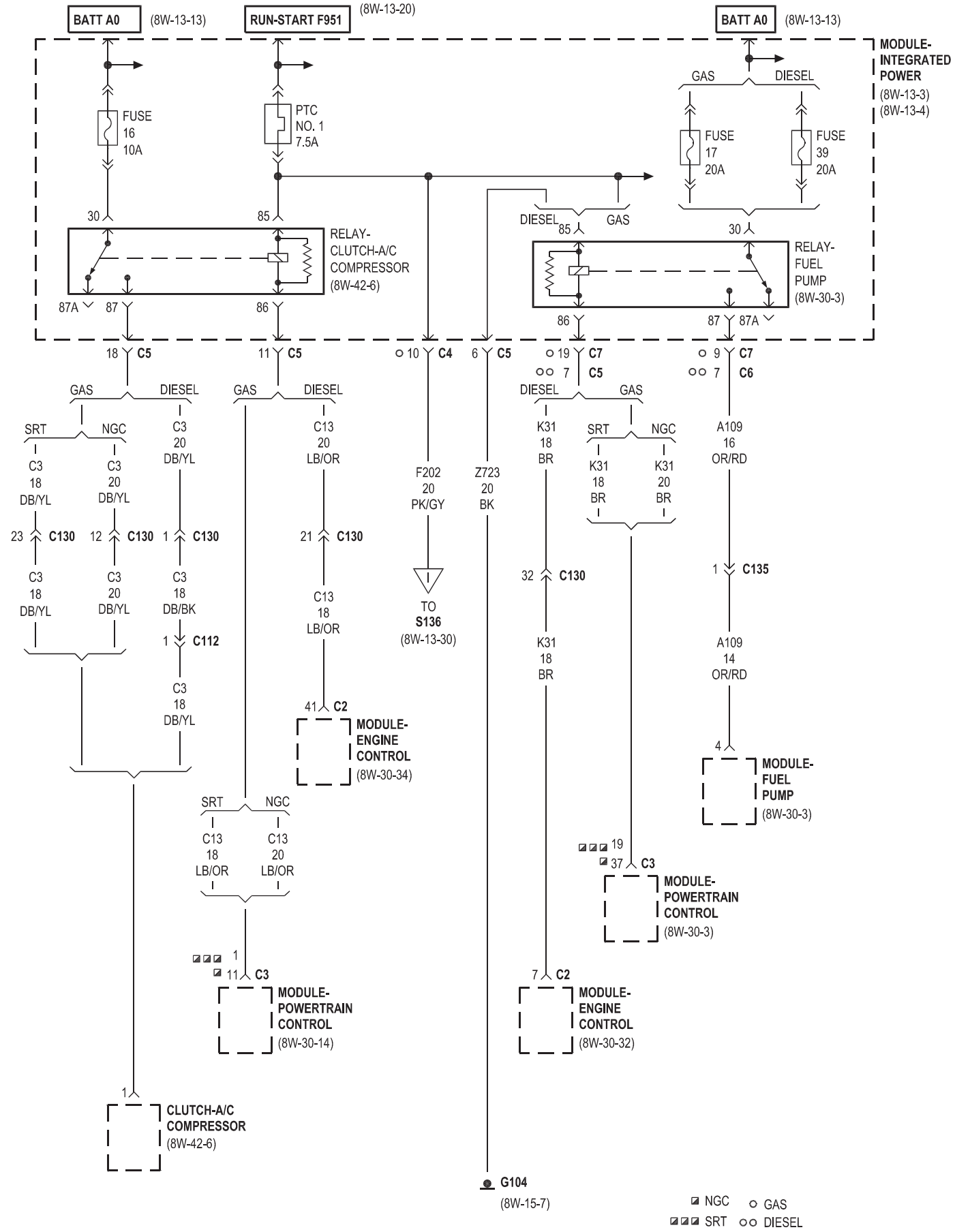
BATT A0
(8W-13-13)
RUN-START F951
(8W-13-20)
BATT A0
(8W-13-13)
MODULE-
INTEGRATED
POWER
(8W-13-3)
(8W-13-4)
FUSE
16
10A
PTC
NO. 1
7.5A
GAS
DIESEL
FUSE
17
20A
FUSE
39
20A
30
85
DIESEL
GAS
85
30
RELAY-
CLUTCH-A/C
COMPRESSOR
(8W-42-6)
RELAY-
FUEL
PUMP
(8W-30-3)
87A
87
86
86
87
87A
18 C5
11 C5
10 C4
6 C5
19 C7
7 C5
9 C7
7 C6
GAS
DIESEL
GAS
DIESEL
DIESEL
GAS
SRT
NGC
C3
20
DB/YL
C13
20
LB/OR
K31
18
BR
SRT
NGC
A109
16
OR/RD
C3
18
DB/YL
C3
20
DB/YL
F202
20
PK/GY
Z723
20
BK
K31
18
BR
K31
18
BR
K31
20
BR
23 C130
12 C130
1 C130
21 C130
32 C130
1 C135
C3
18
DB/YL
C3
20
DB/YL
C3
18
DB/BK
C13
18
LB/OR
TO
S136
(8W-13-30)
K31
18
BR
A109
14
OR/RD
1 C112
41 C2
MODULE-
ENGINE
CONTROL
(8W-30-34)
4
MODULE-
FUEL
PUMP
(8W-30-3)
SRT
NGC
C13
18
LB/OR
C13
20
LB/OR
19
37 C3
MODULE-
POWERTRAIN
CONTROL
(8W-30-3)
1
11 C3
MODULE-
POWERTRAIN
CONTROL
(8W-30-14)
7 C2
MODULE-
ENGINE
CONTROL
(8W-30-32)
1
CLUTCH-A/C
COMPRESSOR
(8W-42-6)
G104
(8W-15-7)
NGC
GAS
SRT
DIESEL

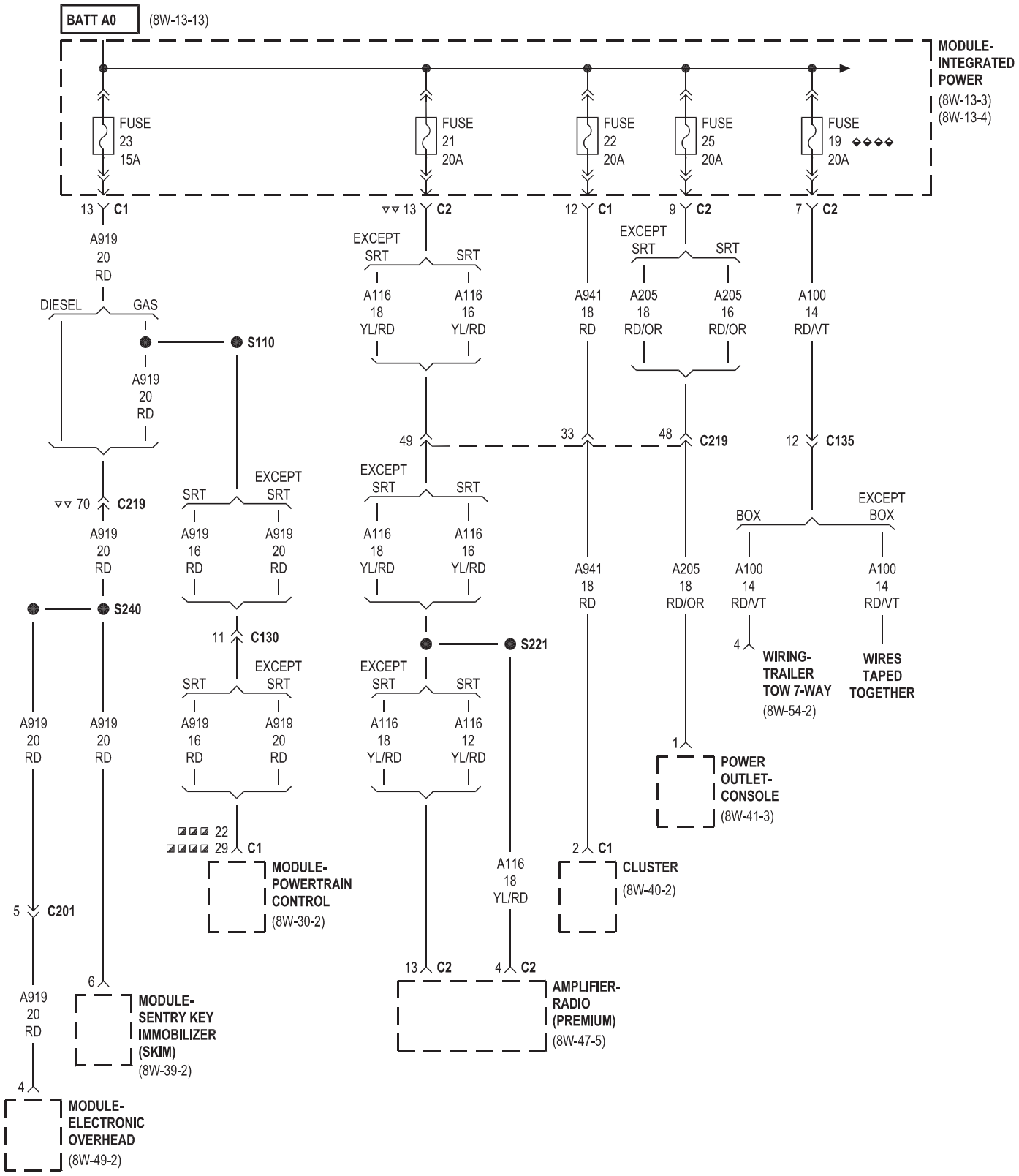
BATT A0
(8W-13-13)
MODULE-INTEGRATED POWER
(8W-13-3)
(8W-13-4)
FUSE 23 15A
FUSE 21 20A
FUSE 22 20A
FUSE 25 20A
FUSE 19 20A
13 C1
13 C2
12 C1
9 C2
7 C2
A919 20 RD
DIESEL
GAS
S110
EXCEPT SRT
SRT
A116 18 YL/RD
A116 16 YL/RD
A941 18 RD
A205 18 RD/OR
A205 16 RD/OR
A100 14 RD/VT
49
33
48 C219
12 C135
70 C219
A919 16 RD
A919 20 RD
BOX
EXCEPT BOX
A100 14 RD/VT
S240
S221
11 C130
A116 18 YL/RD
A116 12 YL/RD
4
WIRING-TRAILER TOW 7-WAY
(8W-54-2)
WIRES TAPED TOGETHER
1
POWER OUTLET-CONSOLE
(8W-41-3)
22
29 C1
MODULE-POWERTRAIN CONTROL
(8W-30-2)
2 C1
CLUSTER
(8W-40-2)
5 C201
6
MODULE-SENTRY KEY IMMOBILIZER (SKIM)
(8W-39-2)
13 C2
4 C2
AMPLIFIER-RADIO (PREMIUM)
(8W-47-5)
MODULE-ELECTRONIC OVERHEAD
(8W-49-2)
SRT
EXCEPT SRT
EXCEPT BASE
TRAILER TOW

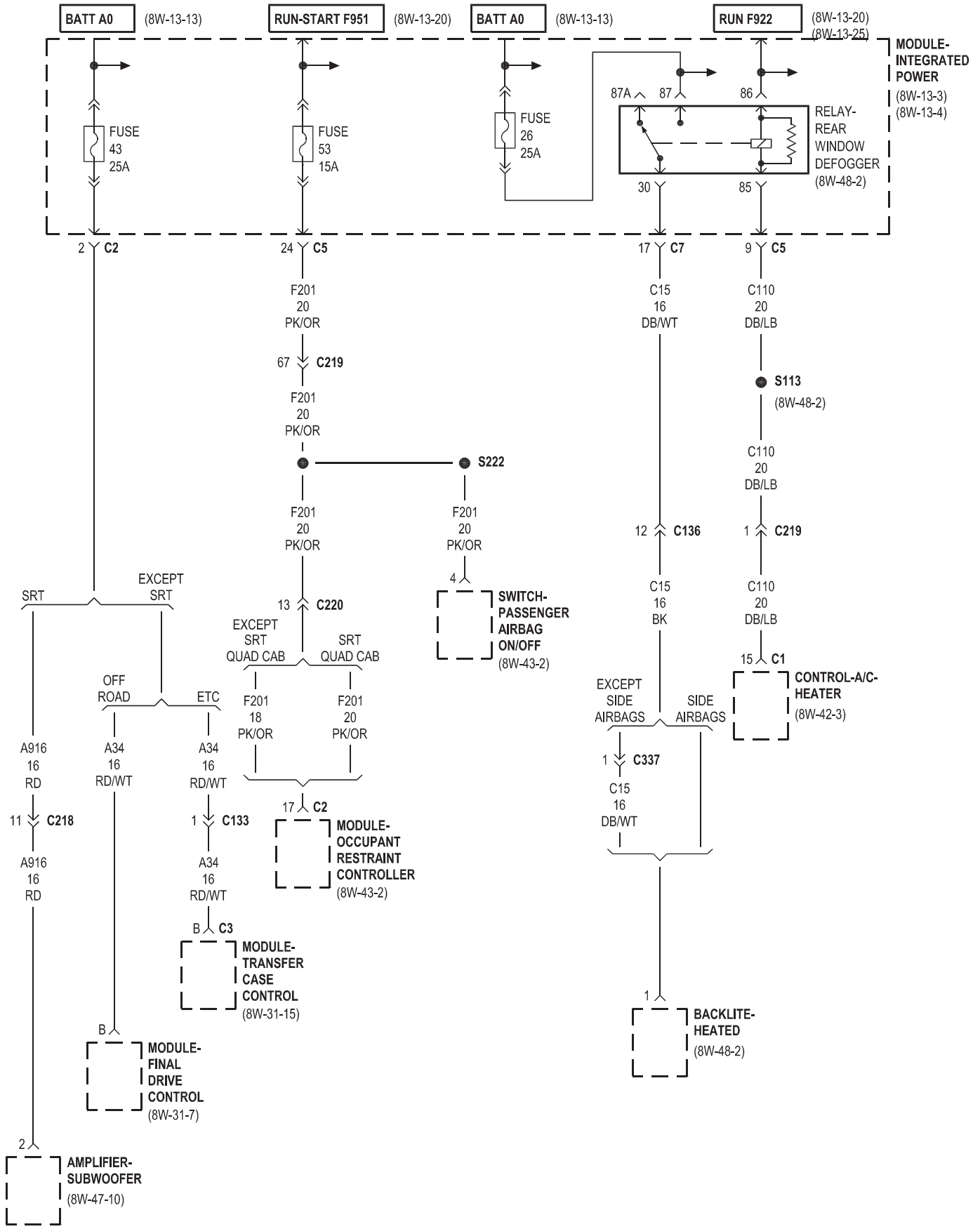
BATT A0
(8W-13-13)
RUN-START F951
(8W-13-20)
BATT A0
(8W-13-13)
RUN F922
(8W-13-20)
(8W-13-25)
MODULE-INTEGRATED POWER
(8W-13-3)
(8W-13-4)
FUSE 43 25A
FUSE 53 15A
FUSE 26 25A
87A
87
86
RELAY-REAR WINDOW DEFOGGER
(8W-48-2)
30
85
2 C2
24 C5
17 C7
9 C5
F201 20 PK/OR
67 C219
S222
S113
(8W-48-2)
C15 16 DB/WT
C110 20 DB/LB
12 C136
1 C219
4
SWITCH-PASSENGER AIRBAG ON/OFF
(8W-43-2)
SRT
EXCEPT SRT
13 C220
EXCEPT SRT QUAD CAB
SRT QUAD CAB
15 C1
CONTROL-A/C-HEATER
(8W-42-3)
OFF ROAD
ETC
F201 18 PK/OR
F201 20 PK/OR
C15 16 BK
EXCEPT SIDE AIRBAGS
SIDE AIRBAGS
1 C337
A916 16 RD
A34 16 RD/WT
11 C218
1 C133
17 C2
MODULE-OCCUPANT RESTRAINT CONTROLLER
(8W-43-2)
B C3
MODULE-TRANSFER CASE CONTROL
(8W-31-15)
B
MODULE-FINAL DRIVE CONTROL
(8W-31-7)
1
BACKLITE-HEATED
(8W-48-2)
2
AMPLIFIER-SUBWOOFER
(8W-47-10)

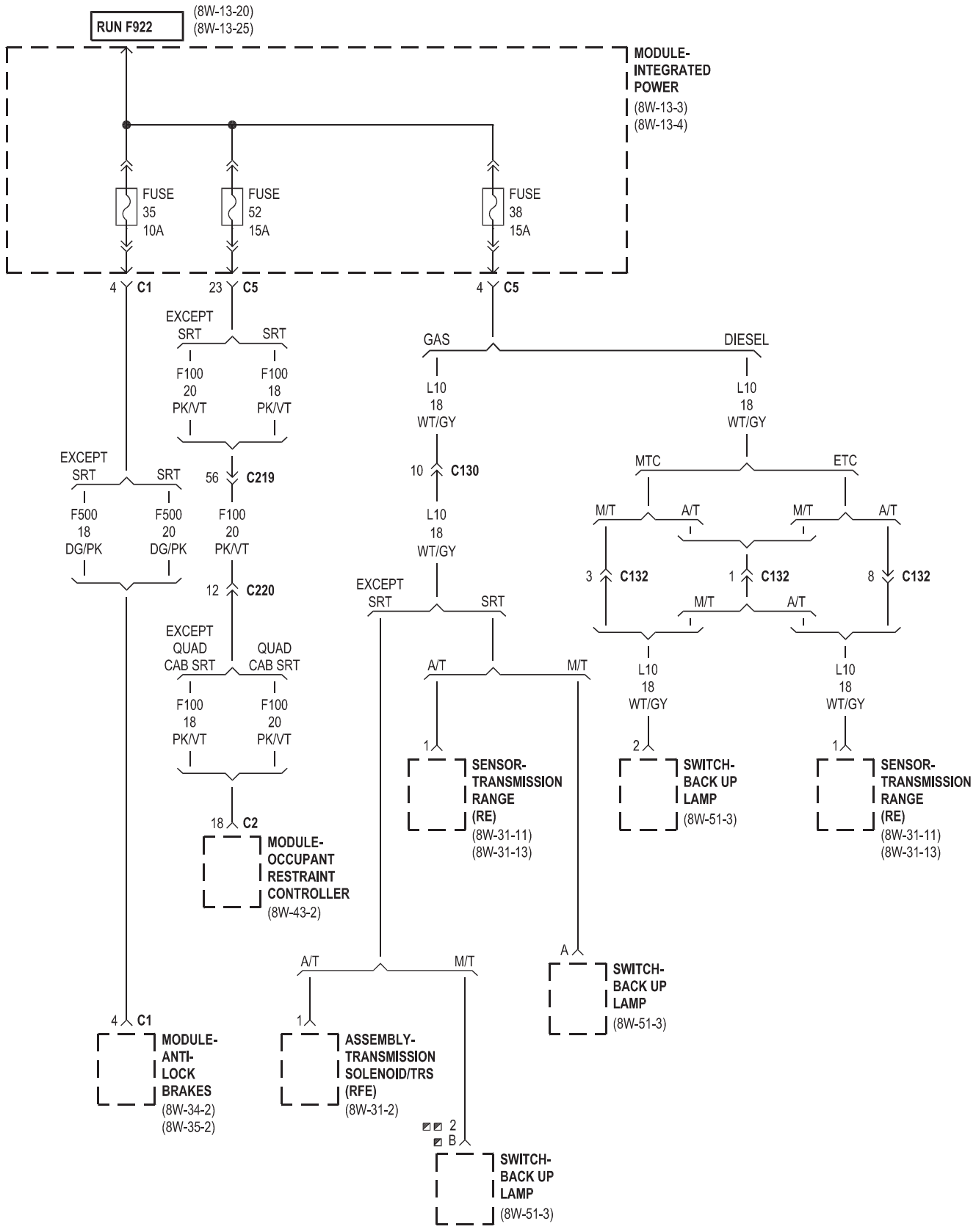

◪ 5.7L NV5600

◪◪ EXCEPT 5.7L NV5600

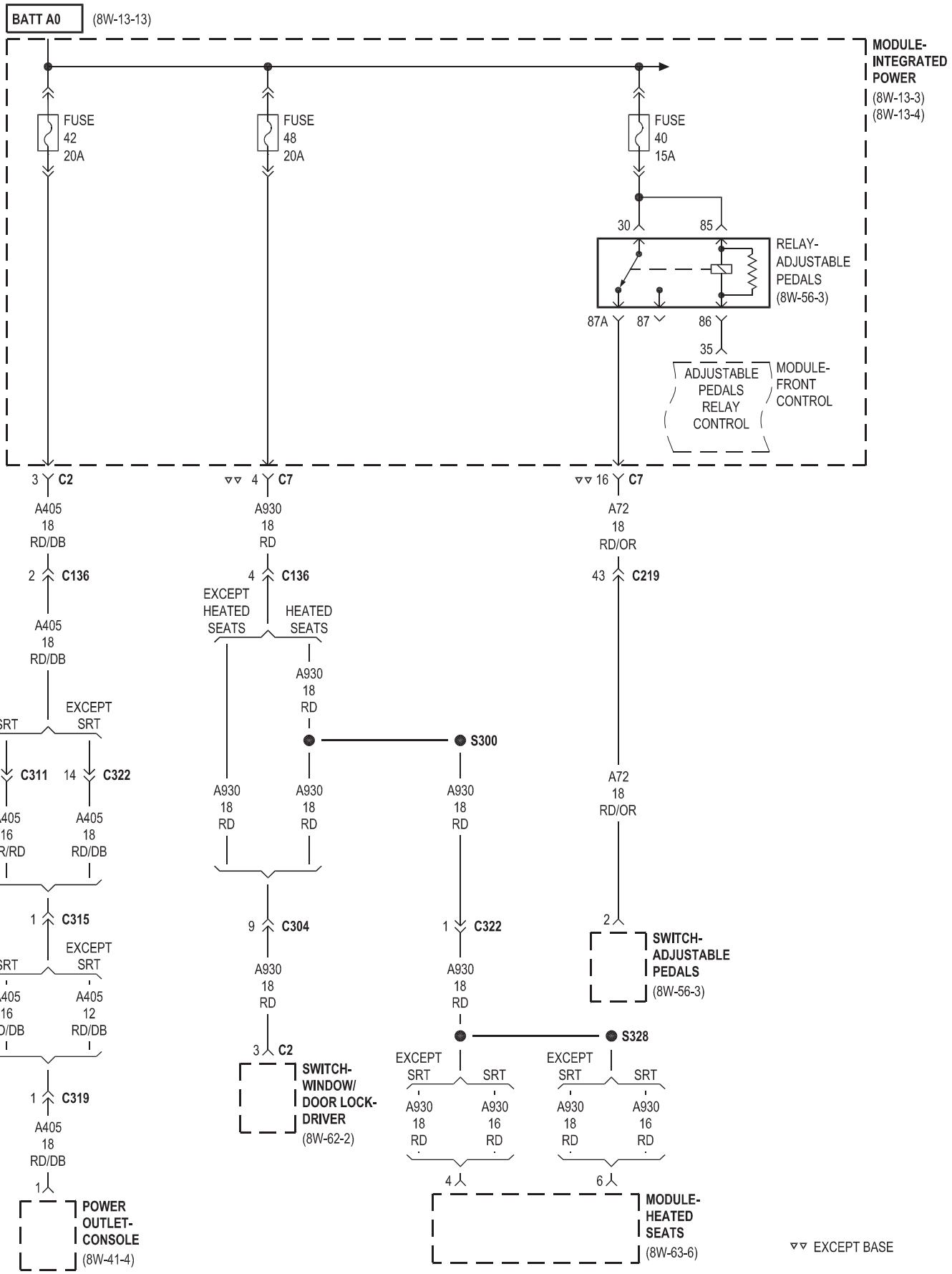
BATT A0
(8W-13-13)
MODULE-
INTEGRATED
POWER
(8W-13-3)
(8W-13-4)
FUSE
42
20A
FUSE
48
20A
FUSE
40
15A
30
85
RELAY-
ADJUSTABLE
PEDALS
(8W-56-3)
87A
87
86
35
ADJUSTABLE
PEDALS
RELAY
CONTROL
MODULE-
FRONT
CONTROL
3 C2
▽▽ 4 C7
▽▽ 16 C7
A405
18
RD/DB
A930
18
RD
A72
18
RD/OR
2 C136
4 C136
43 C219
EXCEPT
HEATED
SEATS
HEATED
SEATS
SRT
EXCEPT
SRT
4 C311
14 C322
A405
16
OR/RD
A405
18
RD/DB
S300
A930
18
RD
A72
18
RD/OR
1 C315
9 C304
1 C322
2
SWITCH-
ADJUSTABLE
PEDALS
(8W-56-3)
A405
16
RD/DB
A405
12
RD/DB
3 C2
S328
1 C319
SWITCH-
WINDOW/
DOOR LOCK-
DRIVER
(8W-62-2)
A930
16
RD
4
6
POWER
OUTLET-
CONSOLE
(8W-41-4)
MODULE-
HEATED
SEATS
(8W-63-6)
▽▽ EXCEPT BASE

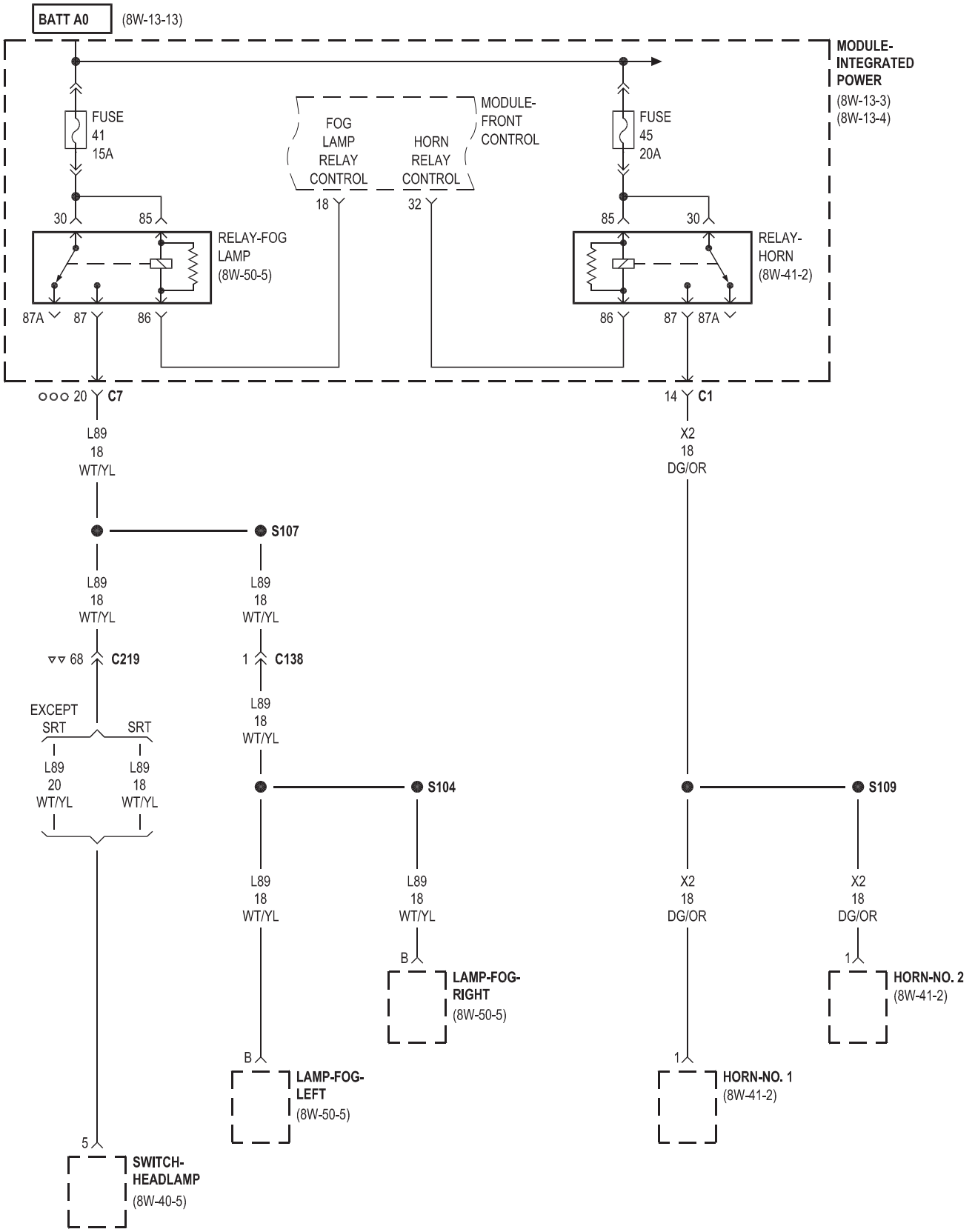

▽▽ EXCEPT BASE
○○○ FOG LAMPS

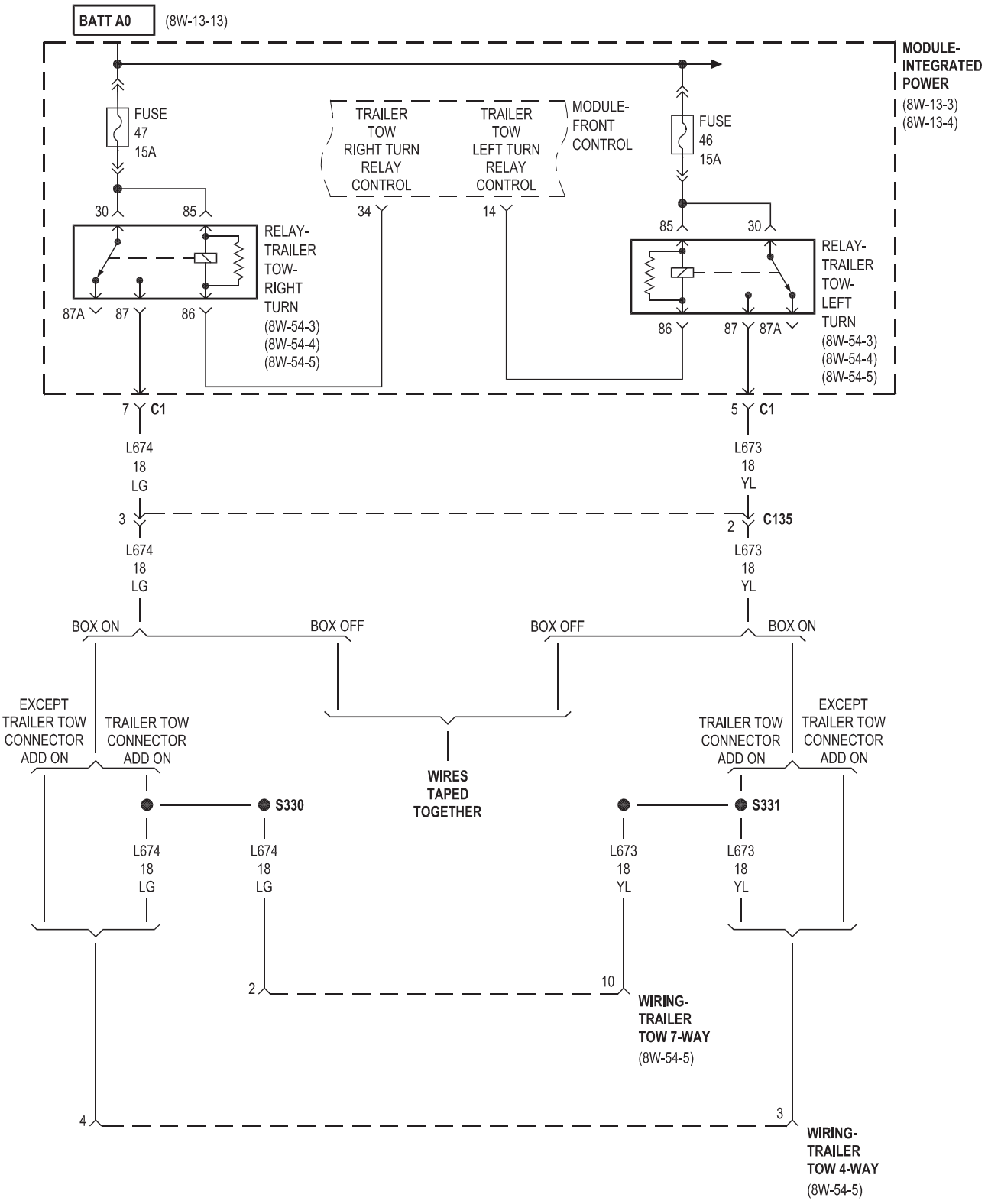
BATT A0
(8W-13-13)
MODULE-
INTEGRATED
POWER
(8W-13-3)
(8W-13-4)
FUSE
47
15A
FUSE
46
15A
TRAILER
TOW
RIGHT TURN
RELAY
CONTROL
TRAILER
TOW
LEFT TURN
RELAY
CONTROL
MODULE-
FRONT
CONTROL
30
85
87A
87
86
RELAY-
TRAILER
TOW-
RIGHT
TURN
(8W-54-3)
(8W-54-4)
(8W-54-5)
34
14
85
30
86
87
87A
RELAY-
TRAILER
TOW-
LEFT
TURN
(8W-54-3)
(8W-54-4)
(8W-54-5)
7
C1
5
C1
L674
18
LG
L673
18
YL
3
2
C135
L674
18
LG
L673
18
YL
BOX ON
BOX OFF
BOX OFF
BOX ON
EXCEPT
TRAILER TOW
CONNECTOR
ADD ON
TRAILER TOW
CONNECTOR
ADD ON
WIRES
TAPED
TOGETHER
TRAILER TOW
CONNECTOR
ADD ON
EXCEPT
TRAILER TOW
CONNECTOR
ADD ON
S330
S331
L674
18
LG
L674
18
LG
L673
18
YL
L673
18
YL
2
10
WIRING-
TRAILER
TOW 7-WAY
(8W-54-5)
4
3
WIRING-
TRAILER
TOW 4-WAY
(8W-54-5)

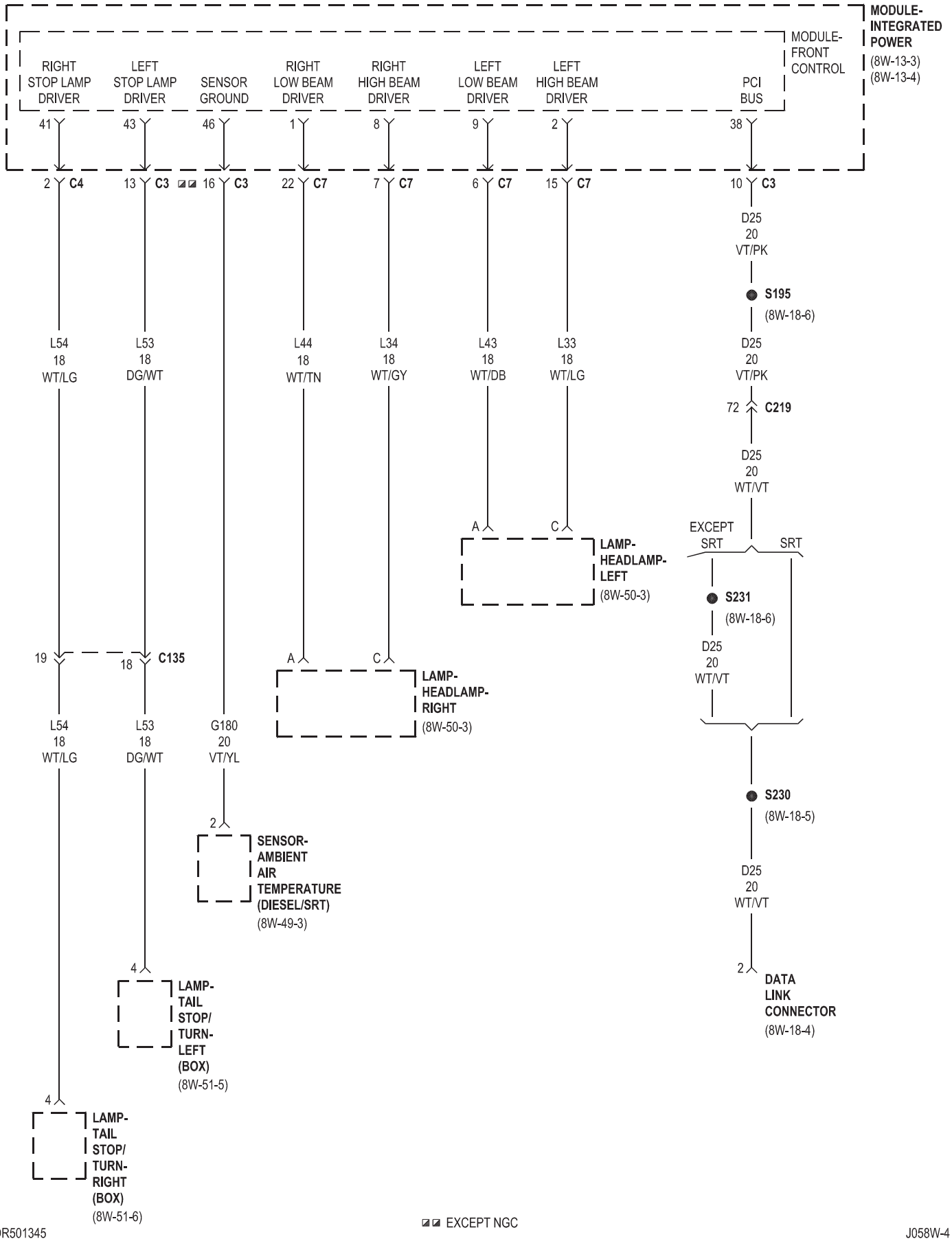
MODULE-INTEGRATED POWER
(8W-13-3)
(8W-13-4)
MODULE-FRONT CONTROL
RIGHT STOP LAMP DRIVER
LEFT STOP LAMP DRIVER
SENSOR GROUND
RIGHT LOW BEAM DRIVER
RIGHT HIGH BEAM DRIVER
LEFT LOW BEAM DRIVER
LEFT HIGH BEAM DRIVER
PCI BUS
41
43
46
1
8
9
2
38
2 C4
13 C3
16 C3
22 C7
7 C7
6 C7
15 C7
10 C3
D25
20
VT/PK
S195
(8W-18-6)
L54
18
WT/LG
L53
18
DG/WT
L44
18
WT/TN
L34
18
WT/GY
L43
18
WT/DB
L33
18
WT/LG
72 C219
D25
20
WT/VT
A
C
LAMP-HEADLAMP-LEFT
(8W-50-3)
EXCEPT SRT
SRT
S231
(8W-18-6)
19
18 C135
A
C
LAMP-HEADLAMP-RIGHT
(8W-50-3)
L54
18
WT/LG
L53
18
DG/WT
G180
20
VT/YL
S230
(8W-18-5)
2
SENSOR-AMBIENT AIR TEMPERATURE (DIESEL/SRT)
(8W-49-3)
4
LAMP-TAIL STOP/TURN-LEFT (BOX)
(8W-51-5)
2
DATA LINK CONNECTOR
(8W-18-4)
4
LAMP-TAIL STOP/TURN-RIGHT (BOX)
(8W-51-6)

◪◪ EXCEPT NGC

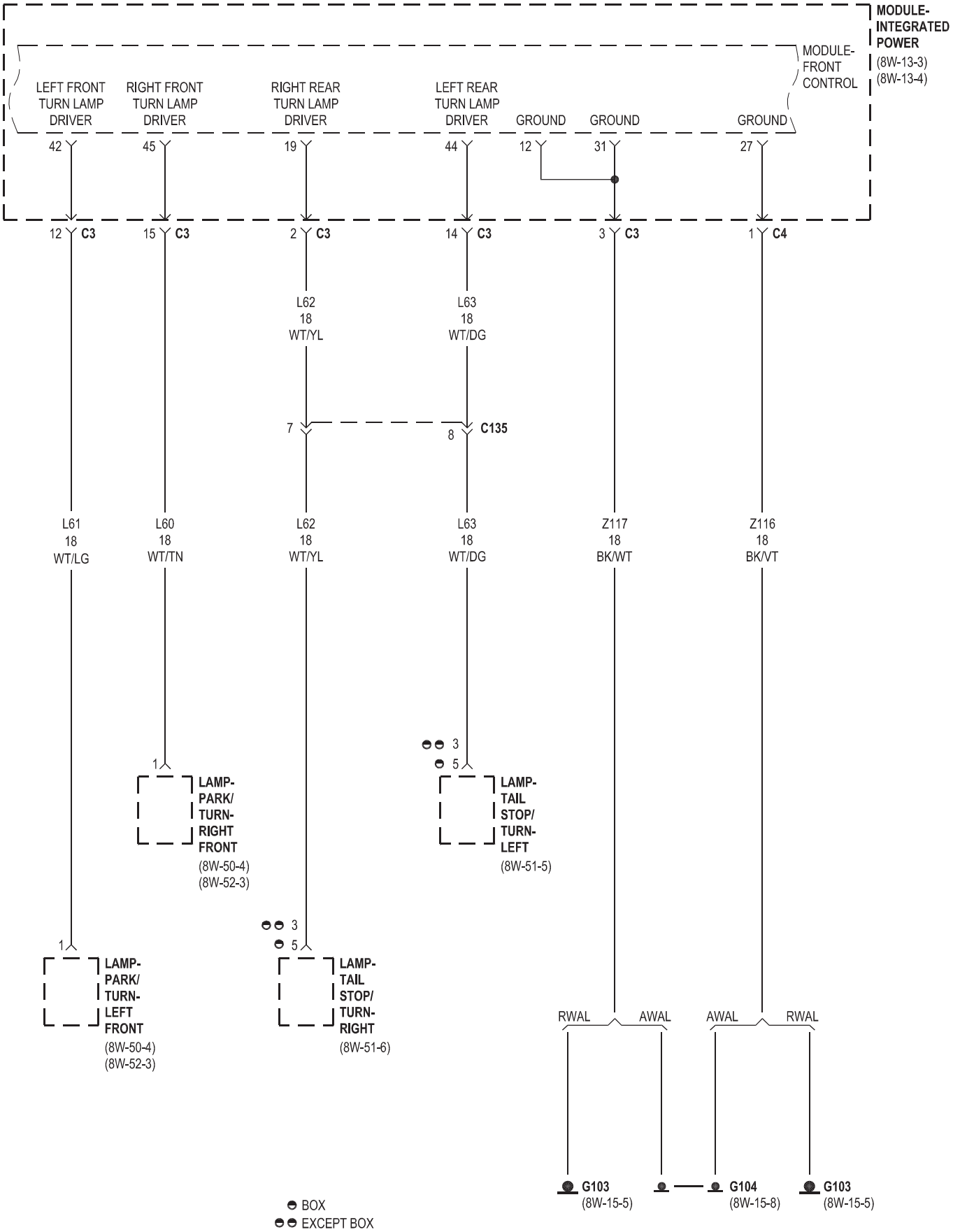
MODULE-INTEGRATED POWER
(8W-13-3)
(8W-13-4)
MODULE-FRONT CONTROL
LEFT FRONT TURN LAMP DRIVER
RIGHT FRONT TURN LAMP DRIVER
RIGHT REAR TURN LAMP DRIVER
LEFT REAR TURN LAMP DRIVER
GROUND
GROUND
GROUND
42
45
19
44
12
31
27
12 C3
15 C3
2 C3
14 C3
3 C3
1 C4
L62 18 WT/YL
L63 18 WT/DG
7
8 C135
L61 18 WT/LG
L60 18 WT/TN
L62 18 WT/YL
L63 18 WT/DG
Z117 18 BK/WT
Z116 18 BK/VT
1
LAMP-PARK/TURN-RIGHT FRONT
(8W-50-4)
(8W-52-3)
3
5
LAMP-TAIL STOP/TURN-LEFT
(8W-51-5)
1
LAMP-PARK/TURN-LEFT FRONT
(8W-50-4)
(8W-52-3)
3
5
LAMP-TAIL STOP/TURN-RIGHT
(8W-51-6)
RWAL
AWAL
AWAL
RWAL
G103
(8W-15-5)
G104
(8W-15-8)
G103
(8W-15-5)
BOX
EXCEPT BOX

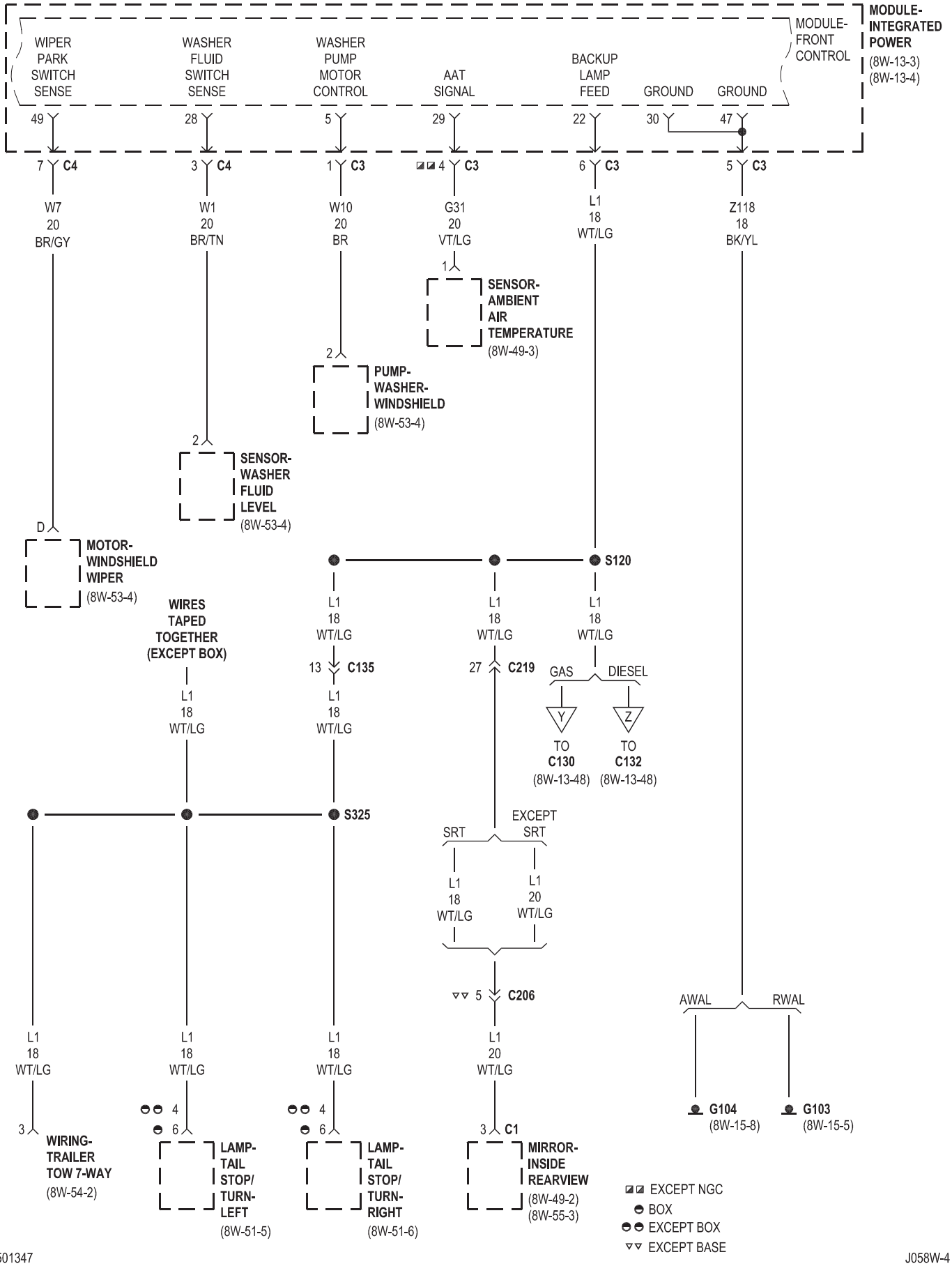

DR501347

J058W-4

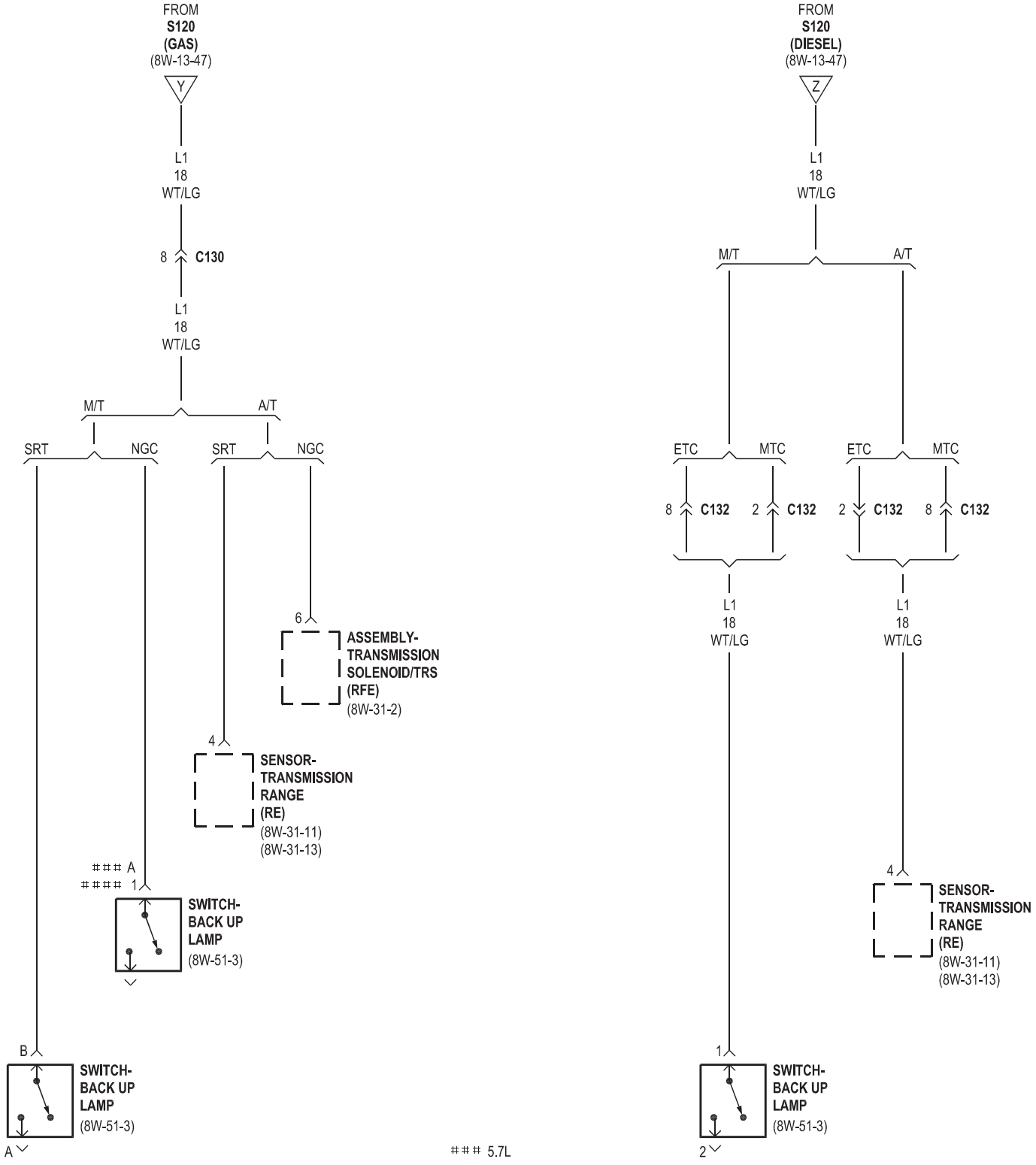
FROM
S120
(GAS)
(8W-13-47)
Y
L1
18
WT/LG
8 C130
L1
18
WT/LG
M/T
A/T
SRT
NGC
SRT
NGC
6
ASSEMBLY-
TRANSMISSION
SOLENOID/TRS
(RFE)
(8W-31-2)
4
SENSOR-
TRANSMISSION
RANGE
(RE)
(8W-31-11)
(8W-31-13)
A
1
SWITCH-
BACK UP
LAMP
(8W-51-3)
B
SWITCH-
BACK UP
LAMP
(8W-51-3)
A
FROM
S120
(DIESEL)
(8W-13-47)
Z
L1
18
WT/LG
M/T
A/T
ETC
MTC
ETC
MTC
8 C132
2 C132
2 C132
8 C132
L1
18
WT/LG
L1
18
WT/LG
4
SENSOR-
TRANSMISSION
RANGE
(RE)
(8W-31-11)
(8W-31-13)
1
SWITCH-
BACK UP
LAMP
(8W-51-3)
2
5.7L
3.7L/4.7L

8W-15 GROUND DISTRIBUTION

Component	Page
Amplifier-Radio	8W-15-19
Amplifier-Subwoofer	8W-15-23
Assembly-EGR Valve	8W-15-13
Assembly-Natural Vacuum Leak Detection	8W-15-14
Backlite-Heated	8W-15-25
Battery	8W-15-2
Battery-Auxiliary	8W-15-2
Clockspring	8W-15-18
Cluster	8W-15-18, 20
Clutch-A/C Compressor	8W-15-13, 15, 16
Control-A/C-Heater	8W-15-17, 21
Data Link Connector	8W-15-17
Data Link Connector-Engine	8W-15-16
G100	8W-15-2
G101	8W-15-2
G102	8W-15-2
G103	8W-15-5, 6
G104	8W-15-7, 8, 9, 10
G105	8W-15-2
G106	8W-15-11, 12
G107	8W-15-13, 14
G108	8W-15-2
G109	8W-15-2
G110	8W-15-15
G113	8W-15-15
G114	8W-15-16
G120	8W-15-16
G121	8W-15-16
G201	8W-15-17, 18
G202	8W-15-19
G203	8W-15-20, 21
G204	8W-15-22
G302	8W-15-23
G303	8W-15-25
Gauge-Engine Oil Temperature	8W-15-17
Generator	8W-15-14, 16
Heater-Fuel	8W-15-16
Heater-Seat Cushion-Driver	8W-15-23
Heater-Seat Cushion-Passenger	8W-15-22
Horn-No. 1	8W-15-10, 12
Horn-No. 2	8W-15-10, 12
Lamp-Bar-Tailgate	8W-15-3
Lamp-Center Bezel	8W-15-21
Lamp-Clearance No. 1	8W-15-21
Lamp-Clearance No. 2	8W-15-21
Lamp-Clearance No. 3	8W-15-21
Lamp-Clearance No. 4	8W-15-21
Lamp-Clearance No. 5	8W-15-21
Lamp-Dome-Rear	8W-15-20
Lamp-Fender-Front Left	8W-15-3
Lamp-Fender-Front Right	8W-15-3
Lamp-Fender-Rear Left	8W-15-3
Lamp-Fender-Rear Right	8W-15-3
Lamp-Fog-Left	8W-15-4
Lamp-Fog-Right	8W-15-4
Lamp-Glove Box	8W-15-21
Lamp-Headlamp-Left	8W-15-6, 8
Lamp-Headlamp-Right	8W-15-2
Lamp-High Mounted Stop	8W-15-20
Lamp-License-Left	8W-15-3
Lamp-License-Right	8W-15-3
Lamp-Park/Turn-Left Front	8W-15-6, 9
Lamp-Park/Turn-Right Front	8W-15-2
Lamp-Reading-Front	8W-15-20
Lamp-Tail Stop/Turn-Left	8W-15-3
Lamp-Tail Stop/Turn-Right	8W-15-3
Lamp-Underhood	8W-15-10, 12
Lamp-Vanity-Left	8W-15-20
Lamp-Vanity-Right	8W-15-20
Latch-Door-Driver	8W-15-24
Latch-Door-Left Rear	8W-15-25
Latch-Door-Passenger	8W-15-24
Latch-Door-Right Rear	8W-15-25
Mirror-Inside Rearview	8W-15-17
Mirror-Outside Rearview-Driver	8W-15-23
Mirror-Outside Rearview-Passenger	8W-15-23
Module-Anti-Lock Brakes	8W-15-11
Module-Brake Provision	8W-15-10, 12
Module-Electronic Overhead	8W-15-17
Module-Engine Control	8W-15-16
Module-Final Drive Control	8W-15-9, 11
Module-Front Control	8W-15-5, 8
Module-Fuel Pump	8W-15-4
Module-Hands Free	8W-15-19
Module-Heated Seats	8W-15-25
Module-Integrated Power	8W-15-5, 7, 8, 10, 12
Module-Occupant Restraint Controller	8W-15-22
Module-Powertrain Control	8W-15-13, 15
Module-Sentry Key Immobilizer	8W-15-18
Module-Transfer Case Control	8W-15-4
Motor-Condenser Fan	8W-15-10, 12
Motor-Sunroof	8W-15-20
Motor-Windshield Wiper	8W-15-10, 12
Power Outlet-Console	8W-15-21
Power Outlet-Instrument Panel	8W-15-21
Power Outlet-Rear	8W-15-23
Pump-Washer-Windshield	8W-15-2, 11
Radio	8W-15-19
Relay-Blower Motor	8W-15-7
Relay-Fuel Heater	8W-15-7
Relay-Fuel Pump	8W-15-7
Relay-Ignition Run-Acc	8W-15-7
Relay-Intake Air Heater No. 1	8W-15-2
Relay-Intake Air Heater No. 2	8W-15-2
Relay-Run	8W-15-7
Relay-Transmission Control	8W-15-5, 7
Relay-Wiper On/Off	8W-15-10, 12
Sensor-Brake Fluid Level	8W-15-5, 9
Sensor-Engine Oil Temperature	8W-15-15
Sensor-Oxygen-Left Front	8W-15-14
Sensor-Oxygen-Left Rear	8W-15-14, 15
Sensor-Oxygen-Right Front	8W-15-14
Sensor-Oxygen-Right Rear	8W-15-14, 15
Sensor-Transfer Case Position	8W-15-9, 13
Sensor-Washer Fluid Level	8W-15-2, 9
Servo-Speed Control	8W-15-6, 8
Solenoid-Brake Transmission Shift Interlock	8W-15-20
Solenoid-Radiator Fan	8W-15-7
Switch-Adjustable Pedals	8W-15-21
Switch-Axle Lock	8W-15-11
Switch-Clutch Interlock	8W-15-6, 7, 8
Switch-Cylinder Lock-Driver	8W-15-24
Switch-Disconnecting Stabilizer Bar	8W-15-11
Switch-Door Lock-Passenger	8W-15-24
Switch-Headlamp	8W-15-20
Switch-Heated Seat-Driver	8W-15-21
Switch-Heated Seat-Passenger	8W-15-21
Switch-Ignition	8W-15-18
Switch-Power Steering Pressure	8W-15-13
Switch-Remote Radio-Left	8W-15-18
Switch-Remote Radio-Right	8W-15-18
Switch-Seat Belt-Driver	8W-15-25
Switch-Seat-Driver	8W-15-23
Switch-Seat-Passenger	8W-15-22
Switch-Stop Lamp	8W-15-9, 17
Switch-Tow/Haul Overdrive	8W-15-17
Switch-Transfer Case Selector	8W-15-4
Switch-Window/Door Lock-Driver	8W-15-23
Wiring-Trailer Tow 4-Way	8W-15-4
Wiring-Trailer Tow 7-Way	8W-15-4

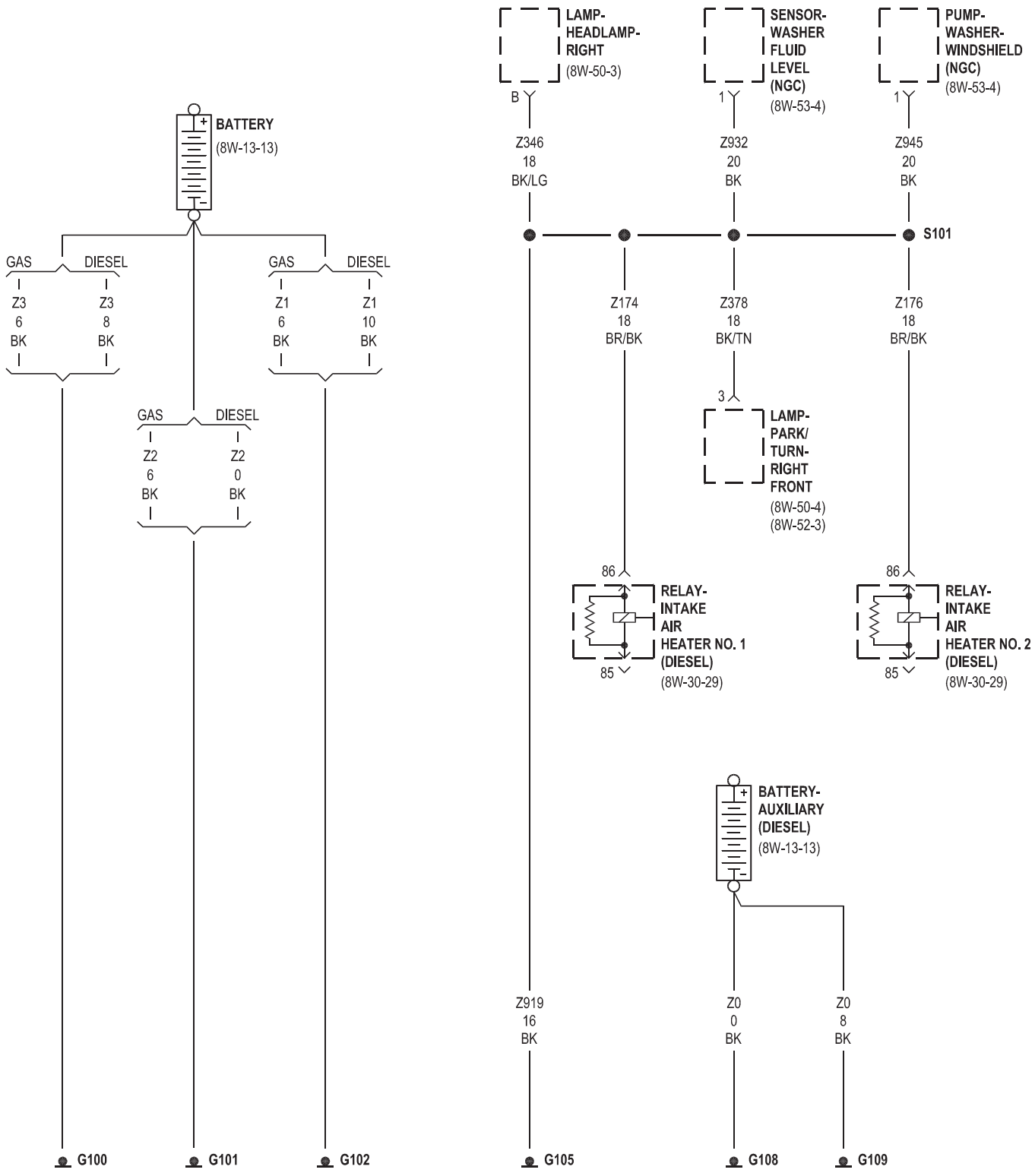
BATTERY
(8W-13-13)
GAS
DIESEL
Z3
6
BK
Z3
8
BK
GAS
DIESEL
Z1
6
BK
Z1
10
BK
GAS
DIESEL
Z2
6
BK
Z2
0
BK
G100
G101
G102
LAMP-
HEADLAMP-
RIGHT
(8W-50-3)
B
Z346
18
BK/LG
SENSOR-
WASHER
FLUID
LEVEL
(NGC)
(8W-53-4)
1
Z932
20
BK
PUMP-
WASHER-
WINDSHIELD
(NGC)
(8W-53-4)
1
Z945
20
BK
S101
Z174
18
BR/BK
Z378
18
BK/TN
Z176
18
BR/BK
3
LAMP-
PARK/
TURN-
RIGHT
FRONT
(8W-50-4)
(8W-52-3)
86
RELAY-
INTAKE
AIR
HEATER NO. 1
(DIESEL)
(8W-30-29)
85
86
RELAY-
INTAKE
AIR
HEATER NO. 2
(DIESEL)
(8W-30-29)
85
BATTERY-
AUXILIARY
(DIESEL)
(8W-13-13)
Z919
16
BK
Z0
0
BK
Z0
8
BK
G105
G108
G109

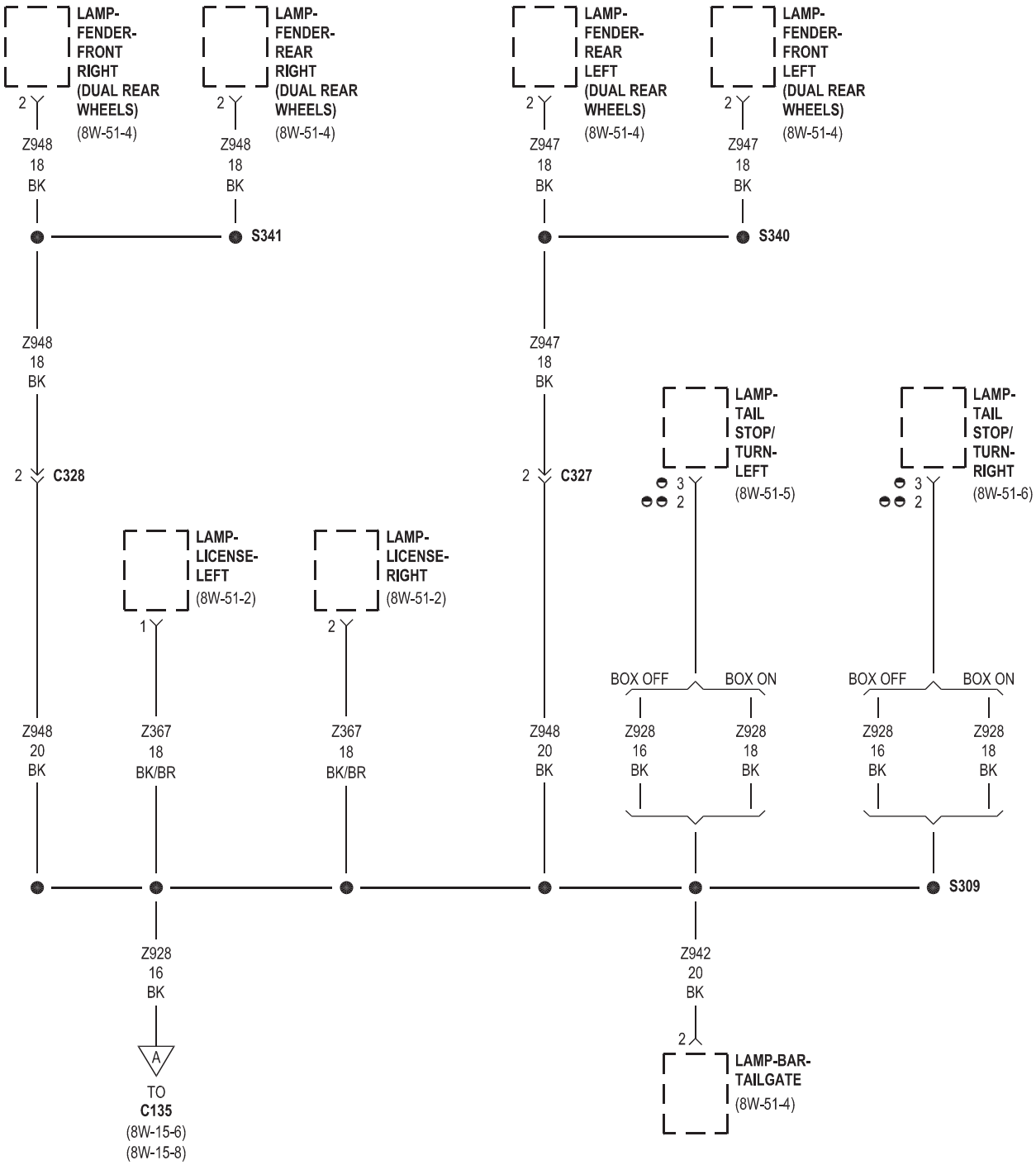

BOX
EXCEPT BOX

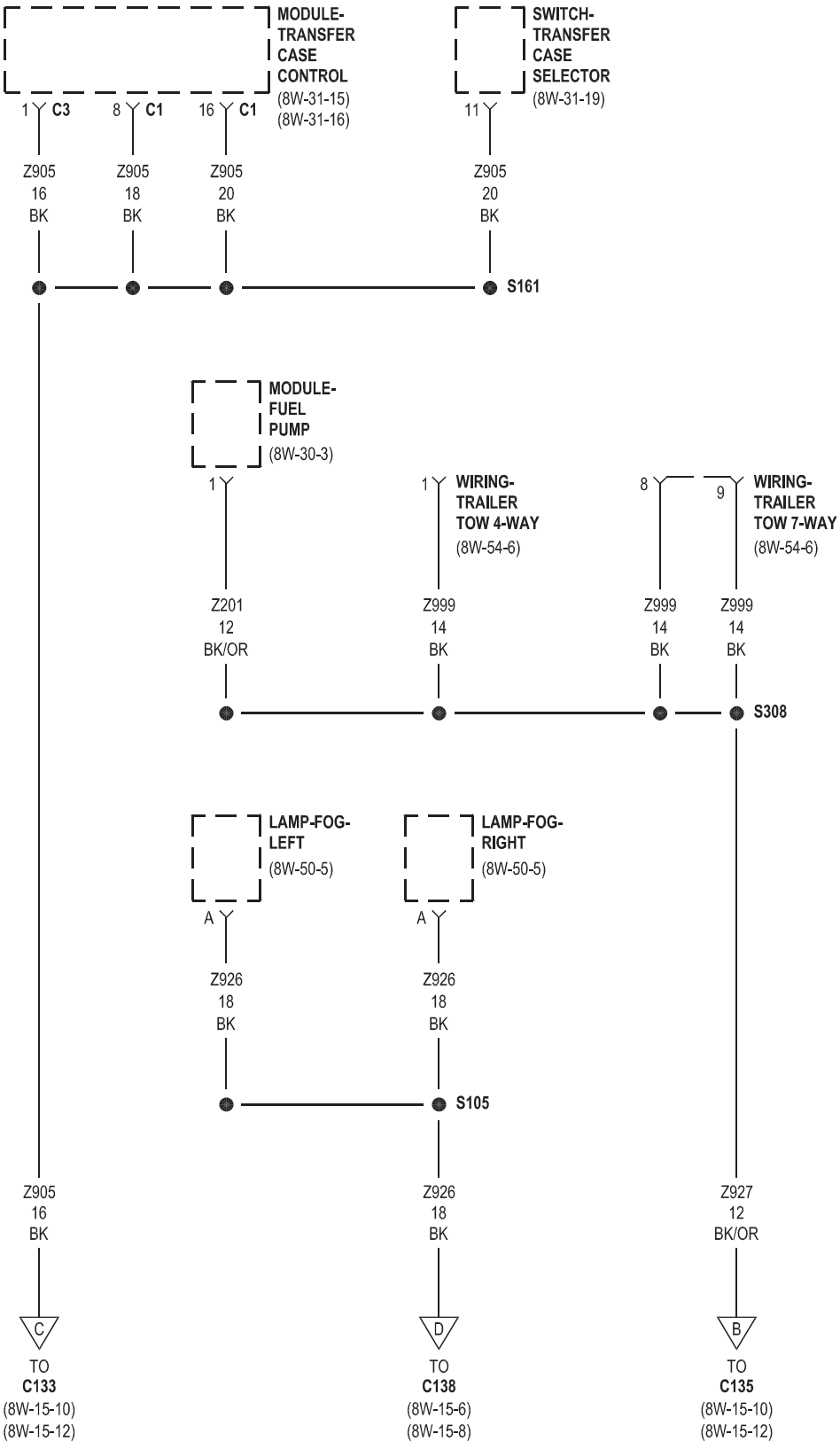
MODULE-
TRANSFER
CASE
CONTROL
(8W-31-15)
(8W-31-16)
SWITCH-
TRANSFER
CASE
SELECTOR
(8W-31-19)
1 C3
8 C1
16 C1
11
Z905
16
BK
Z905
18
BK
Z905
20
BK
Z905
20
BK
S161
MODULE-
FUEL
PUMP
(8W-30-3)
1
1
WIRING-
TRAILER
TOW 4-WAY
(8W-54-6)
8
9
WIRING-
TRAILER
TOW 7-WAY
(8W-54-6)
Z201
12
BK/OR
Z999
14
BK
Z999
14
BK
Z999
14
BK
S308
LAMP-FOG-
LEFT
(8W-50-5)
LAMP-FOG-
RIGHT
(8W-50-5)
A
A
Z926
18
BK
Z926
18
BK
S105
Z905
16
BK
Z926
18
BK
Z927
12
BK/OR
C
D
B
TO
C133
(8W-15-10)
(8W-15-12)
TO
C138
(8W-15-6)
(8W-15-8)
TO
C135
(8W-15-10)
(8W-15-12)

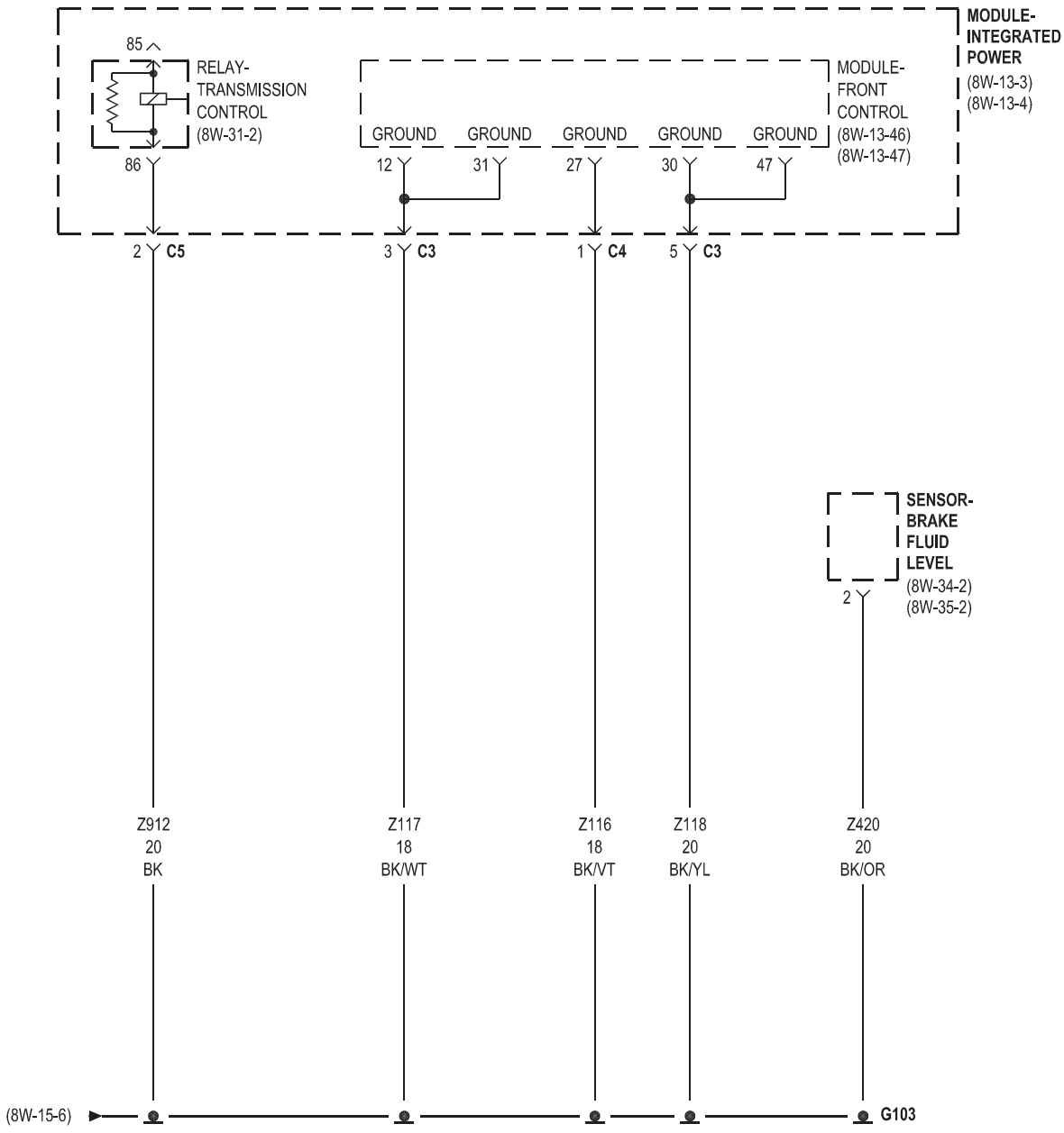
MODULE-
INTEGRATED
POWER
(8W-13-3)
(8W-13-4)
85
RELAY-
TRANSMISSION
CONTROL
(8W-31-2)
86
MODULE-
FRONT
CONTROL
(8W-13-46)
(8W-13-47)
GROUND
GROUND
GROUND
GROUND
GROUND
12
31
27
30
47
2 C5
3 C3
1 C4
5 C3
SENSOR-
BRAKE
FLUID
LEVEL
(8W-34-2)
(8W-35-2)
2
Z912
20
BK
Z117
18
BK/WT
Z116
18
BK/VT
Z118
20
BK/YL
Z420
20
BK/OR
(8W-15-6)
G103

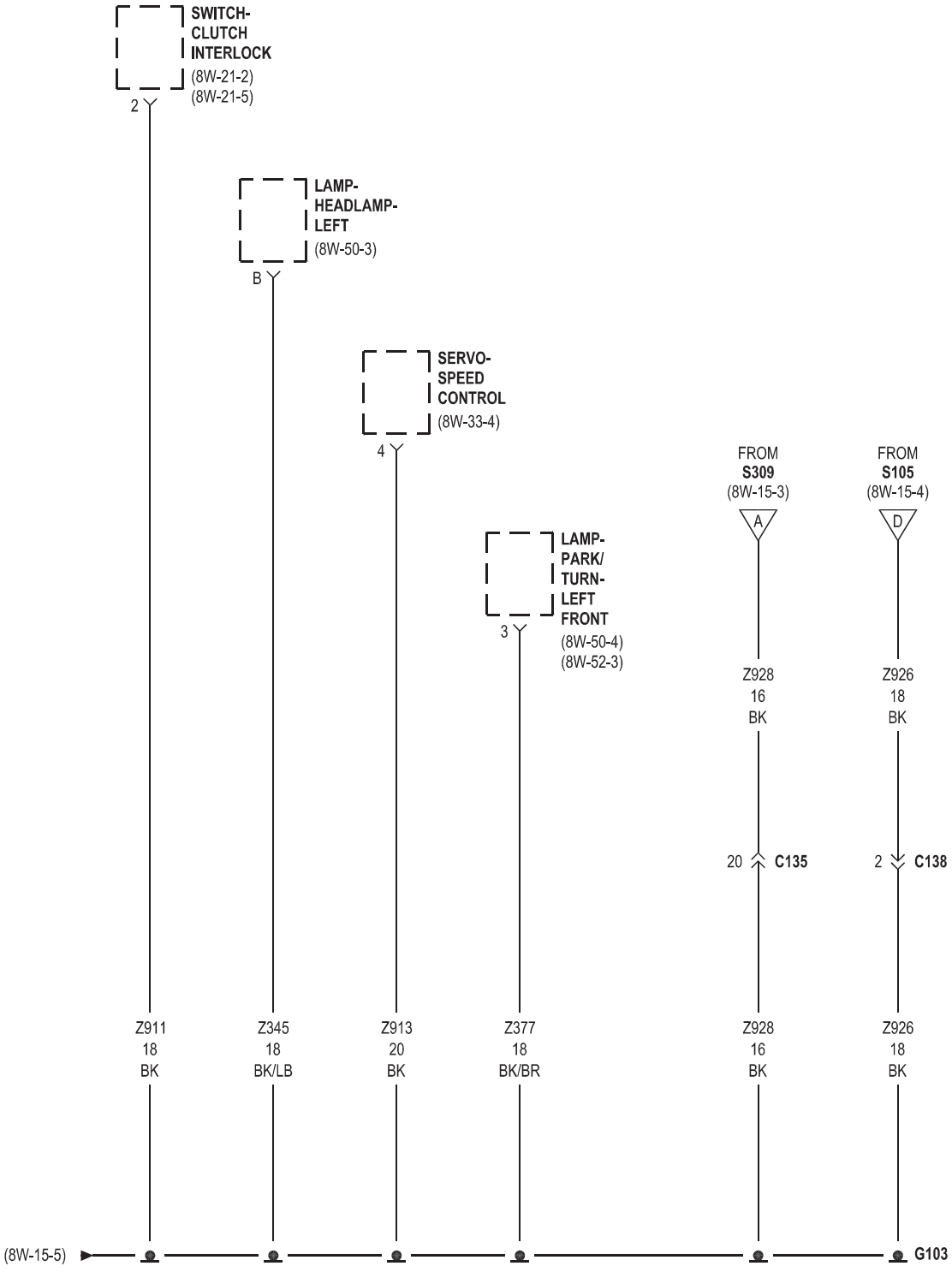
SWITCH-
CLUTCH
INTERLOCK
(8W-21-2)
(8W-21-5)
2
LAMP-
HEADLAMP-
LEFT
(8W-50-3)
B
SERVO-
SPEED
CONTROL
(8W-33-4)
4
LAMP-
PARK/
TURN-
LEFT
FRONT
(8W-50-4)
(8W-52-3)
3
FROM
S309
(8W-15-3)
A
FROM
S105
(8W-15-4)
D
Z928
16
BK
Z926
18
BK
20
C135
2
C138
Z911
18
BK
Z345
18
BK/LB
Z913
20
BK
Z377
18
BK/BR
Z928
16
BK
Z926
18
BK
(8W-15-5)
G103

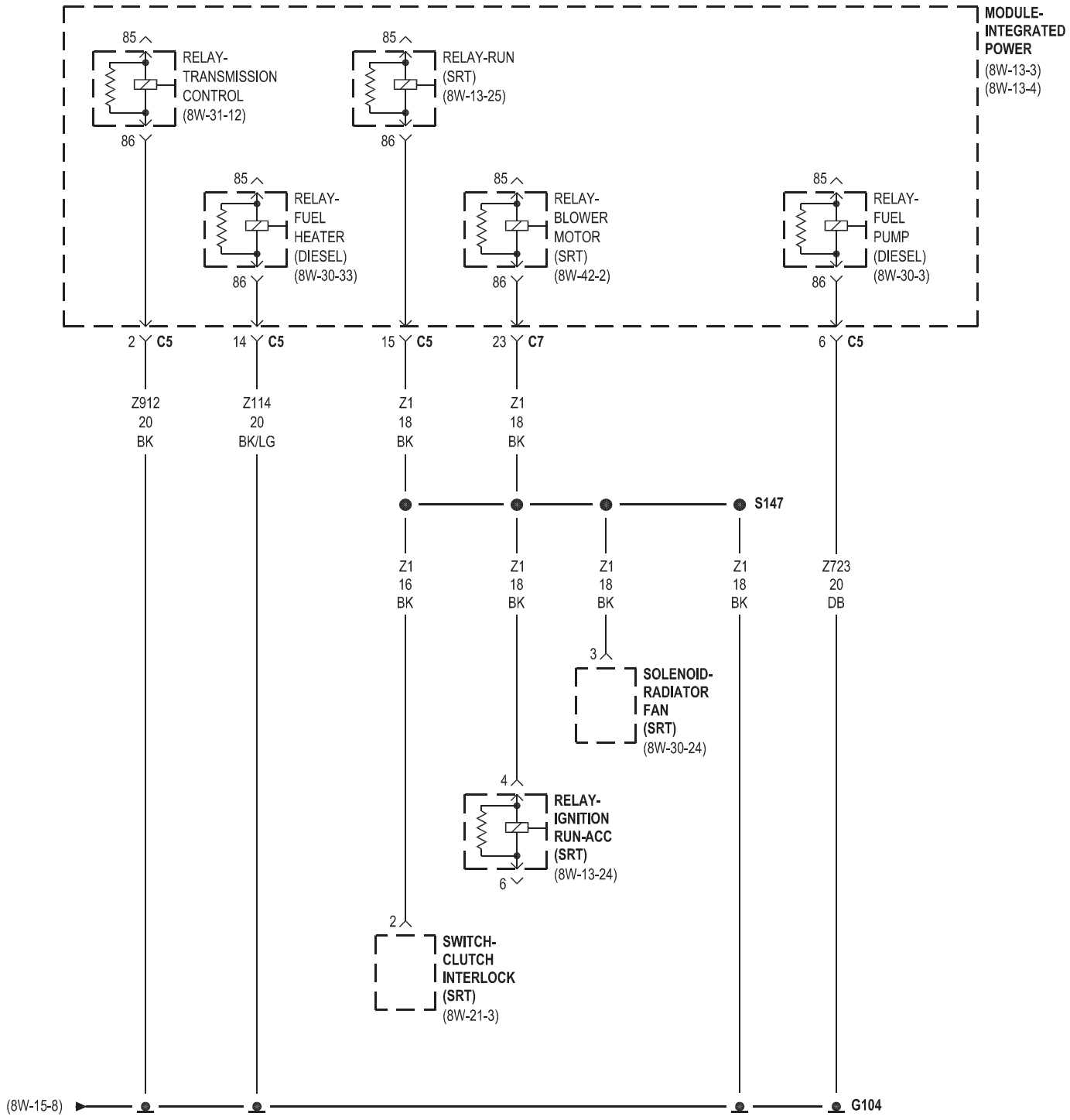
MODULE-
INTEGRATED
POWER
(8W-13-3)
(8W-13-4)
85
RELAY-
TRANSMISSION
CONTROL
(8W-31-12)
86
85
RELAY-RUN
(SRT)
(8W-13-25)
86
85
RELAY-
FUEL
HEATER
(DIESEL)
(8W-30-33)
86
85
RELAY-
BLOWER
MOTOR
(SRT)
(8W-42-2)
86
85
RELAY-
FUEL
PUMP
(DIESEL)
(8W-30-3)
86
2 C5
14 C5
15 C5
23 C7
6 C5
Z912
20
BK
Z114
20
BK/LG
Z1
18
BK
Z1
18
BK
S147
Z1
16
BK
Z1
18
BK
Z1
18
BK
Z1
18
BK
Z723
20
DB
3
SOLENOID-
RADIATOR
FAN
(SRT)
(8W-30-24)
4
RELAY-
IGNITION
RUN-ACC
(SRT)
(8W-13-24)
6
2
SWITCH-
CLUTCH
INTERLOCK
(SRT)
(8W-21-3)
(8W-15-8)
G104

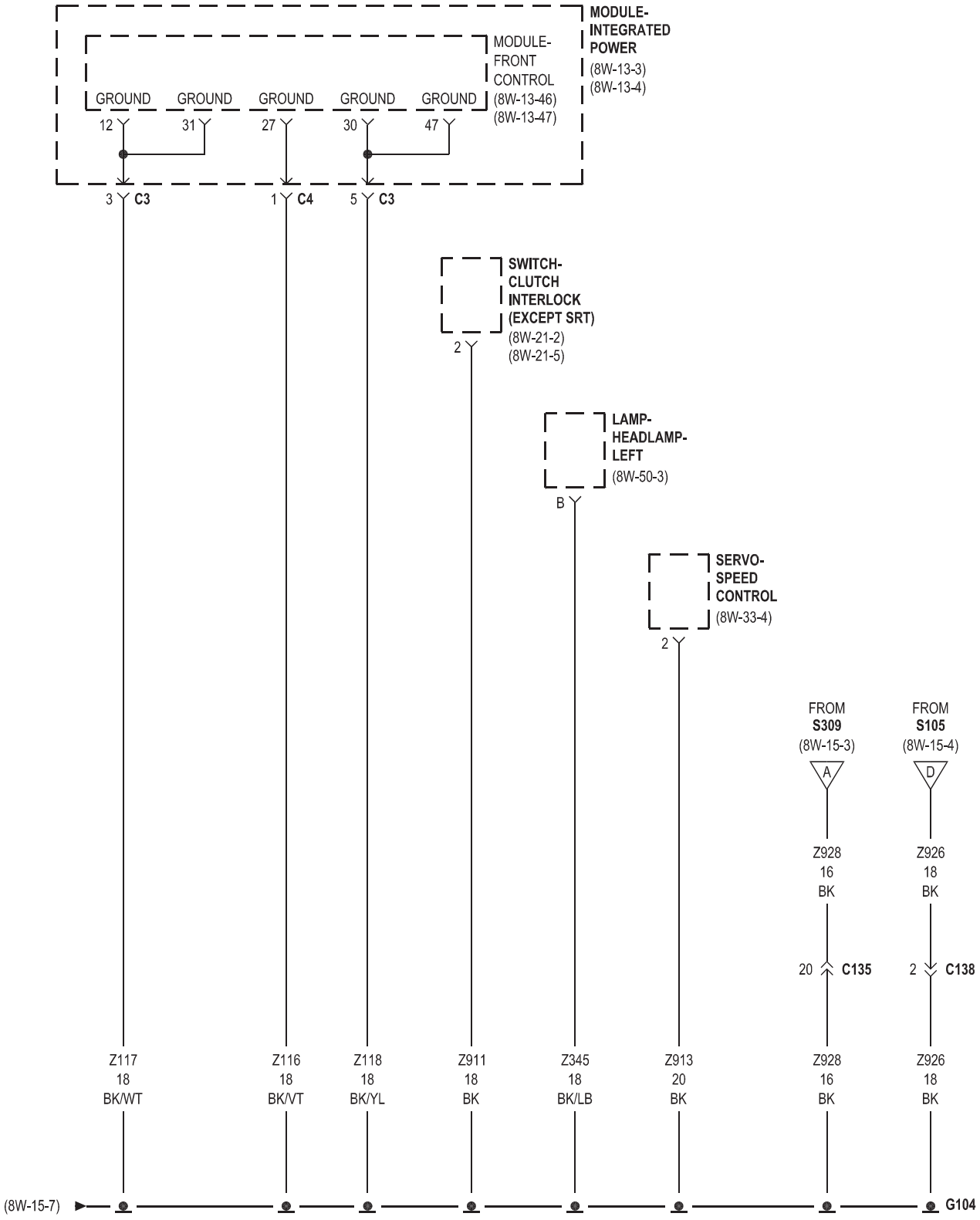
MODULE-INTEGRATED POWER
(8W-13-3)
(8W-13-4)
MODULE-FRONT CONTROL
(8W-13-46)
(8W-13-47)
GROUND
GROUND
GROUND
GROUND
GROUND
12
31
27
30
47
3 C3
1 C4
5 C3
SWITCH-CLUTCH INTERLOCK (EXCEPT SRT)
(8W-21-2)
(8W-21-5)
2
LAMP-HEADLAMP-LEFT
(8W-50-3)
B
SERVO-SPEED CONTROL
(8W-33-4)
2
FROM S309
(8W-15-3)
A
FROM S105
(8W-15-4)
D
Z928 16 BK
Z926 18 BK
20 C135
2 C138
Z117 18 BK/WT
Z116 18 BK/VT
Z118 18 BK/YL
Z911 18 BK
Z345 18 BK/LB
Z913 20 BK
Z928 16 BK
Z926 18 BK
(8W-15-7)
G104

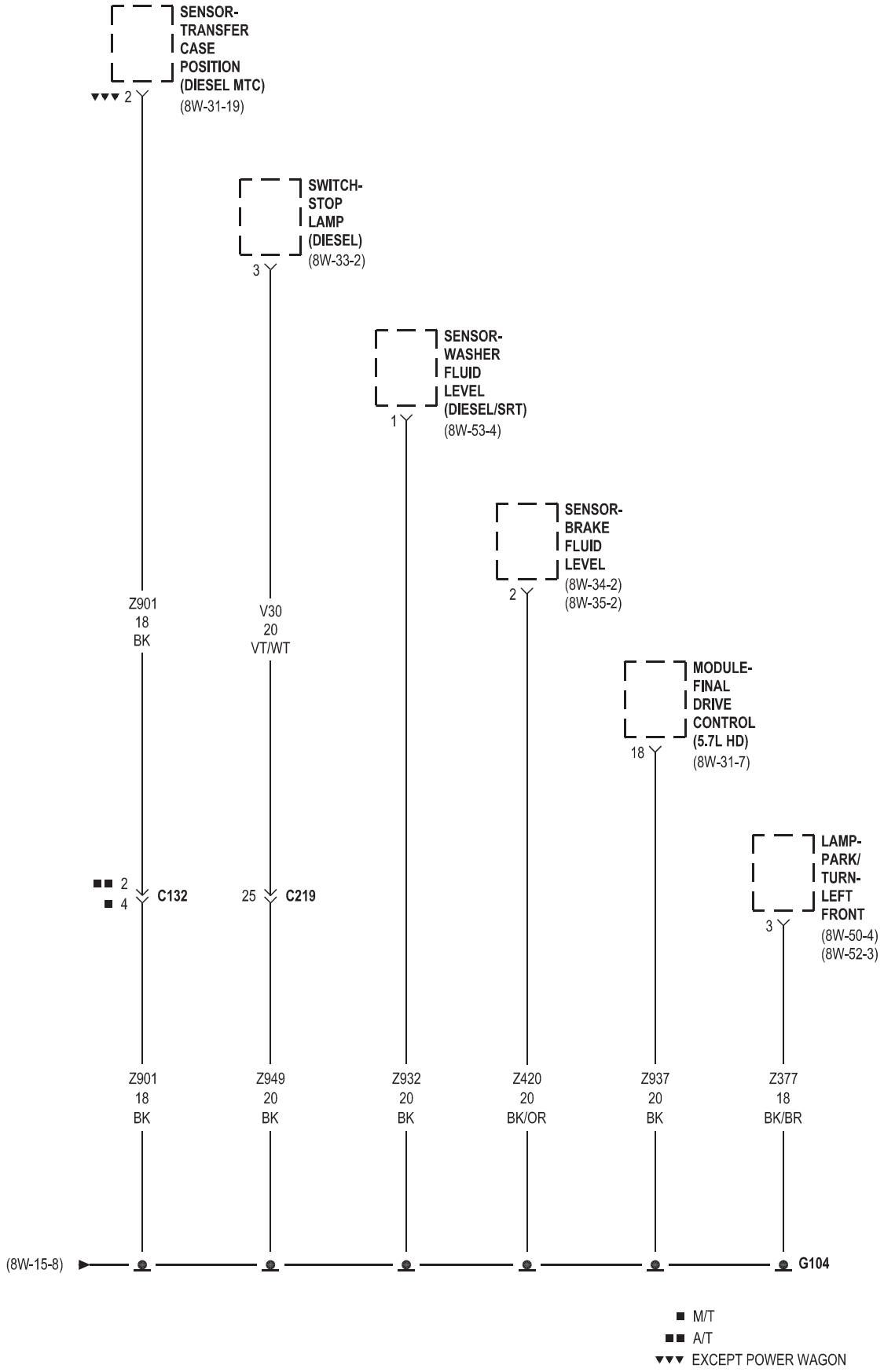
SENSOR-
TRANSFER
CASE
POSITION
(DIESEL MTC)
(8W-31-19)
▼▼▼ 2
SWITCH-
STOP
LAMP
(DIESEL)
(8W-33-2)
3
SENSOR-
WASHER
FLUID
LEVEL
(DIESEL/SRT)
(8W-53-4)
1
SENSOR-
BRAKE
FLUID
LEVEL
(8W-34-2)
(8W-35-2)
2
MODULE-
FINAL
DRIVE
CONTROL
(5.7L HD)
(8W-31-7)
18
LAMP-
PARK/
TURN-
LEFT
FRONT
(8W-50-4)
(8W-52-3)
3
Z901
18
BK
V30
20
VT/WT
■■ 2
■ 4
C132
25
C219
Z901
18
BK
Z949
20
BK
Z932
20
BK
Z420
20
BK/OR
Z937
20
BK
Z377
18
BK/BR
(8W-15-8)
G104
■ M/T
■■ A/T
▼▼▼ EXCEPT POWER WAGON

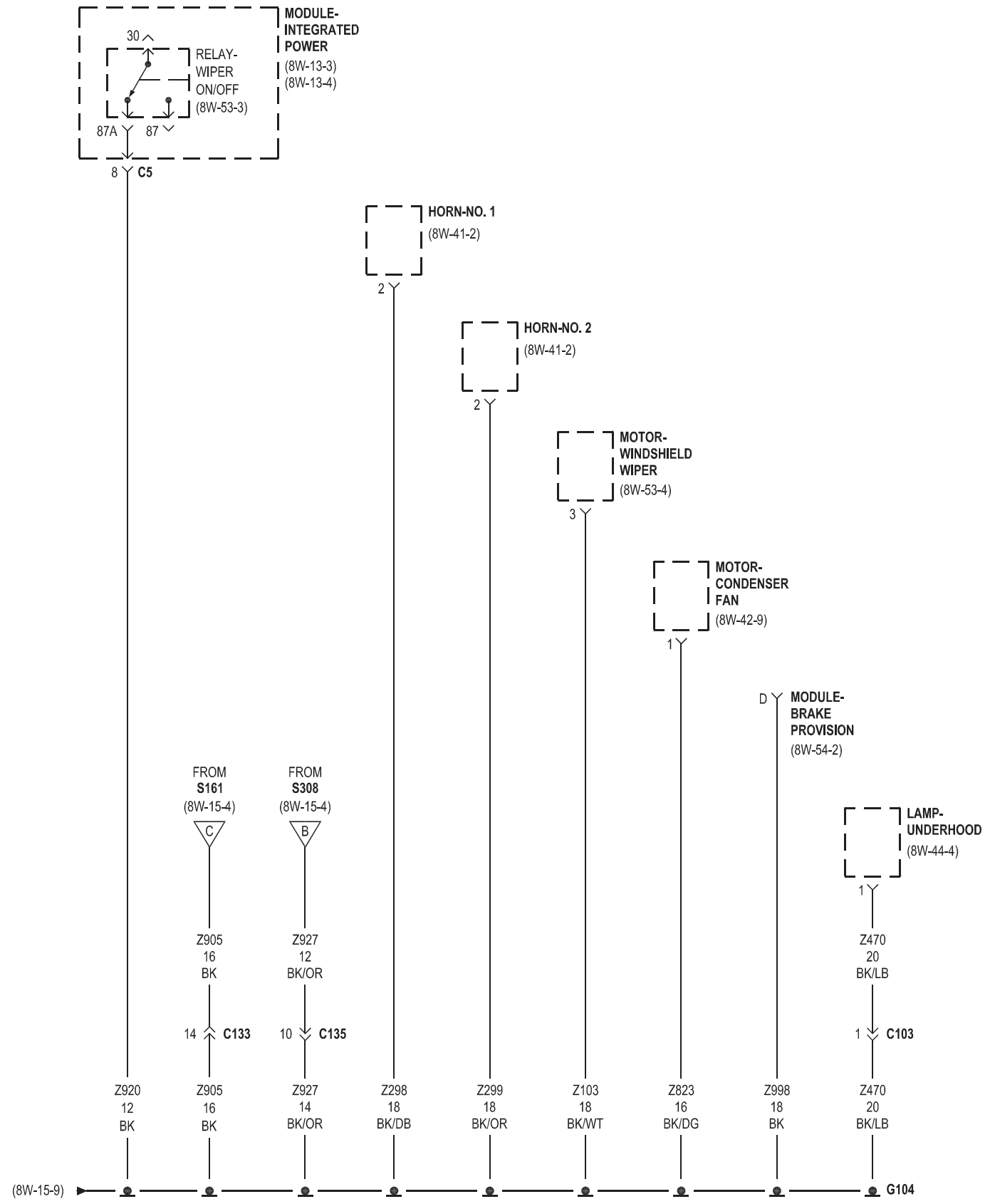
MODULE-
INTEGRATED
POWER
(8W-13-3)
(8W-13-4)
30
RELAY-
WIPER
ON/OFF
(8W-53-3)
87A
87
8
C5
HORN-NO. 1
(8W-41-2)
2
HORN-NO. 2
(8W-41-2)
2
MOTOR-
WINDSHIELD
WIPER
(8W-53-4)
3
MOTOR-
CONDENSER
FAN
(8W-42-9)
1
D
MODULE-
BRAKE
PROVISION
(8W-54-2)
LAMP-
UNDERHOOD
(8W-44-4)
1
FROM
S161
(8W-15-4)
C
FROM
S308
(8W-15-4)
B
Z905
16
BK
Z927
12
BK/OR
Z470
20
BK/LB
14
C133
10
C135
1
C103
Z920
12
BK
Z905
16
BK
Z927
14
BK/OR
Z298
18
BK/DB
Z299
18
BK/OR
Z103
18
BK/WT
Z823
16
BK/DG
Z998
18
BK
Z470
20
BK/LB
(8W-15-9)
G104

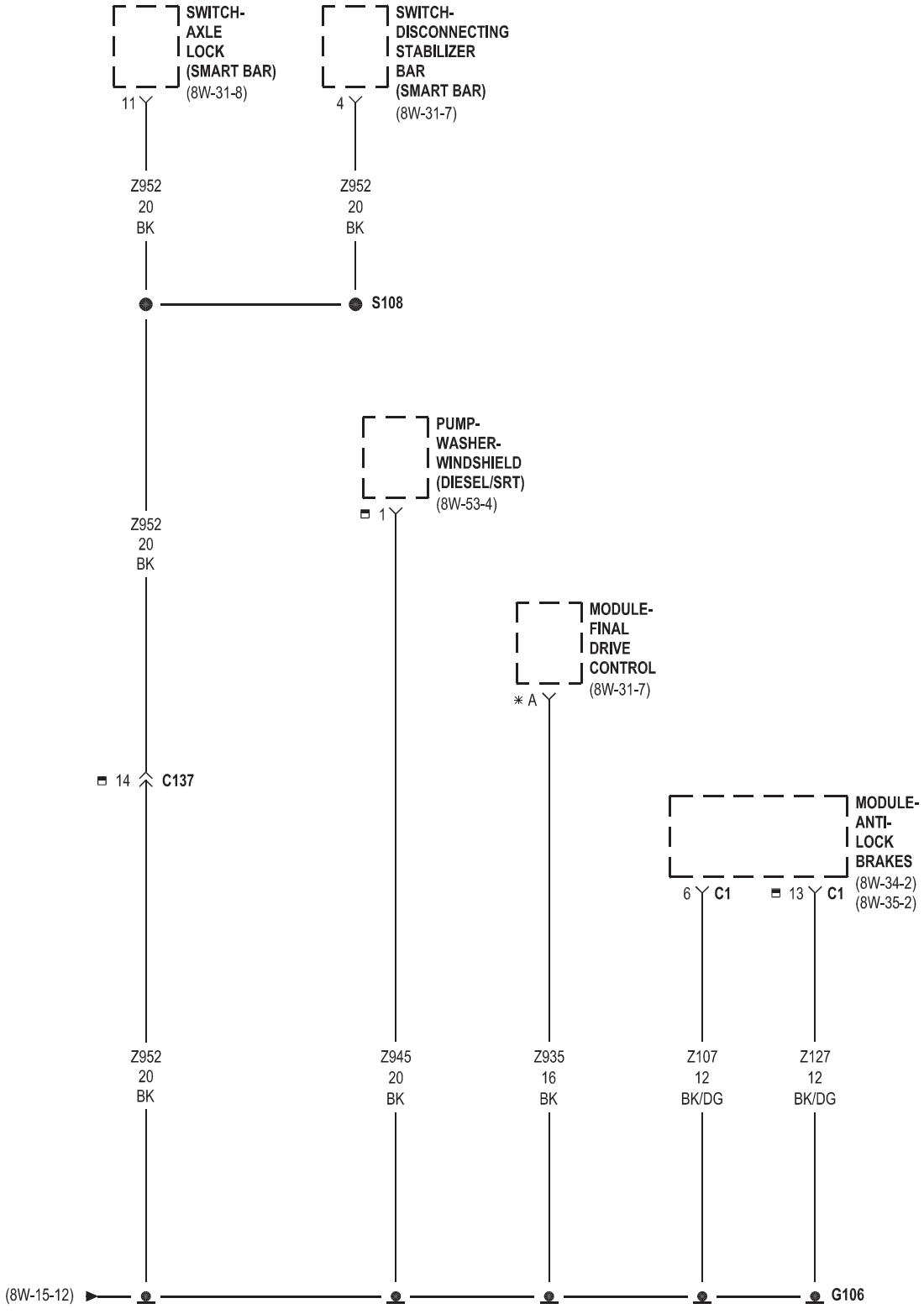
SWITCH-
AXLE
LOCK
(SMART BAR)
(8W-31-8)
11
SWITCH-
DISCONNECTING
STABILIZER
BAR
(SMART BAR)
(8W-31-7)
4
Z952
20
BK
Z952
20
BK
S108
PUMP-
WASHER-
WINDSHIELD
(DIESEL/SRT)
(8W-53-4)
1
Z952
20
BK
MODULE-
FINAL
DRIVE
CONTROL
(8W-31-7)
* A
14
C137
MODULE-
ANTI-
LOCK
BRAKES
(8W-34-2)
(8W-35-2)
6
C1
13
C1
Z952
20
BK
Z945
20
BK
Z935
16
BK
Z107
12
BK/DG
Z127
12
BK/DG
(8W-15-12)
G106

* 5.7L AWAL ETC

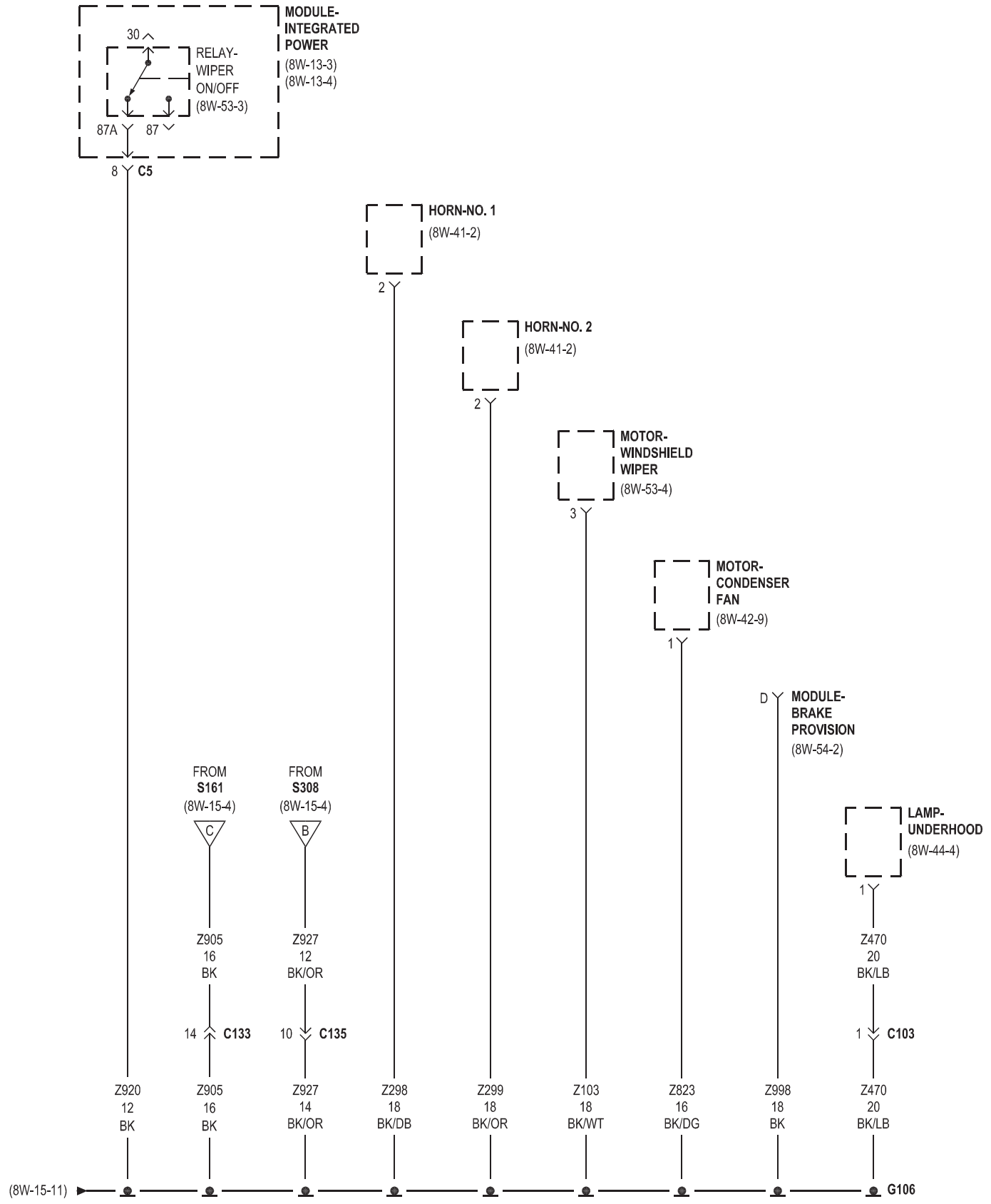
MODULE-
INTEGRATED
POWER
(8W-13-3)
(8W-13-4)
30
RELAY-
WIPER
ON/OFF
(8W-53-3)
87A
87
8
C5
HORN-NO. 1
(8W-41-2)
2
HORN-NO. 2
(8W-41-2)
2
MOTOR-
WINDSHIELD
WIPER
(8W-53-4)
3
MOTOR-
CONDENSER
FAN
(8W-42-9)
1
D
MODULE-
BRAKE
PROVISION
(8W-54-2)
LAMP-
UNDERHOOD
(8W-44-4)
1
FROM
S161
(8W-15-4)
C
FROM
S308
(8W-15-4)
B
Z905
16
BK
Z927
12
BK/OR
Z470
20
BK/LB
14
C133
10
C135
1
C103
Z920
12
BK
Z905
16
BK
Z927
14
BK/OR
Z298
18
BK/DB
Z299
18
BK/OR
Z103
18
BK/WT
Z823
16
BK/DG
Z998
18
BK
Z470
20
BK/LB
(8W-15-11)
G106

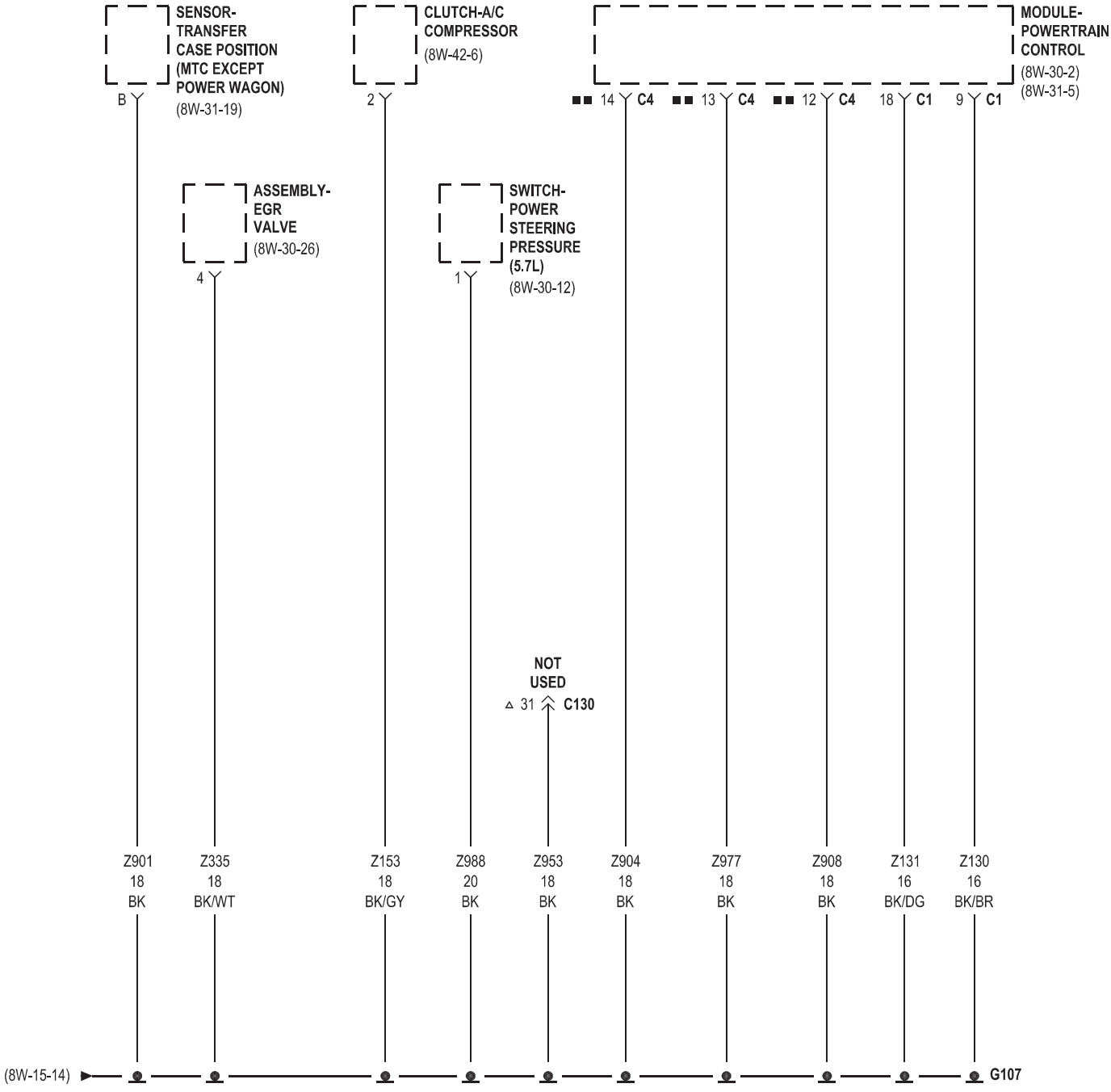
SENSOR-
TRANSFER
CASE POSITION
(MTC EXCEPT
POWER WAGON)
(8W-31-19)
B
CLUTCH-A/C
COMPRESSOR
(8W-42-6)
2
MODULE-
POWERTRAIN
CONTROL
(8W-30-2)
(8W-31-5)
14 C4
13 C4
12 C4
18 C1
9 C1
ASSEMBLY-
EGR
VALVE
(8W-30-26)
4
SWITCH-
POWER
STEERING
PRESSURE
(5.7L)
(8W-30-12)
1
NOT
USED
31 C130
Z901 18 BK
Z335 18 BK/WT
Z153 18 BK/GY
Z988 20 BK
Z953 18 BK
Z904 18 BK
Z977 18 BK
Z908 18 BK
Z131 16 BK/DG
Z130 16 BK/BR
(8W-15-14)
G107

△ 5.7L HD
■■ A/T

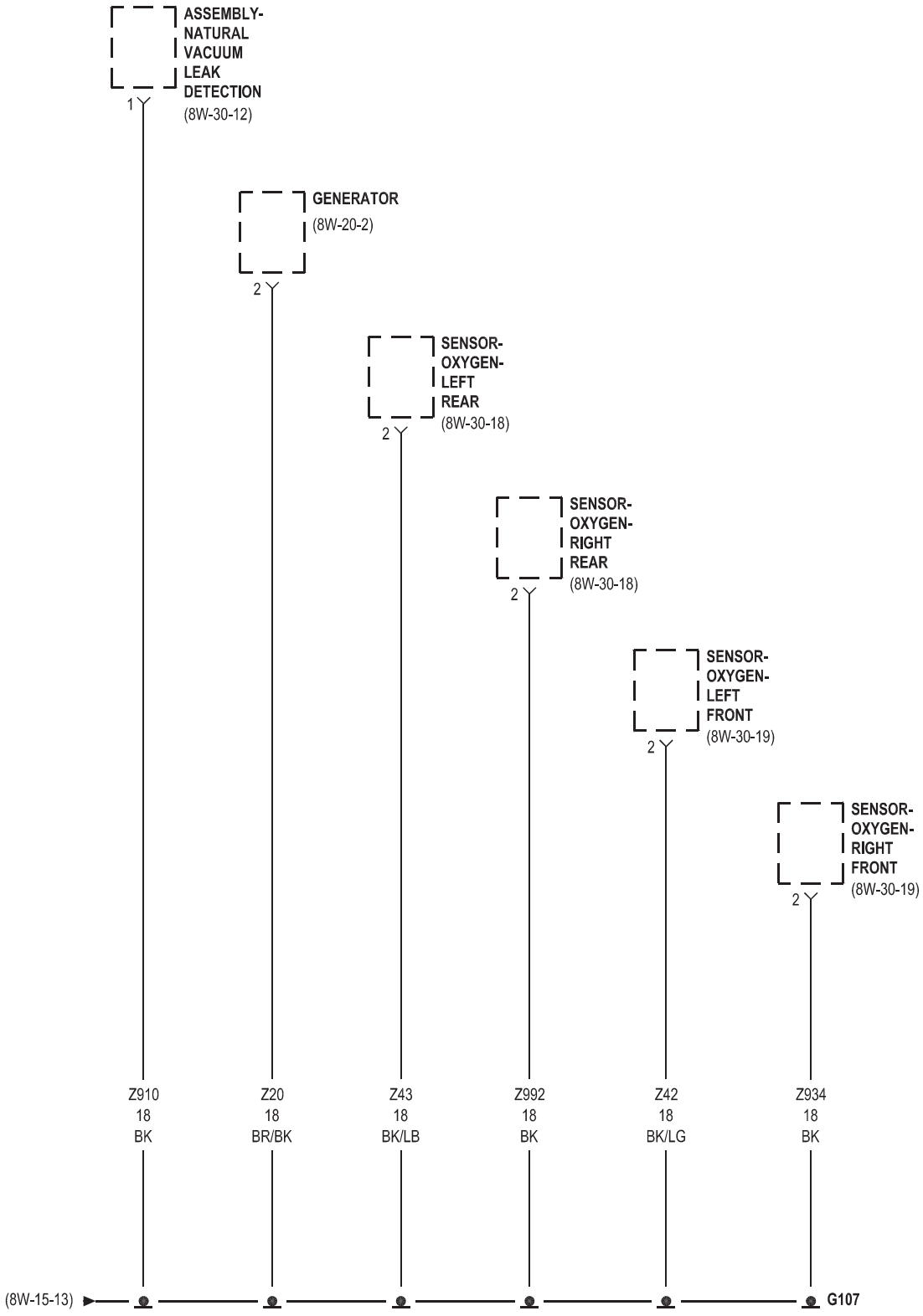
ASSEMBLY-
NATURAL
VACUUM
LEAK
DETECTION
(8W-30-12)
1
GENERATOR
(8W-20-2)
2
SENSOR-
OXYGEN-
LEFT
REAR
(8W-30-18)
2
SENSOR-
OXYGEN-
RIGHT
REAR
(8W-30-18)
2
SENSOR-
OXYGEN-
LEFT
FRONT
(8W-30-19)
2
SENSOR-
OXYGEN-
RIGHT
FRONT
(8W-30-19)
2
Z910
18
BK
Z20
18
BR/BK
Z43
18
BK/LB
Z992
18
BK
Z42
18
BK/LG
Z934
18
BK
(8W-15-13)
G107

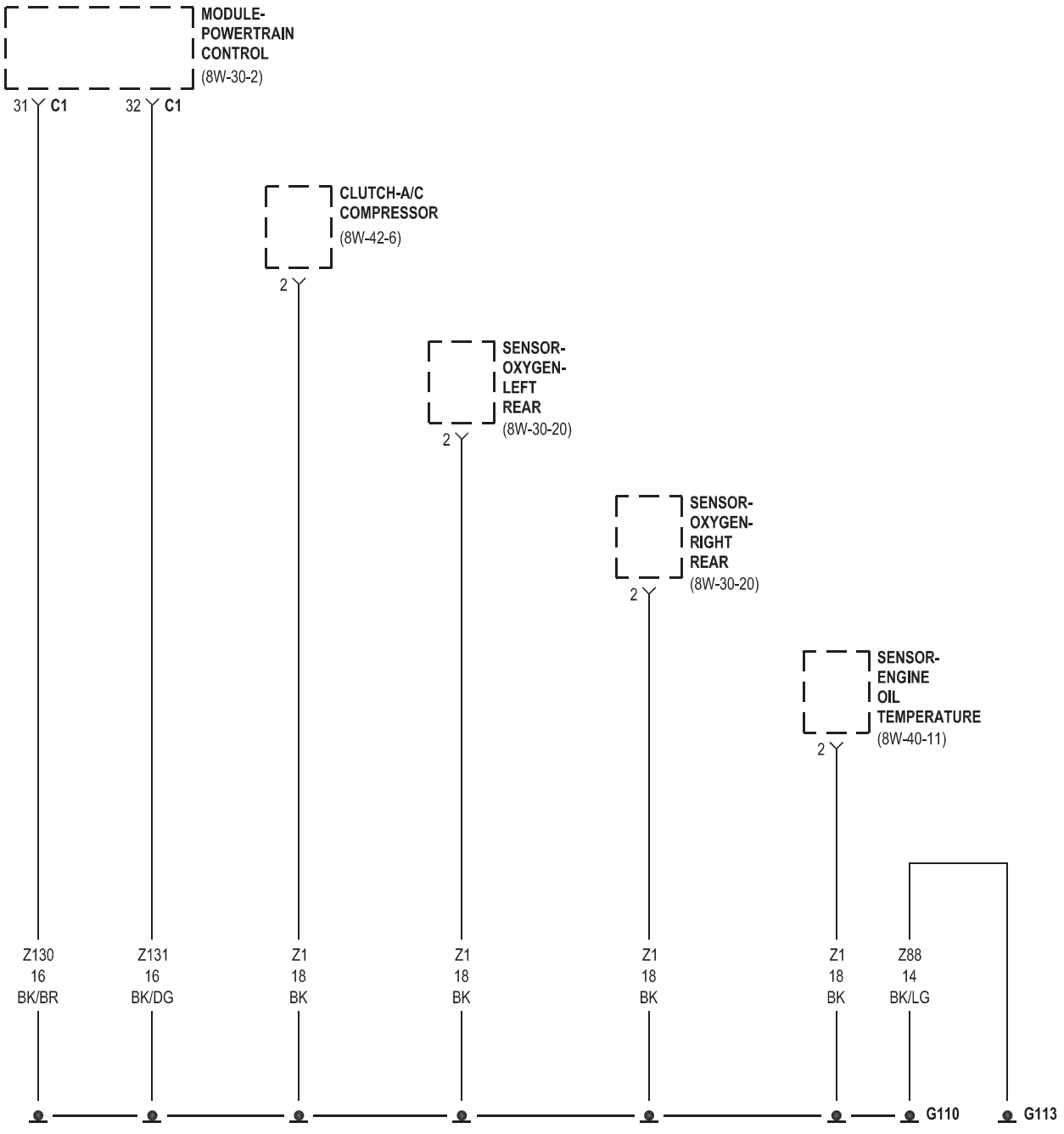
MODULE-
POWERTRAIN
CONTROL
(8W-30-2)
31 C1
32 C1
CLUTCH-A/C
COMPRESSOR
(8W-42-6)
2
SENSOR-
OXYGEN-
LEFT
REAR
(8W-30-20)
2
SENSOR-
OXYGEN-
RIGHT
REAR
(8W-30-20)
2
SENSOR-
ENGINE
OIL
TEMPERATURE
(8W-40-11)
2
Z130
16
BK/BR
Z131
16
BK/DG
Z1
18
BK
Z1
18
BK
Z1
18
BK
Z1
18
BK
Z88
14
BK/LG
G110
G113

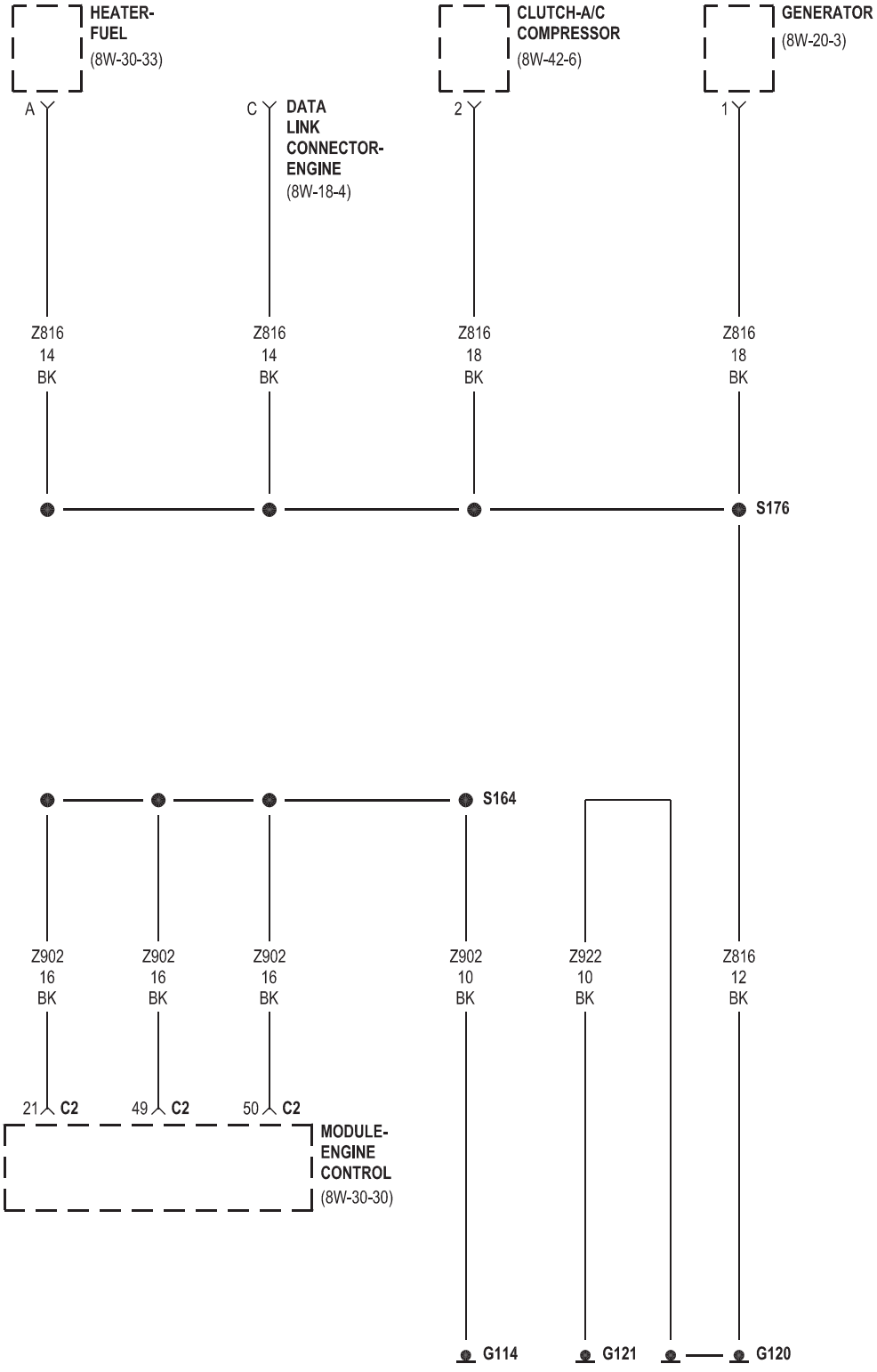
HEATER-FUEL
(8W-30-33)
A
Z816
14
BK
C
DATA LINK CONNECTOR-ENGINE
(8W-18-4)
Z816
14
BK
CLUTCH-A/C COMPRESSOR
(8W-42-6)
2
Z816
18
BK
GENERATOR
(8W-20-3)
1
Z816
18
BK
S176
S164
Z902
16
BK
21 C2
Z902
16
BK
49 C2
Z902
16
BK
50 C2
MODULE-ENGINE CONTROL
(8W-30-30)
Z902
10
BK
G114
Z922
10
BK
G121
Z816
12
BK
G120

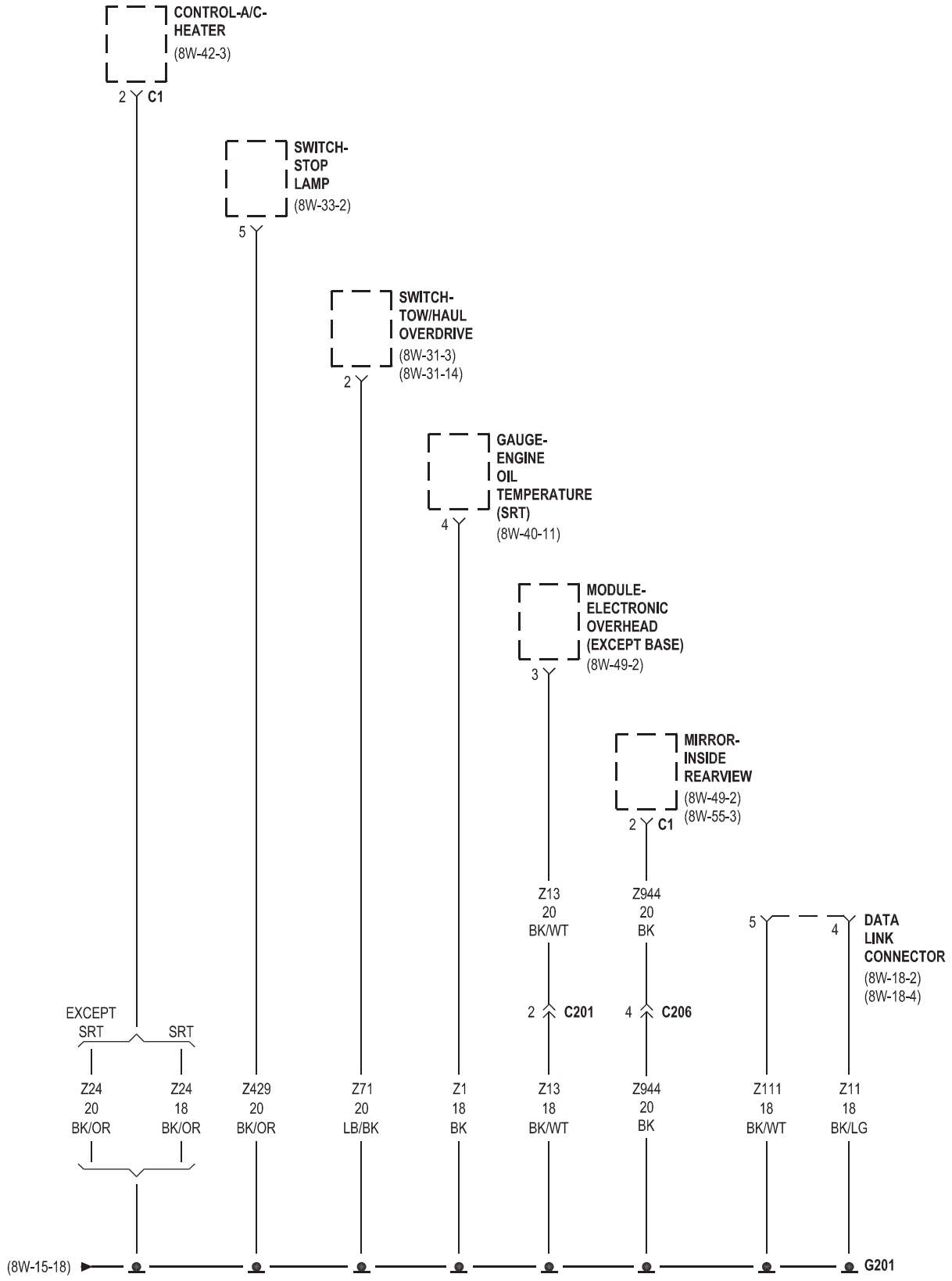
CONTROL-A/C-HEATER
(8W-42-3)
2 C1
SWITCH-STOP LAMP
(8W-33-2)
5
SWITCH-TOW/HAUL OVERDRIVE
(8W-31-3)
(8W-31-14)
2
GAUGE-ENGINE OIL TEMPERATURE (SRT)
(8W-40-11)
4
MODULE-ELECTRONIC OVERHEAD (EXCEPT BASE)
(8W-49-2)
3
MIRROR-INSIDE REARVIEW
(8W-49-2)
(8W-55-3)
2 C1
Z13 20 BK/WT
Z944 20 BK
5
4
DATA LINK CONNECTOR
(8W-18-2)
(8W-18-4)
2 C201
4 C206
EXCEPT SRT
SRT
Z24 20 BK/OR
Z24 18 BK/OR
Z429 20 BK/OR
Z71 20 LB/BK
Z1 18 BK
Z13 18 BK/WT
Z944 20 BK
Z111 18 BK/WT
Z11 18 BK/LG
(8W-15-18)
G201

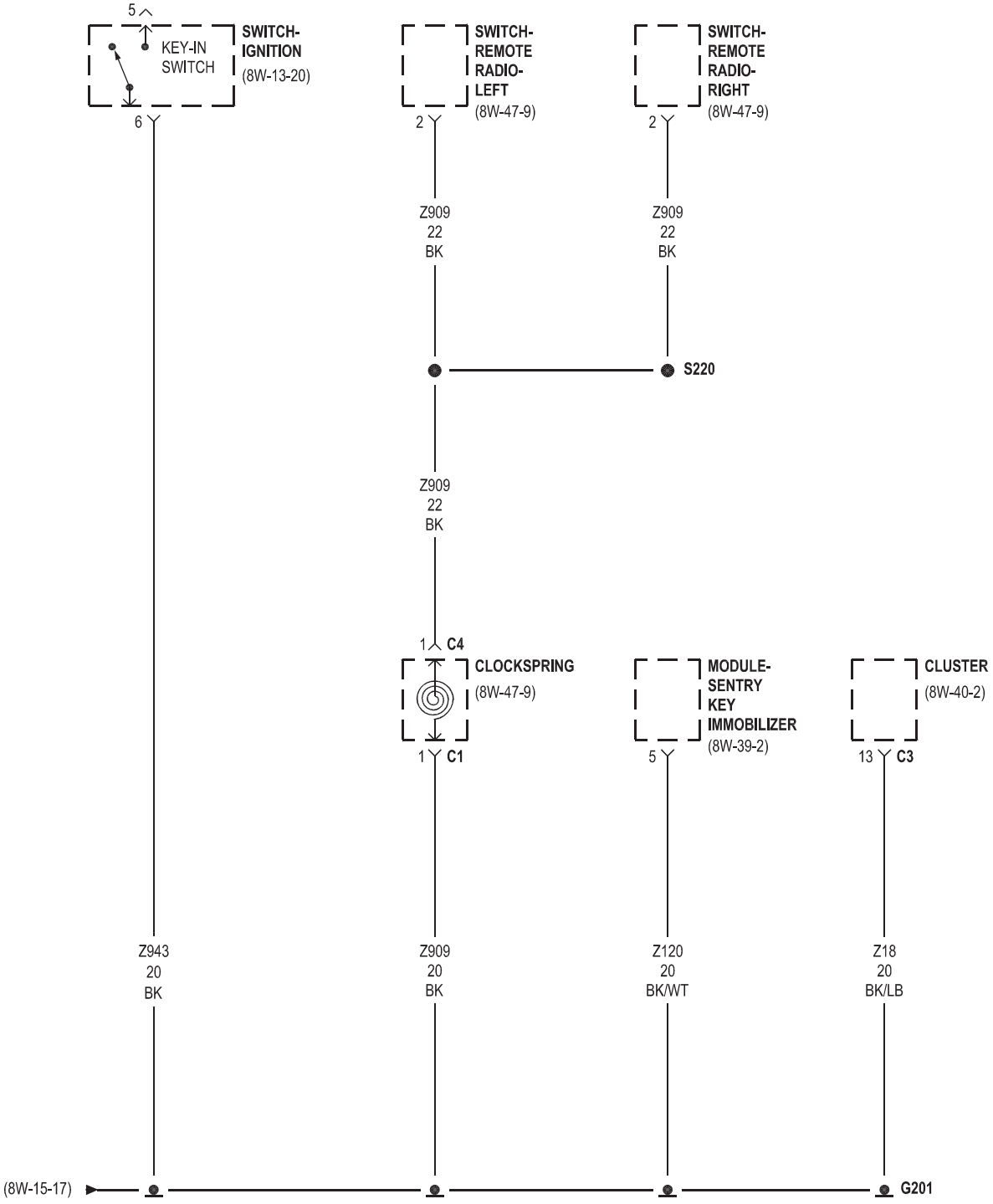
5
SWITCH-
IGNITION
KEY-IN
SWITCH
(8W-13-20)
6
SWITCH-
REMOTE
RADIO-
LEFT
(8W-47-9)
2
SWITCH-
REMOTE
RADIO-
RIGHT
(8W-47-9)
2
Z909
22
BK
Z909
22
BK
S220
Z909
22
BK
1
C4
CLOCKSPRING
(8W-47-9)
1
C1
MODULE-
SENTRY
KEY
IMMOBILIZER
(8W-39-2)
5
CLUSTER
(8W-40-2)
13
C3
Z943
20
BK
Z909
20
BK
Z120
20
BK/WT
Z18
20
BK/LB
(8W-15-17)
G201

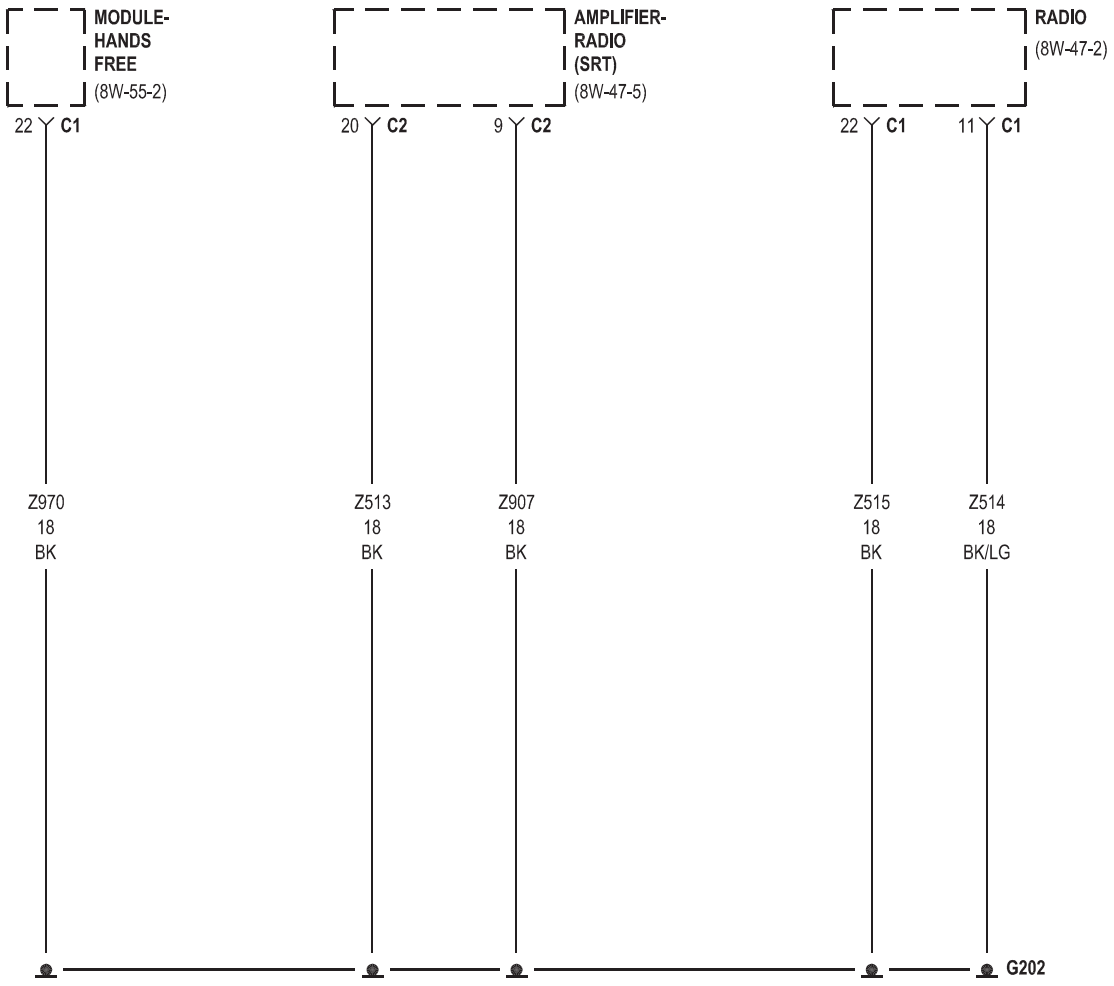
MODULE-
HANDS
FREE
(8W-55-2)
22 C1
Z970
18
BK
AMPLIFIER-
RADIO
(SRT)
(8W-47-5)
20 C2
Z513
18
BK
9 C2
Z907
18
BK
RADIO
(8W-47-2)
22 C1
Z515
18
BK
11 C1
Z514
18
BK/LG
G202

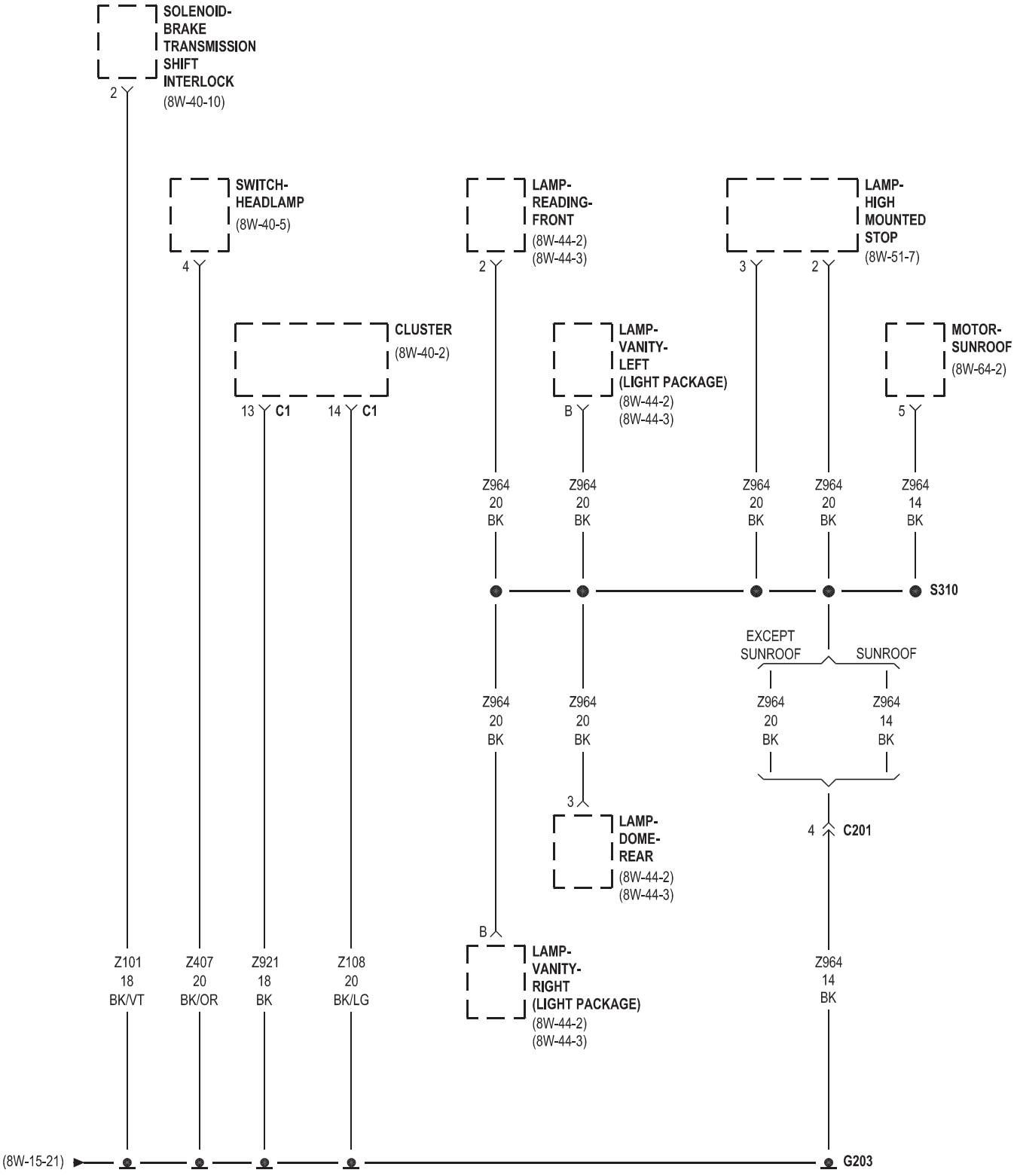
SOLENOID-
BRAKE
TRANSMISSION
SHIFT
INTERLOCK
(8W-40-10)
2
SWITCH-
HEADLAMP
(8W-40-5)
4
CLUSTER
(8W-40-2)
13 C1
14 C1
LAMP-
READING-
FRONT
(8W-44-2)
(8W-44-3)
2
LAMP-
VANITY-
LEFT
(LIGHT PACKAGE)
(8W-44-2)
(8W-44-3)
B
LAMP-
HIGH
MOUNTED
STOP
(8W-51-7)
3
2
MOTOR-
SUNROOF
(8W-64-2)
5
Z964
20
BK
Z964
20
BK
Z964
20
BK
Z964
20
BK
Z964
14
BK
S310
EXCEPT
SUNROOF
SUNROOF
Z964
20
BK
Z964
20
BK
Z964
20
BK
Z964
14
BK
3
LAMP-
DOME-
REAR
(8W-44-2)
(8W-44-3)
4 C201
B
LAMP-
VANITY-
RIGHT
(LIGHT PACKAGE)
(8W-44-2)
(8W-44-3)
Z101
18
BK/VT
Z407
20
BK/OR
Z921
18
BK
Z108
20
BK/LG
Z964
14
BK
(8W-15-21)
G203

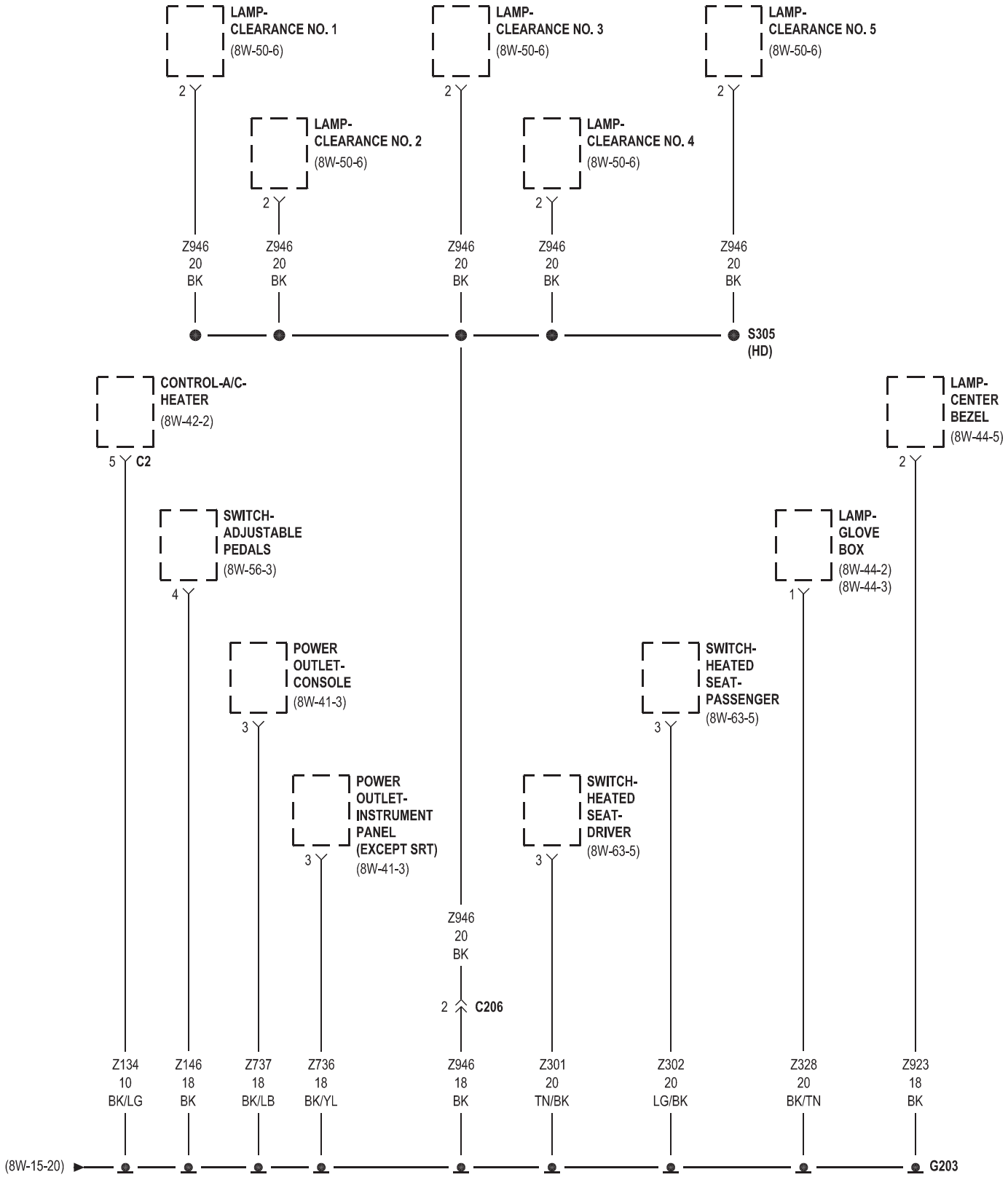
LAMP-
CLEARANCE NO. 1
(8W-50-6)
LAMP-
CLEARANCE NO. 3
(8W-50-6)
LAMP-
CLEARANCE NO. 5
(8W-50-6)
LAMP-
CLEARANCE NO. 2
(8W-50-6)
LAMP-
CLEARANCE NO. 4
(8W-50-6)
Z946
20
BK
S305
(HD)
CONTROL-A/C-
HEATER
(8W-42-2)
C2
LAMP-
CENTER
BEZEL
(8W-44-5)
SWITCH-
ADJUSTABLE
PEDALS
(8W-56-3)
LAMP-
GLOVE
BOX
(8W-44-2)
(8W-44-3)
POWER
OUTLET-
CONSOLE
(8W-41-3)
SWITCH-
HEATED
SEAT-
PASSENGER
(8W-63-5)
POWER
OUTLET-
INSTRUMENT
PANEL
(EXCEPT SRT)
(8W-41-3)
SWITCH-
HEATED
SEAT-
DRIVER
(8W-63-5)
C206
Z134
10
BK/LG
Z146
18
BK
Z737
18
BK/LB
Z736
18
BK/YL
Z946
18
BK
Z301
20
TN/BK
Z302
20
LG/BK
Z328
20
BK/TN
Z923
18
BK
(8W-15-20)
G203

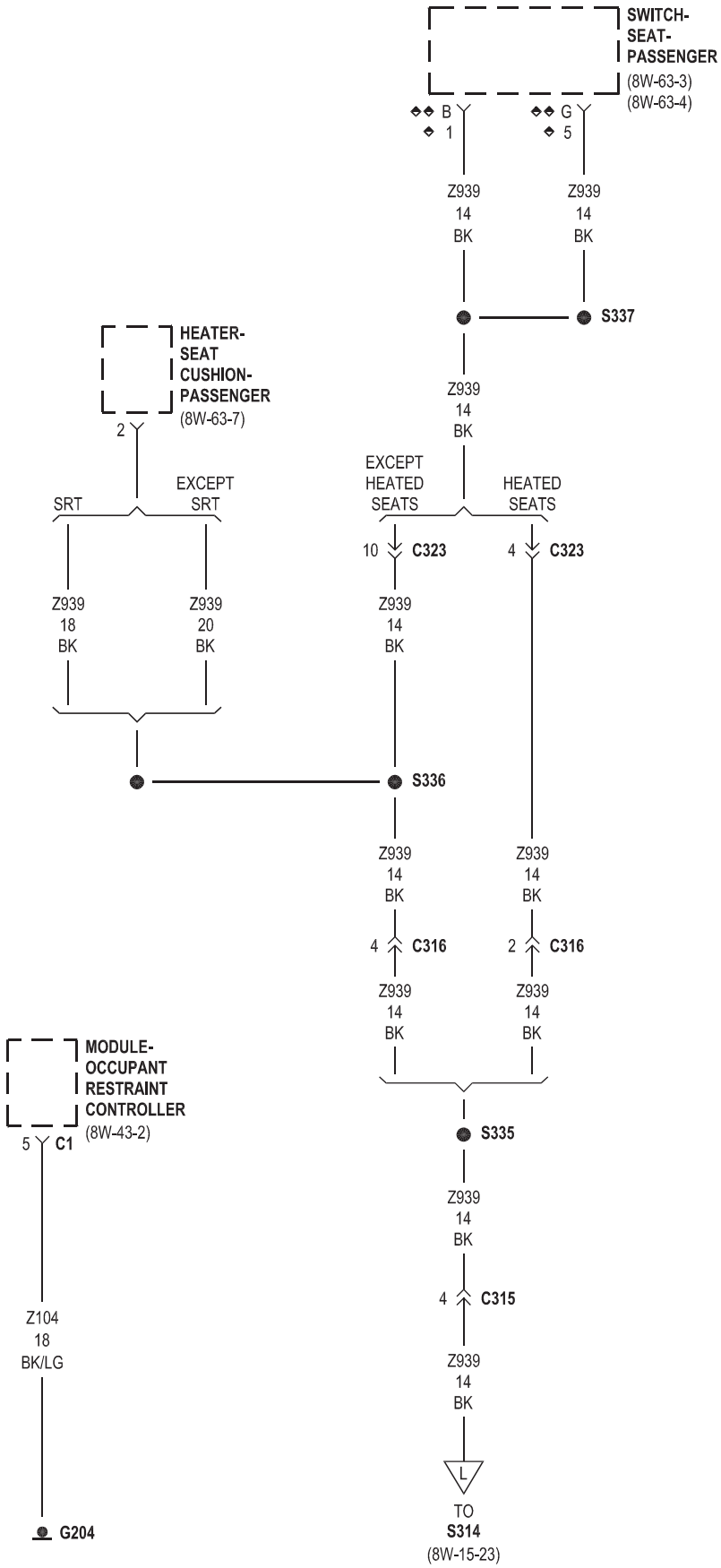
SWITCH-
SEAT-
PASSENGER
(8W-63-3)
(8W-63-4)
◆◆ B
◆ 1
◆◆ G
◆ 5
Z939
14
BK
Z939
14
BK
S337
HEATER-
SEAT
CUSHION-
PASSENGER
(8W-63-7)
2
Z939
14
BK
EXCEPT
HEATED
SEATS
HEATED
SEATS
SRT
EXCEPT
SRT
10 C323
4 C323
Z939
18
BK
Z939
20
BK
Z939
14
BK
S336
Z939
14
BK
Z939
14
BK
4 C316
2 C316
Z939
14
BK
Z939
14
BK
MODULE-
OCCUPANT
RESTRAINT
CONTROLLER
(8W-43-2)
5 C1
S335
Z939
14
BK
4 C315
Z939
14
BK
Z104
18
BK/LG
L
G204
TO
S314
(8W-15-23)
◆ STANDARD CAB
◆◆ QUAD CAB

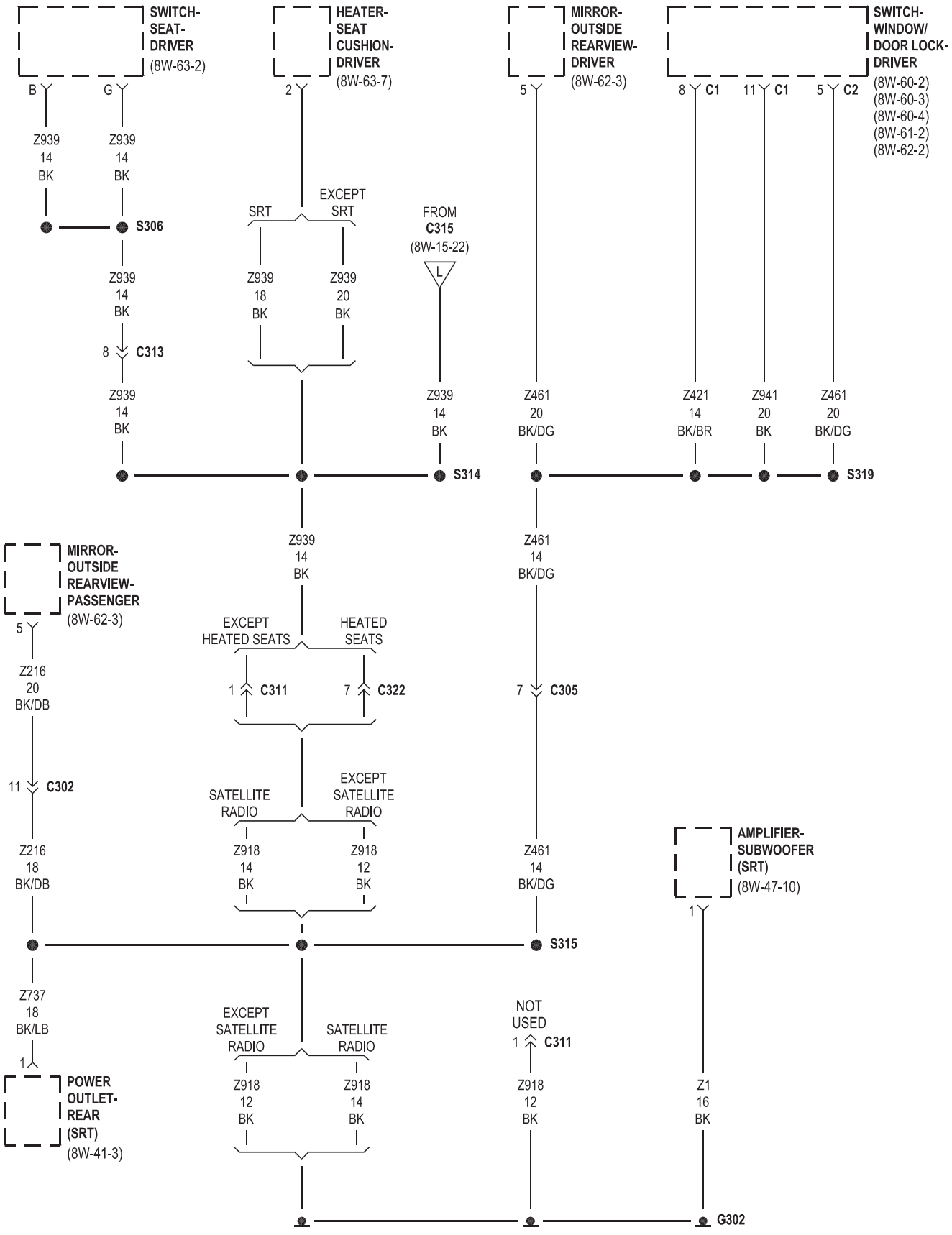
SWITCH-SEAT-DRIVER
(8W-63-2)
B
G
Z939 14 BK
Z939 14 BK
S306
Z939 14 BK
8
C313
Z939 14 BK
HEATER-SEAT CUSHION-DRIVER
(8W-63-7)
2
SRT
EXCEPT SRT
Z939 18 BK
Z939 20 BK
FROM C315
(8W-15-22)
L
Z939 14 BK
S314
MIRROR-OUTSIDE REARVIEW-DRIVER
(8W-62-3)
5
Z461 20 BK/DG
SWITCH-WINDOW/DOOR LOCK-DRIVER
(8W-60-2)
(8W-60-3)
(8W-60-4)
(8W-61-2)
(8W-62-2)
8
C1
11
C1
5
C2
Z421 14 BK/BR
Z941 20 BK
Z461 20 BK/DG
S319
MIRROR-OUTSIDE REARVIEW-PASSENGER
(8W-62-3)
5
Z216 20 BK/DB
11
C302
Z216 18 BK/DB
Z939 14 BK
EXCEPT HEATED SEATS
HEATED SEATS
1
C311
7
C322
SATELLITE RADIO
EXCEPT SATELLITE RADIO
Z918 14 BK
Z918 12 BK
Z461 14 BK/DG
7
C305
Z461 14 BK/DG
S315
AMPLIFIER-SUBWOOFER (SRT)
(8W-47-10)
1
Z737 18 BK/LB
1
POWER OUTLET-REAR (SRT)
(8W-41-3)
EXCEPT SATELLITE RADIO
SATELLITE RADIO
Z918 12 BK
Z918 14 BK
NOT USED
1
C311
Z918 12 BK
Z1 16 BK
G302

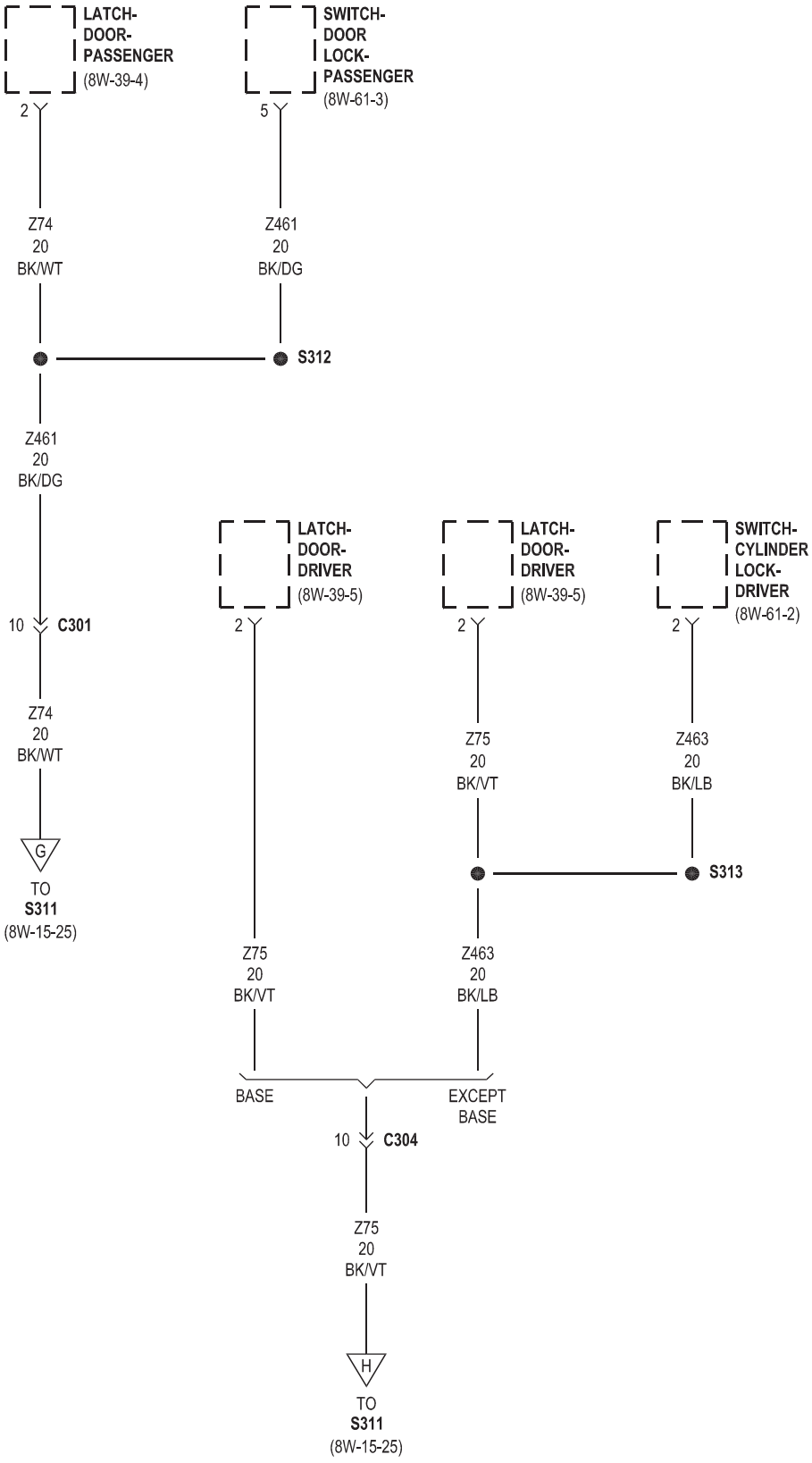
LATCH-
DOOR-
PASSENGER
(8W-39-4)
2
Z74
20
BK/WT
SWITCH-
DOOR
LOCK-
PASSENGER
(8W-61-3)
5
Z461
20
BK/DG
S312
Z461
20
BK/DG
10
C301
Z74
20
BK/WT
G
TO
S311
(8W-15-25)
LATCH-
DOOR-
DRIVER
(8W-39-5)
2
Z75
20
BK/VT
LATCH-
DOOR-
DRIVER
(8W-39-5)
2
Z75
20
BK/VT
SWITCH-
CYLINDER
LOCK-
DRIVER
(8W-61-2)
2
Z463
20
BK/LB
S313
Z463
20
BK/LB
BASE
EXCEPT
BASE
10
C304
Z75
20
BK/VT
H
TO
S311
(8W-15-25)

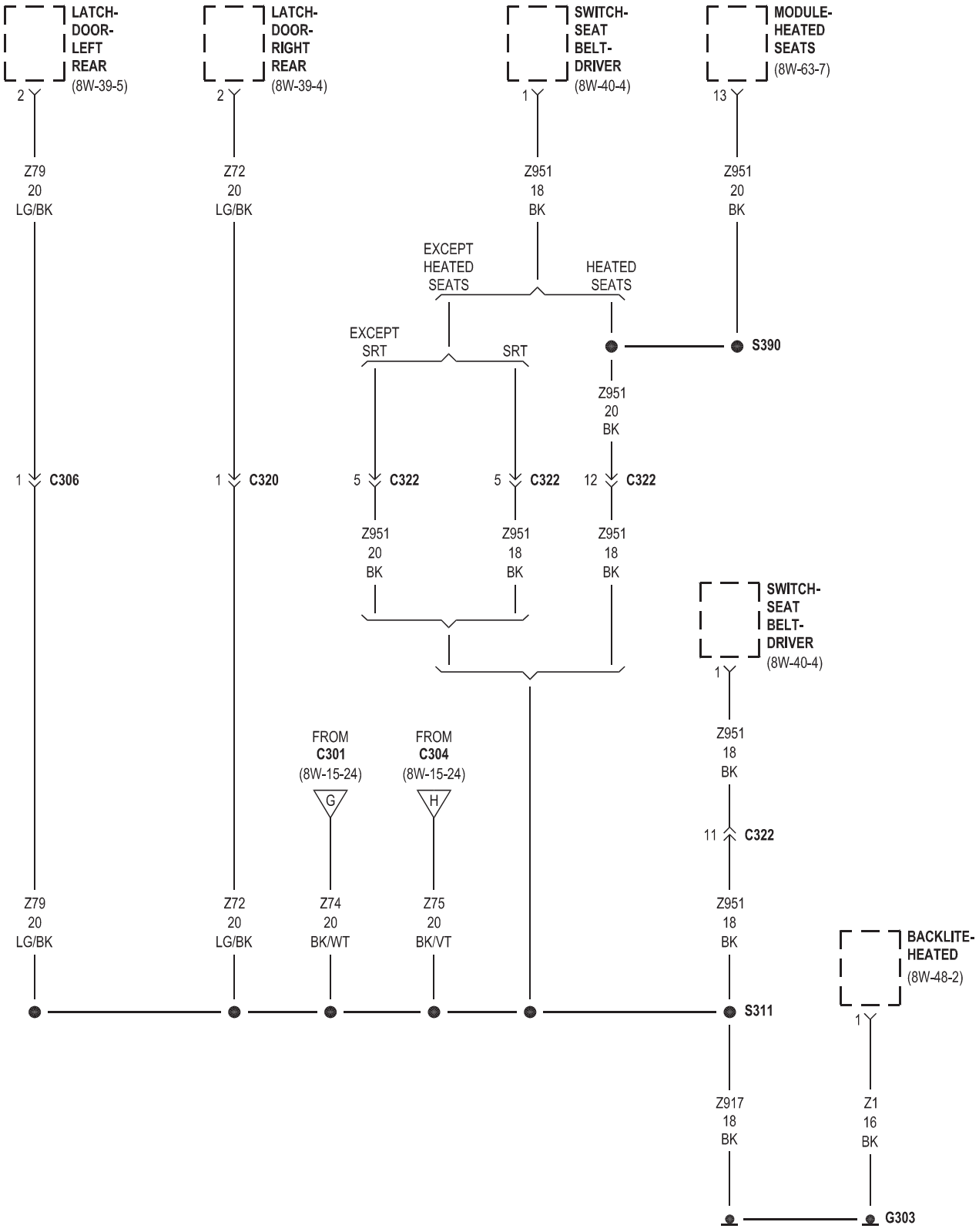
LATCH-DOOR-LEFT REAR
(8W-39-5)
2
Z79
20
LG/BK
1 C306
Z79
20
LG/BK
LATCH-DOOR-RIGHT REAR
(8W-39-4)
2
Z72
20
LG/BK
1 C320
Z72
20
LG/BK
SWITCH-SEAT BELT-DRIVER
(8W-40-4)
1
Z951
18
BK
EXCEPT HEATED SEATS
HEATED SEATS
EXCEPT SRT
SRT
5 C322
Z951
20
BK
5 C322
Z951
18
BK
MODULE-HEATED SEATS
(8W-63-7)
13
Z951
20
BK
S390
Z951
20
BK
12 C322
Z951
18
BK
SWITCH-SEAT BELT-DRIVER
(8W-40-4)
1
Z951
18
BK
11 C322
Z951
18
BK
FROM C301
(8W-15-24)
G
Z74
20
BK/WT
FROM C304
(8W-15-24)
H
Z75
20
BK/VT
S311
BACKLITE-HEATED
(8W-48-2)
1
Z1
16
BK
Z917
18
BK
G303

8W-18 BUS COMMUNICATIONS

Component	Page
Amplifier-Radio	8W-18-5, 6
Cluster	8W-18-5
Control-A/C-Heater	8W-18-5
Data Link Connector	8W-18-2, 3, 4, 5
Data Link Connector-Engine	8W-18-4
Fuse 51	8W-18-2, 4
G120	8W-18-4
G201	8W-18-2, 4
Module-Anti-Lock Brakes	8W-18-6
Module-Electronic Overhead	8W-18-5
Module-Engine Control	8W-18-4, 6
Module-Final Drive Control	8W-18-6
Module-Front Control	8W-18-6
Module-Hands Free	8W-18-6
Module-Integrated Power	8W-18-2, 4, 6
Module-Occupant Restraint Controller	8W-18-5
Module-Powertrain Control	8W-18-2, 3, 6
Module-Sentry Key Immobilizer	8W-18-6
Module-Transfer Case Control	8W-18-6
Radio	8W-18-5

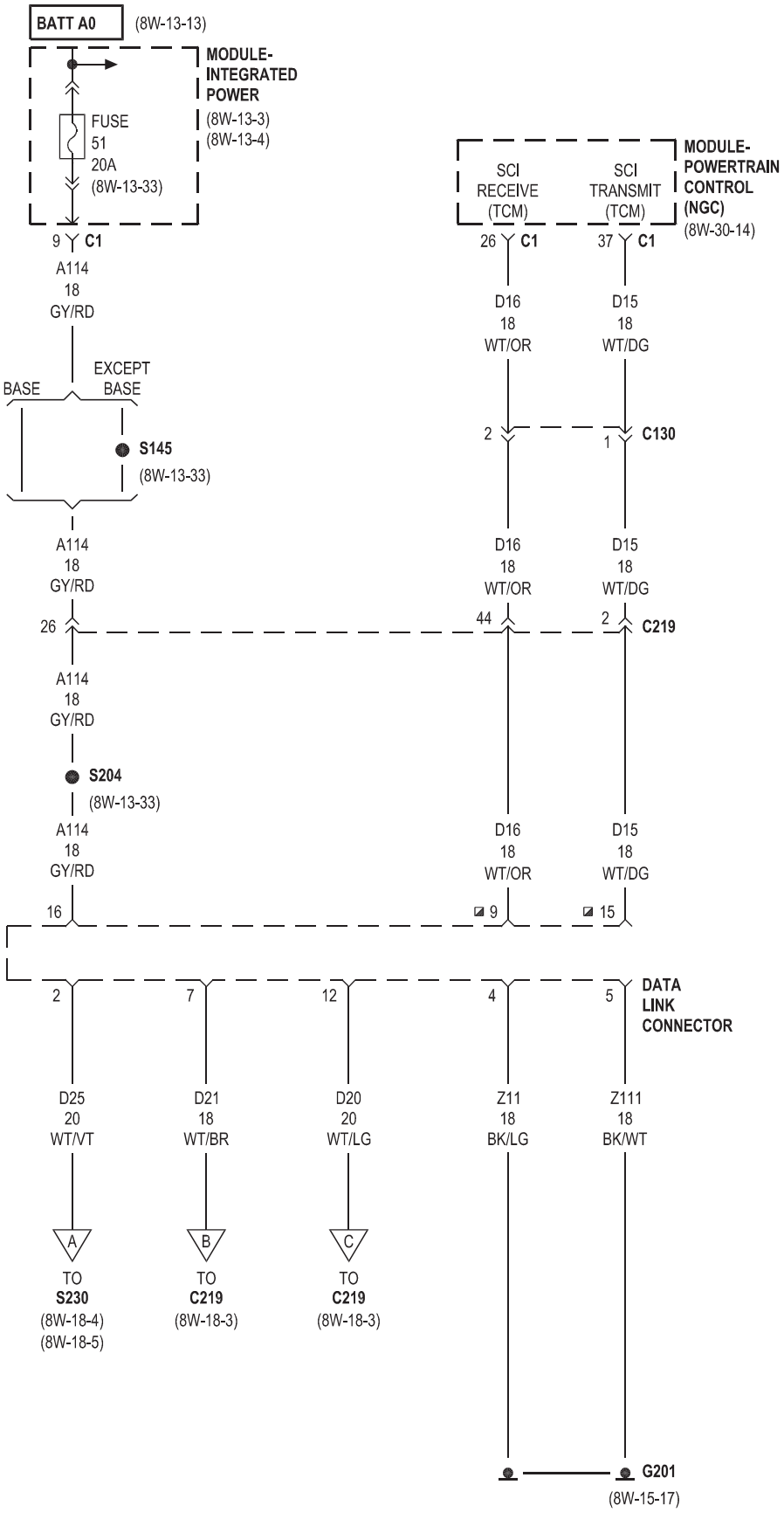
BATT A0
(8W-13-13)
MODULE-
INTEGRATED
POWER
(8W-13-3)
(8W-13-4)
FUSE
51
20A
(8W-13-33)
9 C1
A114
18
GY/RD
BASE
EXCEPT
BASE
S145
(8W-13-33)
A114
18
GY/RD
26
A114
18
GY/RD
S204
(8W-13-33)
A114
18
GY/RD
16
SCI
RECEIVE
(TCM)
SCI
TRANSMIT
(TCM)
MODULE-
POWERTRAIN
CONTROL
(NGC)
(8W-30-14)
26 C1
37 C1
D16
18
WT/OR
D15
18
WT/DG
2
1 C130
D16
18
WT/OR
D15
18
WT/DG
44
2 C219
D16
18
WT/OR
D15
18
WT/DG
9
15
2
7
12
4
5
DATA
LINK
CONNECTOR
D25
20
WT/VT
D21
18
WT/BR
D20
20
WT/LG
Z11
18
BK/LG
Z111
18
BK/WT
A
B
C
TO
S230
(8W-18-4)
(8W-18-5)
TO
C219
(8W-18-3)
TO
C219
(8W-18-3)
G201
(8W-15-17)
NGC

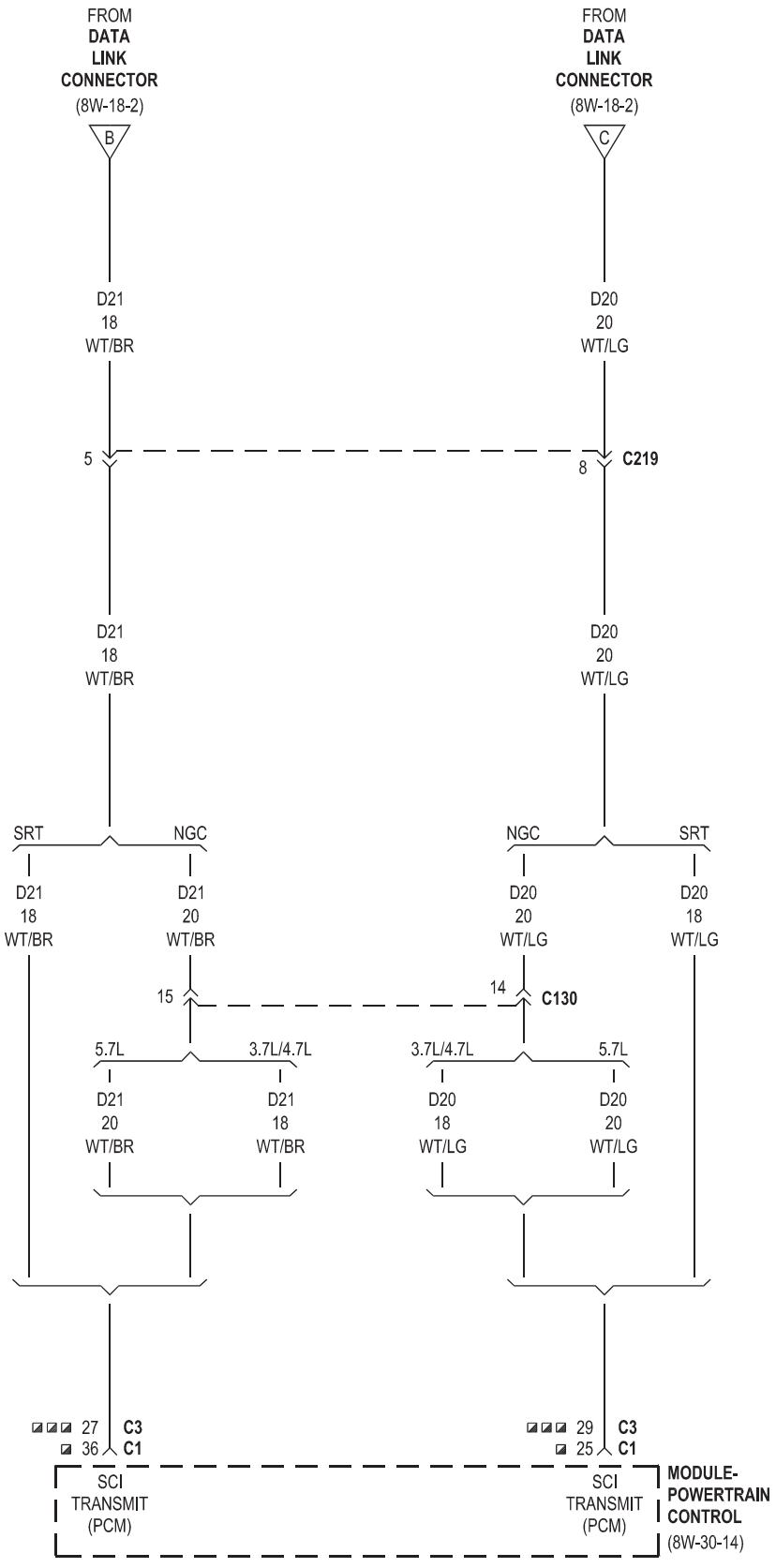
FROM DATA LINK CONNECTOR (8W-18-2)
B
FROM DATA LINK CONNECTOR (8W-18-2)
C
D21 18 WT/BR
D20 20 WT/LG
5
8
C219
D21 18 WT/BR
D20 20 WT/LG
SRT
NGC
NGC
SRT
D21 18 WT/BR
D21 20 WT/BR
D20 20 WT/LG
D20 18 WT/LG
15
14
C130
5.7L
3.7L/4.7L
3.7L/4.7L
5.7L
D21 20 WT/BR
D21 18 WT/BR
D20 18 WT/LG
D20 20 WT/LG
27
36
C3
C1
29
25
C3
C1
SCI TRANSMIT (PCM)
SCI TRANSMIT (PCM)
MODULE-POWERTRAIN CONTROL
(8W-30-14)
NGC
SRT

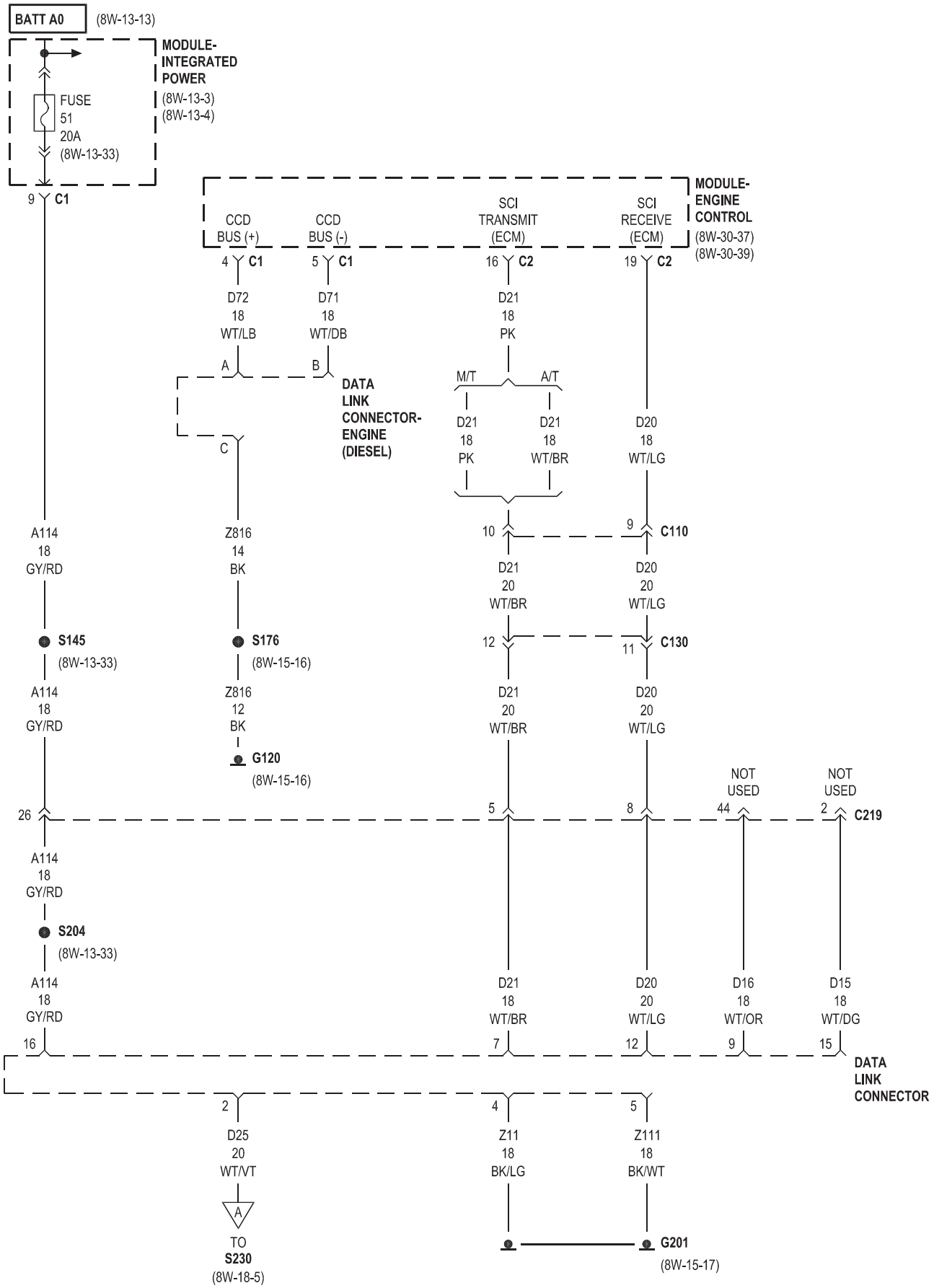
BATT A0
(8W-13-13)
MODULE-
INTEGRATED
POWER
(8W-13-3)
(8W-13-4)
FUSE
51
20A
(8W-13-33)
9 C1
MODULE-
ENGINE
CONTROL
(8W-30-37)
(8W-30-39)
CCD
BUS (+)
CCD
BUS (-)
SCI
TRANSMIT
(ECM)
SCI
RECEIVE
(ECM)
4 C1
5 C1
16 C2
19 C2
D72
18
WT/LB
D71
18
WT/DB
D21
18
PK
A
B
DATA
LINK
CONNECTOR-
ENGINE
(DIESEL)
M/T
A/T
D21
18
PK
D21
18
WT/BR
D20
18
WT/LG
C
A114
18
GY/RD
Z816
14
BK
10
9 C110
D21
20
WT/BR
D20
20
WT/LG
12
11 C130
S145
(8W-13-33)
S176
(8W-15-16)
A114
18
GY/RD
Z816
12
BK
G120
(8W-15-16)
NOT
USED
NOT
USED
26
5
8
44
2 C219
A114
18
GY/RD
S204
(8W-13-33)
A114
18
GY/RD
D21
18
WT/BR
D20
20
WT/LG
D16
18
WT/OR
D15
18
WT/DG
16
7
12
9
15
DATA
LINK
CONNECTOR
2
4
5
D25
20
WT/VT
Z11
18
BK/LG
Z111
18
BK/WT
A
TO
S230
(8W-18-5)
G201
(8W-15-17)

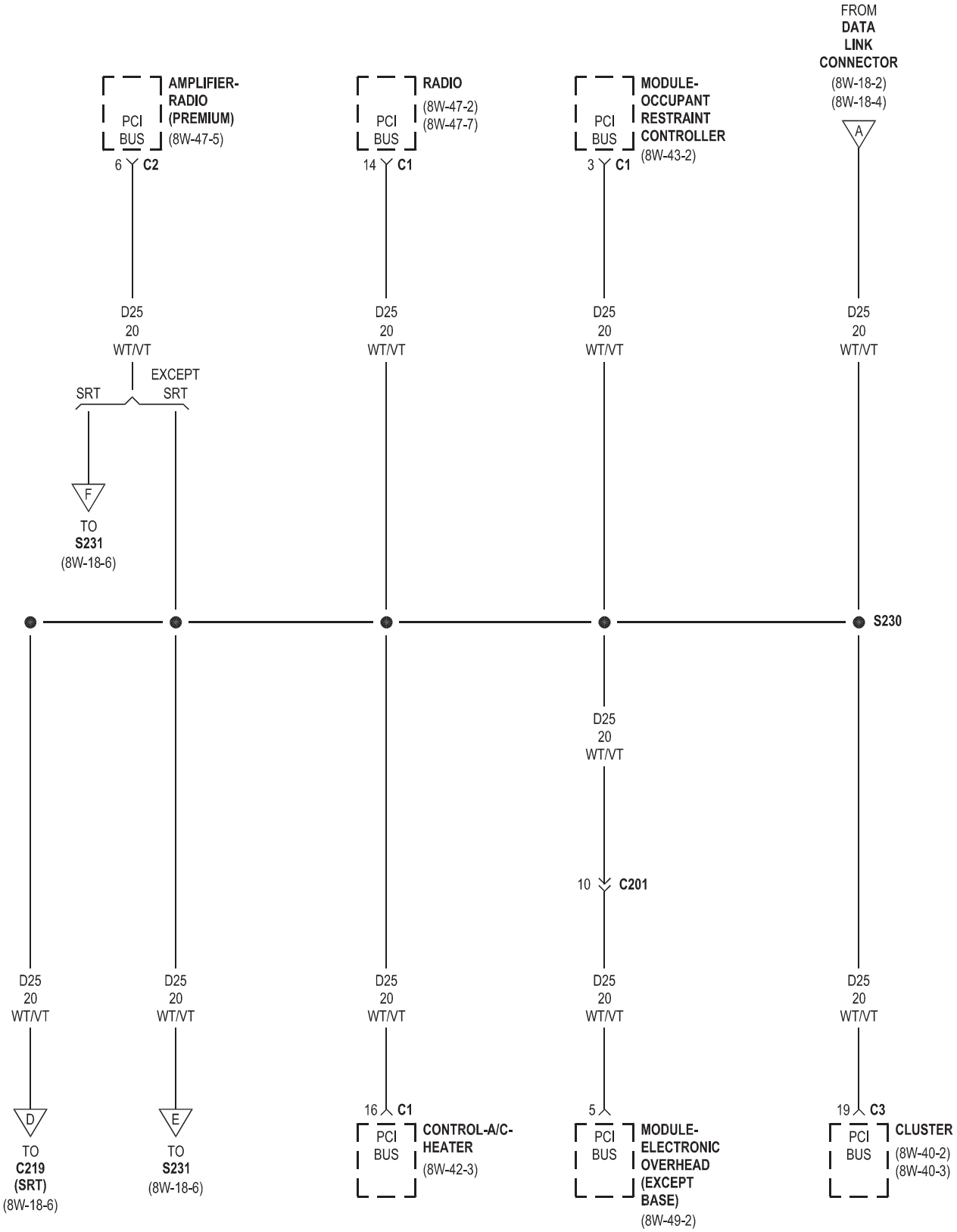
FROM
DATA
LINK
CONNECTOR
(8W-18-2)
(8W-18-4)
A
AMPLIFIER-
RADIO
(PREMIUM)
(8W-47-5)
PCI
BUS
6 C2
RADIO
(8W-47-2)
(8W-47-7)
14 C1
MODULE-
OCCUPANT
RESTRAINT
CONTROLLER
(8W-43-2)
3 C1
D25
20
WT/VT
EXCEPT
SRT
SRT
F
TO
S231
(8W-18-6)
S230
10 C201
D
TO
C219
(SRT)
(8W-18-6)
E
TO
S231
(8W-18-6)
16 C1
CONTROL-A/C-
HEATER
(8W-42-3)
5
MODULE-
ELECTRONIC
OVERHEAD
(EXCEPT
BASE)
(8W-49-2)
19 C3
CLUSTER
(8W-40-2)
(8W-40-3)

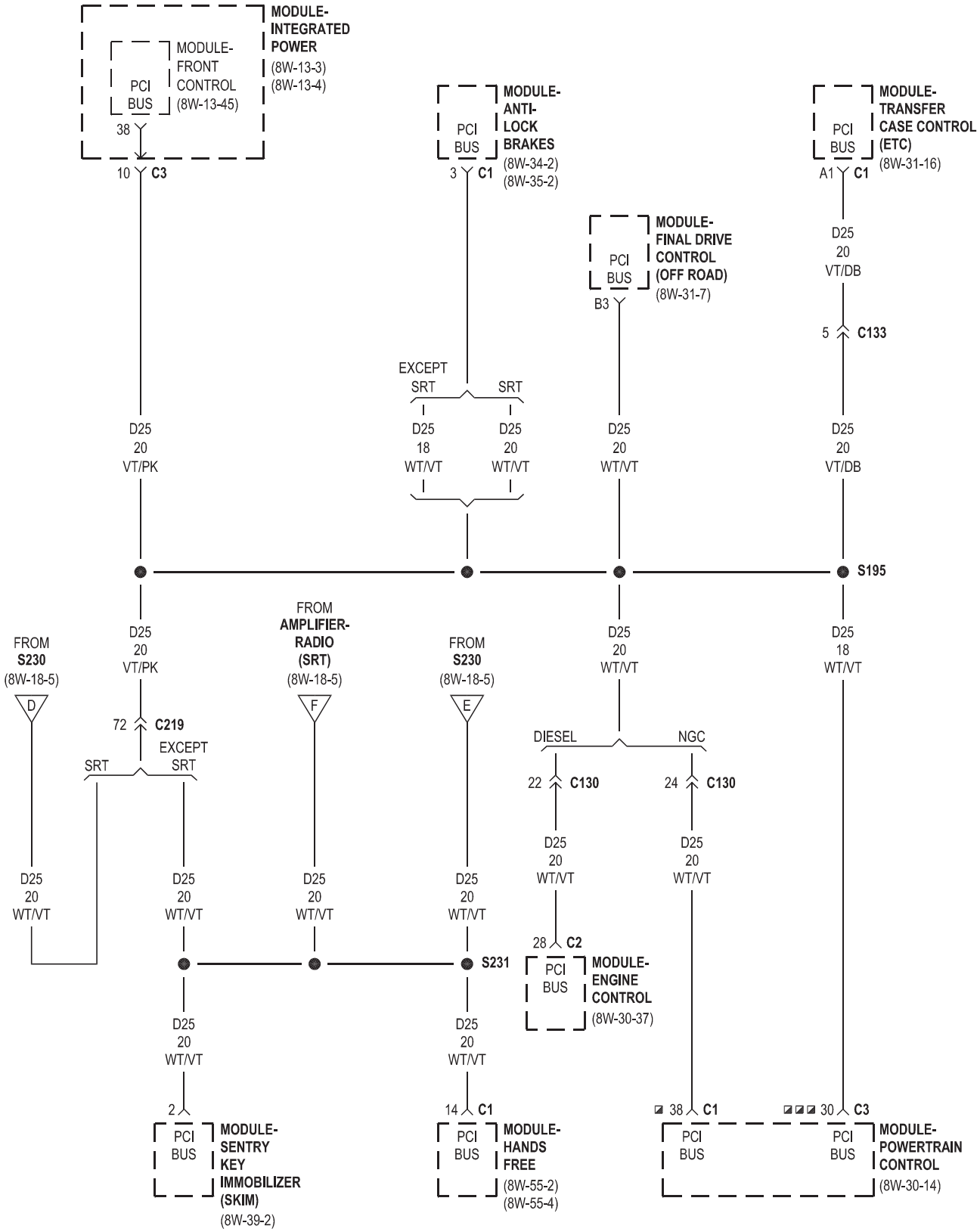
MODULE-INTEGRATED POWER
(8W-13-3)
(8W-13-4)
MODULE-FRONT CONTROL
(8W-13-45)
PCI BUS
38
10 C3
MODULE-ANTI-LOCK BRAKES
(8W-34-2)
(8W-35-2)
3 C1
MODULE-TRANSFER CASE CONTROL (ETC)
(8W-31-16)
A1 C1
MODULE-FINAL DRIVE CONTROL (OFF ROAD)
(8W-31-7)
B3
D25 20 VT/DB
5 C133
EXCEPT SRT
SRT
D25 20 VT/PK
D25 18 WT/VT
D25 20 WT/VT
D25 20 WT/VT
D25 20 VT/DB
S195
FROM S230 (8W-18-5)
D
FROM AMPLIFIER-RADIO (SRT) (8W-18-5)
F
FROM S230 (8W-18-5)
E
D25 20 VT/PK
D25 20 WT/VT
D25 18 WT/VT
72 C219
EXCEPT SRT
SRT
DIESEL
NGC
22 C130
24 C130
D25 20 WT/VT
D25 20 WT/VT
D25 20 WT/VT
D25 20 WT/VT
D25 20 WT/VT
D25 20 WT/VT
28 C2
MODULE-ENGINE CONTROL
(8W-30-37)
S231
D25 20 WT/VT
D25 20 WT/VT
2
14 C1
38 C1
30 C3
MODULE-SENTRY KEY IMMOBILIZER (SKIM)
(8W-39-2)
MODULE-HANDS FREE
(8W-55-2)
(8W-55-4)
MODULE-POWERTRAIN CONTROL
(8W-30-14)
PCI BUS
NGC
SRT

8W-20 CHARGING SYSTEM

Component	Page
Assembly-Natural Vacuum Leak Detection	8W-20-2
Battery	8W-20-2, 3
Battery-Auxiliary	8W-20-3
Fuse 12	8W-20-3
Fuse 23	8W-20-2
Fusible Link	8W-20-2, 3
G100	8W-20-2, 3
G101	8W-20-2, 3
G102	8W-20-2, 3
G107	8W-20-2
G108	8W-20-3
G109	8W-20-3
G120	8W-20-3
Generator	8W-20-2, 3
Module-Engine Control	8W-20-3
Module-Integrated Power	8W-20-2, 3
Module-Powertrain Control	8W-20-2
Starter	8W-20-2, 3

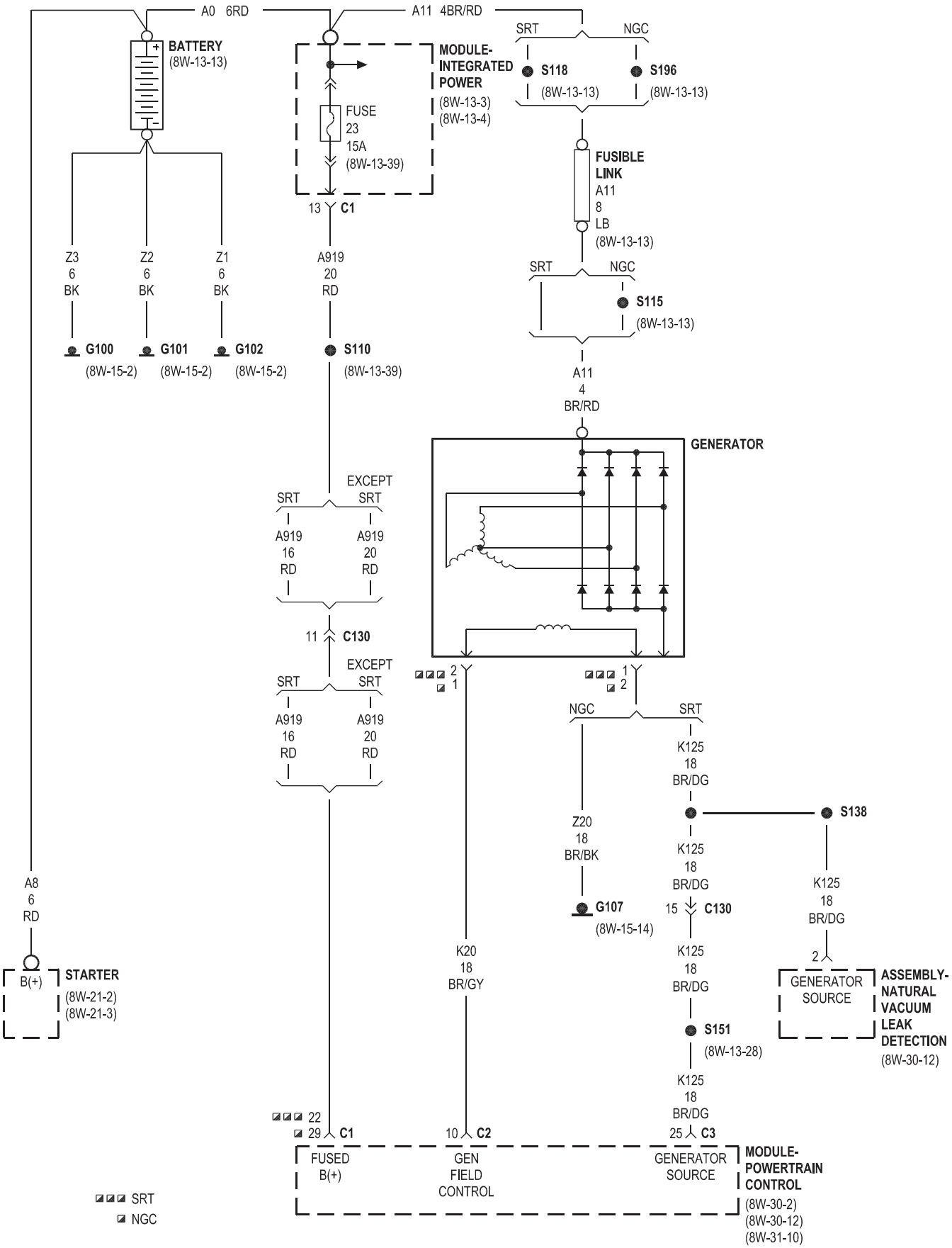
A0 6RD
A11 4BR/RD
BATTERY
(8W-13-13)
MODULE-
INTEGRATED
POWER
(8W-13-3)
(8W-13-4)
FUSE
23
15A
(8W-13-39)
13 C1
SRT
NGC
S118
(8W-13-13)
S196
(8W-13-13)
FUSIBLE
LINK
A11
8
LB
(8W-13-13)
Z3
6
BK
Z2
6
BK
Z1
6
BK
A919
20
RD
SRT
NGC
S115
(8W-13-13)
G100
(8W-15-2)
G101
(8W-15-2)
G102
(8W-15-2)
S110
(8W-13-39)
A11
4
BR/RD
GENERATOR
EXCEPT
SRT
SRT
A919
16
RD
A919
20
RD
11 C130
EXCEPT
SRT
SRT
A919
16
RD
A919
20
RD
2
1
1
2
NGC
SRT
K125
18
BR/DG
S138
Z20
18
BR/BK
K125
18
BR/DG
G107
(8W-15-14)
15 C130
K125
18
BR/DG
A8
6
RD
B(+)
STARTER
(8W-21-2)
(8W-21-3)
K20
18
BR/GY
K125
18
BR/DG
2
GENERATOR
SOURCE
ASSEMBLY-
NATURAL
VACUUM
LEAK
DETECTION
(8W-30-12)
S151
(8W-13-28)
K125
18
BR/DG
22
29 C1
10 C2
25 C3
FUSED
B(+)
GEN
FIELD
CONTROL
GENERATOR
SOURCE
MODULE-
POWERTRAIN
CONTROL
(8W-30-2)
(8W-30-12)
(8W-31-10)
SRT
NGC

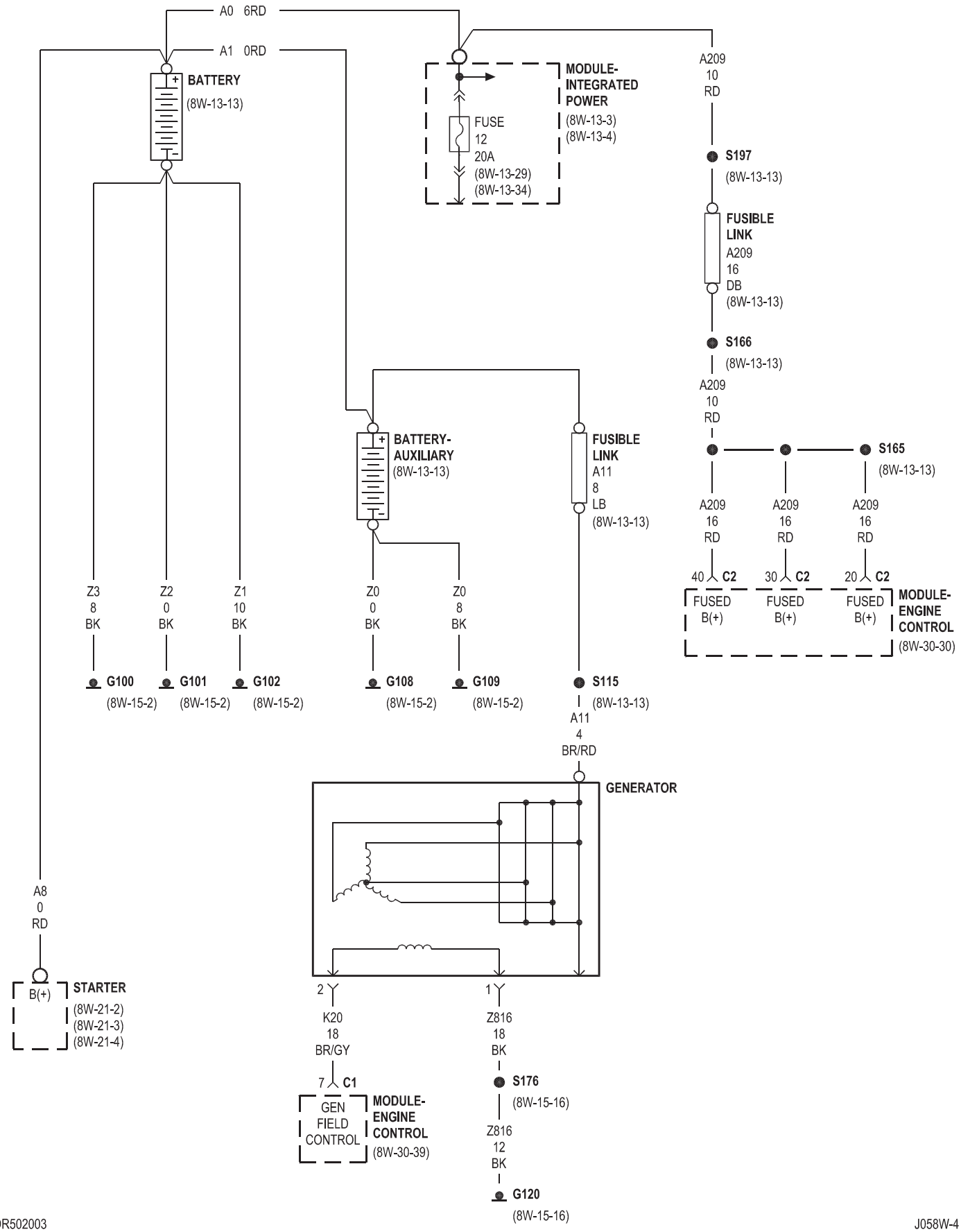
A0 6RD
A1 0RD
BATTERY
(8W-13-13)
MODULE-
INTEGRATED
POWER
(8W-13-3)
(8W-13-4)
FUSE
12
20A
(8W-13-29)
(8W-13-34)
A209
10
RD
S197
(8W-13-13)
FUSIBLE
LINK
A209
16
DB
(8W-13-13)
S166
(8W-13-13)
A209
10
RD
S165
(8W-13-13)
A209
16
RD
40 C2
30 C2
20 C2
FUSED
B(+)
MODULE-
ENGINE
CONTROL
(8W-30-30)
BATTERY-
AUXILIARY
(8W-13-13)
FUSIBLE
LINK
A11
8
LB
(8W-13-13)
Z3
8
BK
Z2
0
BK
Z1
10
BK
Z0
0
BK
Z0
8
BK
G100
(8W-15-2)
G101
(8W-15-2)
G102
(8W-15-2)
G108
(8W-15-2)
G109
(8W-15-2)
S115
(8W-13-13)
A11
4
BR/RD
GENERATOR
A8
0
RD
B(+)
STARTER
(8W-21-2)
(8W-21-3)
(8W-21-4)
2
K20
18
BR/GY
7 C1
GEN
FIELD
CONTROL
MODULE-
ENGINE
CONTROL
(8W-30-39)
1
Z816
18
BK
S176
(8W-15-16)
Z816
12
BK
G120
(8W-15-16)

8W-21 STARTING SYSTEM

Component	Page
Battery	8W-21-2, 3, 4
Battery-Auxiliary	8W-21-4
Fuse 14	8W-21-2, 4
Fuse 30	8W-21-2
G103	8W-21-2
G104	8W-21-2, 3, 5
G107	8W-21-2
Module-Engine Control	8W-21-5
Module-Integrated Power	8W-21-2, 3, 4, 5
Module-Powertrain Control	8W-21-2, 3
Module-Transfer Case Control	8W-21-5
PTC No. 2	8W-21-3
Relay-Starter	8W-21-3
Relay-Starter Motor	8W-21-2, 4
Sensor-Transmission Range	8W-21-3, 5
Starter	8W-21-2, 3, 4
Switch-Clutch Interlock	8W-21-2, 3, 4, 5
Switch-Ignition	8W-21-2, 3, 4
Switch-Push-Button Starter	8W-21-3

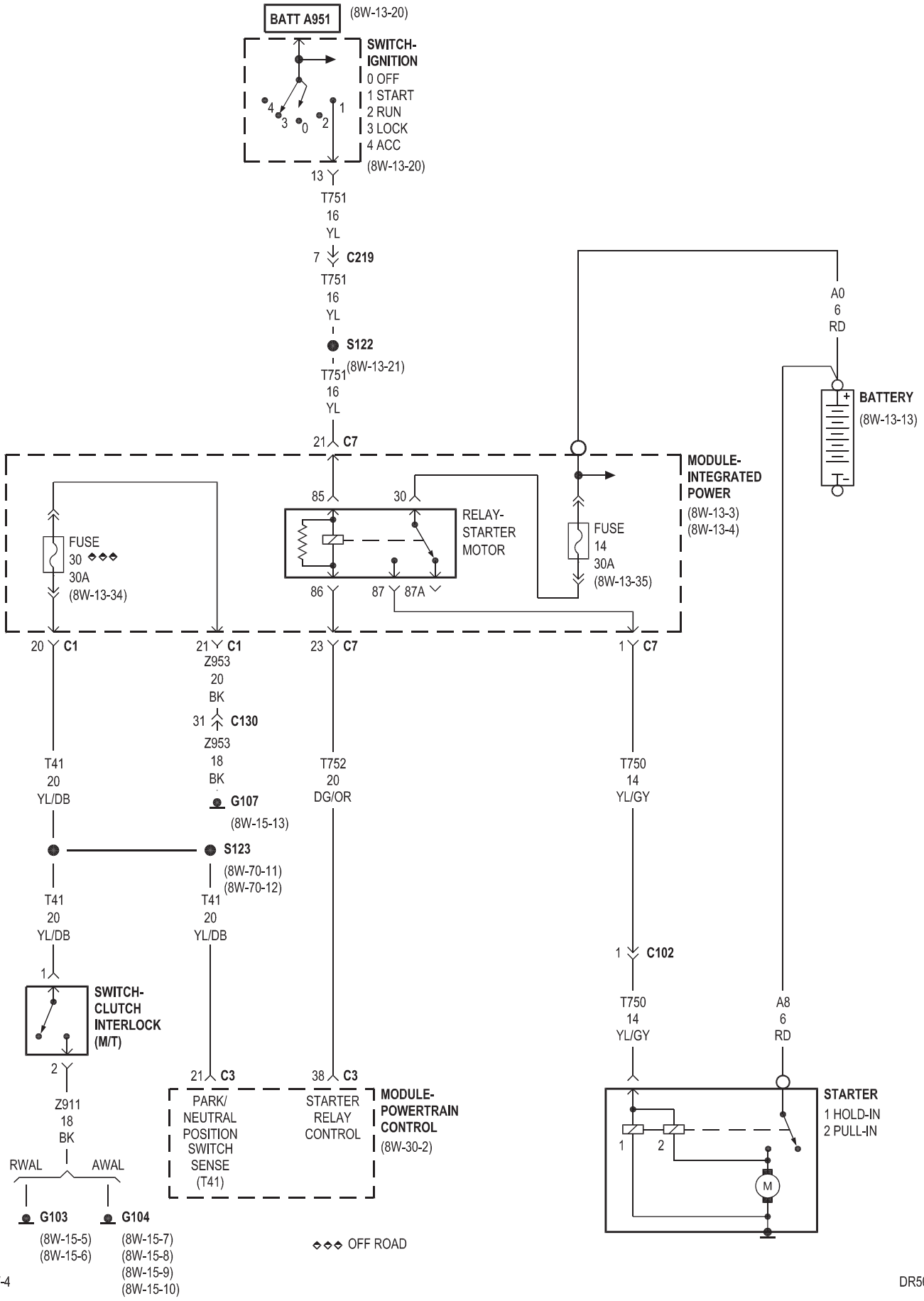
BATT A951
(8W-13-20)
SWITCH-IGNITION
0 OFF
1 START
2 RUN
3 LOCK
4 ACC
(8W-13-20)
13
T751
16
YL
7 C219
T751
16
YL
S122
T751
16
YL
(8W-13-21)
21 C7
A0
6
RD
BATTERY
(8W-13-13)
MODULE-INTEGRATED POWER
(8W-13-3)
(8W-13-4)
FUSE
30
30A
(8W-13-34)
85
30
RELAY-STARTER MOTOR
86
87
87A
FUSE
14
30A
(8W-13-35)
20 C1
21 C1
Z953
20
BK
31 C130
Z953
18
BK
G107
(8W-15-13)
23 C7
T752
20
DG/OR
1 C7
T750
14
YL/GY
T41
20
YL/DB
S123
(8W-70-11)
(8W-70-12)
T41
20
YL/DB
T41
20
YL/DB
1 C102
T750
14
YL/GY
A8
6
RD
1
SWITCH-CLUTCH INTERLOCK (M/T)
2
Z911
18
BK
RWAL
AWAL
G103
(8W-15-5)
(8W-15-6)
G104
(8W-15-7)
(8W-15-8)
(8W-15-9)
(8W-15-10)
21 C3
PARK/ NEUTRAL POSITION SWITCH SENSE (T41)
38 C3
STARTER RELAY CONTROL
MODULE-POWERTRAIN CONTROL
(8W-30-2)
STARTER
1 HOLD-IN
2 PULL-IN
1
2
M
OFF ROAD

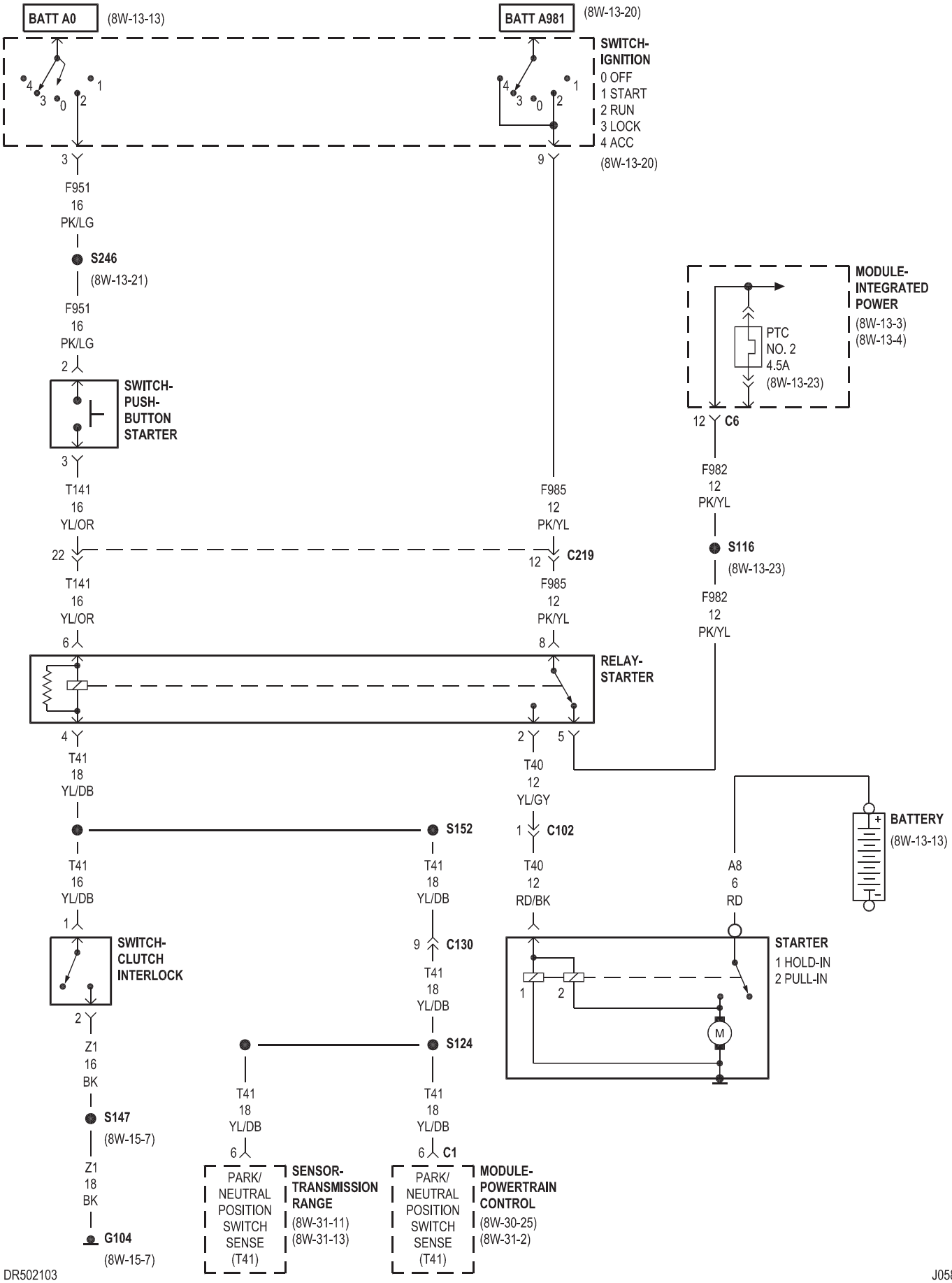
BATT A0
(8W-13-13)
BATT A981
(8W-13-20)
SWITCH-IGNITION
0 OFF
1 START
2 RUN
3 LOCK
4 ACC
(8W-13-20)
F951
16
PK/LG
S246
(8W-13-21)
F951
16
PK/LG
SWITCH-PUSH-BUTTON STARTER
T141
16
YL/OR
F985
12
PK/YL
C219
T141
16
YL/OR
F985
12
PK/YL
RELAY-STARTER
T41
18
YL/DB
T40
12
YL/GY
C102
T41
16
YL/DB
S152
T41
18
YL/DB
T40
12
RD/BK
A8
6
RD
BATTERY
(8W-13-13)
SWITCH-CLUTCH INTERLOCK
C130
T41
18
YL/DB
STARTER
1 HOLD-IN
2 PULL-IN
M
Z1
16
BK
S147
(8W-15-7)
S124
Z1
18
BK
G104
(8W-15-7)
T41
18
YL/DB
T41
18
YL/DB
PARK/NEUTRAL POSITION SWITCH SENSE (T41)
SENSOR-TRANSMISSION RANGE
(8W-31-11)
(8W-31-13)
C1
PARK/NEUTRAL POSITION SWITCH SENSE (T41)
MODULE-POWERTRAIN CONTROL
(8W-30-25)
(8W-31-2)
MODULE-INTEGRATED POWER
(8W-13-3)
(8W-13-4)
PTC
NO. 2
4.5A
(8W-13-23)
C6
F982
12
PK/YL
S116
(8W-13-23)
F982
12
PK/YL

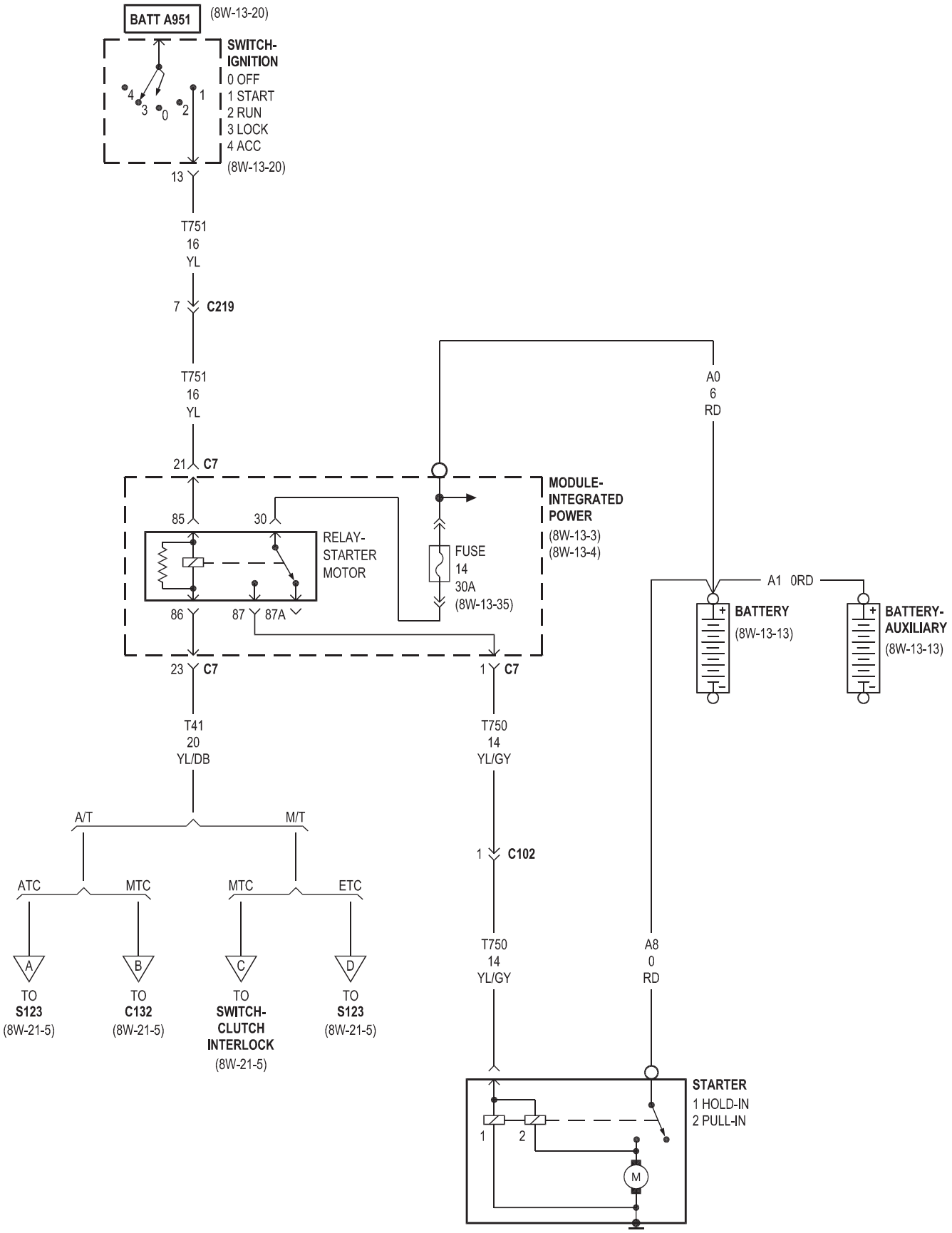
BATT A951
(8W-13-20)
SWITCH-IGNITION
0 OFF
1 START
2 RUN
3 LOCK
4 ACC
(8W-13-20)
13
T751
16
YL
7
C219
T751
16
YL
21
C7
A0
6
RD
MODULE-INTEGRATED POWER
(8W-13-3)
(8W-13-4)
85
30
RELAY-STARTER MOTOR
FUSE
14
30A
(8W-13-35)
86
87
87A
A1 0RD
BATTERY
(8W-13-13)
BATTERY-AUXILIARY
(8W-13-13)
23
C7
1
C7
T41
20
YL/DB
T750
14
YL/GY
A/T
M/T
1
C102
ATC
MTC
MTC
ETC
A
B
C
D
TO S123 (8W-21-5)
TO C132 (8W-21-5)
TO SWITCH-CLUTCH INTERLOCK (8W-21-5)
TO S123 (8W-21-5)
T750
14
YL/GY
A8
0
RD
STARTER
1 HOLD-IN
2 PULL-IN
1
2
M

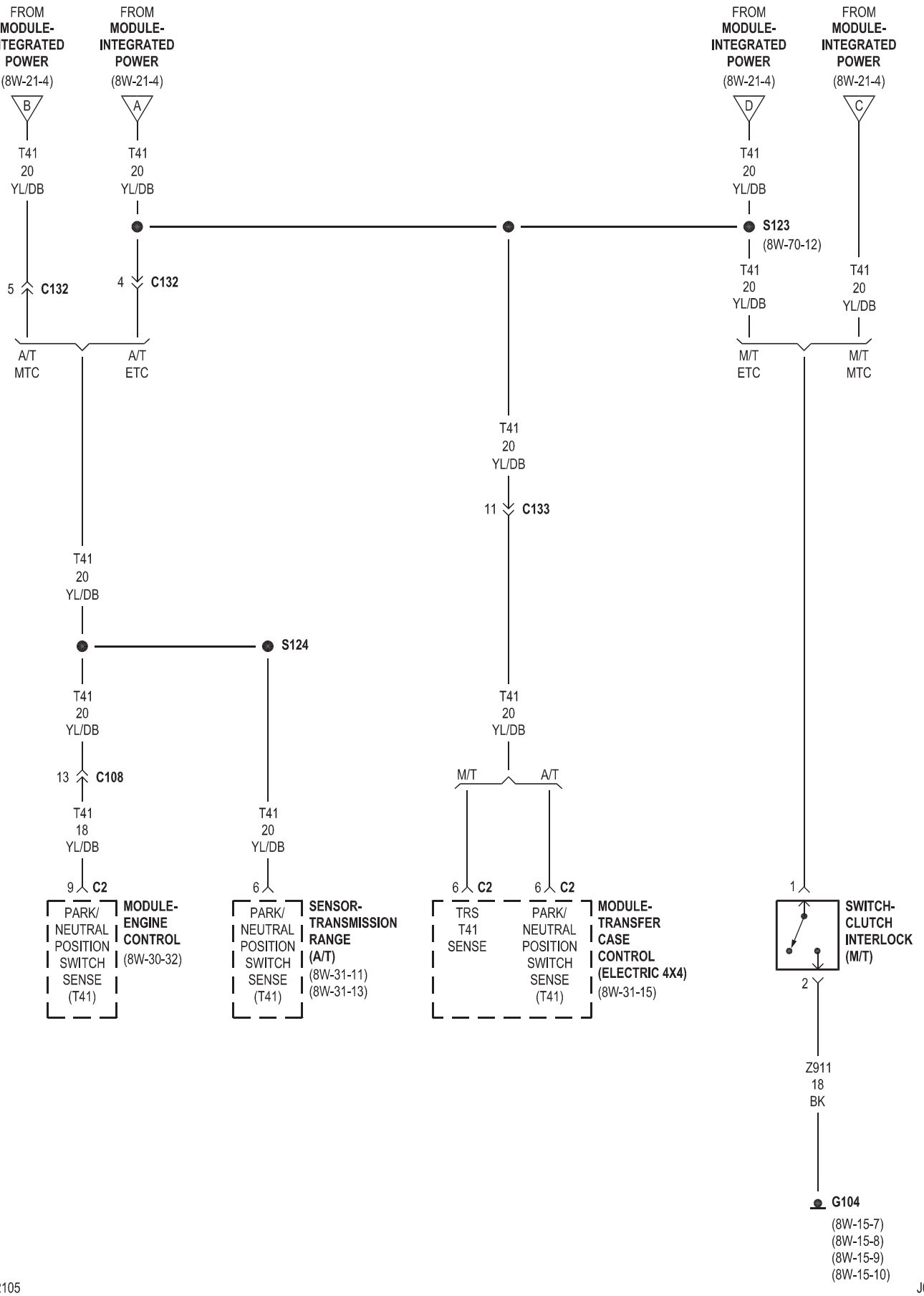
FROM MODULE-INTEGRATED POWER (8W-21-4)
B
A
D
C
T41 20 YL/DB
S123
(8W-70-12)
5 C132
4 C132
A/T MTC
A/T ETC
M/T ETC
M/T MTC
T41 20 YL/DB
11 C133
S124
13 C108
T41 18 YL/DB
9 C2
6 C2
1
2
PARK/ NEUTRAL POSITION SWITCH SENSE (T41)
MODULE-ENGINE CONTROL
(8W-30-32)
SENSOR-TRANSMISSION RANGE (A/T)
(8W-31-11)
(8W-31-13)
M/T
A/T
TRS T41 SENSE
MODULE-TRANSFER CASE CONTROL (ELECTRIC 4X4)
(8W-31-15)
SWITCH-CLUTCH INTERLOCK (M/T)
Z911 18 BK
G104
(8W-15-7)
(8W-15-8)
(8W-15-9)
(8W-15-10)

8W-30 FUEL/IGNITION SYSTEM

Component	Page
Actuator-Fuel Control	8W-30-39
Assembly-EGR Valve	8W-30-26
Assembly-Natural Vacuum Leak Detection	8W-30-12
Assembly-Transmission Solenoid	8W-30-43, 44
Assembly-Transmission Throttle Valve	8W-30-44
Battery	8W-30-29, 30
Capacitor-Ignition	8W-30-6
Clockspring	8W-30-13, 27, 37
Coil-Ignition-Left	8W-30-24
Coil-Ignition-No. 1	8W-30-7, 8
Coil-Ignition-No. 2	8W-30-7, 9
Coil-Ignition-No. 3	8W-30-7, 8
Coil-Ignition-No. 4	8W-30-7, 9
Coil-Ignition-No. 5	8W-30-6, 8
Coil-Ignition-No. 6	8W-30-6, 9
Coil-Ignition-No. 7	8W-30-6, 8
Coil-Ignition-No. 8	8W-30-6, 9
Coil-Ignition-Right	8W-30-24
Data Link Connector	8W-30-14, 37
Data Link Connector-Engine	8W-30-39
Drive-Fan-Radiator	8W-30-35, 36
Fuse 2	8W-30-5
Fuse 5	8W-30-25, 43
Fuse 12	8W-30-33
Fuse 17	8W-30-3
Fuse 23	8W-30-2
Fuse 36	8W-30-36
Fuse 49	8W-30-5
Fuse 50	8W-30-33, 34, 43
Fusible Link	8W-30-29, 30
G103	8W-30-13
G104	8W-30-3, 13, 24, 33, 44
G105	8W-30-29
G106	8W-30-3
G107	8W-30-2, 12, 18, 19, 26
G110	8W-30-2, 20
G114	8W-30-30
G120	8W-30-33
G201	8W-30-11
Generator	8W-30-12, 39
Heater-Fuel	8W-30-33
Heater-Intake Air No. 1	8W-30-29
Heater-Intake Air No. 2	8W-30-29
Injector-Fuel-No. 1	8W-30-7, 8, 10, 42
Injector-Fuel-No. 2	8W-30-7, 9, 10, 42
Injector-Fuel-No. 3	8W-30-7, 8, 10, 42
Injector-Fuel-No. 4	8W-30-7, 9, 10, 41
Injector-Fuel-No. 5	8W-30-7, 8, 10, 41
Injector-Fuel-No. 6	8W-30-7, 9, 10, 41
Injector-Fuel-No. 7	8W-30-6, 8, 10
Injector-Fuel-No. 8	8W-30-6, 9, 10
Injector-Fuel-No. 9	8W-30-10
Injector-Fuel-No. 10	8W-30-10
Module-Anti-Lock Brakes	8W-30-11, 38
Module-Engine Control	8W-30-29, 30, 31, 32, 33, 34, 35, 36, 37, 38, 39, 40, 41, 42, 43, 44
Module-Fuel Pump	8W-30-3, 34
Module-Integrated Power	8W-30-2, 3, 4, 5, 14, 25, 30, 32, 33, 34, 36, 37, 43
Module-Powertrain Control	8W-30-2, 3, 4, 5, 6, 7, 8, 9, 10, 11, 12, 13, 14, 15, 16, 17, 18, 19, 20, 21, 22, 23, 24, 25, 26, 27, 28
Motor-Iac	8W-30-14
PTC No. 1	8W-30-2, 3, 4, 14, 34, 37
Pto Switch	8W-30-11
Pump-Fuel Injection	8W-30-32
Pump-Leak Detection	8W-30-12
Relay-Auto Shut Down	8W-30-5, 21
Relay-Clutch-A/C Compressor	8W-30-14, 34
Relay-Condenser Fan	8W-30-14
Relay-Fuel Heater	8W-30-33
Relay-Fuel Pump	8W-30-3
Relay-Intake Air Heater No. 1	8W-30-29
Relay-Intake Air Heater No. 2	8W-30-29
Relay-Oxygen Sensor Downstream	8W-30-5, 20
Relay-Starter	8W-30-25
Relay-Starter Motor	8W-30-2, 32
Relay-Transmission Control	8W-30-43
Sensor-Accelerator Pedal Position	8W-30-27, 31
Sensor-Ambient Air Temperature	8W-30-4
Sensor-Battery Temperature	8W-30-4, 29
Sensor-Camshaft Position	8W-30-15, 40
Sensor-Crankshaft Position	8W-30-15, 40
Sensor-Engine Coolant Temperature	8W-30-22, 23, 31
Sensor-Engine Oil Pressure	8W-30-23
Sensor-Engine Oil Temperature	8W-30-25
Sensor-Intake Air Temperature	8W-30-22, 23
Sensor-Knock	8W-30-17
Sensor-Knock No. 1	8W-30-17
Sensor-Knock No. 2	8W-30-17
Sensor-Line Pressure	8W-30-16
Sensor-Map	8W-30-22, 23
Sensor-Output Speed	8W-30-43
Sensor-Oxygen-Left Front	8W-30-19, 21
Sensor-Oxygen-Left Rear	8W-30-18, 20
Sensor-Oxygen-Right Front	8W-30-19, 21
Sensor-Oxygen-Right Rear	8W-30-18, 20
Sensor-Temperature/Pressure Intake	8W-30-35
Sensor-Temperature/Pressure-Map	8W-30-39
Sensor-Throttle Position	8W-30-16, 25
Sensor-Transmission Range	8W-30-25, 32
Sensor-Water In Fuel	8W-30-31, 32
Servo-Speed Control	8W-30-13
Solenoid-EVAP/Purge	8W-30-4
Solenoid-Radiator Fan	8W-30-24
Solenoid-Reverse Lock-Out	8W-30-25
Solenoid-Wastegate	8W-30-36, 37
Switch-Clutch Interlock	8W-30-25, 32
Switch-Engine Oil Pressure	8W-30-30
Switch-Ignition	8W-30-11
Switch-Oil Pressure	8W-30-2
Switch-Power Steering Pressure	8W-30-12
Switch-Speed Control-Left	8W-30-13, 27, 37
Switch-Speed Control-Right	8W-30-13, 27
Switch-Stop Lamp	8W-30-13, 38, 44
Switch-Tow/Haul Overdrive	8W-30-11, 32
Throttle Body	8W-30-28
Transducer-A/C Pressure	8W-30-22, 23, 40

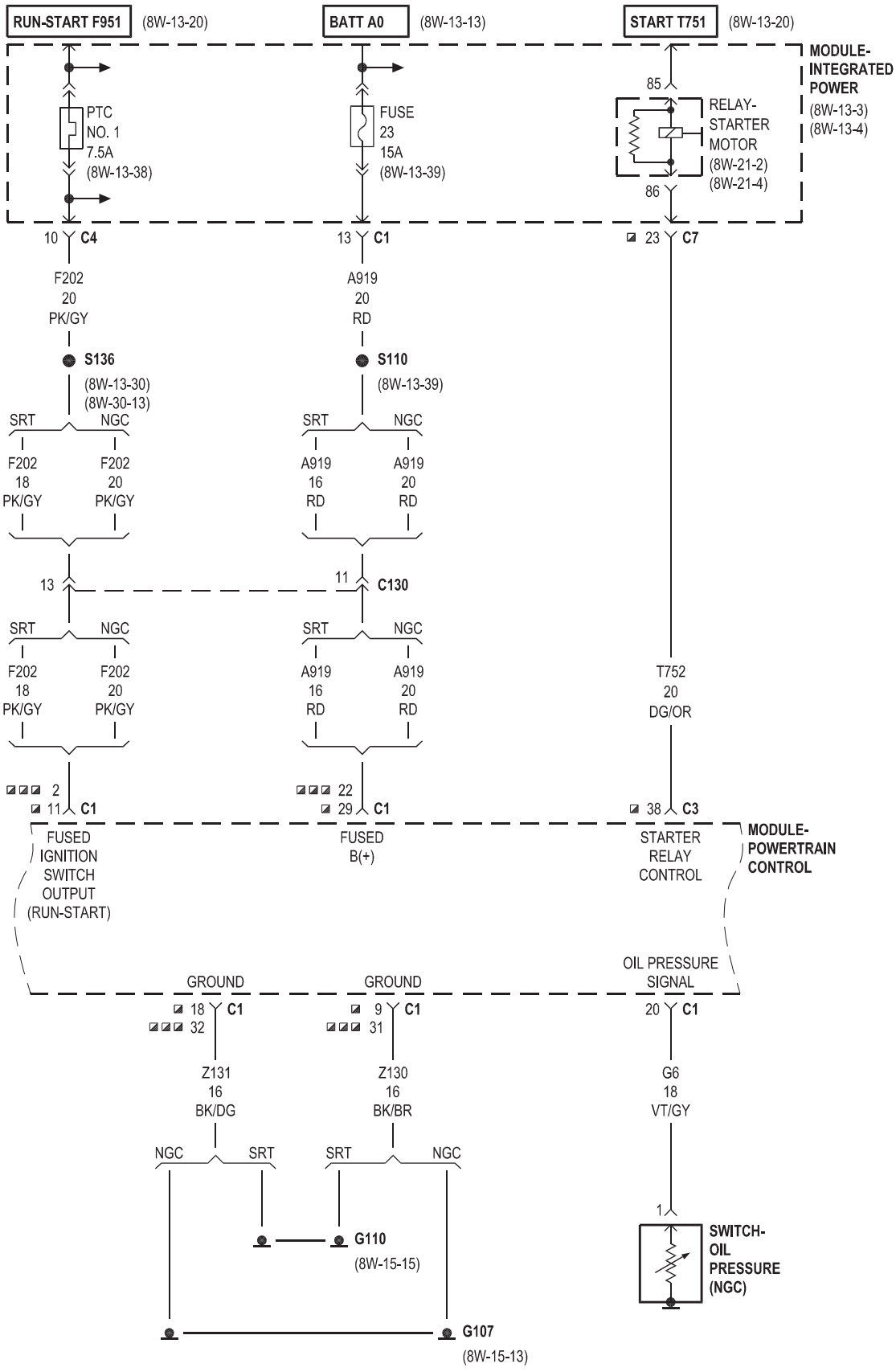
RUN-START F951
(8W-13-20)
BATT A0
(8W-13-13)
START T751
(8W-13-20)
MODULE-
INTEGRATED
POWER
(8W-13-3)
(8W-13-4)
PTC
NO. 1
7.5A
(8W-13-38)
FUSE
23
15A
(8W-13-39)
85
RELAY-
STARTER
MOTOR
(8W-21-2)
(8W-21-4)
86
10 C4
13 C1
23 C7
F202
20
PK/GY
A919
20
RD
S136
(8W-13-30)
(8W-30-13)
S110
(8W-13-39)
SRT
NGC
F202
18
PK/GY
F202
20
PK/GY
A919
16
RD
A919
20
RD
13
11 C130
T752
20
DG/OR
2
11 C1
22
29 C1
38 C3
FUSED
IGNITION
SWITCH
OUTPUT
(RUN-START)
FUSED
B(+)
STARTER
RELAY
CONTROL
MODULE-
POWERTRAIN
CONTROL
GROUND
GROUND
OIL PRESSURE
SIGNAL
18
32 C1
9
31 C1
20 C1
Z131
16
BK/DG
Z130
16
BK/BR
G6
18
VT/GY
1
G110
(8W-15-15)
SWITCH-
OIL
PRESSURE
(NGC)
G107
(8W-15-13)
NGC
SRT

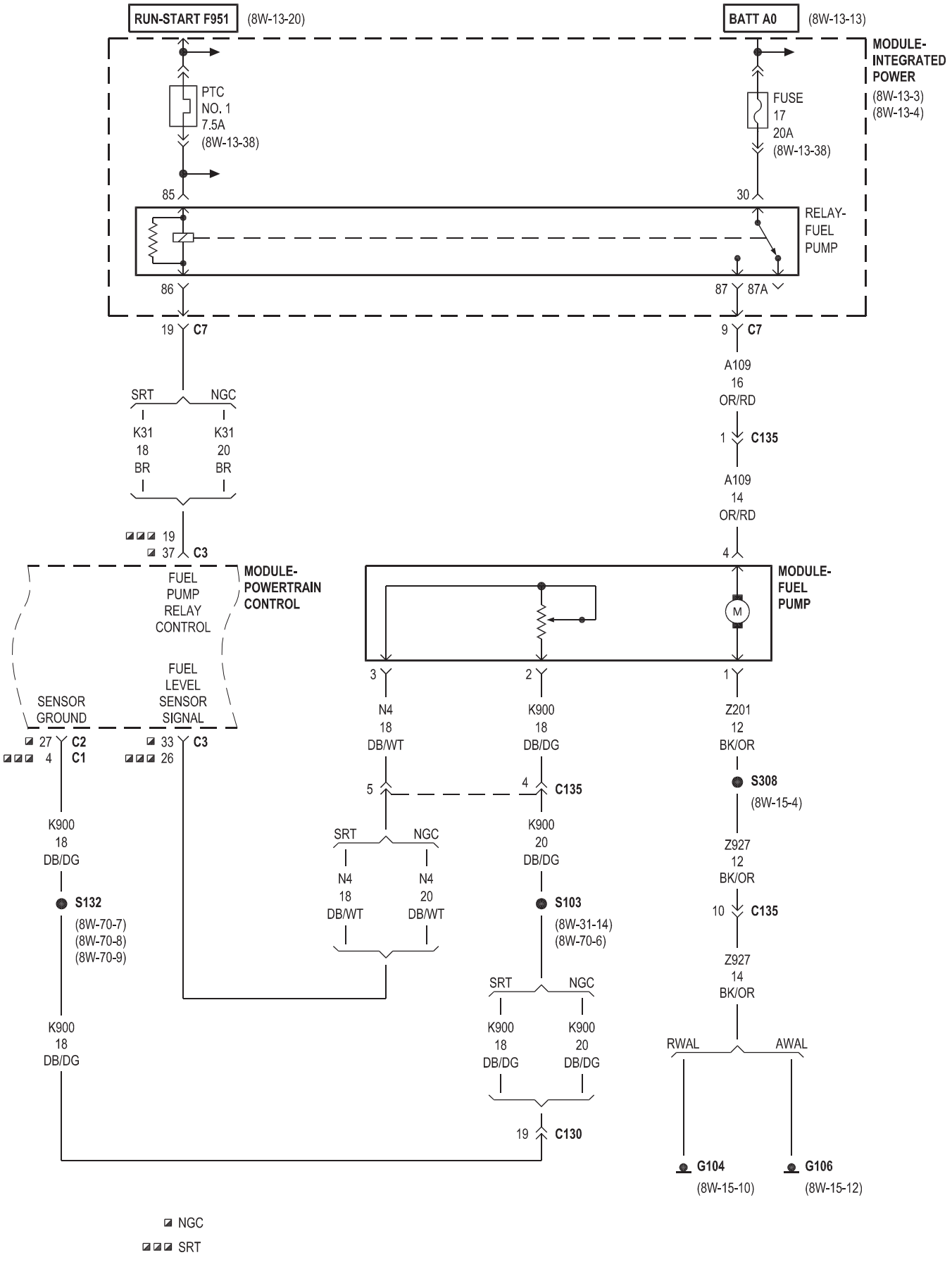
RUN-START F951
(8W-13-20)
BATT A0
(8W-13-13)
MODULE-INTEGRATED POWER
(8W-13-3)
(8W-13-4)
PTC NO. 1 7.5A
(8W-13-38)
FUSE 17 20A
(8W-13-38)
85
30
RELAY-FUEL PUMP
86
87
87A
19 C7
9 C7
A109 16 OR/RD
1 C135
A109 14 OR/RD
4
SRT
NGC
K31 18 BR
K31 20 BR
19
37 C3
MODULE-POWERTRAIN CONTROL
FUEL PUMP RELAY CONTROL
FUEL LEVEL SENSOR SIGNAL
SENSOR GROUND
MODULE-FUEL PUMP
M
3
2
1
N4 18 DB/WT
K900 18 DB/DG
Z201 12 BK/OR
27 C2
4 C1
33 C3
26
5
4 C135
S308
(8W-15-4)
K900 18 DB/DG
S132
(8W-70-7)
(8W-70-8)
(8W-70-9)
SRT
NGC
N4 18 DB/WT
N4 20 DB/WT
K900 20 DB/DG
S103
(8W-31-14)
(8W-70-6)
Z927 12 BK/OR
10 C135
Z927 14 BK/OR
K900 18 DB/DG
K900 20 DB/DG
RWAL
AWAL
19 C130
G104
(8W-15-10)
G106
(8W-15-12)
NGC
SRT

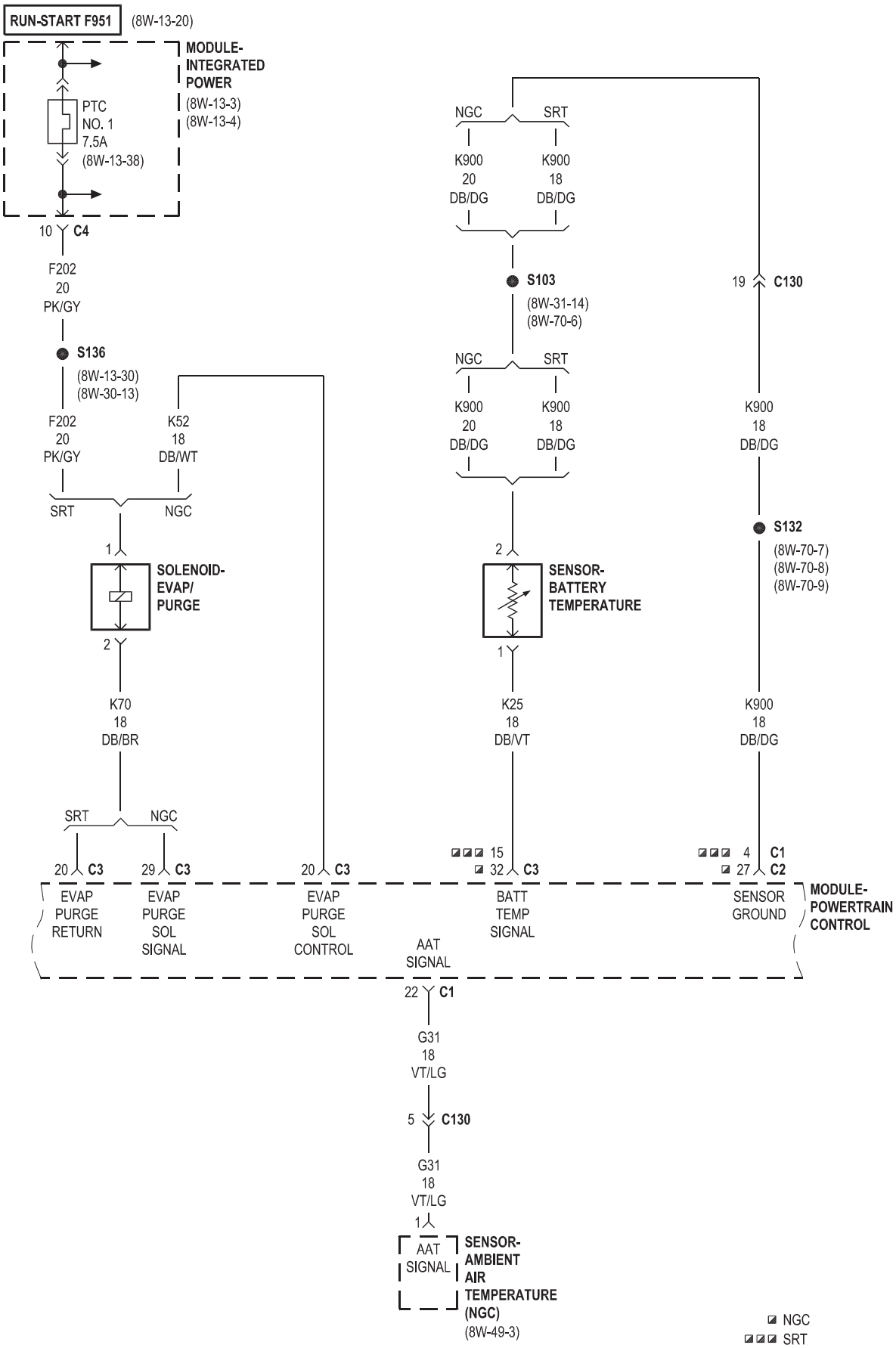
RUN-START F951
(8W-13-20)
MODULE-
INTEGRATED
POWER
(8W-13-3)
(8W-13-4)
PTC
NO. 1
7.5A
(8W-13-38)
10 C4
F202
20
PK/GY
S136
(8W-13-30)
(8W-30-13)
F202
20
PK/GY
K52
18
DB/WT
SRT
NGC
1
SOLENOID-
EVAP/
PURGE
2
K70
18
DB/BR
SRT
NGC
20 C3
EVAP
PURGE
RETURN
29 C3
EVAP
PURGE
SOL
SIGNAL
20 C3
EVAP
PURGE
SOL
CONTROL
NGC
SRT
K900
20
DB/DG
K900
18
DB/DG
S103
(8W-31-14)
(8W-70-6)
NGC
SRT
K900
20
DB/DG
K900
18
DB/DG
2
SENSOR-
BATTERY
TEMPERATURE
1
K25
18
DB/VT
15
32 C3
BATT
TEMP
SIGNAL
19 C130
K900
18
DB/DG
S132
(8W-70-7)
(8W-70-8)
(8W-70-9)
K900
18
DB/DG
4
27 C1 C2
SENSOR
GROUND
MODULE-
POWERTRAIN
CONTROL
AAT
SIGNAL
22 C1
G31
18
VT/LG
5 C130
G31
18
VT/LG
1
AAT
SIGNAL
SENSOR-
AMBIENT
AIR
TEMPERATURE
(NGC)
(8W-49-3)
NGC
SRT

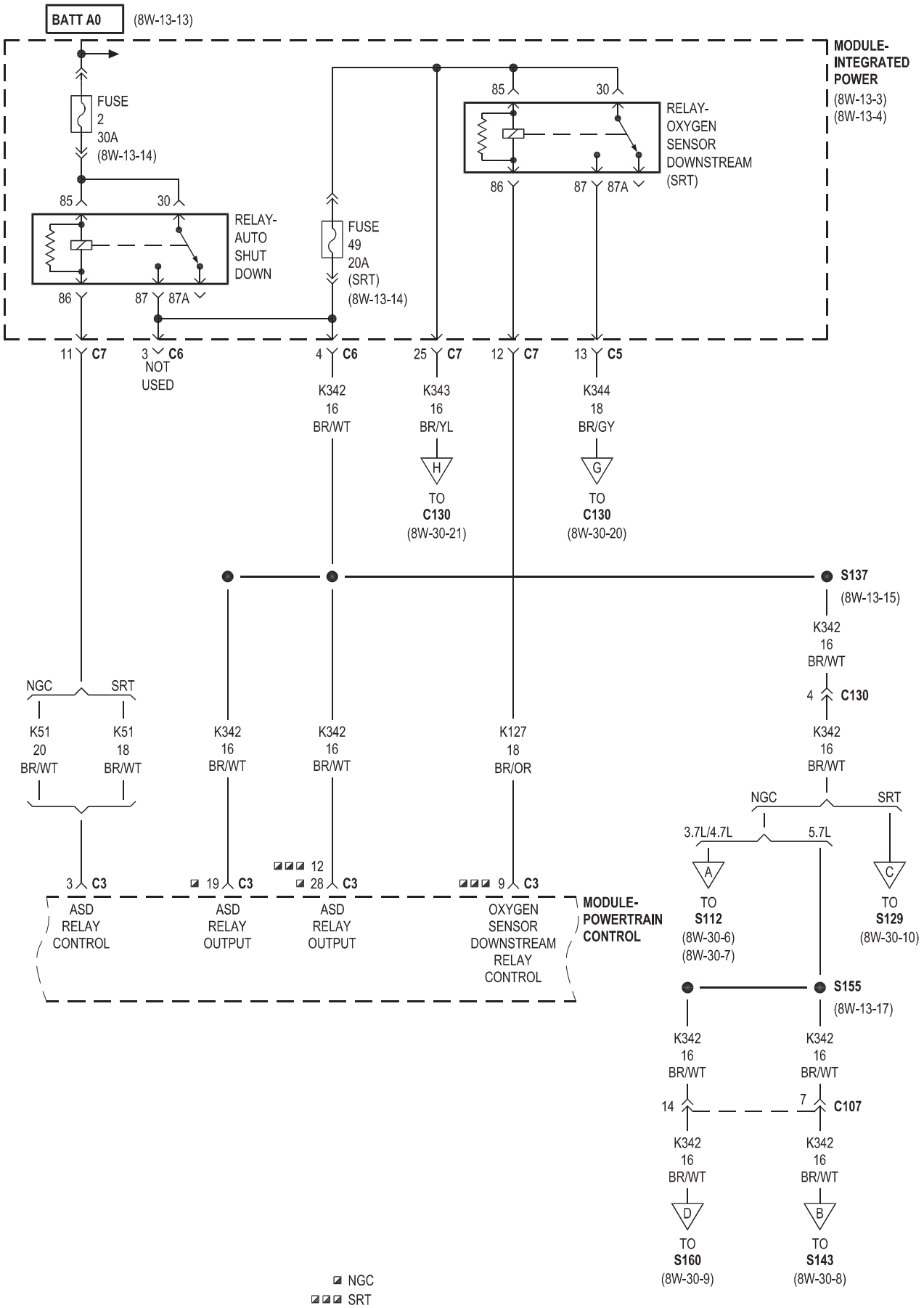
BATT A0
(8W-13-13)
MODULE-
INTEGRATED
POWER
(8W-13-3)
(8W-13-4)
FUSE
2
30A
(8W-13-14)
RELAY-
AUTO
SHUT
DOWN
FUSE
49
20A
(SRT)
(8W-13-14)
RELAY-
OXYGEN
SENSOR
DOWNSTREAM
(SRT)
85
30
86
87
87A
11 C7
3 C6
NOT
USED
4 C6
25 C7
12 C7
13 C5
K342
16
BR/WT
K343
16
BR/YL
K344
18
BR/GY
H
TO
C130
(8W-30-21)
G
TO
C130
(8W-30-20)
S137
(8W-13-15)
K342
16
BR/WT
4 C130
NGC
SRT
K51
20
BR/WT
K51
18
BR/WT
K342
16
BR/WT
K342
16
BR/WT
K127
18
BR/OR
3.7L/4.7L
5.7L
A
TO
S112
(8W-30-6)
(8W-30-7)
C
TO
S129
(8W-30-10)
3 C3
19 C3
12
28 C3
9 C3
ASD
RELAY
CONTROL
ASD
RELAY
OUTPUT
ASD
RELAY
OUTPUT
OXYGEN
SENSOR
DOWNSTREAM
RELAY
CONTROL
MODULE-
POWERTRAIN
CONTROL
S155
(8W-13-17)
K342
16
BR/WT
14
7 C107
D
TO
S160
(8W-30-9)
B
TO
S143
(8W-30-8)
NGC
SRT

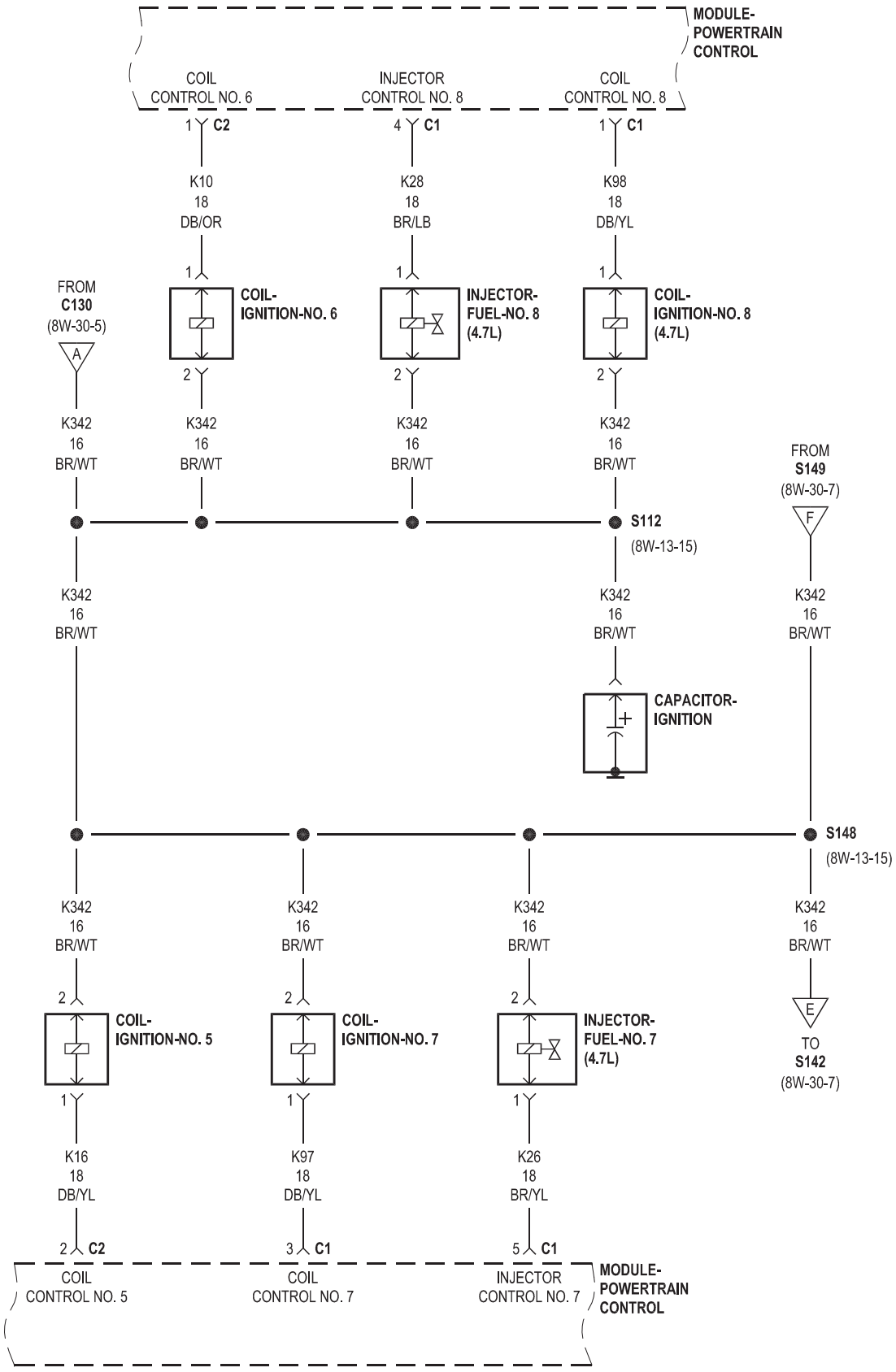
MODULE-
POWERTRAIN
CONTROL
COIL
CONTROL NO. 6
INJECTOR
CONTROL NO. 8
COIL
CONTROL NO. 8
1 C2
4 C1
1 C1
K10
18
DB/OR
K28
18
BR/LB
K98
18
DB/YL
FROM
C130
(8W-30-5)
A
COIL-
IGNITION-NO. 6
INJECTOR-
FUEL-NO. 8
(4.7L)
COIL-
IGNITION-NO. 8
(4.7L)
K342
16
BR/WT
S112
(8W-13-15)
FROM
S149
(8W-30-7)
F
CAPACITOR-
IGNITION
S148
(8W-13-15)
COIL-
IGNITION-NO. 5
COIL-
IGNITION-NO. 7
INJECTOR-
FUEL-NO. 7
(4.7L)
TO
S142
(8W-30-7)
E
K16
18
DB/YL
K97
18
DB/YL
K26
18
BR/YL
2 C2
3 C1
5 C1
COIL
CONTROL NO. 5
COIL
CONTROL NO. 7
INJECTOR
CONTROL NO. 7
MODULE-
POWERTRAIN
CONTROL

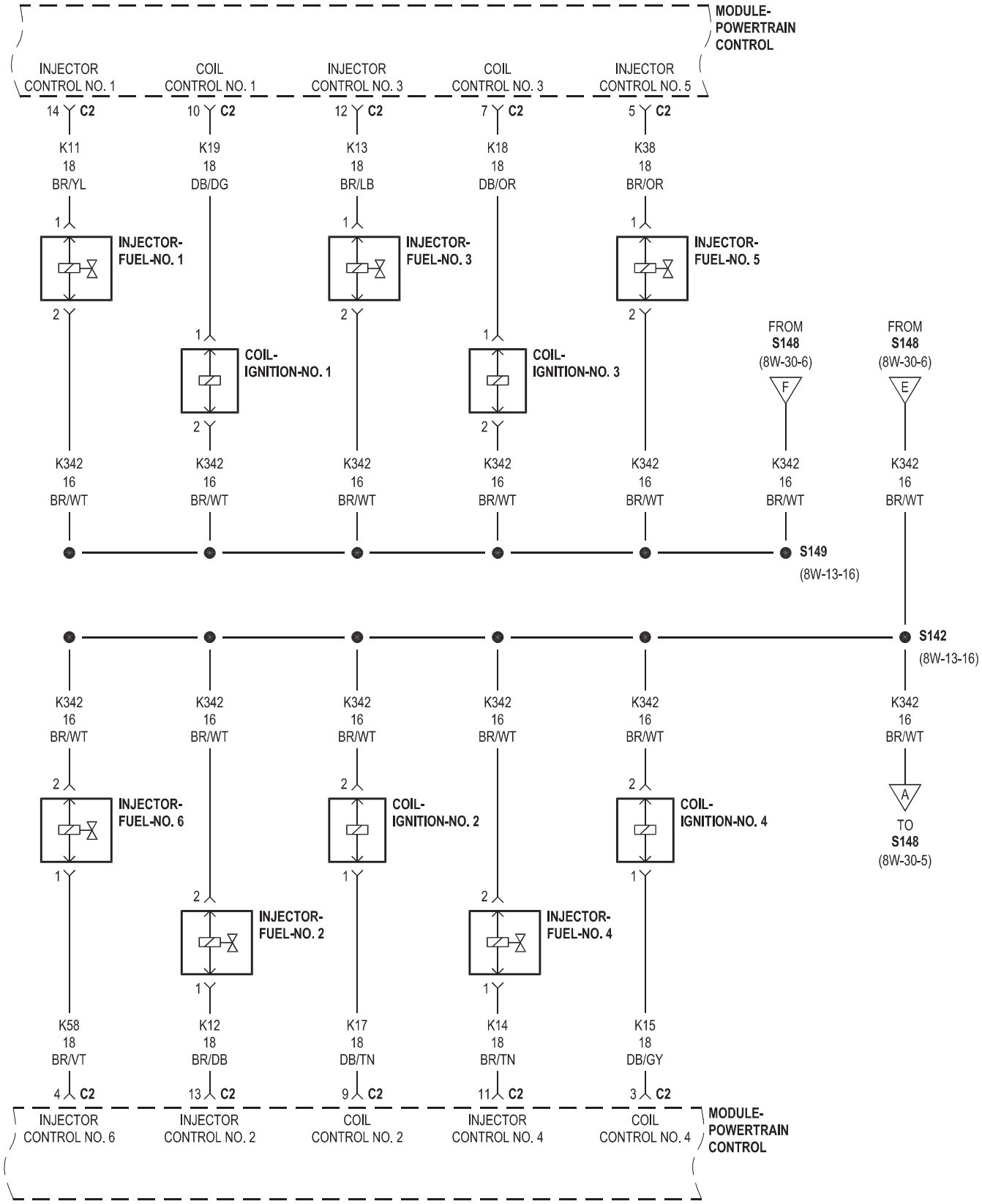
MODULE-POWERTRAIN CONTROL
INJECTOR CONTROL NO. 1
COIL CONTROL NO. 1
INJECTOR CONTROL NO. 3
COIL CONTROL NO. 3
INJECTOR CONTROL NO. 5
14 C2
10 C2
12 C2
7 C2
5 C2
K11 18 BR/YL
K19 18 DB/DG
K13 18 BR/LB
K18 18 DB/OR
K38 18 BR/OR
INJECTOR-FUEL-NO. 1
INJECTOR-FUEL-NO. 3
INJECTOR-FUEL-NO. 5
COIL-IGNITION-NO. 1
COIL-IGNITION-NO. 3
FROM S148 (8W-30-6)
FROM S148 (8W-30-6)
K342 16 BR/WT
S149 (8W-13-16)
S142 (8W-13-16)
INJECTOR-FUEL-NO. 6
COIL-IGNITION-NO. 2
COIL-IGNITION-NO. 4
INJECTOR-FUEL-NO. 2
INJECTOR-FUEL-NO. 4
TO S148 (8W-30-5)
K58 18 BR/VT
K12 18 BR/DB
K17 18 DB/TN
K14 18 BR/TN
K15 18 DB/GY
4 C2
13 C2
9 C2
11 C2
3 C2
INJECTOR CONTROL NO. 6
INJECTOR CONTROL NO. 2
COIL CONTROL NO. 2
INJECTOR CONTROL NO. 4
COIL CONTROL NO. 4
MODULE-POWERTRAIN CONTROL

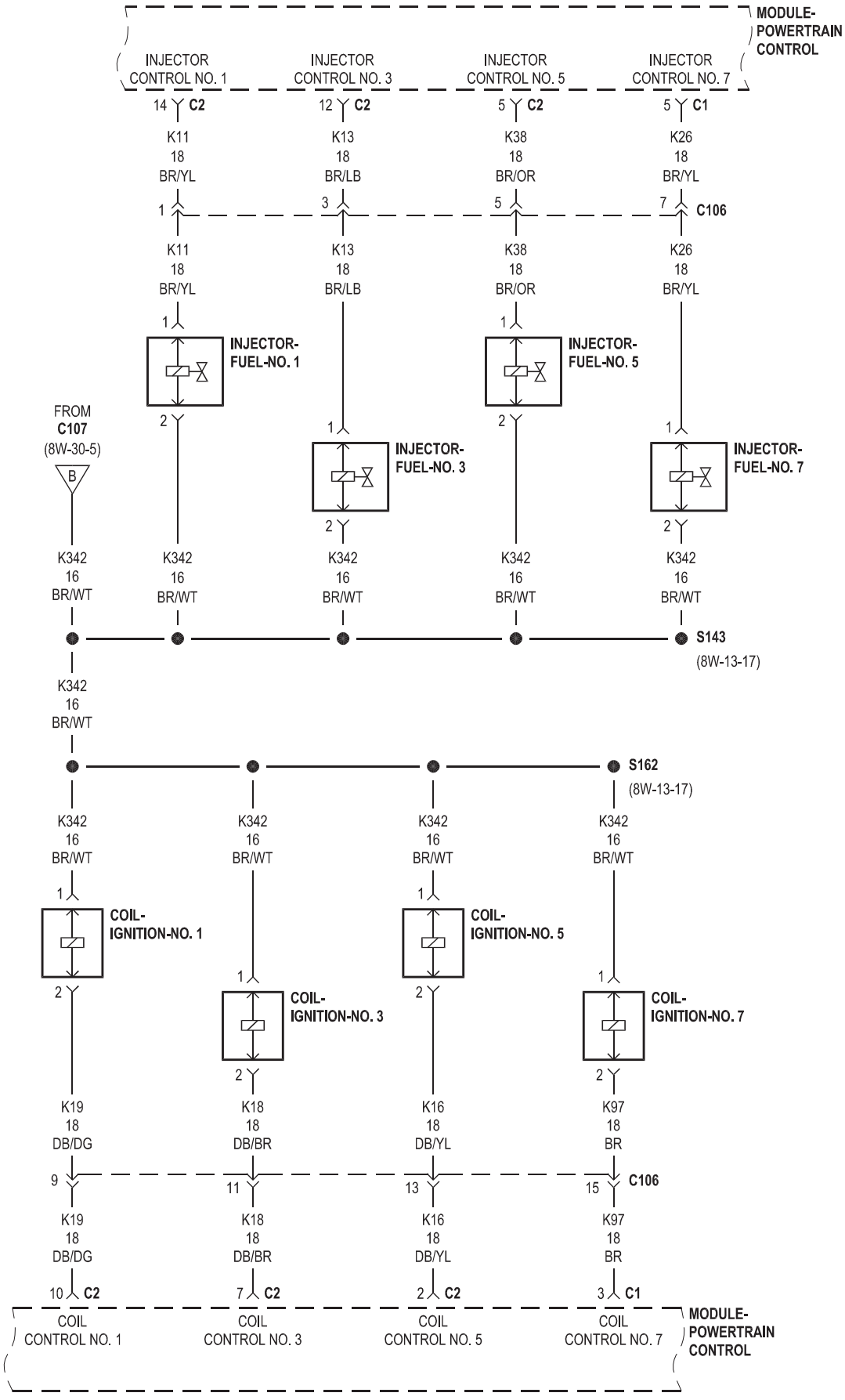
MODULE-
POWERTRAIN
CONTROL
INJECTOR
CONTROL NO. 1
INJECTOR
CONTROL NO. 3
INJECTOR
CONTROL NO. 5
INJECTOR
CONTROL NO. 7
14 C2
12 C2
5 C2
5 C1
K11
18
BR/YL
K13
18
BR/LB
K38
18
BR/OR
K26
18
BR/YL
1
3
5
7
C106
INJECTOR-
FUEL-NO. 1
INJECTOR-
FUEL-NO. 3
INJECTOR-
FUEL-NO. 5
INJECTOR-
FUEL-NO. 7
FROM
C107
(8W-30-5)
B
K342
16
BR/WT
S143
(8W-13-17)
S162
(8W-13-17)
COIL-
IGNITION-NO. 1
COIL-
IGNITION-NO. 3
COIL-
IGNITION-NO. 5
COIL-
IGNITION-NO. 7
K19
18
DB/DG
K18
18
DB/BR
K16
18
DB/YL
K97
18
BR
9
11
13
15
10 C2
7 C2
2 C2
3 C1
COIL
CONTROL NO. 1
COIL
CONTROL NO. 3
COIL
CONTROL NO. 5
COIL
CONTROL NO. 7
MODULE-
POWERTRAIN
CONTROL

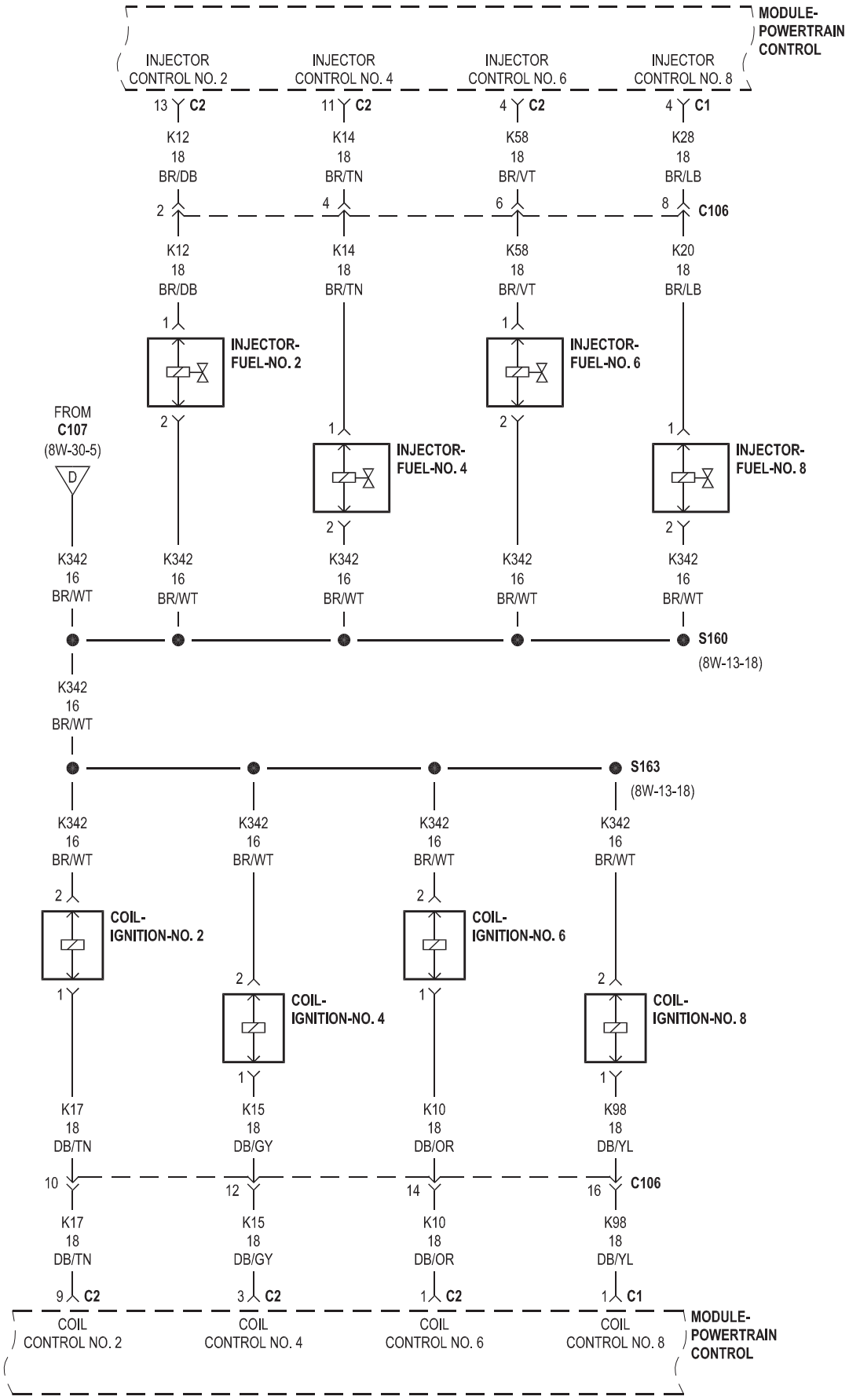
MODULE-POWERTRAIN CONTROL
INJECTOR CONTROL NO. 2
INJECTOR CONTROL NO. 4
INJECTOR CONTROL NO. 6
INJECTOR CONTROL NO. 8
13 C2
11 C2
4 C2
4 C1
K12 18 BR/DB
K14 18 BR/TN
K58 18 BR/VT
K28 18 BR/LB
2
4
6
8 C106
K12 18 BR/DB
K14 18 BR/TN
K58 18 BR/VT
K20 18 BR/LB
1
INJECTOR-FUEL-NO. 2
INJECTOR-FUEL-NO. 6
INJECTOR-FUEL-NO. 4
INJECTOR-FUEL-NO. 8
2
FROM C107 (8W-30-5)
D
K342 16 BR/WT
S160
(8W-13-18)
S163
(8W-13-18)
COIL-IGNITION-NO. 2
COIL-IGNITION-NO. 6
COIL-IGNITION-NO. 4
COIL-IGNITION-NO. 8
K17 18 DB/TN
K15 18 DB/GY
K10 18 DB/OR
K98 18 DB/YL
10
12
14
16 C106
9 C2
3 C2
1 C2
1 C1
COIL CONTROL NO. 2
COIL CONTROL NO. 4
COIL CONTROL NO. 6
COIL CONTROL NO. 8
MODULE-POWERTRAIN CONTROL

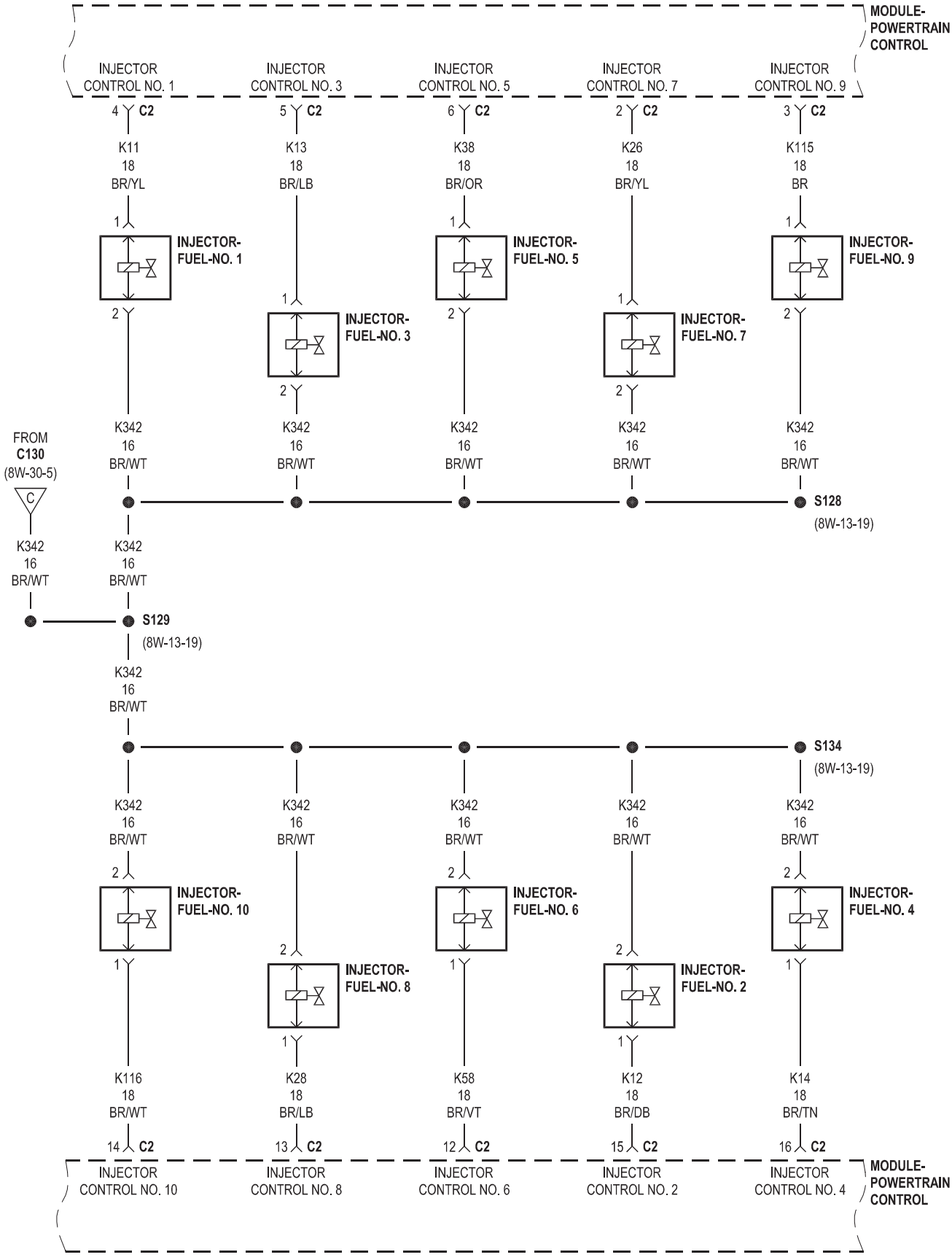
MODULE-
POWERTRAIN
CONTROL
INJECTOR
CONTROL NO. 1
INJECTOR
CONTROL NO. 3
INJECTOR
CONTROL NO. 5
INJECTOR
CONTROL NO. 7
INJECTOR
CONTROL NO. 9
4 C2
5 C2
6 C2
2 C2
3 C2
K11
18
BR/YL
K13
18
BR/LB
K38
18
BR/OR
K26
18
BR/YL
K115
18
BR
INJECTOR-
FUEL-NO. 1
INJECTOR-
FUEL-NO. 3
INJECTOR-
FUEL-NO. 5
INJECTOR-
FUEL-NO. 7
INJECTOR-
FUEL-NO. 9
K342
16
BR/WT
FROM
C130
(8W-30-5)
C
S128
(8W-13-19)
S129
(8W-13-19)
S134
(8W-13-19)
INJECTOR-
FUEL-NO. 10
INJECTOR-
FUEL-NO. 8
INJECTOR-
FUEL-NO. 6
INJECTOR-
FUEL-NO. 2
INJECTOR-
FUEL-NO. 4
K116
18
BR/WT
K28
18
BR/LB
K58
18
BR/VT
K12
18
BR/DB
K14
18
BR/TN
14 C2
13 C2
12 C2
15 C2
16 C2
INJECTOR
CONTROL NO. 10
INJECTOR
CONTROL NO. 8
INJECTOR
CONTROL NO. 6
INJECTOR
CONTROL NO. 2
INJECTOR
CONTROL NO. 4
MODULE-
POWERTRAIN
CONTROL

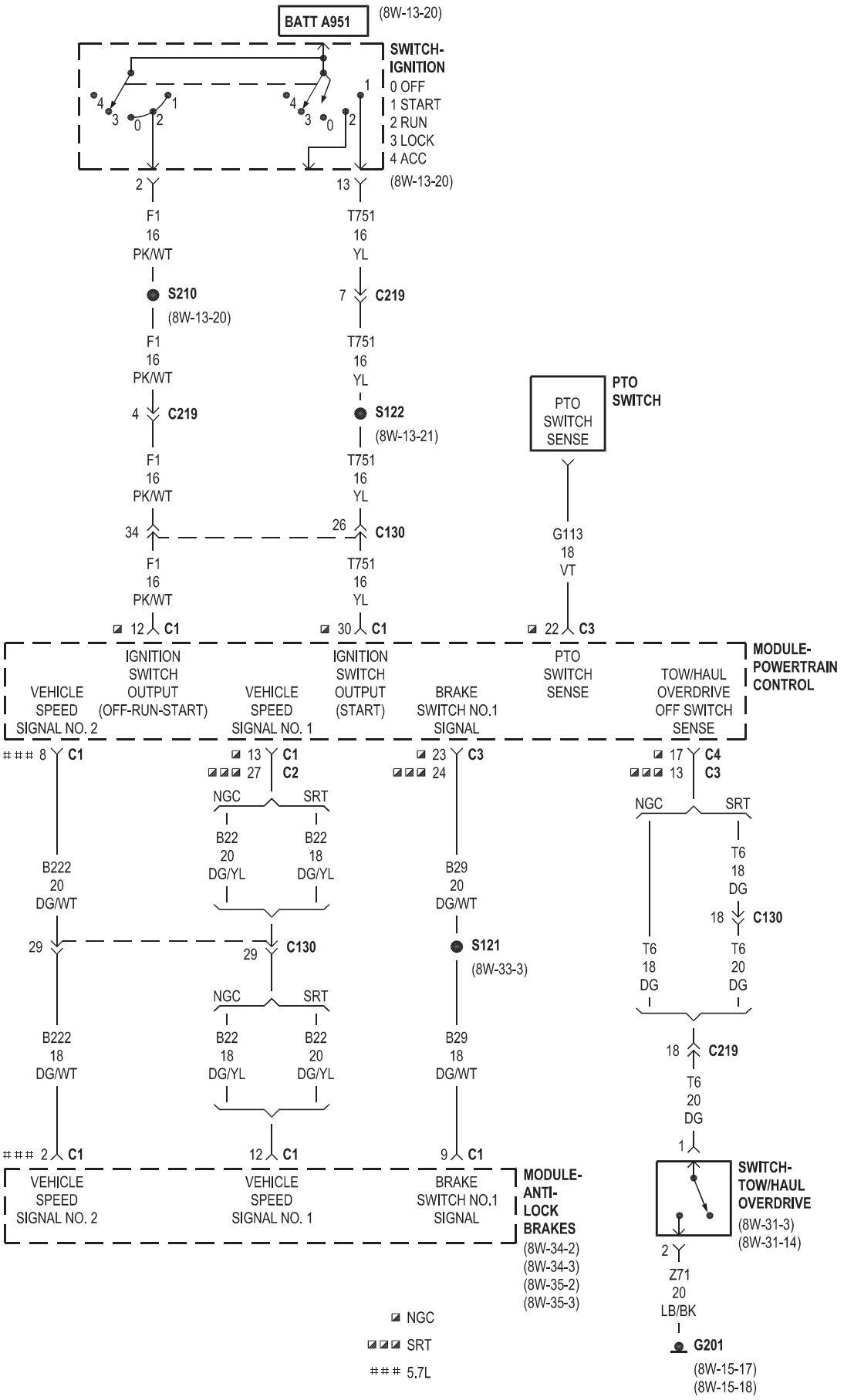
BATT A951
(8W-13-20)
SWITCH-IGNITION
0 OFF
1 START
2 RUN
3 LOCK
4 ACC
(8W-13-20)
F1 16 PK/WT
T751 16 YL
S210
(8W-13-20)
C219
S122
(8W-13-21)
C130
PTO SWITCH
PTO SWITCH SENSE
G113 18 VT
MODULE-POWERTRAIN CONTROL
VEHICLE SPEED SIGNAL NO. 2
IGNITION SWITCH OUTPUT (OFF-RUN-START)
VEHICLE SPEED SIGNAL NO. 1
IGNITION SWITCH OUTPUT (START)
BRAKE SWITCH NO.1 SIGNAL
PTO SWITCH SENSE
TOW/HAUL OVERDRIVE OFF SWITCH SENSE
NGC
SRT
B222 20 DG/WT
B222 18 DG/WT
B22 20 DG/YL
B22 18 DG/YL
B29 20 DG/WT
B29 18 DG/WT
S121
(8W-33-3)
T6 18 DG
T6 20 DG
C219
SWITCH-TOW/HAUL OVERDRIVE
(8W-31-3)
(8W-31-14)
Z71 20 LB/BK
G201
(8W-15-17)
(8W-15-18)
MODULE-ANTI-LOCK BRAKES
(8W-34-2)
(8W-34-3)
(8W-35-2)
(8W-35-3)
NGC
SRT
5.7L

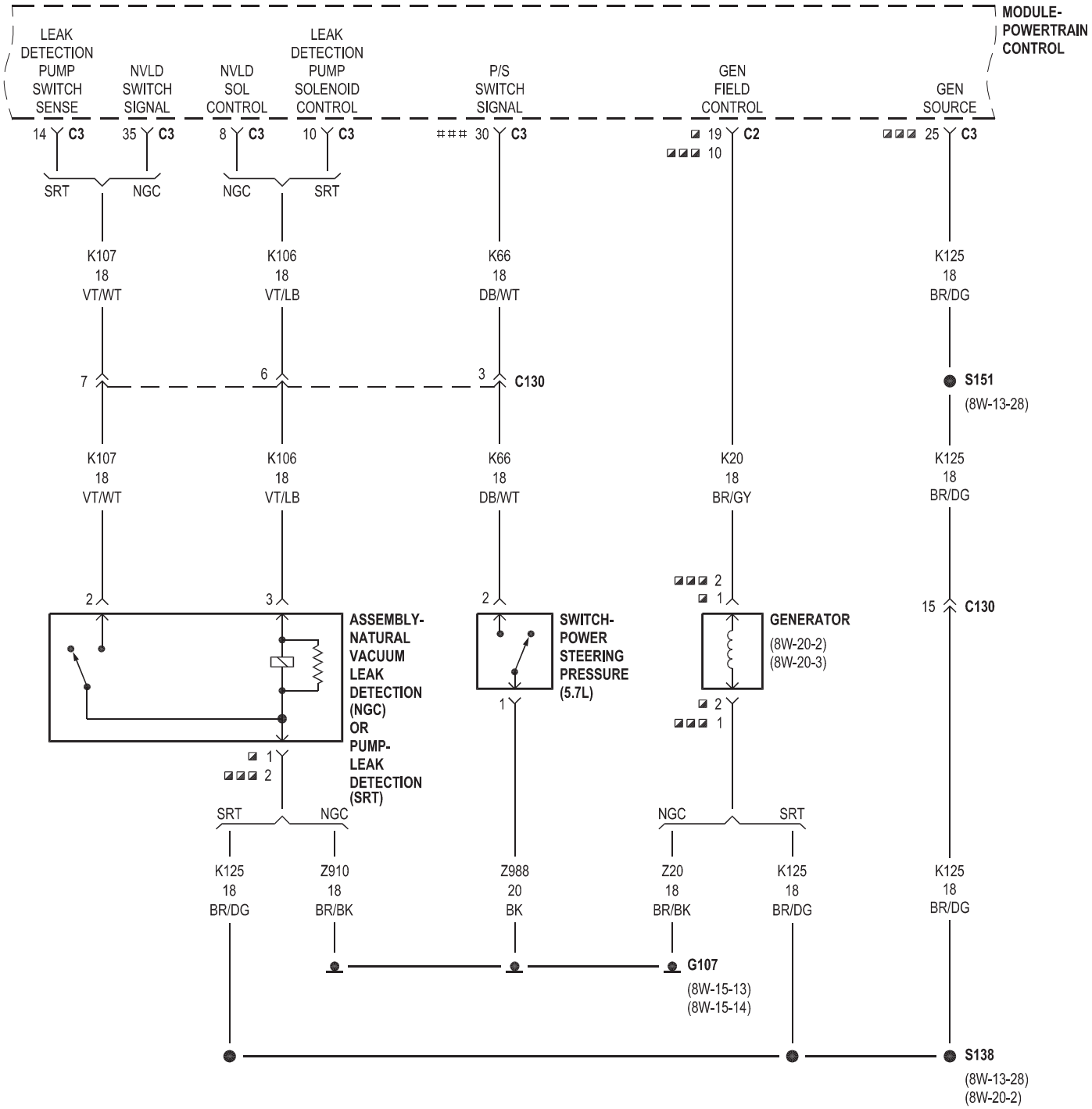
MODULE-
POWERTRAIN
CONTROL
LEAK DETECTION PUMP SWITCH SENSE
NVLD SWITCH SIGNAL
NVLD SOL CONTROL
LEAK DETECTION PUMP SOLENOID CONTROL
P/S SWITCH SIGNAL
GEN FIELD CONTROL
GEN SOURCE
14 C3
35 C3
8 C3
10 C3
30 C3
19 C2
10
25 C3
SRT
NGC
NGC
SRT
K107 18 VT/WT
K106 18 VT/LB
K66 18 DB/WT
K125 18 BR/DG
7
6
3
C130
S151
(8W-13-28)
K107 18 VT/WT
K106 18 VT/LB
K66 18 DB/WT
K20 18 BR/GY
K125 18 BR/DG
2
3
2
2
1
15 C130
ASSEMBLY-NATURAL VACUUM LEAK DETECTION (NGC) OR PUMP-LEAK DETECTION (SRT)
SWITCH-POWER STEERING PRESSURE (5.7L)
GENERATOR
(8W-20-2)
(8W-20-3)
1
2
1
2
1
SRT
NGC
NGC
SRT
K125 18 BR/DG
Z910 18 BR/BK
Z988 20 BK
Z20 18 BR/BK
K125 18 BR/DG
K125 18 BR/DG
G107
(8W-15-13)
(8W-15-14)
S138
(8W-13-28)
(8W-20-2)

NGC
SRT
5.7L

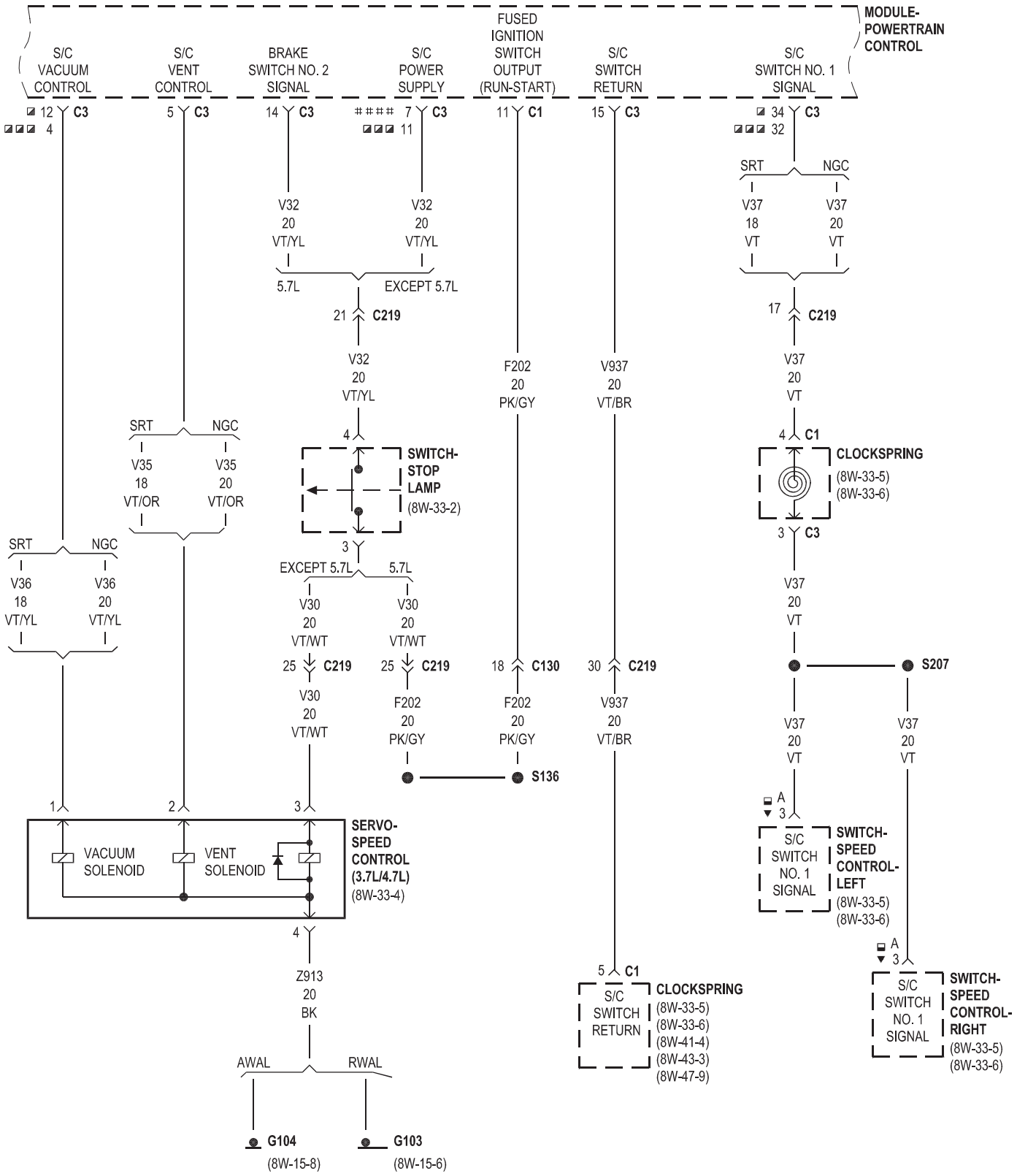
MODULE-POWERTRAIN CONTROL
S/C VACUUM CONTROL
S/C VENT CONTROL
BRAKE SWITCH NO. 2 SIGNAL
S/C POWER SUPPLY
FUSED IGNITION SWITCH OUTPUT (RUN-START)
S/C SWITCH RETURN
S/C SWITCH NO. 1 SIGNAL
12 C3
4
5 C3
14 C3
7 C3
11
11 C1
15 C3
34 C3
32
SRT NGC
V37 18 VT
V37 20 VT
V32 20 VT/YL
V32 20 VT/YL
5.7L
EXCEPT 5.7L
21 C219
17 C219
V32 20 VT/YL
F202 20 PK/GY
V937 20 VT/BR
V37 20 VT
4 C1
CLOCKSPRING
(8W-33-5)
(8W-33-6)
SRT NGC
V35 18 VT/OR
V35 20 VT/OR
4
SWITCH-STOP LAMP
(8W-33-2)
3 C3
SRT NGC
V36 18 VT/YL
V36 20 VT/YL
3
EXCEPT 5.7L
5.7L
V37 20 VT
V30 20 VT/WT
V30 20 VT/WT
25 C219
25 C219
18 C130
30 C219
S207
V37 20 VT
V37 20 VT
F202 20 PK/GY
F202 20 PK/GY
S136
V937 20 VT/BR
A
3
1
2
3
S/C SWITCH NO. 1 SIGNAL
SWITCH-SPEED CONTROL-LEFT
(8W-33-5)
(8W-33-6)
VACUUM SOLENOID
VENT SOLENOID
SERVO-SPEED CONTROL (3.7L/4.7L)
(8W-33-4)
A
3
4
Z913 20 BK
5 C1
S/C SWITCH RETURN
CLOCKSPRING
(8W-33-5)
(8W-33-6)
(8W-41-4)
(8W-43-3)
(8W-47-9)
S/C SWITCH NO. 1 SIGNAL
SWITCH-SPEED CONTROL-RIGHT
(8W-33-5)
(8W-33-6)
AWAL RWAL
G104
(8W-15-8)
G103
(8W-15-6)
NGC
SRT
ETC
MTC
3.7L/4.7L

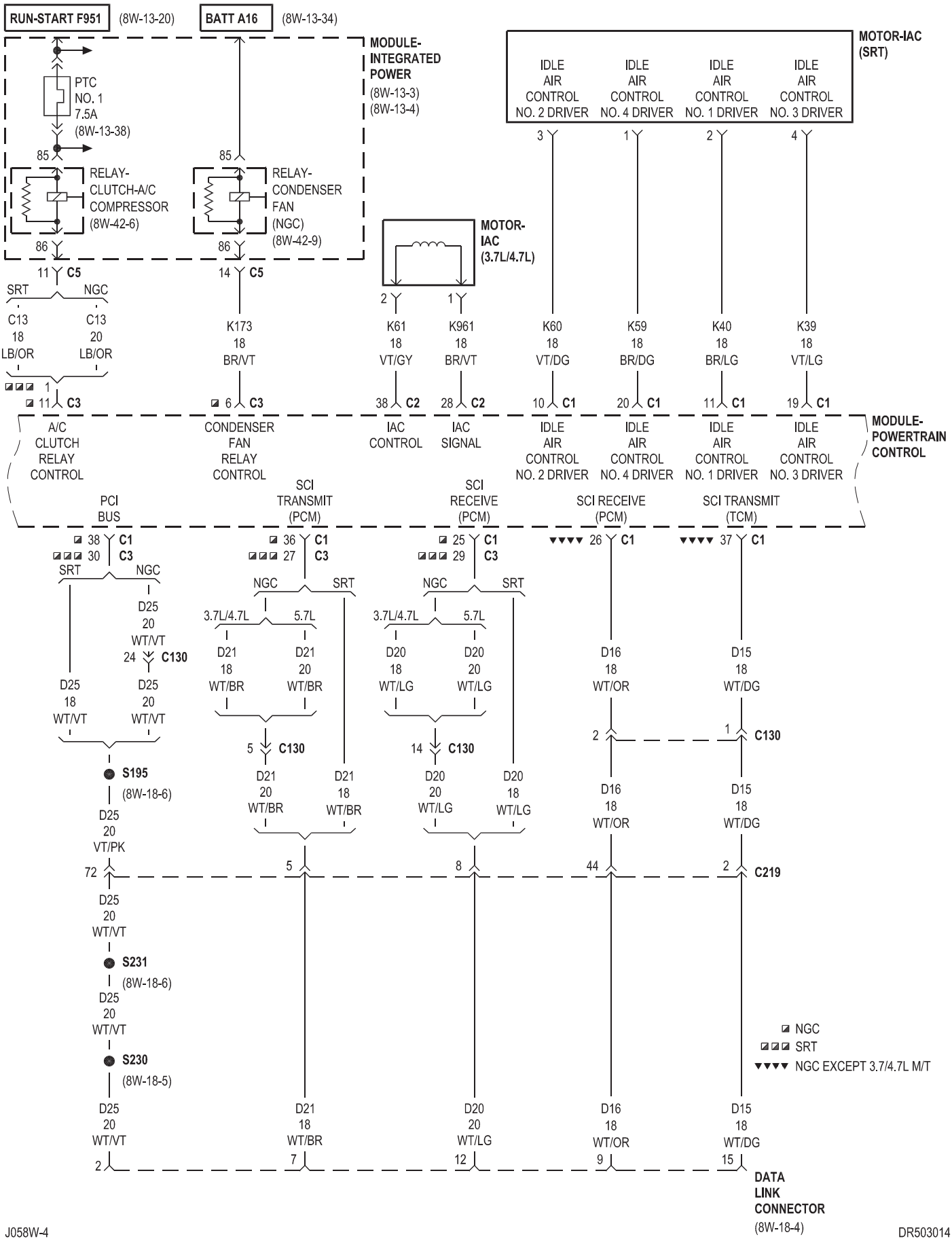
RUN-START F951
(8W-13-20)
BATT A16
(8W-13-34)
MODULE-INTEGRATED POWER
(8W-13-3)
(8W-13-4)
PTC NO. 1 7.5A
(8W-13-38)
RELAY-CLUTCH-A/C COMPRESSOR
(8W-42-6)
RELAY-CONDENSER FAN (NGC)
(8W-42-9)
MOTOR-IAC (3.7L/4.7L)
MOTOR-IAC (SRT)
IDLE AIR CONTROL NO. 2 DRIVER
IDLE AIR CONTROL NO. 4 DRIVER
IDLE AIR CONTROL NO. 1 DRIVER
IDLE AIR CONTROL NO. 3 DRIVER
A/C CLUTCH RELAY CONTROL
CONDENSER FAN RELAY CONTROL
IAC CONTROL
IAC SIGNAL
MODULE-POWERTRAIN CONTROL
PCI BUS
SCI TRANSMIT (PCM)
SCI RECEIVE (PCM)
SCI RECEIVE (PCM)
SCI TRANSMIT (TCM)
SRT
NGC
3.7L/4.7L
5.7L
S195
(8W-18-6)
S231
(8W-18-6)
S230
(8W-18-5)
C130
C219
DATA LINK CONNECTOR
(8W-18-4)
NGC
SRT
NGC EXCEPT 3.7/4.7L M/T

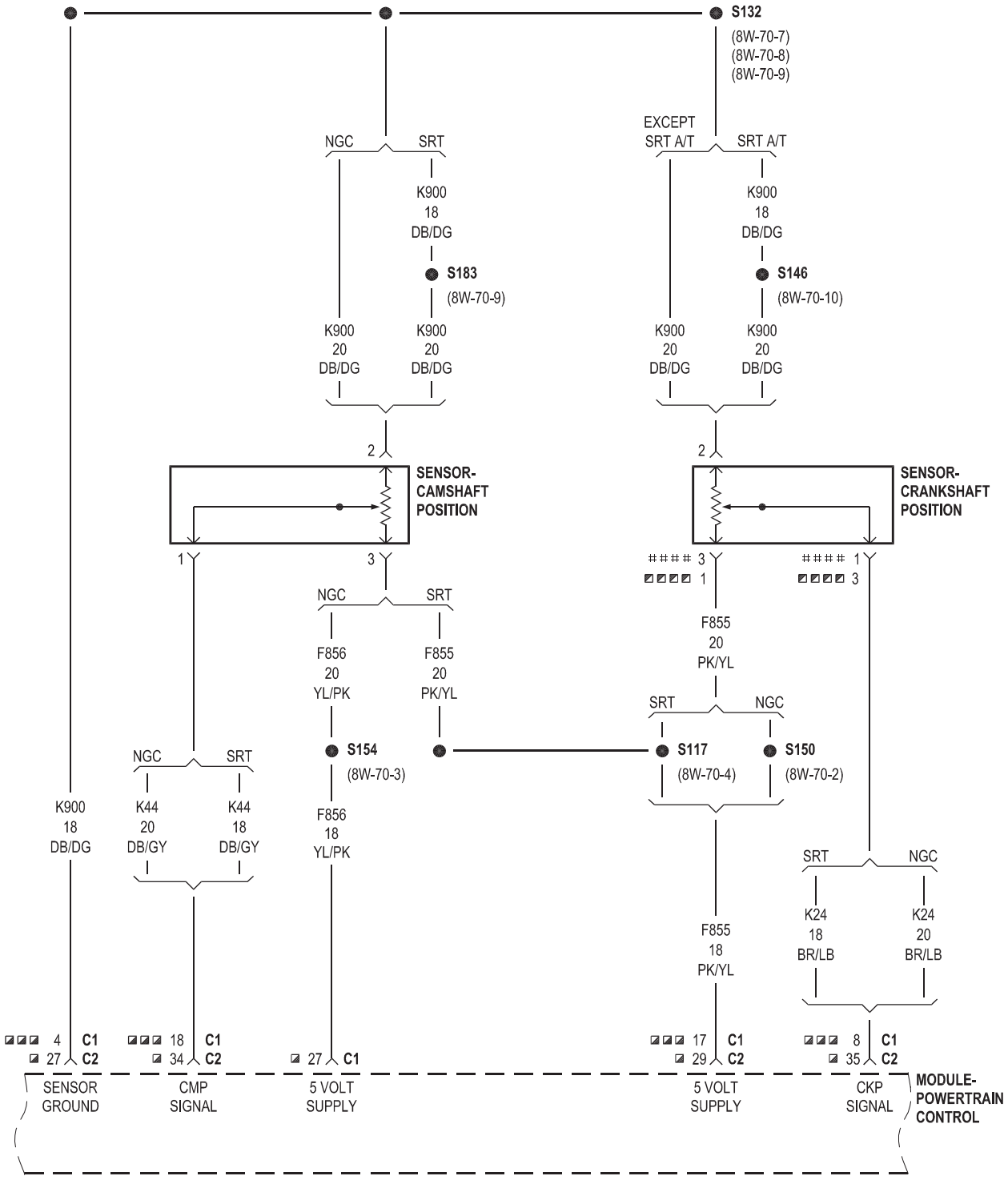

NGC
SRT
EXCEPT 3.7L/4.7L
3.7L/4.7L

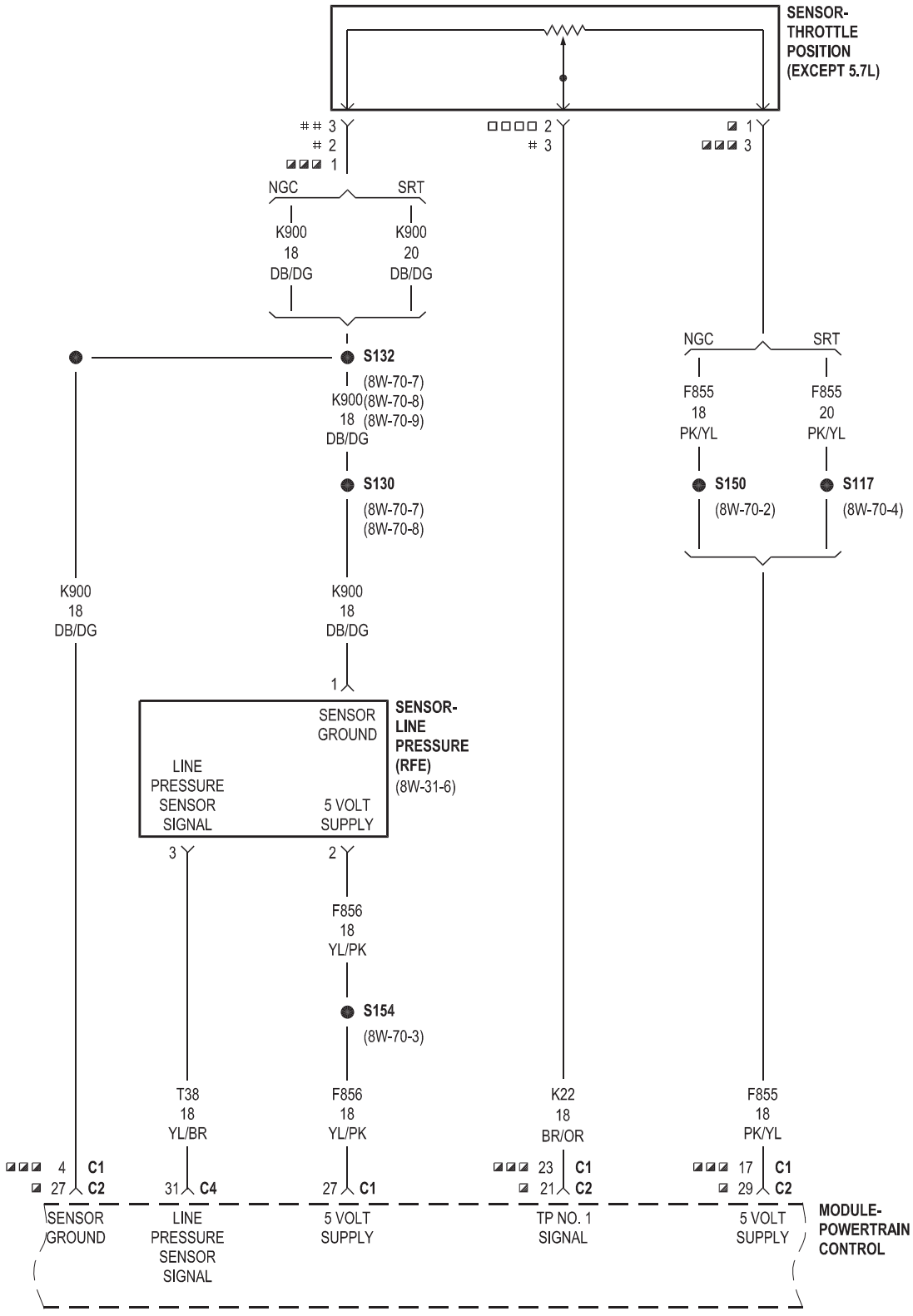

3.7L
4.7L
NGC
SRT
EXCEPT 3.7L

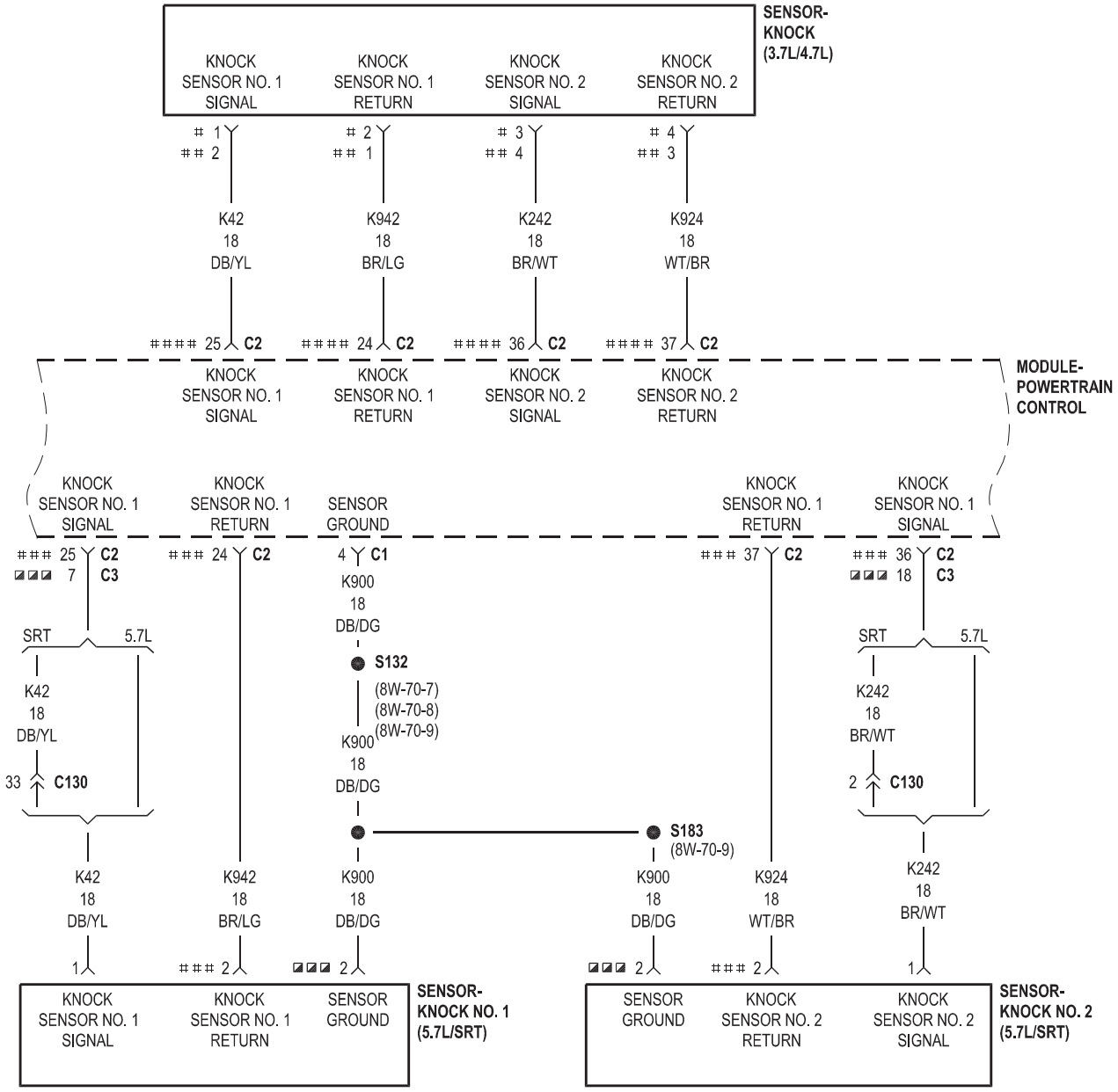

3.7L
4.7L
5,7L
3.7L/4.7L
◪◪◪ SRT

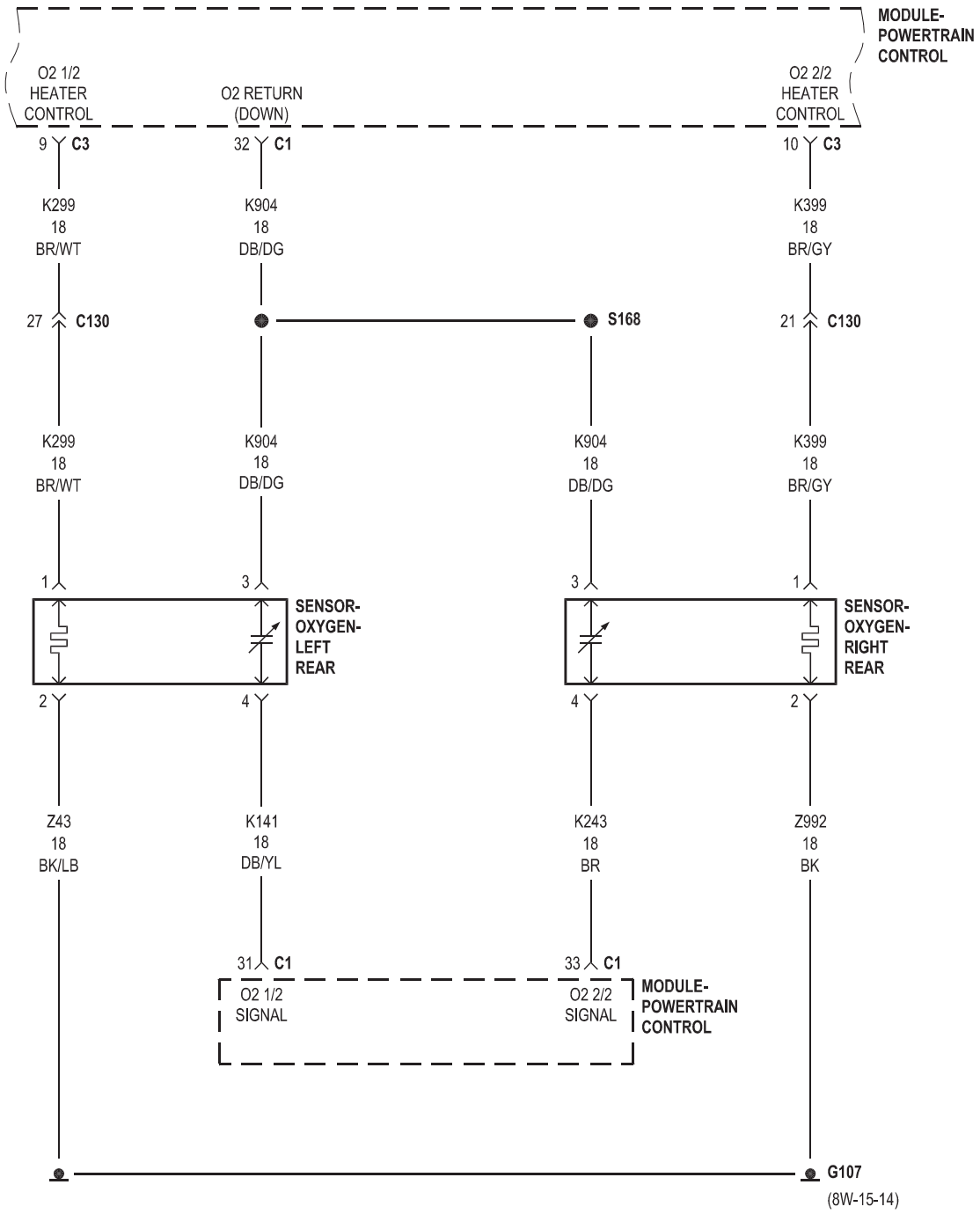
MODULE-
POWERTRAIN
CONTROL
O2 1/2
HEATER
CONTROL
O2 RETURN
(DOWN)
O2 2/2
HEATER
CONTROL
9 C3
32 C1
10 C3
K299
18
BR/WT
K904
18
DB/DG
K399
18
BR/GY
27 C130
S168
21 C130
K299
18
BR/WT
K904
18
DB/DG
K904
18
DB/DG
K399
18
BR/GY
1
3
3
1
SENSOR-
OXYGEN-
LEFT
REAR
SENSOR-
OXYGEN-
RIGHT
REAR
2
4
4
2
Z43
18
BK/LB
K141
18
DB/YL
K243
18
BR
Z992
18
BK
31 C1
33 C1
O2 1/2
SIGNAL
O2 2/2
SIGNAL
MODULE-
POWERTRAIN
CONTROL
G107
(8W-15-14)

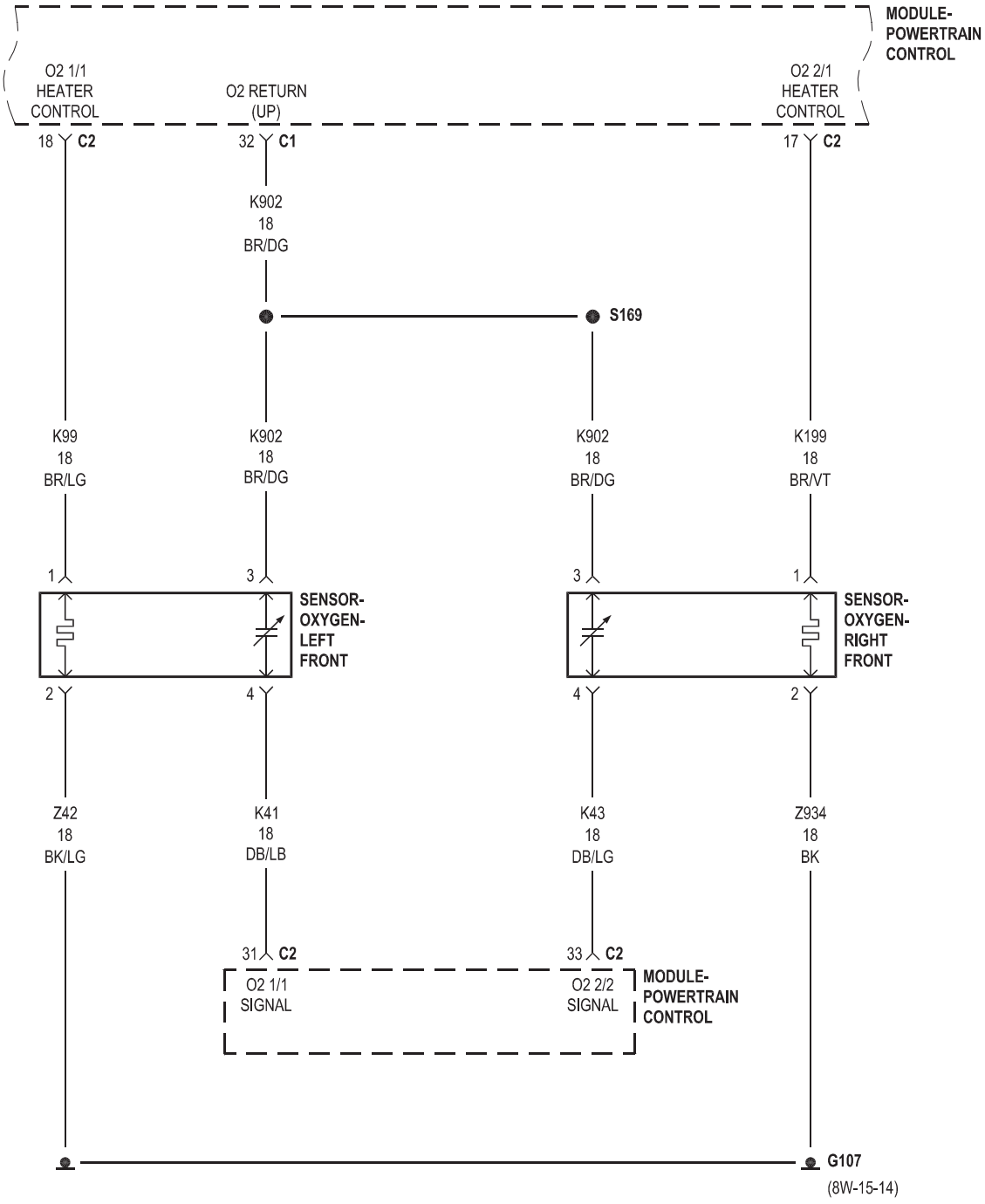
MODULE-
POWERTRAIN
CONTROL
O2 1/1
HEATER
CONTROL
O2 RETURN
(UP)
O2 2/1
HEATER
CONTROL
18 C2
32 C1
17 C2
K902
18
BR/DG
S169
K99
18
BR/LG
K902
18
BR/DG
K902
18
BR/DG
K199
18
BR/VT
1
3
3
1
SENSOR-
OXYGEN-
LEFT
FRONT
SENSOR-
OXYGEN-
RIGHT
FRONT
2
4
4
2
Z42
18
BK/LG
K41
18
DB/LB
K43
18
DB/LG
Z934
18
BK
31 C2
33 C2
O2 1/1
SIGNAL
O2 2/2
SIGNAL
MODULE-
POWERTRAIN
CONTROL
G107
(8W-15-14)

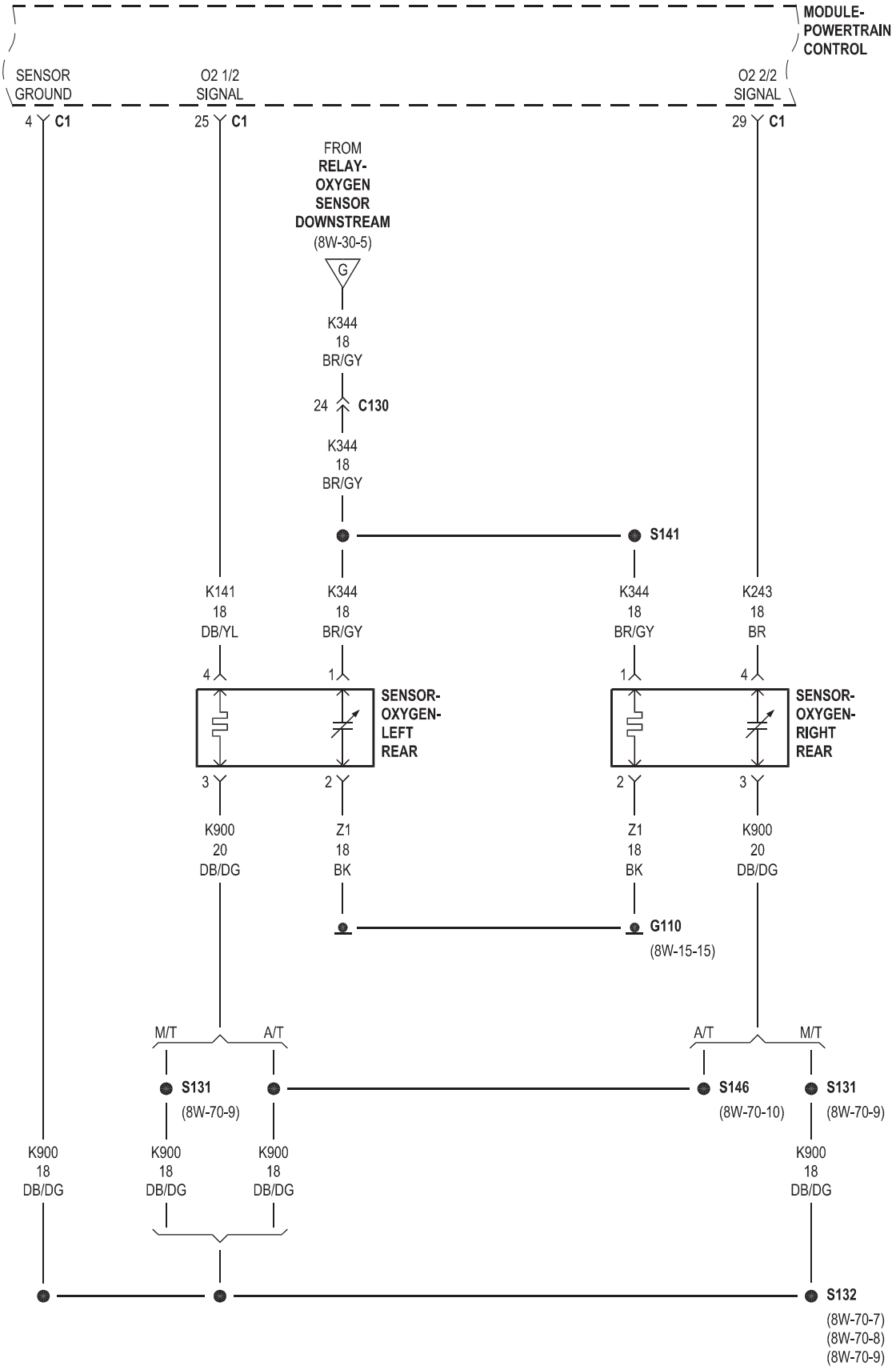
MODULE-
POWERTRAIN
CONTROL
SENSOR
GROUND
O2 1/2
SIGNAL
O2 2/2
SIGNAL
4 C1
25 C1
29 C1
FROM
RELAY-
OXYGEN
SENSOR
DOWNSTREAM
(8W-30-5)
G
K344
18
BR/GY
24 C130
K344
18
BR/GY
S141
K141
18
DB/YL
K344
18
BR/GY
K344
18
BR/GY
K243
18
BR
4
1
1
4
SENSOR-
OXYGEN-
LEFT
REAR
SENSOR-
OXYGEN-
RIGHT
REAR
3
2
2
3
K900
20
DB/DG
Z1
18
BK
Z1
18
BK
K900
20
DB/DG
G110
(8W-15-15)
M/T
A/T
A/T
M/T
S131
(8W-70-9)
S146
(8W-70-10)
S131
(8W-70-9)
K900
18
DB/DG
K900
18
DB/DG
K900
18
DB/DG
K900
18
DB/DG
S132
(8W-70-7)
(8W-70-8)
(8W-70-9)

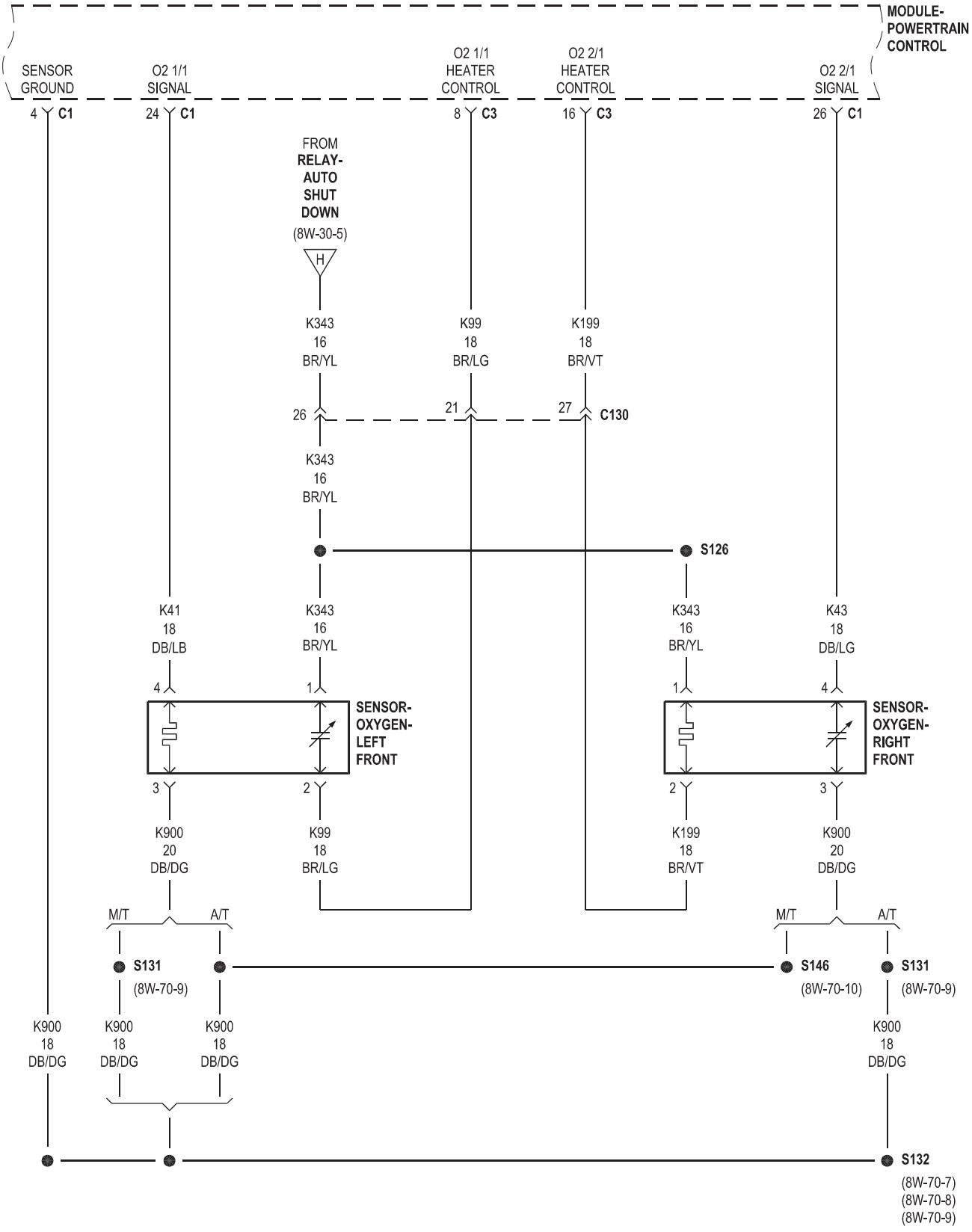
MODULE-
POWERTRAIN
CONTROL
SENSOR
GROUND
4 C1
O2 1/1
SIGNAL
24 C1
O2 1/1
HEATER
CONTROL
8 C3
O2 2/1
HEATER
CONTROL
16 C3
O2 2/1
SIGNAL
26 C1
FROM
RELAY-
AUTO
SHUT
DOWN
(8W-30-5)
H
K343
16
BR/YL
K99
18
BR/LG
K199
18
BR/VT
26
21
27
C130
K343
16
BR/YL
S126
K41
18
DB/LB
K343
16
BR/YL
K343
16
BR/YL
K43
18
DB/LG
4
1
1
4
SENSOR-
OXYGEN-
LEFT
FRONT
SENSOR-
OXYGEN-
RIGHT
FRONT
3
2
2
3
K900
20
DB/DG
K99
18
BR/LG
K199
18
BR/VT
K900
20
DB/DG
M/T
A/T
M/T
A/T
S131
(8W-70-9)
S146
(8W-70-10)
S131
(8W-70-9)
K900
18
DB/DG
K900
18
DB/DG
K900
18
DB/DG
K900
18
DB/DG
S132
(8W-70-7)
(8W-70-8)
(8W-70-9)

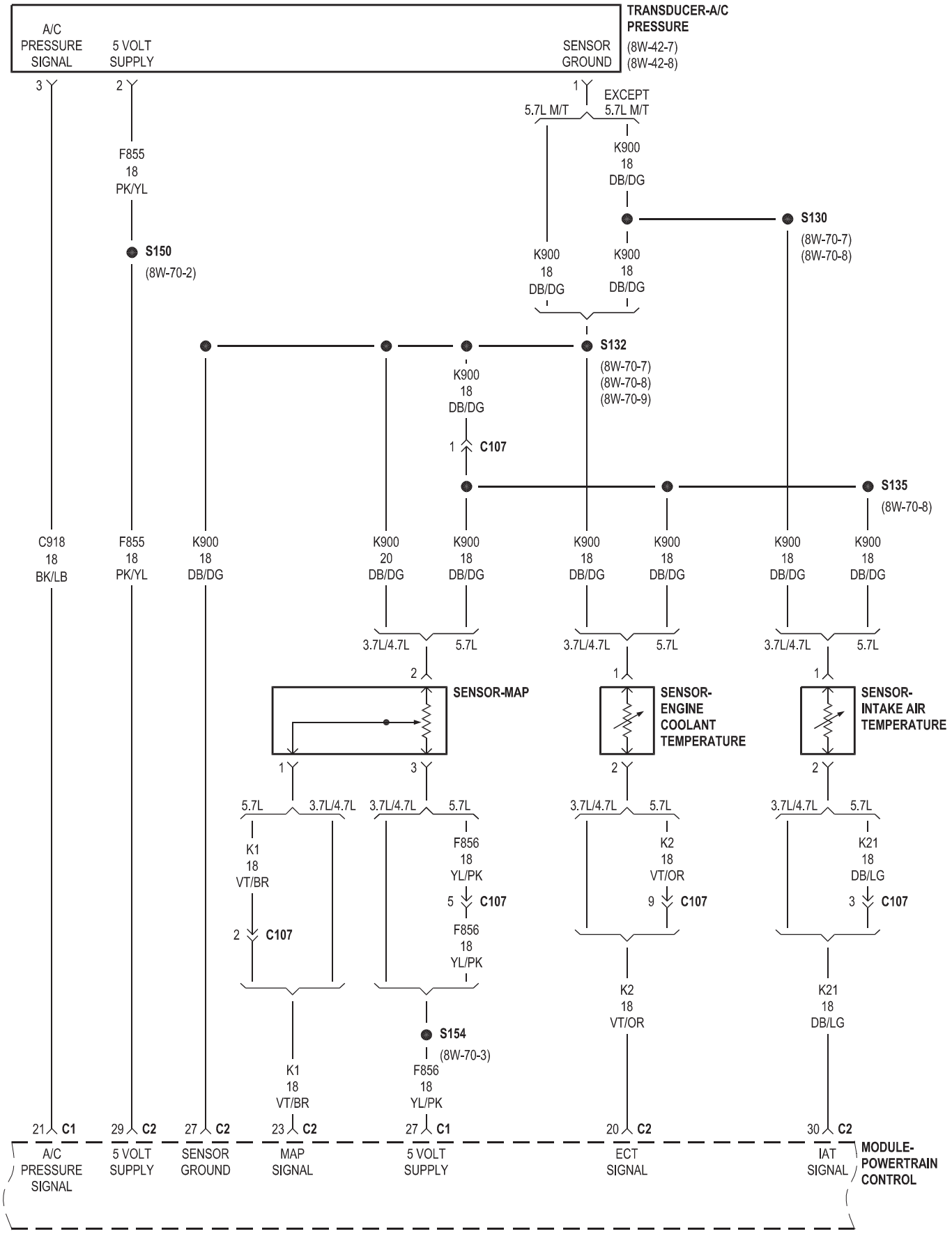
TRANSDUCER-A/C PRESSURE
(8W-42-7)
(8W-42-8)
A/C PRESSURE SIGNAL
5 VOLT SUPPLY
SENSOR GROUND
3
2
1
EXCEPT 5.7L M/T
5.7L M/T
F855 18 PK/YL
K900 18 DB/DG
S150
(8W-70-2)
S130
(8W-70-7)
(8W-70-8)
S132
(8W-70-7)
(8W-70-8)
(8W-70-9)
1 C107
S135
(8W-70-8)
C918 18 BK/LB
K900 20 DB/DG
3.7L/4.7L
5.7L
SENSOR-MAP
SENSOR- ENGINE COOLANT TEMPERATURE
SENSOR- INTAKE AIR TEMPERATURE
K1 18 VT/BR
F856 18 YL/PK
K2 18 VT/OR
K21 18 DB/LG
5 C107
9 C107
3 C107
2 C107
S154
(8W-70-3)
21 C1
29 C2
27 C2
23 C2
27 C1
20 C2
30 C2
MODULE- POWERTRAIN CONTROL
ECT SIGNAL
IAT SIGNAL
MAP SIGNAL

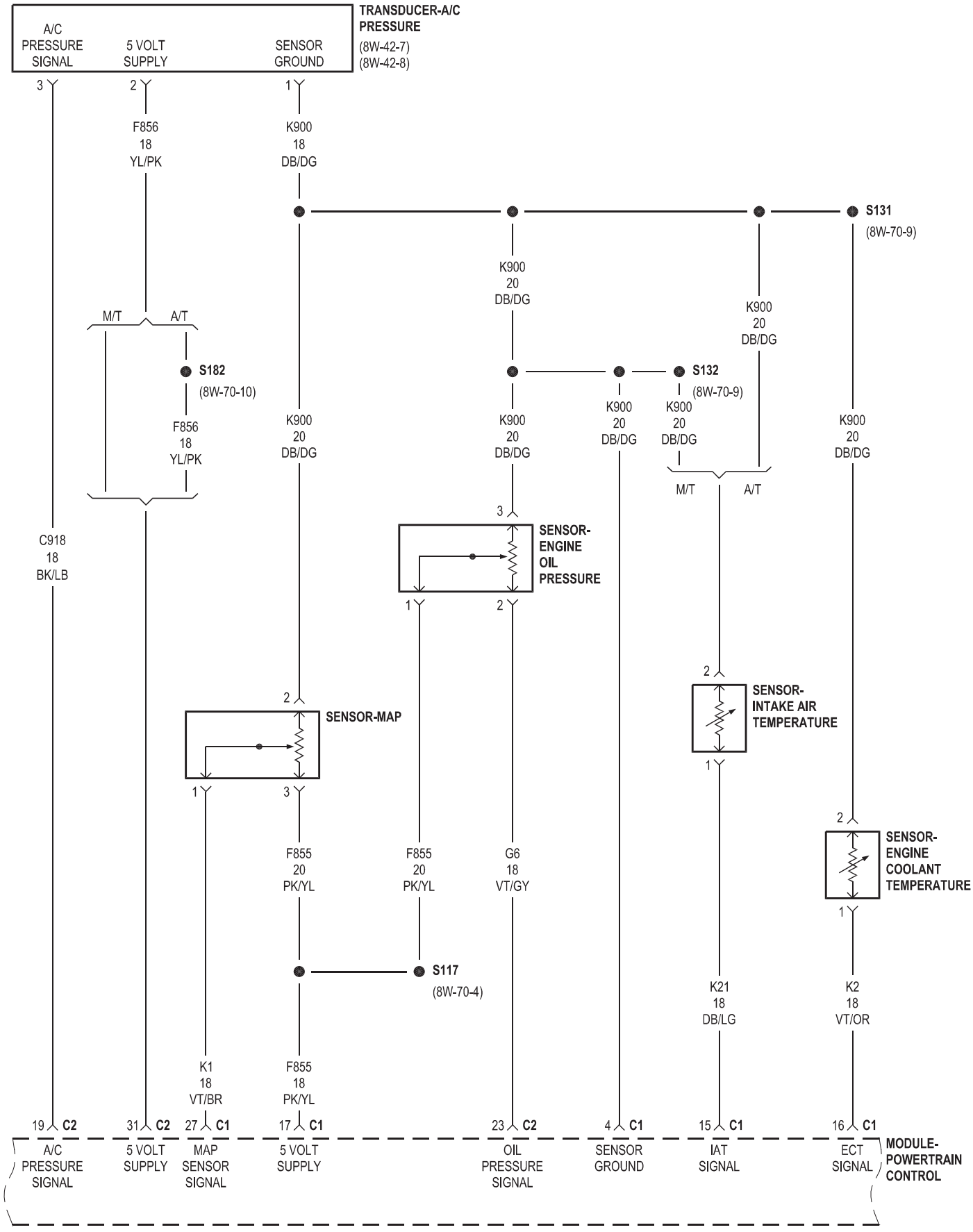
TRANSDUCER-A/C PRESSURE
(8W-42-7)
(8W-42-8)
A/C PRESSURE SIGNAL
5 VOLT SUPPLY
SENSOR GROUND
3
2
1
F856 18 YL/PK
K900 18 DB/DG
S131
(8W-70-9)
K900 20 DB/DG
M/T
A/T
S182
(8W-70-10)
S132
(8W-70-9)
C918 18 BK/LB
SENSOR-ENGINE OIL PRESSURE
SENSOR-MAP
SENSOR-INTAKE AIR TEMPERATURE
SENSOR-ENGINE COOLANT TEMPERATURE
F855 20 PK/YL
G6 18 VT/GY
S117
(8W-70-4)
K21 18 DB/LG
K2 18 VT/OR
K1 18 VT/BR
F855 18 PK/YL
19 C2
31 C2
27 C1
17 C1
23 C2
4 C1
15 C1
16 C1
A/C PRESSURE SIGNAL
5 VOLT SUPPLY
MAP SENSOR SIGNAL
5 VOLT SUPPLY
OIL PRESSURE SIGNAL
SENSOR GROUND
IAT SIGNAL
ECT SIGNAL
MODULE-POWERTRAIN CONTROL

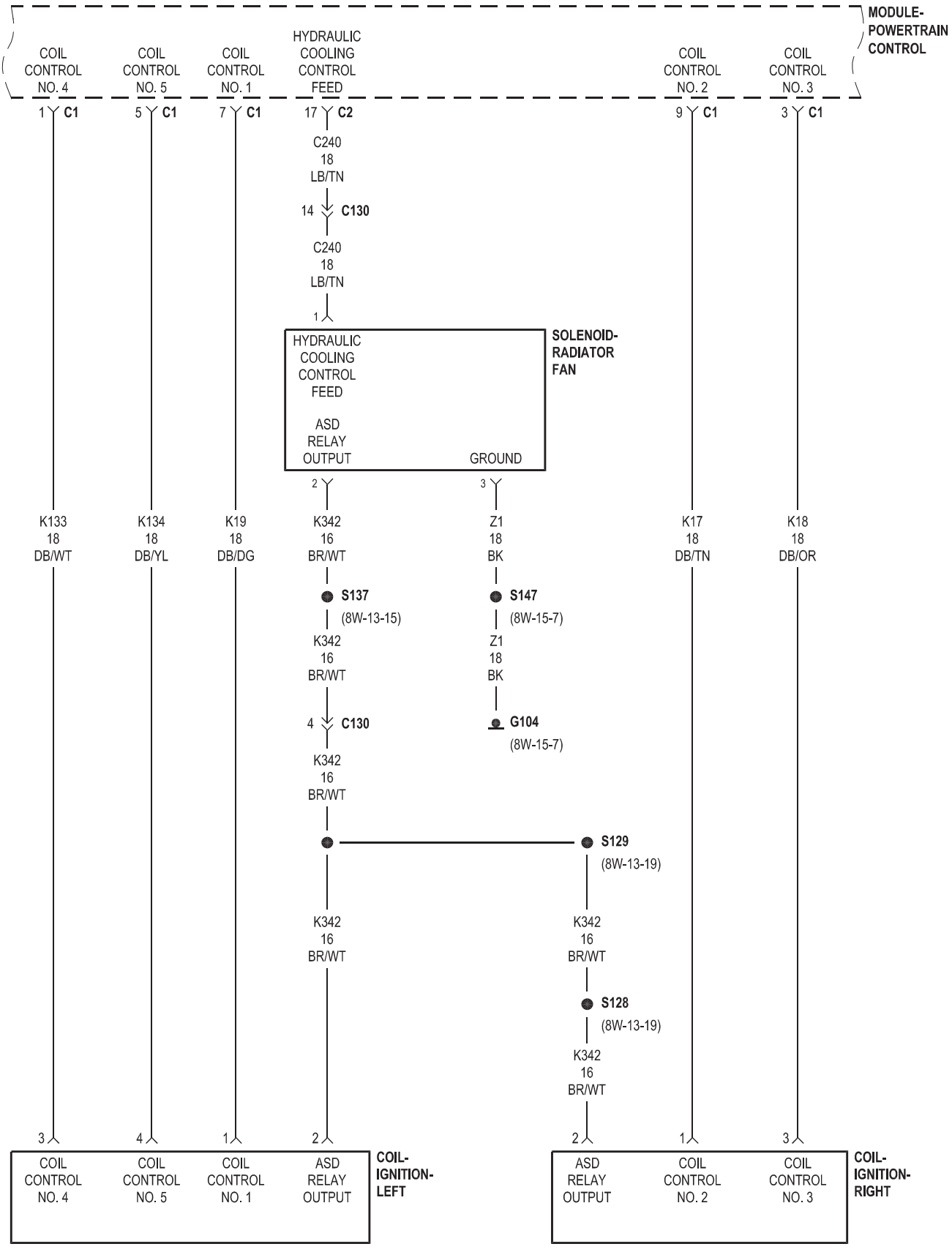
MODULE-POWERTRAIN CONTROL
COIL CONTROL NO. 4
COIL CONTROL NO. 5
COIL CONTROL NO. 1
HYDRAULIC COOLING CONTROL FEED
COIL CONTROL NO. 2
COIL CONTROL NO. 3
1 C1
5 C1
7 C1
17 C2
9 C1
3 C1
C240 18 LB/TN
14 C130
C240 18 LB/TN
1
HYDRAULIC COOLING CONTROL FEED
ASD RELAY OUTPUT
GROUND
SOLENOID-RADIATOR FAN
2
3
K133 18 DB/WT
K134 18 DB/YL
K19 18 DB/DG
K342 16 BR/WT
Z1 18 BK
K17 18 DB/TN
K18 18 DB/OR
S137
(8W-13-15)
S147
(8W-15-7)
K342 16 BR/WT
Z1 18 BK
4 C130
G104
(8W-15-7)
K342 16 BR/WT
S129
(8W-13-19)
K342 16 BR/WT
K342 16 BR/WT
S128
(8W-13-19)
K342 16 BR/WT
3
4
1
2
2
1
3
COIL CONTROL NO. 4
COIL CONTROL NO. 5
COIL CONTROL NO. 1
ASD RELAY OUTPUT
COIL-IGNITION-LEFT
ASD RELAY OUTPUT
COIL CONTROL NO. 2
COIL CONTROL NO. 3
COIL-IGNITION-RIGHT

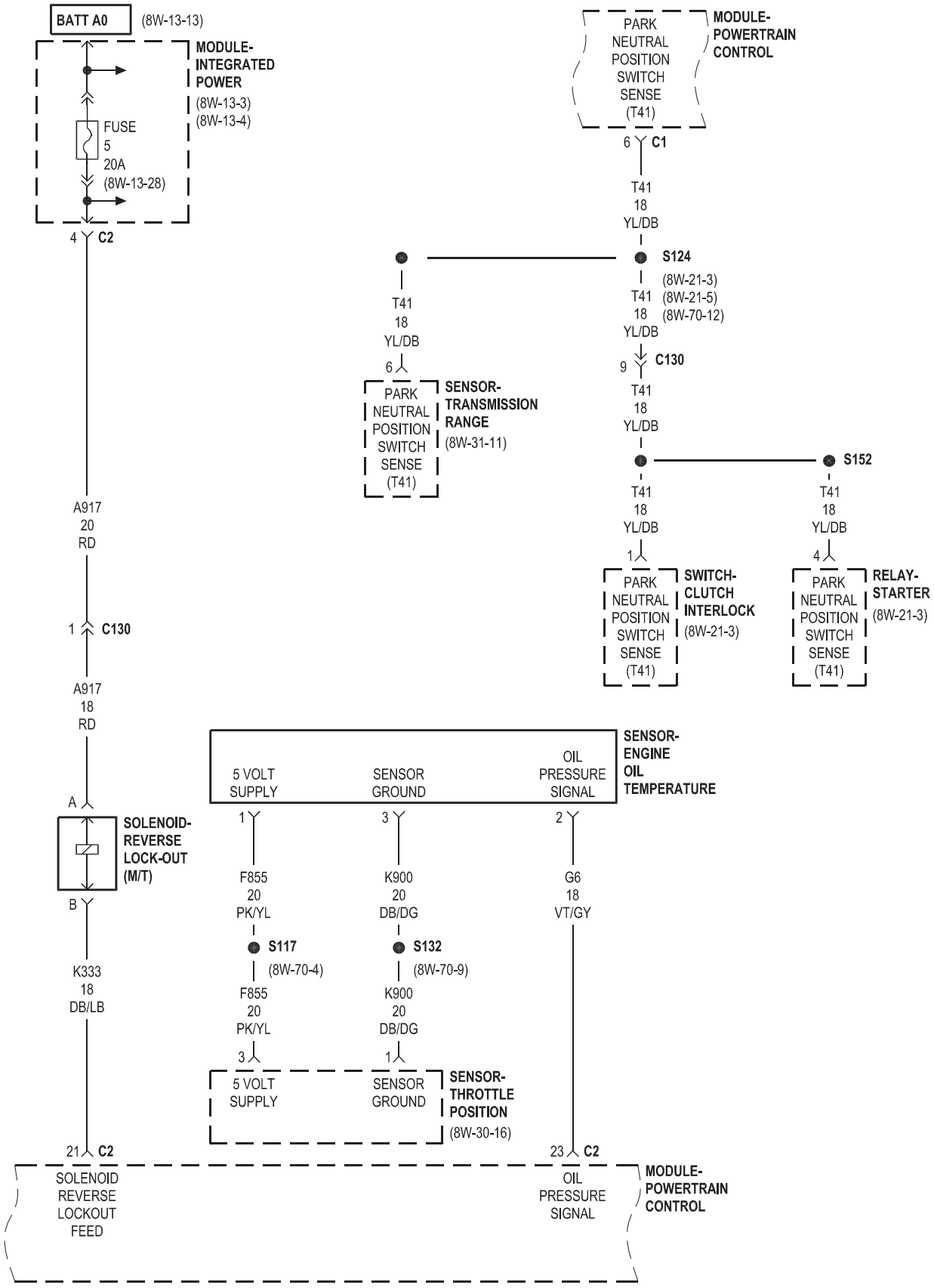
BATT A0
(8W-13-13)
MODULE-
INTEGRATED
POWER
(8W-13-3)
(8W-13-4)
FUSE
5
20A
(8W-13-28)
4 C2
A917
20
RD
1 C130
A917
18
RD
A
B
SOLENOID-
REVERSE
LOCK-OUT
(M/T)
K333
18
DB/LB
21 C2
SOLENOID
REVERSE
LOCKOUT
FEED
PARK
NEUTRAL
POSITION
SWITCH
SENSE
(T41)
MODULE-
POWERTRAIN
CONTROL
6 C1
T41
18
YL/DB
S124
(8W-21-3)
(8W-21-5)
(8W-70-12)
T41
18
YL/DB
9 C130
T41
18
YL/DB
T41
18
YL/DB
6
PARK
NEUTRAL
POSITION
SWITCH
SENSE
(T41)
SENSOR-
TRANSMISSION
RANGE
(8W-31-11)
S152
T41
18
YL/DB
1
PARK
NEUTRAL
POSITION
SWITCH
SENSE
(T41)
SWITCH-
CLUTCH
INTERLOCK
(8W-21-3)
T41
18
YL/DB
4
PARK
NEUTRAL
POSITION
SWITCH
SENSE
(T41)
RELAY-
STARTER
(8W-21-3)
5 VOLT
SUPPLY
SENSOR
GROUND
OIL
PRESSURE
SIGNAL
SENSOR-
ENGINE
OIL
TEMPERATURE
1
3
2
F855
20
PK/YL
K900
20
DB/DG
G6
18
VT/GY
S117
(8W-70-4)
S132
(8W-70-9)
F855
20
PK/YL
K900
20
DB/DG
3
1
5 VOLT
SUPPLY
SENSOR
GROUND
SENSOR-
THROTTLE
POSITION
(8W-30-16)
23 C2
OIL
PRESSURE
SIGNAL
MODULE-
POWERTRAIN
CONTROL

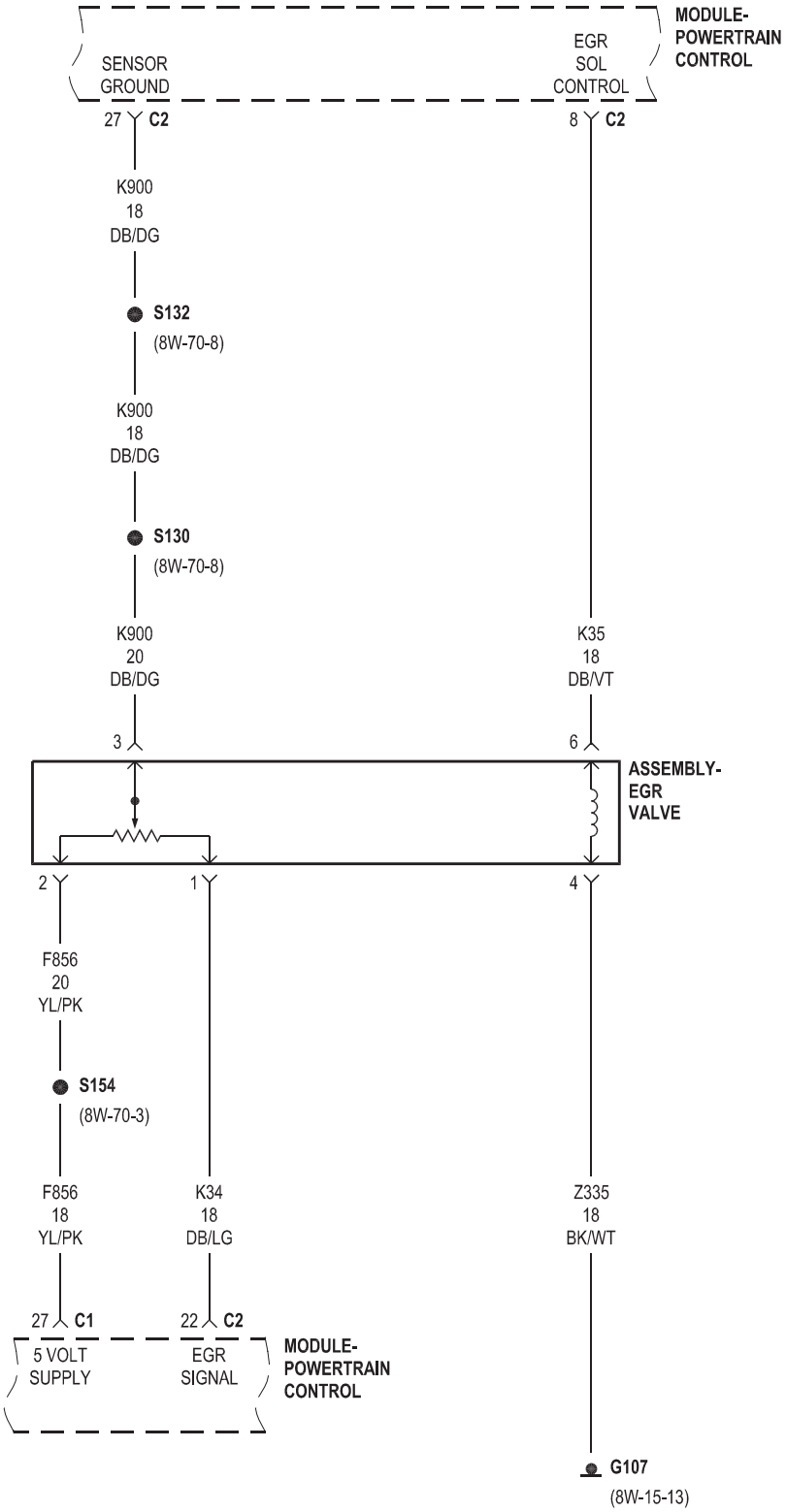
MODULE-
POWERTRAIN
CONTROL
SENSOR
GROUND
EGR
SOL
CONTROL
27 C2
8 C2
K900
18
DB/DG
S132
(8W-70-8)
K900
18
DB/DG
S130
(8W-70-8)
K900
20
DB/DG
K35
18
DB/VT
3
6
ASSEMBLY-
EGR
VALVE
2
1
4
F856
20
YL/PK
S154
(8W-70-3)
F856
18
YL/PK
K34
18
DB/LG
Z335
18
BK/WT
27 C1
22 C2
5 VOLT
SUPPLY
EGR
SIGNAL
MODULE-
POWERTRAIN
CONTROL
G107
(8W-15-13)

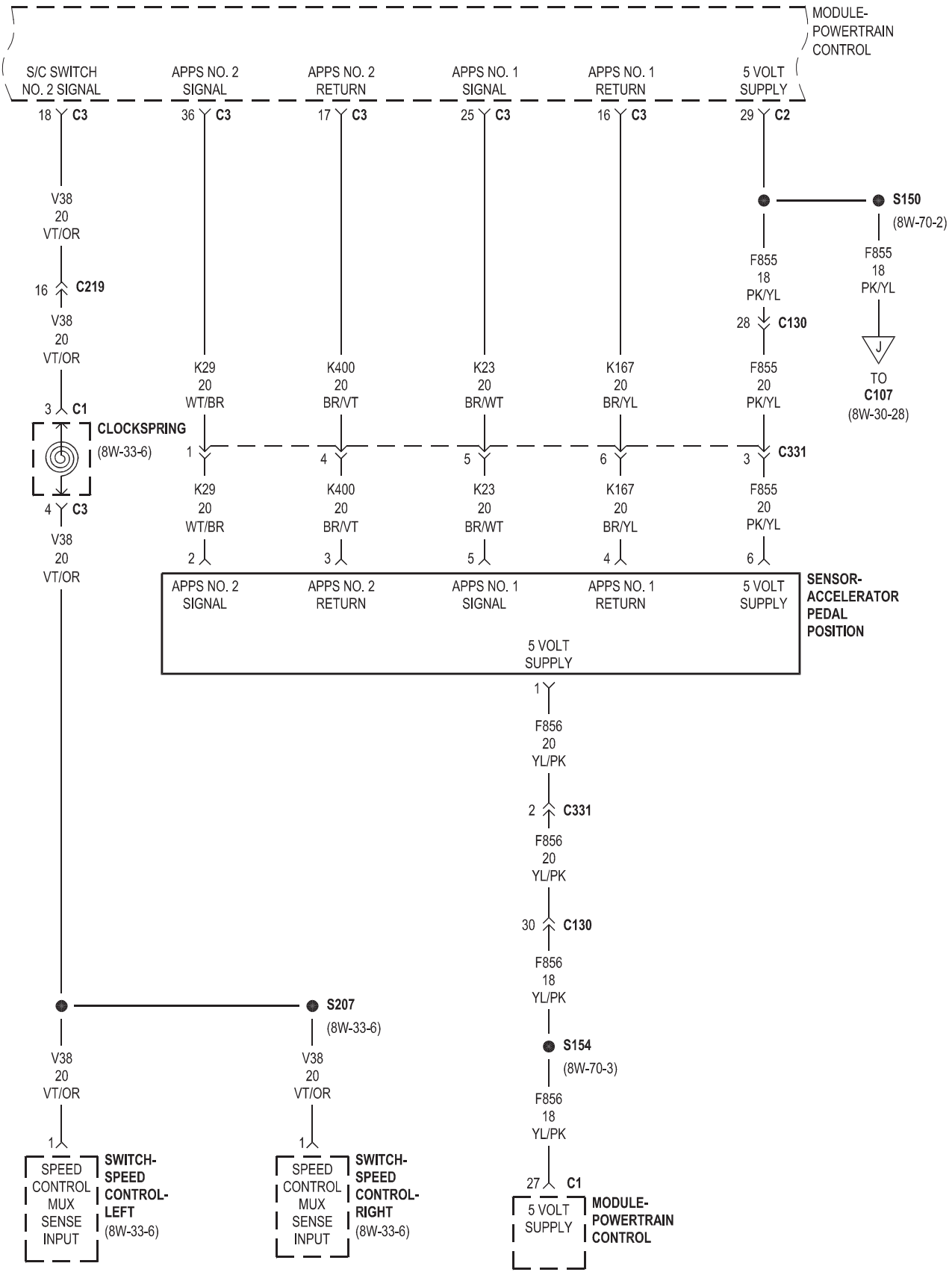
MODULE-
POWERTRAIN
CONTROL
S/C SWITCH
NO. 2 SIGNAL
APPS NO. 2
SIGNAL
APPS NO. 2
RETURN
APPS NO. 1
SIGNAL
APPS NO. 1
RETURN
5 VOLT
SUPPLY
18 C3
36 C3
17 C3
25 C3
16 C3
29 C2
V38
20
VT/OR
16 C219
V38
20
VT/OR
3 C1
CLOCKSPRING
(8W-33-6)
4 C3
V38
20
VT/OR
K29
20
WT/BR
K400
20
BR/VT
K23
20
BR/WT
K167
20
BR/YL
F855
20
PK/YL
1
4
5
6
3 C331
K29
20
WT/BR
K400
20
BR/VT
K23
20
BR/WT
K167
20
BR/YL
F855
20
PK/YL
2
3
5
4
6
APPS NO. 2
SIGNAL
APPS NO. 2
RETURN
APPS NO. 1
SIGNAL
APPS NO. 1
RETURN
5 VOLT
SUPPLY
SENSOR-
ACCELERATOR
PEDAL
POSITION
S150
(8W-70-2)
F855
18
PK/YL
28 C130
F855
18
PK/YL
J
TO
C107
(8W-30-28)
5 VOLT
SUPPLY
1
F856
20
YL/PK
2 C331
F856
20
YL/PK
30 C130
F856
18
YL/PK
S154
(8W-70-3)
F856
18
YL/PK
27 C1
5 VOLT
SUPPLY
MODULE-
POWERTRAIN
CONTROL
S207
(8W-33-6)
V38
20
VT/OR
1
SPEED
CONTROL
MUX
SENSE
INPUT
SWITCH-
SPEED
CONTROL-
LEFT
(8W-33-6)
V38
20
VT/OR
1
SPEED
CONTROL
MUX
SENSE
INPUT
SWITCH-
SPEED
CONTROL-
RIGHT
(8W-33-6)

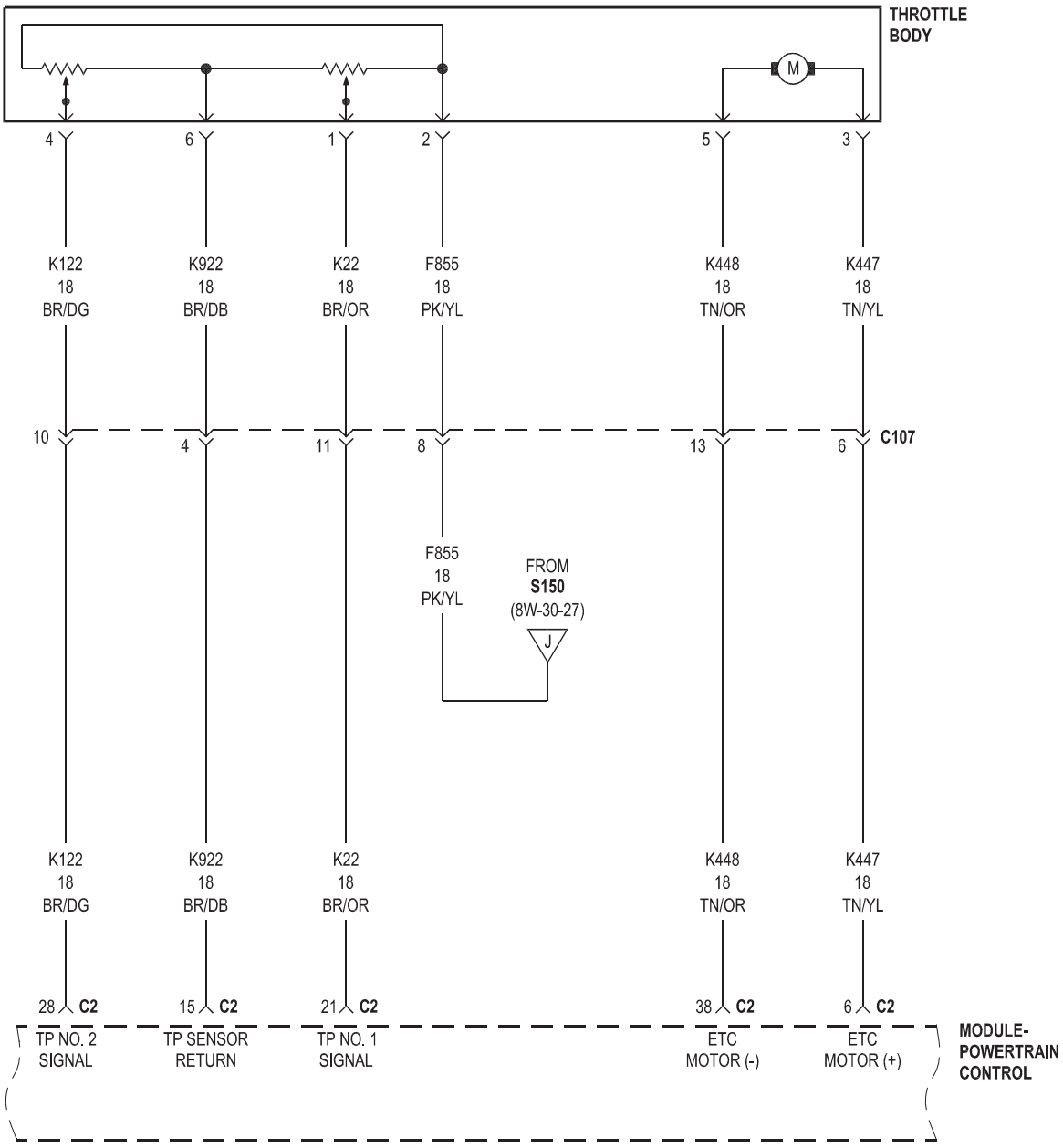
THROTTLE BODY
M
4
6
1
2
5
3
K122 18 BR/DG
K922 18 BR/DB
K22 18 BR/OR
F855 18 PK/YL
K448 18 TN/OR
K447 18 TN/YL
10
4
11
8
13
6
C107
F855 18 PK/YL
FROM S150 (8W-30-27)
J
K122 18 BR/DG
K922 18 BR/DB
K22 18 BR/OR
K448 18 TN/OR
K447 18 TN/YL
28 C2
15 C2
21 C2
38 C2
6 C2
TP NO. 2 SIGNAL
TP SENSOR RETURN
TP NO. 1 SIGNAL
ETC MOTOR (-)
ETC MOTOR (+)
MODULE-POWERTRAIN CONTROL

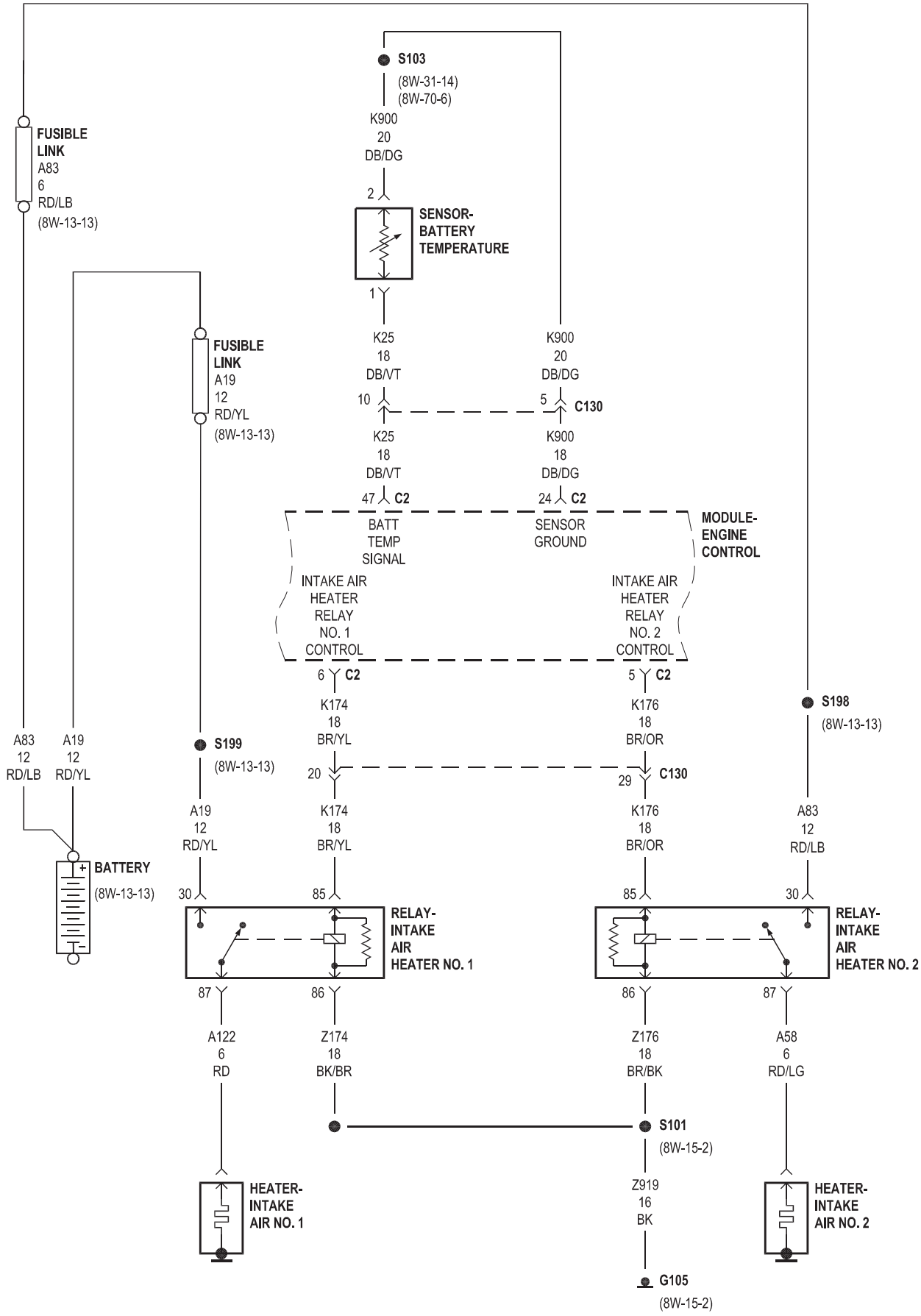
S103
(8W-31-14)
(8W-70-6)
K900
20
DB/DG
2
SENSOR-
BATTERY
TEMPERATURE
1
FUSIBLE
LINK
A83
6
RD/LB
(8W-13-13)
FUSIBLE
LINK
A19
12
RD/YL
(8W-13-13)
K25
18
DB/VT
10
K900
20
DB/DG
5
C130
K25
18
DB/VT
47
C2
K900
18
DB/DG
24
C2
BATT
TEMP
SIGNAL
SENSOR
GROUND
MODULE-
ENGINE
CONTROL
INTAKE AIR
HEATER
RELAY
NO. 1
CONTROL
INTAKE AIR
HEATER
RELAY
NO. 2
CONTROL
6
C2
5
C2
K174
18
BR/YL
K176
18
BR/OR
S198
(8W-13-13)
A83
12
RD/LB
A19
12
RD/YL
S199
(8W-13-13)
20
C130
29
A19
12
RD/YL
K174
18
BR/YL
K176
18
BR/OR
A83
12
RD/LB
BATTERY
(8W-13-13)
30
85
85
30
RELAY-
INTAKE
AIR
HEATER NO. 1
RELAY-
INTAKE
AIR
HEATER NO. 2
87
86
86
87
A122
6
RD
Z174
18
BK/BR
Z176
18
BR/BK
A58
6
RD/LG
S101
(8W-15-2)
HEATER-
INTAKE
AIR NO. 1
Z919
16
BK
HEATER-
INTAKE
AIR NO. 2
G105
(8W-15-2)

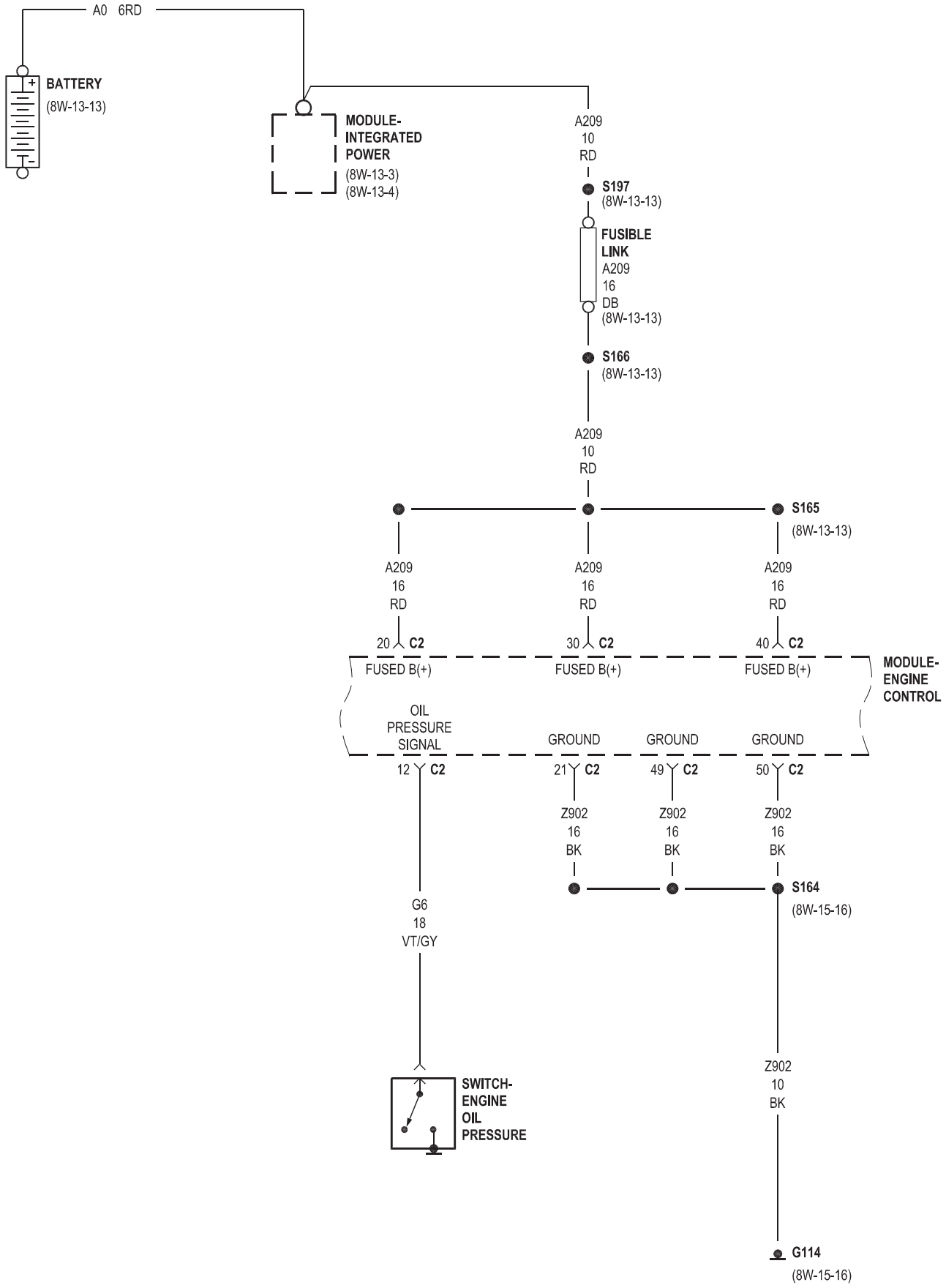
A0 6RD
BATTERY
(8W-13-13)
MODULE-
INTEGRATED
POWER
(8W-13-3)
(8W-13-4)
A209
10
RD
S197
(8W-13-13)
FUSIBLE
LINK
A209
16
DB
(8W-13-13)
S166
(8W-13-13)
A209
10
RD
S165
(8W-13-13)
A209
16
RD
A209
16
RD
A209
16
RD
20 C2
30 C2
40 C2
FUSED B(+)
FUSED B(+)
FUSED B(+)
MODULE-
ENGINE
CONTROL
OIL
PRESSURE
SIGNAL
GROUND
GROUND
GROUND
12 C2
21 C2
49 C2
50 C2
Z902
16
BK
Z902
16
BK
Z902
16
BK
S164
(8W-15-16)
G6
18
VT/GY
SWITCH-
ENGINE
OIL
PRESSURE
Z902
10
BK
G114
(8W-15-16)

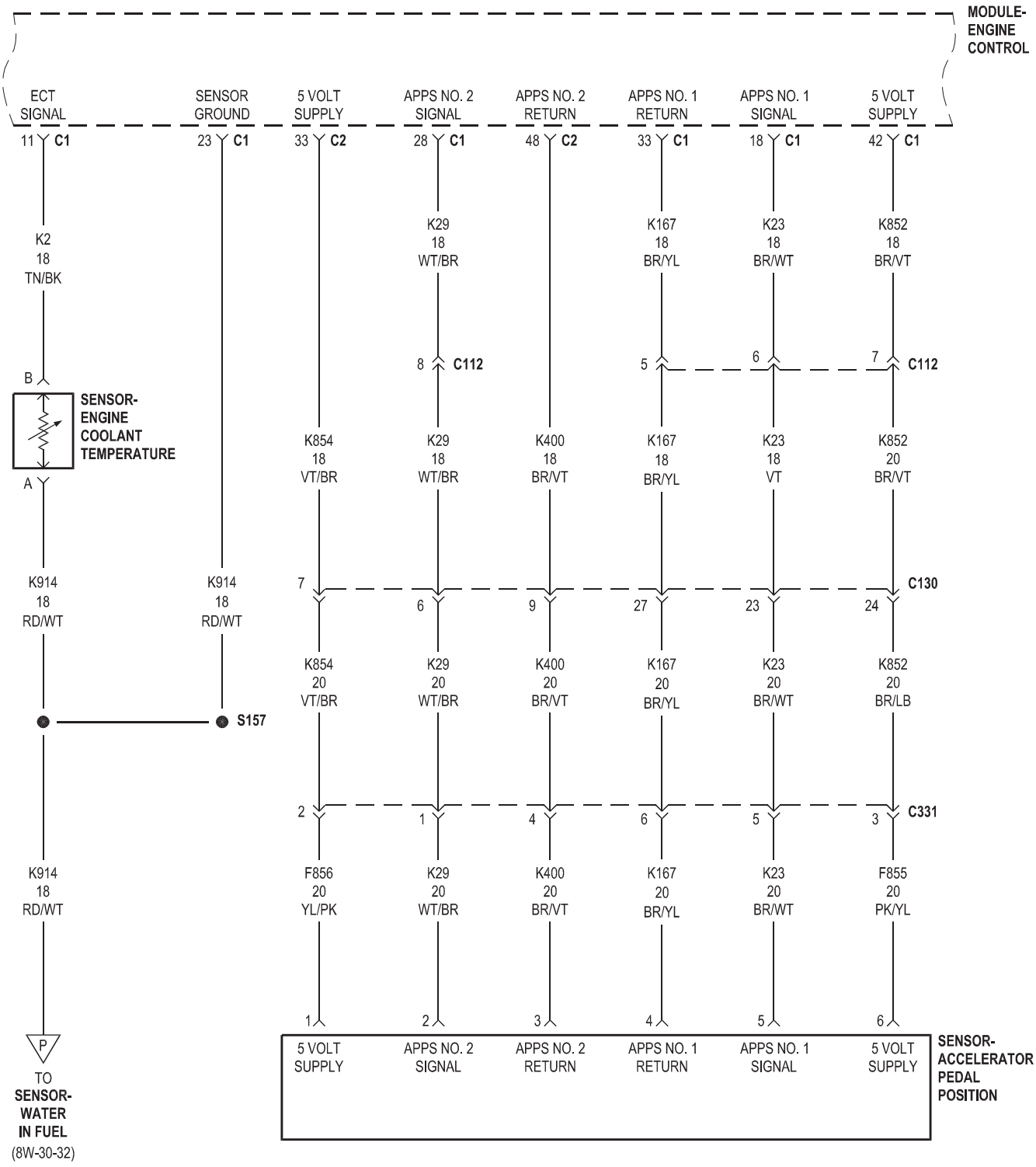
MODULE-
ENGINE
CONTROL
ECT SIGNAL
SENSOR GROUND
5 VOLT SUPPLY
APPS NO. 2 SIGNAL
APPS NO. 2 RETURN
APPS NO. 1 RETURN
APPS NO. 1 SIGNAL
5 VOLT SUPPLY
11 C1
23 C1
33 C2
28 C1
48 C2
33 C1
18 C1
42 C1
K2 18 TN/BK
K29 18 WT/BR
K167 18 BR/YL
K23 18 BR/WT
K852 18 BR/VT
8 C112
5
6
7 C112
B
SENSOR-
ENGINE
COOLANT
TEMPERATURE
A
K854 18 VT/BR
K29 18 WT/BR
K400 18 BR/VT
K167 18 BR/YL
K23 18 VT
K852 20 BR/VT
K914 18 RD/WT
K914 18 RD/WT
7
6
9
27
23
24
C130
K854 20 VT/BR
K29 20 WT/BR
K400 20 BR/VT
K167 20 BR/YL
K23 20 BR/WT
K852 20 BR/LB
S157
2
1
4
6
5
3
C331
K914 18 RD/WT
F856 20 YL/PK
K29 20 WT/BR
K400 20 BR/VT
K167 20 BR/YL
K23 20 BR/WT
F855 20 PK/YL
1
2
3
4
5
6
P
TO
SENSOR-
WATER
IN FUEL
(8W-30-32)
5 VOLT SUPPLY
APPS NO. 2 SIGNAL
APPS NO. 2 RETURN
APPS NO. 1 RETURN
APPS NO. 1 SIGNAL
5 VOLT SUPPLY
SENSOR-
ACCELERATOR
PEDAL
POSITION

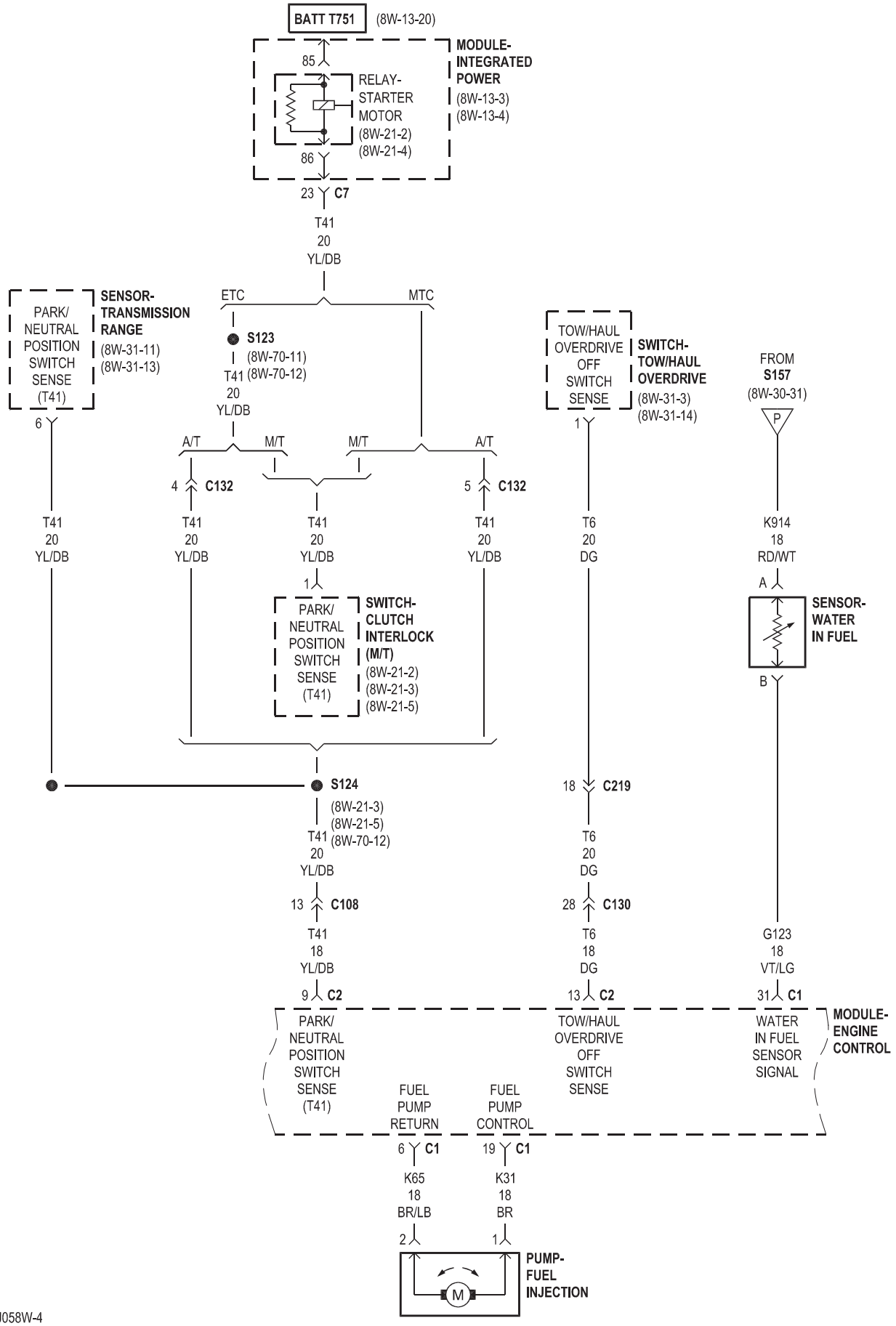
BATT T751
(8W-13-20)
85
RELAY-STARTER MOTOR
(8W-21-2)
(8W-21-4)
86
MODULE-INTEGRATED POWER
(8W-13-3)
(8W-13-4)
23 C7
T41
20
YL/DB
ETC
MTC
S123
(8W-70-11)
T41 (8W-70-12)
20
YL/DB
PARK/ NEUTRAL POSITION SWITCH SENSE (T41)
SENSOR-TRANSMISSION RANGE
(8W-31-11)
(8W-31-13)
6
A/T
M/T
M/T
A/T
4 C132
5 C132
TOW/HAUL OVERDRIVE OFF SWITCH SENSE
SWITCH-TOW/HAUL OVERDRIVE
(8W-31-3)
(8W-31-14)
1
FROM S157
(8W-30-31)
P
T41
20
YL/DB
T41
20
YL/DB
T41
20
YL/DB
T41
20
YL/DB
T6
20
DG
K914
18
RD/WT
A
1
PARK/ NEUTRAL POSITION SWITCH SENSE (T41)
SWITCH-CLUTCH INTERLOCK (M/T)
(8W-21-2)
(8W-21-3)
(8W-21-5)
SENSOR-WATER IN FUEL
B
S124
(8W-21-3)
(8W-21-5)
(8W-70-12)
18 C219
T41
20
YL/DB
T6
20
DG
13 C108
28 C130
T41
18
YL/DB
T6
18
DG
G123
18
VT/LG
9 C2
13 C2
31 C1
MODULE-ENGINE CONTROL
PARK/ NEUTRAL POSITION SWITCH SENSE (T41)
TOW/HAUL OVERDRIVE OFF SWITCH SENSE
WATER IN FUEL SENSOR SIGNAL
FUEL PUMP RETURN
FUEL PUMP CONTROL
6 C1
19 C1
K65
18
BR/LB
K31
18
BR
2
1
PUMP-FUEL INJECTION
M

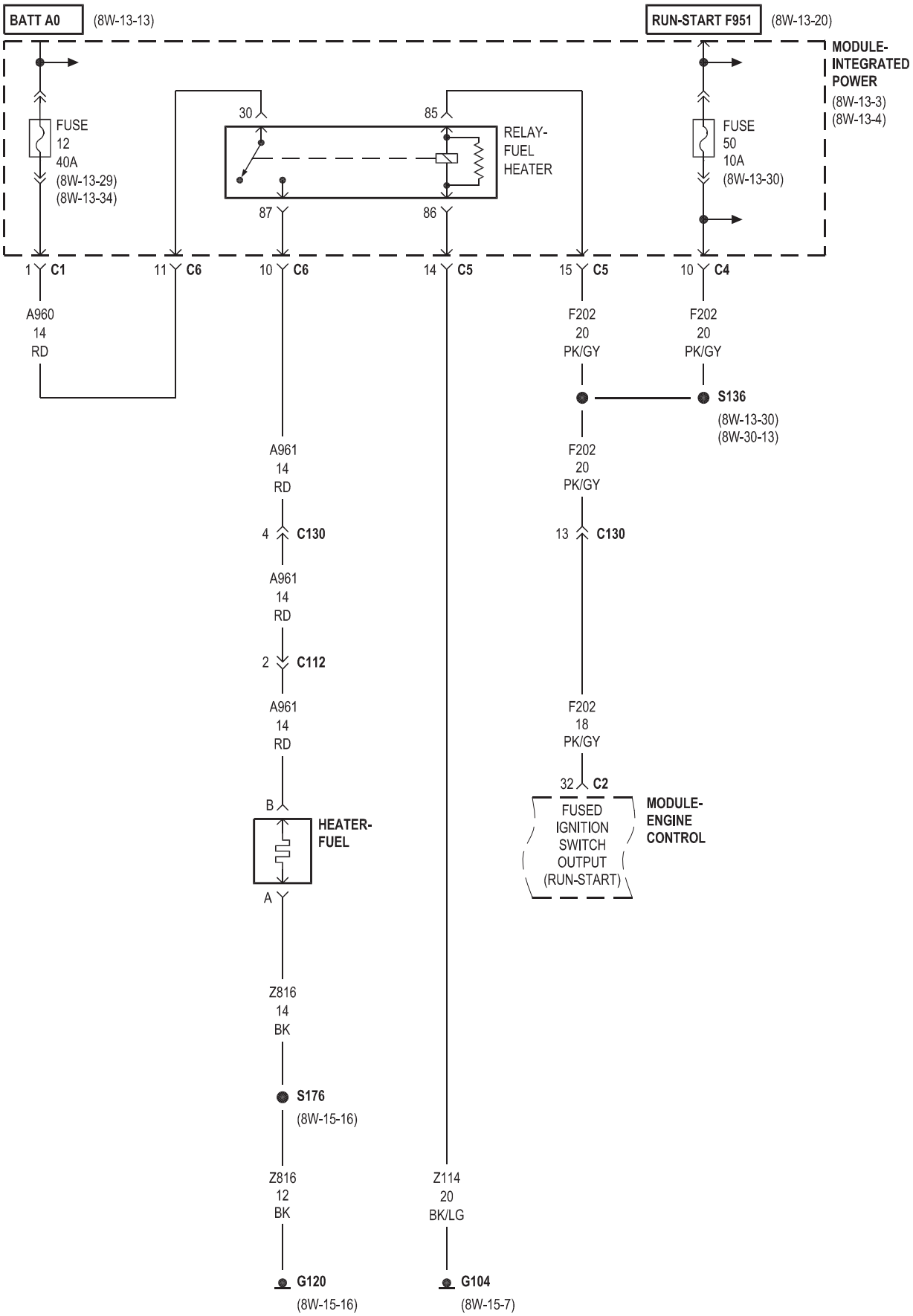
BATT A0
(8W-13-13)
RUN-START F951
(8W-13-20)
MODULE-
INTEGRATED
POWER
(8W-13-3)
(8W-13-4)
FUSE
12
40A
(8W-13-29)
(8W-13-34)
30
85
RELAY-
FUEL
HEATER
87
86
FUSE
50
10A
(8W-13-30)
1 C1
11 C6
10 C6
14 C5
15 C5
10 C4
A960
14
RD
F202
20
PK/GY
F202
20
PK/GY
S136
(8W-13-30)
(8W-30-13)
A961
14
RD
F202
20
PK/GY
4 C130
13 C130
A961
14
RD
2 C112
A961
14
RD
F202
18
PK/GY
32 C2
B
HEATER-
FUEL
A
FUSED
IGNITION
SWITCH
OUTPUT
(RUN-START)
MODULE-
ENGINE
CONTROL
Z816
14
BK
S176
(8W-15-16)
Z816
12
BK
Z114
20
BK/LG
G120
(8W-15-16)
G104
(8W-15-7)

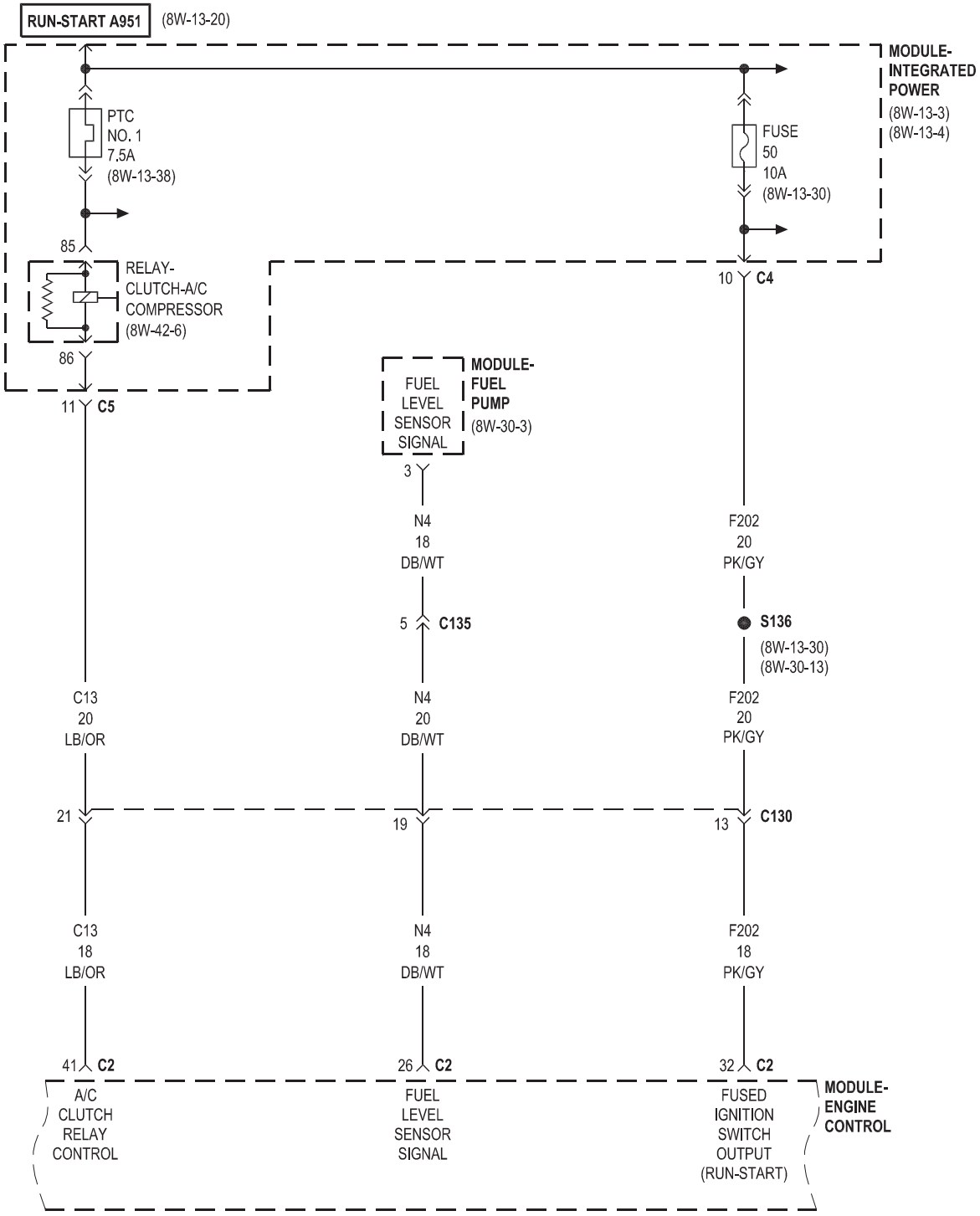
RUN-START A951
(8W-13-20)
MODULE-
INTEGRATED
POWER
(8W-13-3)
(8W-13-4)
PTC
NO. 1
7.5A
(8W-13-38)
FUSE
50
10A
(8W-13-30)
85
RELAY-
CLUTCH-A/C
COMPRESSOR
(8W-42-6)
86
10 C4
11 C5
FUEL
LEVEL
SENSOR
SIGNAL
MODULE-
FUEL
PUMP
(8W-30-3)
3
N4
18
DB/WT
F202
20
PK/GY
5 C135
S136
(8W-13-30)
(8W-30-13)
C13
20
LB/OR
N4
20
DB/WT
F202
20
PK/GY
21
19
13 C130
C13
18
LB/OR
N4
18
DB/WT
F202
18
PK/GY
41 C2
26 C2
32 C2
A/C
CLUTCH
RELAY
CONTROL
FUEL
LEVEL
SENSOR
SIGNAL
FUSED
IGNITION
SWITCH
OUTPUT
(RUN-START)
MODULE-
ENGINE
CONTROL

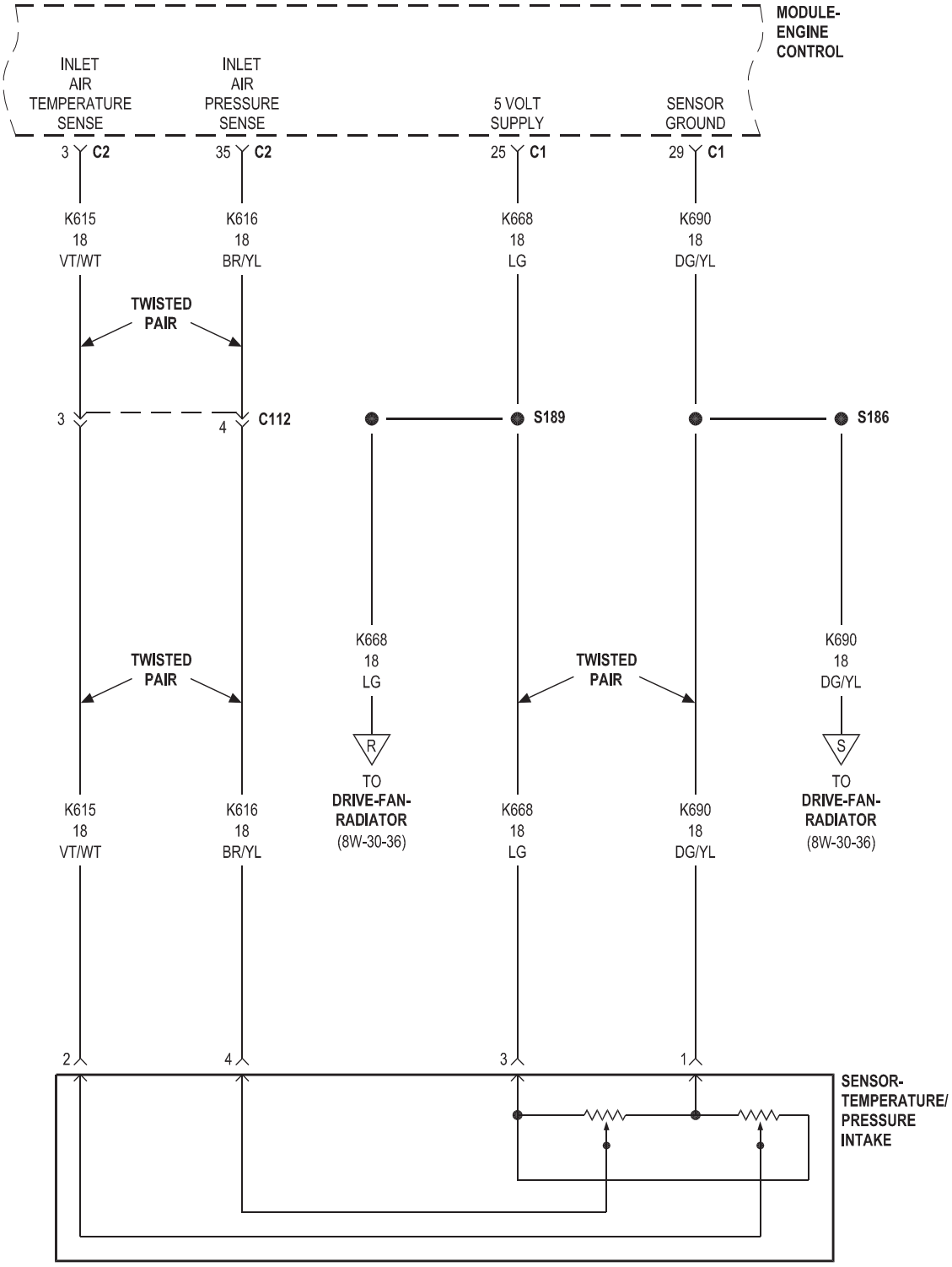
MODULE-
ENGINE
CONTROL
INLET
AIR
TEMPERATURE
SENSE
INLET
AIR
PRESSURE
SENSE
5 VOLT
SUPPLY
SENSOR
GROUND
3 C2
35 C2
25 C1
29 C1
K615
18
VT/WT
K616
18
BR/YL
K668
18
LG
K690
18
DG/YL
TWISTED
PAIR
3
4
C112
S189
S186
TWISTED
PAIR
TWISTED
PAIR
K668
18
LG
K690
18
DG/YL
R
S
TO
DRIVE-FAN-
RADIATOR
(8W-30-36)
TO
DRIVE-FAN-
RADIATOR
(8W-30-36)
K615
18
VT/WT
K616
18
BR/YL
K668
18
LG
K690
18
DG/YL
2
4
3
1
SENSOR-
TEMPERATURE/
PRESSURE
INTAKE

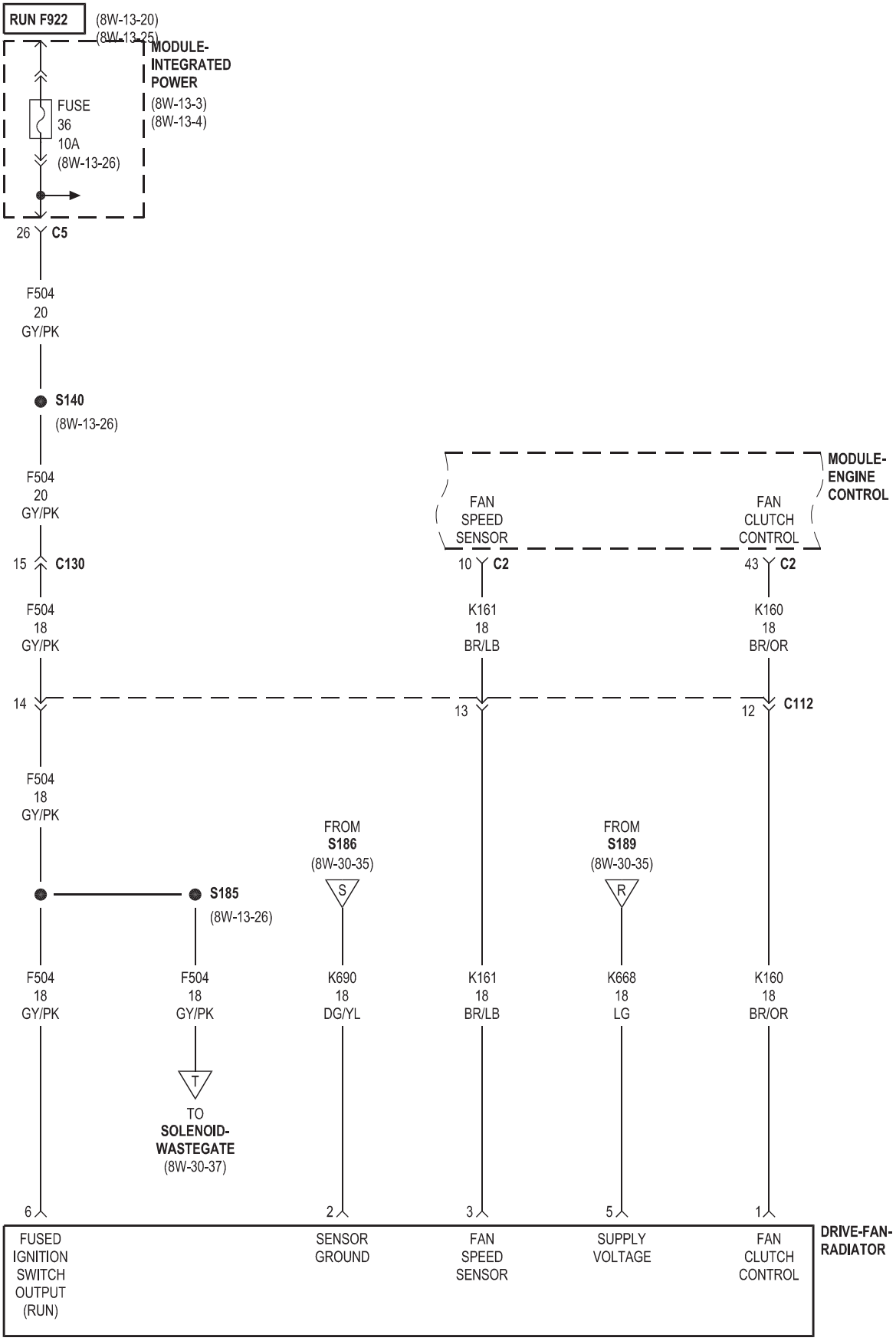
RUN F922
(8W-13-20)
(8W-13-25)
MODULE-
INTEGRATED
POWER
(8W-13-3)
(8W-13-4)
FUSE
36
10A
(8W-13-26)
26 C5
F504
20
GY/PK
S140
(8W-13-26)
F504
20
GY/PK
15 C130
F504
18
GY/PK
14
F504
18
GY/PK
S185
(8W-13-26)
F504
18
GY/PK
F504
18
GY/PK
TO
SOLENOID-
WASTEGATE
(8W-30-37)
FROM
S186
(8W-30-35)
S
K690
18
DG/YL
FROM
S189
(8W-30-35)
R
K668
18
LG
MODULE-
ENGINE
CONTROL
FAN
SPEED
SENSOR
10 C2
K161
18
BR/LB
FAN
CLUTCH
CONTROL
43 C2
K160
18
BR/OR
13
12 C112
K161
18
BR/LB
K160
18
BR/OR
6
2
3
5
1
FUSED
IGNITION
SWITCH
OUTPUT
(RUN)
SENSOR
GROUND
FAN
SPEED
SENSOR
SUPPLY
VOLTAGE
FAN
CLUTCH
CONTROL
DRIVE-FAN-
RADIATOR

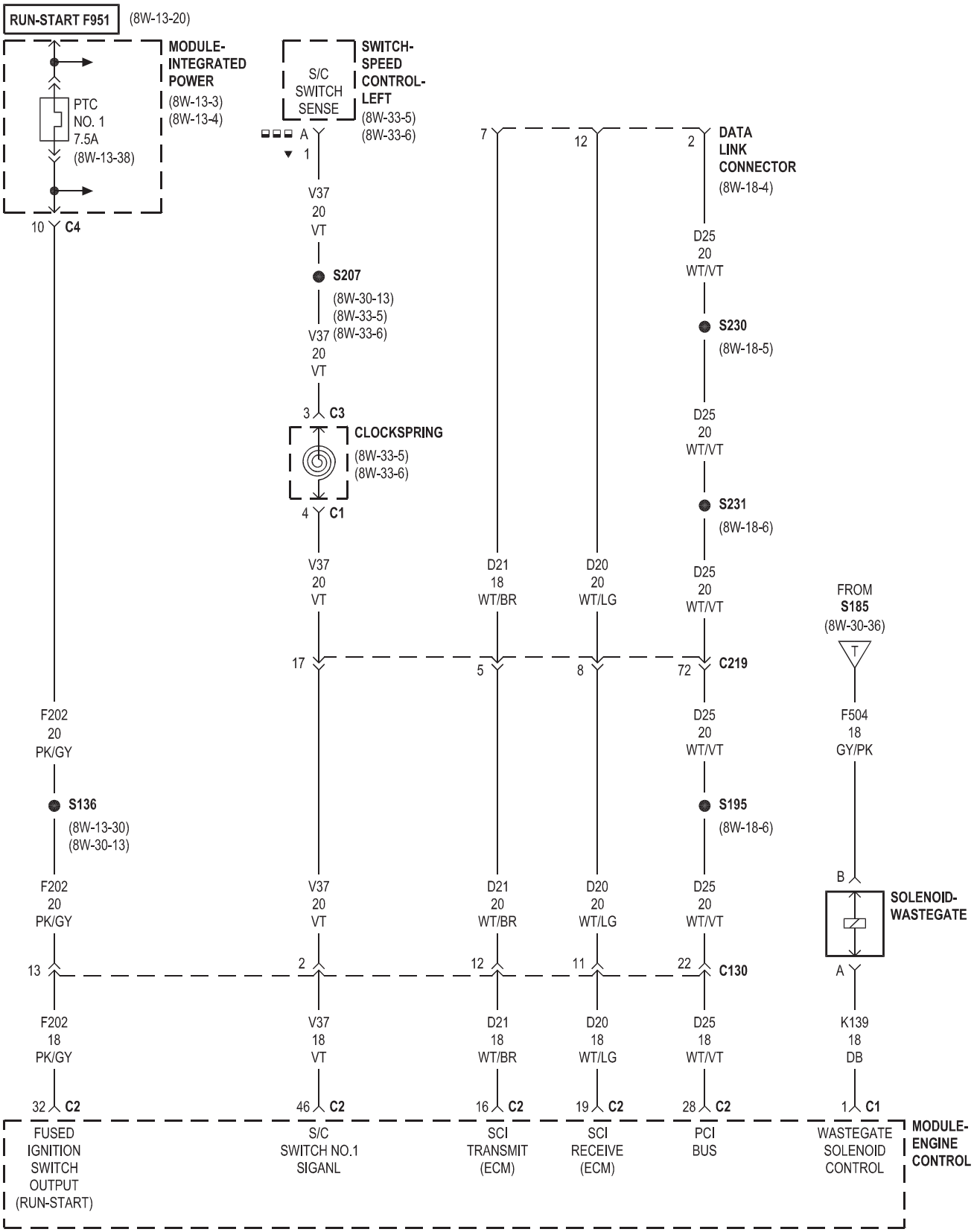
RUN-START F951
(8W-13-20)
MODULE-INTEGRATED POWER
(8W-13-3)
(8W-13-4)
PTC NO. 1 7.5A
(8W-13-38)
10 C4
S/C SWITCH SENSE
SWITCH-SPEED CONTROL-LEFT
(8W-33-5)
(8W-33-6)
A
1
V37 20 VT
S207
(8W-30-13)
(8W-33-5)
(8W-33-6)
V37 20 VT
3 C3
CLOCKSPRING
(8W-33-5)
(8W-33-6)
4 C1
V37 20 VT
7
12
2
DATA LINK CONNECTOR
(8W-18-4)
D25 20 WT/VT
S230
(8W-18-5)
D25 20 WT/VT
S231
(8W-18-6)
D25 20 WT/VT
D21 18 WT/BR
D20 20 WT/LG
FROM S185
(8W-30-36)
17
5
8
72 C219
F202 20 PK/GY
S136
(8W-13-30)
(8W-30-13)
F504 18 GY/PK
D25 20 WT/VT
S195
(8W-18-6)
B
SOLENOID-WASTEGATE
F202 20 PK/GY
V37 20 VT
D21 20 WT/BR
D20 20 WT/LG
D25 20 WT/VT
13
2
12
11
22 C130
A
F202 18 PK/GY
V37 18 VT
D21 18 WT/BR
D20 18 WT/LG
D25 18 WT/VT
K139 18 DB
32 C2
46 C2
16 C2
19 C2
28 C2
1 C1
FUSED IGNITION SWITCH OUTPUT (RUN-START)
S/C SWITCH NO.1 SIGANL
SCI TRANSMIT (ECM)
SCI RECEIVE (ECM)
PCI BUS
WASTEGATE SOLENOID CONTROL
MODULE-ENGINE CONTROL

▼ ETC
▬▬▬ MTC

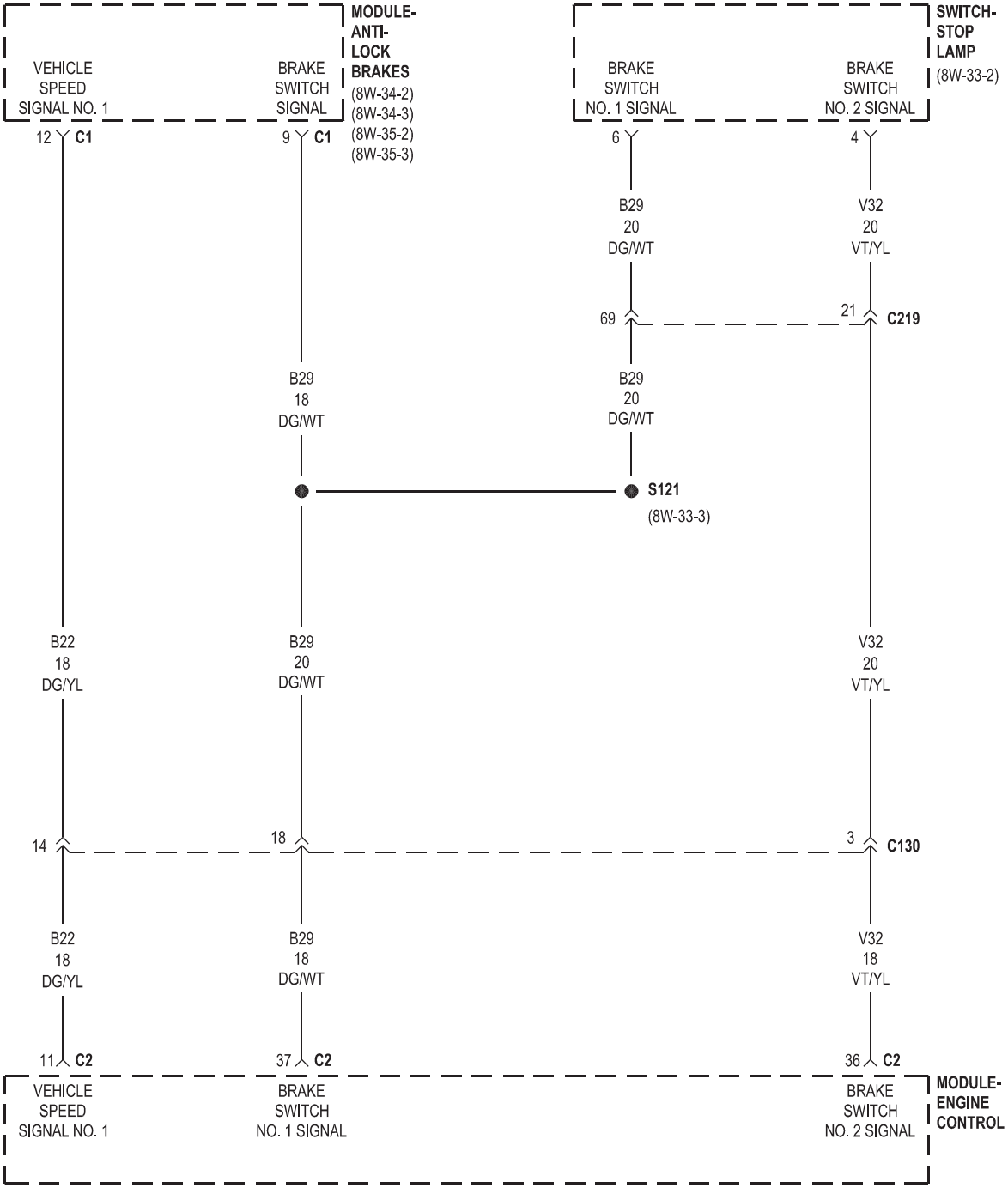
MODULE-
ANTI-
LOCK
BRAKES
(8W-34-2)
(8W-34-3)
(8W-35-2)
(8W-35-3)
VEHICLE
SPEED
SIGNAL NO. 1
BRAKE
SWITCH
SIGNAL
12 C1
9 C1
SWITCH-
STOP
LAMP
(8W-33-2)
BRAKE
SWITCH
NO. 1 SIGNAL
BRAKE
SWITCH
NO. 2 SIGNAL
6
4
B29
20
DG/WT
V32
20
VT/YL
69
21 C219
B29
18
DG/WT
B29
20
DG/WT
S121
(8W-33-3)
B22
18
DG/YL
B29
20
DG/WT
V32
20
VT/YL
14
18
3 C130
B22
18
DG/YL
B29
18
DG/WT
V32
18
VT/YL
11 C2
37 C2
36 C2
VEHICLE
SPEED
SIGNAL NO. 1
BRAKE
SWITCH
NO. 1 SIGNAL
BRAKE
SWITCH
NO. 2 SIGNAL
MODULE-
ENGINE
CONTROL

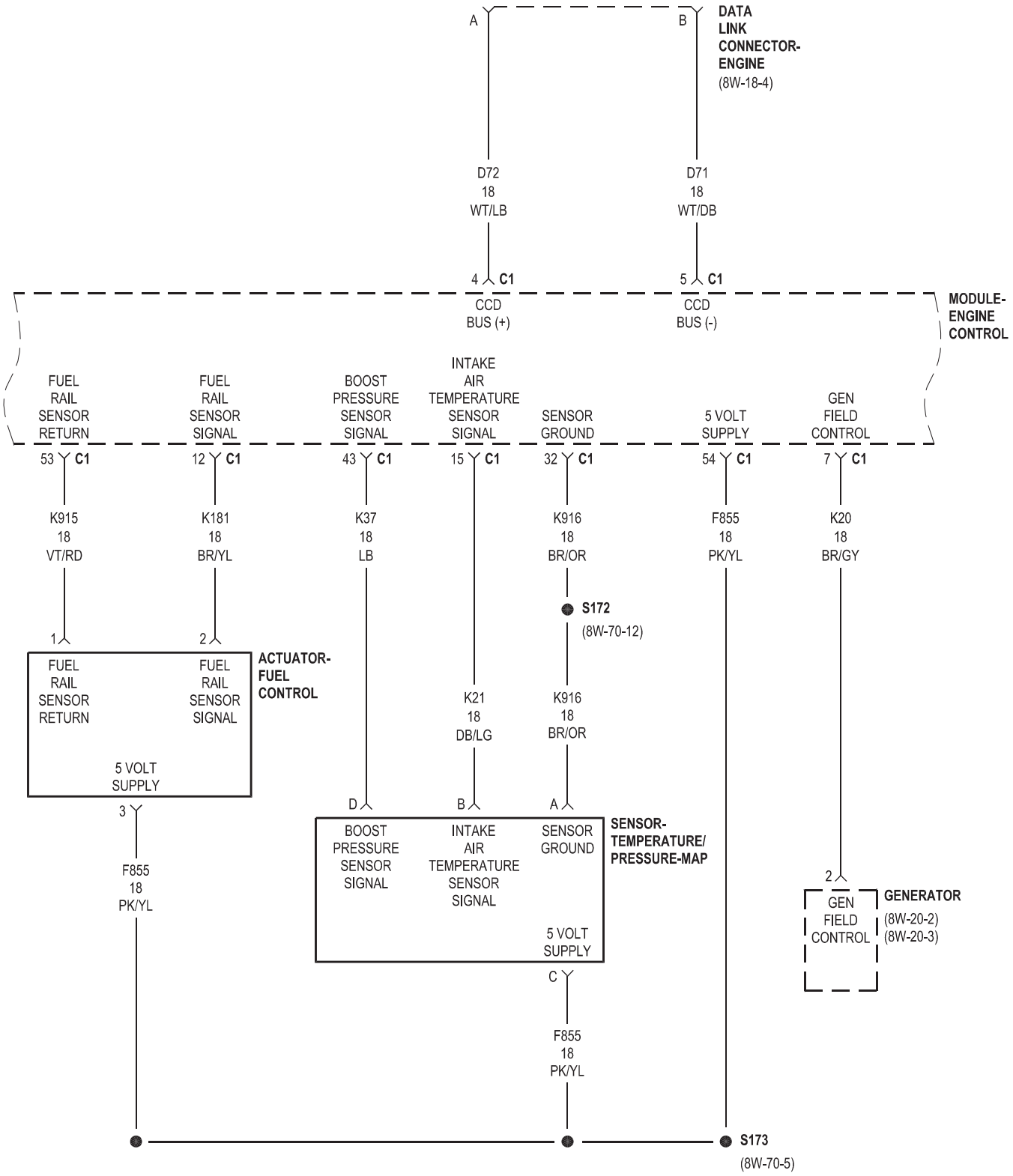
A
B
DATA LINK CONNECTOR-ENGINE
(8W-18-4)
D72
18
WT/LB
D71
18
WT/DB
4 C1
5 C1
CCD BUS (+)
CCD BUS (-)
MODULE-ENGINE CONTROL
FUEL RAIL SENSOR RETURN
FUEL RAIL SENSOR SIGNAL
BOOST PRESSURE SENSOR SIGNAL
INTAKE AIR TEMPERATURE SENSOR SIGNAL
SENSOR GROUND
5 VOLT SUPPLY
GEN FIELD CONTROL
53 C1
12 C1
43 C1
15 C1
32 C1
54 C1
7 C1
K915
18
VT/RD
K181
18
BR/YL
K37
18
LB
K916
18
BR/OR
F855
18
PK/YL
K20
18
BR/GY
S172
(8W-70-12)
1
2
FUEL RAIL SENSOR RETURN
FUEL RAIL SENSOR SIGNAL
5 VOLT SUPPLY
ACTUATOR-FUEL CONTROL
K21
18
DB/LG
K916
18
BR/OR
D
B
A
BOOST PRESSURE SENSOR SIGNAL
INTAKE AIR TEMPERATURE SENSOR SIGNAL
SENSOR GROUND
5 VOLT SUPPLY
SENSOR-TEMPERATURE/PRESSURE-MAP
3
F855
18
PK/YL
C
F855
18
PK/YL
2
GEN FIELD CONTROL
GENERATOR
(8W-20-2)
(8W-20-3)
S173
(8W-70-5)

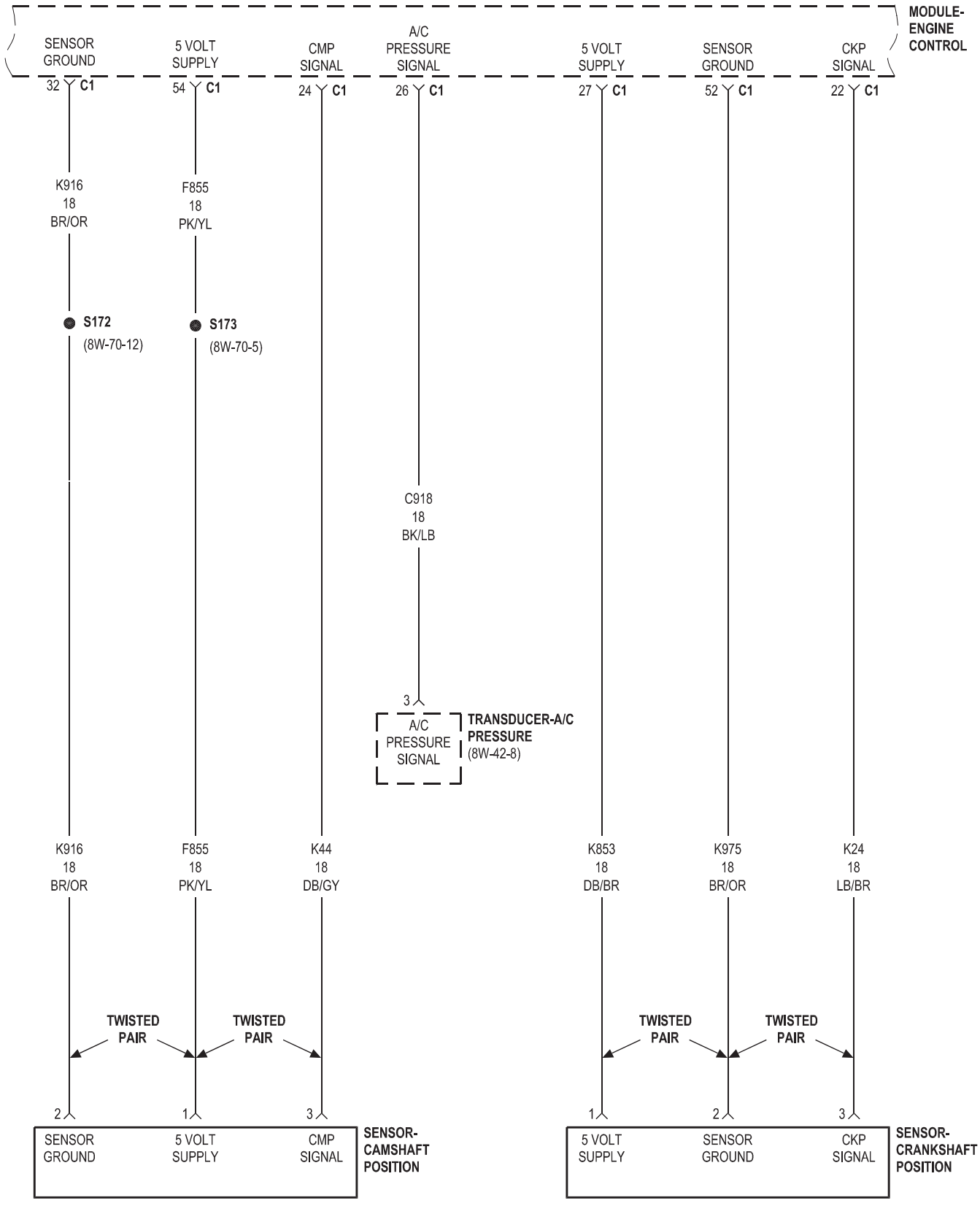
MODULE-ENGINE CONTROL
SENSOR GROUND
32 C1
5 VOLT SUPPLY
54 C1
CMP SIGNAL
24 C1
A/C PRESSURE SIGNAL
26 C1
5 VOLT SUPPLY
27 C1
SENSOR GROUND
52 C1
CKP SIGNAL
22 C1
K916 18 BR/OR
F855 18 PK/YL
S172
(8W-70-12)
S173
(8W-70-5)
C918 18 BK/LB
3
A/C PRESSURE SIGNAL
TRANSDUCER-A/C PRESSURE
(8W-42-8)
K916 18 BR/OR
F855 18 PK/YL
K44 18 DB/GY
K853 18 DB/BR
K975 18 BR/OR
K24 18 LB/BR
TWISTED PAIR
TWISTED PAIR
TWISTED PAIR
TWISTED PAIR
2
1
3
1
2
3
SENSOR GROUND
5 VOLT SUPPLY
CMP SIGNAL
SENSOR-CAMSHAFT POSITION
5 VOLT SUPPLY
SENSOR GROUND
CKP SIGNAL
SENSOR-CRANKSHAFT POSITION

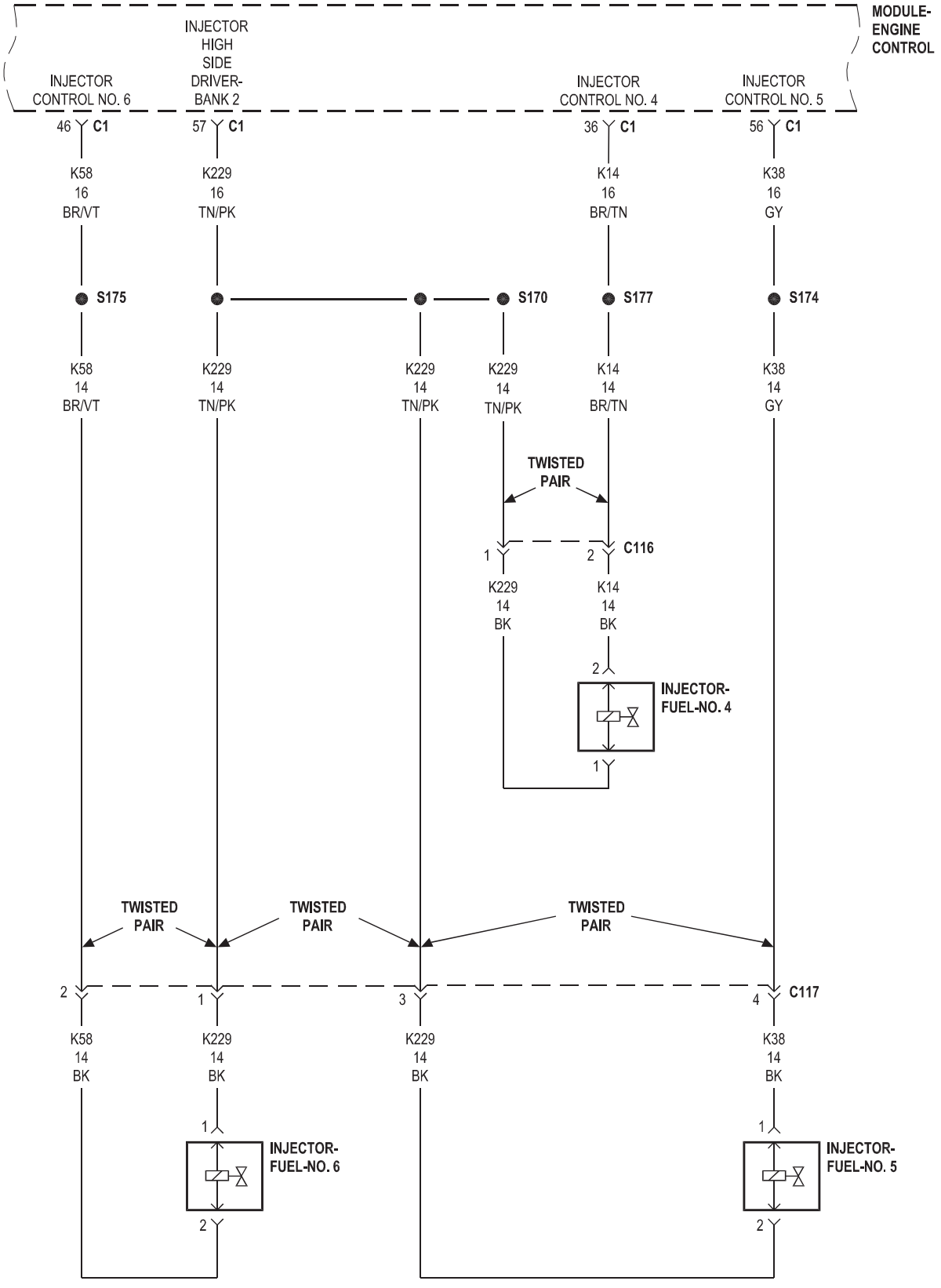
MODULE-
ENGINE
CONTROL
INJECTOR
CONTROL NO. 6
INJECTOR
HIGH
SIDE
DRIVER-
BANK 2
INJECTOR
CONTROL NO. 4
INJECTOR
CONTROL NO. 5
46 C1
57 C1
36 C1
56 C1
K58
16
BR/VT
K229
16
TN/PK
K14
16
BR/TN
K38
16
GY
S175
S170
S177
S174
K58
14
BR/VT
K229
14
TN/PK
K229
14
TN/PK
K229
14
TN/PK
K14
14
BR/TN
K38
14
GY
TWISTED
PAIR
1
2
C116
K229
14
BK
K14
14
BK
2
INJECTOR-
FUEL-NO. 4
1
TWISTED
PAIR
TWISTED
PAIR
TWISTED
PAIR
2
1
3
4
C117
K58
14
BK
K229
14
BK
K229
14
BK
K38
14
BK
1
INJECTOR-
FUEL-NO. 6
2
1
INJECTOR-
FUEL-NO. 5
2

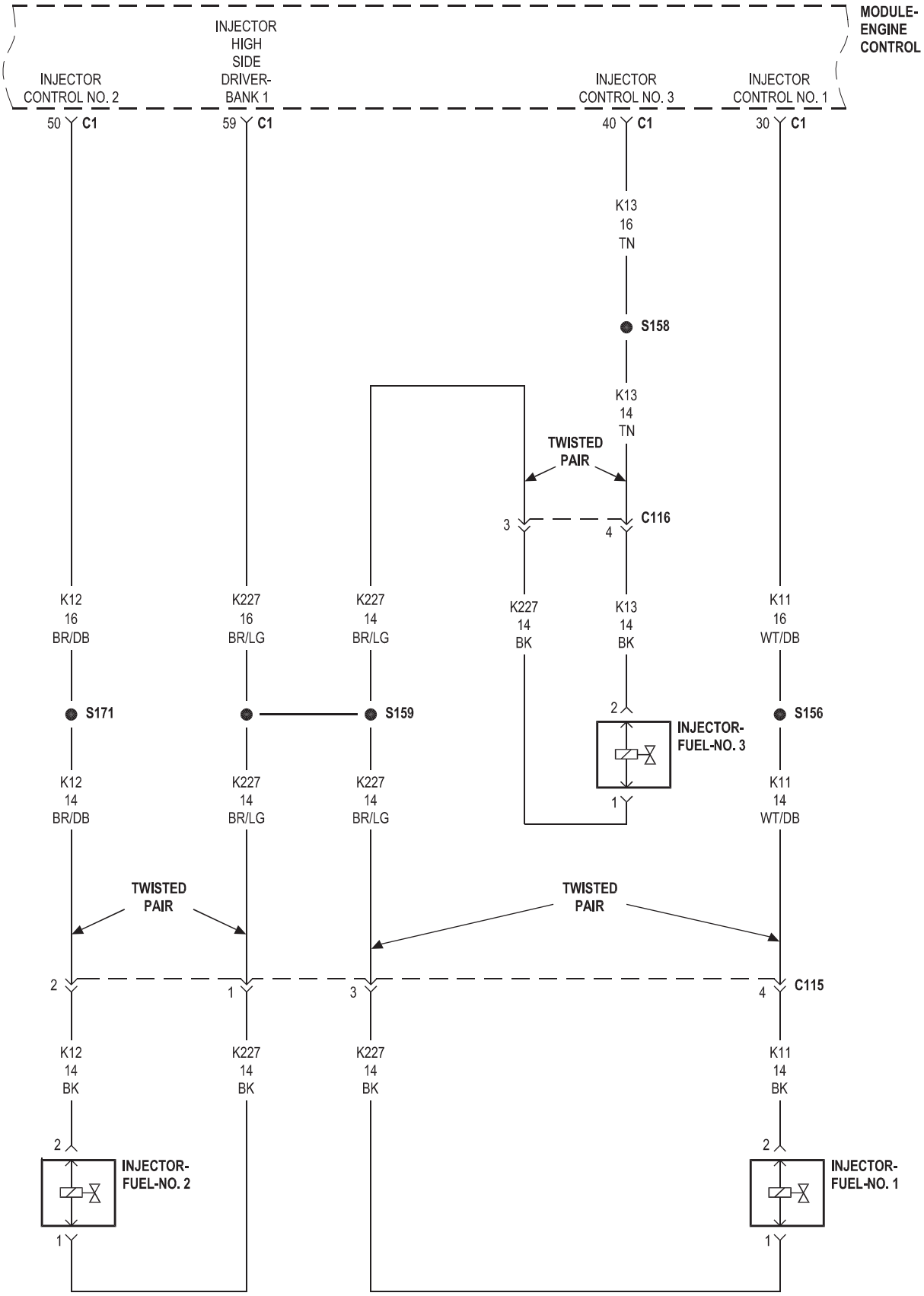
MODULE-
ENGINE
CONTROL
INJECTOR
CONTROL NO. 2
INJECTOR
HIGH
SIDE
DRIVER-
BANK 1
INJECTOR
CONTROL NO. 3
INJECTOR
CONTROL NO. 1
50 C1
59 C1
40 C1
30 C1
K13
16
TN
S158
K13
14
TN
TWISTED
PAIR
3
C116
4
K12
16
BR/DB
K227
16
BR/LG
K227
14
BR/LG
K227
14
BK
K13
14
BK
K11
16
WT/DB
S171
S159
2
INJECTOR-
FUEL-NO. 3
S156
1
K12
14
BR/DB
K227
14
BR/LG
K227
14
BR/LG
K11
14
WT/DB
TWISTED
PAIR
TWISTED
PAIR
2
1
3
4
C115
K12
14
BK
K227
14
BK
K227
14
BK
K11
14
BK
2
INJECTOR-
FUEL-NO. 2
2
INJECTOR-
FUEL-NO. 1
1
1

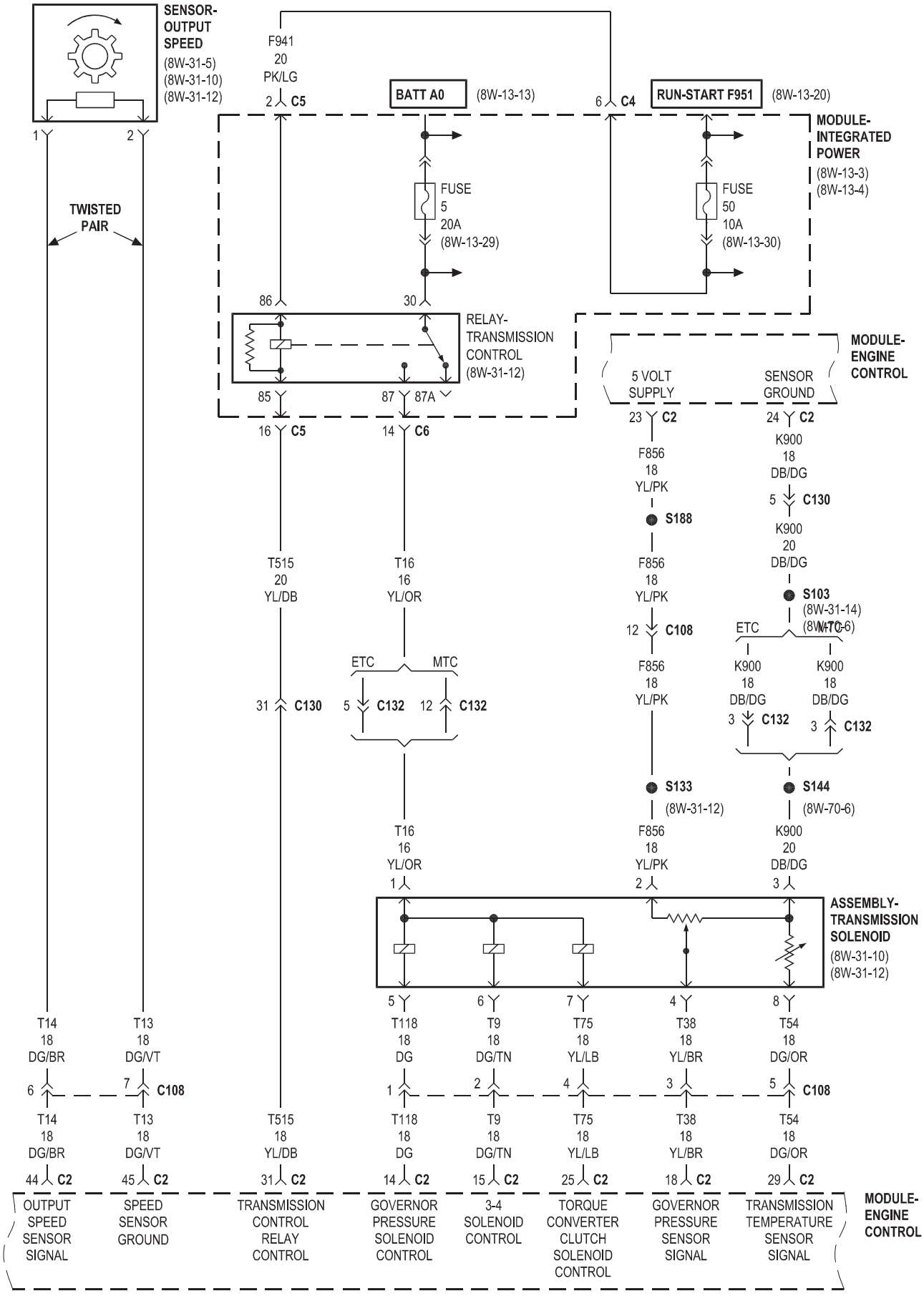
SENSOR-OUTPUT SPEED
(8W-31-5)
(8W-31-10)
(8W-31-12)
1
2
TWISTED PAIR
F941
20
PK/LG
2 C5
BATT A0
(8W-13-13)
6 C4
RUN-START F951
(8W-13-20)
MODULE-INTEGRATED POWER
(8W-13-3)
(8W-13-4)
FUSE
5
20A
(8W-13-29)
FUSE
50
10A
(8W-13-30)
86
30
RELAY-TRANSMISSION CONTROL
(8W-31-12)
85
87
87A
MODULE-ENGINE CONTROL
5 VOLT SUPPLY
SENSOR GROUND
16 C5
14 C6
23 C2
24 C2
F856
18
YL/PK
K900
18
DB/DG
5 C130
S188
K900
20
DB/DG
T515
20
YL/DB
T16
16
YL/OR
F856
18
YL/PK
S103
(8W-31-14)
(8W-70-6)
12 C108
ETC
MTC
K900
18
DB/DG
31 C130
5 C132
12 C132
3 C132
3 C132
F856
18
YL/PK
S133
(8W-31-12)
S144
(8W-70-6)
T16
16
YL/OR
1
F856
18
YL/PK
2
K900
20
DB/DG
3
ASSEMBLY-TRANSMISSION SOLENOID
(8W-31-10)
(8W-31-12)
5
6
7
4
8
T14
18
DG/BR
T13
18
DG/VT
6
7 C108
T118
18
DG
T9
18
DG/TN
T75
18
YL/LB
T38
18
YL/BR
T54
18
DG/OR
1
2
4
3
5 C108
T14
18
DG/BR
T13
18
DG/VT
T515
18
YL/DB
T118
18
DG
T9
18
DG/TN
T75
18
YL/LB
T38
18
YL/BR
T54
18
DG/OR
44 C2
45 C2
31 C2
14 C2
15 C2
25 C2
18 C2
29 C2
MODULE-ENGINE CONTROL
OUTPUT SPEED SENSOR SIGNAL
SPEED SENSOR GROUND
TRANSMISSION CONTROL RELAY CONTROL
GOVERNOR PRESSURE SOLENOID CONTROL
3-4 SOLENOID CONTROL
TORQUE CONVERTER CLUTCH SOLENOID CONTROL
GOVERNOR PRESSURE SENSOR SIGNAL
TRANSMISSION TEMPERATURE SENSOR SIGNAL

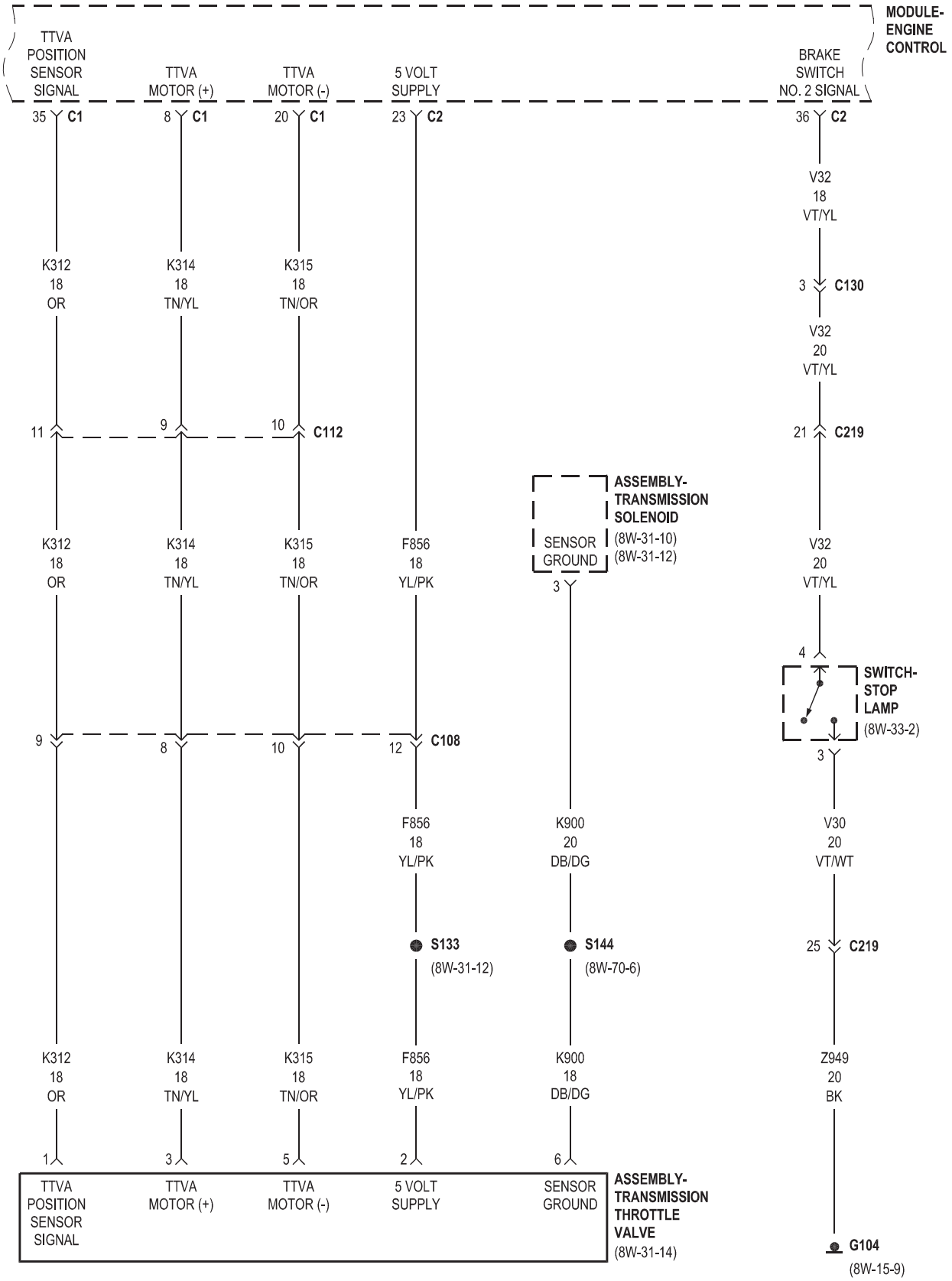
MODULE-ENGINE CONTROL
TTVA POSITION SENSOR SIGNAL
TTVA MOTOR (+)
TTVA MOTOR (-)
5 VOLT SUPPLY
BRAKE SWITCH NO. 2 SIGNAL
35 C1
8 C1
20 C1
23 C2
36 C2
V32 18 VT/YL
3 C130
V32 20 VT/YL
21 C219
K312 18 OR
K314 18 TN/YL
K315 18 TN/OR
11
9
10 C112
ASSEMBLY-TRANSMISSION SOLENOID
(8W-31-10)
(8W-31-12)
SENSOR GROUND
3
F856 18 YL/PK
V32 20 VT/YL
4
SWITCH-STOP LAMP
(8W-33-2)
3
9
8
10
12 C108
F856 18 YL/PK
K900 20 DB/DG
V30 20 VT/WT
S133
(8W-31-12)
S144
(8W-70-6)
25 C219
K312 18 OR
K314 18 TN/YL
K315 18 TN/OR
F856 18 YL/PK
K900 18 DB/DG
Z949 20 BK
1
3
5
2
6
TTVA POSITION SENSOR SIGNAL
TTVA MOTOR (+)
TTVA MOTOR (-)
5 VOLT SUPPLY
SENSOR GROUND
ASSEMBLY-TRANSMISSION THROTTLE VALVE
(8W-31-14)
G104
(8W-15-9)

8W-31 TRANSMISSION CONTROL SYSTEM

Component	Page
Assembly-Shift Motor/Mode Sensor	8W-31-16, 17, 18
Assembly-Transmission Solenoid	8W-31-10, 12, 14
Assembly-Transmission Solenoid/TRS	8W-31-2, 3, 4
Assembly-Transmission Throttle Valve	8W-31-12, 14
Clockspring	8W-31-14
Cluster	8W-31-8, 11, 13, 19
Data Link Connector	8W-31-16
Fuse 5	8W-31-2, 10, 12
Fuse 28	8W-31-19
Fuse 38	8W-31-2, 11, 13
Fuse 43	8W-31-7, 15
Fuse 50	8W-31-12
G103	8W-31-2
G104	8W-31-2, 7, 16, 19
G106	8W-31-7, 8, 16, 19
G107	8W-31-5, 19
G201	8W-31-3, 14
Mirror-Inside Rearview	8W-31-11, 13
Module-Engine Control	8W-31-12, 13, 14
Module-Final Drive Control	8W-31-7, 8, 9
Module-Front Control	8W-31-2, 7, 11
Module-Integrated Power	8W-31-2, 7, 10, 11, 12, 13, 15, 19
Module-Powertrain Conrtol	8W-31-15
Module-Powertrain Control	8W-31-2, 3, 4, 5, 6, 10, 11
Module-Transfer Case Control	8W-31-15, 16, 17, 18, 19
PTC No. 1	8W-31-7
Relay-Starter Motor	8W-31-15
Relay-Transmission Control	8W-31-2, 10, 12
Sensor-Input Speed	8W-31-5
Sensor-Line Pressure	8W-31-6
Sensor-Output Speed	8W-31-5, 10, 12
Sensor-Transfer Case Position	8W-31-9, 19
Sensor-Transmission Range	8W-31-11, 13
Solenoid-Locker Front	8W-31-9
Solenoid-Locker Rear	8W-31-9
Switch-Axle Lock	8W-31-8
Switch-Clutch Interlock	8W-31-15
Switch-Disconnecting Stabilizer Bar	8W-31-7, 8
Switch-Speed Control-Left	8W-31-14
Switch-Speed Control-Right	8W-31-14
Switch-Tow/Haul Overdrive	8W-31-3, 14
Switch-Transfer Case Selector	8W-31-15, 19

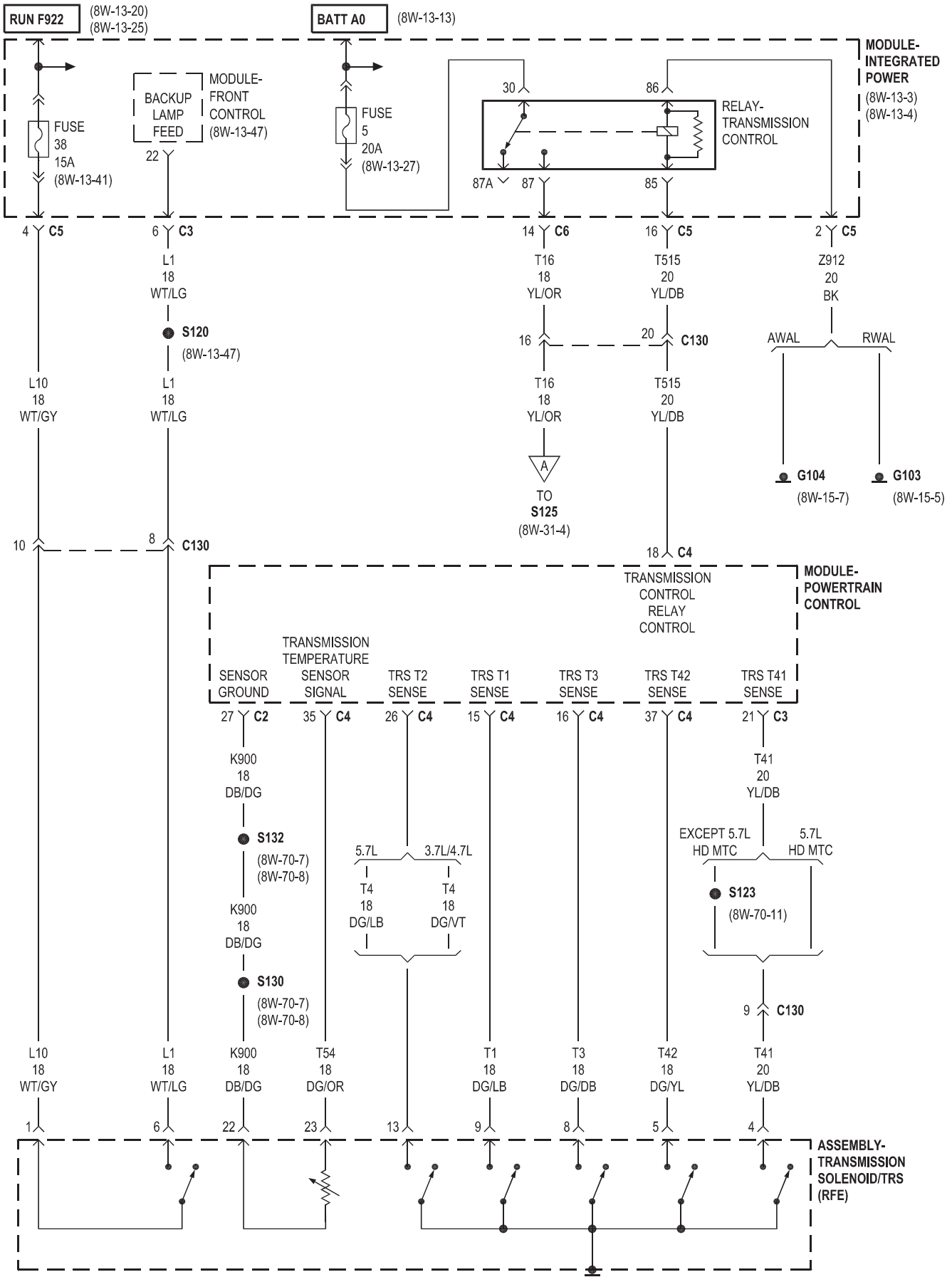
RUN F922
(8W-13-20)
(8W-13-25)
BATT A0
(8W-13-13)
MODULE-
INTEGRATED
POWER
(8W-13-3)
(8W-13-4)
FUSE
38
15A
(8W-13-41)
BACKUP
LAMP
FEED
MODULE-
FRONT
CONTROL
(8W-13-47)
FUSE
5
20A
(8W-13-27)
30
86
RELAY-
TRANSMISSION
CONTROL
87A
87
85
4 C5
6 C3
14 C6
16 C5
2 C5
L1
18
WT/LG
T16
18
YL/OR
T515
20
YL/DB
Z912
20
BK
S120
(8W-13-47)
16
20 C130
AWAL
RWAL
L10
18
WT/GY
L1
18
WT/LG
T16
18
YL/OR
T515
20
YL/DB
A
TO
S125
(8W-31-4)
G104
(8W-15-7)
G103
(8W-15-5)
10
8 C130
18 C4
MODULE-
POWERTRAIN
CONTROL
TRANSMISSION
CONTROL
RELAY
CONTROL
TRANSMISSION
TEMPERATURE
SENSOR
SIGNAL
SENSOR
GROUND
TRS T2
SENSE
TRS T1
SENSE
TRS T3
SENSE
TRS T42
SENSE
TRS T41
SENSE
27 C2
35 C4
26 C4
15 C4
16 C4
37 C4
21 C3
K900
18
DB/DG
T41
20
YL/DB
S132
(8W-70-7)
(8W-70-8)
5.7L
3.7L/4.7L
EXCEPT 5.7L
HD MTC
5.7L
HD MTC
T4
18
DG/LB
T4
18
DG/VT
S123
(8W-70-11)
K900
18
DB/DG
S130
(8W-70-7)
(8W-70-8)
9 C130
L10
18
WT/GY
L1
18
WT/LG
K900
18
DB/DG
T54
18
DG/OR
T1
18
DG/LB
T3
18
DG/DB
T42
18
DG/YL
T41
20
YL/DB
1
6
22
23
13
9
8
5
4
ASSEMBLY-
TRANSMISSION
SOLENOID/TRS
(RFE)

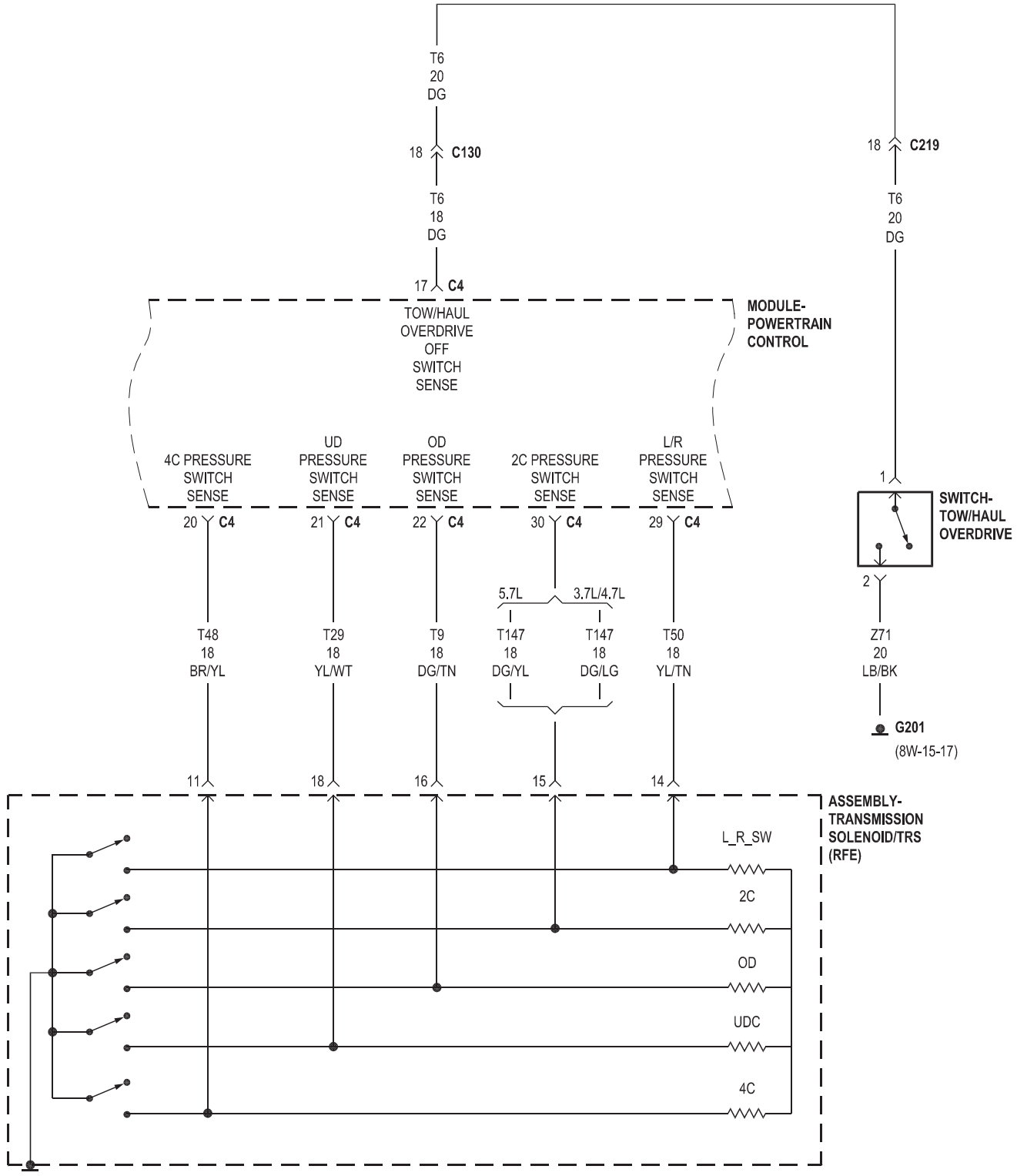
T6
20
DG
18 C130
T6
18
DG
17 C4
TOW/HAUL
OVERDRIVE
OFF
SWITCH
SENSE
MODULE-
POWERTRAIN
CONTROL
4C PRESSURE
SWITCH
SENSE
UD
PRESSURE
SWITCH
SENSE
OD
PRESSURE
SWITCH
SENSE
2C PRESSURE
SWITCH
SENSE
L/R
PRESSURE
SWITCH
SENSE
20 C4
21 C4
22 C4
30 C4
29 C4
5.7L
3.7L/4.7L
T48
18
BR/YL
T29
18
YL/WT
T9
18
DG/TN
T147
18
DG/YL
T147
18
DG/LG
T50
18
YL/TN
11
18
16
15
14
18 C219
T6
20
DG
1
SWITCH-
TOW/HAUL
OVERDRIVE
2
Z71
20
LB/BK
G201
(8W-15-17)
ASSEMBLY-
TRANSMISSION
SOLENOID/TRS
(RFE)
L_R_SW
2C
OD
UDC
4C

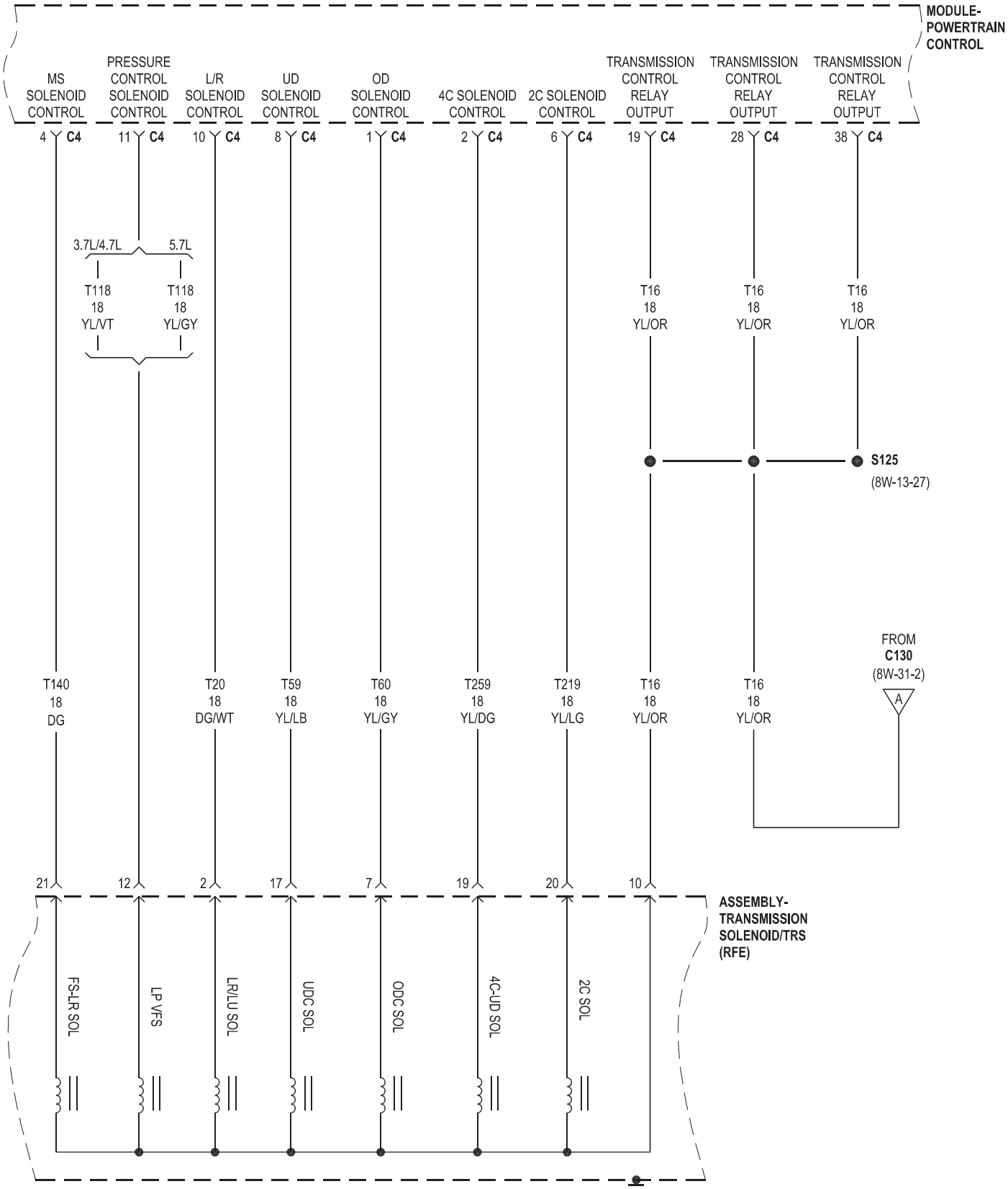
MODULE-
POWERTRAIN
CONTROL
MS SOLENOID CONTROL
PRESSURE CONTROL SOLENOID CONTROL
L/R SOLENOID CONTROL
UD SOLENOID CONTROL
OD SOLENOID CONTROL
4C SOLENOID CONTROL
2C SOLENOID CONTROL
TRANSMISSION CONTROL RELAY OUTPUT
TRANSMISSION CONTROL RELAY OUTPUT
TRANSMISSION CONTROL RELAY OUTPUT
4 C4
11 C4
10 C4
8 C4
1 C4
2 C4
6 C4
19 C4
28 C4
38 C4
3.7L/4.7L
5.7L
T118 18 YL/VT
T118 18 YL/GY
T16 18 YL/OR
T16 18 YL/OR
T16 18 YL/OR
S125
(8W-13-27)
FROM C130
(8W-31-2)
A
T140 18 DG
T20 18 DG/WT
T59 18 YL/LB
T60 18 YL/GY
T259 18 YL/DG
T219 18 YL/LG
T16 18 YL/OR
T16 18 YL/OR
21
12
2
17
7
19
20
10
ASSEMBLY-
TRANSMISSION
SOLENOID/TRS
(RFE)
FS-LR SOL
LP VFS
LR/LU SOL
UDC SOL
ODC SOL
4C-UD SOL
2C SOL

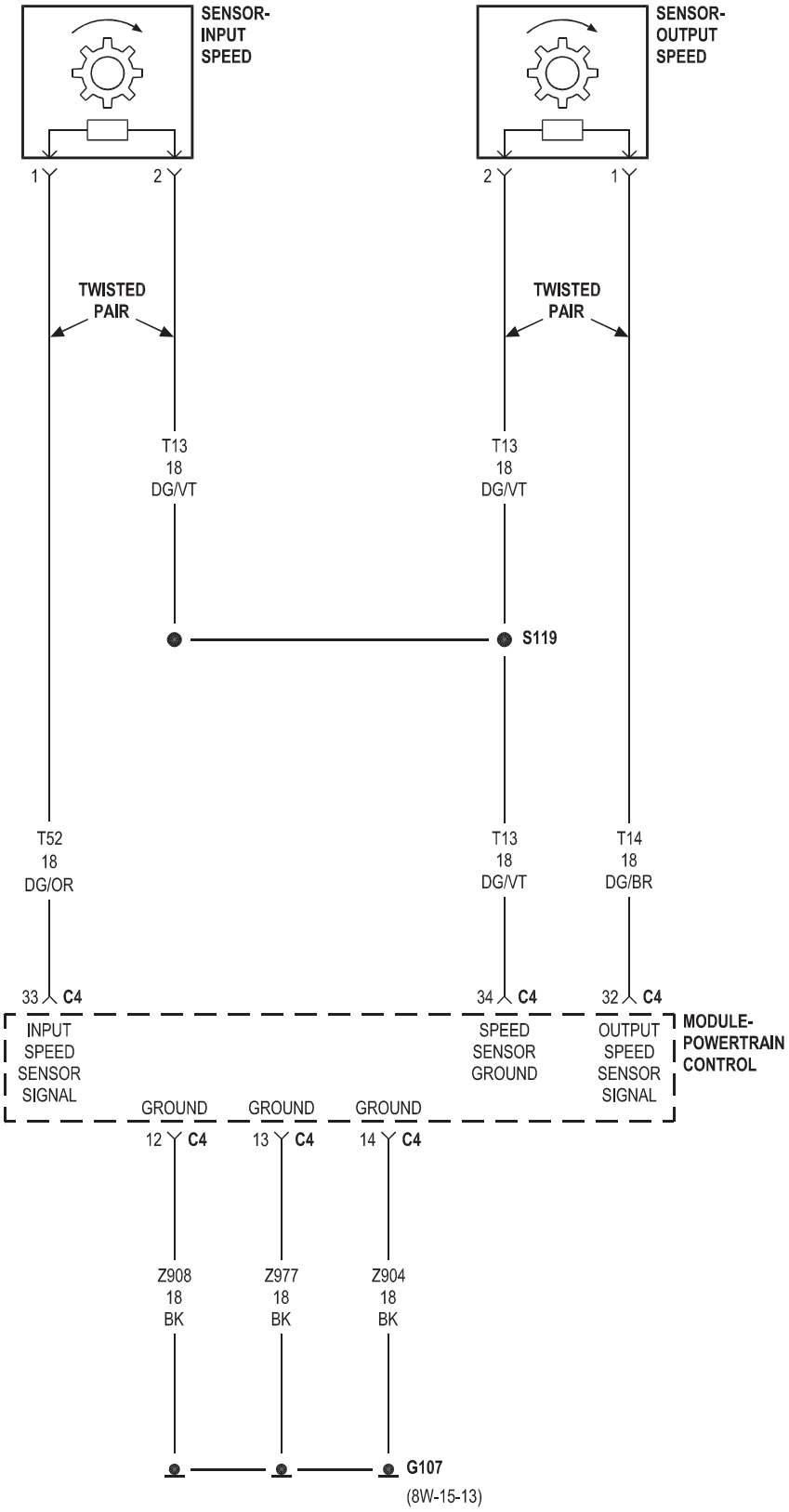
SENSOR-
INPUT
SPEED
SENSOR-
OUTPUT
SPEED
1
2
2
1
TWISTED
PAIR
TWISTED
PAIR
T13
18
DG/VT
T13
18
DG/VT
S119
T52
18
DG/OR
T13
18
DG/VT
T14
18
DG/BR
33 C4
34 C4
32 C4
INPUT
SPEED
SENSOR
SIGNAL
SPEED
SENSOR
GROUND
OUTPUT
SPEED
SENSOR
SIGNAL
MODULE-
POWERTRAIN
CONTROL
GROUND
GROUND
GROUND
12 C4
13 C4
14 C4
Z908
18
BK
Z977
18
BK
Z904
18
BK
G107
(8W-15-13)

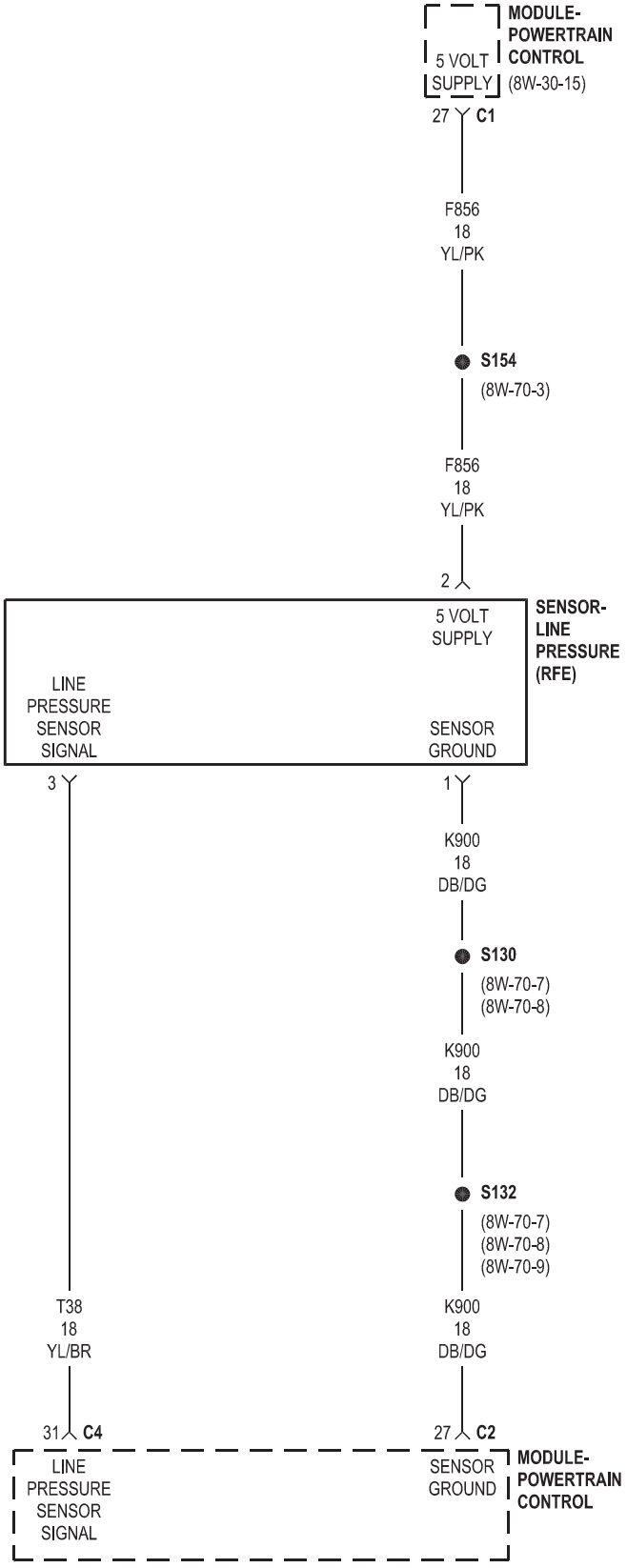
MODULE-
POWERTRAIN
CONTROL
5 VOLT
SUPPLY
(8W-30-15)
27
C1
F856
18
YL/PK
S154
(8W-70-3)
F856
18
YL/PK
2
5 VOLT
SUPPLY
SENSOR-
LINE
PRESSURE
(RFE)
LINE
PRESSURE
SENSOR
SIGNAL
SENSOR
GROUND
3
1
K900
18
DB/DG
S130
(8W-70-7)
(8W-70-8)
K900
18
DB/DG
S132
(8W-70-7)
(8W-70-8)
(8W-70-9)
T38
18
YL/BR
K900
18
DB/DG
31
C4
27
C2
LINE
PRESSURE
SENSOR
SIGNAL
SENSOR
GROUND
MODULE-
POWERTRAIN
CONTROL

5.7L HD

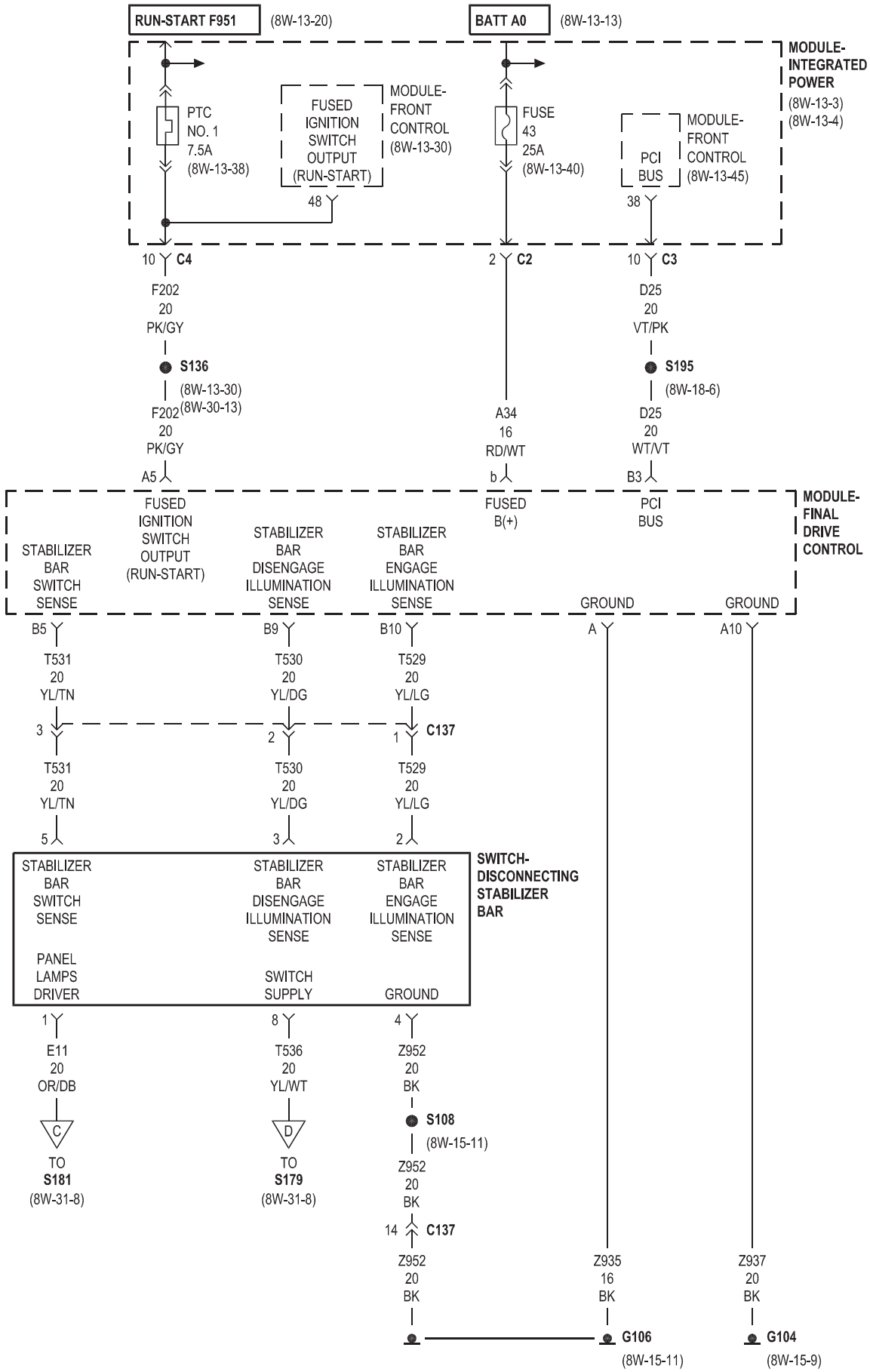
RUN-START F951
(8W-13-20)
BATT A0
(8W-13-13)
MODULE-INTEGRATED POWER
(8W-13-3)
(8W-13-4)
PTC NO. 1 7.5A
(8W-13-38)
FUSED IGNITION SWITCH OUTPUT (RUN-START)
MODULE-FRONT CONTROL
(8W-13-30)
48
FUSE 43 25A
(8W-13-40)
PCI BUS
MODULE-FRONT CONTROL
(8W-13-45)
38
10 C4
F202 20 PK/GY
S136
(8W-13-30)
F202 20 PK/GY
(8W-30-13)
A5
2 C2
A34 16 RD/WT
b
10 C3
D25 20 VT/PK
S195
(8W-18-6)
D25 20 WT/VT
B3
MODULE-FINAL DRIVE CONTROL
STABILIZER BAR SWITCH SENSE
FUSED IGNITION SWITCH OUTPUT (RUN-START)
STABILIZER BAR DISENGAGE ILLUMINATION SENSE
STABILIZER BAR ENGAGE ILLUMINATION SENSE
FUSED B(+)
PCI BUS
GROUND
GROUND
B5
T531 20 YL/TN
B9
T530 20 YL/DG
B10
T529 20 YL/LG
A
A10
3
2
1 C137
T531 20 YL/TN
T530 20 YL/DG
T529 20 YL/LG
5
3
2
SWITCH-DISCONNECTING STABILIZER BAR
STABILIZER BAR SWITCH SENSE
STABILIZER BAR DISENGAGE ILLUMINATION SENSE
STABILIZER BAR ENGAGE ILLUMINATION SENSE
PANEL LAMPS DRIVER
SWITCH SUPPLY
GROUND
1
8
4
E11 20 OR/DB
T536 20 YL/WT
Z952 20 BK
C
D
S108
(8W-15-11)
TO S181
(8W-31-8)
TO S179
(8W-31-8)
Z952 20 BK
14 C137
Z952 20 BK
Z935 16 BK
Z937 20 BK
G106
(8W-15-11)
G104
(8W-15-9)

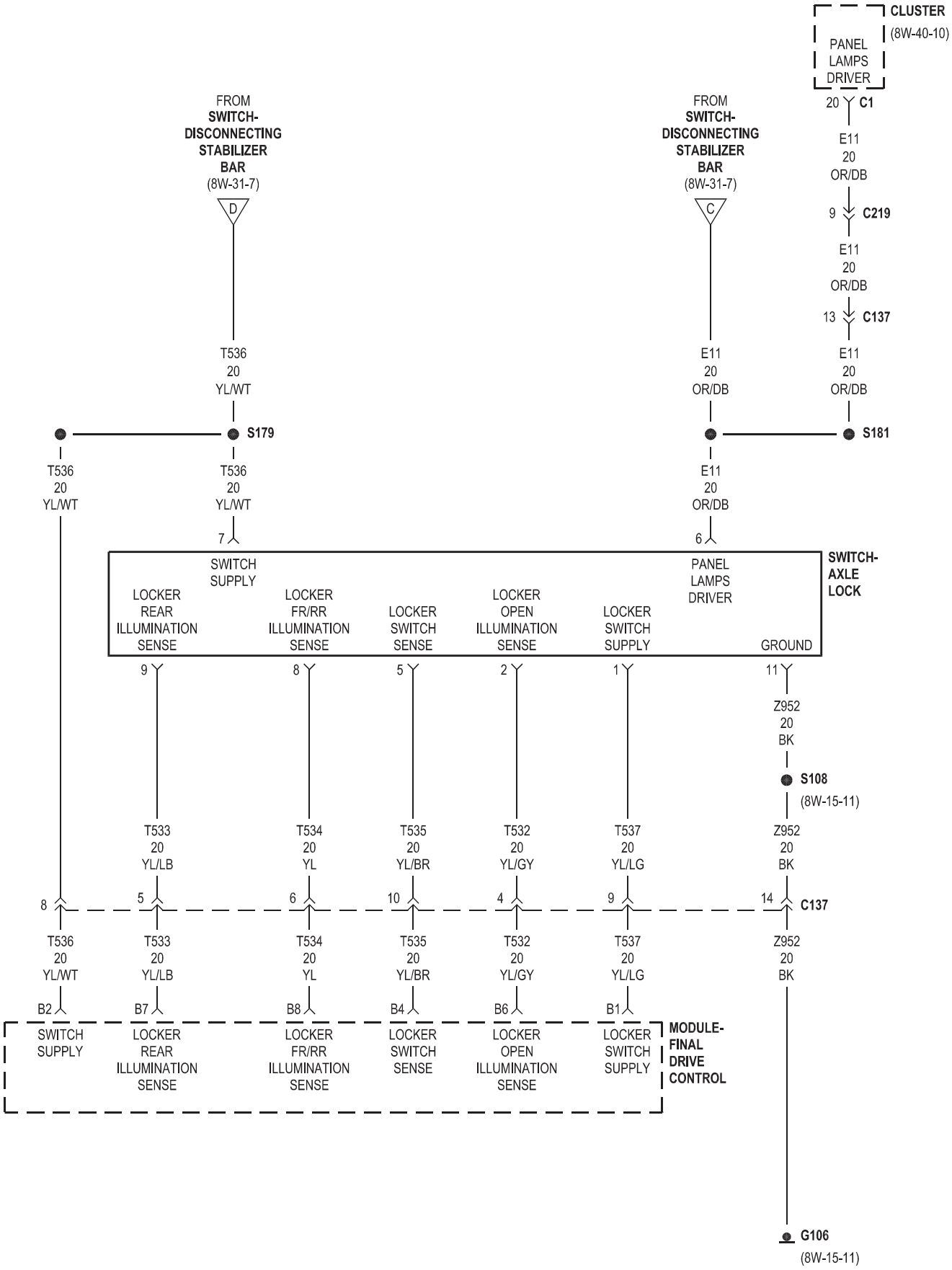
CLUSTER
(8W-40-10)
PANEL LAMPS DRIVER
20 C1
E11 20 OR/DB
9 C219
E11 20 OR/DB
13 C137
E11 20 OR/DB
S181
FROM SWITCH-DISCONNECTING STABILIZER BAR (8W-31-7)
D
C
T536 20 YL/WT
E11 20 OR/DB
S179
T536 20 YL/WT
E11 20 OR/DB
7
6
SWITCH-AXLE LOCK
SWITCH SUPPLY
LOCKER REAR ILLUMINATION SENSE
LOCKER FR/RR ILLUMINATION SENSE
LOCKER SWITCH SENSE
LOCKER OPEN ILLUMINATION SENSE
LOCKER SWITCH SUPPLY
PANEL LAMPS DRIVER
GROUND
9
8
5
2
1
11
Z952 20 BK
S108
(8W-15-11)
T533 20 YL/LB
T534 20 YL
T535 20 YL/BR
T532 20 YL/GY
T537 20 YL/LG
Z952 20 BK
8
5
6
10
4
9
14
C137
T536 20 YL/WT
T533 20 YL/LB
T534 20 YL
T535 20 YL/BR
T532 20 YL/GY
T537 20 YL/LG
Z952 20 BK
B2
B7
B8
B4
B6
B1
SWITCH SUPPLY
LOCKER REAR ILLUMINATION SENSE
LOCKER FR/RR ILLUMINATION SENSE
LOCKER SWITCH SENSE
LOCKER OPEN ILLUMINATION SENSE
LOCKER SWITCH SUPPLY
MODULE-FINAL DRIVE CONTROL
G106
(8W-15-11)

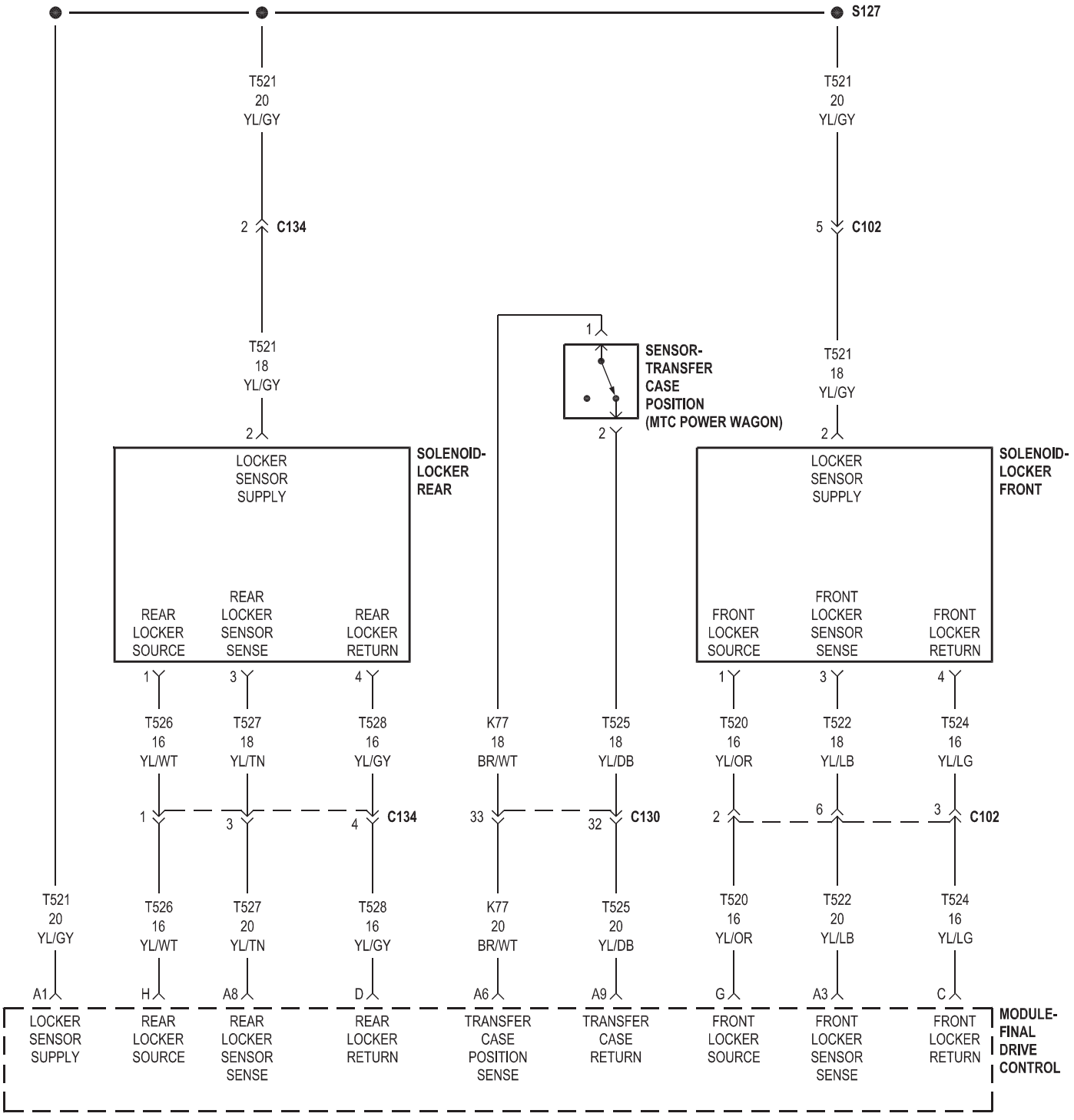
S127
T521
20
YL/GY
2
C134
T521
18
YL/GY
2
LOCKER
SENSOR
SUPPLY
SOLENOID-
LOCKER
REAR
REAR
LOCKER
SOURCE
REAR
LOCKER
SENSOR
SENSE
REAR
LOCKER
RETURN
1
3
4
T526
16
YL/WT
T527
18
YL/TN
T528
16
YL/GY
1
3
4
C134
T521
20
YL/GY
T526
16
YL/WT
T527
20
YL/TN
T528
16
YL/GY
A1
H
A8
D
LOCKER
SENSOR
SUPPLY
REAR
LOCKER
SOURCE
REAR
LOCKER
SENSOR
SENSE
REAR
LOCKER
RETURN
1
SENSOR-
TRANSFER
CASE
POSITION
(MTC POWER WAGON)
2
K77
18
BR/WT
T525
18
YL/DB
33
32
C130
K77
20
BR/WT
T525
20
YL/DB
A6
A9
TRANSFER
CASE
POSITION
SENSE
TRANSFER
CASE
RETURN
T521
20
YL/GY
5
C102
T521
18
YL/GY
2
LOCKER
SENSOR
SUPPLY
SOLENOID-
LOCKER
FRONT
FRONT
LOCKER
SOURCE
FRONT
LOCKER
SENSOR
SENSE
FRONT
LOCKER
RETURN
1
3
4
T520
16
YL/OR
T522
18
YL/LB
T524
16
YL/LG
2
6
3
C102
T520
16
YL/OR
T522
20
YL/LB
T524
16
YL/LG
G
A3
C
FRONT
LOCKER
SOURCE
FRONT
LOCKER
SENSOR
SENSE
FRONT
LOCKER
RETURN
MODULE-
FINAL
DRIVE
CONTROL

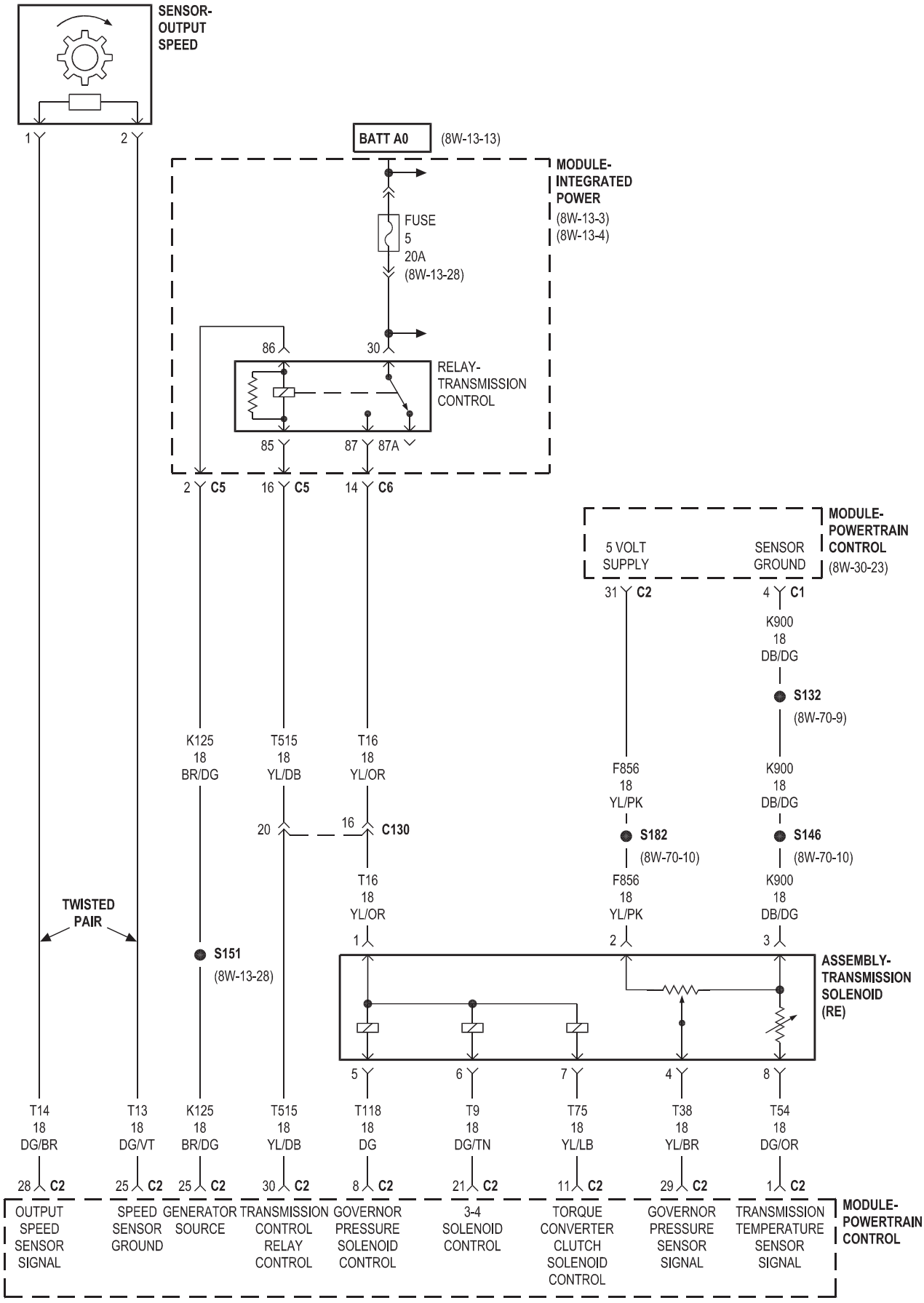
SENSOR-
OUTPUT
SPEED
1
2
BATT A0
(8W-13-13)
MODULE-
INTEGRATED
POWER
(8W-13-3)
(8W-13-4)
FUSE
5
20A
(8W-13-28)
86
30
RELAY-
TRANSMISSION
CONTROL
85
87
87A
2 C5
16 C5
14 C6
MODULE-
POWERTRAIN
CONTROL
(8W-30-23)
5 VOLT
SUPPLY
SENSOR
GROUND
31 C2
4 C1
K900
18
DB/DG
S132
(8W-70-9)
K125
18
BR/DG
T515
18
YL/DB
T16
18
YL/OR
F856
18
YL/PK
S182
(8W-70-10)
K900
18
DB/DG
S146
(8W-70-10)
20
16 C130
T16
18
YL/OR
F856
18
YL/PK
K900
18
DB/DG
TWISTED
PAIR
S151
(8W-13-28)
1
2
3
ASSEMBLY-
TRANSMISSION
SOLENOID
(RE)
5
6
7
4
8
T14
18
DG/BR
T13
18
DG/VT
K125
18
BR/DG
T515
18
YL/DB
T118
18
DG
T9
18
DG/TN
T75
18
YL/LB
T38
18
YL/BR
T54
18
DG/OR
28 C2
25 C2
25 C2
30 C2
8 C2
21 C2
11 C2
29 C2
1 C2
OUTPUT
SPEED
SENSOR
SIGNAL
SPEED
SENSOR
GROUND
GENERATOR
SOURCE
TRANSMISSION
CONTROL
RELAY
CONTROL
GOVERNOR
PRESSURE
SOLENOID
CONTROL
3-4
SOLENOID
CONTROL
TORQUE
CONVERTER
CLUTCH
SOLENOID
CONTROL
GOVERNOR
PRESSURE
SENSOR
SIGNAL
TRANSMISSION
TEMPERATURE
SENSOR
SIGNAL
MODULE-
POWERTRAIN
CONTROL

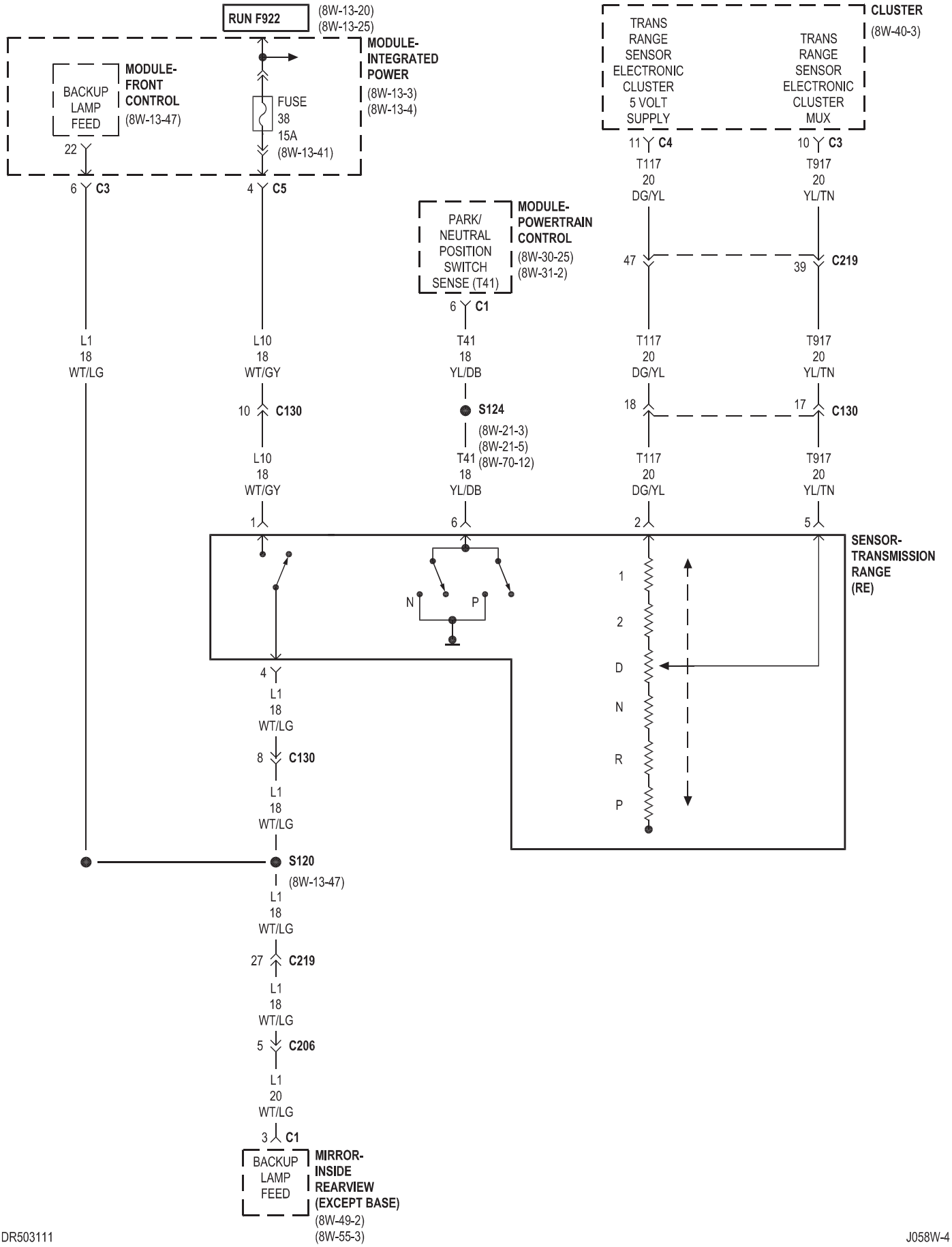
RUN F922
(8W-13-20)
(8W-13-25)
MODULE-
INTEGRATED
POWER
(8W-13-3)
(8W-13-4)
BACKUP
LAMP
FEED
MODULE-
FRONT
CONTROL
(8W-13-47)
22
FUSE
38
15A
(8W-13-41)
6 C3
4 C5
CLUSTER
(8W-40-3)
TRANS
RANGE
SENSOR
ELECTRONIC
CLUSTER
5 VOLT
SUPPLY
TRANS
RANGE
SENSOR
ELECTRONIC
CLUSTER
MUX
11 C4
10 C3
T117
20
DG/YL
T917
20
YL/TN
PARK/
NEUTRAL
POSITION
SWITCH
SENSE (T41)
MODULE-
POWERTRAIN
CONTROL
(8W-30-25)
(8W-31-2)
6 C1
47
39 C219
L1
18
WT/LG
L10
18
WT/GY
T41
18
YL/DB
T117
20
DG/YL
T917
20
YL/TN
10 C130
S124
(8W-21-3)
(8W-21-5)
(8W-70-12)
18
17 C130
1
6
2
5
SENSOR-
TRANSMISSION
RANGE
(RE)
N
P
1
2
D
N
R
P
4
8 C130
S120
(8W-13-47)
27 C219
5 C206
20
WT/LG
3 C1
BACKUP
LAMP
FEED
MIRROR-
INSIDE
REARVIEW
(EXCEPT BASE)
(8W-49-2)
(8W-55-3)

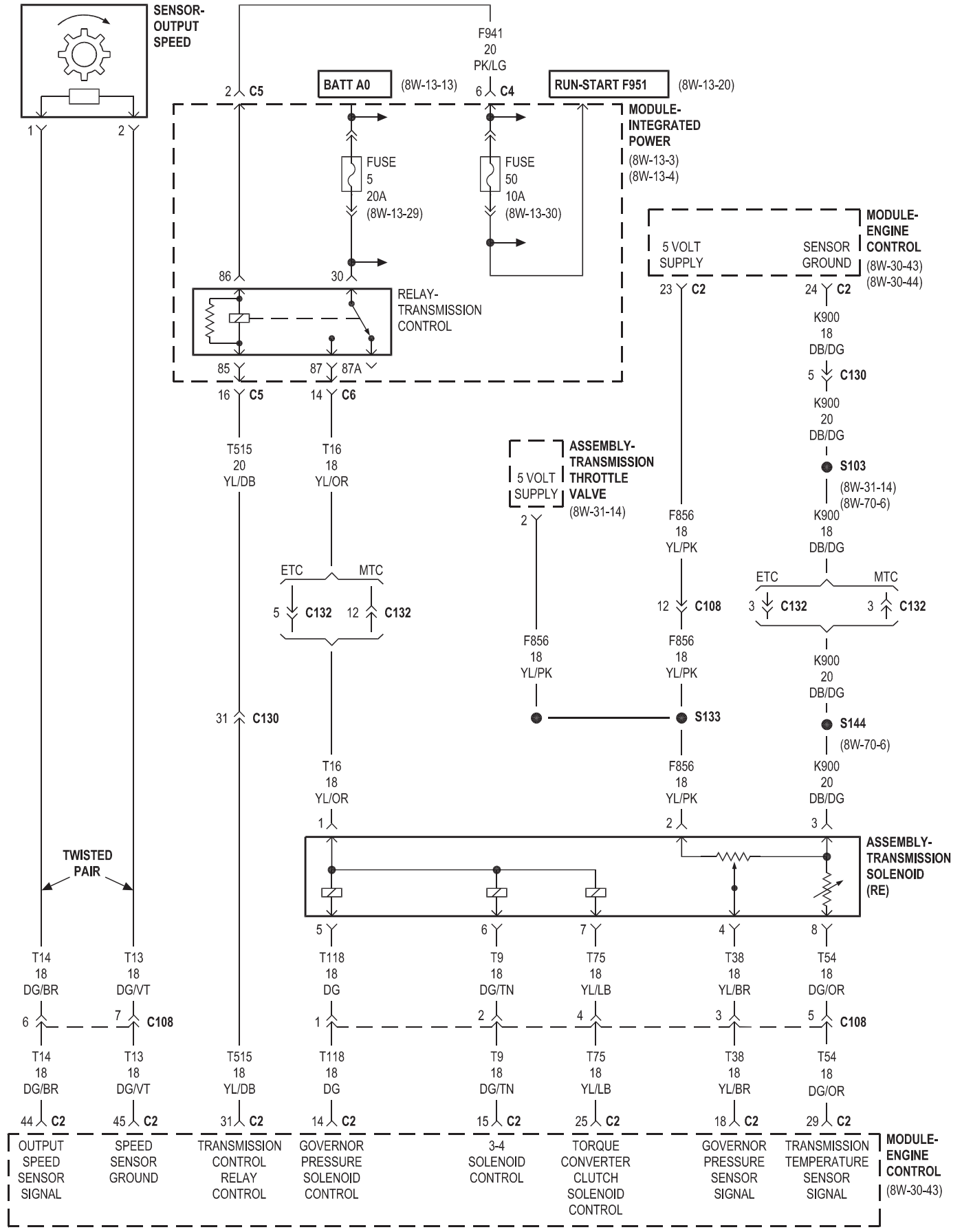
SENSOR-
OUTPUT
SPEED
1
2
F941
20
PK/LG
2 C5
BATT A0
(8W-13-13)
6 C4
RUN-START F951
(8W-13-20)
MODULE-
INTEGRATED
POWER
(8W-13-3)
(8W-13-4)
FUSE
5
20A
(8W-13-29)
FUSE
50
10A
(8W-13-30)
86
30
RELAY-
TRANSMISSION
CONTROL
85
87
87A
16 C5
14 C6
MODULE-
ENGINE
CONTROL
(8W-30-43)
(8W-30-44)
5 VOLT
SUPPLY
SENSOR
GROUND
23 C2
24 C2
K900
18
DB/DG
5 C130
K900
20
DB/DG
S103
(8W-31-14)
(8W-70-6)
T515
20
YL/DB
T16
18
YL/OR
ASSEMBLY-
TRANSMISSION
THROTTLE
VALVE
(8W-31-14)
5 VOLT
SUPPLY
2
F856
18
YL/PK
ETC
MTC
5 C132
12 C132
12 C108
3 C132
3 C132
F856
18
YL/PK
F856
18
YL/PK
K900
18
DB/DG
K900
20
DB/DG
S133
S144
(8W-70-6)
31 C130
T16
18
YL/OR
F856
18
YL/PK
K900
20
DB/DG
1
2
3
TWISTED
PAIR
ASSEMBLY-
TRANSMISSION
SOLENOID
(RE)
5
6
7
4
8
T14
18
DG/BR
T13
18
DG/VT
T118
18
DG
T9
18
DG/TN
T75
18
YL/LB
T38
18
YL/BR
T54
18
DG/OR
6
7 C108
1
2
4
3
5 C108
T14
18
DG/BR
T13
18
DG/VT
T515
18
YL/DB
T118
18
DG
T9
18
DG/TN
T75
18
YL/LB
T38
18
YL/BR
T54
18
DG/OR
44 C2
45 C2
31 C2
14 C2
15 C2
25 C2
18 C2
29 C2
OUTPUT
SPEED
SENSOR
SIGNAL
SPEED
SENSOR
GROUND
TRANSMISSION
CONTROL
RELAY
CONTROL
GOVERNOR
PRESSURE
SOLENOID
CONTROL
3-4
SOLENOID
CONTROL
TORQUE
CONVERTER
CLUTCH
SOLENOID
CONTROL
GOVERNOR
PRESSURE
SENSOR
SIGNAL
TRANSMISSION
TEMPERATURE
SENSOR
SIGNAL
MODULE-
ENGINE
CONTROL
(8W-30-43)

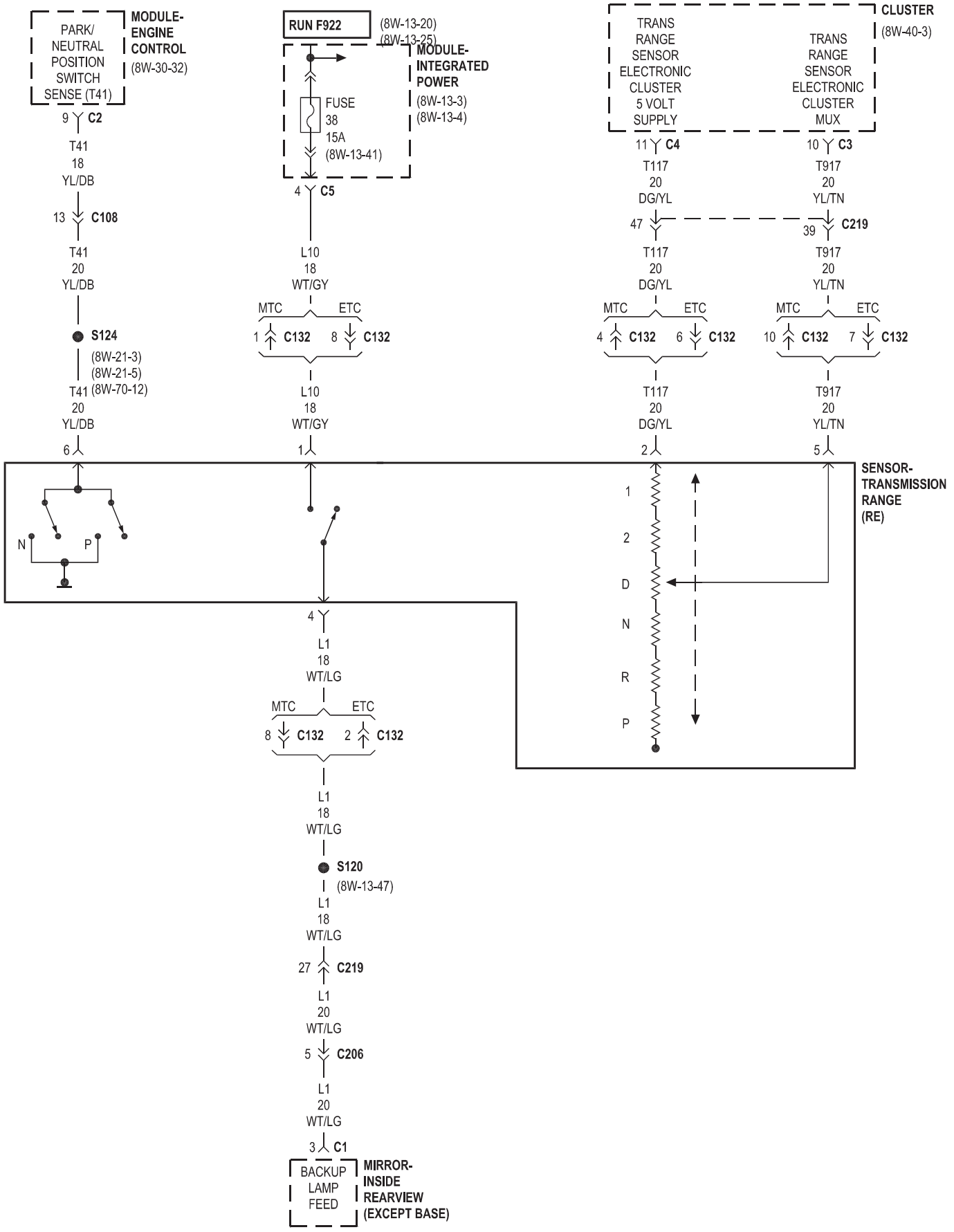
PARK/ NEUTRAL POSITION SWITCH SENSE (T41)
MODULE- ENGINE CONTROL
(8W-30-32)
9 C2
T41 18 YL/DB
13 C108
T41 20 YL/DB
S124
(8W-21-3)
(8W-21-5)
(8W-70-12)
T41 20 YL/DB
6
RUN F922
(8W-13-20)
(8W-13-25)
MODULE- INTEGRATED POWER
FUSE 38 15A
(8W-13-41)
(8W-13-3)
(8W-13-4)
4 C5
L10 18 WT/GY
MTC ETC
1 C132 8 C132
L10 18 WT/GY
1
TRANS RANGE SENSOR ELECTRONIC CLUSTER 5 VOLT SUPPLY
TRANS RANGE SENSOR ELECTRONIC CLUSTER MUX
CLUSTER
(8W-40-3)
11 C4
10 C3
T117 20 DG/YL
T917 20 YL/TN
47 C219 39
T117 20 DG/YL
T917 20 YL/TN
MTC ETC
4 C132 6 C132
10 C132 7 C132
T117 20 DG/YL
T917 20 YL/TN
2
5
SENSOR- TRANSMISSION RANGE (RE)
N
P
1
2
D
N
R
P
4
L1 18 WT/LG
MTC ETC
8 C132 2 C132
L1 18 WT/LG
S120
(8W-13-47)
L1 18 WT/LG
27 C219
L1 20 WT/LG
5 C206
L1 20 WT/LG
3 C1
BACKUP LAMP FEED
MIRROR- INSIDE REARVIEW (EXCEPT BASE)

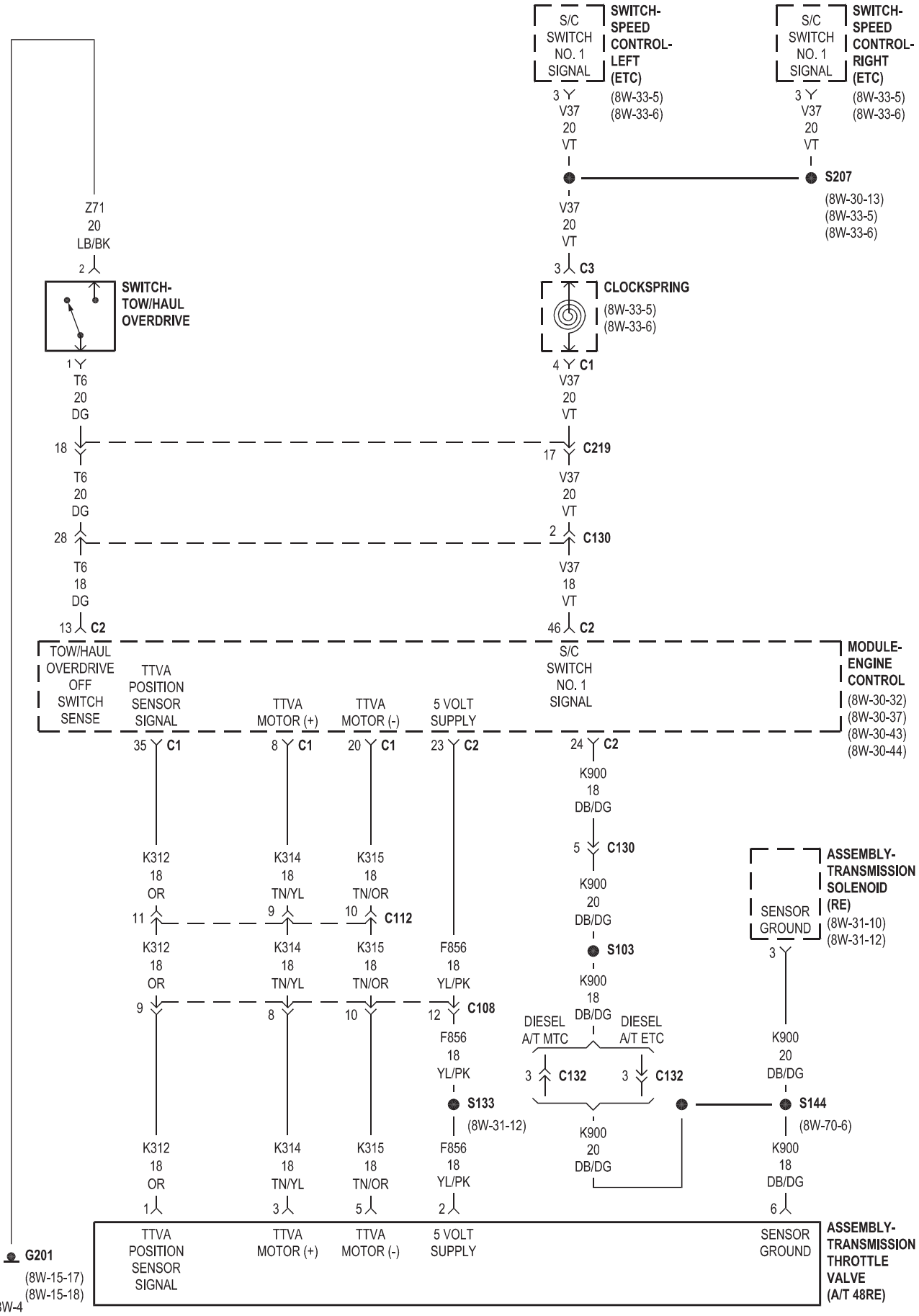
S/C SWITCH NO. 1 SIGNAL
SWITCH-SPEED CONTROL-LEFT (ETC)
(8W-33-5)
(8W-33-6)
S/C SWITCH NO. 1 SIGNAL
SWITCH-SPEED CONTROL-RIGHT (ETC)
(8W-33-5)
(8W-33-6)
3 V37 20 VT
S207
(8W-30-13)
(8W-33-5)
(8W-33-6)
Z71 20 LB/BK
2
SWITCH-TOW/HAUL OVERDRIVE
1 T6 20 DG
3 C3
CLOCKSPRING
(8W-33-5)
(8W-33-6)
4 C1 V37 20 VT
18 T6 20 DG
17 C219 V37 20 VT
28 T6 20 DG
2 C130 V37 18 VT
13 C2
46 C2
TOW/HAUL OVERDRIVE OFF SWITCH SENSE
TTVA POSITION SENSOR SIGNAL
TTVA MOTOR (+)
TTVA MOTOR (-)
5 VOLT SUPPLY
S/C SWITCH NO. 1 SIGNAL
MODULE-ENGINE CONTROL
(8W-30-32)
(8W-30-37)
(8W-30-43)
(8W-30-44)
35 C1
8 C1
20 C1
23 C2
24 C2
K900 18 DB/DG
5 C130
K900 20 DB/DG
S103
K900 18 DB/DG
K312 18 OR
K314 18 TN/YL
K315 18 TN/OR
11
9
10 C112
K312 18 OR
K314 18 TN/YL
K315 18 TN/OR
F856 18 YL/PK
9
8
10
12 C108
F856 18 YL/PK
S133
(8W-31-12)
DIESEL A/T MTC
DIESEL A/T ETC
3 C132
3 C132
K900 20 DB/DG
ASSEMBLY-TRANSMISSION SOLENOID (RE)
(8W-31-10)
(8W-31-12)
SENSOR GROUND
3
K900 20 DB/DG
S144
(8W-70-6)
K900 18 DB/DG
K312 18 OR
K314 18 TN/YL
K315 18 TN/OR
F856 18 YL/PK
1
3
5
2
6
TTVA POSITION SENSOR SIGNAL
TTVA MOTOR (+)
TTVA MOTOR (-)
5 VOLT SUPPLY
SENSOR GROUND
ASSEMBLY-TRANSMISSION THROTTLE VALVE (A/T 48RE)
G201
(8W-15-17)
(8W-15-18)

ELECTRIC TRANSFER CASE

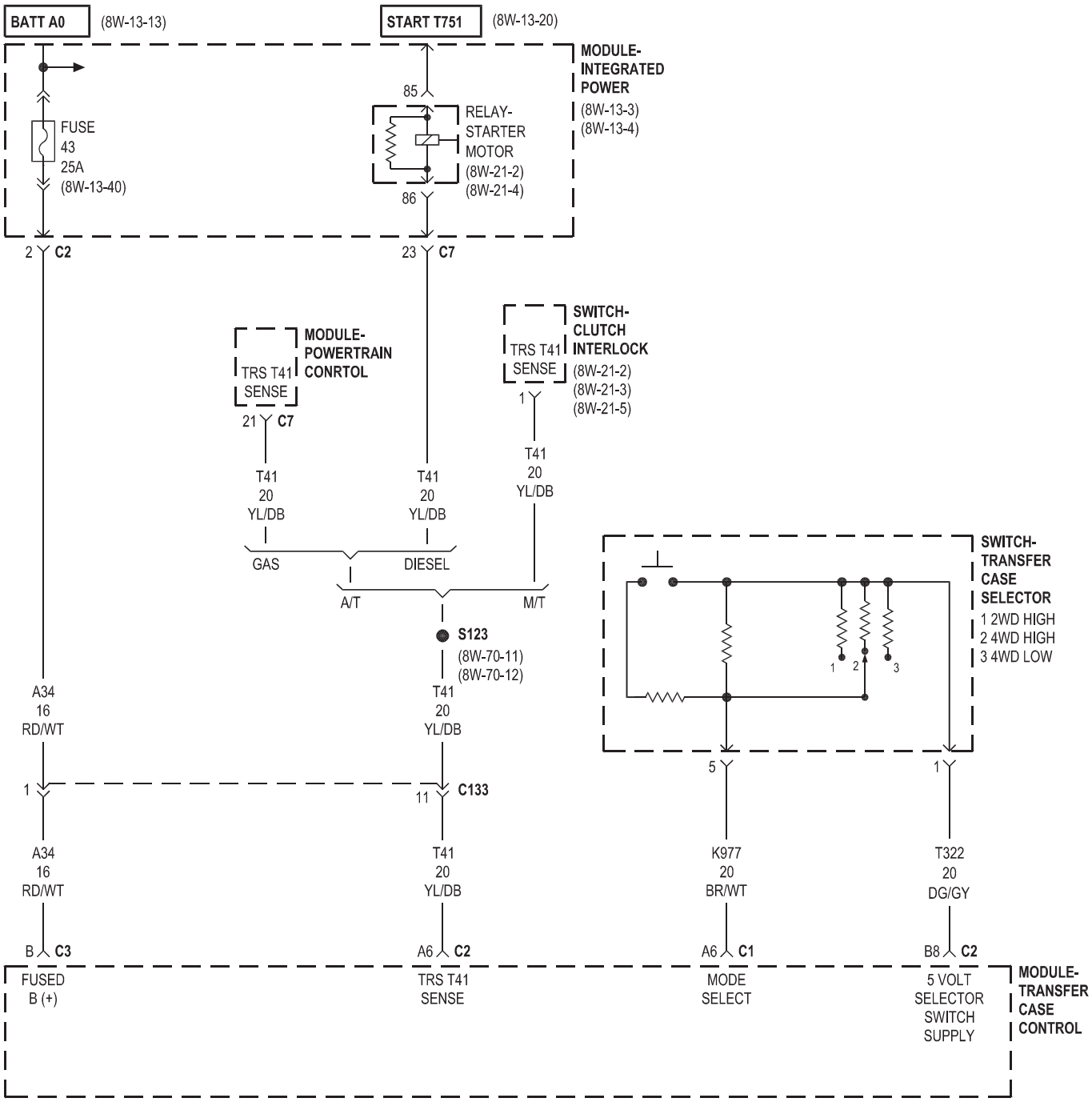

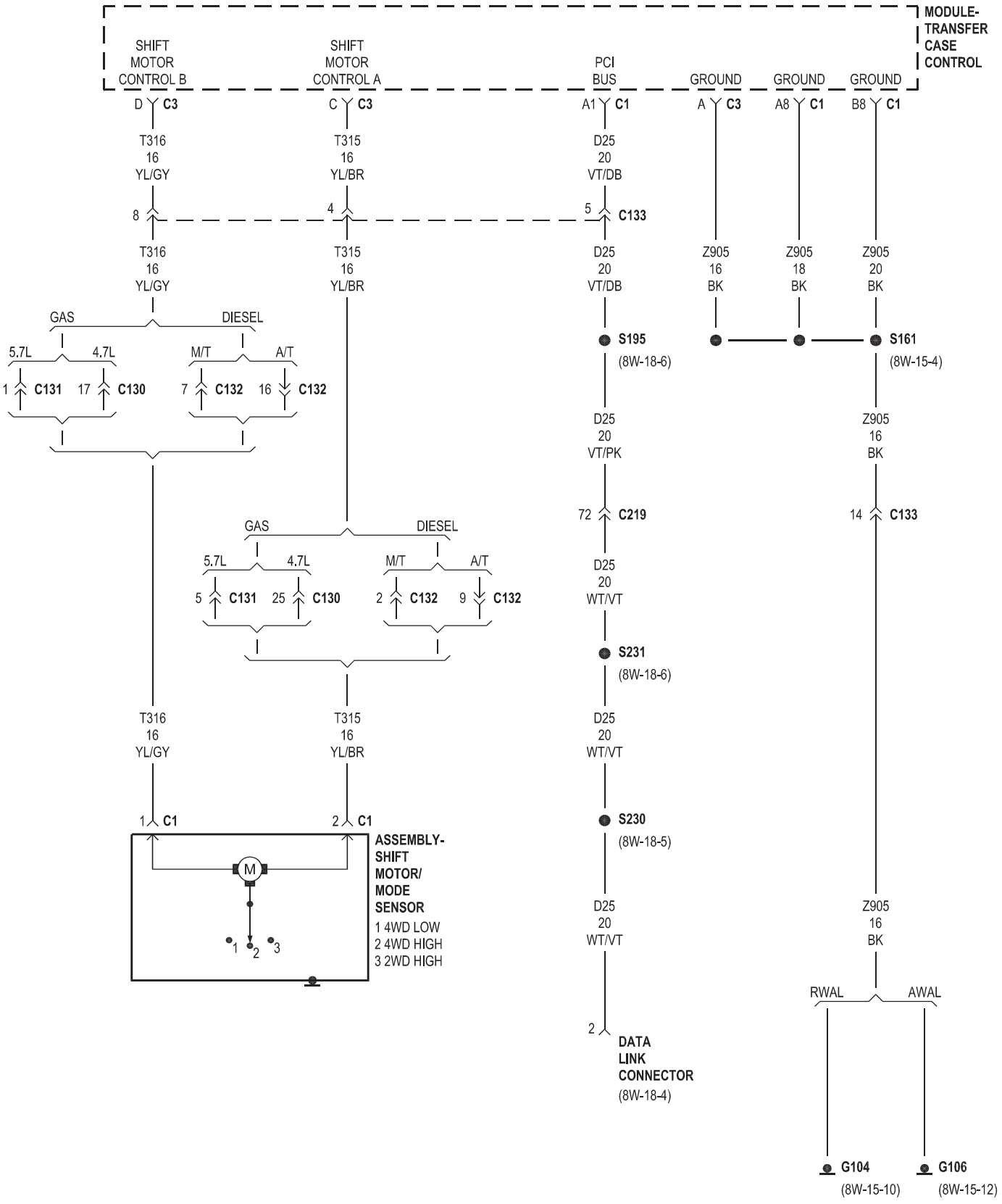
MODULE-TRANSFER CASE CONTROL
SHIFT MOTOR CONTROL B
SHIFT MOTOR CONTROL A
PCI BUS
GROUND
GROUND
GROUND
D C3
C C3
A1 C1
A C3
A8 C1
B8 C1
T316 16 YL/GY
T315 16 YL/BR
D25 20 VT/DB
8
4
5 C133
Z905 16 BK
Z905 18 BK
Z905 20 BK
GAS
DIESEL
5.7L
4.7L
M/T
A/T
1 C131
17 C130
7 C132
16 C132
S195
(8W-18-6)
S161
(8W-15-4)
D25 20 VT/PK
Z905 16 BK
72 C219
14 C133
5 C131
25 C130
2 C132
9 C132
D25 20 WT/VT
S231
(8W-18-6)
S230
(8W-18-5)
1 C1
2 C1
ASSEMBLY-SHIFT MOTOR/ MODE SENSOR
1 4WD LOW
2 4WD HIGH
3 2WD HIGH
M
1
2
3
DATA LINK CONNECTOR
(8W-18-4)
RWAL
AWAL
G104
(8W-15-10)
G106
(8W-15-12)

ELECTRIC TRANSFER CASE EXCEPT 3.7L

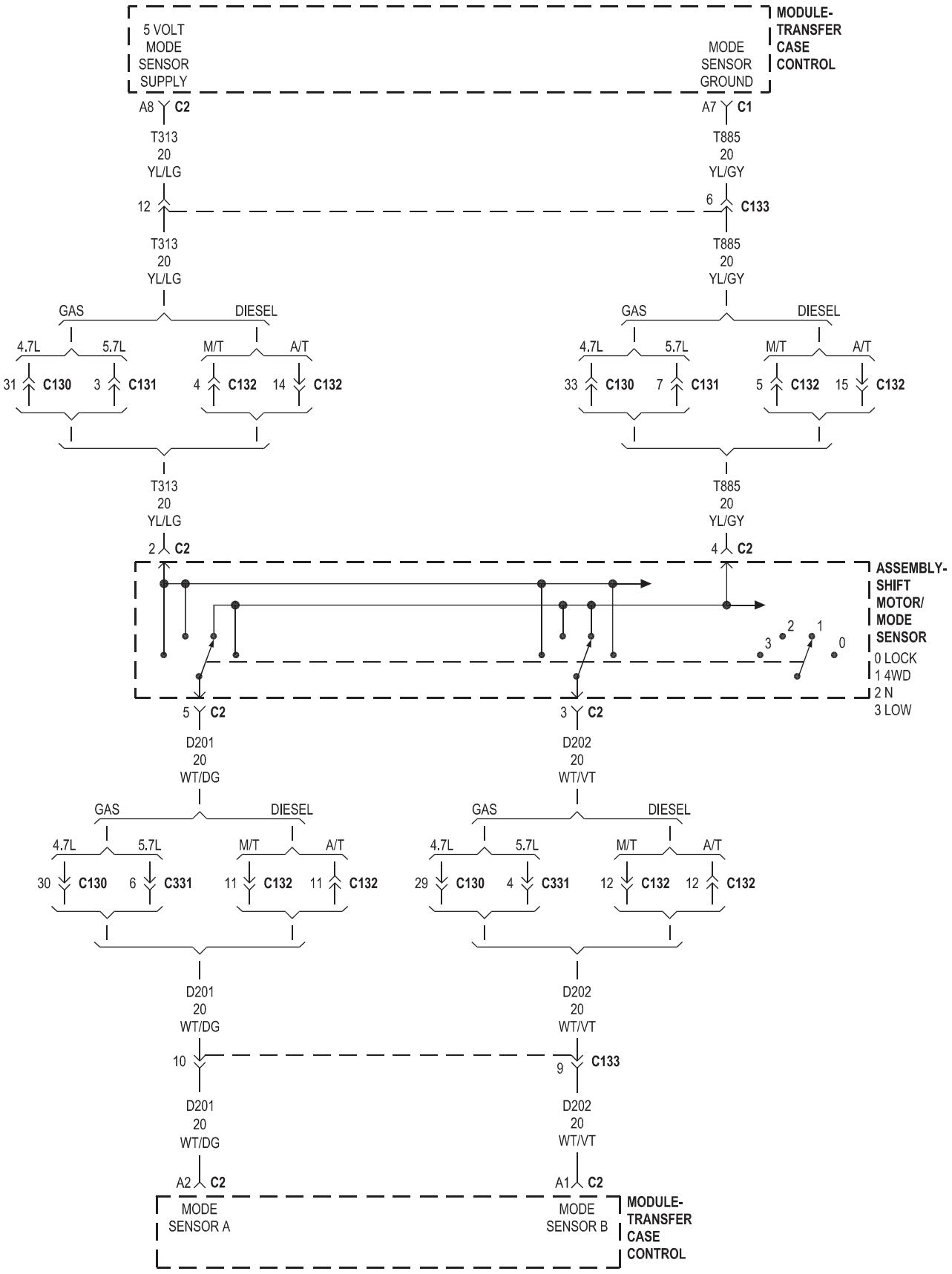

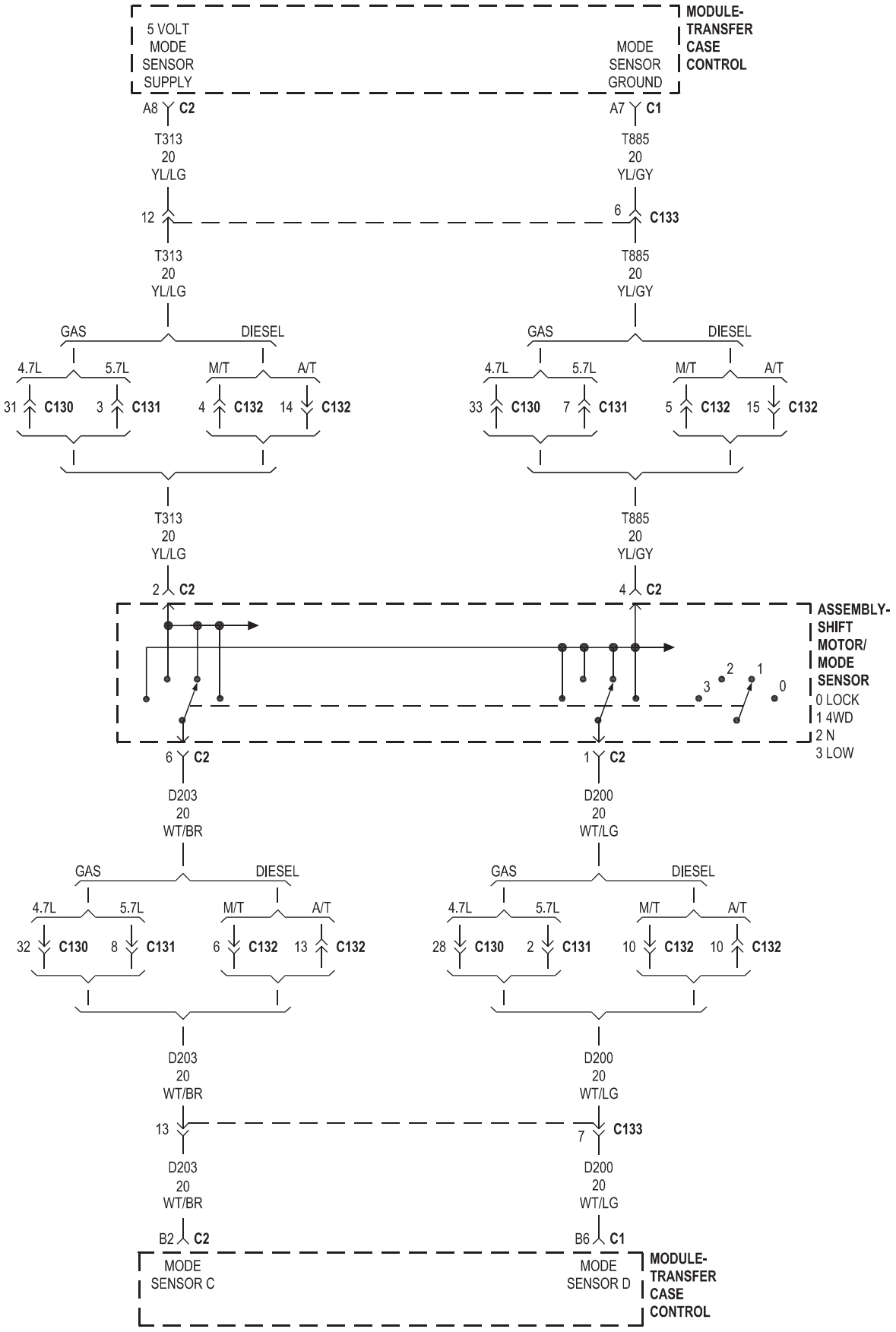
MODULE-TRANSFER CASE CONTROL
5 VOLT MODE SENSOR SUPPLY
MODE SENSOR GROUND
A8 C2
A7 C1
T313 20 YL/LG
T885 20 YL/GY
12
6 C133
GAS
DIESEL
4.7L
5.7L
M/T
A/T
31 C130
3 C131
4 C132
14 C132
33 C130
7 C131
5 C132
15 C132
2 C2
4 C2
ASSEMBLY-SHIFT MOTOR/ MODE SENSOR
0 LOCK
1 4WD
2 N
3 LOW
6 C2
1 C2
D203 20 WT/BR
D200 20 WT/LG
32 C130
8 C131
6 C132
13 C132
28 C130
2 C131
10 C132
10 C132
13
7 C133
B2 C2
B6 C1
MODE SENSOR C
MODE SENSOR D
MODULE-TRANSFER CASE CONTROL

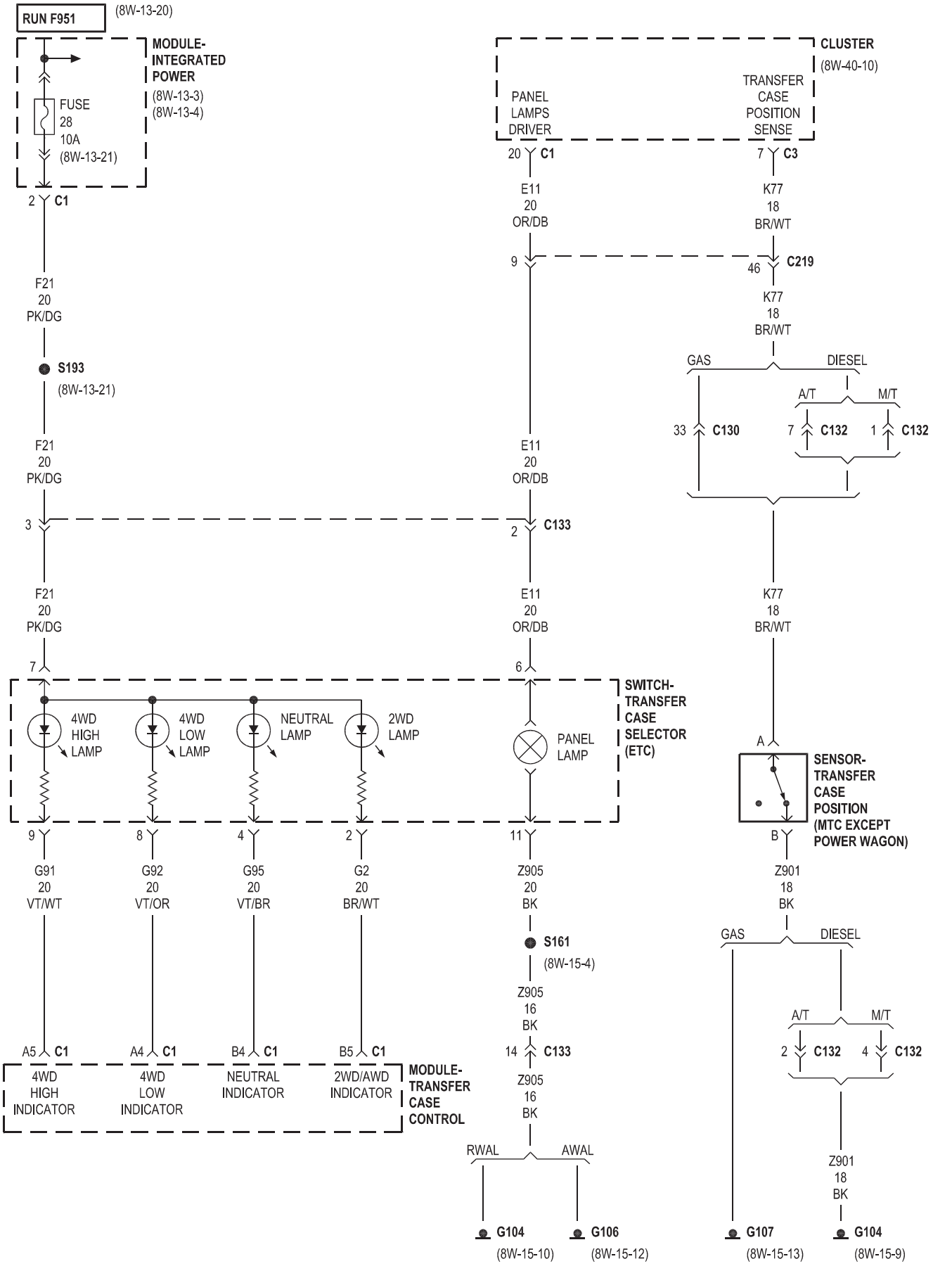
RUN F951
(8W-13-20)
MODULE-
INTEGRATED
POWER
(8W-13-3)
(8W-13-4)
FUSE
28
10A
(8W-13-21)
2 C1
F21
20
PK/DG
S193
(8W-13-21)
F21
20
PK/DG
3
F21
20
PK/DG
7
CLUSTER
(8W-40-10)
PANEL
LAMPS
DRIVER
TRANSFER
CASE
POSITION
SENSE
20 C1
7 C3
E11
20
OR/DB
K77
18
BR/WT
9
46 C219
K77
18
BR/WT
GAS
DIESEL
A/T
M/T
33 C130
7 C132
1 C132
E11
20
OR/DB
2 C133
E11
20
OR/DB
6
K77
18
BR/WT
A
SENSOR-
TRANSFER
CASE
POSITION
(MTC EXCEPT
POWER WAGON)
B
Z901
18
BK
SWITCH-
TRANSFER
CASE
SELECTOR
(ETC)
4WD
HIGH
LAMP
4WD
LOW
LAMP
NEUTRAL
LAMP
2WD
LAMP
PANEL
LAMP
9
8
4
2
11
G91
20
VT/WT
G92
20
VT/OR
G95
20
VT/BR
G2
20
BR/WT
Z905
20
BK
S161
(8W-15-4)
Z905
16
BK
14 C133
Z905
16
BK
GAS
DIESEL
A/T
M/T
2 C132
4 C132
A5 C1
A4 C1
B4 C1
B5 C1
4WD
HIGH
INDICATOR
4WD
LOW
INDICATOR
NEUTRAL
INDICATOR
2WD/AWD
INDICATOR
MODULE-
TRANSFER
CASE
CONTROL
RWAL
AWAL
Z901
18
BK
G104
(8W-15-10)
G106
(8W-15-12)
G107
(8W-15-13)
G104
(8W-15-9)

8W-33 VEHICLE SPEED CONTROL

Component	Page
Clockspring	8W-33-5, 6, 7
Cluster	8W-33-2
Fuse 24	8W-33-2
G103	8W-33-4
G104	8W-33-4
G201	8W-33-2
Lamp-Chmsl-Aftermarket	8W-33-2
Lamp-High Mounted Stop	8W-33-2
Module-Anti-Lock Brakes	8W-33-3
Module-Brake Provision	8W-33-2
Module-Engine Control	8W-33-3, 7
Module-Integrated Power	8W-33-2, 4
Module-Powertrain Control	8W-33-3, 4, 7
PTC No. 1	8W-33-4
Servo-Speed Control	8W-33-4
Switch-Speed Control-Left	8W-33-5, 6
Switch-Speed Control-Right	8W-33-5, 6
Switch-Stop Lamp	8W-33-2, 4

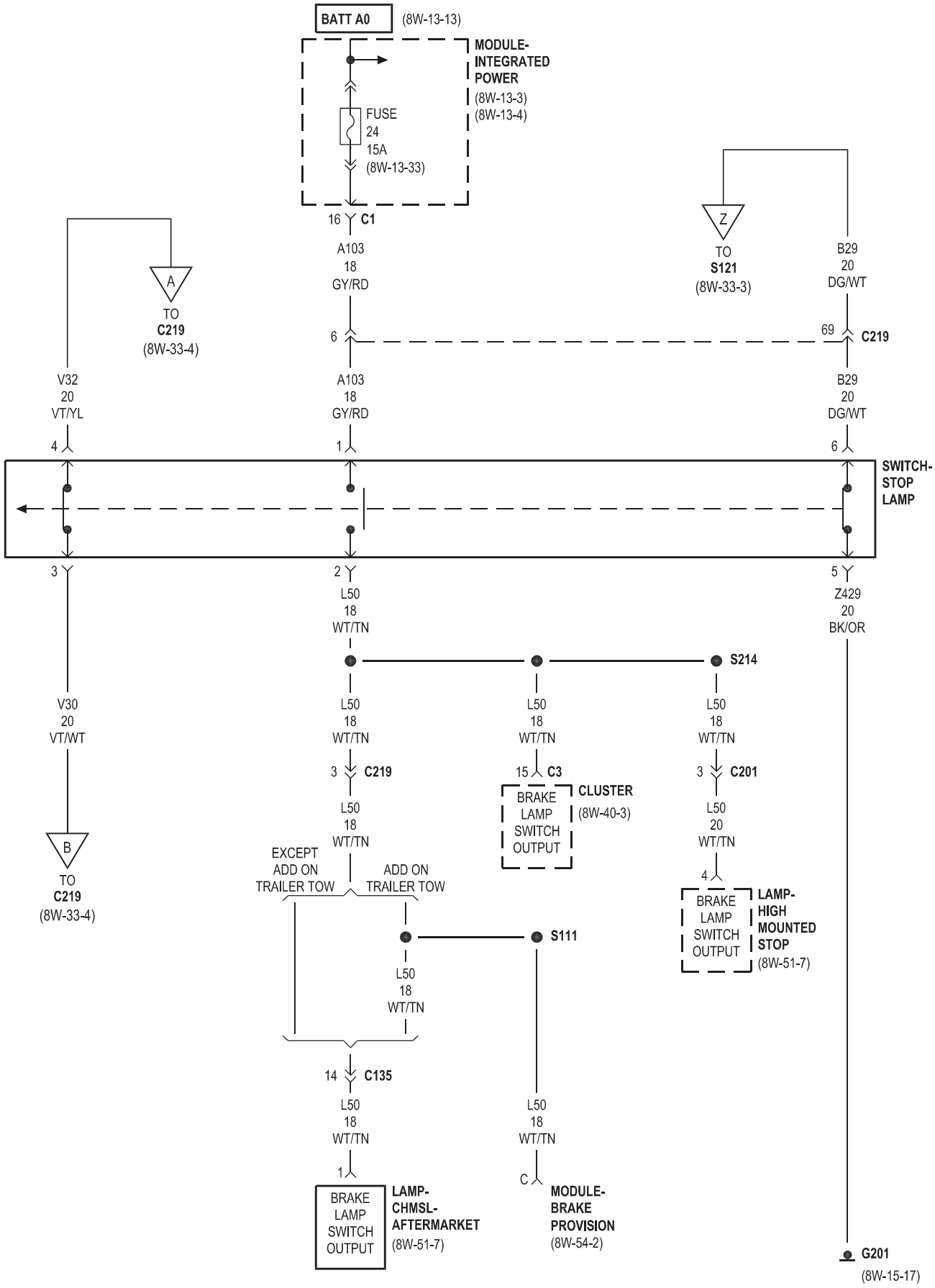
BATT A0
(8W-13-13)
MODULE-
INTEGRATED
POWER
(8W-13-3)
(8W-13-4)
FUSE
24
15A
(8W-13-33)
16 C1
A103
18
GY/RD
A
TO
C219
(8W-33-4)
Z
TO
S121
(8W-33-3)
B29
20
DG/WT
69 C219
6
V32
20
VT/YL
4
A103
18
GY/RD
1
B29
20
DG/WT
6
SWITCH-
STOP
LAMP
3
2
5
L50
18
WT/TN
Z429
20
BK/OR
S214
V30
20
VT/WT
L50
18
WT/TN
3 C219
15 C3
BRAKE
LAMP
SWITCH
OUTPUT
CLUSTER
(8W-40-3)
3 C201
L50
20
WT/TN
4
B
TO
C219
(8W-33-4)
EXCEPT
ADD ON
TRAILER TOW
ADD ON
TRAILER TOW
BRAKE
LAMP
SWITCH
OUTPUT
LAMP-
HIGH
MOUNTED
STOP
(8W-51-7)
S111
L50
18
WT/TN
14 C135
1
C
BRAKE
LAMP
SWITCH
OUTPUT
LAMP-
CHMSL-
AFTERMARKET
(8W-51-7)
MODULE-
BRAKE
PROVISION
(8W-54-2)
G201
(8W-15-17)

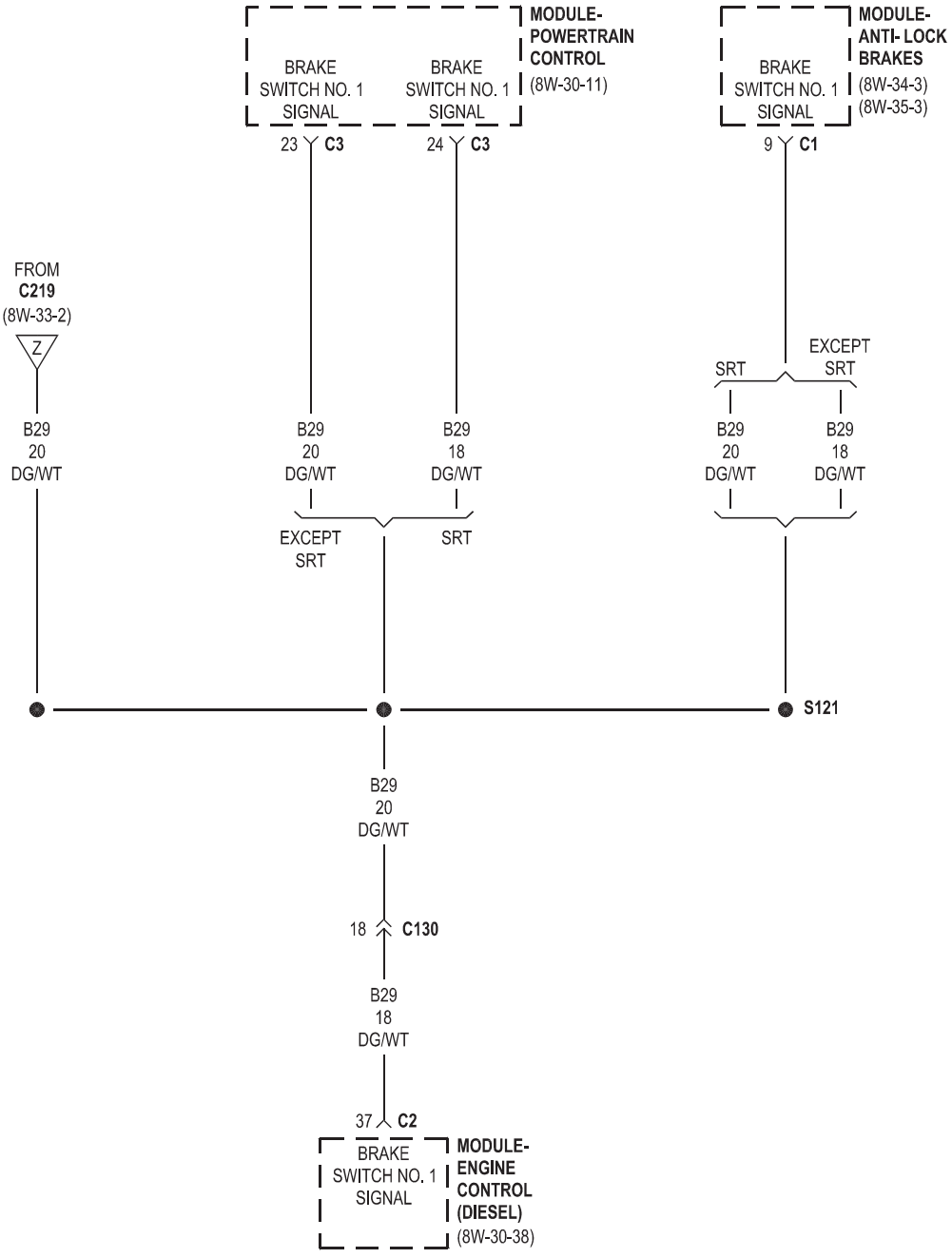
MODULE-
POWERTRAIN
CONTROL
(8W-30-11)
BRAKE
SWITCH NO. 1
SIGNAL
BRAKE
SWITCH NO. 1
SIGNAL
23 C3
24 C3
MODULE-
ANTI- LOCK
BRAKES
(8W-34-3)
(8W-35-3)
BRAKE
SWITCH NO. 1
SIGNAL
9 C1
FROM
C219
(8W-33-2)
Z
B29
20
DG/WT
B29
20
DG/WT
B29
18
DG/WT
EXCEPT
SRT
SRT
SRT
EXCEPT
SRT
B29
20
DG/WT
B29
18
DG/WT
S121
B29
20
DG/WT
18 C130
B29
18
DG/WT
37 C2
BRAKE
SWITCH NO. 1
SIGNAL
MODULE-
ENGINE
CONTROL
(DIESEL)
(8W-30-38)

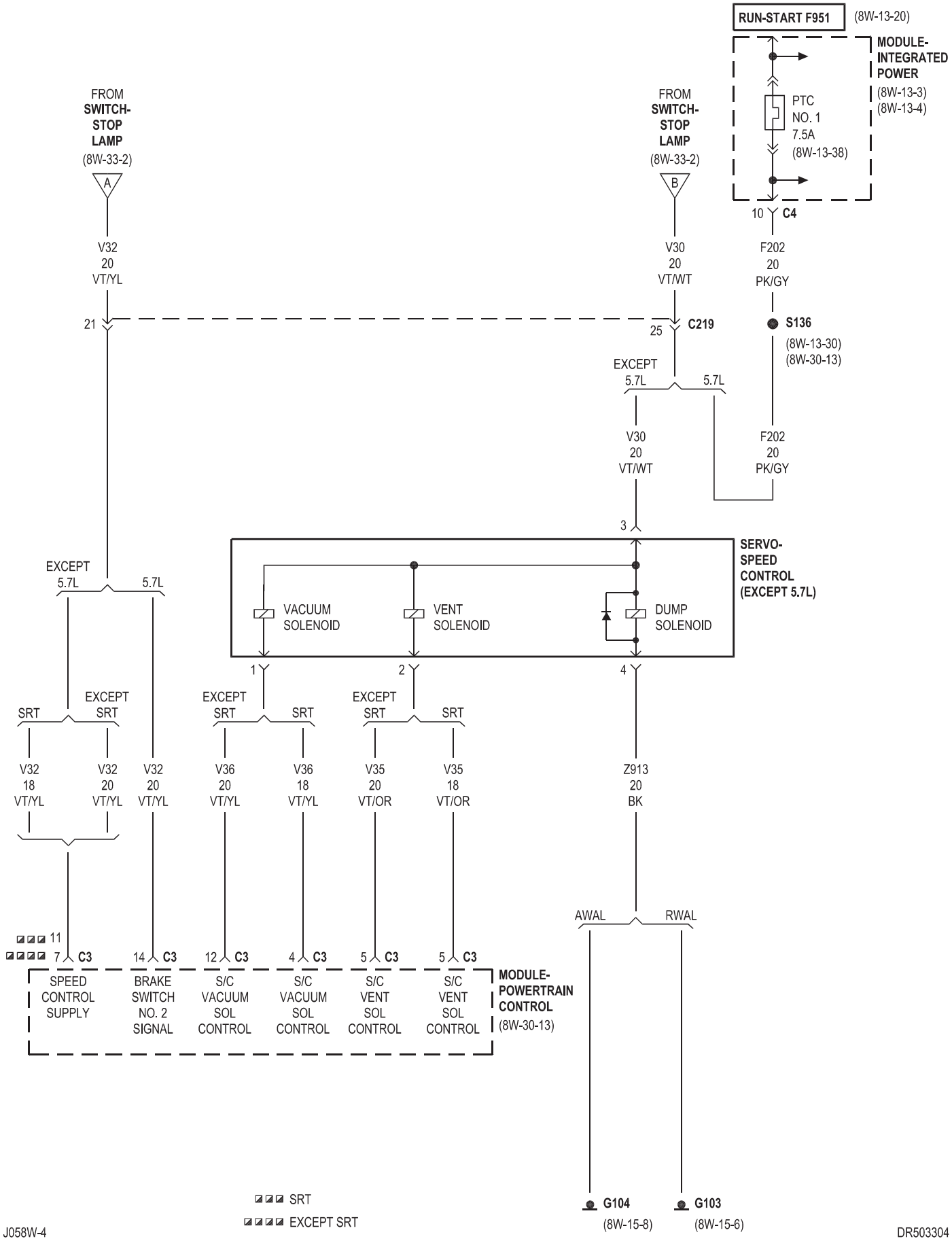
RUN-START F951
(8W-13-20)
MODULE-INTEGRATED POWER
(8W-13-3)
(8W-13-4)
PTC NO. 1 7.5A
(8W-13-38)
10 C4
FROM SWITCH-STOP LAMP
(8W-33-2)
A
B
V32 20 VT/YL
V30 20 VT/WT
F202 20 PK/GY
21
25 C219
S136
(8W-13-30)
(8W-30-13)
EXCEPT 5.7L
5.7L
3
SERVO-SPEED CONTROL (EXCEPT 5.7L)
VACUUM SOLENOID
VENT SOLENOID
DUMP SOLENOID
1
2
4
SRT
V32 18 VT/YL
V32 20 VT/YL
V36 20 VT/YL
V36 18 VT/YL
V35 20 VT/OR
V35 18 VT/OR
Z913 20 BK
AWAL
RWAL
11
7 C3
14 C3
12 C3
4 C3
5 C3
5 C3
SPEED CONTROL SUPPLY
BRAKE SWITCH NO. 2 SIGNAL
S/C VACUUM SOL CONTROL
S/C VACUUM SOL CONTROL
S/C VENT SOL CONTROL
S/C VENT SOL CONTROL
MODULE-POWERTRAIN CONTROL
(8W-30-13)
SRT
EXCEPT SRT
G104
(8W-15-8)
G103
(8W-15-6)

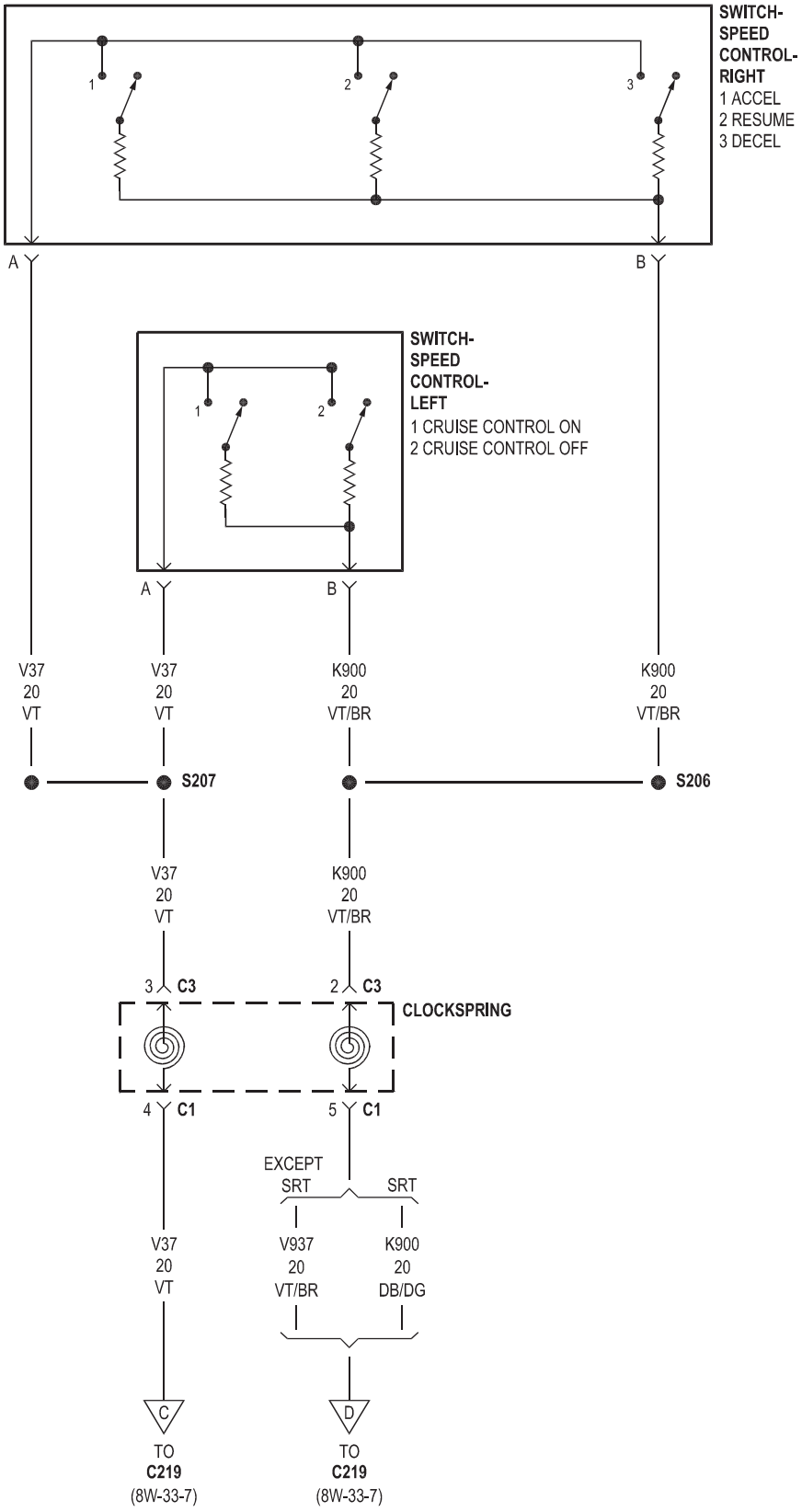
SWITCH-
SPEED
CONTROL-
RIGHT
1 ACCEL
2 RESUME
3 DECEL
1
2
3
A
B
SWITCH-
SPEED
CONTROL-
LEFT
1 CRUISE CONTROL ON
2 CRUISE CONTROL OFF
1
2
A
B
V37
20
VT
V37
20
VT
K900
20
VT/BR
K900
20
VT/BR
S207
S206
V37
20
VT
K900
20
VT/BR
3 C3
2 C3
CLOCKSPRING
4 C1
5 C1
EXCEPT
SRT
SRT
V37
20
VT
V937
20
VT/BR
K900
20
DB/DG
C
D
TO
C219
(8W-33-7)
TO
C219
(8W-33-7)

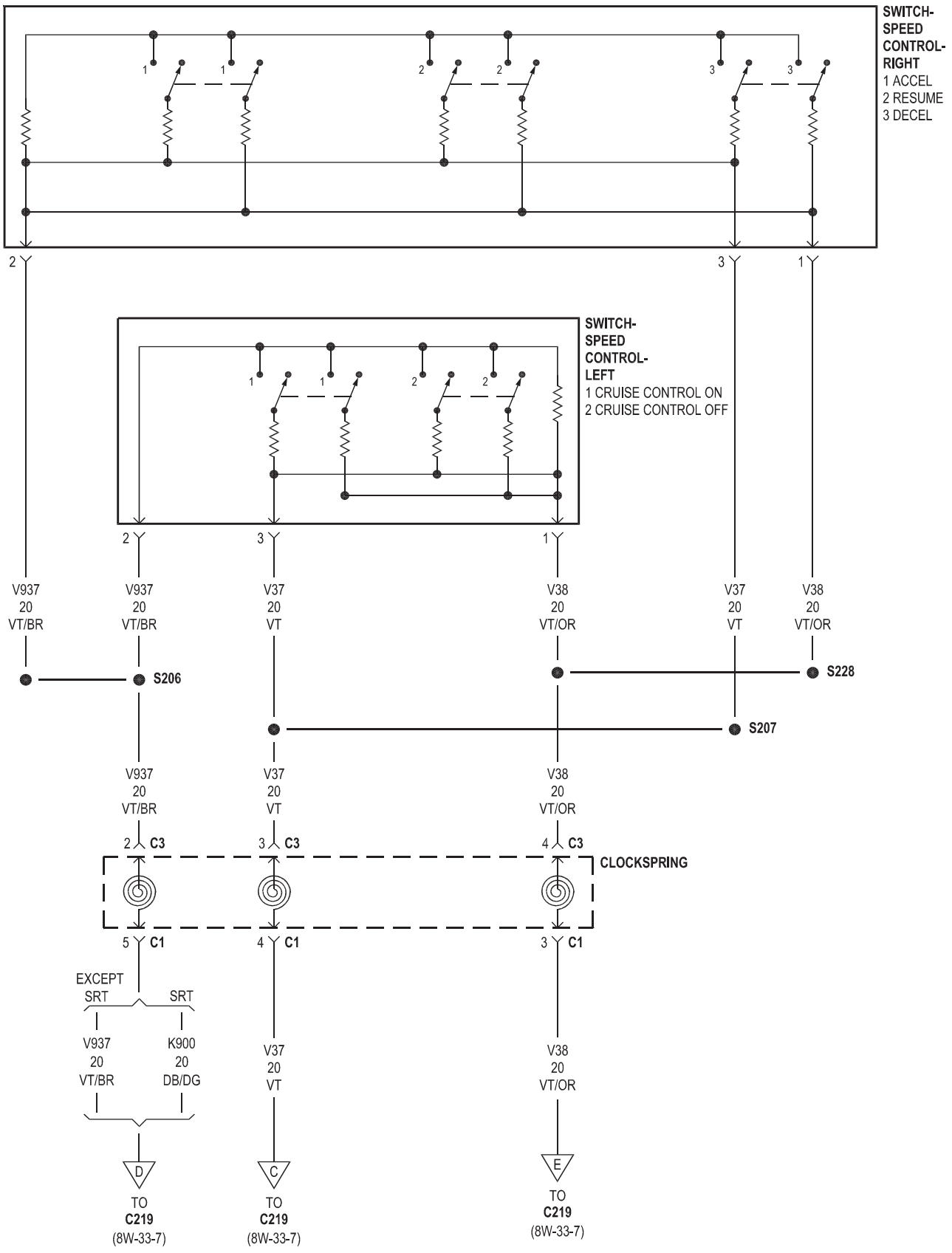
SWITCH-
SPEED
CONTROL-
RIGHT
1 ACCEL
2 RESUME
3 DECEL
SWITCH-
SPEED
CONTROL-
LEFT
1 CRUISE CONTROL ON
2 CRUISE CONTROL OFF
V937
20
VT/BR
V937
20
VT/BR
V37
20
VT
V38
20
VT/OR
V37
20
VT
V38
20
VT/OR
S206
S228
S207
V937
20
VT/BR
V37
20
VT
V38
20
VT/OR
C3
C3
C3
CLOCKSPRING
C1
C1
C1
EXCEPT
SRT
SRT
V937
20
VT/BR
K900
20
DB/DG
V37
20
VT
V38
20
VT/OR
D
C
E
TO
C219
(8W-33-7)
TO
C219
(8W-33-7)
TO
C219
(8W-33-7)

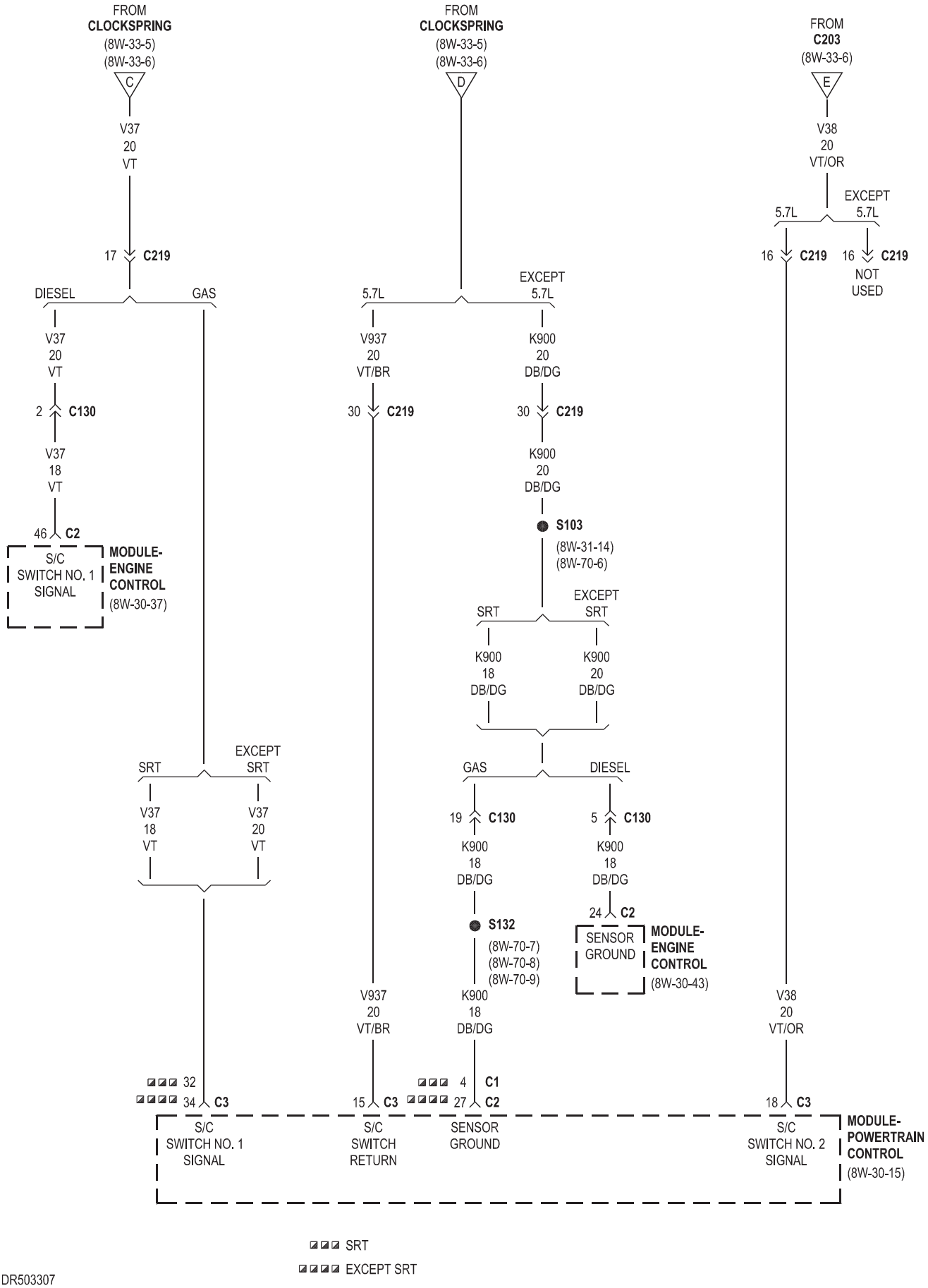
FROM CLOCKSPRING (8W-33-5) (8W-33-6)
C
V37 20 VT
17 C219
DIESEL
GAS
V37 20 VT
2 C130
V37 18 VT
46 C2
S/C SWITCH NO. 1 SIGNAL
MODULE-ENGINE CONTROL (8W-30-37)
SRT
EXCEPT SRT
V37 18 VT
V37 20 VT
FROM CLOCKSPRING (8W-33-5) (8W-33-6)
D
5.7L
EXCEPT 5.7L
V937 20 VT/BR
30 C219
K900 20 DB/DG
30 C219
K900 20 DB/DG
S103
(8W-31-14) (8W-70-6)
SRT
EXCEPT SRT
K900 18 DB/DG
K900 20 DB/DG
GAS
DIESEL
19 C130
5 C130
K900 18 DB/DG
K900 18 DB/DG
S132
(8W-70-7) (8W-70-8) (8W-70-9)
24 C2
SENSOR GROUND
MODULE-ENGINE CONTROL (8W-30-43)
FROM C203 (8W-33-6)
E
V38 20 VT/OR
5.7L
EXCEPT 5.7L
16 C219
16 C219
NOT USED
V937 20 VT/BR
K900 18 DB/DG
V38 20 VT/OR
32
34 C3
15 C3
4 C1
27 C2
18 C3
S/C SWITCH NO. 1 SIGNAL
S/C SWITCH RETURN
SENSOR GROUND
S/C SWITCH NO. 2 SIGNAL
MODULE-POWERTRAIN CONTROL (8W-30-15)
SRT
EXCEPT SRT

8W-34 REAR WHEEL ANTILOCK BRAKES

Component	Page
Data Link Connector	8W-34-2
Fuse 6	8W-34-2
Fuse 35	8W-34-2
G103	8W-34-2
G106	8W-34-2
G201	8W-34-3
Module-Anti-Lock Brakes	8W-34-2, 3
Module-Integrated Power	8W-34-2
Module-Powertrain Control	8W-34-2, 3
Sensor-Brake Fluid Level	8W-34-2
Sensor-Wheel Speed-Abs-Left Front	8W-34-3
Sensor-Wheel Speed-Abs-Rear	8W-34-3
Switch-Stop Lamp	8W-34-3

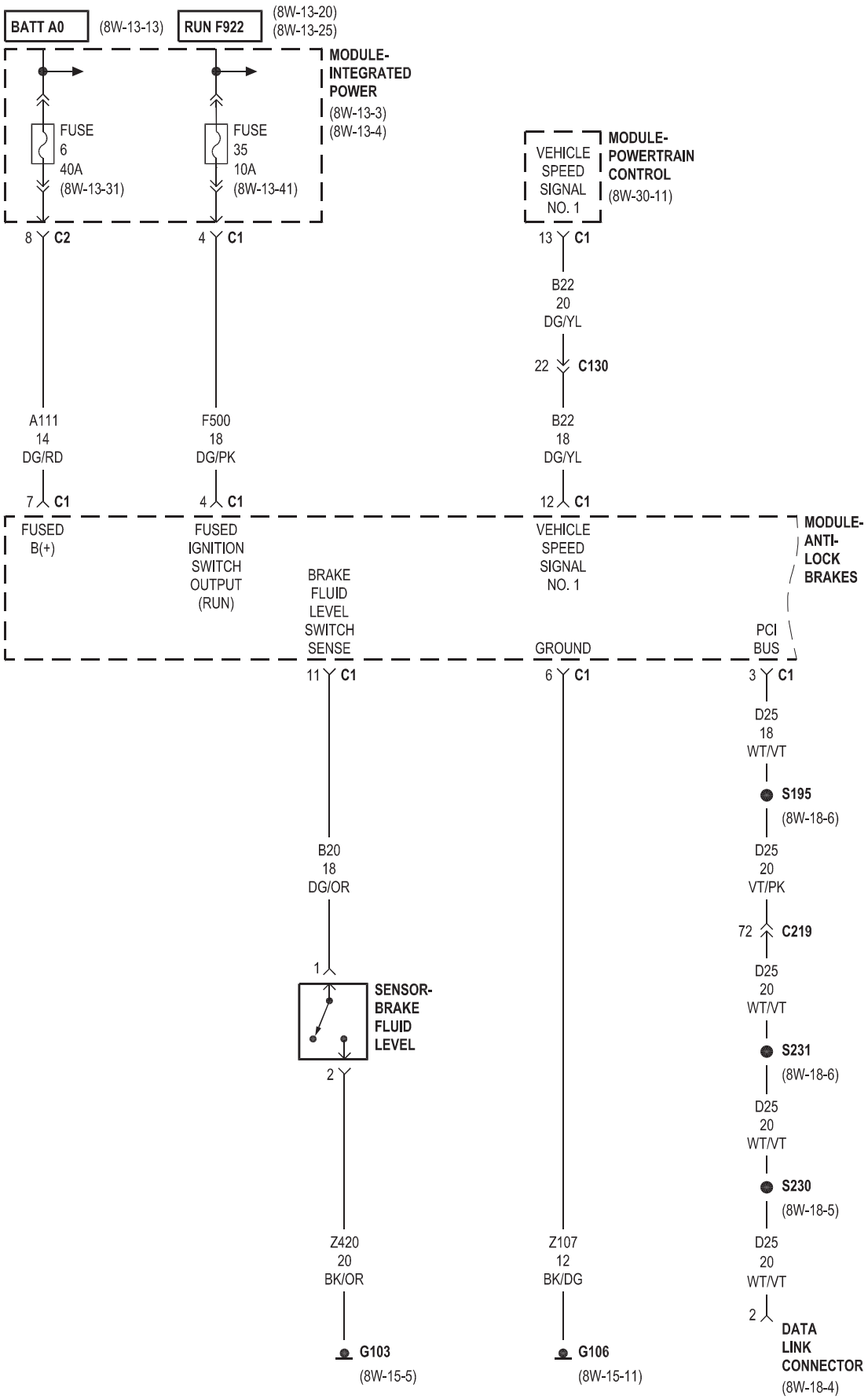
BATT A0
(8W-13-13)
RUN F922
(8W-13-20)
(8W-13-25)
MODULE-
INTEGRATED
POWER
(8W-13-3)
(8W-13-4)
FUSE
6
40A
(8W-13-31)
FUSE
35
10A
(8W-13-41)
VEHICLE
SPEED
SIGNAL
NO. 1
MODULE-
POWERTRAIN
CONTROL
(8W-30-11)
8 C2
4 C1
13 C1
B22
20
DG/YL
22 C130
A111
14
DG/RD
F500
18
DG/PK
B22
18
DG/YL
7 C1
4 C1
12 C1
FUSED
B(+)
FUSED
IGNITION
SWITCH
OUTPUT
(RUN)
BRAKE
FLUID
LEVEL
SWITCH
SENSE
VEHICLE
SPEED
SIGNAL
NO. 1
MODULE-
ANTI-
LOCK
BRAKES
PCI
BUS
GROUND
11 C1
6 C1
3 C1
D25
18
WT/VT
S195
(8W-18-6)
B20
18
DG/OR
D25
20
VT/PK
72 C219
1
D25
20
WT/VT
SENSOR-
BRAKE
FLUID
LEVEL
S231
(8W-18-6)
2
D25
20
WT/VT
S230
(8W-18-5)
Z420
20
BK/OR
Z107
12
BK/DG
D25
20
WT/VT
2
G103
(8W-15-5)
G106
(8W-15-11)
DATA
LINK
CONNECTOR
(8W-18-4)

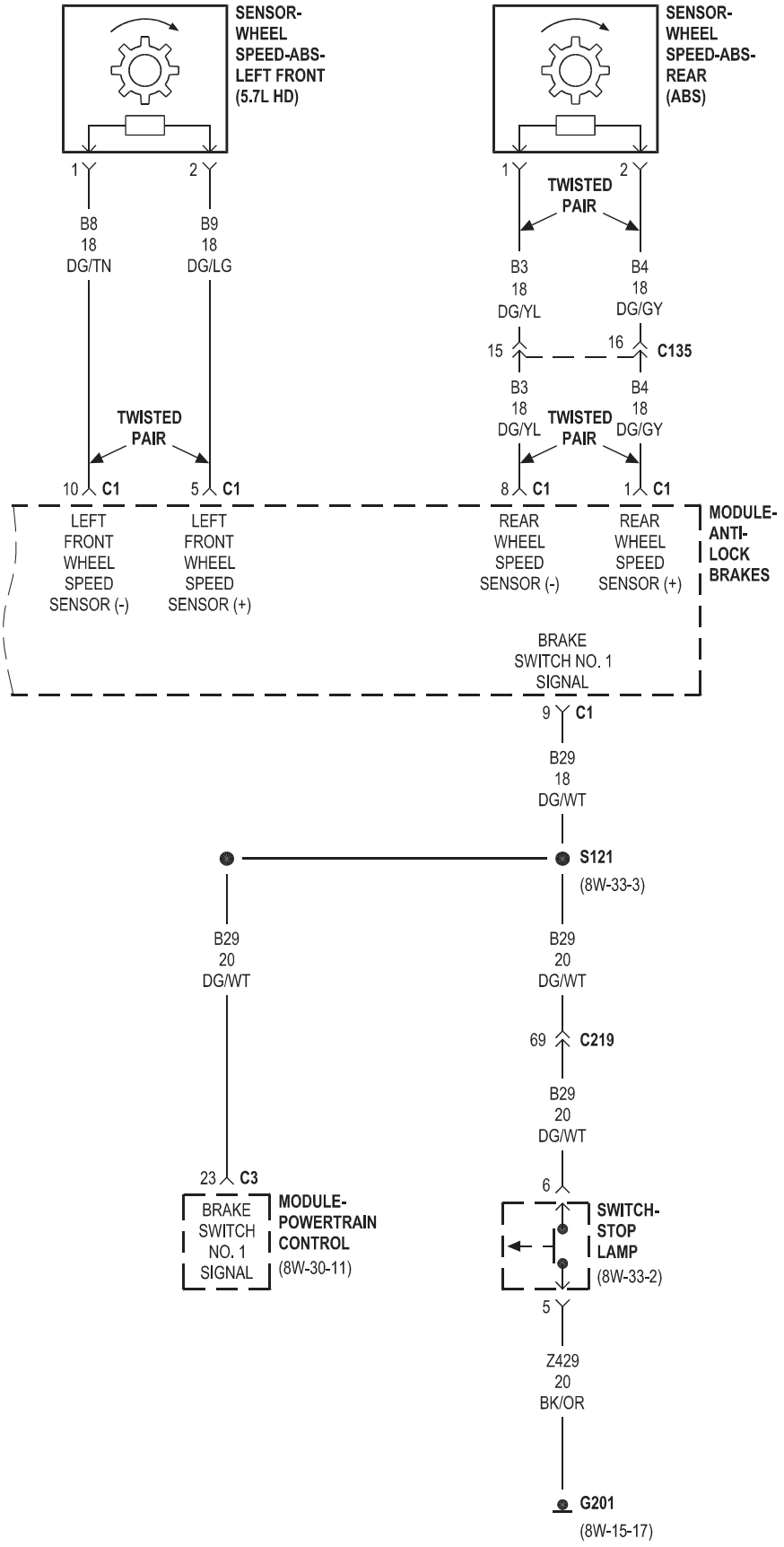
SENSOR-WHEEL SPEED-ABS-LEFT FRONT (5.7L HD)
SENSOR-WHEEL SPEED-ABS-REAR (ABS)
1
2
B8 18 DG/TN
B9 18 DG/LG
TWISTED PAIR
B3 18 DG/YL
B4 18 DG/GY
15
16
C135
10 C1
5 C1
8 C1
1 C1
LEFT FRONT WHEEL SPEED SENSOR (-)
LEFT FRONT WHEEL SPEED SENSOR (+)
REAR WHEEL SPEED SENSOR (-)
REAR WHEEL SPEED SENSOR (+)
MODULE-ANTI-LOCK BRAKES
BRAKE SWITCH NO. 1 SIGNAL
9 C1
B29 18 DG/WT
S121
(8W-33-3)
B29 20 DG/WT
69 C219
23 C3
6
BRAKE SWITCH NO. 1 SIGNAL
MODULE-POWERTRAIN CONTROL
(8W-30-11)
SWITCH-STOP LAMP
(8W-33-2)
5
Z429 20 BK/OR
G201
(8W-15-17)

8W-35 ALL WHEEL ANTILOCK BRAKES

Component	Page
Data Link Connector	8W-35-2
Fuse 6	8W-35-2
Fuse 35	8W-35-2
G104	8W-35-2
G106	8W-35-2
G201	8W-35-3
Module-Anti-Lock Brakes	8W-35-2, 3
Module-Engine Control	8W-35-2, 3
Module-Integrated Power	8W-35-2
Module-Powertrain Control	8W-35-2, 3
Sensor-Brake Fluid Level	8W-35-2
Sensor-Wheel Speed-Abs-Left Front	8W-35-3
Sensor-Wheel Speed-Abs-Rear	8W-35-3
Sensor-Wheel Speed-Abs-Right Front	8W-35-3
Switch-Stop Lamp	8W-35-3

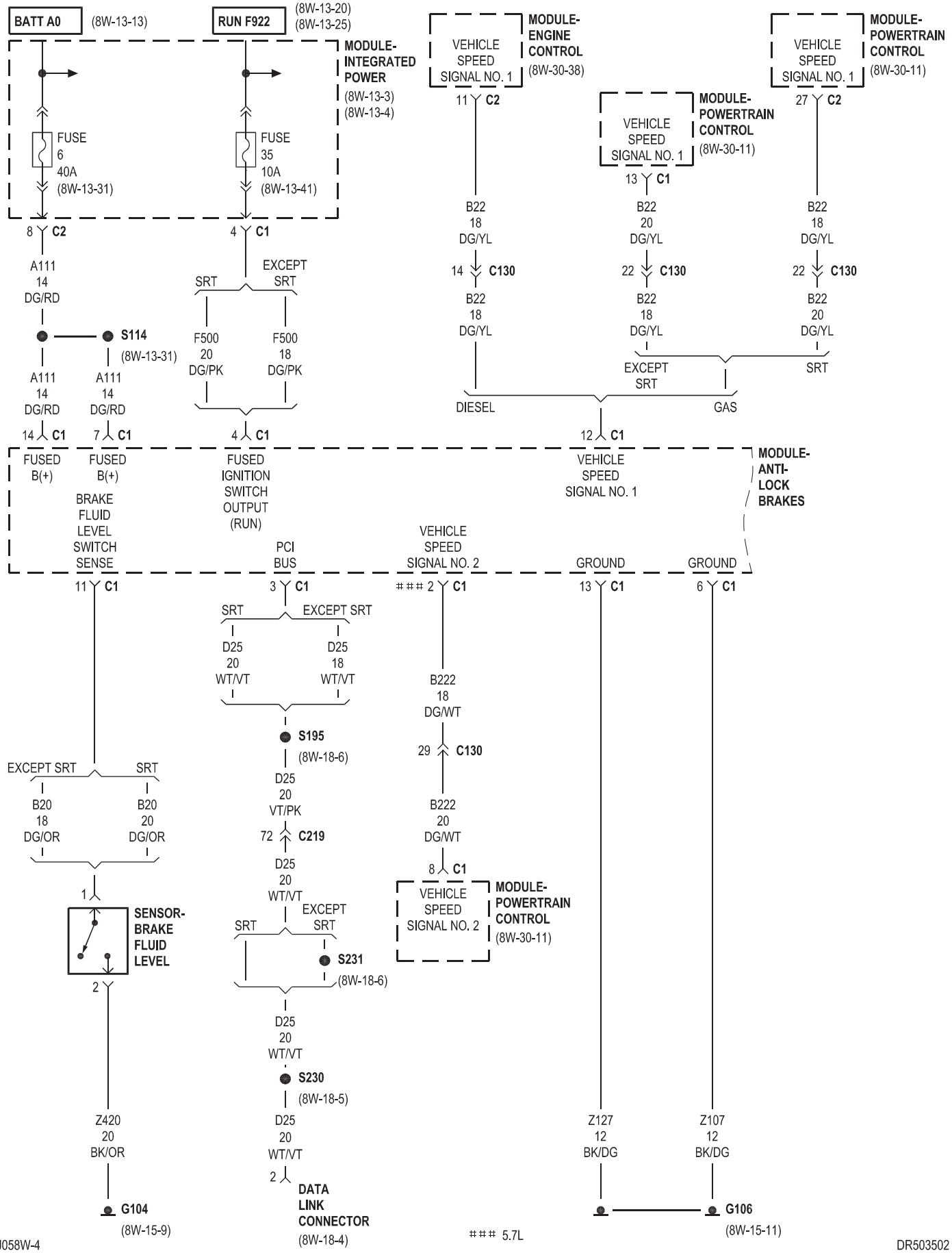
BATT A0
(8W-13-13)
RUN F922
(8W-13-20)
(8W-13-25)
MODULE-INTEGRATED POWER
(8W-13-3)
(8W-13-4)
FUSE 6 40A (8W-13-31)
FUSE 35 10A (8W-13-41)
8 C2
4 C1
A111 14 DG/RD
S114
(8W-13-31)
SRT
EXCEPT SRT
F500 20 DG/PK
F500 18 DG/PK
14 C1
7 C1
4 C1
FUSED B(+)
FUSED B(+)
FUSED IGNITION SWITCH OUTPUT (RUN)
BRAKE FLUID LEVEL SWITCH SENSE
PCI BUS
VEHICLE SPEED SIGNAL NO. 2
GROUND
GROUND
MODULE-ANTI-LOCK BRAKES
11 C1
3 C1
2 C1
13 C1
6 C1
VEHICLE SPEED SIGNAL NO. 1
MODULE-ENGINE CONTROL
(8W-30-38)
11 C2
B22 18 DG/YL
14 C130
B22 18 DG/YL
DIESEL
VEHICLE SPEED SIGNAL NO. 1
MODULE-POWERTRAIN CONTROL
(8W-30-11)
13 C1
B22 20 DG/YL
22 C130
B22 18 DG/YL
EXCEPT SRT
GAS
12 C1
VEHICLE SPEED SIGNAL NO. 1
MODULE-POWERTRAIN CONTROL
(8W-30-11)
27 C2
B22 18 DG/YL
22 C130
B22 20 DG/YL
SRT
D25 20 WT/VT
D25 18 WT/VT
S195
(8W-18-6)
D25 20 VT/PK
72 C219
D25 20 WT/VT
S231
(8W-18-6)
D25 20 WT/VT
S230
(8W-18-5)
D25 20 WT/VT
2
DATA LINK CONNECTOR
(8W-18-4)
B222 18 DG/WT
29 C130
B222 20 DG/WT
8 C1
VEHICLE SPEED SIGNAL NO. 2
MODULE-POWERTRAIN CONTROL
(8W-30-11)
B20 18 DG/OR
B20 20 DG/OR
1
SENSOR-BRAKE FLUID LEVEL
2
Z420 20 BK/OR
G104
(8W-15-9)
Z127 12 BK/DG
Z107 12 BK/DG
G106
(8W-15-11)
5.7L

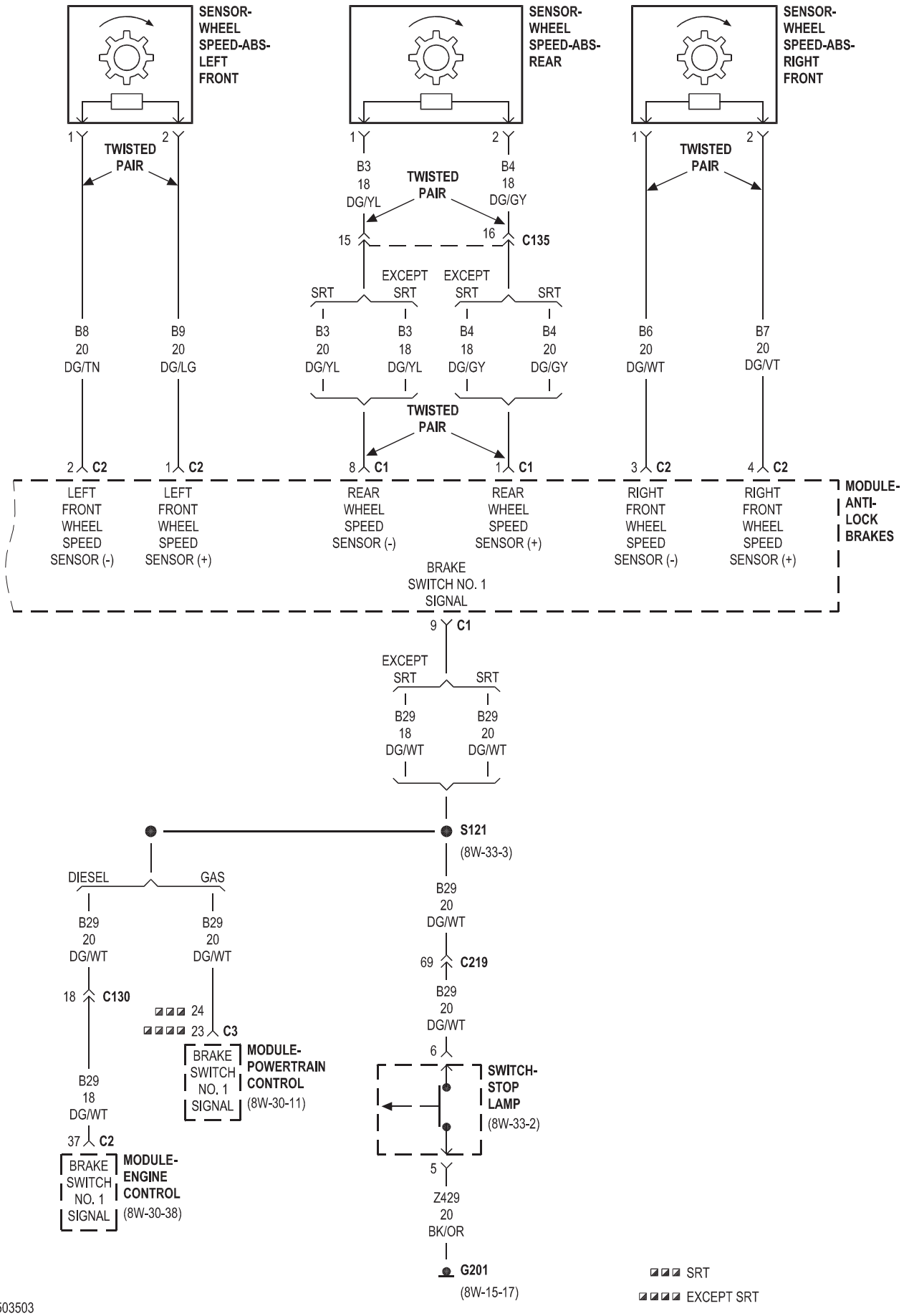
SENSOR-WHEEL SPEED-ABS-LEFT FRONT
SENSOR-WHEEL SPEED-ABS-REAR
SENSOR-WHEEL SPEED-ABS-RIGHT FRONT
TWISTED PAIR
B3 18 DG/YL
B4 18 DG/GY
C135
EXCEPT SRT
SRT
B8 20 DG/TN
B9 20 DG/LG
B3 20 DG/YL
B3 18 DG/YL
B4 18 DG/GY
B4 20 DG/GY
B6 20 DG/WT
B7 20 DG/VT
C1
C2
LEFT FRONT WHEEL SPEED SENSOR (-)
LEFT FRONT WHEEL SPEED SENSOR (+)
REAR WHEEL SPEED SENSOR (-)
REAR WHEEL SPEED SENSOR (+)
RIGHT FRONT WHEEL SPEED SENSOR (-)
RIGHT FRONT WHEEL SPEED SENSOR (+)
MODULE-ANTI-LOCK BRAKES
BRAKE SWITCH NO. 1 SIGNAL
B29 18 DG/WT
B29 20 DG/WT
S121
(8W-33-3)
DIESEL
GAS
C130
C3
C219
BRAKE SWITCH NO. 1 SIGNAL
MODULE-POWERTRAIN CONTROL
(8W-30-11)
MODULE-ENGINE CONTROL
(8W-30-38)
SWITCH-STOP LAMP
(8W-33-2)
Z429 20 BK/OR
G201
(8W-15-17)
SRT
EXCEPT SRT

8W-39 VEHICLE THEFT SECURITY SYSTEM

Component	Page
Cluster	8W-39-2, 4, 5
Data Link Connector	8W-39-3
Fuse 15	8W-39-3
Fuse 23	8W-39-2
Fuse 45	8W-39-3
Fuse 50	8W-39-2
G103	8W-39-3
G104	8W-39-3
G105	8W-39-3
G201	8W-39-2
G303	8W-39-4, 5
Lamp-Headlamp-Left	8W-39-3
Lamp-Headlamp-Right	8W-39-3
Latch-Door-Driver	8W-39-5
Latch-Door-Left Rear	8W-39-5
Latch-Door-Passenger	8W-39-4
Latch-Door-Right Rear	8W-39-4
Module-Front Control	8W-39-3
Module-Integrated Power	8W-39-2, 3
Module-Sentry Key Immobilizer	8W-39-2
PTC No. 1	8W-39-2
Relay-Horn	8W-39-3
Relay-Park Lamp	8W-39-3
Switch-Cylinder Lock-Driver	8W-39-5

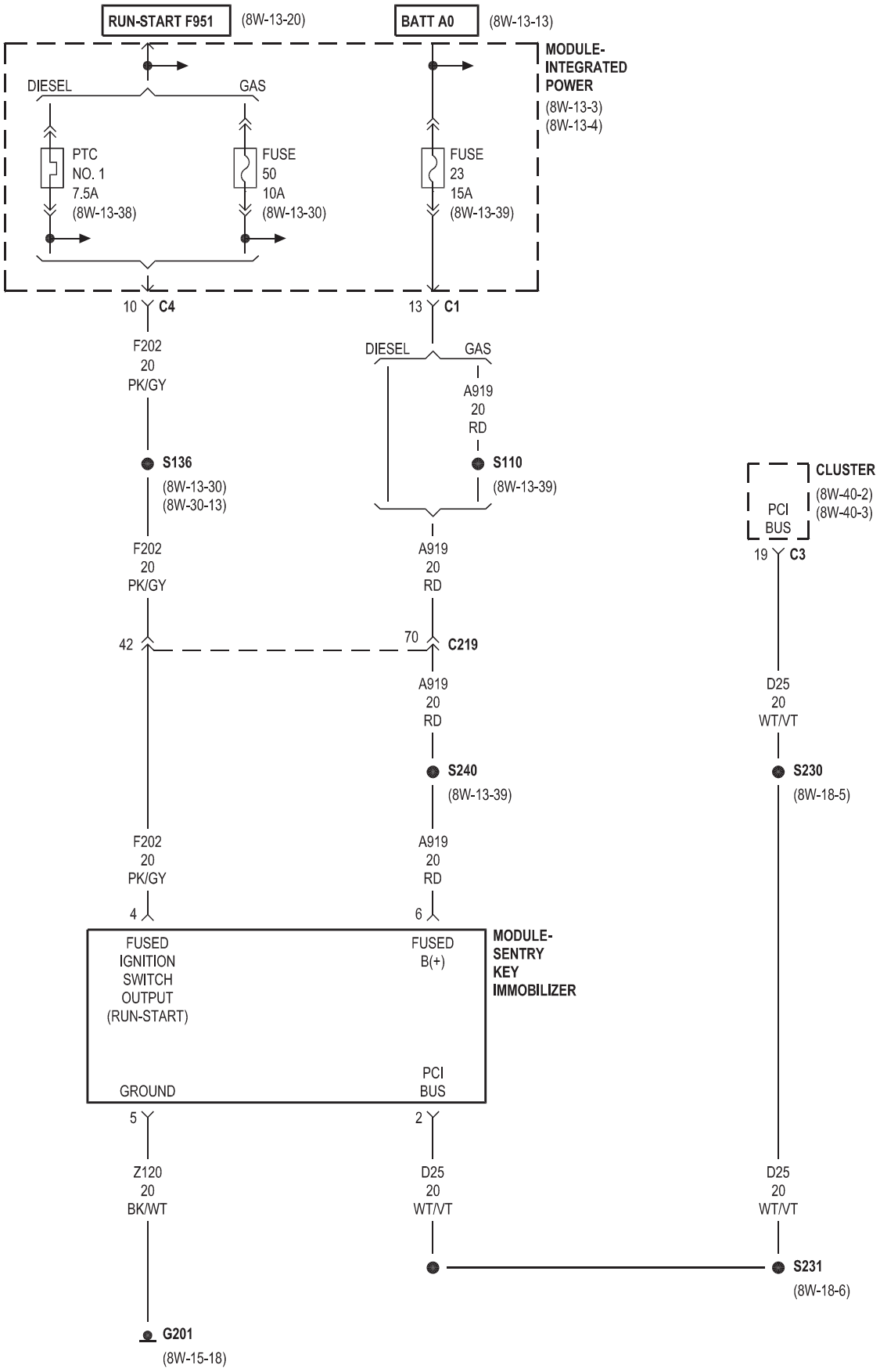
RUN-START F951
(8W-13-20)
BATT A0
(8W-13-13)
MODULE-
INTEGRATED
POWER
(8W-13-3)
(8W-13-4)
DIESEL
GAS
PTC
NO. 1
7.5A
(8W-13-38)
FUSE
50
10A
(8W-13-30)
FUSE
23
15A
(8W-13-39)
10 C4
13 C1
F202
20
PK/GY
DIESEL
GAS
A919
20
RD
S136
(8W-13-30)
(8W-30-13)
S110
(8W-13-39)
CLUSTER
(8W-40-2)
(8W-40-3)
PCI
BUS
19 C3
F202
20
PK/GY
A919
20
RD
42
70 C219
A919
20
RD
D25
20
WT/VT
S240
(8W-13-39)
S230
(8W-18-5)
F202
20
PK/GY
A919
20
RD
4
6
FUSED
IGNITION
SWITCH
OUTPUT
(RUN-START)
FUSED
B(+)
MODULE-
SENTRY
KEY
IMMOBILIZER
GROUND
PCI
BUS
5
2
Z120
20
BK/WT
D25
20
WT/VT
D25
20
WT/VT
S231
(8W-18-6)
G201
(8W-15-18)

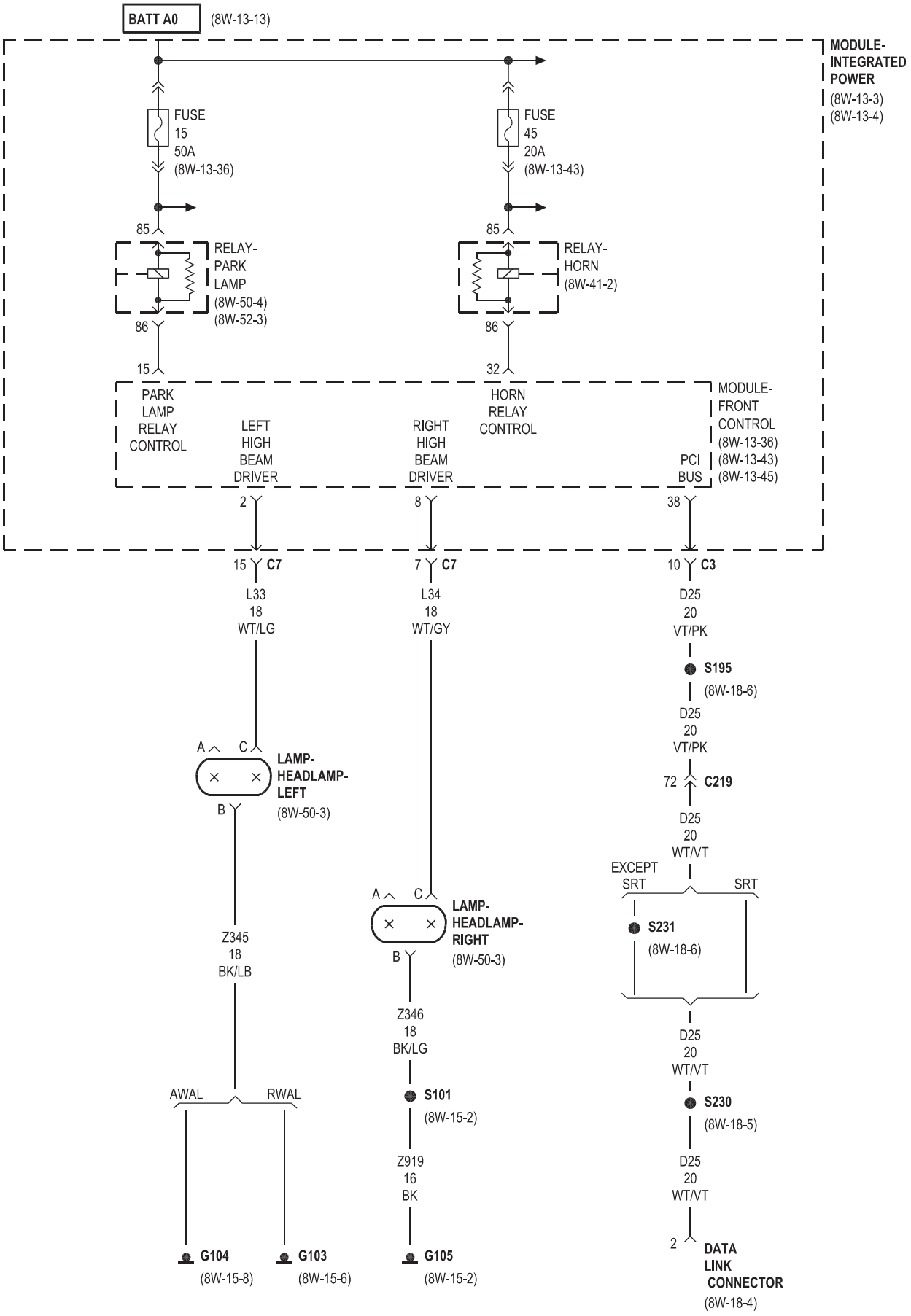
BATT A0
(8W-13-13)
MODULE-
INTEGRATED
POWER
(8W-13-3)
(8W-13-4)
FUSE
15
50A
(8W-13-36)
FUSE
45
20A
(8W-13-43)
85
RELAY-
PARK
LAMP
(8W-50-4)
(8W-52-3)
RELAY-
HORN
(8W-41-2)
86
15
32
PARK
LAMP
RELAY
CONTROL
LEFT
HIGH
BEAM
DRIVER
RIGHT
HIGH
BEAM
DRIVER
HORN
RELAY
CONTROL
MODULE-
FRONT
CONTROL
(8W-13-36)
(8W-13-43)
(8W-13-45)
PCI
BUS
2
8
38
15 C7
7 C7
10 C3
L33
18
WT/LG
L34
18
WT/GY
D25
20
VT/PK
S195
(8W-18-6)
D25
20
VT/PK
72 C219
D25
20
WT/VT
EXCEPT
SRT
SRT
S231
(8W-18-6)
A
C
B
LAMP-
HEADLAMP-
LEFT
(8W-50-3)
LAMP-
HEADLAMP-
RIGHT
(8W-50-3)
Z345
18
BK/LB
Z346
18
BK/LG
AWAL
RWAL
S101
(8W-15-2)
Z919
16
BK
D25
20
WT/VT
S230
(8W-18-5)
D25
20
WT/VT
2
DATA
LINK
CONNECTOR
(8W-18-4)
G104
(8W-15-8)
G103
(8W-15-6)
G105
(8W-15-2)

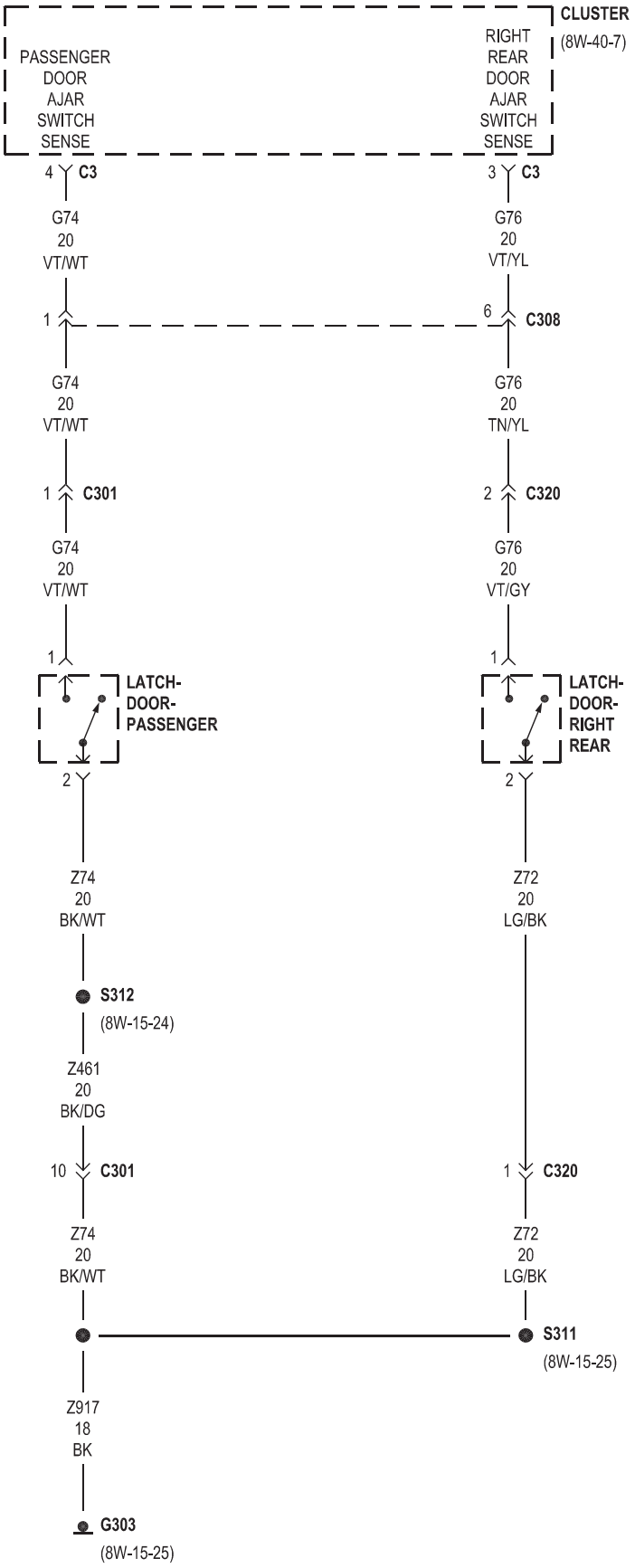
CLUSTER
(8W-40-7)
PASSENGER DOOR AJAR SWITCH SENSE
RIGHT REAR DOOR AJAR SWITCH SENSE
4 C3
3 C3
G74 20 VT/WT
G76 20 VT/YL
1
6 C308
G74 20 VT/WT
G76 20 TN/YL
1 C301
2 C320
G74 20 VT/WT
G76 20 VT/GY
1
1
LATCH-DOOR-PASSENGER
LATCH-DOOR-RIGHT REAR
2
2
Z74 20 BK/WT
Z72 20 LG/BK
S312
(8W-15-24)
Z461 20 BK/DG
10 C301
1 C320
Z74 20 BK/WT
Z72 20 LG/BK
S311
(8W-15-25)
Z917 18 BK
G303
(8W-15-25)

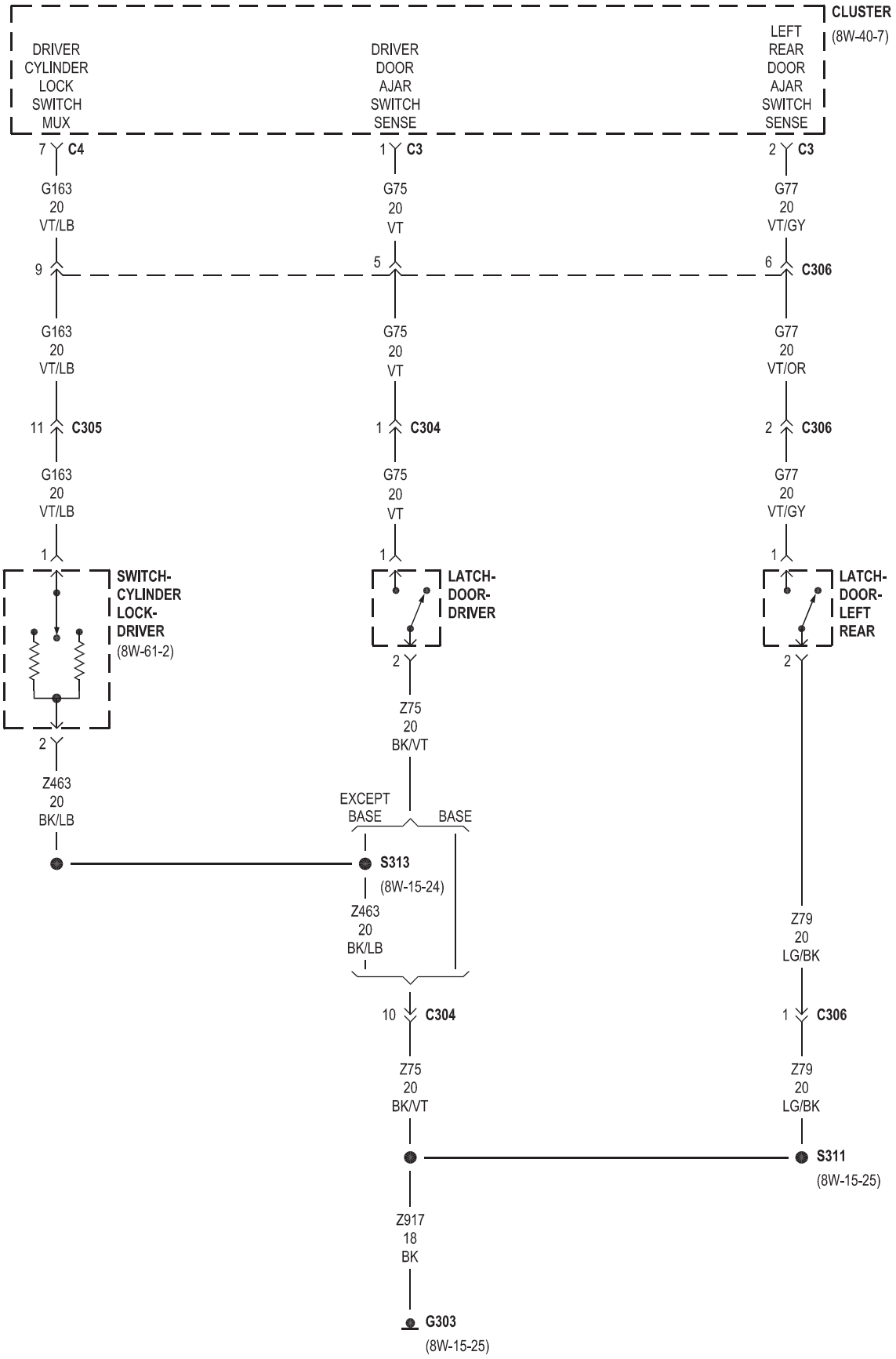
CLUSTER
(8W-40-7)
DRIVER CYLINDER LOCK SWITCH MUX
DRIVER DOOR AJAR SWITCH SENSE
LEFT REAR DOOR AJAR SWITCH SENSE
7 C4
1 C3
2 C3
G163 20 VT/LB
G75 20 VT
G77 20 VT/GY
9
5
6 C306
G163 20 VT/LB
G75 20 VT
G77 20 VT/OR
11 C305
1 C304
2 C306
G163 20 VT/LB
G75 20 VT
G77 20 VT/GY
1
1
1
SWITCH-CYLINDER LOCK-DRIVER
(8W-61-2)
LATCH-DOOR-DRIVER
LATCH-DOOR-LEFT REAR
2
2
2
Z75 20 BK/VT
Z463 20 BK/LB
EXCEPT BASE
BASE
S313
(8W-15-24)
Z463 20 BK/LB
Z79 20 LG/BK
10 C304
1 C306
Z75 20 BK/VT
Z79 20 LG/BK
S311
(8W-15-25)
Z917 18 BK
G303
(8W-15-25)

8W-40 INSTRUMENT CLUSTER

Component	Page
Clockspring	8W-40-10
Cluster	8W-40-2, 3, 4, 5, 6, 7, 8, 9, 10, 11
Control-A/C-Heater	8W-40-9
Data Link Connector	8W-40-2, 3
Fuse 18	8W-40-2
Fuse 22	8W-40-2
Fuse 28	8W-40-2, 11
Fuse 41	8W-40-5
Fuse 51	8W-40-2
G110	8W-40-11
G201	8W-40-2, 11
G203	8W-40-2, 5, 10
G303	8W-40-4, 7
Gauge-Engine Oil Temperature	8W-40-11
Lamp-Dome-Rear	8W-40-9
Lamp-Glove Box	8W-40-9
Lamp-High Mounted Stop	8W-40-9
Lamp-Reading-Front	8W-40-9
Latch-Door-Driver	8W-40-8
Latch-Door-Left Rear	8W-40-8
Latch-Door-Passenger	8W-40-7
Latch-Door-Right Rear	8W-40-7
Module-Integrated Power	8W-40-2, 4, 5, 11
PTC No. 2	8W-40-4
Radio	8W-40-9
Relay-Fog Lamp	8W-40-5
Seat Belt-Tension Reducer-Driver	8W-40-4
Sensor-Engine Oil Temperature	8W-40-11
Sensor-Transfer Case Position	8W-40-10
Sensor-Transmission Range	8W-40-3
Solenoid-Brake Transmission Shift Interlock	8W-40-10
Switch-Axle Lock	8W-40-10
Switch-Cylinder Lock-Driver	8W-40-7
Switch-Disconnecting Stabilizer Bar	8W-40-10
Switch-Door Lock-Passenger	8W-40-7
Switch-Headlamp	8W-40-5
Switch-Heated Seat-Driver	8W-40-9
Switch-Horn	8W-40-10
Switch-Ignition	8W-40-3, 4
Switch-Multifunction	8W-40-6
Switch-Parking Brake	8W-40-10
Switch-Remote Radio-Right	8W-40-10
Switch-Seat Belt-Driver	8W-40-4
Switch-Stop Lamp	8W-40-3
Switch-Transfer Case Selector	8W-40-10
Switch-Window/Door Lock-Driver	8W-40-8

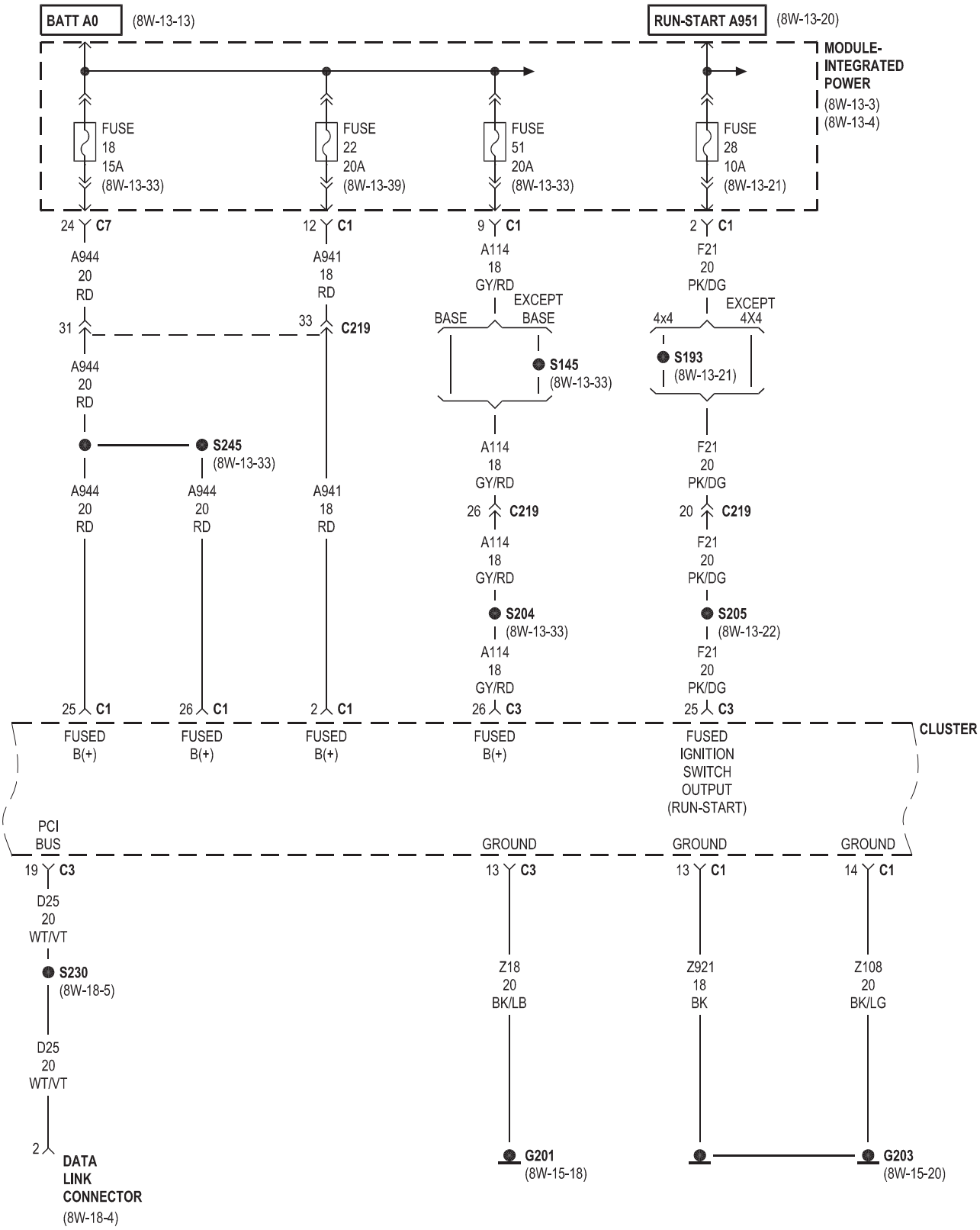
BATT A0
(8W-13-13)
RUN-START A951
(8W-13-20)
MODULE-
INTEGRATED
POWER
(8W-13-3)
(8W-13-4)
FUSE
18
15A
(8W-13-33)
FUSE
22
20A
(8W-13-39)
FUSE
51
20A
(8W-13-33)
FUSE
28
10A
(8W-13-21)
24 C7
12 C1
9 C1
2 C1
A944
20
RD
A941
18
RD
A114
18
GY/RD
F21
20
PK/DG
EXCEPT
BASE
BASE
EXCEPT
4x4
4X4
31
33 C219
S145
(8W-13-33)
S193
(8W-13-21)
S245
(8W-13-33)
26 C219
20 C219
S204
(8W-13-33)
S205
(8W-13-22)
25 C1
26 C1
2 C1
26 C3
25 C3
FUSED
B(+)
FUSED
IGNITION
SWITCH
OUTPUT
(RUN-START)
CLUSTER
PCI
BUS
GROUND
19 C3
13 C3
13 C1
14 C1
D25
20
WT/VT
S230
(8W-18-5)
Z18
20
BK/LB
Z921
18
BK
Z108
20
BK/LG
2
DATA
LINK
CONNECTOR
(8W-18-4)
G201
(8W-15-18)
G203
(8W-15-20)

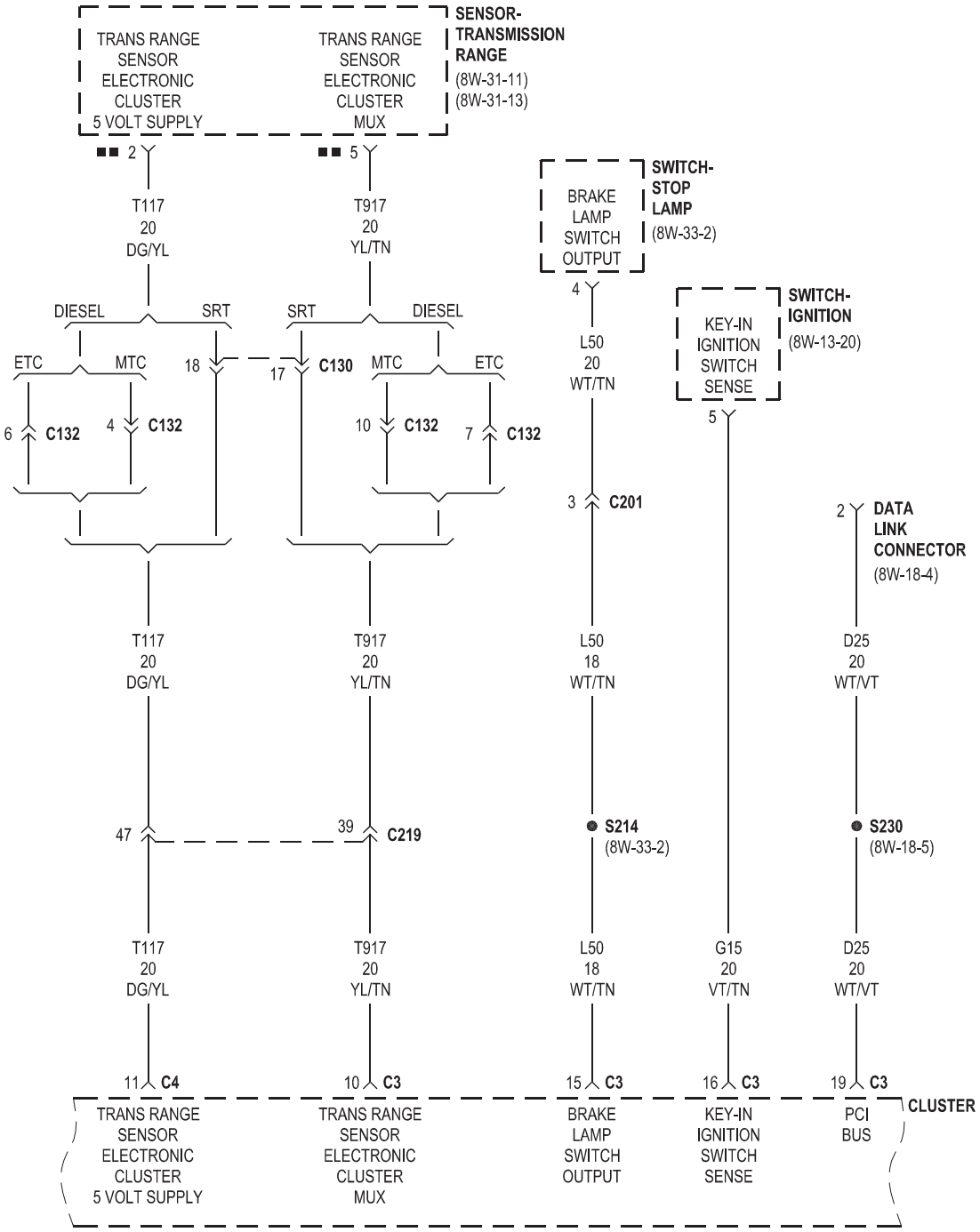
SENSOR-TRANSMISSION RANGE
(8W-31-11)
(8W-31-13)
TRANS RANGE SENSOR ELECTRONIC CLUSTER 5 VOLT SUPPLY
TRANS RANGE SENSOR ELECTRONIC CLUSTER MUX
■■ 2
■■ 5
T117 20 DG/YL
T917 20 YL/TN
SWITCH-STOP LAMP
(8W-33-2)
BRAKE LAMP SWITCH OUTPUT
4
L50 20 WT/TN
SWITCH-IGNITION
(8W-13-20)
KEY-IN IGNITION SWITCH SENSE
5
DIESEL
SRT
SRT
DIESEL
ETC
MTC
18
17 C130
MTC
ETC
6 C132
4 C132
10 C132
7 C132
3 C201
2 DATA LINK CONNECTOR
(8W-18-4)
T117 20 DG/YL
T917 20 YL/TN
L50 18 WT/TN
D25 20 WT/VT
47
39 C219
S214
(8W-33-2)
S230
(8W-18-5)
T117 20 DG/YL
T917 20 YL/TN
L50 18 WT/TN
G15 20 VT/TN
D25 20 WT/VT
11 C4
10 C3
15 C3
16 C3
19 C3
CLUSTER
TRANS RANGE SENSOR ELECTRONIC CLUSTER 5 VOLT SUPPLY
TRANS RANGE SENSOR ELECTRONIC CLUSTER MUX
BRAKE LAMP SWITCH OUTPUT
KEY-IN IGNITION SWITCH SENSE
PCI BUS

■■ A/T

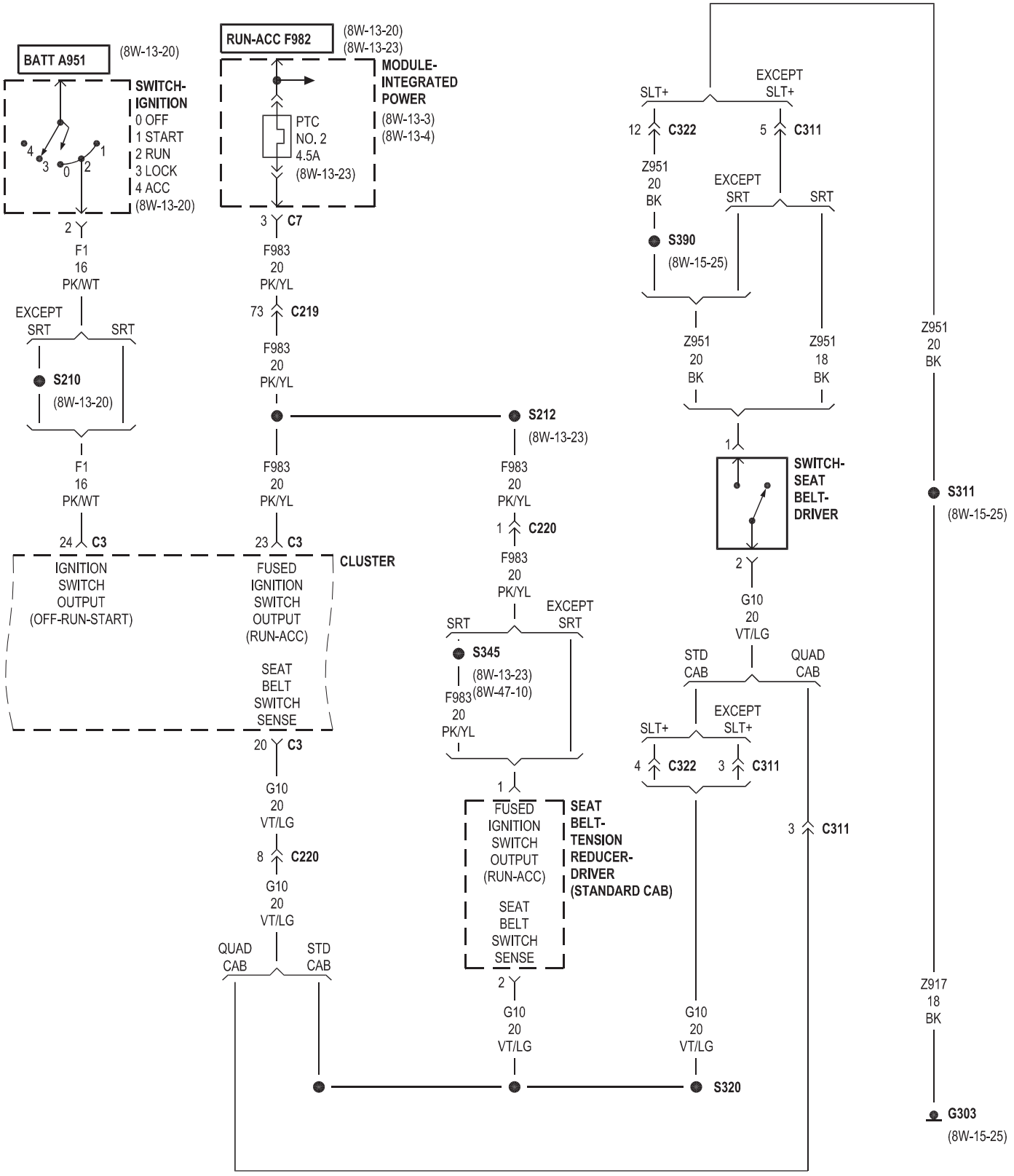
BATT A951
(8W-13-20)
SWITCH-IGNITION
0 OFF
1 START
2 RUN
3 LOCK
4 ACC
(8W-13-20)
RUN-ACC F982
(8W-13-20)
(8W-13-23)
MODULE-INTEGRATED POWER
(8W-13-3)
(8W-13-4)
PTC
NO. 2
4.5A
(8W-13-23)
2
F1
16
PK/WT
3 C7
F983
20
PK/YL
EXCEPT SRT
SRT
S210
(8W-13-20)
73 C219
S212
(8W-13-23)
24 C3
23 C3
IGNITION SWITCH OUTPUT (OFF-RUN-START)
FUSED IGNITION SWITCH OUTPUT (RUN-ACC)
SEAT BELT SWITCH SENSE
CLUSTER
20 C3
G10
20
VT/LG
8 C220
1 C220
S345
(8W-13-23)
(8W-47-10)
EXCEPT SRT
FUSED IGNITION SWITCH OUTPUT (RUN-ACC)
SEAT BELT SWITCH SENSE
SEAT BELT-TENSION REDUCER-DRIVER (STANDARD CAB)
QUAD CAB
STD CAB
SLT+
EXCEPT SLT+
12 C322
5 C311
Z951
20
BK
S390
(8W-15-25)
18
BK
1
SWITCH-SEAT BELT-DRIVER
4 C322
3 C311
3 C311
S320
Z951
20
BK
S311
(8W-15-25)
Z917
18
BK
G303
(8W-15-25)

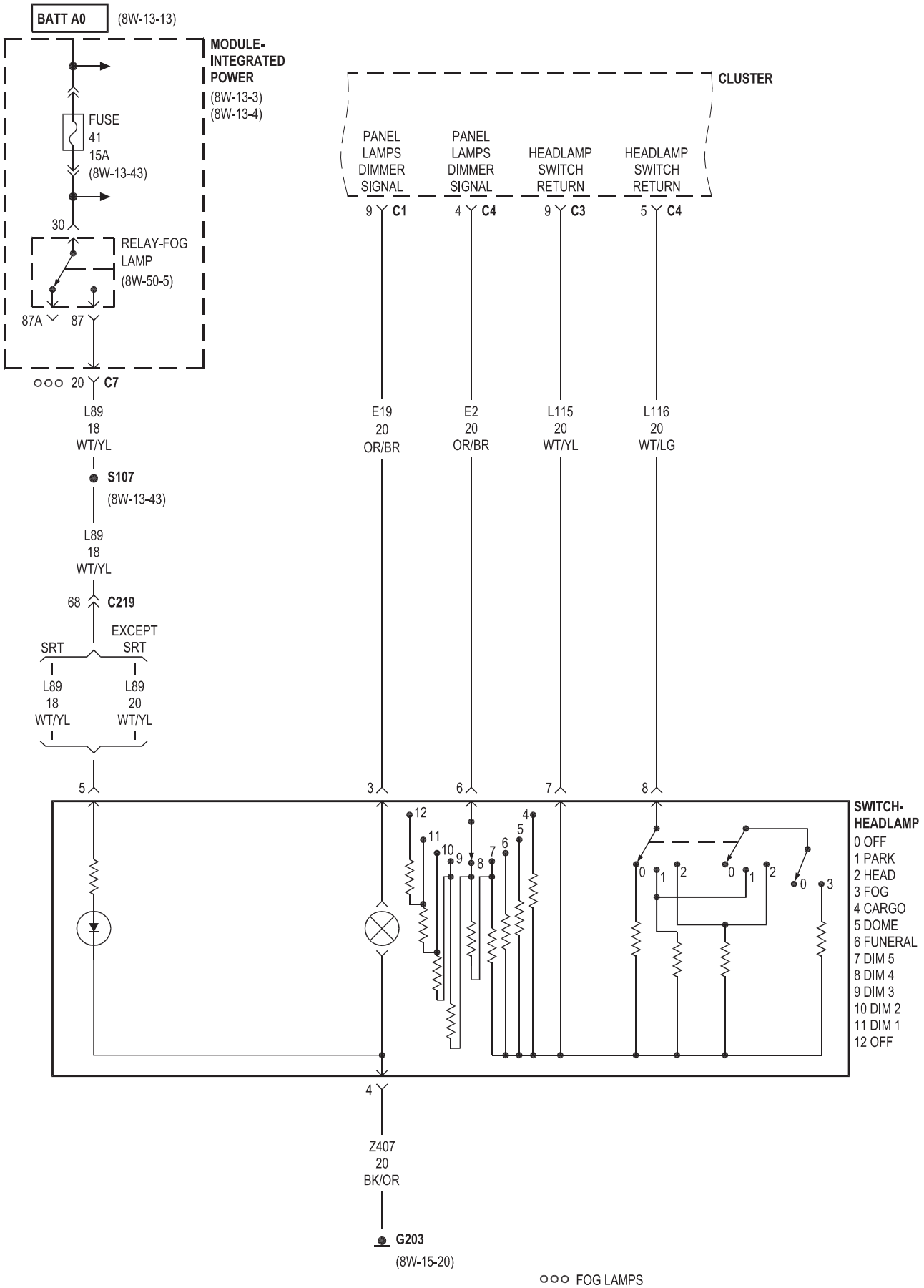
BATT A0
(8W-13-13)
MODULE-
INTEGRATED
POWER
(8W-13-3)
(8W-13-4)
FUSE
41
15A
(8W-13-43)
30
RELAY-FOG
LAMP
(8W-50-5)
87A
87
20 C7
L89
18
WT/YL
S107
(8W-13-43)
L89
18
WT/YL
68 C219
EXCEPT
SRT
SRT
L89
18
WT/YL
L89
20
WT/YL
5
CLUSTER
PANEL
LAMPS
DIMMER
SIGNAL
PANEL
LAMPS
DIMMER
SIGNAL
HEADLAMP
SWITCH
RETURN
HEADLAMP
SWITCH
RETURN
9 C1
4 C4
9 C3
5 C4
E19
20
OR/BR
E2
20
OR/BR
L115
20
WT/YL
L116
20
WT/LG
3
6
7
8
12
11
10
9
8
7
6
5
4
0
1
2
0
1
2
0
3
SWITCH-
HEADLAMP
0 OFF
1 PARK
2 HEAD
3 FOG
4 CARGO
5 DOME
6 FUNERAL
7 DIM 5
8 DIM 4
9 DIM 3
10 DIM 2
11 DIM 1
12 OFF
4
Z407
20
BK/OR
G203
(8W-15-20)
FOG LAMPS

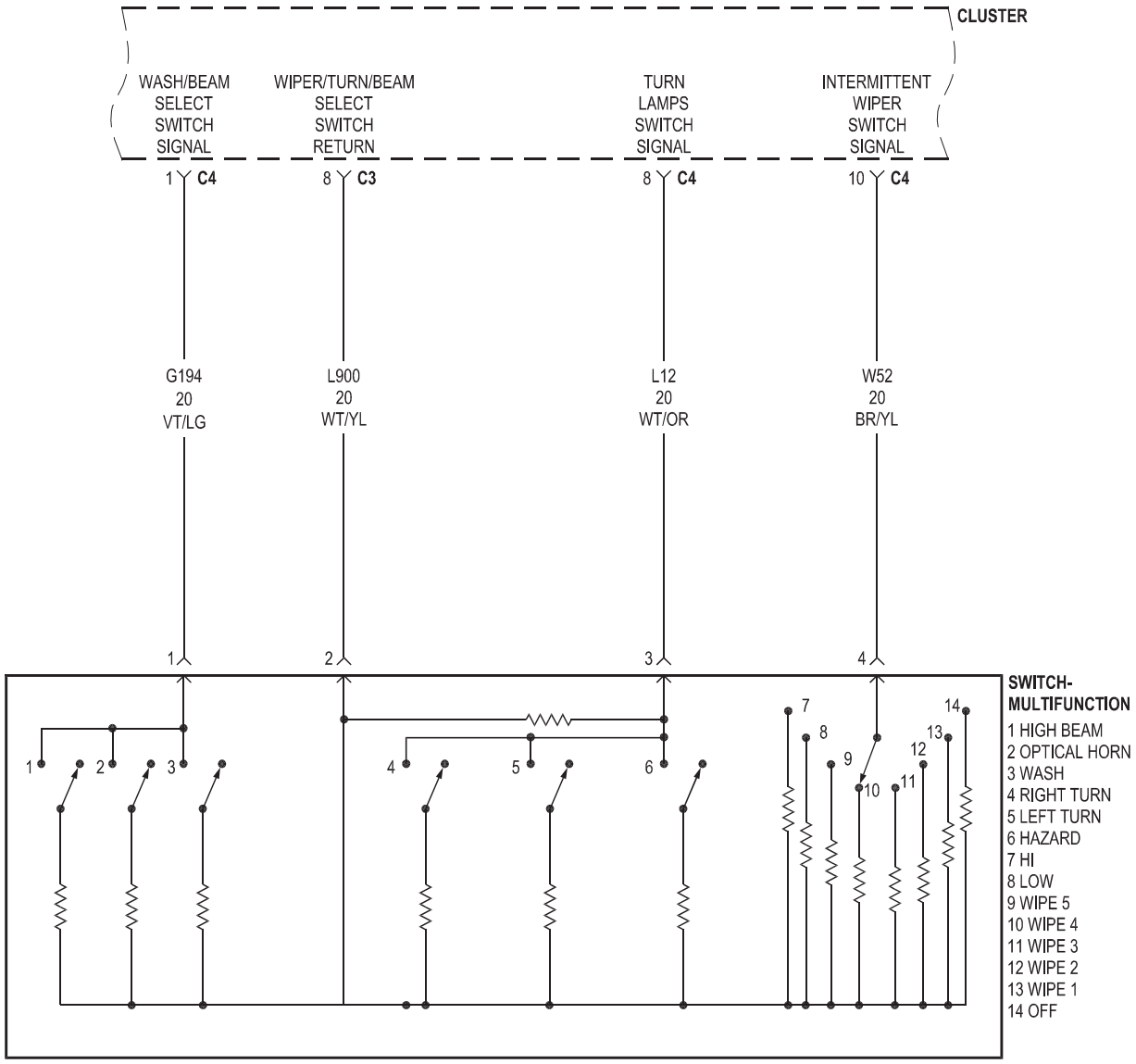
CLUSTER
WASH/BEAM SELECT SWITCH SIGNAL
WIPER/TURN/BEAM SELECT SWITCH RETURN
TURN LAMPS SWITCH SIGNAL
INTERMITTENT WIPER SWITCH SIGNAL
1 C4
8 C3
8 C4
10 C4
G194 20 VT/LG
L900 20 WT/YL
L12 20 WT/OR
W52 20 BR/YL
1
2
3
4
SWITCH-MULTIFUNCTION
1 HIGH BEAM
2 OPTICAL HORN
3 WASH
4 RIGHT TURN
5 LEFT TURN
6 HAZARD
7 HI
8 LOW
9 WIPE 5
10 WIPE 4
11 WIPE 3
12 WIPE 2
13 WIPE 1
14 OFF

EXCEPT BASE

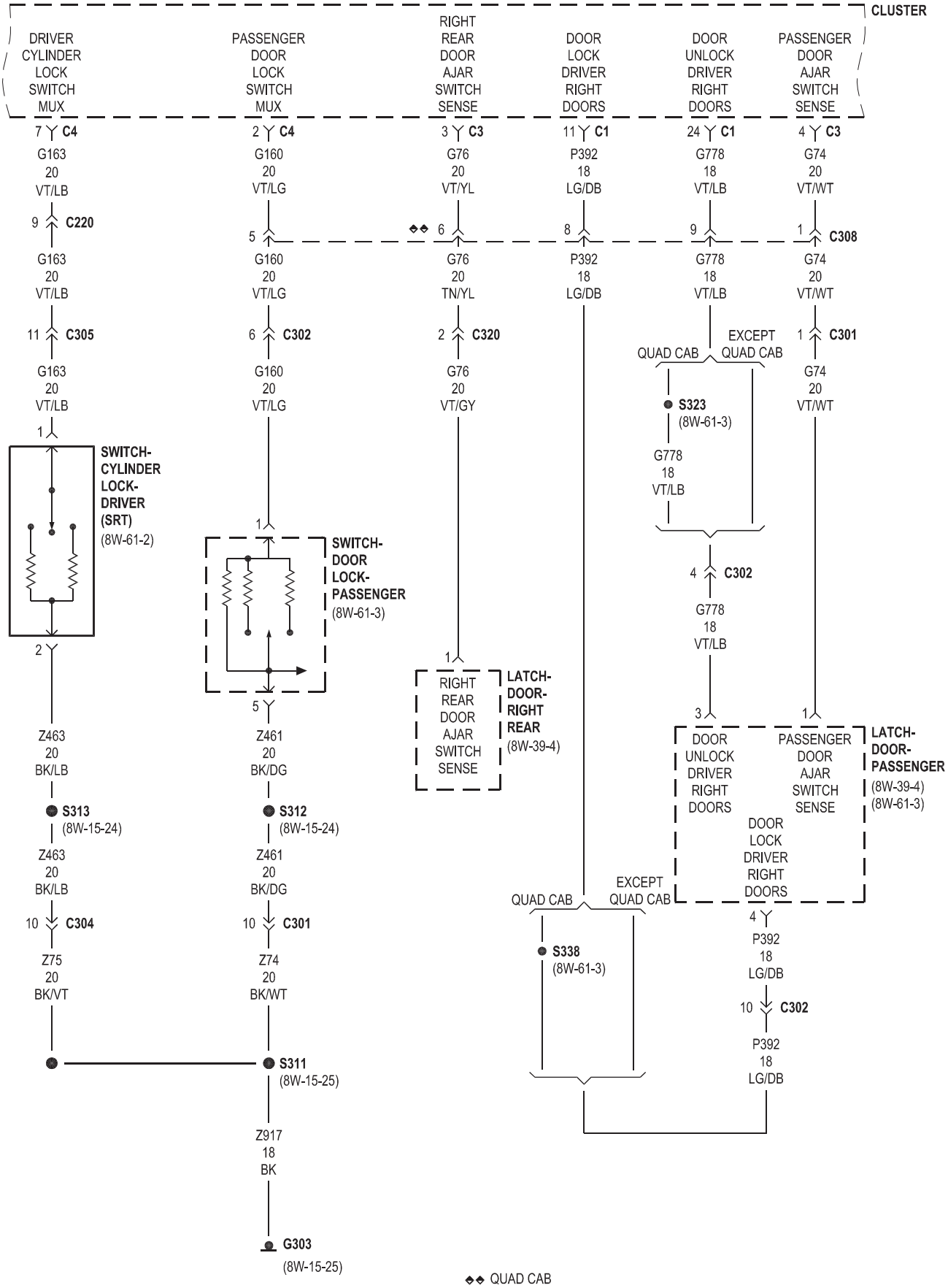
CLUSTER
DRIVER CYLINDER LOCK SWITCH MUX
PASSENGER DOOR LOCK SWITCH MUX
RIGHT REAR DOOR AJAR SWITCH SENSE
DOOR LOCK DRIVER RIGHT DOORS
DOOR UNLOCK DRIVER RIGHT DOORS
PASSENGER DOOR AJAR SWITCH SENSE
7 C4
2 C4
3 C3
11 C1
24 C1
4 C3
G163 20 VT/LB
G160 20 VT/LG
G76 20 VT/YL
P392 18 LG/DB
G778 18 VT/LB
G74 20 VT/WT
9 C220
5
6
8
9
1 C308
G163 20 VT/LB
G160 20 VT/LG
G76 20 TN/YL
P392 18 LG/DB
G778 18 VT/LB
G74 20 VT/WT
11 C305
6 C302
2 C320
QUAD CAB
EXCEPT QUAD CAB
1 C301
G163 20 VT/LB
G160 20 VT/LG
G76 20 VT/GY
S323 (8W-61-3)
G74 20 VT/WT
G778 18 VT/LB
1
SWITCH-CYLINDER LOCK-DRIVER (SRT) (8W-61-2)
1
SWITCH-DOOR LOCK-PASSENGER (8W-61-3)
4 C302
G778 18 VT/LB
2
5
1
RIGHT REAR DOOR AJAR SWITCH SENSE
LATCH-DOOR-RIGHT REAR (8W-39-4)
3
1
DOOR UNLOCK DRIVER RIGHT DOORS
PASSENGER DOOR AJAR SWITCH SENSE
LATCH-DOOR-PASSENGER (8W-39-4) (8W-61-3)
DOOR LOCK DRIVER RIGHT DOORS
Z463 20 BK/LB
Z461 20 BK/DG
QUAD CAB
EXCEPT QUAD CAB
4
S313 (8W-15-24)
S312 (8W-15-24)
S338 (8W-61-3)
P392 18 LG/DB
Z463 20 BK/LB
Z461 20 BK/DG
10 C304
10 C301
10 C302
Z75 20 BK/VT
Z74 20 BK/WT
P392 18 LG/DB
S311 (8W-15-25)
Z917 18 BK
G303 (8W-15-25)
◆◆ QUAD CAB

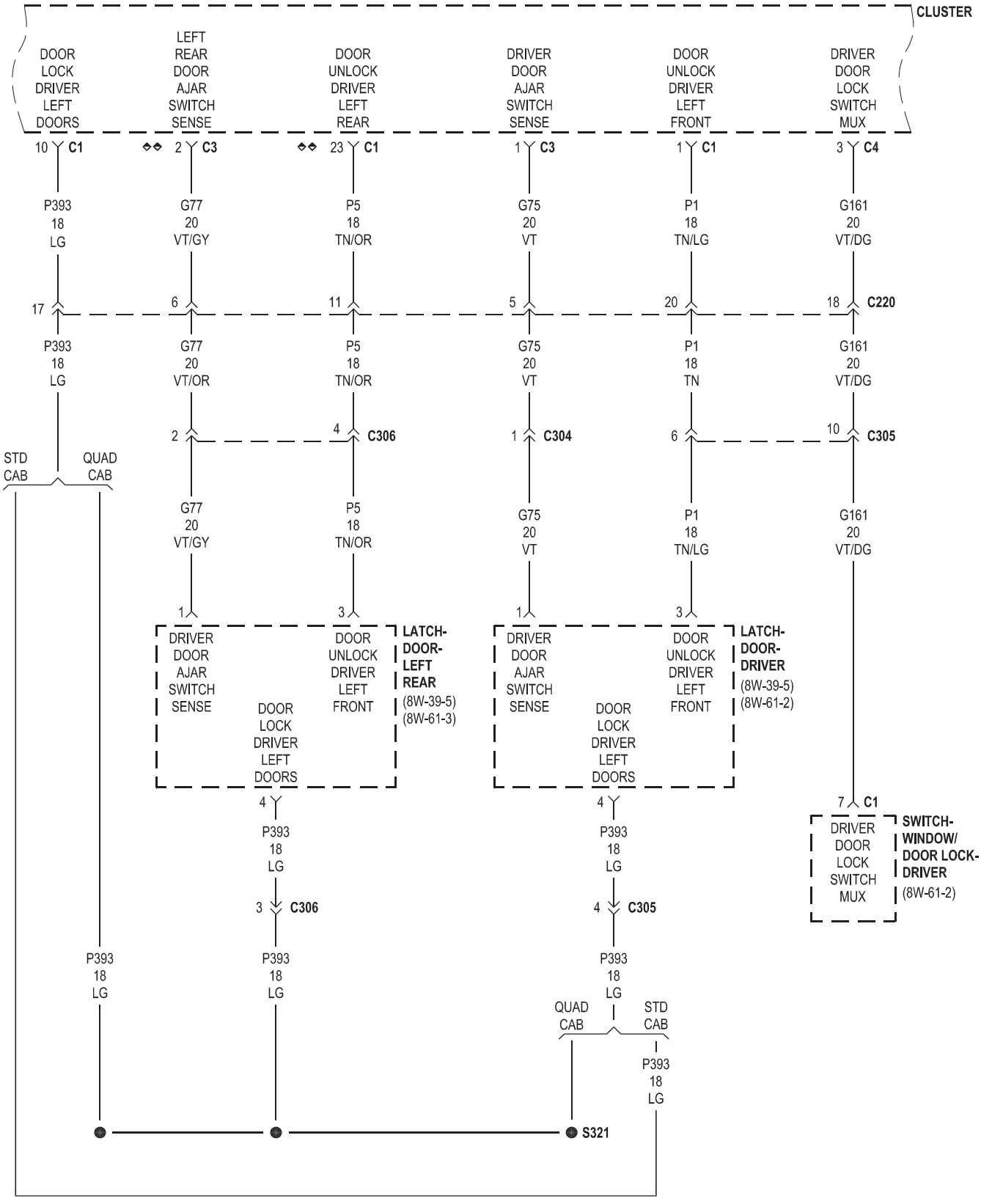
CLUSTER
DOOR LOCK DRIVER LEFT DOORS
LEFT REAR DOOR AJAR SWITCH SENSE
DOOR UNLOCK DRIVER LEFT REAR
DRIVER DOOR AJAR SWITCH SENSE
DOOR UNLOCK DRIVER LEFT FRONT
DRIVER DOOR LOCK SWITCH MUX
10 C1
2 C3
23 C1
1 C3
1 C1
3 C4
P393 18 LG
G77 20 VT/GY
P5 18 TN/OR
G75 20 VT
P1 18 TN/LG
G161 20 VT/DG
17
6
11
5
20
18 C220
P393 18 LG
G77 20 VT/OR
P5 18 TN/OR
G75 20 VT
P1 18 TN
G161 20 VT/DG
2
4 C306
1 C304
6
10 C305
STD CAB
QUAD CAB
G77 20 VT/GY
P5 18 TN/OR
G75 20 VT
P1 18 TN/LG
G161 20 VT/DG
1
3
1
3
DRIVER DOOR AJAR SWITCH SENSE
DOOR UNLOCK DRIVER LEFT FRONT
DOOR LOCK DRIVER LEFT DOORS
LATCH-DOOR-LEFT REAR
(8W-39-5)
(8W-61-3)
DRIVER DOOR AJAR SWITCH SENSE
DOOR UNLOCK DRIVER LEFT FRONT
DOOR LOCK DRIVER LEFT DOORS
LATCH-DOOR-DRIVER
(8W-39-5)
(8W-61-2)
7 C1
DRIVER DOOR LOCK SWITCH MUX
SWITCH-WINDOW/ DOOR LOCK-DRIVER
(8W-61-2)
4
P393 18 LG
3 C306
4
P393 18 LG
4 C305
P393 18 LG
P393 18 LG
P393 18 LG
QUAD CAB
STD CAB
P393 18 LG
S321

◆◆ QUAD CAB

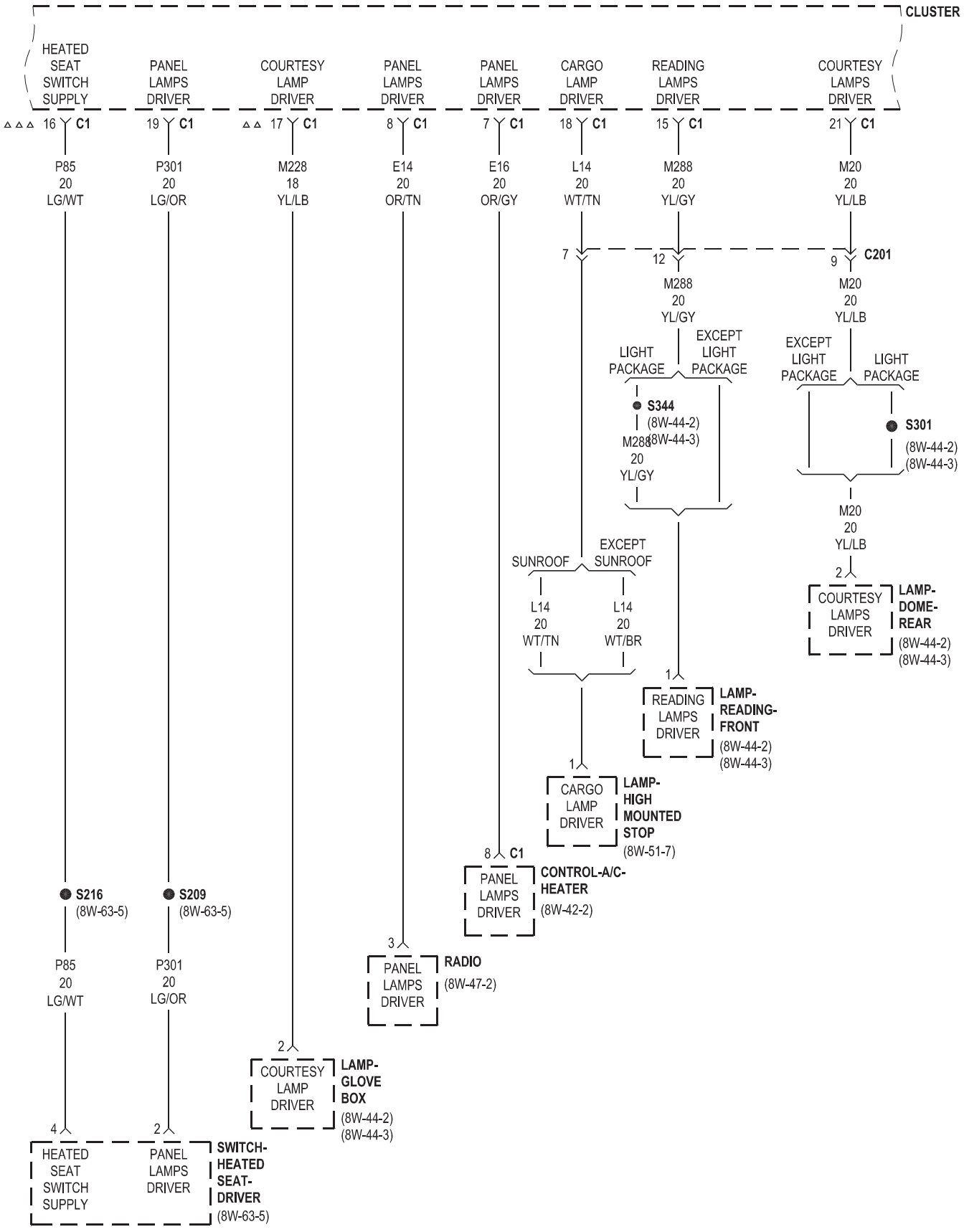

△△ SLT/SRT

△△△ SLT+/SRT

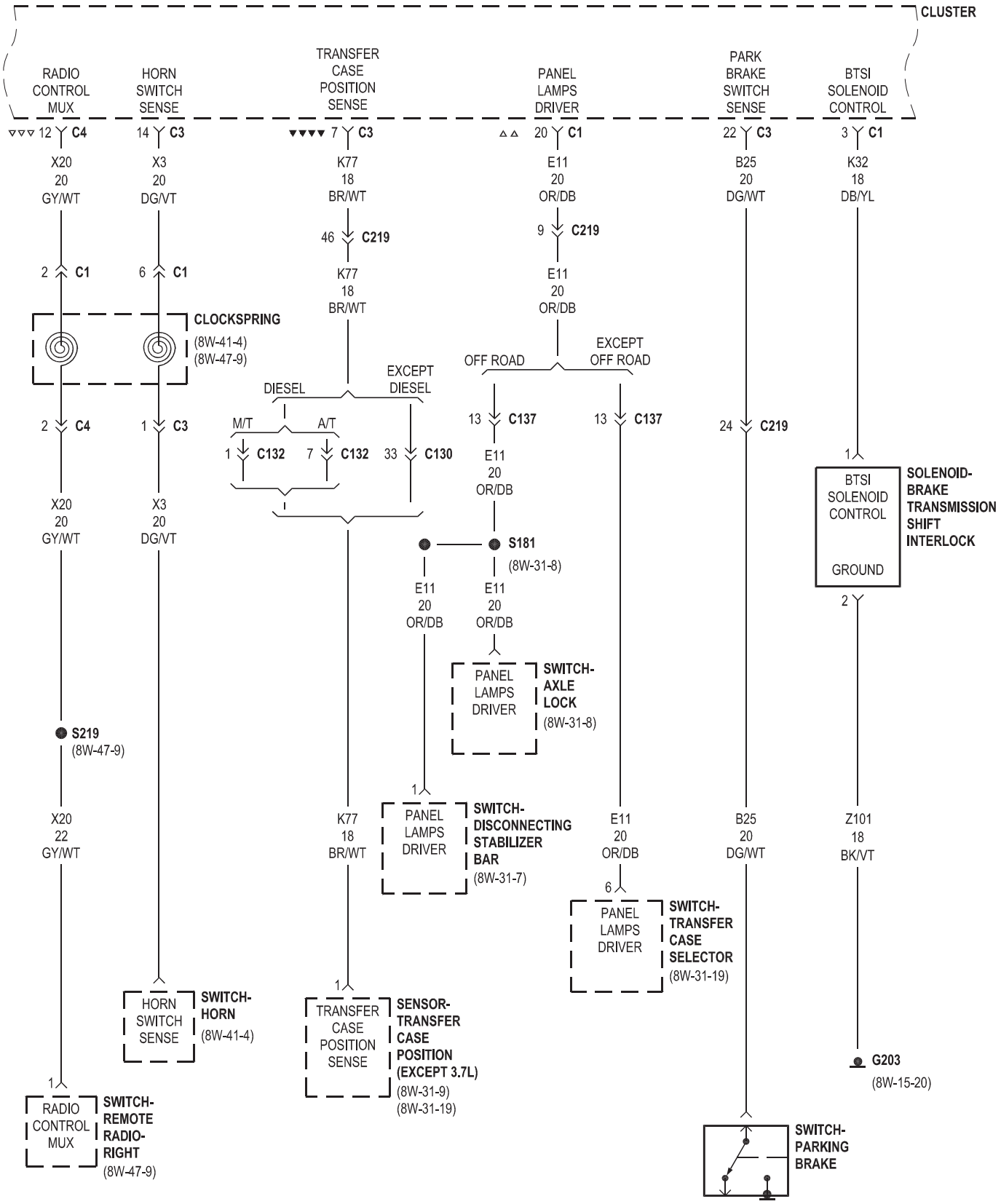
CLUSTER
RADIO CONTROL MUX
HORN SWITCH SENSE
TRANSFER CASE POSITION SENSE
PANEL LAMPS DRIVER
PARK BRAKE SWITCH SENSE
BTSI SOLENOID CONTROL
▽▽▽ 12 C4
14 C3
▼▼▼▼ 7 C3
△△ 20 C1
22 C3
3 C1
X20 20 GY/WT
X3 20 DG/VT
K77 18 BR/WT
E11 20 OR/DB
B25 20 DG/WT
K32 18 DB/YL
46 C219
9 C219
2 C1
6 C1
CLOCKSPRING
(8W-41-4)
(8W-47-9)
OFF ROAD
EXCEPT OFF ROAD
DIESEL
EXCEPT DIESEL
M/T
A/T
13 C137
24 C219
1 C132
7 C132
33 C130
BTSI SOLENOID CONTROL
GROUND
SOLENOID-BRAKE TRANSMISSION SHIFT INTERLOCK
S181
(8W-31-8)
PANEL LAMPS DRIVER
SWITCH-AXLE LOCK
(8W-31-8)
S219
(8W-47-9)
SWITCH-DISCONNECTING STABILIZER BAR
(8W-31-7)
SWITCH-TRANSFER CASE SELECTOR
(8W-31-19)
Z101 18 BK/VT
G203
(8W-15-20)
HORN SWITCH SENSE
SWITCH-HORN
(8W-41-4)
TRANSFER CASE POSITION SENSE
SENSOR-TRANSFER CASE POSITION (EXCEPT 3.7L)
(8W-31-9)
(8W-31-19)
RADIO CONTROL MUX
SWITCH-REMOTE RADIO-RIGHT
(8W-47-9)
SWITCH-PARKING BRAKE
△△ SLT/SRT
▼▼▼▼ EXCEPT SRT
▽▽▽ PREMIUM

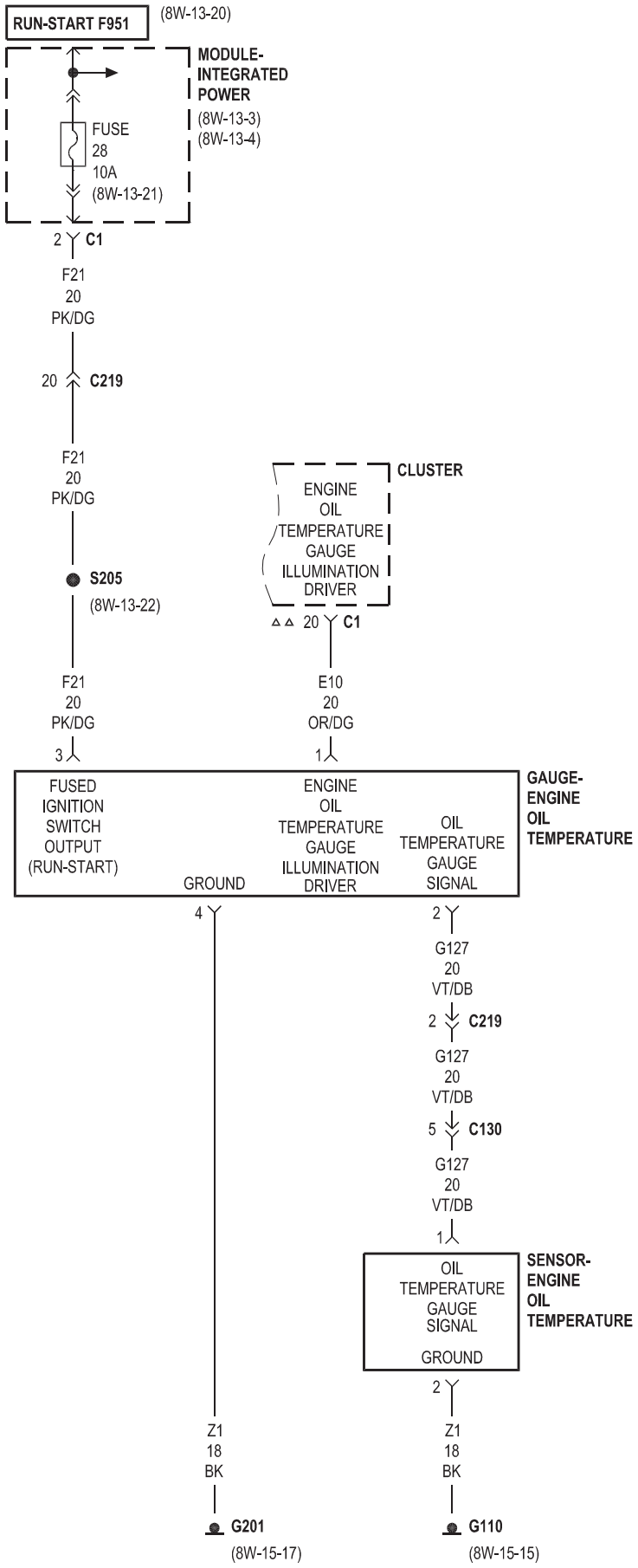
RUN-START F951
(8W-13-20)
MODULE-INTEGRATED POWER
(8W-13-3)
(8W-13-4)
FUSE 28 10A
(8W-13-21)
2 C1
F21 20 PK/DG
20 C219
F21 20 PK/DG
S205
(8W-13-22)
F21 20 PK/DG
3
CLUSTER
ENGINE OIL TEMPERATURE GAUGE ILLUMINATION DRIVER
△△ 20 C1
E10 20 OR/DG
1
FUSED IGNITION SWITCH OUTPUT (RUN-START)
GROUND
ENGINE OIL TEMPERATURE GAUGE ILLUMINATION DRIVER
OIL TEMPERATURE GAUGE SIGNAL
GAUGE-ENGINE OIL TEMPERATURE
4
2
G127 20 VT/DB
2 C219
G127 20 VT/DB
5 C130
G127 20 VT/DB
1
OIL TEMPERATURE GAUGE SIGNAL
GROUND
SENSOR-ENGINE OIL TEMPERATURE
2
Z1 18 BK
Z1 18 BK
G201
(8W-15-17)
G110
(8W-15-15)
△△ SLT/SRT

8W-41 HORN/CIGAR LIGHTER/POWER OUTLET

Component	Page
Clockspring	8W-41-4
Cluster	8W-41-4
Data Link Connector	8W-41-2
Fuse 25	8W-41-3
Fuse 29	8W-41-3
Fuse 42	8W-41-3
Fuse 45	8W-41-2
G104	8W-41-2
G106	8W-41-2
G202	8W-41-3
G302	8W-41-3, 4
Horn-No. 1	8W-41-2
Horn-No. 2	8W-41-2
Module-Front Control	8W-41-2
Module-Integrated Power	8W-41-2, 3
Power Outlet-Console	8W-41-3, 4
Power Outlet-Instrument Panel	8W-41-3
Power Outlet-Rear	8W-41-3
Relay-Horn	8W-41-2
Switch-Horn	8W-41-4

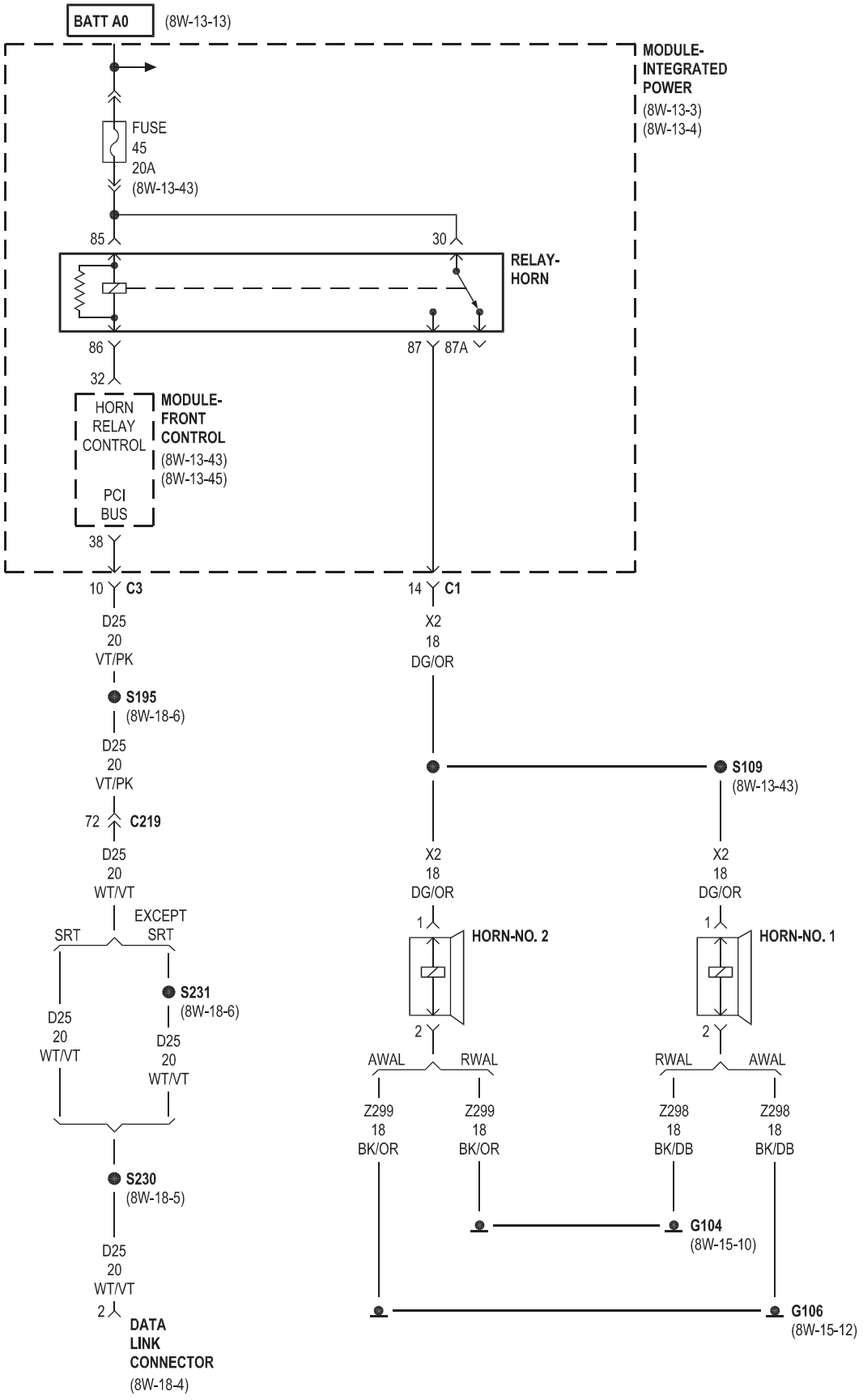
BATT A0
(8W-13-13)
MODULE-
INTEGRATED
POWER
(8W-13-3)
(8W-13-4)
FUSE
45
20A
(8W-13-43)
85
30
RELAY-
HORN
86
87
87A
32
HORN
RELAY
CONTROL
MODULE-
FRONT
CONTROL
(8W-13-43)
(8W-13-45)
PCI
BUS
38
10
C3
14
C1
D25
20
VT/PK
X2
18
DG/OR
S195
(8W-18-6)
D25
20
VT/PK
S109
(8W-13-43)
72
C219
D25
20
WT/VT
X2
18
DG/OR
X2
18
DG/OR
EXCEPT
SRT
SRT
1
HORN-NO. 2
1
HORN-NO. 1
S231
(8W-18-6)
D25
20
WT/VT
D25
20
WT/VT
2
2
AWAL
RWAL
RWAL
AWAL
Z299
18
BK/OR
Z299
18
BK/OR
Z298
18
BK/DB
Z298
18
BK/DB
S230
(8W-18-5)
G104
(8W-15-10)
D25
20
WT/VT
2
DATA
LINK
CONNECTOR
(8W-18-4)
G106
(8W-15-12)

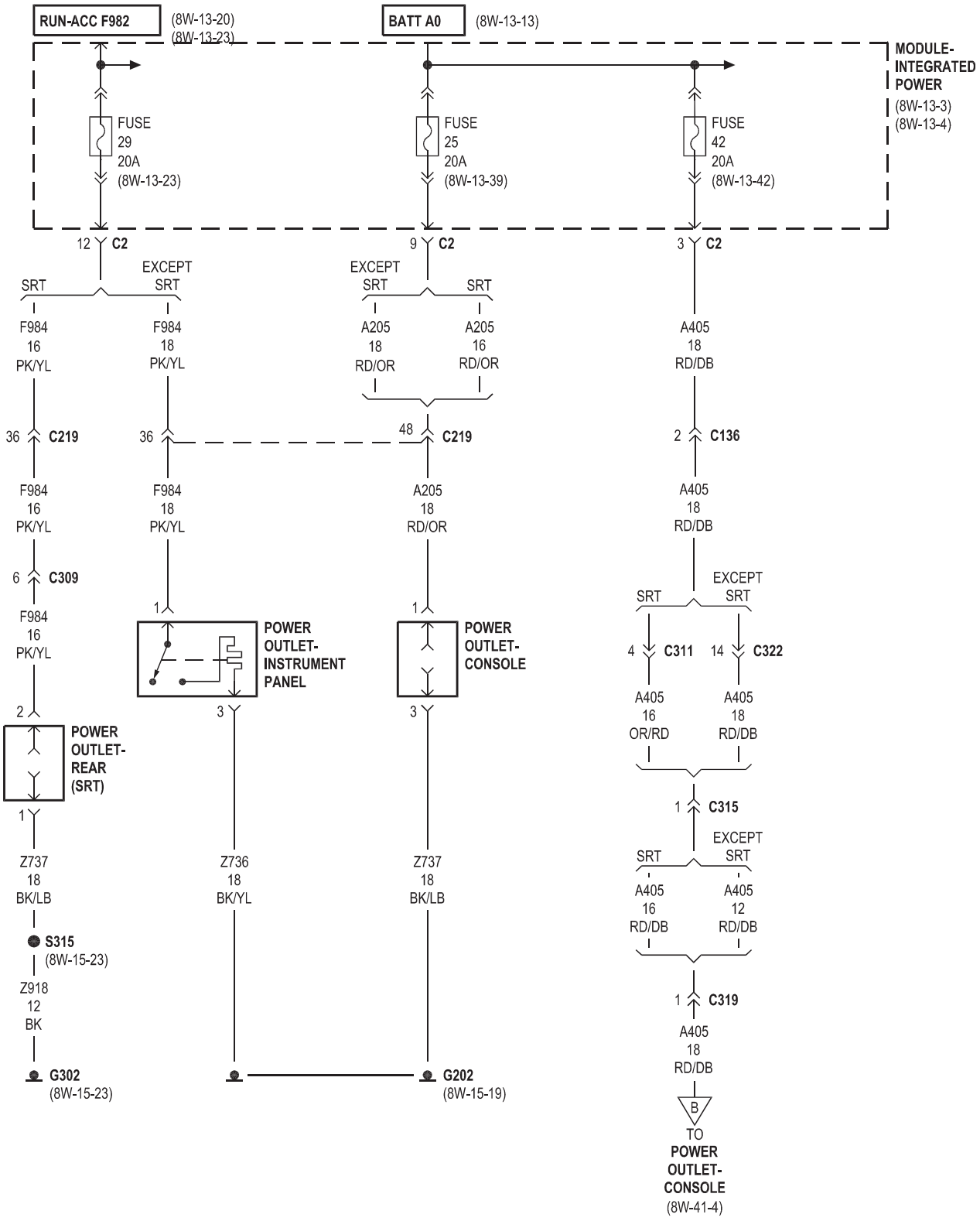
RUN-ACC F982
(8W-13-20)
(8W-13-23)
BATT A0
(8W-13-13)
MODULE-INTEGRATED POWER
(8W-13-3)
(8W-13-4)
FUSE 29 20A (8W-13-23)
FUSE 25 20A (8W-13-39)
FUSE 42 20A (8W-13-42)
12 C2
9 C2
3 C2
EXCEPT SRT
SRT
F984 16 PK/YL
F984 18 PK/YL
A205 18 RD/OR
A205 16 RD/OR
A405 18 RD/DB
36 C219
48 C219
2 C136
6 C309
1
POWER OUTLET-INSTRUMENT PANEL
POWER OUTLET-CONSOLE
2
POWER OUTLET-REAR (SRT)
3
Z737 18 BK/LB
Z736 18 BK/YL
S315
(8W-15-23)
Z918 12 BK
G302
(8W-15-23)
G202
(8W-15-19)
4 C311
14 C322
A405 16 OR/RD
A405 18 RD/DB
1 C315
A405 16 RD/DB
A405 12 RD/DB
1 C319
B
TO POWER OUTLET-CONSOLE
(8W-41-4)

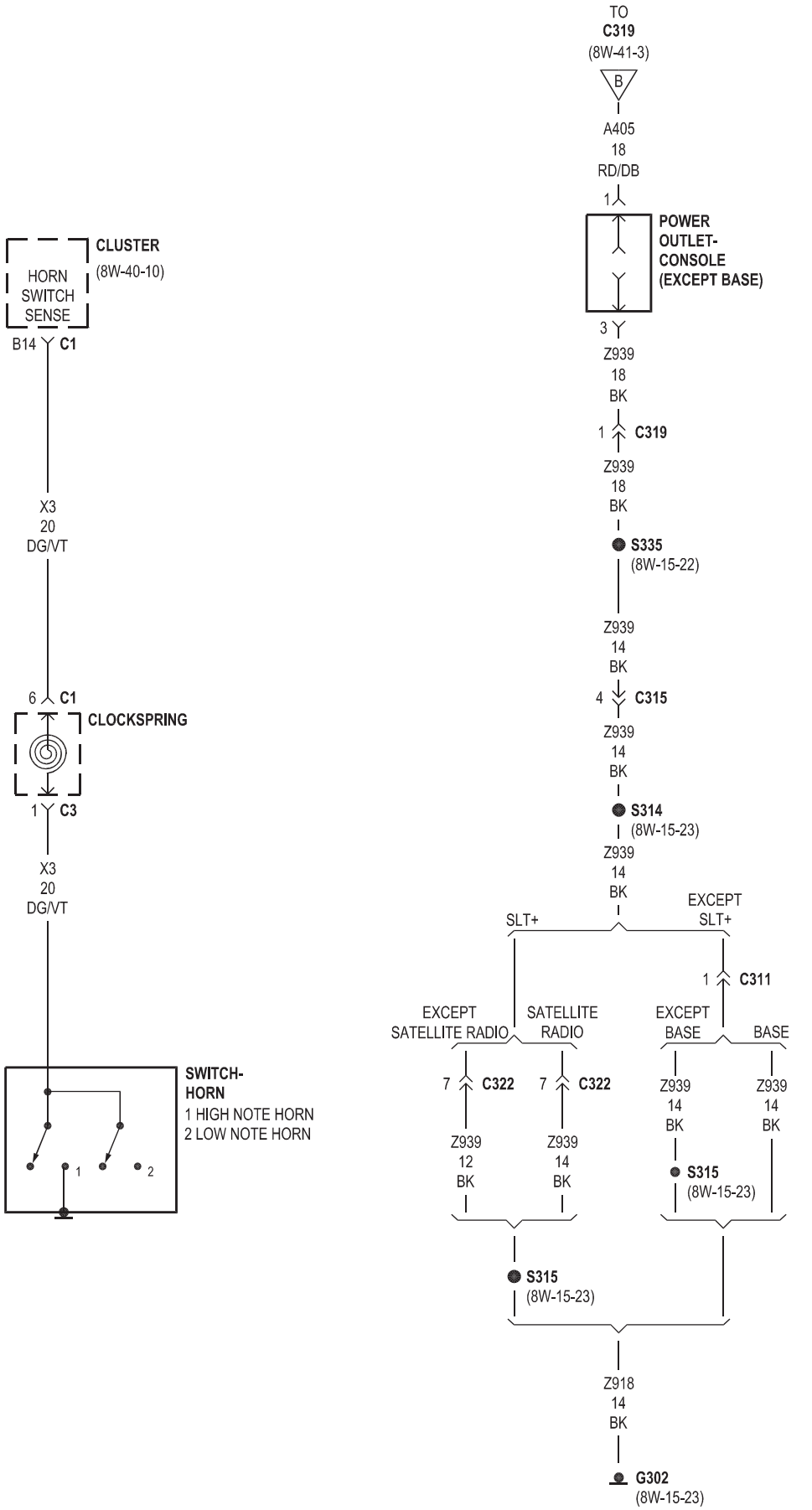
TO
C319
(8W-41-3)
B
A405
18
RD/DB
1
POWER
OUTLET-
CONSOLE
(EXCEPT BASE)
3
Z939
18
BK
1
C319
Z939
18
BK
S335
(8W-15-22)
Z939
14
BK
4
C315
Z939
14
BK
S314
(8W-15-23)
Z939
14
BK
SLT+
EXCEPT
SLT+
1
C311
EXCEPT
SATELLITE RADIO
SATELLITE
RADIO
EXCEPT
BASE
BASE
7
C322
7
C322
Z939
14
BK
Z939
14
BK
Z939
12
BK
Z939
14
BK
S315
(8W-15-23)
S315
(8W-15-23)
Z918
14
BK
G302
(8W-15-23)
CLUSTER
(8W-40-10)
HORN
SWITCH
SENSE
B14
C1
X3
20
DG/VT
6
C1
CLOCKSPRING
1
C3
X3
20
DG/VT
SWITCH-
HORN
1 HIGH NOTE HORN
2 LOW NOTE HORN
1
2

8W-42 AIR CONDITIONING

Component	Page
Actuator-Blend Door	8W-42-5
Actuator-Blend Door-Driver	8W-42-4
Actuator-Blend Door-Passenger	8W-42-4
Actuator-Mode Door 1	8W-42-4, 5
Actuator-Mode Door 2	8W-42-4, 5
Actuator-Recirculation Door	8W-42-4, 5
Cluster	8W-42-2
Clutch-A/C Compressor	8W-42-6
Control-A/C-Heater	8W-42-2, 3, 4, 5
Data Link Connector	8W-42-3, 7
Fuse 12	8W-42-9
Fuse 16	8W-42-6
Fuse 36	8W-42-3
G104	8W-42-2, 9
G106	8W-42-9
G107	8W-42-6
G110	8W-42-6
G120	8W-42-6
G201	8W-42-3
G203	8W-42-2
Module-Engine Control	8W-42-6, 8
Module-Integrated Power	8W-42-2, 3, 6, 9
Module-Powertrain Control	8W-42-6, 7, 9
Motor-Blower	8W-42-2
Motor-Condenser Fan	8W-42-9
PTC No. 1	8W-42-6
Relay-Blower Motor	8W-42-2
Relay-Clutch-A/C Compressor	8W-42-6
Relay-Condenser Fan	8W-42-9
Relay-Heated Mirror	8W-42-3
Resistor Block-Blower Motor	8W-42-2
Sensor-EVAPOrator Temperature	8W-42-3
Switch-Ignition	8W-42-2
Transducer-A/C Pressure	8W-42-7, 8

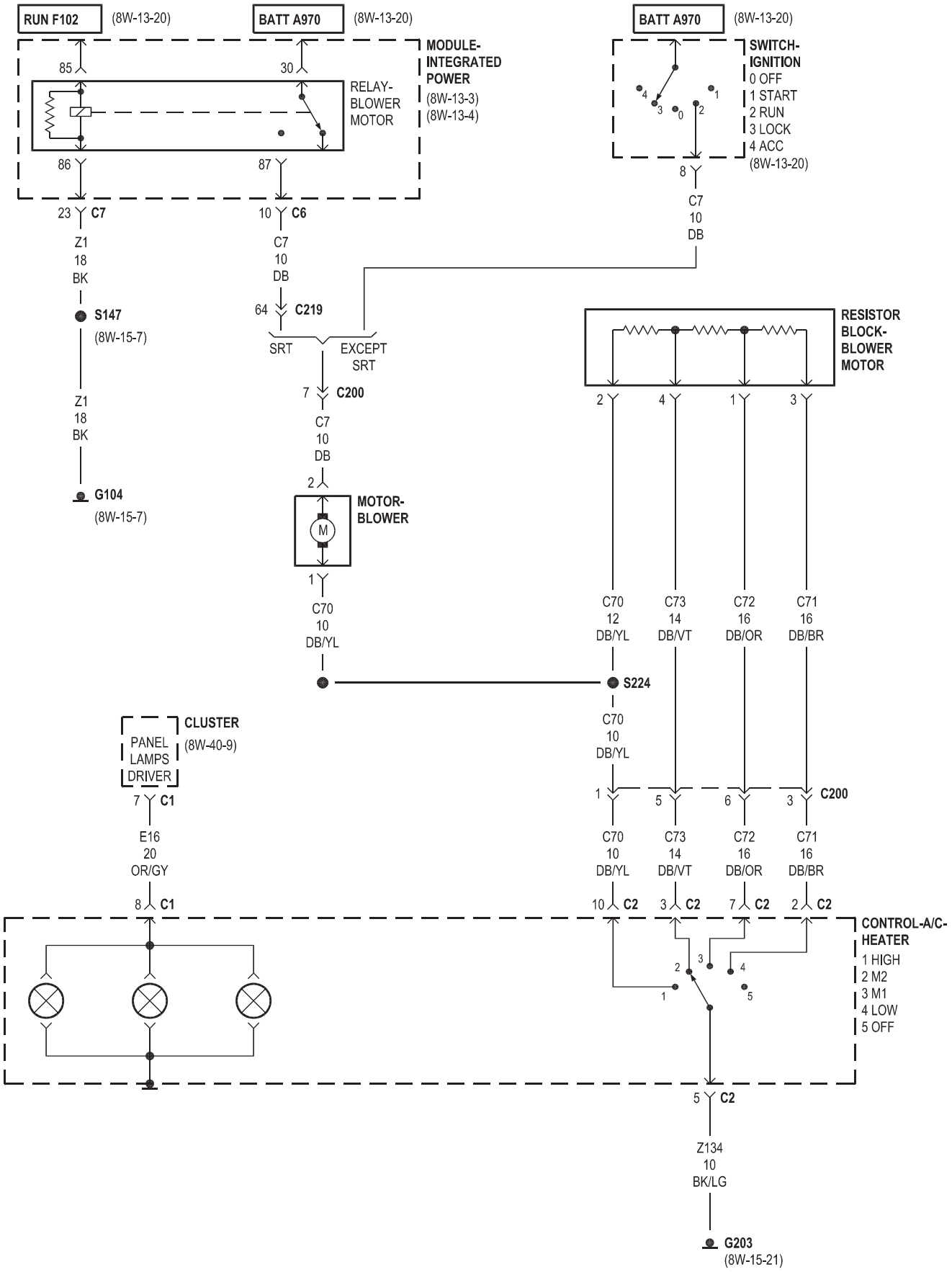
RUN F102
(8W-13-20)
BATT A970
(8W-13-20)
MODULE-INTEGRATED POWER
(8W-13-3)
(8W-13-4)
85
30
RELAY-BLOWER MOTOR
86
87
23 C7
10 C6
Z1
18
BK
S147
(8W-15-7)
Z1
18
BK
G104
(8W-15-7)
C7
10
DB
64 C219
SRT
EXCEPT SRT
7 C200
C7
10
DB
2
MOTOR-BLOWER
M
1
C70
10
DB/YL
BATT A970
(8W-13-20)
SWITCH-IGNITION
0 OFF
1 START
2 RUN
3 LOCK
4 ACC
(8W-13-20)
8
C7
10
DB
RESISTOR BLOCK-BLOWER MOTOR
2
4
1
3
C70
12
DB/YL
C73
14
DB/VT
C72
16
DB/OR
C71
16
DB/BR
S224
C70
10
DB/YL
1
5
6
3
C200
C70
10
DB/YL
C73
14
DB/VT
C72
16
DB/OR
C71
16
DB/BR
10 C2
3 C2
7 C2
2 C2
CLUSTER
PANEL LAMPS DRIVER
(8W-40-9)
7 C1
E16
20
OR/GY
8 C1
CONTROL-A/C-HEATER
1 HIGH
2 M2
3 M1
4 LOW
5 OFF
5 C2
Z134
10
BK/LG
G203
(8W-15-21)

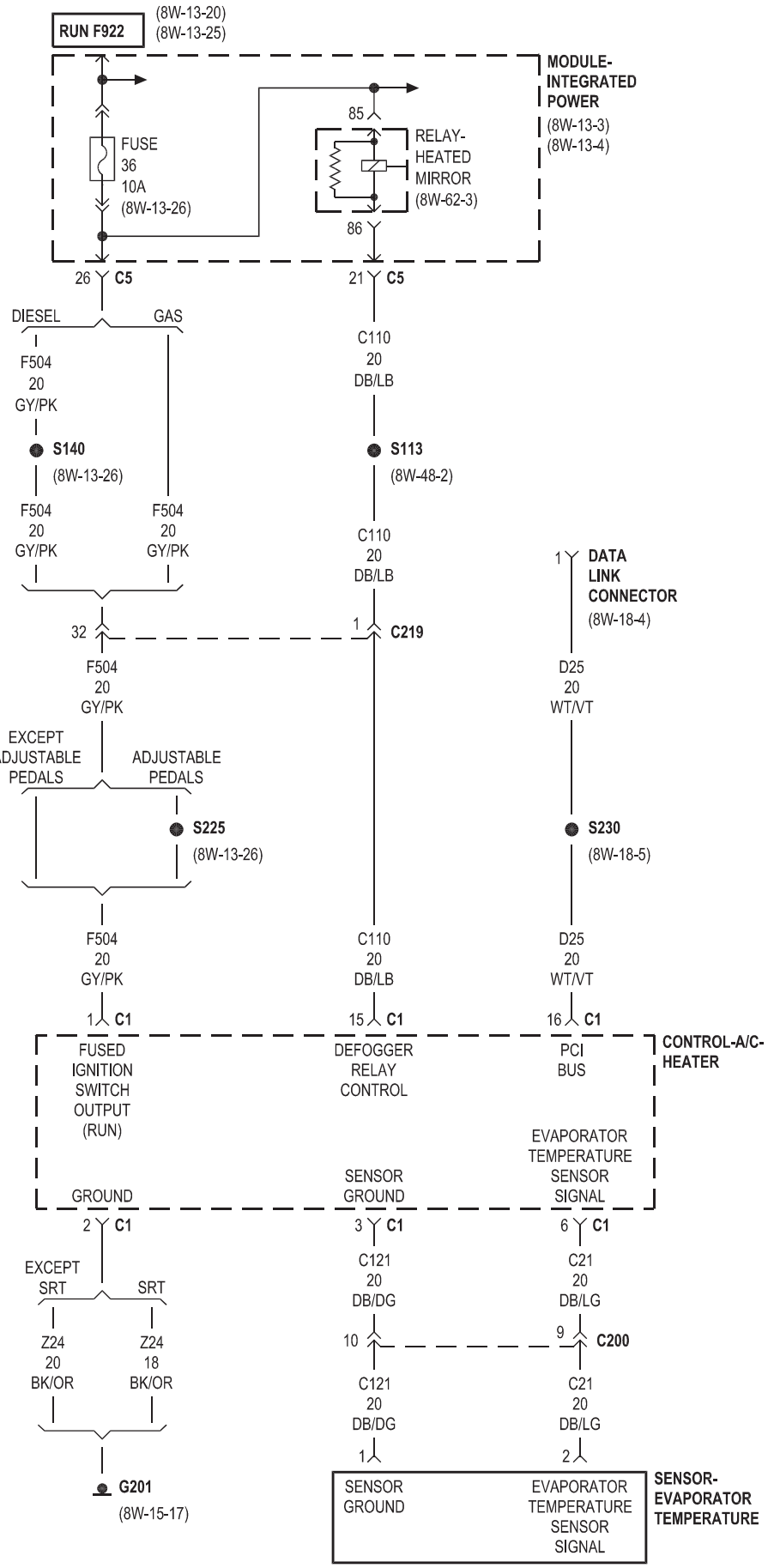
RUN F922
(8W-13-20)
(8W-13-25)
MODULE-
INTEGRATED
POWER
(8W-13-3)
(8W-13-4)
FUSE
36
10A
(8W-13-26)
85
RELAY-
HEATED
MIRROR
(8W-62-3)
86
26 C5
21 C5
DIESEL
GAS
F504
20
GY/PK
S140
(8W-13-26)
C110
20
DB/LB
S113
(8W-48-2)
1 DATA
LINK
CONNECTOR
(8W-18-4)
32
1 C219
EXCEPT
ADJUSTABLE
PEDALS
ADJUSTABLE
PEDALS
S225
(8W-13-26)
D25
20
WT/VT
S230
(8W-18-5)
1 C1
15 C1
16 C1
CONTROL-A/C-
HEATER
FUSED
IGNITION
SWITCH
OUTPUT
(RUN)
DEFOGGER
RELAY
CONTROL
PCI
BUS
EVAPORATOR
TEMPERATURE
SENSOR
SIGNAL
GROUND
SENSOR
GROUND
2 C1
3 C1
6 C1
C121
20
DB/DG
C21
20
DB/LG
EXCEPT
SRT
SRT
Z24
20
BK/OR
Z24
18
BK/OR
10
9 C200
G201
(8W-15-17)
1
2
SENSOR-
EVAPORATOR
TEMPERATURE

DUAL ZONE

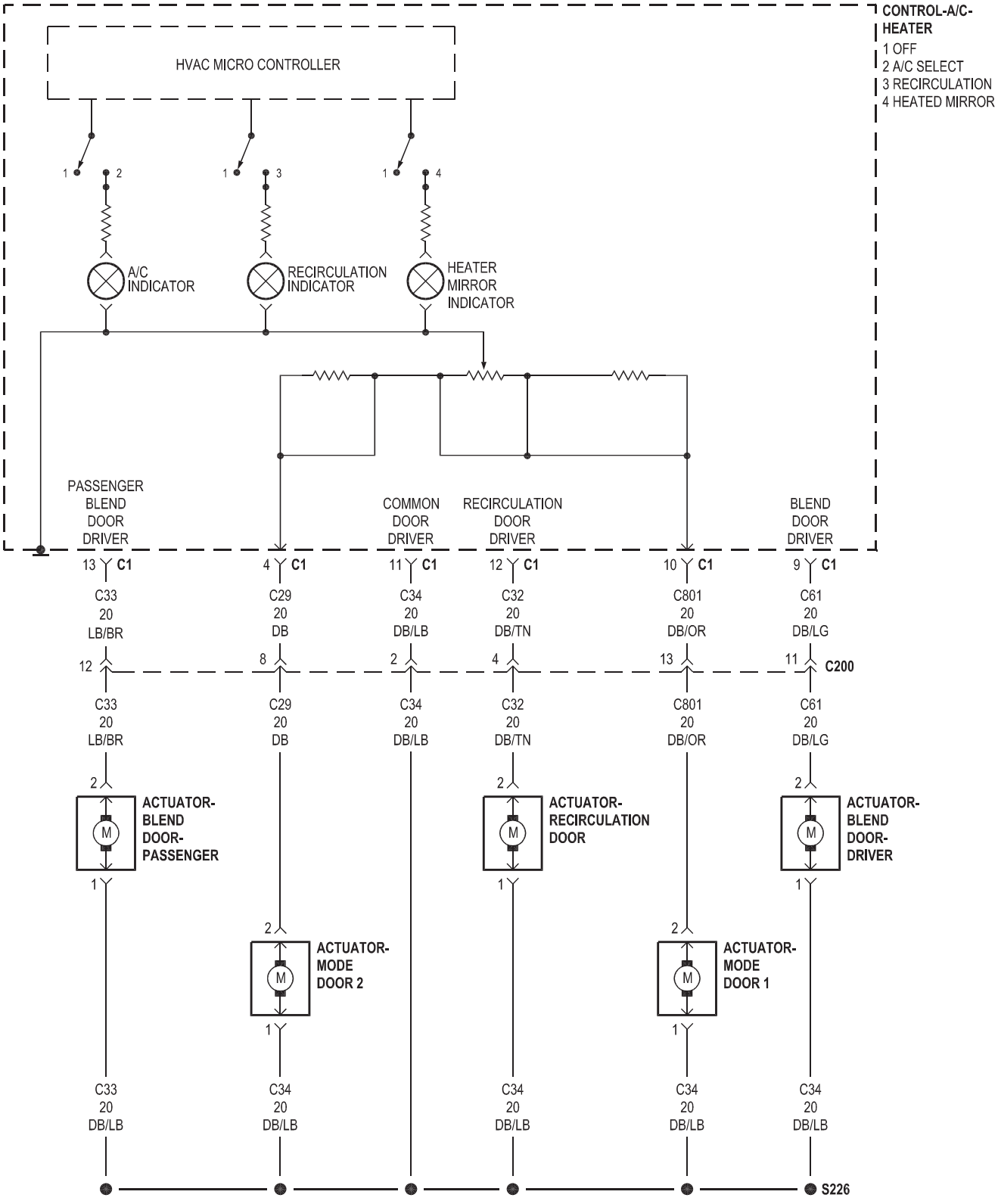
CONTROL-A/C-HEATER
1 OFF
2 A/C SELECT
3 RECIRCULATION
4 HEATED MIRROR
HVAC MICRO CONTROLLER
A/C INDICATOR
RECIRCULATION INDICATOR
HEATER MIRROR INDICATOR
PASSENGER BLEND DOOR DRIVER
COMMON DOOR DRIVER
RECIRCULATION DOOR DRIVER
BLEND DOOR DRIVER
C33 20 LB/BR
C29 20 DB
C34 20 DB/LB
C32 20 DB/TN
C801 20 DB/OR
C61 20 DB/LG
C200
ACTUATOR- BLEND DOOR- PASSENGER
ACTUATOR- MODE DOOR 2
ACTUATOR- RECIRCULATION DOOR
ACTUATOR- MODE DOOR 1
ACTUATOR- BLEND DOOR- DRIVER
S226

SINGLE ZONE

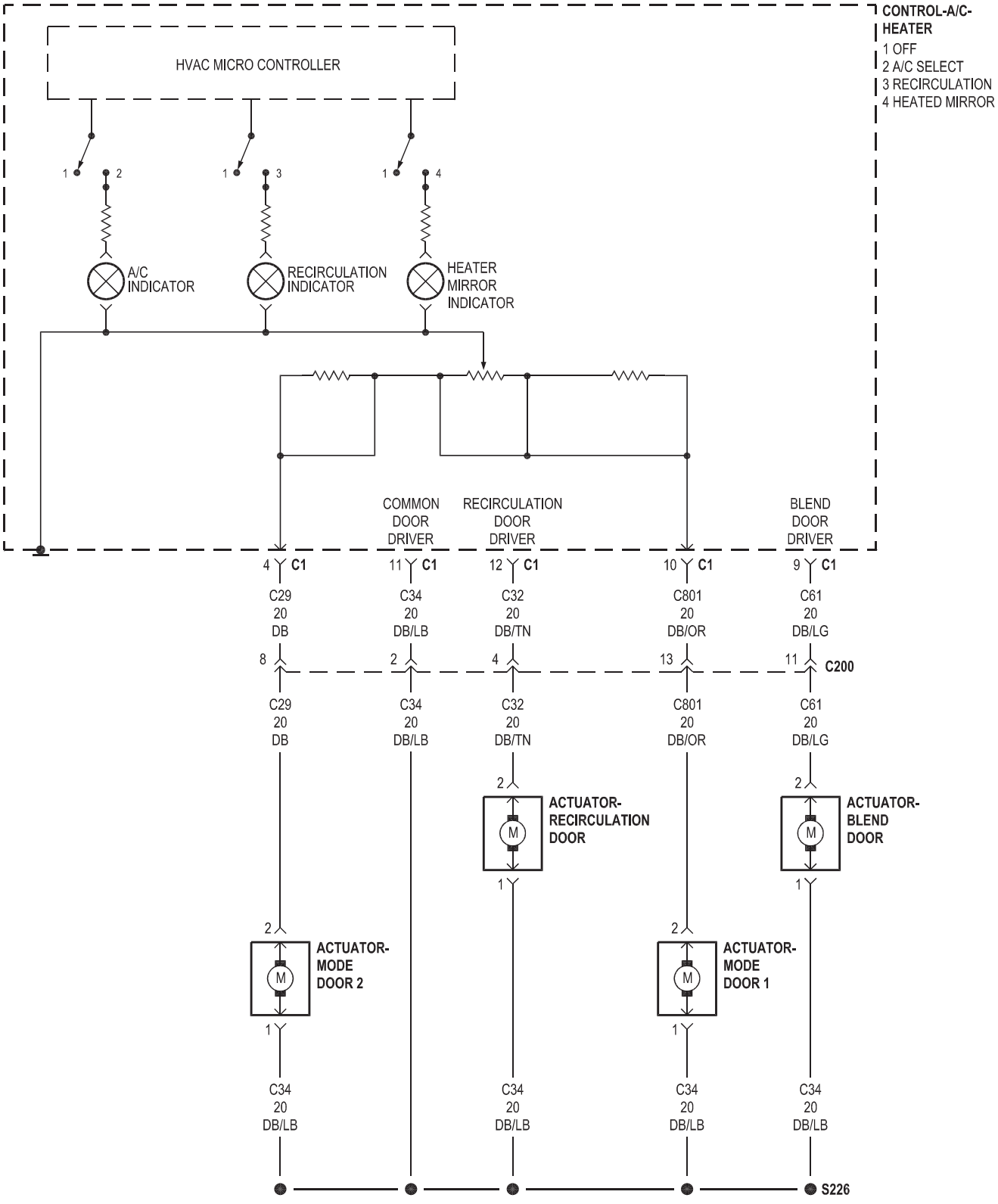
CONTROL-A/C-HEATER
1 OFF
2 A/C SELECT
3 RECIRCULATION
4 HEATED MIRROR
HVAC MICRO CONTROLLER
1 2
1 3
1 4
A/C INDICATOR
RECIRCULATION INDICATOR
HEATER MIRROR INDICATOR
COMMON DOOR DRIVER
RECIRCULATION DOOR DRIVER
BLEND DOOR DRIVER
4 C1
11 C1
12 C1
10 C1
9 C1
C29 20 DB
C34 20 DB/LB
C32 20 DB/TN
C801 20 DB/OR
C61 20 DB/LG
8
2
4
13
11 C200
C29 20 DB
C34 20 DB/LB
C32 20 DB/TN
C801 20 DB/OR
C61 20 DB/LG
2
ACTUATOR- RECIRCULATION DOOR
M
1
2
ACTUATOR- BLEND DOOR
M
1
2
ACTUATOR- MODE DOOR 2
M
1
2
ACTUATOR- MODE DOOR 1
M
1
C34 20 DB/LB
C34 20 DB/LB
C34 20 DB/LB
C34 20 DB/LB
S226

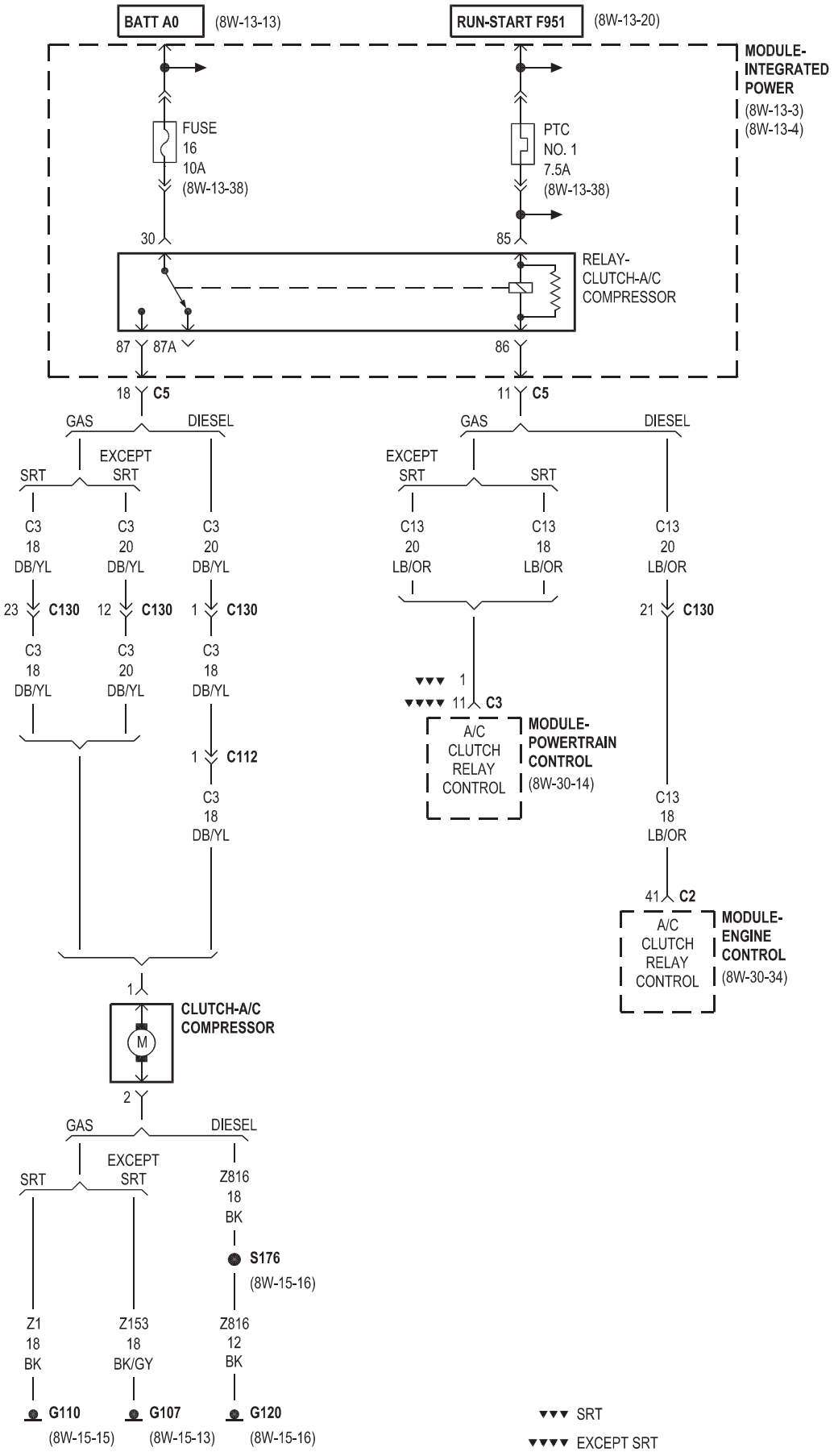
BATT A0
(8W-13-13)
RUN-START F951
(8W-13-20)
MODULE-INTEGRATED POWER
(8W-13-3)
(8W-13-4)
FUSE 16 10A (8W-13-38)
PTC NO. 1 7.5A (8W-13-38)
30
85
RELAY-CLUTCH-A/C COMPRESSOR
87
87A
86
18 C5
11 C5
GAS
DIESEL
EXCEPT SRT
SRT
C3 18 DB/YL
C3 20 DB/YL
C3 20 DB/YL
23 C130
12 C130
1 C130
C3 18 DB/YL
C3 20 DB/YL
C3 18 DB/YL
1 C112
C3 18 DB/YL
C13 20 LB/OR
C13 18 LB/OR
C13 20 LB/OR
21 C130
▼▼▼ 1
▼▼▼▼ 11 C3
A/C CLUTCH RELAY CONTROL
MODULE-POWERTRAIN CONTROL
(8W-30-14)
C13 18 LB/OR
41 C2
A/C CLUTCH RELAY CONTROL
MODULE-ENGINE CONTROL
(8W-30-34)
1
CLUTCH-A/C COMPRESSOR
M
2
Z816 18 BK
S176
(8W-15-16)
Z1 18 BK
Z153 18 BK/GY
Z816 12 BK
G110
(8W-15-15)
G107
(8W-15-13)
G120
(8W-15-16)
▼▼▼ SRT
▼▼▼▼ EXCEPT SRT

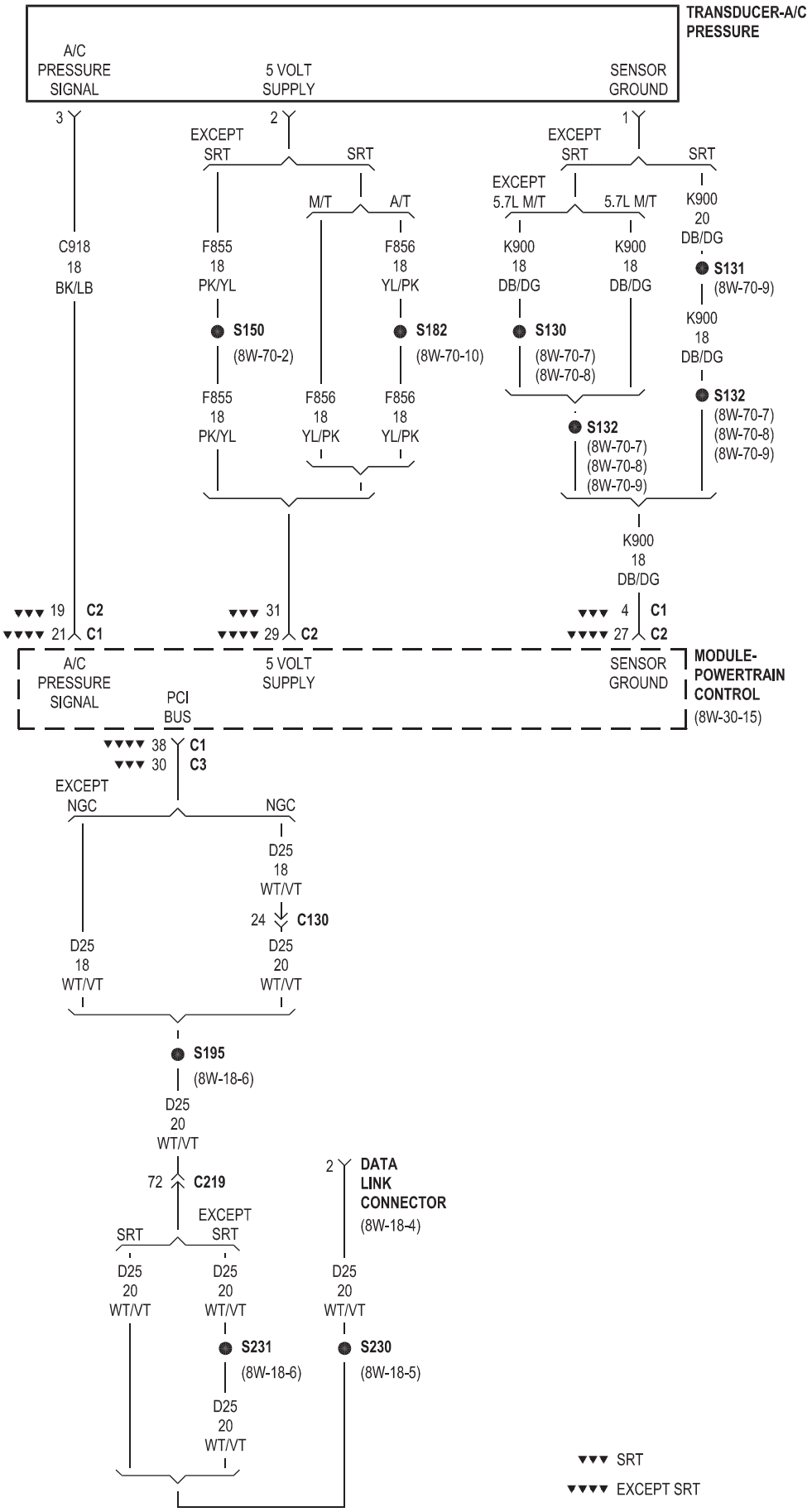
TRANSDUCER-A/C PRESSURE
A/C PRESSURE SIGNAL
5 VOLT SUPPLY
SENSOR GROUND
3
2
1
EXCEPT SRT
SRT
EXCEPT SRT
SRT
M/T
A/T
EXCEPT 5.7L M/T
5.7L M/T
K900 20 DB/DG
C918 18 BK/LB
F855 18 PK/YL
F856 18 YL/PK
K900 18 DB/DG
K900 18 DB/DG
S131 (8W-70-9)
S150 (8W-70-2)
S182 (8W-70-10)
S130 (8W-70-7) (8W-70-8)
K900 18 DB/DG
S132 (8W-70-7) (8W-70-8) (8W-70-9)
F855 18 PK/YL
F856 18 YL/PK
F856 18 YL/PK
S132 (8W-70-7) (8W-70-8) (8W-70-9)
K900 18 DB/DG
19 C2
21 C1
31
29 C2
4 C1
27 C2
A/C PRESSURE SIGNAL
5 VOLT SUPPLY
SENSOR GROUND
MODULE-POWERTRAIN CONTROL (8W-30-15)
PCI BUS
38 C1
30 C3
EXCEPT NGC
NGC
D25 18 WT/VT
24 C130
D25 18 WT/VT
D25 20 WT/VT
S195 (8W-18-6)
D25 20 WT/VT
72 C219
2 DATA LINK CONNECTOR (8W-18-4)
EXCEPT SRT
SRT
D25 20 WT/VT
D25 20 WT/VT
D25 20 WT/VT
S231 (8W-18-6)
S230 (8W-18-5)
D25 20 WT/VT
SRT
EXCEPT SRT

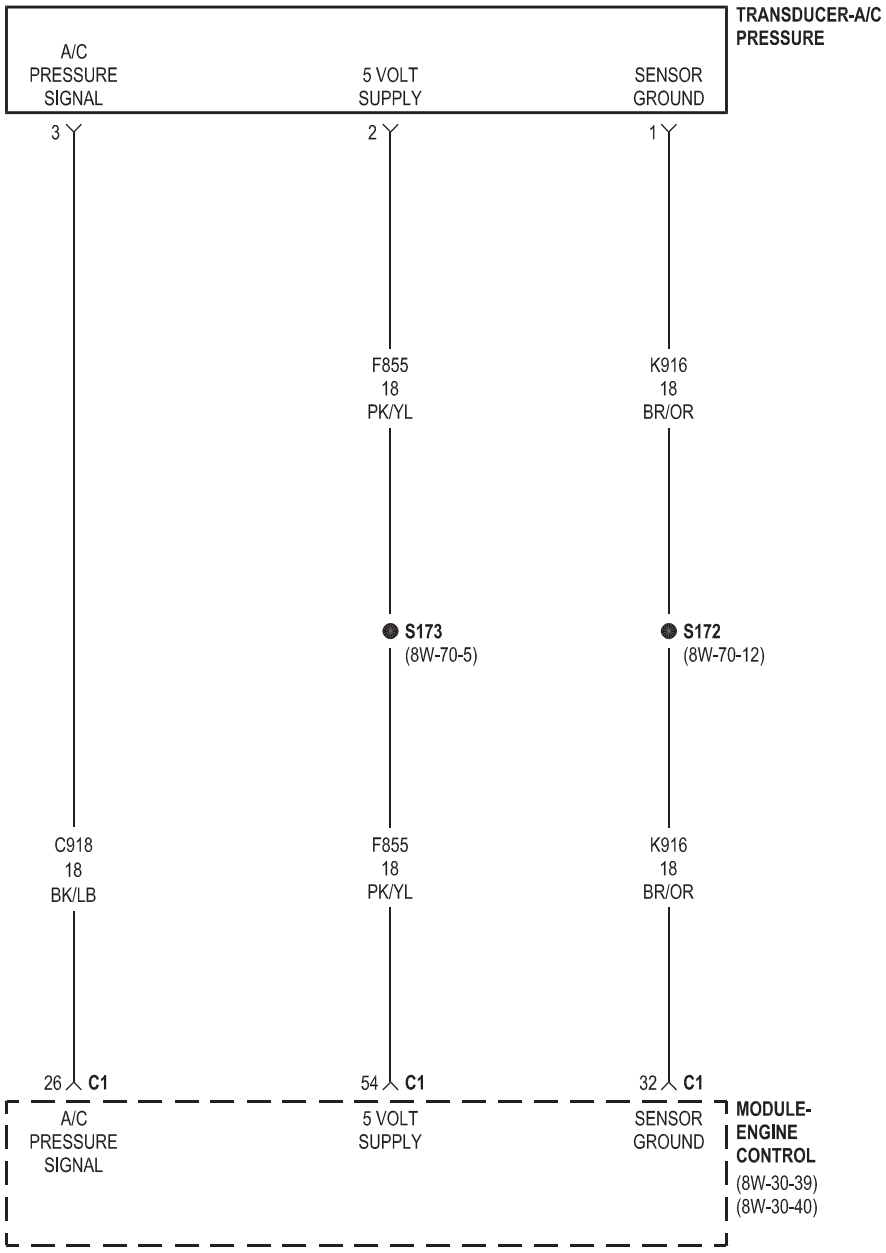
TRANSDUCER-A/C PRESSURE
A/C PRESSURE SIGNAL
5 VOLT SUPPLY
SENSOR GROUND
3
2
1
F855 18 PK/YL
K916 18 BR/OR
S173 (8W-70-5)
S172 (8W-70-12)
C918 18 BK/LB
F855 18 PK/YL
K916 18 BR/OR
26 C1
54 C1
32 C1
A/C PRESSURE SIGNAL
5 VOLT SUPPLY
SENSOR GROUND
MODULE-ENGINE CONTROL
(8W-30-39)
(8W-30-40)

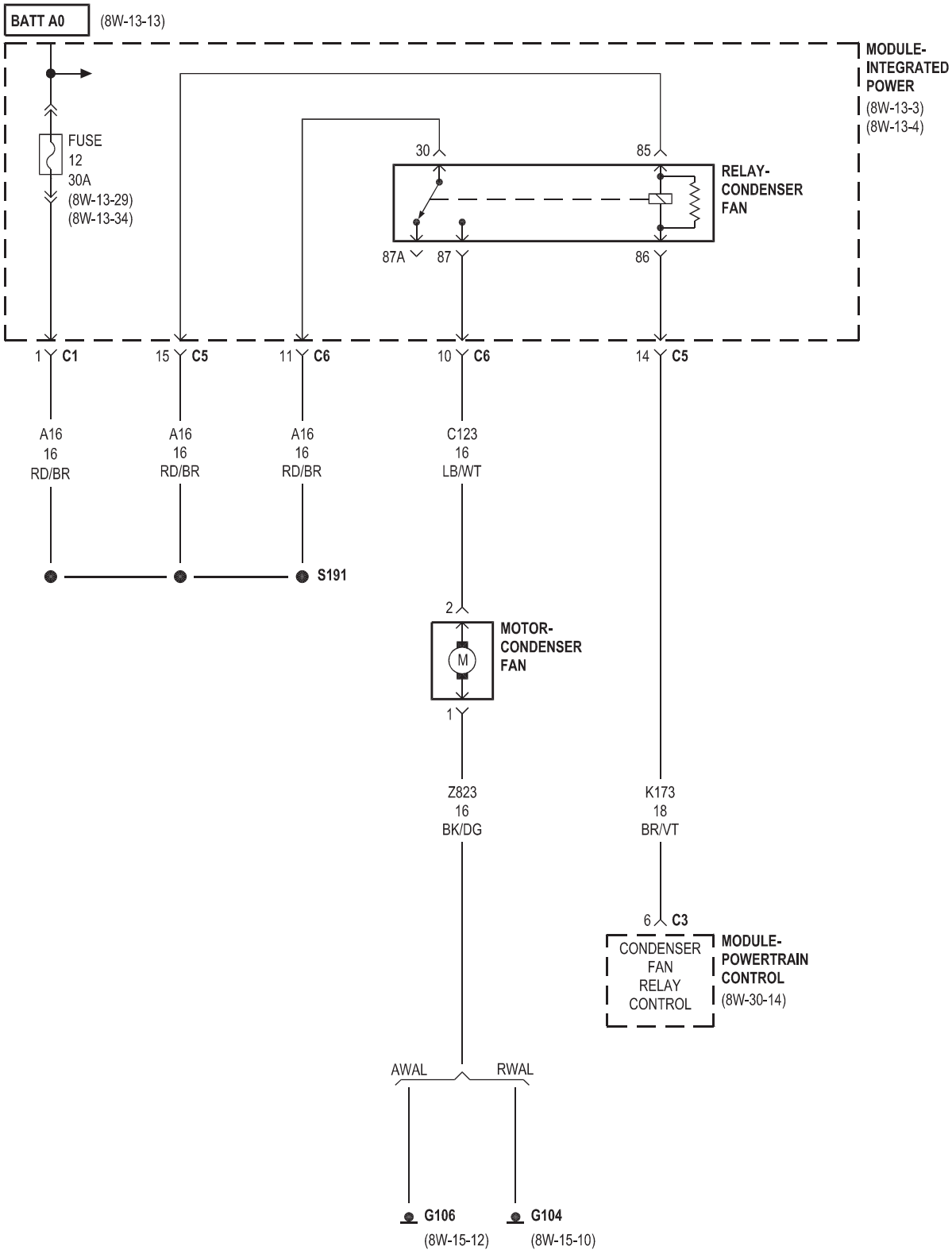
BATT A0
(8W-13-13)
MODULE-
INTEGRATED
POWER
(8W-13-3)
(8W-13-4)
FUSE
12
30A
(8W-13-29)
(8W-13-34)
30
85
RELAY-
CONDENSER
FAN
87A
87
86
1 C1
15 C5
11 C6
10 C6
14 C5
A16
16
RD/BR
A16
16
RD/BR
A16
16
RD/BR
C123
16
LB/WT
S191
2
M
MOTOR-
CONDENSER
FAN
1
Z823
16
BK/DG
K173
18
BR/VT
6 C3
CONDENSER
FAN
RELAY
CONTROL
MODULE-
POWERTRAIN
CONTROL
(8W-30-14)
AWAL
RWAL
G106
(8W-15-12)
G104
(8W-15-10)

8W-43 OCCUPANT RESTRAINT SYSTEM

Component	Page
Airbag-Driver Squib 1	8W-43-3
Airbag-Driver Squib 2	8W-43-3
Airbag-Passenger Squib	8W-43-3
Airbag-Side Curtain-Left	8W-43-4
Airbag-Side Curtain-Right	8W-43-4
Clockspring	8W-43-3
Cluster	8W-43-4
Data Link Connector	8W-43-2
Fuse 52	8W-43-2
Fuse 53	8W-43-2
G204	8W-43-2
Module-Integrated Power	8W-43-2, 4
Module-Occupant Restraint Controller	8W-43-2, 3, 4
PTC No. 2	8W-43-4
Seat Belt Tensioner-Driver	8W-43-3
Seat Belt-Tension Reducer-Driver	8W-43-4
Seat Belt-Tensioner-Passenger	8W-43-3
Sensor-Side Impact-Left 1	8W-43-4
Sensor-Side Impact-Right 1	8W-43-4
Switch-Passenger Airbag On/Off	8W-43-2

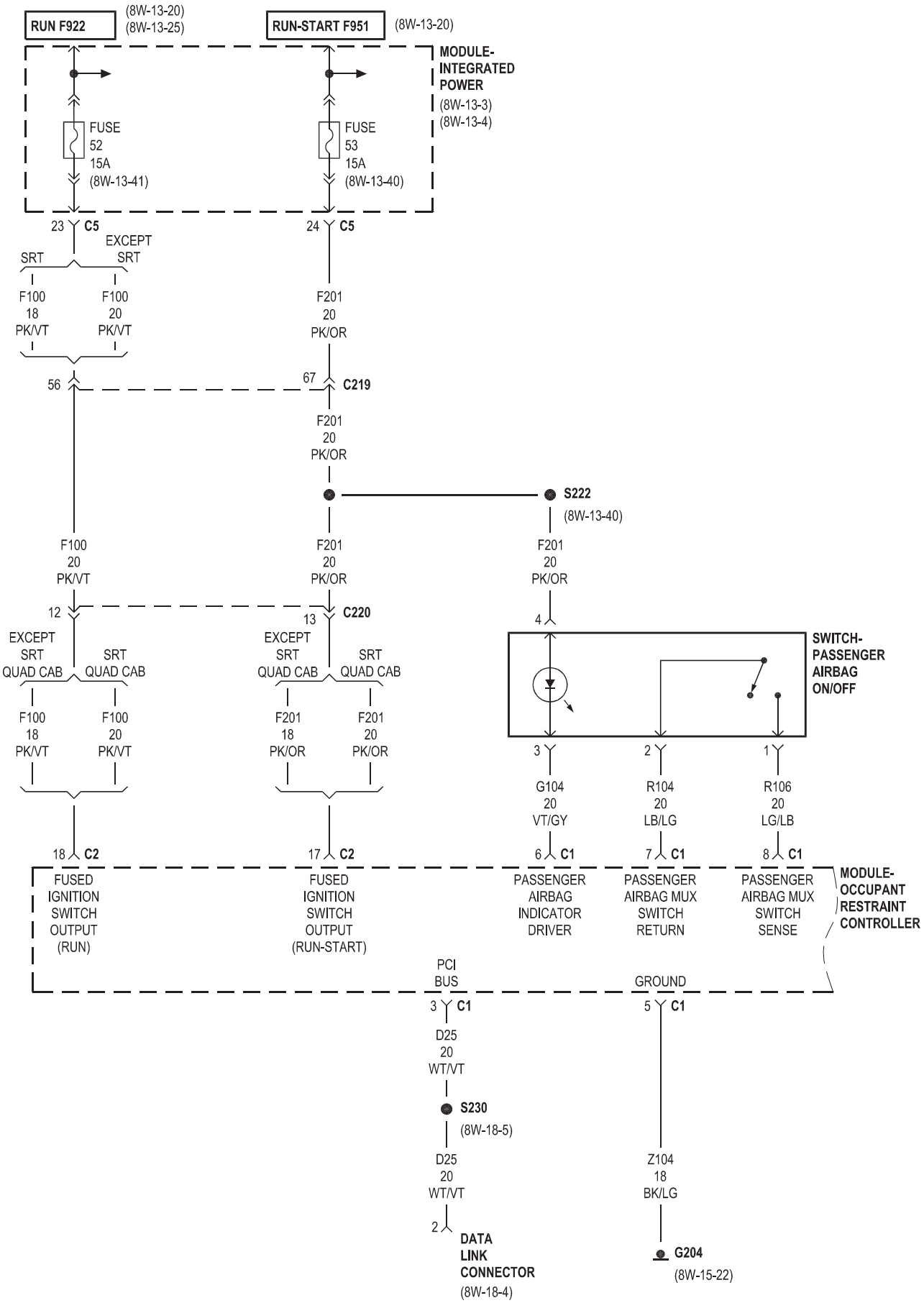
RUN F922
(8W-13-20)
(8W-13-25)
RUN-START F951
(8W-13-20)
MODULE-
INTEGRATED
POWER
(8W-13-3)
(8W-13-4)
FUSE
52
15A
(8W-13-41)
FUSE
53
15A
(8W-13-40)
23 C5
24 C5
EXCEPT
SRT
SRT
F100
18
PK/VT
F100
20
PK/VT
F201
20
PK/OR
56
67 C219
F201
20
PK/OR
S222
(8W-13-40)
F100
20
PK/VT
F201
20
PK/OR
F201
20
PK/OR
12
13 C220
4
EXCEPT
SRT
QUAD CAB
SRT
QUAD CAB
F100
18
PK/VT
F100
20
PK/VT
F201
18
PK/OR
F201
20
PK/OR
SWITCH-
PASSENGER
AIRBAG
ON/OFF
3
2
1
G104
20
VT/GY
R104
20
LB/LG
R106
20
LG/LB
18 C2
17 C2
6 C1
7 C1
8 C1
FUSED
IGNITION
SWITCH
OUTPUT
(RUN)
FUSED
IGNITION
SWITCH
OUTPUT
(RUN-START)
PASSENGER
AIRBAG
INDICATOR
DRIVER
PASSENGER
AIRBAG MUX
SWITCH
RETURN
PASSENGER
AIRBAG MUX
SWITCH
SENSE
MODULE-
OCCUPANT
RESTRAINT
CONTROLLER
PCI
BUS
GROUND
3 C1
5 C1
D25
20
WT/VT
S230
(8W-18-5)
D25
20
WT/VT
Z104
18
BK/LG
2
DATA
LINK
CONNECTOR
(8W-18-4)
G204
(8W-15-22)

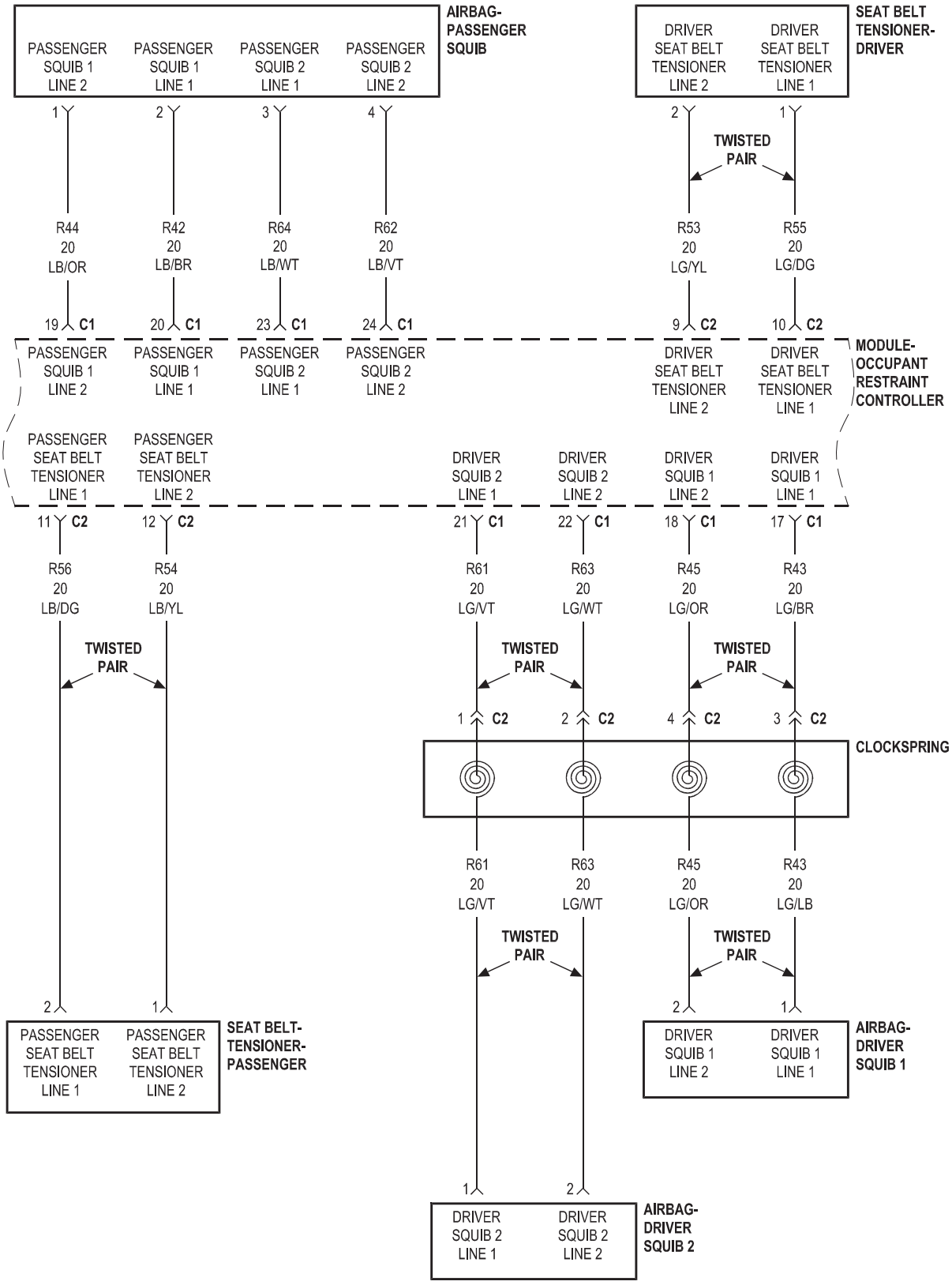
AIRBAG-PASSENGER SQUIB
PASSENGER SQUIB 1 LINE 2
PASSENGER SQUIB 1 LINE 1
PASSENGER SQUIB 2 LINE 1
PASSENGER SQUIB 2 LINE 2
SEAT BELT TENSIONER-DRIVER
DRIVER SEAT BELT TENSIONER LINE 2
DRIVER SEAT BELT TENSIONER LINE 1
TWISTED PAIR
R44 20 LB/OR
R42 20 LB/BR
R64 20 LB/WT
R62 20 LB/VT
R53 20 LG/YL
R55 20 LG/DG
19 C1
20 C1
23 C1
24 C1
9 C2
10 C2
MODULE-OCCUPANT RESTRAINT CONTROLLER
PASSENGER SEAT BELT TENSIONER LINE 1
PASSENGER SEAT BELT TENSIONER LINE 2
DRIVER SQUIB 2 LINE 1
DRIVER SQUIB 2 LINE 2
DRIVER SQUIB 1 LINE 2
DRIVER SQUIB 1 LINE 1
11 C2
12 C2
21 C1
22 C1
18 C1
17 C1
R56 20 LB/DG
R54 20 LB/YL
R61 20 LG/VT
R63 20 LG/WT
R45 20 LG/OR
R43 20 LG/BR
1 C2
2 C2
4 C2
3 C2
CLOCKSPRING
R61 20 LG/VT
R63 20 LG/WT
R45 20 LG/OR
R43 20 LG/LB
SEAT BELT-TENSIONER-PASSENGER
AIRBAG-DRIVER SQUIB 1
AIRBAG-DRIVER SQUIB 2

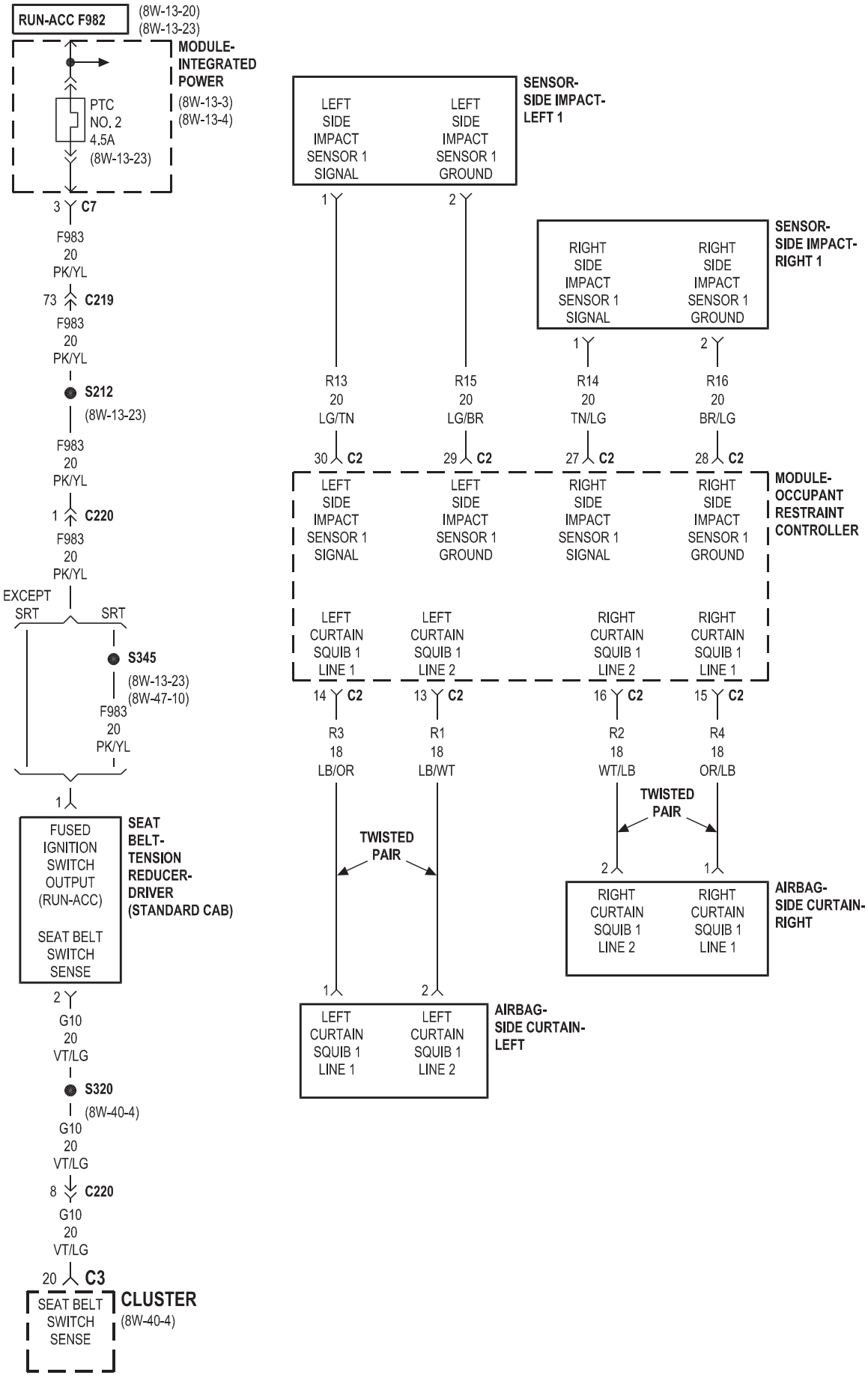
RUN-ACC F982
(8W-13-20)
(8W-13-23)
MODULE-INTEGRATED POWER
PTC NO, 2 4.5A
(8W-13-23)
(8W-13-3)
(8W-13-4)
3 C7
F983 20 PK/YL
73 C219
F983 20 PK/YL
S212
(8W-13-23)
F983 20 PK/YL
1 C220
F983 20 PK/YL
EXCEPT SRT
SRT
S345
(8W-13-23)
(8W-47-10)
F983 20 PK/YL
1
FUSED IGNITION SWITCH OUTPUT (RUN-ACC)
SEAT BELT SWITCH SENSE
SEAT BELT-TENSION REDUCER-DRIVER (STANDARD CAB)
2
G10 20 VT/LG
S320
(8W-40-4)
G10 20 VT/LG
8 C220
G10 20 VT/LG
20 C3
SEAT BELT SWITCH SENSE
CLUSTER
(8W-40-4)
LEFT SIDE IMPACT SENSOR 1 SIGNAL
LEFT SIDE IMPACT SENSOR 1 GROUND
SENSOR-SIDE IMPACT-LEFT 1
1
2
RIGHT SIDE IMPACT SENSOR 1 SIGNAL
RIGHT SIDE IMPACT SENSOR 1 GROUND
SENSOR-SIDE IMPACT-RIGHT 1
1
2
R13 20 LG/TN
R15 20 LG/BR
R14 20 TN/LG
R16 20 BR/LG
30 C2
29 C2
27 C2
28 C2
LEFT SIDE IMPACT SENSOR 1 SIGNAL
LEFT SIDE IMPACT SENSOR 1 GROUND
RIGHT SIDE IMPACT SENSOR 1 SIGNAL
RIGHT SIDE IMPACT SENSOR 1 GROUND
MODULE-OCCUPANT RESTRAINT CONTROLLER
LEFT CURTAIN SQUIB 1 LINE 1
LEFT CURTAIN SQUIB 1 LINE 2
RIGHT CURTAIN SQUIB 1 LINE 2
RIGHT CURTAIN SQUIB 1 LINE 1
14 C2
13 C2
16 C2
15 C2
R3 18 LB/OR
R1 18 LB/WT
R2 18 WT/LB
R4 18 OR/LB
TWISTED PAIR
TWISTED PAIR
2
1
RIGHT CURTAIN SQUIB 1 LINE 2
RIGHT CURTAIN SQUIB 1 LINE 1
AIRBAG-SIDE CURTAIN-RIGHT
1
2
LEFT CURTAIN SQUIB 1 LINE 1
LEFT CURTAIN SQUIB 1 LINE 2
AIRBAG-SIDE CURTAIN-LEFT

8W-44 INTERIOR LIGHTING

Component	Page
Cluster	8W-44-2, 3, 4, 5
Fuse 15	8W-44-5
Fuse 32	8W-44-5
Fuse 51	8W-44-4
G104	8W-44-4
G106	8W-44-4
G203	8W-44-2, 3, 5
Lamp-Center Bezel	8W-44-5
Lamp-Dome-Rear	8W-44-2, 3
Lamp-Glove Box	8W-44-2, 3
Lamp-High Mounted Stop	8W-44-2
Lamp-Reading-Front	8W-44-2, 3
Lamp-Underhood	8W-44-4
Lamp-Vanity-Left	8W-44-2, 3
Lamp-Vanity-Right	8W-44-2, 3
Latch-Door-Driver	8W-44-4
Latch-Door-Left Rear	8W-44-4
Latch-Door-Passenger	8W-44-5
Latch-Door-Right Rear	8W-44-5
Module-Integrated Power	8W-44-4, 5
Motor-Sunroof	8W-44-2, 3
Relay-Park Lamp	8W-44-5

EXCEPT SRT

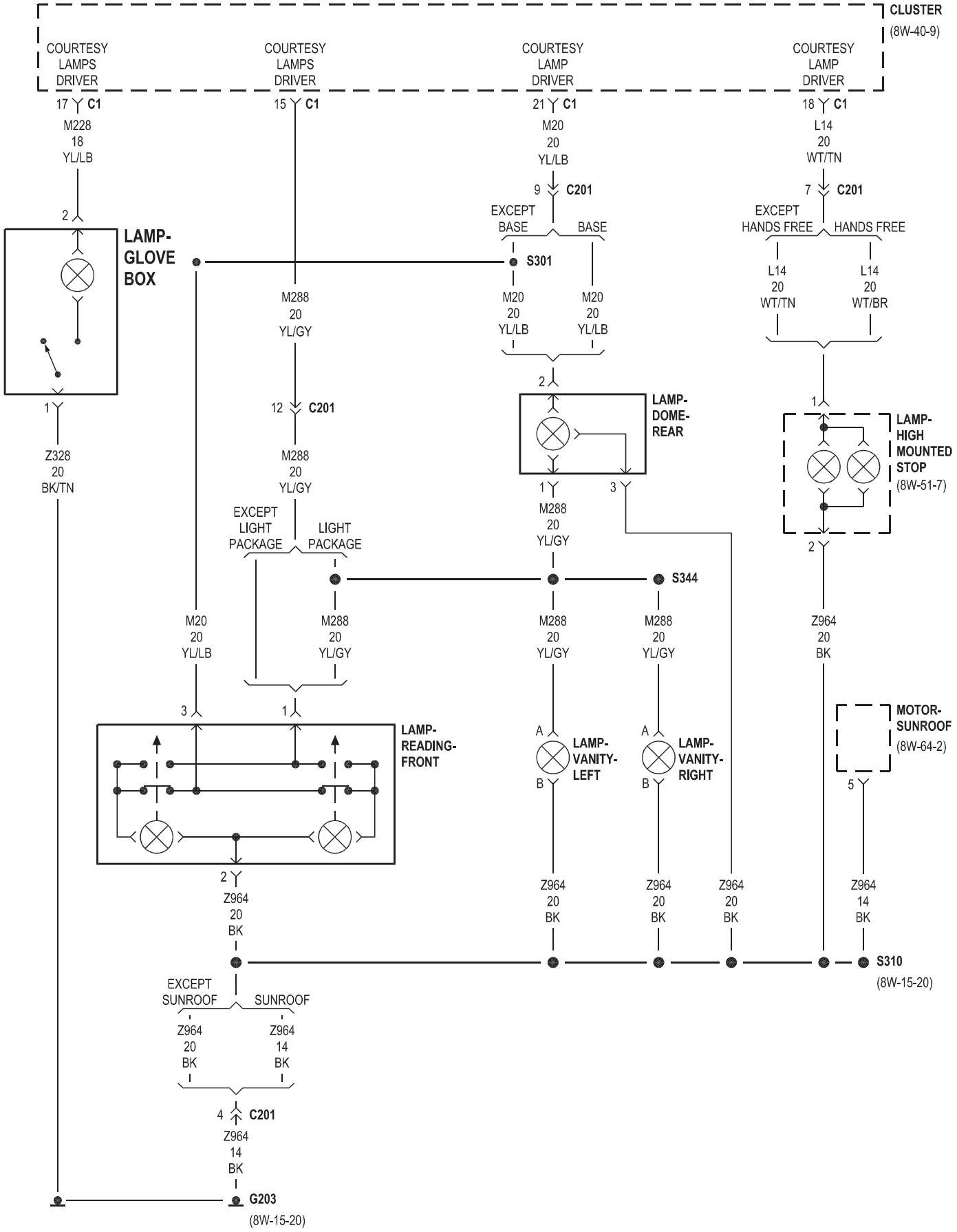
CLUSTER
(8W-40-9)
COURTESY LAMPS DRIVER
COURTESY LAMPS DRIVER
COURTESY LAMP DRIVER
COURTESY LAMP DRIVER
17 C1
15 C1
21 C1
18 C1
M228 18 YL/LB
M288 20 YL/GY
M20 20 YL/LB
L14 20 WT/TN
9 C201
7 C201
EXCEPT BASE
BASE
EXCEPT HANDS FREE
HANDS FREE
S301
L14 20 WT/TN
L14 20 WT/BR
M20 20 YL/LB
M20 20 YL/LB
LAMP- GLOVE BOX
12 C201
LAMP- DOME- REAR
LAMP- HIGH MOUNTED STOP
(8W-51-7)
Z328 20 BK/TN
M288 20 YL/GY
M288 20 YL/GY
EXCEPT LIGHT PACKAGE
LIGHT PACKAGE
S344
M20 20 YL/LB
M288 20 YL/GY
M288 20 YL/GY
M288 20 YL/GY
Z964 20 BK
LAMP- READING- FRONT
LAMP- VANITY- LEFT
LAMP- VANITY- RIGHT
MOTOR- SUNROOF
(8W-64-2)
Z964 20 BK
Z964 20 BK
Z964 20 BK
Z964 14 BK
S310
(8W-15-20)
EXCEPT SUNROOF
SUNROOF
Z964 20 BK
Z964 14 BK
C201
Z964 14 BK
G203
(8W-15-20)

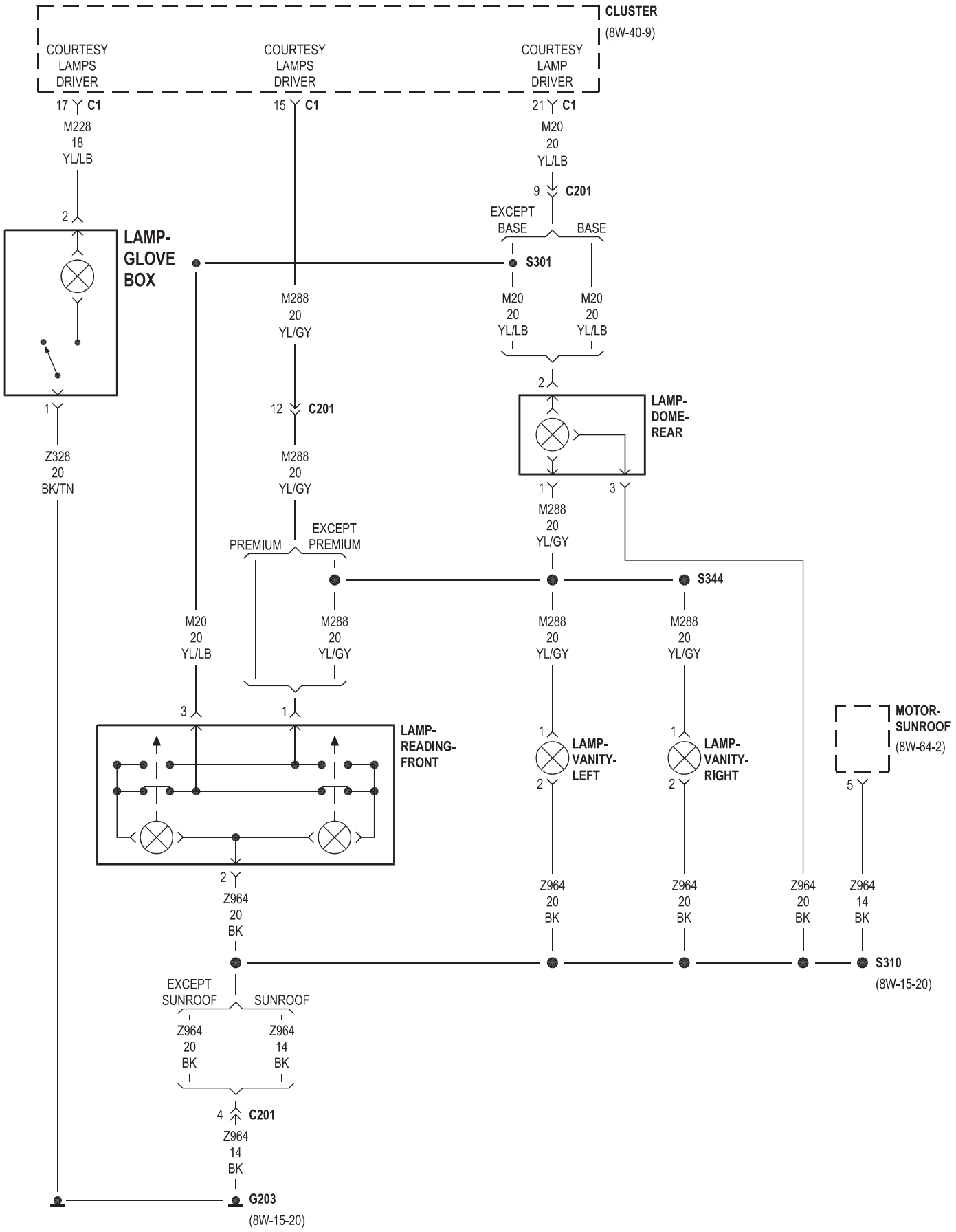
CLUSTER
(8W-40-9)
COURTESY LAMPS DRIVER
COURTESY LAMPS DRIVER
COURTESY LAMP DRIVER
17 C1
15 C1
21 C1
M228 18 YL/LB
M20 20 YL/LB
9 C201
EXCEPT BASE
BASE
2
LAMP- GLOVE BOX
S301
M288 20 YL/GY
M20 20 YL/LB
M20 20 YL/LB
2
LAMP- DOME- REAR
1
12 C201
1
3
Z328 20 BK/TN
M288 20 YL/GY
M288 20 YL/GY
PREMIUM
EXCEPT PREMIUM
S344
M20 20 YL/LB
M288 20 YL/GY
M288 20 YL/GY
M288 20 YL/GY
3
1
1
1
LAMP- READING- FRONT
LAMP- VANITY- LEFT
LAMP- VANITY- RIGHT
MOTOR- SUNROOF
(8W-64-2)
2
2
2
5
Z964 20 BK
Z964 20 BK
Z964 20 BK
Z964 14 BK
S310
(8W-15-20)
EXCEPT SUNROOF
SUNROOF
Z964 20 BK
Z964 14 BK
4 C201
Z964 14 BK
G203
(8W-15-20)

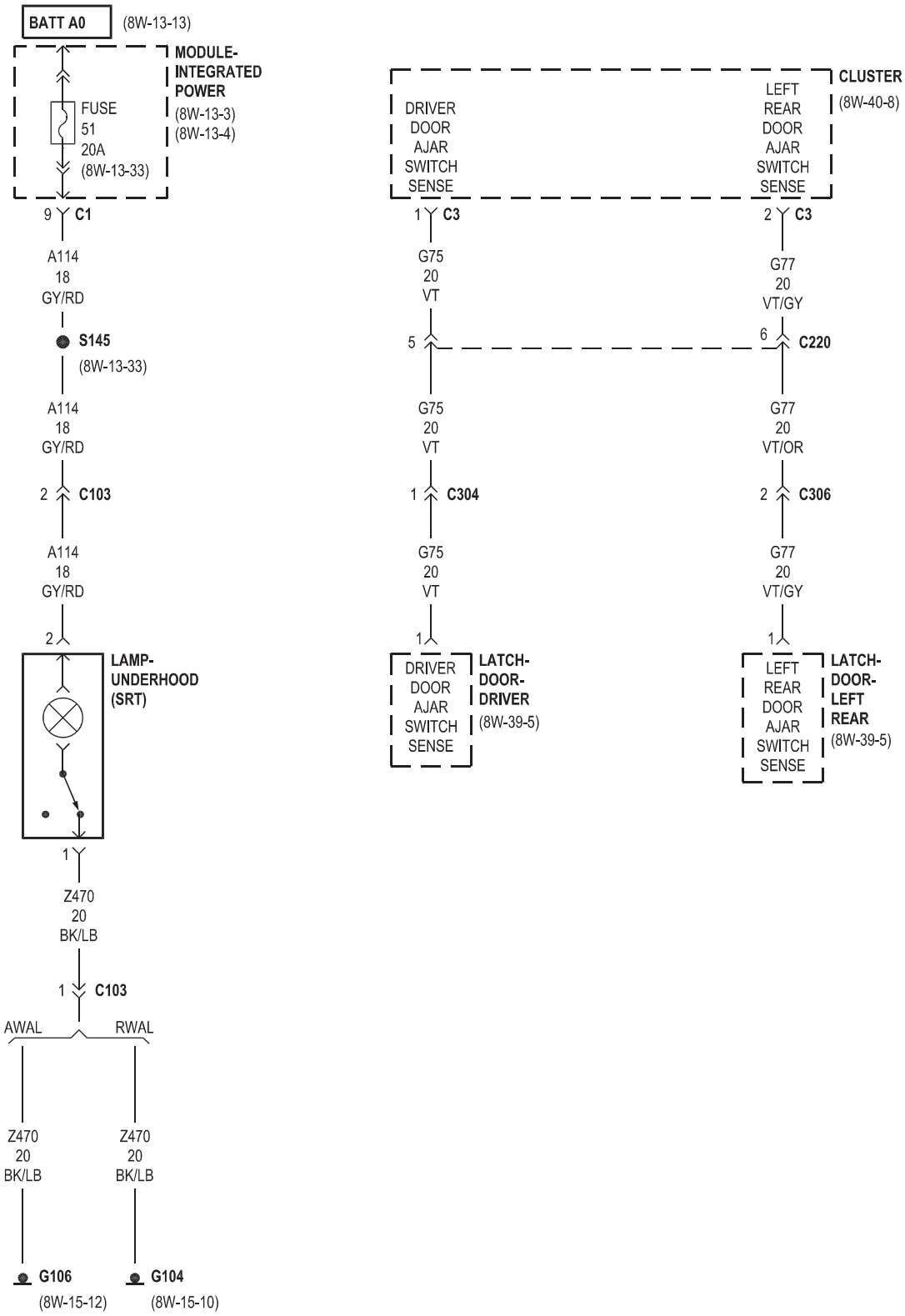
BATT A0
(8W-13-13)
MODULE-
INTEGRATED
POWER
(8W-13-3)
(8W-13-4)
FUSE
51
20A
(8W-13-33)
9 C1
A114
18
GY/RD
S145
(8W-13-33)
A114
18
GY/RD
2 C103
A114
18
GY/RD
2
LAMP-
UNDERHOOD
(SRT)
1
Z470
20
BK/LB
1 C103
AWAL
RWAL
Z470
20
BK/LB
Z470
20
BK/LB
G106
(8W-15-12)
G104
(8W-15-10)
DRIVER
DOOR
AJAR
SWITCH
SENSE
LEFT
REAR
DOOR
AJAR
SWITCH
SENSE
CLUSTER
(8W-40-8)
1 C3
2 C3
G75
20
VT
G77
20
VT/GY
5
6 C220
G75
20
VT
G77
20
VT/OR
1 C304
2 C306
G75
20
VT
G77
20
VT/GY
1
1
DRIVER
DOOR
AJAR
SWITCH
SENSE
LATCH-
DOOR-
DRIVER
(8W-39-5)
LEFT
REAR
DOOR
AJAR
SWITCH
SENSE
LATCH-
DOOR-
LEFT
REAR
(8W-39-5)

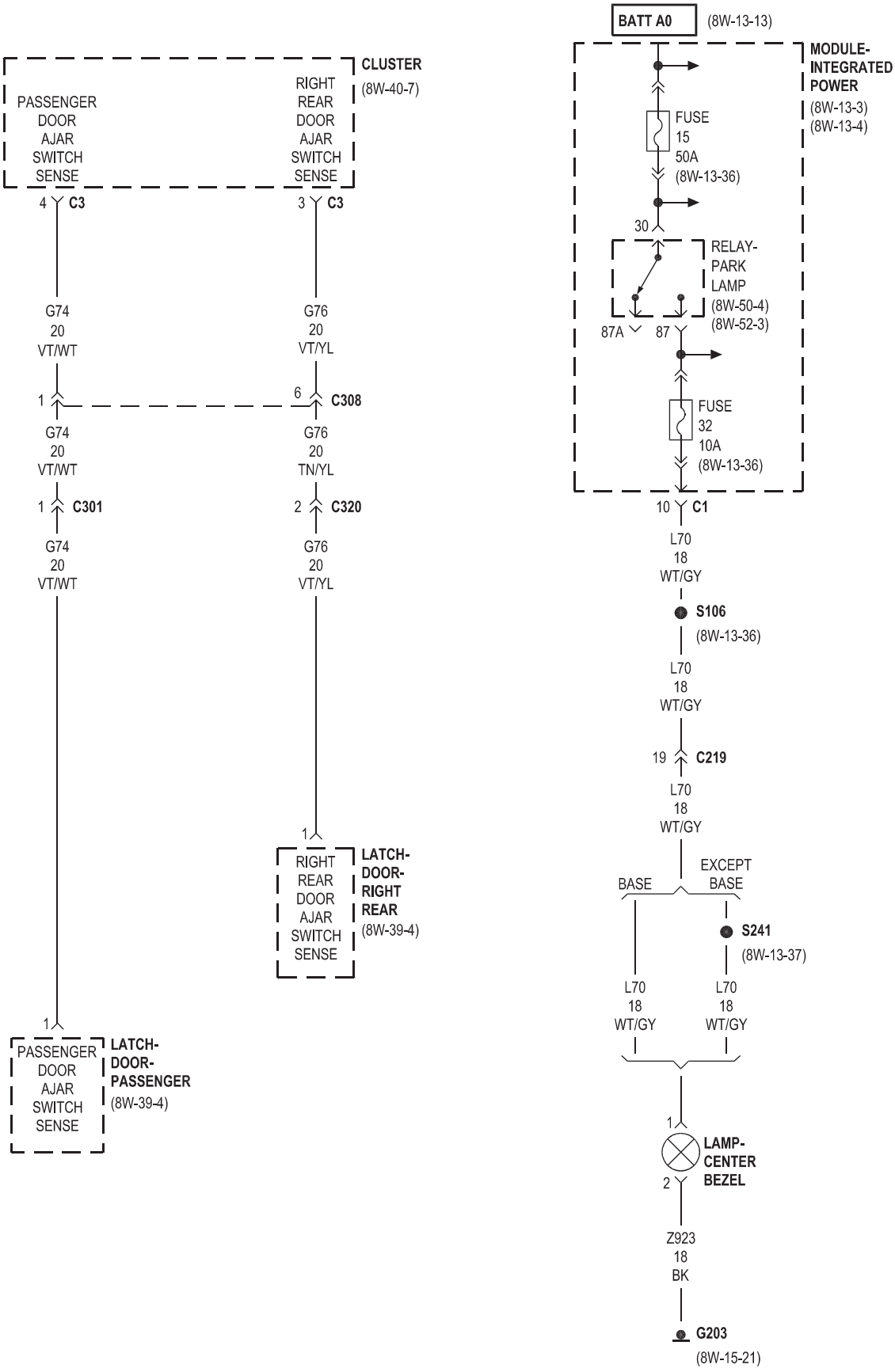
BATT A0
(8W-13-13)
MODULE-
INTEGRATED
POWER
(8W-13-3)
(8W-13-4)
FUSE
15
50A
(8W-13-36)
30
RELAY-
PARK
LAMP
(8W-50-4)
(8W-52-3)
87A
87
FUSE
32
10A
(8W-13-36)
10 C1
L70
18
WT/GY
S106
(8W-13-36)
L70
18
WT/GY
19 C219
L70
18
WT/GY
BASE
EXCEPT
BASE
S241
(8W-13-37)
L70
18
WT/GY
L70
18
WT/GY
1
LAMP-
CENTER
BEZEL
2
Z923
18
BK
G203
(8W-15-21)
CLUSTER
(8W-40-7)
PASSENGER
DOOR
AJAR
SWITCH
SENSE
RIGHT
REAR
DOOR
AJAR
SWITCH
SENSE
4 C3
3 C3
G74
20
VT/WT
G76
20
VT/YL
1
6 C308
G74
20
VT/WT
G76
20
TN/YL
1 C301
2 C320
G74
20
VT/WT
G76
20
VT/YL
1
RIGHT
REAR
DOOR
AJAR
SWITCH
SENSE
LATCH-
DOOR-
RIGHT
REAR
(8W-39-4)
1
PASSENGER
DOOR
AJAR
SWITCH
SENSE
LATCH-
DOOR-
PASSENGER
(8W-39-4)

8W-47 AUDIO SYSTEM

Component	Page
Amplifier-Radio	8W-47-4, 5, 10
Amplifier-Subwoofer	8W-47-10
Clockspring	8W-47-9
Cluster	8W-47-2, 9
Data Link Connector	8W-47-2, 5
Fuse 21	8W-47-5
Fuse 43	8W-47-10
Fuse 51	8W-47-2
G201	8W-47-9
G202	8W-47-2, 5
G302	8W-47-10
Module-Hands Free	8W-47-2, 5, 8
Module-Integrated Power	8W-47-2, 5, 10
PTC No. 2	8W-47-2, 5
Radio	8W-47-2, 3, 4, 7, 9, 10
Receiver-Satellite	8W-47-7, 8
Speaker-Instrument Panel Right	8W-47-4
Speaker-Instrument Panel-Center	8W-47-4
Speaker-Instrument Panel-Left	8W-47-4
Speaker-Left Front Door	8W-47-3, 6
Speaker-Left Rear	8W-47-3, 5, 6
Speaker-Right Front Door	8W-47-3, 6
Speaker-Right Rear	8W-47-3, 5, 6
Speaker-Subwoofer	8W-47-10
Switch-Remote Radio-Left	8W-47-9
Switch-Remote Radio-Right	8W-47-9

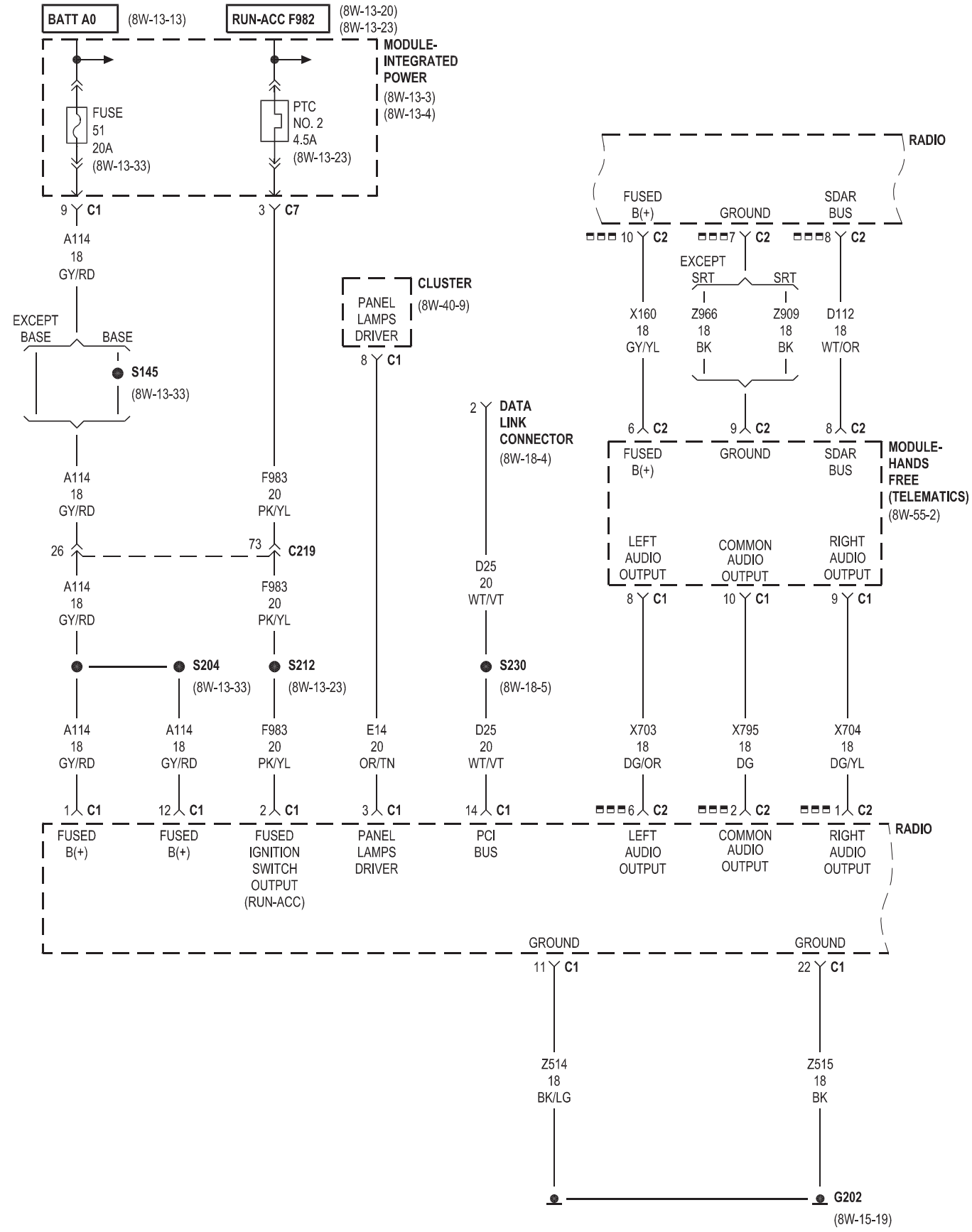
BATT A0
(8W-13-13)
RUN-ACC F982
(8W-13-20)
(8W-13-23)
MODULE-INTEGRATED POWER
(8W-13-3)
(8W-13-4)
FUSE 51 20A (8W-13-33)
PTC NO. 2 4.5A (8W-13-23)
9 C1
3 C7
A114 18 GY/RD
EXCEPT BASE
BASE
S145
(8W-13-33)
A114 18 GY/RD
F983 20 PK/YL
26
73 C219
A114 18 GY/RD
F983 20 PK/YL
S204
(8W-13-33)
S212
(8W-13-23)
A114 18 GY/RD
A114 18 GY/RD
F983 20 PK/YL
1 C1
12 C1
2 C1
FUSED B(+)
FUSED B(+)
FUSED IGNITION SWITCH OUTPUT (RUN-ACC)
CLUSTER
PANEL LAMPS DRIVER
(8W-40-9)
8 C1
E14 20 OR/TN
3 C1
PANEL LAMPS DRIVER
2 DATA LINK CONNECTOR
(8W-18-4)
D25 20 WT/VT
S230
(8W-18-5)
D25 20 WT/VT
14 C1
PCI BUS
RADIO
FUSED B(+)
GROUND
SDAR BUS
10 C2
7 C2
8 C2
EXCEPT SRT
SRT
X160 18 GY/YL
Z966 18 BK
Z909 18 BK
D112 18 WT/OR
6 C2
9 C2
8 C2
MODULE-HANDS FREE (TELEMATICS)
(8W-55-2)
FUSED B(+)
GROUND
SDAR BUS
LEFT AUDIO OUTPUT
COMMON AUDIO OUTPUT
RIGHT AUDIO OUTPUT
8 C1
10 C1
9 C1
X703 18 DG/OR
X795 18 DG
X704 18 DG/YL
6 C2
2 C2
1 C2
LEFT AUDIO OUTPUT
COMMON AUDIO OUTPUT
RIGHT AUDIO OUTPUT
RADIO
GROUND
GROUND
11 C1
22 C1
Z514 18 BK/LG
Z515 18 BK
G202
(8W-15-19)

HANDS FREE

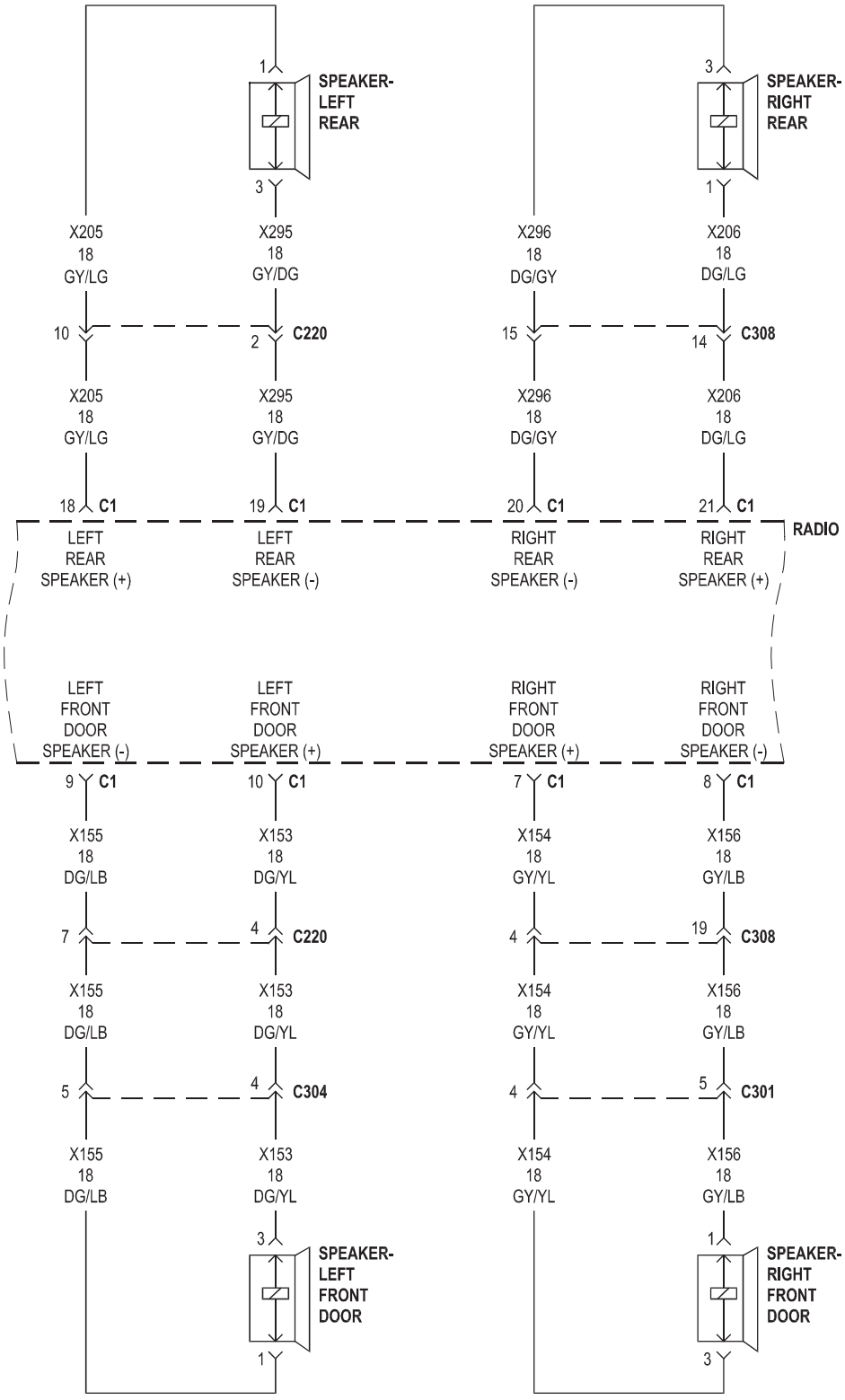
SPEAKER-
LEFT
REAR
SPEAKER-
RIGHT
REAR
X205
18
GY/LG
X295
18
GY/DG
X296
18
DG/GY
X206
18
DG/LG
C220
C308
C1
RADIO
LEFT
REAR
SPEAKER (+)
LEFT
REAR
SPEAKER (-)
RIGHT
REAR
SPEAKER (-)
RIGHT
REAR
SPEAKER (+)
LEFT
FRONT
DOOR
SPEAKER (-)
LEFT
FRONT
DOOR
SPEAKER (+)
RIGHT
FRONT
DOOR
SPEAKER (+)
RIGHT
FRONT
DOOR
SPEAKER (-)
X155
18
DG/LB
X153
18
DG/YL
X154
18
GY/YL
X156
18
GY/LB
C304
C301
SPEAKER-
LEFT
FRONT
DOOR
SPEAKER-
RIGHT
FRONT
DOOR

PREMIUM EXCEPT HANDS FREE CAPABLE

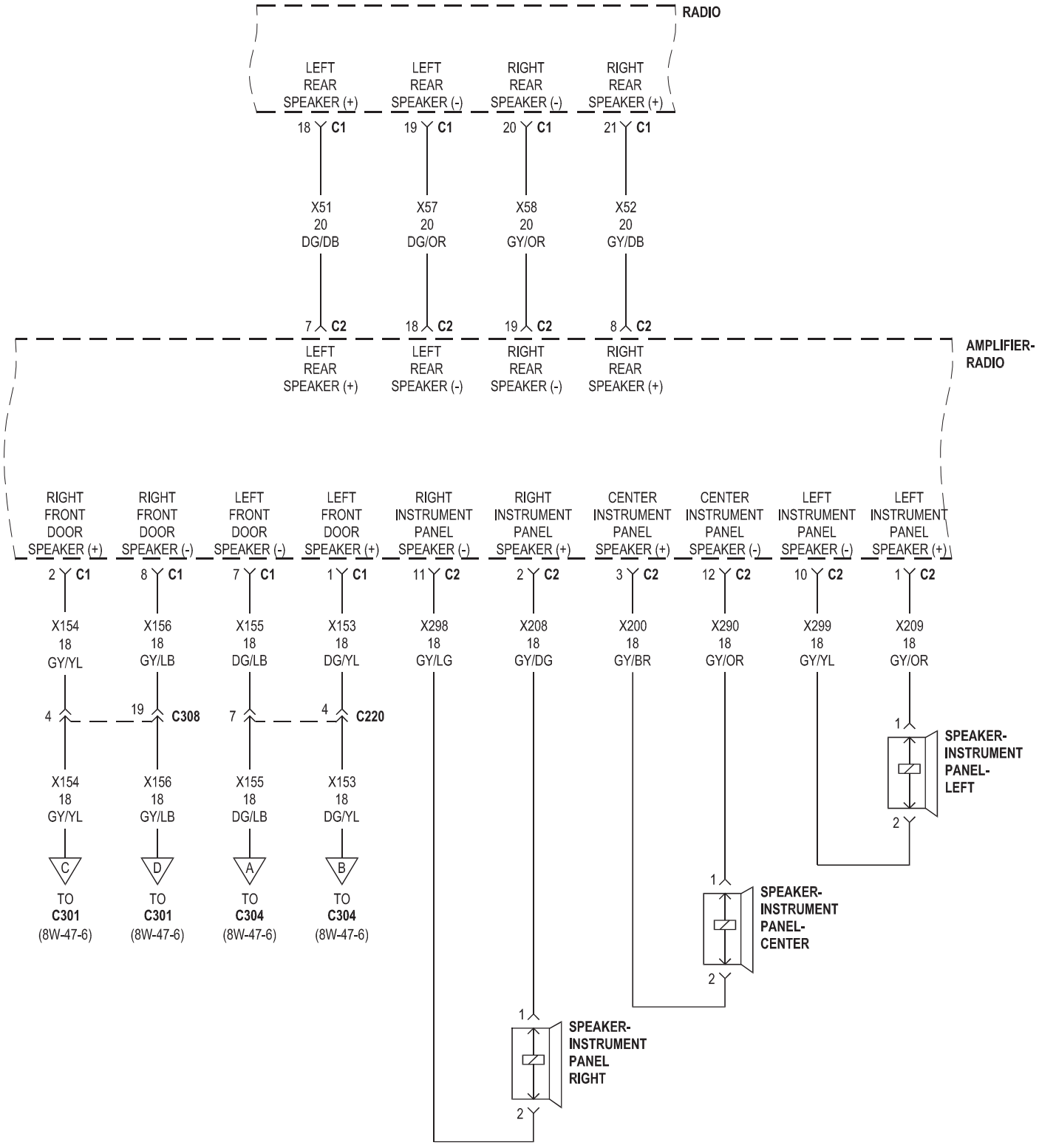

PREMIUM

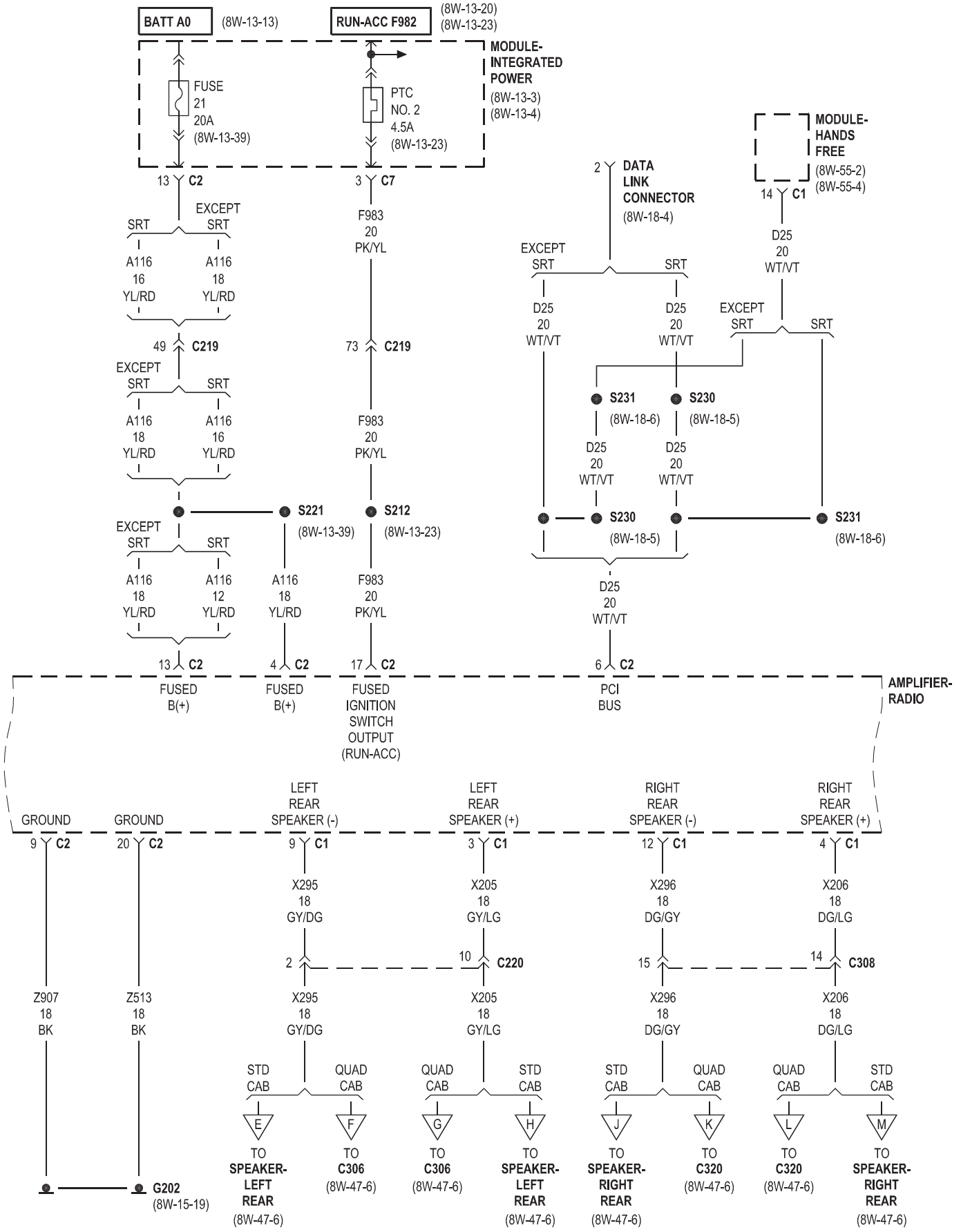
BATT A0
(8W-13-13)
RUN-ACC F982
(8W-13-20)
(8W-13-23)
MODULE-INTEGRATED POWER
(8W-13-3)
(8W-13-4)
FUSE 21 20A (8W-13-39)
PTC NO. 2 4.5A (8W-13-23)
MODULE-HANDS FREE
(8W-55-2)
(8W-55-4)
DATA LINK CONNECTOR
(8W-18-4)
EXCEPT SRT
SRT
A116 16 YL/RD
A116 18 YL/RD
F983 20 PK/YL
D25 20 WT/VT
S231
(8W-18-6)
S230
(8W-18-5)
S221
(8W-13-39)
S212
(8W-13-23)
AMPLIFIER-RADIO
FUSED B(+)
FUSED IGNITION SWITCH OUTPUT (RUN-ACC)
PCI BUS
GROUND
LEFT REAR SPEAKER (-)
LEFT REAR SPEAKER (+)
RIGHT REAR SPEAKER (-)
RIGHT REAR SPEAKER (+)
X295 18 GY/DG
X205 18 GY/LG
X296 18 DG/GY
X206 18 DG/LG
C220
C308
Z907 18 BK
Z513 18 BK
STD CAB
QUAD CAB
TO SPEAKER-LEFT REAR (8W-47-6)
TO C306 (8W-47-6)
TO SPEAKER-RIGHT REAR (8W-47-6)
TO C320 (8W-47-6)
G202
(8W-15-19)

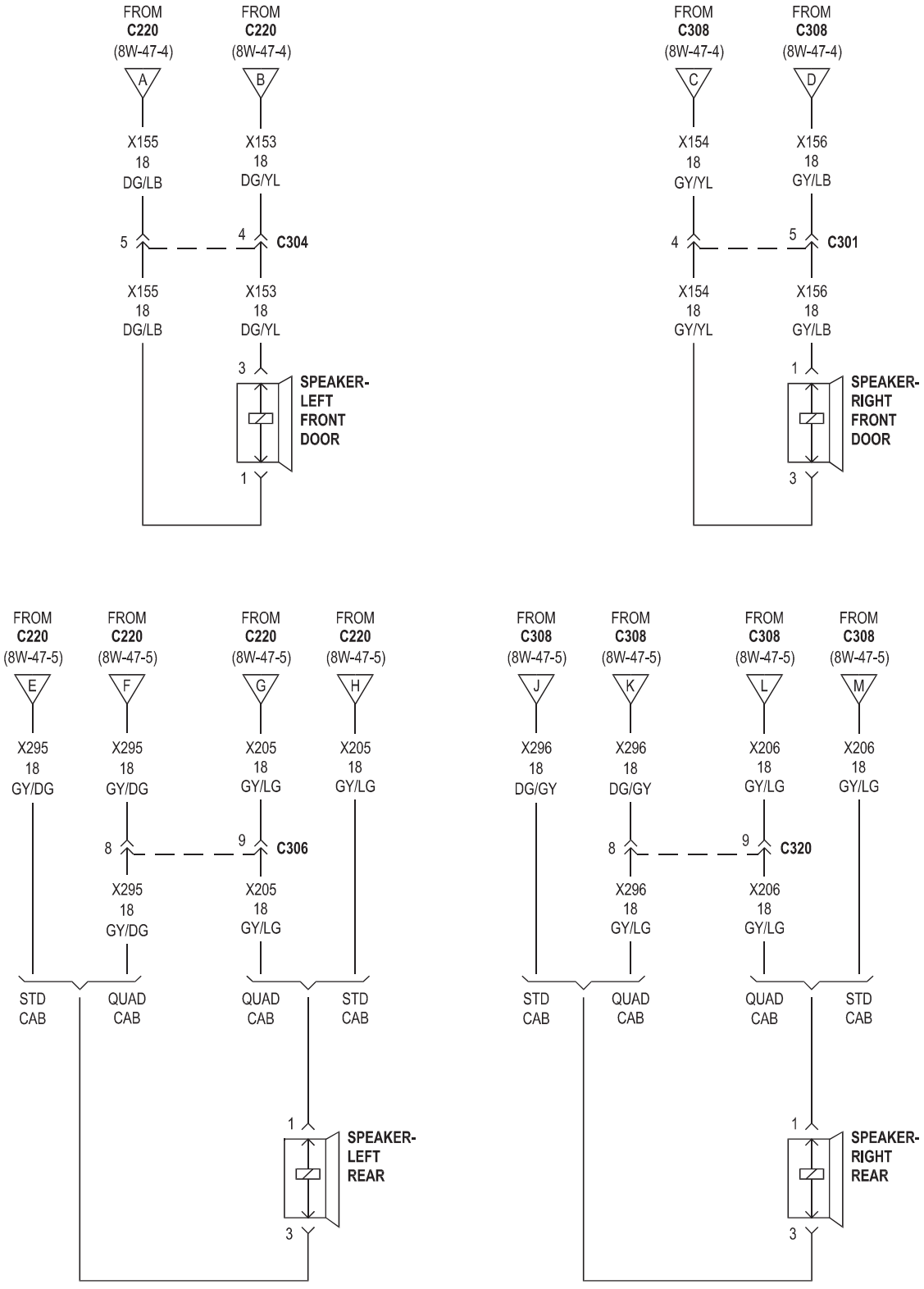
FROM C220 (8W-47-4)
A
X155 18 DG/LB
5
FROM C220 (8W-47-4)
B
X153 18 DG/YL
4
C304
X155 18 DG/LB
X153 18 DG/YL
3
SPEAKER- LEFT FRONT DOOR
1
FROM C308 (8W-47-4)
C
X154 18 GY/YL
4
FROM C308 (8W-47-4)
D
X156 18 GY/LB
5
C301
X154 18 GY/YL
X156 18 GY/LB
1
SPEAKER- RIGHT FRONT DOOR
3
FROM C220 (8W-47-5)
E
X295 18 GY/DG
FROM C220 (8W-47-5)
F
X295 18 GY/DG
8
FROM C220 (8W-47-5)
G
X205 18 GY/LG
9
C306
X295 18 GY/DG
X205 18 GY/LG
STD CAB
QUAD CAB
FROM C220 (8W-47-5)
H
X205 18 GY/LG
QUAD CAB
STD CAB
1
SPEAKER- LEFT REAR
3
FROM C308 (8W-47-5)
J
X296 18 DG/GY
FROM C308 (8W-47-5)
K
X296 18 DG/GY
8
FROM C308 (8W-47-5)
L
X206 18 GY/LG
9
C320
X296 18 GY/LG
X206 18 GY/LG
STD CAB
QUAD CAB
FROM C308 (8W-47-5)
M
X206 18 GY/LG
QUAD CAB
STD CAB
1
SPEAKER- RIGHT REAR
3

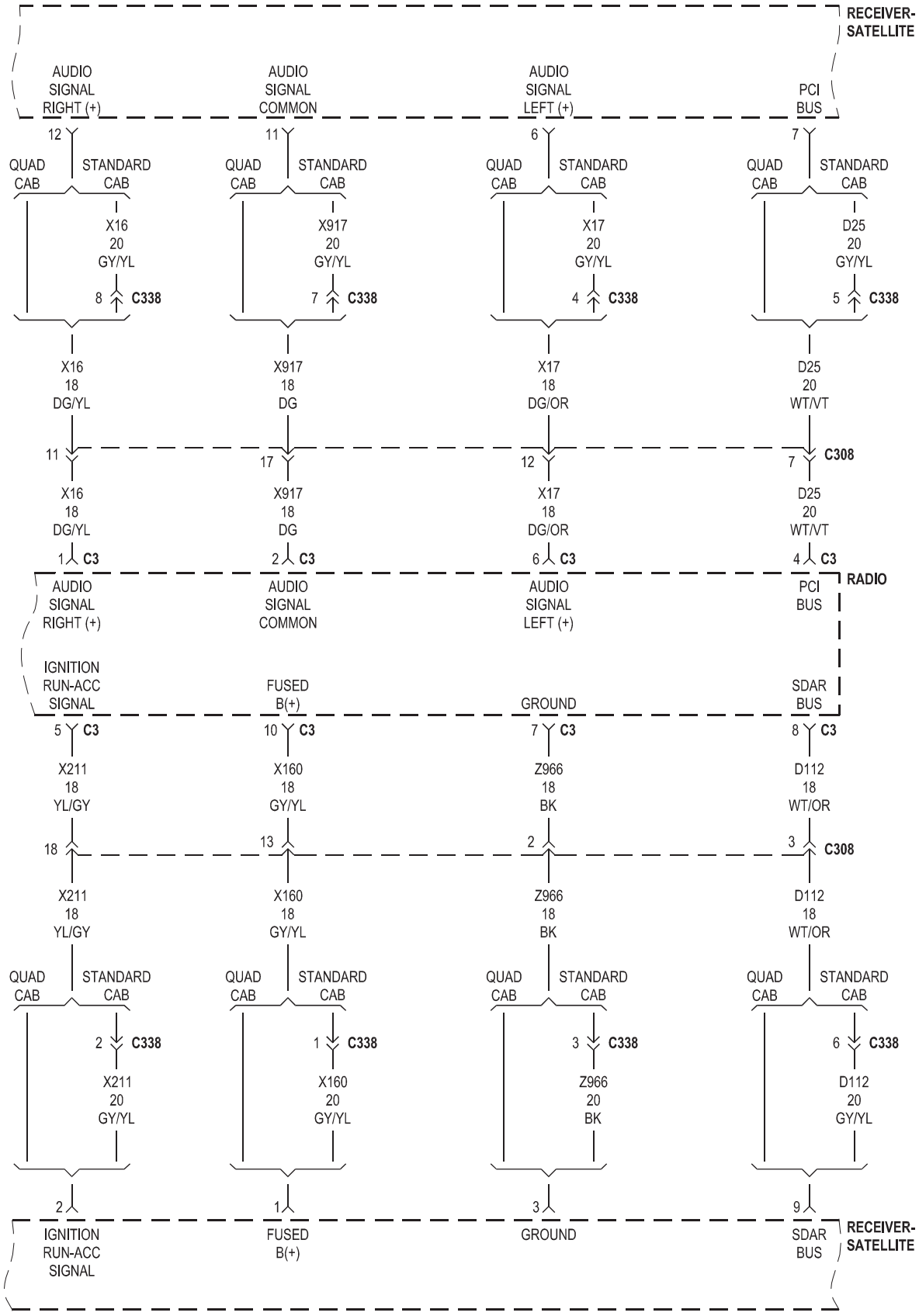
RECEIVER-SATELLITE
AUDIO SIGNAL RIGHT (+)
AUDIO SIGNAL COMMON
AUDIO SIGNAL LEFT (+)
PCI BUS
12
11
6
7
QUAD CAB
STANDARD CAB
X16 20 GY/YL
X917 20 GY/YL
X17 20 GY/YL
D25 20 GY/YL
8 C338
7 C338
4 C338
5 C338
X16 18 DG/YL
X917 18 DG
X17 18 DG/OR
D25 20 WT/VT
11
17
12
7 C308
1 C3
2 C3
6 C3
4 C3
RADIO
IGNITION RUN-ACC SIGNAL
FUSED B(+)
GROUND
SDAR BUS
5 C3
10 C3
7 C3
8 C3
X211 18 YL/GY
X160 18 GY/YL
Z966 18 BK
D112 18 WT/OR
18
13
2
3 C308
2 C338
1 C338
3 C338
6 C338
X211 20 GY/YL
X160 20 GY/YL
Z966 20 BK
D112 20 GY/YL
2
1
3
9
IGNITION RUN-ACC SIGNAL
FUSED B(+)
GROUND
SDAR BUS
RECEIVER-SATELLITE

HANDS FREE

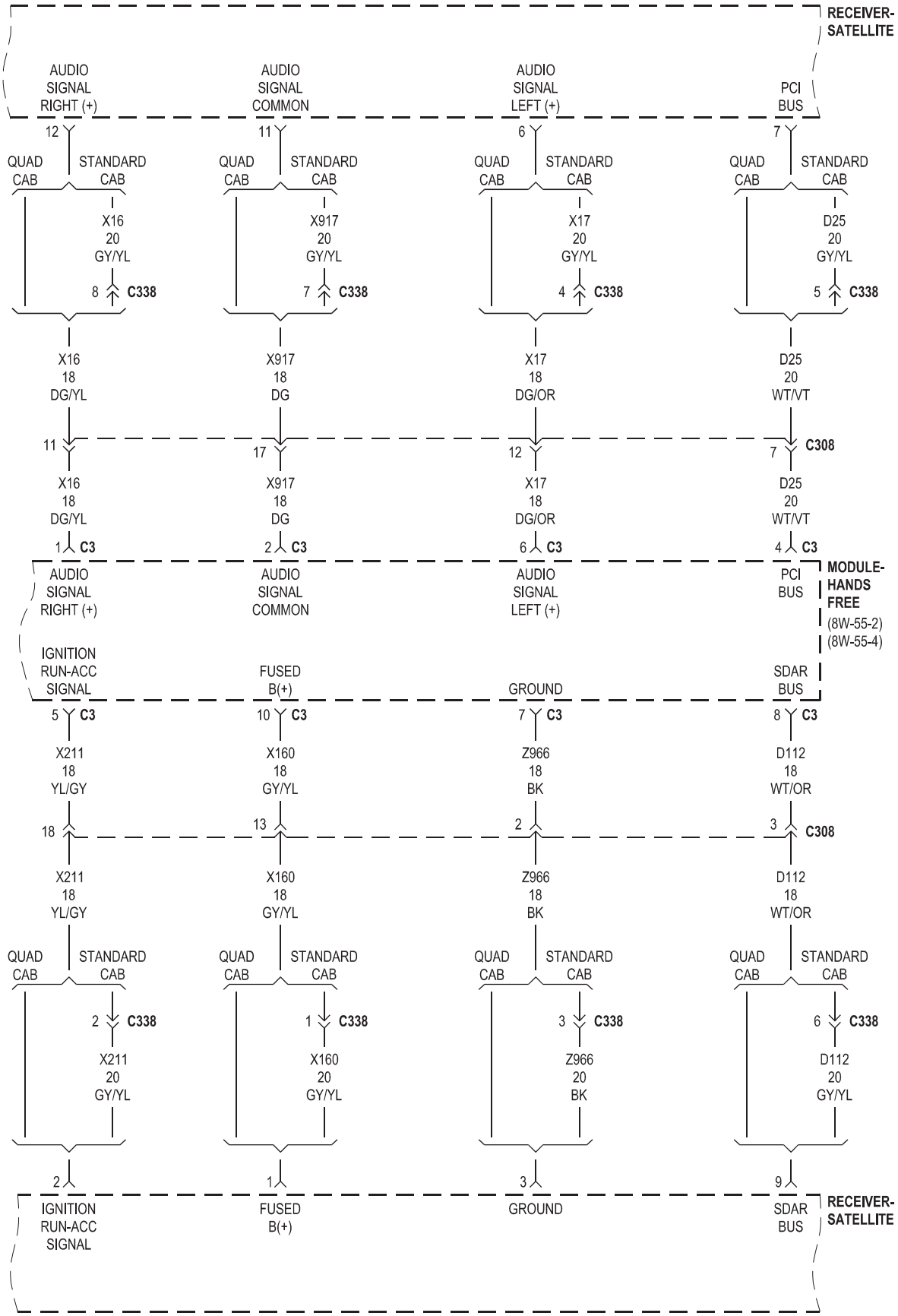
RECEIVER-SATELLITE
AUDIO SIGNAL RIGHT (+)
AUDIO SIGNAL COMMON
AUDIO SIGNAL LEFT (+)
PCI BUS
12
11
6
7
QUAD CAB
STANDARD CAB
X16 20 GY/YL
X917 20 GY/YL
X17 20 GY/YL
D25 20 GY/YL
8 C338
7 C338
4 C338
5 C338
X16 18 DG/YL
X917 18 DG
X17 18 DG/OR
D25 20 WT/VT
11
17
12
7 C308
1 C3
2 C3
6 C3
4 C3
MODULE-HANDS FREE
(8W-55-2)
(8W-55-4)
IGNITION RUN-ACC SIGNAL
FUSED B(+)
GROUND
SDAR BUS
5 C3
10 C3
7 C3
8 C3
X211 18 YL/GY
X160 18 GY/YL
Z966 18 BK
D112 18 WT/OR
18
13
2
3 C308
2 C338
1 C338
3 C338
6 C338
X211 20 GY/YL
X160 20 GY/YL
Z966 20 BK
D112 20 GY/YL
2
1
3
9

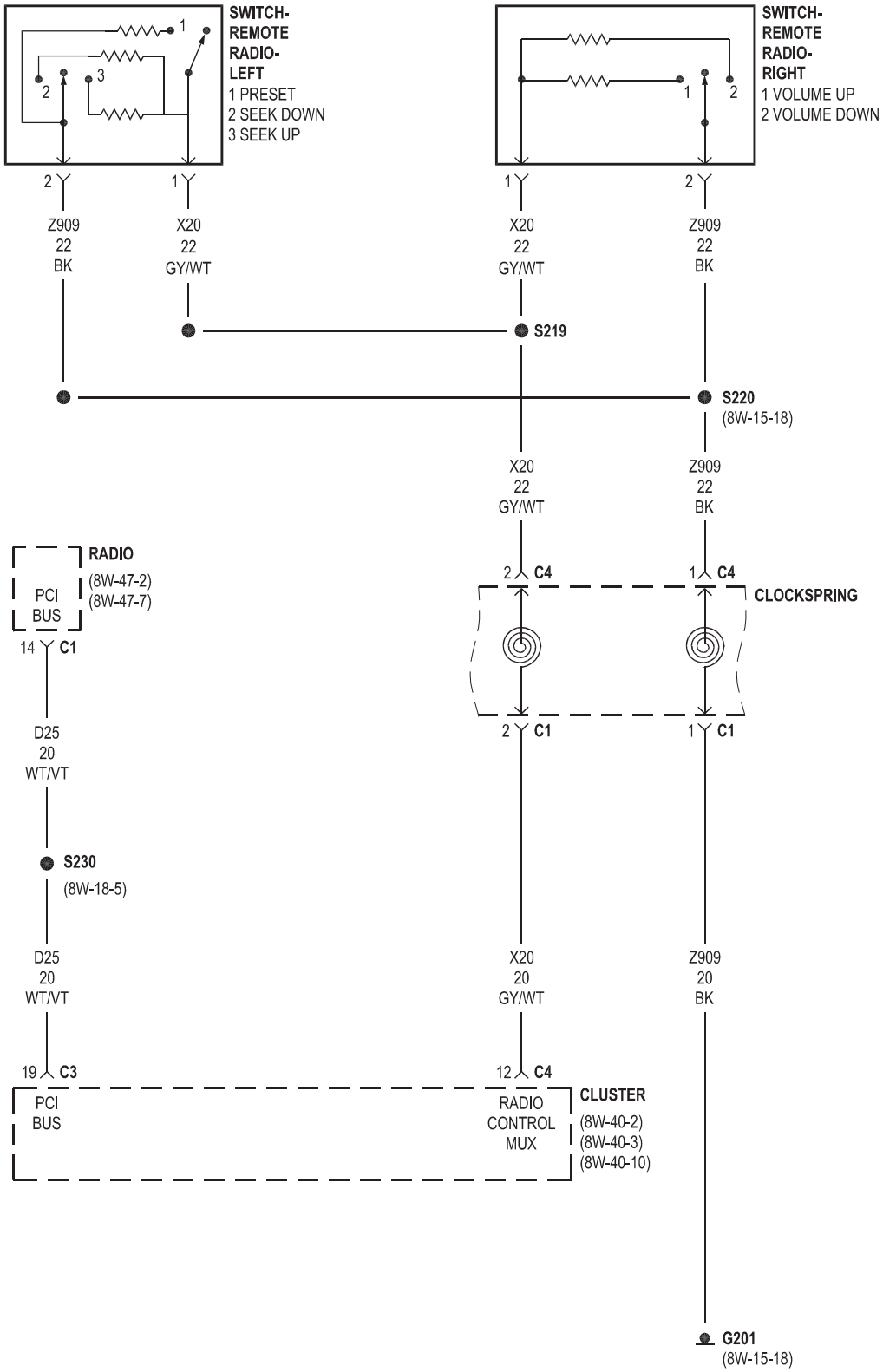
SWITCH-
REMOTE
RADIO-
LEFT
1 PRESET
2 SEEK DOWN
3 SEEK UP
SWITCH-
REMOTE
RADIO-
RIGHT
1 VOLUME UP
2 VOLUME DOWN
Z909
22
BK
X20
22
GY/WT
S219
S220
(8W-15-18)
RADIO
PCI
BUS
(8W-47-2)
(8W-47-7)
C4
CLOCKSPRING
C1
D25
20
WT/VT
S230
(8W-18-5)
X20
20
GY/WT
Z909
20
BK
C3
CLUSTER
RADIO
CONTROL
MUX
(8W-40-2)
(8W-40-3)
(8W-40-10)
G201
(8W-15-18)

SUBWOOFER

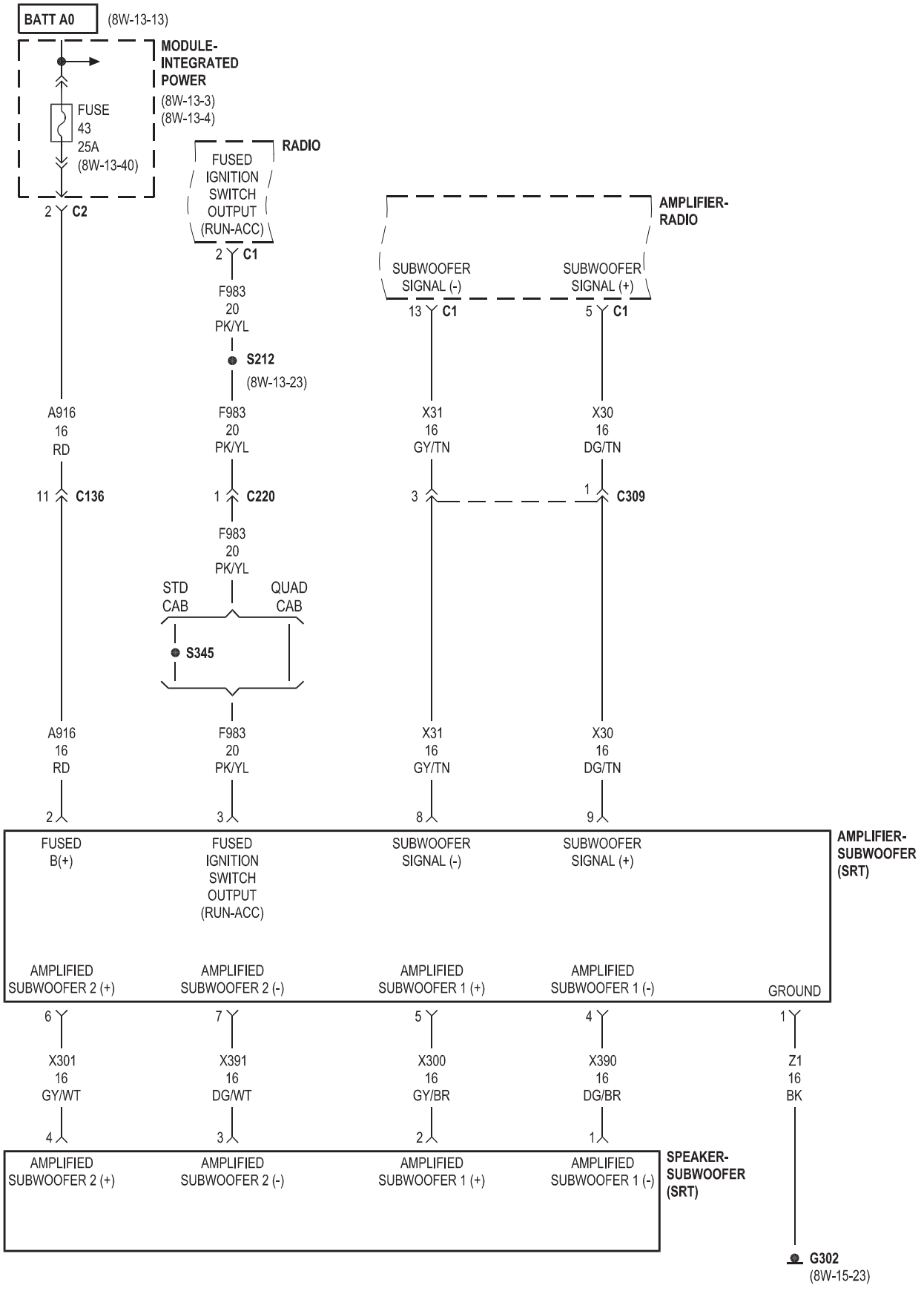
BATT A0
(8W-13-13)
MODULE-INTEGRATED POWER
(8W-13-3)
(8W-13-4)
FUSE 43 25A (8W-13-40)
2 C2
RADIO
FUSED IGNITION SWITCH OUTPUT (RUN-ACC)
2 C1
F983 20 PK/YL
S212
(8W-13-23)
AMPLIFIER-RADIO
SUBWOOFER SIGNAL (-)
SUBWOOFER SIGNAL (+)
13 C1
5 C1
A916 16 RD
11 C136
F983 20 PK/YL
1 C220
X31 16 GY/TN
X30 16 DG/TN
3
1 C309
F983 20 PK/YL
STD CAB
QUAD CAB
S345
A916 16 RD
2
F983 20 PK/YL
3
X31 16 GY/TN
8
X30 16 DG/TN
9
AMPLIFIER-SUBWOOFER (SRT)
FUSED B(+)
FUSED IGNITION SWITCH OUTPUT (RUN-ACC)
SUBWOOFER SIGNAL (-)
SUBWOOFER SIGNAL (+)
AMPLIFIED SUBWOOFER 2 (+)
AMPLIFIED SUBWOOFER 2 (-)
AMPLIFIED SUBWOOFER 1 (+)
AMPLIFIED SUBWOOFER 1 (-)
GROUND
6
7
5
4
1
X301 16 GY/WT
X391 16 DG/WT
X300 16 GY/BR
X390 16 DG/BR
Z1 16 BK
4
3
2
1
AMPLIFIED SUBWOOFER 2 (+)
AMPLIFIED SUBWOOFER 2 (-)
AMPLIFIED SUBWOOFER 1 (+)
AMPLIFIED SUBWOOFER 1 (-)
SPEAKER-SUBWOOFER (SRT)
G302
(8W-15-23)

8W-48 REAR WINDOW DEFOGGER

Component	Page	Component	Page
Backlite-Heated	8W-48-2	G303	8W-48-2
Control-A/C-Heater	8W-48-2	Module-Integrated Power	8W-48-2
Fuse 26	8W-48-2	Relay-Heated Mirror	8W-48-2
Fuse 36	8W-48-2	Relay-Rear Window Defogger	8W-48-2

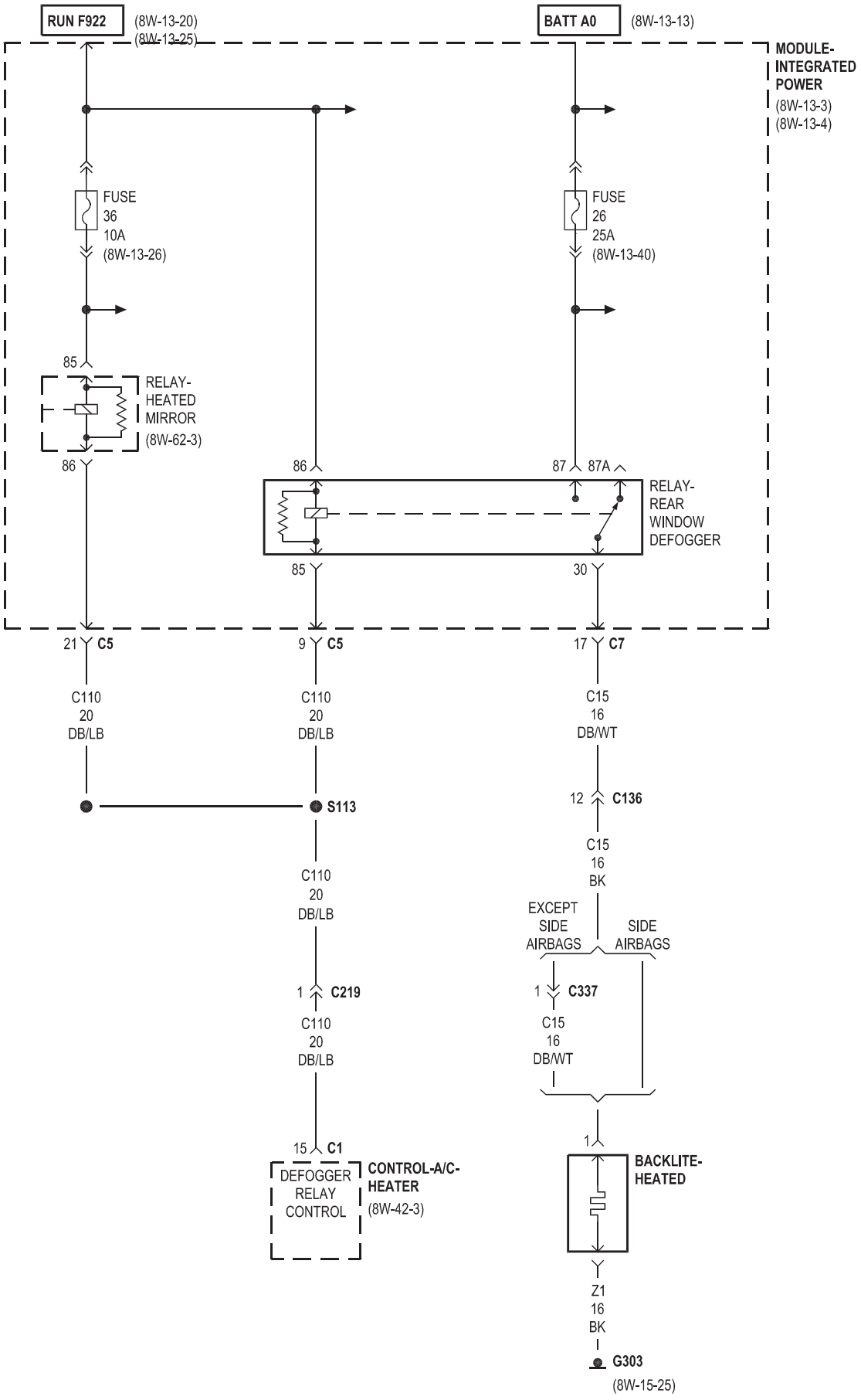
RUN F922
(8W-13-20)
(8W-13-25)
BATT A0
(8W-13-13)
MODULE-
INTEGRATED
POWER
(8W-13-3)
(8W-13-4)
FUSE
36
10A
(8W-13-26)
FUSE
26
25A
(8W-13-40)
85
RELAY-
HEATED
MIRROR
(8W-62-3)
86
86
87
87A
RELAY-
REAR
WINDOW
DEFOGGER
85
30
21 C5
9 C5
17 C7
C110
20
DB/LB
C110
20
DB/LB
C15
16
DB/WT
S113
12 C136
C15
16
BK
C110
20
DB/LB
EXCEPT
SIDE
AIRBAGS
SIDE
AIRBAGS
1 C219
1 C337
C110
20
DB/LB
C15
16
DB/WT
15 C1
1
DEFOGGER
RELAY
CONTROL
CONTROL-A/C-
HEATER
(8W-42-3)
BACKLITE-
HEATED
Z1
16
BK
G303
(8W-15-25)

8W-49 OVERHEAD CONSOLE

Component	Page
Assembly-Transmission Solenoid/TRS	8W-49-2
Cluster	8W-49-4
Data Link Connector	8W-49-2
Fuse 23	8W-49-2
Fuse 28	8W-49-2
G201	8W-49-2
G203	8W-49-4
Lamp-Reading-Front	8W-49-4
Mirror-Inside Rearview	8W-49-2
Module-Electronic Overhead	8W-49-2
Module-Front Control	8W-49-3
Module-Integrated Power	8W-49-2, 3
Module-Powertrain Control	8W-49-3
Sensor-Ambient Air Temperature	8W-49-3
Sensor-Transmission Range	8W-49-2
Switch-Back Up Lamp	8W-49-2

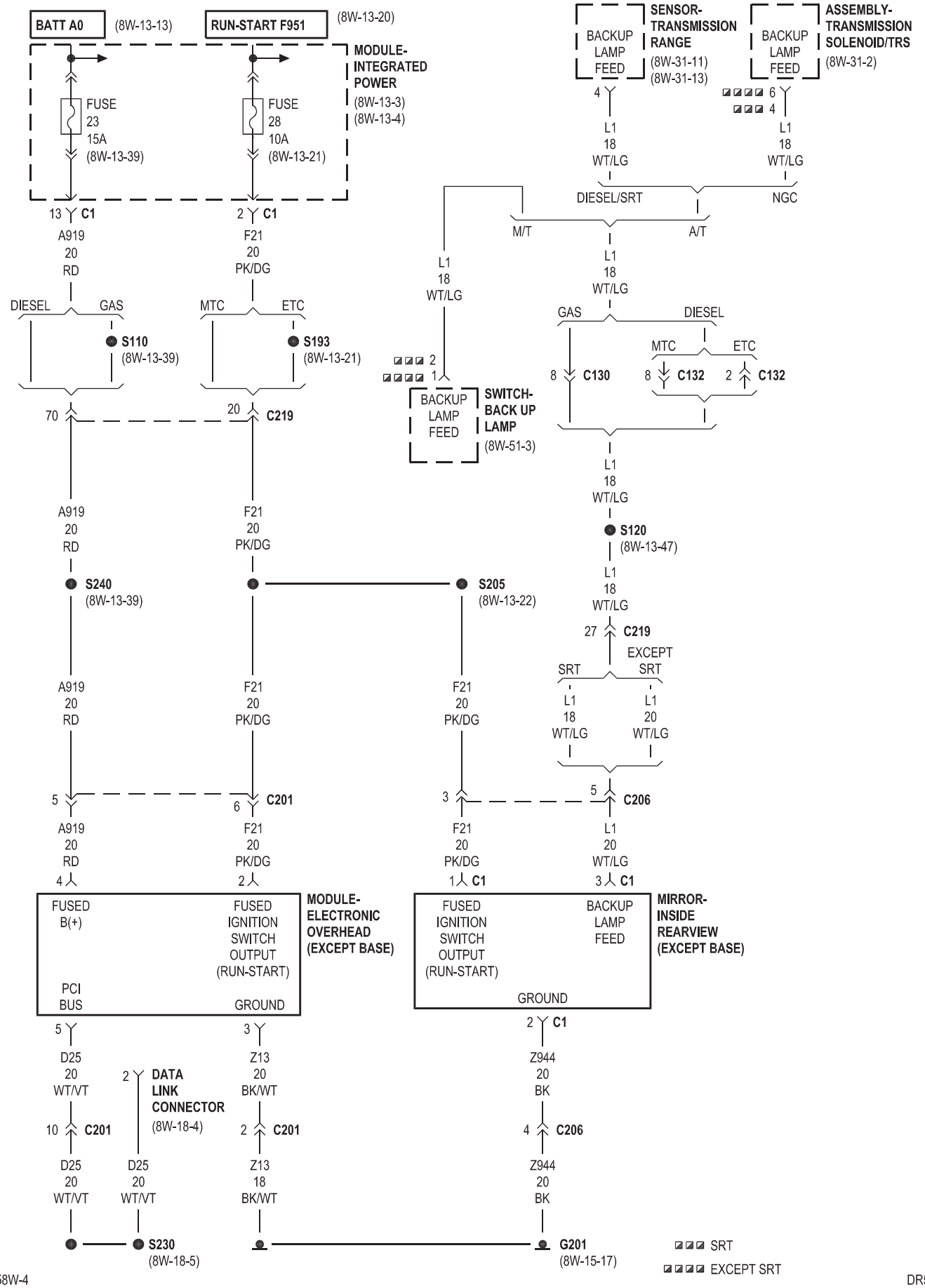
BATT A0
(8W-13-13)
RUN-START F951
(8W-13-20)
MODULE-INTEGRATED POWER
(8W-13-3)
(8W-13-4)
FUSE 23 15A (8W-13-39)
FUSE 28 10A (8W-13-21)
13 C1
2 C1
A919 20 RD
F21 20 PK/DG
DIESEL
GAS
MTC
ETC
S110 (8W-13-39)
S193 (8W-13-21)
70
20 C219
A919 20 RD
F21 20 PK/DG
S240 (8W-13-39)
S205 (8W-13-22)
A919 20 RD
F21 20 PK/DG
F21 20 PK/DG
5
6 C201
3
5 C206
A919 20 RD
F21 20 PK/DG
F21 20 PK/DG
4
2
1 C1
3 C1
FUSED B(+)
FUSED IGNITION SWITCH OUTPUT (RUN-START)
PCI BUS
GROUND
MODULE-ELECTRONIC OVERHEAD (EXCEPT BASE)
FUSED IGNITION SWITCH OUTPUT (RUN-START)
BACKUP LAMP FEED
GROUND
MIRROR-INSIDE REARVIEW (EXCEPT BASE)
5
3
2 C1
D25 20 WT/VT
Z13 20 BK/WT
Z944 20 BK
2
DATA LINK CONNECTOR
(8W-18-4)
10 C201
2 C201
4 C206
D25 20 WT/VT
D25 20 WT/VT
Z13 18 BK/WT
Z944 20 BK
S230 (8W-18-5)
G201 (8W-15-17)
BACKUP LAMP FEED
SENSOR-TRANSMISSION RANGE
(8W-31-11)
(8W-31-13)
BACKUP LAMP FEED
ASSEMBLY-TRANSMISSION SOLENOID/TRS
(8W-31-2)
4
6
4
L1 18 WT/LG
L1 18 WT/LG
DIESEL/SRT
NGC
M/T
A/T
L1 18 WT/LG
L1 18 WT/LG
2
1
BACKUP LAMP FEED
SWITCH-BACK UP LAMP
(8W-51-3)
GAS
DIESEL
MTC
ETC
8 C130
8 C132
2 C132
L1 18 WT/LG
S120 (8W-13-47)
L1 18 WT/LG
27 C219
EXCEPT SRT
SRT
SRT
L1 18 WT/LG
L1 20 WT/LG
SRT
EXCEPT SRT

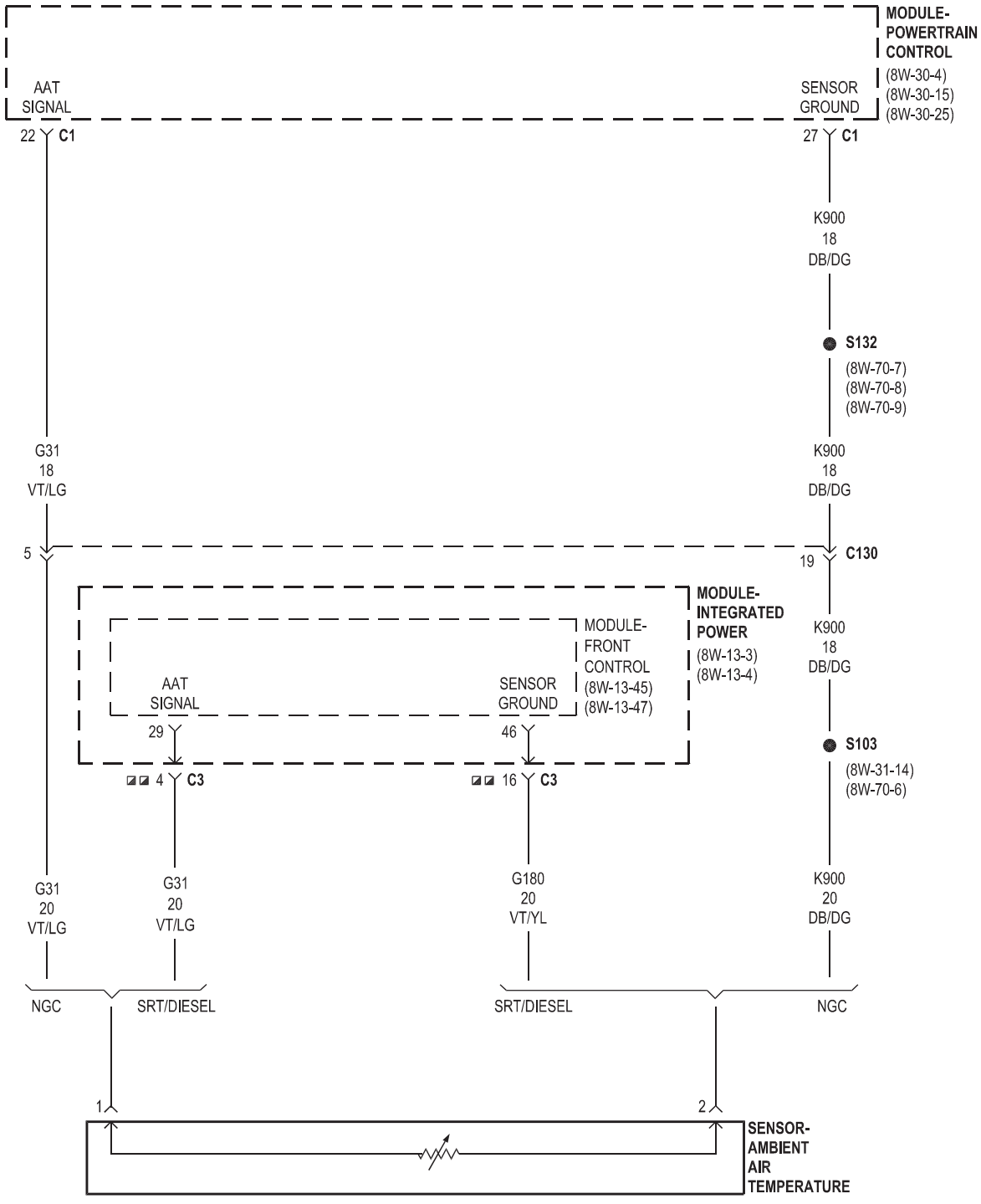
MODULE-
POWERTRAIN
CONTROL
(8W-30-4)
(8W-30-15)
(8W-30-25)
AAT
SIGNAL
22 C1
SENSOR
GROUND
27 C1
K900
18
DB/DG
S132
(8W-70-7)
(8W-70-8)
(8W-70-9)
G31
18
VT/LG
K900
18
DB/DG
5
19 C130
MODULE-
INTEGRATED
POWER
(8W-13-3)
(8W-13-4)
MODULE-
FRONT
CONTROL
(8W-13-45)
(8W-13-47)
AAT
SIGNAL
SENSOR
GROUND
29
46
K900
18
DB/DG
S103
(8W-31-14)
(8W-70-6)
4 C3
16 C3
G31
20
VT/LG
G31
20
VT/LG
G180
20
VT/YL
K900
20
DB/DG
NGC
SRT/DIESEL
SRT/DIESEL
NGC
1
2
SENSOR-
AMBIENT
AIR
TEMPERATURE

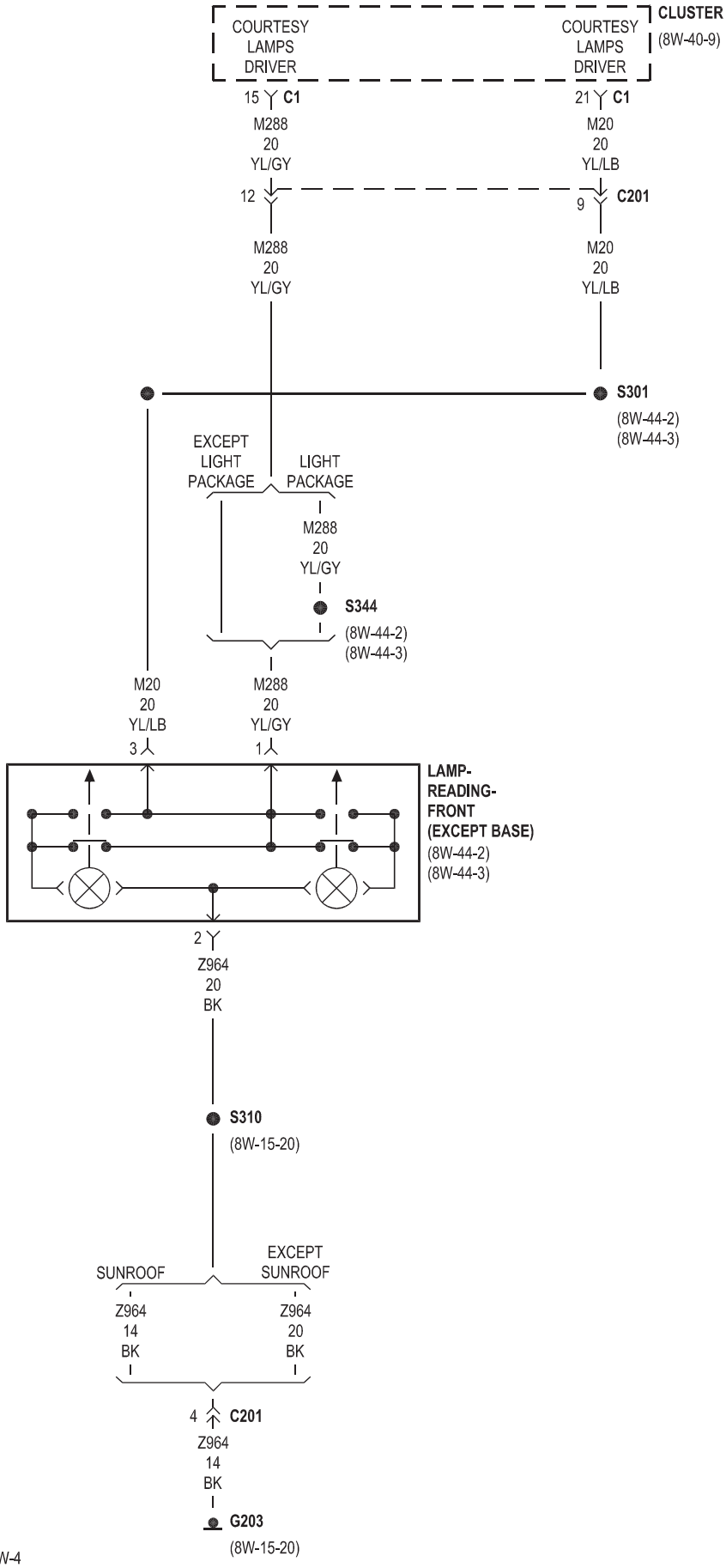
CLUSTER
(8W-40-9)
COURTESY LAMPS DRIVER
COURTESY LAMPS DRIVER
15 C1
21 C1
M288 20 YL/GY
M20 20 YL/LB
12
9 C201
M288 20 YL/GY
M20 20 YL/LB
S301
(8W-44-2)
(8W-44-3)
EXCEPT LIGHT PACKAGE
LIGHT PACKAGE
M288 20 YL/GY
S344
(8W-44-2)
(8W-44-3)
M20 20 YL/LB
3
M288 20 YL/GY
1
LAMP-READING-FRONT (EXCEPT BASE)
(8W-44-2)
(8W-44-3)
2
Z964 20 BK
S310
(8W-15-20)
SUNROOF
EXCEPT SUNROOF
Z964 14 BK
Z964 20 BK
4 C201
Z964 14 BK
G203
(8W-15-20)

8W-50 FRONT LIGHTING

Component	Page
Cluster	8W-50-2, 5
Data Link Connector	8W-50-2
Fuse 15	8W-50-4
Fuse 32	8W-50-4
Fuse 34	8W-50-4
Fuse 41	8W-50-5
G103	8W-50-3, 4, 5
G104	8W-50-3, 4
G105	8W-50-3, 4
G203	8W-50-5, 6
Lamp-Clearance No. 1	8W-50-6
Lamp-Clearance No. 2	8W-50-6
Lamp-Clearance No. 3	8W-50-6
Lamp-Clearance No. 4	8W-50-6
Lamp-Clearance No. 5	8W-50-6
Lamp-Fog-Left	8W-50-5
Lamp-Fog-Right	8W-50-5
Lamp-Headlamp-Left	8W-50-3
Lamp-Headlamp-Right	8W-50-3
Lamp-Park/Turn-Left Front	8W-50-4
Lamp-Park/Turn-Right Front	8W-50-4
Module-Front Control	8W-50-2, 3, 4, 5
Module-Integrated Power	8W-50-2, 3, 4, 5
Relay-Fog Lamp	8W-50-5
Relay-Park Lamp	8W-50-4
Switch-Headlamp	8W-50-2, 5
Switch-Multifunction	8W-50-2

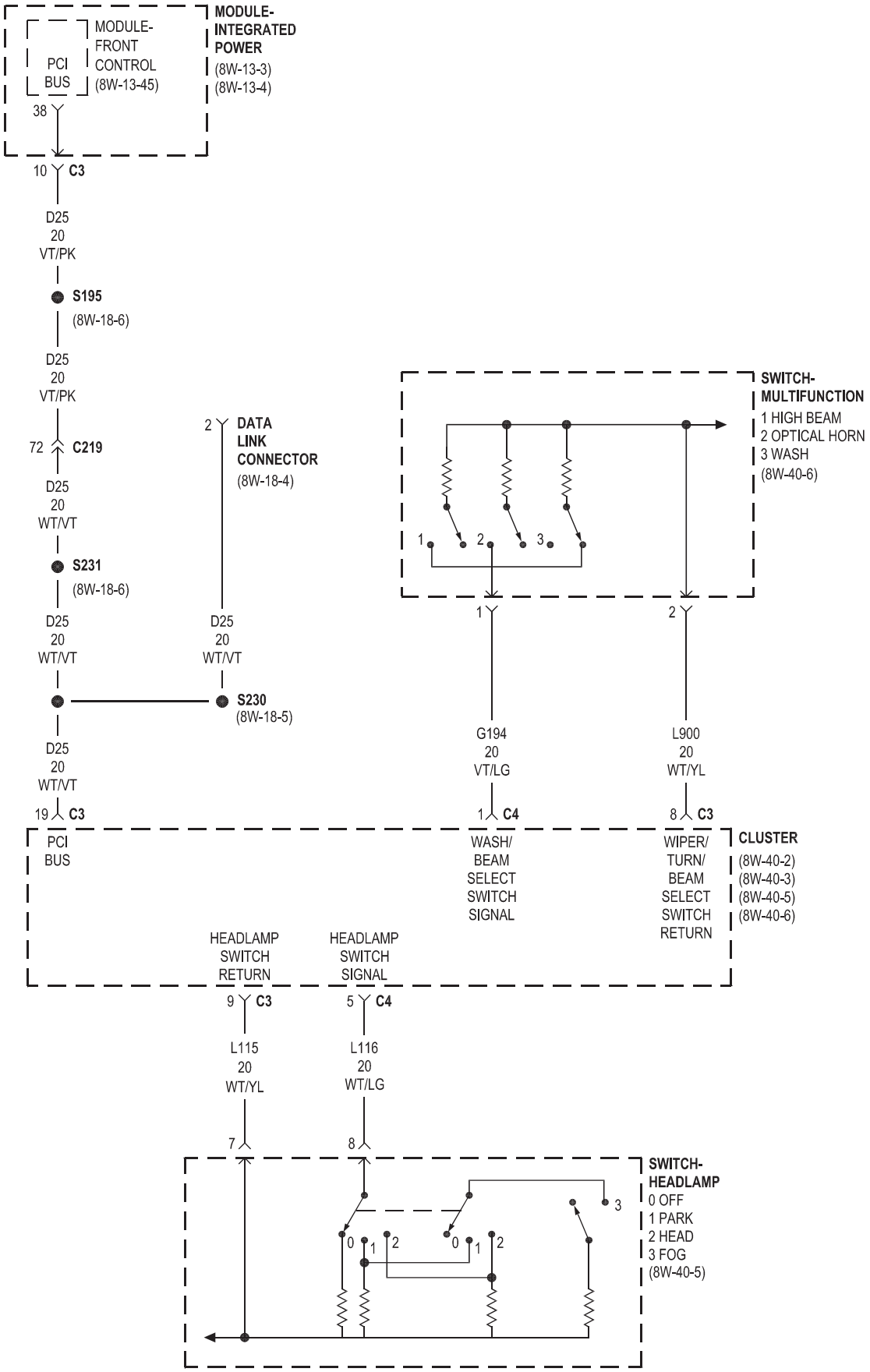
MODULE-INTEGRATED POWER
(8W-13-3)
(8W-13-4)
MODULE-FRONT CONTROL
(8W-13-45)
PCI BUS
38
10 C3
D25
20
VT/PK
S195
(8W-18-6)
D25
20
VT/PK
72 C219
D25
20
WT/VT
S231
(8W-18-6)
D25
20
WT/VT
19 C3
2 DATA LINK CONNECTOR
(8W-18-4)
D25
20
WT/VT
S230
(8W-18-5)
D25
20
WT/VT
SWITCH-MULTIFUNCTION
1 HIGH BEAM
2 OPTICAL HORN
3 WASH
(8W-40-6)
1
2
3
1
2
G194
20
VT/LG
1 C4
L900
20
WT/YL
8 C3
PCI BUS
WASH/ BEAM SELECT SWITCH SIGNAL
WIPER/ TURN/ BEAM SELECT SWITCH RETURN
CLUSTER
(8W-40-2)
(8W-40-3)
(8W-40-5)
(8W-40-6)
HEADLAMP SWITCH RETURN
HEADLAMP SWITCH SIGNAL
9 C3
5 C4
L115
20
WT/YL
L116
20
WT/LG
7
8
SWITCH-HEADLAMP
0 OFF
1 PARK
2 HEAD
3 FOG
(8W-40-5)
0
1
2
0
1
2
3

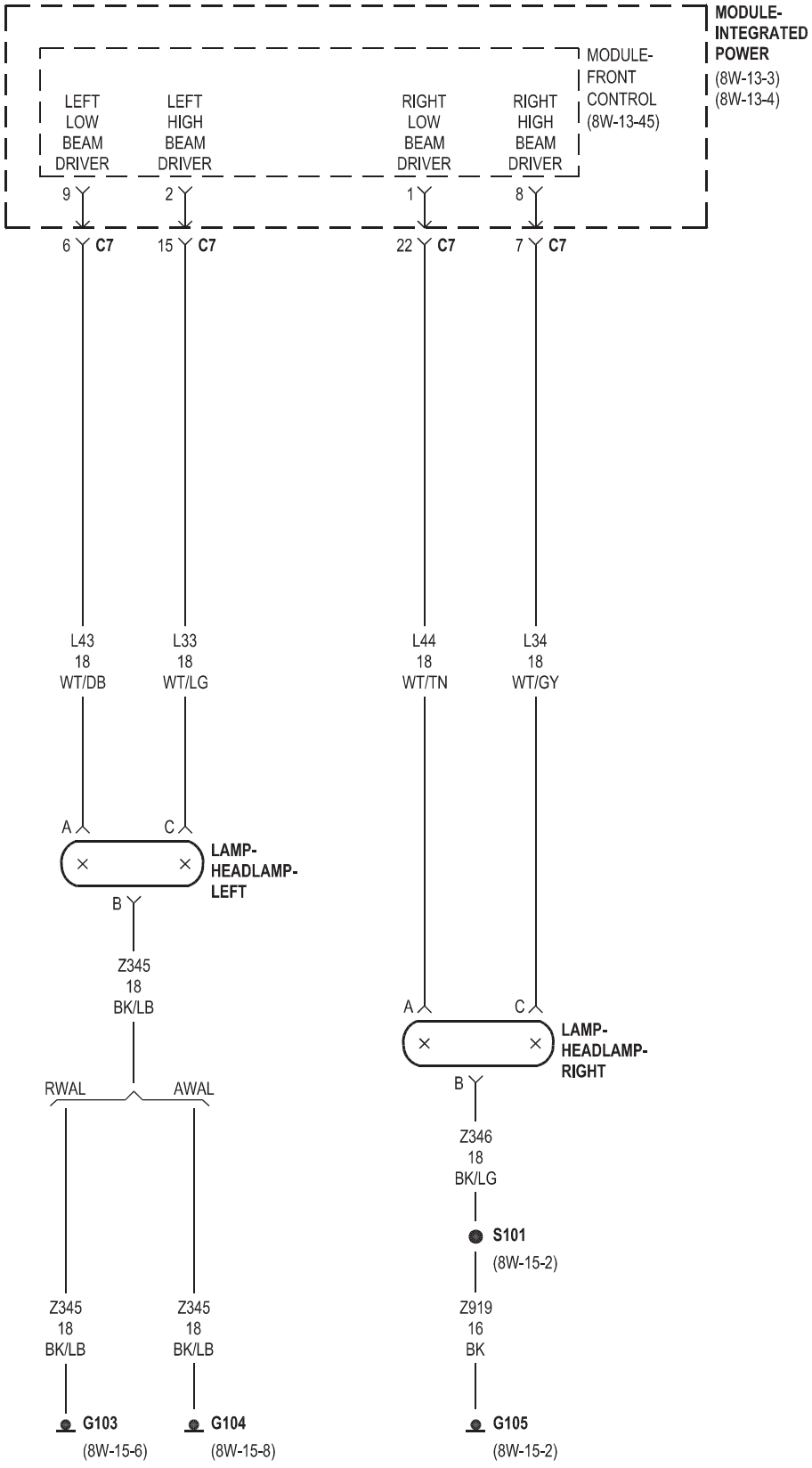
MODULE-INTEGRATED POWER
(8W-13-3)
(8W-13-4)
MODULE-FRONT CONTROL
(8W-13-45)
LEFT LOW BEAM DRIVER
LEFT HIGH BEAM DRIVER
RIGHT LOW BEAM DRIVER
RIGHT HIGH BEAM DRIVER
9
2
1
8
6 C7
15 C7
22 C7
7 C7
L43 18 WT/DB
L33 18 WT/LG
L44 18 WT/TN
L34 18 WT/GY
A
C
LAMP-HEADLAMP-LEFT
B
Z345 18 BK/LB
RWAL
AWAL
Z345 18 BK/LB
Z345 18 BK/LB
G103
(8W-15-6)
G104
(8W-15-8)
LAMP-HEADLAMP-RIGHT
Z346 18 BK/LG
S101
(8W-15-2)
Z919 16 BK
G105
(8W-15-2)

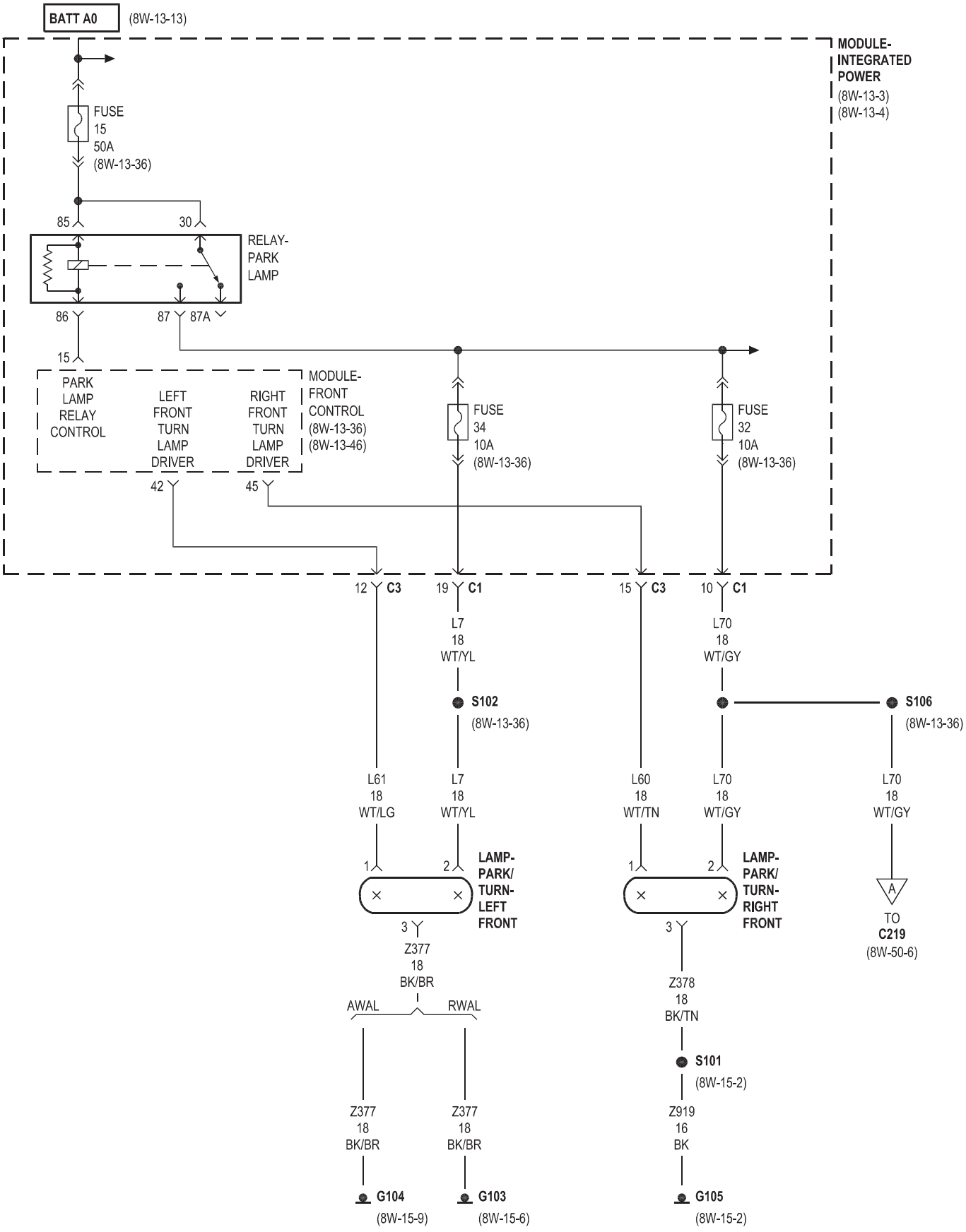
BATT A0
(8W-13-13)
MODULE-
INTEGRATED
POWER
(8W-13-3)
(8W-13-4)
FUSE
15
50A
(8W-13-36)
85
30
RELAY-
PARK
LAMP
86
87
87A
15
PARK
LAMP
RELAY
CONTROL
LEFT
FRONT
TURN
LAMP
DRIVER
RIGHT
FRONT
TURN
LAMP
DRIVER
MODULE-
FRONT
CONTROL
(8W-13-36)
(8W-13-46)
42
45
FUSE
34
10A
(8W-13-36)
FUSE
32
10A
(8W-13-36)
12 C3
19 C1
15 C3
10 C1
L7
18
WT/YL
L70
18
WT/GY
S102
(8W-13-36)
S106
(8W-13-36)
L61
18
WT/LG
L7
18
WT/YL
L60
18
WT/TN
L70
18
WT/GY
L70
18
WT/GY
1
2
LAMP-
PARK/
TURN-
LEFT
FRONT
1
2
LAMP-
PARK/
TURN-
RIGHT
FRONT
3
3
A
TO
C219
(8W-50-6)
Z377
18
BK/BR
Z378
18
BK/TN
AWAL
RWAL
S101
(8W-15-2)
Z377
18
BK/BR
Z377
18
BK/BR
Z919
16
BK
G104
(8W-15-9)
G103
(8W-15-6)
G105
(8W-15-2)

EXCEPT BASE

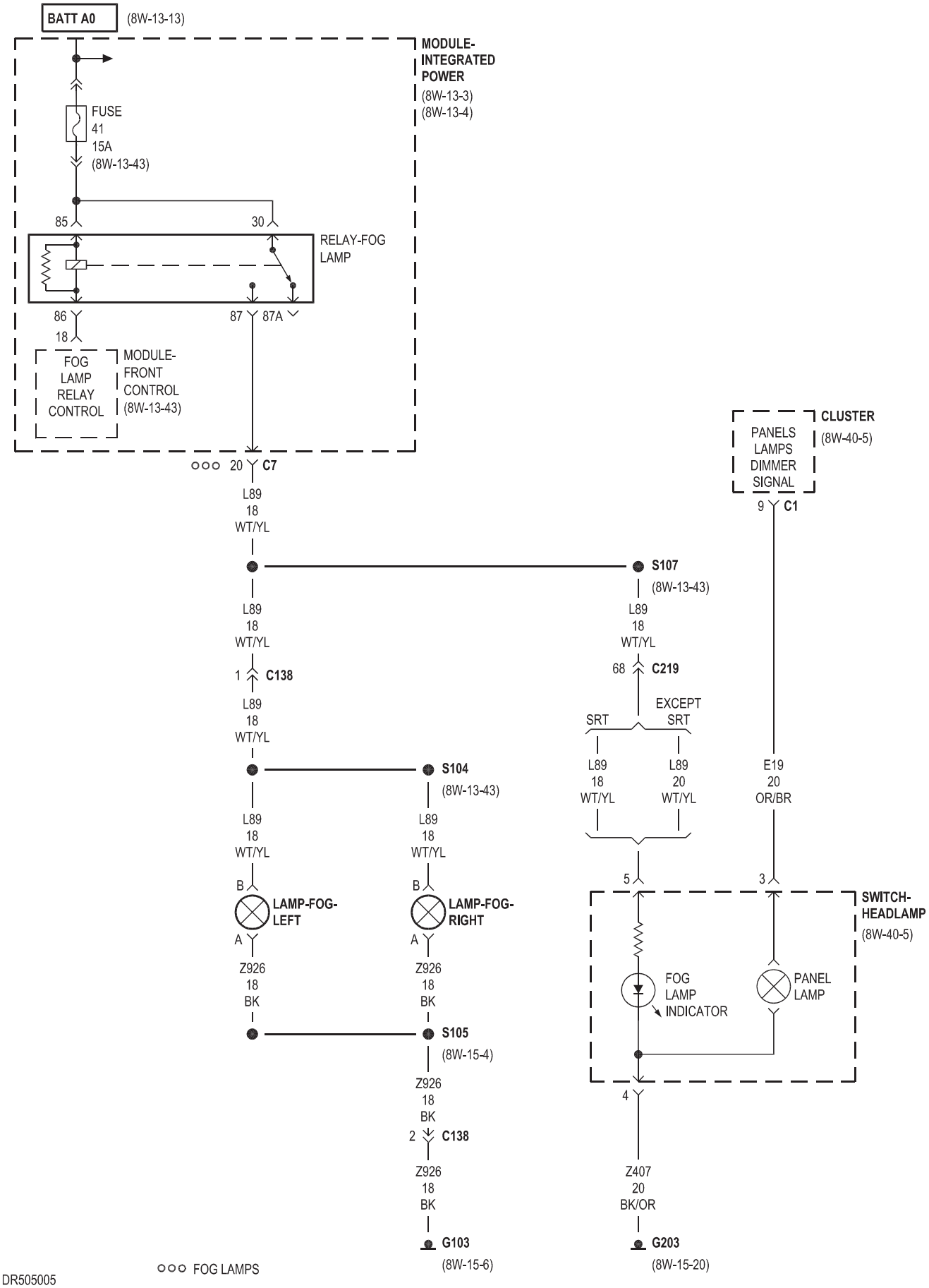
BATT A0
(8W-13-13)
MODULE-INTEGRATED POWER
(8W-13-3)
(8W-13-4)
FUSE 41 15A
(8W-13-43)
85
30
RELAY-FOG LAMP
86
87
87A
18
FOG LAMP RELAY CONTROL
MODULE-FRONT CONTROL
(8W-13-43)
20 C7
L89 18 WT/YL
S107
(8W-13-43)
CLUSTER
(8W-40-5)
PANELS LAMPS DIMMER SIGNAL
9 C1
1 C138
68 C219
EXCEPT SRT
SRT
S104
(8W-13-43)
E19 20 OR/BR
B
LAMP-FOG-LEFT
LAMP-FOG-RIGHT
A
Z926 18 BK
5
3
SWITCH-HEADLAMP
(8W-40-5)
FOG LAMP INDICATOR
PANEL LAMP
S105
(8W-15-4)
4
2 C138
Z407 20 BK/OR
G103
(8W-15-6)
G203
(8W-15-20)
FOG LAMPS

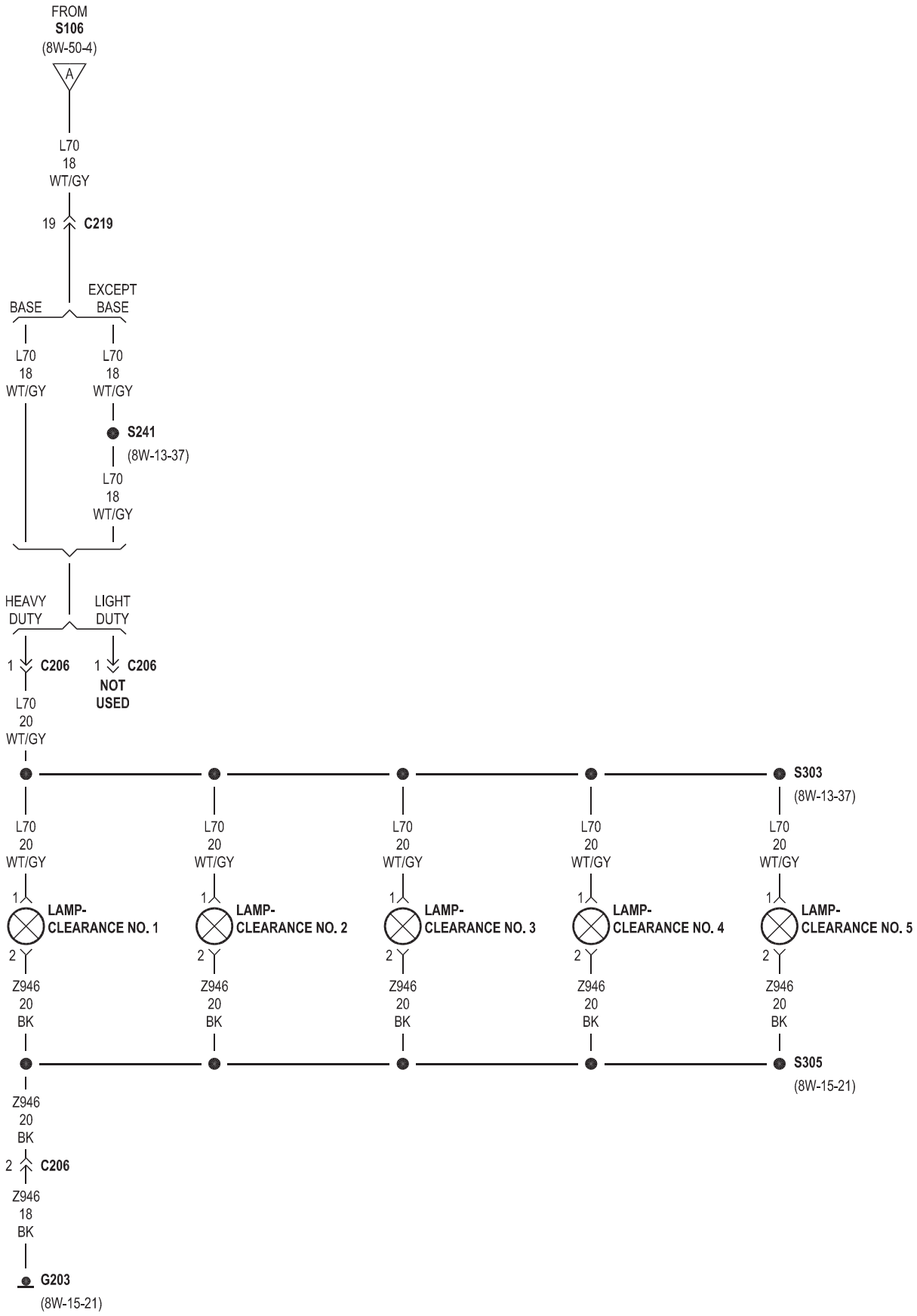
FROM
S106
(8W-50-4)
A
L70
18
WT/GY
19 C219
BASE
EXCEPT BASE
L70
18
WT/GY
L70
18
WT/GY
S241
(8W-13-37)
L70
18
WT/GY
HEAVY DUTY
LIGHT DUTY
1 C206
1 C206
NOT USED
L70
20
WT/GY
S303
(8W-13-37)
L70
20
WT/GY
1
LAMP-
CLEARANCE NO. 1
2
Z946
20
BK
LAMP-
CLEARANCE NO. 2
LAMP-
CLEARANCE NO. 3
LAMP-
CLEARANCE NO. 4
LAMP-
CLEARANCE NO. 5
S305
(8W-15-21)
Z946
20
BK
2 C206
Z946
18
BK
G203
(8W-15-21)

8W-51 REAR LIGHTING

Component	Page
Assembly-Transmission Solenoid/TRS	8W-51-5
Cluster	8W-51-7
Fuse 15	8W-51-2, 3, 7
Fuse 24	8W-51-7
Fuse 32	8W-51-3
Fuse 33	8W-51-7
Fuse 34	8W-51-2
Fuse 38	8W-51-3
G103	8W-51-2, 4, 5, 6
G104	8W-51-2, 4, 5, 6
G203	8W-51-7
Lamp-Bar-Tailgate	8W-51-2, 4
Lamp-Chmsl-Aftermarket	8W-51-7
Lamp-Fender-Front Left	8W-51-4
Lamp-Fender-Front Right	8W-51-4
Lamp-Fender-Rear Left	8W-51-4
Lamp-Fender-Rear Right	8W-51-4
Lamp-High Mounted Stop	8W-51-7
Lamp-License-Left	8W-51-2
Lamp-License-Right	8W-51-2
Lamp-Park/Turn-Left Front	8W-51-2
Lamp-Park/Turn-Right Front	8W-51-3
Lamp-Tail Stop/Turn-Left	8W-51-2, 5
Lamp-Tail Stop/Turn-Right	8W-51-3, 5, 6
Module-Front Control	8W-51-2, 3, 5, 6, 7
Module-Integrated Power	8W-51-2, 3, 5, 6, 7
Relay-Park Lamp	8W-51-2, 3, 7
Sensor-Transmission Range	8W-51-5
Switch-Back Up Lamp	8W-51-3, 5
Switch-Stop Lamp	8W-51-7
Wiring-Trailer Tow 4-Way	8W-51-7
Wiring-Trailer Tow 7-Way	8W-51-5, 7

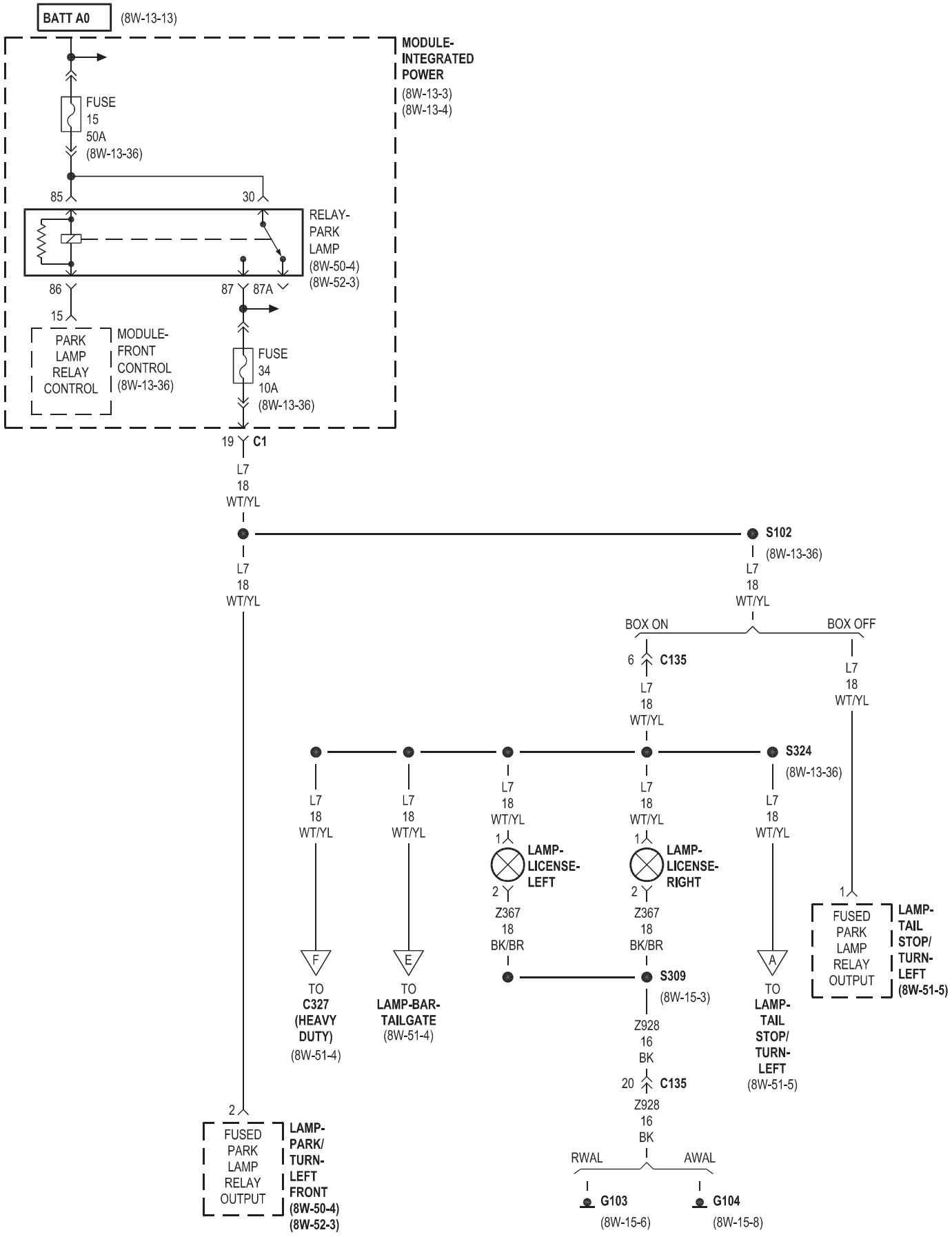
BATT A0
(8W-13-13)
MODULE-
INTEGRATED
POWER
(8W-13-3)
(8W-13-4)
FUSE
15
50A
(8W-13-36)
85
30
RELAY-
PARK
LAMP
(8W-50-4)
(8W-52-3)
86
87
87A
15
PARK
LAMP
RELAY
CONTROL
MODULE-
FRONT
CONTROL
(8W-13-36)
FUSE
34
10A
(8W-13-36)
19
C1
L7
18
WT/YL
S102
(8W-13-36)
BOX ON
BOX OFF
6
C135
S324
(8W-13-36)
1
LAMP-
LICENSE-
LEFT
2
Z367
18
BK/BR
LAMP-
LICENSE-
RIGHT
S309
(8W-15-3)
Z928
16
BK
20
C135
RWAL
AWAL
G103
(8W-15-6)
G104
(8W-15-8)
F
TO
C327
(HEAVY
DUTY)
(8W-51-4)
E
TO
LAMP-BAR-
TAILGATE
(8W-51-4)
A
TO
LAMP-
TAIL
STOP/
TURN-
LEFT
(8W-51-5)
FUSED
PARK
LAMP
RELAY
OUTPUT
LAMP-
TAIL
STOP/
TURN-
LEFT
(8W-51-5)
2
FUSED
PARK
LAMP
RELAY
OUTPUT
LAMP-
PARK/
TURN-
LEFT
FRONT
(8W-50-4)
(8W-52-3)

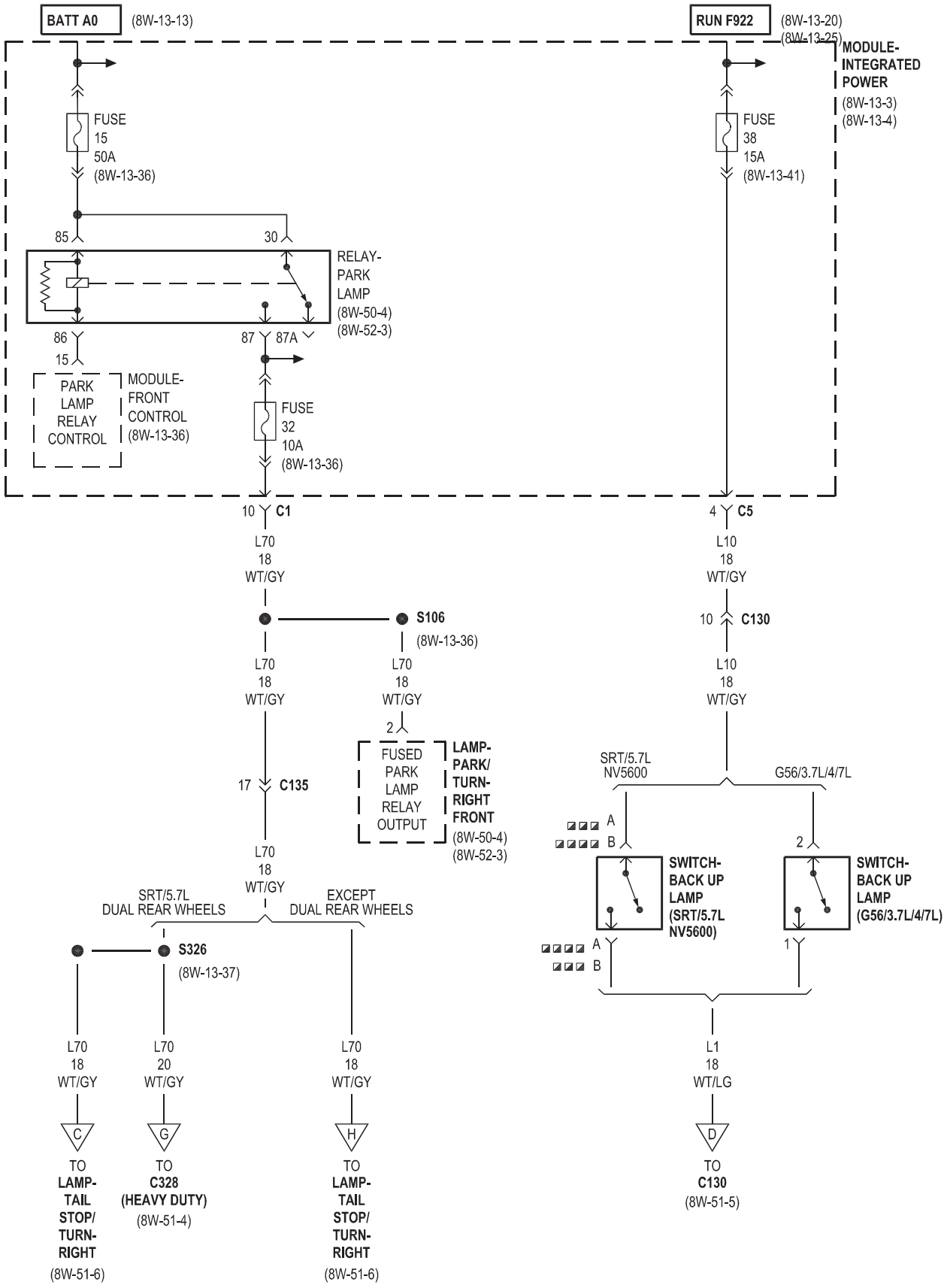
BATT A0
(8W-13-13)
RUN F922
(8W-13-20)
(8W-13-25)
MODULE-INTEGRATED POWER
(8W-13-3)
(8W-13-4)
FUSE 15 50A (8W-13-36)
FUSE 38 15A (8W-13-41)
85
30
RELAY-PARK LAMP
(8W-50-4)
(8W-52-3)
86
87
87A
15
PARK LAMP RELAY CONTROL
MODULE-FRONT CONTROL
(8W-13-36)
FUSE 32 10A (8W-13-36)
10 C1
4 C5
L70 18 WT/GY
L10 18 WT/GY
S106
(8W-13-36)
10 C130
2
FUSED PARK LAMP RELAY OUTPUT
LAMP-PARK/TURN-RIGHT FRONT
(8W-50-4)
(8W-52-3)
17 C135
SRT/5.7L NV5600
G56/3.7L/4/7L
A
B
SWITCH-BACK UP LAMP (SRT/5.7L NV5600)
SWITCH-BACK UP LAMP (G56/3.7L/4/7L)
SRT/5.7L DUAL REAR WHEELS
EXCEPT DUAL REAR WHEELS
S326
(8W-13-37)
L70 18 WT/GY
L70 20 WT/GY
L1 18 WT/LG
C
G
H
D
TO LAMP-TAIL STOP/TURN-RIGHT (8W-51-6)
TO C328 (HEAVY DUTY) (8W-51-4)
TO LAMP-TAIL STOP/TURN-RIGHT (8W-51-6)
TO C130 (8W-51-5)
SRT
EXCEPT SRT

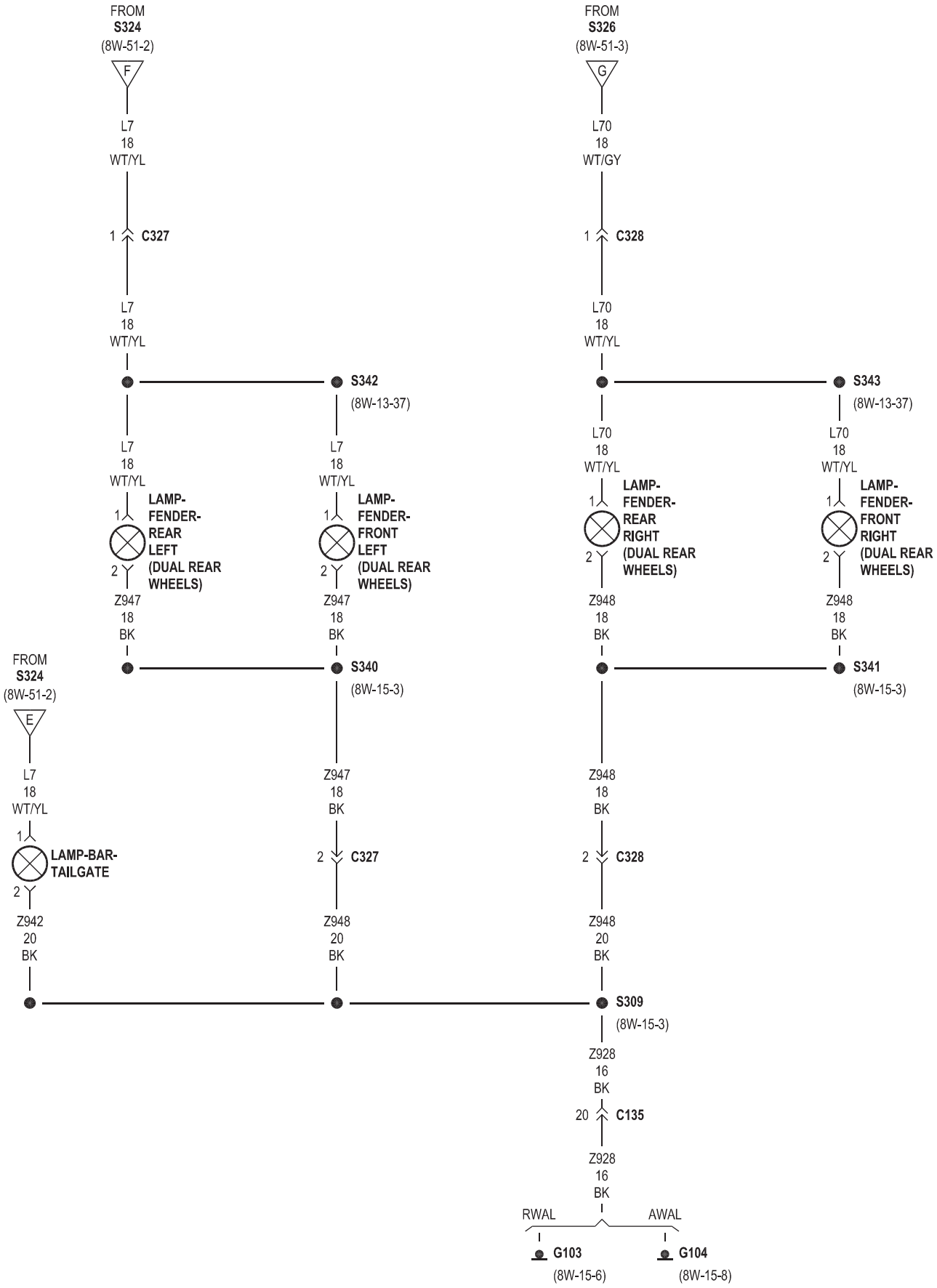
FROM
S324
(8W-51-2)
F
L7
18
WT/YL
1
C327
L7
18
WT/YL
S342
(8W-13-37)
L7
18
WT/YL
1
LAMP-
FENDER-
REAR
LEFT
(DUAL REAR
WHEELS)
2
Z947
18
BK
L7
18
WT/YL
1
LAMP-
FENDER-
FRONT
LEFT
(DUAL REAR
WHEELS)
2
Z947
18
BK
S340
(8W-15-3)
FROM
S324
(8W-51-2)
E
L7
18
WT/YL
1
LAMP-BAR-
TAILGATE
2
Z942
20
BK
Z947
18
BK
2
C327
Z948
20
BK
FROM
S326
(8W-51-3)
G
L70
18
WT/GY
1
C328
L70
18
WT/YL
S343
(8W-13-37)
L70
18
WT/YL
1
LAMP-
FENDER-
REAR
RIGHT
(DUAL REAR
WHEELS)
2
Z948
18
BK
L70
18
WT/YL
1
LAMP-
FENDER-
FRONT
RIGHT
(DUAL REAR
WHEELS)
2
Z948
18
BK
S341
(8W-15-3)
Z948
18
BK
2
C328
Z948
20
BK
S309
(8W-15-3)
Z928
16
BK
20
C135
Z928
16
BK
RWAL
AWAL
G103
(8W-15-6)
G104
(8W-15-8)

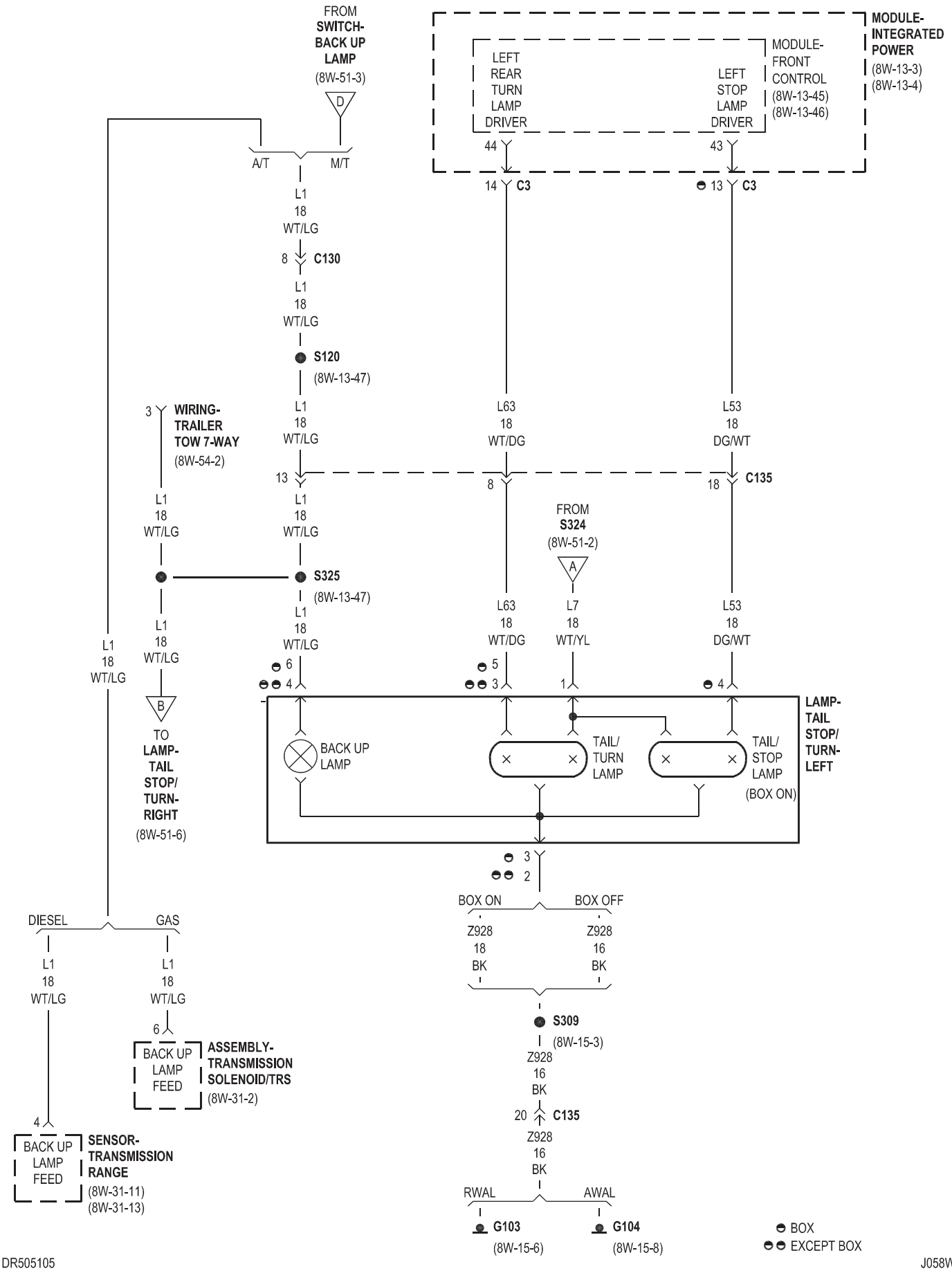
FROM SWITCH-BACK UP LAMP (8W-51-3)
D
A/T
M/T
MODULE-INTEGRATED POWER (8W-13-3) (8W-13-4)
MODULE-FRONT CONTROL (8W-13-45) (8W-13-46)
LEFT REAR TURN LAMP DRIVER
LEFT STOP LAMP DRIVER
44
43
14 C3
13 C3
L1 18 WT/LG
8 C130
S120 (8W-13-47)
3 WIRING-TRAILER TOW 7-WAY (8W-54-2)
L63 18 WT/DG
L53 18 DG/WT
13
8
18 C135
FROM S324 (8W-51-2)
A
L7 18 WT/YL
S325 (8W-13-47)
B
TO LAMP-TAIL STOP/TURN-RIGHT (8W-51-6)
6
5
4
3
1
BACK UP LAMP
TAIL/TURN LAMP
TAIL/STOP LAMP
(BOX ON)
LAMP-TAIL STOP/TURN-LEFT
BOX ON
BOX OFF
Z928 18 BK
Z928 16 BK
S309 (8W-15-3)
20 C135
DIESEL
GAS
BACK UP LAMP FEED
ASSEMBLY-TRANSMISSION SOLENOID/TRS (8W-31-2)
SENSOR-TRANSMISSION RANGE (8W-31-11) (8W-31-13)
RWAL
AWAL
G103 (8W-15-6)
G104 (8W-15-8)
BOX
EXCEPT BOX

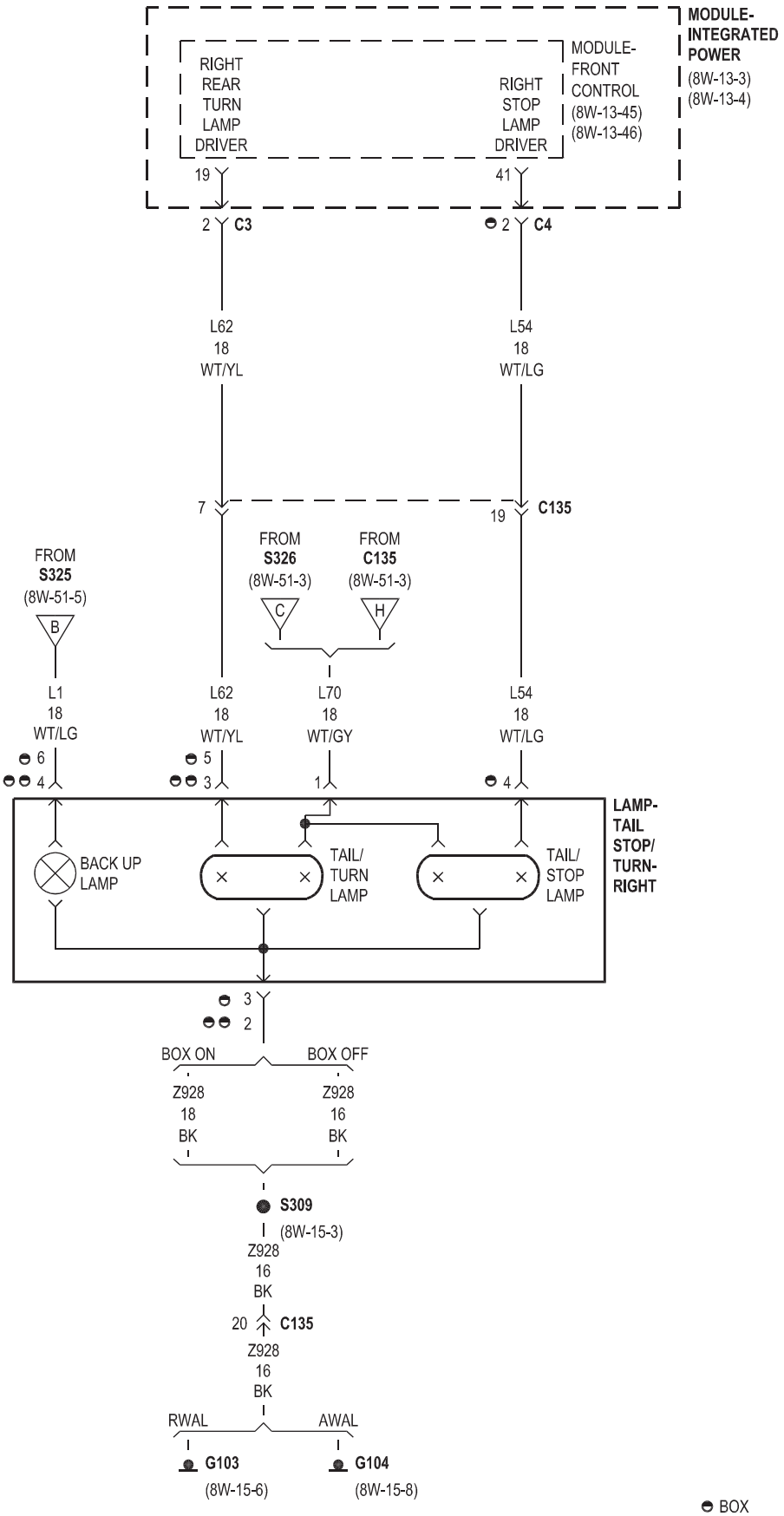
MODULE-
INTEGRATED
POWER
(8W-13-3)
(8W-13-4)
MODULE-
FRONT
CONTROL
(8W-13-45)
(8W-13-46)
RIGHT
REAR
TURN
LAMP
DRIVER
RIGHT
STOP
LAMP
DRIVER
19
41
2
C3
2
C4
L62
18
WT/YL
L54
18
WT/LG
7
19
C135
FROM
S325
(8W-51-5)
B
FROM
S326
(8W-51-3)
C
FROM
C135
(8W-51-3)
H
L1
18
WT/LG
L62
18
WT/YL
L70
18
WT/GY
L54
18
WT/LG
6
4
5
3
1
4
LAMP-
TAIL
STOP/
TURN-
RIGHT
BACK UP
LAMP
TAIL/
TURN
LAMP
TAIL/
STOP
LAMP
3
2
BOX ON
BOX OFF
Z928
18
BK
Z928
16
BK
S309
(8W-15-3)
Z928
16
BK
20
C135
Z928
16
BK
RWAL
AWAL
G103
(8W-15-6)
G104
(8W-15-8)
BOX
EXCEPT BOX

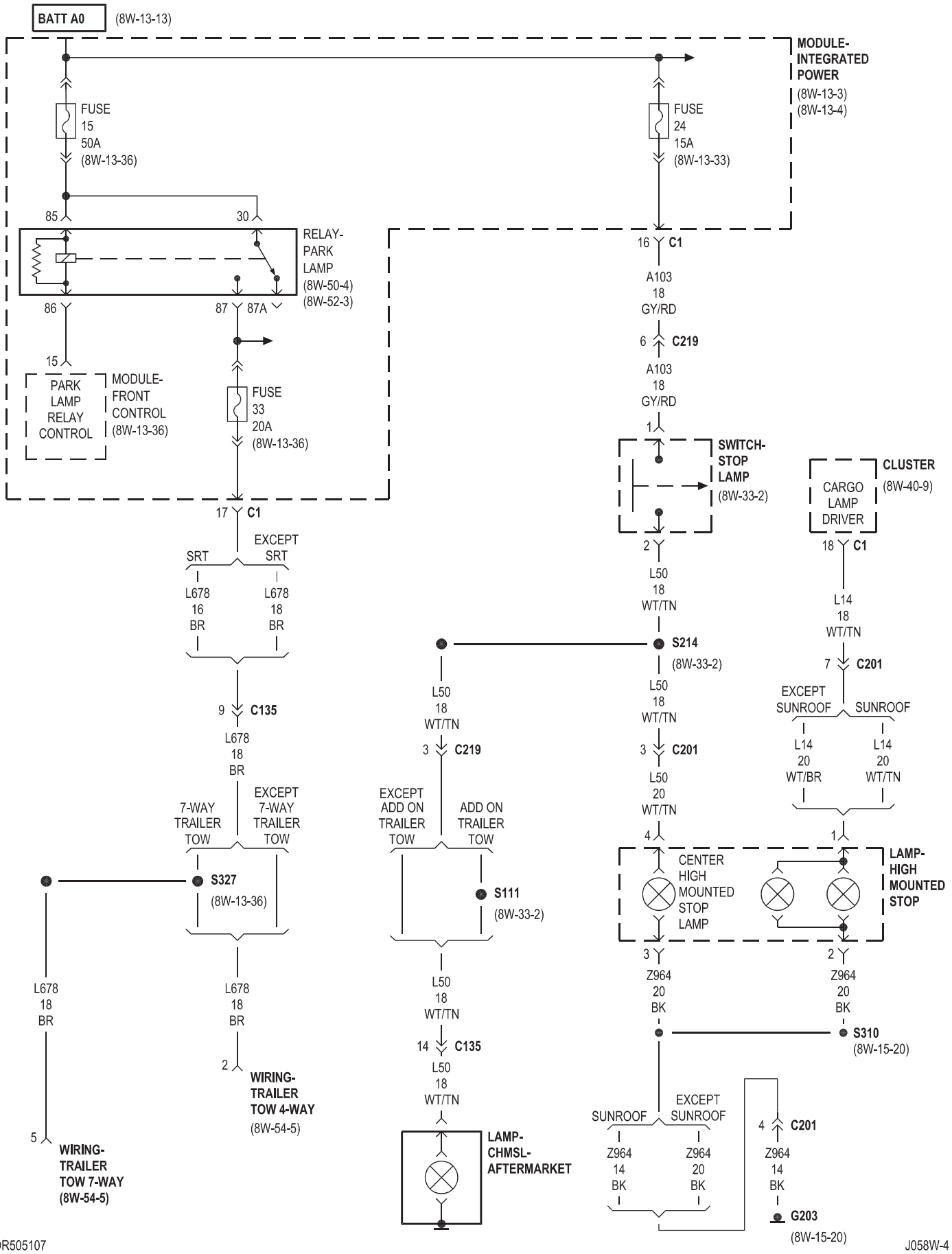

DR505107

J058W-4

8W-52 TURN SIGNALS

Component	Page
Cluster	8W-52-2
Data Link Connector	8W-52-2
Fuse 15	8W-52-3
Fuse 32	8W-52-3
Fuse 34	8W-52-3
Fuse 46	8W-52-6
Fuse 47	8W-52-6
G103	8W-52-3, 4, 5
G104	8W-52-3, 4, 5
G105	8W-52-3
Lamp-Park/Turn-Left Front	8W-52-3
Lamp-Park/Turn-Right Front	8W-52-3
Lamp-Tail Stop/Turn-Left	8W-52-3, 4
Lamp-Tail Stop/Turn-Right	8W-52-3, 5
Module-Front Control	8W-52-2, 3, 4, 5, 6
Module-Integrated Power	8W-52-2, 3, 4, 5, 6
Relay-Park Lamp	8W-52-3
Relay-Trailer Tow-Left Turn	8W-52-6
Relay-Trailer Tow-Right Turn	8W-52-6
Switch-Multifunction	8W-52-2
Tail/Stop Lamp	8W-52-4, 5
Tail/Turn Lamp	8W-52-4, 5
Wiring-Trailer Tow 4-Way	8W-52-6
Wiring-Trailer Tow 7-Way	8W-52-6

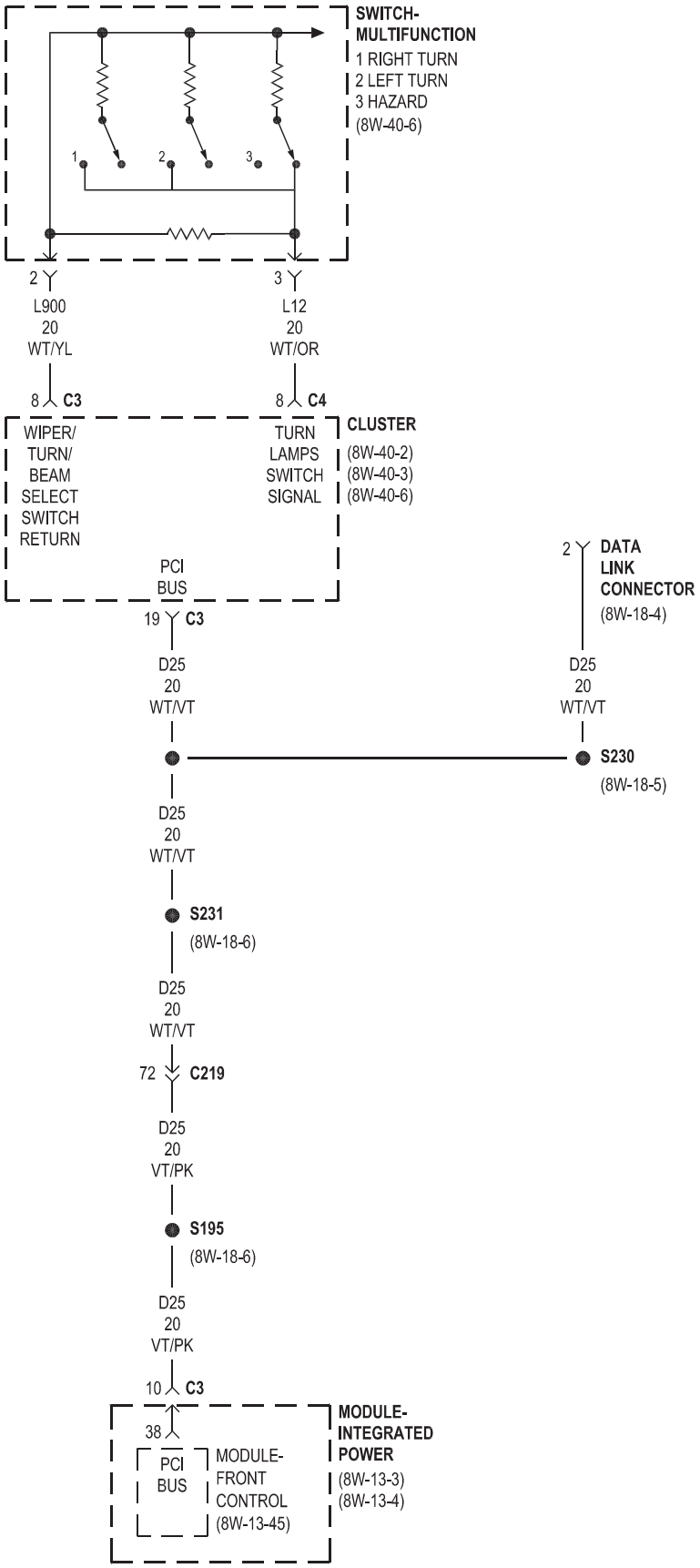
SWITCH-
MULTIFUNCTION
1 RIGHT TURN
2 LEFT TURN
3 HAZARD
(8W-40-6)
1
2
3
2
L900
20
WT/YL
3
L12
20
WT/OR
8 C3
8 C4
WIPER/
TURN/
BEAM
SELECT
SWITCH
RETURN
TURN
LAMPS
SWITCH
SIGNAL
CLUSTER
(8W-40-2)
(8W-40-3)
(8W-40-6)
PCI
BUS
19 C3
D25
20
WT/VT
2
DATA
LINK
CONNECTOR
(8W-18-4)
D25
20
WT/VT
S230
(8W-18-5)
D25
20
WT/VT
S231
(8W-18-6)
D25
20
WT/VT
72 C219
D25
20
VT/PK
S195
(8W-18-6)
D25
20
VT/PK
10 C3
38
PCI
BUS
MODULE-
FRONT
CONTROL
(8W-13-45)
MODULE-
INTEGRATED
POWER
(8W-13-3)
(8W-13-4)

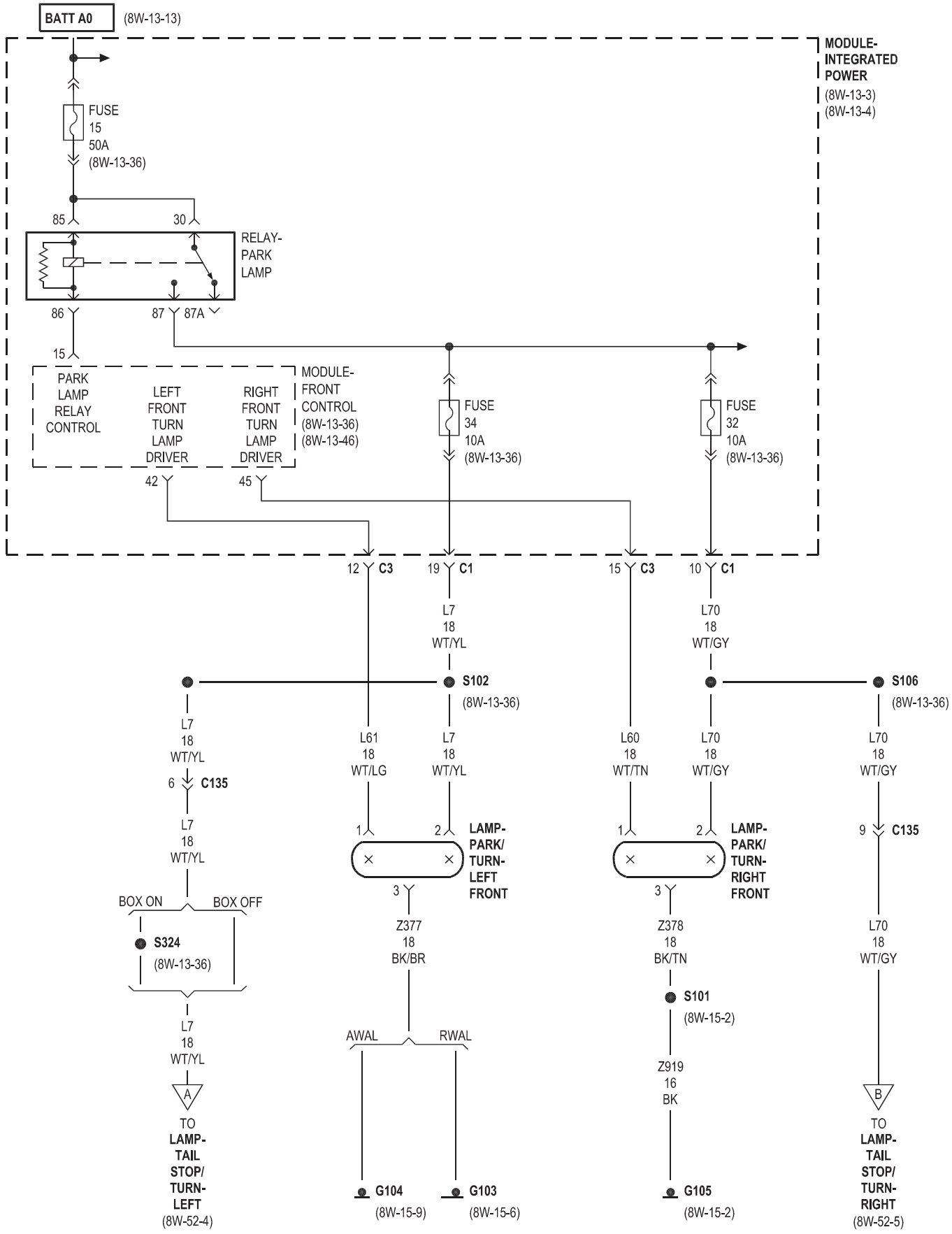
BATT A0
(8W-13-13)
MODULE-
INTEGRATED
POWER
(8W-13-3)
(8W-13-4)
FUSE
15
50A
(8W-13-36)
85
30
RELAY-
PARK
LAMP
86
87
87A
15
PARK
LAMP
RELAY
CONTROL
LEFT
FRONT
TURN
LAMP
DRIVER
RIGHT
FRONT
TURN
LAMP
DRIVER
MODULE-
FRONT
CONTROL
(8W-13-36)
(8W-13-46)
42
45
FUSE
34
10A
(8W-13-36)
FUSE
32
10A
(8W-13-36)
12 C3
19 C1
15 C3
10 C1
L7
18
WT/YL
L70
18
WT/GY
S102
(8W-13-36)
S106
(8W-13-36)
L7
18
WT/YL
6 C135
L7
18
WT/YL
BOX ON
BOX OFF
S324
(8W-13-36)
L7
18
WT/YL
A
TO
LAMP-
TAIL
STOP/
TURN-
LEFT
(8W-52-4)
L61
18
WT/LG
L7
18
WT/YL
1
2
3
LAMP-
PARK/
TURN-
LEFT
FRONT
Z377
18
BK/BR
AWAL
RWAL
G104
(8W-15-9)
G103
(8W-15-6)
L60
18
WT/TN
L70
18
WT/GY
1
2
3
LAMP-
PARK/
TURN-
RIGHT
FRONT
Z378
18
BK/TN
S101
(8W-15-2)
Z919
16
BK
G105
(8W-15-2)
L70
18
WT/GY
9 C135
L70
18
WT/GY
B
TO
LAMP-
TAIL
STOP/
TURN-
RIGHT
(8W-52-5)

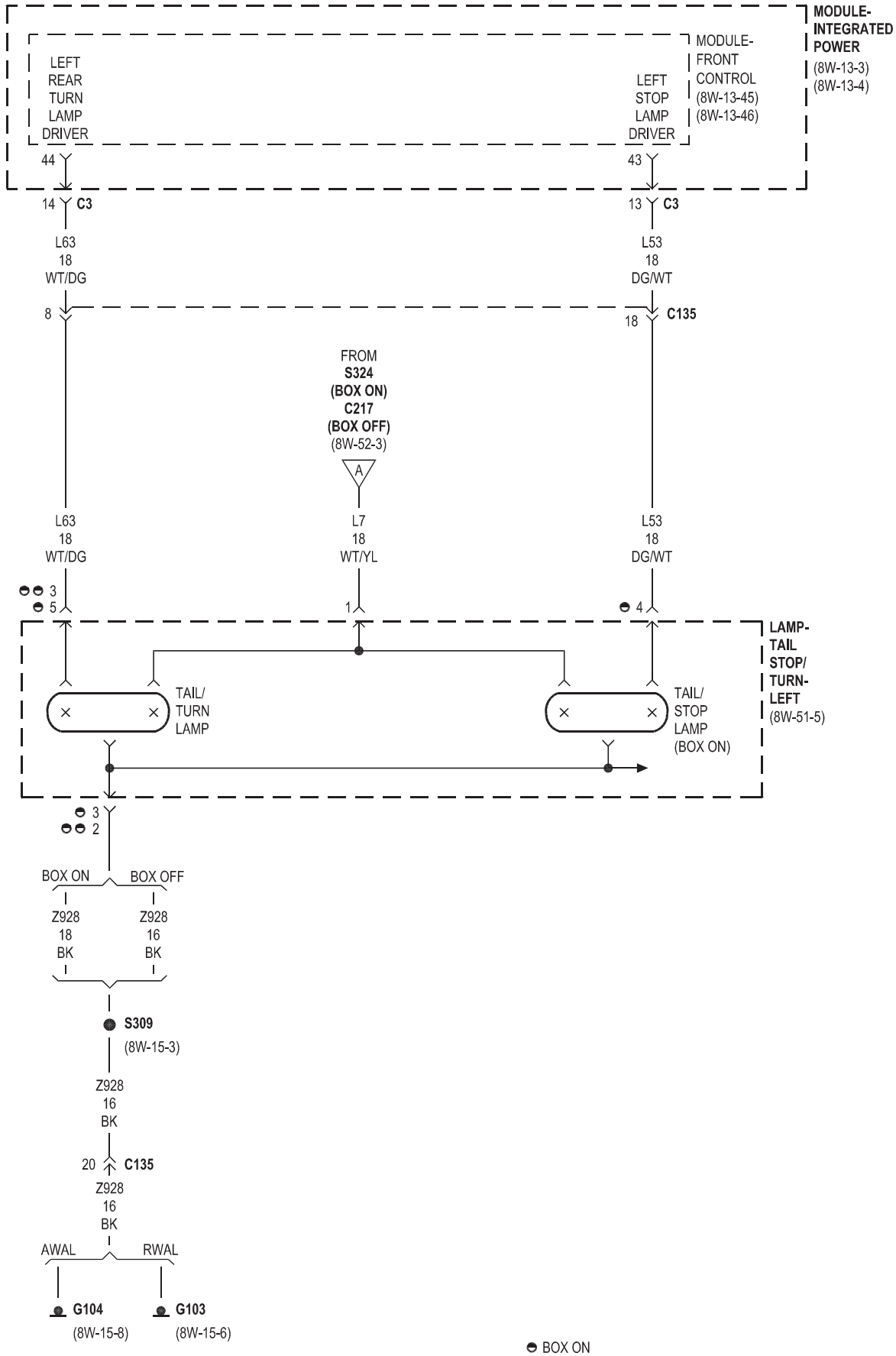
MODULE-INTEGRATED POWER
(8W-13-3)
(8W-13-4)
MODULE-FRONT CONTROL
(8W-13-45)
(8W-13-46)
LEFT REAR TURN LAMP DRIVER
LEFT STOP LAMP DRIVER
44
43
14 C3
13 C3
L63 18 WT/DG
L53 18 DG/WT
8
18 C135
FROM S324 (BOX ON) C217 (BOX OFF)
(8W-52-3)
A
L63 18 WT/DG
L7 18 WT/YL
L53 18 DG/WT
3
5
1
4
LAMP-TAIL STOP/ TURN-LEFT
(8W-51-5)
TAIL/ TURN LAMP
TAIL/ STOP LAMP (BOX ON)
3
2
BOX ON
BOX OFF
Z928 18 BK
Z928 16 BK
S309
(8W-15-3)
Z928 16 BK
20 C135
Z928 16 BK
AWAL
RWAL
G104
(8W-15-8)
G103
(8W-15-6)
BOX ON
BOX OFF

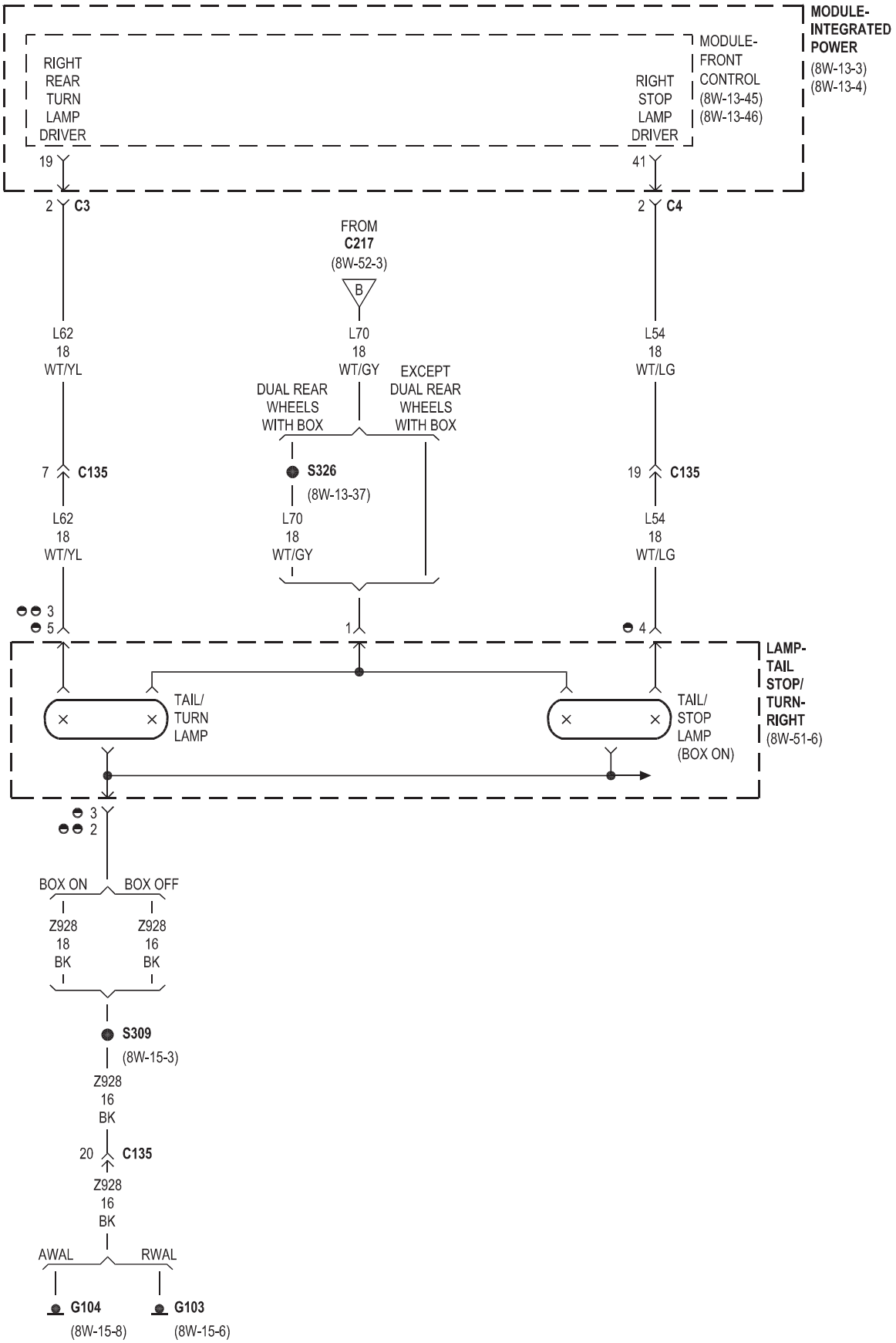
MODULE-INTEGRATED POWER
(8W-13-3)
(8W-13-4)
MODULE-FRONT CONTROL
(8W-13-45)
(8W-13-46)
RIGHT REAR TURN LAMP DRIVER
RIGHT STOP LAMP DRIVER
19
41
2 C3
2 C4
FROM C217
(8W-52-3)
B
L62 18 WT/YL
L70 18 WT/GY
L54 18 WT/LG
DUAL REAR WHEELS WITH BOX
EXCEPT DUAL REAR WHEELS WITH BOX
7 C135
S326
(8W-13-37)
19 C135
L62 18 WT/YL
L70 18 WT/GY
L54 18 WT/LG
3
5
1
4
LAMP-TAIL STOP/ TURN-RIGHT
(8W-51-6)
TAIL/ TURN LAMP
TAIL/ STOP LAMP (BOX ON)
3
2
BOX ON
BOX OFF
Z928 18 BK
Z928 16 BK
S309
(8W-15-3)
Z928 16 BK
20 C135
Z928 16 BK
AWAL
RWAL
G104
(8W-15-8)
G103
(8W-15-6)
BOX ON
BOX OFF

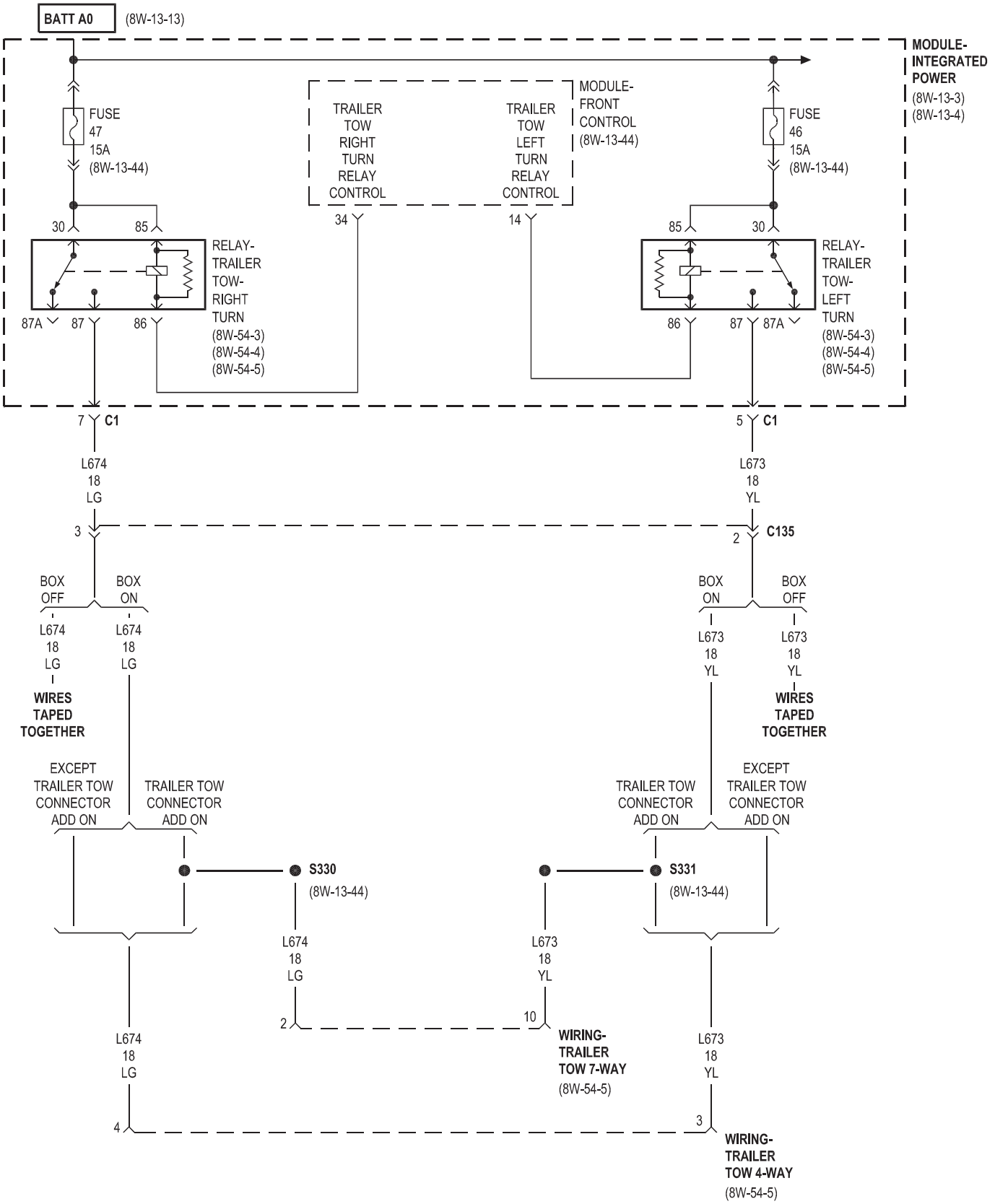
BATT A0
(8W-13-13)
MODULE-
INTEGRATED
POWER
(8W-13-3)
(8W-13-4)
FUSE
47
15A
(8W-13-44)
TRAILER
TOW
RIGHT
TURN
RELAY
CONTROL
34
MODULE-
FRONT
CONTROL
(8W-13-44)
TRAILER
TOW
LEFT
TURN
RELAY
CONTROL
14
FUSE
46
15A
(8W-13-44)
30
85
87A
87
86
RELAY-
TRAILER
TOW-
RIGHT
TURN
(8W-54-3)
(8W-54-4)
(8W-54-5)
85
30
86
87
87A
RELAY-
TRAILER
TOW-
LEFT
TURN
(8W-54-3)
(8W-54-4)
(8W-54-5)
7
C1
5
C1
L674
18
LG
L673
18
YL
3
2
C135
BOX
OFF
BOX
ON
BOX
ON
BOX
OFF
L674
18
LG
L674
18
LG
L673
18
YL
L673
18
YL
WIRES
TAPED
TOGETHER
WIRES
TAPED
TOGETHER
EXCEPT
TRAILER TOW
CONNECTOR
ADD ON
TRAILER TOW
CONNECTOR
ADD ON
TRAILER TOW
CONNECTOR
ADD ON
EXCEPT
TRAILER TOW
CONNECTOR
ADD ON
S330
(8W-13-44)
S331
(8W-13-44)
L674
18
LG
L673
18
YL
2
10
WIRING-
TRAILER
TOW 7-WAY
(8W-54-5)
L674
18
LG
L673
18
YL
4
3
WIRING-
TRAILER
TOW 4-WAY
(8W-54-5)

8W-53 WIPERS

Component	Page
Cluster	8W-53-2
Data Link Connector	8W-53-2
Fuse 8	8W-53-3
G104	8W-53-3, 4
G105	8W-53-4
G106	8W-53-3, 4
Module-Front Control	8W-53-2, 3, 4
Module-Integrated Power	8W-53-2, 3, 4
Motor-Windshield Wiper	8W-53-3, 4
Pump-Washer-Windshield	8W-53-4
Relay-Wiper High/Low	8W-53-3, 4
Relay-Wiper On/Off	8W-53-3
Sensor-Washer Fluid Level	8W-53-4
Switch-Multifunction	8W-53-2

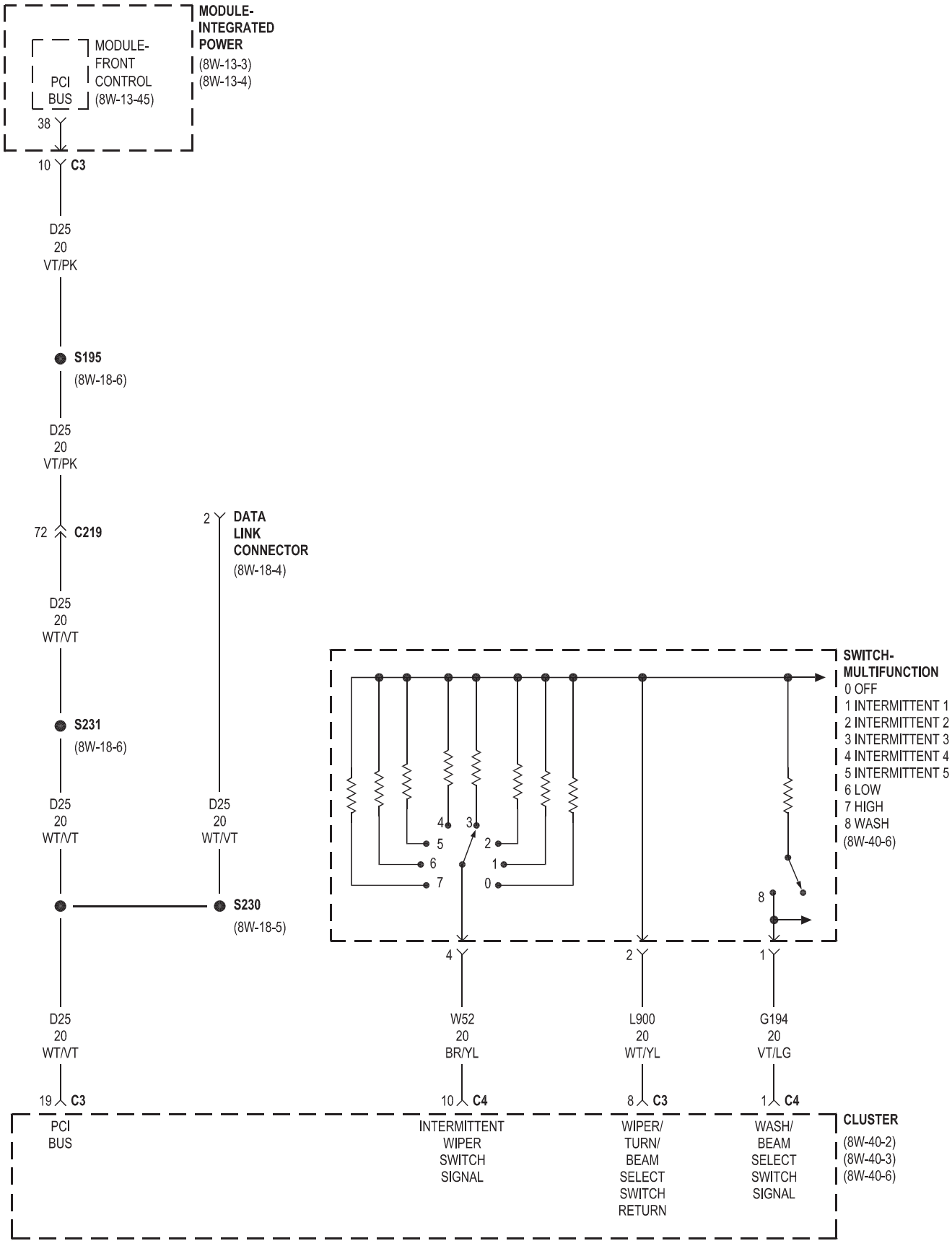
MODULE-
INTEGRATED
POWER
(8W-13-3)
(8W-13-4)
MODULE-
FRONT
CONTROL
(8W-13-45)
PCI
BUS
38
10 C3
D25
20
VT/PK
S195
(8W-18-6)
D25
20
VT/PK
72 C219
D25
20
WT/VT
S231
(8W-18-6)
D25
20
WT/VT
2 DATA
LINK
CONNECTOR
(8W-18-4)
D25
20
WT/VT
S230
(8W-18-5)
SWITCH-
MULTIFUNCTION
0 OFF
1 INTERMITTENT 1
2 INTERMITTENT 2
3 INTERMITTENT 3
4 INTERMITTENT 4
5 INTERMITTENT 5
6 LOW
7 HIGH
8 WASH
(8W-40-6)
4
2
1
W52
20
BR/YL
L900
20
WT/YL
G194
20
VT/LG
D25
20
WT/VT
19 C3
10 C4
8 C3
1 C4
PCI
BUS
INTERMITTENT
WIPER
SWITCH
SIGNAL
WIPER/
TURN/
BEAM
SELECT
SWITCH
RETURN
WASH/
BEAM
SELECT
SWITCH
SIGNAL
CLUSTER
(8W-40-2)
(8W-40-3)
(8W-40-6)

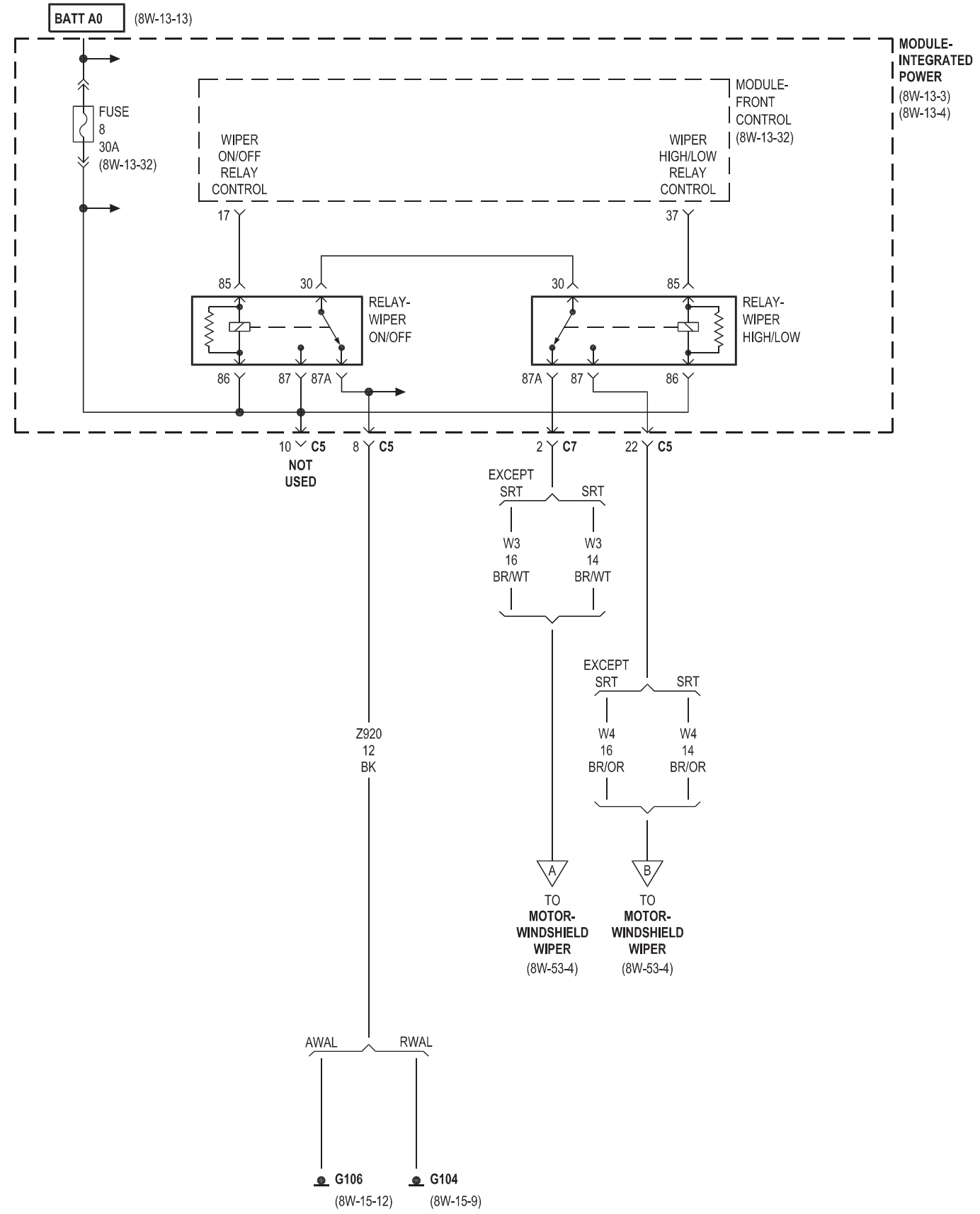
BATT A0
(8W-13-13)
MODULE-
INTEGRATED
POWER
(8W-13-3)
(8W-13-4)
FUSE
8
30A
(8W-13-32)
MODULE-
FRONT
CONTROL
(8W-13-32)
WIPER
ON/OFF
RELAY
CONTROL
WIPER
HIGH/LOW
RELAY
CONTROL
17
37
85
30
30
85
RELAY-
WIPER
ON/OFF
RELAY-
WIPER
HIGH/LOW
86
87
87A
87A
87
86
10 C5
NOT
USED
8 C5
2 C7
22 C5
EXCEPT
SRT
SRT
W3
16
BR/WT
W3
14
BR/WT
EXCEPT
SRT
SRT
W4
16
BR/OR
W4
14
BR/OR
Z920
12
BK
A
B
TO
MOTOR-
WINDSHIELD
WIPER
(8W-53-4)
TO
MOTOR-
WINDSHIELD
WIPER
(8W-53-4)
AWAL
RWAL
G106
(8W-15-12)
G104
(8W-15-9)

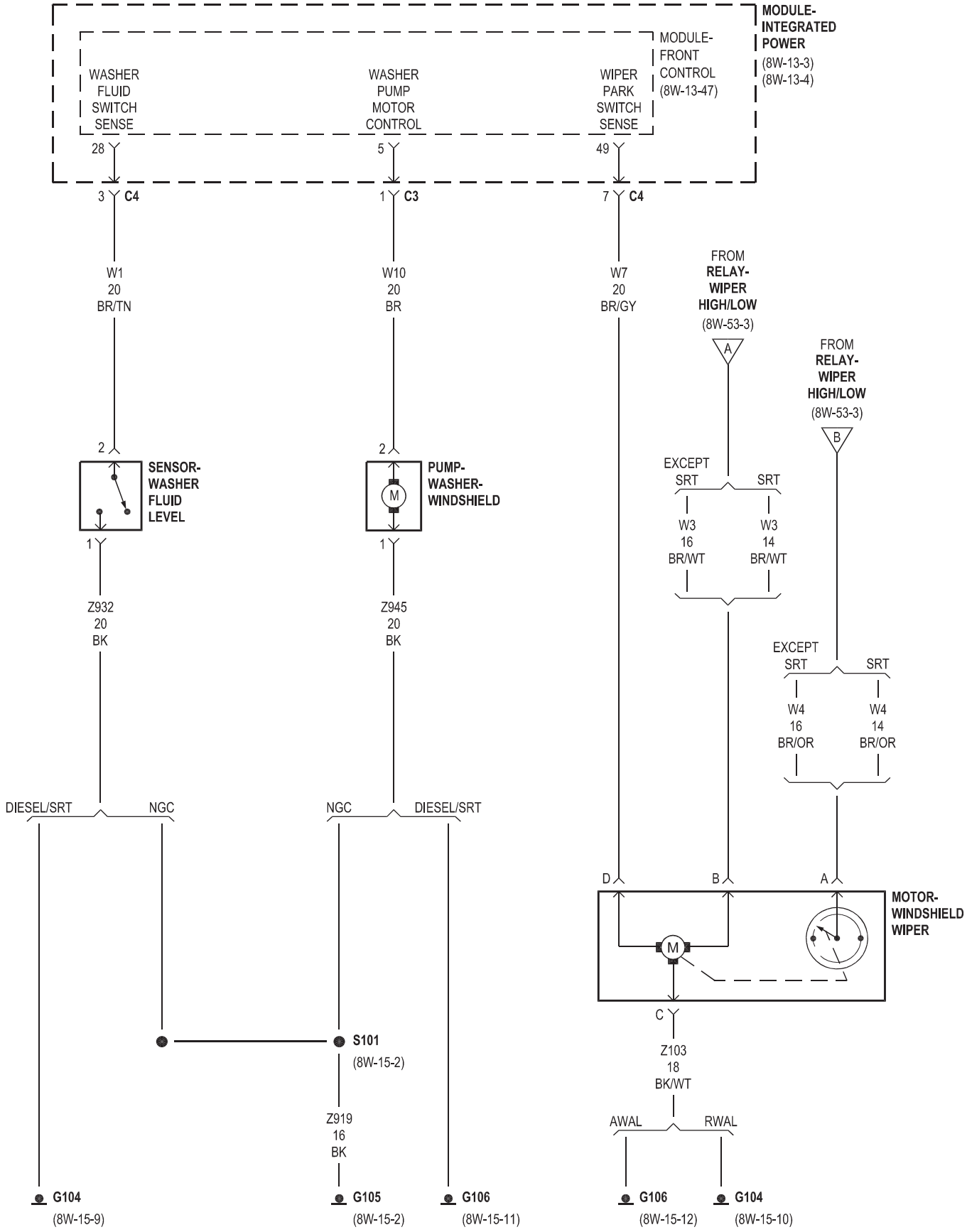
MODULE-INTEGRATED POWER
(8W-13-3)
(8W-13-4)
MODULE-FRONT CONTROL
(8W-13-47)
WASHER FLUID SWITCH SENSE
WASHER PUMP MOTOR CONTROL
WIPER PARK SWITCH SENSE
28
5
49
3 C4
1 C3
7 C4
W1
20
BR/TN
W10
20
BR
W7
20
BR/GY
FROM RELAY-WIPER HIGH/LOW
(8W-53-3)
A
FROM RELAY-WIPER HIGH/LOW
(8W-53-3)
B
2
2
SENSOR-WASHER FLUID LEVEL
PUMP-WASHER-WINDSHIELD
M
EXCEPT SRT
SRT
W3
16
BR/WT
W3
14
BR/WT
1
1
Z932
20
BK
Z945
20
BK
EXCEPT SRT
SRT
W4
16
BR/OR
W4
14
BR/OR
DIESEL/SRT
NGC
NGC
DIESEL/SRT
D
B
A
MOTOR-WINDSHIELD WIPER
M
C
S101
(8W-15-2)
Z103
18
BK/WT
Z919
16
BK
AWAL
RWAL
G104
(8W-15-9)
G105
(8W-15-2)
G106
(8W-15-11)
G106
(8W-15-12)
G104
(8W-15-10)

8W-54 TRAILER TOW

Component	Page
Fuse 1	8W-54-2
Fuse 15	8W-54-3, 4, 5
Fuse 19	8W-54-2
Fuse 24	8W-54-2
Fuse 33	8W-54-3, 4, 5
Fuse 46	8W-54-3, 4, 5
Fuse 47	8W-54-3, 4, 5
G104	8W-54-2, 3, 4, 6
G106	8W-54-2, 3, 4, 6
Module-Brake Provision	8W-54-2, 3
Module-Front Control	8W-54-2, 3, 4, 5
Module-Integrated Power	8W-54-2, 3, 4, 5
Relay-Park Lamp	8W-54-3, 4, 5
Relay-Trailer Tow-Left Turn	8W-54-3, 4, 5
Relay-Trailer Tow-Right Turn	8W-54-3, 4, 5
Switch-Stop Lamp	8W-54-2
Wiring-Trailer Tow 4-Way	8W-54-4, 5, 6
Wiring-Trailer Tow 7-Way	8W-54-2, 5, 6

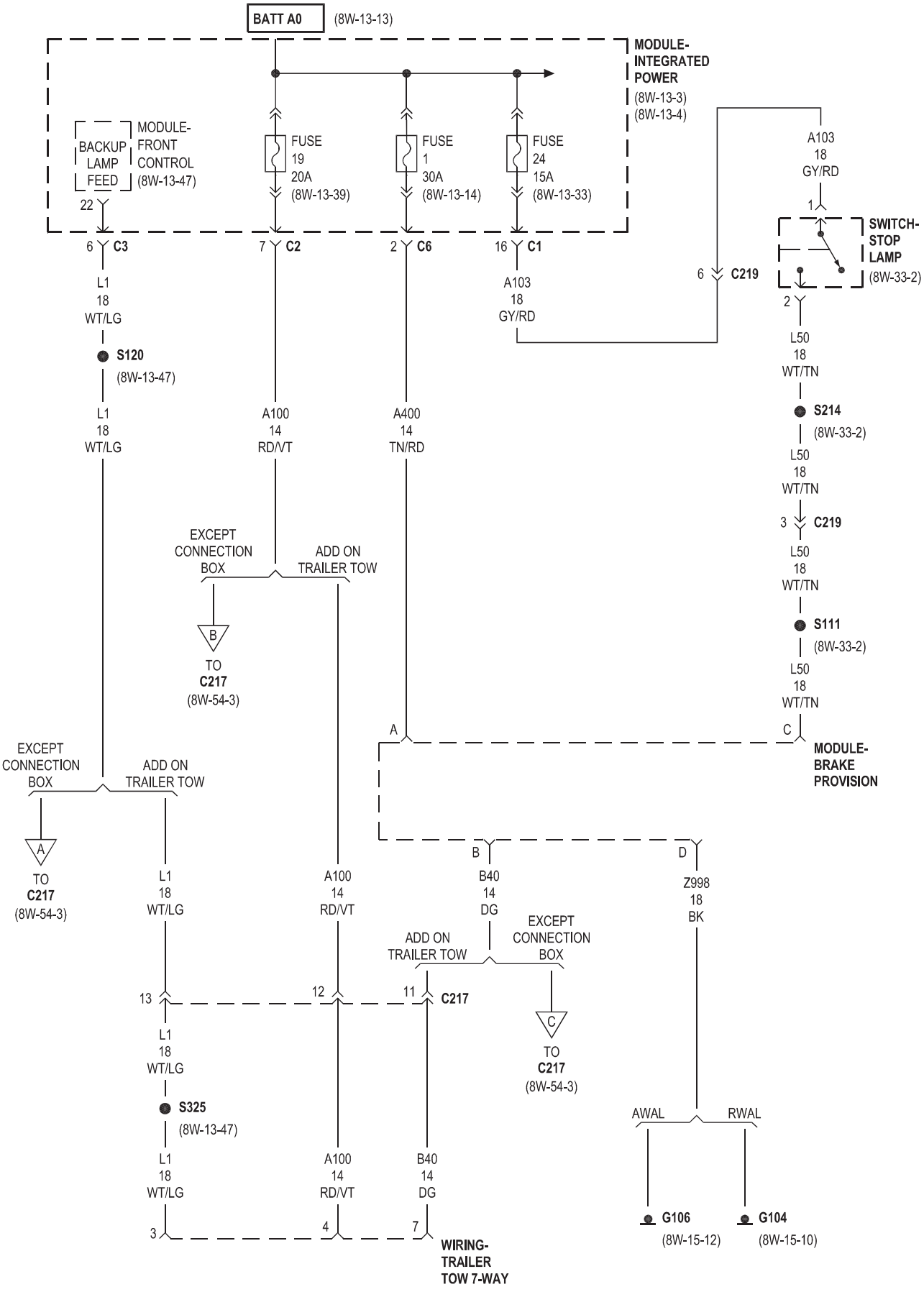
BATT A0
(8W-13-13)
MODULE-
INTEGRATED
POWER
(8W-13-3)
(8W-13-4)
BACKUP
LAMP
FEED
MODULE-
FRONT
CONTROL
(8W-13-47)
22
FUSE
19
20A
(8W-13-39)
FUSE
1
30A
(8W-13-14)
FUSE
24
15A
(8W-13-33)
A103
18
GY/RD
1
SWITCH-
STOP
LAMP
(8W-33-2)
6 C3
7 C2
2 C6
16 C1
6 C219
2
L1
18
WT/LG
S120
(8W-13-47)
A103
18
GY/RD
L50
18
WT/TN
S214
(8W-33-2)
L1
18
WT/LG
A100
14
RD/VT
A400
14
TN/RD
L50
18
WT/TN
3 C219
EXCEPT
CONNECTION
BOX
ADD ON
TRAILER TOW
B
TO
C217
(8W-54-3)
L50
18
WT/TN
S111
(8W-33-2)
L50
18
WT/TN
A
C
MODULE-
BRAKE
PROVISION
EXCEPT
CONNECTION
BOX
ADD ON
TRAILER TOW
A
TO
C217
(8W-54-3)
L1
18
WT/LG
A100
14
RD/VT
B
B40
14
DG
D
Z998
18
BK
ADD ON
TRAILER TOW
EXCEPT
CONNECTION
BOX
13
12
11 C217
C
TO
C217
(8W-54-3)
L1
18
WT/LG
S325
(8W-13-47)
AWAL
RWAL
L1
18
WT/LG
A100
14
RD/VT
B40
14
DG
G106
(8W-15-12)
G104
(8W-15-10)
3
4
7
WIRING-
TRAILER
TOW 7-WAY

EXCEPT BOX

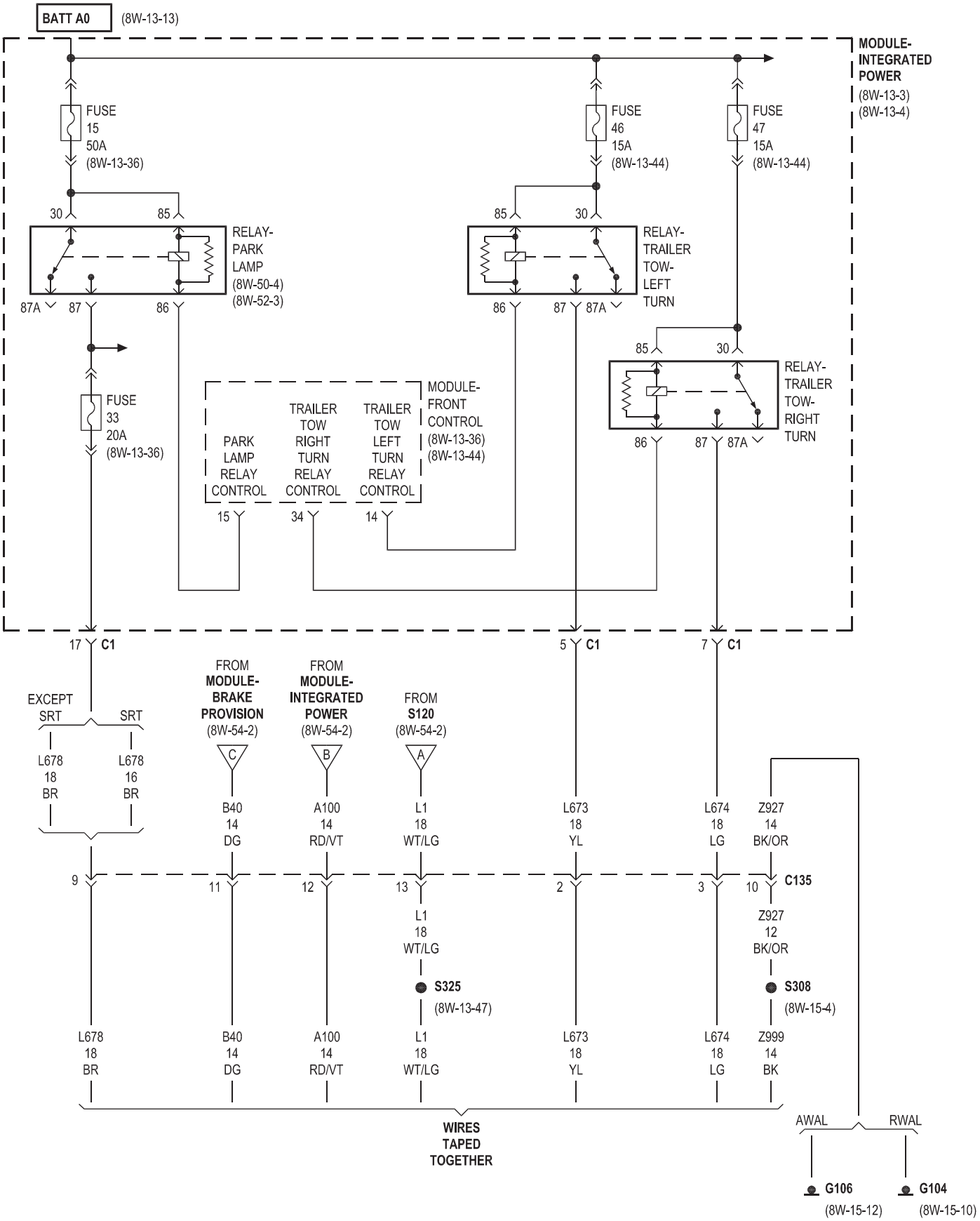
BATT A0
(8W-13-13)
MODULE-INTEGRATED POWER
(8W-13-3)
(8W-13-4)
FUSE 15 50A (8W-13-36)
FUSE 46 15A (8W-13-44)
FUSE 47 15A (8W-13-44)
RELAY-PARK LAMP (8W-50-4) (8W-52-3)
RELAY-TRAILER TOW-LEFT TURN
RELAY-TRAILER TOW-RIGHT TURN
FUSE 33 20A (8W-13-36)
MODULE-FRONT CONTROL (8W-13-36) (8W-13-44)
PARK LAMP RELAY CONTROL
TRAILER TOW RIGHT TURN RELAY CONTROL
TRAILER TOW LEFT TURN RELAY CONTROL
17 C1
5 C1
7 C1
EXCEPT SRT
SRT
L678 18 BR
L678 16 BR
FROM MODULE-BRAKE PROVISION (8W-54-2)
FROM MODULE-INTEGRATED POWER (8W-54-2)
FROM S120 (8W-54-2)
B40 14 DG
A100 14 RD/VT
L1 18 WT/LG
L673 18 YL
L674 18 LG
Z927 14 BK/OR
C135
Z927 12 BK/OR
S325
(8W-13-47)
S308
(8W-15-4)
Z999 14 BK
WIRES TAPED TOGETHER
AWAL
RWAL
G106
(8W-15-12)
G104
(8W-15-10)

EXCEPT ADD ON TRAILER TOW

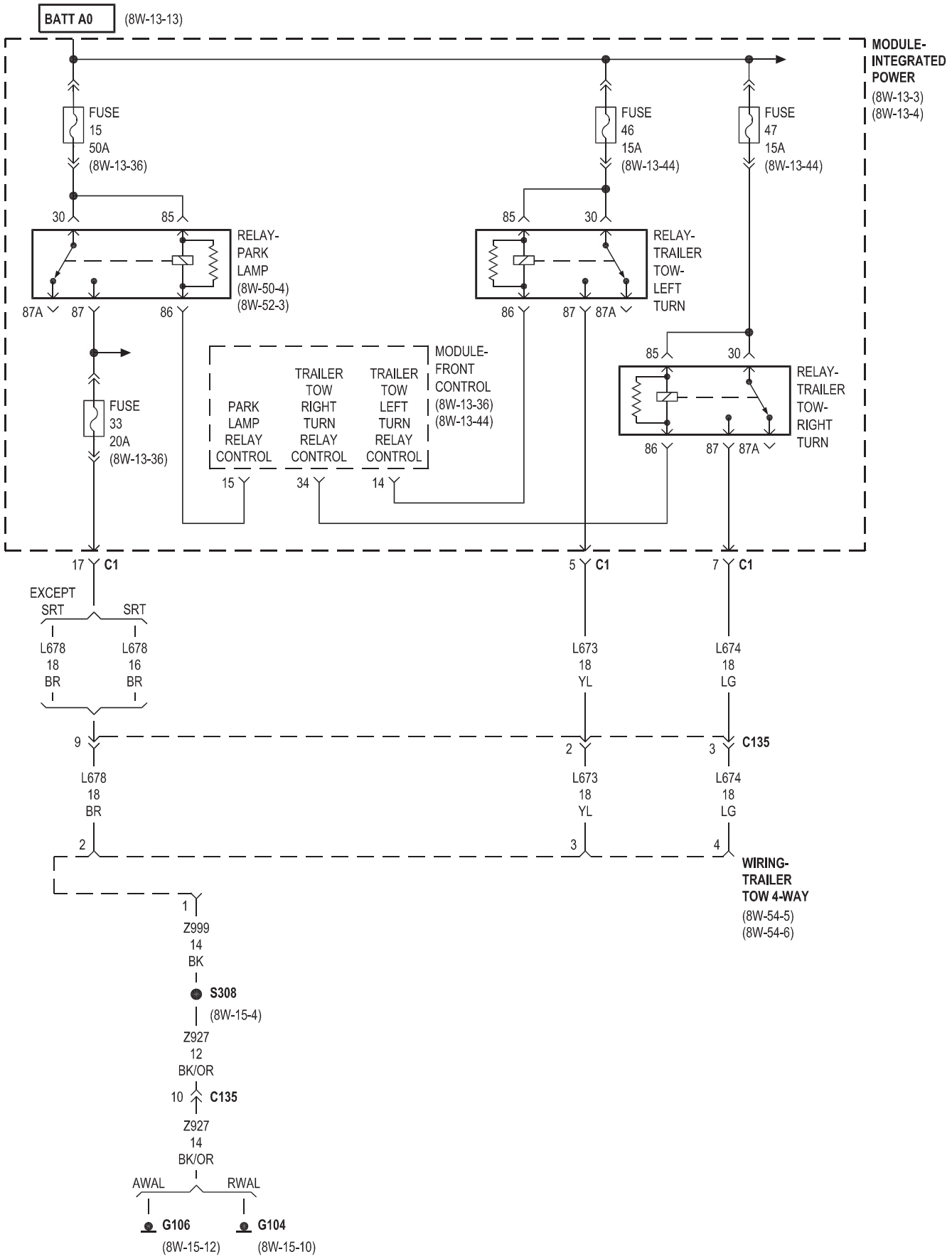

ADD ON TRAILER TOW

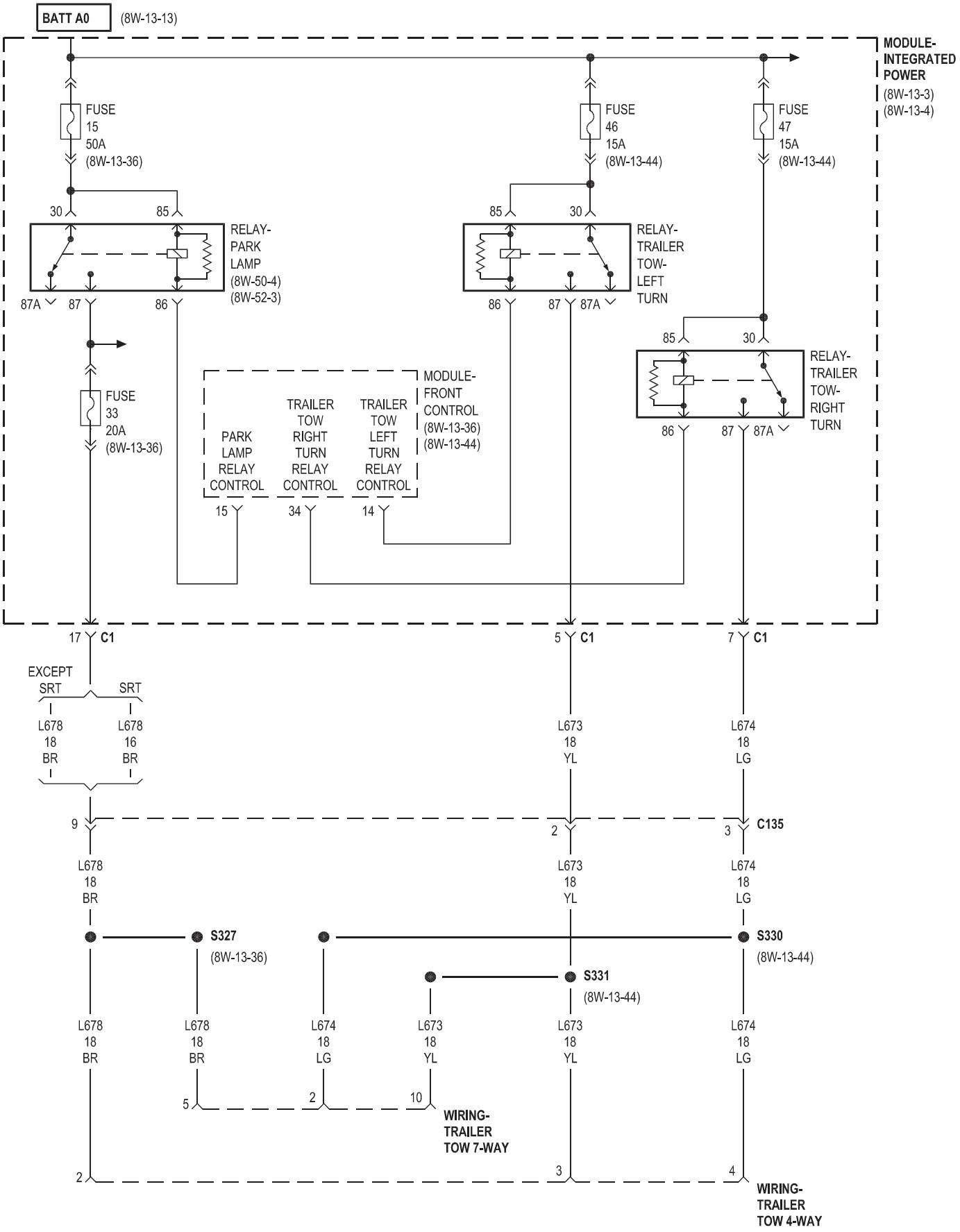

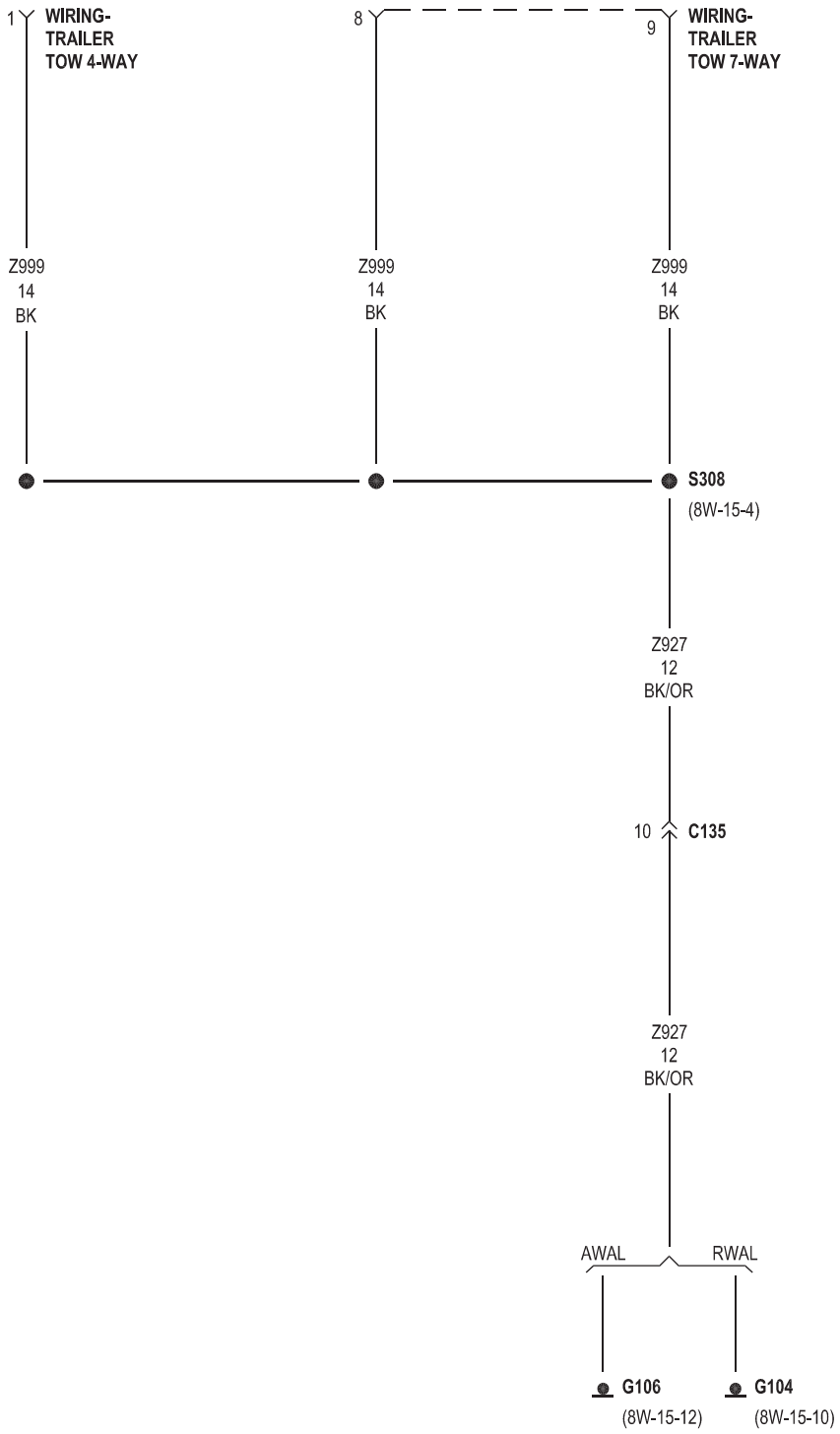
1
WIRING-
TRAILER
TOW 4-WAY
8
9
WIRING-
TRAILER
TOW 7-WAY
Z999
14
BK
Z999
14
BK
Z999
14
BK
S308
(8W-15-4)
Z927
12
BK/OR
10
C135
Z927
12
BK/OR
AWAL
RWAL
G106
(8W-15-12)
G104
(8W-15-10)

8W-55 NAVIGATION/TELECOMMUNICATIONS

Component	Page
Data Link Connector	8W-55-2
Fuse 28	8W-55-3
Fuse 51	8W-55-2
G201	8W-55-3
G202	8W-55-2
Mirror-Inside Rearview	8W-55-3
Module-Front Control	8W-55-3
Module-Hands Free	8W-55-2, 3, 4
Module-Integrated Power	8W-55-2, 3
PTC No. 2	8W-55-2
Radio	8W-55-2
Receiver-Satellite	8W-55-4

HANDS FREE

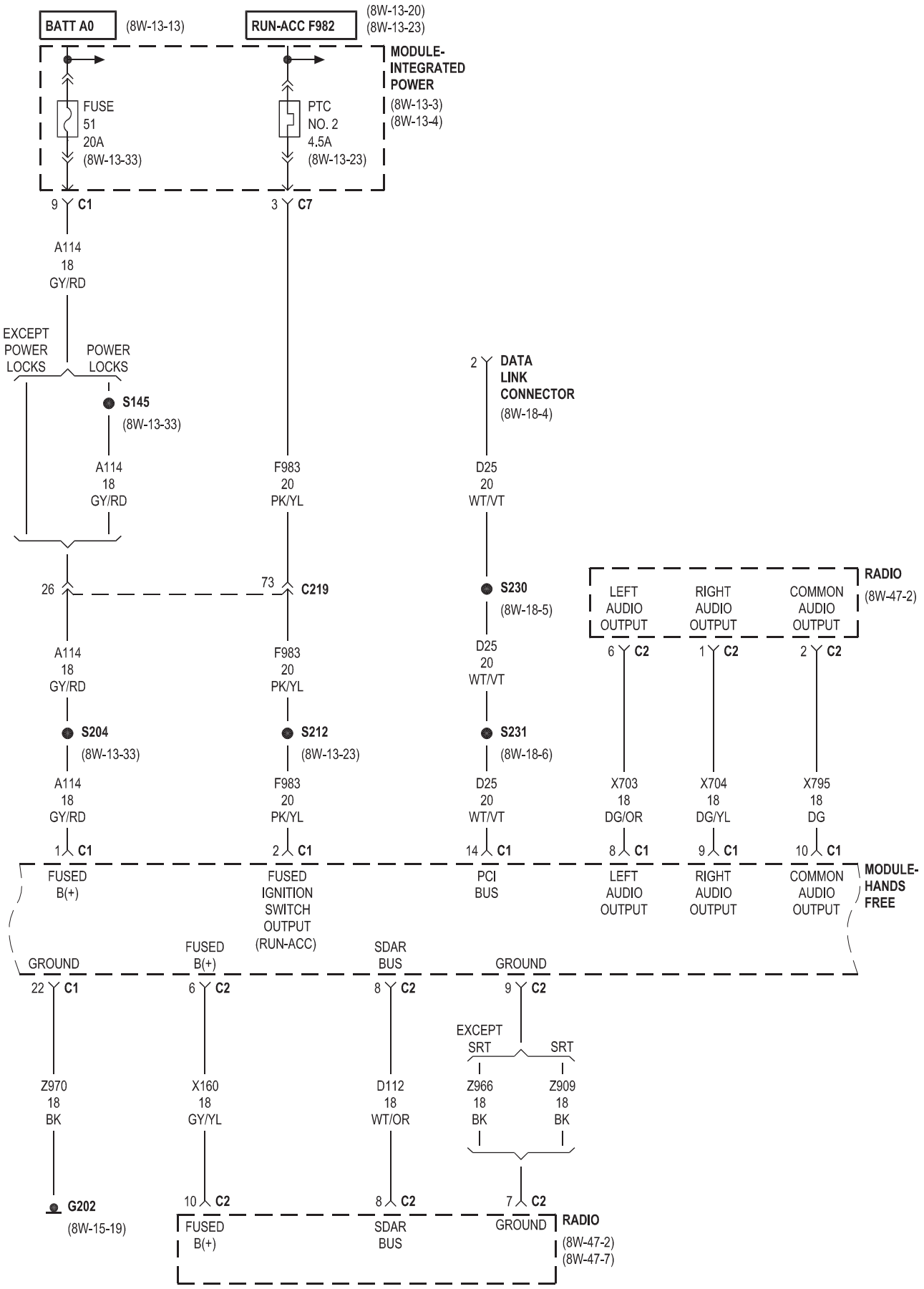
BATT A0
(8W-13-13)
RUN-ACC F982
(8W-13-20)
(8W-13-23)
MODULE-INTEGRATED POWER
(8W-13-3)
(8W-13-4)
FUSE 51 20A (8W-13-33)
PTC NO. 2 4.5A (8W-13-23)
9 C1
3 C7
A114 18 GY/RD
EXCEPT POWER LOCKS
POWER LOCKS
S145
(8W-13-33)
A114 18 GY/RD
F983 20 PK/YL
2 DATA LINK CONNECTOR
(8W-18-4)
D25 20 WT/VT
26
73 C219
S230
(8W-18-5)
RADIO
(8W-47-2)
LEFT AUDIO OUTPUT
RIGHT AUDIO OUTPUT
COMMON AUDIO OUTPUT
6 C2
1 C2
2 C2
A114 18 GY/RD
F983 20 PK/YL
D25 20 WT/VT
S204
(8W-13-33)
S212
(8W-13-23)
S231
(8W-18-6)
X703 18 DG/OR
X704 18 DG/YL
X795 18 DG
1 C1
2 C1
14 C1
8 C1
9 C1
10 C1
FUSED B(+)
FUSED IGNITION SWITCH OUTPUT (RUN-ACC)
PCI BUS
LEFT AUDIO OUTPUT
RIGHT AUDIO OUTPUT
COMMON AUDIO OUTPUT
MODULE-HANDS FREE
GROUND
FUSED B(+)
SDAR BUS
GROUND
22 C1
6 C2
8 C2
9 C2
EXCEPT SRT
SRT
Z970 18 BK
X160 18 GY/YL
D112 18 WT/OR
Z966 18 BK
Z909 18 BK
G202
(8W-15-19)
10 C2
8 C2
7 C2
FUSED B(+)
SDAR BUS
GROUND
RADIO
(8W-47-2)
(8W-47-7)

HANDS FREE

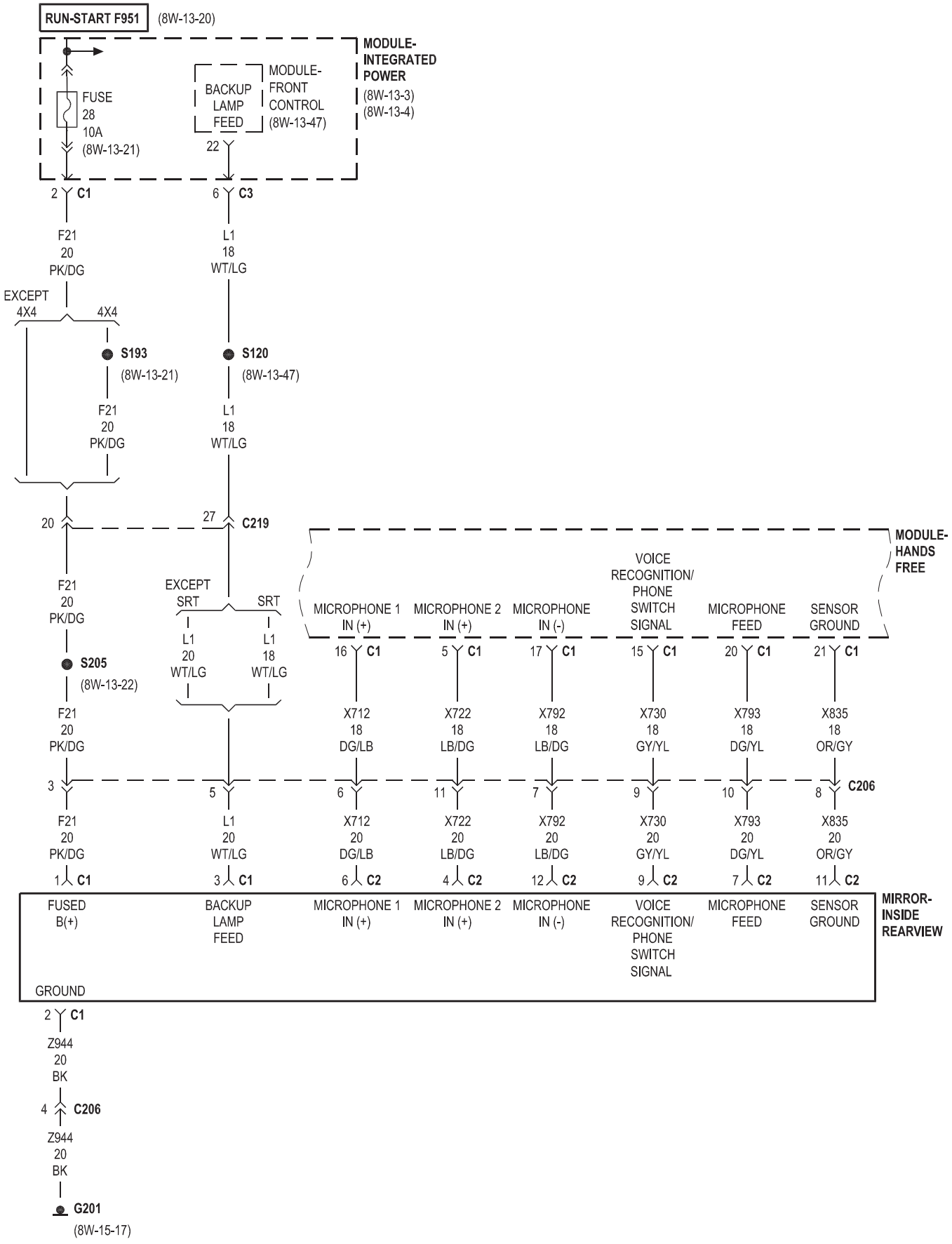
RUN-START F951
(8W-13-20)
MODULE-INTEGRATED POWER
(8W-13-3)
(8W-13-4)
FUSE 28 10A
(8W-13-21)
BACKUP LAMP FEED
MODULE-FRONT CONTROL
(8W-13-47)
22
2 C1
6 C3
F21 20 PK/DG
L1 18 WT/LG
EXCEPT 4X4
4X4
S193
(8W-13-21)
S120
(8W-13-47)
F21 20 PK/DG
L1 18 WT/LG
20
27 C219
MODULE-HANDS FREE
VOICE RECOGNITION/ PHONE SWITCH SIGNAL
MICROPHONE 1 IN (+)
MICROPHONE 2 IN (+)
MICROPHONE IN (-)
MICROPHONE FEED
SENSOR GROUND
EXCEPT SRT
SRT
L1 20 WT/LG
L1 18 WT/LG
S205
(8W-13-22)
16 C1
5 C1
17 C1
15 C1
20 C1
21 C1
F21 20 PK/DG
X712 18 DG/LB
X722 18 LB/DG
X792 18 LB/DG
X730 18 GY/YL
X793 18 DG/YL
X835 18 OR/GY
3
5
6
11
7
9
10
8 C206
F21 20 PK/DG
L1 20 WT/LG
X712 20 DG/LB
X722 20 LB/DG
X792 20 LB/DG
X730 20 GY/YL
X793 20 DG/YL
X835 20 OR/GY
1 C1
3 C1
6 C2
4 C2
12 C2
9 C2
7 C2
11 C2
FUSED B(+)
BACKUP LAMP FEED
MICROPHONE 1 IN (+)
MICROPHONE 2 IN (+)
MICROPHONE IN (-)
VOICE RECOGNITION/ PHONE SWITCH SIGNAL
MICROPHONE FEED
SENSOR GROUND
MIRROR-INSIDE REARVIEW
GROUND
2 C1
Z944 20 BK
4 C206
Z944 20 BK
G201
(8W-15-17)

HANDS FREE

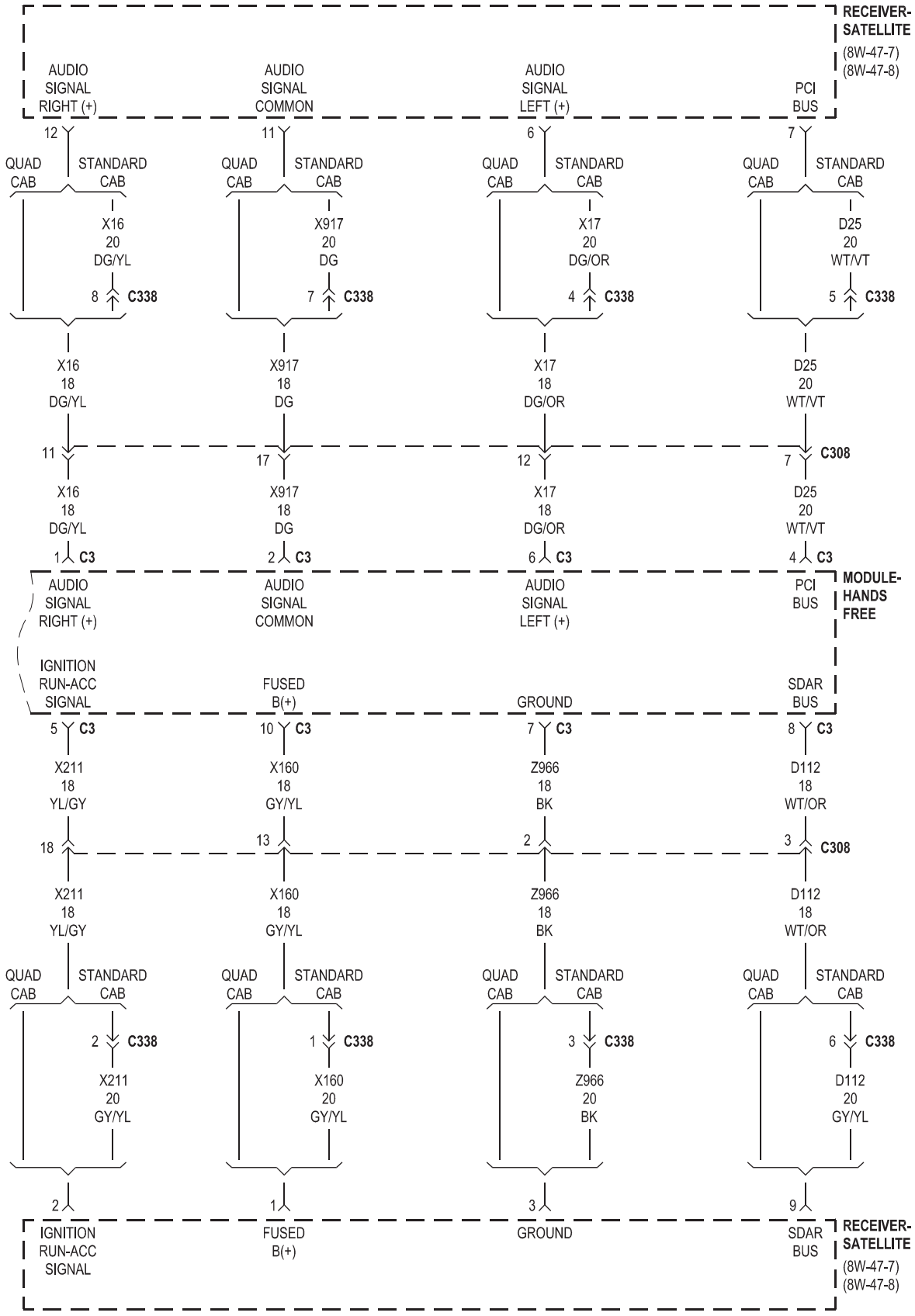
RECEIVER-SATELLITE
(8W-47-7)
(8W-47-8)
AUDIO SIGNAL RIGHT (+)
AUDIO SIGNAL COMMON
AUDIO SIGNAL LEFT (+)
PCI BUS
12
11
6
7
QUAD CAB
STANDARD CAB
X16 20 DG/YL
X917 20 DG
X17 20 DG/OR
D25 20 WT/VT
8 C338
7 C338
4 C338
5 C338
X16 18 DG/YL
X917 18 DG
X17 18 DG/OR
D25 20 WT/VT
11
17
12
7 C308
1 C3
2 C3
6 C3
4 C3
MODULE-HANDS FREE
IGNITION RUN-ACC SIGNAL
FUSED B(+)
GROUND
SDAR BUS
5 C3
10 C3
7 C3
8 C3
X211 18 YL/GY
X160 18 GY/YL
Z966 18 BK
D112 18 WT/OR
18
13
2
3 C308
2 C338
1 C338
3 C338
6 C338
X211 20 GY/YL
X160 20 GY/YL
Z966 20 BK
D112 20 GY/YL
2
1
3
9

8W-56 CONVENIENCE SYSTEMS

Component	Page
Assembly-Winch	8W-56-2
Battery	8W-56-2
Fuse 36	8W-56-3
Fuse 40	8W-56-3
G203	8W-56-3
Module-Front Control	8W-56-3
Module-Integrated Power	8W-56-3
Motor-Adjustable Pedal	8W-56-3
Relay-Adjustable Pedals	8W-56-3
Switch-Adjustable Pedals	8W-56-3

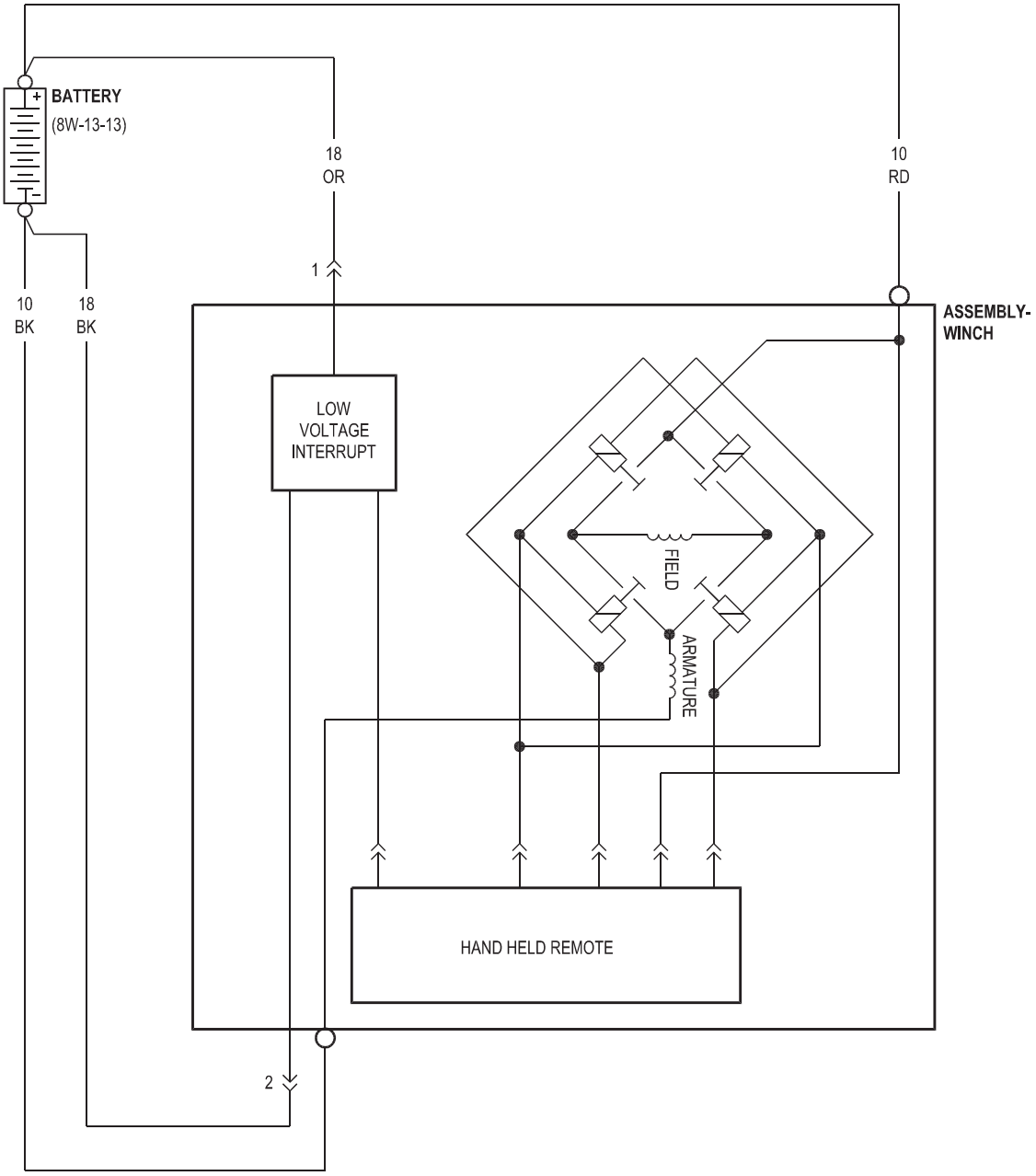
BATTERY
(8W-13-13)
18
OR
10
RD
1
10
BK
18
BK
ASSEMBLY-
WINCH
LOW
VOLTAGE
INTERRUPT
FIELD
ARMATURE
HAND HELD REMOTE
2

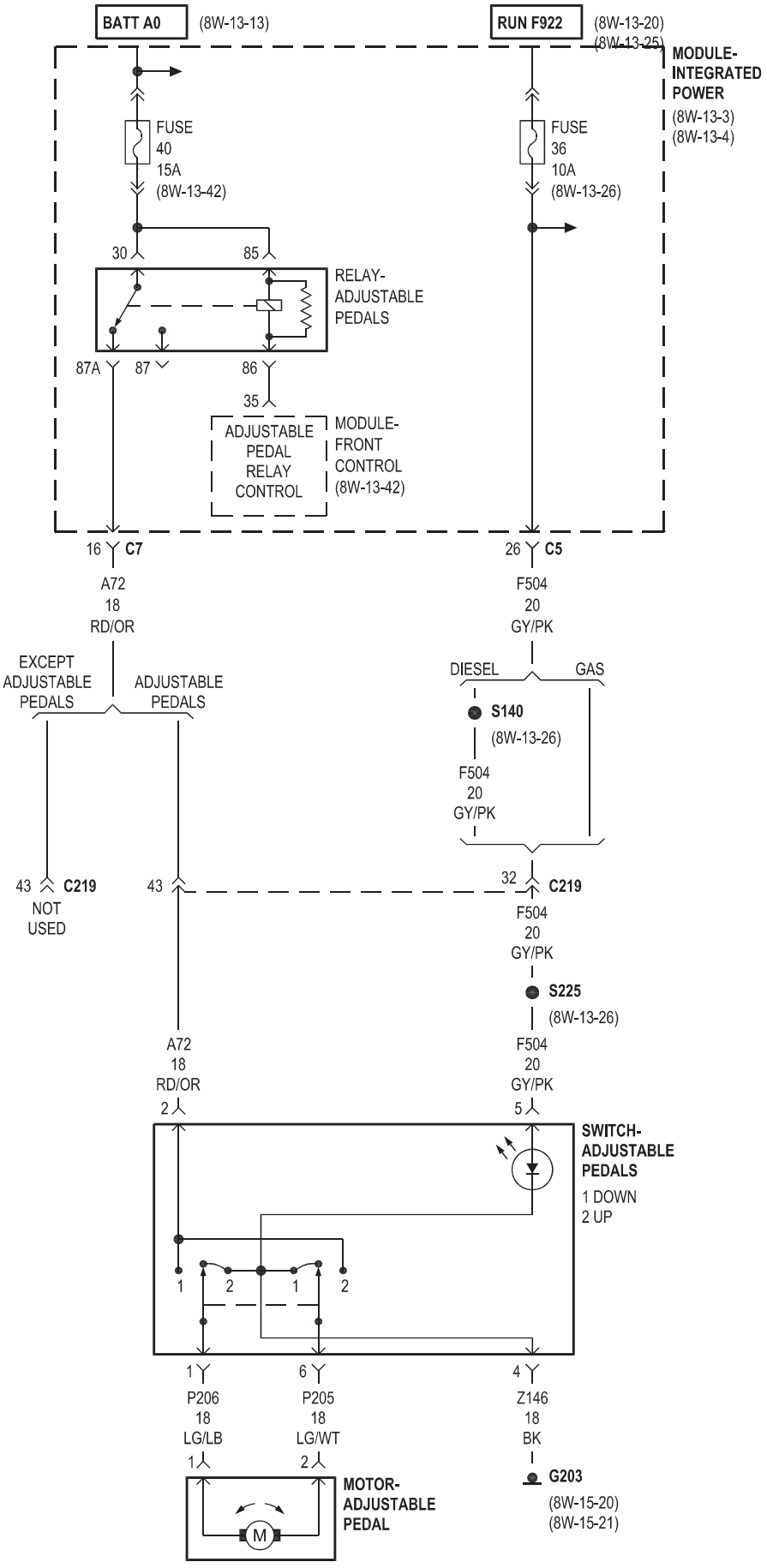
BATT A0
(8W-13-13)
RUN F922
(8W-13-20)
(8W-13-25)
MODULE-
INTEGRATED
POWER
(8W-13-3)
(8W-13-4)
FUSE
40
15A
(8W-13-42)
FUSE
36
10A
(8W-13-26)
30
85
RELAY-
ADJUSTABLE
PEDALS
87A
87
86
35
ADJUSTABLE
PEDAL
RELAY
CONTROL
MODULE-
FRONT
CONTROL
(8W-13-42)
16 C7
26 C5
A72
18
RD/OR
F504
20
GY/PK
EXCEPT
ADJUSTABLE
PEDALS
ADJUSTABLE
PEDALS
DIESEL
GAS
S140
(8W-13-26)
F504
20
GY/PK
43 C219
NOT
USED
43
32 C219
F504
20
GY/PK
S225
(8W-13-26)
A72
18
RD/OR
2
F504
20
GY/PK
5
SWITCH-
ADJUSTABLE
PEDALS
1 DOWN
2 UP
1
2
1
2
1 P206
18
LG/LB
1
6 P205
18
LG/WT
2
4 Z146
18
BK
G203
(8W-15-20)
(8W-15-21)
MOTOR-
ADJUSTABLE
PEDAL
M

8W-60 POWER WINDOWS

Component	Page
Circuit Breaker-Power Window	8W-60-2
G302	8W-60-2, 3, 4, 5
Motor-Power Window Driver	8W-60-2
Motor-Power Window-Left Rear	8W-60-5
Motor-Power Window-Passenger	8W-60-3
Motor-Power Window-Right Rear	8W-60-4
Relay-Ignition Run-Acc	8W-60-2
Switch-Ignition	8W-60-2
Switch-Power Window-Left Rear	8W-60-5
Switch-Power Window-Passenger	8W-60-3
Switch-Power Window-Right Rear	8W-60-4
Switch-Window/Door Lock-Driver	8W-60-2, 3, 4, 5

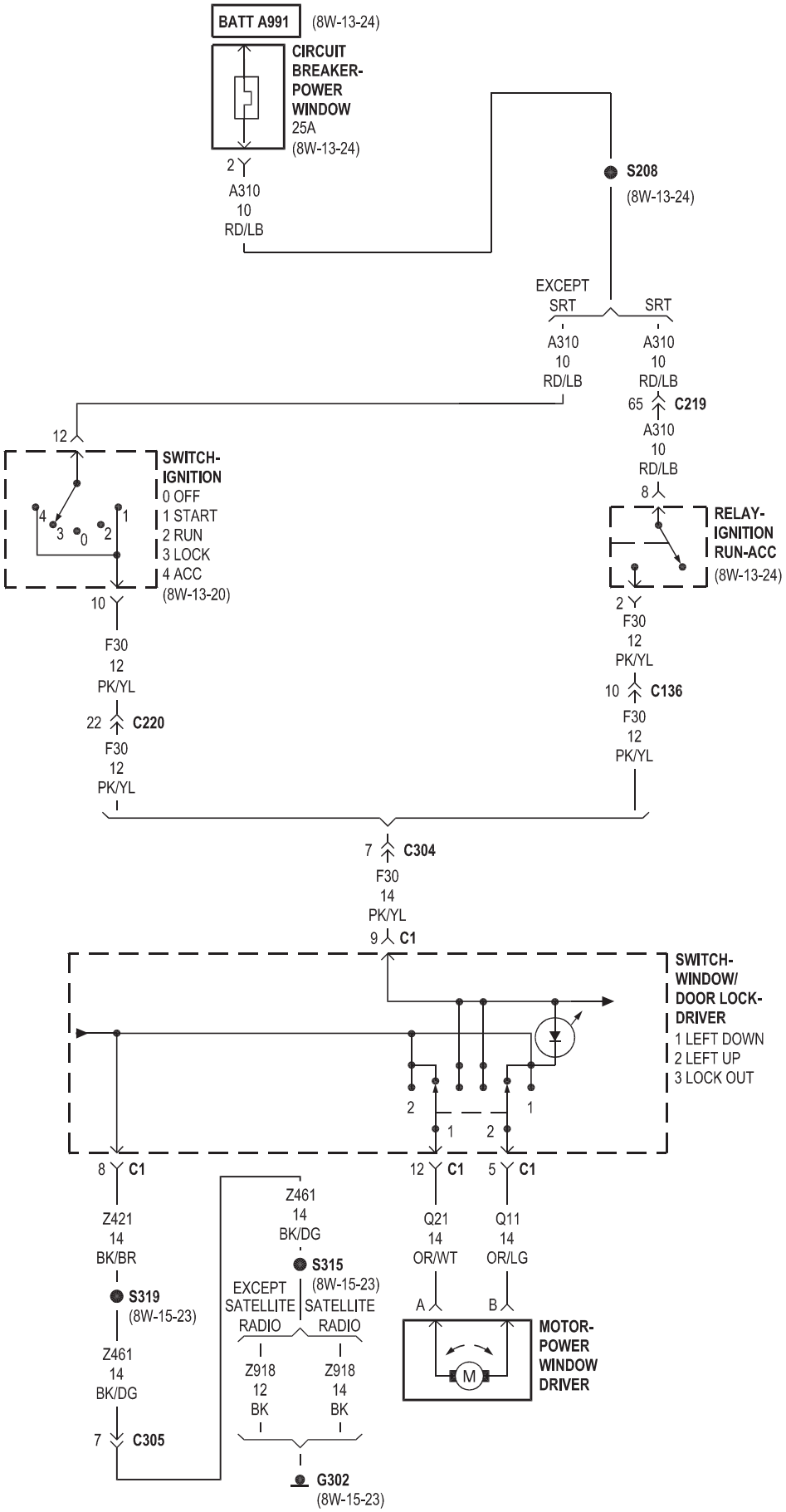
BATT A991
(8W-13-24)
CIRCUIT BREAKER-POWER WINDOW
25A
(8W-13-24)
2
A310
10
RD/LB
S208
(8W-13-24)
EXCEPT SRT
SRT
A310
10
RD/LB
A310
10
RD/LB
65 C219
A310
10
RD/LB
8
12
SWITCH-IGNITION
0 OFF
1 START
2 RUN
3 LOCK
4 ACC
(8W-13-20)
4
3
0
2
1
10
F30
12
PK/YL
22 C220
F30
12
PK/YL
RELAY-IGNITION RUN-ACC
(8W-13-24)
2
F30
12
PK/YL
10 C136
F30
12
PK/YL
7 C304
F30
14
PK/YL
9 C1
SWITCH-WINDOW/ DOOR LOCK-DRIVER
1 LEFT DOWN
2 LEFT UP
3 LOCK OUT
2
1
1
2
8 C1
12 C1
5 C1
Z421
14
BK/BR
S319
(8W-15-23)
Z461
14
BK/DG
7 C305
Z461
14
BK/DG
S315
(8W-15-23)
EXCEPT SATELLITE RADIO
SATELLITE RADIO
Z918
12
BK
Z918
14
BK
G302
(8W-15-23)
Q21
14
OR/WT
Q11
14
OR/LG
A
B
M
MOTOR-POWER WINDOW DRIVER

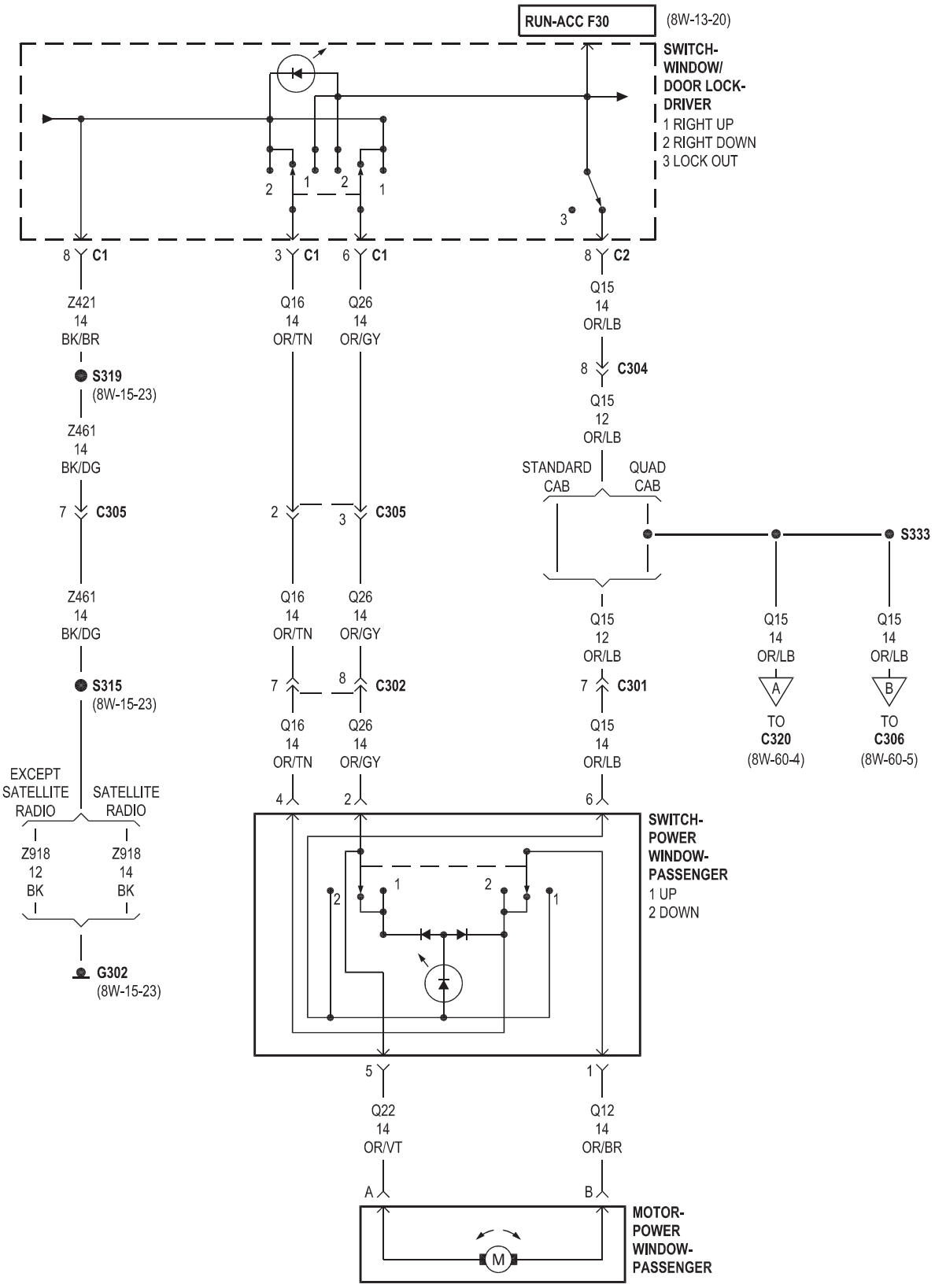
RUN-ACC F30
(8W-13-20)
SWITCH-WINDOW/ DOOR LOCK-DRIVER
1 RIGHT UP
2 RIGHT DOWN
3 LOCK OUT
8 C1
3 C1
6 C1
8 C2
Z421 14 BK/BR
Q16 14 OR/TN
Q26 14 OR/GY
Q15 14 OR/LB
S319
(8W-15-23)
8 C304
Z461 14 BK/DG
Q15 12 OR/LB
STANDARD CAB
QUAD CAB
7 C305
2 C305
3 C305
S333
Z461 14 BK/DG
Q16 14 OR/TN
Q26 14 OR/GY
Q15 12 OR/LB
Q15 14 OR/LB
Q15 14 OR/LB
S315
(8W-15-23)
7 C302
8 C302
7 C301
A
B
TO C320
(8W-60-4)
TO C306
(8W-60-5)
EXCEPT SATELLITE RADIO
SATELLITE RADIO
Q16 14 OR/TN
Q26 14 OR/GY
Q15 14 OR/LB
4
2
6
Z918 12 BK
Z918 14 BK
SWITCH-POWER WINDOW-PASSENGER
1 UP
2 DOWN
G302
(8W-15-23)
5
1
Q22 14 OR/VT
Q12 14 OR/BR
A
B
M
MOTOR-POWER WINDOW-PASSENGER

QUAD CAB

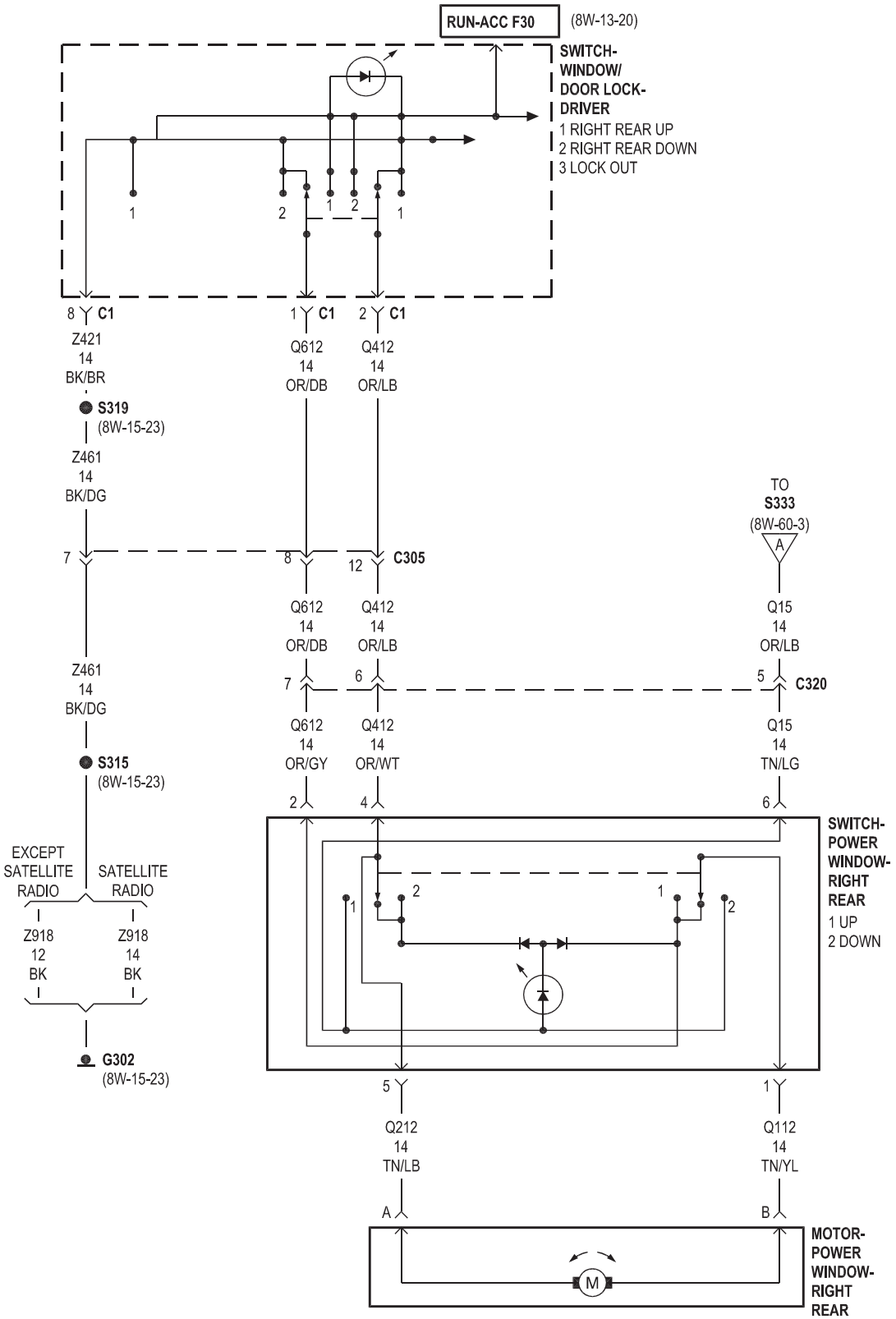
RUN-ACC F30
(8W-13-20)
SWITCH-
WINDOW/
DOOR LOCK-
DRIVER
1 RIGHT REAR UP
2 RIGHT REAR DOWN
3 LOCK OUT
8 C1
Z421
14
BK/BR
S319
(8W-15-23)
Z461
14
BK/DG
7
Z461
14
BK/DG
S315
(8W-15-23)
EXCEPT
SATELLITE
RADIO
SATELLITE
RADIO
Z918
12
BK
Z918
14
BK
G302
(8W-15-23)
1 C1
Q612
14
OR/DB
8
Q612
14
OR/DB
7
Q612
14
OR/GY
2
2 C1
Q412
14
OR/LB
12 C305
Q412
14
OR/LB
6
Q412
14
OR/WT
4
TO
S333
(8W-60-3)
A
Q15
14
OR/LB
5 C320
Q15
14
TN/LG
6
SWITCH-
POWER
WINDOW-
RIGHT
REAR
1 UP
2 DOWN
5
Q212
14
TN/LB
A
1
Q112
14
TN/YL
B
MOTOR-
POWER
WINDOW-
RIGHT
REAR
M

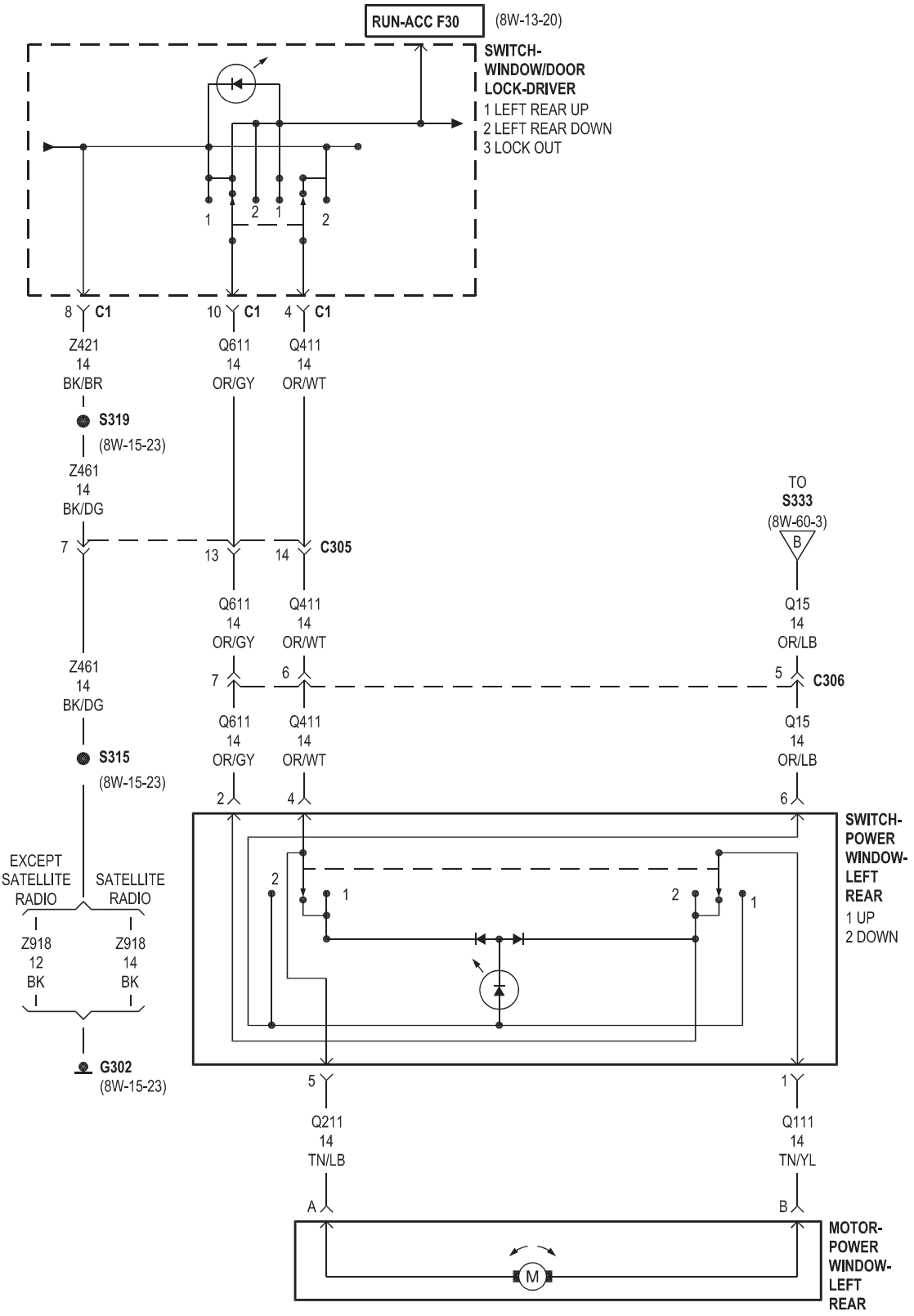
RUN-ACC F30
(8W-13-20)
SWITCH-
WINDOW/DOOR
LOCK-DRIVER
1 LEFT REAR UP
2 LEFT REAR DOWN
3 LOCK OUT
1
2
1
2
8 C1
10 C1
4 C1
Z421
14
BK/BR
Q611
14
OR/GY
Q411
14
OR/WT
S319
(8W-15-23)
Z461
14
BK/DG
7
13
14
C305
TO
S333
(8W-60-3)
B
Q15
14
OR/LB
5
C306
Z461
14
BK/DG
Q611
14
OR/GY
Q411
14
OR/WT
7
6
Q15
14
OR/LB
S315
(8W-15-23)
2
4
6
SWITCH-
POWER
WINDOW-
LEFT
REAR
1 UP
2 DOWN
EXCEPT
SATELLITE
RADIO
SATELLITE
RADIO
Z918
12
BK
Z918
14
BK
G302
(8W-15-23)
5
1
Q211
14
TN/LB
Q111
14
TN/YL
A
B
MOTOR-
POWER
WINDOW-
LEFT
REAR
M

8W-61 POWER DOOR LOCKS

Component	Page
Cluster	8W-61-2, 3
Fuse 28	8W-61-3
G302	8W-61-2
G303	8W-61-2, 3
Latch-Door-Driver	8W-61-2
Latch-Door-Left Rear	8W-61-3
Latch-Door-Passenger	8W-61-3
Latch-Door-Right Rear	8W-61-3
Module-Integrated Power	8W-61-3
Switch-Cylinder Lock-Driver	8W-61-2
Switch-Door Lock-Passenger	8W-61-3
Switch-Window/Door Lock-Driver	8W-61-2

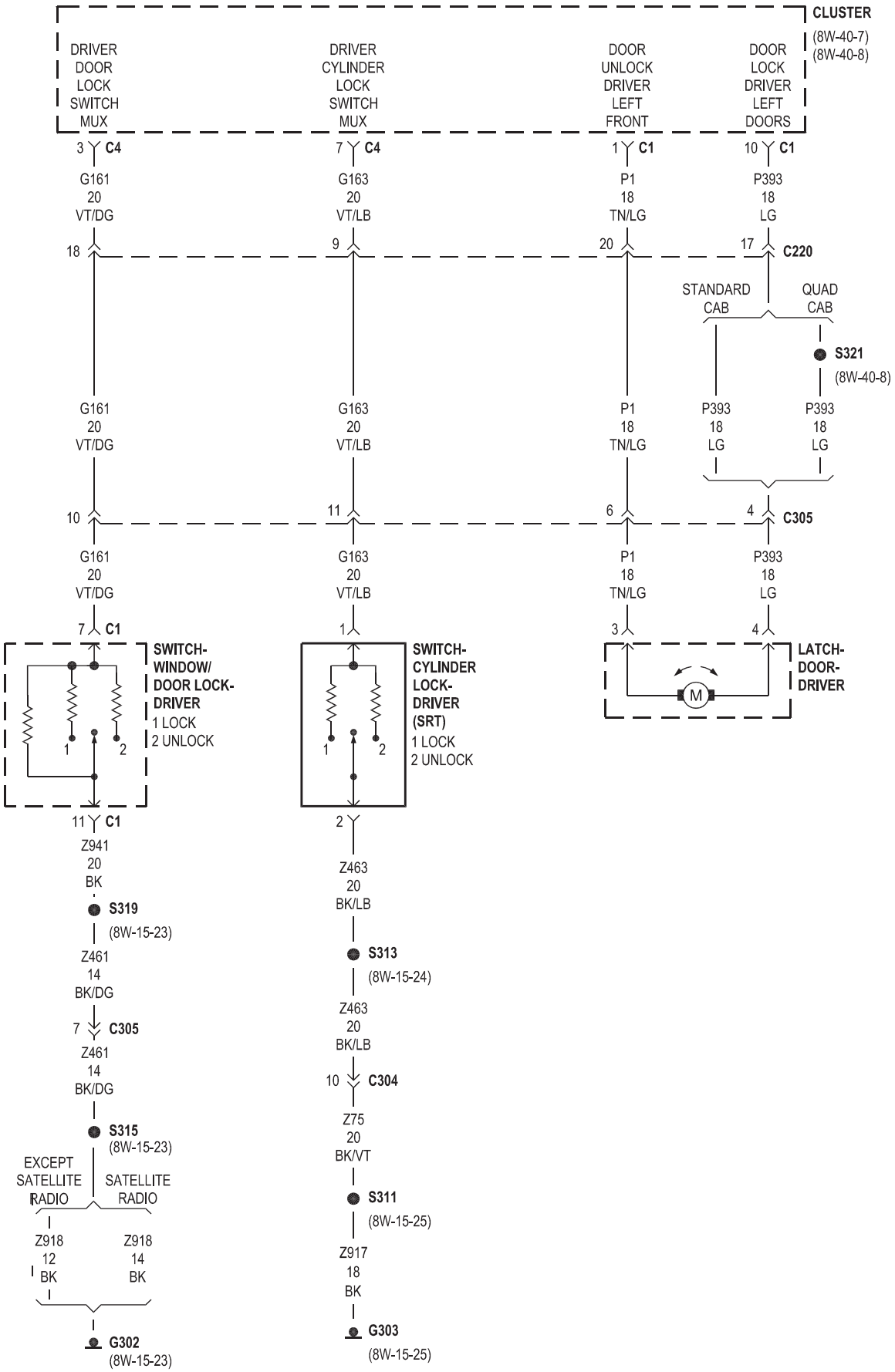
CLUSTER
(8W-40-7)
(8W-40-8)
DRIVER DOOR LOCK SWITCH MUX
DRIVER CYLINDER LOCK SWITCH MUX
DOOR UNLOCK DRIVER LEFT FRONT
DOOR LOCK DRIVER LEFT DOORS
3 C4
7 C4
1 C1
10 C1
G161 20 VT/DG
G163 20 VT/LB
P1 18 TN/LG
P393 18 LG
18
9
20
17 C220
STANDARD CAB
QUAD CAB
S321
(8W-40-8)
G161 20 VT/DG
G163 20 VT/LB
P1 18 TN/LG
P393 18 LG
P393 18 LG
10
11
6
4 C305
G161 20 VT/DG
G163 20 VT/LB
P1 18 TN/LG
P393 18 LG
7 C1
1
3
4
SWITCH-WINDOW/ DOOR LOCK-DRIVER
1 LOCK
2 UNLOCK
SWITCH-CYLINDER LOCK-DRIVER (SRT)
1 LOCK
2 UNLOCK
LATCH-DOOR-DRIVER
M
11 C1
2
Z941 20 BK
Z463 20 BK/LB
S319
(8W-15-23)
S313
(8W-15-24)
Z461 14 BK/DG
Z463 20 BK/LB
7 C305
10 C304
Z461 14 BK/DG
Z75 20 BK/VT
S315
(8W-15-23)
S311
(8W-15-25)
EXCEPT SATELLITE RADIO
SATELLITE RADIO
Z917 18 BK
Z918 12 BK
Z918 14 BK
G303
(8W-15-25)
G302
(8W-15-23)

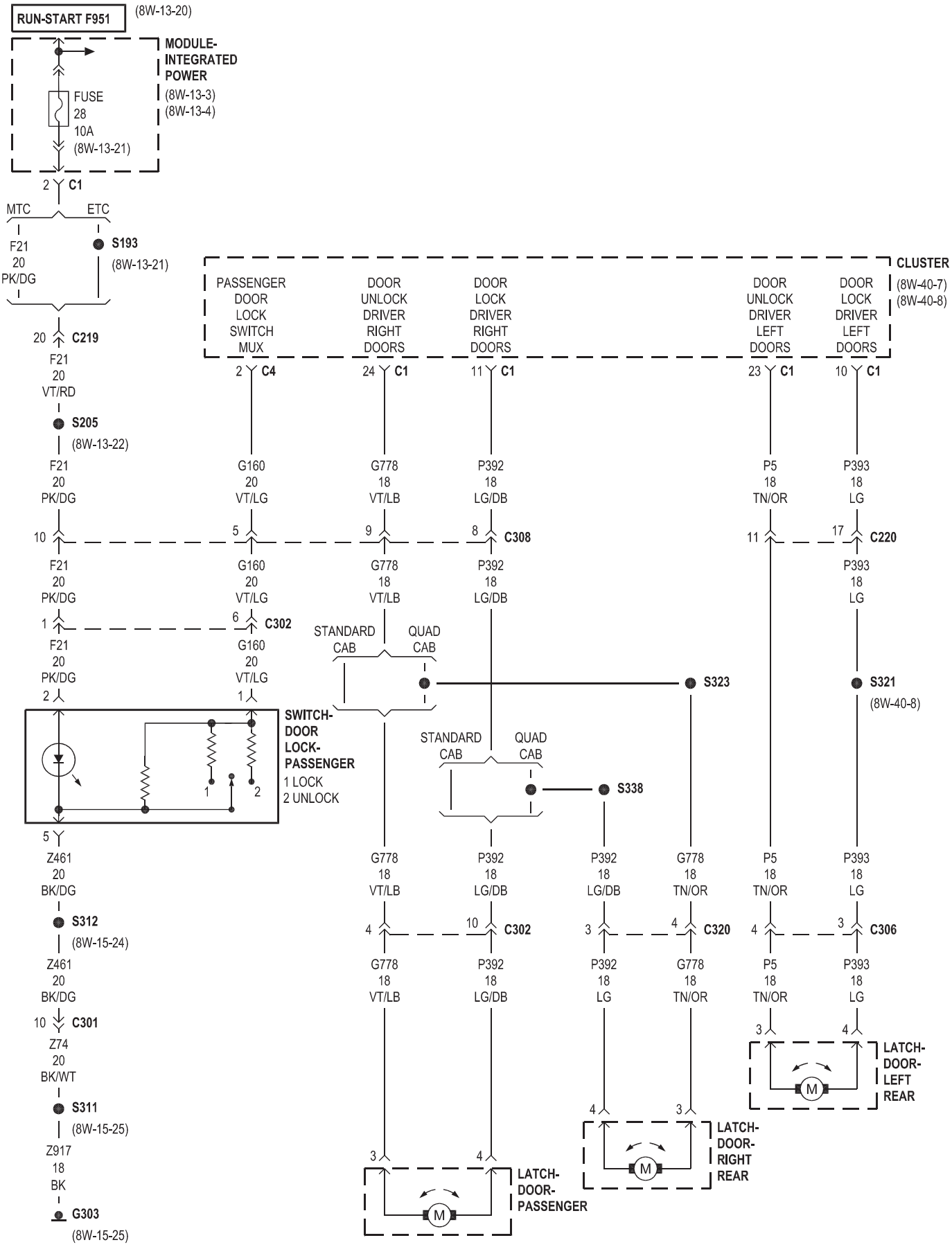
RUN-START F951
(8W-13-20)
MODULE-INTEGRATED POWER
(8W-13-3)
(8W-13-4)
FUSE 28 10A
(8W-13-21)
2 C1
MTC
ETC
F21 20 PK/DG
S193
(8W-13-21)
20 C219
F21 20 VT/RD
S205
(8W-13-22)
CLUSTER
(8W-40-7)
(8W-40-8)
PASSENGER DOOR LOCK SWITCH MUX
DOOR UNLOCK DRIVER RIGHT DOORS
DOOR LOCK DRIVER RIGHT DOORS
DOOR UNLOCK DRIVER LEFT DOORS
DOOR LOCK DRIVER LEFT DOORS
2 C4
24 C1
11 C1
23 C1
10 C1
F21 20 PK/DG
G160 20 VT/LG
G778 18 VT/LB
P392 18 LG/DB
P5 18 TN/OR
P393 18 LG
10
5
9
8 C308
11
17 C220
1
6 C302
STANDARD CAB
QUAD CAB
S323
S321
(8W-40-8)
2
1
SWITCH-DOOR LOCK-PASSENGER
1 LOCK
2 UNLOCK
STANDARD CAB
QUAD CAB
S338
5
Z461 20 BK/DG
S312
(8W-15-24)
4
10 C302
3
4 C320
4
3 C306
Z74 20 BK/WT
10 C301
S311
(8W-15-25)
Z917 18 BK
G303
(8W-15-25)
3
4
LATCH-DOOR-PASSENGER
LATCH-DOOR-RIGHT REAR
LATCH-DOOR-LEFT REAR
M

8W-62 POWER MIRRORS

Component	Page
Control-A/C-Heater	8W-62-3
Fuse 27	8W-62-3
Fuse 36	8W-62-3
Fuse 48	8W-62-2
G302	8W-62-2, 3
Mirror-Outside Rearview-Driver	8W-62-2, 3
Mirror-Outside Rearview-Passenger	8W-62-3
Module-Integrated Power	8W-62-2, 3
Relay-Heated Mirror	8W-62-3
Switch-Window/Door Lock-Driver	8W-62-2, 3

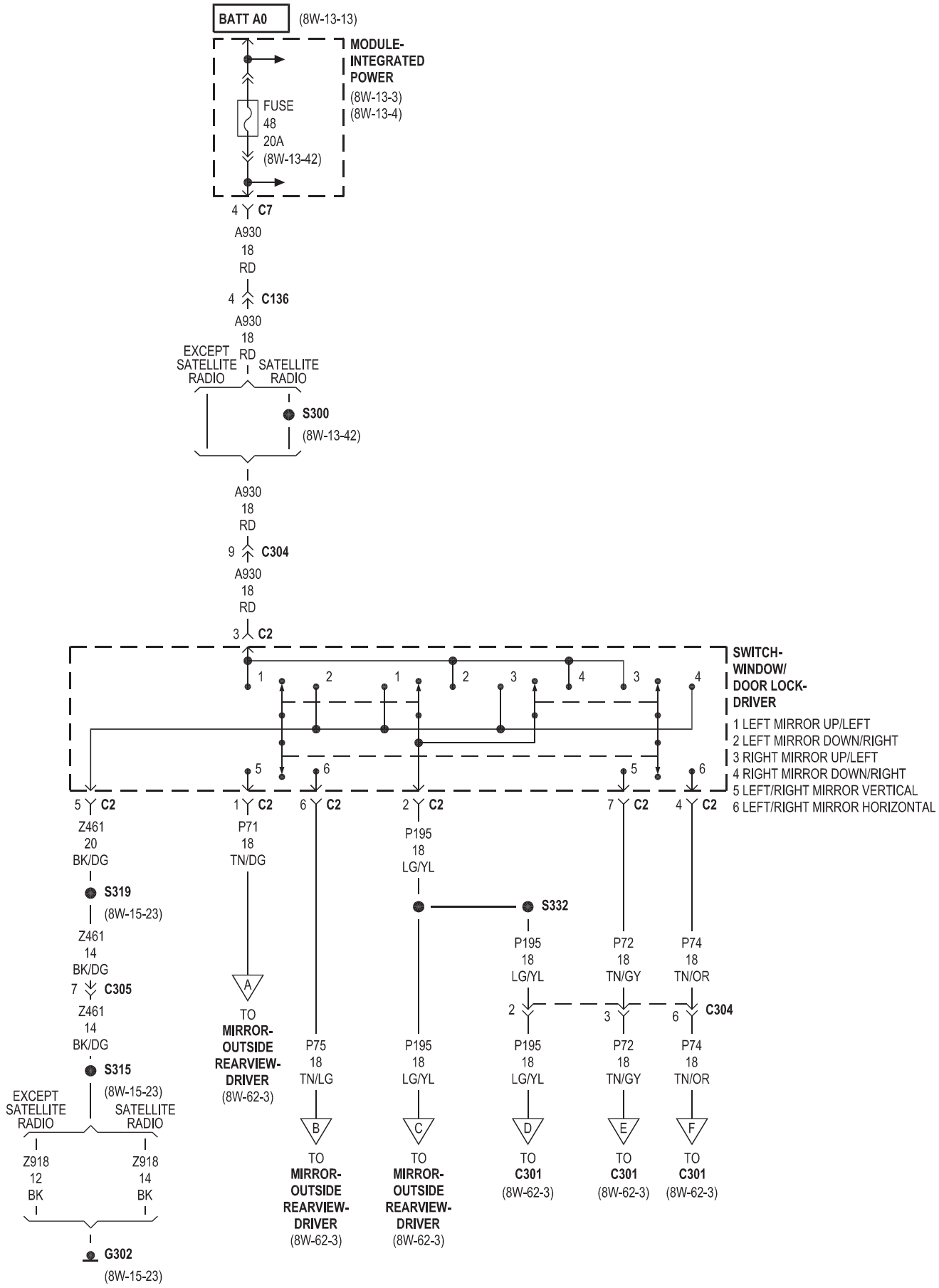
BATT A0
(8W-13-13)
MODULE-INTEGRATED POWER
(8W-13-3)
(8W-13-4)
FUSE 48 20A
(8W-13-42)
4 C7
A930 18 RD
4 C136
A930 18 RD
EXCEPT SATELLITE RADIO
SATELLITE RADIO
S300
(8W-13-42)
A930 18 RD
9 C304
A930 18 RD
3 C2
SWITCH-WINDOW/ DOOR LOCK-DRIVER
1 LEFT MIRROR UP/LEFT
2 LEFT MIRROR DOWN/RIGHT
3 RIGHT MIRROR UP/LEFT
4 RIGHT MIRROR DOWN/RIGHT
5 LEFT/RIGHT MIRROR VERTICAL
6 LEFT/RIGHT MIRROR HORIZONTAL
5 C2
Z461 20 BK/DG
S319
(8W-15-23)
Z461 14 BK/DG
7 C305
Z461 14 BK/DG
S315
(8W-15-23)
EXCEPT SATELLITE RADIO
SATELLITE RADIO
Z918 12 BK
Z918 14 BK
G302
(8W-15-23)
1 C2
P71 18 TN/DG
A
TO MIRROR-OUTSIDE REARVIEW-DRIVER
(8W-62-3)
6 C2
P75 18 TN/LG
B
TO MIRROR-OUTSIDE REARVIEW-DRIVER
(8W-62-3)
2 C2
P195 18 LG/YL
S332
P195 18 LG/YL
2
P195 18 LG/YL
C
TO MIRROR-OUTSIDE REARVIEW-DRIVER
(8W-62-3)
D
TO C301
(8W-62-3)
7 C2
P72 18 TN/GY
3
P72 18 TN/GY
E
TO C301
(8W-62-3)
4 C2
P74 18 TN/OR
6 C304
P74 18 TN/OR
F
TO C301
(8W-62-3)

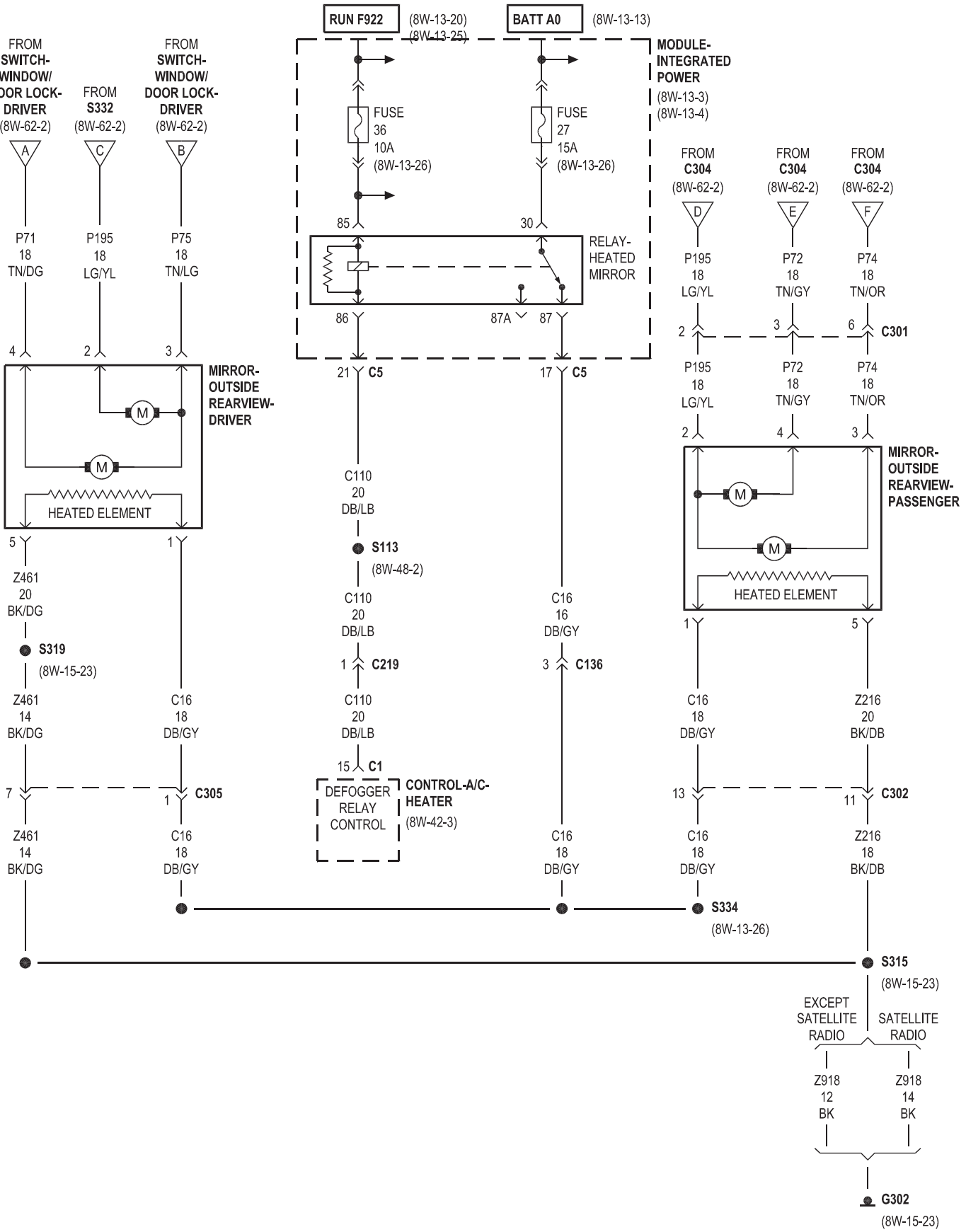
RUN F922
(8W-13-20)
(8W-13-25)
BATT A0
(8W-13-13)
MODULE-INTEGRATED POWER
(8W-13-3)
(8W-13-4)
FUSE 36 10A (8W-13-26)
FUSE 27 15A (8W-13-26)
RELAY-HEATED MIRROR
85
30
86
87A
87
21 C5
17 C5
FROM SWITCH-WINDOW/ DOOR LOCK-DRIVER (8W-62-2)
FROM S332 (8W-62-2)
FROM SWITCH-WINDOW/ DOOR LOCK-DRIVER (8W-62-2)
A
C
B
P71 18 TN/DG
P195 18 LG/YL
P75 18 TN/LG
4
2
3
MIRROR-OUTSIDE REARVIEW-DRIVER
HEATED ELEMENT
5
1
Z461 20 BK/DG
S319
(8W-15-23)
Z461 14 BK/DG
C16 18 DB/GY
7
1
C305
Z461 14 BK/DG
C16 18 DB/GY
C110 20 DB/LB
S113
(8W-48-2)
C110 20 DB/LB
1 C219
C110 20 DB/LB
15 C1
DEFOGGER RELAY CONTROL
CONTROL-A/C-HEATER
(8W-42-3)
C16 16 DB/GY
3 C136
C16 18 DB/GY
FROM C304 (8W-62-2)
FROM C304 (8W-62-2)
FROM C304 (8W-62-2)
D
E
F
P195 18 LG/YL
P72 18 TN/GY
P74 18 TN/OR
2
3
6
C301
P195 18 LG/YL
P72 18 TN/GY
P74 18 TN/OR
2
4
3
MIRROR-OUTSIDE REARVIEW-PASSENGER
HEATED ELEMENT
1
5
C16 18 DB/GY
Z216 20 BK/DB
13
11
C302
C16 18 DB/GY
Z216 18 BK/DB
S334
(8W-13-26)
S315
(8W-15-23)
EXCEPT SATELLITE RADIO
SATELLITE RADIO
Z918 12 BK
Z918 14 BK
G302
(8W-15-23)

8W-63 POWER SEATS

Component	Page
Cluster	8W-63-5
Fuse 7	8W-63-2
Fuse 48	8W-63-6
G203	8W-63-5
G302	8W-63-2, 3, 4, 7
G303	8W-63-7
Heater-Seat Cushion-Driver	8W-63-7
Heater-Seat Cushion-Passenger	8W-63-7
Lumbar Motor-Passenger	8W-63-4
Module-Heated Seats	8W-63-6, 7
Module-Integrated Power	8W-63-2, 6
Motor-Lumbar-Driver	8W-63-2
Motor-Lumbar-Passenger	8W-63-3
Motor-Seat Adjuster-Driver Horizontal	8W-63-2
Motor-Seat Adjuster-Front Driver Vertical	8W-63-2
Motor-Seat Adjuster-Front Passenger Vertical	8W-63-4
Motor-Seat Adjuster-Passenger Horizontal	8W-63-4
Motor-Seat Adjuster-Rear Driver Vertical	8W-63-2
Motor-Seat Adjuster-Rear Passenger Vertical	8W-63-4
Switch-Heated Seat-Driver	8W-63-5, 6
Switch-Heated Seat-Passenger	8W-63-5, 6
Switch-Seat-Driver	8W-63-2
Switch-Seat-Passenger	8W-63-3, 4

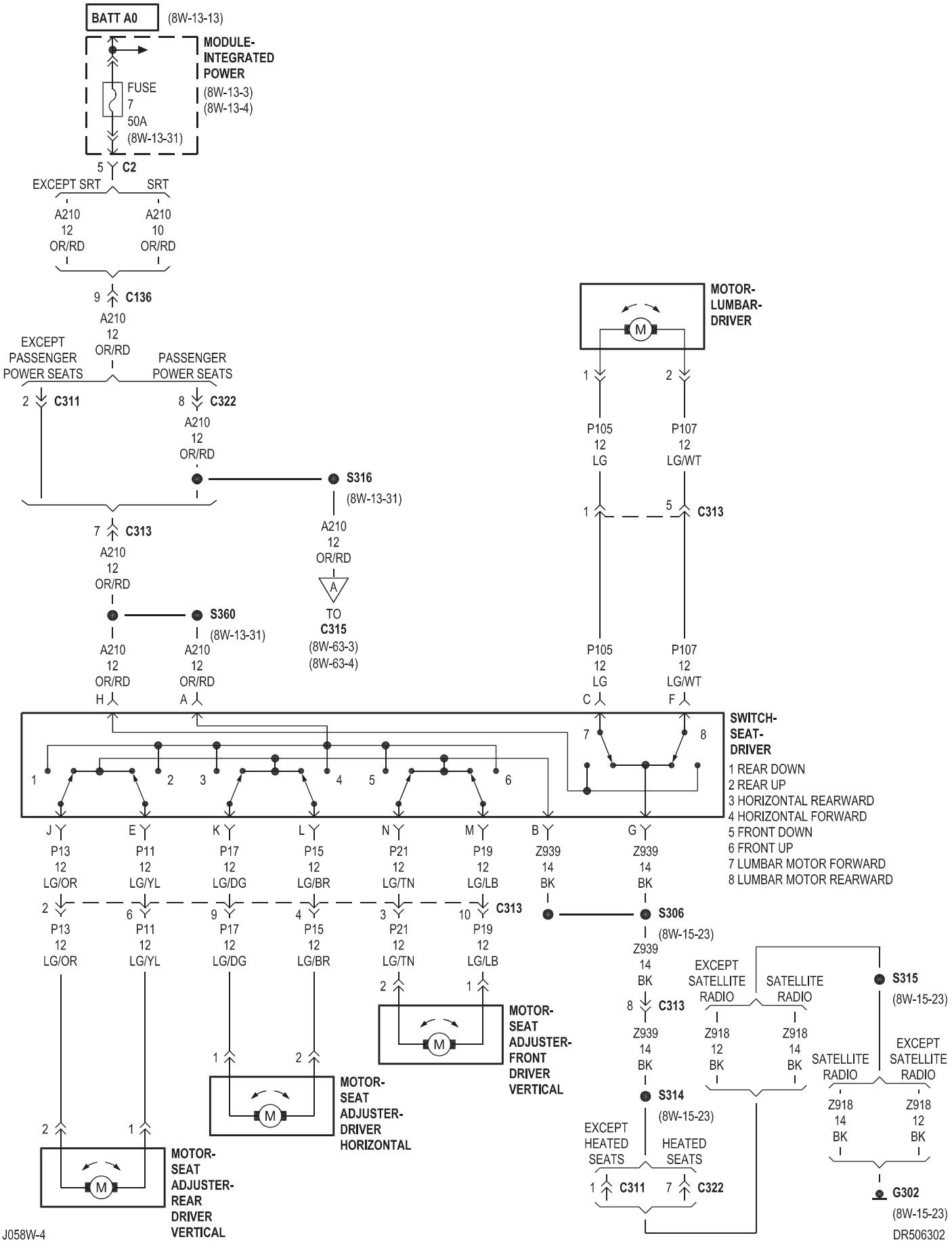
BATT A0
(8W-13-13)
MODULE-INTEGRATED POWER
(8W-13-3)
(8W-13-4)
FUSE 7 50A
(8W-13-31)
5 C2
EXCEPT SRT
SRT
A210 12 OR/RD
A210 10 OR/RD
9 C136
A210 12 OR/RD
EXCEPT PASSENGER POWER SEATS
PASSENGER POWER SEATS
2 C311
8 C322
A210 12 OR/RD
S316
(8W-13-31)
A210 12 OR/RD
A
TO C315
(8W-63-3)
(8W-63-4)
7 C313
A210 12 OR/RD
S360
(8W-13-31)
A210 12 OR/RD H
A210 12 OR/RD A
MOTOR-LUMBAR-DRIVER
P105 12 LG
P107 12 LG/WT
C313
P105 12 LG C
P107 12 LG/WT F
SWITCH-SEAT-DRIVER
1 REAR DOWN
2 REAR UP
3 HORIZONTAL REARWARD
4 HORIZONTAL FORWARD
5 FRONT DOWN
6 FRONT UP
7 LUMBAR MOTOR FORWARD
8 LUMBAR MOTOR REARWARD
P13 12 LG/OR
P11 12 LG/YL
P17 12 LG/DG
P15 12 LG/BR
P21 12 LG/TN
P19 12 LG/LB
Z939 14 BK
C313
S306
(8W-15-23)
MOTOR-SEAT ADJUSTER-FRONT DRIVER VERTICAL
MOTOR-SEAT ADJUSTER-DRIVER HORIZONTAL
MOTOR-SEAT ADJUSTER-REAR DRIVER VERTICAL
EXCEPT SATELLITE RADIO
SATELLITE RADIO
Z918 12 BK
Z918 14 BK
S315
(8W-15-23)
S314
(8W-15-23)
EXCEPT HEATED SEATS
HEATED SEATS
C311
C322
G302
(8W-15-23)
J058W-4
DR506302

STANDARD CAB

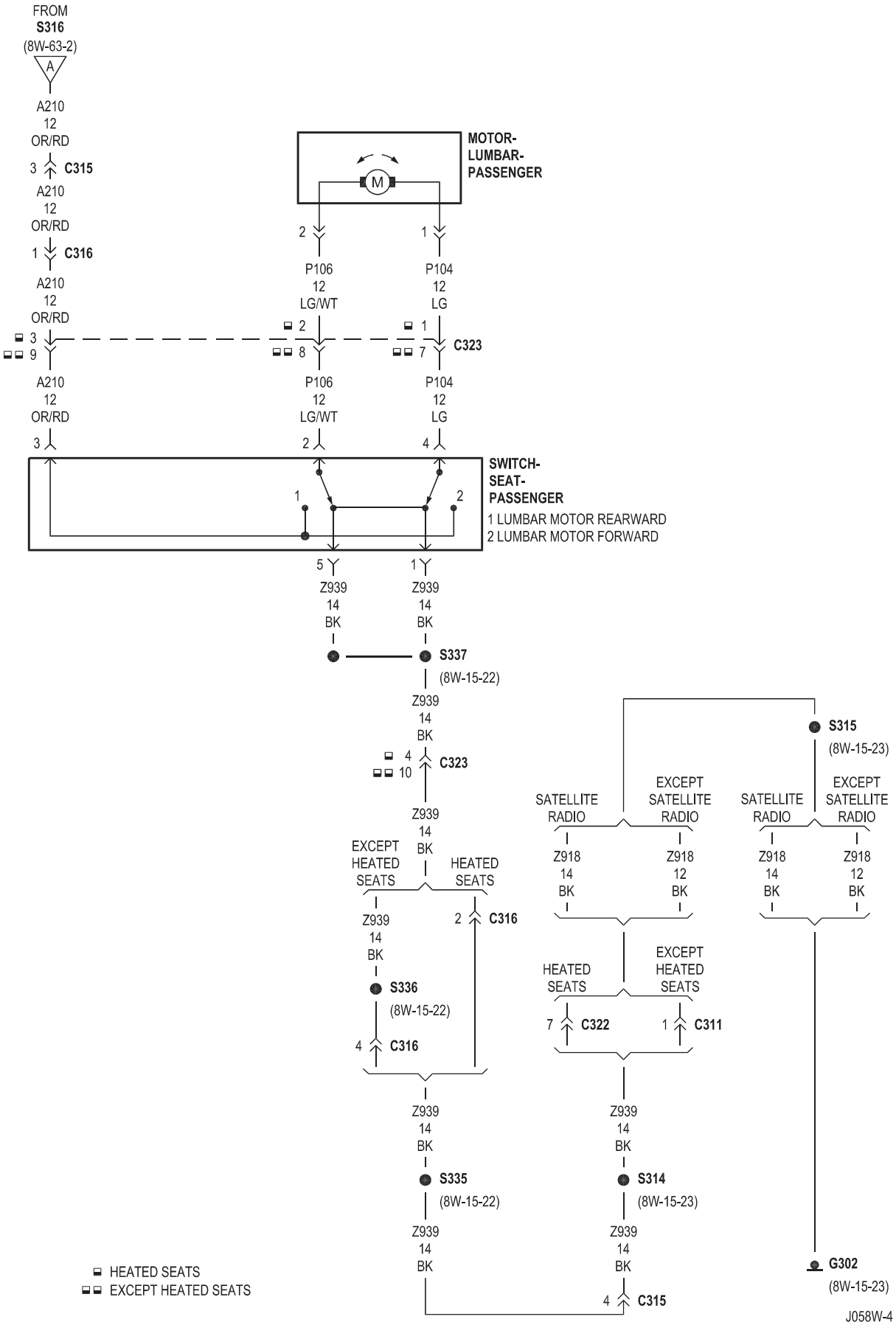

DR506303

J058W-4

QUAD CAB

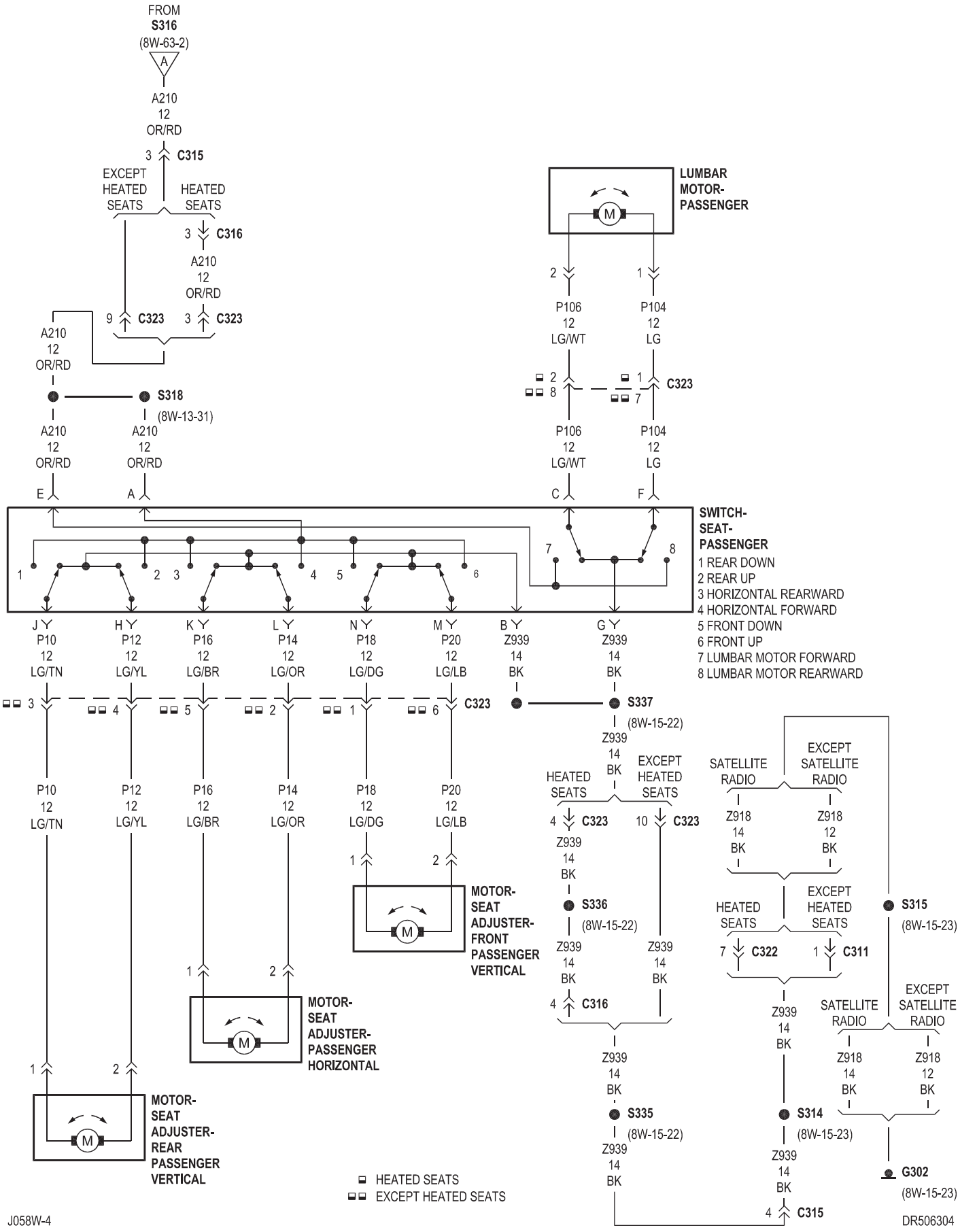
FROM S316 (8W-63-2)
A
A210 12 OR/RD
3 C315
EXCEPT HEATED SEATS
HEATED SEATS
3 C316
A210 12 OR/RD
9 C323
3 C323
A210 12 OR/RD
S318
(8W-13-31)
A210 12 OR/RD
A210 12 OR/RD
E
A
LUMBAR MOTOR- PASSENGER
M
2
1
P106 12 LG/WT
P104 12 LG
2
8
1
7
C323
P106 12 LG/WT
P104 12 LG
C
F
SWITCH- SEAT- PASSENGER
1 REAR DOWN
2 REAR UP
3 HORIZONTAL REARWARD
4 HORIZONTAL FORWARD
5 FRONT DOWN
6 FRONT UP
7 LUMBAR MOTOR FORWARD
8 LUMBAR MOTOR REARWARD
J P10 12 LG/TN
H P12 12 LG/YL
K P16 12 LG/BR
L P14 12 LG/OR
N P18 12 LG/DG
M P20 12 LG/LB
B Z939 14 BK
G Z939 14 BK
3
4
5
2
1
6
C323
S337
(8W-15-22)
Z939 14 BK
HEATED SEATS
EXCEPT HEATED SEATS
4 C323
10 C323
Z939 14 BK
S336
(8W-15-22)
Z939 14 BK
Z939 14 BK
4 C316
Z939 14 BK
S335
(8W-15-22)
Z939 14 BK
SATELLITE RADIO
EXCEPT SATELLITE RADIO
Z918 14 BK
Z918 12 BK
HEATED SEATS
EXCEPT HEATED SEATS
7 C322
1 C311
S315
(8W-15-23)
Z939 14 BK
SATELLITE RADIO
EXCEPT SATELLITE RADIO
Z918 14 BK
Z918 12 BK
S314
(8W-15-23)
Z939 14 BK
G302
(8W-15-23)
4 C315
P10 12 LG/TN
P12 12 LG/YL
P16 12 LG/BR
P14 12 LG/OR
P18 12 LG/DG
P20 12 LG/LB
1
2
MOTOR- SEAT ADJUSTER- FRONT PASSENGER VERTICAL
M
1
2
MOTOR- SEAT ADJUSTER- PASSENGER HORIZONTAL
M
1
2
MOTOR- SEAT ADJUSTER- REAR PASSENGER VERTICAL
M
HEATED SEATS
EXCEPT HEATED SEATS
J058W-4
DR506304

HEATED SEATS

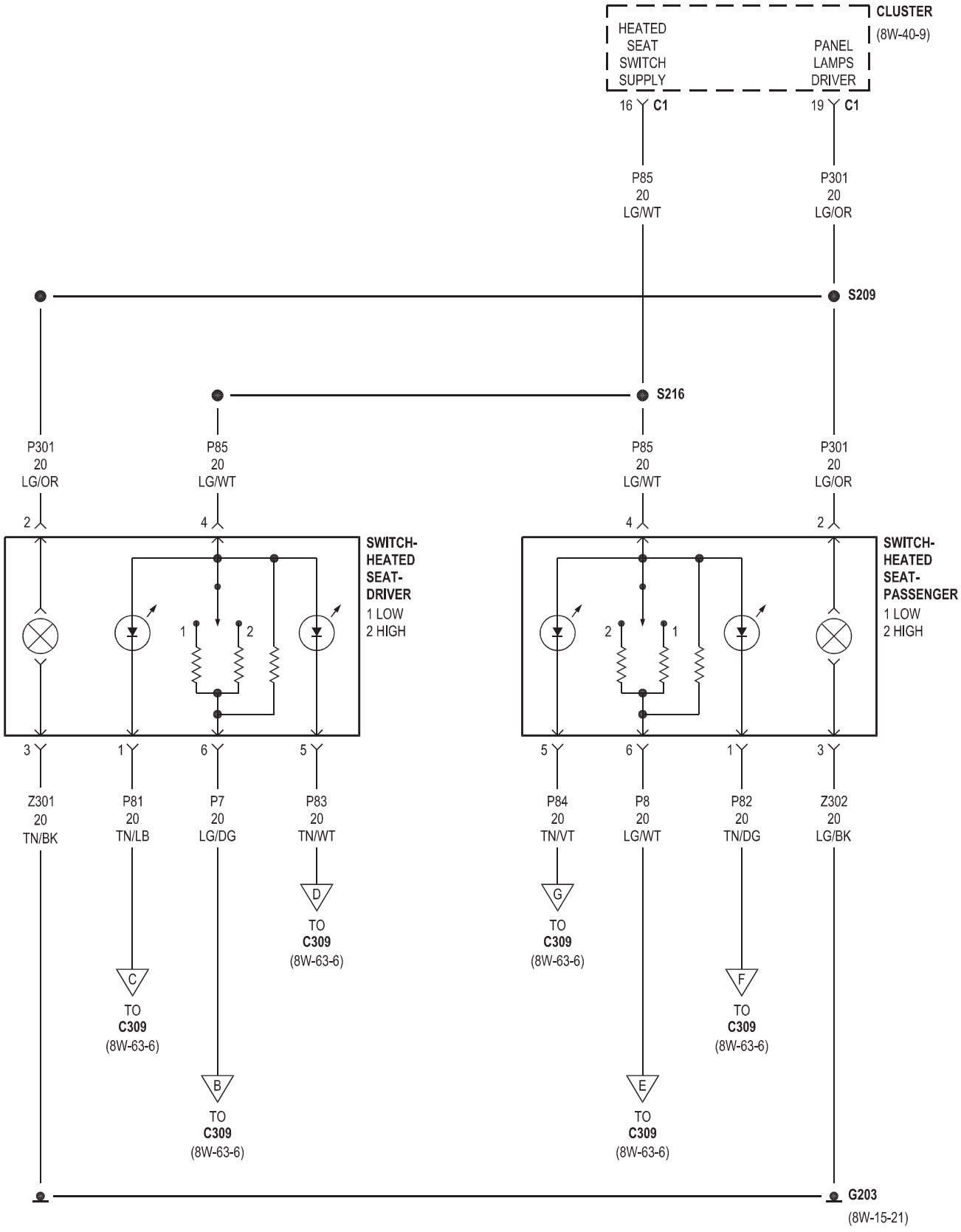

HEATED SEATS

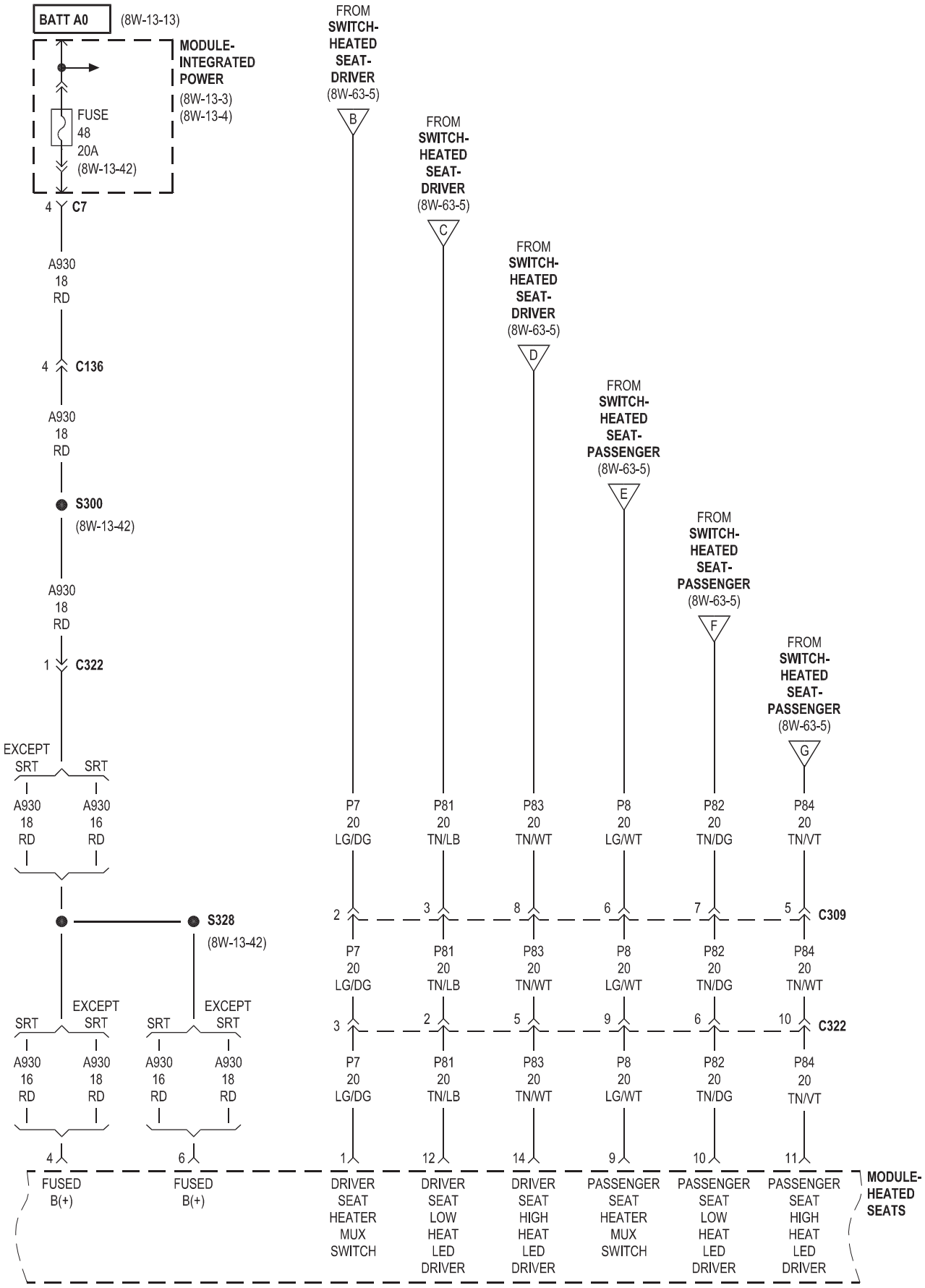

HEATED SEATS

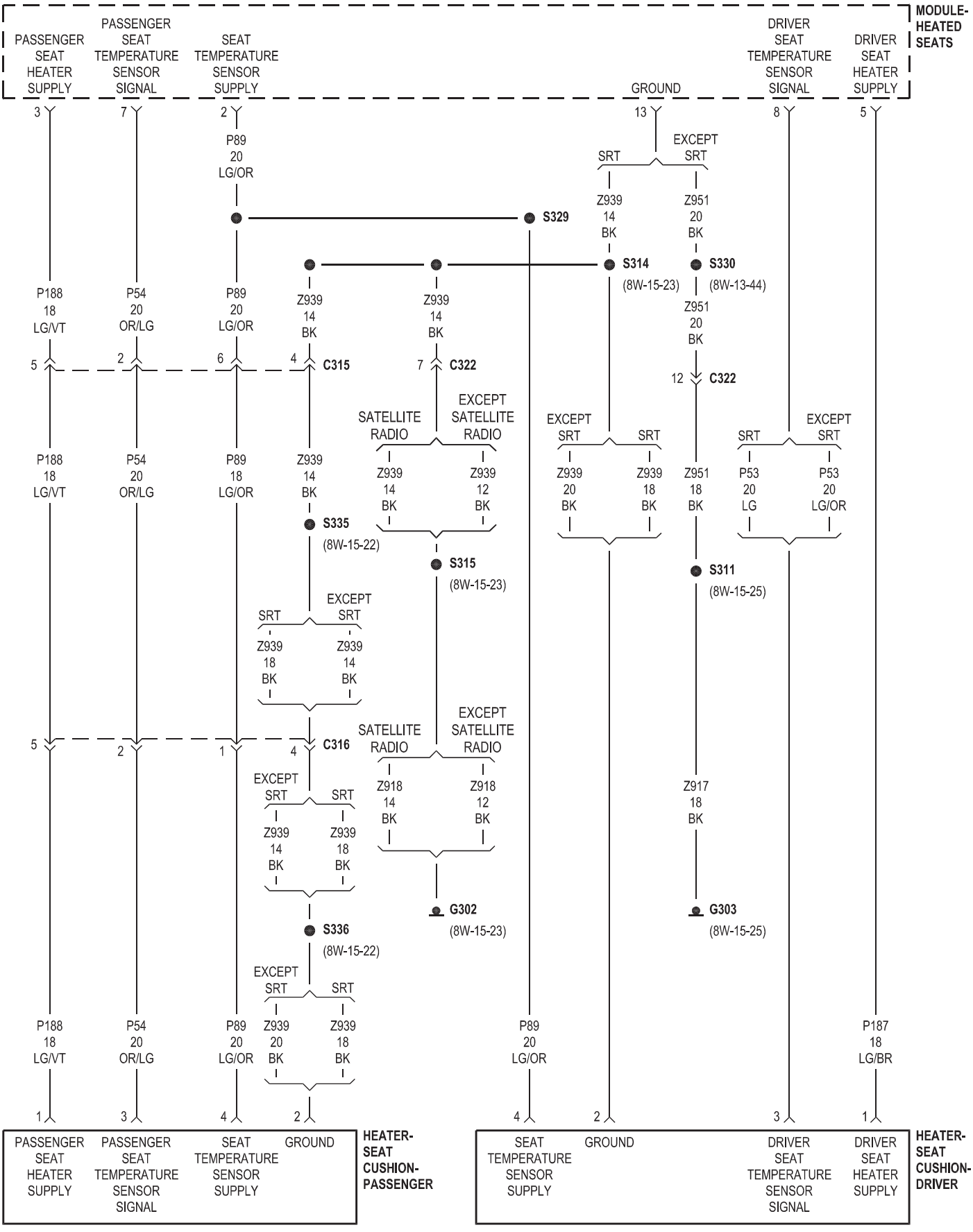

8W-64 POWER SUNROOF

Component	Page
Circuit Breaker-Power Window	8W-64-2
Fuse 9	8W-64-2
G203	8W-64-2
Module-Integrated Power	8W-64-2
Motor-Sunroof	8W-64-2
PTC No. 2	8W-64-2
Switch-Sunroof	8W-64-2

QUAD CAB

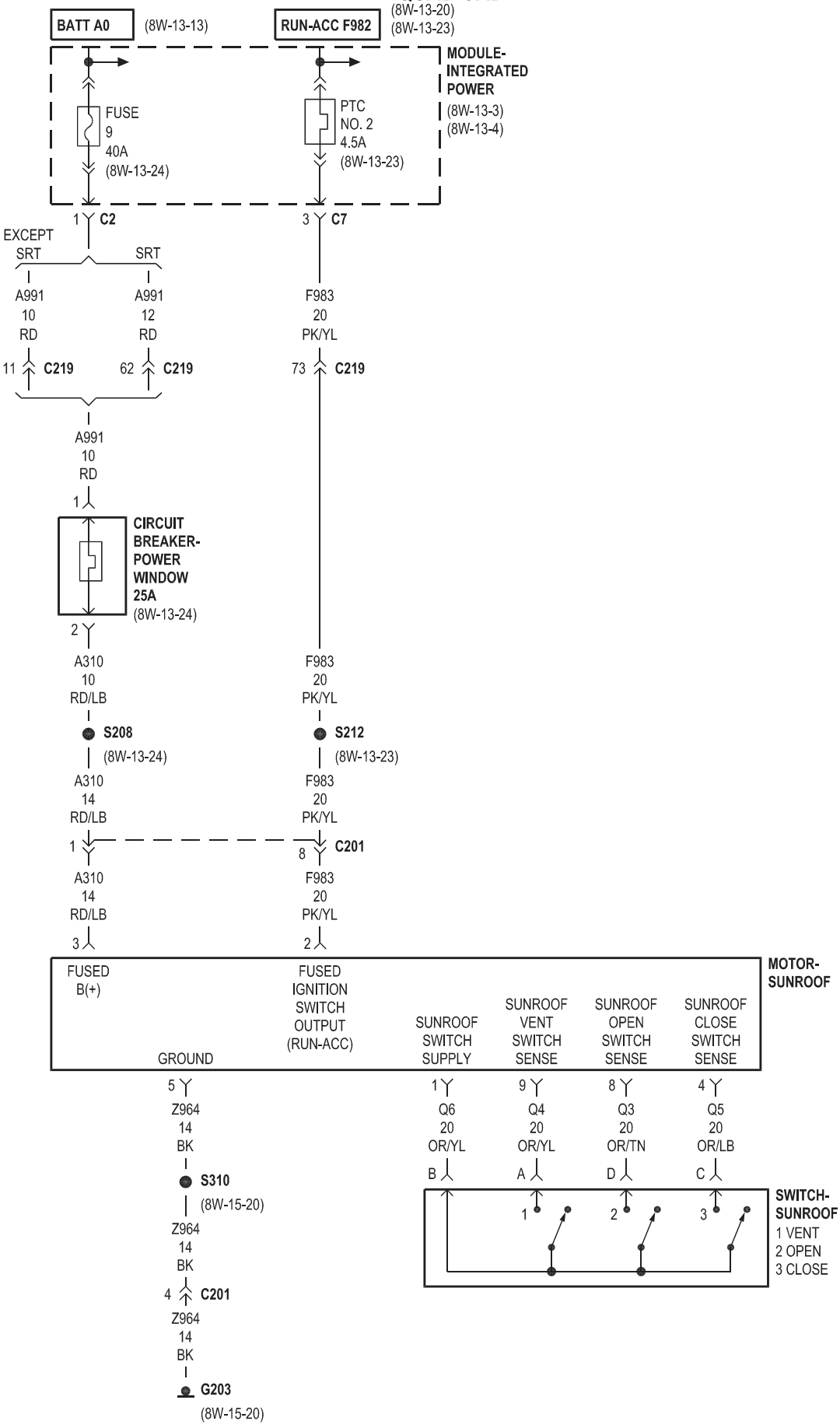
BATT A0
(8W-13-13)
RUN-ACC F982
(8W-13-20)
(8W-13-23)
MODULE-INTEGRATED POWER
(8W-13-3)
(8W-13-4)
FUSE 9 40A
(8W-13-24)
PTC NO. 2 4.5A
(8W-13-23)
1 C2
3 C7
EXCEPT SRT
SRT
A991 10 RD
A991 12 RD
F983 20 PK/YL
11 C219
62 C219
73 C219
A991 10 RD
1
CIRCUIT BREAKER-POWER WINDOW 25A
(8W-13-24)
2
A310 10 RD/LB
F983 20 PK/YL
S208
(8W-13-24)
S212
(8W-13-23)
A310 14 RD/LB
F983 20 PK/YL
1
8
C201
A310 14 RD/LB
F983 20 PK/YL
3
2
MOTOR-SUNROOF
FUSED B(+)
FUSED IGNITION SWITCH OUTPUT (RUN-ACC)
GROUND
SUNROOF SWITCH SUPPLY
SUNROOF VENT SWITCH SENSE
SUNROOF OPEN SWITCH SENSE
SUNROOF CLOSE SWITCH SENSE
5 Z964 14 BK
1 Q6 20 OR/YL
9 Q4 20 OR/YL
8 Q3 20 OR/TN
4 Q5 20 OR/LB
S310
(8W-15-20)
B
A
D
C
SWITCH-SUNROOF
1 VENT
2 OPEN
3 CLOSE
Z964 14 BK
4 C201
Z964 14 BK
G203
(8W-15-20)

8W-70 SPLICE INFORMATION

Component	Page
S101	8W-15-2
S102	8W-13-36
S103	8W-70-6
S104	8W-13-43
S105	8W-15-4
S106	8W-13-36
S107	8W-13-43
S108	8W-15-11
S109	8W-13-43
S110	8W-13-39
S111	8W-33-2
S112	8W-13-15
S113	8W-48-2
S114	8W-13-31
S115	8W-13-13
S116	8W-13-23
S117	8W-70-4
S118	8W-13-13
S119	8W-31-5
S120	8W-13-47
S121	8W-33-3
S122	8W-13-21
S123	8W-70-11, 12
S124	8W-70-3, 5, 12
S125	8W-13-27
S126	8W-30-14, 21
S127	8W-31-9
S128	8W-13-19
S129	8W-13-19
S130	8W-70-7, 8
S131	8W-70-9
S132	8W-70-7, 8, 9
S133	8W-31-12
S134	8W-13-19
S135	8W-70-8
S136	8W-30-13, 30
S137	8W-13-15
S138	8W-20-2
S140	8W-13-26
S141	8W-30-14, 20
S142	8W-13-16
S143	8W-13-17
S144	8W-70-6
S145	8W-13-33
S146	8W-70-10
S147	8W-15-7
S148	8W-13-15
S149	8W-13-16
S150	8W-70-2
S151	8W-13-28
S152	8W-30-3, 25
S154	8W-70-3
S155	8W-13-17
S156	8W-30-42
S157	8W-30-31
S158	8W-30-42
S159	8W-30-42
S160	8W-13-18
S161	8W-15-4
S162	8W-13-17
S163	8W-13-18
S164	8W-15-16
S165	8W-13-13
S166	8W-13-13
S168	8W-30-18
S169	8W-30-19
S170	8W-30-41
S171	8W-30-42
S172	8W-70-12
S173	8W-70-5
S174	8W-30-25, 41
S175	8W-30-41
S176	8W-15-16
S177	8W-30-41
S179	8W-31-8
S181	8W-31-8
S182	8W-70-10
S183	8W-70-9
S185	8W-13-26

Component	Page
S186	8W-30-35
S188	8W-30-43
S189	8W-30-35
S191	8W-42-9
S192	8W-13-24
S193	8W-13-21
S195	8W-18-6
S196	8W-13-13
S197	8W-13-13
S198	8W-13-13
S199	8W-13-13
S204	8W-13-33
S205	8W-13-22
S206	8W-33-5, 6
S207	8W-33-5, 6
S208	8W-13-24
S209	8W-63-5
S210	8W-13-20
S212	8W-13-23
S214	8W-33-2
S216	8W-63-5
S219	8W-47-9
S220	8W-15-18
S221	8W-13-39
S222	8W-13-40
S224	8W-42-2
S225	8W-13-26
S226	8W-42-4, 5
S228	8W-33-6
S230	8W-18-5
S231	8W-18-6
S240	8W-13-39
S241	8W-13-37
S245	8W-13-33
S246	8W-13-21
S300	8W-13-42
S301	8W-44-2, 3
S303	8W-13-37
S305	8W-15-21
S306	8W-15-23
S308	8W-15-4
S309	8W-15-3
S310	8W-15-20
S311	8W-15-25
S312	8W-15-24
S313	8W-15-24
S314	8W-15-23
S315	8W-15-23
S316	8W-13-31
S318	8W-13-31
S319	8W-15-23
S320	8W-40-4
S321	8W-40-8
S323	8W-61-3
S324	8W-13-36
S325	8W-13-47
S326	8W-13-37
S327	8W-13-36
S328	8W-13-42
S329	8W-63-7
S330	8W-13-44
S331	8W-13-44
S332	8W-62-2
S333	8W-60-3
S334	8W-13-26
S335	8W-15-22
S336	8W-15-22
S337	8W-15-22
S338	8W-61-3
S340	8W-15-3
S341	8W-15-3
S342	8W-13-37
S343	8W-13-37
S344	8W-44-2, 3
S345	8W-47-10
S360	8W-13-31
S390	8W-15-25

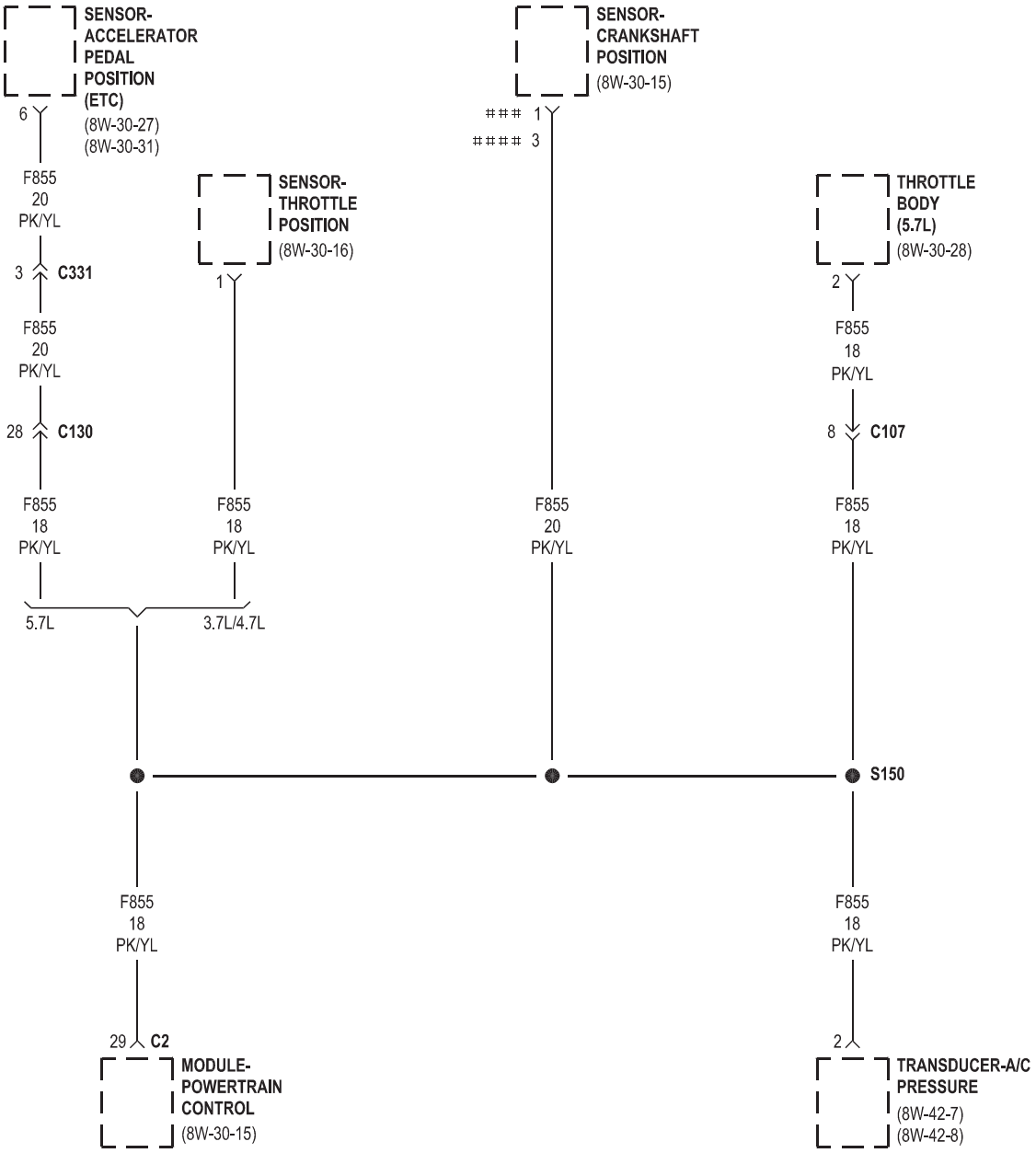
SENSOR-
ACCELERATOR
PEDAL
POSITION
(ETC)
6
(8W-30-27)
(8W-30-31)
F855
20
PK/YL
3
C331
F855
20
PK/YL
28
C130
F855
18
PK/YL
5.7L
SENSOR-
THROTTLE
POSITION
(8W-30-16)
1
F855
18
PK/YL
3.7L/4.7L
SENSOR-
CRANKSHAFT
POSITION
(8W-30-15)
1
3
F855
20
PK/YL
THROTTLE
BODY
(5.7L)
(8W-30-28)
2
F855
18
PK/YL
8
C107
F855
18
PK/YL
S150
F855
18
PK/YL
29
C2
MODULE-
POWERTRAIN
CONTROL
(8W-30-15)
F855
18
PK/YL
2
TRANSDUCER-A/C
PRESSURE
(8W-42-7)
(8W-42-8)

5.7L

3.7L/4.7L

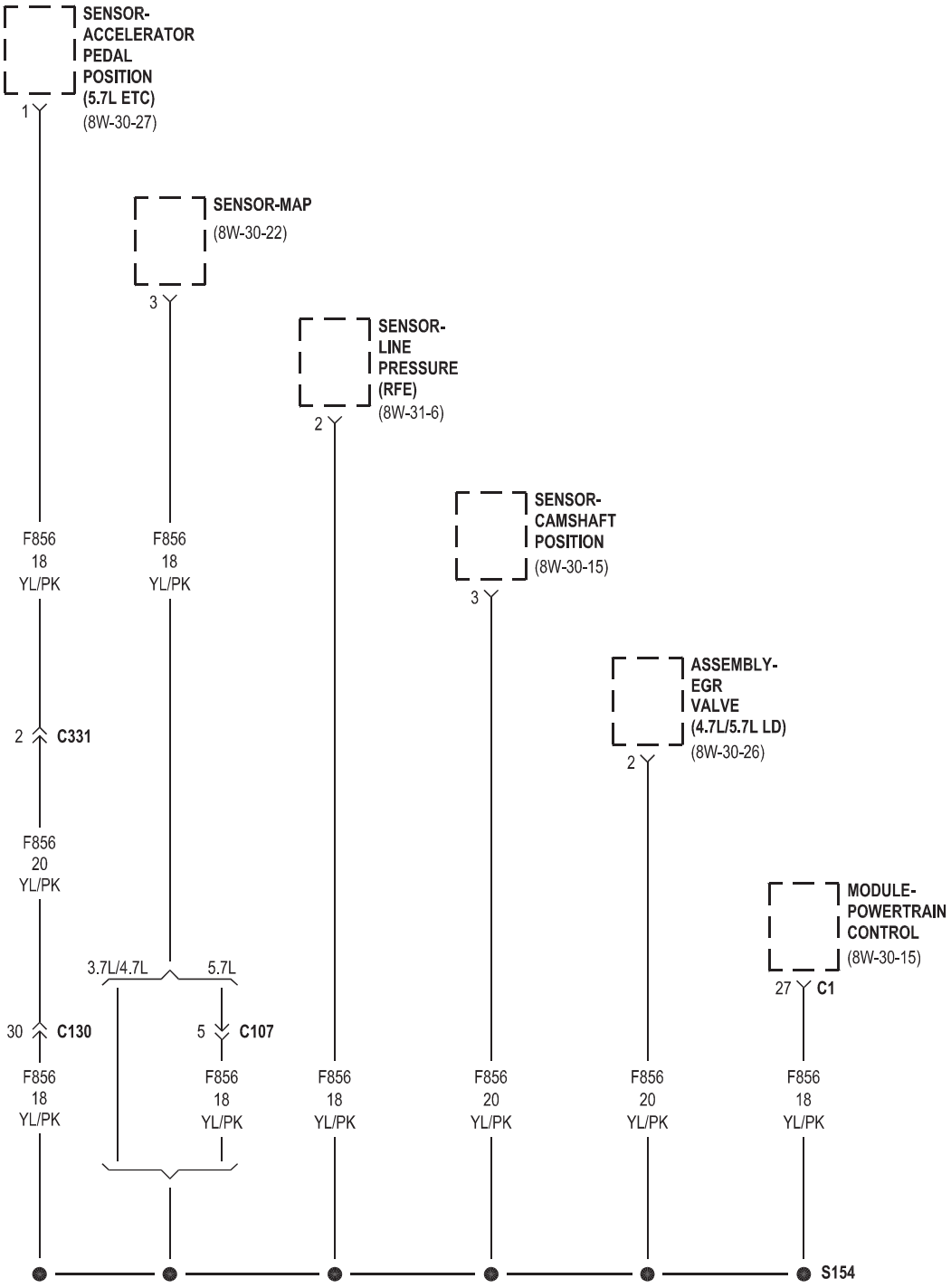
SENSOR-
ACCELERATOR
PEDAL
POSITION
(5.7L ETC)
(8W-30-27)
1
SENSOR-MAP
(8W-30-22)
3
SENSOR-
LINE
PRESSURE
(RFE)
(8W-31-6)
2
SENSOR-
CAMSHAFT
POSITION
(8W-30-15)
3
ASSEMBLY-
EGR
VALVE
(4.7L/5.7L LD)
(8W-30-26)
2
MODULE-
POWERTRAIN
CONTROL
(8W-30-15)
27
C1
F856
18
YL/PK
F856
18
YL/PK
2
C331
F856
20
YL/PK
3.7L/4.7L
5.7L
30
C130
5
C107
F856
18
YL/PK
F856
18
YL/PK
F856
18
YL/PK
F856
20
YL/PK
F856
20
YL/PK
F856
18
YL/PK
S154

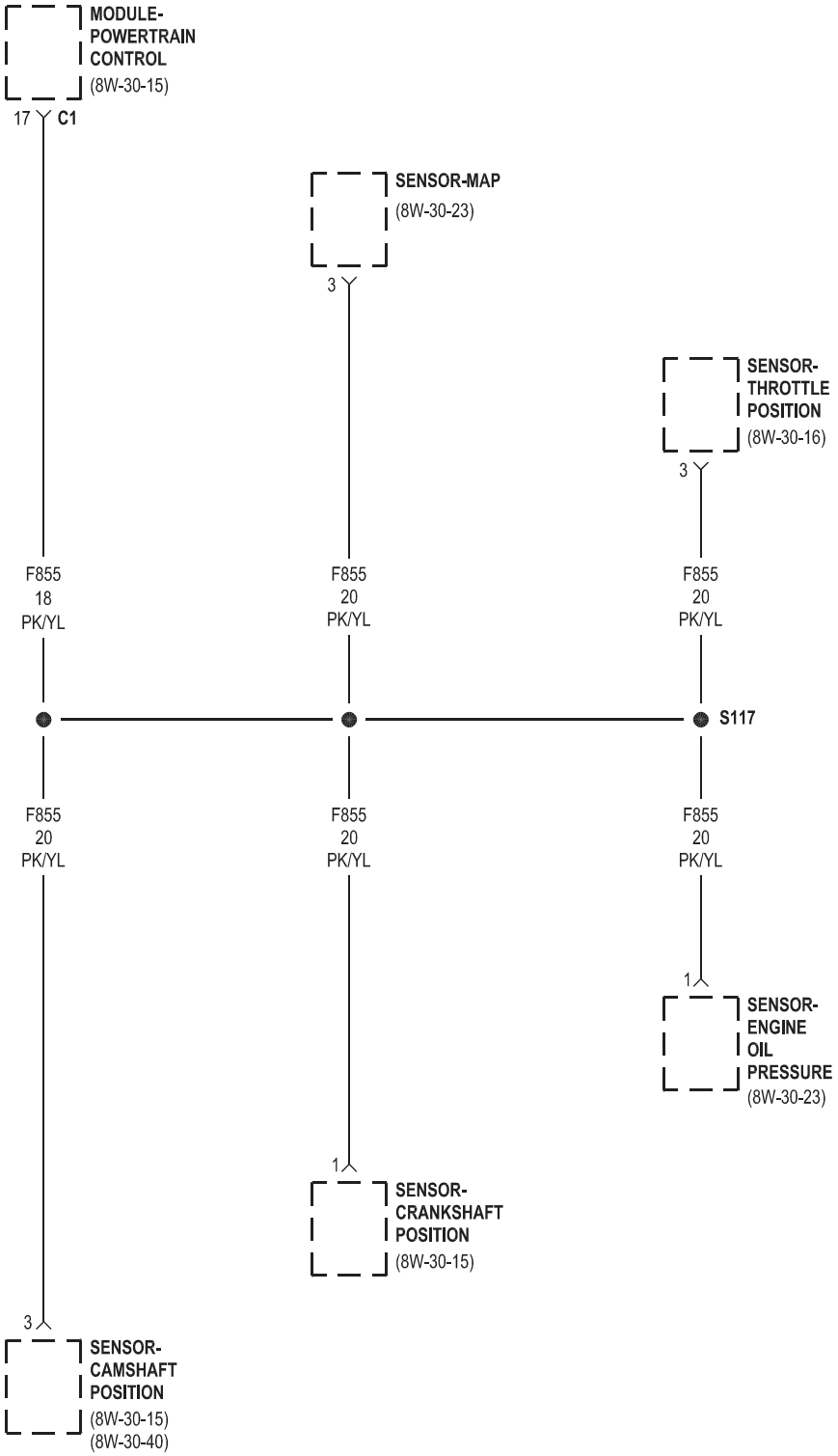
MODULE-
POWERTRAIN
CONTROL
(8W-30-15)
17
C1
SENSOR-MAP
(8W-30-23)
3
SENSOR-
THROTTLE
POSITION
(8W-30-16)
3
F855
18
PK/YL
F855
20
PK/YL
F855
20
PK/YL
S117
F855
20
PK/YL
F855
20
PK/YL
F855
20
PK/YL
1
SENSOR-
ENGINE
OIL
PRESSURE
(8W-30-23)
1
SENSOR-
CRANKSHAFT
POSITION
(8W-30-15)
3
SENSOR-
CAMSHAFT
POSITION
(8W-30-15)
(8W-30-40)

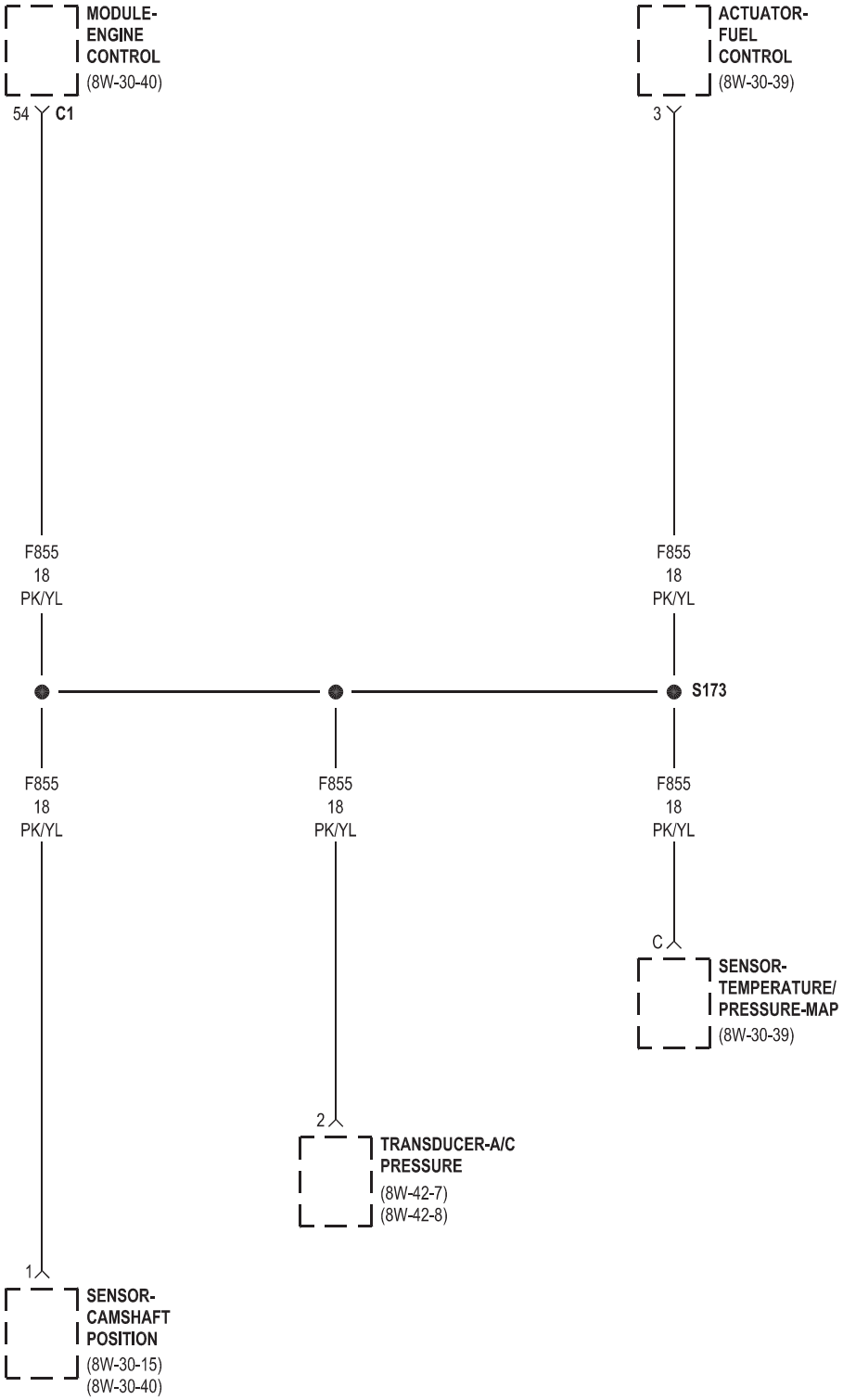
MODULE-
ENGINE
CONTROL
(8W-30-40)
54 C1
ACTUATOR-
FUEL
CONTROL
(8W-30-39)
3
F855
18
PK/YL
F855
18
PK/YL
S173
F855
18
PK/YL
F855
18
PK/YL
F855
18
PK/YL
C
SENSOR-
TEMPERATURE/
PRESSURE-MAP
(8W-30-39)
2
TRANSDUCER-A/C
PRESSURE
(8W-42-7)
(8W-42-8)
1
SENSOR-
CAMSHAFT
POSITION
(8W-30-15)
(8W-30-40)

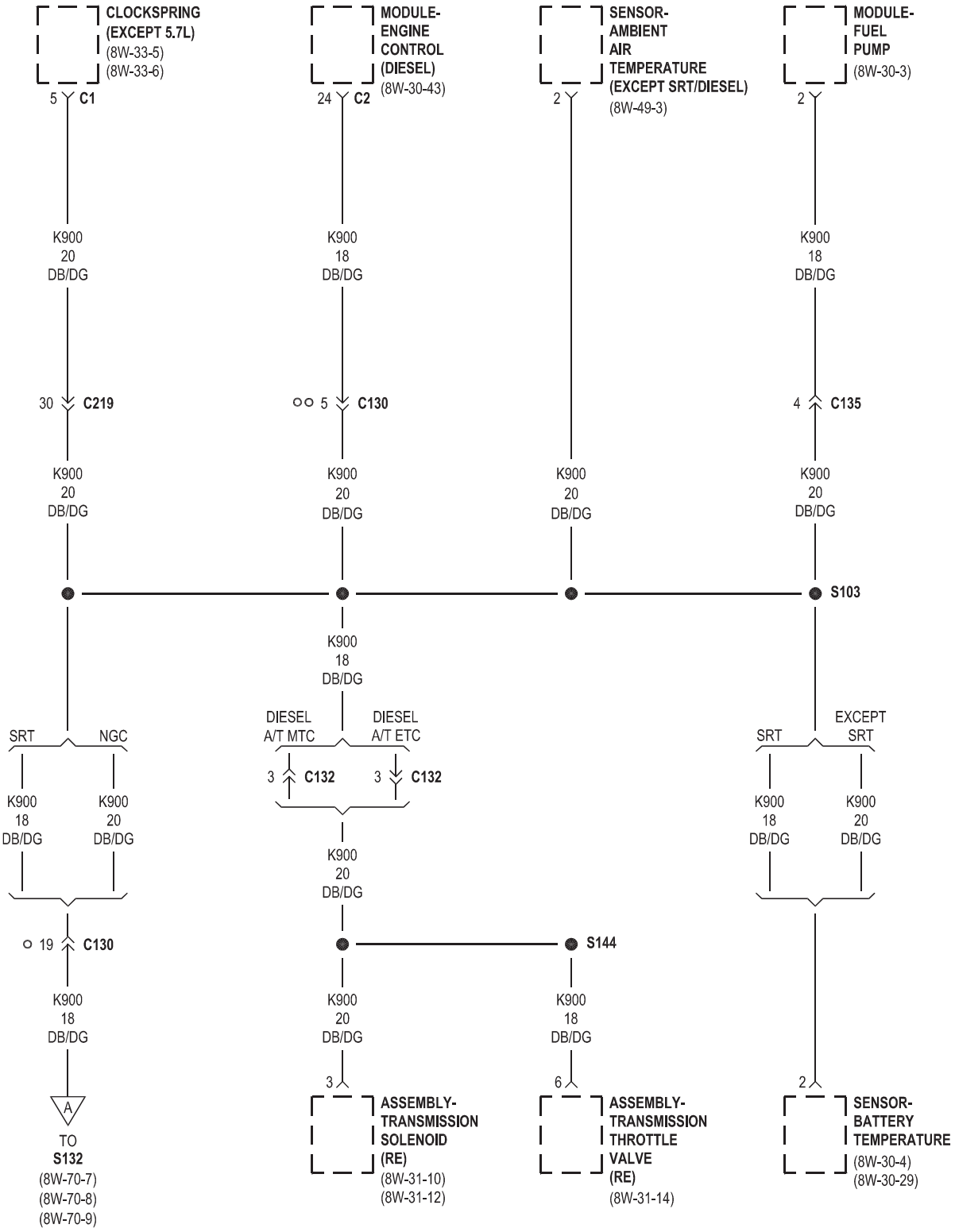
CLOCKSPRING
(EXCEPT 5.7L)
(8W-33-5)
(8W-33-6)
5 C1
K900
20
DB/DG
30 C219
K900
20
DB/DG
SRT
NGC
K900
18
DB/DG
K900
20
DB/DG
19 C130
K900
18
DB/DG
A
TO
S132
(8W-70-7)
(8W-70-8)
(8W-70-9)
MODULE-
ENGINE
CONTROL
(DIESEL)
(8W-30-43)
24 C2
K900
18
DB/DG
5 C130
K900
20
DB/DG
K900
18
DB/DG
DIESEL
A/T MTC
DIESEL
A/T ETC
3 C132
3 C132
K900
20
DB/DG
3
ASSEMBLY-
TRANSMISSION
SOLENOID
(RE)
(8W-31-10)
(8W-31-12)
SENSOR-
AMBIENT
AIR
TEMPERATURE
(EXCEPT SRT/DIESEL)
(8W-49-3)
2
K900
20
DB/DG
S144
K900
18
DB/DG
6
ASSEMBLY-
TRANSMISSION
THROTTLE
VALVE
(RE)
(8W-31-14)
MODULE-
FUEL
PUMP
(8W-30-3)
2
K900
18
DB/DG
4 C135
K900
20
DB/DG
S103
EXCEPT
SRT
SRT
K900
18
DB/DG
K900
20
DB/DG
2
SENSOR-
BATTERY
TEMPERATURE
(8W-30-4)
(8W-30-29)
GAS
DIESEL

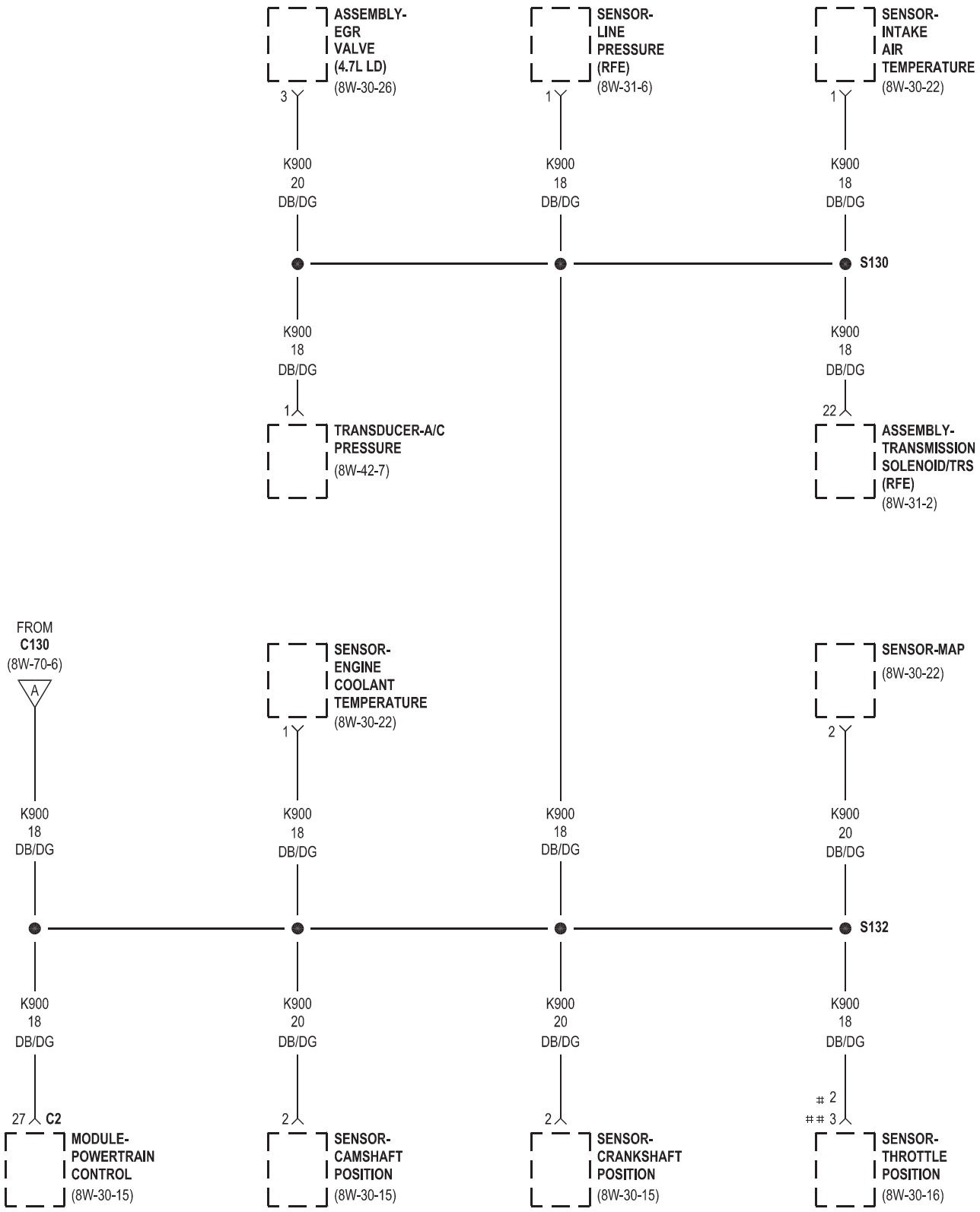
ASSEMBLY-
EGR
VALVE
(4.7L LD)
(8W-30-26)
3
SENSOR-
LINE
PRESSURE
(RFE)
(8W-31-6)
1
SENSOR-
INTAKE
AIR
TEMPERATURE
(8W-30-22)
1
K900
20
DB/DG
K900
18
DB/DG
K900
18
DB/DG
S130
K900
18
DB/DG
K900
18
DB/DG
1
TRANSDUCER-A/C
PRESSURE
(8W-42-7)
22
ASSEMBLY-
TRANSMISSION
SOLENOID/TRS
(RFE)
(8W-31-2)
FROM
C130
(8W-70-6)
A
SENSOR-
ENGINE
COOLANT
TEMPERATURE
(8W-30-22)
1
SENSOR-MAP
(8W-30-22)
2
K900
18
DB/DG
K900
18
DB/DG
K900
18
DB/DG
K900
20
DB/DG
S132
K900
18
DB/DG
K900
20
DB/DG
K900
20
DB/DG
K900
18
DB/DG
27
C2
MODULE-
POWERTRAIN
CONTROL
(8W-30-15)
2
SENSOR-
CAMSHAFT
POSITION
(8W-30-15)
2
SENSOR-
CRANKSHAFT
POSITION
(8W-30-15)
2
3
SENSOR-
THROTTLE
POSITION
(8W-30-16)

3.7L
4.7L

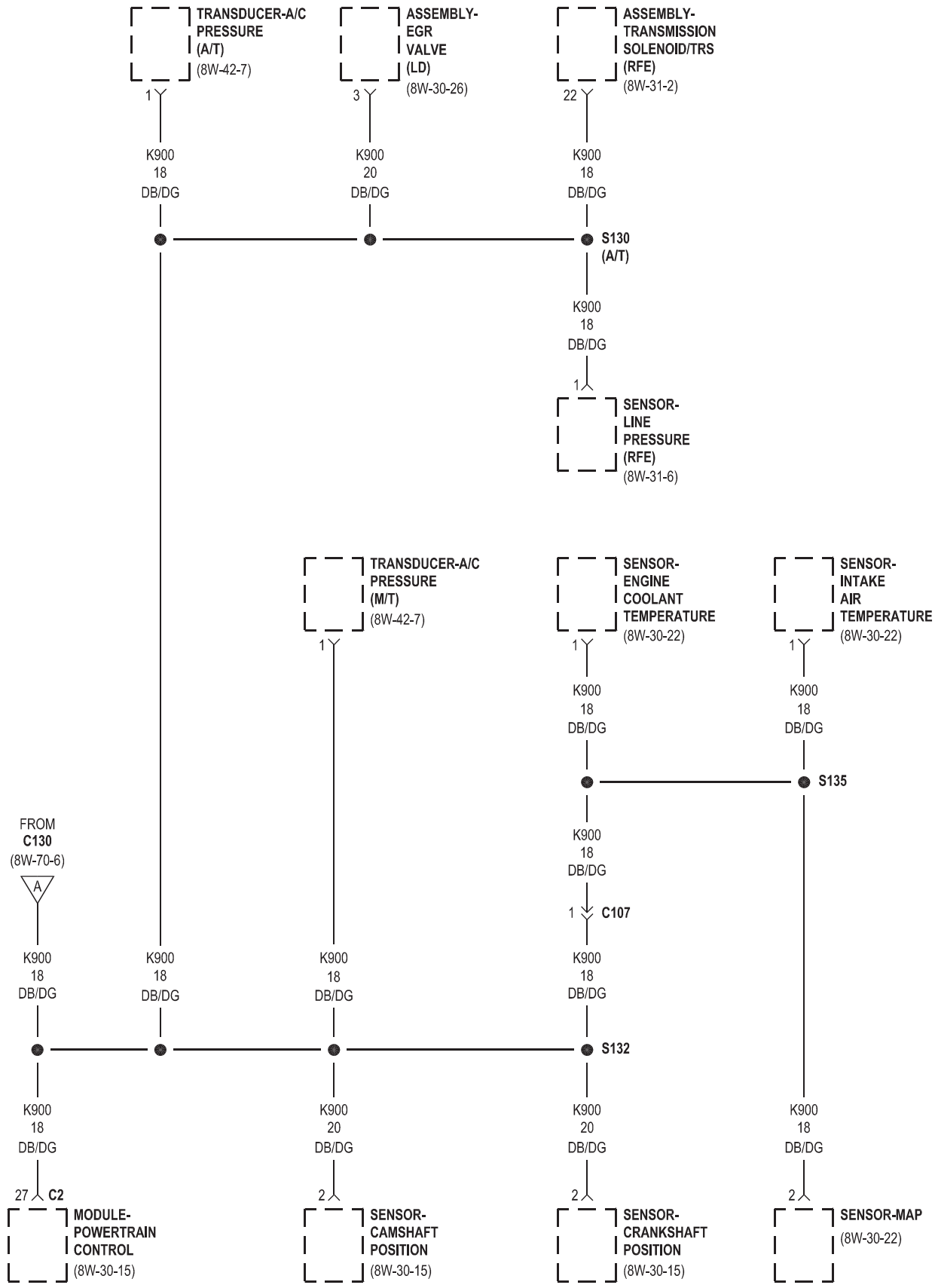
TRANSDUCER-A/C PRESSURE (A/T)
(8W-42-7)
1
K900 18 DB/DG
ASSEMBLY-EGR VALVE (LD)
(8W-30-26)
3
K900 20 DB/DG
ASSEMBLY-TRANSMISSION SOLENOID/TRS (RFE)
(8W-31-2)
22
K900 18 DB/DG
S130 (A/T)
K900 18 DB/DG
1
SENSOR-LINE PRESSURE (RFE)
(8W-31-6)
TRANSDUCER-A/C PRESSURE (M/T)
(8W-42-7)
1
SENSOR-ENGINE COOLANT TEMPERATURE
(8W-30-22)
1
K900 18 DB/DG
SENSOR-INTAKE AIR TEMPERATURE
(8W-30-22)
1
K900 18 DB/DG
S135
K900 18 DB/DG
1 C107
FROM C130
(8W-70-6)
A
K900 18 DB/DG
K900 18 DB/DG
K900 18 DB/DG
K900 18 DB/DG
S132
K900 18 DB/DG
27 C2
MODULE-POWERTRAIN CONTROL
(8W-30-15)
K900 20 DB/DG
2
SENSOR-CAMSHAFT POSITION
(8W-30-15)
K900 20 DB/DG
2
SENSOR-CRANKSHAFT POSITION
(8W-30-15)
K900 18 DB/DG
2
SENSOR-MAP
(8W-30-22)

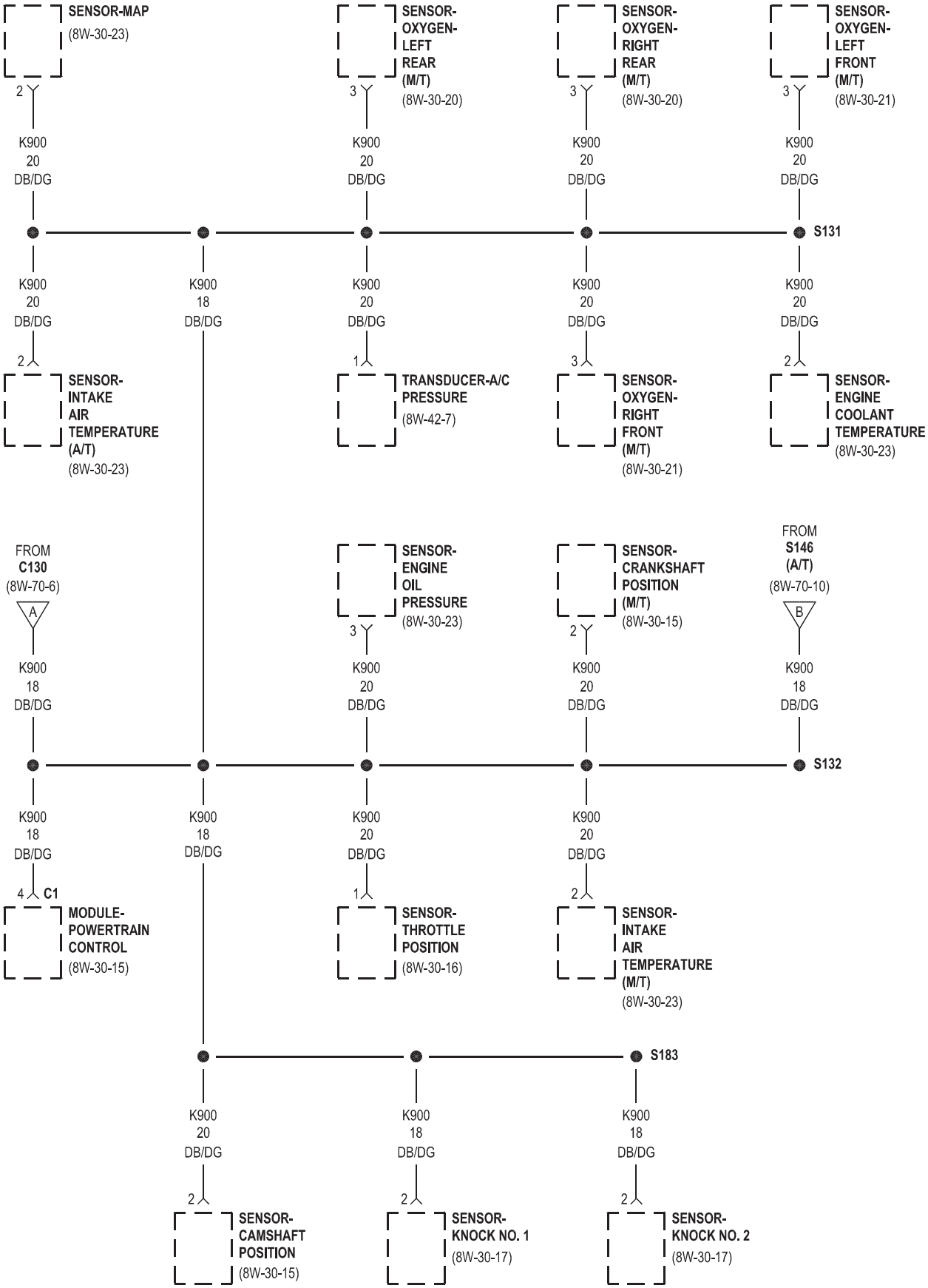
SENSOR-MAP
(8W-30-23)
2
K900
20
DB/DG
SENSOR-
OXYGEN-
LEFT
REAR
(M/T)
(8W-30-20)
3
K900
20
DB/DG
SENSOR-
OXYGEN-
RIGHT
REAR
(M/T)
(8W-30-20)
3
K900
20
DB/DG
SENSOR-
OXYGEN-
LEFT
FRONT
(M/T)
(8W-30-21)
3
K900
20
DB/DG
S131
K900
20
DB/DG
2
SENSOR-
INTAKE
AIR
TEMPERATURE
(A/T)
(8W-30-23)
K900
18
DB/DG
K900
20
DB/DG
1
TRANSDUCER-A/C
PRESSURE
(8W-42-7)
K900
20
DB/DG
3
SENSOR-
OXYGEN-
RIGHT
FRONT
(M/T)
(8W-30-21)
K900
20
DB/DG
2
SENSOR-
ENGINE
COOLANT
TEMPERATURE
(8W-30-23)
FROM
C130
(8W-70-6)
A
K900
18
DB/DG
SENSOR-
ENGINE
OIL
PRESSURE
(8W-30-23)
3
K900
20
DB/DG
SENSOR-
CRANKSHAFT
POSITION
(M/T)
(8W-30-15)
2
K900
20
DB/DG
FROM
S146
(A/T)
(8W-70-10)
B
K900
18
DB/DG
S132
K900
18
DB/DG
4
C1
MODULE-
POWERTRAIN
CONTROL
(8W-30-15)
K900
18
DB/DG
K900
20
DB/DG
1
SENSOR-
THROTTLE
POSITION
(8W-30-16)
K900
20
DB/DG
2
SENSOR-
INTAKE
AIR
TEMPERATURE
(M/T)
(8W-30-23)
S183
K900
20
DB/DG
2
SENSOR-
CAMSHAFT
POSITION
(8W-30-15)
K900
18
DB/DG
2
SENSOR-
KNOCK NO. 1
(8W-30-17)
K900
18
DB/DG
2
SENSOR-
KNOCK NO. 2
(8W-30-17)

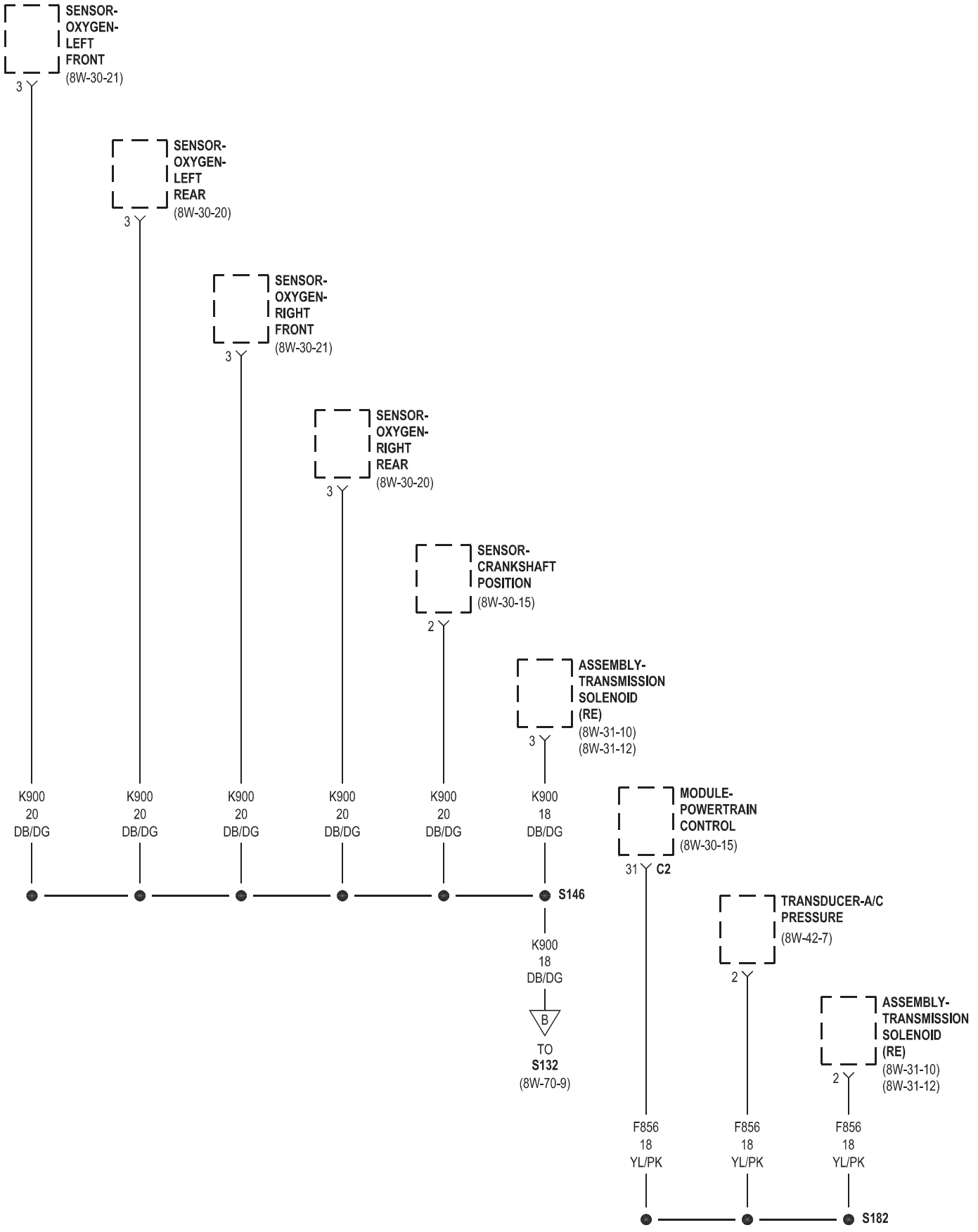
SENSOR-
OXYGEN-
LEFT
FRONT
(8W-30-21)
3
SENSOR-
OXYGEN-
LEFT
REAR
(8W-30-20)
3
SENSOR-
OXYGEN-
RIGHT
FRONT
(8W-30-21)
3
SENSOR-
OXYGEN-
RIGHT
REAR
(8W-30-20)
3
SENSOR-
CRANKSHAFT
POSITION
(8W-30-15)
2
ASSEMBLY-
TRANSMISSION
SOLENOID
(RE)
(8W-31-10)
(8W-31-12)
3
K900
20
DB/DG
K900
20
DB/DG
K900
20
DB/DG
K900
20
DB/DG
K900
20
DB/DG
K900
18
DB/DG
S146
K900
18
DB/DG
B
TO
S132
(8W-70-9)
MODULE-
POWERTRAIN
CONTROL
(8W-30-15)
31
C2
TRANSDUCER-A/C
PRESSURE
(8W-42-7)
2
ASSEMBLY-
TRANSMISSION
SOLENOID
(RE)
(8W-31-10)
(8W-31-12)
2
F856
18
YL/PK
F856
18
YL/PK
F856
18
YL/PK
S182

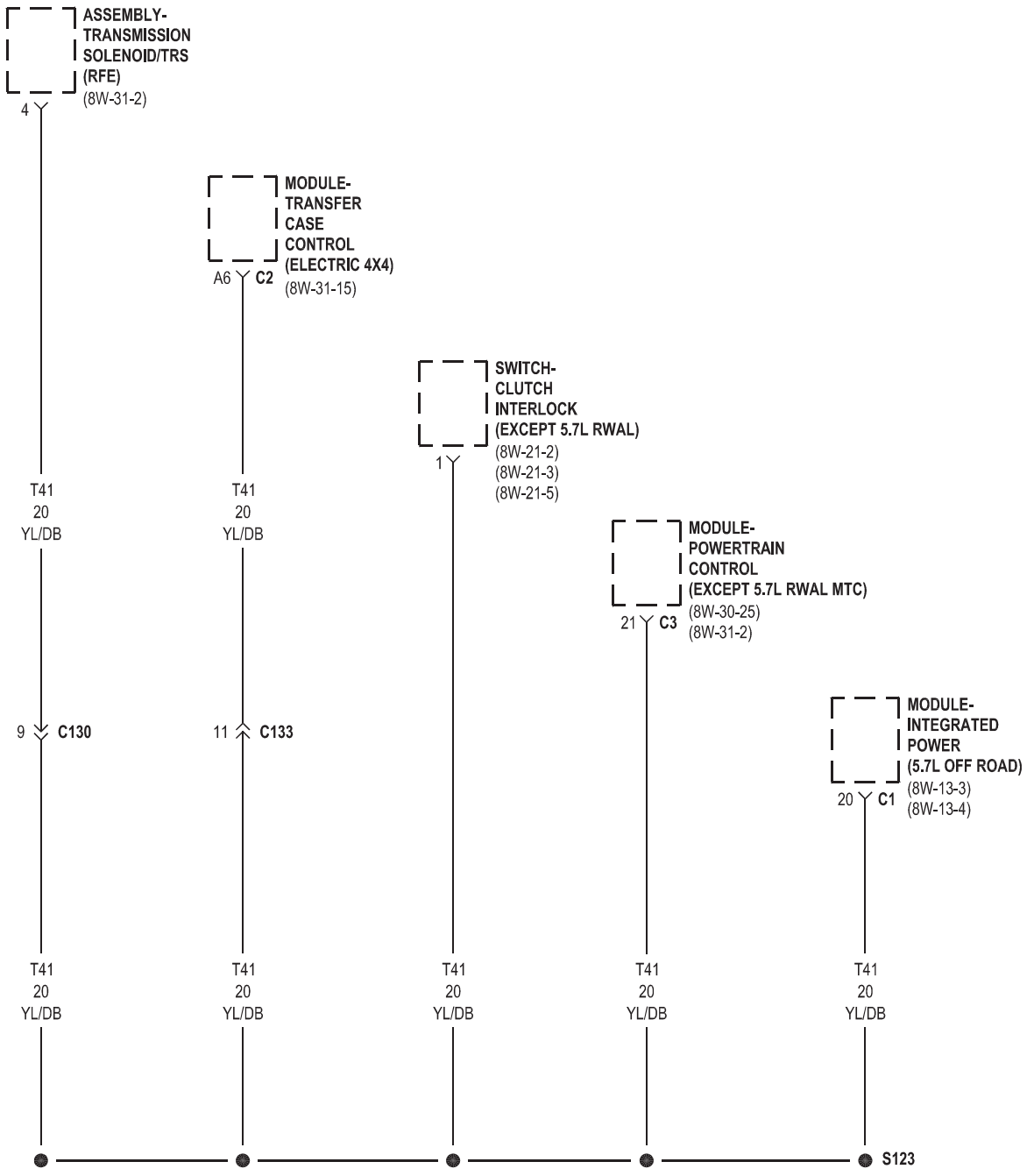
ASSEMBLY-
TRANSMISSION
SOLENOID/TRS
(RFE)
(8W-31-2)
4
MODULE-
TRANSFER
CASE
CONTROL
(ELECTRIC 4X4)
(8W-31-15)
A6
C2
SWITCH-
CLUTCH
INTERLOCK
(EXCEPT 5.7L RWAL)
(8W-21-2)
(8W-21-3)
(8W-21-5)
1
MODULE-
POWERTRAIN
CONTROL
(EXCEPT 5.7L RWAL MTC)
(8W-30-25)
(8W-31-2)
21
C3
MODULE-
INTEGRATED
POWER
(5.7L OFF ROAD)
(8W-13-3)
(8W-13-4)
20
C1
T41
20
YL/DB
9
C130
11
C133
S123

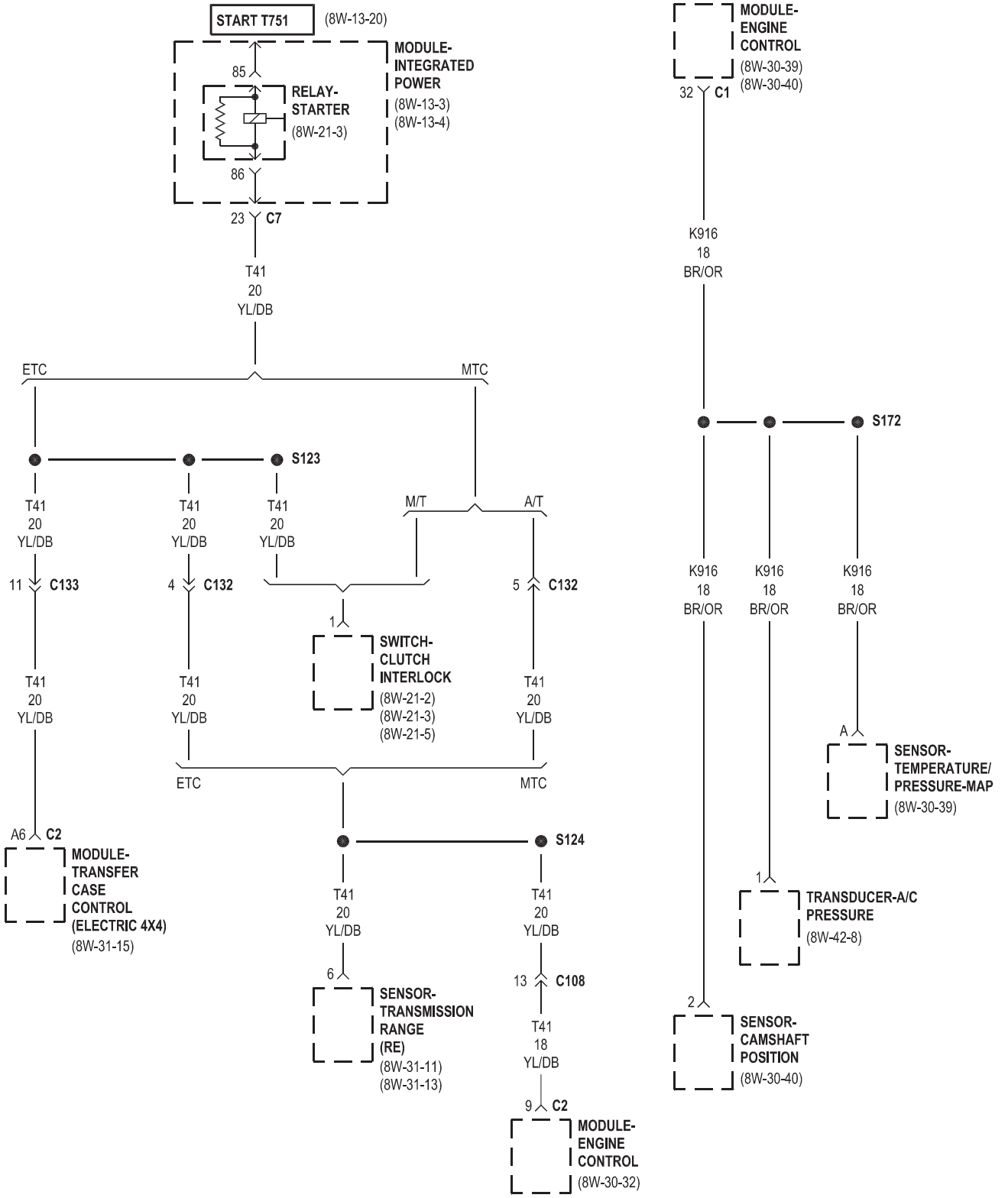
START T751
(8W-13-20)
MODULE-
INTEGRATED
POWER
(8W-13-3)
(8W-13-4)
85
RELAY-
STARTER
(8W-21-3)
86
23 C7
T41
20
YL/DB
ETC
MTC
S123
T41
20
YL/DB
11 C133
4 C132
5 C132
M/T
A/T
1
SWITCH-
CLUTCH
INTERLOCK
(8W-21-2)
(8W-21-3)
(8W-21-5)
A6 C2
MODULE-
TRANSFER
CASE
CONTROL
(ELECTRIC 4X4)
(8W-31-15)
S124
6
SENSOR-
TRANSMISSION
RANGE
(RE)
(8W-31-11)
(8W-31-13)
13 C108
T41
18
YL/DB
9 C2
MODULE-
ENGINE
CONTROL
(8W-30-32)
MODULE-
ENGINE
CONTROL
(8W-30-39)
(8W-30-40)
32 C1
K916
18
BR/OR
S172
A
SENSOR-
TEMPERATURE/
PRESSURE-MAP
(8W-30-39)
TRANSDUCER-A/C
PRESSURE
(8W-42-8)
2
SENSOR-
CAMSHAFT
POSITION
(8W-30-40)

8W-80 CONNECTOR PIN-OUTS

Component	Page
Actuator-Blend Door (Single Zone)	8W-80-6
Actuator-Blend Door-Driver (Dual Zone)	8W-80-6
Actuator-Blend Door-Passenger (Dual Zone)	8W-80-6
Actuator-Fuel Control (Diesel)	8W-80-6
Actuator-Mode Door 1 (Panel To Floor)	8W-80-6
Actuator-Mode Door 2 (Defrost To Floor)	8W-80-7
Actuator-Recirculation Door	8W-80-7
Airbag-Passenger Squib	8W-80-7
Airbag-Side Curtain-Left	8W-80-7
Airbag-Side Curtain-Right	8W-80-8
Amplifier-Radio C1 (Premium)	8W-80-8
Amplifier-Radio C2 (Premium)	8W-80-9
Amplifier-Subwoofer (SRT)	8W-80-9
Antenna Cable-Satellite Radio No. 1	8W-80-10
Antenna Cable-Satellite Radio No. 2	8W-80-10
Antenna-Satellite No. 1	8W-80-10
Antenna-Satellite No. 2	8W-80-10
Assembly-EGR Valve (4.7L/5.7L LD)	8W-80-11
Assembly-Natural Vacuum Leak Detection (NGC)	8W-80-11
Assembly-Shift Motor/Mode Sensor C1 (ETC)	8W-80-11
Assembly-Shift Motor/Mode Sensor C2 (ETC)	8W-80-11
Assembly-Transmission Solenoid (RE)	8W-80-12
Assembly-Transmission Solenoid/TRS (RFE)	8W-80-12
Assembly-Transmission Throttle Valve (RE)	8W-80-13
Assembly-Winch	8W-80-13
Assembly-Winch B(+) Eyelet	8W-80-13
Assembly-Winch Ground	8W-80-13
Backlite-Heated (Ground)	8W-80-13
Backlite-Heated (Power)	8W-80-14
Battery-Negative (3.7L/4.7L)	8W-80-14
Battery-Negative (3.7L/4.7L)	8W-80-14
Battery-Negative (5.7L Off Road)	8W-80-14
Battery-Negative (5.7L/SRT)	8W-80-15
Battery-Negative (5.7L/SRT)	8W-80-15
Battery-Negative (Diesel Left Battery)	8W-80-15
Battery-Negative (Diesel Right Battery)	8W-80-15
Battery-Positive (3.7L/4.7L)	8W-80-16
Battery-Positive (5.7L Except Off Road/ SRT)	8W-80-16
Battery-Positive (5.7L Off Road)	8W-80-16
Battery-Positive (5.7L Off Road)	8W-80-16
Battery-Positive (Diesel Left Battery)	8W-80-17
Battery-Positive (Diesel Right Battery)	8W-80-17
Battery-Positive (Diesel Right Battery)	8W-80-17
C102 (5.7L Off Road)	8W-80-17
C102 (5.7L Off Road)	8W-80-18
C102 (Except 5.7L Off Road)	8W-80-18
C102 (Except 5.7L Off Road)	8W-80-18
C103 (SRT)	8W-80-18
C103	8W-80-18
C106 (5.7L)	8W-80-19
C106 (5.7L)	8W-80-19
C107 (5.7L)	8W-80-20
C107 (5.7L)	8W-80-20
C108 (Diesel A/T)	8W-80-20
C108 (Diesel A/T)	8W-80-21
C112 (Diesel)	8W-80-21
C112 (Diesel)	8W-80-21
C114 (Diesel)	8W-80-22
C114 (Diesel)	8W-80-22
C115 (Diesel)	8W-80-22
C115 (Diesel)	8W-80-22
C116 (Diesel)	8W-80-23
C116 (Diesel)	8W-80-23
C117 (Diesel)	8W-80-23
C117 (Diesel)	8W-80-23
C130 (Diesel)	8W-80-24
C130 (Diesel)	8W-80-25
C130 (Gas)	8W-80-26
C130 (Gas)	8W-80-27
C131 (5.7L ETC)	8W-80-28
C131 (5.7L ETC)	8W-80-28
C132 (Diesel M/T MTC)	8W-80-28
C132 (Diesel M/T MTC)	8W-80-28
C132 (Diesel M/T ETC/Diesel A/T MTC)	8W-80-29
C132 (Diesel M/T ETC/Diesel A/T MTC)	8W-80-29
C132 (Diesel A/T ETC)	8W-80-30
C132 (Diesel A/T ETC)	8W-80-30
C133	8W-80-31
C133	8W-80-31
C134 (5.7L Off Road)	8W-80-31
C134 (Power Wagon)	8W-80-32
C135	8W-80-32
C135	8W-80-33
C136	8W-80-33
C136	8W-80-34
C137 (Smart Bar)	8W-80-34
C137 (Smart Bar)	8W-80-34
C138	8W-80-35
C138	8W-80-35
C200	8W-80-35

Component	Page
C200	8W-80-35
C201	8W-80-36
C201	8W-80-36
C206 (Except Hands Free)	8W-80-36
C206 (Except Hands Free)	8W-80-37
C206 (Hands Free)	8W-80-37
C206 (Hands Free)	8W-80-37
C219	8W-80-38
C219	8W-80-40
C220	8W-80-42
C220	8W-80-42
C301	8W-80-43
C301	8W-80-43
C302	8W-80-43
C302	8W-80-44
C304	8W-80-44
C304	8W-80-44
C305	8W-80-45
C305	8W-80-45
C306 (Quad Cab)	8W-80-46
C306 (Quad Cab)	8W-80-46
C308	8W-80-46
C308	8W-80-47
C309 (Except Base)	8W-80-47
C309 (Except Base)	8W-80-47
C311 (Except Heated Seats)	8W-80-48
C311 (Except Heated Seats)	8W-80-48
C313	8W-80-48
C313	8W-80-49
C315	8W-80-49
C315	8W-80-49
C316 (Heated Seats)	8W-80-49
C316	8W-80-50
C319	8W-80-50
C319	8W-80-50
C320 (Quad Cab)	8W-80-50
C320 (Quad Cab)	8W-80-51
C322 (Heated Seats)	8W-80-51
C322 (Heated Seats)	8W-80-51
C323 (Except Heated Seats)	8W-80-52
C323 (Except Heated Seats)	8W-80-52
C323 (Heated Seats)	8W-80-52
C323 (Heated Seats)	8W-80-53
C327 (Dual Rear Wheels)	8W-80-53
C327 (Dual Rear Wheels)	8W-80-53
C328 (Dual Rear Wheels)	8W-80-53
C328 (Dual Rear Wheels)	8W-80-53
C331 (5.7L/Diesel)	8W-80-54
C331 (5.7L/Diesel)	8W-80-54
C337	8W-80-54
C337	8W-80-54
C338 (Satellite Radio Standard Cab)	8W-80-54
C338 (Satellite Radio Standard Cab)	8W-80-55
Capacitor-Ignition (3.7L/4.7L)	8W-80-55
Circuit Breaker-Power Window	8W-80-55
Clockspring C1	8W-80-55
Clockspring C2	8W-80-56
Clockspring C3	8W-80-56
Clockspring C4 (Premium)	8W-80-56
Cluster C1	8W-80-56
Cluster C3	8W-80-57
Cluster C4	8W-80-57
Clutch-A/C Compressor	8W-80-58
Coil-Ignition-Left (SRT)	8W-80-58
Coil-Ignition-No. 1 (3.7L/4.7L)	8W-80-58
Coil-Ignition-No. 1 (5.7L)	8W-80-58
Coil-Ignition-No. 2 (3.7L/4.7L)	8W-80-58
Coil-Ignition-No. 2 (5.7L)	8W-80-59
Coil-Ignition-No. 3 (3.7L/4.7L)	8W-80-59
Coil-Ignition-No. 3 (5.7L)	8W-80-59
Coil-Ignition-No. 4 (3.7L/4.7L)	8W-80-59
Coil-Ignition-No. 4 (5.7L)	8W-80-60
Coil-Ignition-No. 5 (3.7L/4.7L)	8W-80-60
Coil-Ignition-No. 5 (5.7L)	8W-80-60
Coil-Ignition-No. 6 (3.7L/4.7L)	8W-80-60
Coil-Ignition-No. 6 (5.7L)	8W-80-61
Coil-Ignition-No. 7 (4.7L)	8W-80-61
Coil-Ignition-No. 7 (5.7L)	8W-80-61
Coil-Ignition-No. 8 (4.7L)	8W-80-61
Coil-Ignition-No. 8 (5.7L)	8W-80-62
Coil-Ignition-Right (SRT)	8W-80-62
Control-A/C-Heater C1	8W-80-62
Control-A/C-Heater C2	8W-80-63
Data Link Connector	8W-80-63
Data Link Connector-Engine (Diesel)	8W-80-63
Drive-Fan-Radiator (Diesel)	8W-80-64
Fuse HoLDer (SRT)	8W-80-64
Gauge-Engine Oil Temperature (SRT)	8W-80-64
Generator (Except SRT)	8W-80-64
Generator (SRT)	8W-80-64
Generator (5.7L)	8W-80-65
Generator (Diesel/3.7L/4.7L/SRT)	8W-80-65
Heater-Fuel (Diesel)	8W-80-65
Heater-Intake Air No. 1 (Diesel)	8W-80-65
Heater-Intake Air No. 2 (Diesel)	8W-80-65
Heater-Seat Cushion-Driver	8W-80-66
Heater-Seat Cushion-Passenger	8W-80-66
Horn-No. 1	8W-80-66
Horn-No. 2	8W-80-66
Injector-Fuel-No. 1 (Diesel)	8W-80-67
Injector-Fuel-No. 1 (NGC)	8W-80-67
Injector-Fuel-No. 1 (SRT)	8W-80-67
Injector-Fuel-No. 10 (SRT)	8W-80-67
Injector-Fuel-No. 2 (Diesel)	8W-80-67
Injector-Fuel-No. 2 (NGC)	8W-80-68
Injector-Fuel-No. 2 (SRT)	8W-80-68
Injector-Fuel-No. 3 (Diesel)	8W-80-68
Injector-Fuel-No. 3 (NGC)	8W-80-68

Component	Page
Injector-Fuel-No. 3 (SRT)	8W-80-68
Injector-Fuel-No. 4 (Diesel)	8W-80-69
Injector-Fuel-No. 4 (NGC)	8W-80-69
Injector-Fuel-No. 4 (SRT)	8W-80-69
Injector-Fuel-No. 5 (Diesel)	8W-80-69
Injector-Fuel-No. 5 (NGC)	8W-80-69
Injector-Fuel-No. 5 (SRT)	8W-80-70
Injector-Fuel-No. 6 (Diesel)	8W-80-70
Injector-Fuel-No. 6 (NGC)	8W-80-70
Injector-Fuel-No. 6 (SRT)	8W-80-70
Injector-Fuel-No. 7 (NGC)	8W-80-70
Injector-Fuel-No. 7 (SRT)	8W-80-71
Injector-Fuel-No. 8 (NGC)	8W-80-71
Injector-Fuel-No. 8 (SRT)	8W-80-71
Injector-Fuel-No. 9 (SRT)	8W-80-71
Lamp-Bar-Tailgate (Dual Rear Wheels)	8W-80-71
Lamp-Center Bezel	8W-80-72
Lamp-CHMSL-Aftermarket	8W-80-72
Lamp-Clearance No. 1 (HD)	8W-80-72
Lamp-Clearance No. 2 (HD)	8W-80-72
Lamp-Clearance No. 3 (HD)	8W-80-72
Lamp-Clearance No. 4 (HD)	8W-80-73
Lamp-Clearance No. 5 (HD)	8W-80-73
Lamp-Dome-Rear	8W-80-73
Lamp-Fender-Front Left (Dual Rear Wheels)	8W-80-73
Lamp-Fender-Front Right (Dual Rear Wheels)	8W-80-73
Lamp-Fender-Rear Left (Dual Rear Wheels)	8W-80-74
Lamp-Fender-Rear Right (Dual Rear Wheels)	8W-80-74
Lamp-Fog-Left	8W-80-74
Lamp-Fog-Right	8W-80-74
Lamp-Glove Box	8W-80-74
Lamp-Headlamp-Left	8W-80-75
Lamp-Headlamp-Right	8W-80-75
Lamp-High Mounted Stop	8W-80-75
Lamp-License-Left	8W-80-75
Lamp-License-Right	8W-80-76
Lamp-Park/Turn-Left Front	8W-80-76
Lamp-Park/Turn-Right Front	8W-80-76
Lamp-Reading-Front (Except Base)	8W-80-76
Lamp-Tail Stop/Turn-Left (Box Off)	8W-80-76
Lamp-Tail Stop/Turn-Left (Box On)	8W-80-77
Lamp-Tail Stop/Turn-Right (Box Off)	8W-80-77
Lamp-Tail Stop/Turn-Right (Box On)	8W-80-77
Lamp-Underhood (SRT)	8W-80-77
Lamp-Vanity-Left (light Package)	8W-80-78
Lamp-Vanity-Right (light Package)	8W-80-78
Latch-Door-Driver (Base)	8W-80-78
Latch-Door-Driver (Power Locks)	8W-80-78
Latch-Door-Left Rear (Base)	8W-80-79
Latch-Door-Left Rear (Power Locks)	8W-80-79
Latch-Door-Passenger (Power Locks)	8W-80-79
Latch-Door-Right Rear (Base)	8W-80-79
Latch-Door-Right Rear (Power Locks)	8W-80-80
Mirror-Inside Rearview C1 (Except Base)	8W-80-80
Mirror-Inside Rearview C2 (Hands Free)	8W-80-80
Mirror-Outside Rearview-Driver	8W-80-81
Mirror-Outside Rearview-Passenger	8W-80-81
Module-Anti-Lock Brakes C1	8W-80-81
Module-Anti-Lock Brakes C2 (awal)	8W-80-82
Module-Brake Provision	8W-80-82
Module-Electronic Overhead (Except Base)	8W-80-82
Module-Engine Control C1	8W-80-82
Module-Engine Control C2	8W-80-84
Module-Final Drive Control (Off Road)	8W-80-85
Module-Fuel Pump	8W-80-86
Module-Hands Free C1	8W-80-86
Module-Hands Free C2	8W-80-86
Module-Hands Free C3	8W-80-87
Module-Heated Seats	8W-80-87
Module-Integrated Power C1	8W-80-88
Module-Integrated Power C2	8W-80-89
Module-Integrated Power C3	8W-80-89
Module-Integrated Power C4	8W-80-90
Module-Integrated Power C5	8W-80-90
Module-Integrated Power C6	8W-80-91
Module-Integrated Power C7	8W-80-91
Module-Occupant Restraint Controller C1	8W-80-92
Module-Occupant Restraint Controller C2	8W-80-93
Module-Powertrain Control C1 (SRT)	8W-80-94
Module-Powertrain Control C1 (NGC)	8W-80-95
Module-Powertrain Control C2 (NGC)	8W-80-96
Module-Powertrain Control C2 (SRT)	8W-80-97
Module-Powertrain Control C3 (NGC)	8W-80-98
Module-Powertrain Control C3 (SRT)	8W-80-99
Module-Powertrain Control C4 (NGC)	8W-80-100
Module-Sentry Key Immobilizer (SKIM)	8W-80-101
Module-Transfer Case Control C1 (Electric 4x4)	8W-80-101
Module-Transfer Case Control C2 (Electric 4x4)	8W-80-101
Module-Transfer Case Control C3 (Electric 4x4)	8W-80-102
Motor-Adjustable Pedals (Except Base)	8W-80-102
Motor-Blower	8W-80-102
Motor-Condenser Fan (NGC)	8W-80-102
Motor-IAC (3.7L/4.7L)	8W-80-102
Motor-IAC (SRT)	8W-80-103
Motor-Lumbar-Driver	8W-80-103
Motor-Lumbar-Passenger	8W-80-103
Motor-Power Window-Driver	8W-80-103
Motor-Power Window-Left Rear	8W-80-103

Component	Page
Motor-Power Window-Passenger	8W-80-104
Motor-Power Window-Right Rear	8W-80-104
Motor-Seat Adjuster-Driver Horizontal	8W-80-104
Motor-Seat Adjuster-Front Driver Vertical	8W-80-104
Motor-Seat Adjuster-Front Passenger Vertical	8W-80-104
Motor-Seat Adjuster-Passenger Horizontal	8W-80-105
Motor-Seat Adjuster-Rear Driver Vertical	8W-80-105
Motor-Seat Adjuster-Rear Passenger Vertical	8W-80-105
Motor-Sunroof	8W-80-105
Motor-WindshieLD Wiper	8W-80-106
Power Outlet (Except SRT)	8W-80-106
Power Outlet (SRT)	8W-80-106
Power Outlet-Console (Except Base)	8W-80-106
Power Outlet-Instrument Panel	8W-80-106
Power Outlet-Rear (SRT)	8W-80-107
Pump-Fuel Injection (Diesel)	8W-80-107
Pump-Leak Detection (SRT)	8W-80-107
Pump-Washer-WindshieLD	8W-80-107
Radio C1	8W-80-108
Radio C2	8W-80-108
Receiver-Satellite	8W-80-109
Relay-Ignition Run-Acc (SRT)	8W-80-109
Relay-Run-Accessory (SRT)	8W-80-109
Relay-Starter (SRT)	8W-80-110
Resistor Block-Blower Motor	8W-80-110
Seat Belt-Tension Reducer-Driver (Standard Cab)	8W-80-110
Seat Belt-Tensioner-Driver	8W-80-110
Seat Belt-Tensioner-Passenger	8W-80-111
Sensor-Accelerator Pedal Position (5.7L ETC)	8W-80-111
Sensor-Ambient Air Temperature	8W-80-111
Sensor-Battery Temperature	8W-80-111
Sensor-Brake Fluid Level	8W-80-112
Sensor-Camshaft Position (Diesel)	8W-80-112
Sensor-Camshaft Position (Gas)	8W-80-112
Sensor-Crankshaft Position (3.7L)	8W-80-112
Sensor-Crankshaft Position (4.7L)	8W-80-112
Sensor-Crankshaft Position (5.7L/SRT)	8W-80-113
Sensor-Crankshaft Position (Diesel)	8W-80-113
Sensor-Engine Coolant Temperature (3.7L/4.7L)	8W-80-113
Sensor-Engine Coolant Temperature (5.7L/SRT)	8W-80-113
Sensor-Engine Coolant Temperature (Diesel)	8W-80-113
Sensor-Engine Oil Pressure (SRT)	8W-80-114
Sensor-Engine Oil Temperature (SRT)	8W-80-114
Sensor-Evaporator Temperature	8W-80-114
Sensor-Input Speed (RFE)	8W-80-114
Sensor-Intake Air Temperature (NGC)	8W-80-114
Sensor-Intake Air Temperature (SRT)	8W-80-115
Sensor-Knock (3.7L/4.7L)	8W-80-115
Sensor-Knock No. 1 (5.7L/SRT)	8W-80-115
Sensor-Knock No. 2 (5.7L/SRT)	8W-80-115
Sensor-Line Pressure (RFE)	8W-80-116
Sensor-MAP (NGC)	8W-80-116
Sensor-MAP (SRT)	8W-80-116
Sensor-Output Speed (RFE)	8W-80-116
Sensor-Output Speed (RE)	8W-80-116
Sensor-Oxygen-Left Front (3.7L/5.7L)	8W-80-117
Sensor-Oxygen-Left Front (4.7L)	8W-80-117
Sensor-Oxygen-Left Front (SRT)	8W-80-117
Sensor-Oxygen-Left Rear (3.7L/5.7L LD)	8W-80-117
Sensor-Oxygen-Left Rear (4.7L)	8W-80-118
Sensor-Oxygen-Left Rear (5.7L HD)	8W-80-118
Sensor-Oxygen-Left Rear (SRT)	8W-80-118
Sensor-Oxygen-Right Front (3.7L/5.7L)	8W-80-118
Sensor-Oxygen-Right Front (4.7L)	8W-80-119
Sensor-Oxygen-Right Front (SRT)	8W-80-119
Sensor-Oxygen-Right Rear (3.7L/5.7L LD)	8W-80-119
Sensor-Oxygen-Right Rear (4.7L)	8W-80-119
Sensor-Oxygen-Right Rear (5.7L HD)	8W-80-120
Sensor-Oxygen-Right Rear (SRT)	8W-80-120
Sensor-Side Impact-Left 1	8W-80-120
Sensor-Side Impact-Right 1	8W-80-120
Sensor-Temperature/Pressure-Intake (Diesel)	8W-80-121
Sensor-Temperature/Pressure-Map (Diesel)	8W-80-121
Sensor-Throttle Position (3.7L)	8W-80-121
Sensor-Throttle Position (4.7L)	8W-80-121
Sensor-Throttle Position (SRT)	8W-80-121
Sensor-Transfer Case Position (MTC Except Power Wagon)	8W-80-122
Sensor-Transfer Case Position (MTC Power Wagon)	8W-80-122
Sensor-Transmission Range (RE)	8W-80-122
Sensor-Washer Fluid Level	8W-80-122
Sensor-Water In Fuel	8W-80-123
Sensor-Wheel Speed-ABS-Left Front	8W-80-123
Sensor-Wheel Speed-ABS-Rear	8W-80-123
Sensor-Wheel Speed-ABS-Right Front	8W-80-123
Servo-Speed Control (Gas Except 5.7L)	8W-80-123
Solenoid-Brake Transmission Shift Interlock	8W-80-124
Solenoid-Evap/Purge (NGC)	8W-80-124
Solenoid-Evap/Purge (SRT)	8W-80-124
Solenoid-Locker-Front (5.7L Off Road)	8W-80-124
Solenoid-Locker-Rear (Power Wagon)	8W-80-124
Solenoid-Radiator Fan (SRT)	8W-80-125

Component	Page
Solenoid-Reverse Lock-Out (SRT M/T)	8W-80-125
Solenoid-Wastegate (Diesel)	8W-80-125
Speaker-Instrument Panel-Center (Premium)	8W-80-125
Speaker-Instrument Panel-Left	8W-80-125
Speaker-Instrument Panel-Right	8W-80-126
Speaker-Left Front Door	8W-80-126
Speaker-Left Rear	8W-80-126
Speaker-Right Front Door	8W-80-126
Speaker-Right Rear	8W-80-126
Speaker-Subwoofer (SRT)	8W-80-127
Starter (3.7L/4.7L/5.7L Off Road)	8W-80-127
Starter (5.7L Except Off Road)	8W-80-127
Starter (Diesel)	8W-80-127
Starter-Eyelet (Diesel)	8W-80-127
Starter-Eyelet (3.7L/4.7L/5.7L Off Road/ SRT)	8W-80-128
Starter-Eyelet (5.7L)	8W-80-128
Switch-Adjustable Pedals (Except Base)	8W-80-128
Switch-Axle Lock (Smart Bar)	8W-80-128
Switch-Back Up Lamp (3.7L/4.7L)	8W-80-129
Switch-Back Up Lamp (G56)	8W-80-129
Switch-Back Up Lamp (5.7L Nv5600)	8W-80-129
Switch-Back Up Lamp (SRT M/T)	8W-80-129
Switch-Clutch Interlock (M/T)	8W-80-129
Switch-Cylinder Lock-Driver (SRT)	8W-80-130
Switch-Disconnecting Stabilizer Bar (Smart Bar)	8W-80-130
Switch-Door Lock-Passenger	8W-80-130
Switch-Headlamp	8W-80-130
Switch-Heated Seat-Driver	8W-80-131
Switch-Heated Seat-Passenger	8W-80-131
Switch-Horn	8W-80-131
Switch-Ignition	8W-80-131
Switch-MultiFunction	8W-80-132
Switch-Oil Pressure (Except SRT)	8W-80-132
Switch-Parking Brake	8W-80-132
Switch-Passenger Airbag On/Off	8W-80-132
Switch-Power Steering Pressure (5.7L)	8W-80-132
Switch-Power Window-Left Rear	8W-80-133
Switch-Power Window-Passenger	8W-80-133
Switch-Power Window-Right Rear	8W-80-133
Switch-PTO (NGC)	8W-80-133
Switch-Push-Button Starter (SRT)	8W-80-133
Switch-Remote Radio-Left	8W-80-134
Switch-Remote Radio-Right	8W-80-134
Switch-Seat Belt-Driver	8W-80-134
Switch-Seat-Driver	8W-80-134
Switch-Seat-Passenger (Quad Cab)	8W-80-135
Switch-Seat-Passenger (Standard Cab)	8W-80-135
Switch-Speed Control-Left (ETC)	8W-80-135
Switch-Speed Control-Left (Except ETC)	8W-80-136
Switch-Speed Control-Right (ETC)	8W-80-136
Switch-Speed Control-Right (Except ETC)	8W-80-136
Switch-Stop Lamp	8W-80-136
Switch-Sunroof	8W-80-137
Switch-Tow/haul Overdrive	8W-80-137
Switch-Transfer Case Selector (ETC)	8W-80-137
Switch-Window/door Lock-Driver C1	8W-80-137
Switch-Window/door Lock-Driver C2	8W-80-138
Throttle Body (5.7L)	8W-80-138
Transducer-A/C Pressure (NGC)	8W-80-138
Transducer-A/C Pressure (Diesel/SRT)	8W-80-138
Wiring-Trailer Tow 4-Way	8W-80-139
Wiring-Trailer Tow 7-Way	8W-80-139

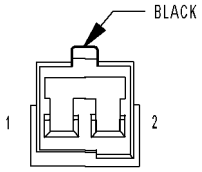

**ACTUATOR-
BLEND DOOR
(SINGLE ZONE)**

ACTUATOR-BLEND DOOR (SINGLE ZONE) - BLACK 2 WAY

CAV	CIRCUIT	FUNCTION
1	C34 20DB/LB	COMMON DOOR DRIVER
2	C61 20DB/LG	BLEND DOOR DRIVER

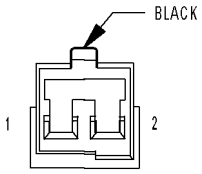

ACTUATOR-
BLEND DOOR-
DRIVER
(DUAL ZONE)

ACTUATOR-BLEND DOOR-DRIVER (DUAL ZONE) - BLACK 2 WAY

CAV	CIRCUIT	FUNCTION
1	C34 20DB/LB	COMMON DOOR DRIVER
2	C61 20DB/LG	BLEND DOOR DRIVER

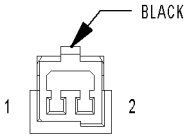

**ACTUATOR-
BLEND DOOR-
PASSENGER
(DUAL ZONE)**

ACTUATOR-BLEND DOOR-PASSENGER (DUAL ZONE) - BLACK 2 WAY

CAV	CIRCUIT	FUNCTION
1	C34 20DB/LB	COMMON DOOR DRIVER
2	C33 20LB/BR	PASSENGER BLEND DOOR DRIVER

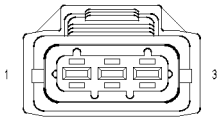

**ACTUATOR-
FUEL
CONTROL
(DIESEL)**

ACTUATOR-FUEL CONTROL (DIESEL) - 3 WAY

CAV	CIRCUIT	FUNCTION
1	K915 18VT/RD	FUEL RAIL SENSOR RETURN
2	K181 18BR/YL	FUEL RAIL SENSOR SIGNAL
3	F855 18PK/YL	5 VOLT SUPPLY

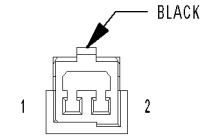

**ACTUATOR-
MODE DOOR 1
(PANEL TO FLOOR)**

ACTUATOR-MODE DOOR 1 (PANEL TO FLOOR) - BLACK 2 WAY

CAV	CIRCUIT	FUNCTION
1	C34 20DB/LB	COMMON DOOR DRIVER
2	C801 20DB/OR	MODE DOOR 1 DRIVER

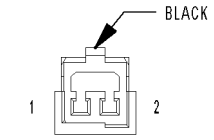

**ACTUATOR-
MODE DOOR 2
(DEFROST TO FLOOR)**

ACTUATOR-MODE DOOR 2 (DEFROST TO FLOOR) - BLACK 2 WAY

CAV	CIRCUIT	FUNCTION
1	C34 20DB/LB	COMMON DOOR DRIVER
2	C29 20DB	MODE DOOR 2 DRIVER

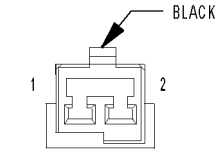

**ACTUATOR-
RECIRCULATION DOOR**

ACTUATOR-RECIRCULATION DOOR - BLACK 2 WAY

CAV	CIRCUIT	FUNCTION
1	C34 20DB/LB	COMMON DOOR DRIVER
2	C32 20DB/TN	RECIRCULATION DOOR DRIVER

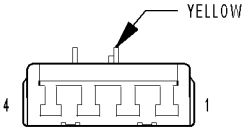

**AIRBAG-PASSENGER
SQUIB**

AIRBAG-PASSENGER SQUIB - YELLOW 4 WAY

CAV	CIRCUIT	FUNCTION
1	R44 20LB/OR	PASSENGER SQUIB 1 LINE 2
2	R42 20LB/BR	PASSENGER SQUIB 1 LINE 1
3	R64 20LB/WT	PASSENGER SQUIB 2 LINE 1
4	R62 20LB/VT	PASSENGER SQUIB 2 LINE 2

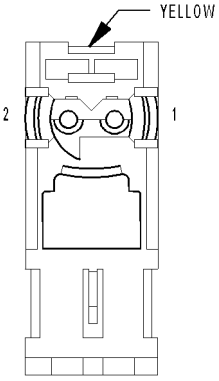

**AIRBAG-
SIDE
CURTAIN-
LEFT**

AIRBAG-SIDE CURTAIN-LEFT - YELLOW 2 WAY

CAV	CIRCUIT	FUNCTION
1	R3 18LB/OR	LEFT CURTAIN SQUIB 1 LINE 1
2	R1 18LB/WT	LEFT CURTAIN SQUIB 1 LINE 2

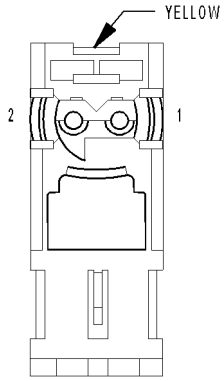

AIRBAG-SIDE CURTAIN-RIGHT

AIRBAG-SIDE CURTAIN-RIGHT - YELLOW 2 WAY

CAV	CIRCUIT	FUNCTION
1	R4 18OR/LB	RIGHT CURTAIN SQUIB 1 LINE 1
2	R2 18WT/LB	RIGHT CURTAIN SQUIB 1 LINE 2

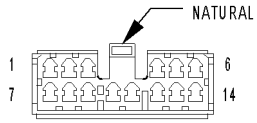

AMPLIFIER-RADIO C1 (PREMIUM)

AMPLIFIER-RADIO C1 (PREMIUM) - NATURAL 14 WAY

CAV	CIRCUIT	FUNCTION
1	X153 18DG/YL	LEFT FRONT DOOR SPEAKER (+)
2	X154 18GY/YL	RIGHT FRONT DOOR SPEAKER (+)
3	X205 18GY/LG	LEFT REAR SPEAKER (+)
4	X206 18DG/LG	RIGHT REAR SPEAKER (+)
5	X30 16DG/TN (SRT)	SUBWOOFER SIGNAL (+)
6	-	-
7	X155 18DG/LB	LEFT FRONT DOOR SPEAKER (-)
8	X156 18GY/LB	RIGHT FRONT DOOR SPEAKER (-)
9	X295 18GY/DG	LEFT REAR SPEAKER (-)
10	-	-
11	-	-
12	X296 18DG/GY	RIGHT REAR SPEAKER (-)
13	X31 16GY/TN (SRT)	SUBWOOFER SIGNAL (-)
14	-	-

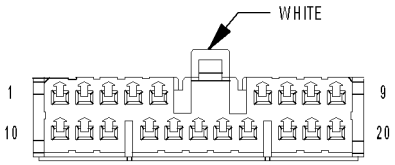

**AMPLIFIER-
RADIO C2
(PREMIUM)**

AMPLIFIER-RADIO C2 (PREMIUM) - WHITE 20 WAY

CAV	CIRCUIT	FUNCTION
1	X209 18GY/OR	LEFT INSTRUMENT PANEL SPEAKER (+)
2	X208 18GY/DG	RIGHT INSTRUMENT PANEL SPEAKER (+)
3	X200 18GY/BR	CENTER INSTRUMENT PANEL SPEAKER (+)
4	A116 18YL/RD	FUSED B(+)
5	-	-
6	D25 20WT/VT	PCI BUS
7	X51 20DG/DB	LEFT REAR SPEAKER (+)
8	X52 20GY/DB	RIGHT REAR SPEAKER (+)
9	Z907 18BK	GROUND
10	X299 18GY/YL	LEFT INSTRUMENT PANEL SPEAKER (-)
11	X298 18GY/LG	RIGHT INSTRUMENT PANEL SPEAKER (-)
12	X290 18GY/OR	CENTER INSTRUMENT PANEL SPEAKER (-)
13	A116 18YL/RD (EXCEPT SRT)	FUSED B(+)
13	A116 12YL/RD (SRT)	FUSED B(+)
14	-	-
15	-	-
16	-	-
17	F983 20PK/YL	FUSED IGNITION SWITCH OUTPUT (RUN-ACC)
18	X57 20DG/OR	LEFT REAR SPEAKER (-)
19	X58 20GY/OR	RIGHT REAR SPEAKER (-)
20	Z513 18BK	GROUND

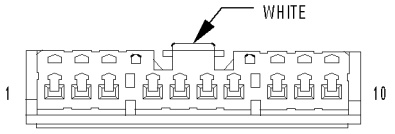

**AMPLIFIER-
SUBWOOFER
(SRT)**

AMPLIFIER-SUBWOOFER (SRT) - WHITE 10 WAY

CAV	CIRCUIT	FUNCTION
1	Z1 16BK	GROUND
2	A916 16RD	FUSED B(+)
3	F983 20PK/YL	FUSED IGNITION SWITCH OUTPUT (RUN-ACC)
4	X390 16DG/BR	AMPLIFIED SUBWOOFER 1 (-)
5	X300 16GY/BR	AMPLIFIED SUBWOOFER 1 (+)
6	X301 16GY/WT	AMPLIFIED SUBWOOFER 2 (+)
7	X391 16DG/WT	AMPLIFIED SUBWOOFER 2 (-)
8	X31 16GY/TN	SUBWOOFER SIGNAL (-)
9	X30 16DG/TN	SUBWOOFER SIGNAL (+)
10	-	-

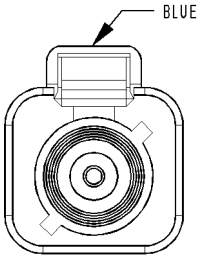

ANTENNA CABLE-SATELLITE RADIO NO. 1

ANTENNA CABLE-SATELLITE RADIO NO. 1 - BLUE 1 WAY

CAV	CIRCUIT	FUNCTION
1	X1	SATELLITE ANTENNA SIGNAL 1

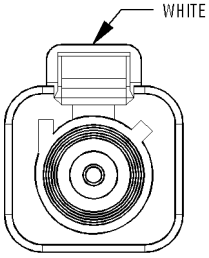

ANTENNA CABLE-SATELLITE RADIO NO. 2

ANTENNA CABLE-SATELLITE RADIO NO. 2 - WHITE 1 WAY

CAV	CIRCUIT	FUNCTION
1	X2	SATELLITE ANTENNA SIGNAL 2

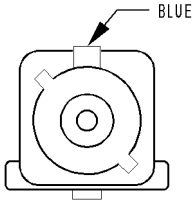

ANTENNA-SATELLITE NO. 1

ANTENNA-SATELLITE NO. 1 - BLUE 1 WAY

CAV	CIRCUIT	FUNCTION
1	X1	SATELLITE ANTENNA SIGNAL 1

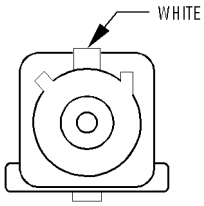

ANTENNA-SATELLITE NO. 2

ANTENNA-SATELLITE NO. 2 - WHITE 1 WAY

CAV	CIRCUIT	FUNCTION
1	X2	SATELLITE ANTENNA SIGNAL 2

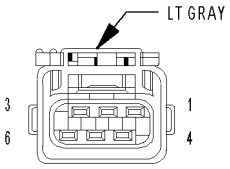

**ASSEMBLY-
EGR
VALVE
(4.7L/5.7L LD)**

ASSEMBLY-EGR VALVE (4.7L/5.7L LD) - LT GRAY 6 WAY

CAV	CIRCUIT	FUNCTION
1	K34 18DB/LG	EGR SIGNAL
2	F856 20YL/PK	5 VOLT SUPPLY
3	K900 20DB/DG	SENSOR GROUND
4	Z335 18BK/WT	GROUND
5	-	-
6	K35 18DB/VT	EGR SOL CONTROL

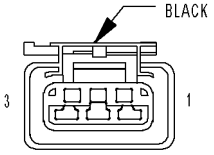

**ASSEMBLY-
NATURAL VACUUM
LEAK DETECTION
(NGC)**

ASSEMBLY-NATURAL VACUUM LEAK DETECTION (NGC) - BLACK 3 WAY

CAV	CIRCUIT	FUNCTION
1	Z910 18BK	GROUND
2	K107 18VT/WT	NVLD SWITCH SIGNAL
3	K106 18VT/LB	NVLD SOL CONTROL

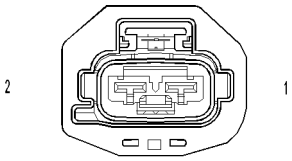

**ASSEMBLY-SHIFT
MOTOR/MODE
SENSOR C1
(ETC)**

ASSEMBLY-SHIFT MOTOR/MODE SENSOR C1 (ETC) - 2 WAY

CAV	CIRCUIT	FUNCTION
1	T316 16YL/GY	SHIFT MOTOR CONTROL B
2	T315 16YL/BR	SHIFT MOTOR CONTROL A

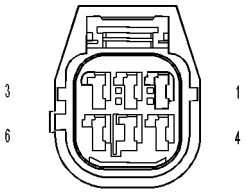

**ASSEMBLY-SHIFT
MOTOR/MODE
SENSOR C2
(ETC)**

ASSEMBLY-SHIFT MOTOR/MODE SENSOR C2 (ETC) - 6 WAY

CAV	CIRCUIT	FUNCTION
1	D200 20WT/LG	MODE SENSOR D
2	T313 20YL/LG	5 VOLT MODE SENSOR SUPPLY
3	D202 20WT/VT	MODE SENSOR B
4	T885 20YL/GY	MODE SENSOR GROUND
5	D201 20WT/DG	MODE SENSOR A
6	D203 20WT/BR	MODE SENSOR C

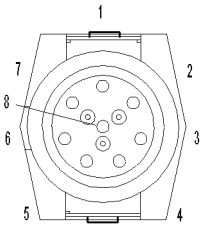

ASSEMBLY-TRANSMISSION SOLENOID (RE)

ASSEMBLY-TRANSMISSION SOLENOID (RE) - 8 WAY

CAV	CIRCUIT	FUNCTION
1	T16 18YL/OR	TRANSMISSION CONTROL RELAY OUTPUT
2	F856 18YL/PK	5 VOLT SUPPLY
3	K900 20DB/DG (DIESEL)	SENSOR GROUND
3	K900 18DB/DG (SRT)	SENSOR GROUND
4	T38 18YL/BR	GOVERNOR PRESSURE SENSOR SIGNAL
5	T118 18DG	GOVERNOR PRESSURE SOLENOID CONTROL
6	T9 18DG/TN	3-4 SOLENOID CONTROL
7	T75 18YL/LB	TORQUE CONVERTER CLUTCH SOLENOID CONTROL
8	T54 18DG/OR	TRANSMISSION TEMPERATURE SENSOR SIGNAL

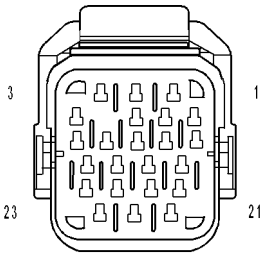

ASSEMBLY-TRANSMISSION SOLENOID/TRS (RFE)

ASSEMBLY-TRANSMISSION SOLENOID/TRS (RFE) - 23 WAY

CAV	CIRCUIT	FUNCTION
1	L10 18WT/GY	FUSED IGNITION SWITCH OUTPUT (RUN)
2	T20 18DG/WT	L/R SOLENOID CONTROL
3	-	-
4	T41 20YL/DB	TRS T41 SENSE
5	T42 18DG/YL	TRS T42 SENSE
6	L1 18WT/LG	BACKUP LAMP FEED
7	T60 18YL/GY	OD SOLENOID CONTROL
8	T3 18DG/DB	TRS T3 SENSE
9	T1 18DG/LB	TRS T1 SENSE
10	T16 18YL/OR	TRANSMISSION CONTROL RELAY OUTPUT
11	T48 18BR/YL	4C PRESSURE SWITCH SENSE
12	T118 18YL/VT (3.7L/4.7L)	PRESSURE CONTROL SOLENOID CONTROL
12	T118 18YL/GY (5.7L)	PRESSURE CONTROL SOLENOID CONTROL
13	T4 18DG/VT (3.7L/4.7L)	TRS T2 SENSE
13	T4 18DG/LB (5.7L)	TRS T2 SENSE
14	T50 18YL/TN	L/R PRESSURE SWITCH SENSE
15	T147 18DG/LG (3.7L/4.7L)	2C PRESSURE SWITCH SENSE
15	T147 18DG/YL (5.7L)	2C PRESSURE SWITCH SENSE
16	T9 18DG/TN	OD PRESSURE SWITCH SENSE
17	T59 18YL/LB	UD SOLENOID CONTROL
18	T29 18YL/WT	UD PRESSURE SWITCH SENSE
19	T259 18YL/DG	4C SOLENOID CONTROL
20	T219 18YL/LG	2C SOLENOID CONTROL
21	T140 18DG	MS SOLENOID CONTROL
22	K900 18DB/DG	SENSOR GROUND
23	T54 18DG/OR	TRANSMISSION TEMPERATURE SENSOR SIGNAL

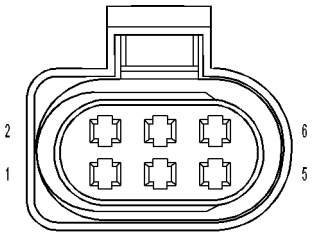

ASSEMBLY-TRANSMISSION THROTTLE VALVE (RE)

ASSEMBLY-TRANSMISSION THROTTLE VALVE (RE) - 6 WAY

CAV	CIRCUIT	FUNCTION
1	K312 18OR	TTVA POSITION SENSOR SIGNAL
2	F856 18YL/PK	5 VOLT SUPPLY
3	K314 18TN/YL	TTVA MOTOR (+)
4	-	-
5	K315 18TN/OR	TTVA MOTOR (-)
6	K900 18DB/DG	SENSOR GROUND

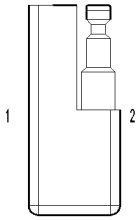

ASSEMBLY-WINCH

ASSEMBLY-WINCH - 2 WAY

CAV	CIRCUIT	FUNCTION
1	18OR	B(+)
2	18BK	GROUND

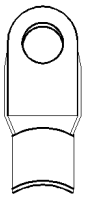

ASSEMBLY-WINCH B(+) EYELET

ASSEMBLY-WINCH B(+) EYELET - 1 WAY

CAV	CIRCUIT	FUNCTION
1	10RD	B(+)

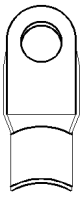

ASSEMBLY-WINCH GROUND

ASSEMBLY-WINCH GROUND - 1 WAY

CAV	CIRCUIT	FUNCTION
1	10BK	GROUND



BACKLITE-HEATED (GROUND)

BACKLITE-HEATED (GROUND) - 1 WAY

CAV	CIRCUIT	FUNCTION
1	Z1 16BK	GROUND



BACKLITE-HEATED (POWER)

BACKLITE-HEATED (POWER) - 1 WAY

CAV	CIRCUIT	FUNCTION
1	C15 16DB/WT (EXCEPT SAB)	REAR WINDOW DEFOGGER RELAY OUTPUT
1	C15 16BK (SAB)	REAR WINDOW DEFOGGER RELAY OUTPUT

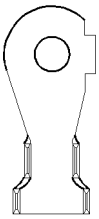

BATTERY-NEGATIVE (3.7L/4.7L)

BATTERY-NEGATIVE (3.7L/4.7L) - 1 WAY

CAV	CIRCUIT	FUNCTION
1	Z3 6BK	GROUND
1	Z1 6BK	GROUND
1	Z2 6BK	GROUND

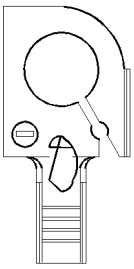

BATTERY-NEGATIVE (3.7L/4.7L)

BATTERY-NEGATIVE (3.7L/4.7L) - 1 WAY

CAV	CIRCUIT	FUNCTION

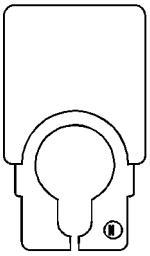

BATTERY-NEGATIVE (5.7L OFF ROAD)

BATTERY-NEGATIVE (5.7L OFF ROAD) - 1 WAY

CAV	CIRCUIT	FUNCTION
1	Z1 6BK	GROUND
1	Z2 6BK	GROUND
1	Z3 6BK	GROUND

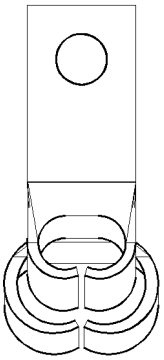

**BATTERY-
NEGATIVE
(5.7L/SRT)**

BATTERY-NEGATIVE (5.7L/SRT) - 1 WAY

CAV	CIRCUIT	FUNCTION
1	Z2 6BK	GROUND
1	Z1 6BK	GROUND
1	Z3 6BK	GROUND

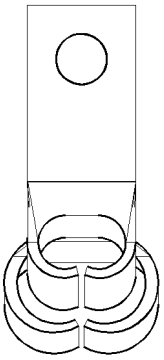

**BATTERY-
NEGATIVE
(5.7L/SRT)**

BATTERY-NEGATIVE (5.7L/SRT) - 1 WAY

CAV	CIRCUIT	FUNCTION

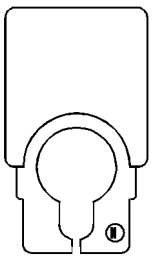

**BATTERY-
NEGATIVE
(DIESEL LEFT BATTERY)**

BATTERY-NEGATIVE (DIESEL LEFT BATTERY) - 1 WAY

CAV	CIRCUIT	FUNCTION
1	Z1 10BK	GROUND
1	Z2 0BK	GROUND
1	Z3 8BK	GROUND

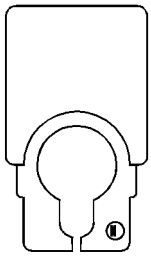

**BATTERY-
NEGATIVE
(DIESEL RIGHT BATTERY)**

BATTERY-NEGATIVE (DIESEL RIGHT BATTERY) - 1 WAY

CAV	CIRCUIT	FUNCTION
1	Z0 8BK	GROUND
2	Z0 0BK	GROUND

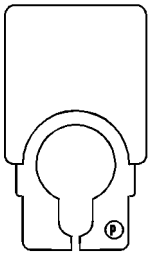

BATTERY-POSITIVE (3.7L/4.7L)

BATTERY-POSITIVE (3.7L/4.7L) - 1 WAY

CAV	CIRCUIT	FUNCTION
1	A0 6RD	B(+)
1	A8 6RD	B(+)

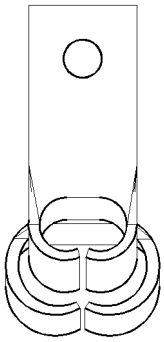

BATTERY POSITIVE (5.7L EXCEPT OFF ROAD/SRT)

BATTERY-POSITIVE (5.7L EXCEPT OFF ROAD/SRT) - 1 WAY

CAV	CIRCUIT	FUNCTION
1	A0 6RD	B(+)
1	A8 6RD	B(+)

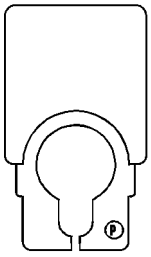

BATTERY-POSITIVE (5.7L OFF ROAD)

BATTERY-POSITIVE (5.7L OFF ROAD) - 1 WAY

CAV	CIRCUIT	FUNCTION
1	A0 6RD	B(+)
1	A8 6RD	B(+)

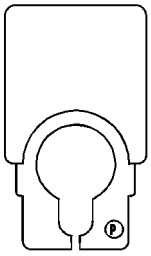

BATTERY-POSITIVE (5.7L OFF ROAD)

BATTERY-POSITIVE (5.7L OFF ROAD) - 1 WAY

CAV	CIRCUIT	FUNCTION

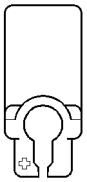

BATTERY-POSITIVE (DIESEL LEFT BATTERY)

BATTERY-POSITIVE (DIESEL LEFT BATTERY) - 1 WAY

CAV	CIRCUIT	FUNCTION
1	A0 6RD	B(+)
1	A8 0RD	B(+)

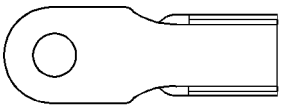

BATTERY-POSITIVE (DIESEL RIGHT BATTERY)

BATTERY-POSITIVE (DIESEL RIGHT BATTERY) - 1 WAY

CAV	CIRCUIT	FUNCTION
1	A1 0E1RD	B(+)
1	A11 8LB	B(+)
1	A1 0E1RD	B(+)

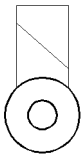

BATTERY-POSITIVE (DIESEL RIGHT BATTERY)

BATTERY-POSITIVE (DIESEL RIGHT BATTERY) - 1 WAY

CAV	CIRCUIT	FUNCTION

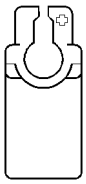

BATTERY-POSITIVE (DIESEL RIGHT BATTERY)

BATTERY-POSITIVE (DIESEL RIGHT BATTERY) - 1 WAY

CAV	CIRCUIT	FUNCTION

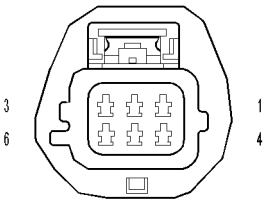

C102 (5.7L OFF ROAD)

C102 (5.7L OFF ROAD) - (BATTERY SIDE)

CAV	CIRCUIT
1	T750 14YL/GY
2	T520 16YL/OR
3	T524 16YL/LG
4	-
5	T521 18YL/GY
6	T522 18YL/LB

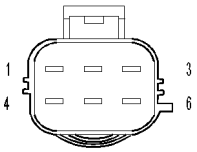

C102
(5.7L OFF ROAD)

C102 (5.7L OFF ROAD) - (HEADLAMP AND DASH SIDE)

CAV	CIRCUIT
1	T750 14YL/GY
2	T520 16YL/OR
3	T524 16YL/LG
4	-
5	T521 20YL/GY
6	T522 20YL/LB

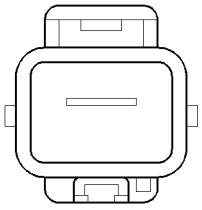

C102
(EXCEPT 5.7L OFF ROAD)

C102 (EXCEPT 5.7L OFF ROAD) - (HEADLAMP AND DASH SIDE)

CAV	CIRCUIT
1	T750 14YL/GY (EXCEPT SRT)
1	T40 12YL/GY (SRT)

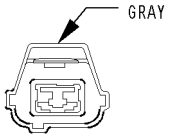

C102
(EXCEPT 5.7L OFF ROAD)

C102 (EXCEPT 5.7L OFF ROAD) - GRAY (BATTERY SIDE)

CAV	CIRCUIT
1	T750 14YL/GY (EXCEPT SRT)
1	T40 12RD/BK (SRT)

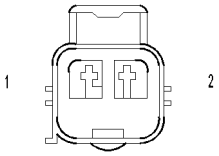

C103
(SRT)

C103 (SRT) - (UNDERHOOD SIDE)

CAV	CIRCUIT
1	Z470 20BK/LB
2	A114 18GY/RD

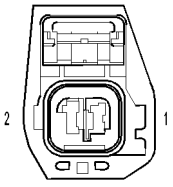

C103

C103 - (HEADLAMP AND DASH SIDE)

CAV	CIRCUIT
1	Z470 20BK/LB
2	A114 18GY/RD

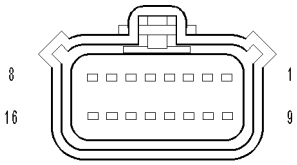

C106
(5.7L)

C106 (5.7L) - (ENGINE SIDE)

CAV	CIRCUIT
1	K11 18BR/YL
2	K12 18BR/DB
3	K13 18BR/LB
4	K14 18BR/TN
5	K38 18BR/OR
6	K58 18BR/VT
7	K26 18BR/YL
8	K28 18BR/LB
9	K19 18DB/DG
10	K17 18DB/TN
11	K18 18DB/OR
12	K15 18DB/GY
13	K16 18DB/YL
14	K10 18DB/OR
15	K97 18BR
16	K98 18DB/YL

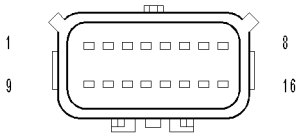

C106
(5.7L)

C106 (5.7L) - (INTAKE AIR FUEL MODULE SIDE)

CAV	CIRCUIT
1	K11 18BR/YL
2	K12 18BR/DB
3	K13 18BR/LB
4	K14 18BR/TN
5	K38 18BR/OR
6	K58 18BR/VT
7	K26 18BR/YL
8	K28 18BR/LB
9	K19 18DB/DG
10	K17 18DB/TN
11	K18 18DB/OR
12	K15 18DB/GY
13	K16 18DB/YL
14	K10 18DB/OR
15	K97 18BR
16	K98 18DB/YL

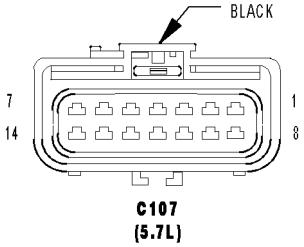

C107 (5.7L) - BLACK (ENGINE SIDE)

CAV	CIRCUIT
1	K900 18DB/DG
2	K1 18VT/BR
3	K21 18DB/LG
4	K922 18BR/DB
5	F856 18YL/PK
6	K447 18TN/YL
7	K342 16BR/WT
8	F855 18PK/YL
9	K2 18VT/OR
10	K122 18BR/DG
11	K22 18BR/OR
12	-
13	K448 18TN/OR
14	K342 16BR/WT

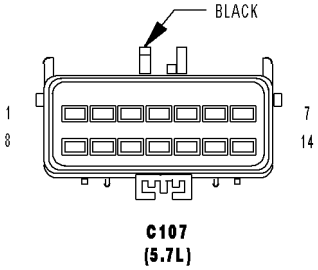

C107 (5.7L) - BLACK (INTAKE AIR FUEL MODULE SIDE)

CAV	CIRCUIT
1	K900 18DB/DG
2	K1 18VT/BR
3	K21 18DB/LG
4	K922 18BR/DB
5	F856 18YL/PK
6	K447 18TN/YL
7	K342 16BR/WT
8	F855 18PK/YL
9	K2 18VT/OR
10	K122 18BR/DG
11	K22 18BR/OR
12	-
13	K448 18TN/OR
14	K342 16BR/WT

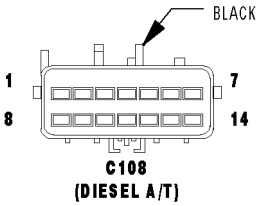

C108 (DIESEL A/T) - BLACK (ENGINE SIDE)

CAV	CIRCUIT
1	T118 18DG
2	T9 18DG/TN
3	T38 18YL/BR
4	T75 18YL/LB
5	T54 18DG/OR
6	T14 18DG/BR
7	T13 18DG/VT
8	K314 18TN/YL
9	K312 18OR
10	K315 18TN/OR
11	-
12	F856 18YL/PK
13	T41 18YL/DB
14	-

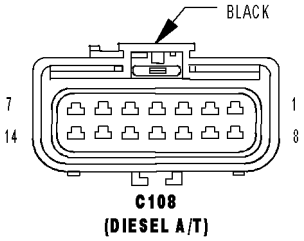

C108 (DIESEL A/T) - BLACK (TRANSMISSION SIDE)

CAV	CIRCUIT
1	T118 18DG
2	T9 18DG/TN
3	T38 18YL/BR
4	T75 18YL/LB
5	T54 18DG/OR
6	T14 18DG/BR
7	T13 18DG/VT
8	K314 18TN/YL
9	K312 18OR
10	K315 18TN/OR
11	-
12	F856 18YL/PK
13	T41 20YL/DB
14	-

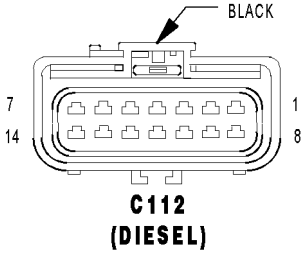

C112 (DIESEL) - BLACK (ENGINE SIDE)

CAV	CIRCUIT
1	C3 18DB/YL
2	A961 14RD
3	K615 18VT/WT
4	K616 18BR/YL
5	K167 18BR/YL
6	K23 18BR/WT
7	K852 18BR/VT
8	K29 18WT/BR
9	K314 18TN/YL (A/T)
10	K315 18TN/OR (A/T)
11	K312 18OR (A/T)
12	K160 18BR/OR
13	K161 18BR/LB
14	F504 18GY/PK

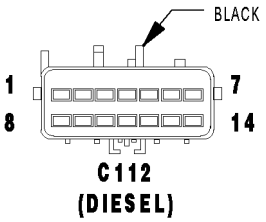

C112 (DIESEL) - BLACK (TRANSMISSION SIDE)

CAV	CIRCUIT
1	C3 18DB/BK
2	A961 14RD
3	K615 18VT/WT
4	K616 18BR/YL
5	K167 18BR/YL
6	K23 18BR/WT
7	K852 18BR/VT
8	K29 18WT/BR
9	K314 18TN/YL (A/T)
10	K315 18TN/OR (A/T)
11	K312 18OR (A/T)
12	K160 18BR/OR
13	K161 18BR/LB
14	F504 18GY/PK

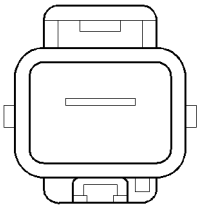

C114
(DIESEL)

C114 (DIESEL) - (ENGINE SIDE)

CAV	CIRCUIT
1	A209 10RD

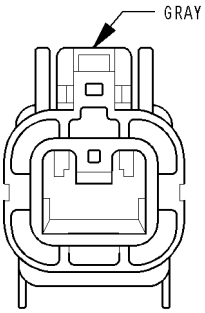

C114
(DIESEL)

C114 (DIESEL) - GRAY (BATTERY SIDE)

CAV	CIRCUIT
1	A209 10RD

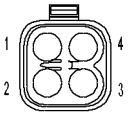

C115
(DIESEL)

C115 (DIESEL) - (ENGINE SIDE)

CAV	CIRCUIT
1	K227 14BR/LG
2	K12 14BR/DB
3	K227 14BR/LG
4	K11 14WT/DB

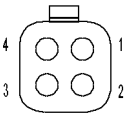

C115
(DIESEL)

C115 (DIESEL) - (INJECTOR SIDE)

CAV	CIRCUIT
1	K227 14BK
2	K12 14BK
3	K227 14BK
4	K11 14BK

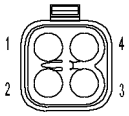

C116
(DIESEL)

C116 (DIESEL) - (ENGINE SIDE)

CAV	CIRCUIT
1	K229 14TN/PK
2	K14 14BR/TN
3	K227 14BR/LG
4	K13 14TN

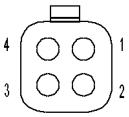

C116
(DIESEL)

C116 (DIESEL) - (INJECTOR SIDE)

CAV	CIRCUIT
1	K229 14BK
2	K14 14BK
3	K227 14BK
4	K13 14BK

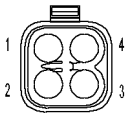

C117
(DIESEL)

C117 (DIESEL) - (ENGINE SIDE)

CAV	CIRCUIT
1	K229 14TN/PK
2	K58 14BR/VT
3	K229 14TN/PK
4	K38 14GY

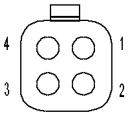

C117
(DIESEL)

C117 (DIESEL) - (INJECTOR SIDE)

CAV	CIRCUIT
1	K229 14BK
2	K58 14BK
3	K229 14BK
4	K38 14BK

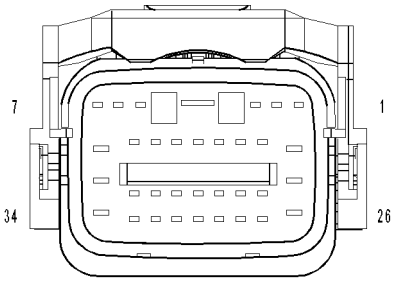

C130
(DIESEL)

C130 (DIESEL) - (HEADLAMP AND DASH SIDE)

CAV	CIRCUIT
1	C3 20DB/YL
2	V37 20VT
3	V32 20VT/YL
4	A961 14RD
5	K900 20DB/DG
6	K29 20WT/BR
7	K854 20VT/BR
8	-
9	K400 20BR/VT
10	K25 18DB/VT
11	D20 20WT/LG
12	D21 20WT/BR
13	F202 20PK/GY
14	B22 18DG/YL
15	F504 20GY/PK
16	-
17	-
18	B29 20DG/WT
19	N4 20DB/WT
20	K174 18BR/YL
21	C13 20LB/OR
22	D25 20WT/VT
23	K23 20BR/WT
24	K852 20BR/LB
25	-
26	-
27	K167 20BR/YL
28	T6 20DG (A/T)
29	K176 18BR/OR
30	-
31	T515 20YL/DB (A/T)
32	K31 18BR
33	-
34	-

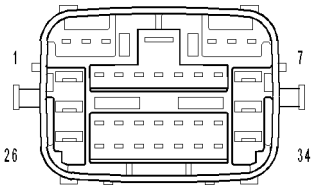

C130
(DIESEL)

C130 (DIESEL) - (TRANSMISSION SIDE)

CAV	CIRCUIT
1	C3 18DB/YL
2	V37 18VT
3	V32 18VT/YL
4	A961 14RD
5	K900 18DB/DG
6	K29 18WT/BR
7	K854 18VT/OR
8	-
9	K400 18BR/VT
10	K25 18DB/VT
11	D20 18WT/LG
12	D21 18WT/BR
13	F202 18PK/GY
14	B22 18DG/YL
15	F504 18GY/PK
16	-
17	-
18	B29 18DG/WT
19	N4 18DB/WT
20	K174 18BR/YL
21	C13 18LB/OR
22	D25 18WT/VT
23	K23 18VT
24	K852 18BR/VT
25	-
26	-
27	K167 18BR/YL
28	T6 18DG (A/T)
29	K176 18BR/OR
30	-
31	T515 18YL/DB (A/T)
32	K31 18BR
33	-
34	-

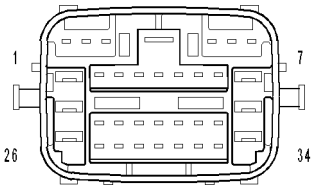

C130
(GAS)

C130 (GAS) - (ENGINE SIDE)

CAV	CIRCUIT
1	D15 18WT/DG (NGC EXCEPT 3.7L/4.7L M/T/SRT A/T)
1	A917 18RD (SRT M/T)
2	D16 18WT/OR (NGC EXCEPT 3.7L/4.7L M/T)
2	K242 18BR/WT (SRT)
3	K66 18DB/WT (5.7L)
4	K342 16BR/WT
5	G31 18VT/LG (NGC)
5	G127 20VT/DB (SRT)
6	K106 18VT/LB
7	K107 18VT/WT
8	L1 18WT/LG
9	T41 20YL/DB (NGC A/T)
9	T41 18YL/DB (SRT A/T)
10	L10 18WT/GY
11	A919 20RD (NGC)
11	A919 16RD (SRT A/T)
12	C3 20DB/YL (NGC)
13	F202 20PK/GY (NGC)
13	F202 18PK/GY (SRT)
14	D20 18WT/LG (3.7L/4.7L)
14	D20 20WT/LG (5.7L)
14	C240 18LB/TN (SRT)
15	D21 18WT/BR (3.7L/4.7L)
15	D21 20WT/BR (5.7L)
16	T16 18YL/OR (A/T)
17	T316 16YL/GY (4.7L A/T ETC)
17	T917 20YL/TN (SRT A/T)
18	T6 18DG (A/T NGC)
18	T117 20DG/YL (SRT A/T)
19	K900 18DB/DG
20	T515 20YL/DB (NGC A/T)
20	T515 18YL/DB (SRT A/T)
21	K399 18BR/GY (NGC)
21	K99 18BR/LG (SRT)
22	B22 20DG/YL (NGC)
22	B22 18DG/YL (SRT)
23	C3 18DB/YL (SRT)
24	D25 20WT/VT (NGC)
24	K344 18BR/GY (SRT)
25	T315 16YL/BR (4.7L A/T ETC)
26	T751 16YL (NGC)
26	K343 16BR/YL (SRT)
27	K299 18BR/WT (NGC)
27	K199 18BR/VT (SRT)
28	D200 20WT/LG (4.7L A/T ETC)
28	F855 18PK/YL (5.7L)
29	D202 20WT/VT (4.7L A/T ETC)
29	B222 20DG/WT (5.7L)
30	D201 20WT/DG (4.7L A/T ETC)
30	F856 18YL/PK (5.7L)
31	T313 20YL/LG (4.7L A/T ETC)
31	Z953 18BK (5.7L M/T MTC OFF ROAD
32	D203 20WT/BR (4.7L A/T ETC)
32	T525 18YL/DB (5.7L OFF ROAD)
33	T885 20YL/GY (4.7L A/T ETC)
33	K77 18BR/WT (NGC MTC)
33	K42 18DB/YL (SRT)
34	F1 16PK/WT (NGC)

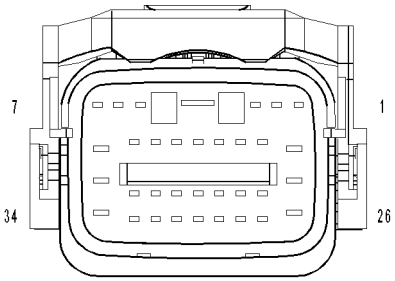

C130
(GAS)

C130 (GAS) - (HEADLAMP AND DASH)

CAV	CIRCUIT
1	D15 18WT/DG (NGC)
1	A917 20RD (SRT)
2	D16 18WT/OR (NGC)
2	K242 18BR/WT (SRT)
3	K66 18DB/WT (5.7L)
4	K342 16BR/WT
5	G31 20VT/LG (NGC)
6	K106 18VT/LB
7	K107 18VT/WT
8	L1 18WT/LG
9	T41 20YL/DB (NGC)
9	T41 18YL/DB (SRT)
10	L10 18WT/GY
11	A919 20RD (NGC)
11	A919 16RD (SRT)
12	C3 20DB/YL (NGC)
13	F202 20PK/GY (NGC)
13	F202 18PK/GY (SRT)
14	D20 20WT/LG (NGC)
14	C240 18LB/TN (SRT)
15	D21 20WT/BR (NGC)
15	K125 18BR/DG (SRT)
16	T16 18YL/OR
17	T917 20YL/TN (SRT)
18	T6 20DG (NGC)
18	T117 20DG/YL (SRT)
19	K900 20DB/DG (NGC)
19	K900 18DB/LG (SRT)
20	T515 20YL/DB (NGC)
20	T515 18YL/DB (SRT)
21	K399 18BR/GY (NGC)
21	K99 18BR/LG (SRT)
22	B22 18DG/YL (NGC)
22	B22 20DG/YL (SRT)
23	C3 18DB/YL (SRT)
24	D25 20WT/VT (NGC)
24	K344 18BR/GY (SRT)
25	T315 16YL/BR (4.7L 4X4)
26	T751 16YL (NGC)
26	K343 16BR/YL (SRT)
27	K299 18BR/WT (NGC)
27	K199 18BR/VT (SRT)
28	D200 20WT/LG (4.7L 4X4)
28	F855 20PK/YL (5.7L)
29	D202 20WT/VT (4.7L 4X4)
29	B222 18DG/WT (5.7L)
30	D201 20WT/DG (4.7L 4X4)
30	F856 20YL/PK (5.7L)
31	T313 20YL/DG (4.7L 4X4)
31	Z953 20BK (5.7L OFF ROAD)
32	D203 20WT/BR (4.7L 4X4)
32	T525 20YL/DB (5.7L OFF ROAD)
33	K77 18BR/WT (NGC MTC)
34	F1 16PK/WT (NGC)

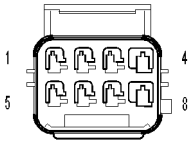

C131
(5.7L ETC)

C131 (5.7L ETC) - (ENGINE SIDE)

CAV	CIRCUIT
1	T316 16YL/GY
2	D200 20WT/LG
3	T313 20YL/LG
4	D202 20WT/VT
5	T315 16YL/BR
6	D201 20WT/DG
7	T885 20YL/GY
8	D203 20WT/BR

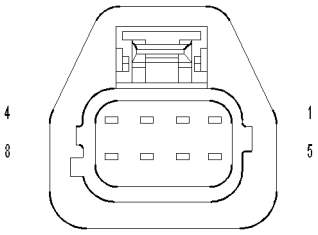

C131
(5.7L ETC)

C131 (5.7L ETC) - (HEADLAMP AND DASH SIDE)

CAV	CIRCUIT
1	T316 16YL/GY
2	D200 20WT/LG
3	T313 20YL/LG
4	D202 20WT/VT
5	T315 16YL/BR
6	D201 20WT/DG
7	T885 20YL/GY
8	D203 20WT/BR

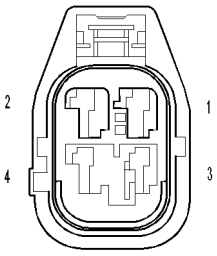

C132
(DIESEL M/T MTC)

C132 (DIESEL M/T MTC) - (HEADLAMP AND DASH SIDE)

CAV	CIRCUIT
1	K77 18 BR/WT
2	L1 18 WT/LG
3	L10 18 WT/GY
4	Z901 18 BK

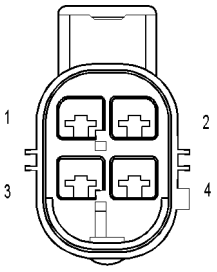

C132
(DIESEL M/T MTC)

C132 (DIESEL M/T MTC) - (TRANSMISSION SIDE)

CAV	CIRCUIT
1	K77 18BR/WT
2	L1 18WT/LG
3	L10 18WT/GY
4	Z901 18BK

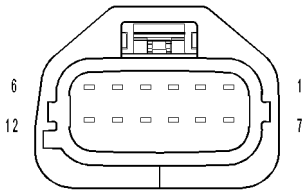

C132
(DIESEL M/T ETC/
DIESEL A/T MTC)

C132 (DIESEL M/T ETC/DIESEL A/T MTC) -
(HEADLAMP AND DASH SIDE)

CAV	CIRCUIT
1	L10 18WT/GY
2	Z901 18BK (A/T)
2	T315 16YL/BR (M/T)
3	K900 18DB/DG (A/T)
4	T117 20DG/YL (A/T)
4	T313 20YL/LG (M/T)
5	T41 20YL/DB (A/T)
5	T885 20YL/GY (M/T)
6	D203 20WT/BR (M/T)
7	K77 18BR/WT (A/T)
7	T316 16YL/GY (M/T)
8	L1 18WT/LG
9	-
10	T917 20YL/TN (A/T)
10	D200 20WT/LG (M/T)
11	D201 20WT/DG (M/T)
12	T16 18YL/OR (A/T)
12	D202 20WT/VT (M/T)

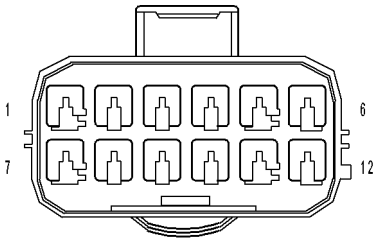

C132
(DIESEL M/T ETC/
DIESEL A/T MTC)

C132 (DIESEL M/T ETC/DIESEL A/T MTC) -
(TRANSMISSION SIDE)

CAV	CIRCUIT
1	L10 18WT/GY
2	Z901 18BK (A/T)
2	T315 16YL/BR (M/T)
3	K900 20DB/DG (A/T)
4	T117 20DG/YL (A/T)
4	T313 20YL/LG (M/T)
5	T41 20YL/DB (A/T)
5	T885 20YL/GY (M/T)
6	D203 20WT/BR (M/T)
7	K77 18BR/WT (A/T)
7	T316 16YL/GY (M/T)
8	L1 18WT/LG (A/T)
9	-
10	T917 20YL/TN (A/T)
10	D200 20WT/LG (M/T)
11	D201 20WT/DG (M/T)
12	T16 18YL/OR (A/T)
12	D202 20WT/VT (M/T)

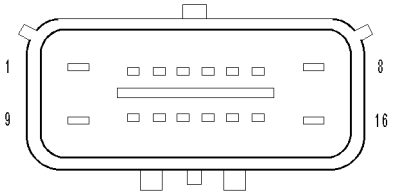

C132
(DIESEL A/T ETC)

C132 (DIESEL A/T ETC) - (HEADLAMP AND DASH SIDE)

CAV	CIRCUIT
1	-
2	L1 18WT/LG
3	K900 18DB/DG
4	T41 20YL/DB
5	T16 18YL/OR
6	T117 20DG/YL
7	T917 20YL/TN
8	L10 18WT/GY
9	T315 16YL/BR
10	D200 20WT/LG
11	D201 20WT/DG
12	D202 20WT/VT
13	D203 20WT/BR
14	T313 20YL/LG
15	T885 20YL/GY
16	T316 16YL/GY

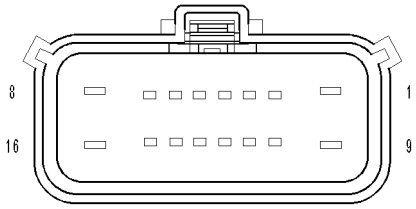

C132
(DIESEL A/T ETC)

C132 (DIESEL A/T ETC) - (TRANSMISSION SIDE)

CAV	CIRCUIT
1	-
2	L1 18WT/LG
3	K900 20DB/DG
4	T41 20YL/DB
5	T16 18YL/OR
6	T117 20DG/YL
7	T917 20YL/TN
8	L10 18WT/GY
9	T315 16YL/BR
10	D200 20WT/LG
11	D201 20WT/DG
12	D202 20WT/VT
13	D203 20WT/BR
14	T313 20YL/LG
15	T885 20YL/GY
16	T316 16YL/GY

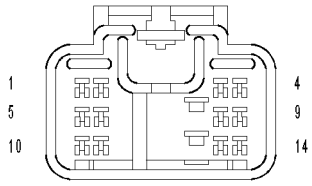

C133

C133 - (HEADLAMP AND DASH SIDE)

CAV	CIRCUIT
1	A34 16RD/WT
2	E11 20OR/DB
3	F21 20PK/DG
4	T315 16YL/BR
5	D25 20VT/DB
6	T885 20YL/GY
7	D200 20WT/LG
8	T316 16YL/GY
9	D202 20WT/VT
10	D201 20WT/DG
11	T41 20YL/DB
12	T313 20YL/LG
13	D203 20WT/BR
14	Z905 16BK

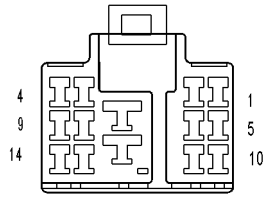

C133

C133 - (TRANSFER CASE CONTROL MODULE SIDE)

CAV	CIRCUIT
1	A34 16RD/WT
2	E11 20OR/DB
3	F21 20PK/DG
4	T315 16YL/BR
5	D25 20VT/DB
6	T885 20YL/GY
7	D200 20WT/LG
8	T316 16YL/GY
9	D202 20WT/VT
10	D201 20WT/DG
11	T41 20YL/DB
12	T313 20YL/LG
13	D203 20WT/BR
14	Z905 16BK

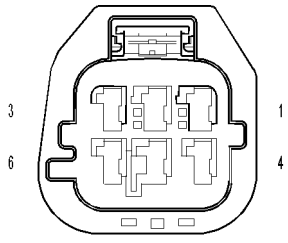

C134
(5.7L OFF ROAD)

C134 (5.7L OFF ROAD) - (HEADLAMP AND DASH SIDE)

CAV	CIRCUIT
1	T526 16YL/WT
2	T521 20YL/GY
3	T527 20YL/TN
4	T528 16YL/GY
5	-
6	-

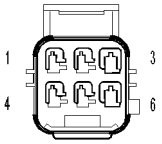

C134
(POWER WAGON)

C134 (POWER WAGON) - (CHASSIS SIDE)

CAV	CIRCUIT
1	T526 16YL/WT
2	T521 18YL/GY
3	T527 18YL/TN
4	T528 16YL/GY
5	-
6	-

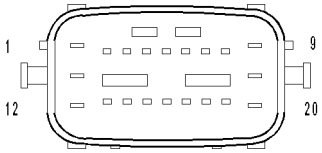

C135

C135 - (HEADLAMP AND DASH SIDE)

CAV	CIRCUIT
1	A109 16OR/RD
2	L673 18YL
3	L674 18LG
4	K900 20DB/DG
5	N4 20DB/WT (EXCEPT SRT)
5	N4 18DB/WT (SRT)
6	L7 18WT/YL
7	L62 18WT/YL
8	L63 18WT/DG
9	L678 18BR (EXCEPT SRT)
9	L678 16BR (SRT)
10	Z927 14BK/OR
11	B40 14DG (TRAILER TOW)
12	A100 14RD/VT (TRAILER TOW)
13	L1 18WT/LG
14	L50 18WT/TN
15	B3 18DG/YL (EXCEPT SRT)
15	B3 20DG/YL (SRT)
16	B4 18DG/GY (EXCEPT SRT)
16	B4 20DG/GY (SRT)
17	L70 18WT/GY
18	L53 18DG/WT
19	L54 18WT/LG
20	Z928 16BK

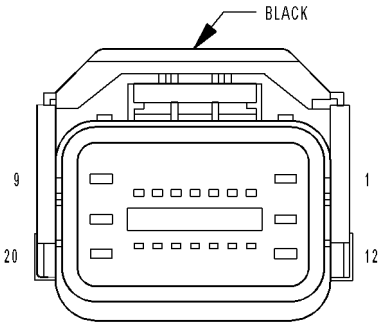

C135

C135 - BLACK (CHASSIS SIDE)

CAV	CIRCUIT
1	A109 14OR/RD
2	L673 18YL
3	L674 18LG
4	K900 18DB/DG
5	N4 18DB/WT
6	L7 18WT/YL
7	L62 18WT/YL
8	L63 18WT/DG
9	L678 18BR
10	Z927 12BK/OR
11	B40 14DG (TRAILER TOW)
12	A100 14RD/VT (TRAILER TOW)
13	L1 18WT/LG
14	L50 18WT/TN
15	B3 18DG/YL
16	B4 18DG/GY
17	L70 18WT/GY
18	L53 18DG/WT (EXCEPT BOX OFF)
19	L54 18WT/LG (EXCEPT BOX OFF)
20	Z928 16BK

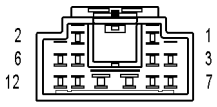

C136

C136 - (BODY SIDE)

CAV	CIRCUIT
1	-
2	A405 18RD/DB
3	C16 16DB/GY (EXCEPT BASE)
4	A930 18RD (EXCEPT BASE)
5	-
6	-
7	-
8	-
9	A210 12OR/RD (EXCEPT BASE)
10	F30 12PK/YL (SRT)
11	A916 16RD (SRT)
12	C15 16BK (EXCEPT BASE/STANDARD CAB SRT)

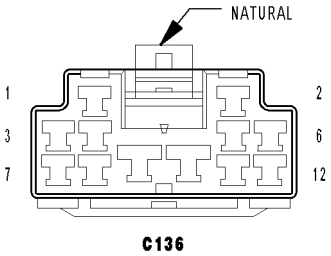

C136

C136 - NATURAL (HEADLAMP AND DASH SIDE)

CAV	CIRCUIT
1	-
2	A405 18RD/DB
3	C16 16DB/GY (EXCEPT 3.7L/4.7L BASE)
4	A930 18RD (EXCEPT 3.7L/4.7L BASE)
5	-
6	-
7	-
8	-
9	A210 12OR/RD (EXCEPT 3.7L/4.7L BASE/SRT)
9	A210 10OR/RD (SRT)
10	F30 12PK/YL (SRT)
11	A916 16RD (SRT)
12	C15 16DB/WT (EXCEPT 3.7L/4.7L BASE)

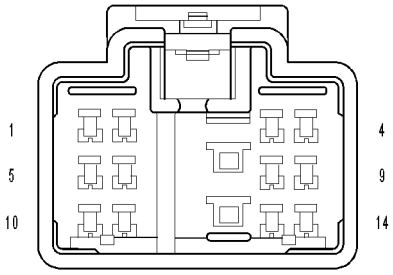

C137
(SMART BAR)

C137 (SMART BAR) - (HEADLAMP AND DASH SIDE)

CAV	CIRCUIT
1	T529 20YL/LG
2	T530 20YL/DG
3	T531 20YL/TN
4	T532 20YL/GY
5	T533 20YL/LB
6	T534 20YL
7	-
8	T536 20YL/WT
9	T537 20YL/LG
10	T535 20YL/BR
11	-
12	-
13	E11 20OR/DB
14	Z952 20BK

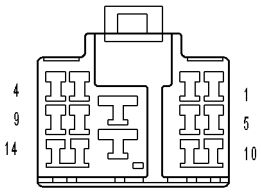

C137
(SMART BAR)

C137 (SMART BAR) - (SMART BAR SWITCH JUMPER SIDE)

CAV	CIRCUIT
1	T529 20YL/LG
2	T530 20YL/DG
3	T531 20YL/TN
4	T532 20YL/GY
5	T533 20YL/LB
6	T534 20YL
7	-
8	T536C 20YL/WT
9	T537 20YL/LG
10	T535 20YL/BR
11	-
12	-
13	E11C 20OR/DB
14	Z952C 20BK

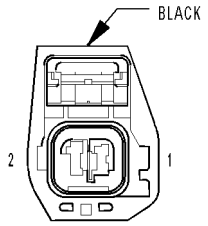

C138

C138 - BLACK (FRONT FASCIA SIDE)

CAV	CIRCUIT
1	L89 18WT/YL
2	Z926 18BK

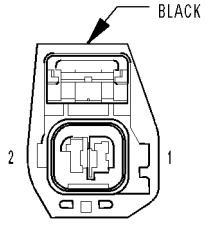

C138

C138 - BLACK (HEADLAMP AND DASH SIDE)

CAV	CIRCUIT
1	L89 18WT/YL
2	Z926 18BK

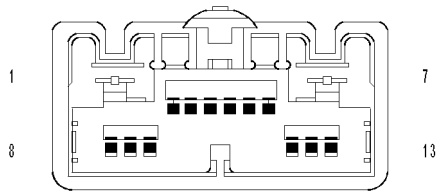

C200

C200 - (HVAC SIDE)

CAV	CIRCUIT
1	C70 10DB/YL
2	C34 20DB/LB
3	C71 16DB/BR
4	C32 20DB/TN
5	C73 14DB/VT
6	C72 16DB/OR
7	C7 10DB
8	C29 20DB
9	C21 20DB/LG (EXCEPT BASE A/C)
10	C121 20DB/DG
11	C33 20LB/BR
12	C61 20DB/LG
12	C33 20LB/BR (DUAL ZONE)
13	C801 20DB/OR

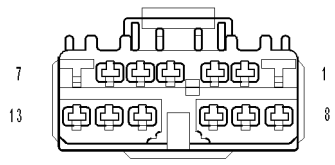

C200

C200 - (I/P SIDE)

CAV	CIRCUIT
1	C70 10DB/YL
2	C34 20DB/LB
3	C71 16DB/BR
4	C32 20DB/TN
5	C73 14DB/VT
6	C72 16DB/OR
7	C7 10DB
8	C29 20DB
9	C21 20DB/LG
10	C121 20DB/DG
11	C61 20DB/LG
12	C33 20LB/BR (EXCEPT BASE)
13	C801 20DB/OR

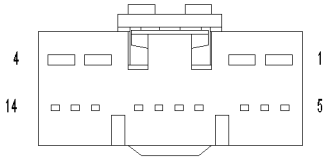

C201

C201 - (HEADLINER SIDE)

CAV	CIRCUIT
1	A310 14RD/LB (SUNROOF)
2	Z13 20BK/WT (EXCEPT BASE)
3	L50 20WT/TN
4	Z964 20BK (EXCEPT SUNROOF)
4	Z964 14BK (SUNROOF)
5	A919 20RD (EXCEPT BASE)
6	F21 20PK/DG (EXCEPT BASE)
7	L14 20WT/BR (EXCEPT SUNROOF)
7	L14 20WT/TN (SUNROOF)
8	F983 20PK/YL (SUNROOF)
9	M20 20YL/LB
10	D25 20WT/VT (EXCEPT BASE)
11	-
12	M288 20YL/GY (EXCEPT BASE)
13	-
14	-

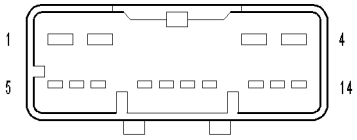

C201

C201 - (I/P SIDE)

CAV	CIRCUIT
1	A310 14RD/LB (EXCEPT BASE)
2	Z13 18BK/WT
3	L50 18WT/TN
4	Z964 14BK (EXCEPT BASE)
5	A919 20RD (EXCEPT BASE)
6	F21 20PK/DG
7	L14 20WT/TN
8	F983 20PK/YL (EXCEPT BASE)
9	M20 20YL/LB
10	D25 20WT/VT (EXCEPT BASE)
11	-
12	M288 18YL/GY
13	-
14	-

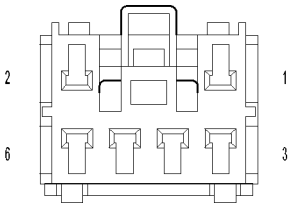

C206
(EXCEPT HANDS FREE)

C206 (EXCEPT HANDS FREE) - (CLEARANCE LAMPS SIDE)

CAV	CIRCUIT
1	L70 20WT/GY (EXCEPT SRT)
2	Z946 20BK (EXCEPT SRT)
3	F21 20PK/DG (ELECTROCHROMATIC MIRROR)
4	Z944 20BK (ELECTROCHROMATIC MIRROR)
5	L1 20WT/LG (ELECTROCHROMATIC MIRROR)
6	-

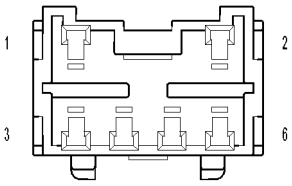

C206
(EXCEPT HANDS FREE)

C206 (EXCEPT HANDS FREE) - (I/P SIDE)

CAV	CIRCUIT
1	L70 18WT/GY (EXCEPT SRT)
2	Z946 18BK
3	F21 20PK/DG
4	Z944 20BK
5	L1 20WT/LG (EXCEPT SRT)
5	L1 18WT/LG (SRT)
6	-

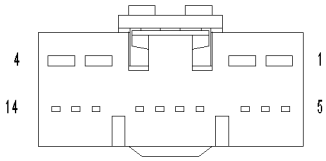

C206
(HANDS FREE)

C206 (HANDS FREE) - (CLEARANCE LAMPS SIDE)

CAV	CIRCUIT
1	L70 20WT/GY (CLEARANCE LAMPS)
2	Z946 20BK (CLEARANCE LAMPS)
3	F21 20PK/DG
4	Z944 20BK
5	L1 20WT/LG
6	X712 20DG/LB
7	X792 20LB/DG
8	X835 20OR/GY
9	X730 20GY/YL
10	X793 20DG/YL
11	X722 20LB/DG
12	-
13	-
14	-

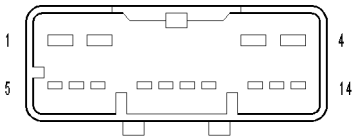

C206
(HANDS FREE)

C206 (HANDS FREE) - (I/P SIDE)

CAV	CIRCUIT
1	L70 18WT/GY
2	Z946 18BK
3	F21 20PK/DG
4	Z944 20BK
5	L1 20WT/LG (EXCEPT SRT)
5	L1 18WT/LG (SRT)
6	X712 18DG/LB
7	X792 18LB/DG
8	X835 18OR/GY
9	X730 18GY/YL
10	X793 18DG/YL
11	X722 18LB/DG
12	-
13	-
14	-

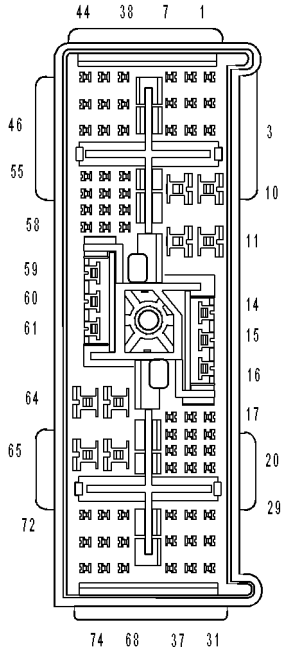

C219

C219 - (I/P SIDE)

CAV	CIRCUIT
1	C110 20DB/LB (EXCEPT BASE)
2	D15 18WT/DG (GAS EXCEPT SRT)
2	G127 20VT/DB (SRT)
3	L50 18WT/TN
4	F1 16PK/WT (EXCEPT SRT)
5	D21 18WT/BR
6	A103 18GY/RD
7	T751 16YL (EXCEPT SRT)
8	D20 20WT/LG
9	E11 20OR/DB (4X4)
10	A970 10RD (EXCEPT SRT)
11	A991 10RD (EXCEPT BASE/SRT)
12	F985 12PK/YL (SRT)
13	-
14	-
15	-
16	V38 20VT/OR (EXCEPT SRT)
16	F102 18PK/DB (SRT)
17	V37 20VT
18	T6 20DG
19	L70 18WT/GY
20	F21 20PK/DG
21	V32 20VT/YL
22	T141 16YL/OR (SRT)
23	A921 16RD (EXCEPT SRT)
24	B25 20DG/WT
25	V30 20VT/WT
26	A114 18GY/RD
27	L1 20WT/LG (EXCEPT SRT)
27	L1 18WT/LG (SRT)
28	-
29	-
30	V937 20VT/BR (EXCEPT SRT)
30	K900 20DB/DG (SRT)
31	A944 20RD
32	F504 20GY/PK
33	A941 18RD
34	-
35	-
36	F984 18PK/YL (EXCEPT SRT)
36	F984 16PK/YL (SRT)
37	-
38	F951 16PK/LG
39	T917 20YL/TN
40	-
41	A951 16RD
42	F202 20PK/GY (EXCEPT BASE)
43	A72 18RD/OR (ADJUSTABLE PEDALS)
44	D16 18WT/OR (EXCEPT SRT)
45	-
46	K77 18BR/WT (EXCEPT SRT)
47	T117 20DG/YL
48	A205 18RD/OR

C219 - (I/P SIDE)

CAV	CIRCUIT
49	A116 18YL/RD (PREMIUM AUDIO EXCEPT SRT)
49	A116 16YL/RD (SRT)
50	-
51	-
52	-
53	
54	-
55	-
56	F100 20PK/VT
57	-
58	-
59	-
60	A981 12RD (SRT)
61	F988 18PK/YL (SRT)
62	A991 12RD (SRT)
63	F982 14PK/YL (EXCEPT SRT)
64	A981 14RD (EXCEPT SRT)
64	C7 10DB (SRT)
65	A310 10RD/LB (SRT)
66	F922 16PK/YL (EXCEPT SRT)
67	F201 20PK/OR
68	L89 20WT/YL (EXCEPT BASE/SRT)
68	L89 18WT/YL (SRT)
69	B29 20DG/WT
70	A919 20RD (EXCEPT BASE)
71	-
72	D25 20VT/PK
73	F983 20PK/YL
74	-

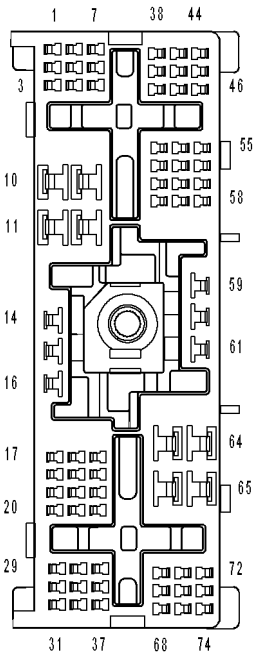

C219

C219 - (HEADLAMP AND DASH SIDE)

CAV	CIRCUIT
1	C110 20DB/LB (EXCEPT 3.7L/4.7L BASE)
2	D15 18WT/DG (GAS EXCEPT SRT)
2	G127 20VT/DB (SRT)
3	L50 18WT/TN
4	F1 16PK/WT (GAS EXCEPT SRT)
5	D21 20WT/BR (EXCEPT SRT)
5	D21 18WT/BR (SRT)
6	A103 18GY/RD
7	T751 16YL (EXCEPT SRT)
8	D20 20WT/LG (EXCEPT SRT)
8	D20 18WT/LG (SRT)
9	E11 20OR/DB (4X4/5.7L OFF ROAD)
10	A970 10RD (EXCEPT SRT)
11	A991 10RD (EXCEPT 3.7L/4.7L BASE/ SRT)
12	F985 12PK/YL (SRT)
13	-
14	-
15	-
16	V38 20VT/OR (5.7L)
16	F102 20PK/DB (SRT)
17	V37 20VT (EXCEPT SRT)
17	V37 18VT (SRT)
18	T6 20DG (A/T EXCEPT SRT)
18	T6 18DG (SRT)
19	L70 18WT/GY
20	F21 20PK/DG
21	V32 20VT/YL (EXCEPT SRT)
21	V32 18VT/YL (SRT)
22	T141 16YL/OR (SRT)
23	A921 16RD (EXCEPT SRT)
24	B25 20DG/WT
25	F202 20PK/GY (5.7L)
25	Z949 20BK (DIESEL)
25	V30 20VT/WT (GAS EXCEPT 5.7L)
26	A114 18GY/RD
27	L1 18WT/LG
28	-
29	-
30	V937 20VT/BR) (5.7L)
30	K900 20DB/DG (EXCEPT 5.7L)
31	A944 20RD
32	F504 20GY/PK
33	A941 18RD
34	-
35	-
36	F984 18PK/YL (EXCEPT SRT)
36	F984 16PK/YL (SRT)
37	-
38	F951 16PK/LG
39	T917 20YL/TN (DIESEL A/T/SRT)
40	-
41	A951 16RD
42	F202 20PK/GY

C219 - (HEADLAMP AND DASH SIDE)

CAV	CIRCUIT
43	A72 18RD/OR (EXCEPT 3.7L/4.7L BASE/SRT)
44	D16 18WT/OR (EXCEPT DIESEL/EXCEPT SRT)
45	-
46	K77 18BR/WT (MTC)
47	T117 20DG/YL (DIESEL A/T/SRT)
48	A205 18RD/OR (EXCEPT SRT)
48	A205 16RD/OR (SRT)
49	A116 18YL/RD (EXCEPT 3.7L/4.7L BASE/SRT)
49	A116 16YL/RD (SRT)
50	-
51	-
52	-
53	-
54	-
55	-
56	F100 20PK/VT (EXCEPT SRT)
56	F100 18PK/VT (SRT)
57	-
58	-
59	-
60	A981 12RD (SRT)
61	F988 18PK/YL (SRT)
62	A991 12RD (SRT)
63	F982 14PK/YL (EXCEPT SRT)
64	A981 14RD (EXCEPT SRT)
64	C7 10DB (SRT)
65	A310 10RD/LB (SRT)
66	F922 16PK/YL (EXCEPT SRT)
67	F201 20PK/OR
68	L89 18WT/YL (EXCEPT 3.7L/4.7L BASE)
69	B29 20DG/WT
70	A919 20RD
71	-
72	D25 20VT/PK
73	F983 20PK/YL
74	-

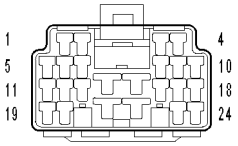

C220

C220 - (I/P SIDE)

CAV	CIRCUIT
1	F983 20PK/YL
2	X295 18GY/DG
3	-
4	X153 18DG/YL
5	G75 20VT
6	G77 20VT/GY
7	X155 18DG/LB
8	G10 20VT/LG
9	G163 20VT/LB (EXCEPT BASE)
10	X205 18GY/LG
11	P5 18TN/OR (EXCEPT BASE)
12	F100 20PK/VT
13	F201 20PK/OR
14	-
15	-
16	-
17	P393 18LG (EXCEPT BASE)
18	G161 20VT/DG (EXCEPT BASE)
19	-
20	P1 18TN/LG (EXCEPT BASE)
21	-
22	F30 12PK/YL (EXCEPT BASE/SRT)
23	-
24	-

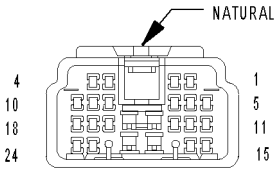

C220

C220 - NATURAL (BODY SIDE)

CAV	CIRCUIT
1	F983 20PK/YL (STANDARD CAB/QUAD CAB SRT)
2	X295 18GY/DG
3	X16 18DG/YL (SRT)
4	X153 18DG/YL
5	G75 20VT
6	G77 20VT/OR (QUAD CAB)
7	X155 18DG/LB
8	G10 20VT/LG
9	G163 20VT/LB (EXCEPT BASE)
10	X205 18GY/LG
11	P5 18TN/OR (QUAD CAB)
12	F100 18PK/VT (EXCEPT SRT QUAD CAB)
12	F100 20PK/VT (SRT QUAD CAB)
13	F201 18PK/OR (NGC/DIESEL/SRT QUAD CAB/SRT STANDARD CAB EXCEPT SAB)
13	F201 20PK/YL (SRT EXCEPT STANDARD CAB SAB)
14	X917 18DG (SRT)
15	X211 18YL/GY (SRT)
16	D25 20WT/VT (SRT)
17	P393 18LG (EXCEPT BASE)
18	G161 20VT/DG (EXCEPT BASE)
19	X17 18DG/OR (SRT)
20	P1 18TN/LG (EXCEPT BASE)
21	Z909 18BK (SRT)
22	F30 12PK/YL (EXCEPT BASE/SRT)
23	D112 18WT/OR (SRT)
24	X160 18GY/YL (SRT)

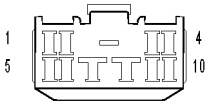

C301

C301 - (BODY SIDE)

CAV	CIRCUIT
1	G74 20VT/WT
2	P195 18LG/YL (EXCEPT BASE)
3	P72 18TN/GY (EXCEPT BASE)
4	X154 18GY/YL
5	X156 18GY/LB
6	P74 18TN/OR (EXCEPT BASE)
7	Q15 12OR/LB (EXCEPT BASE)
8	-
9	-
10	Z74 20BK/WT

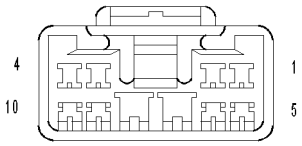

C301

C301 - (PASSENGER DOOR SIDE)

CAV	CIRCUIT
1	G74 20VT/WT
2	P195 18LG/YL
3	P72 18TN/GY
4	X154 18GY/YL
5	X156 18GY/LB
6	P74 18TN/OR
7	Q15 14OR/LB
8	-
9	-
10	Z461 20BK/DG

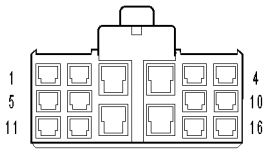

C302

C302 - (BODY SIDE)

CAV	CIRCUIT
1	F21 20PK/DG
2	-
3	-
4	G778 18VT/LB
5	-
6	G160 20VT/LG
7	Q16 14OR/TN
8	Q26 14OR/GY
9	G162 20VT/LB (DRL)
10	P392 18LG/DB
11	Z216 18BK/DB
12	-
13	C16 18DB/GY
14	-
15	-
16	-

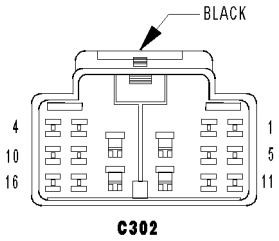

C302 - BLACK (PASSENGER DOOR SIDE)

CAV	CIRCUIT
1	F21 20PK/DG
2	-
3	-
4	G778 18VT/LB
5	-
6	G160 20VT/LG
7	Q16 14OR/TN
8	Q26 14OR/GY
9	-
10	P392 18LG/DB
11	Z216 20BK/DB
12	-
13	C16 18DB/GY
14	-
15	-
16	-

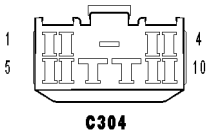

C304 - (BODY SIDE)

CAV	CIRCUIT
1	G75 20VT
2	P195 18LG/YL (EXCEPT BASE)
3	P72 18TN/GY (EXCEPT BASE)
4	X153 18DG/YL
5	X155 18DG/LB
6	P74 18TN/OR (EXCEPT BASE)
7	F30 12PK/YL (EXCEPT BASE)
8	Q15 12OR/LB (EXCEPT BASE)
9	A930 18RD (EXCEPT BASE)
10	Z75 20BK/VT

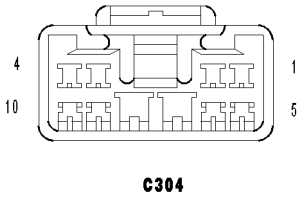

C304 - (DRIVER DOOR SIDE)

CAV	CIRCUIT
1	G75 20VT
2	P195 18LG/YL (EXCEPT BASE)
3	P72 20TN/GY (EXCEPT BASE/SRT)
3	P72 18TN/GY (SRT)
4	X153 18DG/YL
5	X155 18DG/LB
6	P74 18TN/OR (EXCEPT BASE)
7	F30 14PK/YL (EXCEPT BASE)
8	Q15 14OR/LB (EXCEPT BASE)
9	A930 18RD (EXCEPT BASE)
10	Z75 20BK/VT (EXCEPT SRT)
10	Z463 20BK/LB (SRT)

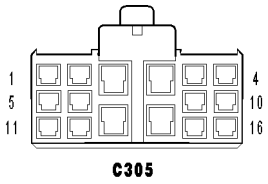

C305 - (BODY SIDE)

CAV	CIRCUIT
1	C16 18DB/GY
2	Q16 14OR/TN
3	Q26 14OR/GY
4	P393 18LG
5	-
6	P1 18TN/LG
7	Z461 14BK/DG
8	Q612 14OR/DB (QUAD CAB)
9	-
10	G161 20VT/DG
11	G163 20VT/LB
12	Q412 14OR/LB (QUAD CAB)
13	Q611 14OR/GY (QUAD CAB)
14	Q411 14OR/WT (QUAD CAB)
15	-
16	-

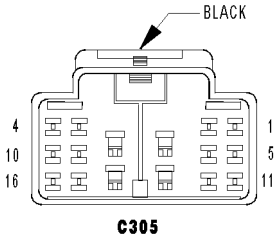

C305 - BLACK (DRIVER DOOR SIDE)

CAV	CIRCUIT
1	C16 18DB/GY
2	Q16 14OR/TN
3	Q26 14OR/GY
4	P393 18LG
5	-
6	P1 18TN/LG
7	Z461 14BK/DG
8	Q612 14OR/DB
9	-
10	G161 20VT/DG
11	G163 20VT/LB (SRT)
12	Q412 14OR/LB
13	Q611 14OR/GY
14	Q411 14OR/WT
15	-
16	-

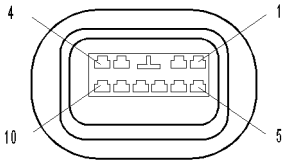

C306
(QUAD CAB)

C306 (QUAD CAB) - (REAR DOOR SIDE)

CAV	CIRCUIT
1	Z79 20LG/BK
2	G77 20VT/GY
3	P393 18LG (EXCEPT BASE)
4	P5 18TN/OR (EXCEPT BASE)
5	Q15 14OR/LB (EXCEPT BASE)
6	Q411 14OR/WT (EXCEPT BASE)
7	Q611 14OR/GY (EXCEPT BASE)
8	X295 18GY/DG
9	X205 18GY/LG
10	-

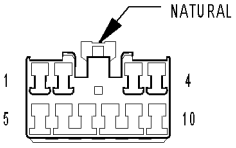

C306
(QUAD CAB)

C306 (QUAD CAB) - NATURAL (BODY SIDE)

CAV	CIRCUIT
1	Z79 20LG/BK
2	G77 20VT/OR
3	P393 18LG (EXCEPT BASE)
4	P5 18TN/OR (EXCEPT BASE)
5	Q15 14OR/LB (EXCEPT BASE)
6	Q411 14OR/WT (EXCEPT BASE)
7	Q611 14OR/GY (EXCEPT BASE)
8	X295 18GY/DG
9	X205 18GY/LG
10	-

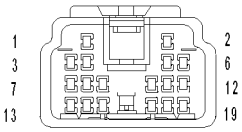

C308

C308 - (BODY SIDE)

CAV	CIRCUIT
1	G74 20VT/WT
2	G162 20VT/LB (DRL)
2	Z966 18BK (SATELLITE RADIO)
3	D112 18WT/OR (SATELLITE RADIO)
4	X154 18GY/YL
5	G160 20VT/LG (EXCEPT BASE)
6	G76 20TN/YL (QUAD CAB)
7	D25 20WT/VT (SATELLITE RADIO)
8	P392 18LG/DB (EXCEPT BASE)
9	G778 18VT/LB (EXCEPT BASE)
10	F21 20PK/DG (EXCEPT BASE)
11	X16 18DG/YL (SATELLITE RADIO)
12	X17 18DG/OR (SATELLITE RADIO)
13	X160 18GY/YL (SATELLITE RADIO)
14	X206 18DG/LG
15	X296 18DG/GY
16	-
17	X917 18DG (SATELLITE RADIO)
18	X211 18YL/GY (SATELLITE RADIO)
19	X156 18GY/LB

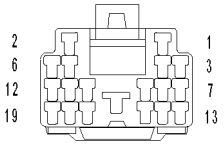

C308

C308 - (I/P SIDE)

CAV	CIRCUIT
1	G74 20VT/WT
2	Z966 18BK (SATELLITE RADIO)
3	D112 18WT/OR (SATELLITE RADIO)
4	X154 18GY/YL
5	G160 20VT/LG
6	G76 20VT/YL
7	D25 20WT/VT (SATELLITE RADIO)
8	P392 18LG/DB (EXCEPT BASE)
9	G778 18VT/LB (EXCEPT BASE)
10	F21 20PK/DG (EXCEPT BASE)
11	X16 18DG/YL (SATELLITE RADIO)
12	X17 18DG/OR (SATELLITE RADIO)
13	X160 18GY/YL (SATELLITE RADIO)
14	X206 18DG/LG
15	X296 18DG/GY
16	-
17	X917 18DG (SATELLITE RADIO)
18	X211 18YL/GY (SATELLITE RADIO)
19	X156 18GY/LB

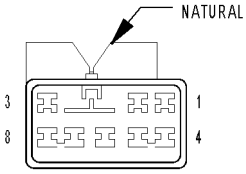

C309
(EXCEPT BASE)

C309 (EXCEPT BASE) - NATURAL (BODY SIDE)

CAV	CIRCUIT
1	X30 16DG/TN (SRT)
2	P7 20LG/DG (EXCEPT SRT)
3	P81 20TN/LB (EXCEPT SRT)
3	X31 16GY/TN (SRT)
4	-
5	P84 20TN/VT (EXCEPT SRT)
6	P8 20LG/WT (EXCEPT SRT)
6	F984 16PK/YL (STANDARD CAB SRT)
7	P82 20TN/DG (EXCEPT SRT)
8	P83 20TN/WT (EXCEPT SRT)

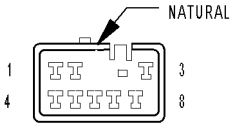

C309
(EXCEPT BASE)

C309 (EXCEPT BASE) - NATURAL (I/P SIDE)

CAV	CIRCUIT
1	X30 16DG/TN (SRT)
2	P7 20LG/DG (EXCEPT SRT)
3	P81 20TN/LB (EXCEPT SRT)
3	X31 16GY/TN (SRT)
4	-
5	P84 20TN/VT (EXCEPT SRT)
6	P8 20LG/WT (EXCEPT SRT)
6	F984 16PK/YL (SRT)
7	P82 20TN/DG (EXCEPT SRT)
8	P83 20TN/WT (EXCEPT SRT)

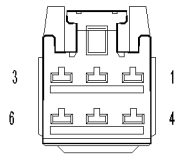

C311
(EXCEPT HEATED SEATS)

C311 (EXCEPT HEATED SEATS) - (BODY SIDE)

CAV	CIRCUIT
1	Z918 12BK (BASE)
1	Z939 12BK (SLT EXCEPT SATELLITE RADIO/STANDARD CAB SRT)
1	Z939 14BK (SLT SATELLITE RADIO/ QUAD CAB SRT)
2	A210 12OR/RD (EXCEPT BASE)
3	G10 20VT/LG (QUAD CAB/SRT)
3	G10 20LG/RD (STANDARD CAB EXCEPT SRT)
4	A405 18RD/DB
5	Z951 20BK (EXCEPT SRT)
5	Z951 18BK (SRT)
6	-

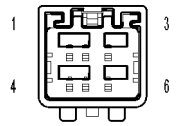

C311
(EXCEPT HEATED SEATS)

C311 (EXCEPT HEATED SEATS) - (DRIVER SEAT SIDE)

CAV	CIRCUIT
1	Z939 14BK
2	A210 12OR/RD
3	G10 20VT/LG
4	A405 12RD/DB
5	Z951 20BK
6	-

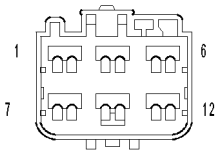

C313

C313 - (DRIVER SEAT SIDE)

CAV	CIRCUIT
1	P105 12LG
2	P13 12LG/OR
3	P21 12LG/TN
4	P15 12LG/BR
5	P107 12LG/WT
6	P11 12LG/YL
7	A210 12OR/RD
8	Z939 14BK
9	P17 12LG/DG
10	P19 12LG/LB
11	-
12	-

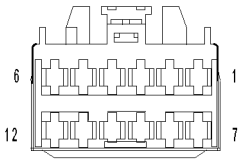

C313

C313 - (DRIVER SEAT SWITCH SIDE)

CAV	CIRCUIT
1	P105 12LG
2	P13 12LG/OR
3	P21 12LG/TN
4	P15 12LG/BR
5	P107 12LG/WT
6	P11 12LG/YL
7	A210 12OR/RD
8	Z939 14BK
9	P17 12LG/DG
10	P19 12LG/LB
11	-
12	-

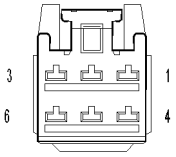

C315

C315 - (DRIVER SEAT SIDE)

CAV	CIRCUIT
1	A405 12RD/DB
1	A405 16RD/DB (SRT)
2	P54 20OR/LG (HEATED SEATS)
3	A210 12OR/RD
4	Z939 14BK
5	P188 18LG/VT (HEATED SEATS)
6	P89 20LG/OR (HEATED SEATS)

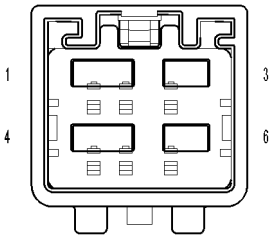

C315

C315 - (JUMPER SIDE)

CAV	CIRCUIT
1	A405 12RD/DB
1	A405 16RD/DB (SRT)
2	P54 20OR/LG (HEATED SEATS)
3	A210 12OR/RD
4	Z939 14BK
5	P188 18LG/VT (HEATED SEATS)
6	P89 18LG/OR (HEATED SEATS)

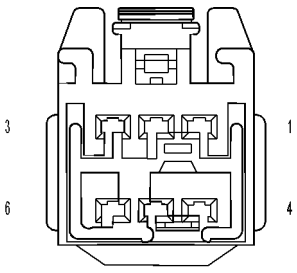

C316
(HEATED SEATS)

C316 (HEATED SEATS) - (JUMPER SIDE)

CAV	CIRCUIT
1	P89 20LG/OR
2	P54 20OR/LG
3	A210 12OR/RD
4	Z939 14BK
4	Z939 18BK (SRT)
5	P188 18LG/VT
6	-

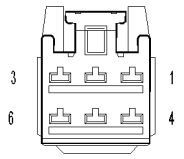

C316

C316 - (PASSENGER SEAT SIDE)

CAV	CIRCUIT
1	P89 20LG/OR
2	P54 20OR/LG
3	A210 12OR/RD
4	Z939 14BK
4	Z939 18BK (SRT)
5	P188 18LG/VT
6	-

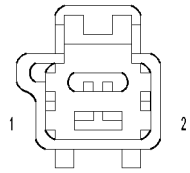

C319

C319 - (CENTER CONSOLE SIDE)

CAV	CIRCUIT
1	Z939 18BK
1	A405 18RD/DB (SRT)
2	A405 18RD/DB
2	Z939 18BK (SRT)

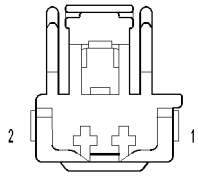

C319

C319 - (SEAT JUMPER SIDE)

CAV	CIRCUIT
1	A405 12RD/DB (EXCEPT HEATED SEAT)
1	Z939 14BK (HEATED SEAT)
2	Z939 14BK (EXCEPT HEATED SEAT)
2	A405 12RD/DB (HEATED SEAT)

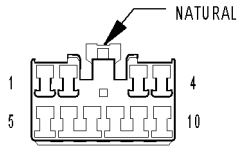

C320
(QUAD CAB)

C320 (QUAD CAB) - NATURAL (BODY SIDE)

CAV	CIRCUIT
1	Z72 20LG/BK
2	G76 20TN/YL
3	P392 18LG/DB (EXCEPT BASE)
4	G778 18VT/LB (EXCEPT BASE)
5	Q15 14OR/LB (EXCEPT BASE)
6	Q412 14OR/LB (EXCEPT BASE)
7	Q612 14OR/DB (EXCEPT BASE)
8	X296 18DG/GY
9	X206 18DG/LG
10	-

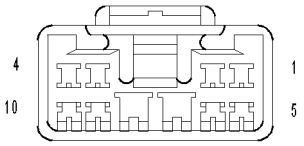

C320
(QUAD CAB)

C320 (QUAD CAB) - (RIGHT REAR DOOR SIDE)

CAV	CIRCUIT
1	Z72 20LG/BK
2	G76 20VT/GY
3	P392 18LG (EXCEPT BASE)
4	G778 18TN/OR (EXCEPT BASE)
5	Q15 14TN/LG (EXCEPT BASE)
6	Q412 14OR/WT (EXCEPT BASE)
7	Q612 14OR/GY (EXCEPT BASE)
8	X296 18GY/DG
9	X206 18GY/LG
10	-

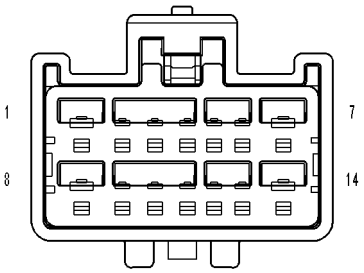

C322
(HEATED SEATS)

C322 (HEATED SEATS) - (DRIVER SEAT SIDE)

CAV	CIRCUIT
1	A930 18RD
1	A930 16RD (SRT)
2	P81 20TN/LB
3	P7 20LG/DG
4	G10 20VT/LG
5	P83 20TN/WT
6	P82 20TN/DG
7	Z939 14BK
7	Z939 14BK (SRT)
8	A210 12OR/RD
9	P8 20LG/WT
10	P84 20TN/VT
11	Z951 18BK (EXCEPT SATELLITE RADIO)
12	Z951 20BK (SATELLITE RADIO)
13	-
14	A405 12RD/DB
14	A405 16RD/DB (SRT)

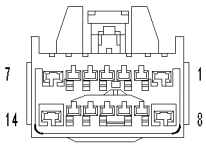

C322
(HEATED SEATS)

C322 (HEATED SEATS) - (BODY SIDE)

CAV	CIRCUIT
1	A930 18RD
2	P81 20TN/LB
3	P7 20LG/DG
4	G10 20VT/LG (SLT)
4	G10 20LG/RD (SLT+)
5	P83 20TN/WT
6	P82 20TN/DG
7	Z939 12BK (EXCEPT SATELLITE RADIO)
7	Z939 14BK (SATELLITE RADIO)
8	A210 12OR/RD
9	P8 20LG/WT
10	P84 20TN/VT
11	Z951 18BK (EXCEPT SATELLITE RADIO)
12	Z951 18BK (SATELLITE RADIO)
13	-
14	A405 18RD/DB

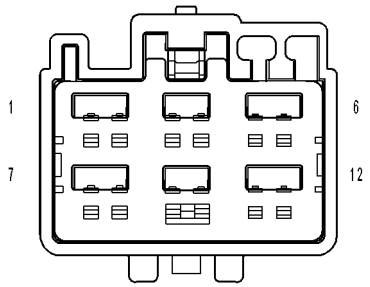

C323
(EXCEPT HEATED SEATS)

C323 (EXCEPT HEATED SEATS) - (PASSENGER SEAT SIDE)

CAV	CIRCUIT
1	P18 12LG/DG
2	P14 12LG/OR
3	P10 12LG/TN
4	P12 12LG/YL
5	P16 12LG/BR
6	P20 12LG/LB
7	P104 12LG
8	P106 12LG/WT
9	A210 12OR/RD
10	Z939 14BK
11	-
12	-

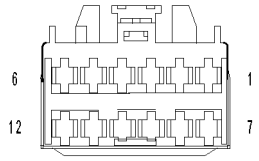

C323
(EXCEPT HEATED SEATS)

C323 (EXCEPT HEATED SEATS) - (PASSENGER SEAT SWITCH SIDE)

CAV	CIRCUIT
1	P18 12LG/DG
2	P14 12LG/OR
3	P10 12LG/TN
4	P12 12LG/YL
5	P16 12LG/BR
6	P20 12LG/LB
7	P104 12LG
8	P106 12LG/WT
9	A210 12OR/RD
10	Z939 14BK
11	-
12	-

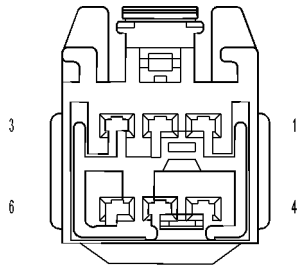

C323
(HEATED SEATS)

C323 (HEATED SEATS) - (PASSENGER SEAT SIDE)

CAV	CIRCUIT
1	P104 12LG
2	P106 12LG/WT
3	A210 12OR/RD
4	Z939 14BK
5	-
6	-

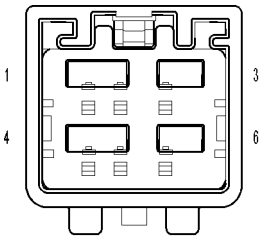

C323
(HEATED SEATS)

C323 (HEATED SEATS) - (SEAT JUMPER SIDE)

CAV	CIRCUIT
1	P104 12LG
2	P106 12LG/WT
3	A210 12OR/RD
4	Z939 14BK
5	-
6	-

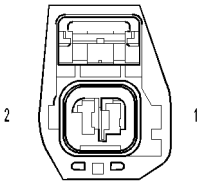

C327
(DUAL REAR
WHEELS)

C327 (DUAL REAR WHEELS) - (CHASSIS SIDE)

CAV	CIRCUIT
1	L7 18WT/YL
2	Z948 20BK

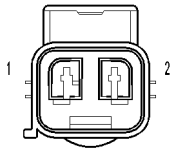

C327
(DUAL REAR WHEELS)

C327 (DUAL REAR WHEELS) - (DRW LAMP SIDE)

CAV	CIRCUIT
1	L7 18WT/YL
2	Z947 18BK

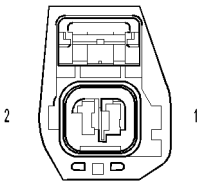

C328
(DUAL REAR
WHEELS)

C328 (DUAL REAR WHEELS) - (CHASSIS SIDE)

CAV	CIRCUIT
1	L70 18WT/GY
2	Z948 20BK

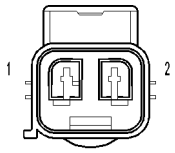

C328
(DUAL REAR WHEELS)

C328 (DUAL REAR WHEELS) - (DRW LAMP SIDE)

CAV	CIRCUIT
1	L70 18WT/YL
2	Z948 18BK

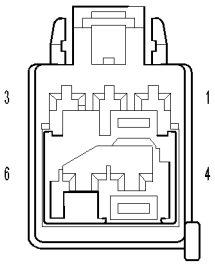

C331
(5.7L/DIESEL)

C331 (5.7L/DIESEL) - (ETC PEDAL JUMPER SIDE)

CAV	CIRCUIT
1	K29 20WT/BR
2	F856 20YL/PK
3	F855 20PK/YL
4	K400 20BR/VT
5	K23 20BR/WT
6	K167 20BR/YL

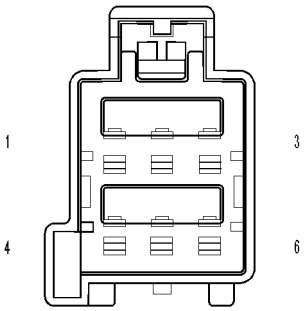

C331
(5.7L/DIESEL)

C331 (5.7L/DIESEL) - (HEADLAMP AND DASH SIDE)

CAV	CIRCUIT
1	K29 20WT/BR
2	F856 20YL/PK (5.7L)
2	K854 20VT/BR (DIESEL)
3	F855 20PK/YL (5.7L)
3	K852 20BR/LB (DIESEL)
4	K400 20BR/VT
5	K23 20BR/WT
6	K167 20BR/YL

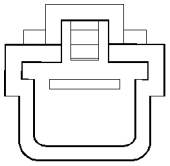

C337

C337 - (BODY SIDE)

CAV	CIRCUIT
1	C15 16BK

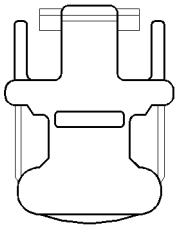

C337

C337 - (ELECTRIC BACKLIGHT SIDE)

CAV	CIRCUIT
1	C15 16DB/WT

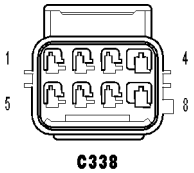

C338
(SATELLITE RADIO STANDARD CAB)

C338 (SATELLITE RADIO STANDARD CAB) - (BODY SIDE)

CAV	CIRCUIT
1	X160 18GY/YL
2	X211 18YL/GY
3	Z966 18BK
4	X17 18DG/OR
5	D25 20WT/VT
6	D112 18WT/OR
7	X917 18DG
8	X16 18DG/YL

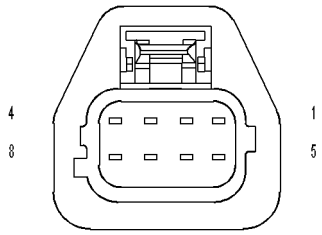

C338
(SATELLITE RADIO STANDARD CAB)

C338 (SATELLITE RADIO STANDARD CAB) - (SDARS JUMPER SIDE)

CAV	CIRCUIT
1	X160 20GY/YL
2	X211 20GY/YL
3	Z966 20BK
4	X17 20GY/YL
5	D25 20GY/YL
6	D112 20GY/YL
7	X917 20GY/YL
8	X16 20GY/YL

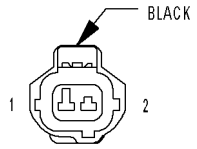

CAPACITOR-IGNITION (3.7L/4.7L)

CAPACITOR-IGNITION (3.7L/4.7L) - BLACK 2 WAY

CAV	CIRCUIT	FUNCTION
1	K342 16BR/WT	ASD RELAY OUTPUT
2	-	-

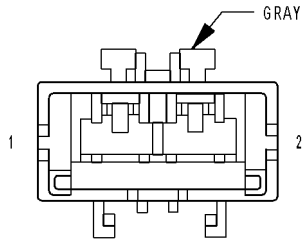

CIRCUIT BREAKER-POWER WINDOW

CIRCUIT BREAKER-POWER WINDOW - GRAY 2 WAY

CAV	CIRCUIT	FUNCTION
1	A991 10RD	FUSED B(+)
2	A310 10RD/LB	FUSED B(+)

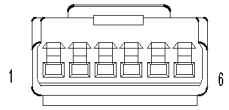

CLOCKSPRING C1

CLOCKSPRING C1 - 6 WAY

CAV	CIRCUIT	FUNCTION
1	Z909 20BK (PREMIUM)	GROUND
2	X20 20GY/WT (PREMIUM)	RADIO CONTROL MUX
3	V38 20VT/OR (EXCEPT SRT)	S/C SWITCH NO. 2 SIGNAL
4	V37 20VT	S/C SWITCH NO. 1 SIGNAL
5	V937 20VT/BR (EXCEPT SRT)	S/C SWITCH RETURN
5	K900 20DB/DG (SRT)	SENSOR GROUND
6	X3 20DG/VT	HORN SWITCH SENSE

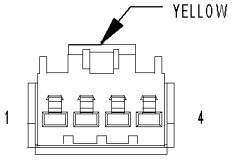

CLOCKSPRING C2

CLOCKSPRING C2 - YELLOW 4 WAY

CAV	CIRCUIT	FUNCTION
1	R61 20LG/VT	DRIVER SQUIB 2 LINE 1
2	R63 20LG/WT	DRIVER SQUIB 2 LINE 2
3	R43 20LG/BR	DRIVER SQUIB 1 LINE 1
4	R45 20LG/OR	DRIVER SQUIB 1 LINE 2

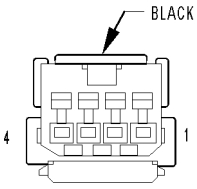

CLOCKSPRING C3

CLOCKSPRING C3 - BLACK 4 WAY

CAV	CIRCUIT	FUNCTION
1	X3 20DG/VT	HORN SWITCH SENSE
2	V937 20VT/BR (ETC)	S/C SWITCH RETURN
2	K900 20VT/BR (EXCEPT ETC)	SENSOR GROUND
3	V37 20VT	S/C SWITCH NO. 1 SIGNAL
4	V38 20VT/OR (5.7L/DIESEL ETC)	S/C SWITCH NO. 2 SIGNAL

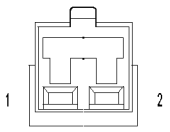

CLOCKSPRING C4 (PREMIUM)

CLOCKSPRING C4 (PREMIUM) - 2 WAY

CAV	CIRCUIT	FUNCTION
1	Z909 22BK	GROUND
2	X20 22GY/WT	RADIO CONTROL MUX

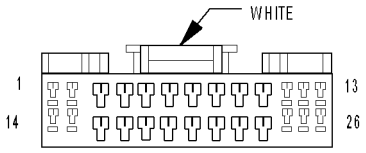

CLUSTER C1

CLUSTER C1 - WHITE 26 WAY

CAV	CIRCUIT	FUNCTION
1	P1 18TN/LG (EXCEPT BASE)	DOOR UNLOCK DRIVER LEFT FRONT
2	A941 18RD	FUSED B(+)
3	K32 18DB/YL	BTSI SOLENOID CONTROL
4	-	-
5	-	-
6	-	-
7	E16 20OR/GY	PANEL LAMPS DRIVER
8	E14 20OR/TN	PANEL LAMPS DRIVER
9	E19 20OR/BR	HEADLAMP SWITCH DIMMER SIGNAL
10	P393 18LG (EXCEPT BASE)	DOOR LOCK DRIVER LEFT DOORS
11	P392 18LG/DB (EXCEPT BASE)	DOOR LOCK DRIVER RIGHT DOORS
12	-	-
13	Z921 18BK	GROUND
14	Z108 20BK/LG	GROUND
15	M288 18YL/GY	READING LAMPS DRIVER
16	P85 20LG/WT (HEATED SEATS)	HEATED SEAT SWITCH SUPPLY
17	M228 18YL/LB (EXCEPT BASE)	GLOVE BOX LAMP DRIVER
18	L14 20WT/TN	CARGO LAMP DRIVER
19	P301 20LG/OR (HEATED SEATS)	HEATED SEAT SWITCH ILLUMINATION DRIVER
20	E11 20OR/DB (SLT)	PANEL LAMPS DRIVER
20	E10 20OR/DG (SRT)	ENGINE OIL TEMPERATURE GAUGE ILLUMINATION DRIVER
21	M20 20YL/LB	COURTESY LAMPS DRIVER
22	-	-
23	P5 18TN/OR (SLT/SRT)	DOOR UNLOCK DRIVER LEFT REAR
24	G778 18VT/LB (SLT/SRT)	DOOR UNLOCK DRIVER RIGHT DOORS
25	A944 20RD	FUSED B(+)
26	A944 20RD	FUSED B(+)

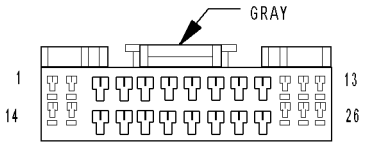

CLUSTER C3

CLUSTER C3 - GRAY 26 WAY

CAV	CIRCUIT	FUNCTION
1	G75 20VT	DRIVER DOOR AJAR SWITCH SENSE
2	G77 20VT/GY	LEFT REAR DOOR AJAR SWITCH SENSE
3	G76 20VT/YL	RIGHT REAR DOOR AJAR SWITCH SENSE
4	G74 20VT/WT	PASSENGER DOOR AJAR SWITCH SENSE
5	-	-
6	-	-
7	K77 18BR/WT (EXCEPT SRT)	TRANSFER CASE POSITION SENSE
8	L900 20WT/YL	WIPER/TURN/BEAM SELECT SWITCH RETURN
9	L115 20WT/YL	HEADLAMP SWITCH RETURN
10	T917 20YL/TN	TRANS RANGE SENSOR ELECTRONIC CLUSTER MUX
11	-	-
12	-	-
13	Z18 20BK/LB	GROUND
14	X3 20DG/VT	HORN SWITCH SENSE
15	L50 18WT/TN	BRAKE LAMP SWITCH OUTPUT
16	G15 20VT/TN	KEY-IN IGNITION SWITCH SENSE
17	-	-
18	-	-
19	D25 20WT/VT	PCI BUS
20	G10 20VT/LG	SEAT BELT SWITCH SENSE
21	-	-
22	B25 20DG/WT	PARK BRAKE SWITCH SENSE
23	F983 20PK/YL	FUSED IGNITION SWITCH OUTPUT (RUN-ACC)
24	F1 16PK/WT	FUSED IGNITION SWITCH OUTPUT (OFF-RUN-START)
25	F21 20PK/DG	FUSED IGNITION SWITCH OUTPUT (RUN-START)
26	A114 18GY/RD	FUSED B(+)

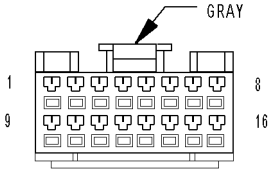

CLUSTER C4

CLUSTER C4 - GRAY 16 WAY

CAV	CIRCUIT	FUNCTION
1	G194 20VT/LG	WASH/BEAM SELECT SWITCH SIGNAL
2	G160 20VT/LG (SLT/SRT)	PASSENGER DOOR LOCK SWITCH MUX
3	G161 20VT/DG (SLT/SRT)	DRIVER DOOR LOCK SWITCH MUX
4	E2 20OR/BR	PANEL LAMPS DIMMER SIGNAL
5	L116 20WT/LG	HEADLAMP SWITCH SIGNAL
6	-	-
7	G163 20VT/LB (SLT/SRT)	DRIVER CYLINDER LOCK SWITCH MUX
8	L12 20WT/OR	TURN LAMPS SWITCH SIGNAL
9	-	-
10	W52 20BR/YL	INTERMITTENT WIPER SWITCH SIGNAL
11	T117 20DG/YL	TRANS RANGE SENSOR ELECTRONIC CLUSTER 5 VOLT SUPPLY
12	X20 20GY/WT (SLT PREMIUM RADIO/ SRT)	RADIO CONTROL MUX
13	-	-
14	-	-
15	-	-
16	-	-

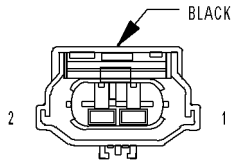

CLUTCH-A/C COMPRESSOR

CLUTCH-A/C COMPRESSOR - BLACK 2 WAY

CAV	CIRCUIT	FUNCTION
1	C3 20DB/YL (NGC)	A/C CLUTCH RELAY OUTPUT
1	C3 18DB/YL (SRT/DIESEL)	A/C CLUTCH RELAY OUTPUT
2	Z816 18BK (DIESEL)	GROUND
2	Z153 18BK/GY (NGC)	GROUND
2	Z1 18BK (SRT)	GROUND

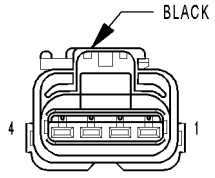

COIL-IGNITION-LEFT (SRT)

COIL-IGNITION-LEFT (SRT) - BLACK 4 WAY

CAV	CIRCUIT	FUNCTION
1	K19 18DB/DG	COIL CONTROL NO. 1
2	K342 16BR/WT	ASD RELAY OUTPUT
3	K133 18DB/WT	COIL CONTROL NO. 4
4	K134 18DB/YL	COIL CONTROL NO. 5

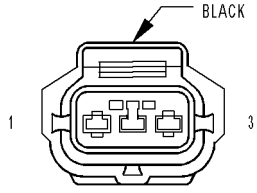

COIL-IGNITION-NO. 1 (3.7L/4.7L)

COIL-IGNITION-NO. 1 (3.7L/4.7L) - BLACK 3 WAY

CAV	CIRCUIT	FUNCTION
1	K19 18DB/DG	COIL CONTROL NO. 1
2	K342 16BR/WT	ASD RELAY OUTPUT
3	-	-

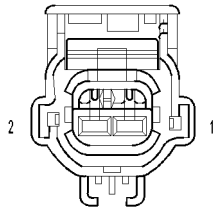

COIL-IGNITION-NO. 1 (5.7L)

COIL-IGNITION-NO. 1 (5.7L) - 2 WAY

CAV	CIRCUIT	FUNCTION
1	K342 16BR/WT	ASD RELAY OUTPUT
2	K19 18DB/DG	COIL CONTROL NO. 1

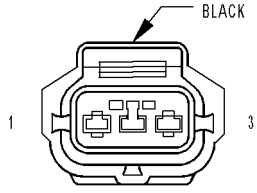

COIL-IGNITION-NO. 2 (3.7L/4.7L)

COIL-IGNITION-NO. 2 (3.7L/4.7L) - BLACK 3 WAY

CAV	CIRCUIT	FUNCTION
1	K17 18DB/TN	COIL CONTROL NO. 2
2	K342 16BR/WT	ASD RELAY OUTPUT
3	-	-

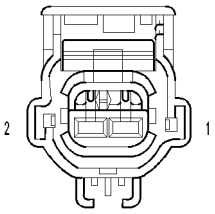

**COIL-
IGNITION-NO. 2
(5.7L)**

COIL-IGNITION-NO. 2 (5.7L) - 2 WAY

CAV	CIRCUIT	FUNCTION
1	K342 16BR/WT	ASD RELAY OUTPUT
2	K17 18DB/TN	COIL CONTROL NO. 2

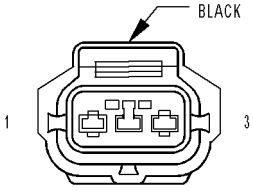

**COIL-
IGNITION-NO. 3
(3.7L/4.7L)**

COIL-IGNITION-NO. 3 (3.7L/4.7L) - BLACK 3 WAY

CAV	CIRCUIT	FUNCTION
1	K18 18DB/OR	COIL CONTROL NO. 3
2	K342 16BR/WT	ASD RELAY OUTPUT
3	-	-

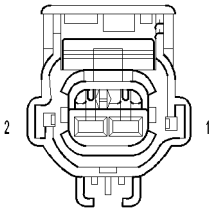

**COIL-
IGNITION-NO. 3
(5.7L)**

COIL-IGNITION-NO. 3 (5.7L) - 2 WAY

CAV	CIRCUIT	FUNCTION
1	K342 16BR/WT	ASD RELAY OUTPUT
2	K18 18DB/OR	COIL CONTROL NO. 3

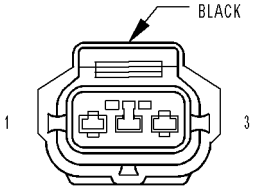

**COIL-
IGNITION-NO. 4
(3.7L/4.7L)**

COIL-IGNITION-NO. 4 (3.7L/4.7L) - BLACK 3 WAY

CAV	CIRCUIT	FUNCTION
1	K15 18DB/GY	COIL CONTROL NO. 4
2	K342 16BR/WT	ASD RELAY OUTPUT
3	-	-

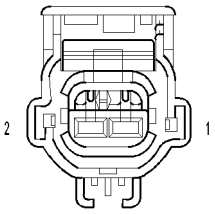

**COIL-
IGNITION-NO. 4
(5.7L)**

COIL-IGNITION-NO. 4 (5.7L) - 2 WAY

CAV	CIRCUIT	FUNCTION
1	K342 16BR/WT	ASD RELAY OUTPUT
2	K15 18DB/GY	COIL CONTROL NO. 4

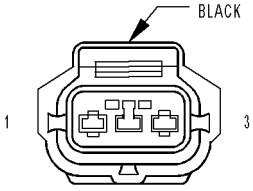

**COIL-
IGNITION-NO. 5
(3.7L/4.7L)**

COIL-IGNITION-NO. 5 (3.7L/4.7L) - BLACK 3 WAY

CAV	CIRCUIT	FUNCTION
1	K16 18DB/YL	COIL CONTROL NO. 5
2	K342 16BR/WT	ASD RELAY OUTPUT
3	-	-

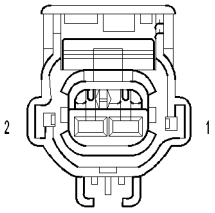

**COIL-
IGNITION-NO. 5
(5.7L)**

COIL-IGNITION-NO. 5 (5.7L) - 2 WAY

CAV	CIRCUIT	FUNCTION
1	K342 16BR/WT	ASD RELAY OUTPUT
2	K16 18DB/YL	COIL CONTROL NO. 5

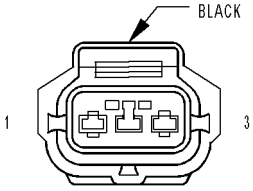

**COIL-
IGNITION-NO. 6
(3.7L/4.7L)**

COIL-IGNITION-NO. 6 (3.7L/4.7L) - BLACK 3 WAY

CAV	CIRCUIT	FUNCTION
1	K10 18DB/OR	COIL CONTROL NO. 6
2	K342 16BR/WT	ASD RELAY OUTPUT
3	-	-

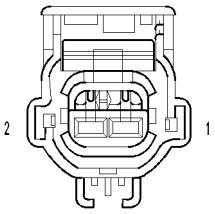

**COIL-
IGNITION-NO. 6
(5.7L)**

COIL-IGNITION-NO. 6 (5.7L) - 2 WAY

CAV	CIRCUIT	FUNCTION
1	K342 16BR/WT	ASD RELAY OUTPUT
2	K10 18DB/OR	COIL CONTROL NO. 6

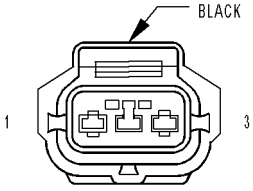

**COIL-
IGNITION-NO. 7
(4.7L)**

COIL-IGNITION-NO. 7 (4.7L) - BLACK 3 WAY

CAV	CIRCUIT	FUNCTION
1	K97 18DB/YL	COIL CONTROL NO. 7
2	K342 16BR/WT	ASD RELAY OUTPUT
3	-	-

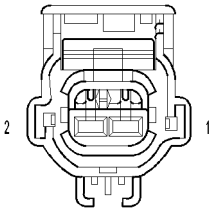

**COIL-
IGNITION-NO. 7
(5.7L)**

COIL-IGNITION-NO. 7 (5.7L) - 2 WAY

CAV	CIRCUIT	FUNCTION
1	K342 16BR/WT	ASD RELAY OUTPUT
2	K97 18BR	COIL CONTROL NO. 7

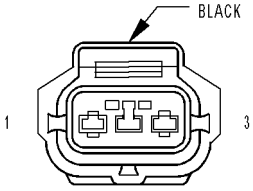

**COIL-
IGNITION-NO. 8
(4.7L)**

COIL-IGNITION-NO. 8 (4.7L) - BLACK 3 WAY

CAV	CIRCUIT	FUNCTION
1	K98 18DB/YL	COIL CONTROL NO. 8
2	K342 16BR/WT	ASD RELAY OUTPUT
3	-	-

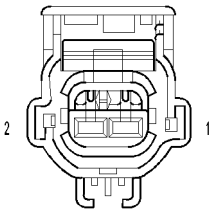

COIL-IGNITION-NO. 8 (5.7L)

COIL-IGNITION-NO. 8 (5.7L) - 2 WAY

CAV	CIRCUIT	FUNCTION
1	K342 16BR/WT	ASD RELAY OUTPUT
2	K98 18DB/YL	COIL CONTROL NO. 8

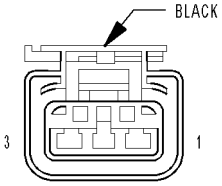

COIL-IGNITION-RIGHT-(SRT)

COIL-IGNITION-RIGHT (SRT) - BLACK 3 WAY

CAV	CIRCUIT	FUNCTION
1	K17 18DB/TN	COIL CONTROL NO. 2
2	K342 16BR/WT	ASD RELAY OUTPUT
3	K18 18DB/OR	COIL CONTROL NO. 3

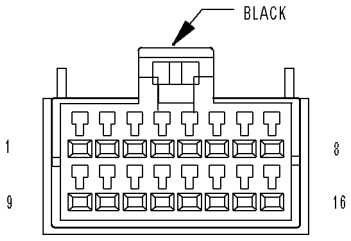

CONTROL-A/C-HEATER C1

CONTROL-A/C-HEATER C1 - BLACK 16 WAY

CAV	CIRCUIT	FUNCTION
1	F504 20GY/PK	FUSED IGNITION SWITCH OUTPUT (RUN)
2	Z24 20BK/OR (EXCEPT SRT)	GROUND
2	Z24 18BK/OR (SRT)	GROUND
3	C121 20DB/DG	SENSOR GROUND
4	C29 20DB	MODE DOOR 2 DRIVER
5	-	-
6	C21 20DB/LG	EVAPORATOR TEMPERATURE SENSOR SIGNAL
7	-	-
8	E16 20OR/GY	PANEL LAMPS DRIVER
9	C61 20DB/LG	BLEND DOOR DRIVER
10	C801 20DB/OR	MODE DOOR 1 DRIVER
11	C34 20DB/LB	COMMON DOOR DRIVER
12	C32 20DB/TN	RECIRCULATION DOOR DRIVER
13	C33 20LB/BR (DUAL ZONE)	PASSENGER BLEND DOOR DRIVER
14	-	-
15	C110 20DB/LB	DEFOGGER RELAY CONTROL
16	D25 20WT/VT	PCI BUS

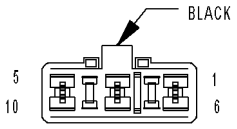

CONTROL-A/C-HEATER C2

CONTROL-A/C-HEATER C2 - BLACK 10 WAY

CAV	CIRCUIT	FUNCTION
1	-	-
2	C71 16DB/BR	BLOWER MOTOR LOW DRIVER
3	C73 14DB/VT	BLOWER MOTOR M2 DRIVER
4	-	-
5	Z134 10BK/LG	GROUND
6	-	-
7	C72 16DB/OR	BLOWER MOTOR M1 DRIVER
8	-	-
9	-	-
10	C70 10DB/YL	BLOWER MOTOR HIGH DRIVER

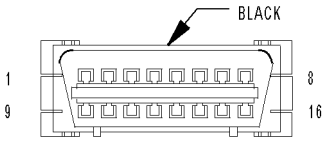

DATA LINK CONNECTOR

DATA LINK CONNECTOR - BLACK 16 WAY

CAV	CIRCUIT	FUNCTION
1	-	-
2	D25 20WT/VT	PCI BUS
3	-	-
4	Z11 18BK/LG	GROUND
5	Z111 18BK/WT	GROUND
6	-	-
7	D21 18WT/BR (DIESEL)	SCI TRANSMIT (ECM)
7	D21 18WT/BR (GAS)	SCI TRANSMIT (PCM)
8	-	-
9	D16 18WT/OR (EXCEPT SRT)	SCI RECEIVE (TCM)
10	-	-
11	-	-
12	D20 20WT/LG (DIESEL)	SCI RECEIVE (ECM)
12	D20 20WT/LG (GAS)	SCI RECEIVE (PCM)
13	-	-
14	-	-
15	D15 18WT/DG (EXCEPT SRT)	SCI TRANSMIT (TCM)
16	A114 18GY/RD	FUSED B(+)

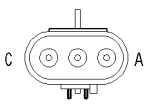

DATA LINK CONNECTOR-ENGINE (DIESEL)

DATA LINK CONNECTOR-ENGINE (DIESEL) - 3 WAY

CAV	CIRCUIT	FUNCTION
A	D72 18WT/LB	CCD BUS (+)
B	D71 18WT/DB	CCD BUS (-)
C	Z816 14BK	GROUND

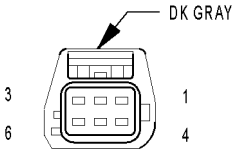

DRIVE-FAN-RADIATOR (DIESEL)

DRIVE-FAN-RADIATOR (DIESEL) - DK GRAY 6 WAY

CAV	CIRCUIT	FUNCTION
1	K160 18BR/OR	FAN CLUTCH CONTROL
2	K690 18DG/YL	SENSOR GROUND
3	K161 18BR/LB	FAN SPEED SENSOR
4	-	-
5	K668 18LG	5 VOLT SUPPLY
6	F504 18GY/PK	FUSED IGNITION SWITCH OUTPUT (RUN)

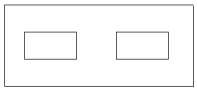

FUSE HOLDER (SRT)

FUSE HOLDER (SRT) - 2 WAY

CAV	CIRCUIT	FUNCTION
1	F988 18PK/YL	FUSED IGNITION SWITCH OUTPUT (RUN-ACC)
2	F982 12PK/YL	FUSED IGNITION SWITCH OUTPUT (RUN-ACC)

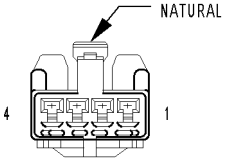

GAUGE-ENGINE OIL TEMPERATURE (SRT)

GAUGE-ENGINE OIL TEMPERATURE (SRT) - NATURAL 4 WAY

CAV	CIRCUIT	FUNCTION
1	E10 20OR/DG	ENGINE OIL TEMPERATURE GAUGE ILLUMINATION DRIVER
2	G127 20VT/DB	OIL TEMPERATURE GAUGE SIGNAL
3	F21 20PK/DG	FUSED IGNITION SWITCH OUTPUT (RUN-START)
4	Z1 18BK	GROUND

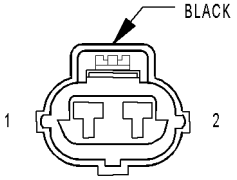

GENERATOR (EXCEPT SRT)

GENERATOR (EXCEPT SRT) - BLACK 2 WAY

CAV	CIRCUIT	FUNCTION
1	Z816 18BK (DIESEL)	GROUND
1	K20 18BR/GY (NGC)	GEN FIELD CONTROL
2	K20 18BR/GY (DIESEL)	GEN FIELD CONTROL
2	Z20 18BR/BK (NGC)	GROUND

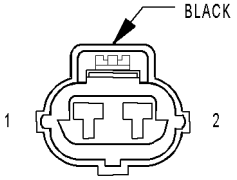

GENERATOR (SRT)

GENERATOR (SRT) - BLACK 2 WAY

CAV	CIRCUIT	FUNCTION
1	K125 18BR/DG	GENERATOR SOURCE
2	K20 18BR/GY	GEN FIELD CONTROL

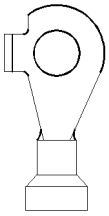

GENERATOR (5.7L)

GENERATOR (5.7L) - 1 WAY

CAV	CIRCUIT	FUNCTION
1	A11 04 BR/RD	B(+)

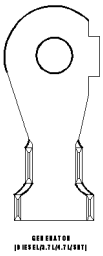

GENERATOR (DIESEL/3.7L/4.7L/SRT)

GENERATOR (DIESEL/3.7L/4.7L/SRT) - 1 WAY

CAV	CIRCUIT	FUNCTION
1	A11 04BR/RD (EXCEPT SRT)	B(+)
1	A11 08LB (SRT)	B(+)

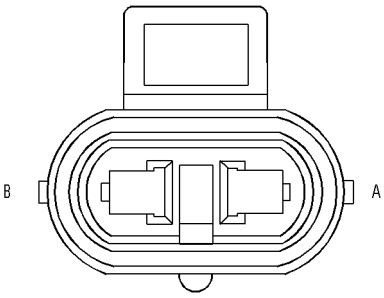

HEATER-FUEL (DIESEL)

HEATER-FUEL (DIESEL) - 2 WAY

CAV	CIRCUIT	FUNCTION
A	Z816 14BK	GROUND
B	A961 14RD	FUEL HEATER RELAY OUTPUT

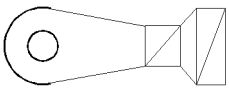

HEATER-INTAKE AIR NO.1 (DIESEL)

HEATER-INTAKE AIR NO. 1 (DIESEL) - 1 WAY

CAV	CIRCUIT	FUNCTION
1	A122 6BK	INTAKE AIR HEATER NO. 1 RELAY OUTPUT

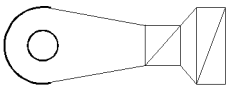

HEATER-INTAKE AIR NO. 2 (DIESEL)

HEATER-INTAKE AIR NO. 2 (DIESEL) - 1 WAY

CAV	CIRCUIT	FUNCTION
1	A58 6BK	INTAKE AIR HEATER NO. 2 RELAY OUTPUT

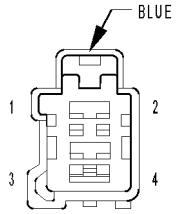

HEATED-SEAT CUSHION-DRIVER

HEATER-SEAT CUSHION-DRIVER - BLUE 4 WAY

CAV	CIRCUIT	FUNCTION
1	P187 18LG/BR	DRIVER SEAT HEATER SUPPLY
2	Z939 20BK (EXCEPT SRT)	GROUND
2	Z939 18BK (SRT)	GROUND
3	P53 20LG/OR (EXCEPT SRT)	DRIVER SEAT TEMPERATURE SENSOR SIGNAL
3	P53 20LG (SRT)	DRIVER SEAT TEMPERATURE SENSOR SIGNAL
4	P89 20LG/OR	SEAT TEMPERATURE SENSOR SUPPLY

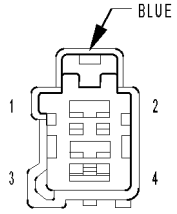

HEATED-SEAT CUSHION-PASSENGER

HEATER-SEAT CUSHION-PASSENGER - BLUE 4 WAY

CAV	CIRCUIT	FUNCTION
1	P188 18LG/VT	PASSENGER SEAT HEATER SUPPLY
2	Z939 20BK (EXCEPT SRT)	GROUND
2	Z939 18BK (SRT)	GROUND
3	P54 20OR/LG	PASSENGER SEAT TEMPERATURE SENSOR SUPPLY
4	P89 20LG/OR	SEAT TEMPERATURE SENSOR SUPPLY

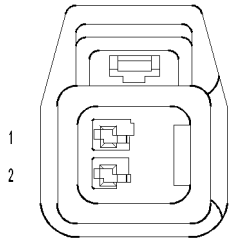

HORN-NO.1

HORN-NO. 1 - 2 WAY

CAV	CIRCUIT	FUNCTION
1	X2 18DG/OR	HORN RELAY OUTPUT
2	Z298 18 BK/DB	GROUND

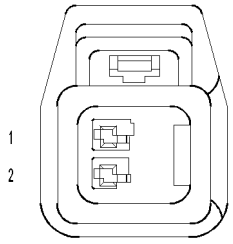

HORN-NO.2

HORN-NO. 2 - 2 WAY

CAV	CIRCUIT	FUNCTION
1	X2 18DG/OR	HORN RELAY OUTPUT
2	Z299 18BK/OR	GROUND



INJECTOR-FUEL-NO. 1 (DIESEL)

INJECTOR-FUEL-NO. 1 (DIESEL) - 2 WAY

CAV	CIRCUIT	FUNCTION
1	K227 14BK	INJECTOR HIGH SIDE DRIVER-BANK 1
2	K11 14BK	INJECTOR CONTROL NO. 1

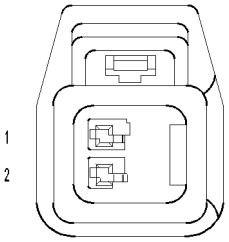

INJECTOR-FUEL-NO. 1 (NGC)

INJECTOR-FUEL-NO. 1 (NGC) - 2 WAY

CAV	CIRCUIT	FUNCTION
1	K11 18BR/YL	INJECTOR CONTROL NO. 1
2	K342 16BR/WT	ASD RELAY OUTPUT

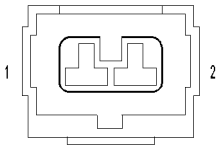

INJECTOR-FUEL-NO. 1 (SRT)

INJECTOR-FUEL-NO. 1 (SRT) - 2 WAY

CAV	CIRCUIT	FUNCTION
1	K11 18BR/YL	INJECTOR CONTROL NO. 1
2	K342 16BR/WT	ASD RELAY OUTPUT

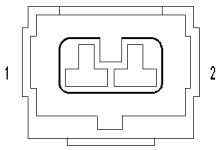

INJECTOR-FUEL-NO. 10 (SRT)

INJECTOR-FUEL-NO. 10 (SRT) - 2 WAY

CAV	CIRCUIT	FUNCTION
1	K116 18BR/WT	INJECTOR CONTROL NO. 10
2	K342 16BR/WT	ASD RELAY OUTPUT



INJECTOR-FUEL-NO. 2 (DIESEL)

INJECTOR-FUEL-NO. 2 (DIESEL) - 2 WAY

CAV	CIRCUIT	FUNCTION
1	K227 14BK	INJECTOR HIGH SIDE DRIVER-BANK 1
2	K12 14BK	INJECTOR CONTROL NO. 2

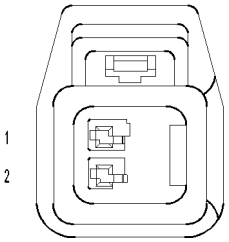

INJECTOR-FUEL-NO. 2 (NGC)

INJECTOR-FUEL-NO. 2 (NGC) - 2 WAY

CAV	CIRCUIT	FUNCTION
1	K12 18BR/DB	INJECTOR CONTROL NO. 2
2	K342 16BR/WT	ASD RELAY OUTPUT

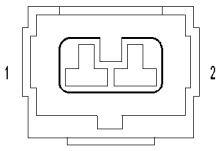

INJECTOR-FUEL-NO. 2 (SRT)

INJECTOR-FUEL-NO. 2 (SRT) - 2 WAY

CAV	CIRCUIT	FUNCTION
1	K12 18BR/DB	INJECTOR CONTROL NO. 2
2	K342 16BR/WT	ASD RELAY OUTPUT



INJECTOR-FUEL-NO. 3 (DIESEL)

INJECTOR-FUEL-NO. 3 (DIESEL) - 2 WAY

CAV	CIRCUIT	FUNCTION
1	K227 14BK	INJECTOR HIGH SIDE DRIVER-BANK 1
2	K13 14BK	INJECTOR CONTROL NO. 3

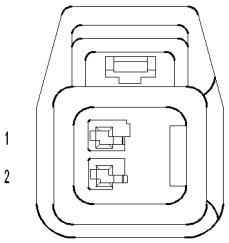

INJECTOR-FUEL-NO. 3 (NGC)

INJECTOR-FUEL-NO. 3 (NGC) - 2 WAY

CAV	CIRCUIT	FUNCTION
1	K13 18BR/LB	INJECTOR CONTROL NO. 3
2	K342 16BR/WT	ASD RELAY OUTPUT

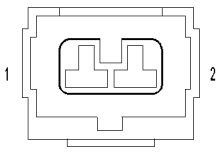

INJECTOR-FUEL-NO. 3 (SRT)

INJECTOR-FUEL-NO. 3 (SRT) - 2 WAY

CAV	CIRCUIT	FUNCTION
1	K13 18BR/LB	INJECTOR CONTROL NO. 3
2	K342 16BR/WT	ASD RELAY OUTPUT



INJECTOR-FUEL-NO. 4 (DIESEL)

INJECTOR-FUEL-NO. 4 (DIESEL) - 2 WAY

CAV	CIRCUIT	FUNCTION
1	K229 14BK	INJECTOR HIGH SIDE DRIVER-BANK 2
2	K14 14BK	INJECTOR CONTROL NO. 4

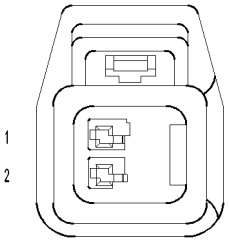

INJECTOR-FUEL-NO. 4 (NGC)

INJECTOR-FUEL-NO. 4 (NGC) - 2 WAY

CAV	CIRCUIT	FUNCTION
1	K14 18BR/TN	INJECTOR CONTROL NO. 4
2	K342 16BR/WT	ASD RELAY OUTPUT

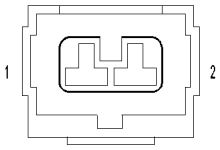

INJECTOR-FUEL-NO. 4 (SRT)

INJECTOR-FUEL-NO. 4 (SRT) - 2 WAY

CAV	CIRCUIT	FUNCTION
1	K14 18BR/TN	INJECTOR CONTROL NO. 4
2	K342 16BR/WT	ASD RELAY OUTPUT



INJECTOR-FUEL-NO. 5 (DIESEL)

INJECTOR-FUEL-NO. 5 (DIESEL) - 2 WAY

CAV	CIRCUIT	FUNCTION
1	K229 14BK	INJECTOR HIGH SIDE DRIVER-BANK 2
2	K38 14BK	INJECTOR CONTROL NO. 5

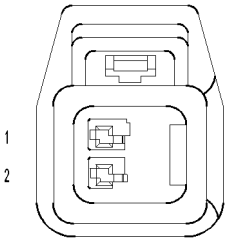

INJECTOR-FUEL-NO. 5 (NGC)

INJECTOR-FUEL-NO. 5 (NGC) - 2 WAY

CAV	CIRCUIT	FUNCTION
1	K38 18BR/OR	INJECTOR CONTROL NO. 5
2	K342 16BR/WT	ASD RELAY OUTPUT

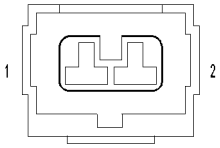

INJECTOR-FUEL-NO. 5 (SRT)

INJECTOR-FUEL-NO. 5 (SRT) - 2 WAY

CAV	CIRCUIT	FUNCTION
1	K38 18BR/OR	INJECTOR CONTROL NO. 5
2	K342 16BR/WT	ASD RELAY OUTPUT



INJECTOR-FUEL-NO. 6 (DIESEL)

INJECTOR-FUEL-NO. 6 (DIESEL) - 2 WAY

CAV	CIRCUIT	FUNCTION
1	K229 14BK	INJECTOR HIGH SIDE DRIVER-BANK 2
2	K58 14BK	INJECTOR CONTROL NO. 6

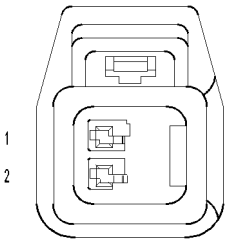

INJECTOR-FUEL-NO. 6 (NGC)

INJECTOR-FUEL-NO. 6 (NGC) - 2 WAY

CAV	CIRCUIT	FUNCTION
1	K58 18BR/VT	INJECTOR CONTROL NO. 6
2	K342 16BR/WT	ASD RELAY OUTPUT

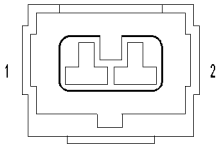

INJECTOR-FUEL-NO. 6 (SRT)

INJECTOR-FUEL-NO. 6 (SRT) - 2 WAY

CAV	CIRCUIT	FUNCTION
1	K58 18BR/VT	INJECTOR CONTROL NO. 6
2	K342 16BR/WT	ASD RELAY OUTPUT

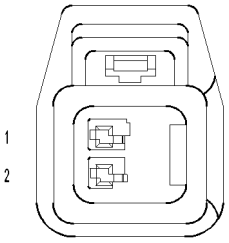

INJECTOR-FUEL-NO. 7 (NGC)

INJECTOR-FUEL-NO. 7 (NGC) - 2 WAY

CAV	CIRCUIT	FUNCTION
1	K26 18BR/YL	INJECTOR CONTROL NO. 7
2	K342 16BR/WT	ASD RELAY OUTPUT

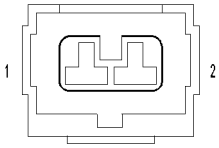

INJECTOR-FUEL-NO. 7 (SRT)

INJECTOR-FUEL-NO. 7 (SRT) - 2 WAY

CAV	CIRCUIT	FUNCTION
1	K26 18BR/YL	INJECTOR CONTROL NO. 7
2	K342 16BR/WT	ASD RELAY OUTPUT

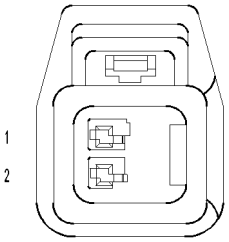

INJECTOR-FUEL-NO. 8 (NGC)

INJECTOR-FUEL-NO. 8 (NGC) - 2 WAY

CAV	CIRCUIT	FUNCTION
1	K28 18BR/LB	INJECTOR CONTROL NO. 8
2	K342 16BR/WT	ASD RELAY OUTPUT

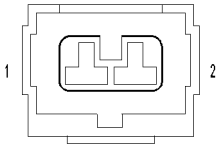

INJECTOR-FUEL-NO. 8 (SRT)

INJECTOR-FUEL-NO. 8 (SRT) - 2 WAY

CAV	CIRCUIT	FUNCTION
1	K28 18BR/LB	INJECTOR CONTROL NO. 8
2	K342 16BR/WT	ASD RELAY OUTPUT

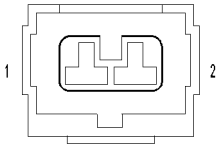

INJECTOR-FUEL-NO. 9 (SRT)

INJECTOR-FUEL-NO. 9 (SRT) - 2 WAY

CAV	CIRCUIT	FUNCTION
1	K115 18BR	INJECTOR CONTROL NO. 9
2	K342 16BR/WT	ASD RELAY OUTPUT

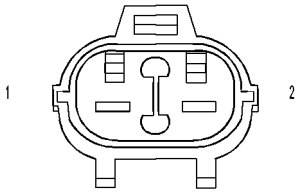

LAMP-BAR-TAILGATE (DUAL REAR WHEELS)

LAMP-BAR-TAILGATE (DUAL REAR WHEELS) - 2 WAY

CAV	CIRCUIT	FUNCTION
1	L7 18WT/YL	FUSED PARK LAMP RELAY OUTPUT
2	Z942 20BK	GROUND

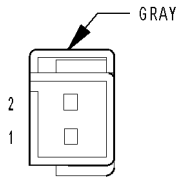

LAMP-CENTER BEZEL

LAMP-CENTER BEZEL - GRAY 2 WAY

CAV	CIRCUIT	FUNCTION
1	L70 18WT/GY	FUSED PARK LAMP RELAY OUTPUT
2	Z923 18BK	GROUND

CONNECTOR NOT AVAILABLE

LAMP-CHMSL-AFTERMARKET - 1 WAY

CAV	CIRCUIT	FUNCTION
1	L50 18 WT/TN	BRAKE LAMP SWITCH OUTPUT

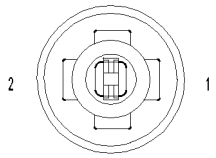

LAMP-CLEARANCE NO. 1 (HD)

LAMP-CLEARANCE NO. 1 (HD) - 2 WAY

CAV	CIRCUIT	FUNCTION
1	L70 20WT/GY	FUSED PARK LAMP RELAY OUTPUT
2	Z946 20BK	GROUND

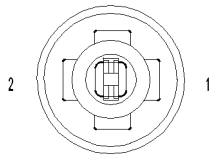

LAMP-CLEARANCE NO. 2 (HD)

LAMP-CLEARANCE NO. 2 (HD) - 2 WAY

CAV	CIRCUIT	FUNCTION
1	L70 20WT/GY	FUSED PARK LAMP RELAY OUTPUT
2	Z946 20BK	GROUND

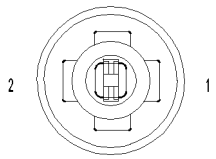

LAMP-CLEARANCE NO. 3 (HD)

LAMP-CLEARANCE NO. 3 (HD) - 2 WAY

CAV	CIRCUIT	FUNCTION
1	L70 20WT/GY	FUSED PARK LAMP RELAY OUTPUT
2	Z946 20BK	GROUND

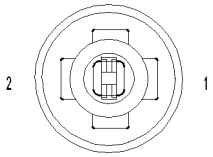

LAMP-CLEARANCE NO. 4 (HD)

LAMP-CLEARANCE NO. 4 (HD) - 2 WAY

CAV	CIRCUIT	FUNCTION
1	L70 20WT/GY	FUSED PARK LAMP RELAY OUTPUT
2	Z946 20BK	GROUND

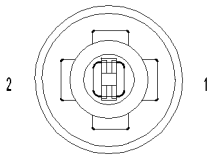

LAMP-CLEARANCE NO. 5 (HD)

LAMP-CLEARANCE NO. 5 (HD) - 2 WAY

CAV	CIRCUIT	FUNCTION
1	L70 20WT/GY	FUSED PARK LAMP RELAY OUTPUT
2	Z946 20BK	GROUND

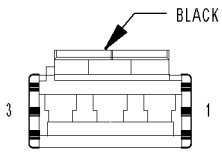

LAMP-DOME-REAR

LAMP-DOME-REAR - BLACK 3 WAY

CAV	CIRCUIT	FUNCTION
1	M288 20YL/GY (LIGHT PACKAGE)	READING LAMPS DRIVER
2	M20 20YL/LB	COURTESY LAMPS DRIVER
3	Z964 20BK	GROUND

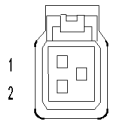

LAMP-FENDER-FRONT LEFT (DUAL REAR WHEELS)

LAMP-FENDER-FRONT LEFT (DUAL REAR WHEELS) - 2 WAY

CAV	CIRCUIT	FUNCTION
1	L7 18WT/YL	FUSED PARK LAMP RELAY OUTPUT
2	Z947 18BK	GROUND

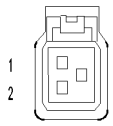

LAMP-FENDER-FRONT RIGHT (DUAL REAR WHEELS)

LAMP-FENDER-FRONT RIGHT (DUAL REAR WHEELS) - 2 WAY

CAV	CIRCUIT	FUNCTION
1	L70 18WT/YL	FUSED PARK LAMP RELAY OUTPUT
2	Z948 18BK	GROUND

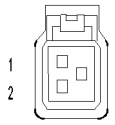

**LAMP-
FENDER-
REAR
LEFT
(DUAL REAR WHEELS)**

LAMP-FENDER-REAR LEFT (DUAL REAR WHEELS) - 2 WAY

CAV	CIRCUIT	FUNCTION
1	L7 18WT/YL	FUSED PARK LAMP RELAY OUTPUT
2	Z947 18BK	GROUND

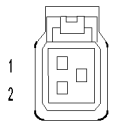

**LAMP-
FENDER-
REAR RIGHT
(DUAL REAR WHEELS)**

LAMP-FENDER-REAR RIGHT (DUAL REAR WHEELS) - 2 WAY

CAV	CIRCUIT	FUNCTION
1	L70 18WT/YL	FUSED PARK LAMP RELAY OUTPUT
2	Z948 18BK	GROUND

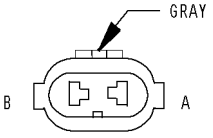

**LAMP-FOG-
LEFT**

LAMP-FOG-LEFT - GRAY 2 WAY

CAV	CIRCUIT	FUNCTION
A	Z926 18BK	GROUND
B	L89 18WT/YL	FOG LAMP RELAY OUTPUT

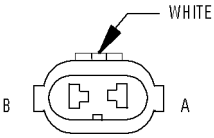

**LAMP-FOG-
RIGHT**

LAMP-FOG-RIGHT - WHITE 2 WAY

CAV	CIRCUIT	FUNCTION
A	Z926 18BK	GROUND
B	L89 18WT/YL	FOG LAMP RELAY OUTPUT

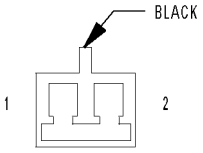

**LAMP-
GLOVE
BOX**

LAMP-GLOVE BOX - BLACK 2 WAY

CAV	CIRCUIT	FUNCTION
1	Z328 20BK/TN	GROUND
2	M228 18YL/LB	GLOVE BOX LAMP DRIVER

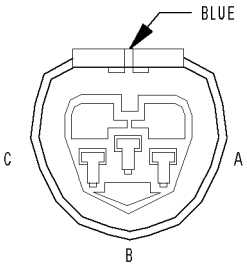

LAMP-HEADLAMP-LEFT

LAMP-HEADLAMP-LEFT - BLUE 3 WAY

CAV	CIRCUIT	FUNCTION
A	L43 18WT/DB	LEFT LOW BEAM DRIVER
B	Z345 18BK/LB	GROUND
C	L33 18WT/LG	LEFT HIGH BEAM DRIVER

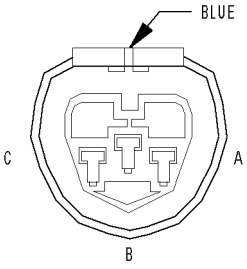

LAMP-HEADLAMP-RIGHT

LAMP-HEADLAMP-RIGHT - BLUE 3 WAY

CAV	CIRCUIT	FUNCTION
A	L44 18WT/TN	RIGHT LOW BEAM DRIVER
B	Z346 18BK/LG	GROUND
C	L34 18WT/GY	RIGHT HIGH BEAM DRIVER

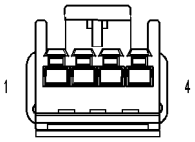

LAMP-HIGH MOUNTED STOP

LAMP-HIGH MOUNTED STOP - 4 WAY

CAV	CIRCUIT	FUNCTION
1	L14 20WT/TN (EXCEPT SUNROOF)	CARGO LAMP DRIVER
1	L14 20WT/BR (SUNROOF)	CARGO LAMP DRIVER
2	Z964 20BK	GROUND
3	Z964 20 BK	GROUND
4	L50 20WT/TN	BRAKE LAMP SWITCH OUTPUT

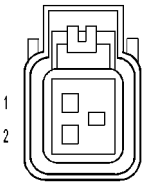

LAMP-LICENSE-LEFT

LAMP-LICENSE-LEFT - 2 WAY

CAV	CIRCUIT	FUNCTION
1	L7 18WT/YL	FUSED PARK LAMP RELAY OUTPUT
2	Z367 18BK/BR	GROUND

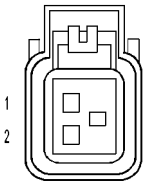

**LAMP-
LICENSE-
RIGHT**

LAMP-LICENSE-RIGHT - 2 WAY

CAV	CIRCUIT	FUNCTION
1	L7 18WT/YL	FUSED PARK LAMP RELAY OUTPUT
2	Z367 18BK/BR	GROUND

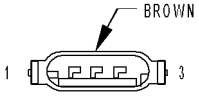

**LAMP-
PARK/
TURN-
LEFT FRONT**

LAMP-PARK/TURN-LEFT FRONT - BROWN 3 WAY

CAV	CIRCUIT	FUNCTION
1	L61 18WT/LG	LEFT FRONT TURN LAMP DRIVER
2	L7 18WT/YL	FUSED PARK LAMP RELAY OUTPUT
3	Z377 18BK/BR	GROUND

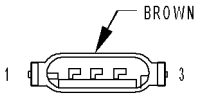

**LAMP-
PARK/
TURN-
RIGHT FRONT**

LAMP-PARK/TURN-RIGHT FRONT - BROWN 3 WAY

CAV	CIRCUIT	FUNCTION
1	L60 18WT/TN	RIGHT FRONT TURN LAMP DRIVER
2	L70 18WT/GY	FUSED PARK LAMP RELAY OUTPUT
3	Z378 18BK/TN	GROUND

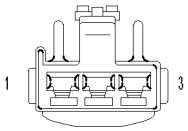

**LAMP-
READING-
FRONT
(EXCEPT BASE)**

LAMP-READING-FRONT (EXCEPT BASE) - 3 WAY

CAV	CIRCUIT	FUNCTION
1	M288 20YL/GY	READING LAMPS DRIVER
2	Z964 20BK	GROUND
3	M22 20YL/OR	COURTESY LAMPS DRIVER

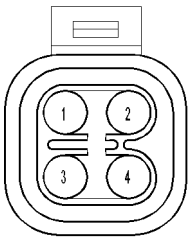

**LAMP-
TAIL
STOP/
TURN-
LEFT
(BOX OFF)**

LAMP-TAIL STOP/TURN-LEFT (BOX OFF) - 4 WAY

CAV	CIRCUIT	FUNCTION
1	L7 18WT/YL	FUSED PARK LAMP RELAY OUTPUT
2	Z928 16BK	GROUND
3	L63 18WT/DG	LEFT REAR TURN LAMP DRIVER
4	L1 18WT/LG	BACKUP LAMP FEED

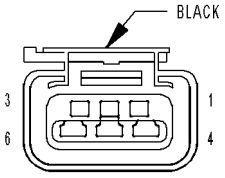

**LAMP-
TAIL STOP/
TURN-
LEFT
(BOX ON)**

LAMP-TAIL STOP/TURN-LEFT (BOX ON) - BLACK 6 WAY

CAV	CIRCUIT	FUNCTION
1	L7 18WT/YL	FUSED PARK LAMP RELAY OUTPUT
2	-	-
3	Z928 18BK	GROUND
4	L53 18DG/WT	LEFT STOP LAMP DRIVER
5	L63 18WT/DG	LEFT REAR TURN LAMP DRIVER
6	L1 18WT/LG	BACKUP LAMP FEED

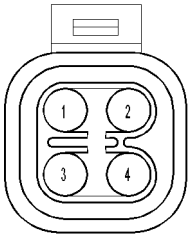

**LAMP-
TAIL
STOP/
TURN-
RIGHT
(BOX OFF)**

LAMP-TAIL STOP/TURN-RIGHT (BOX OFF) - 4 WAY

CAV	CIRCUIT	FUNCTION
1	L70 18WT/GY	FUSED PARK LAMP RELAY OUTPUT
2	Z928 16BK	GROUND
3	L62 18WT/YL	RIGHT REAR TURN LAMP DRIVER
4	L1 18WT/LG	BACKUP LAMP FEED

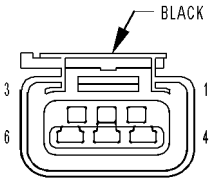

**LAMP-
TAIL
STOP/
TURN-
RIGHT
(BOX ON)**

LAMP-TAIL STOP/TURN-RIGHT (BOX ON) - BLACK 6 WAY

CAV	CIRCUIT	FUNCTION
1	L70 18WT/GY	FUSED PARK LAMP RELAY OUTPUT
2	-	-
3	Z928 18BK	GROUND
4	L54 18WT/LG	RIGHT STOP LAMP DRIVER
5	L62 18WT/YL	RIGHT REAR TURN LAMP DRIVER
6	L1 18WT/LG	BACKUP LAMP FEED

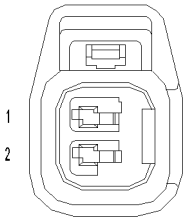

**LAMP-
UNDERHOOD
(SRT)**

LAMP-UNDERHOOD (SRT) - 2 WAY

CAV	CIRCUIT	FUNCTION
1	Z470 20BK/LB	GROUND
2	A114 18GY/RD	FUSED B(+)

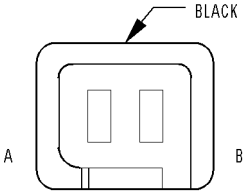

**LAMP-
VANITY-
LEFT
(LIGHT PACKAGE)**

LAMP-VANITY-LEFT (LIGHT PACKAGE) - BLACK 2 WAY

CAV	CIRCUIT	FUNCTION
A	M288 20YL/GY	READING LAMPS DRIVER
B	Z964 20BK	GROUND

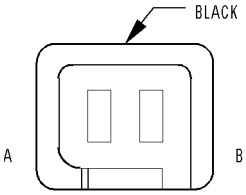

**LAMP-
VANITY-
RIGHT
(LIGHT PACKAGE)**

LAMP-VANITY-RIGHT (LIGHT PACKAGE) - BLACK 2 WAY

CAV	CIRCUIT	FUNCTION
A	M288 20YL/GY	READING LAMPS DRIVER
B	Z964 20BK	GROUND

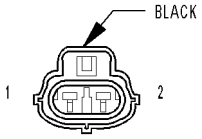

**LATCH-
DOOR-
DRIVER
(BASE)**

LATCH-DOOR-DRIVER (BASE) - BLACK 2 WAY

CAV	CIRCUIT	FUNCTION
1	G75 20VT	DRIVER DOOR AJAR SWITCH SENSE
2	Z75 20BK/VT	GROUND

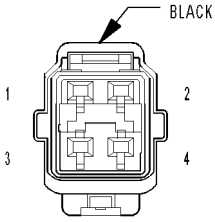

**LATCH-
DOOR-
DRIVER
(POWER LOCKS)**

LATCH-DOOR-DRIVER (POWER LOCKS) - BLACK 4 WAY

CAV	CIRCUIT	FUNCTION
1	G75 20VT	DRIVER DOOR AJAR SWITCH SENSE
2	Z75 20BK/VT	GROUND
3	P1 18TN/LG	DOOR UNLOCK DRIVER LEFT FRONT
4	P393 18LG	DOOR LOCK DRIVER LEFT DOORS

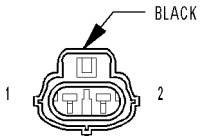

**LATCH-
DOOR-
LEFT REAR
(BASE)**

LATCH-DOOR-LEFT REAR (BASE) - BLACK 2 WAY

CAV	CIRCUIT	FUNCTION
1	G77 20VT/GY	LEFT REAR DOOR AJAR SWITCH SENSE
2	Z79 20LG/BK	GROUND

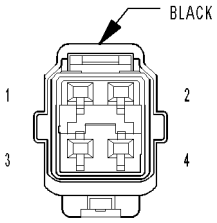

**LATCH-
DOOR-
LEFT REAR
(POWER LOCKS)**

LATCH-DOOR-LEFT REAR (POWER LOCKS) - BLACK 4 WAY

CAV	CIRCUIT	FUNCTION
1	G77 20VT/GY	LEFT REAR DOOR AJAR SWITCH SENSE
2	Z79 20LG/BK	GROUND
3	P5 18TN/OR	DOOR UNLOCK DRIVER LEFT REAR
4	P393 18LG	DOOR LOCK DRIVER LEFT DOORS

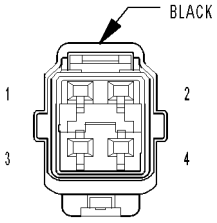

**LATCH-
DOOR-
PASSENGER
(POWER LOCKS)**

LATCH-DOOR-PASSENGER (POWER LOCKS) - BLACK 4 WAY

CAV	CIRCUIT	FUNCTION
1	G74 20VT/WT	PASSENGER DOOR AJAR SWITCH SENSE
2	Z74 20BK/WT	GROUND
3	G778 18VT/LB	DOOR UNLOCK DRIVER RIGHT DOORS
4	P392 18LG/DB	DOOR LOCK DRIVER RIGHT DOORS

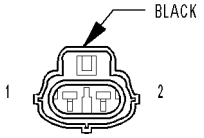

**LATCH-
DOOR-
RIGHT REAR
(BASE)**

LATCH-DOOR-RIGHT REAR (BASE) - BLACK 2 WAY

CAV	CIRCUIT	FUNCTION
1	G76 20VT/GY	RIGHT REAR DOOR AJAR SWITCH SENSE
2	Z72 20LG/BK	GROUND

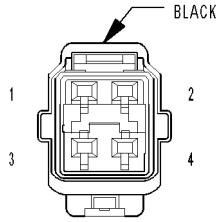

**LATCH-
DOOR-
RIGHT REAR
(POWER LOCKS)**

LATCH-DOOR-RIGHT REAR (POWER LOCKS) - BLACK 4 WAY

CAV	CIRCUIT	FUNCTION
1	G76 20VT/GY	RIGHT REAR DOOR AJAR SWITCH SENSE
2	Z72 20LG/BK	GROUND
3	G778 18TN/OR	DOOR UNLOCK DRIVER RIGHT DOORS
4	P392 18LG	DOOR LOCK DRIVER RIGHT DOORS

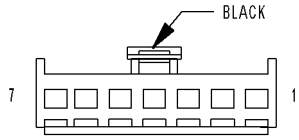

**MIRROR-
INSIDE
REARVIEW C1
(EXCEPT BASE)**

MIRROR-INSIDE REARVIEW C1 (EXCEPT BASE) - BLACK 7 WAY

CAV	CIRCUIT	FUNCTION
1	F21 20PK/DG	FUSED IGNITION SWITCH OUTPUT (RUN-START)
2	Z944 20BK	GROUND
3	L1 20WT/LG	BACKUP LAMP FEED
4	-	-
5	-	-
6	-	-
7	-	-

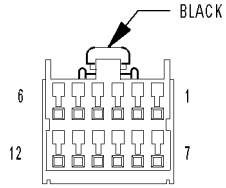

**MIRROR-
INSIDE
REARVIEW C2
(HANDS FREE)**

MIRROR-INSIDE REARVIEW C2 (HANDS FREE) - BLACK 12 WAY

CAV	CIRCUIT	FUNCTION
1	-	-
2	-	-
3	-	-
4	X722 20LB/DG	MICROPHONE 2 IN (+)
5	-	-
6	X712 20DG/LB	MICROPHONE 1 IN (+)
7	X793 20DG/YL	MICROPHONE FEED
8	-	-
9	X730 20GY/YL	VOICE RECOGNITION/PHONE SWITCH SIGNAL
10	-	-
11	X835 20OR/GY	SENSOR GROUND
12	X792 20LB/DG	MICROPHONE IN (-)

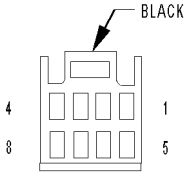

**MIRROR-
OUTSIDE REARVIEW-
DRIVER**

MIRROR-OUTSIDE REARVIEW-DRIVER - BLACK 8 WAY

CAV	CIRCUIT	FUNCTION
1	C16 18DB/GY	HEATED MIRROR RELAY OUTPUT
2	P195 18LG/YL	LEFT MIRROR COMMON DRIVER (RIGHT/DOWN)
3	P75 18TN/LG	LEFT MIRROR LEFT DRIVER
4	P71 18TN/DG	LEFT MIRROR UP DRIVER
5	Z461 20BK/DG	GROUND
6	-	-
7	-	-
8	-	-

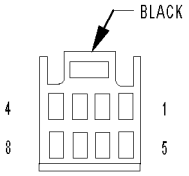

**MIRROR-
OUTSIDE REARVIEW-
PASSENGER**

MIRROR-OUTSIDE REARVIEW-PASSENGER - BLACK 8 WAY

CAV	CIRCUIT	FUNCTION
1	C16 18DB/GY	HEATED MIRROR RELAY OUTPUT
2	P195 18LG/YL	LEFT MIRROR COMMON DRIVER (RIGHT/DOWN)
3	P74 18TN/OR	RIGHT MIRROR LEFT DRIVER
4	P72 18TN/GY	RIGHT MIRROR UP DRIVER
5	Z216 20BK/DB	GROUND
6	-	-
7	-	-
8	-	-

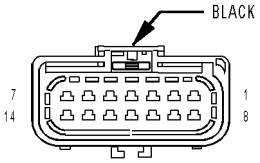

**MODULE-
ANTI-
LOCK
BRAKES C1**

MODULE-ANTI-LOCK BRAKES C1 - BLACK 14 WAY

CAV	CIRCUIT	FUNCTION
1	B4 18DG/GY (EXCEPT SRT)	REAR WHEEL SPEED SENSOR (+)
1	B4 20DG/GY (SRT)	REAR WHEEL SPEED SENSOR (+)
2	B222 18DG/WT (5.7L)	VEHICLE SPEED SIGNAL NO. 2
3	D25 18WT/VT (EXCEPT SRT)	PCI BUS
3	D25 20WT/VT (SRT)	PCI BUS
4	F500 18DG/PK (EXCEPT SRT)	FUSED IGNITION SWITCH OUTPUT (RUN)
4	F500 20DG/PK (SRT)	FUSED IGNITION SWITCH OUTPUT (RUN)
5	B9 18DG/LG (5.7L RWAL)	LEFT FRONT WHEEL SPEED SENSOR (+)
6	Z107 12BK/DG	GROUND
7	A111 14DG/RD	FUSED B(+)
8	B3 18DG/YL (EXCEPT SRT)	REAR WHEEL SPEED SENSOR (-)
8	B3 20DG/YL (SRT)	REAR WHEEL SPEED SENSOR (-)
9	B29 18DG/WT (EXCEPT SRT)	BRAKE SWITCH NO. 1 SIGNAL
9	B29 20DG/WT (SRT)	BRAKE SWITCH NO. 1 SIGNAL
10	B8 18DG/TN (5.7L RWAL)	LEFT FRONT WHEEL SPEED SENSOR (-)
11	B20 18DG/OR (EXCEPT SRT)	BRAKE FLUID LEVEL SWITCH SENSE
11	B20 20DG/OR (SRT)	BRAKE FLUID LEVEL SWITCH SENSE
12	B22 18DG/YL (EXCEPT SRT)	VEHICLE SPEED SIGNAL NO. 1
12	B22 20DG/YL (SRT)	VEHICLE SPEED SIGNAL NO. 1
13	Z127 12BK/DG (AWAL)	GROUND
14	A111 14DG/RD (AWAL)	FUSED B(+)

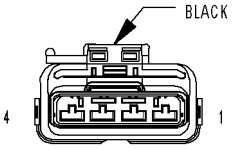

MODULE-ANTI-LOCK BRAKES C2 (AWAL)

MODULE-ANTI-LOCK BRAKES C2 (AWAL) - BLACK 4 WAY

CAV	CIRCUIT	FUNCTION
1	B9 20DG/LG	LEFT FRONT WHEEL SPEED SENSOR (+)
2	B8 20DG/TN	LEFT FRONT WHEEL SPEED SENSOR (-)
3	B6 20DG/WT	RIGHT FRONT WHEEL SPEED SENSOR (-)
4	B7 20DG/VT	RIGHT FRONT WHEEL SPEED SENSOR (+)

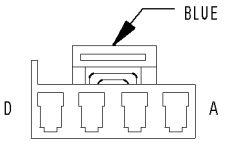

MODULE-BRAKE PROVISION

MODULE-BRAKE PROVISION - BLUE 4 WAY

CAV	CIRCUIT	FUNCTION
A	A400 14TN/RD	FUSED B(+)
B	B40 14DG	TRAILER TOW BRAKE B(+)
C	L50 18WT/TN	BRAKE LAMP SWITCH OUTPUT
D	Z998 18BK	GROUND

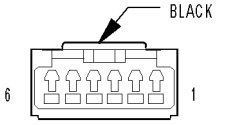

MODULE-ELECTRONIC OVERHEAD (EXCEPT BASE)

MODULE-ELECTRONIC OVERHEAD (EXCEPT BASE) - BLACK 6 WAY

CAV	CIRCUIT	FUNCTION
1	-	-
2	F21 20PK/DG	FUSED IGNITION SWITCH OUTPUT (RUN-START)
3	Z13 20BK/WT	GROUND
4	A919 20RD	FUSED B(+)
5	D25 20WT/VT	PCI BUS
6	-	-

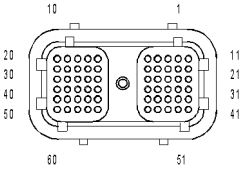

MODULE-ENGINE CONTROL C1

MODULE-ENGINE CONTROL C1 - 60 WAY

CAV	CIRCUIT	FUNCTION
1	K139 18DB	WASTEGATE SOLENOID CONTROL
2	-	-
3	-	-
4	D72 18WT/LB	CCD BUS (+)
5	D71 18WT/DB	CCD BUS (-)
6	K65 18BR/LB	FUEL PUMP RELAY RETURN
7	K20 18BR/GY	GEN FIELD CONTROL
8	K314 18TN/YL (A/T)	TTVA MOTOR (+)
9	-	-
10	-	-
11	K2 18TN/BK	ECT SIGNAL
12	K181 18BR/YL	FUEL RAIL SENSOR SIGNAL
13	-	-
14	-	-
15	K21 18DB/LG	INTAKE AIR TEMPERATURE SENSOR SIGNAL
16	-	-
17	-	-
18	K23 18BR/WT	APPS NO. 1 SIGNAL
19	K31 18BR	FUEL PUMP RELAY CONTROL
20	K315 18TN/OR (A/T)	TTVA MOTOR (-)
21	-	-
22	K24 18LB/BR	CKP SIGNAL
23	K914 18RD/WT	SENSOR GROUND

MODULE-ENGINE CONTROL C1 - 60 WAY

CAV	CIRCUIT	FUNCTION
24	K44 18DB/GY	CMP SIGNAL
25	K668 18LG	5 VOLT SUPPLY
26	C918 18BK/LB	A/C PRESSURE SIGNAL
27	K853 18DB/BR	5 VOLT SUPPLY
28	K29 18WT/BR	APPS NO. 2 SIGNAL
29	K690 18DG/YL	SENSOR GROUND
30	K11 16WT/DB	INJECTOR CONTROL NO. 1
31	G123 18VT/LG	WATER IN FUEL SENSOR SIGNAL
32	K916 18BR/OR	SENSOR GROUND
33	K167 18BR/YL	APPS NO. 1 RETURN
34	-	-
35	K312 18OR (A/T)	TTVA POSITION SENSOR SIGNAL
36	K14 16BR/TN	INJECTOR CONTROL NO. 4
37	-	-
38		
39	-	-
40	K13 16TN	INJECTOR CONTROL NO. 3
41	-	-
42	K852 18BR/VT	5 VOLT SUPPLY
43	K37 18LB	BOOST PRESSURE SENSOR SIGNAL
44	-	-
45	-	-
46	K58 16BR/VT	INJECTOR CONTROL NO. 6
47	-	-
48	-	-
49	-	-
50	K12 16BR/DB	INJECTOR CONTROL NO. 2
51	-	-
52	K975 18BR/OR	SENSOR GROUND
53	K915 18VT/RD	FUEL RAIL SENSOR RETURN
54	F855 18PK/YL	5 VOLT SUPPLY
55	-	-
56	K38 16GY	INJECTOR CONTROL NO. 5
57	K229 16TN/PK	INJECTOR HIGH SIDE DRIVER-BANK 2
58	-	-
59	K227 16BR/LG	INJECTOR HIGH SIDE DRIVER-BANK 1
60	-	-

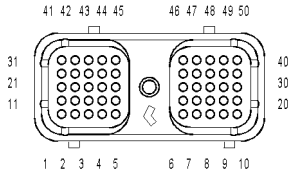

**MODULE-
ENGINE
CONTROL C2**

MODULE-ENGINE CONTROL C2 - 50 WAY

CAV	CIRCUIT	FUNCTION
1	-	-
2	-	-
3	K615 18VT/WT	INLET AIR TEMPERATURE SENSE
4	-	-
5	K176 18BR/OR	INTAKE AIR HEATER NO. 2 RELAY CONTROL
6	K174 18BR/YL	INTAKE AIR HEATER NO. 1 RELAY CONTROL
7	K31 18BR	FUEL PUMP RELAY CONTROL
8	-	-
9	T41 18YL/DB (A/T)	PARK/NEUTRAL POSITION SWITCH SENSE (T41)
10	K161 18BR/LB	FAN SPEED SENSOR
11	B22 18DG/YL	VEHICLE SPEED SIGNAL NO. 1
12	G6 18VT/GY	OIL PRESSURE SIGNAL
13	T6 18DG (A/T)	TOW/HAUL OVERDRIVE OFF SWITCH SENSE
14	T118 18DG (A/T)	GOVERNOR PRESSURE SOLENOID CONTROL
15	T9 18DG/TN (A/T)	3-4 SOLENOID CONTROL
16	D21 18WT/BR	SCI TRANSMIT (ECM)
17	-	-
18	T38 18YL/BR (A/T)	GOVERNOR PRESSURE SENSOR SIGNAL
19	D20 18WT/LG	SCI RECEIVE (ECM)
20	A209 16RD	FUSED B(+)
21	Z902 16BK	GROUND
22	-	-
23	F856 18YL/PK (A/T)	5 VOLT SUPPLY
24	K900 18DB/DG	SENSOR GROUND
25	T75 18YL/LB (A/T)	TORQUE CONVERTER CLUTCH SOLENOID CONTROL
26	N4 18DB/WT	FUEL LEVEL SENSOR SIGNAL
27	-	-
28	D25 18WT/VT	PCI BUS
29	T54 18DG/OR (A/T)	TRANSMISSION TEMPERATURE SENSOR SIGNAL
30	A209 16RD	FUSED B(+)
31	T515 18YL/DB (A/T)	TRANSMISSION CONTROL RELAY CONTROL
32	F202 18PK/GY	FUSED IGNITION SWITCH OUTPUT (RUN-START)
33	K854 18VT/BR	5 VOLT SUPPLY
34	-	-
35	K616 18BR/YL	INLET AIR PRESSURE SENSE
36	V32 18VT/YL	BRAKE SWITCH NO. 2 SIGNAL
37	B29 18DG/WT	BRAKE SWITCH NO. 1 SIGNAL
38	-	-
39	-	-
40	A209 16RD	FUSED B(+)
41	C13 18LB/OR	A/C CLUTCH RELAY CONTROL
42	-	-
43	K160 18BR/OR	FAN CLUTCH CONTROL
44	T14 18DG/BR (A/T)	OUTPUT SPEED SENSOR SIGNAL
45	T13 18DG/VT (A/T)	SPEED SENSOR GROUND
46	V37 18VT	S/C SWITCH NO. 1 SIGNAL
47	K25 18DB/VT	BATT TEMP SIGNAL
48	K400 18BR/VT	APPS NO. 2 RETURN
49	Z902 16BK	GROUND
50	Z902 16BK	GROUND

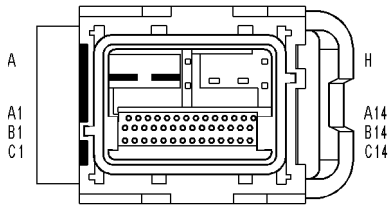

**MODULE-
FINAL
DRIVE
CONTROL
(OFFROAD)**

MODULE-FINAL DRIVE CONTROL (OFF ROAD) - 50 WAY

CAV	CIRCUIT	FUNCTION
A	Z935 16BK	GROUND
A1	T521 20YL/GY	LOCKER SENSOR SUPPLY
A2	-	-
A3	T522 20YL/LB	FRONT LOCKER SENSOR SENSE
A4	-	-
A5	F202 20PK/GY	FUSED IGNITION SWITCH OUTPUT (RUN-START)
A6	K77 20BR/WT	TRANSFER CASE POSITION SENSE
A7	-	-
A8	T527 20YL/TN	REAR LOCKER SENSOR SENSE
A9	T525 20YL/DB	TRANSFER CASE RETURN
A10	Z937 20BK	GROUND
A11	-	-
A12	-	-
A13	-	-
A14	-	-
B	A34 16RD/WT	FUSED B(+)
B1	T537 20YL/LG	LOCKER SWITCH SUPPLY
B2	T536 20YL/WT	SWITCH SUPPLY
B3	D25 20WT/VT	PCI BUS
B4	T535 20YL/BR	LOCKER SWITCH SENSE
B5	T531 20YL/TN	STABILIZER BAR SWITCH SENSE
B6	T532 20YL/GY	LOCKER OPEN ILLUMINATION SENSE
B7	T533 20YL/LB	LOCKER REAR ILLUMINATION SENSE
B8	T534 20YL	LOCKER FR/RR ILLUMINATION SENSE
B9	T530 20YL/DG	STABILIZER BAR DISENGAGE ILLUMINATION SENSE
B10	T529 20YL/LG	STABILIZER BAR ENGAGE ILLUMINATION SENSE
B11	-	-
B12	-	-
B13	-	-
B14	-	-
C	T524 16YL/LG	FRONT LOCKER RETURN
C1	-	-
C2	-	-
C3	-	-
C4	-	-
C5	-	-
C6	-	-
C7	-	-
C8	-	-
C9	-	-
C10	-	-
C11	-	-
C12	-	-
C13	-	-
C14	-	-
D	T528 16YL/GY	REAR LOCKER RETURN
E	-	-
F	-	-
G	T520 16YL/OR	FRONT LOCKER SOURCE
H	T526 16YL/WT	REAR LOCKER SOURCE

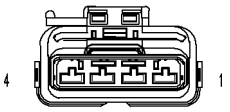

**MODULE-
FUEL PUMP**

MODULE-FUEL PUMP - 4 WAY

CAV	CIRCUIT	FUNCTION
1	Z201 12BK/OR	GROUND
2	K900 18DB/DG	SENSOR GROUND
3	N4 18DB/WT	FUEL LEVEL SENSOR SIGNAL
4	A109 14OR/RD	FUEL PUMP RELAY OUTPUT

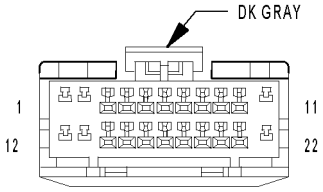

**MODULE-
HANDS FREE C1**

MODULE-HANDS FREE C1 - DK GRAY 22 WAY

CAV	CIRCUIT	FUNCTION
1	A114 18GY/RD	FUSED B(+)
2	F983 20PK/YL	FUSED IGNITION SWITCH OUTPUT (RUN-ACC)
3	-	-
4	-	-
5	X722 18LB/DG	MICROPHONE 2 IN (+)
6	-	-
7	-	-
8	X703 18DG/OR	LEFT AUDIO OUTPUT
9	X704 18DG/YL	RIGHT AUDIO OUTPUT
10	X795 18DG	COMMON AUDIO OUTPUT
11	-	-
12	-	-
13	-	-
14	D25 20WT/VT	PCI BUS
15	X730 18GY/YL	VOICE RECOGNITION/PHONE SWITCH SIGNAL
16	X712 18DG/LB	MICROPHONE 1 IN (+)
17	X792 18LB/DG	MICROPHONE IN (-)
18	-	-
19	-	-
20	X793 18DG/YL	MICROPHONE FEED
21	X835 18OR/GY	SENSOR GROUND
22	Z970 18BK	GROUND

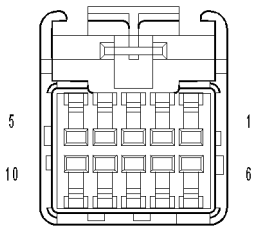

**MODULE-
HANDS
FREE C2**

MODULE-HANDS FREE C2 - 10 WAY

CAV	CIRCUIT	FUNCTION
1	-	-
2	-	-
3	-	-
4	-	-
5	-	-
6	X160 18GY/YL	FUSED B(+)
7	-	-
8	D112 18WT/OR	SDAR BUS
9	Z966 18BK (EXCEPT SRT)	GROUND
9	Z909 18BK (SRT)	GROUND
10	-	-

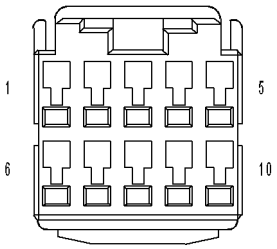

MODULE-HANDS FREE C3

MODULE-HANDS FREE C3 - 10 WAY

CAV	CIRCUIT	FUNCTION
1	X16 18DG/YL	AUDIO SIGNAL RIGHT (+)
2	X917 18DG	AUDIO SIGNAL COMMON
3	-	-
4	D25 20WT/VT	PCI BUS
5	X211 18YL/GY	IGNITION RUN-ACC SIGNAL
6	X17 18DG/OR	AUDIO SIGNAL LEFT (+)
7	Z966 18BK	GROUND
8	D112 18WT/OR	SDAR BUS
9	-	-
10	X160 18GY/YL	FUSED B(+)

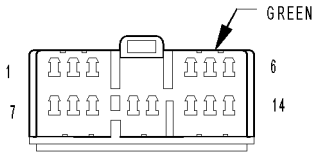

MODULE-HEATED SEATS

MODULE-HEATED SEATS - GREEN 14 WAY

CAV	CIRCUIT	FUNCTION
1	P7 20LG/DG	DRIVER SEAT HEATER MUX SWITCH
2	P89 20LG/OR	SEAT TEMPERATURE SENSOR SUPPLY
3	P188 18LG/VT	PASSENGER SEAT HEATER SUPPLY
4	A930 18RD (EXCEPT SRT)	FUSED B(+)
4	A930 16RD (SRT)	FUSED B(+)
5	P187 18LG/BR	DRIVER SEAT HEATER SUPPLY
6	A930 18RD (EXCEPT SRT)	FUSED B(+)
6	A930 16RD (SRT)	FUSED B(+)
7	P54 20OR/LG	PASSENGER SEAT TEMPERATURE SENSOR SIGNAL
8	P53 20LG/OR (EXCEPT SRT)	DRIVER SEAT TEMPERATURE SENSOR SIGNAL
8	P53 20LG (SRT)	DRIVER SEAT TEMPERATURE SENSOR SIGNAL
9	P8 20LG/WT	PASSENGER SEAT HEATER MUX SWITCH
10	P82 20TN/DG	PASSENGER SEAT LOW HEAT LED DRIVER
11	P84 20TN/VT	PASSENGER SEAT HIGH HEAT LED DRIVER
12	P81 20TN/LB	DRIVER SEAT LOW HEAT LED DRIVER
13	Z951 20BK (EXCEPT SRT)	GROUND
13	Z939 14BK (SRT)	GROUND
14	P83 20TN/WT	DRIVER SEAT HIGH HEAT LED DRIVER

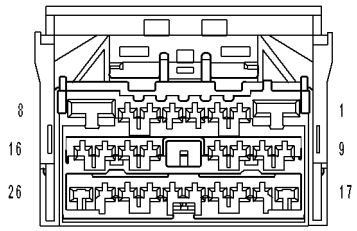

MODULE-
INTEGRATED
POWER C1

MODULE-INTEGRATED POWER C1 - 26 WAY

CAV	CIRCUIT	FUNCTION
1	A960 14RD (DIESEL)	FUSED B(+)
1	A16 16RD/BR (NGC)	FUSED B(+)
2	F21 20PK/DG	FUSED IGNITION SWITCH OUTPUT (RUN-START)
3	-	-
4	F500 18DG/PK (EXCEPT SRT)	FUSED IGNITION SWITCH OUTPUT (RUN)
4	F500 20DG/PK (SRT)	FUSED IGNITION SWITCH OUTPUT (RUN)
5	L673 18YL	TRAILER TOW LEFT TURN RELAY OUTPUT
6	-	-
7	L674 18LG	TRAILER TOW RIGHT TURN RELAY OUTPUT
8	A981 14RD (EXCEPT SRT)	FUSED B(+)
8	A981 12RD (SRT)	FUSED B(+)
9	A114 18GY/RD	FUSED B(+)
10	L70 18WT/GY	FUSED PARK LAMP RELAY OUTPUT
11	F951 16PK/LG	FUSED IGNITION SWITCH OUTPUT (RUN-START)
12	A941 18RD	FUSED B(+)
13	A919 20RD	FUSED B(+)
14	X2 18DG/OR	HORN RELAY OUTPUT
15	-	-
16	A103 18GY/RD	FUSED B(+)
17	L678 18BR (EXCEPT SRT)	FUSED PARK LAMP RELAY OUTPUT
17	L678 16BR (SRT)	FUSED PARK LAMP RELAY OUTPUT
18	-	-
19	L7 18WT/YL	FUSED PARK LAMP RELAY OUTPUT
20	T41 20YL/DB (OFF ROAD)	TRS T41 SENSE
21	Z953 20 BK (OFF ROAD)	GROUND
22	-	-
23	-	-
24	-	-
25	-	-
26	-	-

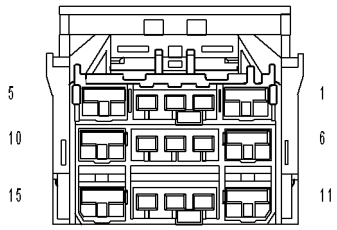

MODULE-
INTEGRATED
POWER C2

MODULE-INTEGRATED POWER C2 - 15 WAY

CAV	CIRCUIT	FUNCTION
1	A991 10RD (EXCEPT 3.7L/4.7L BASE/ EXCEPT SRT)	FUSED B(+)
1	A991 12RD (SRT)	FUSED B(+)
2	A34 16RD/WT (4X4 EXCEPT SRT)	FUSED B(+)
2	A916 16RD (SRT)	FUSED B(+)
3	A405 18RD/DB	FUSED B(+)
4	A917 20RD (SRT)	FUSED B(+)
5	A210 12OR/RD (EXCEPT 3.7L/4.7L BASE/EXCEPT SRT)	FUSED B(+)
5	A210 10OR/RD (SRT)	FUSED B(+)
6	A970 10RD	FUSED B(+)
7	A100 14RD/VT (TRAILER TOW)	FUSED B(+)
8	A111 14DG/RD	FUSED B(+)
9	A205 18RD/OR (EXCEPT SRT)	FUSED B(+)
9	A205 16RD/OR (SRT)	FUSED B(+)
10	A921 16RD (EXCEPT SRT)	FUSED B(+)
11	-	-
12	F984 18PK/YL (EXCEPT SRT)	FUSED IGNITION SWITCH OUTPUT (RUN-ACC)
12	F984 16PK/YL (SRT)	FUSED IGNITION SWITCH OUTPUT (RUN-ACC)
13	A116 18YL/RD (EXCEPT 3.7L/4.7L BASE/EXCEPT SRT)	FUSED B(+)
13	A116 16YL/RD (SRT)	FUSED B(+)
14	A951 16RD	FUSED B(+)
15	-	-

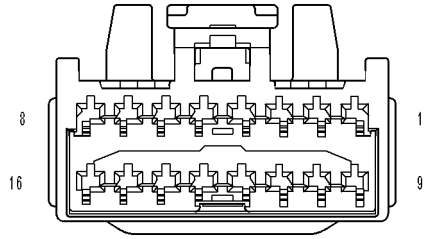

MODULE-
INTEGRATED
POWER C3

MODULE-INTEGRATED POWER C3 - 16 WAY

CAV	CIRCUIT	FUNCTION
1	W10 20BR	WASHER PUMP MOTOR CONTROL
2	L62 18WT/YL	RIGHT REAR TURN LAMP DRIVER
3	Z117 18BK/WT	GROUND
4	G31 20VT/LG (EXCEPT NGC)	AAT SIGNAL
5	Z118 18BK/YL	GROUND
6	L1 18WT/LG	BACKUP LAMP FEED
7	-	-
8	-	-
9	-	-
10	D25 20VT/PK	PCI BUS
11	-	-
12	L61 18WT/LG	LEFT FRONT TURN LAMP DRIVER
13	L53 18DG/WT	LEFT STOP LAMP DRIVER
14	L63 18WT/DG	LEFT REAR TURN LAMP DRIVER
15	L60 18WT/TN	RIGHT FRONT TURN LAMP DRIVER
16	G180 20VT/YL (EXCEPT NGC)	SENSOR GROUND

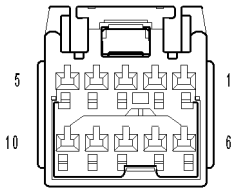

MODULE-INTEGRATED POWER C4

MODULE-INTEGRATED POWER C4 - 10 WAY

CAV	CIRCUIT	FUNCTION
1	Z116 18BK/VT	GROUND
2	L54 18WT/LG	RIGHT STOP LAMP DRIVER
3	W1 20BR/TN	WASHER FLUID SWITCH SENSE
4	-	-
5	-	-
6	F941 20PK/LG (DIESEL)	FUSED IGNITION SWITCH OUTPUT (RUN-START)
7	W7 20BR/GY	WIPER PARK SWITCH SENSE
8	-	-
9	-	-
10	F202 20PK/GY	FUSED IGNITION SWITCH OUTPUT (RUN-START)

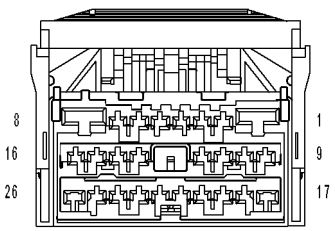

MODULE-INTEGRATED POWER C5

MODULE-INTEGRATED POWER C5 - 26 WAY

CAV	CIRCUIT	FUNCTION
1	F922 16PK/YL (EXCEPT SRT)	FUSED IGNITION SWITCH OUTPUT (RUN)
1	F922 14PK/YL (SRT)	RELAY RUN OUTPUT
2	F941 20PK/LG (DIESEL)	FUSED IGNITION SWITCH OUTPUT (RUN-START)
2	Z912 20BK (NGC)	GROUND
2	K125 18BR/DG (SRT)	GENERATOR SOURCE
3	-	-
4	L10 18WT/GY	FUSED IGNITION SWITCH OUTPUT (RUN)
5	-	-
6	Z723 20BK (DIESEL)	GROUND
7	K31 18BR (DIESEL)	FUEL PUMP RELAY CONTROL
8	Z920 12BK	GROUND
9	C110 20DB/LB (EXCEPT 3.7L/4.7L BASE)	DEFOGGER RELAY CONTROL
10	-	-
11	C13 20LB/OR (EXCEPT SRT)	A/C CLUTCH RELAY CONTROL
11	C13 18LB/OR (SRT)	A/C CLUTCH RELAY CONTROL
12	-	-
13	K344 18BR/GY (SRT)	OXYGEN SENSOR DOWNSTREAM RELAY OUTPUT
14	Z114 20BK/LG (DIESEL)	GROUND
14	K173 18BR/VT (NGC)	CONDENSER FAN RELAY CONTROL
14	F102 18PK/DB (SRT)	FUSED IGNITION SWITCH OUTPUT (RUN)
15	F202 20PK/GY (DIESEL)	FUSED IGNITION SWITCH OUTPUT (RUN-START)
15	A16 16RD/BR (NGC)	FUSED B(+)
15	Z1 18BK (SRT)	GROUND
16	T515 20YL/DB (A/T EXCEPT SRT)	TRANSMISSION CONTROL RELAY CONTROL
16	T515 18YL/DB (SRT)	TRANSMISSION CONTROL RELAY CONTROL
17	C16 16DB/GY (EXCEPT 3.7L/4.7L BASE)	HEATED MIRROR RELAY OUTPUT
18	C3 20DB/YL (EXCEPT SRT)	A/C CLUTCH RELAY OUTPUT
18	C3 18DB/YL (SRT)	A/C CLUTCH RELAY OUTPUT
19	-	-
20	-	-
21	C110 20DB/LB (EXCEPT 3.7L/4.7L BASE)	DEFOGGER RELAY CONTROL
22	W4 16BR/OR (EXCEPT SRT)	WIPER RELAY HIGH SPEED OUTPUT
22	W4 14BR/OR (SRT)	WIPER RELAY HIGH SPEED OUTPUT
23	F100 20PK/VT (EXCEPT SRT)	FUSED IGNITION SWITCH OUTPUT (RUN)
23	F100 18PK/VT (SRT)	FUSED IGNITION SWITCH OUTPUT (RUN)
24	F201 20PK/OR	FUSED IGNITION SWITCH OUTPUT (RUN-START)
25	-	-
26	F504 20GY/PK	FUSED IGNITION SWITCH OUTPUT (RUN)

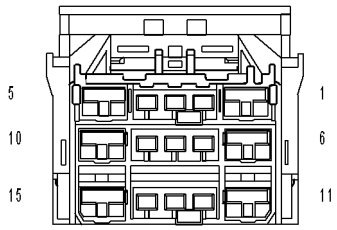

MODULE-
INTEGRATED
POWER C6

MODULE-INTEGRATED POWER C6 - 15 WAY

CAV	CIRCUIT	FUNCTION
1	-	-
2	A400 14TN/RD (TRAILER TOW)	FUSED B(+)
3	-	-
4	K342 16BR/WT (GAS)	ASD RELAY OUTPUT
5	-	-
6	-	-
7	A109 16OR/RD (DIESEL)	FUEL PUMP RELAY OUTPUT
8	-	-
9	-	-
10	A961 14RD (DIESEL)	FUEL HEATER RELAY OUTPUT
10	C123 16LB/WT (NGC)	CONDENSER FAN RELAY OUTPUT
10	C7 10DB (SRT)	BLOWER MOTOR FEED
11	A960 14RD (DIESEL)	FUSED B(+)
11	A16 16RD/BR (NGC)	FUSED B(+)
11	A970 10RD (SRT)	FUSED B(+)
12	F982 14PK/YL (EXCEPT SRT)	FUSED IGNITION SWITCH OUTPUT (RUN-ACC)
12	F982 12PK/YL (SRT)	FUSED IGNITION SWITCH OUTPUT (RUN-ACC)
13	-	-
14	T16 18YL/OR (A/T)	TRANSMISSION CONTROL RELAY OUTPUT
15	-	-

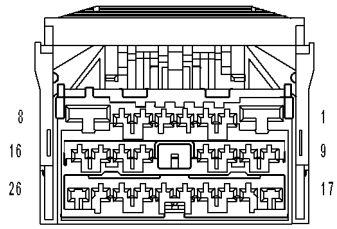

MODULE-
INTEGRATED
POWER C7

MODULE-INTEGRATED POWER C7 - 26 WAY

CAV	CIRCUIT	FUNCTION
1	T750 14YL/GY (EXCEPT SRT)	STARTER MOTOR RELAY OUTPUT
1	F922 14PK/YL (SRT)	RUN RELAY OUTPUT
2	W3 16BR/WT (EXCEPT SRT)	WIPER RELAY LOW SPEED OUTPUT
2	W3 14BR/WT (SRT)	WIPER RELAY LOW SPEED OUTPUT
3	F983 20PK/YL	FUSED IGNITION SWITCH OUTPUT (RUN-ACC)
4	A930 18RD (EXCEPT 3.7L/4.7L BASE)	FUSED B(+)
5	-	-
6	L43 18WT/DB	LEFT LOW BEAM DRIVER
7	L34 18WT/GY	RIGHT HIGH BEAM DRIVER
8	-	-
9	A109 16OR/RD (GAS)	FUEL PUMP RELAY OUTPUT
10	-	-
11	K51 20BR/WT (NGC)	ASD RELAY CONTROL
11	K51 18BR/WT (SRT)	ASD RELAY CONTROL
12	K127 18BR/OR (SRT)	OXYGEN SENSOR DOWNSTREAM RELAY CONTROL
13	-	-
14	-	-
15	L33 18WT/LG	LEFT HIGH BEAM DRIVER
16	A72 18RD/OR (ADJUSTABLE PEDALS)	ADJUSTABLE PEDALS RELAY OUTPUT
17	C15 16DB/WT (EXCEPT 3.7L/4.7L BASE)	REAR WINDOW DEFOGGER RELAY OUTPUT
18	-	-
19	K31 20BR (NGC)	FUEL PUMP RELAY CONTROL
19	K31 18BR (SRT)	FUEL PUMP RELAY CONTROL
20	L89 18WT/YL (FOG LAMPS)	FOG LAMP RELAY OUTPUT
21	T751 16YL (EXCEPT SRT)	IGNITION SWITCH OUTPUT (START)
21	F102 18PK/DB (SRT)	FUSED IGNITION SWITCH OUTPUT (RUN)
22	L44 18WT/TN	RIGHT LOW BEAM DRIVER
23	T41 20YL/DB (DIESEL)	TRS T41 SENSE
23	T752 20DG/OR (NGC)	STARTER MOTOR RELAY CONTROL
23	Z1 18BK (SRT)	GROUND
24	A944 20RD	FUSED B(+)
25	K343 16BR/YL (SRT)	FUSED ASD RELAY OUTPUT
26	-	-

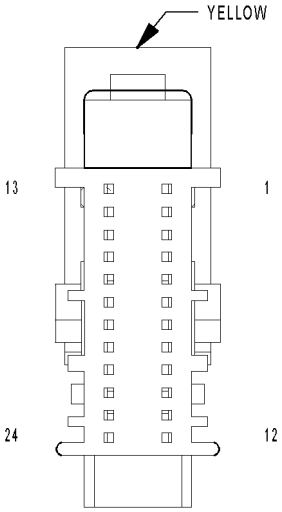

MODULE-OCCUPANT RESTRAINT CONTROLLER C1

MODULE-OCCUPANT RESTRAINT CONTROLLER C1 - YELLOW 24 WAY

CAV	CIRCUIT	FUNCTION
1	-	-
2	-	-
3	D25 20WT/VT	PCI BUS
4	-	-
5	Z104 18BK/LG	GROUND
6	G104 20VT/GY	PASSENGER AIRBAG INDICATOR DRIVER
7	R104 20LB/LG	PASSENGER AIRBAG MUX SWITCH RETURN
8	R106 20LG/LB	PASSENGER AIRBAG MUX SWITCH SENSE
9	-	-
10	-	-
11	-	-
12	-	-
13	-	-
14	-	-
15	-	-
16	-	-
17	R43 20LG/BR	DRIVER SQUIB 1 LINE 1
18	R45 20LG/OR	DRIVER SQUIB 1 LINE 2
19	R44 20LB/OR	PASSENGER SQUIB 1 LINE 2
20	R42 20LB/BR	PASSENGER SQUIB 1 LINE 1
21	R61 20LG/VT	DRIVER SQUIB 2 LINE 1
22	R63 20LG/WT	DRIVER SQUIB 2 LINE 2
23	R64 20LB/WT	PASSENGER SQUIB 2 LINE 1
24	R62 20LB/VT	PASSENGER SQUIB 2 LINE 2

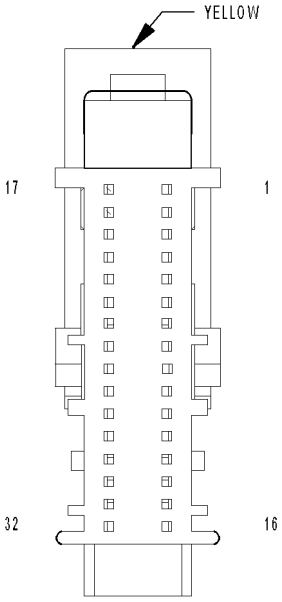

MODULE-OCCUPANT RESTRAINT CONTROLLER C2

MODULE-OCCUPANT RESTRAINT CONTROLLER C2 - YELLOW 32 WAY

CAV	CIRCUIT	FUNCTION
1	-	-
2	-	-
3	-	-
4	-	-
5	-	-
6	-	-
7	-	-
8	-	-
9	R53 20LG/YL	DRIVER SEAT BELT TENSIONER LINE 2
10	R55 20LG/DG	DRIVER SEAT BELT TENSIONER LINE 1
11	R56 20LB/DG	PASSENGER SEAT BELT TENSIONER LINE 1
12	R54 20LB/YL	PASSENGER SEAT BELT TENSIONER LINE 2
13	R1 18LB/WT	LEFT CURTAIN SQUIB 1 LINE 2
14	R3 18LB/OR	LEFT CURTAIN SQUIB 1 LINE 1
15	R4 18OR/LB	RIGHT CURTAIN SQUIB 1 LINE 1
16	R2 18WT/LB	RIGHT CURTAIN SQUIB 1 LINE 2
17	F201 18PK/OR (EXCEPT SRT QUAD CAB)	FUSED IGNITION SWITCH OUTPUT (RUN-START)
17	F201 20PK/OR (SRT QUAD CAB)	FUSED IGNITION SWITCH OUTPUT (RUN-START)
18	F100 18PK/VT (EXCEPT SRT QUAD CAB)	FUSED IGNITION SWITCH OUTPUT (RUN)
18	F100 20PK/VT (SRT QUAD CAB)	FUSED IGNITION SWITCH OUTPUT (RUN)
19	-	-
20	-	-
21	-	-
22	-	-
23	-	-
24	-	-
25	-	-
26	-	-
27	R14 20TN/LG	RIGHT SIDE IMPACT SENSOR 1 SIGNAL
28	R16 20BR/LG	RIGHT SIDE IMPACT SENSOR 1 GROUND
29	R15 20LG/BR	LEFT SIDE IMPACT SENSOR 1 GROUND
30	R13 20LG/TN	LEFT SIDE IMPACT SENSOR 1 SIGNAL
31	-	-
32	-	-

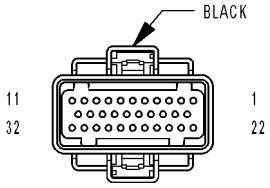

MODULE-POWERTRAIN CONTROL C1 (SRT)

MODULE-POWERTRAIN CONTROL C1 (SRT) - BLACK 32 WAY

CAV	CIRCUIT	FUNCTION
1	K133 18DB/WT	COIL CONTROL NO. 4
2	F202 18PK/GY	FUSED IGNITION SWITCH OUTPUT (RUN-START)
3	K18 18DB/OR	COIL CONTROL NO. 3
4	K900 18DB/DG	SENSOR GROUND
5	K134 18DB/YL	COIL CONTROL NO. 5
6	T41 18YL/DB (A/T)	PARK NEUTRAL POSITION SWITCH SENSE (T41)
7	K19 18DB/DG	COIL CONTROL NO. 1
8	K24 18BR/LB	CKP SIGNAL
9	K17 18DB/TN	COIL CONTROL NO. 2
10	K60 18VT/DG	IDLE AIR CONTROL NO. 2 DRIVER
11	K40 18BR/LG	IDLE AIR CONTROL NO. 1 DRIVER
12	-	-
13	-	-
14	-	-
15	K21 18DB/LG	IAT SIGNAL
16	K2 18VT/OR	ECT SIGNAL
17	F855 18PK/YL	5 VOLT SUPPLY
18	K44 18DB/GY	CMP SIGNAL
19	K39 18VT/LG	IDLE AIR CONTROL NO. 3 DRIVER
20	K59 18BR/DG	IDLE AIR CONTROL NO. 4 DRIVER
21	-	-
22	A919 16RD	FUSED B(+)
23	K22 18BR/OR	THROTTLE POSITION SENSOR SIGNAL
24	K41 18DB/LB	O2 1/1 SIGNAL
25	K141 18DB/YL	O2 1/2 SIGNAL
26	K43 18DB/LG	O2 2/1 SIGNAL
27	K1 18VT/BR	MAP SENSOR SIGNAL
28	-	-
29	K243 18BR	O2 2/2 SIGNAL
30	-	-
31	Z130 16BK/BR	GROUND
32	Z131 16BK/DG	GROUND

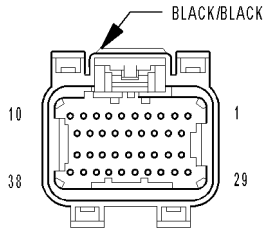

MODULE-POWERTRAIN CONTROL C1 (NGC)

MODULE-POWERTRAIN CONTROL C1 (NGC) - BLACK/BLACK 38 WAY

CAV	CIRCUIT	FUNCTION
1	K98 18DB/YL (EXCEPT 3.7L)	COIL CONTROL NO. 8
2	-	-
3	K97 18DB/YL (4.7L)	COIL CONTROL NO. 7
3	K97 18BR (5.7L)	COIL CONTROL NO. 7
4	K28 18BR/LB (EXCEPT 3.7L)	INJECTOR CONTROL NO. 8
5	K26 18BR/YL (EXCEPT 3.7L)	INJECTOR CONTROL NO. 7
6	-	-
7	-	-
8	B222 20DG/WT (5.7L)	VEHICLE SPEED SIGNAL NO. 2
9	Z130 16BK/BR	GROUND
10	-	-
11	F202 20PK/GY	FUSED IGNITION SWITCH OUTPUT (RUN-START)
12	F1 16PK/WT	FUSED IGNITION SWITCH OUTPUT (OFF-RUN-START)
13	B22 20DG/YL	VEHICLE SPEED SIGNAL NO. 1
14	-	-
15	-	-
16	-	-
17	-	-
18	Z131 16BK/DG	GROUND
19	-	-
20	G6 18VT/GY	OIL PRESSURE SIGNAL
21	C918 18BK/LB	A/C PRESSURE SIGNAL
22	G31 18VT/LG	AAT SIGNAL
23	-	-
24	-	-
25	D20 18WT/LG (3.7L/4.7L)	SCI RECEIVE (PCM)
25	D20 20WT/LG (5.7L)	SCI RECEIVE (PCM)
26	D16 18WT/OR (EXCEPT 3.7L/4.7L A/T)	SCI RECEIVE (TCM)
27	F856 18YL/PK	5 VOLT SUPPLY
28	-	-
29	A919 20RD	FUSED B(+)
30	T751 16YL	IGNITION SWITCH OUTPUT (START)
31	K141 18DB/YL	O2 1/2 SIGNAL
32	K902 18BR/DG	O2 RETURN (UP)
33	K243 18BR	O2 2/2 SIGNAL
34	-	-
35	-	-
36	D21 18WT/BR (3.7L/4.7L)	SCI TRANSMIT (PCM)
36	D21 20WT/BR (5.7L)	SCI TRANSMIT (PCM)
37	D15 18WT/DG (EXCEPT 3.7L/4.7L M/T)	SCI TRANSMIT (TCM)
38	D25 20WT/VT	PCI BUS

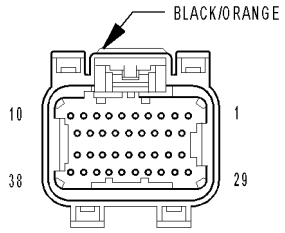

MODULE-POWERTRAIN CONTROL C2 (NGC)

MODULE-POWERTRAIN CONTROL C2 (NGC) - BLACK/ORANGE 38 WAY

CAV	CIRCUIT	FUNCTION
1	K10 18DB/OR	COIL CONTROL NO. 6
2	K16 18DB/YL	COIL CONTROL NO. 5
3	K15 18DB/GY	COIL CONTROL NO. 4
4	K58 18BR/VT	INJECTOR CONTROL NO. 6
5	K38 18BR/OR	INJECTOR CONTROL NO. 5
6	K447 18TN/YL (5.7L)	ETC MOTOR (+)
7	K18 18DB/OR	COIL CONTROL NO. 3
8	K35 18DB/VT (4.7L/5.7L LD)	EGR SOL CONTROL
9	K17 18DB/TN	COIL CONTROL NO. 2
10	K19 18DB/DG	COIL CONTROL NO. 1
11	K14 18BR/TN	INJECTOR CONTROL NO. 4
12	K13 18BR/LB	INJECTOR CONTROL NO. 3
13	K12 18BR/DB	INJECTOR CONTROL NO. 2
14	K11 18BR/YL	INJECTOR CONTROL NO. 1
15	K922 18BR/DB (5.7L)	TP SENSOR RETURN
16	-	-
17	K199 18BR/VT	O2 2/1 HEATER CONTROL
18	K99 18BR/LG	O2 1/1 HEATER CONTROL
19	K20 18BR/GY	GEN FIELD CONTROL
20	K2 18VT/OR	ECT SIGNAL
21	K22 18BR/OR	TP NO. 1 SIGNAL
22	K34 18DB/LG (4.7L/5.7L LD)	EGR SIGNAL
23	K1 18VT/BR	MAP SIGNAL
24	K942 18BR/LG (EXCEPT 4.7L)	KNOCK SENSOR NO. 1 RETURN
25	K42 18DB/YL (EXCEPT 4.7L)	KNOCK SENSOR NO. 1 SIGNAL
26	-	-
27	K900 18DB/DG	SENSOR GROUND
28	K122 18BR/DG (5.7L)	TP NO. 2 SIGNAL
28	K961 18BR/VT (EXCEPT 5.7L)	IAC SIGNAL
29	F855 18PK/YL	5 VOLT SUPPLY
30	K21 18DB/LG	IAT SIGNAL
31	K41 18DB/LB	O2 1/1 SIGNAL
32	K904 18DB/DG	O2 RETURN (DOWN)
33	K43 18DB/LG	O2 2/1 SIGNAL
34	K44 20DB/GY	CMP SIGNAL
35	K24 20BR/LB	CKP SIGNAL
36	K242 18BR/WT	KNOCK SENSOR NO. 2 SIGNAL
37	K924 18WT/BR	KNOCK SENSOR NO. 2 RETURN
38	K448 18TN/OR (5.7L)	ETC MOTOR (-)
38	K61 18VT/GY (EXCEPT 5.7L)	IAC CONTROL

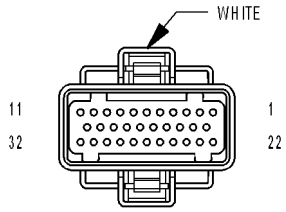

MODULE-POWERTRAIN CONTROL C2 (SRT)

MODULE-POWERTRAIN CONTROL C2 (SRT) - WHITE 32 WAY

CAV	CIRCUIT	FUNCTION
1	T54 18DG/OR (A/T)	TRANSMISSION TEMPERATURE SENSOR SIGNAL
2	K26 18BR/YL	INJECTOR CONTROL NO. 7
3	K115 18BR	INJECTOR CONTROL NO. 9
4	K11 18BR/YL	INJECTOR CONTROL NO. 1
5	K13 18BR/LB	INJECTOR CONTROL NO. 3
6	K38 18BR/OR	INJECTOR CONTROL NO. 5
7	-	-
8	T118 18DG (A/T)	GOVERNOR PRESSURE SOLENOID CONTROL
9	-	-
10	K20 18BR/GY	GEN FIELD CONTROL
11	T75 18YL/LB (A/T)	TORQUE CONVERTER CLUTCH SOLENOID CONTROL
12	K58 18BR/VT	INJECTOR CONTROL NO. 6
13	K28 18BR/LB	INJECTOR CONTROL NO. 8
14	K116 18BR/WT	INJECTOR CONTROL NO. 10
15	K12 18BR/DB	INJECTOR CONTROL NO. 2
16	K14 18BR/TN	INJECTOR CONTROL NO. 4
17	C240 18LB/TN	HYDRAULIC COOLING CONTROL FEED
18	-	-
19	C918 18BK/LB	A/C PRESSURE SIGNAL
20	-	-
21	T9 18DG/TN (A/T)	3-4 SOLENOID CONTROL
21	K333 18DB/LB (M/T)	SOLENOID REVERSE LOCKOUT FEED
22	-	-
23	G6 18VT/GY	OIL PRESSURE SIGNAL
24	-	-
25	T13 18DG/VT (A/T)	SPEED SENSOR GROUND
26	-	-
27	B22 18DG/YL	VEHICLE SPEED SIGNAL NO. 1
28	T14 18DG/BR (A/T)	OUTPUT SPEED SENSOR SIGNAL
29	T38 18YL/BR (A/T)	GOVERNOR PRESSURE SENSOR SIGNAL
30	T515 18YL/DB (A/T)	TRANSMISSION CONTROL RELAY CONTROL
31	F856 18YL/PK	5 VOLT SUPPLY
32	-	-

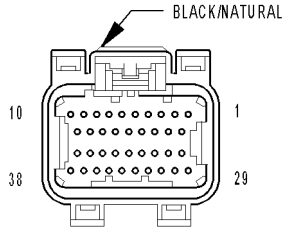

MODULE-POWERTRAIN CONTROL C3 (NGC)

MODULE-POWERTRAIN CONTROL C3 (NGC) - BLACK/NATURAL 38 WAY

CAV	CIRCUIT	FUNCTION
1	-	-
2	-	-
3	K51 20BR/WT	ASD RELAY CONTROL
4	-	-
5	V35 20VT/OR (3.7L/4.7L)	S/C VENT SOL CONTROL
6	K173 18BR/VT	CONDENSER FAN RELAY CONTROL
7	V32 20VT/YL (3.7L/4.7L)	SPEED CONTROL SUPPLY
8	K106 18VT/LB	NVLD SOL CONTROL
9	K299 18BR/WT	O2 1/2 HEATER CONTROL
10	K399 18BR/GY	O2 2/2 HEATER CONTROL
11	C13 20LB/OR	A/C CLUTCH RELAY CONTROL
12	V36 20VT/YL (3.7L/4.7L)	S/C VACUUM SOL CONTROL
13	-	-
14	V32 20VT/YL (5.7L)	BRAKE SWITCH NO. 2 SIGNAL
15	V937 20VT/BR (5.7L)	S/C SWITCH RETURN
16	K167 20BR/YL (5.7L)	APPS NO. 1 RETURN
17	K400 20BR/VT (5.7L)	APPS NO. 2 RETURN
18	V38 20VT/OR (5.7L)	S/C SWITCH NO. 2 SIGNAL
19	K342 16BR/WT	ASD RELAY OUTPUT
20	K52 18DB/WT	EVAP PURGE SOL CONTROL
21	T41 20YL/DB	TRS T41 SENSE
22	G113 18VT (EXCEPT 3.7L/4.7L BASE)	PTO SWITCH SENSE
23	B29 20DG/WT	BRAKE SWITCH NO. 1 SIGNAL
24	-	-
25	K23 20BR/WT (5.7L)	APPS NO. 1 SIGNAL
26	-	-
27	-	-
28	K342 16BR/WT	ASD RELAY OUTPUT
29	K70 18DB/BR	EVAP PURGE SOL SIGNAL
30	K66 18DB/WT (5.7L)	P/S SWITCH SIGNAL
31	-	-
32	K25 18DB/VT	BATT TEMP SIGNAL
33	N4 20DB/WT	FUEL LEVEL SENSOR SIGNAL
34	V37 20VT	S/C SWITCH NO. 1 SIGNAL
35	K107 18VT/WT	NVLD SWITCH SIGNAL
36	K29 20WT/BR (5.7L)	APPS NO. 2 SIGNAL
37	K31 20BR	FUEL PUMP RELAY CONTROL
38	T752 20DG/OR	STARTER RELAY CONTROL

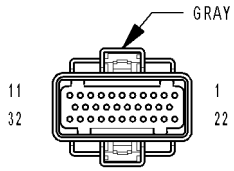

MODULE-POWERTRAIN CONTROL C3 (SRT)

MODULE-POWERTRAIN CONTROL C3 (SRT) - GRAY 32 WAY

CAV	CIRCUIT	FUNCTION
1	C13 18LB/OR	A/C CLUTCH RELAY CONTROL
2	-	-
3	K51 18BR/WT	ASD RELAY CONTROL
4	V36 18VT/YL	S/C VACUUM SOL CONTROL
5	V35 18VT/OR	S/C VENT SOL CONTROL
6	-	-
7	K42 18DB/YL	KNOCK SENSOR NO. 1 SIGNAL
8	K99 18BR/LG	O2 1/1 HEATER CONTROL
9	K127 18BR/OR	OXYGEN SENSOR DOWNSTREAM RELAY CONTROL
10	K106 18VT/LB	LEAK DETECTION PUMP SOLENOID CONTROL
11	V32 18VT/YL	SPEED CONTROL SUPPLY
12	K342 16BR/WT	ASD RELAY OUTPUT
13	T6 18DG	TOW/HAUL OVERDRIVE OFF SWITCH SENSE
14	K107 18VT/WT	LEAK DETECTION PUMP SWITCH SENSE
15	K25 18DB/VT	BATT TEMP SIGNAL
16	K199 18BR/VT	O2 2/1 HEATER CONTROL
17	-	-
18	K242 18BR/WT	KNOCK SENSOR NO. 2 SIGNAL
19	K31 18BR	FUEL PUMP RELAY CONTROL
20	K70 18DB/BR	EVAP PURGE RETURN
21	-	-
22	-	-
23	-	-
24	B29 18DG/WT	BRAKE SWITCH NO. 1 SIGNAL
25	K125 18BR/DG	GENERATOR SOURCE
26	N4 18DB/WT	FUEL LEVEL SENSOR SIGNAL
27	D21 18WT/BR	SCI TRANSMIT (PCM)
28	-	-
29	D20 18WT/LG	SCI RECEIVE (PCM)
30	D25 18WT/VT	PCI BUS
31	-	-
32	V37 18VT	S/C SWITCH NO. 1 SIGNAL

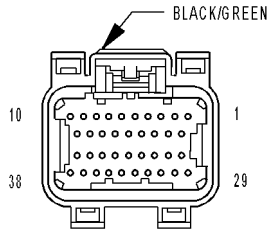

MODULE-POWERTRAIN CONTROL C4 (NGC)

MODULE-POWERTRAIN CONTROL C4 (NGC) - BLACK/GREEN 38 WAY

CAV	CIRCUIT	FUNCTION
1	T60 18YL/GY	OD SOLENOID CONTROL
2	T259 18YL/DG	4C SOLENOID CONTROL
3	-	-
4	T140 18DG	MS SOLENOID CONTROL
5	-	-
6	T219 18YL/LG	2C SOLENOID CONTROL
7	-	-
8	T59 18YL/LB	UD SOLENOID CONTROL
9	-	-
10	T20 18DG/WT	L/R SOLENOID CONTROL
11	T118 YL/VT (3.7L/4.7L)	PRESSURE CONTROL SOLENOID CONTROL
11	T118 18YL/GY (5.7L)	PRESSURE CONTROL SOLENOID CONTROL
12	Z908 18BK	GROUND
13	Z977 18BK	GROUND
14	Z904 18BK	GROUND
15	T1 18DG/LB	TRS T1 SENSE
16	T3 18DG/DB	TRS T3 SENSE
17	T6 18DG	TOW/HAUL OVERDRIVE OFF SWITCH SENSE
18	T515 20YL/DB	TRANSMISSION CONTROL RELAY CONTROL
19	T16 18YL/OR	TRANSMISSION CONTROL RELAY OUTPUT
20	T48 18BR/YL	4C PRESSURE SWITCH SENSE
21	T29 18YL/WT	UD PRESSURE SWITCH SENSE
22	T9 18DG/TN	OD PRESSURE SWITCH SENSE
23	-	-
24	-	-
25	-	-
26	T4 18DG/VT (3.7L/4.7L)	TRS T2 SENSE
26	T4 18DG/LB (5.7L)	TRS T2 SENSE
27	-	-
28	T16 18YL/OR	TRANSMISSION CONTROL RELAY OUTPUT
29	T50 18YL/TN	L/R PRESSURE SWITCH SENSE
30	T147 18DG/LG (3.7L/4.7L)	2C PRESSURE SWITCH SENSE
30	T147 18DG/YL (5.7L)	2C PRESSURE SWITCH SENSE
31	T38 18YL/BR	LINE PRESSURE SENSOR SIGNAL
32	T14 18DG/BR	OUTPUT SPEED SENSOR SIGNAL
33	T52 18DG/OR	INPUT SPEED SENSOR SIGNAL
34	T13 18DG/VT	SPEED SENSOR GROUND
35	T54 18DG/OR	TRANSMISSION TEMPERATURE SENSOR SIGNAL
36	-	-
37	T42 18DG/YL	TRS T42 SENSE
38	T16 18YL/OR	TRANSMISSION CONTROL RELAY OUTPUT

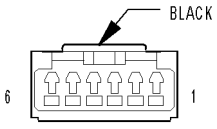

**MODULE-
SENTRY KEY
IMMOBILIZER
(SKIM)**

MODULE-SENTRY KEY IMMOBILIZER (SKIM) - BLACK 6 WAY

CAV	CIRCUIT	FUNCTION
1	-	-
2	D25 20WT/VT	PCI BUS
3	-	-
4	F202 20PK/GY	FUSED IGNITION SWITCH OUTPUT (RUN-START)
5	Z120 20BK/WT	GROUND
6	A919 20RD	FUSED B(+)

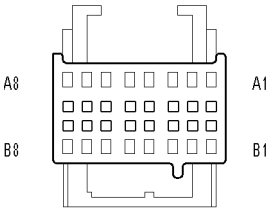

**MODULE-
TRANSFER CASE
CONTROL C1
(ELECTRIC 4x4)**

MODULE-TRANSFER CASE CONTROL C1 (ELECTRIC 4x4) - 16 WAY

CAV	CIRCUIT	FUNCTION
A1	D25 20VT/DB	PCI BUS
A2	-	-
A3	-	-
A4	G92 20VT/OR	4WD LOW INDICATOR
A5	G91 20VT/WT	4WD HIGH INDICATOR
A6	K977 20BR/WT	MODE SELECT
A7	T885 20YL/GY	MODE SENSOR GROUND
A8	Z905 18BK	GROUND
B1	-	-
B2	-	-
B3	-	-
B4	G95 20VT/BR	NEUTRAL INDICATOR
B5	G2 20BR/WT	2WD/AWD INDICATOR
B6	D200 20WT/LG	MODE SENSOR D
B7	-	-
B8	Z905 20BK	GROUND

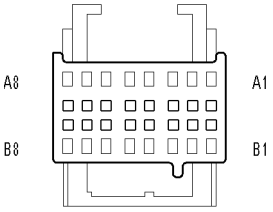

**MODULE-
TRANSFER CASE
CONTROL C2
(ELECTRIC 4x4)**

MODULE-TRANSFER CASE CONTROL C2 (ELECTRIC 4x4) - 16 WAY

CAV	CIRCUIT	FUNCTION
A1	D202 20WT/VT	MODE SENSOR B
A2	D201 20WT/DG	MODE SENSOR A
A3	-	-
A4	-	-
A5	-	-
A6	T41 20YL/DB (A/T)	PARK/NEUTRAL POSITION SWITCH SENSE (T41)
A6	T41 20YL/DB (M/T)	TRS T41 SENSE
A7	-	-
A8	T313 20YL/LG	5 VOLT MODE SENSOR SUPPLY
B1	-	-
B2	D203 20WT/BR	MODE SENSOR C
B3	-	-
B4	-	-
B5	-	-
B6	-	-
B7	-	-
B8	T322 20DG/GY	5 VOLT SELECTOR SWITCH SUPPLY

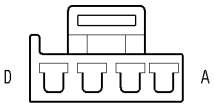

MODULE-TRANSFER CASE CONTROL C3 (ELECTRIC 4x4)

MODULE-TRANSFER CASE CONTROL C3 (ELECTRIC 4x4) - 4 WAY

CAV	CIRCUIT	FUNCTION
A	Z905 16BK	GROUND
B	A34 16RD/WT	FUSED B(+)
C	T315 16YL/BR	SHIFT MOTOR CONTROL A
D	T316 16YL/GY	SHIFT MOTOR CONTROL B

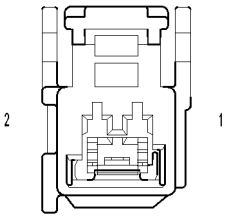

MOTOR-ADJUSTABLE PEDALS (EXCEPT BASE)

MOTOR-ADJUSTABLE PEDALS (EXCEPT BASE) - 2 WAY

CAV	CIRCUIT	FUNCTION
1	P206 18LG/LB	ADJUSTABLE PEDALS MOTOR REARWARD
2	P205 18LG/WT	ADJUSTABLE PEDALS MOTOR FORWARD

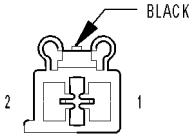

MOTOR-BLOWER

MOTOR-BLOWER - BLACK 2 WAY

CAV	CIRCUIT	FUNCTION
1	C70 10DB/YL	BLOWER MOTOR HIGH DRIVER
2	C7 10DB	BLOWER MOTOR FEED

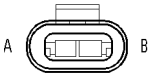

MOTOR-CONDENSER FAN (NGC)

MOTOR-CONDENSER FAN (NGC) - BLACK 2 WAY

CAV	CIRCUIT	FUNCTION
A	Z823 16BK/DG	GROUND
B	C123 16LB/WT	CONDENSER FAN RELAY OUTPUT

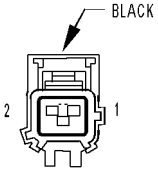

MOTOR-IAC (3.7L/4.7L)

MOTOR-IAC (3.7L/4.7L) - BLACK 2 WAY

CAV	CIRCUIT	FUNCTION
1	K961 18BR/VT	IAC SIGNAL
2	K61 18VT/GY	IAC CONTROL

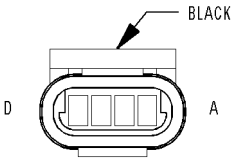

**MOTOR-
IAC
(SRT)**

MOTOR-IAC (SRT) - BLACK 4 WAY

CAV	CIRCUIT	FUNCTION
A	K59 18BR/DG	IDLE AIR CONTROL NO. 4 DRIVER
B	K40 18BR/LG	IDLE AIR CONTROL NO. 1 DRIVER
C	K60 18VT/DG	IDLE AIR CONTROL NO. 2 DRIVER
D	K39 18VT/LG	IDLE AIR CONTROL NO. 3 DRIVER

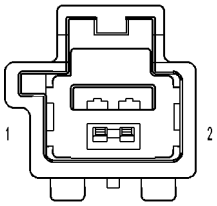

**MOTOR-
LUMBAR-
DRIVER**

MOTOR-LUMBAR-DRIVER - 2 WAY

CAV	CIRCUIT	FUNCTION
1	P105 12LG	DRIVER SEAT LUMBAR MOTOR FORWARD DRIVER
2	P107 12LG/WT	DRIVER SEAT LUMBAR MOTOR REARWARD DRIVER

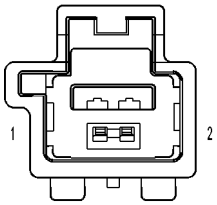

**MOTOR-
LUMBAR-
PASSENGER**

MOTOR-LUMBAR-PASSENGER - 2 WAY

CAV	CIRCUIT	FUNCTION
1	P104 12LG	PASSENGER SEAT LUMBAR MOTOR REARWARD DRIVER
2	P106 12LG/WT	PASSENGER SEAT LUMBAR MOTOR FORWARD DRIVER

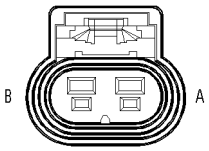

**MOTOR-
POWER WINDOW-
DRIVER**

MOTOR-POWER WINDOW-DRIVER - 2 WAY

CAV	CIRCUIT	FUNCTION
A	Q21 14OR/WT	LEFT FRONT WINDOW DRIVER (DOWN)
B	Q11 14OR/LG	LEFT FRONT WINDOW DRIVER (UP)

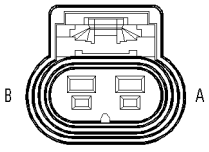

**MOTOR-
POWER WINDOW-
LEFT REAR**

MOTOR-POWER WINDOW-LEFT REAR - 2 WAY

CAV	CIRCUIT	FUNCTION
A	Q211 14TN/LB	DRIVER REAR WINDOW DRIVER (DOWN)
B	Q111 14TN/YL	DRIVER REAR WINDOW DRIVER (UP)

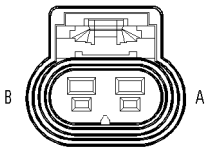

**MOTOR-
POWER WINDOW-
PASSENGER**

MOTOR-POWER WINDOW-PASSENGER - 2 WAY

CAV	CIRCUIT	FUNCTION
A	Q22 14OR/VT	RIGHT FRONT WINDOW DRIVER (DOWN)
B	Q12 14OR/BR	RIGHT FRONT WINDOW DRIVER (UP)

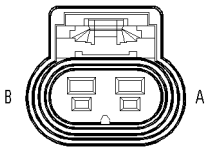

**MOTOR-
POWER WINDOW-
RIGHT REAR**

MOTOR-POWER WINDOW-RIGHT REAR - 2 WAY

CAV	CIRCUIT	FUNCTION
A	Q212 14TN/LB	PASSENGER REAR WINDOW DRIVER (DOWN)
B	Q112 14TN/YL	PASSENGER REAR WINDOW DRIVER (UP)

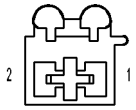

**MOTOR-
SEAT ADJUSTER-
DRIVER HORIZONTAL**

MOTOR-SEAT ADJUSTER-DRIVER HORIZONTAL - 2 WAY

CAV	CIRCUIT	FUNCTION
1	P17 12LG/DG	DRIVER SEAT HORIZONTAL REARWARD DRIVER
2	P15 12LG/BR	DRIVER SEAT HORIZONTAL FORWARD DRIVER

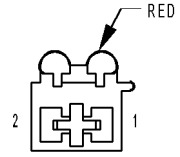

**MOTOR-
SEAT ADJUSTER-
FRONT DRIVER
VERTICAL**

MOTOR-SEAT ADJUSTER-FRONT DRIVER VERTICAL - RED 2 WAY

CAV	CIRCUIT	FUNCTION
1	P21 12LG/TN (EXCEPT SRT)	DRIVER SEAT FRONT DOWN DRIVER
1	P19 12LG/LB (SRT)	DRIVER SEAT FRONT UP DRIVER
2	P19 12LG/LB (EXCEPT SRT)	DRIVER SEAT FRONT UP DRIVER
2	P21 12LG/TN (SRT)	DRIVER SEAT FRONT DOWN DRIVER

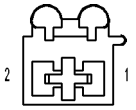

**MOTOR-
SEAT ADJUSTER-
FRONT PASSENGER
VERTICAL**

MOTOR-SEAT ADJUSTER-FRONT PASSENGER VERTICAL - 2 WAY

CAV	CIRCUIT	FUNCTION
1	P20 12LG/LB	PASSENGER SEAT FRONT UP DRIVER
2	P18 12LG/DG	PASSENGER SEAT FRONT DOWN DRIVER

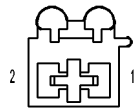

**MOTOR-
SEAT ADJUSTER-
PASSENGER
HORIZONTAL**

MOTOR-SEAT ADJUSTER-PASSENGER HORIZONTAL - 2 WAY

CAV	CIRCUIT	FUNCTION
1	P16 12LG/BR	PASSENGER SEAT HORIZONTAL REARWARD DRIVER
2	P14 12LG/OR	PASSENGER SEAT HORIZONTAL FORWARD DRIVER

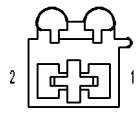

**MOTOR-
SEAT ADJUSTER-
REAR DRIVER
VERTICAL**

MOTOR-SEAT ADJUSTER-REAR DRIVER VERTICAL - 2 WAY

CAV	CIRCUIT	FUNCTION
1	P13 12LG/OR (EXCEPT SRT)	DRIVER SEAT REAR DOWN DRIVER
1	P11 12LG/YL (SRT)	DRIVER SEAT REAR UP DRIVER
2	P11 12LG/YL (EXCEPT SRT)	DRIVER SEAT REAR UP DRIVER
2	P13 12LG/OR (SRT)	DRIVER SEAT REAR DOWN DRIVER

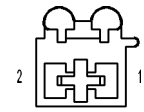

**MOTOR-
SEAT ADJUSTER-
REAR PASSENGER
VERTICAL**

MOTOR-SEAT ADJUSTER-REAR PASSENGER VERTICAL - 2 WAY

CAV	CIRCUIT	FUNCTION
1	P12 12LG/YL	PASSENGER SEAT REAR UP DRIVER
2	P10 12LG/TN	PASSENGER SEAT REAR DOWN DRIVER

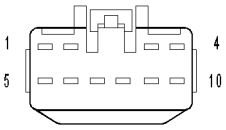

**MOTOR-
SUNROOF**

MOTOR-SUNROOF - 10 WAY

CAV	CIRCUIT	FUNCTION
1	Q6 20OR/LG	SUNROOF SWITCH SUPPLY
2	F983 20PK/YL	FUSED IGNITION SWITCH OUTPUT (RUN-ACC)
3	A310 14RD/LB	FUSED B(+)
4	Q5 20OR/LB	SUNROOF CLOSE SWITCH SENSE
5	Z964 14BK	GROUND
6	-	-
7	-	-
8	Q3 20OR/TN	SUNROOF OPEN SWITCH SENSE
9	Q4 20OR/YL	SUNROOF VENT SWITCH SENSE
10	-	-

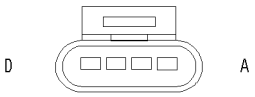

MOTOR-WINDSHIELD WIPER

MOTOR-WINDSHIELD WIPER - 4 WAY

CAV	CIRCUIT	FUNCTION
A	W4 16BR/OR (EXCEPT SRT)	WIPER RELAY HIGH SPEED OUTPUT
A	W4 14 BR/OR (SRT)	WIPER RELAY HIGH SPEED OUTPUT
B	W3 16BR/WT (EXCEPT SRT)	WIPER RELAY LOW SPEED OUTPUT
B	W3 14 BR/WT (SRT)	WIPER RELAY LOW SPEED OUTPUT
C	Z103 18BK/WT	GROUND
D	W7 20BR/GY	WIPER PARK SWITCH SENSE

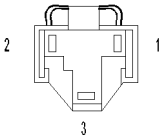

POWER OUTLET (EXCEPT SRT)

POWER OUTLET (EXCEPT SRT) - 3 WAY

CAV	CIRCUIT	FUNCTION
1	A205 18RD/OR	FUSED B(+)
2	-	-
3	Z737 18BK/LB	GROUND

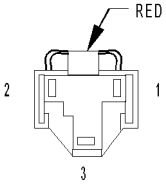

POWER OUTLET (SRT)

POWER OUTLET (SRT) - RED 3 WAY

CAV	CIRCUIT	FUNCTION
1	A205 18RD/OR	FUSED B(+)
2	-	-
3	Z737 18BK/LB	GROUND

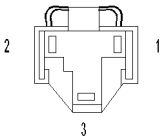

POWER OUTLET-CONSOLE (EXCEPT BASE)

POWER OUTLET-CONSOLE (EXCEPT BASE) - 3 WAY

CAV	CIRCUIT	FUNCTION
1	A405 18RD/DB	FUSED B(+)
2	-	-
3	Z939 18BK	GROUND

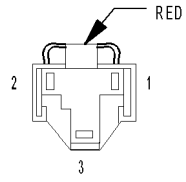

POWER OUTLET-INSTRUMENT PANEL

POWER OUTLET-INSTRUMENT PANEL - RED 3 WAY

CAV	CIRCUIT	FUNCTION
1	F984 18PK/YL	FUSED IGNITION SWITCH OUTPUT (RUN-ACC)
2	-	-
3	Z736 18BK/YL	GROUND

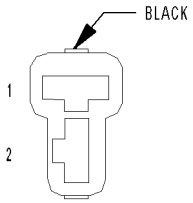

**POWER OUTLET-
REAR
(SRT)**

POWER OUTLET-REAR (SRT) - BLACK 2 WAY

CAV	CIRCUIT	FUNCTION
1	Z737 18BK/LB	GROUND
2	F984 16PK/YL	FUSED IGNITION SWITCH OUTPUT (RUN-ACC)

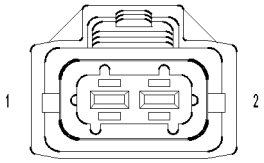

**PUMP-
FUEL INJECTION
(DIESEL)**

PUMP-FUEL INJECTION (DIESEL) - 2 WAY

CAV	CIRCUIT	FUNCTION
1	K31 18BR	FUEL PUMP RELAY CONTROL
2	K65 18BR/LB	FUEL PUMP RELAY RETURN

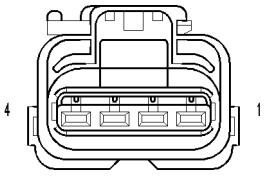

**PUMP-
LEAK DETECTION
(SRT)**

PUMP-LEAK DETECTION (SRT) - 4 WAY

CAV	CIRCUIT	FUNCTION
1	-	-
2	K125 18BR/DG	GENERATOR SOURCE
3	K106 18VT/LB	LEAK DETECTION PUMP SOLENOID CONTROL
4	K107 18VT/WT	LEAK DETECTION PUMP SWITCH SENSE

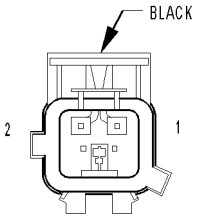

**PUMP-
WASHER-
WINDSHIELD**

PUMP-WASHER-WINDSHIELD - BLACK 2 WAY

CAV	CIRCUIT	FUNCTION
1	Z945 20BK	GROUND
2	W10 20BR	WASHER PUMP MOTOR CONTROL

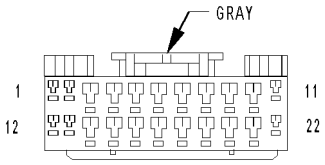

RADIO C1

RADIO C1 - GRAY 22 WAY

CAV	CIRCUIT	FUNCTION
1	A114 18GY/RD	FUSED B(+)
2	F983 20PK/YL	FUSED IGNITION SWITCH OUTPUT (RUN-ACC)
3	E14 20OR/TN	PANEL LAMPS DRIVER
4	-	-
5	-	-
6	-	-
7	X154 18GY/YL (BASE)	RIGHT FRONT DOOR SPEAKER (+)
8	X156 18GY/LB (BASE)	RIGHT FRONT DOOR SPEAKER (-)
9	X155 18DG/LB (BASE)	LEFT FRONT DOOR SPEAKER (-)
10	X153 18DG/YL (BASE)	LEFT FRONT DOOR SPEAKER (+)
11	Z514 18BK/LG	GROUND
12	A114 18GY/RD	FUSED B(+)
13	-	-
14	D25 20WT/VT	PCI BUS
15	-	-
16	-	-
17	-	-
18	X205 18GY/LG (BASE)	LEFT REAR SPEAKER (+)
18	X51 20DG/DB (PREMIUM)	LEFT REAR SPEAKER (+)
19	X295 18GY/DG (BASE)	LEFT REAR SPEAKER (-)
19	X57 20DG/OR (PREMIUM)	LEFT REAR SPEAKER (-)
20	X296 18DG/GY (BASE)	RIGHT REAR SPEAKER (-)
20	X58 20GY/OR (PREMIUM)	RIGHT REAR SPEAKER (-)
21	X206 18DG/LG (BASE)	RIGHT REAR SPEAKER (+)
21	X52 20GY/DB (PREMIUM)	RIGHT REAR SPEAKER (+)
22	Z515 18BK	GROUND

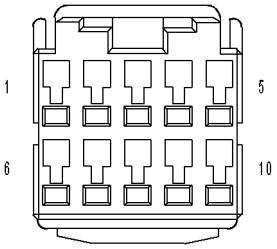

RADIO C2

RADIO C2 - 10 WAY

CAV	CIRCUIT	FUNCTION
1	X16 18DG/YL (EXCEPT HANDS FREE)	AUDIO SIGNAL RIGHT (+)
1	X704 18DG/YL (HANDS FREE)	RIGHT AUDIO OUTPUT
2	X917 18DG (EXCEPT HANDS FREE)	AUDIO SIGNAL COMMON
2	X795 18DG (HANDS FREE)	COMMON AUDIO OUTPUT
3	-	-
4	D25 20WT/VT (EXCEPT HANDS FREE)	PCI BUS
5	X211 18YL/GY (SATELLITE RADIO)	IGNITION RUN-ACC SIGNAL
6	X17 18DG/OR (EXCEPT HANDS FREE)	AUDIO SIGNAL LEFT (+)
6	X703 18DG/OR (HANDS FREE)	LEFT AUDIO OUTPUT
7	Z966 18BK (EXCEPT SRT)	GROUND
7	Z909 18BK (SRT)	GROUND
8	D112 18WT/OR	SDAR BUS
9	-	-
10	X160 18GY/YL (EXCEPT BASE AUDIO)	FUSED B(+)

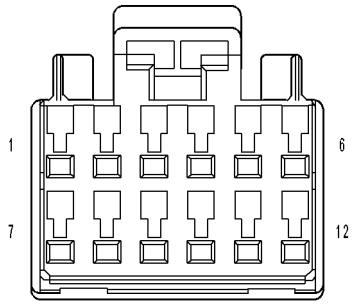

RECEIVER-SATELLITE

RECEIVER-SATELLITE - 12 WAY

CAV	CIRCUIT	FUNCTION
1	X160 18GY/YL (QUAD CAB)	FUSED B(+)
1	X160 20GY/YL (STANDARD CAB)	FUSED B(+)
2	X211 18YL/GY (QUAD CAB)	IGNITION RUN-ACC SIGNAL
2	X211 20YL/GY (STANDARD CAB)	IGNITION RUN-ACC SIGNAL
3	Z966 18BK (EXCEPT SRT QUAD CAB)	GROUND
3	Z909 18BK (SRT QUAD CAB)	GROUND
3	Z966 20BK (STANDARD CAB)	GROUND
4	-	-
5	-	-
6	X17 18DG/OR (QUAD CAB)	AUDIO SIGNAL LEFT (+)
6	X17 20DG/OR (STANDARD CAB)	AUDIO SIGNAL LEFT (+)
7	D25 20WT/VT	PCI BUS
8	-	-
9	D112 18WT/OR (QUAD CAB)	SDAR BUS
9	D112 20GY/YL (STANDARD CAB)	SDAR BUS
10	-	-
11	X917 18DG (QUAD CAB)	AUDIO SIGNAL COMMON
11	X917 18DG (STANDARD CAB)	AUDIO SIGNAL COMMON
12	X16 18DG/YL (QUAD CAB)	AUDIO SIGNAL RIGHT (+)
12	X16 20DG/YL (STANDARD CAB)	AUDIO SIGNAL RIGHT (+)

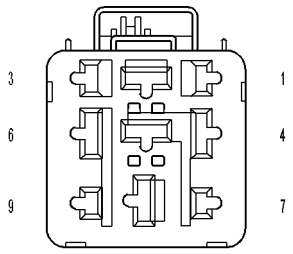

RELAY-IGNITION RUN-ACC (SRT)

RELAY-IGNITION RUN-ACC (SRT) - 9 WAY

CAV	CIRCUIT	FUNCTION
1	-	-
2	F30 12PK/YL	FUSED IGNITION SWITCH OUTPUT (RUN-ACC)
3	-	-
4	Z1 18BK	GROUND
5	-	-
6	F988C 18PK/YL	FUSED IGNITION SWITCH OUTPUT (RUN-ACC)
7	-	-
8	A310 10RD/LB	FUSED B(+)
9	-	-

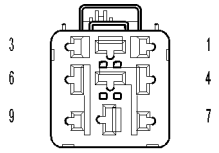

RELAY-RUN-ACCESSORY (SRT)

RELAY-RUN-ACCESSORY (SRT) - 9 WAY

CAV	CIRCUIT	FUNCTION
1	-	-
2	F30 12PK/YL	FUSED IGNITION SWITCH OUTPUT (RUN-ACC)
3	-	-
4	Z1 18BK	GROUND
5	-	-
6	F988 18PK/YL	FUSED IGNITION SWITCH OUTPUT (RUN-ACC)
7	-	-
8	A310 10RD/LB	FUSED B(+)
9	-	-

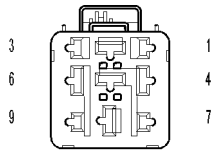

RELAY-STARTER (SRT)

RELAY-STARTER (SRT) - 9 WAY

CAV	CIRCUIT	FUNCTION
1	-	-
2	T40 12YL/GY	STARTER SOLENOID FEED
3	-	-
4	T41 18YL/DB	PARK/NEUTRAL POSITION SWITCH SENSE (T41)
5	F982 12PK/YL	FUSED IGNITION SWITCH OUTPUT (RUN-ACC)
6	T141 16YL/OR	MANUAL CLUTCH INTERLOCK START FEED
7	-	-
8	F985 12PK/YL	FUSED IGNITION SWITCH OUTPUT (RUN-ACC)
9	-	-

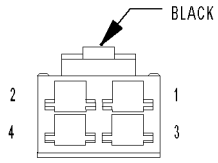

RESISTOR BLOCK-BLOWER MOTOR

RESISTOR BLOCK-BLOWER MOTOR - BLACK 4 WAY

CAV	CIRCUIT	FUNCTION
1	C72 16DB/OR	BLOWER MOTOR M1 DRIVER
2	C70 12DB/YL	BLOWER MOTOR HIGH DRIVER
3	C71 16DB/BR	BLOWER MOTOR LOW DRIVER
4	C73 14DB/VT	BLOWER MOTOR M2 DRIVER

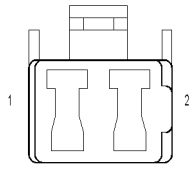

SEAT BELT-TENSION REDUCER-DRIVER (STANDARD CAB)

SEAT BELT-TENSION REDUCER-DRIVER (STANDARD CAB) - 2 WAY

CAV	CIRCUIT	FUNCTION
1	F983 20PK/YL	FUSED IGNITION SWITCH OUTPUT (RUN-ACC)
2	G10 20VT/LG	SEAT BELT SWITCH SENSE

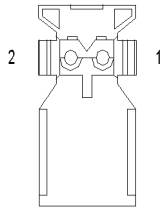

SEAT BELT-TENSIONER-DRIVER

SEAT BELT-TENSIONER-DRIVER - 2 WAY

CAV	CIRCUIT	FUNCTION
1	R55 20LG/DG	DRIVER SEAT BELT TENSIONER LINE 1
2	R53 20LG/YL	DRIVER SEAT BELT TENSIONER LINE 2

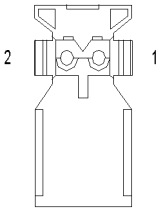

SEAT BELT-TENSIONER-PASSENGER

SEAT BELT-TENSIONER-PASSENGER - 2 WAY

CAV	CIRCUIT	FUNCTION
1	R54 20LB/YL	PASSENGER SEAT BELT TENSIONER LINE 2
2	R56 20LB/DG	PASSENGER SEAT BELT TENSIONER LINE 1

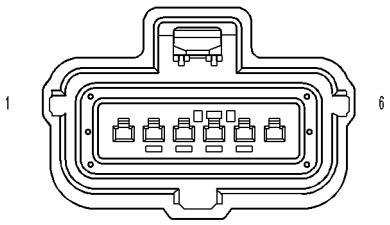

SENSOR-ACCELERATOR PEDAL POSITION (5.7L ETC)

SENSOR-ACCELERATOR PEDAL POSITION (5.7L ETC) - 6 WAY

CAV	CIRCUIT	FUNCTION
1	F856 20YL/PK	5 VOLT SUPPLY
2	K29 20WT/BR	APPS NO. 2 SIGNAL
3	K400 20BR/VT	APPS NO. 2 RETURN
4	K167 20BR/YL	APPS NO. 1 RETURN
5	K23 20BR/WT	APPS NO. 1 SIGNAL
6	F855 20PK/YL	5 VOLT SUPPLY

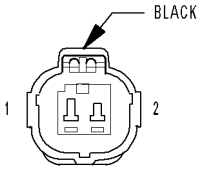

SENSOR-AMBIENT AIR TEMPERATURE

SENSOR-AMBIENT AIR TEMPERATURE - BLACK 2 WAY

CAV	CIRCUIT	FUNCTION
1	G31 20VT/LG	AAT SIGNAL
2	G180 20VT/YL (EXCEPT NGC)	SENSOR GROUND
2	K900 20DB/DG (NGC)	SENSOR GROUND

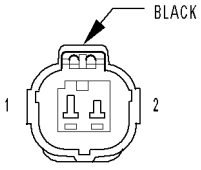

SENSOR-BATTERY TEMPERATURE

SENSOR-BATTERY TEMPERATURE - BLACK 2 WAY

CAV	CIRCUIT	FUNCTION
1	K25 18DB/VT	BATT TEMP SIGNAL
2	K900 20DB/DG (EXCEPT SRT)	SENSOR GROUND
2	K900 18DB/DG (SRT)	SENSOR GROUND

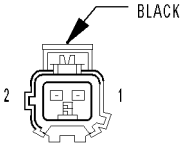

**SENSOR-
BRAKE FLUID
LEVEL**

SENSOR-BRAKE FLUID LEVEL - BLACK 2 WAY

CAV	CIRCUIT	FUNCTION
1	B20 18DG/OR (EXCEPT SRT)	BRAKE FLUID LEVEL SWITCH SENSE
1	B20 20DG/OR (SRT)	BRAKE FLUID LEVEL SWITCH SENSE
2	Z420 20BK/OR	GROUND

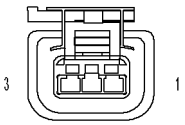

**SENSOR-
CAMSHAFT
POSITION
(DIESEL)**

SENSOR-CAMSHAFT POSITION (DIESEL) - 3 WAY

CAV	CIRCUIT	FUNCTION
1	F855 18PK/YL	5 VOLT SUPPLY
2	K916 18BR/OR	SENSOR GROUND
3	K44 18DB/GY	CMP SIGNAL

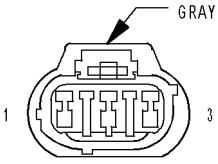

**SENSOR-
CAMSHAFT
POSITION
(GAS)**

SENSOR-CAMSHAFT POSITION (GAS) - GRAY 3 WAY

CAV	CIRCUIT	FUNCTION
1	K44 20DB/GY (EXCEPT SRT)	CMP SIGNAL
1	K44 18DB/GY (SRT)	CMP SIGNAL
2	K900 20DB/DG	SENSOR GROUND
3	F856 20YL/PK (EXCEPT SRT)	5 VOLT SUPPLY
3	F855 20PK/YL (SRT)	5 VOLT SUPPLY

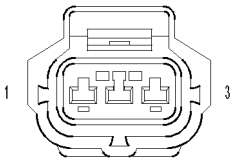

**SENSOR-
CRANKSHAFT
POSITION
(3.7L)**

SENSOR-CRANKSHAFT POSITION (3.7L) - 3 WAY

CAV	CIRCUIT	FUNCTION
1	K24 20BR/LB	CKP SIGNAL
2	K900 20DB/DG	SENSOR GROUND
3	F855 20PK/YL	5 VOLT SUPPLY

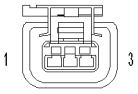

**SENSOR-
CRANKSHAFT
POSITION
(4.7L)**

SENSOR-CRANKSHAFT POSITION (4.7L) - 3 WAY

CAV	CIRCUIT	FUNCTION
1	K24 20BR/LB	CKP SIGNAL
2	K900 20DB/DG	SENSOR GROUND
3	F855 20PK/YL	5 VOLT SUPPLY

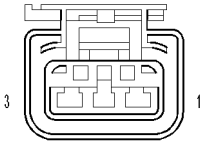

SENSOR-CRANKSHAFT POSITION (5.7L/SRT)

SENSOR-CRANKSHAFT POSITION (5.7L/SRT) - 3 WAY

CAV	CIRCUIT	FUNCTION
1	F855 20PK/YL	5 VOLT SUPPLY
2	K900 20DB/DG	SENSOR GROUND
3	K24 20BR/LB (5.7L)	CKP SIGNAL
3	K24 18BR/LB (SRT)	CKP SIGNAL

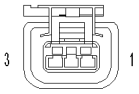

SENSOR-CRANKSHAFT POSITION (DIESEL)

SENSOR-CRANKSHAFT POSITION (DIESEL) - 3 WAY

CAV	CIRCUIT	FUNCTION
1	K853 18DB/BR	5 VOLT SUPPLY
2	K975 18BR/OR	SENSOR GROUND
3	K24 18LB/BR	CKP SIGNAL

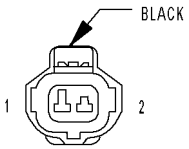

SENSOR-ENGINE COOLANT TEMPERATURE (3.7L/4.7L)

SENSOR-ENGINE COOLANT TEMPERATURE (3.7L/4.7L) - BLACK 2 WAY

CAV	CIRCUIT	FUNCTION
1	K900 18DB/DG	SENSOR GROUND
2	K2 18VT/OR	ECT SIGNAL

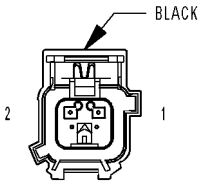

SENSOR-ENGINE COOLANT TEMPERATURE (5.7L/SRT)

SENSOR-ENGINE COOLANT TEMPERATURE (5.7L/SRT) - BLACK 2 WAY

CAV	CIRCUIT	FUNCTION
1	K900 18DB/DG (5.7L)	SENSOR GROUND
1	K2 18VT/OR (SRT)	ECT SIGNAL
2	K2 18VT/OR (5.7L)	ECT SIGNAL
2	K900 20DB/DG (SRT)	SENSOR GROUND

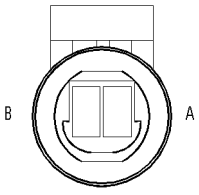

SENSOR-ENGINE COOLANT TEMPERATURE (DIESEL)

SENSOR-ENGINE COOLANT TEMPERATURE (DIESEL) - 2 WAY

CAV	CIRCUIT	FUNCTION
A	K914 18RD/WT	SENSOR GROUND
B	K2 18TN/BK	ECT SIGNAL

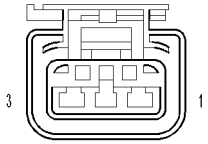

**SENSOR-
ENGINE
OIL
PRESSURE
(SRT)**

SENSOR-ENGINE OIL PRESSURE (SRT) - 3 WAY

CAV	CIRCUIT	FUNCTION
1	F855 20PK/YL	5 VOLT SUPPLY
2	G6 18VT/GY	OIL PRESSURE SIGNAL
3	K900 20DB/DG	SENSOR GROUND

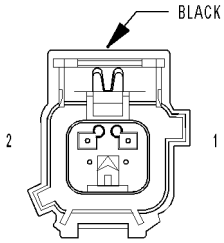

**SENSOR-
ENGINE OIL
TEMPERATURE
(SRT)**

SENSOR-ENGINE OIL TEMPERATURE (SRT) - BLACK 2 WAY

CAV	CIRCUIT	FUNCTION
1	G127 20VT/DB	OIL TEMPERATURE GAUGE SIGNAL
2	Z1 18BK	GROUND

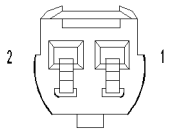

**SENSOR-
EVAPORATOR
TEMPERATURE**

SENSOR-EVAPORATOR TEMPERATURE - 2 WAY

CAV	CIRCUIT	FUNCTION
1	C121 20DB/DG	SENSOR GROUND
2	C21 20DB/LG	EVAPORATOR TEMPERATURE SENSOR SIGNAL

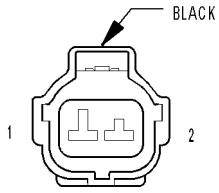

**SENSOR-
INPUT SPEED
(RFE)**

SENSOR-INPUT SPEED (RFE) - BLACK 2 WAY

CAV	CIRCUIT	FUNCTION
1	T52 18DG/OR	INPUT SPEED SENSOR SIGNAL
2	T13 18DG/VT	SPEED SENSOR GROUND

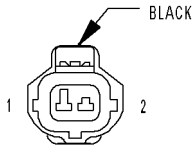

**SENSOR-
INTAKE AIR
TEMPERATURE
(NGC)**

SENSOR-INTAKE AIR TEMPERATURE (NGC) - BLACK 2 WAY

CAV	CIRCUIT	FUNCTION
1	K900 18DB/DG	SENSOR GROUND
2	K21 18DB/LG	IAT SIGNAL

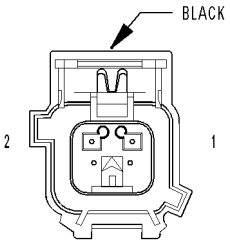

**SENSOR-
INTAKE AIR
TEMPERATURE
(SRT)**

SENSOR-INTAKE AIR TEMPERATURE (SRT) - BLACK 2 WAY

CAV	CIRCUIT	FUNCTION
1	K21 18 DB/LG	IAT SIGNAL
2	K900 20DB/DG	SENSOR GROUND

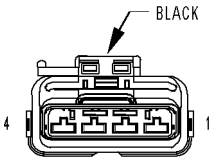

**SENSOR-
KNOCK
(3.7L/4.7L)**

SENSOR-KNOCK (3.7L/4.7L) - BLACK 4 WAY

CAV	CIRCUIT	FUNCTION
1	K42 18DB/YL (3.7L)	KNOCK SENSOR NO. 1 SIGNAL
1	K942 18BR/LG (4.7L)	KNOCK SENSOR NO. 1 RETURN
2	K942 18BR/LG (3.7L)	KNOCK SENSOR NO. 1 RETURN
2	K42 18DB/YL (4.7L)	KNOCK SENSOR NO. 1 SIGNAL
3	K242 18BR/WT (3.7L)	KNOCK SENSOR NO. 2 SIGNAL
3	K924 18WT/BR (4.7L)	KNOCK SENSOR NO. 2 RETURN
4	K924 18WT/BR (3.7L)	KNOCK SENSOR NO. 2 RETURN
4	K242 18BR/WT (4.7L)	KNOCK SENSOR NO. 2 SIGNAL

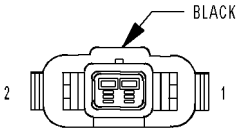

**SENSOR-
KNOCK NO. 1
(5.7L/SRT)**

SENSOR-KNOCK NO. 1 (5.7L/SRT) - BLACK 2 WAY

CAV	CIRCUIT	FUNCTION
1	K42 18DB/YL	KNOCK SENSOR NO. 1 SIGNAL
2	K942 18BR/LG (5.7L)	KNOCK SENSOR NO. 1 RETURN
2	K900 18DB/DG (SRT)	SENSOR GROUND

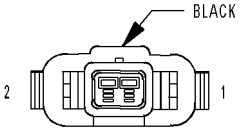

**SENSOR-
KNOCK NO. 2
(5.7L/SRT)**

SENSOR-KNOCK NO. 2 (5.7L/SRT) - BLACK 2 WAY

CAV	CIRCUIT	FUNCTION
1	K242 18BR/WT	KNOCK SENSOR NO. 2 SIGNAL
2	K924 18WT/BR (5.7L)	KNOCK SENSOR NO. 2 RETURN
2	K900 18DB/DG (SRT)	SENSOR GROUND



**SENSOR-
LINE PRESSURE
(RFE)**

SENSOR-LINE PRESSURE (RFE) - 4 WAY

CAV	CIRCUIT	FUNCTION
1	K900 18DB/DG	SENSOR GROUND
2	F856 18YL/PK	5 VOLT SUPPLY
3	T38 18YL/BR	LINE PRESSURE SENSOR SIGNAL
4	-	-

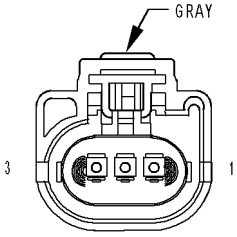

**SENSOR-
MAP
(NGC)**

SENSOR-MAP (NGC) - GRAY 3 WAY

CAV	CIRCUIT	FUNCTION
1	K1 18VT/BR	MAP SIGNAL
2	K900 20DB/DG (3.7L/4.7L)	SENSOR GROUND
2	K900 18DB/DG (5.7L)	SENSOR GROUND
3	F856 18YL/PK	5 VOLT SUPPLY

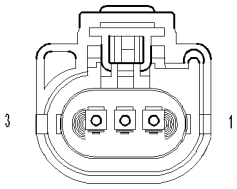

**SENSOR-
MAP
(SRT)**

SENSOR-MAP (SRT) - 3 WAY

CAV	CIRCUIT	FUNCTION
1	K1 18VT/BR	MAP SENSOR SIGNAL
2	K900 20DB/DG	SENSOR GROUND
3	F855 20PK/YL	5 VOLT SUPPLY

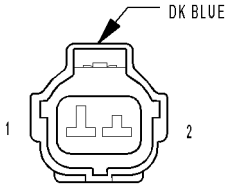

**SENSOR-
OUTPUT SPEED
(RFE)**

SENSOR-OUTPUT SPEED (RFE) - DK BLUE 2 WAY

CAV	CIRCUIT	FUNCTION
1	T14 18DG/BR	OUTPUT SPEED SENSOR SIGNAL
2	T13 18DG/VT	SPEED SENSOR GROUND

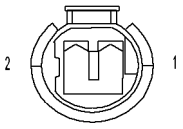

**SENSOR-
OUTPUT SPEED
(RE)**

SENSOR-OUTPUT SPEED (RE) - 2 WAY

CAV	CIRCUIT	FUNCTION
1	T14 18DG/BR	OUTPUT SPEED SENSOR SIGNAL
2	T13 18DG/VT	SPEED SENSOR GROUND

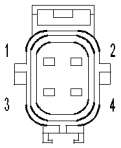

SENSOR-OXYGEN-LEFT FRONT (3.7L/5.7L)

SENSOR-OXYGEN-LEFT FRONT (3.7L/5.7L) - BLACK 4 WAY

CAV	CIRCUIT	FUNCTION
1	K99 18BR/LG	O2 1/1 HEATER CONTROL
2	Z42 18BK/LG	GROUND
3	K902 18BR/DG	O2 RETURN (UP)
4	K41 18DB/LB	O2 1/1 SIGNAL

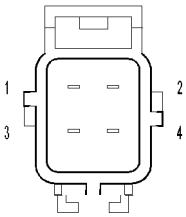

SENSOR-OXYGEN-LEFT FRONT (4.7L)

SENSOR-OXYGEN-LEFT FRONT (4.7L) - 4 WAY

CAV	CIRCUIT	FUNCTION
1	K99 18BR/LG	O2 1/1 HEATER CONTROL
2	Z42 18BK/LG	GROUND
3	K902 18BR/DG	O2 RETURN (UP)
4	K41 18DB/LB	O2 1/1 SIGNAL

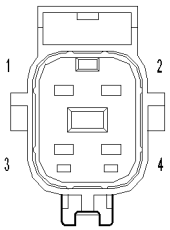

SENSOR-OXYGEN-LEFT FRONT (SRT)

SENSOR-OXYGEN-LEFT FRONT (SRT) - 4 WAY

CAV	CIRCUIT	FUNCTION
1	K343 16BR/YL	FUSED ASD RELAY OUTPUT
2	K99 18BR/LG	O2 1/1 HEATER CONTROL
3	K900 20DB/DG	SENSOR GROUND
4	K41 18DB/LB	O2 1/1 SIGNAL

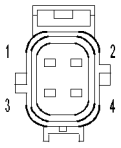

SENSOR-OXYGEN-LEFT REAR (3.7L/5.7L LD)

SENSOR-OXYGEN-LEFT REAR (3.7L/5.7L LD) - 4 WAY

CAV	CIRCUIT	FUNCTION
1	K299 18BR/WT	O2 1/2 HEATER CONTROL
2	Z43 18BK/LB	GROUND
3	K904 18DB/DG	O2 RETURN (DOWN)
4	K141 18DB/YL	O2 1/2 SIGNAL

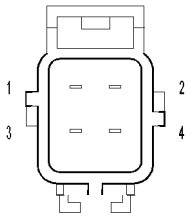

SENSOR-OXYGEN-LEFT REAR (4.7L)

SENSOR-OXYGEN-LEFT REAR (4.7L) - 4 WAY

CAV	CIRCUIT	FUNCTION
1	K299 18BR/WT	O2 1/2 HEATER CONTROL
2	Z43 18BK/LB	GROUND
3	K904 18DB/DG	O2 RETURN (DOWN)
4	K141 18DB/YL	O2 1/2 SIGNAL

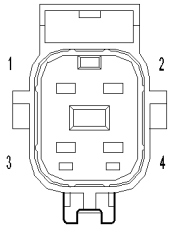

SENSOR-OXYGEN-LEFT REAR (5.7L HD)

SENSOR-OXYGEN-LEFT REAR (5.7L HD) - 4 WAY

CAV	CIRCUIT	FUNCTION
1	K299 18BR/WT	O2 1/2 HEATER CONTROL
2	Z43 18BK/LB	GROUND
3	K904 18DB/DG	O2 RETURN (DOWN)
4	K141 18DB/YL	O2 1/2 SIGNAL

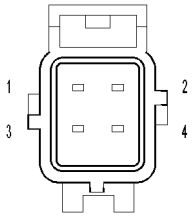

SENSOR-OXYGEN-LEFT REAR (SRT)

SENSOR-OXYGEN-LEFT REAR (SRT) - 4 WAY

CAV	CIRCUIT	FUNCTION
1	K344 18BR/GY	OXYGEN SENSOR DOWNSTREAM RELAY OUTPUT
2	Z1 18BK	GROUND
3	K900 20DB/DG	SENSOR GROUND
4	K141 18DB/YL	O2 1/2 SIGNAL

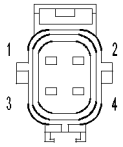

SENSOR-OXYGEN-RIGHT FRONT (3.7L/5.7L)

SENSOR-OXYGEN-RIGHT FRONT (3.7L/5.7L) - 4 WAY

CAV	CIRCUIT	FUNCTION
1	K199 18BR/VT	O2 2/1 HEATER CONTROL
2	Z934 18BK	GROUND
3	K902 18BR/DG	O2 RETURN (UP)
4	K43 18DB/LG	O2 2/1 SIGNAL

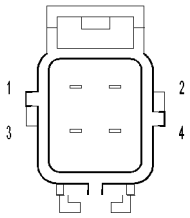

SENSOR-OXYGEN-RIGHT FRONT (4.7L)

SENSOR-OXYGEN-RIGHT FRONT (4.7L) - 4 WAY

CAV	CIRCUIT	FUNCTION
1	K199 18BR/VT	O2 2/1 HEATER CONTROL
2	Z934 18BK	GROUND
3	K902 18BR/DG	O2 RETURN (UP)
4	K43 18DB/LG	O2 2/1 SIGNAL

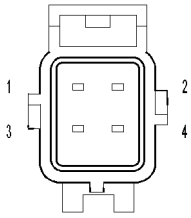

SENSOR-OXYGEN-RIGHT FRONT (SRT)

SENSOR-OXYGEN-RIGHT FRONT (SRT) - 4 WAY

CAV	CIRCUIT	FUNCTION
1	K343 16BR/YL	FUSED ASD RELAY OUTPUT
2	K199 18BR/VT	O2 2/1 HEATER CONTROL
3	K900 20DB/DG	SENSOR GROUND
4	K43 18DB/LG	O2 2/1 SIGNAL

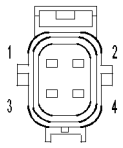

SENSOR-OXYGEN-RIGHT REAR (3.7L/5.7L LD)

SENSOR-OXYGEN-RIGHT REAR (3.7L/5.7L LD) - 4 WAY

CAV	CIRCUIT	FUNCTION
1	K399 18BR/GY	O2 2/2 HEATER CONTROL
2	Z992 18BK	GROUND
3	K904 18DB/DG	O2 RETURN (DOWN)
4	K243 18BR	O2 2/2 SIGNAL

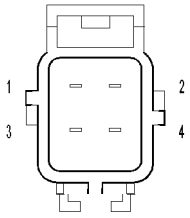

SENSOR-OXYGEN-RIGHT REAR (4.7L)

SENSOR-OXYGEN-RIGHT REAR (4.7L) - 4 WAY

CAV	CIRCUIT	FUNCTION
1	K399 18BR/GY	O2 2/2 HEATER CONTROL
2	Z992 18BK	GROUND
3	K904 18DB/DG	O2 RETURN (DOWN)
4	K243 18BR	O2 2/2 SIGNAL

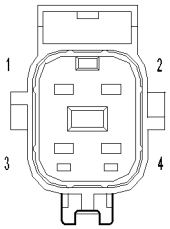

SENSOR-OXYGEN-RIGHT REAR (5.7L HD)

SENSOR-OXYGEN-RIGHT REAR (5.7L HD) - 4 WAY

CAV	CIRCUIT	FUNCTION
1	K399 18BR/GY	O2 2/2 HEATER CONTROL
2	Z992 18BK	GROUND
3	K904 18DB/DG	O2 RETURN (DOWN)
4	K243 18BR	O2 2/2 SIGNAL

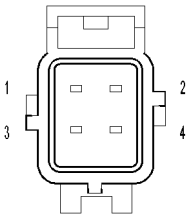

SENSOR-OXYGEN-RIGHT REAR (SRT)

SENSOR-OXYGEN-RIGHT REAR (SRT) - 4 WAY

CAV	CIRCUIT	FUNCTION
1	K344 18BR/GY	OXYGEN SENSOR DOWNSTREAM RELAY OUTPUT
2	Z1 18BK	GROUND
3	K900 20DB/DG	SENSOR GROUND
4	K243 18BR	O2 2/2 SIGNAL

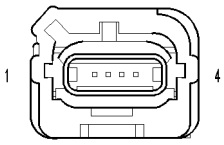

SENSOR-SIDE IMPACT-LEFT 1

SENSOR-SIDE IMPACT-LEFT 1 - 4 WAY

CAV	CIRCUIT	FUNCTION
1	R13 20LG/TN	LEFT SIDE IMPACT SENSOR 1 SIGNAL
2	R15 20LG/BR	LEFT SIDE IMPACT SENSOR 1 GROUND
3	-	-
4	-	-

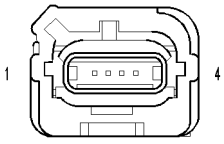

SENSOR-SIDE IMPACT-RIGHT 1

SENSOR-SIDE IMPACT-RIGHT 1 - 4 WAY

CAV	CIRCUIT	FUNCTION
1	R14 20TN/LG	RIGHT SIDE IMPACT SENSOR 1 SIGNAL
2	R16 20BR/LG	RIGHT SIDE IMPACT SENSOR 1 GROUND
3	-	-
4	-	-

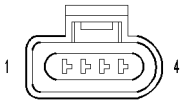

**SENSOR-
TEMPERATURE/
PRESSURE
INTAKE
(DIESEL)**

SENSOR-TEMPERATURE/PRESSURE-INTAKE (DIESEL) - 4 WAY

CAV	CIRCUIT	FUNCTION
1	K690 18DG/YL	SENSOR GROUND
2	K615 18VT/WT	INLET AIR TEMPERATURE SENSE
3	K668 18LG	5 VOLT SUPPLY
4	K616 18BR/YL	INLET AIR PRESSURE SENSE

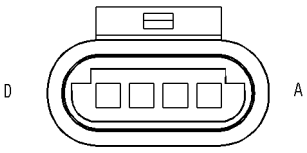

**SENSOR-
TEMPERATURE/
PRESSURE-
MAP
(DIESEL)**

SENSOR-TEMPERATURE/PRESSURE-MAP (DIESEL) - 4 WAY

CAV	CIRCUIT	FUNCTION
A	K916 18BR/OR	SENSOR GROUND
B	K21 18DB/LG	INTAKE AIR TEMPERATURE SENSOR SIGNAL
C	F855 18PK/YL	5 VOLT SUPPLY
D	K37 18LB	BOOST PRESSURE SENSOR SIGNAL

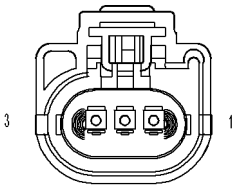

**SENSOR-
THROTTLE POSITION
(3.7L)**

SENSOR-THROTTLE POSITION (3.7L) - 3 WAY

CAV	CIRCUIT	FUNCTION
1	F855 18PK/YL	5 VOLT SUPPLY
2	K900 18DB/DG	SENSOR GROUND
3	K22 18BR/OR	TP NO. 1 SIGNAL

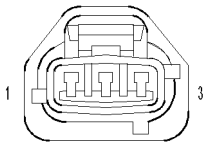

**SENSOR-
THROTTLE POSITION
(4.7L)**

SENSOR-THROTTLE POSITION (4.7L) - 3 WAY

CAV	CIRCUIT	FUNCTION
1	F855 18PK/YL	5 VOLT SUPPLY
2	K22 18BR/OR	TP NO. 1 SIGNAL
3	K900 18DB/DG	SENSOR GROUND

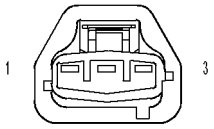

**SENSOR-
THROTTLE
POSITION
(SRT)**

SENSOR-THROTTLE POSITION (SRT) - 3 WAY

CAV	CIRCUIT	FUNCTION
1	K900 20DB/DG	SENSOR GROUND
2	K22 18BR/OR	THROTTLE POSITION SENSOR SIGNAL
3	F855 20PK/YL	5 VOLT SUPPLY

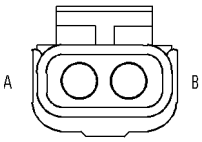

SENSOR-TRANSFER CASE POSITION (MTC EXCEPT POWER WAGON)

SENSOR-TRANSFER CASE POSITION (MTC EXCEPT POWER WAGON) - 2 WAY

CAV	CIRCUIT	FUNCTION
A	K77 18BR/WT	TRANSFER CASE POSITION SENSE
B	Z901 18BK	GROUND

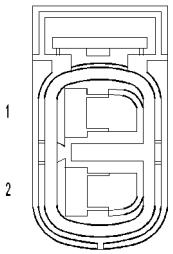

SENSOR-TRANSFER CASE POSITION (MTC POWER WAGON)

SENSOR-TRANSFER CASE POSITION (MTC POWER WAGON) - 2 WAY

CAV	CIRCUIT	FUNCTION
1	K77 18BR/WT	TRANSFER CASE POSITION SENSE
2	T525 18YL/DB	TRANSFER CASE RETURN

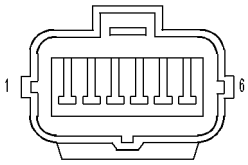

SENSOR-TRANSMISSION RANGE (RE)

SENSOR-TRANSMISSION RANGE (RE) - 6 WAY

CAV	CIRCUIT	FUNCTION
1	L10 18WT/GY	FUSED IGNITION SWITCH OUTPUT (RUN)
2	T117 20DG/YL	TRANS RANGE SENSOR ELECTRONIC CLUSTER 5 VOLT SUPPLY
3	-	-
4	L1 18WT/LG	BACKUP LAMP FEED
5	T917 20YL/TN	TRANS RANGE SENSOR ELECTRONIC CLUSTER MUX
6	T41 20YL/DB (EXCEPT SRT)	PARK/NEUTRAL POSITION SWITCH SENSE (T41)
6	T41 18YL/DB (SRT)	PARK/NEUTRAL POSITION SWITCH SENSE (T41)

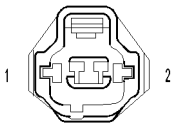

SENSOR-WASHER FLUID LEVEL

SENSOR-WASHER FLUID LEVEL - 2 WAY

CAV	CIRCUIT	FUNCTION
1	Z932 20BK	GROUND
2	W1 20BR/TN	WASHER FLUID SWITCH SENSE

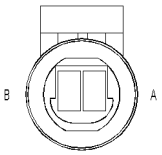

**SENSOR-
WATER
IN FUEL**

SENSOR-WATER IN FUEL - 2 WAY

CAV	CIRCUIT	FUNCTION
A	K914 18RD/WT	SENSOR GROUND
B	G123 18VT/LG	WATER IN FUEL SENSOR SIGNAL

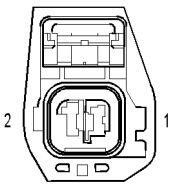

**SENSOR-
WHEEL SPEED-
ABS-LEFT
FRONT**

SENSOR-WHEEL SPEED-ABS-LEFT FRONT - 2 WAY

CAV	CIRCUIT	FUNCTION
1	B8 18DG/TN (5.7L HD RWAL)	LEFT FRONT WHEEL SPEED SENSOR (-)
1	B8 20DG/TN (EXCEPT 5.7L HD RWAL)	LEFT FRONT WHEEL SPEED SENSOR (-)
2	B9 18DG/LG (5.7L HD RWAL)	LEFT FRONT WHEEL SPEED SENSOR (+)
2	B9 20DG/LG (EXCEPT 5.7L HD RWAL)	LEFT FRONT WHEEL SPEED SENSOR (+)



**SENSOR-
WHEEL SPEED-
ABS-REAR**

SENSOR-WHEEL SPEED-ABS-REAR - 2 WAY

CAV	CIRCUIT	FUNCTION
1	B3 18DG/YL	REAR WHEEL SPEED SENSOR (-)
2	B4 18DG/GY	REAR WHEEL SPEED SENSOR (+)

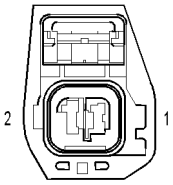

**SENSOR-
WHEEL SPEED-
ABS-RIGHT
FRONT**

SENSOR-WHEEL SPEED-ABS-RIGHT FRONT - 2 WAY

CAV	CIRCUIT	FUNCTION
1	B6 20DG/WT	RIGHT FRONT WHEEL SPEED SENSOR (-)
2	B7 20DG/VT	RIGHT FRONT WHEEL SPEED SENSOR (+)

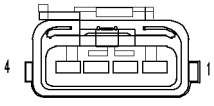

**SERVO-
SPEED CONTROL
(GAS EXCEPT 5.7L)**

SERVO-SPEED CONTROL (GAS EXCEPT 5.7L) - 4 WAY

CAV	CIRCUIT	FUNCTION
1	V36 20VT/YL (EXCEPT SRT)	S/C VACUUM SOL CONTROL
1	V36 18VT/YL (SRT)	S/C VACUUM SOL CONTROL
2	V35 20VT/OR (EXCEPT SRT)	S/C VENT SOL CONTROL
2	V35 18VT/OR (SRT)	S/C VENT SOL CONTROL
3	V30 20VT/WT	S/C BRAKE SWITCH OUTPUT
4	Z913 20BK	GROUND

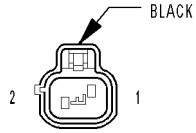

**SOLENOID-
BRAKE
TRANSMISSION
SHIFT INTERLOCK**

SOLENOID-BRAKE TRANSMISSION SHIFT INTERLOCK - BLACK 2 WAY

CAV	CIRCUIT	FUNCTION
1	K32 18DB/YL	BTSI SOLENOID CONTROL
2	Z101 18BK/VT	GROUND

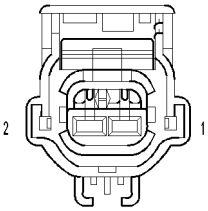

**SOLENOID-
EVAP/
PURGE
(NGC)**

SOLENOID-EVAP/PURGE (NGC) - 2 WAY

CAV	CIRCUIT	FUNCTION
1	K52 18DB/WT	EVAP PURGE SOL CONTROL
2	K70 18DB/BR	EVAP PURGE SOL SIGNAL

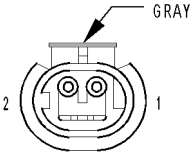

**SOLENOID-
EVAP/
PURGE
(SRT)**

SOLENOID-EVAP/PURGE (SRT) - GRAY 2 WAY

CAV	CIRCUIT	FUNCTION
1	F202 20PK/GY	FUSED IGNITION SWITCH OUTPUT (RUN-START)
2	K70 18DB/BR	EVAP PURGE RETURN

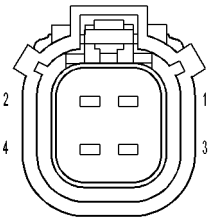

**SOLENOID-
LOCKER-
FRONT
(5.7L OFF ROAD)**

SOLENOID-LOCKER-FRONT (5.7L OFF ROAD) - 4 WAY

CAV	CIRCUIT	FUNCTION
1	T520 16YL/OR	FRONT LOCKER SOURCE
2	T521 18YL/GY	LOCKER SENSOR SUPPLY
3	T522 18YL/LB	FRONT LOCKER SENSOR SENSE
4	T524 16YL/LG	FRONT LOCKER RETURN

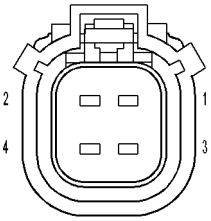

**SOLENOID-
LOCKER-
REAR
(POWER WAGON)**

SOLENOID-LOCKER-REAR (POWER WAGON) - 4 WAY

CAV	CIRCUIT	FUNCTION
1	T526 16YL/WT	REAR LOCKER SOURCE
2	T521 18YL/GY	LOCKER SENSOR SUPPLY
3	T527 18YL/TN	REAR LOCKER SENSOR SENSE
4	T528 16YL/GY	REAR LOCKER RETURN

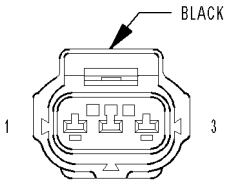

**SOLENOID-
RADIATOR FAN
(SRT)**

SOLENOID-RADIATOR FAN (SRT) - BLACK 3 WAY

CAV	CIRCUIT	FUNCTION
1	C240 18LB/TN	HYDRAULIC COOLING CONTROL FEED
2	K342 16BR/WT	ASD RELAY OUTPUT
3	Z1 18BK	GROUND

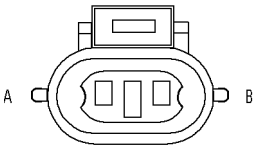

**SOLENOID-
REVERSE
LOCK-OUT
(SRT M/T)**

SOLENOID-REVERSE LOCK-OUT (SRT M/T) - 2 WAY

CAV	CIRCUIT	FUNCTION
A	A917 18RD	FUSED B(+)
B	K333 18DB/LB	SOLENOID REVERSE LOCKOUT FEED

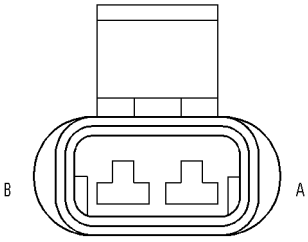

**SOLENOID-
WASTEGATE
(DIESEL)**

SOLENOID-WASTEGATE (DIESEL) - 2 WAY

CAV	CIRCUIT	FUNCTION
A	K139 18DB	WASTEGATE SOLENOID CONTROL
B	F504 18GY/PK	FUSED IGNITION SWITCH OUTPUT (RUN)

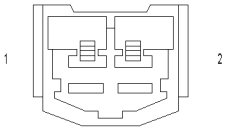

**SPEAKER-
INSTRUMENT
PANEL-
CENTER
(PREMIUM)**

SPEAKER-INSTRUMENT PANEL-CENTER (PREMIUM) - 2 WAY

CAV	CIRCUIT	FUNCTION
1	X290 18GY/OR	CENTER INSTRUMENT PANEL SPEAKER (-)
2	X200 18GY/BR	CENTER INSTRUMENT PANEL SPEAKER (+)

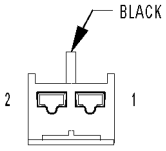

**SPEAKER-
INSTRUMENT
PANEL-
LEFT**

SPEAKER-INSTRUMENT PANEL-LEFT - BLACK 2 WAY

CAV	CIRCUIT	FUNCTION
1	X209 18GY/OR	LEFT INSTRUMENT PANEL SPEAKER (+)
2	X299 18GY/YL	LEFT INSTRUMENT PANEL SPEAKER (-)

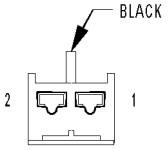

SPEAKER-INSTRUMENT PANEL-RIGHT

SPEAKER-INSTRUMENT PANEL-RIGHT - BLACK 2 WAY

CAV	CIRCUIT	FUNCTION
1	X208 18GY/DG	RIGHT INSTRUMENT PANEL SPEAKER (+)
2	X298 18GY/LG	RIGHT INSTRUMENT PANEL SPEAKER (-)

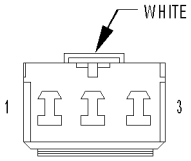

SPEAKER-LEFT FRONT DOOR

SPEAKER-LEFT FRONT DOOR - WHITE 3 WAY

CAV	CIRCUIT	FUNCTION
1	X155 18DG/LB	LEFT FRONT DOOR SPEAKER (-)
2	-	-
3	X153 18DG/YL	LEFT FRONT DOOR SPEAKER (+)

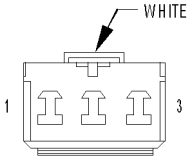

SPEAKER-LEFT REAR

SPEAKER-LEFT REAR - WHITE 3 WAY

CAV	CIRCUIT	FUNCTION
1	X205 18GY/LG	LEFT REAR SPEAKER (+)
2	-	-
3	X295 18GY/DG	LEFT REAR SPEAKER (-)

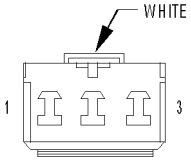

SPEAKER-RIGHT FRONT DOOR

SPEAKER-RIGHT FRONT DOOR - WHITE 3 WAY

CAV	CIRCUIT	FUNCTION
1	X156 18GY/LB	RIGHT FRONT DOOR SPEAKER (-)
2	-	-
3	X154 18GY/YL	RIGHT FRONT DOOR SPEAKER (+)

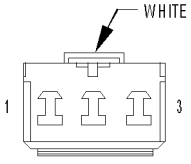

SPEAKER-RIGHT REAR

SPEAKER-RIGHT REAR - WHITE 3 WAY

CAV	CIRCUIT	FUNCTION
1	X206 18DG/LG	RIGHT REAR SPEAKER (+)
2	-	-
3	X296 18DG/GY	RIGHT REAR SPEAKER (-)

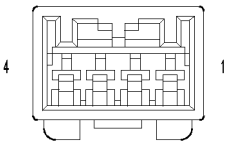

SPEAKER-SUBWOOFER (SRT)

SPEAKER-SUBWOOFER (SRT) - 4 WAY

CAV	CIRCUIT	FUNCTION
1	X390 16DG/BR	AMPLIFIED SUBWOOFER 1 (-)
2	X300 16GY/BR	AMPLIFIED SUBWOOFER 1 (+)
3	X391 16DG/WT	AMPLIFIED SUBWOOFER 2 (-)
4	X301 16GY/WT	AMPLIFIED SUBWOOFER 2 (+)

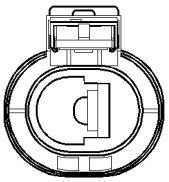

STARTER (3.7L/4.7L/5.7L OFF ROAD)

STARTER (3.7L/4.7L/5.7L OFF ROAD) - 1 WAY

CAV	CIRCUIT	FUNCTION
1	T750 14YL/GY	STARTER MOTOR RELAY OUTPUT

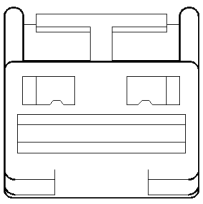

STARTER (5.7L EXCEPT OFF ROAD)

STARTER (5.7L EXCEPT OFF ROAD) - 1 WAY

CAV	CIRCUIT	FUNCTION
1	T750 14YL/GY	STARTER MOTOR RELAY OUTPUT

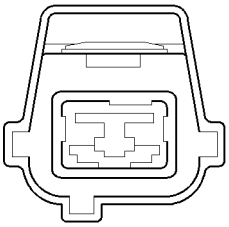

STARTER (DIESEL)

STARTER (DIESEL) - 1 WAY

CAV	CIRCUIT	FUNCTION
1	T750 14YL/GY	STARTER MOTOR RELAY OUTPUT

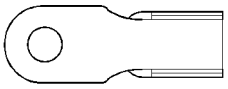

STARTER-EYELET (DIESEL)

STARTER-EYELET (DIESEL) - 1 WAY

CAV	CIRCUIT	FUNCTION
1	A8 0RD	B(+)

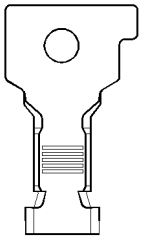

STARTER-EYELET (3.7L/4.7L/5.7L OFF ROAD/SRT)

STARTER-EYELET (3.7L/4.7L/5.7L OFF ROAD/SRT) - 1 WAY

CAV	CIRCUIT	FUNCTION
1	A8 06RD	B(+)

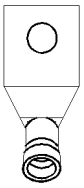

STARTER-EYELET (5.7L)

STARTER-EYELET (5.7L) - 1 WAY

CAV	CIRCUIT	FUNCTION
1	A8 6RD	B(+)

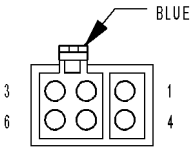

SWITCH-ADJUSTABLE PEDALS (EXCEPT BASE)

SWITCH-ADJUSTABLE PEDALS (EXCEPT BASE) - BLUE 6 WAY

CAV	CIRCUIT	FUNCTION
1	P206 18LG/LB	ADJUSTABLE PEDALS MOTOR REARWARD
2	A72 18RD/OR	ADJUSTABLE PEDALS RELAY OUTPUT
3	-	-
4	Z146 18BK	GROUND
5	F504 20GY/PK	FUSED IGNITION SWITCH OUTPUT (RUN)
6	P205 18LG/WT	ADJUSTABLE PEDALS MOTOR FORWARD

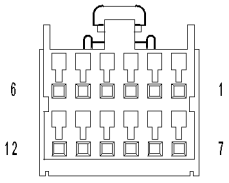

SWITCH-AXLE LOCK (SMART BAR)

SWITCH-AXLE LOCK (SMART BAR) - 12 WAY

CAV	CIRCUIT	FUNCTION
1	T537 20YL/LG	LOCKER SWITCH SUPPLY
2	T532 20YL/GY	LOCKER OPEN ILLUMINATION SENSE
3	-	-
4	-	-
5	T535 20YL/BR	LOCKER SWITCH SENSE
6	E11 20OR/DB	PANEL LAMPS DRIVER
7	T536 20YL/WT	SWITCH SUPPLY
8	T534 20YL	LOCKER FR/RR ILLUMINATION SENSE
9	T533 20YL/LB	LOCKER REAR ILLUMINATION SENSE
10	-	-
11	Z952 20BK	GROUND
12	-	-

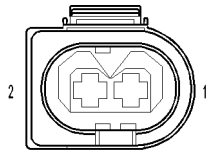

**SWITCH-
BACK UP
LAMP
(3.7L/4.7L)**

SWITCH-BACK UP LAMP (3.7L/4.7L) - 2 WAY

CAV	CIRCUIT	FUNCTION
1	L1 18WT/LG	BACKUP LAMP FEED
2	L10 18WT/GY	FUSED IGNITION SWITCH OUTPUT (RUN)

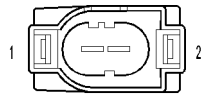

**SWITCH-
BACK UP
LAMP
(G56)**

SWITCH-BACK UP LAMP (G56) - 2 WAY

CAV	CIRCUIT	FUNCTION
1	L1 18WT/LG	BACKUP LAMP FEED
2	L10 18WT/GY	FUSED IGNITION SWITCH OUTPUT (RUN)

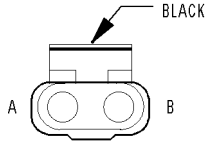

**SWITCH-
BACK UP
LAMP
(5.7L NV5600)**

SWITCH-BACK UP LAMP (5.7L NV5600) - BLACK 2 WAY

CAV	CIRCUIT	FUNCTION
A	L1 18WT/LG	BACKUP LAMP FEED
B	L10 18WT/GY	FUSED IGNITION SWITCH OUTPUT (RUN)

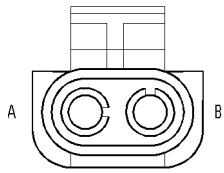

**SWITCH-
BACK UP
LAMP
(SRT M/T)**

SWITCH-BACK UP LAMP (SRT M/T) - 2 WAY

CAV	CIRCUIT	FUNCTION
A	L10 18WT/GY	FUSED IGNITION SWITCH OUTPUT (RUN)
B	L1 18WT/LG	BACKUP LAMP FEED

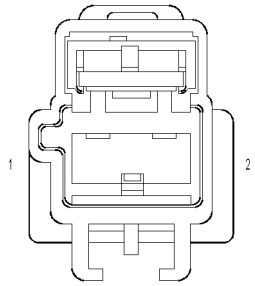

**SWITCH-
CLUTCH
INTERLOCK
(M/T)**

SWITCH-CLUTCH INTERLOCK (M/T) - 2 WAY

CAV	CIRCUIT	FUNCTION
1	T41 20YL/DB (EXCEPT SRT)	TRS T41 SENSE
1	T41 16YL/DB (SRT)	PARK NEUTRAL POSITION SWITCH SENSE (T41)
2	Z911 18BK (EXCEPT SRT)	GROUND
2	Z1 16BK (SRT)	GROUND

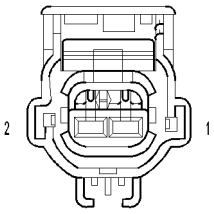

**SWITCH-
CYLINDER LOCK-
DRIVER
(SRT)**

SWITCH-CYLINDER LOCK-DRIVER (SRT) - 2 WAY

CAV	CIRCUIT	FUNCTION
1	G163 20VT/LB	DRIVER CYLINDER LOCK SWITCH MUX
2	Z463 20BK/LB	GROUND

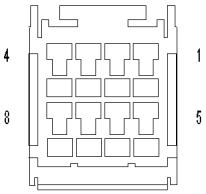

**SWITCH-
DISCONNECTING
STABILIZER BAR
(SMART BAR)**

SWITCH-DISCONNECTING STABILIZER BAR (SMART BAR) - 8 WAY

CAV	CIRCUIT	FUNCTION
1	E11 20OR/DB	PANEL LAMPS DRIVER
2	T529 20YL/LG	STABILIZER BAR ENGAGE ILLUMINATION SENSE
3	T530 20YL/DG	STABILIZER BAR DISENGAGE ILLUMINATION SENSE
4	Z952 20BK	GROUND
5	T531 20YL/TN	STABILIZER BAR SWITCH SENSE
6	-	-
7	-	-
8	T536 20YL/WT	SWITCH SUPPLY

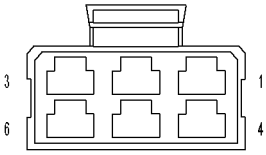

**SWITCH-
DOOR LOCK-
PASSENGER**

SWITCH-DOOR LOCK-PASSENGER - 6 WAY

CAV	CIRCUIT	FUNCTION
1	G160 20VT/LG	PASSENGER DOOR LOCK SWITCH MUX
2	F21 20PK/DG	FUSED IGNITION SWITCH OUTPUT (RUN-START)
3	-	-
4	-	-
5	Z461 20BK/DG	GROUND
6	-	-

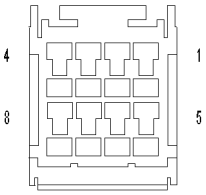

**SWITCH-
HEADLAMP**

SWITCH-HEADLAMP - 8 WAY

CAV	CIRCUIT	FUNCTION
1	-	-
2	-	-
3	E19 20OR/BR	HEADLAMP SWITCH DIMMER SIGNAL
4	Z407 20BK/OR	GROUND
5	L89 20WT/YL (FOG LAMPS EXCEPT SRT)	FOG LAMP RELAY OUTPUT
5	L89 18WT/YL (FOG LAMPS SRT)	FOG LAMP RELAY OUTPUT
6	E2 20OR/BR	PANEL LAMPS DIMMER SIGNAL
7	L115 20WT/YL	HEADLAMP SWITCH RETURN
8	L116 20WT/LG	HEADLAMP SWITCH SIGNAL

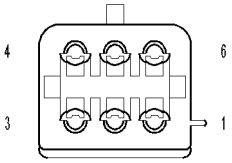

**SWITCH-
HEATED SEAT-
DRIVER**

SWITCH-HEATED SEAT-DRIVER - 6 WAY

CAV	CIRCUIT	FUNCTION
1	P81 20TN/LB	DRIVER SEAT LOW HEAT LED DRIVER
2	P301 20LG/OR	HEATED SEAT SWITCH ILLUMINATION DRIVER
3	Z301 20TN/BK	GROUND
4	P85 20LG/WT	HEATED SEAT SWITCH SUPPLY
5	P83 20TN/WT	DRIVER SEAT HIGH HEAT LED DRIVER
6	P7 20LG/DG	DRIVER SEAT HEATER MUX SWITCH

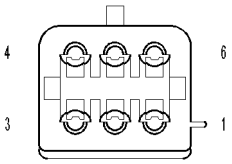

**SWITCH-
HEATED SEAT-
PASSENGER**

SWITCH-HEATED SEAT-PASSENGER - 6 WAY

CAV	CIRCUIT	FUNCTION
1	P82 20TN/DG	PASSENGER SEAT LOW HEAT LED DRIVER
2	P301 20LG/OR	HEATED SEAT SWITCH ILLUMINATION DRIVER
3	Z302 20LG/BK	GROUND
4	P85 20LG/WT	HEATED SEAT SWITCH SUPPLY
5	P84 20TN/VT	PASSENGER SEAT HIGH HEAT LED DRIVER
6	P8 20LG/WT	PASSENGER SEAT HEATER MUX SWITCH

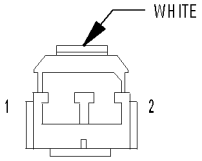

**SWITCH-
HORN**

SWITCH-HORN - WHITE 2 WAY

CAV	CIRCUIT	FUNCTION
1	X3 20DG/VT	HORN SWITCH SENSE
2	-	-

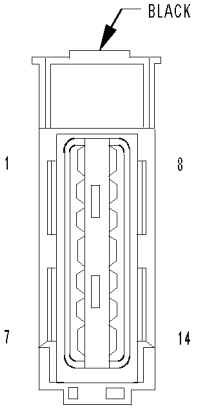

**SWITCH-
IGNITION**

SWITCH-IGNITION - BLACK 14 WAY

CAV	CIRCUIT	FUNCTION
1	A970 10RD (EXCEPT SRT)	FUSED B(+)
1	F988 18PK/YL (SRT)	FUSED IGNITION SWITCH OUTPUT (RUN-ACC)
2	F1 16PK/WT	FUSED IGNITION SWITCH OUTPUT (OFF-RUN-START)
3	F951 16PK/LG	FUSED IGNITION SWITCH OUTPUT (RUN-START)
4	A951 16RD	FUSED B(+)
5	G15 20VT/TN	KEY-IN IGNITION SWITCH SENSE
6	Z943 20BK	GROUND
7	A921 16RD (EXCEPT SRT)	FUSED B(+)
8	C7 10DB (EXCEPT SRT)	BLOWER MOTOR FEED
8	F102 18PK/DB (SRT)	FUSED IGNITION SWITCH OUTPUT (RUN)
9	F982 14PK/YL (EXCEPT SRT)	FUSED IGNITION SWITCH OUTPUT (RUN-ACC)
9	F985 12PK/YL (SRT)	FUSED IGNITION SWITCH OUTPUT (RUN-ACC)
10	F30 12PK/YL (EXCEPT BASE/SRT)	FUSED IGNITION SWITCH OUTPUT (RUN-ACC)
11	A981 14RD (EXCEPT SRT)	FUSED B(+)
11	A981 12RD (SRT)	FUSED B(+)
12	A310 10RD/LB (EXCEPT BASE/SRT)	FUSED B(+)
13	T751 16YL (EXCEPT SRT)	IGNITION SWITCH OUTPUT (START)
14	F922 16PK/YL (EXCEPT SRT)	FUSED IGNITION SWITCH OUTPUT (RUN)

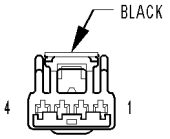

SWITCH-MULTIFUCTION

SWITCH-MULTIFUNCTION - BLACK 4 WAY

CAV	CIRCUIT	FUNCTION
1	G194 20VT/LG	WASH/BEAM SELECT SWITCH SIGNAL
2	L900 20WT/YL	WIPER/TURN/BEAM SELECT SWITCH RETURN
3	L12 20WT/OR	TURN LAMPS SWITCH SIGNAL
4	W52 20BR/YL	INTERMITTENT WIPER SWITCH SIGNAL

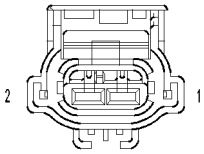

SWITCH-OIL PRESSURE (EXCEPT SRT)

SWITCH-OIL PRESSURE (EXCEPT SRT) - 2 WAY

CAV	CIRCUIT	FUNCTION
1	G6 18VT/GY	OIL PRESSURE SIGNAL
2	-	-

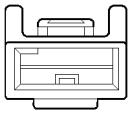

SWITCH-PARKING BRAKE

SWITCH-PARKING BRAKE - 1 WAY

CAV	CIRCUIT	FUNCTION
1	B25 20DG/WT	PARK BRAKE SWITCH SENSE

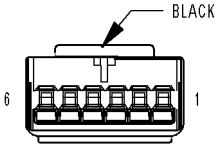

SWITCH-PASSENGER AIRBAG ON/OFF

SWITCH-PASSENGER AIRBAG ON/OFF - BLACK 6 WAY

CAV	CIRCUIT	FUNCTION
1	R106 20LG/LB	PASSENGER AIRBAG MUX SWITCH SENSE
2	R104 20LB/LG	PASSENGER AIRBAG MUX SWITCH RETURN
3	G104 20VT/GY	PASSENGER AIRBAG INDICATOR DRIVER
4	F201 20PK/OR	FUSED IGNITION SWITCH OUTPUT (RUN-START)
5	-	-
6	-	-

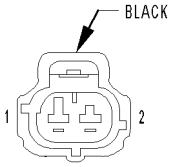

SWITCH-POWER STEERING PRESSURE (5.7L)

SWITCH-POWER STEERING PRESSURE (5.7L) - BLACK 2 WAY

CAV	CIRCUIT	FUNCTION
1	Z988 20BK	GROUND
2	K66 18DB/WT	P/S SWITCH SIGNAL

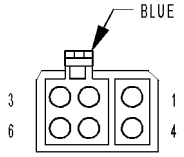

SWITCH-POWER WINDOW-LEFT REAR

SWITCH-POWER WINDOW-LEFT REAR - BLUE 6 WAY

CAV	CIRCUIT	FUNCTION
1	Q111 14TN/YL	DRIVER REAR WINDOW DRIVER (UP)
2	Q611 14OR/GY	LEFT REAR WINDOW DRIVER (DOWN)
3	-	-
4	Q411 14OR/WT	LEFT REAR WINDOW DRIVER (UP)
5	Q211 14TN/LB	DRIVER REAR WINDOW DRIVER (DOWN)
6	Q15 14OR/LB	POWER WINDOW SWITCH FEED

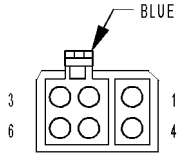

SWITCH-POWER WINDOW-PASSENGER

SWITCH-POWER WINDOW-PASSENGER - BLUE 6 WAY

CAV	CIRCUIT	FUNCTION
1	Q12 14OR/BR	RIGHT FRONT WINDOW DRIVER (UP)
2	Q26 14OR/GY	MASTER WINDOW SWITCH RIGHT FRONT (DOWN)
3	-	-
4	Q16 14OR/TN	MASTER WINDOW SWITCH RIGHT FRONT (UP)
5	Q22 14OR/VT	RIGHT FRONT WINDOW DRIVER (DOWN)
6	Q15 14OR/LB	POWER WINDOW SWITCH FEED

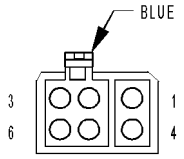

SWITCH-POWER WINDOW-RIGHT REAR

SWITCH-POWER WINDOW-RIGHT REAR - BLUE 6 WAY

CAV	CIRCUIT	FUNCTION
1	Q112 14TN/YL	PASSENGER REAR WINDOW DRIVER (UP)
2	Q612 14OR/GY	RIGHT REAR WINDOW DRIVER (DOWN)
3	-	-
4	Q412 14OR/WT	RIGHT REAR WINDOW DRIVER (UP)
5	Q212 14TN/LB	PASSENGER REAR WINDOW DRIVER (DOWN)
6	Q15 14OR/LB	POWER WINDOW SWITCH FEED

CONNECTOR NOT AVAILABLE

SWITCH-PTO (NGC) - 1 WAY

CAV	CIRCUIT	FUNCTION
1	G113 18VT	PTO SWITCH SENSE

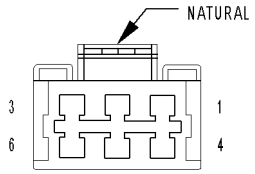

SWITCH-PUSH-BUTTON STARTER (SRT)

SWITCH-PUSH-BUTTON STARTER (SRT) - NATURAL 6 WAY

CAV	CIRCUIT	FUNCTION
1	-	-
2	F951 16PK/LG	FUSED IGNITION SWITCH OUTPUT (RUN-START)
3	T141 16YL/OR	MANUAL CLUTCH INTERLOCK START FEED
4	-	-
5	-	-
6	-	-

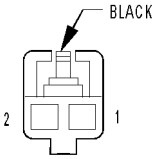

SWITCH-REMOTE RADIO-LEFT

SWITCH-REMOTE RADIO-LEFT - BLACK 2 WAY

CAV	CIRCUIT	FUNCTION
1	X20 22GY/WT	RADIO CONTROL MUX
2	Z909 22BK	GROUND

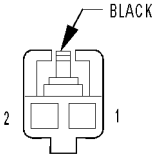

SWITCH-REMOTE RADIO-RIGHT

SWITCH-REMOTE RADIO-RIGHT - BLACK 2 WAY

CAV	CIRCUIT	FUNCTION
1	X20 22GY/WT	RADIO CONTROL MUX
2	Z909 22BK	GROUND

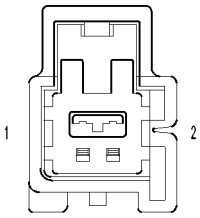

SWITCH-SEAT BELT-DRIVER

SWITCH-SEAT BELT-DRIVER - 2 WAY

CAV	CIRCUIT	FUNCTION
1	Z951 20BK (EXCEPT SRT)	GROUND
1	Z951 18BK (SRT)	GROUND
2	G10 20VT/LG	SEAT BELT SWITCH SENSE

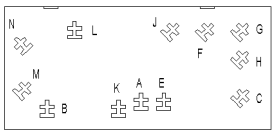

SWITCH-SEAT-DRIVER

SWITCH-SEAT-DRIVER - 12 WAY

CAV	CIRCUIT	FUNCTION
A	A210 12OR/RD	FUSED B(+)
B	Z939 14BK	GROUND
C	P105 12LG	DRIVER SEAT LUMBAR MOTOR FORWARD DRIVER
D	-	-
E	P11 12LG/YL	DRIVER SEAT REAR UP DRIVER
F	P107 12LG/WT	DRIVER SEAT LUMBAR MOTOR REARWARD DRIVER
G	Z939 14BK	GROUND
H	A210 12OR/RD	FUSED B(+)
I	-	-
J	P13 12LG/OR	DRIVER SEAT REAR DOWN DRIVER
K	P17 12LG/DG	DRIVER SEAT HORIZONTAL REARWARD DRIVER
L	P15 12LG/BR	DRIVER SEAT HORIZONTAL FORWARD DRIVER
M	P19 12LG/LB	DRIVER SEAT FRONT UP DRIVER
N	P21 12LG/TN	DRIVER SEAT FRONT DOWN DRIVER

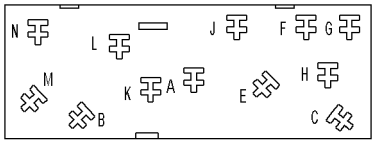

**SWITCH-
SEAT-
PASSENGER
(QUAD CAB)**

SWITCH-SEAT-PASSENGER (QUAD CAB) - 12 WAY

CAV	CIRCUIT	FUNCTION
A	A210 12OR/RD	FUSED B(+)
B	Z939 14BK	GROUND
C	P106 12LG/WT	PASSENGER SEAT LUMBAR MOTOR FORWARD DRIVER
D	-	-
E	A210 12OR/RD	FUSED B(+)
F	P104 12LG	PASSENGER SEAT LUMBAR MOTOR REARWARD DRIVER
G	Z939 14BK	GROUND
H	P12 12LG/YL	PASSENGER SEAT REAR UP DRIVER
I	-	-
J	P10 12LG/TN	PASSENGER SEAT REAR DOWN DRIVER
K	P16 12LG/BR	PASSENGER SEAT HORIZONTAL REARWARD DRIVER
L	P14 12LG/OR	PASSENGER SEAT HORIZONTAL FORWARD DRIVER
M	P20 12LG/LB	PASSENGER SEAT FRONT UP DRIVER
N	P18 12LG/DG	PASSENGER SEAT FRONT DOWN DRIVER

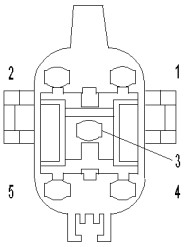

**SWITCH-
SEAT-
PASSENGER
(STANDARD CAB)**

SWITCH-SEAT-PASSENGER (STANDARD CAB) - 5 WAY

CAV	CIRCUIT	FUNCTION
1	Z939 14BK	GROUND
2	P106 12LG/WT	PASSENGER SEAT LUMBAR MOTOR FORWARD DRIVER
3	A210 12OR/RD	FUSED B(+)
4	P104 12LG	PASSENGER SEAT LUMBAR MOTOR REARWARD DRIVER
5	Z939 14BK	GROUND

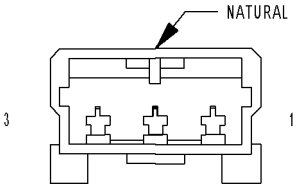

**SWITCH-
SPEED CONTROL-
LEFT
(ETC)**

SWITCH-SPEED CONTROL-LEFT (ETC) - NATURAL 3 WAY

CAV	CIRCUIT	FUNCTION
1	V38 20VT/OR (5.7L/DIESEL)	S/C SWITCH NO. 2 SIGNAL
2	V937 20VT/BR	S/C SWITCH RETURN
3	V37 20VT	S/C SWITCH NO. 1 SIGNAL

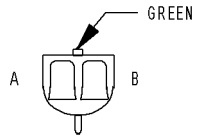

**SWITCH-
SPEED CONTROL-
LEFT
(EXCEPT ETC)**

SWITCH-SPEED CONTROL-LEFT (EXCEPT ETC) - GREEN 2 WAY

CAV	CIRCUIT	FUNCTION
A	V37 20VT	S/C SWITCH NO. 1 SIGNAL
B	K900 20VT/BR	SENSOR GROUND

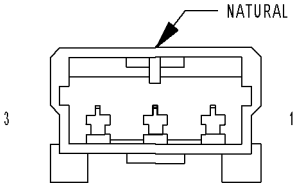

**SWITCH-
SPEED CONTROL-
RIGHT
(ETC)**

SWITCH-SPEED CONTROL-RIGHT (ETC) - NATURAL 3 WAY

CAV	CIRCUIT	FUNCTION
1	V38 20VT/OR (5.7L/DIESEL)	S/C SWITCH NO. 2 SIGNAL
2	V937 20VT/BR	S/C SWITCH RETURN
3	V37 20VT	S/C SWITCH NO. 1 SIGNAL

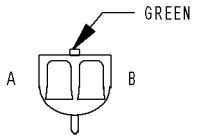

**SWITCH-
SPEED CONTROL-
RIGHT
(EXCEPT ETC)**

SWITCH-SPEED CONTROL-RIGHT (EXCEPT ETC) - GREEN 2 WAY

CAV	CIRCUIT	FUNCTION
A	V37 20VT	S/C SWITCH NO. 1 SIGNAL
B	K900 20VT/BR	SENSOR GROUND

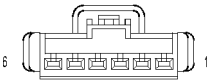

**SWITCH-
STOP
LAMP**

SWITCH-STOP LAMP - 6 WAY

CAV	CIRCUIT	FUNCTION
1	A103 18GY/RD	FUSED B(+)
2	L50 18WT/TN	BRAKE LAMP SWITCH OUTPUT
3	V30 20VT/WT (5.7L)	FUSED IGNITION SWITCH OUTPUT (RUN-START)
3	V30 20VT/WT (DIESEL)	GROUND
3	V30 20VT/WT (GAS EXCEPT 5.7L)	S/C BRAKE SWITCH OUTPUT
4	V32 20VT/YL (5.7L/DIESEL)	BRAKE SWITCH NO. 2 SIGNAL
4	V32 20VT/YL (GAS EXCEPT 5.7L)	SPEED CONTROL SUPPLY
5	Z429 20BK/OR	GROUND
6	B29 20DG/WT	BRAKE SWITCH NO. 1 SIGNAL

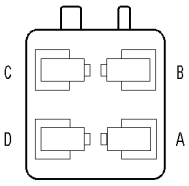

SWITCH-SUNROOF

SWITCH-SUNROOF - 4 WAY

CAV	CIRCUIT	FUNCTION
A	Q4 20OR/YL	SUNROOF VENT SWITCH SENSE
B	Q6 20OR/LG	SUNROOF SWITCH SUPPLY
C	Q5 20OR/LB	SUNROOF CLOSE SWITCH SENSE
D	Q3 20OR/TN	SUNROOF OPEN SWITCH SENSE

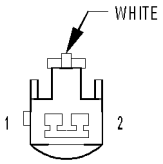

SWITCH-TOW/HAUL OVERDRIVE

SWITCH-TOW/HAUL OVERDRIVE - WHITE 2 WAY

CAV	CIRCUIT	FUNCTION
1	T6 20DG	TOW/HAUL OVERDRIVE OFF SWITCH SENSE
2	Z71 20LB/BK	GROUND

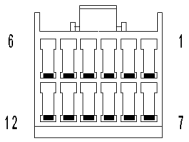

SWITCH-TRANSFER CASE SELECTOR (ETC)

SWITCH-TRANSFER CASE SELECTOR (ETC) - 12 WAY

CAV	CIRCUIT	FUNCTION
1	T322 20DG/GY	5 VOLT SELECTOR SWITCH SUPPLY
2	G2 20BR/WT	2WD/AWD INDICATOR
3	-	-
4	G95 20VT/BR	NEUTRAL INDICATOR
5	K977 20BR/WT	MODE SELECT
6	E11 20OR/DB	PANEL LAMPS DRIVER
7	F21 20PK/DG	FUSED IGNITION SWITCH OUTPUT (RUN-START)
8	G92 20VT/OR	4WD LOW INDICATOR
9	G91 20VT/WT	4WD HIGH INDICATOR
10	-	-
11	Z905 20BK	GROUND
12	-	-

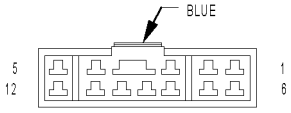

SWITCH-WINDOW/DOOR LOCK-DRIVER C1

SWITCH-WINDOW/DOOR LOCK-DRIVER C1 - BLUE 12 WAY

CAV	CIRCUIT	FUNCTION
1	Q612 14OR/DB	RIGHT REAR WINDOW DRIVER (DOWN)
2	Q412 14OR/LB	RIGHT REAR WINDOW DRIVER (UP)
3	Q16 14OR/TN	MASTER WINDOW SWITCH RIGHT FRONT (UP)
4	Q411 14OR/WT	LEFT REAR WINDOW DRIVER (UP)
5	Q11 14OR/LG	LEFT FRONT WINDOW DRIVER (UP)
6	Q26 14OR/GY	MASTER WINDOW SWITCH RIGHT FRONT (DOWN)
7	G161 20VT/DG	DRIVER DOOR LOCK SWITCH MUX
8	Z421 14BK/BR	GROUND
9	F30 14PK/YL	FUSED IGNITION SWITCH OUTPUT (RUN-ACC)
10	Q611 14OR/GY	LEFT REAR WINDOW DRIVER (DOWN)
11	Z941 20BK	GROUND
12	Q21 14OR/WT	LEFT FRONT WINDOW DRIVER (DOWN)

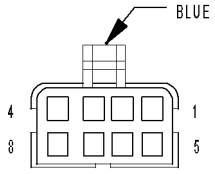

SWITCH-WINDOW/DOOR LOCK-DRIVER C2

SWITCH-WINDOW/DOOR LOCK-DRIVER C2 - BLUE 8 WAY

CAV	CIRCUIT	FUNCTION
1	P71 18TN/DG	LEFT MIRROR UP DRIVER
2	P195 18LG/YL	LEFT MIRROR COMMON DRIVER (RIGHT/DOWN)
3	A930 18RD	FUSED B(+)
4	P74 18TN/OR	RIGHT MIRROR LEFT DRIVER
5	Z461 20BK/DG	GROUND
6	P75 18TN/LG	LEFT MIRROR LEFT DRIVER
7	P72 18TN/GY	RIGHT MIRROR UP DRIVER
8	Q15 14OR/LB	POWER WINDOW SWITCH FEED

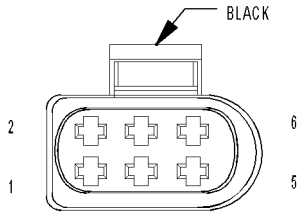

THROTTLE BODY (5.7L)

THROTTLE BODY (5.7L) - BLACK 6 WAY

CAV	CIRCUIT	FUNCTION
1	K22 18BR/OR	TP NO. 1 SIGNAL
2	F855 18PK/YL	5 VOLT SUPPLY
3	K447 18TN/YL	ETC MOTOR (+)
4	K122 18BR/DG	TP NO. 2 SIGNAL
5	K448 18TN/OR	ETC MOTOR (-)
6	K922 18BR/DB	TP SENSOR RETURN

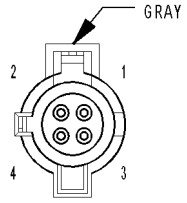

TRANSDUCER-A/C PRESSURE (NGC)

TRANSDUCER-A/C PRESSURE (NGC) - GRAY 4 WAY

CAV	CIRCUIT	FUNCTION
1	K900 18DB/DG	SENSOR GROUND
2	F855 18PK/YL	5 VOLT SUPPLY
3	C918 18BK/LB	A/C PRESSURE SIGNAL
4	-	-

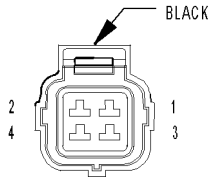

TRANSDUCER-A/C PRESSURE (DIESEL/SRT)

TRANSDUCER-A/C PRESSURE (DIESEL/SRT) - BLACK 4 WAY

CAV	CIRCUIT	FUNCTION
1	K916 18BR/OR (DIESEL)	SENSOR GROUND
1	K900 20DB/DG (SRT)	SENSOR GROUND
2	F855 18PK/YL	5 VOLT SUPPLY
3	C918 18BK/LB	A/C PRESSURE SIGNAL
4	-	-

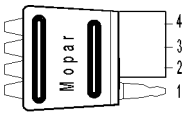

WIRING-
TRAILER
TOW 4-WAY

WIRING-TRAILER TOW 4-WAY - 4 WAY

CAV	CIRCUIT	FUNCTION
1	Z999 14BK	GROUND
2	L678 18BR	FUSED PARK LAMP RELAY OUTPUT
3	L673 18YL	TRAILER TOW LEFT TURN RELAY OUTPUT
4	L674 18LG	TRAILER TOW RIGHT TURN RELAY OUTPUT

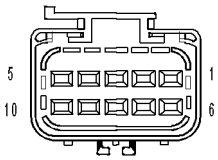

WIRING-
TRAILER
TOW 7-WAY

WIRING-TRAILER TOW 7-WAY - 10 WAY

CAV	CIRCUIT	FUNCTION
1	-	-
2	L674 18LG	TRAILER TOW RIGHT TURN RELAY OUTPUT
3	L1 18WT/LG	BACKUP LAMP FEED
4	A100 14RD/VT	FUSED B(+)
5	L678 18BR	FUSED PARK LAMP RELAY OUTPUT
6	-	-
7	B40 14DG	TRAILER TOW BRAKE B(+)
8	Z999 14BK	GROUND
9	Z999 14BK	GROUND
10	L673 18YL	TRAILER TOW LEFT TURN RELAY OUTPUT

8W-91 CONNECTOR/GROUND/SPLICE LOCATION

TABLE OF CONTENTS

page

CONNECTOR/GROUND/SPLICE LOCATION
DESCRIPTION 1

CONNECTOR/GROUND/SPLICE LOCATION

DESCRIPTION

This section provides illustrations identifying connector, ground, and splice locations in the vehicle. Connector, ground, and splice indexes are provided. Use the wiring diagrams in each section for connector, ground, and splice identification. Refer to the index for the proper figure number. For items that are not shown in this section N/S is placed in the Fig. column.

CONNECTORS

CONNECTOR NAME/NUMBER	COLOR	LOCATION	FIG.
Actuator-Blend Door-Driver	BK	On HVAC Unit	N/S
Actuator-Blend Door-Passenger (Dual Zone)	BK	On HVAC Unit	N/S
Actuator-Fuel Control (Diesel)	BK	Left Rear Engine	N/S
Actuator-Mode Door-Floor to Defrost	BK	On HVAC Unit	N/S
Actuator-Mode Door-Floor to Panel	BK	On HVAC Unit	N/S
Actuator-Recirculation Door	BK	On HVAC Unit	N/S
Airbag-Driver Squib 1	BK	On Steering Wheel	46
Airbag-Driver Squib 2	BR	On Steering Wheel	46
Airbag-Passenger Squib	YL	Right Front of Instrument Panel	50, 54
Airbag-Side Curtain-Left	YL	Top Left B-Pillar	60, 65
Airbag-Side Curtain-Right	YL	Top Right B-Pillar	64, 66
Amplifier-Radio C1 (Except SRT)	GY	Top Center of Instrument Panel	50, 54
Amplifier-Radio C1 (SRT)	NAT	Top Center of Instrument Panel	50, 54
Amplifier-Radio C2 (Except SRT)	GY	Top Center of Instrument Panel	50, 54
Amplifier-Radio C2 (SRT)	WT	Top Center of Instrument Panel	50, 54
Amplifier-Subwoofer (SRT-10)	WT	Center Body	60, 61, 65
Antenna-Radio	-	At Antenna Base	52
Antenna-Satellite No. 1		Center Rear Roof	62, 63
Antenna-Satellite No. 2		Center Rear Roof	62, 63
Antenna Cable-Radio	-	Right Kick Panel	51, 52
Antenna Cable-Satellite No. 1		Behind Passenger Seat	62
Antenna Cable-Satellite No. 2		Behind Passenger Seat	62

CONNECTOR NAME/NUMBER	COLOR	LOCATION	FIG.
Assembly-Exhaust Gas Recirculation Valve	LT GY	Right Front Engine	10
Assembly-Natural Vacuum Leak Detection (NGC)	BK	Rear of Transmission	24, 69
Assembly-Shift Motor/Mode Sensor C1	BK	Left Front Side of Transfer Case	19, 20, 22, 29
Assembly-Shift Motor/Mode Sensor C2	BK	Left Rear of Transmission	19, 20, 29
Assembly-Transmission Throttle Valve		On Transmission	N/S
Assembly-Transmission Solenoid/ Pressure Switch (3.7L/4.7L)	BK	Left Side of Transmission	21, 22
Assembly-Transmission Solenoid/ TRS	BK	Left Side of Transmission	20, 17
Backlite-Heated	BK	Left of Rear Window	60, 65
Backlite-Heated-Ground	BK	Right of Rear Wingdow	67
Battery (+)	-	Left Engine Compartment	37
Battery (-)	-	Left Engine Compartment	37
C102		Near Integrated Power Module	32
C103		Left Rear Engine Compartment	N/S
C106	BK	Left Rear Engine	8
C107 (5.7L)	BK	Left Rear Engine	8
C112 (Diesel)	BK	Near T/O for Water In Fuel Sensor	N/S
C115 (Diesel)	BK	Top of Engine Near Injectors 1 and 2	15
C116 (Diesel)	BK	Top of Engine Near Injectors 3 and 4	N/S
C117 (Diesel)	BK	Top of Engine Near Injectors 5 and 6	N/S
C130	BK	Left Rear of Engine	4, 30, 42
C131 (GAS)		Right Rear Engine Compartment	4, 30
C131 (DIESEL)		Left Rear Engine Compartment	42
C200	GY	Under Instrument Panel	54
C201	WT	Near Left Instrument Panel Speaker	50, 53, 56
C202	BK	Left Rear Side of Engine Compartment	36
C206	BK	Right Instrument Panel	50, 54, 67
C207		Rear Engine Compartment	31
C216	BK	Middle Left Frame	31, 34, 69
C217	BK	Middle Left Frame	31, 34, 69
C218	WT	Left Side of Instrument Panel	31, 33, 55, 60, 65
C219	GY	Left Side of Instrument Panel	31, 33, 45, 50, 53, 55, 60
C220	WT	Left Side of Instrument Panel	50, 53, 55, 60, 65
C301	WT	Right Kick Panel	55, 58, 64, 66

CONNECTOR NAME/NUMBER	COLOR	LOCATION	FIG.
C302	BK	Left Front Door	55, 58, 64, 66
C304	WT	Left Side of Instrument Panel	57, 60, 65
C305	BK	At Left Front Door	57, 60, 65
C306	WT	Middle Front of Door	59, 65
C308	WT	Under Instrument Panel	54, 55, 64, 66
C309	WT	Left Side of Instrument Panel	50, 53, 55, 60, 65
C311	BK	Left Rear of Frame	60, 65
C313	DK GY	At Driver Seat	N/S
C315	DK GY	At Driver Seat	N/S
C316	BK	At Passenger Seat	N/S
C319	BK	Bottom Left of Left Door	N/S
C320	NAT	Right Rear Door	59
C322	DK GY	Left Rear of Frame	60, 65
C323	BK	Left Side of Instrument Panel	N/S
C327	BK	Right Rear Fender	69, 70
C328	BK	Left Rear Fender	69, 70, 71
C331		Left Side Instrument Panel	31
C333		Left Side Insrument Panel	31, 32
C337		Left B-Pillar	60, 65
C338		Under Right Seat	60, 62
Capacitor-Ignition		Left Rear of Engine Compartment	4
Circuit Breaker-Power Window	GY	Under Instrument Panel	45, 50, 53
Clockspring C1	BK	Steering Column	45
Clockspring C2	YL	Steering Column	45
Clockspring C3	BK	Steering Column	46
Clockspring C4	BK	Steering Column	46
Cluster C1	GY	Rear of Instrument Cluster	50
Cluster C3	WT	Rear of Instrument Cluster	50
Cluster C4	GY	Rear of Instrument Cluster	50
Clutch-A/C Compressor	BK	At A/C Compressor	3, 7, 8, 15, 12
Coil-Ignition-Left (SRT-10)	BK	Top Front of Engine	27
Coil-Ignition-Right (SRT-10)	BK	Top Front of Engine	N/S
Coil-Ignition-No. 1	BK	Left Top Side of Intake Manifold	7
Coil-Ignition-No. 2	BK	Right Top Side of Intake Manifold	3
Coil-Ignition-No. 3	BK	Left Top Side of Intake Manifold	7
Coil-Ignition-No. 4	BK	Right Top Side of Intake Manifold	3
Coil-Ignition-No. 5	BK	Left Top Side of Intake Manifold	5, 7
Coil-Ignition-No. 6	BK	Right Top Side of Intake Manifold	3
Coil-Ignition-No. 7	BK	Left Top Side of Intake Manifold	7
Coil-Ignition-No. 8	BK	Right Top Side of Intake Manifold	3
Control-A/C-Heater C1	BK	Center of Instrument Panel	49, 50, 51
Control-A/C-Heater C2	BK	Center of Instrument Panel	49, 50
Data Link Connector	BK	Left Bottom of Instrument Panel	50, 53

CONNECTOR NAME/NUMBER	COLOR	LOCATION	FIG.
Data Link Connector - Engine (Diesel)	BK	Near T/O for Water In Fuel Sensor	N/S
Drive-Fan-Radiator	DK GY	Front Engine Compartment	39
Gauge-Oil Temperature (SRT-10)	NAT	Left Instrument Panel	50
Generator (Except SRT-10)	BK	Front of Engine	7, 10, 15
Generator (SRT-10)	GY	Right Front Engine	12
Heater-Fuel (Diesel)	BK	Left Side Engine	15
Heater-Seat Cushion - Driver	BL	Under Driver Seat	N/S
Heater-Seat Cushion - Passenger	BL	Under Passenger Seat	N/S
Horn-No. 1	BK	Left Front Fender	32, 40
Horn-No. 2	BK	Left Front Fender	32, 39, 40
Injector-Fuel-No. 1	BK	Left Top Engine	7, 11
Injector-Fuel-No. 2	BK	Right Top Engine	3,11
Injector-Fuel-No. 3	BK	Left Top Engine	7,11
Injector-Fuel-No. 4	BK	Right Top Engine	3,11
Injector-Fuel-No. 5	BK	Left Top Engine	7,11
Injector-Fuel-No. 6	BK	Right Top Engine	3,11
Injector-Fuel-No. 7	BK	Left Top Engine	7,11
Injector-Fuel-No. 8	BK	Right Top Engine	3,11
Injector-Fuel-No. 9 (SRT-10)	BK	Left Top Engine	11
Injector-Fuel-No. 10 (SRT-10)	BK	Right Top Engine	11
Lamp-Cab No. 1	BK	Left Roof	67
Lamp-Cab No. 2	BK	Left-Center Roof	67
Lamp-Cab No. 3	BK	Center Roof	67
Lamp-Cab No. 4	BK	Right-Center Roof	67
Lamp-Cab No. 5	BK	Right Roof	67
Lamp-Center Bezel	GY	Center Stack	50
Lamp-CHMSL-Aftermarket		Left Rear Chassis	70
Lamp-Dome-Rear	BK	Center of Headliner	56
Lamp-Fender Marker-Front Left (Dual Wheels)	BK	Front of Left Rear Fender	71
Lamp-Fender Marker-Front Right (Dual Wheels)	BK	Rear of Left Rear Fender	71
Lamp-Fender Marker-Rear Left (Dual Wheels)	BK	Front of Right Rear Fender	71
Lamp-Fender Marker-Rear Right (Dual Wheels)	BK	Rear of Right Rear Fender	71
Lamp-Fog-Left Front	WT	Left Front Facia	N/S
Lamp-Fog-Right Front	WT	Right Front Facia	N/S
Lamp-Headlamp-Left	BL	At Headlamp	32, 39, 40
Lamp-Headlamp-Right	BL	At Headlamp	1, 30, 35
Lamp-High Mounted Stop/Cargo	BK	Rear of Cab	56, 68
Lamp-License-Left	BK	At Rear Bumper	69, 70
Lamp-License-Right	BK	At Rear Bumper	69, 70

CONNECTOR NAME/NUMBER	COLOR	LOCATION	FIG.
Lamp-Glove Box	BK	At Glove Box	50, 54
Lamp-Park/Turn-Left Front	BK	At Lamp	32, 39, 40
Lamp-Park/Turn-Right Front	BK	At Lamp	1, 30, 35
Lamp-Reading-Front	NAT	Center of Headliner	56
Lamp-Tail/Stop/Turn-Left	BK	At Lamp	69, 70
Lamp-Tail/Stop/Turn-Right	BK	At Lamp	69, 70
Lamp-Underhood	BK	Left Hood	43
Lamp-Vanity-Left (SRT-10)	BK	Left Headliner	56
Lamp-Vanity-Right (SRT-10)	BK	Right Headliner	56
Lamp Bar-Tailgate		At Tailgate	N/S
Latch-Door-Driver	BK	Left Front Door	57
Latch-Door-Left Rear	BK	Left Rear Door	59
Latch-Door-Passenger	BK	Right Front Door	58
Latch-Door-Right Rear	BK	Right Rear Door	59
Mirror-Inside Rearview C1	BK	Top Center of Windshield	67
Mirror-Inside Rearview C2	BK	Top Center of Windshield	67
Mirror-Outside Rearview-Driver	BK	At Mirror	57
Mirror-Outside Rearview-Passenger	BK	At Mirror	58
Module-Airbag Control C1	YL	Lower Center of Instrument Panel	50, 51
Module-Airbag Control C2	YL	Lower Center of Instrument Panel	60, 65
Module-Anti-Lock Brakes C1	BK	Left Fender Side Shield	31, 33, 34
Module-Anti-Lock Brakes C2 (ABS)	BK	Left Fender Side Shield	31, 34
Module-Brake Provision	BL	Left Kick Panel	31, 33
Module-Electronic Overhead	BK	In Overhead Console	N/S
Module-Engine Control C1	BK	Left Engine	15, 16
Module-Engine Control C2	BK	Left Engine	15, 16
Module-Final Drive Control		Right Front Engine Compartment	30
Module-Fuel Pump	LT GY	At Fuel Tank	69
Module-Hands Free C1	DK GY	Right Instrument Panel	54
Module-Hands Free C2	DK GY	Right Instrument Panel	54
Module-Hands Free C3		Right Instrument Panel	54
Module-Heated Seats	GN	Under Driver Seat	N/S
Module-Integrated Power C1	BK	Left Front Fender	35, 39
Module-Integrated Power C2	WT	Left Front Fender	35, 39
Module-Integrated Power C3	GN	Left Front Fender	35, 39
Module-Integrated Power C4	WT	Left Front Fender	35, 39
Module-Integrated Power C5	BK	Left Front Fender	35, 39
Module-Integrated Power C6	BK	Left Front Fender	35, 39
Module-Integrated Power C7	GY	Left Front Fender	35, 39
Module-Integrated Power Eyelet	-	Right Side of IPM	37
Module-Integrated Power FCM	BK	In IPM	N/S
Module-Powertrain Control C1 (NGC)	BK	Right Rear Engine Compartment	4

CONNECTOR NAME/NUMBER	COLOR	LOCATION	FIG.
Module-Powertrain Control C1 (SRT-10)	BK	Right Rear Engine Compartment	41
Module-Powertrain Control C2 (NGC)	OR	Right Rear Engine Compartment	4
Module-Powertrain Control C2 (SRT-10)	WT	Right Rear Engine Compartment	41
Module-Powertrain Control C3 (NGC)	WT	Right Rear Engine Compartment	30
Module-Powertrain Control C3 (SRT-10)	GY	Right Rear Engine Compartment	30
Module-Powertrain Control C4	GN	Right Rear Engine Compartment	4
Module-Sentry Key Immobilizer	BK	On Steering Column	44
Module-Transfer Case Control C1	BK	Left Side of Instrument Panel	50, 53
Module-Transfer Case Control C2	GY	Left Side of Instrument Panel	50, 53
Module-Transfer Case Control C3	BK	Left Side of Instrument Panel	50, 53
Module-Wiper	BK	Left Side of Cowl	31, 34
Motor-Adjustable Pedals		Left of Instrument Panel	45
Motor-Blower	BK	Behind Right Side of Instrument Panel	N/S
Motor-Condenser Fan	BK	Near Condenser	32, 33
Motor-IAC	BK	On Throttle Body	7, 11
Motor-Seat Adjuster-Driver Horizontal	BK	At Driver Seat	N/S
Motor-Seat Adjuster-Driver Lumbar	DK GY	At Driver Seat	N/S
Motor-Seat Adjuster-Front Driver Vertical	RD	At Driver Seat	N/S
Motor-Seat Adjuster-Front Passenger Vertical	BK	At Passenger Seat	N/S
Motor-Seat Adjuster-Passenger Horizontal	BK	At Passenger Seat	N/S
Motor-Seat Adjuster-Passanger Lumbar	BK	At Passenger Seat	N/S
Motor-Seat Adjuster-Passenger Vertical	BK	At Passenger Seat	N/S
Motor-Seat Adjuster-Rear Driver Vertical	BK	At Driver Seat	N/S
Motor-Sunroof		Center Headliner	N/S
Motor-Window-Left Front	BK	In Passenger Door at Motor	58
Motor-Window-Left Rear	BK	In Door at Motor	59
Motor-Window-Right Front	BK	In Passenger Door at Motor	58
Motor-Window-Right Rear	BK	In Door at Motor	59
Power Outlet-Cigar Lighter	NAT	Rear of Cigar Lighter	47, 50, 51
Power Outlet-Instrument Panel	RD	Center of Instrument Panel	50
Power Outlet-Rear (SRT-10)	BK	Rear of Center Console	61
Pump-Fuel Injection (Diesel)	BK	Left Side Engine	15
Pump-Leak Detection (SRT-10)	BK	Rear of Transmission	26, 28

CONNECTOR NAME/NUMBER	COLOR	LOCATION	FIG.
Pump-Washer-Windshield	BK	At Washer Fluid Reservoir	30, 32, 35, 39
Radio C1 (Base)	GY	Rear of Radio	50, 51
Radio C1 (Premium)	BK	Rear of Radio	51
Radio C2 (Premium)	BK	Rear of Radio	51
Receiver-Satellite		Rear Cab Floor	62, 63
Receiver-Satellite Antenna No. 1		At Receiver on Rear Cab Floor	62, 63
Receiver-Satellite Antenna No. 2		At Receiver on Rear Cab Floor	62, 63
Relay-Intake Air Heater	-	Right Engine Compartment	2
Relay-Run-Accessory (SRT-10)		Left Kick Panel	33
Relay-Starter		Left Kick Panel	33
Resistor-Blower Motor	BK	Behind Right Side of Instrument Panel	N/S
Seat Belt-Tensioner-Driver	YL	Left B-Pillar	60, 65
Seat Belt-Tensioner-Passenger	YL	Right B-Pillar	64, 66
Seat Belt-Tension Reducer (Standard Cab)	YL	Left B-Pillar	60
Sensor-Accelerator Pedal Position	BK	Under Battery Tray	36
Sensor-Ambient Air Temperature	BK	Left Rear of Hood	32, 40
Sensor-Battery Temperature	BK	Below Battery Tray	31, 34, 35, 39
Sensor-Brake Fluid Level	BK	Near Master Cylinder	31, 34, 40
Sensor-Camshaft Position	GY	Right Front Side of Engine	3, 10
Sensor-Crankshaft Position (Except SRT-10)	BK	Right Rear of Engine Block	3, 10
Sensor-Crankshaft Position (SRT-10)	BK	Front Underside of Engine	N/S
Sensor-Engine Coolant Temperature	BK	Front of Engine	7, 11
Sensor-Engine Oil Pressure (SRT-10)		Lower Right Front Engine	14
Sensor-Engine Oil Temperature (SRT-10)	BK	Lower Right Front Engine	14
Sensor-Evaporator Temperature	BK	Right Side of HVAC	N/S
Sensor-Fuel Pressure	BK	Left Rear of Transmission	N/S
Sensor-Input Speed	BK	At Transmission	21, 22
Sensor-Intake Air Temperature	BK	On Intake Manifold	5, 13
Sensor-Knock	BK	Left Rear of Engine	5, 8, 10
Sensor-Knock No. 1 (5.7L)	BK	Left Rear of Engine	N/S
Sensor-Knock No. 2 (5.7L)	BK	Right Rear of Engine	N/S
Sensor-Knock No. 1 (SRT-10)		Right Side Engine	11
Sensor-Knock No. 2 (SRT-10)		Left Rear Engine	11
Sensor-Line Pressure	BK	Right Rear of Transmission	21, 24
Sensor-MAP	GY	Left Front of Intake Manifold	7, 11
Sensor-Output Speed	DB	Left Side of Transmission	17, 20, 21, 22
Sensor-Oxygen-Left Front	BK	Left Front of Side of Transmission	21, 22, 23, 25, 26, 27

CONNECTOR NAME/NUMBER	COLOR	LOCATION	FIG.
Sensor-Oxygen-Left Rear	NAT	Left Rear of Side of Transmission	21, 22, 23, 25, 26, 27
Sensor-Oxygen-Right Front	BK	Right Front Side of Transmission	21, 23, 24, 27
Sensor-Oxygen-Right Rear	BK	Right Rear Side of Transmission	21, 23, 24, 26, 27
Sensor-Side Impact-Left 1	YL	Left B-Pillar	60, 65
Sensor-Side Impact-Right 1	YL	Right B-Pillar	64, 66
Sensor-Temperature/Pressure-Intake	BK	Right Side Engine	15
Sensor-Temperature/Pressure MAP (Diesel)	BK	Left rear Engine	N/S
Sensor-Throttle Position (Except SRT-10)	NAT	Throttle Body	7
Sensor-Throttle Position (SRT-10)	NAT	Top of Engine	13
Sensor-Transfer Case Position (Manual Transfer Case)		Near T/O for Backup Lamp Switch	22, 23, 25, 29
Sensor-Transmission Range	BK	Left side of Transmission	17, 20
Sensor-Washer Fluid Level	BK	At Reservoir	30, 32, 35, 39
Sensor-Water In Fuel (Diesel)	BK	Left Side Engine	15
Sensor-Wheel Speed-ABS-Left Front	BK	Left Rear Lower Side of Engine Compartment	31, 40
Sensor-Wheel Speed-ABS-Rear	BK	Right Rear of Body	70
Sensor-Wheel Speed-ABS-Right Front	GY	Right Rear Lower Side of Engine Compartment	30
Servo-Speed Control	BK	Left Front Side of Engine Compartment	32, 34
Solenoid-Brake Transmission Shift Interlock	BK	Near Steering Column	45, 50, 53
Solenoid-Evap/Purge	BK	Left Fender Side Shield	32, 34
Solenoid-Locker-Front		Left Rear Engine	6
Solenoid-Locker-Rear		At Rear Differential	70
Solenoid-Radiator Fan (SRT-10)	BK	At Fan	N/S
Solenoid-Reverse Lock-Out (SRT-10)	WT	Left Rear of Transmission	26
Solenoid-Wastegate		Right Front Engine	15
Speaker-Instrument Panel-Center	WT	Center of Instrument Panel	50, 51
Speaker-Instrument Panel-Left	BK	Left Side of Instrument Panel	50, 53
Speaker-Instrument Panel-Right	BK	Right Side of Instrument Panel	50, 54
Speaker-Left Front Door	WT	In Left Front Door	57
Speaker-Left Rear (Standard Cab)	WT	In Lower Left B-Pillar	60
Speaker-Left Rear (Quad Cab)	WT	In Left Rear Door	59
Speaker-Right Front Door	WT	In Right Front Door	58
Speaker-Right Rear (Standard Cab)	BK	In Lower Right B-Pillar	64
Speaker-Right Rear (Quad Cab)	BK	In Right Rear Door	59
Speaker-Subwoofer (SRT-10)		Rear Center Cab	61, 64
Starter	-	Left Rear of Engine	6, 12

CONNECTOR NAME/NUMBER	COLOR	LOCATION	FIG.
Starter Solenoid	NAT	Left Engine	32
Switch-Adjustable Pedals	BL	Left of Instrument Panel	50, 53
Switch-Axle Lock		At Transfer Case	32
Switch-Back Up Lamp (Except SRT-10)	BK	Left Rear of Transmission	18, 19, 23, 25
Switch-Back Up Lamp (SRT-10)	BR	Right Side of Transmission	26
Switch-Clutch Interlock	BK	At Clutch Pedal	31, 33
Switch-Disconnecting Stabilizer Bar		At Transfer Case	32
Switch-Door Key Position (Premium)	BK	In Left Front Door	57
Switch-Door Lock-Passenger	BL	In Right Front Door	58
Switch-Headlamp	BK	Left Side of Instrument Panel	47, 50, 53
Switch-Heated Seat-Driver	RD	Center of Instrument Panel	48, 50, 51
Switch-Heated Seat-Passenger	BL	Center of Instrument Panel	48, 50, 51
Switch-Horn	WT	In Steering Wheel	N/S
Switch-Ignition	BK	Steering Column	45
Switch-Multifunction	BK	On Steering Column	45
Switch-Oil Pressure (Except SRT)	BK	Lower Left Side of Engine	7, 10
Switch-Parking Brake	BK	At Park Brake	31, 33
Switch-Passenger Airbag On/Off	BK	Right Side of Instrument Panel	48, 50, 54
Switch-Power Steering Pressure	BK	Near Power Steering Pump	8
Switch-Power Window-Left Rear	BL	In Door	59
Switch-Power Window-Passenger	BL	Passenger Door	58
Switch-Power Window-Passenger	BL	In Right Front Door	58
Switch-Power Window-Right Rear	BL	In Door	59
Switch-Push-Button Starter	NAT	Center Instrument Panel	51
Switch-PTO		Near G107	N/S
Switch-Remote Radio-Left	BK	At Steering Wheel	46
SwitchRemote Radio-Right	BK	At Steering Wheel	46
Switch-Seat-Driver	BK	At Driver Seat	N/S
Switch-Seat-Passenger	BK	At Passenger Seat	N/S
Switch-Seat Belt-Driver	DK GY	Left B-Pillar	N/S
Switch-Speed Control-Left (Except ETC)	GN	At Steering Wheel	N/S
Switch-Speed Control-Right (ETC)	NAT	At Steering Wheel	N/S
Switch-Speed Control-Right (Except ETC)	GN	At Steering Wheel	N/S
Switch-Speed Control-Right (ETC)	NAT	At Steering Wheel	N/S
Switch-Stop Lamp	BK	Top of Brake Pedal Arm	44, 50, 53
Switch-Tow/Haul Overdrive	WT	Center of Instrument Panel	50
Switch-Transfer Case Selector	BK	Center of Instrument Panel	17, 18, 48, 50, 51
Switch-Window/Door Lock-Driver C1	BL	In Left Front Door	57

CONNECTOR NAME/NUMBER	COLOR	LOCATION	FIG.
Switch-Window/Door Lock-Driver C2	BL	In Left Front Door	57
Throttle Body		Top of Engine	9
Transducer-A/C Pressure (Diesel/SRT)	BK	Left Side of A/C Compressor	15
Transducer-A/C Pressure (NGC)	GY	Left Side of A/C Compressor	7, 8
Wiring-Trailer Tow 4-Way	BK	At Trailer Hitch	70
Wiring-Trailer Tow 7-Way	BK	At Trailer Hitch	70, 72

GROUNDS

GROUND NUMBER	LOCATION	FIG.
G100	Battery Ground - Left Front Engine	37
G101	Battery Ground - Left Front Engine	16, 38
G102	Battery Ground - Left Front Chassis	38
G103	Left Front Engine Compartment	31
G104	Left Front Engine Compartment	N/S
G105	Right Side Engine Compartment	4, 15, 30
G106	Left Rear Engine Compartment	31, 40
G108	Diesel Auxiliary Battery Ground	N/S
G109	Diesel Auxiliary Battery Ground	N/S
G110 (SRT-10)	Right Engine Compartment Frame Rail	41
G114 (SRT-10)	Left Side Engine Compartment	32
G114 (Diesel)	Right Side Engine Compartment	15
G115 (SRT-10)	Rear Engine	N/S
G120	Left Side Engine	15
G201	Right Side of Instrument Panel	53
G202	Center of Instrument Panel	50, 51
G203	Center of Instrument Panel	50, 51
G204	Right Side of Instrument Panel	50
G301	Left Front Body	55, 60, 65
G302	Left Front Body	55, 60, 65
G303	Below Right Side of Rear Window	67

SPLICES

SPLICE NUMBER	LOCATION	FIG.
S101	Left Side Engine Compartment	30
S102	Left Side Engine Compartment	32
S103	Left Rear of Engine Compartment	31, 34
S104	Front Facia	50
S105	Front Facia	N/S
S106	Left Rear of Engine Compartment	32
S107	Left Front Fender	32
S108	Rear Engine Compartment	32, 34
S109	Left Front Fender	32
S110	Left Rear Engine Compartment	32
S111	Center Rear of Engine Compartment	N/S
S112	Right Rear of Engine	3, 4
S113	Rear Engine Compartment	32
S114	Left Rear of Engine Compartment	32
S115	Left Rear of Engine Compartment	N/S
S116 (SRT-10)	Left Rear Engine Compartment	32
S117	Top Right of Engine	11
S120	Left Front Fender	32
S121	Left Rear Engine Compartment	32
S122	Left Front Fender	32
S123 (Gas)	Left Rear Engine Compartment	32
S123 (Diesel)	Left Side Engine Compartment	32
S124	Center Rear of Engine Compartment	N/S
S125	Right Rear of Engine Compartment	4
S126	Right Rear Engine Compartment	41
S127	Right Front Engine Compartment	30
S129	Rear Engine	27
S130	Top Front of Transmission	3, 10
S131 (SRT-10)	Left Top Engine	11
S132 (Except SRT-10)	Left Rear of Engine Compartment	3, 10
S132 (SRT-10)	Right Top Engine	11
S133	Left Rear of Engine	4, 10
S134 (4.7L)	Left Rear of Engine Compartment	21
S134 (5.7L)	Left Rear of Engine Compartment	10
S134 (SRT-10)	Right Top Engine	11
S135 (Except SRT-10)	Headlamp and Dash, Left Side	N/S
S135 (SRT-10)	Left Top Engine	11
S136	Left Front Fender	32
S137	Left Rear of Engine Compartment	30

SPLICE NUMBER	LOCATION	FIG.
S138 (Except SRT-10)	Left Rear of Engine	N/S
S138 (SRT-10)	Right Rear Engine Compartment	41
S139	Right Front of Transmission	N/S
S140	Right Rear Engine Compartment	32
S141 (SRT-10)	Right Rear Engine Compartment	41
S142	Left Side of Engine	3
S143	Left Side of Engine Compartment	N/S
S144	Top Front of Transmission	N/S
S145	Left Front Fender	32
S146	Left Front Transmission	22
S147	Left Side Engine Compartment	32
S148	Top Front of Transmission	3
S149	Left Rear of Engine	7
S150	Top Center of Engine	3, 4, 10
S151	Rear Engine Compartment	32
S152	Left Rear Engine Compartment	32
S153	Rear Engine Compartment	4
S154	Left Top Engine	N/S
S155	Left Rear Engine Compartment near T/O for Fuel Control Actuator	10
S156	Engine Harness in T/O for C115	N/S
S157	Near T/O for Camshaft Position Sensor	N/S
S158	Near T/O for C114	15
S159	Near T/O for Engine Control Module	N/S
S160	Top Left Engine	15
S161	Transfer Case Jumper Near T/O for Transfer Case Control Module	N/S
S162	Left Side Engine	N/S
S163	Right Side Engine	N/S
S164	Near Engine Control Module C2	15
S165	Near Engine Control Module C2	15
S166	In Battery Positive Harness	N/S
S168	Right Rear of Engine	3
S169	Right Rear of Engine	3, 8
S170	Left Engine	15
S171	Top Left Engine	15
S172	In T/O for Fuel Control Actuator	N/S
S173	Center Instrument Panel	50
S174	Left Side Engine Compartment	32
S175	Near T/O for Engine Control Module	N/S
S176	Left Side Engine Near T/O for Fuel Control Actuator	N/S
S177	On Engine Harness Near T/O for C115	N/S
S179	On Smart Bar Jumper	32
S180	On Smart Bar Jumper	32

SPLICE NUMBER	LOCATION	FIG.
S181	On Smart Bar Jumper	32
S182	Right Rear Engine Compartment	41
S183	Right Top Engine	11
S185	Left Front Engine	15
S186	Left Front Engine	15
S187	Rear of Engine	8
S188	Left Side Engine	15
S189	Left Front Engine	15
S191	Near Integrated Power Module	32
S192	Left Rear Engine Compartment	32
S193	Left Side Engine Compartment	32
S195	Right Engine Compartment	32
S204	Left Side of Instrument Panel	50
S205	Left Side of Instrument Panel	50
S206	At Steering Column	N/S
S207	At Steering Column	N/S
S208	Left Instrument Panel	50
S209	Center of Instrument Panel	50
S210 (Except SRT-10)	Center of Instrument Panel	50, 53
S212	Left Side of Instrument Panel	45, 53
S214	Left Side of Instrument Panel	45, 53
S216 (Except SRT-10)	Center of Instrument Panel	50, 51
S217	Left Side of Instrument Panel	N/S
S218	Left Side of Instrument Panel	N/S
S219	Center of Instrument Panel	N/S
S220	Center of Instrument Panel	N/S
S221	Center of Instrument Panel	50, 54
S222	Center of Instrument Panel	50
S224	Right Side of HVAC	N/S
S226	Right Side of HVAC	N/S
S228	At Steering Column	N/S
S230	Right Instrument Panel	50
S231	Left Instrument Panel	53
S240	Left Instrument Panel	50
S241	Center Instrument Panel	50, 51
S245	Left Instrument Panel	50
S246	Center Instrument Panel	N/S
S300	Left Kick Panel	55, 60, 65
S301	Center of Headliner	56
S303	Front Center Roof	67
S304	Center of Headliner	N/S

SPLICE NUMBER	LOCATION	FIG.
S305	Front Center Roof	67
S306	Left Side of Frame	N/S
S307	Center of Headliner	N/S
S308	Left Rear Chassis	69, 70
S309	Center Rear of Chassis	70
S310	Front Headliner	56
S311	Left Front of Body	60, 65
S312	Right Door	58
S313	Left Front Door	57
S314	Left Rear Frame Rail	N/S
S315	Left Front Body	55, 60, 65
S316	At Driver Seat	N/S
S318	At Passenger Seat	N/S
S319	Left Front Door	57
S320	Center of Body	60
S321	Left Front Body	60
S322	Left Front Body	64, 66
S323	Left Front Body	64, 66
S324	Left Rear Chassis	70
S325	Left Rear Chassis	70
S326	Left Rear Chassis	70
S327	Left Rear Chassis	70
S328	At Driver Seat	N/S
S329	At Driver Seat	N/S
S330	Center Rear of Chassis	70
S331	Center Rear of Chassis	70
S332	Left Front Door	57
S333	Left Front Body	55, 65
S334	Left Front Body	55, 60, 65
S335	Between Front Seats on Heated Seat Jumper	N/S
S336	Passenger Seat	N/S
S337	Passenger Seat	N/S
S338	Under Passenger Seat	66
S340	Left Rear Fender	71
S341	Right Rear Fender	71
S342	Left Rear Fender	71
S343	Right Rear Fender	71
S344	Center Headliner	56
S345 (SRT-10)	Left Kick Panel	55, 60
S351	Driver Seat	N/S

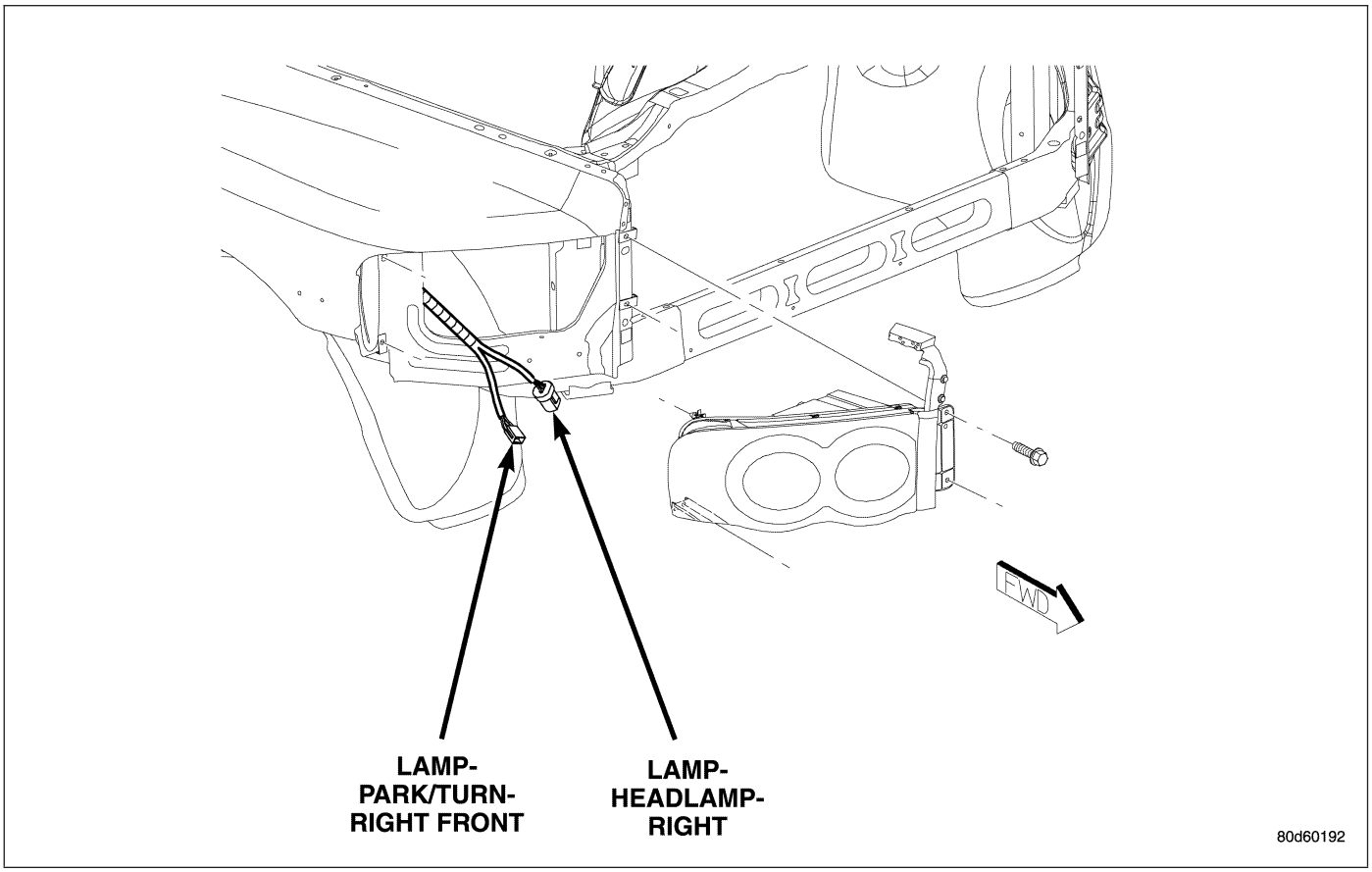

Fig. 1 RIGHT SIDE FRONT LIGHTING

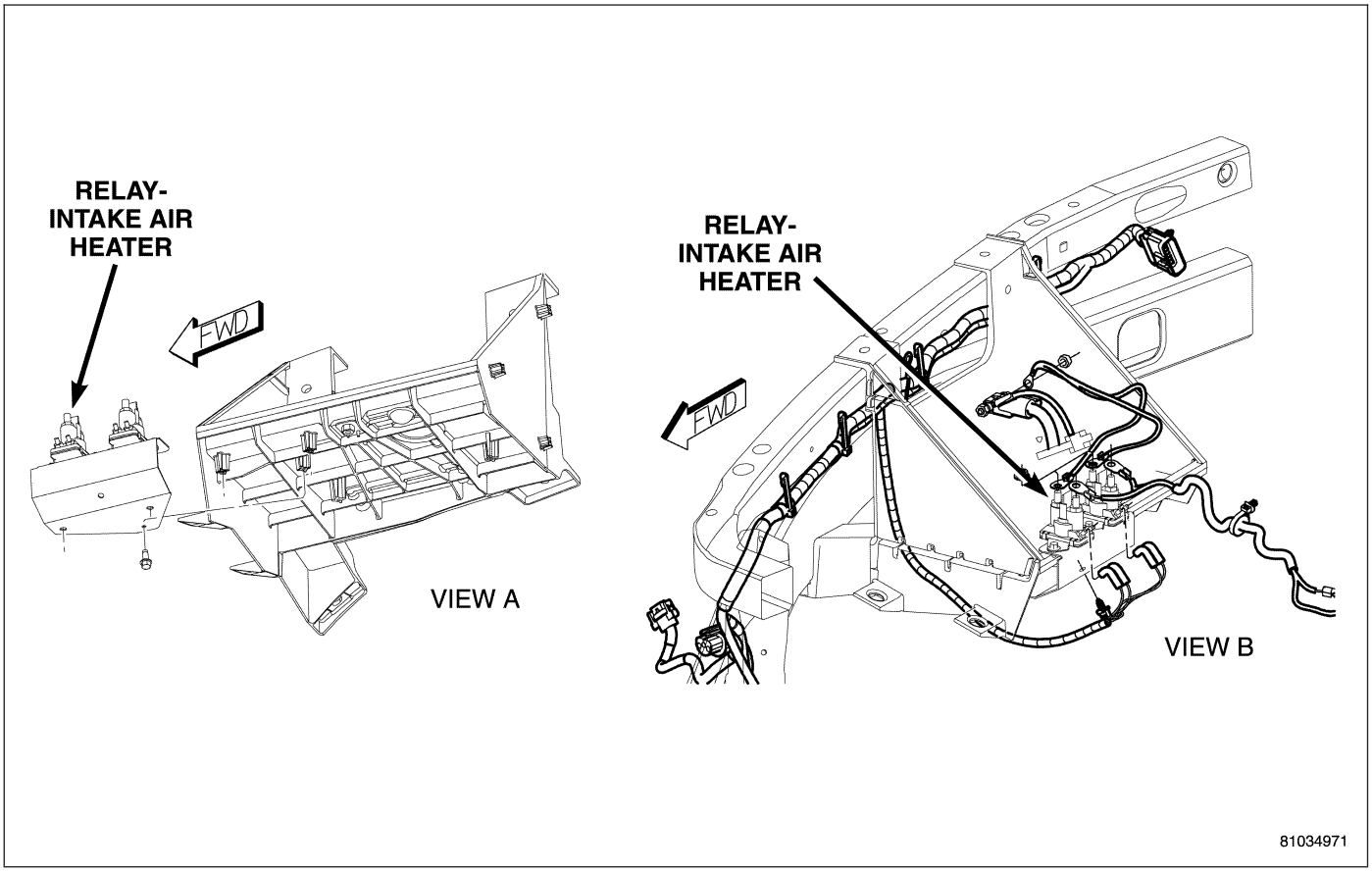

Fig. 2 RIGHT BATTERY TRAY

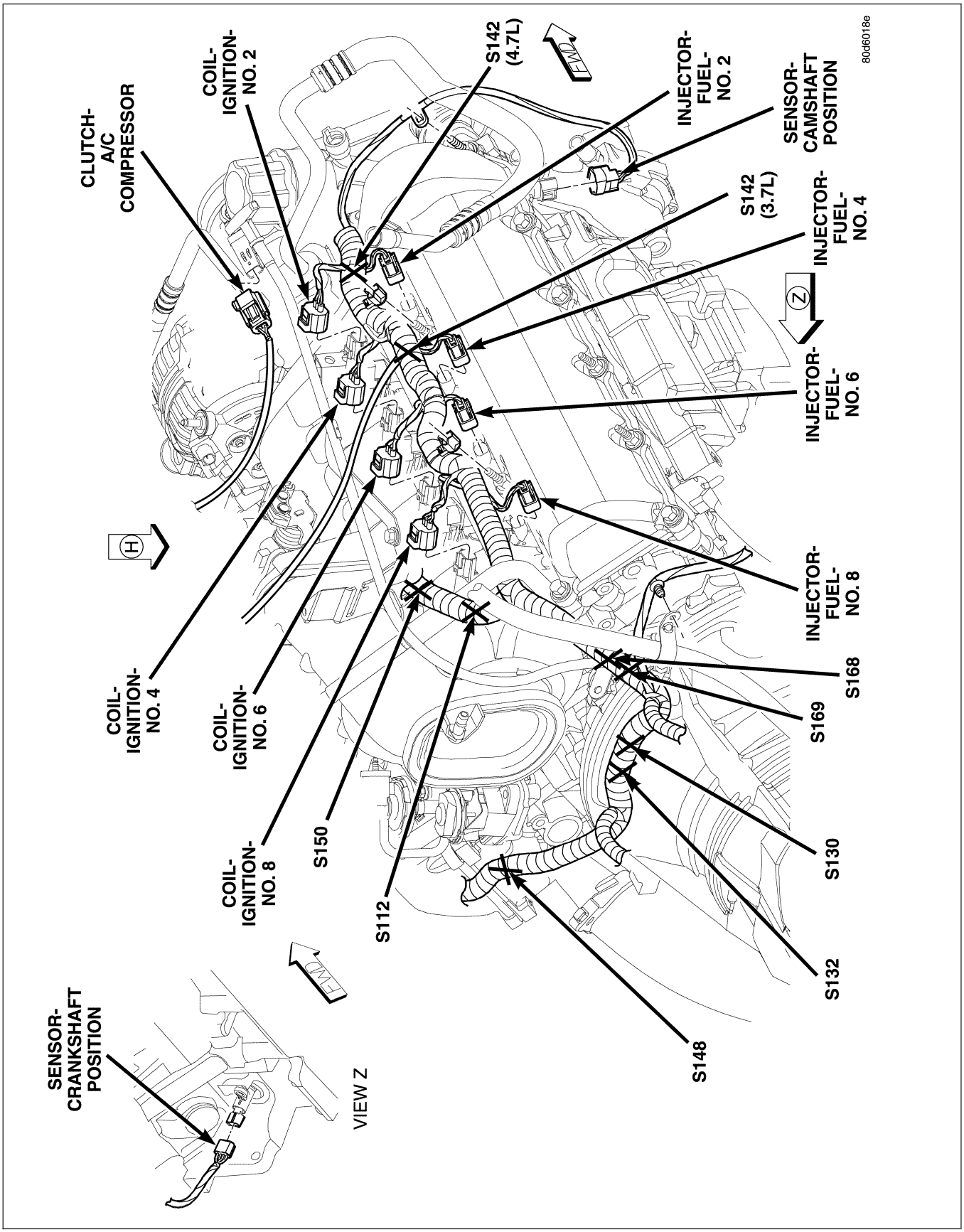

Fig. 3 RIGHT SIDE ENGINE, 4.7L

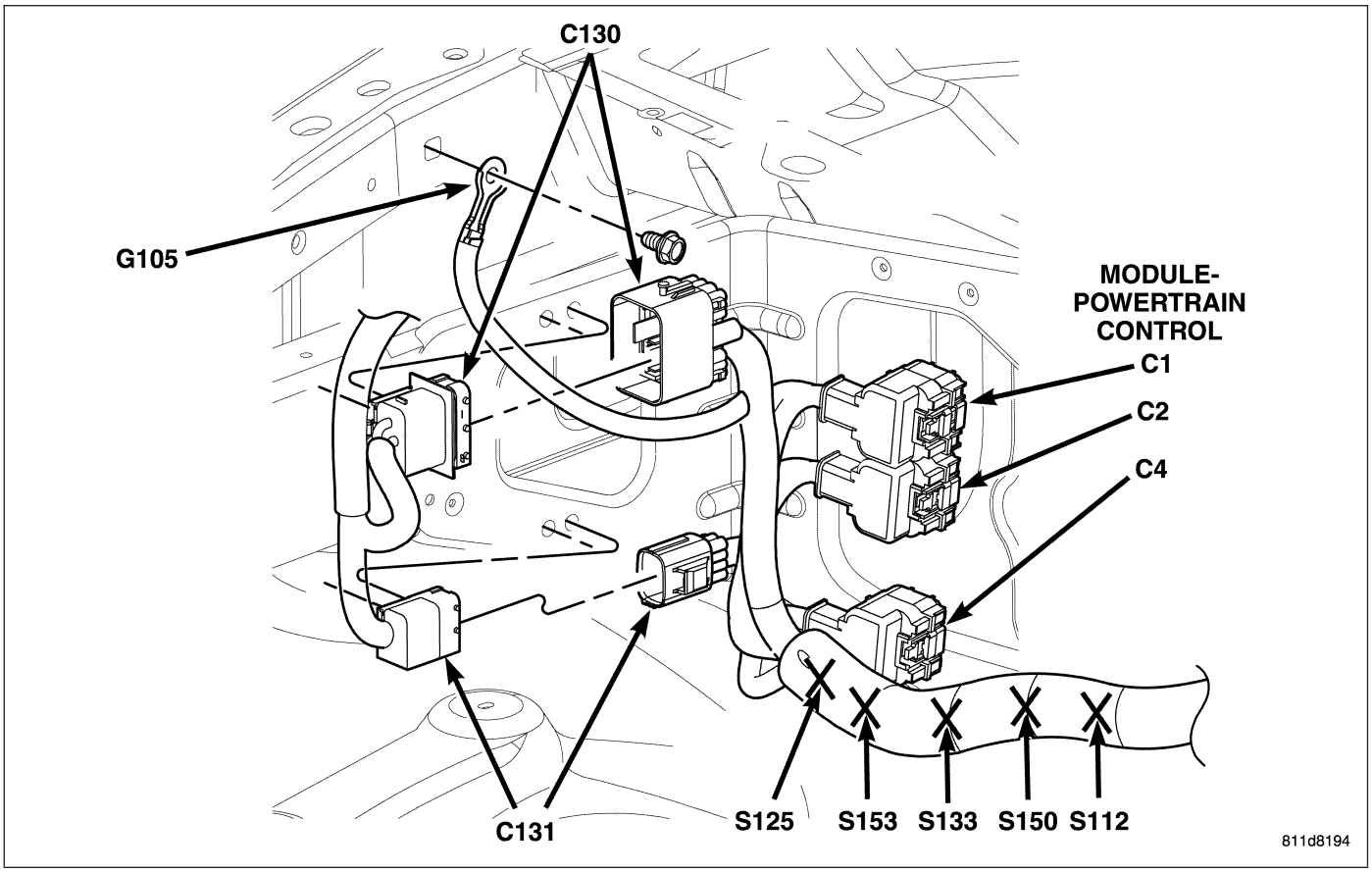

Fig. 4 RIGHT REAR ENGINE COMPARTMENT

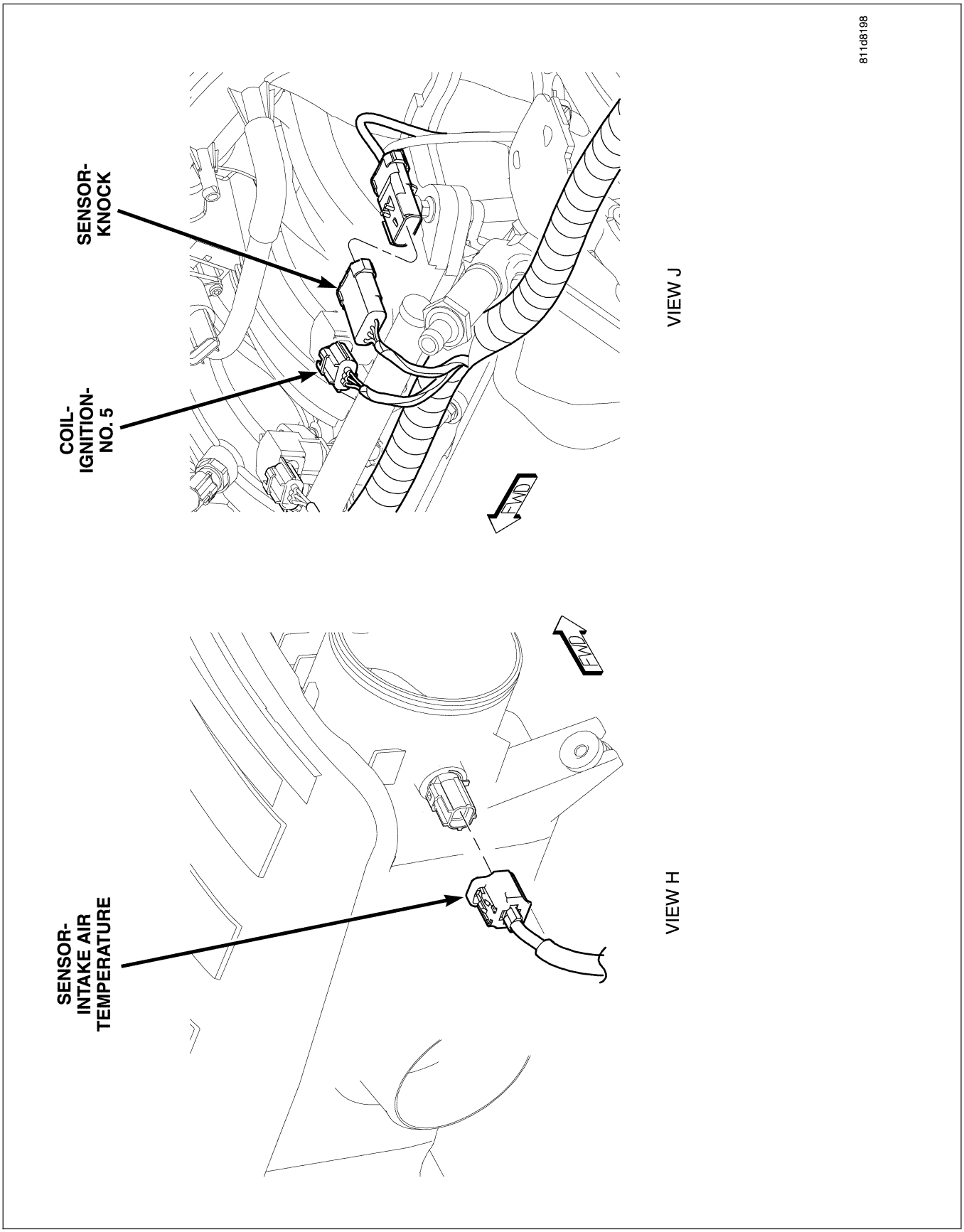

Fig. 5 RIGHT TOP ENGINE (3.7L/4.7L)

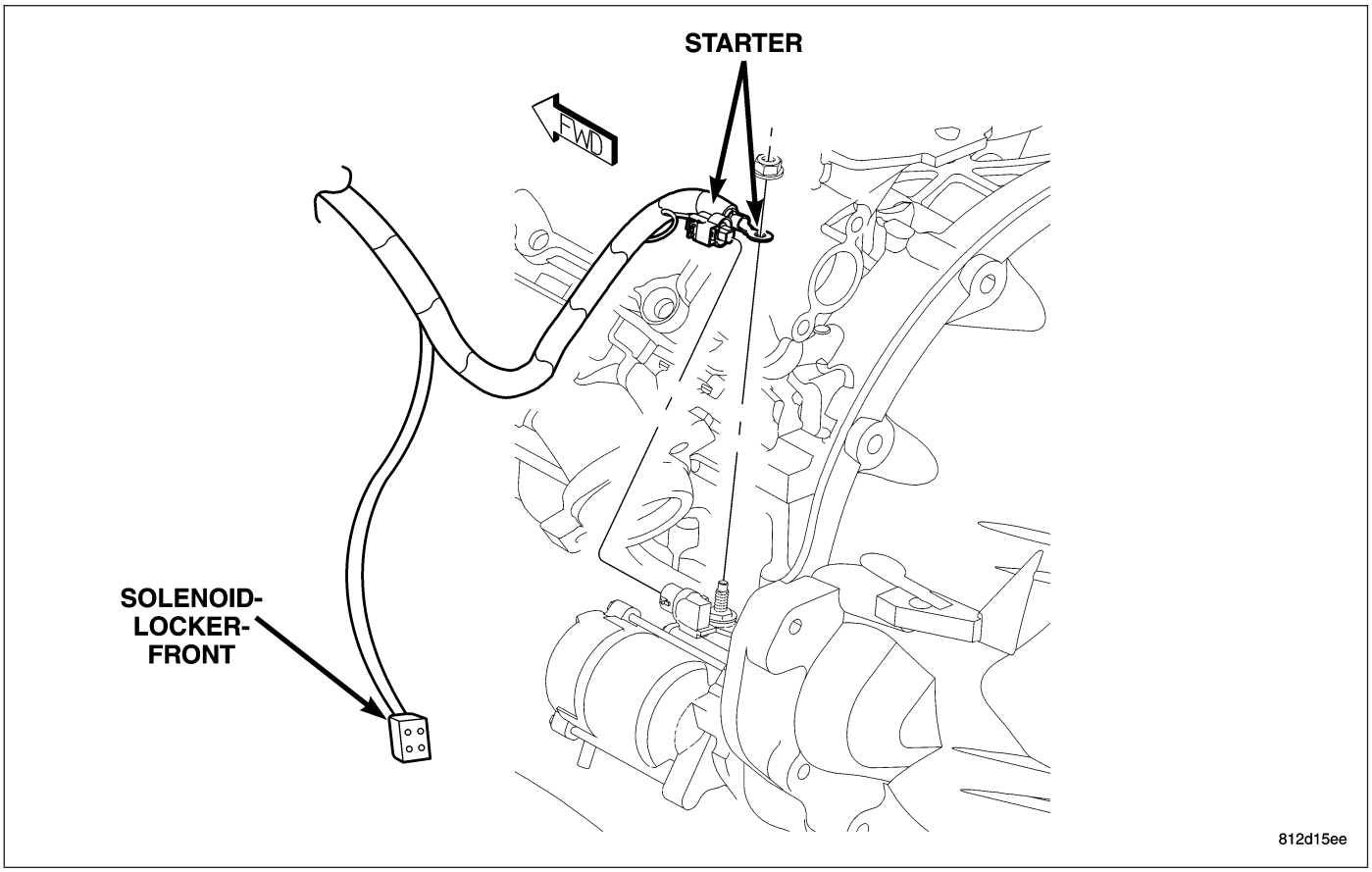

Fig. 6 STARTER

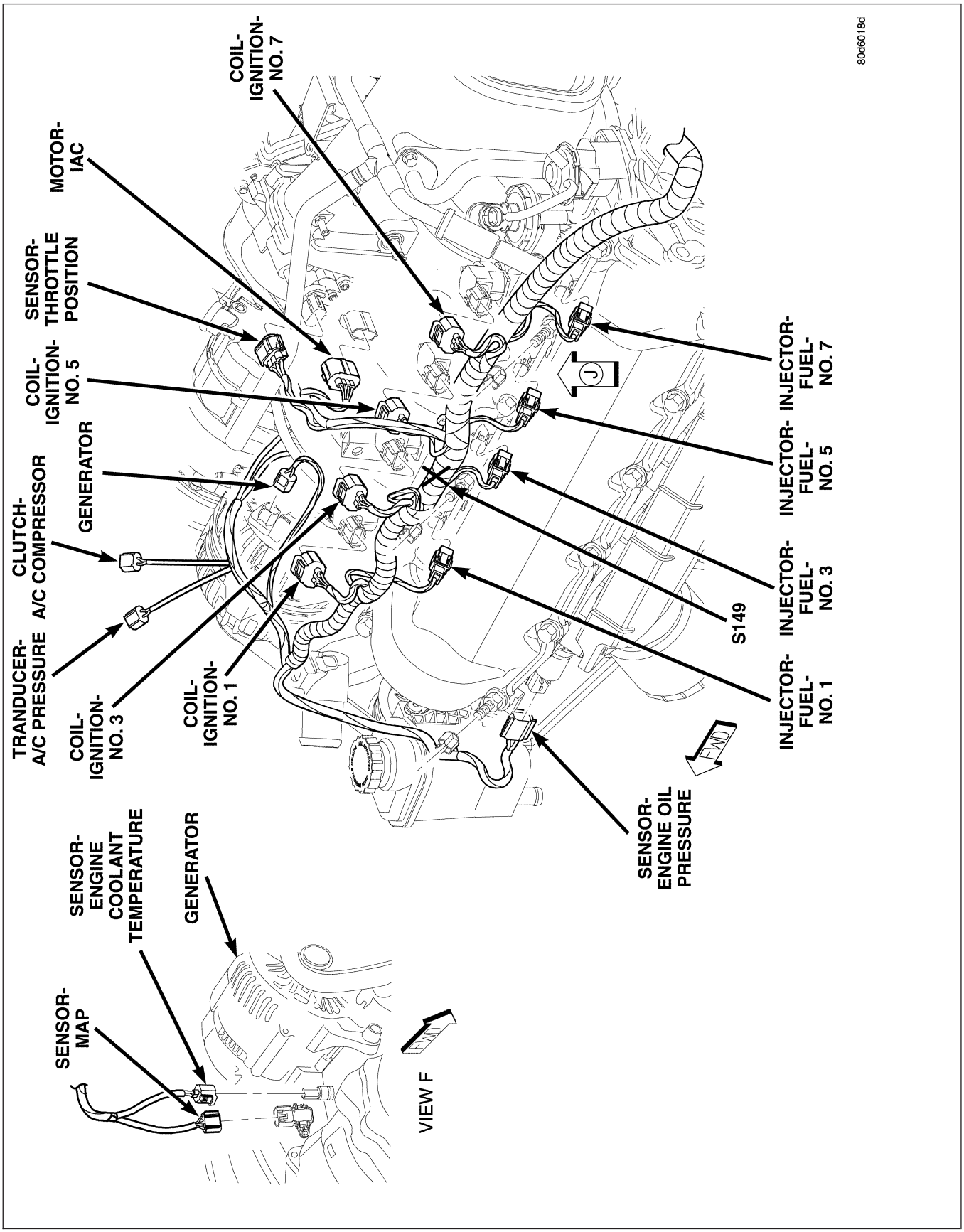

Fig. 7 LEFT SIDE ENGINE (3.7L/4.7L)

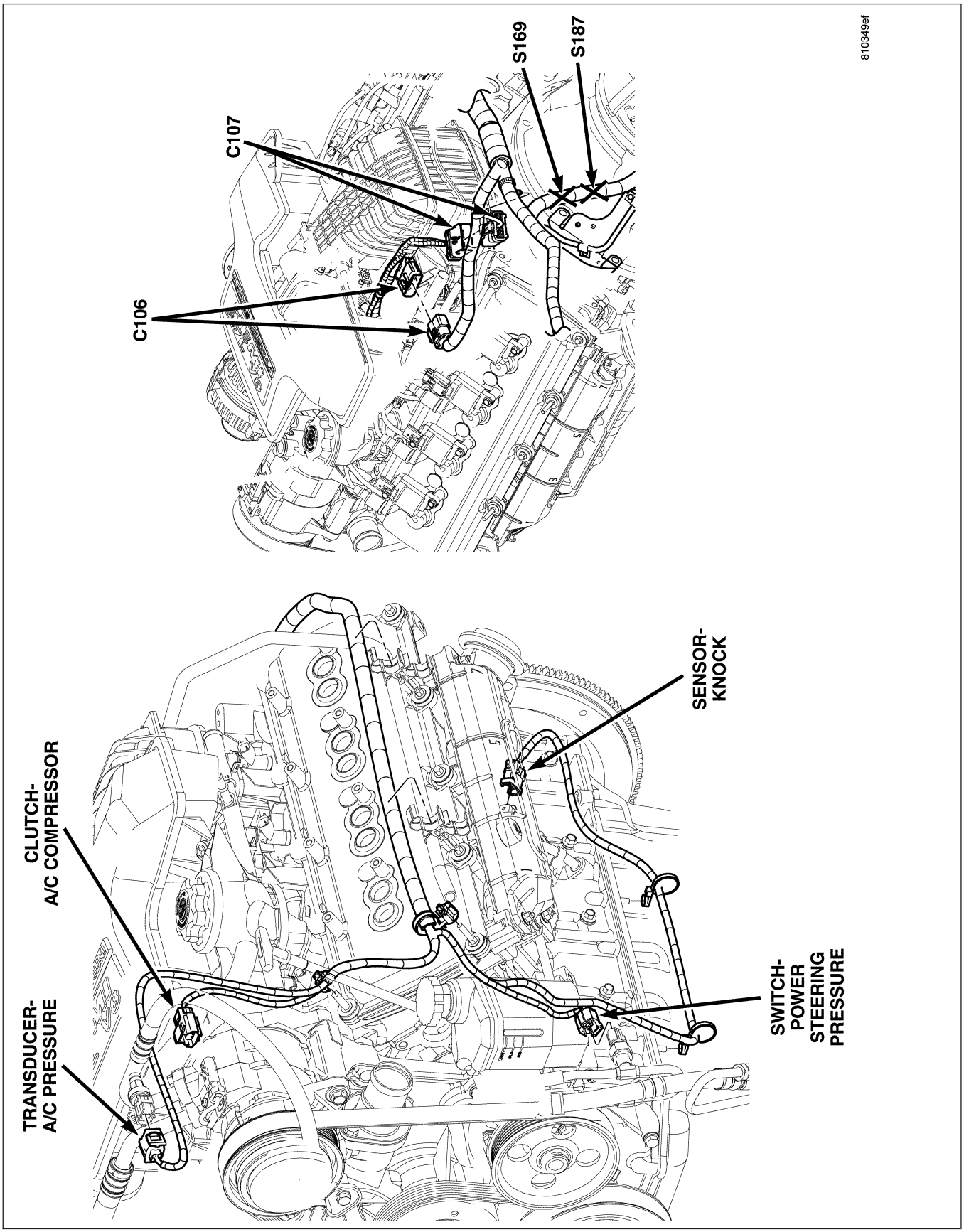

Fig. 8 LEFT SIDE ENGINE (5.7L)

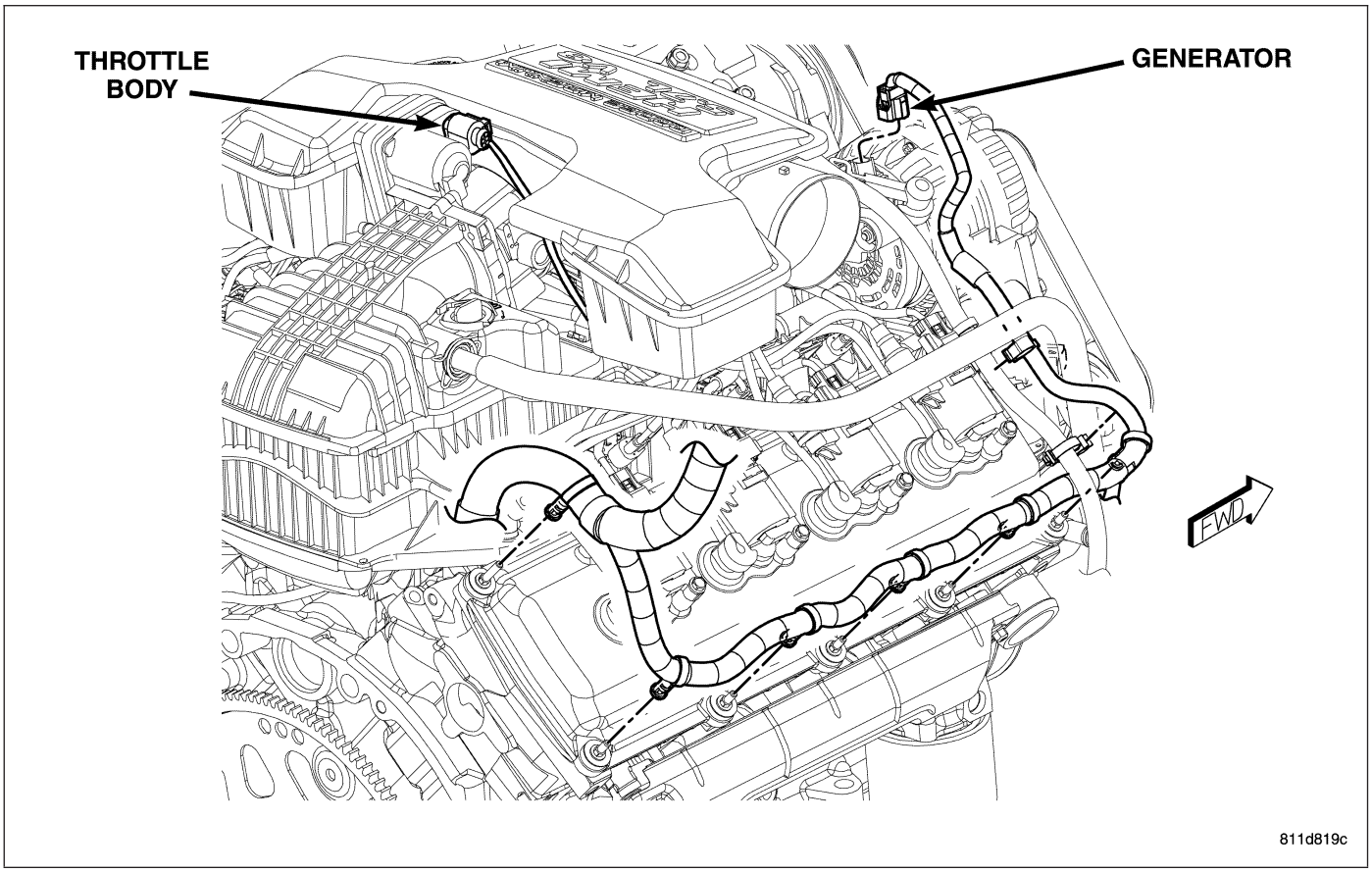

Fig. 9 RIGHT REAR ENGINE (5.7L)

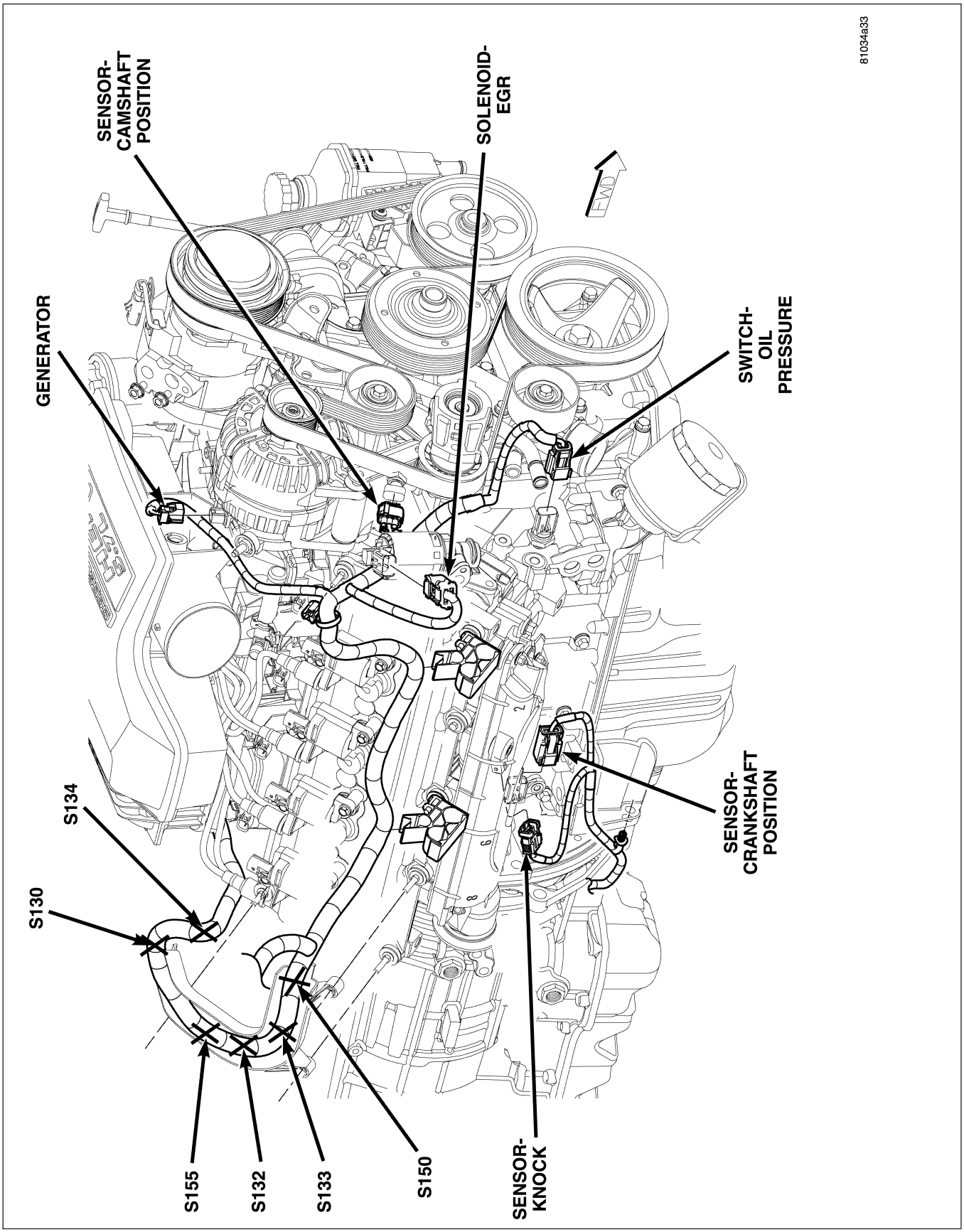

Fig. 10 RIGHT SIDE ENGINE (5.7L)

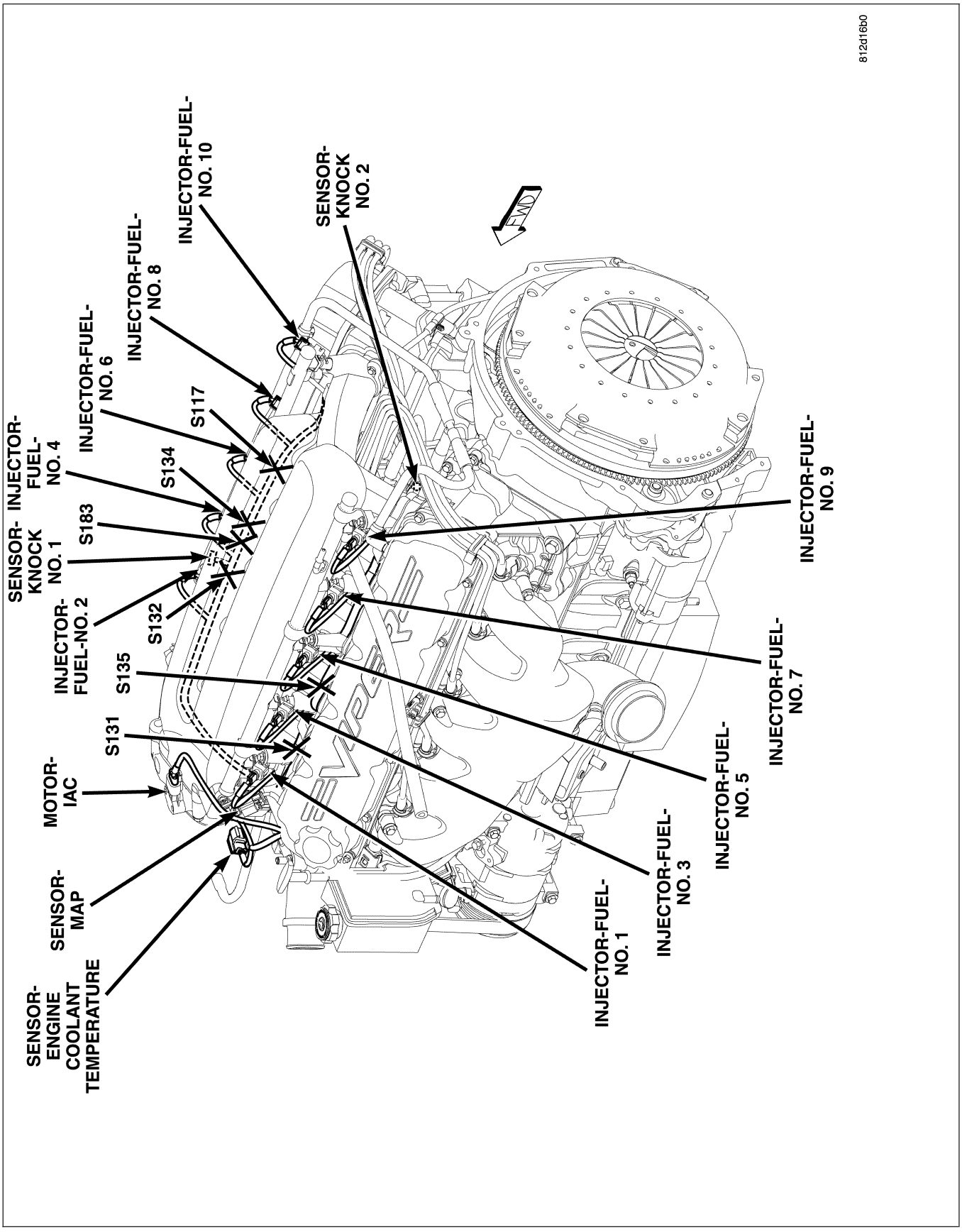

Fig. 11 LEFT REAR ENGINE (SRT)

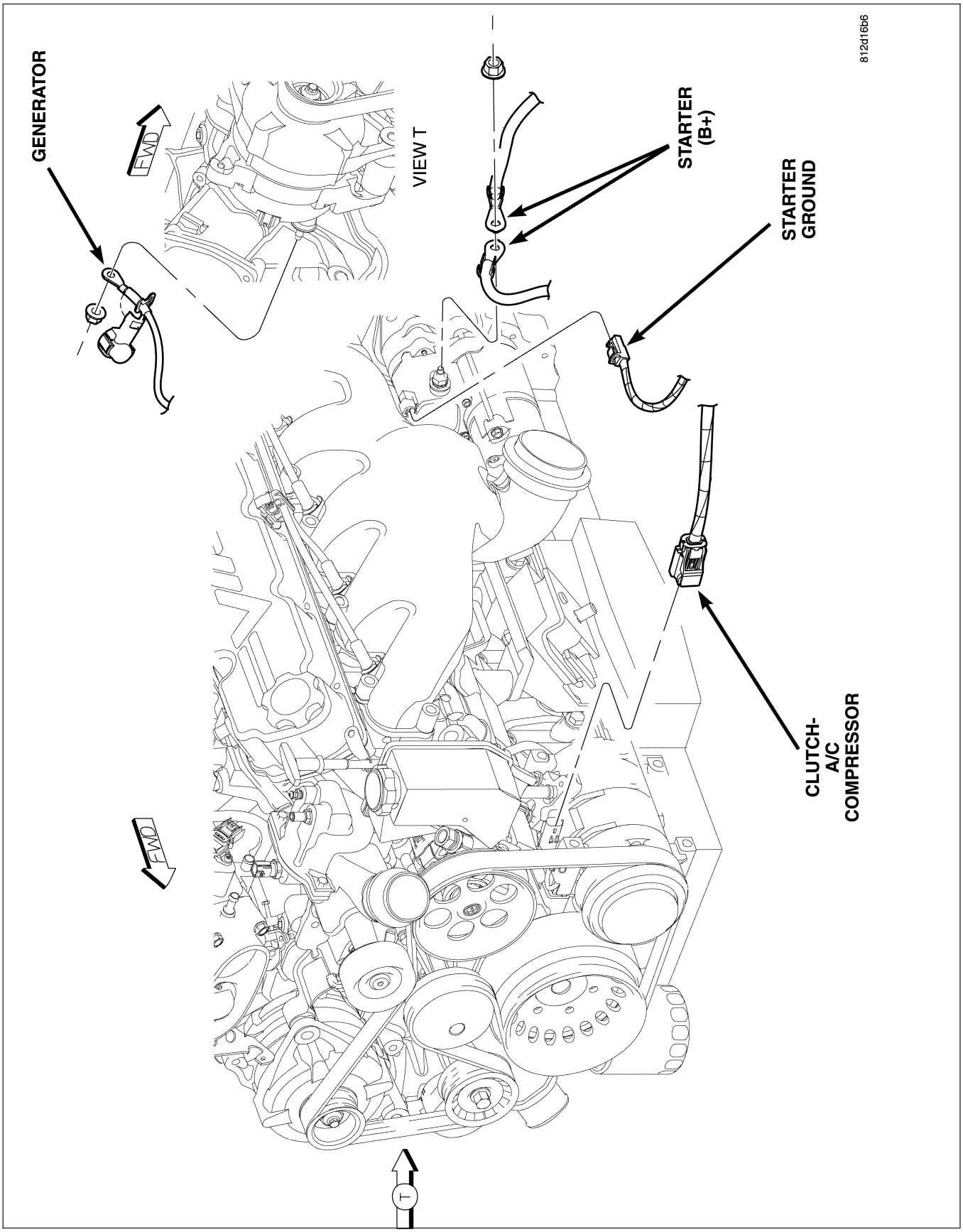

Fig. 12 FRONT ENGINE (SRT)

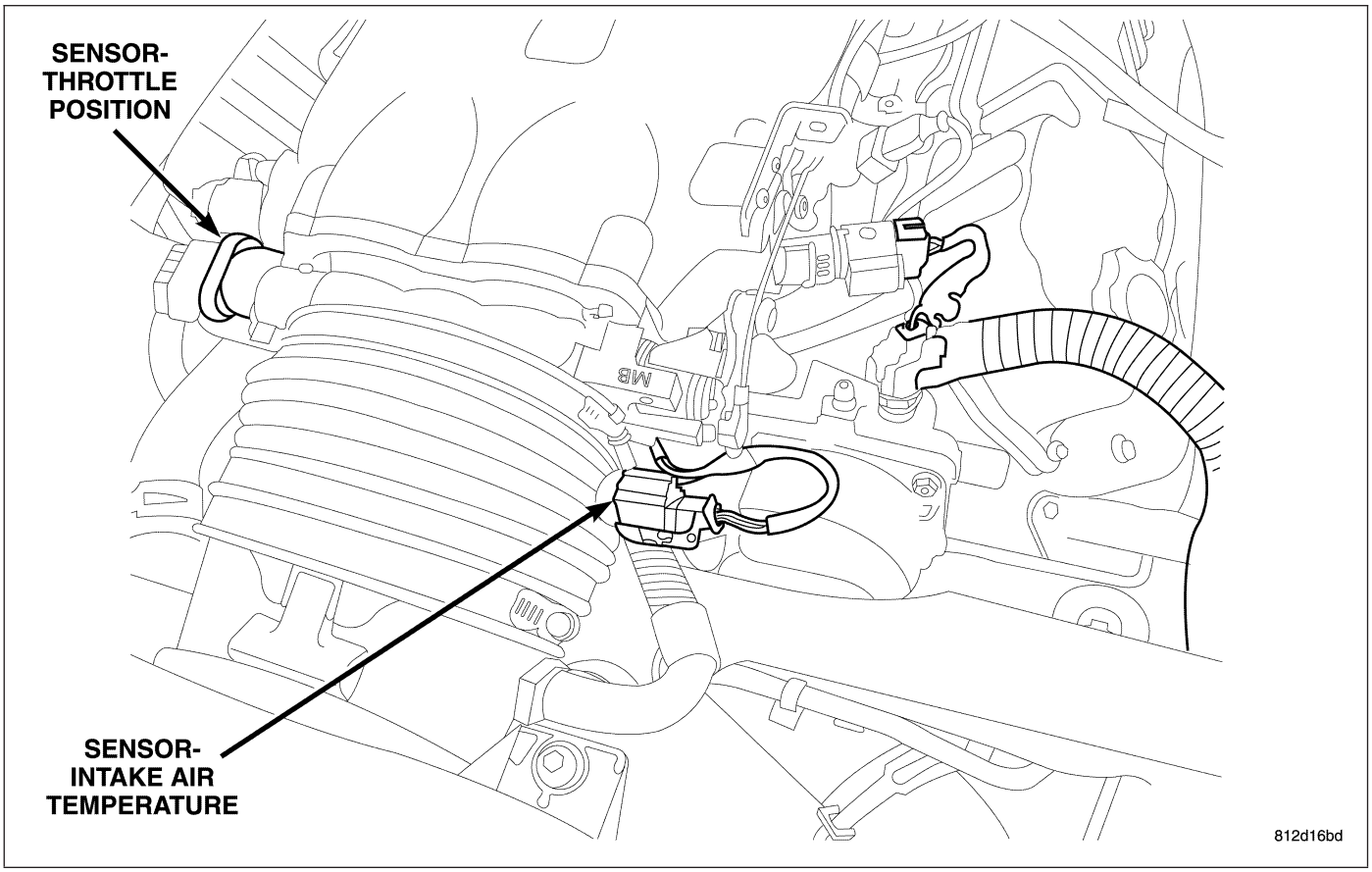

Fig. 13 LEFT FRONT ENGINE (SRT)

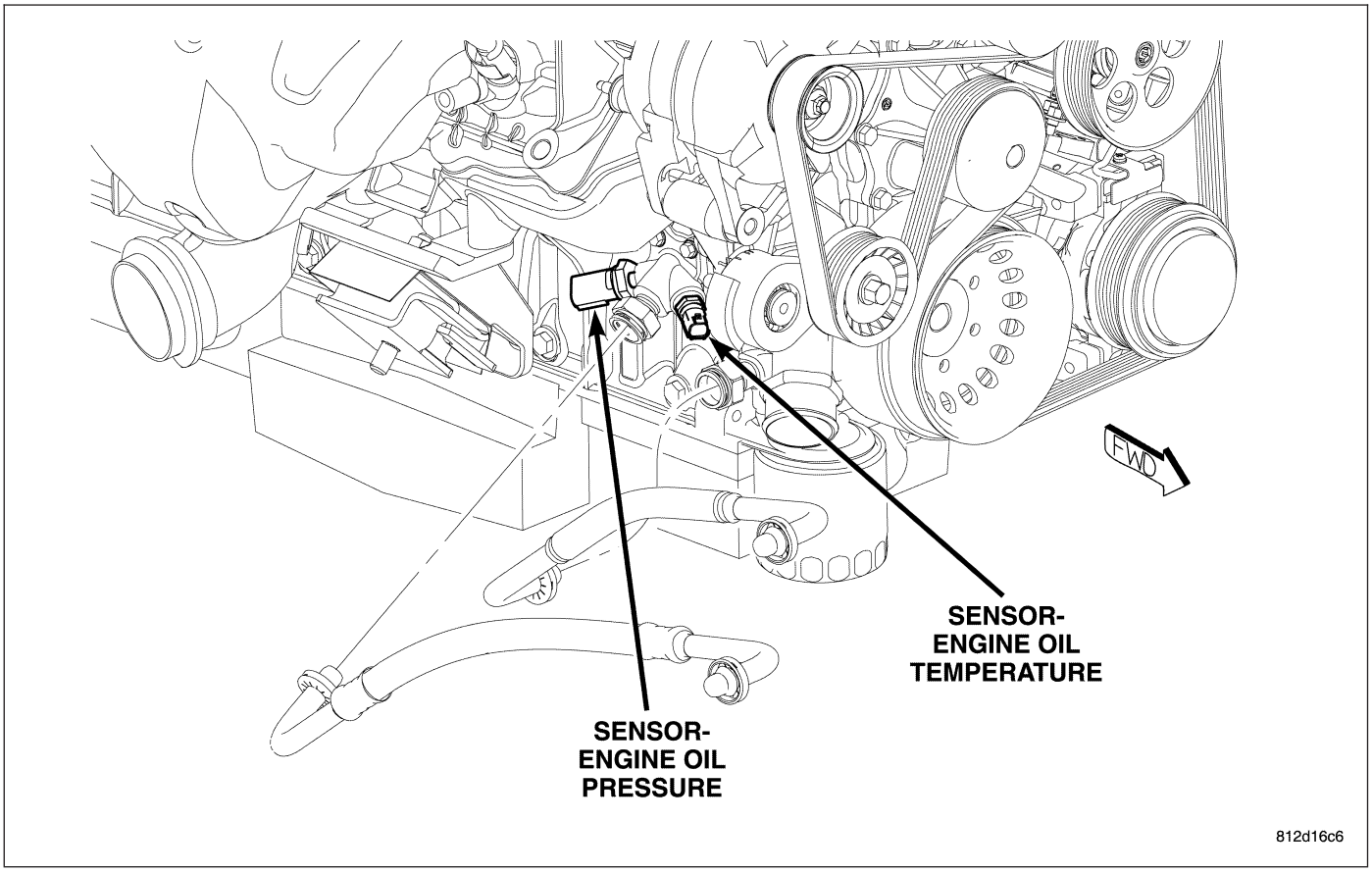

Fig. 14 RIGHT FRONT ENGINE (SRT)

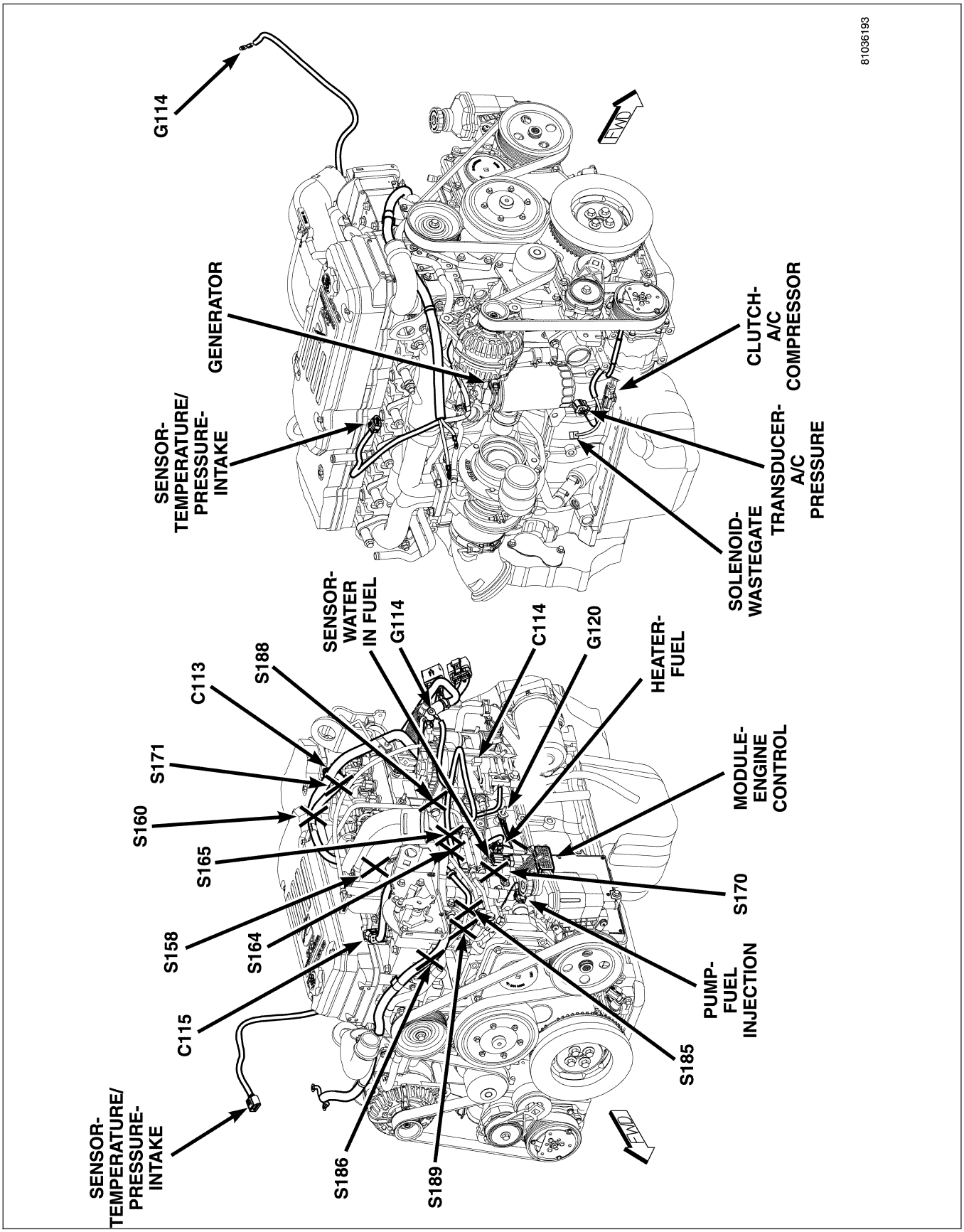

Fig. 15 ENGINE (DIESEL)

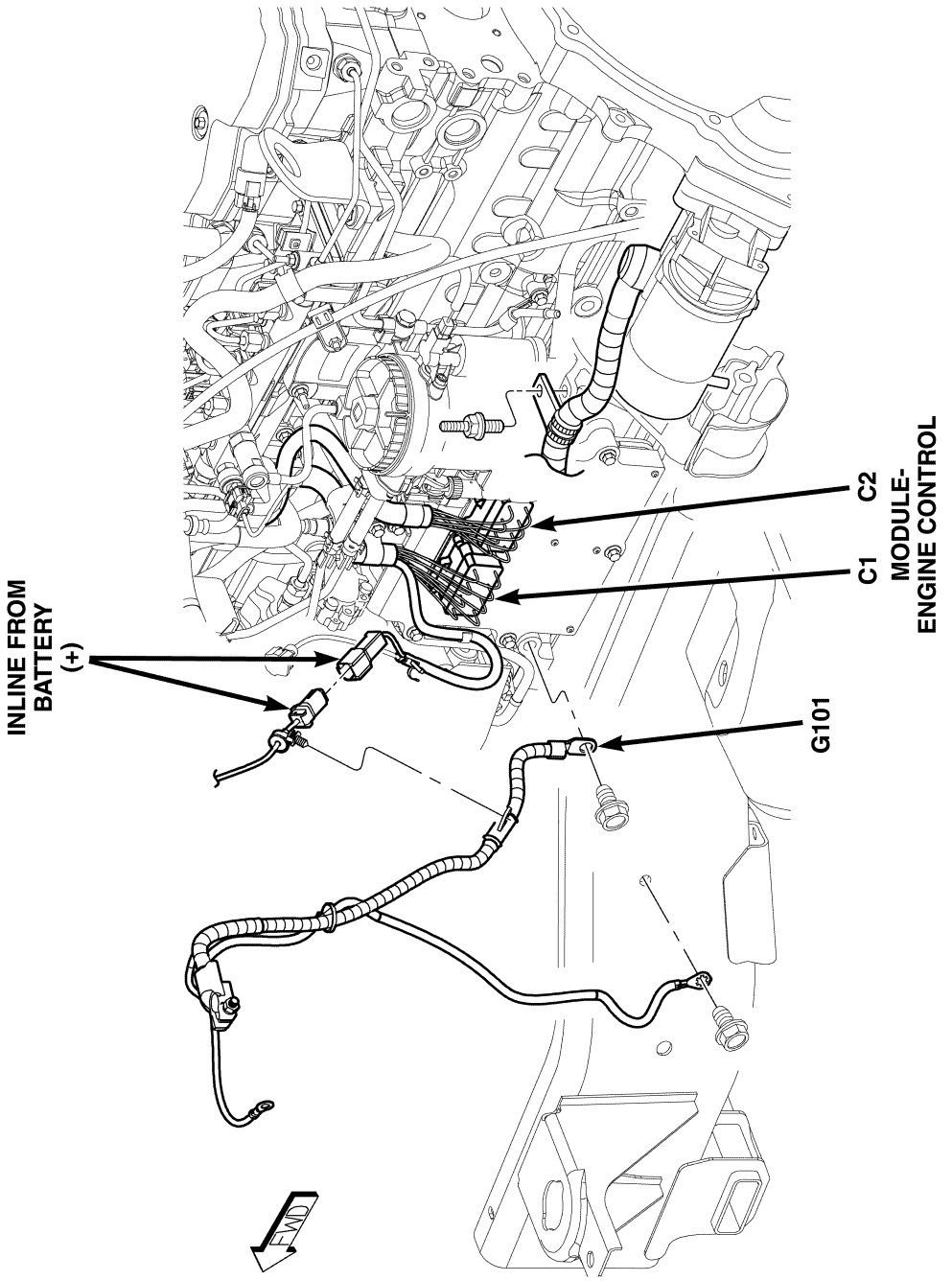

Fig. 16 LEFT SIDE ENGINE (DIESEL)

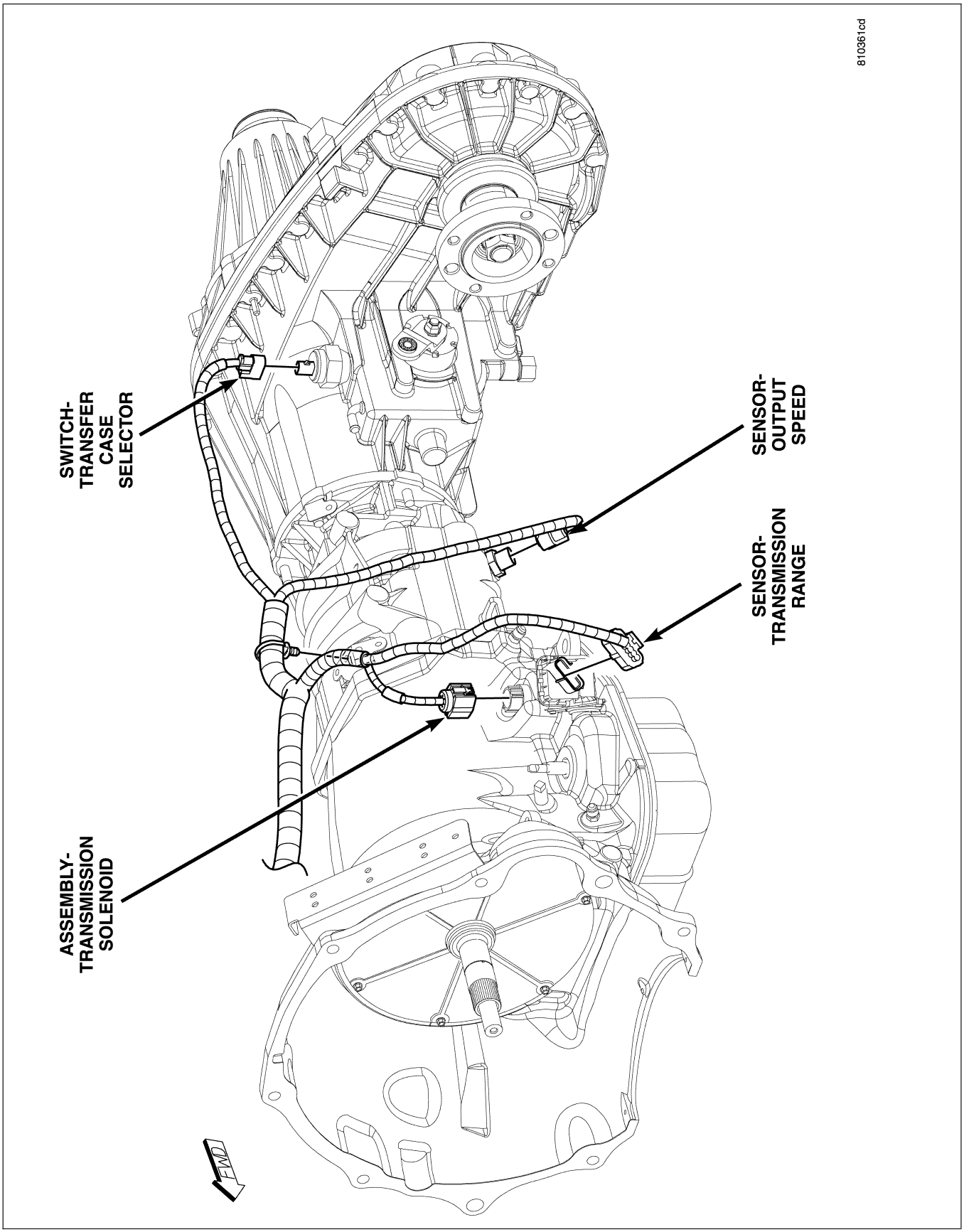

Fig. 17 AUTOMATIC TRANSMISSION (DIESEL)

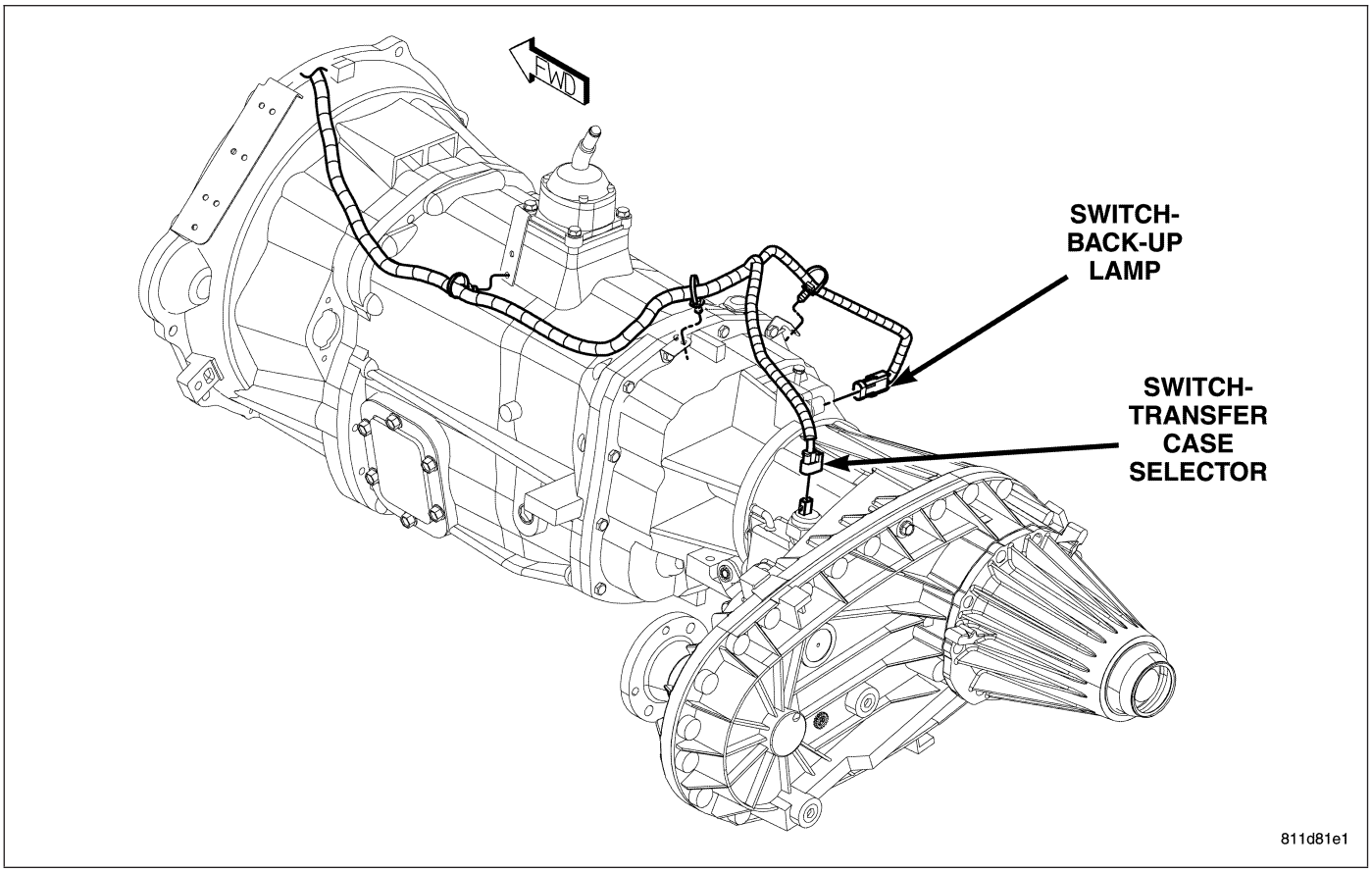

Fig. 18 MANUAL TRANSMISSION (DIESEL)

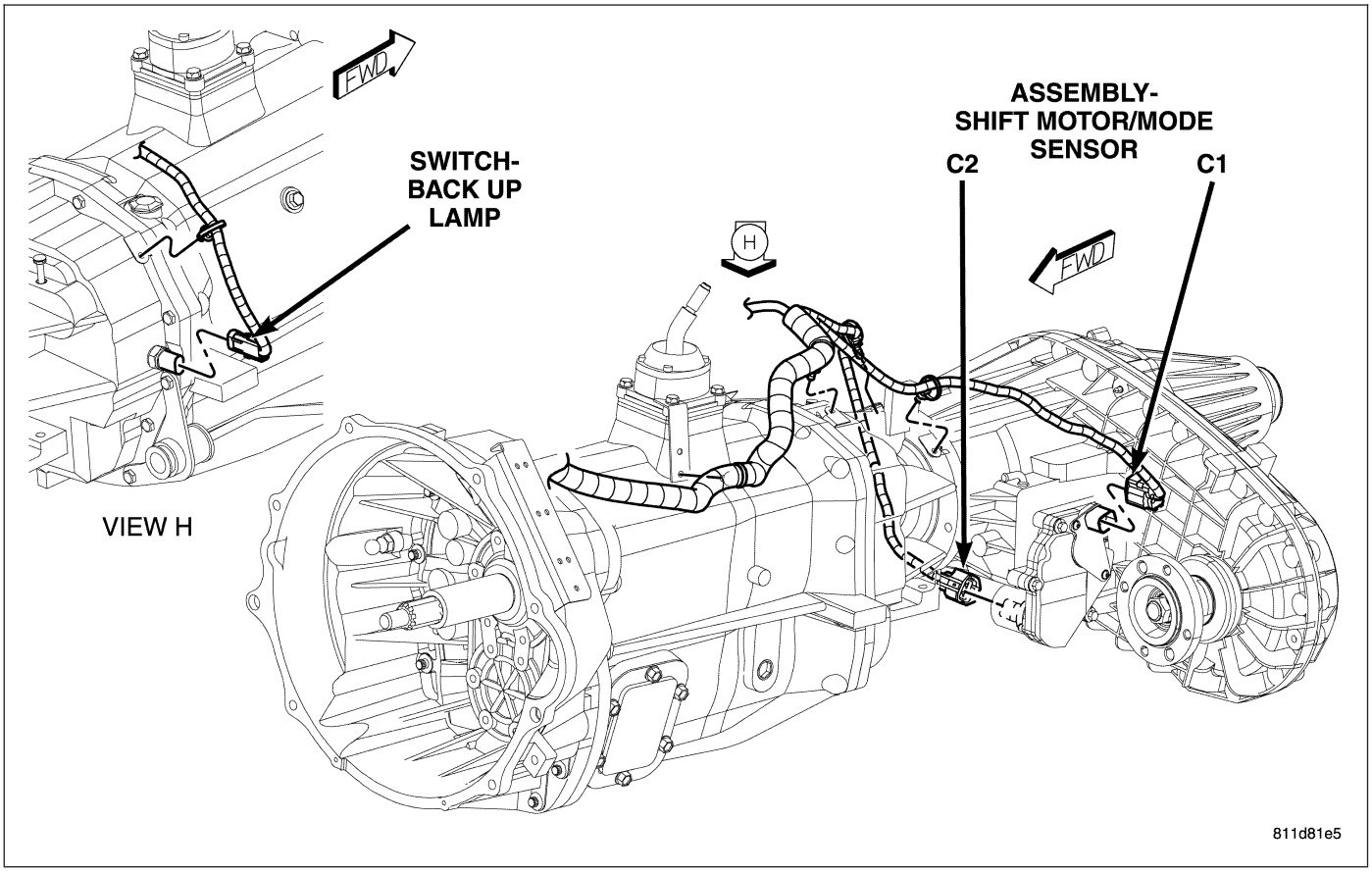

Fig. 19 FRONT MANUAL TRANSMISSION (DIESEL)

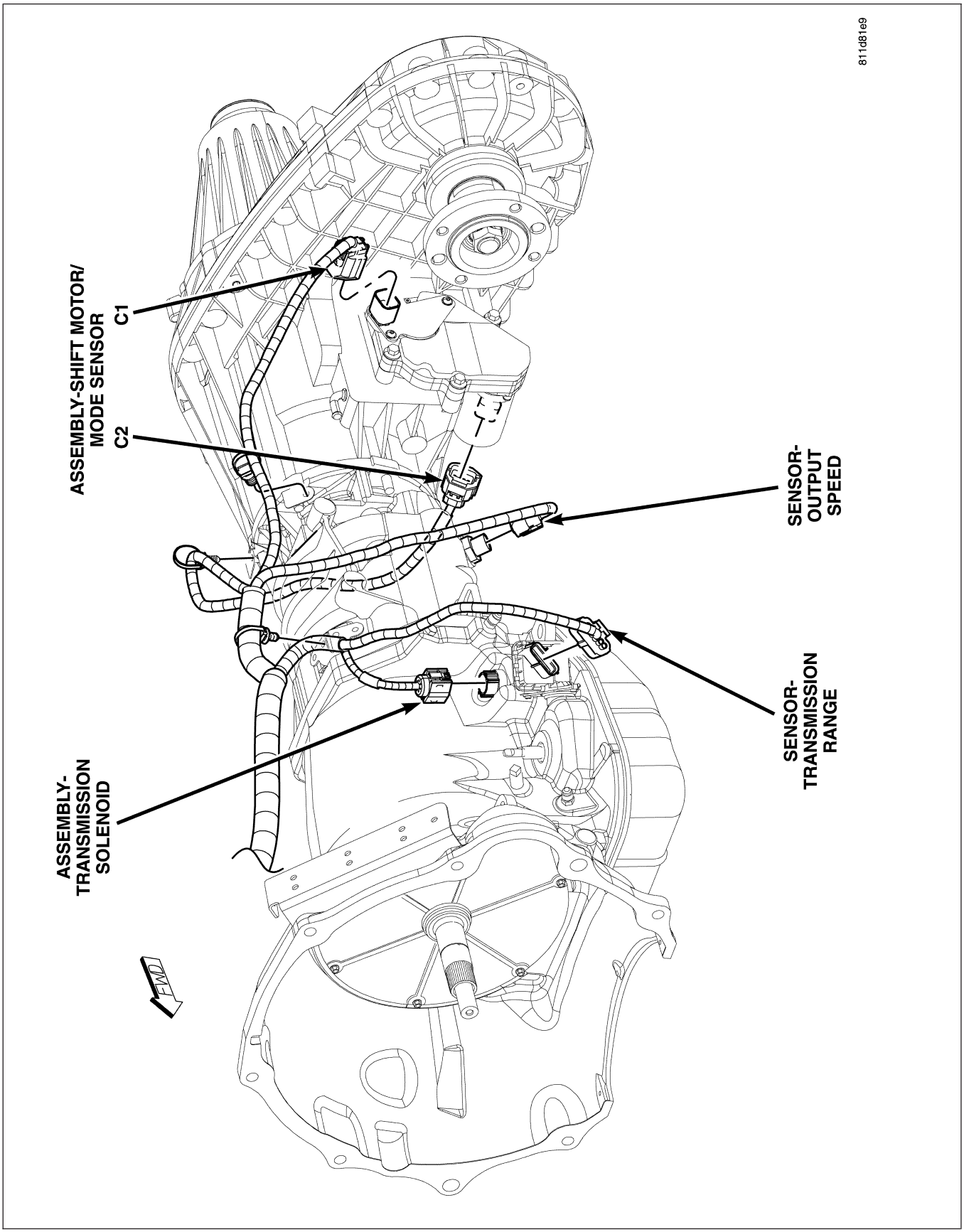

Fig. 20 AUTOMATIC TRANSMISSION (DIESEL) (ETC)

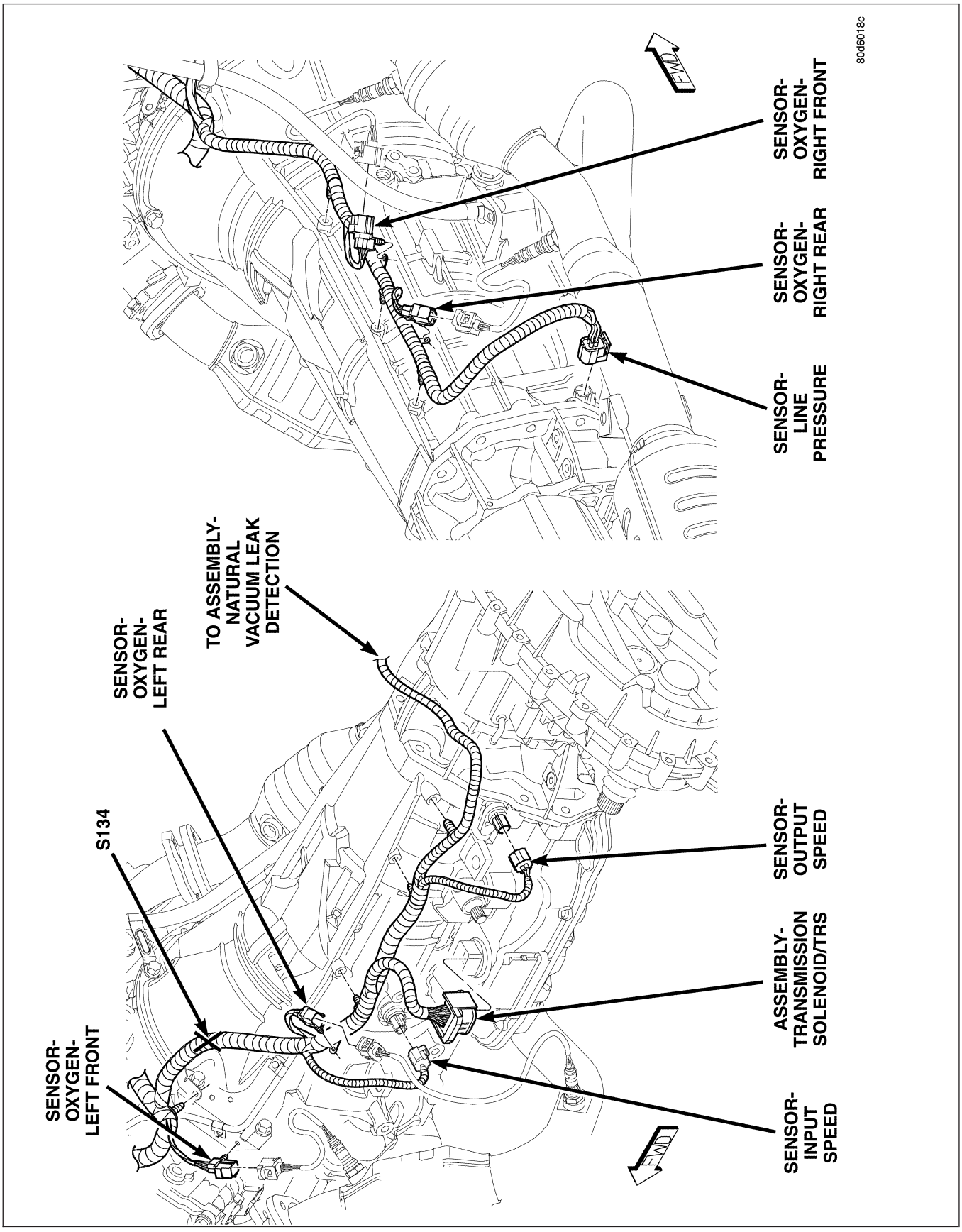

Fig. 21 TRANSMISSION (RFE 4X4 3.7L/4.7L)

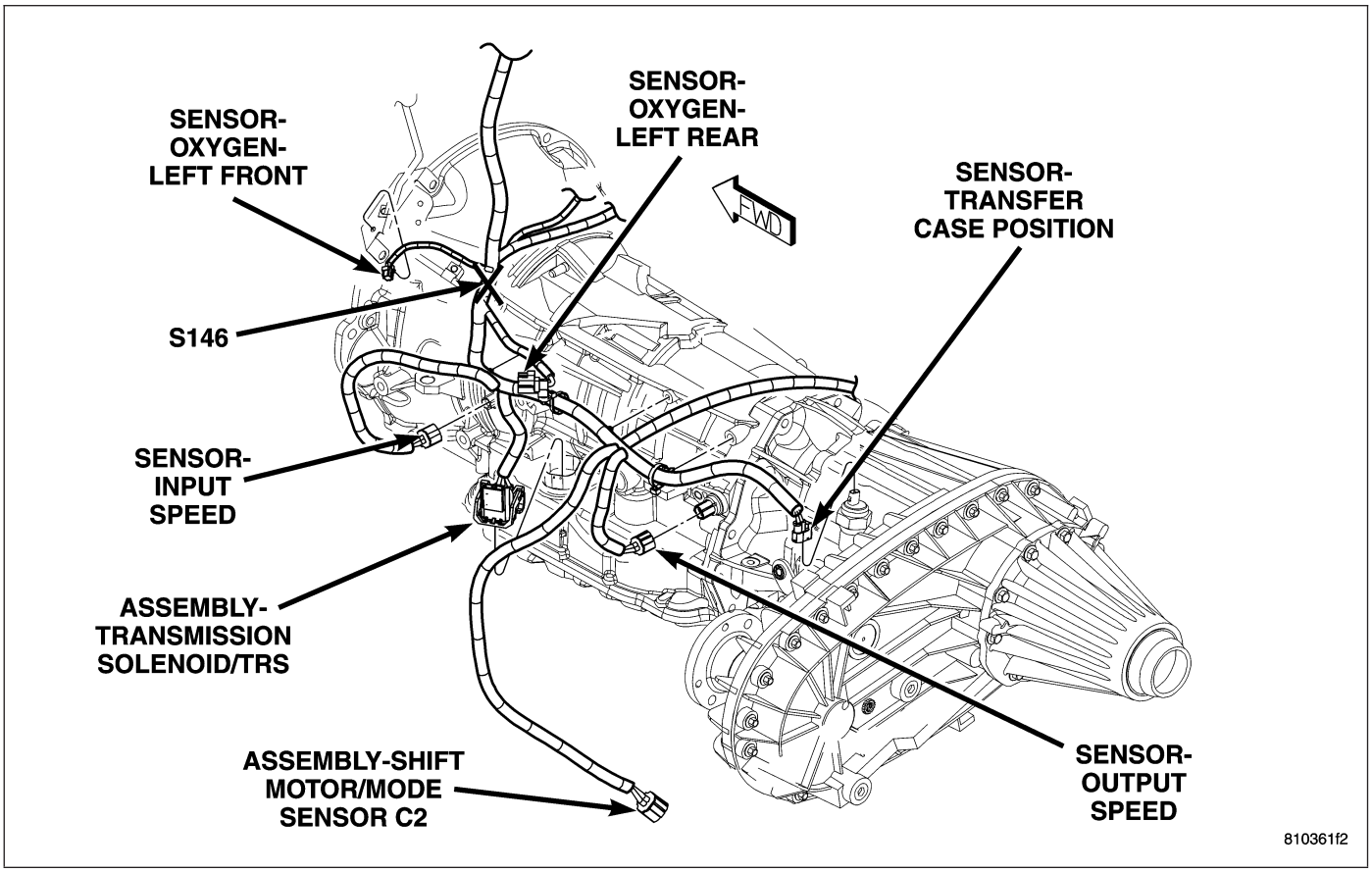

Fig. 22 LEFT TRANSMISSION (RFE)

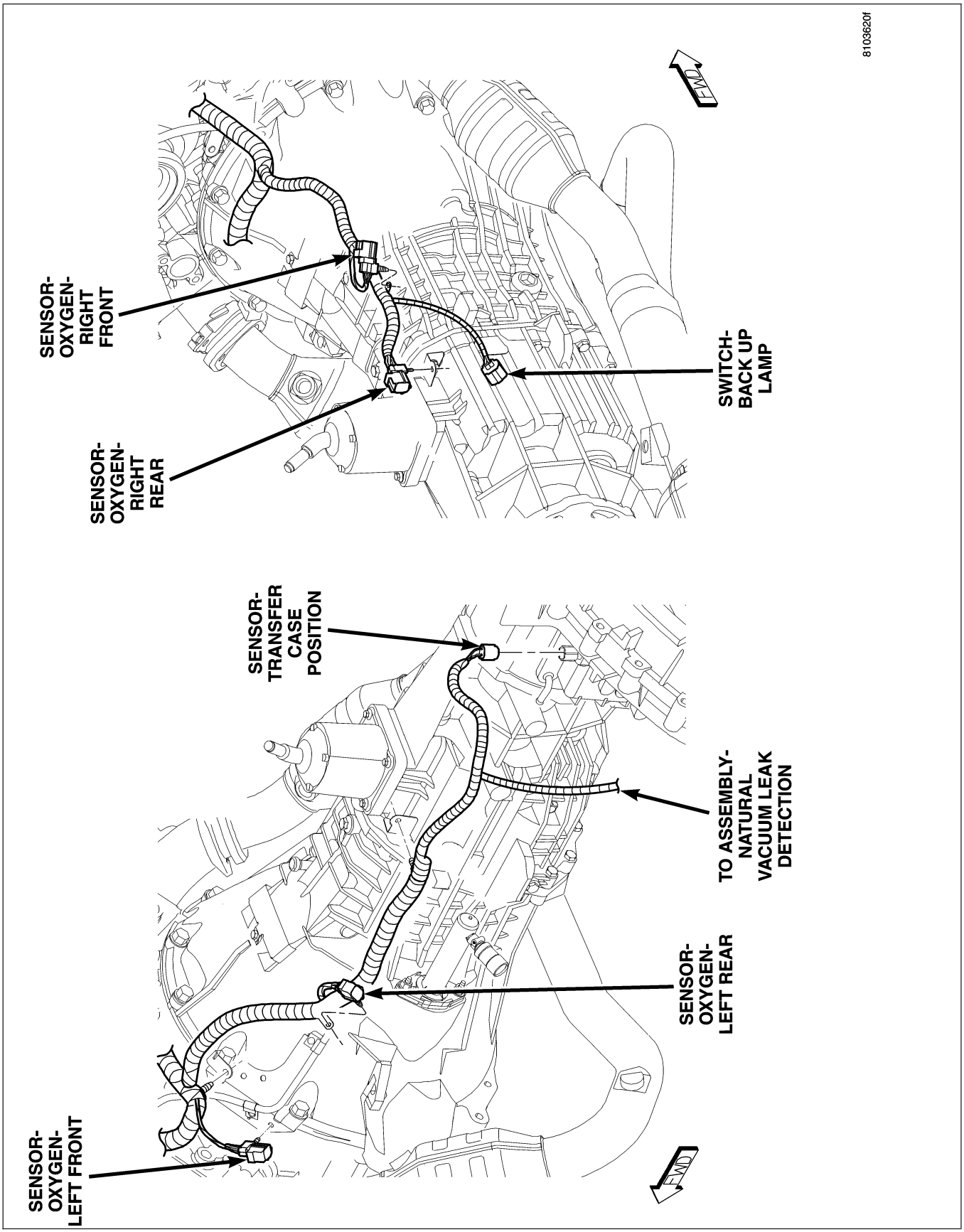

Fig. 23 MANUAL TRANSMISSION (4X4) (3.7L/4.7L)

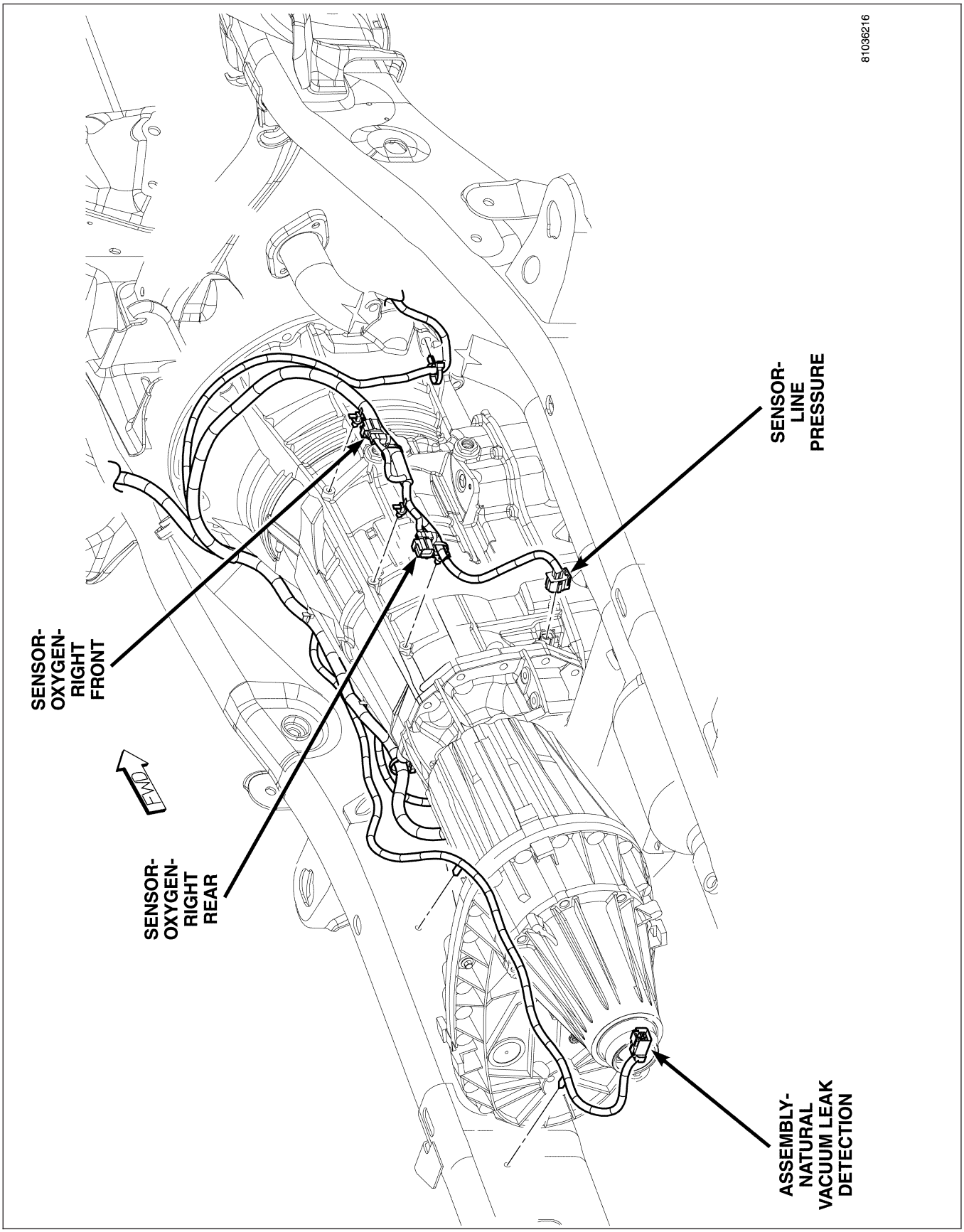

Fig. 24 RIGHT TRANSMISSION (RFE)

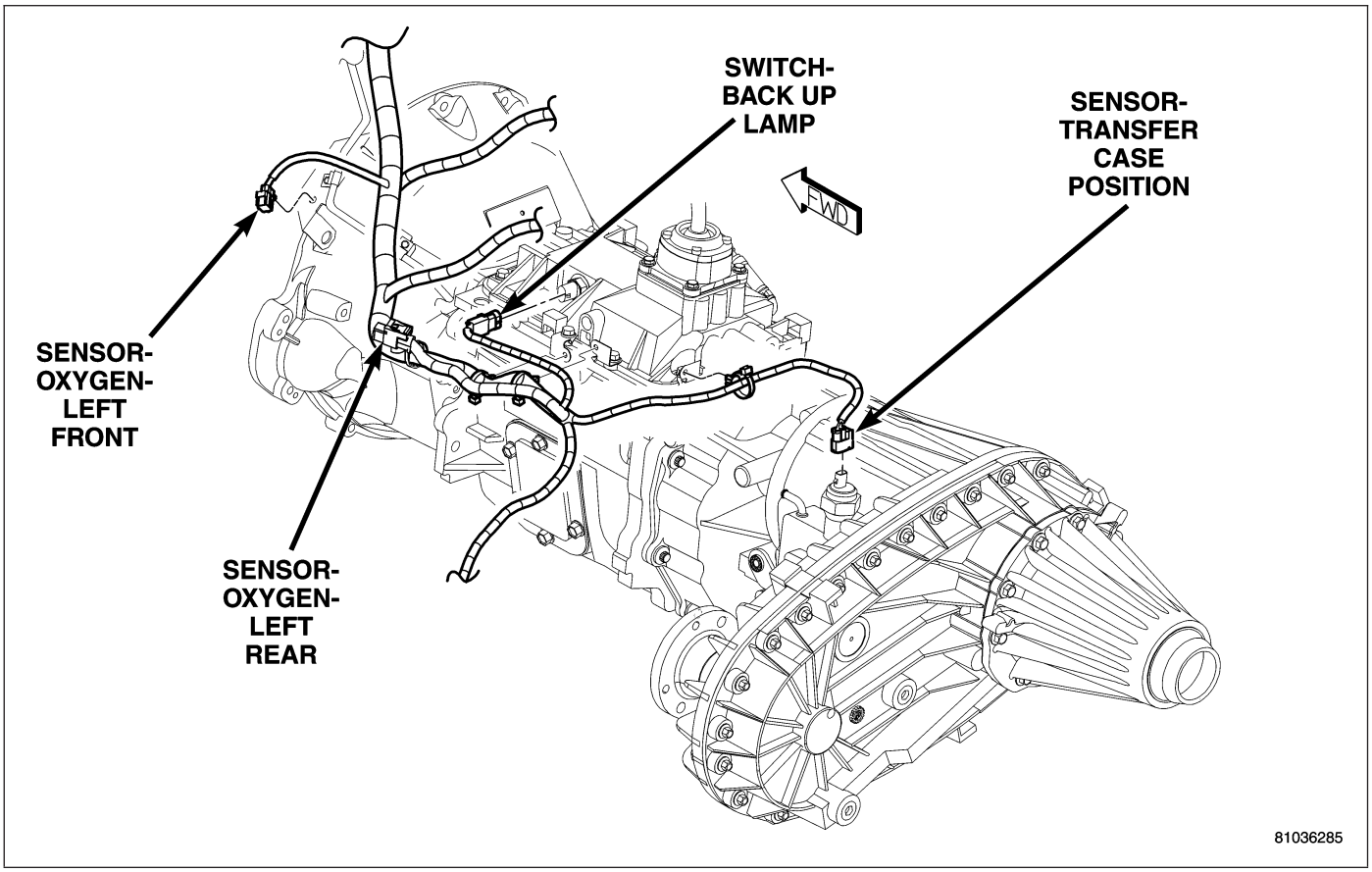

Fig. 25 MANUAL TRANSMISSION (5.7L/DIESEL)

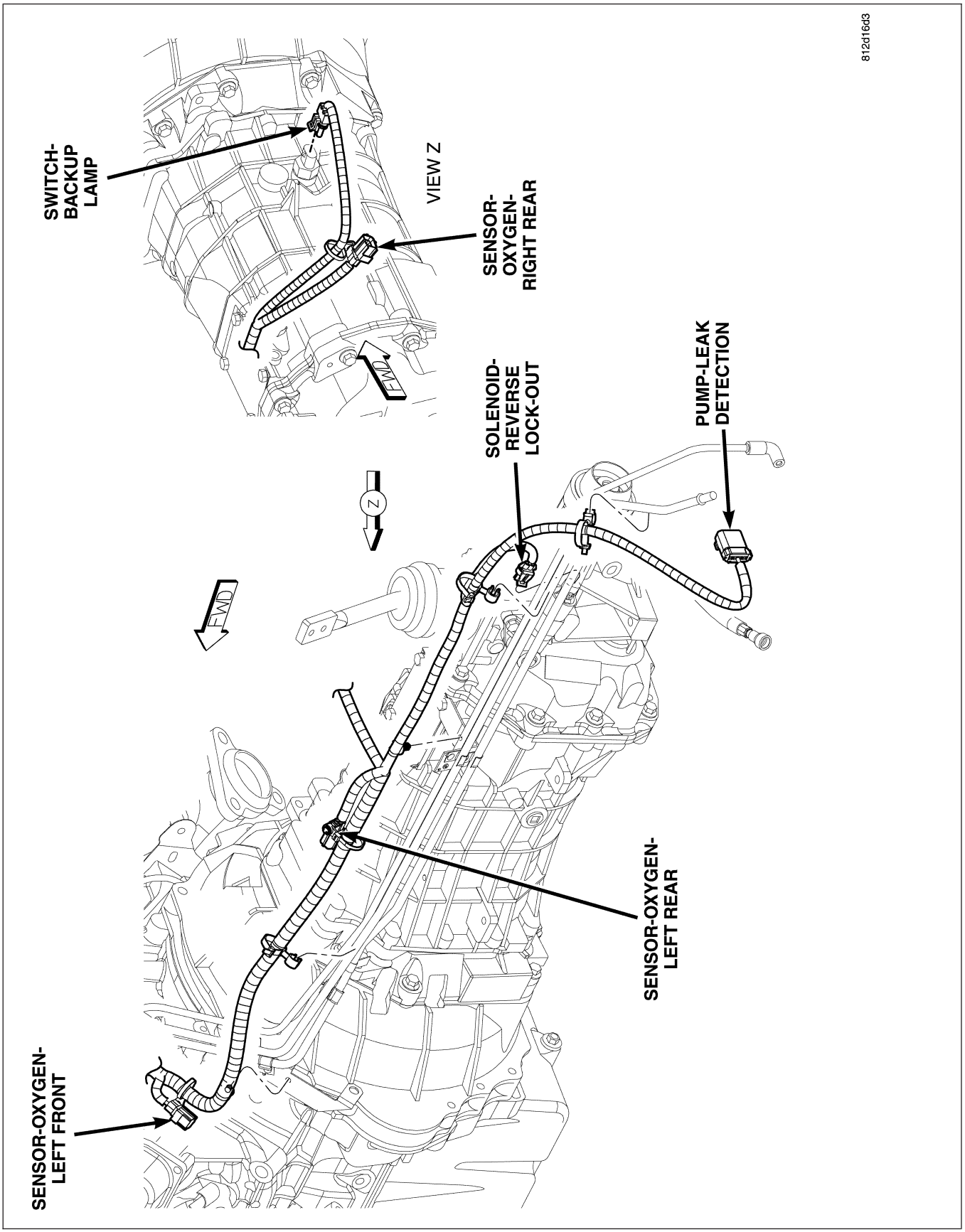

Fig. 26 MANUAL TRANSMISSION (SRT)

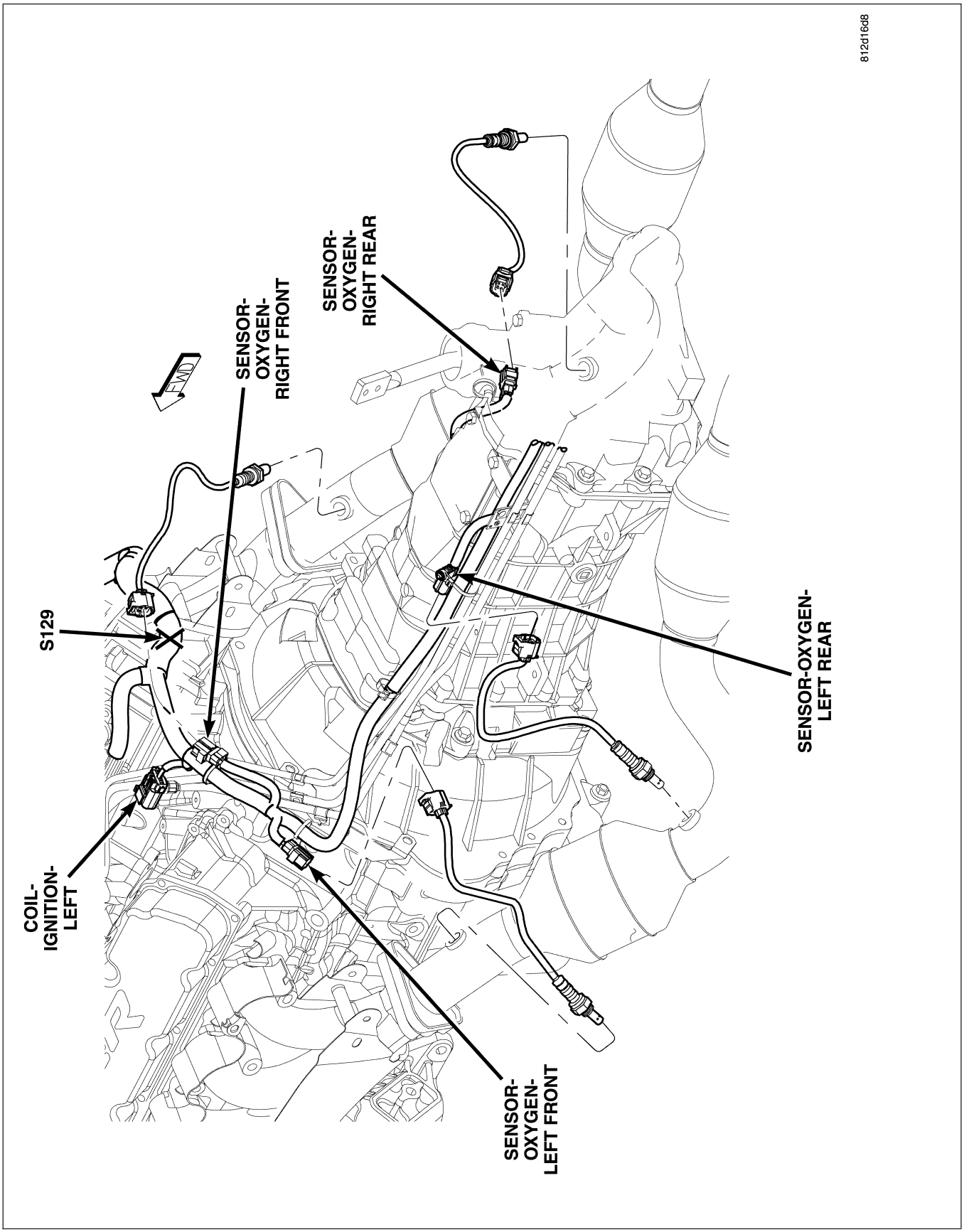

Fig. 27 TRANSMISSION AND EXHAUST (SRT)

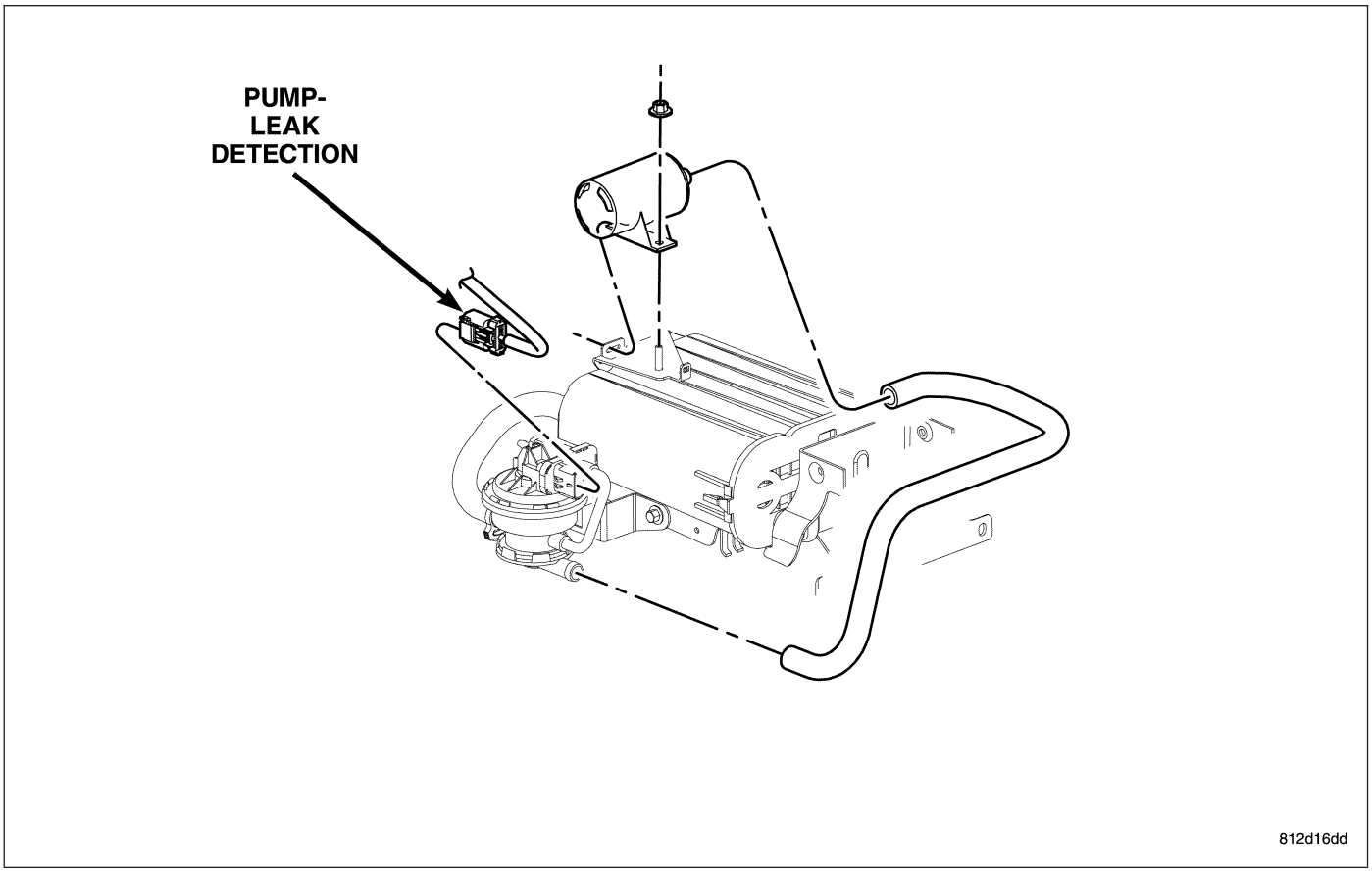

Fig. 28 LEAK DETECTION PUMP (SRT)

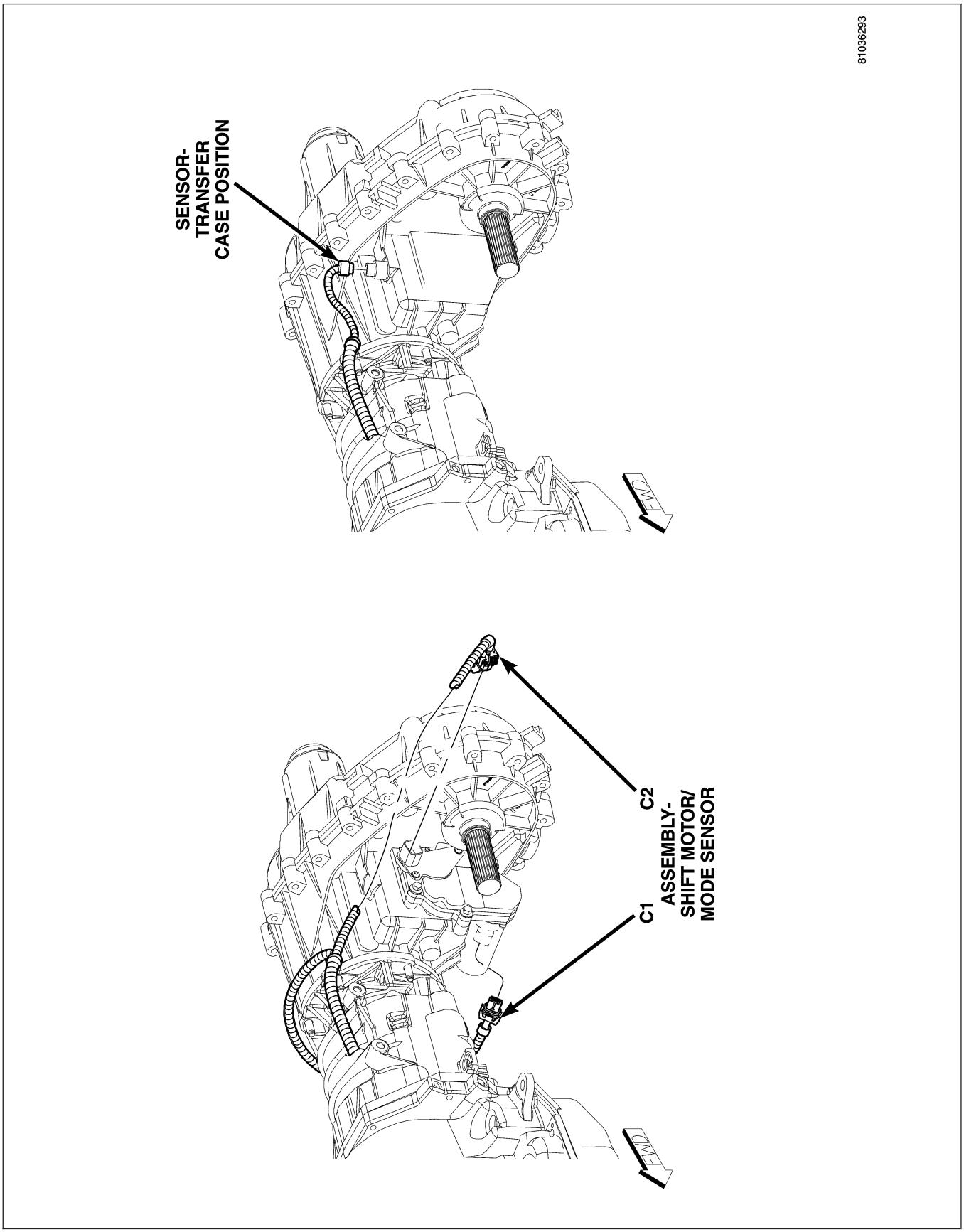

Fig. 29 LEFT FRONT TRANSFER CASE

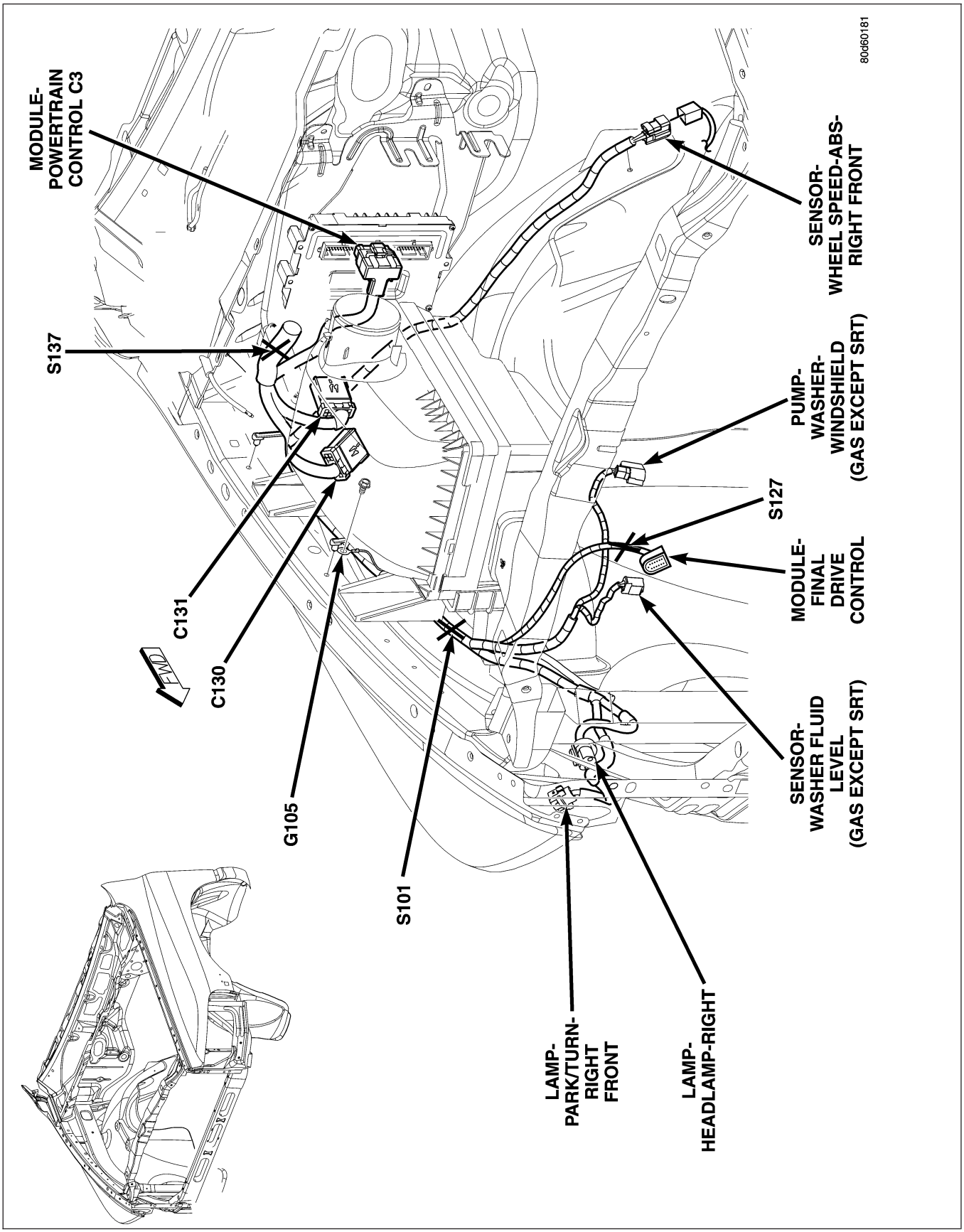

Fig. 30 RIGHT SIDE ENGINE COMPARTMENT

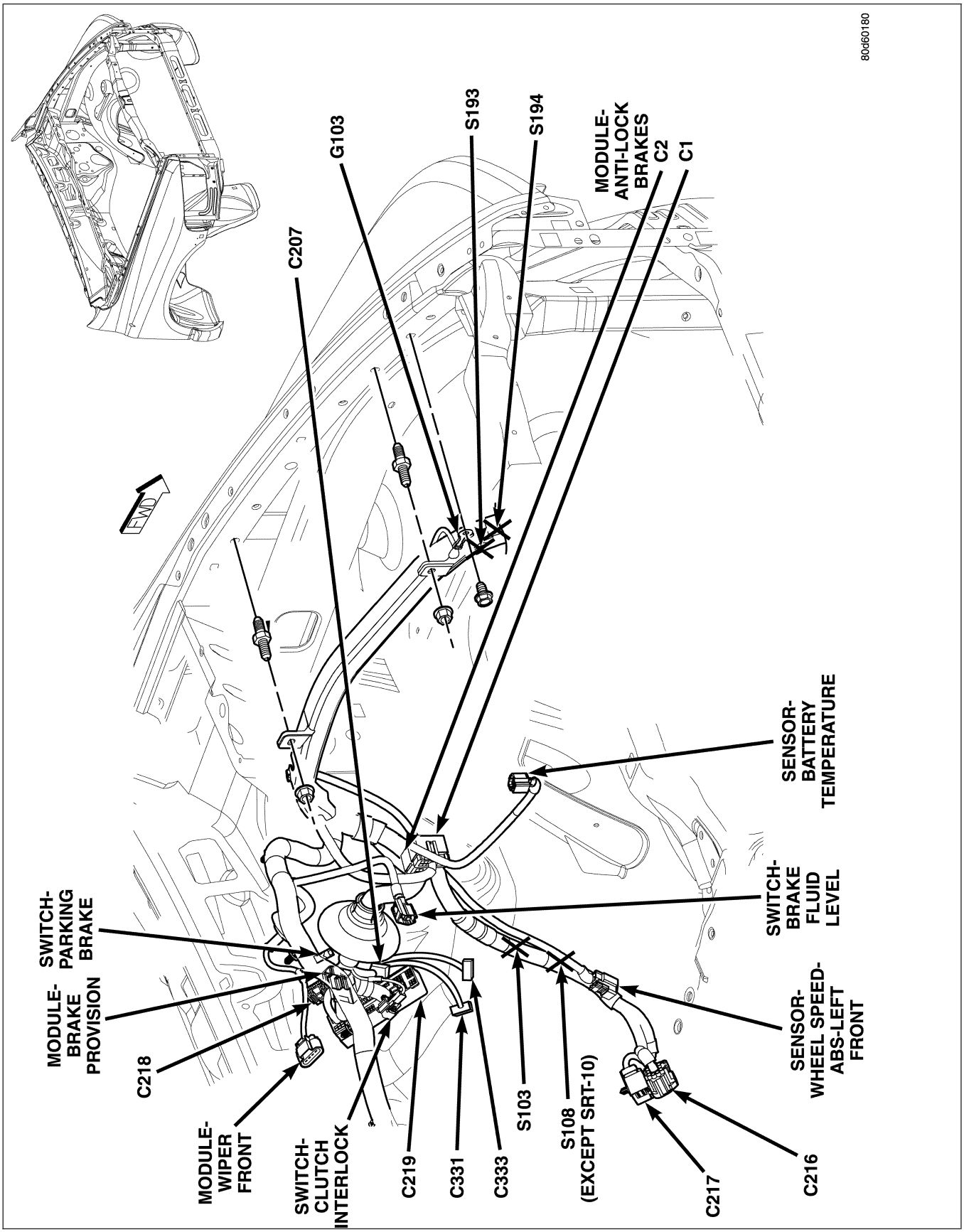

Fig. 31 LEFT REAR ENGINE COMPARTMENT

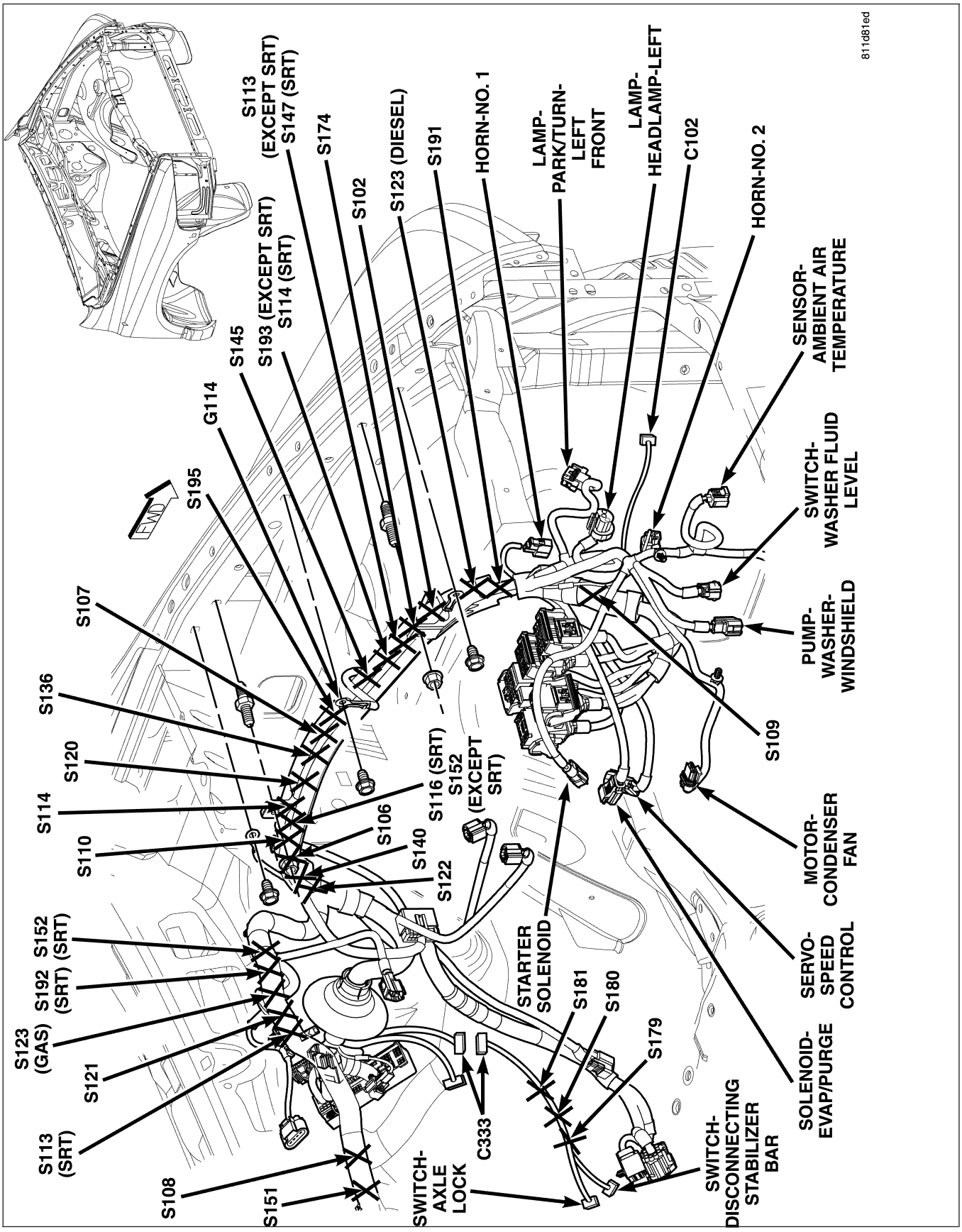

Fig. 32 LEFT ENGINE COMPARTMENT

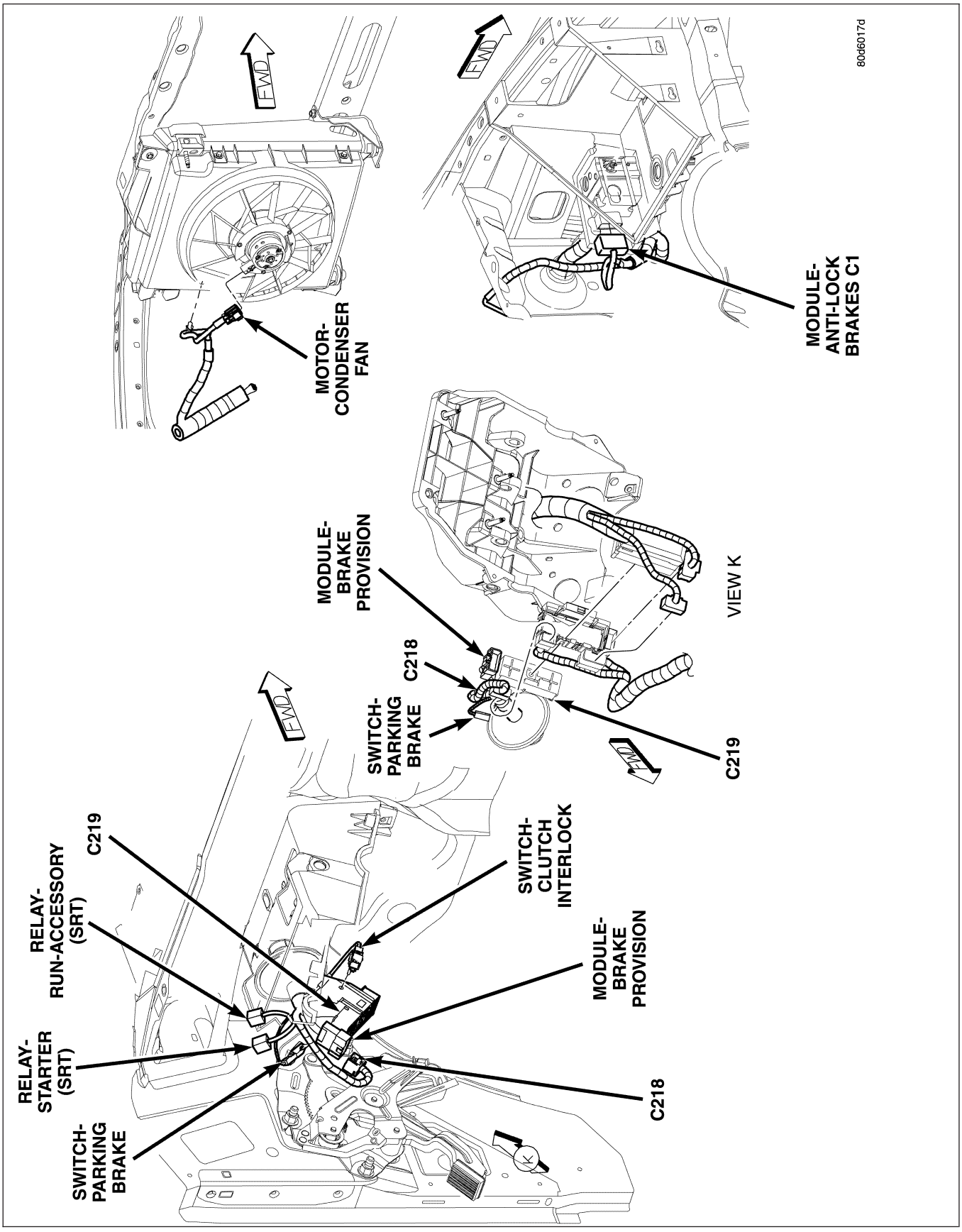

Fig. 33 ENGINE COMPARTMENT

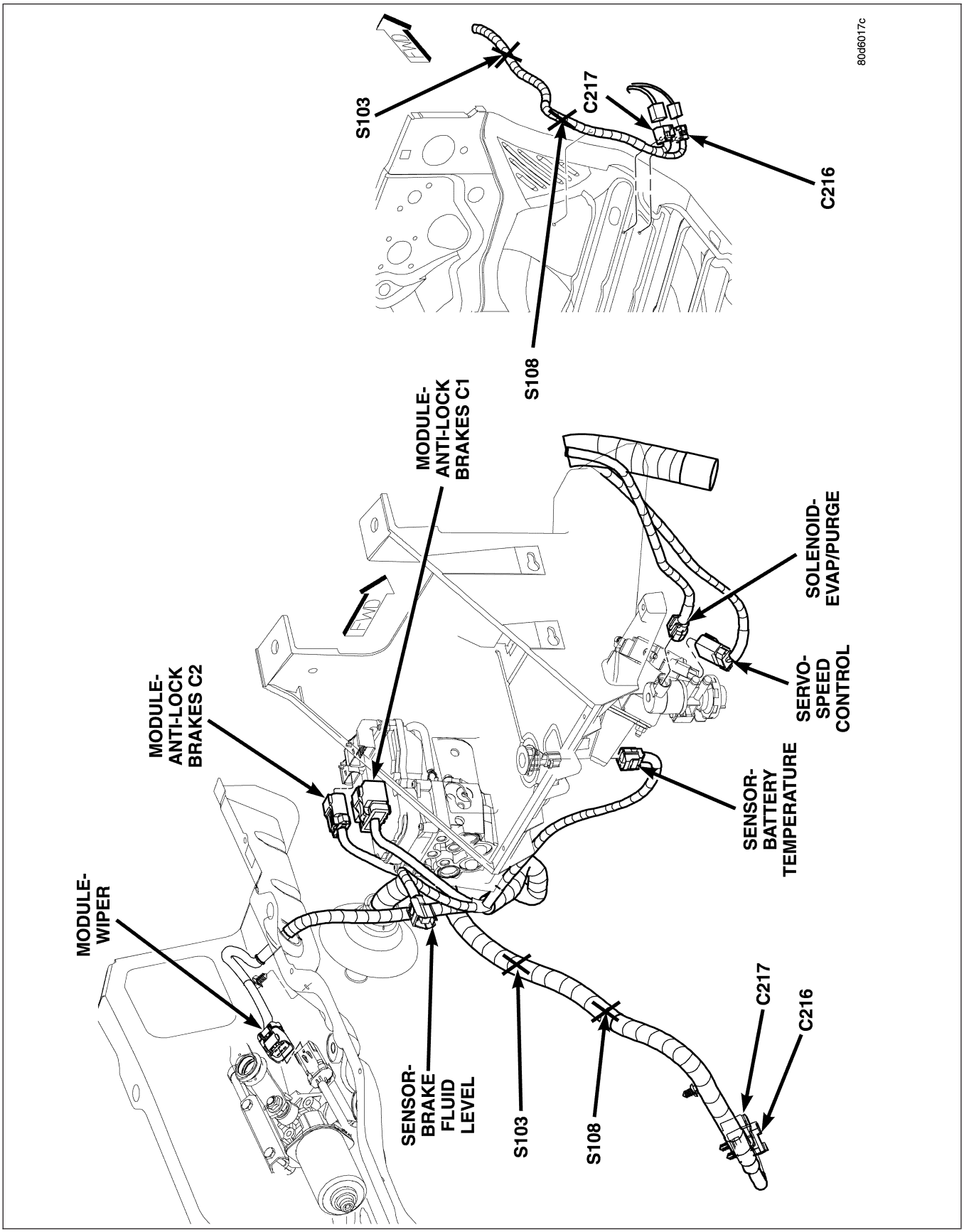

Fig. 34 LEFT SIDE ENGINE COMPARTMENT

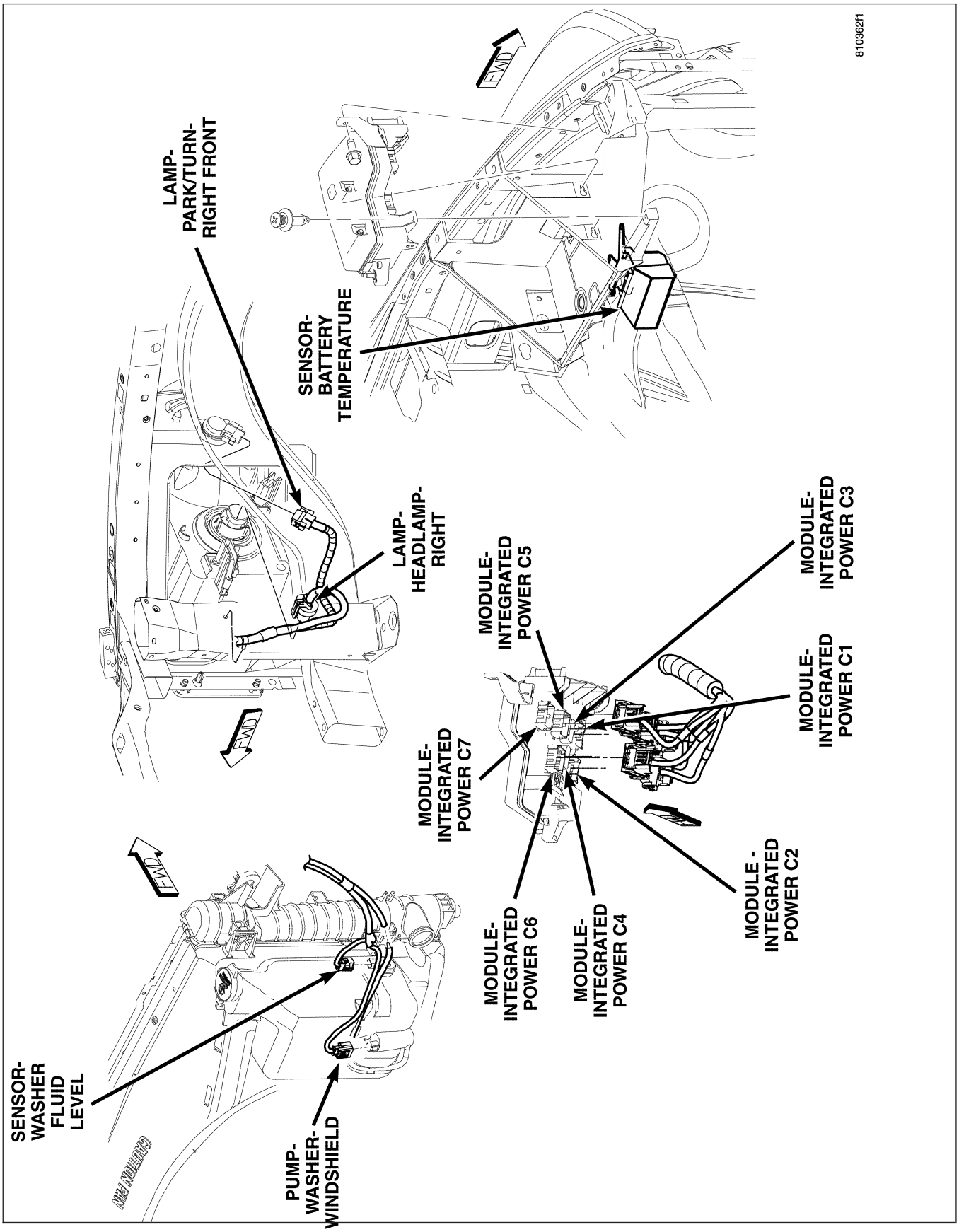

Fig. 35 LEFT FRONT ENGINE COMPARTMENT

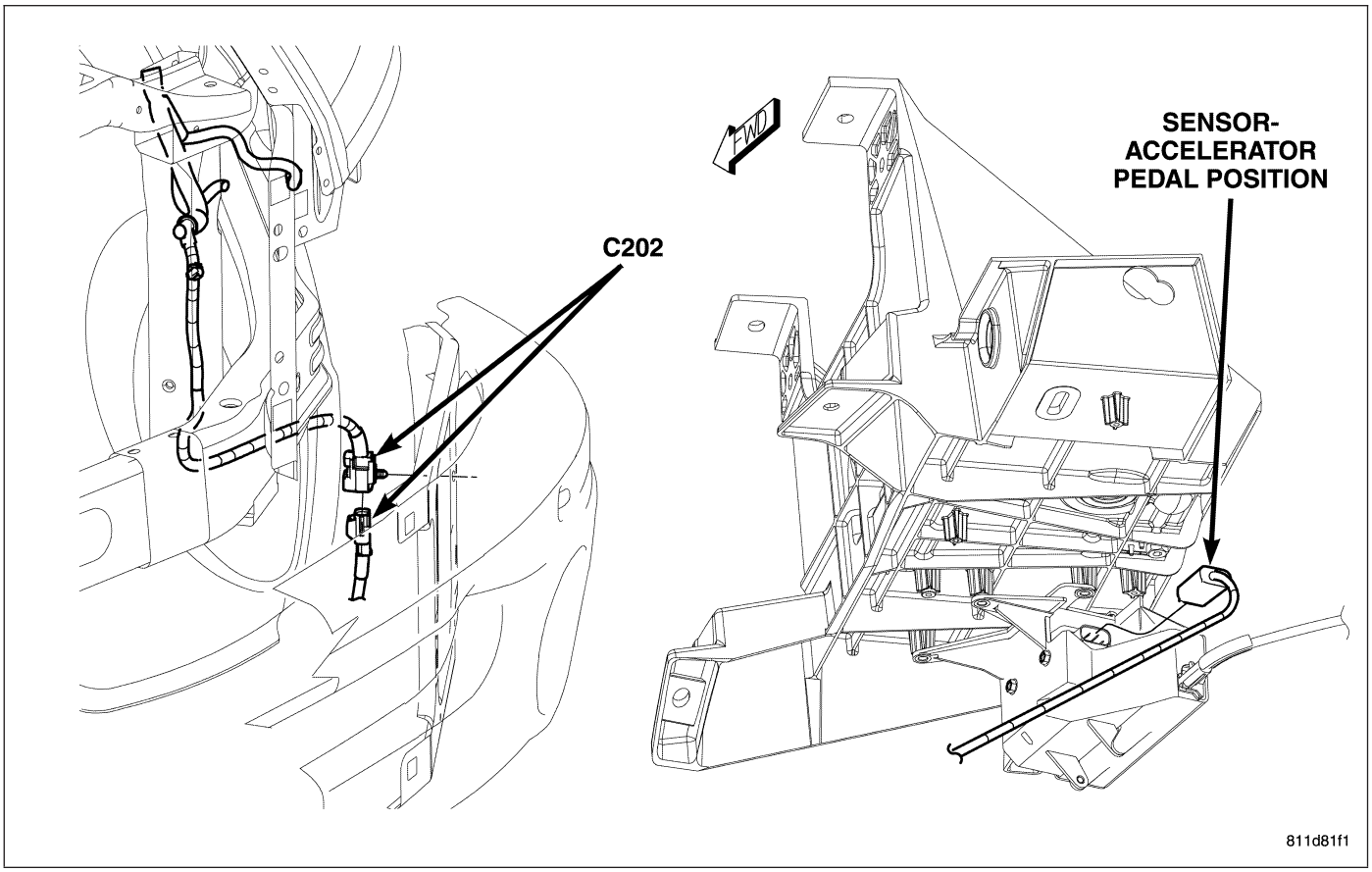

Fig. 36 LEFT FRONT FACIA AND BATTERY TRAY

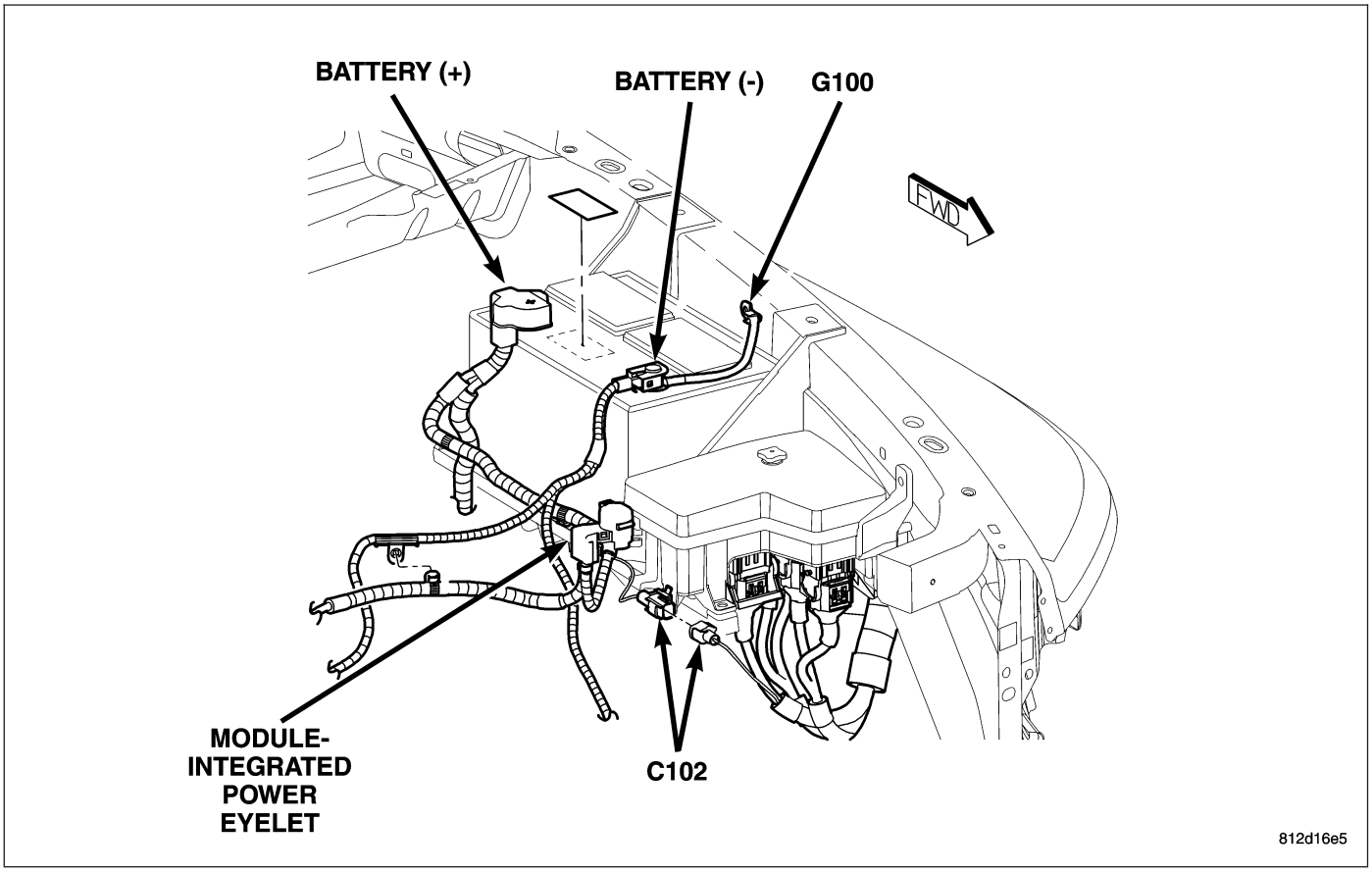

Fig. 37 BATTERY

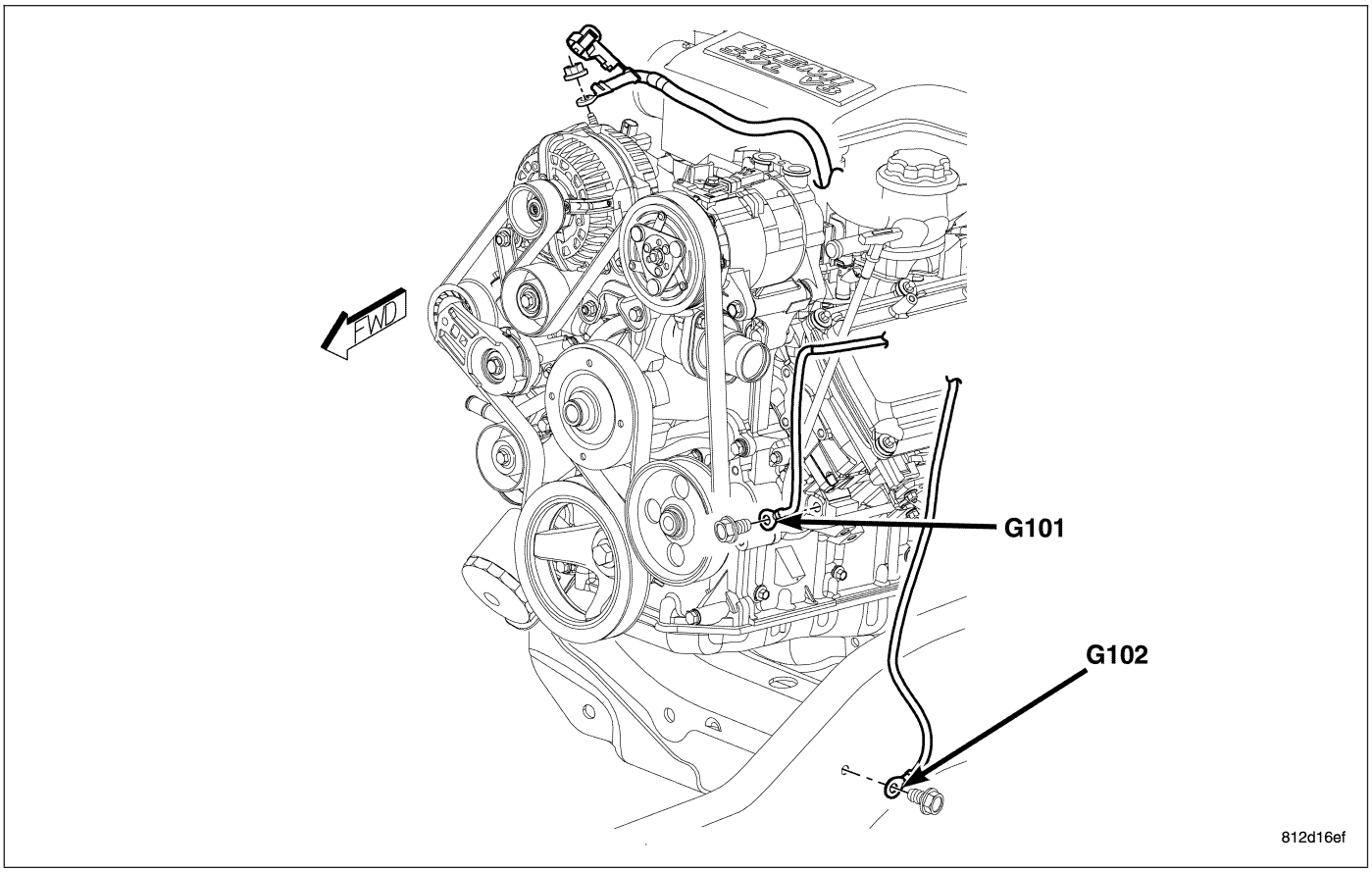

Fig. 38 BATTERY GROUNDS

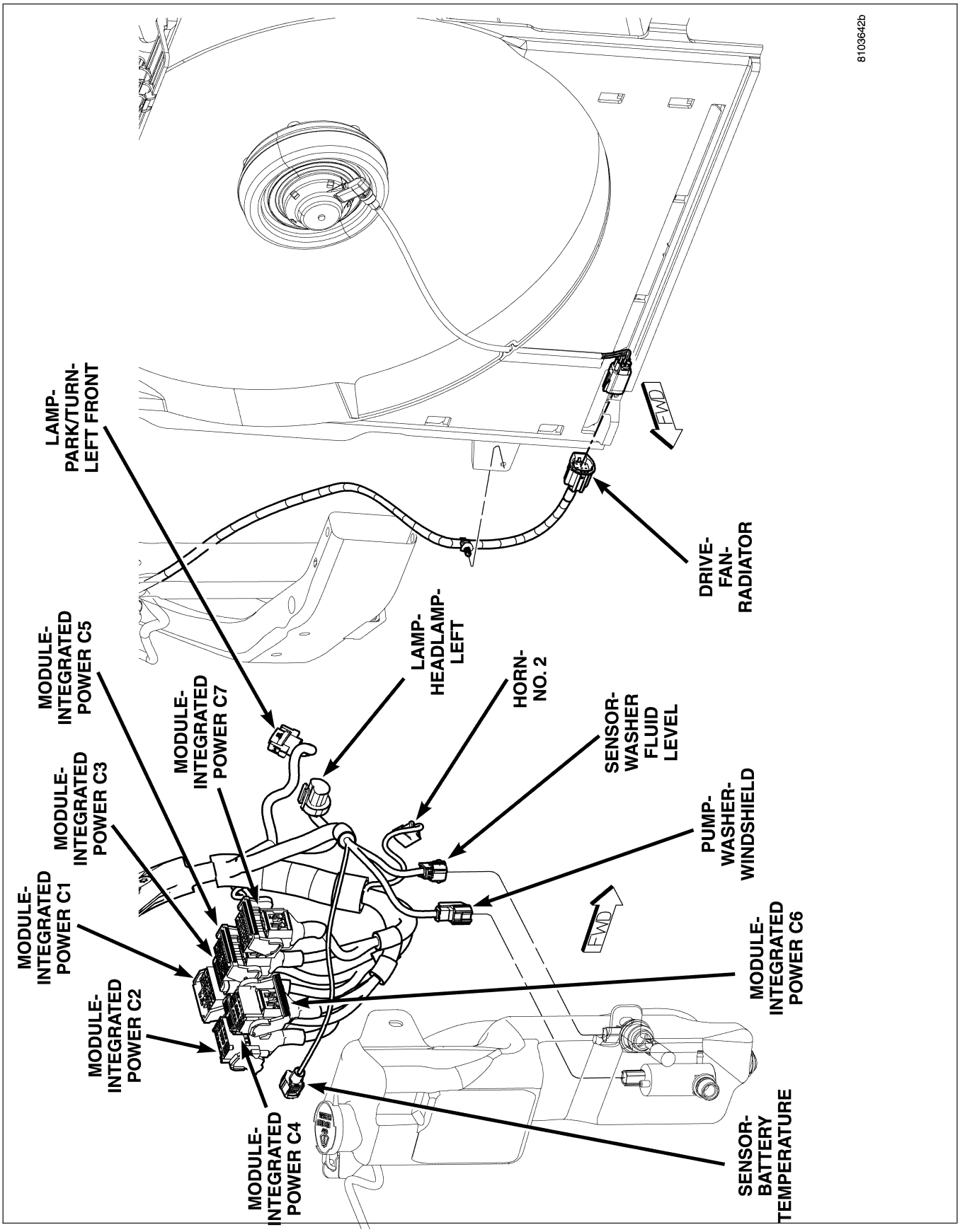

Fig. 39 INTEGRATED POWER MODULE AND FAN

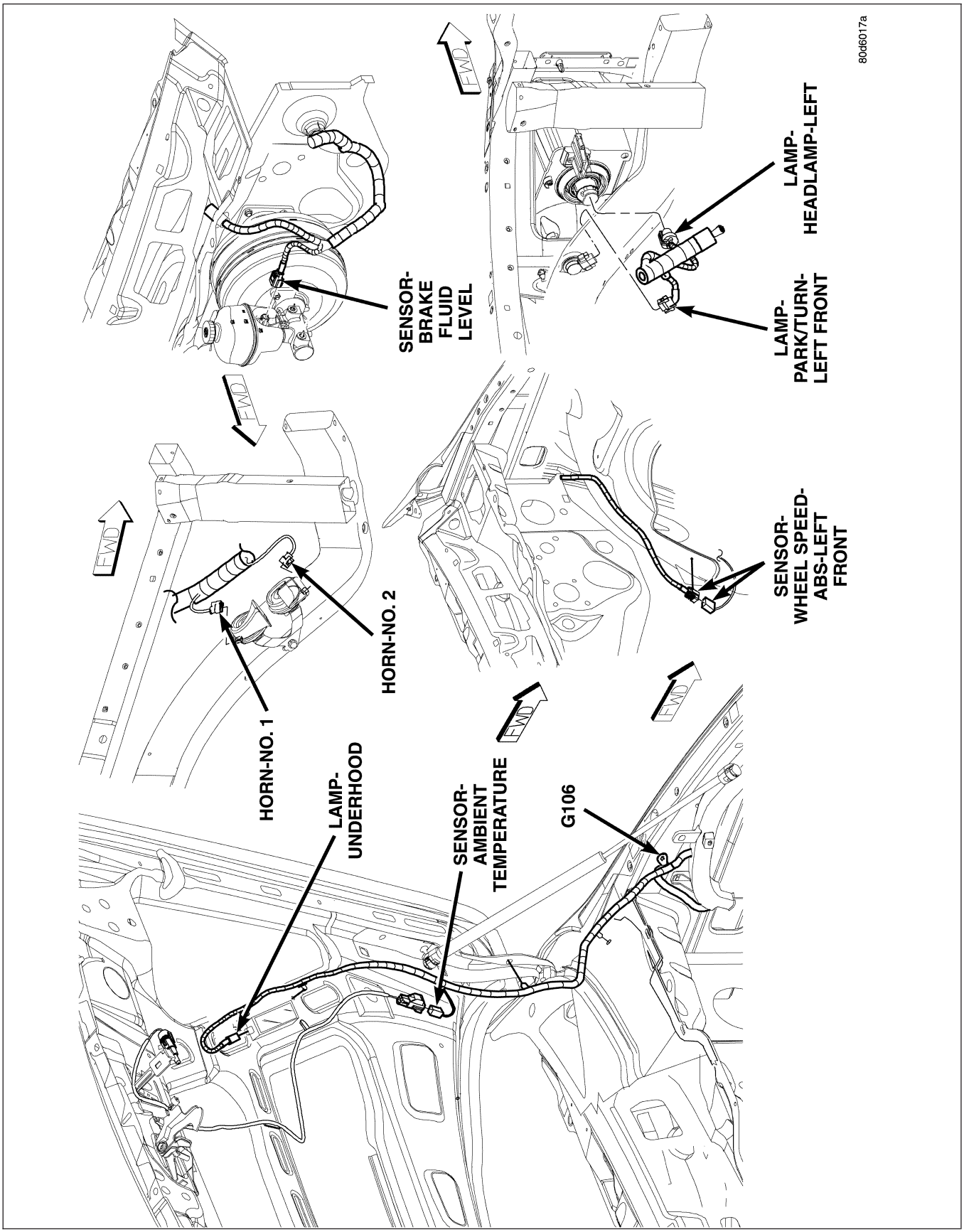

Fig. 40 LEFT SIDE ENGINE COMPARTMENT AND HOOD

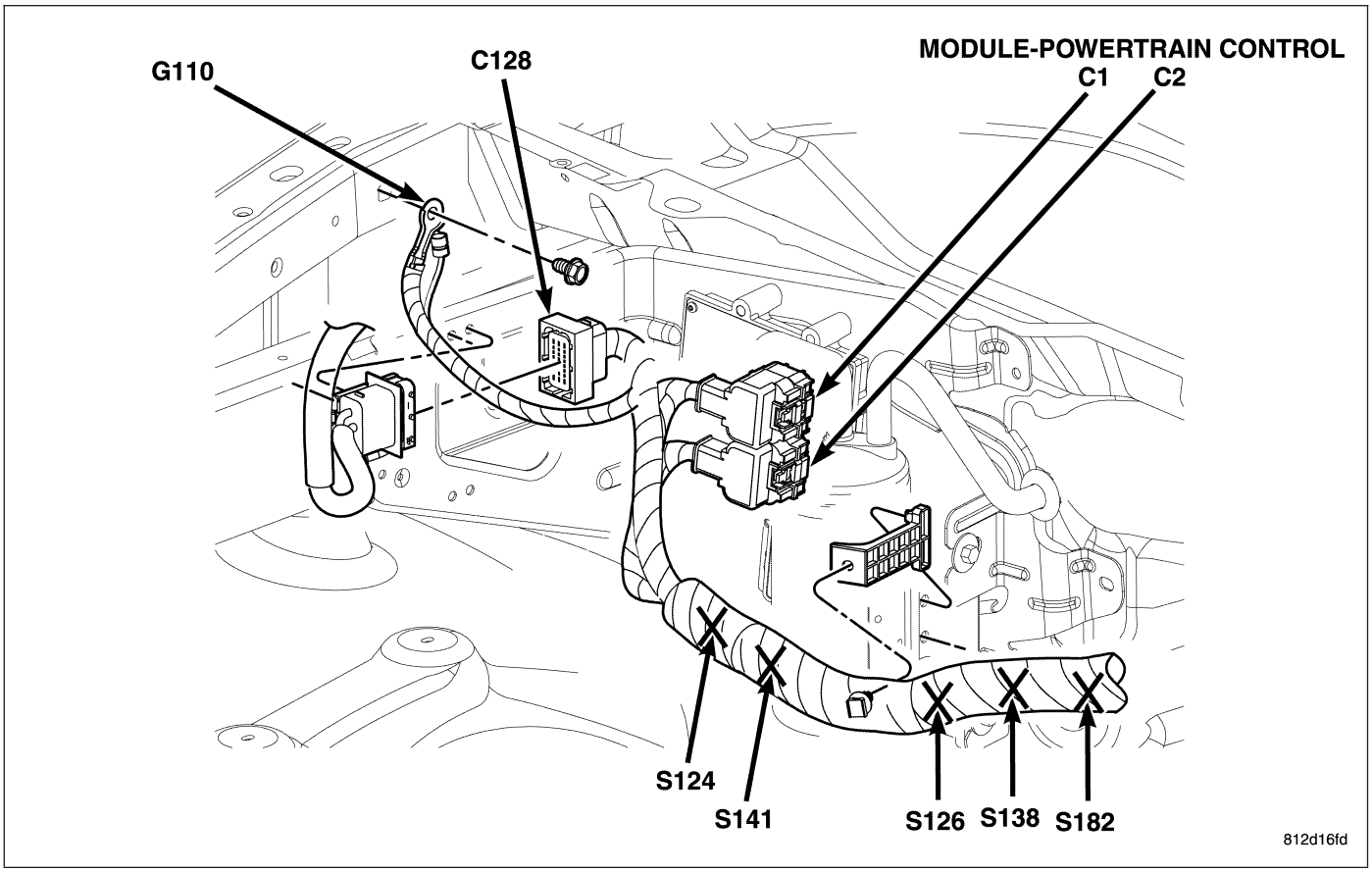

Fig. 41 RIGHT REAR ENGINE WIRING (SRT-10)

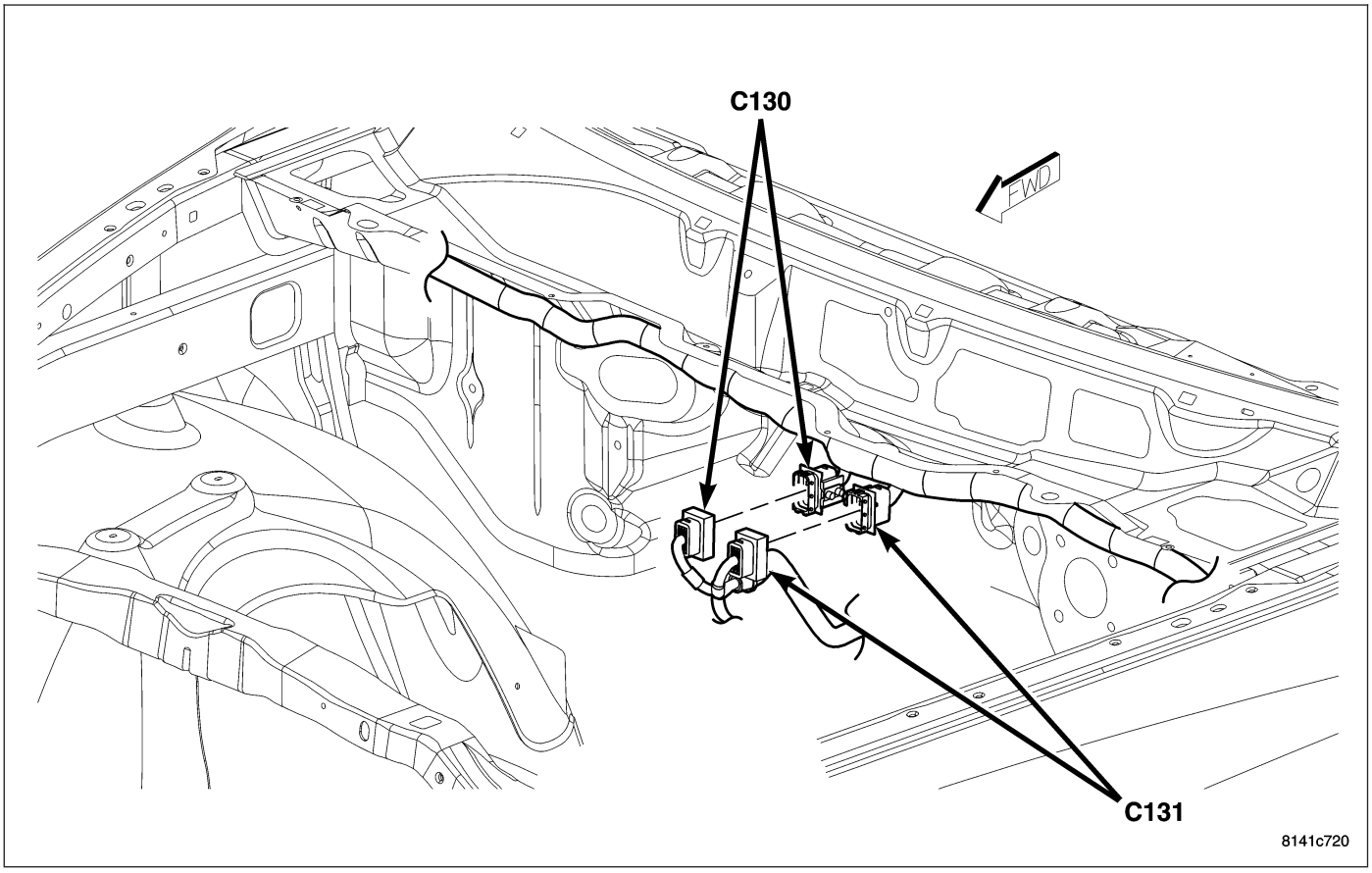

Fig. 42 REAR ENGINE COMPARTMENT INLINES (DIESEL)

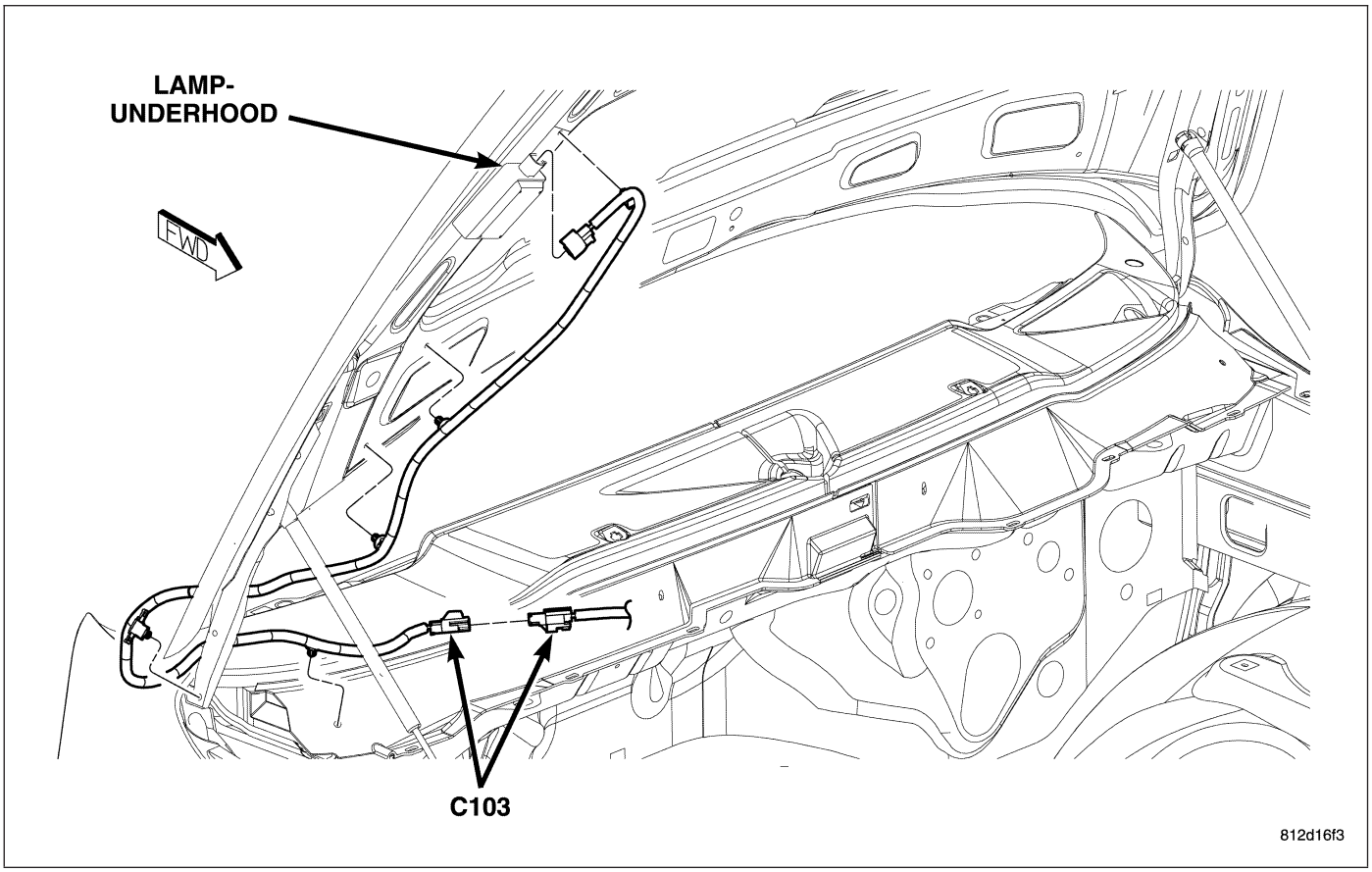

Fig. 43 HOOD

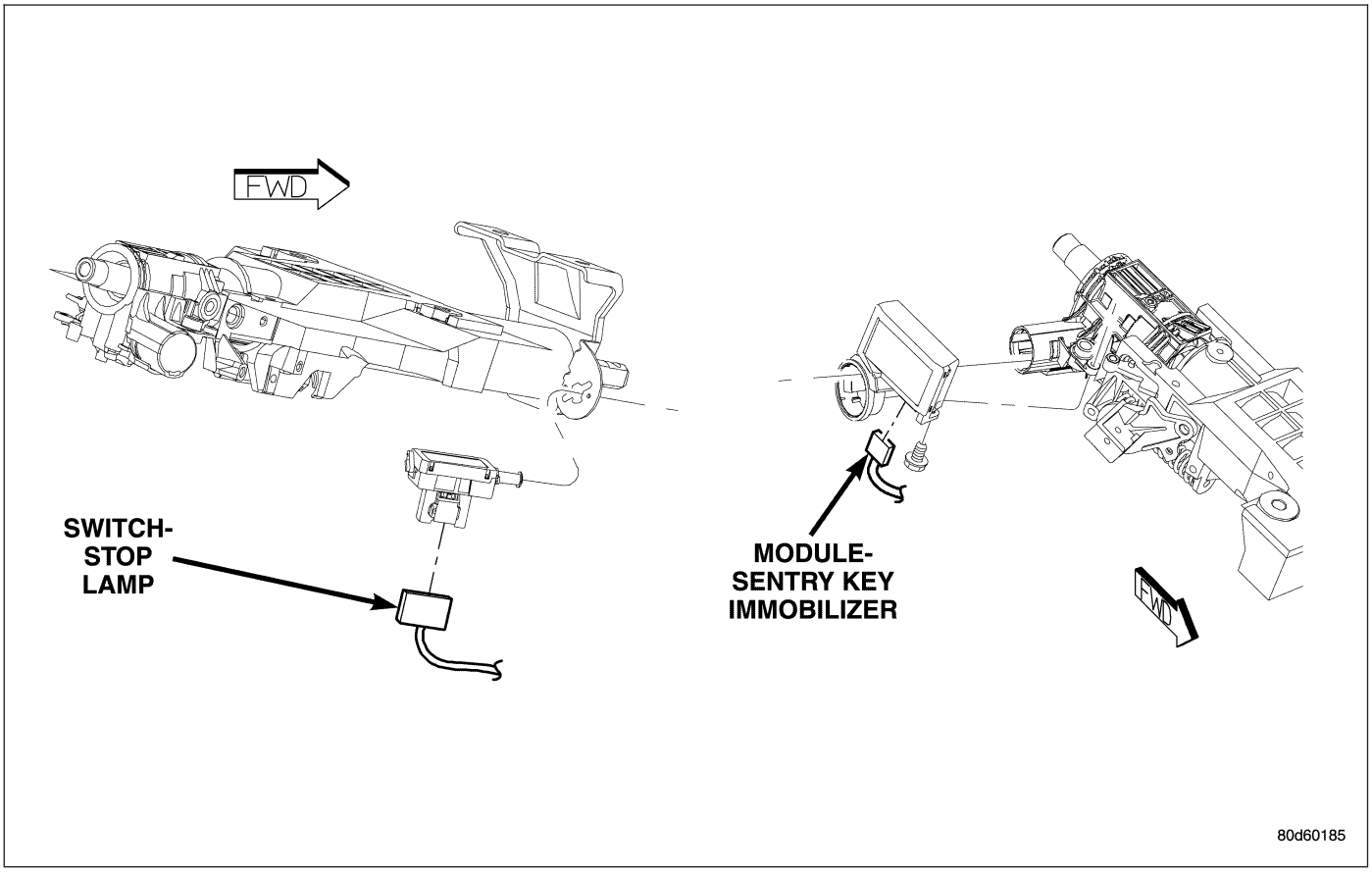

Fig. 44 STEERING COLUMN

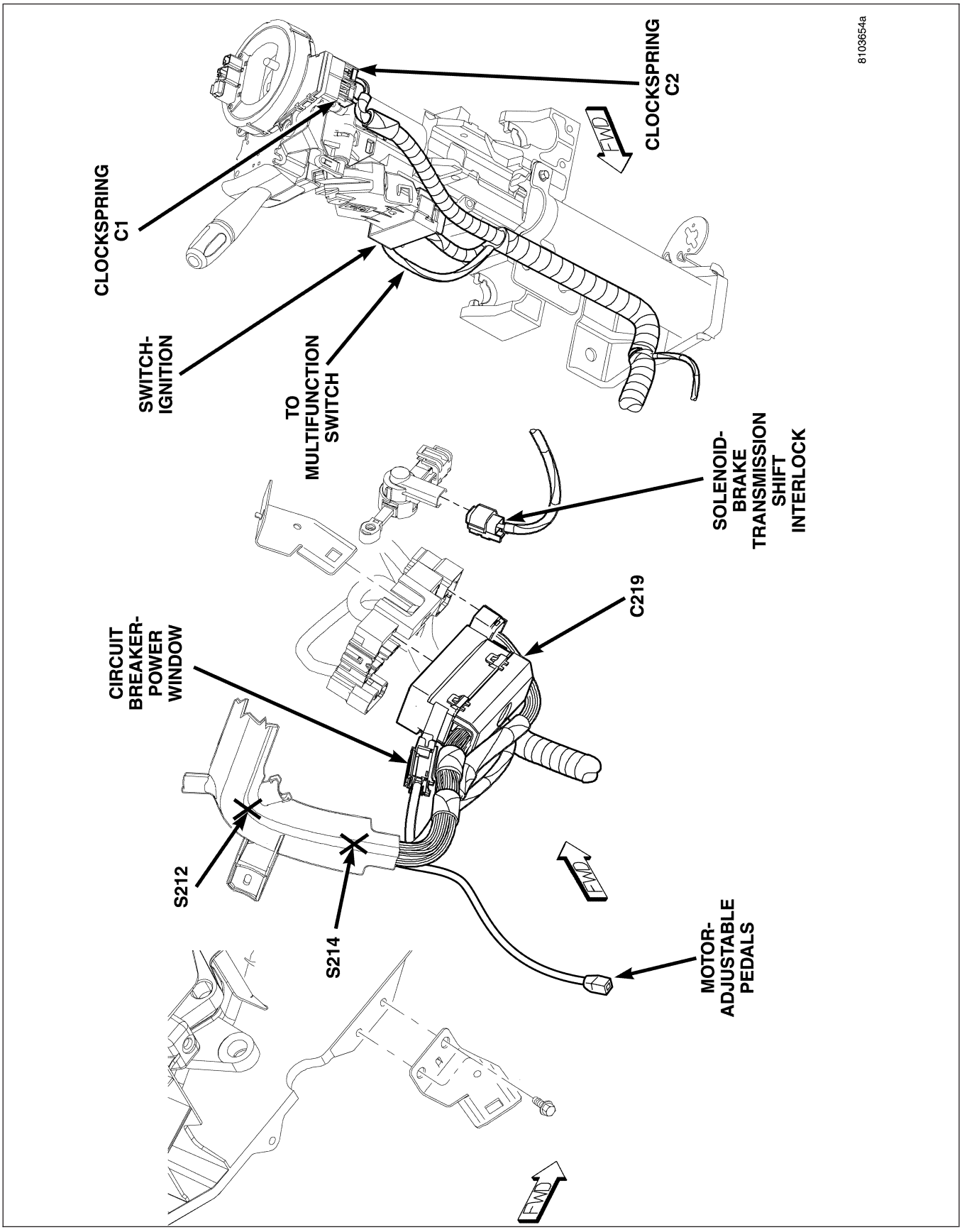

Fig. 45 LEFT STEERING COLUMN

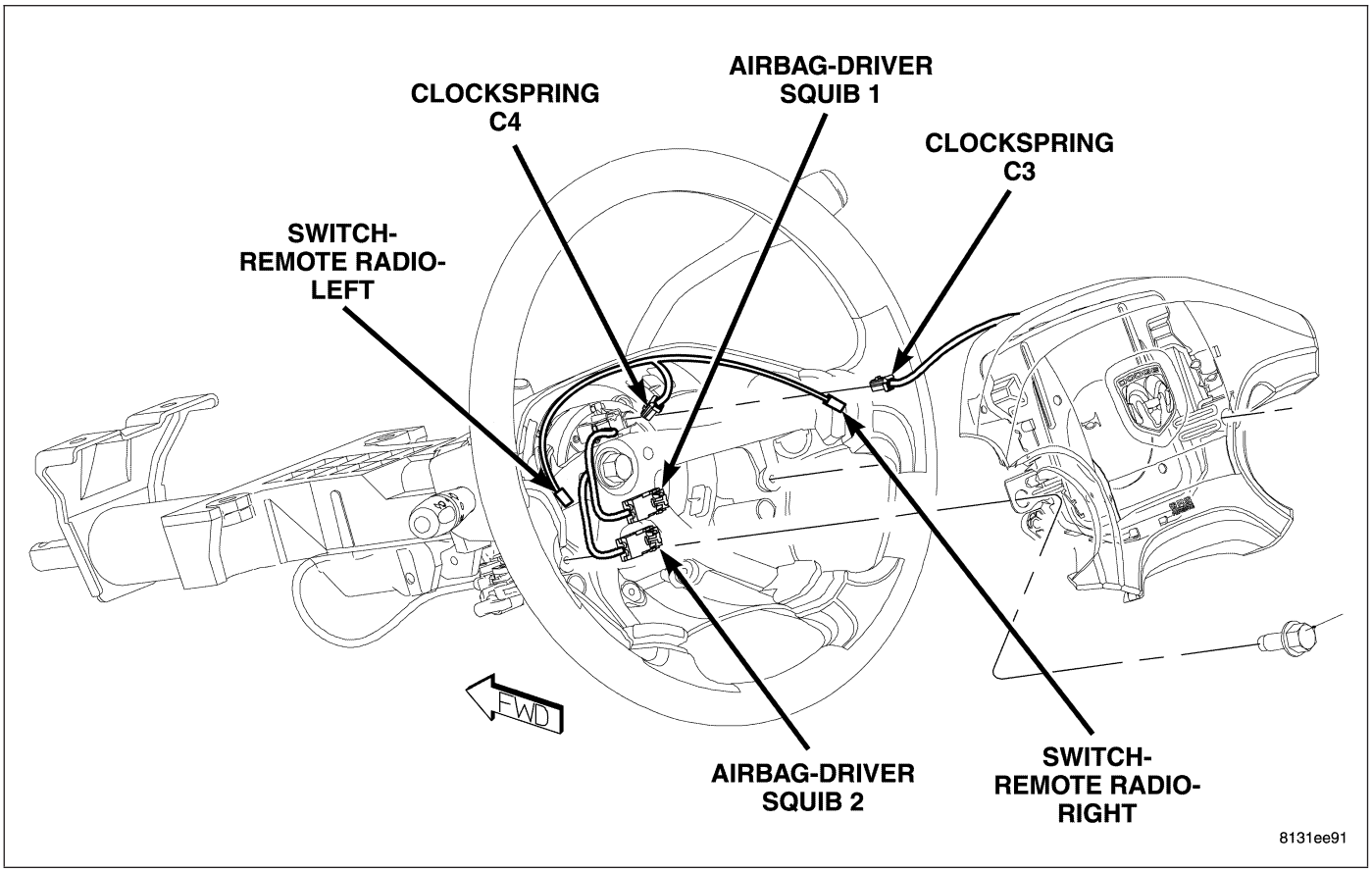

Fig. 46 STEERING WHEEL

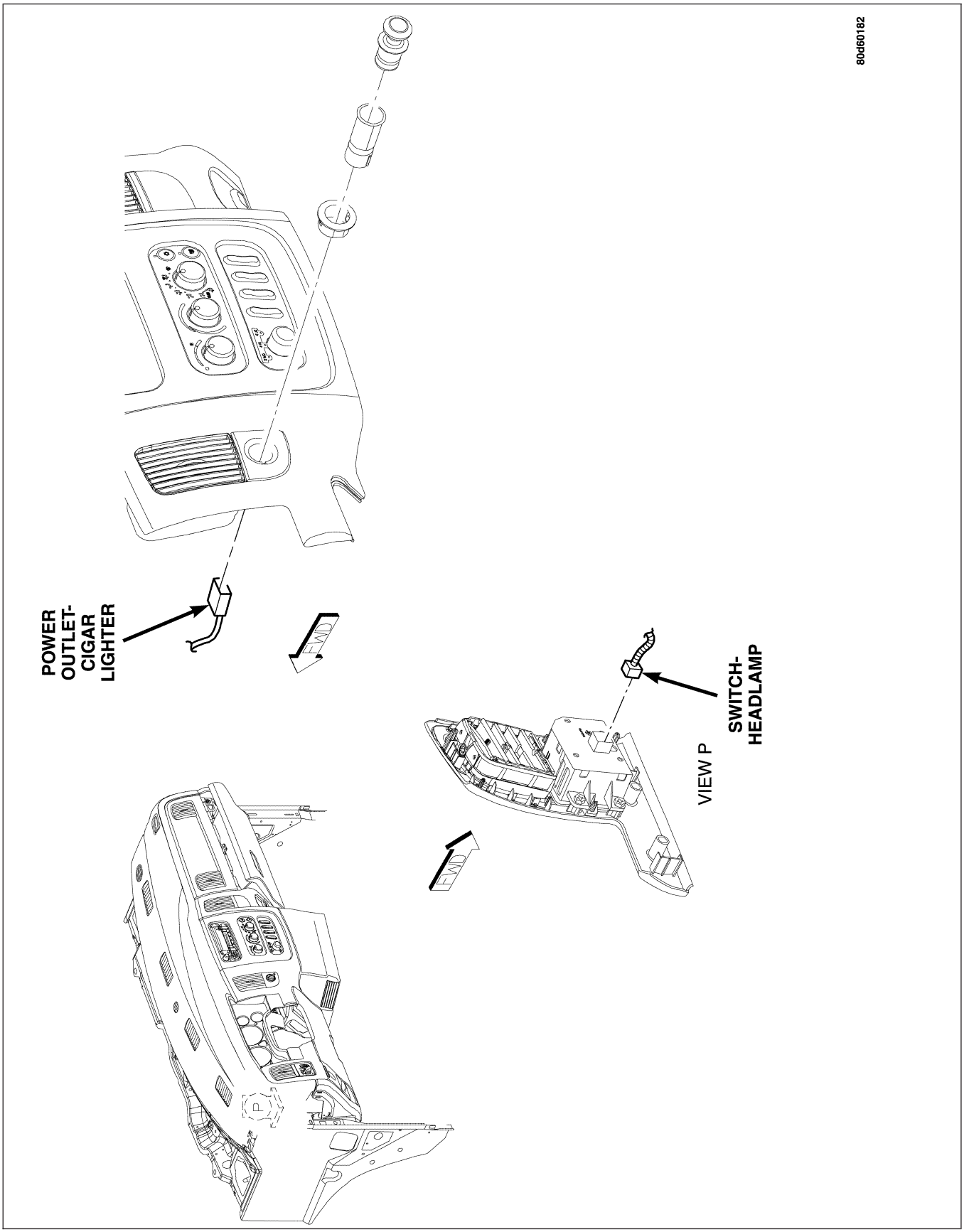

Fig. 47 INSTRUMENT PANEL

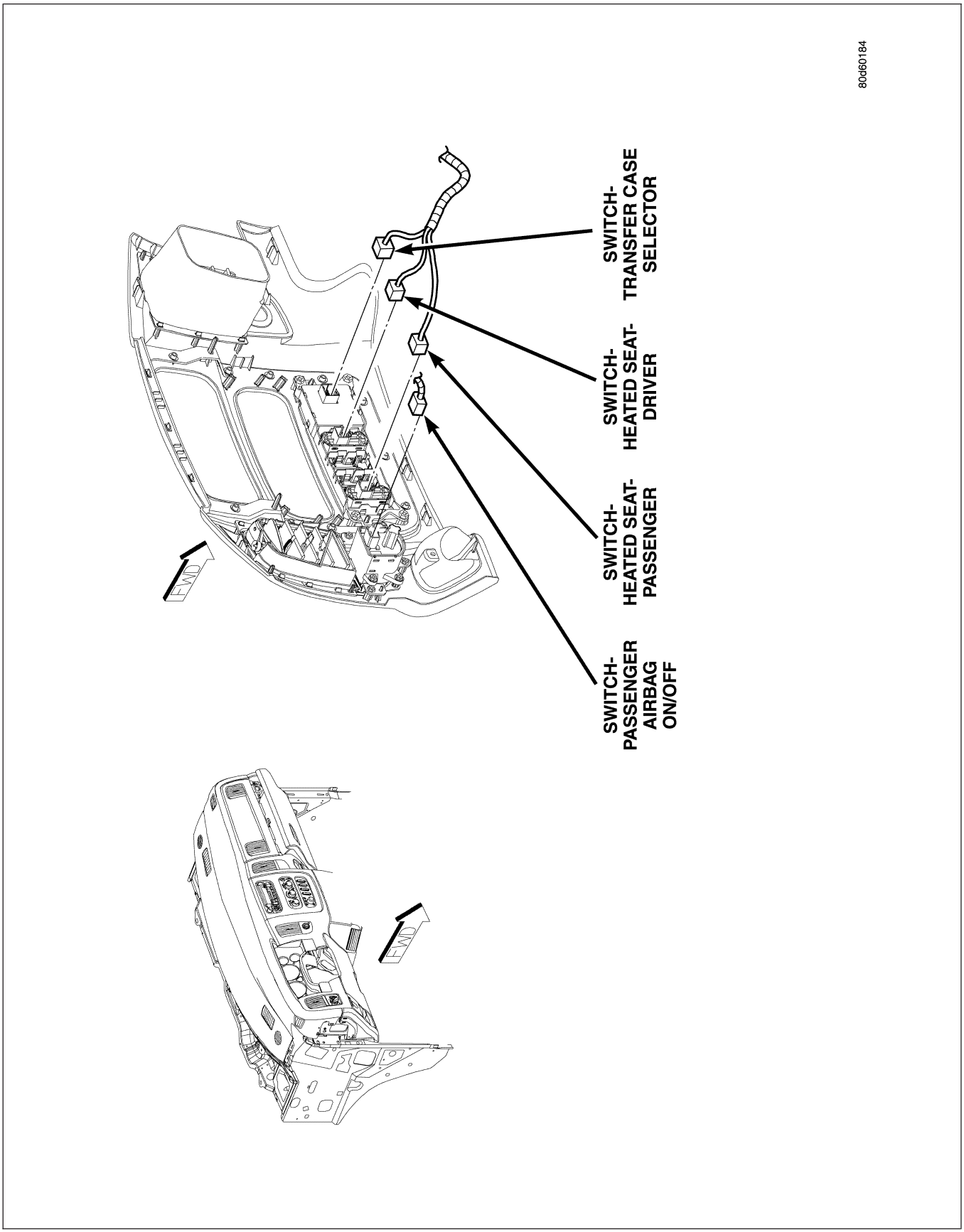

Fig. 48 REAR INSTRUMENT PANEL

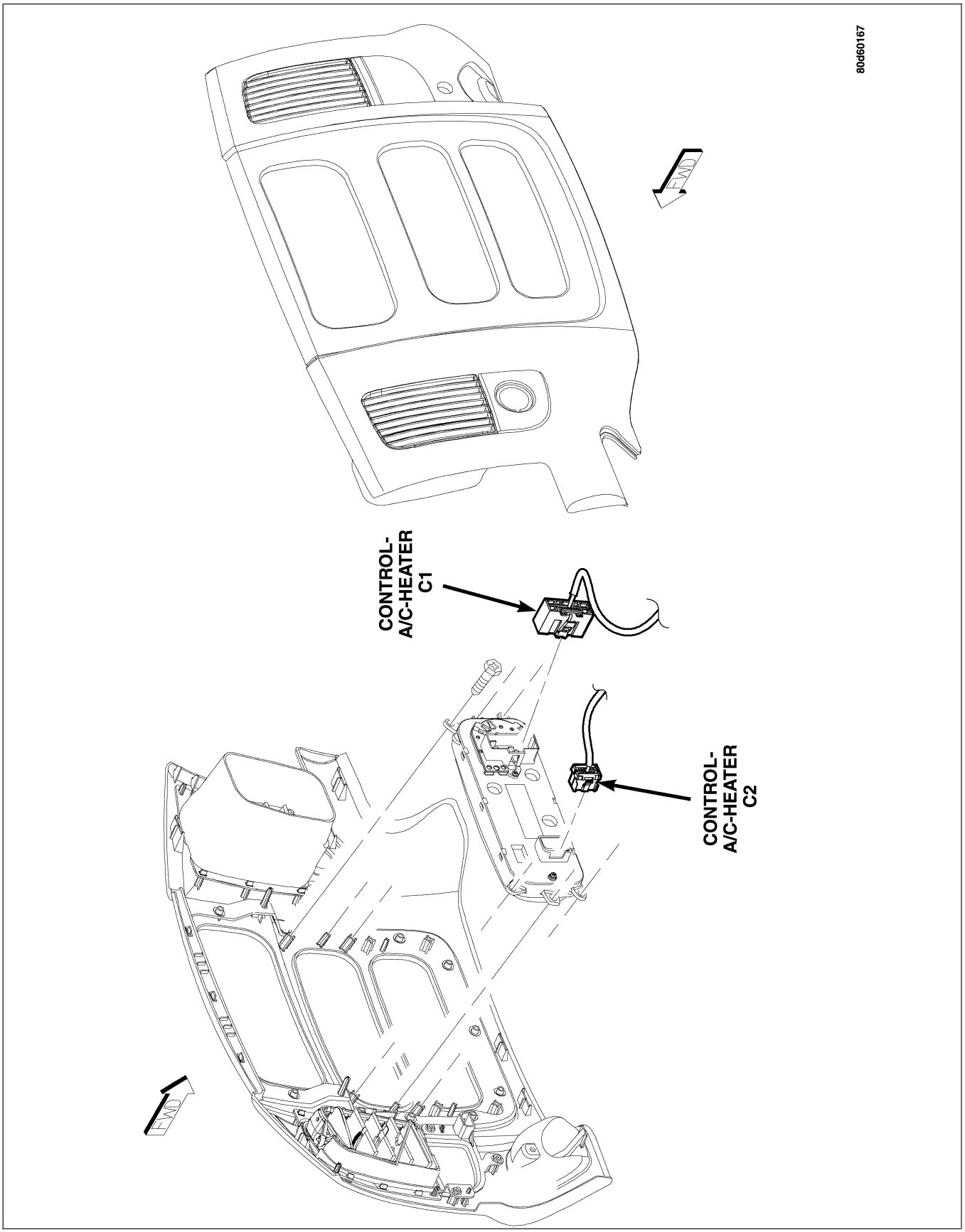

Fig. 49 CENTER INSTRUMENT PANEL

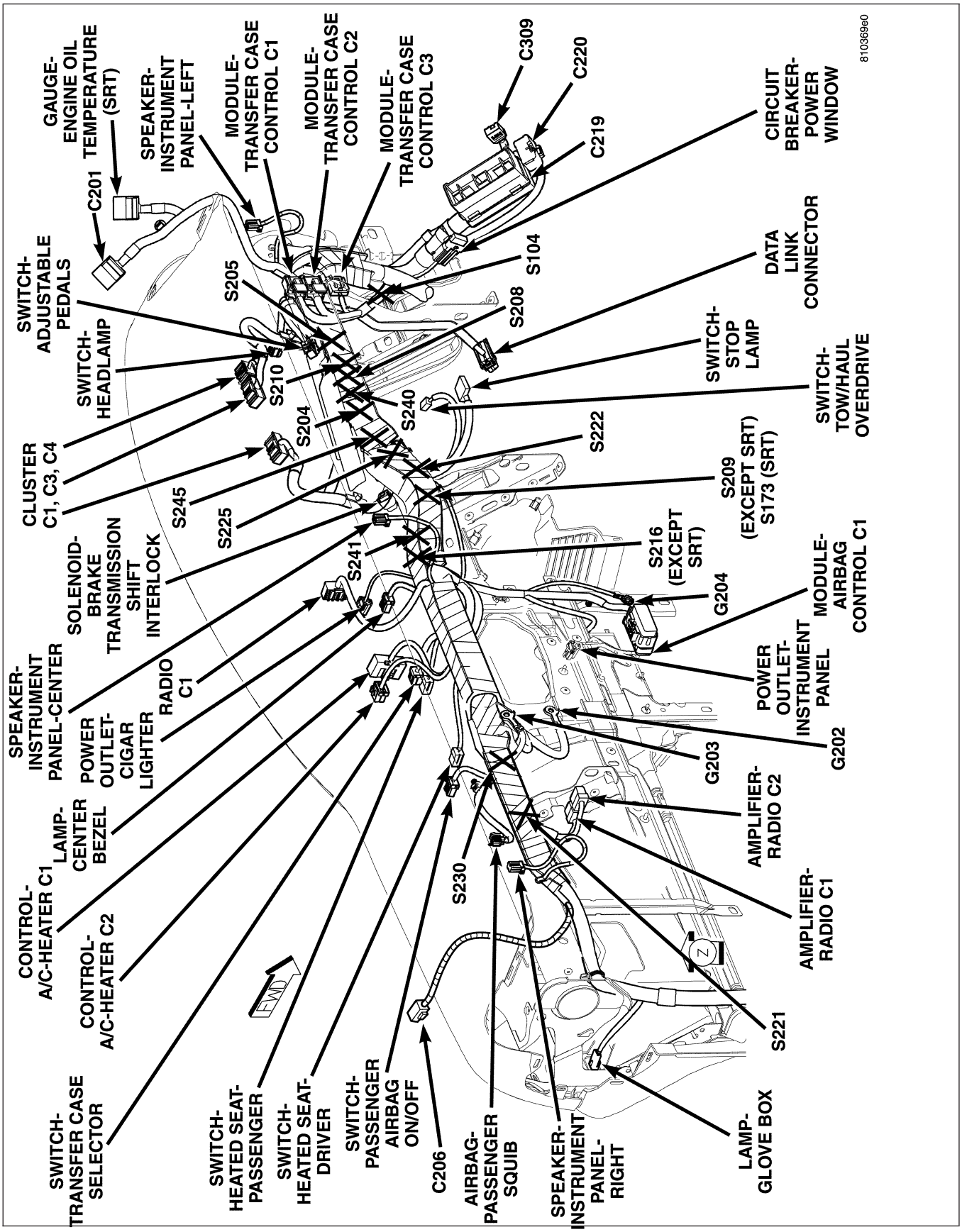

Fig. 50 INSTRUMENT PANEL

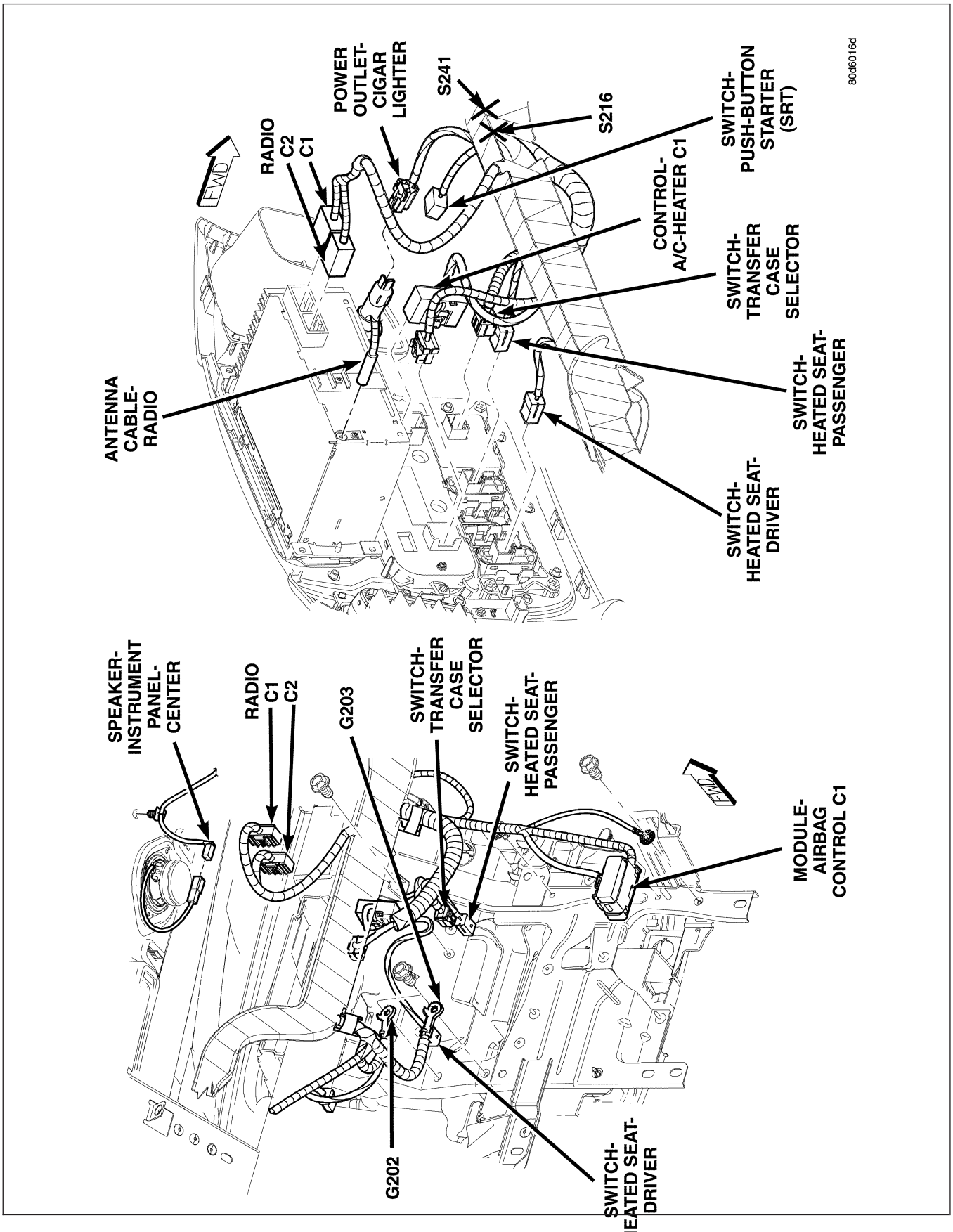

Fig. 51 CENTER INSTRUMENT PANEL

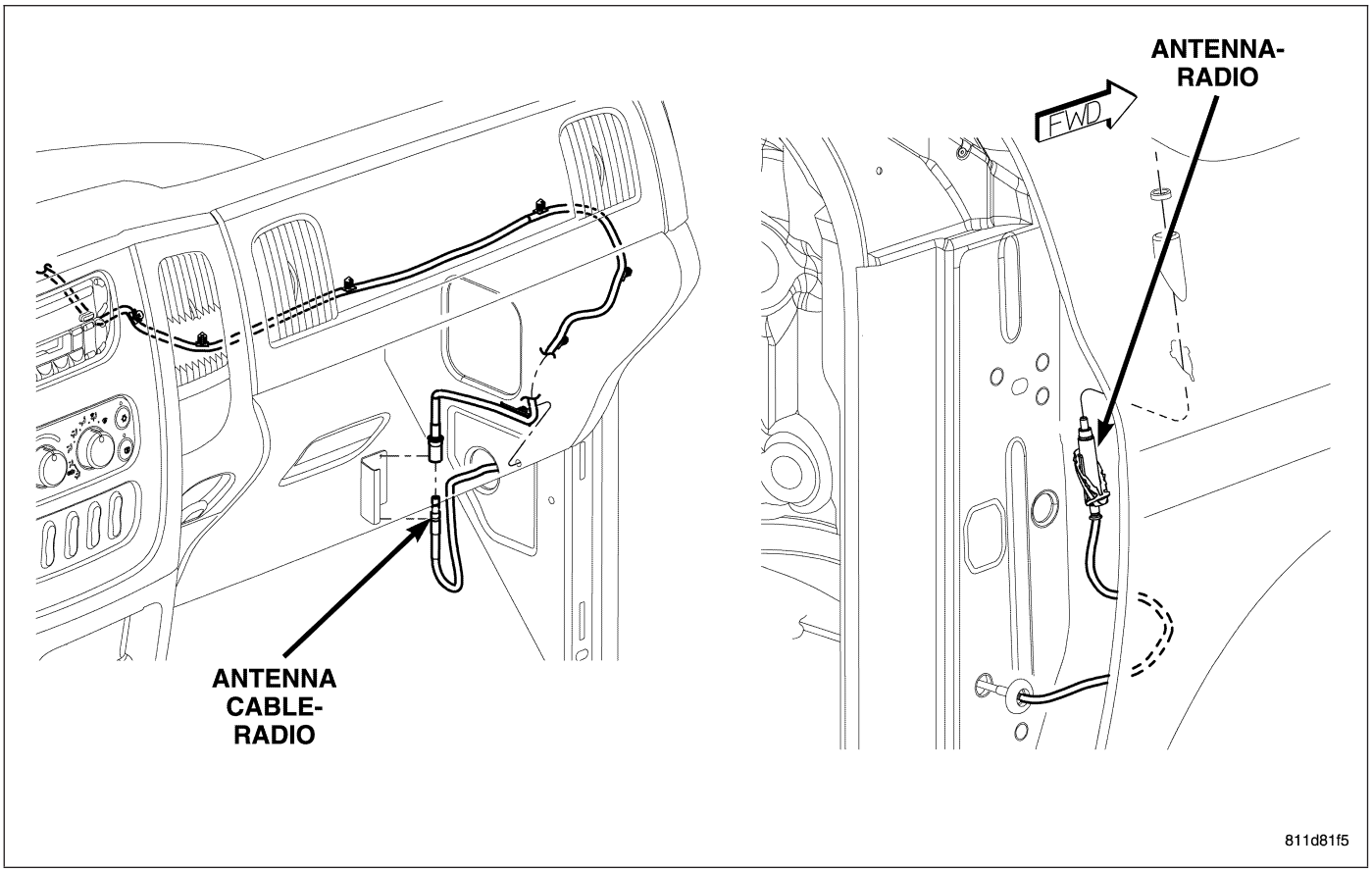

Fig. 52 RADIO ANTENNA

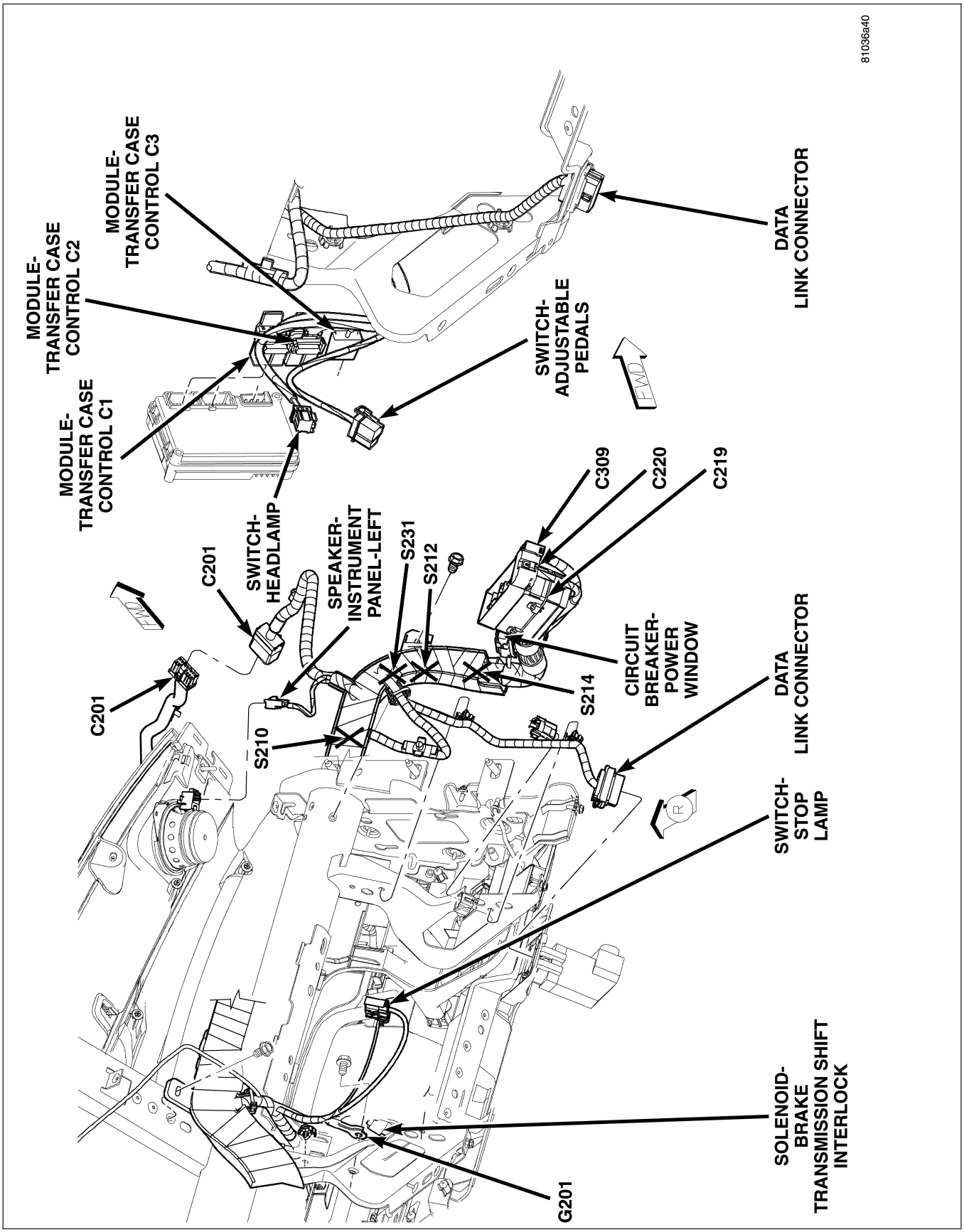

Fig. 53 LEFT INSTRUMENT PANEL

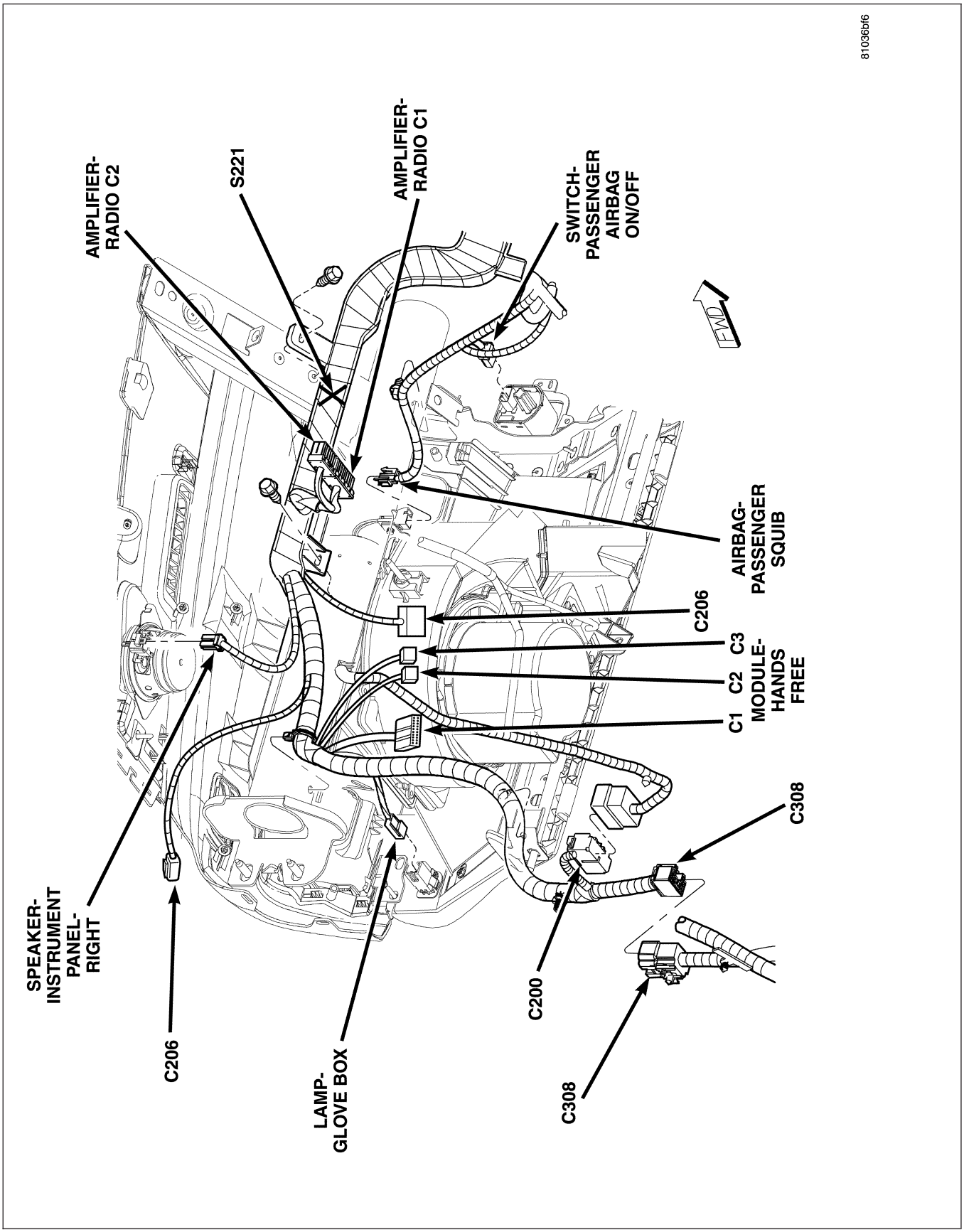

Fig. 54 RIGHT INSTRUMENT PANEL

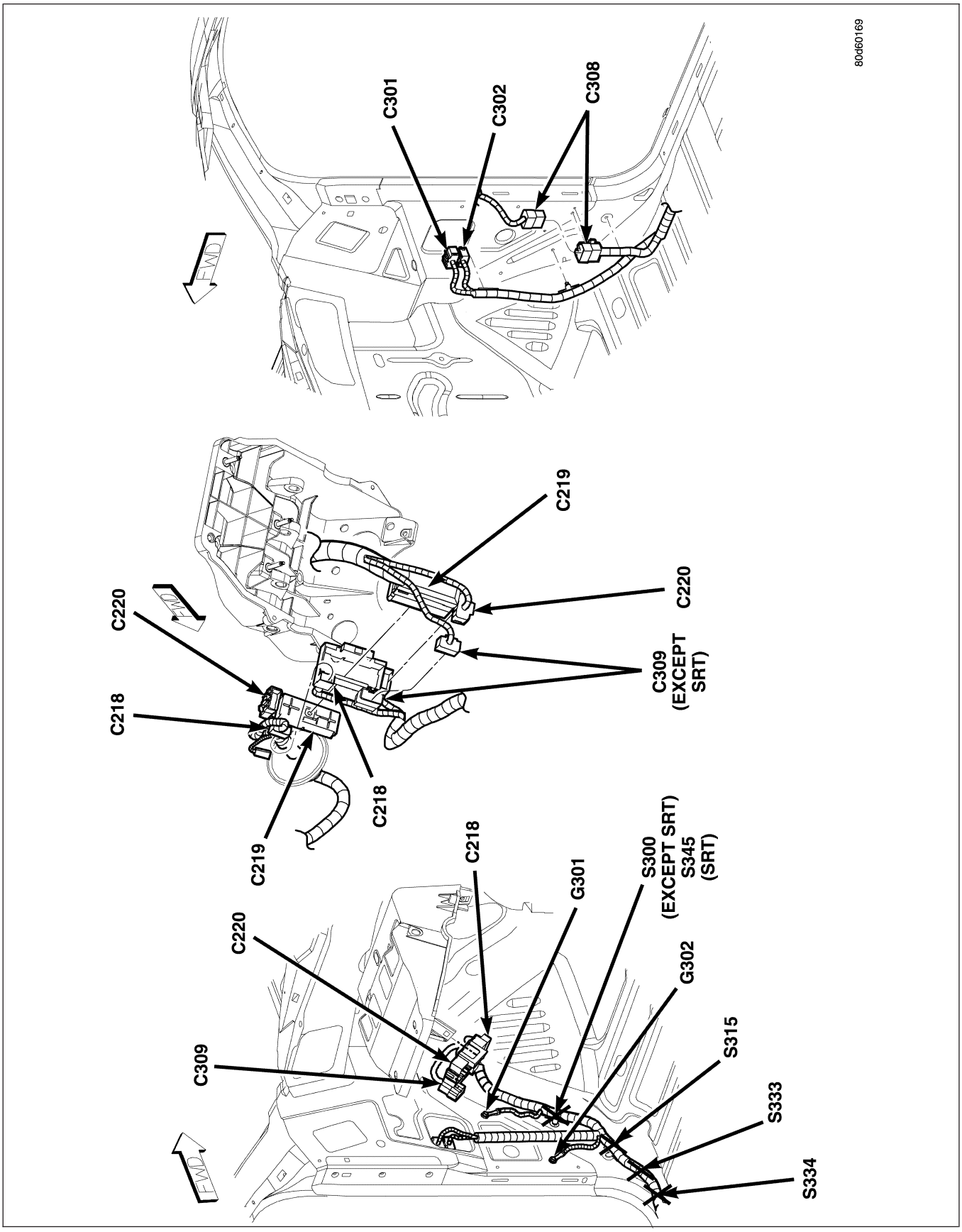

Fig. 55 STANDARD CAB FRONT BODY

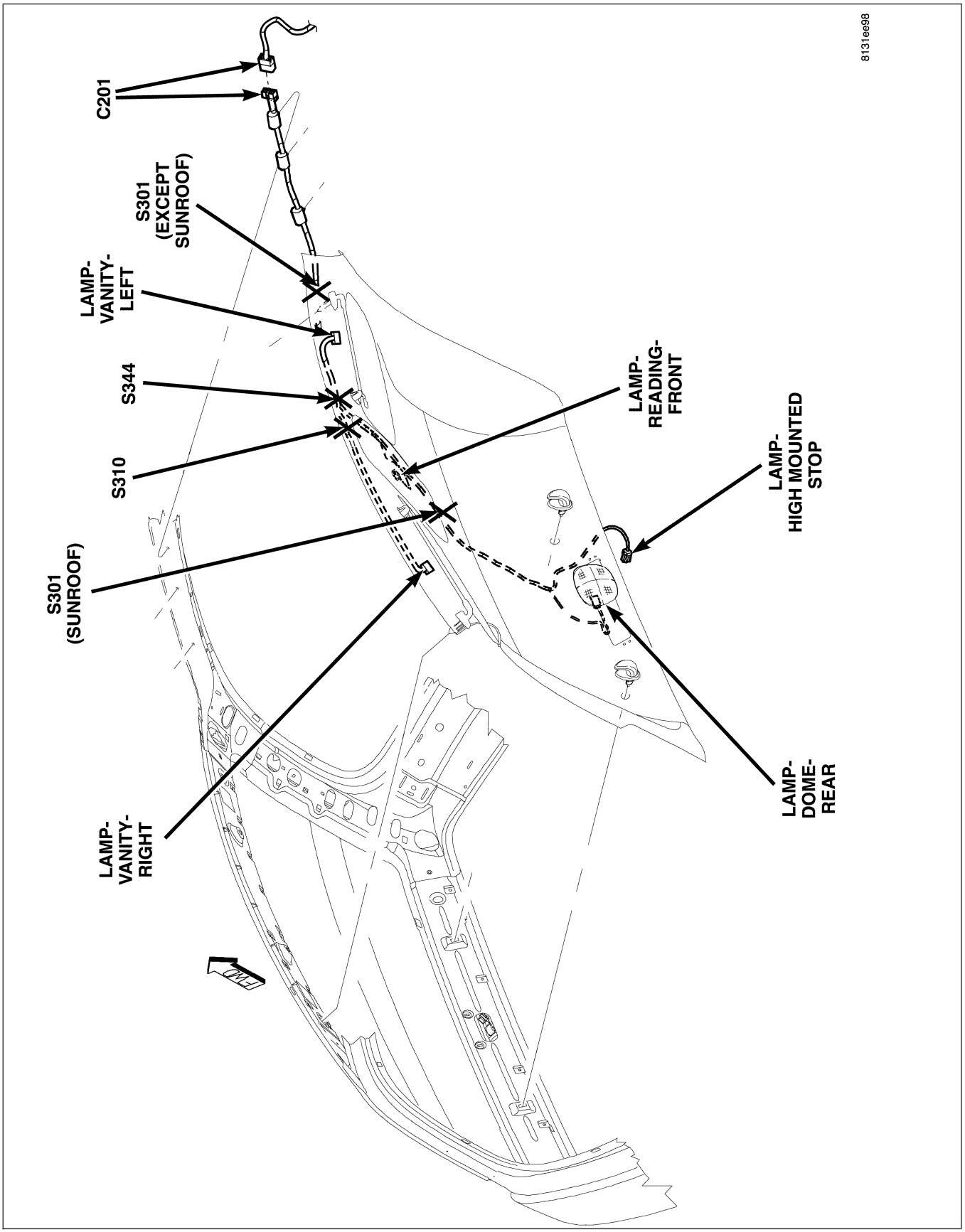

Fig. 56 HEADLINER

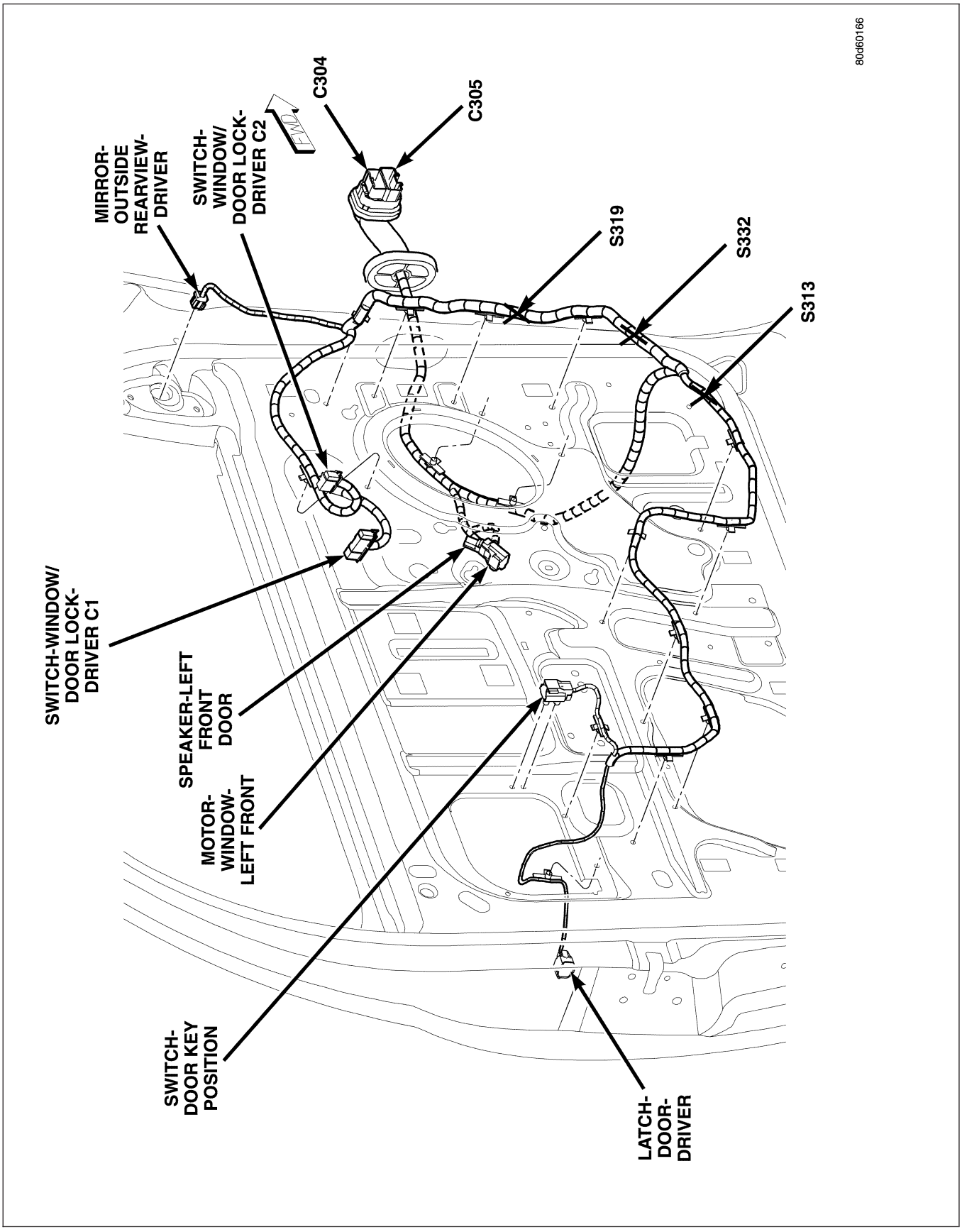

Fig. 57 LEFT FRONT DOOR PREMIUM

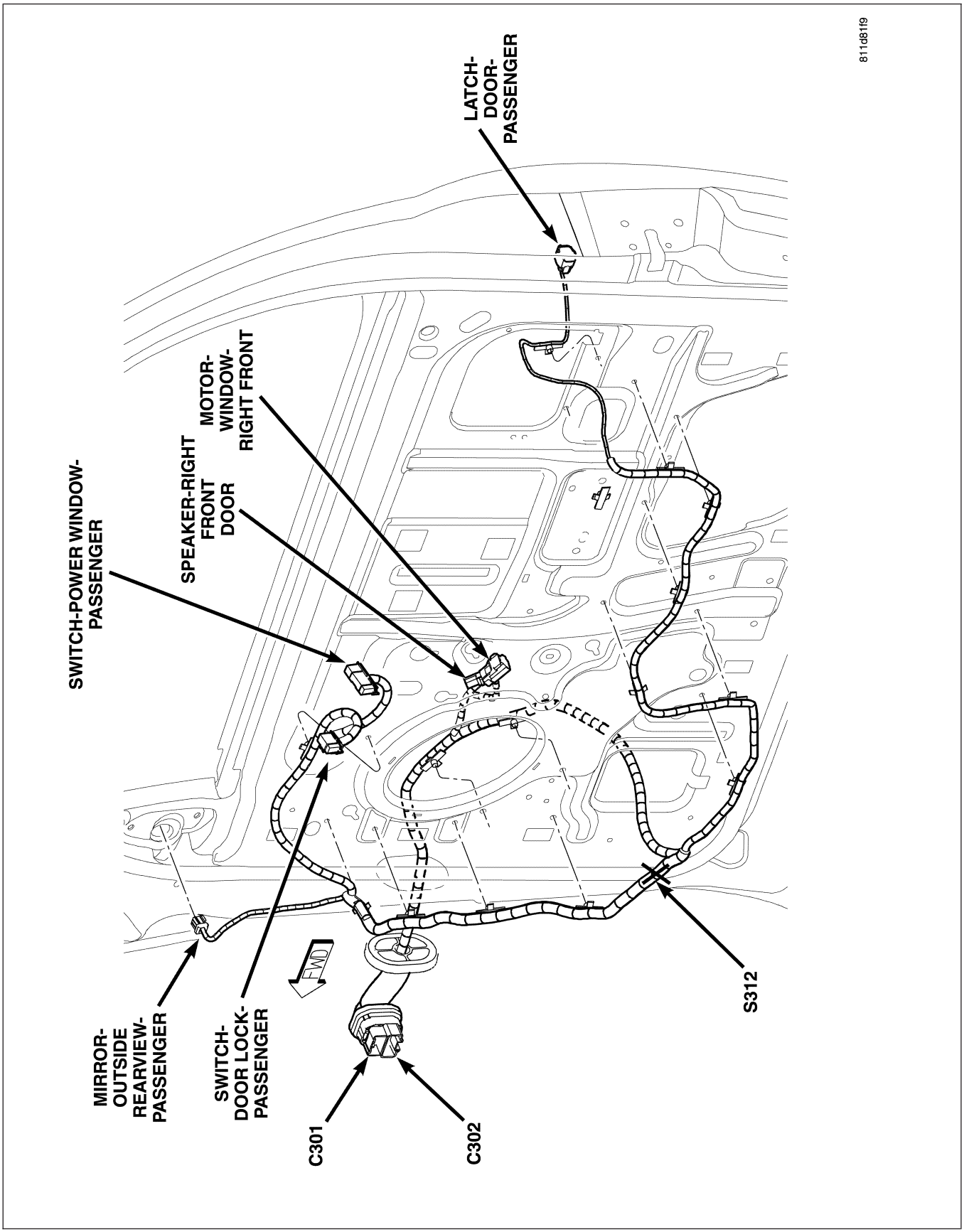

Fig. 58 RIGHT FRONT DOOR PREMIUM

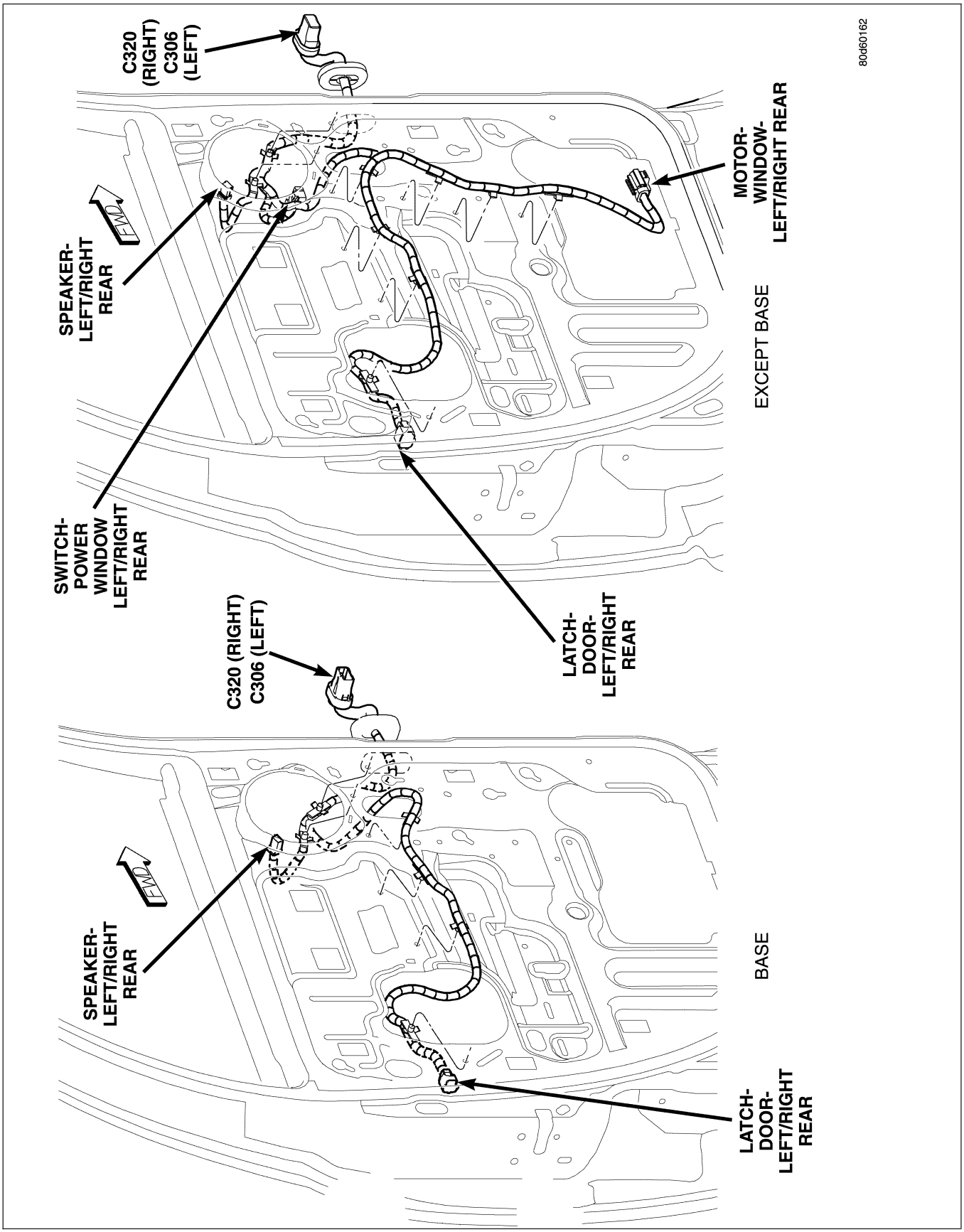

Fig. 59 LEFT REAR DOOR (RIGHT SIDE SIMILAR)

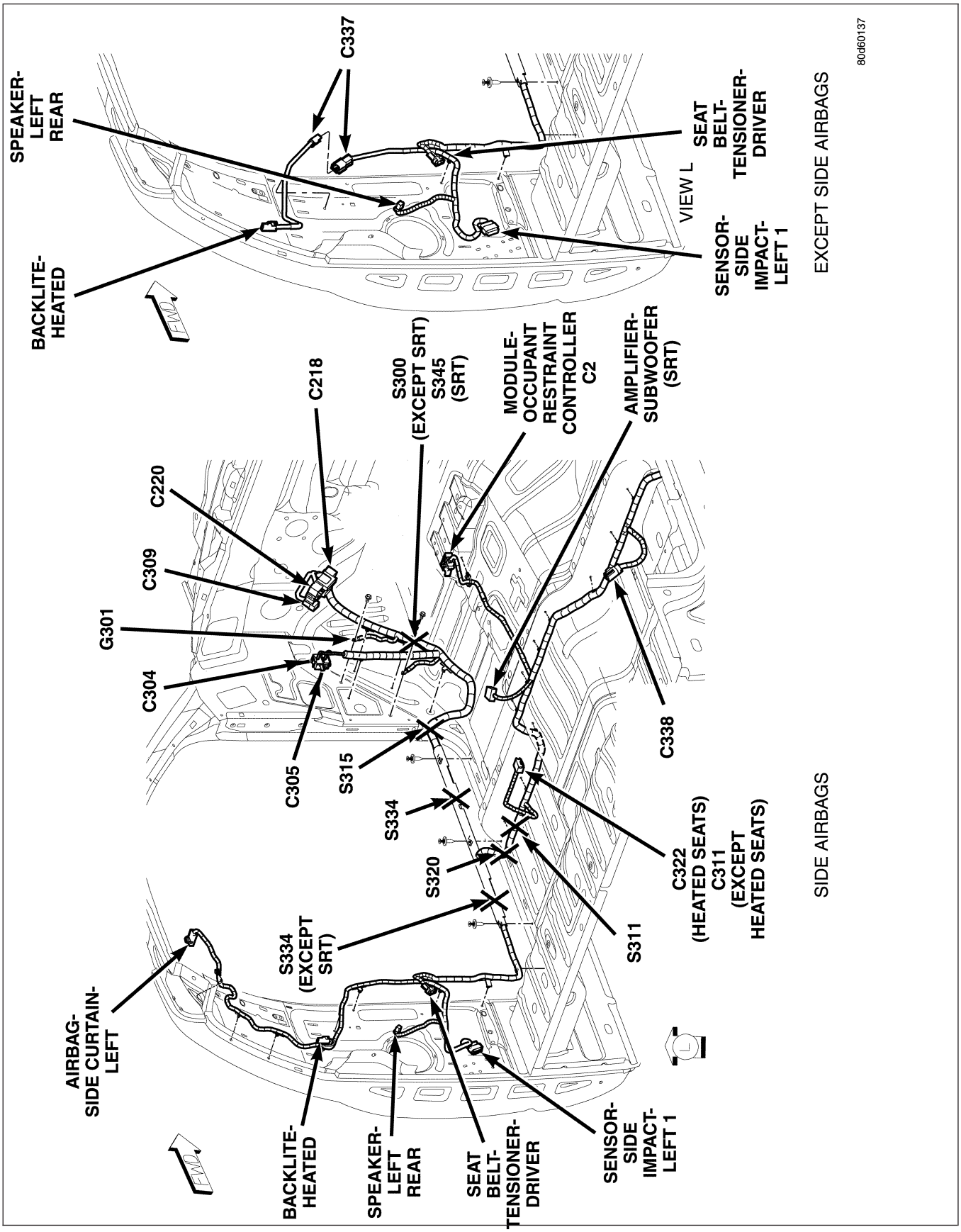

Fig. 60 STANDARD CAB LEFT SIDE BODY

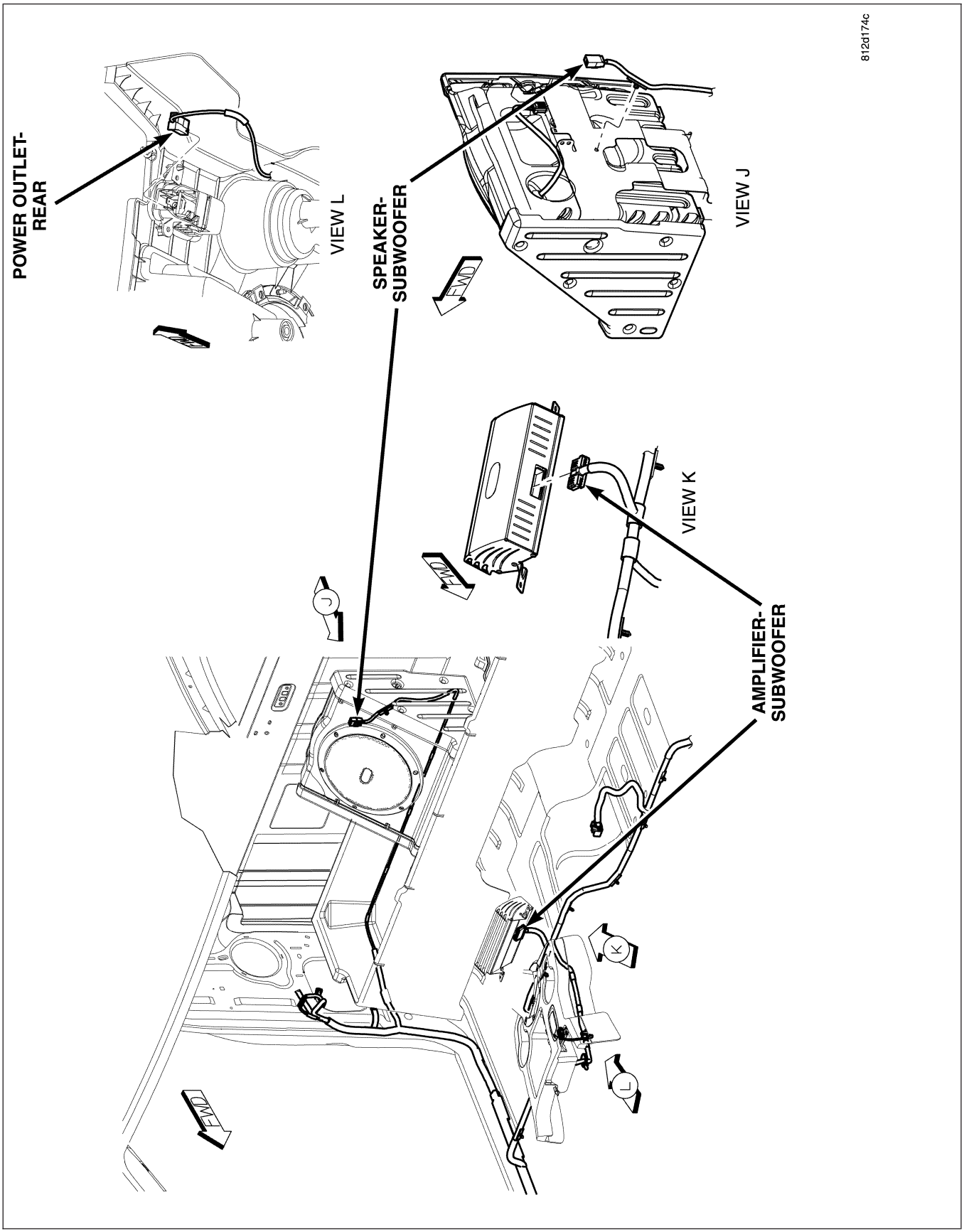

Fig. 61 CENTER BODY (SRT)

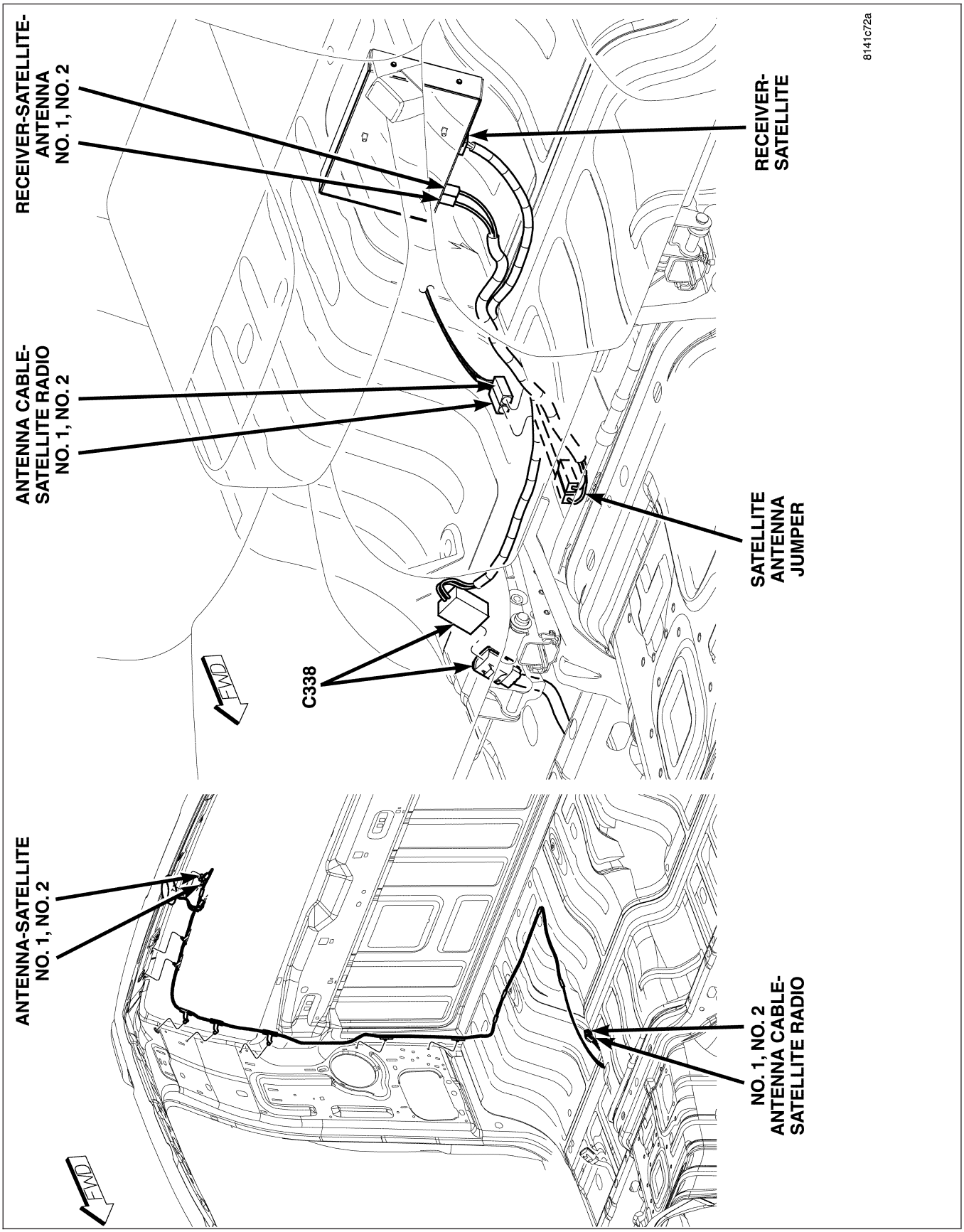

Fig. 62 SATELLITE RADIO - STANDARD CAB

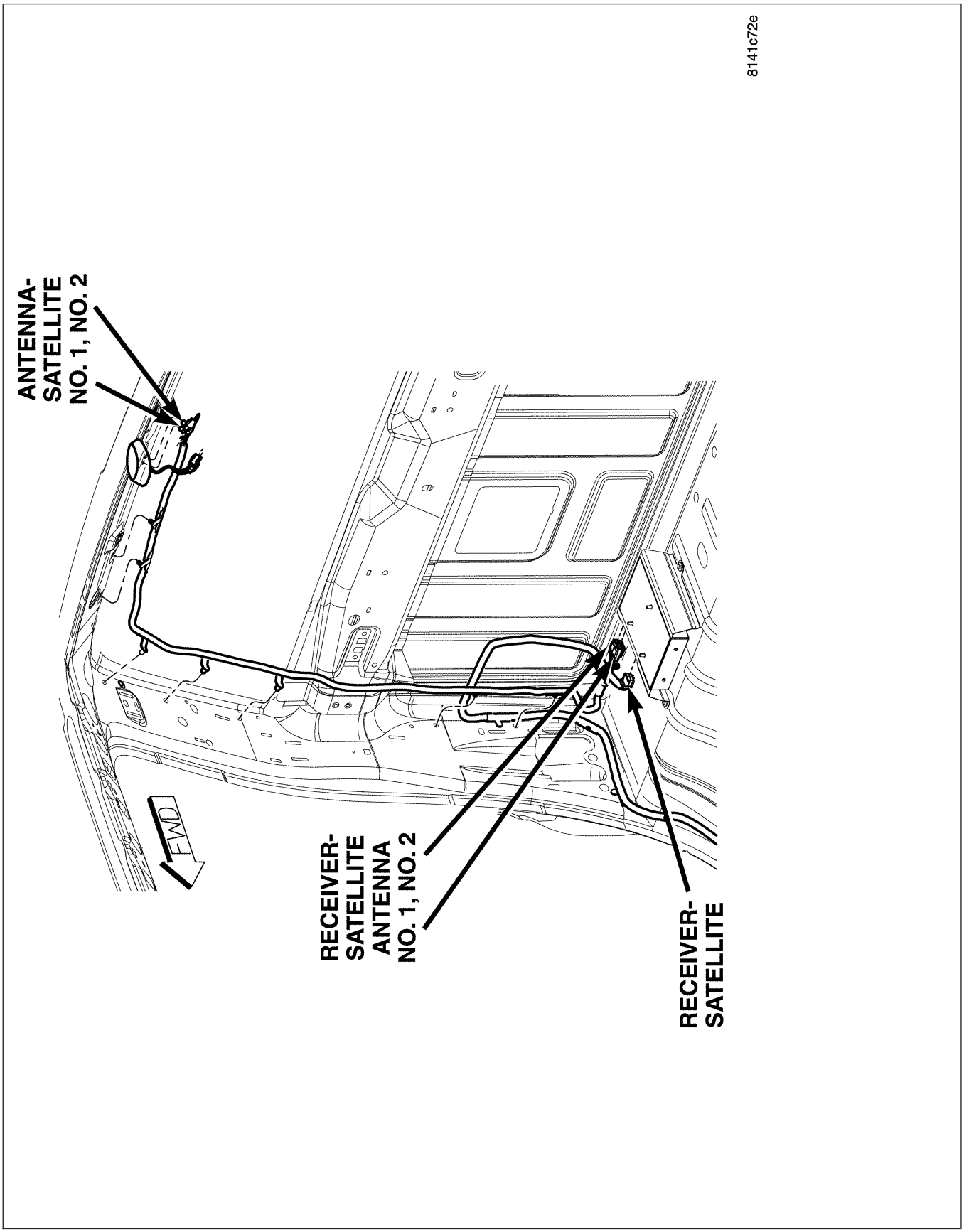

Fig. 63 SATELLITE RADIO - QUAD CAB

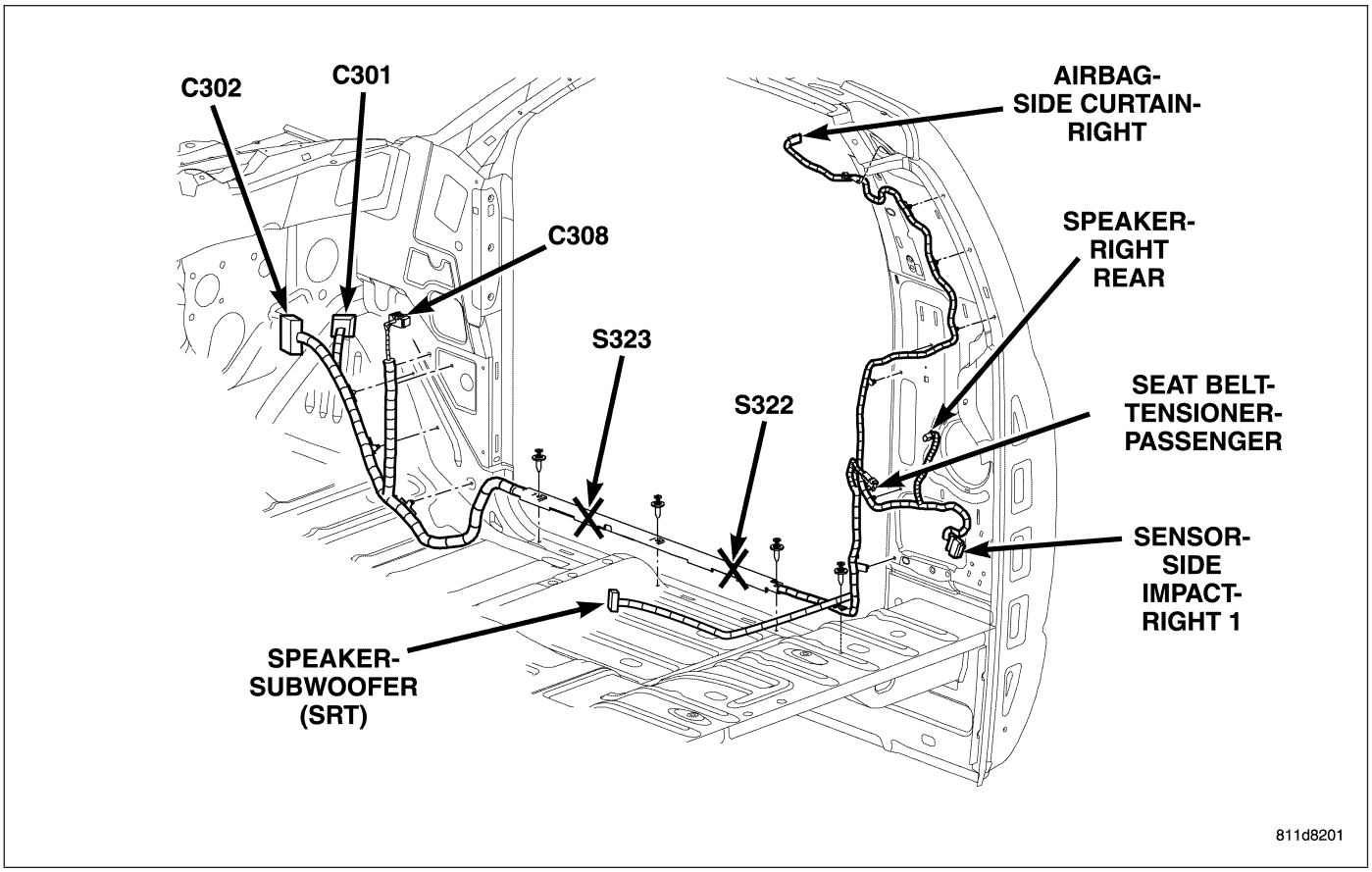

Fig. 64 STANDARD CAB RIGHT SIDE BODY

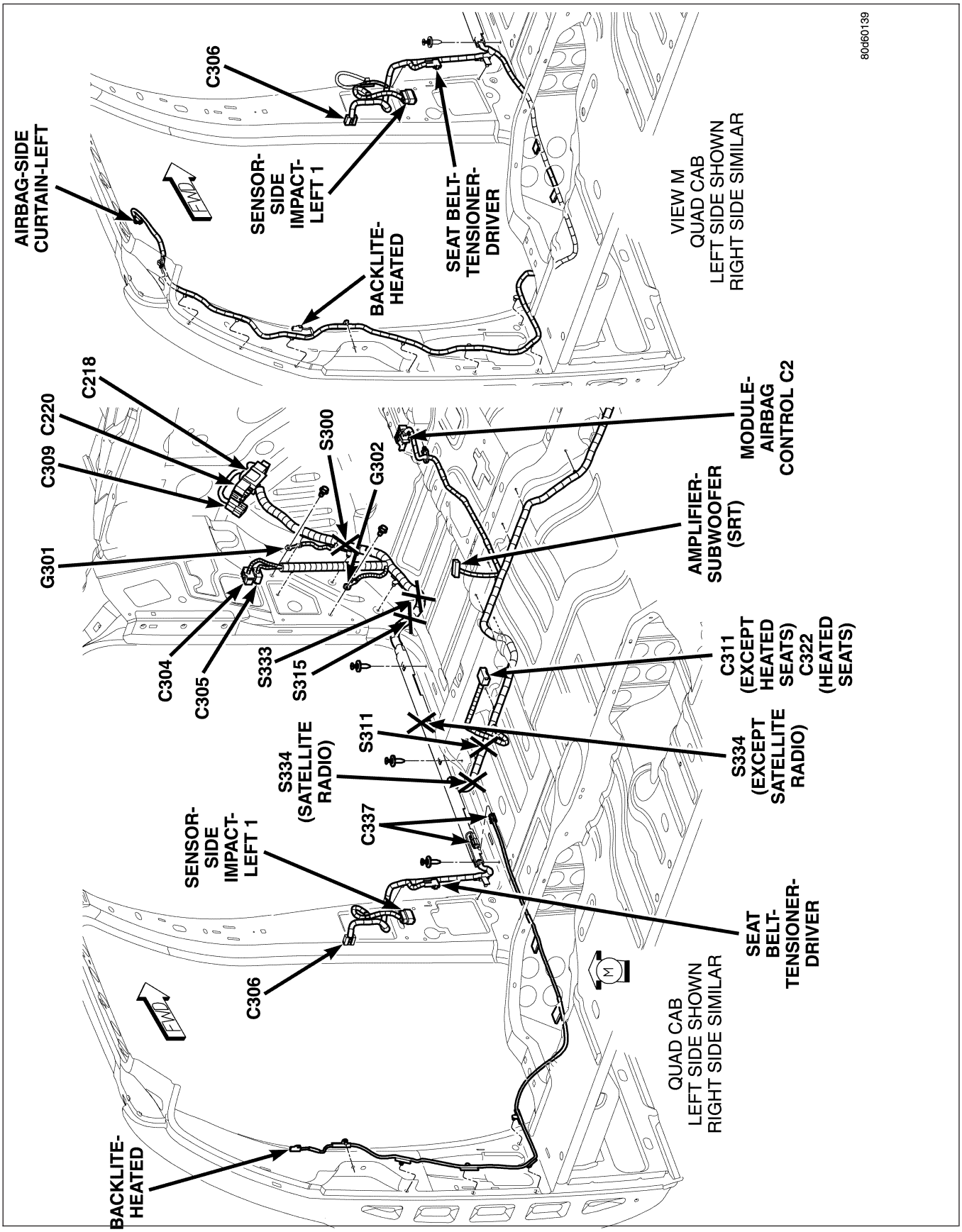

Fig. 65 QUAD CAB LEFT SIDE BODY

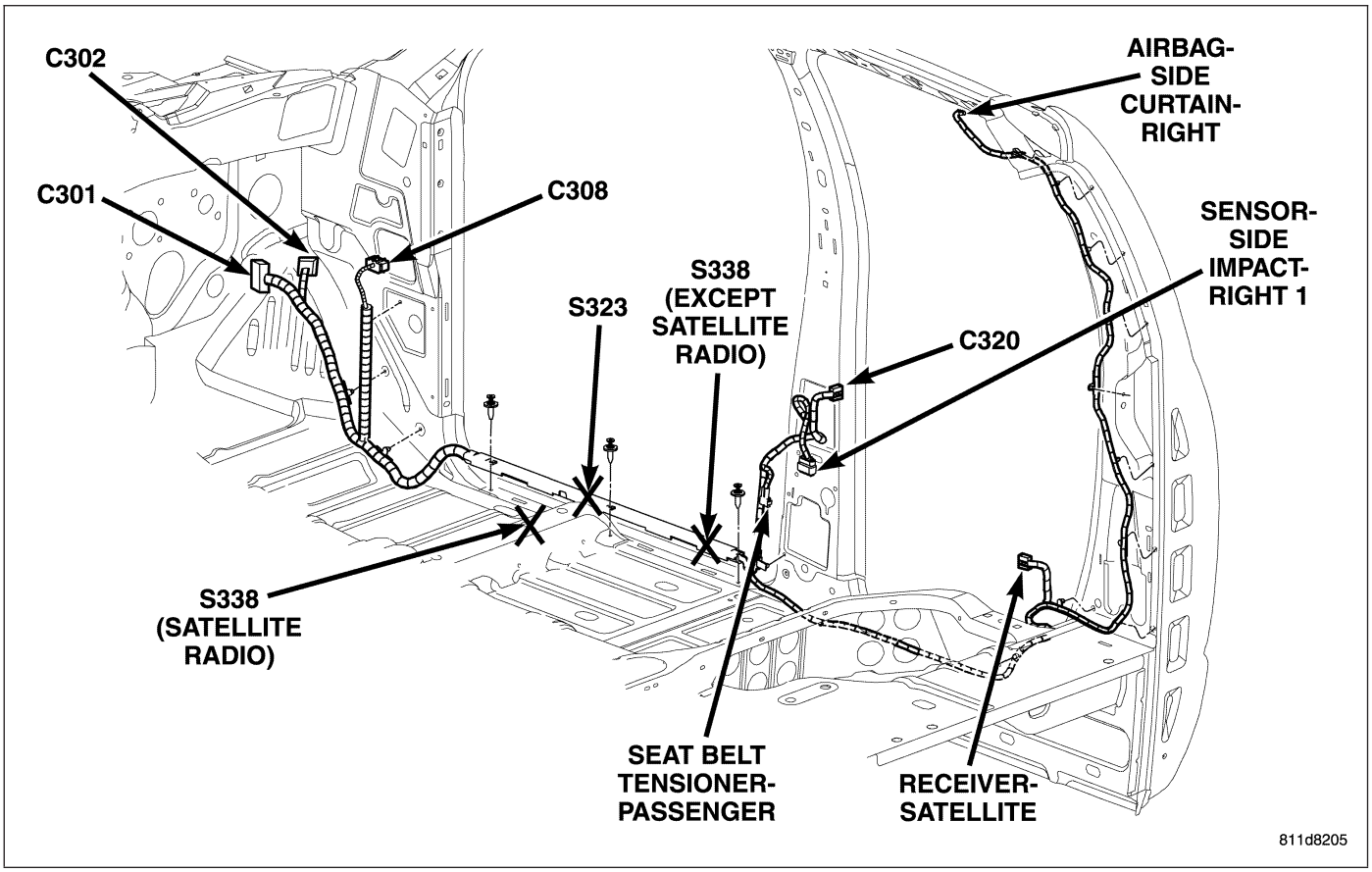

Fig. 66 QUAD CAB RIGHT SIDE BODY

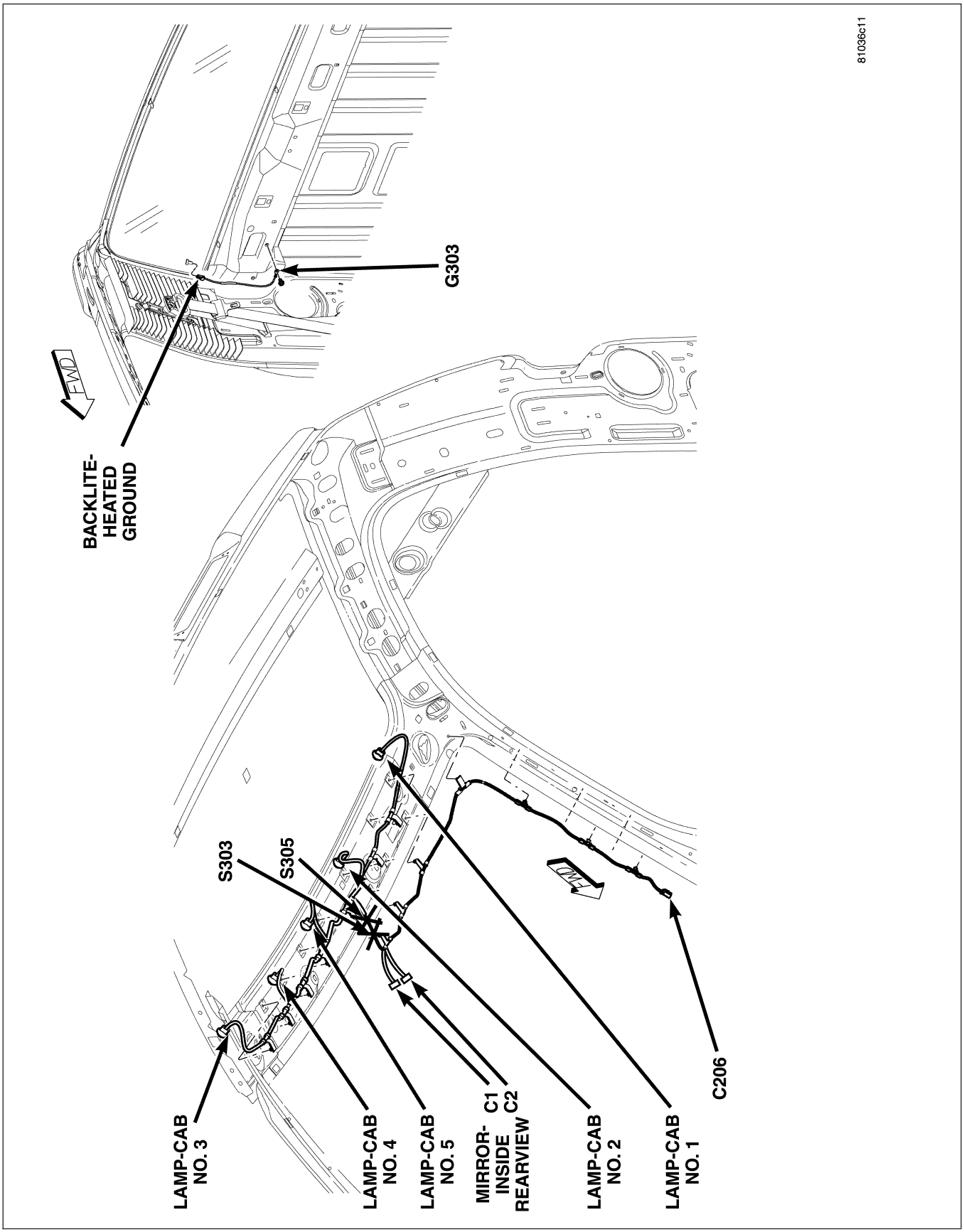
81036c11
G303
FWD
BACKLITE-
HEATED
GROUND
S303
S305
FWD
LAMP-CAB
NO. 3
LAMP-CAB
NO. 4
LAMP-CAB
NO. 5
MIRROR-
INSIDE
REARVIEW
C1
C2
LAMP-CAB
NO. 2
LAMP-CAB
NO. 1
C206

Fig. 67 ROOF

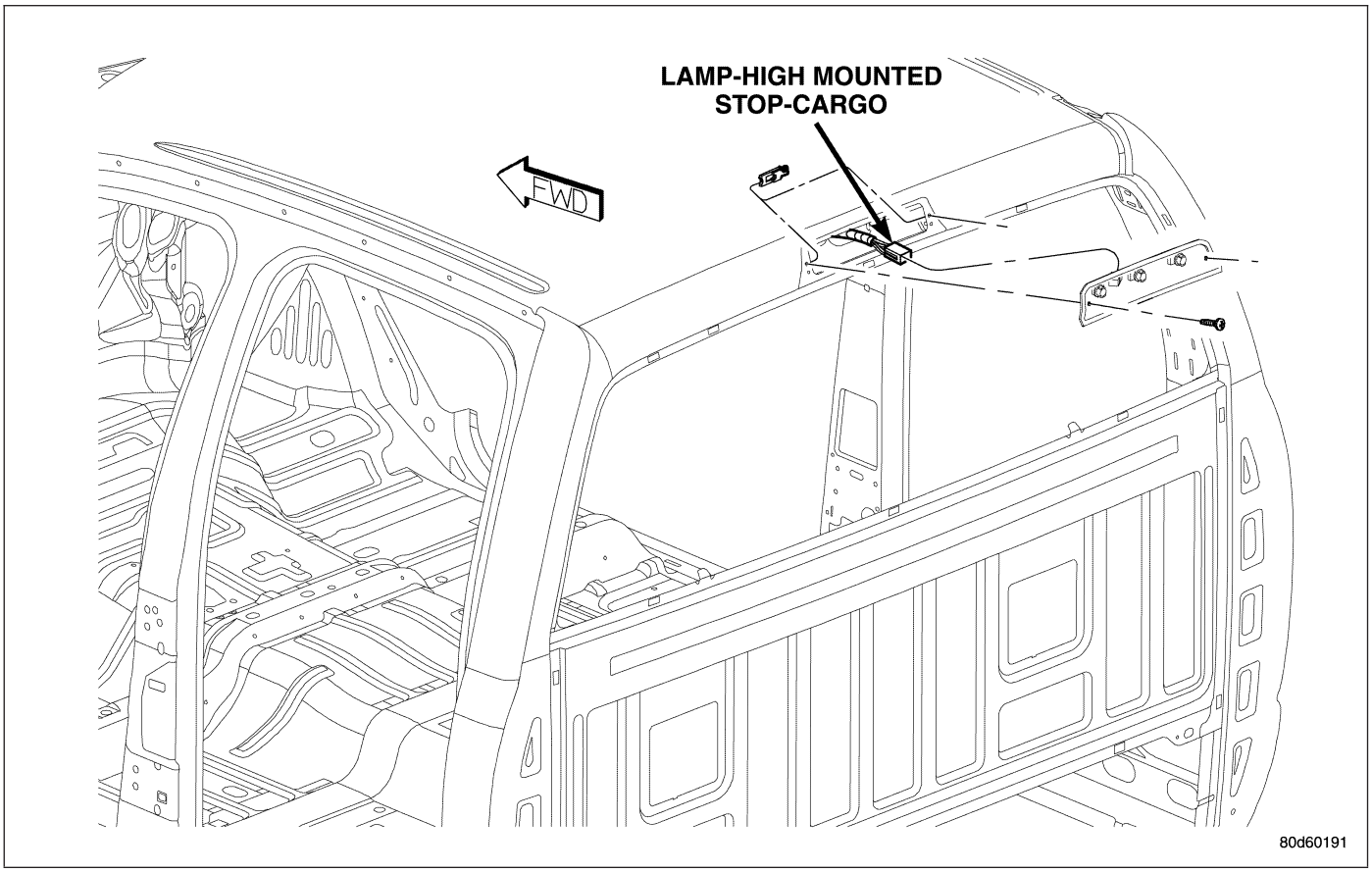

Fig. 68 REAR BODY

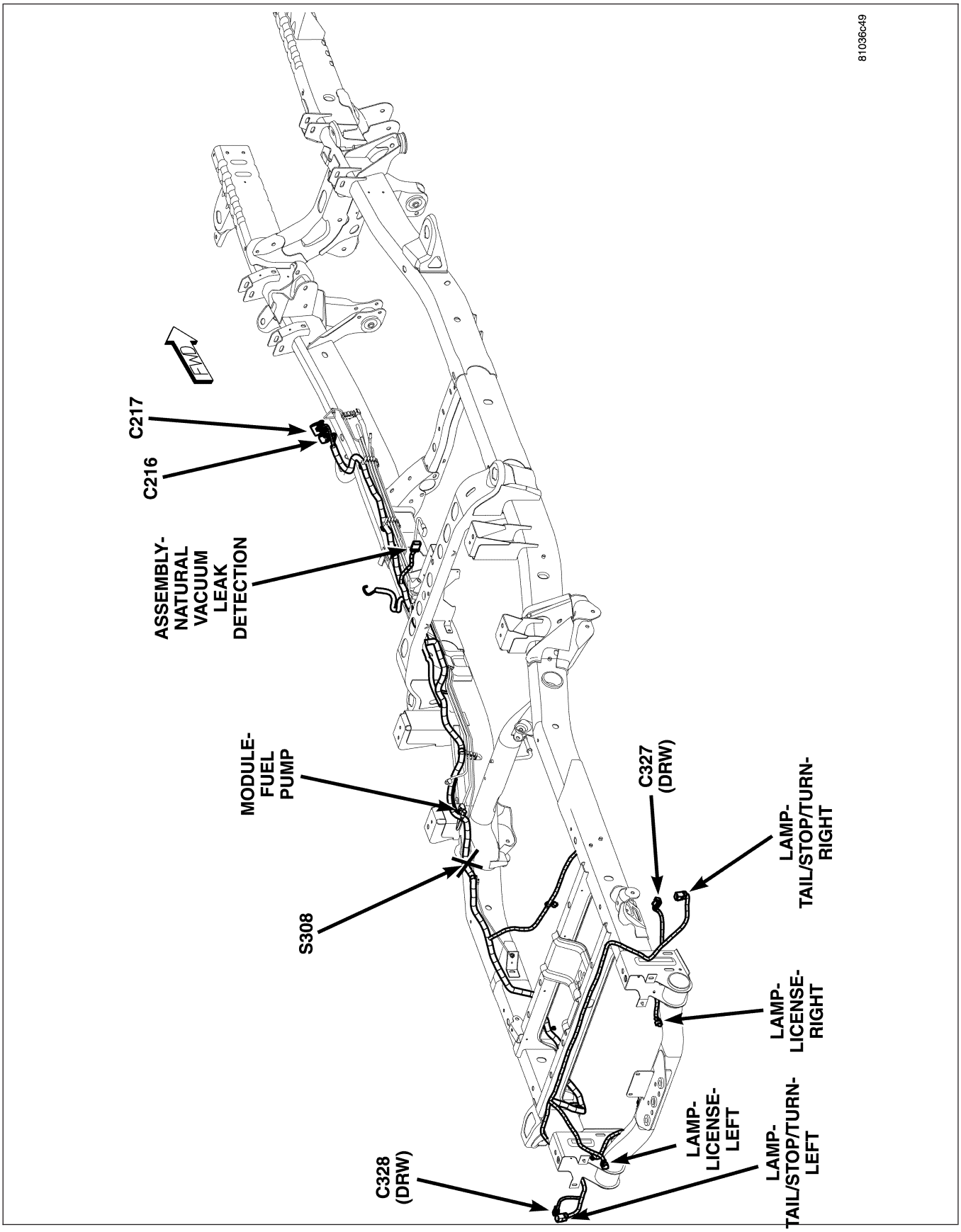

Fig. 69 CHASSIS

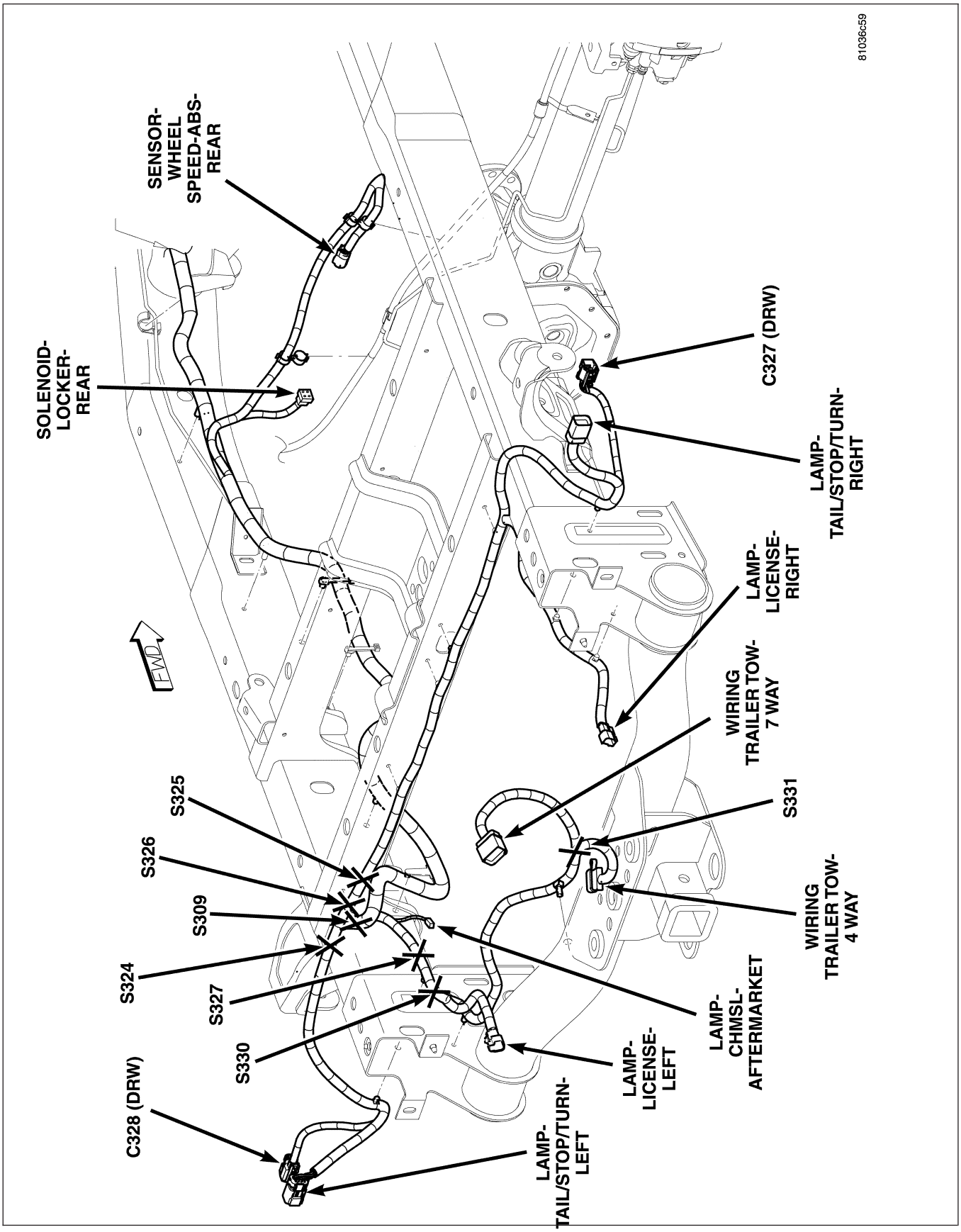

Fig. 70 REAR CHASSIS

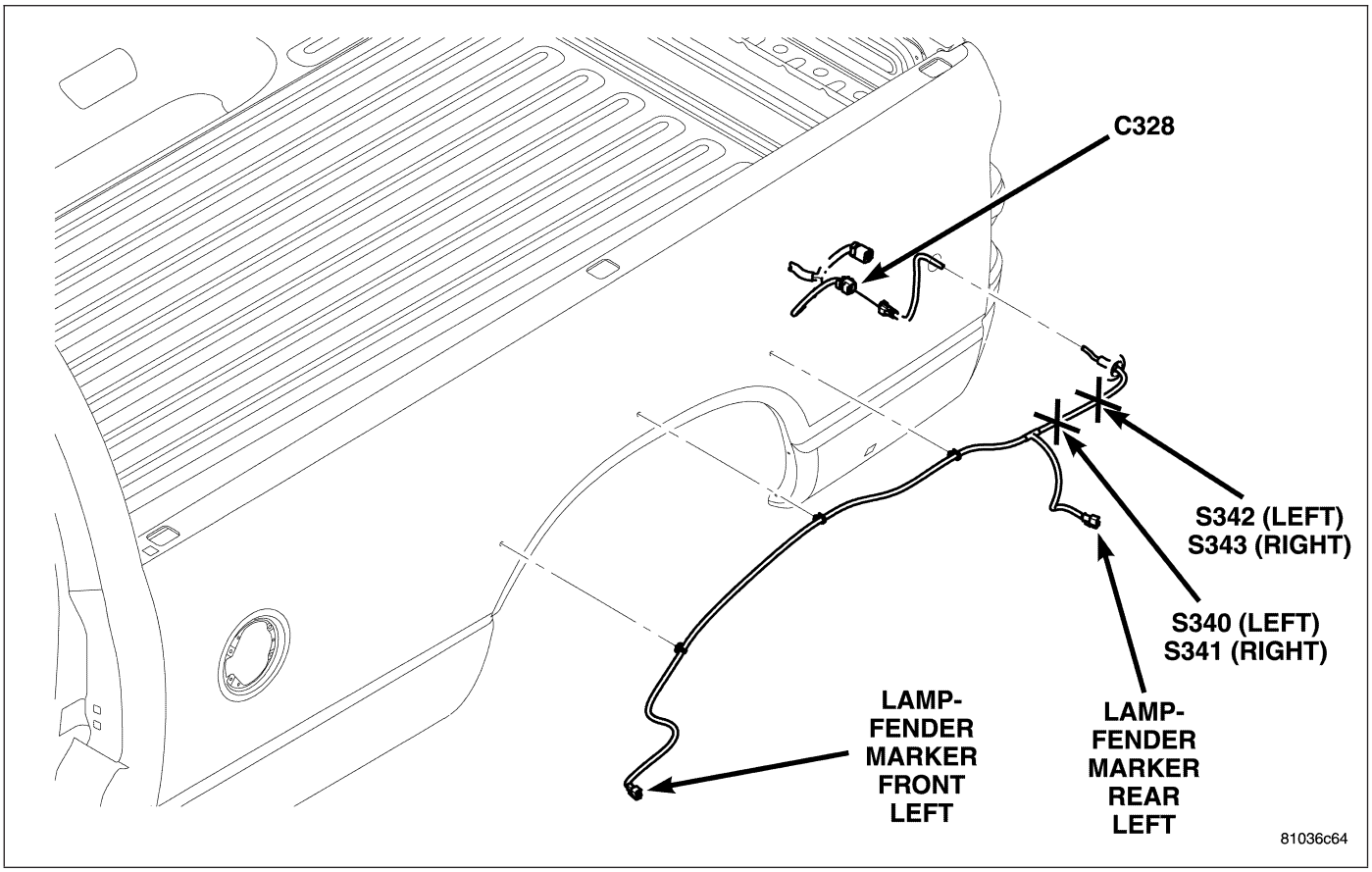

Fig. 71 LEFT REAR FENDER (RIGHT SIDE SIMILAR)

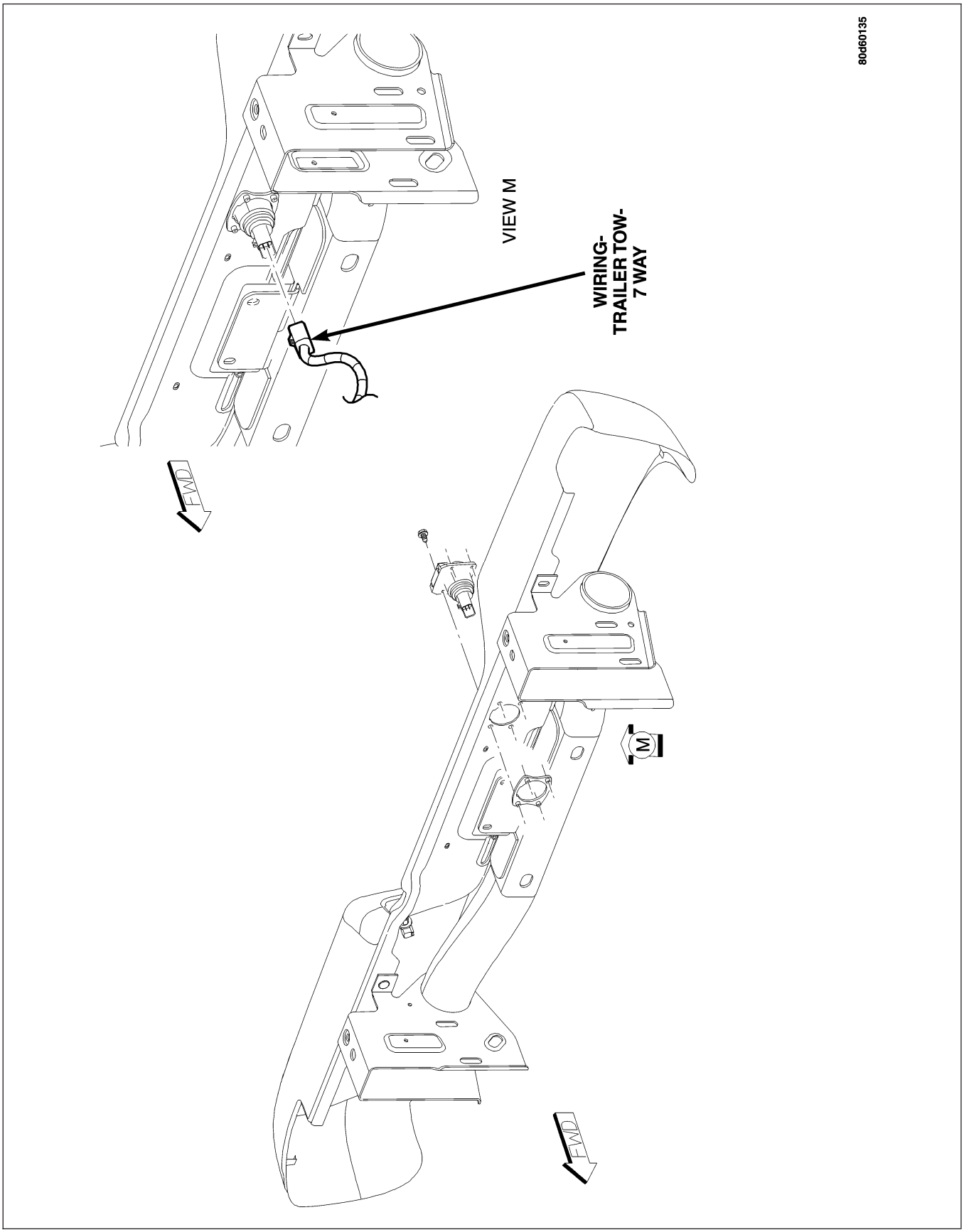

Fig. 72 REAR BUMPER

8W-97 POWER DISTRIBUTION

TABLE OF CONTENTS

page

POWER DISTRIBUTION
DESCRIPTION 1
OPERATION 1
SPECIAL TOOLS
POWER DISTRIBUTION SYSTEMS 2
MODULE-INTEGRATED POWER
DESCRIPTION 3
OPERATION 3
REMOVAL 4
INSTALLATION 5
IOD FUSE
DESCRIPTION 6
OPERATION 7
POWER OUTLET-INSTRUMENT PANEL
DESCRIPTION 7

page

OPERATION 7
DIAGNOSIS AND TESTING
CIGAR LIGHTER OUTLET 8
REMOVAL 8
INSTALLATION 8
POWER OUTLET-CONSOLE
DESCRIPTION 9
OPERATION 9
DIAGNOSIS AND TESTING
POWER OUTLET 9
REMOVAL 10
INSTALLATION 10

POWER DISTRIBUTION

DESCRIPTION

The power distribution system for this vehicle consists of the following components:

- Integrated Power Module (IPM)
- Front Control Module (FCM)
- Power Distribution Center (PDC)
- Power Outlets
- Cigar Lighter Outlets

The power distribution system also incorporates various types of circuit control and protection devices, including:

- Automatic resetting circuit breakers
- Blade-type fuses
- Cartridge fuses
- Relays

For complete circuit diagrams, refer to the appropriate wiring information. The wiring information includes wiring diagrams, proper wire and connector repair procedures, details of wire harness routing and retention, connector pin-out information and location views for the various wire harness connectors, splices and grounds.

OPERATION

The power distribution system for this vehicle is designed to provide safe, reliable, and centralized distribution points for the electrical current required to operate all of the many standard and optional factory-installed electrical and electronic powertrain, chassis, safety, security, comfort and convenience systems. At the same time, the power distribution system was designed to provide ready access to these electrical distribution points for the technician to use when conducting diagnosis and repair of inoperative circuits. The power distribution system can also prove useful for the sourcing of additional electrical circuits that may be required to provide the electrical current needed to operate many accessories that the vehicle owner may choose to have installed.

SPECIAL TOOLS

POWER DISTRIBUTION SYSTEMS

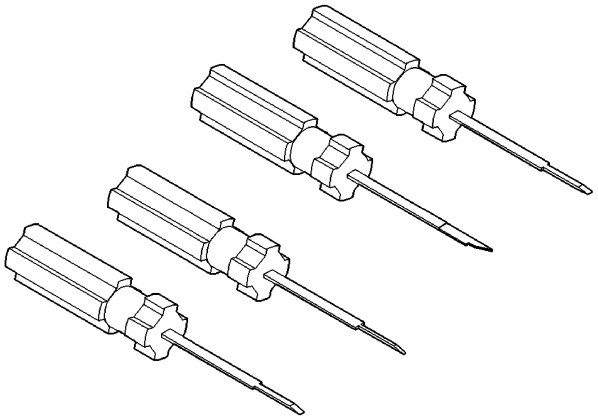

MODULE-INTEGRATED POWER

DESCRIPTION

The Integrated Power Module (IPM) is a combination of the Power Distribution Center (PDC) (1) and the Front Control Module (FCM) (2). The PDC mates directly with the FCM to form the IPM. The PDC is a printed circuit board based module that contains fuses and relays, while the FCM contains the electronics controlling the IPM and other functions. The IPM is located in the engine compartment, next to the battery and connects directly to the battery positive via a stud located on top of the unit. The ground connection is via electrical connectors. The IPM provides the primary means of voltage distribution and protection for the entire vehicle.

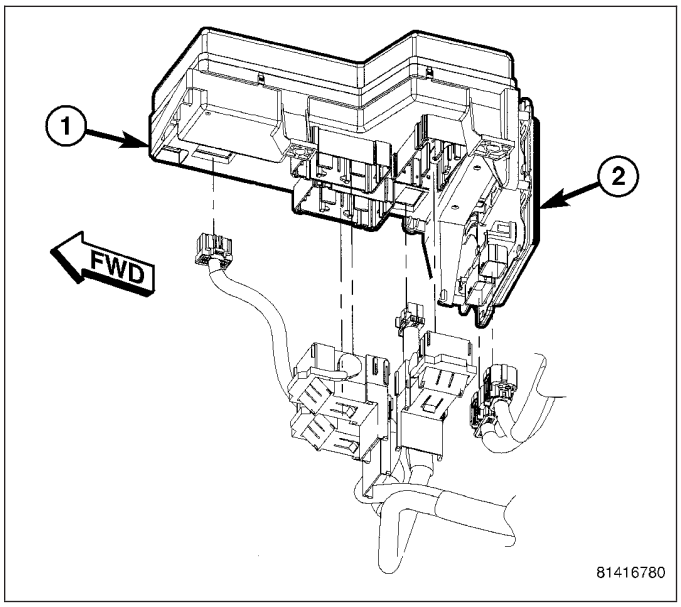

The molded plastic IPM housing includes a base and cover. The IPM cover is easily opened or removed for service access by unscrewing the cover retaining nut and has a fuse and relay layout map integral to the inside surface of the cover. This IPM housing base and cover are secured in place via bolts to the left front fender support assembly.

Replaceable components of the IPM assembly are broken down into the following components:

- The Power Distribution Center (PDC)
- The IPM cover
- The Front Control Module (FCM)
- Complete IPM assembly that includes all three parts

OPERATION

All of the current from the battery and the generator output enters the integrated power module via a stud on the top of the module. The integrated power module cover is removed to access the fuses or relays. Internal connections of all of the power distribution center circuits is accomplished by a combination of bus bars and a printed circuit board.

For complete circuit diagrams, refer to the appropriate wiring information. The wiring information includes wiring diagrams, proper wire and connector repair procedures, details of wire harness routing and retention, connector pin-out information and location views for the various wire harness connectors, splices and grounds.

REMOVAL

1. Disconnect and isolate the battery negative cable.
2. Remove cover (4) by loosening the cover screw (1).
3. Remove the B+ terminal nut from the Integrated Power Module (IPM) B+ terminal. Remove the B+ cable from the IPM.
4. Disconnect the gray connector from the IPM.
5. Remove the IPM retaining bolt (2) and screw (3).

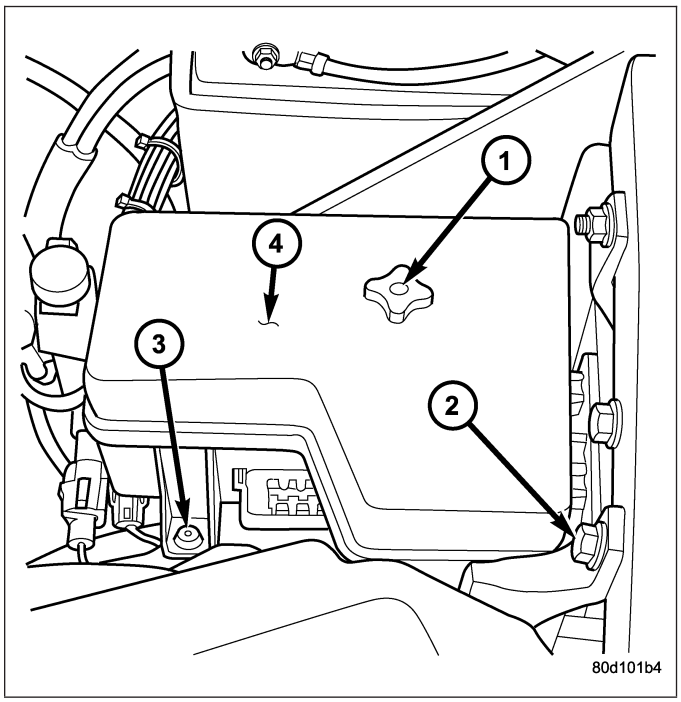

6. Grasp the IPM with two hands and slide the assembly in the direction shown to free the module from its mounting bracket. Position the assembly upside down to access the electrical connectors located on the bottom of the unit.
7. Disconnect the electrical connectors by depressing the locking tab and rotating the connector arm outboard, until the connector is free from the IPM assembly. Be certain to pull the connectors straight off.
8. Remove the IPM from the vehicle.

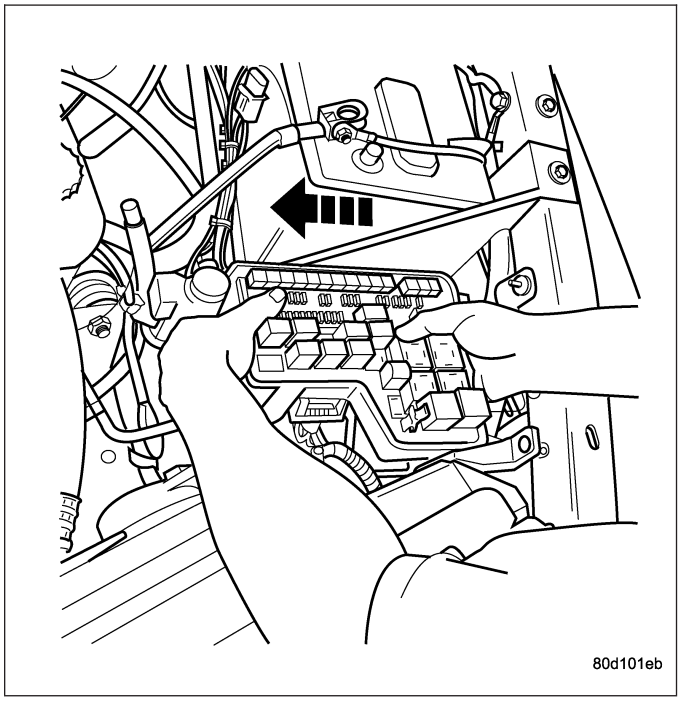

INSTALLATION

1. Position the Integrated Power Module (IPM) into the vehicle.

NOTE: Integrated power module electrical connectors are color coded to ease location reference.

2. Connect the electrical connectors by pushing straight on and rotating the connector arm inboard, until the connector is firmly locked in place on the IPM assembly.

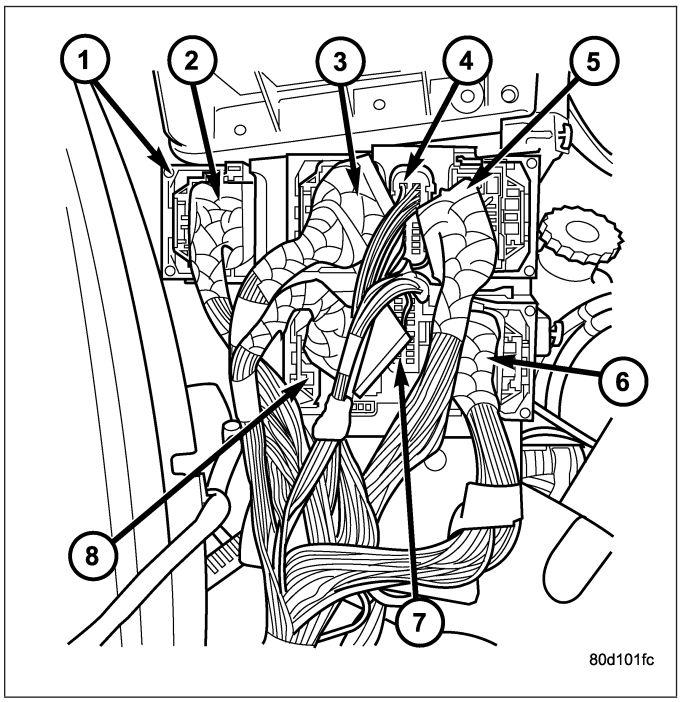

3. Grasp the IPM (3) with two hands and install the assembly onto the battery tray (2) making sure to line up the tabs with the retaining slots in the tray (1).

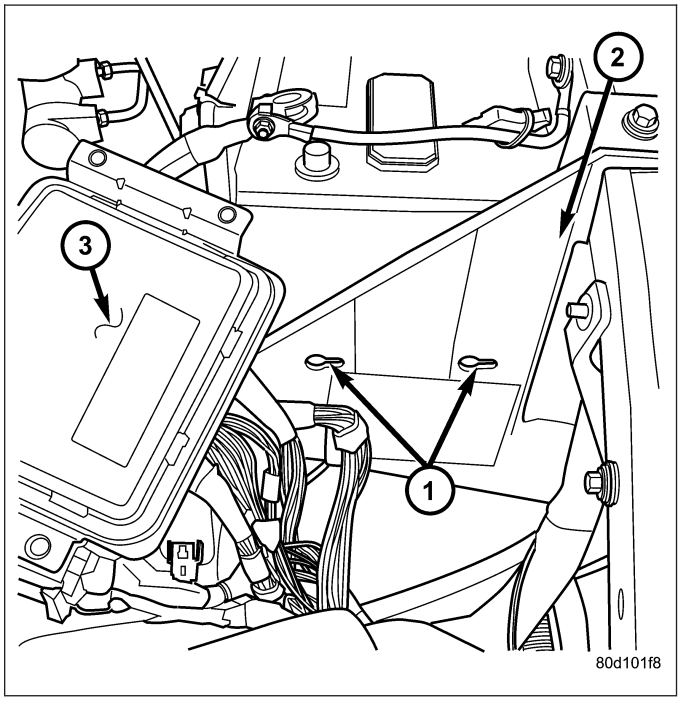

4. Install the IPM retaining bolt (2) and screw (3).
5. Connect the gray connector on the IPM housing.
6. Install the B+ terminal cable and nut on the B+ terminal.
7. Install the IPM cover (4) and tighten the retaining screw (1).
8. Connect the battery negative cable.

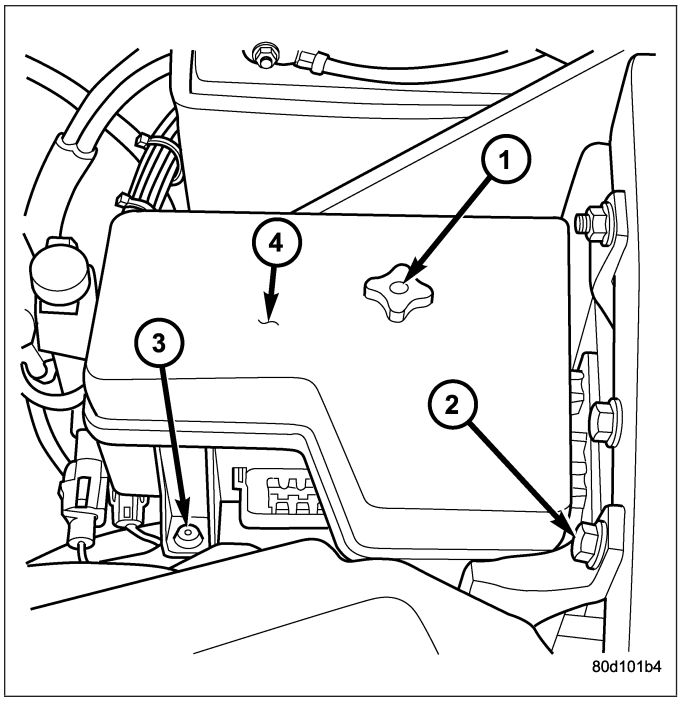

IOD FUSE

DESCRIPTION

All vehicles are equipped with an Ignition-Off Draw (IOD) fuse (1) that is disconnected within the Integrated Power Module (IPM) when the vehicle is shipped from the factory. Dealer personnel are to reconnect the IOD fuse in the IPM as part of the new vehicle preparation procedures and then disconnect it again until new vehicle delivery to the customer.

A laser printed fuse layout map is integral to the IPM cover to ensure proper fuse identification. The IOD fuse (1) is a 20 ampere mini blade-type fuse, located in fuse cavity # 51. The fuse is secured within a black molded plastic fuse holder and puller unit that serves both as a tool for disconnecting and reconnecting the fuse in the IPM cavity, and as a fuse holder that conveniently stores the fuse in the same cavity after it has been disconnected.

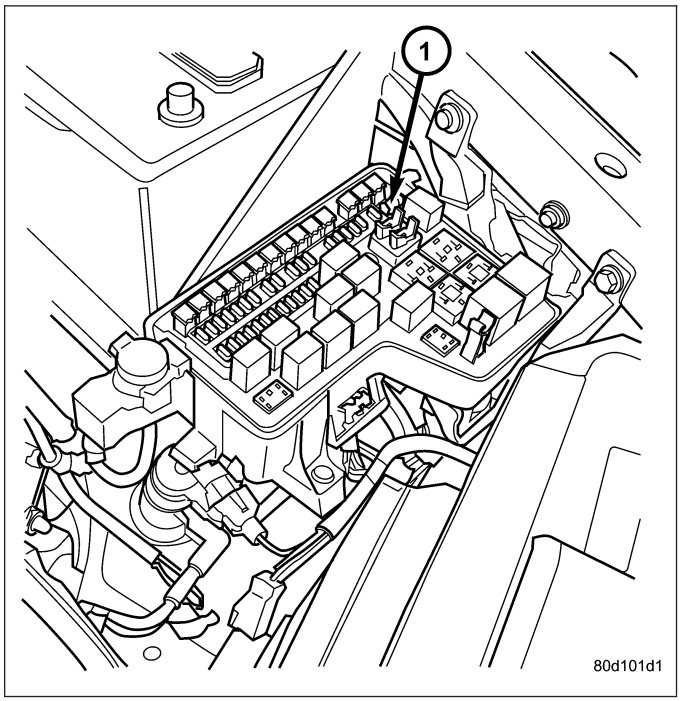

CIRCUITS INCLUDED WITH IOD FUSE

- Cluster (CCN)
- Diagnostic Connector
- Map Lamps
- Glove Box Lamp
- Courtesy Lamps
- Radio

- Underhood Lamp

OPERATION

The term Ignition-Off Draw (IOD) identifies a normal condition where power is being drained from the battery with the ignition switch in the Off position. The IOD fuse feeds the memory and sleep mode functions for some of the electronic modules in the vehicle as well as various other accessories that require battery current when the ignition switch is in the Off position. The only reason the IOD fuse is disconnected is to reduce the normal IOD of the vehicle electrical system during new vehicle transportation and pre-delivery storage to reduce battery depletion, while still allowing vehicle operation so that the vehicle can be loaded, unloaded and moved as needed by both vehicle transportation company and dealer personnel.

The IOD fuse is disconnected from Integrated Power Module (IPM) fuse cavity # 51 when the vehicle is shipped from the assembly plant. Dealer personnel must reconnect the IOD fuse when the vehicle is being prepared for delivery in order to restore full electrical system operation. Once the vehicle is prepared for delivery, the IOD function of this fuse becomes transparent and the fuse that has been assigned the IOD designation becomes only another Fused B(+) circuit fuse.

The IOD fuse can be used by the vehicle owner as a convenient means of reducing battery depletion when a vehicle is to be stored for periods not to exceed about thirty days. However, it must be remembered that disconnecting the IOD fuse will not eliminate IOD, but only reduce this normal condition. If a vehicle will be stored for more than about thirty days, the battery negative cable should be disconnected to eliminate normal IOD; and, the battery should be tested and recharged at regular intervals during the vehicle storage period to prevent the battery from becoming discharged or damaged.

POWER OUTLET-INSTRUMENT PANEL

DESCRIPTION

A cigar lighter outlet is installed to the left of the center stack area in the lower instrument panel. The cigar lighter outlet is secured by a snap fit within the bezel.

The cigar lighter outlet, plastic cap and the knob and heating element unit are available for service replacement. These components cannot be repaired and, if inoperative or damaged, they must be replaced.

OPERATION

The cigar lighter consists of two major components: a knob and heating element unit, and the cigar lighter base or outlet shell. The receptacle shell is connected to ground, and an insulated contact in the bottom of the shell is connected to battery current. The cigar lighter receives battery voltage from a fuse in the Integrated Power Module (IPM) when the ignition switch is in the Accessory or Run positions.

The cigar lighter knob and heating element are encased within a spring-loaded housing, which also features a sliding protective heat shield. When the knob and heating element are inserted in the outlet shell, the heating element resistor coil is grounded through its housing to the outlet shell. If the cigar lighter knob is pushed inward, the heat shield slides up toward the knob exposing the heating element, and the heating element extends from the housing toward the insulated contact in the bottom of the outlet shell.

Two small spring-clip retainers are located on either side of the insulated contact inside the bottom of the outlet shell. These clips engage and hold the heating element against the insulated contact long enough for the resistor coil to heat up. When the heating element is engaged with the contact, battery current can flow through the resistor coil to ground, causing the resistor coil to heat.

When the resistor coil becomes sufficiently heated, excess heat radiates from the heating element causing the spring-clips to expand. Once the spring-clips expand far enough to release the heating element, the spring-loaded housing forces the knob and heating element to pop back outward to their relaxed position. When the cigar lighter knob and element are pulled out of the outlet shell, the protective heat shield slides downward on the housing so that the heating element is recessed and shielded around its circumference for safety.

DIAGNOSIS AND TESTING

CIGAR LIGHTER OUTLET

For complete circuit diagrams, refer to the appropriate wiring information. The wiring information includes wiring diagrams, proper wire and connector repair procedures, details of wire harness routing and retention, connector pin-out information and location views for the various wire harness connectors, splices and grounds.

1. Check the fused B(+) fuse in the Integrated Power Module (IPM). If OK, go to Step 2. If not OK, repair the shorted circuit or component as required and replace the inoperative fuse.
2. Turn the ignition switch to the Run position. Check for battery voltage at the fused B(+) fuse in the IPM. If OK, go to Step 3. If not OK, repair the open or short as required.
3. Remove the cigar lighter knob and element from the cigar lighter outlet shell. Check for continuity between the inside circumference of the cigar lighter outlet shell and a good ground. there should be continuity. If OK, go to Step 4. If not OK, go to Step 5.
4. Turn the ignition switch to the Run position. Check for battery voltage at the insulated contact located at the back of the cigar lighter outlet shell. If OK, replace the inoperative cigar lighter knob and element. If not OK, go to Step 5.
5. Turn the ignition switch to the Off position. Disconnect and isolate the battery negative cable. Check for continuity between the ground circuit cavity of the cigar lighter wire harness connector and a good ground. There should be continuity. If OK, go to Step 6. If not OK, repair the open ground circuit to ground as required.
6. Connect the battery negative cable. Turn the ignition switch to the Accessory or Run positions. Check for battery voltage at the fused B(+) circuit cavity of the cigar lighter wire harness connector. If OK, replace the inoperative cigar lighter outlet. If not OK, repair the open fused B(+) circuit to the IPM fuse as required.

REMOVAL

1. Disconnect and isolate the battery negative cable.
2. Pull the cigar lighter knob and element (1) out of the cigar lighter receptacle base (6), or unsnap the protective cap from the power outlet receptacle base (6).
3. Look inside the cigar lighter or power outlet receptacle base and note the position of the rectangular retaining bosses (3) of the mount that secures the receptacle base to the panel (4).
4. Insert a pair of external snap ring pliers (5) into the cigar lighter or power outlet receptacle base and engage the tips of the pliers with the retaining bosses of the mount.
5. Squeeze the pliers to disengage the mount retaining bosses from the receptacle base and, using a gentle rocking motion, pull the pliers and the receptacle base out of the mount.
6. Pull the receptacle base away from the instrument panel far enough to access the instrument panel wire harness connector (2).

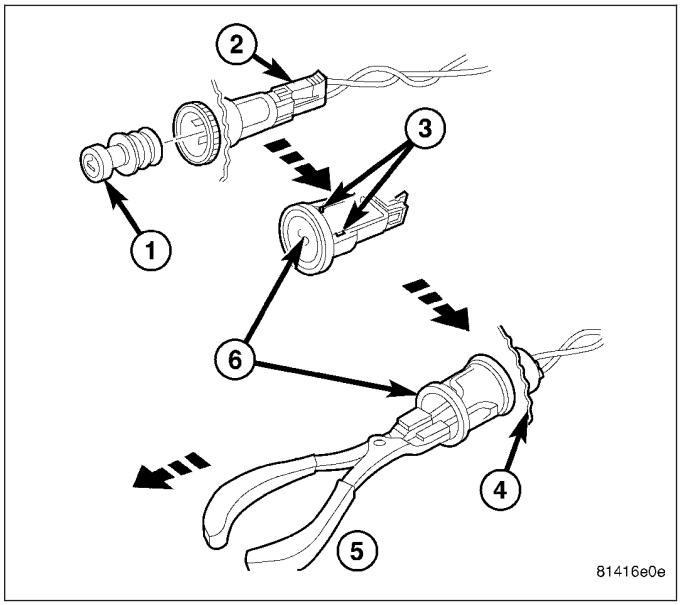

7. Disconnect the instrument panel wire harness connector (2) from the cigar lighter or power outlet receptacle base (6).
8. Remove the cigar lighter or power outlet mount from the instrument panel.

INSTALLATION

1. Connect the instrument panel wire harness connector to the cigar lighter or power outlet receptacle base connector receptacle.
2. Install the cigar lighter or power outlet mount into the instrument panel.

3. Align the splines on the outside of the cigar lighter or power outlet receptacle base connector receptacle with the grooves on the inside of the mount.
4. Press firmly on the cigar lighter or power outlet receptacle base until the retaining bosses of the mount are fully engaged in their receptacles.
5. Install the cigar lighter knob and element into the cigar lighter receptacle base, or the protective cap into the power outlet receptacle base.
6. Connect the battery negative cable.

POWER OUTLET-CONSOLE

DESCRIPTION

Two power outlets are utilized on this model. One in the instrument panel center lower bezel and the other in the center console. The power outlet bases are secured by a snap fit within the instrument panel or trim panel. A plastic protective cap snaps into the power outlet base when the power outlet is not being used, and hangs from the power outlet base mount by an integral bail strap while the power outlet is in use.

The power outlet receptacle unit and the accessory power outlet protective cap are available for service. The power outlet receptacle cannot be repaired and, if faulty or damaged, it must be replaced.

OPERATION

The power outlet base or receptacle shell is connected to ground, and an insulated contact in the bottom of the shell is connected to battery current. The power outlet receives battery voltage from a fuse in the integrated power module at all times.

While the power outlet is very similar to a cigar lighter base unit, it does not include the two small spring-clip retainers inside the bottom of the receptacle shell that are used to secure the cigar lighter heating element to the insulated contact.

DIAGNOSIS AND TESTING

POWER OUTLET

For complete circuit diagrams, refer to the appropriate wiring information. The wiring information includes wiring diagrams, proper wire and connector repair procedures, details of wire harness routing and retention, connector pin-out information and location views for the various wire harness connectors, splices and grounds.

1. Check the fused B(+) fuse in the Integrated Power Module (IPM). If OK, go to Step 2. If not OK, repair the shorted circuit or component as required and replace the inoperative fuse.
2. Turn the ignition switch to the Run position. Check for battery voltage at the fused B(+) fuse in the IPM. If OK, go to Step 3. If not OK, repair the open or short as required.
3. Remove the cigar lighter knob and element from the cigar lighter outlet shell. Check for continuity between the inside circumference of the cigar lighter outlet shell and a good ground. there should be continuity. If OK, go to Step 4. If not OK, go to Step 5.
4. Turn the ignition switch to the Run position. Check for battery voltage at the insulated contact located at the back of the cigar lighter outlet shell. If OK, replace the inoperative cigar lighter knob and element. If not OK, go to Step 5.
5. Turn the ignition switch to the Off position. Disconnect and isolate the battery negative cable. Check for continuity between the ground circuit cavity of the cigar lighter wire harness connector and a good ground. There should be continuity. If OK, go to Step 6. If not OK, repair the open ground circuit to ground as required.
6. Connect the battery negative cable. Turn the ignition switch to the Accessory or Run positions. Check for battery voltage at the fused B(+) circuit cavity of the cigar lighter wire harness connector. If OK, replace the inoperative cigar lighter outlet. If not OK, repair the open fused B(+) circuit to the IPM fuse as required.

REMOVAL

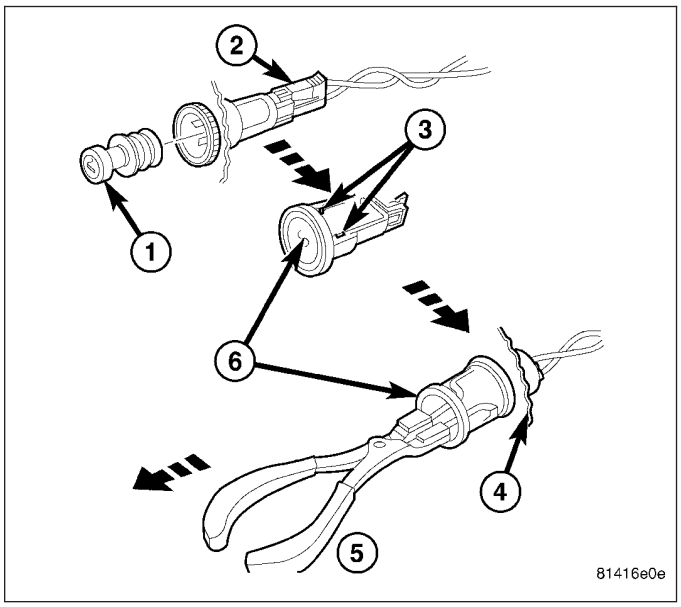

1. Disconnect and isolate the battery negative cable.
2. Pull the cigar lighter knob and element (1) out of the cigar lighter receptacle base (6), or unsnap the protective cap from the power outlet receptacle base (6).
3. Look inside the cigar lighter or power outlet receptacle base and note the position of the rectangular retaining bosses (3) of the mount that secures the receptacle base to the panel (4).
4. Insert a pair of external snap ring pliers (5) into the cigar lighter or power outlet receptacle base and engage the tips of the pliers with the retaining bosses of the mount.
5. Squeeze the pliers to disengage the mount retaining bosses from the receptacle base and, using a gentle rocking motion, pull the pliers and the receptacle base out of the mount.
6. Pull the receptacle base away from the instrument panel far enough to access the instrument panel wire harness connector (2).
7. Disconnect the instrument panel wire harness connector (2) from the cigar lighter or power outlet receptacle base (6).
8. Remove the cigar lighter or power outlet mount from the instrument panel.

INSTALLATION

1. Connect the instrument panel wire harness connector to the cigar lighter or power outlet receptacle base connector receptacle.
2. Install the cigar lighter or power outlet mount into the instrument panel.
3. Align the splines on the outside of the cigar lighter or power outlet receptacle base connector receptacle with the grooves on the inside of the mount.
4. Press firmly on the cigar lighter or power outlet receptacle base until the retaining bosses of the mount are fully engaged in their receptacles.
5. Install the cigar lighter knob and element into the cigar lighter receptacle base, or the protective cap into the power outlet receptacle base.
6. Connect the battery negative cable.

ENGINE

TABLE OF CONTENTS

page

ENGINE - ELECTRICAL DIAGNOSTICS - 3.7L/4.7L/5.7L 1
ENGINE - ELECTRICAL DIAGNOSTICS - DIESEL 1045
ENGINE - ELECTRICAL DIAGNOSTICS - SRT-10 1486
ENGINE - 3.7L - SERVICE INFORMATION 2037
ENGINE - 4.7L - SERVICE INFORMATION 2161
ENGINE - 5.7L - SERVICE INFORMATION 2285
ENGINE - 8.3L - SERVICE INFORMATION 2420
ENGINE - 5.9L DIESEL - SERVICE INFORMATION 2527

ENGINE - ELECTRICAL DIAGNOSTICS - 3.7L/4.7L/5.7L

TABLE OF CONTENTS

page

ENGINE - ELECTRICAL DIAGNOSTICS - 3.7L/4.7L/5.7L
DIAGNOSIS AND TESTING
PRE-DIAGNOSTIC TROUBLESHOOTING PROCEDURE 5
INTERMITTENT CONDITION 7
P0016–CRANKSHAFT / CAMSHAFT TIMING MISALIGNMENT 8
P0031-O2 SENSOR 1/1 HEATER CIRCUIT LOW 14
P0032-O2 SENSOR 1/1 HEATER CIRCUIT HIGH 18
P0037-O2 SENSOR 1/2 HEATER CIRCUIT LOW 23
P0038-O2 SENSOR 1/2 HEATER CIRCUIT HIGH 27
P0051-O2 SENSOR 2/1 HEATER CIRCUIT LOW 32
P0052-O2 SENSOR 2/1 HEATER CIRCUIT HIGH 36
P0057-O2 SENSOR 2/2 HEATER CIRCUIT LOW 41
P0058-O2 SENSOR 2/2 HEATER CIRCUIT HIGH 45
P0068-MANIFOLD PRESSURE/THROTTLE POSITION CORRELATION 50
P0071-AMBIENT AIR TEMPERATURE SENSOR PERFORMANCE 60
P0072-AMBIENT AIR TEMPERATURE SENSOR CIRCUIT LOW 66
P0073–AMBIENT AIR TEMPERATURE SENSOR CIRCUIT HIGH 69
P0107-MANIFOLD ABSOLUTE PRESSURE SENSOR CIRCUIT LOW 73
P0108-MANIFOLD ABSOLUTE PRESSURE SENSOR CIRCUIT HIGH 78
P0111-INTAKE AIR TEMPERATURE SENSOR RATIONALITY 83
P0112-INTAKE AIR TEMPERATURE SENSOR CIRCUIT LOW 88
P0113-INTAKE AIR TEMPERATURE SENSOR CIRCUIT HIGH 91
P0116–ENGINE COOLANT TEMPERATURE SENSOR CIRCUIT PERFORMANCE 95
P0117-ENGINE COOLANT TEMPERATURE SENSOR CIRCUIT LOW 101
P0118-ENGINE COOLANT TEMPERATURE SENSOR CIRCUIT HIGH 105
P0121-THROTTLE POSITION SENSOR 1 PERFORMANCE 110
P0122-THROTTLE POSITION SENSOR 1 CIRCUIT LOW (3.7L, 4.7L) 119
P0122-THROTTLE POSITION SENSOR 1 CIRCUIT LOW (5.7L) 124
P0123-THROTTLE POSITION SENSOR 1 CIRCUIT HIGH (3.7L, 4.7L) 129
P0123-THROTTLE POSITION SENSOR 1 CIRCUIT HIGH (5.7L) 134
P0125-INSUFFICIENT COOLANT TEMP FOR CLOSED-LOOP FUEL CONTROL 139
P0128-THERMOSTAT RATIONALITY 142
P0129-BAROMETRIC PRESSURE OUT-OF-RANGE LOW 152
P0131-O2 SENSOR 1/1 CIRCUIT LOW 158

P0132-O2 SENSOR 1/1 CIRCUIT HIGH 163
P0133-O2 SENSOR 1/1 SLOW RESPONSE . 168
P0135-O2 SENSOR 1/1 HEATER PERFORMANCE 171
P0137-O2 SENSOR 1/2 CIRCUIT LOW 175
P0138-O2 SENSOR 1/2 CIRCUIT HIGH 180
P0139-O2 SENSOR 1/2 SLOW RESPONSE . 185
P0141-O2 SENSOR 1/2 HEATER PERFORMANCE 189
P0151-O2 SENSOR 2/1 CIRCUIT LOW 193
P0152-O2 SENSOR 2/1 CIRCUIT HIGH 198
P0153-O2 SENSOR 2/1 SLOW RESPONSE . 203
P0155-O2 SENSOR 2/1 HEATER PERFORMANCE 206
P0157-O2 SENSOR 2/2 CIRCUIT LOW 210
P0158-O2 SENSOR 2/2 CIRCUIT HIGH 215
P0159-O2 SENSOR 2/2 SLOW RESPONSE . 220
P0161-O2 SENSOR 2/2 HEATER PERFORMANCE 224
P0171-FUEL SYSTEM 1/1 LEAN 228
P0172-FUEL SYSTEM 1/1 RICH 235
P0174-FUEL SYSTEM 2/1 LEAN 242
P0175-FUEL SYSTEM 2/1 RICH 249
P0201-FUEL INJECTOR 1 CIRCUIT 256
P0202-FUEL INJECTOR 2 CIRCUIT 260
P0203-FUEL INJECTOR 3 CIRCUIT 264
P0204-FUEL INJECTOR 4 CIRCUIT 268
P0205-FUEL INJECTOR 5 CIRCUIT 272
P0206-FUEL INJECTOR 6 CIRCUIT 276
P0207-FUEL INJECTOR 7 CIRCUIT 280
P0208-FUEL INJECTOR 8 CIRCUIT 284
P0221-THROTTLE POSITION SENSOR 2 PERFORMANCE 288
P0222-THROTTLE POSITION SENSOR 2 CIRCUIT LOW 297
P0223-THROTTLE POSITION SENSOR 2 CIRCUIT HIGH 303
P0300-MULTIPLE CYLINDER MISFIRE 307
P0301-CYLINDER 1 MISFIRE 314
P0302-CYLINDER 2 MISFIRE 323
P0303-CYLINDER 3 MISFIRE 333
P0304-CYLINDER 4 MISFIRE 343
P0305-CYLINDER 5 MISFIRE 353
P0306-CYLINDER 6 MISFIRE 363
P0307-CYLINDER 7 MISFIRE 373
P0308-CYLINDER 8 MISFIRE 383
P0315-NO CRANK SENSOR LEARNED 393
P0325-KNOCK SENSOR 1 CIRCUIT 396
P0330-KNOCK SENSOR 2 CIRCUIT 401
P0335-CRANKSHAFT POSITION SENSOR CIRCUIT 406
P0339-CRANKSHAFT POSITION SENSOR INTERMITTENT 415
P0340-CAMSHAFT POSITION SENSOR CIRCUIT 422
P0344-CAMSHAFT POSITION SENSOR INTERMITTENT 430
P0401-EGR SYSTEM PERFORMANCE 436
P0403-EGR SOLENOID CIRCUIT 442
P0404-EGR POSITION SENSOR PERFORMANCE 447
P0405-EGR POSITION SENSOR CIRCUIT LOW 453
P0406-EGR POSITION SENSOR CIRCUIT HIGH 458
P0420-CATALYST 1/1 EFFICIENCY 463
P0430-CATALYST 2/1 EFFICIENCY 466
P0440-GENERAL EVAP SYSTEM FAILURE . 469
P0441-EVAP PURGE SYSTEM PERFORMANCE 478
P0442-EVAP PURGE SYSTEM MEDIUM LEAK 482
P0443-EVAP PURGE SOLENOID CIRCUIT . 489
P0452-NVLD PRESSURE SWITCH STUCK CLOSED 494
P0453-NVLD PRESSURE SWITCH STUCK OPEN 499
P0455-EVAP PURGE SYSTEM LARGE LEAK . 504
P0456-EVAP PURGE SYSTEM SMALL LEAK . 504G
P0457-LOOSE FUEL CAP 505
P0461-FUEL LEVEL SENSOR 1 PERFORMANCE 510
P0462-FUEL LEVEL SENSOR 1 CIRCUIT LOW 514
P0463-FUEL LEVEL SENSOR 1 CIRCUIT HIGH 517
P0480-COOLING FAN 1 CONTROL CIRCUIT 522
P0498-NVLD CANISTER VENT VALVE SOLENOID CIRCUIT LOW 526
P0499-NVLD CANISTER VENT VALVE SOLENOID CIRCUIT HIGH 529
P0501-VEHICLE SPEED SENSOR 1 PERFORMANCE 533
P0503-VEHICLE SPEED SENSOR 1 ERRATIC 538
P0506-IDLE SPEED PERFORMANCE LOWER THAN EXCEPTED 543
P0507-IDLE SPEED PERFORMANCE HIGHER THAN EXCEPTED 545
P0508-IDLE AIR CONTROL VALVE SENSE CIRCUIT LOW 547
P0509-IDLE AIR CONTROL VALVE SENSE CIRCUIT HIGH 552
P0513-INVALID SKIM KEY 556
P0516-BATTERY TEMPERATURE SENSOR CIRCUIT LOW 558
P0517-BATTERY TEMPERATURE SENSOR CIRCUIT HIGH 561
P0522-OIL PRESSURE TOO LOW 565
P0532-A/C PRESSURE SENSOR CIRCUIT LOW 570
P0533-A/C PRESSURE SENSOR CIRCUIT HIGH 575
P0551-POWER STEERING PRESSURE SWITCH PERFORMANCE 580

P0562-BATTERY VOLTAGE LOW 584
P0563-BATTERY VOLTAGE HIGH 589
P0571-BRAKE SWITCH 1 PERFORMANCE . 592
P0572-BRAKE SWITCH 1 STUCK ON 597
P0573-BRAKE SWITCH 1 STUCK OFF 601
P0579-SPEED CONTROL SWITCH 1 PERFORMANCE (5.7L) 605
P0580-SPEED CONTROL SWITCH 1 CIRCUIT LOW (3.7L,4.7L) 613
P0580-SPEED CONTROL SWITCH 1 CIRCUIT LOW (5.7L) 617
P0581-SPEED CONTROL SWITCH 1 CIRCUIT HIGH (3.7L,4.7L) 623
P0581-SPEED CONTROL SWITCH 1 CIRCUIT HIGH (5.7L) 629
P0582-SPEED CONTROL VACUUM CONTROL CIRCUIT 635
P0585-SPEED CONTROL SWITCH 1/2 CORRELATION (5.7L) 641
P0586-SPEED CONTROL VENT CONTROL CIRCUIT 653
P0591-SPEED CONTROL SWITCH 2 PERFORMANCE 659
P0592-SPEED CONTROL SWITCH 2 CIRCUIT LOW 667
P0593-SPEED CONTROL SWITCH 2 CIRCUIT HIGH 672
P0594-SPEED CONTROL SERVO POWER RELAY CIRCUIT 677
P0600-SERIAL COMMUNICATION LINK 683
P0601-INTERNAL MEMORY CHECKSUM INVALID 684
P0606-INTERNAL ECM PROCESSOR 685
P060B-ETC A/D GROUND PERFORMANCE . 686
P060D-ETC LEVEL 2 APP PERFORMANCE . 687
P060E-ETC LEVEL 2 TPS PERFORMANCE . 688
P060F-ETC LEVEL 2 ECT PERFORMANCE . 689
P061A-ETC LEVEL 2 TORQUE PERFORMANCE 690
P061C-ETC LEVEL 2 RPM PERFORMANCE . 691
P0622-GENERATOR FIELD CONTROL CIRCUIT 692
P0627-FUEL PUMP RELAY CIRCUIT 696
P062C-ETC LEVEL 2 MPH PERFORMANCE 700
P0630-VIN NOT PROGRAMMED IN PCM . . . 701
P0632-ODOMETER NOT PROGRAMMED IN PCM 702
P0633-SKIM KEY NOT PROGRAMMED IN PCM 703
P0642-SENSOR REFERENCE VOLTAGE 1 CIRCUIT LOW 704
P0643-PRIMARY 5-VOLT SUPPLY CIRCUIT HIGH 708
P0645-A/C CLUTCH RELAY CIRCUIT 711
P0652-SENSOR REFERENCE VOLTAGE 2 CIRCUIT LOW 715
P0653-SENSOR REFERENCE VOLTAGE 2 CIRCUIT HIGH 718
P0685-AUTO SHUTDOWN RELAY CONTROL CIRCUIT 721
P0688-AUTO SHUTDOWN RELAY SENSE CIRCUIT LOW 725
P0700-TRANSMISSION CONTROL SYSTEM (MIL REQUEST) 730
P0703-BRAKE SWITCH 2 PERFORMANCE . 731
P0850-PARK/NEUTRAL SWITCH PERFORMANCE 737
P1115-GENERAL TEMPERATURE RATIONALITY 741
P1501-VEHICLE SPEED SENSOR 1/2 CORRELATION - DRIVE WHEELS 745
P1502-VEHICLE SPEED SENSOR 1/2 CORRELATION - NON DRIVE WHEELS 750
P1572-BRAKE PEDAL STUCK ON 755
P1573-BRAKE PEDAL STUCK OFF 759
P1593-SPEED CONTROL SWITCH 1/2 STUCK 763
P1593-SPEED CONTROL SWITCH 1 STUCK (3.7L, 4.7L) 773
P1602–PCM NOT PROGRAMMED 778
P1603-PCM INTERNAL DUAL-PORT RAM COMMUNICATION FAILURE 779
P1604-PCM INTERNAL DUAL-PORT RAM READ/WRITE INTEGRITY FAILURE 781
P1607-PCM INTERNAL SHUTDOWN TIMER RATIONALITY 783
P1618-SENSOR REFERENCE VOLTAGE 1 CIRCUIT ERRATIC 784
P1628-SENSOR REFERENCE VOLTAGE 2 CIRCUIT ERRATIC 789
P1696-EEPROM MEMORY WRITE DENIED/ INVALID 794
P1697-EMR (SRI) MILEAGE NOT STORED . 796
P2072-ELECTRONIC THROTTLE CONTROL SYSTEM - ICE BLOCKAGE 798
P2074-MAP/TPS CORRELLATION - HIGH AIRFLOW/VACUUM LEAK DETECTED 799
P2096-DOWNSTREAM FUEL TRIM SYSTEM 1 LEAN 809
P2097-DOWNSTREAM FUEL TRIM SYSTEM 1 RICH 816
P2098-DOWNSTREAM FUEL TRIM SYSTEM 2 LEAN 823
P2099-DOWNSTREAM FUEL TRIM SYSTEM 2 RICH 830
P2100-ELECTRONIC THROTTLE CONTROL MOTOR CIRCUIT 837
P2101-ELECTRONIC THROTTLE CONTROL MOTOR PERFORMANCE 843
P2107-ELECTRONIC THROTTLE CONTROL MODULE PROCESSOR 845
P2108-ELECTRONIC THROTTLE CONTROL MODULE PERFORMANCE 846
P2110-ELECTRONIC THROTTLE CONTROL - FORCED LIMITED RPM 847
P2111-ELECTRONIC THROTTLE CONTROL - UNABLE TO CLOSE 852

P2112-ELECTRONIC THROTTLE CONTROL - UNABLE TO OPEN 857
P2115-ACCELERATOR PEDAL POSITION SENSOR 1 MINIMUM STOP PERFORMANCE 862
P2116-ACCELERATOR PEDAL POSITION SENSOR 2 MINIMUM STOP PERFORMANCE 863
P2118-ELECTRONIC THROTTLE CONTROL MOTOR CIRCUIT 864
P2122-ACCELERATOR PEDAL POSITION SENSOR 1 CIRCUIT LOW 870
P2123-ACCELERATOR PEDAL POSITION SENSOR 1 CIRCUIT HIGH 876
P2127-ACCELERATOR PEDAL POSITION SENSOR 2 CIRCUIT LOW 881
P2128-ACCELERATOR PEDAL POSITION SENSOR 2 CIRCUIT HIGH 888
P2135-THROTTLE POSITION SENSOR 1/2 CORRELATION 893
P2138-ACCELERATOR PEDAL POSITION SENSOR 1/2 CORRELATION 901
P2161-VEHICLE SPEED SENSOR 2 ERRATIC 907
P2166-ACCELERATOR PEDAL POSITION SENSOR 1 MAXIMUM STOP PERFORMANCE 911
P2167-ACCELERATOR PEDAL POSITION SENSOR 2 MAXIMUM STOP PERFORMANCE 912
P2172-HIGH AIRFLOW/VACUUM LEAK DETECTED (INSTANTANEOUS ACCUMULATION) 913
P2173-HIGH AIRFLOW/VACUUM LEAK DETECTED (SLOW ACCUMULATION) 924
P2174-LOW AIRFLOW/RESTRICTION DETECTED (INSTANTANEOUS ACCUMULATION) 935
P2175-LOW AIRFLOW/RESTRICTION DETECTED (SLOW ACCUMULATION) 946
P2181-COOLING SYSTEM PERFORMANCE . 957
P2299-BRAKE PEDAL POSITION / ACCELERATOR PEDAL POSITION INCOMPATIBLE 964
P2302-IGNITION COIL 1 SECONDARY CIRCUIT- INSUFFICIENT IONIZATION 967
P2305-IGNITION COIL 2 SECONDARY CIRCUIT- INSUFFICIENT IONIZATION 971
P2308-IGNITION COIL 3 SECONDARY CIRCUIT- INSUFFICIENT IONIZATION 975
P2311-IGNITION COIL 4 SECONDARY CIRCUIT- INSUFFICIENT IONIZATION 979
P2314-IGNITION COIL 5 SECONDARY CIRCUIT- INSUFFICIENT IONIZATION 983
P2317-IGNITION COIL 6 SECONDARY CIRCUIT- INSUFFICIENT IONIZATION 987
P2320-IGNITION COIL 7 SECONDARY CIRCUIT- INSUFFICIENT IONIZATION 991
P2323-IGNITION COIL 8 SECONDARY CIRCUIT- INSUFFICIENT IONIZATION 995
P2503-CHARGING SYSTEM OUTPUT LOW . 999
U0101-LOST COMMUNICATION WITH TCM 1004
U0155-NO CLUSTER BUS MESSAGE 1006
U0168-NO SKIM BUS MESSAGE 1008
*5.7L INTERMITTENT NO CRANK CONDITION 1010
*CHECKING THE FUEL DELIVERY SYSTEM 1011
*HARD START FUEL SYSTEM 1014
*ENGINE CRANKS BUT DOES NOT START 1017
*FUEL PRESSURE LEAK DOWN 1021
*NO CRANK CONDITION 1023
*NO RESPONSE WITH A NO START CONDITION 1028
*START AND STALL CONDITION 1035
STANDARD PROCEDURE
POWERTRAIN VERIFICATION TEST 1038
SCHEMATICS AND DIAGRAMS 1042

ENGINE - ELECTRICAL DIAGNOSTICS - 3.7L/4.7L/5.7L

DIAGNOSIS AND TESTING

PRE-DIAGNOSTIC TROUBLESHOOTING PROCEDURE

For the Engine circuit diagram (Refer to 9 - ENGINE - SCHEMATICS AND DIAGRAMS).

For a complete wiring diagram **Refer to Section 8W**.

Diagnostic Test

1. NO RESPONSE

Make sure the scan tool will communicate with the appropriate modules.

Are you currently experiencing a NO RESPONSE condition?

Yes >> The NO RESPONSE condition must be properly diagnosed before continuing.
Refer to the appropriate BUS Communication test in Section 8 ELECTRONIC CONTROL MODULES - ELECTRICAL DIAGNOSTICS.

No >> Go To 2

---

2. NO START

Is the customer complaint a NO START condition?

Yes >> Check the vehicle for any NO START related PCM DTC(s) or Vehicle Theft Security related DTC(s).
If no Theft related DTC(s) are present, refer to the Non DTC Diagnostic Procedures that relate to Fuel and Starting.

No >> Go To 3

---

3. VEHICLE HISTORY AND TSB(s)

Continue by reading PCM DTC(s) and record the related Freeze Frame data if any DTC(s) are present.

Whether or not any DTC(s) are present you will want to check the following items which may assist in repairing the customers complaint successfully.

Check the vehicles repair history.

If the vehicle has a repair history that pertains to the customer's current complaint, review the repair.

Inpect the vehicle for any aftermarket accessories that may have been installed incorrectly.

Check for any TSB(s) related to the customer's complaint or DTC(s).

If a TSB applies, follow the instructions per the TSB.

Choose the following scenario that best applies.

The TSB repaired the customers complaint.
Testing complete.

A DTC is present, no TSB applies, or the TSB didn't repair the customers complaint.
Go To 4

No DTC(s) are present.
Refer to the INTERMITTENT CONDITION Diagnostic Procedure.

PRE-DIAGNOSTIC TROUBLESHOOTING PROCEDURE (CONTINUED)

4. WIRE HARNESS INSPECTION

Clear the DTC(s).

Attempt to duplicate the customer complaint.

Whether the customer complaint can be duplicated or not, make a quick wire harness inspection related to the DTC(s) that were previously cleared.

Check the Powertrain Control Module connectors, the suspected component connection, in-line connectors, wire harness splices, PCM power and ground circuits, and any related fuses.

If the DTC(s) are fuel or air related, check the fuel level and quality.

Were any repairs made that fixed the customer's complaint?

Yes >> Testing complete.

No >> Refer to the diagnostic test procedure related to the DTC.

INTERMITTENT CONDITION

For the Engine circuit diagrams (Refer to 9 - ENGINE - SCHEMATICS AND DIAGRAMS).

For a complete wiring diagram **Refer to Section 8W**.

POSSIBLE CAUSES
INTERMITTENT CONDITION

Diagnostic Test

1. INTERMITTENT CONDITION

NOTE: The conditions that set the DTC are not present at this time. The following list may help in identifying the intermittent condition.

WARNING: When the engine is operating, do not stand in direct line with the fan. Do not put your hands near the pulleys, belts, or fan. Do not wear loose clothing. Failure to follow these instructions can result in personal injury or death.

Refer to any Technical Service Bulletins (TSBs) that may apply.

Review the scan tool Freeze Frame information. If possible, try to duplicate the conditions under which the DTC set.

With the engine running at normal operating temperature, monitor the scan tool parameters related to the DTC while wiggling the wire harness. Look for parameter values to change and/or a DTC to set.

Turn the ignition off.

Visually inspect the related wire harness. Disconnect all the related harness connectors. Look for any chafed, pierced, pinched, partially broken wires and broken, bent, pushed out, or corroded terminals.

Perform a voltage drop test on the related circuits between the suspected faulty component and the PCM.

CAUTION: Do not probe the PCM harness connectors. Probing the PCM harness connectors will damage the PCM terminals resulting in poor terminal to pin connection. Install Miller Special Tool #8815 to perform diagnosis.

Inspect and clean all PCM, engine, and chassis grounds that are related to the most current DTC.

If numerous trouble codes were set, use a wire schematic and look for any common ground or supply circuits.

For any Relay DTCs, actuate the Relay with the scan tool and wiggle the related wire harness to try to interrupt the actuation.

For intermittent Evaporative Emission trouble codes perform a visual and physical inspection of the related parts including hoses and the Fuel Filler cap.

For intermittent Misfire DTC's check for restrictions in the Intake and Exhaust system, proper installation of Sensors, vacuum leaks, and binding components that are run by the accessory drive belt.

Use the scan tool to perform a System Test if one applies to failing component.

A co-pilot, data recorder, and/or lab scope should be used to help diagnose intermittent conditions.

Were any problems found during the above inspections?

Yes >> Perform the necessary repairs.
Perform the POWERTRAIN VERIFICATION TEST. (Refer to 9 - ENGINE - STANDARD PROCEDURE)

No >> Test Complete.

P0016–CRANKSHAFT / CAMSHAFT TIMING MISALIGNMENT

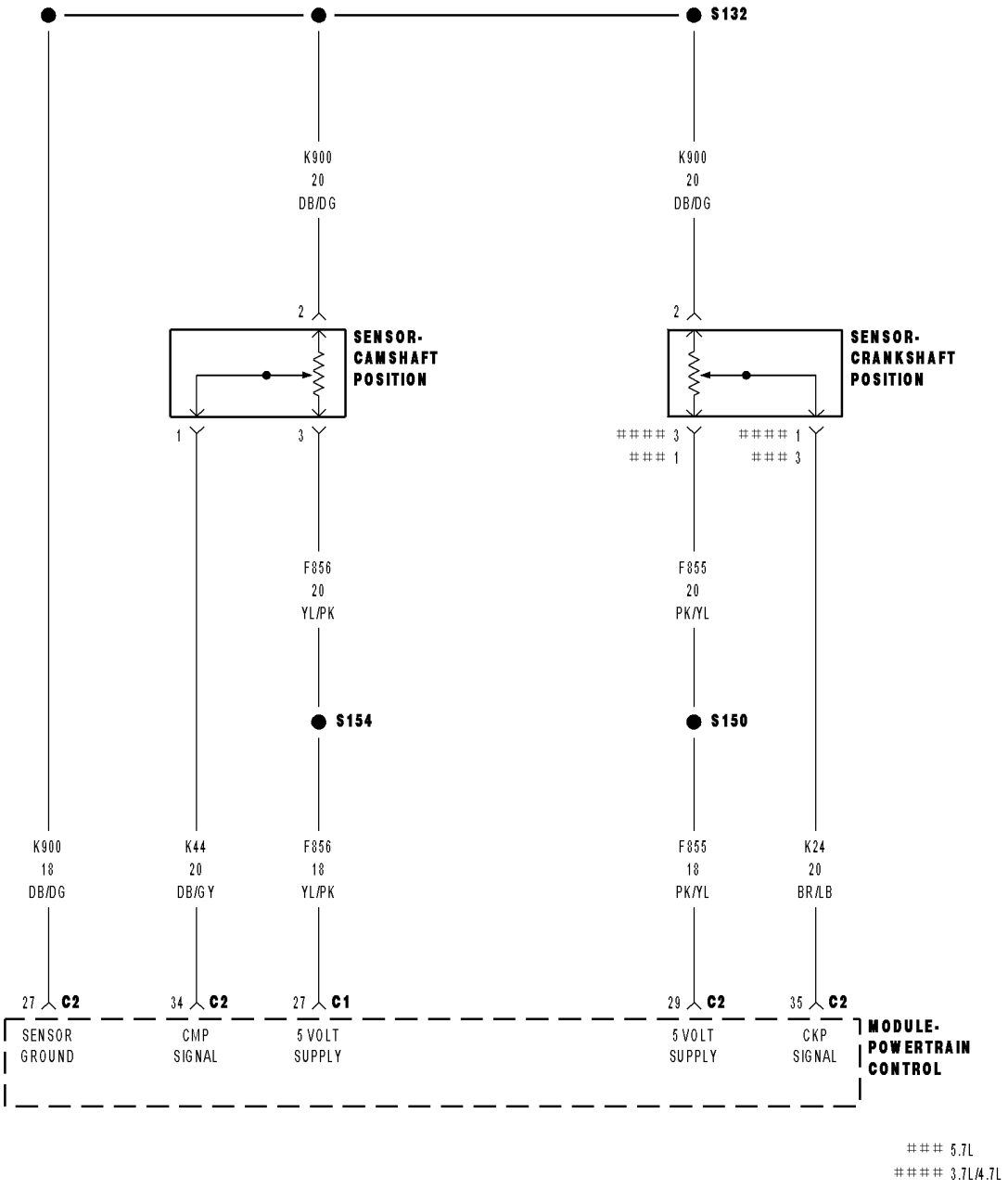

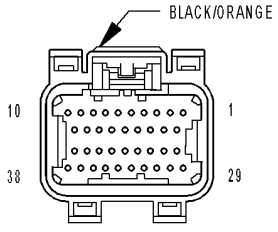

MODULE-
POWERTRAIN
CONTROL C2
(NGC)

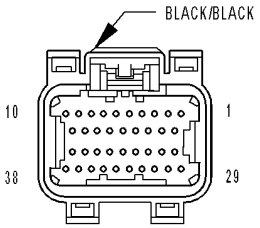

MODULE-
POWERTRAIN
CONTROL C1
(NGC)

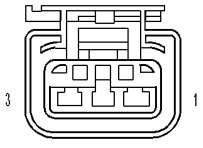

SENSOR-
CRANKSHAFT
POSITION
(5.7L/SRT)

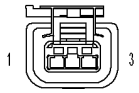

CRANKSHAFT
POSITION
SENSOR
(4.7L)

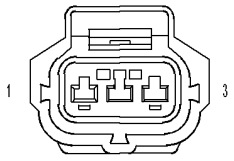

SENSOR-
CRANKSHAFT
POSITION
(3.7L)

81456016

P0016–CRANKSHAFT / CAMSHAFT TIMING MISALIGNMENT (CONTINUED)

For the Engine circuit diagram (Refer to 9 - ENGINE - SCHEMATICS AND DIAGRAMS).

For a complete wiring diagram **Refer to Section 8W**.

- **When Monitored:**
  Engine cranking and Engine running
- **Set Condition:**
  Powertrain Control Module detects an error when the camshaft position is out of phase with the crankshaft position. One Trip Fault. Three good trips to turn off the MIL.

Possible Causes
ERRATIC CAM POSITION SENSOR SIGNAL
CAMSHAFT POSITION SENSOR TONE WHEEL/PULSE RING
ERRATIC CRANKSHAFT POSITION SENSOR SIGNAL
CRANKSHAFT POSITION SENSOR TONE WHEEL/PULSE RING
CAMSHAFT POSITION SENSOR
CRANKSHAFT POSITION SENSOR

Always perform the Pre-Diagnostic Troubleshooting procedure before proceeding. (Refer to 9 - ENGINE - DIAGNOSIS AND TESTING).

Diagnostic Test

1. ACTIVE DTC

WARNING: When the engine is operating, do not stand in direct line with the fan. Do not put your hands near the pulleys, belts, or fan. Do not wear loose clothing. Failure to follow these instructions can result in personal injury or death.

With the scan tool clear the DTC(s).

Start the engine and run until operating temp is reached. (Closed Loop)

If the DTC does not reset it may be necessary to test drive the vehicle.

Does the P0016 return?

Yes >> Go To 2

No >> Refer to the INTERMITTENT CONDITION Diagnostic Procedure.
Perform the POWERTRAIN VERIFICATION TEST. (Refer to 9 - ENGINE - STANDARD PROCEDURE)

---

2. CHECKING THE CMP SIGNAL WITH A LAB SCOPE

With a lab scope, backprobe the (K44) CMP Signal circuit at the CMP Sensor harness connector.

WARNING: When the engine is operating, do not stand in direct line with the fan. Do not put your hands near the pulleys, belts, or fan. Do not wear loose clothing. Failure to follow these instructions can result in personal injury or death.

Start the engine.

Observe the lab scope screen.

Are there any irregular or missing signals?

Yes >> Go To 3

No >> Go To 6

P0016–CRANKSHAFT / CAMSHAFT TIMING MISALIGNMENT (CONTINUED)

3. CMP WIRE HARNESS INSPECTION

Turn the ignition off.

Visually inspect the related wire harness. Look for any chafed, pierced, pinched, or partially broken wires.

Visually inspect the related wire harness connectors. Look for broken, bent, pushed out, or corroded terminals.

Make sure the Crankshaft Position Sensor and the Camshaft Position Sensor are properly installed and the mounting bolt(s) are torqued to their proper specification.

Refer to any TSBs that may apply.

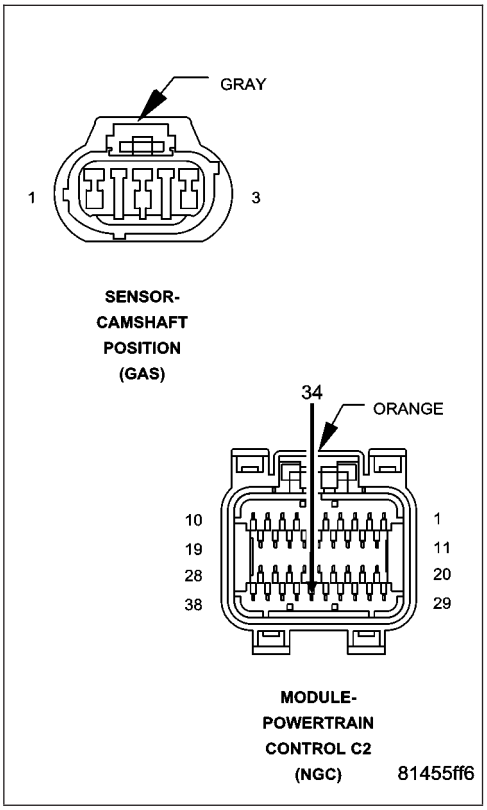

Were any of the above conditions present?

Yes >> Repair as necessary.
Perform the POWERTRAIN VERIFICATION TEST. (Refer to 9 - ENGINE - STANDARD PROCEDURE)

No >> Go To 4

4. TONE WHEEL/PULSE RING INSPECTION

Remove the Camshaft Position Sensor.

Inspect the Tone Wheel/Pulse Ring for damage, foreign material, or excessive movement.

Were any problems found?

Yes >> Repair or replace the Tone Wheel/Pulse Ring as necessary.
Perform the POWERTRAIN VERIFICATION TEST. (Refer to 9 - ENGINE - STANDARD PROCEDURE)

No >> Go To 5

5. CAMSHAFT POSITION SENSOR

If there are no possible causes remaining, view repair.

Repair

Replace the Camshaft Position Sensor.
Perform the POWERTRAIN VERIFICATION TEST. (Refer to 9 - ENGINE - STANDARD PROCEDURE)

P0016–CRANKSHAFT / CAMSHAFT TIMING MISALIGNMENT (CONTINUED)

6. ERRATIC CMP SIGNAL

Turn the ignition off.

Remove the lab scope probe.

WARNING: When the engine is operating, do not stand in direct line with the fan. Do not put your hands near the pulleys, belts, or fan. Do not wear loose clothing. Failure to follow these instructions can result in personal injury or death.

Ignition on, engine not running.

With scan tool, erase DTCs.

Start the engine.

Gently tap on and wiggle the Cam Position Sensor.

Ignition on, engine not running.

Inspect the Sensor connector and harness connector, and inspect the PCM connector and harness connector for loose, bent, corroded, or pushed out pins/terminals.

Inspect the related wire harness and the splices in the CMP circuit.

Does the P0016 return?

Yes >> Repair the wiring/connector concerns as needed or replace the Camshaft Position Sensor.
Perform the POWERTRAIN VERIFICATION TEST. (Refer to 9 - ENGINE - STANDARD PROCEDURE)

No >> Go To 7

---

7. CHECKING THE CKP SIGNAL WITH A LAB SCOPE

Turn the ignition off.

With a lab scope, backprobe the (K24) CKP Signal circuit at the CKP harness connector.

WARNING: When the engine is operating, do not stand in direct line with the fan. Do not put your hands near the pulleys, belts, or fan. Do not wear loose clothing. Failure to follow these instructions can result in personal injury or death.

Start the engine.

Observe the lab scope screen.

Are there any irregular or missing signals?

Yes >> Go To 8

No >> Go To 10

P0016–CRANKSHAFT / CAMSHAFT TIMING MISALIGNMENT (CONTINUED)

8. CKP WIRE HARNESS INSPECTION

Turn the ignition off.

Visually inspect the related wire harness. Look for any chafed, pierced, pinched, or partially broken wires.

Visually inspect the related wire harness connectors. Look for broken, bent, pushed out, or corroded terminals.

Make sure the Crankshaft Position Sensor and the Camshaft Position Sensor are properly installed and the mounting bolt(s) are torqued to their proper specification.

Refer to any TSBs that may apply.

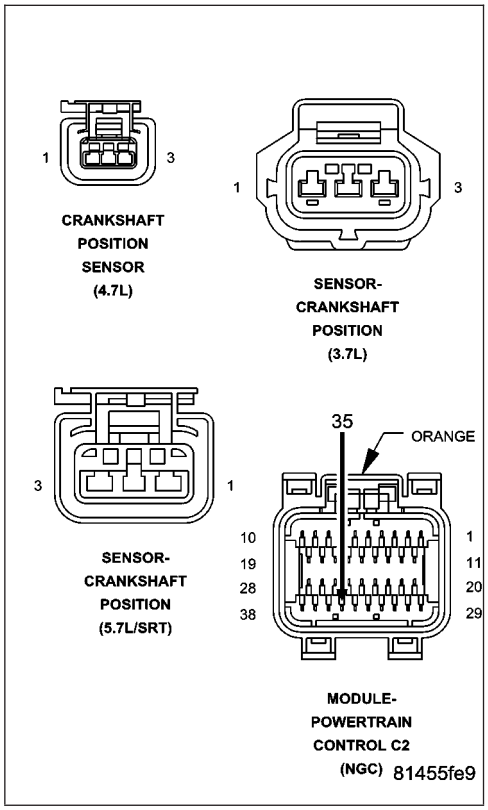

Were any of the above conditions present?

Yes >> Repair as necessary.
Perform the POWERTRAIN VERIFICATION TEST. (Refer to 9 - ENGINE - STANDARD PROCEDURE)

No >> Go To 9

---

9. TONE WHEEL/FLEX PLATE INSPECTION

Remove the Crankshaft Position Sensor.

Inspect the Tone Wheel/Flex Plate slots for damage, foreign material, or excessive movement.

Were any problems found?

Yes >> Repair or replace the Tone Wheel/Flex Plate as necessary.
Perform the POWERTRAIN VERIFICATION TEST. (Refer to 9 - ENGINE - STANDARD PROCEDURE)

No >> Replace the Crankshaft Position Sensor.
Perform the POWERTRAIN VERIFICATION TEST. (Refer to 9 - ENGINE - STANDARD PROCEDURE)

P0016–CRANKSHAFT / CAMSHAFT TIMING MISALIGNMENT (CONTINUED)

10. **ERRATIC CKP SIGNAL**

NOTE: The conditions that set this DTC are not present at this time. The following test may help in identifying the intermittent condition.

WARNING: When the engine is operating, do not stand in direct line with the fan. Do not put your hands near the pulleys, belts, or fan. Do not wear loose clothing. Failure to follow these instructions can result in personal injury or death.

Start the engine.

Gently tap on and wiggle the Crank Position Sensor.

Turn the ignition off.

Inspect the Sensor connector and harness connector, and inspect the PCM connector and harness connector for loose, bent, corroded, or pushed out pins/terminals.

Inspect the related wire harness and the splices in the CKP circuits.

Were any problems found?

Yes >> Repair the wiring/connector concerns as needed or replace the Crankshaft Position Sensor. Perform the POWERTRAIN VERIFICATION TEST. (Refer to 9 - ENGINE - STANDARD PROCEDURE)

No >> Test Complete.

P0031-O2 SENSOR 1/1 HEATER CIRCUIT LOW

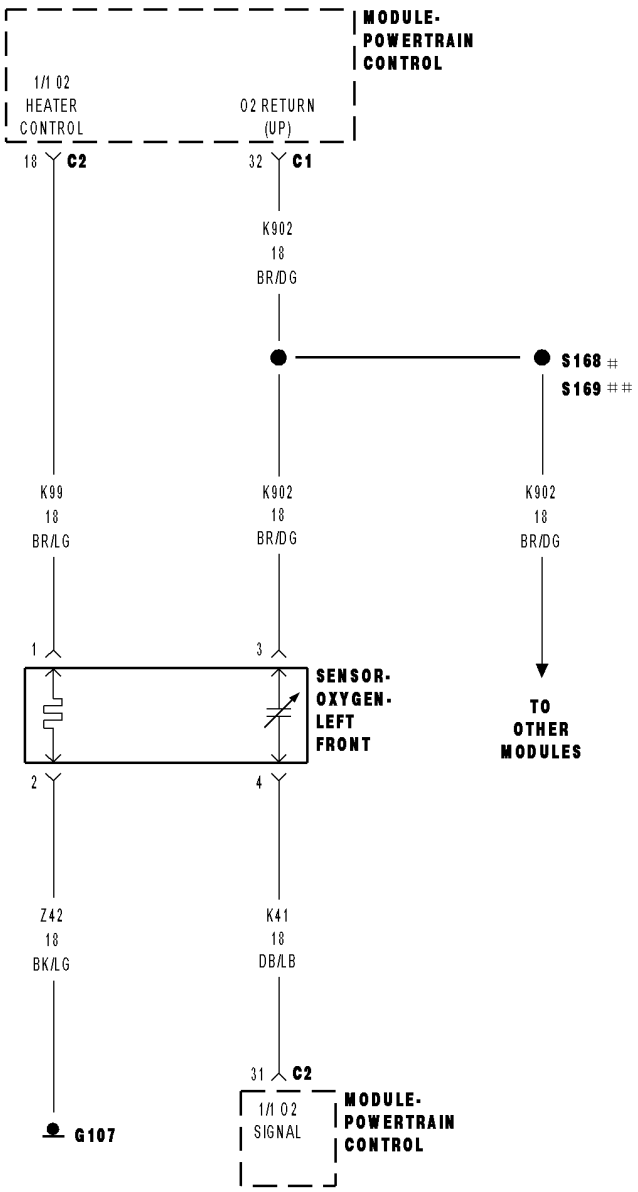

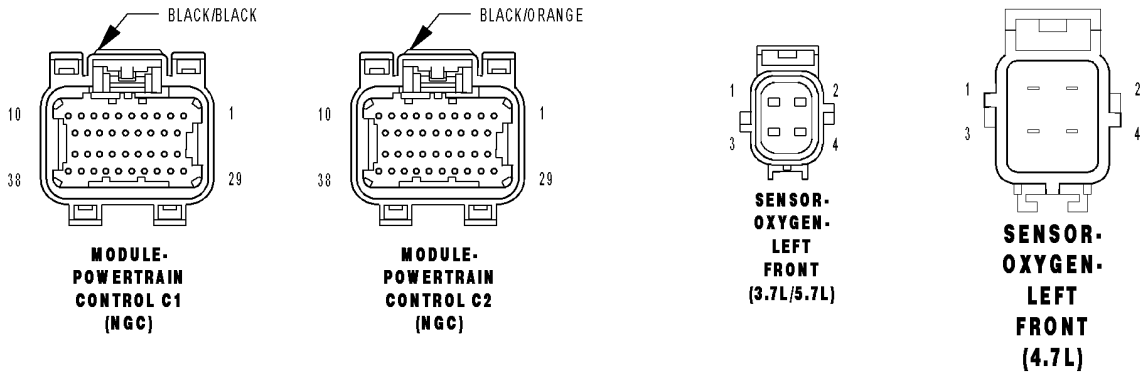

P0031-O2 SENSOR 1/1 HEATER CIRCUIT LOW (CONTINUED)

For the Engine circuit diagram (Refer to 9 - ENGINE - SCHEMATICS AND DIAGRAMS).

For a complete wiring diagram **Refer to Section 8W**.

- **When Monitored:**
  Battery voltage above 10.6 volts, ASD is powered up, and O2 heater is powered.
- **Set Condition:**
  Desired state does not match Actual state. One Trip Fault. Three good trips to turn off the MIL.

Possible Causes
(K99) O2 SENSOR 1/1 HEATER CONTROL CIRCUIT SHORTED TO GROUND
O2 SENSOR
PCM

Always perform the Pre-Diagnostic Troubleshooting procedure before proceeding. (Refer to 9 - ENGINE - DIAGNOSIS AND TESTING).

Diagnostic Test

1. O2 SENSOR HEATER OPERATION

Turn the ignition off.

NOTE: Wait a minimum of 8 minutes to allow the O2 Sensor to cool down before continuing the test. Allow the O2 Sensor voltage to stabilize at 5.0 volts.

Ignition on, engine not running.

With a scan tool, actuate the O2 Heater Test.

With the scan tool, monitor 1/1 O2 Sensor voltage for at least 2 minutes.

Does the O2 Sensor voltage stay above 4.5 volts?

Yes >> Go To 2

No >> Refer to the INTERMITTENT CONDITION Diagnostic Procedure.
Perform the POWERTRAIN VERIFICATION TEST. (Refer to 9 - ENGINE - STANDARD PROCEDURE)

---

2. O2 HEATER ELEMENT

Turn the ignition off.

NOTE: Allow the O2 Sensor to cool down to room temperature.

Disconnect the 1/1 O2 Sensor harness connector.

Measure the resistance across the O2 Sensor Heater element, between the Heater Control terminal and the Heater ground terminal at the component.

NOTE: O2 Heater Element resistance values should be measured at 70°F (21.1°C). The resistance value will vary with different temperature values.

Is the O2 Sensor Heater Element resistance between 2.0 and 30.0 ohms?

Yes >> Go To 3

No >> Replace the O2 Sensor.
Perform the POWERTRAIN VERIFICATION TEST. (Refer to 9 - ENGINE - STANDARD PROCEDURE)

P0031-O2 SENSOR 1/1 HEATER CIRCUIT LOW (CONTINUED)

3. O2 SENSOR

Ignition on, engine not running.

With a scan tool, actuate the O2 1/1 Heater Test with the O2 Sensor harness connector still disconnected.

Using a 12-volt test light connected to ground, probe the (K99) O2 1/1 Heater Control circuit in the O2 Sensor harness connector.

Does the test light illuminate brightly and flash on and off during the actuation?

Yes >> Replace the O2 Sensor.
Perform the POWERTRAIN VERIFICATION TEST. (Refer to 9 - ENGINE - STANDARD PROCEDURE)

No >> Go To 4

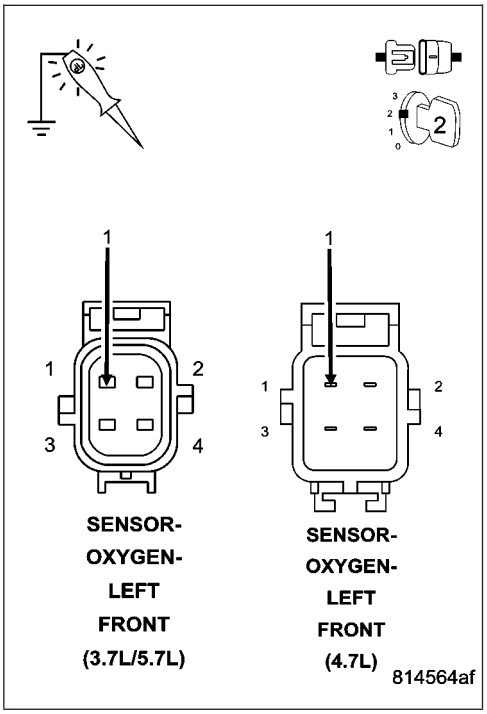

4. (K99) O2 1/1 HEATER CONTROL CIRCUIT SHORTED TO GROUND

Turn the ignition off.

Disconnect the C2 PCM harness connector.

Measure the resistance between ground and the (K99) O2 1/1 Heater Control circuit in the O2 Sensor harness connector.

Is the resistance below 5.0 ohms?

Yes >> Repair the short to ground in the (K99) O2 1/1 Heater Control circuit.
Perform the POWERTRAIN VERIFICATION TEST. (Refer to 9 - ENGINE - STANDARD PROCEDURE)

No >> Go To 5

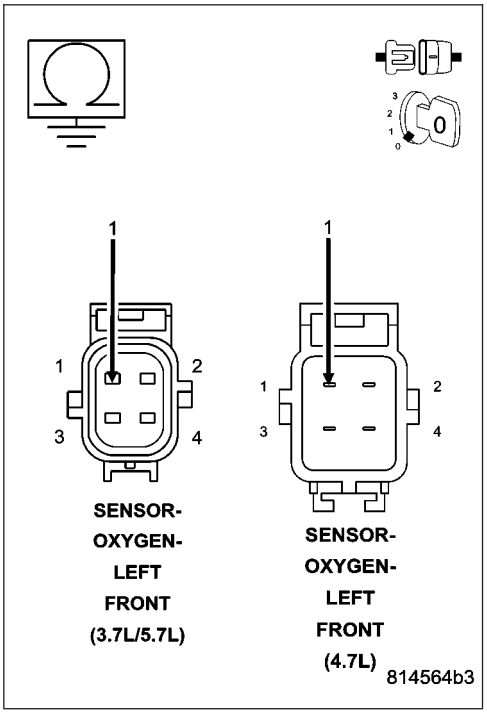

P0031-O2 SENSOR 1/1 HEATER CIRCUIT LOW (CONTINUED)

5. **PCM**

NOTE: Before continuing, check the PCM harness connector terminals for corrosion, damage, or terminal push out. Repair as necessary.

Using the schematics as a guide, inspect the wire harness and connectors. Pay particular attention to all Power and Ground circuits.

Were there any problems found?

Yes >> Repair as necessary.
Perform the POWERTRAIN VERIFICATION TEST. (Refer to 9 - ENGINE - STANDARD PROCEDURE)

No >> Replace and program the Powertrain Control Module per Service Information.
Perform the POWERTRAIN VERIFICATION TEST. (Refer to 9 - ENGINE - STANDARD PROCEDURE)

P0032-O2 SENSOR 1/1 HEATER CIRCUIT HIGH

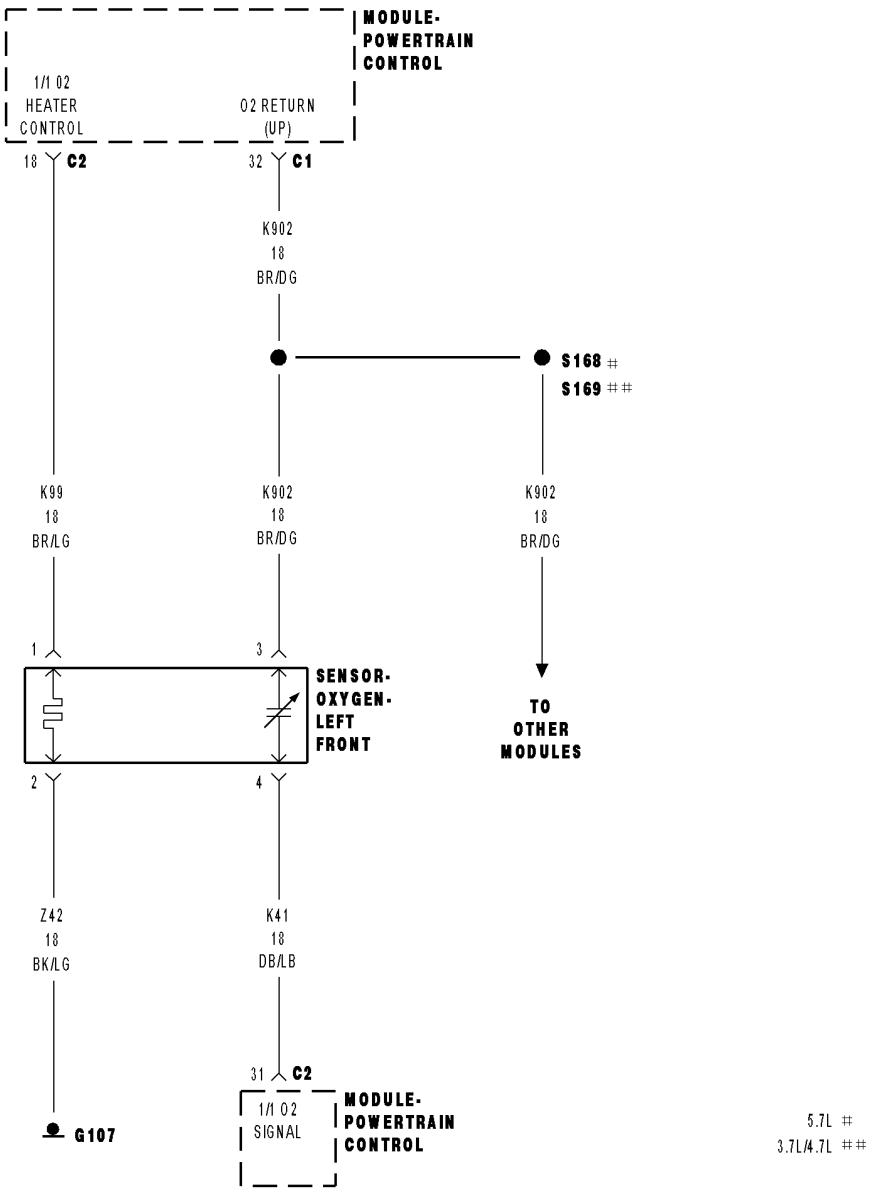

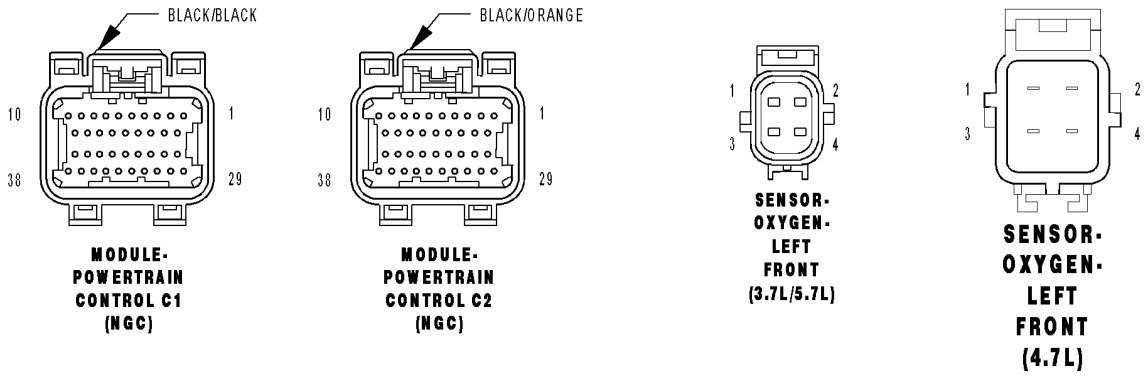

P0032-O2 SENSOR 1/1 HEATER CIRCUIT HIGH (CONTINUED)

For the Engine circuit diagram (Refer to 9 - ENGINE - SCHEMATICS AND DIAGRAMS).

For a complete wiring diagram **Refer to Section 8W**.

- **When Monitored:**
  Battery voltage above 10.6 volts, ASD is powered up, and O2 heater is off.
- **Set Condition:**
  Desired state does not equal Actual state. One Trip Fault. Three good trips to turn off the MIL.

Possible Causes
(K99) O2 1/1 HEATER CONTROL CIRCUIT OPEN
(Z42) O2 1/1 HEATER GROUND CIRCUIT OPEN
(K99) O2 1/1 HEATER CONTROL CIRCUIT SHORTED TO BATTERY VOLTAGE
O2 SENSOR
PCM

Always perform the Pre-Diagnostic Troubleshooting procedure before proceeding. (Refer to 9 - ENGINE - DIAGNOSIS AND TESTING).

Diagnostic Test

1. ACTIVE DTC

Ignition on, engine not running.

With a scan tool, read DTC's

Is the DTC active at this time?

Yes >> Go To 2

No >> Refer to the INTERMITTENT CONDITION Diagnostic Procedure.
Perform the POWERTRAIN VERIFICATION TEST. (Refer to 9 - ENGINE - STANDARD PROCEDURE)

---

2. O2 HEATER ELEMENT

Turn the ignition off.

NOTE: Allow the O2 Sensor to cool down to room temperature.

Disconnect the 1/1 O2 Sensor harness connector.

Measure the resistance across the O2 Sensor Heater element between the O2 Heater Control terminal and the O2 Heater ground terminal at the component.

NOTE: O2 Heater Element resistance values should be measured at 70°F (21.1°C). The resistance value will vary with different temperature values.

Is the O2 Sensor Heater Element resistance between 2.0 and 30.0 ohms?

Yes >> Go To 3

No >> Replace the O2 Sensor.
Perform the POWERTRAIN VERIFICATION TEST. (Refer to 9 - ENGINE - STANDARD PROCEDURE)

P0032-O2 SENSOR 1/1 HEATER CIRCUIT HIGH (CONTINUED)

3. (K99) O2 1/1 HEATER CONTROL CIRCUIT

Ignition on, engine not running.

With a scan tool, actuate the O2 1/1 Heater Test with the Sensor harness connector still disconnected.

Using a 12-volt test light connected to ground, probe the (K99) O2 1/1 Heater Control circuit in the O2 Sensor harness connector.

Does the test light illuminate brightly and flash on and off during the actuation?

Yes >> Go To 4

No >> Go To 5

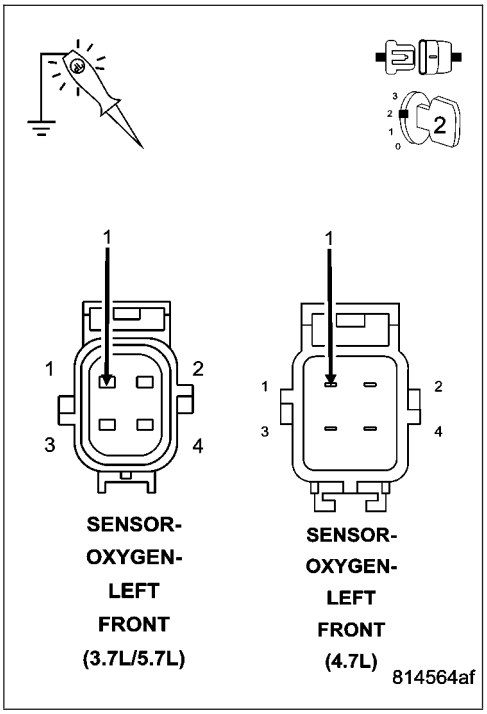

4. (Z42) O2 HEATER GROUND CIRCUIT OPEN

Turn the ignition off.

Measure the resistance between an engine ground and the (Z42) O2 1/1 Heater ground circuit in the O2 Sensor harness connector.

Is the resistance below 5.0 ohms?

Yes >> Replace the O2 Sensor.
Perform the POWERTRAIN VERIFICATION TEST. (Refer to 9 - ENGINE - STANDARD PROCEDURE)

No >> Repair the open in the (Z42) O2 1/1 Heater ground circuit.
Perform the POWERTRAIN VERIFICATION TEST. (Refer to 9 - ENGINE - STANDARD PROCEDURE)

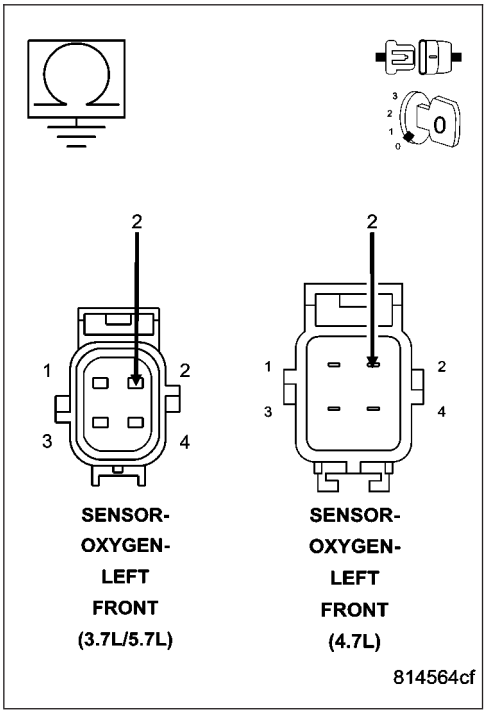

P0032-O2 SENSOR 1/1 HEATER CIRCUIT HIGH (CONTINUED)

5. (K99) O2 1/1 HEATER CONTROL CIRCUIT SHORTED TO BATTERY VOLTAGE

Turn the ignition off.

Disconnect the C2 PCM harness connector.

Ignition on, engine not running.

Using a 12-volt test light connected to ground, probe the (K99) O2 1/1 Heater Control circuit in the O2 Sensor harness connector.

Does the test light illuminate brightly?

Yes >> Repair the short to battery voltage in the (K99) O2 1/1 Heater Control circuit.
Perform the POWERTRAIN VERIFICATION TEST. (Refer to 9 - ENGINE - STANDARD PROCEDURE)

No >> Go To 6

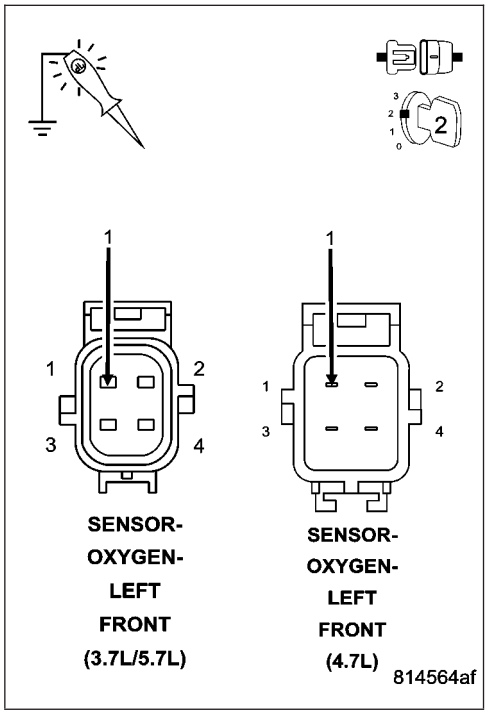

6. (K99) O2 1/1 HEATER CONTROL CIRCUIT OPEN

Turn the ignition off.

CAUTION: Do not probe the PCM harness connectors. Probing the PCM harness connectors will damage the PCM terminals resulting in poor terminal to pin connection. Install Miller Special Tool #8815 to perform diagnosis.

Measure the resistance of the (K99) O2 1/1 Heater Control circuit from the O2 Sensor harness connector to the appropriate terminal of special tool #8815.

Is the resistance below 5.0 ohms?

Yes >> Go To 7

No >> Repair the open in the (K99) O2 1/1 Heater Control circuit.
Perform the POWERTRAIN VERIFICATION TEST. (Refer to 9 - ENGINE - STANDARD PROCEDURE)

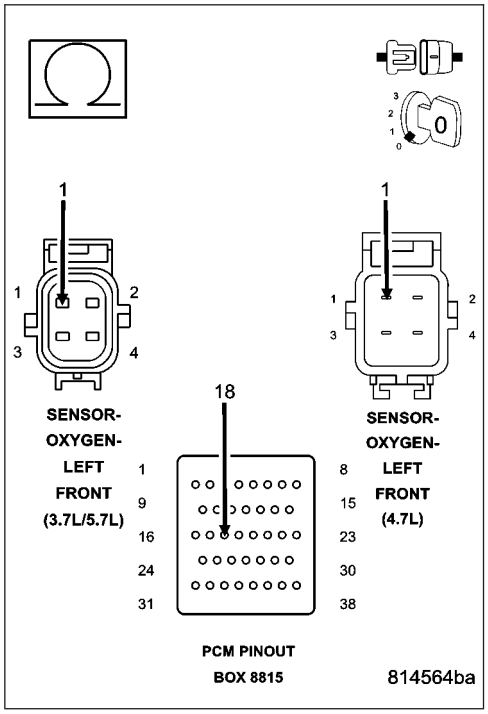

P0032-O2 SENSOR 1/1 HEATER CIRCUIT HIGH (CONTINUED)

7. **PCM**

NOTE: Before continuing, check the PCM harness connector terminals for corrosion, damage, or terminal push out. Repair as necessary.

Using the schematics as a guide, inspect the wire harness and connectors. Pay particular attention to all Power and Ground circuits.

Were there any problems found?

Yes >> Repair as necessary.
Perform the POWERTRAIN VERIFICATION TEST. (Refer to 9 - ENGINE - STANDARD PROCEDURE)

No >> Replace and program the Powertrain Control Module per Service Information.
Perform the POWERTRAIN VERIFICATION TEST. (Refer to 9 - ENGINE - STANDARD PROCEDURE)

P0037-O2 SENSOR 1/2 HEATER CIRCUIT LOW

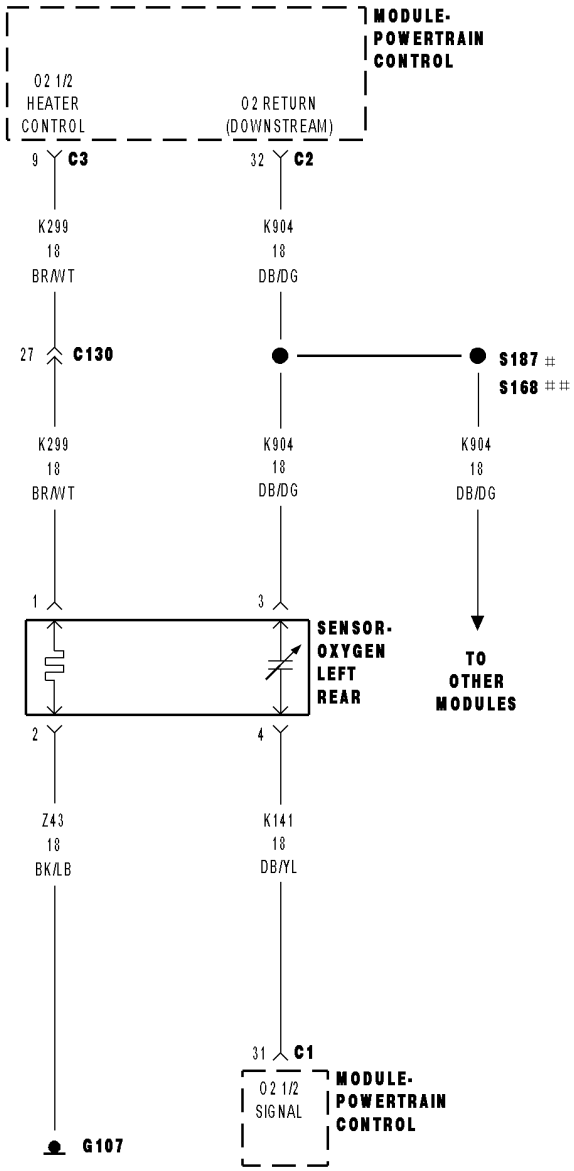

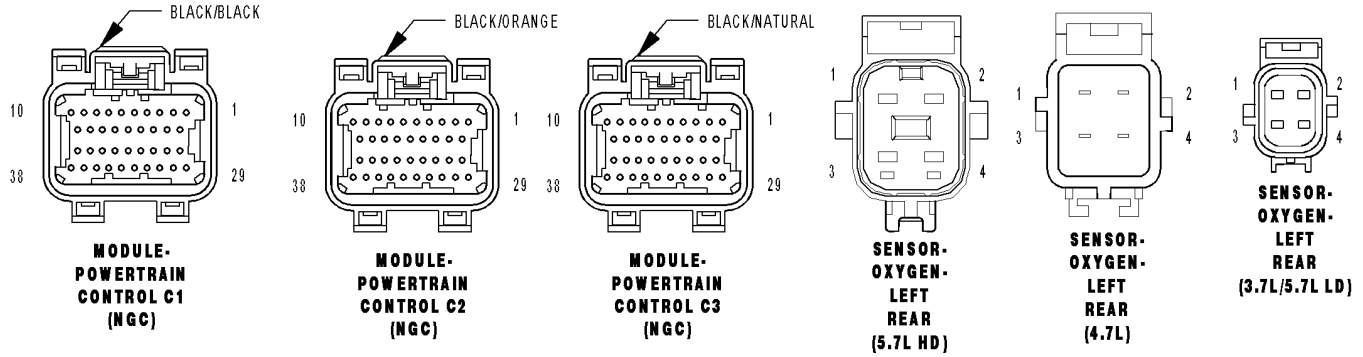

81452b26

P0037-O2 SENSOR 1/2 HEATER CIRCUIT LOW (CONTINUED)

For the Engine circuit diagrams (Refer to 9 - ENGINE - SCHEMATICS AND DIAGRAMS).

For a complete wiring diagram **Refer to Section 8W**.

- **When Monitored:**
  Battery voltage above 10.6 volts, ASD is powered up, and O2 heater is on.
- **Set Condition:**
  Desired state does not match Actual state. One Trip Fault. Three good trips to turn off the MIL.

Possible Causes
(K299) O2 1/2 HEATER CONTROL CIRCUIT SHORTED TO GROUND
O2 SENSOR
PCM

Always perform the Pre-Diagnostic Troubleshooting procedure before proceeding. (Refer to 9 - ENGINE - DIAGNOSIS AND TESTING).

Diagnostic Test

1. O2 SENSOR HEATER OPERATION

Turn the ignition off.

NOTE: Wait a minimum of 8 minutes to allow the O2 Sensor to cool down before continuing the test. Allow the O2 Sensor voltage to stabilize at 5.0 volts.

Ignition on, engine not running.

With a scan tool, actuate the O2 1/2 Heater Test.

With the scan tool, monitor 1/2 O2 Sensor voltage for at least 2 minutes.

Does the O2 Sensor voltage stay above 4.5 volts?

Yes >> Go To 2

No >> Refer to the INTERMITTENT CONDITION Diagnostic Procedure.
Perform the POWERTRAIN VERIFICATION TEST. (Refer to 9 - ENGINE - STANDARD PROCEDURE)

---

2. O2 HEATER ELEMENT

Turn the ignition off.

NOTE: Allow the O2 Sensor to cool down to room temperature.

Disconnect the 1/2 O2 Sensor harness connector.

Measure the resistance across the O2 Sensor Heater element, between the O2 Heater Control terminal and the O2 Heater ground terminal at the component.

NOTE: O2 Heater Element resistance values should be measured at 70°F (21.1°C). The resistance value will vary with different temperature values.

Is the O2 Sensor Heater Element resistance between 2.0 and 30.0 ohms?

Yes >> Go To 3

No >> Replace the O2 Sensor.
Perform the POWERTRAIN VERIFICATION TEST. (Refer to 9 - ENGINE - STANDARD PROCEDURE)

P0037-O2 SENSOR 1/2 HEATER CIRCUIT LOW (CONTINUED)

3. O2 SENSOR

Ignition on, engine not running.

With a scan tool, actuate the O2 Heater Test with the 1/2 O2 Sensor harness connector still disconnected.

Using a 12-volt test light connected to ground, probe the (K299) O2 1/2 Heater Control circuit in the O2 Sensor harness connector.

Does the test light illuminate brightly and flash on and off during the actuation?

Yes >> Replace the O2 Sensor.
Perform the POWERTRAIN VERIFICATION TEST. (Refer to 9 - ENGINE - STANDARD PROCEDURE)

No >> Go To 4

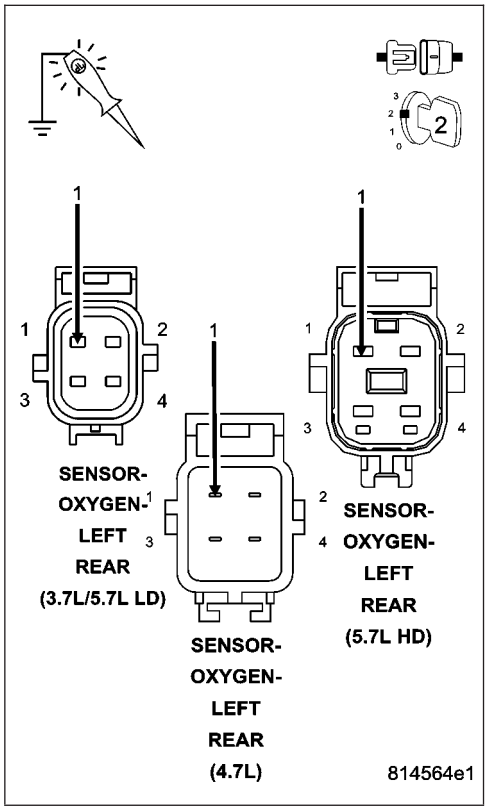

4. (K299) O2 1/2 HEATER CONTROL CIRCUIT SHORTED TO GROUND

Turn the ignition off.

Disconnect the C3 PCM harness connector.

Measure the resistance between ground and the (K299) O2 1/2 Heater Control circuit in the O2 Sensor harness connector.

Is the resistance below 5.0 ohms?

Yes >> Repair the short to ground in the (K299) O2 1/2 Heater Control circuit.
Perform the POWERTRAIN VERIFICATION TEST. (Refer to 9 - ENGINE - STANDARD PROCEDURE)

No >> Go To 5

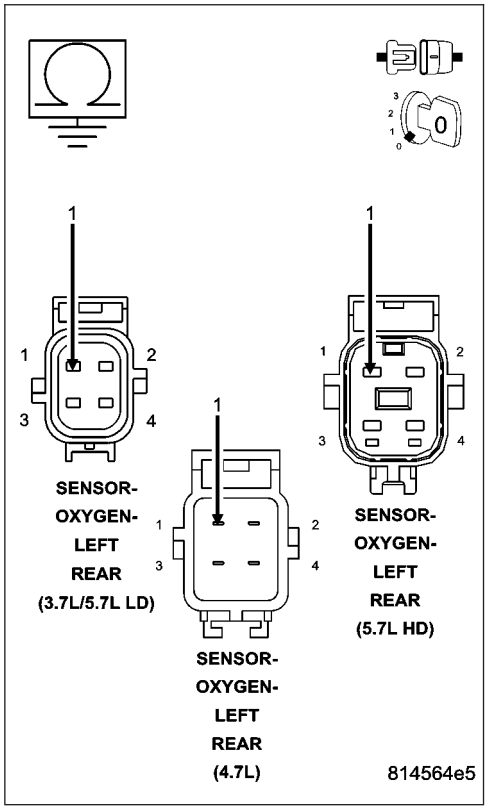

P0037-O2 SENSOR 1/2 HEATER CIRCUIT LOW (CONTINUED)

5. **PCM**

NOTE: Before continuing, check the PCM harness connector terminals for corrosion, damage, or terminal push out. Repair as necessary.

Using the schematics as a guide, inspect the wire harness and connectors. Pay particular attention to all Power and Ground circuits.

Were there any problems found?

Yes >> Repair as necessary.
Perform the POWERTRAIN VERIFICATION TEST. (Refer to 9 - ENGINE - STANDARD PROCEDURE)

No >> Replace and program the Powertrain Control Module per Service Information.
Perform the POWERTRAIN VERIFICATION TEST. (Refer to 9 - ENGINE - STANDARD PROCEDURE)

P0038-O2 SENSOR 1/2 HEATER CIRCUIT HIGH

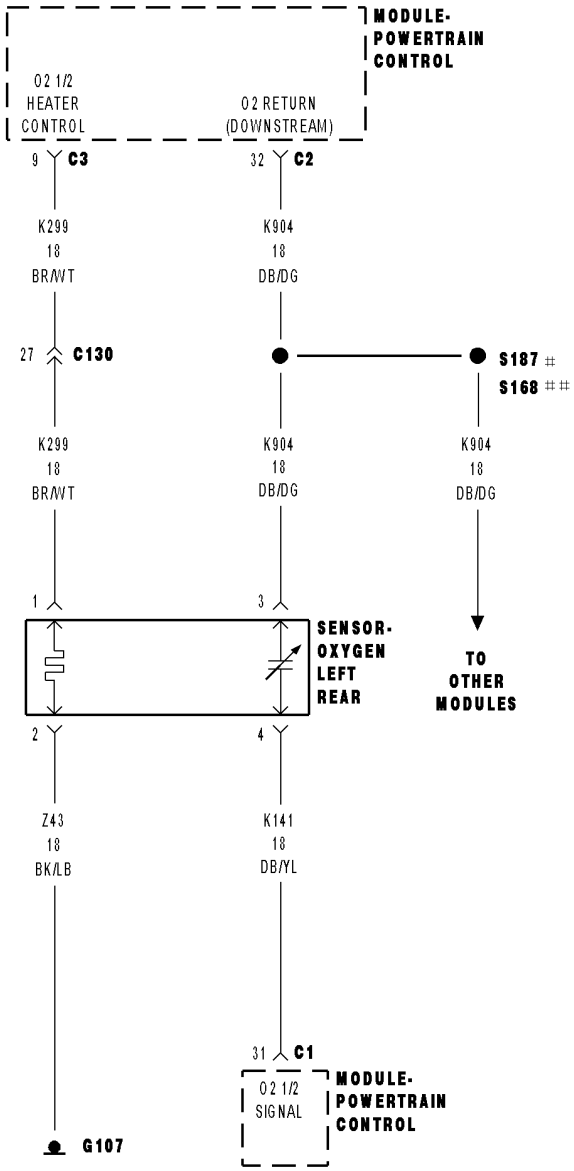

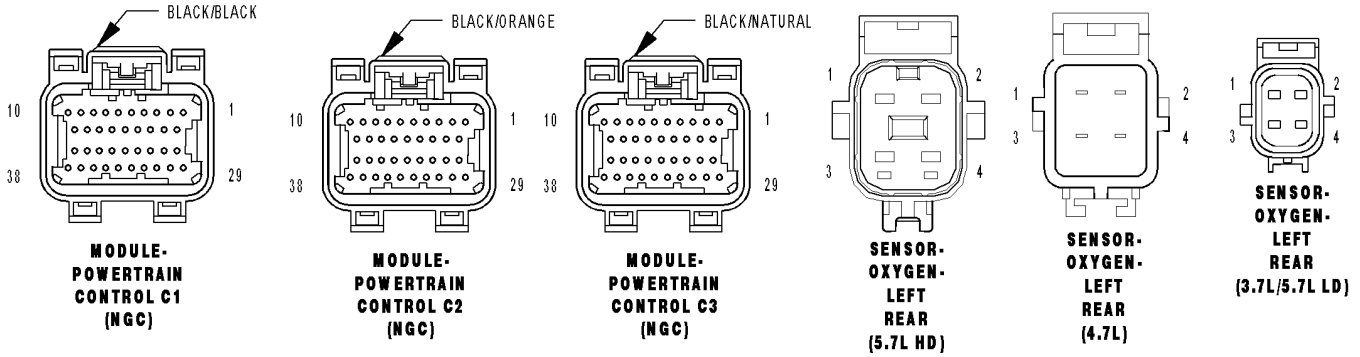

81452b26

P0038-O2 SENSOR 1/2 HEATER CIRCUIT HIGH (CONTINUED)

For the Engine circuit diagram (Refer to 9 - ENGINE - SCHEMATICS AND DIAGRAMS).

For a complete wiring diagram **Refer to Section 8W**.

- **When Monitored:**
  Battery voltage above 10.6 volts, ASD is powered up, and O2 heater is off.
- **Set Condition:**
  Desired state does not equal Actual state. One Trip Fault. Three good trips to turn off the MIL.

Possible Causes
(K299) O2 1/2 HEATER CONTROL CIRCUIT OPEN
(Z43) O2 1/2 HEATER GROUND CIRCUIT OPEN
(K299) O2 SENSOR 1/2 HEATER CONTROL CIRCUIT SHORTED TO BATTERY VOLTAGE
O2 SENSOR
PCM

Always perform the Pre-Diagnostic Troubleshooting procedure before proceeding. (Refer to 9 - ENGINE - DIAGNOSIS AND TESTING).

Diagnostic Test

1. ACTIVE DTC

Ignition on, engine not running.

With a scan tool, read DTC's.

Is the DTC active at this time?

Yes >> Go To 2

No >> Refer to the INTERMITTENT CONDITION Diagnostic Procedure.
Perform the POWERTRAIN VERIFICATION TEST. (Refer to 9 - ENGINE - STANDARD PROCEDURE)

---

2. O2 HEATER ELEMENT

Turn the ignition off.

NOTE: Allow the O2 Sensor to cool down to room temperature.

Disconnect the 1/2 O2 Sensor harness connector.

Measure the resistance across the O2 Sensor Heater element, between the Heater Control terminal and the Heater ground terminal at the component.

NOTE: O2 Heater Element resistance values should be measured at 70°F (21.1°C). The resistance value will vary with different temperature values.

Is the O2 Sensor Heater Element resistance between 2.0 and 30.0 ohms?

Yes >> Go To 3

No >> Replace the O2 Sensor.
Perform the POWERTRAIN VERIFICATION TEST. (Refer to 9 - ENGINE - STANDARD PROCEDURE)

P0038-O2 SENSOR 1/2 HEATER CIRCUIT HIGH (CONTINUED)

3. (K299) O2 1/2 HEATER CONTROL CIRCUIT

Ignition on, engine not running.

With a scan tool, actuate the O2 1/2 Heater Test with the O2 Sensor harness connector still disconnected.

Using a 12-volt test light connected to ground, probe the (K299) O2 1/2 Heater Control circuit in the O2 Sensor harness connector.

Does the test light illuminate brightly and flash on and off during the actuation?

Yes >> Go To 4

No >> Go To 5

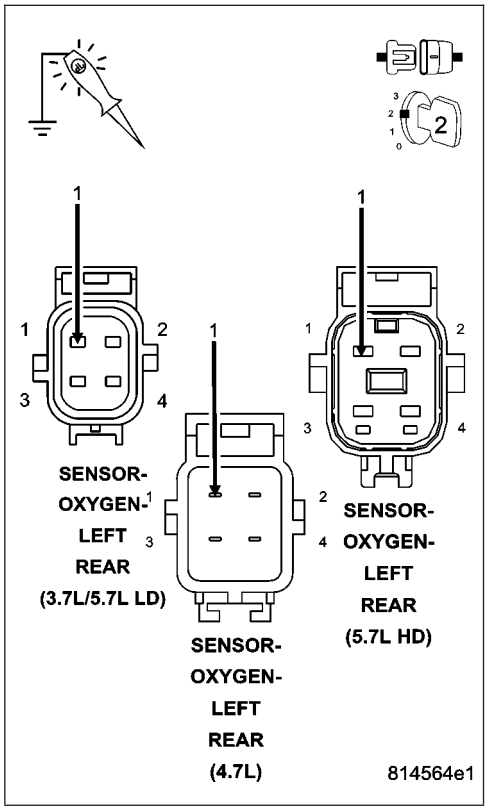

4. (Z43) O2 HEATER GROUND CIRCUIT OPEN

Turn the ignition off.

Measure the resistance between an engine ground and the (Z43) O2 1/2 Heater ground circuit in the O2 Sensor harness connector.

Is the resistance below 5.0 ohms?

Yes >> Replace the O2 Sensor.
Perform the POWERTRAIN VERIFICATION TEST. (Refer to 9 - ENGINE - STANDARD PROCEDURE)

No >> Repair the open in the (Z43) O2 1/2 Heater ground circuit.
Perform the POWERTRAIN VERIFICATION TEST. (Refer to 9 - ENGINE - STANDARD PROCEDURE)

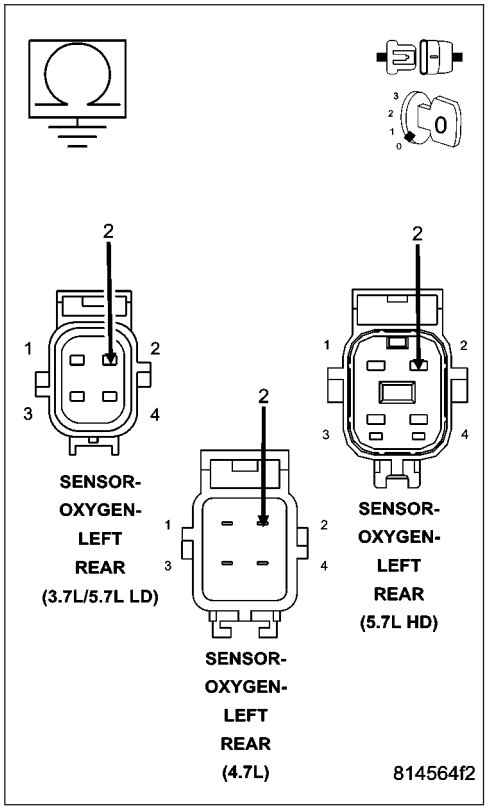

P0038-O2 SENSOR 1/2 HEATER CIRCUIT HIGH (CONTINUED)

5. (K299) O2 1/2 HEATER CONTROL CIRCUIT SHORTED TO BATTERY VOLTAGE

Turn the ignition off.

Disconnect the C3 PCM harness connector.

Ignition on, engine not running.

Using a 12-volt test light connect to ground, probe the (K299) O2 1/2 Heater Control circuit in the O2 Sensor harness connector.

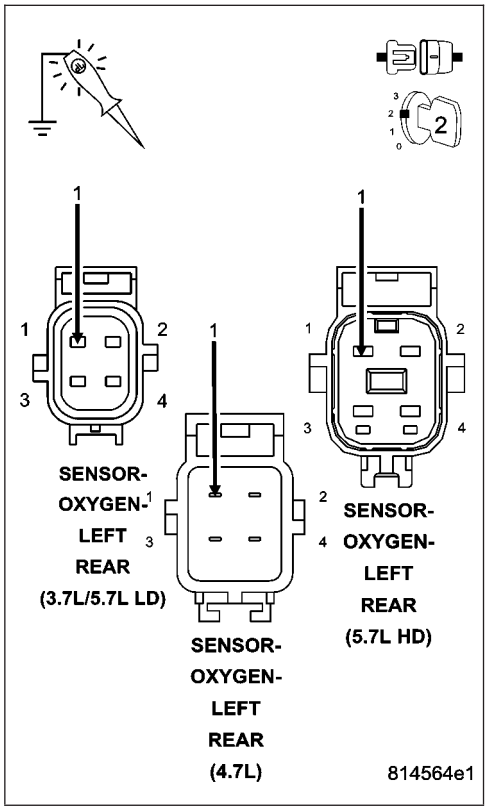

Does the test light illuminate brightly?

Yes >> Repair the short to battery voltage in the (K299) O2 1/2 Heater Control circuit.
Perform the POWERTRAIN VERIFICATION TEST. (Refer to 9 - ENGINE - STANDARD PROCEDURE)

No >> Go To 6

6. (K299) O2 1/2 HEATER CONTROL CIRCUIT OPEN

Turn the ignition off.

CAUTION: Do not probe the PCM harness connectors. Probing the PCM harness connectors will damage the PCM terminals resulting in poor terminal to pin connection. Install Miller Special Tool #8815 to perform diagnosis.

Measure the resistance of the (K299) O2 1/2 Heater Control circuit from the O2 Sensor harness connector to the appropriate terminal of special tool #8815.

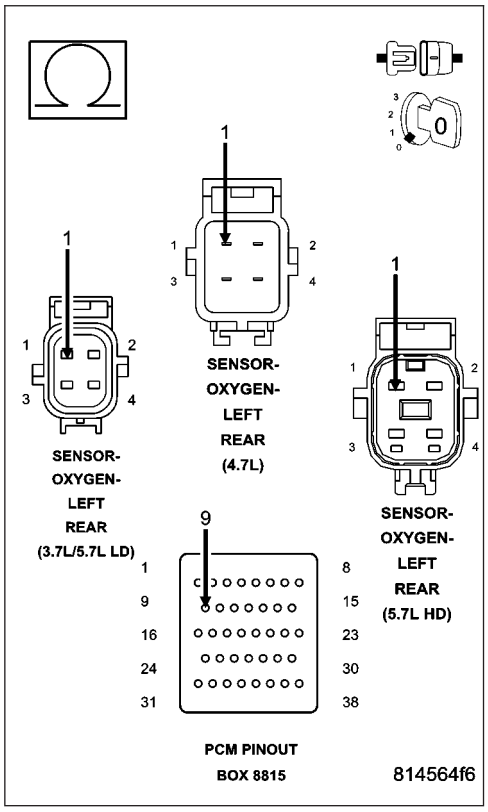

Is the resistance below 5.0 ohms?

Yes >> Go To 7

No >> Repair the open in the (K299) O2 1/2 Heater Control circuit.
Perform the POWERTRAIN VERIFICATION TEST. (Refer to 9 - ENGINE - STANDARD PROCEDURE)

P0038-O2 SENSOR 1/2 HEATER CIRCUIT HIGH (CONTINUED)

7. **PCM**

NOTE: Before continuing, check the PCM harness connector terminals for corrosion, damage, or terminal push out. Repair as necessary.

Using the schematics as a guide, inspect the wire harness and connectors. Pay particular attention to all Power and Ground circuits.

Were there any problems found?

Yes >> Repair as necessary.
Perform the POWERTRAIN VERIFICATION TEST. (Refer to 9 - ENGINE - STANDARD PROCEDURE)

No >> Replace and program the Powertrain Control Module per Service Information.
Perform the POWERTRAIN VERIFICATION TEST. (Refer to 9 - ENGINE - STANDARD PROCEDURE)

P0051-O2 SENSOR 2/1 HEATER CIRCUIT LOW

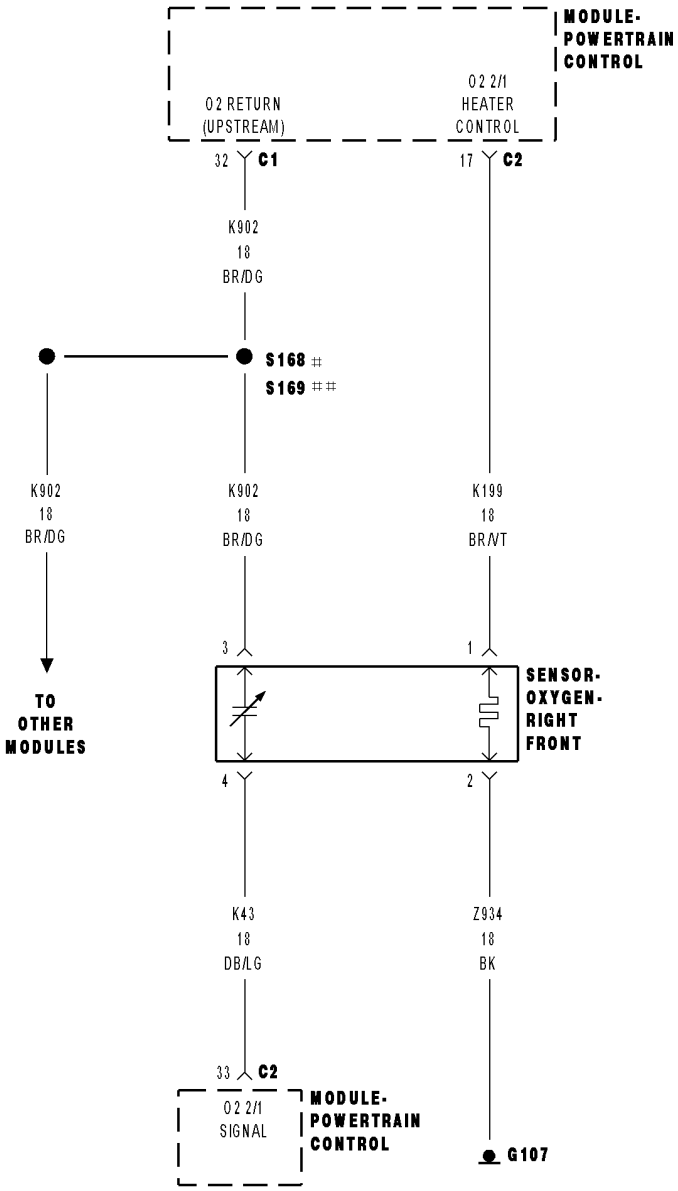

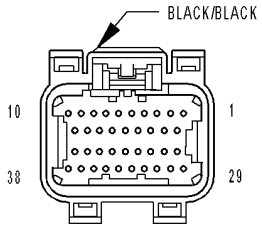

MODULE-
POWERTRAIN
CONTROL C1
(NGC)

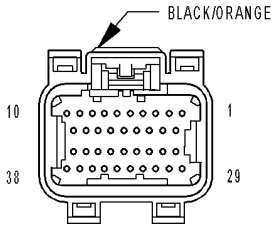

MODULE-
POWERTRAIN
CONTROL C2
(NGC)

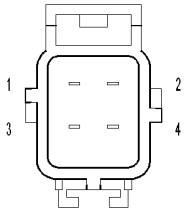

SENSOR-
OXYGEN-
RIGHT
FRONT
(4.7L)

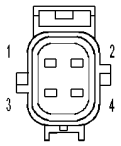

SENSOR-
OXYGEN-
RIGHT
FRONT
(3.7L/5.7L)

81452b7e

P0051-O2 SENSOR 2/1 HEATER CIRCUIT LOW (CONTINUED)

For the Engine circuit diagram (Refer to 9 - ENGINE - SCHEMATICS AND DIAGRAMS).

For a complete wiring diagram **Refer to Section 8W**.

- **When Monitored:**
  Battery voltage above 10.6 volts, ASD is powered up, and O2 heater is on.
- **Set Condition:**
  Desired state does not match Actual state. One Trip Fault. Three good trips to turn off the MIL.

Possible Causes
(K199) O2 2/1 HEATER CONTROL CIRCUIT SHORTED TO GROUND
O2 SENSOR
PCM

Always perform the Pre-Diagnostic Troubleshooting procedure before proceeding. (Refer to 9 - ENGINE - DIAGNOSIS AND TESTING).

Diagnostic Test

1. O2 SENSOR HEATER OPERATION

Turn the ignition off.

NOTE: Wait a minimum of 8 minutes to allow the O2 Sensor to cool down before continuing the test. Allow the O2 Sensor voltage to stabilize at 5.0 volts.

Ignition on, engine not running.

With a scan tool, actuate the O2 Heater Test.

With a scan tool, monitor 2/1 O2 Sensor voltage for at least 2 minutes.

Does the O2 Sensor voltage stay above 4.5 volts?

Yes >> Go To 2

No >> Refer to the INTERMITTENT CONDITION Diagnostic Procedure.
Perform the POWERTRAIN VERIFICATION TEST. (Refer to 9 - ENGINE - STANDARD PROCEDURE)

---

2. O2 HEATER ELEMENT

Turn the ignition off.

NOTE: Allow the O2 Sensor to cool down to room temperature.

Disconnect the 2/1 O2 Sensor harness connector.

Measure the resistance across the O2 Sensor Heater element, between the Heater Control terminal and the Heater ground terminal at the component.

NOTE: O2 Heater Element resistance values should be measured at 70°F (21.1°C). The resistance value will vary with different temperature values.

Is the O2 Sensor Heater Element resistance between 2.0 and 30.0 ohms?

Yes >> Go To 3

No >> Replace the O2 Sensor.
Perform the POWERTRAIN VERIFICATION TEST. (Refer to 9 - ENGINE - STANDARD PROCEDURE)

P0051-O2 SENSOR 2/1 HEATER CIRCUIT LOW (CONTINUED)

3. O2 SENSOR

Ignition on, engine not running.

With a scan tool, actuate the O2 Heater Test with the O2 Sensor harness connector still disconnected.

Using a 12-volt test light connected to ground, probe the (K199) O2 2/1 Heater Control circuit in the O2 Sensor harness connector.

Does the test light illuminate brightly and flash on and off during the actuation?

Yes >> Replace the O2 Sensor.
Perform the POWERTRAIN VERIFICATION TEST. (Refer to 9 - ENGINE - STANDARD PROCEDURE)

No >> Go To 4

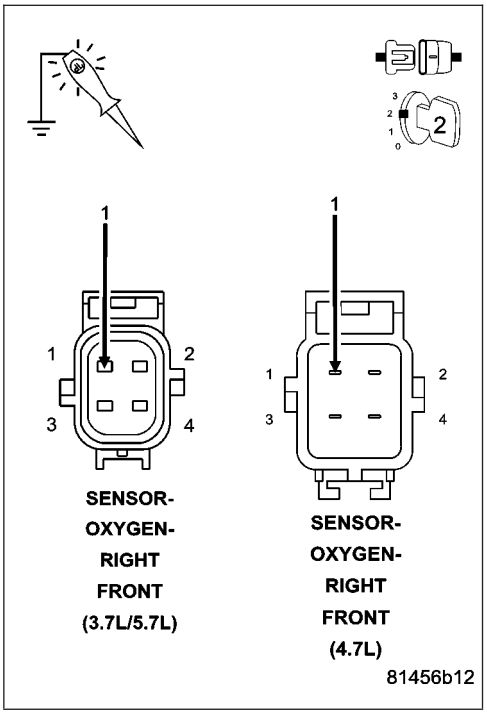

4. (K199) O2 2/1 HEATER CONTROL CIRCUIT SHORTED TO GROUND

Turn the ignition off.

Disconnect the C2 PCM harness connector.

Measure the resistance between ground and the (K199) O2 2/1 Heater Control circuit in the O2 Sensor harness connector.

Is the resistance below 5.0 ohms?

Yes >> Repair the short to ground in the (K199) O2 2/1 Sensor Heater Control circuit.
Perform the POWERTRAIN VERIFICATION TEST. (Refer to 9 - ENGINE - STANDARD PROCEDURE)

No >> Go To 5

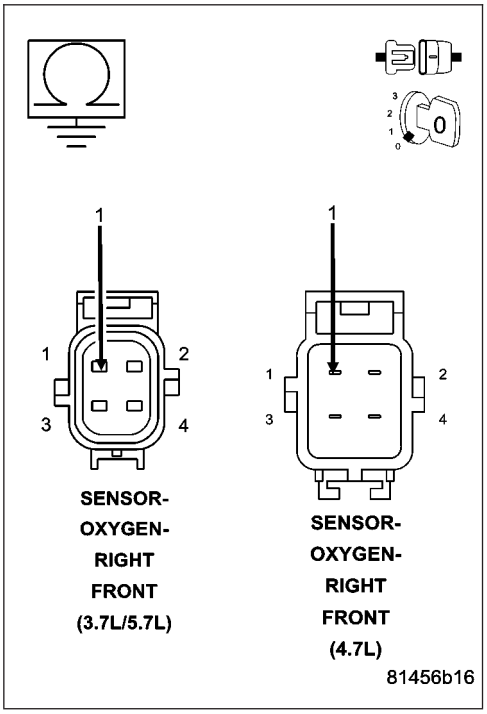

P0051-O2 SENSOR 2/1 HEATER CIRCUIT LOW (CONTINUED)

5. **PCM**

NOTE: Before continuing, check the PCM harness connector terminals for corrosion, damage, or terminal push out. Repair as necessary.

Using the schematics as a guide, inspect the wire harness and connectors. Pay particular attention to all Power and Ground circuits.

Were there any problems found?

Yes >> Repair as necessary.
Perform the POWERTRAIN VERIFICATION TEST. (Refer to 9 - ENGINE - STANDARD PROCEDURE)

No >> Replace and program the Powertrain Control Module per Service Information.
Perform the POWERTRAIN VERIFICATION TEST. (Refer to 9 - ENGINE - STANDARD PROCEDURE)

P0052-O2 SENSOR 2/1 HEATER CIRCUIT HIGH

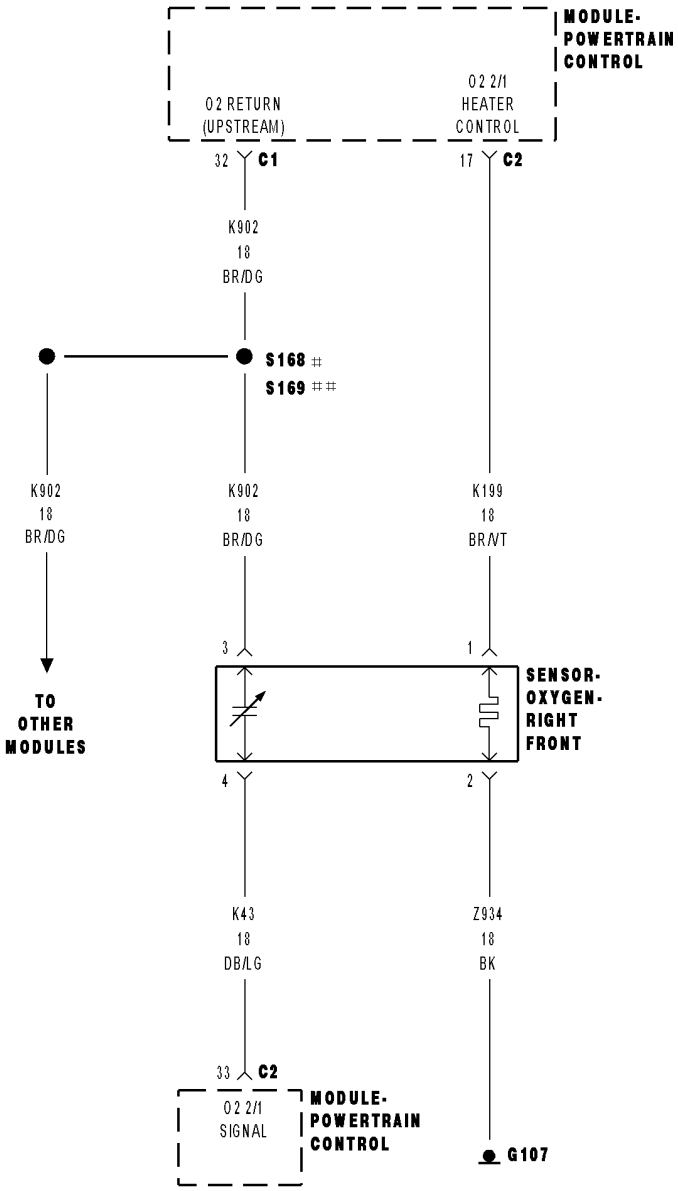

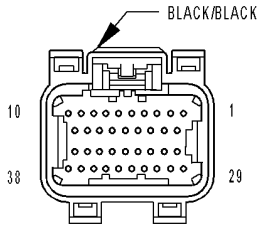

MODULE-
POWERTRAIN
CONTROL C1
(NGC)

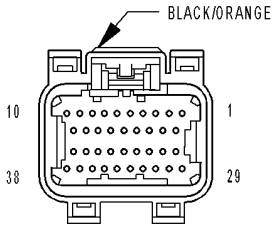

MODULE-
POWERTRAIN
CONTROL C2
(NGC)

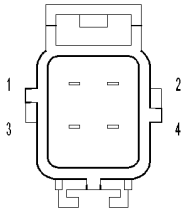

SENSOR-
OXYGEN-
RIGHT
FRONT
(4.7L)

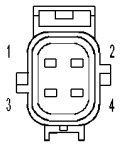

SENSOR-
OXYGEN-
RIGHT
FRONT
(3.7L/5.7L)

81452b7e

P0052-O2 SENSOR 2/1 HEATER CIRCUIT HIGH (CONTINUED)

For the Engine circuit diagram (Refer to 9 - ENGINE - SCHEMATICS AND DIAGRAMS).

For a complete wiring diagram **Refer to Section 8W**.

- **When Monitored:**
  Battery voltage above 10.6 volts, ASD is powered up, and O2 heater is off.
- **Set Condition:**
  Desired state does not equal Actual state. One Trip Fault. Three good trips to turn off the MIL.

Possible Causes
(K199) O2 2/1 HEATER CONTROL CIRCUIT OPEN
(Z934) O2 2/1 HEATER GROUND CIRCUIT OPEN
(K199) O2 2/1 HEATER CONTROL CIRCUIT SHORTED TO BATTERY VOLTAGE
O2 SENSOR
PCM

Always perform the Pre-Diagnostic Troubleshooting procedure before proceeding. (Refer to 9 - ENGINE - DIAGNOSIS AND TESTING).

Diagnostic Test

1. ACTIVE DTC

Ignition on, engine not running.

With a scan tool, read DTC's.

Is the DTC active at this time?

Yes >> Go To 2

No >> Refer to the INTERMITTENT CONDITION Diagnostic Procedure.
Perform the POWERTRAIN VERIFICATION TEST. (Refer to 9 - ENGINE - STANDARD PROCEDURE)

---

2. O2 HEATER ELEMENT

Turn the ignition off.

NOTE: Allow the O2 Sensor to cool down to room temperature.

Disconnect the 2/1 O2 Sensor harness connector.

Measure the resistance across the O2 Sensor Heater element, between the O2 Heater Control terminal and the Heater ground terminal at the component connector.

NOTE: O2 Heater Element resistance values should be measured at 70°F (21.1°C). The resistance value will vary with different temperature values.

Is the O2 Sensor Heater Element resistance between 2.0 and 30.0 ohms?

Yes >> Go To 3

No >> Replace the O2 Sensor.
Perform the POWERTRAIN VERIFICATION TEST. (Refer to 9 - ENGINE - STANDARD PROCEDURE)

P0052-O2 SENSOR 2/1 HEATER CIRCUIT HIGH (CONTINUED)

3. (K199) O2 2/1 HEATER CONTROL CIRCUIT

Ignition on, engine not running.

With the scan tool, actuate the O2 Heater Test with the Sensor harness connector still disconnected.

Using a 12-volt test light connected to ground, probe the (K199) O2 2/1 Heater Control circuit in the O2 Sensor harness connector.

Does the test light illuminate brightly and flash on and off during the actuation?

Yes >> Go To 4

No >> Go To 5

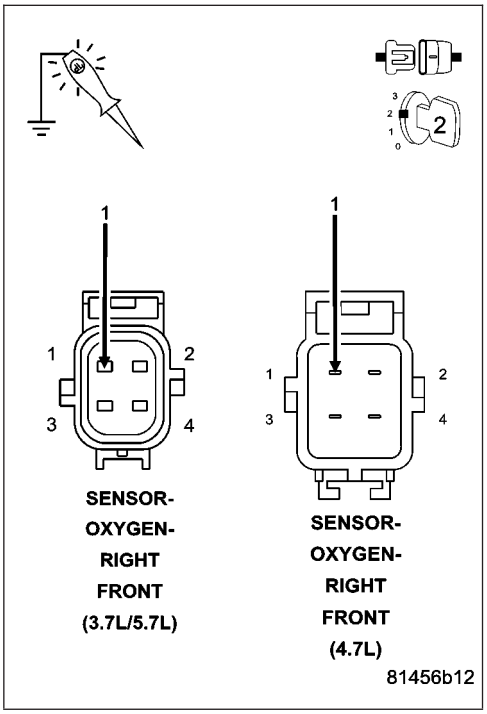

4. (Z934) O2 2/1 HEATER GROUND CIRCUIT OPEN

Turn the ignition off.

Measure the resistance between an engine ground and the (Z934) O2 2/1 Heater ground circuit in the O2 Sensor harness connector.

Is the resistance below 5.0 ohms?

Yes >> Replace the O2 Sensor.
Perform the POWERTRAIN VERIFICATION TEST. (Refer to 9 - ENGINE - STANDARD PROCEDURE)

No >> Repair the open in the (Z934) O2 2/1 Heater ground circuit.
Perform the POWERTRAIN VERIFICATION TEST. (Refer to 9 - ENGINE - STANDARD PROCEDURE)

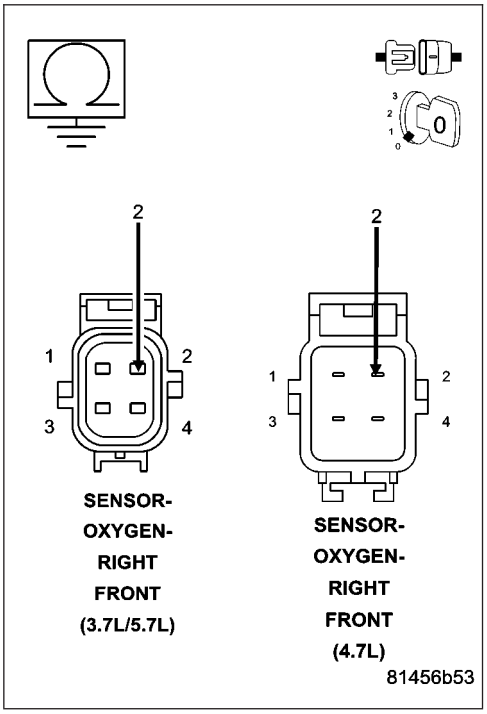

P0052-O2 SENSOR 2/1 HEATER CIRCUIT HIGH (CONTINUED)

5. (K199) O2 2/1 HEATER CONTROL CIRCUIT SHORTED TO BATTERY VOLTAGE

Turn the ignition off.

Disconnect the C3 PCM harness connector.

Ignition on, engine not running.

Using a 12-volt test light connected to ground, probe the (K199) O2 2/1 Heater Control circuit in the O2 Sensor harness connector.

Does the test light illuminate?

Yes >> Repair the short to battery voltage in the (K199) O2 2/1 Heater Control circuit.
Perform the POWERTRAIN VERIFICATION TEST. (Refer to 9 - ENGINE - STANDARD PROCEDURE)

No >> Go To 6

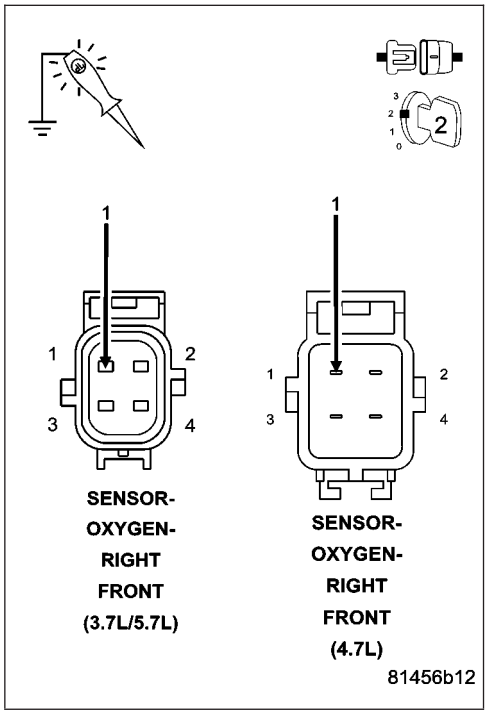

6. (K199) O2 2/1 HEATER CONTROL CIRCUIT OPEN

Turn the ignition off.

CAUTION: Do not probe the PCM harness connectors. Probing the PCM harness connectors will damage the PCM terminals resulting in poor terminal to pin connection. Install Miller Special Tool #8815 to perform diagnosis.

Measure the resistance of the (K199) O2 2/1 Heater Control circuit from the O2 Sensor harness connector to the appropriate terminal of special tool #8815.

Is the resistance below 5.0 ohms?

Yes >> Go To 7

No >> Repair the open in the (K199) O2 2/1 Heater Control circuit.
Perform the POWERTRAIN VERIFICATION TEST. (Refer to 9 - ENGINE - STANDARD PROCEDURE)

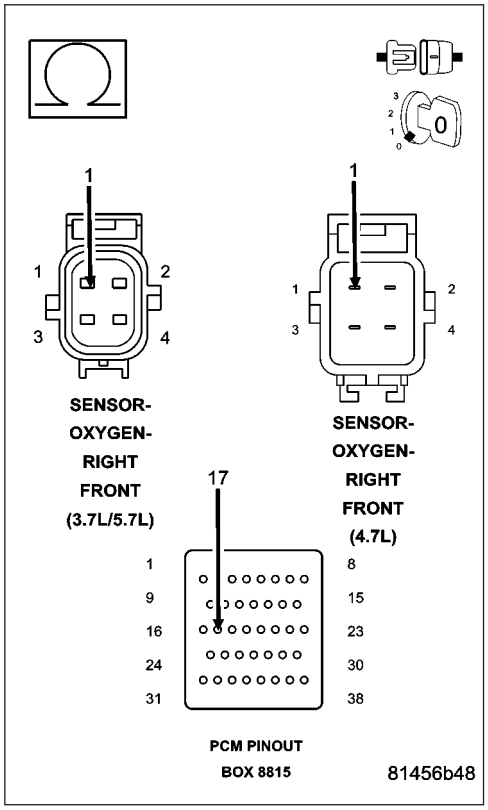

P0052-O2 SENSOR 2/1 HEATER CIRCUIT HIGH (CONTINUED)

7. **PCM**

NOTE: Before continuing, check the PCM harness connector terminals for corrosion, damage, or terminal push out. Repair as necessary.

Using the schematics as a guide, inspect the wire harness and connectors. Pay particular attention to all Power and Ground circuits.

Were there any problems found?

Yes >> Repair as necessary.
Perform the POWERTRAIN VERIFICATION TEST. (Refer to 9 - ENGINE - STANDARD PROCEDURE)

No >> Replace and program the Powertrain Control Module per Service Information.
Perform the POWERTRAIN VERIFICATION TEST. (Refer to 9 - ENGINE - STANDARD PROCEDURE)

P0057-O2 SENSOR 2/2 HEATER CIRCUIT LOW

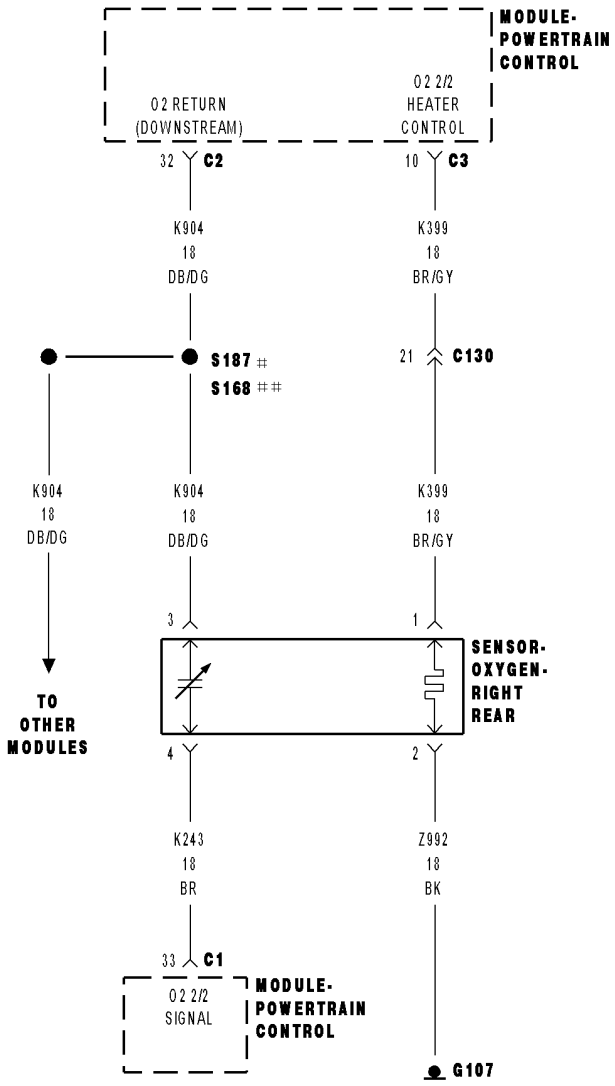

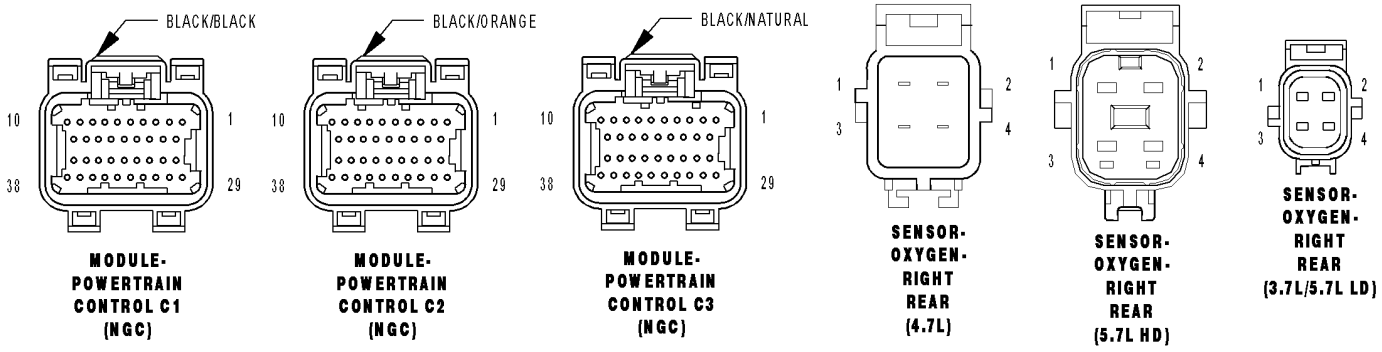

81452bb4

P0057-O2 SENSOR 2/2 HEATER CIRCUIT LOW (CONTINUED)

For the Engine circuit diagrams (Refer to 9 - ENGINE - SCHEMATICS AND DIAGRAMS).

For a complete wiring diagram **Refer to Section 8W**.

- **When Monitored:**
  Battery voltage above 10.6 volts, ASD is powered up, and O2 heater is on.
- **Set Condition:**
  Desired state does not match Actual state. One Trip Fault. Three good trips to turn off the MIL.

Possible Causes
(K399) O2 SENSOR 2/2 HEATER CONTROL CIRCUIT SHORTED TO GROUND
O2 SENSOR
PCM

Always perform the Pre-Diagnostic Troubleshooting procedure before proceeding. (Refer to 9 - ENGINE - DIAGNOSIS AND TESTING).

Diagnostic Test

1. O2 SENSOR HEATER OPERATION

Turn the ignition off.

NOTE: Wait a minimum of 8 minutes to allow the O2 Sensor to cool down before continuing the test. Allow the O2 Sensor voltage to stabilize at 5.0 volts.

Ignition on, engine not running.

With a scan tool, actuate the O2 Heater Test.

With the scan tool, monitor 2/2 O2 Sensor voltage for at least 2 minutes.

Does the O2 Sensor voltage stay above 4.5 volts?

Yes >> Go To 2

No >> Refer to the INTERMITTENT CONDITION Diagnostic Procedure.
Perform the POWERTRAIN VERIFICATION TEST. (Refer to 9 - ENGINE - STANDARD PROCEDURE)

---

2. O2 HEATER ELEMENT

Turn the ignition off.

NOTE: Allow the O2 Sensor to cool down to room temperature.

Disconnect the 2/2 O2 Sensor harness connector.

Measure the resistance across the O2 Sensor Heater element, between the O2 Heater Control terminal and the O2 Heater ground terminal in the component connector.

NOTE: O2 Heater Element resistance values should be measured at 70°F (21.1°C). The resistance value will vary with different temperature values.

Is the O2 Sensor Heater Element resistance between 2.0 and 30.0 ohms?

Yes >> Go To 3

No >> Replace the O2 Sensor.
Perform the POWERTRAIN VERIFICATION TEST. (Refer to 9 - ENGINE - STANDARD PROCEDURE)

P0057-O2 SENSOR 2/2 HEATER CIRCUIT LOW (CONTINUED)

3. O2 SENSOR

Ignition on, engine not running.

With a scan tool, actuate the O2 Heater Test with the O2 Sensor harness connector still disconnected.

Using a 12-volt test light connected to ground, probe the (K399) O2 2/2 Heater Control circuit in the O2 Sensor harness connector.

Does the test light illuminate brightly and flash on and off during the actuation?

Yes >> Replace the O2 Sensor.
Perform the POWERTRAIN VERIFICATION TEST. (Refer to 9 - ENGINE - STANDARD PROCEDURE)

No >> Go To 4

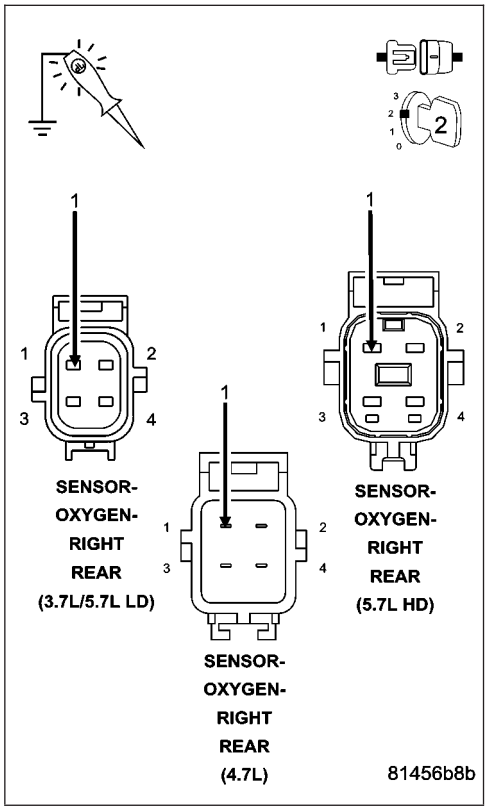

4. (K399) O2 2/2 HEATER CONTROL CIRCUIT SHORTED TO GROUND

Turn the ignition off.

Disconnect the C3 PCM harness connector.

Measure the resistance between ground and the (K399) O2 2/2 Heater Control circuit in the O2 Sensor harness connector.

Is the resistance below 5.0 ohms?

Yes >> Repair the short to ground in the (K399) O2 2/2 Sensor Heater Control circuit.
Perform the POWERTRAIN VERIFICATION TEST. (Refer to 9 - ENGINE - STANDARD PROCEDURE)

No >> Go To 5

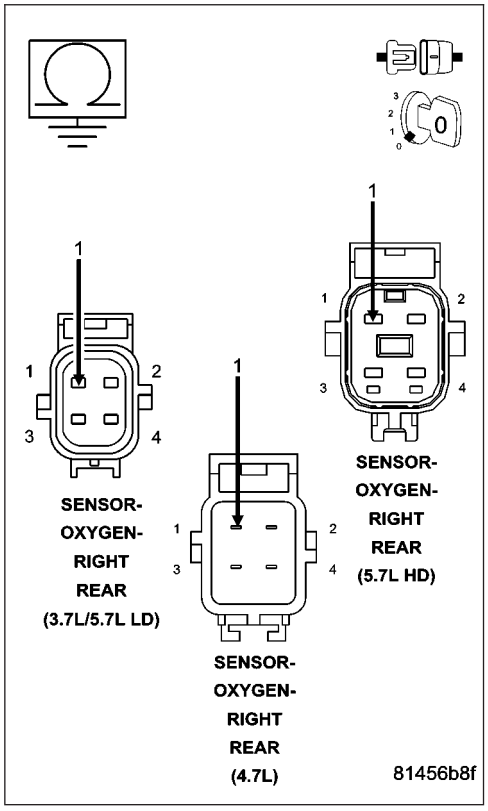

P0057-O2 SENSOR 2/2 HEATER CIRCUIT LOW (CONTINUED)

5. **PCM**

NOTE: Before continuing, check the PCM harness connector terminals for corrosion, damage, or terminal push out. Repair as necessary.

Using the schematics as a guide, inspect the wire harness and connectors. Pay particular attention to all Power and Ground circuits.

Were there any problems found?

Yes >> Repair as necessary.
Perform the POWERTRAIN VERIFICATION TEST. (Refer to 9 - ENGINE - STANDARD PROCEDURE)

No >> Replace and program the Powertrain Control Module per Service Information.
Perform the POWERTRAIN VERIFICATION TEST. (Refer to 9 - ENGINE - STANDARD PROCEDURE)

P0058-O2 SENSOR 2/2 HEATER CIRCUIT HIGH

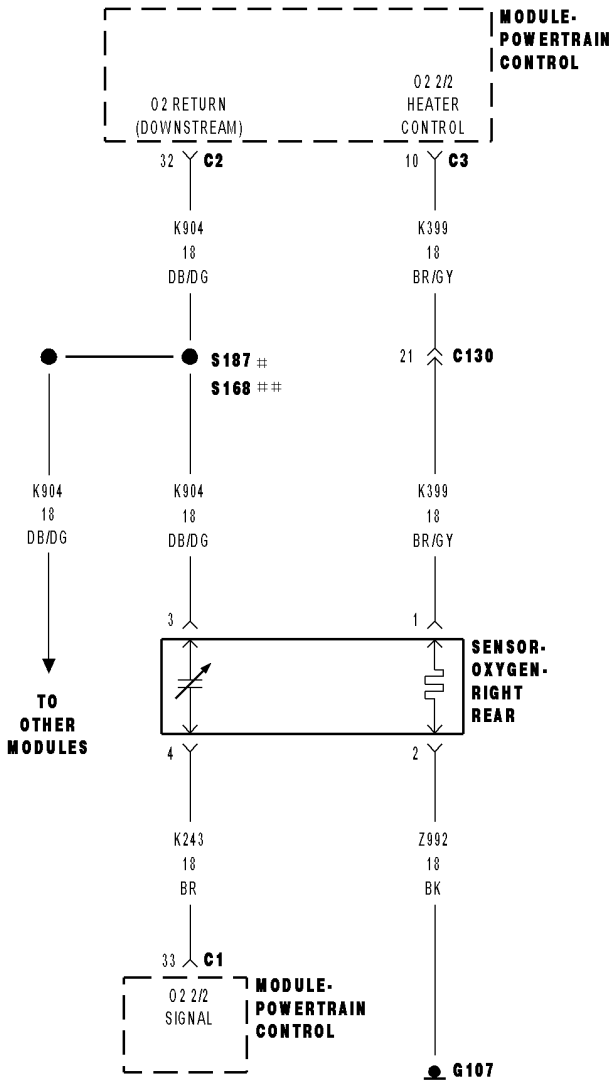

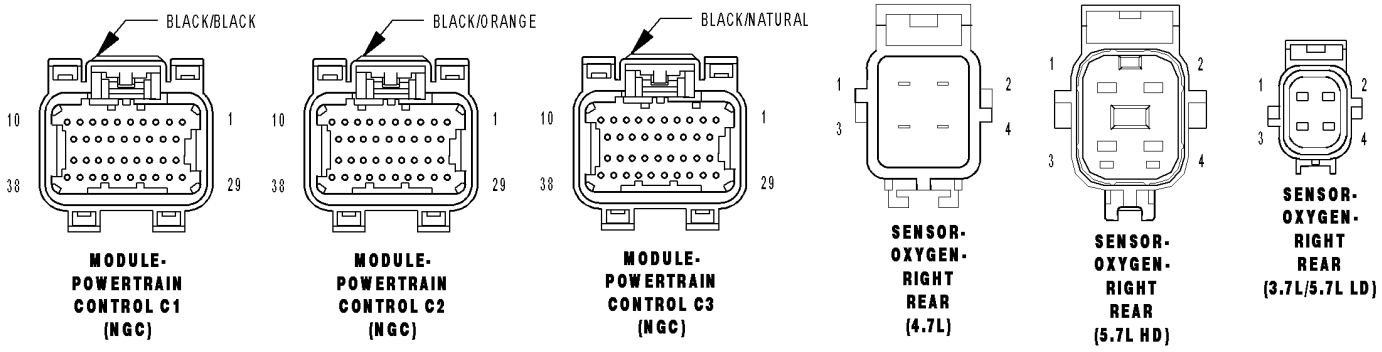

81452bb4

P0058-O2 SENSOR 2/2 HEATER CIRCUIT HIGH (CONTINUED)

For the Engine circuit diagram (Refer to 9 - ENGINE - SCHEMATICS AND DIAGRAMS).

For a complete wiring diagram **Refer to Section 8W**.

- **When Monitored:**
  Battery voltage above 10.6 volts, ASD is powered up, and O2 heater is off.
- **Set Condition:**
  Desired state does not equal Actual state. One Trip Fault. Three good trips to turn off the MIL.

Possible Causes
(K399) O2 2/2 HEATER CONTROL CIRCUIT OPEN
(Z992) O2 2/2 HEATER GROUND CIRCUIT OPEN
(K399) O2 2/2 HEATER CONTROL CIRCUIT SHORTED TO BATTERY VOLTAGE
O2 SENSOR
PCM

Always perform the Pre-Diagnostic Troubleshooting procedure before proceeding. (Refer to 9 - ENGINE - DIAGNOSIS AND TESTING).

Diagnostic Test

1. ACTIVE DTC

Ignition on, engine not running.

With a scan tool, read DTC's.

Is the DTC active at this time?

Yes >> Go To 2

No >> Refer to the INTERMITTENT CONDITION Diagnostic Procedure.
Perform the POWERTRAIN VERIFICATION TEST. (Refer to 9 - ENGINE - STANDARD PROCEDURE)

---

2. O2 HEATER ELEMENT

Turn the ignition off.

NOTE: Allow the O2 Sensor to cool down to room temperature.

Disconnect the 2/2 O2 Sensor harness connector.

Measure the resistance across the O2 Sensor Heater element, between the O2 Heater Control terminal and the O2 Heater ground terminal in the component connector.

NOTE: O2 Heater Element resistance values should be measured at 70°F (21.1°C). The resistance value will vary with different temperature values.

Is the O2 Sensor Heater Element resistance between 2.0 and 30.0 ohms?

Yes >> Go To 3

No >> Replace the O2 Sensor.
Perform the POWERTRAIN VERIFICATION TEST. (Refer to 9 - ENGINE - STANDARD PROCEDURE)

P0058-O2 SENSOR 2/2 HEATER CIRCUIT HIGH (CONTINUED)

3. (K399) O2 2/2 HEATER CONTROL CIRCUIT

Ignition on, engine not running.

With a scan tool, actuate the O2 2/2 Heater Test with the Sensor harness connector still disconnected.

Using a 12-volt test light connected to ground, probe the (K399) O2 2/2 Heater Control circuit in the O2 Sensor harness connector.

Does the test light illuminate brightly and flash on and off during the actuation?

Yes >> Go To 4

No >> Go To 5

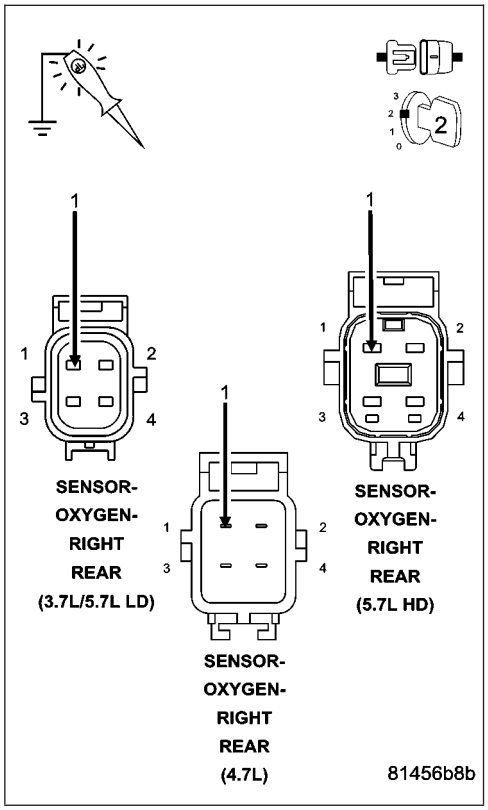

4. (Z992) O2 HEATER GROUND CIRCUIT OPEN

Turn the ignition off.

Measure the resistance between an engine ground and the (Z992) O2 2/2 Heater ground circuit in the O2 Sensor harness connector.

Is the resistance below 5.0 ohms?

Yes >> Replace the O2 Sensor.
Perform the POWERTRAIN VERIFICATION TEST. (Refer to 9 - ENGINE - STANDARD PROCEDURE)

No >> Repair the open in the (Z992) O2 2/2 Heater ground circuit.
Perform the POWERTRAIN VERIFICATION TEST. (Refer to 9 - ENGINE - STANDARD PROCEDURE)

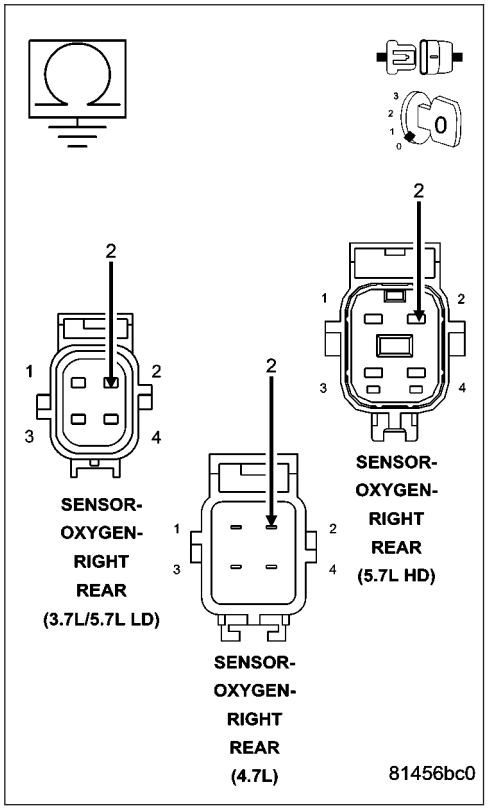

P0058-O2 SENSOR 2/2 HEATER CIRCUIT HIGH (CONTINUED)

5. (K399) O2 2/2 HEATER CONTROL CIRCUIT SHORTED TO BATTERY VOLTAGE

Turn the ignition off.

Disconnect the C3 PCM harness connector.

Ignition on, engine not running.

Using a 12-volt test light connected to ground, probe the (K399) O2 Heater 2/2 Control circuit in the O2 Sensor harness connector.

Does the test light illuminate?

Yes >> Repair the short to battery voltage in the (K399) O2 2/2 Heater Control circuit.
Perform the POWERTRAIN VERIFICATION TEST. (Refer to 9 - ENGINE - STANDARD PROCEDURE)

No >> Go To 6

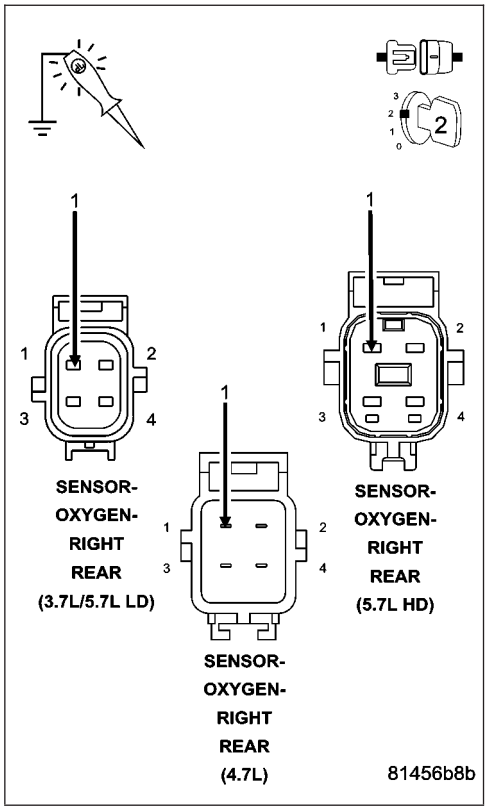

6. (K399) O2 2/2 HEATER CONTROL CIRCUIT OPEN

Turn the ignition off.

CAUTION: Do not probe the PCM harness connectors. Probing the PCM hanrness connectors will damage the PCM terminals resulting in poor terminal to pin connection. Install Miller Special Tool #8815 to perform diagnosis.

Measure the resistance of the (K399) O2 2/2 Heater Control circuit from the O2 Sensor harness connector to the appropriate terminal of special tool #8815.

Is the resistance below 5.0 ohms?

Yes >> Go To 7

No >> Repair the open in the (K399) O2 2/2 Heater Control circuit.
Perform the POWERTRAIN VERIFICATION TEST. (Refer to 9 - ENGINE - STANDARD PROCEDURE)

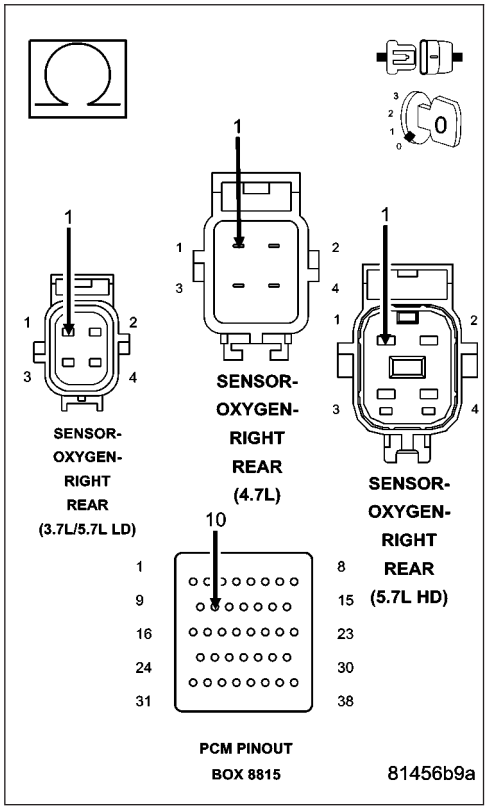

P0058-O2 SENSOR 2/2 HEATER CIRCUIT HIGH (CONTINUED)

7. **PCM**

NOTE: Before continuing, check the PCM harness connector terminals for corrosion, damage, or terminal push out. Repair as necessary.

Using the schematics as a guide, inspect the wire harness and connectors. Pay particular attention to all Power and Ground circuits.

Were there any problems found?

Yes >> Repair as necessary.
Perform the POWERTRAIN VERIFICATION TEST. (Refer to 9 - ENGINE - STANDARD PROCEDURE)

No >> Replace and program the Powertrain Control Module per Service Information.
Perform the POWERTRAIN VERIFICATION TEST. (Refer to 9 - ENGINE - STANDARD PROCEDURE)

P0068-MANIFOLD PRESSURE/THROTTLE POSITION CORRELATION

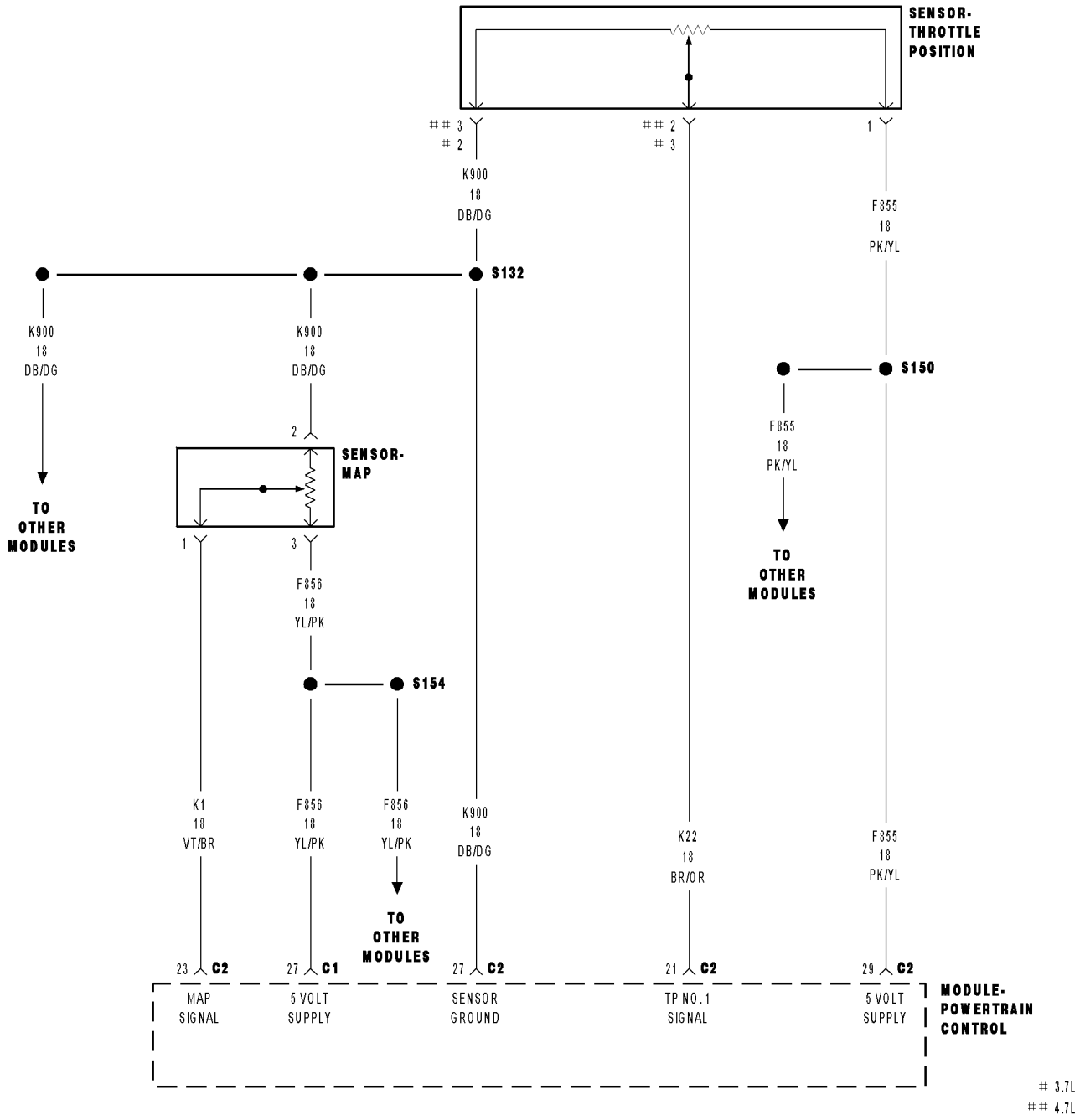

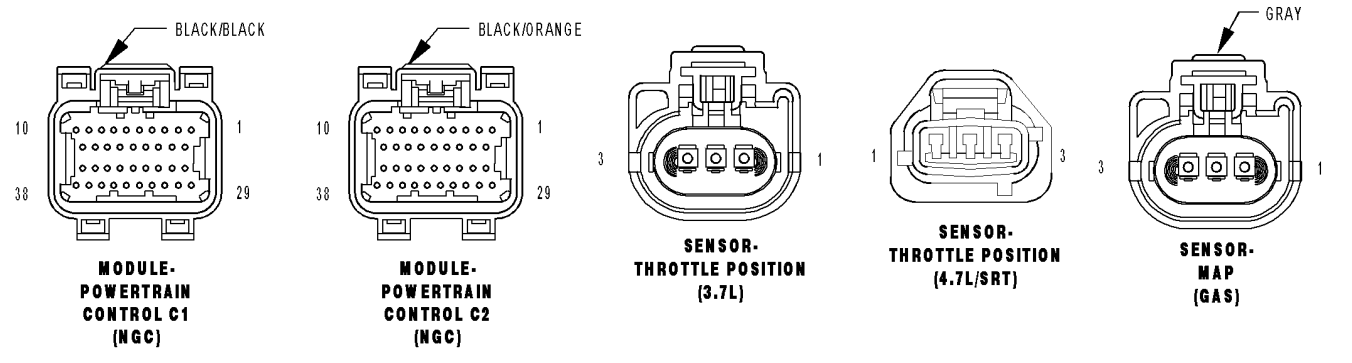

81452c0a

P0068-MANIFOLD PRESSURE/THROTTLE POSITION CORRELATION (CONTINUED)

For the Engine circuit diagram (Refer to 9 - ENGINE - SCHEMATICS AND DIAGRAMS).

For a complete wiring diagram **Refer to Section 8W**.

Theory of Operation

This DTC sets when an unexpected high intake manifold air flow condition exists that can lead to increased engine speed and puts the NGC into a High Air flow Protection limiting mode. The High Air flow Protection feature includes RPM limits for when a Throttle and/or MAP sensor limp-in fault is present.

- **When Monitored:**
  During all drive modes.
- **Set Condition:**
  If vacuum drops below 1.5″Hg with engine RPM greater than 2000 RPM and closed throttle. One Trip Fault. Three good trips to turn off the MIL.

Possible Causes
VACUUM LEAK
RESISTANCE IN THE (F856) 5-VOLT SUPPLY CIRCUIT
(F856) 5-VOLT SUPPLY CIRCUIT SHORTED TO GROUND
RESISTANCE IN THE (K1) MAP SIGNAL CIRCUIT
(K1) MAP SIGNAL CIRCUIT SHORTED TO GROUND
RESISTANCE IN THE (F855) 5-VOLT SUPPLY CIRCUIT
(F855) 5-VOLT SUPPLY CIRCUIT SHORTED TO GROUND
RESISTANCE IN THE (K22) TP SENSOR NO.1 SIGNAL CIRCUIT
(K22) TP SENSOR NO.1 SIGNAL CIRCUIT SHORTED TO GROUND
RESISTANCE IN THE (K900) SENSOR GROUND CIRCUIT
MAP SENSOR
THROTTLE POSITION SENSOR
PCM

Always perform the Pre-Diagnostic Troubleshooting procedure before proceeding. (Refer to 9 - ENGINE - DIAGNOSIS AND TESTING).

Diagnostic Test

1. ACTIVE DTC

NOTE: Diagnose any TP Sensor or MAP Sensor component DTCs before continuing.

NOTE: If the P0501 - No Vehicle Speed Signal is set long with this DTC, refer to the P0501 diagnostics before continuing.

NOTE: The throttle plate and linkage should be free from binding and carbon build up.

NOTE: Make sure the throttle plate is at the idle position.

Ignition on, engine not running.

With a scan tool, read DTCs.

Is the DTC active at this time?

Yes >> Go To 2

No >> Refer to the INTERMITTENT CONDITION Diagnostic Procedure.
Perform the POWERTRAIN VERIFICATION TEST. (Refer to 9 - ENGINE - STANDARD PROCEDURE)

P0068-MANIFOLD PRESSURE/THROTTLE POSITION CORRELATION (CONTINUED)

2. VACUUM LEAK

NOTE: This code is enabled on engines with a plastic intake manifold and is intended to shut down the engine if a large crack occurs.

NOTE: A large vacuum leak is most likely the cause of this DTC.

Inspect the Intake Manifold for leaks and cracks.

Inspect the Power Brake Booster for any vacuum leaks.

Inspect the PCV system for proper operation and vacuum leaks.

Inspect the throttle plate to see if it is bent and will close entirely, if it is bent it may need to be replaced.

Inspect the MAP Sensor for proper installation.

Verify the engine is free from any mechanical failures.

Were any vacuum leaks found?

Yes >> Repair the vacuum leak as necessary.
Perform the POWERTRAIN VERIFICATION TEST. (Refer to 9 - ENGINE - STANDARD PROCEDURE)

No >> Go To 3

---

3. MAP SENSOR OPERATION

Start the engine.

With a scan tool, monitor the MAP Sensor voltage.

Snap the throttle.

Does the MAP Sensor voltage vary from below 2.0 volts at idle to above 3.5 volts at wide open throttle?

Yes >> Go To 4

No >> Go To 11

---

4. TP SENSOR OPERATION

Ignition on, engine not running.

With a scan tool, monitor the TP Sensor voltage while slowly pressing the throttle pedal from closed to wide open throttle.

Does voltage start at approximately 0.8 of a volt and go above 3.5 volts with a smooth transition?

Yes >> Refer to the INTERMITTENT CONDITION Diagnostic Procedure.
Perform the POWERTRAIN VERIFICATION TEST. (Refer to 9 - ENGINE - STANDARD PROCEDURE)

No >> Go To 5

P0068-MANIFOLD PRESSURE/THROTTLE POSITION CORRELATION (CONTINUED)

5. EXCESSIVE RESISTANCE IN THE (F855) 5-VOLT SUPPLY CIRCUIT

Turn the ignition off.

Disconnect the TP Sensor harness connector.

Disconnect the C2 PCM harness connector.

CAUTION: Do not probe the PCM harness connectors. Probing the PCM harness connectors will damage the PCM terminals resulting in poor terminal to pin connection. Install Miller Special Tool #8815 to perform diagnosis.

Measure the resistance of the (F855) 5-volt Supply circuit from the TP Sensor harness connector to the appropriate terminal of special tool #8815.

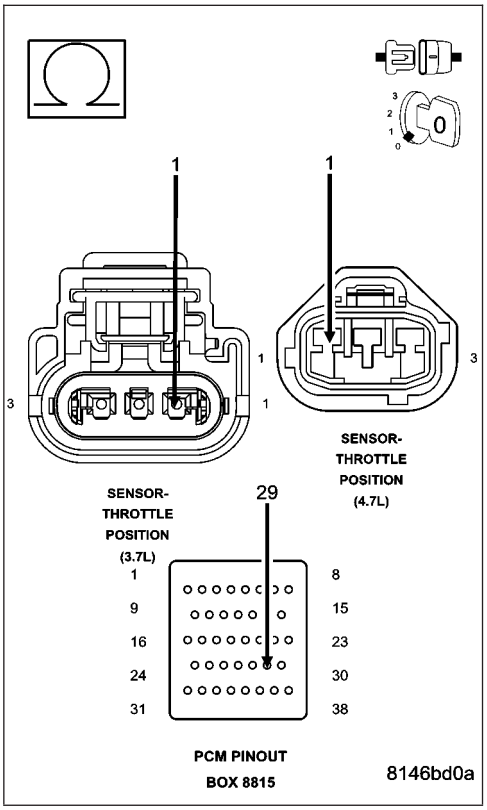

Is the resistance below 5.0 ohms?

Yes >> Go To 6

No >> Repair the excessive resistance in the (F855) 5-volt Supply circuit.

Perform the POWERTRAIN VERIFICATION TEST. (Refer to 9 - ENGINE - STANDARD PROCEDURE)

6. (F855) 5-VOLT SUPPLY CIRCUIT SHORTED TO GROUND

Measure the resistance between ground and (F855) 5-volt Supply circuit in the TP Sensor harness connector.

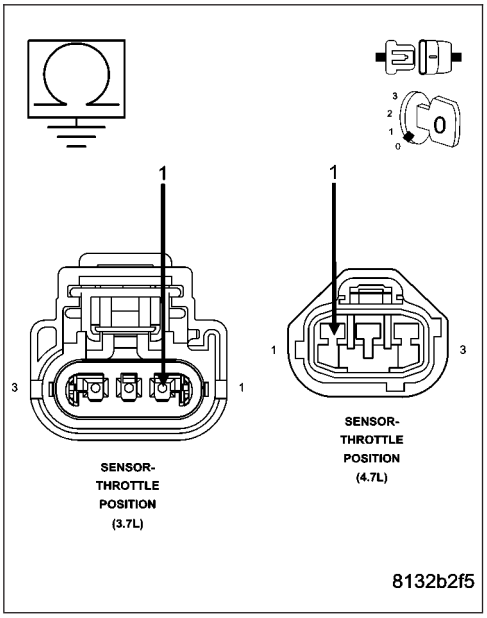

Is the resistance below 100 ohms?

Yes >> Repair the short to ground in the (F855) 5-volt Supply circuit.

Perform the POWERTRAIN VERIFICATION TEST. (Refer to 9 - ENGINE - STANDARD PROCEDURE)

No >> Go To 7

P0068-MANIFOLD PRESSURE/THROTTLE POSITION CORRELATION (CONTINUED)

7. THROTTLE POSITION SENSOR

Connect the C2 PCM harness connector.

Ignition on, engine not running.

With a scan tool, monitor the TP Sensor voltage.

Connect a jumper wire between the (K22) TP Sensor No.1 Signal circuit and the (K900) Sensor ground circuit in the Sensor harness connector.

Does the TP Sensor voltage change from approximately 4.9 volts to below 0.5 of a volt with the jumper wire installed?

Yes >> Replace the Throttle Position Sensor.
Perform the POWERTRAIN VERIFICATION TEST. (Refer to 9 - ENGINE - STANDARD PROCEDURE)

No >> Go To 8

NOTE: Remove the jumper wire before continuing.

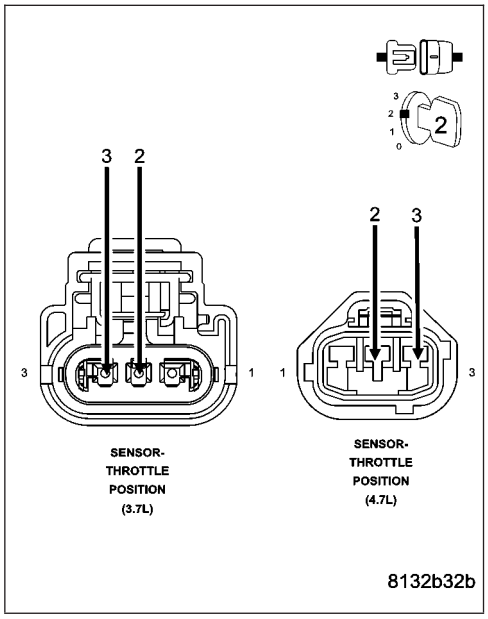

8. EXCESSIVE RESISTANCE IN THE (K22) TP NO.1 SIGNAL CIRCUIT

Turn the ignition off.

Disconnect the C2 PCM harness connector.

CAUTION: Do not probe the PCM harness connectors. Probing the PCM harness connectors will damage the PCM terminals resulting in poor terminal to pin connection. Install Miller Special Tool #8815 to perform diagnosis.

Measure the resistance of the (K22) TP Sensor No.1 Signal circuit from the TP Sensor harness connector to the appropriate terminal of special tool #8815.

Is the resistance below 5.0 ohms?

Yes >> Go To 9

No >> Repair the excessive resistance in the (K22) TP Sensor No.1 Signal circuit.
Perform the POWERTRAIN VERIFICATION TEST. (Refer to 9 - ENGINE - STANDARD PROCEDURE)

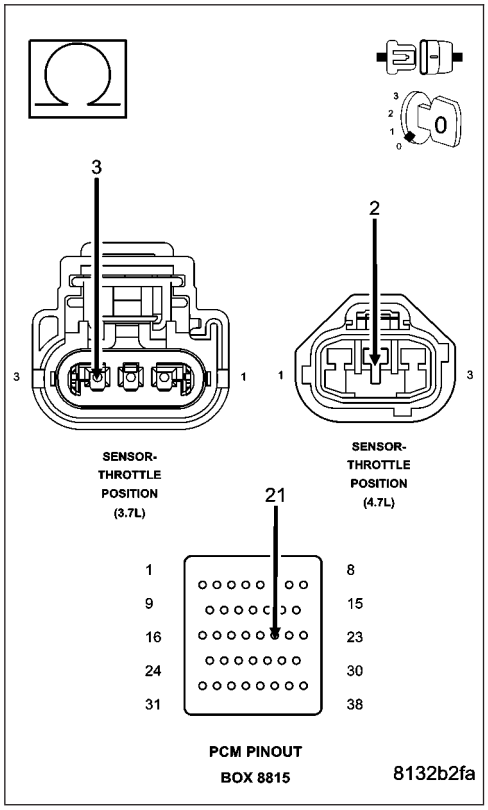

P0068-MANIFOLD PRESSURE/THROTTLE POSITION CORRELATION (CONTINUED)

9. (K22) TP SENSOR NO.1 SIGNAL CIRCUIT SHORTED TO GROUND

Measure the resistance between ground and the (K22) TP Sensor No.1 Signal circuit in the TP Sensor harness connector.

Is the resistance below 100 ohms?

Yes >> Repair the short to ground in the (K22) TP Sensor No.1 Signal circuit.
Perform the POWERTRAIN VERIFICATION TEST. (Refer to 9 - ENGINE - STANDARD PROCEDURE)

No >> Go To 10

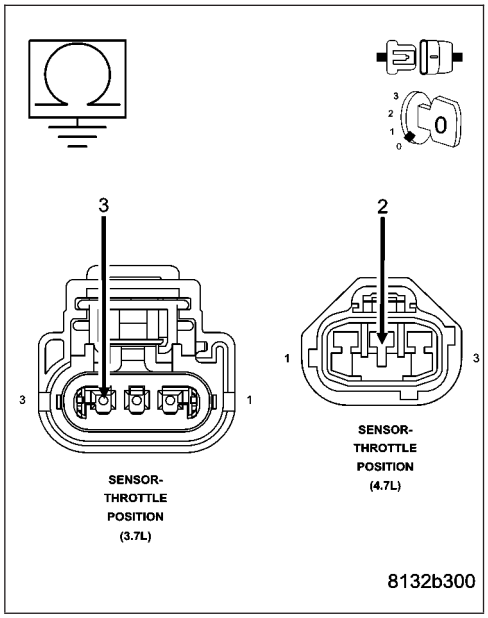

10. EXCESSIVE RESISTANCE IN THE (K900) SENSOR GROUND CIRCUIT

CAUTION: Do not probe the PCM harness connectors. Probing the PCM harness connectors will damage the PCM terminals resulting in poor terminal to pin connection. Install Miller Special Tool #8815 to perform diagnosis.
Measure the resistance of the (K900) Sensor ground circuit from the TP Sensor harness connector to the appropriate terminal of special tool #8815.

Is the resistance below 5.0 ohms?

Yes >> Go To 17

No >> Repair the excessive resistance in the (K900) Sensor ground circuit.
Perform the POWERTRAIN VERIFICATION TEST. (Refer to 9 - ENGINE - STANDARD PROCEDURE)

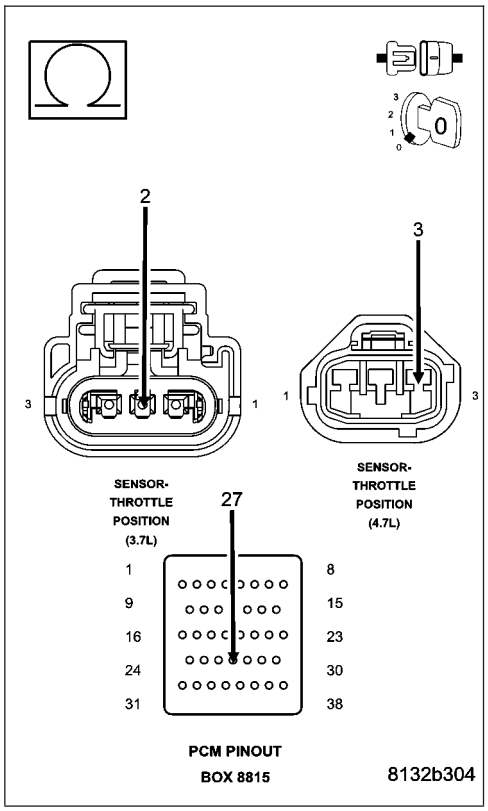

P0068-MANIFOLD PRESSURE/THROTTLE POSITION CORRELATION (CONTINUED)

11. EXCESSIVE RESISTANCE IN THE (F856) 5-VOLT SUPPLY CIRCUIT

Turn the ignition off.

Disconnect the MAP Sensor harness connector.

Disconnect the C1 PCM harness connector.

CAUTION: Do not probe the PCM harness connectors. Probing the PCM harness connectors will damage the PCM terminals resulting in poor terminal to pin connection. Install Miller Special Tool #8815 to perform diagnosis.

Measure the resistance of the (F856) 5-volt Supply circuit from the MAP Sensor harness connector to the appropriate terminal of special tool #8815.

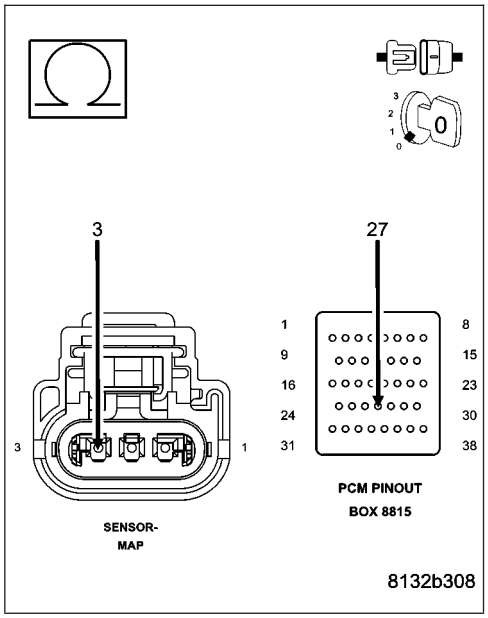

Is the resistance below 5.0 ohms?

Yes >> Go To 12

No >> Repair the excessive resistance in the (F856) 5-volt Supply circuit.

Perform the POWERTRAIN VERIFICATION TEST. (Refer to 9 - ENGINE - STANDARD PROCEDURE)

12. (F856) 5-VOLT SUPPLY CIRCUIT SHORTED TO GROUND

Measure the resistance between ground and the (F856) 5-volt Supply circuit in the MAP Sensor harness connector.

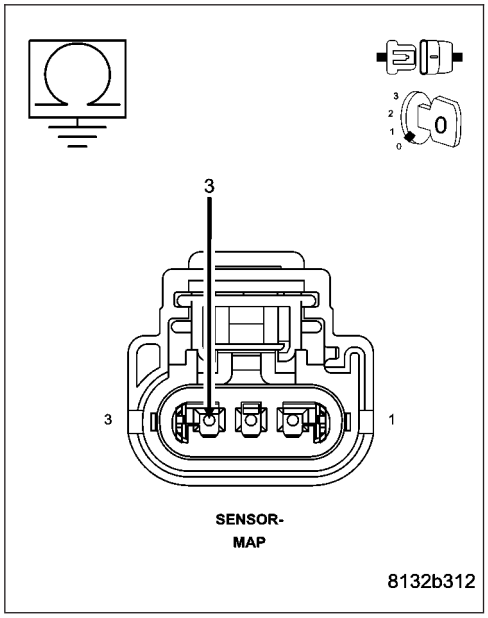

Is the resistance above 100k ohms?

Yes >> Go To 13

No >> Repair the short to ground in the (F856) 5-volt Supply circuit.

Perform the POWERTRAIN VERIFICATION TEST. (Refer to 9 - ENGINE - STANDARD PROCEDURE)

P0068-MANIFOLD PRESSURE/THROTTLE POSITION CORRELATION (CONTINUED)

13. MAP SENSOR

Turn the ignition off.

Connect the C1 PCM harness connector.

Ignition on, engine not running.

With a scan tool, monitor the MAP Sensor voltage.

Connect a jumper wire between the (K1) MAP Signal circuit and the (K900) Sensor ground circuit.

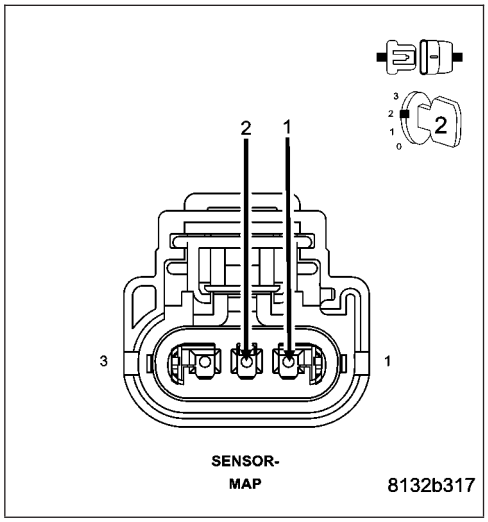

Does the scan tool display MAP voltage from approximately 4.9 volts to below 0.5 of a volt with the jumper wire installed?

Yes >> Replace the MAP Sensor.
Perform the POWERTRAIN VERIFICATION TEST. (Refer to 9 - ENGINE - STANDARD PROCEDURE)

No >> Go To 14

NOTE: Remove the jumper wire before continuing.

14. EXCESSIVE RESISTANCE IN THE (K1) MAP SIGNAL CIRCUIT

Turn the ignition off.

Disconnect the C2 PCM harness connector.

CAUTION: Do not probe the PCM harness connectors. Probing the PCM harness connectors will damage the PCM terminals resulting in poor terminal to pin connection. Install Miller Special Tool #8815 to perform diagnosis.

Measure the resistance of the (K1) MAP Signal circuit from the MAP Sensor harness connector to the appropriate terminal of special tool #8815.

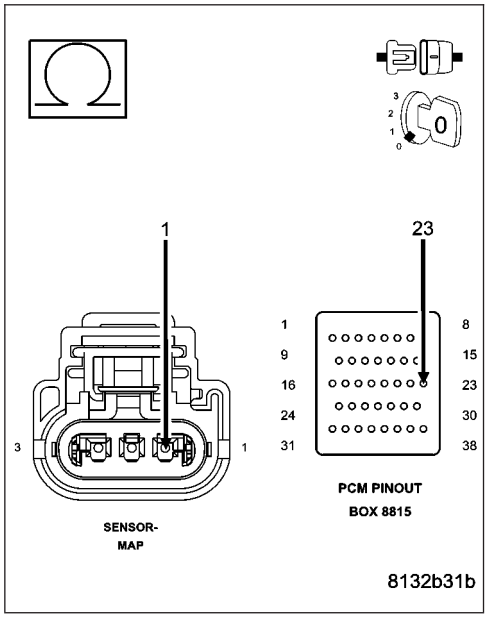

Is the resistance below 5.0 ohms?

Yes >> Go To 15

No >> Repair the excessive resistance in the (K1) MAP Signal circuit
Perform the POWERTRAIN VERIFICATION TEST. (Refer to 9 - ENGINE - STANDARD PROCEDURE)

P0068-MANIFOLD PRESSURE/THROTTLE POSITION CORRELATION (CONTINUED)

15. (K1) MAP SIGNAL CIRCUIT SHORTED TO GROUND

Measure the resistance between ground and the (K1) MAP Signal circuit in the MAP Sensor harness connector.

Is the resistance below 100 ohms?

Yes >> Repair the short to ground in the (K1) MAP Signal circuit. Perform the POWERTRAIN VERIFICATION TEST. (Refer to 9 - ENGINE - STANDARD PROCEDURE)

No >> Go To 16

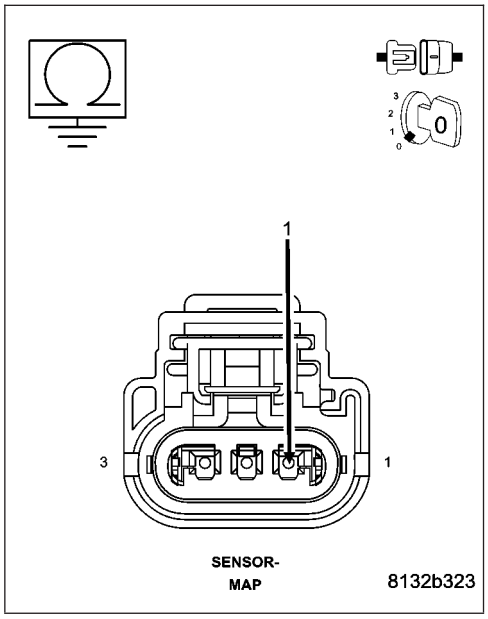

16. EXCESSIVE RESISTANCE IN THE (K900) SENSOR GROUND CIRCUIT

CAUTION: Do not probe the PCM harness connectors. Probing the PCM harness connectors will damage the PCM terminals resulting in poor terminal to pin connection. Install Miller Special Tool #8815 to perform diagnosis.

Measure the resistance of the (K900) Sensor ground circuit from the MAP Sensor harness connector to the appropriate terminal of special tool #8815.

Is the resistance below 5.0 ohms?

Yes >> Go To 17

No >> Repair the excessive resistance in the (K900) Sensor ground circuit.
Perform the POWERTRAIN VERIFICATION TEST. (Refer to 9 - ENGINE - STANDARD PROCEDURE)

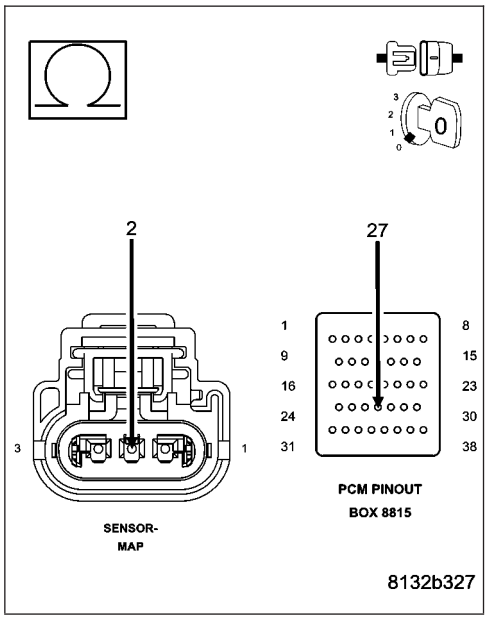

P0068-MANIFOLD PRESSURE/THROTTLE POSITION CORRELATION (CONTINUED)

17. **PCM**

NOTE: Before continuing, check the PCM harness connector terminals for corrosion, damage, or terminal push out. Repair as necessary.

Using the schematics as a guide, inspect the wire harness and connectors. Pay particular attention to all Power and Ground circuits.

Were there any problems found?

Yes >> Repair as necessary.
Perform the POWERTRAIN VERIFICATION TEST. (Refer to 9 - ENGINE - STANDARD PROCEDURE)

No >> Replace and program the Powertrain Control Module per Service Information.
Perform the POWERTRAIN VERIFICATION TEST. (Refer to 9 - ENGINE - STANDARD PROCEDURE)

P0071-AMBIENT AIR TEMPERATURE SENSOR PERFORMANCE

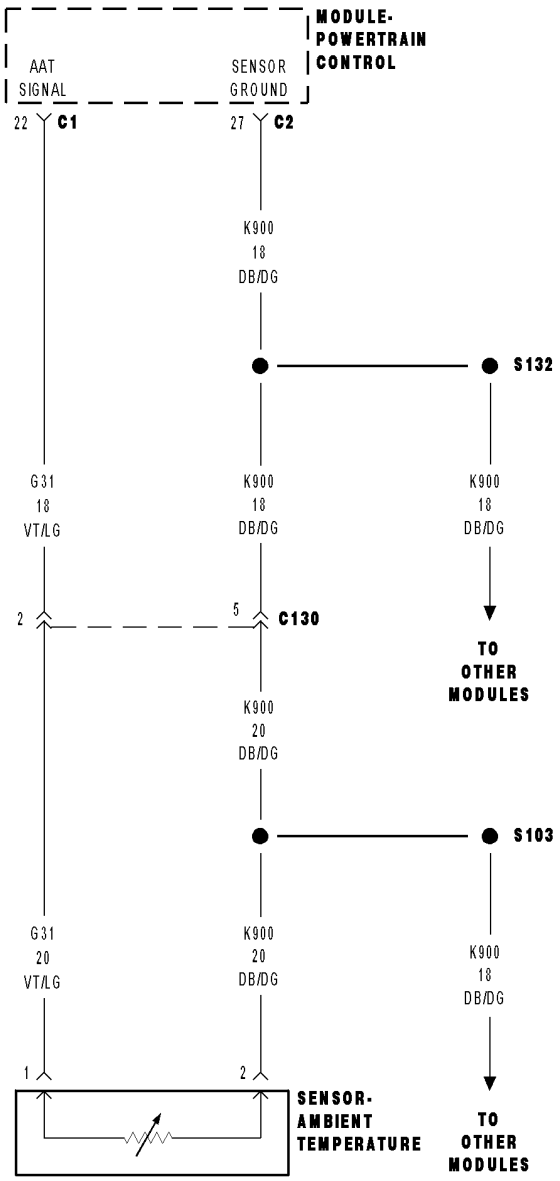

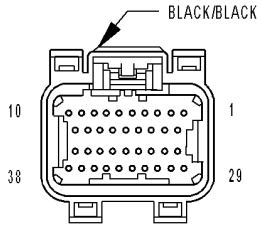

MODULE-
POWERTRAIN
CONTROL C1
(NGC)

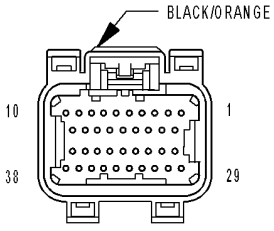

MODULE-
POWERTRAIN
CONTROL C2
(NGC)

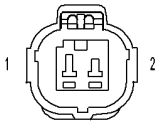

SENSOR-
AMBIENT AIR
TEMPERATURE

81452c47

P0071-AMBIENT AIR TEMPERATURE SENSOR PERFORMANCE (CONTINUED)

For the Engine circuit diagram (Refer to 9 - ENGINE - SCHEMATICS AND DIAGRAMS).

For a complete wiring diagram **Refer to Section 8W**.

- **When Monitored:**
  Engine off time is greater than 480 minutes. Ambient temperature is greater than 4 deg C (38 deg F).
- **Set Condition:**
  After a calibrated amount of cool down time the PCM compares the ECT Sensor, IAT Sensor, and the Ambient Air Temp Sensor values. If the IAT Sensor value is not within –10 deg C (18 deg F) of the other two temperature sensors. Two Trip Fault. Three good trips to turn off the MIL.

Possible Causes
(G31) AAT SIGNAL CIRCUIT SHORTED TO BATTERY VOLTAGE
(G31) AAT SIGNAL CIRCUIT OPEN
(K900) SENSOR GROUND CIRCUIT OPEN
(G31) AAT SIGNAL CIRCUIT SHORTED TO GROUND
(G31) AAT SIGNAL CIRCUIT SHORTED TO THE (K900) SENSOR GROUND CIRCUIT
AMBIENT AIR TEMPERATURE SENSOR
PCM

Always perform the Pre-Diagnostic Troubleshooting procedure before proceeding. (Refer to 9 - ENGINE - DIAGNOSIS AND TESTING).

Diagnostic Test

1. ACTIVE DTC

Ignition on, engine not running.
With a scan tool, read DTCs.

Is the DTC active at this time?

Yes >> Go To 2

No >> Refer to the INTERMITTENT CONDITION Diagnostic Procedure.
Perform the POWERTRAIN VERIFICATION TEST. (Refer to 9 - ENGINE - STANDARD PROCEDURE)

P0071-AMBIENT AIR TEMPERATURE SENSOR PERFORMANCE (CONTINUED)

2. (G31) AAT SIGNAL CIRCUIT SHORTED TO BATTERY VOLTAGE

Turn the ignition off.

Disconnect the C2 PCM harness connector.

Disconnect the AAT Sensor harness connector.

NOTE: Visually inspect both the component and the PCM connectors. Look for damaged, partially broken wires, and backed out or corroded terminals.

Ignition on, engine not running.

Measure the voltage on the (G31) AAT Signal circuit in the AAT Sensor harness connector.

Is the voltage above 0 volts?

Yes >> Repair the short to voltage in the (G31) AAT Signal circuit. Perform the POWERTRAIN VERIFICATION TEST. (Refer to 9 - ENGINE - STANDARD PROCEDURE)

No >> Go To 3

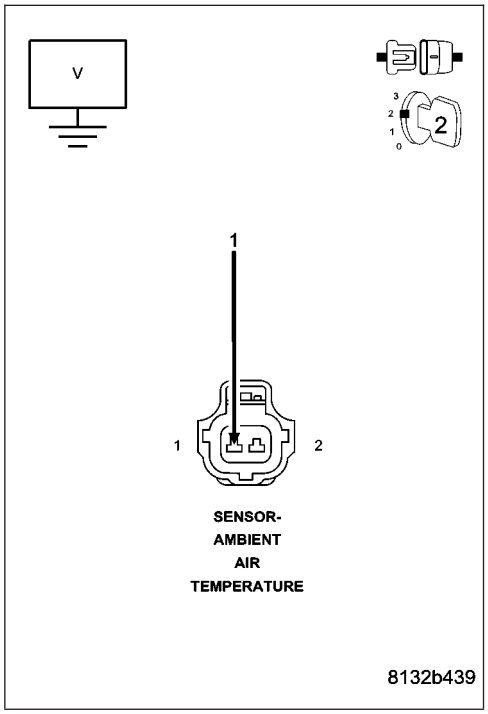

3. AAT SENSOR VOLTAGE ABOVE 4.6 VOLTS

Turn the ignition off.

Connect the C2 PCM harness connector.

Ignition on, engine not running.

With a scan tool, read the AAT voltage.

Is the voltage above 4.6 volts?

Yes >> Go To 4

No >> Go To 7

P0071-AMBIENT AIR TEMPERATURE SENSOR PERFORMANCE (CONTINUED)

4. AAT SENSOR

Connect a jumper wire between the (G31) AAT Signal circuit and the (K900) Sensor ground circuit in the AAT Sensor harness connector.

With a scan tool, read the AAT voltage.

Is the voltage below 1.0 volt with the jumper wire installed?

Yes >> Replace the AAT Sensor.
Perform the POWERTRAIN VERIFICATION TEST. (Refer to 9 - ENGINE - STANDARD PROCEDURE)

No >> Go To 5

NOTE: Remove the jumper wire before continuing.

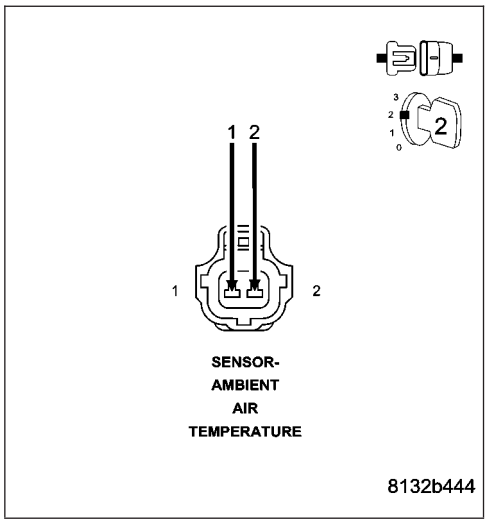

5. (G31) AAT SIGNAL CIRCUIT OPEN

Turn the ignition off.

Disconnect the C2 PCM harness connector.

CAUTION: Do not probe the PCM harness connectors. Probing the PCM harness connectors will damage the PCM terminals resulting in poor terminal to pin connection. Install Miller Special Tool #8815 to perform diagnosis.

Measure the resistance of the (G31) AAT Signal circuit from the AAT Sensor harness connector to the appropriate terminal of special tool #8815.

Is the resistance below 5.0 ohms?

Yes >> Go To 6

No >> Repair the open in the (G31) AAT Signal circuit.
Perform the POWERTRAIN VERIFICATION TEST. (Refer to 9 - ENGINE - STANDARD PROCEDURE)

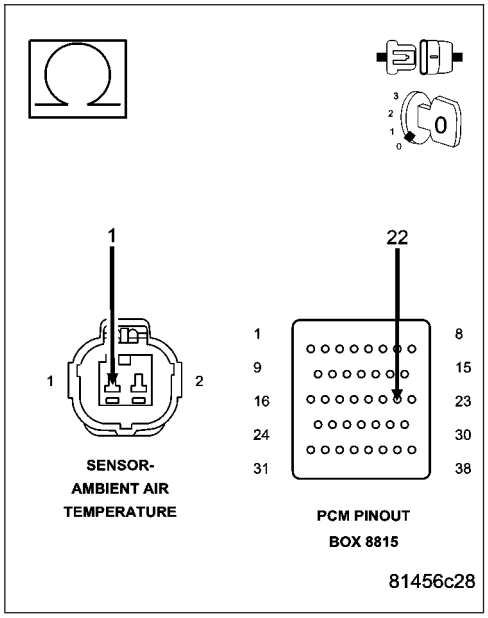

P0071-AMBIENT AIR TEMPERATURE SENSOR PERFORMANCE (CONTINUED)

6. (K900) SENSOR GROUND CIRCUIT OPEN

Measure the resistance of the (K900) Sensor ground circuit from the AAT Sensor harness connector to the appropriate terminal of special tool #8815.

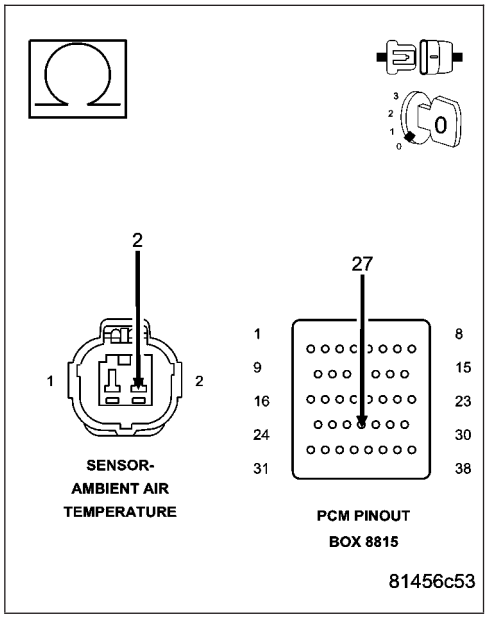

Is the resistance below 5.0 ohms?

Yes >> Go To 9

No >> Repair the open in the (K900) Sensor ground circuit. Perform the POWERTRAIN VERIFICATION TEST. (Refer to 9 - ENGINE - STANDARD PROCEDURE)

7. (G31) AAT SIGNAL CIRCUIT SHORTED TO GROUND

Turn the ignition off.

Disconnect the C2 PCM harness connector.

Measure the resistance between ground and the (G31) AAT Signal circuit in the AAT Sensor harness connector.

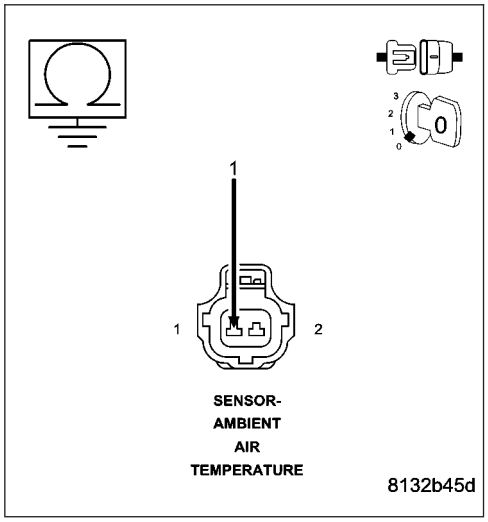

Is the resistance below 100 ohms?

Yes >> Repair the short to ground in the (G31) AAT Signal circuit. Perform the POWERTRAIN VERIFICATION TEST. (Refer to 9 - ENGINE - STANDARD PROCEDURE)

No >> Go To 8

P0071-AMBIENT AIR TEMPERATURE SENSOR PERFORMANCE (CONTINUED)

8. (G31) AAT SIGNAL CIRCUIT SHORTED TO THE (K900) SENSOR GROUND CIRCUIT

Measure the resistance between the (G31) AAT Signal circuit and the (K900) Sensor ground circuit in the AAT Sensor harness connector.

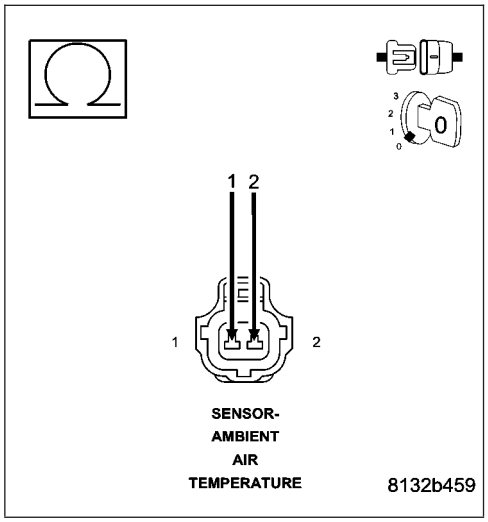

Is the resistance below 5.0 ohms?

Yes >> Repair the short between the (K900) Sensor ground circuit and the (G31) AAT Signal circuit.
Perform the POWERTRAIN VERIFICATION TEST. (Refer to 9 - ENGINE - STANDARD PROCEDURE)

No >> Go To 9

9. PCM

NOTE: Before continuing, check the PCM harness connector terminals for corrosion, damage, or terminal push out. Repair as necessary.
Using the schematics as a guide, inspect the wire harness and connectors. Pay particular attention to all Power and Ground circuits.

Were there any problems found?

Yes >> Repair as necessary.
Perform the POWERTRAIN VERIFICATION TEST. (Refer to 9 - ENGINE - STANDARD PROCEDURE)

No >> Replace and program the Powertrain Control Module per Service Information.
Perform the POWERTRAIN VERIFICATION TEST. (Refer to 9 - ENGINE - STANDARD PROCEDURE)

P0072-AMBIENT AIR TEMPERATURE SENSOR CIRCUIT LOW

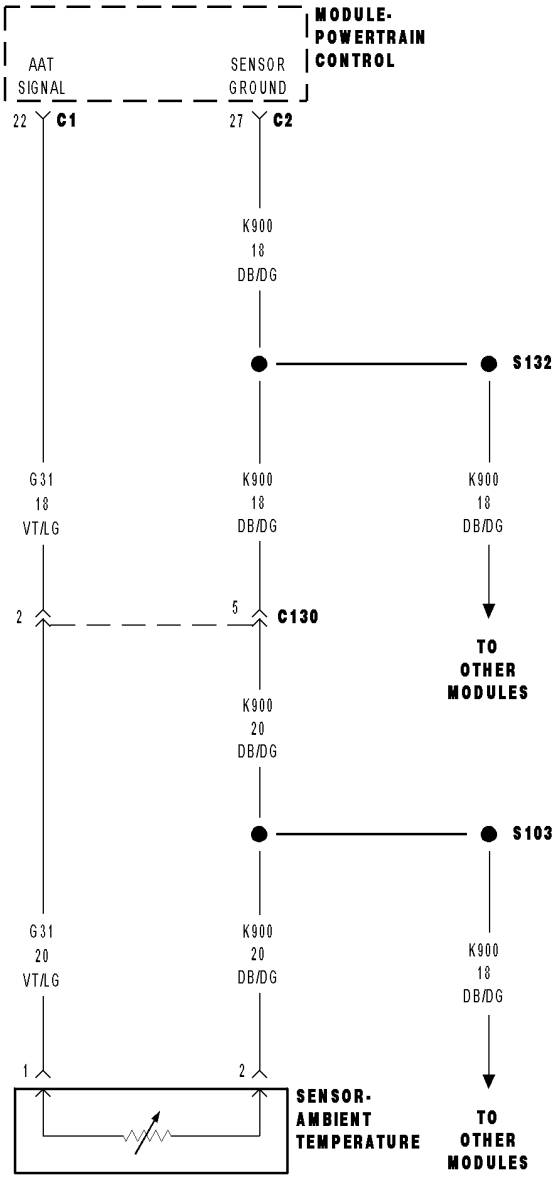

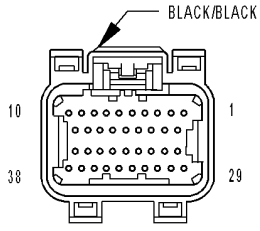

MODULE-
POWERTRAIN
CONTROL C1
(NGC)

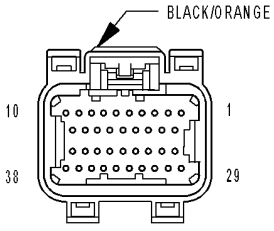

MODULE-
POWERTRAIN
CONTROL C2
(NGC)

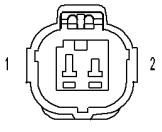

SENSOR-
AMBIENT AIR
TEMPERATURE

81452c47

P0072-AMBIENT AIR TEMPERATURE SENSOR CIRCUIT LOW (CONTINUED)

For the Engine circuit diagram (Refer to 9 - ENGINE - SCHEMATICS AND DIAGRAMS).

For a complete wiring diagram **Refer to Section 8W**.

- **When Monitored:**
  The ignition key on.
- **Set Condition:**
  Ambient Temperature Sensor is less than 0.078 of a volt at the PCM for 2.8 seconds. One Trip Fault. Three good trips to turn off the MIL.

Possible Causes
(G31) AAT SIGNAL CIRCUIT SHORTED TO GROUND
(G31) AAT SIGNAL CIRCUIT SHORTED TO THE (K900) SENSOR GROUND CIRCUIT
AMBIENT AIR TEMPERATURE SENSOR
PCM

Always perform the Pre-Diagnostic Troubleshooting procedure before proceeding. (Refer to 9 - ENGINE - DIAGNOSIS AND TESTING).

Diagnostic Test

1. AAT SENSOR VOLTAGE BELOW 0.078 OF A VOLT

Ignition on, engine not running.
With a scan tool, read the Ambient Air Temperature Sensor voltage.

Is the voltage below 0.078 of a volt?

Yes >> Go To 2

No >> Refer to the INTERMITTENT CONDITION Diagnostic Procedure.
Perform the POWERTRAIN VERIFICATION TEST. (Refer to 9 - ENGINE - STANDARD PROCEDURE)

---

2. CHECKING AAT SENSOR

Turn the ignition off.
Disconnect the Ambient Air Temperature Sensor harness connector.
Ignition on, engine not running.
With a scan tool, read the AAT Sensor voltage.

Is the voltage above 4.6 volts?

Yes >> Replace the Ambient Temperature Sensor.
Perform the POWERTRAIN VERIFICATION TEST. (Refer to 9 - ENGINE - STANDARD PROCEDURE)

No >> Go To 3

P0072-AMBIENT AIR TEMPERATURE SENSOR CIRCUIT LOW (CONTINUED)

3. (G31) AAT SIGNAL CIRCUIT SHORTED TO GROUND

Turn the ignition off.

Disconnect the C2 PCM harness connector.

Measure the resistance between ground and the (G31) AAT Signal circuit in the AAT Sensor harness connector.

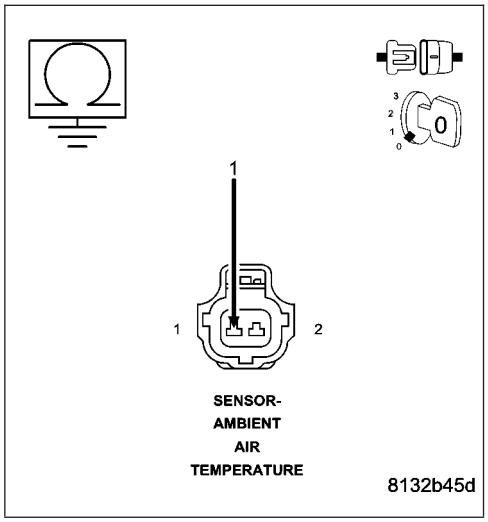

Is the resistance below 100 ohms?

Yes >> Repair the short to ground in the (G31) AAT Signal circuit.
Perform the POWERTRAIN VERIFICATION TEST. (Refer to 9 - ENGINE - STANDARD PROCEDURE)

No >> Go To 4

4. (G31) AAT SIGNAL CIRCUIT SHORTED TO THE (K900) SENSOR GROUND CIRCUIT

Measure the resistance between the (K900) Sensor ground circuit and the (G31) AAT Signal circuit in the AAT Sensor harness connector.

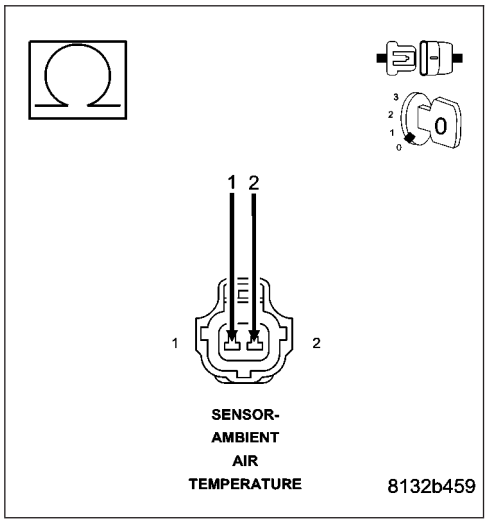

Is the resistance below 5.0 ohms?

Yes >> Repair the short between the (K900) Sensor ground circuit and the (G31) AAT Signal circuit.
Perform the POWERTRAIN VERIFICATION TEST. (Refer to 9 - ENGINE - STANDARD PROCEDURE)

No >> Go To 5

5. PCM

NOTE: Before continuing, check the PCM harness connector terminals for corrosion, damage, or terminal push out. Repair as necessary.

Using the schematics as a guide, inspect the wire harness and connectors. Pay particular attention to all Power and Ground circuits.

Were there any problems found?

Yes >> Repair as necessary.
Perform the POWERTRAIN VERIFICATION TEST. (Refer to 9 - ENGINE - STANDARD PROCEDURE)

No >> Replace and program the Powertrain Control Module per Service Information.
Perform the POWERTRAIN VERIFICATION TEST. (Refer to 9 - ENGINE - STANDARD PROCEDURE)

P0073–AMBIENT AIR TEMPERATURE SENSOR CIRCUIT HIGH

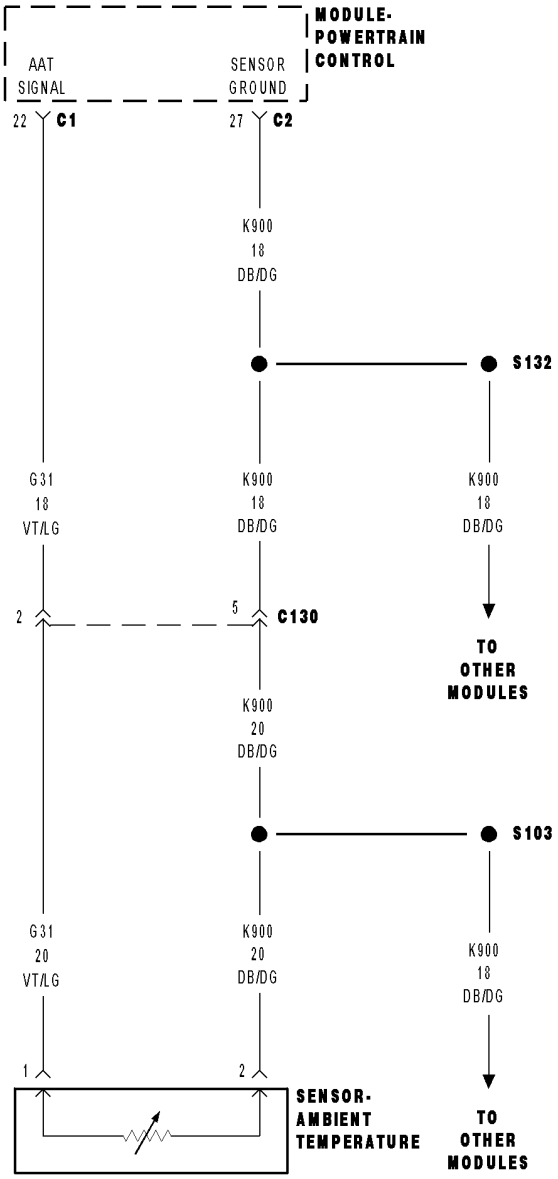

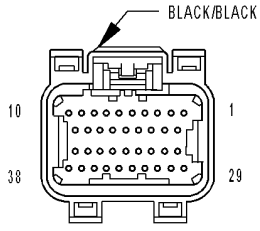

MODULE-
POWERTRAIN
CONTROL C1
(NGC)

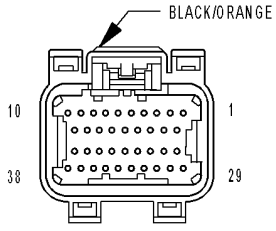

MODULE-
POWERTRAIN
CONTROL C2
(NGC)

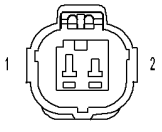

SENSOR-
AMBIENT AIR
TEMPERATURE

81452c47

P0073–AMBIENT AIR TEMPERATURE SENSOR CIRCUIT HIGH (CONTINUED)

For the Engine circuit diagram (Refer to 9 - ENGINE - SCHEMATICS AND DIAGRAMS).

For a complete wiring diagram **Refer to Section 8W**.

- **When Monitored:**
  With the ignition on. Battery voltage greater than 10 volts.
- **Set Condition:**
  The Ambient Temperature Sensor voltage is greater than 4.98 volts at the PCM for 2.8 seconds. One Trip Fault. Three good trips to turn off the MIL.

Possible Causes
(G31) AAT SIGNAL CIRCUIT SHORTED TO BATTERY VOLTAGE
(G31) AAT SIGNAL CIRCUIT OPEN
(K900) SENSOR GROUND CIRCUIT OPEN
AMBIENT AIR TEMPERATURE SENSOR
PCM

Always perform the Pre-Diagnostic Troubleshooting procedure before proceeding. (Refer to 9 - ENGINE - DIAGNOSIS AND TESTING).

Diagnostic Test

1. AAT SENSOR VOLTAGE ABOVE 4.98 VOLTS

Ignition on, engine not running.

With a scan tool, read the Ambient Air Temperature Sensor voltage.

Is the voltage above 4.98 volts?

Yes >> Go To 2

No >> Refer to the INTERMITTENT CONDITION Diagnostic Procedure.
Perform the POWERTRAIN VERIFICATION TEST. (Refer to 9 - ENGINE - STANDARD PROCEDURE)

2. AAT SENSOR

Turn the ignition off.

Disconnect the Ambient Air Temperature Sensor harness connector.

Connect a jumper wire between the (G31) AAT Signal circuit and the (K900) Sensor ground circuit in the AAT Sensor harness connector.

Ignition on, engine not running.

With a scan tool, read AAT Sensor voltage.

Is the voltage below 1.0 volt with the jumper wire installed?

Yes >> Replace the Ambient Air Temperature Sensor.
Perform the POWERTRAIN VERIFICATION TEST. (Refer to 9 - ENGINE - STANDARD PROCEDURE)

No >> Go To 3

NOTE: Remove the jumper wire before continuing.

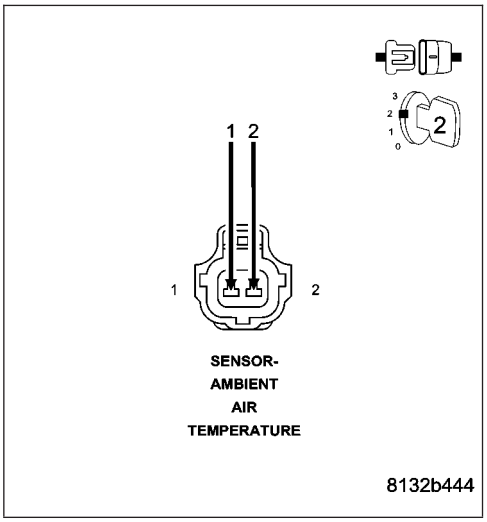

P0073–AMBIENT AIR TEMPERATURE SENSOR CIRCUIT HIGH (CONTINUED)

3. (G31) AAT SIGNAL CIRCUIT SHORTED TO BATTERY VOLTAGE

Turn the ignition off.

Disconnect the C2 PCM harness connector.

Ignition on, engine not running.

Measure the voltage on the (G31) AAT Signal circuit in the AAT Sensor harness connector.

Is the voltage above 0 volts?

Yes >> Repair the short to battery voltage in the (G31) AAT Signal circuit.
Perform the POWERTRAIN VERIFICATION TEST. (Refer to 9 - ENGINE - STANDARD PROCEDURE)

No >> Go To 4

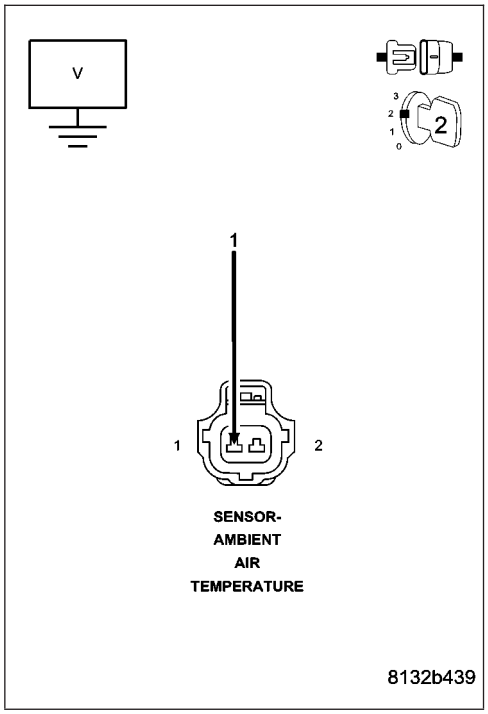

4. (G31) AAT SIGNAL CIRCUIT OPEN

Turn the ignition off.

CAUTION: Do not probe the PCM harness connectors. Probing the PCM harness connectors will damage the PCM terminals resulting in poor terminal to pin connection. Install Miller Special Tool #8815 to perform diagnosis.

Measure the resistance of the (G31) AAT Signal circuit from the AAT Sensor harness connector to the appropriate terminal of special tool #8815.

Is the resistance below 5.0 ohms?

Yes >> Go To 5

No >> Repair the open in the (G31) AAT Signal circuit.
Perform the POWERTRAIN VERIFICATION TEST. (Refer to 9 - ENGINE - STANDARD PROCEDURE)

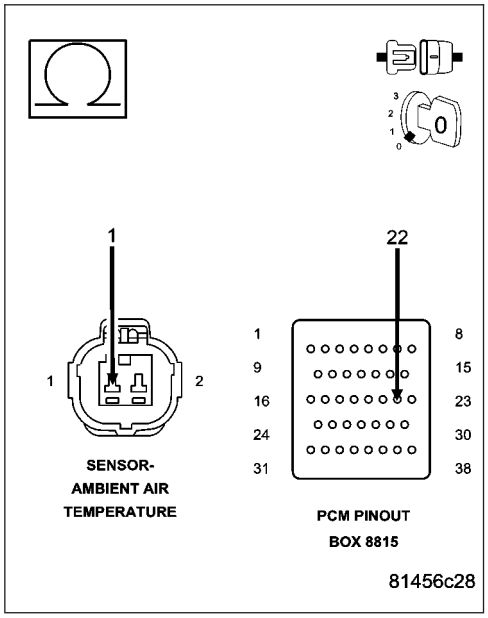

P0073–AMBIENT AIR TEMPERATURE SENSOR CIRCUIT HIGH (CONTINUED)

5. (K900) SENSOR GROUND CIRCUIT OPEN

Measure the resistance of the (K900) Sensor ground circuit from the AAT Sensor harness connector to the appropriate terminal of special tool #8815.

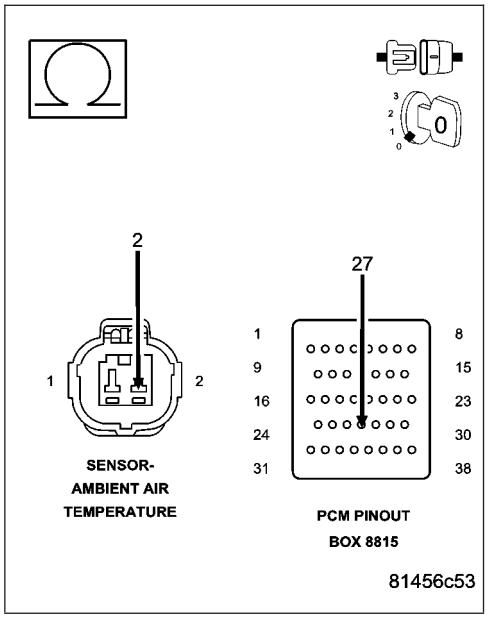

Is the resistance below 5.0 ohms?

Yes >> Go To 6

No >> Repair the open in the (K900) Sensor ground circuit.
Perform the POWERTRAIN VERIFICATION TEST. (Refer to 9 - ENGINE - STANDARD PROCEDURE)

6. PCM

NOTE: Before continuing, check the PCM harness connector terminals for corrosion, damage, or terminal push out. Repair as necessary.

Using the schematics as a guide, inspect the wire harness and connectors. Pay particular attention to all Power and Ground circuits.

Were there any problems found?

Yes >> Repair as necessary.
Perform the POWERTRAIN VERIFICATION TEST. (Refer to 9 - ENGINE - STANDARD PROCEDURE)

No >> Replace and program the Powertrain Control Module per Service Information.
Perform the POWERTRAIN VERIFICATION TEST. (Refer to 9 - ENGINE - STANDARD PROCEDURE)

P0107-MANIFOLD ABSOLUTE PRESSURE SENSOR CIRCUIT LOW

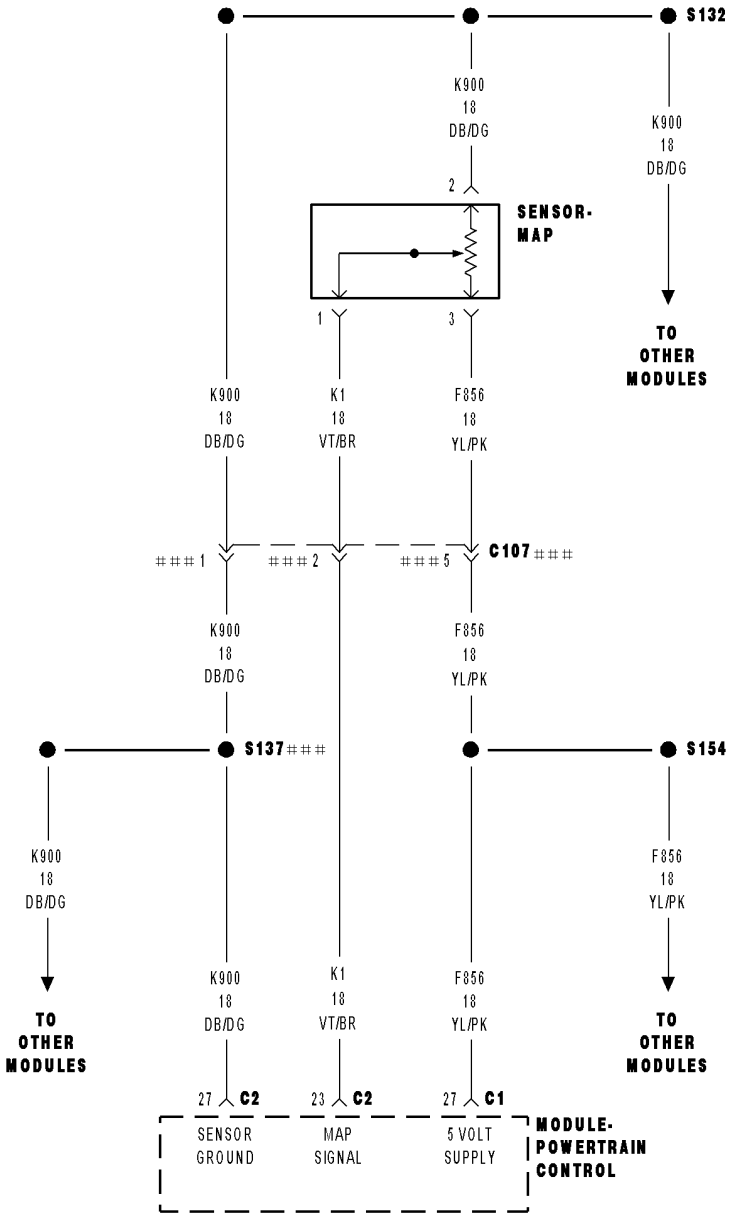

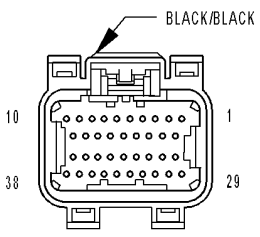

MODULE-
POWERTRAIN
CONTROL C1
(NGC)

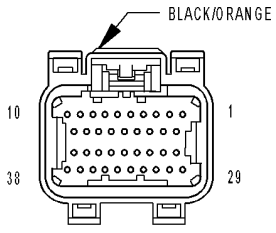

MODULE-
POWERTRAIN
CONTROL C2
(NGC)

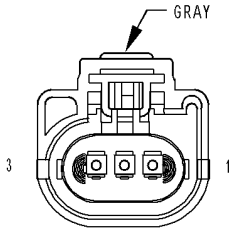

SENSOR-
MAP
(GAS)

81452cc9

P0107-MANIFOLD ABSOLUTE PRESSURE SENSOR CIRCUIT LOW (CONTINUED)

For the Engine circuit diagram (Refer to 9 - ENGINE - SCHEMATICS AND DIAGRAMS).

For a complete wiring diagram **Refer to Section 8W**.

- **When Monitored:**
  Engine speed between 600 to 3500 RPM. Battery voltage greater than 10 volts.
- **Set Condition:**
  The MAP sensor signal voltage is below 0.08 of a volt for 3.0 seconds. One Trip Fault. Three good trips to turn off the MIL, (5.7L ETC light will flash.)

Possible Causes
(F856) 5-VOLT SUPPLY CIRCUIT OPEN
(F856) 5-VOLT SUPPLY CIRCUIT SHORTED TO GROUND
(K1) MAP SIGNAL CIRCUIT SHORTED TO GROUND
(K1) MAP SIGNAL CIRCUIT SHORTED TO THE (K900) SENSOR GROUND CIRCUIT
MAP SENSOR
PCM

Always perform the Pre-Diagnostic Troubleshooting procedure before proceeding. (Refer to 9 - ENGINE - DIAGNOSIS AND TESTING).

Diagnostic Test

1. MAP SENSOR VOLTAGE BELOW 0.08 OF A VOLT

Ignition on, engine not running.

With a scan tool, read the MAP Sensor voltage.

Is the voltage below 0.08 of a volt?

Yes >> Go To 2

No >> Refer to the INTERMITTENT CONDITION Diagnostic Procedure.
Perform the POWERTRAIN VERIFICATION TEST. (Refer to 9 - ENGINE - STANDARD PROCEDURE)

---

2. (F856) 5-VOLT SUPPLY CIRCUIT

Turn the ignition off.

Disconnect the MAP Sensor harness connector.

Ignition on, engine not running.

Measure the voltage on the (F856) 5-volt Supply circuit in the MAP Sensor harness connector.

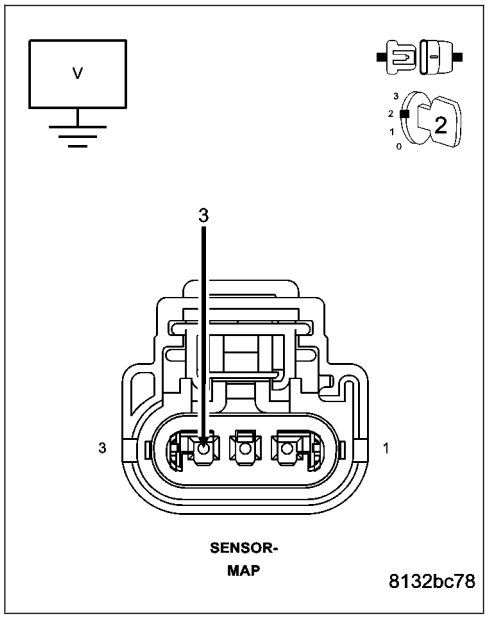

Is the voltage between 4.5 to 5.2 volts?

Yes >> Go To 3

No >> Go To 6

P0107-MANIFOLD ABSOLUTE PRESSURE SENSOR CIRCUIT LOW (CONTINUED)

3. MAP SENSOR

With a scan tool, monitor the MAP Sensor voltage with the Sensor harness connector disconnected.

Is the voltage above 4.5 volts?

Yes >> Replace the MAP Sensor.
Perform the POWERTRAIN VERIFICATION TEST. (Refer to 9 - ENGINE - STANDARD PROCEDURE)

No >> Go To 4

4. (K1) MAP SIGNAL CIRCUIT SHORTED TO GROUND

Turn the ignition off.

Disconnect the C2 PCM harness connector.

Measure the resistance between ground and the (K1) MAP Signal circuit in the MAP Sensor harness connector.

Is the resistance below 100 ohms?

Yes >> Repair the short to ground in the (K1) MAP Signal circuit.
Perform the POWERTRAIN VERIFICATION TEST. (Refer to 9 - ENGINE - STANDARD PROCEDURE)

No >> Go To 5

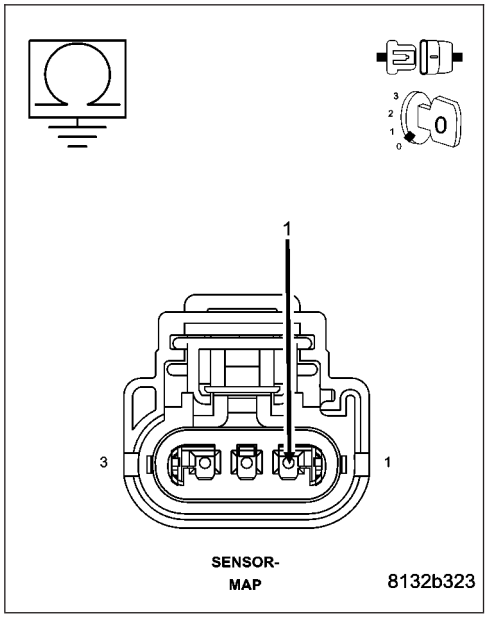

5. (K1) MAP SIGNAL CIRCUIT SHORTED TO THE (K900) SENSOR GROUND CIRCUIT

Measure the resistance between the (K1) MAP Signal circuit and the (K900) Sensor ground circuit in the MAP Sensor harness connector.

Is the resistance below 100 ohms?

Yes >> Repair the short between the (K900) Sensor ground and the (K1) MAP Signal circuit.
Perform the POWERTRAIN VERIFICATION TEST. (Refer to 9 - ENGINE - STANDARD PROCEDURE)

No >> Go To 8

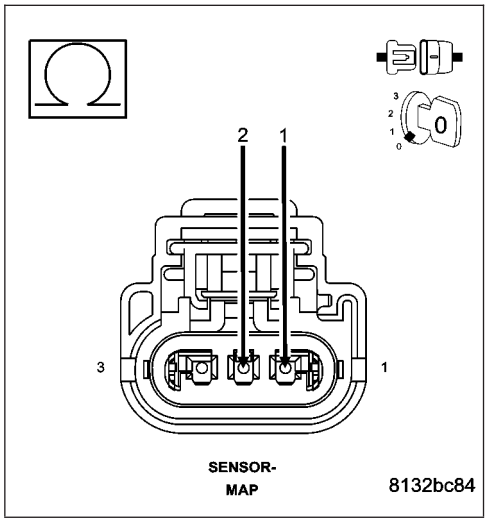

P0107-MANIFOLD ABSOLUTE PRESSURE SENSOR CIRCUIT LOW (CONTINUED)

6. (F856) 5-VOLT SUPPLY CIRCUIT OPEN

Turn the ignition off.

Disconnect the C1 PCM harness connector.

CAUTION: Do not probe the PCM harness connectors. Probing the PCM harness connectors will damage the PCM terminals resulting in poor terminal to pin connection. Install Miller Special Tool #8815 to perform diagnosis.

Measure the resistance of the (F856) 5-volt Supply circuit from the MAP Sensor harness connector to the appropriate terminal of special tool #8815.

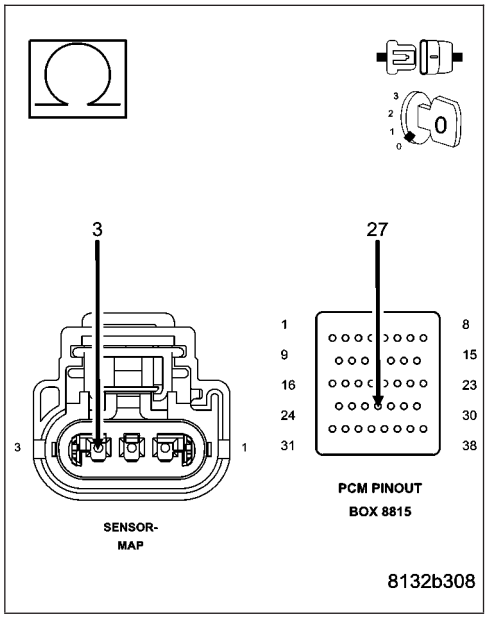

Is the resistance below 5.0 ohms?

Yes >> Go To 7

No >> Repair the open in the (F856) 5-volt Supply circuit.
Perform the POWERTRAIN VERIFICATION TEST. (Refer to 9 - ENGINE - STANDARD PROCEDURE)

7. (F856) 5-VOLT SUPPLY CIRCUIT SHORTED TO GROUND

Measure the resistance between ground and the (F856) 5-volt Supply circuit in the MAP Sensor harness connector.

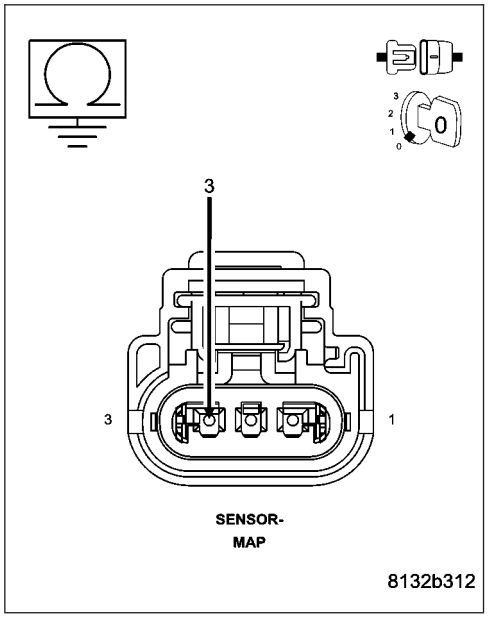

Is the resistance below 100 ohms?

Yes >> Repair the short to ground in the (F856) 5-volt Supply circuit.
Perform the POWERTRAIN VERIFICATION TEST. (Refer to 9 - ENGINE - STANDARD PROCEDURE)

No >> Go To 8

P0107-MANIFOLD ABSOLUTE PRESSURE SENSOR CIRCUIT LOW (CONTINUED)

8. **PCM**

NOTE: Before continuing, check the PCM harness connector terminals for corrosion, damage, or terminal push out. Repair as necessary.

Using the schematics as a guide, inspect the wire harness and connectors. Pay particular attention to all Power and Ground circuits.

Were there any problems found?

Yes >> Repair as necessary.
Perform the POWERTRAIN VERIFICATION TEST. (Refer to 9 - ENGINE - STANDARD PROCEDURE)

No >> Replace and program the Powertrain Control Module per Service Information.
Perform the POWERTRAIN VERIFICATION TEST. (Refer to 9 - ENGINE - STANDARD PROCEDURE)

P0108-MANIFOLD ABSOLUTE PRESSURE SENSOR CIRCUIT HIGH

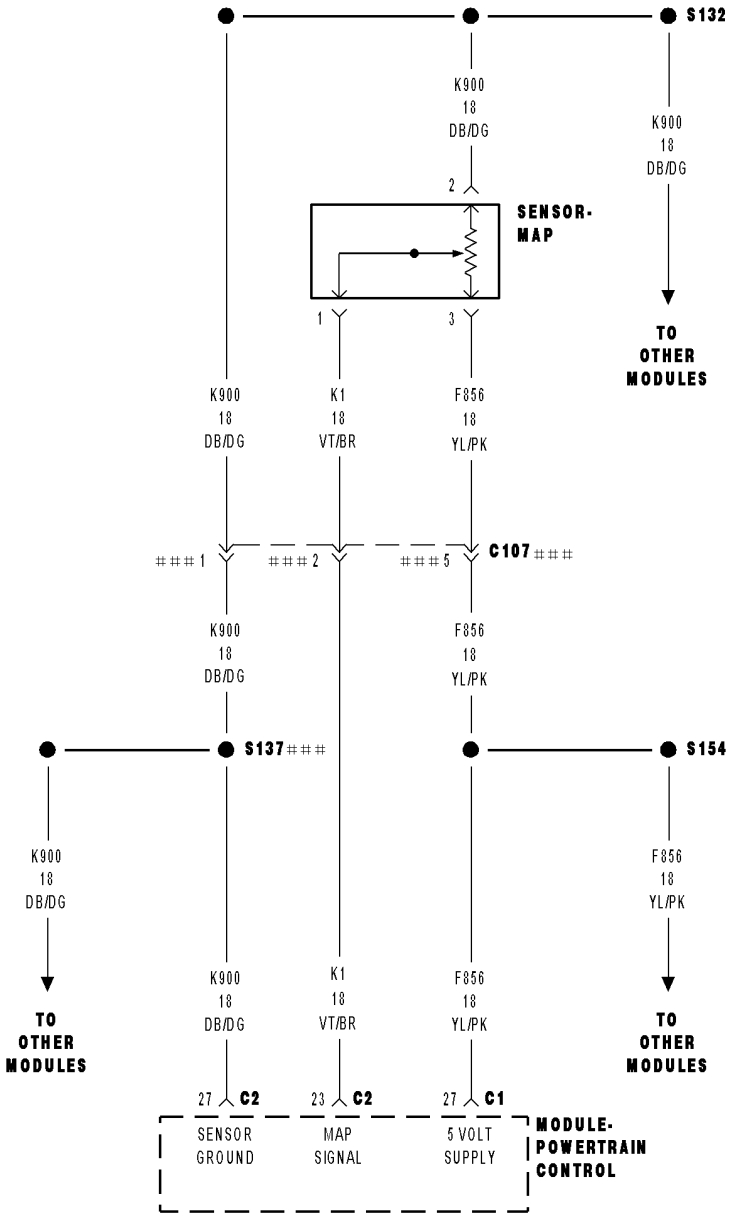

5.7L

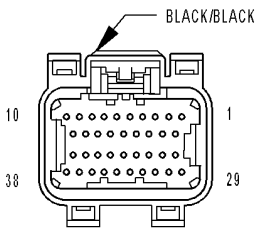

MODULE-
POWERTRAIN
CONTROL C1
(NGC)

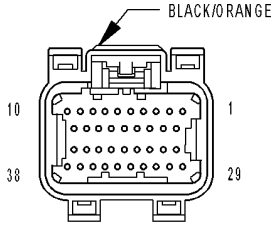

MODULE-
POWERTRAIN
CONTROL C2
(NGC)

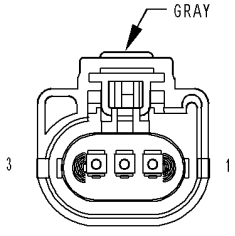

SENSOR-
MAP
(GAS)

81452cc9

P0108-MANIFOLD ABSOLUTE PRESSURE SENSOR CIRCUIT HIGH (CONTINUED)

For the Engine circuit diagram (Refer to 9 - ENGINE - SCHEMATICS AND DIAGRAMS).

For a complete wiring diagram **Refer to Section 8W**.

- **When Monitored:**
  Engine speed between 600 to 3500 RPM. Battery voltage greater than 10.37 volts.
- **Set Condition:**
  The MAP sensor signal voltage is greater than 4.92 volts for 3.0 seconds. One trip fault. Three good trips to turn off the MIL. (5.7L ETC light will flash).

Possible Causes
(K1) MAP SIGNAL CIRCUIT SHORTED TO BATTERY VOLTAGE
(K1) MAP SIGNAL CIRCUIT OPEN
(K1) MAP SIGNAL CIRCUIT SHORTED TO THE (F856) 5-VOLT SUPPLY CIRCUIT
(K900) SENSOR GROUND CIRCUIT OPEN
MAP SENSOR
PCM

Always perform the Pre-Diagnostic Troubleshooting procedure before proceeding. (Refer to 9 - ENGINE - DIAGNOSIS AND TESTING).

Diagnostic Test

1. MAP SENSOR VOLTAGE ABOVE 4.92 VOLTS

Start the engine.

With a scan tool, read the MAP Sensor voltage.

Is the voltage above 4.92 volts?

Yes >> Go To 2

No >> Refer to the INTERMITTENT CONDITION Diagnostic Procedure.
Perform the POWERTRAIN VERIFICATION TEST. (Refer to 9 - ENGINE - STANDARD PROCEDURE)

2. MAP SENSOR

Turn the ignition off.

Disconnect the MAP Sensor harness connector.

Connect a jumper wire between the (K1) MAP Signal circuit and the (K900) Sensor ground circuit in the Sensor harness connector.

Ignition on, engine not running.

With a scan tool, monitor the MAP Sensor voltage.

Is the voltage below 1.0 volt with the jumper wire installed?

Yes >> Replace the MAP Sensor.
Perform the POWERTRAIN VERIFICATION TEST. (Refer to 9 - ENGINE - STANDARD PROCEDURE)

No >> Go To 3

NOTE: Remove the jumper wire before continuing.

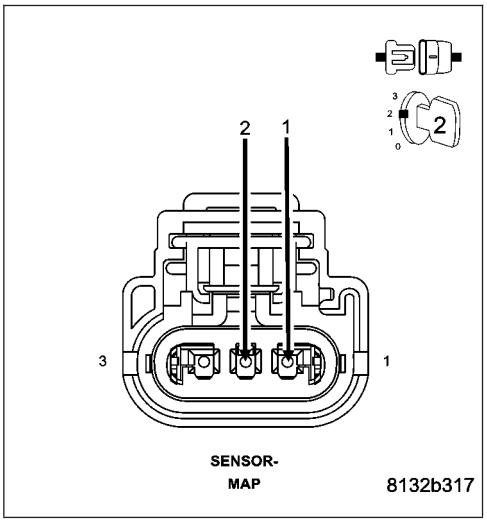

P0108-MANIFOLD ABSOLUTE PRESSURE SENSOR CIRCUIT HIGH (CONTINUED)

3. (K1) MAP SIGNAL CIRCUIT SHORTED TO BATTERY VOLTAGE

Turn the ignition off.

Disconnect the C1 and C2 PCM harness connectors.

Ignition on, engine not running.

Measure the voltage on the (K1) MAP Signal circuit in the MAP Sensor harness connector.

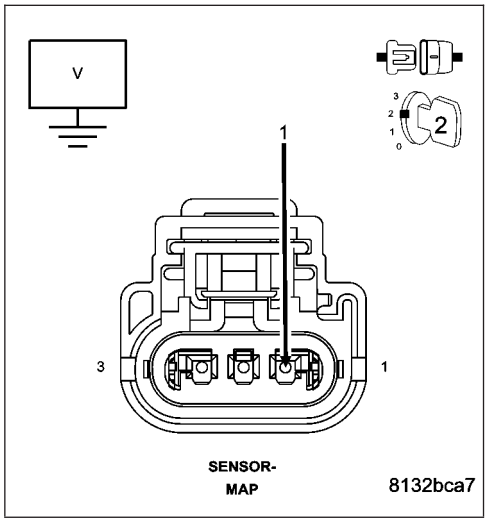

Is the voltage above 0 volts?

Yes >> Repair the short to battery voltage in the (K1) MAP Signal circuit.
Perform the POWERTRAIN VERIFICATION TEST. (Refer to 9 - ENGINE - STANDARD PROCEDURE)

No >> Go To 4

4. (K1) MAP SIGNAL CIRCUIT OPEN

Turn the ignition off.

CAUTION: Do not probe the PCM harness connectors. Probing the PCM harness connectors will damage the PCM terminals resulting in poor terminal to pin connection. Install Miller Special Tool #8815 to perform diagnosis.

Measure the resistance of the (K1) MAP Signal circuit from the MAP Sensor harness connector to the appropriate terminal of special tool #8815.

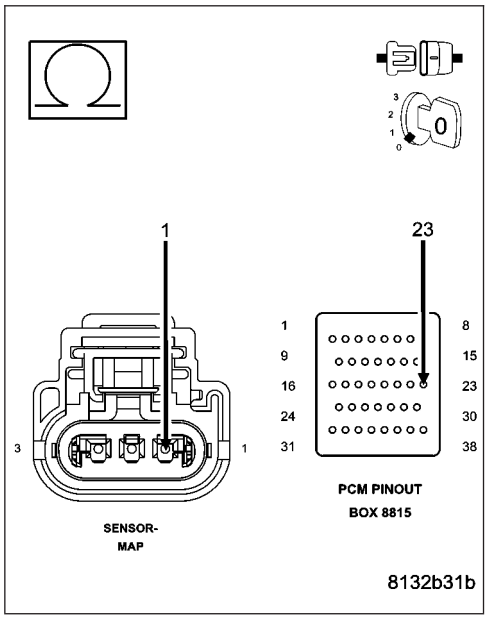

Is the resistance below 5.0 ohms?

Yes >> Go To 5

No >> Repair the open in the (K1) MAP Signal circuit.
Perform the POWERTRAIN VERIFICATION TEST. (Refer to 9 - ENGINE - STANDARD PROCEDURE)

P0108-MANIFOLD ABSOLUTE PRESSURE SENSOR CIRCUIT HIGH (CONTINUED)

5. (K1) MAP SIGNAL CIRCUIT SHORTED TO THE (F856) 5-VOLT SUPPLY CIRCUIT

Measure the resistance between the (K1) MAP Signal circuit and the (F856) 5-volt Supply circuit in the MAP Sensor harness connector.

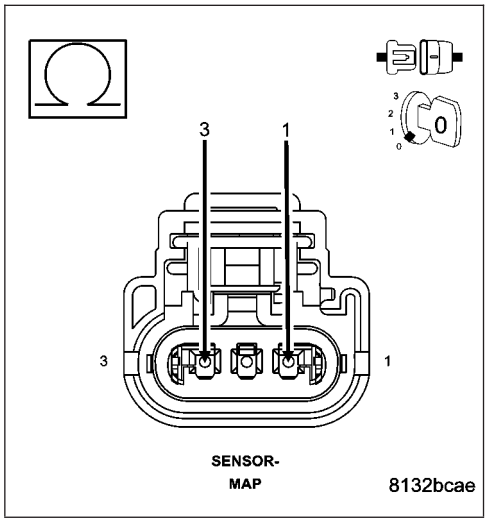

Is the resistance below 100 ohms?

Yes >> Repair the short between the (F856) 5-volt Supply circuit and the (K1) MAP Signal circuit.
Perform the POWERTRAIN VERIFICATION TEST. (Refer to 9 - ENGINE - STANDARD PROCEDURE)

No >> Go To 6

6. (K900) SENSOR GROUND CIRCUIT OPEN

Measure the resistance of the (K900) Sensor ground circuit from the MAP Sensor harness connector to the appropriate terminal of special tool #8815.

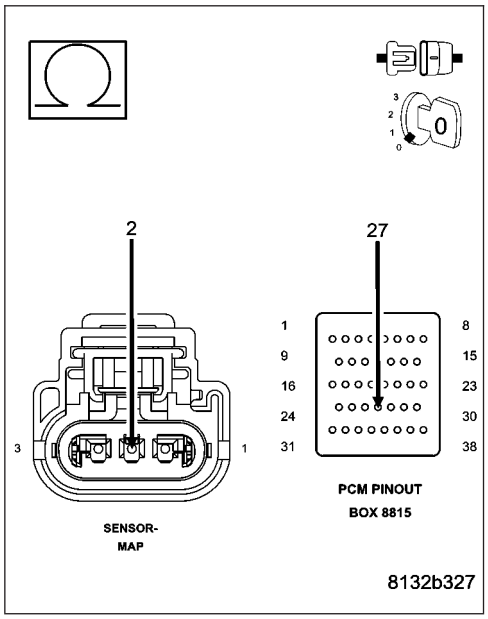

Is the resistance below 5.0 ohms?

Yes >> Go To 7

No >> Repair the open in the (K900) Sensor ground circuit.
Perform the POWERTRAIN VERIFICATION TEST. (Refer to 9 - ENGINE - STANDARD PROCEDURE)

P0108-MANIFOLD ABSOLUTE PRESSURE SENSOR CIRCUIT HIGH (CONTINUED)

7. PCM

NOTE: Before continuing, check the PCM harness connector terminals for corrosion, damage, or terminal push out. Repair as necessary.

Using the schematics as a guide, inspect the wire harness and connectors. Pay particular attention to all Power and Ground circuits.

Were there any problems found?

Yes >> Repair as necessary.
Perform the POWERTRAIN VERIFICATION TEST. (Refer to 9 - ENGINE - STANDARD PROCEDURE)

No >> Replace and program the Powertrain Control Module per Service Information.
Perform the POWERTRAIN VERIFICATION TEST. (Refer to 9 - ENGINE - STANDARD PROCEDURE)

P0111-INTAKE AIR TEMPERATURE SENSOR RATIONALITY

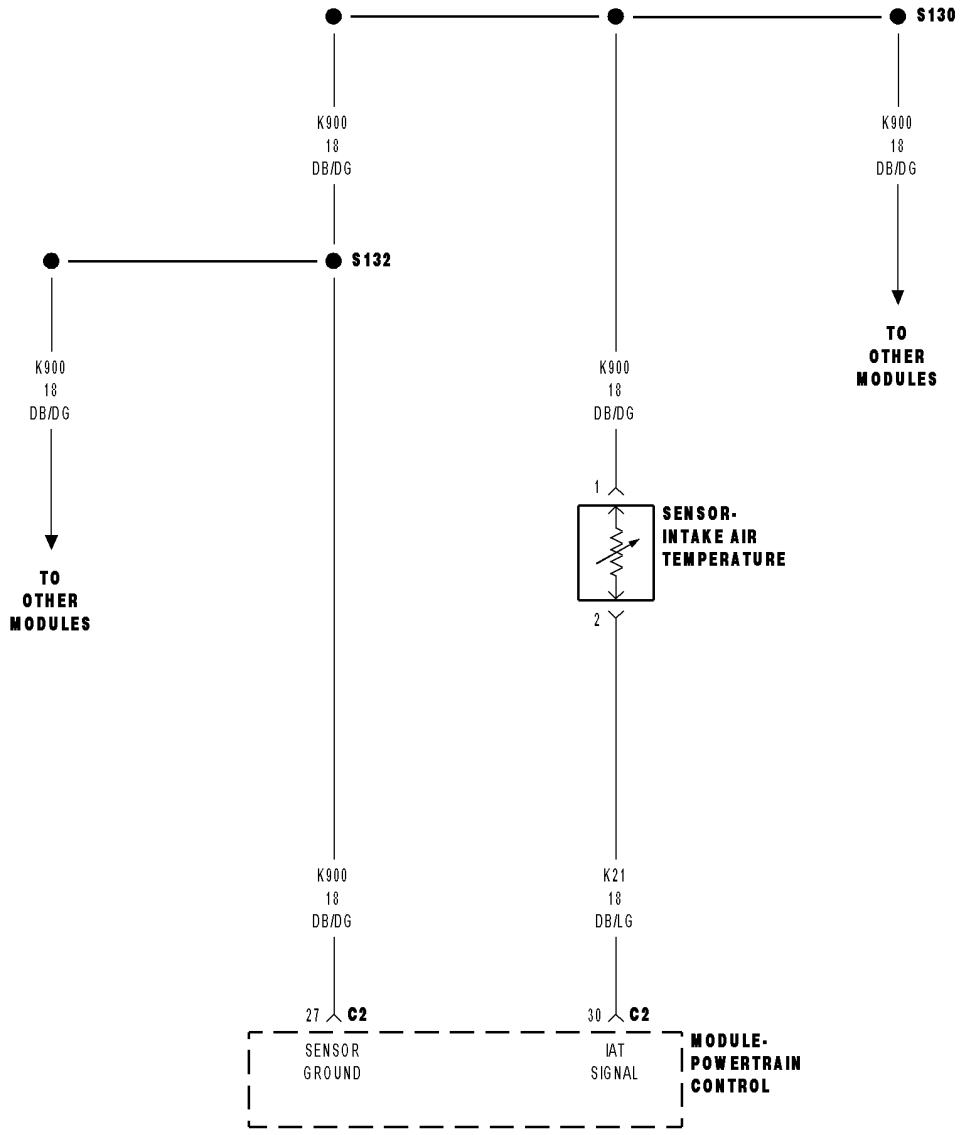

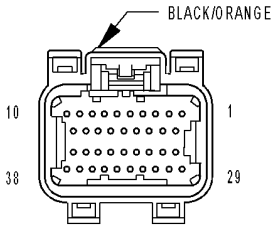

MODULE-
POWERTRAIN
CONTROL C2
(NGC)

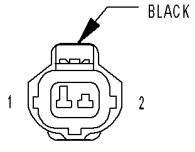

SENSOR-INTAKE
AIR TEMPERATURE
(EXCEPT SRT)

81452d0d

P0111-INTAKE AIR TEMPERATURE SENSOR RATIONALITY (CONTINUED)

For the Engine System Schematic circuit diagram (Refer to 9 - ENGINE - SCHEMATICS AND DIAGRAMS).

For a complete wiring diagram **Refer to Section 8W**.

Theory of Operation

Intake Air Temperature Sensor performance looks at the outputs of three temperature sensors and compare them under cold start conditions. Following a start to run delay time, the outputs of the ambient, engine coolant, and intake air temperature sensors will be compared. If the engine coolant and ambient air temperature sensors agree and the intake air temperature does not agree, the intake air temperature sensor is declared as irrational.

- **When Monitored:**
  The engine off time is greater than 480 minutes. Ambient Temperature if greater than 4 deg C (38 deg F).
- **Set Condition:**
  After a calibrated amount of cool down time the PCM compares the ECT Sensor, IAT Sensor, and the Ambient Air Temp Sensor values. If the IAT Sensor value is not within 10 deg C of the other two temperature sensors. Two Trip Fault. Three good trips to turn off the MIL.

Possible Causes
(K21) IAT SIGNAL CIRCUIT SHORTED TO BATTERY VOLTAGE
(K21) IAT SIGNAL CIRCUIT OPEN
(K900) SENSOR GROUND CIRCUIT OPEN
(K21) IAT SIGNAL CIRCUIT SHORTED TO GROUND
(K21) IAT SIGNAL CIRCUIT SHORTED TO THE (K900) SENSOR GROUND CIRCUIT
INTAKE AIR TEMPERATURE SENSOR
PCM

Always perform the Pre-Diagnostic Troubleshooting procedure before proceeding. (Refer to 9 - ENGINE - DIAGNOSIS AND TESTING).

Diagnostic Test

1. ACTIVE DTC

Ignition on, engine not running.
With a scan tool, read DTCs.

Is the DTC active at this time?

Yes >> Go To 2

No >> Refer to the INTERMITTENT CONDITION Diagnostic Procedure.
Perform the POWERTRAIN VERIFICATION TEST. (Refer to 9 - ENGINE - STANDARD PROCEDURE)

P0111-INTAKE AIR TEMPERATURE SENSOR RATIONALITY (CONTINUED)

2. (K21) IAT SIGNAL CIRCUIT SHORTED TO BATTERY VOLTAGE

Turn the ignition off.

Disconnect the C2 PCM harness connector.

Disconnect the IAT Sensor harness connector.

NOTE: Visually inspect both the component and the PCM connectors. Look for damaged, partially broken wires, and backed out or corroded terminals.

Ignition on, engine not running.

Measure the voltage on the (K21) IAT Signal circuit in the IAT Sensor harness connector.

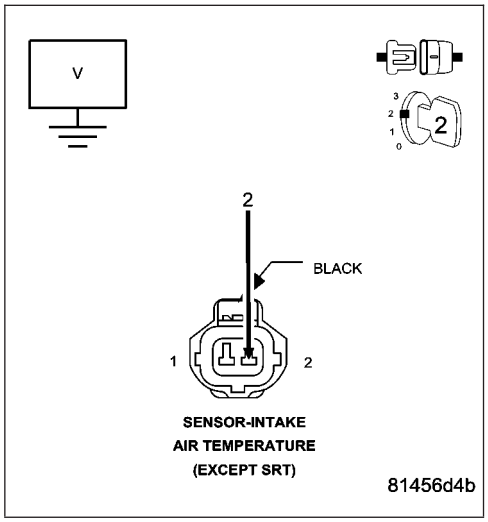

Is the voltage above 0 volts?

Yes >> Repair the short to battery voltage in the (K21) IAT Signal circuit.
Perform the POWERTRAIN VERIFICATION TEST. (Refer to 9 - ENGINE - STANDARD PROCEDURE)

No >> Go To 3

3. IAT SENSOR VOLTAGE ABOVE 4.6 VOLTS

Turn the ignition off.

Connect the C2 PCM harness connector.

Ignition on, engine not running.

With a scan tool, read the IAT voltage.

Is the voltage above 4.6 volts?

Yes >> Go To 4

No >> Go To 7

4. IAT SENSOR

Connect a jumper wire between the (K21) IAT Signal circuit and the (K900) Sensor ground circuit in the IAT Sensor harness connector.

With a scan tool, read the IAT voltage.

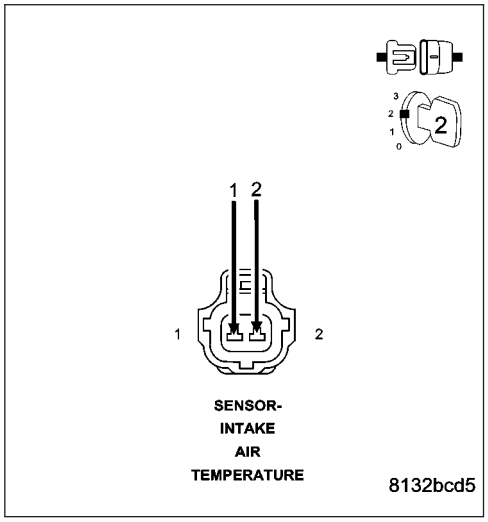

Is the voltage below 1.0 volt with the jumper wire installed?

Yes >> Replace the IAT Sensor.
Perform the POWERTRAIN VERIFICATION TEST. (Refer to 9 - ENGINE - STANDARD PROCEDURE)

No >> Go To 5

NOTE: Remove the jumper wire before continuing.

P0111-INTAKE AIR TEMPERATURE SENSOR RATIONALITY (CONTINUED)

5. (K21) IAT SIGNAL CIRCUIT OPEN

Turn the ignition off.

Disconnect the C2 PCM harness connector.

CAUTION: Do not probe the PCM harness connectors. Probing the PCM harness connectors will damage the PCM terminals resulting in poor terminal to pin connection. Install Miller Special Tool #8815 to perform diagnosis.

Measure the resistance of the (K21) IAT Signal circuit from the IAT Sensor harness connector to the appropriate terminal of special tool #8815.

Is the resistance below 5.0 ohms?

Yes >> Go To 6

No >> Repair the open in the (K21) IAT Signal circuit.
Perform the POWERTRAIN VERIFICATION TEST. (Refer to 9 - ENGINE - STANDARD PROCEDURE)

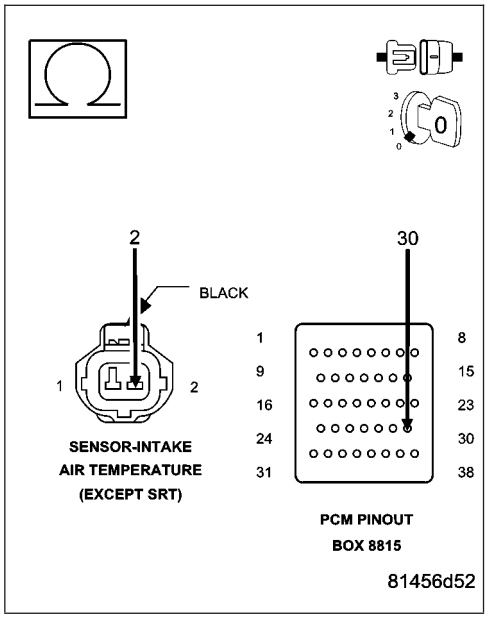

6. (K900) SENSOR GROUND CIRCUIT OPEN

Measure the resistance of the (K900) Sensor ground circuit from the IAT Sensor harness connector to the appropriate terminal of special tool #8815.

Is the resistance below 5.0 ohms?

Yes >> Go To 9

No >> Repair the open in the (K900) Sensor ground circuit.
Perform the POWERTRAIN VERIFICATION TEST. (Refer to 9 - ENGINE - STANDARD PROCEDURE)

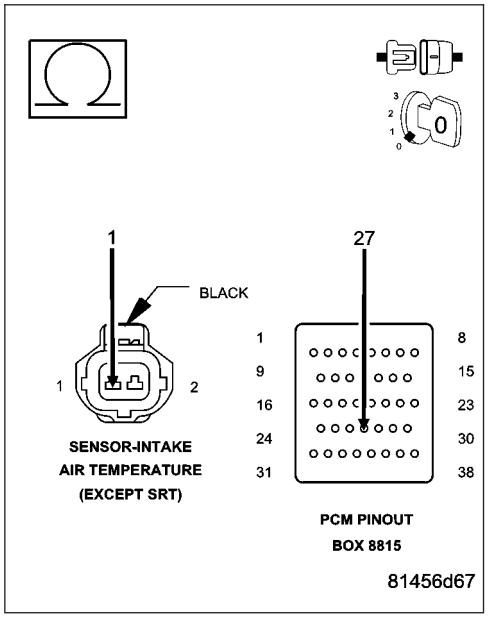

P0111-INTAKE AIR TEMPERATURE SENSOR RATIONALITY (CONTINUED)

7. (K21) IAT SIGNAL CIRCUIT SHORTED TO GROUND

Turn the ignition off.

Disconnect the C2 PCM harness connector.

Measure the resistance between ground and the (K21) IAT Signal circuit in the IAT Sensor harness connector.

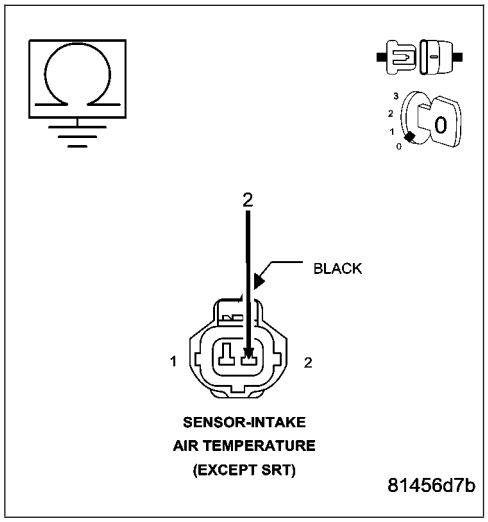

Is the resistance below 100 ohms?

Yes >> Repair the short to ground in the (K21) IAT Signal circuit.
Perform the POWERTRAIN VERIFICATION TEST. (Refer to 9 - ENGINE - STANDARD PROCEDURE)

No >> Go To 8

8. (K21) IAT SIGNAL CIRCUIT SHORTED TO THE (K900) SENSOR GROUND CIRCUIT

Measure the resistance between the (K21) IAT Signal circuit and the (K900) Sensor ground circuit in the IAT Sensor harness connector.

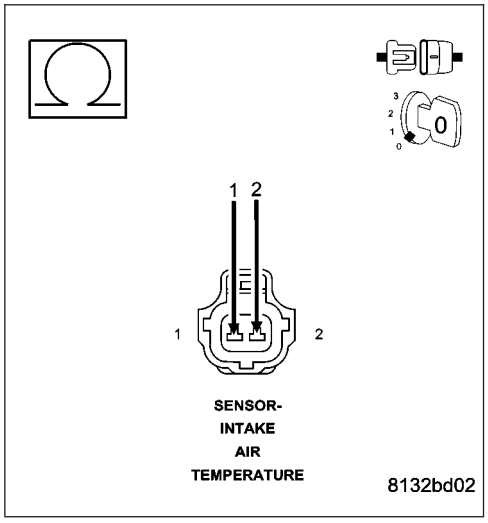

Is the resistance below 5.0 ohms?

Yes >> Repair the short between the (K900) Sensor ground circuit and the (K21) IAT Signal circuit.
Perform the POWERTRAIN VERIFICATION TEST. (Refer to 9 - ENGINE - STANDARD PROCEDURE)

No >> Go To 9

9. PCM

NOTE: Before continuing, check the PCM harness connector terminals for corrosion, damage, or terminal push out. Repair as necessary.

Using the schematics as a guide, inspect the wire harness and connectors. Pay particular attention to all Power and Ground circuits.

Were there any problems found?

Yes >> Repair as necessary.
Perform the POWERTRAIN VERIFICATION TEST. (Refer to 9 - ENGINE - STANDARD PROCEDURE)

No >> Replace and program the Powertrain Control Module per Service Information.
Perform the POWERTRAIN VERIFICATION TEST. (Refer to 9 - ENGINE - STANDARD PROCEDURE)

P0112-INTAKE AIR TEMPERATURE SENSOR CIRCUIT LOW

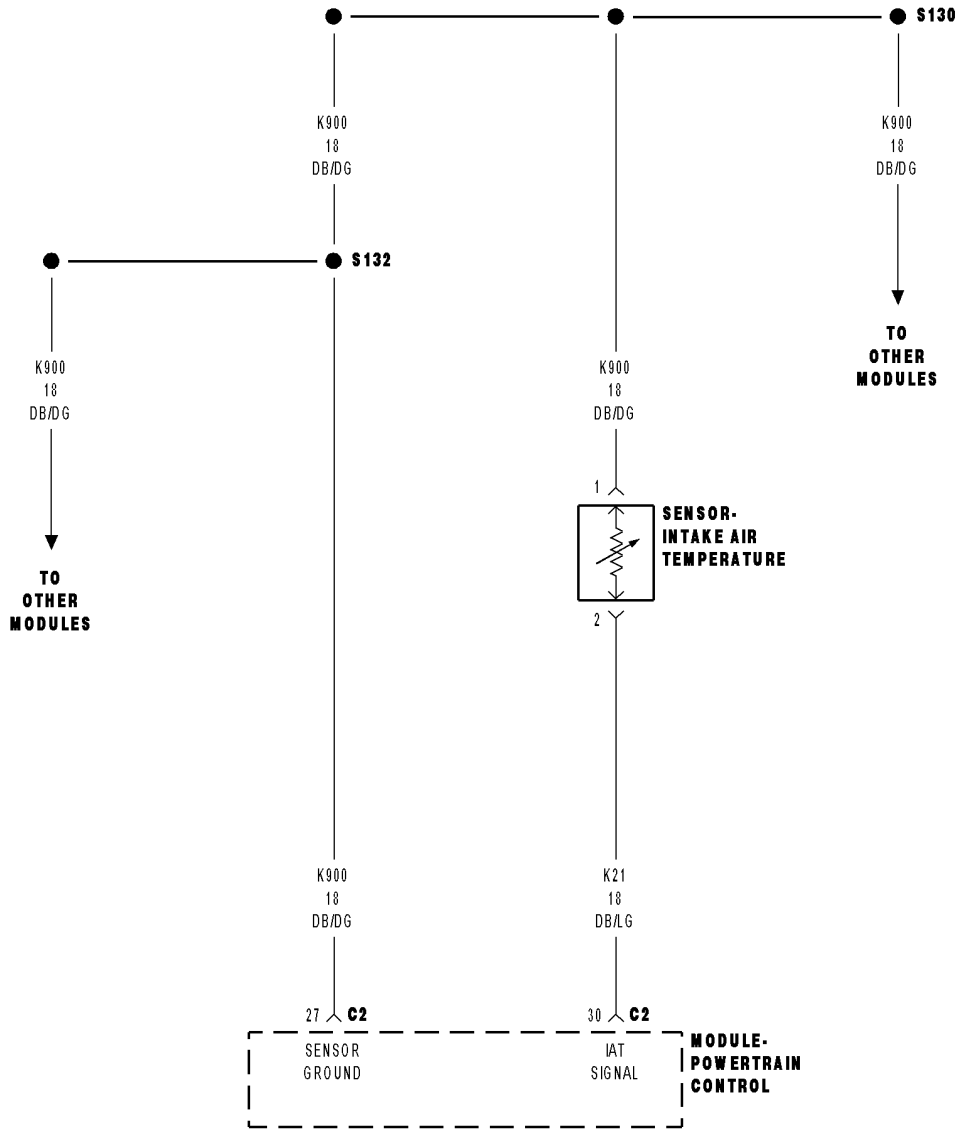

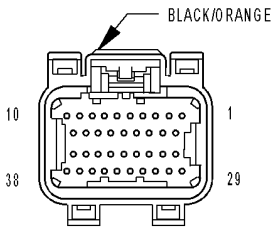

MODULE-
POWERTRAIN
CONTROL C2
(NGC)

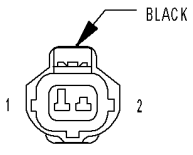

SENSOR-INTAKE
AIR TEMPERATURE
(EXCEPT SRT)

81452d0d

P0112-INTAKE AIR TEMPERATURE SENSOR CIRCUIT LOW (CONTINUED)

For the Engine System Schematic circuit diagram (Refer to 9 - ENGINE - SCHEMATICS AND DIAGRAMS).

For a complete wiring diagram **Refer to Section 8W**.

- **When Monitored:**
  With the ignition on and battery voltage greater than 10.4 volts.
- **Set Condition:**
  When the Inlet Air Temp Sensor Signal circuit voltage is less than .078 volt for more than 2.8 seconds. One trip failure. Three good trips to clear the MIL.

Possible Causes
(K21) IAT SIGNAL CIRCUIT SHORTED TO GROUND
(K21) IAT SIGNAL CIRCUIT SHORTED TO THE (K900) SENSOR GROUND CIRCUIT
INTAKE AIR TEMPERATURE SENSOR
PCM

Always perform the Pre-Diagnostic Troubleshooting procedure before proceeding. (Refer to 9 - ENGINE - DIAGNOSIS AND TESTING).

Diagnostic Test

1. IAT SENSOR VOLTAGE BELOW 0.078 OF A VOLT

Ignition on, engine not running.
With a scan tool, read the IAT voltage.

Is the voltage below 0.078 of a volt?

Yes >> Go To 2

No >> Refer to the INTERMITTENT CONDITION Diagnostic Procedure.
Perform the POWERTRAIN VERIFICATION TEST. (Refer to 9 - ENGINE - STANDARD PROCEDURE)

---

2. IAT SENSOR

Turn the ignition off.
Disconnect the IAT Sensor harness connector.
Ignition on, engine not running.
With a scan tool, read IAT voltage.

Is the voltage above 0.05 of a volt?

Yes >> Replace the Intake Air Temperature Sensor.
Perform the POWERTRAIN VERIFICATION TEST. (Refer to 9 - ENGINE - STANDARD PROCEDURE)

No >> Go To 3

P0112-INTAKE AIR TEMPERATURE SENSOR CIRCUIT LOW (CONTINUED)

3. (K21) IAT SIGNAL CIRCUIT SHORTED TO GROUND

Turn the ignition off.

Disconnect the C2 PCM harness connector.

Measure the resistance between ground and the (K21) IAT Signal circuit in the IAT Sensor harness connector.

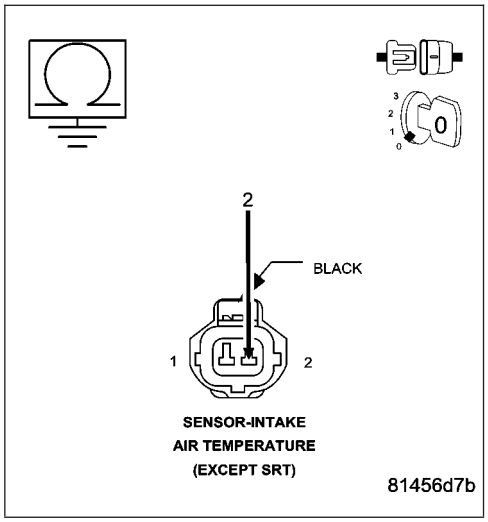

Is the resistance below 100 ohms?

Yes >> Repair the short to ground in the (K21) IAT Signal circuit.
Perform the POWERTRAIN VERIFICATION TEST. (Refer to 9 - ENGINE - STANDARD PROCEDURE)

No >> Go To 4

4. (K21) IAT SIGNAL CIRCUIT SHORTED TO THE (K900) SENSOR GROUND CIRCUIT

Measure the resistance between the (K21) IAT Signal circuit and the (K900) Sensor ground circuit in the IAT Sensor harness connector.

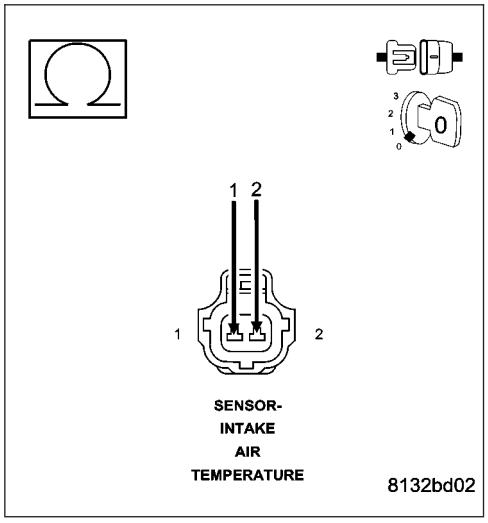

Is the resistance below 100 ohms?

Yes >> Repair the short between the (K900) Sensor ground circuit and the (K21) IAT Sensor Signal circuit.
Perform the POWERTRAIN VERIFICATION TEST. (Refer to 9 - ENGINE - STANDARD PROCEDURE)

No >> Go To 5

5. PCM

NOTE: Before continuing, check the PCM harness connector terminals for corrosion, damage, or terminal push out. Repair as necessary.

Using the schematics as a guide, inspect the wire harness and connectors. Pay particular attention to all Power and Ground circuits.

Were there any problems found?

Yes >> Repair as necessary.
Perform the POWERTRAIN VERIFICATION TEST. (Refer to 9 - ENGINE - STANDARD PROCEDURE)

No >> Replace and program the Powertrain Control Module per Service Information.
Perform the POWERTRAIN VERIFICATION TEST. (Refer to 9 - ENGINE - STANDARD PROCEDURE)

P0113-INTAKE AIR TEMPERATURE SENSOR CIRCUIT HIGH

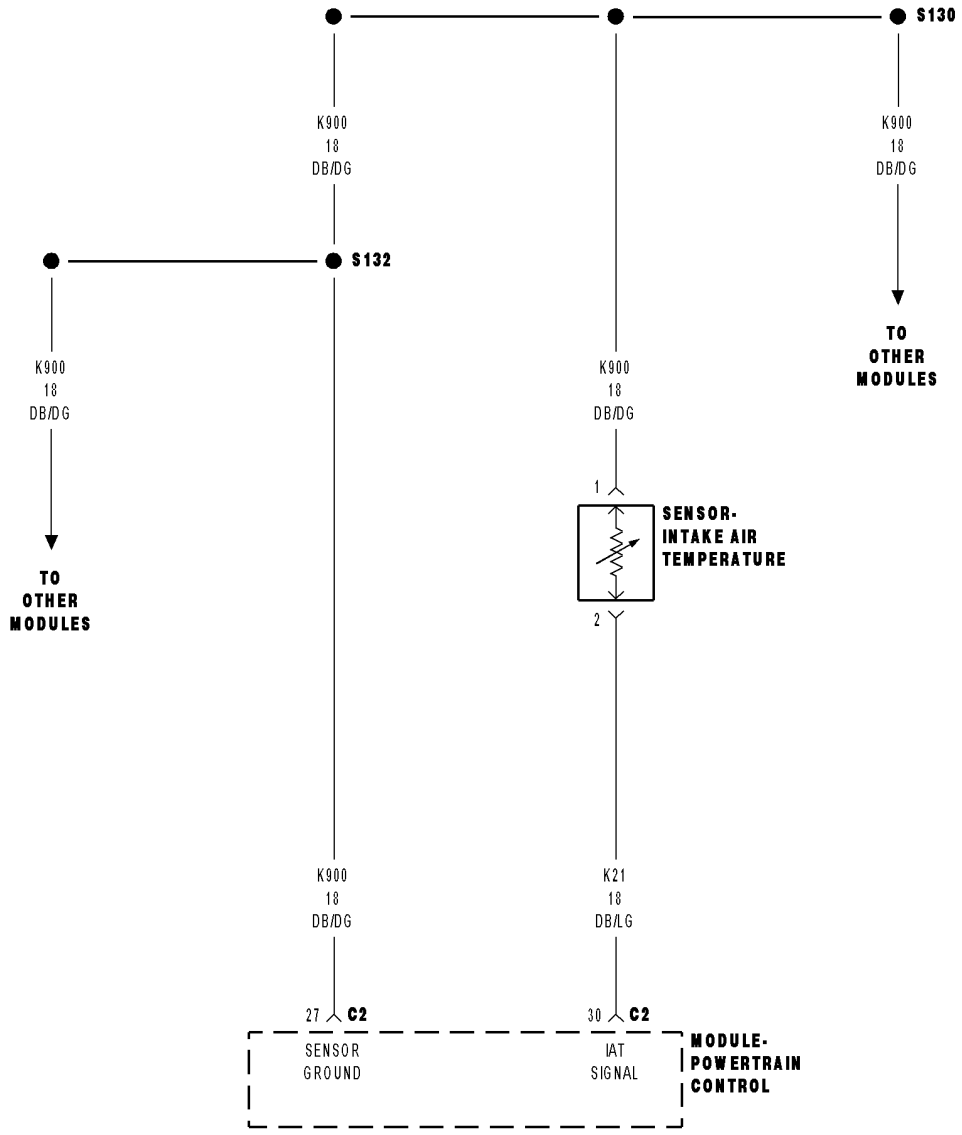

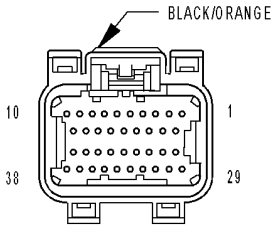

MODULE-
POWERTRAIN
CONTROL C2
(NGC)

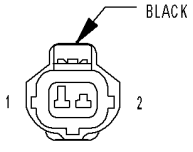

SENSOR-INTAKE
AIR TEMPERATURE
(EXCEPT SRT)

81452d0d

P0113-INTAKE AIR TEMPERATURE SENSOR CIRCUIT HIGH (CONTINUED)

For the Engine System Schematic circuit diagram. (Refer to 9 - ENGINE - SCHEMATICS AND DIAGRAMS)

For a complete wiring diagram **Refer to Section 8W**.

- **When Monitored:**
  With the ignition on. Battery voltage greater than 10.4 volts.
- **Set Condition:**
  The Intake Air Temperature (IAT) sensor circuit voltage at the PCM goes above 4.98 volts for 2.8 seconds. One Trip Fault. Three good trips to turn off the MIL.

Possible Causes
(K21) IAT SIGNAL CIRCUIT SHORTED TO BATTERY VOLTAGE
(K21) IAT SIGNAL CIRCUIT OPEN
(K900) SENSOR GROUND CIRCUIT OPEN
IAT SENSOR
PCM

Always perform the Pre-Diagnostic Troubleshooting procedure before proceeding. (Refer to 9 - ENGINE - DIAGNOSIS AND TESTING).

Diagnostic Test

1. IAT SENSOR VOLTAGE ABOVE 4.98 VOLTS

Ignition on, engine not running.

With a scan tool, read the Intake Air Temperature Sensor voltage.

Is the voltage above 4.98 volts?

Yes >> Go To 2

No >> Refer to the INTERMITTENT CONDITION Diagnostic Procedure.
Perform the POWERTRAIN VERIFICATION TEST. (Refer to 9 - ENGINE - STANDARD PROCEDURE)

---

2. IAT SENSOR

Turn the ignition off.

Disconnect the Intake Air Temperature Sensor harness connector.

Connect a jumper wire between the (K21) IAT Signal circuit and the (K900) Sensor ground circuit in the IAT Sensor harness connector.

Ignition on, engine not running.

With a scan tool, read the IAT Sensor voltage.

Is the voltage below 1.0 volt with the jumper wire installed?

Yes >> Replace the IAT Sensor.
Perform the POWERTRAIN VERIFICATION TEST. (Refer to 9 - ENGINE - STANDARD PROCEDURE)

No >> Go To 3

NOTE: Remove the jumper wire before continuing.

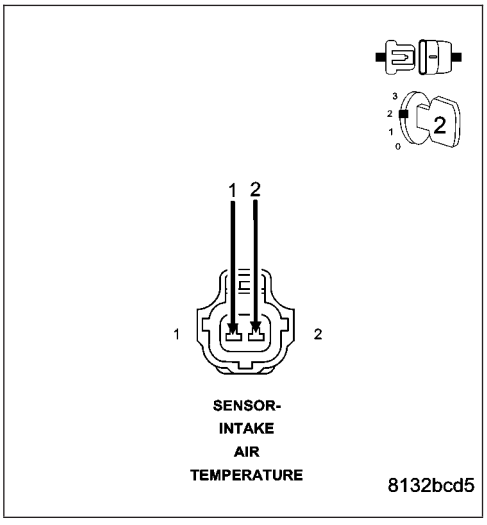

P0113-INTAKE AIR TEMPERATURE SENSOR CIRCUIT HIGH (CONTINUED)

3. (K21) IAT SIGNAL CIRCUIT SHORTED TO BATTERY VOLTAGE

Disconnect the C2 PCM harness connector.

Ignition on, engine not running.

Measure the voltage on the (K21) IAT Signal circuit in the IAT Sensor harness connector.

Is the voltage above 0 volts?

Yes >> Repair the short to battery voltage in the (K21) IAT Signal circuit.
Perform the POWERTRAIN VERIFICATION TEST. (Refer to 9 - ENGINE - STANDARD PROCEDURE)

No >> Go To 4

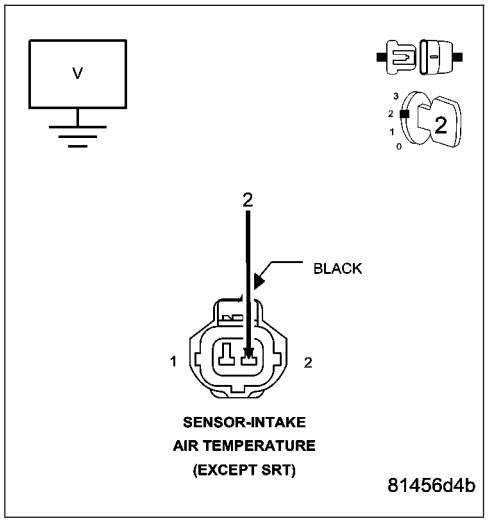

4. (K21) IAT SIGNAL CIRCUIT OPEN

Turn the ignition off.

CAUTION: Do not probe the PCM harness connectors. Probing the PCM harness connectors will damage the PCM terminals resulting in poor terminal to pin connection. Install Miller Special Tool #8815 to perform diagnosis.

Measure the resistance of the (K21) IAT Signal circuit from the IAT Sensor harness connector to the appropriate terminal of special tool #8815.

Is the resistance below 5.0 ohms?

Yes >> Go To 5

No >> Repair the open in the (K21) IAT Signal circuit.
Perform the POWERTRAIN VERIFICATION TEST. (Refer to 9 - ENGINE - STANDARD PROCEDURE)

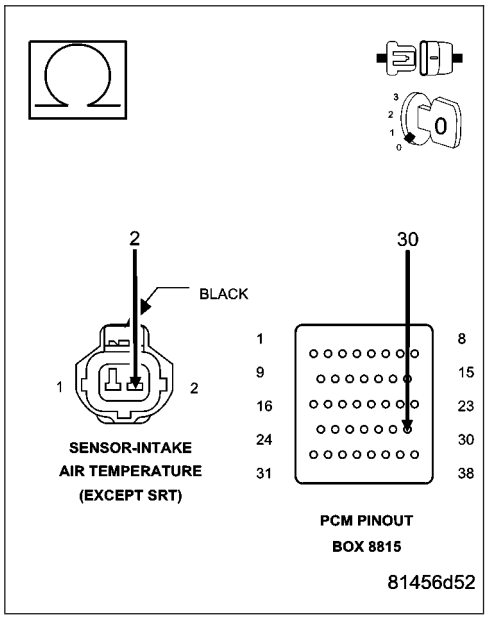

P0113-INTAKE AIR TEMPERATURE SENSOR CIRCUIT HIGH (CONTINUED)

5. (K900) SENSOR GROUND CIRCUIT OPEN

Measure the resistance of the (K900) Sensor ground circuit from the IAT Sensor harness connector to the appropriate terminal of special tool #8815.

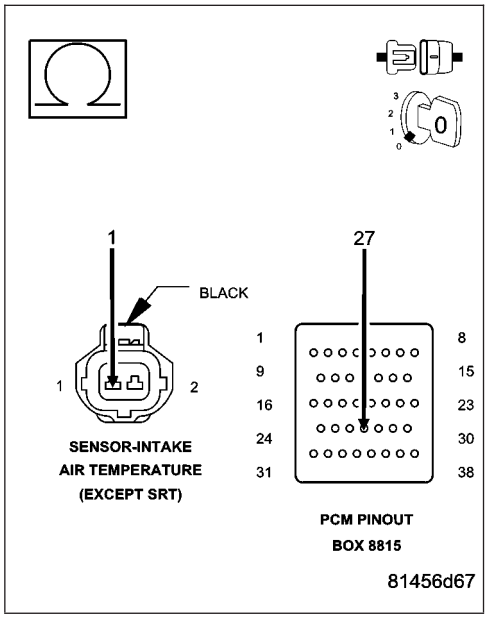

Is the resistance below 5.0 ohms?

Yes >> Go To 6

No >> Repair the open in the (K900) Sensor ground circuit.
Perform the POWERTRAIN VERIFICATION TEST. (Refer to 9 - ENGINE - STANDARD PROCEDURE)

---

6. PCM

NOTE: Before continuing, check the PCM harness connector terminals for corrosion, damage, or terminal push out. Repair as necessary.

Using the schematics as a guide, inspect the wire harness and connectors. Pay particular attention to all Power and Ground circuits.

Were there any problems found?

Yes >> Repair as necessary.
Perform the POWERTRAIN VERIFICATION TEST. (Refer to 9 - ENGINE - STANDARD PROCEDURE)

No >> Replace and program the Powertrain Control Module per Service Information.
Perform the POWERTRAIN VERIFICATION TEST. (Refer to 9 - ENGINE - STANDARD PROCEDURE)

P0116–ENGINE COOLANT TEMPERATURE SENSOR CIRCUIT PERFORMANCE

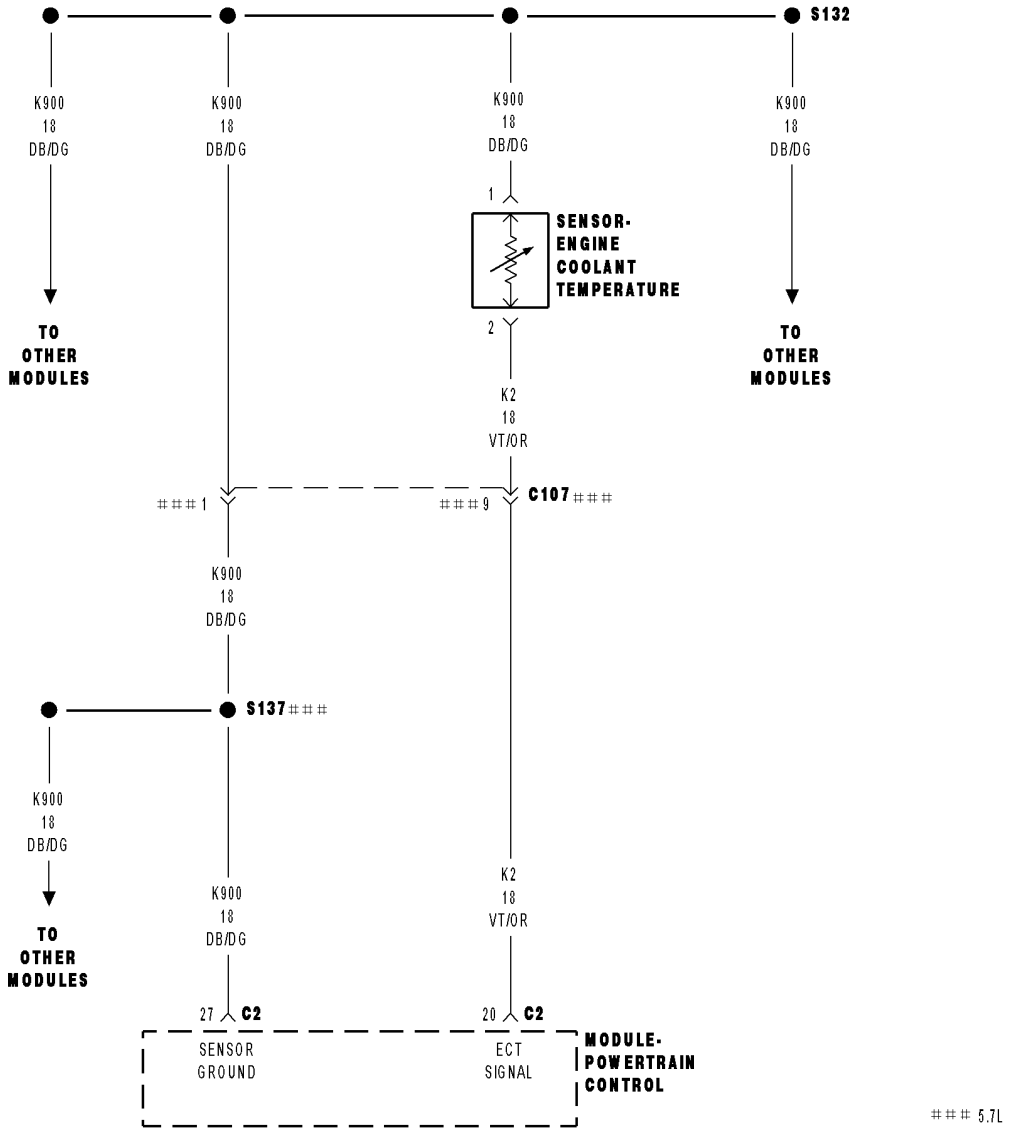

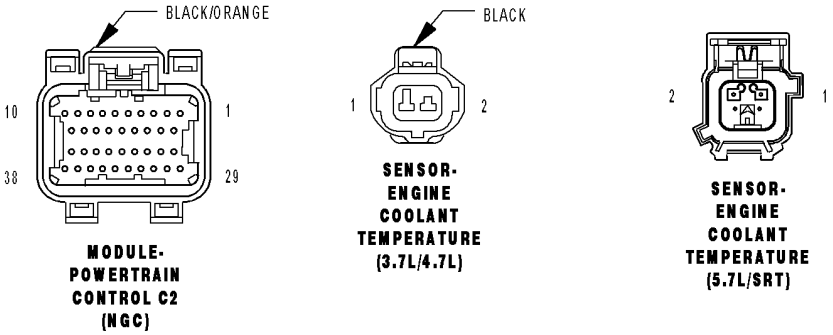

81452d65

P0116–ENGINE COOLANT TEMPERATURE SENSOR CIRCUIT PERFORMANCE (CONTINUED)

For the Engine System Schematic circuit diagram. (Refer to 9 - ENGINE - SCHEMATICS AND DIAGRAMS).

For a complete wiring diagram **Refer to Section 8W**.

Theory of Operation

Engine Coolant Temperature Sensor performance looks at the outputs of three temperature sensors and compare them under cold start conditions. Following a start to run delay time, the outputs of the ambient, engine coolant, and intake air temperature sensors will be compared. If the intake air and ambient air temperature sensors agree and the engine coolant temperature does not agree, the engine coolant temperature sensor is declared as irrational.

- **When Monitored:**
  Engine off time is greater than 480 minutes. Ambient temperature is greater than 4 deg C (38 deg F).
- **Set Condition:**
  After a calibrated amount of cool down time the PCM compares the ECT Sensor, IAT Sensor, and the Ambient Air Temp Sensor values. If the ECT Sensor value is not within 10 deg C of the other two temperature sensors. Two Trip Fault. Three good trips to turn off the MIL. (5.7L ETC lamp will illuminate with the MIL.)

Possible Causes
(K2) ECT SIGNAL CIRCUIT SHORTED TO BATTERY VOLTAGE
(K2) ECT SIGNAL CIRCUIT OPEN
(K900) SENSOR GROUND CIRCUIT OPEN
(K2) ECT SIGNAL CIRCUIT SHORTED TO GROUND
(K2) ECT SIGNAL CIRCUIT SHORTED TO THE (K900) SENSOR GROUND CIRCUIT
ECT SENSOR
PCM

Always perform the Pre-Diagnostic Troubleshooting procedure before proceeding. (Refer to 9 - ENGINE - DIAGNOSIS AND TESTING).

Diagnostic Test

1. ACTIVE DTC

Ignition on, engine not running.
With a scan tool, read DTCs.

Is the DTC active at this time?

Yes >> Go To 2

No >> Refer to the INTERMITTENT CONDITION Diagnostic Procedure.
Perform the POWERTRAIN VERIFICATION TEST. (Refer to 9 - ENGINE - STANDARD PROCEDURE)

P0116–ENGINE COOLANT TEMPERATURE SENSOR CIRCUIT PERFORMANCE (CONTINUED)

2. (K2) ECT SIGNAL CIRCUIT SHORTED TO BATTERY VOLTAGE

Turn the ignition off.

Disconnect the C2 PCM harness connector.

Disconnect the ECT Sensor harness connector.

NOTE: Visually inspect both the component and the PCM connectors. Look for damaged, partially broken wires, and backed out or corroded terminals.

Ignition on, engine not running.

Measure the voltage on the (K2) ECT Signal circuit in the ECT Sensor harness connector.

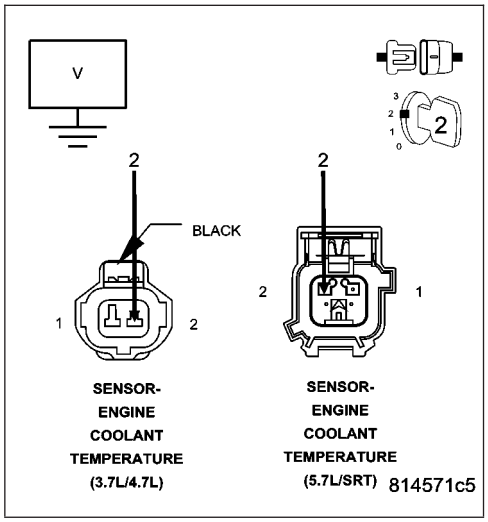

Is the voltage above 0 volts?

Yes >> Repair the short to battery voltage in the (K2) ECT Signal circuit.
Perform the POWERTRAIN VERIFICATION TEST. (Refer to 9 - ENGINE - STANDARD PROCEDURE)

No >> Go To 3

3. ECT SENSOR VOLTAGE ABOVE 4.6 VOLTS

Turn the ignition off.

Connect the C2 PCM harness connector.

Ignition on, engine not running.

With a scan tool, read the ECT voltage.

Is the voltage above 4.6 volts?

Yes >> Go To 4

No >> Go To 7

4. ECT SENSOR

Connect a jumper wire between the (K2) ECT Signal circuit and the (K900) Sensor ground circuit in the ECT Sensor harness connector.

With a scan tool, read the ECT voltage.

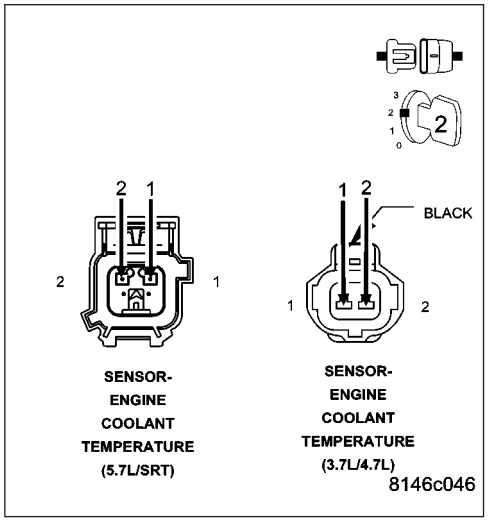

Is the voltage below 1.0 volt with the jumper wire installed?

Yes >> Replace the ECT Sensor.
Perform the POWERTRAIN VERIFICATION TEST. (Refer to 9 - ENGINE - STANDARD PROCEDURE)

No >> Go To 5

NOTE: Remove the jumper wire before continuing.

P0116–ENGINE COOLANT TEMPERATURE SENSOR CIRCUIT PERFORMANCE (CONTINUED)

5. (K2) ECT SIGNAL CIRCUIT OPEN

Turn the ignition off.

Disconnect the C2 PCM harness connector.

CAUTION: Do not probe the PCM harness connectors. Probing the PCM harness connectors will damage the PCM terminals resulting in poor terminal to pin connection. Install Miller Special Tool #8815 to perform diagnosis.

Measure the resistance of the (K2) ECT Signal circuit from the ECT Sensor harness connector to the appropriate terminal of special tool #8815.

Is the resistance below 5.0 ohms?

Yes >> Go To 6

No >> Repair the open in the (K2) ECT Signal circuit.
Perform the POWERTRAIN VERIFICATION TEST. (Refer to 9 - ENGINE - STANDARD PROCEDURE)

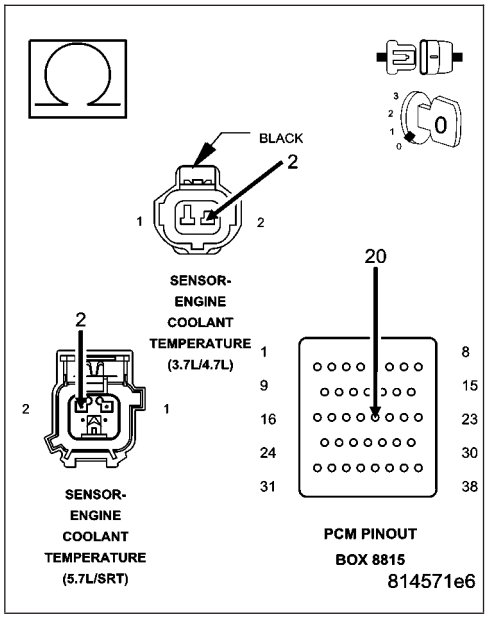

6. (K900) SENSOR GROUND CIRCUIT OPEN

Measure the resistance of the (K900) Sensor ground circuit from the ECT Sensor harness connector to the appropriate terminal of special tool #8815.

Is the resistance below 5.0 ohms?

Yes >> Go To 9

No >> Repair the open in the (K900) Sensor ground circuit.
Perform the POWERTRAIN VERIFICATION TEST. (Refer to 9 - ENGINE - STANDARD PROCEDURE)

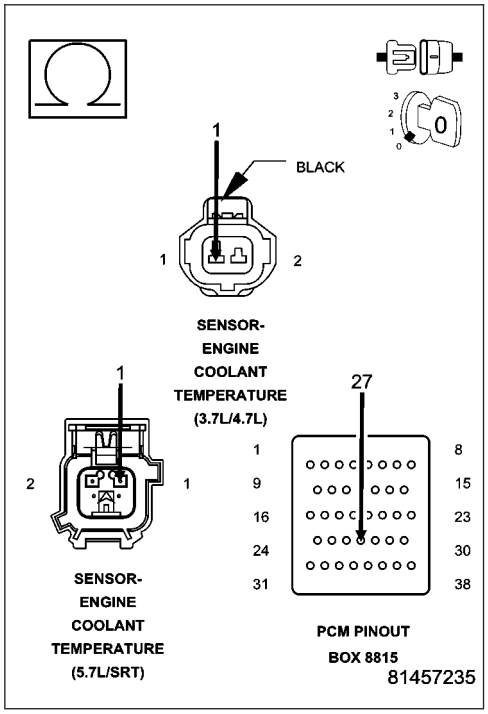

P0116–ENGINE COOLANT TEMPERATURE SENSOR CIRCUIT PERFORMANCE (CONTINUED)

7. (K2) ECT SIGNAL CIRCUIT SHORTED TO GROUND

Turn the ignition off.

Disconnect the C2 PCM harness connector.

Measure the resistance between ground and the (K2) ECT Signal circuit in the ECT Sensor harness connector.

Is the resistance below 100 ohms?

Yes >> Repair the short to ground in the (K2) ECT Signal circuit. Perform the POWERTRAIN VERIFICATION TEST. (Refer to 9 - ENGINE - STANDARD PROCEDURE)

No >> Go To 8

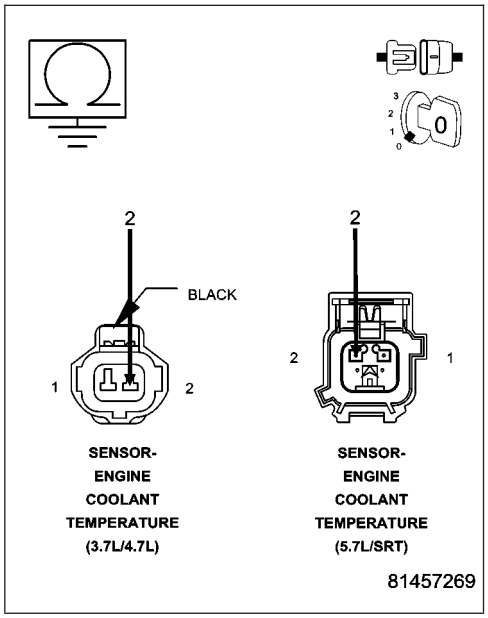

8. (K2) ECT SIGNAL CIRCUIT SHORTED TO THE (K900) SENSOR GROUND CIRCUIT

Measure the resistance between the (K2) ECT Signal circuit and the (K900) Sensor ground circuit in the ECT Sensor harness connector.

Is the resistance below 5.0 ohms?

Yes >> Repair the short between the (K900) Sensor ground circuit and the (K2) ECT Signal circuit.
Perform the POWERTRAIN VERIFICATION TEST. (Refer to 9 - ENGINE - STANDARD PROCEDURE)

No >> Go To 9

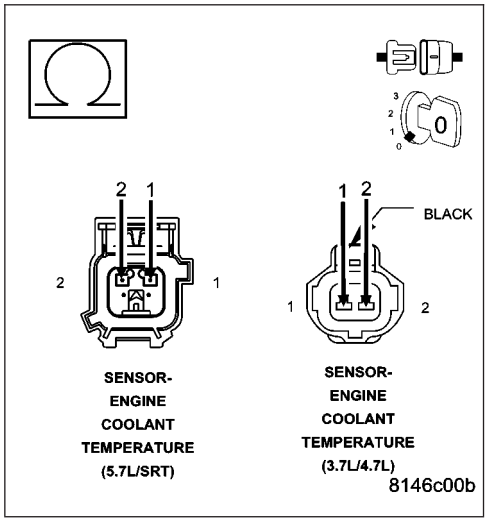

P0116–ENGINE COOLANT TEMPERATURE SENSOR CIRCUIT PERFORMANCE (CONTINUED)

9. **PCM**

NOTE: Before continuing, check the PCM harness connector terminals for corrosion, damage, or terminal push out. Repair as necessary.

Using the schematics as a guide, inspect the wire harness and connectors. Pay particular attention to all Power and Ground circuits.

Were there any problems found?

Yes >> Repair as necessary.
Perform the POWERTRAIN VERIFICATION TEST. (Refer to 9 - ENGINE - STANDARD PROCEDURE)

No >> Replace and program the Powertrain Control Module per Service Information.
Perform the POWERTRAIN VERIFICATION TEST. (Refer to 9 - ENGINE - STANDARD PROCEDURE)

P0117-ENGINE COOLANT TEMPERATURE SENSOR CIRCUIT LOW

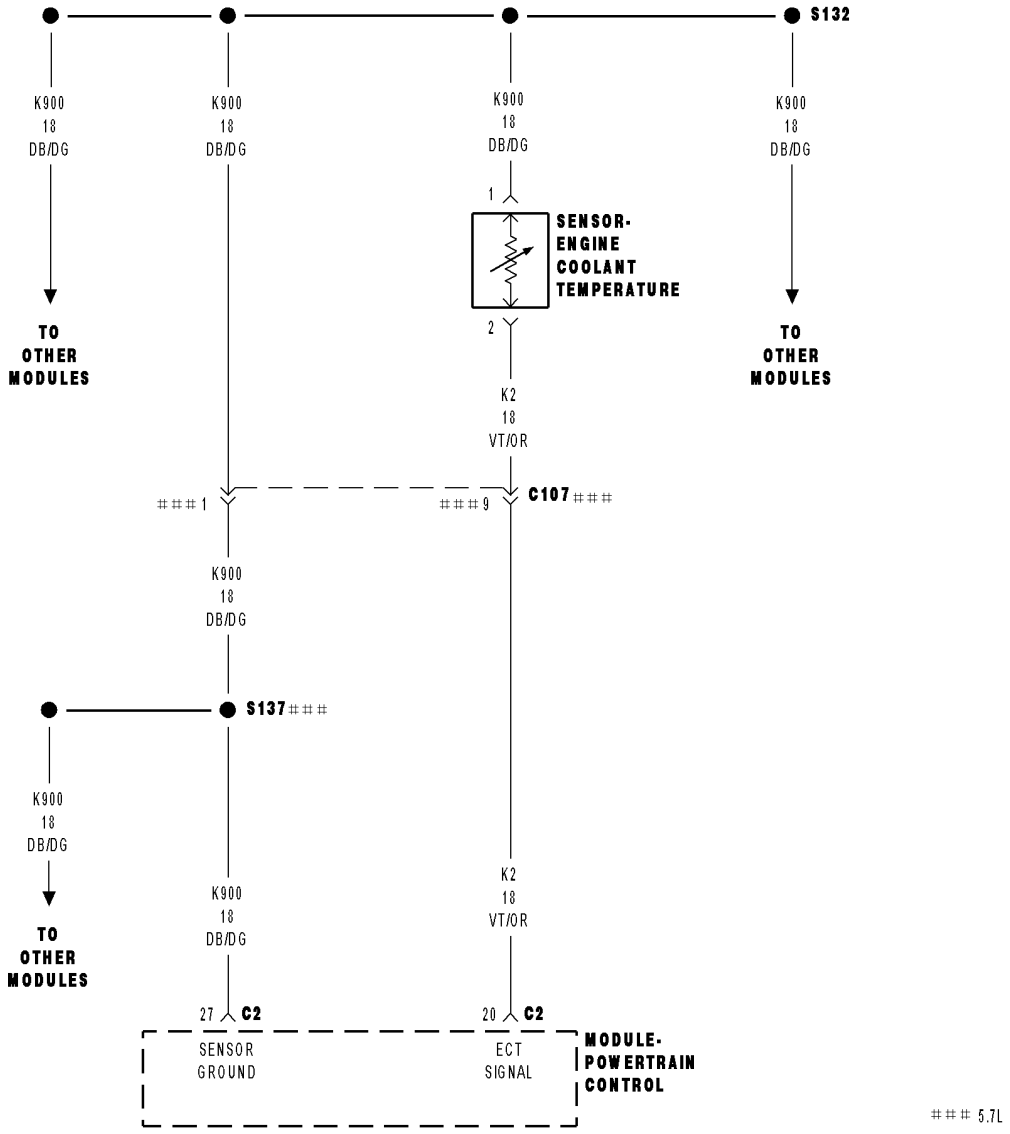

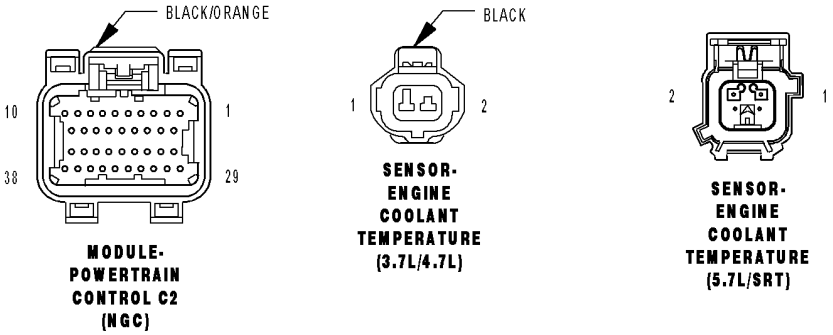

81452d65

P0117-ENGINE COOLANT TEMPERATURE SENSOR CIRCUIT LOW (CONTINUED)

For the Engine System Schematic circuit diagram (Refer to 9 - ENGINE - SCHEMATICS AND DIAGRAMS).

For a complete wiring diagram **Refer to Section 8W**.

Theory of Operation

The engine coolant temperature sensor is a negative temperature coefficient thermistor-type sensor whose resistance varies inversely with temperature. At cold temperatures the sensor resistance is high so the voltage is high. As the coolant temperature increases the resistance decreases and the voltage becomes low.

- **When Monitored:**
  With the ignition on. Battery voltage greater than 10.4 volts.
- **Set Condition:**
  The Engine Coolant Temperature (ECT) sensor circuit voltage at the PCM is less than 0.078 of a volt for more than 2.8 seconds. One Trip Fault. Three good trips to clear the MIL.

Possible Causes
(K2) ECT SIGNAL CIRCUIT SHORTED TO GROUND
(K2) ECT SIGNAL CIRCUIT SHORTED TO THE (K900) SENSOR GROUND CIRCUIT
ECT SENSOR
PCM

Always perform the Pre-Diagnostic Troubleshooting procedure before proceeding. (Refer to 9 - ENGINE - DIAGNOSIS AND TESTING).

Diagnostic Test

1. ECT SENSOR VOLTAGE BELOW 0.078 OF A VOLT

Ignition on, engine not running.
With a scan tool, read the ECT voltage.

Is the voltage below 0.078 of a volt?

Yes >> Go To 2

No >> Refer to the INTERMITTENT CONDITION Diagnostic Procedure.
Perform the POWERTRAIN VERIFICATION TEST. (Refer to 9 - ENGINE - STANDARD PROCEDURE)

---

2. ECT SENSOR

Turn the ignition off.
Disconnect the ECT harness connector.
Ignition on, engine not running.
With a scan tool, read ECT voltage.

Is the voltage above 1.0 volt?

Yes >> Replace the ECT Sensor.
Perform the POWERTRAIN VERIFICATION TEST. (Refer to 9 - ENGINE - STANDARD PROCEDURE)

No >> Go To 3

P0117-ENGINE COOLANT TEMPERATURE SENSOR CIRCUIT LOW (CONTINUED)

3. (K2) ECT SIGNAL CIRCUIT SHORTED TO THE (K900) SENSOR GROUND CIRCUIT

Turn the ignition off.

Disconnect the C2 PCM harness connector.

Measure the resistance between the (K900) Sensor ground circuit and the (K2) ECT Signal circuit in the ECT Sensor harness connector.

Is the resistance below 5.0 ohms?

Yes >> Repair the short to between the (K900) Sensor ground circuit and the (K2) ECT Signal circuit.
Perform the POWERTRAIN VERIFICATION TEST. (Refer to 9 - ENGINE - STANDARD PROCEDURE)

No >> Go To 4

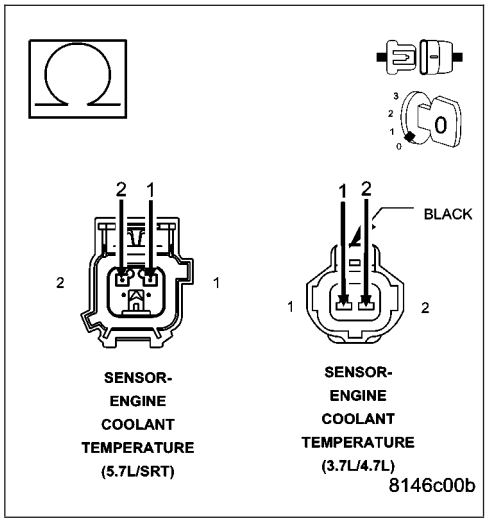

4. (K2) ECT SIGNAL CIRCUIT SHORTED GROUND

Measure the resistance between ground and the (K2) ECT Signal circuit in the ECT Sensor harness connector.

Is the resistance below 100 ohms?

Yes >> Repair the short to ground in the (K2) ECT Signal circuit.
Perform the POWERTRAIN VERIFICATION TEST. (Refer to 9 - ENGINE - STANDARD PROCEDURE)

No >> Go To 5

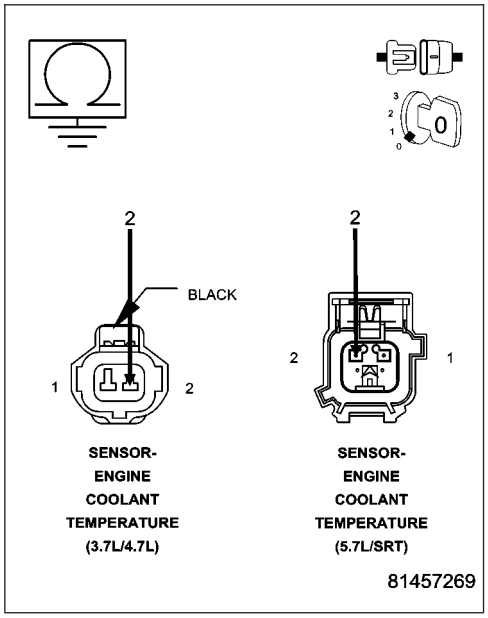

P0117-ENGINE COOLANT TEMPERATURE SENSOR CIRCUIT LOW (CONTINUED)

5. **PCM**

NOTE: Before continuing, check the PCM harness connector terminals for corrosion, damage, or terminal push out. Repair as necessary.

Using the schematics as a guide, inspect the wire harness and connectors. Pay particular attention to all Power and Ground circuits.

Were there any problems found?

Yes >> Repair as necessary.
Perform the POWERTRAIN VERIFICATION TEST. (Refer to 9 - ENGINE - STANDARD PROCEDURE)

No >> Replace and program the Powertrain Control Module per Service Information.
Perform the POWERTRAIN VERIFICATION TEST. (Refer to 9 - ENGINE - STANDARD PROCEDURE)

P0118-ENGINE COOLANT TEMPERATURE SENSOR CIRCUIT HIGH

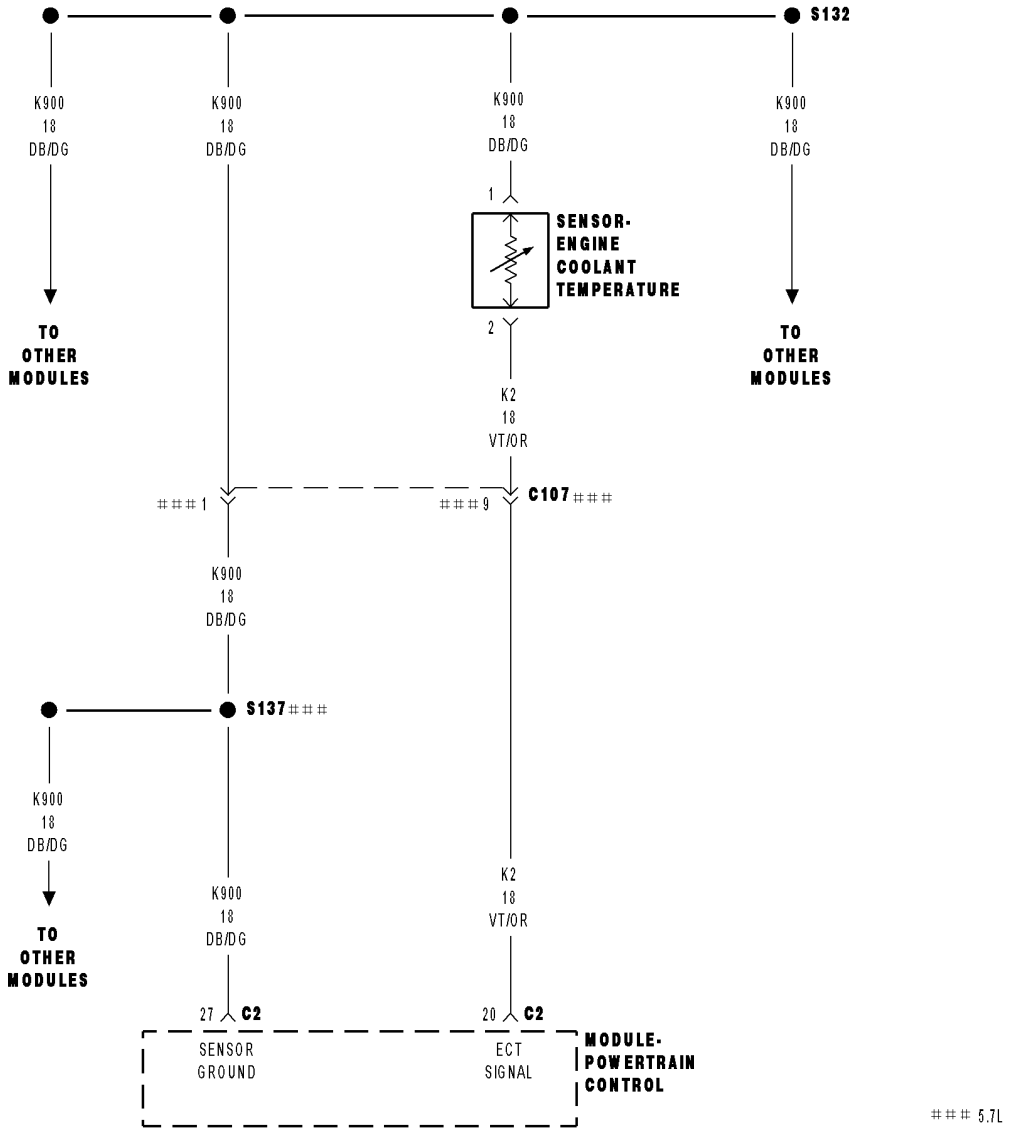

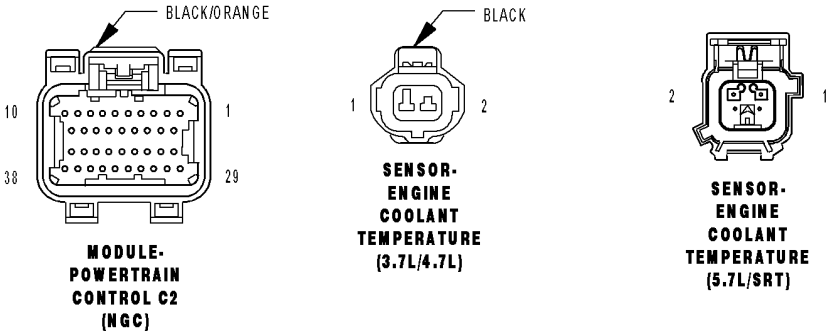

81452d65

P0118-ENGINE COOLANT TEMPERATURE SENSOR CIRCUIT HIGH (CONTINUED)

For the Engine System Schematic circuit diagram (Refer to 9 - ENGINE - SCHEMATICS AND DIAGRAMS).

For a complete wiring diagram **Refer to Section 8W**.

- **When Monitored:**
  With the ignition on. Battery voltage greater than 10.4 volts.
- **Set Condition:**
  The Engine Coolant Temperature (ECT) sensor circuit voltage at the PCM is greater than 4.98 volts for more than 2.8 seconds. One Trip Fault. Three good trips to turn off the MIL. (5.7L ETC lamp will illuminate with the MIL.)

Possible Causes
(K2) ECT SIGNAL CIRCUIT SHORTED TO BATTERY VOLTAGE
(K2) ECT SIGNAL CIRCUIT OPEN
(K900) SENSOR GROUND CIRCUIT OPEN
ECT SENSOR
PCM

Always perform the Pre-Diagnostic Troubleshooting procedure before proceeding. (Refer to 9 - ENGINE - DIAGNOSIS AND TESTING).

Diagnostic Test

1. ECT SENSOR VOLTAGE ABOVE 4.98 VOLTS

Ignition on, engine not running.

With a scan tool, read the ECT voltage.

Is the voltage above 4.98 volts?

Yes >> Go To 2

No >> Refer to the INTERMITTENT CONDITION Diagnostic Procedure.
Perform the POWERTRAIN VERIFICATION TEST. (Refer to 9 - ENGINE - STANDARD PROCEDURE)

P0118-ENGINE COOLANT TEMPERATURE SENSOR CIRCUIT HIGH (CONTINUED)

2. ECT SENSOR

Turn the ignition off.

Disconnect the ECT harness connector.

Connect a jumper wire between the (K2) ECT Signal circuit and the (K900) Sensor ground circuit in the ECT harness connector.

Ignition on, engine not running.

With a scan tool, read ECT voltage.

Is the voltage below 1.0 volt with the jumper wire installed?

Yes >> Replace the ECT Sensor.
Perform the POWERTRAIN VERIFICATION TEST. (Refer to 9 - ENGINE - STANDARD PROCEDURE)

No >> Go To 3

NOTE: Remove the jumper wire before continuing.

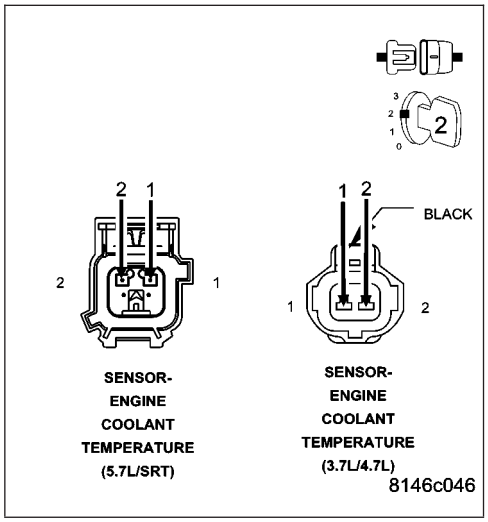

3. (K2) ECT SIGNAL CIRCUIT SHORTED TO BATTERY VOLTAGE

Turn the ignition off.

Disconnect the C2 PCM harness connector.

Ignition on, engine not running.

Measure the voltage on the (K2) ECT Signal circuit in the ECT Sensor harness connector.

Is the voltage above 0 volts?

Yes >> Repair the short to battery voltage in the (K2) ECT Signal circuit.
Perform the POWERTRAIN VERIFICATION TEST. (Refer to 9 - ENGINE - STANDARD PROCEDURE)

No >> Go To 4

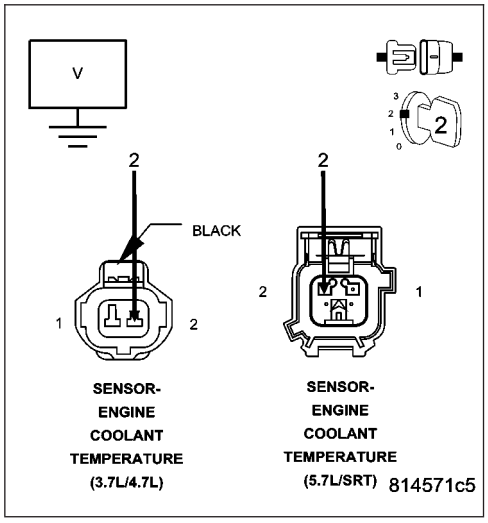

P0118-ENGINE COOLANT TEMPERATURE SENSOR CIRCUIT HIGH (CONTINUED)

4. (K2) ECT SIGNAL CIRCUIT OPEN

Turn the ignition off.

CAUTION: Do not probe the PCM harness connectors. Probing the PCM harness connectors will damage the PCM terminals resulting in poor terminal to pin connection. Install Miller Special Tool #8815 to perform diagnosis.

Measure the resistance of the (K2) ECT Signal circuit from the ECT Sensor harness connector to the appropriate terminal of special tool #8815.

Is the resistance below 5.0 ohms?

Yes >> Go To 5

No >> Repair the open in the (K2) ECT Signal circuit.
Perform the POWERTRAIN VERIFICATION TEST. (Refer to 9 - ENGINE - STANDARD PROCEDURE)

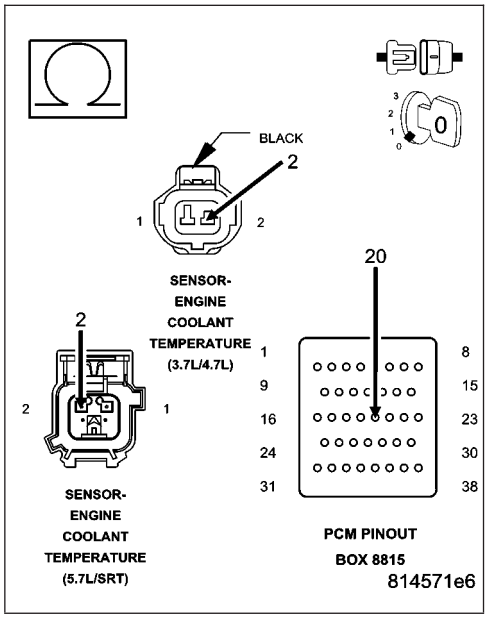

5. (K900) SENSOR GROUND CIRCUIT OPEN

Measure the resistance of the (K900) Sensor ground circuit from the ECT Sensor harness connector to the appropriate terminal of special tool #8815.

Is the resistance below 5.0 ohms?

Yes >> Go To 6

No >> Repair the open in the (K900) Sensor ground circuit.
Perform the POWERTRAIN VERIFICATION TEST. (Refer to 9 - ENGINE - STANDARD PROCEDURE)

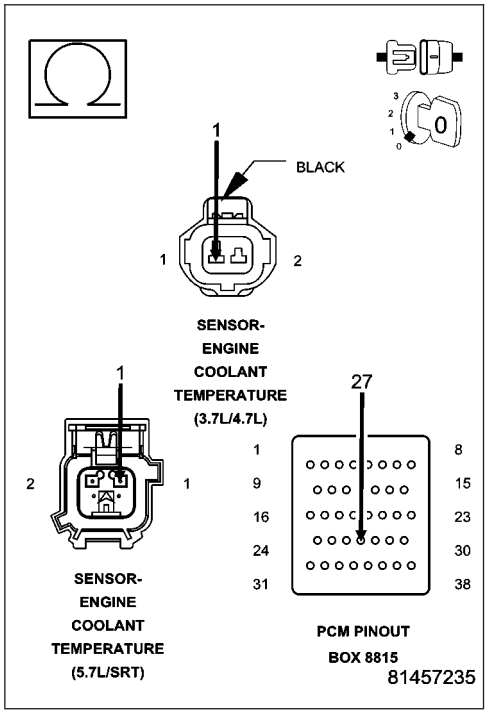

P0118-ENGINE COOLANT TEMPERATURE SENSOR CIRCUIT HIGH (CONTINUED)

6. PCM

NOTE: Before continuing, check the PCM harness connector terminals for corrosion, damage, or terminal push out. Repair as necessary.

Using the schematics as a guide, inspect the wire harness and connectors. Pay particular attention to all Power and Ground circuits.

Were there any problems found?

Yes >> Repair as necessary.
Perform the POWERTRAIN VERIFICATION TEST. (Refer to 9 - ENGINE - STANDARD PROCEDURE)

No >> Replace and program the Powertrain Control Module per Service Information.
Perform the POWERTRAIN VERIFICATION TEST. (Refer to 9 - ENGINE - STANDARD PROCEDURE)

P0121-THROTTLE POSITION SENSOR 1 PERFORMANCE

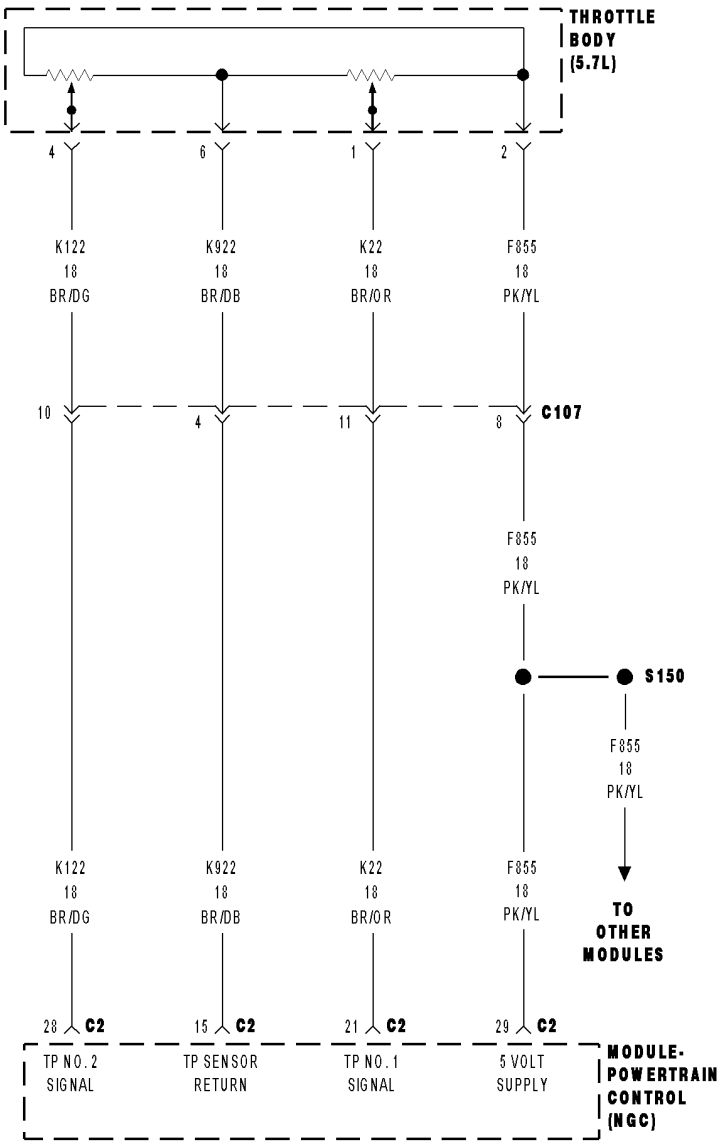

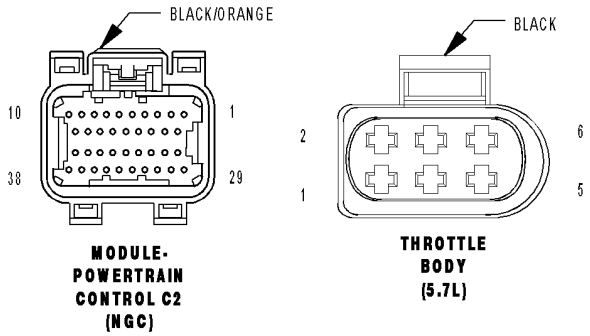

81452d8c

P0121-THROTTLE POSITION SENSOR 1 PERFORMANCE (CONTINUED)

For the Engine System Schematic circuit diagram (Refer to 9 - ENGINE - SCHEMATICS AND DIAGRAMS).

For a complete wiring diagram **Refer to Section 8W**.

- **When Monitored:**
  Ignition on and No MAP Sensor DTCs set.
- **Set Condition:**
  TP Sensor signals do not correlate to the MAP Sensor signal. One Trip Fault. ETC light will illuminate. P2135 should set with this code also.

Possible Causes
(K22) TP SENSOR NO.1 SIGNAL CIRCUIT SHORTED TO BATTERY VOLTAGE
RESISTANCE IN THE (K22) TP SENSOR NO.1 OR (K122) TP SENSOR NO.2 SIGNAL CIRCUIT
(K22) TP SENSOR NO.1 SIGNAL CIRCUIT SHORTED TO GROUND
RESISTANCE IN THE (F855) 5-VOLT SUPPLY CIRCUIT
(F855) 5-VOLT SUPPLY CIRCUIT SHORTED TO GROUND
RESISTANCE IN THE (K922) SENSOR RETURN CIRCUIT
(K22) TP SENSOR NO.1 SIGNAL CIRCUIT SHORTED TO THE (K122) TP SENSOR NO.2 SIGNAL CIRCUIT
THROTTLE POSITION SENSOR/THROTTLE BODY
PCM

Always perform the Pre-Diagnostic Troubleshooting procedure before proceeding. (Refer to 9 - ENGINE - DIAGNOSIS AND TESTING).

Diagnostic Test

1. ACTIVE DTC

NOTE: Diagnose any other TP Sensor DTC(s) before continuing.

NOTE: The throttle plate should be free from binding and carbon build up.

NOTE: Make sure the throttle plate is at the idle position.
Ignition on, engine not running.

NOTE: Inspect the engine for vacuum leaks.
With a scan tool, read DTCs.

Is the DTC active at this time?

Yes >> Go To 2

No >> Go To 11

P0121-THROTTLE POSITION SENSOR 1 PERFORMANCE (CONTINUED)

2. (K22) TP SENSOR NO.1 SIGNAL CIRCUIT OR THE (K122) TP SENSOR NO.2 SIGNAL CIRCUIT SHORTED TO BATTERY VOLTAGE

Turn the ignition off.

Disconnect the C2 PCM harness connector.

Disconnect the Throttle Body harness connector.

Ignition on, engine not running.

Measure the voltage on the (K22) TP No.1 Signal and the (K122) TP No.2 Signal circuits in the Throttle Body harness connector.

Is the voltage above 0 volts?

Yes >> Repair the short to battery voltage in the (K22) TP Sensor No.1 or (K122) TP Sensor No.2 Signal circuit.
Perform the POWERTRAIN VERIFICATION TEST. (Refer to 9 - ENGINE - STANDARD PROCEDURE)

No >> Go To 3

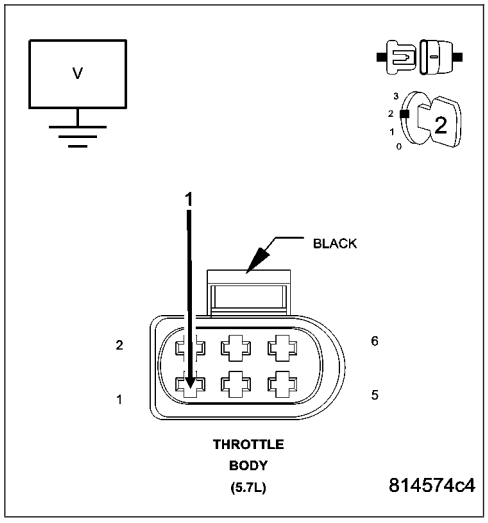

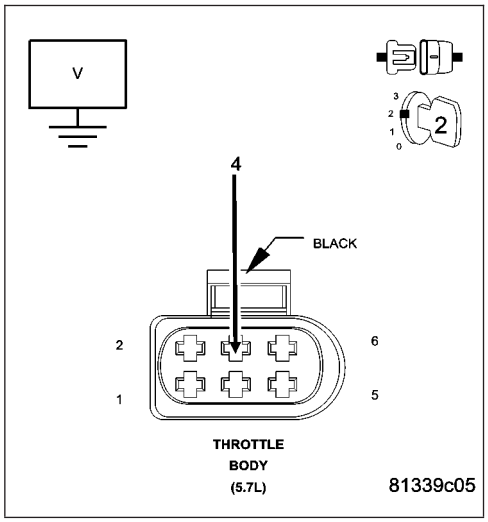

P0121-THROTTLE POSITION SENSOR 1 PERFORMANCE (CONTINUED)

3. THROTTLE POSITION SENSOR

Turn the ignition off.

Connect the C2 PCM harness connector.

Ignition on, engine not running.

With a scan tool, monitor the TP Sensor No.1 and No.2 voltage.

Connect a jumper wire between the (K922) Sensor Return circuit and the (K22) TP Sensor No.1 Signal circuit.

NOTE: TP Sensor No.1 voltage should change from approximately 4.5 volts to less than 0.5 of a volt.

For TP Sensor No.2, connect a jumper wire between (F855) 5-volt supply circuit and the (K122) TP Sensor No.2 signal circuit.

NOTE: TP Sensor No.2 voltage should change from approximately 0 volts to 5.0 volts?

Is the voltage reading within the listed specification when the jumper wire is installed?

Yes >> Replace the Throttle Body Assembly. Disconnect the Battery when replacing the Throttle Body Assembly. After installation is complete, use a scan tool and select the ETC RELEARN function.

Perform the POWERTRAIN VERIFICATION TEST. (Refer to 9 - ENGINE - STANDARD PROCEDURE)

No >> Go To 4

NOTE: Remove the jumper wire before continuing.

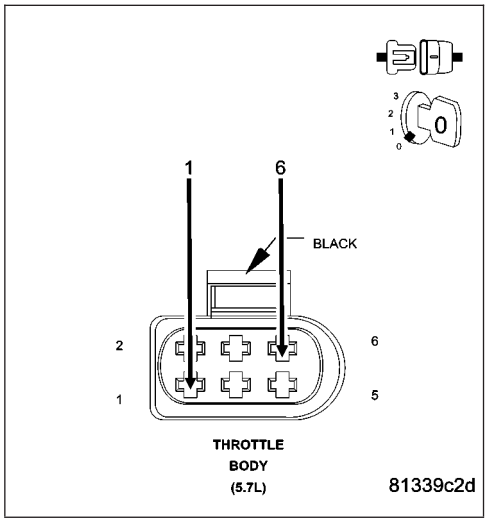

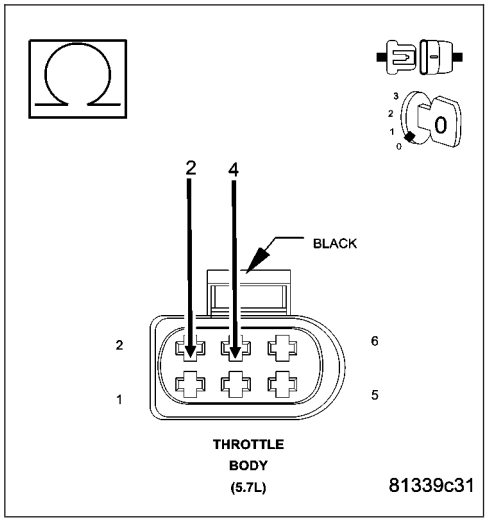

P0121-THROTTLE POSITION SENSOR 1 PERFORMANCE (CONTINUED)

4. EXCESSIVE RESISTANCE IN THE (K22) TP SENSOR NO.1 SIGNAL CIRCUIT AND (K122) TP SENSOR NO.2 SIGNAL CIRCUIT

Turn the ignition off.

Disconnect the C2 PCM harness connector.

CAUTION: Do not probe the PCM harness connectors. Probing the PCM harness connectors will damage the PCM terminals resulting in poor terminal to pin connection. Install Miller Special Tool #8815 to perform diagnosis.

Measure the resistance of the (K22) TP Sensor No.1 Signal circuit from the Throttle Body harness connector to the appropriate terminal of special tool #8815.

Measure the resistance of the (K122) TP Sensor No.2 Signal circuit from the Throttle Body harness connector to the appropriate terminal of special tool #8815.

Is the resistance below 5.0 ohms for each circuit?

Yes >> Go To 5

No >> Repair the excessive resistance in the (K22) TP Sensor No.1 Signal circuit or the (K122) TP Sensor No.2 Signal circuit.

Perform the POWERTRAIN VERIFICATION TEST. (Refer to 9 - ENGINE - STANDARD PROCEDURE)

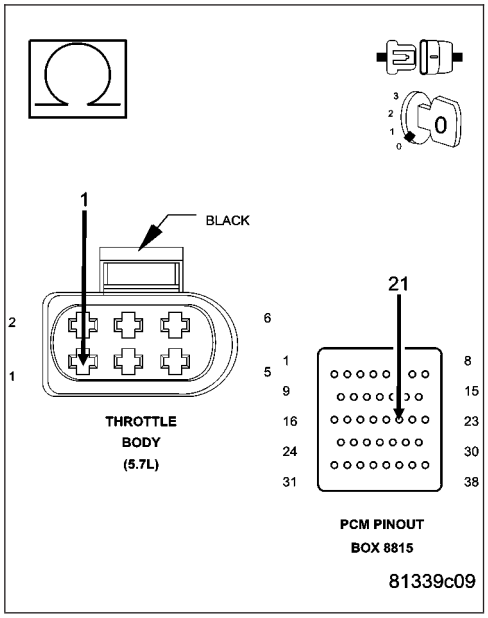

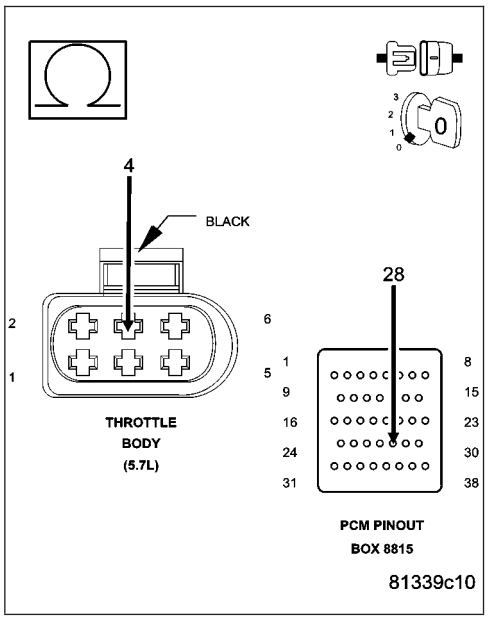

P0121-THROTTLE POSITION SENSOR 1 PERFORMANCE (CONTINUED)

5. (K22) TP SENSOR NO.1 SIGNAL CIRCUIT OR (K122) TP SENSOR NO.2 SIGNAL CIRCUIT SHORTED TO GROUND

Measure the resistance between ground and the (K22) TP Sensor No.1 Signal circuit and the (K122) TP Sensor No.2 Signal circuit in Throttle Body harness connector.

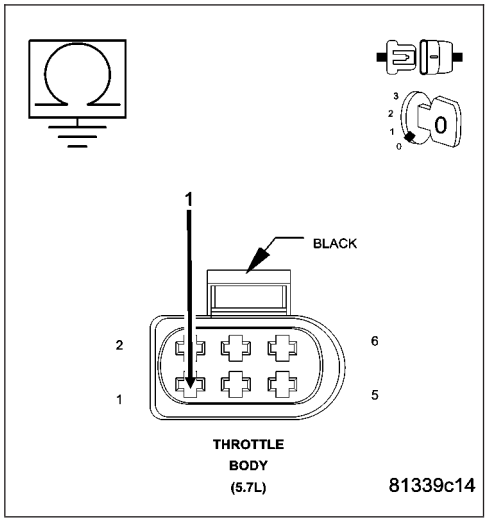

Is the resistance below 100 ohms?

Yes >> Repair the short to ground in the (K22) TP Sensor No.1 Signal circuit or the (K122) TP Sensor No.2 Signal circuit. Perform the POWERTRAIN VERIFICATION TEST. (Refer to 9 - ENGINE - STANDARD PROCEDURE)

No >> Go To 6

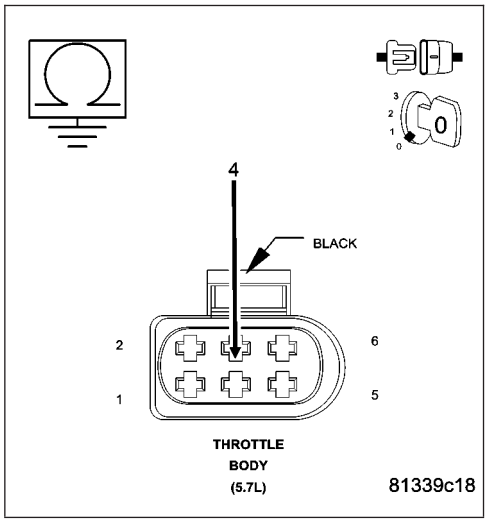

P0121-THROTTLE POSITION SENSOR 1 PERFORMANCE (CONTINUED)

6. EXCESSIVE RESISTANCE IN THE (F855) 5–VOLT SUPPLY CIRCUIT

Measure the resistance of the (F855) 5-volt Supply circuit from the Throttle Body harness connector to the appropriate terminal of special tool #8815.

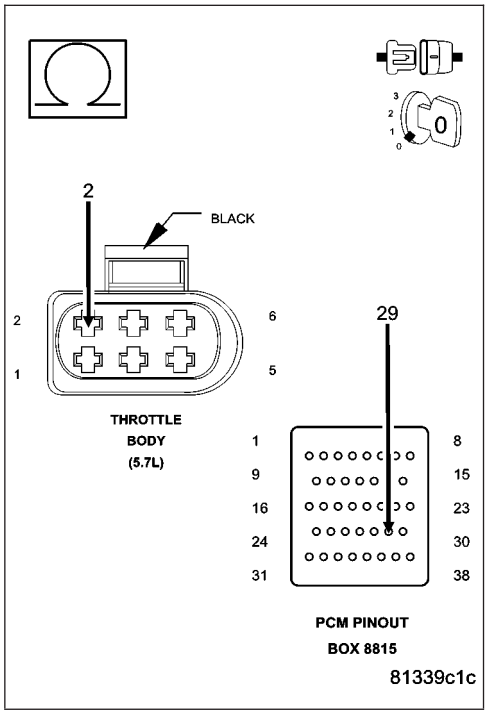

Is the resistance below 5.0 ohms?

Yes >> Go To 7

No >> Repair the excessive resistance in the (F855) 5-volt Supply circuit.

Perform the POWERTRAIN VERIFICATION TEST. (Refer to 9 - ENGINE - STANDARD PROCEDURE)

7. (F855) 5-VOLT SUPPLY SHORTED TO GROUND

Measure the resistance between ground and the (F855) 5-volt Supply circuit in the Throttle Body harness connector.

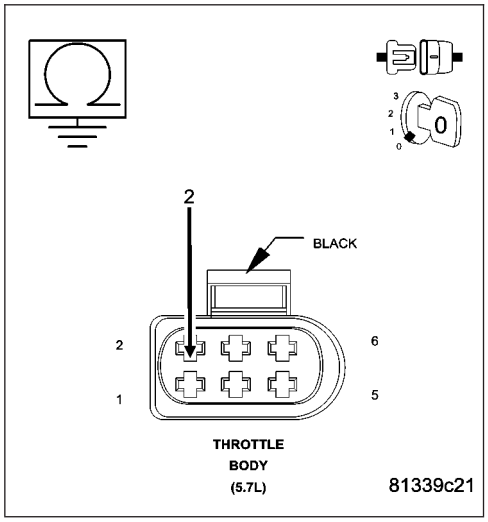

Is the resistance below 100 ohms?

Yes >> Repair the short to ground in the (F855) 5-volt Supply circuit.

Perform the POWERTRAIN VERIFICATION TEST. (Refer to 9 - ENGINE - STANDARD PROCEDURE)

No >> Go To 8

P0121-THROTTLE POSITION SENSOR 1 PERFORMANCE (CONTINUED)

8. EXCESSIVE RESISTANCE IN THE (K922) SENSOR RETURN CIRCUIT

Measure the resistance of the (K922) Sensor Return circuit from the Throttle Body harness connector to the appropriate terminal of special tool #8815.

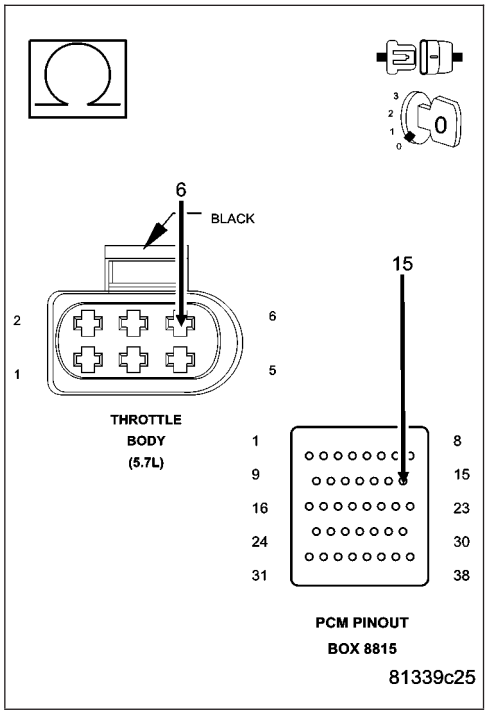

Is the resistance below 5.0 ohms?

Yes >> Go To 9

No >> Repair the excessive resistance in the (K922) Sensor Return circuit.

Perform the POWERTRAIN VERIFICATION TEST. (Refer to 9 - ENGINE - STANDARD PROCEDURE)

9. (K22) TP SENSOR NO.1 SIGNAL CIRCUIT SHORTED TO THE (K122) TP SENSOR NO.2 SIGNAL CIRCUIT

Measure the resistance between the (K22) TP Sensor No.1 Signal circuit and the (K122) TP Sensor No.2 Signal circuit in the Throttle Body harness connector.

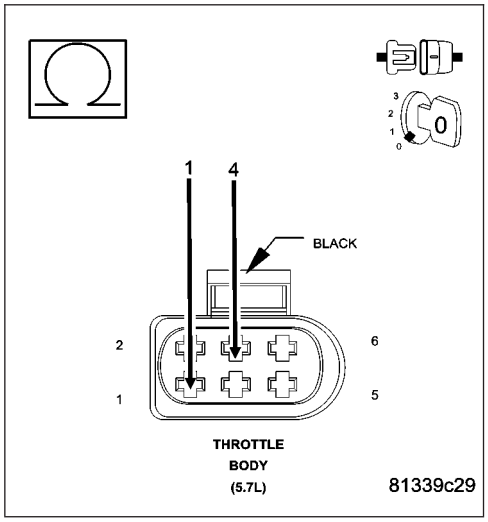

Is the resistance below 5.0 ohms?

Yes >> Repair the short between the (K122) TP Sensor No.2 Signal circuit and the (K22) TP Sensor No.1 Signal circuit.

Perform the POWERTRAIN VERIFICATION TEST. (Refer to 9 - ENGINE - STANDARD PROCEDURE)

No >> Go To 10

P0121-THROTTLE POSITION SENSOR 1 PERFORMANCE (CONTINUED)

10. PCM

NOTE: Before continuing, check the PCM harness connector terminals for corrosion, damage, or terminal push out. Repair as necessary.

Using the schematics as a guide, inspect the wire harness and connectors. Pay particular attention to all Power and Ground circuits.

Were there any problems found?

Yes >> Repair as necessary.
Perform the POWERTRAIN VERIFICATION TEST. (Refer to 9 - ENGINE - STANDARD PROCEDURE)

No >> Replace and program the Powertrain Control Module per Service Information.
Perform the POWERTRAIN VERIFICATION TEST. (Refer to 9 - ENGINE - STANDARD PROCEDURE)

---

11. THROTTLE FOLLOWER TEST

Ignition on, engine not running.

With a scan tool, perform the Throttle Follower Test and monitor the TP Sensor No.1 or No.2 voltage.

Slowly press the throttle pedal down.

The voltage for TP Sensor No.1 should start at approximately 0.3 of a volt and increase to above 4.7 volts.

The voltage for TP Sensor No.2 should start at approximately 4.7 volts and decrease to approximately 0.3 of a volt.

Is the voltage within the range of the listed specification for the appropriate Sensor?

Yes >> Refer to the INTERMITTENT CONDITION Diagnostic Procedure.
Perform the POWERTRAIN VERIFICATION TEST. (Refer to 9 - ENGINE - STANDARD PROCEDURE)

No >> Disconnect the Battery when replacing the Throttle Body Assembly. Replace the Throttle Body Assembly. After installation is complete, use a scan tool and select the ETC RELEARN function.
Perform the POWERTRAIN VERIFICATION TEST. (Refer to 9 - ENGINE - STANDARD PROCEDURE)

P0122-THROTTLE POSITION SENSOR 1 CIRCUIT LOW (3.7L, 4.7L)

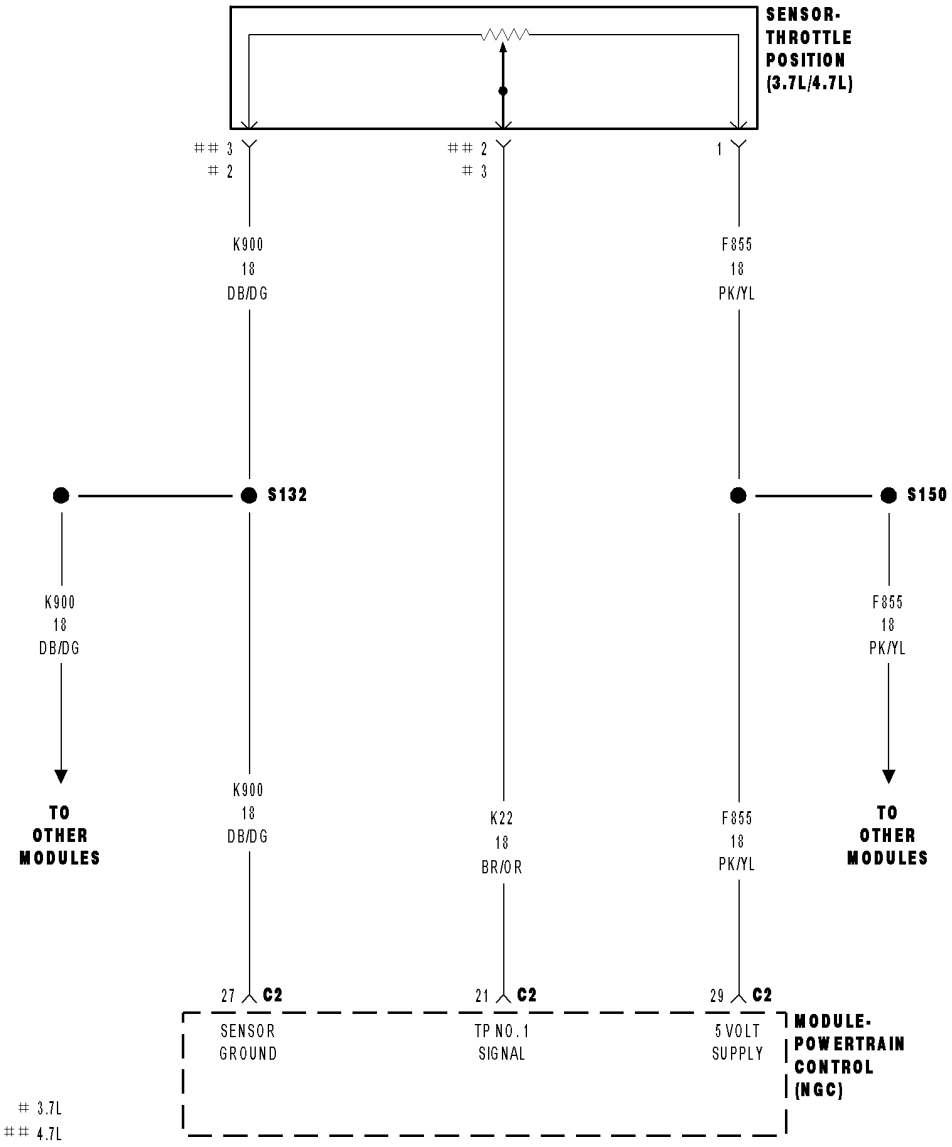

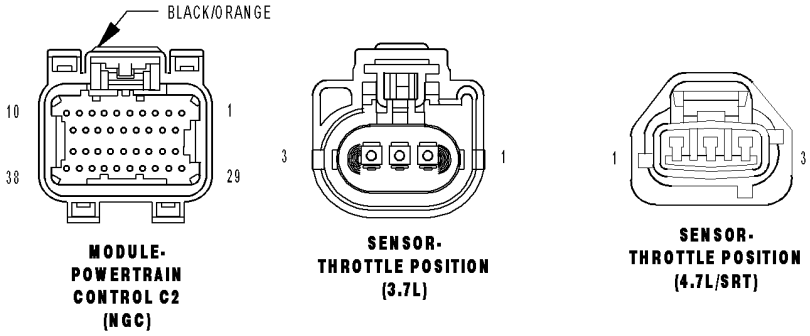

81452da7

P0122-THROTTLE POSITION SENSOR 1 CIRCUIT LOW (3.7L, 4.7L) (CONTINUED)

For the Engine System Schematic circuit diagram (Refer to 9 - ENGINE - SCHEMATICS AND DIAGRAMS).

For a complete wiring diagram **Refer to Section 8W**.

- **When Monitored:**
  With the ignition on. Battery voltage greater than 10.4 volts.
- **Set Condition:**
  Throttle Position Sensor voltage at the PCM is less than 0.0978 of a volt for 1.3 seconds. One Trip Fault. Three good trips to turn off the MIL.

Possible Causes
(F855) 5-VOLT SUPPLY CIRCUIT OPEN
(F855) 5-VOLT SUPPLY CIRCUIT SHORTED TO GROUND
(K22) TP SENSOR NO.1 SIGNAL CIRCUIT SHORTED TO GROUND
(K22) TP SENSOR NO.1 SIGNAL CIRCUIT SHORTED TO THE (K900) SENSOR GROUND CIRCUIT
THROTTLE POSITION SENSOR
PCM

Always perform the Pre-Diagnostic Troubleshooting procedure before proceeding. (Refer to 9 - ENGINE - DIAGNOSIS AND TESTING).

Diagnostic Test

1. THROTTLE POSITION SENSOR VOLTAGE BELOW 0.098 OF A VOLT

Ignition on, engine not running.

With a scan tool, read the TP Sensor voltage.

Is the voltage below 0.098 of a volt?

Yes >> Go To 2

No >> Go To 9

---

2. (F855) 5-VOLT SUPPLY CIRCUIT

Turn the ignition off.

Disconnect the TP Sensor harness connector.

Ignition on, engine not running.

Measure the voltage on the (F855) 5-volt Supply circuit in the TP Sensor harness connector.

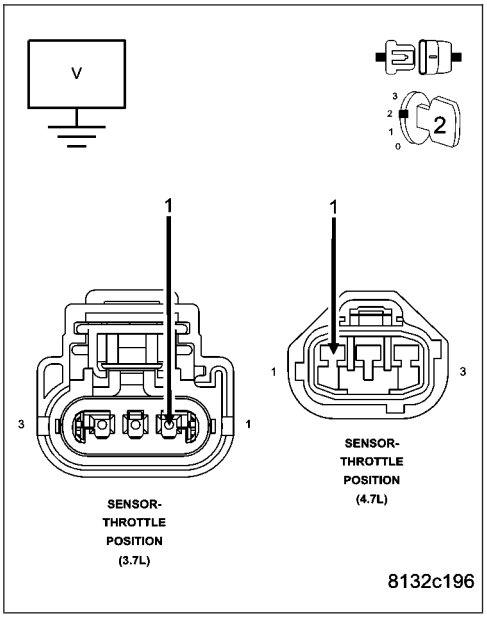

Is the voltage between 4.5 to 5.2 volts?

Yes >> Go To 3

No >> Go To 6

P0122-THROTTLE POSITION SENSOR 1 CIRCUIT LOW (3.7L, 4.7L) (CONTINUED)

3. THROTTLE POSITION SENSOR

With the a scan tool, monitor the TP Sensor voltage with the Sensor harness connector disconnected.

Is the voltage above 4.5 volts?

Yes >> Replace the Throttle Position Sensor.
Perform the POWERTRAIN VERIFICATION TEST. (Refer to 9 - ENGINE - STANDARD PROCEDURE)

No >> Go To 4

---

4. (K22) TP SENSOR NO.1 SIGNAL CIRCUIT SHORTED TO GROUND

Turn the ignition off.

Disconnect the C2 PCM harness connector.

Measure the resistance between ground and the (K22) TP Sensor No.1 Signal circuit in the TP Sensor harness connector.

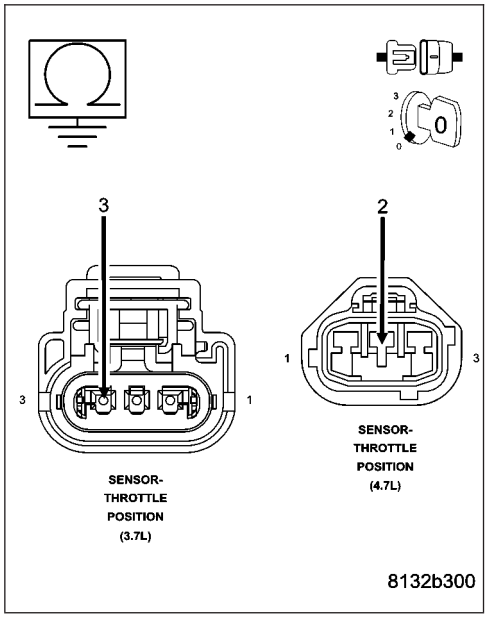

Is the resistance below 100 ohms?

Yes >> Repair the short to ground in the (K22) TP Sensor No.1 Signal circuit.
Perform the POWERTRAIN VERIFICATION TEST. (Refer to 9 - ENGINE - STANDARD PROCEDURE)

No >> Go To 5

---

5. (K22) TP SENSOR NO.1 SIGNAL CIRCUIT SHORTED TO THE (K900) SENSOR GROUND CIRCUIT

Measure the resistance between the (K22) TP Sensor No.1 Signal circuit and the (K900) Sensor ground circuit in the TP Sensor harness connector.

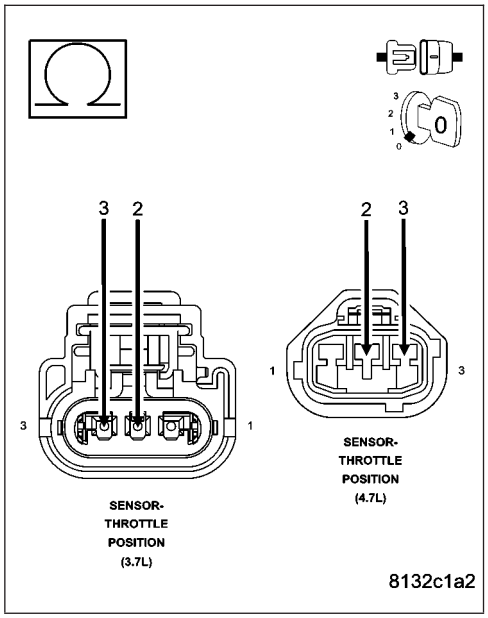

Is the resistance below 100 ohms?

Yes >> Repair the short between the (K900) Sensor ground and the (K22) TP Sensor No.1 Signal circuit.
Perform the POWERTRAIN VERIFICATION TEST. (Refer to 9 - ENGINE - STANDARD PROCEDURE)

No >> Go To 8

P0122-THROTTLE POSITION SENSOR 1 CIRCUIT LOW (3.7L, 4.7L) (CONTINUED)

6. (F855) 5-VOLT SUPPLY CIRCUIT OPEN

Turn the ignition off.

Disconnect the C2 PCM harness connector.

CAUTION: Do not probe the PCM harness connectors. Probing the PCM harness connectors will damage the PCM terminals resulting in poor terminal to pin connection. Install Miller Special Tool #8815 to perform diagnosis.

Measure the resistance of the (F855) 5-volt Supply circuit from the TP Sensor harness connector to the appropriate terminal of special tool #8815.

Is the resistance below 5.0 ohms?

Yes >> Go To 7

No >> Repair the open in the (F855) 5-volt Supply circuit.
Perform the POWERTRAIN VERIFICATION TEST. (Refer to 9 - ENGINE - STANDARD PROCEDURE)

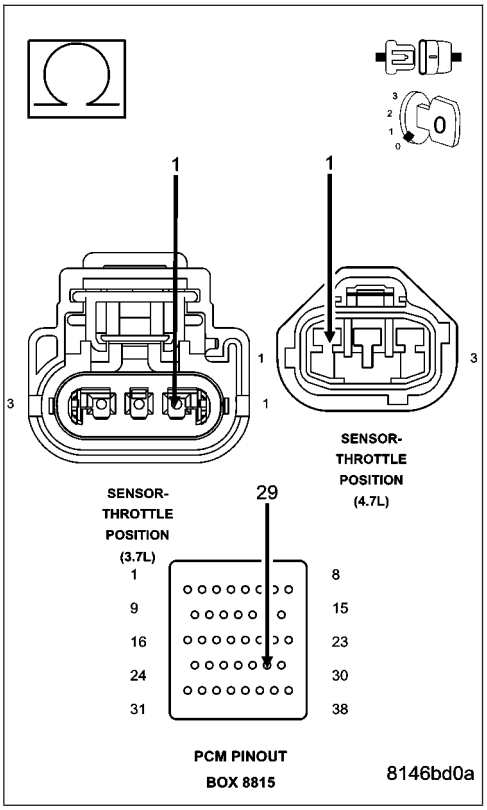

7. (F855) 5-VOLT SUPPLY CIRCUIT SHORTED TO GROUND

Measure the resistance between ground and the (F855) 5-volt Supply circuit in the TP Sensor harness connector.

Is the resistance below 100 ohms?

Yes >> Repair the short to ground in the (F855) 5-volt Supply circuit.
Perform the POWERTRAIN VERIFICATION TEST. (Refer to 9 - ENGINE - STANDARD PROCEDURE)

No >> Go To 8

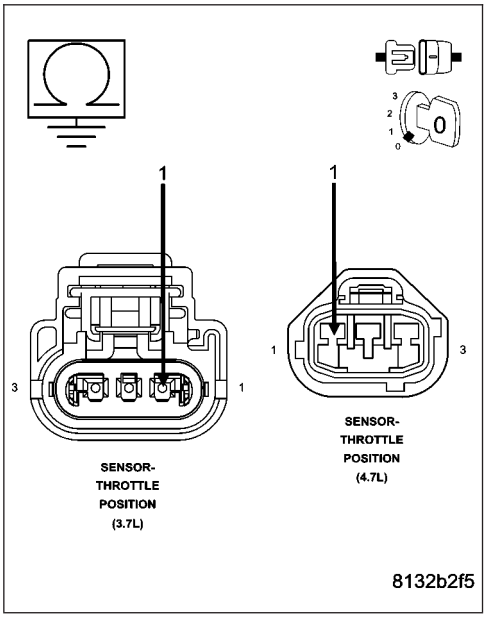

P0122-THROTTLE POSITION SENSOR 1 CIRCUIT LOW (3.7L, 4.7L) (CONTINUED)

8. PCM

NOTE: Before continuing, check the PCM harness connector terminals for corrosion, damage, or terminal push out. Repair as necessary.

Using the schematics as a guide, inspect the wire harness and connectors. Pay particular attention to all Power and Ground circuits.

Were there any problems found?

Yes >> Repair as necessary.
Perform the POWERTRAIN VERIFICATION TEST. (Refer to 9 - ENGINE - STANDARD PROCEDURE)

No >> Replace and program the Powertrain Control Module per Service Information.
Perform the POWERTRAIN VERIFICATION TEST. (Refer to 9 - ENGINE - STANDARD PROCEDURE)

---

9. THROTTLE POSITION SENSOR SWEEP

With a scan tool, monitor the Throttle Position Sensor voltage.

Slowly open the throttle from the idle position to the wide open throttle position.

Does voltage start at approximately 0.8 of a volt and go above 3.5 volts with a smooth transition?

Yes >> Refer to the INTERMITTENT CONDITION Diagnostic Procedure.
Perform the POWERTRAIN VERIFICATION TEST. (Refer to 9 - ENGINE - STANDARD PROCEDURE)

No >> Replace the Throttle Position Sensor.
Perform the POWERTRAIN VERIFICATION TEST. (Refer to 9 - ENGINE - STANDARD PROCEDURE)

P0122-THROTTLE POSITION SENSOR 1 CIRCUIT LOW (5.7L)

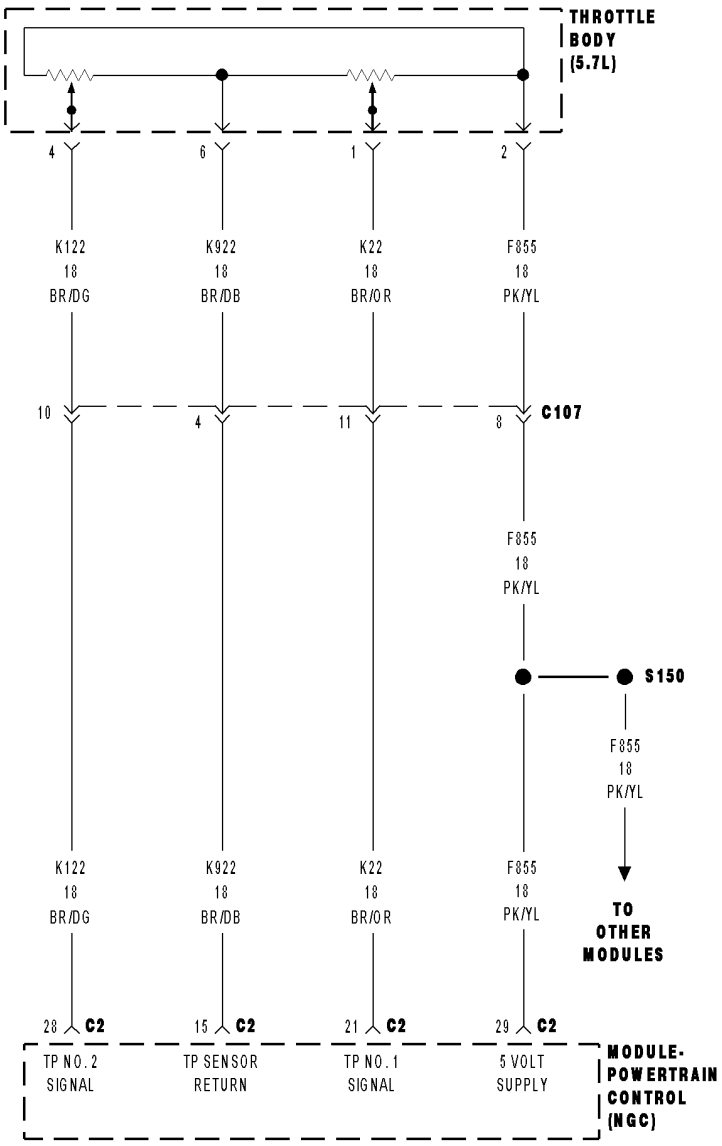

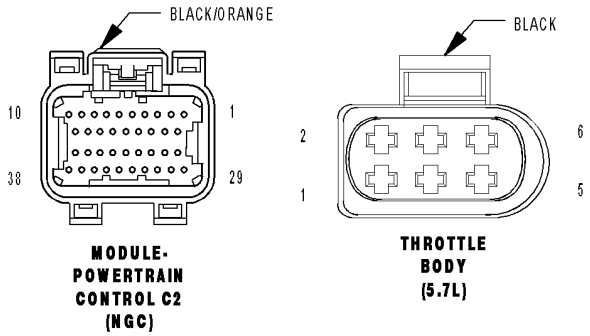

81452d8c

P0122-THROTTLE POSITION SENSOR 1 CIRCUIT LOW (5.7L) (CONTINUED)

For the Engine System Schematic circuit diagram (Refer to 9 - ENGINE - SCHEMATICS AND DIAGRAMS).

For a complete wiring diagram **Refer to Section 8W**.

- **When Monitored:**
  With the ignition on. Battery voltage greater than 10 volts.
- **Set Condition:**
  Throttle Position Sensor voltage at the PCM is less than 0.16 of a volt for 0.7 of a second. One Trip Fault. Three good trips to turn off the MIL. ETC light will illuminate.

Possible Causes
(F855) 5-VOLT SUPPLY CIRCUIT OPEN
(F855) 5-VOLT SUPPLY CIRCUIT SHORTED TO GROUND
(K22) TP SENSOR NO.1 SIGNAL CIRCUIT SHORTED TO GROUND
(K22) TP SENSOR NO.1 SIGNAL CIRCUIT SHORTED TO THE (K922) SENSOR RETURN CIRCUIT
THROTTLE POSITION SENSOR/THROTTLE BODY
PCM

Always perform the Pre-Diagnostic Troubleshooting procedure before proceeding. (Refer to 9 - ENGINE - DIAGNOSIS AND TESTING).

Diagnostic Test

1. ACTIVE DTC

NOTE: If a 5-Volt Supply DTC has also set, diagnose the 5-Volt DTC before continuing.
Ignition on, engine not running.
With a scan tool, read DTCs.

Is the DTC active at this time?

Yes >> Go To 2
No >> Go To 10

---

2. P0222 ALSO SET

Was the P0222-TP SENSOR NO.2 VOLTAGE LOW DTC set along with the P0122?

Yes >> Go To 3
No >> Go To 4

P0122-THROTTLE POSITION SENSOR 1 CIRCUIT LOW (5.7L) (CONTINUED)

3. (F855) 5-VOLT SUPPLY CIRCUIT

Turn the ignition off.

Disconnect the Throttle Body harness connector.

Ignition on, engine not running.

Measure the voltage on the (F855) 5-volt Supply circuit in the Throttle Body harness connector.

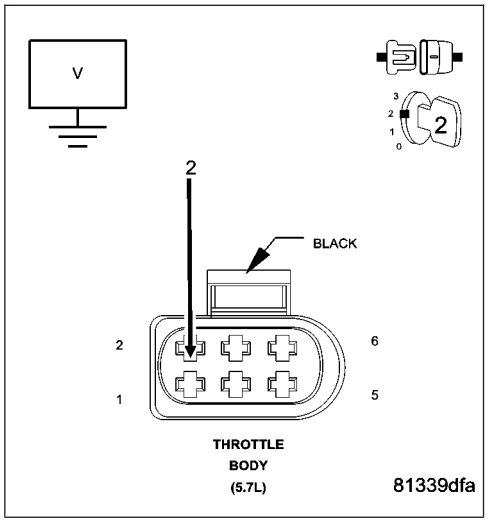

Is the voltage between 4.8 to 5.2 volts?

Yes >> Go To 4

No >> Go To 7

---

4. THROTTLE POSITION SENSOR

With a scan tool, monitor the TP Sensor No.1 voltage with the Sensor harness connector disconnected.

Is the voltage above 4.5 volts?

Yes >> Disconnect the Battery when replacing the Throttle Body Assembly. Replace the Throttle Body Assembly. After installation is complete, using a scan tool select the ETC RELEARN function.

Perform the POWERTRAIN VERIFICATION TEST. (Refer to 9 - ENGINE - STANDARD PROCEDURE)

No >> Go To 5

---

5. (K22) TP SENSOR NO.1 SIGNAL CIRCUIT SHORTED TO GROUND

Turn the ignition off.

Disconnect the C2 PCM harness connector.

Measure the resistance between ground and the (K22) TP Sensor No.1 Signal circuit in the Throttle Body harness connector.

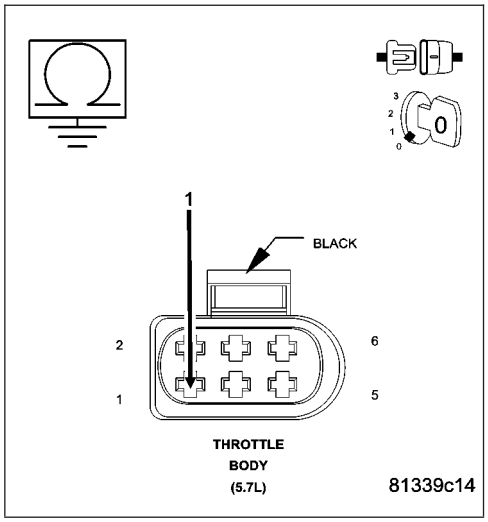

Is the resistance below 100 ohms?

Yes >> Repair the short to ground in the (K22) TP Sensor No.1 Signal circuit.

Perform the POWERTRAIN VERIFICATION TEST. (Refer to 9 - ENGINE - STANDARD PROCEDURE)

No >> Go To 6

P0122-THROTTLE POSITION SENSOR 1 CIRCUIT LOW (5.7L) (CONTINUED)

6. (K22) TP SENSOR NO.1 SIGNAL CIRCUIT SHORTED TO THE (K922) SENSOR RETURN CIRCUIT

Measure the resistance between the (K22) TP Sensor No.1 Signal circuit and the (K922) Sensor Return circuit in the Throttle Body harness connector.

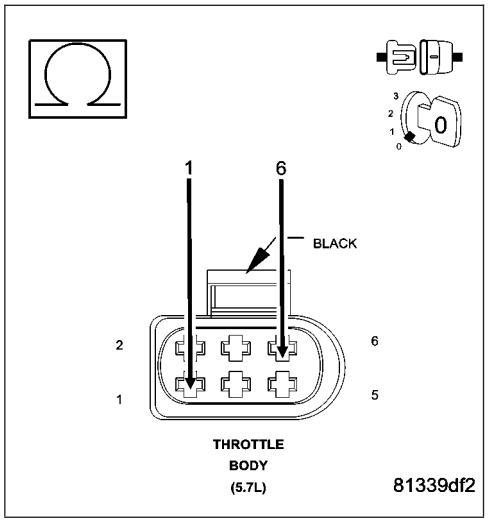

Is the resistance below 100 ohms?

Yes >> Repair the short between the (K922) Sensor Return circuit and the (K22) TP Sensor No.1 Signal circuit.
Perform the POWERTRAIN VERIFICATION TEST. (Refer to 9 - ENGINE - STANDARD PROCEDURE)

No >> Go To 9

7. (F855) 5-VOLT SUPPLY CIRCUIT OPEN

Turn the ignition off.

Disconnect the C2 PCM harness connector.

CAUTION: Do not probe the PCM harness connectors. Probing the PCM harness connectors will damage the PCM terminals resulting in poor terminal to pin connection. Install Miller Special Tool #8815 to perform diagnostics.

Measure the resistance of the (F855) 5-volt Supply circuit from the Throttle Body harness connector to the appropriate terminal of special tool #8815.

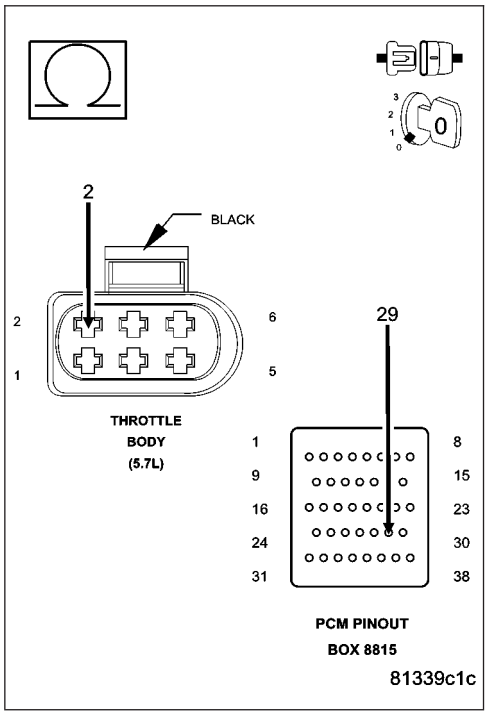

Is the resistance below 5.0 ohms?

Yes >> Go To 8

No >> Repair the open in the (F855) 5-volt Supply circuit.
Perform the POWERTRAIN VERIFICATION TEST. (Refer to 9 - ENGINE - STANDARD PROCEDURE)

P0122-THROTTLE POSITION SENSOR 1 CIRCUIT LOW (5.7L) (CONTINUED)

8. (F855) 5-VOLT SUPPLY CIRCUIT SHORTED TO GROUND

Measure the resistance between ground and the (F855) 5-volt Supply circuit in the Throttle Body harness connector.

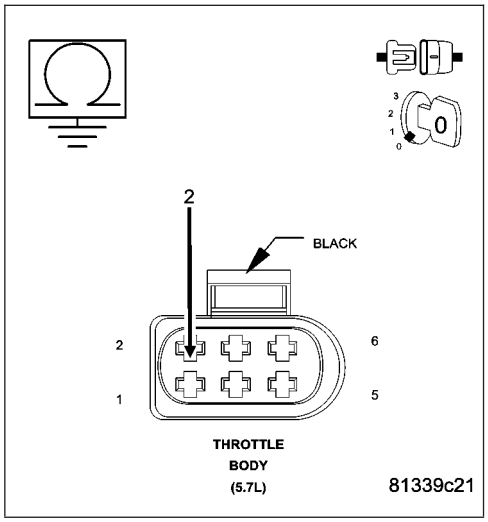

Is the resistance below 100 ohms?

Yes >> Repair the short to ground in the (F855) 5-volt Supply circuit.
Perform the POWERTRAIN VERIFICATION TEST. (Refer to 9 - ENGINE - STANDARD PROCEDURE)

No >> Go To 9

9. PCM

NOTE: Before continuing, check the PCM harness connector terminals for corrosion, damage, or terminal push out. Repair as necessary.
Using the schematics as a guide, inspect the wire harness and connectors. Pay particular attention to all Power and Ground circuits.

Were there any problems found?

Yes >> Repair as necessary.
Perform the POWERTRAIN VERIFICATION TEST. (Refer to 9 - ENGINE - STANDARD PROCEDURE)

No >> Replace and program the Powertrain Control Module per Service Information.
Perform the POWERTRAIN VERIFICATION TEST. (Refer to 9 - ENGINE - STANDARD PROCEDURE)

10. THROTTLE FOLLOWER TEST

With a scan tool, perform the Throttle Follower Test.
Monitor the TP Sensor No.1 voltage.

Does voltage start at approximately 0.8 of a volt and go above 3.5 volts with a smooth transition?

Yes >> Refer to the INTERMITTENT CONDITION Diagnostic Procedure.
Perform the POWERTRAIN VERIFICATION TEST. (Refer to 9 - ENGINE - STANDARD PROCEDURE)

No >> Disconnect the Battery when replacing the Throttle Body Assembly. Replace the Throttle Body Assembly. After installation is complete, using a scan tool select ETC RELEARN function.
Perform the POWERTRAIN VERIFICATION TEST. (Refer to 9 - ENGINE - STANDARD PROCEDURE)

P0123-THROTTLE POSITION SENSOR 1 CIRCUIT HIGH (3.7L, 4.7L)

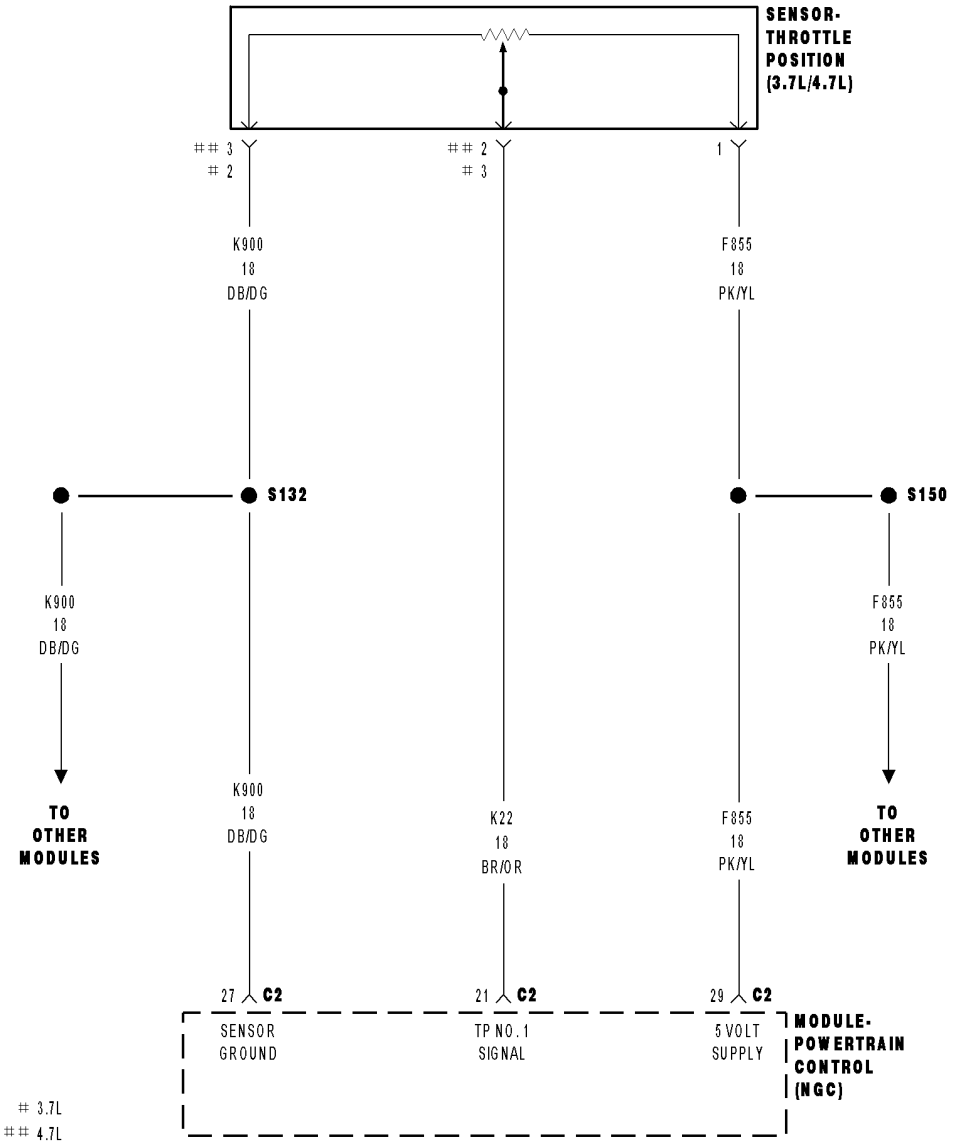

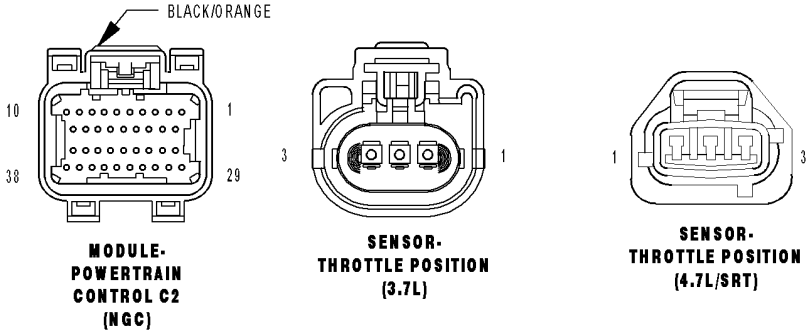

81452da7

P0123-THROTTLE POSITION SENSOR 1 CIRCUIT HIGH (3.7L, 4.7L) (CONTINUED)

For the Engine System Schematic circuit diagram (Refer to 9 - ENGINE - SCHEMATICS AND DIAGRAMS).

For a complete wiring diagram **Refer to Section 8W**.

- **When Monitored:**
  With the ignition on. Battery voltage greater than 10.4 volts.
- **Set Condition:**
  Throttle Position Sensor voltage at the PCM is greater than 4.47 volts for 1.3 seconds. One Trip Fault. Three good trips to turn off the MIL.

Possible Causes
(K22) TP SENSOR NO.1 SIGNAL CIRCUIT SHORTED TO BATTERY VOLTAGE
(K22) TP SENSOR NO.1 SIGNAL CIRCUIT OPEN
(K22) TP SENSOR NO.1 SIGNAL CIRCUIT SHORTED TO THE (F855) 5-VOLT SUPPLY CIRCUIT
(K900) SENSOR GROUND CIRCUIT OPEN
THROTTLE POSITION SENSOR
PCM

Always perform the Pre-Diagnostic Troubleshooting procedure before proceeding. (Refer to 9 - ENGINE - DIAGNOSIS AND TESTING).

Diagnostic Test

1. TP SENSOR VOLTAGE ABOVE 4.5 VOLTS

NOTE: Make sure the throttle is fully closed and free from binding or carbon build up.

Start the engine.

With a scan tool, read the TP Sensor voltage.

Is the voltage above 4.5 volts?

Yes >> Go To 2

No >> Go To 8

P0123-THROTTLE POSITION SENSOR 1 CIRCUIT HIGH (3.7L, 4.7L) (CONTINUED)

2. THROTTLE POSITION SENSOR

Turn the ignition off.

Disconnect the TP Sensor harness connector.

Connect a jumper wire between the (K22) TP Sensor No.1 Signal circuit and the (K900) Sensor ground circuit in the Sensor harness connector.

With a scan tool, monitor the TP Sensor voltage.

Ignition on, engine not running.

Is the voltage below 0.5 of a volt with the jumper wire installed?

Yes >> Replace the Throttle Position Sensor.
Perform the POWERTRAIN VERIFICATION TEST. (Refer to 9 - ENGINE - STANDARD PROCEDURE)

No >> Go To 3

NOTE: Remove the jumper wire before continuing.

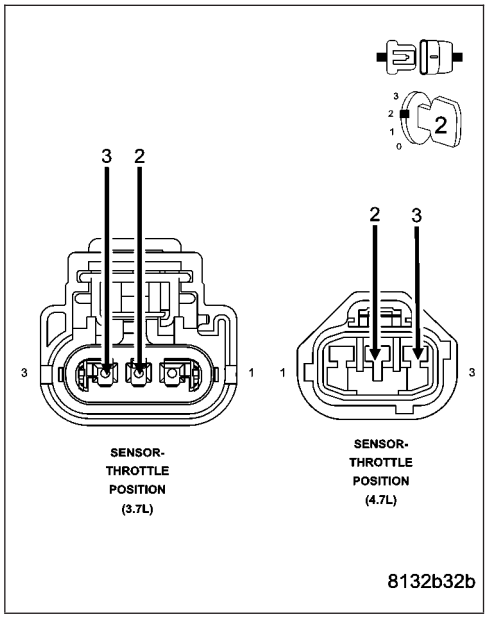

3. (K22) TP SENSOR NO.1 SIGNAL CIRCUIT SHORTED TO BATTERY VOLTAGE

Turn the ignition off.

Disconnect the C2 PCM harness connector.

Ignition on, engine not running.

Measure the voltage on the (K22) TP Sensor No.1 Signal circuit in the TP Sensor harness connector.

Is the voltage above 0 volts?

Yes >> Repair the short to battery voltage in the (K22) TP Sensor No.1 Signal circuit.
Perform the POWERTRAIN VERIFICATION TEST. (Refer to 9 - ENGINE - STANDARD PROCEDURE)

No >> Go To 4

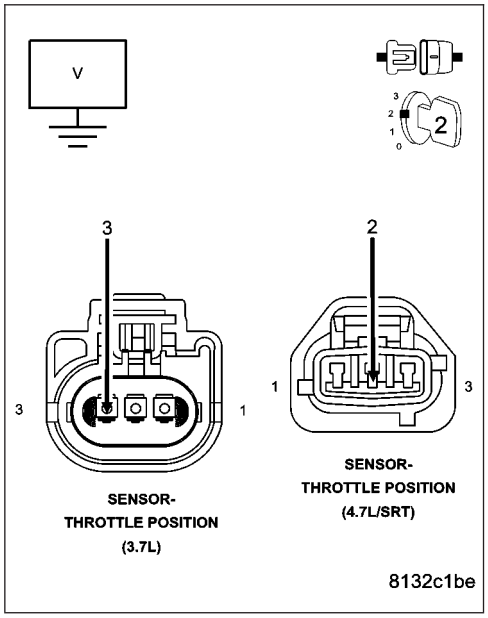

P0123-THROTTLE POSITION SENSOR 1 CIRCUIT HIGH (3.7L, 4.7L) (CONTINUED)

4. (K22) TP SENSOR NO.1 SIGNAL CIRCUIT OPEN

Turn the ignition off.

CAUTION: Do not probe the PCM harness connectors. Probing the PCM harness connectors will damage the PCM terminals resulting in poor terminal to pin connection. Install Miller Special Tool #8815 to perform diagnosis.

Measure the resistance of the (K22) TP Sensor No.1 Signal circuit from the TP Sensor harness connector to the appropriate terminal of special tool #8815.

Is the resistance below 5.0 ohms?

Yes >> Go To 5

No >> Repair the open in the (K22) TP Sensor No.1 Signal circuit.

Perform the POWERTRAIN VERIFICATION TEST. (Refer to 9 - ENGINE - STANDARD PROCEDURE)

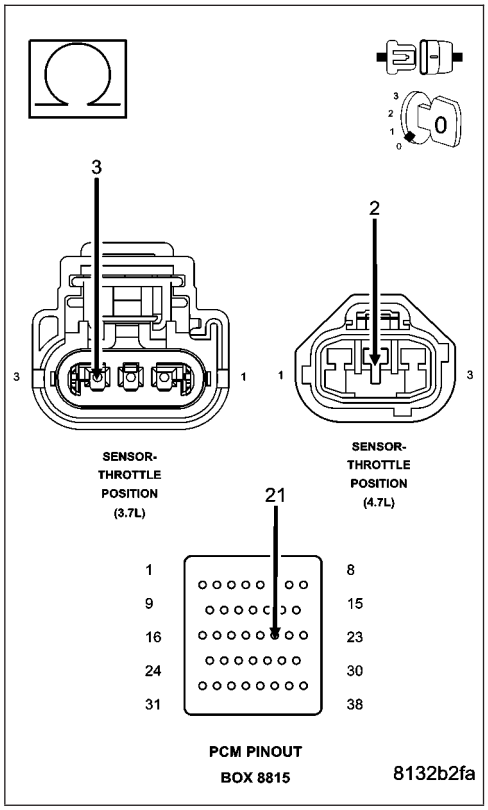

5. (K22) TP SENSOR NO.1 SIGNAL CIRCUIT SHORTED TO THE (F855) 5-VOLT SUPPLY CIRCUIT

Measure the resistance between the (K22) TP Sensor No.1 Signal circuit and the (F855) 5-volt Supply circuit in the TP Sensor harness connector.

Is the resistance below 100 ohms?

Yes >> Repair the short between the (F855) 5-volt Supply circuit and the (K22) TP Sensor No.1 Signal circuit.

Perform the POWERTRAIN VERIFICATION TEST. (Refer to 9 - ENGINE - STANDARD PROCEDURE)

No >> Go To 6

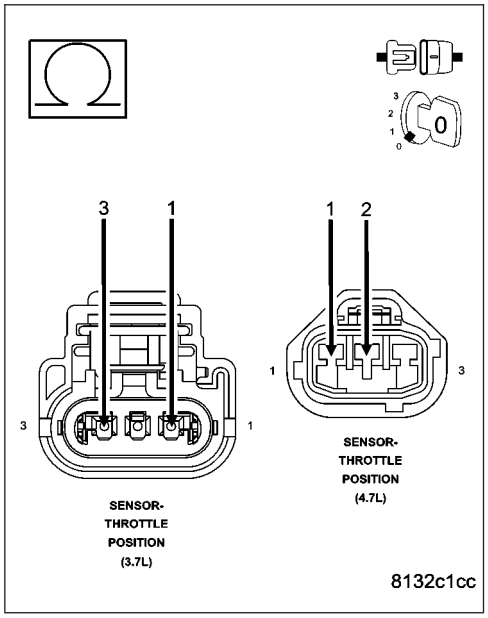

P0123-THROTTLE POSITION SENSOR 1 CIRCUIT HIGH (3.7L, 4.7L) (CONTINUED)

6. (K900) SENSOR GROUND CIRCUIT OPEN

Measure the resistance of the (K900) Sensor ground circuit from the TP Sensor harness connector to the appropriate terminal of special tool #8815.

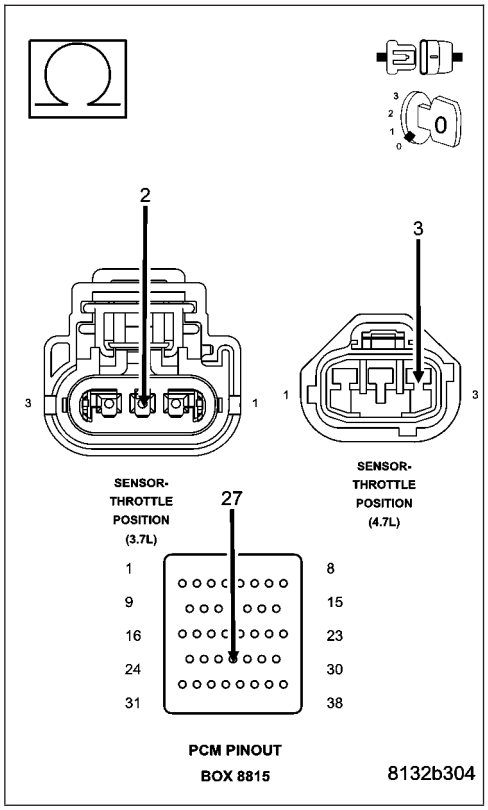

Is the resistance below 5.0 ohms?

Yes >> Go To 7

No >> Repair the open in the (K900) Sensor ground circuit.
Perform the POWERTRAIN VERIFICATION TEST. (Refer to 9 - ENGINE - STANDARD PROCEDURE)

7. PCM

NOTE: Before continuing, check the PCM harness connector terminals for corrosion, damage, or terminal push out. Repair as necessary.

Using the schematics as a guide, inspect the wire harness and connectors. Pay particular attention to all Power and Ground circuits.

Were there any problems found?

Yes >> Repair as necessary.
Perform the POWERTRAIN VERIFICATION TEST. (Refer to 9 - ENGINE - STANDARD PROCEDURE)

No >> Replace and program the Powertrain Control Module per Service Information.
Perform the POWERTRAIN VERIFICATION TEST. (Refer to 9 - ENGINE - STANDARD PROCEDURE)

8. THROTTLE POSITION SENSOR SWEEP

With a scan tool, monitor the Throttle Position Sensor voltage.

Slowly open the throttle from the idle position to the wide open throttle position.

Does voltage start at approximately 0.8 of a volt and go above 3.5 volts with a smooth transition?

Yes >> Refer to the INTERMITTENT CONDITION Diagnostic Procedure.
Perform the POWERTRAIN VERIFICATION TEST. (Refer to 9 - ENGINE - STANDARD PROCEDURE)

No >> Replace the Throttle Position Sensor.
Perform the POWERTRAIN VERIFICATION TEST. (Refer to 9 - ENGINE - STANDARD PROCEDURE)

P0123-THROTTLE POSITION SENSOR 1 CIRCUIT HIGH (5.7L)

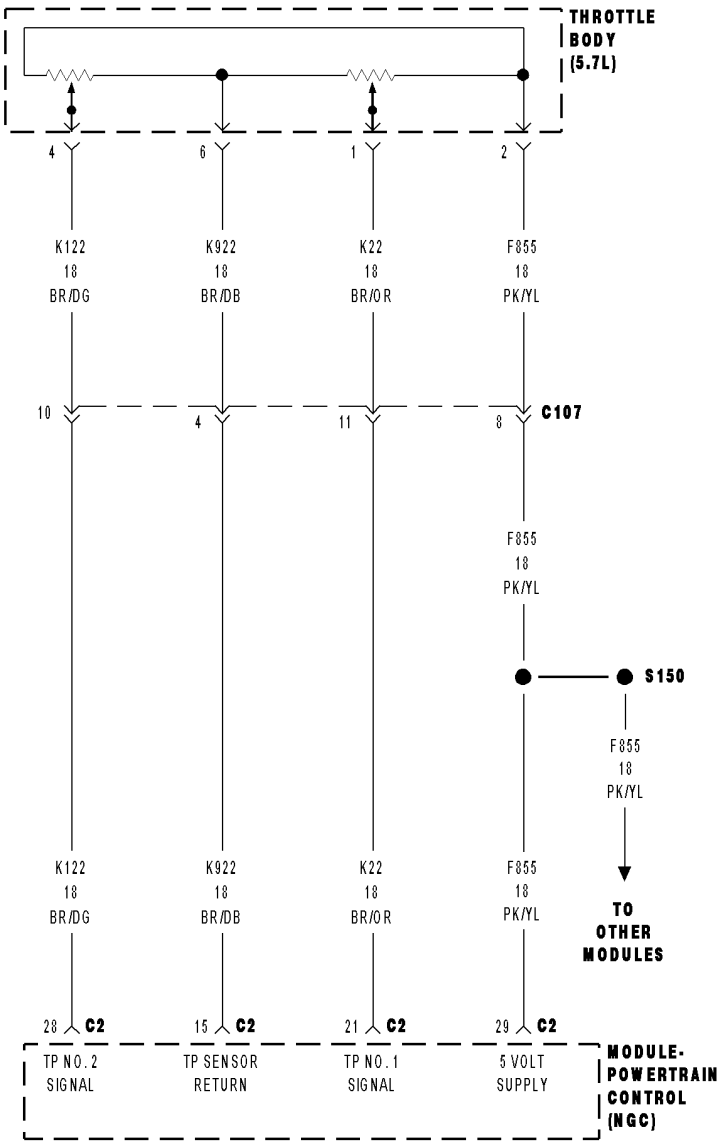

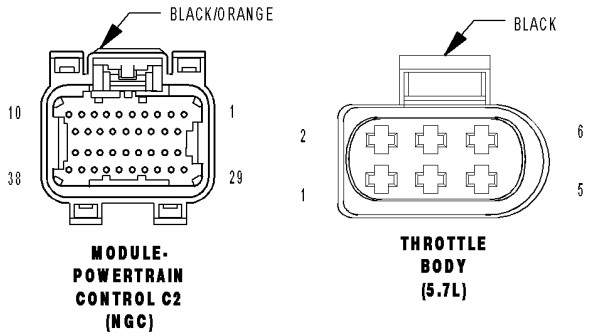

81452d8c

P0123-THROTTLE POSITION SENSOR 1 CIRCUIT HIGH (5.7L) (CONTINUED)

For the Engine System Schematic circuit diagram (Refer to 9 - ENGINE - SCHEMATICS AND DIAGRAMS).

For a complete wiring diagram **Refer to Section 8W**.

- **When Monitored:**
  With the ignition on. Battery voltage greater than 10 volts.
- **Set Condition:**
  Throttle Position Sensor No.1 voltage is greater than 4.8 volts for 25 ms. One Trip Fault. 5.7L ETC light will illuminate.

Possible Causes
(K22) TP SENSOR NO.1 SIGNAL CIRCUIT SHORTED TO BATTERY VOLTAGE
(K22) TP SENSOR NO.1 SIGNAL CIRCUIT OPEN
(K22) TP SENSOR NO.1 SIGNAL CIRCUIT SHORTED TO THE (F855) 5-VOLT SUPPLY CIRCUIT
(K922) SENSOR RETURN CIRCUIT OPEN
THROTTLE POSITION SENSOR/THROTTLE BODY
THROTTLE PLATE JAMMED AGAINST THE MAXIMUM STOP
PCM

Always perform the Pre-Diagnostic Troubleshooting procedure before proceeding. (Refer to 9 - ENGINE - DIAGNOSIS AND TESTING).

Diagnostic Test

1. TP SENSOR NO.1 VOLTAGE ABOVE 4.8 VOLTS

NOTE: Make sure the throttle is fully closed and free from binding or carbon build up.

NOTE: If a 5-Volt Supply DTC has also set, diagnose the 5-Volt DTC before continuing.

NOTE: If P2101 is also set, then make sure that the blade moves freely and does not hang up near Wide Open Throttle before trying to repair P0123.

Start the engine.

With a scan tool, read the TP Sensor No.1 voltage.

Is the voltage above 4.8 volts?

Yes >> Go To 2

No >> Go To 8

P0123-THROTTLE POSITION SENSOR 1 CIRCUIT HIGH (5.7L) (CONTINUED)

2. THROTTLE POSITION SENSOR

Turn the ignition off.

Disconnect the Throttle Body harness connector.

Connect a jumper wire between the (K22) TP Sensor No.1 Signal circuit and the (K922) Sensor Return circuit in the Throttle Body harness connector.

With a scan tool, monitor the TP Sensor No.1 voltage.

Ignition on, engine not running.

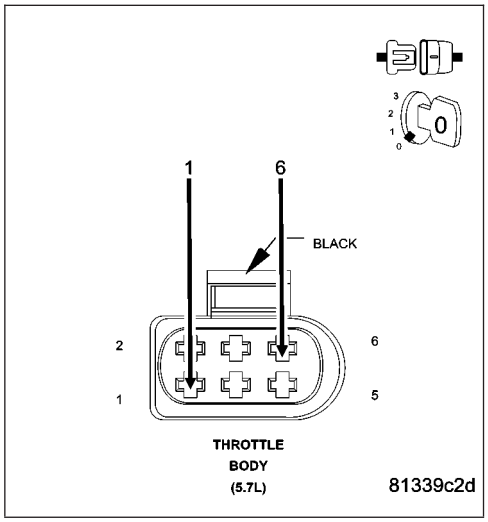

Is the voltage below 0.5 of a volt with the jumper wire installed?

Yes >> Disconnect the Battery when replacing the Throttle Body Assembly. Replace the Throttle Body Assembly. After installation is complete, using a scan tool, select the ETC RELEARN function.

Perform the POWERTRAIN VERIFICATION TEST. (Refer to 9 - ENGINE - STANDARD PROCEDURE)

No >> Go To 3

NOTE: Remove the jumper wire before continuing.

---

3. (K22) TP SENSOR NO.1 SIGNAL CIRCUIT SHORTED TO BATTERY VOLTAGE

Turn the ignition off.

Disconnect the C2 PCM harness connector.

Ignition on, engine not running.

Measure the voltage on the (K22) TP Sensor No.1 Signal circuit in the Throttle Body harness connector.

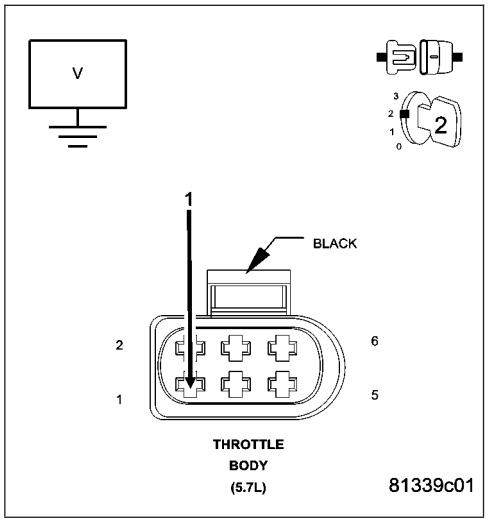

Is the voltage above 0 volts?

Yes >> Repair the short to battery voltage in the (K22) TP Sensor No.1 Signal circuit.

Perform the POWERTRAIN VERIFICATION TEST. (Refer to 9 - ENGINE - STANDARD PROCEDURE)

No >> Go To 4

P0123-THROTTLE POSITION SENSOR 1 CIRCUIT HIGH (5.7L) (CONTINUED)

4. (K22) TP SENSOR NO.1 SIGNAL CIRCUIT OPEN

Turn the ignition off.

CAUTION: Do not probe the PCM harness connectors. Probing the PCM harness connectors will damage the PCM terminals resulting in poor terminal to pin connection. Install Miller Special Tool #8815 to perform diagnosis.

Measure the resistance of the (K22) TP Sensor No.1 Signal circuit from the Throttle Body harness connector to the appropriate terminal of special tool #8815.

Is the resistance below 5.0 ohms?

Yes >> Go To 5

No >> Repair the open in the (K22) TP Sensor No.1 Signal circuit.

Perform the POWERTRAIN VERIFICATION TEST. (Refer to 9 - ENGINE - STANDARD PROCEDURE)

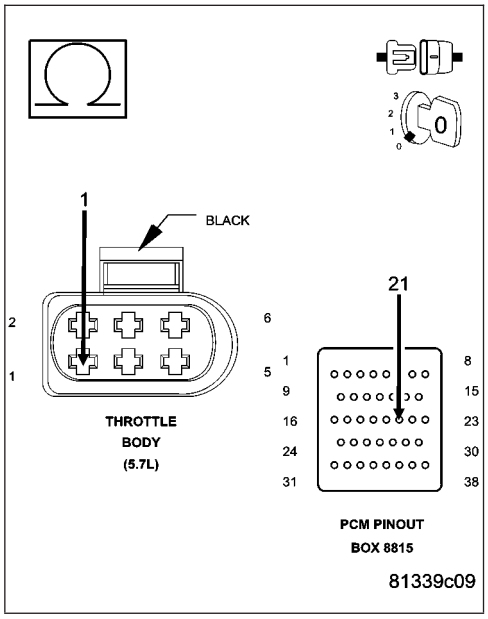

5. (K22) TP SENSOR NO.1 SIGNAL CIRCUIT SHORTED TO THE (F855) 5-VOLT SUPPLY CIRCUIT

Measure the resistance between the (K22) TP Sensor No.1 Signal circuit and the (F855) 5-volt Supply circuit in the Throttle Body harness connector.

Is the resistance below 100 ohms?

Yes >> Repair the short between the (F855) 5-volt Supply circuit and the (K22) TP Sensor No.1 Signal circuit.

Perform the POWERTRAIN VERIFICATION TEST. (Refer to 9 - ENGINE - STANDARD PROCEDURE)

No >> Go To 6

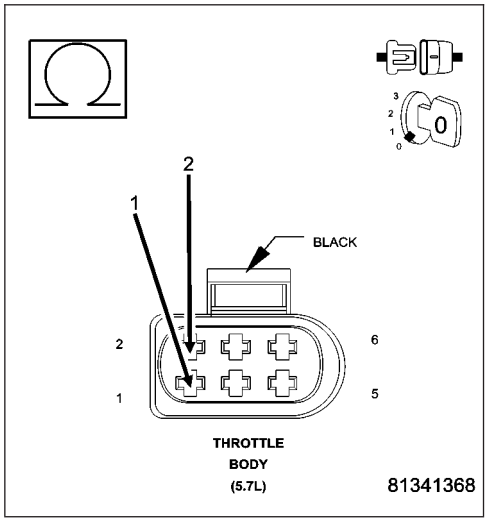

P0123-THROTTLE POSITION SENSOR 1 CIRCUIT HIGH (5.7L) (CONTINUED)

6. (K922) SENSOR RETURN CIRCUIT OPEN

Measure the resistance of the (K922) Sensor Return circuit from the Throttle Body harness connector to the appropriate terminal of special tool #8815.

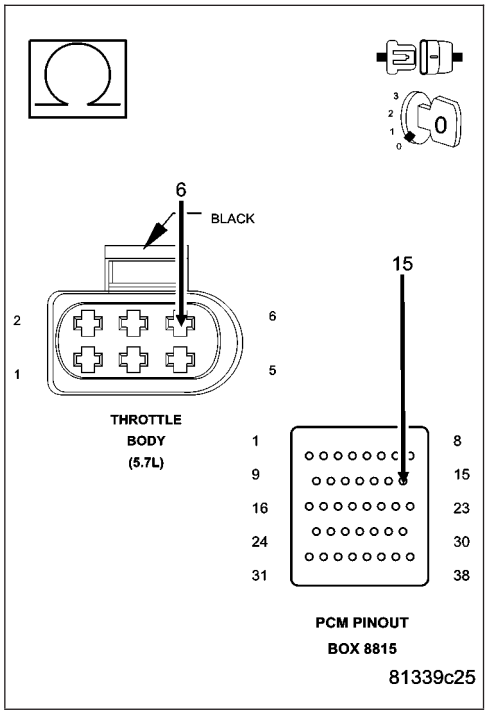

Is the resistance below 5.0 ohms?

Yes >> Go To 7

No >> Repair the open in the (K922) Sensor Return circuit.
Perform the POWERTRAIN VERIFICATION TEST. (Refer to 9 - ENGINE - STANDARD PROCEDURE)

---

7. PCM

NOTE: Before continuing, check the PCM harness connector terminals for corrosion, damage, or terminal push out. Repair as necessary.
Using the schematics as a guide, inspect the wire harness and connectors. Pay particular attention to all Power and Ground circuits.

Were there any problems found?

Yes >> Repair as necessary.
Perform the POWERTRAIN VERIFICATION TEST. (Refer to 9 - ENGINE - STANDARD PROCEDURE)

No >> Replace and program the Powertrain Control Module per Service Information.
Perform the POWERTRAIN VERIFICATION TEST. (Refer to 9 - ENGINE - STANDARD PROCEDURE)

---

8. THROTTLE FOLLOWER TEST

With a scan tool, perform the Throttle Follower Test.
Monitor the TP Sensor No.1 voltage.

Does voltage start at approximately 0.3 of a volt and go above 4.7 volts with a smooth transition?

Yes >> Refer to the INTERMITTENT CONDITION Diagnostic Procedure.
Perform the POWERTRAIN VERIFICATION TEST. (Refer to 9 - ENGINE - STANDARD PROCEDURE)

No >> Disconnect the Battery when replacing the Throttle Body Assembly. Replace the Throttle Body Assembly. After installation is complete, using a scan tool select the ETC RELEARN function.
Perform the POWERTRAIN VERIFICATION TEST. (Refer to 9 - ENGINE - STANDARD PROCEDURE)

P0125-INSUFFICIENT COOLANT TEMP FOR CLOSED-LOOP FUEL CONTROL

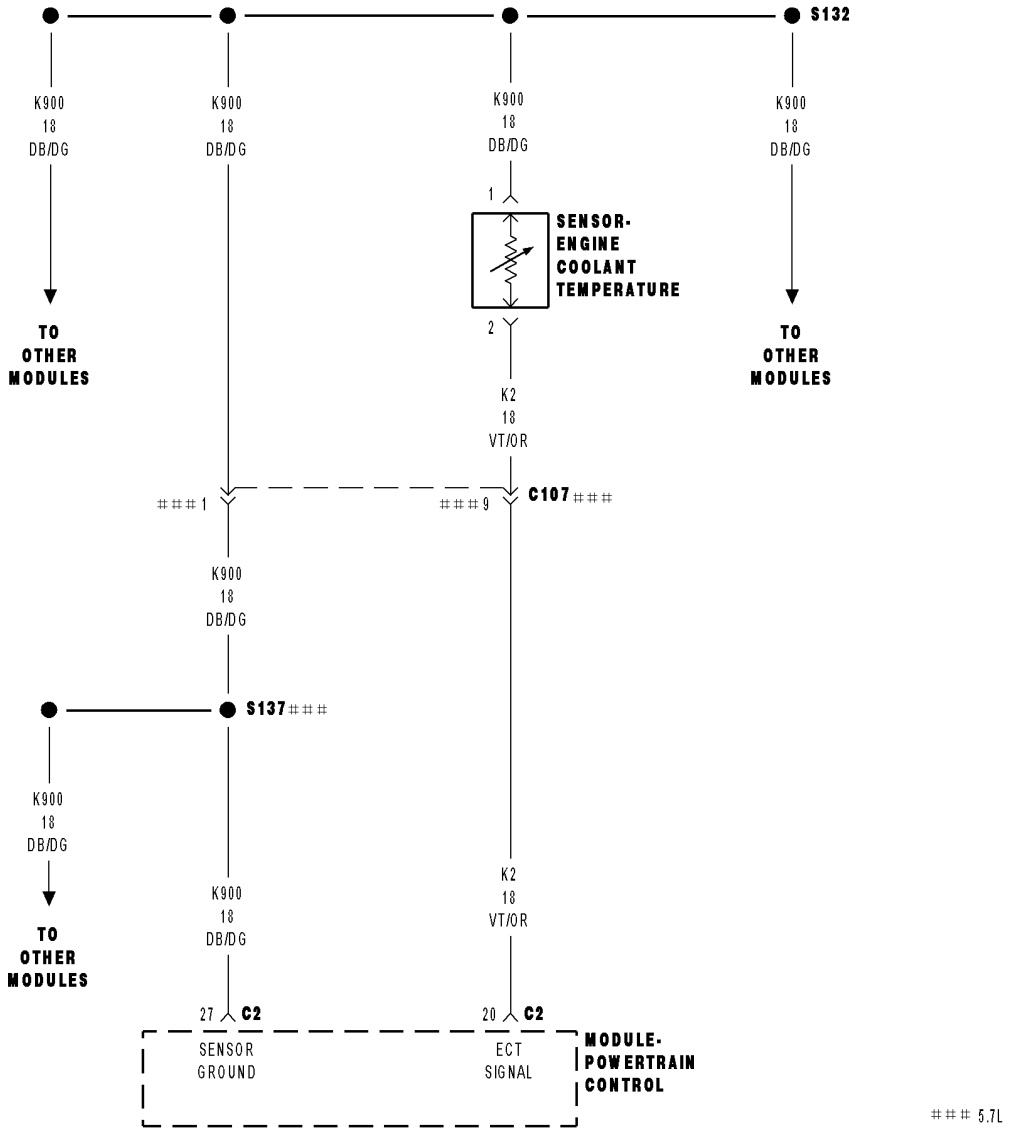

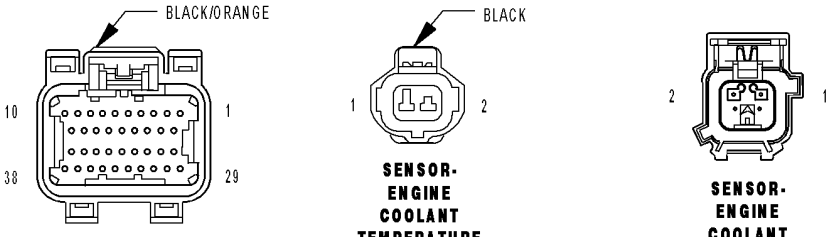

81452d65

P0125-INSUFFICIENT COOLANT TEMP FOR CLOSED-LOOP FUEL CONTROL (CONTINUED)

For the Engine System circuit diagrams Refer to 9 - ENGINE - SCHEMATICS AND DIAGRAMS).

For a complete wiring diagram **Refer to Section 8W**.

Theory of Operation

The engine coolant temperature sensor is a negative temperature coefficient thermistor-type sensor whose resistance varies inversely with temperature. At cold temperatures the sensor resistance is high so the voltage is high. As the coolant temperature increases the resistance decreases and the voltage becomes low. The INSUFFICIENT COOLANT TEMP FOR CLOSED-LOOP FUEL CONTROL determines if the engine coolant temperature will reach the closed loop fueling control temperature limit in a regulated time after start.

- **When Monitored:**
  With battery voltage greater than 10.4 volts and after engine is started.
- **Set Condition:**
  The engine temperature does not go above -10°C (15°F). Failure time depends on start-up coolant temperature and ambient temperature. (i.e. 2 minutes for a start temp of -10°C (15°F) or up to 10 minutes for a vehicle with a start-up temp of -28°C (5°F). Two Trip Fault. Three good trips to turn off the MIL.

Possible Causes
LOW COOLANT LEVEL
THERMOSTAT
ECT SENSOR

Always perform the Pre-Diagnostic Troubleshooting procedure before proceeding. (Refer to 9 - ENGINE - DIAGNOSIS AND TESTING).

Diagnostic Test

1. CHECKING COOLANT LEVEL AND CONDITION

Ignition on, engine not running.

With a scan tool, read DTCs.

NOTE: If an Engine Coolant Temperature (ECT) DTC is set along with this code, diagnose the ECT DTC first.

NOTE: Inspect the ECT terminals and related PCM terminals. Make sure the terminals are free from corrosion and damage.

NOTE: The best way to diagnose this DTC is to allow the vehicle to sit overnight outside in order to have a totally cold soaked engine.

NOTE: Extremely cold outside ambient temperatures may have caused this DTC to set.

WARNING: Never open the cooling system when the engine is hot. The system is under pressure. Extreme burns or scalding may result. Failure to follow these instructions can result in personal injury or death. Allow the engine to cool before opening the cooling system.

Inspect the coolant system for proper level and condition.

Is the coolant level and condition OK?

Yes >> Go To 2

No >> Inspect the vehicle for a coolant leak, make the appropriate repairs, and add the correct amount of coolant.
Perform the POWERTRAIN VERIFICATION TEST. (Refer to 9 - ENGINE - STANDARD PROCEDURE)

P0125-INSUFFICIENT COOLANT TEMP FOR CLOSED-LOOP FUEL CONTROL (CONTINUED)

2. THERMOSTAT OPERATION

NOTE: This test works best if performed on a cold engine (cold soak)

Ignition on, engine not running.

With a scan tool, read the Eng Coolant Tmp Deg value. If the engine was allowed to sit overnight (cold soak), the temperature value should be a sensible value that is somewhere close to the ambient temperature.

NOTE: If engine coolant temperature is above 82°C (180°F), allow the engine to cool until 65°C (150°F) is reached.

Start the Engine.

During engine warm-up monitor the Eng Coolant Tmp Deg value. The temp deg value change should be a smooth transition from start up to normal operating temp 82°C (180°F). Also monitor the actual coolant temperature with a thermometer.

NOTE: As the engine warms up to operating temperature, the actual coolant temperature (thermometer reading) and the scan tool Eng Coolant Tmp Deg values should stay relatively close to each other.

Using the appropriate service information, determine the proper opening temperature of the thermostat.

Did the thermostat open at the proper temperature?

Yes >> Go To 3

No >> Replace the thermostat.
Perform the POWERTRAIN VERIFICATION TEST. (Refer to 9 - ENGINE - STANDARD PROCEDURE)

---

3. ECT SENSOR OPERATION

Ignition on, engine not running.

With a scan tool, read the Eng Coolant Tmp Deg value. If the engine was allowed to sit overnight (cold soak), the temperature value should be a sensible value that is somewhere close to the ambient temperature.

NOTE: If engine coolant temperature is above 82°C (180°F), allow the engine to cool until 65°C (150°F) is reached.

Start the Engine.

During engine warm-up monitor the Eng Coolant Tmp Deg value. The temp deg value change should be a smooth transition from start up to normal operating temp 82°C (180°F). Also monitor the actual coolant temperature with a thermometer.

NOTE: As the engine warms up to operating temperature, the actual coolant temperature (thermometer reading) and the scan tools Eng Coolant Tmp Deg value should stay relatively close to each other.

Is the thermometer reading relatively close to the scan tool ECT reading?

Yes >> Test Complete.

No >> Replace the Engine Coolant Temperature Sensor.
Perform the POWERTRAIN VERIFICATION TEST. (Refer to 9 - ENGINE - STANDARD PROCEDURE)

P0128-THERMOSTAT RATIONALITY

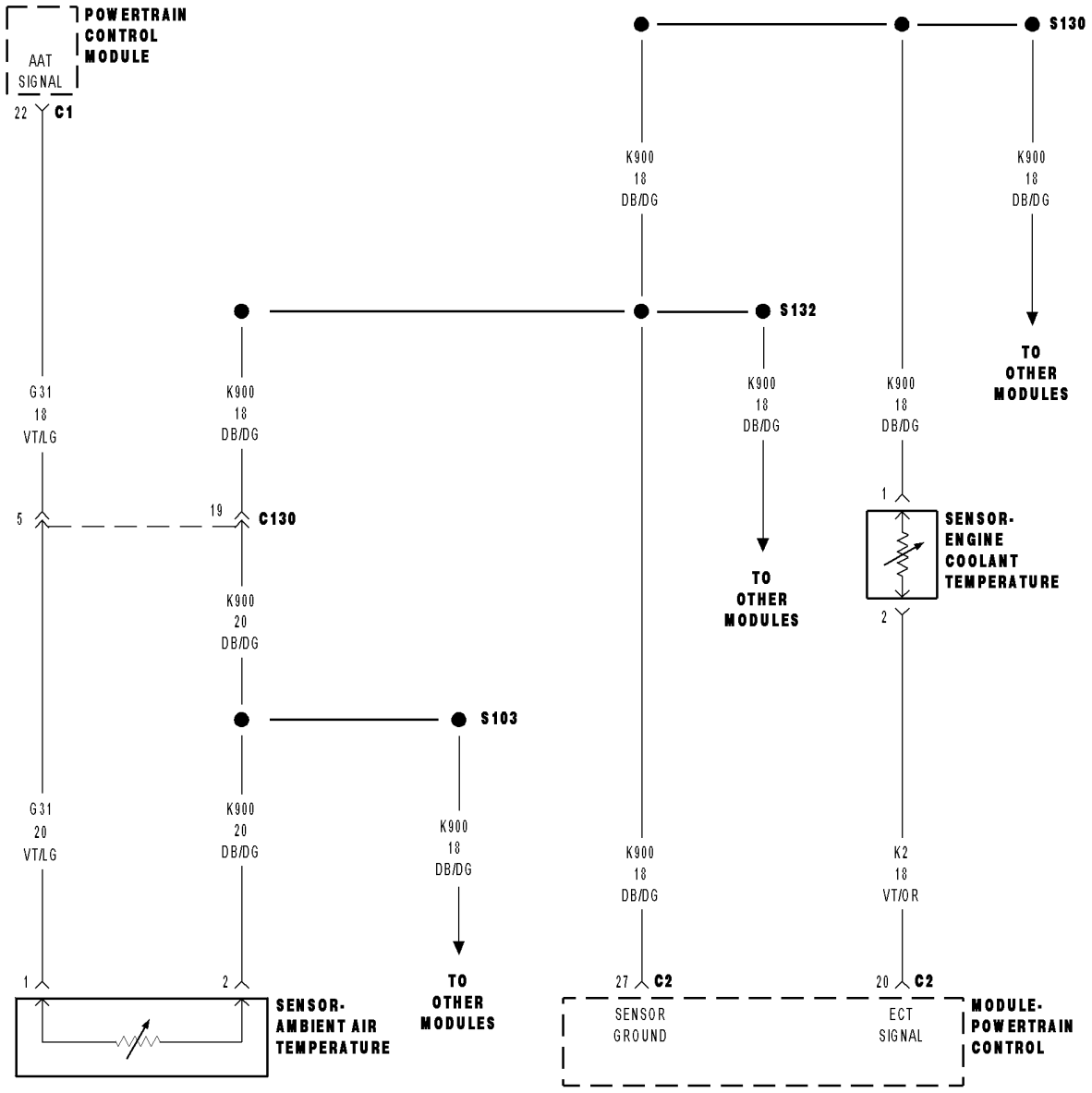

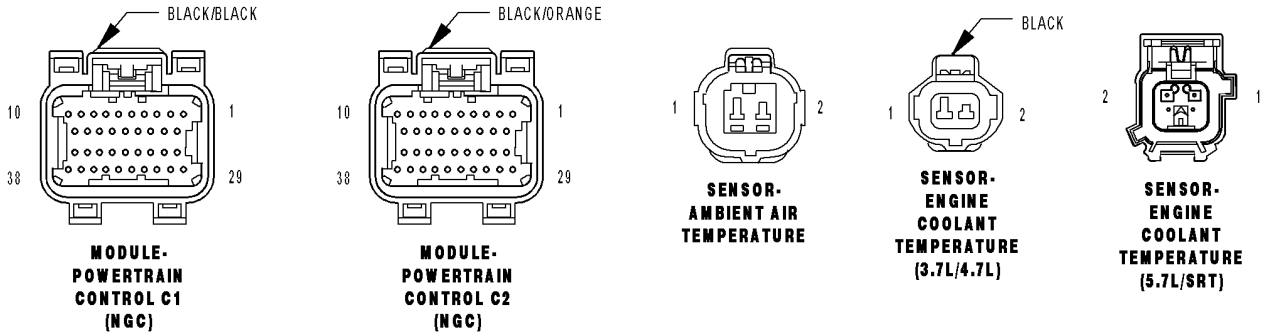

81452dd2

P0128-THERMOSTAT RATIONALITY (CONTINUED)

For the Engine circuit diagrams (Refer to 9 - ENGINE - SCHEMATICS AND DIAGRAMS).

For a complete wiring diagram **Refer to Section 8W**.

- **When Monitored:**
  Engine running.
- **Set Condition:**
  The PCM predicts a coolant temperature value that it will compare to the actual coolant temperature. A significant difference results in an error. Two Trip Fault. Three good trips to turn off the MIL.

Possible Causes
LOW COOLANT LEVEL
THERMOSTAT OPERATION
SIGNAL CIRCUIT SHORTED TO BATTERY VOLTAGE
TEMPERATURE SENSOR
SIGNAL CIRCUIT OPEN
(K900) SENSOR GROUND CIRCUIT OPEN
SIGNAL CIRCUIT SHORTED TO GROUND
SIGNAL CIRCUIT SHORTED TO THE (K900) SENSOR GROUND CIRCUIT
OTHER POSSIBLE CAUSES
PCM

Always perform the Pre-Diagnostic Troubleshooting procedure before proceeding. (Refer to 9 - ENGINE - DIAGNOSIS AND TESTING).

Diagnostic Test

1. ACTIVE DTC

NOTE: If any ECT, AAT, CMP or CKP sensor DTCs have set along with P0128, diagnose them before continuing.

NOTE: Make sure that the Pinion Factor has been programmed correctly into the PCM.

Ignition on, engine not running.

With a scan tool, read DTCs.

Is the DTC active at this time?

Yes >> Go To 2

No >> Refer to the INTERMITTENT CONDITION Diagnostic Procedure.
Perform the POWERTRAIN VERIFICATION TEST. (Refer to 9 - ENGINE - STANDARD PROCEDURE)

P0128-THERMOSTAT RATIONALITY (CONTINUED)

2. LOW COOLANT LEVEL

NOTE: If an Engine Coolant Temperature (ECT) DTC is set along with this code, diagnose the ECT DTC first.

NOTE: Inspect the ECT terminals and related PCM terminals. Make sure the terminals are free from corrosion and damage.

NOTE: The best way to diagnose this DTC is to allow the vehicle to sit overnight outside in order to have a totally cold soaked engine.

NOTE: Extremely cold outside ambient temperatures may have caused this DTC to set.

WARNING: Never open the cooling system when the engine is hot. The system is under pressure. Failure to follow these instructions can result in personal injury including extreme burns, scalding, or death. Allow the engine to cool before opening the cooling system.

Check the coolant system to make sure that the coolant is in good condition and at the proper level.

Is the coolant level and condition OK?

Yes >> Go To 3

No >> Inspect the vehicle for a coolant leak and add the necessary amount of coolant.
Perform the POWERTRAIN VERIFICATION TEST. (Refer to 9 - ENGINE - STANDARD PROCEDURE)

---

3. THERMOSTAT OPERATION

NOTE: This test works best if performed on a cold engine (cold soak).

Ignition on, engine not running.

With a scan tool, read the ECT Deg value. If the engine was allowed to sit overnight (cold soak), the temperature value should be a sensible value that is somewhere close to the ambient temperature.

NOTE: If engine coolant temperature is above 82°C (180°F), allow the engine to cool until 65°C (150°F) is reached.

Start the Engine.

During engine warm-up, monitor the ECT Deg value. The temp deg value change should be a smooth transition from start up to normal operating temp 82°C (180°F). Also monitor the actual coolant temperature with a thermometer.

NOTE: As the engine warms up to operating temperature, the actual coolant temperature (thermometer reading) and the scan tool, ECT Temperature value should stay relatively close to each other.

Using the appropriate service information, determine the proper opening temperature of the thermostat.

Did the thermostat open at the proper temperature?

Yes >> Go To 4

No >> Replace the thermostat.
Perform the POWERTRAIN VERIFICATION TEST. (Refer to 9 - ENGINE - STANDARD PROCEDURE)

---

4. AMBIENT AIR TEMP SENSOR OPERATION

Ignition on, engine not running.

With a scan tool, read and record the AAT Sensor Temperature value.

Using the DRB Temperature Probe #CH7050, or an equivalent temperature measuring tool, measure the ambient air temperature near the AAT Sensor.

Is the AAT Sensor value with -15°C (5°F) of the temperature probe reading?

Yes >> Go To 5

No >> Go To 7

P0128-THERMOSTAT RATIONALITY (CONTINUED)

5. ECT SENSOR OPERATION

WARNING: Make sure the engine cooling system is cool before removing the pressure cap or any hose. The cooling system is pressurized when hot. Failure to follow these instructions can result in personal injury including extreme burns, scalding, or death.

With a scan tool, read and record the ECT Sensor Temperature value.

Use the DRB Temperature Probe #CH7050, or an equivalent temperature measuring tool, measure the engine coolant temperature.

Is the ECT Sensor value with -15°C (5°F) of the temperature probe reading?

Yes >> Go To 6

No >> Go To 7

---

6. OTHER POSSIBLE CAUSES

Inspect the Temperature Sensors for any physical damage.

Inspect the engine coolant. Make sure the coolant is at the proper level. Refer to the Service Information COOLING.

Make sure the Temperature Sensors are properly installed.

Make sure the CMP and CKP sensors are installed properly. Check the connectors for any signs of damage.

WARNING: When the engine is operating, do not stand in direct line with the fan. Do not put your hands near the pulleys, belts, or fan. Do not wear loose clothing. Failure to follow these instructions can result in personal injury or death.

Refer to any Technical Service Bulletins (TSBs) that may apply.

With the engine running at normal operating temperature, monitor the Temperature sensor parameters while wiggling the wire harness. Look for parameter values to change.

Visually inspect the related wire harness. Look for any chafed, pierced, pinched, partially broken wires and broken, bent, pushed out, or corroded terminals.

CAUTION: Do not probe the PCM harness connectors. Probing the PCM harness connectors will damage the PCM terminals resulting in poor terminal to pin connection. Install Miller Special Tool #8815 to perform diagnosis.

Inspect and clean all PCM, engine, and chassis grounds.

Were any problems found during the above inspections?

Yes >> Repair as necessary.
Perform the POWERTRAIN VERIFICATION TEST. (Refer to 9 - ENGINE - STANDARD PROCEDURE)

No >> Test Complete.

P0128-THERMOSTAT RATIONALITY (CONTINUED)

7. SIGNAL CIRCUIT SHORTED TO BATTERY VOLTAGE

NOTE: Visually inspect both the component and the PCM connectors. Look for damage, partially broken wires and backed out or corroded terminals

Turn the ignition off.

Disconnect the applicable Temperature Sensor harness connector.

Disconnect the C2 PCM harness connector.

Ignition on, engine not running.

Measure the voltage on the (K2) ECT Signal circuit and the (G31) AAT Signal circuit at the appropriate Temperature Sensor harness connector.

Is the voltage above 5.2 volts?

Yes >> Repair the short to battery voltage in the Signal circuit. Perform the POWERTRAIN VERIFICATION TEST. (Refer to 9 - ENGINE - STANDARD PROCEDURE)

No >> Go To 8

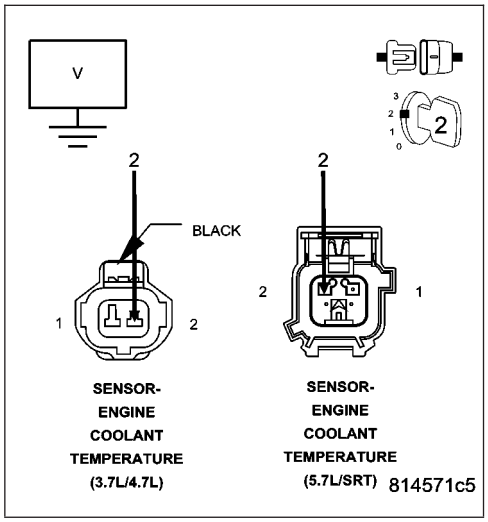

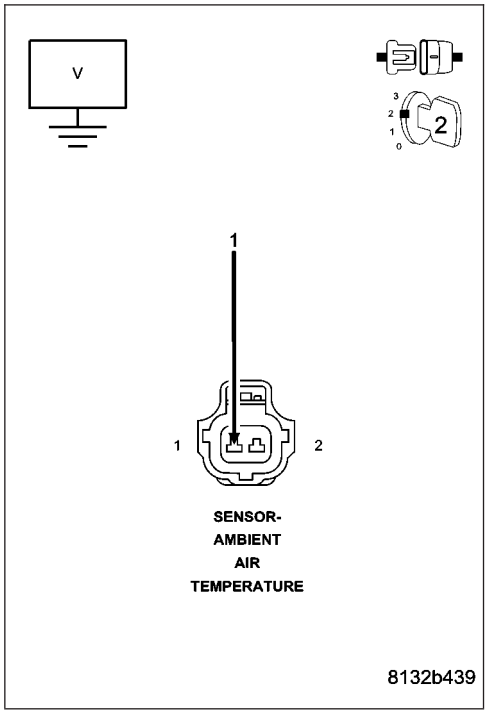

P0128-THERMOSTAT RATIONALITY (CONTINUED)

8. TEMPERATURE SENSOR

Turn the ignition off.

Connect the C2 PCM harness connector.

Connect a jumper wire across the ECT and AAT Sensor harness connectors.

Ignition on, engine not running.

With a scan tool, read the Temperature Sensor voltage.

Does the voltage start at 5.0 volts and drop below 1.0 volt when the jumper wire is installed?

Yes >> Replace the appropriate Temperature Sensor.
Perform the POWERTRAIN VERIFICATION TEST. (Refer to 9 - ENGINE - STANDARD PROCEDURE)

No >> Go To 9

NOTE: Disconnect the jumper wire before continuing.

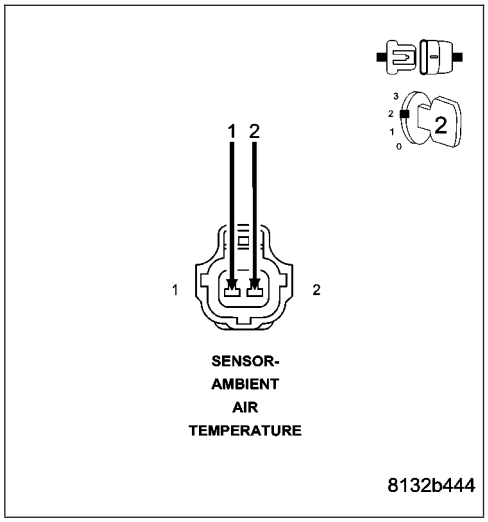

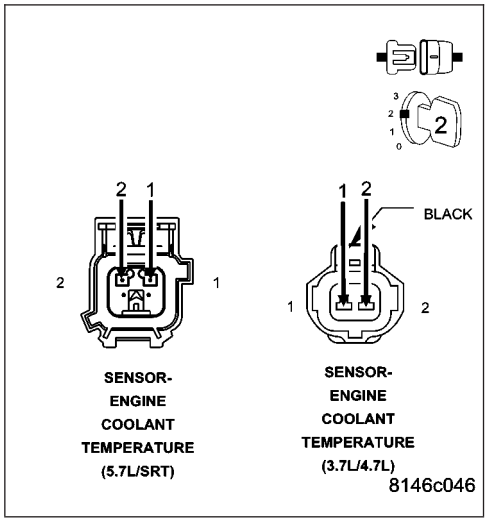

P0128-THERMOSTAT RATIONALITY (CONTINUED)

9. SIGNAL CIRCUIT OPEN

Turn the ignition off.

CAUTION: Do not probe the PCM harness connectors. Probing the PCM harness connectors will damage the PCM terminals resulting in poor terminal to pin connection. Install Miller Special Tool #8815 to perform diagnosis.

Measure the resistance of the (K2) ECT Sensor Signal circuit from the ECT Sensor harness connector to the appropriate terminal of special tool #8815.

Measure the resistance of the (G31) AAT Sensor Signal circuit from the AAT Sensor harness connector to the appropriate terminal of special tool #8815.

Is the resistance below 5.0 ohms?

Yes >> Go To 10

No >> Repair the open in the Sensor Signal circuit.
Perform the POWERTRAIN VERIFICATION TEST. (Refer to 9 - ENGINE - STANDARD PROCEDURE))

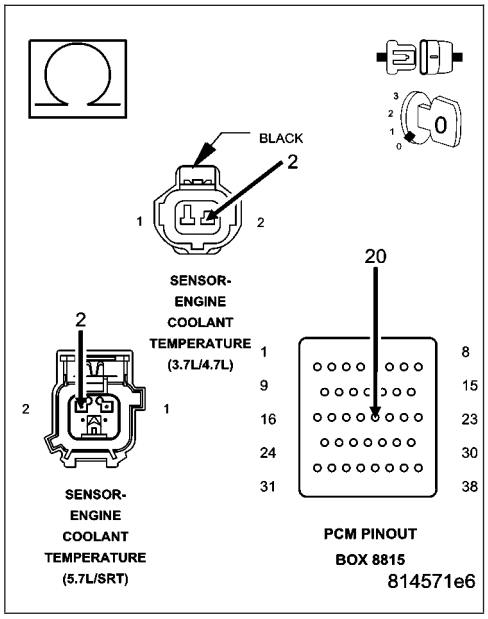

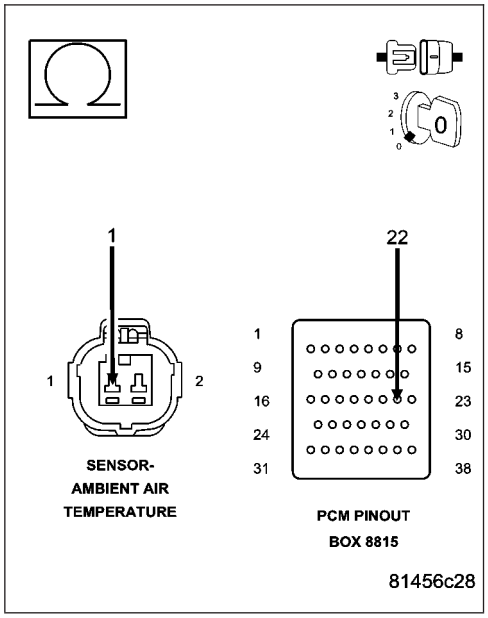

P0128-THERMOSTAT RATIONALITY (CONTINUED)

10. SENSOR GROUND CIRCUIT OPEN

Measure the resistance of the (K900) Sensor ground circuit from the appropriate Temperature Sensor harness connector to the appropriate terminal of special tool #8815.

Is the resistance below 5.0 ohms?

Yes >> Go To 11

No >> Repair the open in the Sensor ground circuit.
Perform the POWERTRAIN VERIFICATION TEST. (Refer to 9 - ENGINE - STANDARD PROCEDURE)

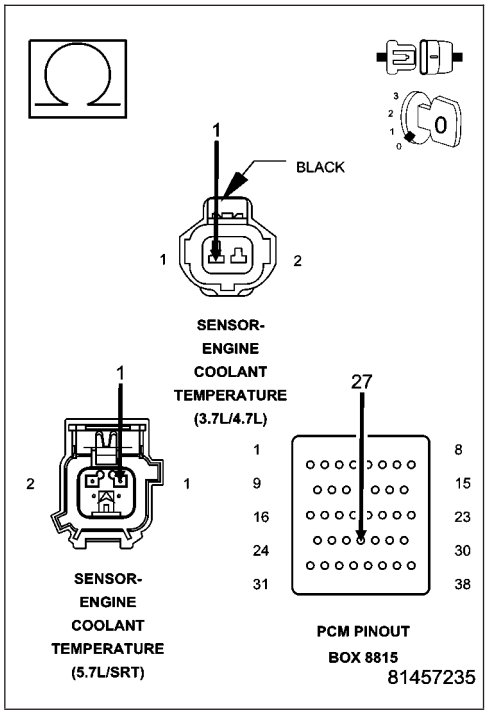

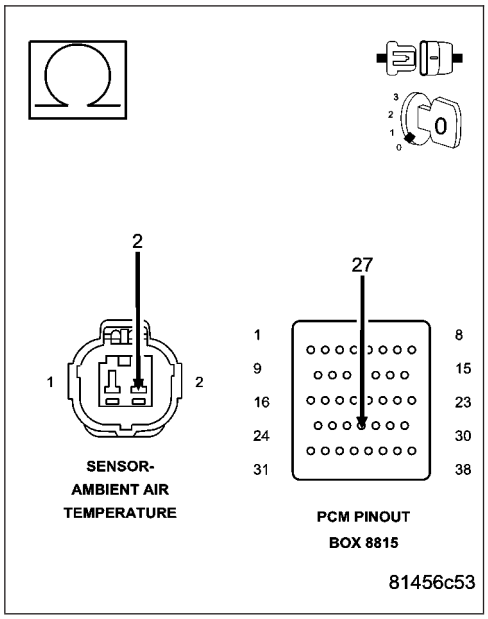

P0128-THERMOSTAT RATIONALITY (CONTINUED)

11. SIGNAL CIRCUIT SHORTED TO GROUND

Measure the resistance between ground and the Sensor Signal circuit in the Temperature Sensor harness connector.

Is the resistance below 100 ohms?

Yes >> Repair the short to ground in the Signal circuit. Perform the POWERTRAIN VERIFICATION TEST. (Refer to 9 - ENGINE - STANDARD PROCEDURE)

No >> Go To 12

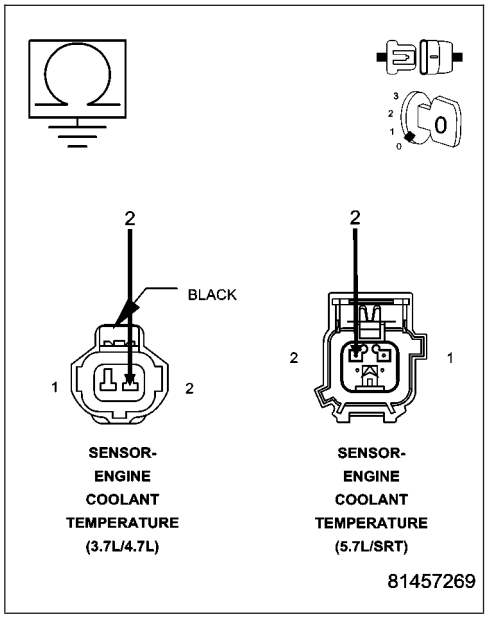

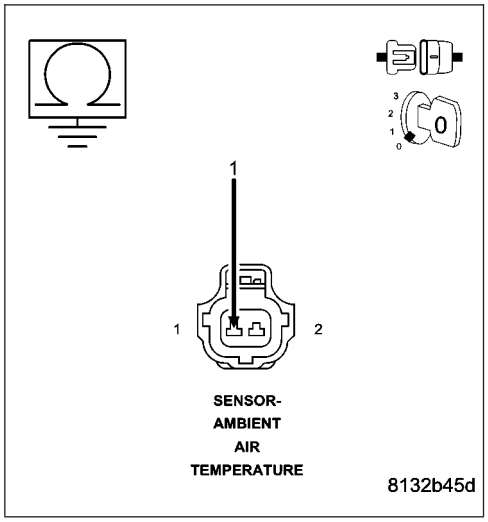

P0128-THERMOSTAT RATIONALITY (CONTINUED)

12. SIGNAL CIRCUIT SHORTED TO THE (K900) SENSOR GROUND CIRCUIT

Measure the resistance between the Signal circuit and the (K900) Sensor ground circuit in the (K2) ECT Sensor harness connector.

Measure the resistance between the Signal circuit and the (K900) Sensor ground circuit in the (G31) AAT Sensor harness connector.

Is the resistance below 100 ohms?

Yes >> Repair the short between the (K900) Sensor ground circuit and the appropriate Sensor Signal circuit.
Perform the POWERTRAIN VERIFICATION TEST. (Refer to 9 - ENGINE - STANDARD PROCEDURE)

No >> Go To 13

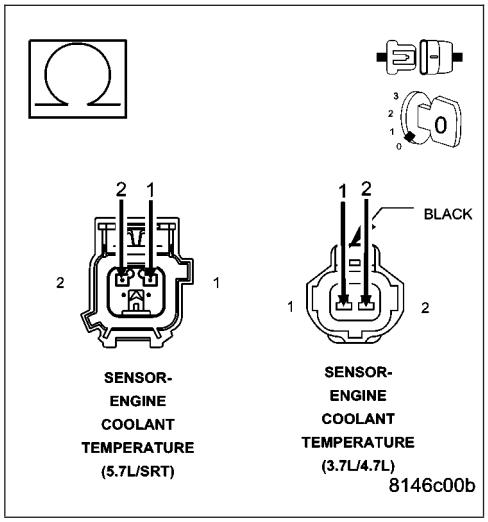

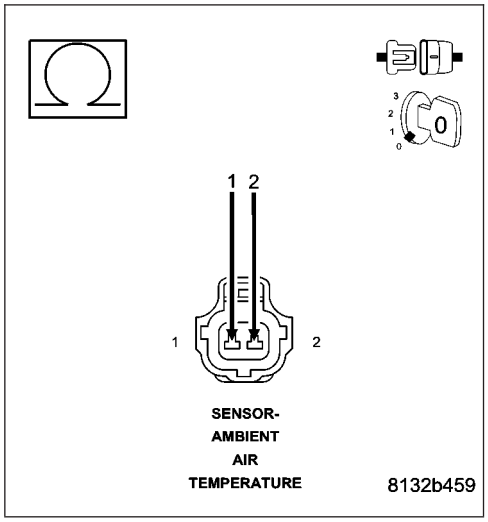

13. PCM

NOTE: Before continuing, check the PCM harness connector terminals for corrosion, damage, or terminal push out. Repair as necessary.

Using the schematics as a guide, inspect the wire harness and connectors. Pay particular attention to all Power and Ground circuits.

Were there any problems found?

Yes >> Repair as necessary.
Perform the POWERTRAIN VERIFICATION TEST. (Refer to 9 - ENGINE - STANDARD PROCEDURE)

No >> Replace and program the Powertrain Control Module per Service Information.
Perform the POWERTRAIN VERIFICATION TEST. (Refer to 9 - ENGINE - STANDARD PROCEDURE)

P0129-BAROMETRIC PRESSURE OUT-OF-RANGE LOW

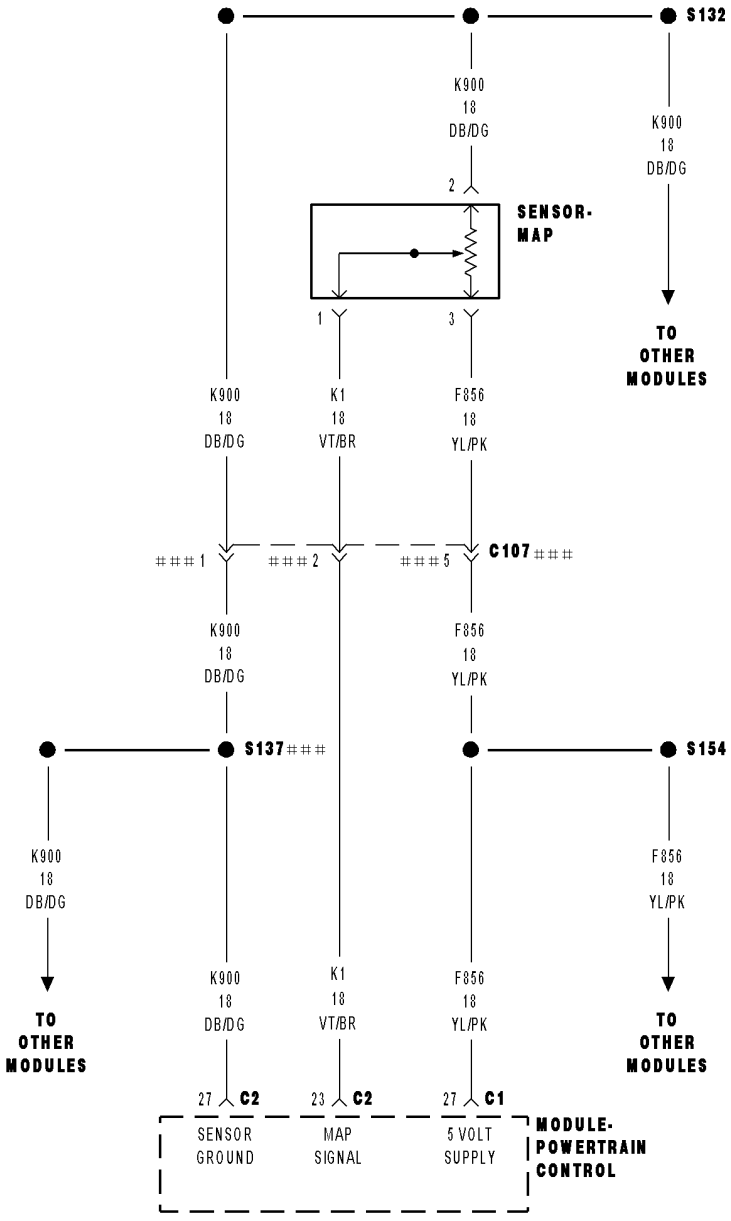

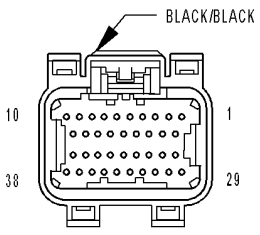

MODULE-
POWERTRAIN
CONTROL C1
(NGC)

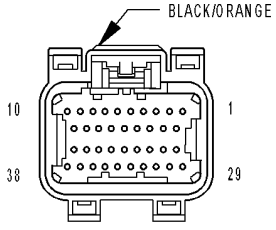

MODULE-
POWERTRAIN
CONTROL C2
(NGC)

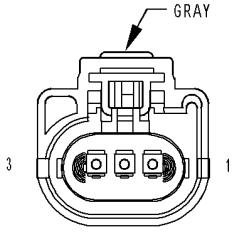

SENSOR-
MAP
(GAS)

81452cc9

P0129-BAROMETRIC PRESSURE OUT-OF-RANGE LOW (CONTINUED)

For the Engine circuit diagram (Refer to 9 - ENGINE - SCHEMATICS AND DIAGRAMS).

For a complete wiring diagram **Refer to Section 8W**.

- **When Monitored:**
  With the ignition key on. No Cam or Crank signal within 75 ms. Engine speed less than 250 RPM.
- **Set Condition:**
  The PCM senses the voltage from the MAP sensor to be less than 2.2 volts but above 0.04 of a volt for 300 milliseconds. One Trip Fault. Three good trips to turn off the MIL. (5.7L ETC lamp will flash)

Possible Causes
(F856) 5-VOLT SUPPLY CIRCUIT SHORTED TO BATTERY VOLTAGE
(F856) 5-VOLT SUPPLY CIRCUIT OPEN
(F856) 5-VOLT SUPPLY CIRCUIT SHORTED TO GROUND
(K1) MAP SIGNAL CIRCUIT OPEN
(K1) MAP SIGNAL CIRCUIT SHORTED TO GROUND
(K1) MAP SIGNAL CIRCUIT SHORTED TO THE (K900) SENSOR GROUND CIRCUIT
MAP SENSOR
PCM

Always perform the Pre-Diagnostic Troubleshooting procedure before proceeding. (Refer to 9 - ENGINE - DIAGNOSIS AND TESTING).

Diagnostic Test

1. ACTIVE DTC

Ignition on, engine not running.
With a scan tool, read DTCs.

Is the DTC active at this time.

Yes >> Go To 2

No >> Refer to the INTERMITTENT CONDITION Diagnostic Procedure.
Perform the POWERTRAIN VERIFICATION TEST. (Refer to 9 - ENGINE - STANDARD PROCEDURE)

P0129-BAROMETRIC PRESSURE OUT-OF-RANGE LOW (CONTINUED)

2. (F856) 5-VOLT SUPPLY CIRCUIT

Turn the ignition off.

Disconnect the MAP Sensor harness connector.

Ignition on, engine not running.

Measure the voltage on the (F856) 5-volt Supply circuit in the MAP Sensor harness connector.

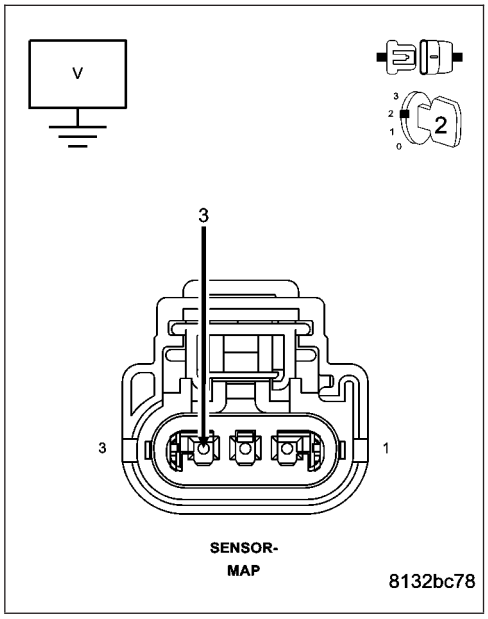

Is the voltage between 4.5 to 5.2 volts?

Yes >> Go To 3

No >> Go To 7

---

3. MAP SENSOR

With a scan tool, monitor the MAP Sensor voltage with the Sensor harness connector disconnected.

Is the voltage above 2.2 volts?

Yes >> Replace the MAP Sensor.
Perform the POWERTRAIN VERIFICATION TEST. (Refer to 9 - ENGINE - STANDARD PROCEDURE)

No >> Go To 4

---

4. (K1) MAP SIGNAL CIRCUIT OPEN

Turn the ignition off.

Disconnect the C2 PCM harness connector.

CAUTION: Do not probe the PCM harness connectors. Probing the PCM harness connectors will damage the PCM terminals resulting in poor terminal to pin connection. Install Miller Special Tool #8815 to perform diagnosis.

Measure the resistance of the (K1) MAP Signal circuit from the MAP Sensor harness connector to the appropriate terminal of special tool #8815.

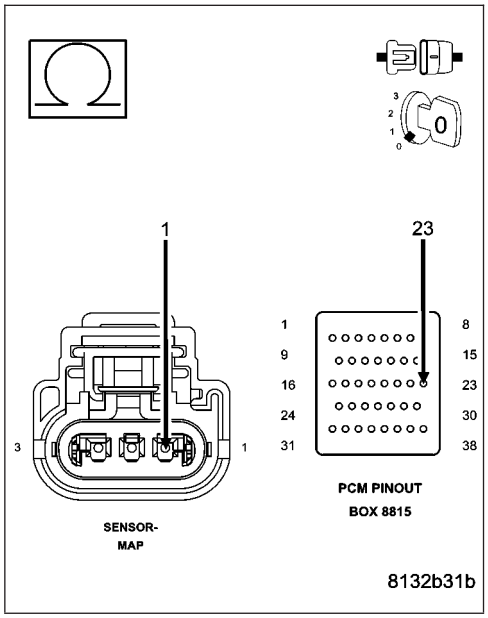

Is the resistance below 5.0 ohms?

Yes >> Go To 5

No >> Repair the open in the (K1) MAP Signal circuit.
Perform the POWERTRAIN VERIFICATION TEST. (Refer to 9 - ENGINE - STANDARD PROCEDURE)

P0129-BAROMETRIC PRESSURE OUT-OF-RANGE LOW (CONTINUED)

5. (K1) MAP SIGNAL CIRCUIT SHORTED TO THE (K900) SENSOR GROUND CIRCUIT

Measure the resistance between the (K900) Sensor ground circuit and the (K1) MAP Signal circuit in the MAP Sensor harness connector.

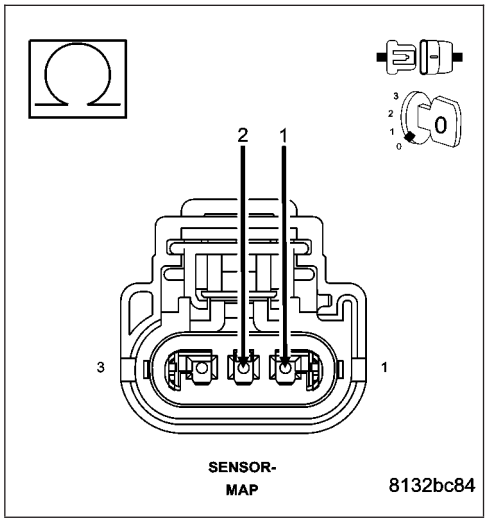

Is the resistance below 5.0 ohms?

Yes >> Repair the short between the (K900) Sensor ground circuit and the (K1) MAP Signal circuit.
Perform the POWERTRAIN VERIFICATION TEST. (Refer to 9 - ENGINE - STANDARD PROCEDURE)

No >> Go To 6

6. (K1) MAP SIGNAL CIRCUIT SHORTED TO GROUND

Measure the resistance between ground and the (K1) MAP Signal circuit in the MAP Sensor harness connector.

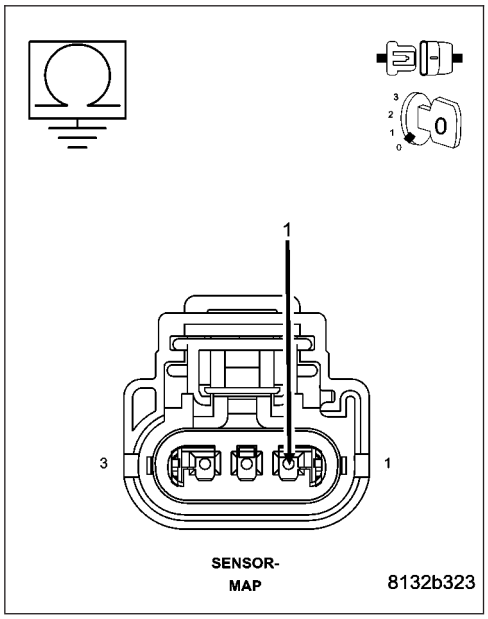

Is the resistance below 100 ohms?

Yes >> Repair the short to ground in the (K1) MAP Signal circuit.
Perform the POWERTRAIN VERIFICATION TEST. (Refer to 9 - ENGINE - STANDARD PROCEDURE)

No >> Go To 10

P0129-BAROMETRIC PRESSURE OUT-OF-RANGE LOW (CONTINUED)

7. (F856) 5-VOLT SUPPLY CIRCUIT SHORTED TO BATTERY VOLTAGE

Turn the ignition off.

Disconnect the C1 PCM harness connector.

Ignition on, engine not running.

Measure the voltage on the (F856) 5-volt Supply circuit in the MAP Sensor harness connector.

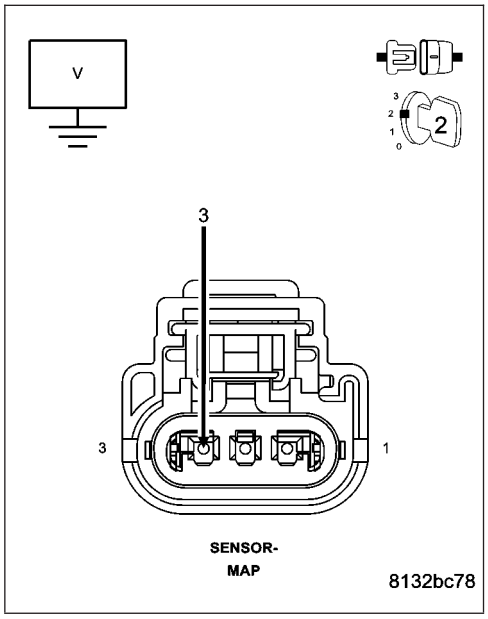

Is the voltage above 5.2 volts?

Yes >> Repair the short to battery voltage in the (F856) 5-volt Supply circuit.
Perform the POWERTRAIN VERIFICATION TEST. (Refer to 9 - ENGINE - STANDARD PROCEDURE)

No >> Go To 8

---

8. (F856) 5-VOLT SUPPLY CIRCUIT OPEN

Turn the ignition off.

CAUTION: Do not probe the PCM harness connectors. Probing the PCM harness connectors will damage the PCM terminals resulting in poor terminal to pin connection. Install Miller Special Tool #8815 to perform diagnosis.

Measure the resistance of the (F856) 5-volt Supply circuit from the MAP Sensor harness connector to the appropriate terminal of special tool #8815.

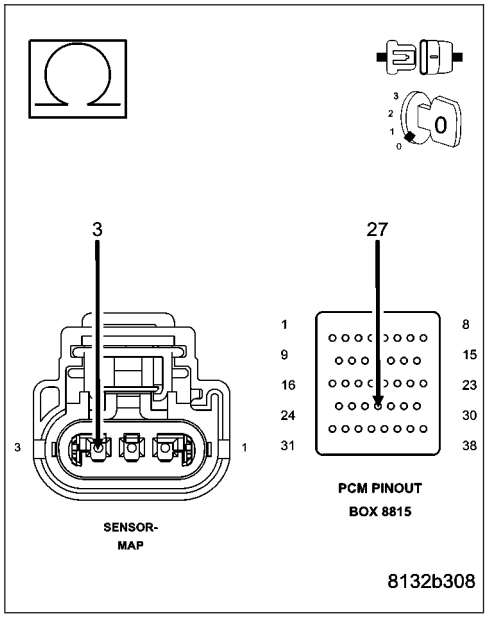

Is the resistance below 5.0 ohms?

Yes >> Go To 9

No >> Repair the open in the (F856) 5-volt Supply circuit.
Perform the POWERTRAIN VERIFICATION TEST. (Refer to 9 - ENGINE - STANDARD PROCEDURE)

P0129-BAROMETRIC PRESSURE OUT-OF-RANGE LOW (CONTINUED)

9. (F856) 5-VOLT SUPPLY CIRCUIT SHORTED TO GROUND

Measure the resistance between ground and the (F856) 5-volt Supply circuit in the MAP Sensor harness connector.

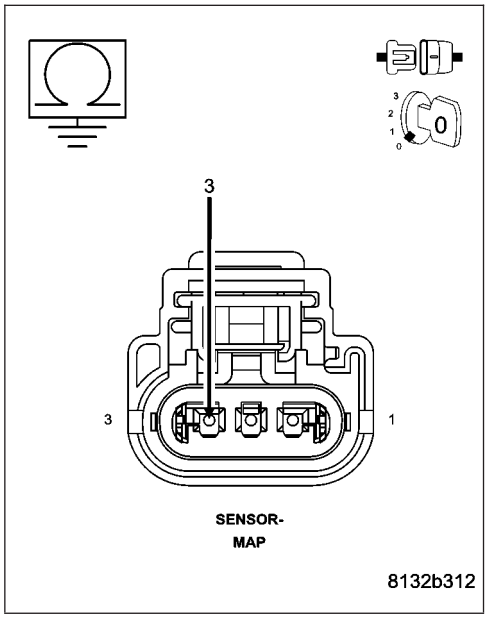

Is the resistance below 100 ohms?

Yes >> Repair the short to ground in the (F856) 5-volt Supply circuit.
Perform the POWERTRAIN VERIFICATION TEST. (Refer to 9 - ENGINE - STANDARD PROCEDURE)

No >> Go To 10

10. PCM

NOTE: Before continuing, check the PCM harness connector terminals for corrosion, damage, or terminal push out. Repair as necessary.

Using the schematics as a guide, inspect the wire harness and connectors. Pay particular attention to all Power and Ground circuits.

Were there any problems found?

Yes >> Repair as necessary.
Perform the POWERTRAIN VERIFICATION TEST. (Refer to 9 - ENGINE - STANDARD PROCEDURE)

No >> Replace and program the Powertrain Control Module per Service Information.
Perform the POWERTRAIN VERIFICATION TEST. (Refer to 9 - ENGINE - STANDARD PROCEDURE)

P0131-O2 SENSOR 1/1 CIRCUIT LOW

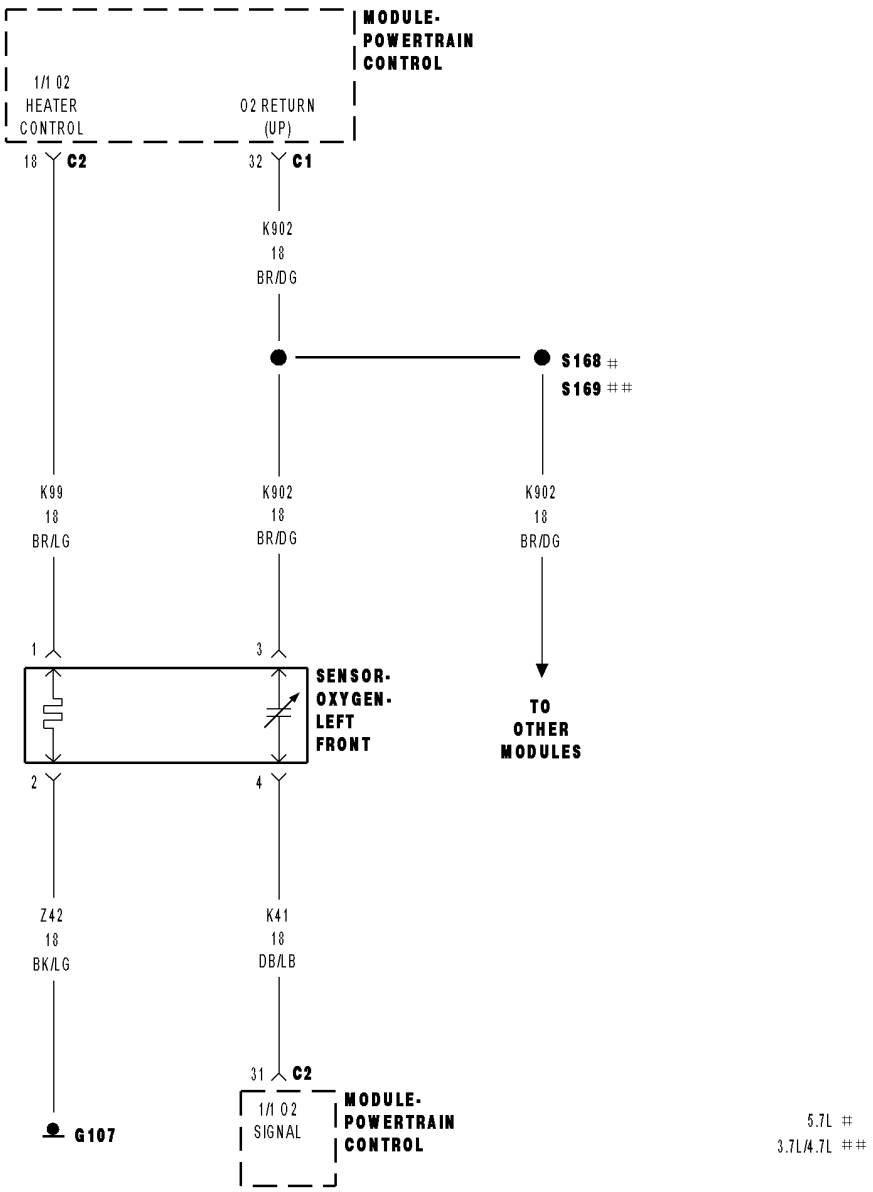

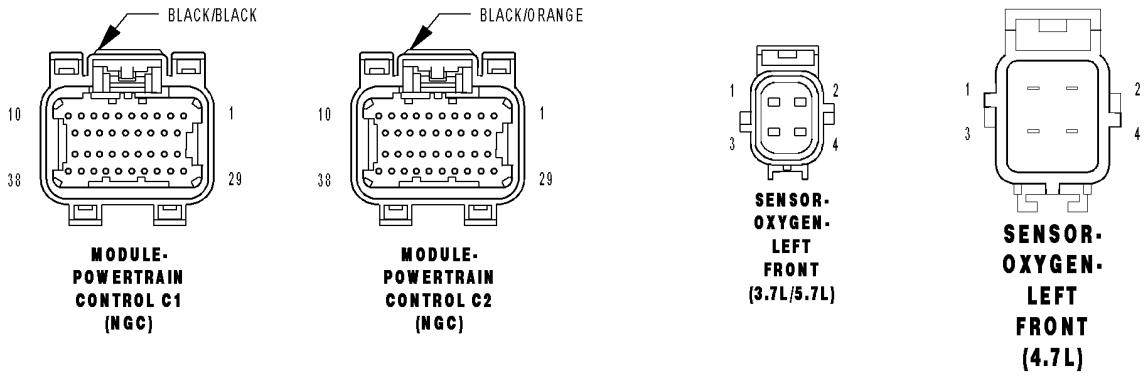

P0131-O2 SENSOR 1/1 CIRCUIT LOW (CONTINUED)

For the Engine circuit diagrams (Refer to 9 - ENGINE - SCHEMATICS AND DIAGRAMS).

For a complete wiring diagram **Refer to Section 8W**.

- **When Monitored:**
  Engine running for less than 30 seconds and the O2 Sensor Heater Temperature is less than 251°C (484°F) with battery voltage greater 10.4 volts.
- **Set Condition:**
  The oxygen sensor signal voltage is below 2.5196 volts for 6 seconds after starting engine. One Trip Fault. Three good trips to turn off the MIL.

Possible Causes
(K902) O2 RETURN UPSTREAM CIRCUIT SHORTED TO GROUND
(K41) O2 1/1 SIGNAL CIRCUIT SHORTED TO GROUND
(K41) O2 1/1 SIGNAL CIRCUIT SHORTED TO THE (K902) O2 RETURN UPSTREAM CIRCUIT
(K41) O2 1/1 SIGNAL CIRCUIT SHORTED TO THE (Z42) O2 1/1 HEATER GROUND CIRCUIT
O2 SENSOR
PCM

Always perform the Pre-Diagnostic Troubleshooting procedure before proceeding. (Refer to 9 - ENGINE - DIAGNOSIS AND TESTING).

Diagnostic Test

1. O2 SENSOR BELOW 2.52 VOLTS

Start the engine.
Allow the engine to reach normal operating temperature.
With a scan tool, read the 1/1 O2 Sensor voltage.

Is the voltage below 2.52 volts?

Yes >> Go To 2

No >> Refer to the INTERMITTENT CONDITION Diagnostic Procedure.
Perform the POWERTRAIN VERIFICATION TEST. (Refer to 9 - ENGINE - STANDARD PROCEDURE)

---

2. (K41) O2 SENSOR 1/1 SIGNAL CIRCUIT

Turn the ignition off.
Disconnect the 1/1 O2 Sensor harness connector.
Ignition on, engine not running.
With a scan tool, monitor the O2 Sensor voltage.

Is the 1/1 O2 Sensor voltage above 4.8 volts?

Yes >> Go To 3

No >> Go To 5

P0131-O2 SENSOR 1/1 CIRCUIT LOW (CONTINUED)

3. O2 SENSOR

Measure the voltage on the (K902) O2 Return Upstream circuit in the O2 Sensor harness connector.

Is the voltage at 2.5 volts?

Yes >> Replace the O2 Sensor.
Perform the POWERTRAIN VERIFICATION TEST. (Refer to 9 - ENGINE - STANDARD PROCEDURE)

No >> Go To 4

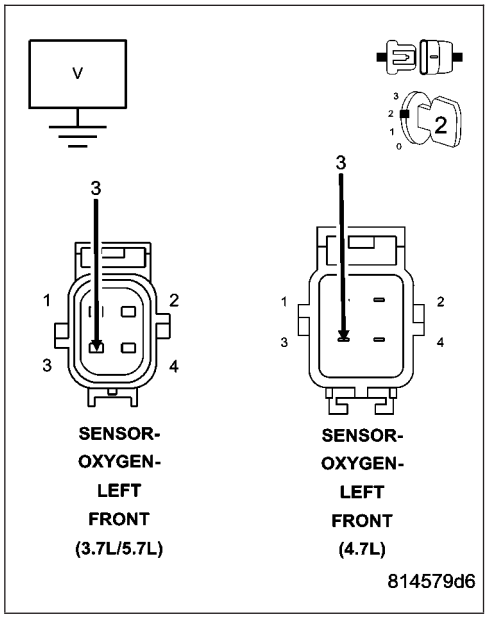

4. (K902) O2 RETURN UPSTREAM CIRCUIT SHORTED TO GROUND

Turn the ignition off.

Disconnect the C1 PCM harness connector.

Measure the resistance between ground and the (K902) O2 Return Upstream circuit in the O2 Sensor harness connector.

Is the resistance below 100 ohms?

Yes >> Repair the short to ground in the (K902) O2 Return Upstream circuit.
Perform the POWERTRAIN VERIFICATION TEST. (Refer to 9 - ENGINE - STANDARD PROCEDURE)

No >> Go To 8

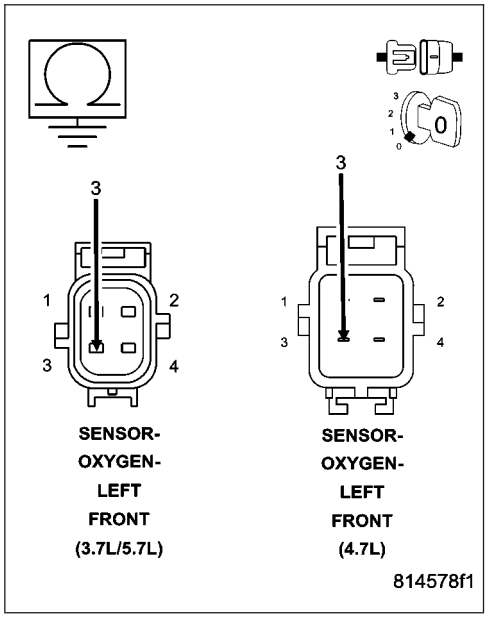

P0131-O2 SENSOR 1/1 CIRCUIT LOW (CONTINUED)

5. (K41) O2 SENSOR 1/1 SIGNAL CIRCUIT SHORTED TO GROUND

Turn the ignition off.

Disconnect the C1 and C2 PCM harness connectors.

Measure the resistance between ground and the (K41) O2 Sensor 1/1 Signal circuit in the O2 Sensor harness connector.

Is the resistance below 100 ohms?

Yes >> Repair the short to ground in the (K41) O2 Sensor 1/1 Signal circuit.

Perform the POWERTRAIN VERIFICATION TEST. (Refer to 9 - ENGINE - STANDARD PROCEDURE)

No >> Go To 6

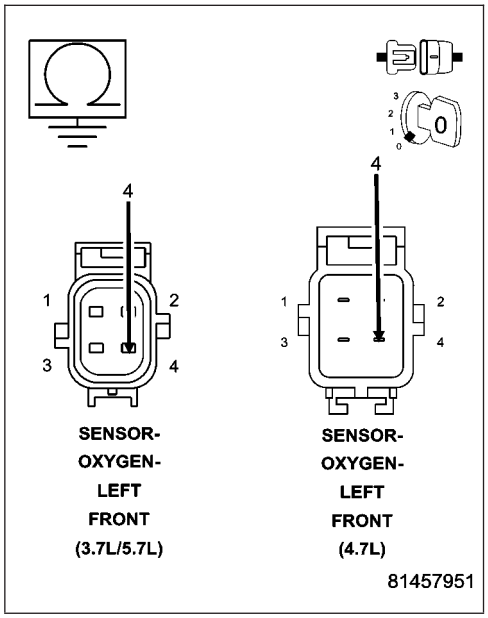

6. (K41) O2 SENSOR 1/1 SIGNAL CIRCUIT SHORTED TO THE (K902) O2 RETURN UPSTREAM CIRCUIT

Measure the resistance between the (K41) O2 Sensor 1/1 Signal circuit and the (K902) O2 Return Upstream circuit in the O2 Sensor harness connector.

Is the resistance below 100 ohms?

Yes >> Repair the short between the (K902) O2 Return Upstream circuit and the (K41) O2 Sensor 1/1 Signal circuit.

Perform the POWERTRAIN VERIFICATION TEST. (Refer to 9 - ENGINE - STANDARD PROCEDURE)

No >> Go To 7

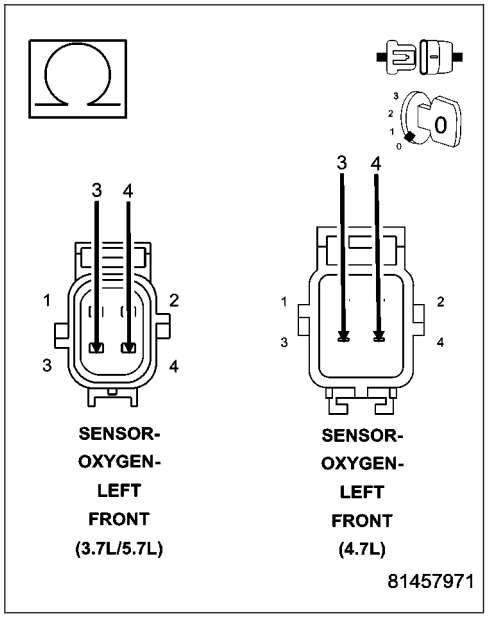

P0131-O2 SENSOR 1/1 CIRCUIT LOW (CONTINUED)

7. (K41) O2 SENSOR 1/1 SIGNAL CIRCUIT SHORTED TO THE (Z42) O2 1/1 HEATER GROUND CIRCUIT

Measure the resistance between the (K41) O2 Sensor 1/1 Signal circuit and the (Z42) O2 1/1 Heater ground circuit in the O2 Sensor harness connector.

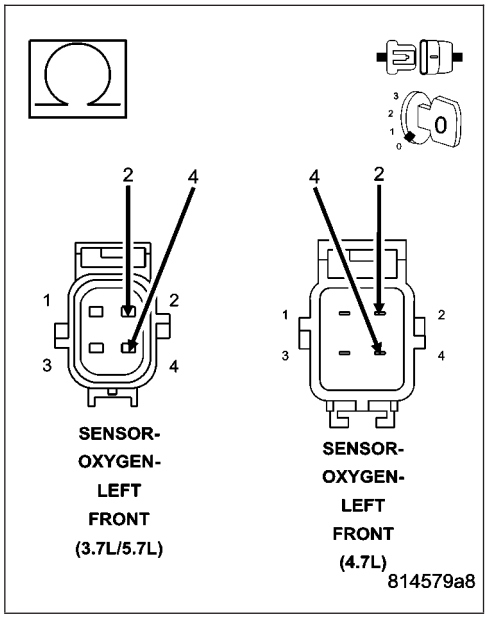

Is the resistance below 100 ohms?

Yes >> Repair the short between the (Z42) O2 1/1 Heater ground circuit and the (K41) O2 Sensor 1/1 Signal circuit.
Perform the POWERTRAIN VERIFICATION TEST. (Refer to 9 - ENGINE - STANDARD PROCEDURE)

No >> Go To 8

---

8. PCM

NOTE: Before continuing, check the PCM harness connector terminals for corrosion, damage, or terminal push out. Repair as necessary.

Using the schematics as a guide, inspect the wire harness and connectors. Pay particular attention to all Power and Ground circuits.

Were there any problems found?

Yes >> Repair as necessary.
Perform the POWERTRAIN VERIFICATION TEST. (Refer to 9 - ENGINE - STANDARD PROCEDURE)

No >> Replace and program the Powertrain Control Module per Service Information.
Perform the POWERTRAIN VERIFICATION TEST. (Refer to 9 - ENGINE - STANDARD PROCEDURE)

P0132-O2 SENSOR 1/1 CIRCUIT HIGH

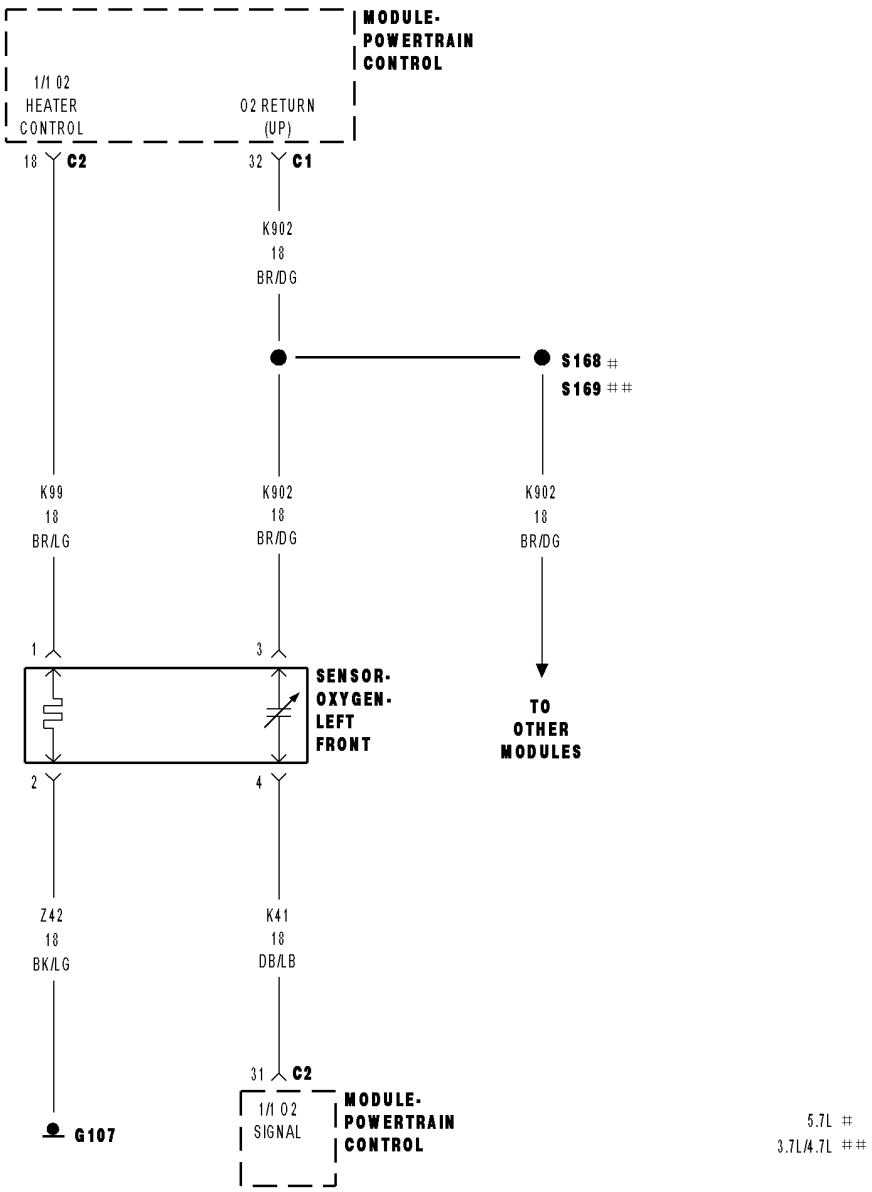

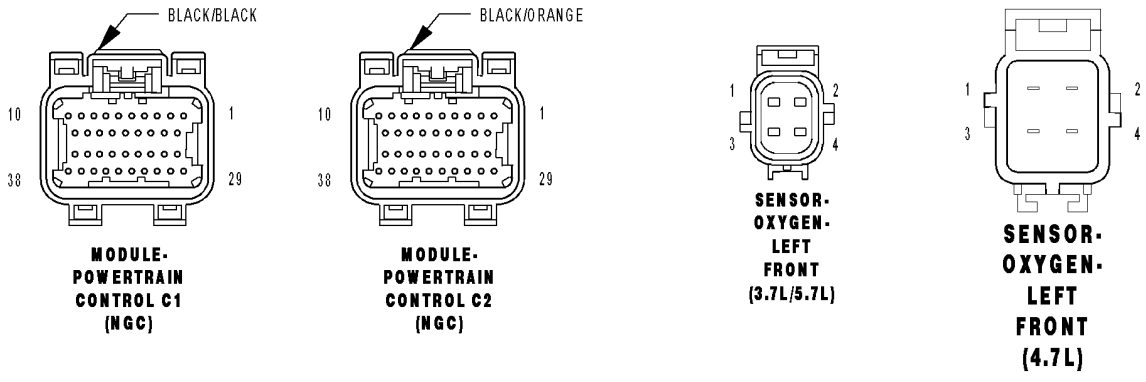

P0132-O2 SENSOR 1/1 CIRCUIT HIGH (CONTINUED)

For the Engine circuit diagrams (Refer to 9 - ENGINE - SCHEMATICS AND DIAGRAMS).

For a complete wiring diagram **Refer to Section 8W**.

- **When Monitored:**
  O2 Sensor Heater Temperature is greater than 496°C (925°F) and battery voltage greater than 10.4 volts.
- **Set Condition:**
  The Oxygen Sensor voltage is above 3.99 volts for 40 seconds. One Trip Fault. Three good trips to turn off the MIL.

Possible Causes
(K41) O2 1/1 SIGNAL CIRCUIT SHORTED TO BATTERY VOLTAGE
(K902) O2 RETURN UPSTREAM CIRCUIT SHORTED TO BATTERY VOLTAGE
(K41) O2 1/1 SIGNAL CIRCUIT OPEN
(K902) O2 RETURN UPSTREAM CIRCUIT OPEN
O2 SENSOR
PCM

Always perform the Pre-Diagnostic Troubleshooting procedure before proceeding. (Refer to 9 - ENGINE - DIAGNOSIS AND TESTING).

Diagnostic Test

1. O2 SENSOR ABOVE 3.99 VOLTS

NOTE: When only one O2 Sensor is shorted to voltage, the scan tool will display all O2 Sensor voltage readings at approximately 5.0 volts. When diagnosing this DTC, only diagnose the O2 Sensor that set the DTC.

Start the engine.

Allow the engine to reach normal operating temperature.

With a scan tool, read the 1/1 O2 Sensor voltage.

Is the voltage above 3.9 volts?

Yes >> Go To 2

No >> Refer to the INTERMITTENT CONDITION Diagnostic Procedure.
Perform the POWERTRAIN VERIFICATION TEST. (Refer to 9 - ENGINE - STANDARD PROCEDURE)

P0132-O2 SENSOR 1/1 CIRCUIT HIGH (CONTINUED)

2. (K41) O2 1/1 SIGNAL CIRCUIT SHORTED TO BATTERY VOLTAGE

Start the engine and allow the engine to idle.

Disconnect the 1/1 O2 Sensor harness connector.

Measure the voltage on the (K41) O2 Sensor 1/1 Signal circuit in the 1/1 O2 Sensor harness connector.

NOTE: Measure the voltage in reference to ground, not the (K902) O2 Return Upstream circuit.

Is the voltage above 0 volts?

Yes >> Repair the short to battery voltage in the (K41) O2 Sensor 1/1 Signal circuit.
Perform the POWERTRAIN VERIFICATION TEST. (Refer to 9 - ENGINE - STANDARD PROCEDURE)

No >> Go To 3

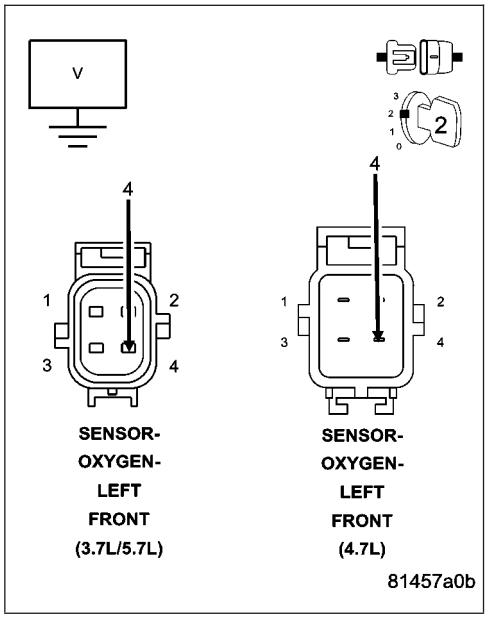

3. (K902) O2 RETURN UPSTREAM CIRCUIT SHORTED TO BATTERY VOLTAGE

Turn the ignition off.

Disconnect the C1 PCM harness connector.

Ignition on, engine not running.

Measure the voltage on the (K902) O2 Return Upstream circuit in the 1/1 O2 Sensor harness connector.

Is there any voltage present?

Yes >> Repair the short to battery voltage in the (K902) O2 Return Upstream circuit.
Perform the POWERTRAIN VERIFICATION TEST. (Refer to 9 - ENGINE - STANDARD PROCEDURE)

No >> Go To 4

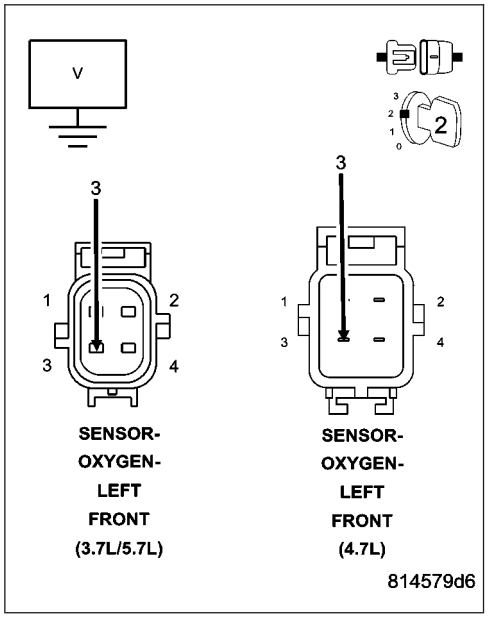

P0132-O2 SENSOR 1/1 CIRCUIT HIGH (CONTINUED)

4. 1/1 O2 SENSOR

Turn the ignition off.

Connect the C1 PCM harness connector.

Connect a jumper wire between the (K41) O2 1/1 Signal circuit and the (K902) O2 Return Upstream circuit in the O2 Sensor harness connector.

Ignition on, engine not running.

With a scan tool, monitor the 1/1 O2 Sensor voltage.

Is the voltage between 2.3 and 2.7 volts with the jumper wire installed?

Yes >> Replace the O2 Sensor.
Perform the POWERTRAIN VERIFICATION TEST. (Refer to 9 - ENGINE - STANDARD PROCEDURE)

No >> Go To 5

NOTE: Remove the jumper wire before continuing.

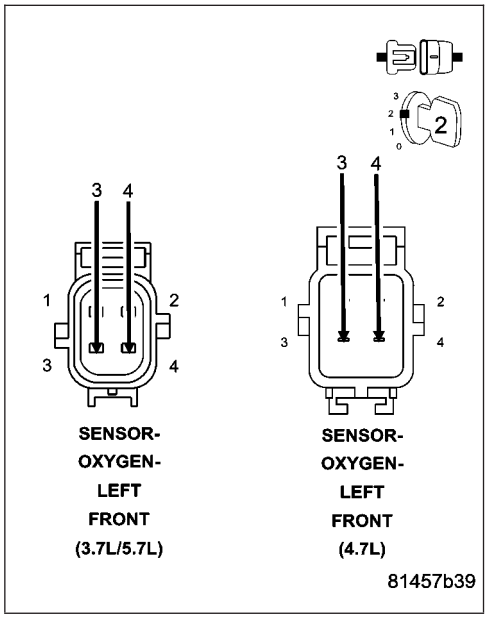

5. (K41) O2 1/1 SIGNAL CIRCUIT OPEN

Turn the ignition off.

Disconnect the C1 and C2 PCM harness connectors.

CAUTION: Do not probe the PCM harness connectors. Probing the PCM harness connectors will damage the PCM terminals resulting in poor terminal to pin connection. Install Miller Special Tool #8815 to perform diagnosis.

Measure the resistance of the (K41) O2 1/1 Signal circuit from the 1/1 O2 Sensor harness connector to the appropriate terminal of special tool #8815.

Is the resistance below 5.0 ohms?

Yes >> Go To 6

No >> Repair the open in the (K41) O2 1/1 Signal circuit.
Perform the POWERTRAIN VERIFICATION TEST. (Refer to 9 - ENGINE - STANDARD PROCEDURE)

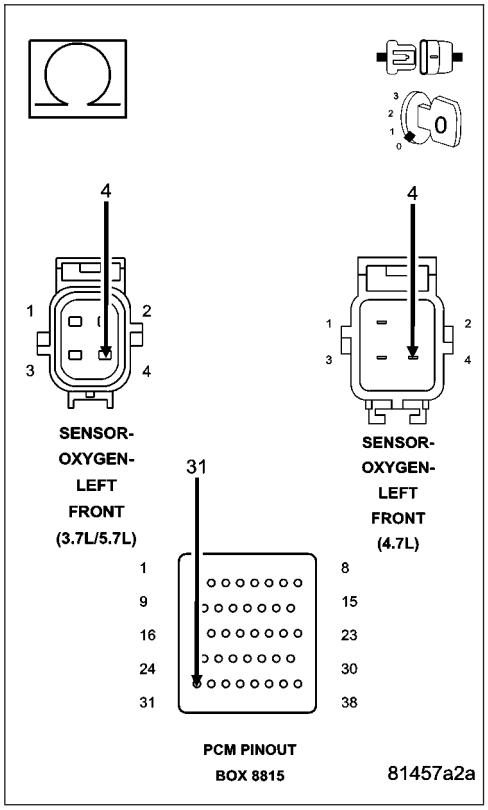

P0132-O2 SENSOR 1/1 CIRCUIT HIGH (CONTINUED)

6. (K902) O2 RETURN UPSTREAM CIRCUIT OPEN

Measure the resistance of the (K902) O2 Return Upstream circuit from the O2 Sensor harness connector to the appropriate terminal of special tool #8815.

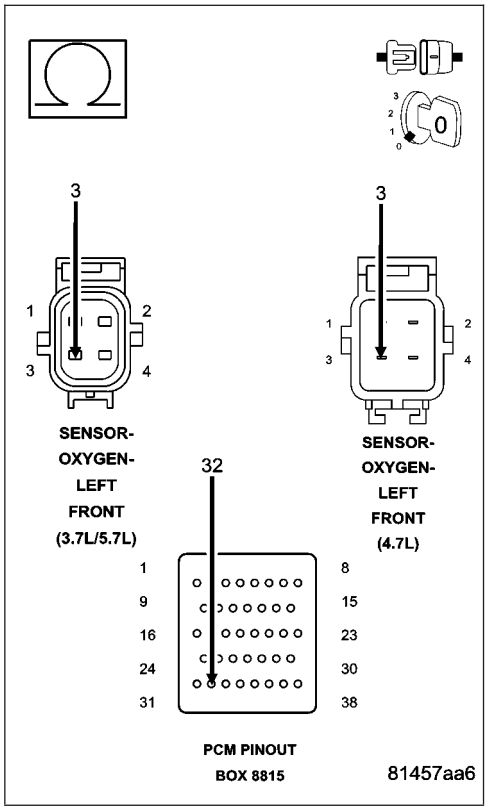

Is the resistance below 5.0 ohms?

Yes >> Go To 7

No >> Repair the open in the (K902) O2 Return Upstream circuit. Perform the POWERTRAIN VERIFICATION TEST. (Refer to 9 - ENGINE - STANDARD PROCEDURE)

7. PCM

NOTE: Before continuing, check the PCM harness connector terminals for corrosion, damage, or terminal push out. Repair as necessary.

Using the schematics as a guide, inspect the wire harness and connectors. Pay particular attention to all Power and Ground circuits.

Were there any problems found?

Yes >> Repair as necessary.
Perform the POWERTRAIN VERIFICATION TEST. (Refer to 9 - ENGINE - STANDARD PROCEDURE)

No >> Replace and program the Powertrain Control Module per Service Information.
Perform the POWERTRAIN VERIFICATION TEST. (Refer to 9 - ENGINE - STANDARD PROCEDURE)

P0133-O2 SENSOR 1/1 SLOW RESPONSE

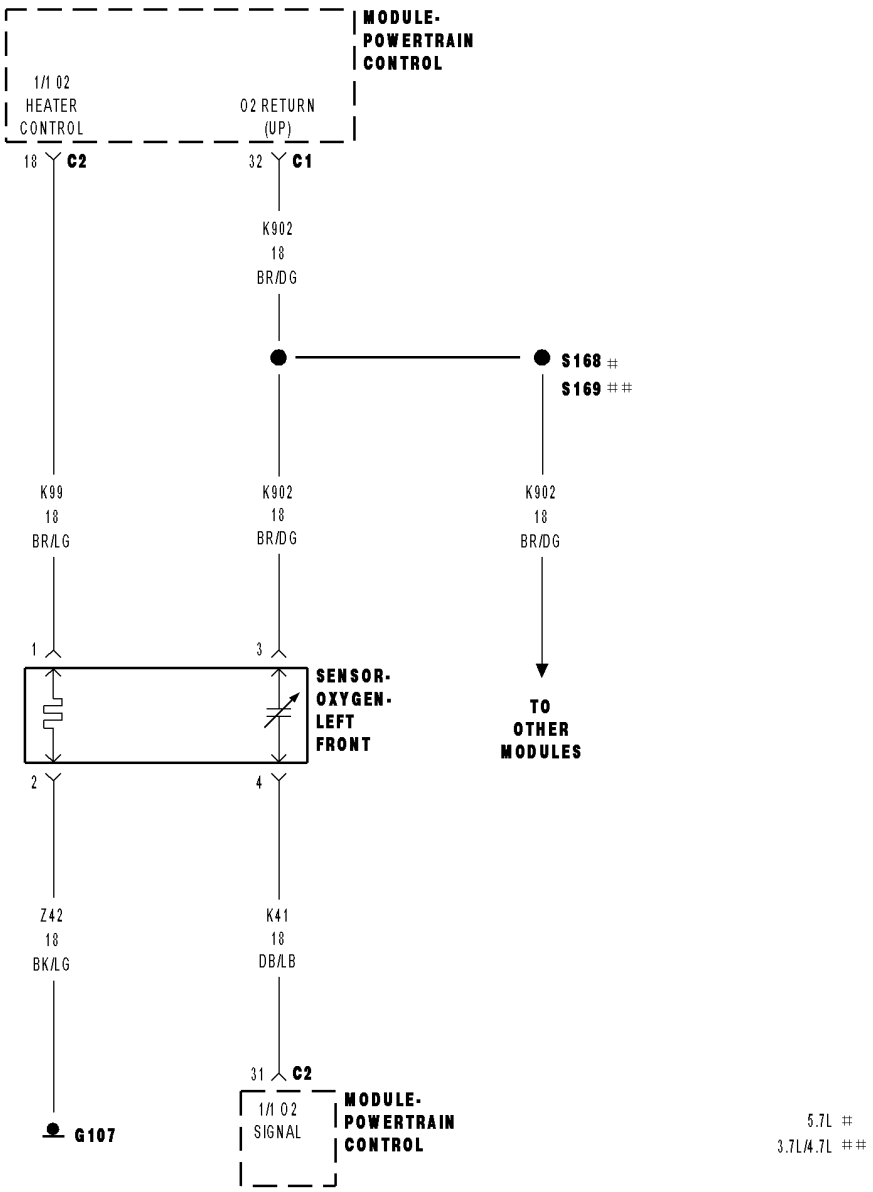

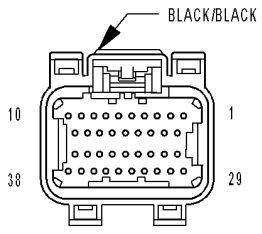

MODULE-
POWERTRAIN
CONTROL C1
(NGC)

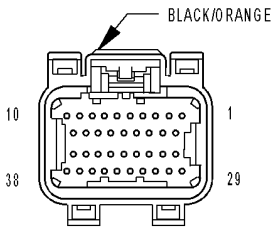

MODULE-
POWERTRAIN
CONTROL C2
(NGC)

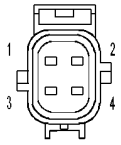

SENSOR-
OXYGEN-
LEFT
FRONT
(3.7L/5.7L)

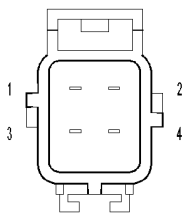

SENSOR-
OXYGEN-
LEFT
FRONT
(4.7L)

81452b01

P0133-O2 SENSOR 1/1 SLOW RESPONSE (CONTINUED)

For the Engine circuit diagram (Refer to 9 - ENGINE - SCHEMATICS AND DIAGRAMS).

For a complete wiring diagram **Refer to Section 8W**.

- **When Monitored:**
  Vehicle is started and driven between 20 and 55 MPH with the Throttle open for a minimum of 120 seconds. Coolant greater than 70°C (158°F). Catalytic Converter Temp greater than 600°C (1112°F) and EVAP Purge is active.
- **Set Condition:**
  The oxygen sensor signal voltage switches less than 16 times from lean to rich within 20 seconds during monitoring. Two Trip Fault. Three good trips to turn off the MIL.

Possible Causes
EXHAUST LEAK
(K41) O2 1/1 SIGNAL CIRCUIT
(K902) O2 RETURN UPSTREAM CIRCUIT
O2 SENSOR

Always perform the Pre-Diagnostic Troubleshooting procedure before proceeding. (Refer to 9 - ENGINE - DIAGNOSIS AND TESTING).

Diagnostic Test

1. ACTIVE DTC

NOTE: Check for contaminants that may have damaged the O2 Sensor: contaminated fuel, unapproved silicone, oil and coolant.
Ignition on, engine not running.

NOTE: After the repairs have been made, verify proper O2 Sensor operation. If all the O2 Sensor voltage readings have not returned to normal, follow the diagnostic procedure for the remaining O2 Sensors.
With a scan tool, read DTCs.

Is the DTC active at this time?

Yes >> Go To 2

No >> Refer to the INTERMITTENT CONDITION Diagnostic Procedure.
Perform the POWERTRAIN VERIFICATION TEST. (Refer to 9 - ENGINE - STANDARD PROCEDURE)

---

2. EXHAUST LEAK

Start the engine.
Inspect the exhaust system for leaks between the engine and the O2 Sensors.

Are there any exhaust leaks?

Yes >> Repair or replace the leaking exhaust parts as necessary.
Perform the POWERTRAIN VERIFICATION TEST. (Refer to 9 - ENGINE - STANDARD PROCEDURE)

No >> Go To 3

P0133-O2 SENSOR 1/1 SLOW RESPONSE (CONTINUED)

3. (K41) O2 1/1 SIGNAL CIRCUIT

Turn the ignition off

Disconnect the 1/1 O2 Sensor harness connector.

Ignition on, engine not running.

Measure the voltage on the (K41) O2 1/1 Signal circuit in the O2 Sensor harness connector.

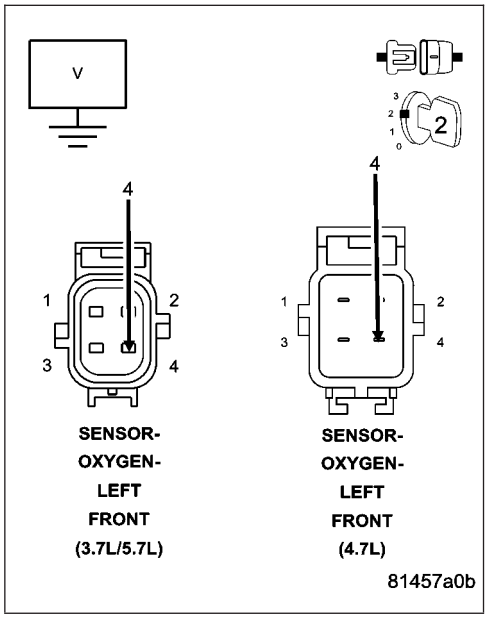

Is the voltage between 4.5 and 5.0 volts?

Yes >> Go To 4

No >> Check the (K41) O2 1/1 Signal circuit for a short to ground, open, or short to voltage. If OK, replace and program the Powertrain Control Module per Service Information.

Perform the POWERTRAIN VERIFICATION TEST. (Refer to 9 - ENGINE - STANDARD PROCEDURE)

4. (K902) O2 RETURN UPSTREAM CIRCUIT

Measure the voltage on the (K902) O2 Return Upstream circuit in the O2 Sensor harness connector.

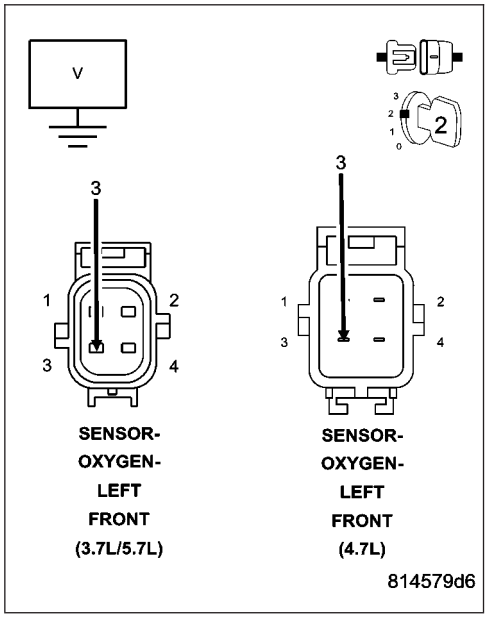

Is the voltage at 2.5 volts?

Yes >> Go To 5

No >> Check the (K902) O2 Return Upstream circuit for a short to ground, open, or short to voltage. If OK, replace and program the Powertrain Control Module per Service Information.

Perform (NGC) POWERTRAIN VERIFICATION TEST VER - 5. (Refer to 8 - ELECTRICAL/ELECTRONIC CONTROL MODULES/POWERTRAIN CONTROL MODULE - DIAGNOSIS AND TESTING)

5. O2 SENSOR

If there are no possible causes remaining, view repair.

Repair

Replace the O2 Sensor

Perform the POWERTRAIN VERIFICATION TEST. (Refer to 9 - ENGINE - STANDARD PROCEDURE)

P0135-O2 SENSOR 1/1 HEATER PERFORMANCE

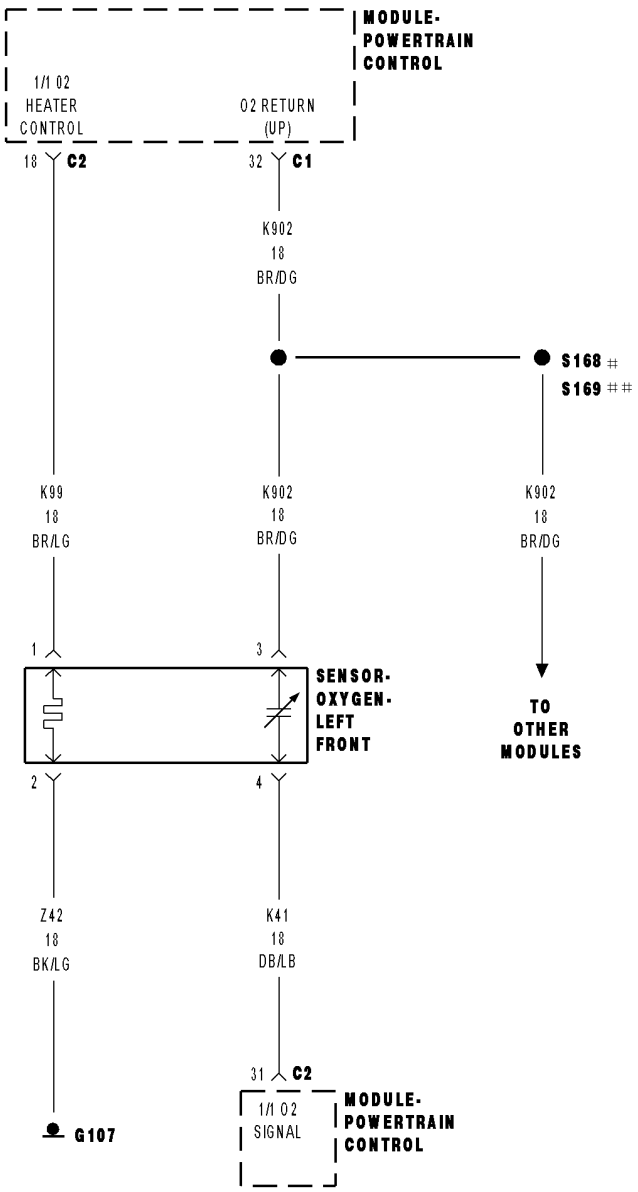

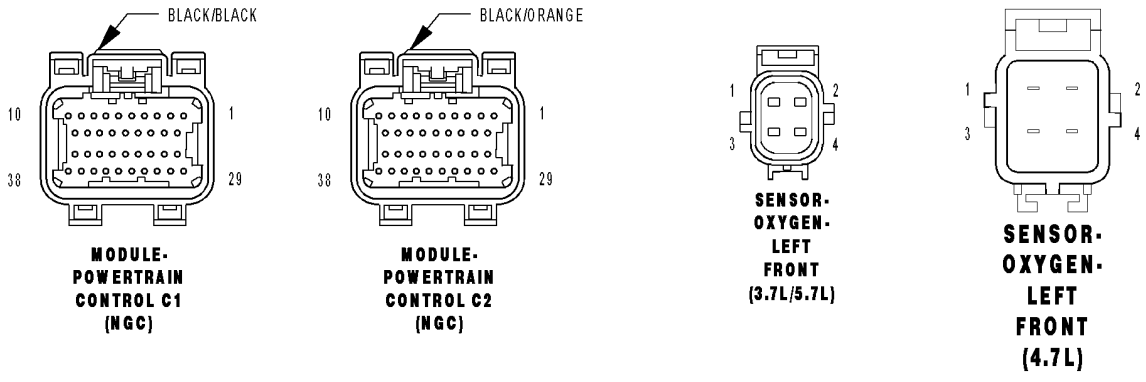

P0135-O2 SENSOR 1/1 HEATER PERFORMANCE (CONTINUED)

For the Engine circuit diagram (Refer to 9 - ENGINE - SCHEMATICS AND DIAGRAMS).

For a complete wiring diagram **Refer to Section 8W**.

Theory of Operation

This diagnostic provides a continuous check of the O2 heater circuit during operation. The heater circuit is momentarily disabled to allow a resistance measurement to be taken to infer heater temperature. The current delivery to the heater is duty cycled to maintain a specific target temperature. The error from the target temperature is continuously monitored to assess heater performance.

- **When Monitored:**
  Engine running and heater duty cycle greater than 0%. Battery voltage greater than 11.0 volts.
- **Set Condition:**
  No sensor output is received when the PCM powers up the sensor heater. Two trip fault. Three good trips to turn off the MIL.

Possible Causes
(K99) O2 1/1 HEATER CONTROL CIRCUIT OPEN
(Z42) O2 1/1 HEATER GROUND CIRCUIT OPEN
O2 SENSOR HEATER ELEMENT
PCM

Always perform the Pre-Diagnostic Troubleshooting procedure before proceeding. (Refer to 9 - ENGINE - DIAGNOSIS AND TESTING).

Diagnostic Test

1. O2 SENSOR HEATER OPERATION

Turn the ignition off.

NOTE: Wait a minimum of 8 minutes to allow the O2 Sensor to cool down before continuing the test. Allow the O2 Sensor voltage to stabilize between 4.6 and 5.0 volts.

Ignition on, engine not running.

With a scan tool, actuate the O2 Heater Test.

With the scan tool, monitor 1/1 O2 Sensor voltage for at least 2 minutes.

Does the voltage stay above 4.5 volts?

Yes >> Go To 2

No >> Refer to the INTERMITTENT CONDITION Diagnostic Procedure.
Perform the POWERTRAIN VERIFICATION TEST. (Refer to 9 - ENGINE - STANDARD PROCEDURE)

P0135-O2 SENSOR 1/1 HEATER PERFORMANCE (CONTINUED)

2. O2 SENSOR HEATER ELEMENT

Turn the ignition off.

NOTE: Allow the O2 sensor to cool down to room temperature.

Disconnect the O2 Sensor harness connector.

Measure the resistance of the O2 Heater Element across the 1/1 O2 Sensor connector between the O2 Heater Control terminal and the Heater ground terminal.

NOTE: O2 Heater Element resistance values should be measured at 70°F (21.1°C). The resistance value will vary with different temperature values.

Is the resistance of the O2 Sensor Heater Element between 2.0 and 30.0 ohms?

Yes >> Go To 3

No >> Replace the O2 Sensor.
Perform the POWERTRAIN VERIFICATION TEST. (Refer to 9 - ENGINE - STANDARD PROCEDURE)

3. (K99) O2 1/1 HEATER CONTROL CIRCUIT OPEN

Disconnect the C2 PCM harness connector.

CAUTION: Do not probe the PCM harness connectors. Probing the PCM harness connectors will damage the PCM terminals resulting in poor terminal to pin connection. Install Miller Special Tool #8815 to perform diagnosis.

Measure the resistance of the (K99) O2 1/1 Heater Control circuit from the O2 harness connector to the appropriate terminal of special tool #8815.

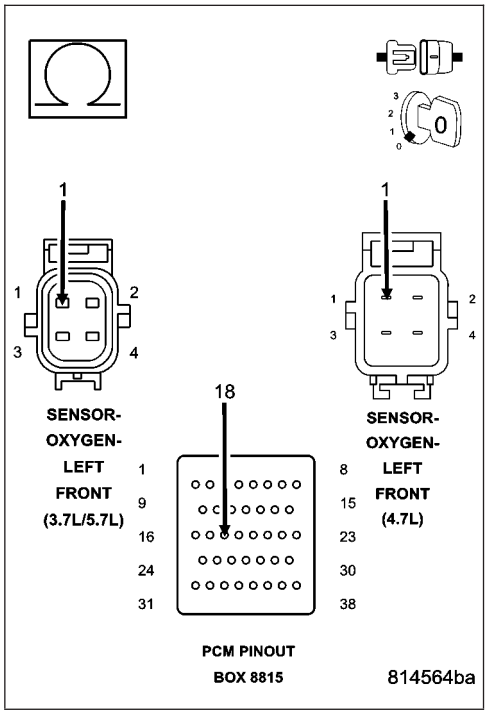

Is the resistance below 0.5 of an ohm?

Yes >> Go To 4

No >> Repair the excessive resistance in the (K99) O2 1/1 Heater Control circuit.
Perform the POWERTRAIN VERIFICATION TEST. (Refer to 9 - ENGINE - STANDARD PROCEDURE)

P0135-O2 SENSOR 1/1 HEATER PERFORMANCE (CONTINUED)

4. (Z42) O2 1/1 HEATER GROUND CIRCUIT OPEN

Measure the resistance between ground and the (Z42) O2 1/1 Heater ground circuit in the O2 Sensor harness connector.

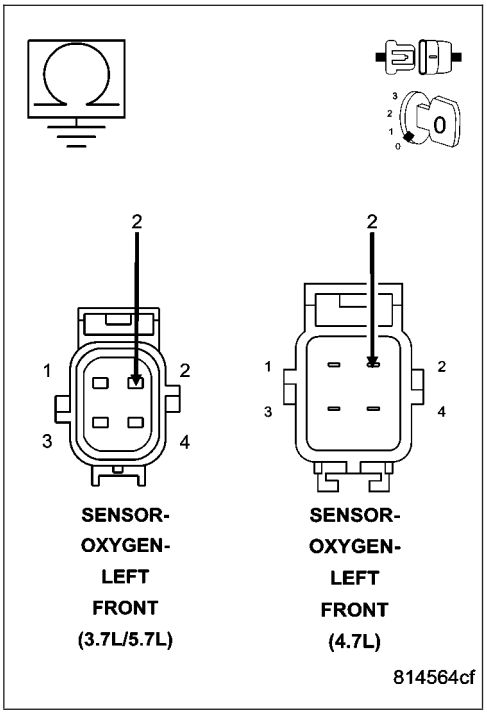

Is the resistance below 0.5 of an ohm?

Yes >> Go To 5

No >> Repair the excessive resistance in the (Z42) O2 1/1 Heater ground circuit.
Perform the POWERTRAIN VERIFICATION TEST. (Refer to 9 - ENGINE - STANDARD PROCEDURE)

---

5. PCM

NOTE: Before continuing, check the PCM harness connector terminals for corrosion, damage, or terminal push out. Repair as necessary.
Using the schematics as a guide, inspect the wire harness and connectors. Pay particular attention to all Power and Ground circuits.

Were there any problems found?

Yes >> Repair as necessary.
Perform the POWERTRAIN VERIFICATION TEST. (Refer to 9 - ENGINE - STANDARD PROCEDURE)

No >> Replace and program the Powertrain Control Module per Service Information.
Perform the POWERTRAIN VERIFICATION TEST. (Refer to 9 - ENGINE - STANDARD PROCEDURE)

P0137-O2 SENSOR 1/2 CIRCUIT LOW

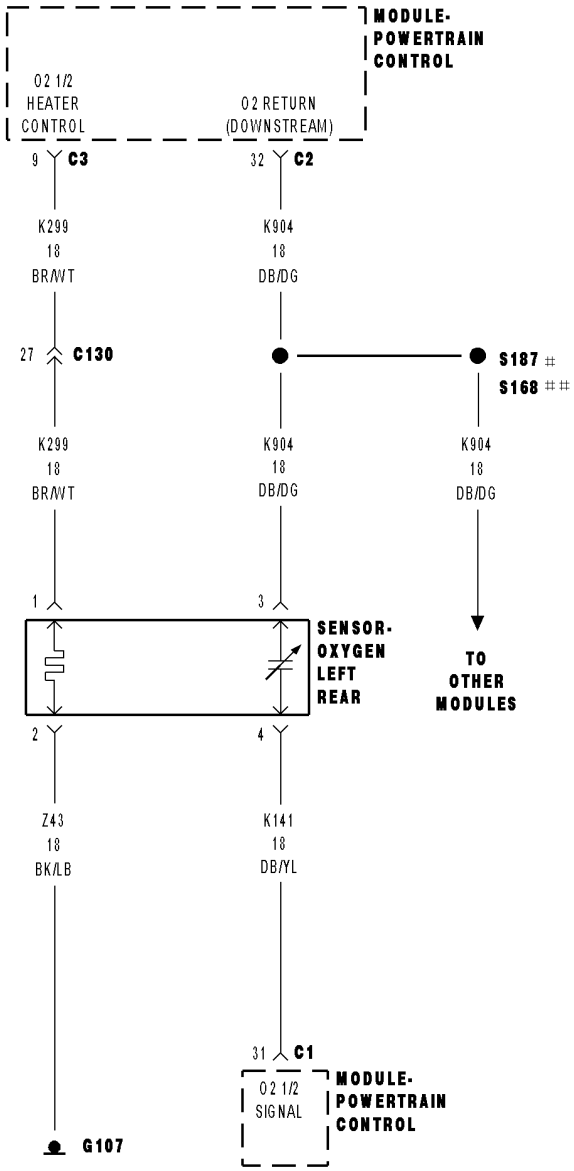

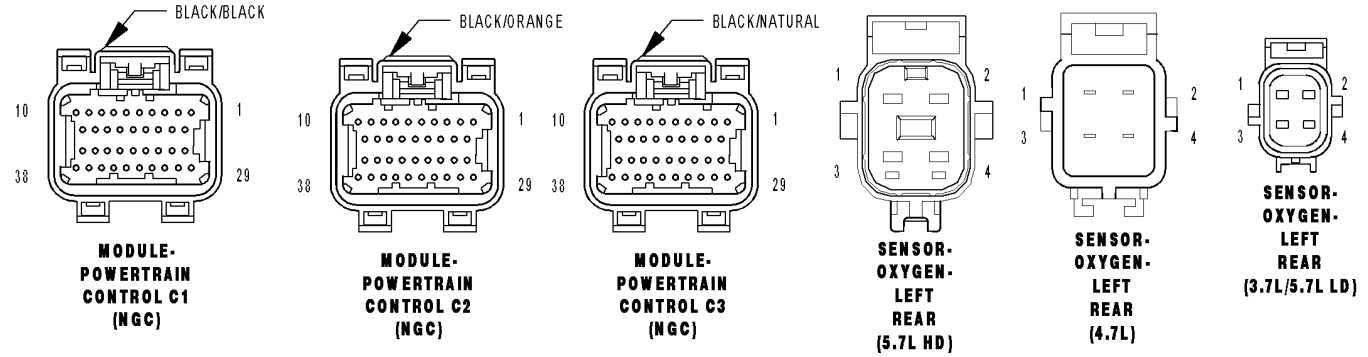

81452b26

P0137-O2 SENSOR 1/2 CIRCUIT LOW (CONTINUED)

For the Engine circuit diagram (Refer to 9 - ENGINE - SCHEMATICS AND DIAGRAMS).

For a complete wiring diagram **Refer to Section 8W**.

- **When Monitored:**
  Engine running for less than 30 seconds and the O2 Sensor Heater Temperature is less than 251°C (484°F) with battery voltage greater 10.99 volts.
- **Set Condition:**
  The oxygen sensor signal voltage is below 2.5196 volts for 3 seconds after starting engine. One Trip Fault. Three good trips to turn off the MIL.

Possible Causes
(K904) O2 RETURN DOWNSTREAM CIRCUIT SHORTED TO GROUND
(K141) O2 1/2 SIGNAL CIRCUIT SHORTED TO GROUND
(K141) O2 1/2 SIGNAL CIRCUIT SHORTED TO THE (K904) O2 RETURN DOWNSTREAM CIRCUIT
(K141) O2 1/2 SIGNAL CIRCUIT SHORTED TO THE (Z43) O2 1/2 HEATER GROUND CIRCUIT
O2 SENSOR
PCM

Always perform the Pre-Diagnostic Troubleshooting procedure before proceeding. (Refer to 9 - ENGINE - DIAGNOSIS AND TESTING).

Diagnostic Test

1. O2 SENSOR BELOW 2.52 VOLTS

Start the engine.
Allow the engine to reach normal operating temperature.
With a scan tool, read the 1/2 O2 Sensor voltage.

Is the voltage below 2.52 volts?

Yes >> Go To 2

No >> Refer to the INTERMITTENT CONDITION Diagnostic Procedure.
Perform the POWERTRAIN VERIFICATION TEST. (Refer to 9 - ENGINE - STANDARD PROCEDURE)

---

2. (K141) O2 1/2 SIGNAL CIRCUIT

Turn the ignition off.
Disconnect the 1/2 O2 Sensor harness connector.
Ignition on, engine not running.
With a scan tool, monitor the 1/2 O2 Sensor voltage.

Is the O2 Sensor voltage above 4.8 volts?

Yes >> Go To 3

No >> Go To 5

P0137-O2 SENSOR 1/2 CIRCUIT LOW (CONTINUED)

3. O2 SENSOR

Measure the voltage on the (K904) O2 Return Downstream circuit in the O2 Sensor harness connector.

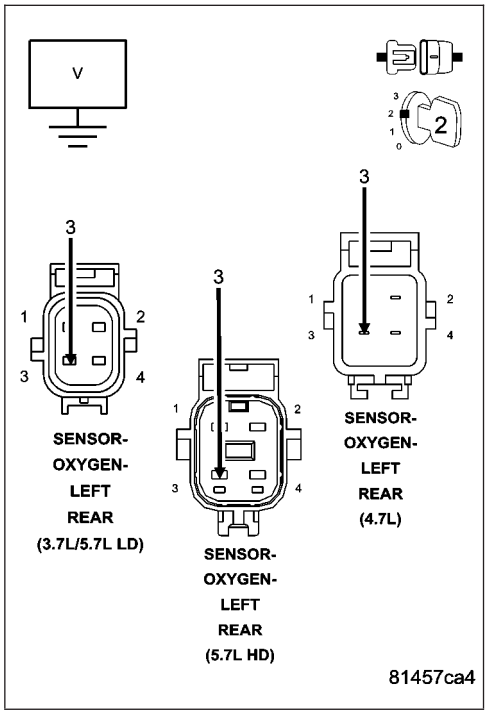

Is the voltage at 2.5 volts?

Yes >> Replace the O2 Sensor.
Perform the POWERTRAIN VERIFICATION TEST. (Refer to 9 - ENGINE - STANDARD PROCEDURE)

No >> Go To 4

4. (K904) O2 RETURN DOWNSTREAMCIRCUIT SHORTED TO GROUND

Turn the ignition off.

Disconnect the C2 PCM harness connector.

Measure the resistance between ground and the (K904) O2 Return Downstream circuit in the O2 Sensor harness connector.

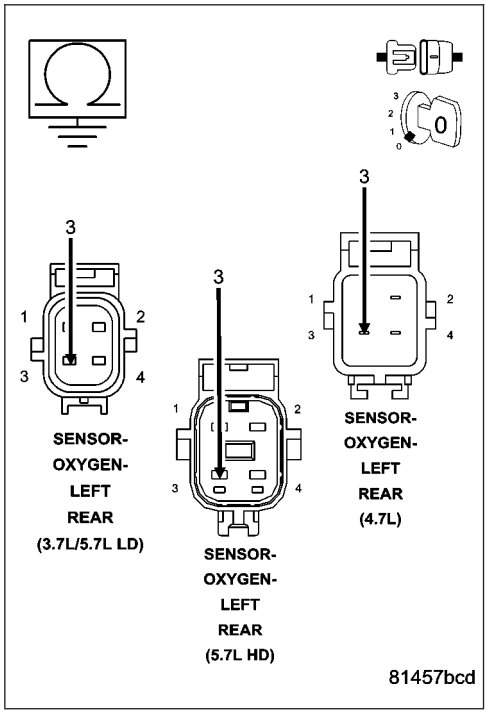

Is the resistance below 100 ohms?

Yes >> Repair the short to ground in the (K904) O2 Return Downstream circuit.
Perform the POWERTRAIN VERIFICATION TEST. (Refer to 9 - ENGINE - STANDARD PROCEDURE)

No >> Go To 8

P0137-O2 SENSOR 1/2 CIRCUIT LOW (CONTINUED)

5. (K141) O2 1/2 SIGNAL CIRCUIT SHORTED TO GROUND

Turn the ignition off.

Disconnect the C1 and C2 PCM harness connectors.

Measure the resistance between ground and the (K141) O2 1/2 Signal circuit in the O2 Sensor harness connector.

Is the resistance below 100 ohms?

Yes >> Repair the short to ground in the (K141) O2 1/2 Signal circuit.

Perform the POWERTRAIN VERIFICATION TEST. (Refer to 9 - ENGINE - STANDARD PROCEDURE)

No >> Go To 6

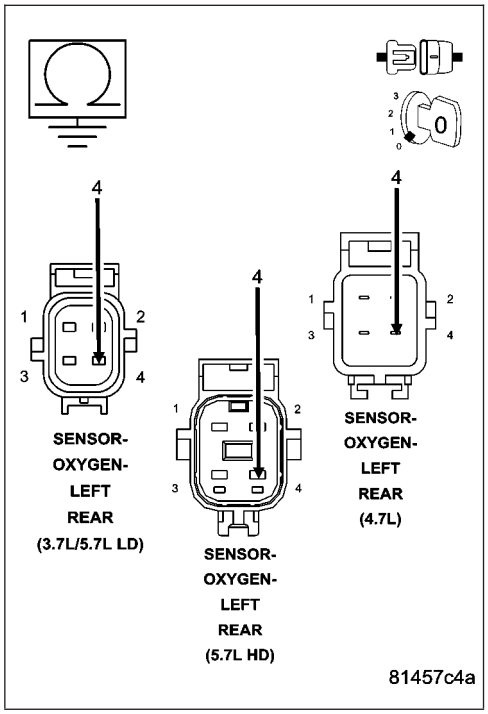

6. (K141) O2 1/2 SIGNAL CIRCUIT SHORTED TO THE (K904) O2 RETURN DOWNSTREAM CIRCUIT

Measure the resistance between the (K141) O2 1/2 Signal circuit and the (K904) O2 Return Downstream circuit in the O2 Sensor harness connector.

Is the resistance below 100 ohms?

Yes >> Repair the short between the (K904) O2 Return Downstream circuit and the (K141) O2 1/2 Signal circuit.

Perform the POWERTRAIN VERIFICATION TEST. (Refer to 9 - ENGINE - STANDARD PROCEDURE)

No >> Go To 7

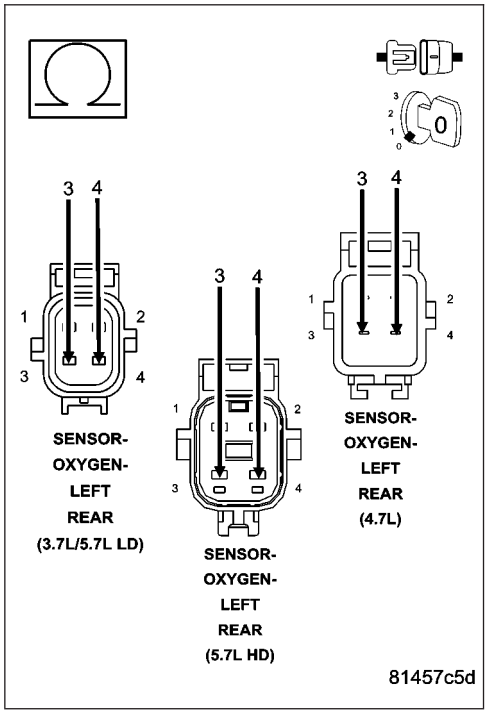

P0137-O2 SENSOR 1/2 CIRCUIT LOW (CONTINUED)

7. (K141) O2 1/2 SIGNAL CIRCUIT SHORTED TO THE (Z43) O2 1/2 HEATER GROUND CIRCUIT

Measure the resistance between the (K141) O2 1/2 Signal circuit and the (Z43) O2 1/2 Heater ground circuit in the O2 Sensor harness connector.

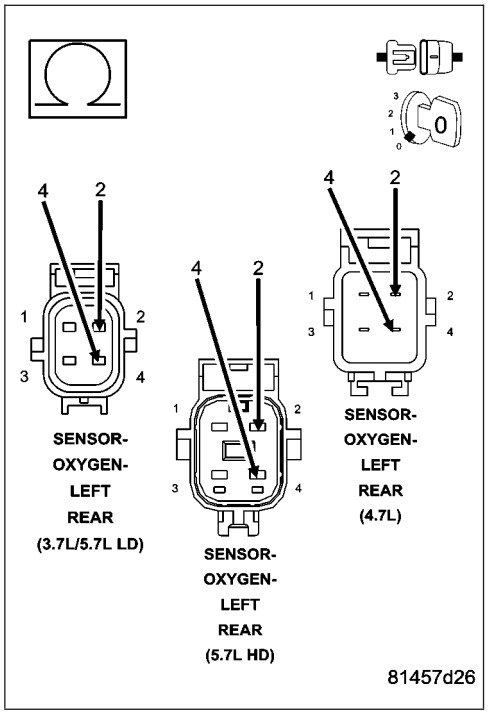

Is the resistance below 100 ohms?

Yes >> Repair the short between the (Z43) O2 1/2 Heater ground circuit and the (K141) O2 1/2 Signal circuit.
Perform the POWERTRAIN VERIFICATION TEST. (Refer to 9 - ENGINE - STANDARD PROCEDURE)

No >> Go To 8

8. PCM

NOTE: Before continuing, check the PCM harness connector terminals for corrosion, damage, or terminal push out. Repair as necessary.
Using the schematics as a guide, inspect the wire harness and connectors. Pay particular attention to all Power and Ground circuits.

Were there any problems found?

Yes >> Repair as necessary.
Perform the POWERTRAIN VERIFICATION TEST. (Refer to 9 - ENGINE - STANDARD PROCEDURE)

No >> Replace and program the Powertrain Control Module per Service Information.
Perform the POWERTRAIN VERIFICATION TEST. (Refer to 9 - ENGINE - STANDARD PROCEDURE)

P0138-O2 SENSOR 1/2 CIRCUIT HIGH

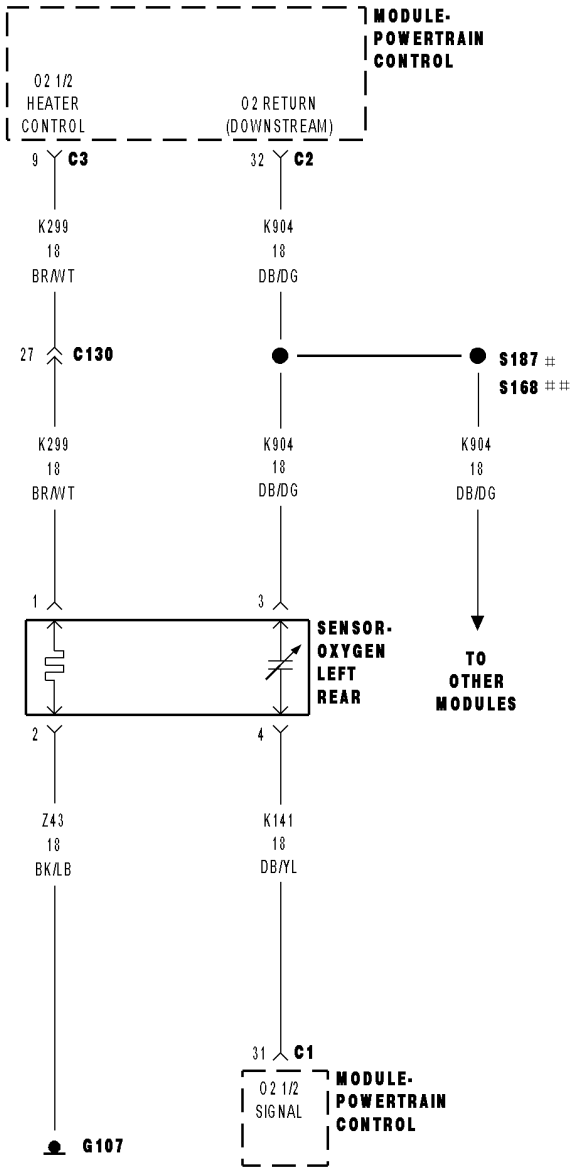

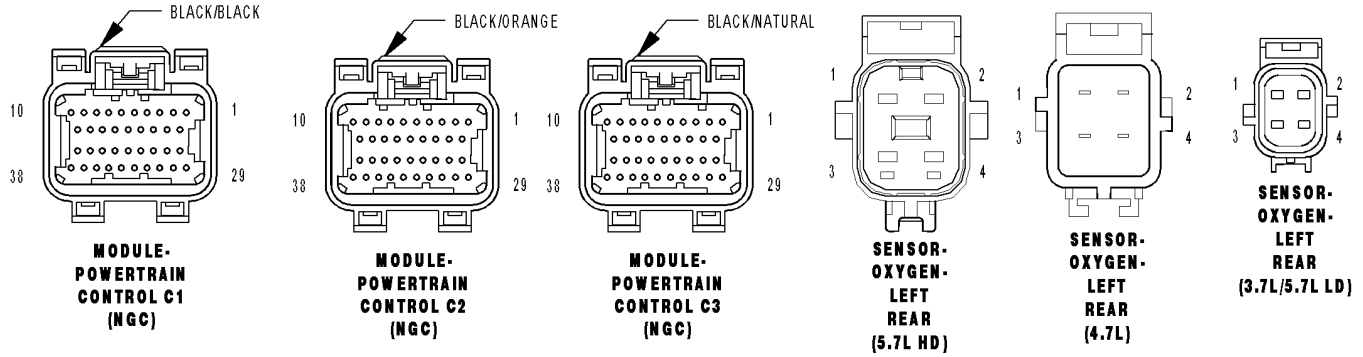

81452b26

P0138-O2 SENSOR 1/2 CIRCUIT HIGH (CONTINUED)

For the Engine circuit diagram (Refer to 9 - ENGINE - SCHEMATICS AND DIAGRAMS).

For a complete wiring diagram **Refer to Section 8W**.

- **When Monitored:**
  O2 Sensor Heater Temperature is greater than 496°C (925°F) and battery voltage greater than 10.99 volts.
- **Set Condition:**
  The Oxygen Sensor voltage is above 3.99 volts for 30 seconds. One Trip Fault. Three good trips to turn off the MIL.

Possible Causes
(K141) O2 1/2 SIGNAL CIRCUIT SHORTED TO BATTERY VOLTAGE
(K904) O2 RETURN DOWNSTREAM CIRCUIT SHORTED TO BATTERY VOLTAGE
(K141) O2 1/2 SENSOR SIGNAL CIRCUIT OPEN
(K904) O2 RETURN DOWNSTREAM CIRCUIT OPEN
O2 SENSOR
PCM

Always perform the Pre-Diagnostic Troubleshooting procedure before proceeding. (Refer to 9 - ENGINE - DIAGNOSIS AND TESTING).

Diagnostic Test

1. O2 SENSOR ABOVE 3.7 VOLTS

NOTE: When only one O2 Sensor is shorted to voltage, the scan tool will display all O2 Sensor voltage readings at approximately 5.0 volts. When diagnosing this DTC, only diagnose the O2 Sensor that set the DTC.

Start the engine.

Allow the engine to reach normal operating temperature.

With a scan tool, read the 1/2 O2 Sensor voltage.

Is the voltage above 3.7 volts?

Yes >> Go To 2

No >> Refer to the INTERMITTENT CONDITION Diagnostic Procedure.
Perform the POWERTRAIN VERIFICATION TEST. (Refer to 9 - ENGINE - STANDARD PROCEDURE)

P0138-O2 SENSOR 1/2 CIRCUIT HIGH (CONTINUED)

2. (K141) O2 1/2 SIGNAL CIRCUIT SHORTED TO BATTERY VOLTAGE

Start the engine and allow the engine to idle.

Disconnect the 1/2 O2 Sensor harness connector.

Measure the voltage on the (K141) O2 Sensor 1/2 Signal circuit in the O2 Sensor harness connector.

NOTE: Measure the voltage in reference to ground, not the (K904) O2 Return Downstream circuit.

Is the voltage above 0 volts?

Yes >> Repair the short to battery voltage in the (K141) O2 Sensor 1/2 Signal circuit.
Perform the POWERTRAIN VERIFICATION TEST. (Refer to 9 - ENGINE - STANDARD PROCEDURE)

No >> Go To 3

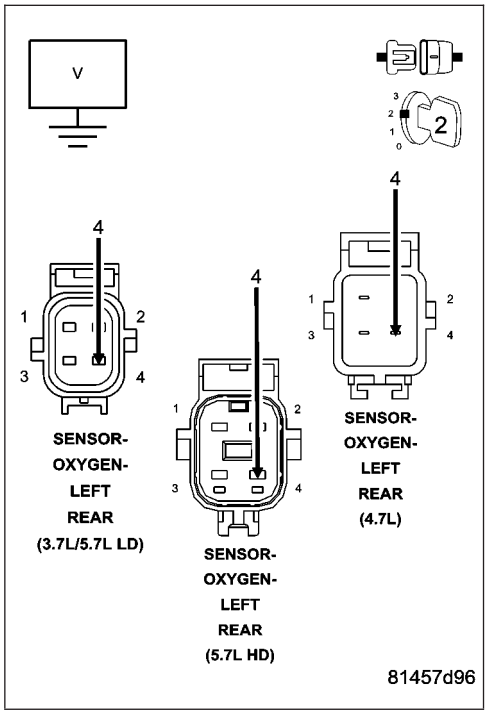

3. (K904) O2 RETURN DOWNSTREAM CIRCUIT SHORTED TO BATTERY VOLTAGE

Turn the ignition off.

Disconnect the C2 PCM harness connector.

Ignition on, engine not running.

Measure the voltage on the (K904) O2 Return Downstream circuit in the O2 Sensor harness connector.

Is there any voltage present?

Yes >> Repair the short to battery voltage in the (K904) O2 Return Downstream circuit.
Perform the POWERTRAIN VERIFICATION TEST. (Refer to 9 - ENGINE - STANDARD PROCEDURE)

No >> Go To 4

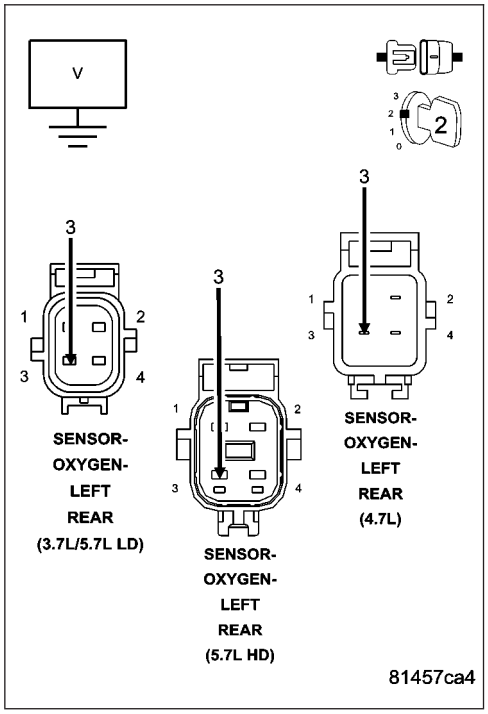

P0138-O2 SENSOR 1/2 CIRCUIT HIGH (CONTINUED)

4. O2 SENSOR

Turn the ignition off.

Connect the C2 PCM harness connector.

Connect a jumper wire between the (K141) O2 1/2 Signal circuit and the (K904) O2 Return Downstream circuit in the 1/2 O2 Sensor harness connector.

Ignition on, engine not running.

With a scan tool, monitor the 1/2 O2 Sensor voltage.

Is the voltage between 2.3 and 2.7 volts with the jumper wire installed?

Yes >> Replace the O2 Sensor.
Perform the POWERTRAIN VERIFICATION TEST. (Refer to 9 - ENGINE - STANDARD PROCEDURE)

No >> Go To 5

NOTE: Remove the jumper wire before continuing.

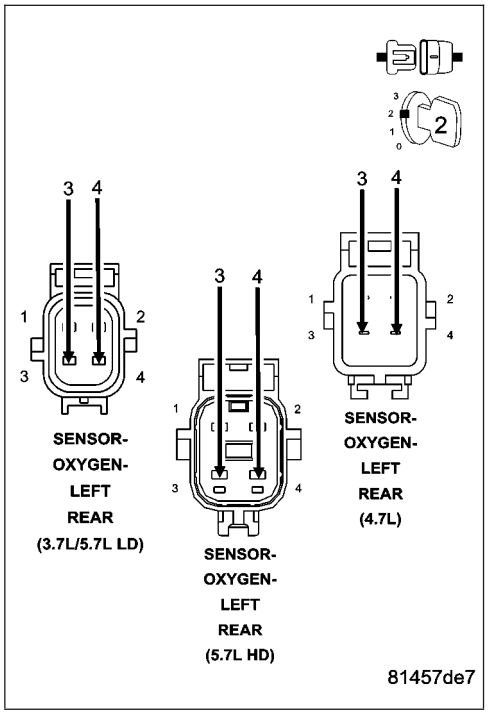

5. (K141) O2 1/2 SIGNAL CIRCUIT OPEN

Turn the ignition off.

Disconnect the C1and C2 PCM harness connectors.

CAUTION: Do not probe the PCM harness connectors. Probing the PCM harness connectors will damage the PCM terminals resulting in poor terminal to pin connection. Install Miller Special Tool #8815 to perform diagnosis.

Measure the resistance of the (K141) O2 1/2 Signal circuit from the O2 Sensor harness connector to the appropriate terminal of special tool #8815.

Is the resistance below 5.0 ohms?

Yes >> Go To 6

No >> Repair the open in the (K141) O2 1/2 Signal circuit.
Perform the POWERTRAIN VERIFICATION TEST. (Refer to 9 - ENGINE - STANDARD PROCEDURE)

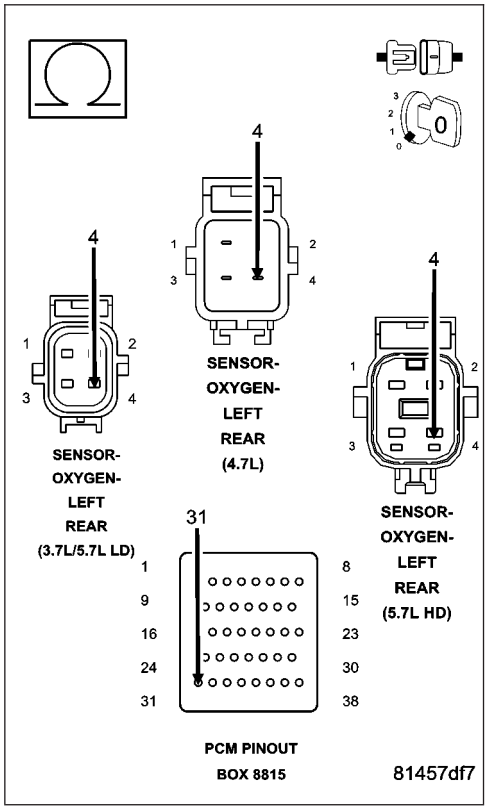

P0138-O2 SENSOR 1/2 CIRCUIT HIGH (CONTINUED)

6. (K904) O2 RETURN DOWNSTREAM CIRCUIT OPEN

Measure the resistance of the (K904) O2 Return Downstream circuit from the O2 Sensor harness connector to the appropriate terminal of special tool #8815.

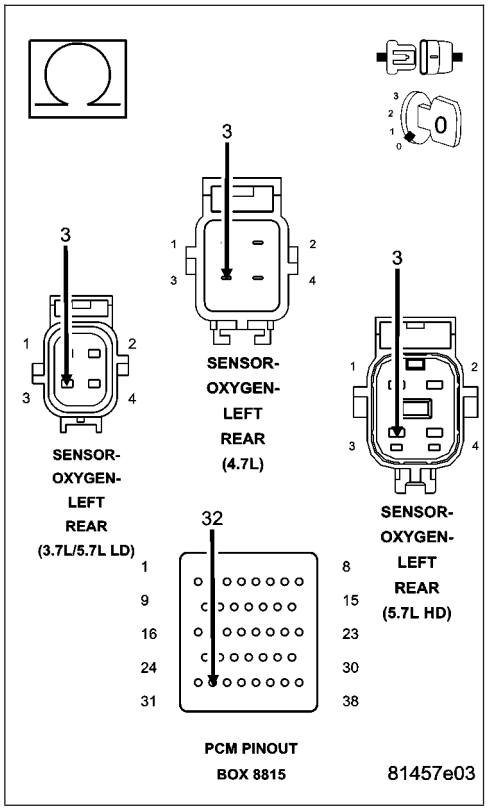

Is the resistance below 5.0 ohms?

Yes >> Go To 7

No >> Repair the open in the (K904) O2 Return Downstream circuit.
Perform the POWERTRAIN VERIFICATION TEST. (Refer to 9 - ENGINE - STANDARD PROCEDURE)

---

7. PCM

NOTE: Before continuing, check the PCM harness connector terminals for corrosion, damage, or terminal push out. Repair as necessary.

Using the schematics as a guide, inspect the wire harness and connectors. Pay particular attention to all Power and Ground circuits.

Were there any problems found?

Yes >> Repair as necessary.
Perform the POWERTRAIN VERIFICATION TEST. (Refer to 9 - ENGINE - STANDARD PROCEDURE)

No >> Replace and program the Powertrain Control Module per Service Information.
Perform the POWERTRAIN VERIFICATION TEST. (Refer to 9 - ENGINE - STANDARD PROCEDURE)

P0139-O2 SENSOR 1/2 SLOW RESPONSE

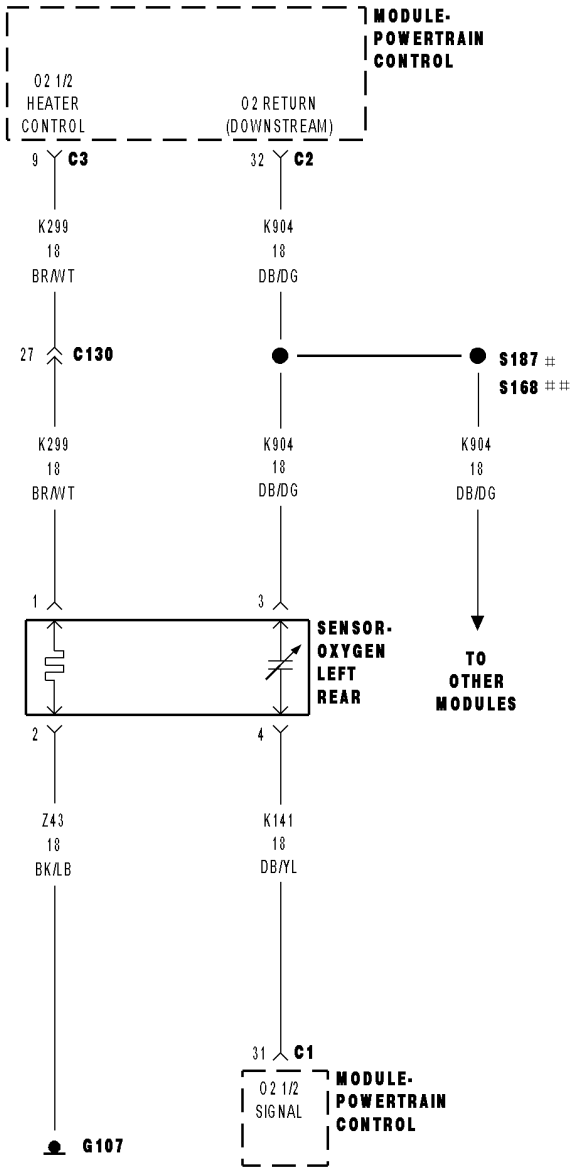

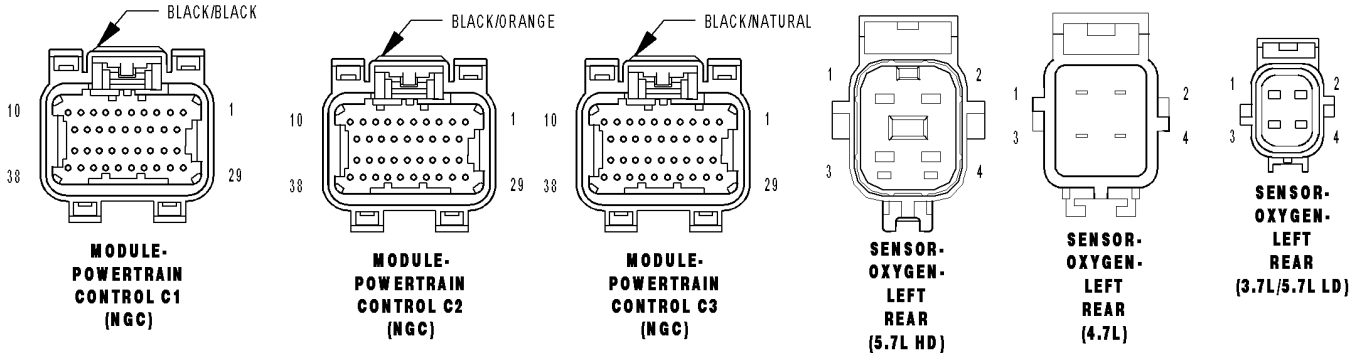

81452b26

P0139-O2 SENSOR 1/2 SLOW RESPONSE (CONTINUED)

For the Engine circuit diagram (Refer to 9 - ENGINE - SCHEMATICS AND DIAGRAMS).

For a complete wiring diagram **Refer to Section 8W**.

Theory of Operation

The downstream O2 Sensor is located in the exhaust path behind the catalytic converter, is monitored for proper response to assure optimum catalytic converter efficiency. The downstream O2 response monitor is intended to diagnose a downstream O2 sensor that is not moving or stuck in a voltage window and to insure accurate information for catalyst monitor diagnosis.

- **When Monitored:**
  Vehicle is started and driven between 20 and 55 MPH with the Throttle open for a minimum of 120 seconds. Coolant greater than 70°C (158°F). Catalytic Converter Temp greater than 600°C (1112°F) and EVAP Purge is active.
- **Set Condition:**
  The oxygen sensor signal voltage switches less than 16 times from lean to rich within 20 seconds during monitoring. Two Trip Fault. Three good trips to turn off the MIL.

Possible Causes
EXHAUST LEAK
(K141) O2 1/2 SIGNAL CIRCUIT
(K904) O2 RETURN DOWNSTREAM CIRCUIT
O2 SENSOR

Always perform the Pre-Diagnostic Troubleshooting procedure before proceeding. (Refer to 9 - ENGINE - DIAGNOSIS AND TESTING).

Diagnostic Test

1. ACTIVE DTC

NOTE: Check for contaminants that may have damaged the O2 Sensor: contaminated fuel, unapproved silicone, oil and coolant.
Ignition on, engine not running.

NOTE: After the repairs have been made, verify proper O2 Sensor operation. If all the O2 Sensor voltage readings have not returned to normal, follow the diagnostic procedure for the remaining O2 Sensors.
With a scan tool, read DTCs.

Is the DTC active at this time?

Yes >> Go To 2

No >> Refer to the INTERMITTENT CONDITION Diagnostic Procedure.
Perform the POWERTRAIN VERIFICATION TEST. (Refer to 9 - ENGINE - STANDARD PROCEDURE)

---

2. EXHAUST LEAK

Start the engine.

Inspect the exhaust system for leaks between the engine and the O2 Sensors.

Are there any exhaust leaks?

Yes >> Repair or replace the leaking exhaust parts as necessary.
Perform the POWERTRAIN VERIFICATION TEST. (Refer to 9 - ENGINE - STANDARD PROCEDURE)

No >> Go To 3

P0139-O2 SENSOR 1/2 SLOW RESPONSE (CONTINUED)

3. (K141) O2 1/2 SIGNAL CIRCUIT

Turn the ignition off

Disconnect the 1/2 O2 Sensor harness connector.

Ignition on, engine not running.

Measure the voltage on the (K141) O2 1/2 Signal circuit in the O2 Sensor harness connector.

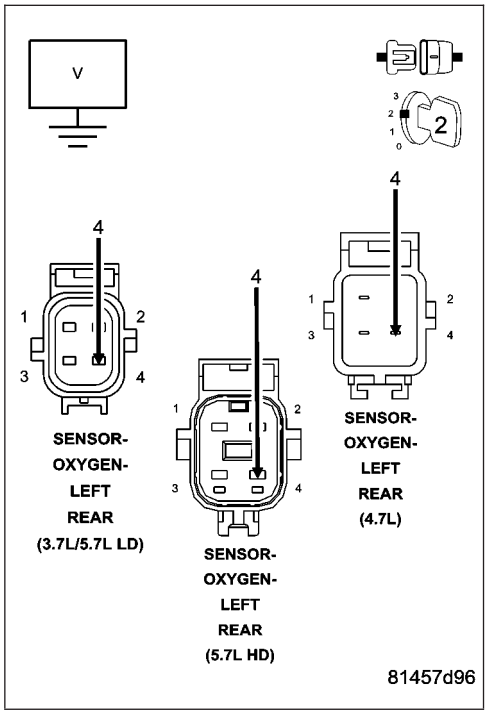

Is the voltage between 4.5 and 5.0 volts?

Yes >> Go To 4

No >> Check the (K141) O2 1/2 Signal circuit for a short to ground, open, or short to voltage. If OK, replace and program the Powertrain Control Module per Service Information.

Perform the POWERTRAIN VERIFICATION TEST. (Refer to 9 - ENGINE - STANDARD PROCEDURE)

4. (K904) O2 RETURN DOWNSTREAM CIRCUIT

Measure the voltage on the (K904) O2 Return Downstream circuit in the 1/2 O2 Sensor harness connector.

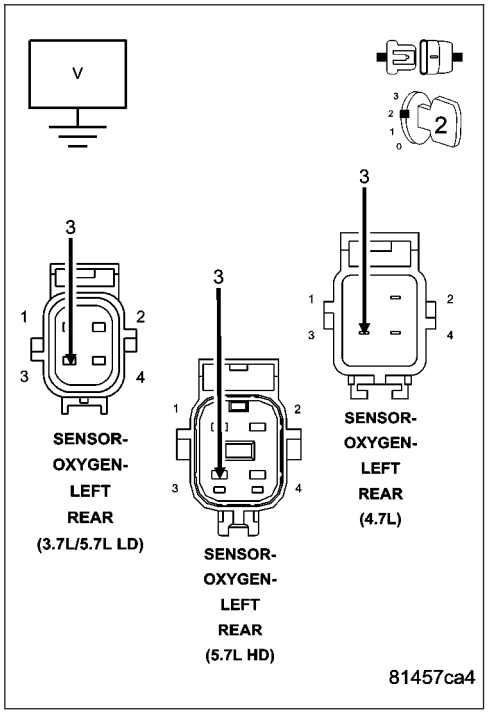

Is the voltage at 2.5 volts?

Yes >> Go To 5

No >> Check the (K904) O2 Return Downstream circuit for a short to ground, open, or short to voltage. If OK, replace and program the Powertrain Control Module per Service Information.

Perform the POWERTRAIN VERIFICATION TEST. (Refer to 9 - ENGINE - STANDARD PROCEDURE)

P0139-O2 SENSOR 1/2 SLOW RESPONSE (CONTINUED)

5. **O2 SENSOR**

If there are no possible causes remaining, view repair.

Repair

Replace the O2 Sensor

Perform the POWERTRAIN VERIFICATION TEST. (Refer to 9 - ENGINE - STANDARD PROCEDURE)

P0141-O2 SENSOR 1/2 HEATER PERFORMANCE

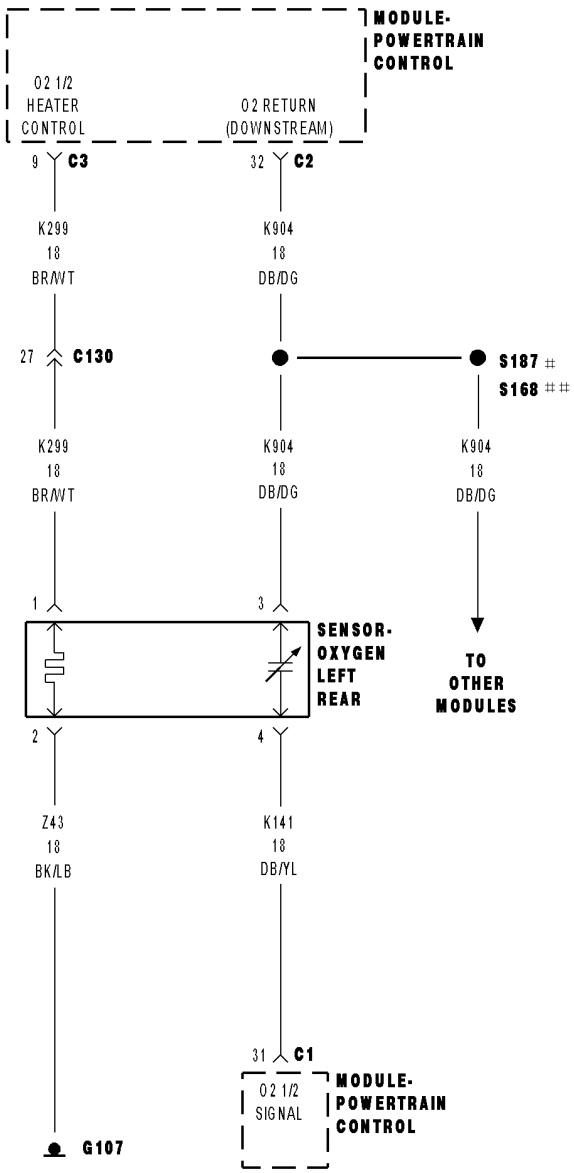

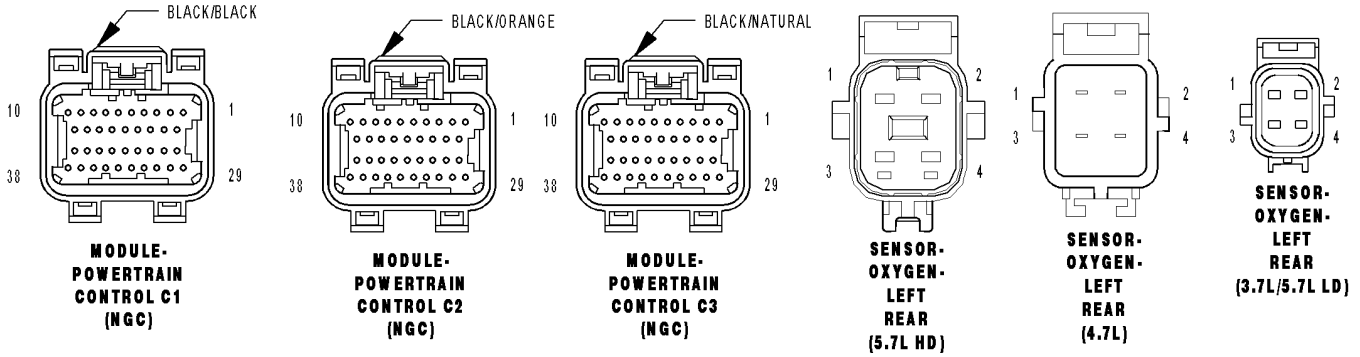

81452b26

P0141-O2 SENSOR 1/2 HEATER PERFORMANCE (CONTINUED)

For the Engine circuit diagram (Refer to 9 - ENGINE - SCHEMATICS AND DIAGRAMS).

For a complete wiring diagram **Refer to Section 8W**.

Theory of Operation

This diagnostic provides a continuous check of the O2 heater circuit during operation. The heater circuit is momentarily disabled to allow a resistance measurement to be taken to infer heater temperature. The current delivery to the heater is duty cycled to maintain a specific target temperature. The error from the target temperature is continuously monitored to assess heater performance.

- **When Monitored:**
  Engine running and heater duty cycle greater than 0%. Battery voltage greater than 11.0 volts.
- **Set Condition:**
  No sensor output is received when the PCM powers up the sensor heater. Two trip fault. Three good trips to turn off the MIL.

Possible Causes
(K299) O2 1/2 HEATER CONTROL CIRCUIT OPEN
(Z43) O2 HEATER GROUND CIRCUIT OPEN
O2 SENSOR HEATER ELEMENT
PCM

Always perform the Pre-Diagnostic Troubleshooting procedure before proceeding. (Refer to 9 - ENGINE - DIAGNOSIS AND TESTING).

Diagnostic Test

1. O2 SENSOR HEATER OPERATION

Turn the ignition off.

NOTE: Wait a minimum of 8 minutes to allow the O2 Sensor to cool down before continuing the test. Allow the O2 Sensor voltage to stabilize between 4.6 and 5.0 volts.

Ignition on, engine not running.

With a scan tool, actuate the O2 Heater Test.

With the scan tool, monitor 1/2 O2 Sensor voltage for at least 2 minutes.

Does the voltage stay above 4.5 volts?

Yes >> Go To 2

No >> Refer to the INTERMITTENT CONDITION Diagnostic Procedure.
Perform the POWERTRAIN VERIFICATION TEST. (Refer to 9 - ENGINE - STANDARD PROCEDURE)

P0141-O2 SENSOR 1/2 HEATER PERFORMANCE (CONTINUED)

2. O2 SENSOR HEATER ELEMENT

Turn the ignition off.

NOTE: Allow the O2 sensor to cool down to room temperature.

Disconnect the O2 Sensor harness connector.

Measure the resistance of the O2 Heater Element across the O2 Sensor connector between the O2 Heater Control terminal and the Heater ground terminal.

NOTE: O2 Heater Element resistance values should be measured at 70°F (21.1°C). The resistance value will vary with different temperature values.

Is the resistance of the O2 Sensor Heater Element between 2.0 and 30.0 ohms?

Yes >> Go To 3

No >> Replace the O2 Sensor.
Perform the POWERTRAIN VERIFICATION TEST. (Refer to 9 - ENGINE - STANDARD PROCEDURE)

3. (K299) O2 1/2 HEATER CONTROL CIRCUIT OPEN

Disconnect the C3 PCM harness connector.

CAUTION: Do not probe the PCM harness connectors. Probing the PCM harness connectors will damage the PCM terminals resulting in poor terminal to pin connection. Install Miller Special Tool #8815 to perform diagnosis.

Measure the resistance of the (K299) O2 1/2 Heater Control circuit from the O2 harness connector to the appropriate terminal of special tool #8815.

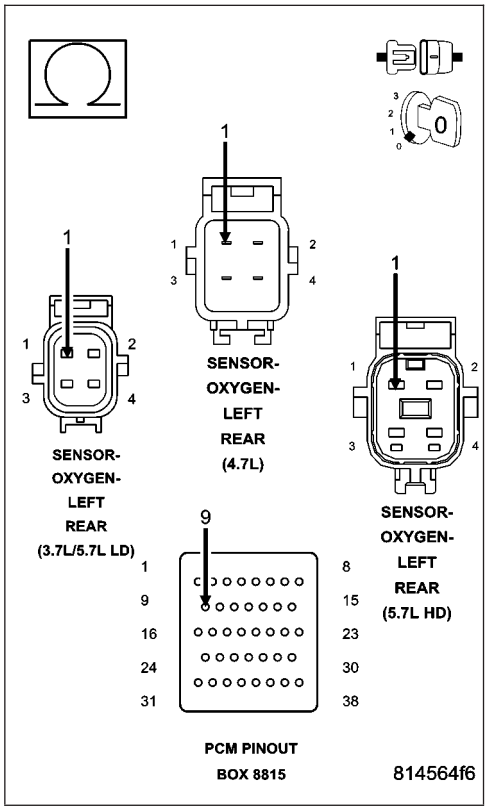

Is the resistance below 0.5 of an ohm?

Yes >> Go To 4

No >> Repair the excessive resistance in the (K299) O2 1/2 Heater Control circuit.
Perform the POWERTRAIN VERIFICATION TEST. (Refer to 9 - ENGINE - STANDARD PROCEDURE)

P0141-O2 SENSOR 1/2 HEATER PERFORMANCE (CONTINUED)

4. (Z43) O2 1/2 HEATER GROUND CIRCUIT OPEN

Measure the resistance between ground and the (Z43) O2 1/2 Heater ground circuit in the O2 Sensor harness connector.

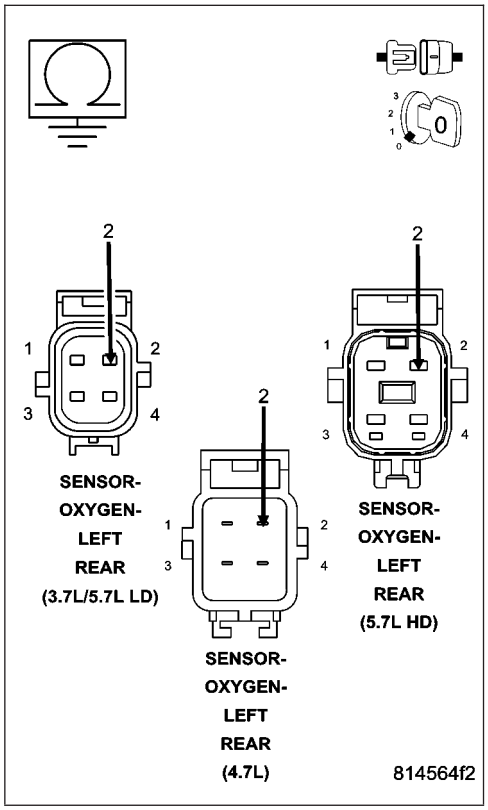

Is the resistance below 0.5 of an ohm?

Yes >> Go To 5

No >> Repair the excessive resistance in the (Z43) O2 1/2 Heater ground circuit.
Perform the POWERTRAIN VERIFICATION TEST. (Refer to 9 - ENGINE - STANDARD PROCEDURE)

---

5. PCM

NOTE: Before continuing, check the PCM harness connector terminals for corrosion, damage, or terminal push out. Repair as necessary.

Using the schematics as a guide, inspect the wire harness and connectors. Pay particular attention to all Power and Ground circuits.

Were there any problems found?

Yes >> Repair as necessary.
Perform the POWERTRAIN VERIFICATION TEST. (Refer to 9 - ENGINE - STANDARD PROCEDURE)

No >> Replace and program the Powertrain Control Module per Service Information.
Perform the POWERTRAIN VERIFICATION TEST. (Refer to 9 - ENGINE - STANDARD PROCEDURE)

P0151-O2 SENSOR 2/1 CIRCUIT LOW

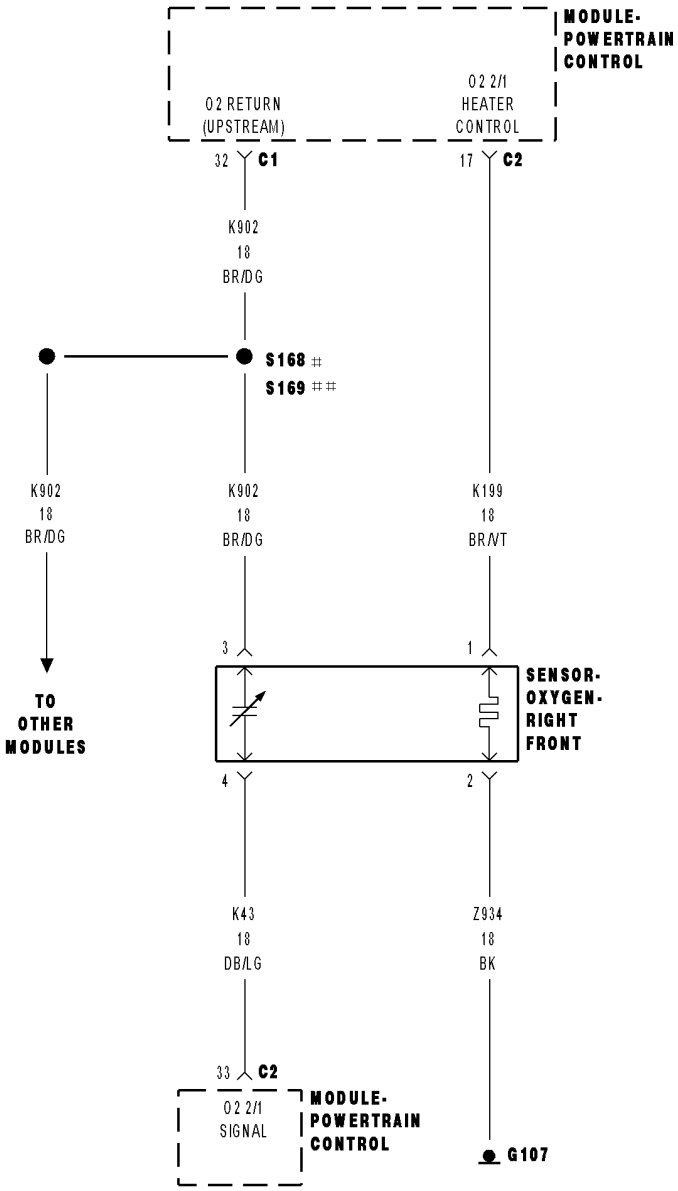

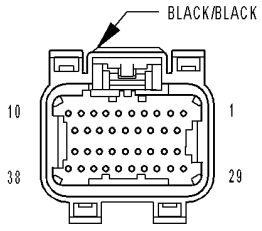

MODULE-
POWERTRAIN
CONTROL C1
(NGC)

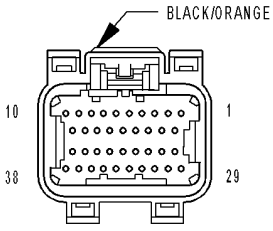

MODULE-
POWERTRAIN
CONTROL C2
(NGC)

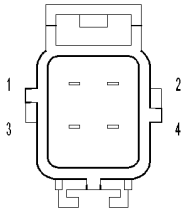

SENSOR-
OXYGEN-
RIGHT
FRONT
(4.7L)

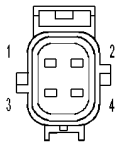

SENSOR-
OXYGEN-
RIGHT
FRONT
(3.7L/5.7L)

81452b7e

P0151-O2 SENSOR 2/1 CIRCUIT LOW (CONTINUED)

For the Engine circuit diagram (Refer to 9 - ENGINE - SCHEMATICS AND DIAGRAMS).

For a complete wiring diagram **Refer to Section 8W**.

- **When Monitored:**
  Engine running for less than 30 seconds and the O2 Sensor Heater Temperature is less than 251°C (484°F) with battery voltage greater 10.99 volts.
- **Set Condition:**
  The oxygen sensor signal voltage is below 2.5196 volts for 3 seconds after starting engine. One Trip Fault. Three good trips to turn off the MIL.

Possible Causes
(K902) O2 RETURN UPSTREAM CIRCUIT SHORTED TO GROUND
(K43) O2 2/1 SIGNAL CIRCUIT SHORTED TO GROUND
(K43) O2 2/1 SIGNAL CIRCUIT SHORTED TO THE (K902) O2 RETURN UPSTREAM CIRCUIT
(K43) O2 2/1 SIGNAL CIRCUIT SHORTED TO THE (Z934) HEATER GROUND CIRCUIT
O2 SENSOR
PCM

Always perform the Pre-Diagnostic Troubleshooting procedure before proceeding. (Refer to 9 - ENGINE - DIAGNOSIS AND TESTING).

Diagnostic Test

1. O2 SENSOR BELOW 2.52 VOLTS

Start the engine.
Allow the engine to reach normal operating temperature.
With a scan tool, read the 2/1 O2 Sensor voltage.

Is the voltage below 2.52 volts?

Yes >> Go To 2

No >> Refer to the INTERMITTENT CONDITION Diagnostic Procedure.
Perform the POWERTRAIN VERIFICATION TEST. (Refer to 9 - ENGINE - STANDARD PROCEDURE)

---

2. (K43) O2 2/1 SIGNAL CIRCUIT

Turn the ignition off.
Disconnect the 2/1 O2 Sensor harness connector.
Ignition on, engine not running.
With a scan tool, monitor the 2/1 O2 Sensor voltage.

Is the O2 Sensor voltage above 4.8 volts?

Yes >> Go To 3

No >> Go To 5

P0151-O2 SENSOR 2/1 CIRCUIT LOW (CONTINUED)

3. O2 SENSOR

Measure the voltage on the (K902) O2 Return Upstream circuit in the O2 Sensor harness connector.

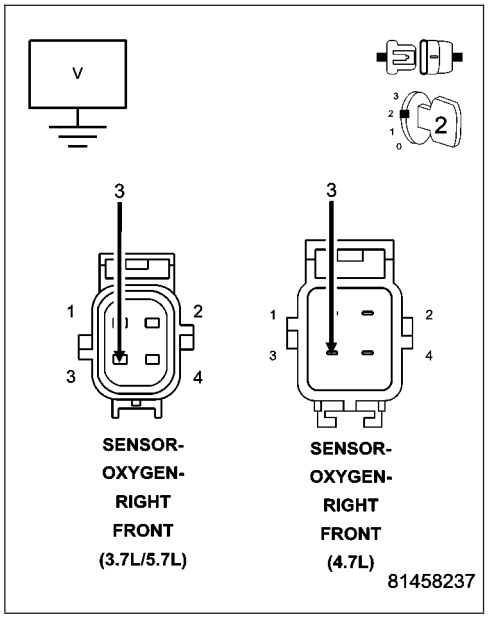

Is the voltage at 2.5 volts?

Yes >> Replace the 2/1 O2 Sensor.
Perform the POWERTRAIN VERIFICATION TEST. (Refer to 9 - ENGINE - STANDARD PROCEDURE)

No >> Go To 4

4. (K902) O2 RETURN UPSTREAM CIRCUIT SHORTED TO GROUND

Turn the ignition off.

Disconnect the C1 PCM harness connector.

Measure the resistance between ground and the (K902) O2 Return Upstream circuit in the O2 Sensor harness connector.

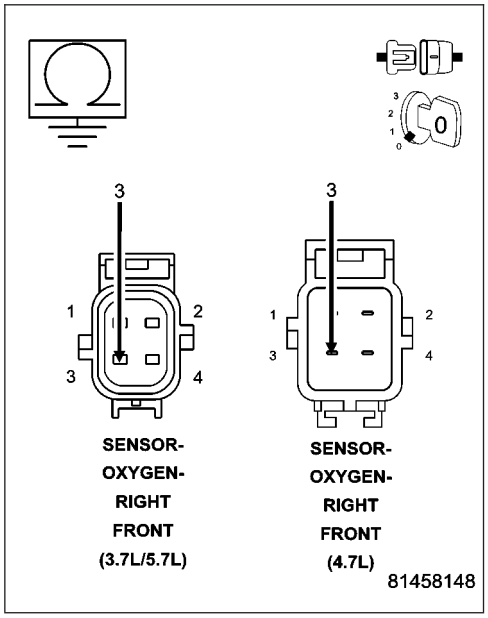

Is the resistance below 100 ohms?

Yes >> Repair the short to ground in the (K902) O2 Return Upstream circuit.
Perform the POWERTRAIN VERIFICATION TEST. (Refer to 9 - ENGINE - STANDARD PROCEDURE)

No >> Go To 8

P0151-O2 SENSOR 2/1 CIRCUIT LOW (CONTINUED)

5. (K43) O2 2/1 SIGNAL CIRCUIT SHORTED TO GROUND

Turn the ignition off.

Disconnect the C1 and C2 PCM harness connectors.

Measure the resistance between ground and the (K43) O2 2/1 Signal circuit in the O2 Sensor harness connector.

Is the resistance below 100 ohms?

Yes >> Repair the short to ground in the (K43) O2 2/1 Signal circuit.

Perform the POWERTRAIN VERIFICATION TEST. (Refer to 9 - ENGINE - STANDARD PROCEDURE)

No >> Go To 6

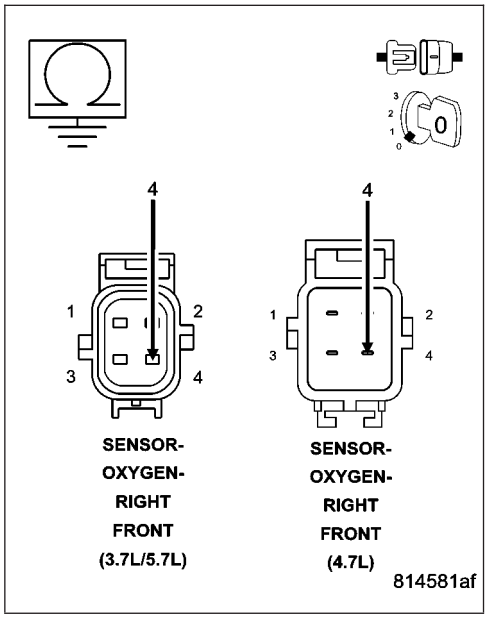

6. (K43) O2 2/1 SIGNAL CIRCUIT SHORTED TO THE (K902) O2 RETURN UPSTREAM CIRCUIT

Measure the resistance between the (K43) O2 2/1 Signal circuit and the (K902) O2 Return Upstream circuit in the O2 Sensor harness connector.

Is the resistance below 100 ohms?

Yes >> Repair the short between the (K902) O2 Return Upstream circuit and the (K43) O2 2/1 Signal circuit.

Perform the POWERTRAIN VERIFICATION TEST. (Refer to 9 - ENGINE - STANDARD PROCEDURE)

No >> Go To 7

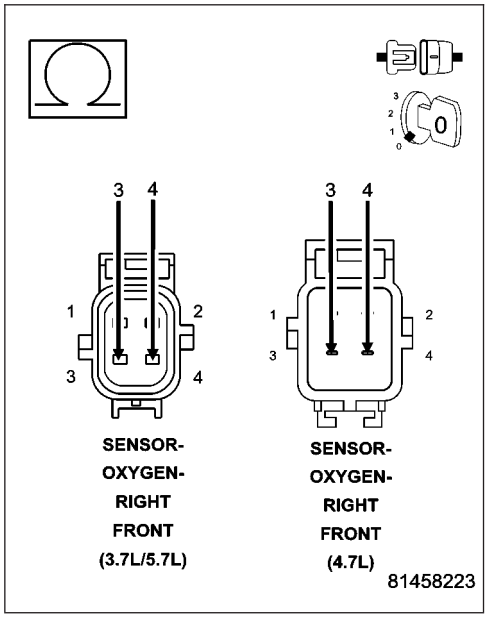

P0151-O2 SENSOR 2/1 CIRCUIT LOW (CONTINUED)

7. (K43) O2 2/1 SIGNAL CIRCUIT SHORTED TO THE (Z934) HEATER GROUND CIRCUIT

Measure the resistance between the (K43) O2 2/1 Signal circuit and the (Z934) O2 Heater ground circuit in the O2 Sensor harness connector.

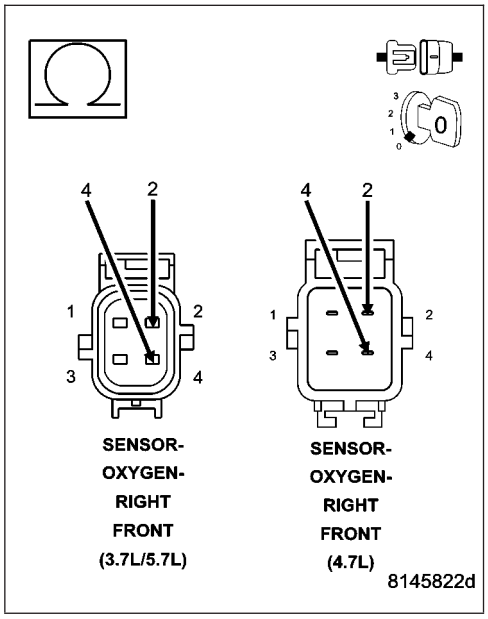

Is the resistance below 100 ohms?

Yes >> Repair the short between the (Z934) O2 Heater ground circuit and the (K43) O2 2/1 Signal circuit.
Perform the POWERTRAIN VERIFICATION TEST. (Refer to 9 - ENGINE - STANDARD PROCEDURE)

No >> Go To 8

8. PCM

NOTE: Before continuing, check the PCM harness connector terminals for corrosion, damage, or terminal push out. Repair as necessary.

Using the schematics as a guide, inspect the wire harness and connectors. Pay particular attention to all Power and Ground circuits.

Were there any problems found?

Yes >> Repair as necessary.
Perform the POWERTRAIN VERIFICATION TEST. (Refer to 9 - ENGINE - STANDARD PROCEDURE)

No >> Replace and program the Powertrain Control Module per Service Information.
Perform the POWERTRAIN VERIFICATION TEST. (Refer to 9 - ENGINE - STANDARD PROCEDURE)

P0152-O2 SENSOR 2/1 CIRCUIT HIGH

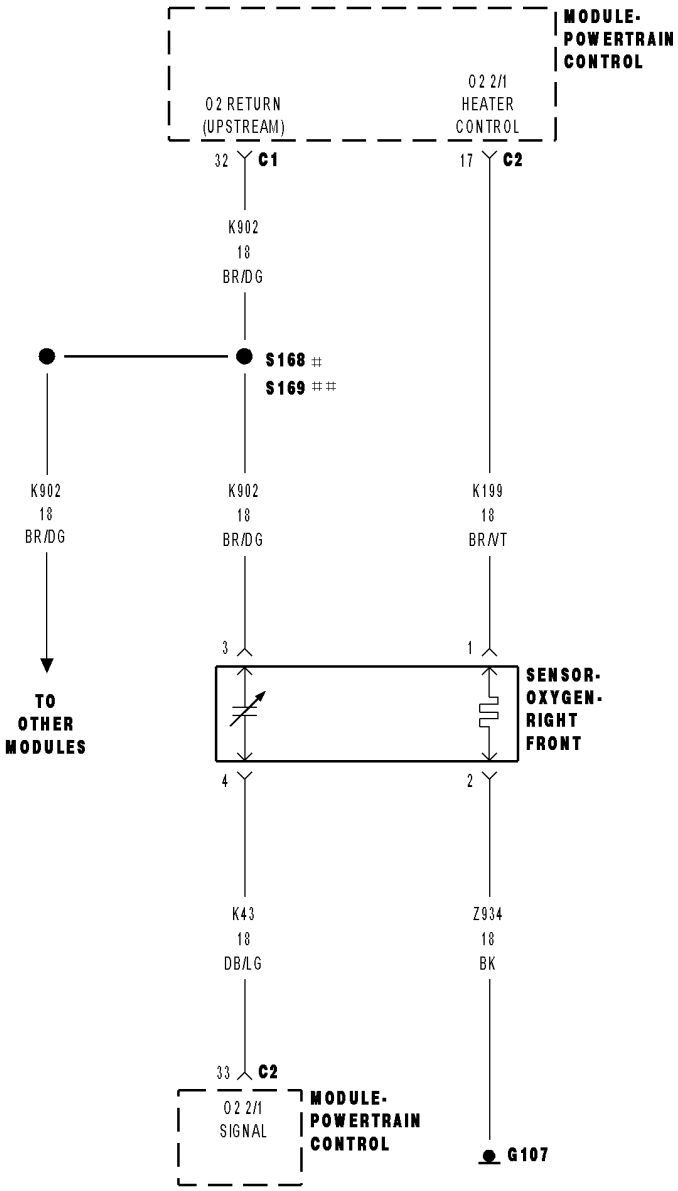

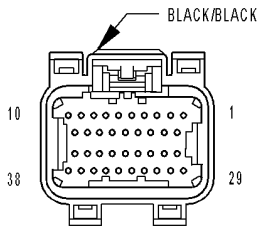

MODULE-
POWERTRAIN
CONTROL C1
(NGC)

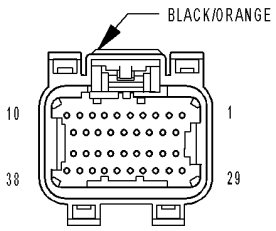

MODULE-
POWERTRAIN
CONTROL C2
(NGC)

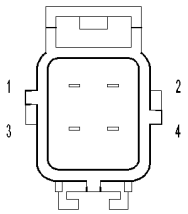

SENSOR-
OXYGEN-
RIGHT
FRONT
(4.7L)

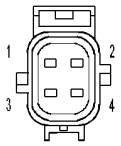

SENSOR-
OXYGEN-
RIGHT
FRONT
(3.7L/5.7L)

81452b7e

P0152-O2 SENSOR 2/1 CIRCUIT HIGH (CONTINUED)

For the Engine circuit diagram (Refer to 9 - ENGINE - SCHEMATICS AND DIAGRAMS).

For a complete wiring diagram **Refer to Section 8W**.

- **When Monitored:**
  O2 Sensor Heater Temperature is greater than 496°C (925°F) and battery voltage greater than 10.99 volts.
- **Set Condition:**
  The Oxygen Sensor voltage is above 3.99 volts for 30 seconds. One Trip Fault. Three good trips to turn off the MIL.

Possible Causes
(K43) O2 2/1 SIGNAL CIRCUIT SHORTED TO BATTERY VOLTAGE
(K902) O2 RETURN UPSTREAM CIRCUIT SHORTED TO BATTERY VOLTAGE
(K43) O2 2/1 SIGNAL CIRCUIT OPEN
(K902) O2 RETURN UPSTREAM CIRCUIT OPEN
O2 SENSOR
PCM

Always perform the Pre-Diagnostic Troubleshooting procedure before proceeding. (Refer to 9 - ENGINE - DIAGNOSIS AND TESTING).

Diagnostic Test

1. O2 SENSOR ABOVE 3.99 VOLTS

NOTE: When only one O2 Sensor is shorted to voltage, the scan tool will display all O2 Sensor voltage readings at approximately 5.0 volts. When diagnosing this DTC, only diagnose the O2 Sensor that set the DTC.

Start the engine.

Allow the engine to reach normal operating temperature.

With a scan tool, read the 2/1 O2 Sensor voltage.

Is the voltage above 3.99 volts?

Yes >> Go To 2

No >> Refer to the INTERMITTENT CONDITION Diagnostic Procedure.
Perform the POWERTRAIN VERIFICATION TEST. (Refer to 9 - ENGINE - STANDARD PROCEDURE)

P0152-O2 SENSOR 2/1 CIRCUIT HIGH (CONTINUED)

2. (K43) O2 2/1 SIGNAL CIRCUIT SHORTED TO BATTERY VOLTAGE

Start the engine and allow the engine to idle.

Disconnect the 2/1 O2 Sensor harness connector.

Measure the voltage on the (K43) O2 Sensor 2/1 Signal circuit in the 2/1 O2 Sensor harness connector.

NOTE: Measure the voltage in reference to ground, not the (K902) O2 Return Upstream circuit.

Is the voltage above 0 volts?

Yes >> Repair the short to battery voltage in the (K43) O2 Sensor 2/1 Signal circuit.
Perform the POWERTRAIN VERIFICATION TEST. (Refer to 9 - ENGINE - STANDARD PROCEDURE)

No >> Go To 3

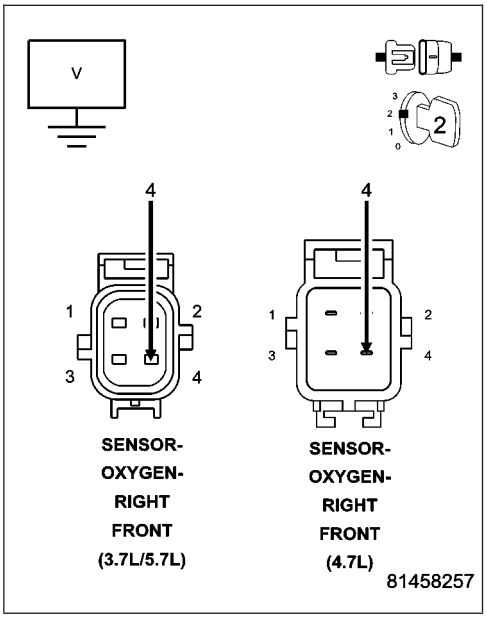

3. (K902) O2 RETURN UPSTREAM CIRCUIT SHORTED TO BATTERY VOLTAGE

Turn the ignition off.

Disconnect the C1 PCM harness connector.

Ignition on, engine not running.

Measure the voltage on the (K902) O2 Return Upstream circuit in the 2/1 O2 Sensor harness connector.

Is there any voltage present?

Yes >> Repair the short to battery voltage in the (K902) O2 Return Upstream circuit.
Perform the POWERTRAIN VERIFICATION TEST. (Refer to 9 - ENGINE - STANDARD PROCEDURE)

No >> Go To 4

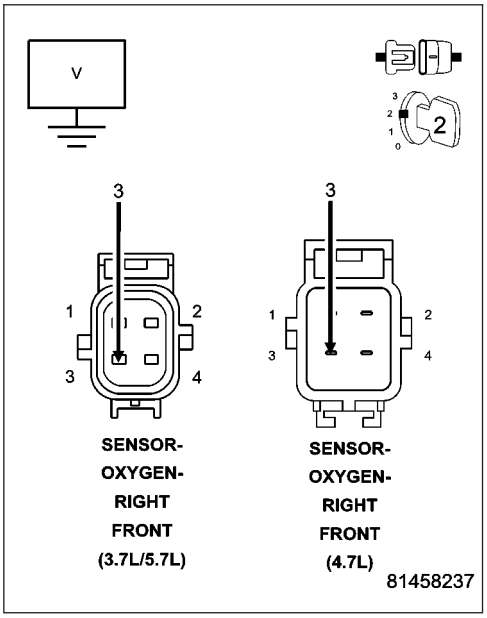

P0152-O2 SENSOR 2/1 CIRCUIT HIGH (CONTINUED)

4. O2 SENSOR

Turn the ignition off.

Connect the C1 PCM harness connector.

Connect a jumper wire between the (K43) O2 2/1 Signal circuit and the (K902) O2 Return Upstream circuit in the O2 Sensor harness connector.

Ignition on, engine not running.

With a scan tool, monitor the 2/1 O2 Sensor voltage.

Is the voltage between 2.3 and 2.7 volts with the jumper wire in place?

Yes >> Replace the O2 Sensor.
Perform the POWERTRAIN VERIFICATION TEST. (Refer to 9 - ENGINE - STANDARD PROCEDURE)

No >> Go To 5

NOTE: Remove the jumper wire before continuing.

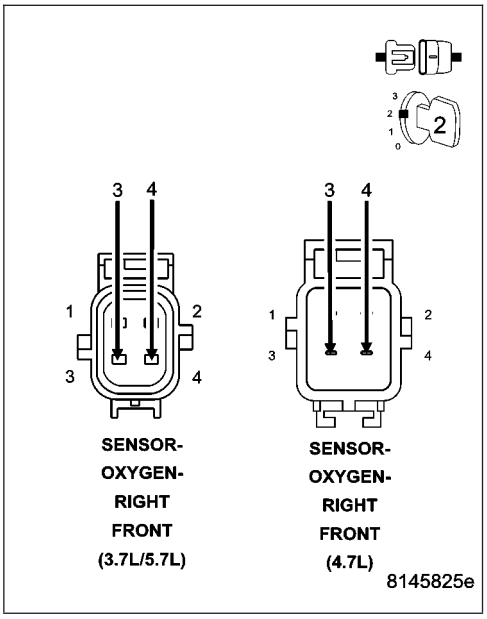

5. (K43) O2 2/1 SIGNAL CIRCUIT OPEN

Turn the ignition off.

Disconnect the C1 and C2 PCM harness connectors.

CAUTION: Do not probe the PCM harness connectors. Probing the PCM harness connectors will damage the PCM terminals resulting in poor terminal to pin connection. Install Miller Special Tool #8815 to perform diagnosis.

Measure the resistance of the (K43) O2 2/1 Signal circuit from the 2/1 O2 Sensor harness connector to the appropriate terminal of special tool #8815.

Is the resistance below 5.0 ohms?

Yes >> Go To 6

No >> Repair the open in the (K43) O2 2/1 Signal circuit.
Perform the POWERTRAIN VERIFICATION TEST. (Refer to 9 - ENGINE - STANDARD PROCEDURE)

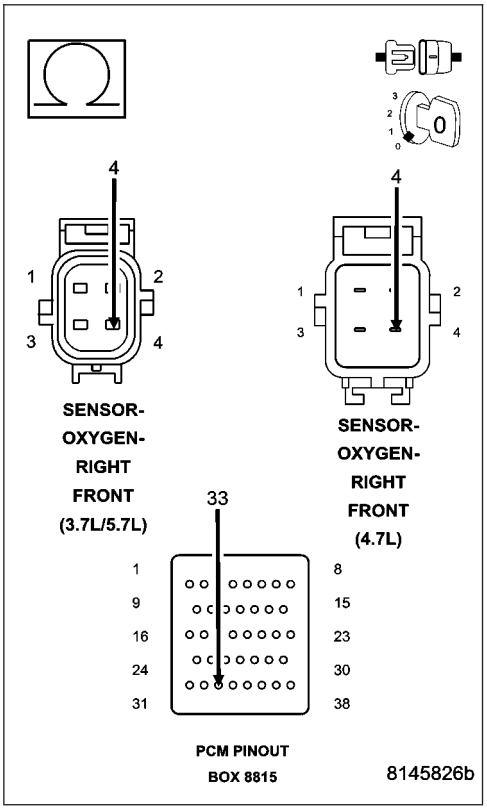

P0152-O2 SENSOR 2/1 CIRCUIT HIGH (CONTINUED)

6. (K902) O2 RETURN UPSTREAM CIRCUIT OPEN

Measure the resistance of the (K902) O2 Return Upstream circuit from the O2 Sensor harness connector to the appropriate terminal of special tool #8815.

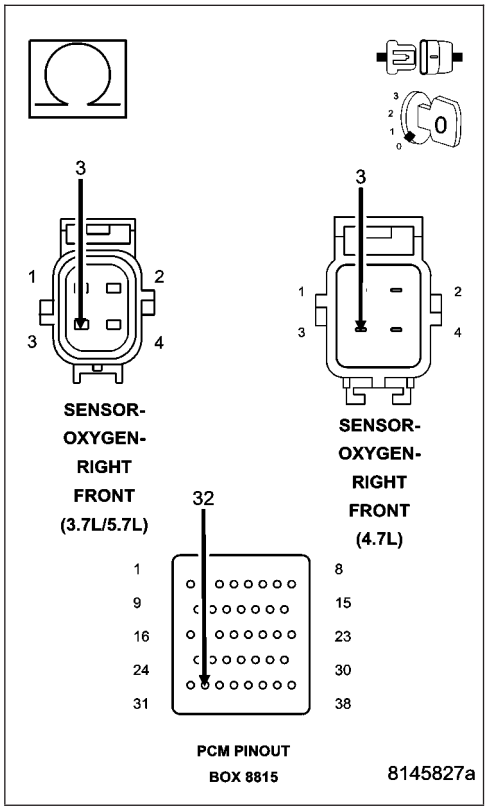

Is the resistance below 5.0 ohms?

Yes >> Go To 7

No >> Repair the open in the (K902) O2 Return Upstream circuit. Perform the POWERTRAIN VERIFICATION TEST. (Refer to 9 - ENGINE - STANDARD PROCEDURE)

---

7. PCM

NOTE: Before continuing, check the PCM harness connector terminals for corrosion, damage, or terminal push out. Repair as necessary.

Using the schematics as a guide, inspect the wire harness and connectors. Pay particular attention to all Power and Ground circuits.

Were there any problems found?

Yes >> Repair as necessary.
Perform the POWERTRAIN VERIFICATION TEST. (Refer to 9 - ENGINE - STANDARD PROCEDURE)

No >> Replace and program the Powertrain Control Module per Service Information.
Perform the POWERTRAIN VERIFICATION TEST. (Refer to 9 - ENGINE - STANDARD PROCEDURE)

P0153-O2 SENSOR 2/1 SLOW RESPONSE

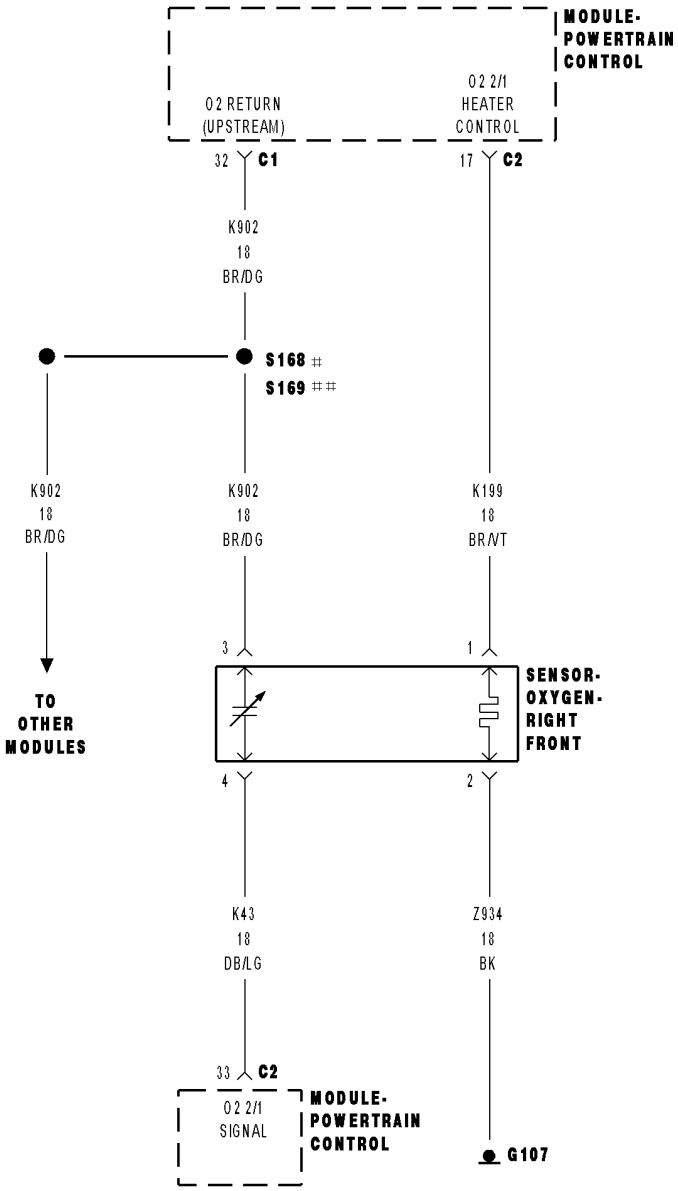

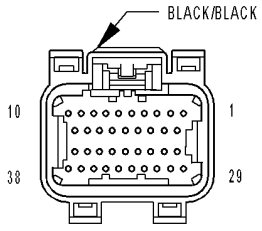

MODULE-
POWERTRAIN
CONTROL C1
(NGC)

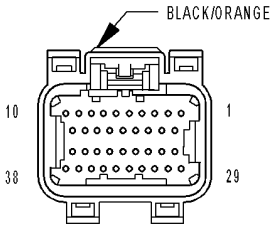

MODULE-
POWERTRAIN
CONTROL C2
(NGC)

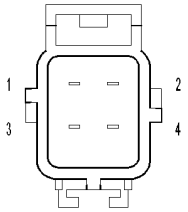

SENSOR-
OXYGEN-
RIGHT
FRONT
(4.7L)

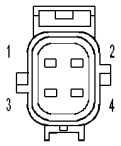

SENSOR-
OXYGEN-
RIGHT
FRONT
(3.7L/5.7L)

81452b7e

P0153-O2 SENSOR 2/1 SLOW RESPONSE (CONTINUED)

For the Engine circuit diagram (Refer to 9 - ENGINE - SCHEMATICS AND DIAGRAMS).

For a complete wiring diagram **Refer to Section 8W**.

- **When Monitored:**
  Vehicle is started and driven between 20 and 55 MPH with the Throttle open for a minimum of 120 seconds. Coolant greater than 70°C (158°F). Catalytic Converter Temp greater than 600°C (1112°F) and EVAP Purge is active.
- **Set Condition:**
  The oxygen sensor signal voltage switches less than 16 times from lean to rich within 20 seconds during monitoring. Two Trip Fault. Three good trips to turn off the MIL.

Possible Causes
EXHAUST LEAK
(K43) O2 2/1 SIGNAL CIRCUIT
(K902) O2 RETURN UPSTREAM CIRCUIT
O2 SENSOR

Always perform the Pre-Diagnostic Troubleshooting procedure before proceeding. (Refer to 9 - ENGINE - DIAGNOSIS AND TESTING).

Diagnostic Test

1. ACTIVE DTC

NOTE: Check for contaminants that may have damaged the O2 Sensor: contaminated fuel, unapproved silicone, oil and coolant.
Ignition on, engine not running.

NOTE: After the repairs have been made, verify proper O2 Sensor operation. If all the O2 Sensor voltage readings have not returned to normal, follow the diagnostic procedure for the remaining O2 Sensors.
With a scan tool, read DTCs and record the related Freeze Frame data.

Is the DTC active at this time?

Yes >> Go To 2

No >> Refer to the INTERMITTENT CONDITION Diagnostic Procedure.
Perform the POWERTRAIN VERIFICATION TEST. (Refer to 9 - ENGINE - STANDARD PROCEDURE)

---

2. EXHAUST LEAK

Start the engine.
Inspect the exhaust system for leaks between the engine and the O2 Sensors.

Are there any exhaust leaks?

Yes >> Repair or replace the leaking exhaust parts as necessary.
Perform the POWERTRAIN VERIFICATION TEST. (Refer to 9 - ENGINE - STANDARD PROCEDURE)

No >> Go To 3

P0153-O2 SENSOR 2/1 SLOW RESPONSE (CONTINUED)

3. (K43) O2 2/1 SIGNAL CIRCUIT

Turn the ignition off

Disconnect the O2 Sensor harness connector.

Ignition on, engine not running.

Measure the voltage on the (K43) O2 2/1 Signal circuit in the O2 Sensor harness connector.

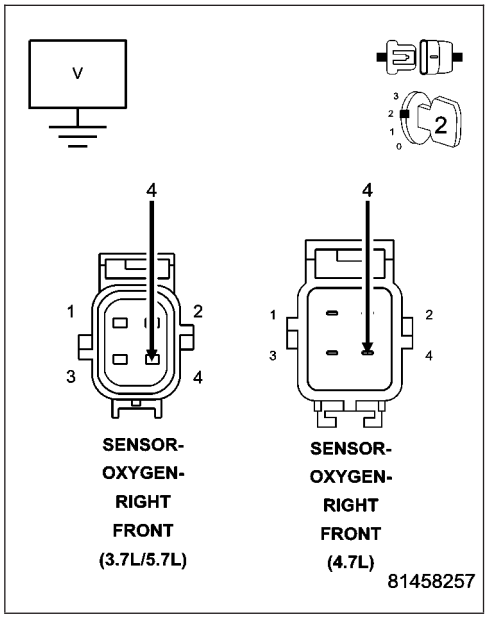

Is the voltage between 4.5 and 5.0 volts?

Yes >> Go To 4

No >> Check the (K43) O2 2/1 Signal circuit for a short to ground, open, or short to voltage. If OK, replace and program the Powertrain Control Module per Service Information.

Perform the POWERTRAIN VERIFICATION TEST. (Refer to 9 - ENGINE - STANDARD PROCEDURE)

4. (K902) O2 RETURN UPSTREAM CIRCUIT

Measure the voltage on the (K902) O2 Return Upstream circuit in the O2 Sensor harness connector.

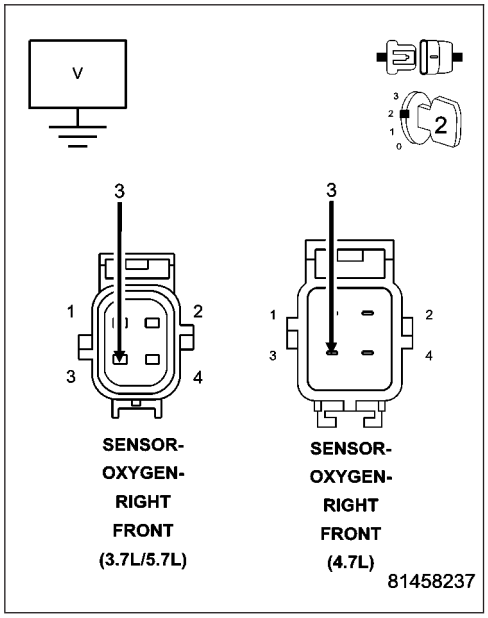

Is the voltage at 2.5 volts?

Yes >> Go To 5

No >> Check the (K902) O2 Return Upstream circuit for a short to ground, open, or short to voltage. If OK, replace and program the Powertrain Control Module per Service Information.

Perform the POWERTRAIN VERIFICATION TEST. (Refer to 9 - ENGINE - STANDARD PROCEDURE)

5. O2 SENSOR

If there are no possible causes remaining, view repair.

Repair

Replace the O2 Sensor

Perform (NGC) POWERTRAIN VERIFICATION TEST VER - 5. (Refer to 8 - ELECTRICAL/ELECTRONIC CONTROL MODULES/POWERTRAIN CONTROL MODULE - DIAGNOSIS AND TESTING)

P0155-O2 SENSOR 2/1 HEATER PERFORMANCE

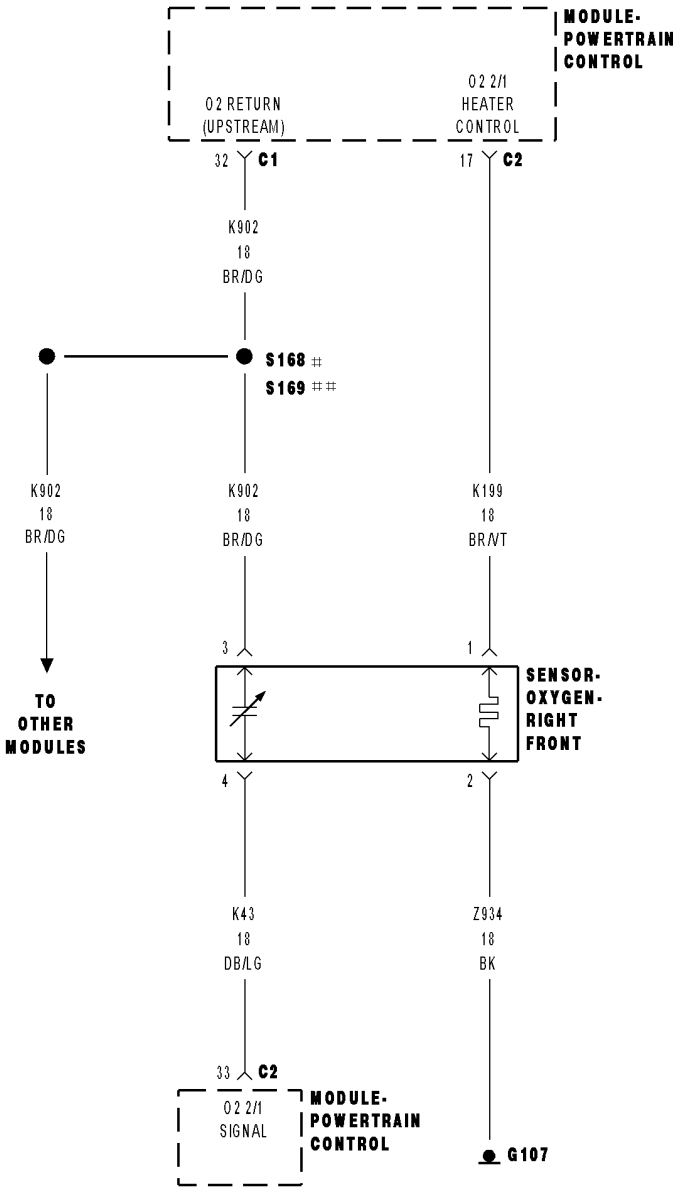

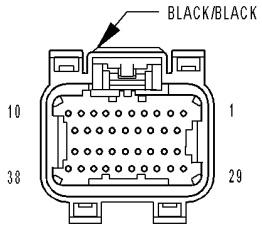

MODULE-
POWERTRAIN
CONTROL C1
(NGC)

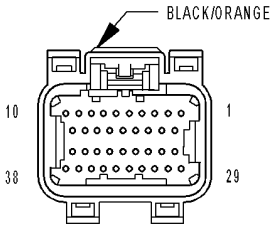

MODULE-
POWERTRAIN
CONTROL C2
(NGC)

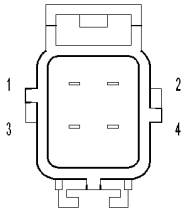

SENSOR-
OXYGEN-
RIGHT
FRONT
(4.7L)

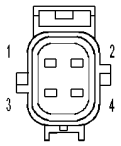

SENSOR-
OXYGEN-
RIGHT
FRONT
(3.7L/5.7L)

81452b7e

P0155-O2 SENSOR 2/1 HEATER PERFORMANCE (CONTINUED)

For the Engine circuit diagram (Refer to 9 - ENGINE - SCHEMATICS AND DIAGRAMS).

For a complete wiring diagram **Refer to Section 8W**.

Theory of Operation

This diagnostic provides a continuous check of the O2 heater circuit during operation. The heater circuit is momentarily disabled to allow a resistance measurement to be taken to infer heater temperature. The current delivery to the heater is duty cycled to maintain a specific target temperature. The error from the target temperature is continuously monitored to assess heater performance.

- **When Monitored:**
  Engine running and heater duty cycle greater than 0%. Battery voltage greater than 11.0 volts.
- **Set Condition:**
  No sensor output is received when the PCM powers up the sensor heater. Two trip fault. Three good trips to turn off the MIL.

Possible Causes
(K199) O2 2/1 HEATER CONTROL CIRCUIT OPEN
(Z934) O2 HEATER GROUND CIRCUIT OPEN
O2 SENSOR HEATER ELEMENT
PCM

Always perform the Pre-Diagnostic Troubleshooting procedure before proceeding. (Refer to 9 - ENGINE - DIAGNOSIS AND TESTING).

Diagnostic Test

1. O2 SENSOR HEATER OPERATION

Turn the ignition off.

NOTE: Wait a minimum of 8 minutes to allow the O2 Sensor to cool down before continuing the test. Allow the O2 Sensor voltage to stabilize between 4.6 and 5.0 volts.

Ignition on, engine not running.

With a scan tool, actuate the O2 Heater Test.

With the scan tool, monitor 2/1 O2 Sensor voltage for at least 2 minutes.

Does the voltage stay above 4.5 volts?

Yes >> Go To 2

No >> Refer to the INTERMITTENT CONDITION Diagnostic Procedure.
Perform the POWERTRAIN VERIFICATION TEST. (Refer to 9 - ENGINE - STANDARD PROCEDURE)

P0155-O2 SENSOR 2/1 HEATER PERFORMANCE (CONTINUED)

2. O2 SENSOR HEATER ELEMENT

Turn the ignition off.

NOTE: Allow the O2 sensor to cool down to room temperature.

Disconnect the 2/1 O2 Sensor harness connector.

Measure the resistance of the O2 Heater Element across the O2 Sensor connector between the O2 Heater Control terminal and the O2 Heater ground terminal.

NOTE: O2 Heater Element resistance values should be measured at 70°F (21.1°C). The resistance value will vary with different temperature values.

Is the resistance of the O2 Sensor Heater Element between 2.0 and 30.0 ohms?

Yes >> Go To 3

No >> Replace the O2 Sensor.
Perform the POWERTRAIN VERIFICATION TEST. (Refer to 9 - ENGINE - STANDARD PROCEDURE)

---

3. (K199) O2 2/1 HEATER CONTROL CIRCUIT OPEN

Disconnect the C2 PCM harness connector.

CAUTION: Do not probe the PCM harness connectors. Probing the PCM harness connectors will damage the PCM terminals resulting in poor terminal to pin connection. Install Miller Special Tool #8815 to perform diagnosis.

Measure the resistance of the (K199) O2 2/1 Heater Control circuit from the O2 harness connector to the appropriate terminal of special tool #8815.

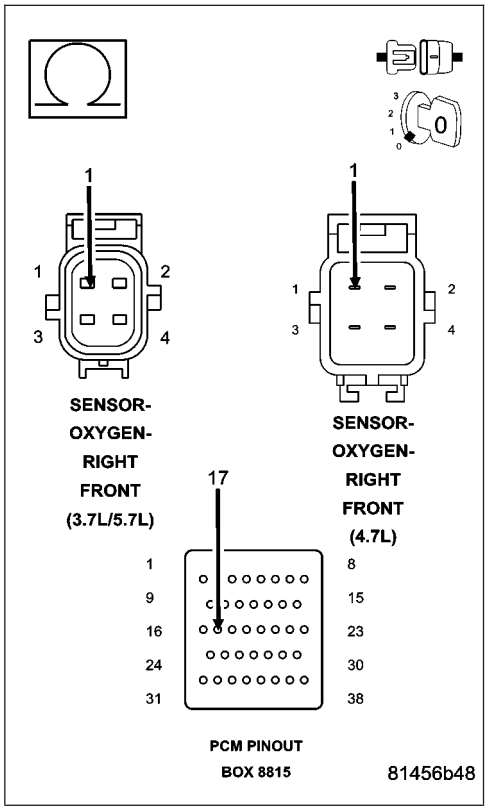

Is the resistance below 0.5 of an ohm?

Yes >> Go To 4

No >> Repair the excessive resistance in the (K199) O2 2/1 Heater Control circuit.
Perform the POWERTRAIN VERIFICATION TEST. (Refer to 9 - ENGINE - STANDARD PROCEDURE)

P0155-O2 SENSOR 2/1 HEATER PERFORMANCE (CONTINUED)

4. (Z934) O2 SENSOR HEATER GROUND CIRCUIT OPEN

Measure the resistance between ground and the (Z934) O2 Heater ground circuit in the O2 Sensor harness connector.

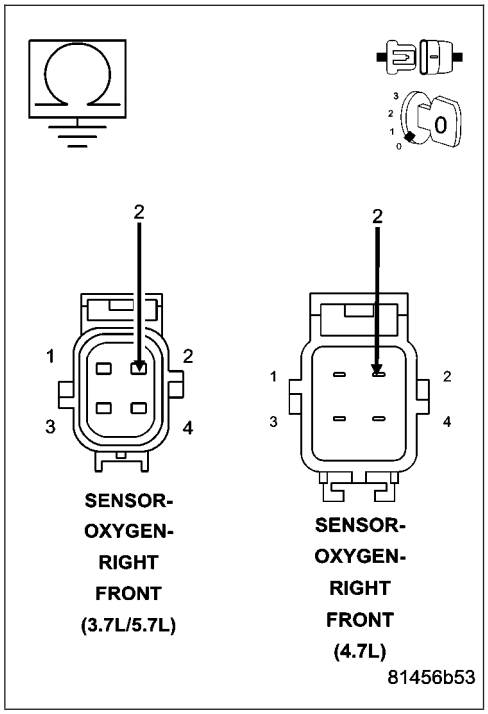

Is the resistance below 0.5 of an ohm?

Yes >> Go To 5

No >> Repair the excessive resistance in the (Z934) O2 Heater ground circuit.
Perform the POWERTRAIN VERIFICATION TEST. (Refer to 9 - ENGINE - STANDARD PROCEDURE)

5. PCM

NOTE: Before continuing, check the PCM harness connector terminals for corrosion, damage, or terminal push out. Repair as necessary.
Using the schematics as a guide, inspect the wire harness and connectors. Pay particular attention to all Power and Ground circuits.

Were there any problems found?

Yes >> Repair as necessary.
Perform the POWERTRAIN VERIFICATION TEST. (Refer to 9 - ENGINE - STANDARD PROCEDURE)

No >> Replace and program the Powertrain Control Module per Service Information.
Perform the POWERTRAIN VERIFICATION TEST. (Refer to 9 - ENGINE - STANDARD PROCEDURE)

P0157-O2 SENSOR 2/2 CIRCUIT LOW

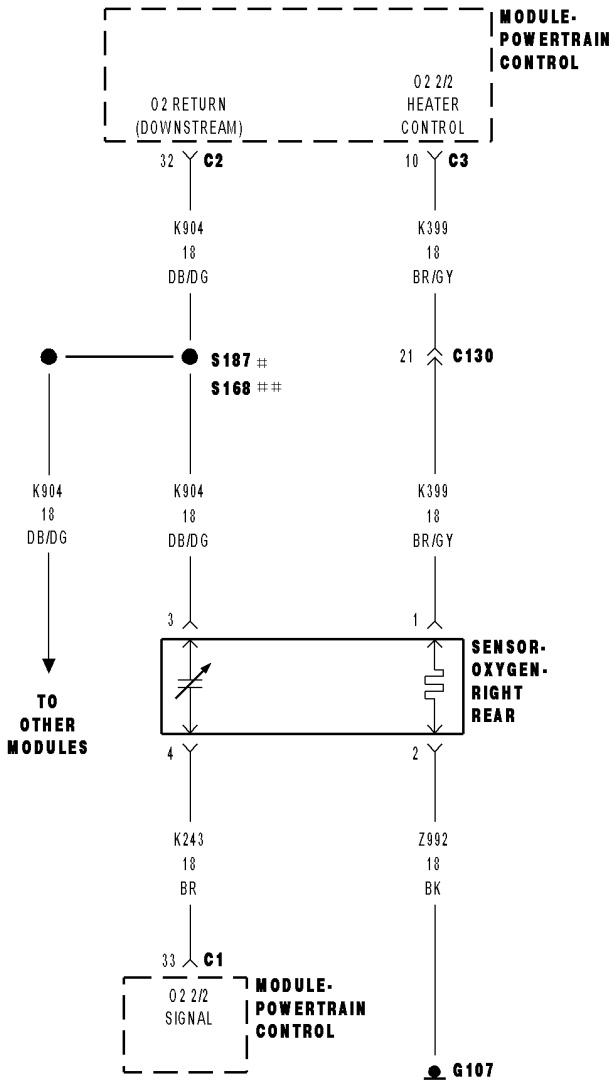

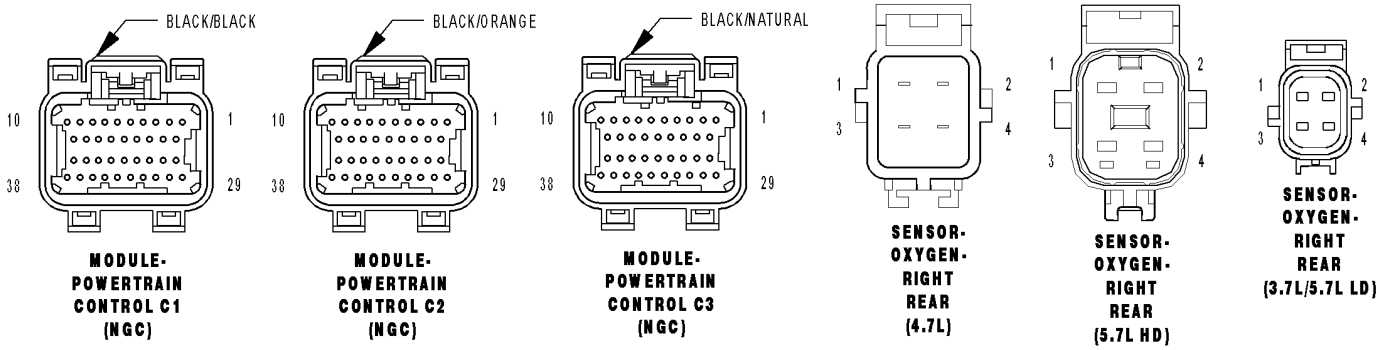

81452bb4

P0157-O2 SENSOR 2/2 CIRCUIT LOW (CONTINUED)

For the Engine circuit diagram (Refer to 9 - ENGINE - SCHEMATICS AND DIAGRAMS).

For a complete wiring diagram **Refer to Section 8W**.

- **When Monitored:**
  Engine running for less than 30 seconds and the O2 Sensor Heater Temperature is less than 251°C (484°F) with battery voltage greater 10.99 volts.
- **Set Condition:**
  The oxygen sensor signal voltage is below 2.5196 volts for 3 seconds after starting engine. One Trip Fault. Three good trips to turn off the MIL.

Possible Causes
(K904) O2 RETURN DOWNSTREAM CIRCUIT SHORTED TO GROUND
(K243) O2 2/2 SIGNAL CIRCUIT SHORTED TO GROUND
(K243) O2 SIGNAL CIRCUIT SHORTED TO THE (K904) O2 RETURN DOWNSTREAM CIRCUIT
(K243) O2 SIGNAL CIRCUIT SHORTED TO THE (Z992) O2 2/2 HEATER GROUND CIRCUIT
O2 SENSOR
PCM

Always perform the Pre-Diagnostic Troubleshooting procedure before proceeding. (Refer to 9 - ENGINE - DIAGNOSIS AND TESTING).

Diagnostic Test

1. O2 SENSOR BELOW 2.52 VOLTS

Start the engine.
Allow the engine to reach normal operating temperature.
With a scan tool, read the 2/2 O2 Sensor voltage.

Is the voltage below 2.52 volts?

Yes >> Go To 2

No >> Refer to the INTERMITTENT CONDITION Diagnostic Procedure.
Perform the POWERTRAIN VERIFICATION TEST. (Refer to 9 - ENGINE - STANDARD PROCEDURE)

---

2. (K243) O2 2/2 SIGNAL CIRCUIT

Turn the ignition off.
Disconnect the 2/2 O2 Sensor harness connector.
Ignition on, engine not running.
With a scan tool, monitor the 2/2 O2 Sensor voltage.

Is the O2 Sensor voltage above 4.8 volts?

Yes >> Go To 3

No >> Go To 5

P0157-O2 SENSOR 2/2 CIRCUIT LOW (CONTINUED)

3. O2 SENSOR

Measure the voltage on the (K904) O2 Return Downstream circuit in the O2 Sensor harness connector.

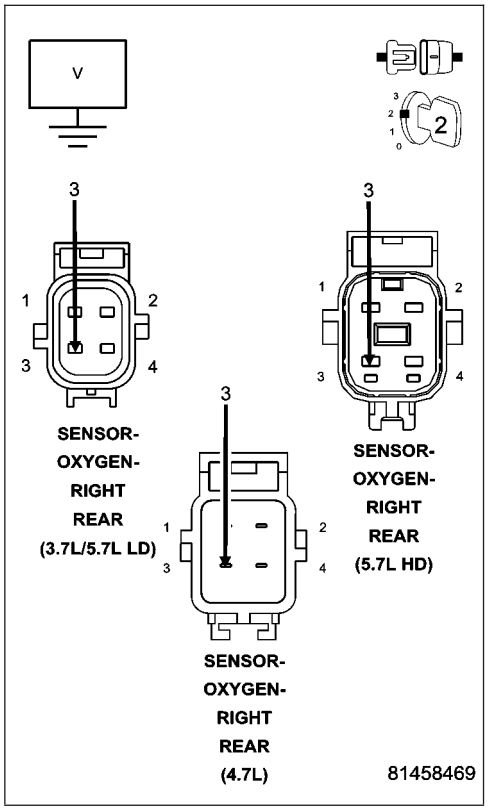

Is the voltage at 2.5 volts?

Yes >> Replace the O2 Sensor.
Perform the POWERTRAIN VERIFICATION TEST. (Refer to 9 - ENGINE - STANDARD PROCEDURE)

No >> Go To 4

4. (K904) O2 RETURN DOWNSTREAM CIRCUIT SHORTED TO GROUND

Turn the ignition off.

Disconnect the C2 PCM harness connector.

Measure the resistance between ground and the (K904) O2 Return Downstream circuit in the O2 Sensor harness connector.

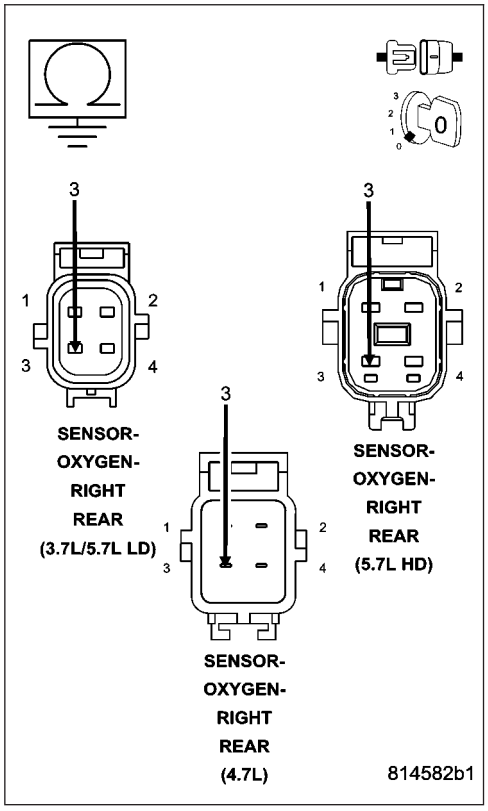

Is the resistance below 100 ohms?

Yes >> Repair the short to ground in the (K904) O2 Return Downstream circuit.
Perform the POWERTRAIN VERIFICATION TEST. (Refer to 9 - ENGINE - STANDARD PROCEDURE)

No >> Go To 8

P0157-O2 SENSOR 2/2 CIRCUIT LOW (CONTINUED)

5. (K243) O2 2/2 SIGNAL CIRCUIT SHORTED TO GROUND

Turn the ignition off.

Disconnect the C1 and C2 PCM harness connectors.

Measure the resistance between ground and the (K243) O2 2/2 Signal circuit in the O2 Sensor harness connector.

Is the resistance below 100 ohms?

Yes >> Repair the short to ground in the (K243) O2 2/2 Signal circuit.

Perform the POWERTRAIN VERIFICATION TEST. (Refer to 9 - ENGINE - STANDARD PROCEDURE)

No >> Go To 6

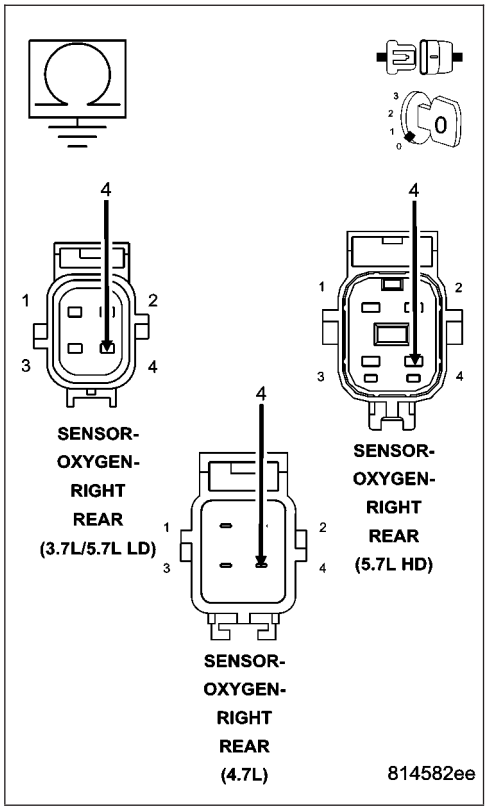

6. (K243) O2 2/2 SIGNAL CIRCUIT SHORTED TO THE (K904) O2 RETURN DOWNSTREAM CIRCUIT

Measure the resistance between the (K243) O2 2/2 Signal circuit and the (K904) O2 Return Downstream circuit in the O2 Sensor harness connector.

Is the resistance below 100 ohms?

Yes >> Repair the short between the (K904) O2 Return Downstream circuit and the (K243) O2 2/2 Signal circuit.

Perform the POWERTRAIN VERIFICATION TEST. (Refer to 9 - ENGINE - STANDARD PROCEDURE)

No >> Go To 7

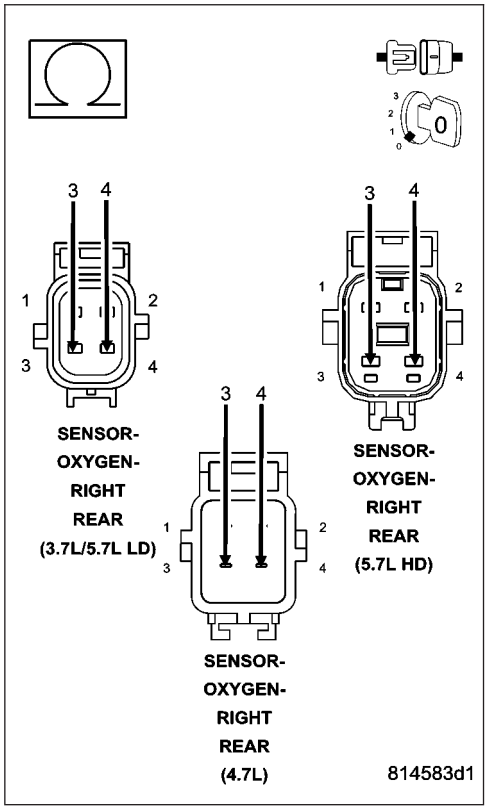

P0157-O2 SENSOR 2/2 CIRCUIT LOW (CONTINUED)

7. (K243) O2 2/2 SIGNAL CIRCUIT SHORTED TO THE (Z992) O2 2/2 HEATER GROUND CIRCUIT

Measure the resistance between the (K243) O2 2/2 Signal circuit and the (Z992) O2 2/2 Heater ground circuit in the O2 Sensor harness connector.

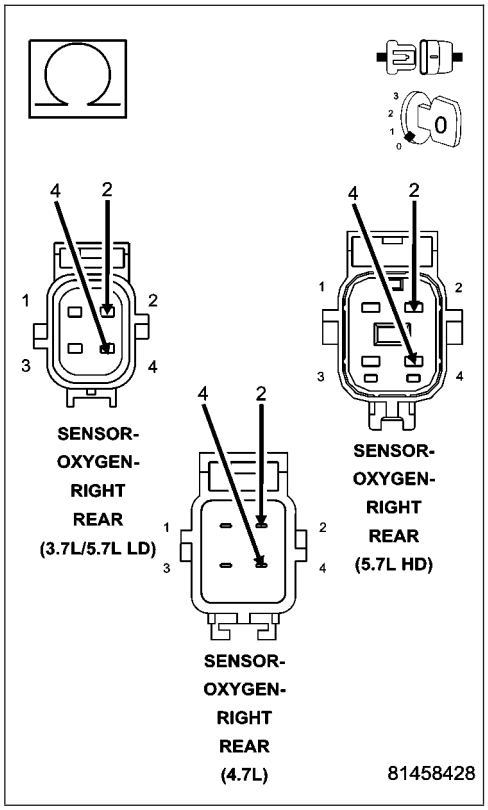

Is the resistance below 100 ohms?

Yes >> Repair the short between the (Z992) O2 2/2 Heater ground circuit and the (K243) O2 2/2 Signal circuit.
Perform the POWERTRAIN VERIFICATION TEST. (Refer to 9 - ENGINE - STANDARD PROCEDURE)

No >> Go To 8

8. PCM

NOTE: Before continuing, check the PCM harness connector terminals for corrosion, damage, or terminal push out. Repair as necessary.

Using the schematics as a guide, inspect the wire harness and connectors. Pay particular attention to all Power and Ground circuits.

Were there any problems found?

Yes >> Repair as necessary.
Perform the POWERTRAIN VERIFICATION TEST. (Refer to 9 - ENGINE - STANDARD PROCEDURE)

No >> Replace and program the Powertrain Control Module per Service Information.
Perform the POWERTRAIN VERIFICATION TEST. (Refer to 9 - ENGINE - STANDARD PROCEDURE)

P0158-O2 SENSOR 2/2 CIRCUIT HIGH

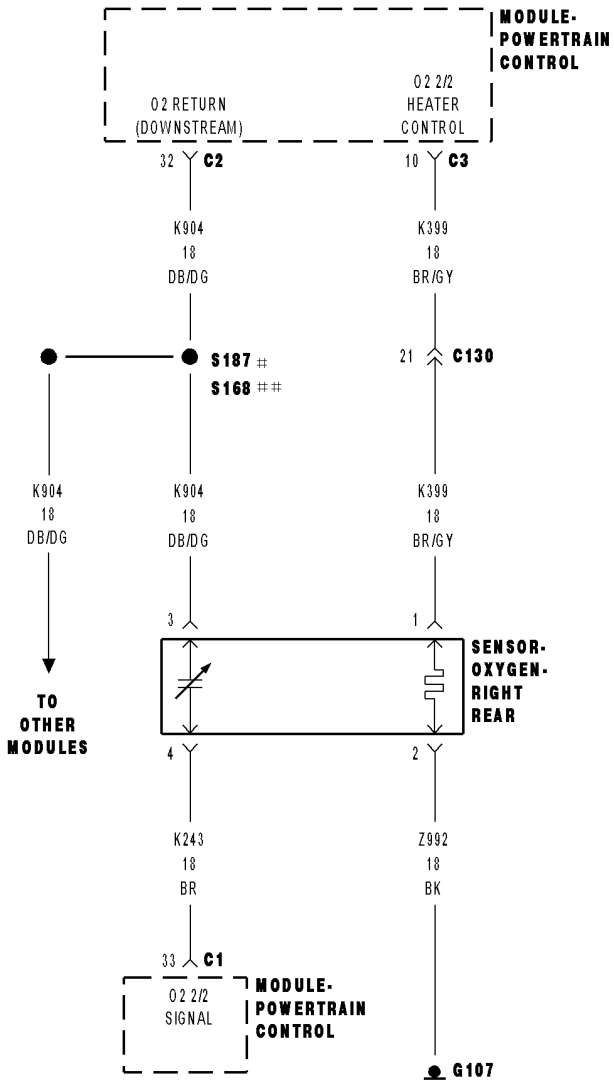

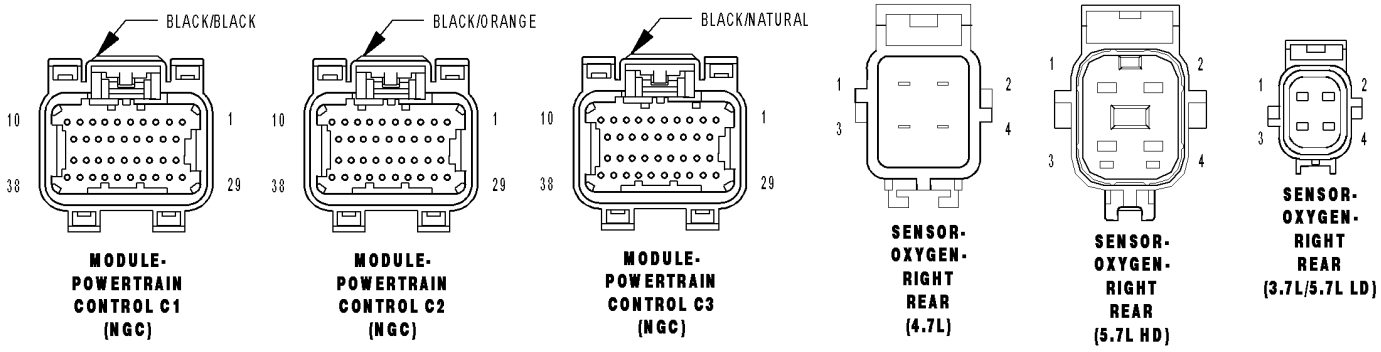

81452bb4

P0158-O2 SENSOR 2/2 CIRCUIT HIGH (CONTINUED)

For the Engine circuit diagram (Refer to 9 - ENGINE - SCHEMATICS AND DIAGRAMS).

For a complete wiring diagram **Refer to Section 8W**.

- **When Monitored:**
  O2 Sensor Heater Temperature is greater than 496°C (925°F) and battery voltage greater than 10.99 volts.
- **Set Condition:**
  The Oxygen Sensor voltage is above 3.99 volts for 30 seconds. One Trip Fault. Three good trips to turn off the MIL.

Possible Causes
(K243) O2 2/2 SIGNAL CIRCUIT SHORTED TO BATTERY VOLTAGE
(K904) O2 RETURN DOWNSTREAM CIRCUIT SHORTED TO BATTERY VOLTAGE
(K243) O2 2/2 SIGNAL CIRCUIT OPEN
(K904) O2 RETURN DOWNSTREAM CIRCUIT OPEN
O2 SENSOR
PCM

Always perform the Pre-Diagnostic Troubleshooting procedure before proceeding. (Refer to 9 - ENGINE - DIAGNOSIS AND TESTING).

Diagnostic Test

1. O2 SENSOR ABOVE 3.99 VOLTS

NOTE: When only one O2 Sensor is shorted to voltage, the scan tool will display all O2 Sensor voltage readings at approximately 5.0 volts. When diagnosing this DTC, only diagnose the O2 Sensor that set the DTC.

Start the engine.

Allow the engine to reach normal operating temperature.

With a scan tool, read the 2/2 O2 Sensor voltage.

Is the voltage above 3.99 volts?

Yes >> Go To 2

No >> Refer to the INTERMITTENT CONDITION Diagnostic Procedure.
Perform the POWERTRAIN VERIFICATION TEST. (Refer to 9 - ENGINE - STANDARD PROCEDURE)

P0158-O2 SENSOR 2/2 CIRCUIT HIGH (CONTINUED)

2. (K243) O2 2/2 SIGNAL CIRCUIT SHORTED TO BATTERY VOLTAGE

Start the engine and allow the engine to idle.

Disconnect the 2/2 O2 Sensor harness connector.

Measure the voltage on the (K243) O2 Sensor 2/2 Signal circuit in the O2 Sensor harness connector.

NOTE: Measure the voltage in reference to ground, not the (K904) O2 Return Downstream circuit.

Is the voltage above 0 volts?

Yes >> Repair the short to battery voltage in the (K243) O2 Sensor 2/2 Signal circuit.
Perform the POWERTRAIN VERIFICATION TEST. (Refer to 9 - ENGINE - STANDARD PROCEDURE)

No >> Go To 3

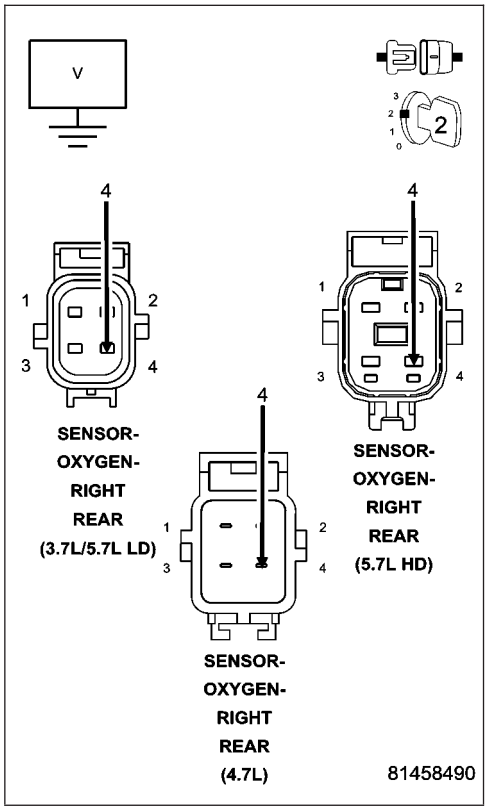

3. (K904) O2 RETURN DOWNSTREAM CIRCUIT SHORTED TO BATTERY VOLTAGE

Turn the ignition off.

Disconnect the C2 PCM harness connector.

Ignition on, engine not running.

Measure the voltage on the (K904) O2 Return Downstream circuit in the 2/2 O2 Sensor harness connector.

Is there any voltage present?

Yes >> Repair the short to battery voltage in the (K904) O2 Return Downstream circuit.
Perform the POWERTRAIN VERIFICATION TEST. (Refer to 9 - ENGINE - STANDARD PROCEDURE)

No >> Go To 4

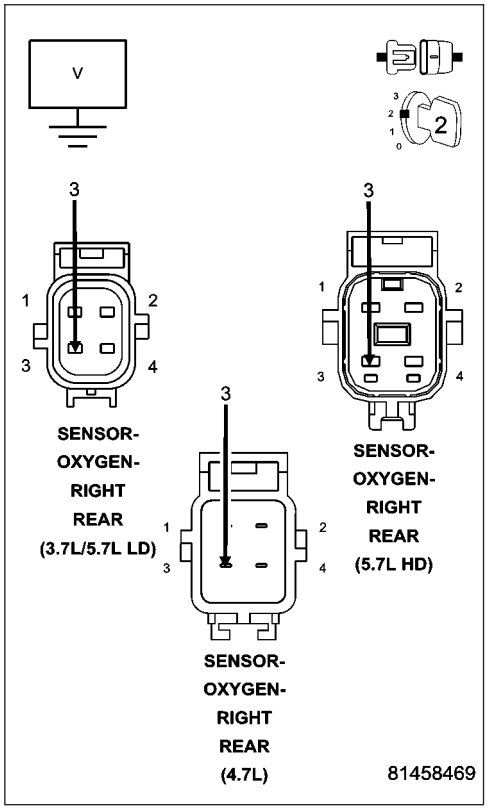

P0158-O2 SENSOR 2/2 CIRCUIT HIGH (CONTINUED)

4. O2 SENSOR

Turn the ignition off.

Connect the C2 PCM harness connector.

Connect a jumper wire between the (K243) O2 2/2 Signal circuit and the (K904) O2 Return Downstream circuit in the 2/2 O2 Sensor harness connector.

Ignition on, engine not running.

With a scan tool, monitor the 2/2 O2 Sensor voltage.

Is the voltage between 2.3 and 2.7 volts with the jumper wire installed?

Yes >> Replace the O2 Sensor.
Perform the POWERTRAIN VERIFICATION TEST. (Refer to 9 - ENGINE - STANDARD PROCEDURE)

No >> Go To 5

NOTE: Remove the jumper wire before continuing.

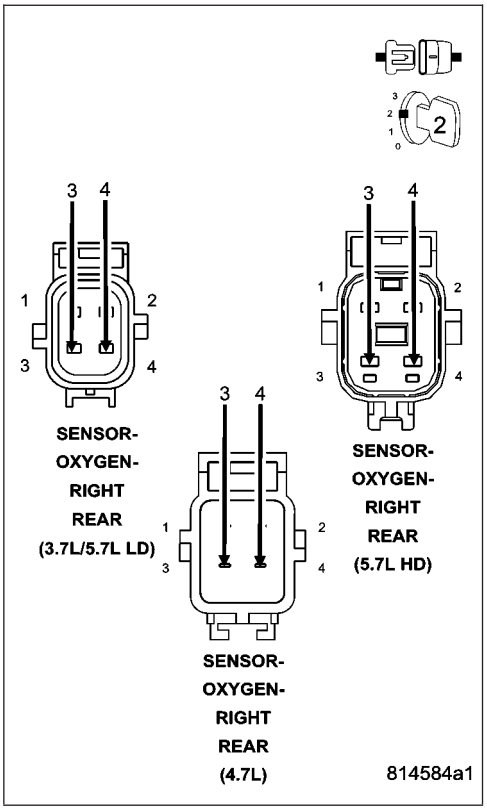

5. (K243) O2 2/2 SIGNAL CIRCUIT OPEN

Turn the ignition off.

Disconnect the C1 and C2 PCM harness connectors.

CAUTION: Do not probe the PCM harness connectors. Probing the PCM harness connectors will damage the PCM terminals resulting in poor terminal to pin connection. Install Miller Special Tool #8815 to perform diagnosis.

Measure the resistance of the (K243) O2 2/2 Signal circuit from the O2 Sensor harness connector to the appropriate terminal of special tool #8815.

Is the resistance below 5.0 ohms?

Yes >> Go To 6

No >> Repair the open in the (K243) O2 2/2 Signal circuit.
Perform the POWERTRAIN VERIFICATION TEST. (Refer to 9 - ENGINE - STANDARD PROCEDURE)

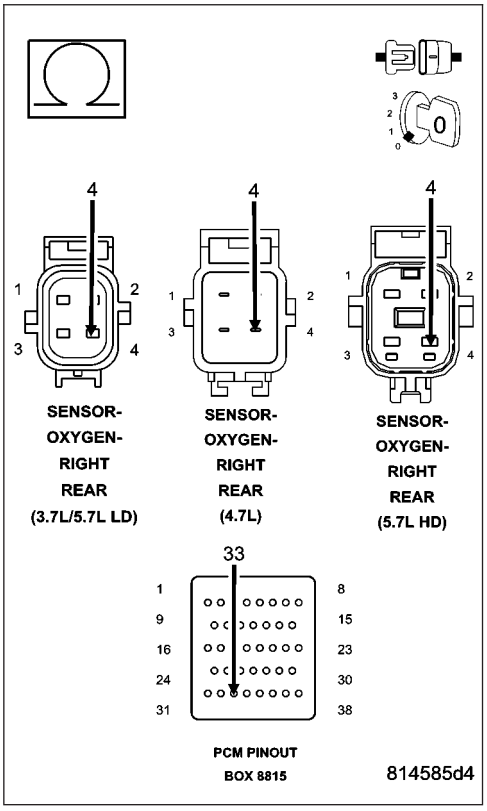

P0158-O2 SENSOR 2/2 CIRCUIT HIGH (CONTINUED)

6. (K904) O2 RETURN DOWNSTREAM CIRCUIT OPEN

Measure the resistance of the (K904) O2 Return Downstream circuit from the O2 Sensor harness connector to the appropriate terminal of special tool #8815.

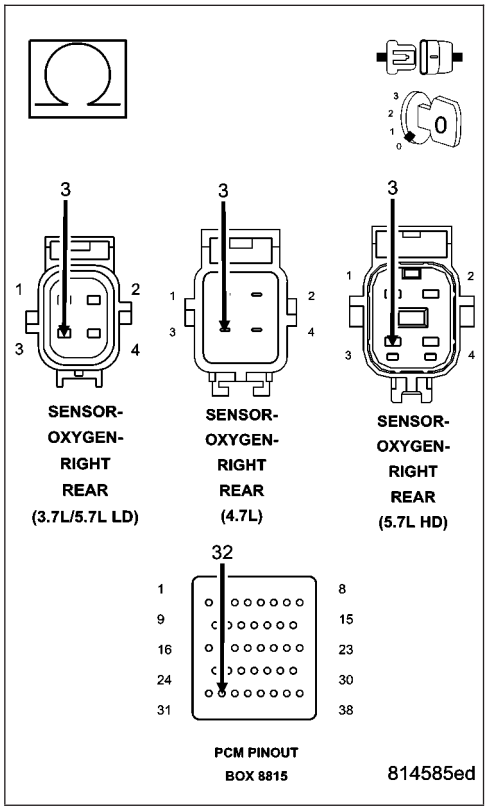

Is the resistance below 5.0 ohms?

Yes >> Go To 7

No >> Repair the open in the (K904) O2 Return Downstream circuit.
Perform the POWERTRAIN VERIFICATION TEST. (Refer to 9 - ENGINE - STANDARD PROCEDURE)

7. PCM

NOTE: Before continuing, check the PCM harness connector terminals for corrosion, damage, or terminal push out. Repair as necessary.

Using the schematics as a guide, inspect the wire harness and connectors. Pay particular attention to all Power and Ground circuits.

Were there any problems found?

Yes >> Repair as necessary.
Perform the POWERTRAIN VERIFICATION TEST. (Refer to 9 - ENGINE - STANDARD PROCEDURE)

No >> Replace and program the Powertrain Control Module per Service Information.
Perform the POWERTRAIN VERIFICATION TEST. (Refer to 9 - ENGINE - STANDARD PROCEDURE)

P0159-O2 SENSOR 2/2 SLOW RESPONSE

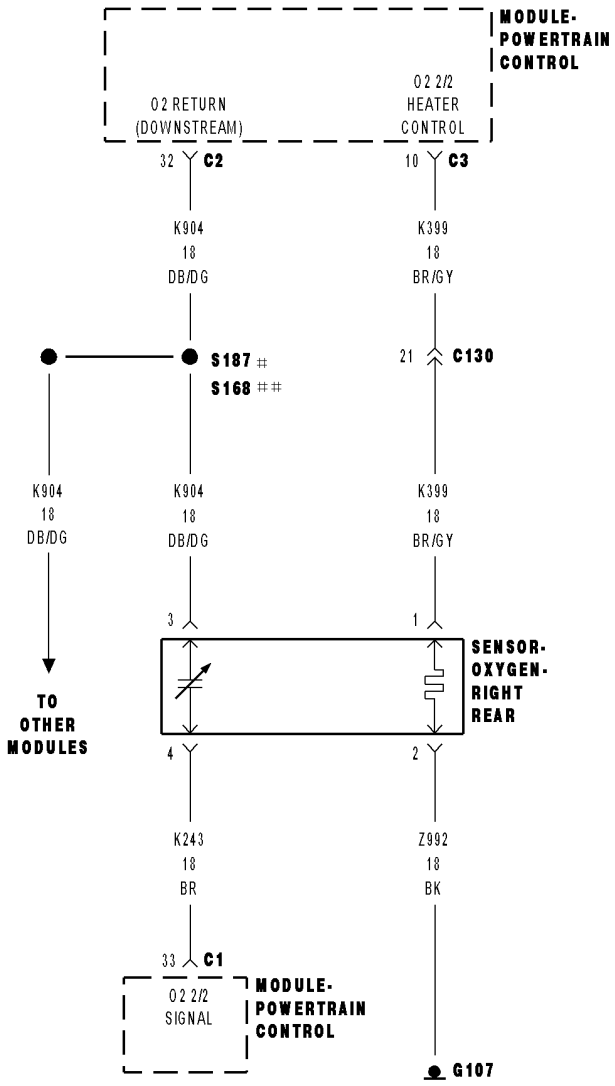

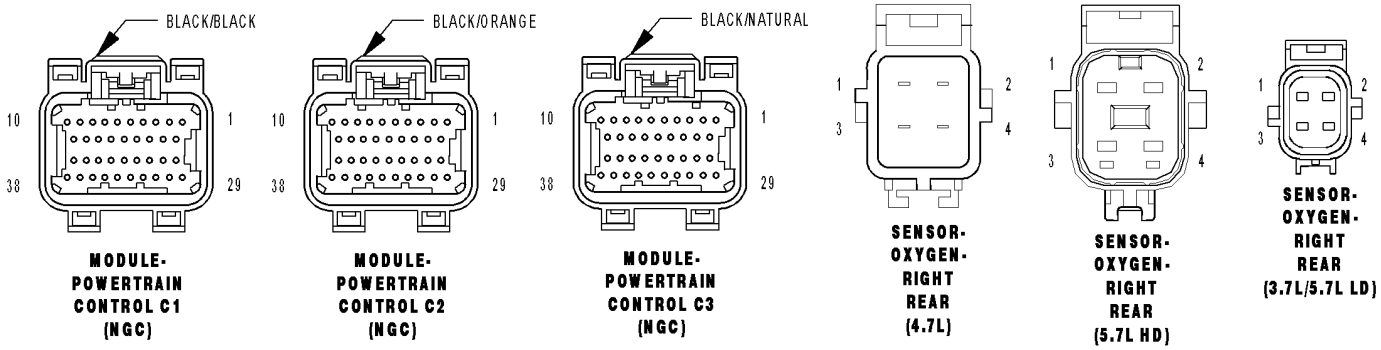

81452bb4

P0159-O2 SENSOR 2/2 SLOW RESPONSE (CONTINUED)

For the Engine circuit diagram (Refer to 9 - ENGINE - SCHEMATICS AND DIAGRAMS).

For a complete wiring diagram **Refer to Section 8W**.

Theory of Operation

The downstream O2 Sensor is located in the exhaust path behind the catalytic converter, is monitored for proper response to assure optimum catalytic converter efficiency. The downstream O2 response monitor is intended to diagnose a downstream O2 sensor that is not moving or stuck in a voltage window and to insure accurate information for catalyst monitor diagnosis.

- **When Monitored:**
  Vehicle is started and driven between 20 and 55 MPH with the Throttle open for a minimum of 120 seconds. Coolant greater than 70°C (158°F). Catalytic Converter Temp greater than 600°C (1112°F) and EVAP Purge is active.
- **Set Condition:**
  The oxygen sensor signal voltage switches less than 16 times from lean to rich within 20 seconds during monitoring. Two Trip Fault. Three good trips to turn off the MIL.

Possible Causes
EXHAUST LEAK
(K243) O2 2/2 SIGNAL CIRCUIT
(K904) O2 RETURN DOWNSTREAM CIRCUIT
O2 SENSOR

Always perform the Pre-Diagnostic Troubleshooting procedure before proceeding. (Refer to 9 - ENGINE - DIAGNOSIS AND TESTING).

Diagnostic Test

1. ACTIVE DTC

NOTE: Check for contaminants that may have damaged the O2 Sensor: contaminated fuel, unapproved silicone, oil and coolant.
Ignition on, engine not running.

NOTE: After the repairs have been made, verify proper O2 Sensor operation. If all the O2 Sensor voltage readings have not returned to normal, follow the diagnostic procedure for the remaining O2 Sensors.
With a scan tool, read DTCs.

Is the DTC active at this time?

Yes >> Go To 2

No >> Refer to the INTERMITTENT CONDITION Diagnostic Procedure.
Perform the POWERTRAIN VERIFICATION TEST. (Refer to 9 - ENGINE - STANDARD PROCEDURE)

---

2. EXHAUST LEAK

Start the engine.

Inspect the exhaust system for leaks between the engine and the O2 Sensors.

Are there any exhaust leaks?

Yes >> Repair or replace the leaking exhaust parts as necessary.
Perform the POWERTRAIN VERIFICATION TEST. (Refer to 9 - ENGINE - STANDARD PROCEDURE)

No >> Go To 3

P0159-O2 SENSOR 2/2 SLOW RESPONSE (CONTINUED)

3. (K243) O2 2/2 SIGNAL CIRCUIT

Turn the ignition off

Disconnect the 2/2 O2 Sensor harness connector.

Ignition on, engine not running.

Measure the voltage on the (K243) O2 2/2 Signal circuit in the O2 Sensor harness connector.

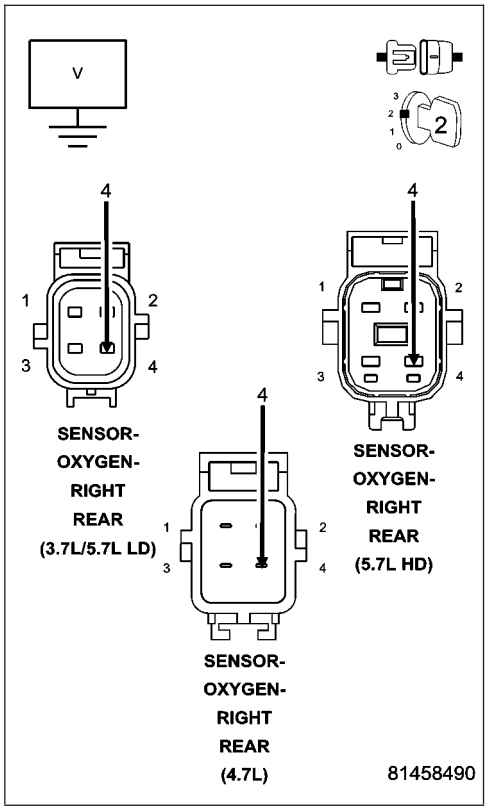

Is the voltage between 4.5 and 5.0 volts?

Yes >> Go To 4

No >> Check the (K243) O2 2/2 Signal circuit for a short to ground, open, or short to voltage. If OK, replace and program the Powertrain Control Module per Service Information.

Perform the POWERTRAIN VERIFICATION TEST. (Refer to 9 - ENGINE - STANDARD PROCEDURE)

4. (K904) O2 RETURN DOWNSTREAM CIRCUIT

Measure the voltage on the (K904) O2 Return Downstream circuit in the O2 Sensor harness connector.

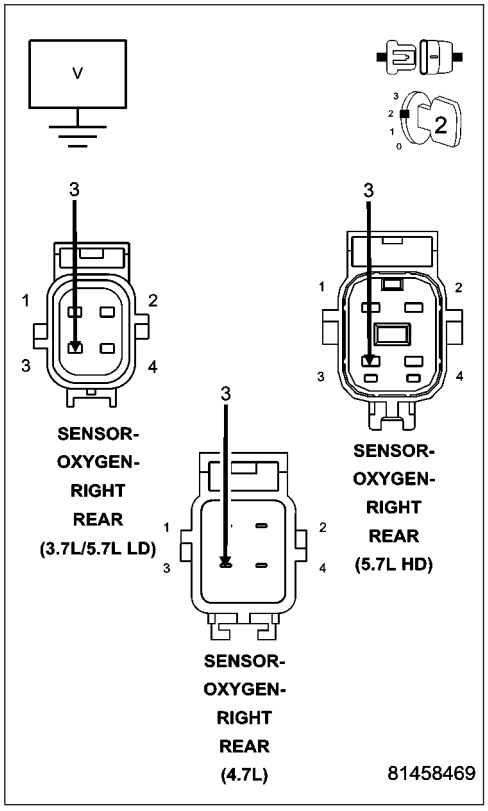

Is the voltage at 2.5 volts?

Yes >> Go To 5

No >> Check the (K904) O2 Return Downstream circuit for a short to ground, open, or short to voltage. If OK, replace and program the Powertrain Control Module per Service Information.

Perform the POWERTRAIN VERIFICATION TEST. (Refer to 9 - ENGINE - STANDARD PROCEDURE)

P0159-O2 SENSOR 2/2 SLOW RESPONSE (CONTINUED)

5. **O2 SENSOR**

If there are no possible causes remaining, view repair.

Repair

Replace the O2 Sensor

Perform the POWERTRAIN VERIFICATION TEST. (Refer to 9 - ENGINE - STANDARD PROCEDURE)

P0161-O2 SENSOR 2/2 HEATER PERFORMANCE

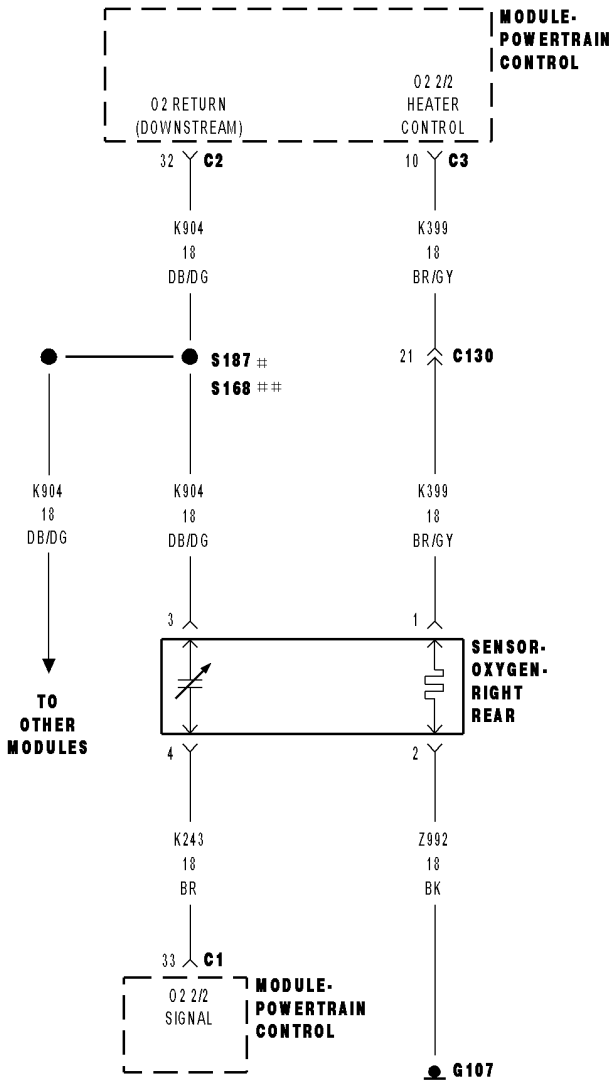

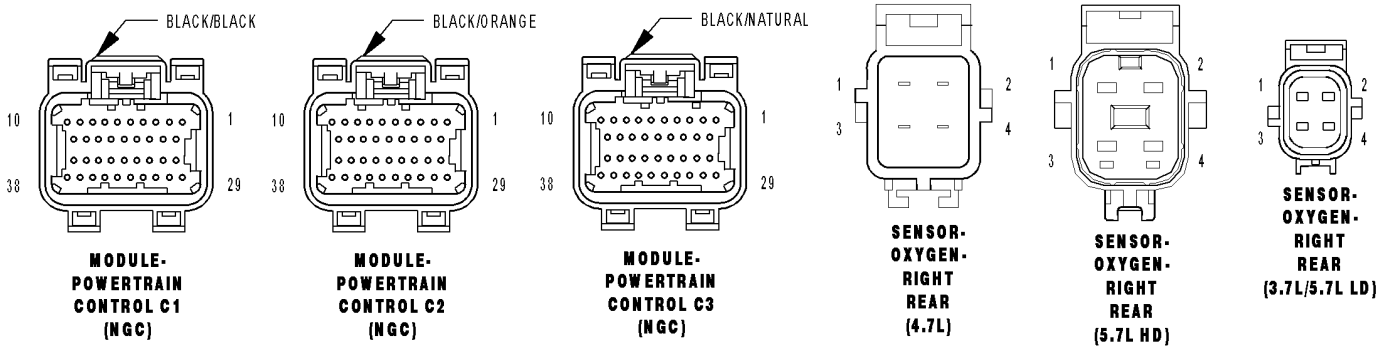

81452bb4

P0161-O2 SENSOR 2/2 HEATER PERFORMANCE (CONTINUED)

For the Engine circuit diagram (Refer to 9 - ENGINE - SCHEMATICS AND DIAGRAMS).

For a complete wiring diagram **Refer to Section 8W**.

Theory of Operation

This diagnostic provides a continuous check of the O2 heater circuit during operation. The heater circuit is momentarily disabled to allow a resistance measurement to be taken to infer heater temperature. The current delivery to the heater is duty cycled to maintain a specific target temperature. The error from the target temperature is continuously monitored to assess heater performance.

- **When Monitored:**
  Engine running and heater duty cycle greater than 0%. Battery voltage greater than 11.0 volts.
- **Set Condition:**
  No sensor output is received when the PCM powers up the sensor heater. Two trip fault. Three good trips to turn off the MIL.

Possible Causes
(K399) O2 2/2 HEATER CONTROL CIRCUIT OPEN
(Z922) O2 2/2 HEATER GROUND CIRCUIT OPEN
O2 SENSOR HEATER ELEMENT
PCM

Always perform the Pre-Diagnostic Troubleshooting procedure before proceeding. (Refer to 9 - ENGINE - DIAGNOSIS AND TESTING.

Diagnostic Test

1. O2 SENSOR HEATER OPERATION

Turn the ignition off.

NOTE: Wait a minimum of 8 minutes to allow the O2 Sensor to cool down before continuing the test. Allow the O2 Sensor voltage to stabilize between 4.6 and 5.0 volts.

Ignition on, engine not running.

With a scan tool, actuate the O2 Heater Test.

With a scan tool, monitor 2/2 O2 Sensor voltage for at least 2 minutes.

Does the voltage stay above 4.5 volts?

Yes >> Go To 2

No >> Refer to the INTERMITTENT CONDITION Diagnostic Procedure.
Perform the POWERTRAIN VERIFICATION TEST. (Refer to 9 - ENGINE - STANDARD PROCEDURE)

P0161-O2 SENSOR 2/2 HEATER PERFORMANCE (CONTINUED)

2. O2 SENSOR HEATER ELEMENT

Turn the ignition off.

NOTE: Allow the O2 sensor to cool down to room temperature.

Disconnect the O2 Sensor harness connector.

Measure the resistance of the 2/2 O2 Heater Element, between the O2 Heater Control terminal and the O2 Heater ground terminal in the O2 Sensor connector.

NOTE: O2 Heater Element resistance values should be measured at 70°F (21.1°C). The resistance value will vary with different temperature values.

Is the resistance of the O2 Sensor Heater Element between 2.0 and 30.0 ohms?

Yes >> Go To 3

No >> Replace the O2 Sensor.
Perform the POWERTRAIN VERIFICATION TEST. (Refer to 9 - ENGINE - STANDARD PROCEDURE)

---

3. (K399) O2 2/2 HEATER CONTROL CIRCUIT OPEN

Disconnect the C3 PCM harness connector.

CAUTION: Do not probe the PCM harness connectors. Probing the PCM harness connectors will damage the PCM terminals resulting in poor terminal to pin connection. Install Miller Special Tool #8815 to perform diagnosis.

Measure the resistance of the (K399) O2 2/2 Heater Control circuit from the O2 harness connector to the appropriate terminal of special tool #8815.

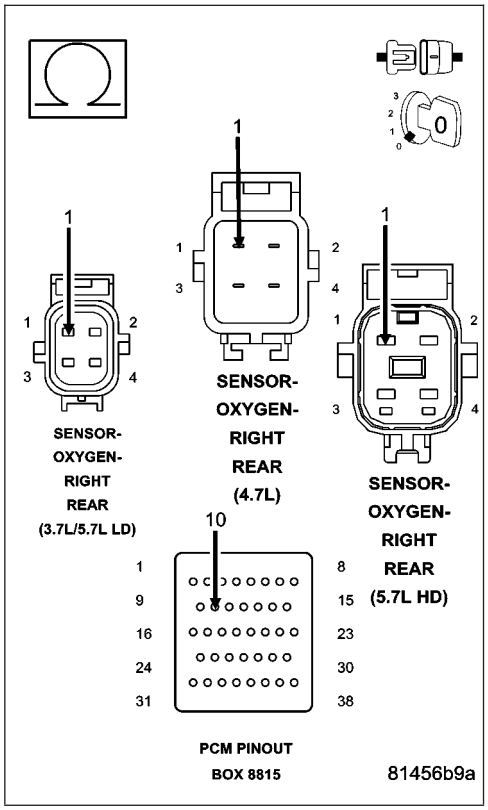

Is the resistance below 0.5 of an ohm?

Yes >> Go To 4

No >> Repair the excessive resistance in the (K399) O2 2/2 Heater Control circuit.
Perform the POWERTRAIN VERIFICATION TEST. (Refer to 9 - ENGINE - STANDARD PROCEDURE)

P0161-O2 SENSOR 2/2 HEATER PERFORMANCE (CONTINUED)

4. (Z992) O2 2/2 HEATER GROUND CIRCUIT OPEN

Measure the resistance between ground and the (Z992) O2 2/2 Heater ground circuit in the O2 Sensor harness connector.

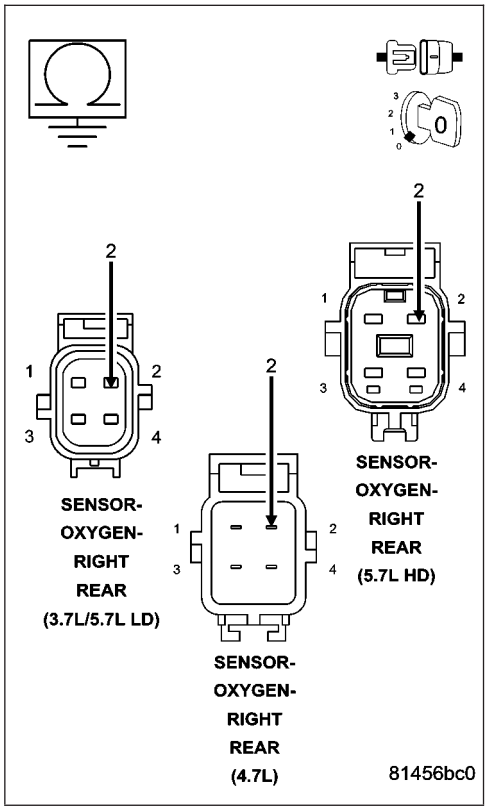

Is the resistance below 0.5 of an ohm?

Yes >> Go To 5

No >> Repair the excessive resistance in the (Z992) O2 2/2 Heater ground circuit.
Perform the POWERTRAIN VERIFICATION TEST. (Refer to 9 - ENGINE - STANDARD PROCEDURE)

5. PCM

NOTE: Before continuing, check the PCM harness connector terminals for corrosion, damage, or terminal push out. Repair as necessary.

Using the schematics as a guide, inspect the wire harness and connectors. Pay particular attention to all Power and Ground circuits.

Were there any problems found?

Yes >> Repair as necessary.
Perform the POWERTRAIN VERIFICATION TEST. (Refer to 9 - ENGINE - STANDARD PROCEDURE)

No >> Replace and program the Powertrain Control Module per Service Information.
Perform the POWERTRAIN VERIFICATION TEST. (Refer to 9 - ENGINE - STANDARD PROCEDURE)

P0171-FUEL SYSTEM 1/1 LEAN

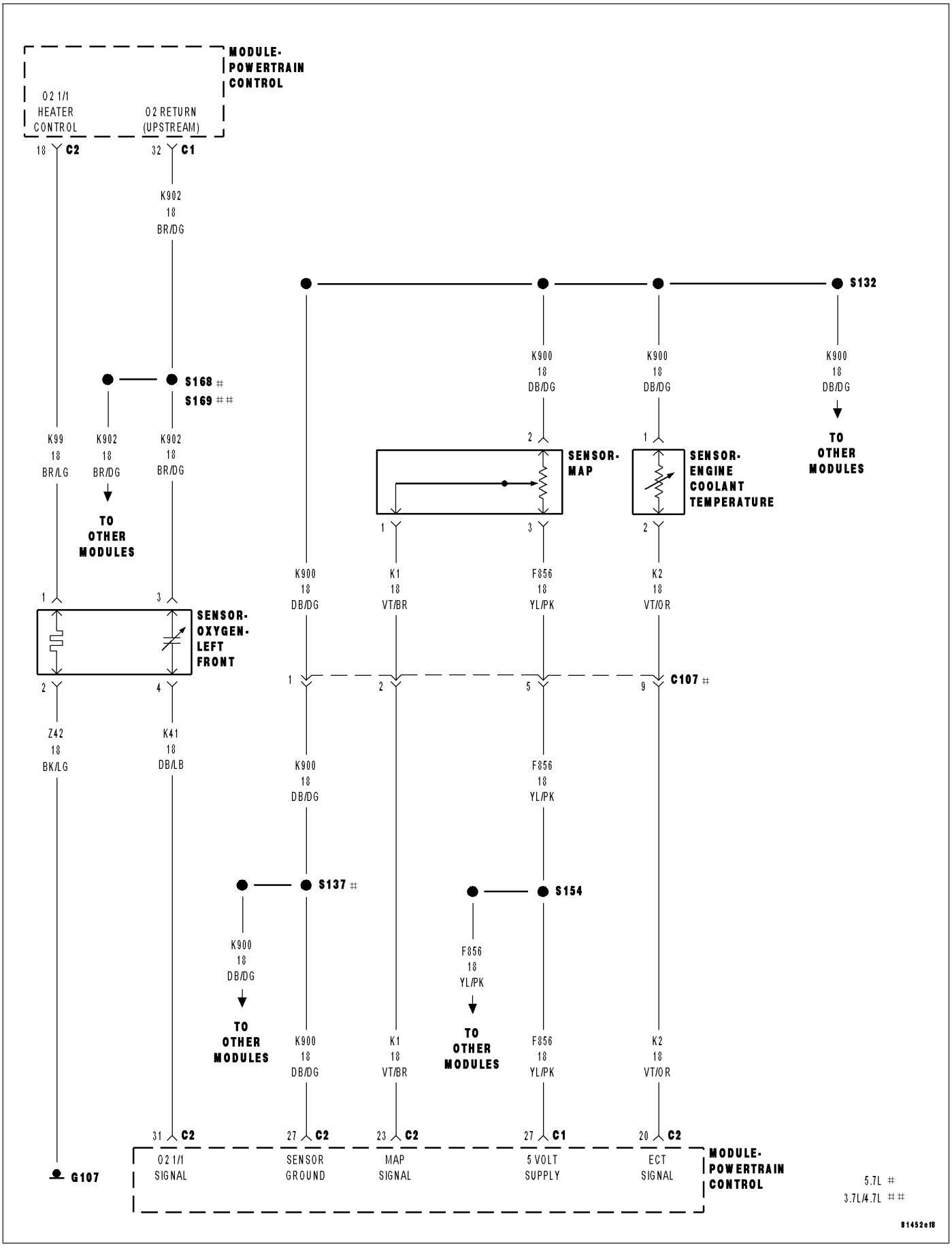

P0171-FUEL SYSTEM 1/1 LEAN (CONTINUED)

For the Engine circuit diagram (Refer to 9 - ENGINE - SCHEMATICS AND DIAGRAMS).

For a complete wiring diagram **Refer to Section 8W**.

Theory of Operation

The fuel feedback system will maintain a stoiciometric fuel/air mixture, 14.7:1, by modifying the injector pulsewidth according to the oxygen content of the exhaust gas. The PCM makes short term and long term fuel corrections to maintain stoiciometric fuel/air ratio for best catalytic converter efficiency. Short term fuel correction is based on upstream O2 sensor output and is designed for quick engine response. The long term fuel correction compensated for variations in the engine specifications, sensor tolerances and component aging and is designed to correct rich and lean conditions over a longer period of time.

- **When Monitored:**
  With the engine running in closed loop mode, the ambient/battery temperature above 20 deg. F and altitude below 8500 ft.
- **Set Condition:**
  If the PCM multiplies short term compensation by long term adaptive and a certain percentage is exceeded for two trips, a freeze frame is stored, the MIL illuminates and a trouble code is stored. Two Trip Fault. Three good trips to turn off the MIL

Possible Causes
RESTRICTED FUEL SUPPLY LINE
FUEL PUMP INLET STRAINER PLUGGED
FUEL PUMP MODULE
O2 SIGNAL CIRCUIT
O2 RETURN CIRCUIT
O2 SENSOR HEATER OPERATION
O2 SENSOR
MAP SENSOR OPERATION
ECT SENSOR OPERATION
ENGINE MECHANICAL
FUEL FILTER/PRESSURE REGULATOR (HIGH)
PCM

Always perform the Pre-Diagnostic Troubleshooting procedure before proceeding. (Refer to 9 - ENGINE - DIAGNOSIS AND TESTING).

Diagnostic Test

1. ACTIVE DTC

Diagnose all other trouble codes before continuing.

NOTE: Check for contaminants that may have damaged an O2 Sensor: contaminated fuel, unapproved silicone, oil and coolant.

Ignition on, engine not running.

With a scan tool, read DTCs.

Is the DTC active at this time?

Yes >> Go To 2

No >> Refer to the INTERMITTENT CONDITION Diagnostic Procedure.
Perform the POWERTRAIN VERIFICATION TEST. (Refer to 9 - ENGINE - STANDARD PROCEDURE)

P0171-FUEL SYSTEM 1/1 LEAN (CONTINUED)

2. CHECKING FUEL PRESSURE

WARNING: The fuel system is under a constant pressure (even with the engine off). Before testing or servicing any fuel system hose, fitting or line, the fuel system pressure must be released. Failure to follow these instructions can result in personal injury or death.

Install a fuel pressure gauge to the fuel rail.

Ignition on, engine not running.

With a scan tool, actuate the ASD Fuel System test and observe the fuel pressure gauge.

NOTE: Fuel pressure specification is 407 KPa +/- 34 KPa (59 psi +/- 5 psi).

Turn the ignition off.

CAUTION: Stop All Actuations.

Choose a conclusion that best matches your fuel pressure reading.

Within Specification

Go To 3

Above Specification

Replace the fuel filter/pressure regulator.

Perform the POWERTRAIN VERIFICATION TEST. (Refer to 9 - ENGINE - STANDARD PROCEDURE)

Below Specification

Go To 12

---

3. O2 SENSOR OPERATION

Start the engine.

Allow the engine to reach normal operating temperature.

NOTE: If one of the O2 Sensor's Signal or Return circuit is shorted to ground the scan tool will display all O2 Sensor voltage readings low. The O2 Sensor that is shorted to ground will display a voltage reading near or at 0 volts.

NOTE: If one of the O2 Sensor Signal or Return circuits are shorted to voltage, the scan tool will display all O2 Sensor voltage readings high.

NOTE: After the repairs have been made, verify proper O2 Sensor operation. If all the O2 Sensor voltage readings have not returned to normal, follow the diagnostic procedure for the remaining O2 Sensors.

With a scan tool, monitor all of the O2 Sensor voltage readings.

Is the voltage switching between 2.5 and 3.4 volts for all the O2 Sensors?

Yes >> Go To 4

No >> Go To 8

P0171-FUEL SYSTEM 1/1 LEAN (CONTINUED)

4. 1/1 O2 SENSOR HEATER OPERATION

Turn the ignition off.

NOTE: Wait a minimum of 10 minutes to allow the O2 Sensor to cool down before continuing the test. Allow the O2 Sensor voltage to stabilize at 5.0 volts.

Ignition on, engine not running.

With a scan tool, actuate the 1/1 O2 Heater Test.

With the scan tool, monitor 1/1 O2 Sensor voltage for at least 2 minutes.

Does the voltage stay above 4.5 volts?

Yes >> Replace the 1/1 O2 Sensor.
Perform the POWERTRAIN VERIFICATION TEST. (Refer to 9 - ENGINE - STANDARD PROCEDURE)

No >> Go To 5

---

5. MAP SENSOR OPERATION

Turn the ignition off.

Connect a Vacuum Gauge to a Manifold Vacuum source.

Start the engine.

Allow the engine to idle.

NOTE: If engine will not idle, maintain a constant RPM above idle.

With the scan tool, read the MAP Sensor vacuum value.

Is the scan tool reading within 1″ of the Vacuum Gauge reading?

Yes >> Go To 6

No >> Replace the MAP Sensor.
Perform the POWERTRAIN VERIFICATION TEST. (Refer to 9 - ENGINE - STANDARD PROCEDURE)

---

6. ECT SENSOR OPERATION

NOTE: For this test to be valid, the thermostat must be operating correctly.

NOTE: This test works best if performed on a cold engine (cold soak)

Ignition on, engine not running.

With a scan tool, read the Engine Coolant Temperature (ECT) Sensor value. If the engine was allowed to sit overnight (cold soak), the temperature value should be a sensible value that is somewhere close to the ambient temperature.

NOTE: If engine coolant temperature is above 82°C (180°F), allow the engine to cool until 65°C (150°F) is reached.

Start the Engine.

During engine warm-up, monitor the ECT Sensor value. The temperature value change should be a smooth transition from start up to normal operating temperature 82°C (180°F). The value should reach at least 82°C (180°F).

Did the ECT value increase smoothly and did it reach at least 180°F (82°C)?

Yes >> Go To 7

No >> Replace the Engine Coolant Temperature Sensor.
Perform the POWERTRAIN VERIFICATION TEST. (Refer to 9 - ENGINE - STANDARD PROCEDURE)

P0171-FUEL SYSTEM 1/1 LEAN (CONTINUED)

7. ENGINE MECHANICAL

Turn the ignition off.

Check for any of the following conditions/mechanical problems.

AIR INDUCTION SYSTEM - must be free from leaks.

ENGINE VACUUM - must be at least 13 inches in neutral

ENGINE VALVE TIMING - must be within specifications

ENGINE COMPRESSION - must be within specifications

ENGINE EXHAUST SYSTEM - must be free of any restrictions or leaks.

ENGINE PCV SYSTEM - must flow freely

TORQUE CONVERTER STALL SPEED - must be within specifications

POWER BRAKE BOOSTER - no internal vacuum leaks

FUEL - must be free of contamination

FUEL INJECTOR - plugged or restricted injector; control wire not connected to correct injector

Are there any engine mechanical problems?

Yes >> Repair as necessary.
Perform the POWERTRAIN VERIFICATION TEST. (Refer to 9 - ENGINE - STANDARD PROCEDURE)

No >> Go To 11

---

8. 1/1 O2 SENSOR

Ignition on, engine not running.

Disconnect the 1/1 O2 Sensor harness connector.

With a scan tool, monitor the 1/1 O2 Sensor voltage.

O2 Sensor voltage should read 5.0 volts on the scan tool with the connector disconnected.

Connect a jumper wire between the (K41) Signal circuit and the (K902) O2 Return Upstream circuit in the O2 Sensor harness connector.

NOTE: The voltage should drop from 5.0 volts to 2.5 volts with the jumper wire in place.

Did the O2 Sensor voltage change from 5.0 volts to 2.5 volts with the jumper wire installed?

Yes >> Replace the O2 Sensor.
Perform the POWERTRAIN VERIFICATION TEST. (Refer to 9 - ENGINE - STANDARD PROCEDURE)

No >> Go To 9

NOTE: Remove the jumper wire before continuing.

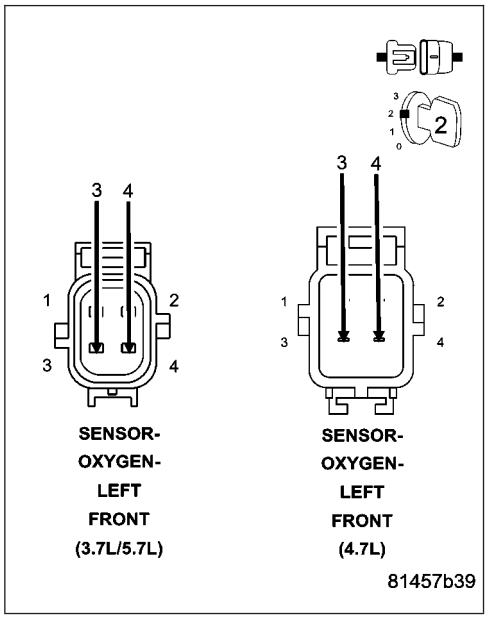

P0171-FUEL SYSTEM 1/1 LEAN (CONTINUED)

9. (K41) O2 SENSOR 1/1 SIGNAL CIRCUIT

With a scan tool, monitor the 1/1 O2 Sensor voltage reading with the jumper wire removed.

NOTE: The scan tool will display all O2 Sensor voltage readings approximately 5.0 volts when only one O2 Sensor's Signal circuit is shorted to voltage.

NOTE: The scan tool will display one O2 Sensor voltage close to zero and the others will read lower than normal when one O2 Sensor Signal circuit contains excessive resistance.

Is the voltage above 4.8 volts?

Yes >> Go To 10

No >> Check the (K41) O2 Sensor 1/1 Signal circuit for a short to ground, open, or short to voltage. Inspect the O2 Sensor connector and the PCM harness connector. If OK, replace and program the Powertrain Control Module per Service Information.
Perform the POWERTRAIN VERIFICATION TEST. (Refer to 9 - ENGINE - STANDARD PROCEDURE)

---

10. (K902) O2 RETURN UPSTREAM CIRCUIT

Disconnect the 1/1 O2 Sensor harness connector.

Measure the voltage on the (K902) O2 Return Upstream circuit in the O2 Sensor harness connector.

Is the voltage at 2.5 volts?

Yes >> Go To 11

No >> Check the O2 Return circuit for a short to ground, open, or short to voltage. Inspect the O2 Sensor connector and the PCM harness connector. If OK, replace and program the Powertriain Control Module per Service Information.
Perform the POWERTRAIN VERIFICATION TEST. (Refer to 9 - ENGINE - STANDARD PROCEDURE)

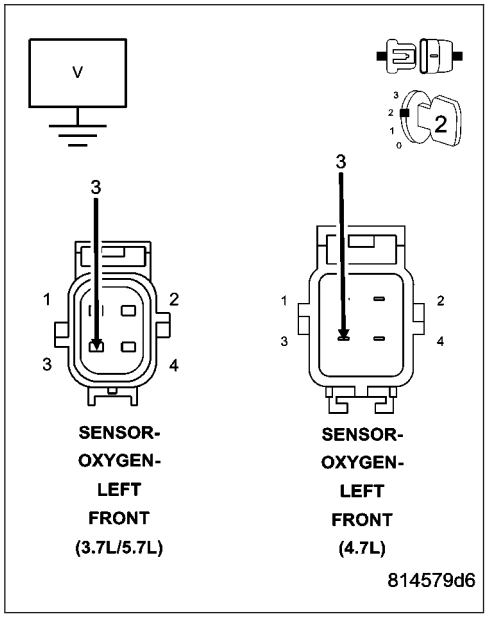

---

11. PCM

NOTE: Before continuing, check the PCM harness connector terminals for corrosion, damage, or terminal push out. Repair as necessary.

Using the schematics as a guide, inspect the wire harness and connectors. Pay particular attention to all Power and Ground circuits.

Were there any problems found?

Yes >> Repair as necessary.
Perform the POWERTRAIN VERIFICATION TEST. (Refer to 9 - ENGINE - STANDARD PROCEDURE)

No >> Replace and program the Powertrain Control Module per Service Information.
Perform the POWERTRAIN VERIFICATION TEST. (Refer to 9 - ENGINE - STANDARD PROCEDURE)

P0171-FUEL SYSTEM 1/1 LEAN (CONTINUED)

12. RESTRICTED FUEL SUPPLY LINE

WARNING: The fuel system is under a constant pressure (even with the engine off). Before testing or servicing any fuel system hose, fitting or line, the fuel system pressure must be released. Failure to follow these instructions can result in personal injury or death.

Raise vehicle on hoist, and disconnect the fuel pressure line at the fuel pump module.

Install special 5/16 fuel line adapter tool #6539 between disconnected fuel line and the fuel pump module.

Attach a fuel pressure test gauge to the T fitting on tool #6539.

Ignition on, engine not running.

With a scan tool, actuate the ASD Fuel System test and observe the fuel pressure gauge.

NOTE: Fuel pressure specification is 407 KPa +/- 34 KPa (59 psi +/- 5 psi).

CAUTION: Stop All Actuations.

Is the fuel pressure within specification?

Yes >> Repair or replace fuel supply line as necessary.
Perform the POWERTRAIN VERIFICATION TEST. (Refer to 9 - ENGINE - STANDARD PROCEDURE)

No >> Go To 13

---

13. FUEL PUMP INLET STRAINER

Turn the ignition off.

WARNING: The fuel system is under a constant pressure (even with the engine off). Before testing or servicing any fuel system hose, fitting or line, the fuel system pressure must be released.

Remove the Fuel Pump Module and inspect the Fuel Inlet Strainer.

Is the Fuel Inlet Strainer plugged?

Yes >> Replace the Fuel Pump Inlet Strainer.
Perform the POWERTRAIN VERIFICATION TEST. (Refer to 9 - ENGINE - STANDARD PROCEDURE)

No >> Go To 14

---

14. FUEL PUMP MODULE

If there are no possible causes remaining, view repair.

Repair

Replace the Fuel Pump Module.
Perform the POWERTRAIN VERIFICATION TEST. (Refer to 9 - ENGINE - STANDARD PROCEDURE)

P0172-FUEL SYSTEM 1/1 RICH

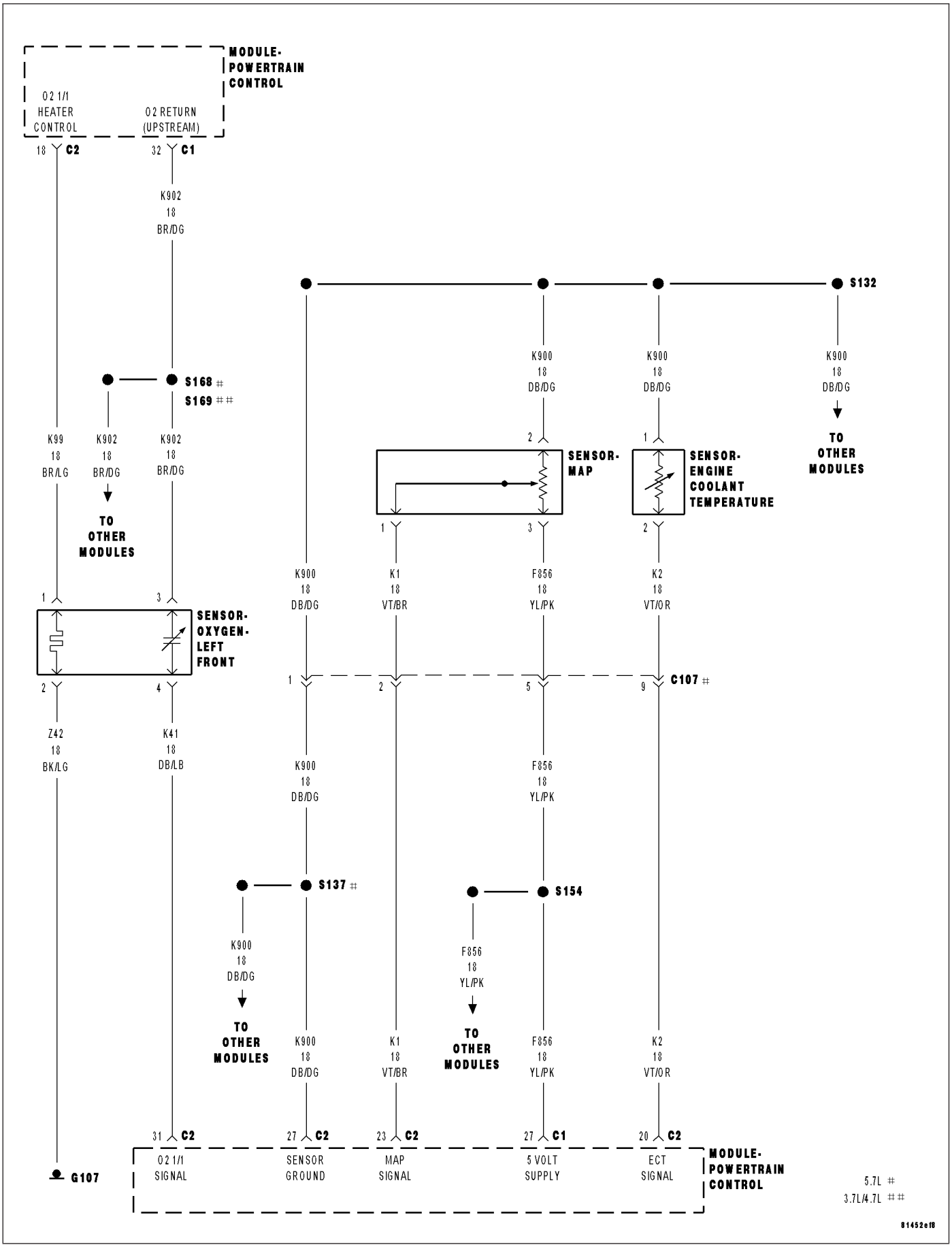

P0172-FUEL SYSTEM 1/1 RICH (CONTINUED)

For the Engine circuit diagram (Refer to 9 - ENGINE - SCHEMATICS AND DIAGRAMS).

For a complete wiring diagram **Refer to Section 8W**.

Theory of Operation

The fuel feedback system will maintain a stoiciometric fuel/air mixture, 14.7:1, by modifying the injector pulsewidth according to the oxygen content of the exhaust gas. The PCM makes short term and long term fuel corrections to maintain stoiciometric fuel/air ratio for best catalytic converter efficiency. Short term fuel correction is based on upstream O2 sensor output and is designed for quick engine response. The long term fuel correction compensated for variations in the engine specifications, sensor tolerances and component aging and is designed to correct rich and lean conditions over a longer period of time.

- **When Monitored:**
  With the engine running in closed loop mode, the ambient/battery temperature above 20 deg. F and altitude below 8500 ft.
- **Set Condition:**
  If the PCM multiplies short term compensation by long term adaptive and a purge fuel multiplier and the result is below a certain value for 30 seconds over two trips, a freeze frame is stored, the MIL illuminates and a trouble code is stored. Two Trip Fault. Three good trips to turn off the MIL.

Possible Causes
O2 SENSOR HEATER OPERATION
EVAP PURGE SOLENOID OPERATION
O2 SIGNAL CIRCUIT
O2 RETURN CIRCUIT
O2 SENSOR
MAP SENSOR
ECT SENSOR
ENGINE MECHANICAL PROBLEM
FUEL FILTER/PRESSURE REGULATOR (HIGH)
PCM

Always perform the Pre-Diagnostic Troubleshooting procedure before proceeding. (Refer to 9 - ENGINE - DIAGNOSIS AND TESTING).

Diagnostic Test

1. ACTIVE DTC

NOTE: Check for contaminates that may have damaged an O2 Sensor: contaminated fuel, unapproved silicone, oil and coolant.

Ignition on, engine not running.

With a scan tool, read DTCs.

Is the DTC active at this time?

Yes >> Go To 2

No >> Refer to the INTERMITTENT CONDITION Diagnostic Procedure.
Perform the POWERTRAIN VERIFICATION TEST. (Refer to 9 - ENGINE - STANDARD PROCEDURE)

P0172-FUEL SYSTEM 1/1 RICH (CONTINUED)

2. CHECKING FUEL PRESSURE

WARNING: The fuel system is under a constant pressure (even with the engine off). Before testing or servicing any fuel system hose, fitting or line, the fuel system pressure must be released. Failure to follow these instructions can result in personal injury or death.

Install a fuel pressure gauge to the fuel rail.

Ignition on, engine not running.

With the scan tool, actuate the ASD Fuel System test and observe the fuel pressure gauge.

NOTE: Fuel pressure specification is 407 KPa +/- 34 KPa (59 psi +/- 5 psi).

Turn the ignition off.

CAUTION: Stop All Actuations.

Choose a conclusion that best matches your fuel pressure reading.

Within Specification

Go To 3

Above Specification

Replace the fuel filter/pressure regulator.

Perform the POWERTRAIN VERIFICATION TEST. (Refer to 9 - ENGINE - STANDARD PROCEDURE)

---

3. O2 SENSOR OPERATION

Start the engine.

Allow the engine to reach normal operating temperature.

NOTE: If one of the O2 Sensors Signal or Return circuit is shorted to ground or voltage, all the other O2 Sensor voltage readings will be affected.

NOTE: After the repairs have been made, verify proper O2 Sensor operation. If all the O2 Sensor voltage readings have not returned to normal, follow the diagnostic procedure for the remaining O2 Sensors.

With the scan tool, monitor the 1/1 O2 Sensor voltage reading.

Is the voltage switching between 2.5 and 3.4 volts?

Yes >> Go To 4

No >> Go To 9

---

4. 1/1 O2 SENSOR HEATER OPERATION

Turn the ignition off.

NOTE: Wait a minimum of 10 minutes to allow the O2 Sensor to cool down before continuing the test. Allow the O2 Sensor voltage to stabilize at 5.0 volts.

Ignition on, engine not running.

With the scan tool, perform the 1/1 O2 Heater Test.

With the scan tool, monitor the O2 Sensor voltage while performing the Heater test for at least 2 minutes.

Does the voltage stay above 4.5 volts during the Heater test?

Yes >> Replace the O2 Sensor.

Perform the POWERTRAIN VERIFICATION TEST. (Refer to 9 - ENGINE - STANDARD PROCEDURE)

No >> Go To 5

P0172-FUEL SYSTEM 1/1 RICH (CONTINUED)

5. MAP SENSOR OPERATION

Turn the ignition off.

Connect a Vacuum Gauge to a Manifold Vacuum source.

Start the engine.

Allow the engine to idle.

NOTE: If engine will not idle, maintain a constant RPM above idle.

With a scan tool, read the MAP Sensor vacuum value.

Is the scan tool reading within 1″ of the Vacuum Gauge reading?

Yes >> Go To 6

No >> Replace the MAP Sensor.
Perform the POWERTRAIN VERIFICATION TEST. (Refer to 9 - ENGINE - STANDARD PROCEDURE)

NOTE: Remove the vacuum gauge before continuing.

---

6. ECT SENSOR OPERATION

NOTE: For this test to be valid, the thermostat must be operating correctly.

NOTE: This test works best if performed on a cold engine (cold soak)

Ignition on, engine not running.

With a scan tool, read the Engine Coolant Temperature Sensor value. If the engine was allowed to sit overnight (cold soak), the temperature value should be a sensible value that is somewhere close to the ambient temperature.

NOTE: If engine coolant temperature is above 82°C (180°F), allow the engine to cool until 65°C (150°F) is reached.

Start the Engine.

During engine warm-up, monitor the Engine Coolant Temperature value. The temp value change should be a smooth transition from start up to normal operating temp 82°C (180°F). The value should reach at least 82°C (180°F).

Did the ECT value increase smoothly and reach at least 180°F (82°C)?

Yes >> Go To 7

No >> Replace the Engine Coolant Temperature Sensor.
Perform the POWERTRAIN VERIFICATION TEST. (Refer to 9 - ENGINE - STANDARD PROCEDURE)

---

7. EVAP PURGE SOLENOID OPERATION

Turn the ignition off.

Disconnect the hoses at the Evap Purge Solenoid.

Using a hand vacuum pump, apply 10 inches of vacuum to the Evap Purge Solenoid vacuum source port on the component side.

Did the Evap Purge Solenoid hold vacuum?

Yes >> Go To 8

No >> Replace the EVAP Purge Solenoid.
Perform the POWERTRAIN VERIFICATION TEST. (Refer to 9 - ENGINE - STANDARD PROCEDURE)

NOTE: Connect the vacuum hoses before continuing.

P0172-FUEL SYSTEM 1/1 RICH (CONTINUED)

8. ENGINE MECHANICAL

Check for any of the following conditions/mechanical problems.

AIR INDUCTION SYSTEM - must be free from restrictions.

ENGINE VACUUM - must be at least 13 inches in neutral

ENGINE VALVE TIMING - must be within specifications

ENGINE COMPRESSION - must be within specifications

ENGINE EXHAUST SYSTEM - must be free of any restrictions or leaks.

ENGINE PCV SYSTEM - must flow freely

TORQUE CONVERTER STALL SPEED - must be within specifications

POWER BRAKE BOOSTER - no internal vacuum leaks

FUEL - must be free of contamination

FUEL INJECTOR - plugged or restricted injector; control wire not connected to correct injector

Are there any engine mechanical problems?

Yes >> Repair as necessary.
Perform the POWERTRAIN VERIFICATION TEST. (Refer to 9 - ENGINE - STANDARD PROCEDURE)

No >> Go To 12

---

9. 1/1 O2 SENSOR

NOTE: Perform the following test on the O2 Sensors whose voltage was not switching properly in the previous step.

Ignition on, engine not running.

Disconnect the 1/1 O2 Sensor harness connector.

With a scan tool, monitor the 1/1 O2 Sensor voltage.

O2 Sensor voltage should read 5.0 volts on the scan tool with the connector disconnected.

Connect a jumper wire between the (K41) O2 Sensor 1/1 Signal circuit and the (K902) O2 Return Upstream circuit in the O2 Sensor harness connector.

NOTE: The voltage should drop from 5.0 volts down to 2.5 volts with the jumper wire connected.

Did the O2 Sensor voltage drop from 5 volts to 2.5 volts when the jumper wire was installed?

Yes >> Replace the 1/1 O2 Sensor
Perform the POWERTRAIN VERIFICATION TEST. (Refer to 9 - ENGINE - STANDARD PROCEDURE)

No >> Go To 10

NOTE: Remove the jumper wire before continuing.

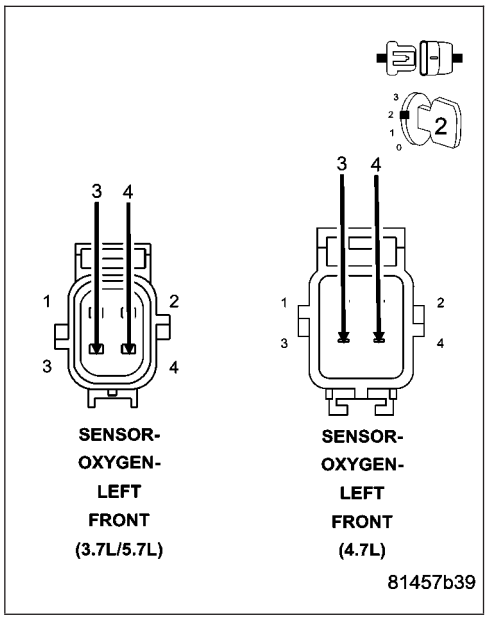

P0172-FUEL SYSTEM 1/1 RICH (CONTINUED)

10. (K41) O2 SENSOR 1/1 SIGNAL CIRCUIT

WARNING: When the engine is operating, do not stand in direct line with the fan. Do not put your hands near the pulleys, belts, or fan. Do not wear loose clothing. Failure to follow these instructions can result in personal injury or death.

Start the engine.

Measure the voltage on the (K41) O2 Sensor 1/1 Signal circuit in the O2 Sensor harness connector.

Is the voltage above 4.8 volts?

Yes >> Check the (K41) O2 Sensor 1/1 Signal circuit for damage, short to ground, open, or short to voltage. Inspect the O2 Sensor connector and the PCM harness connector. If OK, replace and program the Powertrain Control Module per Service Information.

Perform the POWERTRAIN VERIFICATION TEST. (Refer to 9 - ENGINE - STANDARD PROCEDURE)

No >> Go To 11

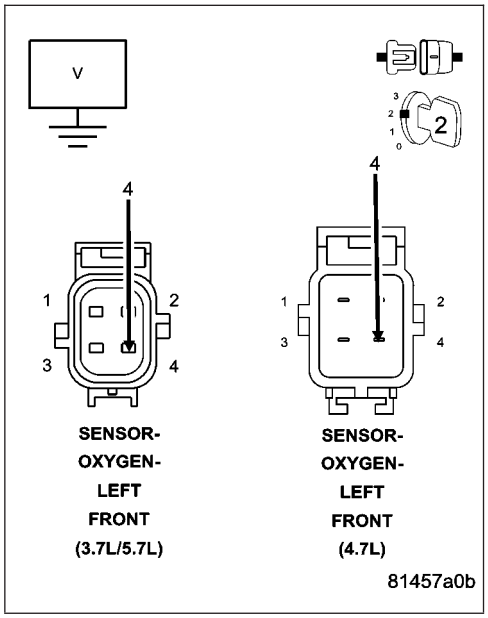

11. (K902) O2 SENSOR RETURN UPSTREAM CIRCUIT

Engine still running.

Measure the voltage on the (K902) O2 Return Upstream circuit in the 1/1 O2 Sensor harness connector.

Is the voltage at 2.5 volts?

Yes >> Go To 12

No >> Check the (K902) O2 Return Upstream circuit for damage, short to ground, open, or short to voltage. Inspect the O2 Sensor connector and the PCM harness connector. If OK, replace and program the Powertrain Control Module per Service Information.

Perform the POWERTRAIN VERIFICATION TEST. (Refer to 9 - ENGINE - STANDARD PROCEDURE)

NOTE: Turn the ignition off before continuing.

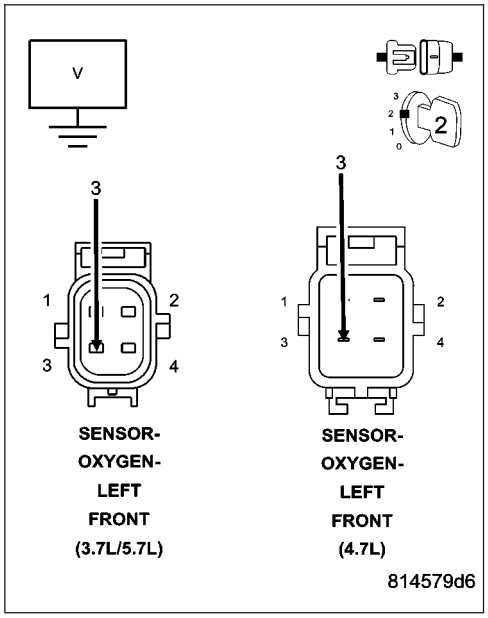

P0172-FUEL SYSTEM 1/1 RICH (CONTINUED)

12. PCM

NOTE: Before continuing, check the PCM harness connector terminals for corrosion, damage, or terminal push out. Repair as necessary.

Using the schematics as a guide, inspect the wire harness and connectors. Pay particular attention to all Power and Ground circuits.

Were there any problems found?

Yes >> Repair as necessary.
Perform the POWERTRAIN VERIFICATION TEST. (Refer to 9 - ENGINE - STANDARD PROCEDURE)

No >> Replace and program the Powertrain Control Module per Service Information.
Perform the POWERTRAIN VERIFICATION TEST. (Refer to 9 - ENGINE - STANDARD PROCEDURE)

P0174-FUEL SYSTEM 2/1 LEAN

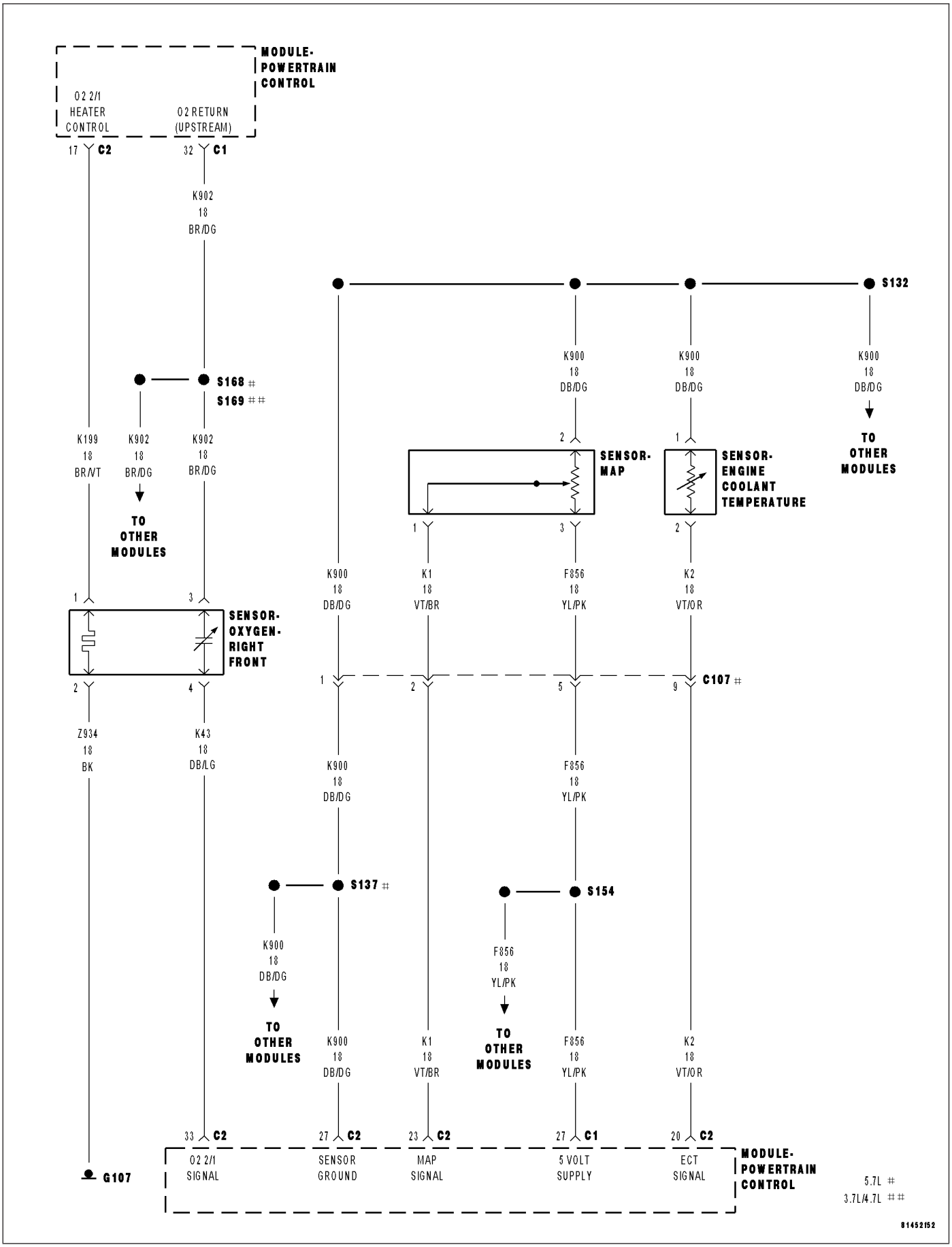

P0174-FUEL SYSTEM 2/1 LEAN (CONTINUED)

For the Engine circuit diagram (Refer to 9 - ENGINE - SCHEMATICS AND DIAGRAMS).

For a complete wiring diagram **Refer to Section 8W**.

Theory of Operation

The fuel feedback system will maintain a stoiciometric fuel/air mixture, 14.7:1, by modifying the injector pulsewidth according to the oxygen content of the exhaust gas. The PCM makes short term and long term fuel corrections to maintain stoiciometric fuel/air ratio for best catalytic converter efficiency. Short term fuel correction is based on upstream O2 sensor output and is designed for quick engine response. The long term fuel correction compensated for variations in the engine specifications, sensor tolerances and component aging and is designed to correct rich and lean conditions over a longer period of time.

- **When Monitored:**
  With the engine running in closed loop mode, the ambient/battery temperature above 20 deg. F and altitude below 8500 ft.
- **Set Condition:**
  If the PCM multiplies short term compensation by long term adaptive and a certain percentage is exceeded for two trips, a freeze frame is stored, the MIL illuminates and a trouble code is stored. Two Trip Fault. Three good trips to turn off the MIL.

Possible Causes
RESTRICTED FUEL SUPPLY LINE
FUEL PUMP INLET STRAINER PLUGGED
FUEL PUMP MODULE
O2 SIGNAL CIRCUIT
O2 RETURN CIRCUIT
O2 SENSOR HEATER OPERATION
O2 SENSOR
MAP SENSOR OPERATION
ECT SENSOR OPERATION
ENGINE MECHANICAL
FUEL FILTER/PRESSURE REGULATOR (HIGH)
PCM

Always perform the Pre-Diagnostic Troubleshooting procedure before proceeding. (Refer to 9 - ENGINE - DIAGNOSIS AND TESTING).

Diagnostic Test

1. ACTIVE DTC

Diagnose all other trouble codes before continuing.

NOTE: Check for contaminants that may have damaged an O2 Sensor: contaminated fuel, unapproved silicone, oil and coolant.

Ignition on, engine not running.

With a scan tool, read DTCs.

Is the DTC active at this time?

Yes >> Go To 2

No >> Refer to the INTERMITTENT CONDITION Diagnostic Procedure.
Perform the POWERTRAIN VERIFICATION TEST. (Refer to 9 - ENGINE - STANDARD PROCEDURE)

P0174-FUEL SYSTEM 2/1 LEAN (CONTINUED)

2. CHECKING FUEL PRESSURE

WARNING: The fuel system is under a constant pressure (even with the engine off). Before testing or servicing any fuel system hose, fitting or line, the fuel system pressure must be released. Failure to follow these instructions can result in personal injury or death.

Install a fuel pressure gauge to the fuel rail.

Ignition on, engine not running.

With the scan tool, actuate the ASD Fuel System test and observe the fuel pressure gauge.

NOTE: Fuel pressure specification is 407 KPa +/- 34 KPa (59 psi +/- 5 psi).

Turn the ignition off.

CAUTION: Stop All Actuations.

Choose a conclusion that best matches your fuel pressure reading.

Within Specification

Go To 3

Above Specification

Replace the fuel filter/pressure regulator.

Perform the POWERTRAIN VERIFICATION TEST. (Refer to 9 - ENGINE - STANDARD PROCEDURE)

Below Specification

Go To 12

---

3. O2 SENSOR OPERATION

Start the engine.

Allow the engine to reach normal operating temperature.

NOTE: If one of the O2 Sensor's Signal or Return circuit is shorted to ground the scan tool will display all O2 Sensor voltage readings low. The O2 Sensor that is shorted to ground will display a voltage reading near or at 0 volts.

NOTE: If one of the O2 Sensor Signal or Return circuits are shorted to voltage, the scan tool will display all O2 Sensor voltage readings high.

NOTE: After the repairs have been made, verify proper O2 Sensor operation. If all the O2 Sensor voltage readings have not returned to normal, follow the diagnostic procedure for the remaining O2 Sensors.

With the scan tool, monitor the 2/1 O2 Sensor voltage reading.

Is the voltage switching between 2.5 and 3.4 volts?

Yes >> Go To 4

No >> Go To 8

P0174-FUEL SYSTEM 2/1 LEAN (CONTINUED)

4. 2/1 O2 SENSOR HEATER OPERATION

Turn the ignition off.

NOTE: Wait a minimum of 10 minutes to allow the O2 Sensor to cool down before continuing the test. Allow the O2 Sensor voltage to stabilize at 5.0 volts.

NOTE: Perform the following test on all O2 Sensors.
Ignition on, engine not running.

With a scan tool, actuate the 2/1 O2 Heater Test.

With the scan tool, monitor 2/1 O2 Sensor voltage for at least 2 minutes.

Does the voltage stay above 4.5 volts?

Yes >> Replace the 2/1 O2 Sensor.
Perform the POWERTRAIN VERIFICATION TEST. (Refer to 9 - ENGINE - STANDARD PROCEDURE)

No >> Go To 5

---

5. MAP SENSOR OPERATION

Turn the ignition off.

Connect a Vacuum Gauge to a Manifold Vacuum source.

Start the engine.

Allow the engine to idle.

NOTE: If engine will not idle, maintain a constant RPM above idle.
With the scan tool, read the MAP Sensor vacuum value.

Is the scan tool reading within 1″ of the Vacuum Gauge reading?

Yes >> Go To 6

No >> Replace the MAP Sensor.
Perform the POWERTRAIN VERIFICATION TEST. (Refer to 9 - ENGINE - STANDARD PROCEDURE)

---

6. ECT SENSOR OPERATION

NOTE: For this test to be valid, the thermostat must be operating correctly.

NOTE: This test works best if performed on a cold engine (cold soak).
Ignition on, engine not running.

With the scan tool, read the Engine Coolant Temperature (ECT) Sensor value. If the engine was allowed to sit overnight (cold soak), the temperature value should be a sensible value that is somewhere close to the ambient temperature.

NOTE: If engine coolant temperature is above 82°C (180°F), allow the engine to cool until 65°C (150°F) is reached.
Start the Engine.

During engine warm-up, monitor the ECT Sensor value. The temperature value change should be a smooth transition from start up to normal operating temperature 82°C (180°F). The value should reach at least 82°C (180°F).

Did the ECT value increase smoothly and did it reach at least 180°F (82°C)?

Yes >> Go To 7

No >> Replace the Engine Coolant Temperature Sensor.
Perform the POWERTRAIN VERIFICATION TEST. (Refer to 9 - ENGINE - STANDARD PROCEDURE)

P0174-FUEL SYSTEM 2/1 LEAN (CONTINUED)

7. ENGINE MECHANICAL

Turn the ignition off.

Check for any of the following conditions/mechanical problems.

AIR INDUCTION SYSTEM - must be free from leaks.

ENGINE VACUUM - must be at least 13 inches in neutral

ENGINE VALVE TIMING - must be within specifications

ENGINE COMPRESSION - must be within specifications

ENGINE EXHAUST SYSTEM - must be free of any restrictions or leaks.

ENGINE PCV SYSTEM - must flow freely

TORQUE CONVERTER STALL SPEED - must be within specifications

POWER BRAKE BOOSTER - no internal vacuum leaks

FUEL - must be free of contamination

FUEL INJECTOR - plugged or restricted injector; control wire not connected to correct injector

Are there any engine mechanical problems?

Yes >> Repair as necessary.
Perform the POWERTRAIN VERIFICATION TEST. (Refer to 9 - ENGINE - STANDARD PROCEDURE)

No >> Go To 11

---

8. O2 SENSOR

Ignition on, engine not running.

Disconnect the 2/1 O2 Sensor harness connector.

With the scan tool, monitor the 2/1 O2 Sensor voltage.

O2 Sensor voltage should read 5.0 volts on the scan tool with the connector disconnected.

Connect a jumper wire between the (K43) O2 Sensor 2/1 Signal circuit and the (K902) O2 Return Upstream circuit in the O2 Sensor harness connector.

NOTE: The voltage should drop from 5.0 volts to 2.5 volts with the jumper wire in place.

Did the O2 Sensor voltage change from 5.0 volts to 2.5 volts when the jumper wire was installed?

Yes >> Replace the 2/1 O2 Sensor.
Perform the POWERTRAIN VERIFICATION TEST. (Refer to 9 - ENGINE - STANDARD PROCEDURE)

No >> Go To 9

NOTE: Remove the jumper wire before continuing.

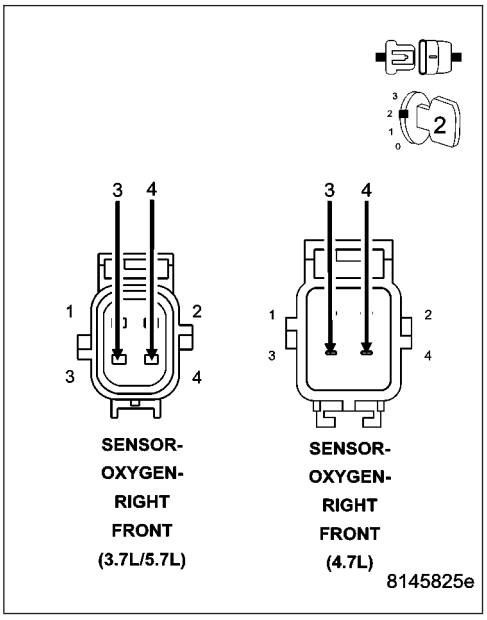

P0174-FUEL SYSTEM 2/1 LEAN (CONTINUED)

9. O2 SENSOR SIGNAL CIRCUIT

With the scan tool, monitor all the O2 Sensor voltage reading with the jumper wire removed.

NOTE: The scan tool will display all O2 Sensor voltage readings approximately 5.0 volts when only one O2 Sensor's Signal circuit is shorted to voltage.

NOTE: The scan tool will display one O2 Sensor voltage close to zero and the others will read lower than normal when one O2 Sensor Signal circuit contains excessive resistance.

Is the voltage above 4.8 volts?

Yes >> Go To 10

No >> Check all the O2 Signal circuits for a short to ground, open, or short to voltage. Inspect the O2 Sensor connector and the PCM harness connector. If OK, replace and program the Powertrain Control Module per Service Information.
Perform the POWERTRAIN VERIFICATION TEST. (Refer to 9 - ENGINE - STANDARD PROCEDURE)

---

10. (K902) O2 RETURN UPSTREAM CIRCUIT

Disconnect the 2/1 O2 Sensor harness connector.

Measure the voltage on the (K902) O2 Return Upstream circuit in the O2 Sensor harness connector.

Is the voltage at 2.5 volts?

Yes >> Go To 11

No >> Check the (K902) O2 Return Upstream circuit for a short to ground, open, or short to voltage. Inspect the O2 Sensor connector and the PCM harness connector. If OK, replace and program the Powertrain Control Module per Service Information.
Perform the POWERTRAIN VERIFICATION TEST. (Refer to 9 - ENGINE - STANDARD PROCEDURE)

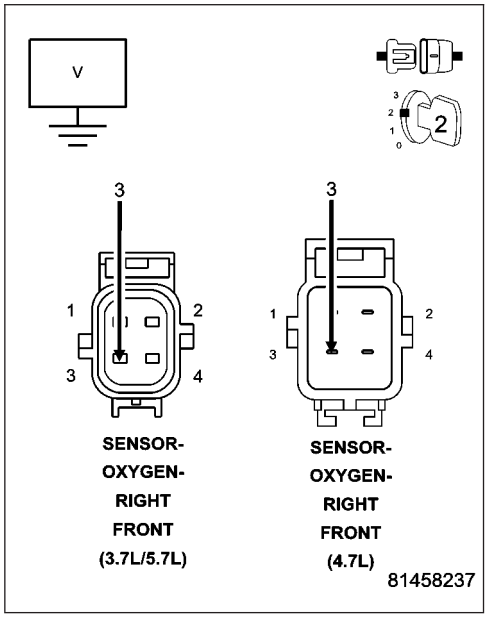

---

11. PCM

NOTE: Before continuing, check the PCM harness connector terminals for corrosion, damage, or terminal push out. Repair as necessary.

Using the schematics as a guide, inspect the wire harness and connectors. Pay particular attention to all Power and Ground circuits.

Were there any problems found?

Yes >> Repair as necessary.
Perform the POWERTRAIN VERIFICATION TEST. (Refer to 9 - ENGINE - STANDARD PROCEDURE)

No >> Replace and program the Powertrain Control Module per Service Information.
Perform the POWERTRAIN VERIFICATION TEST. (Refer to 9 - ENGINE - STANDARD PROCEDURE)

P0174-FUEL SYSTEM 2/1 LEAN (CONTINUED)

12. RESTRICTED FUEL SUPPLY LINE

WARNING: The fuel system is under a constant pressure (even with the engine off). Before testing or servicing any fuel system hose, fitting or line, the fuel system pressure must be released. Failure to follow these instructions can result in personal injury or death.

Raise vehicle on hoist, and disconnect the fuel pressure line at the fuel pump module.

Install special 5/16 fuel line adapter tool #6539 between disconnected fuel line and the fuel pump module.

Attach a fuel pressure test gauge to the T fitting on tool #6539.

Ignition on, engine not running.

With the scan tool, actuate the ASD Fuel System test and observe the fuel pressure gauge.

NOTE: Fuel pressure specification is 407 KPa +/- 34 KPa (59 psi +/- 5 psi).

CAUTION: Stop All Actuations.

Is the fuel pressure within specification?

Yes >> Repair or replace fuel supply line as necessary.
Perform the POWERTRAIN VERIFICATION TEST. (Refer to 9 - ENGINE - STANDARD PROCEDURE)

No >> Go To 13

---

13. FUEL PUMP INLET STRAINER

Turn the ignition off.

WARNING: The fuel system is under a constant pressure (even with the engine off). Before testing or servicing any fuel system hose, fitting or line, the fuel system pressure must be released.

Remove the Fuel Pump Module and inspect the Fuel Inlet Strainer.

Is the Fuel Inlet Strainer plugged?

Yes >> Replace the Fuel Pump Inlet Strainer.
Perform the POWERTRAIN VERIFICATION TEST. (Refer to 9 - ENGINE - STANDARD PROCEDURE)

No >> Go To 14

---

14. FUEL PUMP MODULE

If there are no possible causes remaining, view repair.

Repair

Replace the Fuel Pump Module.
Perform the POWERTRAIN VERIFICATION TEST. (Refer to 9 - ENGINE - STANDARD PROCEDURE)

P0175-FUEL SYSTEM 2/1 RICH

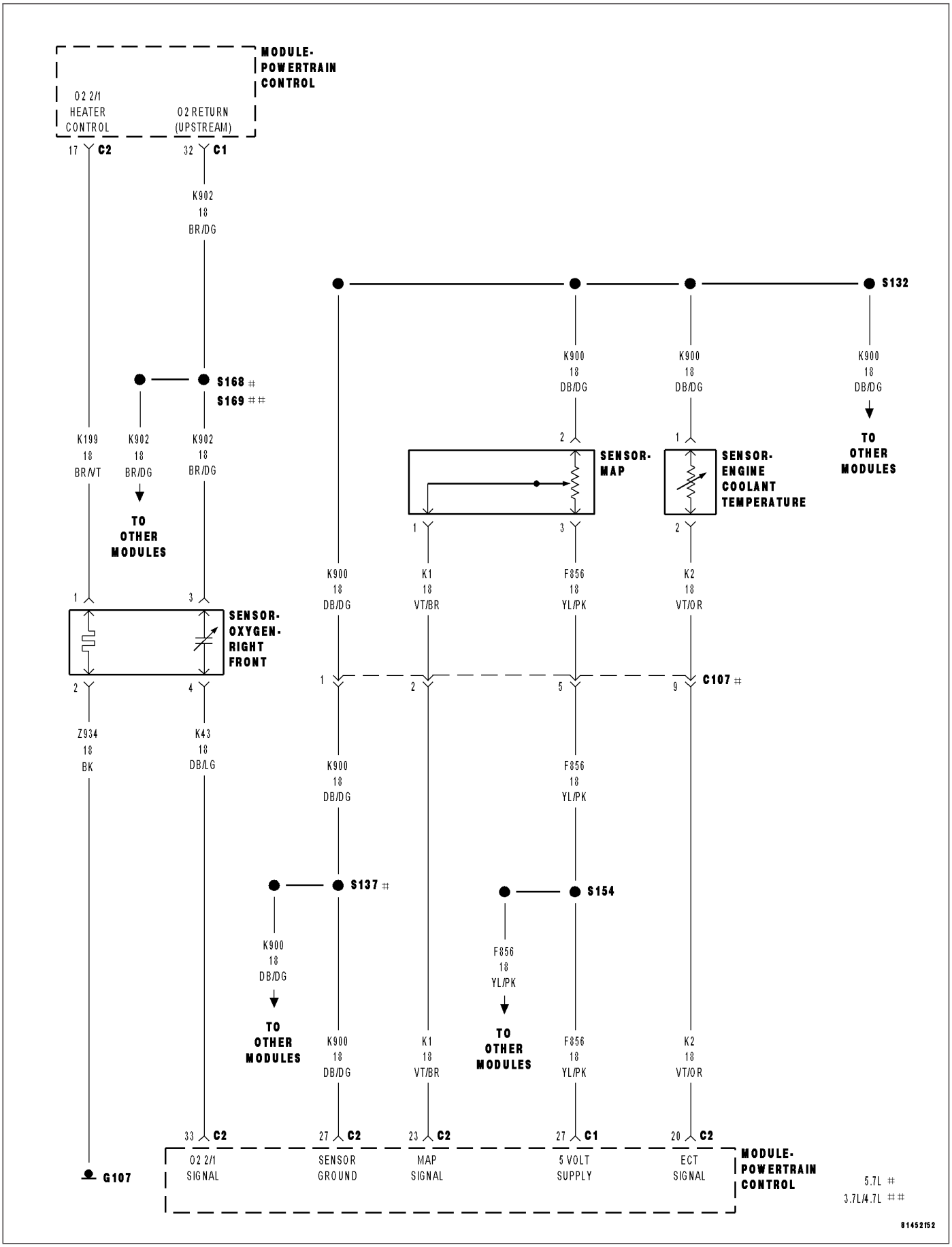

P0175-FUEL SYSTEM 2/1 RICH (CONTINUED)

For the Engine circuit diagram (Refer to 9 - ENGINE - SCHEMATICS AND DIAGRAMS).

For a complete wiring diagram **Refer to Section 8W**.

Theory of Operation

The fuel feedback system will maintain a stoiciometric fuel/air mixture, 14.7:1, by modifying the injector pulsewidth according to the oxygen content of the exhaust gas. The PCM makes short term and long term fuel corrections to maintain stoiciometric fuel/air ratio for best catalytic converter efficiency. Short term fuel correction is based on upstream O2 sensor output and is designed for quick engine response. The long term fuel correction compensated for variations in the engine specifications, sensor tolerances and component aging and is designed to correct rich and lean conditions over a longer period of time.

- **When Monitored:**
  With the engine running in closed loop mode, the ambient/battery temperature above 20 deg. F and altitude below 8500 ft.
- **Set Condition:**
  If the PCM multiplies short term compensation by long term adaptive and a purge fuel multiplier and the result is below a certain value for 30 seconds over two trips, a freeze frame is stored, the MIL illuminates and a trouble code is stored. Two Trip Fault. Three good trips to turn off the MIL.

Possible Causes
O2 SENSOR HEATER OPERATION
EVAP PURGE SOLENOID OPERATION
O2 SIGNAL CIRCUIT
O2 RETURN CIRCUIT
O2 SENSOR
MAP SENSOR
ECT SENSOR
ENGINE MECHANICAL
FUEL FILTER/PRESSURE REGULATOR (HIGH)
PCM

Always perform the Pre-Diagnostic Troubleshooting procedure before proceeding. (Refer to 9 - ENGINE - DIAGNOSIS AND TESTING).

Diagnostic Test

1. ACTIVE DTC

NOTE: Check for contaminates that may have damaged an O2 Sensor: contaminated fuel, unapproved silicone, oil and coolant.

Ignition on, engine not running.

With a scan tool, read DTCs.

Is the DTC active at this time?

Yes >> Go To 2

No >> Refer to the INTERMITTENT CONDITION Diagnostic Procedure.
Perform the POWERTRAIN VERIFICATION TEST. (Refer to 9 - ENGINE - STANDARD PROCEDURE)

P0175-FUEL SYSTEM 2/1 RICH (CONTINUED)

2. CHECKING FUEL PRESSURE

WARNING: The fuel system is under a constant pressure (even with the engine off). Before testing or servicing any fuel system hose, fitting or line, the fuel system pressure must be released. Failure to follow these instructions can result in personal injury or death.

Install a fuel pressure gauge to the fuel rail.

Ignition on, engine not running.

With the scan tool, actuate the ASD Fuel System test and observe the fuel pressure gauge.

NOTE: Fuel pressure specification is 407 KPa +/- 34 KPa (59 psi +/- 5 psi).

Turn the ignition off.

CAUTION: Stop All Actuations.

Choose a conclusion that best matches your fuel pressure reading.

Within Specification

Go To 3

Above Specification

Replace the fuel filter/pressure regulator.

Perform the POWERTRAIN VERIFICATION TEST. (Refer to 9 - ENGINE - STANDARD PROCEDURE)

---

3. O2 SENSOR OPERATION

Start the engine.

Allow the engine to reach normal operating temperature.

NOTE: If one of the O2 Sensors Signal or Return circuit is shorted to ground or voltage, all the other O2 Sensor voltage readings will be affected.

NOTE: After the repairs have been made, verify proper O2 Sensor operation. If all the O2 Sensor voltage readings have not returned to normal, follow the diagnostic procedure for the remaining O2 Sensors.

With the scan tool, monitor the 2/1 O2 Sensor voltage reading.

Is the voltage switching between 2.5 and 3.4 volts?

Yes >> Go To 4

No >> Go To 9

---

4. 2/1 O2 SENSOR HEATER OPERATION

Turn the ignition off.

NOTE: Wait a minimum of 10 minutes to allow the O2 Sensor to cool down before continuing the test. Allow the O2 Sensor voltage to stabilize at 5.0 volts.

Ignition on, engine not running.

With the scan tool, perform the 2/1 O2 Heater Test for each O2 Sensor.

With the scan tool, monitor the 2/1 O2 Sensor voltage while performing the Heater test for at least 2 minutes.

Does the voltage stay above 4.5 volts for each Sensor?

Yes >> Replace the 2/1 O2 Sensor.

Perform the POWERTRAIN VERIFICATION TEST. (Refer to 9 - ENGINE - STANDARD PROCEDURE)

No >> Go To 5

P0175-FUEL SYSTEM 2/1 RICH (CONTINUED)

5. MAP SENSOR OPERATION

Turn the ignition off.

Connect a Vacuum Gauge to a Manifold Vacuum source.

Start the engine.

Allow the engine to idle.

NOTE: If engine will not idle, maintain a constant RPM above idle.

With the scan tool, read the MAP Sensor vacuum value.

Is the scan tool reading within 1″ of the Vacuum Gauge reading?

Yes >> Go To 6

No >> Replace the MAP Sensor.
Perform the POWERTRAIN VERIFICATION TEST. (Refer to 9 - ENGINE - STANDARD PROCEDURE)

NOTE: Remove the vacuum gauge before continuing.

---

6. ECT SENSOR OPERATION

NOTE: For this test to be valid, the thermostat must be operating correctly.

NOTE: This test works best if performed on a cold engine (cold soak).

Ignition on, engine not running.

With the scan tool, read the Engine Coolant Temperature Sensor value. If the engine was allowed to sit overnight (cold soak), the temperature value should be a sensible value that is somewhere close to the ambient temperature.

NOTE: If engine coolant temperature is above 82°C (180°F), allow the engine to cool until 65°C (150°F) is reached.

Start the Engine.

During engine warm-up, monitor the Engine Coolant Temperature value. The temp value change should be a smooth transition from start up to normal operating temp 82°C (180°F). The value should reach at least 82°C (180°F).

Did the ECT value increase smoothly and reach at least 180°F (82°C)?

Yes >> Go To 7

No >> Replace the Engine Coolant Temperature Sensor.
Perform the POWERTRAIN VERIFICATION TEST. (Refer to 9 - ENGINE - STANDARD PROCEDURE)

---

7. EVAP PURGE SOLENOID OPERATION

Turn the ignition off.

Disconnect the hoses at the Evap Purge Solenoid.

Using a hand vacuum pump, apply 10 inches of vacuum to the Evap Purge Solenoid vacuum source port on the component side.

Did the Evap Purge Solenoid hold vacuum?

Yes >> Go To 8

No >> Replace the EVAP Purge Solenoid.
Perform the POWERTRAIN VERIFICATION TEST. (Refer to 9 - ENGINE - STANDARD PROCEDURE)

NOTE: Connect the vacuum hoses before continuing.

P0175-FUEL SYSTEM 2/1 RICH (CONTINUED)

8. ENGINE MECHANICAL

Check for any of the following conditions/mechanical problems.

AIR INDUCTION SYSTEM - must be free from restrictions.

ENGINE VACUUM - must be at least 13 inches in neutral

ENGINE VALVE TIMING - must be within specifications

ENGINE COMPRESSION - must be within specifications

ENGINE EXHAUST SYSTEM - must be free of any restrictions or leaks.

ENGINE PCV SYSTEM - must flow freely

TORQUE CONVERTER STALL SPEED - must be within specifications

POWER BRAKE BOOSTER - no internal vacuum leaks

FUEL - must be free of contamination

FUEL INJECTOR - plugged or restricted injector; control wire not connected to correct injector

Are there any engine mechanical problems?

Yes >> Repair as necessary.
Perform the POWERTRAIN VERIFICATION TEST. (Refer to 9 - ENGINE - STANDARD PROCEDURE)

No >> Go To 12

---

9. 2/1 O2 SENSOR

Ignition on, engine not running.

Disconnect the 2/1 O2 Sensor harness connector.

With the scan tool, monitor the 2/1 O2 Sensor voltage.

O2 Sensor voltage should read 5.0 volts on the scan tool with the connector disconnected.

Connect a jumper wire between the (K43) O2 Sensor 2/1 Signal circuit and the (K902) O2 Return Upstream circuit in the O2 Sensor harness connector.

NOTE: The voltage should drop from 5.0 volts down to 2.5 volts with the jumper wire connected.

Did the O2 Sensor voltage drop from 5 volts to 2.5 volts when the jumper wire was installed?

Yes >> Replace the O2 Sensor
Perform the POWERTRAIN VERIFICATION TEST. (Refer to 9 - ENGINE - STANDARD PROCEDURE)

No >> Go To 10

NOTE: Remove the jumper wire before continuing.

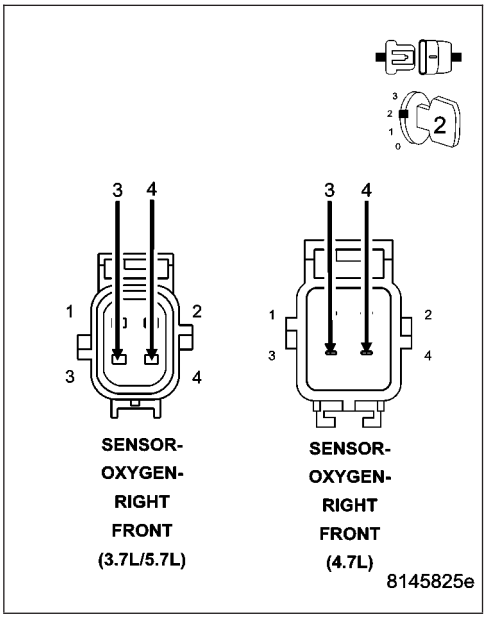

P0175-FUEL SYSTEM 2/1 RICH (CONTINUED)

10. O2 SENSOR SIGNAL CIRCUIT

WARNING: When the engine is operating, do not stand in direct line with the fan. Do not put your hands near the pulleys, belts, or fan. Do not wear loose clothing. Failure to follow these instructions can result in personal injury or death.

Start the engine.

Measure the voltage on the (K43) O2 Sensor 2/1 Signal circuit in the O2 Sensor harness connector.

Is the voltage above 4.8 volts?

Yes >> Check the (K43) O2 Sensor 2/1 Signal circuit for damage, short to ground, open, or short to voltage. Inspect the O2 Sensor connector and the PCM harness connector. If OK, replace and program the Powertrain Control Module per Service Information.

Perform the POWERTRAIN VERIFICATION TEST. (Refer to 9 - ENGINE - STANDARD PROCEDURE)

No >> Go To 11

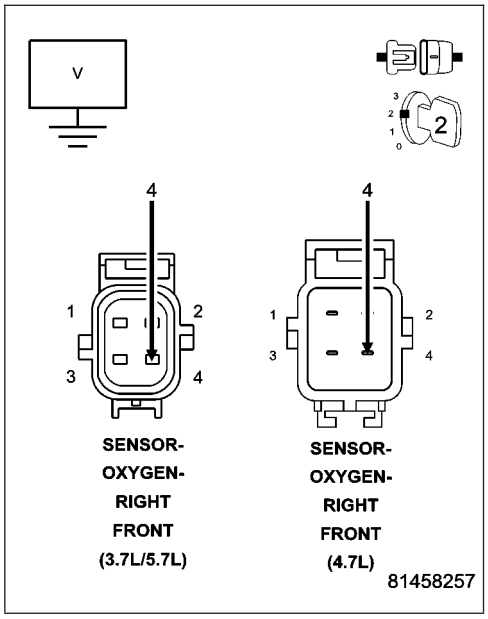

11. (K902) O2 SENSOR RETURN UPSTREAM CIRCUIT

Engine still running.

Measure the voltage on the (K902) O2 Return Upstream circuit in the O2 Sensor harness connector.

Is the voltage at 2.5 volts?

Yes >> Go To 12

No >> Check the (K902) O2 Return Upstream circuit for damage, short to ground, open, or short to voltage. Inspect the O2 Sensor connector and the PCM harness connector. If OK, replace and program the Powertrain Control Module per Service Information.

Perform the POWERTRAIN VERIFICATION TEST. (Refer to 9 - ENGINE - STANDARD PROCEDURE)

NOTE: Turn the ignition off before continuing.

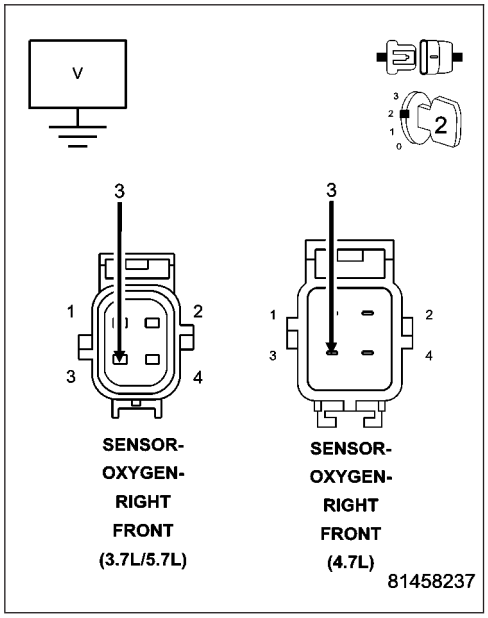

P0175-FUEL SYSTEM 2/1 RICH (CONTINUED)

12. PCM

NOTE: Before continuing, check the PCM harness connector terminals for corrosion, damage, or terminal push out. Repair as necessary.

Using the schematics as a guide, inspect the wire harness and connectors. Pay particular attention to all Power and Ground circuits.

Were there any problems found?

Yes >> Repair as necessary.
Perform the POWERTRAIN VERIFICATION TEST. (Refer to 9 - ENGINE - STANDARD PROCEDURE)

No >> Replace and program the Powertrain Control Module per Service Information.
Perform the POWERTRAIN VERIFICATION TEST. (Refer to 9 - ENGINE - STANDARD PROCEDURE)

P0201-FUEL INJECTOR 1 CIRCUIT

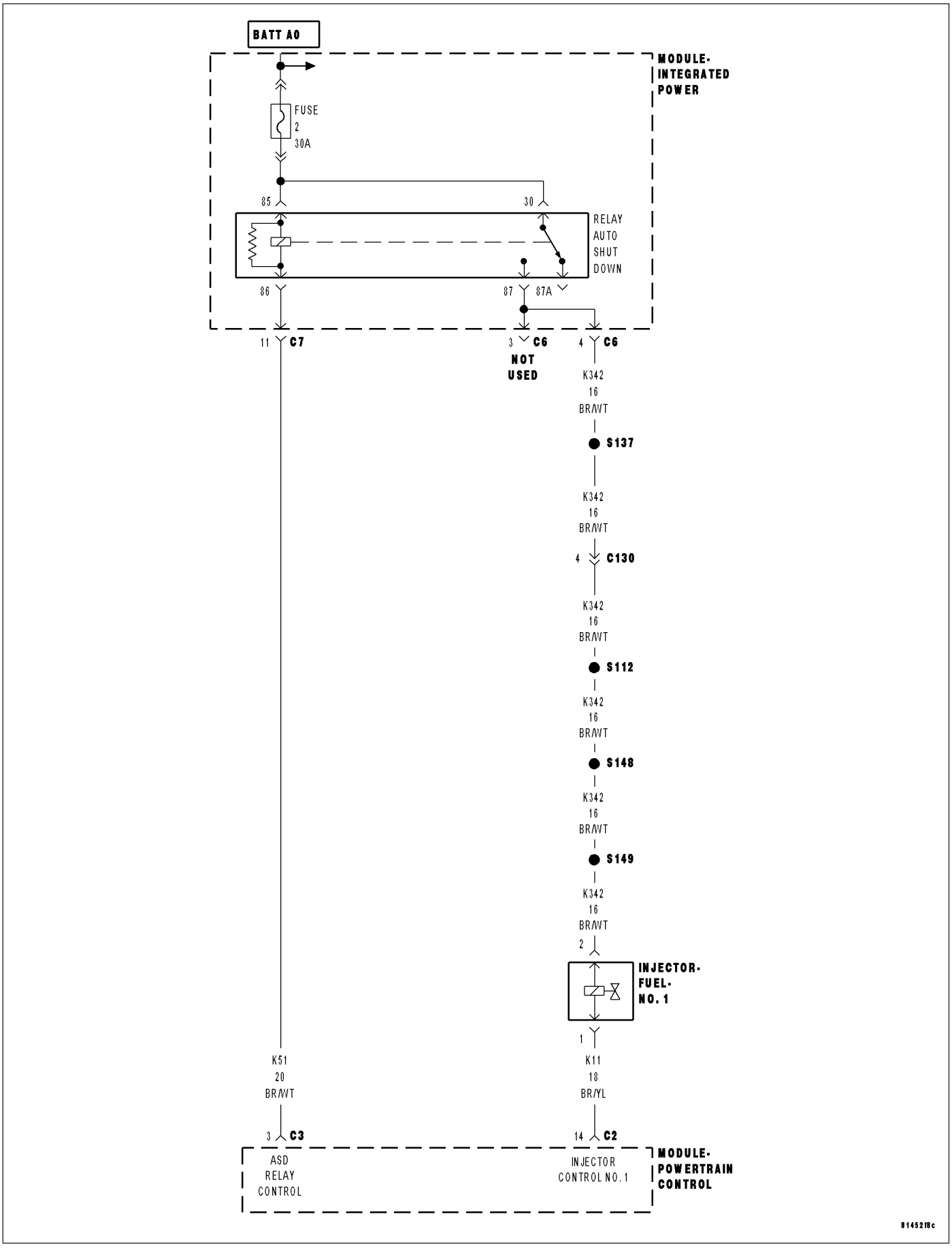

P0201-FUEL INJECTOR 1 CIRCUIT (CONTINUED)

For the Engine circuit diagram (Refer to 9 - ENGINE - SCHEMATICS AND DIAGRAMS).

For a complete wiring diagram **Refer to Section 8W**.

- **When Monitored:**
  With battery voltage greater than 10 volts. Auto Shutdown Relay energized. Engine speed less than 3000 rpm.
- **Set Condition:**
  No inductive spike is detected after injector turn off.

Possible Causes
(K342) ASD RELAY OUTPUT CIRCUIT
(K11) INJECTOR CONTROL NO.1 CIRCUIT OPEN
(K11) INJECTOR CONTROL NO.1 CIRCUIT SHORTED TO GROUND
FUEL INJECTOR
PCM

Always perform the Pre-Diagnostic Troubleshooting procedure before proceeding. (Refer to 9 - ENGINE - DIAGNOSIS AND TESTING).

Diagnostic Test

1. ACTIVE DTC

Ignition on, engine not running.

With a scan tool, read DTCs.

Is the DTC active at this time?

Yes >> Go To 2

No >> Refer to the INTERMITTENT CONDITION Diagnostic Procedure.
Perform the POWERTRAIN VERIFICATION TEST. (Refer to 9 - ENGINE - STANDARD PROCEDURE)

---

2. (K342) ASD RELAY OUTPUT CIRCUIT

Turn the ignition off.

Disconnect the No.1 Fuel Injector harness connector.

Ignition on, engine not running.

With the scan tool, actuate the ASD Relay.

Using a 12-volt test light connected to ground, probe the (K342) ASD Relay Output circuit in the Fuel Injector harness connector.

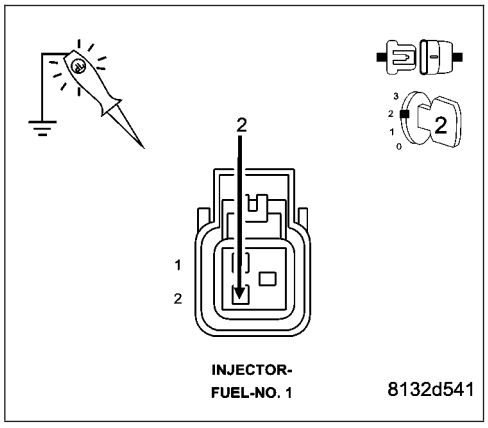

Does the test light illuminate brightly?

Yes >> Go To 3

No >> Repair the excessive resistance or short to ground in the (K342) ASD Relay Output circuit.
Perform the POWERTRAIN VERIFICATION TEST. (Refer to 9 - ENGINE - STANDARD PROCEDURE)

P0201-FUEL INJECTOR 1 CIRCUIT (CONTINUED)

3. FUEL INJECTOR

Using a 12-volt test light connected to 12-volts, probe the (K11) Injector Control No.1 circuit.

With the scan tool, actuate the Fuel Injector.

What is the state of the test light during the actuation?

Brightly Blinking.

Replace the Fuel Injector.

Perform the POWERTRAIN VERIFICATION TEST. (Refer to 9 - ENGINE - STANDARD PROCEDURE)

ON Constantly.

Go To 4

OFF Constantly.

Go To 5

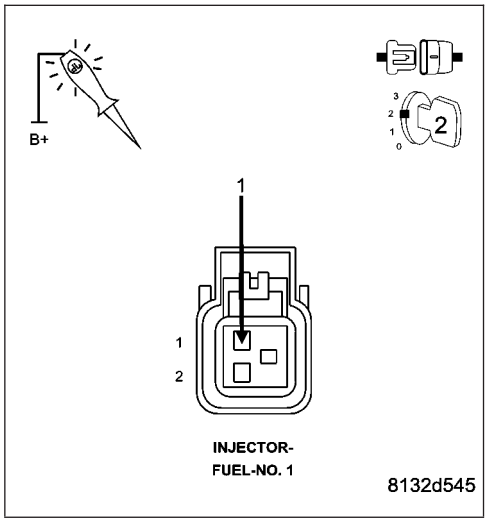

4. (K11) INJECTOR CONTROL NO.1 CIRCUIT SHORTED TO GROUND

Turn the ignition off.

Disconnect the C2 PCM harness connector.

Measure the resistance between ground and the (K11) Injector Control No.1 circuit in the Injector harness connector.

Is the resistance below 100 ohms?

Yes >> Repair the short to ground in the (K11) Injector Control No.1 circuit.

Perform the POWERTRAIN VERIFICATION TEST. (Refer to 9 - ENGINE - STANDARD PROCEDURE)

No >> Go To 6

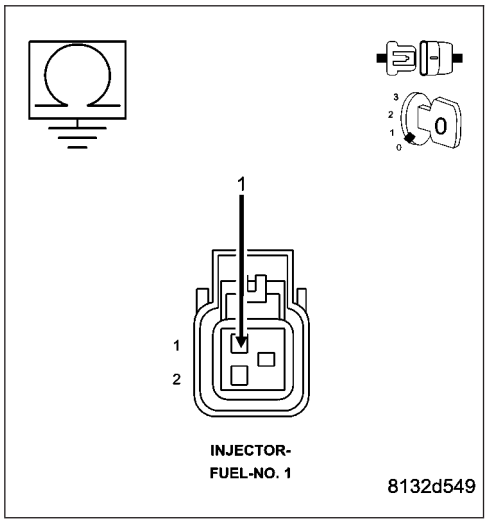

P0201-FUEL INJECTOR 1 CIRCUIT (CONTINUED)

5. (K11) INJECTOR CONTROL NO.1 CIRCUIT OPEN

Turn the ignition off.

Disconnect the C2 PCM harness connector.

CAUTION: Do not probe the PCM harness connectors. Probing the PCM harness connectors will damage the PCM terminals resulting in poor terminal to pin connection. Install Miller Special Tool #8815 to perform diagnosis.

Measure the resistance of the (K11) Injector Control No.1 circuit from the Fuel Injector harness connector to the appropriate terminal of special tool #8815.

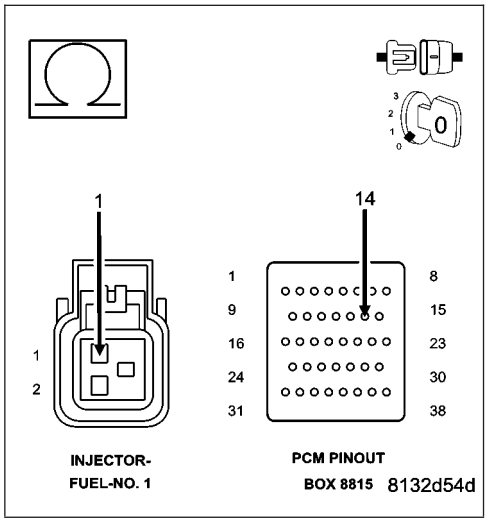

Is the resistance below 5.0 ohms?

Yes >> Go To 6

No >> Repair the open in the (K11) Injector Control No.1 circuit. Perform the POWERTRAIN VERIFICATION TEST. (Refer to 9 - ENGINE - STANDARD PROCEDURE)

6. PCM

NOTE: Before continuing, check the PCM harness connector terminals for corrosion, damage, or terminal push out. Repair as necessary.

Using the schematics as a guide, inspect the wire harness and connectors. Pay particular attention to all Power and Ground circuits.

Were there any problems found?

Yes >> Repair as necessary.
Perform the POWERTRAIN VERIFICATION TEST. (Refer to 9 - ENGINE - STANDARD PROCEDURE)

No >> Replace and program the Powertrain Control Module per Service Information.
Perform the POWERTRAIN VERIFICATION TEST. (Refer to 9 - ENGINE - STANDARD PROCEDURE)

P0202-FUEL INJECTOR 2 CIRCUIT

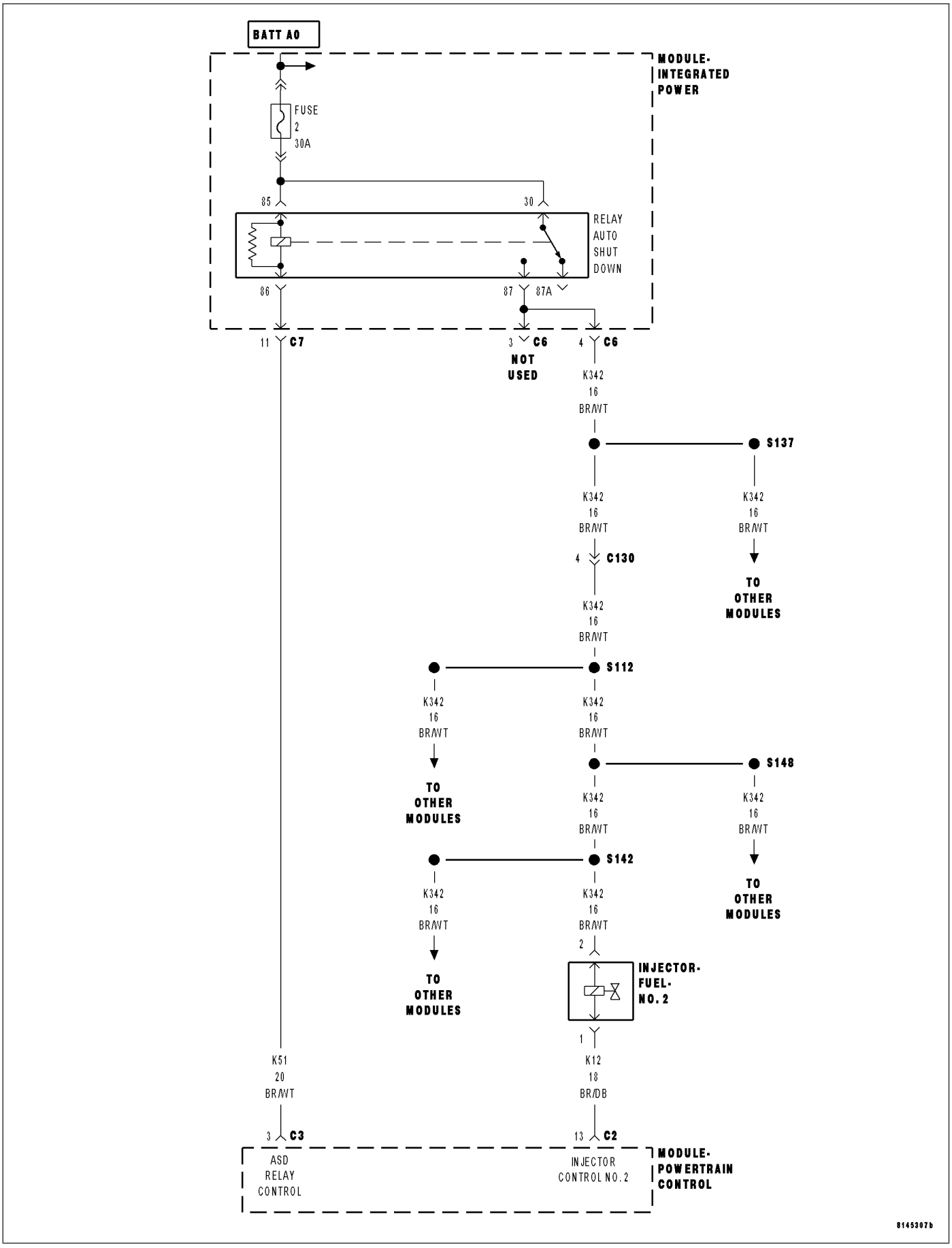

P0202-FUEL INJECTOR 2 CIRCUIT (CONTINUED)

For the Engine circuit diagram (Refer to 9 - ENGINE - SCHEMATICS AND DIAGRAMS).

For a complete wiring diagram **Refer to Section 8W**.

- **When Monitored:**
  With battery voltage greater than 10 volts. Auto Shutdown Relay energized. Engine speed less than 3000 rpm.
- **Set Condition:**
  No inductive spike is detected after injector turn off.

Possible Causes
(K342) ASD RELAY OUTPUT CIRCUIT
(K12) INJECTOR CONTROL NO.2 CIRCUIT OPEN
(K12) INJECTOR CONTROL NO.2 CIRCUIT SHORTED TO GROUND
FUEL INJECTOR
PCM

Always perform the Pre-Diagnostic Troubleshooting procedure before proceeding. (Refer to 9 - ENGINE - DIAGNOSIS AND TESTING).

Diagnostic Test

1. ACTIVE DTC

Ignition on, engine not running.

With a scan tool, read DTCs.

Is the DTC active at this time?

Yes >> Go To 2

No >> Refer to the INTERMITTENT CONDITION Diagnostic Procedure.
Perform the POWERTRAIN VERIFICATION TEST. (Refer to 9 - ENGINE - STANDARD PROCEDURE)

---

2. (K342) ASD RELAY OUTPUT CIRCUIT

Turn the ignition off.

Disconnect the No.2 Fuel Injector harness connector.

Ignition on, engine not running.

With the scan tool, actuate the ASD Relay.

Using a 12-volt test light connected to ground, probe the (K342) ASD Relay Output circuit in the No.2 Fuel Injector harness connector.

Does the test light illuminate brightly?

Yes >> Go To 3

No >> Repair the excessive resistance or short to ground in the (K342) ASD Relay Output circuit.
Perform the POWERTRAIN VERIFICATION TEST. (Refer to 9 - ENGINE - STANDARD PROCEDURE)

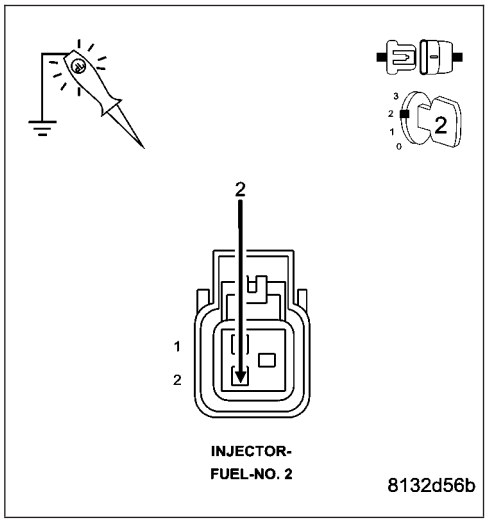

P0202-FUEL INJECTOR 2 CIRCUIT (CONTINUED)

3. FUEL INJECTOR

Using a 12-volt test light connected to 12-volts, probe the (K12) Injector Control No.2 circuit.

With the scan tool, actuate the No.2 Fuel Injector.

What is the state of the test light during the actuation?

Brightly Blinking.

Replace the Fuel Injector.

Perform the POWERTRAIN VERIFICATION TEST. (Refer to 9 - ENGINE - STANDARD PROCEDURE)

ON Constantly.

Go To 4

OFF Constantly.

Go To 5

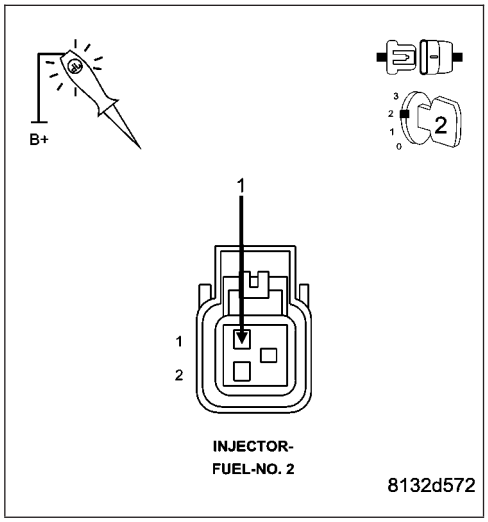

4. (K12) INJECTOR CONTROL NO.2 CIRCUIT SHORTED TO GROUND

Turn the ignition off.

Disconnect the C2 PCM harness connector.

Measure the resistance between ground and the (K12) Injector Control No.2 circuit in the Injector harness connector.

Is the resistance below 100 ohms?

Yes >> Repair the short to ground in the (K12) Injector Control No.2 circuit.

Perform the POWERTRAIN VERIFICATION TEST. (Refer to 9 - ENGINE - STANDARD PROCEDURE)

No >> Go To 6

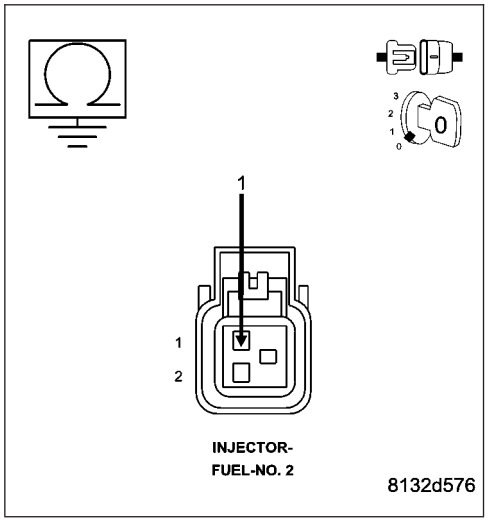

P0202-FUEL INJECTOR 2 CIRCUIT (CONTINUED)

5. (K12) INJECTOR CONTROL NO.2 CIRCUIT OPEN

Turn the ignition off.

Disconnect the C2 PCM harness connector.

CAUTION: Do not probe the PCM harness connectors. Probing the PCM harness connectors will damage the PCM terminals resulting in poor terminal to pin connection. Install Miller Special Tool #8815 to perform diagnosis.

Measure the resistance of the (K12) Injector Control No.2 circuit from the Fuel Injector harness connector to the appropriate terminal of special tool #8815.

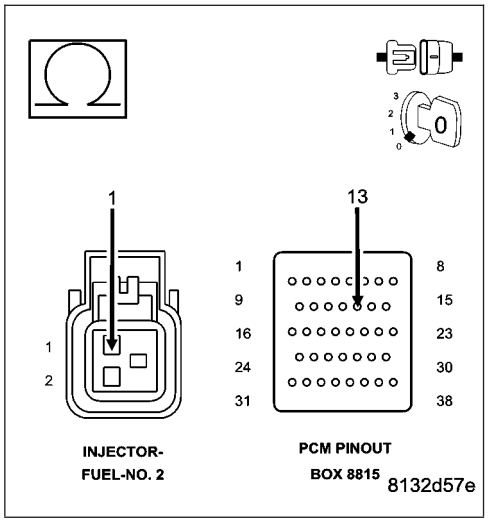

Is the resistance below 5.0 ohms?

Yes >> Go To 6

No >> Repair the open in the (K12) Injector Control No.2 circuit. Perform the POWERTRAIN VERIFICATION TEST. (Refer to 9 - ENGINE - STANDARD PROCEDURE)

6. PCM

NOTE: Before continuing, check the PCM harness connector terminals for corrosion, damage, or terminal push out. Repair as necessary.

Using the schematics as a guide, inspect the wire harness and connectors. Pay particular attention to all Power and Ground circuits.

Were there any problems found?

Yes >> Repair as necessary.
Perform the POWERTRAIN VERIFICATION TEST. (Refer to 9 - ENGINE - STANDARD PROCEDURE)

No >> Replace and program the Powertrain Control Module per Service Information.
Perform the POWERTRAIN VERIFICATION TEST. (Refer to 9 - ENGINE - STANDARD PROCEDURE)

P0203-FUEL INJECTOR 3 CIRCUIT

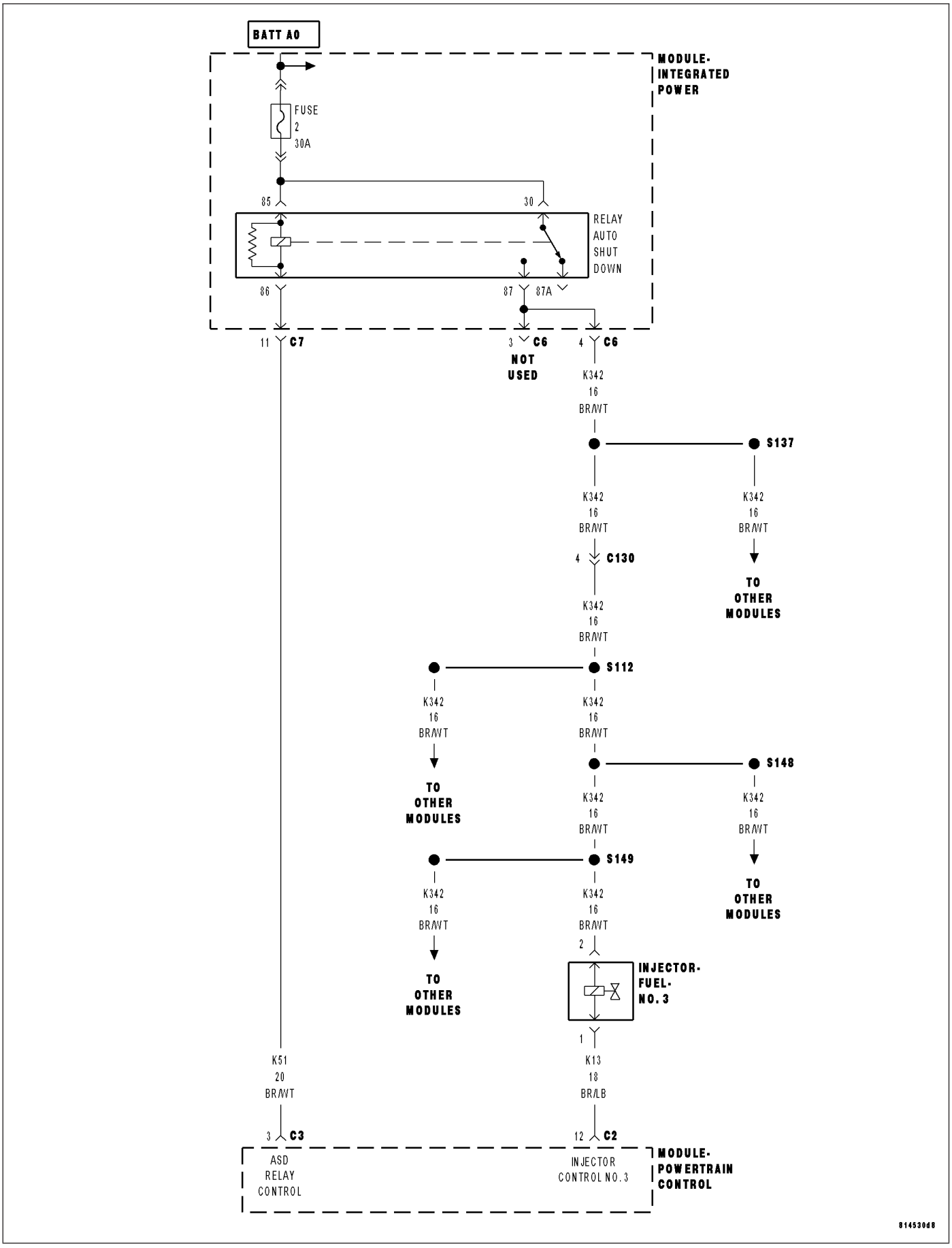

P0203-FUEL INJECTOR 3 CIRCUIT (CONTINUED)

For the Engine circuit diagram (Refer to 9 - ENGINE - SCHEMATICS AND DIAGRAMS).

For a complete wiring diagram **Refer to Section 8W**.

- **When Monitored:**
  With battery voltage greater than 10 volts. Auto Shutdown Relay energized. Engine speed less than 3000 rpm.
- **Set Condition:**
  No inductive spike is detected after injector turn off.

Possible Causes
(K342) ASD RELAY OUTPUT CIRCUIT
(K13) INJECTOR CONTROL NO.3 CIRCUIT OPEN
(K13) INJECTOR CONTROL NO.3 CIRCUIT SHORTED TO GROUND
FUEL INJECTOR
PCM

Always perform the Pre-Diagnostic Troubleshooting procedure before proceeding. (Refer to 9 - ENGINE - DIAGNOSIS AND TESTING).

Diagnostic Test

1. ACTIVE DTC

Ignition on, engine not running.

With a scan tool, read DTCs.

Is the DTC active at this time?

Yes >> Go To 2

No >> Refer to the INTERMITTENT CONDITION Diagnostic Procedure.
Perform the POWERTRAIN VERIFICATION TEST. (Refer to 9 - ENGINE - STANDARD PROCEDURE)

---

2. (K342) ASD RELAY OUTPUT CIRCUIT

Turn the ignition off.

Disconnect the No.3 Fuel Injector harness connector.

Ignition on, engine not running.

With the scan tool, actuate the ASD Relay.

Using a 12-volt test light connected to ground, probe the (K342) ASD Relay Output circuit in the No.3 Fuel Injector harness connector.

Does the test light illuminate brightly?

Yes >> Go To 3

No >> Repair the excessive resistance or short to ground in the (K342) ASD Relay Output circuit.
Perform the POWERTRAIN VERIFICATION TEST. (Refer to 9 - ENGINE - STANDARD PROCEDURE)

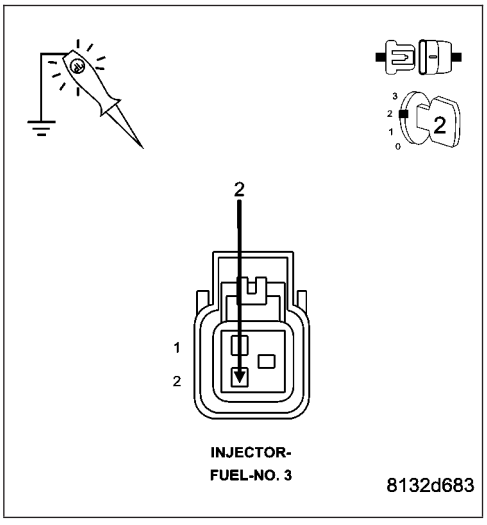

P0203-FUEL INJECTOR 3 CIRCUIT (CONTINUED)

3. FUEL INJECTOR

Using a 12-volt test light connected to 12-volts, probe the (K13) Injector Control No.3 circuit.

With the scan tool, actuate the No.3 Fuel Injector.

What is the state of the test light during the actuation?

Brightly Blinking.

Replace the Fuel Injector.

Perform the POWERTRAIN VERIFICATION TEST. (Refer to 9 - ENGINE - STANDARD PROCEDURE)

ON Constantly.

Go To 4

OFF Constantly.

Go To 5

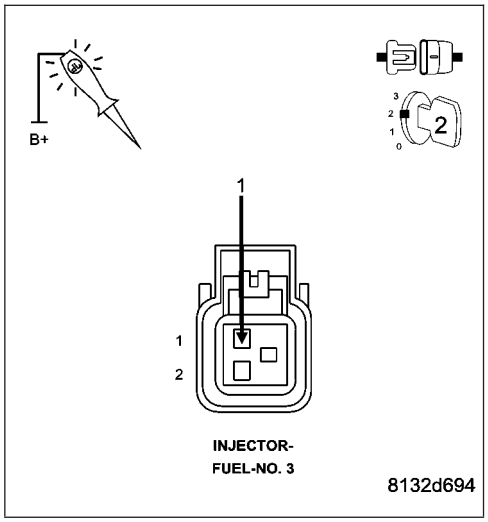

4. (K13) INJECTOR CONTROL NO.3 CIRCUIT SHORTED TO GROUND

Turn the ignition off.

Disconnect the C2 PCM harness connector.

Measure the resistance between ground and the (K13) Injector Control No.3 circuit in the Injector harness connector.

Is the resistance below 100 ohms?

Yes >> Repair the short to ground in the (K13) Injector Control No.3 circuit.

Perform the POWERTRAIN VERIFICATION TEST. (Refer to 9 - ENGINE - STANDARD PROCEDURE)

No >> Go To 6

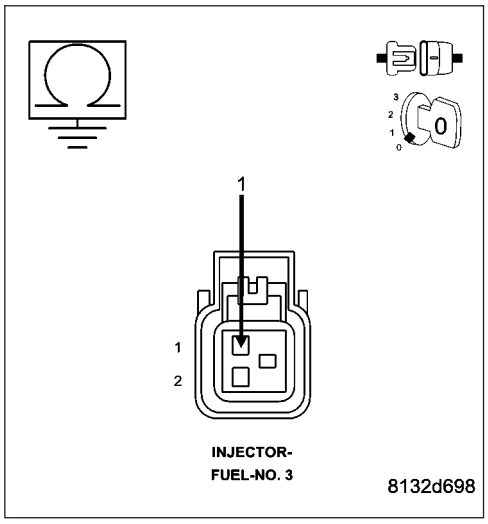

P0203-FUEL INJECTOR 3 CIRCUIT (CONTINUED)

5. (K13) INJECTOR CONTROL NO.3 CIRCUIT OPEN

Turn the ignition off.

Disconnect the C2 PCM harness connector.

CAUTION: Do not probe the PCM harness connectors. Probing the PCM harness connectors will damage the PCM terminals resulting in poor terminal to pin connection. Install Miller Special Tool #8815 to perform diagnosis.

Measure the resistance of the (K13) Injector Control No.3 circuit from the Fuel Injector harness connector to the appropriate terminal of special tool #8815.

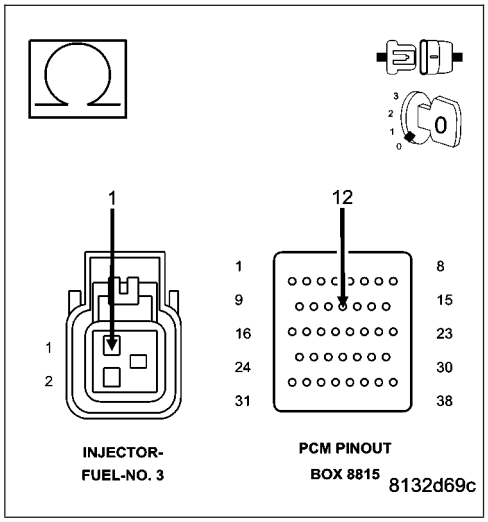

Is the resistance below 5.0 ohms?

Yes >> Go To 6

No >> Repair the open in the (K13) Injector Control No.3 circuit. Perform the POWERTRAIN VERIFICATION TEST. (Refer to 9 - ENGINE - STANDARD PROCEDURE)

6. PCM

NOTE: Before continuing, check the PCM harness connector terminals for corrosion, damage, or terminal push out. Repair as necessary.

Using the schematics as a guide, inspect the wire harness and connectors. Pay particular attention to all Power and Ground circuits.

Were there any problems found?

Yes >> Repair as necessary.
Perform the POWERTRAIN VERIFICATION TEST. (Refer to 9 - ENGINE - STANDARD PROCEDURE)

No >> Replace and program the Powertrain Control Module per Service Information.
Perform the POWERTRAIN VERIFICATION TEST. (Refer to 9 - ENGINE - STANDARD PROCEDURE)

P0204-FUEL INJECTOR 4 CIRCUIT

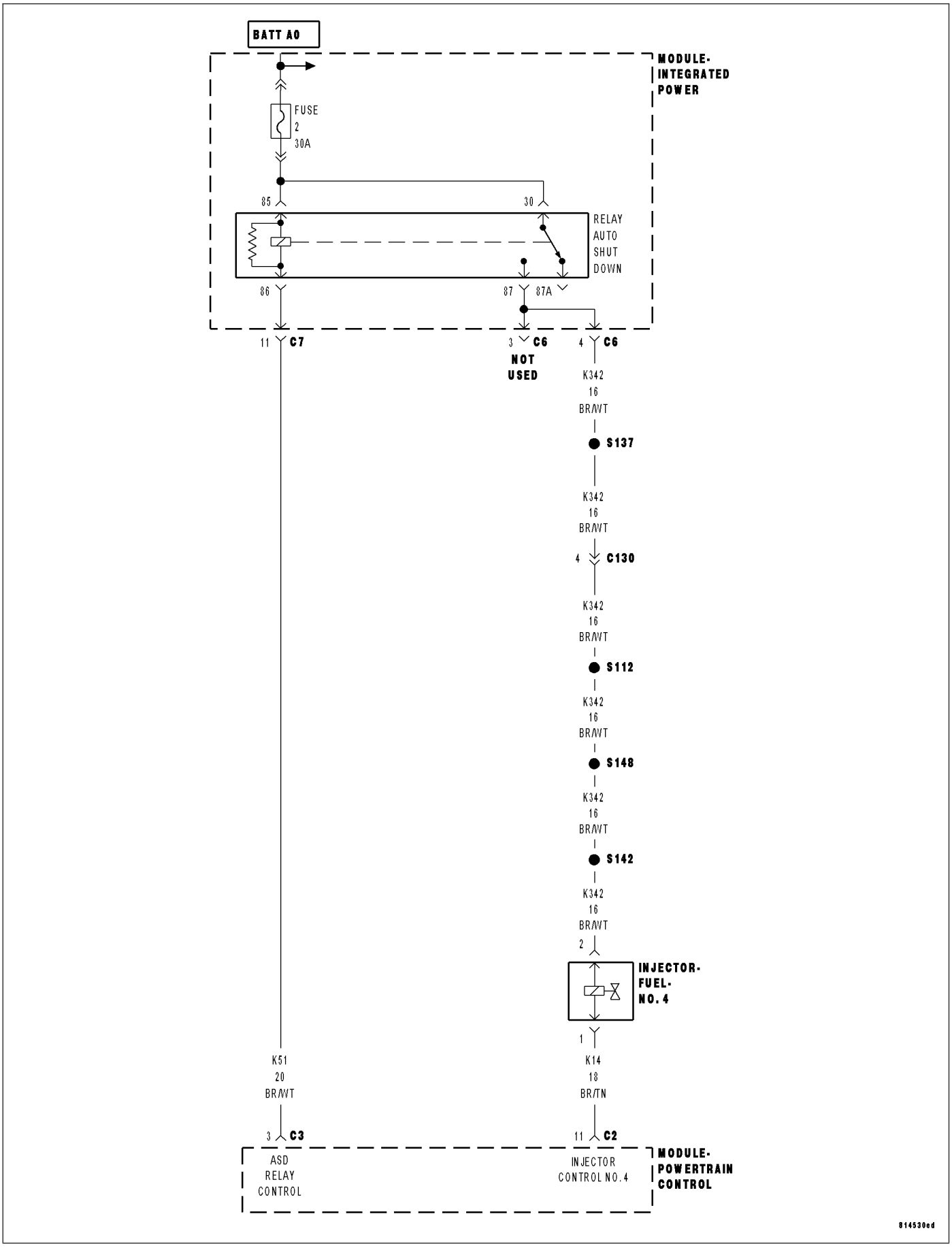

P0204-FUEL INJECTOR 4 CIRCUIT (CONTINUED)

For the Engine circuit diagram (Refer to 9 - ENGINE - SCHEMATICS AND DIAGRAMS).

For a complete wiring diagram **Refer to Section 8W**.

- **When Monitored:**
  With battery voltage greater than 10 volts. Auto Shutdown Relay energized. Engine speed less than 3000 rpm.
- **Set Condition:**
  No inductive spike is detected after injector turn off.

Possible Causes
(K342) ASD RELAY OUTPUT CIRCUIT
(K14) INJECTOR CONTROL NO.4 CIRCUIT OPEN
(K14) INJECTOR CONTROL NO.4 CIRCUIT SHORTED TO GROUND
FUEL INJECTOR
PCM

Always perform the Pre-Diagnostic Troubleshooting procedure before proceeding. (Refer to 9 - ENGINE - DIAGNOSIS AND TESTING).

Diagnostic Test

1. ACTIVE DTC

Ignition on, engine not running.

With a scan tool, read DTCs.

Is the DTC active at this time?

Yes >> Go To 2

No >> Refer to the INTERMITTENT CONDITION Diagnostic Procedure.
Perform the POWERTRAIN VERIFICATION TEST. (Refer to 9 - ENGINE - STANDARD PROCEDURE)

---

2. (K342) ASD RELAY OUTPUT CIRCUIT

Turn the ignition off.

Disconnect the No.4 Fuel Injector harness connector.

Ignition on, engine not running.

With the scan tool, actuate the ASD Relay.

Using a 12-volt test light connected to ground, probe the (K342) ASD Relay Output circuit in the No.4 Fuel Injector harness connector.

Does the test light illuminate brightly?

Yes >> Go To 3

No >> Repair the excessive resistance or short to ground in the (K342) ASD Relay Output circuit.
Perform the POWERTRAIN VERIFICATION TEST. (Refer to 9 - ENGINE - STANDARD PROCEDURE)

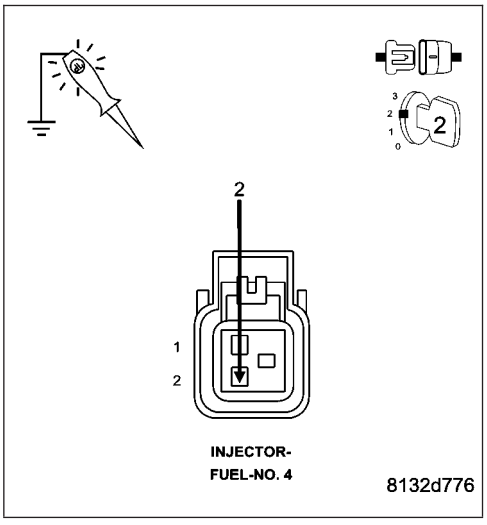

P0204-FUEL INJECTOR 4 CIRCUIT (CONTINUED)

3. FUEL INJECTOR

Using a 12-volt test light connected to 12-volts, probe the (K14) Injector Control No.4 circuit.

With the scan tool, actuate the No.4 Fuel Injector.

What is the state of the test light during the actuation?

Brightly Blinking.

Replace the Fuel Injector.

Perform the POWERTRAIN VERIFICATION TEST. (Refer to 9 - ENGINE - STANDARD PROCEDURE)

ON Constantly.

Go To 4

OFF Constantly.

Go To 5

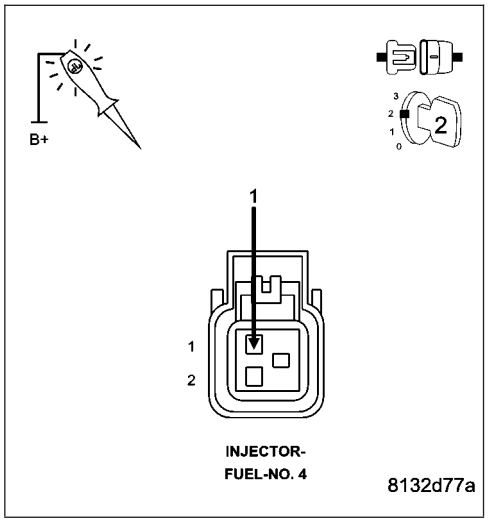

4. (K14) INJECTOR CONTROL NO.4 CIRCUIT SHORTED TO GROUND

Turn the ignition off.

Disconnect the C2 PCM harness connector.

Measure the resistance between ground and the (K14) Injector Control No.4 circuit in the Injector harness connector.

Is the resistance below 100 ohms?

Yes >> Repair the short to ground in the (K14) Injector Control No.4 circuit.

Perform the POWERTRAIN VERIFICATION TEST. (Refer to 9 - ENGINE - STANDARD PROCEDURE)

No >> Go To 6

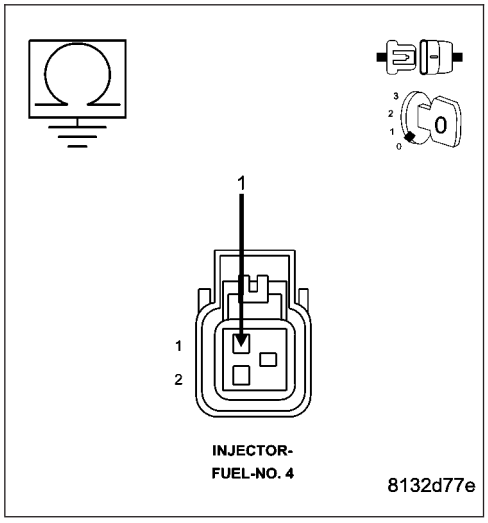

P0204-FUEL INJECTOR 4 CIRCUIT (CONTINUED)

5. (K14) INJECTOR CONTROL NO.4 CIRCUIT OPEN

Turn the ignition off.

Disconnect the C2 PCM harness connector.

CAUTION: Do not probe the PCM harness connectors. Probing the PCM harness connectors will damage the PCM terminals resulting in poor terminal to pin connection. Install Miller Special Tool #8815 to perform diagnosis.

Measure the resistance of the (K14) Injector Control No.4 circuit from the Fuel Injector harness connector to the appropriate terminal of special tool #8815.

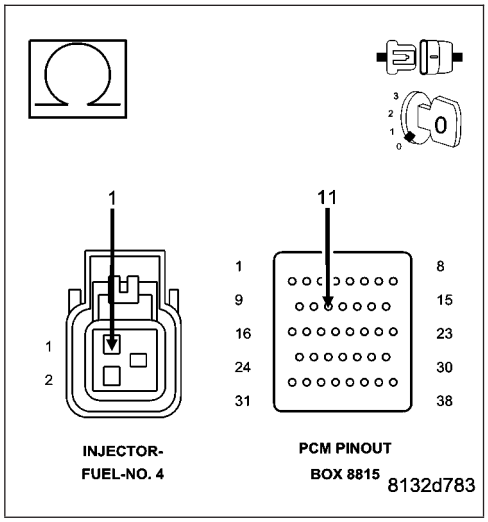

Is the resistance below 5.0 ohms?

Yes >> Go To 6

No >> Repair the open in the (K14) Injector Control No.4 circuit. Perform the POWERTRAIN VERIFICATION TEST. (Refer to 9 - ENGINE - STANDARD PROCEDURE)

6. PCM

NOTE: Before continuing, check the PCM harness connector terminals for corrosion, damage, or terminal push out. Repair as necessary.

Using the schematics as a guide, inspect the wire harness and connectors. Pay particular attention to all Power and Ground circuits.

Were there any problems found?

Yes >> Repair as necessary.
Perform the POWERTRAIN VERIFICATION TEST. (Refer to 9 - ENGINE - STANDARD PROCEDURE)

No >> Replace and program the Powertrain Control Module per Service Information.
Perform the POWERTRAIN VERIFICATION TEST. (Refer to 9 - ENGINE - STANDARD PROCEDURE)

P0205-FUEL INJECTOR 5 CIRCUIT

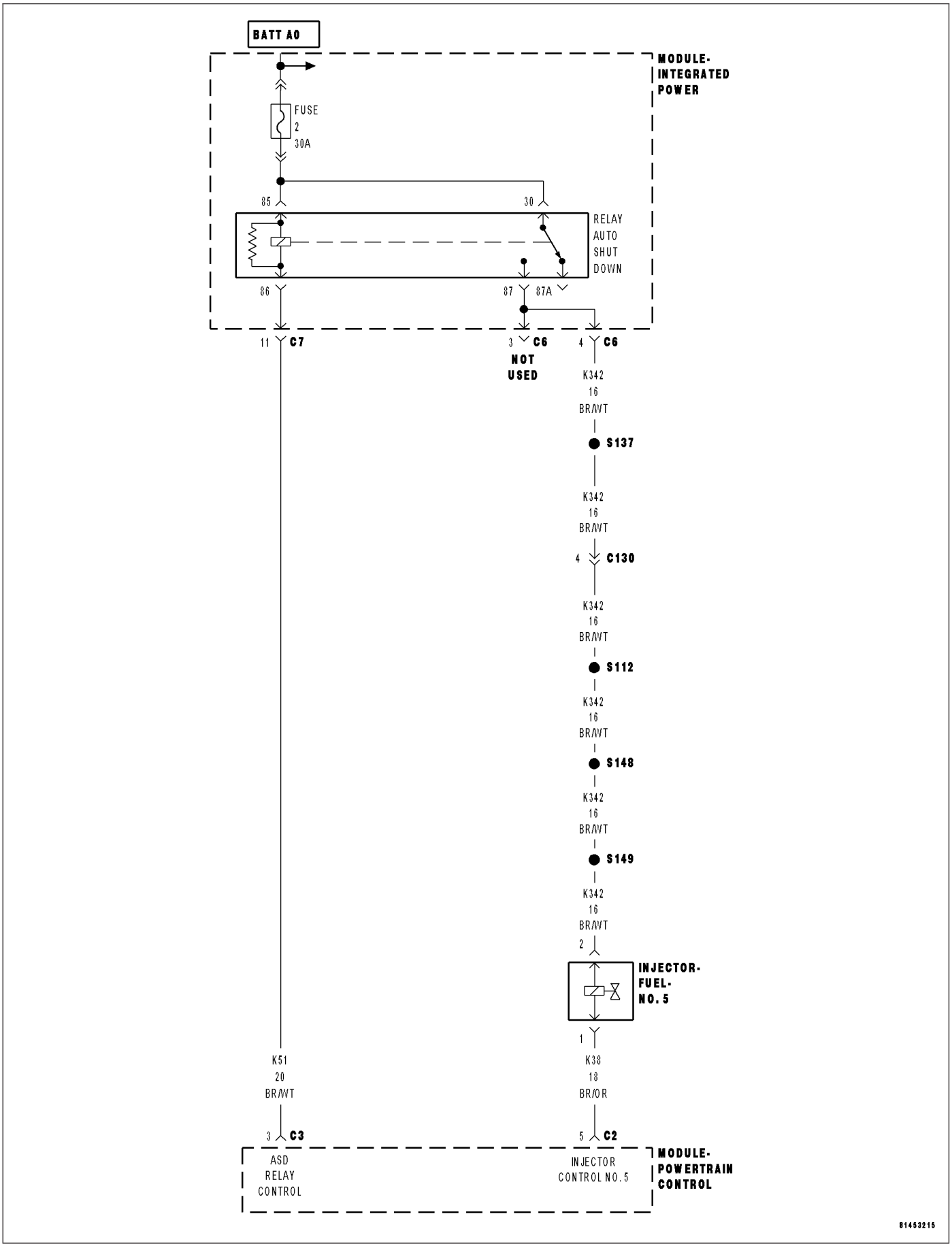

P0205-FUEL INJECTOR 5 CIRCUIT (CONTINUED)

For the Engine circuit diagram (Refer to 9 - ENGINE - SCHEMATICS AND DIAGRAMS).

For a complete wiring diagram **Refer to Section 8W**.

- **When Monitored:**
  With battery voltage greater than 10 volts. Auto Shutdown Relay energized. Engine speed less than 3000 rpm.
- **Set Condition:**
  No inductive spike is detected after injector turn off.

Possible Causes
(K342) ASD RELAY OUTPUT CIRCUIT
(K38) INJECTOR CONTROL NO.5 CIRCUIT OPEN
(K38) INJECTOR CONTROL NO.5 CIRCUIT SHORTED TO GROUND
FUEL INJECTOR
PCM

Always perform the Pre-Diagnostic Troubleshooting procedure before proceeding. (Refer to 9 - ENGINE - DIAGNOSIS AND TESTING).

Diagnostic Test

1. ACTIVE DTC

Ignition on, engine not running.

With a scan tool, read DTCs.

Is the DTC active at this time?

Yes >> Go To 2

No >> Refer to the INTERMITTENT CONDITION Diagnostic Procedure.
Perform the POWERTRAIN VERIFICATION TEST. (Refer to 9 - ENGINE - STANDARD PROCEDURE)

---

2. (K342) ASD RELAY OUTPUT CIRCUIT

Turn the ignition off.

Disconnect the No.5 Fuel Injector harness connector.

Ignition on, engine not running.

With the scan tool, actuate the ASD Relay.

Using a 12-volt test light connected to ground, probe the (K342) ASD Relay Output circuit in the No.5 Fuel Injector harness connector.

Does the test light illuminate brightly?

Yes >> Go To 3

No >> Repair the excessive resistance or short to ground in the (K342) ASD Relay Output circuit.
Perform the POWERTRAIN VERIFICATION TEST. (Refer to 9 - ENGINE - STANDARD PROCEDURE)

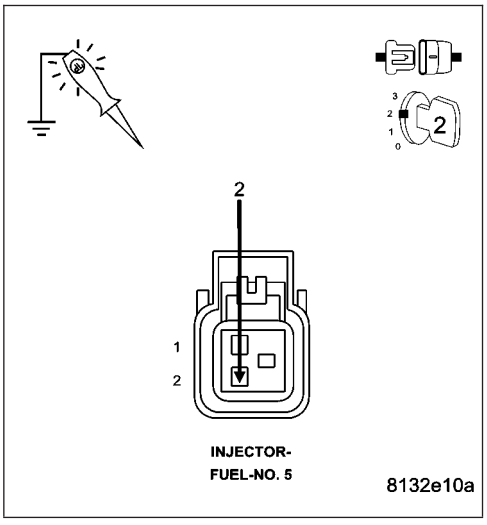

P0205-FUEL INJECTOR 5 CIRCUIT (CONTINUED)

3. FUEL INJECTOR

Using a 12-volt test light connected to 12-volts, probe the (K38) Injector Control No.5 circuit.

With the scan tool, actuate the No.5 Fuel Injector.

What is the state of the test light during the actuation?

Brightly Blinking.

Replace the Fuel Injector.

Perform the POWERTRAIN VERIFICATION TEST. (Refer to 9 - ENGINE - STANDARD PROCEDURE)

ON Constantly.

Go To 4

OFF Constantly.

Go To 5

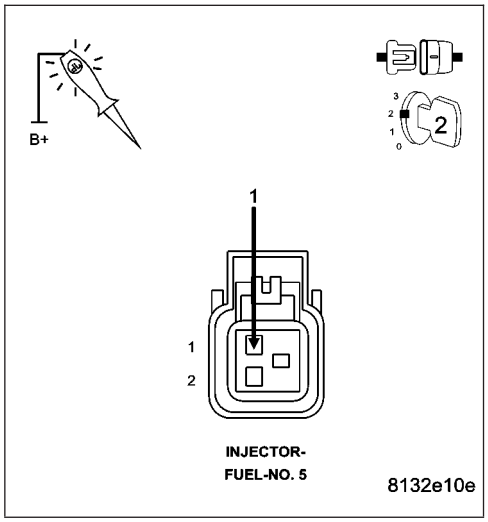

4. (K38) INJECTOR CONTROL NO.5 CIRCUIT SHORTED TO GROUND

Turn the ignition off.

Disconnect the C2 PCM harness connector.

Measure the resistance between ground and the (K38) Injector Control No.5 circuit in the Injector harness connector.

Is the resistance below 100 ohms?

Yes >> Repair the short to ground in the (K38) Injector Control No.5 circuit.

Perform the POWERTRAIN VERIFICATION TEST. (Refer to 9 - ENGINE - STANDARD PROCEDURE)

No >> Go To 6

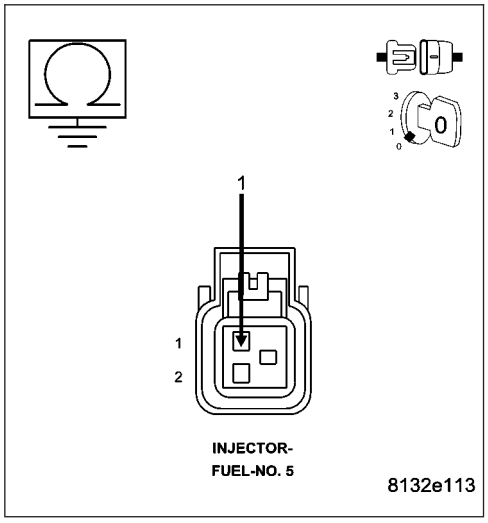

P0205-FUEL INJECTOR 5 CIRCUIT (CONTINUED)

5. (K38) INJECTOR CONTROL NO.5 CIRCUIT OPEN

Turn the ignition off.

Disconnect the C2 PCM harness connector.

CAUTION: Do not probe the PCM harness connectors. Probing the PCM harness connectors will damage the PCM terminals resulting in poor terminal to pin connection. Install Miller Special Tool #8815 to perform diagnosis.

Measure the resistance of the (K38) Injector Control No.5 circuit from the Fuel Injector harness connector to the appropriate terminal of special tool #8815.

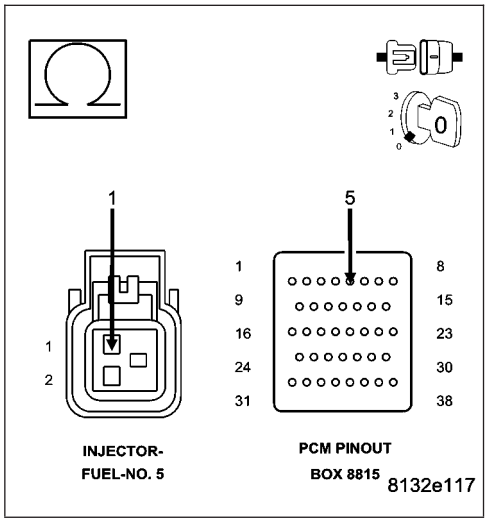

Is the resistance below 5.0 ohms?

Yes >> Go To 6

No >> Repair the open in the (K38) Injector Control No.5 circuit. Perform the POWERTRAIN VERIFICATION TEST. (Refer to 9 - ENGINE - STANDARD PROCEDURE)

6. PCM

NOTE: Before continuing, check the PCM harness connector terminals for corrosion, damage, or terminal push out. Repair as necessary.

Using the schematics as a guide, inspect the wire harness and connectors. Pay particular attention to all Power and Ground circuits.

Were there any problems found?

Yes >> Repair as necessary.
Perform the POWERTRAIN VERIFICATION TEST. (Refer to 9 - ENGINE - STANDARD PROCEDURE)

No >> Replace and program the Powertrain Control Module per Service Information.
Perform the POWERTRAIN VERIFICATION TEST. (Refer to 9 - ENGINE - STANDARD PROCEDURE)

P0206-FUEL INJECTOR 6 CIRCUIT

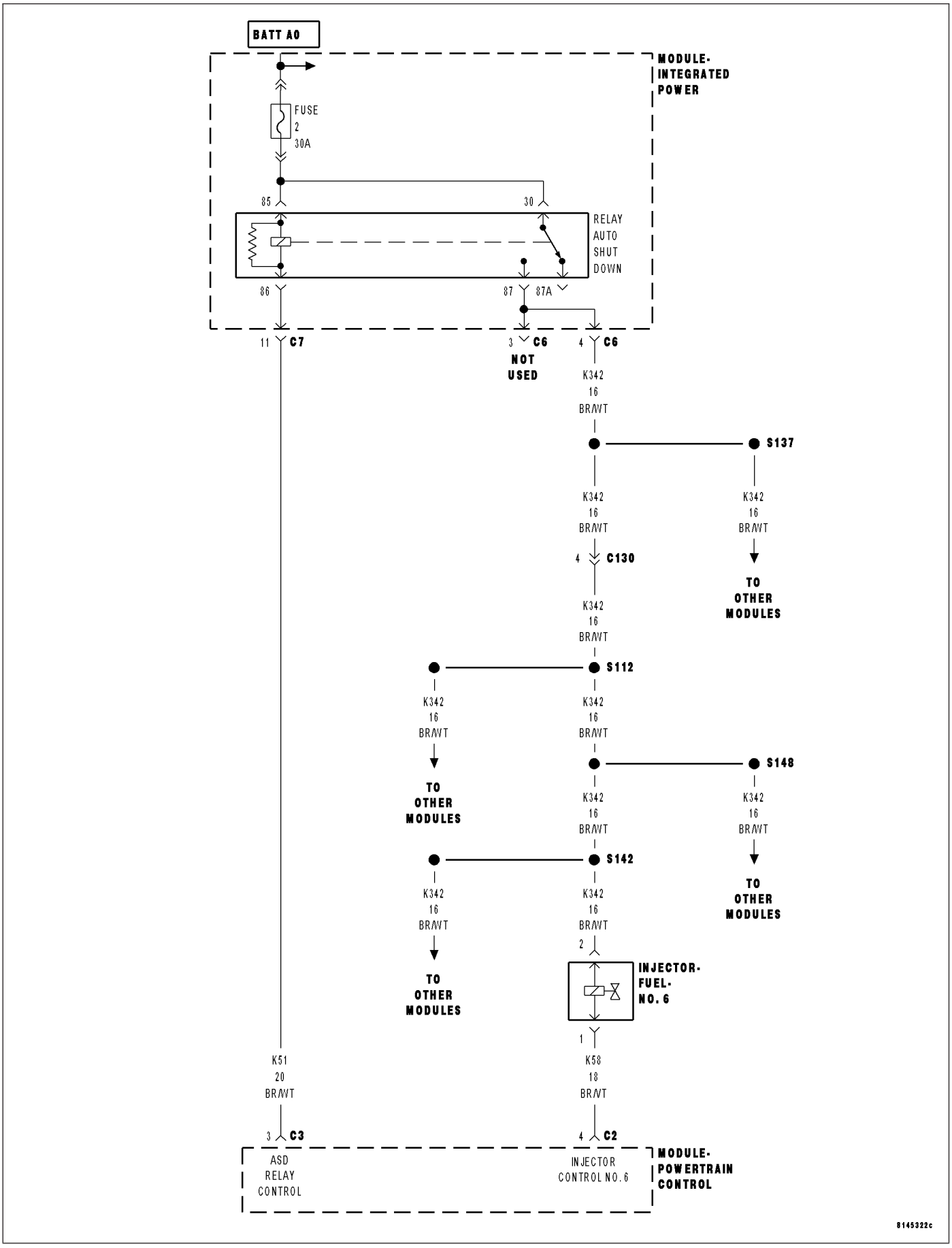

P0206-FUEL INJECTOR 6 CIRCUIT (CONTINUED)

For the Engine circuit diagram (Refer to 9 - ENGINE - SCHEMATICS AND DIAGRAMS).

For a complete wiring diagram **Refer to Section 8W**.

- **When Monitored:**
  With battery voltage greater than 10 volts. Auto Shutdown Relay energized. Engine speed less than 3000 rpm.
- **Set Condition:**
  No inductive spike is detected after injector turn off.

Possible Causes
(K342) ASD RELAY OUTPUT CIRCUIT
(K58) INJECTOR CONTROL NO.6 CIRCUIT OPEN
(K58) INJECTOR CONTROL NO.6 CIRCUIT SHORTED TO GROUND
FUEL INJECTOR
PCM

Always perform the Pre-Diagnostic Troubleshooting procedure before proceeding. (Refer to 9 - ENGINE - DIAGNOSIS AND TESTING).

Diagnostic Test

1. ACTIVE DTC

Ignition on, engine not running.

With a scan tool, read DTCs.

Is the DTC active at this time?

Yes >> Go To 2

No >> Refer to the INTERMITTENT CONDITION Diagnostic Procedure.
Perform the POWERTRAIN VERIFICATION TEST. (Refer to 9 - ENGINE - STANDARD PROCEDURE)

---

2. (K342) ASD RELAY OUTPUT CIRCUIT

Turn the ignition off.

Disconnect the No.6 Fuel Injector harness connector.

Ignition on, engine not running.

With the scan tool, actuate the ASD Relay.

Using a 12-volt test light connected to ground, probe the (K342) ASD Relay Output circuit in the No.6 Fuel Injector harness connector.

Does the test light illuminate brightly?

Yes >> Go To 3

No >> Repair the excessive resistance or short to ground in the (K342) ASD Relay Output circuit.
Perform the POWERTRAIN VERIFICATION TEST. (Refer to 9 - ENGINE - STANDARD PROCEDURE)

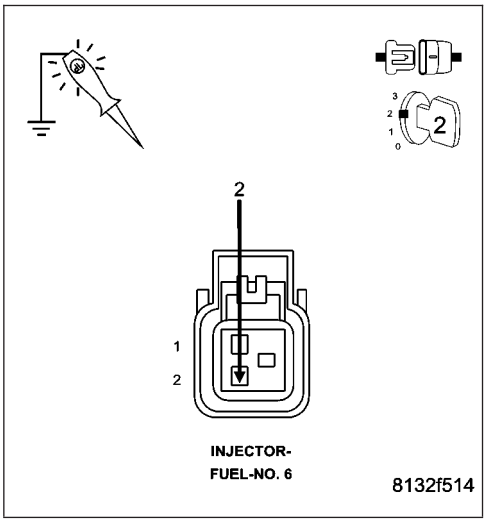

P0206-FUEL INJECTOR 6 CIRCUIT (CONTINUED)

3. FUEL INJECTOR

Using a 12-volt test light connected to 12-volts, probe the (K58) Injector Control No.6 circuit.

With the scan tool, actuate the No.6 Fuel Injector.

What is the state of the test light during the actuation?

Brightly Blinking.

Replace the Fuel Injector.

Perform the POWERTRAIN VERIFICATION TEST. (Refer to 9 - ENGINE - STANDARD PROCEDURE)

ON Constantly.

Go To 4

OFF Constantly.

Go To 5

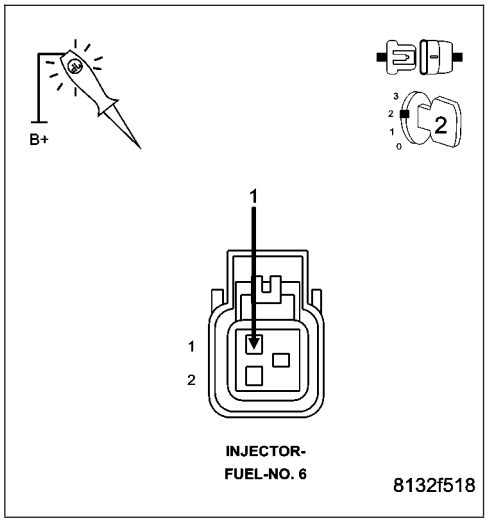

4. (K58) INJECTOR CONTROL NO.6 CIRCUIT SHORTED TO GROUND

Turn the ignition off.

Disconnect the C2 PCM harness connector.

Measure the resistance between ground and the (K58) Injector Control No.6 circuit in the Injector harness connector.

Is the resistance below 100 ohms?

Yes >> Repair the short to ground in the (K58) Injector Control No.6 circuit.

Perform the POWERTRAIN VERIFICATION TEST. (Refer to 9 - ENGINE - STANDARD PROCEDURE)

No >> Go To 6

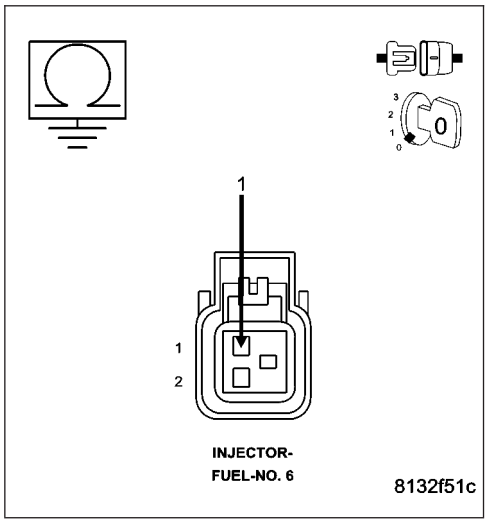

P0206-FUEL INJECTOR 6 CIRCUIT (CONTINUED)

5. (K58) INJECTOR CONTROL NO.6 CIRCUIT OPEN

Turn the ignition off.

Disconnect the C2 PCM harness connector.

CAUTION: Do not probe the PCM harness connectors. Probing the PCM harness connectors will damage the PCM terminals resulting in poor terminal to pin connection. Install Miller Special Tool #8815 to perform diagnosis.

Measure the resistance of the (K58) Injector Control No.6 circuit from the Fuel Injector harness connector to the appropriate terminal of special tool #8815.

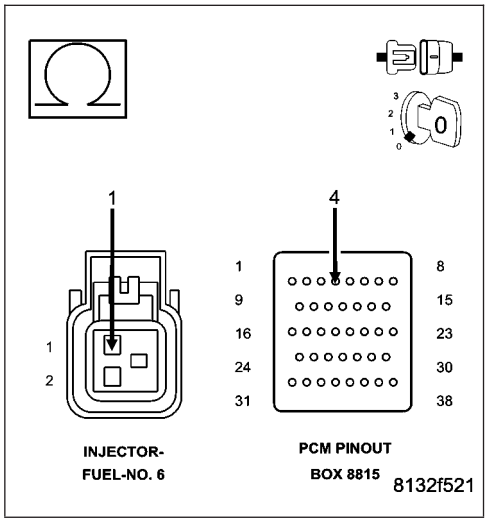

Is the resistance below 5.0 ohms?

Yes >> Go To 6

No >> Repair the open in the (K58) Injector Control No.6 circuit. Perform the POWERTRAIN VERIFICATION TEST. (Refer to 9 - ENGINE - STANDARD PROCEDURE)

6. PCM

NOTE: Before continuing, check the PCM harness connector terminals for corrosion, damage, or terminal push out. Repair as necessary.

Using the schematics as a guide, inspect the wire harness and connectors. Pay particular attention to all Power and Ground circuits.

Were there any problems found?

Yes >> Repair as necessary.
Perform the POWERTRAIN VERIFICATION TEST. (Refer to 9 - ENGINE - STANDARD PROCEDURE)

No >> Replace and program the Powertrain Control Module per Service Information.
Perform the POWERTRAIN VERIFICATION TEST. (Refer to 9 - ENGINE - STANDARD PROCEDURE)

P0207-FUEL INJECTOR 7 CIRCUIT

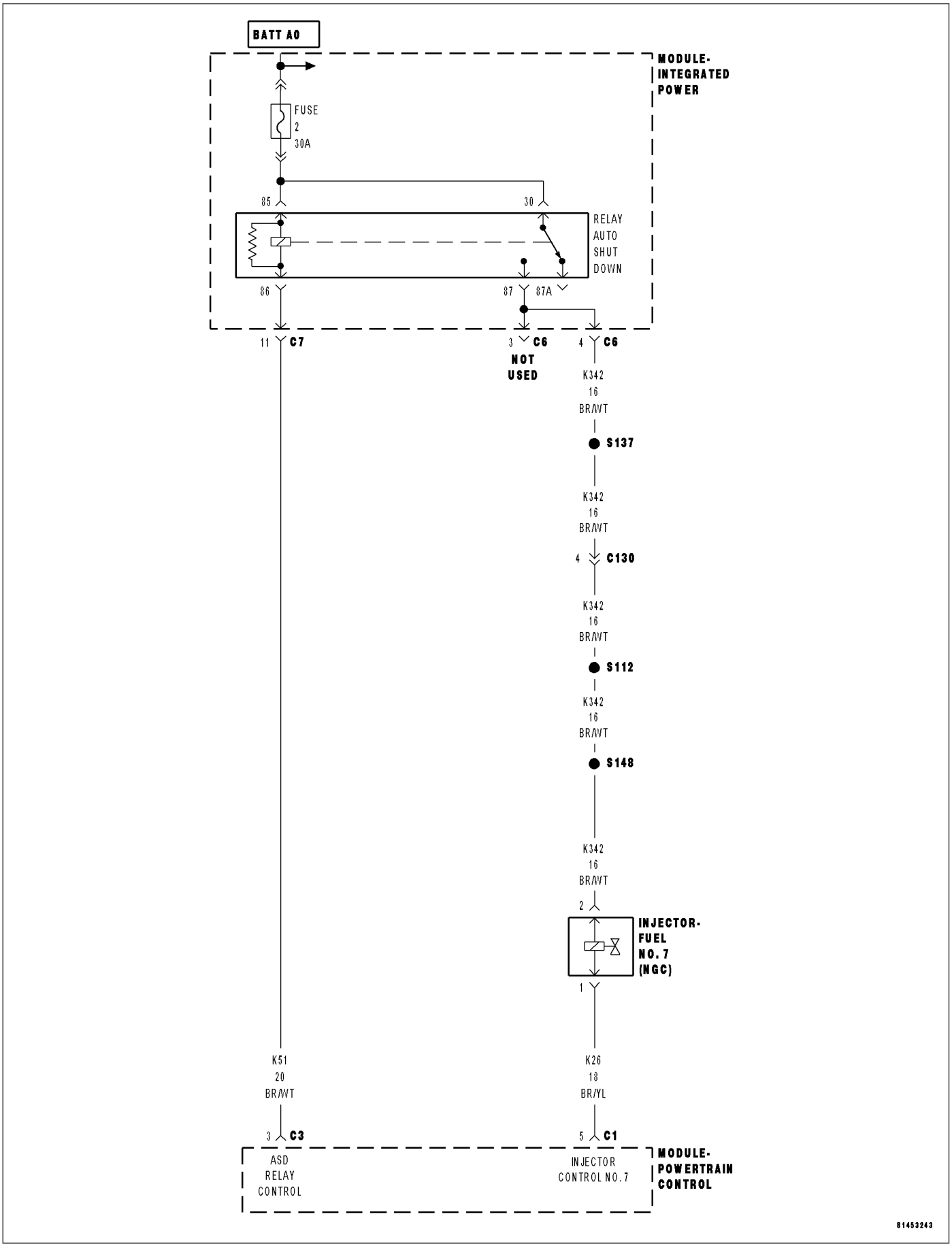

P0207-FUEL INJECTOR 7 CIRCUIT (CONTINUED)

For the Engine circuit diagram (Refer to 9 - ENGINE - SCHEMATICS AND DIAGRAMS).

For a complete wiring diagram **Refer to Section 8W**.

- **When Monitored:**
  With battery voltage greater than 10 volts. Auto Shutdown Relay energized. Engine speed less than 3000 rpm.
- **Set Condition:**
  No inductive spike is detected after injector turn off.

Possible Causes
(K342) ASD RELAY OUTPUT CIRCUIT
(K26) INJECTOR CONTROL NO.7 CIRCUIT OPEN
(K26) INJECTOR CONTROL NO.7 CIRCUIT SHORTED TO GROUND
FUEL INJECTOR
PCM

Always perform the Pre-Diagnostic Troubleshooting procedure before proceeding. (Refer to 9 - ENGINE - DIAGNOSIS AND TESTING).

Diagnostic Test

1. ACTIVE DTC

Ignition on, engine not running.

With a scan tool, read DTCs.

Is the DTC active at this time?

Yes >> Go To 2

No >> Refer to the INTERMITTENT CONDITION Diagnostic Procedure.
Perform the POWERTRAIN VERIFICATION TEST. (Refer to 9 - ENGINE - STANDARD PROCEDURE)

---

2. (K342) ASD RELAY OUTPUT CIRCUIT

Turn the ignition off.

Disconnect the No.7 Fuel Injector harness connector.

Ignition on, engine not running.

With the scan tool, actuate the ASD Relay.

Using a 12-volt test light connected to ground, probe the (K342) ASD Relay Output circuit in the No.7 Fuel Injector harness connector.

Does the test light illuminate brightly?

Yes >> Go To 3

No >> Repair the excessive resistance or short to ground in the (K342) ASD Relay Output circuit.
Perform the POWERTRAIN VERIFICATION TEST. (Refer to 9 - ENGINE - STANDARD PROCEDURE)

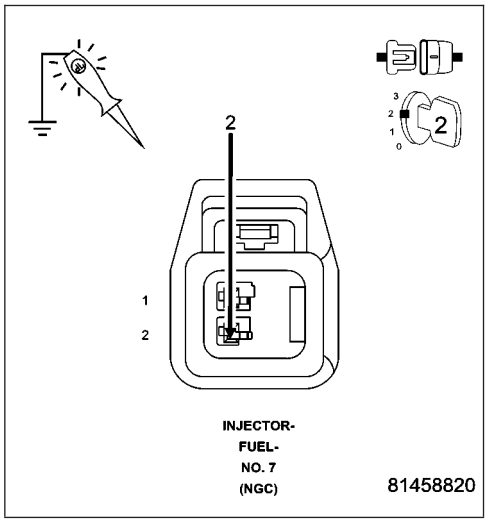

P0207-FUEL INJECTOR 7 CIRCUIT (CONTINUED)

3. FUEL INJECTOR

Using a 12-volt test light connected to 12-volts, probe the (K26) Injector Control No.7 circuit.

With the scan tool, actuate the No.7 Fuel Injector.

What is the state of the test light during the actuation?

Brightly Blinking.

Replace the Fuel Injector.

Perform the POWERTRAIN VERIFICATION TEST. (Refer to 9 - ENGINE - STANDARD PROCEDURE)

ON Constantly.

Go To 4

OFF Constantly.

Go To 5

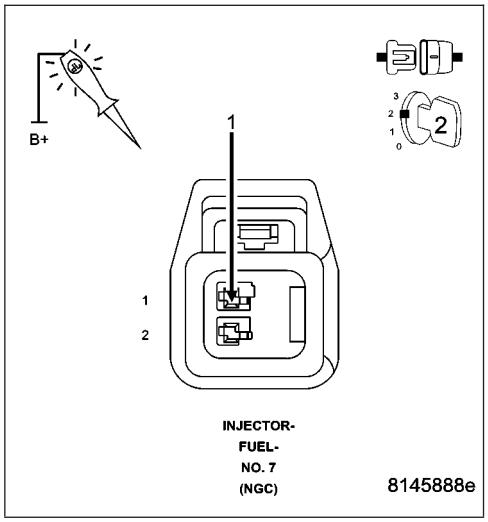

4. (K26) INJECTOR CONTROL NO.7 CIRCUIT SHORTED TO GROUND

Turn the ignition off.

Disconnect the C1 PCM harness connector.

Measure the resistance between ground and the (K26) Injector Control No.7 circuit in the Injector harness connector.

Is the resistance below 100 ohms?

Yes >> Repair the short to ground in the (K26) Injector Control No.7 circuit.

Perform the POWERTRAIN VERIFICATION TEST. (Refer to 9 - ENGINE - STANDARD PROCEDURE)

No >> Go To 6

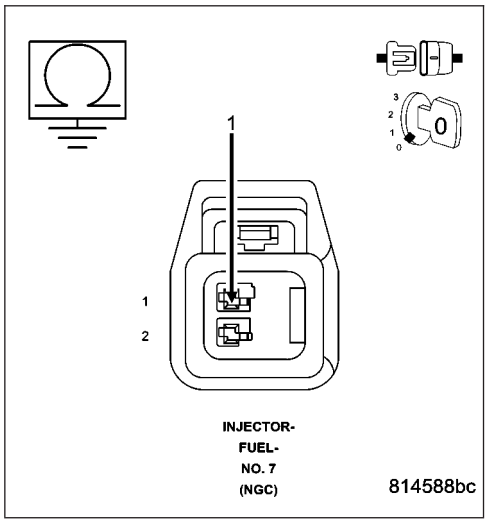

P0207-FUEL INJECTOR 7 CIRCUIT (CONTINUED)

5. (K26) INJECTOR CONTROL NO.7 CIRCUIT OPEN

Turn the ignition off.

Disconnect the C1 PCM harness connector.

CAUTION: Do not probe the PCM harness connectors. Probing the PCM harness connectors will damage the PCM terminals resulting in poor terminal to pin connection. Install Miller Special Tool #8815 to perform diagnosis.

Measure the resistance of the (K26) Injector Control No.7 circuit from the Fuel Injector harness connector to the appropriate terminal of special tool #8815.

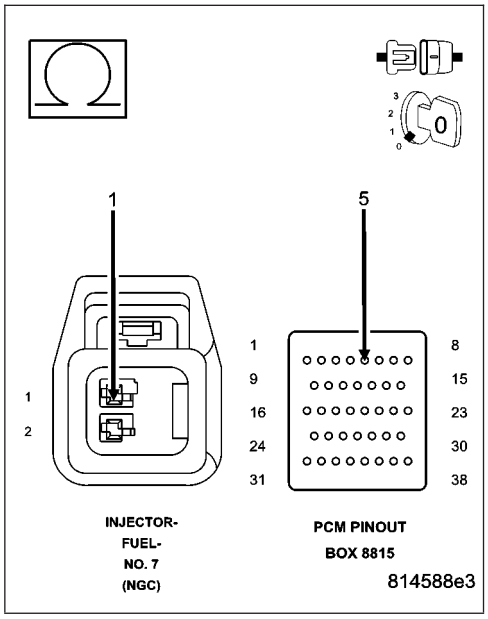

Is the resistance below 5.0 ohms?

Yes >> Go To 6

No >> Repair the open in the (K26) Injector Control No.7 circuit. Perform the POWERTRAIN VERIFICATION TEST. (Refer to 9 - ENGINE - STANDARD PROCEDURE)

6. PCM

NOTE: Before continuing, check the PCM harness connector terminals for corrosion, damage, or terminal push out. Repair as necessary.

Using the schematics as a guide, inspect the wire harness and connectors. Pay particular attention to all Power and Ground circuits.

Were there any problems found?

Yes >> Repair as necessary.
Perform the POWERTRAIN VERIFICATION TEST. (Refer to 9 - ENGINE - STANDARD PROCEDURE)

No >> Replace and program the Powertrain Control Module per Service Information.
Perform the POWERTRAIN VERIFICATION TEST. (Refer to 9 - ENGINE - STANDARD PROCEDURE)

P0208-FUEL INJECTOR 8 CIRCUIT

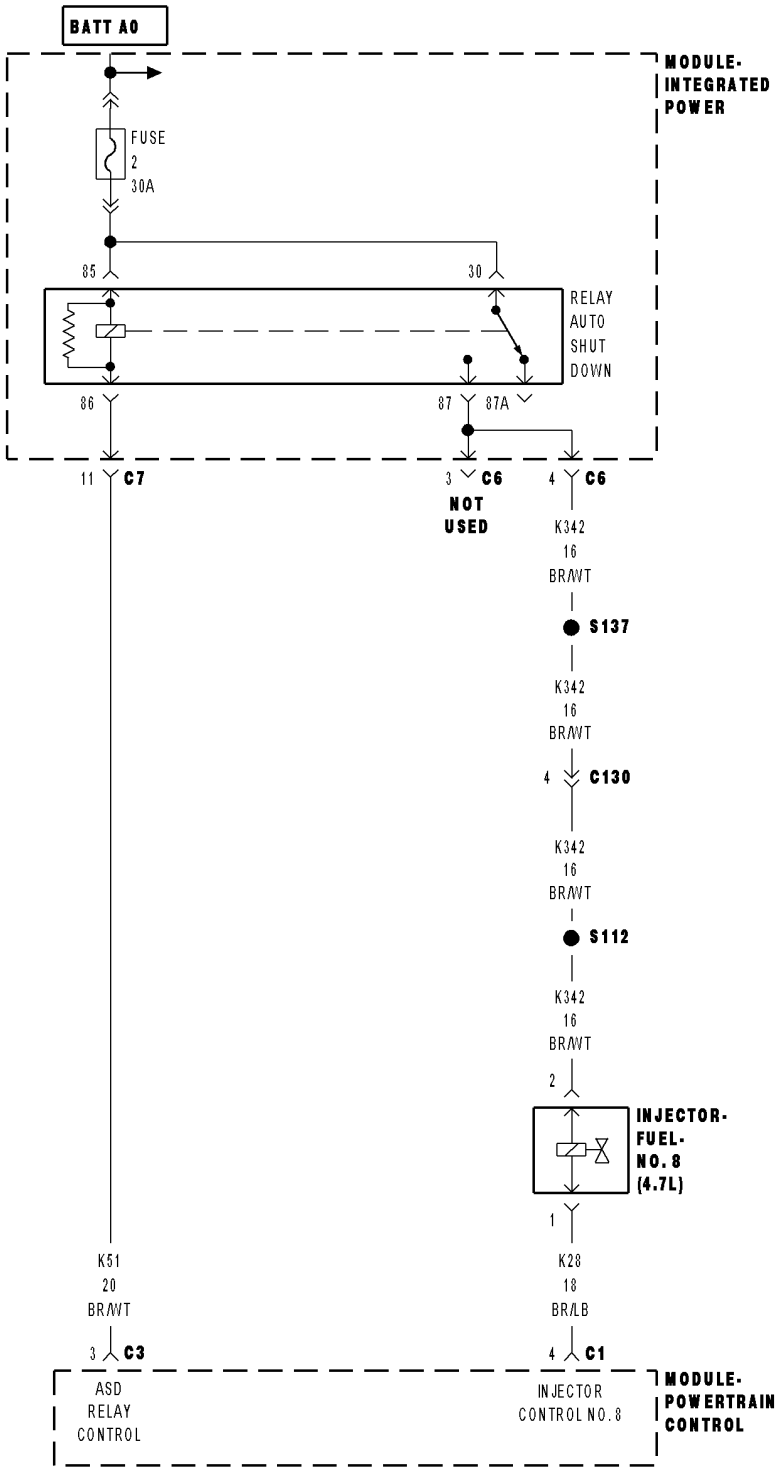

P0208-FUEL INJECTOR 8 CIRCUIT (CONTINUED)

For the Engine circuit diagram (Refer to 9 - ENGINE - SCHEMATICS AND DIAGRAMS).

For a complete wiring diagram **Refer to Section 8W**.

- **When Monitored:**
  With battery voltage greater than 10 volts. Auto Shutdown Relay energized. Engine speed less than 3000 rpm.
- **Set Condition:**
  No inductive spike is detected after injector turn off.

Possible Causes
(K342) ASD RELAY OUTPUT CIRCUIT
(K28) INJECTOR CONTROL NO.8 CIRCUIT OPEN
(K28) INJECTOR CONTROL NO.8 CIRCUIT SHORTED TO GROUND
FUEL INJECTOR
PCM

Always perform the Pre-Diagnostic Troubleshooting procedure before proceeding. (Refer to 9 - ENGINE - DIAGNOSIS AND TESTING).

Diagnostic Test

1. ACTIVE DTC

Ignition on, engine not running.

With a scan tool, read DTC.

Is the DTC active at this time?

Yes >> Go To 2

No >> Refer to the INTERMITTENT CONDITION Diagnostic Procedure.
Perform the POWERTRAIN VERIFICATION TEST. (Refer to 9 - ENGINE - STANDARD PROCEDURE)

---

2. (K342) ASD RELAY OUTPUT CIRCUIT

Turn the ignition off.

Disconnect the No.8 Fuel Injector harness connector.

Ignition on, engine not running.

With the scan tool, actuate the ASD Relay.

Using a 12-volt test light connected to ground, probe the (K342) ASD Relay Output circuit in the No.8 Fuel Injector harness connector.

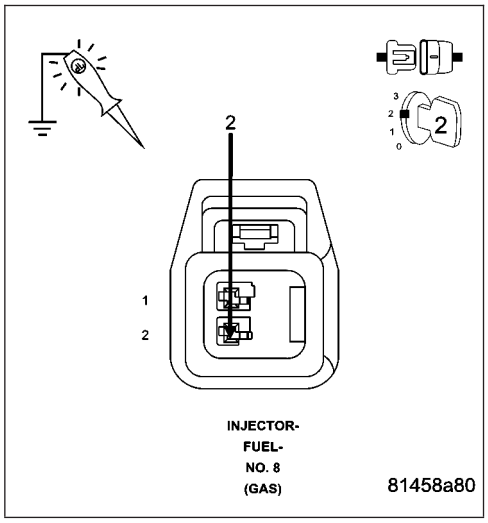

Does the test light illuminate brightly?

Yes >> Go To 3

No >> Repair the excessive resistance or short to ground in the (K342) ASD Relay Output circuit.
Perform the POWERTRAIN VERIFICATION TEST. (Refer to 9 - ENGINE - STANDARD PROCEDURE)

P0208-FUEL INJECTOR 8 CIRCUIT (CONTINUED)

3. FUEL INJECTOR

Using a 12-volt test light connected to 12-volts, probe the (K28) Injector Control No.8 circuit.

With the scan tool, actuate the No.8 Fuel Injector.

What is the state of the test light during the actuation?

Brightly Blinking.

Replace the Fuel Injector.

Perform the POWERTRAIN VERIFICATION TEST. (Refer to 9 - ENGINE - STANDARD PROCEDURE)

ON Constantly.

Go To 4

OFF Constantly.

Go To 5

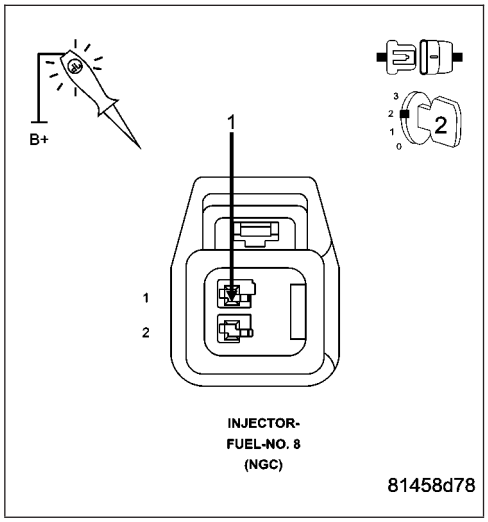

4. (K28) INJECTOR CONTROL NO.8 CIRCUIT SHORTED TO GROUND

Turn the ignition off.

Disconnect the C1 PCM harness connector.

Measure the resistance between ground and the (K28) Injector Control No.8 circuit in the Injector harness connector.

Is the resistance below 100 ohms?

Yes >> Repair the short to ground in the (K28) Injector Control No.8 circuit.

Perform the POWERTRAIN VERIFICATION TEST. (Refer to 9 - ENGINE - STANDARD PROCEDURE)

No >> Go To 6

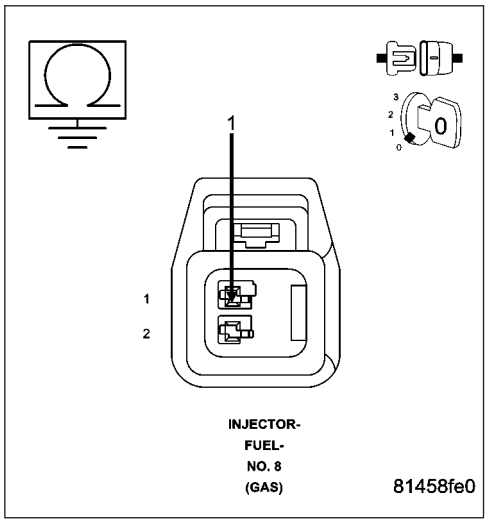

P0208-FUEL INJECTOR 8 CIRCUIT (CONTINUED)

5. (K28) INJECTOR CONTROL NO.8 CIRCUIT OPEN

Turn the ignition off.

Disconnect the C1 PCM harness connector.

CAUTION: Do not probe the PCM harness connectors. Probing the PCM harness connectors will damage the PCM terminals resulting in poor terminal to pin connection. Install Miller Special Tool #8815 to perform diagnosis.

Measure the resistance of the (K28) Injector Control No.8 circuit from the Fuel Injector harness connector to the appropriate terminal of special tool #8815.

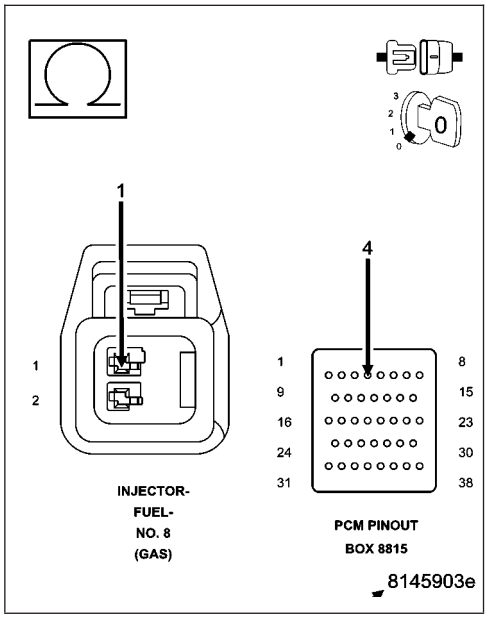

Is the resistance below 5.0 ohms?

Yes >> Go To 6

No >> Repair the open in the (K28) Injector Control No.8 circuit. Perform the POWERTRAIN VERIFICATION TEST. (Refer to 9 - ENGINE - STANDARD PROCEDURE)

6. PCM

NOTE: Before continuing, check the PCM harness connector terminals for corrosion, damage, or terminal push out. Repair as necessary.

Using the schematics as a guide, inspect the wire harness and connectors. Pay particular attention to all Power and Ground circuits.

Were there any problems found?

Yes >> Repair as necessary.
Perform the POWERTRAIN VERIFICATION TEST. (Refer to 9 - ENGINE - STANDARD PROCEDURE)

No >> Replace and program the Powertrain Control Module per Service Information.
Perform the POWERTRAIN VERIFICATION TEST. (Refer to 9 - ENGINE - STANDARD PROCEDURE)

P0221-THROTTLE POSITION SENSOR 2 PERFORMANCE

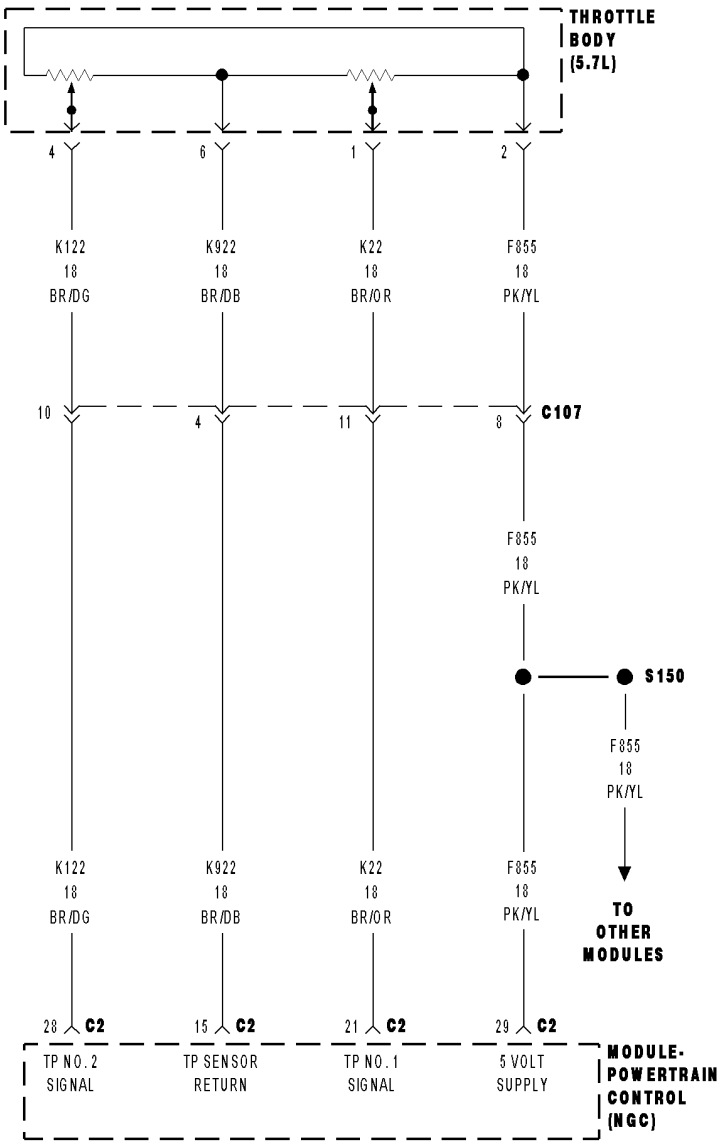

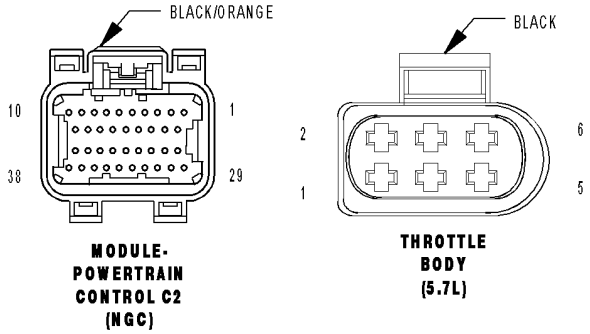

81452d8c

P0221-THROTTLE POSITION SENSOR 2 PERFORMANCE (CONTINUED)

For the Engine System Schematic circuit diagram (Refer to 9 - ENGINE - SCHEMATICS AND DIAGRAMS).

For a complete wiring diagram **Refer to Section 8W**.

- **When Monitored:**
  Ignition on and No MAP Sensor DTCs set.
- **Set Condition:**
  TP Sensor signals do not correlate to the MAP Sensor signal. One Trip Fault. ETC light will illuminate. P2135 should set with this code also.

Possible Causes
(K122) TP SENSOR NO.2 SIGNAL CIRCUIT OR (K22) TP SENSOR NO.1 SIGNAL CIRCUIT SHORTED TO BATTERY VOLTAGE
RESISTANCE IN THE (K22) TP SENSOR NO.1 OR (K122) TP SENSOR NO.2 SIGNAL CIRCUIT
(K122) TP SENSOR NO.2 SIGNAL CIRCUIT OR (K22) TP SENSOR NO.1 SIGNAL CIRCUIT SHORTED TO GROUND
RESISTANCE IN THE (F855) 5-VOLT SUPPLY CIRCUIT
(F855) 5-VOLT SUPPLY CIRCUIT SHORTED TO GROUND
RESISTANCE IN THE (K922) SENSOR RETURN CIRCUIT
(K22) TP SENSOR NO.1 SIGNAL CIRCUIT SHORTED TO (K122) TP SENSOR NO.2 SIGNAL CIRCUIT
THROTTLE POSITION SENSOR/THROTTLE BODY
PCM

Always perform the Pre-Diagnostic Troubleshooting procedure before proceeding. (Refer to 9 - ENGINE - DIAGNOSIS AND TESTING).

Diagnostic Test

1. ACTIVE DTC

NOTE: Diagnose any other TP Sensor DTC(s) before continuing.

NOTE: The throttle plate and linkage should be free from binding and carbon build up.

NOTE: Make sure the throttle plate is at the idle position.
Ignition on, engine not running.

NOTE: Inspect the engine for vacuum leaks.
With a scan tool, read DTCs.

Is the DTC active at this time?

Yes >> Go To 2

No >> Go To 11

P0221-THROTTLE POSITION SENSOR 2 PERFORMANCE (CONTINUED)

2. (K122) TP SENSOR NO.2 SIGNAL CIRCUIT OR (K22) TP SENSOR NO.1 SIGNAL CIRCUIT SHORTED TO BATTERY VOLTAGE

Turn the ignition off.

Disconnect the C2 PCM harness connector.

Disconnect the Throttle Body harness connector.

Ignition on, engine not running.

Measure the voltage on the (K122) TP No.2 Signal circuit in the Throttle Body harness connector.

Measure the voltage on the (K22) TP No.1 Signal circuit in the Throttle Body harness connector.

Is the voltage above 5.2 volts for each reading?

Yes >> Repair the short to battery voltage in the (K122) TP Sensor No.2 Signal circuit or the (K22) TP Sensor No.2 Signal circuit.

Perform the POWERTRAIN VERIFICATION TEST. (Refer to 9 - ENGINE - STANDARD PROCEDURE)

No >> Go To 3

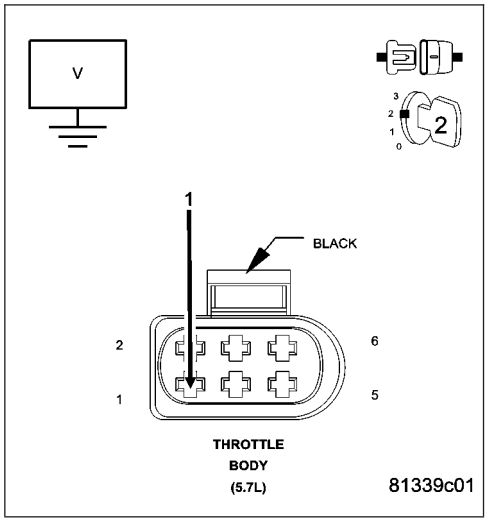

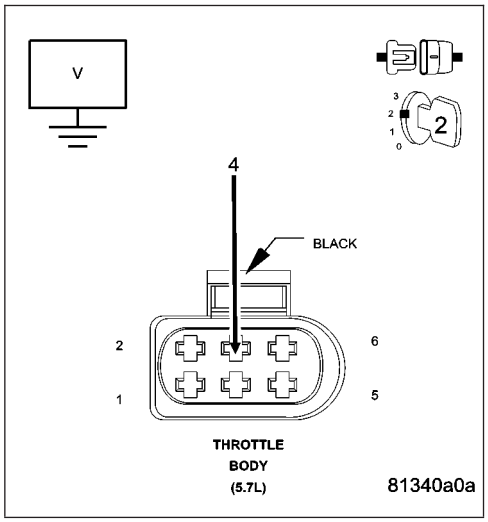

P0221-THROTTLE POSITION SENSOR 2 PERFORMANCE (CONTINUED)

3. THROTTLE POSITION SENSOR

Turn the ignition off.

Connect the C2 PCM harness connector.

Ignition on, engine not running.

With the scan tool, monitor the TP Sensor No.1 and No.2 voltage.

Connect a jumper wire between the (K922) Sensor Return circuit and the (K22) TP Sensor No.1 Signal circuit.

NOTE: TP Sensor No.1 voltage should change from approximately 4.7 volts to 0.3 of a volt.

For TP Sensor No.2, connect a jumper wire between (F855) 5-volt supply circuit and the (K122) TP Sensor No.2 Signal circuit.

NOTE: TP Sensor No.2 voltage should change from approximately 0 volts to 5.0 volts.

Is the voltage reading within the listed specification with the jumper wire installed?

Yes >> Disconnect the Battery when replacing the Throttle Body Assembly. Replace the Throttle Body Assembly. After installation is complete, using a scan tool, select the ETC RELEARN function.

Perform the POWERTRAIN VERIFICATION TEST. (Refer to 9 - ENGINE - STANDARD PROCEDURE)

No >> Go To 4

NOTE: Remove the jumper wire before continuing.

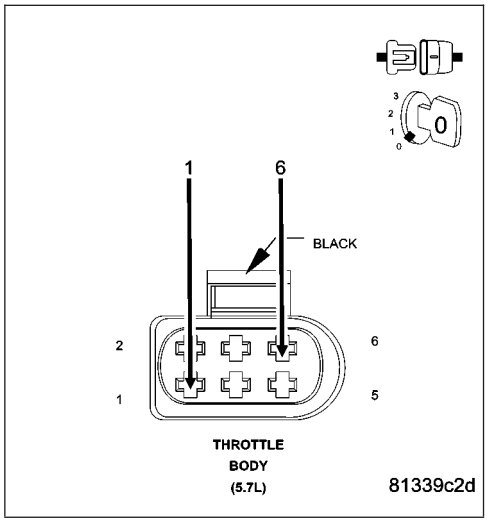

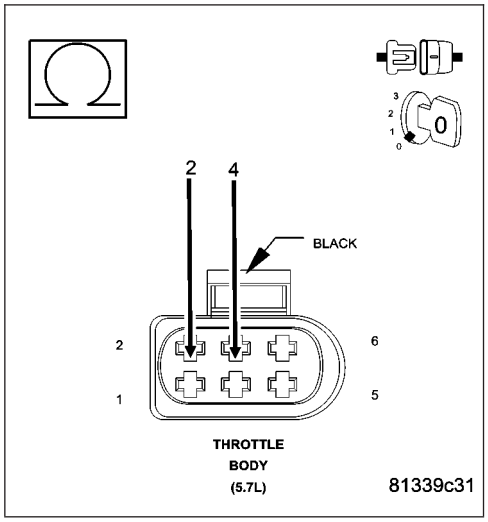

P0221-THROTTLE POSITION SENSOR 2 PERFORMANCE (CONTINUED)

4. EXCESSIVE RESISTANCE IN THE (K22) TP SENSOR NO.1 OR (K122) TP SENSOR NO.2 SIGNAL CIRCUIT

Turn the ignition off.

Disconnect the C2 PCM harness connector.

CAUTION: Do not probe the PCM harness connectors. Probing the PCM harness connectors will damage the PCM terminals resulting in poor terminal to pin connection. Install Miller Special Tool #8815 to perform diagnosis.

Measure the resistance of the (K22) TP Sensor No.1 Signal circuit from the Throttle Body harness connector to the appropriate terminal of special tool #8815. Measure the resistance of the (K122) TP Sensor No.2 Signal circuit from the Throttle Body harness connector to the appropriate terminal of special tool #8815.

Is the resistance below 5.0 ohms for each circuit?

Yes >> Go To 5

No >> Repair the excessive resistance in the (K22) TP Sensor No.1 or (K122) TP Sensor No.2 Signal circuit.

Perform the POWERTRAIN VERIFICATION TEST. (Refer to 9 - ENGINE - STANDARD PROCEDURE)

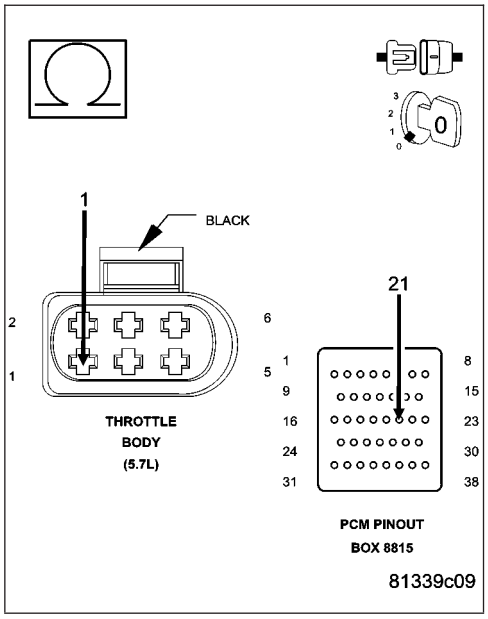

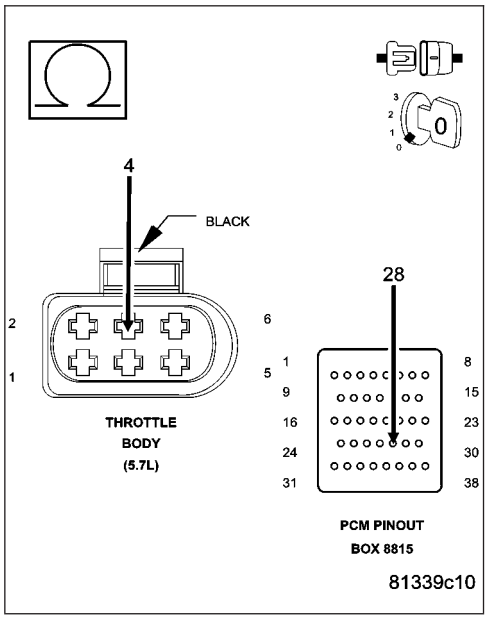

P0221-THROTTLE POSITION SENSOR 2 PERFORMANCE (CONTINUED)

5. (K22) TP SENSOR NO.1 OR (K122) TP SENSOR NO.1 SIGNAL CIRCUIT SHORTED TO GROUND

Measure the resistance between ground and the (K122) TP Sensor No.2 Signal circuit at the Throttle Body harness connector.

Measure the resistance between ground and the (K22) TP Sensor No.1 Signal circuit at the Throttle Body harness connector.

Is the resistance below 100 ohms for each circuit?

Yes >> Go To 6

No >> Repair the short to ground in the (K122), (K22) TP Sensor Signal circuit.

Perform the POWERTRAIN VERIFICATION TEST. (Refer to 9 - ENGINE - STANDARD PROCEDURE)

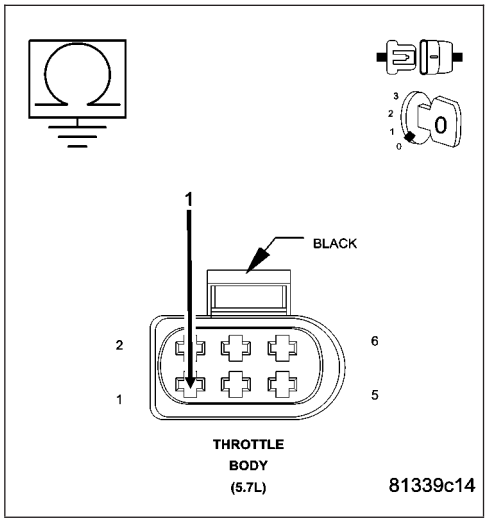

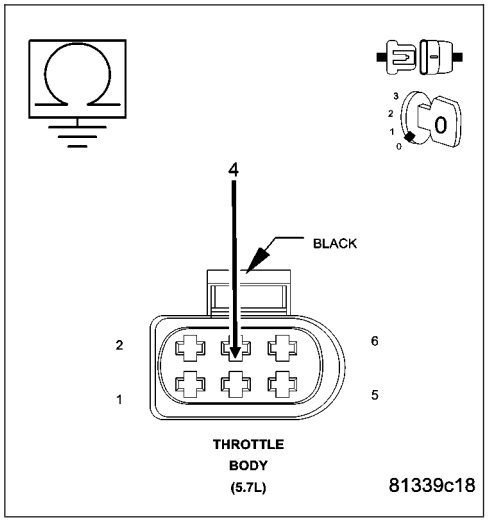

P0221-THROTTLE POSITION SENSOR 2 PERFORMANCE (CONTINUED)

6. EXCESSIVE RESISTANCE IN THE (F855) 5-VOLT SUPPLY CIRCUIT

Measure the resistance of the (F855) 5-volt Supply circuit from the Throttle Body harness connector to the appropriate terminal of special tool #8815.

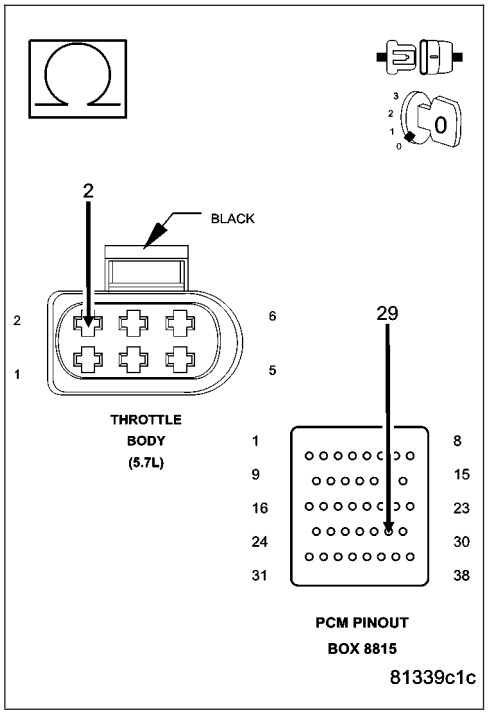

Is the resistance below 5.0 ohms?

Yes >> Go To 7

No >> Repair the excessive resistance in the (F855) 5-volt Supply circuit.

Perform the POWERTRAIN VERIFICATION TEST. (Refer to 9 - ENGINE - STANDARD PROCEDURE)

7. (F855) 5-VOLT SUPPLY SHORTED TO GROUND

Measure the resistance between ground and the (F855) 5-volt Supply circuit at the Throttle Body harness connector.

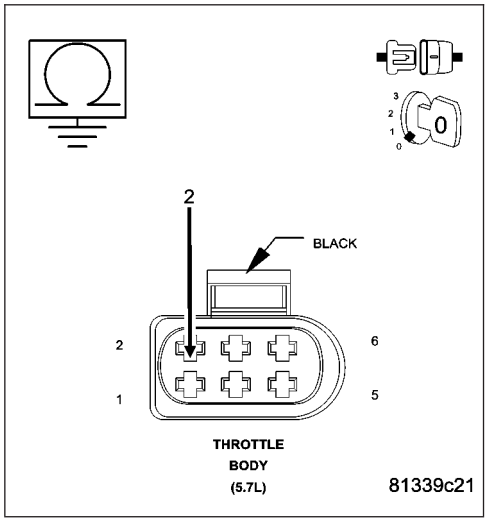

Is the resistance below 100 ohms?

Yes >> Repair the short to ground in the (F855) 5-volt Supply circuit.

Perform the POWERTRAIN VERIFICATION TEST. (Refer to 9 - ENGINE - STANDARD PROCEDURE)

No >> Go To 8

P0221-THROTTLE POSITION SENSOR 2 PERFORMANCE (CONTINUED)

8. EXCESSIVE RESISTANCE IN THE (K922) SENSOR RETURN CIRCUIT

Measure the resistance of the (K922) Sensor Return circuit from the Throttle Body harness connector to the appropriate terminal of special tool #8815.

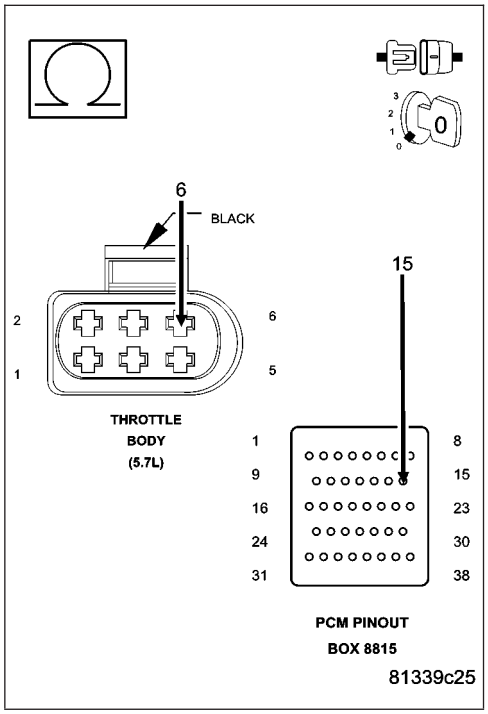

Is the resistance below 5.0 ohms?

Yes >> Go To 9

No >> Repair the excessive resistance in the (K922) Sensor Return circuit.
Perform the POWERTRAIN VERIFICATION TEST. (Refer to 9 - ENGINE - STANDARD PROCEDURE)

9. (K22) TP SENSOR NO.1 SIGNAL SHORTED TO THE (K122) TP SENSOR NO.2 SIGNAL

Measure the resistance between the (K22) TP Sensor No.1 Signal circuit and the (K122) TP Sensor No.2 Signal circuit at the Throttle Body harness connector.

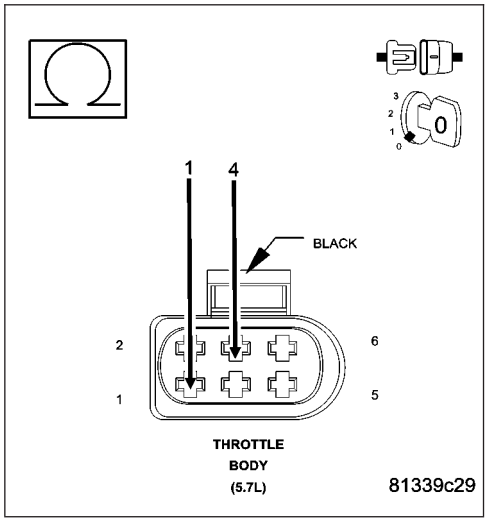

Is the resistance below 5.0 ohms?

Yes >> Repair the short between the (K122) TP Sensor No.2 Signal circuit and the (K22) TP Sensor No.1 Signal circuit.
Perform the POWERTRAIN VERIFICATION TEST. (Refer to 9 - ENGINE - STANDARD PROCEDURE)

No >> Go To 10

P0221-THROTTLE POSITION SENSOR 2 PERFORMANCE (CONTINUED)

10. PCM

NOTE: Before continuing, check the PCM harness connector terminals for corrosion, damage, or terminal push out. Repair as necessary.

Using the schematics as a guide, inspect the wire harness and connectors. Pay particular attention to all Power and Ground circuits.

Were there any problems found?

Yes >> Repair as necessary.
Perform the POWERTRAIN VERIFICATION TEST. (Refer to 9 - ENGINE - STANDARD PROCEDURE)

No >> Replace and program the Powertrain Control Module per Service Information.
Perform the POWERTRAIN VERIFICATION TEST. (Refer to 9 - ENGINE - STANDARD PROCEDURE)

---

11. THROTTLE FOLLOWER TEST

Ignition on, engine not running.

With the scan tool, perform the Throttle Follower Test and monitor the TP Sensor No.1 or No.2 voltage.

Slowly press the throttle pedal down.

The voltage for TP Sensor No.1 should start at approximately 0.3 of a volt and increase to above 4.3 volts.

The voltage for TP Sensor No.2 should start at approximately 4.3 volts and decrease to approximately 0.3 of a volt.

Is the voltage within the range of the listed specification for the appropriate Sensor?

Yes >> Refer to the INTERMITTENT CONDITION Diagnostic Procedure.
Perform the POWERTRAIN VERIFICATION TEST. (Refer to 9 - ENGINE - STANDARD PROCEDURE)

No >> Disconnect the Battery when replacing the Throttle Body Assembly. Replace the Throttle Body Assembly. After installation is complete, using a scan tool select the ETC RELEARN function.
Perform the POWERTRAIN VERIFICATION TEST. (Refer to 9 - ENGINE - STANDARD PROCEDURE)

P0222-THROTTLE POSITION SENSOR 2 CIRCUIT LOW

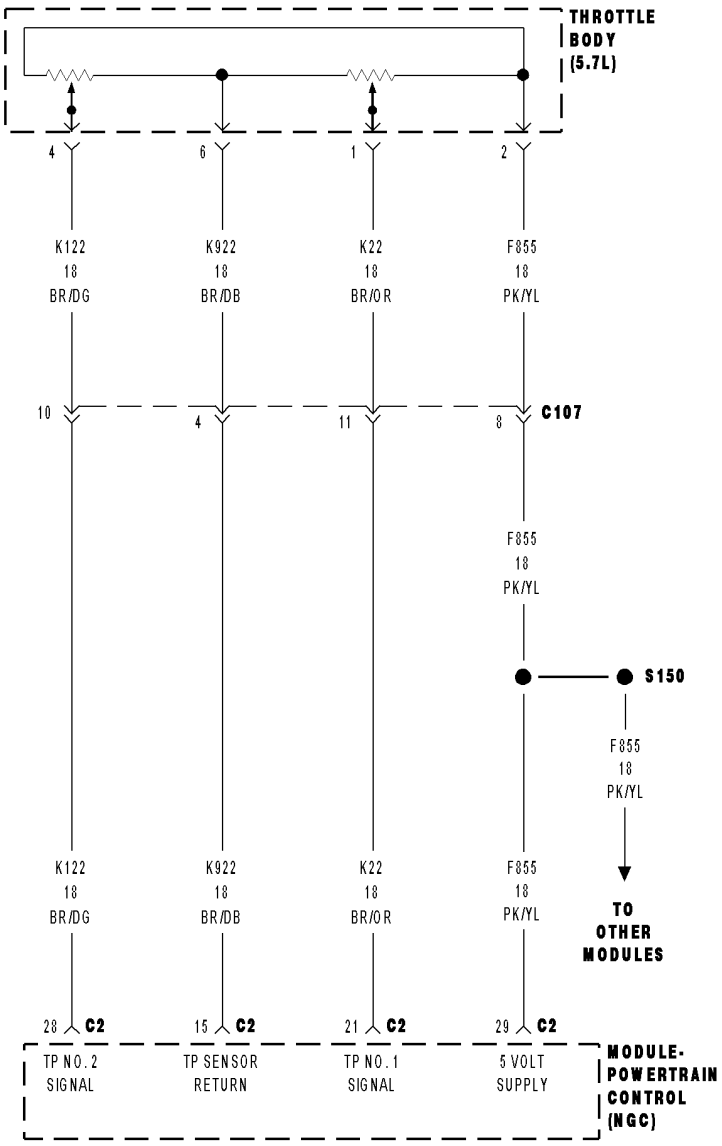

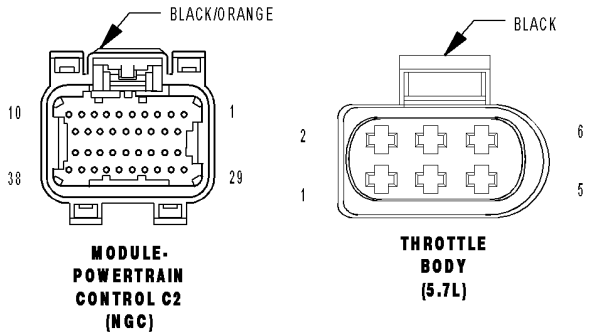

81452d8c

P0222-THROTTLE POSITION SENSOR 2 CIRCUIT LOW (CONTINUED)

For the Engine System Schematic circuit diagram (Refer to 9 - ENGINE - SCHEMATICS AND DIAGRAMS).

For a complete Engine wiring diagram **Refer to Section 8W**.

- **When Monitored:**
  With the ignition on. Battery voltage greater than 10 volts.
- **Set Condition:**
  Throttle Position Sensor voltage at the PCM is less than 0.16 of a volt for 0.7 of a second. One Trip Fault. Three good trips to turn off the MIL.

Possible Causes
(F855) 5-VOLT SUPPLY CIRCUIT OPEN
(F855) 5-VOLT SUPPLY CIRCUIT SHORTED TO GROUND
(K122) TP SENSOR NO.2 SIGNAL CIRCUIT SHORTED TO GROUND
(K122) TP SENSOR NO.2 SIGNAL CIRCUIT SHORTED TO THE (K922) SENSOR RETURN CIRCUIT
THROTTLE POSITION SENSOR/THROTTLE BODY
THROTTLE PLATE JAMMED AGAINST THE MAXIMUM STOP
PCM

Always perform the Pre-Diagnostic Troubleshooting procedure before proceeding. (Refer to 9 - ENGINE - DIAGNOSIS AND TESTING).

Diagnostic Test

1. TP SENSOR NO.2 BELOW 0.35 OF A VOLT

NOTE: If a 5-Volt supply DTC has also set, diagnose the 5-Volt DTC before continuing.

NOTE: Make sure the throttle moves freely and does not hang up at Wide Open Throttle, by performing the Throttle Follower Test

NOTE: If P2101 is also set, then make sure that the blade moves freely and does not hang up near Wide Open Throttle before trying to repair P0222.

Ignition on, engine not running.

With the scan tool, read the TP Sensor voltage.

Is the voltage below 0.35 of a volt?

Yes >> Go To 2

No >> Go To 11

---

2. P0122 ALSO SET

Was the P0122-TP SENSOR NO.1 VOLTAGE LOW DTC set along with the P0222?

Yes >> Go To 3

No >> Go To 4

P0222-THROTTLE POSITION SENSOR 2 CIRCUIT LOW (CONTINUED)

3. (F855) 5-VOLT SUPPLY CIRCUIT

Turn the ignition off.

Disconnect the Throttle Body harness connector.

Ignition on, engine not running.

Measure the voltage on the (F855) 5-volt Supply circuit in the Throttle Body harness connector.

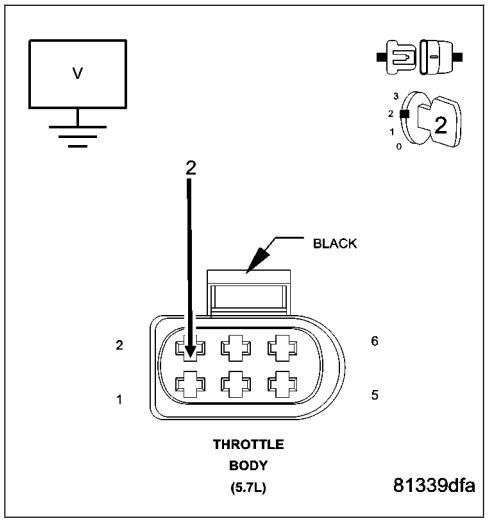

Is the voltage between 4.5 to 5.2 volts?

Yes >> Go To 4

No >> Go To 8

4. THROTTLE POSITION SENSOR

Connect a jumper wire between the (F855) 5-volt Supply circuit and the (K122) TP Sensor No.2 Signal circuit in the Throttle Body harness connector.

With the scan tool, monitor the TP Sensor No.2 voltage.

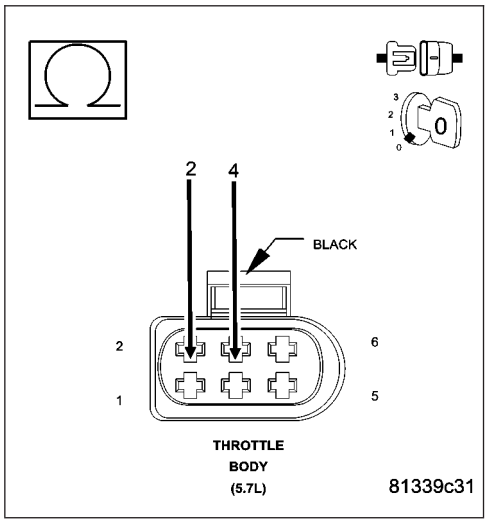

Is the voltage between 4.8 and 5.2 volts with the jumper wire installed?

Yes >> Disconnect the Battery when replacing the Throttle Body Assembly. Replace the Throttle Body Assembly. After installation is complete, with a scan tool select the ETC RELEARN function.

Perform the POWERTRAIN VERIFICATION TEST. (Refer to 9 - ENGINE - STANDARD PROCEDURE)

No >> Go To 5

NOTE: Remove the jumper wire before continuing.

P0222-THROTTLE POSITION SENSOR 2 CIRCUIT LOW (CONTINUED)

5. (K122) TP SENSOR NO.2 SIGNAL CIRCUIT OPEN

Turn the ignition off.

Disconnect the C2 PCM harness connector.

CAUTION: Do not probe the PCM harness connectors. Probing the PCM harness connectors will damage the PCM terminals resulting in poor terminal to pin connection. Install Miller Special Tool #8815 to perform diagnosis.

Measure the resistance of the (K122) TP Sensor No.2 Signal circuit from the Throttle Body harness connector to the appropriate terminal of special tool #8815.

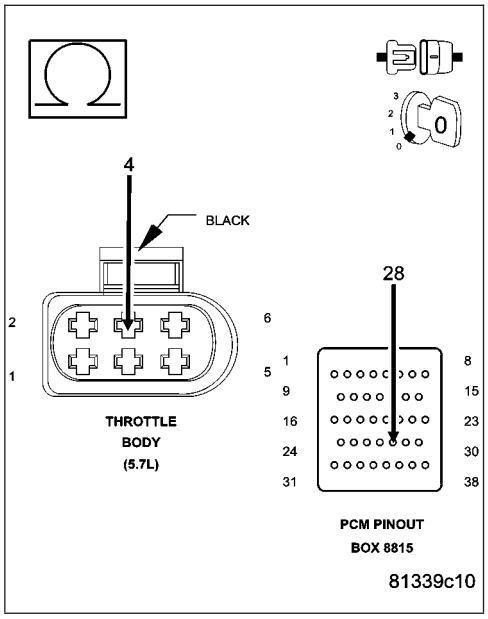

Is the resistance below 5.0 ohms?

Yes >> Go To 6

No >> Repair the open in the (K122) TP Sensor No.2 Signal circuit.

Perform the POWERTRAIN VERIFICATION TEST. (Refer to 9 - ENGINE - STANDARD PROCEDURE)

6. (K122) TP SENSOR NO.2 SIGNAL CIRCUIT SHORTED TO GROUND

Measure the resistance between ground and the (K122) TP Sensor No.2 Signal circuit at the Throttle Body harness connector.

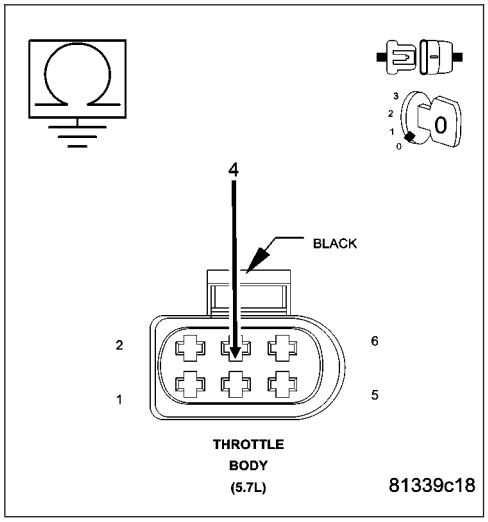

Is the resistance below 100 ohms?

Yes >> Repair the short to ground in the (K122) TP Sensor No.2 Signal.

Perform the POWERTRAIN VERIFICATION TEST. (Refer to 9 - ENGINE - STANDARD PROCEDURE)

No >> Go To 7

P0222-THROTTLE POSITION SENSOR 2 CIRCUIT LOW (CONTINUED)

7. (K122) TP SENSOR NO.2 SIGNAL CIRCUIT SHORTED TO (K922) SENSOR RETURN CIRCUIT

Measure the resistance between the (K122) TP Sensor No.2 Signal circuit and the (K922) TP Sensor Return circuit at the Throttle Body harness connector.

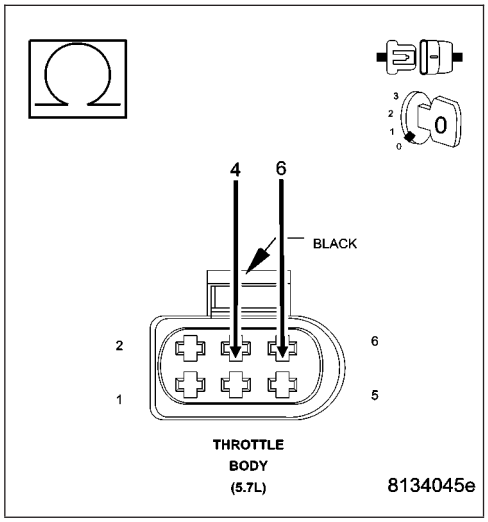

Is the resistance below 100 ohms?

Yes >> Repair the short between the (K922) Sensor Return circuit and the (K122) TP Sensor No.2 Signal circuit.
Perform the POWERTRAIN VERIFICATION TEST. (Refer to 9 - ENGINE - STANDARD PROCEDURE)

No >> Go To 10

8. (F855) 5-VOLT SUPPLY CIRCUIT OPEN

Turn the ignition off.

Disconnect the C2 PCM harness connector.

CAUTION: Do not probe the PCM harness connectors. Probing the PCM harness connectors will damage the PCM terminals resulting in poor terminal to pin connection. Install Miller Special Tool #8815 to perform diagnosis.

Measure the resistance of the (F855) 5-volt Supply circuit from the Throttle Body harness connector to the appropriate terminal of special tool #8815.

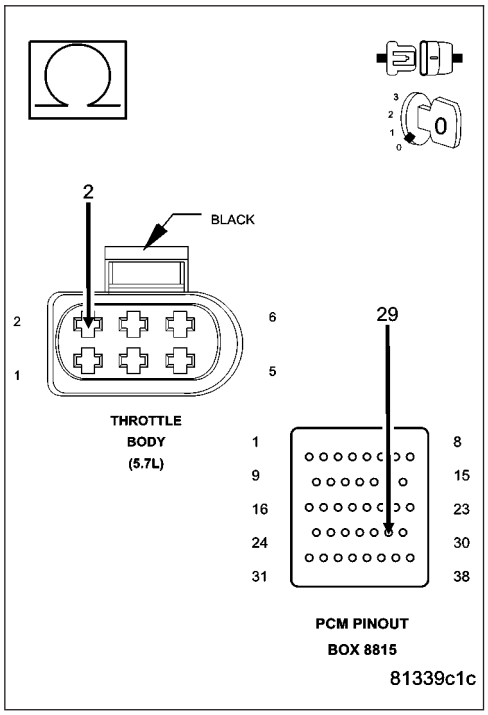

Is the resistance below 5.0 ohms?

Yes >> Go To 9

No >> Repair the open in the (F855) 5-volt Supply circuit.
Perform the POWERTRAIN VERIFICATION TEST. (Refer to 9 - ENGINE - STANDARD PROCEDURE)

P0222-THROTTLE POSITION SENSOR 2 CIRCUIT LOW (CONTINUED)

9. (F855) 5-VOLT SUPPLY CIRCUIT SHORTED TO GROUND

Measure the resistance between ground and the (F855) 5-volt Supply circuit at the Throttle Body harness connector.

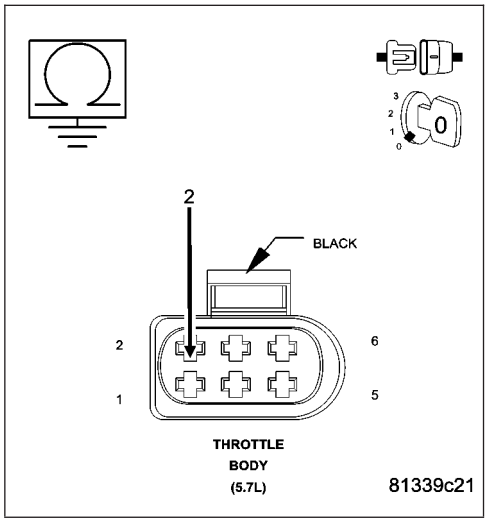

Is the resistance below 100 ohms?

Yes >> Repair the short to ground in the (F855) 5-volt Supply circuit.
Perform the POWERTRAIN VERIFICATION TEST. (Refer to 9 - ENGINE - STANDARD PROCEDURE)

No >> Go To 10

---

10. PCM

NOTE: Before continuing, check the PCM harness connector terminals for corrosion, damage, or terminal push out. Repair as necessary.
Using the schematics as a guide, inspect the wire harness and connectors. Pay particular attention to all Power and Ground circuits.

Were there any problems found?

Yes >> Repair as necessary.
Perform the POWERTRAIN VERIFICATION TEST. (Refer to 9 - ENGINE - STANDARD PROCEDURE)

No >> Replace and program the Powertrain Control Module per Service Information.
Perform the POWERTRAIN VERIFICATION TEST. (Refer to 9 - ENGINE - STANDARD PROCEDURE)

---

11. THROTTLE FOLLOWER TEST

Ignition on, engine not running.
With the scan tool, perform the Throttle Follower Test.
Monitor the TP Sensor No.2 voltage while slowly pressing the Throttle pedal down.

Is there a smooth voltage change from high to low?

Yes >> Refer to the INTERMITTENT CONDITION Diagnostic Procedure.
Perform the POWERTRAIN VERIFICATION TEST. (Refer to 9 - ENGINE - STANDARD PROCEDURE)

No >> Disconnect the Battery when replacing the Throttle Body Assembly. Replace the Throttle Body Assembly. After installation is complete, with a scan tool select the ETC RELEARN function.
Perform the POWERTRAIN VERIFICATION TEST. (Refer to 9 - ENGINE - STANDARD PROCEDURE)

P0223-THROTTLE POSITION SENSOR 2 CIRCUIT HIGH

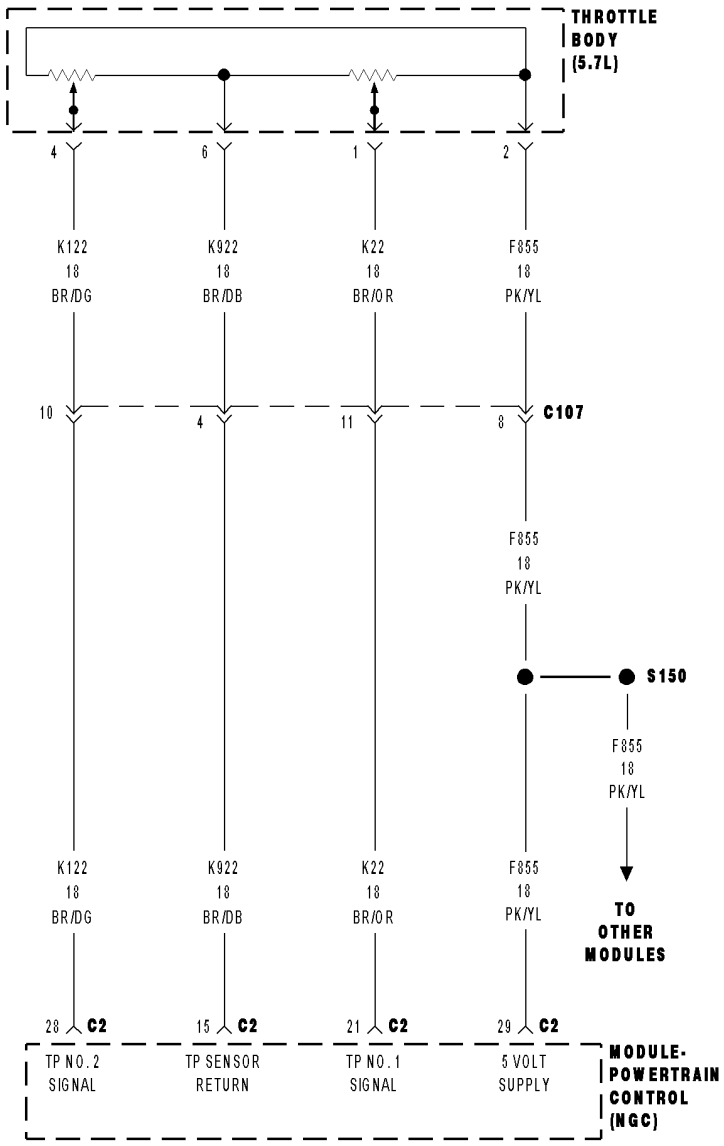

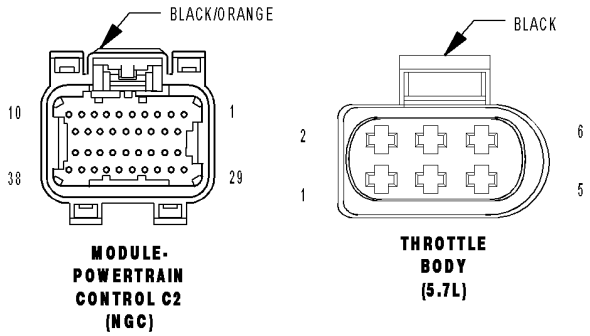

81452d8c

P0223-THROTTLE POSITION SENSOR 2 CIRCUIT HIGH (CONTINUED)

For the Engine circuit diagram (Refer to 9 - ENGINE - SCHEMATICS AND DIAGRAMS).

For a complete wiring diagram **Refer to Section 8W**.

- **When Monitored:**
  With the ignition on.
- **Set Condition:**
  Throttle Position Sensor No.2 Signal circuit voltage is greater than 4.9 volts for 25 ms. One Trip Fault. ETC light will illuminate.

Possible Causes
(K122) TP SENSOR NO.2 SIGNAL CIRCUIT SHORTED TO BATTERY VOLTAGE
(K122) TP SENSOR NO.2 SIGNAL CIRCUIT SHORTED TO THE (F855) 5-VOLT SUPPLY CIRCUIT
(K922) SENSOR RETURN CIRCUIT OPEN
THROTTLE POSITION SENSOR/THROTTLE BODY
PCM

Always perform the Pre-Diagnostic Troubleshooting procedure before proceeding. (Refer to 9 - ENGINE - DIAGNOSIS AND TESTING).

Diagnostic Test

1. ACTIVE DTC

NOTE: If a 5-Volt supply DTC has also set, diagnose the 5-Volt DTC before continuing.
Ignition on, engine not running.
With a scan tool, read DTCs.

Is the DTC active at this time?

Yes >> Go To 2

No >> Go To 7

---

2. THROTTLE POSITION SENSOR

Turn the ignition off.
Disconnect the Throttle Body Assembly harness connector.
Ignition on, engine not running.
With the scan tool monitor the TP Sensor No.2 voltage.

Is the voltage below 0.5 volt?

Yes >> Disconnect the Battery when replacing the Throttle Body Assembly. Replace the Throttle Body Assembly. After installation is complete, with the scan tool select the ETC RELEARN function.
Perform the POWERTRAIN VERIFICATION TEST. (Refer to 9 - ENGINE - STANDARD PROCEDURE)

No >> Go To 3

P0223-THROTTLE POSITION SENSOR 2 CIRCUIT HIGH (CONTINUED)

3. (K122) TP SENSOR NO.2 SIGNAL CIRCUIT SHORTED TO BATTERY VOLTAGE

Turn the ignition off.

Disconnect the C2 PCM harness connector.

Ignition on, engine not running.

Measure the voltage on the (K122) TP Sensor No.2 Signal circuit at the Throttle Body harness connector.

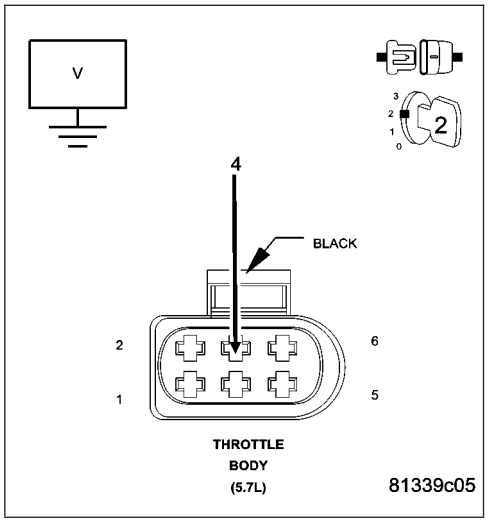

Is the voltage above 0 volts?

Yes >> Repair the short to battery voltage in the (K122) TP Sensor No.2 Signal circuit.
Perform the POWERTRAIN VERIFICATION TEST. (Refer to 9 - ENGINE - STANDARD PROCEDURE)

No >> Go To 4

4. (K122) TP SENSOR NO.2 SIGNAL CIRCUIT SHORTED TO (F855) 5-VOLT SUPPLY CIRCUIT

Measure the resistance between the (K122) TP Sensor No.2 Signal circuit and the (F855) 5-volt Supply circuit at the Throttle Body harness connector.

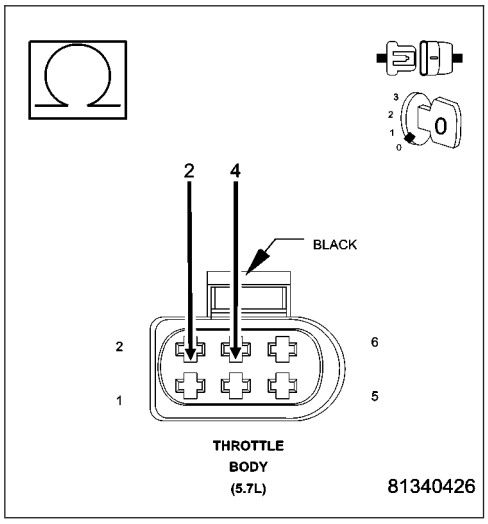

Is the resistance below 100 ohms?

Yes >> Repair the short between the (K122) TP Sensor No.2 Signal circuit and the (F855) 5-volt Supply circuit.
Perform the POWERTRAIN VERIFICATION TEST. (Refer to 9 - ENGINE - STANDARD PROCEDURE)

No >> Go To 5

P0223-THROTTLE POSITION SENSOR 2 CIRCUIT HIGH (CONTINUED)

5. (K922) SENSOR RETURN CIRCUIT OPEN

CAUTION: Do not probe the PCM harness connectors. Probing the PCM harness connectors will damage the PCM terminals resulting in poor terminal to pin connection. Install Miller Special Tool #8815 to perform diagnosis.

Measure the resistance of the (K922) Sensor Return circuit from the Throttle Body harness connector to the appropriate terminal of special tool #8815.

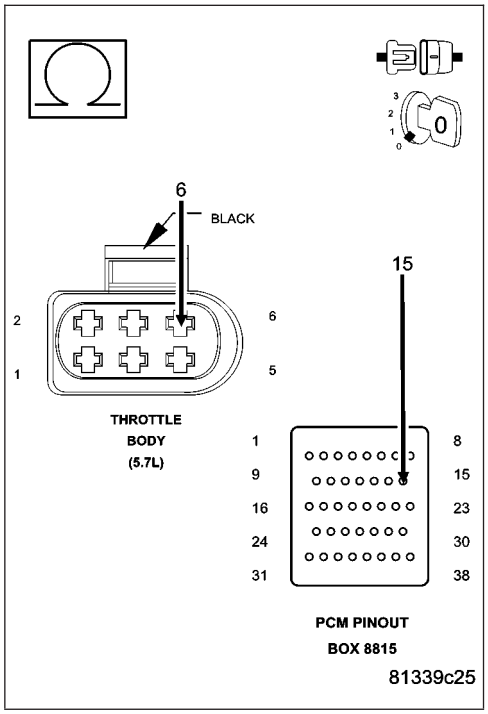

Is the resistance below 5.0 ohms?

Yes >> Go To 6

No >> Repair the open in the (K922) Sensor Return circuit.
Perform the POWERTRAIN VERIFICATION TEST. (Refer to 9 - ENGINE - STANDARD PROCEDURE)

---

6. PCM

NOTE: Before continuing, check the PCM harness connector terminals for corrosion, damage, or terminal push out. Repair as necessary.

Using the schematics as a guide, inspect the wire harness and connectors. Pay particular attention to all Power and Ground circuits.

Were there any problems found?

Yes >> Repair as necessary.
Perform the POWERTRAIN VERIFICATION TEST. (Refer to 9 - ENGINE - STANDARD PROCEDURE)

No >> Replace and program the Powertrain Control Module per Service Information.
Perform the POWERTRAIN VERIFICATION TEST. (Refer to 9 - ENGINE - STANDARD PROCEDURE)

---

7. THROTTLE FOLLOWER TEST

With the scan tool, perform the Throttle Follower Test.

Monitor the TP Sensor No.2 voltage while slowly pressing the Throttle pedal down.

Is there a smooth voltage change from high to low?

Yes >> Refer to the INTERMITTENT CONDITION Diagnostic Procedure.
Perform the POWERTRAIN VERIFICATION TEST. (Refer to 9 - ENGINE - STANDARD PROCEDURE)

No >> Disconnect the Battery when replacing the Throttle Body Assembly. Replace the Throttle Body Assembly. After installation is complete, with the scan tool select the ETC RELEARN function.
Perform the POWERTRAIN VERIFICATION TEST. (Refer to 9 - ENGINE - STANDARD PROCEDURE)

P0300-MULTIPLE CYLINDER MISFIRE

For the Engine circuit diagram (Refer to 9 - ENGINE - SCHEMATICS AND DIAGRAMS).

For a complete wiring diagram **Refer to Section 8W**.

- **When Monitored:**
  Any time the engine is running, and the adaptive numerator has been successfully updated.
- **Set Condition:**
  When more than a 2% (2.5% LEV) misfire rate is measured during two trips. Above 3000 RPM 1 trip less than 3000 RPM 2 trip. Three good trips to turn off the MIL.

Possible Causes
(K342) ASD RELAY OUTPUT CIRCUIT
INJECTOR CONTROL CIRCUIT
COIL CONTROL CIRCUIT
IGNITION WIRE
SPARK PLUG
IGNITION COIL
FUEL PUMP INLET STRAINER PLUGGED
RESTRICTED FUEL SUPPLY LINE
FUEL PUMP MODULE
FUEL PRESSURE LEAK DOWN
FUEL INJECTOR
ENGINE MECHANICAL
PCM

Always perform the Pre-Diagnostic Troubleshooting procedure before proceeding. (Refer to 9 - ENGINE - DIAGNOSIS AND TESTING).

Diagnostic Test

1. CYLINDER MIS-FIRE CONDITION ACTIVE

NOTE: Check for any TSB's that apply to a Misfire condition. Review the vehicle repair history for any misfire condition repairs that have been performed.

Star the engine.

Observe the WHICH CYLINDER IS MISFIRING screen for at least one minute on the scan tool.

Is there a misfire present?

Yes >> Go To 2

No >> Refer to the INTERMITTENT CONDITION Diagnostic Procedure.
Perform the POWERTRAIN VERIFICATION TEST. (Refer to 9 - ENGINE - STANDARD PROCEDURE)

P0300-MULTIPLE CYLINDER MISFIRE (CONTINUED)

2. VISUAL INSPECTION

NOTE: Anything that affects the speed of the crankshaft can cause a misfire DTC.

NOTE: When a Misfire is detected for a particular cylinder, the PCM will shut down that cylinders Injector Control circuit.

- Visually inspect the engine for any of the following conditions.
- Worn serpentine belt
- Binding Engine-Driven accessories: A/C Compressor, P/S Pump, Water pump.
- Misalignment of the Water pump, P/S Pump and A/C Compressor pulleys
- Corroded PCM power and ground circuits.
- Improper CKP, CMP, MAP, and TP Sensor mounting
- Poor connector/terminal to component connection. i.e., CKP sensor, Fuel Injector, Ign coil, etc.
- Vacuum leaks
- Restricted Air Induction system or Exhaust system.
- Internal engine component failures.

Were any of the above conditions present?

Yes >> Repair as necessary.
Perform the POWERTRAIN VERIFICATION TEST. (Refer to 9 - ENGINE - STANDARD PROCEDURE)

No >> Go To 3

---

3. (K342) ASD RELAY OUTPUT CIRCUIT

Turn the ignition off.

Disconnect the Ignition Coil harness connector of the misfiring cylinders.

Disconnect the Fuel Injector harness connector of the misfiring cylinders.

Ignition on, engine not running.

With a scan tool, actuate the ASD Relay.

Using a 12-volt test light connected to ground, probe the (K342) ASD Relay Output circuit in the Ignition Coil harness connector and Fuel Injector harness connector while the relay is actuating.

Does the test light illuminate brightly?

Yes >> Go To 4

No >> Repair the excessive resistance or short to ground in the (K342) ASD Relay Output circuit.
Perform the POWERTRAIN VERIFICATION TEST. (Refer to 9 - ENGINE - STANDARD PROCEDURE)

P0300-MULTIPLE CYLINDER MISFIRE (CONTINUED)

4. IGNITION SYSTEM OPERATION

Turn the ignition off.
Connect the Ignition Coil harness connectors.
Remove the Ignition Coils.
Leave the Fuel Injector harness connector of the cylinder being tested disconnected.
Install a spark tester on the Ignition Coil.
While cranking the engine observe the spark coming from the spark tester.

NOTE: A crisp blue spark that is able to jump the gap of the spark tester should be generated.

Is good spark present?

Yes >> Go To 5

No >> Go To 14

NOTE: Connect the Fuel Injector harness connector before continuing.

---

5. SPARK PLUG

Turn the ignition off.
Remove the Spark Plug.
Inspect the Spark Plug for the following conditions.
- Cracks
- Carbon Tracking
- Foreign Material
- Gap size out of specifications
- Loose or broke electrode

NOTE: Lightly tap the bottom of the spark plug on a solid surface. The electrode in the spark plug should not move.

Does the Spark Plug have any problems?

Yes >> Replace the Spark Plug.
Perform the POWERTRAIN VERIFICATION TEST. (Refer to 9 - ENGINE - STANDARD PROCEDURE)

No >> Go To 6

---

6. FUEL PRESSURE CHECK

WARNING: The fuel system is under a constant pressure (even with the engine off). Before testing or servicing any fuel system hose, fitting or line, the fuel system pressure must be released. Failure to follow these instructions can result in personal injury or death.
Install a fuel pressure gauge to the fuel rail.
Start the engine and observe the fuel pressure reading.

NOTE: Fuel pressure specification is 407 KPa +/- 34 KPa (59 psi +/- 5 psi).

Choose a conclusion that best matches your fuel pressure reading.

Within Specification
Go To 7

Below Specification
Go To 12

Above Specification
Replace the fuel filter/pressure regulator.
Perform the POWERTRAIN VERIFICATION TEST. (Refer to 9 - ENGINE - STANDARD PROCEDURE)

P0300-MULTIPLE CYLINDER MISFIRE (CONTINUED)

7. FUEL PRESSURE LEAK DOWN

NOTE: Before continuing visually and physically inspect the fuel delivery system for external leaks or damage. Repair / replace as necessary.

Turn the ignition off.

WARNING: The fuel system is under a constant pressure (even with the engine off). Before testing or servicing any fuel system hose, fitting or line, the fuel system pressure must be released. Failure to follow these instructions can result in personal injury or death

Install special tool #6539 (5/16″) or #6631 (3/8″) fuel line adapter.

Install the fuel pressure gauge.

Start the engine and allow the fuel system to reach maximum pressure.

Turn the ignition off.

NOTE: Fuel specification is 407 KPa +/- 34 KPa (59 psi +/- 5 psi).

Using special tool #C4390, Hose Clamp Pliers, pinch the rubber fuel line between the fuel pressure gauge and the engine.

Monitor the fuel pressure gauge for a minimum of 5 minutes.

NOTE: The pressure should not fall below 241 KPa (35 psi)

Does the pressure fall below the listed specification?

Yes >> Replace the leaking Fuel Injector(s).
Perform the POWERTRAIN VERIFICATION TEST. (Refer to 9 - ENGINE - STANDARD PROCEDURE)

No >> Go To 8

---

8. FUEL INJECTOR OPERATION

WARNING: The fuel system is under a constant pressure (even with the engine off). Before testing or servicing any fuel system hose, fitting or line, the fuel system pressure must be released. Failure to follow these instructions can result in personal injury or death.

CAUTION: After each Fuel Injector actuation, start the engine to clean the cylinder of fuel. Failure to do so could cause engine damage.

Remove special tool #C4390.

Start the engine and allow the fuel pressure to reach maximum pressure.

Ignition on, engine not running.

Using the scan tool, actuate the Fuel Injector for the cylinder that indicated the misfire.

Monitor the fuel pressure gauge.

Does the fuel pressure gauge indicate a drop in fuel pressure?

Yes >> Go To 9

No >> Go To 10

NOTE: Turn the ignition off, remove the Fuel Pressure gauge, and connect the fuel lines before continuing.

P0300-MULTIPLE CYLINDER MISFIRE (CONTINUED)

9. ENGINE MECHANICAL

Check for any of the following conditions/mechanical problems.
ENGINE VACUUM - must be at least 13 inches in neutral
ENGINE VALVE TIMING - must be within specifications
ENGINE COMPRESSION - must be within specifications
ENGINE EXHAUST SYSTEM - must be free of any restrictions or leaks.
ENGINE PCV SYSTEM - must flow freely
TORQUE CONVERTER STALL SPEED - must be within specifications
POWER BRAKE BOOSTER - no internal vacuum leaks
FUEL - must be free of contamination
CAM LOBES - must not be worn excessively
CYLINDER LEAKAGE TEST - must be within specifications
VALVE SPRINGS - cannot be weak or broken

Are there any engine mechanical problems?

Yes >> Repair as necessary.
Perform the POWERTRAIN VERIFICATION TEST. (Refer to 9 - ENGINE - STANDARD PROCEDURE)

No >> Go To 17

---

10. FUEL INJECTOR

Turn the ignition off.
Disconnect the Fuel Injector harness connector of the misfiring cylinder.
Ignition on, engine not running.

NOTE: When a Misfire is detected for a particular cylinder, the PCM will shut down that cylinders Injector Control circuit.
With the scan tool, erase DTCs.
Using a 12-volt test light connected to 12-volts, probe the Injector Control circuit.
With the scan tool, actuate the Fuel Injector.

Does the test light blink/flicker?

Yes >> Replace the Fuel Injector.
Perform the POWERTRAIN VERIFICATION TEST. (Refer to 9 - ENGINE - STANDARD PROCEDURE)

No >> Go To 11

---

11. INJECTOR CONTROL CIRCUIT

Turn the ignition off.
Disconnect the Fuel Injector harness connector.
Disconnect the PCM harness connectors.

CAUTION: Do not probe the PCM harness connectors. Probing the PCM harness connectors will damage the PCM terminals resulting in poor terminal to pin connection. Install Miller Special Tool #8815 to perform diagnosis.
Check the Injector Control circuit for an open, short to ground, and short to voltage.

Was a problem found with the Injector Control circuit?

Yes >> Repair the excessive resistance or short in the Injector Control circuit.
Perform the POWERTRAIN VERIFICATION TEST. (Refer to 9 - ENGINE - STANDARD PROCEDURE)

No >> Go To 17

P0300-MULTIPLE CYLINDER MISFIRE (CONTINUED)

12. FUEL SUPPLY LINE RESTRICTED

Turn the ignition off.

WARNING: The fuel system is under a constant pressure (even with the engine off). Before testing or servicing any fuel system hose, fitting or line, the fuel system pressure must be released. Failure to follow these instructions can result in personal injury or death.

Raise vehicle on hoist, and disconnect the fuel pressure line at the fuel pump module.

Install special tool #6539 (5/16″) #6631(3/8″) fuel line adapter and the fuel pressure gauge between the fuel supply line and the fuel pump module.

Ignition on, engine not running.

With the scan tool, actuate the ASD Fuel System test and observe the fuel pressure gauge.

NOTE: Fuel pressure specification is 407 KPa +/- 34 KPa (59 psi +/- 5 psi).

Is the fuel pressure within specification?

Yes >> Repair or replace fuel supply line as necessary.
Perform the POWERTRAIN VERIFICATION TEST. (Refer to 9 - ENGINE - STANDARD PROCEDURE)

No >> Go To 13

---

13. FUEL PUMP INLET STRAINER

Turn the ignition off.

WARNING: The fuel system is under a constant pressure (even with the engine off). Before testing or servicing any fuel system hose, fitting or line, the fuel system pressure must be released. Failure to follow these instructions can result in personal injury or death.

Remove the Fuel Pump Module and inspect the Fuel Inlet Strainer.

Is the Fuel Inlet Strainer plugged?

Yes >> Replace the Fuel Pump Inlet Strainer.
Perform the POWERTRAIN VERIFICATION TEST. (Refer to 9 - ENGINE - STANDARD PROCEDURE)

No >> Before continuing, check the Fuel Pump Module harness connector terminals for corrosion, damage, or terminal push out. Make sure the ground circuit is functional. Repair as necessary. Replace the Fuel Pump Module.
Perform the POWERTRAIN VERIFICATION TEST. (Refer to 9 - ENGINE - STANDARD PROCEDURE)

---

14. IGNITION WIRE

NOTE: If the vehicle being tested does not have an ignition wire answer YES to this test and continue.

Turn the ignition off.

Remove the ignition wire.

Measure the resistance of the ignition wire.

Is the resistance below 10K ohms?

Yes >> Go To 15

No >> Replace the Ignition Wire.
Perform the POWERTRAIN VERIFICATION TEST. (Refer to 9 - ENGINE - STANDARD PROCEDURE)

P0300-MULTIPLE CYLINDER MISFIRE (CONTINUED)

15. IGNITION COIL

Disconnect the Ignition Coil harness connector.

Remove the Fuel Pump Relay or ASD Relay.

Using a 12-volt test light connected to 12-volts, probe the Ignition Coil Control circuit.

Crank the engine for 5 seconds while observing the test light.

NOTE: The primary resistance of the 3.7L and 4.7L Ignition coil is 0.6 to 0.9 of an ohm and the resistance of a 5.7L Ignition coil is 0.558 to 0.682 of an ohm at 77°F (25°C).

Does the test light brightly blink/flicker?

Yes >> Replace the Ignition Coil.
Perform the POWERTRAIN VERIFICATION TEST. (Refer to 9 - ENGINE - STANDARD PROCEDURE)

No >> Go To 16

---

16. COIL CONTROL CIRCUIT

Turn the ignition off.

Disconnect the Ignition Coil harness connector.

Disconnect the PCM harness connectors.

CAUTION: Do not probe the PCM harness connectors. Probing the PCM harness connectors will damage the PCM terminals resulting in poor terminal to pin connection. Install Miller Special Tool #8815 to perform diagnosis.

Check the Coil Control circuit for an open, short to ground, and short to voltage.

Was a problem found with the Coil Control circuit?

Yes >> Repair the Coil Control circuit.
Perform the POWERTRAIN VERIFICATION TEST. (Refer to 9 - ENGINE - STANDARD PROCEDURE)

No >> Go To 17

---

17. PCM

NOTE: Before continuing, check the PCM harness connector terminals for corrosion, damage, or terminal push out. Repair as necessary.

Using the schematics as a guide, inspect the wire harness and connectors. Pay particular attention to all Power and Ground circuits.

Were there any problems found?

Yes >> Repair as necessary.
Perform the POWERTRAIN VERIFICATION TEST. (Refer to 9 - ENGINE - STANDARD PROCEDURE)

No >> Replace and program the Powertrain Control Module per Service Information.
Perform the POWERTRAIN VERIFICATION TEST. (Refer to 9 - ENGINE - STANDARD PROCEDURE)

P0301-CYLINDER 1 MISFIRE

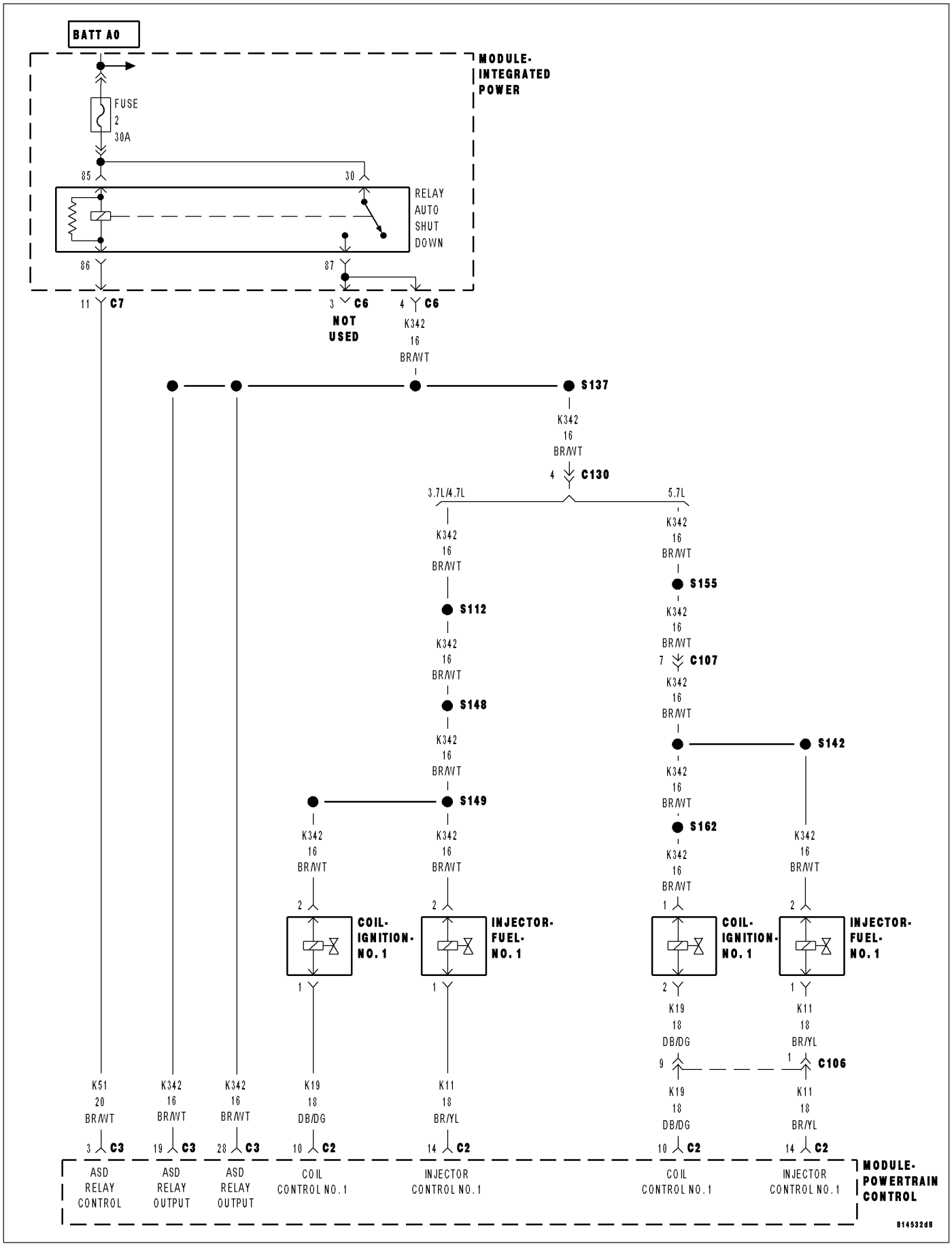

P0301-CYLINDER 1 MISFIRE (CONTINUED)

For the Engine circuit diagram (Refer to 9 - ENGINE - SCHEMATICS AND DIAGRAMS).

For a complete wiring diagram **Refer to Section 8W**.

- **When Monitored:**
  Any time the engine is running, and the adaptive numerator has been successfully updated.
- **Set Condition:**
  When more than 2% (2.5% LEV) misfire rate is measured during two trips, or with 10% to 30% misfire rate during on trip. Three good trips to clear the MIL.

Possible Causes
(K342) ASD RELAY OUTPUT CIRCUIT
(K11) INJECTOR CONTROL NO.1 CIRCUIT
(K19) COIL CONTROL NO.1 CIRCUIT
IGNITION WIRE
SPARK PLUG
IGNITION COIL
FUEL PUMP INLET STRAINER PLUGGED
RESTRICTED FUEL SUPPLY LINE
FUEL PUMP MODULE
FUEL PRESSURE LEAK DOWN
FUEL INJECTOR
ENGINE MECHANICAL
PCM

Always perform the Pre-Diagnostic Troubleshooting procedure before proceeding. (Refer to 9 - ENGINE - DIAGNOSIS AND TESTING).

Diagnostic Test

1. CYLINDER MIS-FIRE CONDITION ACTIVE

Engine running.

Observe the WHICH CYLINDER IS MISFIRING screen for at least one minute on the scan tool.

Is there a misfire present at this time?

Yes >> Go To 2

No >> Refer to the INTERMITTENT CONDITION Diagnostic Procedure.
Perform the POWERTRAIN VERIFICATION TEST. (Refer to 9 - ENGINE - STANDARD PROCEDURE)

P0301-CYLINDER 1 MISFIRE (CONTINUED)

2. VISUAL INSPECTION

NOTE: Anything that affects the speed of the crankshaft can cause a misfire DTC.

NOTE: When a Misfire is detected for a particular cylinder, the PCM will shut down that cylinders Injector Control circuit.

- Visually inspect the engine for any of the following conditions.
- Worn serpentine belt
- Binding Engine-Driven accessories: A/C Compressor, P/S Pump, Water pump.
- Misalignment of the Water pump, P/S Pump and A/C Compressor pulleys
- Corroded PCM power and ground circuits.
- Improper CKP, CMP, MAP, and TP Sensor mounting
- Poor connector/terminal to component connection. i.e., CKP sensor, Fuel Injector, Ign coil, etc.
- Vacuum leaks
- Restricted Air Induction system or Exhaust system.
- Internal engine component failures.

Were any of the above conditions present?

Yes >> Repair as necessary.
Perform the POWERTRAIN VERIFICATION TEST. (Refer to 9 - ENGINE - STANDARD PROCEDURE)

No >> Go To 3

---

3. (K342) ASD RELAY OUTPUT CIRCUIT

Turn the ignition off.

Disconnect the Ignition Coil No.1 harness connector.

Disconnect the Fuel Injector No.1 harness connector.

Ignition on, engine not running.

With the scan tool, actuate the ASD Relay.

Using a 12-volt test light connected to ground, probe the (K342) ASD Relay Output circuit in the Ignition Coil harness connector and Fuel Injector harness connector while the relay is actuating.

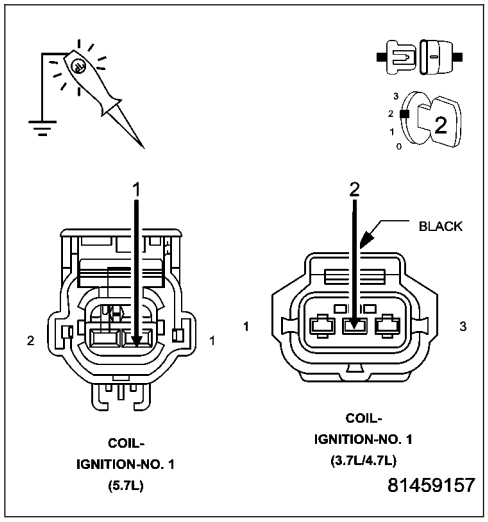

Does the test light illuminate brightly?

Yes >> Go To 4

No >> Repair the excessive resistance or short to ground in the (K342) ASD Relay Output circuit.
Perform the POWERTRAIN VERIFICATION TEST. (Refer to 9 - ENGINE - STANDARD PROCEDURE)

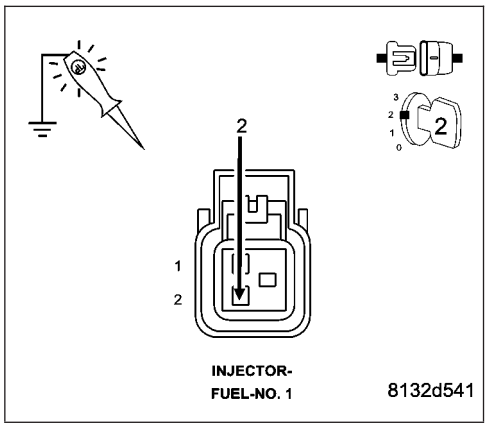

P0301-CYLINDER 1 MISFIRE (CONTINUED)

4. IGNITION SYSTEM OPERATION

Turn the ignition off.
Connect the Ignition Coil No.1 harness connector.
Remove the Ignition Coil.
Leave the Fuel Injector harness connector of the cylinder being tested disconnected.
Install a spark tester on the Ignition Coil.
While cranking the engine observe the spark coming from the spark tester.

NOTE: A crisp blue spark that is able to jump the gap of the spark tester should be generated.

Is good spark present?

Yes >> Go To 5

No >> Go To 14

NOTE: Connect the Fuel Injector harness connector before continuing.

---

5. SPARK PLUG

Turn the ignition off.
Remove the Spark Plug.
Inspect the Spark Plug for the following conditions.
- Cracks
- Carbon Tracking
- Foreign Material
- Gap size out of specifications
- Loose or broke electrode

NOTE: Lightly tap the bottom of the spark plug on a solid surface. The electrode in the spark plug should not move.

Were any of the above conditions present?

Yes >> Replace the Spark Plug.
Perform the POWERTRAIN VERIFICATION TEST. (Refer to 9 - ENGINE - STANDARD PROCEDURE)

No >> Go To 6

---

6. FUEL PRESSURE CHECK

WARNING: The fuel system is under a constant pressure (even with the engine off). Before testing or servicing any fuel system hose, fitting or line, the fuel system pressure must be released. Failure to follow these instructions can result in personal injury or death.
Install a fuel pressure gauge to the fuel rail.
Start the engine and observe the fuel pressure reading.

NOTE: Fuel pressure specification is 407 KPa +/- 34 KPa (59 psi +/- 5 psi).

Choose a conclusion that best matches your fuel pressure reading.

Within Specification
Go To 7

Below Specification
Go To 12

Above Specification
Replace the fuel filter/pressure regulator.
Perform the POWERTRAIN VERIFICATION TEST. (Refer to 9 - ENGINE - STANDARD PROCEDURE)

P0301-CYLINDER 1 MISFIRE (CONTINUED)

7. FUEL PRESSURE LEAK DOWN

NOTE: Before continuing visually and physically inspect the fuel delivery system for external leaks or damage. Repair / replace as necessary.

Turn the ignition off.

WARNING: The fuel system is under a constant pressure (even with the engine off). Before testing or servicing any fuel system hose, fitting or line, the fuel system pressure must be released. Failure to follow these instructions can result in personal injury or death

Install special tool #6539 (5/16″) or #6631 (3/8″) fuel line adapter.

Install the fuel pressure gauge.

Start the engine and allow the fuel system to reach maximum pressure.

Turn the ignition off.

NOTE: Fuel specification is 407 KPa +/- 34 KPa (59 psi +/- 5 psi).

Using special tool #C4390, Hose Clamp Pliers, pinch the rubber fuel line between the fuel pressure gauge and the engine.

Monitor the fuel pressure gauge for a minimum of 5 minutes.

NOTE: The pressure should not fall below 241 KPa (35 psi).

Does the pressure fall below the listed specification?

Yes >> Replace the leaking Fuel Injector(s).
Perform the POWERTRAIN VERIFICATION TEST. (Refer to 9 - ENGINE - STANDARD PROCEDURE)

No >> Go To 8

---

8. FUEL INJECTOR OPERATION

WARNING: The fuel system is under a constant pressure (even with the engine off). Before testing or servicing any fuel system hose, fitting or line, the fuel system pressure must be released. Failure to follow these instructions can result in personal injury or death.

CAUTION: After each Fuel Injector actuation, start the engine to clean the cylinder of fuel. Failure to do so could cause engine damage.

Remove special tool #C4390.

Start the engine and allow the fuel pressure to reach maximum pressure.

Ignition on, engine not running.

Using the scan tool, actuate the No.1 Fuel Injector.

Monitor the fuel pressure gauge.

Does the fuel pressure gauge indicate a drop in fuel pressure?

Yes >> Go To 9

No >> Go To 10

NOTE: Turn the ignition off, remove the Fuel Pressure gauge, and connect the fuel lines before continuing.

P0301-CYLINDER 1 MISFIRE (CONTINUED)

9. ENGINE MECHANICAL

Check for any of the following conditions/mechanical problems.
ENGINE VACUUM - must be at least 13 inches in neutral
ENGINE VALVE TIMING - must be within specifications
ENGINE COMPRESSION - must be within specifications
ENGINE EXHAUST SYSTEM - must be free of any restrictions or leaks.
ENGINE PCV SYSTEM - must flow freely
TORQUE CONVERTER STALL SPEED - must be within specifications
POWER BRAKE BOOSTER - no internal vacuum leaks
FUEL - must be free of contamination
CAM LOBES - must not be worn excessively
CYLINDER LEAKAGE TEST - must be within specifications
VALVE SPRINGS - cannot be weak or broken

Are there any engine mechanical problems?

Yes >> Repair as necessary.
Perform the POWERTRAIN VERIFICATION TEST. (Refer to 9 - ENGINE - STANDARD PROCEDURE)

No >> Go To 17

---

10. FUEL INJECTOR

Turn the ignition off.
Disconnect the No.1 Fuel Injector harness connector.
Ignition on, engine not running.

NOTE: When a Misfire is detected for a particular cylinder, the PCM will shut down that cylinders Injector Control circuit.
With the scan tool, erase DTCs.
Using a 12-volt test light connected to 12-volts, probe the (K11) Injector Control No.1 circuit.
With the scan tool, actuate the Fuel Injector.

Does the test light blink/flicker?

Yes >> Replace the Fuel Injector.
Perform the POWERTRAIN VERIFICATION TEST. (Refer to 9 - ENGINE - STANDARD PROCEDURE)

No >> Go To 11

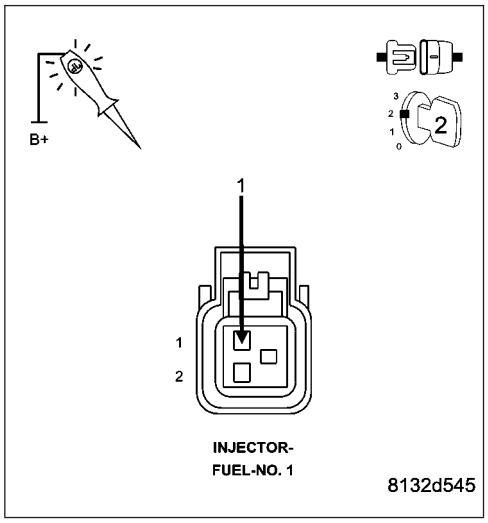

P0301-CYLINDER 1 MISFIRE (CONTINUED)

11. (K11) INJECTOR CONTROL NO.1 CIRCUIT

Turn the ignition off.

Disconnect the C2 PCM harness connector.

CAUTION: Do not probe the PCM harness connectors. Probing the PCM harness connectors will damage the PCM terminals resulting in poor terminal to pin connection. Install Miller Special Tool #8815 to perform diagnosis.

Check the (K11) Injector Control No.1 circuit for an open, short to ground, and short to voltage.

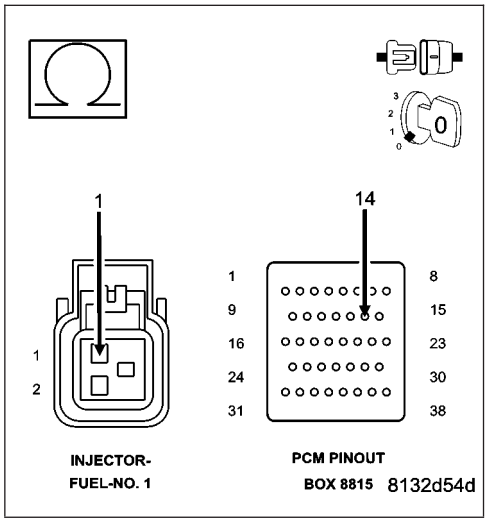

Was a problem found with the (K11) Injector Control No.1 circuit?

Yes >> Repair the excessive resistance or short in the (K11) Injector Control No.1 circuit.

Perform the POWERTRAIN VERIFICATION TEST. (Refer to 9 - ENGINE - STANDARD PROCEDURE)

No >> Go To 17

---

12. FUEL SUPPLY LINE RESTRICTED

Turn the ignition off.

WARNING: The fuel system is under a constant pressure (even with the engine off). Before testing or servicing any fuel system hose, fitting or line, the fuel system pressure must be released. Failure to follow these instructions can result in personal injury or death.

Raise vehicle on hoist, and disconnect the fuel pressure line at the fuel pump module.

Install special tool #6539 (5/16″) #6631(3/8″) fuel line adapter and the fuel pressure gauge between the fuel supply line and the fuel pump module.

Ignition on, engine not running.

With the scan tool, actuate the ASD Fuel System test and observe the fuel pressure gauge.

NOTE: Fuel pressure specification is 407 KPa +/- 34 KPa (59 psi +/- 5 psi).

Is the fuel pressure within specification?

Yes >> Repair or replace fuel supply line as necessary.

Perform the POWERTRAIN VERIFICATION TEST. (Refer to 9 - ENGINE - STANDARD PROCEDURE)

No >> Go To 13

P0301-CYLINDER 1 MISFIRE (CONTINUED)

13. FUEL PUMP INLET STRAINER

Turn the ignition off.

WARNING: The fuel system is under a constant pressure (even with the engine off). Before testing or servicing any fuel system hose, fitting or line, the fuel system pressure must be released. Failure to follow these instructions can result in personal injury or death.

Remove the Fuel Pump Module and inspect the Fuel Inlet Strainer.

Is the Fuel Inlet Strainer plugged?

Yes >> Replace the Fuel Pump Inlet Strainer.
Perform the POWERTRAIN VERIFICATION TEST. (Refer to 9 - ENGINE - STANDARD PROCEDURE)

No >> Before continuing, check the Fuel Pump Module harness connector terminals for corrosion, damage, or terminal push out. Make sure the ground circuit is functional. Repair as necessary. Replace the Fuel Pump Module.
Perform the POWERTRAIN VERIFICATION TEST. (Refer to 9 - ENGINE - STANDARD PROCEDURE)

---

14. IGNITION WIRE

NOTE: If the vehicle being tested does not have an ignition wire answer YES to this test and continue.

Turn the ignition off.

Remove the ignition wire.

Measure the resistance of the ignition wire.

Is the resistance below 10K ohms?

Yes >> Go To 15

No >> Replace the Ignition Wire.
Perform the POWERTRAIN VERIFICATION TEST. (Refer to 9 - ENGINE - STANDARD PROCEDURE)

---

15. IGNITION COIL

Disconnect the Ignition Coil harness connector.

Remove the Fuel Pump Relay.

Using a 12-volt test light connected to 12-volts, probe the (K19) Coil Control No.1 circuit.

Crank the engine for 5 seconds while observing the test light.

NOTE: The primary resistance of the 3.7L and 4.7L Ignition coil is 0.6 to 0.9 of an ohm at 77°F (25°C).

Does the test light brightly blink/flicker?

Yes >> Replace the Ignition Coil.
Perform the POWERTRAIN VERIFICATION TEST. (Refer to 9 - ENGINE - STANDARD PROCEDURE)

No >> Go To 16

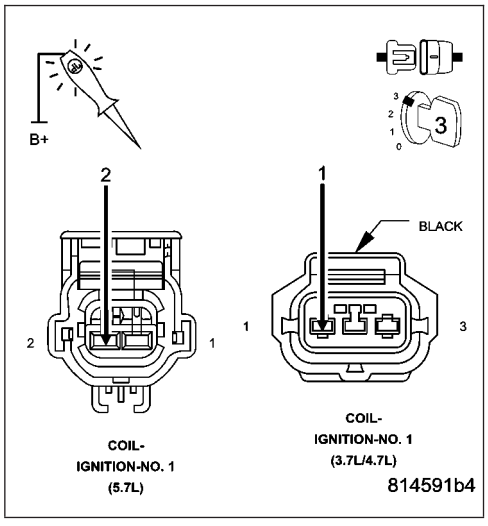

P0301-CYLINDER 1 MISFIRE (CONTINUED)

16. (K19) COIL CONTROL NO.1 CIRCUIT

Turn the ignition off.

Disconnect the C2 PCM harness connector.

CAUTION: Do not probe the PCM harness connectors. Probing the PCM harness connectors will damage the PCM terminals resulting in poor terminal to pin connection. Install Miller Special Tool #8815 to perform diagnosis.

Check the (K19) Coil Control No.1 circuit for an open, short to ground, and short to voltage.

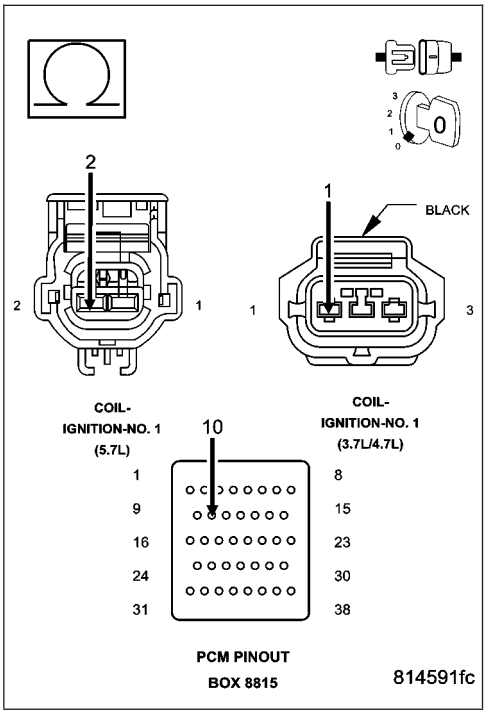

Was a problem found with the (K19) Coil Control No.1 circuit?

Yes >> Repair the (K19) Coil Control No.1 circuit.
Perform the POWERTRAIN VERIFICATION TEST. (Refer to 9 - ENGINE - STANDARD PROCEDURE)

No >> Go To 17

17. PCM

NOTE: Before continuing, check the PCM harness connector terminals for corrosion, damage, or terminal push out. Repair as necessary.

Using the schematics as a guide, inspect the wire harness and connectors. Pay particular attention to all Power and Ground circuits.

Were there any problems found?

Yes >> Repair as necessary.
Perform the POWERTRAIN VERIFICATION TEST. (Refer to 9 - ENGINE - STANDARD PROCEDURE)

No >> Replace and program the Powertrain Control Module per Service Information.
Perform the POWERTRAIN VERIFICATION TEST. (Refer to 9 - ENGINE - STANDARD PROCEDURE)

P0302-CYLINDER 2 MISFIRE

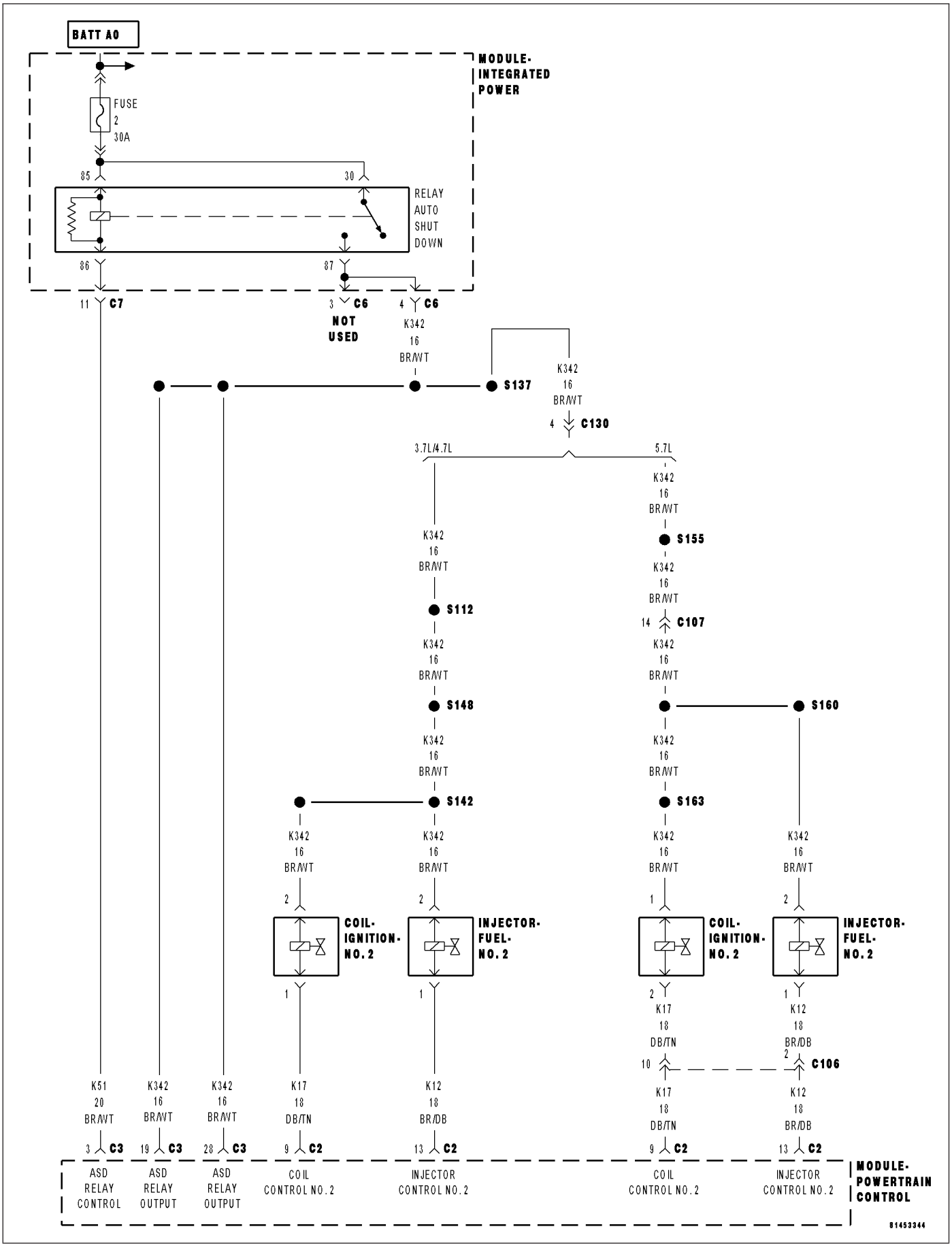

P0302-CYLINDER 2 MISFIRE (CONTINUED)

For the Engine circuit diagram (Refer to 9 - ENGINE - SCHEMATICS AND DIAGRAMS).

For a complete wiring diagram **Refer to Section 8W**.

- **When Monitored:**
  Any time the engine is running, and the adaptive numerator has been successfully updated.
- **Set Condition:**
  When more than 2% (2.5% LEV) misfire rate is measured during two trips, or with 10 % to 30 % misfire rate during one trip. Three good trips to clear the MIL.

Possible Causes
(K342) ASD RELAY OUTPUT CIRCUIT
(K12) INJECTOR CONTROL NO.2 CIRCUIT
(K17) COIL CONTROL NO.2 CIRCUIT
IGNITION WIRE
SPARK PLUG
IGNITION COIL
FUEL PUMP INLET STRAINER PLUGGED
RESTRICTED FUEL SUPPLY LINE
FUEL PUMP MODULE
FUEL PRESSURE LEAK DOWN
FUEL INJECTOR
ENGINE MECHANICAL
PCM

Always perform the Pre-Diagnostic Troubleshooting procedure before proceeding. (Refer to 9 - ENGINE - DIAGNOSIS AND TESTING).

Diagnostic Test

1. CYLINDER MIS-FIRE CONDITION ACTIVE

Engine running.

Observe the WHICH CYLINDER IS MISFIRING screen for at least one minute with the scan tool.

Is there a misfire present at this time?

Yes >> Go To 2

No >> Refer to the INTERMITTENT CONDITION Diagnostic Procedure.
Perform the POWERTRAIN VERIFICATION TEST. (Refer to 9 - ENGINE - STANDARD PROCEDURE)

P0302-CYLINDER 2 MISFIRE (CONTINUED)

2. VISUAL INSPECTION

NOTE: Anything that affects the speed of the crankshaft can cause a misfire DTC.

NOTE: When a Misfire is detected for a particular cylinder, the PCM will shut down that cylinders Injector Control circuit.

- Visually inspect the engine for any of the following conditions.
- Worn serpentine belt
- Binding Engine-Driven accessories: A/C Compressor, P/S Pump, Water pump.
- Misalignment of the Water pump, P/S Pump and A/C Compressor pulleys
- Corroded PCM power and ground circuits.
- Improper CKP, CMP, MAP, and TP Sensor mounting
- Poor connector/terminal to component connection. i.e., CKP sensor, Fuel Injector, Ign coil, etc.
- Vacuum leaks
- Restricted Air Induction system or Exhaust system.
- Internal engine component failures.

Were any of the above conditions present?

Yes >> Repair as necessary.
Perform the POWERTRAIN VERIFICATION TEST. (Refer to 9 - ENGINE - STANDARD PROCEDURE)

No >> Go To 3

P0302-CYLINDER 2 MISFIRE (CONTINUED)

3. (K342) ASD RELAY OUTPUT CIRCUIT

Turn the ignition off.
Disconnect the Ignition Coil No.2 harness connector.
Disconnect the Fuel Injector No.2 harness connector.
Ignition on, engine not running.
With the scan tool, actuate the ASD Relay.
Using a 12-volt test light connected to ground, probe the (K342) ASD Relay Output circuit in the Ignition Coil harness connector and Fuel Injector harness connector while the relay is actuating.

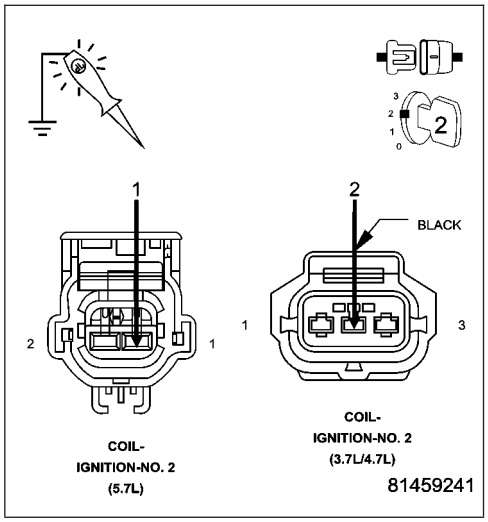

Does the test light illuminate brightly?

Yes >> Go To 4

No >> Repair the excessive resistance or short to ground in the (K342) ASD Relay Output circuit.
Perform the POWERTRAIN VERIFICATION TEST. (Refer to 9 - ENGINE - STANDARD PROCEDURE)

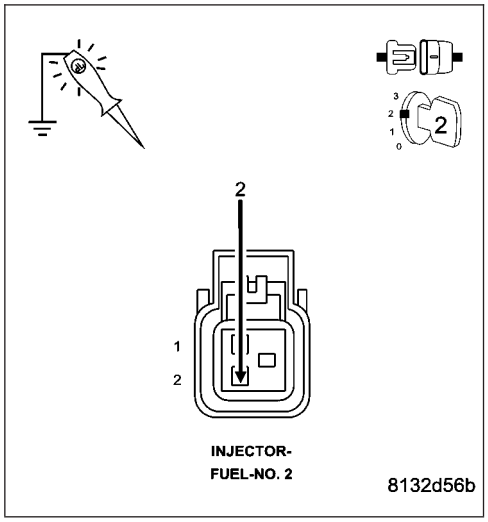

4. IGNITION SYSTEM OPERATION

Turn the ignition off.
Connect the Ignition Coil No.2 harness connector.
Remove the Ignition Coil.
Leave the Fuel Injector harness connector of the cylinder being tested disconnected.
Install a spark tester on the Ignition Coil.
While cranking the engine observe the spark coming from the spark tester.

NOTE: A crisp blue spark that is able to jump the gap of the spark tester should be generated.

Is good spark present?

Yes >> Go To 5

No >> Go To 14

NOTE: Connect the Fuel Injector harness connector before continuing.

P0302-CYLINDER 2 MISFIRE (CONTINUED)

5. SPARK PLUG

Turn the ignition off.

Remove the Spark Plug.

Inspect the Spark Plug for the following conditions.

- Cracks
- Carbon Tracking
- Foreign Material
- Gap size out of specifications
- Loose or broke electrode

NOTE: Lightly tap the bottom of the spark plug on a solid surface. The electrode in the spark plug should not move.

Were any of the above conditions present?

Yes >> Replace the Spark Plug.
Perform the POWERTRAIN VERIFICATION TEST. (Refer to 9 - ENGINE - STANDARD PROCEDURE)

No >> Go To 6

---

6. FUEL PRESSURE CHECK

WARNING: The fuel system is under a constant pressure (even with the engine off). Before testing or servicing any fuel system hose, fitting or line, the fuel system pressure must be released. Failure to follow these instructions can result in personal injury or death.

Install a fuel pressure gauge to the fuel rail.

Start the engine and observe the fuel pressure reading.

NOTE: Fuel pressure specification is 407 KPa +/- 34 KPa (59 psi +/- 5 psi).

Choose a conclusion that best matches your fuel pressure reading.

Within Specification
Go To 7

Below Specification
Go To 12

Above Specification
Replace the fuel filter/pressure regulator.
Perform the POWERTRAIN VERIFICATION TEST. (Refer to 9 - ENGINE - STANDARD PROCEDURE)

P0302-CYLINDER 2 MISFIRE (CONTINUED)

7. FUEL PRESSURE LEAK DOWN

NOTE: Before continuing visually and physically inspect the fuel delivery system for external leaks or damage. Repair / replace as necessary.

Turn the ignition off.

WARNING: The fuel system is under a constant pressure (even with the engine off). Before testing or servicing any fuel system hose, fitting or line, the fuel system pressure must be released. Failure to follow these instructions can result in personal injury or death.

Install special tool #6539 (5/16″) or #6631 (3/8″) fuel line adapter.

Install the fuel pressure gauge.

Start the engine and allow the fuel system to reach maximum pressure.

Turn the ignition off.

NOTE: Fuel specification is 407 KPa +/- 34 KPa (59 psi +/- 5 psi).

Using special tool #C4390, Hose Clamp Pliers, pinch the rubber fuel line between the fuel pressure gauge and the engine.

Monitor the fuel pressure gauge for a minimum of 5 minutes.

NOTE: The pressure should not fall below 241 KPa (35 psi)

Does the pressure fall below the listed specification?

Yes >> Replace the leaking Fuel Injector(s).
Perform the POWERTRAIN VERIFICATION TEST. (Refer to 9 - ENGINE - STANDARD PROCEDURE)

No >> Go To 8

---

8. FUEL INJECTOR OPERATION

WARNING: The fuel system is under a constant pressure (even with the engine off). Before testing or servicing any fuel system hose, fitting or line, the fuel system pressure must be released. Failure to follow these instructions can result in personal injury or death.

CAUTION: After each Fuel Injector actuation, start the engine to clean the cylinder of fuel. Failure to do so could cause engine damage.

Remove special tool #C4390.

Start the engine and allow the fuel pressure to reach maximum pressure.

Ignition on, engine not running.

Using scan tool, actuate the No.2 Fuel Injector.

Monitor the fuel pressure gauge.

Does the fuel pressure gauge indicate a drop in fuel pressure?

Yes >> Go To 9

No >> Go To 10

NOTE: Turn the ignition off, remove the Fuel Pressure gauge, and connect the fuel lines before continuing.

P0302-CYLINDER 2 MISFIRE (CONTINUED)

9. ENGINE MECHANICAL

Check for any of the following conditions/mechanical problems.
ENGINE VACUUM - must be at least 13 inches in neutral
ENGINE VALVE TIMING - must be within specifications
ENGINE COMPRESSION - must be within specifications
ENGINE EXHAUST SYSTEM - must be free of any restrictions or leaks.
ENGINE PCV SYSTEM - must flow freely
TORQUE CONVERTER STALL SPEED - must be within specifications
POWER BRAKE BOOSTER - no internal vacuum leaks
FUEL - must be free of contamination
CAM LOBES - must not be worn excessively
CYLINDER LEAKAGE TEST - must be within specifications
VALVE SPRINGS - cannot be weak or broken

Are there any engine mechanical problems?

Yes >> Repair as necessary.
Perform the POWERTRAIN VERIFICATION TEST. (Refer to 9 - ENGINE - STANDARD PROCEDURE)

No >> Go To 17

---

10. FUEL INJECTOR

Turn the ignition off.
Disconnect the No.2 Fuel Injector harness connector.
Ignition on, engine not running.

NOTE: When a Misfire is detected for a particular cylinder, the PCM will shut down that cylinders Injector Control circuit.
With the scan tool, erase DTCs.
Using a 12-volt test light connected to 12-volts, probe the (K12) Injector Control No.2 circuit.
With the scan tool, actuate the Fuel Injector.

Does the test light blink/flicker?

Yes >> Replace the Fuel Injector.
Perform the POWERTRAIN VERIFICATION TEST. (Refer to 9 - ENGINE - STANDARD PROCEDURE)

No >> Go To 11

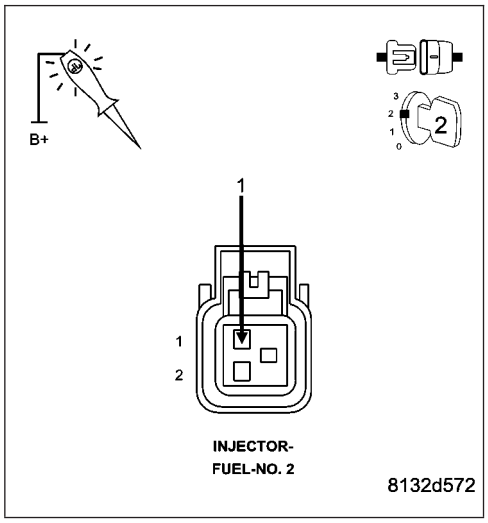

P0302-CYLINDER 2 MISFIRE (CONTINUED)

11. (K12) INJECTOR CONTROL NO.2 CIRCUIT

Turn the ignition off.

Disconnect the C2 PCM harness connector.

CAUTION: Do not probe the PCM harness connectors. Probing the PCM harness connectors will damage the PCM terminals resulting in poor terminal to pin connection. Install Miller Special Tool #8815 to perform diagnosis.

Check the (K12) Injector Control No.2 circuit for an open, short to ground, and short to voltage.

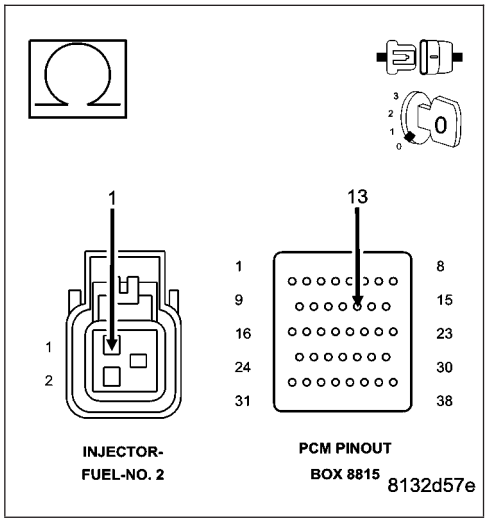

Was a problem found with the (K12) Injector Control No.2 circuit?

Yes >> Repair the excessive resistance or short in the (K12) Injector Control No.2 circuit.

Perform the POWERTRAIN VERIFICATION TEST. (Refer to 9 - ENGINE - STANDARD PROCEDURE)

No >> Go To 17

---

12. FUEL SUPPLY LINE RESTRICTED

Turn the ignition off.

WARNING: The fuel system is under a constant pressure (even with the engine off). Before testing or servicing any fuel system hose, fitting or line, the fuel system pressure must be released. Failure to follow these instructions can result in personal injury or death.

Raise vehicle on hoist, and disconnect the fuel pressure line at the fuel pump module.

Install special tool #6539 (5/16″) #6631(3/8″) fuel line adapter and the fuel pressure gauge between the fuel supply line and the fuel pump module.

Ignition on, engine not running.

With the scan tool, actuate the ASD Fuel System test and observe the fuel pressure gauge.

NOTE: Fuel pressure specification is 407 KPa +/- 34 KPa (59 psi +/- 5 psi).

Is the fuel pressure within specification?

Yes >> Repair or replace fuel supply line as necessary.

Perform the POWERTRAIN VERIFICATION TEST. (Refer to 9 - ENGINE - STANDARD PROCEDURE)

No >> Go To 13

P0302-CYLINDER 2 MISFIRE (CONTINUED)

13. FUEL PUMP INLET STRAINER

Turn the ignition off.

WARNING: The fuel system is under a constant pressure (even with the engine off). Before testing or servicing any fuel system hose, fitting or line, the fuel system pressure must be released. Failure to follow these instructions can result in personal injury or death.

Remove the Fuel Pump Module and inspect the Fuel Inlet Strainer.

Is the Fuel Inlet Strainer plugged?

Yes >> Replace the Fuel Pump Inlet Strainer.
Perform the POWERTRAIN VERIFICATION TEST. (Refer to 9 - ENGINE - STANDARD PROCEDURE)

No >> Before continuing, check the Fuel Pump Module harness connector terminals for corrosion, damage, or terminal push out. Make sure the ground circuit is functional. Repair as necessary. Replace the Fuel Pump Module.
Perform the POWERTRAIN VERIFICATION TEST. (Refer to 9 - ENGINE - STANDARD PROCEDURE)

---

14. IGNITION WIRE

NOTE: If the vehicle being tested does not have an ignition wire answer YES to this test and continue.

Turn the ignition off.

Remove the ignition wire.

Measure the resistance of the ignition wire.

Is the resistance below 10K ohms?

Yes >> Go To 15

No >> Replace the Ignition Wire.
Perform the POWERTRAIN VERIFICATION TEST. (Refer to 9 - ENGINE - STANDARD PROCEDURE)

---

15. IGNITION COIL

Disconnect the Ignition Coil harness connector.

Remove the Fuel Pump Relay.

Using a 12-volt test light connected to 12-volts, probe the (K17) Coil Control No.2 circuit.

Crank the engine for 5 secondc while observing the test light.

NOTE: The primary resistance of the 3.7L and 4.7L Ignition coil is 0.6 to 0.9 of an ohm at 77°F (25°C).

Does the test light brightly blink/flicker?

Yes >> Replace the Ignition Coil.
Perform the POWERTRAIN VERIFICATION TEST. (Refer to 9 - ENGINE - STANDARD PROCEDURE)

No >> Go To 16

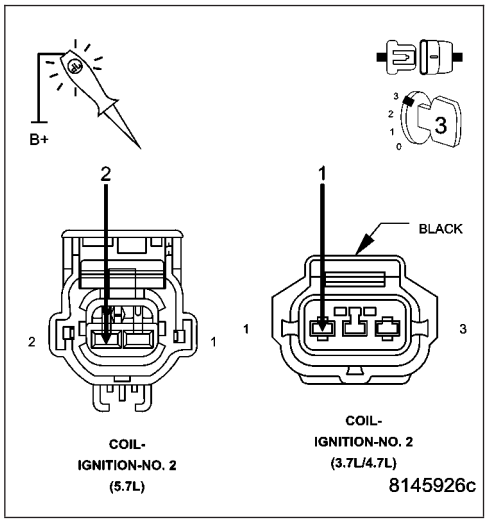

P0302-CYLINDER 2 MISFIRE (CONTINUED)

16. (K17) COIL CONTROL NO.2 CIRCUIT

Turn the ignition off.

Disconnect the C2 PCM harness connector.

CAUTION: Do not probe the PCM harness connectors. Probing the PCM harness connectors will damage the PCM terminals resulting in poor terminal to pin connection. Install Miller Special Tool #8815 to perform diagnosis.

Check the (K17) Coil Control No.2 circuit for an open, short to ground, and short to voltage.

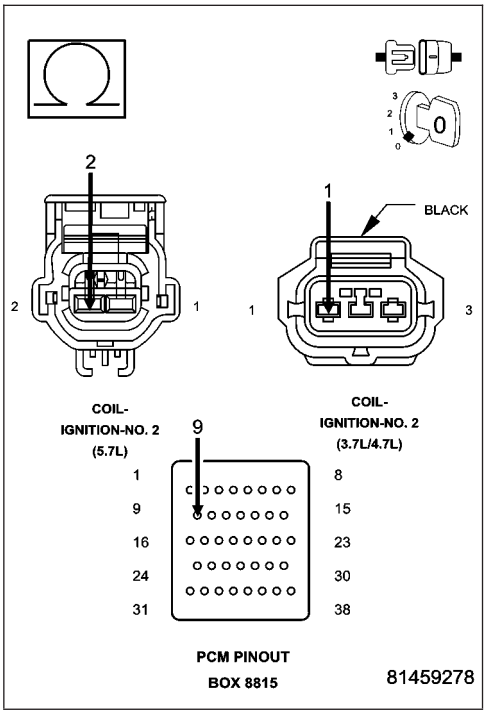

Was a problem found with the (K17) Coil Control No.2 circuit?

Yes >> Repair the (K17) Coil Control No.2 circuit.
Perform the POWERTRAIN VERIFICATION TEST. (Refer to 9 - ENGINE - STANDARD PROCEDURE)

No >> Go To 17

17. PCM

NOTE: Before continuing, check the PCM harness connector terminals for corrosion, damage, or terminal push out. Repair as necessary.

Using the schematics as a guide, inspect the wire harness and connectors. Pay particular attention to all Power and Ground circuits.

Were there any problems found?

Yes >> Repair as necessary.
Perform the POWERTRAIN VERIFICATION TEST. (Refer to 9 - ENGINE - STANDARD PROCEDURE)

No >> Replace and program the Powertrain Control Module per Service Information.
Perform the POWERTRAIN VERIFICATION TEST. (Refer to 9 - ENGINE - STANDARD PROCEDURE)

P0303-CYLINDER 3 MISFIRE

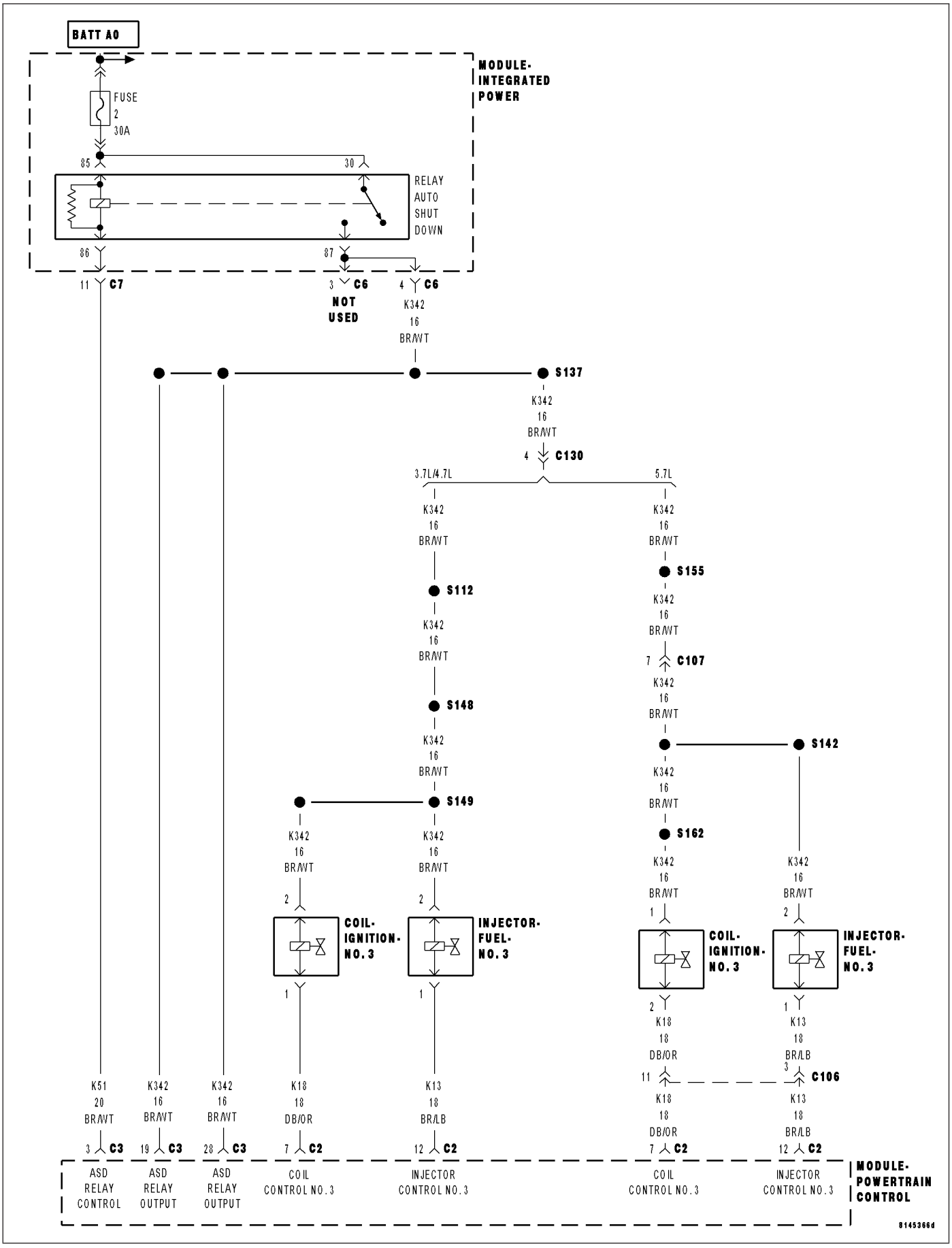

P0303-CYLINDER 3 MISFIRE (CONTINUED)

For the Engine circuit diagram (Refer to 9 - ENGINE - SCHEMATICS AND DIAGRAMS).

For a complete wiring diagram **Refer to Section 8W**.

- **When Monitored:**
  Any time the engine is running, and the adaptive numerator has been successfully updated.
- **Set Condition:**
  When more than 2% (2.5% LEV) misfire rate is measured during two trips, or with 10% to 30% misfire rate during on trip. Three good trips to clear the MIL.

Possible Causes
(K342) ASD RELAY OUTPUT CIRCUIT
(K13) INJECTOR CONTROL NO.3 CIRCUIT
(K18) COIL CONTROL NO.3 CIRCUIT
IGNITION WIRE
SPARK PLUG
IGNITION COIL
FUEL PUMP INLET STRAINER PLUGGED
RESTRICTED FUEL SUPPLY LINE
FUEL PUMP MODULE
FUEL PRESSURE LEAK DOWN
FUEL INJECTOR
ENGINE MECHANICAL
PCM

Always perform the Pre-Diagnostic Troubleshooting procedure before proceeding. (Refer to 9 - ENGINE - DIAGNOSIS AND TESTING).

Diagnostic Test

1. CYLINDER MIS-FIRE CONDITION ACTIVE

Engine running.

Observe the WHICH CYLINDER IS MISFIRING screen for at least one minute with the scan tool.

Is there a misfire present at this time?

Yes >> Go To 2

No >> Refer to the INTERMITTENT CONDITION Diagnostic Procedure.
Perform the POWERTRAIN VERIFICATION TEST. (Refer to 9 - ENGINE - STANDARD PROCEDURE)

P0303-CYLINDER 3 MISFIRE (CONTINUED)

2. VISUAL INSPECTION

NOTE: Anything that affects the speed of the crankshaft can cause a misfire DTC.

NOTE: When a Misfire is detected for a particular cylinder, the PCM will shut down that cylinders Injector Control circuit.

- Visually inspect the engine for any of the following conditions.
- Worn serpentine belt
- Binding Engine-Driven accessories: A/C Compressor, P/S Pump, Water pump.
- Misalignment of the Water pump, P/S Pump and A/C Compressor pulleys
- Corroded PCM power and ground circuits.
- Improper CKP, CMP, MAP, and TP Sensor mounting
- Poor connector/terminal to component connection. i.e., CKP sensor, Fuel Injector, Ign coil, etc.
- Vacuum leaks
- Restricted Air Induction system or Exhaust system.
- Internal engine component failures.

Were any of the above conditions present?

Yes >> Repair as necessary.
Perform the POWERTRAIN VERIFICATION TEST. (Refer to 9 - ENGINE - STANDARD PROCEDURE)

No >> Go To 3

P0303-CYLINDER 3 MISFIRE (CONTINUED)

3. (K342) ASD RELAY OUTPUT CIRCUIT

Turn the ignition off.
Disconnect the No.3 Ignition Coil harness connector.
Disconnect the No.3 Fuel Injector harness connector.
Ignition on, engine not running.
With a scan tool, actuate the ASD Relay.
Using a 12-volt test light connected to ground, probe the (K342) ASD Relay Output circuit in the Ignition Coil harness connector and Fuel Injector harness connector while the relay is actuating.

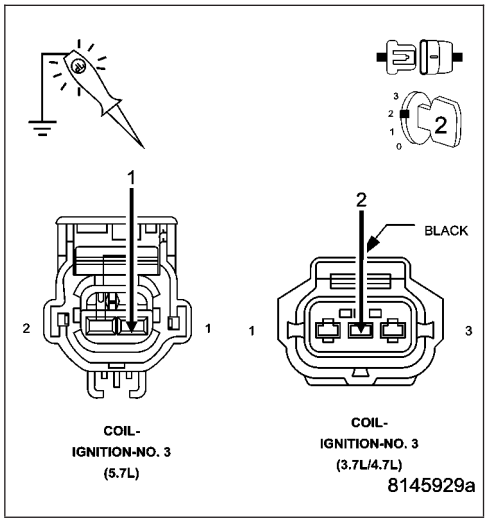

Does the test light illuminate brightly?

Yes >> Go To 4

No >> Repair the excessive resistance or short to ground in the (K342) ASD Relay Output circuit.
Perform the POWERTRAIN VERIFICATION TEST. (Refer to 9 - ENGINE - STANDARD PROCEDURE)

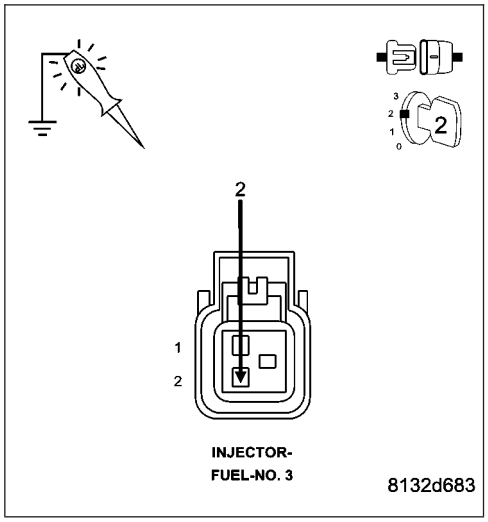

4. IGNITION SYSTEM OPERATION

Turn the ignition off.
Connect the Ignition Coil No.3 harness connector.
Remove the Ignition Coil.
Leave the Fuel Injector harness connector of the cylinder being tested disconnected.
Install a spark tester on the Ignition Coil.
While cranking the engine observe the spark coming from the spark tester.

NOTE: A crisp blue spark that is able to jump the gap of the spark tester should be generated.

Is good spark present?

Yes >> Go To 5

No >> Go To 14

NOTE: Connect the Fuel Injector harness connector before continuing.

P0303-CYLINDER 3 MISFIRE (CONTINUED)

5. SPARK PLUG

Turn the ignition off.

Remove the Spark Plug.

Inspect the Spark Plug for the following conditions.

- Cracks
- Carbon Tracking
- Foreign Material
- Gap size out of specifications
- Loose or broke electrode

NOTE: Lightly tap the bottom of the spark plug on a solid surface. The electrode in the spark plug should not move.

Were any of the above conditions present?

Yes >> Replace the Spark Plug.
Perform the POWERTRAIN VERIFICATION TEST. (Refer to 9 - ENGINE - STANDARD PROCEDURE)

No >> Go To 6

---

6. FUEL PRESSURE CHECK

WARNING: The fuel system is under a constant pressure (even with the engine off). Before testing or servicing any fuel system hose, fitting or line, the fuel system pressure must be released. Failure to follow these instructions can result in personal injury or death.

Install a fuel pressure gauge to the fuel rail.

Start the engine and observe the fuel pressure reading.

NOTE: Fuel pressure specification is 407 KPa +/- 34 KPa (59 psi +/- 5 psi).

Choose a conclusion that best matches your fuel pressure reading.

Within Specification
Go To 7

Below Specification
Go To 12

Above Specification
Replace the fuel filter/pressure regulator.
Perform the POWERTRAIN VERIFICATION TEST. (Refer to 9 - ENGINE - STANDARD PROCEDURE)

P0303-CYLINDER 3 MISFIRE (CONTINUED)

7. FUEL PRESSURE LEAK DOWN

NOTE: Before continuing visually and physically inspect the fuel delivery system for external leaks or damage. Repair / replace as necessary.

Turn the ignition off.

WARNING: The fuel system is under a constant pressure (even with the engine off). Before testing or servicing any fuel system hose, fitting or line, the fuel system pressure must be released. Failure to follow these instructions can result in personal injury or death

Install special tool #6539 (5/16″) or #6631 (3/8″) fuel line adapter.

Install the fuel pressure gauge.

Start the engine and allow the fuel system to reach maximum pressure.

Turn the ignition off.

NOTE: Fuel specification is 407 KPa +/- 34 KPa (59 psi +/- 5 psi).

Using special tool #C4390, Hose Clamp Pliers, pinch the rubber fuel line between the fuel pressure gauge and the engine.

Monitor the fuel pressure gauge for a minimum of 5 minutes.

NOTE: The pressure should not fall below 241 KPa (35 psi).

Does the pressure fall below the listed specification?

Yes >> Replace the leaking Fuel Injector(s).
Perform the POWERTRAIN VERIFICATION TEST. (Refer to 9 - ENGINE - STANDARD PROCEDURE)

No >> Go To 8

---

8. FUEL INJECTOR OPERATION

WARNING: The fuel system is under a constant pressure (even with the engine off). Before testing or servicing any fuel system hose, fitting or line, the fuel system pressure must be released. Failure to follow these instructions can result in personal injury or death.

CAUTION: After each Fuel Injector actuation, start the engine to clean the cylinder of fuel. Failure to do so could cause engine damage.

Remove special tool #C4390.

Start the engine and allow the fuel pressure to reach maximum pressure.

Ignition on, engine not running.

Using a scan tool, actuate the No.3 Fuel Injector.

Monitor the fuel pressure gauge.

Does the fuel pressure gauge indicate a drop in fuel pressure?

Yes >> Go To 9

No >> Go To 10

NOTE: Turn the ignition off, remove the Fuel Pressure gauge, and connect the fuel lines before continuing.

P0303-CYLINDER 3 MISFIRE (CONTINUED)

9. ENGINE MECHANICAL

Check for any of the following conditions/mechanical problems.
ENGINE VACUUM - must be at least 13 inches in neutral
ENGINE VALVE TIMING - must be within specifications
ENGINE COMPRESSION - must be within specifications
ENGINE EXHAUST SYSTEM - must be free of any restrictions or leaks.
ENGINE PCV SYSTEM - must flow freely
TORQUE CONVERTER STALL SPEED - must be within specifications
POWER BRAKE BOOSTER - no internal vacuum leaks
FUEL - must be free of contamination
CAM LOBES - must not be worn excessively
CYLINDER LEAKAGE TEST - must be within specifications
VALVE SPRINGS - cannot be weak or broken

Are there any engine mechanical problems?

Yes >> Repair as necessary.
Perform the POWERTRAIN VERIFICATION TEST. (Refer to 9 - ENGINE - STANDARD PROCEDURE)

No >> Go To 17

---

10. FUEL INJECTOR

Turn the ignition off.
Disconnect the No.3 Fuel Injector harness connector.
Ignition on, engine not running.

NOTE: When a Misfire is detected for a particular cylinder, the PCM will shut down that cylinders Injector Control circuit.
With the scan tool, erase DTCs.
Using a 12-volt test light connected to 12-volts, probe the (K13) Injector Control No.3 circuit.
With the scan tool, actuate the Fuel Injector.

Does the test light blink/flicker?

Yes >> Replace the Fuel Injector.
Perform the POWERTRAIN VERIFICATION TEST. (Refer to 9 - ENGINE - STANDARD PROCEDURE)

No >> Go To 11

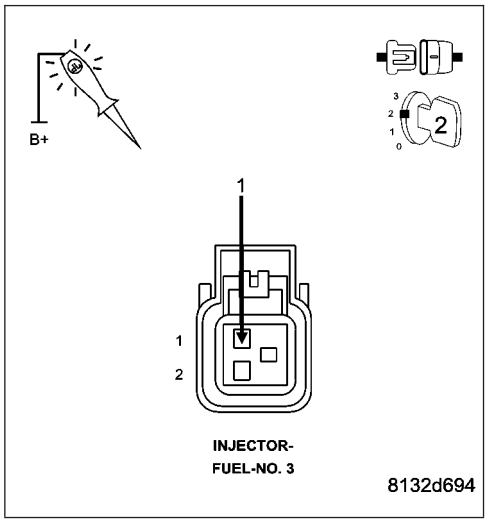

P0303-CYLINDER 3 MISFIRE (CONTINUED)

11. (K13) INJECTOR CONTROL NO.3 CIRCUIT

Turn the ignition off.

Disconnect the C2 PCM harness connector.

CAUTION: Do not probe the PCM harness connectors. Probing the PCM harness connectors will damage the PCM terminals resulting in poor terminal to pin connection. Install Miller Special Tool #8815 to perform diagnosis.

Check the (K13) Injector Control No.3 circuit for an open, short to ground, and short to voltage.

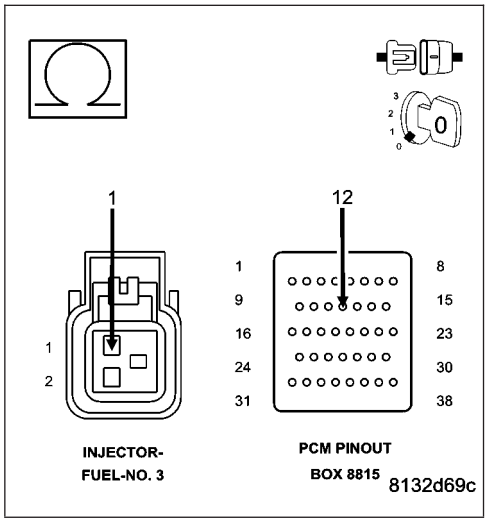

Was a problem found with the (K13) Injector Control No.3 circuit?

Yes >> Repair the excessive resistance or short in the (K13) Injector Control No.3 circuit.

Perform the POWERTRAIN VERIFICATION TEST. (Refer to 9 - ENGINE - STANDARD PROCEDURE)

No >> Go To 17

---

12. FUEL SUPPLY LINE RESTRICTED

Turn the ignition off.

WARNING: The fuel system is under a constant pressure (even with the engine off). Before testing or servicing any fuel system hose, fitting or line, the fuel system pressure must be released. Failure to follow these instructions can result in personal injury or death.

Raise vehicle on hoist, and disconnect the fuel pressure line at the fuel pump module.

Install special tool #6539 (5/16″) #6631(3/8″) fuel line adapter and the fuel pressure gauge between the fuel supply line and the fuel pump module.

Ignition on, engine not running.

With a scan tool, actuate the ASD Fuel System test and observe the fuel pressure gauge.

NOTE: Fuel pressure specification is 407 KPa +/- 34 KPa (59 psi +/- 5 psi).

Is the fuel pressure within specification?

Yes >> Repair or replace fuel supply line as necessary.

Perform the POWERTRAIN VERIFICATION TEST. (Refer to 9 - ENGINE - STANDARD PROCEDURE)

No >> Go To 13

P0303-CYLINDER 3 MISFIRE (CONTINUED)

13. FUEL PUMP INLET STRAINER

Turn the ignition off.

WARNING: The fuel system is under a constant pressure (even with the engine off). Before testing or servicing any fuel system hose, fitting or line, the fuel system pressure must be released. Failure to follow these instructions can result in personal injury or death.

Remove the Fuel Pump Module and inspect the Fuel Inlet Strainer.

Is the Fuel Inlet Strainer plugged?

Yes >> Replace the Fuel Pump Inlet Strainer.
Perform the POWERTRAIN VERIFICATION TEST. (Refer to 9 - ENGINE - STANDARD PROCEDURE)

No >> Before continuing, check the Fuel Pump Module harness connector terminals for corrosion, damage, or terminal push out. Make sure the ground circuit is functional. Repair as necessary. Replace the Fuel Pump Module.
Perform the POWERTRAIN VERIFICATION TEST. (Refer to 9 - ENGINE - STANDARD PROCEDURE)

---

14. IGNITION WIRE

NOTE: If the vehicle being tested does not have an ignition wire answer YES to this test and continue.

Turn the ignition off.

Remove the ignition wire.

Measure the resistance of the ignition wire.

Is the resistance below 10K ohms?

Yes >> Go To 15

No >> Replace the Ignition Wire.
Perform the POWERTRAIN VERIFICATION TEST. (Refer to 9 - ENGINE - STANDARD PROCEDURE)

---

15. IGNITION COIL

Disconnect the No.3 Ignition Coil harness connector.

Remove the Fuel Pump Relay.

Using a 12-volt test light connected to 12-volts, probe the (K18) Coil Control No.3 circuit.

Crank the engine for 5 seconds while observing the test light.

NOTE: The primary resistance of the 3.7L and 4.7L Ignition coil is 0.6 to 0.9 of an ohm at 77°F (25°C).

Does the test light brightly blink/flicker?

Yes >> Replace the Ignition Coil.
Perform the POWERTRAIN VERIFICATION TEST. (Refer to 9 - ENGINE - STANDARD PROCEDURE)

No >> Go To 16

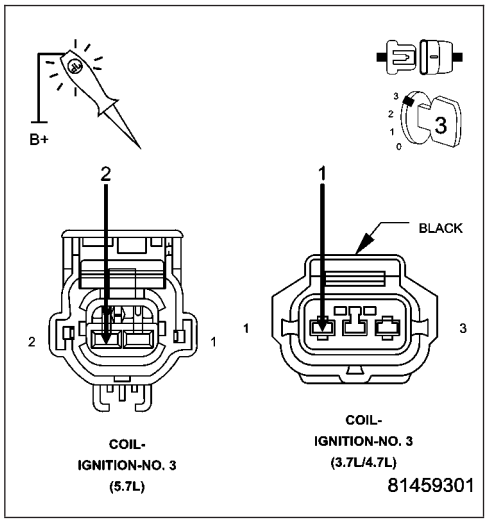

P0303-CYLINDER 3 MISFIRE (CONTINUED)

16. (K18) COIL CONTROL NO.3 CIRCUIT

Turn the ignition off.

Disconnect the C2 PCM harness connector.

CAUTION: Do not probe the PCM harness connectors. Probing the PCM harness connectors will damage the PCM terminals resulting in poor terminal to pin connection. Install Miller Special Tool #8815 to perform diagnosis.

Check the (K18) Coil Control No.3 circuit for an open, short to ground, and short to voltage.

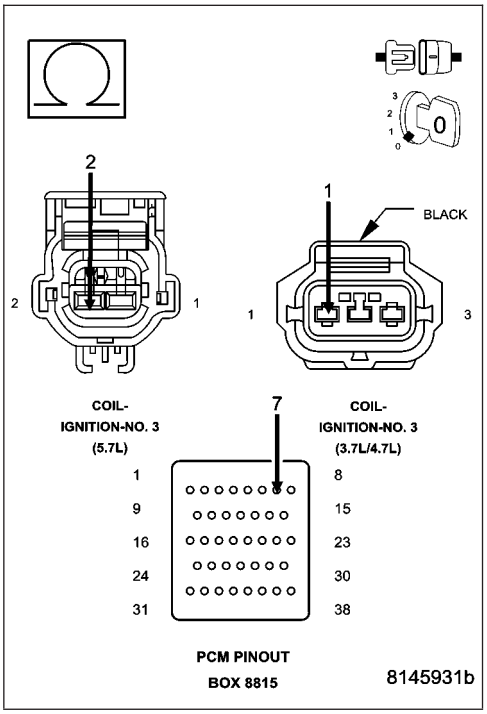

Was a problem found with the (K18) Coil Control No.3 circuit?

Yes >> Repair the (K18) Coil Control No.3 circuit.
Perform the POWERTRAIN VERIFICATION TEST. (Refer to 9 - ENGINE - STANDARD PROCEDURE)

No >> Go To 17

17. PCM

NOTE: Before continuing, check the PCM harness connector terminals for corrosion, damage, or terminal push out. Repair as necessary.

Using the schematics as a guide, inspect the wire harness and connectors. Pay particular attention to all Power and Ground circuits.

Were there any problems found?

Yes >> Repair as necessary.
Perform the POWERTRAIN VERIFICATION TEST. (Refer to 9 - ENGINE - STANDARD PROCEDURE)

No >> Replace and program the Powertrain Control Module per Service Information.
Perform the POWERTRAIN VERIFICATION TEST. (Refer to 9 - ENGINE - STANDARD PROCEDURE)

P0304-CYLINDER 4 MISFIRE

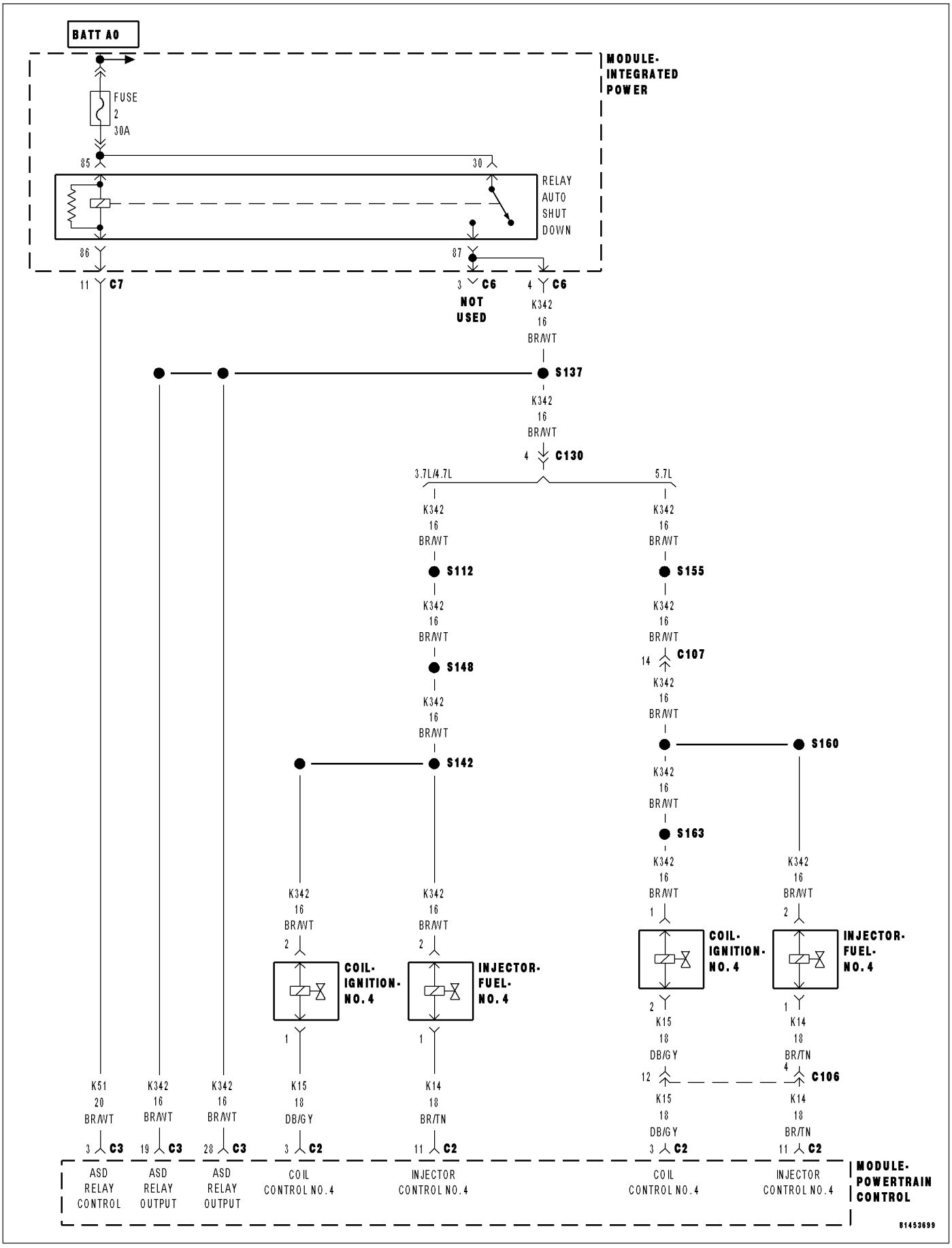

P0304-CYLINDER 4 MISFIRE (CONTINUED)

For the Engine circuit diagram (Refer to 9 - ENGINE - SCHEMATICS AND DIAGRAMS).

For a complete wiring diagram **Refer to Section 8W**.

- **When Monitored:**
  Any time the engine is running, and the adaptive numerator has been successfully updated.
- **Set Condition:**
  When more than 2% (2.5% LEV) misfire rate is measured during two trips, or with 10% to 30% misfire rate during on trip. Three good trips to clear the MIL.

Possible Causes
(K342) ASD RELAY OUTPUT CIRCUIT
(K14) INJECTOR CONTROL NO.4 CIRCUIT
(K15) COIL CONTROL NO.4 CIRCUIT
IGNITION WIRE
SPARK PLUG
IGNITION COIL
FUEL PUMP INLET STRAINER PLUGGED
RESTRICTED FUEL SUPPLY LINE
FUEL PUMP MODULE
FUEL PRESSURE LEAK DOWN
FUEL INJECTOR
ENGINE MECHANICAL
PCM

Always perform the Pre-Diagnostic Troubleshooting procedure before proceeding. (Refer to 9 - ENGINE - DIAGNOSIS AND TESTING).

Diagnostic Test

1. CYLINDER MIS-FIRE CONDITION ACTIVE

Engine running.

Observe the WHICH CYLINDER IS MISFIRING screen for at least one minute with the scan tool.

Is there a misfire present at this time?

Yes >> Go To 2

No >> Refer to the INTERMITTENT CONDITION Diagnostic Procedure.
Perform the POWERTRAIN VERIFICATION TEST. (Refer to 9 - ENGINE - STANDARD PROCEDURE)

P0304-CYLINDER 4 MISFIRE (CONTINUED)

2. VISUAL INSPECTION

NOTE: Anything that affects the speed of the crankshaft can cause a misfire DTC.

NOTE: When a Misfire is detected for a particular cylinder, the PCM will shut down that cylinders Injector Control circuit.

- Visually inspect the engine for any of the following conditions.
- Worn serpentine belt
- Binding Engine-Driven accessories: A/C Compressor, P/S Pump, Water pump.
- Misalignment of the Water pump, P/S Pump and A/C Compressor pulleys
- Corroded PCM power and ground circuits.
- Improper CKP, CMP, MAP, and TP Sensor mounting
- Poor connector/terminal to component connection. i.e., CKP sensor, Fuel Injector, Ign coil, etc.
- Vacuum leaks
- Restricted Air Induction system or Exhaust system.
- Internal engine component failures.

Were any of the above conditions present?

Yes >> Repair as necessary.
Perform the POWERTRAIN VERIFICATION TEST. (Refer to 9 - ENGINE - STANDARD PROCEDURE)

No >> Go To 3

P0304-CYLINDER 4 MISFIRE (CONTINUED)

3. (K342) ASD RELAY OUTPUT CIRCUIT

Turn the ignition off.
Disconnect the No.4 Ignition Coil harness connector.
Disconnect the No.4 Fuel Injector harness connector.
Ignition on, engine not running.
With the scan tool, actuate the ASD Relay.
Using a 12-volt test light connected to ground, probe the (K342) ASD Relay Output circuit in the Ignition Coil harness connector and Fuel Injector harness connector while the relay is actuating.

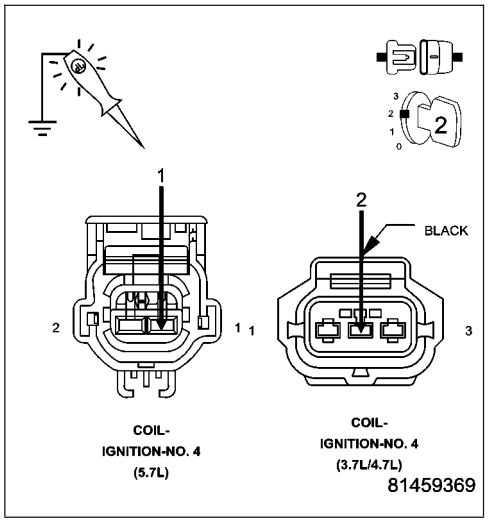

Does the test light illuminate brightly?

Yes >> Go To 4

No >> Repair the excessive resistance or short to ground in the (K342) ASD Relay Output circuit.
Perform the POWERTRAIN VERIFICATION TEST. (Refer to 9 - ENGINE - STANDARD PROCEDURE)

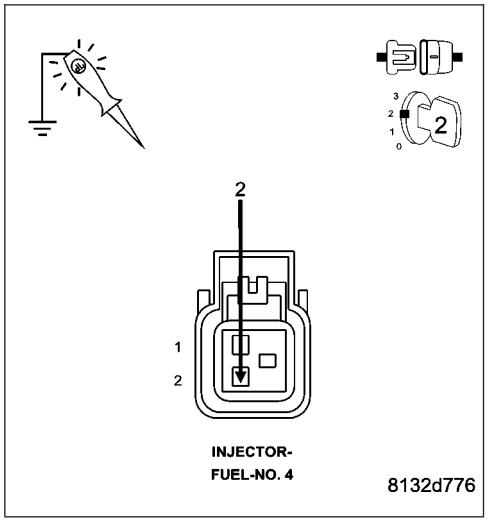

4. IGNITION SYSTEM OPERATION

Turn the ignition off.
Connect the No.4 Ignition Coil harness connector.
Remove the No.4 Ignition Coil.
Leave the Fuel Injector harness connector of the cylinder being tested disconnected.
Install a spark tester on the Ignition Coil.
While cranking the engine observe the spark coming from the spark tester.

NOTE: A crisp blue spark that is able to jump the gap of the spark tester should be generated.

Is good spark present?

Yes >> Go To 5

No >> Go To 14

NOTE: Connect the Fuel Injector harness connector before continuing.

P0304-CYLINDER 4 MISFIRE (CONTINUED)

5. SPARK PLUG

Turn the ignition off.

Remove the Spark Plug.

Inspect the Spark Plug for the following conditions.

- Cracks
- Carbon Tracking
- Foreign Material
- Gap size out of specifications
- Loose or broke electrode

NOTE: Lightly tap the bottom of the spark plug on a solid surface. The electrode in the spark plug should not move.

Were any of the above conditions present?

Yes >> Replace the Spark Plug.
Perform the POWERTRAIN VERIFICATION TEST. (Refer to 9 - ENGINE - STANDARD PROCEDURE)

No >> Go To 6

---

6. FUEL PRESSURE CHECK

WARNING: The fuel system is under a constant pressure (even with the engine off). Before testing or servicing any fuel system hose, fitting or line, the fuel system pressure must be released. Failure to follow these instructions can result in personal injury or death.

Install a fuel pressure gauge to the fuel rail.

Start the engine and observe the fuel pressure reading.

NOTE: Fuel pressure specification is 407 KPa +/- 34 KPa (59 psi +/- 5 psi).

Choose a conclusion that best matches your fuel pressure reading.

Within Specification
Go To 7

Below Specification
Go To 12

Above Specification
Replace the fuel filter/pressure regulator.
Perform the POWERTRAIN VERIFICATION TEST. (Refer to 9 - ENGINE - STANDARD PROCEDURE)

P0304-CYLINDER 4 MISFIRE (CONTINUED)

7. FUEL PRESSURE LEAK DOWN

NOTE: Before continuing visually and physically inspect the fuel delivery system for external leaks or damage. Repair / replace as necessary.

Turn the ignition off.

WARNING: The fuel system is under a constant pressure (even with the engine off). Before testing or servicing any fuel system hose, fitting or line, the fuel system pressure must be released. Failure to follow these instructions can result in personal injury or death

Install special tool #6539 (5/16″) or #6631 (3/8″) fuel line adapter.

Install the fuel pressure gauge.

Start the engine and allow the fuel system to reach maximum pressure.

Turn the ignition off.

NOTE: Fuel specification is 407 KPa +/- 34 KPa (59 psi +/- 5 psi).

Using special tool #C4390, Hose Clamp Pliers, pinch the rubber fuel line between the fuel pressure gauge and the engine.

Monitor the fuel pressure gauge for a minimum of 5 minutes.

NOTE: The pressure should not fall below 241 KPa (35 psi)

Does the pressure fall below the listed specification?

Yes >> Replace the leaking Fuel Injector(s).
Perform the POWERTRAIN VERIFICATION TEST. (Refer to 9 - ENGINE - STANDARD PROCEDURE)

No >> Go To 8

---

8. FUEL INJECTOR OPERATION

WARNING: The fuel system is under a constant pressure (even with the engine off). Before testing or servicing any fuel system hose, fitting or line, the fuel system pressure must be released. Failure to follow these instructions can result in personal injury or death.

CAUTION: After each Fuel Injector actuation, start the engine to clean the cylinder of fuel. Failure to do so could cause engine damage.

Remove special tool #C4390.

Start the engine and allow the fuel pressure to reach maximum pressure.

Ignition on, engine not running.

Using the scan tool, actuate the No.4 Fuel Injector.

Monitor the fuel pressure gauge.

Does the fuel pressure gauge indicate a drop in fuel pressure?

Yes >> Go To 9

No >> Go To 10

NOTE: Turn the ignition off, remove the Fuel Pressure gauge, and connect the fuel lines before continuing.

P0304-CYLINDER 4 MISFIRE (CONTINUED)

9. ENGINE MECHANICAL

Check for any of the following conditions/mechanical problems.
ENGINE VACUUM - must be at least 13 inches in neutral
ENGINE VALVE TIMING - must be within specifications
ENGINE COMPRESSION - must be within specifications
ENGINE EXHAUST SYSTEM - must be free of any restrictions or leaks.
ENGINE PCV SYSTEM - must flow freely
TORQUE CONVERTER STALL SPEED - must be within specifications
POWER BRAKE BOOSTER - no internal vacuum leaks
FUEL - must be free of contamination
CAM LOBES - must not be worn excessively
CYLINDER LEAKAGE TEST - must be within specifications
VALVE SPRINGS - cannot be weak or broken

Are there any engine mechanical problems?

Yes >> Repair as necessary.
Perform the POWERTRAIN VERIFICATION TEST. (Refer to 9 - ENGINE - STANDARD PROCEDURE)

No >> Go To 17

---

10. FUEL INJECTOR

Turn the ignition off.
Disconnect the No.4 Fuel Injector harness connector.
Ignition on, engine not running.

NOTE: When a Misfire is detected for a particular cylinder, the PCM will shut down that cylinders Injector Control circuit.
With the scan tool, erase DTCs.
Using a 12-volt test light connected to 12-volts, probe the (K14) Injector Control No.4 circuit.
With the scan tool, actuate the Fuel Injector.

Does the test light blink/flicker?

Yes >> Replace the Fuel Injector.
Perform the POWERTRAIN VERIFICATION TEST. (Refer to 9 - ENGINE - STANDARD PROCEDURE)

No >> Go To 11

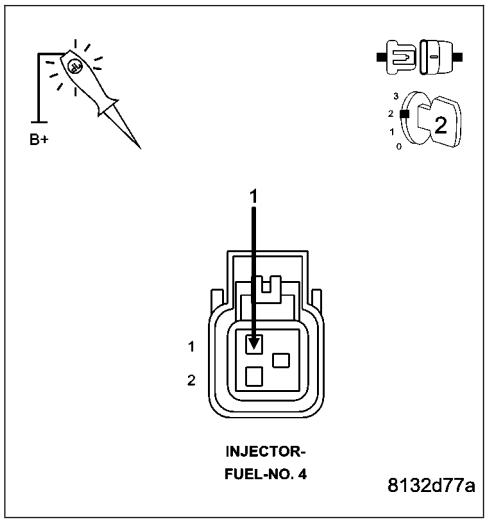

P0304-CYLINDER 4 MISFIRE (CONTINUED)

11. (K14) INJECTOR CONTROL NO.4 CIRCUIT

Turn the ignition off.

Disconnect the C2 PCM harness connector.

CAUTION: Do not probe the PCM harness connectors. Probing the PCM harness connectors will damage the PCM terminals resulting in poor terminal to pin connection. Install Miller Special Tool #8815 to perform diagnosis.

Check the (K14) Injector Control No.4 circuit for an open, short to ground, and short to voltage.

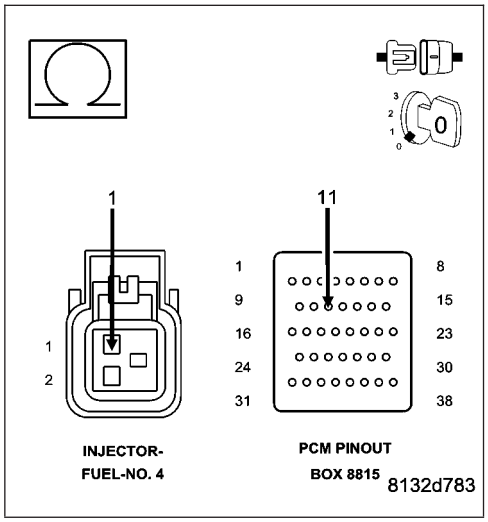

Was a problem found with the (K14) Injector Control No.4 circuit?

Yes >> Repair the excessive resistance or short in the (K14) Injector Control No.4 circuit.

Perform the POWERTRAIN VERIFICATION TEST. (Refer to 9 - ENGINE - STANDARD PROCEDURE)

No >> Go To 17

---

12. FUEL SUPPLY LINE RESTRICTED

Turn the ignition off.

WARNING: The fuel system is under a constant pressure (even with the engine off). Before testing or servicing any fuel system hose, fitting or line, the fuel system pressure must be released. Failure to follow these instructions can result in personal injury or death.

Raise vehicle on hoist, and disconnect the fuel pressure line at the fuel pump module.

Install special tool #6539 (5/16″) #6631(3/8″) fuel line adapter and the fuel pressure gauge between the fuel supply line and the fuel pump module.

Ignition on, engine not running.

With the scan tool, actuate the ASD Fuel System test and observe the fuel pressure gauge.

NOTE: Fuel pressure specification is 407 KPa +/- 34 KPa (59 psi +/- 5 psi).

Is the fuel pressure within specification?

Yes >> Repair or replace fuel supply line as necessary.

Perform the POWERTRAIN VERIFICATION TEST. (Refer to 9 - ENGINE - STANDARD PROCEDURE)

No >> Go To 13

P0304-CYLINDER 4 MISFIRE (CONTINUED)

13. FUEL PUMP INLET STRAINER

Turn the ignition off.

WARNING: The fuel system is under a constant pressure (even with the engine off). Before testing or servicing any fuel system hose, fitting or line, the fuel system pressure must be released. Failure to follow these instructions can result in personal injury or death.

Remove the Fuel Pump Module and inspect the Fuel Inlet Strainer.

Is the Fuel Inlet Strainer plugged?

Yes >> Replace the Fuel Pump Inlet Strainer.
Perform the POWERTRAIN VERIFICATION TEST. (Refer to 9 - ENGINE - STANDARD PROCEDURE)

No >> Before continuing, check the Fuel Pump Module harness connector terminals for corrosion, damage, or terminal push out. Make sure the ground circuit is functional. Repair as necessary. Replace the Fuel Pump Module.
Perform the POWERTRAIN VERIFICATION TEST. (Refer to 9 - ENGINE - STANDARD PROCEDURE)

---

14. IGNITION WIRE

NOTE: If the vehicle being tested does not have an ignition wire answer YES to this test and continue.

Turn the ignition off.

Remove the ignition wire.

Measure the resistance of the ignition wire.

Is the resistance below 10K ohms?

Yes >> Go To 15

No >> Replace the Ignition Wire.
Perform the POWERTRAIN VERIFICATION TEST. (Refer to 9 - ENGINE - STANDARD PROCEDURE)

---

15. IGNITION COIL

Disconnect the No.4 Ignition Coil harness connector.

Remove the Fuel Pump Relay.

Using a 12-volt test light connected to 12-volts, probe the (K15) Coil Control No.4 circuit.

Crank the engine for 5 seconds while observing the test light.

NOTE: The primary resistance of the 3.7L and 4.7L Ignition coil is 0.6 to 0.9 of an ohm at 77°F (25°C).

Does the test light brightly blink/flicker?

Yes >> Replace the Ignition Coil.
Perform the POWERTRAIN VERIFICATION TEST. (Refer to 9 - ENGINE - STANDARD PROCEDURE)

No >> Go To 16

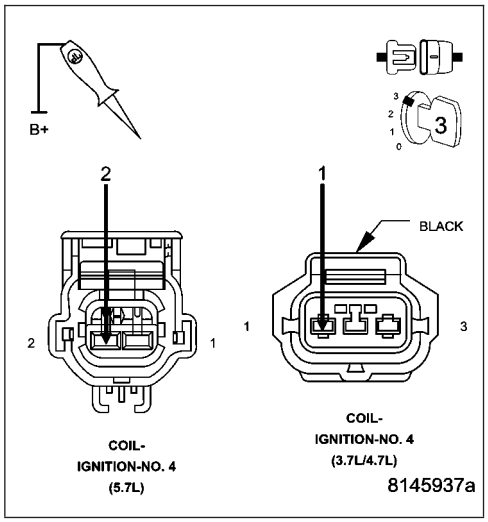

P0304-CYLINDER 4 MISFIRE (CONTINUED)

16. (K15) COIL CONTROL NO.4 CIRCUIT

Turn the ignition off.

Disconnect the C2 PCM harness connector.

CAUTION: Do not probe the PCM harness connectors. Probing the PCM harness connectors will damage the PCM terminals resulting in poor terminal to pin connection. Install Miller Special Tool #8815 to perform diagnosis.

Check the (K15) Coil Control No.4 circuit for an open, short to ground, and short to voltage.

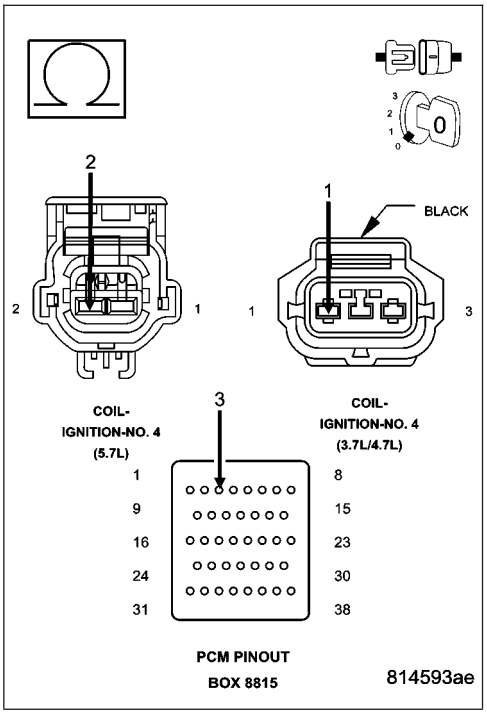

Was a problem found with the (K15) Coil Control No.4 circuit?

Yes >> Repair the (K15) Coil Control No.4 circuit.
Perform the POWERTRAIN VERIFICATION TEST. (Refer to 9 - ENGINE - STANDARD PROCEDURE)

No >> Go To 17

17. PCM

NOTE: Before continuing, check the PCM harness connector terminals for corrosion, damage, or terminal push out. Repair as necessary.

Using the schematics as a guide, inspect the wire harness and connectors. Pay particular attention to all Power and Ground circuits.

Were there any problems found?

Yes >> Repair as necessary.
Perform the POWERTRAIN VERIFICATION TEST. (Refer to 9 - ENGINE - STANDARD PROCEDURE)

No >> Replace and program the Powertrain Control Module per Service Information.
Perform the POWERTRAIN VERIFICATION TEST. (Refer to 9 - ENGINE - STANDARD PROCEDURE)

P0305-CYLINDER 5 MISFIRE

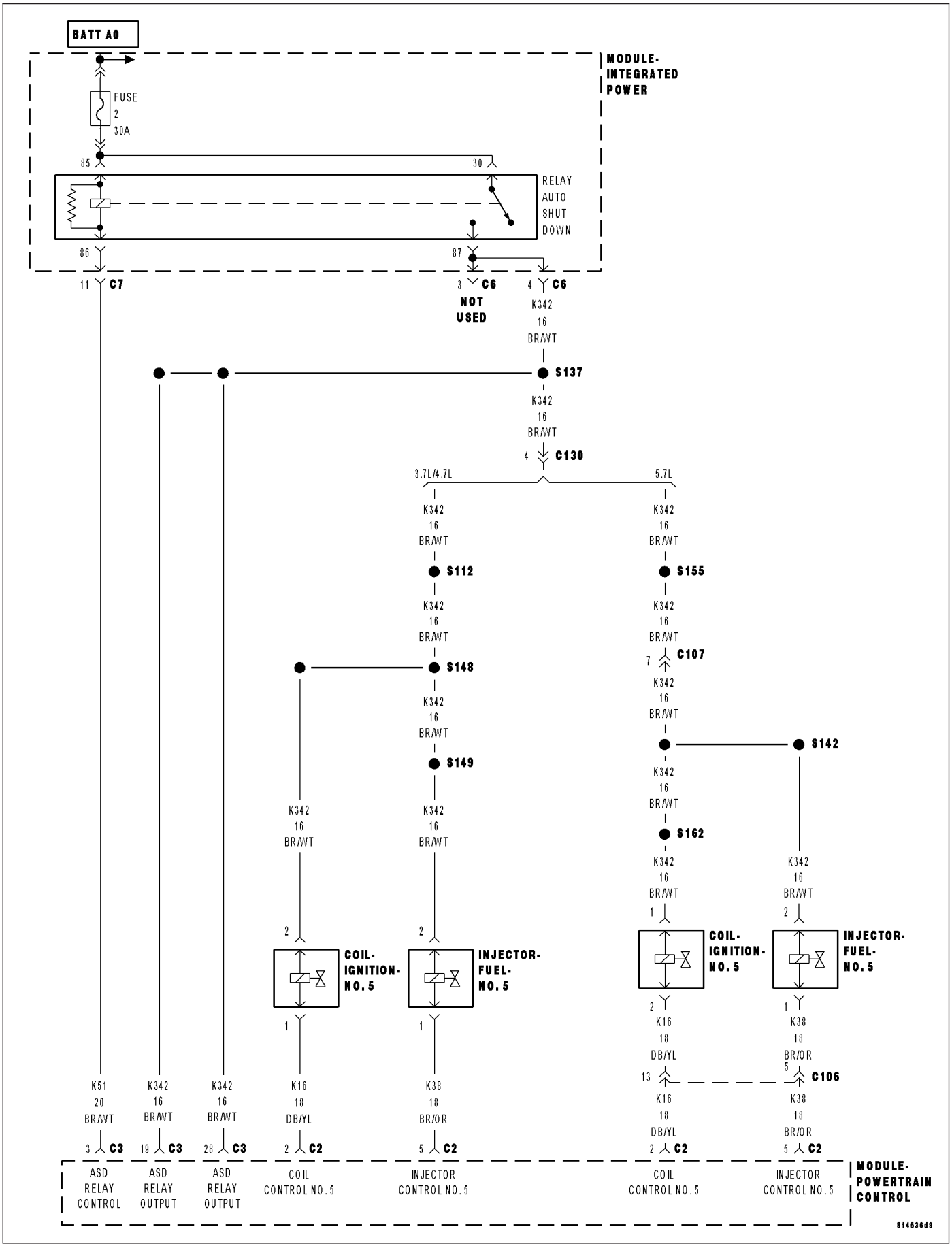

P0305-CYLINDER 5 MISFIRE (CONTINUED)

For the Engine circuit diagram (Refer to 9 - ENGINE - SCHEMATICS AND DIAGRAMS).

For a complete wiring diagram **Refer to Section 8W**.

- **When Monitored:**
  Any time the engine is running, and the adaptive numerator has been successfully updated.
- **Set Condition:**
  When more than 2% (2.5% LEV) misfire rate is measured during two trips, or with 10% to 30% misfire rate during on trip. Three good trips to clear the MIL.

Possible Causes
(K342) ASD RELAY OUTPUT CIRCUIT
(K38) INJECTOR CONTROL NO.5 CIRCUIT
(K16) COIL CONTROL NO.5 CIRCUIT
IGNITION WIRE
SPARK PLUG
IGNITION COIL
FUEL PUMP INLET STRAINER PLUGGED
RESTRICTED FUEL SUPPLY LINE
FUEL PUMP MODULE
FUEL PRESSURE LEAK DOWN
FUEL INJECTOR
ENGINE MECHANICAL
PCM

Always perform the Pre-Diagnostic Troubleshooting procedure before proceeding. (Refer to 9 - ENGINE - DIAGNOSIS AND TESTING).

Diagnostic Test

1. CYLINDER MIS-FIRE CONDITION ACTIVE

Engine running.

Observe the WHICH CYLINDER IS MISFIRING screen for at least one minute with a scan tool.

Is there a misfire present at this time?

Yes >> Go To 2

No >> Refer to the INTERMITTENT CONDITION Diagnostic Procedure.
Perform the POWERTRAIN VERIFICATION TEST. (Refer to 9 - ENGINE - STANDARD PROCEDURE)

P0305-CYLINDER 5 MISFIRE (CONTINUED)

2. VISUAL INSPECTION

NOTE: Anything that affects the speed of the crankshaft can cause a misfire DTC.

NOTE: When a Misfire is detected for a particular cylinder, the PCM will shut down that cylinders Injector Control circuit.

- Visually inspect the engine for any of the following conditions.
- Worn serpentine belt
- Binding Engine-Driven accessories: A/C Compressor, P/S Pump, Water pump.
- Misalignment of the Water pump, P/S Pump and A/C Compressor pulleys
- Corroded PCM power and ground circuits.
- Improper CKP, CMP, MAP, and TP Sensor mounting
- Poor connector/terminal to component connection. i.e., CKP sensor, Fuel Injector, Ign coil, etc.
- Vacuum leaks
- Restricted Air Induction system or Exhaust system.
- Internal engine component failures.

Were any of the above conditions present?

Yes >> Repair as necessary.
Perform the POWERTRAIN VERIFICATION TEST. (Refer to 9 - ENGINE - STANDARD PROCEDURE)

No >> Go To 3

P0305-CYLINDER 5 MISFIRE (CONTINUED)

3. (K342) ASD RELAY OUTPUT CIRCUIT

Turn the ignition off.
Disconnect the No.5 Ignition Coil harness connector.
Disconnect the No.5 Fuel Injector harness connector.
Ignition on, engine not running.
With the scan tool, actuate the ASD Relay.
Using a 12-volt test light connected to ground, probe the (K342) ASD Relay Output circuit in the Ignition Coil harness connector and Fuel Injector harness connector while the relay is actuating.

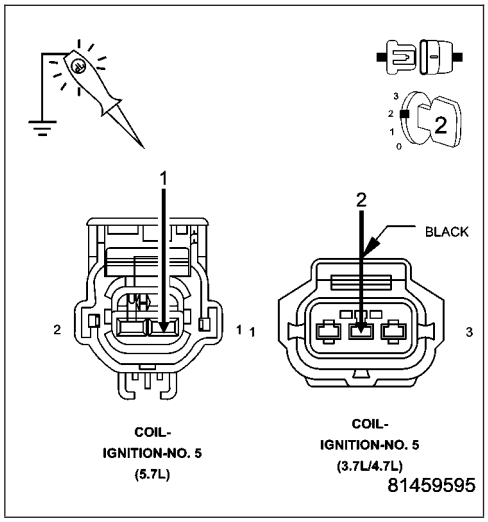

Does the test light illuminate brightly?

Yes >> Go To 4

No >> Repair the excessive resistance or short to ground in the (K342) ASD Relay Output circuit.
Perform the POWERTRAIN VERIFICATION TEST. (Refer to 9 - ENGINE - STANDARD PROCEDURE)

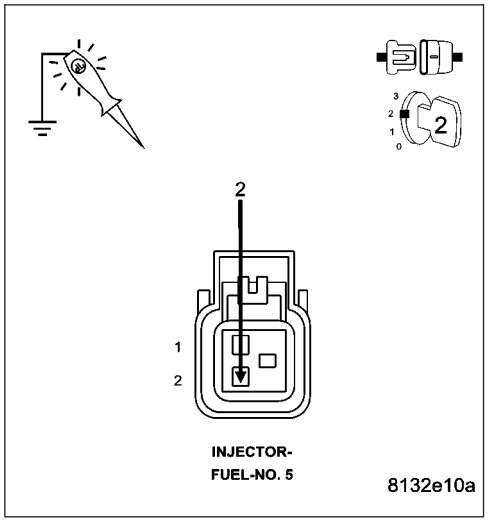

4. IGNITION SYSTEM OPERATION

Turn the ignition off.
Connect the Ignition Coil No.5 harness connector.
Remove the Ignition Coil.
Leave the Fuel Injector harness connector of the cylinder being tested disconnected.
Install a spark tester on the Ignition Coil.
While cranking the engine observe the spark coming from the spark tester.

NOTE: A crisp blue spark that is able to jump the gap of the spark tester should be generated.

Is good spark present?

Yes >> Go To 5

No >> Go To 14

NOTE: Connect the Fuel Injector harness connector before continuing.

P0305-CYLINDER 5 MISFIRE (CONTINUED)

5. SPARK PLUG

Turn the ignition off.

Remove the Spark Plug.

Inspect the Spark Plug for the following conditions.

- Cracks
- Carbon Tracking
- Foreign Material
- Gap size out of specifications
- Loose or broke electrode

NOTE: Lightly tap the bottom of the spark plug on a solid surface. The electrode in the spark plug should not move.

Were any of the above conditions present?

Yes >> Replace the Spark Plug.
Perform the POWERTRAIN VERIFICATION TEST. (Refer to 9 - ENGINE - STANDARD PROCEDURE)

No >> Go To 6

---

6. FUEL PRESSURE CHECK

WARNING: The fuel system is under a constant pressure (even with the engine off). Before testing or servicing any fuel system hose, fitting or line, the fuel system pressure must be released. Failure to follow these instructions can result in personal injury or death.

Install a fuel pressure gauge to the fuel rail.

Start the engine and observe the fuel pressure reading.

NOTE: Fuel pressure specification is 407 KPa +/- 34 KPa (59 psi +/- 5 psi).

Choose a conclusion that best matches your fuel pressure reading.

Within Specification
Go To 7

Below Specification
Go To 12

Above Specification
Replace the fuel filter/pressure regulator.
Perform the POWERTRAIN VERIFICATION TEST. (Refer to 9 - ENGINE - STANDARD PROCEDURE)

P0305-CYLINDER 5 MISFIRE (CONTINUED)

7. FUEL PRESSURE LEAK DOWN

NOTE: Before continuing visually and physically inspect the fuel delivery system for external leaks or damage. Repair / replace as necessary.

Turn the ignition off.

WARNING: The fuel system is under a constant pressure (even with the engine off). Before testing or servicing any fuel system hose, fitting or line, the fuel system pressure must be released. Failure to follow these instructions can result in personal injury or death.

Install special tool #6539 (5/16″) or #6631 (3/8″) fuel line adapter.

Install the fuel pressure gauge.

Start the engine and allow the fuel system to reach maximum pressure.

Turn the ignition off.

NOTE: Fuel specification is 407 KPa +/- 34 KPa (59 psi +/- 5 psi).

Using special tool #C4390, Hose Clamp Pliers, pinch the rubber fuel line between the fuel pressure gauge and the engine.

Monitor the fuel pressure gauge for a minimum of 5 minutes.

NOTE: The pressure should not fall below 241 KPa (35 psi).

Does the pressure fall below the listed specification?

Yes >> Replace the leaking Fuel Injector(s).
Perform the POWERTRAIN VERIFICATION TEST. (Refer to 9 - ENGINE - STANDARD PROCEDURE)

No >> Go To 8

---

8. FUEL INJECTOR OPERATION

WARNING: The fuel system is under a constant pressure (even with the engine off). Before testing or servicing any fuel system hose, fitting or line, the fuel system pressure must be released. Failure to follow these instructions can result in personal injury or death.

CAUTION: After each Fuel Injector actuation, start the engine to clean the cylinder of fuel. Failure to do so could cause engine damage.

Remove special tool #C4390.

Start the engine and allow the fuel pressure to reach maximum pressure.

Ignition on, engine not running.

Using the scan tool, actuate the No.5 Fuel Injector.

Monitor the fuel pressure gauge.

Does the fuel pressure gauge indicate a drop in fuel pressure?

Yes >> Go To 9

No >> Go To 10

NOTE: Turn the ignition off, remove the Fuel Pressure gauge, and connect the fuel lines before continuing.

P0305-CYLINDER 5 MISFIRE (CONTINUED)

9. ENGINE MECHANICAL

Check for any of the following conditions/mechanical problems.
ENGINE VACUUM - must be at least 13 inches in neutral
ENGINE VALVE TIMING - must be within specifications
ENGINE COMPRESSION - must be within specifications
ENGINE EXHAUST SYSTEM - must be free of any restrictions or leaks.
ENGINE PCV SYSTEM - must flow freely
TORQUE CONVERTER STALL SPEED - must be within specifications
POWER BRAKE BOOSTER - no internal vacuum leaks
FUEL - must be free of contamination
CAM LOBES - must not be worn excessively
CYLINDER LEAKAGE TEST - must be within specifications
VALVE SPRINGS - cannot be weak or broken

Are there any engine mechanical problems?

Yes >> Repair as necessary.
Perform the POWERTRAIN VERIFICATION TEST. (Refer to 9 - ENGINE - STANDARD PROCEDURE)

No >> Go To 17

---

10. FUEL INJECTOR

Turn the ignition off.
Disconnect the No.5 Fuel Injector harness connector.
Ignition on, engine not running.

NOTE: When a Misfire is detected for a particular cylinder, the PCM will shut down that cylinders Injector Control circuit.
With the scan tool, erase DTCs.
Using a 12-volt test light connected to 12-volts, probe the (K38) Injector Control No.5 circuit.
With the scan tool, actuate the Fuel Injector.

Does the test light blink/flicker?

Yes >> Replace the Fuel Injector.
Perform the POWERTRAIN VERIFICATION TEST. (Refer to 9 - ENGINE - STANDARD PROCEDURE)

No >> Go To 11

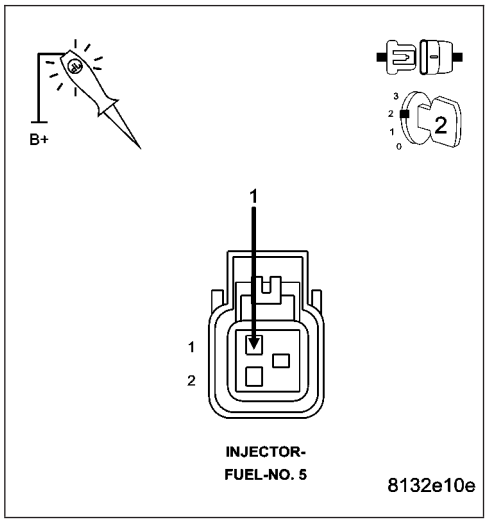

P0305-CYLINDER 5 MISFIRE (CONTINUED)

11. (K38) INJECTOR CONTROL NO.5 CIRCUIT

Turn the ignition off.

Disconnect the C2 PCM harness connector.

CAUTION: Do not probe the PCM harness connectors. Probing the PCM harness connectors will damage the PCM terminals resulting in poor terminal to pin connection. Install Miller Special Tool #8815 to perform diagnosis.

Check the (K38) Injector Control No.5 circuit for an open, short to ground, and short to voltage.

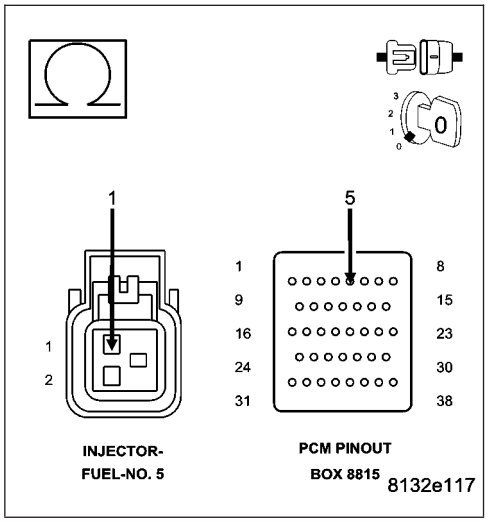

Was a problem found with the (K38) Injector Control No.5 circuit?

Yes >> Repair the excessive resistance or short in the (K38) Injector Control No.5 circuit.

Perform the POWERTRAIN VERIFICATION TEST. (Refer to 9 - ENGINE - STANDARD PROCEDURE)

No >> Go To 17

---

12. FUEL SUPPLY LINE RESTRICTED

Turn the ignition off.

WARNING: The fuel system is under a constant pressure (even with the engine off). Before testing or servicing any fuel system hose, fitting or line, the fuel system pressure must be released. Failure to follow these instructions can result in personal injury or death.

Raise vehicle on hoist, and disconnect the fuel pressure line at the fuel pump module.

Install special tool #6539 (5/16″) #6631(3/8″) fuel line adapter and the fuel pressure gauge between the fuel supply line and the fuel pump module.

Ignition on, engine not running.

With the scan tool, actuate the ASD Fuel System test and observe the fuel pressure gauge.

NOTE: Fuel pressure specification is 407 KPa +/- 34 KPa (59 psi +/- 5 psi).

Is the fuel pressure within specification?

Yes >> Repair or replace fuel supply line as necessary.

Perform the POWERTRAIN VERIFICATION TEST. (Refer to 9 - ENGINE - STANDARD PROCEDURE)

No >> Go To 13

P0305-CYLINDER 5 MISFIRE (CONTINUED)

13. FUEL PUMP INLET STRAINER

Turn the ignition off.

WARNING: The fuel system is under a constant pressure (even with the engine off). Before testing or servicing any fuel system hose, fitting or line, the fuel system pressure must be released. Failure to follow these instructions can result in personal injury or death.

Remove the Fuel Pump Module and inspect the Fuel Inlet Strainer.

Is the Fuel Inlet Strainer plugged?

Yes >> Replace the Fuel Pump Inlet Strainer.
Perform the POWERTRAIN VERIFICATION TEST. (Refer to 9 - ENGINE - STANDARD PROCEDURE)

No >> Before continuing, check the Fuel Pump Module harness connector terminals for corrosion, damage, or terminal push out. Make sure the ground circuit is functional. Repair as necessary. Replace the Fuel Pump Module.
Perform the POWERTRAIN VERIFICATION TEST. (Refer to 9 - ENGINE - STANDARD PROCEDURE)

---

14. IGNITION WIRE

NOTE: If the vehicle being tested does not have an ignition wire answer YES to this test and continue.

Turn the ignition off.

Remove the ignition wire.

Measure the resistance of the ignition wire.

Is the resistance below 10K ohms?

Yes >> Go To 15

No >> Replace the Ignition Wire.
Perform the POWERTRAIN VERIFICATION TEST. (Refer to 9 - ENGINE - STANDARD PROCEDURE)

---

15. IGNITION COIL

Disconnect the No.5 Ignition Coil harness connector.

Remove the Fuel Pump Relay.

Using a 12-volt test light connected to 12-volts, probe the (K16) Coil Control No.5 circuit.

Crank the engine for 5 seconds while observing the test light.

NOTE: The primary resistance of the 3.7L and 4.7L Ignition coil is 0.6 to 0.9 of an ohm at 77°F (25°C).

Does the test light brightly blink/flicker?

Yes >> Replace the Ignition Coil.
Perform the POWERTRAIN VERIFICATION TEST. (Refer to 9 - ENGINE - STANDARD PROCEDURE)

No >> Go To 16

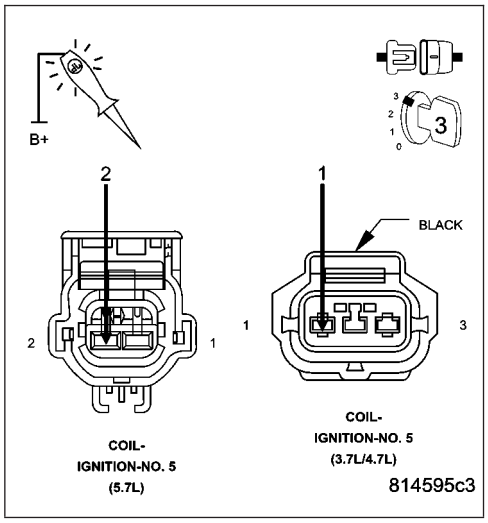

P0305-CYLINDER 5 MISFIRE (CONTINUED)

16. (K16) COIL CONTROL NO.5 CIRCUIT

Turn the ignition off.

Disconnect the C2 PCM harness connectors.

CAUTION: Do not probe the PCM harness connectors. Probing the PCM harness connectors will damage the PCM terminals resulting in poor terminal to pin connection. Install Miller Special Tool #8815 to perform diagnosis.

Check the (K16) Coil Control No.5 circuit for an open, short to ground, and short to voltage.

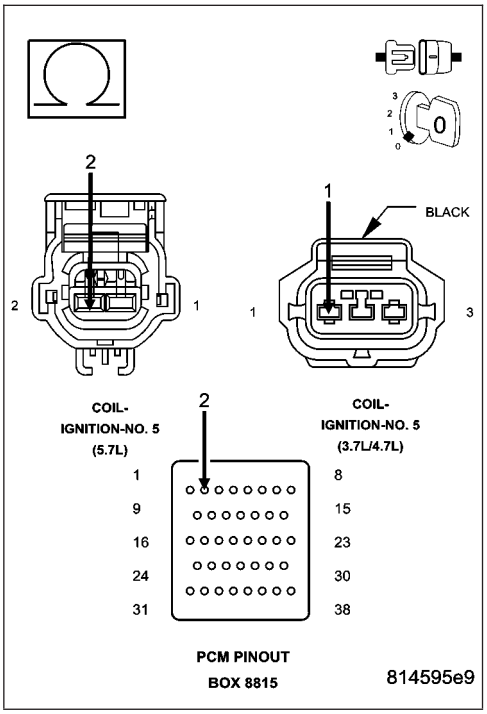

Was a problem found with the (K16) Coil Control No.5 circuit?

Yes >> Repair the (K16) Coil Control No.5 circuit.
Perform the POWERTRAIN VERIFICATION TEST. (Refer to 9 - ENGINE - STANDARD PROCEDURE)

No >> Go To 17

17. PCM

NOTE: Before continuing, check the PCM harness connector terminals for corrosion, damage, or terminal push out. Repair as necessary.

Using the schematics as a guide, inspect the wire harness and connectors. Pay particular attention to all Power and Ground circuits.

Were there any problems found?

Yes >> Repair as necessary.
Perform the POWERTRAIN VERIFICATION TEST. (Refer to 9 - ENGINE - STANDARD PROCEDURE)

No >> Replace and program the Powertrain Control Module per Service Information.
Perform the POWERTRAIN VERIFICATION TEST. (Refer to 9 - ENGINE - STANDARD PROCEDURE) d

P0306-CYLINDER 6 MISFIRE

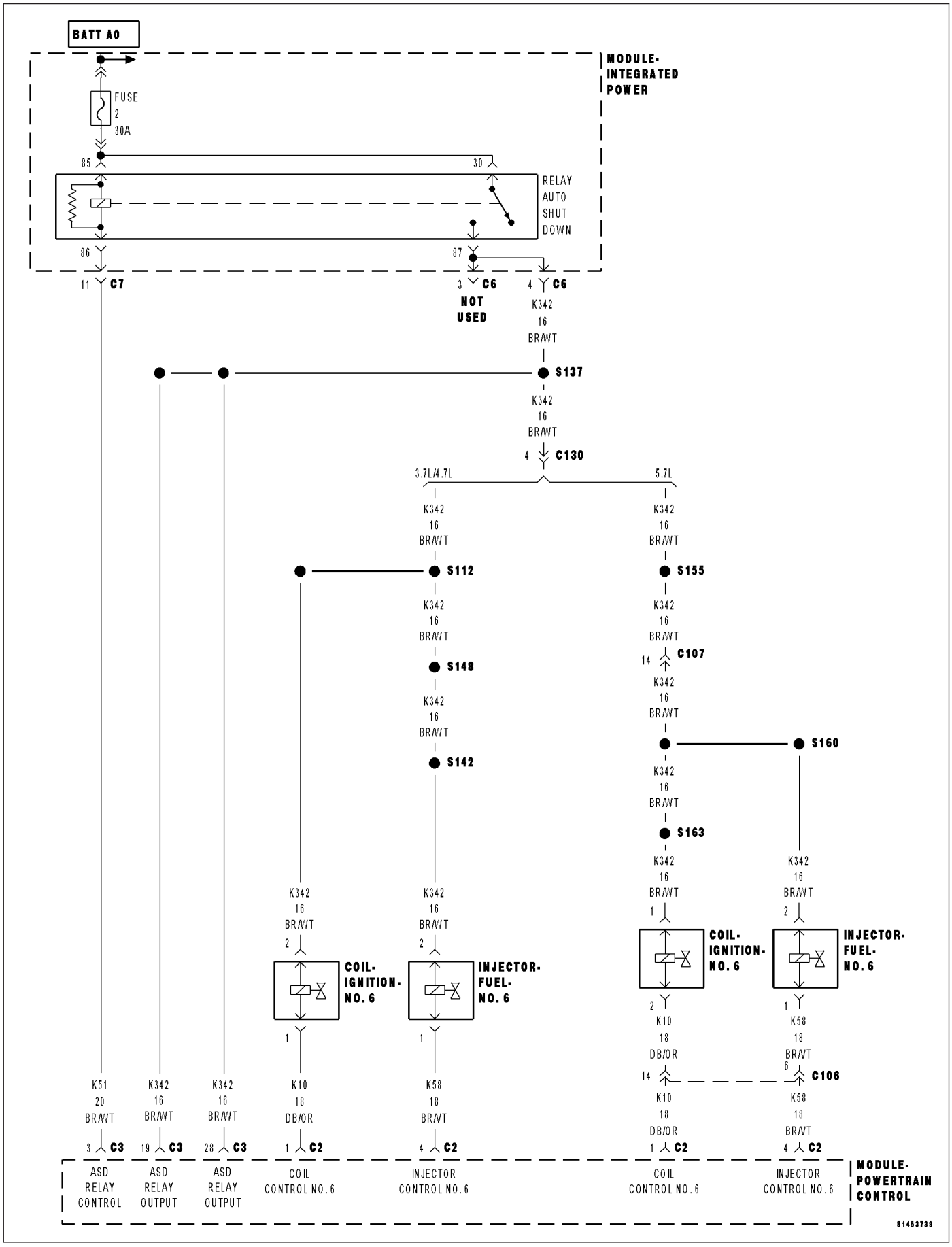

P0306-CYLINDER 6 MISFIRE (CONTINUED)

For the Engine circuit diagram (Refer to 9 - ENGINE - SCHEMATICS AND DIAGRAMS).

For a complete wiring diagram **Refer to Section 8W**.

- **When Monitored:**
  Any time the engine is running, and the adaptive numerator has been successfully updated.
- **Set Condition:**
  When more than 2% (2.5% LEV) misfire rate is measured during two trips, or with 10% to 30% misfire rate during on trip. Three good trips to clear the MIL.

Possible Causes
(K342) ASD RELAY OUTPUT CIRCUIT
(K58) INJECTOR CONTROL NO.6 CIRCUIT
(K10) COIL CONTROL NO.6 CIRCUIT
IGNITION WIRE
SPARK PLUG
IGNITION COIL
FUEL PUMP INLET STRAINER PLUGGED
RESTRICTED FUEL SUPPLY LINE
FUEL PUMP MODULE
FUEL PRESSURE LEAK DOWN
FUEL INJECTOR
ENGINE MECHANICAL
PCM

Always perform the Pre-Diagnostic Troubleshooting procedure before proceeding. (Refer to 9 - ENGINE - DIAGNOSIS AND TESTING).

Diagnostic Test

1. CYLINDER MIS-FIRE CONDITION ACTIVE

Engine running.

Observe the WHICH CYLINDER IS MISFIRING screen for at least one minute with a scan tool.

Is there a misfire present at this time?

Yes >> Go To 2

No >> Refer to the INTERMITTENT CONDITION Diagnostic Procedure.
Perform the POWERTRAIN VERIFICATION TEST. (Refer to 9 - ENGINE - STANDARD PROCEDURE)

P0306-CYLINDER 6 MISFIRE (CONTINUED)

2. VISUAL INSPECTION

NOTE: Anything that affects the speed of the crankshaft can cause a misfire DTC.

NOTE: When a Misfire is detected for a particular cylinder, the PCM will shut down that cylinders Injector Control circuit.

- Visually inspect the engine for any of the following conditions.
- Worn serpentine belt
- Binding Engine-Driven accessories: A/C Compressor, P/S Pump, Water pump.
- Misalignment of the Water pump, P/S Pump and A/C Compressor pulleys
- Corroded PCM power and ground circuits.
- Improper CKP, CMP, MAP, and TP Sensor mounting
- Poor connector/terminal to component connection. i.e., CKP sensor, Fuel Injector, Ign coil, etc.
- Vacuum leaks
- Restricted Air Induction system or Exhaust system.
- Internal engine component failures.

Were any of the above conditions present?

Yes >> Repair as necessary.
Perform the POWERTRAIN VERIFICATION TEST. (Refer to 9 - ENGINE - STANDARD PROCEDURE)

No >> Go To 3

P0306-CYLINDER 6 MISFIRE (CONTINUED)

3. (K342) ASD RELAY OUTPUT CIRCUIT

Turn the ignition off.
Disconnect the No.6 Ignition Coil harness connector.
Disconnect the No.6 Fuel Injector harness connector.
Ignition on, engine not running.
With the scan tool, actuate the ASD Relay.
Using a 12-volt test light connected to ground, probe the (K342) ASD Relay Output circuit in the Ignition Coil harness connector and Fuel Injector harness connector while the relay is actuating.

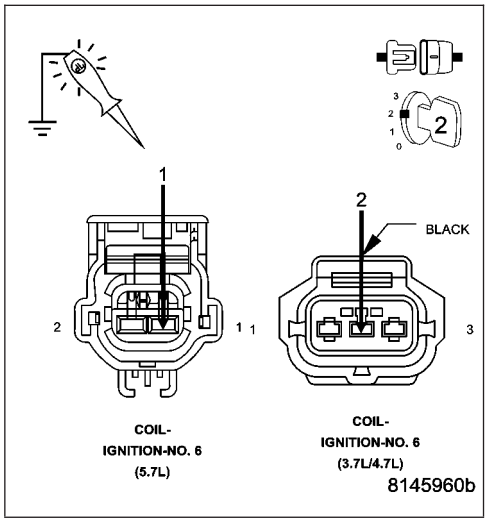

Does the test light illuminate brightly?

Yes >> Go To 4

No >> Repair the excessive resistance or short to ground in the (K342) ASD Relay Output circuit.
Perform the POWERTRAIN VERIFICATION TEST. (Refer to 9 - ENGINE - STANDARD PROCEDURE)

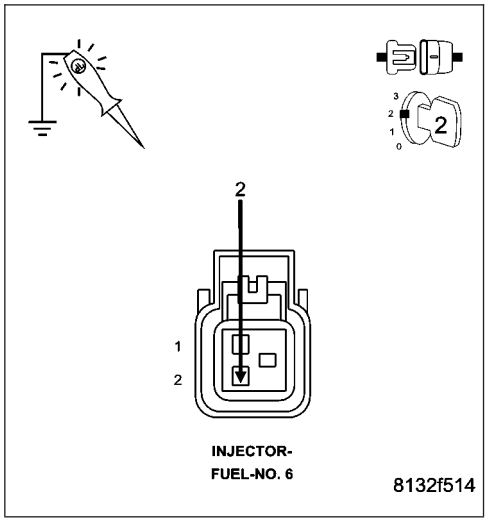

4. IGNITION SYSTEM OPERATION

Turn the ignition off.
Connect the Ignition Coil No.6 harness connector.
Remove the Ignition Coil.
Leave the Fuel Injector harness connector of the cylinder being tested disconnected.
Install a spark tester on the Ignition Coil.
While cranking the engine observe the spark coming from the spark tester.

NOTE: A crisp blue spark that is able to jump the gap of the spark tester should be generated.

Is good spark present?

Yes >> Go To 5

No >> Go To 14

NOTE: Connect the Fuel Injector harness connector before continuing.

P0306-CYLINDER 6 MISFIRE (CONTINUED)

5. SPARK PLUG

Turn the ignition off.

Remove the Spark Plug.

Inspect the Spark Plug for the following conditions.

- Cracks
- Carbon Tracking
- Foreign Material
- Gap size out of specifications
- Loose or broke electrode

NOTE: Lightly tap the bottom of the spark plug on a solid surface. The electrode in the spark plug should not move.

Were any of the above conditions present?

Yes >> Replace the Spark Plug.
Perform the POWERTRAIN VERIFICATION TEST. (Refer to 9 - ENGINE - STANDARD PROCEDURE)

No >> Go To 6

---

6. FUEL PRESSURE CHECK

WARNING: The fuel system is under a constant pressure (even with the engine off). Before testing or servicing any fuel system hose, fitting or line, the fuel system pressure must be released. Failure to follow these instructions can result in personal injury or death.

Install a fuel pressure gauge to the fuel rail.

Start the engine and observe the fuel pressure reading.

Choose a conclusion that best matches your fuel pressure reading.

Within Specification
Go To 7

Below Specification
Go To 12

Above Specification
Replace the fuel filter/pressure regulator.
Perform the POWERTRAIN VERIFICATION TEST. (Refer to 9 - ENGINE - STANDARD PROCEDURE)

NOTE: Fuel pressure specification is 407 KPa +/- 34 KPa (59 psi +/- 5 psi).

P0306-CYLINDER 6 MISFIRE (CONTINUED)

7. FUEL PRESSURE LEAK DOWN

NOTE: Before continuing visually and physically inspect the fuel delivery system for external leaks or damage. Repair / replace as necessary.

Turn the ignition off.

WARNING: The fuel system is under a constant pressure (even with the engine off). Before testing or servicing any fuel system hose, fitting or line, the fuel system pressure must be released. Failure to follow these instructions can result in personal injury or death

Install special tool #6539 (5/16″) or #6631 (3/8″) fuel line adapter.

Install the fuel pressure gauge.

Start the engine and allow the fuel system to reach maximum pressure.

Turn the ignition off.

NOTE: Fuel specification is 407 KPa +/- 34 KPa (59 psi +/- 5 psi).

Using special tool #C4390, Hose Clamp Pliers, pinch the rubber fuel line between the fuel pressure gauge and the engine.

Monitor the fuel pressure gauge for a minimum of 5 minutes.

NOTE: The pressure should not fall below 241 KPa (35 psi).

Does the pressure fall below the listed specification?

Yes >> Replace the leaking Fuel Injector(s).
Perform the POWERTRAIN VERIFICATION TEST. (Refer to 9 - ENGINE - STANDARD PROCEDURE)

No >> Go To 8

---

8. FUEL INJECTOR OPERATION

WARNING: The fuel system is under a constant pressure (even with the engine off). Before testing or servicing any fuel system hose, fitting or line, the fuel system pressure must be released. Failure to follow these instructions can result in personal injury or death.

CAUTION: After each Fuel Injector actuation, start the engine to clean the cylinder of fuel. Failure to do so could cause engine damage.

Remove special tool #C4390.

Start the engine and allow the fuel pressure to reach maximum pressure.

Ignition on, engine not running.

Using the scan tool, actuate the No.6 Fuel Injector.

Monitor the fuel pressure gauge.

Does the fuel pressure gauge indicate a drop in fuel pressure?

Yes >> Go To 9

No >> Go To 10

NOTE: Turn the ignition off, remove the Fuel Pressure gauge, and connect the fuel lines before continuing.

P0306-CYLINDER 6 MISFIRE (CONTINUED)

9. ENGINE MECHANICAL

Check for any of the following conditions/mechanical problems.
ENGINE VACUUM - must be at least 13 inches in neutral
ENGINE VALVE TIMING - must be within specifications
ENGINE COMPRESSION - must be within specifications
ENGINE EXHAUST SYSTEM - must be free of any restrictions or leaks.
ENGINE PCV SYSTEM - must flow freely
TORQUE CONVERTER STALL SPEED - must be within specifications
POWER BRAKE BOOSTER - no internal vacuum leaks
FUEL - must be free of contamination
CAM LOBES - must not be worn excessively
CYLINDER LEAKAGE TEST - must be within specifications
VALVE SPRINGS - cannot be weak or broken

Are there any engine mechanical problems?

Yes >> Repair as necessary.
Perform the POWERTRAIN VERIFICATION TEST. (Refer to 9 - ENGINE - STANDARD PROCEDURE)

No >> Go To 17

---

10. FUEL INJECTOR

Turn the ignition off.
Disconnect the No.6 Fuel Injector harness connector.
Ignition on, engine not running.

NOTE: When a Misfire is detected for a particular cylinder, the PCM will shut down that cylinders Injector Control circuit.
With the scan tool, erase DTCs.
Using a 12-volt test light connected to 12-volts, probe the (K58) Injector Control No.6 circuit.
With the scan tool, actuate the Fuel Injector.

Does the test light blink/flicker?

Yes >> Replace the Fuel Injector.
Perform the POWERTRAIN VERIFICATION TEST. (Refer to 9 - ENGINE - STANDARD PROCEDURE)

No >> Go To 11

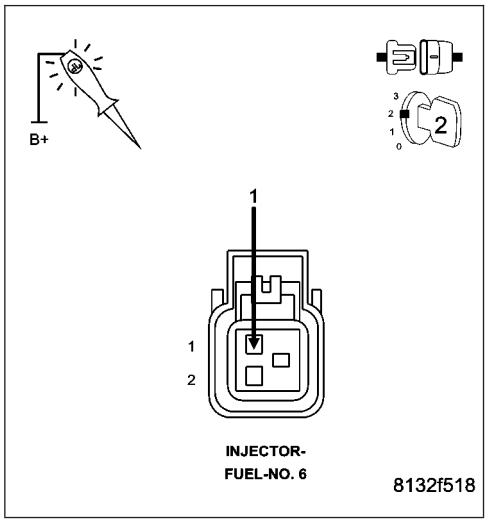

P0306-CYLINDER 6 MISFIRE (CONTINUED)

11. (K58) INJECTOR CONTROL NO.6 CIRCUIT

Turn the ignition off.

Disconnect the C2 PCM harness connector.

CAUTION: Do not probe the PCM harness connectors. Probing the PCM harness connectors will damage the PCM terminals resulting in poor terminal to pin connection. Install Miller Special Tool #8815 to perform diagnosis.

Check the (K58) Injector Control No.6 circuit for an open, short to ground, and short to voltage.

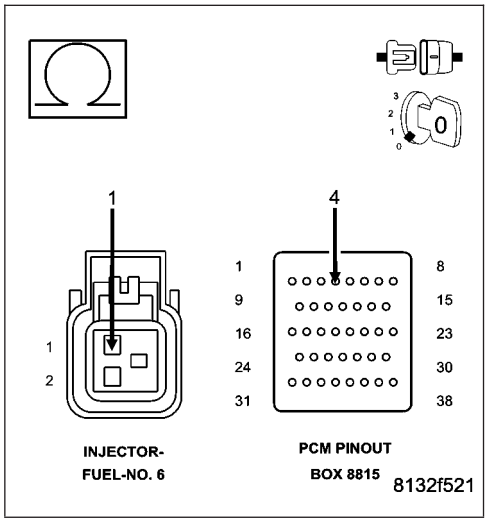

Was a problem found with the (K58) Injector Control No.6 circuit?

Yes >> Repair the excessive resistance or short in the (K58) Injector Control No.6 circuit.

Perform the POWERTRAIN VERIFICATION TEST. (Refer to 9 - ENGINE - STANDARD PROCEDURE)

No >> Go To 17

---

12. FUEL SUPPLY LINE RESTRICTED

Turn the ignition off.

WARNING: The fuel system is under a constant pressure (even with the engine off). Before testing or servicing any fuel system hose, fitting or line, the fuel system pressure must be released. Failure to follow these instructions can result in personal injury or death.

Raise vehicle on hoist, and disconnect the fuel pressure line at the fuel pump module.

Install special tool #6539 (5/16″) #6631(3/8″) fuel line adapter and the fuel pressure gauge between the fuel supply line and the fuel pump module.

Ignition on, engine not running.

With the scan tool, actuate the ASD Fuel System test and observe the fuel pressure gauge.

NOTE: Fuel pressure specification is 407 KPa +/- 34 KPa (59 psi +/- 5 psi).

Is the fuel pressure within specification?

Yes >> Repair or replace fuel supply line as necessary.

Perform the POWERTRAIN VERIFICATION TEST. (Refer to 9 - ENGINE - STANDARD PROCEDURE)

No >> Go To 13

P0306-CYLINDER 6 MISFIRE (CONTINUED)

13. FUEL PUMP INLET STRAINER

Turn the ignition off.

WARNING: The fuel system is under a constant pressure (even with the engine off). Before testing or servicing any fuel system hose, fitting or line, the fuel system pressure must be released. Failure to follow these instructions can result in personal injury or death.

Remove the Fuel Pump Module and inspect the Fuel Inlet Strainer.

Is the Fuel Inlet Strainer plugged?

Yes >> Replace the Fuel Pump Inlet Strainer.
Perform the POWERTRAIN VERIFICATION TEST. (Refer to 9 - ENGINE - STANDARD PROCEDURE)

No >> Before continuing, check the Fuel Pump Module harness connector terminals for corrosion, damage, or terminal push out. Make sure the ground circuit is functional. Repair as necessary. Replace the Fuel Pump Module.
Perform the POWERTRAIN VERIFICATION TEST. (Refer to 9 - ENGINE - STANDARD PROCEDURE)

---

14. IGNITION WIRE

NOTE: If the vehicle being tested does not have an ignition wire answer YES to this test and continue.

Turn the ignition off.

Remove the ignition wire.

Measure the resistance of the ignition wire.

Is the resistance below 10K ohms?

Yes >> Go To 15

No >> Replace the Ignition Wire.
Perform the POWERTRAIN VERIFICATION TEST. (Refer to 9 - ENGINE - STANDARD PROCEDURE)

---

15. IGNITION COIL

Disconnect the No.6 Ignition Coil harness connector.

Remove the Fuel Pump Relay.

Using a 12-volt test light connected to 12-volts, probe the (K10) Coil Control No.6 circuit.

Crank the engine for 5 seconds while observing the test light.

NOTE: The primary resistance of the 3.7L and 4.7L Ignition coil is 0.6 to 0.9 of an ohm at 77°F (25°C).

Does the test light brightly blink/flicker?

Yes >> Replace the Ignition Coil.
Perform the POWERTRAIN VERIFICATION TEST. (Refer to 9 - ENGINE - STANDARD PROCEDURE)

No >> Go To 16

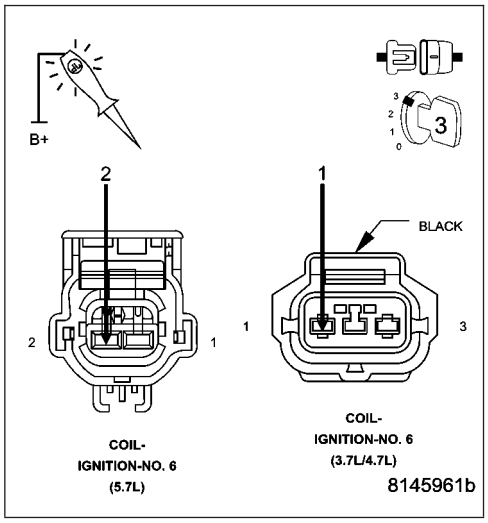

P0306-CYLINDER 6 MISFIRE (CONTINUED)

16. (K10) COIL CONTROL NO.6 CIRCUIT

Turn the ignition off.

Disconnect the PCM harness connector.

Check the (K10) Coil Control No.6 circuit for an open, short to ground, and short to voltage.

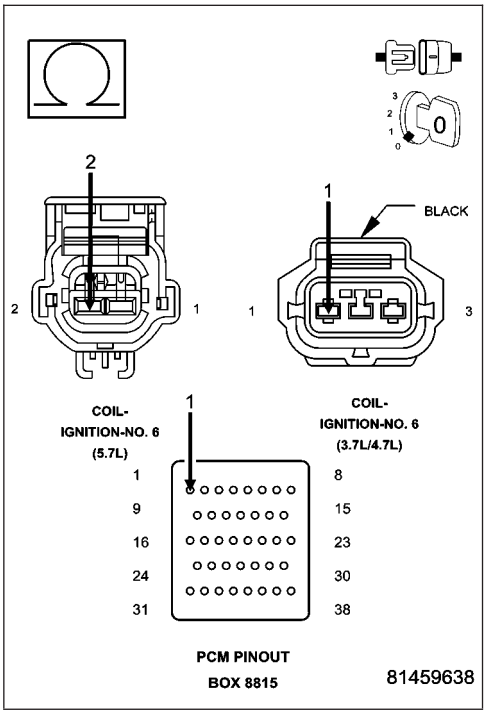

Was a problem found with the (K10) Coil Control No.6 circuit?

Yes >> Repair the (K10) Coil Control No.6 circuit.
Perform the POWERTRAIN VERIFICATION TEST. (Refer to 9 - ENGINE - STANDARD PROCEDURE)

No >> Go To 17

17. PCM

NOTE: Before continuing, check the PCM harness connector terminals for corrosion, damage, or terminal push out. Repair as necessary.

Using the schematics as a guide, inspect the wire harness and connectors. Pay particular attention to all Power and Ground circuits.

Were there any problems found?

Yes >> Repair as necessary.
Perform the POWERTRAIN VERIFICATION TEST. (Refer to 9 - ENGINE - STANDARD PROCEDURE)

No >> Replace and program the Powertrain Control Module per Service Information.
Perform the POWERTRAIN VERIFICATION TEST. (Refer to 9 - ENGINE - STANDARD PROCEDURE)

P0307-CYLINDER 7 MISFIRE

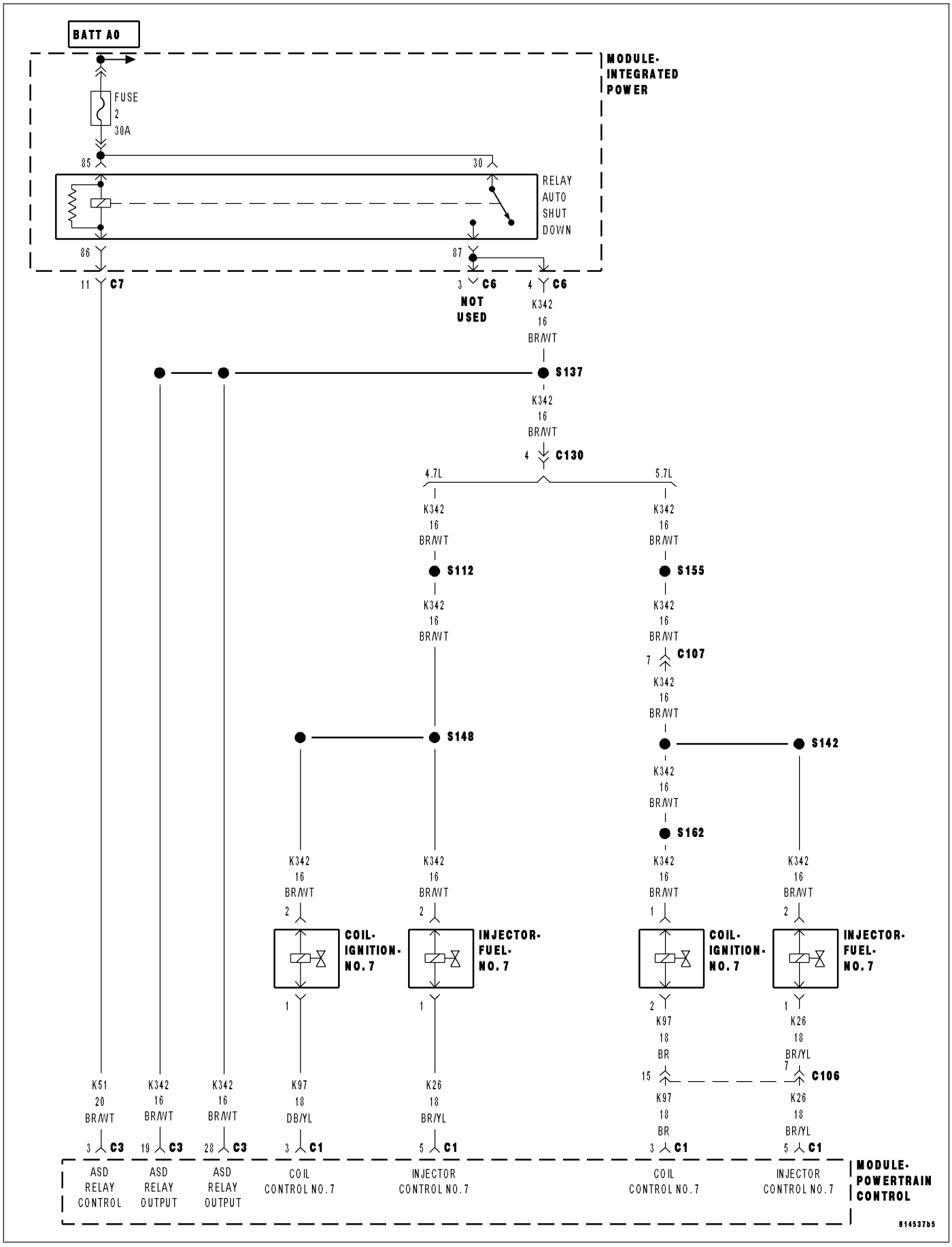

P0307-CYLINDER 7 MISFIRE (CONTINUED)

For the Engine circuit diagram (Refer to 9 - ENGINE - SCHEMATICS AND DIAGRAMS).

For a complete wiring diagram **Refer to Section 8W**.

- **When Monitored:**
  Any time the engine is running, and the adaptive numerator has been successfully updated.
- **Set Condition:**
  When more than 2% (2.5% LEV) misfire rate is measured during two trips, or with 10% to 30% misfire rate during on trip. Three good trips to clear the MIL.

Possible Causes
(K342) ASD RELAY OUTPUT CIRCUIT
(K26) INJECTOR CONTROL NO.7 CIRCUIT
(K97) COIL CONTROL NO.7 CIRCUIT
IGNITION WIRE
SPARK PLUG
IGNITION COIL
FUEL PUMP INLET STRAINER PLUGGED
RESTRICTED FUEL SUPPLY LINE
FUEL PUMP MODULE
FUEL PRESSURE LEAK DOWN
FUEL INJECTOR
ENGINE MECHANICAL
PCM

Always perform the Pre-Diagnostic Troubleshooting procedure before proceeding. (Refer to 9 - ENGINE - DIAGNOSIS AND TESTING).

Diagnostic Test

1. CYLINDER MIS-FIRE CONDITION ACTIVE

Engine running.

Observe the WHICH CYLINDER IS MISFIRING screen for at least one minute with a scan tool.

Is there a misfire present at this time?

Yes >> Go To 2

No >> Refer to the INTERMITTENT CONDITION Diagnostic Procedure.
Perform the POWERTRAIN VERIFICATION TEST. (Refer to 9 - ENGINE - STANDARD PROCEDURE)

P0307-CYLINDER 7 MISFIRE (CONTINUED)

2. VISUAL INSPECTION

NOTE: Anything that affects the speed of the crankshaft can cause a misfire DTC.

NOTE: When a Misfire is detected for a particular cylinder, the PCM will shut down that cylinders Injector Control circuit.

- Visually inspect the engine for any of the following conditions.
- Worn serpentine belt
- Binding Engine-Driven accessories: A/C Compressor, P/S Pump, Water pump.
- Misalignment of the Water pump, P/S Pump and A/C Compressor pulleys
- Corroded PCM power and ground circuits.
- Improper CKP, CMP, MAP, and TP Sensor mounting
- Poor connector/terminal to component connection. i.e., CKP sensor, Fuel Injector, Ign coil, etc.
- Vacuum leaks
- Restricted Air Induction system or Exhaust system.
- Internal engine component failures.

Were any of the above conditions present?

Yes >> Repair as necessary.
Perform the POWERTRAIN VERIFICATION TEST. (Refer to 9 - ENGINE - STANDARD PROCEDURE)

No >> Go To 3

P0307-CYLINDER 7 MISFIRE (CONTINUED)

3. (K342) ASD RELAY OUTPUT CIRCUIT

Turn the ignition off.
Disconnect the No.7 Ignition Coil harness connector.
Disconnect the No.7 Fuel Injector harness connector.
Ignition on, engine not running.
With the scan tool, actuate the ASD Relay.
Using a 12-volt test light connected to ground, probe the (K342) ASD Relay Output circuit in the Ignition Coil harness connector and Fuel Injector harness connector while the relay is actuating.

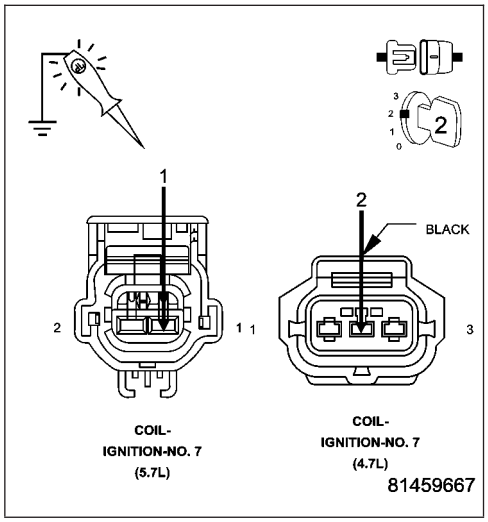

Does the test light illuminate brightly?

Yes >> Go To 4

No >> Repair the excessive resistance or short to ground in the (K342) ASD Relay Output circuit.
Perform the POWERTRAIN VERIFICATION TEST. (Refer to 9 - ENGINE - STANDARD PROCEDURE)

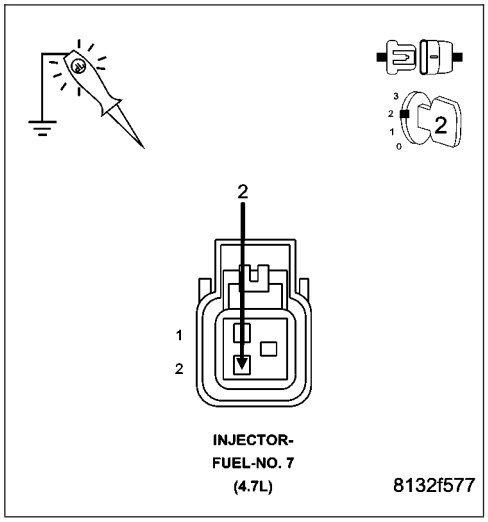

4. IGNITION SYSTEM OPERATION

Turn the ignition off.
Connect the Ignition Coil No.7 harness connector.
Remove the Ignition Coil.
Leave the Fuel Injector harness connector of the cylinder being tested disconnected.
Install a spark tester on the Ignition Coil.
While cranking the engine observe the spark coming from the spark tester.

Is good spark present?

Yes >> Go To 5

No >> Go To 14

NOTE: Connect the Fuel Injector harness connector before continuing.

P0307-CYLINDER 7 MISFIRE (CONTINUED)

5. SPARK PLUG

Turn the ignition off.

Remove the Spark Plug.

Inspect the Spark Plug for the following conditions.

- Cracks
- Carbon Tracking
- Foreign Material
- Gap size out of specifications
- Loose or broke electrode

NOTE: Lightly tap the bottom of the spark plug on a solid surface. The electrode in the spark plug should not move.

Were any of the above conditions present?

Yes >> Replace the Spark Plug.
Perform the POWERTRAIN VERIFICATION TEST. (Refer to 9 - ENGINE - STANDARD PROCEDURE)

No >> Go To 6

---

6. FUEL PRESSURE CHECK

WARNING: The fuel system is under a constant pressure (even with the engine off). Before testing or servicing any fuel system hose, fitting or line, the fuel system pressure must be released. Failure to follow these instructions can result in personal injury or death.

Install a fuel pressure gauge to the fuel rail.

Start the engine and observe the fuel pressure reading.

NOTE: Fuel pressure specification is 407 KPa +/- 34 KPa (59 psi +/- 5 psi).

Choose a conclusion that best matches your fuel pressure reading.

Within Specification
Go To 7

Below Specification
Go To 12

Above Specification
Replace the fuel filter/pressure regulator.
Perform the POWERTRAIN VERIFICATION TEST. (Refer to 9 - ENGINE - STANDARD PROCEDURE)

P0307-CYLINDER 7 MISFIRE (CONTINUED)

7. FUEL PRESSURE LEAK DOWN

NOTE: Before continuing visually and physically inspect the fuel delivery system for external leaks or damage. Repair / replace as necessary.

Turn the ignition off.

WARNING: The fuel system is under a constant pressure (even with the engine off). Before testing or servicing any fuel system hose, fitting or line, the fuel system pressure must be released. Failure to follow these instructions can result in personal injury or death.

Install special tool #6539 (5/16″) or #6631 (3/8″) fuel line adapter.

Install the fuel pressure gauge.

Start the engine and allow the fuel system to reach maximum pressure.

Turn the ignition off.

NOTE: Fuel specification is 407 KPa +/- 34 KPa (59 psi +/- 5 psi).

Using special tool #C4390, Hose Clamp Pliers, pinch the rubber fuel line between the fuel pressure gauge and the engine.

Monitor the fuel pressure gauge for a minimum of 5 minutes.

NOTE: The pressure should not fall below 241 KPa (35 psi).

Does the pressure fall below the listed specification?

Yes >> Replace the leaking Fuel Injector(s).
Perform the POWERTRAIN VERIFICATION TEST. (Refer to 9 - ENGINE - STANDARD PROCEDURE)

No >> Go To 8

---

8. FUEL INJECTOR OPERATION

WARNING: The fuel system is under a constant pressure (even with the engine off). Before testing or servicing any fuel system hose, fitting or line, the fuel system pressure must be released. Failure to follow these instructions can result in personal injury or death.

CAUTION: After each Fuel Injector actuation, start the engine to clean the cylinder of fuel. Failure to do so could cause engine damage.

Remove special tool #C4390.

Start the engine and allow the fuel pressure to reach maximum pressure.

Ignition on, engine not running.

Using the scan tool, actuate the No.7 Fuel Injector.

Monitor the fuel pressure gauge.

Does the fuel pressure gauge indicate a drop in fuel pressure?

Yes >> Go To 9

No >> Go To 10

NOTE: Turn the ignition off, remove the Fuel Pressure gauge, and connect the fuel lines before continuing.

P0307-CYLINDER 7 MISFIRE (CONTINUED)

9. ENGINE MECHANICAL

Check for any of the following conditions/mechanical problems.
ENGINE VACUUM - must be at least 13 inches in neutral
ENGINE VALVE TIMING - must be within specifications
ENGINE COMPRESSION - must be within specifications
ENGINE EXHAUST SYSTEM - must be free of any restrictions or leaks.
ENGINE PCV SYSTEM - must flow freely
TORQUE CONVERTER STALL SPEED - must be within specifications
POWER BRAKE BOOSTER - no internal vacuum leaks
FUEL - must be free of contamination
CAM LOBES - must not be worn excessively
CYLINDER LEAKAGE TEST - must be within specifications
VALVE SPRINGS - cannot be weak or broken

Are there any engine mechanical problems?

Yes >> Repair as necessary.
Perform the POWERTRAIN VERIFICATION TEST. (Refer to 9 - ENGINE - STANDARD PROCEDURE)

No >> Go To 17

---

10. FUEL INJECTOR

Turn the ignition off.
Disconnect the No.7 Fuel Injector harness connector.
Ignition on, engine not running.

NOTE: When a Misfire is detected for a particular cylinder, the PCM will shut down that cylinders Injector Control circuit.
With the scan tool, erase DTCs.
Using a 12-volt test light connected to 12-volts, probe the (K26) Injector Control No.7 circuit.
With the scan tool, actuate the Fuel Injector.

Does the test light blink/flicker?

Yes >> Replace the Fuel Injector.
Perform the POWERTRAIN VERIFICATION TEST. (Refer to 9 - ENGINE - STANDARD PROCEDURE)

No >> Go To 11

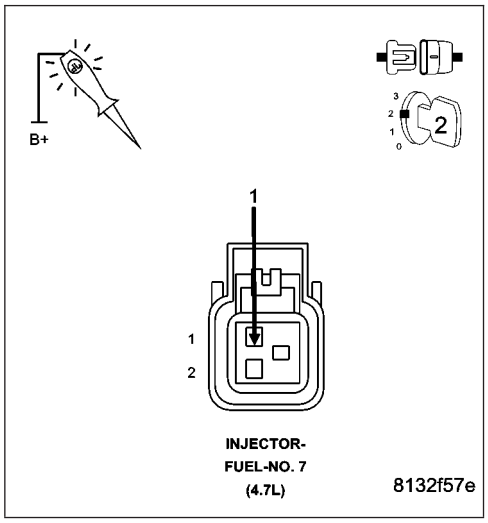

P0307-CYLINDER 7 MISFIRE (CONTINUED)

11. (K26) INJECTOR CONTROL NO.7 CIRCUIT

Turn the ignition off.

Disconnect the C1 PCM harness connector.

CAUTION: Do not probe the PCM harness connectors. Probing the PCM harness connectors will damage the PCM terminals resulting in poor terminal to pin connection. Install Miller Special Tool #8815 to perform diagnosis.

Check the (K26) Injector Control No.7 circuit for an open, short to ground, and short to voltage.

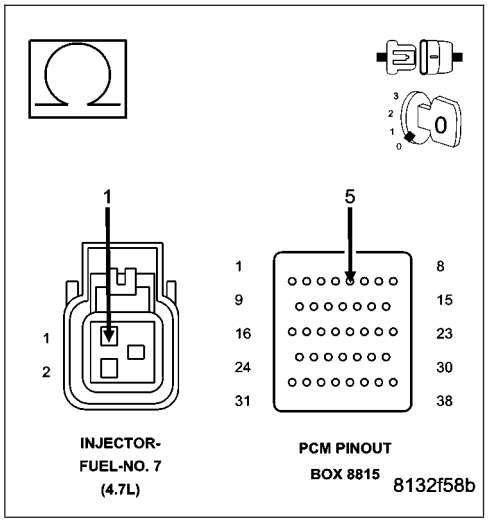

Was a problem found with the (K26) Injector Control No.7 circuit?

Yes >> Repair the excessive resistance or short in the (K26) Injector Control No.7 circuit.

Perform the POWERTRAIN VERIFICATION TEST. (Refer to 9 - ENGINE - STANDARD PROCEDURE)

No >> Go To 17

---

12. FUEL SUPPLY LINE RESTRICTED

Turn the ignition off.

WARNING: The fuel system is under a constant pressure (even with the engine off). Before testing or servicing any fuel system hose, fitting or line, the fuel system pressure must be released. Failure to follow these instructions can result in personal injury or death.

Raise vehicle on hoist, and disconnect the fuel pressure line at the fuel pump module.

Install special tool #6539 (5/16″) #6631(3/8″) fuel line adapter and the fuel pressure gauge between the fuel supply line and the fuel pump module.

Ignition on, engine not running.

With the scan tool, actuate the ASD Fuel System test and observe the fuel pressure gauge.

NOTE: Fuel pressure specification is 407 KPa +/- 34 KPa (59 psi +/- 5 psi).

Is the fuel pressure within specification?

Yes >> Repair or replace fuel supply line as necessary.

Perform the POWERTRAIN VERIFICATION TEST. (Refer to 9 - ENGINE - STANDARD PROCEDURE)

No >> Go To 13

P0307-CYLINDER 7 MISFIRE (CONTINUED)

13. FUEL PUMP INLET STRAINER

Turn the ignition off.

WARNING: The fuel system is under a constant pressure (even with the engine off). Before testing or servicing any fuel system hose, fitting or line, the fuel system pressure must be released. Failure to follow these instructions can result in personal injury or death.

Remove the Fuel Pump Module and inspect the Fuel Inlet Strainer.

Is the Fuel Inlet Strainer plugged?

Yes >> Replace the Fuel Pump Inlet Strainer.
Perform the POWERTRAIN VERIFICATION TEST. (Refer to 9 - ENGINE - STANDARD PROCEDURE)

No >> Before continuing, check the Fuel Pump Module harness connector terminals for corrosion, damage, or terminal push out. Make sure the ground circuit is functional. Repair as necessary. Replace the Fuel Pump Module.
Perform the POWERTRAIN VERIFICATION TEST. (Refer to 9 - ENGINE - STANDARD PROCEDURE)

---

14. IGNITION WIRE

NOTE: If the vehicle being tested does not have an ignition wire answer YES to this test and continue.

Turn the ignition off.

Remove the ignition wire.

Measure the resistance of the ignition wire.

Is the resistance below 10K ohms?

Yes >> Go To 15

No >> Replace the Ignition Wire.
Perform the POWERTRAIN VERIFICATION TEST. (Refer to 9 - ENGINE - STANDARD PROCEDURE)

---

15. IGNITION COIL

Disconnect the No.7 Ignition Coil harness connector.

Remove the Fuel Pump Relay.

Using a 12-volt test light connected to 12-volts, probe the (K97) Coil Control No.7 circuit.

Crank the engine for 5 seconds while observing the test light.

NOTE: The primary resistance of the 4.7L Ignition coil is 0.6 to 0.9 of an ohm at 77°F (25°C).

Does the test light brightly blink/flicker?

Yes >> Replace the Ignition Coil.
Perform the POWERTRAIN VERIFICATION TEST. (Refer to 9 - ENGINE - STANDARD PROCEDURE)

No >> Go To 16

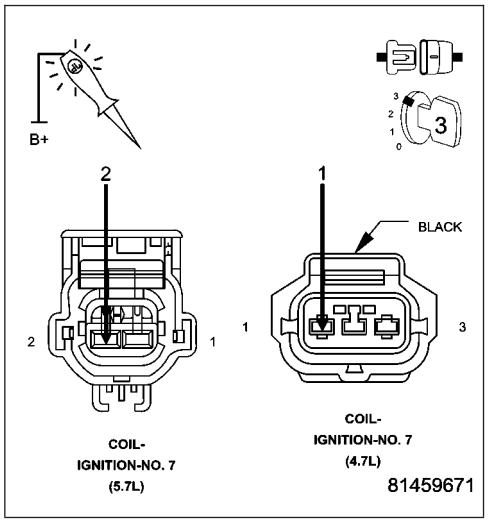

P0307-CYLINDER 7 MISFIRE (CONTINUED)

16. (K97) COIL CONTROL NO.7 CIRCUIT

Turn the ignition off.

Disconnect the C1 PCM harness connector.

CAUTION: Do not probe the PCM harness connectors. Probing the PCM harness connectors will damage the PCM terminals resulting in poor terminal to pin connection. Install Miller Special Tool #8815 to perform diagnosis.

Check the (K97) Coil Control No.7 circuit for an open, short to ground, and short to voltage.

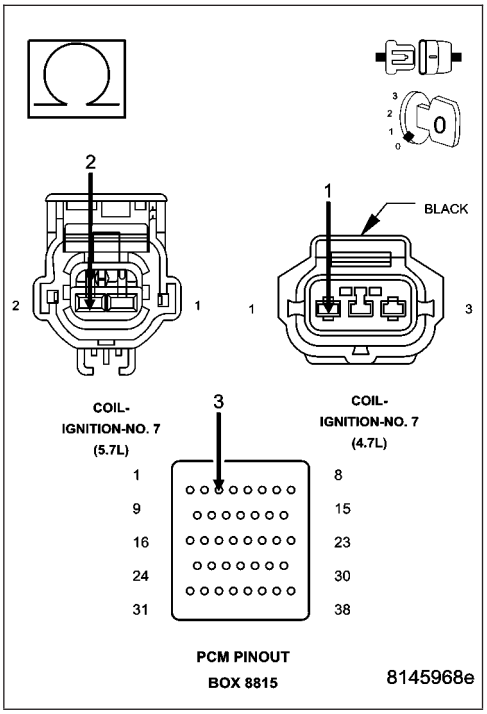

Was a problem found with the (K97) Coil Control No.7 circuit?

Yes >> Repair the (K97) Coil Control No.7 circuit.
Perform the POWERTRAIN VERIFICATION TEST. (Refer to 9 - ENGINE - STANDARD PROCEDURE)

No >> Go To 17

17. PCM

NOTE: Before continuing, check the PCM harness connector terminals for corrosion, damage, or terminal push out. Repair as necessary.

Using the schematics as a guide, inspect the wire harness and connectors. Pay particular attention to all Power and Ground circuits.

Were there any problems found?

Yes >> Repair as necessary.
Perform the POWERTRAIN VERIFICATION TEST. (Refer to 9 - ENGINE - STANDARD PROCEDURE)

No >> Replace and program the Powertrain Control Module per Service Information.
Perform the POWERTRAIN VERIFICATION TEST. (Refer to 9 - ENGINE - STANDARD PROCEDURE)

P0308-CYLINDER 8 MISFIRE

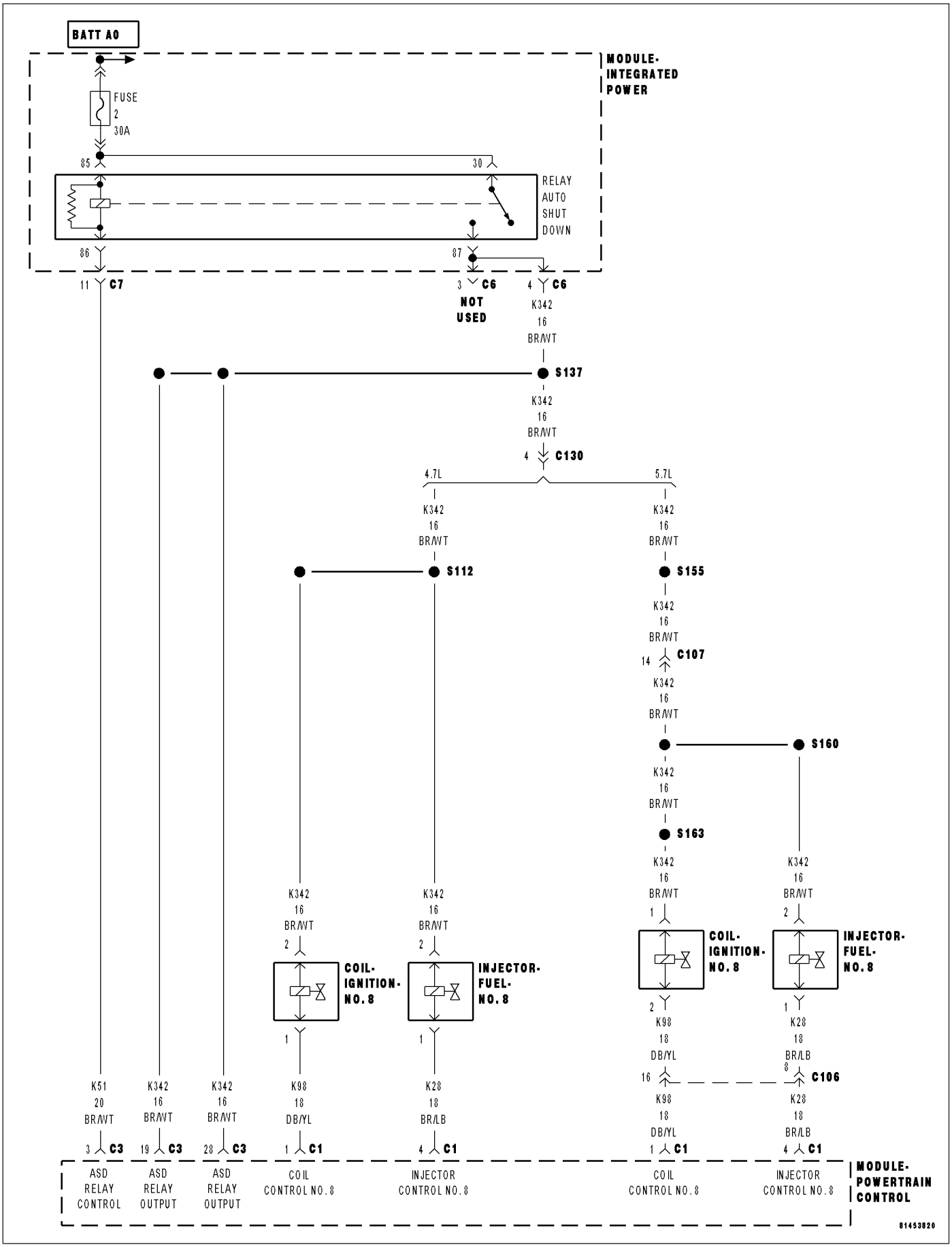

P0308-CYLINDER 8 MISFIRE (CONTINUED)

For the Engine circuit diagram (Refer to 9 - ENGINE - SCHEMATICS AND DIAGRAMS).

For a complete wiring diagram **Refer to Section 8W**.

- **When Monitored:**
  Any time the engine is running, and the adaptive numerator has been successfully updated.
- **Set Condition:**
  When more than 2% (2.5% LEV) misfire rate is measured during two trips, or with 10% to 30% misfire rate during on trip. Three good trips to clear the MIL.

Possible Causes
(K342) ASD RELAY OUTPUT CIRCUIT
(K28) INJECTOR CONTROL NO.8 CIRCUIT
(K98) COIL CONTROL NO.8 CIRCUIT
IGNITION WIRE
SPARK PLUG
IGNITION COIL
FUEL PUMP INLET STRAINER PLUGGED
RESTRICTED FUEL SUPPLY LINE
FUEL PUMP MODULE
FUEL PRESSURE LEAK DOWN
FUEL INJECTOR
ENGINE MECHANICAL
PCM

Always perform the Pre-Diagnostic Troubleshooting procedure before proceeding. (Refer to 9 - ENGINE - DIAGNOSIS AND TESTING).

Diagnostic Test

1. CYLINDER MIS-FIRE CONDITION ACTIVE

Engine running.

Observe the WHICH CYLINDER IS MISFIRING screen for at least one minute with a scan tool.

Is there a misfire present at this time?

Yes >> Go To 2

No >> Refer to the INTERMITTENT CONDITION Diagnostic Procedure.
Perform the POWERTRAIN VERIFICATION TEST. (Refer to 9 - ENGINE - STANDARD PROCEDURE)

P0308-CYLINDER 8 MISFIRE (CONTINUED)

2. VISUAL INSPECTION

NOTE: Anything that affects the speed of the crankshaft can cause a misfire DTC.

NOTE: When a Misfire is detected for a particular cylinder, the PCM will shut down that cylinders Injector Control circuit.

- Visually inspect the engine for any of the following conditions.
- Worn serpentine belt
- Binding Engine-Driven accessories: A/C Compressor, P/S Pump, Water pump.
- Misalignment of the Water pump, P/S Pump and A/C Compressor pulleys
- Corroded PCM power and ground circuits.
- Improper CKP, CMP, MAP, and TP Sensor mounting
- Poor connector/terminal to component connection. i.e., CKP sensor, Fuel Injector, Ign coil, etc.
- Vacuum leaks
- Restricted Air Induction system or Exhaust system.
- Internal engine component failures.

Were any of the above conditions present?

Yes >> Repair as necessary.
Perform the POWERTRAIN VERIFICATION TEST. (Refer to 9 - ENGINE - STANDARD PROCEDURE)

No >> Go To 3

P0308-CYLINDER 8 MISFIRE (CONTINUED)

3. (K342) ASD RELAY OUTPUT CIRCUIT

Turn the ignition off.
Disconnect the No.8 Ignition Coil harness connector.
Disconnect the No.8 Fuel Injector harness connector.
Ignition on, engine not running.
With the scan tool, actuate the ASD Relay.
Using a 12-volt test light connected to ground, probe the (K342) ASD Relay Output circuit in the Ignition Coil harness connector and Fuel Injector harness connector while the relay is actuating.

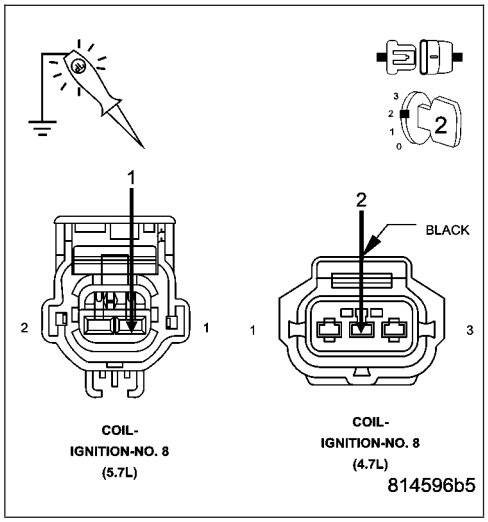

Does the test light illuminate brightly?

Yes >> Go To 4

No >> Repair the excessive resistance or short to ground in the (K342) ASD Relay Output circuit.
Perform the POWERTRAIN VERIFICATION TEST. (Refer to 9 - ENGINE - STANDARD PROCEDURE)

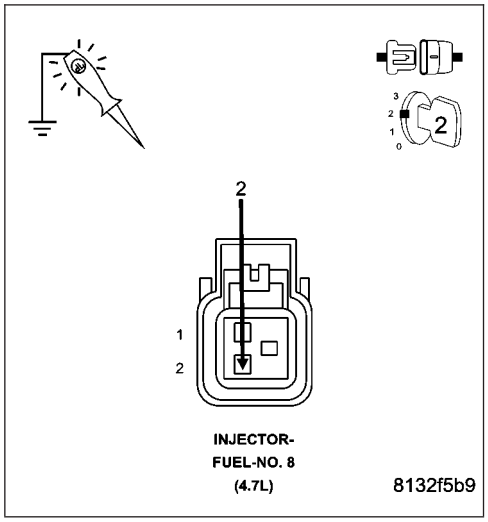

4. IGNITION SYSTEM OPERATION

Turn the ignition off.
Connect the Ignition Coil No.8 harness connector.
Remove the Ignition Coil.
Leave the Fuel Injector harness connector of the cylinder being tested disconnected.
Install a spark tester on the Ignition Coil.
While cranking the engine observe the spark coming from the spark tester.

NOTE: A crisp blue spark that is able to jump the gap of the spark tester should be generated.

Is good spark present?

Yes >> Go To 5

No >> Go To 14

NOTE: Connect the Fuel Injector harness connector before continuing.

P0308-CYLINDER 8 MISFIRE (CONTINUED)

5. SPARK PLUG

Turn the ignition off.

Remove the Spark Plug.

Inspect the Spark Plug for the following conditions.

- Cracks
- Carbon Tracking
- Foreign Material
- Gap size out of specifications
- Loose or broke electrode

NOTE: Lightly tap the bottom of the spark plug on a solid surface. The electrode in the spark plug should not move.

Were any of the above conditions present?

Yes >> Replace the Spark Plug.
Perform the POWERTRAIN VERIFICATION TEST. (Refer to 9 - ENGINE - STANDARD PROCEDURE)

No >> Go To 6

---

6. FUEL PRESSURE CHECK

WARNING: The fuel system is under a constant pressure (even with the engine off). Before testing or servicing any fuel system hose, fitting or line, the fuel system pressure must be released. Failure to follow these instructions can result in personal injury or death.

Install a fuel pressure gauge to the fuel rail.

Start the engine and observe the fuel pressure reading.

NOTE: Fuel pressure specification is 407 KPa +/- 34 KPa (59 psi +/- 5 psi).

Choose a conclusion that best matches your fuel pressure reading.

Within Specification
Go To 7

Below Specification
Go To 12

Above Specification
Replace the fuel filter/pressure regulator.
Perform the POWERTRAIN VERIFICATION TEST. (Refer to 9 - ENGINE - STANDARD PROCEDURE)

P0308-CYLINDER 8 MISFIRE (CONTINUED)

7. FUEL PRESSURE LEAK DOWN

NOTE: Before continuing visually and physically inspect the fuel delivery system for external leaks or damage. Repair / replace as necessary.

Turn the ignition off.

WARNING: The fuel system is under a constant pressure (even with the engine off). Before testing or servicing any fuel system hose, fitting or line, the fuel system pressure must be released. Failure to follow these instructions can result in personal injury or death.

Install special tool #6539 (5/16″) or #6631 (3/8″) fuel line adapter.

Install the fuel pressure gauge.

Start the engine and allow the fuel system to reach maximum pressure.

Turn the ignition off.

NOTE: Fuel specification is 407 KPa +/- 34 KPa (59 psi +/- 5 psi).

Using special tool #C4390, Hose Clamp Pliers, pinch the rubber fuel line between the fuel pressure gauge and the engine.

Monitor the fuel pressure gauge for a minimum of 5 minutes.

NOTE: The pressure should not fall below 241 KPa (35 psi).

Does the pressure fall below the listed specification?

Yes >> Replace the leaking Fuel Injector(s).
Perform the POWERTRAIN VERIFICATION TEST. (Refer to 9 - ENGINE - STANDARD PROCEDURE)

No >> Go To 8

---

8. FUEL INJECTOR OPERATION

WARNING: The fuel system is under a constant pressure (even with the engine off). Before testing or servicing any fuel system hose, fitting or line, the fuel system pressure must be released. Failure to follow these instructions can result in personal injury or death.

CAUTION: After each Fuel Injector actuation, start the engine to clean the cylinder of fuel. Failure to do so could cause engine damage.

Remove special tool #C4390.

Start the engine and allow the fuel pressure to reach maximum pressure.

Ignition on, engine not running.

Using the scan tool, actuate the No.8 Fuel Injector.

Monitor the fuel pressure gauge.

Does the fuel pressure gauge indicate a drop in fuel pressure?

Yes >> Go To 9

No >> Go To 10

NOTE: Turn the ignition off, remove the Fuel Pressure gauge, and connect the fuel lines before continuing.

P0308-CYLINDER 8 MISFIRE (CONTINUED)

9. ENGINE MECHANICAL

Check for any of the following conditions/mechanical problems.
ENGINE VACUUM - must be at least 13 inches in neutral
ENGINE VALVE TIMING - must be within specifications
ENGINE COMPRESSION - must be within specifications
ENGINE EXHAUST SYSTEM - must be free of any restrictions or leaks.
ENGINE PCV SYSTEM - must flow freely
TORQUE CONVERTER STALL SPEED - must be within specifications
POWER BRAKE BOOSTER - no internal vacuum leaks
FUEL - must be free of contamination
CAM LOBES - must not be worn excessively
CYLINDER LEAKAGE TEST - must be within specifications
VALVE SPRINGS - cannot be weak or broken

Are there any engine mechanical problems?

Yes >> Repair as necessary.
Perform the POWERTRAIN VERIFICATION TEST. (Refer to 9 - ENGINE - STANDARD PROCEDURE)

No >> Go To 17

---

10. FUEL INJECTOR

Turn the ignition off.
Disconnect the No.8 Fuel Injector harness connector.
Ignition on, engine not running.

NOTE: When a Misfire is detected for a particular cylinder, the PCM will shut down that cylinders Injector Control circuit.
With the scan tool, erase DTCs.
Using a 12-volt test light connected to 12-volts, probe the (K28) Injector Control No.8 circuit.
With the scan tool, actuate the Fuel Injector.

Does the test light blink/flicker?

Yes >> Replace the Fuel Injector.
Perform the POWERTRAIN VERIFICATION TEST. (Refer to 9 - ENGINE - STANDARD PROCEDURE)

No >> Go To 11

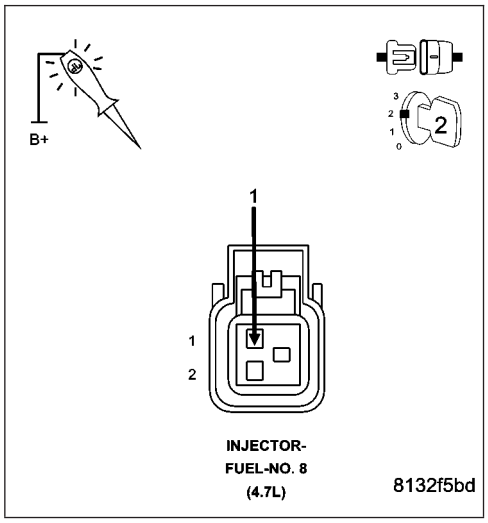

P0308-CYLINDER 8 MISFIRE (CONTINUED)

11. (K28) INJECTOR CONTROL NO.8 CIRCUIT

Turn the ignition off.

Disconnect the C1 PCM harness connector.

CAUTION: Do not probe the PCM harness connectors. Probing the PCM harness connectors will damage the PCM terminals resulting in poor terminal to pin connection. Install Miller Special Tool #8815 to perform diagnosis.

Check the (K28) Injector Control No.8 circuit for an open, short to ground, and short to voltage.

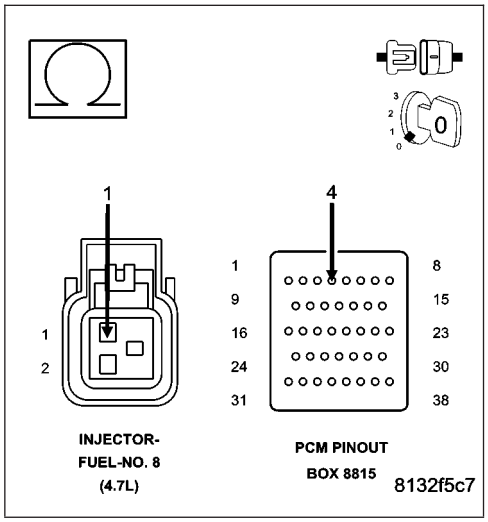

Was a problem found with the (K28) Injector Control No.8 circuit?

Yes >> Repair the excessive resistance or short in the (K28) Injector Control No.8 circuit.

Perform the POWERTRAIN VERIFICATION TEST. (Refer to 9 - ENGINE - STANDARD PROCEDURE)

No >> Go To 17

---

12. FUEL SUPPLY LINE RESTRICTED

Turn the ignition off.

WARNING: The fuel system is under a constant pressure (even with the engine off). Before testing or servicing any fuel system hose, fitting or line, the fuel system pressure must be released. Failure to follow these instructions can result in personal injury or death.

Raise vehicle on hoist, and disconnect the fuel pressure line at the fuel pump module.

Install special tool #6539 (5/16″) #6631(3/8″) fuel line adapter and the fuel pressure gauge between the fuel supply line and the fuel pump module.

Ignition on, engine not running.

With the scan tool, actuate the ASD Fuel System test and observe the fuel pressure gauge.

NOTE: Fuel pressure specification is 407 KPa +/- 34 KPa (59 psi +/- 5 psi).

Is the fuel pressure within specification?

Yes >> Repair or replace fuel supply line as necessary.

Perform the POWERTRAIN VERIFICATION TEST. (Refer to 9 - ENGINE - STANDARD PROCEDURE)

No >> Go To 13

P0308-CYLINDER 8 MISFIRE (CONTINUED)

13. FUEL PUMP INLET STRAINER

Turn the ignition off.

WARNING: The fuel system is under a constant pressure (even with the engine off). Before testing or servicing any fuel system hose, fitting or line, the fuel system pressure must be released. Failure to follow these instructions can result in personal injury or death.

Remove the Fuel Pump Module and inspect the Fuel Inlet Strainer.

Is the Fuel Inlet Strainer plugged?

Yes >> Replace the Fuel Pump Inlet Strainer.
Perform the POWERTRAIN VERIFICATION TEST. (Refer to 9 - ENGINE - STANDARD PROCEDURE)

No >> Before continuing, check the Fuel Pump Module harness connector terminals for corrosion, damage, or terminal push out. Make sure the ground circuit is functional. Repair as necessary. Replace the Fuel Pump Module.
Perform the POWERTRAIN VERIFICATION TEST. (Refer to 9 - ENGINE - STANDARD PROCEDURE)

---

14. IGNITION WIRE

NOTE: If the vehicle being tested does not have an ignition wire answer YES to this test and continue.

Turn the ignition off.

Remove the ignition wire.

Measure the resistance of the ignition wire.

Is the resistance below 10K ohms?

Yes >> Go To 15

No >> Replace the Ignition Wire.
Perform the POWERTRAIN VERIFICATION TEST. (Refer to 9 - ENGINE - STANDARD PROCEDURE)

---

15. IGNITION COIL

Disconnect the No.8 Ignition Coil harness connector.

Remove the Fuel Pump Relay.

Using a 12-volt test light connected to 12-volts, probe the (K98) Coil Control No.8 circuit.

Crank the engine for 5 seconds while observing the test light.

NOTE: The primary resistance of the 4.7L Ignition coil is 0.6 to 0.9 of an ohm at 77°F (25°C).

Does the test light brightly blink/flicker?

Yes >> Replace the Ignition Coil.
Perform the POWERTRAIN VERIFICATION TEST. (Refer to 9 - ENGINE - STANDARD PROCEDURE)

No >> Go To 16

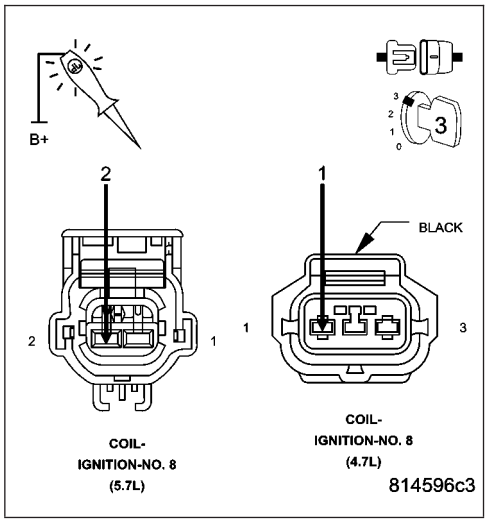

P0308-CYLINDER 8 MISFIRE (CONTINUED)

16. (K98) COIL CONTROL NO.8 CIRCUIT

Turn the ignition off.

Disconnect the C1 PCM harness connector.

CAUTION: Do not probe the PCM harness connectors. Probing the PCM harness connectors will damage the PCM terminals resulting in poor terminal to pin connection. Install Miller Special Tool #8815 to perform diagnosis.

Check the (K98) Coil Control No.8 circuit for an open, short to ground, and short to voltage.

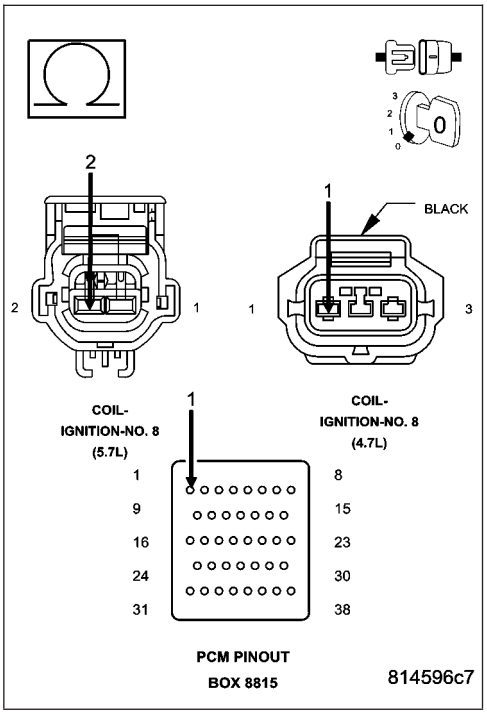

Was a problem found with the (K98) Coil Control No.8 circuit?

Yes >> Repair the (K98) Coil Control No.8 circuit.
Perform the POWERTRAIN VERIFICATION TEST. (Refer to 9 - ENGINE - STANDARD PROCEDURE)

No >> Go To 17

17. PCM

NOTE: Before continuing, check the PCM harness connector terminals for corrosion, damage, or terminal push out. Repair as necessary.

Using the schematics as a guide, inspect the wire harness and connectors. Pay particular attention to all Power and Ground circuits.

Were there any problems found?

Yes >> Repair as necessary.
Perform the POWERTRAIN VERIFICATION TEST. (Refer to 9 - ENGINE - STANDARD PROCEDURE)

No >> Replace and program the Powertrain Control Module per Service Information.
Perform the POWERTRAIN VERIFICATION TEST. (Refer to 9 - ENGINE - STANDARD PROCEDURE)

P0315-NO CRANK SENSOR LEARNED

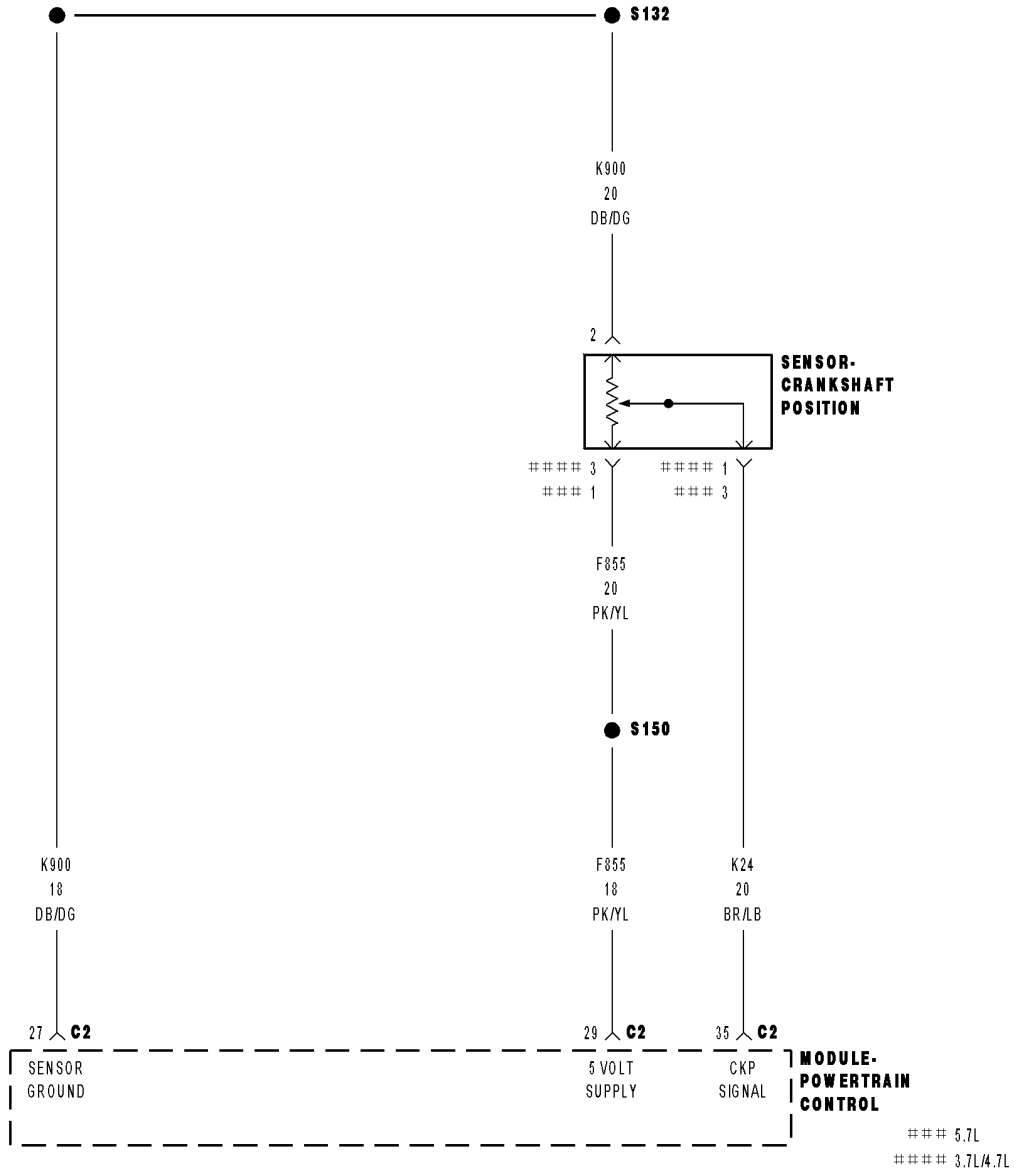

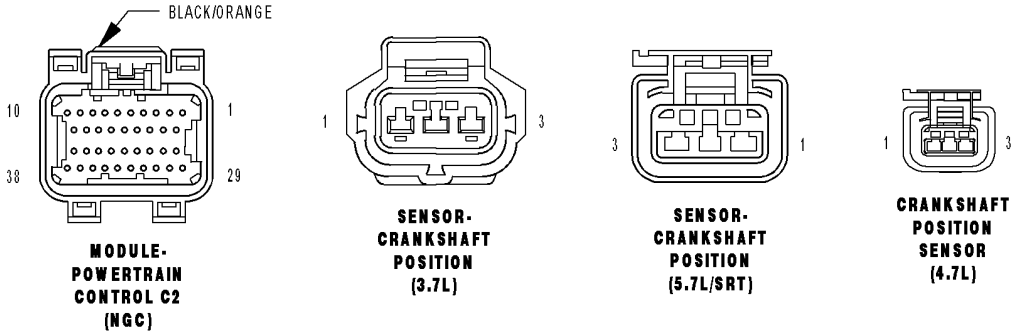

814538ec

P0315-NO CRANK SENSOR LEARNED (CONTINUED)

For the Engine circuit diagram (Refer to 9 - ENGINE - SCHEMATICS AND DIAGRAMS).

For a complete wiring diagram **Refer to Section 8W**.

- **When Monitored:**
  Under closed throttle decel and A/C off. ECT above 75°C (167°F). Engine start time is greater than 50 seconds.
- **Set Condition:**
  One of the CKP sensor target windows has more than 2.86% variance from the reference. One Trip Fault. Three good trips to turn off the MIL.

Possible Causes
TONE WHEEL/PULSE RING
WIRE HARNESS
CRANKSHAFT POSITION SENSOR

Always perform the Pre-Diagnostic Troubleshooting procedure before proceeding. (Refer to 9 - ENGINE - DIAGNOSIS AND TESTING).

Diagnostic Test

1. ACTIVE DTC

Ignition on, engine not running.

With a scan tool, clear DTCs, PCM battery disconnect to reset the PCM.

Start the engine.

If the MIL has not yet illuminated, test drive the vehicle to try to get the code to reset.

Does the code reset while cranking or during the test drive?

Yes >> Go To 2

No >> Refer to the INTERMITTENT CONDITION Diagnostic Procedure.
Perform the POWERTRAIN VERIFICATION TEST. (Refer to 9 - ENGINE - STANDARD PROCEDURE)

P0315-NO CRANK SENSOR LEARNED (CONTINUED)

2. WIRE HARNESS INSPECTION

Turn the ignition off.

Visually inspect the CKP wire harness. Look for any chafed, pierced, pinched, or partially broken wires.

Visually inspect the CKP wire harness connectors. Look for broken, bent, pushed out, or corroded terminals.

Make sure the Crankshaft Position Sensor is properly installed and the mounting bolt(s) are torqued to the proper specification.

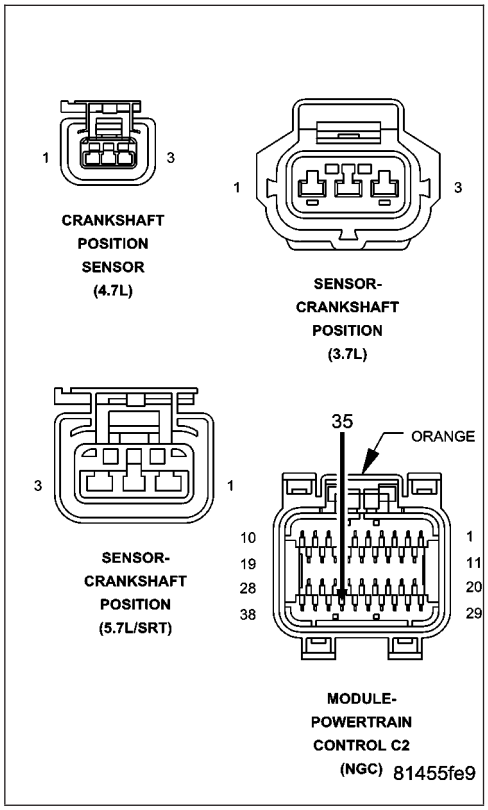

Were any of the above conditions present?

Yes >> Repair as necessary
Perform the POWERTRAIN VERIFICATION TEST. (Refer to 9 - ENGINE - STANDARD PROCEDURE)

No >> Go To 3

3. TONE WHEEL/FLEX PLATE INSPECTION

Remove the Crankshaft Position Sensor.

Inspect the Tone Wheel/Flex Plate slots for damage, foreign material, or excessive movement.

Were any problems found?

Yes >> Repair or replace the Tone Wheel/Flex Plate as necessary.
Perform the POWERTRAIN VERIFICATION TEST. (Refer to 9 - ENGINE - STANDARD PROCEDURE)

No >> Go To 4

4. CRANKSHAFT POSITION SENSOR

If there are no possible causes remaining, view repair.

Repair

Replace the Crankshaft Position Sensor.
Perform the POWERTRAIN VERIFICATION TEST. (Refer to 9 - ENGINE - STANDARD PROCEDURE)

P0325-KNOCK SENSOR 1 CIRCUIT

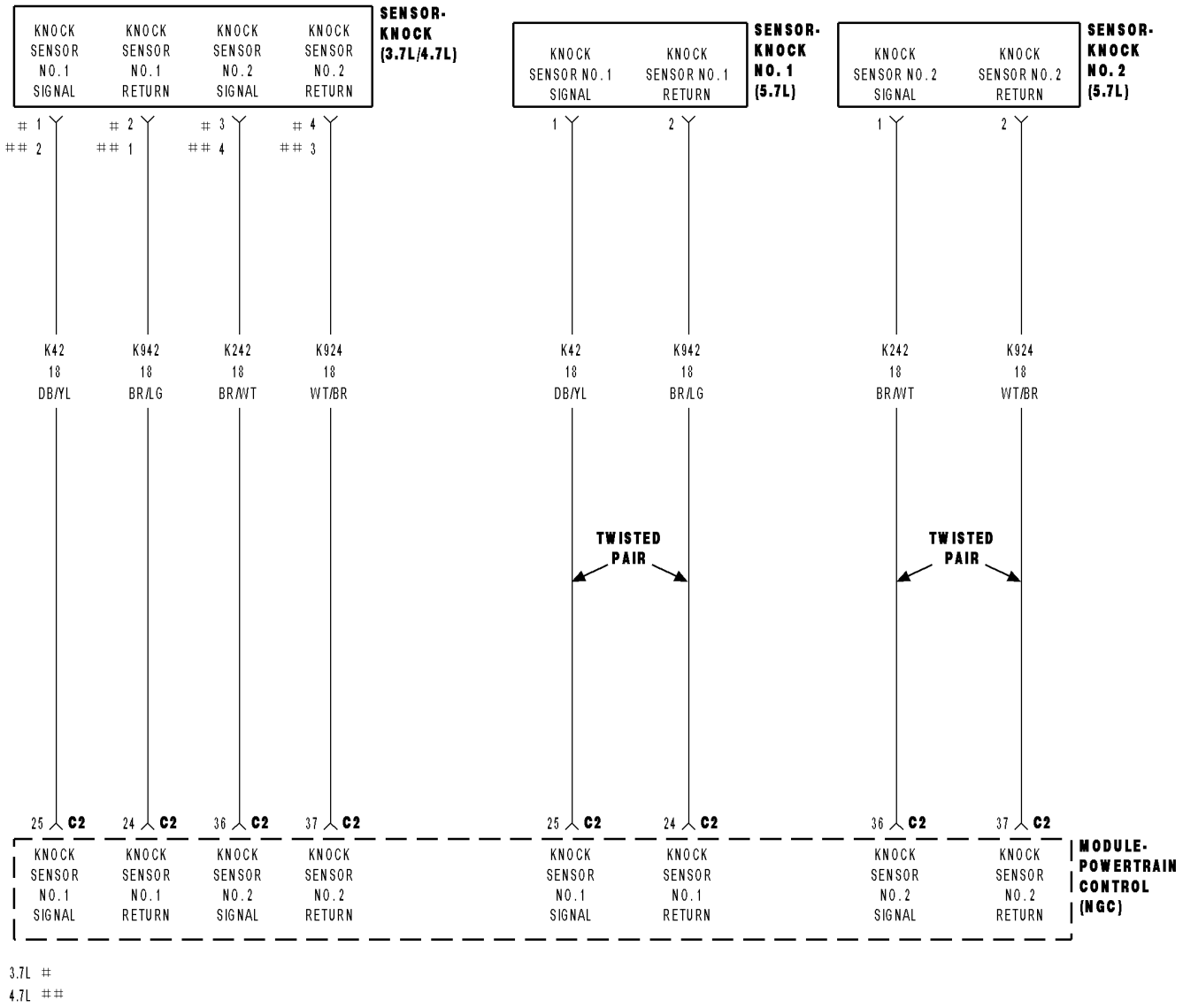

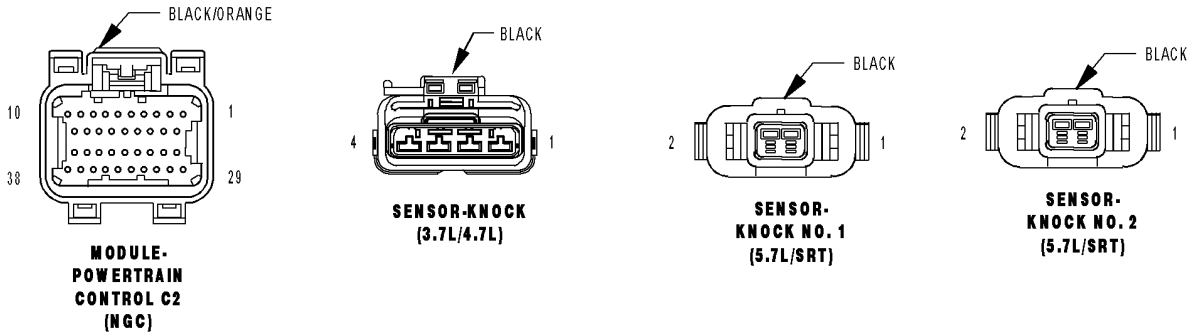

81453951

P0325-KNOCK SENSOR 1 CIRCUIT (CONTINUED)

For the Engine circuit diagram (Refer to 9 - ENGINE - SCHEMATICS AND DIAGRAMS).

For a complete wiring diagram **Refer to Section 8W**.

- **When Monitored:**
  Engine running.
- **Set Condition:**
  The Knock Sensor circuit voltage falls below a minimum value at idle or deceleration. The minimum value is from a look-up table internal to the PCM and is based on engine RPM. DTC will also set if the sensor voltage goes above 5.0 volts. One Trip Fault. Three good trips to turn off the MIL.

Possible Causes
(K42) KNOCK SENSOR NO.1 SIGNAL CIRCUIT SHORTED TO BATTERY VOLTAGE
(K42) KNOCK SENSOR NO.1 SIGNAL CIRCUIT OPEN
(K942) KNOCK SENSOR NO.1 RETURN CIRCUIT OPEN
(K42) KNOCK SENSOR NO.1 SIGNAL CIRCUIT SHORTED TO THE (K942) KNOCK SENSOR NO.1 RETURN CIRCUIT
(K42) KNOCK SENSOR NO.1 SIGNAL CIRCUIT SHORTED TO GROUND
KNOCK SENSOR
PCM

Always perform the Pre-Diagnostic Troubleshooting procedure before proceeding. (Refer to 9 - ENGINE - DIAGNOSIS AND TESTING).

Diagnostic Test

1. ACTIVE DTC

Ignition on, engine not running.

With a scan tool, read DTCs.

Is the DTC active at this time?

Yes >> Go To 2

No >> Refer to the INTERMITTENT CONDITION Diagnostic Procedure.
Perform the POWERTRAIN VERIFICATION TEST. (Refer to 9 - ENGINE - STANDARD PROCEDURE)

P0325-KNOCK SENSOR 1 CIRCUIT (CONTINUED)

2. (K42) KNOCK SENSOR NO.1 SIGNAL SHORTED TO BATTERY VOLTAGE

Turn the ignition off.

Disconnect the Knock Sensor harness connector.

Disconnect the C2 PCM harness connector.

Ignition on, engine not running.

Measure the voltage on the (K42) Knock Sensor No.1 Signal circuit in the Knock Sensor harness connector.

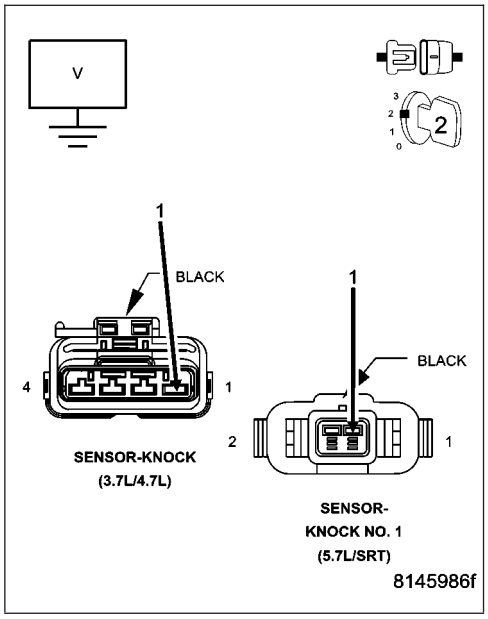

Is the voltage above 2.0 volts?

Yes >> Repair the short to battery voltage in the (K42) Knock Sensor No.1 Signal circuit.
Perform the POWERTRAIN VERIFICATION TEST. (Refer to 9 - ENGINE - STANDARD PROCEDURE)

No >> Go To 3

3. (K42) KNOCK SENSOR NO.1 SIGNAL CIRCUIT OPEN

Turn the ignition off.

CAUTION: Do not probe the PCM harness connectors. Probing the PCM harness connectors will damage the PCM terminals resulting in poor terminal to pin connection. Install Miller Special Tool #8815 to perform diagnosis.

Measure the resistance of the (K42) Knock Sensor No.1 Signal circuit from the Knock Sensor harness connector to the appropriate terminal of special tool #8815.

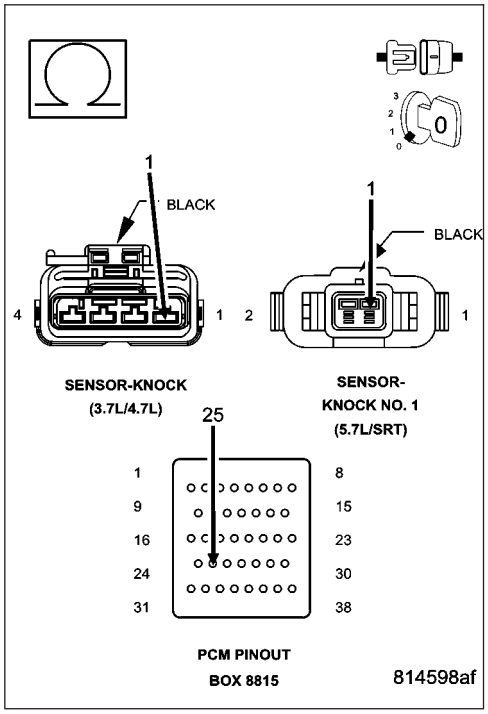

Is the resistance below 5.0 ohms?

Yes >> Go To 4

No >> Repair the open in the (K42) Knock Sensor No.1 Signal circuit.
Perform the POWERTRAIN VERIFICATION TEST. (Refer to 9 - ENGINE - STANDARD PROCEDURE)

P0325-KNOCK SENSOR 1 CIRCUIT (CONTINUED)

4. (K942) KNOCK SENSOR NO.1 RETURN CIRCUIT OPEN

Measure the resistance of the (K942) Knock Sensor No.1 Return circuit from the Knock Sensor harness connector to the appropriate terminal of special tool #8815.

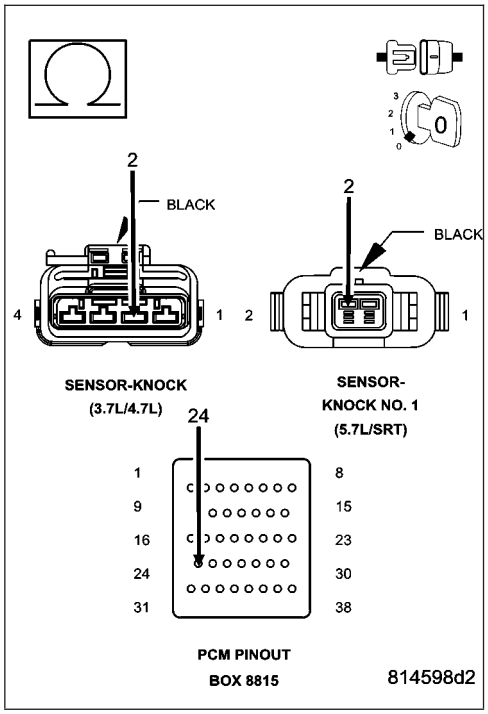

Is the resistance below 5.0 ohms?

Yes >> Go To 5

No >> Repair the open in the (K942) Knock Sensor No.1 Return circuit.

Perform the POWERTRAIN VERIFICATION TEST. (Refer to 9 - ENGINE - STANDARD PROCEDURE)

5. (K42) KNOCK SENSOR NO.1 SIGNAL SHORTED TO THE (K942) KNOCK SENSOR NO.1 RETURN CIRCUIT

Measure the resistance between the (K42) Knock Sensor No.1 Signal circuit and the (K942) Knock Sensor No.1 Return circuit in the Knock Sensor harness connector.

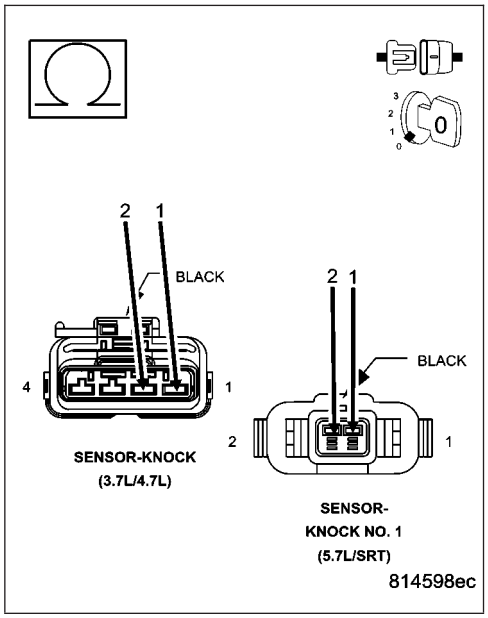

Is the resistance below 100 ohms?

Yes >> Repair the short between the (K42) Knock Sensor No.1 Signal circuit and the (K942) Knock Sensor No.1 Return circuit.

Perform the POWERTRAIN VERIFICATION TEST. (Refer to 9 - ENGINE - STANDARD PROCEDURE)

No >> Go To 6

P0325-KNOCK SENSOR 1 CIRCUIT (CONTINUED)

6. (K42) KNOCK SENSOR NO.1 SIGNAL SHORTED TO GROUND

Measure the resistance between ground and the (K42) Knock Sensor No.1 Signal circuit in the Knock Sensor harness connector.

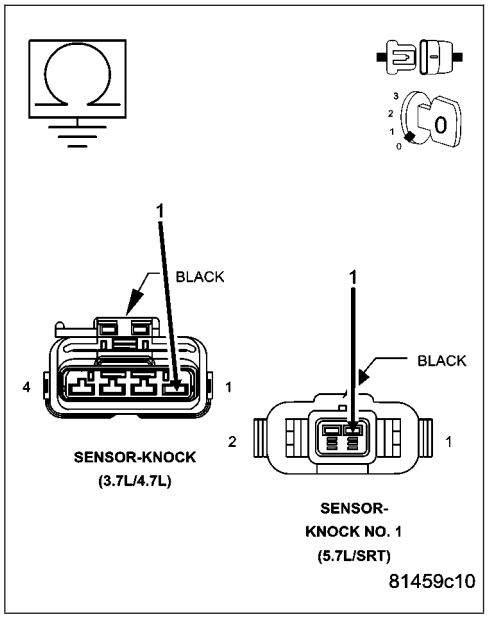

Is the resistance below 100 ohms?

Yes >> Repair the short to ground in the (K42) Knock Sensor No.1 Signal circuit.
Perform the POWERTRAIN VERIFICATION TEST. (Refer to 9 - ENGINE - STANDARD PROCEDURE)

No >> Go To 7

---

7. KNOCK SENSOR

Replace the Knock Sensor.
Ignition on, engine not running.
With the scan tool, erase DTC.
Attempt to operate the vehicle using the information noted in the Freeze Frame.
With the scan tool, read DTCs.

Does the scan tool display the DTC that was previously erased?

Yes >>

NOTE: Before continuing, check the PCM harness connector terminals for corrosion, damage, or terminal push out. Repair as necessary. Replace and program the Powertrain Control Module per Service Information.

Perform the POWERTRAIN VERIFICATION TEST. (Refer to 9 - ENGINE - STANDARD PROCEDURE)

No >> Test Complete.

P0330-KNOCK SENSOR 2 CIRCUIT

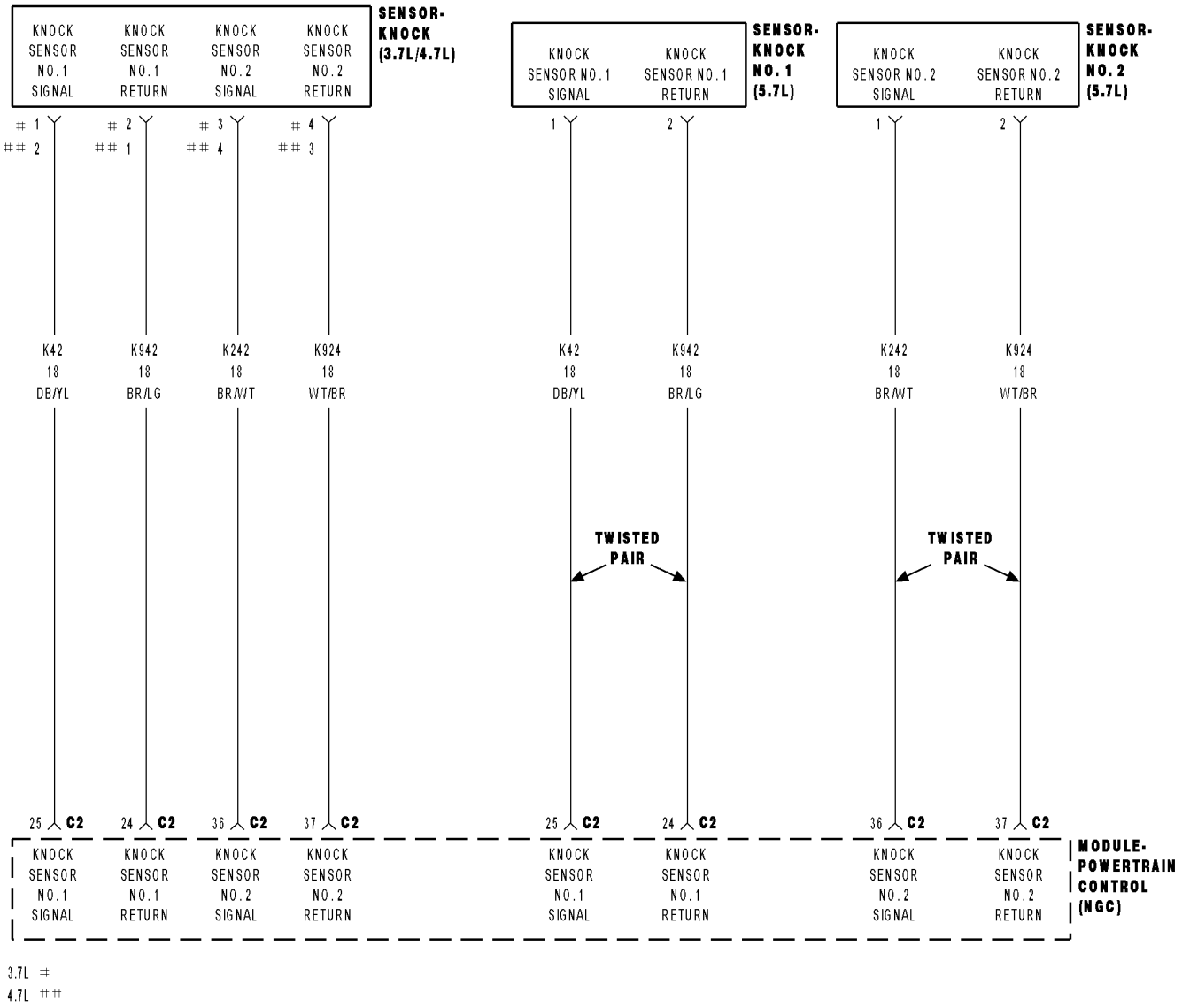

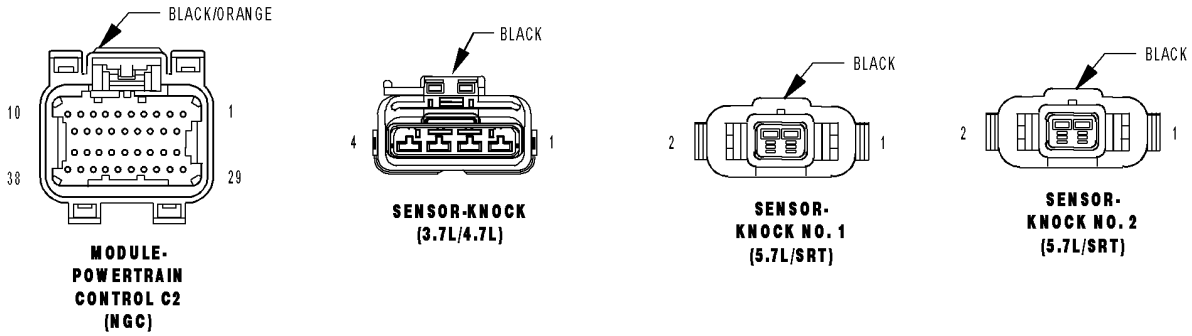

81453951

P0330-KNOCK SENSOR 2 CIRCUIT (CONTINUED)

For the Engine circuit diagram (Refer to 9 - ENGINE - SCHEMATICS AND DIAGRAMS).

For a complete wiring diagram **Refer to Section 8W**.

- **When Monitored:**
  Engine running
- **Set Condition:**
  The Knock Sensor circuit voltage falls below a minimum value at idle or deceleration. The minimum value is from a look-up table internal to the PCM and is based on engine RPM. DTC well also set if the sensor voltage goes above 5.0 volts. One Trip Fault. Three good trips to turn off the MIL. One Trip Fault. Three good trips to turn off the MIL.

Possible Causes
(K242) KNOCK SENSOR NO.2 SIGNAL CIRCUIT SHORTED TO BATTERY VOLTAGE
(K242) KNOCK SENSOR NO.2 SIGNAL CIRCUIT OPEN
(K924) KNOCK SENSOR NO.2 RETURN CIRCUIT OPEN
(K242) KNOCK SENSOR NO.2 SIGNAL CIRCUIT SHORTED TO THE (K924) KNOCK SENSOR NO.2 RETURN CIRCUIT
(K242) KNOCK SENSOR NO.2 SIGNAL CIRCUIT SHORTED TO GROUND
KNOCK SENSOR
PCM

Always perform the Pre-Diagnostic Troubleshooting procedure before proceeding. (Refer to 9 - ENGINE - DIAGNOSIS AND TESTING).

Diagnostic Test

1. ACTIVE DTC

Ignition on, engine not running.

With a scan tool, read DTCs.

Is the DTC active at this time?

Yes >> Go To 2

No >> Refer to the INTERMITTENT CONDITION Diagnostic Procedure.
Perform the POWERTRAIN VERIFICATION TEST. (Refer to 9 - ENGINE - STANDARD PROCEDURE)

P0330-KNOCK SENSOR 2 CIRCUIT (CONTINUED)

2. (K242) KNOCK SENSOR NO.2 SIGNAL SHORTED TO BATTERY VOLTAGE

Turn the ignition off.

Disconnect the No.2 Knock Sensor harness connector.

Disconnect the C2 PCM harness connector.

Ignition on, engine not running.

Measure the voltage on the (K242) Knock Sensor No.2 Signal circuit in the Knock Sensor harness connector.

Is the voltage above 2.0 volts?

Yes >> Repair the short to battery voltage in the (K242) Knock Sensor No.2 Signal circuit.
Perform the POWERTRAIN VERIFICATION TEST. (Refer to 9 - ENGINE - STANDARD PROCEDURE)

No >> Go To 3

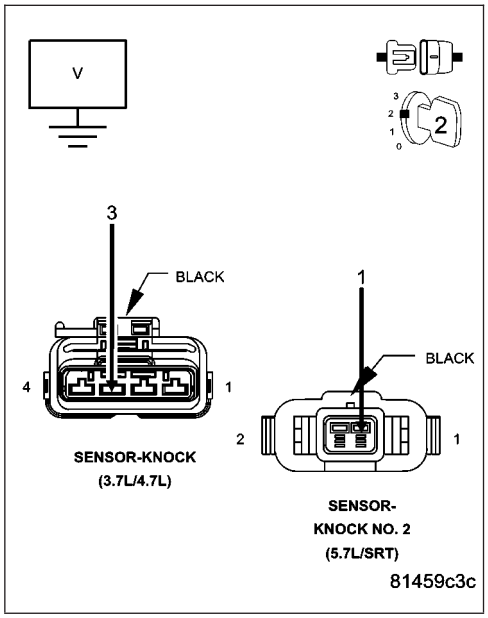

3. (K242) KNOCK SENSOR NO.2 SIGNAL CIRCUIT OPEN

Turn the ignition off.

CAUTION: Do not probe the PCM harness connectors. Probing the PCM harness connectors will damage the PCM terminals resulting in poor terminal to pin connection. Install Miller Special Tool #8815 to perform diagnosis.

Measure the resistance of the (K242) Knock Sensor No.2 Signal circuit from the Knock Sensor harness connector to the appropriate terminal of special tool #8815.

Is the resistance below 5.0 ohms?

Yes >> Go To 4

No >> Repair the open in the (K242) Knock Sensor No.2 Signal circuit.
Perform the POWERTRAIN VERIFICATION TEST. (Refer to 9 - ENGINE - STANDARD PROCEDURE)

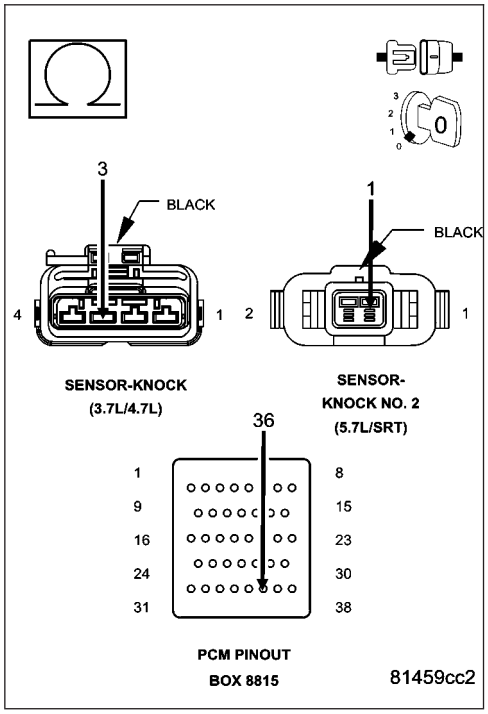

P0330-KNOCK SENSOR 2 CIRCUIT (CONTINUED)

4. (K924) KNOCK SENSOR NO.2 RETURN CIRCUIT OPEN

Measure the resistance of the (K924) Knock Sensor No.2 Return circuit from the Knock Sensor harness connector to the appropriate terminal of special tool #8815.

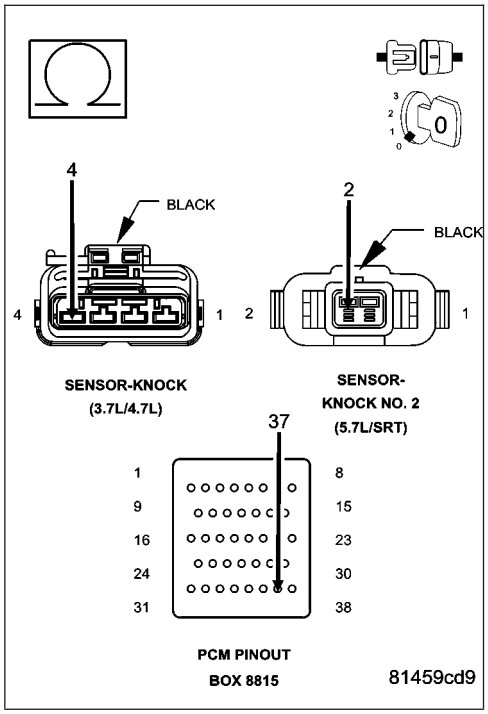

Is the resistance below 5.0 ohms?

Yes >> Go To 5

No >> Repair the open in the (K924) Knock Sensor No.2 Return circuit.

Perform the POWERTRAIN VERIFICATION TEST. (Refer to 9 - ENGINE - STANDARD PROCEDURE)

5. (K242) KNOCK SENSOR NO.2 SIGNAL SHORTED TO THE (K924) KNOCK SENSOR NO.2 RETURN CIRCUIT

Measure the resistance between the (K242) Knock Sensor No.2 Signal circuit and the (K924) Knock Sensor No.2 Return circuit in the Knock Sensor harness connector.

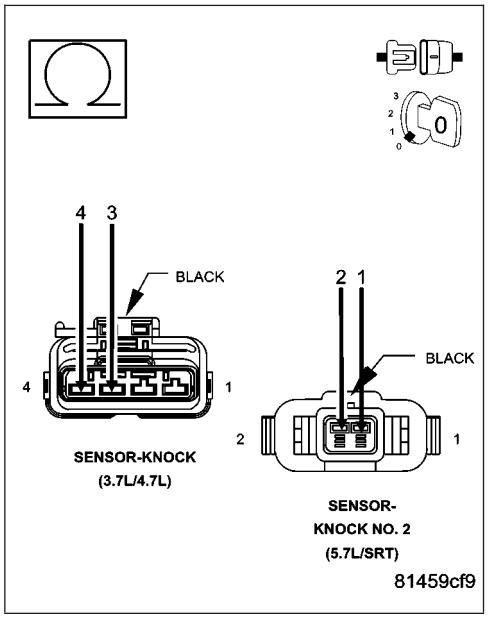

Is the resistance below 100 ohms?

Yes >> Repair the short between the (K242) Knock Sensor No.2 Signal circuit and the (K924) Knock Sensor No.2 Return circuit.

Perform the POWERTRAIN VERIFICATION TEST. (Refer to 9 - ENGINE - STANDARD PROCEDURE)

No >> Go To 6

P0330-KNOCK SENSOR 2 CIRCUIT (CONTINUED)

6. (K242) KNOCK SENSOR NO.2 SIGNAL SHORTED TO GROUND

Measure the resistance between ground and the (K242) Knock Sensor No.2 Signal circuit in the Knock Sensor harness connector.

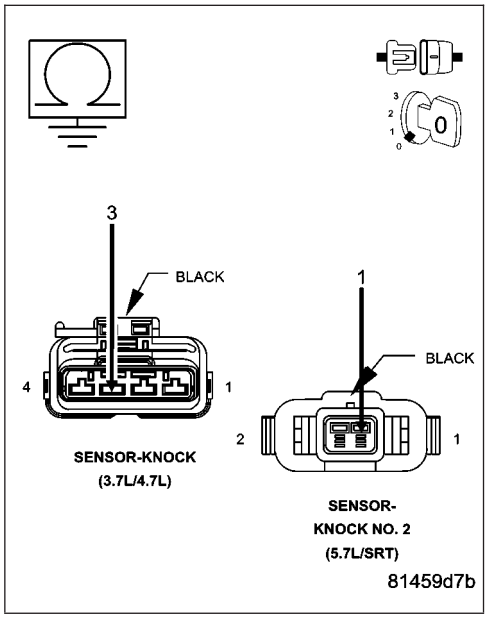

Is the resistance below 100 ohms?

Yes >> Repair the short to ground in the (K242) Knock Sensor No.2 Signal circuit.

Perform the POWERTRAIN VERIFICATION TEST. (Refer to 9 - ENGINE - STANDARD PROCEDURE)

No >> Go To 7

---

7. KNOCK SENSOR

Replace the Knock Sensor.

Ignition on, engine not running.

With the scan tool, erase DTC.

Attempt to operate the vehicle using the information noted in the Freeze Frame.

With the scan tool, read DTCs.

Does the scan tool display the DTC that was previously erased?

Yes >>

NOTE: Before continuing, check the PCM harness connector terminals for corrosion, damage, or terminal push out. Repair as necessary. Replace and program the Powertrain Control Module per Service Information.

Perform the POWERTRAIN VERIFICATION TEST. (Refer to 9 - ENGINE - STANDARD PROCEDURE)

No >> Test Complete.

P0335-CRANKSHAFT POSITION SENSOR CIRCUIT

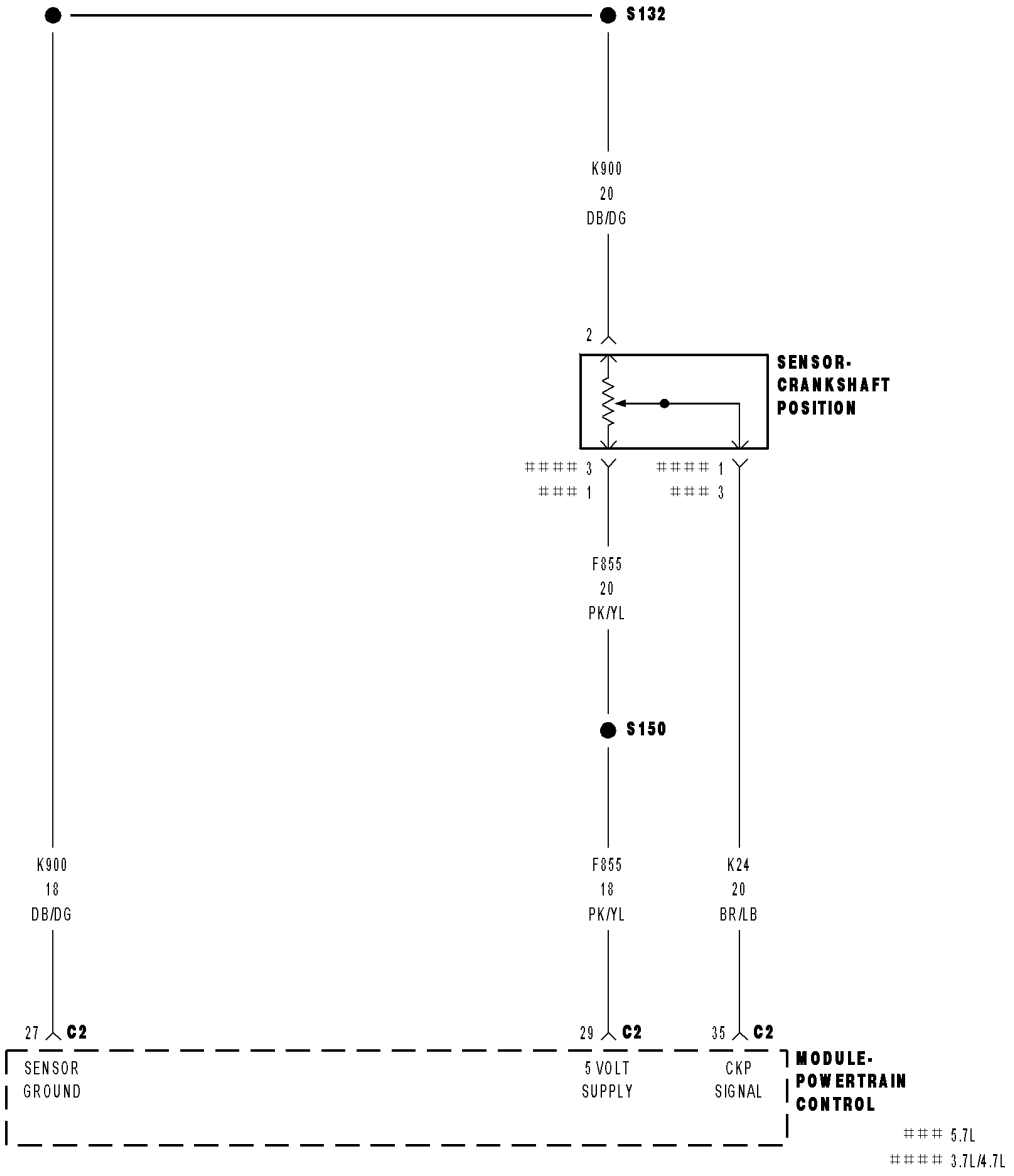

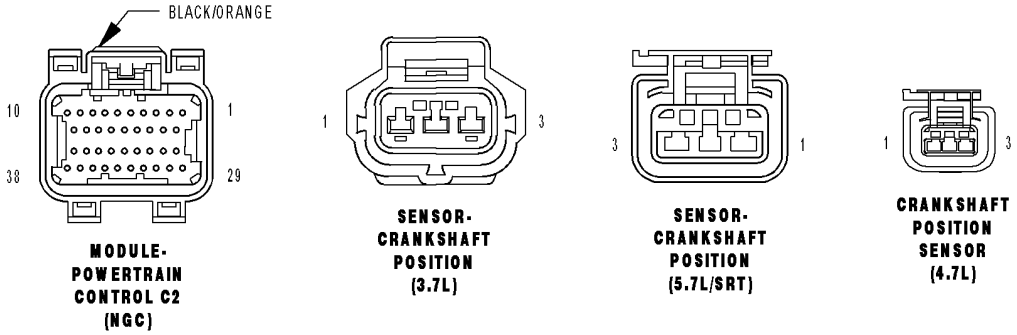

814538ec

P0335-CRANKSHAFT POSITION SENSOR CIRCUIT (CONTINUED)

For the Engine circuit diagram (Refer to 9 - ENGINE - SCHEMATICS AND DIAGRAMS).

For a complete wiring diagram **Refer to Section 8W**.

- **When Monitored:**
  Engine cranking.
- **Set Condition:**
  No CKP signal is present during engine cranking, and at least 8 camshaft position sensor signals have occurred. One Trip Fault. Three good trips to turn off the MIL.

Possible Causes
(F855) 5-VOLT SUPPLY CIRCUIT SHORTED TO BATTERY VOLTAGE
(F855) 5-VOLT SUPPLY CIRCUIT OPEN
(F855) 5-VOLT SUPPLY CIRCUIT SHORTED TO GROUND
(K24) CKP SIGNAL CIRCUIT OPEN
(K24) CKP SIGNAL CIRCUIT SHORTED TO BATTERY VOLTAGE
(K24) CKP SIGNAL CIRCUIT SHORTED GROUND
(K24) CKP SIGNAL CIRCUIT SHORTED TO THE (F855) 5-VOLT SUPPLY CIRCUIT
(K900) SENSOR GROUND CIRCUIT OPEN
CRANKSHAFT POSITION SENSOR
CAMSHAFT POSITION SENSOR
PCM

Always perform the Pre-Diagnostic Troubleshooting procedure before proceeding. (Refer to 9 - ENGINE - DIAGNOSIS AND TESTING).

Diagnostic Test

1. ACTIVE DTC

Crank the engine.
Ignition on, engine not running.
With a scan tool, read DTCs.

Is the DTC active at this time?

Yes >> Go To 2

No >> Go To 14

P0335-CRANKSHAFT POSITION SENSOR CIRCUIT (CONTINUED)

2. (F855) 5-VOLT SUPPLY CIRCUIT

Turn the ignition off.

Disconnect the CKP Sensor harness connector.

Ignition on, engine not running.

Measure the voltage on the (F855) 5-volt Supply circuit in the CKP Sensor harness connector.

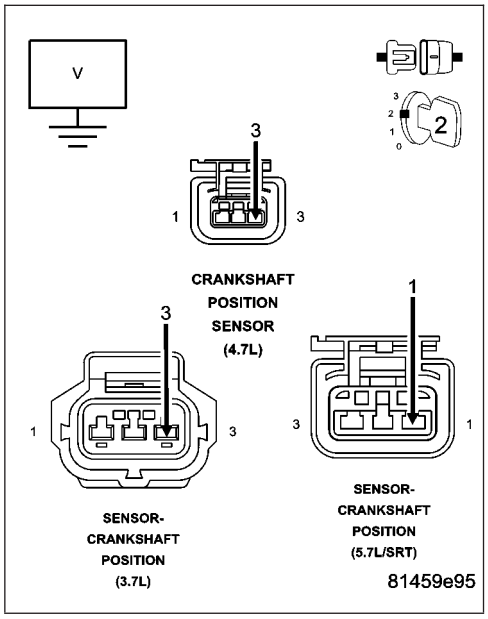

Is the voltage between 4.5 and 5.2 volts?

Yes >> Go To 3

No >> Go To 10

3. (K24) CKP SIGNAL CIRCUIT

Measure the voltage on the (K24) CKP Signal circuit in the CKP Sensor harness connector.

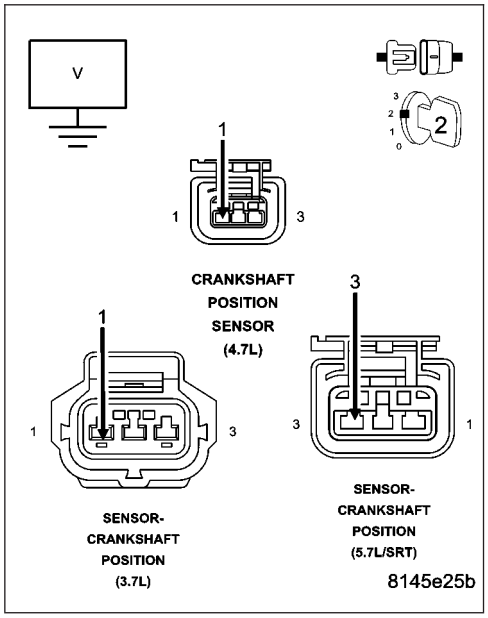

Is the voltage between 4.5 and 5.0 volts?

Yes >> Go To 4

No >> Go To 7

P0335-CRANKSHAFT POSITION SENSOR CIRCUIT (CONTINUED)

4. (K900) SENSOR GROUND CIRCUIT OPEN

Turn the ignition off.

Disconnect the C2 PCM harness connector.

CAUTION: Do not probe the PCM harness connectors. Probing the PCM harness connectors will damage the PCM terminals resulting in poor terminal to pin connection. Install Miller Special Tool #8815 to perform diagnosis.

Measure the resistance of the (K900) Sensor ground circuit from the CKP Sensor harness connector to the appropriate terminal of special tool #8815.

Is the resistance below 5.0 ohms?

Yes >> Go To 5

No >> Repair the open in the (K900) Sensor ground circuit.
Perform the POWERTRAIN VERIFICATION TEST. (Refer to 9 - ENGINE - STANDARD PROCEDURE)

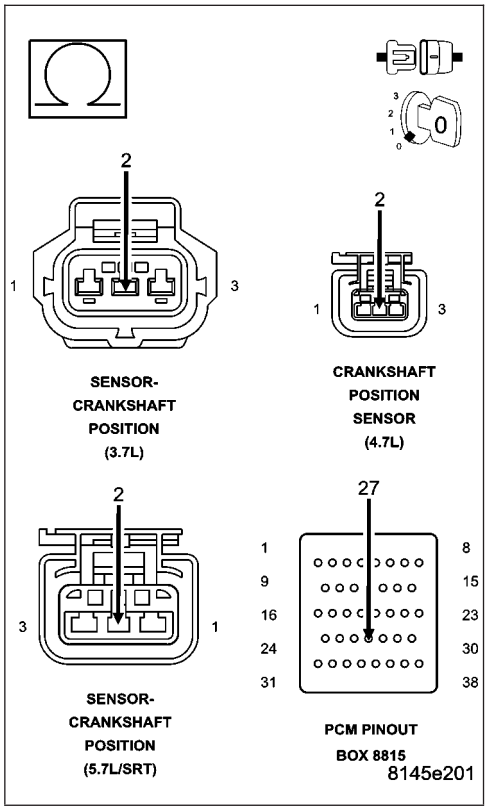

5. (K24) CKP SIGNAL CIRCUIT SHORTED TO THE (F855) 5-VOLT SUPPLY CIRCUIT

Measure the resistance between the (K24) CKP Signal circuit and the (F855) 5-volt Supply circuit in the CKP Sensor harness connector.

Is the resistance below 5.0 ohms?

Yes >> Repair the short between the (K24) CKP Signal circuit and the (F855) 5-volt Supply circuit.
Perform the POWERTRAIN VERIFICATION TEST. (Refer to 9 - ENGINE - STANDARD PROCEDURE)

No >> Go To 6

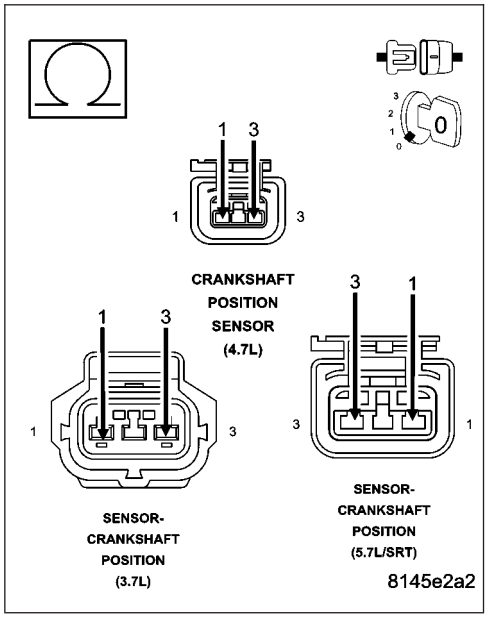

P0335-CRANKSHAFT POSITION SENSOR CIRCUIT (CONTINUED)

6. CRANKSHAFT POSITION SENSOR

NOTE: Inspect the slots on the flywheel for damage. If a problem is found repair as necessary.

If there are no possible causes remaining, view repair.

Repair

Replace the Crankshaft Position Sensor.

Perform the POWERTRAIN VERIFICATION TEST. (Refer to 9 - ENGINE - STANDARD PROCEDURE)

---

7. (K24) CKP SIGNAL CIRCUIT SHORTED TO BATTERY VOLTAGE

Turn the ignition off.

Disconnect the C2 PCM harness connector.

Ignition on, engine not running.

Measure the voltage on the (K24) CKP Signal circuit in the CKP Sensor harness connector.

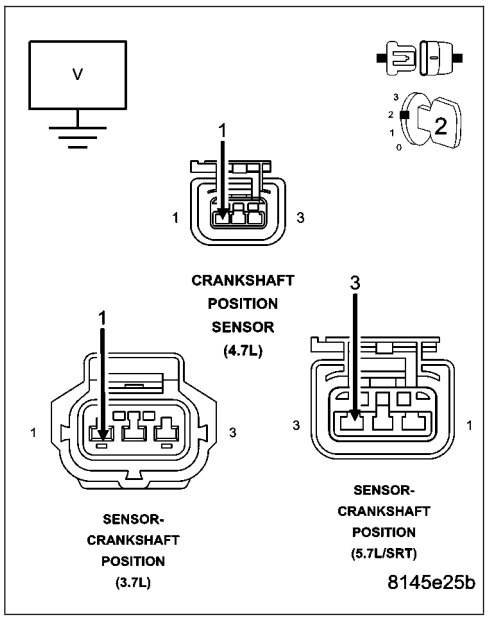

Is the voltage above 0 volts?

Yes >> Repair the short to battery voltage in the (K24) CKP Signal circuit.

Perform the POWERTRAIN VERIFICATION TEST. (Refer to 9 - ENGINE - STANDARD PROCEDURE)

No >> Go To 8

P0335-CRANKSHAFT POSITION SENSOR CIRCUIT (CONTINUED)

8. (K24) CKP SIGNAL CIRCUIT OPEN

Turn the ignition off.

CAUTION: Do not probe the PCM harness connectors. Probing the PCM harness connectors will damage the PCM terminals resulting in poor terminal to pin connection. Install Miller Special Tool #8815 to perform diagnosis.

Measure the resistance of the (K24) CKP Signal circuit from the CKP Sensor harness connector to the appropriate terminal of special tool #8815.

Is the resistance below 5.0 ohms?

Yes >> Go To 9

No >> Repair the open in the (K24) CKP Signal circuit. Perform the POWERTRAIN VERIFICATION TEST. (Refer to 9 - ENGINE - STANDARD PROCEDURE)

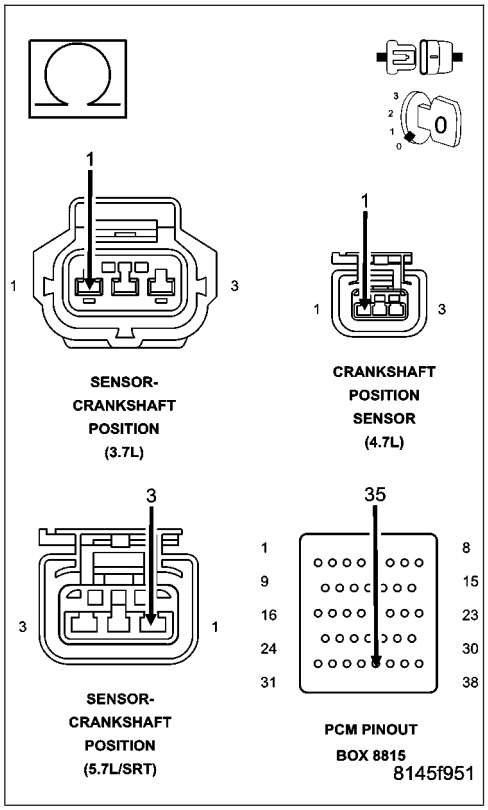

9. (K24) CKP SIGNAL CIRCUIT SHORTED TO GROUND

Measure the resistance between ground and the (K24) CKP Signal circuit in the CKP Sensor harness connector.

Is the resistance below 5.0 ohms?

Yes >> Repair the short to ground in the (K24) CKP Signal circuit. Perform the POWERTRAIN VERIFICATION TEST. (Refer to 9 - ENGINE - STANDARD PROCEDURE)

No >> Go To 13

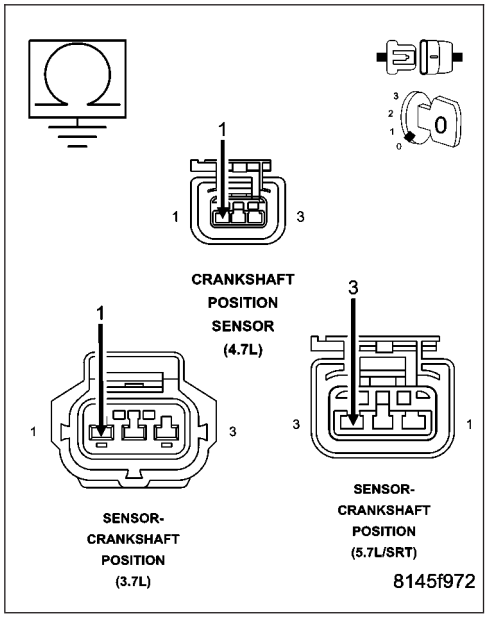

P0335-CRANKSHAFT POSITION SENSOR CIRCUIT (CONTINUED)

10. (F855) 5-VOLT SUPPLY CIRCUIT SHORTED TO BATTERY VOLTAGE

Turn the ignition off.

Disconnect the C2 PCM harness connector.

Ignition on, engine not running.

Measure the voltage on the (F855) 5-volt Supply circuit in the CKP Sensor harness connector.

Is the voltage above 0 volts?

Yes >> Repair the short to battery voltage in the (F855) 5-volt Supply circuit.
Perform the POWERTRAIN VERIFICATION TEST. (Refer to 9 - ENGINE - STANDARD PROCEDURE)

No >> Go To 11

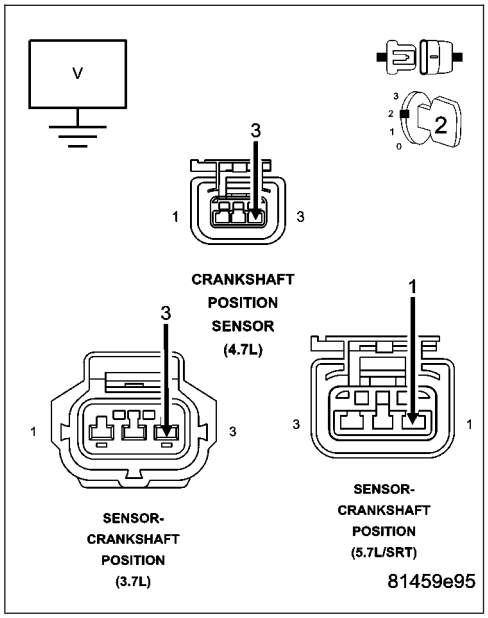

11. (F855) 5-VOLT SUPPLY CIRCUIT OPEN

Turn the ignition off.

CAUTION: Do not probe the PCM harness connectors. Probing the PCM harness connectors will damage the PCM terminals resulting in poor terminal to pin connection. Install Miller Special Tool #8815 to perform diagnosis.

Measure the resistance of the (F855) 5-volt Supply circuit from the CKP Sensor harness connector to the appropriate terminal of special tool #8815.

Is the resistance below 5.0 ohms?

Yes >> Go To 12

No >> Repair the open in the (F855) 5-volt Supply circuit.
Perform the POWERTRAIN VERIFICATION TEST. (Refer to 9 - ENGINE - STANDARD PROCEDURE)

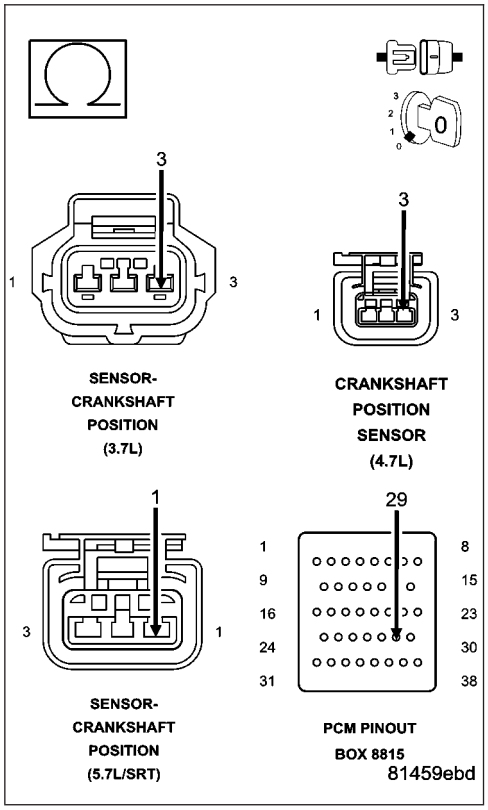

P0335-CRANKSHAFT POSITION SENSOR CIRCUIT (CONTINUED)

12. (F855) 5-VOLT SUPPLY CIRCUIT SHORTED TO GROUND

Measure the resistance between ground and the (F855) 5-volt Supply circuit in the CKP Sensor harness connector.

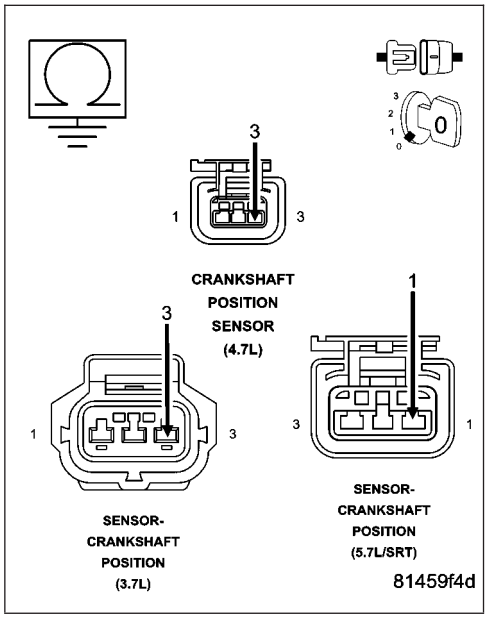

Is the resistance below 100 ohms?

Yes >> Repair the short to ground in the (F855) 5-volt Supply circuit.
Perform the POWERTRAIN VERIFICATION TEST. (Refer to 9 - ENGINE - STANDARD PROCEDURE)

No >> Go To 13

13. PCM

NOTE: Before continuing, check the PCM harness connector terminals for corrosion, damage, or terminal push out. Repair as necessary.

Using the schematics as a guide, inspect the wire harness and connectors. Pay particular attention to all Power and Ground circuits.

Were there any problems found?

Yes >> Repair as necessary.
Perform the POWERTRAIN VERIFICATION TEST. (Refer to 9 - ENGINE - STANDARD PROCEDURE)

No >> Replace and program the Powertrain Control Module per Service Information.
Perform the POWERTRAIN VERIFICATION TEST. (Refer to 9 - ENGINE - STANDARD PROCEDURE)

P0335-CRANKSHAFT POSITION SENSOR CIRCUIT (CONTINUED)

14. ERRATIC CKP SENSOR SIGNAL

Turn the ignition off.

With a lab scope probe and the Miller special tool #6801, backprobe the (K24) CKP Signal circuit in the CKP harness connector.

WARNING: When the engine is operating, do not stand in direct line with the fan. Do not put your hands near the pulleys, belts, or fan. Do not wear loose clothing. Failure to follow these instructions can result in personal injury or death.

Ignition on, engine not running.

Wiggle the related wire harness and lightly tap on the Crank Position Sensor.

Observe the lab scope screen.

Look for any pulses generated by the CKP Sensor.

Allow the engine to idle.

Observe the lab scope screen.

Did the CKP Sensor generate any erratic pulses?

Yes >> Inspect the related wire harness and replace the Crankshaft Position Sensor if no wiring problems were found.

Perform the POWERTRAIN VERIFICATION TEST. (Refer to 9 - ENGINE - STANDARD PROCEDURE)

No >> Go To 15

---

15. ERRATIC CMP SIGNAL

Turn the ignition off.

With a lab scope probe and the Miller special tool #6801, backprobe the (K44) CMP Signal circuit in the CMP harness connector.

WARNING: When the engine is operating, do not stand in direct line with the fan. Do not put your hands near the pulleys, belts, or fan. Do not wear loose clothing. Failure to follow these instructions can result in personal injury or death.

Ignition on, engine not running.

Wiggle the related wire harness and lightly tap on the Cam Position Sensor.

Observe the lab scope screen.

Look for any pulses generated by the CMP Sensor.

Allow the engine to idle.

Observe the lab scope screen.

Did the CMP Sensor generate any pulses?

Yes >> Inspect the related wire harness and replace the Camshaft Position Sensor if no wiring problems were found.

Perform the POWERTRAIN VERIFICATION TEST. (Refer to 9 - ENGINE - STANDARD PROCEDURE)

No >> Test complete, the conditions that set this DTC are not present at this time.

P0339-CRANKSHAFT POSITION SENSOR INTERMITTENT

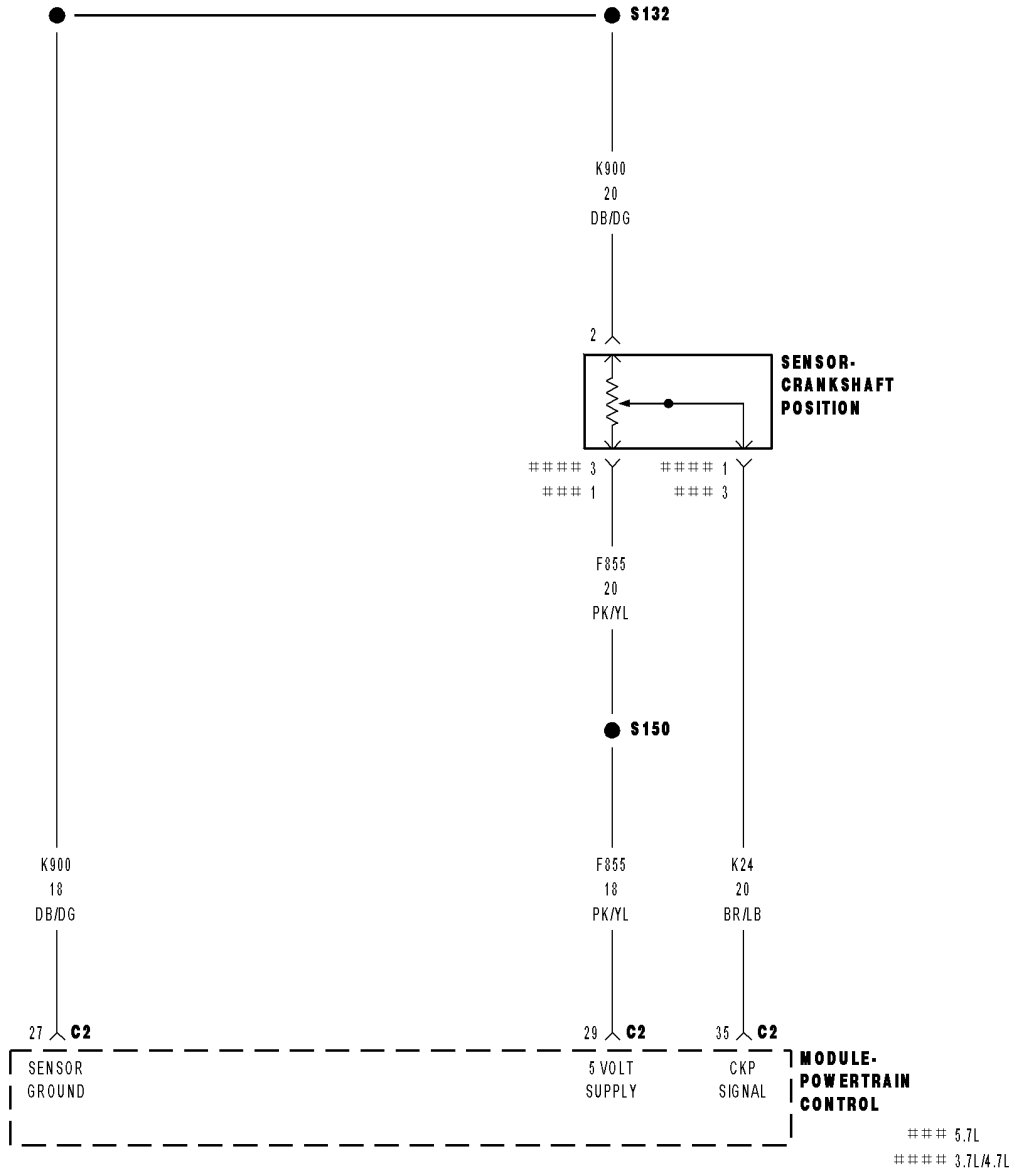

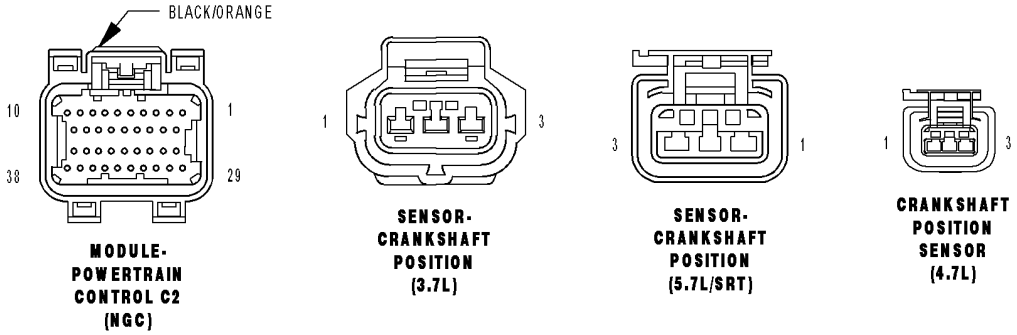

814538ec

P0339-CRANKSHAFT POSITION SENSOR INTERMITTENT (CONTINUED)

For the Engine circuit diagram (Refer to 9 - ENGINE - SCHEMATICS AND DIAGRAMS).

For a complete wiring diagram **Refer to Section 8W**.

- **When Monitored:**
  While cranking the engine and with the engine running.
- **Set Condition:**
  When the CKP Sensor failure counter reaches 20. One Trip Fault. Three good trips to turn off the MIL.

Possible Causes
(F855) 5-VOLT SUPPLY CIRCUIT OPEN
(F855) 5-VOLT SUPPLY CIRCUIT SHORTED TO GROUND
(K24) CKP SIGNAL CIRCUIT SHORTED TO BATTERY VOLTAGE
(K24) CKP SIGNAL CIRCUIT OPEN
(K24) CKP SIGNAL CIRCUIT SHORTED TO GROUND
(K24) CKP SIGNAL CIRCUIT SHORTED TO THE (F855) 5-VOLT SUPPLY CIRCUIT
CRANKSHAFT POSITION SENSOR
TONE WHEEL/PULSE RING
PCM

Always perform the Pre-Diagnostic Troubleshooting procedure before proceeding. (Refer to 9 - ENGINE - DIAGNOSIS AND TESTING).

Diagnostic Test

1. ACTIVE DTC

Ignition on, engine not running.

With a scan tool read DTCs.

Is the DTC active at this time?

Yes >> Go To 2

No >> Refer to the INTERMITTENT CONDITION Diagnostic Procedure.
Perform the POWERTRAIN VERIFICATION TEST. (Refer to 9 - ENGINE - STANDARD PROCEDURE)

---

2. CHECKING CRANKSHAFT POSITION SENSOR SIGNAL WITH A LAB SCOPE

Turn the ignition off.

With a lab scope probe and the Miller special tool #6801, backprobe the (K24) CKP Signal circuit in the Sensor harness connector.

WARNING: When the engine is operating, do not stand in direct line with the fan. Do not put your hands near the pulleys, belts, or fan. Do not wear loose clothing. Failure to follow these instructions can result in personal injury or death.

Ignition on, engine not running.

Observe the lab scope screen.

Start the engine.

Observe the lab scope screen.

Are there any irregular or missing signals?

Yes >> Go To 3

No >> Go To 8

P0339-CRANKSHAFT POSITION SENSOR INTERMITTENT (CONTINUED)

3. WIRE HARNESS INSPECTION

Turn the ignition off.

Visually inspect the related wire harness including the ground circuit. Look for any chafed, pierced, pinched, or partially broken wires.

Visually inspect the related wire harness connectors. Look for broken, bent, pushed out, or corroded terminals.

Make sure the Crankshaft Position Sensor and the Camshaft Position Sensor are properly installed and the mounting bolt(s) are torqued to the proper specification.

Refer to any TSBs that may apply.

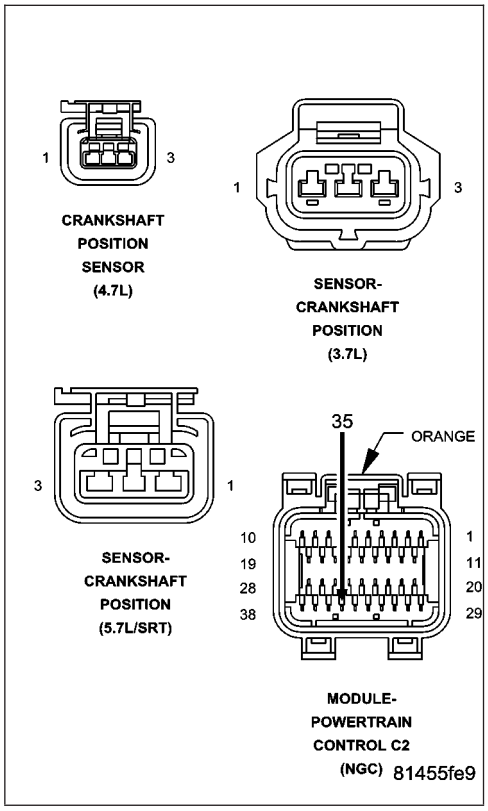

Were any of the above conditions present?

Yes >> Repair as necessary.
Perform the POWERTRAIN VERIFICATION TEST. (Refer to 9 - ENGINE - STANDARD PROCEDURE)

No >> Go To 4

---

4. (F855) 5-VOLT SUPPLY CIRCUIT OPEN OR SHORTED TO GROUND

Disconnect the CKP Sensor connector.

Ignition on, engine not running.

Measure the voltage on the (F855) 5-volt Supply circuit in the Sensor harness connector.

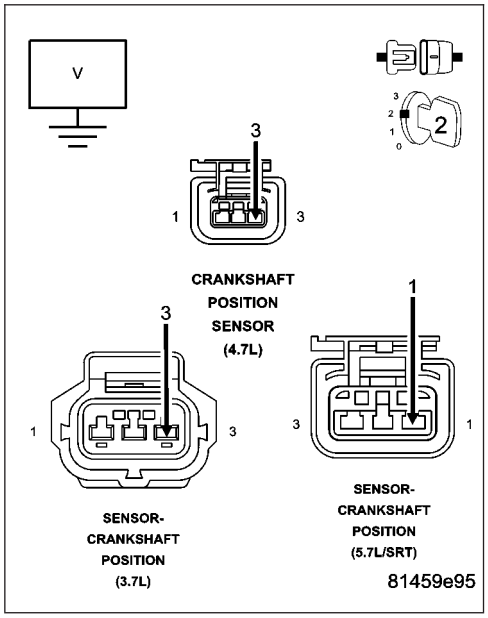

Is the voltage between 4.5 and 5.2 volts?

Yes >> Go To 5

No >> Repair the open or short to ground in the (F855) 5-volt Supply circuit. Use Miller special tool #8815 when checking for an open circuit to prevent PCM harness connector terminal damage.
Perform the POWERTRAIN VERIFICATION TEST. (Refer to 9 - ENGINE - STANDARD PROCEDURE)

P0339-CRANKSHAFT POSITION SENSOR INTERMITTENT (CONTINUED)

5. TONE WHEEL/FLEX PLATE INSPECTION

Turn the ignition off.

Carefully disconnect the Negative Battery (Ground) cable.

Remove the Crankshaft Position Sensor.

Inspect the Tone Wheel/Flex Plate slots for damage, foreign material, or excessive movement.

Were any problems found?

Yes >> Repair or replace the Tone Wheel/Flex Plate as necessary.
Perform the POWERTRAIN VERIFICATION TEST. (Refer to 9 - ENGINE - STANDARD PROCEDURE)

No >> Go To 6

---

6. CHECKING CAMSHAFT POSITION SENSOR SIGNAL WITH A LAB SCOPE

Install the CKP Sensor and connect the battery cable.

NOTE: An intermittent condition in the Cam Position Sensor can cause the P0339 to set.
With the a lab scope probe and the Miller special tool #6801, backprobe the (K44) CMP Signal circuit in the Sensor harness connector.

WARNING: When the engine is operating, do not stand in direct line with the fan. Do not put your hands near the pulleys, belts, or fan. Do not wear loose clothing. Failure to follow these instructions can result in personal injury or death.
Ignition on, engine not running.

Wiggle the related wire harness and lightly tap on the Cam Position Sensor.

Observe the lab scope screen.

Start the engine.

Observe the lab scope screen.

Are there any irregular or missing signals?

Yes >> Replace the Cam Position Sensor.
Perform the POWERTRAIN VERIFICATION TEST. (Refer to 9 - ENGINE - STANDARD PROCEDURE)

No >> Go To 7

---

7. CRANKSHAFT POSITION SENSOR

If there are no possible causes remaining, view repair.

Repair

Replace the Crankshaft Position Sensor.
Perform the POWERTRAIN VERIFICATION TEST. (Refer to 9 - ENGINE - STANDARD PROCEDURE)

P0339-CRANKSHAFT POSITION SENSOR INTERMITTENT (CONTINUED)

8. (K24) CKP SIGNAL CIRCUIT SHORTED TO BATTERY VOLTAGE

Turn the ignition off.

Disconnect the C2 PCM harness connector.

Disconnect the CKP Sensor harness connector.

Ignition on, engine not running.

Measure the voltage on the (K24) CKP Signal circuit in the Sensor harness connector.

Wiggle the related wire harness while taking this measurement.

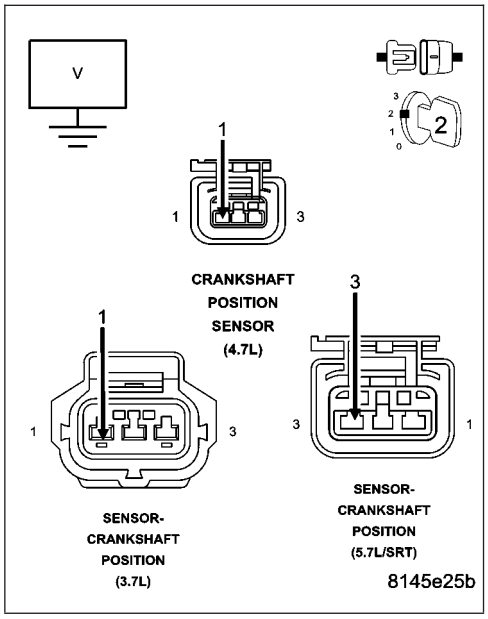

Is the voltage above 0 volts?

Yes >> Repair the short to battery voltage in the (K24) CKP Signal circuit.

Perform the POWERTRAIN VERIFICATION TEST. (Refer to 9 - ENGINE - STANDARD PROCEDURE)

No >> Go To 9

9. (K24) CKP SIGNAL CIRCUIT OPEN

Turn the ignition off.

CAUTION: Do not probe the PCM harness connectors. Probing the PCM harness connectors will damage the PCM terminals resulting in poor terminal to pin connection. Install Miller Special Tool #8815 to perform diagnosis.

Measure the resistance in the (K24) CKP Signal circuit from the CKP harness connector to the appropriate terminal of special tool #8815.

Wiggle the wire harness while taking this measurement.

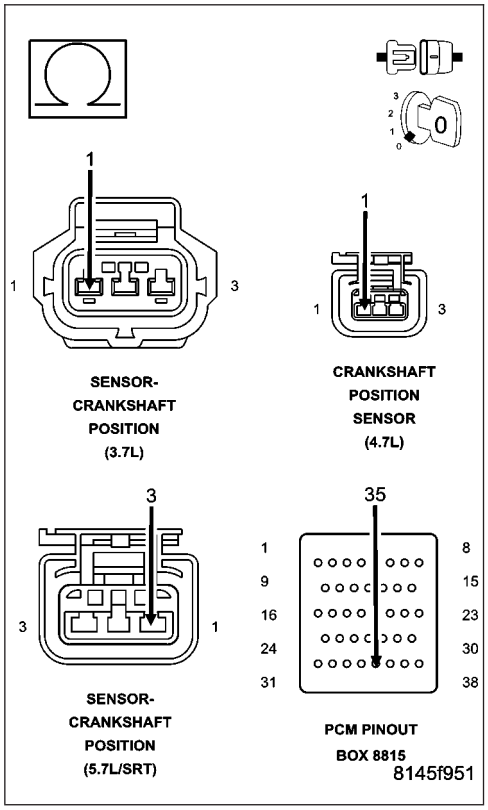

Is the resistance below 1.0 ohm?

Yes >> Go To 10

No >> Repair the excessive resistance in the (K24) CKP Signal circuit.

Perform the POWERTRAIN VERIFICATION TEST. (Refer to 9 - ENGINE - STANDARD PROCEDURE)

P0339-CRANKSHAFT POSITION SENSOR INTERMITTENT (CONTINUED)

10. (K24) CKP SIGNAL CIRCUIT SHORTED TO GROUND

Measure the resistance between ground and the (K24) CKP Signal circuit in the CKP Sensor harness connector.

Wiggle the related wire harness while monitoring the resistance value.

Does the resistance ever go below 100 ohms?

Yes >> Repair the short to ground in the (K24) Signal circuit.
Perform the POWERTRAIN VERIFICATION TEST. (Refer to 9 - ENGINE - STANDARD PROCEDURE)

No >> Go To 11

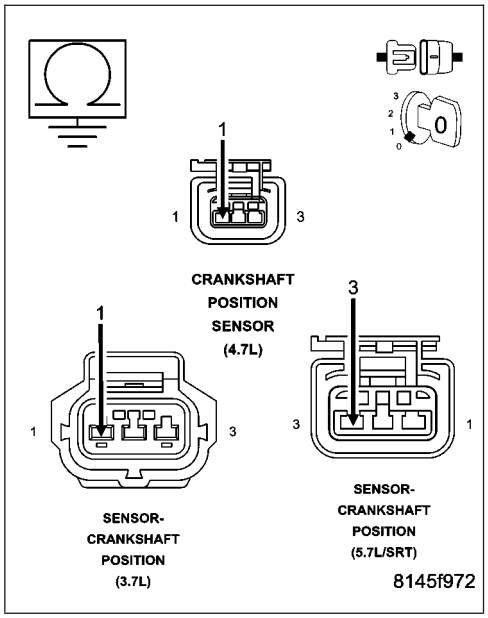

11. (K24) CKP SIGNAL CIRCUIT SHORTED TO THE (F855) 5-VOLT SUPPLY CIRCUIT

Measure the resistance between the (F855) 5-volt Supply circuit and the (K24) CKP Signal circuit in the CKP harness connector.

Wiggle the related wire harness while taking this measurement.

Is the resistance below 5.0 ohms?

Yes >> Repair the short between the (F855) 5-volt Supply circuit and the (K24) CKP Signal circuit.
Perform the POWERTRAIN VERIFICATION TEST. (Refer to 9 - ENGINE - STANDARD PROCEDURE)

No >> Go To 12

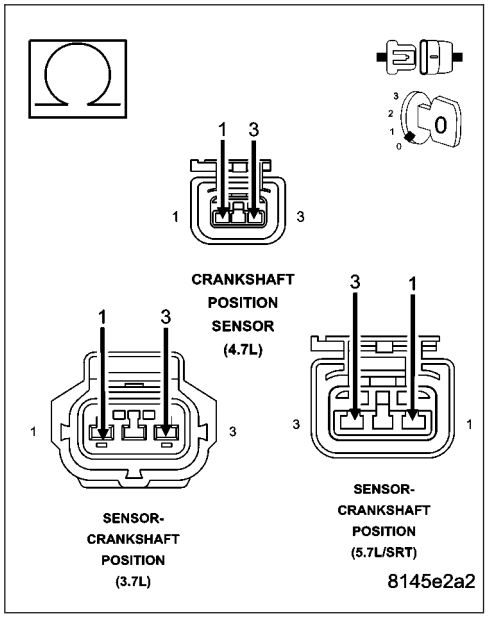

P0339-CRANKSHAFT POSITION SENSOR INTERMITTENT (CONTINUED)

12. **PCM**

NOTE: Before continuing, check the PCM harness connector terminals for corrosion, damage, or terminal push out. Repair as necessary.

Using the schematics as a guide, inspect the wire harness and connectors. Pay particular attention to all Power and Ground circuits.

Were there any problems found?

Yes >> Repair as necessary.
Perform the POWERTRAIN VERIFICATION TEST. (Refer to 9 - ENGINE - STANDARD PROCEDURE)

No >> Replace and program the Powertrain Control Module per Service Information.
Perform the POWERTRAIN VERIFICATION TEST. (Refer to 9 - ENGINE - STANDARD PROCEDURE)

P0340-CAMSHAFT POSITION SENSOR CIRCUIT

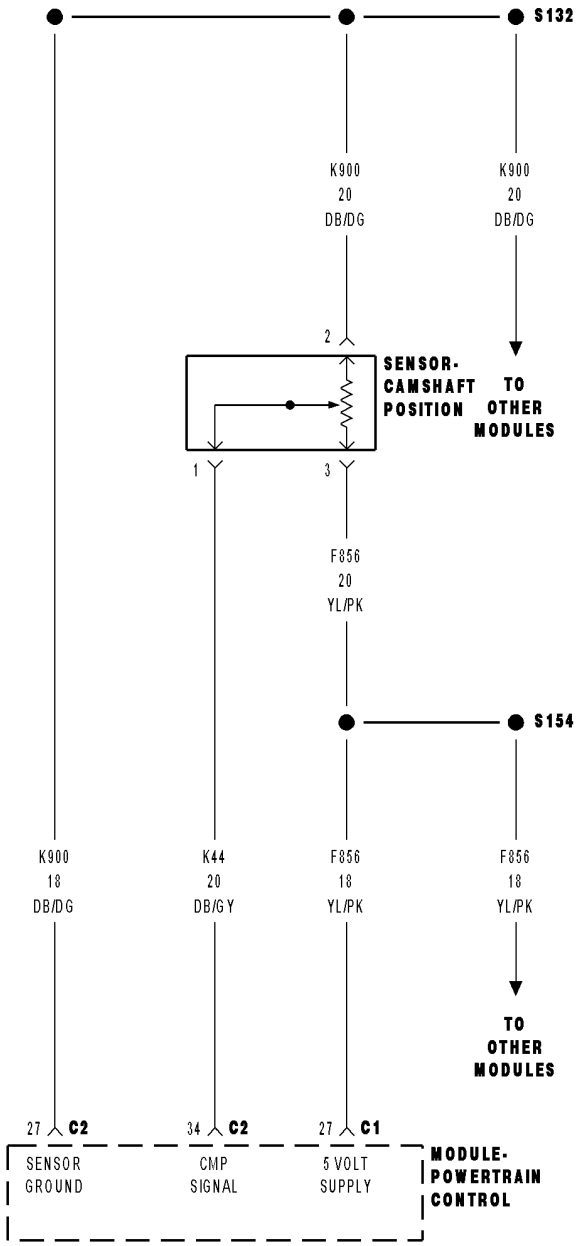

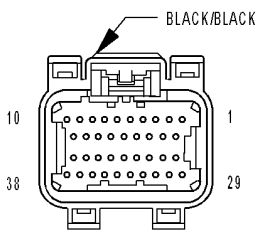

MODULE-
POWERTRAIN
CONTROL C1
(NGC)

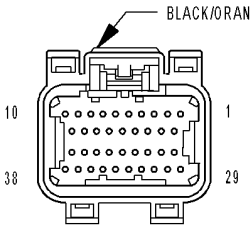

MODULE-
POWERTRAIN
CONTROL C2
(NGC)

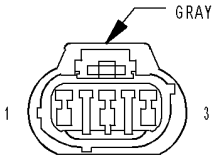

SENSOR-
CAMSHAFT
POSITION
(GAS)

8145398c

P0340-CAMSHAFT POSITION SENSOR CIRCUIT (CONTINUED)

For the Engine circuit diagram (Refer to 9 - ENGINE - SCHEMATICS AND DIAGRAMS).

For a complete wiring diagram **Refer to Section 8W**.

- **When Monitored:**
  During engine cranking and with the engine running. Battery voltage greater than 10 volts.
- **Set Condition:**
  At least 5 seconds or 2.5 engine revolutions have elapsed with crankshaft position sensor signals present but no camshaft position sensor signal. One Trip Fault. Three good trips to turn off the MIL.

Possible Causes
(F856) 5-VOLT SUPPLY CIRCUIT SHORTED TO BATTERY VOLTAGE
(F856) 5-VOLT SUPPLY CIRCUIT OPEN
(F856) 5-VOLT SUPPLY CIRCUIT SHORTED TO GROUND
(K44) CMP SIGNAL CIRCUIT SHORTED TO BATTERY VOLTAGE
(K44) CMP SIGNAL CIRCUIT OPEN
(K44) CMP SIGNAL CIRCUIT SHORTED GROUND
(K44) CMP SIGNAL SHORTED TO THE (F856) 5-VOLT SUPPLY CIRCUIT
(K900) SENSOR GROUND CIRCUIT OPEN
CAMSHAFT POSITION SENSOR
CRANKSHAFT POSITION SENSOR
PCM

Always perform the Pre-Diagnostic Troubleshooting procedure before proceeding. (Refer to 9 - ENGINE - DIAGNOSIS AND TESTING).

Diagnostic Test

1. ACTIVE DTC

Crank the engine.
Ignition on, engine not running.
With a scan tool read the DTCs.

Is the DTC active at this time?

Yes >> Go To 2

No >> Go To 14

P0340-CAMSHAFT POSITION SENSOR CIRCUIT (CONTINUED)

2. (F856) 5-VOLT SUPPLY CIRCUIT

Turn the ignition off.

Disconnect the CMP Sensor harness connector.

Ignition on, engine not running.

Measure the voltage on the (F856) 5-volt Supply circuit in the CMP Sensor harness connector.

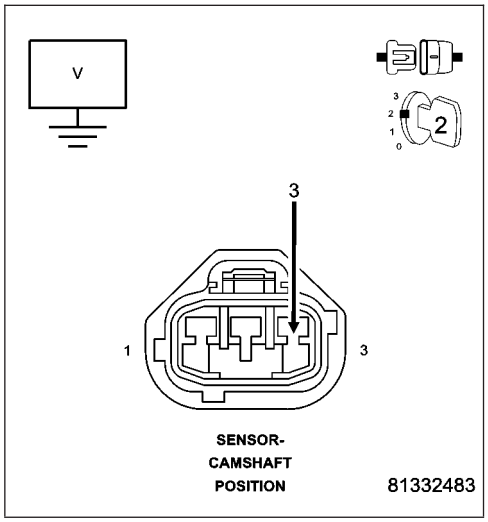

Is the voltage between 4.5 and 5.2 volts?

Yes >> Go To 3

No >> Go To 10

3. (K44) CMP SIGNAL CIRCUIT

Measure the voltage on the (K44) CMP Signal circuit in the CMP Sensor harness connector.

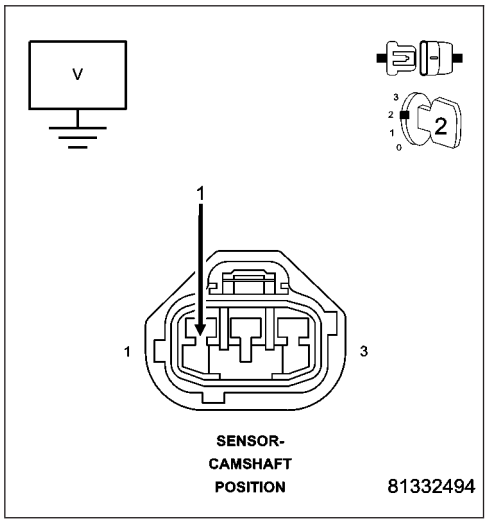

Is the voltage between 4.5 and 5.0 volts?

Yes >> Go To 4

No >> Go To 7

P0340-CAMSHAFT POSITION SENSOR CIRCUIT (CONTINUED)

4. (K900) SENSOR GROUND CIRCUIT OPEN

Turn the ignition off.

Disconnect the C2 PCM harness connector.

CAUTION: Do not probe the PCM harness connectors. Probing the PCM harness connectors will damage the PCM terminals resulting in poor terminal to pin connection. Install Miller Special Tool #8815 to perform diagnosis.

Measure the resistance of the (K900) Sensor ground circuit from the CMP Sensor harness connector to the appropriate terminal of special tool #8815.

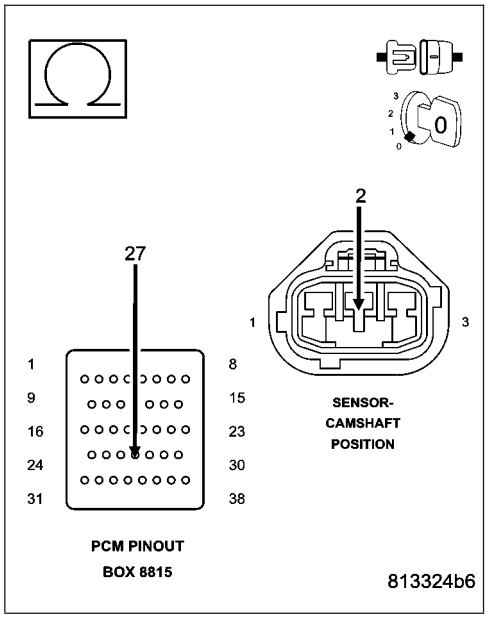

Is the resistance below 5.0 ohms?

Yes >> Go To 5

No >> Repair the open in the (K900) Sensor ground circuit.
Perform the POWERTRAIN VERIFICATION TEST. (Refer to 9 - ENGINE - STANDARD PROCEDURE)

5. (K44) CMP SIGNAL SHORTED TO THE (F856) 5-VOLT SUPPLY CIRCUIT

Measure the resistance between the (K44) CMP Signal circuit and the (F856) 5-volt Supply circuit in the CMP Sensor harness connector.

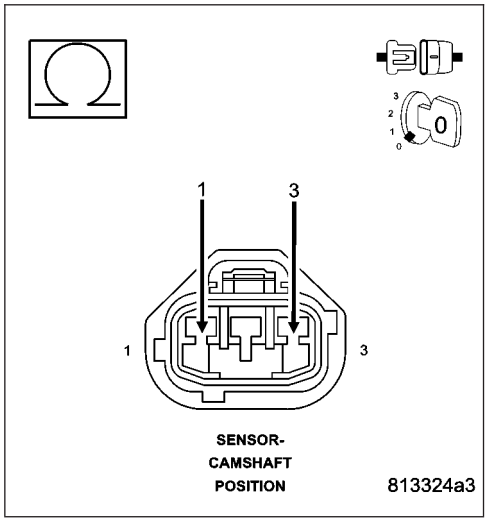

Is the resistance below 5.0 ohms?

Yes >> Repair the short between the (K44) CMP Signal circuit and the (F856) 5-volt Supply circuit.
Perform the POWERTRAIN VERIFICATION TEST. (Refer to 9 - ENGINE - STANDARD PROCEDURE)

No >> Go To 6

6. CAMSHAFT POSITION SENSOR

NOTE: Inspect the Camshaft sprocket for damage per the Service Information. If a problem is found repair as necessary.

If there are no possible causes remaining, view repair.

Repair

Replace the Camshaft Position Sensor.
Perform the POWERTRAIN VERIFICATION TEST. (Refer to 9 - ENGINE - STANDARD PROCEDURE)

P0340-CAMSHAFT POSITION SENSOR CIRCUIT (CONTINUED)

7. (K44) CMP SIGNAL CIRCUIT SHORTED TO BATTERY VOLTAGE

Turn the ignition off.

Disconnect the C2 PCM harness connector.

Ignition on, engine not running.

Measure the voltage on the (K44) CMP Signal circuit in the CMP Sensor harness connector.

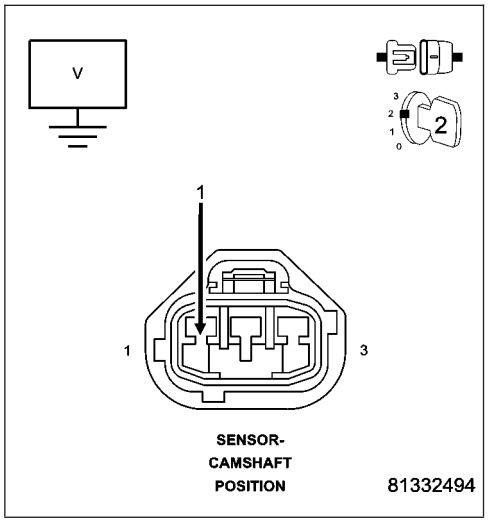

Is the voltage above 0 volts?

Yes >> Repair the short to battery voltage in the (K44) CMP Signal circuit.
Perform the POWERTRAIN VERIFICATION TEST. (Refer to 9 - ENGINE - STANDARD PROCEDURE)

No >> Go To 8

8. (K44) CMP SIGNAL CIRCUIT OPEN

Turn the ignition off.

CAUTION: Do not probe the PCM harness connectors. Probing the PCM harness connectors will damage the PCM terminals resulting in poor terminal to pin connection. Install Miller Special Tool #8815 to perform diagnosis.

Measure the resistance of the (K44) CMP Signal circuit from the CMP Sensor harness connector to the appropriate terminal of special tool #8815.

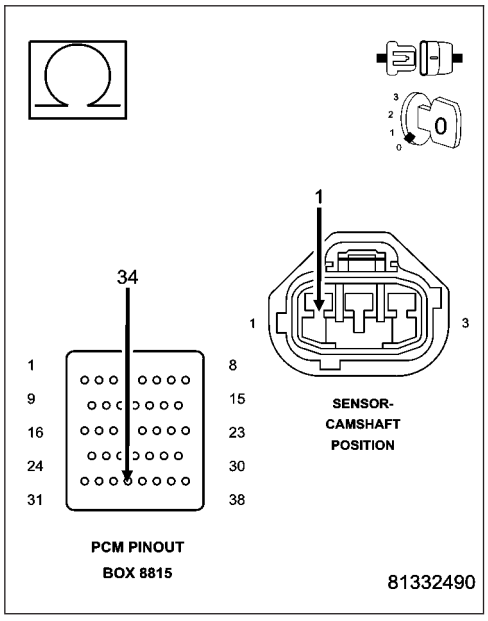

Is the resistance below 5.0 ohms?

Yes >> Go To 9

No >> Repair the open in the (K44) CMP Signal circuit.
Perform the POWERTRAIN VERIFICATION TEST. (Refer to 9 - ENGINE - STANDARD PROCEDURE)

P0340-CAMSHAFT POSITION SENSOR CIRCUIT (CONTINUED)

9. (K44) CMP SIGNAL CIRCUIT SHORTED TO GROUND

Measure the resistance between ground and the (K44) CMP Signal circuit in the CMP Sensor harness connector.

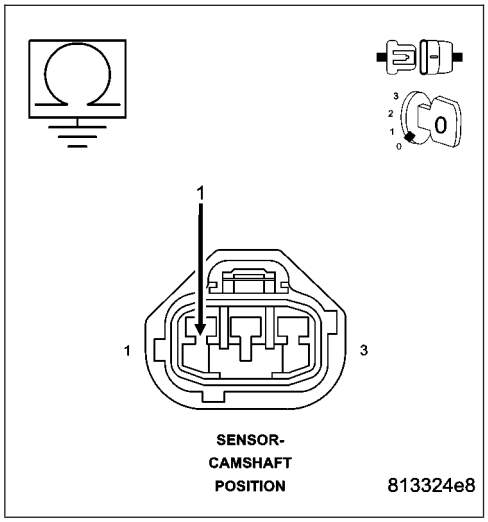

Is the resistance below 100 ohms?

Yes >> Repair the short to ground in the (K44) CMP Signal circuit
Perform the POWERTRAIN VERIFICATION TEST. (Refer to 9 - ENGINE - STANDARD PROCEDURE)

No >> Go To 10

10. (F856) 5-VOLT SUPPLY CIRCUIT SHORTED TO BATTERY VOLTAGE

Turn the ignition off.

Disconnect the C1 PCM harness connector.

Ignition on, engine not running.

Measure the voltage on the (F856) 5-volt Supply circuit in the CMP Sensor harness connector.

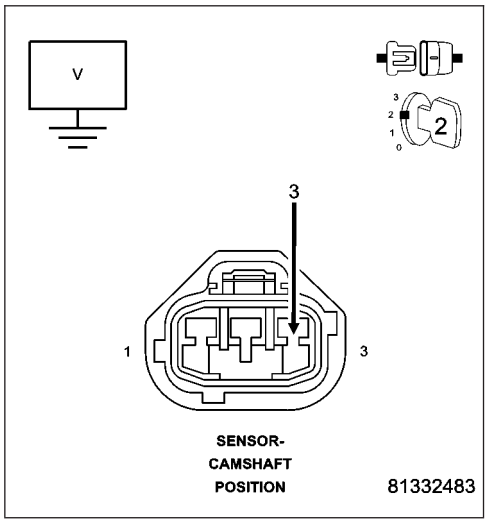

Is the voltage above 0 volts?

Yes >> Repair the short to battery voltage in the (F856) 5-volt Supply circuit.
Perform the POWERTRAIN VERIFICATION TEST. (Refer to 9 - ENGINE - STANDARD PROCEDURE)

No >> Go To 11

P0340-CAMSHAFT POSITION SENSOR CIRCUIT (CONTINUED)

11. (F856) 5-VOLT SUPPLY CIRCUIT OPEN

Turn the ignition off.

CAUTION: Do not probe the PCM harness connectors. Probing the PCM harness connectors will damage the PCM terminals resulting in poor terminal to pin connection. Install Miller Special Tool #8815 to perform diagnosis.

Measure the resistance of the (F856) 5-volt Supply circuit between the CMP Sensor harness connector to the appropriate terminal of special tool #8815.

Is the resistance below 5.0 ohms?

Yes >> Go To 12

No >> Repair the open in the (F856) 5-volt Supply circuit.
Perform the POWERTRAIN VERIFICATION TEST. (Refer to 9 - ENGINE - STANDARD PROCEDURE)

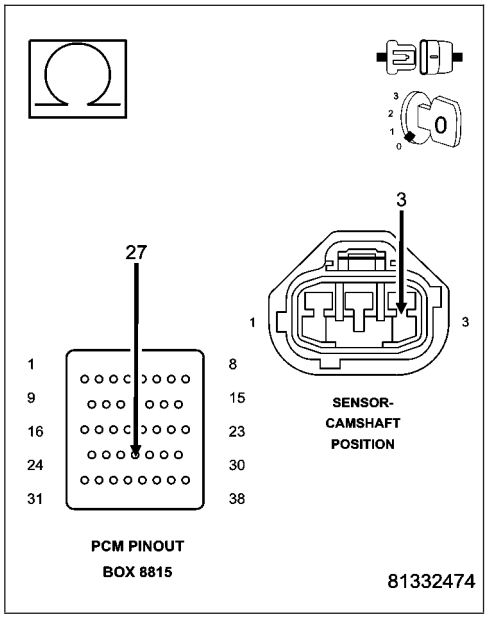

12. (F856) 5-VOLT SUPPLY CIRCUIT SHORTED TO GROUND

Measure the resistance between ground and the (F856) 5-volt Supply circuit in the CMP Sensor harness connector.

Is the resistance below 100 ohms?

Yes >> Repair the short to ground in the (F856) 5-volt Supply circuit.
Perform the POWERTRAIN VERIFICATION TEST. (Refer to 9 - ENGINE - STANDARD PROCEDURE)

No >> Go To 13

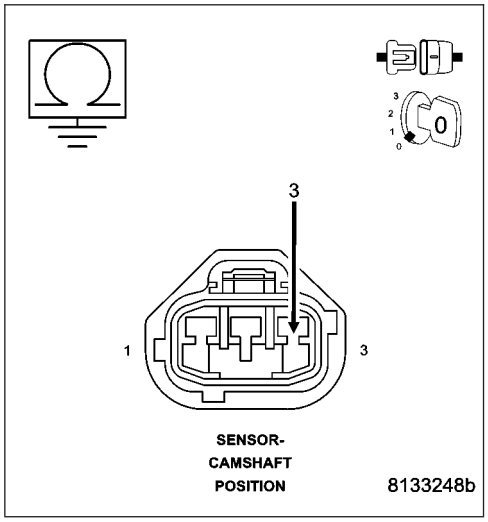

P0340-CAMSHAFT POSITION SENSOR CIRCUIT (CONTINUED)

13. PCM

NOTE: Before continuing, check the PCM harness connector terminals for corrosion, damage, or terminal push out. Repair as necessary.

Using the schematics as a guide, inspect the wire harness and connectors. Pay particular attention to all Power and Ground circuits.

Were there any problems found?

Yes >> Repair as necessary.
Perform the POWERTRAIN VERIFICATION TEST. (Refer to 9 - ENGINE - STANDARD PROCEDURE)

No >> Replace and program the Powertrain Control Module per Service Information.
Perform the POWERTRAIN VERIFICATION TEST. (Refer to 9 - ENGINE - STANDARD PROCEDURE)

---

14. ERRATIC CMP SIGNAL

With a lab scope probe and the Miller special tool #6801, back probe the (K44) CMP Signal circuit in the CMP harness connector.

WARNING: When the engine is operating, do not stand in direct line with the fan. Do not put your hands near the pulleys, belts, or fan. Do not wear loose clothing. Failure to follow these instructions can result in personal injury or death.

Ignition on, engine not running.

Wiggle the related wire harness and lightly tap the Camshaft Position Sensor.

Observe the lab scope screen.

Allow the engine to idle.

Observe the lab scope screen.

Did the CMP Sensor generate any erratic pulses?

Yes >> Replace the Camshaft Position Sensor.
Perform the POWERTRAIN VERIFICATION TEST. (Refer to 9 - ENGINE - STANDARD PROCEDURE)

No >> Go To 15

---

15. ERRATIC CKP SIGNAL

Turn the ignition off.

With a lab scope probe and the Miller special tool #6801, backprobe the (K24) CKP Signal circuit in the CKP harness connector.

WARNING: When the engine is operating, do not stand in direct line with the fan. Do not put your hands near the pulleys, belts, or fan. Do not wear loose clothing. Failure to follow these instructions can result in personal injury or death.

Ignition on, engine not running.

Wiggle the related wire harness and lightly tap on the Crankshaft Position Sensor.

Observe the lab scope screen.

Allow the engine to idle.

Observe the lab scope screen.

Did the CKP Sensor generate any erratic pulses?

Yes >> Replace the Crankshaft Position Sensor.
Perform the POWERTRAIN VERIFICATION TEST. (Refer to 9 - ENGINE - STANDARD PROCEDURE)

No >> Test complete, the conditions that set this DTC are not present at this time

---

P0344-CAMSHAFT POSITION SENSOR INTERMITTENT

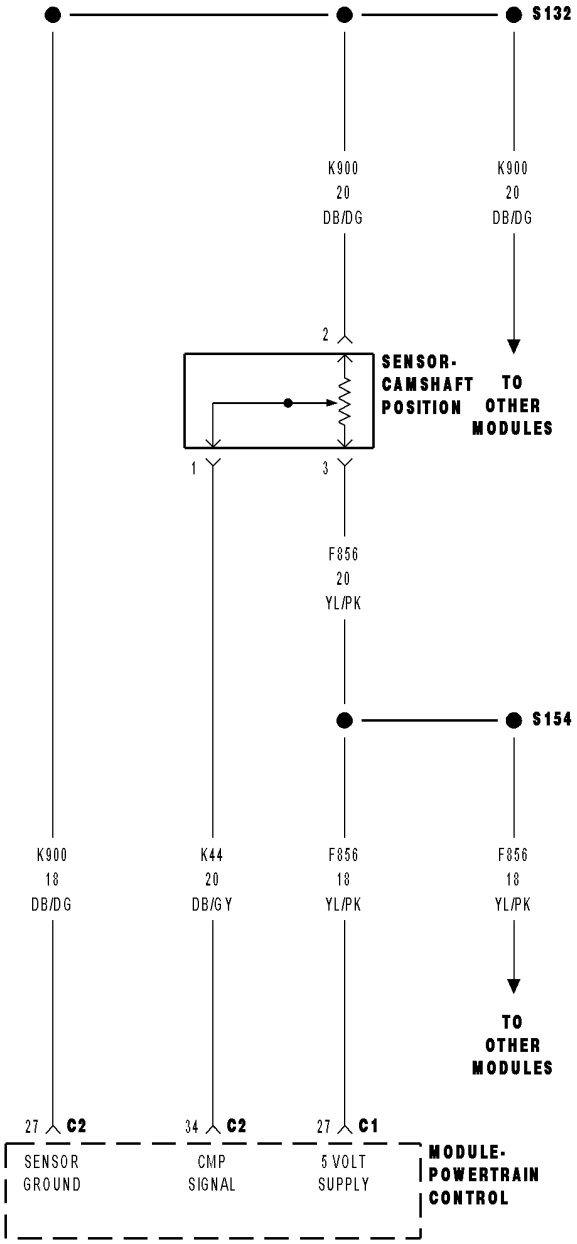

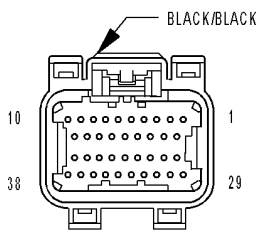

MODULE-
POWERTRAIN
CONTROL C1
(NGC)

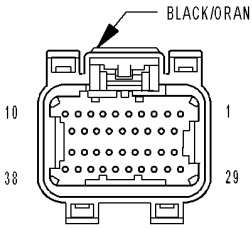

MODULE-
POWERTRAIN
CONTROL C2
(NGC)

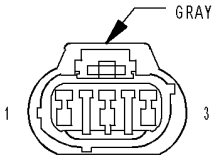

SENSOR-
CAMSHAFT
POSITION
(GAS)

8145398c

P0344-CAMSHAFT POSITION SENSOR INTERMITTENT (CONTINUED)

For the Engine circuit diagram (Refer to 9 - ENGINE - SCHEMATICS AND DIAGRAMS).

For a complete wiring diagram **Refer to Section 8W**.

- **When Monitored:**
  While cranking the engine and engine running.
- **Set Condition:**
  When the failure counter reaches 20. One Trip Fault. Three good trips to turn off the MIL.

Possible Causes
(F856) 5-VOLT SUPPLY CIRCUIT OPEN
(F856) 5-VOLT SUPPLY CIRCUIT SHORTED TO GROUND
(K44) CMP SIGNAL CIRCUIT SHORTED TO BATTERY VOLTAGE
(K44) CMP SIGNAL CIRCUIT OPEN
(K44) CMP SIGNAL CIRCUIT SHORTED TO GROUND
(K44) CMP SIGNAL CIRCUIT SHORTED TO THE (F856) 5-VOLT SUPPLY
TONE WHEEL/PULSE RING
CAMSHAFT POSITION SENSOR
PCM

Always perform the Pre-Diagnostic Troubleshooting procedure before proceeding. (Refer to 9 - ENGINE - DIAGNOSIS AND TESTING).

Diagnostic Test

1. ACTIVE DTC

Ignition on, engine not running.

With a scan tool, read DTCs.

Is the DTC active at this time?

Yes >> Go To 2

No >> Refer to the INTERMITTENT CONDITION Diagnostic Procedure.
Perform the POWERTRAIN VERIFICATION TEST. (Refer to 9 - ENGINE - STANDARD PROCEDURE)

---

2. CHECKING CAMSHAFT POSITION SENSOR SIGNAL WITH A LAB SCOPE

Turn the ignition off.

With a lab scope probe and the Miller special tool #6801, backprobe the (K44) CMP Signal circuit in the CMP harness connector.

WARNING: When the engine is operating, do not stand in direct line with the fan. Do not put your hands near the pulleys, belts, or fan. Do not wear loose clothing. Failure to follow these instructions can result in personal injury or death.

Ignition on, engine not running.

Observe the lab scope screen.

Start the engine.

Observe the lab scope screen.

Are there any irregular or missing signals?

Yes >> Go To 3

No >> Go To 8

P0344-CAMSHAFT POSITION SENSOR INTERMITTENT (CONTINUED)

3. WIRE HARNESS INSPECTION

Turn the ignition off.

Visually inspect the related wire harness including the ground circuit. Look for any chafed, pierced, pinched, or partially broken wires.

Visually inspect the related wire harness connectors. Look for broken, bent, pushed out, or corroded terminals.

Make sure the Crankshaft Position Sensor and the Camshaft Position Sensor are properly installed and the mounting bolt(s) are torqued to the proper specification.

Refer to any TSBs that may apply.

Were any of the above conditions present?

Yes >> Repair as necessary.
Perform the POWERTRAIN VERIFICATION TEST. (Refer to 9 - ENGINE - STANDARD PROCEDURE)

No >> Go To 4

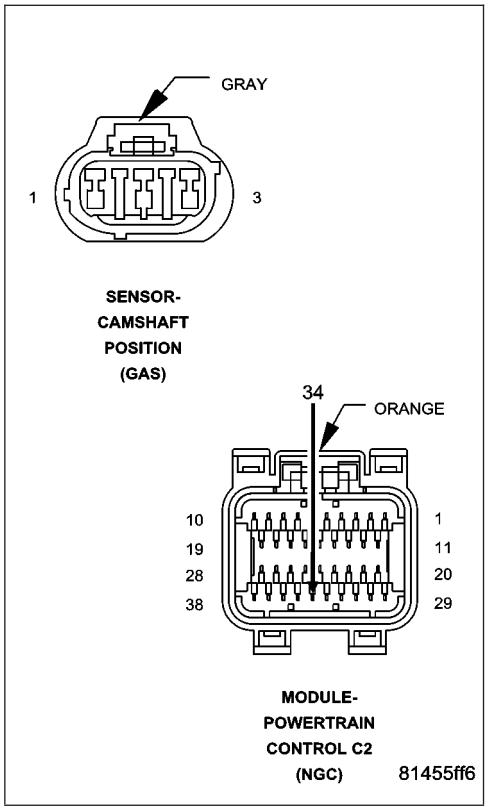

4. (F856) 5-VOLT SUPPLY CIRCUIT OPEN OR SHORTED TO GROUND

Disconnect the CMP Sensor connector.

Ignition on, engine not running.

Measure the voltage on the (F856) 5-volt Supply circuit in the CMP harness connector.

Is the voltage between 4.5 and 5.2 volts?

Yes >> Go To 5

No >> Repair the open or short to ground in the (F856) 5-volt Supply circuit. Use Miller special tool #8815 when checking for an open circuit to prevent PCM harness connector terminal damage.
Perform the POWERTRAIN VERIFICATION TEST. (Refer to 9 - ENGINE - STANDARD PROCEDURE)

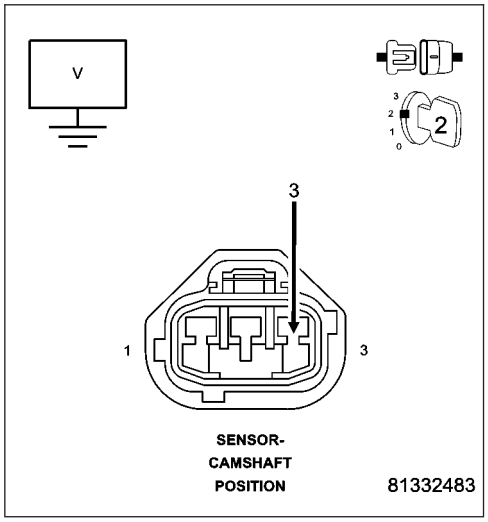

P0344-CAMSHAFT POSITION SENSOR INTERMITTENT (CONTINUED)

5. TONE WHEEL/PULSE RING INSPECTION

Turn the ignition off.

Carefully disconnect the Battery Ground cable.

Remove the Camshaft Position Sensor.

Inspect the Tone Wheel/Pulse Ring for damage, foreign material, or excessive movement.

Were any problems found?

Yes >> Repair or replace the Tone Wheel/Pulse Ring as necessary.
Perform the POWERTRAIN VERIFICATION TEST. (Refer to 9 - ENGINE - STANDARD PROCEDURE)

No >> Go To 6

---

6. CHECKING CRANKSHAFT POSITION SENSOR SIGNAL WITH A LAB SCOPE

NOTE: An intermittent condition in the Crank Position Sensor can cause the P0344 to set.

Install the CMP Sensor and connect the Battery cable.

With a lab scope probe and the Miller special tool #6801, backprobe the (K24) CKP Signal circuit in the CKP harness connector.

WARNING: When the engine is operating, do not stand in direct line with the fan. Do not put your hands near the pulleys, belts, or fan. Do not wear loose clothing. Failure to follow these instructions can result in personal injury or death.

Ignition on, engine not running.

Wiggle the related wire harness and lightly tap on the Crank Position Sensor.

Observe the lab scope screen.

Start the engine.

Observe the lab scope screen.

Are there any irregular or missing signals?

Yes >> Replace the Crank Position Sensor.
Perform the POWERTRAIN VERIFICATION TEST. (Refer to 9 - ENGINE - STANDARD PROCEDURE)

No >> Go To 7

---

7. CAMSHAFT POSITION SENSOR

If there are no possible causes remaining, view repair.

Repair

Replace the Camshaft Position Sensor.
Perform the POWERTRAIN VERIFICATION TEST. (Refer to 9 - ENGINE - STANDARD PROCEDURE)

P0344-CAMSHAFT POSITION SENSOR INTERMITTENT (CONTINUED)

8. (K44) CMP SIGNAL CIRCUIT SHORTED TO BATTERY VOLTAGE

Turn the ignition off.
Disconnect the CMP Sensor connector.
Disconnect the C2 PCM harness connector.
Ignition on, engine not running.
Measure the voltage on the (K44) CMP Signal circuit.
Wiggle the related wire harness while taking this measurement.

Does the voltage ever increase above 0 volts?

Yes >> Repair the short to battery voltage in the (K44) CMP Signal circuit.
Perform the POWERTRAIN VERIFICATION TEST. (Refer to 9 - ENGINE - STANDARD PROCEDURE)

No >> Go To 9

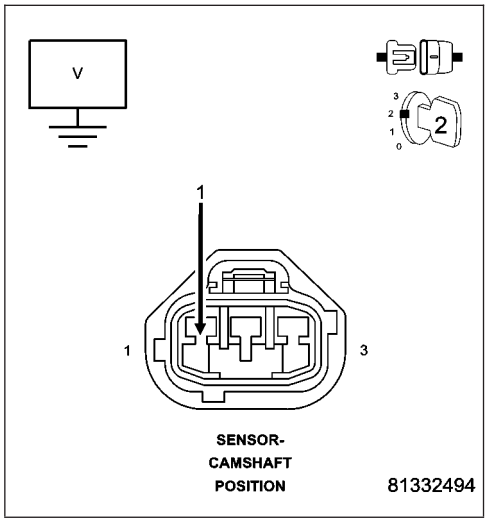

9. (K44) CMP SIGNAL CIRCUIT OPEN

Turn the ignition off.

CAUTION: Do not probe the PCM harness connectors. Probing the PCM harness connectors will damage the PCM terminals resulting in poor terminal to pin connection. Install Miller Special Tool #8815 to perform diagnosis.
Measure the resistance in the (K44) CMP Signal circuit from the CMP harness connector to the appropriate terminal of special tool #8815.
Wiggle the related wire harness while taking this measurement.

Is the resistance below 5.0 ohms?

Yes >> Go To 10

No >> Repair the excessive resistance in the (K44) CMP Signal circuit.
Perform the POWERTRAIN VERIFICATION TEST. (Refer to 9 - ENGINE - STANDARD PROCEDURE)

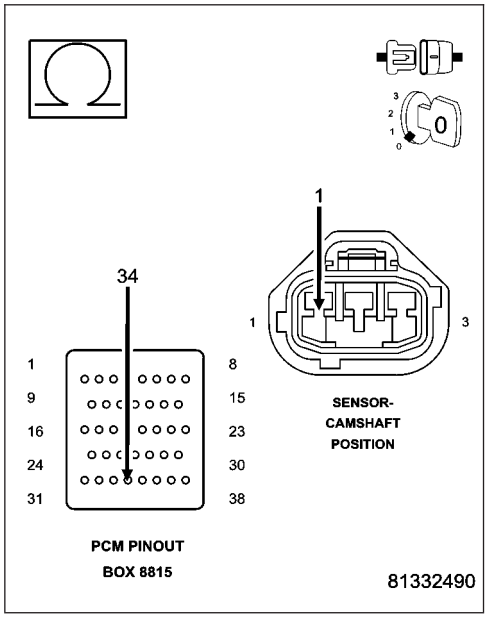

P0344-CAMSHAFT POSITION SENSOR INTERMITTENT (CONTINUED)

10. (K44) CMP SIGNAL CIRCUIT SHORTED TO GROUND

Measure the resistance between ground and the (K44) CMP Signal circuit in the CMP Sensor harness connector.
Wiggle the related wire harness while monitoring the resistance value.

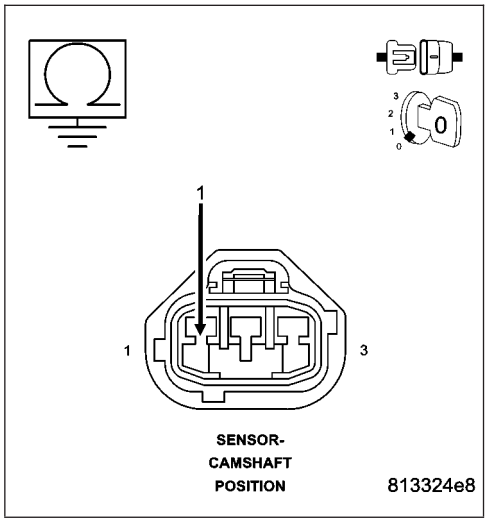

Does the resistance ever go below 100 ohms?

Yes >> Repair the short to ground in the (K44) CMP Signal circuit.
Perform the POWERTRAIN VERIFICATION TEST. (Refer to 9 - ENGINE - STANDARD PROCEDURE)

No >> Go To 11

11. (K44) CMP SIGNAL CIRCUIT SHORTED TO THE (F856) 5-VOLT SUPPLY CIRCUIT

Measure the resistance between the (F856) 5-volt Supply circuit and the (K44) CMP Signal circuit in the CMP harness connector.
Wiggle the related wire harness while taking this measurement.

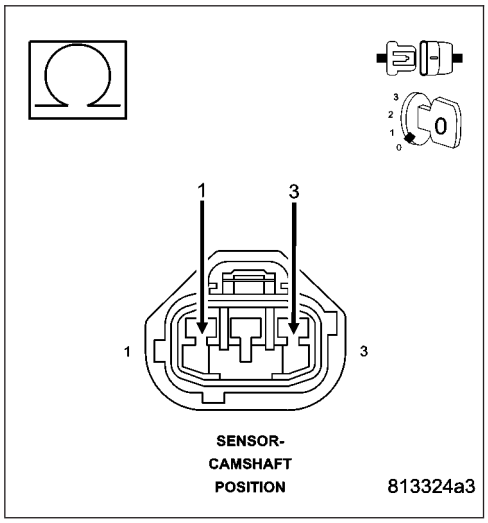

Is the resistance below 5.0 ohms?

Yes >> Repair the short between the (F856) 5-volt Supply circuit and the (K44) CMP Signal circuit.
Perform the POWERTRAIN VERIFICATION TEST. (Refer to 9 - ENGINE - STANDARD PROCEDURE)

No >> Go To 12

12. PCM

NOTE: Before continuing, check the PCM harness connector terminals for corrosion, damage, or terminal push out. Repair as necessary.
Using the schematics as a guide, inspect the wire harness and connectors. Pay particular attention to all Power and Ground circuits.

Were there any problems found?

Yes >> Repair as necessary.
Perform the POWERTRAIN VERIFICATION TEST. (Refer to 9 - ENGINE - STANDARD PROCEDURE)

No >> Replace and program the Powertrain Control Module per Service Information.
Perform the POWERTRAIN VERIFICATION TEST. (Refer to 9 - ENGINE - STANDARD PROCEDURE)

P0401-EGR SYSTEM PERFORMANCE

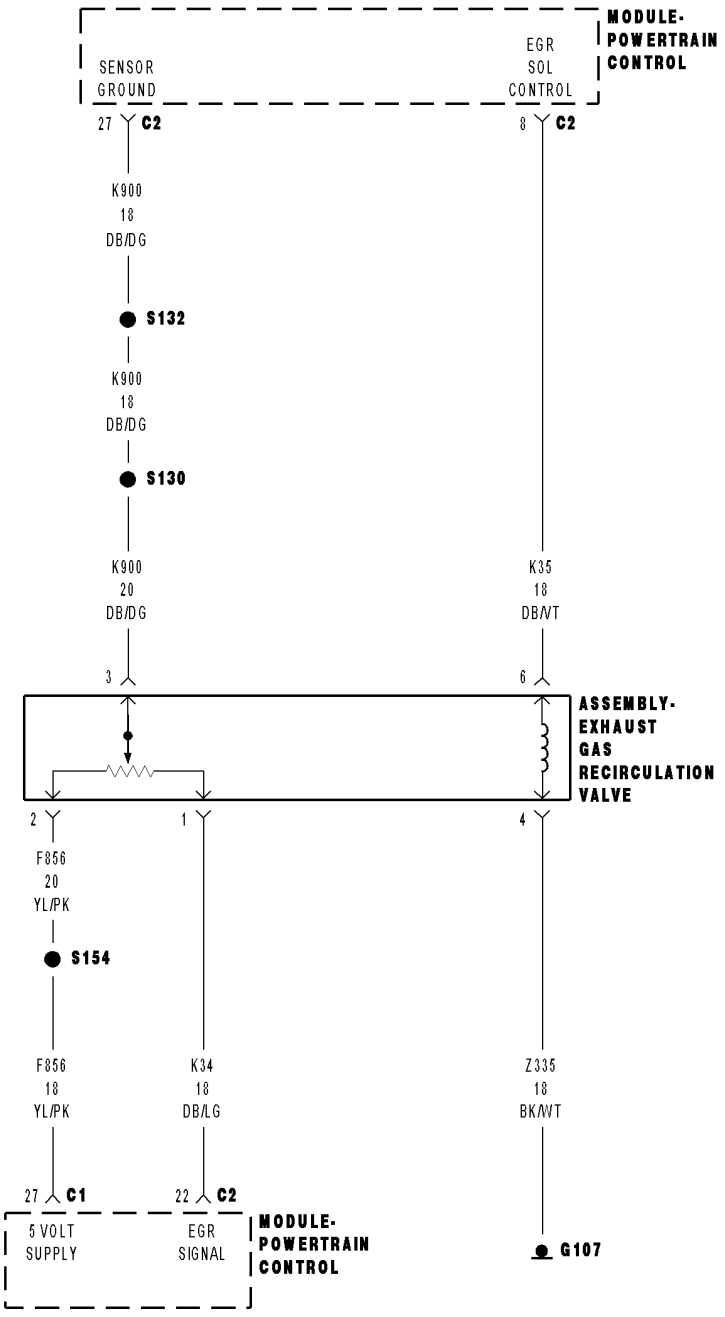

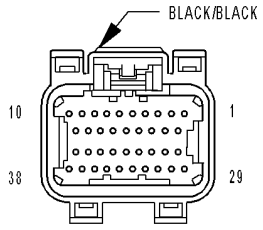

MODULE-
POWERTRAIN
CONTROL C1
(NGC)

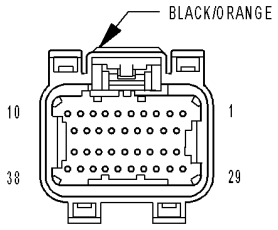

MODULE-
POWERTRAIN
CONTROL C2
(NGC)

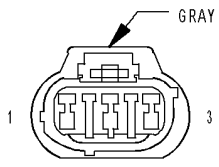

SENSOR-
CAMSHAFT
POSITION
(GAS)

814539c3

P0401-EGR SYSTEM PERFORMANCE (CONTINUED)

For the Engine circuit diagram (Refer to 9 - ENGINE - SCHEMATICS AND DIAGRAMS).

For a complete wiring diagram **Refer to Section 8W**.

Theory of Operation

Exhaust gas recirculation is a method of reducing emissions of oxides of nitrogen. As the inert exhaust gas is recirculated, the mixture absorbs heat in the combustion chamber without interacting with the fuel/air mixture and reduces the formation of NOx emissions. After the EGR monitor conditions are met, the EGR valve is turned on and off momentarily. The EGR monitor calculated the difference in engine roughness from the EGR off condition to the EGR condition. This engine combustion stability difference as measured by engine roughness is the measure of a functional EGR system.

- **When Monitored:**
  Engine running for greater than two minutes with the Engine Coolant Temp greater than 70°C (158°F). EGR active. Less than 8500 feet. Ambient temperature greater than -6°C (20°F).
- **Set Condition:**The PCM closes the EGR valve while monitoring the O2 Sensor signal. Once a closed EGR fueling sample has been established the PCM then ramps in EGR and additional fueling while monitoring the O2 sensor signal in the open state. A fueling sample is again established. The PCM then compares the different O2 Sensor signal readings (fueling samples). If a larger than expected variation is detected, a soft failure is recorded. Three soft failures set a one trip failure. After two failed trips, a DTC is set and the MIL is illuminated.

Possible Causes
(Z335) EGR SOLENOID GROUND CIRCUIT OPEN
(K35) EGR SOLENOID CONTROL CIRCUIT SHORTED TO GROUND
(K35) EGR SOLENOID CONTROL CIRCUIT SHORTED TO BATTERY VOLTAGE
(K35) EGR SOLENOID CONTROL CIRCUIT OPEN
EGR SOLENOID ASSEMBLY
PCM

Always perform the Pre-Diagnostic Troubleshooting procedure before proceeding. (Refer to 9 - ENGINE - DIAGNOSIS AND TESTING).

Diagnostic Test

1. ACTIVE DTC

Ignition on, engine not running.

With a scan tool, read DTCs.

Is the DTC active at this time?

Yes >> Go To 2

No >> Refer to the INTERMITTENT CONDITION Diagnostic Procedure.
Perform the POWERTRAIN VERIFICATION TEST. (Refer to 9 - ENGINE - STANDARD PROCEDURE)

P0401-EGR SYSTEM PERFORMANCE (CONTINUED)

2. EGR OPERATION

NOTE: If the vehicle is running rough at idle (scan tool not actuating) follow the yes path to continue.
Turn all accessories off.
Start the engine.
Allow the engine to reach normal operating temperature.
With the scan tool, enter Engine System Test, then EGR System Test.
Actuate the FLOW function in the EGR System Test.

Did the engine run rough or stall?

Yes >> Go To 3

No >> Go To 6

---

3. EGR VALVE OPEN AT IDLE

Turn the ignition off.
Disconnect the EGR Solenoid Assembly harness connector.
Start engine. Attempt to allow the engine to idle.

Does the engine run rough or stall?

Yes >> Inspect the EGR tube assembly. If OK, replace the EGR valve.
Perform the POWERTRAIN VERIFICATION TEST. (Refer to 9 - ENGINE - STANDARD PROCEDURE)

No >> Go To 4

---

4. EGR VALVE ASSEMBLY INSPECTION

Inspect the EGR Assembly for the following.
Gasket(s) for leaking
Damage and/or holes in the EGR tube(s)
Carbon build up on or near the EGR pintle and passage ways.
Obstruction in the EGR tubes.

Were any problem found?

Yes >> Repair or replace the EGR Assembly as necessary.
Perform the POWERTRAIN VERIFICATION TEST. (Refer to 9 - ENGINE - STANDARD PROCEDURE)

No >> Go To 5

P0401-EGR SYSTEM PERFORMANCE (CONTINUED)

5. (K35) EGR SOLENOID CONTROL CIRCUIT SHORTED TO BATTERY VOLTAGE

Turn the ignition off.

Disconnect the EGR Solenoid harness connector.

Ignition on, engine not running.

Measure the voltage on the (K35) EGR Solenoid Control circuit in the EGR Solenoid connector.

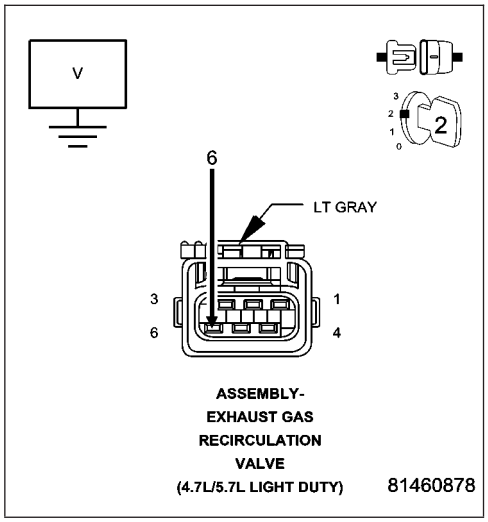

Is the voltage above 1.0 volt?

Yes >> Repair the short to battery voltage in the (K35) EGR Solenoid Control circuit.
Perform the POWERTRAIN VERIFICATION TEST. (Refer to 9 - ENGINE - STANDARD PROCEDURE)

No >> Go To 10

6. EGR SOLENOID ASSEMBLY

Disconnect the EGR Solenoid harness connector.

Using a 12-volt test light, jump across the (K35) EGR Solenoid Control terminal and the (Z335) Ground terminal in the EGR Solenoid harness connector.

With the scan tool, actuate the EGR solenoid.

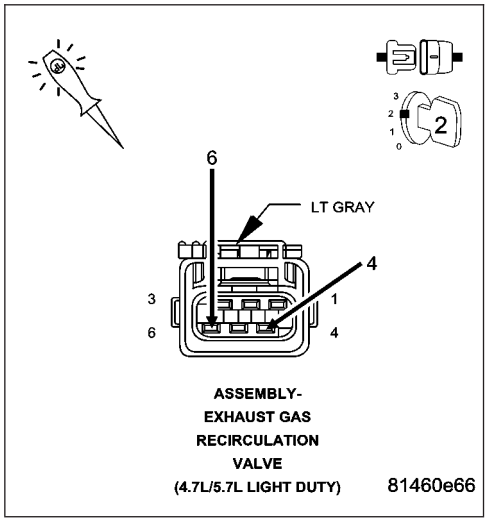

Does the 12-volt test light flash on and off?

Yes >> Inspect the tube(s) for obstructions and damage, repair as necessary. If OK, replace the EGR Solenoid Assembly.
Perform the POWERTRAIN VERIFICATION TEST. (Refer to 9 - ENGINE - STANDARD PROCEDURE)

No >> Go To 7

P0401-EGR SYSTEM PERFORMANCE (CONTINUED)

7. (Z335) EGR SOLENOID GROUND CIRCUIT OPEN

Turn the ignition off.

Using a 12-volt test light connected to battery voltage, probe the (Z335) EGR Solenoid ground circuit in the EGR Solenoid harness connector.

Does the 12-volt test light illuminate brightly?

Yes >> Go To 8

No >> Repair the open in the (Z335) EGR Solenoid ground circuit.

Perform the POWERTRAIN VERIFICATION TEST. (Refer to 9 - ENGINE - STANDARD PROCEDURE)

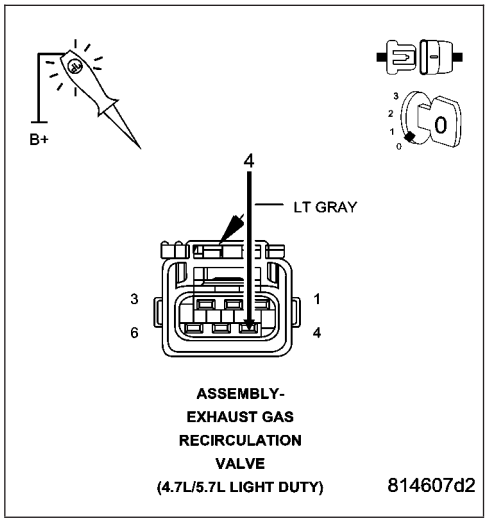

8. (K35) EGR SOLENOID CONTROL CIRCUIT SHORTED TO GROUND

Disconnect the C2 PCM harness connector.

Measure the resistance between ground and the (K35) EGR Solenoid Control circuit in the EGR Solenoid harness connector.

Is the resistance below 100 ohms?

Yes >> Repair the short to ground in the (K35) EGR Solenoid Control circuit.

Perform the POWERTRAIN VERIFICATION TEST. (Refer to 9 - ENGINE - STANDARD PROCEDURE)

No >> Go To 9

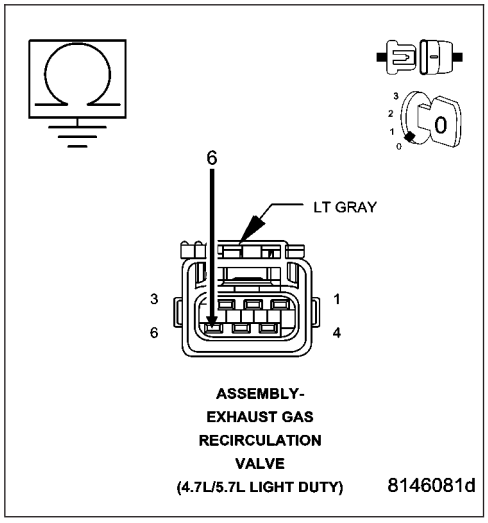

P0401-EGR SYSTEM PERFORMANCE (CONTINUED)

9. (K35) EGR SOLENOID CONTROL CIRCUIT OPEN

CAUTION: Do not probe the PCM harness connectors. Probing the PCM harness connectors will damage the PCM terminals resulting in poor terminal to pin connection. Install Miller Special Tool #8815 to perform diagnosis.
Measure the resistance of the (K35) EGR Solenoid Control circuit from the EGR Solenoid harness connector to the appropriate terminal of special tool #8815.

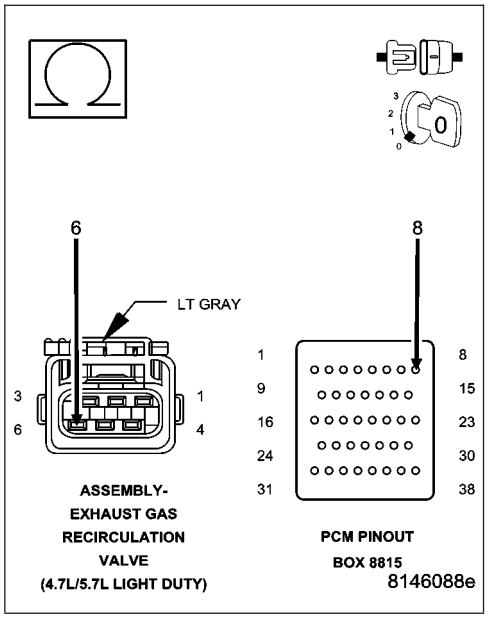

Is the resistance below 5.0 ohms?

Yes >> Go To 10

No >> Repair the open in the (K35) EGR Solenoid Control circuit. Perform the POWERTRAIN VERIFICATION TEST. (Refer to 9 - ENGINE - STANDARD PROCEDURE)

---

10. PCM

NOTE: Before continuing, check the PCM harness connector terminals for corrosion, damage, or terminal push out. Repair as necessary.
Using the schematics as a guide, inspect the wire harness and connectors. Pay particular attention to all Power and Ground circuits.

Were there any problems found?

Yes >> Repair as necessary.
Perform the POWERTRAIN VERIFICATION TEST. (Refer to 9 - ENGINE - STANDARD PROCEDURE)

No >> Replace and program the Powertrain Control Module per Service Information.
Perform the POWERTRAIN VERIFICATION TEST. (Refer to 9 - ENGINE - STANDARD PROCEDURE)

P0403-EGR SOLENOID CIRCUIT

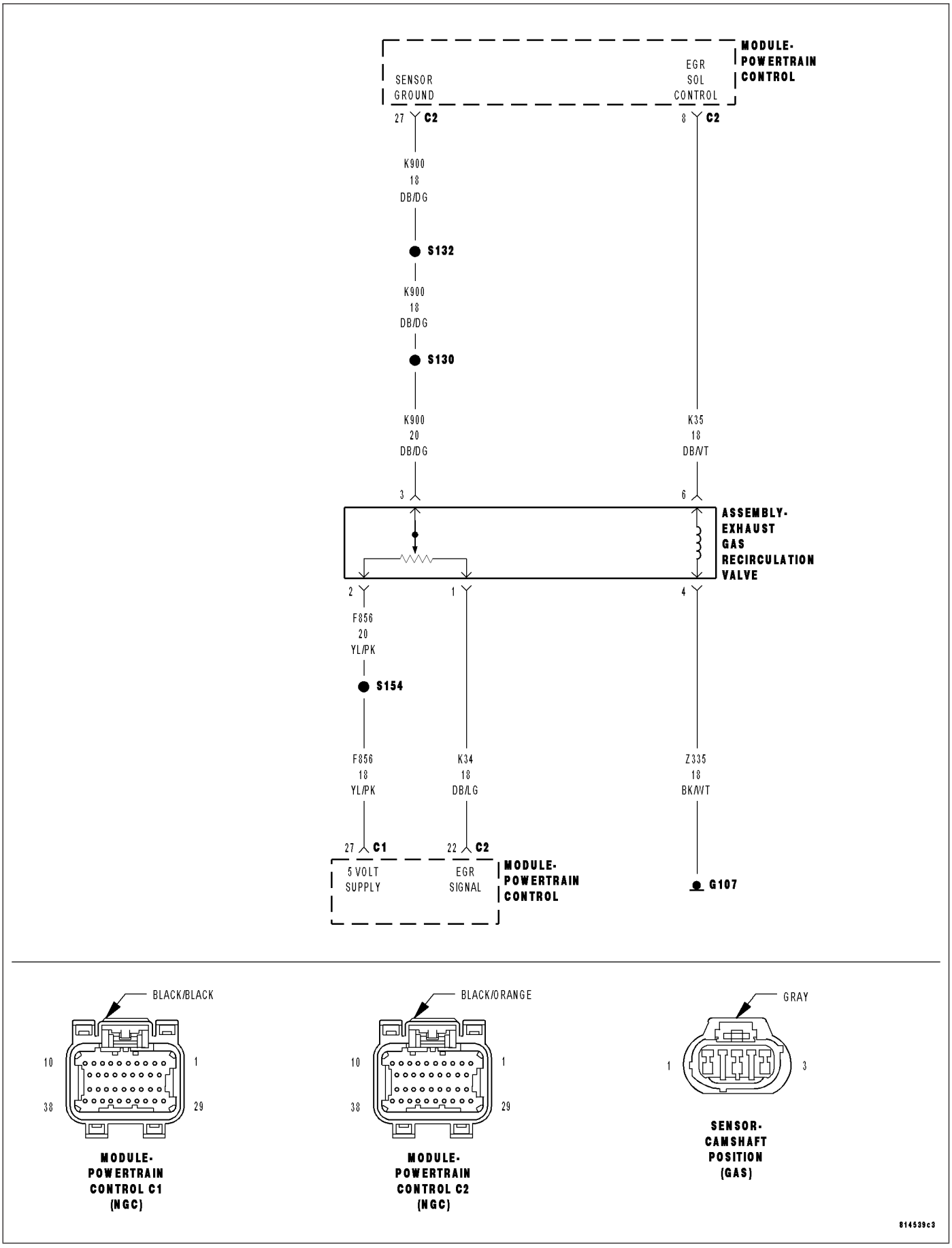

P0403-EGR SOLENOID CIRCUIT (CONTINUED)

For the Engine circuit diagram (Refer to 9 - ENGINE - SCHEMATICS AND DIAGRAMS).

For a complete wiring diagram **Refer to Section 8W**.

- **When Monitored:**
  Engine running. Battery voltage greater than 10 volts.
- **Set Condition:**
  The EGR solenoid control circuit is not in the expected state when requested to operate by the PCM. One Trip Fault.

Possible Causes
(Z335) EGR SOLENOID GROUND CIRCUIT OPEN
(K35) EGR SOLENOID CONTROL CIRCUIT SHORTED TO BATTERY VOLTAGE
(K35) EGR SOLENOID CONTROL CIRCUIT SHORTED TO GROUND
(K35) EGR SOLENOID CONTROL CIRCUIT SHORTED TO THE (K900) SENSOR GROUND CIRCUIT
(K35) EGR SOLENOID CONTROL CIRCUIT OPEN
EGR SOLENOID ASSEMBLY
PCM

Always perform the Pre-Diagnostic Troubleshooting procedure before proceeding. (Refer to 9 - ENGINE - DIAGNOSIS AND TESTING).

Diagnostic Test

1. ACTIVE DTC

Ignition on, engine not running.
With a scan tool, read DTCs.

Is the DTC active at this time?

Yes >> Go To 2

No >> Refer to the INTERMITTENT CONDITION Diagnostic Procedure.
Perform the POWERTRAIN VERIFICATION TEST. (Refer to 9 - ENGINE - STANDARD PROCEDURE)

---

2. EGR SOLENOID ASSEMBLY

Turn the ignition off.
Disconnect the EGR Solenoid harness connector.
Ignition on, engine not running.
Turn off all accessories.
Using a 12-volt test light connected to the (Z335) EGR Solenoid ground circuit, probe the (K34) EGR Solenoid Control circuit.
With a scan tool, actuate the EGR solenoid.

Does the 12-volt test light flash on and off?

Yes >> Replace the EGR Solenoid Assembly.
Perform the POWERTRAIN VERIFICATION TEST. (Refer to 9 - ENGINE - STANDARD PROCEDURE)

No >> Go To 3

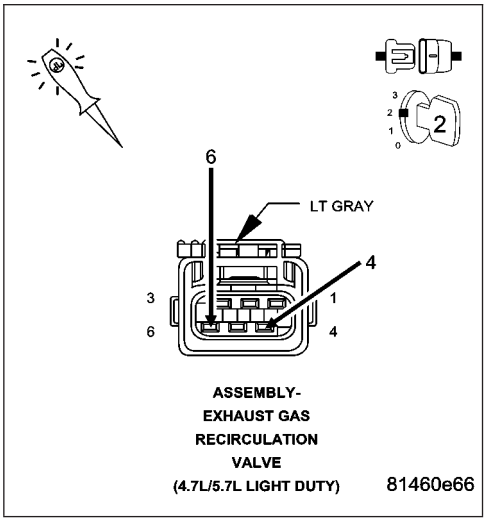

P0403-EGR SOLENOID CIRCUIT (CONTINUED)

3. (Z335) EGR SOLENOID GROUND CIRCUIT OPEN

Turn the ignition off.

Using a 12-volt test light connected to the 12-volts, probe the (Z335) EGR Solenoid ground circuit in the EGR Solenoid harness connector.

Does the test light illuminate brightly?

Yes >> Go To 4

No >> Repair the open in the (Z335) EGR Solenoid ground circuit.

Perform the POWERTRAIN VERIFICATION TEST. (Refer to 9 - ENGINE - STANDARD PROCEDURE)

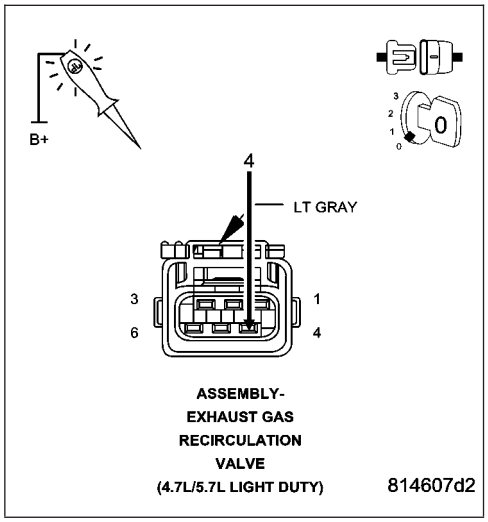

4. (K35) EGR SOLENOID CONTROL CIRCUIT SHORTED TO BATTERY VOLTAGE

Ignition on, engine not running.

Disconnect the C2 PCM harness connector.

Measure the voltage on the (K35) EGR Solenoid Control circuit in the EGR Solenoid connector.

Is the voltage above 1.0 volt?

Yes >> Repair the short to battery voltage in the (K35) EGR Solenoid Control circuit.

Perform the POWERTRAIN VERIFICATION TEST. (Refer to 9 - ENGINE - STANDARD PROCEDURE)

No >> Go To 5

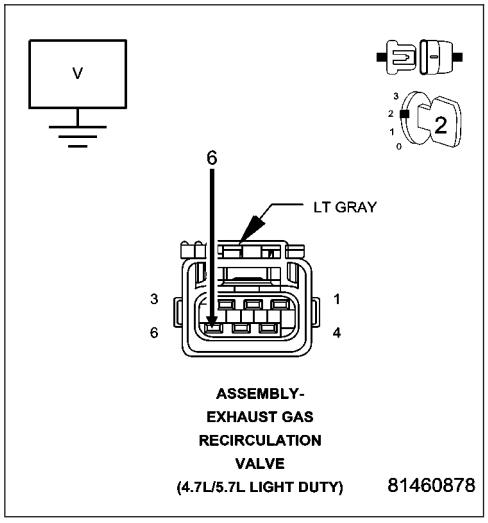

P0403-EGR SOLENOID CIRCUIT (CONTINUED)

5. (K35) EGR SOLENOID CONTROL CIRCUIT SHORTED TO GROUND

Turn the ignition off.

Measure the resistance between ground and the (K35) EGR Solenoid Control circuit in the EGR Solenoid harness connector.

Is the resistance below 100 ohms?

Yes >> Repair the short to ground in the (K35) EGR Solenoid Control circuit.

Perform the POWERTRAIN VERIFICATION TEST. (Refer to 9 - ENGINE - STANDARD PROCEDURE)

No >> Go To 6

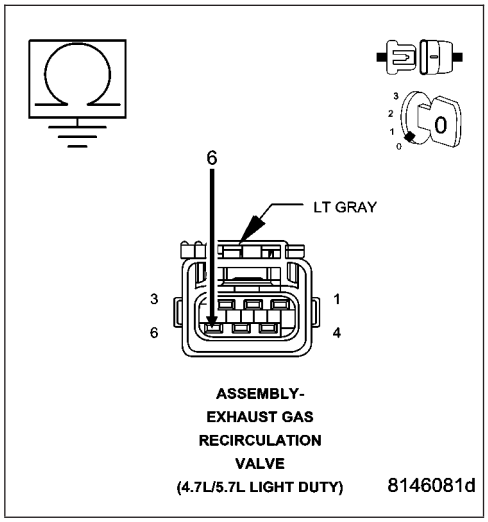

6. (K35) EGR SOLENOID CONTROL CIRCUIT SHORTED TO THE (K900) SENSOR GROUND CIRCUIT

Measure the resistance between the (K35) EGR Solenoid Control circuit and the (K900) Sensor ground circuit in the EGR Solenoid connector.

Is the resistance below 5.0 ohms?

Yes >> Repair the short between the (K900) Sensor ground circuit and the (K35) EGR Solenoid Control circuit.

Perform the POWERTRAIN VERIFICATION TEST. (Refer to 9 - ENGINE - STANDARD PROCEDURE)

No >> Go To 7

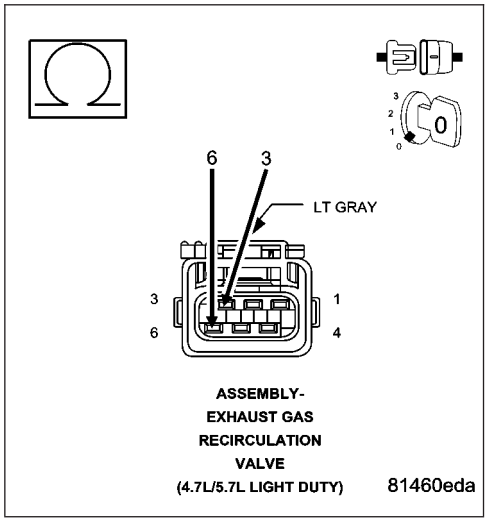

P0403-EGR SOLENOID CIRCUIT (CONTINUED)

7. (K35) EGR SOLENOID CONTROL CIRCUIT OPEN

CAUTION: Do not probe the PCM harness connectors. Probing the PCM harness connectors will damage the PCM terminals resulting in poor terminal to pin connection. Install Miller Special Tool #8815 to perform diagnosis.
Measure the resistance of the (K35) EGR Solenoid Control circuit from the EGR Solenoid harness connector to the appropriate terminal of special tool #8815.

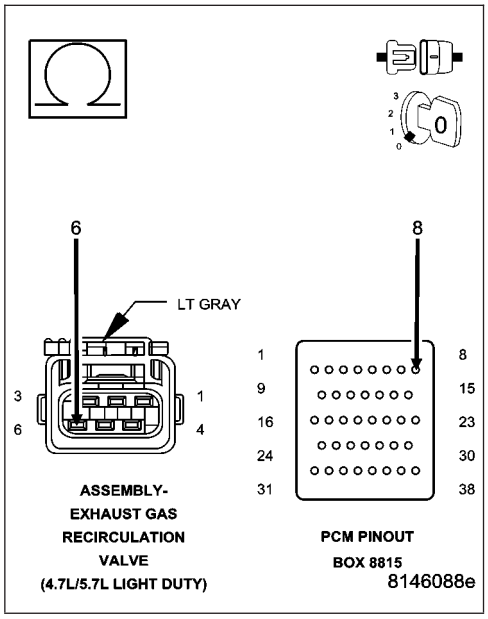

Is the resistance below 5.0 ohms?

Yes >> Go To 8

No >> Repair the open in the (K35) EGR Solenoid Control circuit.
Perform the POWERTRAIN VERIFICATION TEST. (Refer to 9 - ENGINE - STANDARD PROCEDURE)

---

8. PCM

NOTE: Before continuing, check the PCM harness connector terminals for corrosion, damage, or terminal push out. Repair as necessary.
Using the schematics as a guide, inspect the wire harness and connectors. Pay particular attention to all Power and Ground circuits.

Were there any problems found?

Yes >> Repair as necessary.
Perform the POWERTRAIN VERIFICATION TEST. (Refer to 9 - ENGINE - STANDARD PROCEDURE)

No >> Replace and program the Powertrain Control Module per Service Information.
Perform the POWERTRAIN VERIFICATION TEST. (Refer to 9 - ENGINE - STANDARD PROCEDURE)

P0404-EGR POSITION SENSOR PERFORMANCE

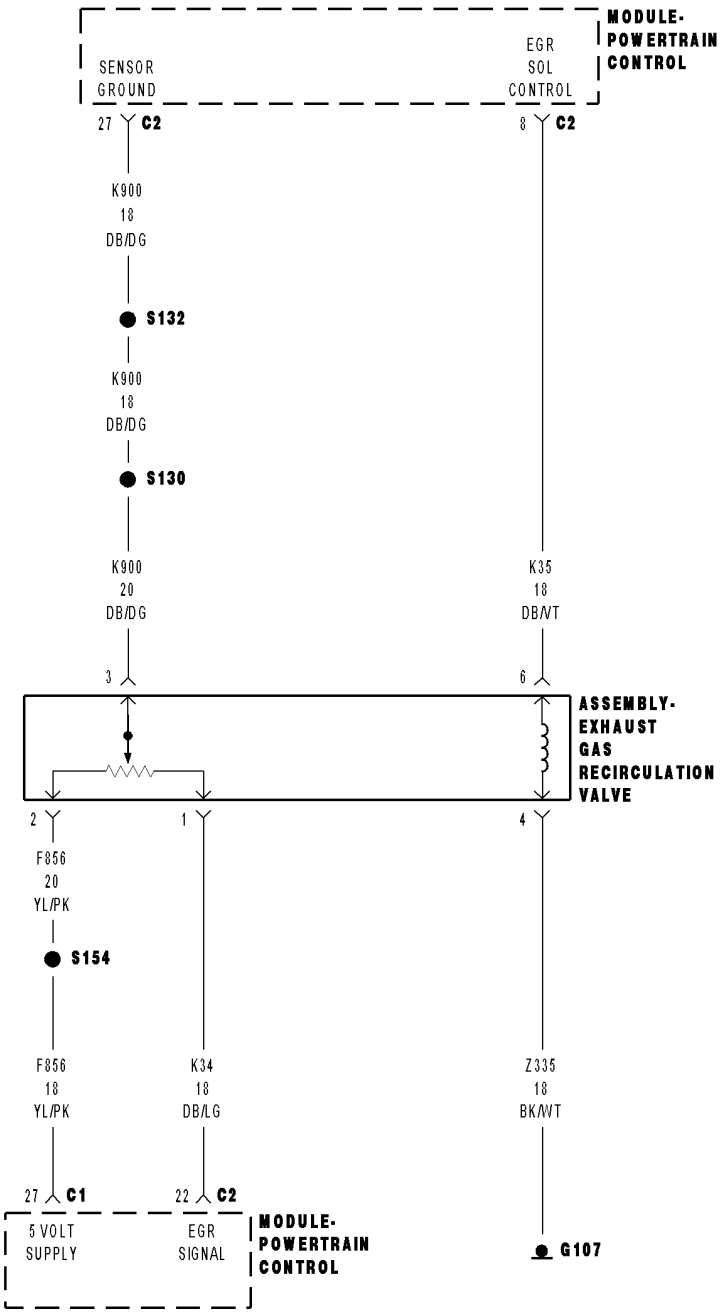

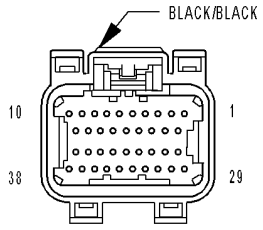

MODULE-
POWERTRAIN
CONTROL C1
(NGC)

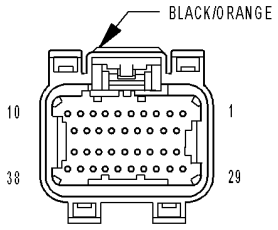

MODULE-
POWERTRAIN
CONTROL C2
(NGC)

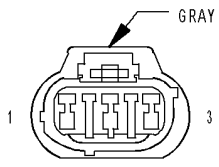

SENSOR-
CAMSHAFT
POSITION
(GAS)

814539c3

P0404-EGR POSITION SENSOR PERFORMANCE (CONTINUED)

For the Engine circuit diagram (Refer to 9 - ENGINE - SCHEMATICS AND DIAGRAMS).

For a complete wiring diagram **Refer to Section 8W**.

Theory of Operation

The EGR valve has a position sensor and the EGR position rationality is designed to make sure that the valve moves freely within its operating range. Closed valve position reference check verifies that the valve is within its allowable upper and lower limits. The EGR position rationality test looks for a sustained error relative to commanded valve position.

- **When Monitored:**
  Engine running.
- **Set Condition:**
  The EGR flow or valve movement is not what is expected.

Possible Causes
EXCESSIVE RESISTANCE IN THE (F856) 5-VOLT SUPPLY CIRCUIT
(K35) EGR SOLENOID CONTROL CIRCUIT
(K34) EGR SENSOR SIGNAL CIRCUIT OPEN
(K34) EGR SENSOR SIGNAL CIRCUIT SHORTED TO GROUND
(K900) SENSOR GROUND CIRCUIT OPEN
EGR SOLENOID ASSEMBLY
PCM

Always perform the Pre-Diagnostic Troubleshooting procedure before proceeding. (Refer to 9 - ENGINE - DIAGNOSIS AND TESTING).

Diagnostic Test

1. ACTIVE DTC

Ignition on, engine not running.
With a scan tool, read DTCs.

Is the DTC active at this time?

Yes >> Go To 2

No >> Refer to the INTERMITTENT CONDITION Diagnostic Procedure.
Perform the POWERTRAIN VERIFICATION TEST. (Refer to 9 - ENGINE - STANDARD PROCEDURE)

---

2. EGR POSITION VOLTAGE

NOTE: Diagnose all other EGR DTC(s) before continuing.
Start the engine.
With a scan tool, read the EGR Position Sensor voltage.

Choose a conclusion that best matches the EGR voltage reading.

Below 3.5 volts
Go To 3

Between 3.5 volts to 4.3 volts
Go To 5

Above 4.3 volts
Go To 6

P0404-EGR POSITION SENSOR PERFORMANCE (CONTINUED)

3. EXCESSIVE RESISTANCE IN THE (F856) 5-VOLT SUPPLY CIRCUIT

Turn the ignition off.

Disconnect the EGR Solenoid harness connector.

Disconnect the C1 and C2 PCM harness connectors.

CAUTION: Do not probe the PCM harness connectors. Probing the PCM harness connectors will damage the PCM terminals resulting in poor terminal to pin connection. Install Miller Special Tool #8815 to perform diagnosis.

Measure the resistance of the (F856) 5-volt Supply circuit from the EGR Solenoid harness connector to the appropriate terminal of special tool #8815.

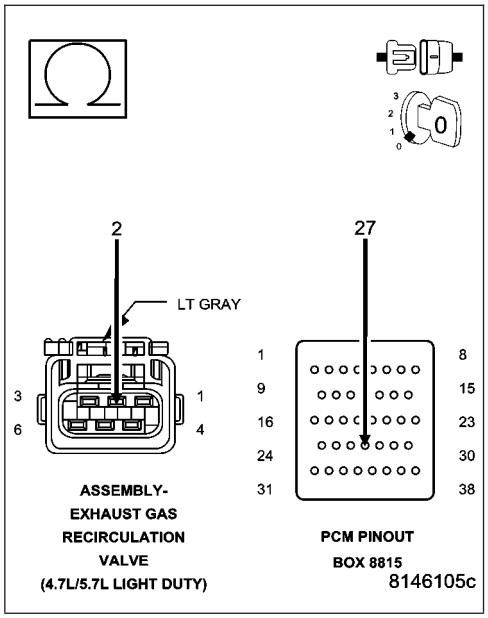

Is the resistance below 5.0 ohms?

Yes >> Go To 4

No >> Repair the excessive resistance in the (F856) 5-volt Supply circuit.

Perform the POWERTRAIN VERIFICATION TEST. (Refer to 9 - ENGINE - STANDARD PROCEDURE)

4. (K34) EGR SENSOR SIGNAL CIRCUIT SHORTED TO GROUND

Measure the resistance between ground and the (K34) EGR Sensor Signal circuit in the EGR Solenoid harness connector.

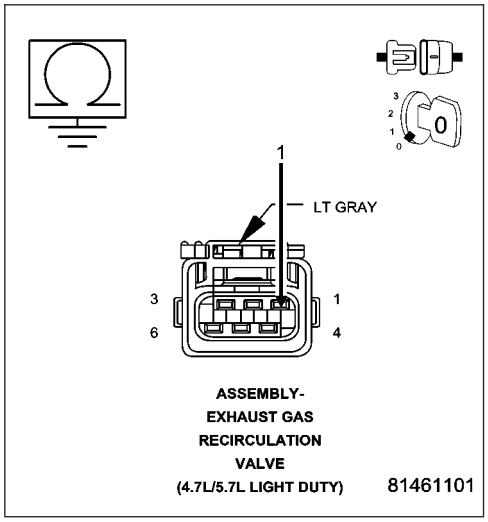

Is the resistance below 5.0 ohms?

Yes >> Repair the short to ground in the (K34) EGR Sensor Signal circuit.

Perform the POWERTRAIN VERIFICATION TEST. (Refer to 9 - ENGINE - STANDARD PROCEDURE)

No >> Replace the EGR Assembly.

Perform the POWERTRAIN VERIFICATION TEST. (Refer to 9 - ENGINE - STANDARD PROCEDURE)

P0404-EGR POSITION SENSOR PERFORMANCE (CONTINUED)

5. (K35) EGR SOLENOID CONTROL CIRCUIT

Ignition on, engine not running.
With the scan tool, actuate the EGR Solenoid.
Allow the EGR Solenoid to actuate for at least 15 seconds.
Feel the EGR Solenoid for operation.
Stop actuation.

Does EGR Solenoid operate while actuating and then turn off when actuation test is stopped?

a. Yes
Refer to the INTERMITTENT CONDITION Diagnostic Procedure.
Perform the POWERTRAIN VERIFICATION TEST. (Refer to 9 - ENGINE - STANDARD PROCEDURE)

No >> Refer to the P0403-EGR Control Circuit diagnostic procedure and continue.
Perform the POWERTRAIN VERIFICATION TEST. (Refer to 9 - ENGINE - STANDARD PROCEDURE)

---

6. (K34) EGR SENSOR SIGNAL CIRCUIT

Turn the ignition off.
Disconnect the EGR Solenoid harness connector.
Ignition on, engine not running.
Measure the voltage of the (K34) EGR Sensor Signal circuit in the EGR Solenoid harness connector.

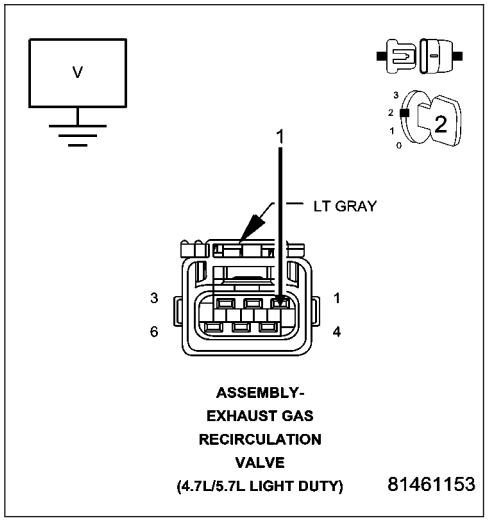

Is the voltage above 4.30 volts?

Yes >> Go To 7

No >> Go To 8

P0404-EGR POSITION SENSOR PERFORMANCE (CONTINUED)

7. (K900) SENSOR GROUND CIRCUIT OPEN

Turn the ignition off.

Disconnect the C2 PCM harness connector.

CAUTION: Do not probe the PCM harness connectors. Probing the PCM harness connectors will damage the PCM terminals resulting in poor terminal to pin connection. Install Miller Special Tool #8815 to perform diagnosis.

Measure the resistance of the (K900) Sensor ground circuit from the EGR Solenoid harness connector to the appropriate terminal of special tool #8815.

Is the resistance below 5.0 ohms?

Yes >> Replace the EGR Assembly.
Perform the POWERTRAIN VERIFICATION TEST. (Refer to 9 - ENGINE - STANDARD PROCEDURE)

No >> Repair the open in the (K900) Sensor ground circuit.
Perform the POWERTRAIN VERIFICATION TEST. (Refer to 9 - ENGINE - STANDARD PROCEDURE)

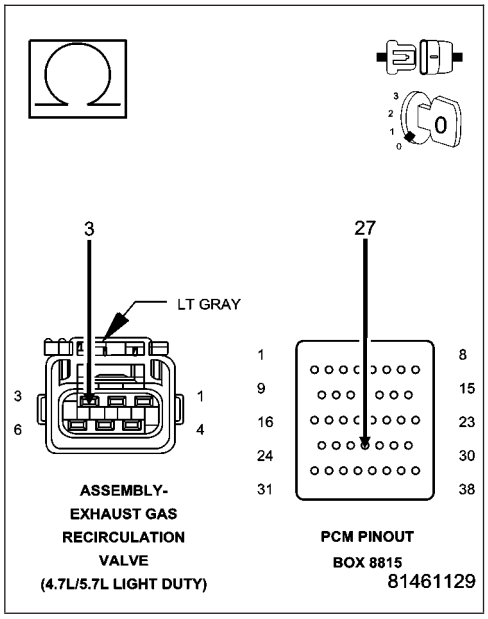

8. (K34) EGR SENSOR SIGNAL CIRCUIT OPEN

Turn the ignition off.

Disconnect the C2 PCM harness connector.

CAUTION: Do not probe the PCM harness connectors. Probing the PCM harness connectors will damage the PCM terminals resulting in poor terminal to pin connection. Install Miller Special Tool #8815 to perform diagnosis.

Measure the resistance of the (K34) EGR Sensor Signal circuit from the EGR Solenoid harness connector to the appropriate terminal of special tool #8815.

Is the resistance below 5.0 ohms?

Yes >> Go To 9

No >> Repair the open in the (K34) EGR Sensor Signal circuit.
Perform the POWERTRAIN VERIFICATION TEST. (Refer to 9 - ENGINE - STANDARD PROCEDURE)

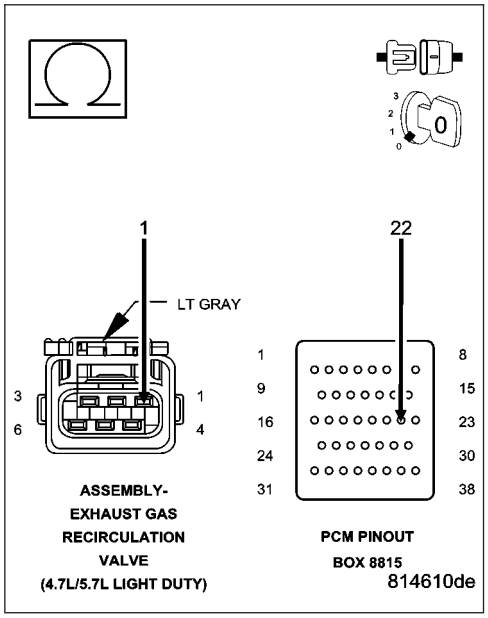

P0404-EGR POSITION SENSOR PERFORMANCE (CONTINUED)

9. (K34) EGR SENSOR SIGNAL CIRCUIT SHORTED TO GROUND

Measure the resistance between ground and the (K34) EGR Sensor Signal circuit in the EGR Solenoid harness connector.

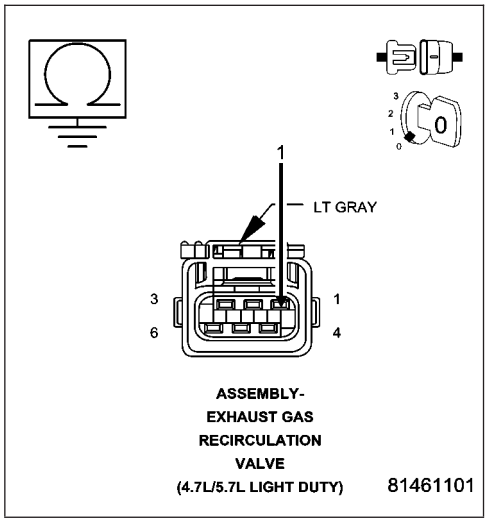

Is the resistance below 100 ohms?

Yes >> Repair the short to ground in the (K34) EGR Sensor Signal circuit.
Perform the POWERTRAIN VERIFICATION TEST. (Refer to 9 - ENGINE - STANDARD PROCEDURE)

No >> Go To 10

10. PCM

NOTE: Before continuing, check the PCM harness connector terminals for corrosion, damage, or terminal push out. Repair as necessary.
Using the schematics as a guide, inspect the wire harness and connectors. Pay particular attention to all Power and Ground circuits.

Were there any problems found?

Yes >> Repair as necessary.
Perform the POWERTRAIN VERIFICATION TEST. (Refer to 9 - ENGINE - STANDARD PROCEDURE)

No >> Replace and program the Powertrain Control Module per Service Information.
Perform the POWERTRAIN VERIFICATION TEST. (Refer to 9 - ENGINE - STANDARD PROCEDURE)

P0405-EGR POSITION SENSOR CIRCUIT LOW

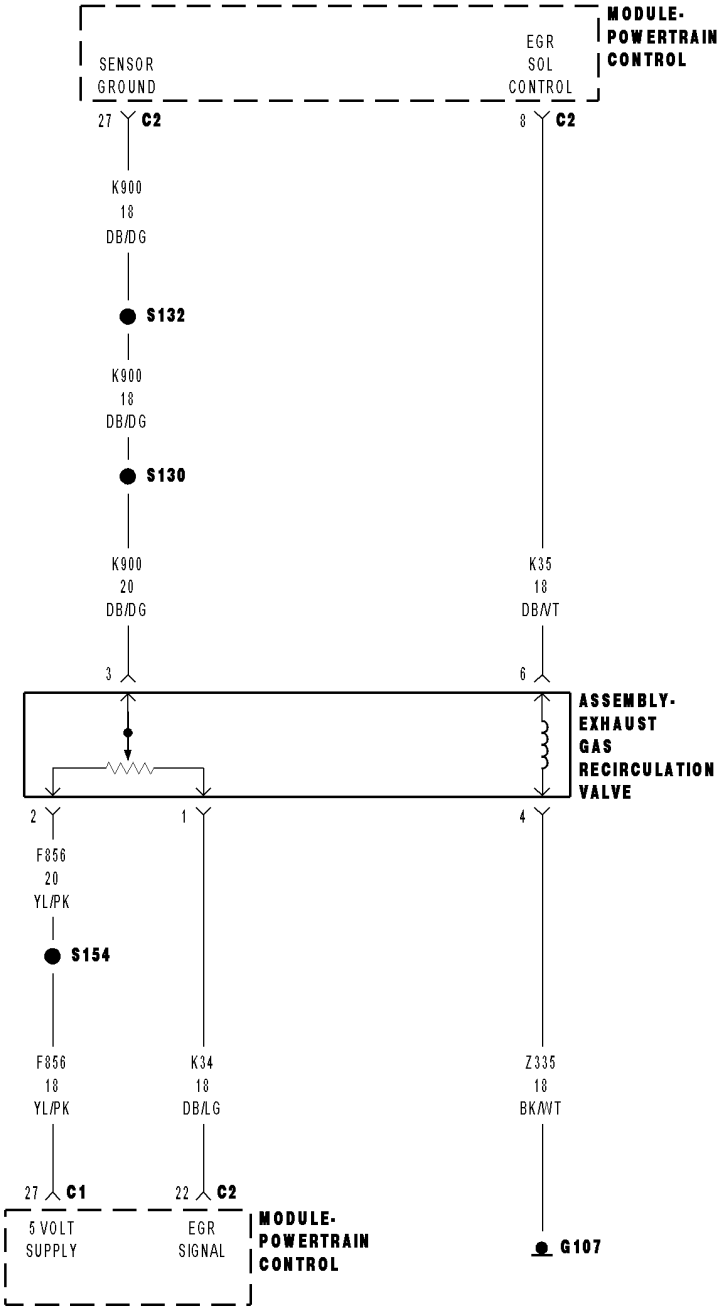

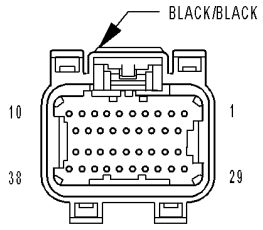

MODULE-
POWERTRAIN
CONTROL C1
(NGC)

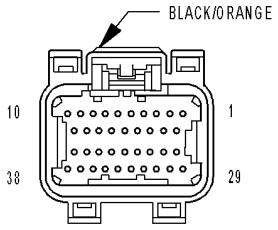

MODULE-
POWERTRAIN
CONTROL C2
(NGC)

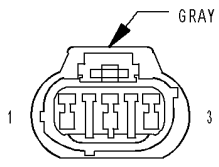

SENSOR-
CAMSHAFT
POSITION
(GAS)

814539c3

P0405-EGR POSITION SENSOR CIRCUIT LOW (CONTINUED)

For the Engine circuit diagram (Refer to 9 - ENGINE - SCHEMATICS AND DIAGRAMS).

For a complete wiring diagram **Refer to Section 8W**.

- **When Monitored:**
  With the ignition on. Battery voltage above 10.0 volts.
- **Set Condition:**
  EGR Position Sensor Signal is less than 0.1 of a volt. One trip Fault.

Possible Causes
(F856) 5-VOLT SUPPLY CIRCUIT SHORTED TO GROUND
(F856) 5-VOLT SUPPLY CIRCUIT OPEN
(K34) EGR POSITION SENSOR SIGNAL CIRCUIT SHORTED TO GROUND
(K34) EGR POSITION SENSOR SIGNAL CIRCUIT SHORTED TO THE (K900) SENSOR GROUND CIRCUIT
EGR POSITION SENSOR
PCM

Always perform the Pre-Diagnostic Troubleshooting procedure before proceeding. (Refer to 9 - ENGINE - DIAGNOSIS AND TESTING).

Diagnostic Test

1. EGR POSITION SENSOR BELOW 0.2 OF A VOLT

Ignition on, engine not running.

With a scan tool, read the EGR Position Sensor voltage.

Is the voltage below 0.2 of a volt?

Yes >> Go To 2

No >> Go To 9

---

2. (F856) 5-VOLT SUPPLY CIRCUIT

Turn the ignition off.

Disconnect the EGR Solenoid harness connector.

Ignition on, engine not running.

Measure the voltage of the (F856) 5-volt Supply circuit in the EGR Solenoid harness connector.

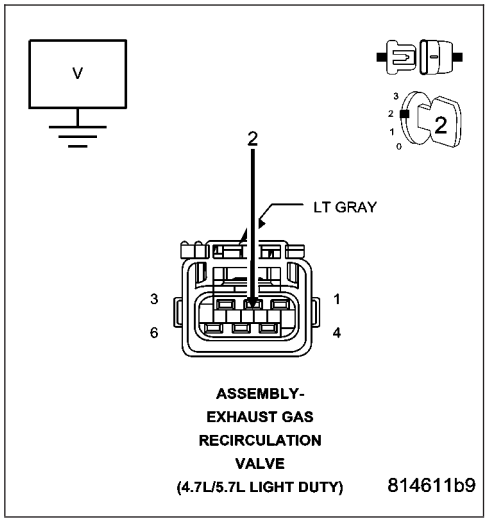

Is the voltage between 4.5 to 5.2 volts?

Yes >> Go To 3

No >> Go To 6

P0405-EGR POSITION SENSOR CIRCUIT LOW (CONTINUED)

3. EGR POSITION

With the scan tool, monitor the EGR Position Sensor voltage.

Is the voltage above 4.5 volts?

Yes >> Replace the EGR Solenoid Assembly.
Perform the POWERTRAIN VERIFICATION TEST. (Refer to 9 - ENGINE - STANDARD PROCEDURE)

No >> Go To 4

---

4. (K34) EGR POSITION SENSOR SIGNAL CIRCUIT SHORTED TO GROUND

Turn the ignition off.

Disconnect the C2 PCM harness connector.

Measure the resistance between ground and the (K34) EGR Position Sensor Signal circuit in the EGR Solenoid harness connector.

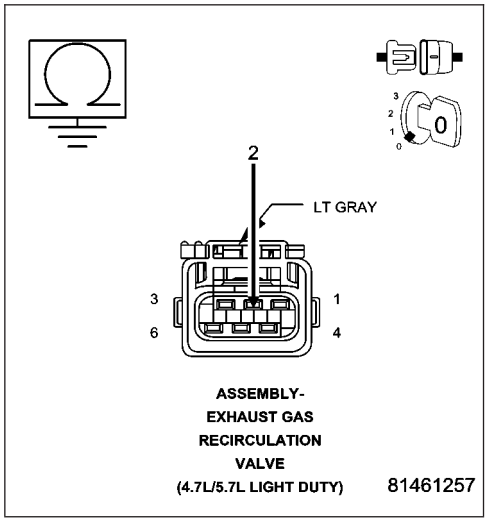

Is the resistance below 100 ohms?

Yes >> Repair the short to ground circuit in the (K34) EGR Position Sensor Signal circuit.
Perform the POWERTRAIN VERIFICATION TEST. (Refer to 9 - ENGINE - STANDARD PROCEDURE)

No >> Go To 5

---

5. (K34) EGR SENSOR SIGNAL CIRCUIT SHORTED TO THE (K900) SENSOR GROUND CIRCUIT

Measure the resistance between the (K34) EGR Position Sensor Signal circuit and (K900) Sensor ground circuit in the EGR Solenoid harness connector.

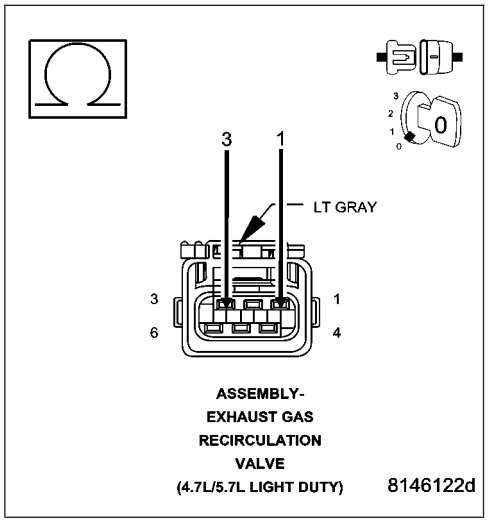

Is the resistance below 100 ohms?

Yes >> Repair the short between the (K900) Sensor ground and the (K34) EGR Position Sensor Signal circuit.
Perform the POWERTRAIN VERIFICATION TEST. (Refer to 9 - ENGINE - STANDARD PROCEDURE)

No >> Go To 8

P0405-EGR POSITION SENSOR CIRCUIT LOW (CONTINUED)

6. (F856) 5-VOLT SUPPLY CIRCUIT SHORTED TO GROUND

Turn the ignition off.

Disconnect the C1 PCM harness connector.

Measure the resistance between ground and the (F856) 5-volt Supply circuit in the EGR Solenoid harness connector.

Is the resistance below 100 ohms?

Yes >> Repair the short to ground in the (F856) 5-volt Supply circuit.
Perform the POWERTRAIN VERIFICATION TEST. (Refer to 9 - ENGINE - STANDARD PROCEDURE)

No >> Go To 7

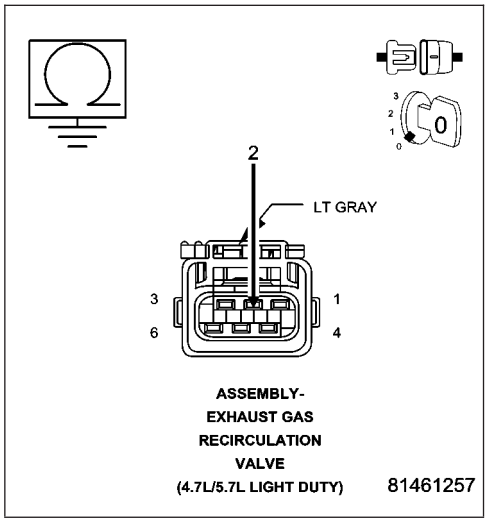

7. (F856) 5-VOLT SUPPLY CIRCUIT OPEN

CAUTION: Do not probe the PCM harness connectors. Probing the PCM harness connectors will damage the PCM terminals resulting in poor terminal to pin connection. Install Miller Special Tool #8815 to perform diagnosis.

Measure the resistance of the (F856) 5-volt Supply circuit from the EGR Solenoid harness connector to the appropriate terminal of special tool #8815.

Is the resistance below 5.0 ohms?

Yes >> Go To 8

No >> Repair the open in the (F856) 5-volt Supply circuit.
Perform the POWERTRAIN VERIFICATION TEST. (Refer to 9 - ENGINE - STANDARD PROCEDURE)

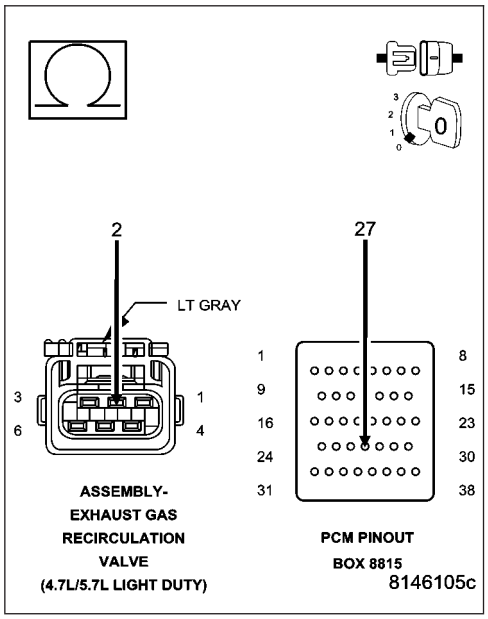

P0405-EGR POSITION SENSOR CIRCUIT LOW (CONTINUED)

8. PCM

NOTE: Before continuing, check the PCM harness connector terminals for corrosion, damage, or terminal push out. Repair as necessary.

Using the schematics as a guide, inspect the wire harness and connectors. Pay particular attention to all Power and Ground circuits.

Were there any problems found?

Yes >> Repair as necessary.
Perform the POWERTRAIN VERIFICATION TEST. (Refer to 9 - ENGINE - STANDARD PROCEDURE)

No >> Replace and program the Powertrain Control Module per Service Information.
Perform the POWERTRAIN VERIFICATION TEST. (Refer to 9 - ENGINE - STANDARD PROCEDURE)

---

9. EGR POSITION SENSOR SWEEP

NOTE: The engine will run rough and possibly stall in the following test. Feather the accelerator pedal to keep the engine from stalling.

Start the engine.

With the scan tool, enter System Test and then EGR System Test. Push the 4=VARIABLE function.

Monitor the EGR voltage while slowly pushing the up arrow.

Is the voltage change smooth?

Yes >> Refer to the INTERMITTENT CONDITION Diagnostic Procedure.
Perform the POWERTRAIN VERIFICATION TEST. (Refer to 9 - ENGINE - STANDARD PROCEDURE)

No >> Replace the EGR Solenoid Assembly.
Perform the POWERTRAIN VERIFICATION TEST. (Refer to 9 - ENGINE - STANDARD PROCEDURE)

P0406-EGR POSITION SENSOR CIRCUIT HIGH

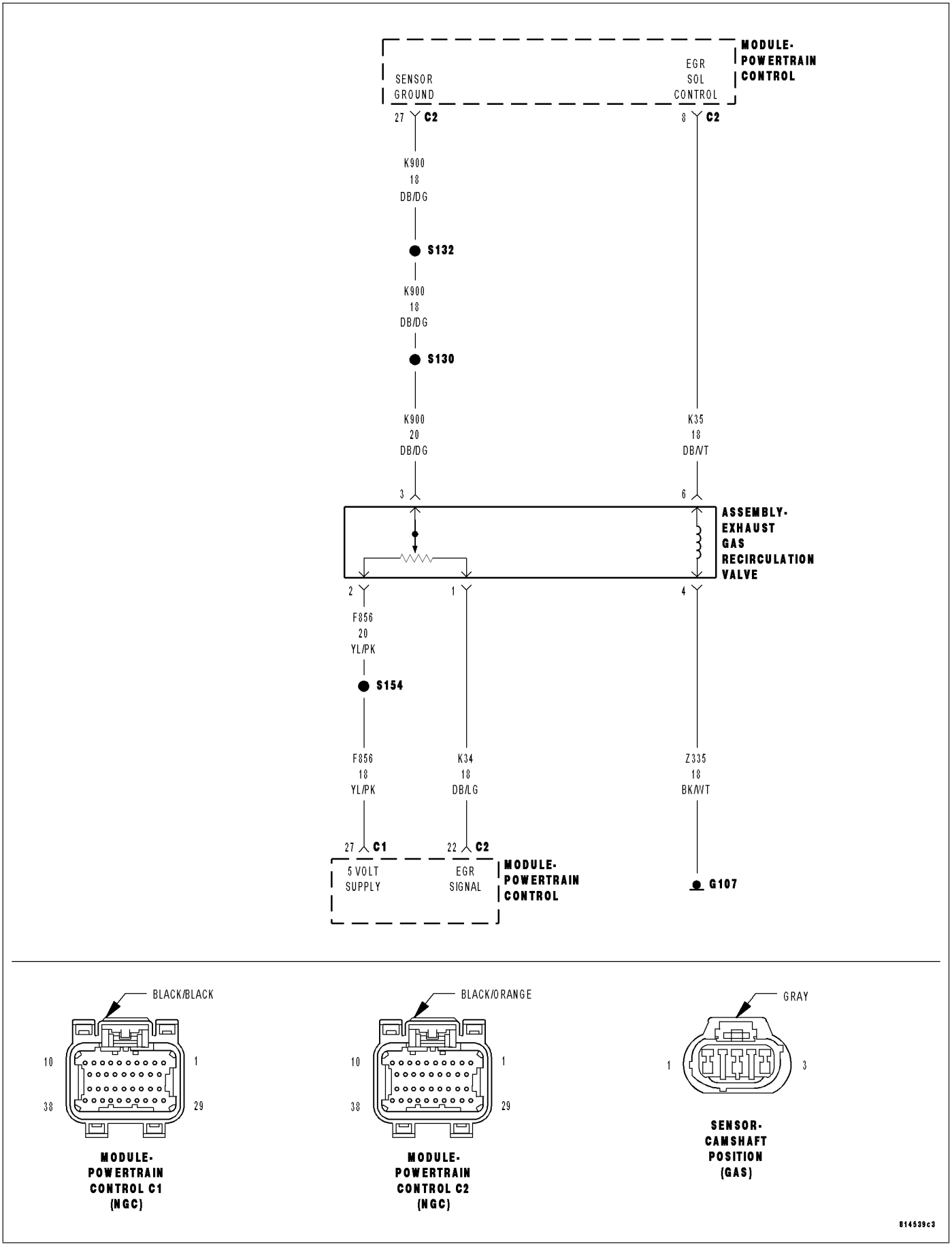

P0406-EGR POSITION SENSOR CIRCUIT HIGH (CONTINUED)

For the Engine circuit diagram (Refer to 9 - ENGINE - SCHEMATICS AND DIAGRAMS).

For a complete wiring diagram **Refer to Section 8W**.

- **When Monitored:**
  With the ignition on. Battery voltage greater than 10 volts.
- **Set Condition:**
  EGR position sensor signal is greater than 4.89. One trip Fault.

Possible Causes
(K34) EGR POSITION SENSOR SIGNAL CIRCUIT SHORTED TO THE (F856) 5-VOLT SUPPLY CIRCUIT
(K34) EGR POSITION SENSOR SIGNAL CIRCUIT SHORTED TO BATTERY VOLTAGE
(K34) EGR POSITION SENSOR SIGNAL CIRCUIT OPEN
(K900) SENSOR GROUND CIRCUIT OPEN
EGR SOLENOID ASSEMBLY
PCM

Always perform the Pre-Diagnostic Troubleshooting procedure before proceeding. (Refer to 9 - ENGINE - DIAGNOSIS AND TESTING).

Diagnostic Test

1. EGR POSITION SENSOR VOLTAGE ABOVE 4.5 VOLTS

Start the engine.

With the scan tool, read the EGR Position Sensor voltage.

Is the voltage above 4.5 volts?

Yes >> Go To 2

No >> Go To 8

---

2. (K34) EGR POSITION SENSOR SIGNAL CIRCUIT SHORTED TO THE (F856) 5-VOLT SUPPLY CIRCUIT

Turn the ignition off.

Disconnect the EGR Solenoid harness connector.

Disconnect the C1 and C2 PCM harness connectors.

Measure the resistance between the (K34) EGR Position Sensor Signal circuit and the (F856) 5-volt Supply circuit in the EGR Solenoid harness connector.

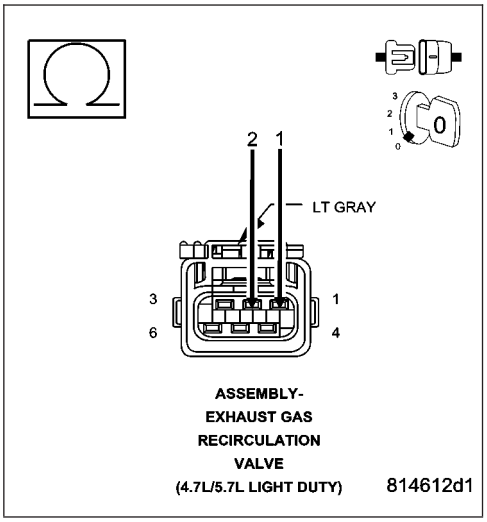

Is the resistance below 100 ohms?

Yes >> Repair the short between the (K34) EGR Position Sensor Signal circuit and the (F856) 5-volt Supply circuit.
Perform the POWERTRAIN VERIFICATION TEST. (Refer to 9 - ENGINE - STANDARD PROCEDURE)

No >> Go To 3

P0406-EGR POSITION SENSOR CIRCUIT HIGH (CONTINUED)

3. (K34) EGR POSITION SENSOR SIGNAL CIRCUIT SHORTED TO BATTERY VOLTAGE

Ignition on, engine not running.

Measure the voltage on the (K34) EGR Sensor Signal circuit in the EGR Solenoid harness connector.

Is the voltage above 0 volts?

Yes >> Repair the short to battery voltage in the (K34) EGR Position Sensor Signal circuit.
Perform the POWERTRAIN VERIFICATION TEST. (Refer to 9 - ENGINE - STANDARD PROCEDURE)

No >> Go To 4

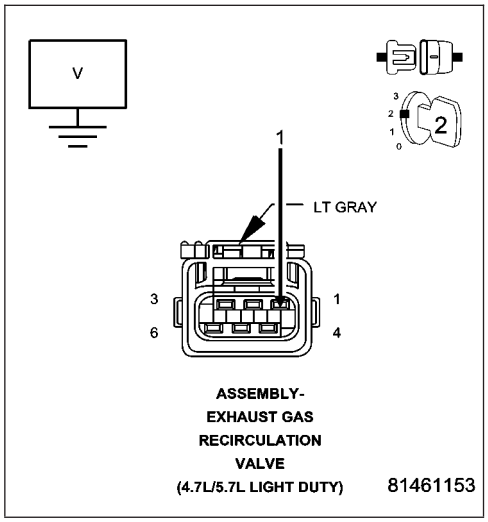

4. EGR SOLENOID ASSEMBLY

Turn the ignition off.

Connect the PCM harness connectors.

Connect a jumper wire between the (K34) EGR Position Sensor Signal circuit and the (K900) Sensor ground circuit.

With the scan tool, monitor the EGR Position Sensor voltage.

Ignition on, engine not running.

Is the voltage below 0.5 of a volt?

Yes >> Replace the EGR Solenoid Assembly.
Perform the POWERTRAIN VERIFICATION TEST. (Refer to 9 - ENGINE - STANDARD PROCEDURE)

No >> Go To 5

NOTE: Remove the jumper wire before continuing.

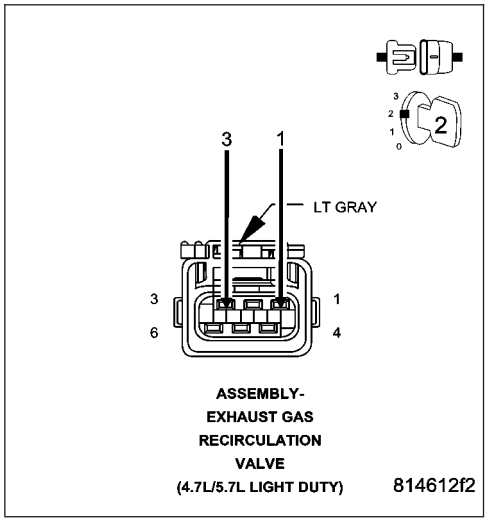

P0406-EGR POSITION SENSOR CIRCUIT HIGH (CONTINUED)

5. (K34) EGR POSITION SENSOR SIGNAL CIRCUIT OPEN

Turn the ignition off.

Disconnect the C2 PCM harness connector.

CAUTION: Do not probe the PCM harness connectors. Probing the PCM harness connectors will damage the PCM terminals resulting in poor terminal to pin connection. Install Miller Special Tool #8815 to perform diagnosis.

Measure the resistance of the (K34) EGR Position Sensor Signal circuit from the EGR Solenoid harness connector to the appropriate terminal of special tool #8815.

Is the resistance below 5.0 ohms?

Yes >> Go To 6

No >> Repair the open in the (K34) EGR Position Sensor Signal circuit.
Perform the POWERTRAIN VERIFICATION TEST. (Refer to 9 - ENGINE - STANDARD PROCEDURE)

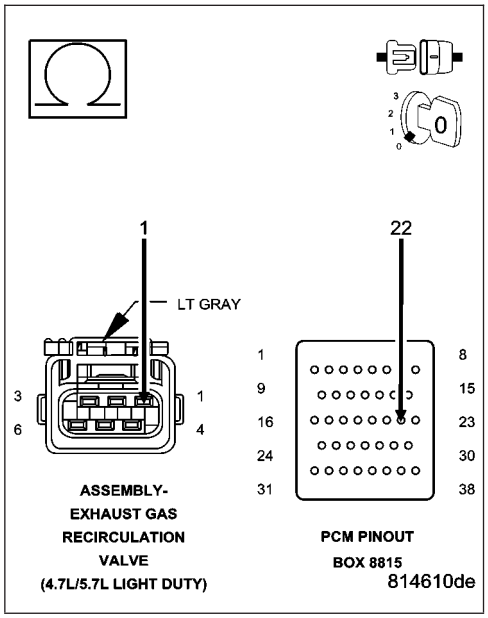

6. (K900) SENSOR GROUND CIRCUIT OPEN

Measure the resistance of the (K900) Sensor ground circuit from the EGR Solenoid harness connector to the appropriate terminal of special tool #8815.

Is the resistance below 30 ohms?

Yes >> Go To 7

No >> Repair the open in the (K900) Sensor ground circuit.
Perform the POWERTRAIN VERIFICATION TEST. (Refer to 9 - ENGINE - STANDARD PROCEDURE)

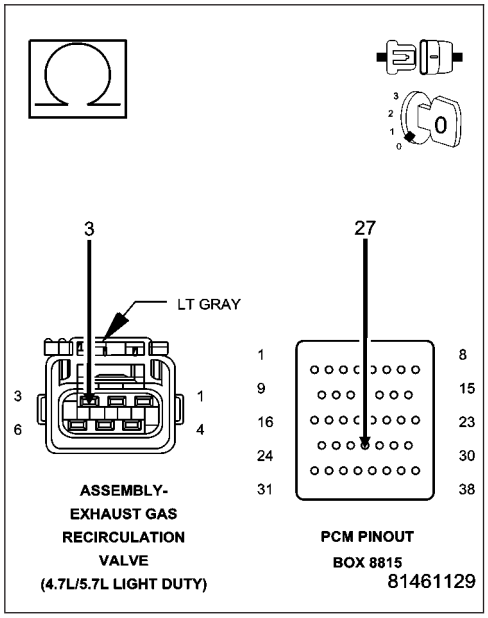

P0406-EGR POSITION SENSOR CIRCUIT HIGH (CONTINUED)

7. PCM

NOTE: Before continuing, check the PCM harness connector terminals for corrosion, damage, or terminal push out. Repair as necessary.

Using the schematics as a guide, inspect the wire harness and connectors. Pay particular attention to all Power and Ground circuits.

Were there any problems found?

Yes >> Repair as necessary.
Perform the POWERTRAIN VERIFICATION TEST. (Refer to 9 - ENGINE - STANDARD PROCEDURE)

No >> Replace and program the Powertrain Control Module per Service Information.
Perform the POWERTRAIN VERIFICATION TEST. (Refer to 9 - ENGINE - STANDARD PROCEDURE)

---

8. EGR POSITION SENSOR SWEEP

NOTE: The engine will run rough and possibly stall in the following test. Feather the accelerator pedal to keep the engine from stalling.

Start the engine.

With the scan tool, enter System Test and then EGR System Test. Push the 4=VARIABLE function.

Monitor the EGR voltage while slowly pushing the up arrow.

Is the voltage change smooth?

Yes >> Refer to the INTERMITTENT CONDITION Diagnostic Procedure.
Perform the POWERTRAIN VERIFICATION TEST. (Refer to 9 - ENGINE - STANDARD PROCEDURE)

No >> Replace the EGR Solenoid Assembly.
Perform the POWERTRAIN VERIFICATION TEST. (Refer to 9 - ENGINE - STANDARD PROCEDURE)

P0420-CATALYST 1/1 EFFICIENCY

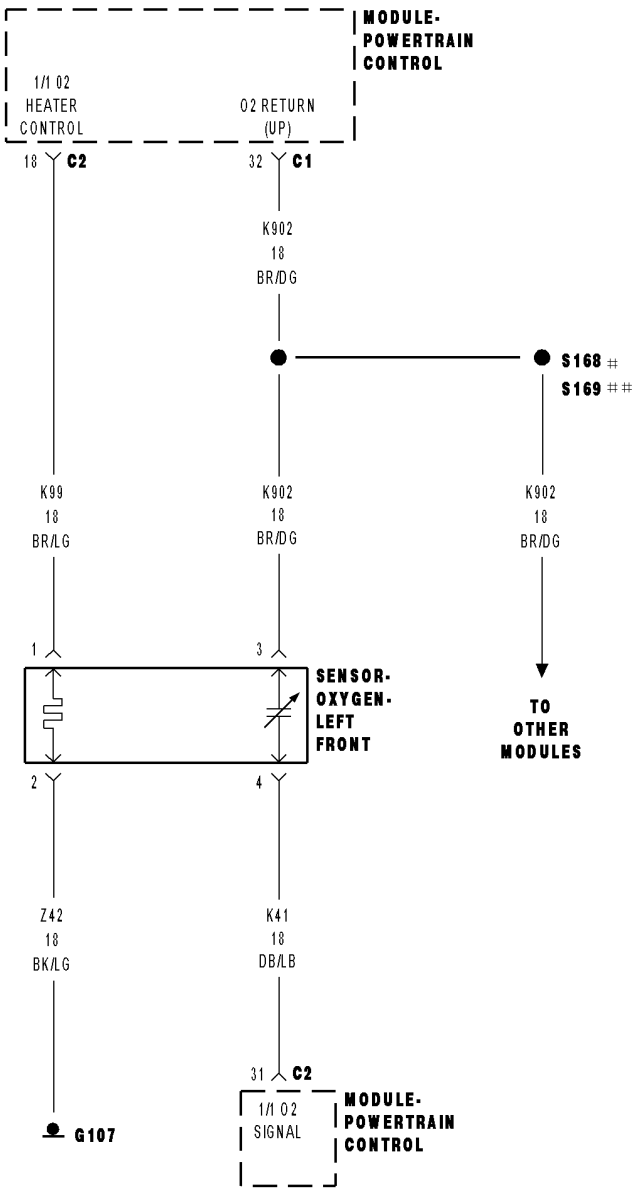

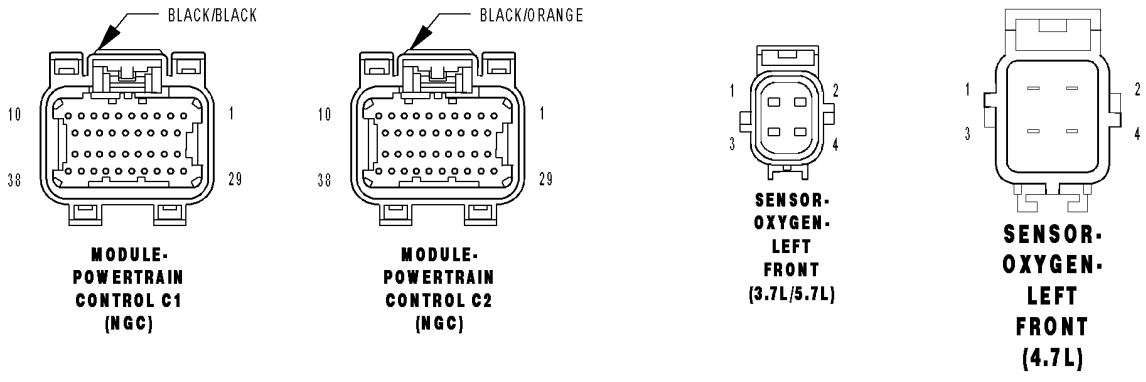

P0420-CATALYST 1/1 EFFICIENCY (CONTINUED)

For the Engine circuit diagram (Refer to 9 - ENGINE - SCHEMATICS AND DIAGRAMS).

For a complete wiring diagram **Refer to Section 8W**.

Theory of Operation

The upstream O2 sensor is used to detect the amount of oxygen in the exhaust gas before the gas enters the catalytic converter. During the catalyst/O2 monitor test, the response rate (cycles/second) of the upstream O2 sensor determines the sensor's ability to achieve the tailpipe emissions limits. The response rate of the downstream O2 sensor relative to the upstream O2 sensor response rate measures the catalyst's ability to store oxygen and is used to infer the catalyst's ability to achieve the tailpipe emissions limits.

- **When Monitored:**
  After engine warm up to 70°C (158°F), 180 seconds of open throttle operation, at a speed greater than 18 mph and less than 55 mph, with the engine at 1200-1700 rpm and MAP vacuum between 15.0 and 21.0 inches of mercury (Hg).
- **Set Condition:**
  As catalyst efficiency deteriorates, the switch rate of the downstream O2 sensor approaches that of the upstream O2 sensor. If at any point during the test the switch ratio reaches a predetermined value a counter is incremented by one. Three good trips to turn off the MIL.

Possible Causes
EXHAUST LEAK
ENGINE MECHANICAL
AGING O2 SENSOR
CATALYTIC CONVERTER

Always perform the Pre-Diagnostic Troubleshooting procedure before proceeding. (Refer to 9 - ENGINE - DIAGNOSIS AND TESTING).

Diagnostic Test

1. ACTIVE DTC

NOTE: A new rear O2 Sensor along with an aging front O2 Sensor may cause the DTC to set. Review the repair history of the vehicle before continuing.

NOTE: If an O2 Sensor DTC set along with the Catalytic Converter Efficiency DTC diagnose the O2 Sensor DTC(s) before continuing.

NOTE: Check for contaminants that may have damaged the O2 Sensor and Catalytic Converter: contaminated fuel, unapproved silicone, oil and coolant, repair necessary.

Ignition on, engine not running.

With a scan tool, read DTCs.

Is the DTC active at this time?

Yes >> Go To 2

No >> Refer to the INTERMITTENT CONDITION Diagnostic Procedure.
Perform the POWERTRAIN VERIFICATION TEST. (Refer to 9 - ENGINE - STANDARD PROCEDURE)

P0420-CATALYST 1/1 EFFICIENCY (CONTINUED)

2. VISUALLY INSPECT CATALYTIC CONVERTER

Inspect the Catalytic Converter for the following damage.
Damaged Catalytic Converter, dents or holes.
Severe discoloration caused by overheating the Catalytic Converter.
Catalytic Converter broken internally.
Leaking Catalytic Converter.

Were any problems found?

Yes >> Replace the Catalytic Converter. Repair the condition that may have caused the failure.
Perform the POWERTRAIN VERIFICATION TEST. (Refer to 9 - ENGINE - STANDARD PROCEDURE)

No >> Go To 3

---

3. EXHAUST LEAK

Start the engine.
Inspect the exhaust for leaks between the engine and the 1/1 O2 Sensor.
Inspect the exhaust for leaks between the engine and the 1/2 O2 Sensor.

Are there any exhaust leaks?

Yes >> Repair or replace the leaking exhaust parts as necessary.
Perform the POWERTRAIN VERIFICATION TEST. (Refer to 9 - ENGINE - STANDARD PROCEDURE)

No >> Go To 4

---

4. ENGINE MECHANICAL

Check the exhaust for excessive smoke caused by an internal problem in the engine.

Is an engine mechanical condition present?

Yes >> Repair the engine mechanical condition as necessary.
Perform the POWERTRAIN VERIFICATION TEST. (Refer to 9 - ENGINE - STANDARD PROCEDURE)

No >> Go To 5

---

5. AGING O2 SENSOR

A new rear O2 Sensor along with an aging front O2 Sensor may cause the DTC to set.
Review the vehicles repair history.

Has the rear O2 Sensor been replaced without replacing the front O2 Sensor?

Yes >> Replace the Front O2 Sensor as necessary.
Perform the POWERTRAIN VERIFICATION TEST. (Refer to 9 - ENGINE - STANDARD PROCEDURE)

No >> Go To 6

---

6. CATALYTIC CONVERTER

If there are no possible cause remaining, view repair.

Repair

Replace the Catalytic Converter.
Perform the POWERTRAIN VERIFICATION TEST. (Refer to 9 - ENGINE - STANDARD PROCEDURE)

P0430-CATALYST 2/1 EFFICIENCY

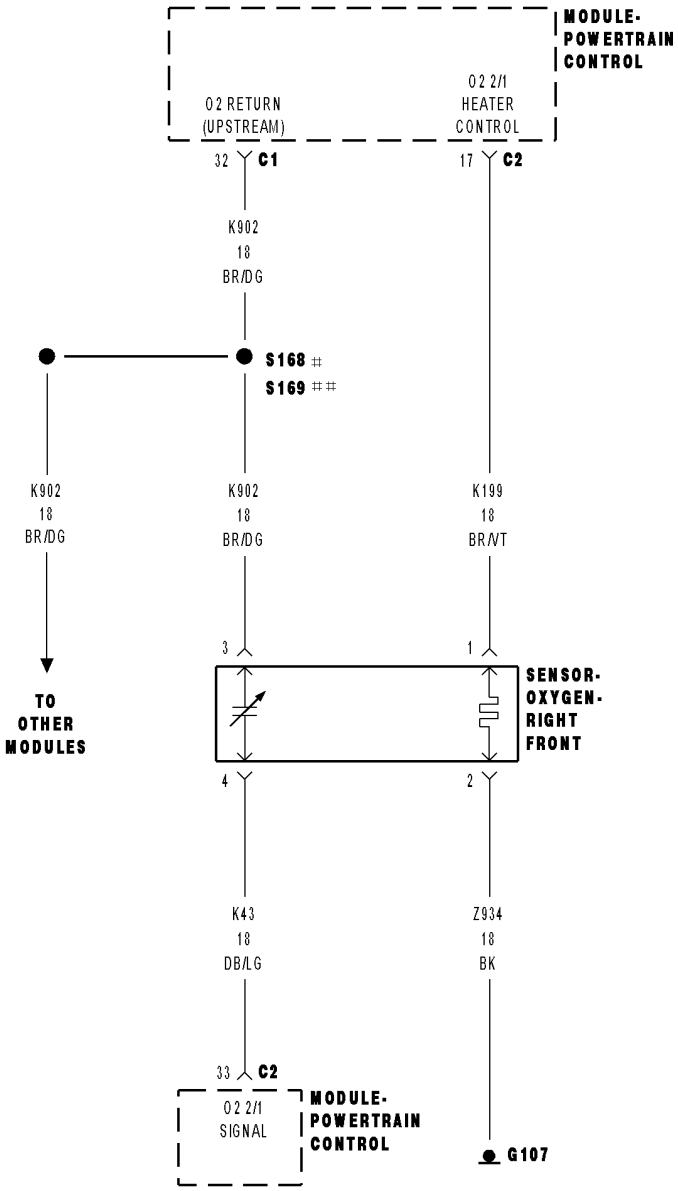

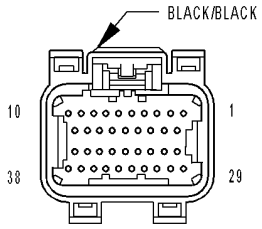

MODULE-
POWERTRAIN
CONTROL C1
(NGC)

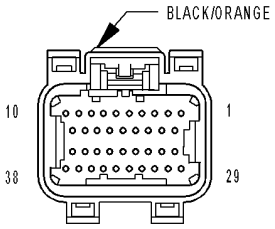

MODULE-
POWERTRAIN
CONTROL C2
(NGC)

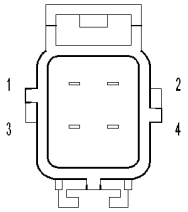

SENSOR-
OXYGEN-
RIGHT
FRONT
(4.7L)

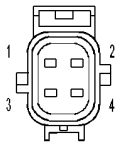

SENSOR-
OXYGEN-
RIGHT
FRONT
(3.7L/5.7L)

81452b7e

P0430-CATALYST 2/1 EFFICIENCY (CONTINUED)

For the Engine circuit diagram (Refer to 9 - ENGINE - SCHEMATICS AND DIAGRAMS).

For a complete wiring diagram **Refer to Section 8W**.

Theory of Operation

The upstream O2 sensor is used to detect the amount of oxygen in the exhaust gas before the gas enters the catalytic converter. During the catalyst/O2 monitor test, the response rate (cycles/second) of the upstream O2 sensor determines the sensor's ability to achieve the tailpipe emissions limits. The response rate of the downstream O2 sensor relative to the upstream O2 sensor response rate measures the catalyst's ability to store oxygen and is used to infer the catalyst's ability to achieve the tailpipe emissions limits.

- **When Monitored:**
  After engine warm up to 147 deg. F, 180 seconds of open throttle operation, at a speed greater than 20 mph, with the engine at 1200-1700 rpm and MAP vacuum between 15.0 and 21.0 inches of mercury (Hg).
- **Set Condition:**
  As catalyst efficiency deteriorates, the switch rate of the downstream O2 sensor approaches that of the upstream O2 sensor. If at any point during the test the switch ratio reaches a predetermined value a counter is incremented by one. Three good trips to turn off the MIL.

Possible Causes
EXHAUST LEAK
ENGINE MECHANICAL
AGING O2 SENSOR
CATALYTIC CONVERTER

Always perform the Pre-Diagnostic Troubleshooting procedure before proceeding. (Refer to 9 - ENGINE - DIAGNOSIS AND TESTING).

Diagnostic Test

1. ACTIVE DTC

NOTE: A new rear O2 Sensor along with an aging front O2 Sensor may cause the DTC to set. Review the repair history of the vehicle before continuing.

NOTE: If an O2 Sensor DTC set along with the Catalytic Converter Efficiency DTC diagnose the O2 Sensor DTC(s) before continuing.

NOTE: Check for contaminants that may have damaged the O2 Sensor and Catalytic Converter: contaminated fuel, unapproved silicone, oil and coolant, repair necessary.

Ignition on, engine not running.

With a scan tool, read DTCs.

Is the DTC active at this time?

Yes >> Go To 2

No >> Refer to the INTERMITTENT CONDITION Diagnostic Procedure.
Perform the POWERTRAIN VERIFICATION TEST. (Refer to 9 - ENGINE - STANDARD PROCEDURE)

P0430-CATALYST 2/1 EFFICIENCY (CONTINUED)

2. VISUALLY INSPECT CATALYTIC CONVERTER

Inspect the Catalytic Converter for the following damage.
Damaged Catalytic Converter, dents or holes.
Severe discoloration caused by overheating the Catalytic Converter.
Catalytic Converter broken internally.
Leaking Catalytic Converter.

Were any problems found?

Yes >> Replace the Catalytic Converter. Repair the condition that may have caused the failure.
Perform the POWERTRAIN VERIFICATION TEST. (Refer to 9 - ENGINE - STANDARD PROCEDURE)

No >> Go To 3

---

3. EXHAUST LEAK

Start the engine.
Inspect the exhaust for leaks between the engine and the 2/1 O2 Sensor.
Inspect the exhaust for leaks between the engine and the 2/2 O2 Sensor.

Are there any exhaust leaks?

Yes >> Repair or replace the leaking exhaust parts as necessary.
Perform the POWERTRAIN VERIFICATION TEST. (Refer to 9 - ENGINE - STANDARD PROCEDURE)

No >> Go To 4

---

4. ENGINE MECHANICAL

Check the exhaust for excessive smoke caused by an internal problem in the engine.

Is an engine mechanical condition present?

Yes >> Repair the engine mechanical condition as necessary.
Perform the POWERTRAIN VERIFICATION TEST. (Refer to 9 - ENGINE - STANDARD PROCEDURE)

No >> Go To 5

---

5. AGING O2 SENSOR

A new rear O2 Sensor along with an aging front O2 Sensor may cause the DTC to set.
Review the vehicles repair history.

Has the rear O2 Sensor been replaced without replacing the front O2 Sensor?

Yes >> Replace the 2/1 O2 Sensor as necessary.
Perform the POWERTRAIN VERIFICATION TEST. (Refer to 9 - ENGINE - STANDARD PROCEDURE)

No >> Go To 6

---

6. CATALYTIC CONVERTER

If there are no possible cause remaining, view repair.

Repair

Replace the Catalytic Converter.
Perform the POWERTRAIN VERIFICATION TEST. (Refer to 9 - ENGINE - STANDARD PROCEDURE)

P0440-GENERAL EVAP SYSTEM FAILURE

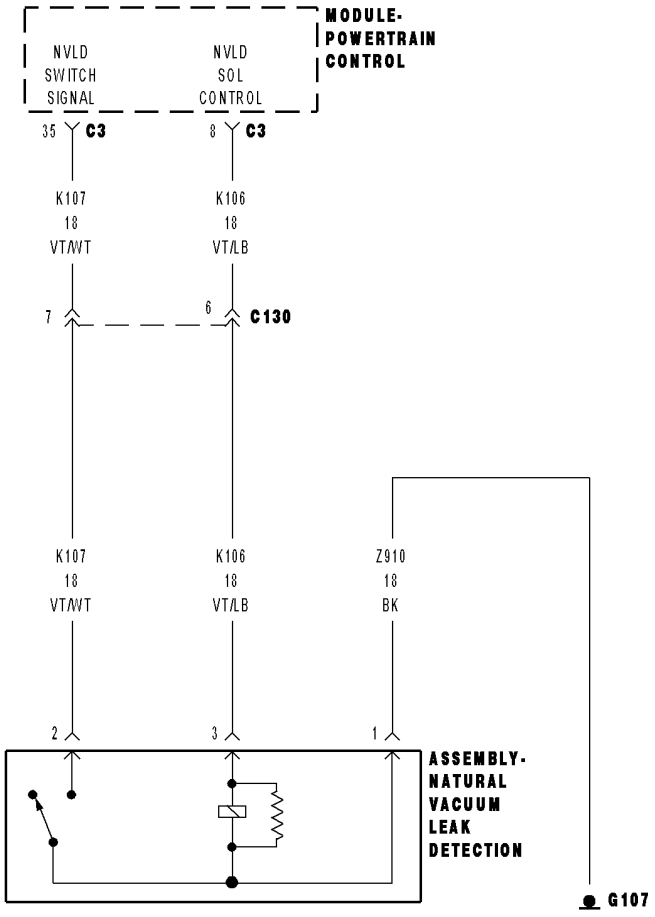

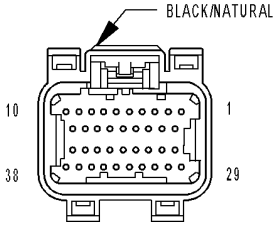

MODULE-
POWERTRAIN
CONTROL C3
(NGC)

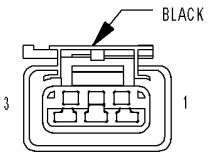

ASSEMBLY-
NATURAL VACUUM
LEAK DETECTION
(3.7L/4.7L/5.7L)

81453a02

P0440-GENERAL EVAP SYSTEM FAILURE (CONTINUED)

For a complete wiring diagram **Refer to Section 8W**.

Theory of Operation

The theory behind the Natural Vacuum Leak Detection (NVLD) is adherence to the Ideal Gas Law. Pressure in a sealed vessel will change linearly as a function of the temperature of the gas in the vessel. Even small leaks will allow the pressure in the vessel to come to equilibrium with the atmospheric pressure. After key-off and a calibrated amount of time, cool down from operating temperatures or diurnal ambient temperature the system pressure will force the system to go negative or draw a vacuum if there is no leak. When the vacuum level reaches 1" H2O (0.25 KPA) the NVLD vacuum switch closes. This sends a signal to the NGC freezing a timer and registering a pass. If a switch closure is not detected an assessment of leak size will be made.

- **When Monitored:**
  Engine Running. Fuel Level greater than 12%. Ambient Temperature between 4°C and 32°C (39°F and 89°F).
- **Set Condition:**
  The PCM does not see the NVLD switch close during the medium/large leak test. The PCM then will increase the vacuum supply to the EVAP system by increasing flow through the EVAP Purge valve. If the switch does not close with an increase in vacuum an error is detected. Two Trip Fault. Three good trips to turn off the MIL.

Possible Causes
EVAP PURGE SOLENOID VACUUM SUPPLY
(Z910) GROUND CIRCUIT OPEN
(K107) NVLD SWITCH SIGNAL CIRCUIT OPEN
EVAPORATIVE EMISSION LEAK DETECTION
NVLD ASSEMBLY
EVAP PURGE SOLENOID
PCM

Always perform the Pre-Diagnostic Troubleshooting procedure before proceeding. (Refer to 9 - ENGINE - DIAGNOSIS AND TESTING).

Diagnostic Test

1. VEHICLE HISTORY AND SERVICE BULLETIN INVESTIGATION

Ignition on, engine not running.

With a scan tool, read DTCs and record the related Freeze Frame data if any DTC(s) are present.

Whether or not any DTC(s) are present you will want to check the following items which may assist in repairing the customer's complaint successfully.

Check the vehicles repair history.

If the vehicle has a repair history that pertains to the customer's current complaint, review the repair.

Inspect the vehicle for any aftermarket accessories that may have been installed incorrectly.

Check for any service bulletin(s) related to the customer's complaint or DTC(s).

If a service bulletin applies, follow the instructions per the service bulletin.

Choose the following scenario that best applies.

The service bulletin repaired the customer's complaint.
Testing complete.

A DTC is present, no service bulletins apply, or the service bulletin didn't repair the customer's complaint.
Go To 2

P0440-GENERAL EVAP SYSTEM FAILURE (CONTINUED)

2. ACTIVE DTC

NOTE: If any of the following DTCs are set (P0443, P0452, P0453, P0498, or P0499) diagnose them first before continuing with P0440.

NOTE: A loose gas cap could have caused this DTC to set. Make sure the gas cap is tight and in good condition.

Ignition on, engine not running.

With a scan tool, read DTCs.

Is the DTC active at this time?

Yes >> Go To 3

No >> Refer to the INTERMITTENT CONDITION Diagnostic Procedure.
Perform the POWERTRAIN VERIFICATION TEST. (Refer to 9 - ENGINE - STANDARD PROCEDURE)

---

3. VISUAL AND PHYSICAL INSPECTION

Turn the ignition off.

Perform a visual and physical inspection of the entire Evaporative Emission system.

Check for the following conditions:

- Hoses disconnected or left off
- Holes or cracks
- Loose seal points
- Evidence of damaged components
- Incorrect routing of hoses and tubes
- Fuel Cap left off or bad gasket seal

Were any of the above conditions found?

Yes >> Repair as necessary.
Perform the POWERTRAIN VERIFICATION TEST. (Refer to 9 - ENGINE - STANDARD PROCEDURE)

No >> Go To 4

---

4. EVAP VACUUM SUPPLY HOSE INSPECTION

Carefully inspect the Evap Purge Solenoid vacuum supply hose for proper routing.

Check for a pinched or plugged hose from the throttle body or intake manifold to the Purge Solenoid.

Make sure the vacuum port at the throttle body or intake manifold is free from any blockage.

Were any problems found?

Yes >> Repair the vacuum supply, hose/tube as necessary.
Perform the POWERTRAIN VERIFICATION TEST. (Refer to 9 - ENGINE - STANDARD PROCEDURE)

No >> Go To 5

P0440-GENERAL EVAP SYSTEM FAILURE (CONTINUED)

5. CHECKING EVAP PURGE SOLENOID FUNCTIONALITY

NOTE: To continue testing you will need Miller Tool #8404 Evaporative Emission Leak Detector (EELD).

WARNING: Keep lit cigarettes, sparks, flames, and other ignition sources away from the test area to prevent the ignition of explosive gases, Keep the test area well ventilated.

Connect the red power lead of the EELD to the battery positive terminal and the black ground lead to battery negative terminal.

Disconnect the vacuum hoses at the Evap Purge Solenoid.

Connect the SMOKE supply tip (black hose) to the “CAN” port on the Evap Purge Solenoid.

Set the smoke/air control switch to SMOKE.

While still holding the remote smoke/air start button, check to see if smoke is exiting the purge valve. This indicates that there is a leak internal to the purge valve.

Is smoke visible from the EVAP Purge Solenoid?

Yes >> Replace the Evap Purge Solenoid.
Perform the POWERTRAIN VERIFICATION TEST. (Refer to 9 - ENGINE - STANDARD PROCEDURE)

No >> Go To 6

---

6. CHECKING EVAP PURGE SOLENOID FUNCTIONALITY

NOTE: This is an optional method of checking the purge valve for leaks if the EELD is unavailable.

Disconnect the Smoke supply tip from the vacuum supply hoses at the EVAP Purge Solenoid.

Using a hand vacuum pump, apply 10 in Hg to the ″CAN″ side of the EVAP Purge Solenoid.

Observe the vacuum gauge for at least 15 seconds.

Does the EVAP Purge Solenoid hold vacuum?

Yes >> Go To 7

No >> Replace the Evap Purge Solenoid.
Perform the POWERTRAIN VERIFICATION TEST. (Refer to 9 - ENGINE - STANDARD PROCEDURE)

---

7. NVLD SWITCH OPERATION

CAUTION: Do not attempt to probe the NVLD Terminals to diagnose the switch function. This may damage the switch and disable the NVLD component. Follow procedures outlined in the service manual for NVLD switch testing using a scan tool.

Connect the previously disconnected vacuum hose.

Start the engine.

Allow the engine to idle.

Using the scan tool, perform the NVLD FORCED MONITOR TEST.

Monitor the NVLD Switch state.

NOTE: As the test runs, the NVLD Switch should go from an OPEN state to a CLOSED state and then return to OPEN when the test is complete This may take up to 10 minutes.

Did the NVLD Switch operate as described above?

Yes >> Test complete.

No >> Go To 8

P0440-GENERAL EVAP SYSTEM FAILURE (CONTINUED)

8. VERIFY NVLD SWITCH OPERATION

Start the engine.

Allow the engine to idle.

Using the scan tool, perform the NVLD FORCED MONITOR TEST for a second time.

While the NVLD FORCED MONITOR TEST is running, open/remove the gas cap.

Monitor the NVLD Switch state.

Did the NVLD Switch go from OPEN to CLOSED?

Yes >> Replace the NVLD Assembly.
Perform the POWERTRAIN VERIFICATION TEST. (Refer to 9 - ENGINE - STANDARD PROCEDURE)

No >> Go To 9

---

9. VERIFY EVAPORATIVE EMISSION LEAK

WARNING: Keep lit cigarettes, sparks, flames, and other ignition sources away from the test area to prevent the ignition of explosive gases. Keep the test area well ventilated.

Turn the ignition off.

To continue testing you will need Miller Tool #8404 Evaporative Emission Leak Detector (EELD).

NOTE: The fuel tank should have between 20% and 80% of fuel tank capacity to properly test the Evap system.

Connect the red power lead of EELD to the battery positive terminal and the black ground lead to battery negative terminal.

Block the vent hose of the EVAP Canister.

Connect shop air to the EELD.

Set the smoke/air control switch to AIR.

Insert the tester's AIR supply tip (clear hose) into the .040 orifice on the tester's control panel.

Press the remote smoke/air start button.

Position the red flag on the air flow meter so it is aligned with the indicator ball.

When the calibration is complete, release the remote button. The EELD flow meter is now calibrated in liters per minute.

Install the service port adapter #8404-14 on the vehicle's service port (if equipped) or install the #8404-ADP into the filter line.

Connect the Air supply hose from the EELD to the service port (if equipped) or to the #8404-ADP adapter.

Press the remote button to activate AIR flow.

Compare the flow meter indicator ball reading to the red flag.

ABOVE the red flag indicates a leak present.

BELOW the red flag indicates a sealed system.

Is the indicator ball above the red flag?

Yes >> Go To 10

No >> Go To 11

P0440-GENERAL EVAP SYSTEM FAILURE (CONTINUED)

10. EVAPORATIVE EMISSION LEAK DETECTION

NOTE: A thorough visual inspection of the Evap system hoses, tubes, and connections may save time in your diagnosis. Look for any physical damage or signs of wetness at connections. The strong smell of fuel vapors may aid diagnosis also.

Remove the Air supply hose from the service port or the #8404-ADP adapter.

Connect the SMOKE supply tip (black hose) to the service port (if equipped) or to the #8404-ADP adapter.

Set the smoke/air control switch to SMOKE.

NOTE: The flow meter indicator ball will not move at this point.

Press the remote smoke/air start button.

NOTE: Make sure that smoke has filled the EVAP system by continuing to press the remote smoke/air start button, remove the vehicle fuel cap, and wait for the smoke to exit. Once smoke is indicated reinstall the fuel cap.

NOTE: For optimal performance, introduce smoke into the system for an additional 60 seconds; continue introducing smoke at 15 second intervals, as necessary.

While still holding the remote smoke/air start button, use the white light (#8404-CLL) to follow the EVAP system path, and look for the source of the leak indicated by exiting smoke.

If a leak is concealed from view (i.e., top of fuel tank), release the remote smoke/air start button, and use the ultra-violet (UV) black light #8404-UVL and the yellow goggles 8404-20 to look for residual traces of dye that are left behind by the smoke.

The exiting smoke deposits a residual fluid that is either bright green or bright yellow in color when viewed with a UV light.

NOTE: The EVAP System is divided into three zones. A leak from any of these zones can cause this DTC to set. The lists below specify the possible leak points in that specific zone. For further assistance see the Zone Identification Charts below.

- ZONE 1

1 Fuel Cap
2 Recirculation Check Valve.
3 Vapor Recirculation Line.
4 Signal Vapor Line for FVM.
5 Flow Management Valve.
6 Fuel Tank to Canister Vapor Line connection.
7 Fuel Tank Vent (Check Valve).
8 Vapor Line to Canister.
9 Flow Control Orfice.
10 Control Valve.
11 Liquid Trap.
12 Fuel Tank.
13 Check valve.
14 Fuel Fill Tube to Tank connector.
15 Fuel Fill Tube
Damaged or disconnected EVAP system components.

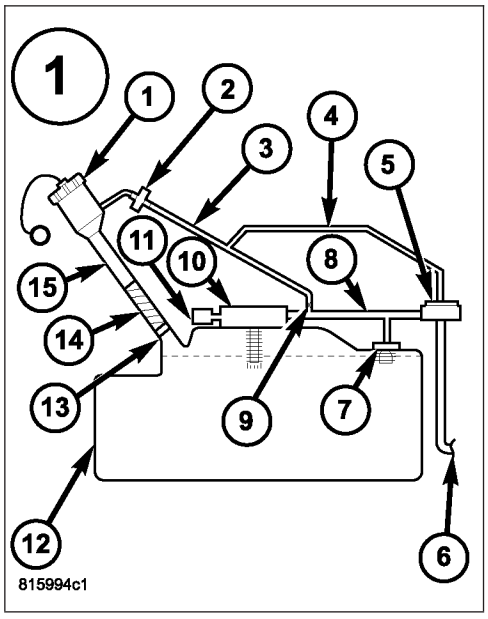

P0440-GENERAL EVAP SYSTEM FAILURE (CONTINUED)

- ZONE 2

1 Filter.
2 NVLD.
3 Canister Vent Line.
4 Evap Canister.
5 Chassis Purge Valve.
6 Fuel Tank to Canister Vapor Line connection.
7 Evap Purge connection.

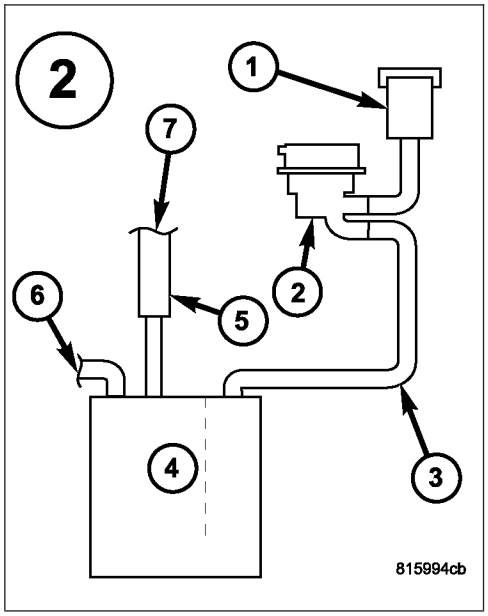

- ZONE 3

1 Evap Purge Vacuum Line.
2 Connection to Chassis Line.
3 Connection to Canister.
4 Chassis Purge Line.
5 Evap Purge Vacuum Line.
6 Connection to Evap Purge Harness.
7 Chassis Evap Purge Line connection to Engine Vacuum.
8 Evap Purge Valve.
9 Service Port.

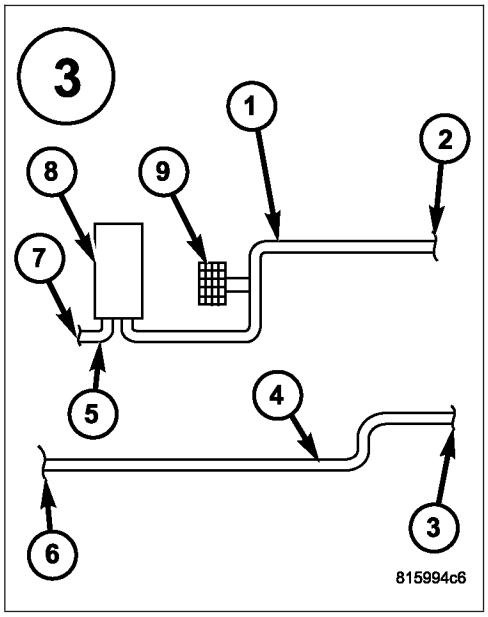

NOTE: Carefully inspect the vent side of the EVAP Canister. Due to the filtering system in the canister the smoke or dye may or may not be visible. Introducing smoke into the filtered side of the canister may assist in locating the leak.

Was a leak found?

Yes >> Repair or replace the leaking component as necessary. Perform the POWERTRAIN VERIFICATION TEST. (Refer to 9 - ENGINE - STANDARD PROCEDURE)

No >> Go To 11

P0440-GENERAL EVAP SYSTEM FAILURE (CONTINUED)

11. NVLD ASSEMBLY

Turn the ignition off.

Disconnect the NVLD electrical harness connector.

Check connectors - Clean/repair as necessary.

Ignition on, engine not running.

Connect a jumper wire between the (K107) NVLD Switch Signal circuit and the (Z910) Ground circuit in the NVLD electrical harness connector.

Monitor the NVLD Switch state on the scan tool.

Does the Switch change from OPEN to CLOSED when the jumper wire is installed?

Yes >> Replace the NVLD Assembly.
Perform the POWERTRAIN VERIFICATION TEST. (Refer to 9 - ENGINE - STANDARD PROCEDURE)

No >> Go To 12

NOTE: Remove the jumper wire before continuing.

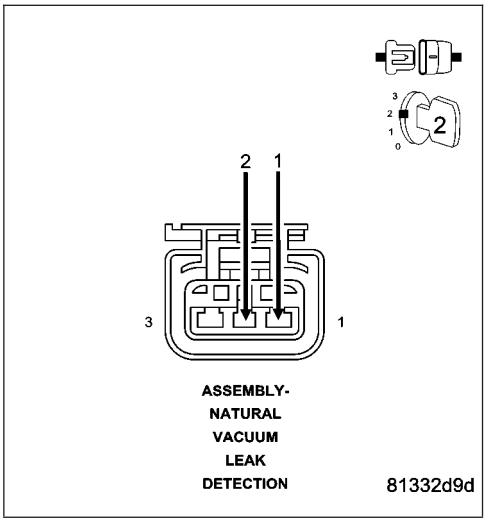

12. (Z910) GROUND CIRCUIT OPEN

Turn the ignition off.

Measure the resistance between the (Z910) Ground circuit and ground.

Is the resistance below 5.0 ohms?

Yes >> Go To 13

No >> Repair the open in the (Z910) Ground circuit.
Perform the POWERTRAIN VERIFICATION TEST. (Refer to 9 - ENGINE - STANDARD PROCEDURE) .

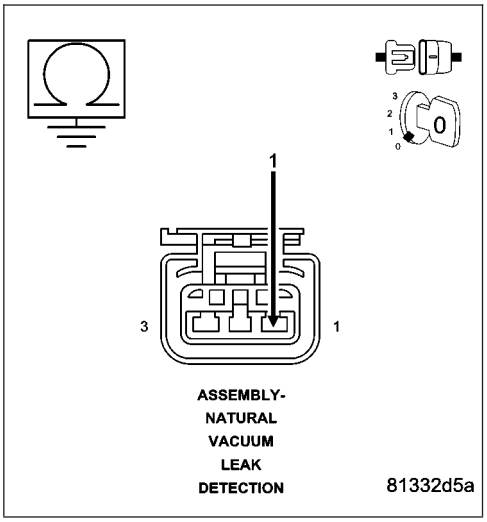

P0440-GENERAL EVAP SYSTEM FAILURE (CONTINUED)

13. (K107) NVLD SWITCH SIGNAL CIRCUIT OPEN

Disconnect the PCM harness connectors.

CAUTION: Do not probe the PCM harness connectors. Probing the PCM harness connectors will damage the PCM terminals resulting in poor terminal to pin connection. Install Miller Special Tool #8815 to perform diagnosis.

Measure the resistance of the (K107) NVLD Switch Signal circuit from the NVLD electrical harness connector to the appropriate terminal of the special tool #8815.

Is the resistance below 5.0 ohms?

Yes >> Go To 14

No >> Repair the open in the (K107) Signal circuit.
Perform the POWERTRAIN VERIFICATION TEST. (Refer to 9 - ENGINE - STANDARD PROCEDURE)

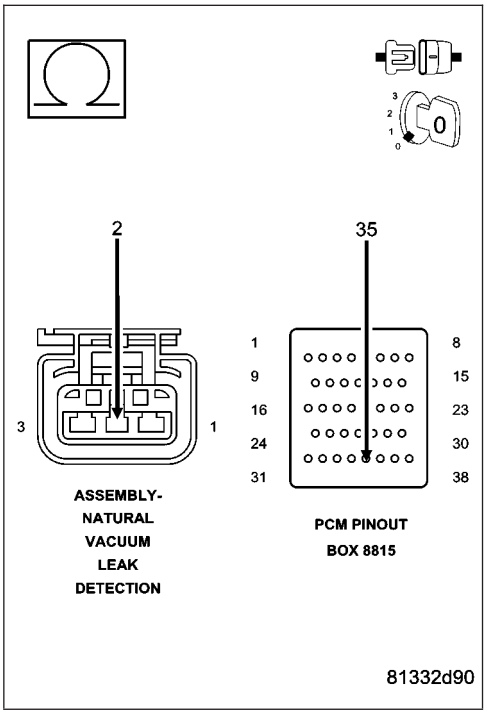

14. PCM

NOTE: Before continuing, check the PCM harness connector terminals for corrosion, damage, or terminal push out. Repair as necessary.

Using the schematics as a guide, inspect the wire harness and connectors. Pay particular attention to all Power and Ground circuits.

Were there any problems found?

Yes >> Repair as necessary.
Perform the POWERTRAIN VERIFICATION TEST. (Refer to 9 - ENGINE - STANDARD PROCEDURE)

No >> Replace and program the Powertrain Control Module per Service Information.
Perform the POWERTRAIN VERIFICATION TEST. (Refer to 9 - ENGINE - STANDARD PROCEDURE)

P0441-EVAP PURGE SYSTEM PERFORMANCE

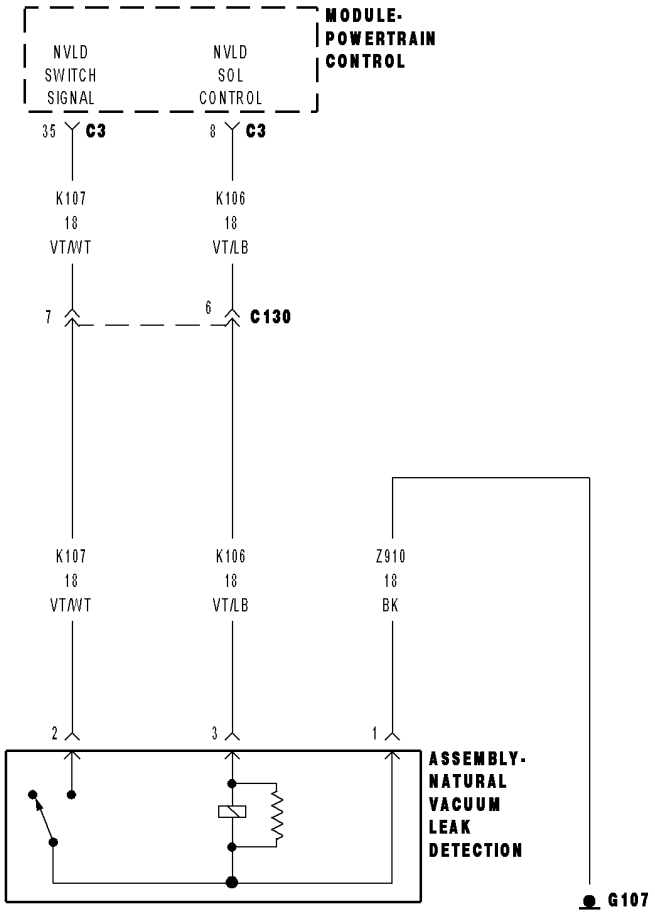

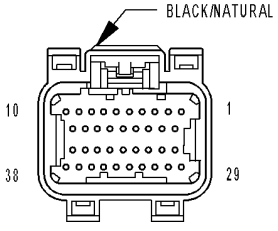

MODULE-
POWERTRAIN
CONTROL C3
(NGC)

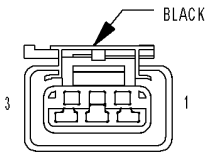

ASSEMBLY-
NATURAL VACUUM
LEAK DETECTION
(3.7L/4.7L/5.7L)

81453a02

P0441-EVAP PURGE SYSTEM PERFORMANCE (CONTINUED)

For a complete wiring diagram **Refer to Section 8W**.

- **When Monitored:**
  Cold start test. Engine Running. Small Leak Test Passed.
- **Set Condition:**
  The PCM activates the EVAP Purge solenoid gradually increases to maximum flow. During flow, the PCM looks for the NVLD switch to close. If the PCM does not see the NVLD switch close at maximum flow an error is detected. Two Trip Fault. Three good trips to turn off the MIL.

Possible Causes
EVAP PURGE SOLENOID VACUUM SUPPLY
EVAP PURGE SOLENOID

Always perform the Pre-Diagnostic Troubleshooting procedure before proceeding. (Refer to 9 - ENGINE - DIAGNOSIS AND TESTING).

Diagnostic Test

1. VEHICLE HISTORY AND SERVICE BULLETIN INVESTIGATION

Ignition on, engine not running.

With a scan tool, read DTCs and record the related Freeze Frame data if any DTC(s) are present.

Whether or not any DTC(s) are present you will want to check the following items which may assist in repairing the customer's complaint successfully.

Check the vehicles repair history.

If the vehicle has a repair history that pertains to the customer's current complaint, review the repair.

Inspect the vehicle for any aftermarket accessories that may have been installed incorrectly.

Check for any service bulletin(s) related to the customer's complaint or DTC(s).

If a service bulletin applies, follow the instructions per the service bulletin.

Choose the following scenario that best applies.

The service bulletin repaired the customer's complaint.
Testing complete.

A DTC is present, no service bulletins apply, or the service bulletin didn't repair the customer's complaint.
Go To 2

---

2. ACTIVE DTC

NOTE: If any of the following DTCs are set (P0443, P0452, P0453, P0498, or P0499) diagnose them first before continuing with P0441.

Ignition on, engine not running.

With a scan tool, read DTCs.

Is the DTC active at this time?

Yes >> Go To 3

No >> Refer to the INTERMITTENT CONDITION Diagnostic Procedure.
Perform the POWERTRAIN VERIFICATION TEST. (Refer to 9 - ENGINE - STANDARD PROCEDURE)

P0441-EVAP PURGE SYSTEM PERFORMANCE (CONTINUED)

3. CHECKING EVAP PURGE SOLENOID FUNCTIONALITY

NOTE: After disconnecting the Evap Purge vacuum connections, inspect the lines and solenoid for any signs of contamination or foreign materials.

Using a hand vacuum pump, apply 10 in Hg to ″CAN″ side of the EVAP Purge Solenoid.

Ignition on, engine not running.

Observe the vacuum gauge.

With the scan tool, actuate the EVAP Purge Solenoid.

Does the vacuum drop when the solenoid is actuated?

Yes >> Go To 4

No >> Replace the Evap Purge Solenoid.
Perform the POWERTRAIN VERIFICATION TEST. (Refer to 9 - ENGINE - STANDARD PROCEDURE)

NOTE: Remove the vacuum pump before continuing.

---

4. EVAP VACUUM SUPPLY HOSE INSPECTION

Turn the ignition off.

Carefully inspect the Evap Purge Solenoid vacuum supply hose for proper routing.

Check for a pinched or plugged hose from the throttle body or intake manifold to the Purge Solenoid.

Inspect the vacuum port at the throttle body or intake manifold for any damage or plugging.

Were any problems found?

Yes >> Repair the vacuum supply hose/tube as necessary.
Perform the POWERTRAIN VERIFICATION TEST. (Refer to 9 - ENGINE - STANDARD PROCEDURE)

No >> Go to 5

---

5. NVLD SWITCH OPERATION

CAUTION: Do not attempt to probe the NVLD Terminals to diagnose the switch function. This may damage the switch and disable the NVLD component. Follow procedures outlined in the service manual for NVLD switch testing using a scan tool.

Connect the previously disconnected vacuum hose.

Start the engine.

Allow the engine to idle.

Using the scan tool, perform the NVLD FORCED MONITOR TEST.

Monitor the NVLD Switch state.

NOTE: As the test runs, the NVLD Switch should go from an OPEN state to a CLOSED state and then return to OPEN when the test is complete This may take up to 10 minutes.

Did the NVLD Switch operate as described above?

Yes >> Test complete.

No >> Go To 6

P0441-EVAP PURGE SYSTEM PERFORMANCE (CONTINUED)

6. VERIFY NVLD SWITCH OPERATION

Start the engine.
Allow the engine to idle.
Using the scan tool, perform the NVLD FORCED MONITOR TEST for a second time.
While the NVLD FORCED MONITOR TEST is running, open/remove the gas cap.
Monitor the NVLD Switch state.

Did the NVLD Switch go from OPEN to CLOSED?

Yes >> Replace the NVLD Assembly.
Perform the POWERTRAIN VERIFICATION TEST. (Refer to 9 - ENGINE - STANDARD PROCEDURE)

No >> Test complete.

P0442-EVAP PURGE SYSTEM MEDIUM LEAK

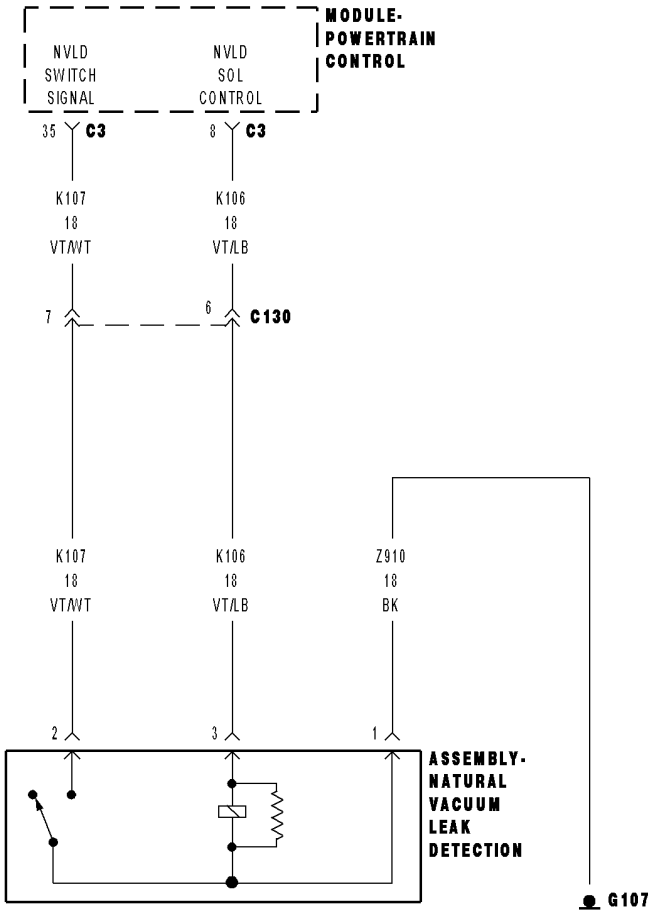

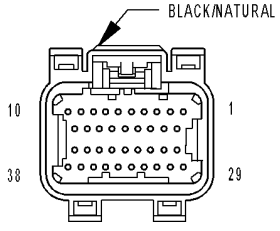

MODULE-
POWERTRAIN
CONTROL C3
(NGC)

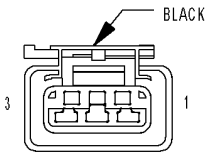

ASSEMBLY-
NATURAL VACUUM
LEAK DETECTION
(3.7L/4.7L/5.7L)

81453a02

P0442-EVAP PURGE SYSTEM MEDIUM LEAK (CONTINUED)

For a complete wiring diagram **Refer to Section 8W**.

Theory of Operation

The theory behind the Natural Vacuum Leak Detection (NVLD) is adherence to the Ideal Gas Law. Pressure in a sealed vessel will change linearly as a function of the temperature of the gas in the vessel. Even small leaks will allow the pressure in the vessel to come to equilibrium with the atmospheric pressure. After key-off and a calibrated amount of time, cool down from operating temperatures or diurnal ambient temperature the system pressure will force the system to go negative or draw a vacuum if there is no leak. When the vacuum level reaches 1" H2O (0.25 KPA) the NVLD vacuum switch closes. This sends a signal to the NGC freezing a timer and registering a pass. If a switch closure is not detected an assessment of leak size will be made.

- **When Monitored:**
  Engine Running. Cold start test. Fuel Level greater than 12%. Ambient Temperature between 4°C and 32°C (39°F and 89°F) Close Loop fuel system. Test runs when small leak test is maturing.
- **Set Condition:**
  The PCM activates the EVAP Purge Solenoid to pull the EVAP system into a vacuum to close the NVLD switch. Once the NVLD switch is closed, the PCM turns the EVAP Purge solenoid off to seal the EVAP system. If the NVLD switch reopens before the calibrated amount of time for a Medium leak an error is detected. Two Trip Fault. Three good trips to turn off the MIL.

Possible Causes
EVAP PURGE SYSTEM LEAK
EVAP PURGE SOLENOID
NVLD SWITCH

Always perform the Pre-Diagnostic Troubleshooting procedure before proceeding. (Refer to 9 - ENGINE - DIAGNOSIS AND TESTING).

Diagnostic Test

1. VEHICLE HISTORY AND SERVICE BULLETIN INVESTIGATION

Ignition on, engine not running.

With a scan tool, read DTCs and record the related Freeze Frame data if any DTC(s) are present.

Whether or not any DTC(s) are present you will want to check the following items which may assist in repairing the customer's complaint successfully.

Check the vehicles repair history.

If the vehicle has a repair history that pertains to the customer's current complaint, review the repair.

Inspect the vehicle for any aftermarket accessories that may have been installed incorrectly.

Check for any service bulletin(s) related to the customer's complaint or DTC(s).

If a service bulletin applies, follow the instructions per the service bulletin.

Choose the following scenario that best applies.

The service bulletin repaired the customer's complaint.
Testing complete.

A DTC is present, no service bulletins apply, or the service bulletin didn't repair the customer's complaint.
Go To 2.

P0442-EVAP PURGE SYSTEM MEDIUM LEAK (CONTINUED)

2. ACTIVE DTC

Ignition on, engine not running.
With a scan tool, read DTCs.

Is the DTC active at this time?

Yes >> Go To 3.

No >> Refer to the INTERMITTENT CONDITION Diagnostic Procedure.
Perform the POWERTRAIN VERIFICATION TEST. (Refer to 9 - ENGINE - STANDARD PROCEDURE)

---

3. LOOSE OR MISSING FUEL FILL CAP

Inspect the fuel fill cap.
Inspect the cap for any abnormal defects.

Was the cap off, missing, or broken?

Yes >> Properly install the fuel fill cap and proceed to step.
Perform the POWERTRAIN VERIFICATION TEST. (Refer to 9 - ENGINE - STANDARD PROCEDURE)

No >> Go To 4.

---

4. NVLD SERVICE TEST

With the scan tool perform the NVLD Service Test.

Does the NVLD Service Test pass?

Yes >> Test complete.
Perform the POWERTRAIN VERIFICATION TEST. (Refer to 9 - ENGINE - STANDARD PROCEDURE)

No >> Go To 5

P0442-EVAP PURGE SYSTEM MEDIUM LEAK (CONTINUED)

5. VERIFY EVAPORATIVE EMISSION LEAK

To continue testing you will need Miller Tool #8404A Evaporative Emission Leak Detector (EELD).

WARNING: Keep lit cigarettes, sparks, flames, and other ignition sources away from the test area to prevent the ignition of explosive gases. Keep the test area well ventilated.

NOTE: The fuel tank should have between 20% and 80% of fuel tank capacity to properly test the Evap system.

Connect the red power lead of the EELD to the battery positive terminal and the black ground lead to battery negative terminal.

Block the vent hose of the canister if using the service port.

Connect shop air to the EELD.

Set the smoke/air control switch to AIR.

Insert the tester's AIR supply tip (clear hose) into the appropriate calibration orifice on the tester's control panel (based on DTC leak size).

Press the remote smoke/air start button.

Position the red flag on the air flow meter so it is aligned with the indicator ball.

When the calibration is complete, release the remote button. The EELD flow meter is now calibrated in liters per minute to the size leak indicated by the DTC set in the PCM.

Install the service port adapter #8404-14 on the vehicle's service port and block the vent hose of the EVAP Canister (if equipped) or install the #8404-ADP service adaptor into the filter line.

Connect the Air supply hose from the EELD to the service port (if equipped) or to the #8404-ADP adapter.

Press the remote button to activate AIR flow.

NOTE: Larger volume fuel tanks, lower fuel levels or if the vehicle is equipped with a Flow Management Valve may indicate high flow and will require 4 to 5 minutes to fill.

Compare the flow meter indicator ball reading to the red flag.

ABOVE the red flag indicates a leak present.

BELOW the red flag indicates a sealed system.

Is the indicator ball above the red flag?

Yes >> Go To 6.

No >> Refer to the INTERMITTENT CONDITION Diagnostic Procedure.
Perform the POWERTRAIN VERIFICATION TEST. (Refer to 9 - ENGINE - STANDARD PROCEDURE)

P0442-EVAP PURGE SYSTEM MEDIUM LEAK (CONTINUED)

6. EVAPORATIVE EMISSION LEAK DETECTION

NOTE: A thorough visual inspection of the Evap system hoses, tubes, and connections may save time in your diagnosis. Look for any physical damage or signs of wetness at connections. The strong smell of fuel vapors may also aid diagnosis.

To continue testing, you will need Miller Tool #8404A Evaporative Emissions Leak Detector (EELD).

Remove the Air supply hose from the service port (if equipped) or from the #8404-ADP adapter.

Connect the SMOKE supply tip (black hose) to the service port (if equipped) or to the #8404-ADP adapter.

Set the smoke/air control switch to SMOKE.

NOTE: The flow meter indicator ball will not move in the smoke mode.

Press the remote smoke/air start button.

NOTE: Make sure that smoke has filled the EVAP system by continuing to press the remote smoke/air start button, remove the vehicle fuel cap, and wait for the smoke to exit. Once smoke is indicated reinstall the fuel cap.

NOTE: For optimal performance, introduce smoke into the system for an additional 60 seconds; continue introducing smoke at 15 second intervals, as necessary.

While still holding the remote smoke/air start button, use the white light (#8404-CLL) to follow the EVAP system path, and look for the source of the leak indicated by exiting smoke.

If a leak is concealed from view (i.e., top of fuel tank), release the remote smoke/air start button, and use the ultra-violet (UV) black light #8404-UVL and the yellow goggles 8404-20 to look for residual traces of dye that is left behind by the smoke.

The exiting smoke deposits a residual fluid that is either bright green or bright yellow in color when viewed with a UV light.

NOTE: The EVAP System is divided into three zones. A leak from any of these zones can cause this DTC to set. The lists below specify the possible leak points in that specific zone. For further assistance see the Zone Identification Charts below.

- ZONE 1

1 Fuel Cap
2 Recirculation Check Valve.
3 Vapor Recirculation Line.
4 Signal Vapor Line for FVM.
5 Flow Management Valve.
6 Fuel Tank to Canister Vapor Line connection.
7 Fuel Tank Vent (Check Valve).
8 Vapor Line to Canister.
9 Flow Control Orfice.
10 Control Valve.
11 Liquid Trap.
12 Fuel Tank.
13 Check valve.
14 Fuel Fill Tube to Tank connector.
15 Fuel Fill Tube
Damaged or disconnected EVAP system components.

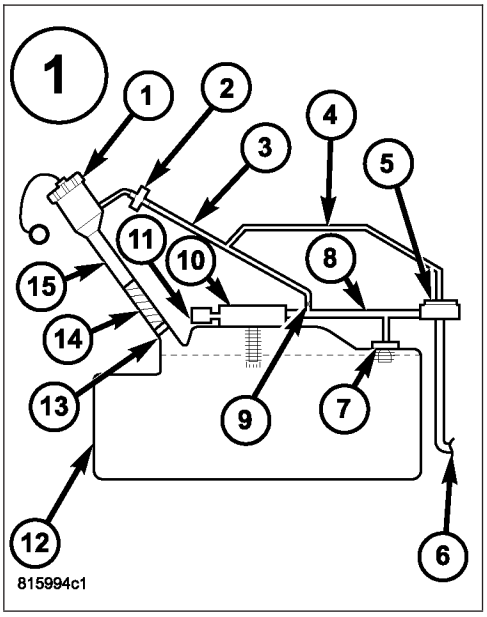

P0442-EVAP PURGE SYSTEM MEDIUM LEAK (CONTINUED)

- ZONE 2

1 Filter.
2 NVLD.
3 Canister Vent Line.
4 Evap Canister.
5 Chassis Purge Valve.
6 Fuel Tank to Canister Vapor Line connection.
7 Evap Purge connection.

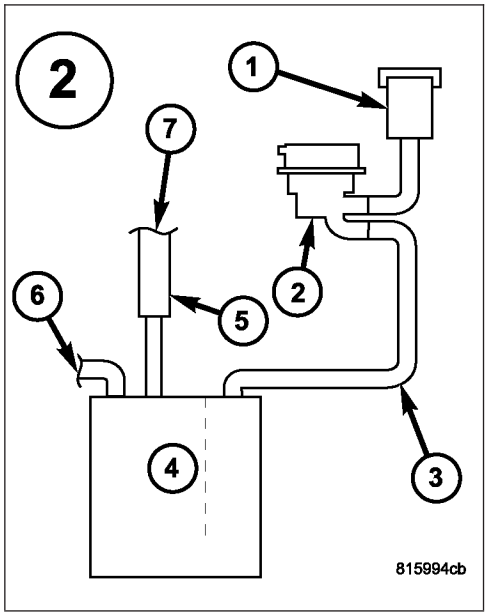

- ZONE 3

1 Evap Purge Vacuum Line.
2 Connection to Chassis Line.
3 Connection to Canister.
4 Chassis Purge Line.
5 Evap Purge Vacuum Line.
6 Connection to Evap Purge Harness.
7 Chassis Evap Purge Line connection to Engine Vacuum.
8 Evap Purge Valve.
9 Service Port.

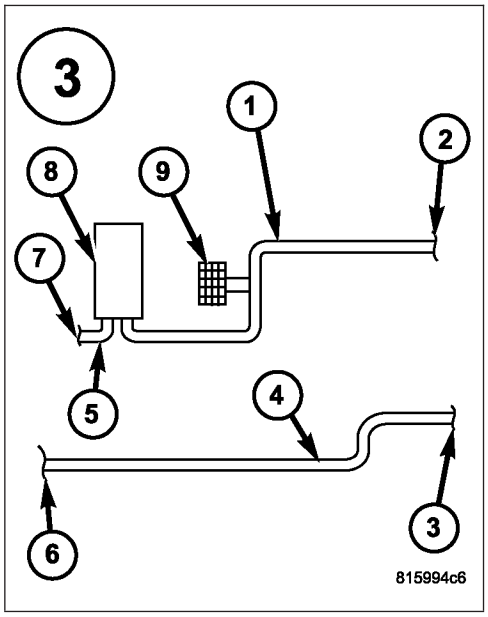

NOTE: Carefully inspect the vent side of the EVAP Canister. Due to the filtering system in the canister the smoke may not be as thick. Introducing smoke into the filtered side of the canister may assist in locating the leak.

Was a leak found?

Yes >> Go To 7.

No >> Go To 8.

7. LEAK AT GAS CAP

Remove the SMOKE supply tip (black hose) from the service port (if equipped) or to the #8404–ADP adapter.

Install gas cap adapter, Miller Tool #8382 (1/4 turn cap) or #6922 (screw cap) and #8399* (secondary seal depressor) and repeat test 5.

Was a leak found at the gas cap adapter?

Yes >> Replace the Fuel Filler tube assembly.
Perform the POWERTRAIN VERIFICATION TEST. (Refer to 9 - ENGINE - STANDARD PROCEDURE)

No >> Replace the gas cap.
Perform the POWERTRAIN VERIFICATION TEST. (Refer to 9 - ENGINE - STANDARD PROCEDURE)

P0442-EVAP PURGE SYSTEM MEDIUM LEAK (CONTINUED)

8. EVAP PURGE SOLENOID OPERATION

NOTE: After disconnecting the Evap Purge Solenoid vacuum connections, inspect the lines and solenoid for any signs of contamination from the EVAP Canister. This may indicate a faulty check valve. Replace/repair as necessary.

Turn the ignition off.

Disconnect the vacuum hoses at the Evap Purge Solenoid.

Press the remote smoke/air start button on the EELD.

While holding the remote smoke/air start button, check to see if smoke is exiting the purge valve. This indicates that there is a leak internal to the purge valve.

NOTE: Below is an optional method of checking the purge valve for leaks if the EELD is unavailable.

Turn the ignition off.

Disconnect the vacuum hoses at the Evap Purge Solenoid.

Using a hand vacuum pump, apply 10 in HG to the “CAN” of the Evap Purge Solenoid.

NOTE: Monitor the vacuum gauge for at least 15 seconds.

Is smoke visible from the EVAP Purge Solenoid if using the EELD, or not hold a vacuum?

Yes >> Go To 9.

No >> Replace the Evap Purge Solenoid.
Perform the POWERTRAIN VERIFICATION TEST. (Refer to 9 - ENGINE - STANDARD PROCEDURE)

---

9. NVLD SWITCH OPERATION

Reconnect all vacuum hoses.

Start the engine.

Allow the engine to idle.

Using the scan tool, perform the NVLD FORCED MONITOR TEST.

Monitor the NVLD Switch.

NOTE: As the test runs, the NVLD Switch should go from an OPEN state to CLOSED. After the vacuum is released form the EVAP system the Switch state will return to OPEN.

Did the NVLD Switch operate as described above?

Yes >> Refer to the INTERMITTENT CONDITION Diagnostic Procedure. (Refer to 9 - ENGINE - DIAGNOSIS AND TESTING)

No >> Replace the NVLD Assembly.
Perform the POWERTRAIN VERIFICATION TEST. (Refer to 9 - ENGINE - STANDARD PROCEDURE)

P0443-EVAP PURGE SOLENOID CIRCUIT

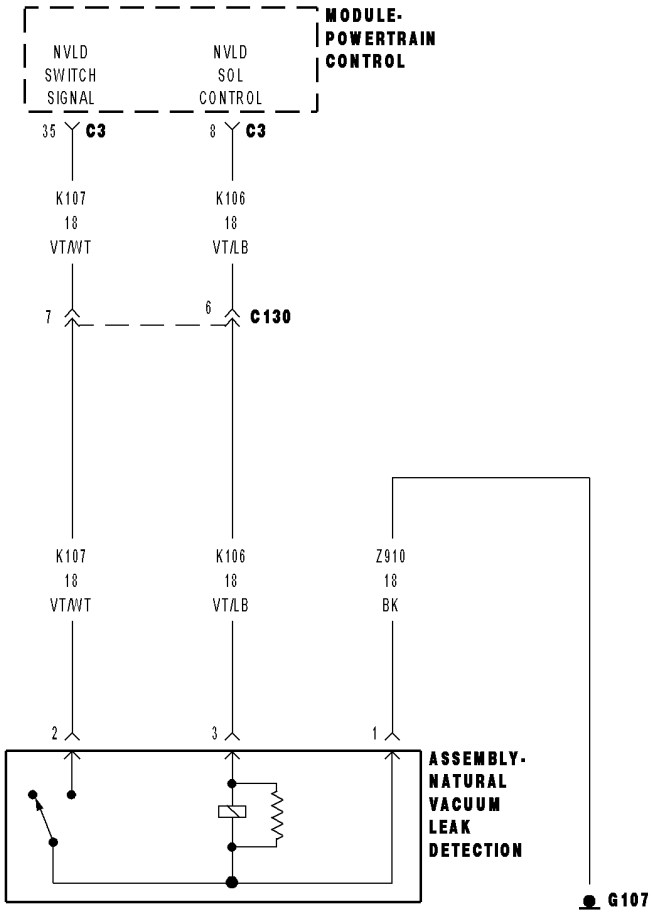

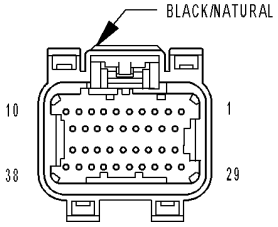

MODULE-
POWERTRAIN
CONTROL C3
(NGC)

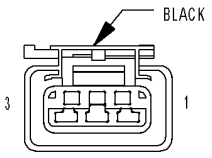

ASSEMBLY-
NATURAL VACUUM
LEAK DETECTION
(3.7L/4.7L/5.7L)

81453a02

P0443-EVAP PURGE SOLENOID CIRCUIT (CONTINUED)

For a complete wiring diagram **Refer to Section 8W**.

- **When Monitored:**
  The ignition on or engine running. Battery voltage greater than 10 volts.
- **Set Condition:**
  The PCM will set a trouble code if the actual state of the solenoid does not match the intended state. One Trip Fault. Three good trips to turn off the MIL.

Possible Causes
(K52) EVAP PURGE CONTROL CIRCUIT OPEN
(K52) EVAP PURGE SOLENOID CONTROL CIRCUIT SHORTED TO GROUND
(K70) EVAP PURGE SOLENOID SIGNAL CIRCUIT OPEN
(K70) EVAP PURGE SOLENOID SIGNAL CIRCUIT SHORTED TO GROUND
EVAP PURGE SOLENOID
PCM

Always perform the Pre-Diagnostic Troubleshooting procedure before proceeding. (Refer to 9 - ENGINE - DIAGNOSIS AND TESTING).

Diagnostic Test

1. VEHICLE HISTORY AND SERVICE BULLETIN INVESTIGATION

Ignition on, engine not running.

With a scan tool, read DTCs and record the related Freeze Frame data if any DTC(s) are present.

Whether or not any DTC(s) are present you will want to check the following items which may assist in repairing the customer's complaint successfully.

Check the vehicles repair history.

If the vehicle has a repair history that pertains to the customer's current complaint, review the repair.

Inspect the vehicle for any aftermarket accessories that may have been installed incorrectly.

Check for any service bulletin(s) related to the customer's complaint or DTC(s).

If a service bulletin applies, follow the instructions per the service bulletin.

Choose the following scenario that best applies.

The service bulletin repaired the customer's complaint.
Testing complete.

A DTC is present, no service bulletins apply, or the service bulletin didn't repair the customer's complaint.
Go To 2

---

2. ACTIVE DTC

Ignition on, engine not running.

With the scan tool, read DTCs.

Is the DTC active at this time?

Yes >> Go To 3

No >> Refer to the INTERMITTENT CONDITION Diagnostic Procedure.
Perform the POWERTRAIN VERIFICATION TEST. (Refer to 9 - ENGINE - STANDARD PROCEDURE)

P0443-EVAP PURGE SOLENOID CIRCUIT (CONTINUED)

3. EVAP PURGE SOLENOID OPERATION

Turn the ignition off.

Disconnect the EVAP Purge Solenoid harness connector.

Ignition on, engine not running.

Using a 12-volt test light, jump across the (K52) Evap Purge Solenoid Control circuit and (K70) Evap Purge Solenoid Signal circuit in the EVAP Purge Solenoid harness connector.

With a scan tool, actuate the EVAP Purge Solenoid.

Does the test light flash on and off?

Yes >> Replace the EVAP Purge Solenoid.
Perform the POWERTRAIN VERIFICATION TEST. (Refer to 9 - ENGINE - STANDARD PROCEDURE)

No >> Go To 4

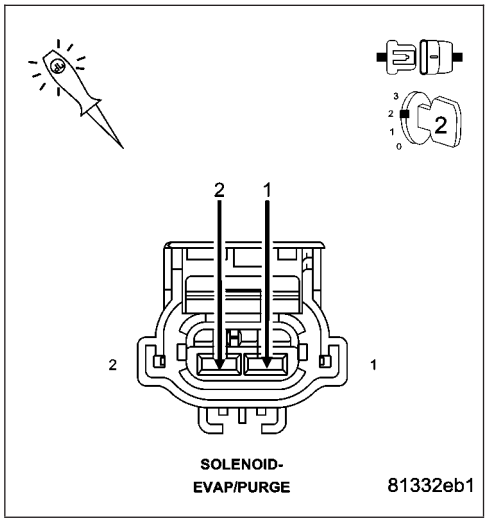

4. (K52) EVAP PURGE SOLENOID CONTROL CIRCUIT OPEN

Turn the ignition off.

Disconnect the C3 PCM harness connector.

CAUTION: Do not probe the PCM harness connectors. Probing the PCM harness connectors will damage the PCM terminals resulting in poor terminal to pin connection. Install Miller Special Tool #8815 to perform diagnosis.

Measure the resistance of the (K52) Evap Purge Solenoid Control circuit from the Evap Purge Solenoid harness connector to the appropriate terminal of special tool #8815.

Is the resistance below 5.0 ohms?

Yes >> Go To 5

No >> Repair the open in the (K52) EVAP Purge Solenoid Control circuit.
Perform the POWERTRAIN VERIFICATION TEST. (Refer to 9 - ENGINE - STANDARD PROCEDURE)

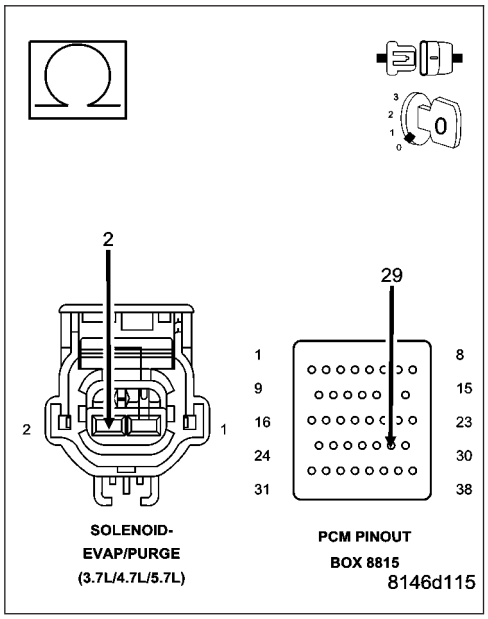

P0443-EVAP PURGE SOLENOID CIRCUIT (CONTINUED)

5. (K52) EVAP PURGE SOLENOID CONTROL CIRCUIT SHORTED TO GROUND

Measure the resistance between ground and the (K52) Evap Purge Solenoid Control circuit in the Evap Purge Solenoid harness connector.

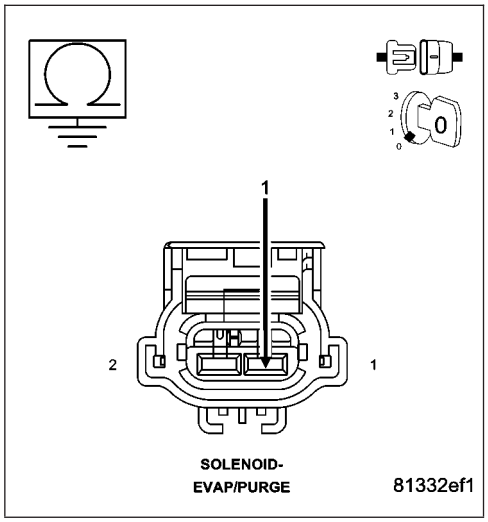

Is the resistance below 100 ohms?

Yes >> Repair the short to ground in the (K52) EVAP Purge Solenoid Control circuit.
Perform the POWERTRAIN VERIFICATION TEST. (Refer to 9 - ENGINE - STANDARD PROCEDURE)

No >> Go To 6

6. (K70) EVAP PURGE SOLENOID SIGNAL CIRCUIT OPEN

CAUTION: Do not probe the PCM harness connectors. Probing the PCM harness connectors will damage the PCM terminals resulting in poor terminal to pin connection. Install Miller Special Tool #8815 to perform diagnosis.

Measure the resistance of the (K70) Evap Purge Solenoid Signal circuit from the EVAP Purge Solenoid harness connector to the appropriate terminal of special tool #8815.

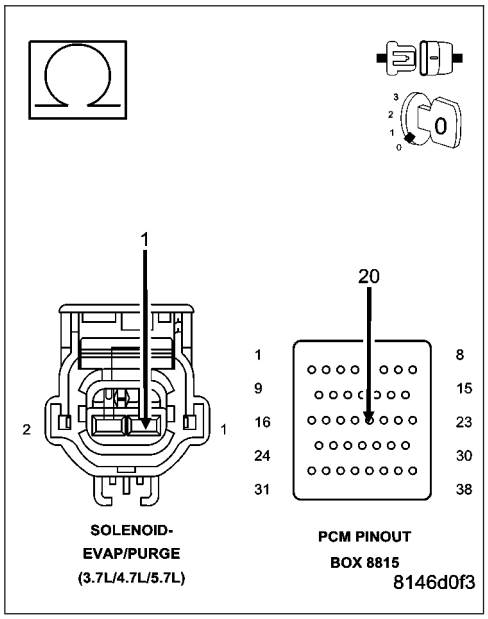

Is the resistance below 5.0 ohms?

Yes >> Go To 7

No >> Repair the open in the (K70) Evap Purge Solenoid Signal circuit.
Perform the POWERTRAIN VERIFICATION TEST. (Refer to 9 - ENGINE - STANDARD PROCEDURE)

P0443-EVAP PURGE SOLENOID CIRCUIT (CONTINUED)

7. (K70) EVAP PURGE SOLENOID SIGNAL CIRCUIT SHORTED TO GROUND

Measure the resistance between ground and the (K70) Evap Purge Solenoid Signal circuit in the Evap Purge Solenoid harness connector.

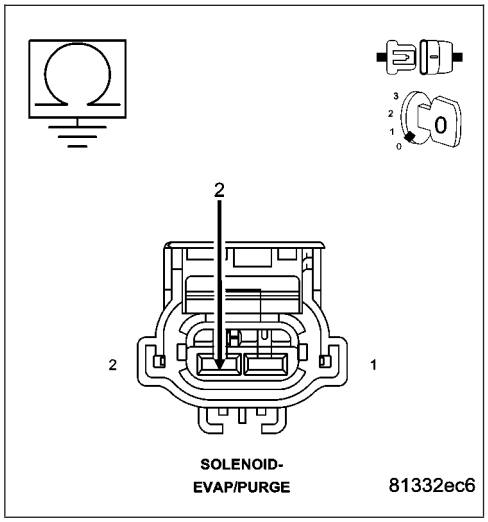

Is the resistance below 100 ohms?

Yes >> Repair the short to ground in the (K70) Evap Purge Solenoid Signal circuit.
Perform the POWERTRAIN VERIFICATION TEST. (Refer to 9 - ENGINE - STANDARD PROCEDURE)

No >> Go To 8

8. PCM

NOTE: Before continuing, check the PCM harness connector terminals for corrosion, damage, or terminal push out. Repair as necessary.
Using the schematics as a guide, inspect the wire harness and connectors. Pay particular attention to all Power and Ground circuits.

Were there any problems found?

Yes >> Repair as necessary.
Perform the POWERTRAIN VERIFICATION TEST. (Refer to 9 - ENGINE - STANDARD PROCEDURE)

No >> Replace and program the Powertrain Control Module per Service Information.
Perform the POWERTRAIN VERIFICATION TEST. (Refer to 9 - ENGINE - STANDARD PROCEDURE)

P0452-NVLD PRESSURE SWITCH STUCK CLOSED

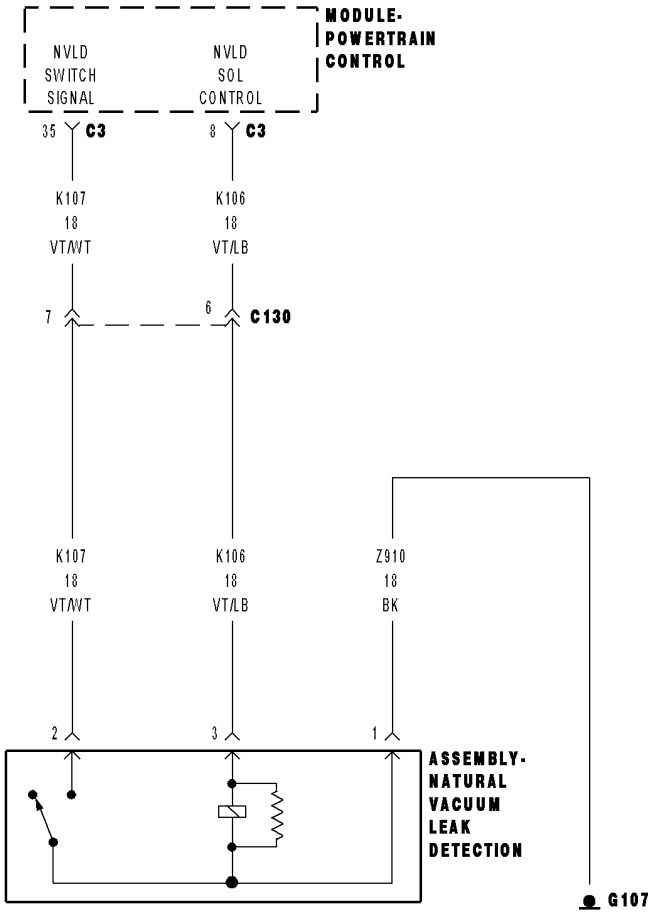

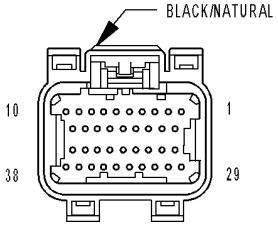

MODULE-
POWERTRAIN
CONTROL C3
(NGC)

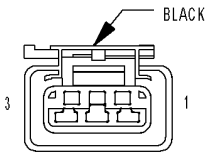

ASSEMBLY-
NATURAL VACUUM
LEAK DETECTION
(3.7L/4.7L/5.7L)

81453a02

P0452-NVLD PRESSURE SWITCH STUCK CLOSED (CONTINUED)

For a complete wiring diagram **Refer to Section 8W**.

- **When Monitored:**
  Immediately after the engine has been started.
- **Set Condition:**
  The PCM activates the NLVD Solenoid. If PCM does not see NVLD switch open an error is detected. One Trip Fault. Three good trips to turn off the MIL.

Possible Causes
(K52) EVAP PURGE SOLENOID CONTROL CIRCUIT SHORTED TO GROUND
(K107) NVLD SWITCH SIGNAL CIRCUIT SHORTED TO GROUND
NVLD ASSEMBLY
EVAP PURGE SOLENOID
PCM

Always perform the Pre-Diagnostic Troubleshooting procedure before proceeding. (Refer to 9 - ENGINE - DIAGNOSIS AND TESTING).

Diagnostic Test

1. VEHICLE HISTORY AND SERVICE BULLETIN INVESTIGATION

Ignition on, engine not running.

With a scan tool, read DTCs and record the related Freeze Frame data if any DTC(s) are present.

Whether or not any DTC(s) are present you will want to check the following items which may assist in repairing the customer's complaint successfully.

Check the vehicles repair history.

If the vehicle has a repair history that pertains to the customer's current complaint, review the repair.

Inspect the vehicle for any aftermarket accessories that may have been installed incorrectly.

Check for any service bulletin(s) related to the customer's complaint or DTC(s).

If a service bulletin applies, follow the instructions per the service bulletin.

Choose the following scenario that best applies.

The service bulletin repaired the customer's complaint.
Testing complete.

A DTC is present, no service bulletins apply, or the service bulletin didn't repair the customer's complaint.
Go To 2

---

2. ACTIVE DTC

Ignition on, engine not running.

With a scan tool, read DTCs.

Is the DTC active at this time?

Yes >> Go To 3

No >> Refer to the INTERMITTENT CONDITION Diagnostic Procedure.
Perform the POWERTRAIN VERIFICATION TEST. (Refer to 9 - ENGINE - STANDARD PROCEDURE)

P0452-NVLD PRESSURE SWITCH STUCK CLOSED (CONTINUED)

3. EVAP PURGE SOLENOID OPERATION

Turn the ignition off.
Disconnect the EVAP Purge Solenoid harness connector.
Ignition on, engine not running.
Using a 12-volt test light, jump across the Evap Purge Solenoid harness connector.
With the scan tool, actuate the EVAP Purge Solenoid.

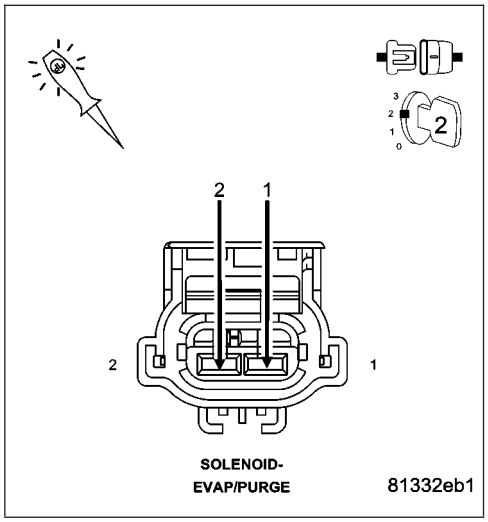

Does the test light flash on and off?

Yes >> Go To 4
No >> Go To 8

4. EVAP PURGE SOLENOID LEAKS/STUCK OPEN

Turn the ignition off.
Connect the Evap Purge Solenoid harness connector.
Disconnect the vacuum hoses at the Evap Purge Solenoid.

NOTE: After disconnecting the Evap Purge Solenoid vacuum connections, inspect the lines and solenoid for any signs of contamination from the EVAP Canister. This may indicate a faulty check valve. Replace/repair as necessary.
Using a hand vacuum pump, apply 10 in Hg to the ″CAN″ of the EVAP Purge Solenoid.

NOTE: Monitor the vacuum gauge for at least 15 seconds.

Does the EVAP Purge Solenoid hold vacuum?

Yes >> Go To 5
No >> Replace the Evap Purge Solenoid.
Perform the POWERTRAIN VERIFICATION TEST. (Refer to 9 - ENGINE - STANDARD PROCEDURE)

5. NVLD SWITCH OPERATION

Ignition on, engine not running.
Using the scan tool, monitor the NVLD Switch State with the vacuum pump still installed and holding vacuum.

Does the scan tool display the NVLD state OPEN?

Yes >> Refer to the INTERMITTENT CONDITION Diagnostic Procedure.
Perform the POWERTRAIN VERIFICATION TEST. (Refer to 9 - ENGINE - STANDARD PROCEDURE)
No >> Go To 6

NOTE: Remove the vacuum pump and connect the vacuum hose before continuing.

P0452-NVLD PRESSURE SWITCH STUCK CLOSED (CONTINUED)

6. NVLD ASSEMBLY

Disconnect the NVLD electrical connector.

Does the Switch change from CLOSED to OPEN?

Yes >> Replace the NVLD Assembly.
Perform the POWERTRAIN VERIFICATION TEST. (Refer to 9 - ENGINE - STANDARD PROCEDURE)

No >> Go To 7

7. (K107) SIGNAL CIRCUIT SHORTED TO GROUND

Turn the ignition off.

Disconnect the C3 PCM harness connector.

Measure the resistance between ground and the (K107) NVLD Switch Signal circuit in the NVLD Assembly harness connector.

Is the resistance below 100 ohms?

Yes >> Repair the short to ground in the (K107) NVLD Switch Signal circuit.
Perform the POWERTRAIN VERIFICATION TEST. (Refer to 9 - ENGINE - STANDARD PROCEDURE)

No >> Go To 9

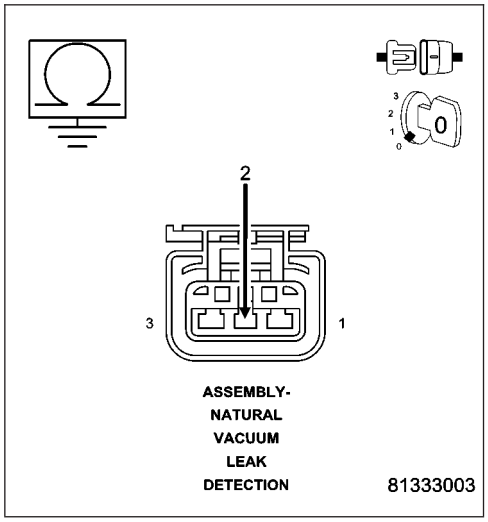

8. (K52) EVAP PURGE SOLENOID CONTROL CIRCUIT SHORTED TO GROUND

Turn the ignition off.

Disconnect the C3 PCM harness connector.

Measure the resistance between ground and the (K52) Evap Purge Solenoid Control circuit in the EVAP Purge Solenoid harness connector.

Is the resistance below 100 ohms?

Yes >> Repair the short to ground in the (K52) Evap Purge Sol Control circuit.
Perform the POWERTRAIN VERIFICATION TEST. (Refer to 9 - ENGINE - STANDARD PROCEDURE)

No >> Go To 9

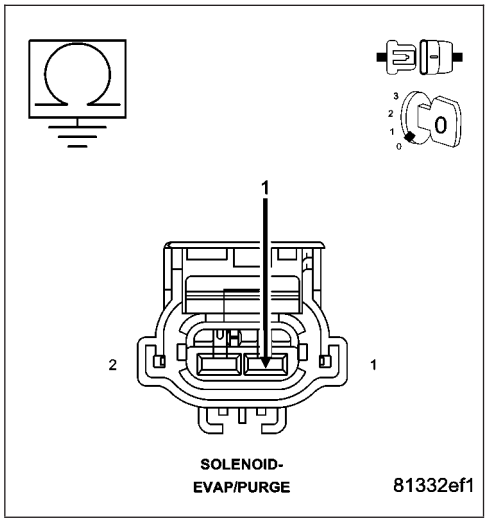

P0452-NVLD PRESSURE SWITCH STUCK CLOSED (CONTINUED)

9. PCM

NOTE: Before continuing, check the PCM harness connector terminals for corrosion, damage, or terminal push out. Repair as necessary.

Using the schematics as a guide, inspect the wire harness and connectors. Pay particular attention to all Power and Ground circuits.

Were there any problems found?

Yes >> Repair as necessary.
Perform the POWERTRAIN VERIFICATION TEST. (Refer to 9 - ENGINE - STANDARD PROCEDURE)

No >> Replace and program the Powertrain Control Module per Service Information.
Perform the POWERTRAIN VERIFICATION TEST. (Refer to 9 - ENGINE - STANDARD PROCEDURE)

P0453-NVLD PRESSURE SWITCH STUCK OPEN

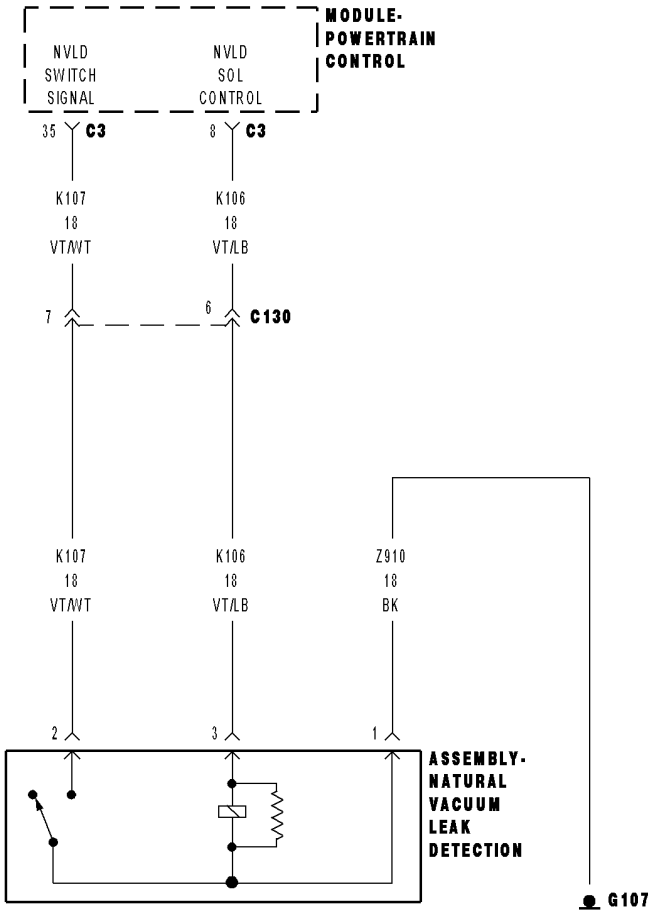

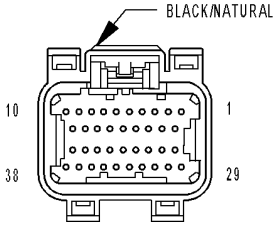

MODULE-
POWERTRAIN
CONTROL C3
(NGC)

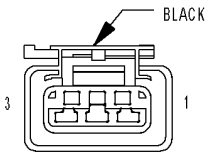

ASSEMBLY-
NATURAL VACUUM
LEAK DETECTION
(3.7L/4.7L/5.7L)

81453a02

P0453-NVLD PRESSURE SWITCH STUCK OPEN (CONTINUED)

For a complete wiring diagram **Refer to Section 8W**.

- **When Monitored:**
  Engine running.
- **Set Condition:**
  If the PCM does not see the NVLD switch close during test an error is detected. One Trip Fault. Three good trips to turn off the MIL.

Possible Causes
(K107) NVLD SWITCH SIGNAL CIRCUIT SHORTED TO BATTERY VOLTAGE
(K107) NVLD SWITCH SIGNAL CIRCUIT OPEN
(K107) NVLD SWITCH SIGNAL CIRCUIT SHORTED TO THE (K106) NVLD SOLENOID CONTROL CIRCUIT
(Z910) GROUND CIRCUIT OPEN
NVLD ASSEMBLY
PCM

Always perform the Pre-Diagnostic Troubleshooting procedure before proceeding. (Refer to 9 - ENGINE - DIAGNOSIS AND TESTING).

Diagnostic Test

1. NVLD SWITCH OPERATION

Start the engine.
Allow the engine to idle.
Using a scan tool, perform the NVLD FORCED MONITOR TEST.
Monitor the NVLD Switch state.

NOTE: As the test runs, the NVLD Switch should go from an OPEN state to a CLOSED state and then return to OPEN when the test is complete.

Did the NVLD Switch operate as described above?

Yes >> Refer to the INTERMITTENT CONDITION Diagnostic Procedure.
Perform the POWERTRAIN VERIFICATION TEST. (Refer to 9 - ENGINE - STANDARD PROCEDURE)

No >> Go To 2

P0453-NVLD PRESSURE SWITCH STUCK OPEN (CONTINUED)

2. NVLD ASSEMBLY

Turn the ignition off.

Disconnect the NVLD electrical harness connector.

Ignition on, engine not running.

Monitor the NVLD Switch state on the scan tool.

Connect a jumper wire between the (K107) NVLD Switch Signal circuit and the (Z910) Ground circuit in the NVLD harness connector.

Does the Switch change from OPEN to CLOSED with the jumper wire installed?

Yes >> Replace the NVLD Assembly.
Perform the POWERTRAIN VERIFICATION TEST. (Refer to 9 - ENGINE - STANDARD PROCEDURE)

No >> Go To 3

NOTE: Remove the jumper wire before continuing.

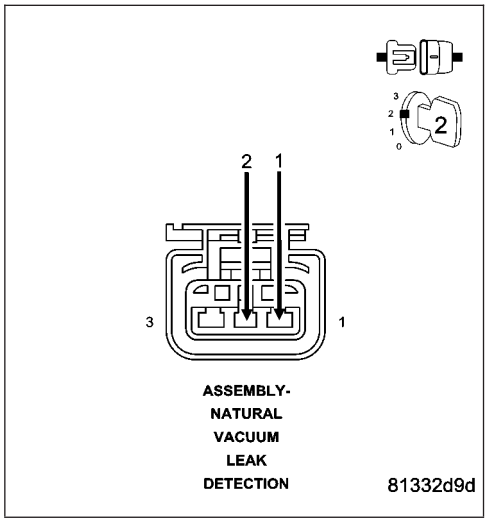

3. (K107) NVLD SWITCH SIGNAL CIRCUIT SHORTED TO BATTERY VOLTAGE

Turn the ignition off.

Disconnect the C3 PCM harness connector.

Ignition on, engine not running.

Measure the voltage on the (K107) NVLD Switch Signal circuit in the NVLD electrical harness connector.

Is the voltage above 0 volts?

Yes >> Repair the short to battery voltage in the (K107) NVLD Switch Signal circuit.
Perform the POWERTRAIN VERIFICATION TEST. (Refer to 9 - ENGINE - STANDARD PROCEDURE)

No >> Go To 4

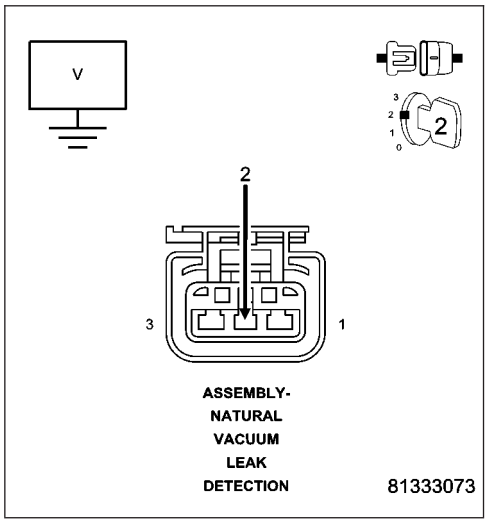

P0453-NVLD PRESSURE SWITCH STUCK OPEN (CONTINUED)

4. (K107) NVLD SWITCH SIGNAL CIRCUIT OPEN

Turn the ignition off.

CAUTION: Do not probe the PCM harness connectors. Probing the PCM harness connectors will damage the PCM terminals resulting in poor terminal to pin connection. Install Miller Special Tool #8815 to perform diagnosis.

Measure the resistance of the (K107) NVLD Switch Signal circuit from the NVLD electrical harness connector to the appropriate terminal of special tool #8815.

Is the resistance below 5.0 ohms?

Yes >> Go To 5

No >> Repair the open in the (K107) NVLD Switch Signal circuit. Perform the POWERTRAIN VERIFICATION TEST. (Refer to 9 - ENGINE - STANDARD PROCEDURE)

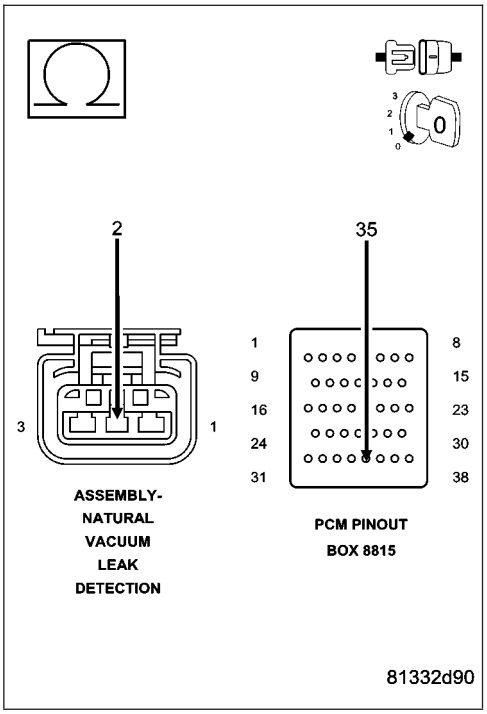

5. (K107) NVLD SWITCH SIGNAL CIRCUIT SHORTED TO THE (K106) NVLD SOLENOID CONTROL CIRCUIT

Measure the resistance between the (K107) NVLD Switch Signal circuit and the (K106) NVLD Solenoid Control circuit in the NVLD electrical harness connector.

Is the resistance below 5.0 ohms?

Yes >> Repair the short between the (K107) NVLD Switch Signal circuit and the (K106) NVLD Solenoid Control circuit. Perform the POWERTRAIN VERIFICATION TEST. (Refer to 9 - ENGINE - STANDARD PROCEDURE)

No >> Go To 6

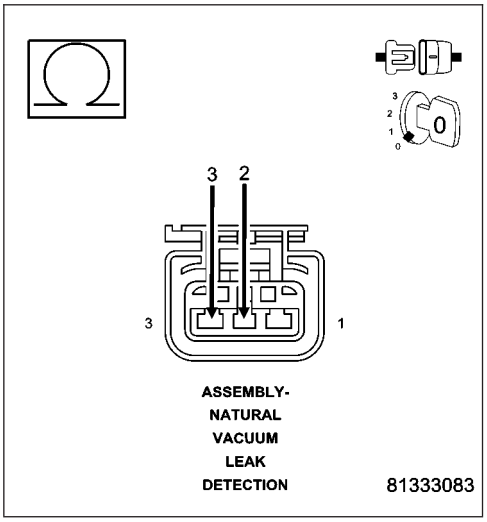

P0453-NVLD PRESSURE SWITCH STUCK OPEN (CONTINUED)

6. (Z910) GROUND CIRCUIT OPEN

Measure the resistance between the (Z910) Ground circuit and ground.

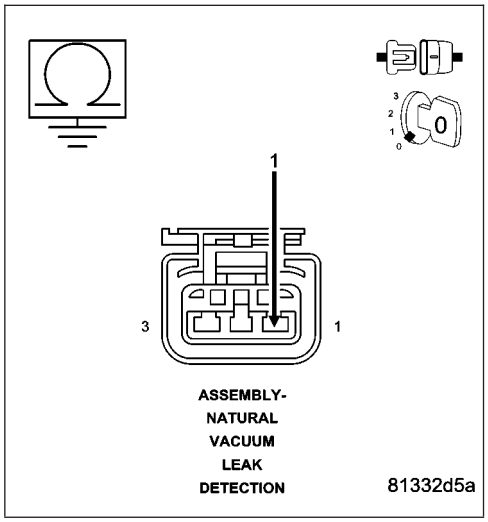

Is the resistance below 5.0 ohms?

Yes >> Go To 7

No >> Repair the open in the (Z910) Ground circuit.
Perform the POWERTRAIN VERIFICATION TEST. (Refer to 9 - ENGINE - STANDARD PROCEDURE))

---

7. PCM

NOTE: Before continuing, check the PCM harness connector terminals for corrosion, damage, or terminal push out. Repair as necessary.
Using the schematics as a guide, inspect the wire harness and connectors. Pay particular attention to all Power and Ground circuits.

Were there any problems found?

Yes >> Repair as necessary.
Perform the POWERTRAIN VERIFICATION TEST. (Refer to 9 - ENGINE - STANDARD PROCEDURE)

No >> Replace and program the Powertrain Control Module per Service Information.
Perform the POWERTRAIN VERIFICATION TEST. (Refer to 9 - ENGINE - STANDARD PROCEDURE)

P0455-EVAP PURGE SYSTEM LARGE LEAK

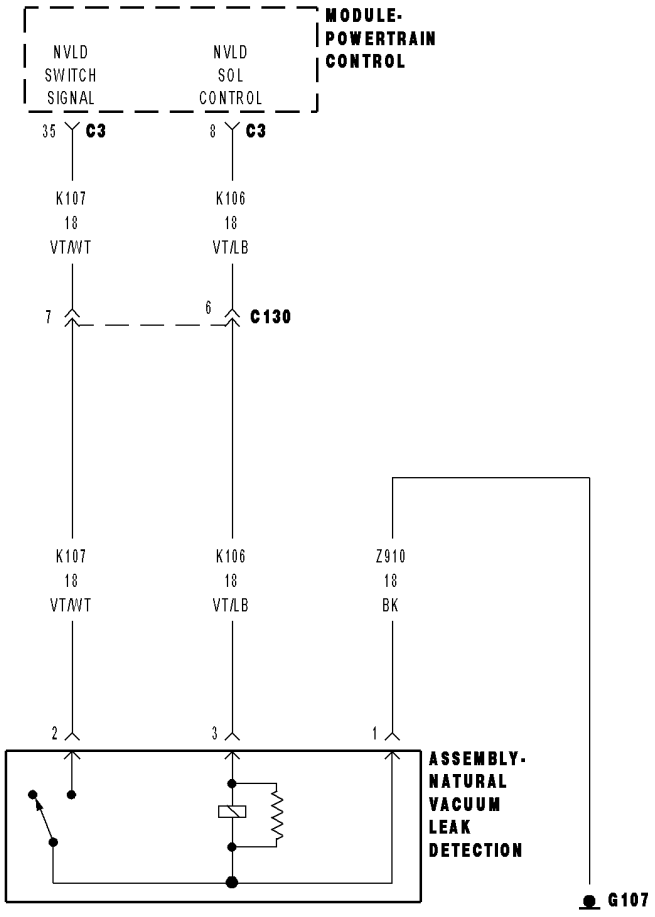

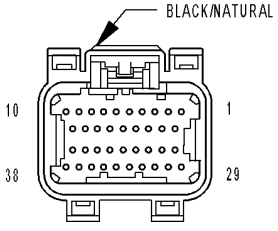

MODULE-
POWERTRAIN
CONTROL C3
(NGC)

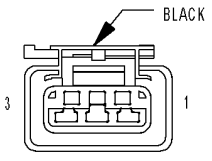

ASSEMBLY-
NATURAL VACUUM
LEAK DETECTION
(3.7L/4.7L/5.7L)

81453a02

P0455-EVAP PURGE SYSTEM LARGE LEAK (CONTINUED)

For a complete wiring diagram **Refer to Section 8W**.

Theory of Operation

The theory behind the Natural Vacuum Leak Detection (NVLD) is adherence to the Ideal Gas Law. Pressure in a sealed vessel will change linearly as a function of the temperature of the gas in the vessel. Even small leaks will allow the pressure in the vessel to come to equilibrium with the atmospheric pressure. After key-off and a calibrated amount of time, cool down from operating temperatures or diurnal ambient temperature the system pressure will force the system to go negative or draw a vacuum if there is no leak. When the vacuum level reaches 1" H2O (0.25 KPA) the NVLD vacuum switch closes. This sends a signal to the NGC freezing a timer and registering a pass. If a switch closure is not detected an assessment of leak size will be made.

- **When Monitored:**
  Engine Running. Cold start test. Fuel Level greater than 12%. Ambient Temperature between 4°C and 32°C (39°F and 89°F) Close Loop fuel system. Test runs when small leak test is maturing.
- **Set Condition:**
  The PCM activates the EVAP Purge Solenoid to pull the EVAP system into a vacuum to close the NVLD switch. Once the NVLD switch is closed, the PCM turns the EVAP Purge solenoid off to seal the EVAP system. If the NVLD switch reopens before the calibrated amount of time for a Large leak an error is detected. Two Trip Fault. Three good trips to turn off the MIL.

Possible Causes
EVAP PURGE SYSTEM LEAK
EVAP PURGE SOLENOID
NVLD SWITCH

Always perform the Pre-Diagnostic Troubleshooting procedure before proceeding. (Refer to 9 - ENGINE - DIAGNOSIS AND TESTING).

Diagnostic Test

1. VEHICLE HISTORY AND SERVICE BULLETIN INVESTIGATION

Ignition on, engine not running.

With a scan tool, read DTCs and record the related Freeze Frame data if any DTC(s) are present.

Whether or not any DTC(s) are present you will want to check the following items which may assist in repairing the customer's complaint successfully.

Check the vehicles repair history.

If the vehicle has a repair history that pertains to the customer's current complaint, review the repair.

Inspect the vehicle for any aftermarket accessories that may have been installed incorrectly.

Check for any service bulletin(s) related to the customer's complaint or DTC(s).

If a service bulletin applies, follow the instructions per the service bulletin.

Choose the following scenario that best applies.

The service bulletin repaired the customer's complaint.
Testing complete.

A DTC is present, no service bulletins apply, or the service bulletin didn't repair the customer's complaint.
Go To 2

P0455-EVAP PURGE SYSTEM LARGE LEAK (CONTINUED)

2. ACTIVE DTC

Check for any related TSBs before continuing.

NOTE: Since a hot vehicle can conceal a leak, it is best to perform this test at room temperature.

NOTE: A loose gas cap could have caused this DTC to set. Make sure gas cap is tight and in good condition. Make sure the gas cap meets OEM specifications.

Ignition on, engine not running.

With a scan tool, read DTCs and record the related Freeze Frame data.

Is the DTC active at this time?

Yes >> Go To 3

No >> Refer to the INTERMITTENT CONDITION Diagnostic Procedure.
Perform the POWERTRAIN VERIFICATION TEST. (Refer to 9 - ENGINE - STANDARD PROCEDURE)

---

3. VISUAL AND PHYSICAL INSPECTION

Perform a visual and physical inspection of the entire Evaporative Emission system.

Check for the follow conditions:

- Holes or cracks
- Loose seal points
- Evidence of damaged components
- Incorrect routing of hoses and tubes
- Fuel Cap gasket seal

Were any of the above conditions found?

Yes >> Repair as necessary.
Perform the POWERTRAIN VERIFICATION TEST. (Refer to 9 - ENGINE - STANDARD PROCEDURE)

No >> Go To 4

P0455-EVAP PURGE SYSTEM LARGE LEAK (CONTINUED)

4. VERIFY EVAPORATIVE EMISSION LEAK

To continue testing you will need Miller Tool #8404A Evaporative Emission Leak Detector (EELD).

WARNING: Keep lit cigarettes, sparks, flames, and other ignition sources away from the test area to prevent the ignition of explosive gases. Keep the test area well ventilated.

NOTE: The fuel tank should have between 20% and 80% of fuel tank capacity to properly test the Evap system.

Connect the red power lead of the EELD to the battery positive terminal and the black ground lead to battery negative terminal.

Block the vent hose of the canister if using the service port.

Connect shop air to the EELD.

Set the smoke/air control switch to AIR.

Insert the tester's AIR supply tip (clear hose) into the appropriate calibration orifice on the tester's control panel (based on DTC leak size).

Press the remote smoke/air start button.

Position the red flag on the air flow meter so it is aligned with the indicator ball.

When the calibration is complete, release the remote button. The EELD flow meter is now calibrated in liters per minute to the size leak indicated by the DTC set in the PCM.

Install the service port adapter #8404-14 on the vehicle's service port and block the vent hose of the EVAP Canister (if equipped) or install the #8404-ADP service adaptor into the filter line.

Connect the Air supply hose from the EELD to the service port (if equipped) or to the #8404-ADP adapter.

Press the remote button to activate AIR flow.

NOTE: Larger volume fuel tanks, lower fuel levels or if the vehicle is equipped with a Flow Management Valve may indicate high flow and will require 4 to 5 minutes to fill.

Compare the flow meter indicator ball reading to the red flag.

ABOVE the red flag indicates a leak present.

BELOW the red flag indicates a sealed system.

Is the indicator ball above the red flag?

Yes >> Go To 5

No >> Refer to the Freeze Frame data recorded in step 1. If the data indicates that the vehicle was in motion when the DTC was set, verify that all hoses are properly connected.

Perform the POWERTRAIN VERIFICATION TEST. (Refer to 9 - ENGINE - STANDARD PROCEDURE)

P0455-EVAP PURGE SYSTEM LARGE LEAK (CONTINUED)

5. EVAPORATIVE EMISSION LEAK DETECTION

NOTE: A thorough visual inspection of the Evap system hoses, tubes, and connections may save time in your diagnosis. Look for any physical damage or signs of wetness at connections. The strong smell of fuel vapors may aid diagnosis also.

To continue testing, you will need Miller Tool #8404A Evaporative Emissions Leak Detector (EELD).

Remove the Air supply hose from the service port (if equipped) or from the #8404-ADP adapter.

Connect the SMOKE supply tip (black hose) to the service port (if equipped) or to the #8404-ADP adapter.

Set the smoke/air control switch to SMOKE.

NOTE: The flow meter indicator ball will not move in the smoke mode.

Press the remote smoke/air start button.

NOTE: Make sure that smoke has filled the EVAP system by continuing to press the remote smoke/air start button, remove the vehicle fuel cap, and wait for the smoke to exit. Once smoke is indicated reinstall the fuel cap.

NOTE: For optimal performance, introduce smoke into the system for an additional 60 seconds; continue introducing smoke at 15 second intervals, as necessary.

While still holding the remote smoke/air start button, use the white light (#8404-CLL) to follow the EVAP system path, and look for the source of the leak indicated by exiting smoke.

If a leak is concealed from view (i.e., top of fuel tank), release the remote smoke/air start button, and use the ultra-violet (UV) black light #8404-UVL and the yellow goggles 8404-20 to look for residual traces of dye that is left behind by the smoke.

The exiting smoke deposits a residual fluid that is either bright green or bright yellow in color when viewed with a UV light.

NOTE: The EVAP System is divided into three zones. A leak from any of these zones can cause this DTC to set. The lists below specify the possible leak points in that specific zone. For further assistance see the Zone Identification Charts below.

- ZONE 1

1 Fuel Cap
2 Recirculation Check Valve.
3 Vapor Recirculation Line.
4 Signal Vapor Line for FVM.
5 Flow Management Valve.
6 Fuel Tank to Canister Vapor Line connection.
7 Fuel Tank Vent (Check Valve).
8 Vapor Line to Canister.
9 Flow Control Orfice.
10 Control Valve.
11 Liquid Trap.
12 Fuel Tank.
13 Check valve.
14 Fuel Fill Tube to Tank connector.
15 Fuel Fill Tube
Damaged or disconnected EVAP system components.

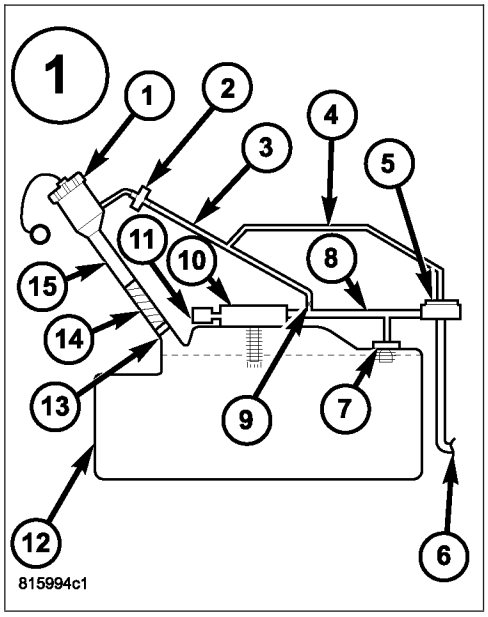

P0455-EVAP PURGE SYSTEM LARGE LEAK (CONTINUED)

- ZONE 2

1 Filter.
2 NVLD.
3 Canister Vent Line.
4 Evap Canister.
5 Chassis Purge Valve.
6 Fuel Tank to Canister Vapor Line connection.
7 Evap Purge connection.

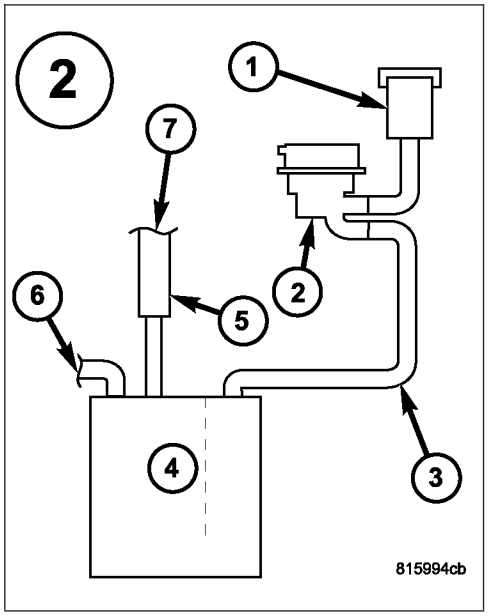

- ZONE 3

1 Evap Purge Vacuum Line.
2 Connection to Chassis Line.
3 Connection to Canister.
4 Chassis Purge Line.
5 Evap Purge Vacuum Line.
6 Connection to Evap Purge Harness.
7 Chassis Evap Purge Line connection to Engine Vacuum.
8 Evap Purge Valve.
9 Service Port.

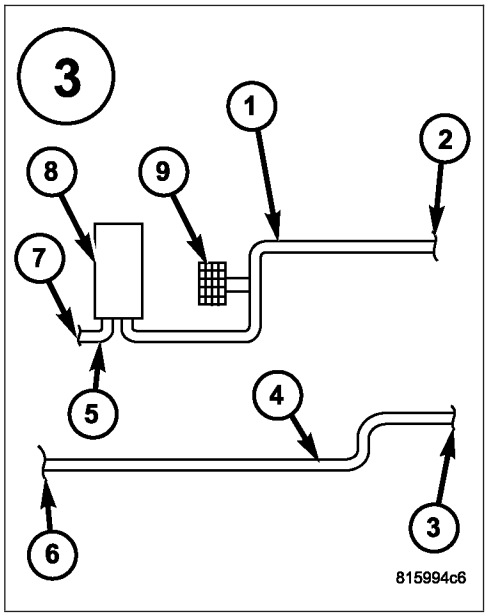

NOTE: Carefully inspect the vent side of the EVAP Canister. Due to the filtering system in the canister the smoke may not be as thick. Introducing smoke into the filtered side of the canister may assist in locating the leak.

Was a leak found at the gas cap?

Yes >> Go To 6
Perform the POWERTRAIN VERIFICATION TEST. (Refer to 9 - ENGINE - STANDARD PROCEDURE)

No >> Go To 7

6. LEAK AT GAS CAP

Remove the SMOKE supply tip (black hose) from the service port (if equipped) or to the #8404–ADP adapter.
Install gas cap adapter, Miller Tool #8382 (1/4 turn cap) or #6922 (screw cap) and #8399* (secondary seal depressor) and repeat test 5.

Was a leak found at the gas cap adapter?

Yes >> Replace the Fuel Filler tube assembly.
Perform the POWERTRAIN VERIFICATION TEST. (Refer to 9 - ENGINE - STANDARD PROCEDURE)

No >> Replace the gas cap.
Perform the POWERTRAIN VERIFICATION TEST. (Refer to 9 - ENGINE - STANDARD PROCEDURE)

P0455-EVAP PURGE SYSTEM LARGE LEAK (CONTINUED)

7. EVAP PURGE SOLENOID OPERATION

NOTE: After disconnecting the Evap Purge Solenoid vacuum connections, inspect the lines and solenoid for any signs of contamination from the EVAP Canister. This may indicate a faulty check valve. Replace/repair as necessary.

Turn the ignition off.

Disconnect the vacuum hoses at the Evap Purge Solenoid.

Press the remote smoke/air start button on the EELD.

While holding the remote smoke/air start button, check to see if smoke is exiting the purge valve. This indicates that there is a leak internal to the purge valve.

NOTE: Below is an optional method of checking the purge valve for leaks if the EELD is unavailable.

Turn the ignition off.

Disconnect the vacuum hoses at the Evap Purge Solenoid.

Using a hand vacuum pump, apply 10 in HG to the “CAN” of the Evap Purge Solenoid.

NOTE: Monitor the vacuum gauge for at least 15 seconds.

Is smoke visible from the EVAP Purge Solenoid if using the EELD, or not hold a vacuum?

Yes >> Replace the NVLD.
Perform the POWERTRAIN VERIFICATION TEST. (Refer to 9 - ENGINE - STANDARD PROCEDURE)

No >> Replace the Evap Purge Solenoid.
Perform the POWERTRAIN VERIFICATION TEST. (Refer to 9 - ENGINE - STANDARD PROCEDURE)

P0456-EVAP PURGE SYSTEM SMALL LEAK

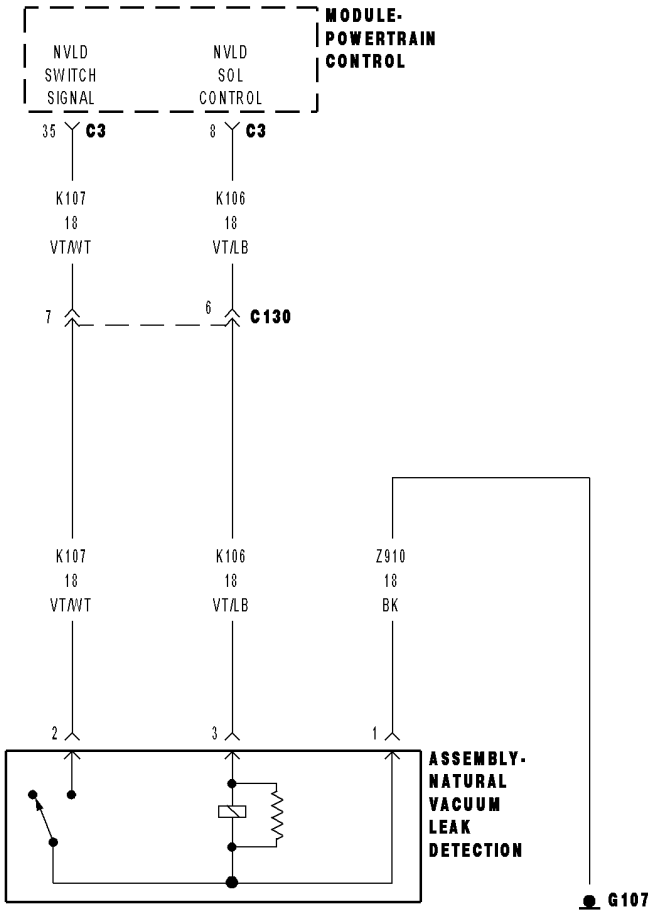

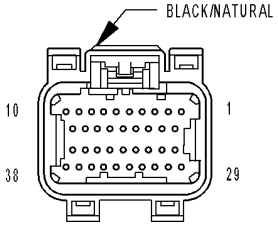

MODULE-
POWERTRAIN
CONTROL C3
(NGC)

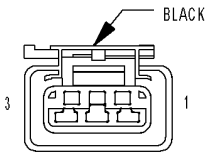

ASSEMBLY-
NATURAL VACUUM
LEAK DETECTION
(3.7L/4.7L/5.7L)

81453a02

P0456-EVAP PURGE SYSTEM SMALL LEAK (CONTINUED)

For a complete wiring diagram **Refer to Section 8W**.

Theory of Operation

The theory behind the Natural Vacuum Leak Detection (NVLD) is adherence to the Ideal Gas Law. Pressure in a sealed vessel will change linearly as a function of the temperature of the gas in the vessel. Even small leaks will allow the pressure in the vessel to come to equilibrium with the atmospheric pressure. After key-off and a calibrated amount of time, cool down from operating temperatures or diurnal ambient temperature the system pressure will force the system to go negative or draw a vacuum if there is no leak. When the vacuum level reaches 1" H2O (0.25 KPA) the NVLD vacuum switch closes. This sends a signal to the NGC freezing a timer and registering a pass. If a switch closure is not detected an assessment of leak size will be made.

- **When Monitored:**
  Ignition off. Fuel Level less than 88%. Ambient Temperature between 4°C and 43°C (39°F and 109°F) Close Loop fuel system.
- **Set Condition:**
  Due to temperature changes, a vacuum is created in the fuel tank and EVAP system. With the EVAP system sealed, the PCM monitors the NVLD switch. If the NVLD switch does not close within a calibrated time allowance, an error is detected by the PCM. One Trip Fault. Three good trips to turn off the MIL.

Possible Causes
EVAP PURGE SYSTEM LEAK
EVAP PURGE SOLENOID

Always perform the Pre-Diagnostic Troubleshooting procedure before proceeding. (Refer to 9 - ENGINE - DIAGNOSIS AND TESTING).

Diagnostic Test

1. VEHICLE HISTORY AND SERVICE BULLETIN INVESTIGATION

Ignition on, engine not running.

With a scan tool, read DTCs and record the related Freeze Frame data if any DTC(s) are present.

Whether or not any DTC(s) are present you will want to check the following items which may assist in repairing the customer's complaint successfully.

Check the vehicles repair history.

If the vehicle has a repair history that pertains to the customer's current complaint, review the repair.

Inspect the vehicle for any aftermarket accessories that may have been installed incorrectly.

Check for any service bulletin(s) related to the customer's complaint or DTC(s).

If a service bulletin applies, follow the instructions per the service bulletin.

Choose the following scenario that best applies.

The service bulletin repaired the customer's complaint.
Testing complete.

A DTC is present, no service bulletins apply, or the service bulletin didn't repair the customer's complaint.
Go To 2

P0456-EVAP PURGE SYSTEM SMALL LEAK (CONTINUED)

2. ACTIVE DTC

NOTE: Since a hot vehicle can conceal a leak, it is best to perform this test at room temperature.

NOTE: A loose gas cap could have caused this DTC to set. Make sure gas cap is tight and in good condition. Make sure the gas cap meets OEM specifications.

Ignition on, engine not running.

With a scan tool, read DTCs.

Is the DTC active at this time?

Yes >> Go To 3

No >> Refer to the INTERMITTENT CONDITION Diagnostic Procedure.
Perform the POWERTRAIN VERIFICATION TEST. (Refer to 9 - ENGINE - STANDARD PROCEDURE)

---

3. VISUAL AND PHYSICAL INSPECTION

Perform a visual and physical inspection of the entire Evaporative Emission system.

Check for the follow conditions:

- Holes or cracks
- Loose seal points
- Evidence of damaged components
- Incorrect routing of hoses and tubes
- Fuel Cap gasket seal

Were any of the above conditions found?

Yes >> Repair as necessary.
Perform the POWERTRAIN VERIFICATION TEST. (Refer to 9 - ENGINE - STANDARD PROCEDURE)

No >> Go To 4

P0456-EVAP PURGE SYSTEM SMALL LEAK (CONTINUED)

4. VERIFY EVAPORATIVE EMISSION LEAK

To continue testing you will need Miller Tool #8404A Evaporative Emission Leak Detector (EELD).

WARNING: Keep lit cigarettes, sparks, flames, and other ignition sources away from the test area to prevent the ignition of explosive gases. Keep the test area well ventilated.

NOTE: The fuel tank should have between 20% and 80% of fuel tank capacity to properly test the Evap system.

Connect the red power lead of the EELD to the battery positive terminal and the black ground lead to battery negative terminal.

Block the vent hose of the canister if using the service port.

Connect shop air to the EELD.

Set the smoke/air control switch to AIR.

Insert the tester's AIR supply tip (clear hose) into the appropriate calibration orifice on the tester's control panel (based on DTC leak size).

Press the remote smoke/air start button.

Position the red flag on the air flow meter so it is aligned with the indicator ball.

When the calibration is complete, release the remote button. The EELD flow meter is now calibrated in liters per minute to the size leak indicated by the DTC set in the PCM.

Install the service port adapter #8404-14 on the vehicle's service port and block the vent hose of the EVAP Canister (if equipped) or install the #8404-ADP service adaptor into the filter line.

Connect the Air supply hose from the EELD to the service port (if equipped) or to the #8404-ADP adapter.

Press the remote button to activate AIR flow.

NOTE: Larger volume fuel tanks, lower fuel levels or if the vehicle is equipped with a Flow Management Valve may indicate high flow and will require 4 to 5 minutes to fill.

Compare the flow meter indicator ball reading to the red flag.

ABOVE the red flag indicates a leak present.

BELOW the red flag indicates a sealed system.

Is the indicator ball above the red flag?

Yes >> Go To 5

No >> Refer to the INTERMITTENT CONDITION Diagnostic Procedure.
Perform the POWERTRAIN VERIFICATION TEST. (Refer to 9 - ENGINE - STANDARD PROCEDURE)

P0456-EVAP PURGE SYSTEM SMALL LEAK (CONTINUED)

5. EVAPORATIVE EMISSION LEAK DETECTION

NOTE: A thorough visual inspection of the Evap system hoses, tubes, and connections may save time in your diagnosis. Look for any physical damage or signs of wetness at connections. The strong smell of fuel vapors may also aid diagnosis.

To continue testing, you will need Miller Tool #8404A Evaporative Emissions Leak Detector (EELD).

Remove the Air supply hose from the service port (if equipped) or from the #8404-ADP adapter.

Connect the SMOKE supply tip (black hose) to the service port (if equipped) or to the #8404-ADP adapter.

Set the smoke/air control switch to SMOKE.

NOTE: The flow meter indicator ball will not move in the smoke mode.

Press the remote smoke/air start button.

NOTE: Make sure that smoke has filled the EVAP system by continuing to press the remote smoke/air start button, remove the vehicle fuel cap, and wait for the smoke to exit. Once smoke is indicated reinstall the fuel cap.

NOTE: For optimal performance, introduce smoke into the system for an additional 60 seconds; continue introducing smoke at 15 second intervals, as necessary.

While still holding the remote smoke/air start button, use the white light (#8404-CLL) to follow the EVAP system path, and look for the source of the leak indicated by exiting smoke.

If a leak is concealed from view (i.e., top of fuel tank), release the remote smoke/air start button, and use the ultra-violet (UV) black light #8404-UVL and the yellow goggles 8404-20 to look for residual traces of dye that is left behind by the smoke.

The exiting smoke deposits a residual fluid that is either bright green or bright yellow in color when viewed with a UV light.

NOTE: The EVAP System is divided into three zones. A leak from any of these zones can cause this DTC to set. The lists below specify the possible leak points in that specific zone. For further assistance see the Zone Identification Charts below.

- ZONE 1

1 Fuel Cap
2 Recirculation Check Valve.
3 Vapor Recirculation Line.
4 Signal Vapor Line for FVM.
5 Flow Management Valve.
6 Fuel Tank to Canister Vapor Line connection.
7 Fuel Tank Vent (Check Valve).
8 Vapor Line to Canister.
9 Flow Control Orfice.
10 Control Valve.
11 Liquid Trap.
12 Fuel Tank.
13 Check valve.
14 Fuel Fill Tube to Tank connector.
15 Fuel Fill Tube
Damaged or disconnected EVAP system components.

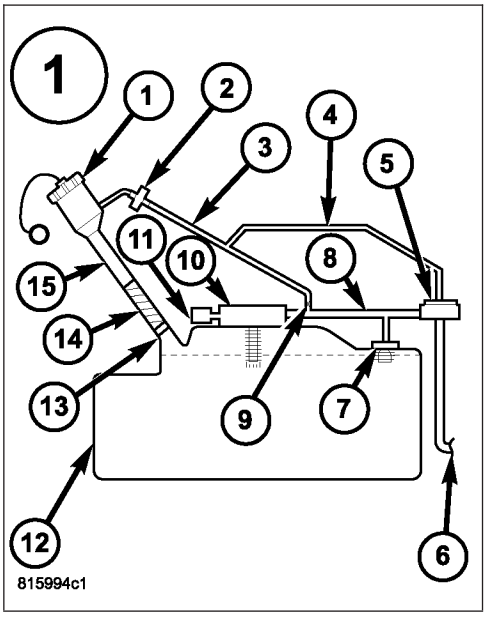

P0456-EVAP PURGE SYSTEM SMALL LEAK (CONTINUED)

- ZONE 2

1 Filter.
2 NVLD.
3 Canister Vent Line.
4 Evap Canister.
5 Chassis Purge Valve.
6 Fuel Tank to Canister Vapor Line connection.
7 Evap Purge connection.

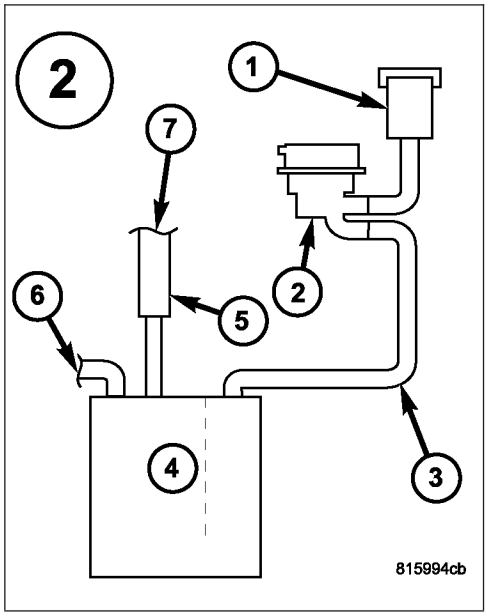

- ZONE 3

1 Evap Purge Vacuum Line.
2 Connection to Chassis Line.
3 Connection to Canister.
4 Chassis Purge Line.
5 Evap Purge Vacuum Line.
6 Connection to Evap Purge Harness.
7 Chassis Evap Purge Line connection to Engine Vacuum.
8 Evap Purge Valve.
9 Service Port.

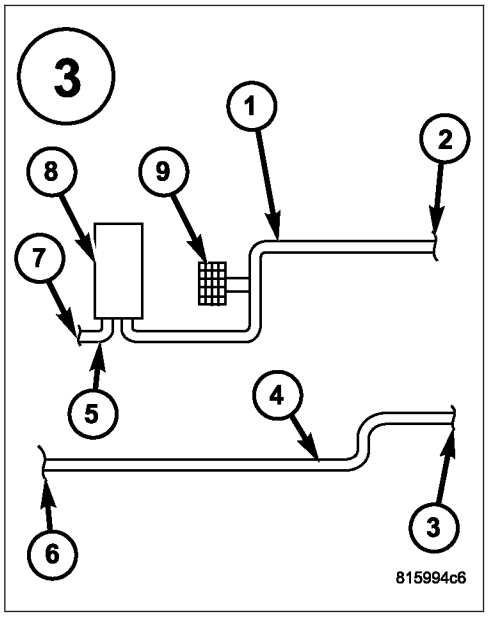

NOTE: Carefully inspect the vent side of the EVAP Canister. Due to the filtering system in the canister the smoke may not be as thick. Introducing smoke into the filtered side of the canister may assist in locating the leak.

Was a leak found?

Yes >> Go To 6
Perform the POWERTRAIN VERIFICATION TEST. (Refer to 9 - ENGINE - STANDARD PROCEDURE)

No >> Go To 7

6. LEAK AT GAS CAP

Remove the SMOKE supply tip (black hose) from the service port (if equipped) or to the #8404–ADP adapter.
Install gas cap adapter, Miller Tool #8382 (1/4 turn cap) or #6922 (screw cap) and #8399* (secondary seal depressor) and repeat test 5.

Was a leak found at the gas cap adapter?

Yes >> Replace the Fuel Filler tube assembly.
Perform the POWERTRAIN VERIFICATION TEST. (Refer to 9 - ENGINE - STANDARD PROCEDURE)

No >> Replace the gas cap.
Perform the POWERTRAIN VERIFICATION TEST. (Refer to 9 - ENGINE - STANDARD PROCEDURE)

P0456-EVAP PURGE SYSTEM SMALL LEAK (CONTINUED)

7. EVAP PURGE SOLENOID OPERATION

NOTE: After disconnecting the Evap Purge Solenoid vacuum connections, inspect the lines and solenoid for any signs of contamination from the EVAP Canister. This may indicate a faulty check valve. Replace/repair as necessary.

Turn the ignition off.

Disconnect the vacuum hoses at the Evap Purge Solenoid.

Press the remote smoke/air start button on the EELD.

While holding the remote smoke/air start button, check to see if smoke is exiting the purge valve. This indicates that there is a leak internal to the purge valve.

NOTE: Below is an optional method of checking the purge valve for leaks if the EELD is unavailable.

Turn the ignition off.

Disconnect the vacuum hoses at the Evap Purge Solenoid.

Using a hand vacuum pump, apply 10 in HG to the “CAN” of the Evap Purge Solenoid.

NOTE: Monitor the vacuum gauge for at least 15 seconds.

Is smoke visible from the EVAP Purge Solenoid if using the EELD, or not hold a vacuum?

Yes >> Replace the NVLD.
Perform the POWERTRAIN VERIFICATION TEST. (Refer to 9 - ENGINE - STANDARD PROCEDURE)

No >> Replace the Evap Purge Solenoid.
Perform the POWERTRAIN VERIFICATION TEST. (Refer to 9 - ENGINE - STANDARD PROCEDURE)

P0457-LOOSE FUEL CAP

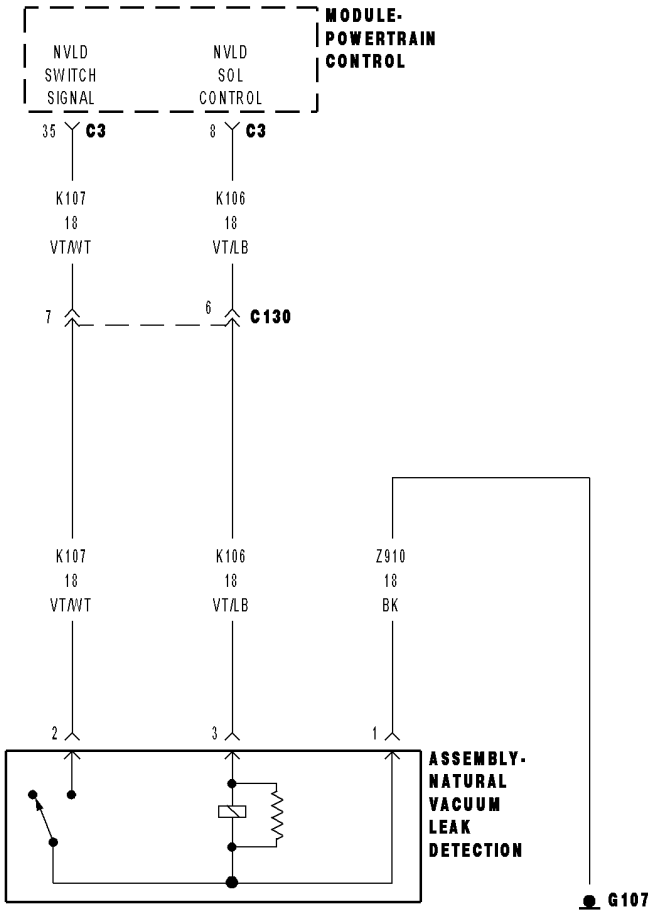

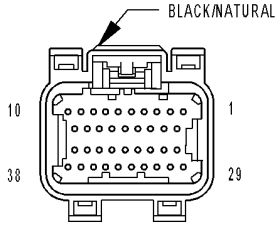

MODULE-
POWERTRAIN
CONTROL C3
(NGC)

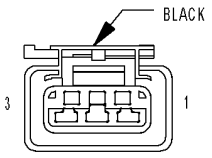

ASSEMBLY-
NATURAL VACUUM
LEAK DETECTION
(3.7L/4.7L/5.7L)

81453a02

P0457-LOOSE FUEL CAP (CONTINUED)

For the Engine circuit diagram (Refer to 9 - ENGINE - SCHEMATICS AND DIAGRAMS).

For a complete wiring diagram **Refer to Section 8W**.

Theory of Operation

Fuel level is recorded when the ignition key is turned off and is compared to the fuel level when the ignition key is turned back on. The PCM recognizes an increase in fuel level and will fail the Medium leak test because the fuel cap is broken or not installed properly. GAS CAP will be displayed in odometer to inform the owner that the cap is off of loose.

- **When Monitored:**
  Engine running. Ambient Temperature between 4°C and 32°C (39°F and 89°F) Close Loop fuel system. Test runs after the medium leak test is inconclusive and the PCM has senses a fuel increase.
- **Set Condition:**
  The PCM activates the EVAP Purge Solenoid to pull the EVAP system into a vacuum to close the NVLD switch. Once the NVLD switch is closed, the PCM turns the EVAP Purge Solenoid off to seal the EVAP system. If the NVLD switch reopens before the calibrated amount of time after a fuel tank fill, an error is detected. Two Trip Fault. Three good trips to turn off the MIL.

Possible Causes
LOOSE OR MISSING FUEL CAP
FUEL FILL CAP
NVLD SWITCH
EVAP PURGE SOLENOID
EVAP PURGE SYSTEM MEDIUM LEAK

Always perform the Pre-Diagnostic Troubleshooting procedure before proceeding (Refer to 9 - ENGINE - DIAGNOSIS AND TESTING) .

Diagnostic Test

1. ACTIVE DTC

NOTE: After the PCM has determined the leak test inconclusive and sees an increase in fuel level, the PCM will request the GAS CAP indicator on to inform the customer that the gas fill cap is loose or off.

Ignition on, engine not running.

With a scan tool, read DTCs.

Is the DTC active at this time?

Yes >> Go To 2

No >> Refer to the INTERMITTENT CONDITION Diagnostic Procedure.
Perform the POWERTRAIN VERIFICATION TEST. (Refer to 9 - ENGINE - STANDARD PROCEDURE)

---

2. LOOSE OR MISSING FUEL FILL CAP

Inspect the fuel fill cap.

Inspect the cap for any abnormal defects.

Was the cap off, missing, or broken?

Yes >> Properly install the fuel fill cap and proceed to step 3.

No >> Go To 4

P0457-LOOSE FUEL CAP (CONTINUED)

3. NVLD SERVICE TEST

With the scan tool perform the NVLD Service Test.

Does the NVLD Service Test pass?

Yes >> Test complete.
Perform the POWERTRAIN VERIFICATION TEST. (Refer to 9 - ENGINE - STANDARD PROCEDURE)

No >> Go To 4

---

4. VERIFY EVAPORATIVE EMISSION LEAK

To continue testing you will need Miller Tool #8404A Evaporative Emission Leak Detector (EELD).

WARNING: Keep lit cigarettes, sparks, flames, and other ignition sources away from the test area to prevent the ignition of explosive gases. Keep the test area well ventilated.

NOTE: The fuel tank should have between 20% and 80% of fuel tank capacity to properly test the Evap system.

Connect the red power lead of the EELD to the battery positive terminal and the black ground lead to battery negative terminal.

Block the vent hose of the canister if using the service port.

Connect shop air to the EELD.

Set the smoke/air control switch to AIR.

Insert the tester's AIR supply tip (clear hose) into the appropriate calibration orifice on the tester's control panel (based on Medium leak size).

Press the remote smoke/air start button.

Position the red flag on the air flow meter so it is aligned with the indicator ball.

When the calibration is complete, release the remote button. The EELD flow meter is now calibrated in liters per minute to the size leak indicated by the DTC set in the PCM.

Install the service port adapter #8404-14 on the vehicle's service port and block the vent hose of the EVAP Canister (if equipped) or install the #8404-ADP service adaptor into the filter line.

Connect the Air supply hose from the EELD to the service port (if equipped) or to the #8404-ADP adapter.

Press the remote button to activate AIR flow.

NOTE: Larger volume fuel tanks, lower fuel levels or if the vehicle is equipped with a Flow Management Valve may indicate high flow and will require 4 to 5 minutes to fill.

Compare the flow meter indicator ball reading to the red flag.

ABOVE the red flag indicates a leak present.

BELOW the red flag indicates a sealed system.

Is the indicator ball above the red flag?

Yes >> Go To 5

No >> Refer to the INTERMITTENT CONDITION Diagnostic Procedure.
Perform the POWERTRAIN VERIFICATION TEST. (Refer to 9 - ENGINE - STANDARD PROCEDURE)

P0457-LOOSE FUEL CAP (CONTINUED)

5. EVAPORATIVE EMISSION LEAK DETECTION

NOTE: A thorough visual inspection of the Evap system hoses, tubes, and connections may save time in your diagnosis. Look for any physical damage or signs of wetness at connections. The strong smell of fuel vapors may also aid diagnosis.

To continue testing, you will need Miller Tool #8404A Evaporative Emissions Leak Detector (EELD).

Remove the Air supply hose from the service port (if equipped) or from the #8404-ADP adapter.

Connect the SMOKE supply tip (black hose) to the service port (if equipped) or to the #8404-ADP adapter.

Set the smoke/air control switch to SMOKE.

NOTE: The flow meter indicator ball will not move in the smoke mode.

Press the remote smoke/air start button.

NOTE: Make sure that smoke has filled the EVAP system by continuing to press the remote smoke/air start button, remove the vehicle fuel cap, and wait for the smoke to exit. Once smoke is indicated reinstall the fuel cap.

NOTE: For optimal performance, introduce smoke into the system for an additional 60 seconds; continue introducing smoke at 15 second intervals, as necessary.

While still holding the remote smoke/air start button, use the white light (#8404-CLL) to follow the EVAP system path, and look for the source of the leak indicated by exiting smoke.

If a leak is concealed from view (i.e., top of fuel tank), release the remote smoke/air start button, and use the ultra-violet (UV) black light #8404-UVL and the yellow goggles 8404-20 to look for residual traces of dye that is left behind by the smoke.

The exiting smoke deposits a residual fluid that is either bright green or bright yellow in color when viewed with a UV light.

NOTE: Carefully inspect the vent side of the EVAP Canister. Due to the filtering system in the canister the smoke may not be as thick. Introducing smoke into the filtered side of the canister may assist in locating the leak.

Was a leak found?

Yes >> Repair or replace the leaking component as necessary.
Perform the POWERTRAIN VERIFICATION TEST. (Refer to 9 - ENGINE - STANDARD PROCEDURE)

No >> Go To 6

---

6. EVAP PURGE SOLENOID OPERATION

NOTE: After disconnecting the Evap Purge Solenoid vacuum connections, inspect the lines and solenoid for any signs of contamination from the EVAP Canister. This may indicate a faulty check valve. Replace/repair as necessary.

Turn the ignition off.

Disconnect the vacuum hoses at the Evap Purge Solenoid.

Using a hand vacuum pump, apply 10 in Hg to the ″CAN″ of the EVAP Purge Solenoid.

NOTE: Monitor the vacuum gauge for at least 15 seconds.

Does the EVAP Purge Solenoid hold vacuum?

Yes >> Go To 7.

No >> Replace the Evap Purge Solenoid.
Perform the POWERTRAIN VERIFICATION TEST. (Refer to 9 - ENGINE - STANDARD PROCEDURE)

P0457-LOOSE FUEL CAP (CONTINUED)

7. NVLD SWITCH OPERATION

Reconnect all vacuum hoses.

Start the engine.

Allow the engine to idle.

Using the scan tool, perform the NVLD FORCED MONITOR TEST.

Monitor the NVLD Switch.

NOTE: As the test runs, the NVLD Switch should go from an OPEN state to CLOSED. After the vacuum is released form the EVAP system the Switch state will return to OPEN.

Did the NVLD Switch operate as described above?

Yes >> Refer to the INTERMITTENT CONDITION Diagnostic Procedure. (Refer to 9 - ENGINE - DIAGNOSIS AND TESTING)

No >> Replace the NVLD Assembly.
Perform the POWERTRAIN VERIFICATION TEST. (Refer to 9 - ENGINE - STANDARD PROCEDURE)

P0461-FUEL LEVEL SENSOR 1 PERFORMANCE

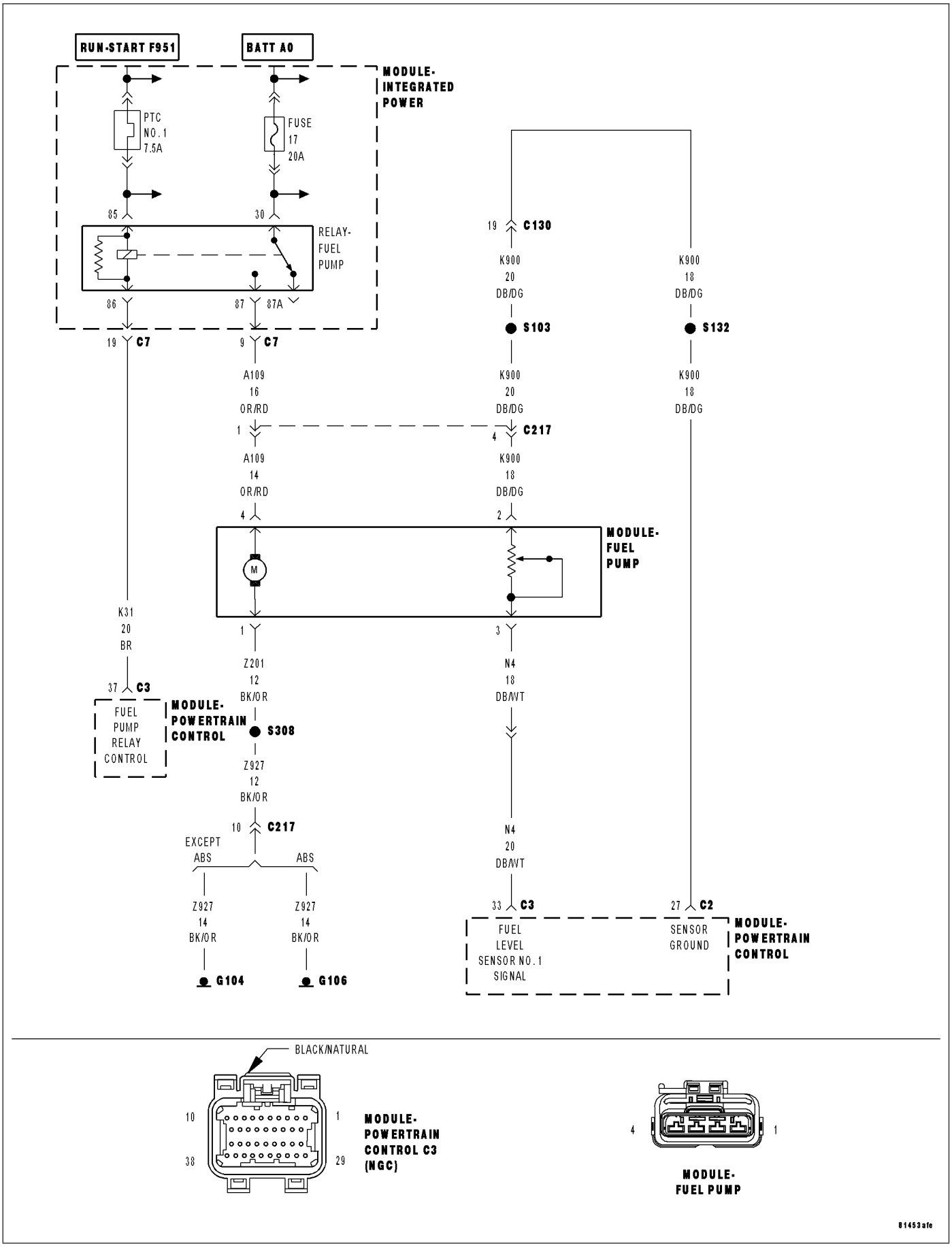

P0461-FUEL LEVEL SENSOR 1 PERFORMANCE (CONTINUED)

For the Engine circuit diagram (Refer to 9 - ENGINE - SCHEMATICS AND DIAGRAMS).

For a complete wiring diagram **Refer to Section 8W**.

Theory of Operation

The fuel level rationality will set a fault for a fuel level reading that does not change over an accumulated mileage threshold to keep stuck high or stuck low fuel levels from disabling OBD monitors. If the vehicle is fitted with a saddle tank fuel system this feature includes diagnostics for both of the sending units and diagnostics for a siphon tube that has become disconnected or plugged. The power up test looks to see a large enough fuel level voltage change from the last key-off to the following engine run. The engine run test looks to see a fuel level voltage change over an accumulated mileage.

- **When Monitored:**
  TEST No.1: With the ignition on, the fuel level is compared to the previous key down after a 20 second delay.
  TEST No.2: The PCM monitors the fuel level at ignition on.
- **Set Condition:**
  TEST No.1: If the PCM does not see a difference in fuel level of greater than 0.1 volt the test will fail. TEST No.2: If the PCM does not see a change in the fuel level of .1765 over a set amount of miles the test will fail. Three good trips to turn off the MIL.

Possible Causes
(N4) FUEL LEVEL SIGNAL CIRCUIT OPEN
(N4) FUEL LEVEL SIGNAL CIRCUIT SHORTED TO GROUND
(K900) SENSOR GROUND CIRCUIT OPEN
FUEL TANK
FUEL LEVEL SENSOR

Always perform the Pre-Diagnostic Troubleshooting procedure before proceeding. (Refer to 9 - ENGINE - DIAGNOSIS AND TESTING).

Diagnostic Test

1. ACTIVE DTC

NOTE: Diagnose P0462 or P0463 first, if set along with P0461.

Ignition on, engine not running.

With a scan tool, read DTCs.

Is the DTC active at this time?

Yes >> Go To 2

No >> Refer to the INTERMITTENT CONDITION Diagnostic Procedure.
Perform the POWERTRAIN VERIFICATION TEST. (Refer to 9 - ENGINE - STANDARD PROCEDURE)

---

2. VISUALLY INSPECT FUEL TANK

Visually inspect the Fuel Tank for damage that may restrict the Fuel Sending Unit float from moving.

Is the Fuel Tank OK?

Yes >> Go To 3

No >> Replace the Fuel Tank as necessary.
Perform the POWERTRAIN VERIFICATION TEST. (Refer to 9 - ENGINE - STANDARD PROCEDURE)

P0461-FUEL LEVEL SENSOR 1 PERFORMANCE (CONTINUED)

3. (N4) FUEL LEVEL SIGNAL CIRCUIT OPEN

Turn the ignition off.

Disconnect the Fuel Pump Module harness connector.

Disconnect the C3 PCM harness connector.

CAUTION: Do not probe the PCM harness connectors. Probing the PCM harness connectors will damage the PCM terminals resulting in poor terminal to pin connection. Install Miller Special Tool #8815 to perform diagnosis.

Measure the resistance of the (N4) Fuel Level Signal circuit from the Fuel Pump Module harness connector to the appropriate terminal of special tool #8815.

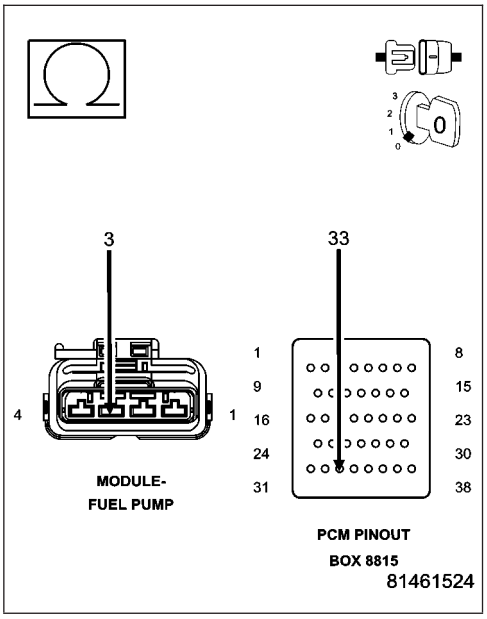

Is the resistance below 5.0 ohms?

Yes >> Go To 4

No >> Repair the open in the (N4) Fuel Level Signal circuit.
Perform the POWERTRAIN VERIFICATION TEST. (Refer to 9 - ENGINE - STANDARD PROCEDURE)

4. (N4) FUEL LEVEL SIGNAL CIRCUIT SHORTED TO GROUND

Measure the resistance between ground and the (N4) Fuel Level Signal circuit in the Fuel Pump Module harness connector.

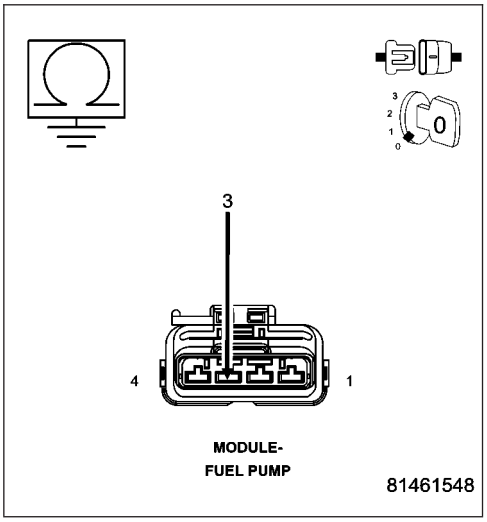

Is the resistance below 100 ohms?

Yes >> Repair the short to ground in the (N4) Fuel Level Signal circuit.
Perform the POWERTRAIN VERIFICATION TEST. (Refer to 9 - ENGINE - STANDARD PROCEDURE)

No >> Go To 5

P0461-FUEL LEVEL SENSOR 1 PERFORMANCE (CONTINUED)

5. (K900) SENSOR GROUND CIRCUIT OPEN

Measure the resistance of the (K900) Sensor Ground circuit from the Fuel Pump Module harness connector to the appropriate terminal of special tool #8815.

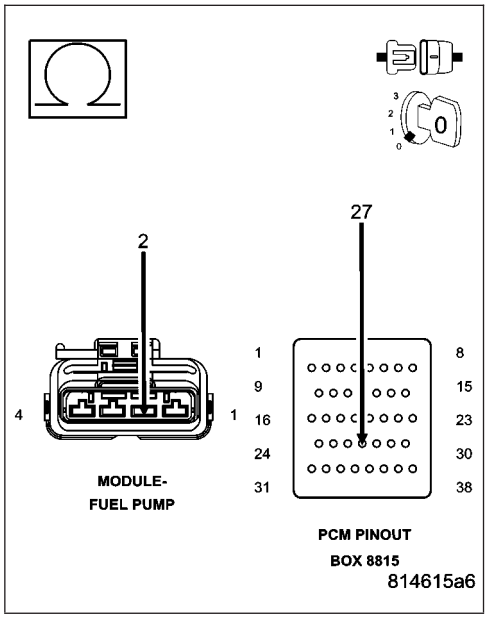

Is the resistance below 5.0 ohms?

Yes >> Go To 6

No >> Repair the open in the (K900) Sensor Ground circuit.
Perform the POWERTRAIN VERIFICATION TEST. (Refer to 9 - ENGINE - STANDARD PROCEDURE)

6. INTERNAL INSPECTION OF THE FUEL TANK

WARNING: The fuel system is under a constant pressure (even with the engine off). Before testing or servicing any fuel system hose, fitting or line, the fuel system pressure must be released. Failure to follow these instructions can result in personal injury or death.

Remove the Fuel Tank per Service Information.

Remove the Fuel Pump Module.

Visually inspect the inside of the Fuel Tank for any obstructions or deformities.

Inspect the Fuel Pump Module Float arm for damage.

Were any problems found?

Yes >> Repair or replace as necessary.
Perform the POWERTRAIN VERIFICATION TEST. (Refer to 9 - ENGINE - STANDARD PROCEDURE)

No >> Go To 7

7. FUEL LEVEL SENSOR

If there are no possible causes remaining, view repair.

Repair

Replace the Fuel Level Sensor.
Perform the POWERTRAIN VERIFICATION TEST. (Refer to 9 - ENGINE - STANDARD PROCEDURE)

P0462-FUEL LEVEL SENSOR 1 CIRCUIT LOW

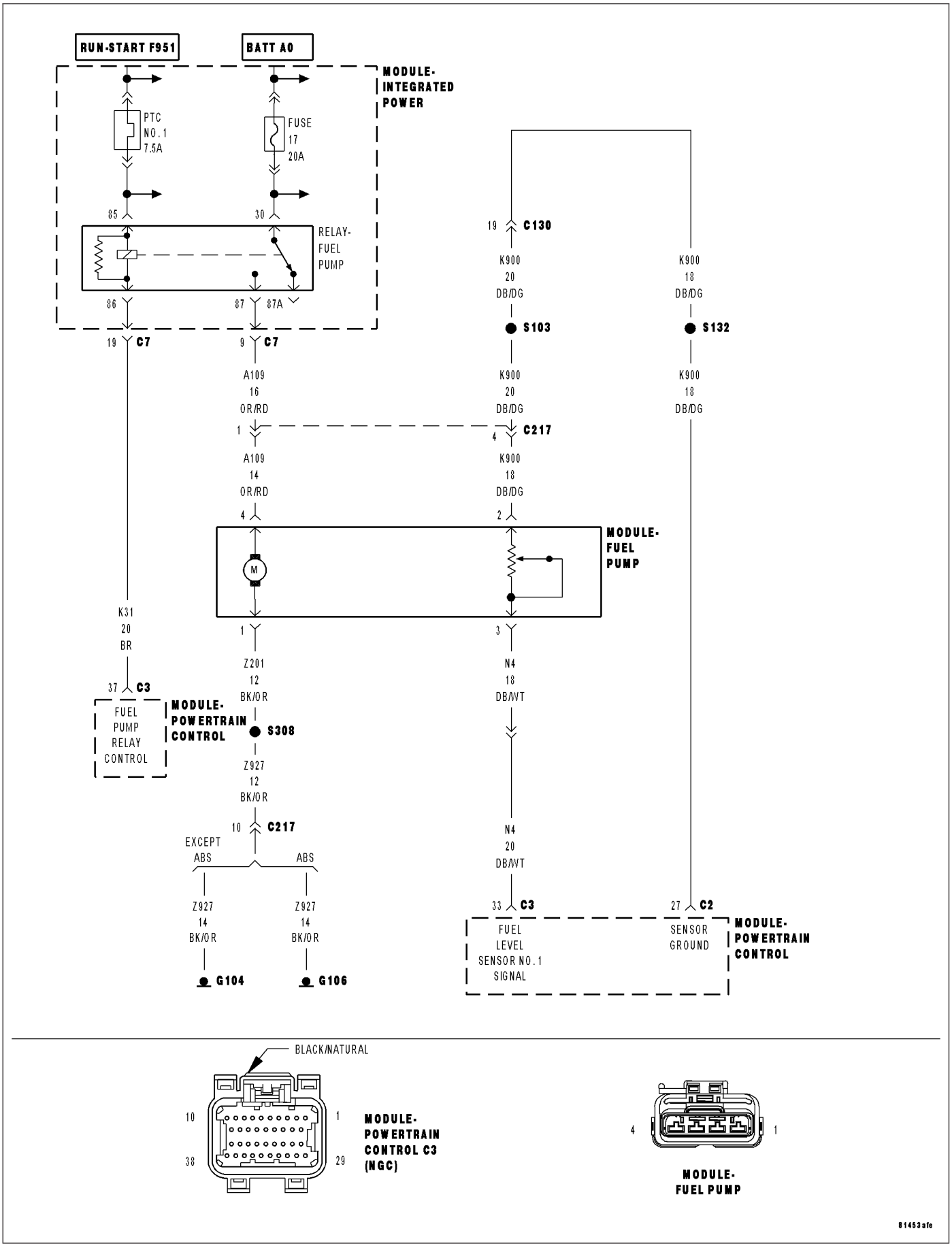

P0462-FUEL LEVEL SENSOR 1 CIRCUIT LOW (CONTINUED)

For the Engine circuit diagram (Refer to 9 - ENGINE - SCHEMATICS AND DIAGRAMS).

For a complete wiring diagram **Refer to Section 8W**.

- **When Monitored:**
  Ignition on and battery voltage above 10.4 volts.
- **Set Condition:**
  The fuel level sensor signal voltage goes below 0.4 of a volt for more than 90 seconds. One Trip Fault. Three good trips to turn off the MIL.

Possible Causes
(N4) FUEL LEVEL SIGNAL CIRCUIT SHORTED TO GROUND
(N4) FUEL LEVEL SIGNAL CIRCUIT SHORTED TO THE (K900) SENSOR GROUND CIRCUIT
FUEL LEVEL SENSOR
INSTRUMENT CLUSTER

Always perform the Pre-Diagnostic Troubleshooting procedure before proceeding. (Refer to 9 - ENGINE - SCHEMATICS AND DIAGRAMS).

Diagnostic Test

1. FUEL LEVEL SENSOR VOLTAGE BELOW 0.4 OF A VOLT

NOTE: Diagnose any Bus Message failures before continuing.
Ignition on, engine not running.
With the scan tool, read the Fuel Level Sensor voltage.

Is the Fuel Level Sensor voltage below 0.4 of a volt?

Yes >> Go To 2

No >> Refer to the INTERMITTENT CONDITION Diagnostic Procedure.
Perform the POWERTRAIN VERIFICATION TEST. (Refer to 9 - ENGINE - STANDARD PROCEDURE)

---

2. FUEL LEVEL SENSOR

Turn the ignition off.
Disconnect the Fuel Pump Module harness connector.
Ignition on, engine not running.
With the scan tool, read the Fuel Level Sensor voltage.

Did the Fuel Level Sensor voltage change from below 0.4 of a volt to above 4.0 volts?

Yes >> Replace the Fuel Level Sensor.
Perform the POWERTRAIN VERIFICATION TEST. (Refer to 9 - ENGINE - STANDARD PROCEDURE)

No >> Go To 3

P0462-FUEL LEVEL SENSOR 1 CIRCUIT LOW (CONTINUED)

3. (N4) FUEL LEVEL SIGNAL CIRCUIT SHORTED TO GROUND

Turn the ignition off.

Disconnect the C3 PCM harness connector.

Measure the resistance between ground and the (N4) Fuel Level Signal circuit in the Fuel Pump Module harness connector.

Is the resistance below 100 ohms?

Yes >> Repair the short to ground in the (N4) Fuel Level Signal circuit.
Perform the POWERTRAIN VERIFICATION TEST. (Refer to 9 - ENGINE - STANDARD PROCEDURE)

No >> Go To 4

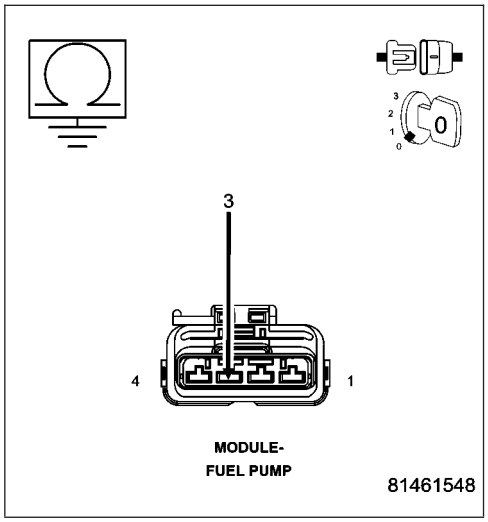

4. (N4) FUEL LEVEL SIGNAL CIRCUIT SHORTED TO THE (K900) SENSOR GROUND CIRCUIT

Measure the resistance between the (N4) Fuel Level Signal circuit and the (K900) Sensor Ground circuit in the Fuel Pump Module harness connector.

Is the resistance below 5.0 ohms?

Yes >> Repair the short between the (K900) Sensor Ground circuit and the (N4) Fuel Level Signal circuit.
Perform the POWERTRAIN VERIFICATION TEST. (Refer to 9 - ENGINE - STANDARD PROCEDURE)

No >> Go To 5

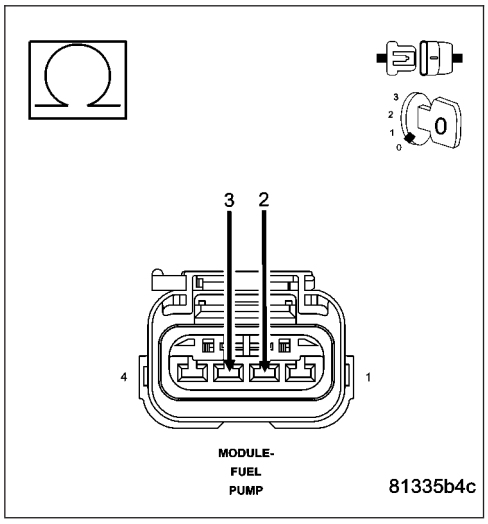

5. PCM

NOTE: Before continuing, check the PCM harness connector terminals for corrosion, damage, or terminal push out. Repair as necessary.

Using the schematics as a guide, inspect the wire harness and connectors. Pay particular attention to all Power and Ground circuits.

Were there any problems found?

Yes >> Repair as necessary.
Perform the POWERTRAIN VERIFICATION TEST. (Refer to 9 - ENGINE - STANDARD PROCEDURE)

No >> Replace and program the Powertrain Control Module per Service Information.
Perform the POWERTRAIN VERIFICATION TEST. (Refer to 9 - ENGINE - STANDARD PROCEDURE)

P0463-FUEL LEVEL SENSOR 1 CIRCUIT HIGH

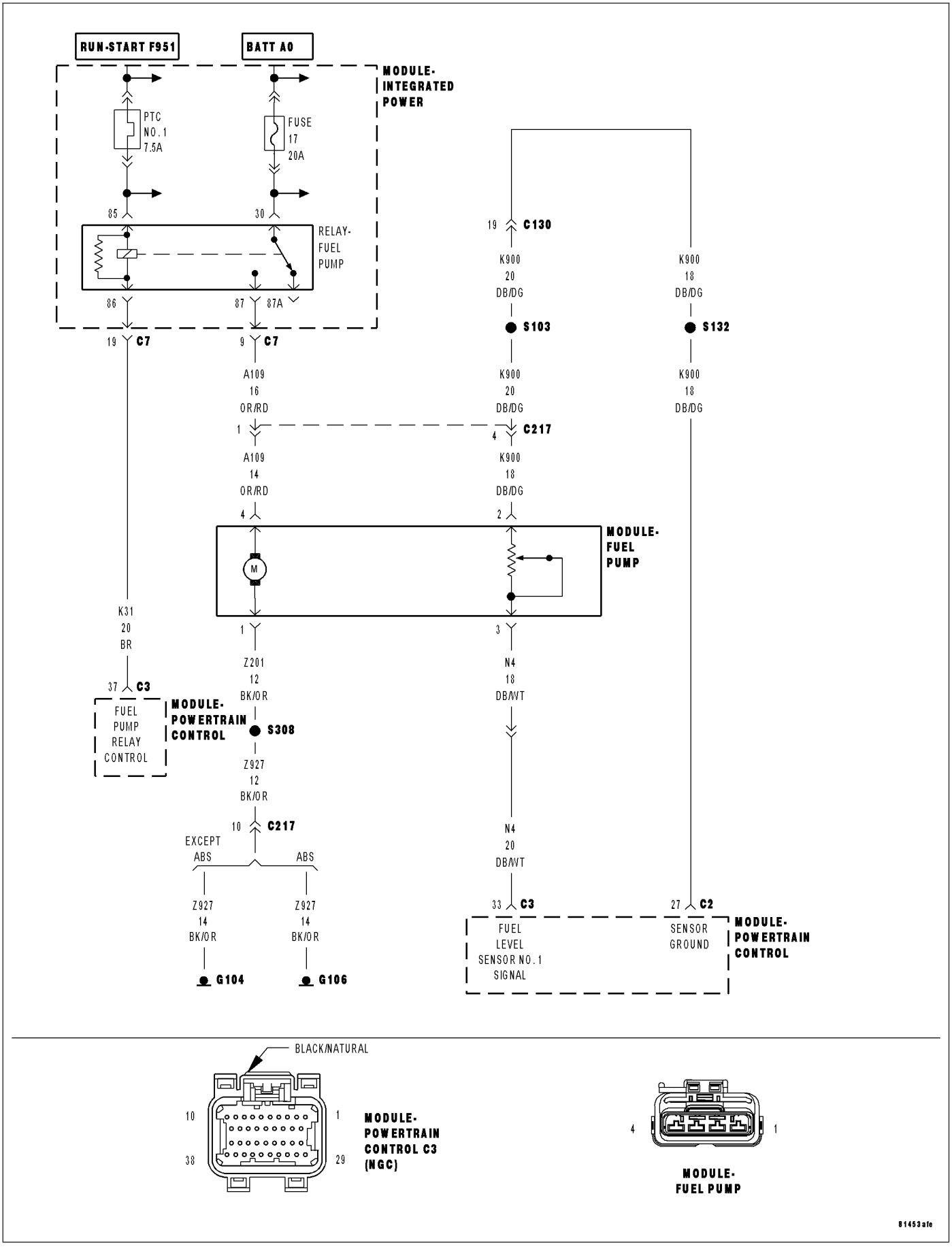

P0463-FUEL LEVEL SENSOR 1 CIRCUIT HIGH (CONTINUED)

For the Engine circuit diagram (Refer to 9 - ENGINE - SCHEMATICS AND DIAGRAMS).

For a complete wiring diagram **Refer to Section 8W**.

- **When Monitored:**
  Ignition on and battery voltage above 10.4 volts.
- **Set Condition:**
  The fuel level sensor signal voltage at the PCM goes above 4.9 volts for more than 90 seconds. One Trip Fault. Three good trips to turn off the MIL.

Possible Causes
(N4) FUEL LEVEL SIGNAL CIRCUIT SHORTED TO BATTERY VOLTAGE
(N4) FUEL LEVEL SIGNAL CIRCUIT OPEN
(K900) SENSOR GROUND CIRCUIT OPEN
FUEL LEVEL SENSOR
PCM

Always perform the Pre-Diagnostic Troubleshooting procedure before proceeding. (Refer to 9 - ENGINE - DIAGNOSIS AND TESTING).

Diagnostic Test

1. FUEL LEVEL SENSOR VOLTS ABOVE 4.9 VOLTS

NOTE: Diagnose any Bus Message failures before continuing.
Ignition on, engine not running.
With a scan tool, read the Fuel Level Sensor voltage.

Is the Fuel Level Sensor voltage above 4.9 volts?

Yes >> Go To 2

No >> Refer to the INTERMITTENT CONDITION Diagnostic Procedure.
Perform the POWERTRAIN VERIFICATION TEST. (Refer to 9 - ENGINE - STANDARD PROCEDURE)

P0463-FUEL LEVEL SENSOR 1 CIRCUIT HIGH (CONTINUED)

2. FUEL LEVEL SENSOR

Turn the ignition off.

Disconnect the Fuel Pump Module electrical harness connector.

Ignition on, engine not running.

Connect a jumper wire between the (N4) Fuel Level Signal circuit and the (K900) Sensor Ground circuit in the Fuel Pump Module harness connector.

With the scan tool, read the Fuel Level Sensor voltage.

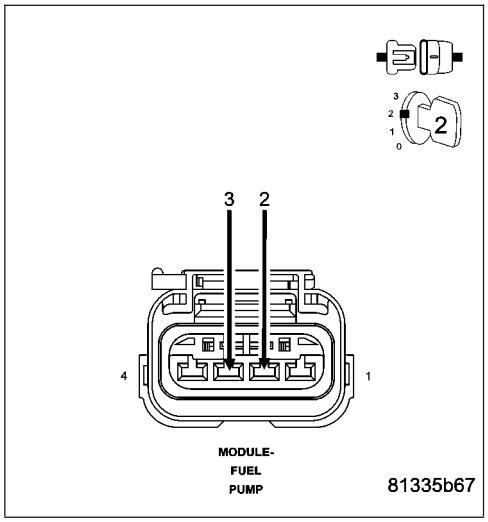

Did the Fuel Level Sensor voltage change from above 4.8 volts to below 0.4 of a volt with the jumper wire installed?

Yes >> Replace the Fuel Level Sensor.
Perform the POWERTRAIN VERIFICATION TEST. (Refer to 9 - ENGINE - STANDARD PROCEDURE)

No >> Go To 3

NOTE: Remove the jumper wire before continuing.

3. (N4) FUEL LEVEL SIGNAL CIRCUIT SHORTED TO BATTERY VOLTAGE

Turn the ignition off.

Disconnect the C3 PCM harness connector.

Ignition on, engine not running.

Measure the voltage on the (N4) Fuel Level Signal circuit in the Fuel Pump Module harness connector.

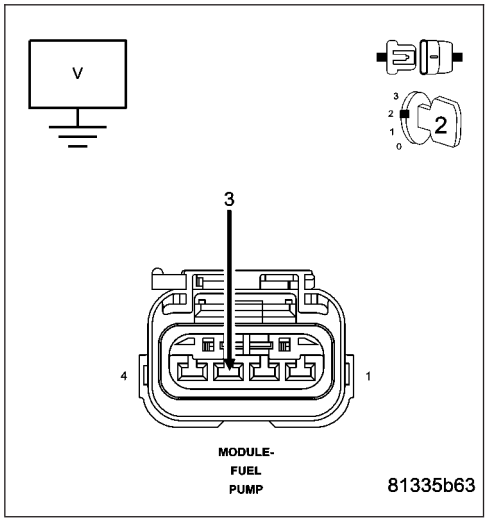

Is the voltage above 0 volts?

Yes >> Repair the short to battery voltage in the (N4) Fuel Level Signal circuit.
Perform the POWERTRAIN VERIFICATION TEST. (Refer to 9 - ENGINE - STANDARD PROCEDURE)

No >> Go To 4

P0463-FUEL LEVEL SENSOR 1 CIRCUIT HIGH (CONTINUED)

4. (N4) FUEL LEVEL SIGNAL CIRCUIT OPEN

Turn the ignition off.

CAUTION: Do not probe the PCM harness connectors. Probing the PCM harness connectors will damage the PCM terminals resulting in poor terminal to pin connection. Install Miller Special Tool #8815 to perform diagnosis.

Measure the resistance of the (N4) Fuel Level Signal circuit from the Fuel Pump Module harness connector to the appropriate terminal of special tool #8815.

Is the resistance below 5.0 ohms?

Yes >> Go To 5

No >> Repair the open in the (N4) Fuel Level Signal circuit. Perform the POWERTRAIN VERIFICATION TEST. (Refer to 9 - ENGINE - STANDARD PROCEDURE)

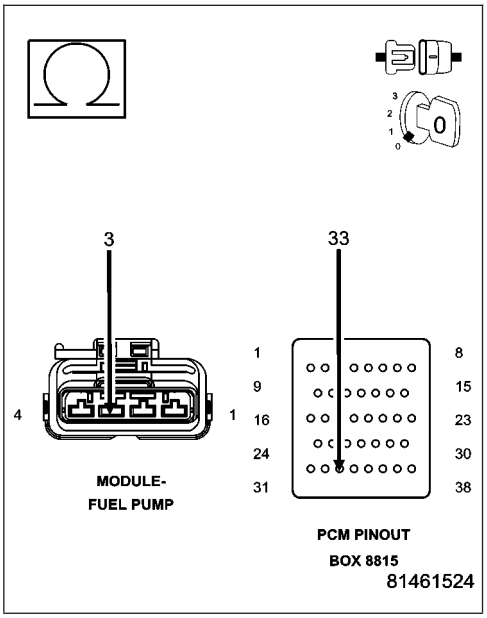

5. (K900) SENSOR GROUND CIRCUIT OPEN

Measure the resistance of the (K900) Sensor Ground circuit from the Fuel Pump Module harness connector to the appropriate terminal of special tool #8815.

Is the resistance below 5.0 ohms?

Yes >> Go To 6

No >> Repair the open in the (K900) Sensor Ground circuit. Perform the POWERTRAIN VERIFICATION TEST. (Refer to 9 - ENGINE - STANDARD PROCEDURE)

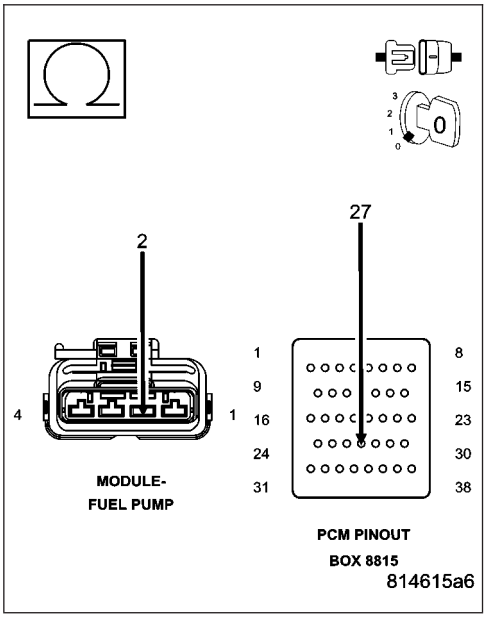

P0463-FUEL LEVEL SENSOR 1 CIRCUIT HIGH (CONTINUED)

6. PCM

NOTE: Before continuing, check the PCM harness connector terminals for corrosion, damage, or terminal push out. Repair as necessary.

Using the schematics as a guide, inspect the wire harness and connectors. Pay particular attention to all Power and Ground circuits.

Were there any problems found?

Yes >> Repair as necessary.
Perform the POWERTRAIN VERIFICATION TEST. (Refer to 9 - ENGINE - STANDARD PROCEDURE)

No >> Replace and program the Powertrain Control Module per Service Information.
Perform the POWERTRAIN VERIFICATION TEST. (Refer to 9 - ENGINE - STANDARD PROCEDURE)

P0480-COOLING FAN 1 CONTROL CIRCUIT

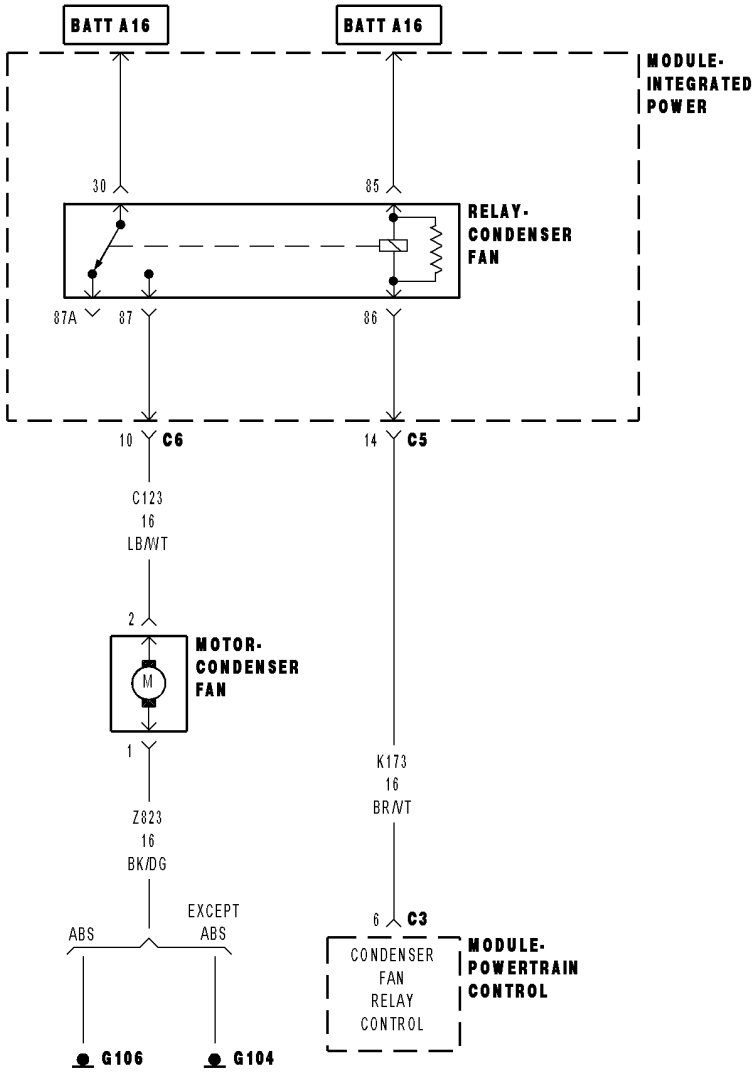

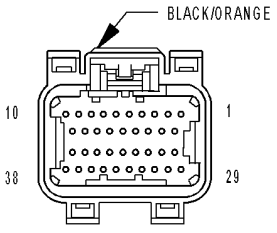

MODULE-
POWERTRAIN
CONTROL C2
(NGC)

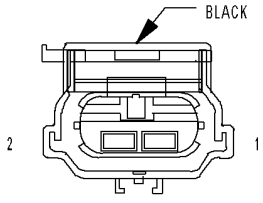

MOTOR-
CONDENSER
FAN
(NGC)

81453b55

P0480-COOLING FAN 1 CONTROL CIRCUIT (CONTINUED)

For the Engine circuit diagram (Refer to 9 - ENGINE - SCHEMATICS AND DIAGRAMS).

For a complete wiring diagram **Refer to Section 8W**.

- **When Monitored:**
  With the ignition on. Battery voltage greater than 10 volts.
- **Set Condition:**
  An open or shorted circuit is detected in the radiator fan relay control circuit. One Trip Fault. Three good trips to turn off the MIL.

Possible Causes
(A16) FUSED B+ CIRCUITS
(K173) COOOLING FAN NO.1 RELAY CONTROL CIRCUIT OPEN
(K173) COOOLING FAN NO.1 RELAY CONTROL CIRCUIT SHORTED TO GROUND
LOW SPEED RADIATOR FAN RELAY
PCM

Always perform the Pre-Diagnostic Troubleshooting procedure before proceeding. (Refer to 9 - ENGINE - DIAGNOSIS AND TESTING).

Diagnostic Test

1. COOLING FAN RELAY OPERATION

Ignition on, engine not running.

With a scan tool, actuate the Cooling Fan Relay.

Is the Cooling Fan Relay operating?

Yes >> Refer to the INTERMITTENT CONDITION Diagnostic Procedure.
Perform the POWERTRAIN VERIFICATION TEST. (Refer to 9 - ENGINE - STANDARD PROCEDURE)

No >> Go To 2

---

2. (A16) FUSED B+ CIRCUITS

Turn the ignition off.

Remove the Cooling Fan Relay.

Using a 12-volt test light connected to ground, probe the (A16) Fused B+ circuits.

Does the test light illuminate brightly?

Yes >> Go To 3

No >> Repair the open or short to ground in the (A16) Fused B+ circuits. Inspect the related fuse and repair as necessary.
Perform the POWERTRAIN VERIFICATION TEST. (Refer to 9 - ENGINE - STANDARD PROCEDURE)

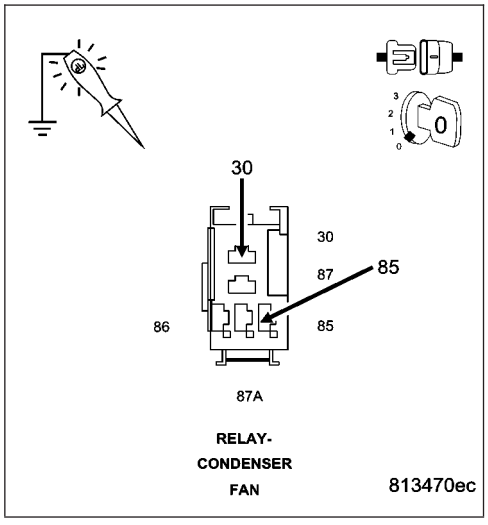

P0480-COOLING FAN 1 CONTROL CIRCUIT (CONTINUED)

3. COOOLING FAN RELAY RESISTANCE

Measure the resistance of the Cooling Fan Relay Coil.

Is the resistance between 60 to 80 ohms?

Yes >> Go To 4

No >> Replace the Cooling Fan Relay.
Perform the POWERTRAIN VERIFICATION TEST. (Refer to 9 - ENGINE - STANDARD PROCEDURE)

---

4. (K173) COOLING FAN NO.1 CONTROL CIRCUIT OPEN

Disconnect the C3 PCM harness connector.

CAUTION: Do not probe the PCM harness connectors. Probing the PCM harness connectors will damage the PCM terminals resulting in poor terminal to pin connection. Install Miller Special Tool #8815 to perform diagnosis.
Measure the resistance of the (K173) Cooling Fan No.1 Relay Control circuit from the Relay to the appropriate terminal of special tool #8815.

Is the resistance below 5.0 ohms?

Yes >> Go To 5

No >> Repair the open in the (K173) Cooing Fan No.1 Relay Control circuit.
Perform the POWERTRAIN VERIFICATION TEST. (Refer to 9 - ENGINE - STANDARD PROCEDURE)

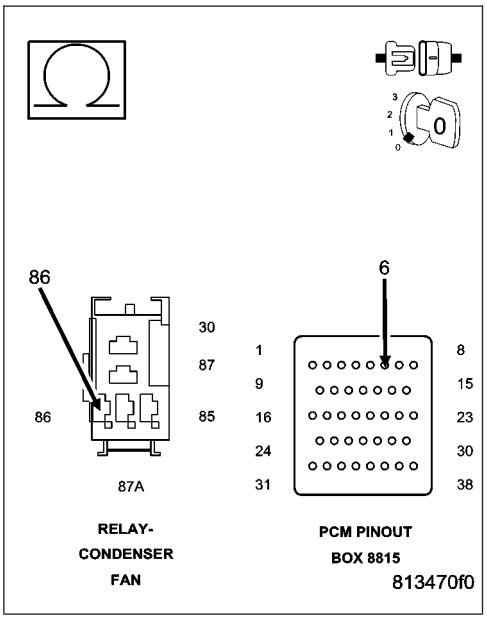

---

5. (K173) COOLING FAN NO.1 CONTROL CIRCUIT SHORTED TO GROUND

Measure the resistance between ground and the (K173) Cooling Fan No.1 Relay Control circuit at the Relay connection.

Is the resistance below 100 ohms?

Yes >> Repair the short to ground in the (K173) Cooling Fan No.1 Relay Control circuit.
Perform the POWERTRAIN VERIFICATION TEST. (Refer to 9 - ENGINE - STANDARD PROCEDURE)

No >> Go To 6

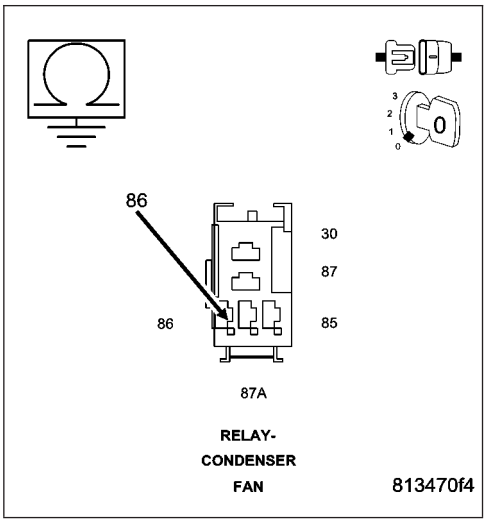

P0480-COOLING FAN 1 CONTROL CIRCUIT (CONTINUED)

6. PCM

NOTE: Before continuing, check the PCM harness connector terminals for corrosion, damage, or terminal push out. Repair as necessary.

Using the schematics as a guide, inspect the wire harness and connectors. Pay particular attention to all Power and Ground circuits.

Were there any problems found?

Yes >> Repair as necessary.
Perform the POWERTRAIN VERIFICATION TEST. (Refer to 9 - ENGINE - STANDARD PROCEDURE)

No >> Replace and program the Powertrain Control Module per Service Information.
Perform the POWERTRAIN VERIFICATION TEST. (Refer to 9 - ENGINE - STANDARD PROCEDURE)

P0498-NVLD CANISTER VENT VALVE SOLENOID CIRCUIT LOW

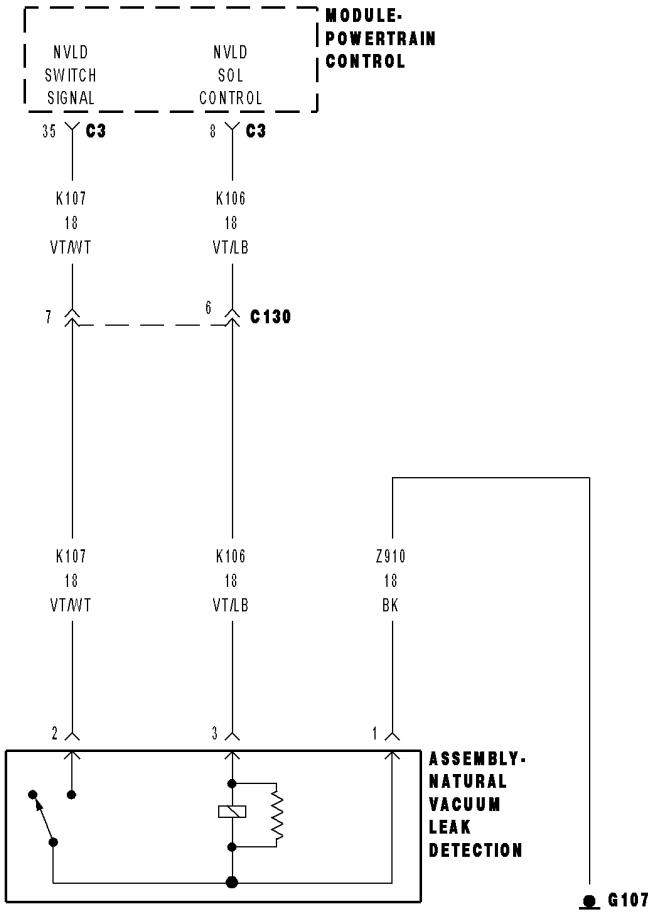

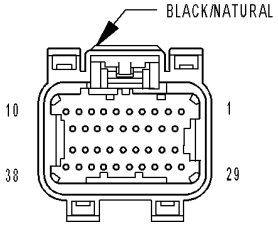

MODULE-
POWERTRAIN
CONTROL C3
(NGC)

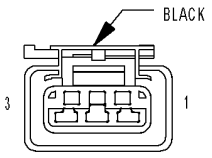

ASSEMBLY-
NATURAL VACUUM
LEAK DETECTION
(3.7L/4.7L/5.7L)

81453a02

P0498-NVLD CANISTER VENT VALVE SOLENOID CIRCUIT LOW (CONTINUED)

For a complete wiring diagram **Refer to Section 8W**.

- **When Monitored:**
  Engine running.
- **Set Condition:**
  The PCM detects a short in the NVLD Canister vent solenoid circuits. One Trip Fault. Three good trips to turn off the MIL.

Possible Causes
(K106) NVLD SOLENOID CONTROL CIRCUIT SHORTED TO GROUND
NVLD ASSEMBLY
PCM

Always perform the Pre-Diagnostic Troubleshooting procedure before proceeding. (Refer to 9 - ENGINE - DIAGNOSIS AND TESTING).

Diagnostic Test

1. VEHICLE HISTORY AND SERVICE BULLETIN INVESTIGATION

Ignition on, engine not running.

With a scan tool, read DTCs and record the related Freeze Frame data if any DTC(s) are present.

Whether or not any DTC(s) are present you will want to check the following items which may assist in repairing the customer's complaint successfully.

Check the vehicles repair history.

If the vehicle has a repair history that pertains to the customer's current complaint, review the repair.

Inspect the vehicle for any aftermarket accessories that may have been installed incorrectly.

Check for any service bulletin(s) related to the customer's complaint or DTC(s).

If a service bulletin applies, follow the instructions per the service bulletin.

Choose the following scenario that best applies.

The service bulletin repaired the customer's complaint.
Testing complete.

A DTC is present, no service bulletins apply, or the service bulletin didn't repair the customer's complaint.
Go To 2.

---

2. ACTIVE DTC

Ignition on, engine not running.

With a scan tool, read DTCs.

Is the DTC active at this time?

Yes >> Go To 3

No >> Refer to the INTERMITTENT CONDITION Diagnostic Procedure.
Perform the POWERTRAIN VERIFICATION TEST. (Refer to 9 - ENGINE - STANDARD PROCEDURE)

P0498-NVLD CANISTER VENT VALVE SOLENOID CIRCUIT LOW (CONTINUED)

3. NVLD SOLENOID

Turn the ignition off.
Disconnect the NVLD electrical harness connector.
Measure the resistance of the NVLD Solenoid Coil.

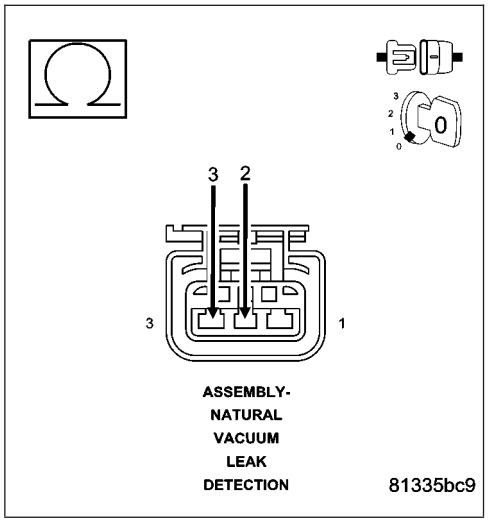

Is the resistance between 7.5 to 8.5 ohms?

Yes >> Go To 4

No >> Replace the NVLD Assembly.
Perform the POWERTRAIN VERIFICATION TEST. (Refer to 9 - ENGINE - STANDARD PROCEDURE)

---

4. (K106) NVLD SOLENOID CONTROL CIRCUIT SHORTED TO GROUND

Disconnect the C3 PCM harness connector.
Measure the resistance between ground and the (K106) NVLD Solenoid Control circuit in the NVLD electrical harness connector.

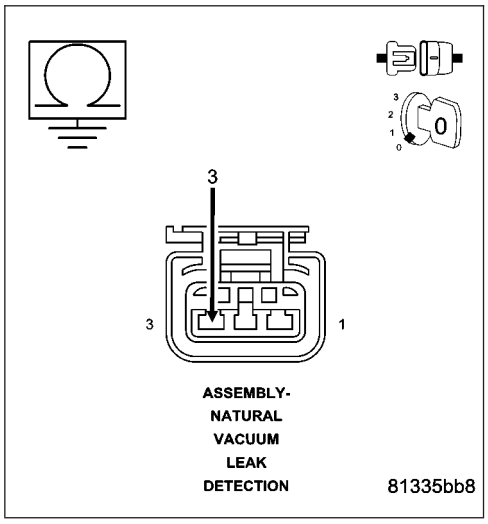

Is the resistance below 100 ohms?

Yes >> Repair the short to ground in the (K106) NVLD Solenoid Control circuit.
Perform the POWERTRAIN VERIFICATION TEST. (Refer to 9 - ENGINE - STANDARD PROCEDURE)

No >> Go To 5

---

5. PCM

NOTE: Before continuing, check the PCM harness connector terminals for corrosion, damage, or terminal push out. Repair as necessary.
Using the schematics as a guide, inspect the wire harness and connectors. Pay particular attention to all Power and Ground circuits.

Were there any problems found?

Yes >> Repair as necessary.
Perform the POWERTRAIN VERIFICATION TEST. (Refer to 9 - ENGINE - STANDARD PROCEDURE)

No >> Replace and program the Powertrain Control Module per Service Information.
Perform the POWERTRAIN VERIFICATION TEST. (Refer to 9 - ENGINE - STANDARD PROCEDURE)

P0499-NVLD CANISTER VENT VALVE SOLENOID CIRCUIT HIGH

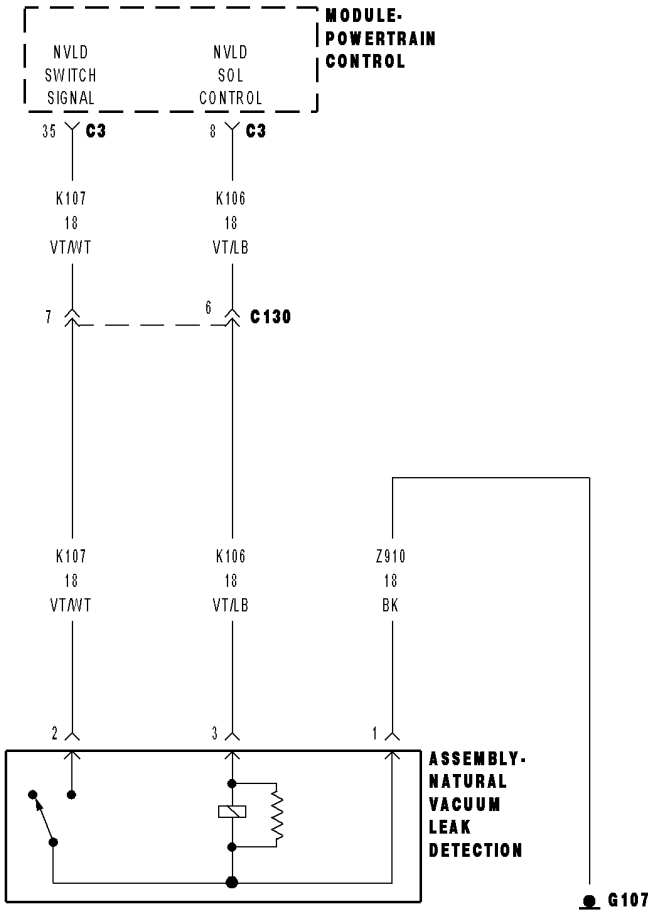

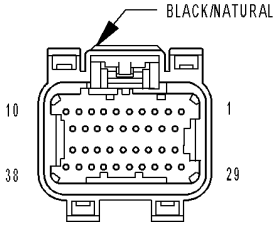

MODULE-
POWERTRAIN
CONTROL C3
(NGC)

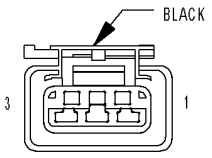

ASSEMBLY-
NATURAL VACUUM
LEAK DETECTION
(3.7L/4.7L/5.7L)

81453a02

P0499-NVLD CANISTER VENT VALVE SOLENOID CIRCUIT HIGH (CONTINUED)

For a complete wiring diagram **Refer to Section 8W**.

- **When Monitored:**
  Engine running.
- **Set Condition:**
  The PCM detects an open in the NVLD Canister vent solenoid circuits for more than 9.375 seconds. One Trip Fault. Three good trips to turn off the MIL.

Possible Causes
(K106) NVLD SOLENOID CONTROL CIRCUIT SHORTED TO BATTERY VOLTAGE
(K106) NVLD SOLENOID CONTROL CIRCUIT OPEN
(Z910) GROUND CIRCUIT OPEN
NVLD SOLENOID
PCM

Always perform the Pre-Diagnostic Troubleshooting procedure before proceeding. (Refer to 9 - ENGINE - DIAGNOSIS AND TESTING).

Diagnostic Test

1. VEHICLE HISTORY AND SERVICE BULLETIN INVESTIGATION

Ignition on, engine not running.

With a scan tool, read DTCs and record the related Freeze Frame data if any DTC(s) are present.

Whether or not any DTC(s) are present you will want to check the following items which may assist in repairing the customer's complaint successfully.

Check the vehicles repair history.

If the vehicle has a repair history that pertains to the customer's current complaint, review the repair.

Inspect the vehicle for any aftermarket accessories that may have been installed incorrectly.

Check for any service bulletin(s) related to the customer's complaint or DTC(s).

If a service bulletin applies, follow the instructions per the service bulletin.

Choose the following scenario that best applies.

The service bulletin repaired the customer's complaint.
Testing complete.

A DTC is present, no service bulletins apply, or the service bulletin didn't repair the customer's complaint.
Go To 2.

---

2. ACTIVE DTC

Ignition on, engine not running.

With a scan tool, read DTCs.

Is the DTC active at this time?

Yes >> Go To 3

No >> Refer to the INTERMITTENT CONDITION Diagnostic Procedure.
Perform the POWERTRAIN VERIFICATION TEST. (Refer to 9 - ENGINE - STANDARD PROCEDURE)

P0499-NVLD CANISTER VENT VALVE SOLENOID CIRCUIT HIGH (CONTINUED)

3. NVLD SOLENOID

Turn the ignition off.

Disconnect the NVLD Assembly harness connector.

Measure the resistance of the NVLD Solenoid coil.

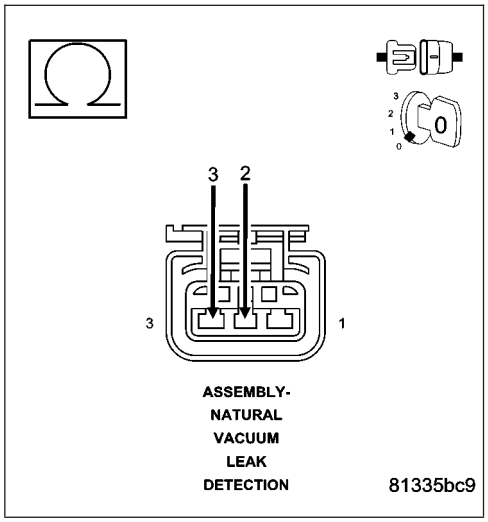

Is the resistance between 7.5 to 8.5 ohms?

Yes >> Go To 4

No >> Replace the NVLD Assembly.
Perform the POWERTRAIN VERIFICATION TEST. (Refer to 9 - ENGINE - STANDARD PROCEDURE)

4. (K106) NVLD SOLENOID CONTROL CIRCUIT SHORTED TO BATTERY VOLTAGE

Disconnect the C3 PCM harness connector.

Take this measurement with the Ignition in the off (lock) position and in the Ignition on, engine off position.

Measure the voltage on the (K106) NVLD Solenoid Control circuit in the NVLD Assembly harness connector.

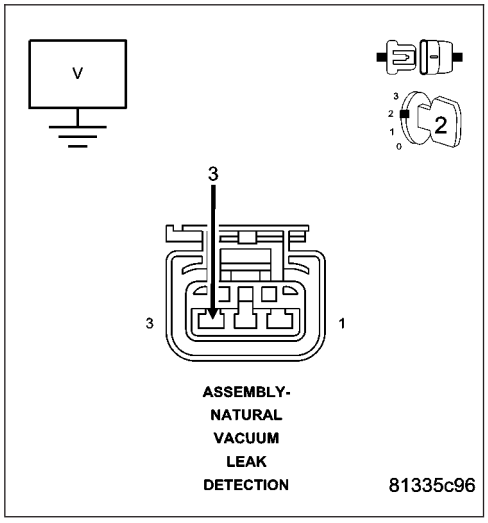

Is the voltage above 0 volts?

Yes >> Repair the short to battery voltage in the (K106) NVLD Solenoid Control circuit.
Perform the POWERTRAIN VERIFICATION TEST. (Refer to 9 - ENGINE - STANDARD PROCEDURE)

No >> Go To 5

P0499-NVLD CANISTER VENT VALVE SOLENOID CIRCUIT HIGH (CONTINUED)

5. (K106) NVLD SOLENOID CONTROL CIRCUIT OPEN

Turn the ignition off.

CAUTION: Do not probe the PCM harness connectors. Probing the PCM harness connectors will damage the PCM terminals resulting in poor terminal to pin connection. Install Miller Special Tool #8815 to perform diagnosis.

Measure the resistance of the (K106) NVLD Solenoid Control circuit from the NVLD Assembly harness connector to the appropriate terminal of special tool #8815.

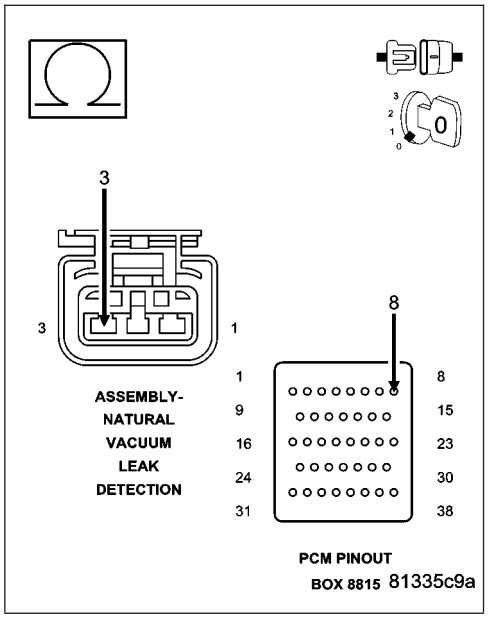

Is the resistance below 5.0 ohms?

Yes >> Go To 6

No >> Repair the open in the (K106) NVLD Solenoid Control circuit.
Perform the POWERTRAIN VERIFICATION TEST. (Refer to 9 - ENGINE - STANDARD PROCEDURE)

6. (Z910) GROUND CIRCUIT OPEN

Measure the resistance between the (Z910) Ground circuit and ground.

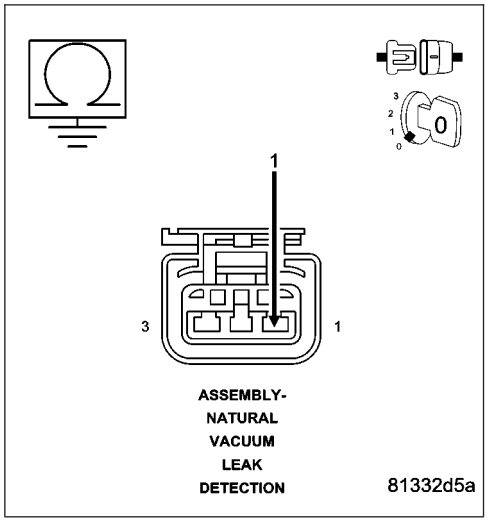

Is the resistance below 5.0 ohms?

Yes >> Go To 7

No >> Repair the open in the (Z910) Ground circuit.
Perform the POWERTRAIN VERIFICATION TEST. (Refer to 9 - ENGINE - STANDARD PROCEDURE)

7. PCM

NOTE: Before continuing, check the PCM harness connector terminals for corrosion, damage, or terminal push out. Repair as necessary.

Using the schematics as a guide, inspect the wire harness and connectors. Pay particular attention to all Power and Ground circuits.

Were there any problems found?

Yes >> Repair as necessary.
Perform the POWERTRAIN VERIFICATION TEST. (Refer to 9 - ENGINE - STANDARD PROCEDURE)

No >> Replace and program the Powertrain Control Module per Service Information.
Perform the POWERTRAIN VERIFICATION TEST. (Refer to 9 - ENGINE - STANDARD PROCEDURE)

P0501-VEHICLE SPEED SENSOR 1 PERFORMANCE

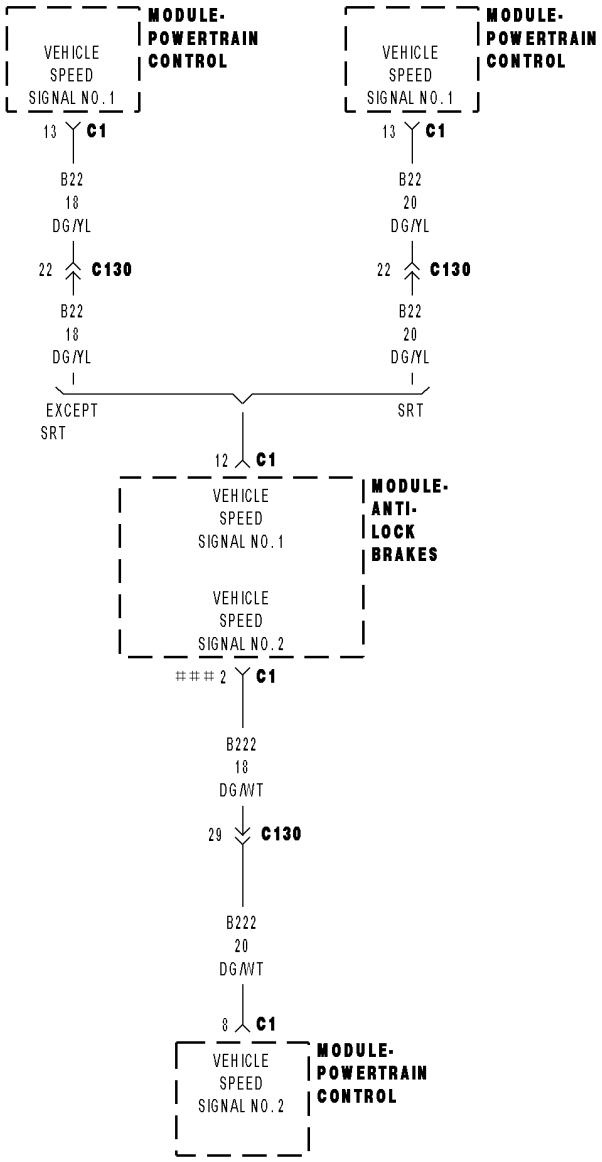

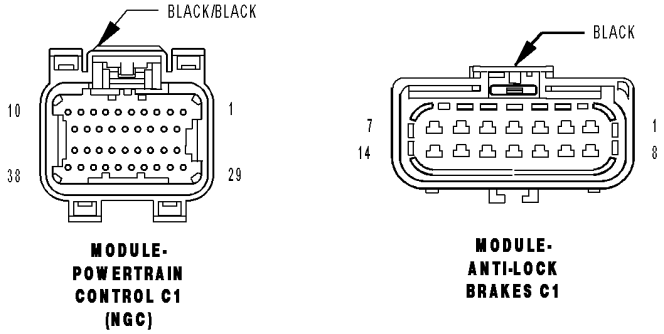

81453b7e

P0501-VEHICLE SPEED SENSOR 1 PERFORMANCE (CONTINUED)

For the Engine circuit diagram (Refer to 9 - ENGINE - SCHEMATICS AND DIAGRAMS).

For a complete wiring diagram **Refer to Section 8W**.

Theory of Operation

The vehicle speed sensor rationality is a continuous test that monitors the vehicle speed sensor for lack of activity. The rationality will not run if a limp-in exists for MAP, Throttle Position, and Engine Coolant Temperature. If vehicle speed sensor is below a minimum threshold for a period of time after the vehicle is operated at a sufficient load, a failure will be indicated.

- **When Monitored:**
  With the engine running, transmission not in park or neutral, brakes not applied, and engine rpm greater than 1500.
- **Set Condition:**
  This code will set if no vehicle speed signal is received from the ABS Module for more than 11 seconds for 2 consecutive trips. Two Trip Fault. Three good trips to turn off the MIL.

Possible Causes
(B22) VEHICLE SPEED NO.1 SIGNAL CIRCUIT SHORTED TO VOLTAGE
(B22) VEHICLE SPEED NO.1 SIGNAL CIRCUIT OPEN
(B22) VEHICLE SPEED NO.1 SIGNAL CIRCUIT SHORTED TO GROUND
TIRE CIRCUMFERENCE
PCM

Always perform the Pre-Diagnostic Troubleshooting procedure before proceeding. (Refer to 9 - ENGINE - DIAGNOSIS AND TESTING).

Diagnostic Test

1. ACTIVE DTC

Ignition on, engine not running.

NOTE: Check for any Bus Communication DTCs. If no Bus or Communication DTCs are set, check for active DTCs stored in the Anti-Lock Brake Module. Any bus or communication DTCs or VSS DTCs in the Anti-Lock Brake Module must be properly diagnosed before continuing.

With a scan tool, read DTCs.

Is the DTC active at this time?

Yes >> Go To 2

No >> Refer to the INTERMITTENT CONDITION Diagnostic Procedure.
Perform the POWERTRAIN VERIFICATION TEST. (Refer to 9 - ENGINE - STANDARD PROCEDURE)

P0501-VEHICLE SPEED SENSOR 1 PERFORMANCE (CONTINUED)

2. VISUAL INSPECTION

NOTE: This code can set due to tire circumference differences and from the front or rear wheels being on a slippery surface while the opposite tires are not.

This code may also set on a hard acceleration on loose gravel or during other off road driving conditions.

Check tire pressure of all the tires.

Check tire wear on all the tires.

Ask the customer what the road and driving conditions were like when the fault set.

Were any problems found?

Yes >> Repair as necessary. If the code set during a front OR rear wheel spin condition, no repair is necessary. Perform the POWERTRAIN VERIFICATION TEST. (Refer to 9 - ENGINE - STANDARD PROCEDURE)

No >> Go To 3

---

3. (B22) VEHICLE SPEED NO.1 SIGNAL CIRCUIT SHORTED TO VOLTAGE

Turn the ignition off.

Disconnect the C1 Anti-lock Brake Module harness connector.

Disconnect the C1 PCM harness connector.

CAUTION: Do not probe the PCM harness connectors. Probing the PCM harness connectors will damage the PCM terminals resulting in poor terminal to pin connection. Install Miller Special Tool #8815 to perform diagnosis.

Ignition on, engine not running.

Measure the voltage of the (B22) Vehicle Speed No.1 Signal circuit at the appropriate terminal of special tool #8815.

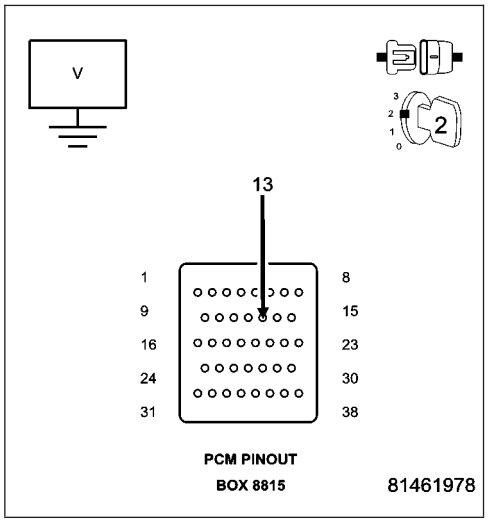

Is the voltage above 6.0 volts?

Yes >> Repair the short to voltage in the (B22) Vehicle Speed No.1 Signal circuit.
Perform the POWERTRAIN VERIFICATION TEST. (Refer to 9 - ENGINE - STANDARD PROCEDURE)

No >> Go To 4

P0501-VEHICLE SPEED SENSOR 1 PERFORMANCE (CONTINUED)

4. (B22) VEHICLE SPEED NO.1 SIGNAL CIRCUIT OPEN

Turn the ignition off.

Measure the resistance of the (B22) Vehicle Speed No.1 Signal circuit from the ABS Module harness connector to the appropriate terminal of special tool #8815.

Is the voltage above 6.0 volts?

Yes >> Go To 5

No >> Repair the open in the (B22) Vehicle Speed No.1 Signal circuit.

Perform the POWERTRAIN VERIFICATION TEST. (Refer to 9 - ENGINE - STANDARD PROCEDURE)

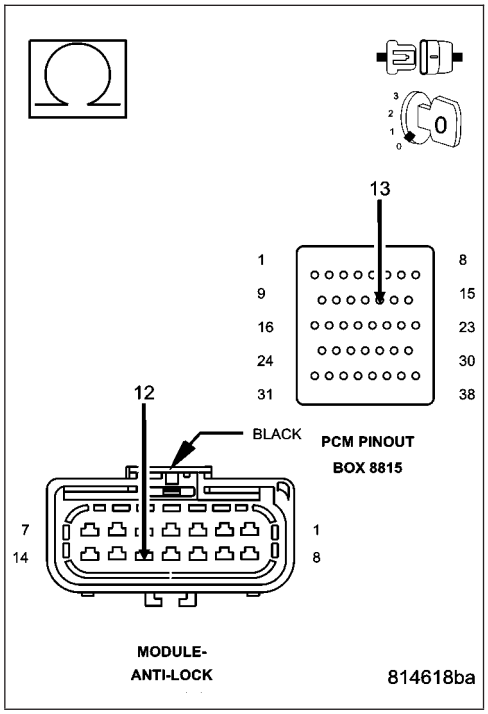

5. (B22) VEHICLE SPEED NO.1 SIGNAL CIRCUIT SHORTED TO GROUND

Measure the resistance between ground and the (B22) Vehicle Speed No.1 Signal circuit at the appropriate terminal of special tool #8815.

Is the resistance below 100 ohms?

Yes >> Repair the short to ground in the (B22) Vehicle Speed No.1 Signal circuit.

Perform the POWERTRAIN VERIFICATION TEST. (Refer to 9 - ENGINE - STANDARD PROCEDURE)

No >> Go To 6

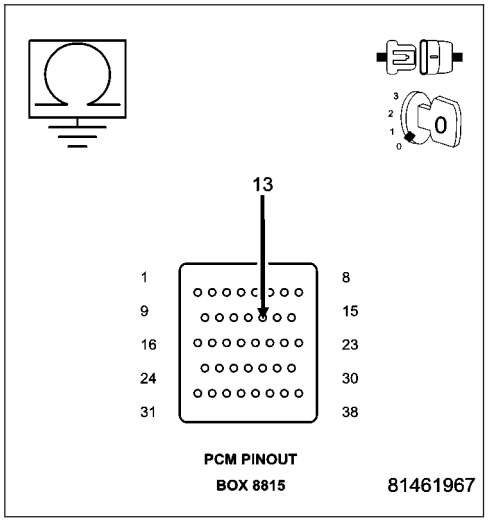

P0501-VEHICLE SPEED SENSOR 1 PERFORMANCE (CONTINUED)

6. PCM

NOTE: Before continuing, check the PCM harness connector terminals for corrosion, damage, or terminal push out. Repair as necessary.

Using the schematics as a guide, inspect the wire harness and connectors. Pay particular attention to all Power and Ground circuits.

Were there any problems found?

Yes >> Repair as necessary.
Perform the POWERTRAIN VERIFICATION TEST. (Refer to 9 - ENGINE - STANDARD PROCEDURE)

No >> Replace and program the Powertrain Control Module per Service Information.
Perform the POWERTRAIN VERIFICATION TEST. (Refer to 9 - ENGINE - STANDARD PROCEDURE)

P0503-VEHICLE SPEED SENSOR 1 ERRATIC

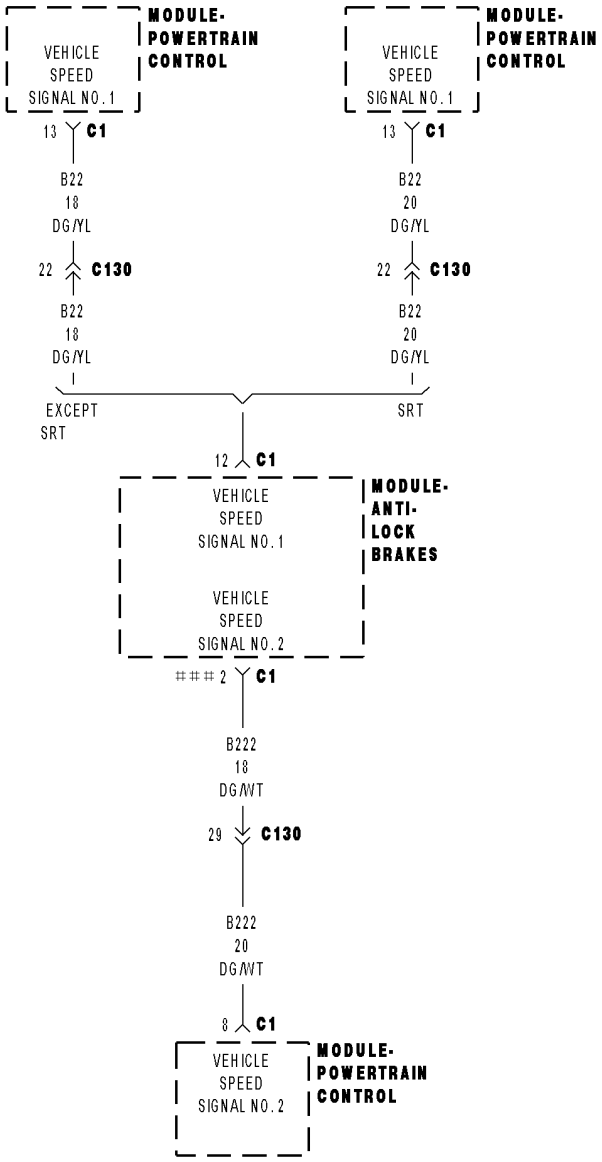

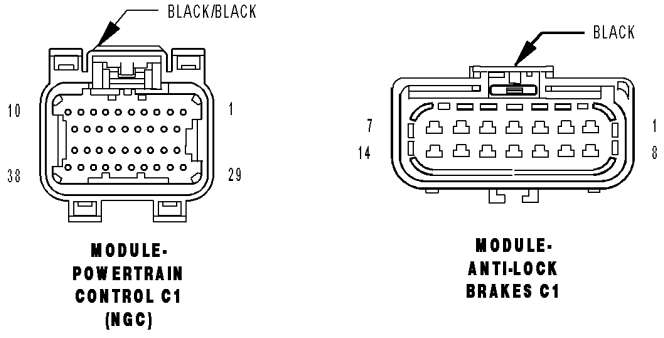

81453b7e

P0503-VEHICLE SPEED SENSOR 1 ERRATIC (CONTINUED)

For the Engine circuit diagram (Refer to 9 - ENGINE - SCHEMATICS AND DIAGRAMS).

For a complete wiring diagram **Refer to Section 8W**.

Theory of Operation

The vehicle speed sensor rationality is a continuous test that monitors the vehicle speed sensor for lack of activity. The rationality will not run if a limp-in exists for MAP, Throttle Position, and Engine Coolant Temperature. If vehicle speed sensor is below a minimum threshold for a period of time after the vehicle is operated at a sufficient load, a failure will be indicated.

- **When Monitored:**
  With the engine running, transmission not in park or neutral, brakes not applied, and engine rpm greater than 1500.
- **Set Condition:**
  This code will set if no vehicle speed signal is received from the ABS Module for more than 11 seconds for 2 consecutive trips. Two Trip Fault. Three good trips to turn off the MIL.

Possible Causes
(B22) VEHICLE SPEED NO.1 SIGNAL CIRCUIT SHORTED TO VOLTAGE
(B22) VEHICLE SPEED NO.1 SIGNAL CIRCUIT OPEN
(B22) VEHICLE SPEED NO.1 SIGNAL CIRCUIT SHORTED TO GROUND
TIRE CIRCUMFERENCE
PCM

Always perform the Pre-Diagnostic Troubleshooting procedure before proceeding. (Refer to 9 - ENGINE - DIAGNOSIS AND TESTING).

Diagnostic Test

1. ACTIVE DTC

Ignition on, engine not running.

NOTE: Check for any Bus Communication DTCs. If no Bus or Communication DTCs are set, check for active DTCs stored in the Anti-Lock Brake Module. Any bus or communication DTCs or VSS DTCs in the Anti-Lock Brake Module must be properly diagnosed before continuing.

With a scan tool, read DTCs.

Is the DTC active at this time?

Yes >> Go To 2

No >> Refer to the INTERMITTENT CONDITION Diagnostic Procedure.
Perform the POWERTRAIN VERIFICATION TEST. (Refer to 9 - ENGINE - STANDARD PROCEDURE)

P0503-VEHICLE SPEED SENSOR 1 ERRATIC (CONTINUED)

2. VISUAL INSPECTION

NOTE: This code can set due to tire circumference differences and from the front or rear wheels being on a slippery surface while the opposite tires are not.

This code may also set on a hard acceleration on loose gravel or during other off road driving conditions.

Check tire pressure of all the tires.

Check tire wear on all the tires.

Ask the customer what the road and driving conditions were like when the fault set.

Were any problems found?

Yes >> Repair as necessary. If the code set during a front OR rear wheel spin condition, no repair is necessary. Perform the POWERTRAIN VERIFICATION TEST. (Refer to 9 - ENGINE - STANDARD PROCEDURE)

No >> Go To 3

---

3. (B22) VEHICLE SPEED NO.1 SIGNAL CIRCUIT SHORTED TO VOLTAGE

Turn the ignition off.

Disconnect the C1 Anti-lock Brake Module harness connector.

Disconnect the C1 PCM harness connector.

CAUTION: Do not probe the PCM harness connectors. Probing the PCM harness connectors will damage the PCM terminals resulting in poor terminal to pin connection. Install Miller Special Tool #8815 to perform diagnosis.

Ignition on, engine not running.

Measure the voltage of the (B22) Vehicle Speed No.1 Signal circuit at the appropriate terminal of special tool #8815.

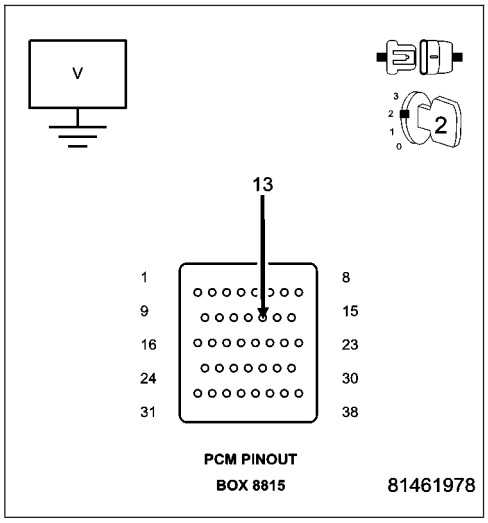

Is the voltage above 6.0 volts?

Yes >> Repair the short to voltage in the (B22) Vehicle Speed No.1 Signal circuit.
Perform the POWERTRAIN VERIFICATION TEST. (Refer to 9 - ENGINE - STANDARD PROCEDURE)

No >> Go To 4

P0503-VEHICLE SPEED SENSOR 1 ERRATIC (CONTINUED)

4. (B22) VEHICLE SPEED NO.1 SIGNAL CIRCUIT OPEN

Turn the ignition off.

Measure the resistance of the (B22) Vehicle Speed No.1 Signal circuit from the ABS Module harness connector to the appropriate terminal of special tool #8815.

Is the voltage above 6.0 volts?

Yes >> Go To 5

No >> Repair the open in the (B22) Vehicle Speed No.1 Signal circuit.

Perform the POWERTRAIN VERIFICATION TEST. (Refer to 9 - ENGINE - STANDARD PROCEDURE)

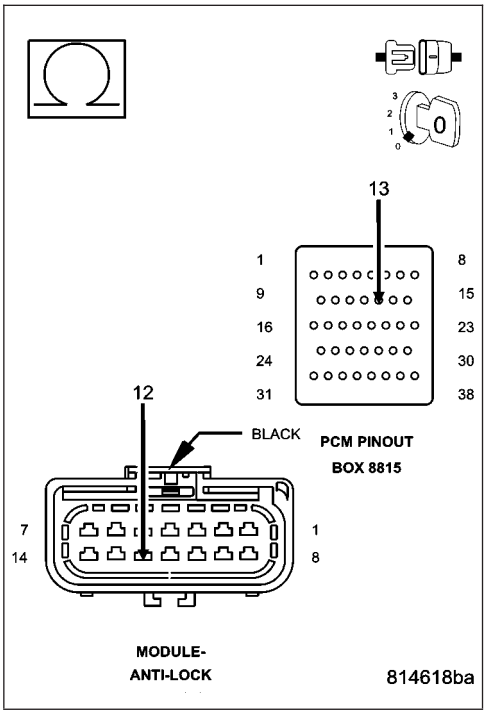

5. (B22) VEHICLE SPEED NO.1 SIGNAL CIRCUIT SHORTED TO GROUND

Measure the resistance between ground and the (B22) Vehicle Speed No.1 Signal circuit at the appropriate terminal of special tool #8815.

Is the resistance below 100 ohms?

Yes >> Repair the short to ground in the (B22) Vehicle Speed No.1 Signal circuit.

Perform the POWERTRAIN VERIFICATION TEST. (Refer to 9 - ENGINE - STANDARD PROCEDURE)

No >> Go To 6

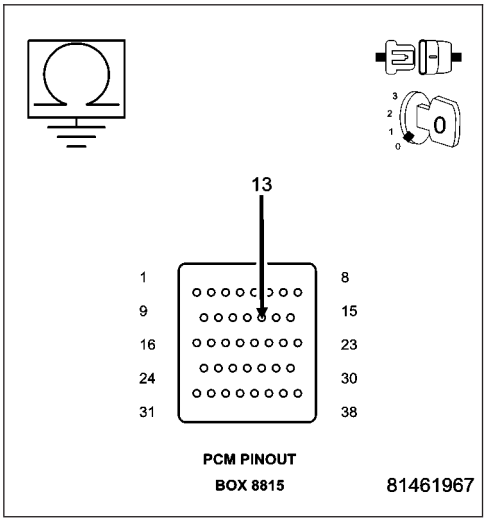

P0503-VEHICLE SPEED SENSOR 1 ERRATIC (CONTINUED)

6. PCM

NOTE: Before continuing, check the PCM harness connector terminals for corrosion, damage, or terminal push out. Repair as necessary.

Using the schematics as a guide, inspect the wire harness and connectors. Pay particular attention to all Power and Ground circuits.

Were there any problems found?

Yes >> Repair as necessary.
Perform the POWERTRAIN VERIFICATION TEST. (Refer to 9 - ENGINE - STANDARD PROCEDURE)

No >> Replace and program the Powertrain Control Module per Service Information.
Perform the POWERTRAIN VERIFICATION TEST. (Refer to 9 - ENGINE - STANDARD PROCEDURE)

P0506-IDLE SPEED PERFORMANCE LOWER THAN EXCEPTED

For the Engine circuit diagram (Refer to 9 - ENGINE - SCHEMATICS AND DIAGRAMS).

For a complete wiring diagram **Refer to Section 8W**.

Theory of Operation

The objective of the Idle “Speed Rationality is to monitor the ability to achieve and maintain a steady idle condition. The monitor will judge the functionality of the idle speed control system by monitoring RPM during idle. If RPM does not come within a calibrated deadband of target idle speed, a timer is started. If the timer reaches its maximum threshold without any sign of the RPM trending towards control, a soft failure is generated.

- **When Monitored:**
  With the engine running at idle, MAF <250 mg/tdc, air temp >-17.8°C (0°F) and <-7°C (19.4°F) enable after coolant temp >70°C (158°F) or air temp >-7°C (19.4°F), coolant temp >-7°C (19.4°F) <130°C (266°F), canister purge <100% duty cycle, and no VSS, MAF/MAP, ECT, TPS, ETC, CRK Sensor DTCs nor any fuel system or injector DTCs.
- **Set Condition:**
  Engine speed is 100 RPM or more below idle speed for 7 seconds. Two Trip Fault. Three good trips to turn off the MIL.

Possible Causes
AIR INDUCTION SYSTEM
THROTTLE BODY
PCM

Always perform the Pre-Diagnostic Troubleshooting procedure before proceeding. (Refer to 9 - ENGINE - DIAGNOSIS AND TESTING).

Diagnostic Test

1. ACTIVE DTC

NOTE: If any other DTCs are present, they must be diagnosed and repaired before continuing this test.
Ignition on, engine not running.
With a scan tool, read DTCs.

Is the DTC active at this time?

Yes >> Go To 2

No >> Refer to the INTERMITTENT CONDITION Diagnostic Procedure.
Perform the POWERTRAIN VERIFICATION TEST. (Refer to 9 - ENGINE - STANDARD PROCEDURE)

---

2. AIR INDUCTION SYSTEM

Inspect the Air Induction System for the following problems.
Restrictions: Dirty Air Cleaner, Foreign material trapped in the air intake tube, etc.
Leaks: Air Intake tube connection, Air Cleaner housing, etc.

Were any problems found?

Yes >> Repair or replace as necessary.
Perform the POWERTRAIN VERIFICATION TEST. (Refer to 9 - ENGINE - STANDARD PROCEDURE)

No >> Go To 3

P0506-IDLE SPEED PERFORMANCE LOWER THAN EXCEPTED (CONTINUED)

3. THROTTLE BODY OPERATION

Inspect the throttle body for carbon build up, other restrictions, and a bent throttle plate using a straight edge.

If the throttle plate does not close entirely it may be bent and needs to be replaced.

Verify that the throttle cable between the Accelerator Pedal and APPS is not binding.

WARNING: When the engine is operating, do not stand in direct line with the fan. Do not put your hands near the pulleys, belts, or fan. Do not wear loose clothing. Failure to follow these instructions can result in personal injury or death.

While the vehicle is running, lightly tap on ETC Motor, with your hand, and listen for idle to raise.

Were any problems found or did the idle fluctuate while tapping on the ETC Motor?

Yes >> Repair or replace as necessary.
Perform the POWERTRAIN VERIFICATION TEST. (Refer to 9 - ENGINE - STANDARD PROCEDURE)

No >> Go To 4

---

4. PCM

NOTE: Before continuing, check the PCM harness connector terminals for corrosion, damage, or terminal push out. Repair as necessary.

Using the schematics as a guide, inspect the wire harness and connectors. Pay particular attention to all Power and Ground circuits.

Were there any problems found?

Yes >> Repair as necessary.
Perform the POWERTRAIN VERIFICATION TEST. (Refer to 9 - ENGINE - STANDARD PROCEDURE)

No >> Replace and program the Powertrain Control Module per Service Information.
Perform the POWERTRAIN VERIFICATION TEST. (Refer to 9 - ENGINE - STANDARD PROCEDURE)

P0507-IDLE SPEED PERFORMANCE HIGHER THAN EXCEPTED

For the Engine circuit diagram (Refer to 9 - ENGINE - SCHEMATICS AND DIAGRAMS).

For a complete wiring diagram **Refer to Section 8W**.

Theory of Operation

The objective of the Idle “Speed Rationality is to monitor the ability to achieve and maintain a steady idle condition. The monitor will judge the functionality of the idle speed control system by monitoring RPM during idle. If RPM does not come within a calibrated deadband of target idle speed, a timer is started. If the timer reaches its maximum threshold without any sign of the RPM trending towards control, a soft failure is generated.

- **When Monitored:**
  With the engine running at idle, MAF <250 mg/tdc, air temp >-17.8°C (0°F) and <-7°C (19.4°F) enable after coolant temp >70°C (158°F) or air temp >-7°C (19.4°F), coolant temp >-7°C (19.4°F) <130°C (266°F), canister purge <100% duty cycle, and no VSS, MAF/MAP, ECT, TPS, ETC, CRK Sensor DTCs nor any fuel system or injector DTCs.
- **Set Condition:**
  Engine speed is 200 RPM or more above idle speed for 7 seconds. Two Trip Fault. Three good trips to turn off the MIL.

Possible Causes
AIR INDUCTION SYSTEM
VACUUM LEAKS
THROTTLE BODY
PCM

Always perform the Pre-Diagnostic Troubleshooting procedure before proceeding. (Refer to 9 - ENGINE - DIAGNOSIS AND TESTING).

Diagnostic Test

1. ACTIVE DTC

NOTE: If any other DTCs are present, they must be diagnosed and repaired before continuing this test.
Ignition on, engine not running.
With a scan tool, read DTCs.

Is the DTC active at this time?

Yes >> Go To 2

No >> Refer to the INTERMITTENT CONDITION Diagnostic Procedure.
Perform the POWERTRAIN VERIFICATION TEST. (Refer to 9 - ENGINE - STANDARD PROCEDURE)

---

2. AIR INDUCTION SYSTEM

Inspect the Air Induction System for the following problems.
Restrictions: Dirty Air Cleaner, Foreign material trapped in the air intake tube, etc.
Leaks: Air Intake tube connection, Air Cleaner housing, etc.

Were any problems found?

Yes >> Repair or replace as necessary.
Perform the POWERTRAIN VERIFICATION TEST. (Refer to 9 - ENGINE - STANDARD PROCEDURE)

No >> Go To 3

P0507-IDLE SPEED PERFORMANCE HIGHER THAN EXCEPTED (CONTINUED)

3. VACUUM LEAKS

Start the engine.

Inspect the vehicle for external vacuum leaks.

Inspect the engine for internal leaks.

Were any vacuum leaks found?

Yes >> Repair the vacuum leak as necessary.
Perform the POWERTRAIN VERIFICATION TEST. (Refer to 9 - ENGINE - STANDARD PROCEDURE)

No >> Go To 4

---

4. THROTTLE BODY OPERATION

Inspect the throttle body for carbon build up, other restrictions, and a bent throttle plate using a straight edge.

If the throttle plate does not close entirely it may be bent and needs to be replaced.

Verify that the throttle cable between the Accelerator Pedal and APPS is not binding.

WARNING: When the engine is operating, do not stand in direct line with the fan. Do not put your hands near the pulleys, belts, or fan. Do not wear loose clothing. Failure to follow these instructions can result in personal injury or death.

While the vehicle is running, lightly tap on ETC Motor, with your hand, and listen for idle to fluctuate.

Were any problems found or did the idle fluctuate when tapping on the ETC Motor?

Yes >> Repair or replace as necessary.
Perform the POWERTRAIN VERIFICATION TEST. (Refer to 9 - ENGINE - STANDARD PROCEDURE)

No >> Go To 5

---

5. PCM

NOTE: Before continuing, check the PCM harness connector terminals for corrosion, damage, or terminal push out. Repair as necessary.

Using the schematics as a guide, inspect the wire harness and connectors. Pay particular attention to all Power and Ground circuits.

Were there any problems found?

Yes >> Repair as necessary.
Perform the POWERTRAIN VERIFICATION TEST. (Refer to 9 - ENGINE - STANDARD PROCEDURE)

No >> Replace and program the Powertrain Control Module per Service Information.
Perform the POWERTRAIN VERIFICATION TEST. (Refer to 9 - ENGINE - STANDARD PROCEDURE)

P0508-IDLE AIR CONTROL VALVE SENSE CIRCUIT LOW

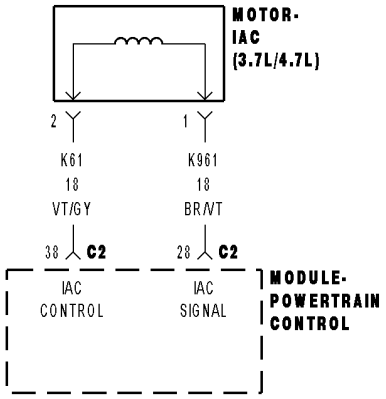

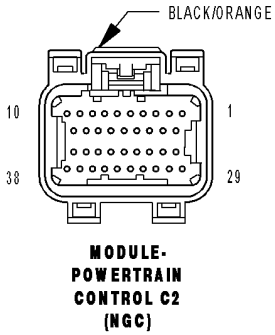

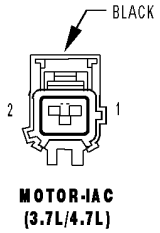

8145446e

P0508-IDLE AIR CONTROL VALVE SENSE CIRCUIT LOW (CONTINUED)

For the Engine circuit diagram (Refer to 9 - ENGINE - SCHEMATICS AND DIAGRAMS).

For a complete wiring diagram **Refer to Section 8W**.

- **When Monitored:**
  Engine running. Battery voltage greater than 10 volts. IAC motor operating.
- **Set Condition:**
  The PCM senses a short to ground or battery voltage on any of the Linear Idle Air Control (LIAC) control circuits for 2.75 seconds while the IAC motor is active. One Trip Fault. Three good trips to turn off the MIL.

Possible Causes
(K61) IAC CONTROL CIRCUIT SHORTED TO GROUND
(K961) IAC SIGNAL CIRCUIT OPEN
(K961) IAC SIGNAL CIRCUIT SHORTED TO GROUND
(K61) IAC CONTROL CIRCUIT OPEN
IAC MOTOR
PCM

Always perform the Pre-Diagnostic Troubleshooting procedure before proceeding. (Refer to 9 - ENGINE - DIAGNOSIS AND TESTING).

Diagnostic Test

1. IAC MOTOR OPERATION

NOTE: If the engine will not idle, maintain an engine speed between 800 and 1500 RPM.

Start the engine.

Allow the engine to idle.

With a scan tool, read the IAC Current.

Is the IAC Current below 146 mA?

Yes >> Go To 2

No >> Refer to the INTERMITTENT CONDITION Diagnostic Procedure.
Perform the POWERTRAIN VERIFICATION TEST. (Refer to 9 - ENGINE - STANDARD PROCEDURE)

P0508-IDLE AIR CONTROL VALVE SENSE CIRCUIT LOW (CONTINUED)

2. IAC MOTOR

Turn the ignition off.

Disconnect the IAC Motor harness connector.

Remove the IAC Motor.

NOTE: Inspect the IAC air passages for restrictions and damage to the IAC valve.

Measure the resistance across the IAC Motor pin terminals (component).

Is the resistance 9.7 +/- 1.0 ohms?

Yes >> Go To 3

No >> Replace the IAC Motor.
Perform the POWERTRAIN VERIFICATION TEST. (Refer to 9 - ENGINE - STANDARD PROCEDURE)

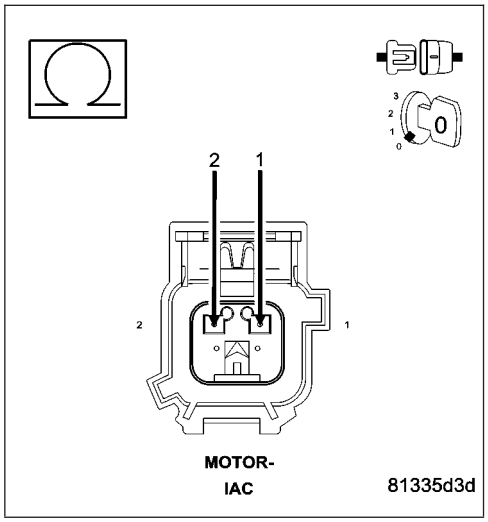

3. (K961) IAC SIGNAL CIRCUIT OPEN

Disconnect the PCM harness connectors.

CAUTION: Do not probe the PCM harness connectors. Probing the PCM harness connectors will damage the PCM terminals resulting in poor terminal to pin connection. Install Miller Special Tool #8815 to perform diagnosis.

Measure the resistance of the (K961) IAC Signal circuit from the IAC Motor harness connector to the appropriate terminal of special tool #8815.

Is the resistance below 5.0 ohms?

Yes >> Go To 4

No >> Repair the open in the (K961) IAC Signal circuit.
Perform the POWERTRAIN VERIFICATION TEST. (Refer to 9 - ENGINE - STANDARD PROCEDURE)

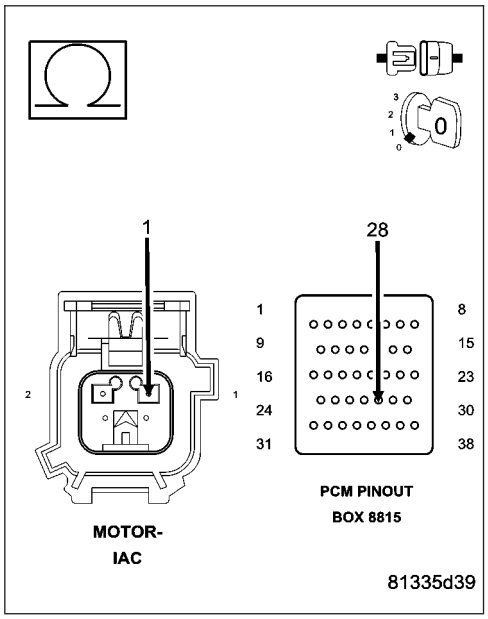

P0508-IDLE AIR CONTROL VALVE SENSE CIRCUIT LOW (CONTINUED)

4. (K961) IAC SIGNAL CIRCUIT SHORTED TO GROUND

Measure the resistance between ground and the (K961) IAC Signal circuit in the IAC Motor harness connector.

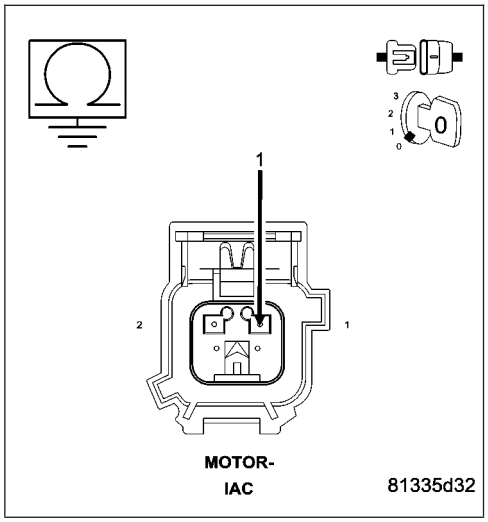

Is the resistance below 100 ohms?

Yes >> Repair the short to ground in the (K961) IAC Signal circuit. Perform the POWERTRAIN VERIFICATION TEST. (Refer to 9 - ENGINE - STANDARD PROCEDURE)

No >> Go To 5

5. (K61) IAC CONTROL CIRCUIT OPEN

Measure the resistance of the (K61) IAC Control circuit from the IAC Motor harness connector to the appropriate terminal of special tool #8815.

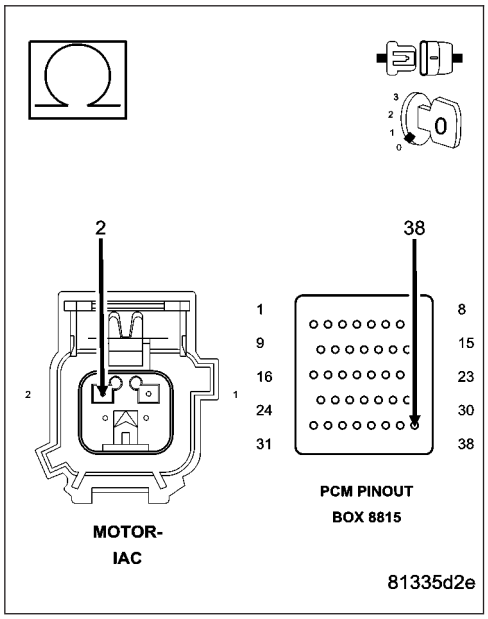

Is the resistance below 5.0 ohms?

Yes >> Go To 6

No >> Repair the open in the (K61) IAC Control circuit. Perform the POWERTRAIN VERIFICATION TEST. (Refer to 9 - ENGINE - STANDARD PROCEDURE)

P0508-IDLE AIR CONTROL VALVE SENSE CIRCUIT LOW (CONTINUED)

6. (K61) IAC CONTROL CIRCUIT SHORTED TO GROUND

Measure the resistance between ground and the (K61) IAC Control circuit in the IAC Motor harness connector.

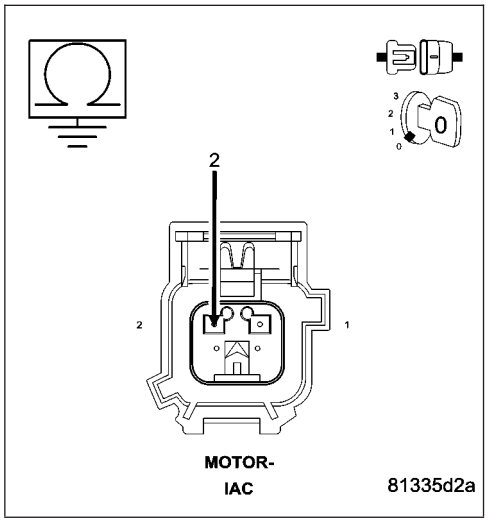

Is the resistance below 100 ohms?

Yes >> Repair the short to ground in the (K61) IAC Control circuit. Perform the POWERTRAIN VERIFICATION TEST. (Refer to 9 - ENGINE - STANDARD PROCEDURE)

No >> Go To 7

7. PCM

NOTE: Before continuing, check the PCM harness connector terminals for corrosion, damage, or terminal push out. Repair as necessary.

Using the schematics as a guide, inspect the wire harness and connectors. Pay particular attention to all Power and Ground circuits.

Were there any problems found?

Yes >> Repair as necessary.
Perform the POWERTRAIN VERIFICATION TEST. (Refer to 9 - ENGINE - STANDARD PROCEDURE)

No >> Replace and program the Powertrain Control Module per Service Information.
Perform the POWERTRAIN VERIFICATION TEST. (Refer to 9 - ENGINE - STANDARD PROCEDURE)

P0509-IDLE AIR CONTROL VALVE SENSE CIRCUIT HIGH

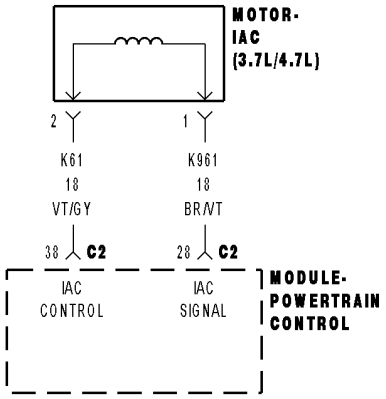

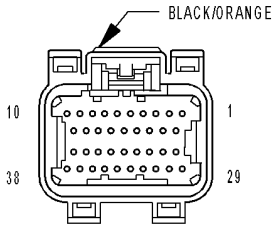

MODULE-
POWERTRAIN
CONTROL C2
(NGC)

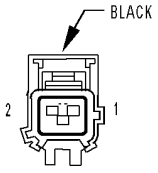

MOTOR-IAC
(3.7L/4.7L)

8145446e

P0509-IDLE AIR CONTROL VALVE SENSE CIRCUIT HIGH (CONTINUED)

For the Engine circuit diagram (Refer to 9 - ENGINE - SCHEMATICS AND DIAGRAMS).

For a complete wiring diagram **Refer to Section 8W**.

- **When Monitored:**
  Engine running. Battery voltage greater than 10 volts. IAC motor operating.
- **Set Condition:**
  The PCM senses a short to ground or battery voltage on any of the Linear Idle Air Control (LIAC) control circuits for 2.75 seconds while the IAC motor is active. One Trip Fault. Three good trips to turn off the MIL.

Possible Causes
(K961) IAC RETURN CIRCUIT SHORTED TO BATTERY VOLTAGE
(K61) IAC CONTROL CIRCUIT SHORTED TO BATTERY VOLTAGE
(K61) IAC CONTROL CIRCUIT SHORTED TO THE (K961) IAC RETURN CIRCUIT
IAC MOTOR
PCM

Always perform the Pre-Diagnostic Troubleshooting procedure before proceeding. (Refer to 9 - ENGINE - DIAGNOSIS AND TESTING).

Diagnostic Test

1. IAC MOTOR OPERATION

NOTE: If the engine will not idle, maintain an engine speed between 800 and 1500 RPM.
Start the engine.
Allow the engine to idle.
With a scan tool, read the IAC Current.

Is the IAC Current above 999 mA?

Yes >> Go To 2

No >> Refer to the INTERMITTENT CONDITION Diagnostic Procedure.
Perform the POWERTRAIN VERIFICATION TEST. (Refer to 9 - ENGINE - STANDARD PROCEDURE)

---

2. IAC MOTOR

Turn the ignition off.
Disconnect the IAC Motor harness connector.
With the scan tool, monitor the IAC Current.
Ignition on, engine not running.

Does the scan tool display IAC Current at 0 mA?

Yes >> Replace the IAC Motor.
Perform the POWERTRAIN VERIFICATION TEST. (Refer to 9 - ENGINE - STANDARD PROCEDURE)

No >> Go To 3

P0509-IDLE AIR CONTROL VALVE SENSE CIRCUIT HIGH (CONTINUED)

3. (K961) IAC SIGNAL CIRCUIT SHORTED TO BATTERY VOLTAGE

Turn the ignition off.

Disconnect the PCM harness connectors.

Ignition on, engine not running.

Measure the voltage on the (K961) IAC Signal circuit in the IAC Motor harness connector.

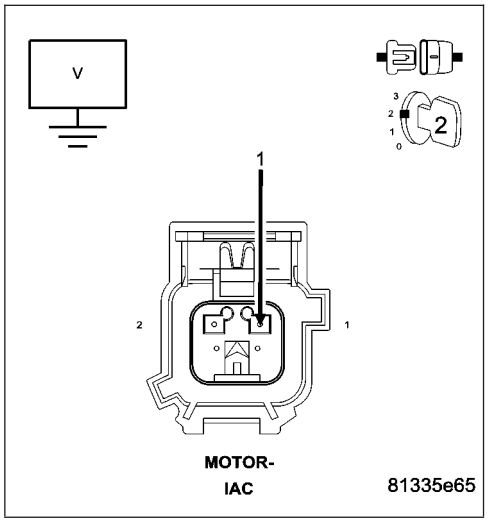

Is the voltage above 0.5 of a volt?

Yes >> Repair the short to battery voltage in the (K961) IAC Signal circuit.
Perform the POWERTRAIN VERIFICATION TEST. (Refer to 9 - ENGINE - STANDARD PROCEDURE)

No >> Go To 4

4. (K61) IAC CONTROL CIRCUIT SHORTED TO BATTERY VOLTAGE

Turn the ignition off.

Measure the voltage on the (K61) IAC Control circuit in the IAC Motor harness connector.

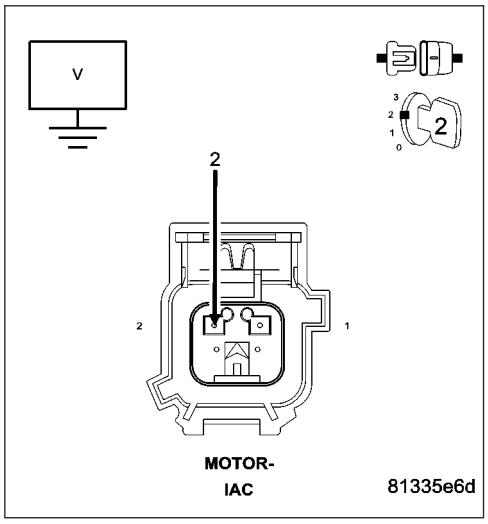

Is the voltage above 0.5 of a volt?

Yes >> Repair the short to battery voltage in the (K61) IAC Control circuit.
Perform the POWERTRAIN VERIFICATION TEST. (Refer to 9 - ENGINE - STANDARD PROCEDURE)

No >> Go To 5

P0509-IDLE AIR CONTROL VALVE SENSE CIRCUIT HIGH (CONTINUED)

5. (K61) IAC CONTROL CIRCUIT SHORTED TO THE (K961) IAC RETURN CIRCUIT

Measure the resistance across the (K961) IAC Signal circuit and the (K61) IAC Control circuit in the IAC Motor harness connector.

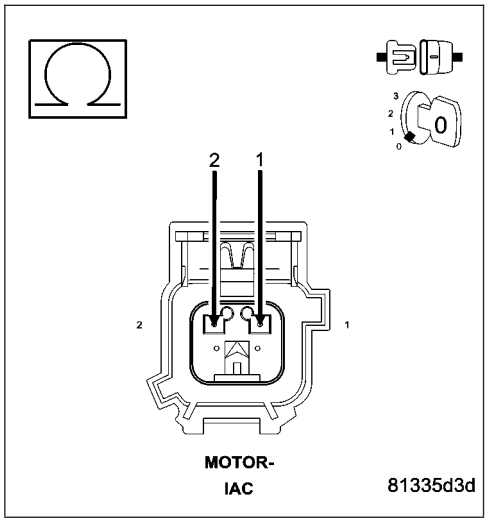

Is the resistance below 5.0 ohms?

Yes >> Repair the short between the (K961) IAC Signal circuit and the (K61) IAC Control circuit.
Perform the POWERTRAIN VERIFICATION TEST. (Refer to 9 - ENGINE - STANDARD PROCEDURE)

No >> Go To 6

6. PCM

NOTE: Before continuing, check the PCM harness connector terminals for corrosion, damage, or terminal push out. Repair as necessary.
Using the schematics as a guide, inspect the wire harness and connectors. Pay particular attention to all Power and Ground circuits.

Were there any problems found?

Yes >> Repair as necessary.
Perform the POWERTRAIN VERIFICATION TEST. (Refer to 9 - ENGINE - STANDARD PROCEDURE)

No >> Replace and program the Powertrain Control Module per Service Information.
Perform the POWERTRAIN VERIFICATION TEST. (Refer to 9 - ENGINE - STANDARD PROCEDURE)

P0513-INVALID SKIM KEY

For the Engine circuit diagram (Refer to 9 - ENGINE - SCHEMATICS AND DIAGRAMS).

For a complete wiring diagram **Refer to Section 8W**.

- **When Monitored:**
  Ignition on.
- **Set Condition:**
  The PCM detects an invalid SKIM key. One Trip Fault.

Possible Causes
INCORRECT VIN PROGRAMMED IN THE PCM
NO COMMUNICATION WITH SKIM
NO VIN PROGRAMMED IN THE PCM
IGNITION KEY
PCM

Always perform the Pre-Diagnostic Troubleshooting procedure before proceeding. (Refer to 9 - ENGINE - DIAGNOSIS AND TESTING).

Diagnostic Test

1. ACTIVE DTC

Ignition on, engine not running.

With the scan tool, read the PCM DTCs.

Is the DTC active at this time?

Yes >> Go To 2

No >> Go To 6

---

2. NO COMMUNICATION WITH SKIM

With the scan tool, attempt to communicate with the SKIM.

Can the scan tool communicate with the SKIM?

Yes >> Go To 3

No >> Refer to Section 8 - Electrical VEHICLE THEFT SECURITY - ELECTRICAL DIAGNOSTICS and perform the appropriate Diagnostic Procedure.
Perform SKIM VERIFICATION. (Refer to 8 - ELECTRICAL/VEHICLE THEFT SECURITY - STANDARD PROCEDURE)

---

3. SKIM TROUBLE CODES SET

With the scan tool, check for SKIM DTCs.

Are any DTCs present in the SKIM?

Yes >> Refer to Section 8 - Electrical VEHICLE THEFT SECURITY - ELECTRICAL DIAGNOSTICS and perform the appropriate Diagnostic Procedure.
Perform SKIM VERIFICATION. (Refer to 8 - ELECTRICAL/VEHICLE THEFT SECURITY - STANDARD PROCEDURE)

No >> Go To 4

P0513-INVALID SKIM KEY (CONTINUED)

4. VIN PROGRAMMED INTO PCM

With the scan tool, display the VIN that is programmed in the PCM.

Has a VIN been programmed into the PCM?

Yes >> Go To 5

No >> Program the correct VIN into the PCM and retest.
Perform SKIM VERIFICATION. (Refer to 8 - ELECTRICAL/VEHICLE THEFT SECURITY - STANDARD PROCEDURE)

---

5. PCM

Turn the ignition off.
Replace and program the SKIM per Service Information.
Ignition on, engine not running.
With the scan tool, erase all SKIM and PCM DTCs.
Attempt to start and idle the engine.
With the scan tool, read the PCM DTCs.

Does the scan tool display this code?

Yes >> NOTE: Before continuing, check the PCM harness connector terminals for corrosion, damage, or terminal push out. Repair as necessary. Replace and program the Powertrain Control Module per Service Information.
Perform SKIM VERIFICATION. (Refer to 8 - ELECTRICAL/VEHICLE THEFT SECURITY - STANDARD PROCEDURE)

No >> Test Complete.

---

6. IGNITION KEY

NOTE: You must obtain the SKIM pin number.

NOTE: This DTC could have been set if the SKIM harness connector was disconnected, or if the SKIM was replaced recently.

NOTE: All keys that the customer uses for this vehicle must be tested to verify they are operating properly.
Ignition on, engine not running.
Verify the correct VIN is programmed into the PCM and SKIM.
Turn the ignition off.
With each customer key turn the ignition on and crank the engine to start.
With the scan tool, read the PCM DTCs. Look for P0513.

Is the DTC P0513 still active?

Yes >> Replace the Ignition Key.
Perform SKIM VERIFICATION. (Refer to 8 - ELECTRICAL/VEHICLE THEFT SECURITY - STANDARD PROCEDURE)

No >> Test Complete.

NOTE: If this DTC cannot be reset, it could have been an actual theft attempt.

P0516-BATTERY TEMPERATURE SENSOR CIRCUIT LOW

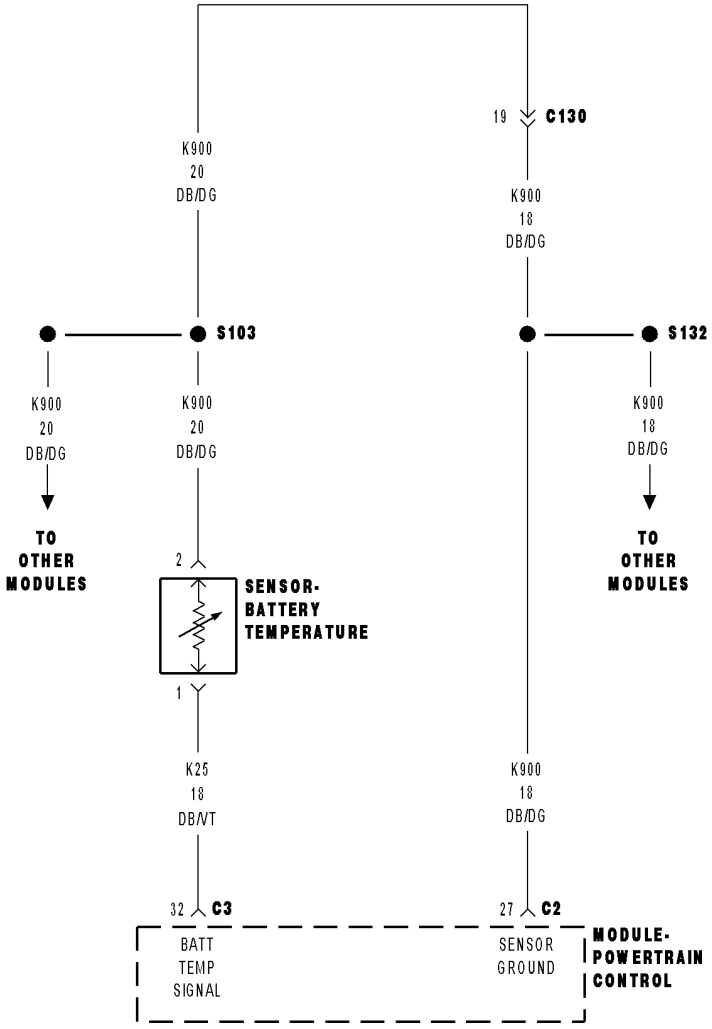

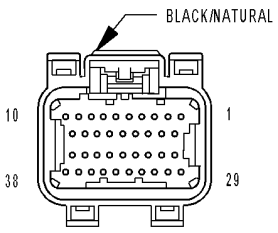

MODULE-
POWERTRAIN
CONTROL C3
(NGC)

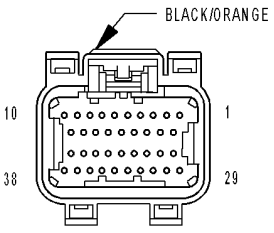

MODULE-
POWERTRAIN
CONTROL C2
(NGC)

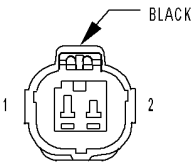

SENSOR-
BATTERY
TEMPERATURE

814544bc

P0516-BATTERY TEMPERATURE SENSOR CIRCUIT LOW (CONTINUED)

For the Engine circuit diagram (Refer to 9 - ENGINE - SCHEMATICS AND DIAGRAMS).

For a complete wiring diagram **Refer to Section 8W**.

- **When Monitored:**
  Ignition on and battery voltage greater than 10 volts.
- **Set Condition:**
  Battery temperature sensor voltage below 0.039 of a volt. One Trip Fault. Three good trips to turn off the MIL.

Possible Causes
(K25) BATT TEMP SIGNAL CIRCUIT SHORTED TO GROUND
(K25) BATT TEMP SIGNAL CIRCUIT SHORTED TO THE (K900) SENSOR GROUND CIRCUIT
BATTERY TEMPERATURE SENSOR
PCM

Always perform the Pre-Diagnostic Troubleshooting procedure before proceeding. (Refer to 9 - ENGINE - DIAGNOSIS AND TESTING).

Diagnostic Test

1. BATTERY TEMP SENSOR VOLTAGE BELOW 0.5 OF A VOLT

Ignition on, engine not running.

With the scan tool, monitor Battery Temperature Sensor volts.

Is the voltage below 0.5 of a volt?

Yes >> Go To 2

No >> Refer to the INTERMITTENT CONDITION Diagnostic Procedure.
Perform the POWERTRAIN VERIFICATION TEST. (Refer to 9 - ENGINE - STANDARD PROCEDURE)

---

2. BATTERY TEMPERATURE SENSOR

Ignition on, engine not running.

With the scan tool, read the Battery Temp Sensor Voltage value.

Disconnect the Battery Temperature Sensor harness connector.

Did the Battery Temperature Voltage value change from below 1.0 volt to above 4.5 volts?

Yes >> Replace the Battery Temperature Sensor.
Perform the POWERTRAIN VERIFICATION TEST. (Refer to 9 - ENGINE - STANDARD PROCEDURE)

No >> Go To 3

P0516-BATTERY TEMPERATURE SENSOR CIRCUIT LOW (CONTINUED)

3. (K25) BATT TEMP SIGNAL CIRCUIT SHORTED TO GROUND

Turn the ignition off.

Disconnect the C3 PCM harness connector.

Measure the resistance between ground and the (K25) Batt Temp Signal circuit in the Battery Temp Sensor harness connector.

Is the resistance below 100 ohms?

Yes >> Repair the short to ground in the (K25) Batt Temp Signal circuit.
Perform the POWERTRAIN VERIFICATION TEST. (Refer to 9 - ENGINE - STANDARD PROCEDURE)

No >> Go To 4

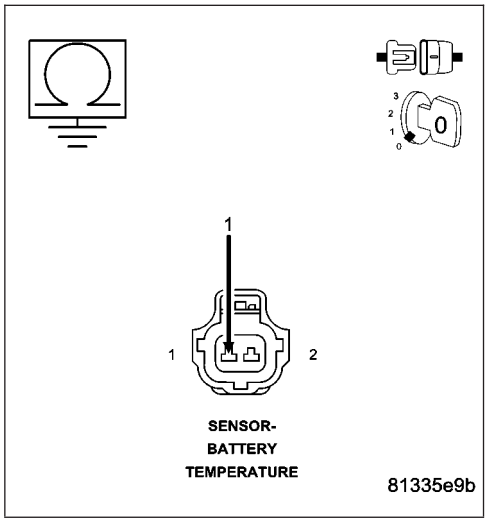

4. (K25) BATT TEMP SIGNAL CIRCUIT SHORTED TO THE (K900) SENSOR GROUND CIRCUIT

Measure the resistance between the (K25) Batt Temp Signal circuit and the (K900) Sensor Ground circuit in the Battery Temp Sensor harness connector.

Is the resistance below 5.0 ohms?

Yes >> Repair the short between the (K900) Sensor Ground circuit and the (K25) Batt Temp Signal circuit.
Perform the POWERTRAIN VERIFICATION TEST. (Refer to 9 - ENGINE - STANDARD PROCEDURE)

No >> Go To 5

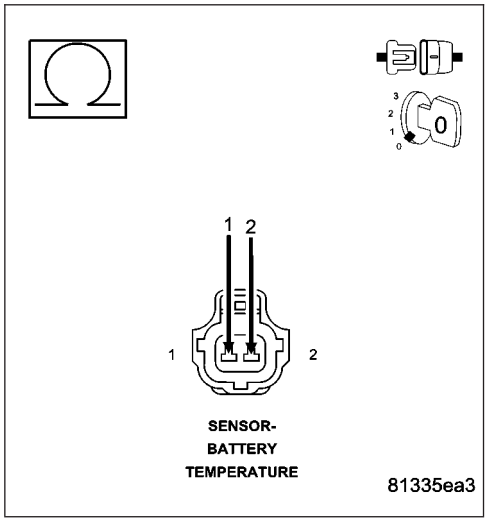

5. PCM

NOTE: Before continuing, check the PCM harness connector terminals for corrosion, damage, or terminal push out. Repair as necessary.

Using the schematics as a guide, inspect the wire harness and connectors. Pay particular attention to all Power and Ground circuits.

Were there any problems found?

Yes >> Repair as necessary.
Perform the POWERTRAIN VERIFICATION TEST. (Refer to 9 - ENGINE - STANDARD PROCEDURE)

No >> Replace and program the Powertrain Control Module per Service Information.
Perform the POWERTRAIN VERIFICATION TEST. (Refer to 9 - ENGINE - STANDARD PROCEDURE)

P0517-BATTERY TEMPERATURE SENSOR CIRCUIT HIGH

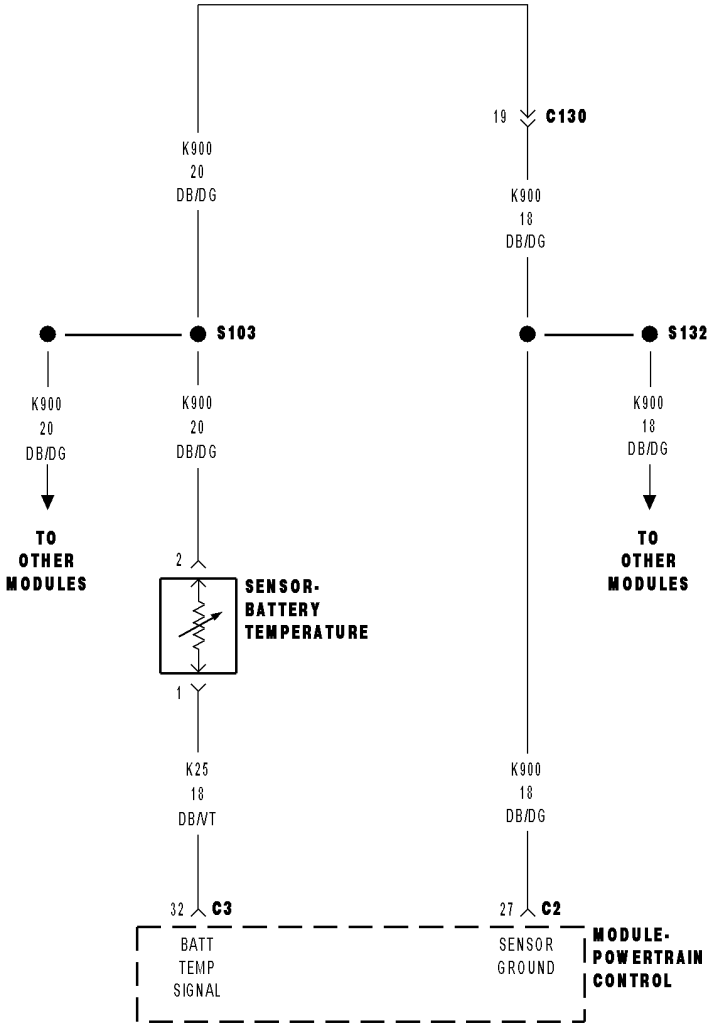

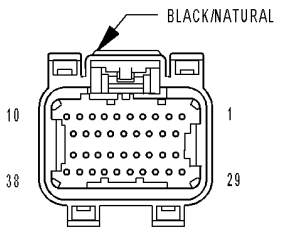

MODULE-
POWERTRAIN
CONTROL C3
(NGC)

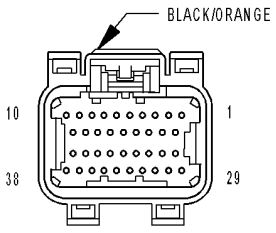

MODULE-
POWERTRAIN
CONTROL C2
(NGC)

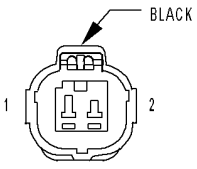

SENSOR-
BATTERY
TEMPERATURE

814544bc

P0517-BATTERY TEMPERATURE SENSOR CIRCUIT HIGH (CONTINUED)

For the Engine circuit diagram (Refer to 9 - ENGINE - SCHEMATICS AND DIAGRAMS).

For a complete wiring diagram **Refer to Section 8W**.

- **When Monitored:**
  Ignition on and battery voltage greater than 10 volts.
- **Set Condition:**
  Battery temperature voltage above 4.94 volts. One Trip Fault. Three good trips to turn off the MIL.

Possible Causes
(K25) BATT TEMP SENSOR SIGNAL CIRCUIT SHORTED TO BATTERY VOLTAGE
(K25) BATT TEMP SIGNAL CIRCUIT OPEN
(K900) SENSOR GROUND CIRCUIT OPEN
BATTERY TEMPERATURE SENSOR
PCM

Always perform the Pre-Diagnostic Troubleshooting procedure before proceeding. (Refer to 9 - ENGINE - DIAGNOSIS AND TESTING).

Diagnostic Test

1. BATTERY TEMPERATURE SENSOR VOLTAGE ABOVE 4.8 VOLTS

Ignition on, engine not running.

With a scan tool, monitor the Battery Temperature Sensor voltage.

Is the voltage above 4.9 volts?

Yes >> Go To 2

No >> Refer to the INTERMITTENT CONDITION Diagnostic Procedure.
Perform the POWERTRAIN VERIFICATION TEST. (Refer to 9 - ENGINE - STANDARD PROCEDURE)

---

2. BATTERY TEMPERATURE SENSOR

Turn the ignition off.

Disconnect the Battery Temperature Sensor harness connector.

Ignition on, engine not running.

With the scan tool, read the Battery Temp Voltage value.

Connect a jumper wire between the (K25) Batt Temp Signal circuit and the (K900) Sensor Ground circuit in the Battery Temp Sensor harness connector.

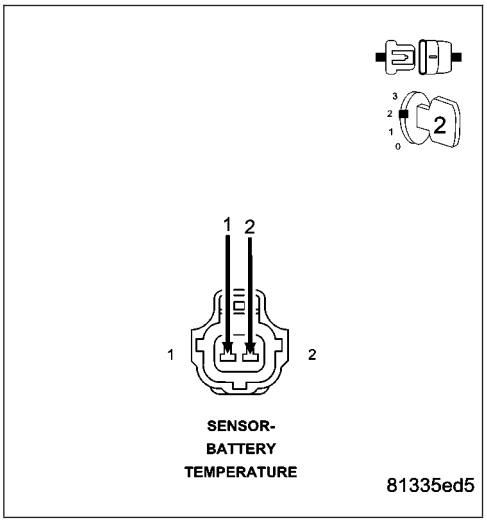

Did the Battery Temp voltage value change from greater than 4.5 volts to less than 1.0 volt with the jumper wire installed?

Yes >> Replace the Battery Temperature Sensor.
Perform the POWERTRAIN VERIFICATION TEST. (Refer to 9 - ENGINE - STANDARD PROCEDURE)

No >> Go To 3

NOTE: Remove the jumper wire before continuing.

P0517-BATTERY TEMPERATURE SENSOR CIRCUIT HIGH (CONTINUED)

3. (K25) BATT TEMP SIGNAL CIRCUIT SHORTED TO BATTERY VOLTAGE

Turn the ignition off.

Disconnect the C2 and C3 PCM harness connectors.

Measure the voltage on the (K25) Batt Temp Signal circuit in the Battery Temp Sensor harness connector.

Is the voltage above 5.2 volts?

Yes >> Repair the short to battery voltage in the (K25) Batt Temp Signal circuit.
Perform the POWERTRAIN VERIFICATION TEST. (Refer to 9 - ENGINE - STANDARD PROCEDURE)

No >> Go To 4

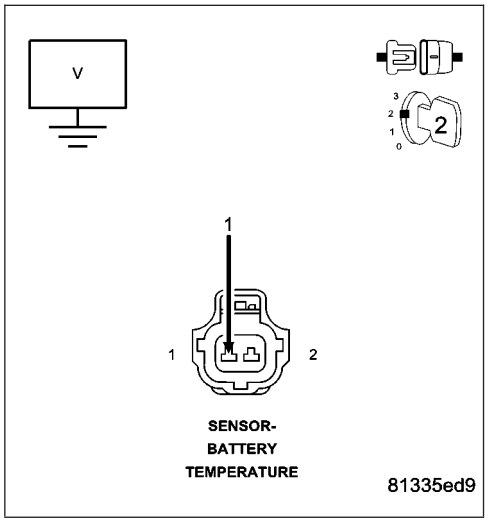

4. (K25) BATT TEMP SIGNAL CIRCUIT OPEN

Turn the ignition off.

CAUTION: Do not probe the PCM harness connectors. Probing the PCM harness connectors will damage the PCM terminals resulting in poor terminal to pin connection. Install Miller Special Tool #8815 to perform diagnosis.

Measure the resistance of the (K25) Batt Temp Signal circuit from the Battery Temp Sensor harness connector to the appropriate terminal of special tool #8815.

Is the resistance below 5.0 ohms?

Yes >> Go To 5

No >> Repair the open in the (K25) Batt Temp Signal circuit.
Perform the POWERTRAIN VERIFICATION TEST. (Refer to 9 - ENGINE - STANDARD PROCEDURE)

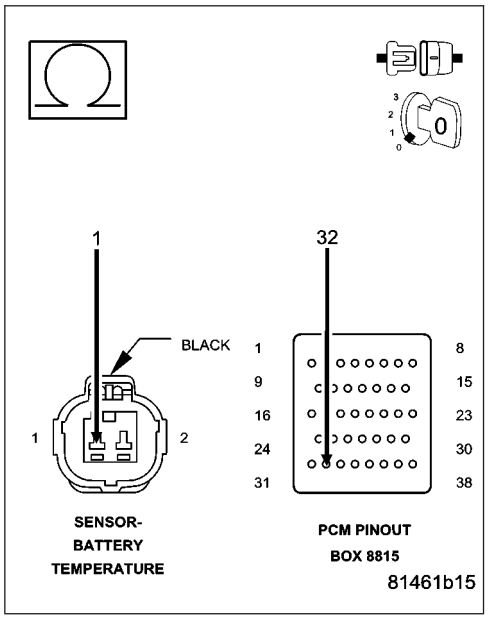

P0517-BATTERY TEMPERATURE SENSOR CIRCUIT HIGH (CONTINUED)

5. (K900) SENSOR GROUND CIRCUIT OPEN

Measure the resistance in the (K900) Sensor Ground circuit from the Sensor harness connector to the appropriate terminal of special tool #8815.

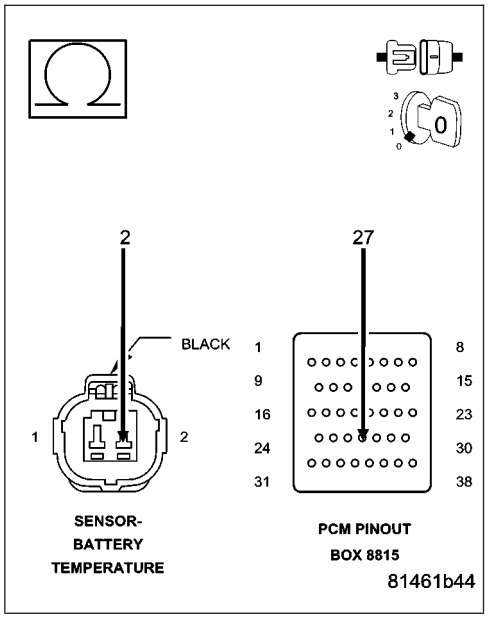

Is the resistance below 5.0 ohms?

Yes >> Go To 6

No >> Repair the open in the (K900) Sensor Ground circuit.
Perform the POWERTRAIN VERIFICATION TEST. (Refer to 9 - ENGINE - STANDARD PROCEDURE)

---

6. PCM

NOTE: Before continuing, check the PCM harness connector terminals for corrosion, damage, or terminal push out. Repair as necessary.

Using the schematics as a guide, inspect the wire harness and connectors. Pay particular attention to all Power and Ground circuits.

Were there any problems found?

Yes >> Repair as necessary.
Perform the POWERTRAIN VERIFICATION TEST. (Refer to 9 - ENGINE - STANDARD PROCEDURE)

No >> Replace and program the Powertrain Control Module per Service Information.
Perform the POWERTRAIN VERIFICATION TEST. (Refer to 9 - ENGINE - STANDARD PROCEDURE)

P0522-OIL PRESSURE TOO LOW

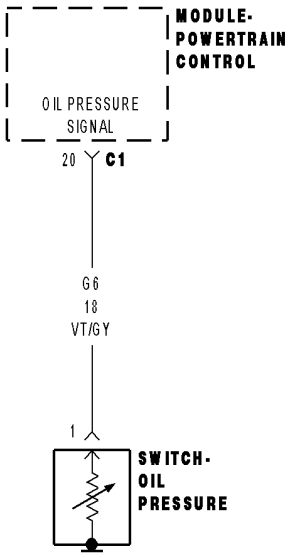

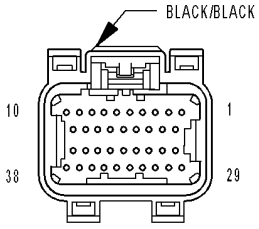

MODULE-
POWERTRAIN
CONTROL C1
(NGC)

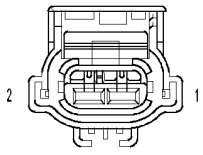

SWITCH-OIL
PRESSURE

814544e9

P0522-OIL PRESSURE TOO LOW (CONTINUED)

For the Engine circuit diagram (Refer to 9 - ENGINE - SCHEMATICS AND DIAGRAMS).

For a complete wiring diagram **Refer to Section 8W**.

- **When Monitored:**
  With the ignition key on and battery voltage above 10.4 volts.
- **Set Condition:**
  The oil pressure sensor voltage at PCM goes below 0.1 of a volt for 0.5 of a second. One Trip Fault. Three good trips to turn off the MIL.

Possible Causes
(G6) OIL PRESSURE SIGNAL CIRCUIT OPEN
(G6) OIL PRESSURE SIGNAL CIRCUIT SHORTED TO BATTERY VOLTAGE
(G6) OIL PRESSURE SIGNAL CIRCUIT SHORTED TO GROUND
OIL PRESSURE SWITCH
PCM

Always perform the Pre-Diagnostic Troubleshooting procedure before proceeding. (Refer to 9 - ENGINE - DIAGNOSIS AND TESTING).

Diagnostic Test

1. ACTIVE DTC

Ignition on, engine not running.

With a scan tool, read DTCs.

Is the DTC active at this time?

Yes >> Go To 2

No >> Refer to the INTERMITTENT CONDITION Diagnostic Procedure.
Perform the POWERTRAIN VERIFICATION TEST. (Refer to 9 - ENGINE - STANDARD PROCEDURE)

P0522-OIL PRESSURE TOO LOW (CONTINUED)

2. OIL PRESSURE SWITCH

Turn the ignition off.

Disconnect the Oil Pressure Switch harness connector.

Ignition on, engine not running.

Connect a jumper wire to the (G6) Oil Pressure Signal circuit in the Sensor harness connector.

With the scan tool monitor the Oil Pressure Switch state.

Touch the other end of the jumper wire to a known good Ground several times.

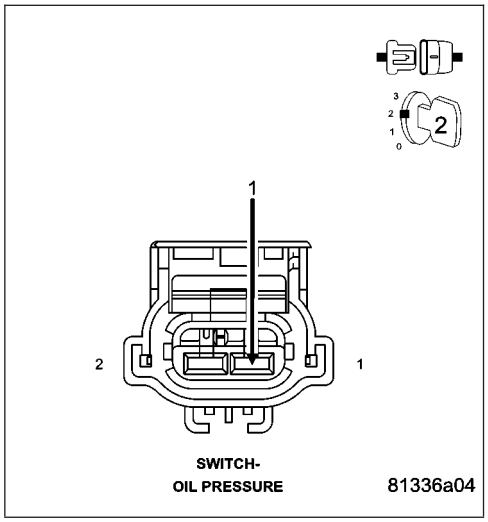

Did the Oil Pressure Switch state change from High to Low when connecting and disconnecting the jumper wire to ground?

Yes >> Replace the Oil Pressure Switch.
Perform the POWERTRAIN VERIFICATION TEST. (Refer to 9 - ENGINE - STANDARD PROCEDURE)

No >> Go To 3

NOTE: Remove the jumper wire before continuing.

---

3. (G6) OIL PRESSURE SIGNAL CIRCUIT SHORTED TO BATTERY VOLTAGE

Turn the ignition off.

Disconnect the PCM harness connectors.

Ignition on, engine not running.

Measure the voltage on the (G6) Oil Pressure Signal circuit in the Switch harness connector.

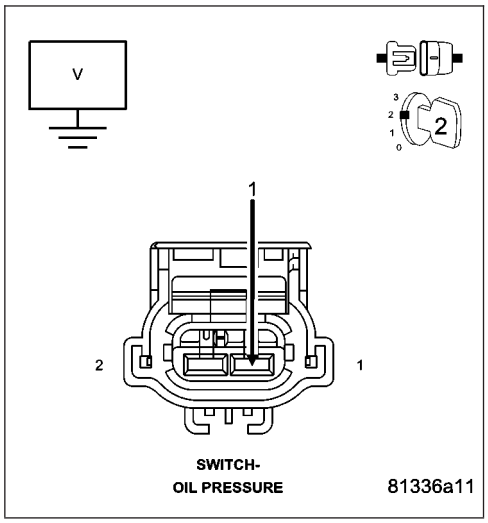

Is the voltage above 0 volts?

Yes >> Repair the short to battery voltage on the (G6) Oil Pressure Signal circuit.
Perform the POWERTRAIN VERIFICATION TEST. (Refer to 9 - ENGINE - STANDARD PROCEDURE)

No >> Go To 4

P0522-OIL PRESSURE TOO LOW (CONTINUED)

4. (G6) OIL PRESSURE SWITCH SIGNAL CIRCUIT OPEN

CAUTION: Do not probe the PCM harness connectors. Probing the PCM harness connectors will damage the PCM terminals resulting in poor terminal to pin connection. Install Miller Special Tool #8815 to perform diagnosis.

Measure the resistance of the (G6) Oil Pressure Signal circuit from the Oil Pressure Switch harness connector to the appropriate terminal of special tool #8815.

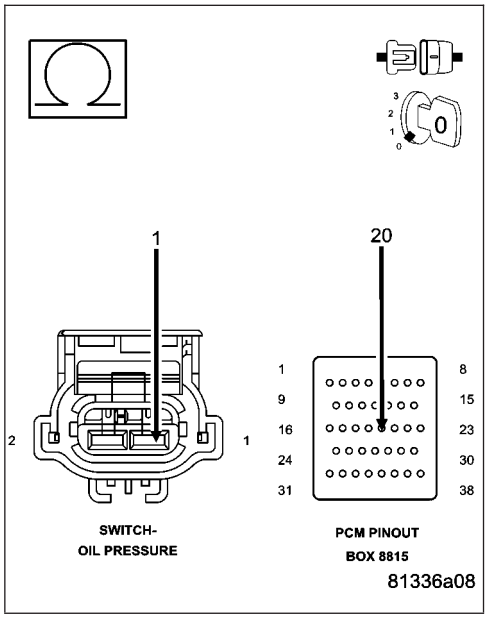

Is the resistance below 5.0 ohms?

Yes >> Go To 5

No >> Repair the open in the (G6) Oil Pressure Signal circuit.
Perform the POWERTRAIN VERIFICATION TEST. (Refer to 9 - ENGINE - STANDARD PROCEDURE)

5. (G6) SIGNAL CIRCUIT SHORTED TO GROUND

Measure the resistance between a known good ground and the (G6) Oil Pressure Signal circuit in the Switch connector.

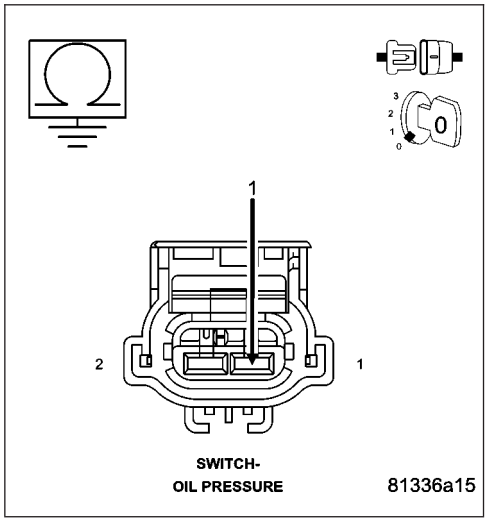

Is the resistance below 100 ohms?

Yes >> Repair the short to ground in the (G6) Oil Pressure Signal circuit.
Perform the POWERTRAIN VERIFICATION TEST. (Refer to 9 - ENGINE - STANDARD PROCEDURE)

No >> Go To 6

P0522-OIL PRESSURE TOO LOW (CONTINUED)

6. PCM

NOTE: Before continuing, check the PCM harness connector terminals for corrosion, damage, or terminal push out. Repair as necessary.

Using the schematics as a guide, inspect the wire harness and connectors. Pay particular attention to all Power and Ground circuits.

Were there any problems found?

Yes >> Repair as necessary.
Perform the POWERTRAIN VERIFICATION TEST. (Refer to 9 - ENGINE - STANDARD PROCEDURE)

No >> Replace and program the Powertrain Control Module per Service Information.
Perform the POWERTRAIN VERIFICATION TEST. (Refer to 9 - ENGINE - STANDARD PROCEDURE)

P0532-A/C PRESSURE SENSOR CIRCUIT LOW

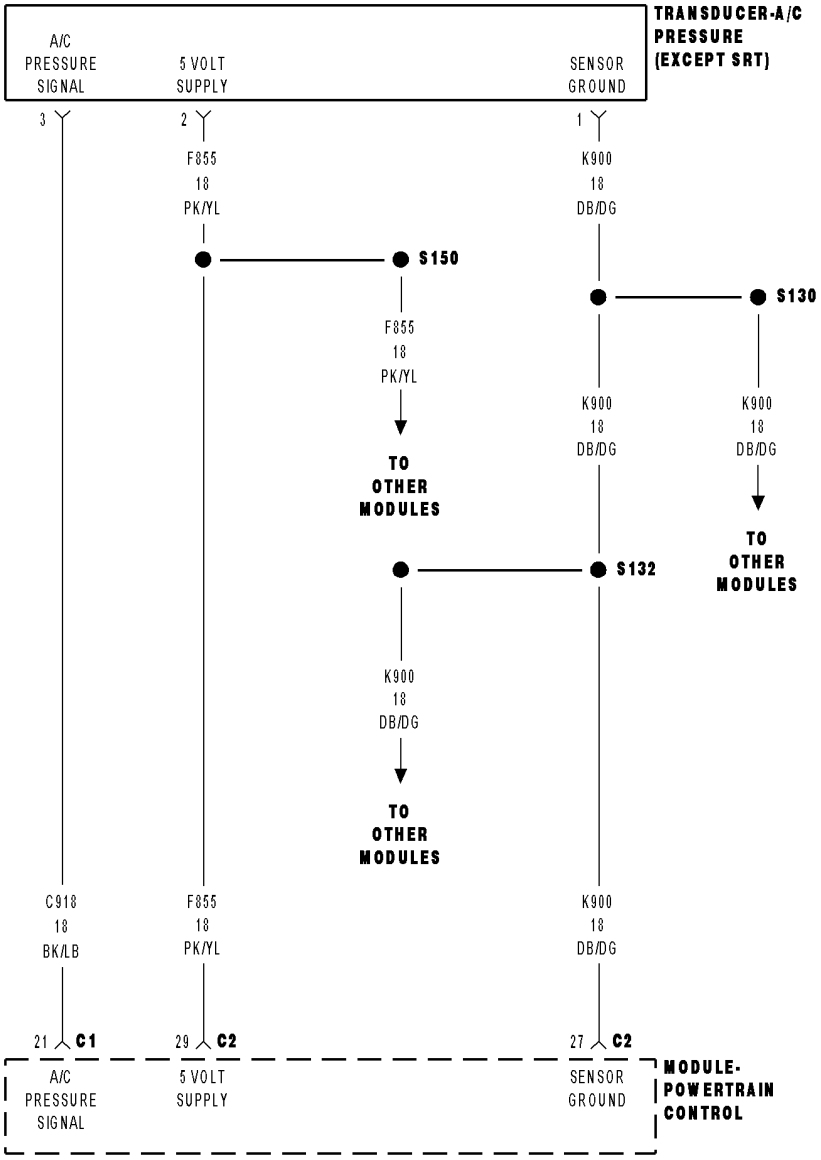

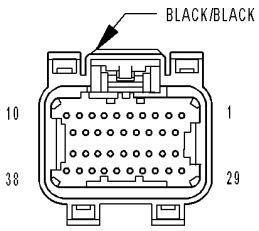

MODULE-POWERTRAIN CONTROL C1 (NGC)

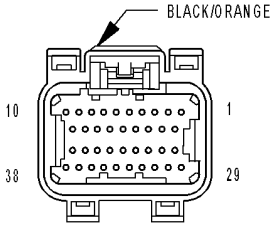

MODULE-POWERTRAIN CONTROL C2 (NGC)

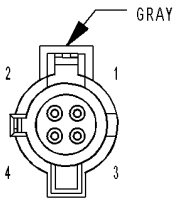

TRANSDUCER-A/C PRESSURE (EXCEPT SRT)

81454504

P0532-A/C PRESSURE SENSOR CIRCUIT LOW (CONTINUED)

For the Engine circuit diagram (Refer to 9 - ENGINE - SCHEMATICS AND DIAGRAMS).

For a complete wiring diagram **Refer to Section 8W**.

- **When Monitored:**
  Engine running, AC is learned, and AC Clutch Relay energized.
- **Set Condition:**
  The A/C pressure transducer signal voltage at the PCM goes below 0.58 of a volt for 2.6 seconds. One Trip Fault. Three good trips to turn off the MIL.

Possible Causes
(F855) 5-VOLT SUPPLY CIRCUIT OPEN
(F855) 5-VOLT SUPPLY CIRCUIT SHORTED TO GROUND
A/C PRESSURE TRANSDUCER
(C918) A/C PRESSURE SIGNAL CIRCUIT SHORTED TO GROUND
(C918) A/C PRESSURE SIGNAL CIRCUIT SHORTED TO THE (K900) SENSOR GROUND CIRCUIT
PCM

Always perform the Pre-Diagnostic Troubleshooting procedure before proceeding. (Refer to 9 - ENGINE - DIAGNOSIS AND TESTING).

Diagnostic Test

1. A/C PRESSURE TRANSDUCER VOLTAGE BELOW 0.6 OF A VOLT

NOTE: Make sure the A/C refrigerant System is properly charged per Service Information.

Start the engine.

With a scan tool, read the A/C Pressure Sensor voltage.

Is the voltage below 0.6 of a volt?

Yes >> Go To 2

No >> Refer to the INTERMITTENT CONDITION Diagnostic Procedure.
Perform the POWERTRAIN VERIFICATION TEST. (Refer to 9 - ENGINE - STANDARD PROCEDURE)

---

2. (F855) 5-VOLT SUPPLY CIRCUIT

Turn the ignition off.

Disconnect the A/C Pressure Transducer harness connector.

Ignition on, engine not running.

Measure the voltage on the (F855) 5-volt Supply circuit in the A/C Pressure Transducer harness connector.

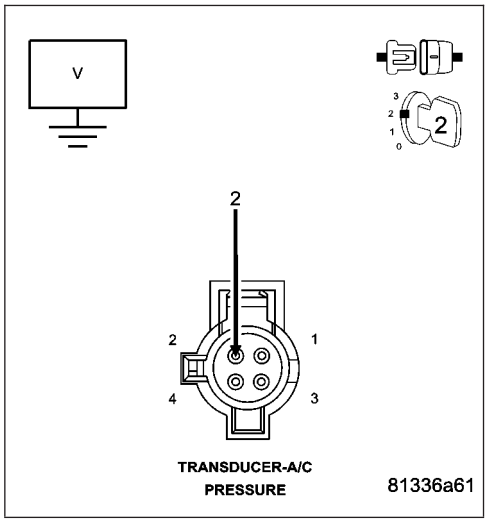

Is the voltage between 4.5 to 5.2 volts?

Yes >> Go To 3

No >> Go To 6

P0532-A/C PRESSURE SENSOR CIRCUIT LOW (CONTINUED)

3. A/C PRESSURE TRANSDUCER

With the scan tool, monitor the A/C Pressure Transducer voltage.

Is the voltage above 0.6 of a volt?

Yes >> Replace the A/C Pressure Transducer.
Perform the POWERTRAIN VERIFICATION TEST. (Refer to 9 - ENGINE - STANDARD PROCEDURE)

No >> Go To 4

---

4. (C918) A/C PRESSURE SIGNAL CIRCUIT SHORTED TO GROUND

Turn the ignition off.

Disconnect the C1 PCM harness connector.

Measure the resistance between ground and the (C918) A/C Pressure Signal circuit in the A/C Pressure Transducer harness connector.

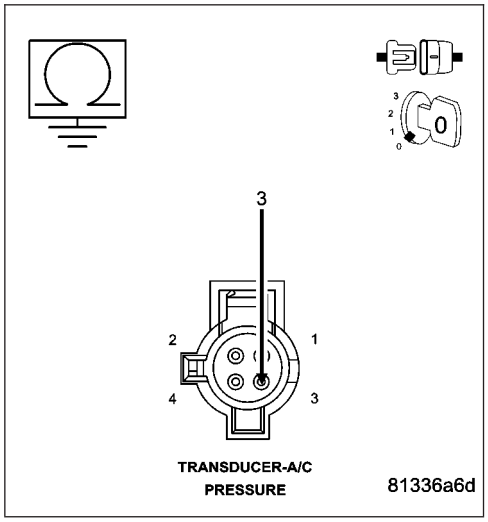

Is the resistance below 100 ohms?

Yes >> Repair the short to ground in the (C918) A/C Pressure Signal circuit.
Perform the POWERTRAIN VERIFICATION TEST. (Refer to 9 - ENGINE - STANDARD PROCEDURE)

No >> Go To 5

---

5. (C918) A/C PRESSURE SIGNAL CIRCUIT SHORTED TO THE (K900) SENSOR GROUND CIRCUIT

Disconnect the C2 PCM harness connector.

Measure the resistance between the (C918) A/C Pressure Signal circuit and the (K900) Sensor Ground circuit in the A/C Pressure Transducer harness connector.

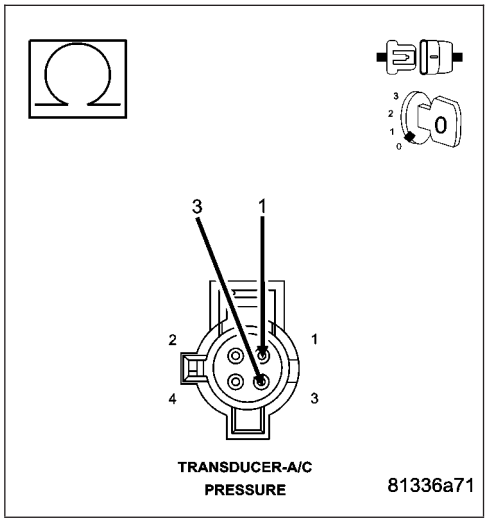

Is the resistance below 100 ohms?

Yes >> Repair the short between the (K900) Sensor Ground circuit and the (C918) A/C Pressure Signal circuit.
Perform the POWERTRAIN VERIFICATION TEST. (Refer to 9 - ENGINE - STANDARD PROCEDURE)

No >> Go To 8

P0532-A/C PRESSURE SENSOR CIRCUIT LOW (CONTINUED)

6. (F855) 5-VOLT SUPPLY CIRCUIT OPEN

Turn the ignition off.

Disconnect the C2 PCM harness connector.

CAUTION: Do not probe the PCM harness connectors. Probing the PCM harness connectors will damage the PCM terminals resulting in poor terminal to pin connection. Install Miller Special Tool #8815 to perform diagnosis.

Measure the resistance of the (F855) 5-volt Supply circuit from the A/C Pressure Transducer harness connector to the appropriate terminal of special tool #8815.

Is the resistance below 5.0 ohms?

Yes >> Go To 7

No >> Repair the open in the (F855) 5-volt Supply circuit.
Perform the POWERTRAIN VERIFICATION TEST. (Refer to 9 - ENGINE - STANDARD PROCEDURE)

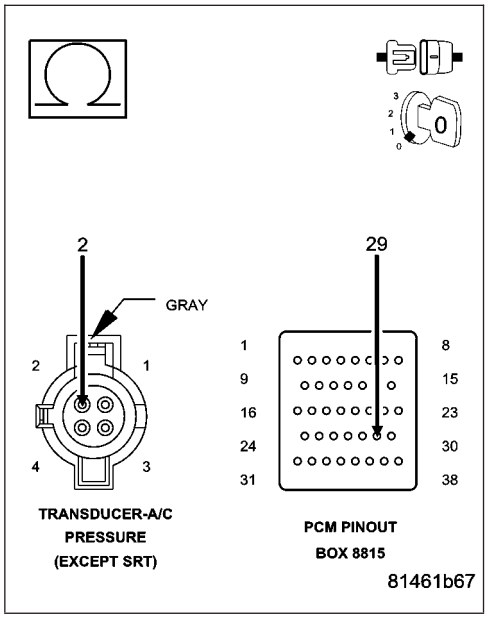

7. (F855) 5-VOLT SUPPLY CIRCUIT SHORTED TO GROUND

Measure the resistance between ground and the (F855) 5-volt Supply circuit in the A/C Pressure Transducer harness connector.

Is the resistance below 100 ohms?

Yes >> Repair the short to ground in the (F855) 5-volt Supply circuit.
Perform the POWERTRAIN VERIFICATION TEST. (Refer to 9 - ENGINE - STANDARD PROCEDURE)

No >> Go To 8

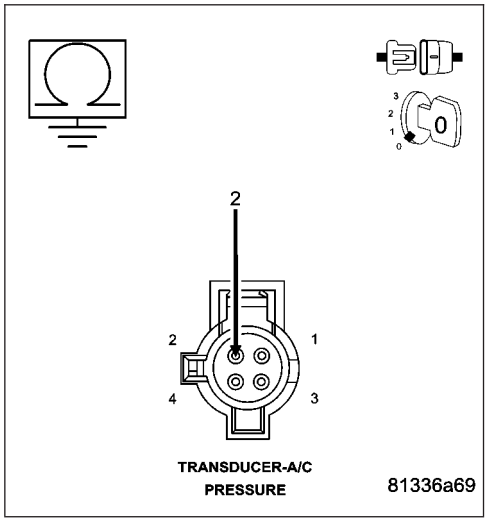

P0532-A/C PRESSURE SENSOR CIRCUIT LOW (CONTINUED)

8. **PCM**

NOTE: Before continuing, check the PCM harness connector terminals for corrosion, damage, or terminal push out. Repair as necessary.

Using the schematics as a guide, inspect the wire harness and connectors. Pay particular attention to all Power and Ground circuits.

Were there any problems found?

Yes >> Repair as necessary.
Perform the POWERTRAIN VERIFICATION TEST. (Refer to 9 - ENGINE - STANDARD PROCEDURE)

No >> Replace and program the Powertrain Control Module per Service Information.
Perform the POWERTRAIN VERIFICATION TEST. (Refer to 9 - ENGINE - STANDARD PROCEDURE)

P0533-A/C PRESSURE SENSOR CIRCUIT HIGH

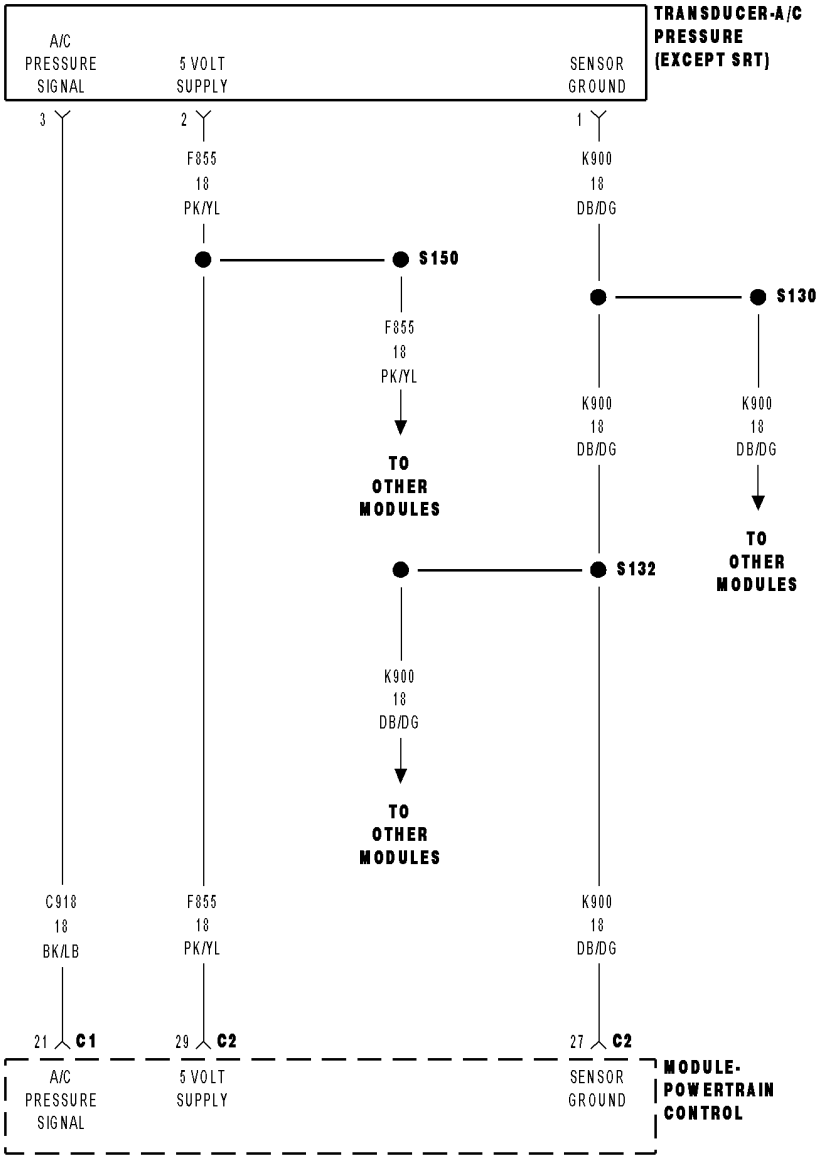

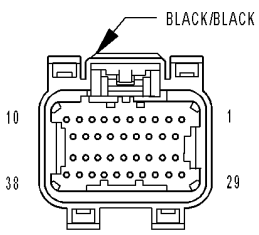

MODULE-POWERTRAIN CONTROL C1 (NGC)

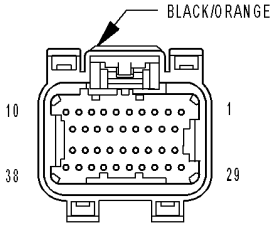

MODULE-POWERTRAIN CONTROL C2 (NGC)

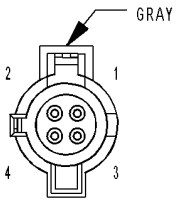

TRANSDUCER-A/C PRESSURE (EXCEPT SRT)

81454504

P0533-A/C PRESSURE SENSOR CIRCUIT HIGH (CONTINUED)

For the Engine circuit diagram (Refer to 9 - ENGINE - SCHEMATICS AND DIAGRAMS).

For a complete wiring diagram **Refer to Section 8W**.

- **When Monitored:**
  Engine running and the A/C Clutch Relay energized.
- **Set Condition:**
  The A/C pressure transducer signal at the PCM goes above 4.92 volts. One trip Fault. Three good trips to turn off the MIL.

Possible Causes
(C918) A/C PRESSURE SIGNAL CIRCUIT SHORTED TO BATTERY VOLTAGE
(C918) A/C PRESSURE SIGNAL CIRCUIT OPEN
(C918) A/C PRESSURE SIGNAL CIRCUIT SHORTED TO THE (F855) 5-VOLT SUPPLY CIRCUIT
(K900) SENSOR GROUND CIRCUIT OPEN
A/C PRESSURE TRANSDUCER
PCM

Always perform the Pre-Diagnostic Troubleshooting procedure before proceeding. (Refer to 9 - ENGINE - DIAGNOSIS AND TESTING).

Diagnostic Test

1. A/C PRESSURE TRANSDUCER VOLTAGE ABOVE 4.9 VOLTS

NOTE: Make sure the A/C refrigerant system is properly charged per Service Information.

Start the engine.

With a scan tool, read the A/C Pressure Sensor voltage.

Is the voltage above 4.9 volts?

Yes >> Go To 2

No >> Refer to the INTERMITTENT CONDITION Diagnostic Procedure.
Perform the POWERTRAIN VERIFICATION TEST. (Refer to 9 - ENGINE - STANDARD PROCEDURE)

P0533-A/C PRESSURE SENSOR CIRCUIT HIGH (CONTINUED)

2. A/C PRESSURE TRANSDUCER

Turn the ignition off.

Disconnect the A/C Pressure Transducer harness connector.

Connect a jumper wire between the (C918) A/C Pressure Signal circuit and the (K900) Sensor Ground circuit in the Transducer harness connector.

Ignition on, engine not running.

With the scan tool, monitor the A/C Pressure Transducer voltage.

Is the voltage below 1.0 volt with the jumper wire installed?

Yes >> Replace the A/C Pressure Transducer.
Perform the POWERTRAIN VERIFICATION TEST. (Refer to 9 - ENGINE - STANDARD PROCEDURE)

No >> Go To 3

NOTE: Remove the jumper wire before continuing.

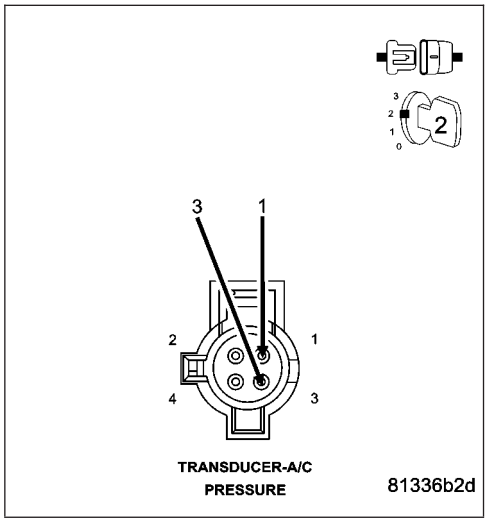

3. (C918) A/C PRESSURE SIGNAL CIRCUIT SHORTED TO BATTERY VOLTAGE

Turn the ignition off.

Disconnect the C1 PCM harness connector.

Ignition on, engine not running.

Measure the voltage on the (C918) A/C Pressure Signal circuit in the A/C Pressure Transducer harness connector.

Is the voltage above 0 volts?

Yes >> Repair the short to battery voltage in the (C918) A/C Pressure Signal circuit.
Perform the POWERTRAIN VERIFICATION TEST. (Refer to 9 - ENGINE - STANDARD PROCEDURE)

No >> Go To 4

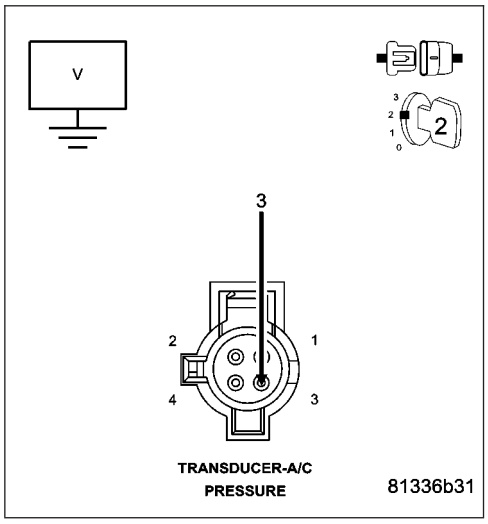

P0533-A/C PRESSURE SENSOR CIRCUIT HIGH (CONTINUED)

4. (C918) A/C PRESSURE SIGNAL CIRCUIT OPEN

Turn the ignition off.

CAUTION: Do not probe the PCM harness connectors. Probing the PCM harness connectors will damage the PCM terminals resulting in poor terminal to pin connection. Install Miller Special Tool #8815 to perform diagnosis.

Measure the resistance of the (C918) A/C Pressure Signal circuit from the A/C Pressure Transducer harness connector to the appropriate terminal of special tool #8815.

Is the resistance below 5.0 ohms?

Yes >> Go To 5

No >> Repair the open in the (C918) A/C Pressure Signal circuit. Perform the POWERTRAIN VERIFICATION TEST. (Refer to 9 - ENGINE - STANDARD PROCEDURE)

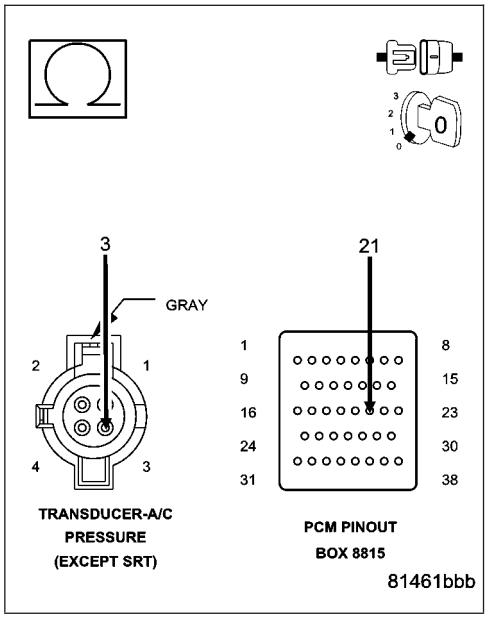

5. (C918) A/C PRESSURE SIGNAL CIRCUIT SHORTED TO THE (F855) 5-VOLT SUPPLY CIRCUIT

Measure the resistance between the (C918) A/C Pressure Signal circuit and the (F855) 5-volt Supply circuit in the A/C Pressure Transducer harness connector.

Is the resistance below 5.0 ohms?

Yes >> Repair the short between the (F855) 5-volt Supply circuit and the (C918) A/C Pressure Signal circuit.
Perform the POWERTRAIN VERIFICATION TEST. (Refer to 9 - ENGINE - STANDARD PROCEDURE)

No >> Go To 6

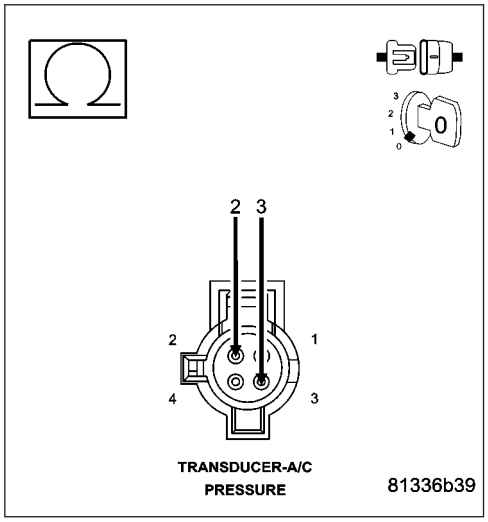

P0533-A/C PRESSURE SENSOR CIRCUIT HIGH (CONTINUED)

6. (K900) SENSOR GROUND CIRCUIT OPEN

Disconnect the C2 PCM harness connector.

CAUTION: Do not probe the PCM harness connectors. Probing the PCM harness connectors will damage the PCM terminals resulting in poor terminal to pin connection. Install Miller Special Tool #8815 to perform diagnosis.

Measure the resistance of the (K900) Sensor Ground circuit from the A/C Pressure Sensor harness connector to the appropriate terminal of special tool #8815.

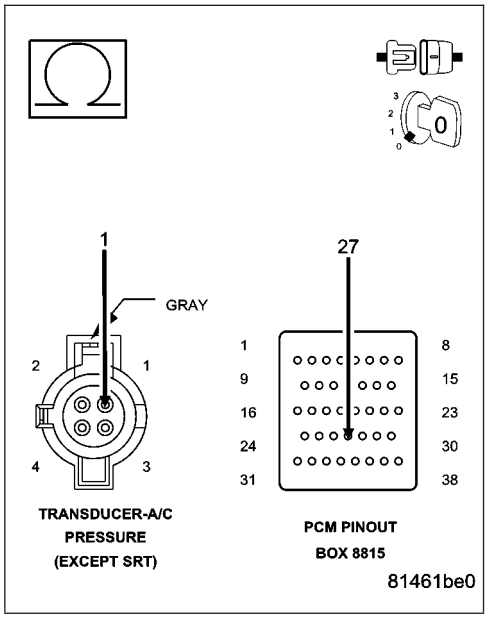

Is the resistance below 5.0 ohms?

Yes >> Go To 7

No >> Repair the open in the (K900) Sensor Ground circuit.
Perform the POWERTRAIN VERIFICATION TEST. (Refer to 9 - ENGINE - STANDARD PROCEDURE)

7. PCM

NOTE: Before continuing, check the PCM harness connector terminals for corrosion, damage, or terminal push out. Repair as necessary.

Using the schematics as a guide, inspect the wire harness and connectors. Pay particular attention to all Power and Ground circuits.

Were there any problems found?

Yes >> Repair as necessary.
Perform the POWERTRAIN VERIFICATION TEST. (Refer to 9 - ENGINE - STANDARD PROCEDURE)

No >> Replace and program the Powertrain Control Module per Service Information.
Perform the POWERTRAIN VERIFICATION TEST. (Refer to 9 - ENGINE - STANDARD PROCEDURE)

P0551-POWER STEERING PRESSURE SWITCH PERFORMANCE

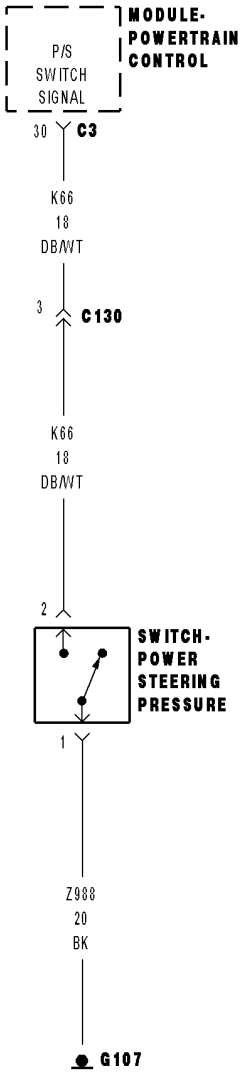

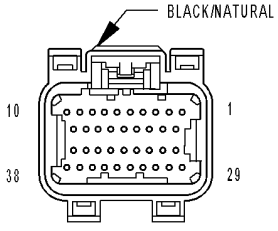

MODULE-
POWERTRAIN
CONTROL C3
(NGC)

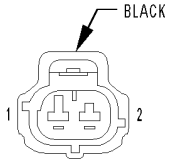

SWITCH-POWER
STEERING PRESSURE
(NGC)

81454521

P0551-POWER STEERING PRESSURE SWITCH PERFORMANCE (CONTINUED)

For the Engine circuit diagram (Refer to 9 - ENGINE - SCHEMATICS AND DIAGRAMS).

For a complete wiring diagram **Refer to Section 8W**.

Theory of Operation

The power steering switch is used to enable quick spark and fuel corrections for high power steering loads to maintain target idle speed. The power steering switch rationality monitors the switch input during high vehicle speed conditions when the steering wheel cannot be turned far enough to reach the high-pressure switch point. If the power steering switch input remains at a high-pressure condition at high vehicle speeds, a failure timer will increment.

- **When Monitored:**
  With the ignition key on and engine running.
- **Set Condition:**
  With the vehicle above 40 mph for over 30 seconds, the power steering pressure switch remains open. Two Trip Fault. Three good trips to turn off the MIL.

Possible Causes
(K66) P/S SWITCH SIGNAL CIRCUIT OPEN
(K66) P/S SWITCH SIGNAL CIRCUIT SHORTED TO GROUND
(Z988) GROUND CIRCUIT OPEN
POWER STEERING PRESSURE SWITCH
PCM

Always perform the Pre-Diagnostic Troubleshooting procedure before proceeding. (Refer to 9 - ENGINE - DIAGNOSIS AND TESTING).

Diagnostic Test

1. ACTIVE DTC

Ignition on, engine not running.
With a scan tool, read DTCs.

Is the DTC active at this time?

Yes >> Go To 2

No >> Refer to the INTERMITTENT CONDITION Diagnostic Procedure.
Perform the POWERTRAIN VERIFICATION TEST. (Refer to 9 - ENGINE - STANDARD PROCEDURE)

P0551-POWER STEERING PRESSURE SWITCH PERFORMANCE (CONTINUED)

2. POWER STEERING PRESSURE SWITCH

Turn the ignition off.

Disconnect the Power Steering Pressure Switch harness connector.

Ignition on, engine not running.

Connect a jumper wire to the (K66) P/S Switch Signal circuit at the harness connector.

Use the scan tool to monitor the Power Steering Pressure Switch status.

Touch the other end of the jumper wire to the (Z988) Ground circuit at the Power Steering Pressure Switch harness connector several times.

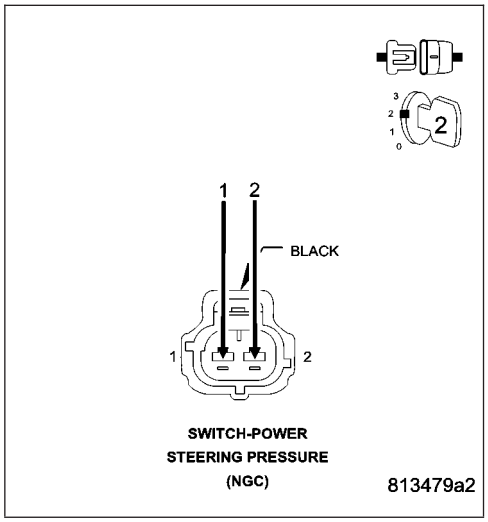

Did the Power Steering Pressure Switch status change from High to Low when connecting and disconnecting the jumper wire?

Yes >> Replace the Power Steering Pressure Switch.
Perform the POWERTRAIN VERIFICATION TEST. (Refer to 9 - ENGINE - STANDARD PROCEDURE)

No >> Go To 3

NOTE: Remove the jumper wire before continuing.

---

3. (K66) P/S SWITCH SIGNAL CIRCUIT OPEN

Turn the ignition off.

Disconnect the C3 PCM harness connector.

CAUTION: Do not probe the PCM harness connectors. Probing the PCM harness connectors will damage the PCM terminals resulting in poor terminal to pin connection. Install Miller Special Tool #8815 to perform diagnosis.

Measure resistance of (K66) P/S Switch Signal circuit from the Power Steering Pressure Switch harness connector to the appropriate terminal of special tool #8815.

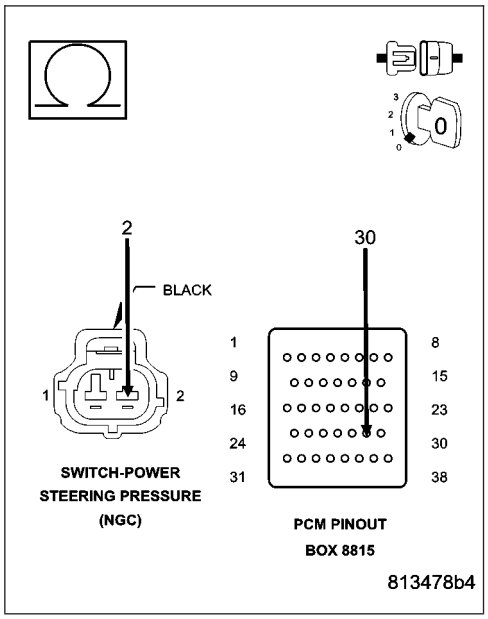

Is the resistance below 5.0 ohms?

Yes >> Go To 4

No >> Repair the open in the (K66) P/S Switch Signal circuit.
Perform the POWERTRAIN VERIFICATION TEST. (Refer to 9 - ENGINE - STANDARD PROCEDURE)

P0551-POWER STEERING PRESSURE SWITCH PERFORMANCE (CONTINUED)

4. (K66) P/S SWITCH SIGNAL CIRCUIT SHORTED TO GROUND

Measure the resistance between ground and the (K66) P/S Switch Signal circuit in the Switch connector.

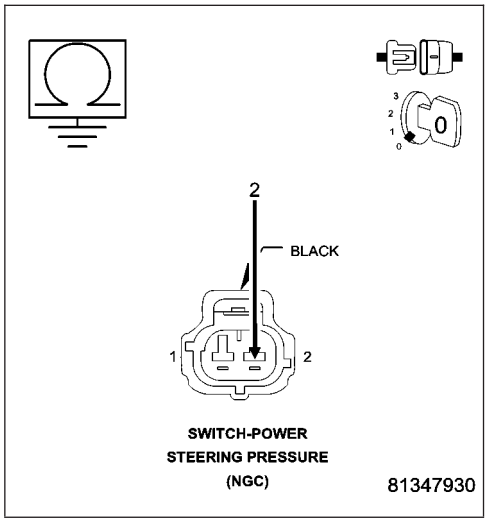

Is the resistance below 100 ohms?

Yes >> Repair the short to ground in the (K66) P/S Switch Signal circuit.
Perform the POWERTRAIN VERIFICATION TEST. (Refer to 9 - ENGINE - STANDARD PROCEDURE)

No >> Go To 5

5. (Z988) GROUND CIRCUIT OPEN

Measure the resistance between Ground and the (Z988) Ground circuit in the Power Steering Pressure Switch connector.

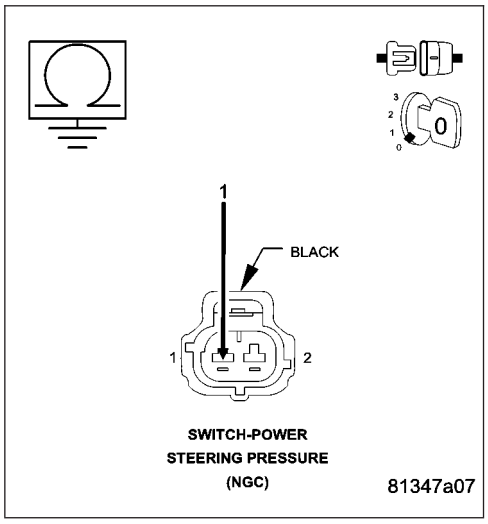

Is the resistance below 100 ohms?

Yes >> Go To 6

No >> Repair the open in the (Z988) Ground circuit.
Perform the POWERTRAIN VERIFICATION TEST. (Refer to 9 - ENGINE - STANDARD PROCEDURE)

6. PCM

NOTE: Before continuing, check the PCM harness connector terminals for corrosion, damage, or terminal push out. Repair as necessary.
Using the schematics as a guide, inspect the wire harness and connectors. Pay particular attention to all Power and Ground circuits.

Were there any problems found?

Yes >> Repair as necessary.
Perform the POWERTRAIN VERIFICATION TEST. (Refer to 9 - ENGINE - STANDARD PROCEDURE)

No >> Replace and program the Powertrain Control Module per Service Information.
Perform the POWERTRAIN VERIFICATION TEST. (Refer to 9 - ENGINE - STANDARD PROCEDURE)

P0562-BATTERY VOLTAGE LOW

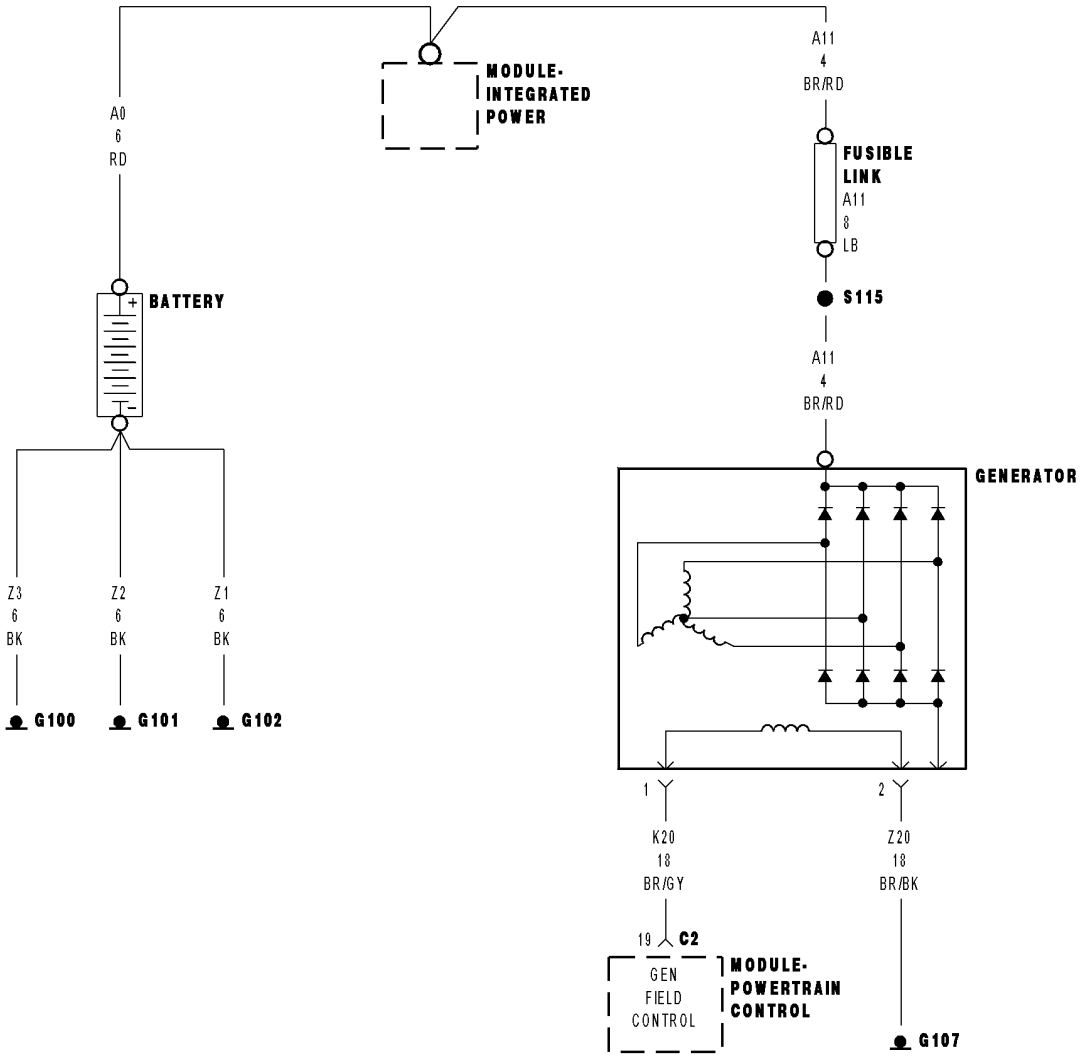

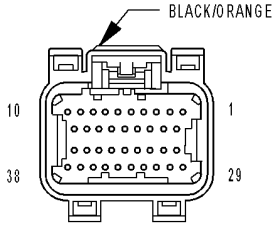

MODULE-
POWERTRAIN
CONTROL C2
(NGC)

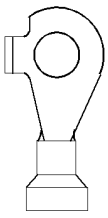

GENERATOR
(5.7L)

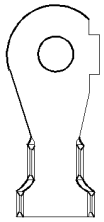

GENERATOR
(DIESEL/3.7L/4.7L/SRT)

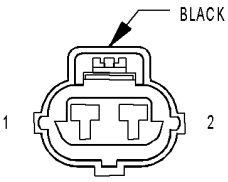

GENERATOR
(EXCEPT SRT)

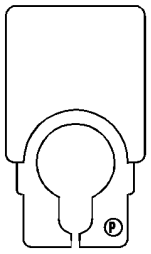

BATTERY-
POSITIVE
(3.7L/4.7L)

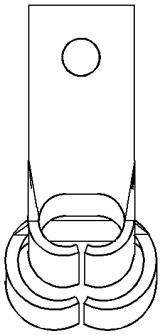

BATTERY
POSITIVE
(5.7L EXCEPT OFF ROAD/SRT)

81454554

P0562-BATTERY VOLTAGE LOW (CONTINUED)

For the Engine circuit diagram (Refer to 9 - ENGINE - SCHEMATICS AND DIAGRAMS).

For a complete wiring diagram **Refer to Section 8W**.

- **When Monitored:**
  The engine running. The engine speed greater than 1000 RPM.
- **Set Condition:**
  Battery voltage is 1 volt less than desired voltage for a set period of time. One Trip Fault. ETC light is flashing.

Possible Causes
RESISTANCE IN THE (A11) BATTERY POSITIVE CIRCUIT
RESISTANCE IN THE GENERATOR CASE GROUND
GENERATOR OPERATION
(K20) GENERATOR FIELD CONTROL CIRCUIT OPEN
(K20) GENERATOR FIELD CONTROL CIRCUIT SHORTED TO GROUND
(Z20) GROUND CIRCUIT OPEN
PCM

Always perform the Pre-Diagnostic Troubleshooting procedure before proceeding. (Refer to 9 - ENGINE - DIAGNOSIS AND TESTING).

Diagnostic Test

1. ACTIVE DTC

NOTE: Make sure the Battery is in good condition. Using the Midtronics Battery Tester, test the Battery before continuing.

NOTE: Inspect the vehicle for after market accessories that may exceed the Generator System output.
Turn the ignition off.

NOTE: Make sure the generator drive belt is in good operating condition.

NOTE: Inspect the fuses in the IPM. If an open fuse is found, use the wire diagram/schematic as a guide, inspect the wiring and connectors for damage.
Ignition on, engine not running.

With the scan tool, read DTCs.

Is the DTC active at this time?

Yes >> Go To 2

No >> Refer to the INTERMITTENT CONDITION Diagnostic Procedure.
Perform the POWERTRAIN VERIFICATION TEST. (Refer to 9 - ENGINE - STANDARD PROCEDURE)

P0562-BATTERY VOLTAGE LOW (CONTINUED)

2. (A11) B+ CIRCUIT HIGH RESISTANCE

WARNING: When the engine is operating, do not stand in direct line with the fan. Do not put your hands near the pulleys, belts, or fan. Do not wear loose clothing. Failure to follow these instructions can result in personal injury or death.

NOTE: Make sure all wires are clear of the engine's moving parts.
Measure the voltage between the (A11) B+ Terminal at the Generator and the Battery + Post.

Start the engine.

Is the voltage above 0.4 of a volt?

Yes >> Repair the excessive resistance in the (A11) B+ circuit between the Generator and Battery.
Perform the POWERTRAIN VERIFICATION TEST. (Refer to 9 - ENGINE - STANDARD PROCEDURE)

No >> Go To 3

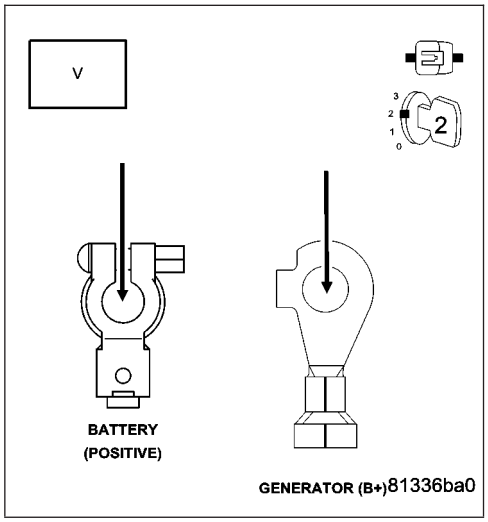

3. GENERATOR CASE GROUND HIGH RESISTANCE

Ignition on, engine not running.

Start the engine.

Allow the engine to reach normal operating temperature.

NOTE: Make sure all wires are clear of the engine's moving parts.
Measure the voltage between the Generator case and Battery ground post.

Is the voltage above 0.1 of a volt?

Yes >> Repair excessive resistance in the Generator Ground between the Generator Case and Battery ground side.
Perform the POWERTRAIN VERIFICATION TEST. (Refer to 9 - ENGINE - STANDARD PROCEDURE)

No >> Go To 4

4. GENERATOR OPERATION

Turn the ignition off.

Disconnect the Generator Field harness connector.

Using a 12-volt test light, jump it across the Generator Field harness connector.

Ignition on, engine not running.

With the scan tool, actuate the Gen Field Control circuit.

Does the test light illuminate brightly and flash on and off?

Yes >> Replace the Generator.
Perform the POWERTRAIN VERIFICATION TEST. (Refer to 9 - ENGINE - STANDARD PROCEDURE)

No >> Go To 5

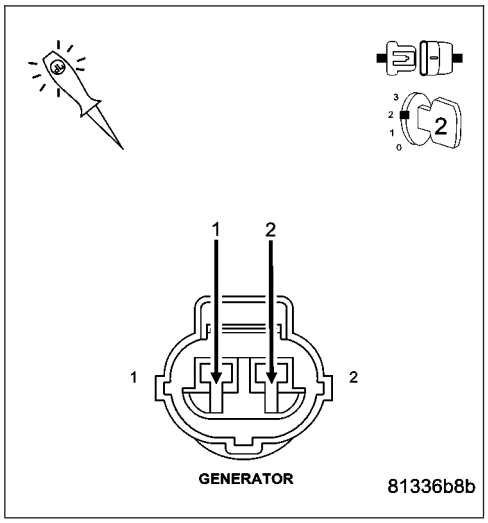

P0562-BATTERY VOLTAGE LOW (CONTINUED)

5. (K20) GENERATOR FIELD CONTROL CIRCUIT OPEN

Turn the ignition off.

Disconnect the C2 PCM harness connector.

CAUTION: Do not probe the PCM harness connectors. Probing the PCM harness connectors will damage the PCM terminals resulting in poor terminal to pin connection. Install Miller Special Tool #8815 to perform diagnosis.

Measure the resistance of the (K20) Gen Field Control circuit from the Generator harness connector to the appropriate terminal of the special tool #8815.

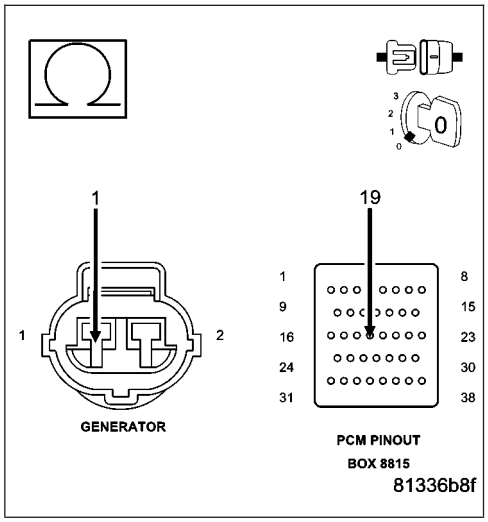

Is the resistance below 5.0 ohms?

Yes >> Go To 6

No >> Repair the open in the (K20) Gen Field Control circuit.
Perform the POWERTRAIN VERIFICATION TEST. (Refer to 9 - ENGINE - STANDARD PROCEDURE)

6. (K20) GENERATOR FIELD CONTROL CIRCUIT SHORTED TO GROUND

Measure the resistance between ground and the (K20) Gen Field Control circuit in the Generator Field harness connector.

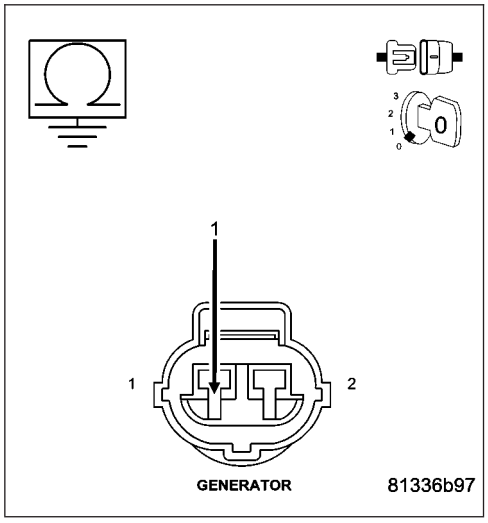

Is the resistance below 100 ohms?

Yes >> Repair the short to ground in the (K20) Gen Field Control circuit.
Perform the POWERTRAIN VERIFICATION TEST. (Refer to 9 - ENGINE - STANDARD PROCEDURE)

No >> Go To 7

P0562-BATTERY VOLTAGE LOW (CONTINUED)

7. (Z20) GROUND CIRCUIT OPEN

Using a 12-volt test light connected to 12-volts, probe the (Z20) Ground circuit in the Generator Field harness connector.

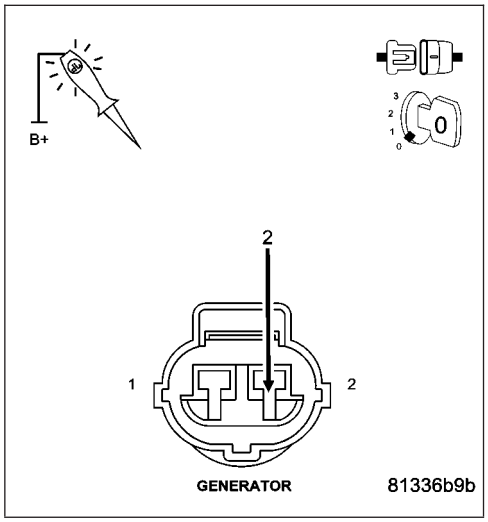

Does the test light illuminate brightly?

Yes >> Go To 8

No >> Repair the open in the (Z20) Ground circuit.
Perform the POWERTRAIN VERIFICATION TEST. (Refer to 9 - ENGINE - STANDARD PROCEDURE)

---

8. PCM

NOTE: Before continuing, check the PCM harness connector terminals for corrosion, damage, or terminal push out. Repair as necessary.
Using the schematics as a guide, inspect the wire harness and connectors. Pay particular attention to all Power and Ground circuits.

Were there any problems found?

Yes >> Repair as necessary.
Perform the POWERTRAIN VERIFICATION TEST. (Refer to 9 - ENGINE - STANDARD PROCEDURE)

No >> Replace and program the Powertrain Control Module per Service Information.
Perform the POWERTRAIN VERIFICATION TEST. (Refer to 9 - ENGINE - STANDARD PROCEDURE)

P0563-BATTERY VOLTAGE HIGH

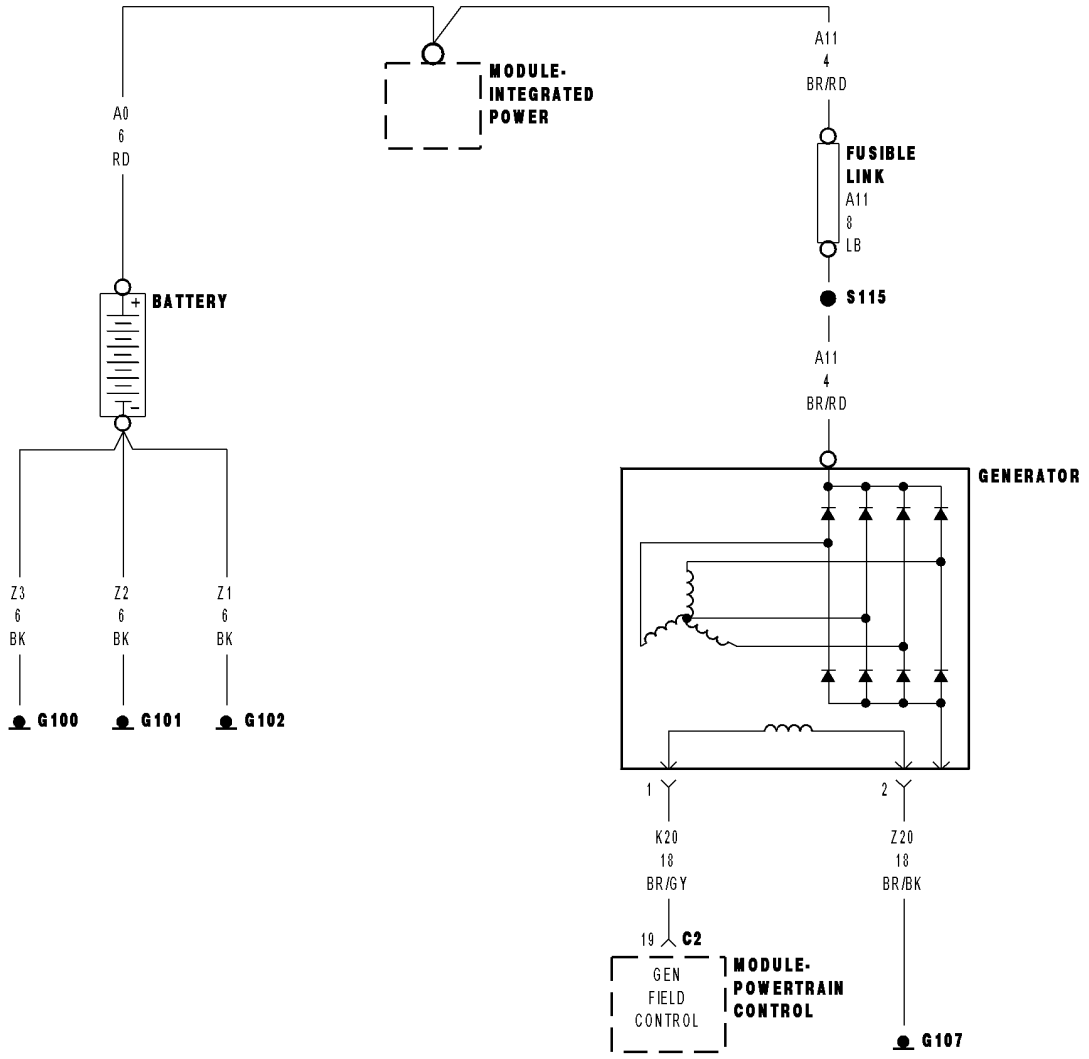

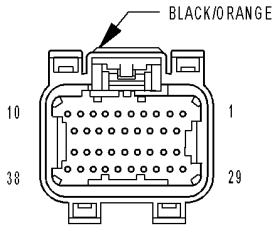

MODULE-
POWERTRAIN
CONTROL C2
(NGC)

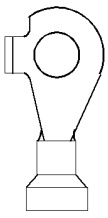

GENERATOR
(5.7L)

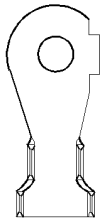

GENERATOR
(DIESEL/3.7L/4.7L/SRT)

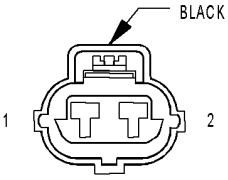

GENERATOR
(EXCEPT SRT)

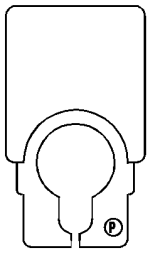

BATTERY-
POSITIVE
(3.7L/4.7L)

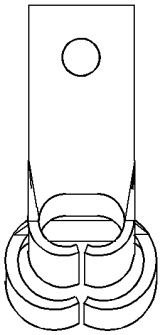

BATTERY
POSITIVE
(5.7L EXCEPT OFF ROAD/SRT)

81454554

P0563-BATTERY VOLTAGE HIGH (CONTINUED)

For the Engine circuit diagram (Refer to 9 - ENGINE - SCHEMATICS AND DIAGRAMS).

For a complete wiring diagram **Refer to Section 8W**.

- **When Monitored:**
  With the ignition on. Engine RPM greater than 1000 RPM. With no other charging system codes set.
- **Set Condition:**
  Battery voltage is 1 volt greater than desired voltage for more than 10 seconds. Battery voltage greater than 15.75 volts. One Trip Fault. Three good trips to turn off the MIL.

Possible Causes
(K20) GENERATOR FIELD CONTROL CIRCUIT SHORTED TO BATTERY VOLTAGE
GENERATOR
PCM

Always perform the Pre-Diagnostic Troubleshooting procedure before proceeding. (Refer to 9 - ENGINE - DIAGNOSIS AND TESTING).

Diagnostic Test

1. ACTIVE DTC

NOTE: Make sure the Battery is in good condition. Using the Midtronics Battery Tester, test the Battery before continuing.

NOTE: Inspect the vehicle for after market accessories that may exceed the Generator System output.
Turn the ignition off.

NOTE: Make sure the generator drive belt is in good operating condition.

NOTE: Inspect the fuses in the IPM. If a fuse is open use the wire diagram/schematic as a guide, inspect the wiring and connectors for damage.
Ignition on, engine not running.
With a scan tool, read DTCs.

Is the DTC active at this time?

Yes >> Go To 2

No >> Refer to the INTERMITTENT CONDITION Diagnostic Procedure.
Perform the POWERTRAIN VERIFICATION TEST. (Refer to 9 - ENGINE - STANDARD PROCEDURE)

P0563-BATTERY VOLTAGE HIGH (CONTINUED)

2. GENERATOR OPERATION

Turn the ignition off.

Disconnect the Generator Field harness connector.

Using a 12-volt test light, jump across the Generator Field harness connector.

Ignition on, engine not running.

With the scan tool, actuate the Generator Field Driver.

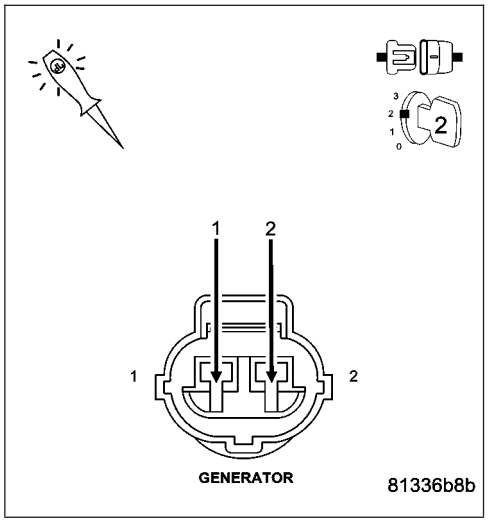

Does the test light illuminate brightly and flash on and off?

Yes >> Replace the Generator.
Perform the POWERTRAIN VERIFICATION TEST. (Refer to 9 - ENGINE - STANDARD PROCEDURE)

No >> Go To 3

3. (K20) FIELD CIRCUIT SHORTED BATTERY VOLTAGE

Turn the ignition off.

Disconnect the C2 PCM harness connector.

Ignition on, engine not running.

Measure the voltage on the (K20) Gen Field Control circuit at the Generator Field harness connector.

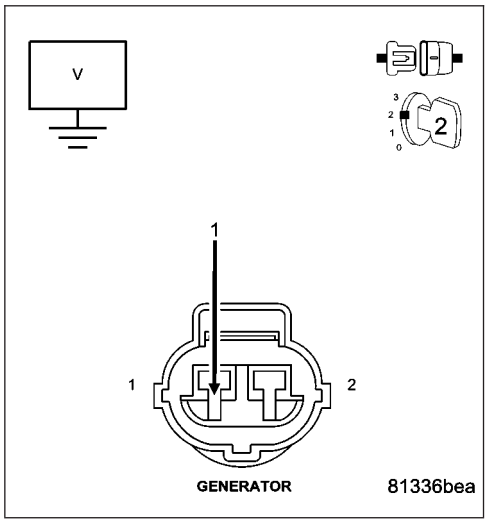

Is the voltage above 1.0 volt?

Yes >> Repair the short to battery voltage in the (K20) Gen Field Control circuit.
Perform the POWERTRAIN VERIFICATION TEST. (Refer to 9 - ENGINE - STANDARD PROCEDURE)

No >> Go To 4

4. PCM

NOTE: Before continuing, check the PCM harness connector terminals for corrosion, damage, or terminal push out. Repair as necessary.

Using the schematics as a guide, inspect the wire harness and connectors. Pay particular attention to all Power and Ground circuits.

Were there any problems found?

Yes >> Repair as necessary.
Perform the POWERTRAIN VERIFICATION TEST. (Refer to 9 - ENGINE - STANDARD PROCEDURE)

No >> Replace and program the Powertrain Control Module per Service Information.
Perform the POWERTRAIN VERIFICATION TEST. (Refer to 9 - ENGINE - STANDARD PROCEDURE)

P0571-BRAKE SWITCH 1 PERFORMANCE

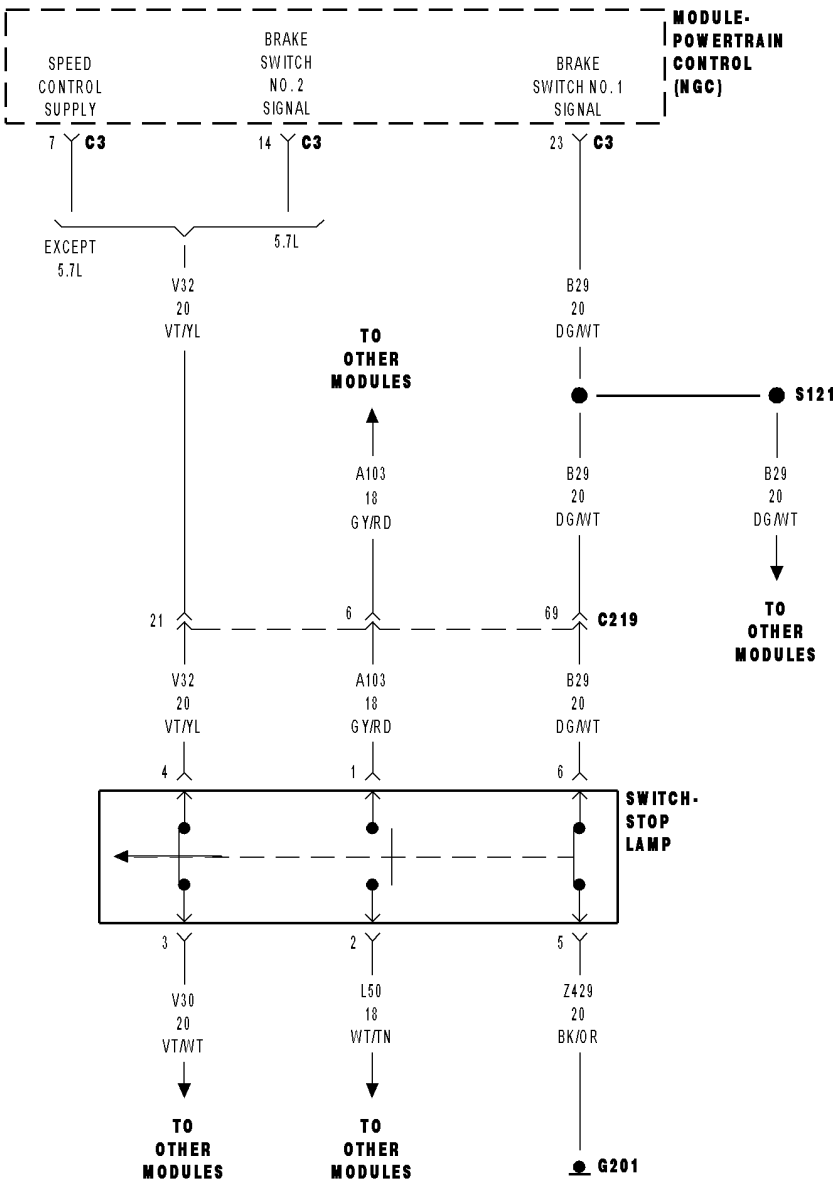

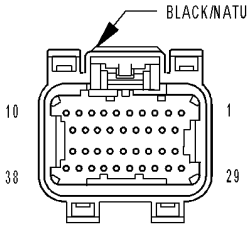

MODULE-
POWERTRAIN
CONTROL C3
(NGC)

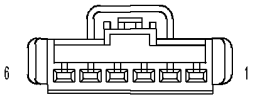

SWITCH-STOP
LAMP

814545c3

P0571-BRAKE SWITCH 1 PERFORMANCE (CONTINUED)

For the Engine circuit diagram (Refer to 9 - ENGINE - SCHEMATICS AND DIAGRAMS).

For a complete wiring diagram **Refer to Section 8W**.

Theory of Operation

The brake switch rationality checks both failure modes of the brake switch. The brake switch stuck on test checks for a high vehicle speed condition where the brake switch is unexpectedly depressed. The brake switch stuck off test checks for repeated vehicle stop maneuvers without the brake switch depressed.

- **When Monitored:**
  Ignition on.
- **Set Condition:**
  If the output of Brake Switch No.1 to the PCM looks like it is not applied, while Brake Lamp Switch Output circuit is applied the fault will mature in 60ms. Two Trip Fault.

Possible Causes
(B29) BRAKE SWITCH NO.1 SIGNAL SHORTED TO GROUND
(V32) BRAKE SWITCH NO.2 SIGNAL CIRCUIT OPEN
(V32) BRAKE SWITCH NO.2 SIGNAL CIRCUIT SHORTED TO GROUND
(Z429) GROUND CIRCUIT OPEN
STOP LAMP SWITCH
PCM

Always perform the Pre-Diagnostic Troubleshooting procedure before proceeding. (Refer to 9 - ENGINE - DIAGNOSIS AND TESTING).

Diagnostic Test

1. ACTIVE DTC

NOTE: Make sure the Stop Lamp Switch is properly adjusted before continuing.

NOTE: Make sure the Stop Lamp Switch is properly wired, such as (B29) Brake Switch No.1 and (L50) Brake Lamp Switch Output circuit are not switched at the harness connector.

Ignition on, engine not running.

With a scan tool, read DTCs.

Is the DTC active at this time?

Yes >> Go To 2

No >> Refer to the INTERMITTENT CONDITION Diagnostic Procedure.
Perform the POWERTRAIN VERIFICATION TEST. (Refer to 9 - ENGINE - STANDARD PROCEDURE)

P0571-BRAKE SWITCH 1 PERFORMANCE (CONTINUED)

2. (B29) BRAKE SWITCH NO.1 SIGNAL SHORTED TO GROUND

Turn the ignition off.

Disconnect the Stop Lamp Switch harness connector.

Disconnect the C3 PCM harness connector.

Measure the resistance between ground and the (B29) Brake Switch No.1 Signal circuit in the Stop Lamp Switch harness connector.

Is the resistance below 100 ohms?

Yes >> Repair the short to ground in the (B29) Brake Switch No.1 Signal circuit.
Perform the POWERTRAIN VERIFICATION TEST. (Refer to 9 - ENGINE - STANDARD PROCEDURE)

No >> Go To 3

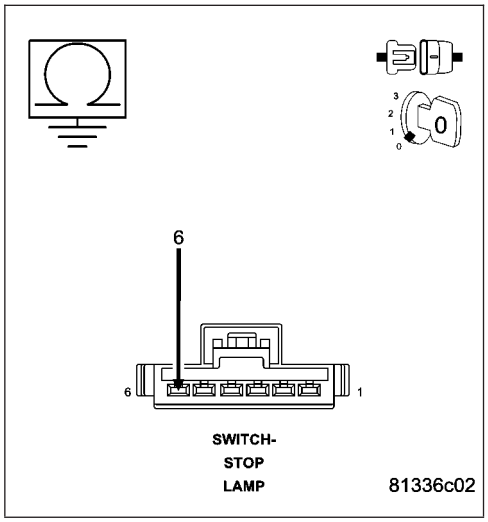

3. (V32) BRAKE SWITCH NO.2 SIGNAL CIRCUIT OPEN

CAUTION: Do not probe the PCM harness connectors. Probing the PCM harness connectors will damage the PCM terminals resulting in poor terminal to pin connection. Install Miller Special Tool #8815 to perform diagnosis.

Measure the resistance of the (V32) Brake Switch No.2 Signal circuit from the Stop Lamp Switch harness connector to the appropriate terminal of special tool #8815.

Is the resistance below 5.0 ohms?

Yes >> Go To 4

No >> Repair the open in the (V32) Brake Switch No.2 Signal circuit.
Perform the POWERTRAIN VERIFICATION TEST. (Refer to 9 - ENGINE - STANDARD PROCEDURE)

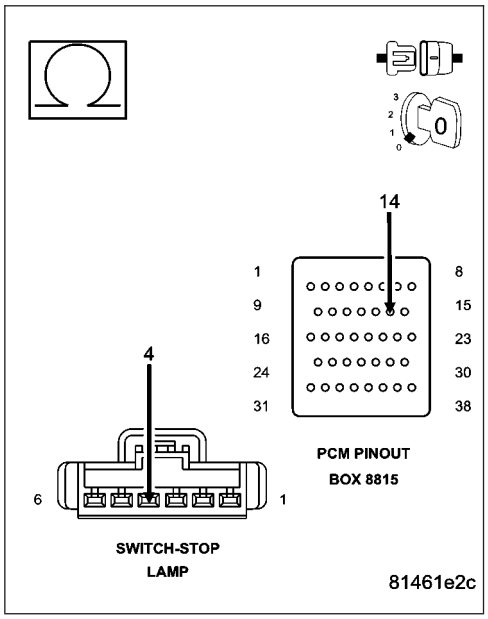

P0571-BRAKE SWITCH 1 PERFORMANCE (CONTINUED)

4. (V32) BRAKE SWITCH NO.2 SIGNAL CIRCUIT SHORTED TO GROUND

Measure the resistance between ground and the (V32) Brake Switch No.2 Signal circuit in the Stop Lamp Switch harness connector.

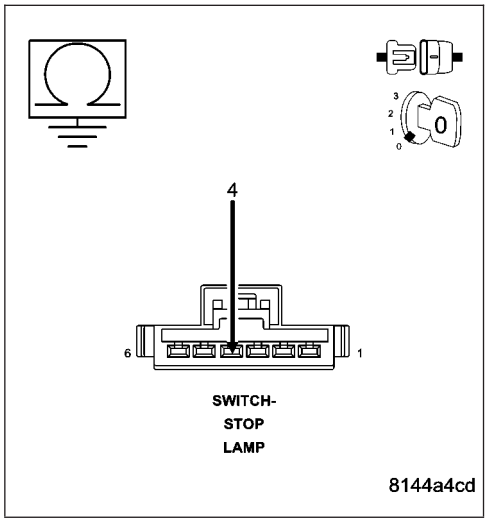

Is the resistance below 100 ohms?

Yes >> Repair the short to ground in the (V32) Brake Switch No.2 Signal circuit.
Perform the POWERTRAIN VERIFICATION TEST. (Refer to 9 - ENGINE - STANDARD PROCEDURE)

No >> Go To 5

5. (Z429) GROUND CIRCUIT OPEN

Measure the resistance between ground and the (Z429) Ground circuit in the Stop Lamp Switch harness connector.

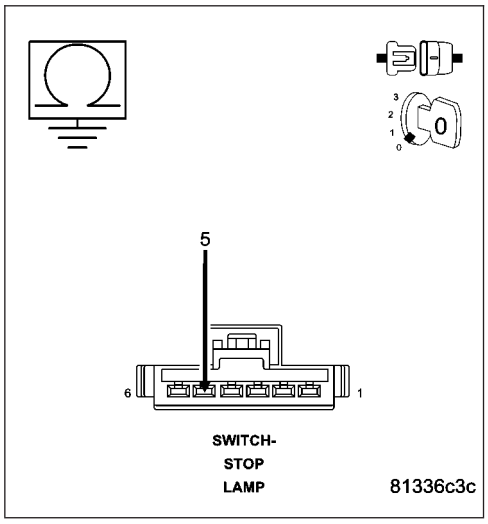

Is the resistance below 5.0 ohms?

Yes >> Go To 6

No >> Repair the open in the (Z429) Ground circuit.
Perform the POWERTRAIN VERIFICATION TEST. (Refer to 9 - ENGINE - STANDARD PROCEDURE)

6. STOP LAMP SWITCH

Measure the resistance between the (Z429) Ground circuit terminal and the (B29) Brake Switch No.1 Signal terminal in the Stop Lamp Switch.

Next, measure the resistance between the (V30) Fused Igniton Switch circuit terminal and the (V32) Brake Switch No.2 Signal circuit terminal in the Stop Lamp Switch.

Apply and release the brake pedal while monitoring the ohmmeter.

Does the resistance change from below 5.0 ohms to an open circuit for one or both of the measurements taken?

Yes >> Go To 7

No >> Replace the Stop Lamp Switch.
Perform the POWERTRAIN VERIFICATION TEST. (Refer to 9 - ENGINE - STANDARD PROCEDURE)

P0571-BRAKE SWITCH 1 PERFORMANCE (CONTINUED)

7. **PCM**

NOTE: Before continuing, check the PCM harness connector terminals for corrosion, damage, or terminal push out. Repair as necessary.

Using the schematics as a guide, inspect the wire harness and connectors. Pay particular attention to all Power and Ground circuits.

Were there any problems found?

Yes >> Repair as necessary.
Perform the POWERTRAIN VERIFICATION TEST. (Refer to 9 - ENGINE - STANDARD PROCEDURE)

No >> Replace and program the Powertrain Control Module per Service Information.
Perform the POWERTRAIN VERIFICATION TEST. (Refer to 9 - ENGINE - STANDARD PROCEDURE)

P0572-BRAKE SWITCH 1 STUCK ON

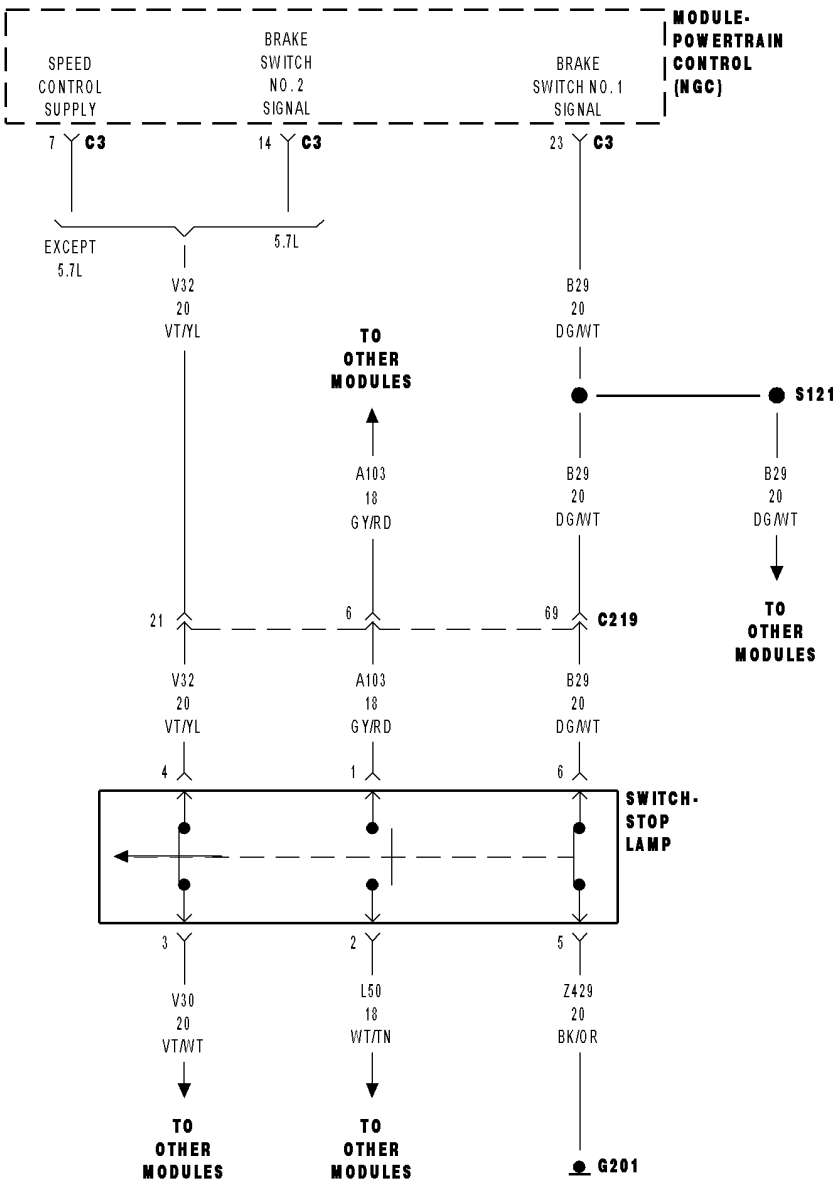

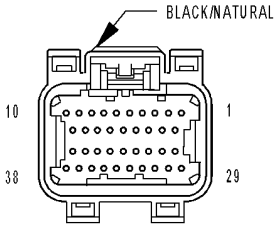

MODULE-
POWERTRAIN
CONTROL C3
(NGC)

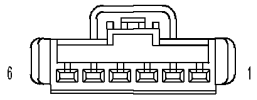

SWITCH-STOP
LAMP

814545c3

P0572-BRAKE SWITCH 1 STUCK ON (CONTINUED)

For the Engine circuit diagram (Refer to 9 - ENGINE - SCHEMATICS AND DIAGRAMS).

For a complete wiring diagram **Refer to Section 8W**.

- **When Monitored:**
  Ignition on.
- **Set Condition:**
  When the PCM recognizes Brake Switch No.1 is mechanically stuck in the low/on position. Two Trip Fault. Three Global Good Trips to Clear.

Possible Causes
(B29) BRAKE SWITCH NO.1 SIGNAL CIRCUIT SHORTED TO GROUND
(V32) BRAKE SWITCH NO.2 SIGNAL CIRCUIT OPEN (5.7L ONLY)
STOP LAMP SWITCH
PCM

Always perform the Pre-Diagnostic Troubleshooting procedure before proceeding. (Refer to 9 - ENGINE - DIAGNOSIS AND TESTING).

Diagnostic Test

1. ACTIVE DTC

NOTE: Verify battery voltage is greater than 10 volts.
With a scan tool, read DTCs.

Is the DTC active at this time?

Yes >> Go To 2

No >> Refer to the INTERMITTENT CONDITION Diagnostic Procedure.
Perform the POWERTRAIN VERIFICATION TEST. (Refer to 9 - ENGINE - STANDARD PROCEDURE)

---

2. STOP LAMP SWITCH

Turn the ignition off.

Remove the Stop Lamp Switch and disconnect the harness connector.

Measure the resistance between the (Z429) Ground circuit terminal and the (B29) Brake Switch No.1 Signal terminal in the Stop Lamp Switch.

Measure the resistance between the (V30) Fused Ignition Switch circuit terminal and the (V32) Brake Switch No.2 Signal terminal in the Stop Lamp Switch.

Apply and release the stop lamp switch plunger while monitoring the ohmmeter.

Does the resistance change from below 5.0 ohms to an open circuit?

Yes >> Go To 3

No >> Replace the Stop Lamp Switch.
Perform the POWERTRAIN VERIFICATION TEST. (Refer to 9 - ENGINE - STANDARD PROCEDURE)

P0572-BRAKE SWITCH 1 STUCK ON (CONTINUED)

3. (B29) BRAKE SWITCH NO.1 SIGNAL CIRCUIT SHORTED TO GROUND

Turn the ignition off.

Disconnect the C3 PCM harness connector.

Measure the resistance between ground and the (B29) Brake Switch No.1 Signal circuit in the Stop Lamp Switch harness connector.

Is the resistance below 100 ohms?

Yes >> Repair the short to ground in the (B29) Brake Switch No.1 Signal circuit.
Perform the POWERTRAIN VERIFICATION TEST. (Refer to 9 - ENGINE - STANDARD PROCEDURE)

No >> Go To 4

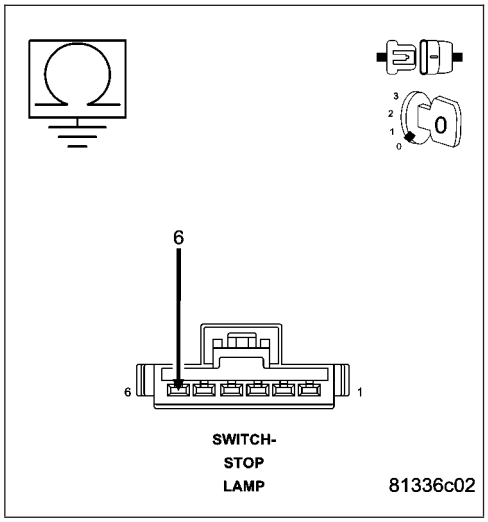

4. (V32) BRAKE SWITCH NO.2 SIGNAL CIRCUIT OPEN

NOTE: If this vehicle is equipped with a 3.7L or 4.7L engine, answer YES to this test and continue to the next step.

CAUTION: Do not probe the PCM harness connectors. Probing the PCM harness connectors will damage the PCM terminals resulting in poor terminal to pin connection. Install Miller Special Tool #8815 to perform diagnosis.

Measure the resistance of the (V32) Brake Switch No.2 Signal Output circuit from the Stop Lamp Switch harness connector to the appropriate terminal of special tool #8815.

Is the resistance below 5.0 ohms?

Yes >> Go To 5

No >> Repair the open in the (V32) Brake Switch No.2 Signal circuit.
Perform the POWERTRAIN VERIFICATION TEST. (Refer to 9 - ENGINE - STANDARD PROCEDURE)

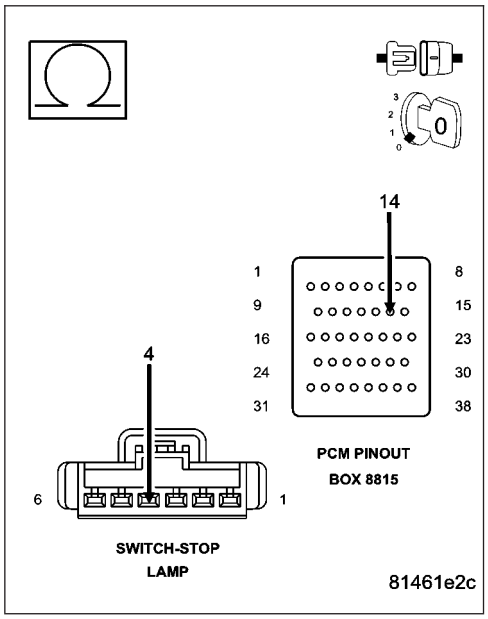

P0572-BRAKE SWITCH 1 STUCK ON (CONTINUED)

5. **PCM**

NOTE: Before continuing, check the PCM harness connector terminals for corrosion, damage, or terminal push out. Repair as necessary.

Using the schematics as a guide, inspect the wire harness and connectors. Pay particular attention to all Power and Ground circuits.

Were there any problems found?

Yes >> Repair as necessary.
Perform the POWERTRAIN VERIFICATION TEST. (Refer to 9 - ENGINE - STANDARD PROCEDURE)

No >> Replace and program the Powertrain Control Module per Service Information.
Perform the POWERTRAIN VERIFICATION TEST. (Refer to 9 - ENGINE - STANDARD PROCEDURE)

P0573-BRAKE SWITCH 1 STUCK OFF

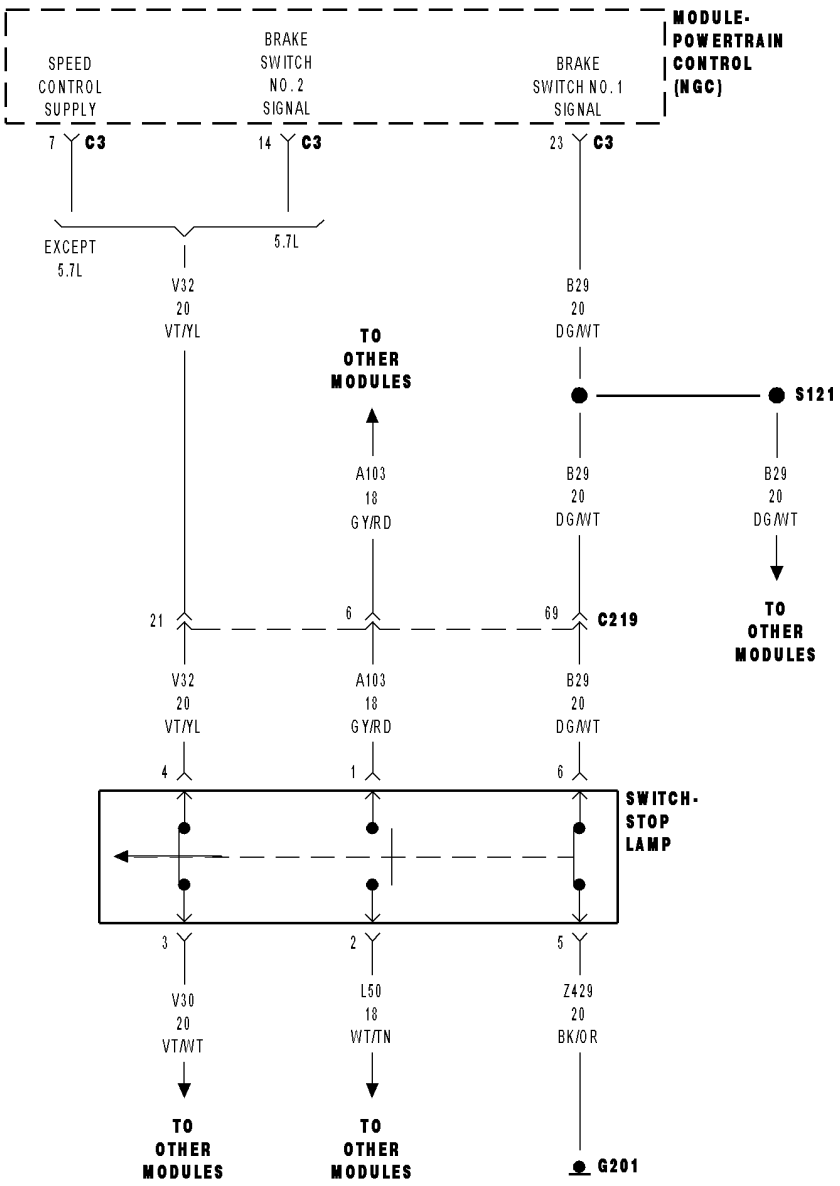

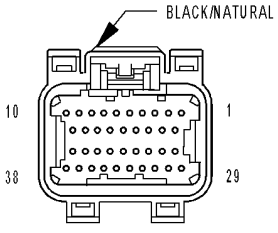

MODULE-
POWERTRAIN
CONTROL C3
(NGC)

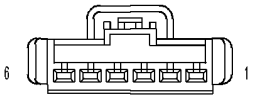

SWITCH-STOP
LAMP

814545c3

P0573-BRAKE SWITCH 1 STUCK OFF (CONTINUED)

For the Engine circuit diagram (Refer to 9 - ENGINE - SCHEMATICS AND DIAGRAMS).

For a complete wiring diagram **Refer to Section 8W**.

- **When Monitored:**
  Ignition on.
- **Set Condition:**
  When the PCM recognizes Brake Switch No.1 is stuck in the high/off position. One Trip Fault. Three good trips to turn off the MIL.

Possible Causes
(B29) BRAKE SWITCH NO.1 SIGNAL CIRCUIT OPEN
(V32) BRAKE SWITCH NO.2 SIGNAL CIRCUIT SHORTED TO GROUND (5.7L ONLY)
(Z429) GROUND CIRCUIT OPEN
STOP LAMP SWITCH
PCM

Always perform the Pre-Diagnostic Troubleshooting procedure before proceeding. (Refer to 9 - ENGINE - DIAGNOSIS AND TESTING).

Diagnostic Test

1. ACTIVE DTC

Ignition on, engine not running.

With a scan tool, read DTCs.

Is the DTC active at this time?

Yes >> Go To 2

No >> Refer to the INTERMITTENT CONDITION Diagnostic Procedure.
Perform the POWERTRAIN VERIFICATION TEST. (Refer to 9 - ENGINE - STANDARD PROCEDURE)

---

2. STOP LAMP SWITCH

Turn the ignition off.

Disconnect the Stop Lamp Switch harness connector.

Measure the resistance between the (Z429) Ground circuit terminal and the (B29) Brake Switch No.1 Signal circuit terminal in the Stop Lamp Switch.

Apply and release the Stop Lamp Switch while monitoring the ohmmeter.

Does the resistance change from below 5.0 ohms to an open circuit?

Yes >> Go To 3

No >> Replace the Stop Lamp Switch.
Perform the POWERTRAIN VERIFICATION TEST. (Refer to 9 - ENGINE - STANDARD PROCEDURE)

P0573-BRAKE SWITCH 1 STUCK OFF (CONTINUED)

3. (B29) BRAKE SWITCH NO.1 SIGNAL CIRCUIT OPEN

Turn the ignition off.

Disconnect the C3 PCM harness connector.

CAUTION: Do not probe the PCM harness connectors. Probing the PCM harness connectors will damage the PCM terminals resulting in poor terminal to pin connection. Install Miller Special Tool #8815 to perform diagnosis.

Measure the resistance of the (B29) Brake Switch No.1 Signal circuit from the Stop Lamp Switch harness connector to the appropriate terminal of special tool #8815.

Is the resistance below 5.0 ohms?

Yes >> Go To 4

No >> Repair the open in the (B29) Brake Switch No.1 Signal circuit.

Perform the POWERTRAIN VERIFICATION TEST. (Refer to 9 - ENGINE - STANDARD PROCEDURE)

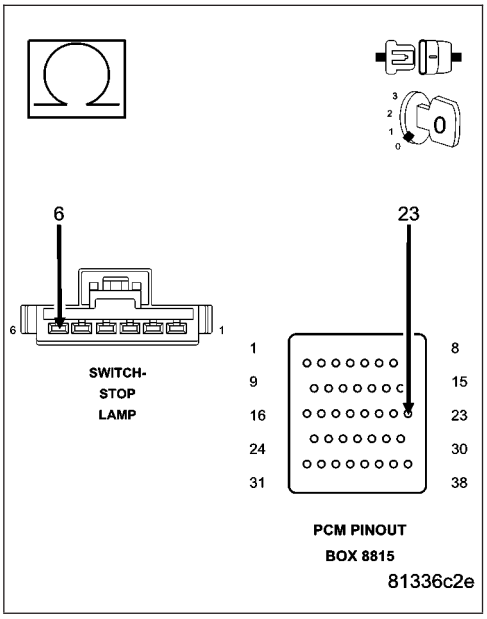

4. (V32) BRAKE SWITCH NO.2 SIGNAL CIRCUIT SHORTED TO GROUND

NOTE: If this vehicle is equipped with a 3.7L or 4.7L engine, answer NO to this test and continue on to the next step.

Measure the resistance between ground and the (L50) Brake Lamp Switch Output circuit in the Stop Lamp Switch harness connector.

Is the resistance below 100 ohms?

Yes >> Repair the short to ground in the (V32) Brake Switch No.2 Signal circuit.

Perform the POWERTRAIN VERIFICATION TEST. (Refer to 9 - ENGINE - STANDARD PROCEDURE)

No >> Go To 5

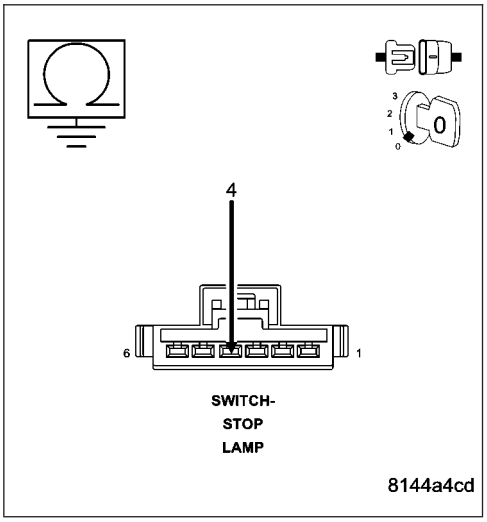

P0573-BRAKE SWITCH 1 STUCK OFF (CONTINUED)

5. (Z429) GROUND CIRCUIT OPEN

Measure the resistance between the (Z429) Ground circuit and ground in the Stop Lamp Switch harness connector.

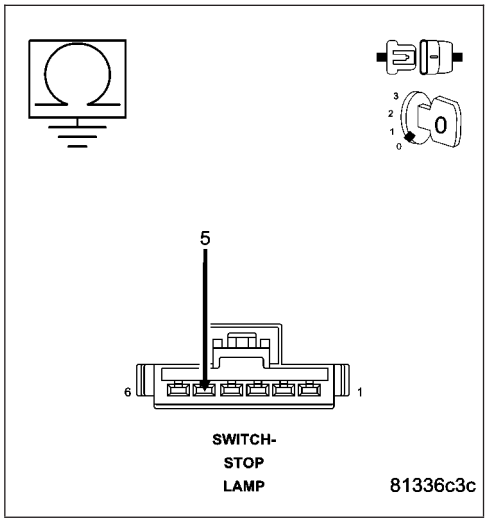

Is the resistance below 5.0 ohms?

Yes >> Go To 6

No >> Repair the open in the (Z429) Ground circuit.
Perform the POWERTRAIN VERIFICATION TEST. (Refer to 9 - ENGINE - STANDARD PROCEDURE)

---

6. PCM

NOTE: Before continuing, check the PCM harness connector terminals for corrosion, damage, or terminal push out. Repair as necessary.
Using the schematics as a guide, inspect the wire harness and connectors. Pay particular attention to all Power and Ground circuits.

Were there any problems found?

Yes >> Repair as necessary.
Perform the POWERTRAIN VERIFICATION TEST. (Refer to 9 - ENGINE - STANDARD PROCEDURE)

No >> Replace and program the Powertrain Control Module per Service Information.
Perform the POWERTRAIN VERIFICATION TEST. (Refer to 9 - ENGINE - STANDARD PROCEDURE)

P0579-SPEED CONTROL SWITCH 1 PERFORMANCE (5.7L)

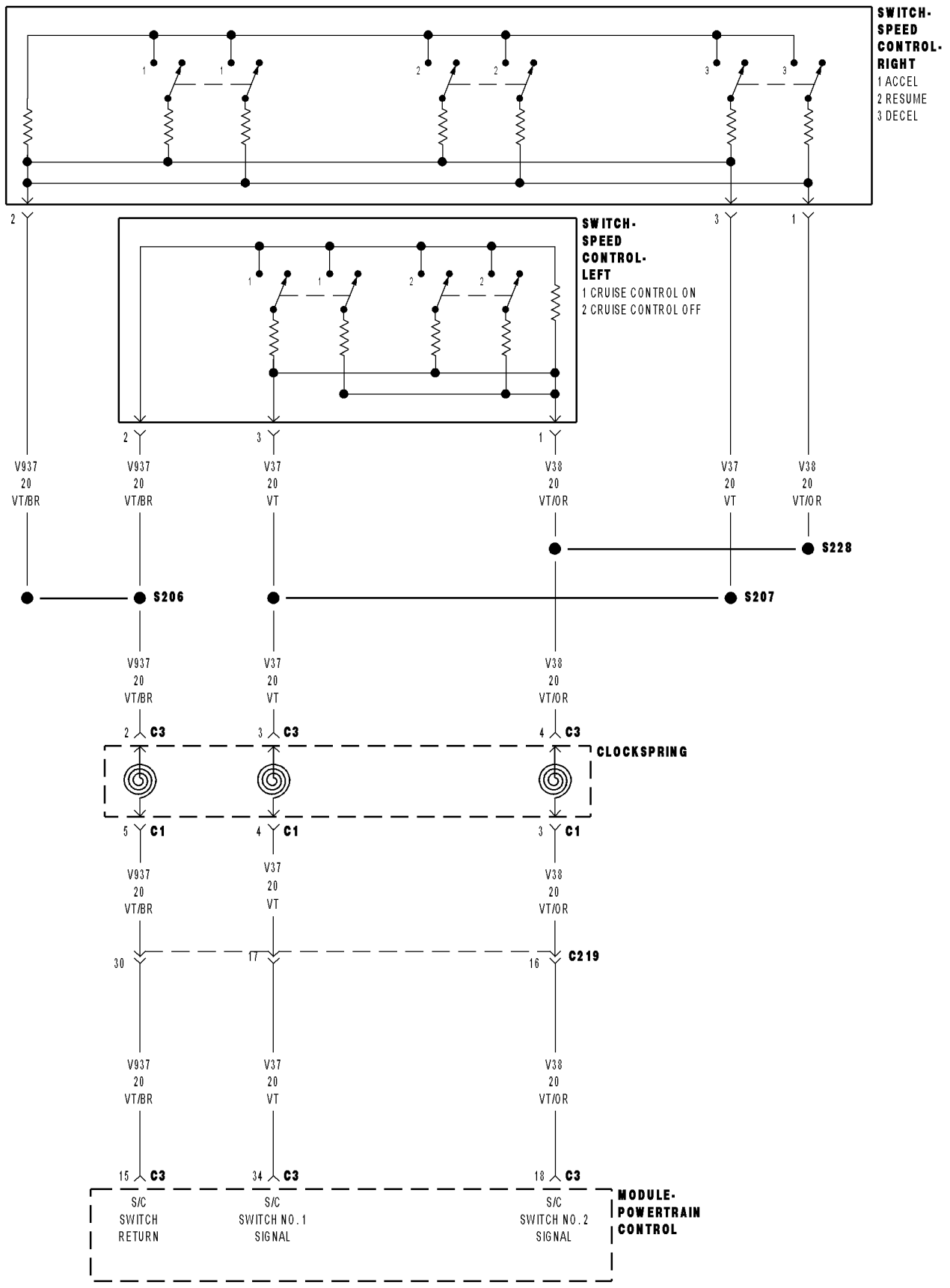

P0579-SPEED CONTROL SWITCH 1 PERFORMANCE (5.7L) (CONTINUED)

For the Engine circuit diagram (Refer to 9 - ENGINE - SCHEMATICS AND DIAGRAMS).

For a complete wiring diagram **Refer to Section 8W**.

- **When Monitored:**
  With the ignition key on.
- **Set Condition:**
  Cruise switch voltage output is not out of range but it does not equal any of the values for any of the button positions.

Possible Causes
(V37) S/C SWITCH NO.1 SIGNAL CIRCUIT SHORTED TO BATTERY VOLTAGE
(V37) S/C SWITCH NO.1 SIGNAL CIRCUIT OPEN
(V937) SWITCH RETURN CIRCUIT OPEN
(V37) S/C SWITCH NO.1 SIGNAL CIRCUIT SHORTED TO GROUND
(V37) S/C SWITCH NO.1 SIGNAL CIRCUIT SHORTED TO THE (V937) SWITCH RETURN CIRCUIT
CLOCKSPRING
SPEED CONTROL SWITCH
PCM

Always perform the Pre-Diagnostic Troubleshooting procedure before proceeding. (Refer to 9 - ENGINE - DIAGNOSIS AND TESTING).

Diagnostic Test

1. SPEED CONTROL SWITCH STATUS

Start the engine.
With a scan tool, monitor each which function for the Speed Control Switches.
Notice the voltage reading when no buttons are pressed.
Press and release each Speed Control Button.
- Resume/Accel
- Cancel
- Decel (Coast)
- On/Off
- Set

Does each switch function change status when pressing and then depressing each switch?

Yes >> Refer to the INTERMITTENT CONDITION Diagnostic Procedure.
Perform the POWERTRAIN VERIFICATION TEST. (Refer to 9 - ENGINE - STANDARD PROCEDURE)

No >> Go To 2

P0579-SPEED CONTROL SWITCH 1 PERFORMANCE (5.7L) (CONTINUED)

2. SPEED CONTROL SWITCH

Turn the ignition off.

Remove and disconnect the Speed Control Switches from the steering wheel per Service Information.

Measure the resistance across each Speed Control Switch.

Monitor the ohmmeter while pressing each function button on each switch.

The following resistance specs are taken between terminals (V37) S/C Switch No.1 Signal and (V937) S/C Switch Return circuits of the Switch when holding the switch button in the following position

Not pressing any switch - 20.5 kohms

On/Off - 0.47 kohms

Set - 5.49 kohms

Coast - 2.94 kohms

Cancel - 1.24 kohms

Resume/Accel - 15.4 kohms

Does the function on the Speed Control Switches have the correct resistance value?

Yes >> Go To 3

No >> Replace the Speed Control Switch that had the incorrect resistance value.
Perform the POWERTRAIN VERIFICATION TEST. (Refer to 9 - ENGINE - STANDARD PROCEDURE)

---

3. (V37) S/C SWITCH NO.1 SIGNAL CIRCUIT SHORTED TO BATTERY VOLTAGE

Disconnect the C3 PCM harness connector.

Ignition on, engine not running.

Measure the voltage on the (V37) S/C Switch No.1 Signal circuit in the Speed Control harness connector.

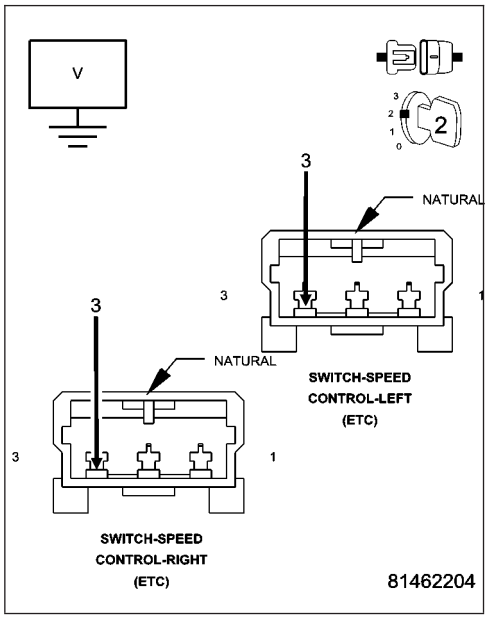

Is the voltage above 5.0 volts?

Yes >> Repair the short to battery voltage in the (V37) S/C Switch No.1 Signal circuit.
Perform the POWERTRAIN VERIFICATION TEST. (Refer to 9 - ENGINE - STANDARD PROCEDURE)

No >> Go To 4

P0579-SPEED CONTROL SWITCH 1 PERFORMANCE (5.7L) (CONTINUED)

4. CLOCKSPRING

Turn the ignition off.

Disconnect the upper and lower clockspring harness connectors per Service Information.

Measure the resistance of the (V37) S/C Switch No.1 Signal circuit between the upper and lower clockspring harness connectors.

Measure the resistance of the (V937) Switch Return circuit between the upper and lower clockspring harness connectors.

Is the resistance above 5.0 ohms?

Yes >> Replace the Clockspring per Service Information.
Perform the POWERTRAIN VERIFICATION TEST. (Refer to 9 - ENGINE - STANDARD PROCEDURE)

No >> Go To 5

NOTE: Connect the Clockspring harness connectors per Service Information before continuing.

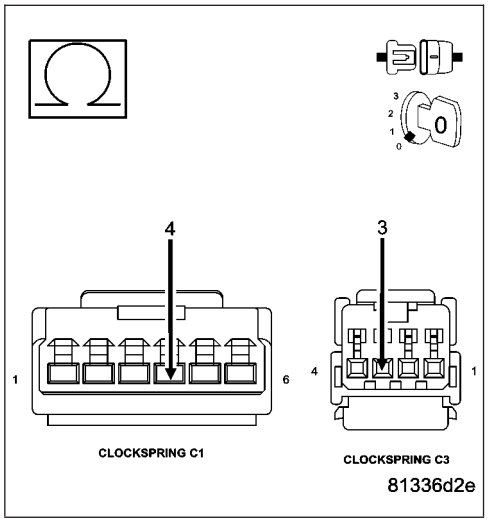

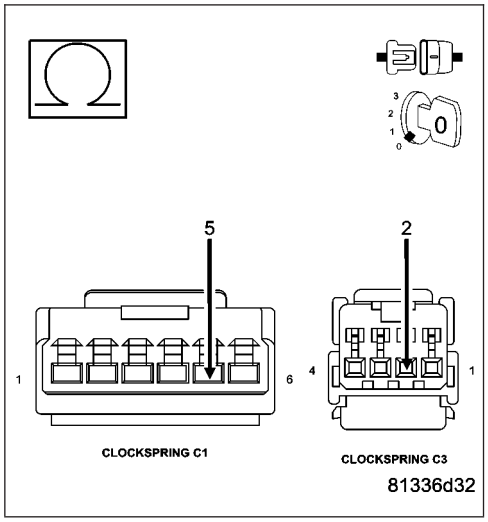

P0579-SPEED CONTROL SWITCH 1 PERFORMANCE (5.7L) (CONTINUED)

5. (V37) S/C SWITCH NO.1 SIGNAL CIRCUIT OPEN

NOTE: The measurement must be taken from both Speed Control Switch harness connectors.

CAUTION: Do not probe the PCM harness connectors. Probing the PCM harness connectors will damage the PCM terminals resulting in poor terminal to pin connection. Install Miller Special Tool #8815 to perform diagnosis.

Measure the resistance of the (V37) S/C Switch No.1 Signal circuit from the Speed Control harness connector to the appropriate terminal of special tool #8815.

Is the resistance below 5.0 ohms for both measurements?

Yes >> Go To 6

No >> Repair the open in the (V37) S/C Switch No.1 Signal circuit.
Perform the POWERTRAIN VERIFICATION TEST. (Refer to 9 - ENGINE - STANDARD PROCEDURE)

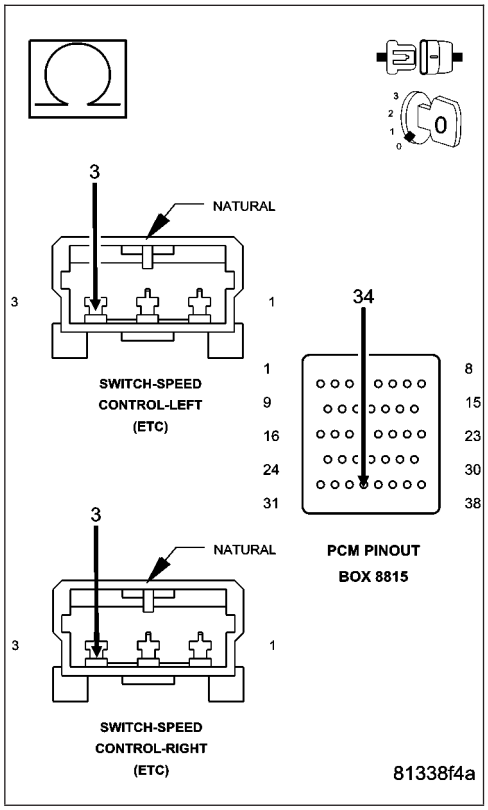

6. (V937) SWITCH RETURN CIRCUIT OPEN

NOTE: The measurement must be taken from both Speed Control Switch harness connectors.

Measure the resistance of the (V937) Switch Return circuit from the Speed Control harness connector to the appropriate terminal of special tool #8815.

Is the resistance below 5.0 ohms for both measurements?

Yes >> Go To 7

No >> Repair the open in the (V937) Switch Return circuit.
Perform the POWERTRAIN VERIFICATION TEST. (Refer to 9 - ENGINE - STANDARD PROCEDURE)

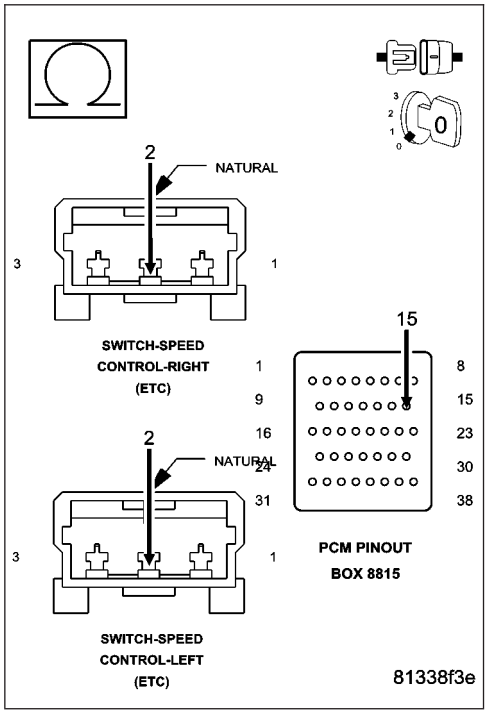

P0579-SPEED CONTROL SWITCH 1 PERFORMANCE (5.7L) (CONTINUED)

7. (V37) S/C NO.1 SWITCH SIGNAL CIRCUIT SHORTED TO GROUND

Measure the resistance between ground and the (V37) S/C Switch No.1 Signal circuit in the Speed Control harness connector.

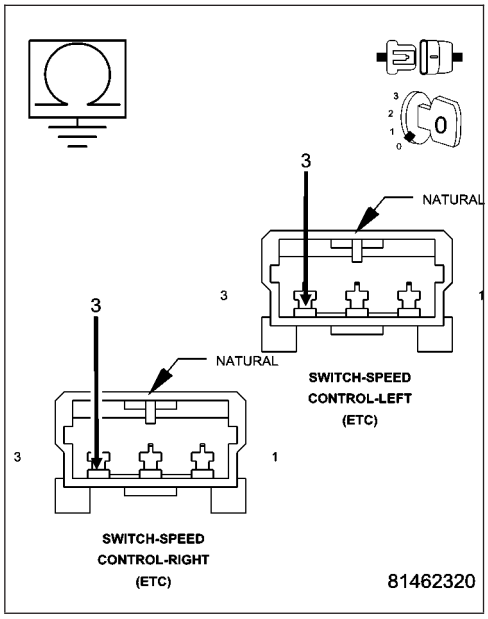

Is the resistance below 100 ohms?

Yes >> Repair the short to ground in the (V37) S/C Switch No.1 Signal circuit.
Perform the POWERTRAIN VERIFICATION TEST. (Refer to 9 - ENGINE - STANDARD PROCEDURE)

No >> Go To 8

8. (V37) S/C SWITCH NO.1 SIGNAL CIRCUIT SHORTED TO THE (V937) S/C SWITCH RETURN CIRCUIT

Measure the resistance between the (V37) S/C Switch No.1 Signal circuit and the (V937) S/C Switch Return circuit in the Speed Control harness connector.

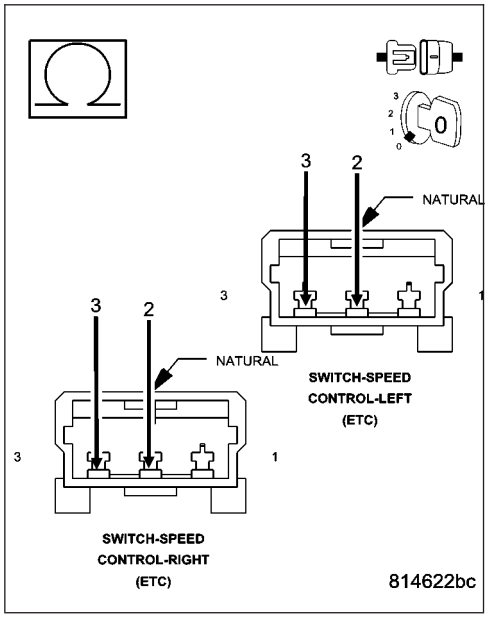

Is the resistance below 5.0 ohms?

Yes >> Repair the short between the (V37) S/C Switch No.1 Signal circuit and the (V937) Switch Return circuit.
Perform the POWERTRAIN VERIFICATION TEST. (Refer to 9 - ENGINE - STANDARD PROCEDURE)

No >> Go To 9

P0579-SPEED CONTROL SWITCH 1 PERFORMANCE (5.7L) (CONTINUED)

9. SPEED CONTROL SWITCH VOLTAGE VALUES

Allow the engine to idle.

With a scan tool, monitor the S/C Switch voltage readings.

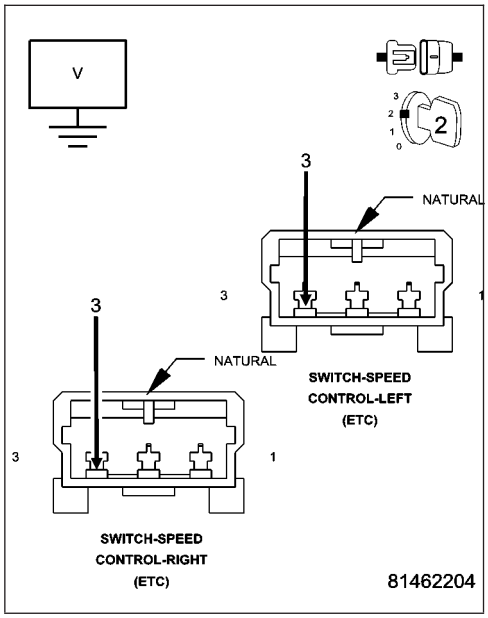

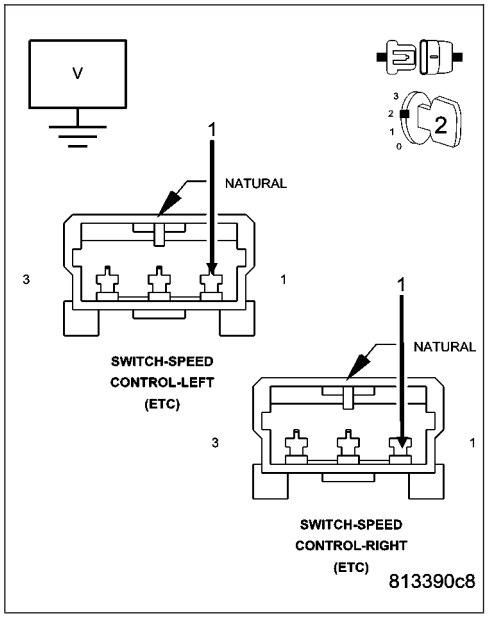

SWITCH POSITION	SWITCH No.1 VOLTAGE VALUE	SWITCH No.2 VOLATGE VALUE
NO SWITCHES PRESSED	4.31 to 4.78 volts	4.31 to 4.78 volts
ON/OFF PRESSED	0.59 to 1.13 volts	3.53 to 3.92 volts
RES/ACCEL PRESSED	3.88 to 4.17 volts	2.04 to 2.47 volts
SET PRESSED	3.16 to 3.56 volts	1.17 to 1.56 volts
COAST PRESSED	2.57 to 2.94 volts	0.77 to 1.09 volts
CANCEL PRESSED	1.59 to 1.99 volts	2.84 to 3.25 volts

P0579-SPEED CONTROL SWITCH 1 PERFORMANCE (5.7L) (CONTINUED)

Take these same voltage measurements with a voltmeter by back probing the (V37) S/C Switch No.1 Signal circuit and the (V38) S/C Switch No.2 Signal circuit at the switches.

Compare the voltage readings on the voltmeter to what the scan tool displayed.

Are the voltage readings out of the listed specification and is there less than a 0.2 of a volt difference between the voltmeter switch values and the scan tool switch value?

Yes >> Replace the Speed Control Switch.
Perform the POWERTRAIN VERIFICATION TEST. (Refer to 9 - ENGINE - STANDARD PROCEDURE)

No >> Go To 10

---

10. PCM

NOTE: Before continuing, check the PCM harness connector terminals for corrosion, damage, or terminal push out. Repair as necessary.

Using the schematics as a guide, inspect the wire harness and connectors. Pay particular attention to all Power and Ground circuits.

Were there any problems found?

Yes >> Repair as necessary.
Perform the POWERTRAIN VERIFICATION TEST. (Refer to 9 - ENGINE - STANDARD PROCEDURE)

No >> Replace and program the Powertrain Control Module per Service Information.
Perform the POWERTRAIN VERIFICATION TEST. (Refer to 9 - ENGINE - STANDARD PROCEDURE)

P0580-SPEED CONTROL SWITCH 1 CIRCUIT LOW (3.7L,4.7L)

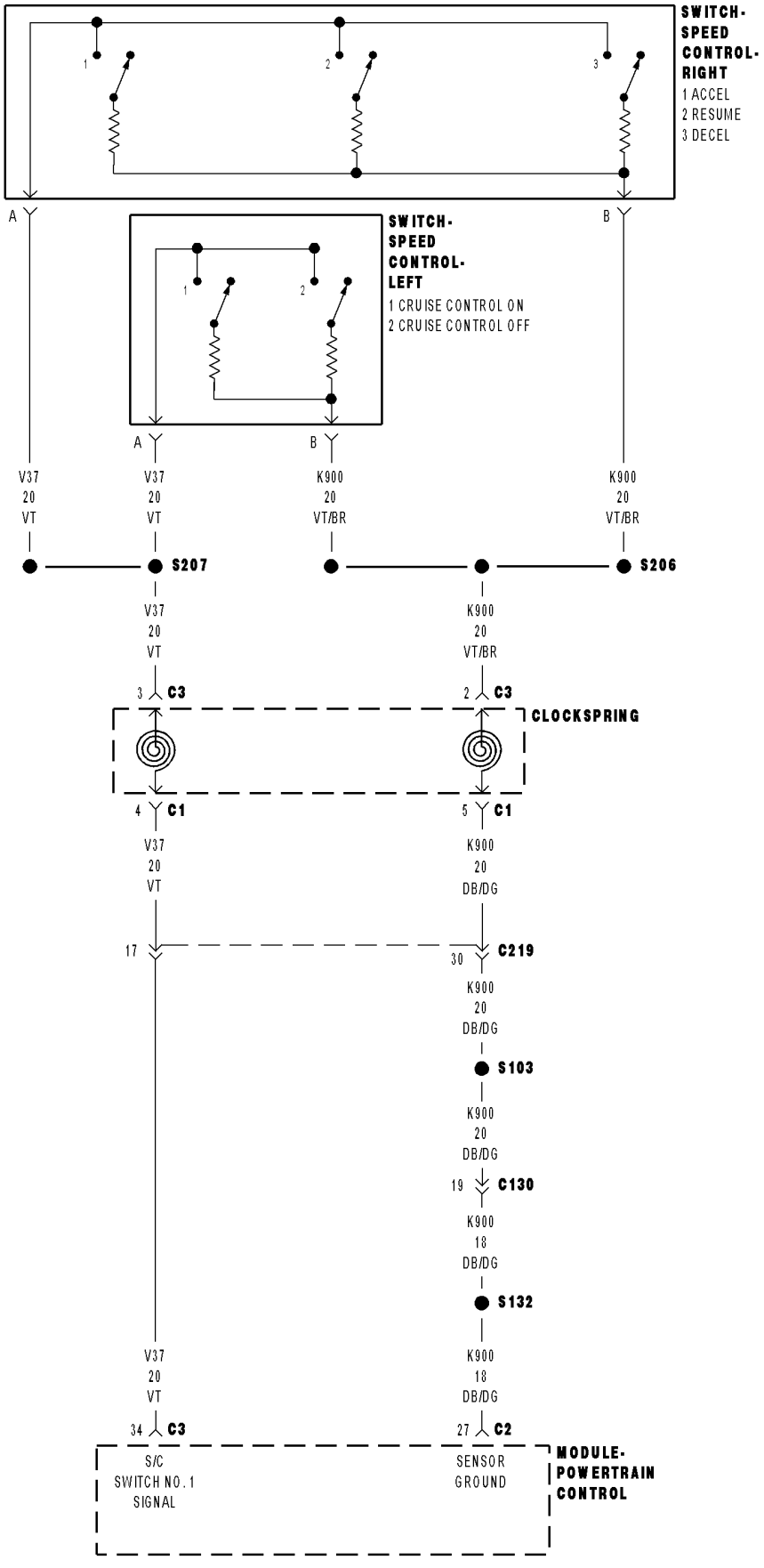

P0580-SPEED CONTROL SWITCH 1 CIRCUIT LOW (3.7L,4.7L) (CONTINUED)

For the Engine circuit diagram (Refer to 9 - ENGINE - SCHEMATICS AND DIAGRAMS).

For a complete wiring diagram **Refer to Section 8W**.

- **When Monitored:**
  With the ignition key on. Battery voltage above 10 volts.
- **Set Condition:**
  When switch voltage is less than 0.43 of a volt for 2 minutes. One trip fault. Three good trips to turn off the MIL.

Possible Causes
(V37) S/C SIGNAL NO.1 CIRCUIT SHORTED TO GROUND
(V37) S/C SIGNAL NO.1 CIRCUIT SHORTED TO THE (K900) SENSOR GROUND CIRCUIT
CLOCKSPRING
SPEED CONTROL ON/OFF SWITCH
SPEED CONTROL RESUME/ACCEL SWITCH
PCM

Always perform the Pre-Diagnostic Troubleshooting procedure before proceeding. (Refer to 9 - ENGINE - DIAGNOSIS AND TESTING).

Diagnostic Test

1. SPEED CONTROL SWITCH VOLTAGE LOW

NOTE: Do not press any of the Speed Control Switch buttons.
Ignition on, engine not running.
With a scan tool, read the Speed Control voltage.

Is the Speed Control voltage below 1.0 volt?

Yes >> Go To 2

No >> Refer to the INTERMITTENT CONDITION Diagnostic Procedure.
Perform the POWERTRAIN VERIFICATION TEST. (Refer to 9 - ENGINE - STANDARD PROCEDURE)

---

2. SPEED CONTROL ON/OFF SWITCH

Ignition on, engine not running.
With the scan tool, monitor the Speed Control Switch voltage.
Disconnect the Speed Control On/Off Switch harness connector per Service Information.

Did the voltage change to above 4.7 volts?

Yes >> Replace the Speed Control On/Off Switch.
Perform the POWERTRAIN VERIFICATION TEST. (Refer to 9 - ENGINE - STANDARD PROCEDURE)

No >> Go To 3

P0580-SPEED CONTROL SWITCH 1 CIRCUIT LOW (3.7L,4.7L) (CONTINUED)

3. SPEED CONTROL RESUME/ACCEL SWITCH

With the scan tool, monitor the Speed Control Switch voltage.

Disconnect the Speed Control Resume/Accel Switch harness connector.

Did the voltage change to above 4.7 volts?

Yes >> Replace the Speed Control Resume/Accel Switch.
Perform the POWERTRAIN VERIFICATION TEST. (Refer to 9 - ENGINE - STANDARD PROCEDURE)

No >> Go To 4

---

4. CLOCKSPRING

Turn the ignition off.

Disconnect the C1 Cockspring 6-way harness connector (instrument panel wiring side) per Service Information.

Ignition on, engine not running.

With the scan tool, read the S/C Switch voltage.

Did the S/C Switch volts change to 5.0 volts?

Yes >> Replace the Clockspring.
Perform the POWERTRAIN VERIFICATION TEST. (Refer to 9 - ENGINE - STANDARD PROCEDURE)

No >> Go To 5

---

5. (V37) S/C NO.1 SIGNAL CIRCUIT SHORTED TO GROUND

Turn the ignition off.

Connect the C1 Clockspring harness connecter per Service Information.

Disconnect the C2 and C3 PCM harness connectors.

Measure the resistance between ground and the (V37) S/C Signal circuit in the Switch harness connectors.

Is the resistance below 100 ohms?

Yes >> Repair the short to ground in the (V37) S/C Signal circuit.
Perform the POWERTRAIN VERIFICATION TEST. (Refer to 9 - ENGINE - STANDARD PROCEDURE)

No >> Go To 6

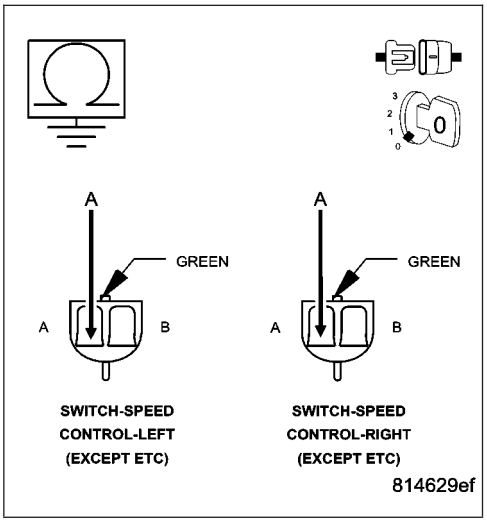

P0580-SPEED CONTROL SWITCH 1 CIRCUIT LOW (3.7L,4.7L) (CONTINUED)

6. (V37) S/C SIGNAL NO.1 CIRCUIT SHORTED TO THE (K900) SENSOR GROUND CIRCUIT

Measure the resistance between the (K900) Sensor ground circuit and the (V37) S/C Signal No.1 circuit in the Speed Control Switch harness connectors.

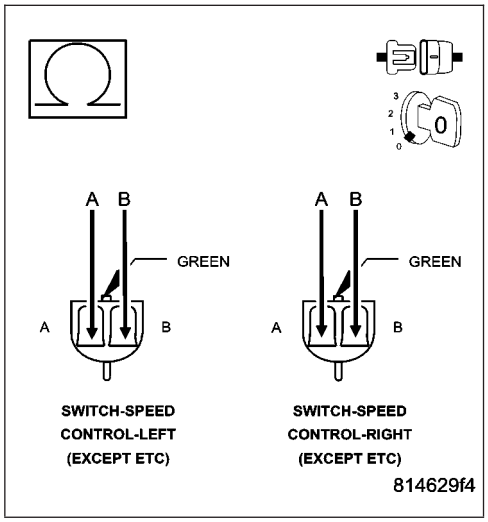

Is the resistance below 5.0 ohms?

Yes >> Repair the short between the (V37) S/C Signal No.1 circuit and the (K900) Sensor ground circuit.
Perform the POWERTRAIN VERIFICATION TEST. (Refer to 9 - ENGINE - STANDARD PROCEDURE)

No >> Go To 7

7. PCM

NOTE: Before continuing, check the PCM harness connector terminals for corrosion, damage, or terminal push out. Repair as necessary.
Using the schematics as a guide, inspect the wire harness and connectors. Pay particular attention to all Power and Ground circuits.

Were there any problems found?

Yes >> Repair as necessary.
Perform the POWERTRAIN VERIFICATION TEST. (Refer to 9 - ENGINE - STANDARD PROCEDURE)

No >> Replace and program the Powertrain Control Module per Service Information.
Perform the POWERTRAIN VERIFICATION TEST. (Refer to 9 - ENGINE - STANDARD PROCEDURE)

P0580-SPEED CONTROL SWITCH 1 CIRCUIT LOW (5.7L)

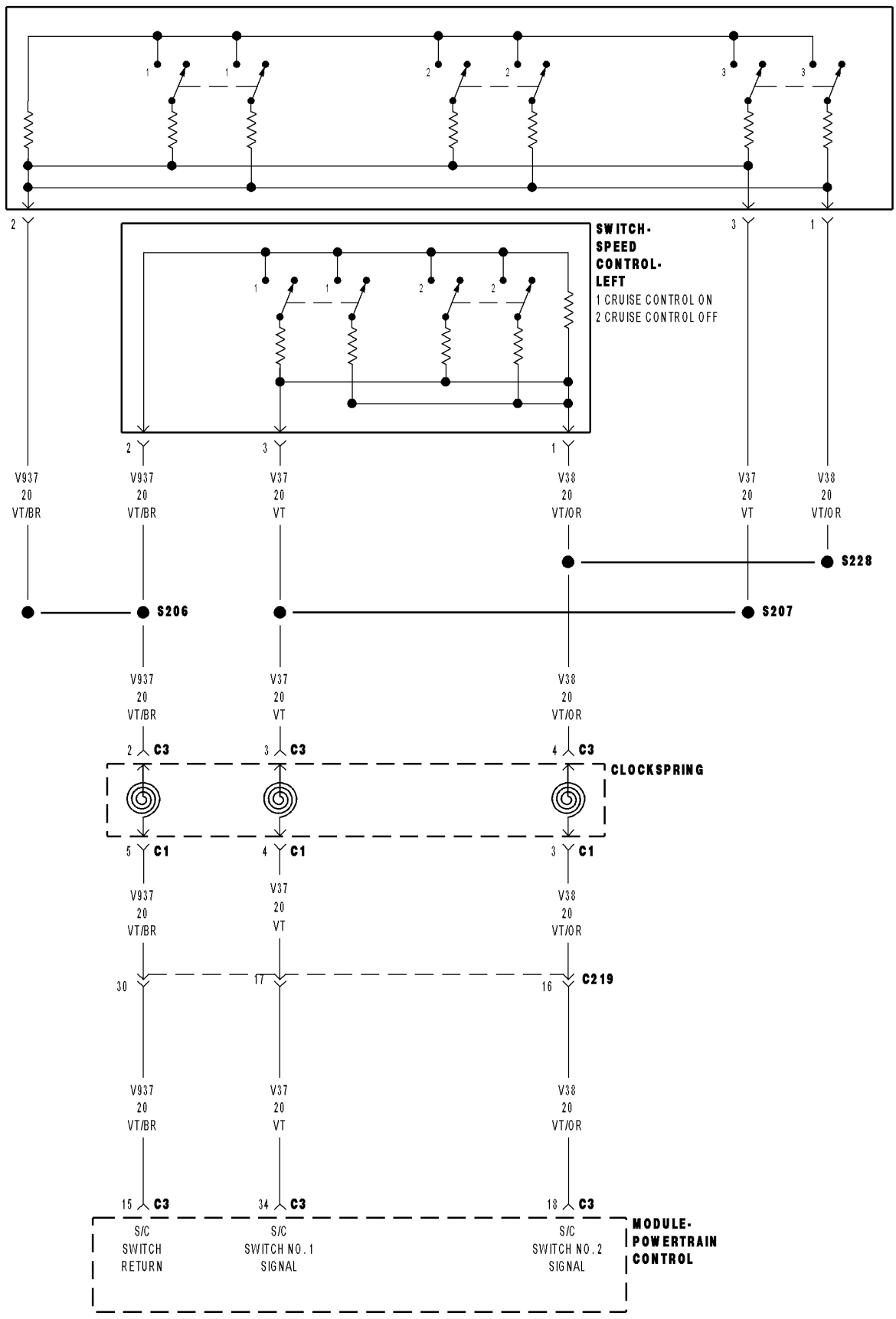

P0580-SPEED CONTROL SWITCH 1 CIRCUIT LOW (5.7L) (CONTINUED)

For the Engine circuit diagram (Refer to 9 - ENGINE - SCHEMATICS AND DIAGRAMS).

For a complete wiring diagram **Refer to Section 8W**.

- **When Monitored:**
  With the ignition key on.
- **Set Condition:**
  Speed control switch input No.1 is below the minimum acceptable voltage at the PCM. One trip fault.

Possible Causes
(V37) S/C SWITCH NO.1 SIGNAL CIRCUIT SHORTED TO THE (V937) S/C SWITCH RETURN
(V37) S/C SWITCH NO.1 SIGNAL CIRCUIT SHORTED TO GROUND
CLOCKSPRING
SPEED CONTROL ON/OFF SWITCH
SPEED CONTROL RESUME/ACCEL SWITCH
PCM

Always perform the Pre-Diagnostic Troubleshooting procedure before proceeding. (Refer to 9 - ENGINE - DIAGNOSIS AND TESTING).

Diagnostic Test

1. SPEED CONTROL SWITCH VOLTAGE LOW

NOTE: Do not press any of the Speed Control Switch buttons.

Ignition on, engine not running.

With a scan tool, read the Speed Control voltage.

Is the Speed Control voltage below 1.0 volt?

Yes >> Go To 2

No >> Refer to the INTERMITTENT CONDITION Diagnostic Procedure.
Perform the POWERTRAIN VERIFICATION TEST. (Refer to 9 - ENGINE - STANDARD PROCEDURE)

P0580-SPEED CONTROL SWITCH 1 CIRCUIT LOW (5.7L) (CONTINUED)

2. SPEED CONTROL SWITCHES

Turn the ignition off.

Remove and disconnect the Speed Control Switches from the steering wheel per Service Information.

Measure the resistance across each Speed Control Switch.

Monitor the ohmmeter while pressing each function button on each switch.

The following resistance specs are taken between terminals (V37) S/C Switch No.1 Signal and (V937) S/C Switch Return circuits of the Switch when holding the switch button in the following positions.

Not pressing any switch - 20.5 kohms

On/Off - 0.47 kohms

Set - 5.49 kohms

Coast - 2.94 kohms

Cancel - 1.24 kohms

Resume/Accel - 15.4 kohms

Does the function on the Speed Control Switches have the correct resistance value?

Yes >> Go To 3

No >> Replace the Speed Control Switch that had the incorrect resistance value.
Perform the POWERTRAIN VERIFICATION TEST. (Refer to 9 - ENGINE - STANDARD PROCEDURE)

---

3. SPEED CONTROL ON/OFF SWITCH

Connect the Resume/Accel Switch.

Ignition on, engine not running.

With the scan tool, monitor the Speed Control Switch voltage.

Disconnect the Speed Control On/Off Switch harness connector.

Did the voltage change to above 4.8 volts?

Yes >> Replace the Speed Control On/Off Switch.
Perform the POWERTRAIN VERIFICATION TEST. (Refer to 9 - ENGINE - STANDARD PROCEDURE)

No >> Go To 4

---

4. SPEED CONTROL RESUME/ACCEL SWITCH

With the scan tool, monitor the Speed Control Switch voltage.

Disconnect the Speed Control Resume/Accel Switch harness connector per Service Information.

Did the voltage change to above 4.8 volts?

Yes >> Replace the Speed Control Resume/Accel Switch.
Perform the POWERTRAIN VERIFICATION TEST. (Refer to 9 - ENGINE - STANDARD PROCEDURE)

No >> Go To 5

P0580-SPEED CONTROL SWITCH 1 CIRCUIT LOW (5.7L) (CONTINUED)

5. CLOCKSPRING

Turn the ignition off.

Disconnect the clockspring harness connector (instrument panel wiring side) per Service Information.

Ignition on, engine not running.

With the scan tool, read the S/C Switch voltage.

Did the S/C Switch volts change to 5.0 volts?

Yes >> Replace the Clockspring.
Perform the POWERTRAIN VERIFICATION TEST. (Refer to 9 - ENGINE - STANDARD PROCEDURE)

No >> Go To 6

---

6. (V37) S/C SWITCH NO.1 SIGNAL CIRCUIT SHORTED TO THE (V937) S/C SWITCH RETURN CIRCUIT

Turn the ignition off.

Connect the Clockspring harness connectors per Service Information.

Disconnect the C3 PCM harness connector.

CAUTION: Do not probe the PCM harness connectors. Probing the PCM harness connectors will damage the PCM terminals resulting in poor terminal to pin connection. Install Miller Special Tool #8815 to perform diagnosis.

Measure the resistance between the (V937) S/C Switch Return circuit and the (V37) S/C Switch No.1 Signal circuit at the Speed Control Switch.

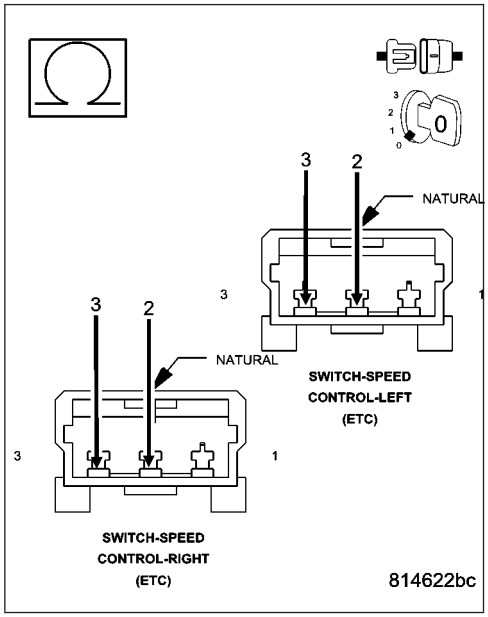

Is the resistance below 5.0 ohms?

Yes >> Repair the short between the (V37) S/C Switch No.1 Signal circuit and the (V937) S/C Switch Return circuit.
Perform the POWERTRAIN VERIFICATION TEST. (Refer to 9 - ENGINE - STANDARD PROCEDURE)

No >> Go To 7

P0580-SPEED CONTROL SWITCH 1 CIRCUIT LOW (5.7L) (CONTINUED)

7. (V37) S/C SWITCH NO.1 SIGNAL CIRCUIT SHORTED TO GROUND

Measure the resistance between ground and the (V37) S/C Switch No.1 Signal circuit in the Switch harness connector.

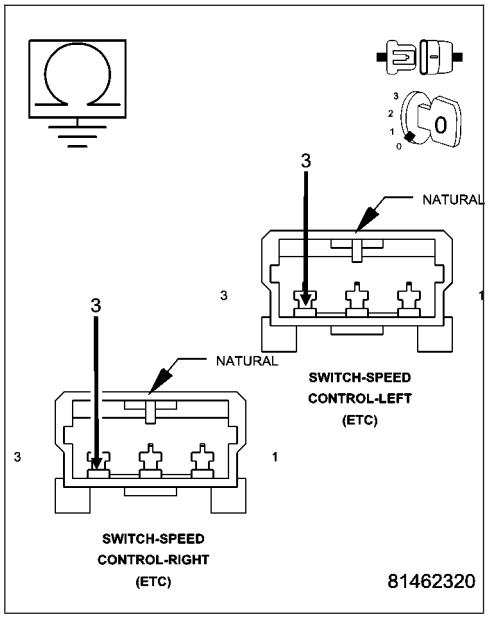

Is the resistance below 100 ohms?

Yes >> Repair the short to ground in the (V37) S/C Switch No.1 Signal circuit.
Perform the POWERTRAIN VERIFICATION TEST. (Refer to 9 - ENGINE - STANDARD PROCEDURE)

No >> Go To 8

8. SPEED CONTROL SWITCH VOLTAGE VALUES

Allow the engine to idle.

With a scan tool, monitor the S/C Switch voltage readings.

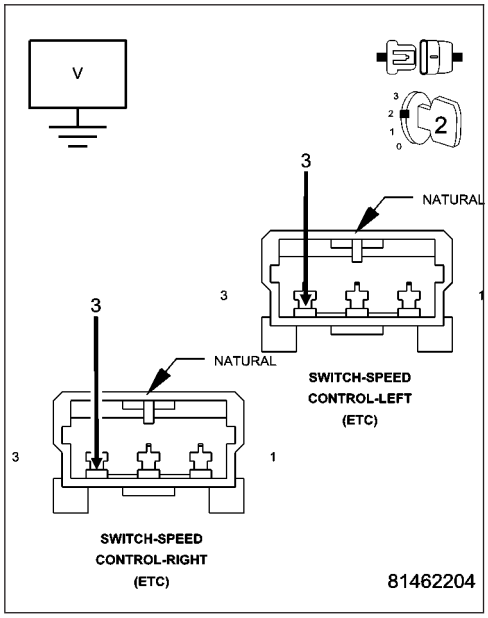

SWITCH POSITION	SWITCH No.1 VOLTAGE VALUE	SWITCH No.2 VOLATGE VALUE
NO SWITCHES PRESSED	4.31 to 4.78 volts	4.31 to 4.78 volts
ON/OFF PRESSED	0.59 to 1.13 volts	3.53 to 3.92 volts
RES/ACCEL PRESSED	3.88 to 4.17 volts	2.04 to 2.47
SET PRESSED	3.16 to 3.56 volts	1.17 to 1.56 volts
COAST PRESSED	2.57 to 2.94 volts	0.77 to 1.09 volts
CANCEL PRESSED	1.59 to 1.99 volts	2.84 to 3.25 volts

P0580-SPEED CONTROL SWITCH 1 CIRCUIT LOW (5.7L) (CONTINUED)

Take these same voltage measurements with a voltmeter by back probing the (V37) S/C Switch No.1 Signal circuit at the switches.

Compare the voltage readings on the voltmeter to what the scan tool displayed.

Are the voltage readings out of the listed specification and is there less than a 0.2 of a volt difference between the voltmeter switch values and the scan tool switch value?

Yes >> Replace the Speed Control Switch.
Perform the POWERTRAIN VERIFICATION TEST. (Refer to 9 - ENGINE - STANDARD PROCEDURE)

No >> Go To 9

---

9. PCM

NOTE: Before continuing, check the PCM harness connector terminals for corrosion, damage, or terminal push out. Repair as necessary.

Using the schematics as a guide, inspect the wire harness and connectors. Pay particular attention to all Power and Ground circuits.

Were there any problems found?

Yes >> Repair as necessary.
Perform the POWERTRAIN VERIFICATION TEST. (Refer to 9 - ENGINE - STANDARD PROCEDURE)

No >> Replace and program the Powertrain Control Module per Service Information.
Perform the POWERTRAIN VERIFICATION TEST. (Refer to 9 - ENGINE - STANDARD PROCEDURE)

P0581-SPEED CONTROL SWITCH 1 CIRCUIT HIGH (3.7L,4.7L)

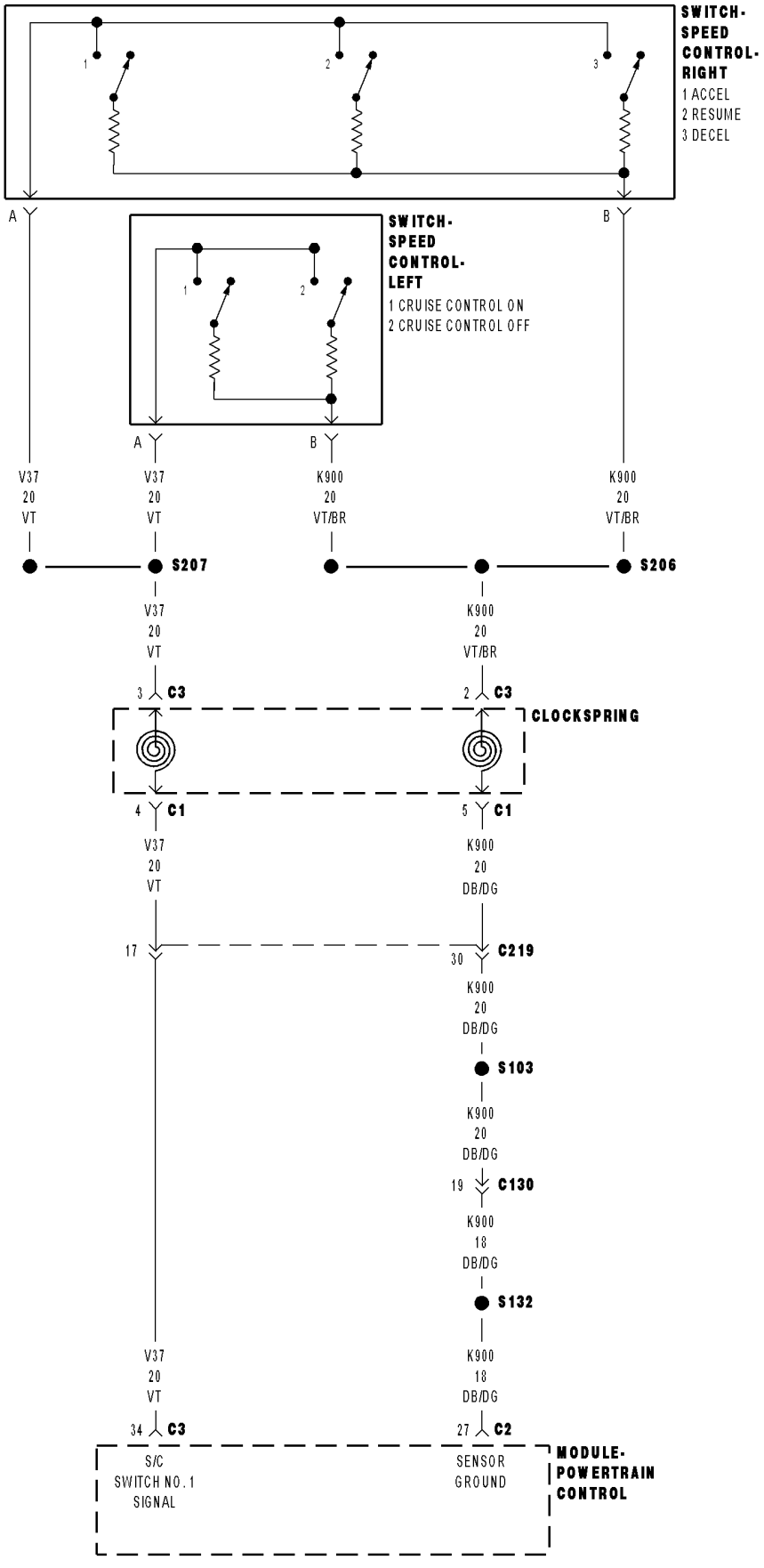

P0581-SPEED CONTROL SWITCH 1 CIRCUIT HIGH (3.7L,4.7L) (CONTINUED)

For the Engine circuit diagram (Refer to 9 - ENGINE - SCHEMATICS AND DIAGRAMS).

For a complete wiring diagram **Refer to Section 8W**.

- **When Monitored:**
  With the ignition key on. Battery voltage above 10 volts.
- **Set Condition:**
  The PCM detects an open or short to voltage in the Speed Control Switch Signal circuit. One Trip Fault. Three good trips to turn off the MIL.

Possible Causes
(V37) S/C SWITCH NO.1 SIGNAL CIRCUIT SHORTED TO BATTERY VOLTAGE
(V37) S/C SWITCH NO.1 SIGNAL CIRCUIT OPEN BETWEEN PCM AND CLOCKSPRING
(K900) SENSOR GROUND CIRCUIT OPEN BETWEEN PCM AND CLOCKSPRING
(K900) SENSOR GROUND CIRCUIT OPEN BETWEEN CLOCKSPRING AND S/C SWITCH
(V37) S/C SWITCH NO.1 SIGNAL CIRCUIT OPEN BETWEEN CLOCKSPRING AND S/C SWITCH
CLOCKSPRING
SPEED CONTROL SWITCH
PCM

Always perform the Pre-Diagnostic Troubleshooting procedure before proceeding. (Refer to 9 - ENGINE - DIAGNOSIS AND TESTING).

Diagnostic Test

1. SPEED CONTROL SWITCH VOLTAGE HIGH

NOTE: Do not press any of the Speed Control Switch buttons.
Ignition on, engine not running.
With a scan tool, read the Speed Control voltage.

Is the Speed Control voltage above 4.8 volts?

Yes >> Go To 2

No >> Refer to the INTERMITTENT CONDITION Diagnostic Procedure.
Perform the POWERTRAIN VERIFICATION TEST. (Refer to 9 - ENGINE - STANDARD PROCEDURE)

P0581-SPEED CONTROL SWITCH 1 CIRCUIT HIGH (3.7L,4.7L) (CONTINUED)

2. SPEED CONTROL SWITCHES

Turn the ignition off.

Remove the Speed Control Switches from the steering wheel.

Measure the resistance across each Speed Control Switch.

Monitor the ohmmeter while pressing each function button on each switch.

Resume/Accel - 15.4 kohms

Cancel - 1.24 kohms

Coast - 2.94 kohms

On/Off - 0.47 kohms

Set - 5.49 kohms

Does the function on the Speed Control Switches have the correct resistance value?

Yes >> Go To 3

No >> Replace the Speed Control Switch that had the incorrect resistance value.
Perform the POWERTRAIN VERIFICATION TEST. (Refer to 9 - ENGINE - STANDARD PROCEDURE)

3. CLOCKSPRING

Disconnect the upper and lower 6-way clockspring harness connector per Service Information.

Measure the resistance of the (K900) Sensor ground circuit between the upper and lower 6-way clockspring harness connectors.

Measure the resistance of the (V37) S/C Switch No.1 Signal circuit between the upper and lower 6-way clockspring harness connectors.

Was the resistance above 5.0 ohms for either circuit?

Yes >> Replace the clockspring.
Perform the POWERTRAIN VERIFICATION TEST. (Refer to 9 - ENGINE - STANDARD PROCEDURE)

No >> Go To 4

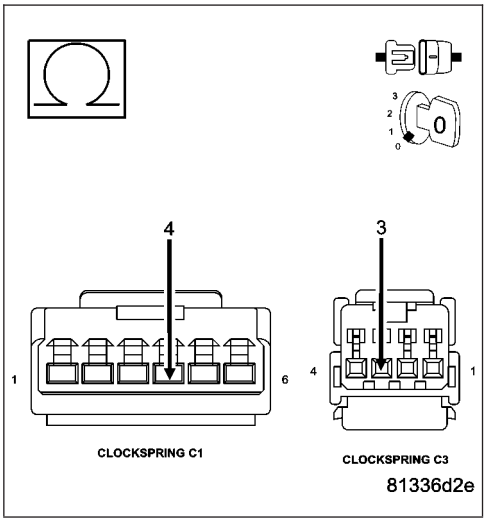

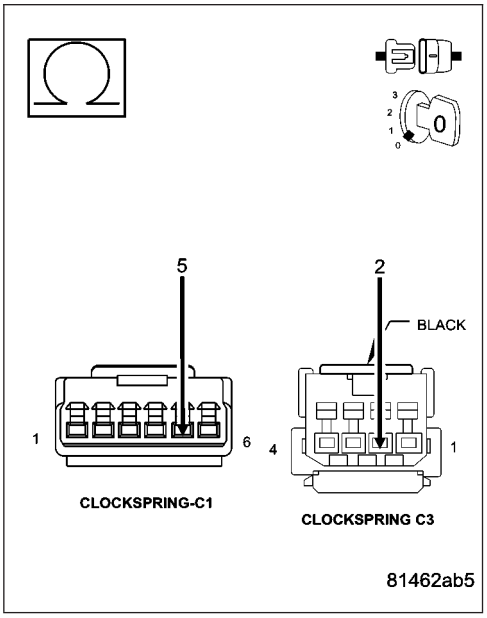

P0581-SPEED CONTROL SWITCH 1 CIRCUIT HIGH (3.7L,4.7L) (CONTINUED)

4. (V37) S/C SWITCH NO.1 SIGNAL CIRCUIT SHORTED TO BATTERY VOLTAGE

Connect the Clockspring harness connectors per Service Information.

Disconnect the C2 and C3 PCM harness connectors.

Ignition on, engine not running.

Measure the voltage on the (V37) S/C Switch No.1 Signal circuit in the Speed Control harness connector.

Is the voltage above 5.3 volts?

Yes >> Repair the short to battery voltage in the (V37) S/C Switch No.1 Signal circuit.
Perform the POWERTRAIN VERIFICATION TEST. (Refer to 9 - ENGINE - STANDARD PROCEDURE)

No >> Go To 5

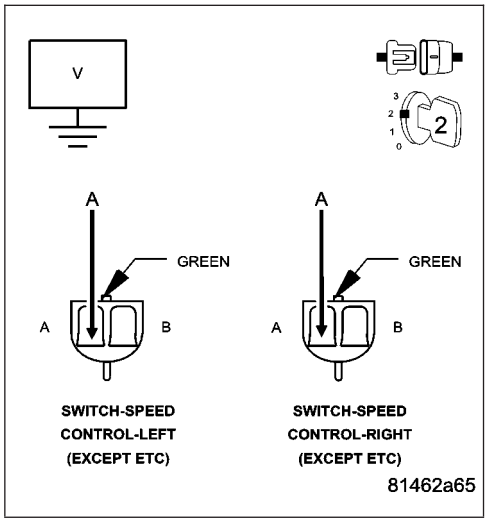

5. (V37) S/C SWITCH NO.1 SIGNAL CIRCUIT OPEN BETWEEN PCM AND CLOCKSPRING

Turn the ignition off.

Disconnect the upper and lower Clockspring harness connectors per Service Information.

CAUTION: Do not probe the PCM harness connectors. Probing the PCM harness connectors will damage the PCM terminals resulting in poor terminal to pin connection. Install Miller Special Tool #8815 to perform diagnosis.

Measure the resistance of the (V37) S/C Switch No.1 Signal circuit from the lower Clockspring harness connector to the appropriate terminal of special tool #8815.

Is the resistance below 5.0 ohms?

Yes >> Go To 6

No >> Repair the open in the (V37) S/C Switch No.1 Signal circuit between the PCM and Clockspring.
Perform the POWERTRAIN VERIFICATION TEST. (Refer to 9 - ENGINE - STANDARD PROCEDURE)

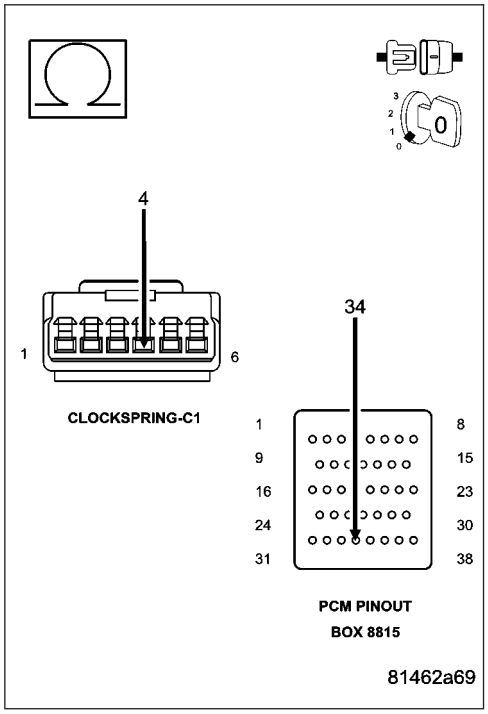

P0581-SPEED CONTROL SWITCH 1 CIRCUIT HIGH (3.7L,4.7L) (CONTINUED)

6. (K900) SENSOR GROUND CIRCUIT OPEN BETWEEN PCM AND CLOCKSPRING

Measure the resistance of the (K900) Sensor ground circuit from the lower Clockspring harness connector to the appropriate terminal of special tool #8815.

Is the resistance below 5.0 ohms?

Yes >> Go To 7

No >> Repair the open (K900) Sensor ground circuit between the PCM and Clockspring.
Perform the POWERTRAIN VERIFICATION TEST. (Refer to 9 - ENGINE - STANDARD PROCEDURE)

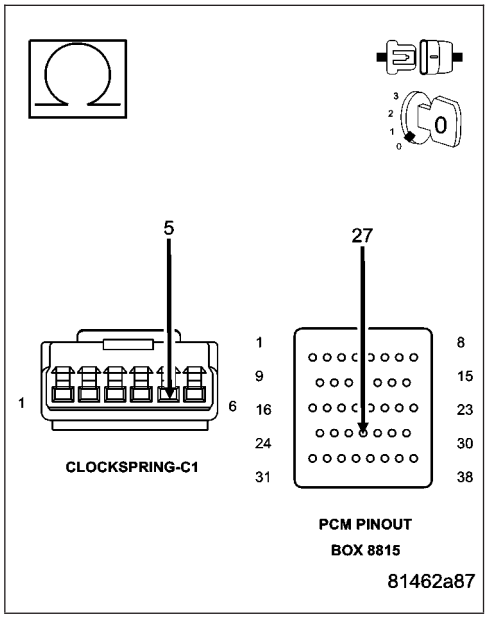

7. (V37) S/C SWITCH NO.1 SIGNAL CIRCUIT OPEN BETWEEN CLOCKSPRING AND S/C SWITCH

Measure the resistance of the (V37) S/C Switch No.1 Signal circuit from the upper Clockspring harness connector to the On/Off switch harness connector.

Is the resistance below 5.0 ohms?

Yes >> Go To 8

No >> Repair the open in the (V37) S/C Switch No.1 Signal circuit, Clockspring to S/C Switch.
Perform the POWERTRAIN VERIFICATION TEST. (Refer to 9 - ENGINE - STANDARD PROCEDURE)

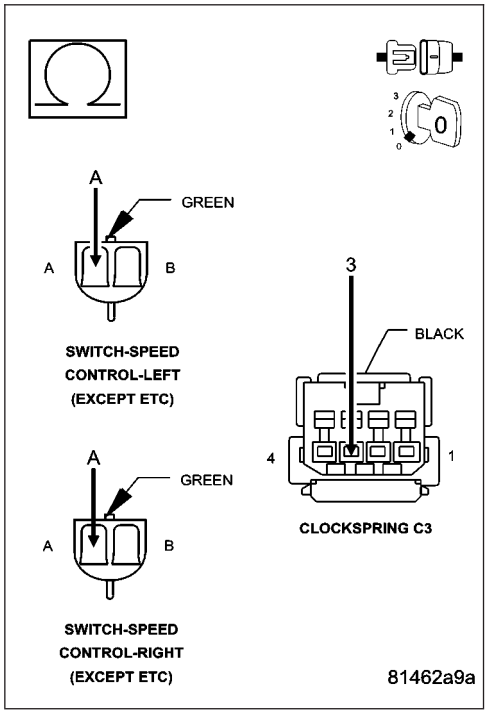

P0581-SPEED CONTROL SWITCH 1 CIRCUIT HIGH (3.7L,4.7L) (CONTINUED)

8. (K900) SENSOR GROUND CIRCUIT OPEN BETWEEN CLOCKSPRING AND S/C SWITCH

Measure the resistance of the (K900) Sensor ground circuit from the On/Off Switch 2-way harness connector to the upper Clockspring harness connector.

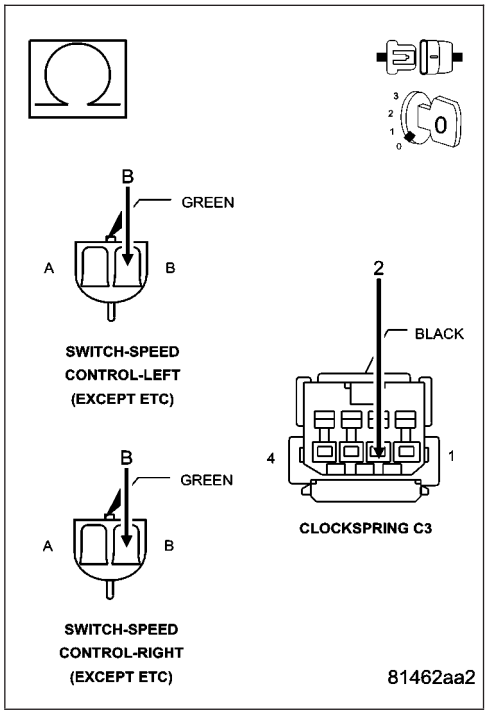

Is the resistance below 5.0 ohms?

Yes >> Go To 9

No >> Repair the open in the (K900) Sensor ground circuit between the Clockspring and S/C Switch.
Perform the POWERTRAIN VERIFICATION TEST. (Refer to 9 - ENGINE - STANDARD PROCEDURE)

9. PCM

NOTE: Before continuing, check the PCM harness connector terminals for corrosion, damage, or terminal push out. Repair as necessary.
Using the schematics as a guide, inspect the wire harness and connectors. Pay particular attention to all Power and Ground circuits.

Were there any problems found?

Yes >> Repair as necessary.
Perform the POWERTRAIN VERIFICATION TEST. (Refer to 9 - ENGINE - STANDARD PROCEDURE)

No >> Replace and program the Powertrain Control Module per Service Information.
Perform the POWERTRAIN VERIFICATION TEST. (Refer to 9 - ENGINE - STANDARD PROCEDURE)

P0581-SPEED CONTROL SWITCH 1 CIRCUIT HIGH (5.7L)

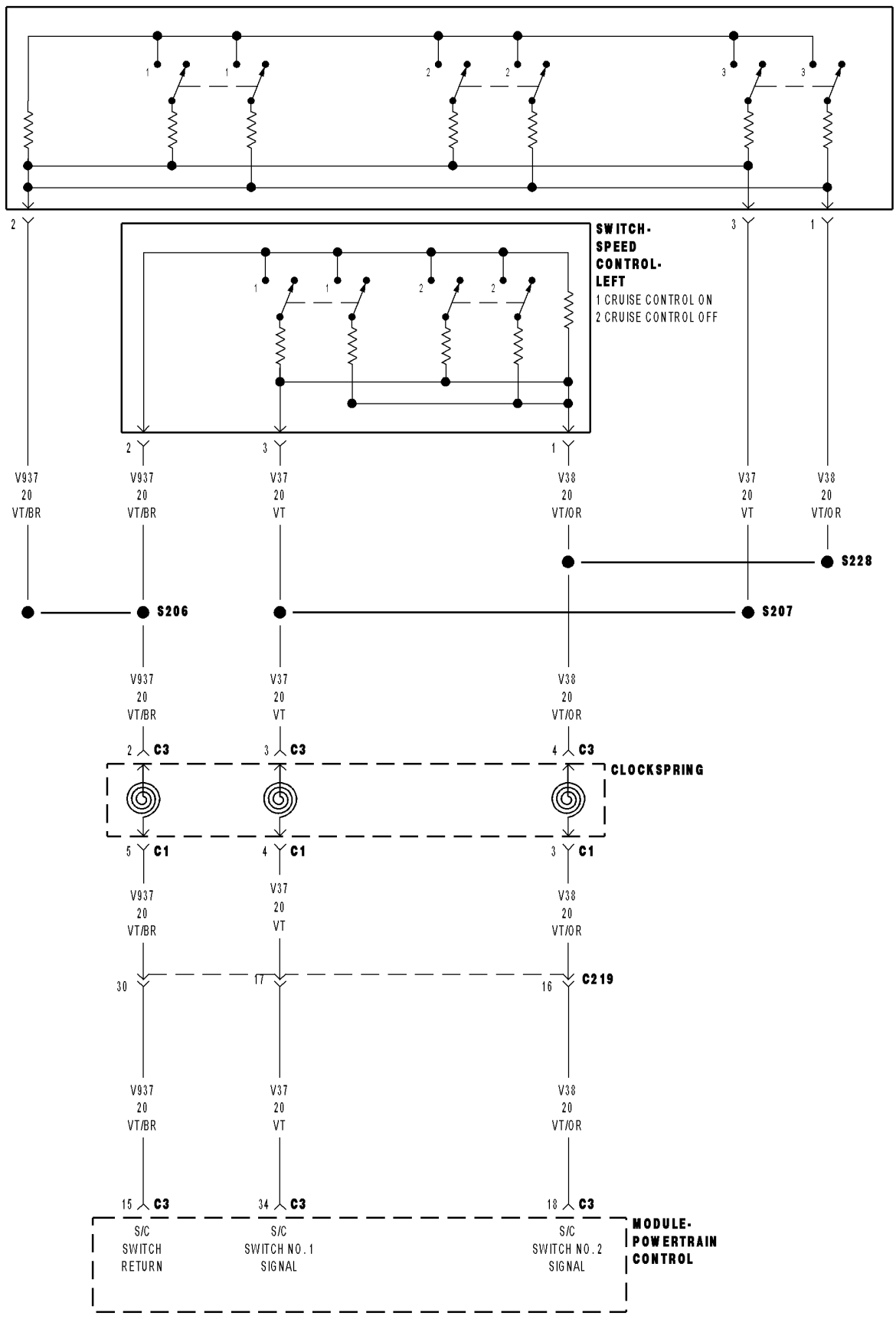

P0581-SPEED CONTROL SWITCH 1 CIRCUIT HIGH (5.7L) (CONTINUED)

For the Engine circuit diagram (Refer to 9 - ENGINE - SCHEMATICS AND DIAGRAMS).

For a complete wiring diagram **Refer to Section 8W**.

- **When Monitored:**
  With the ignition key on.
- **Set Condition:**
  Speed control switch input above the maximum acceptable voltage at the PCM. One trip fault.

Possible Causes
(V37) S/C SWITCH NO.1 SIGNAL CIRCUIT SHORTED TO BATTERY VOLTAGE
(V37) S/C SWITCH NO.1 SIGNAL CIRCUIT OPEN
(V937) SWITCH RETURN CIRCUIT OPEN
CLOCKSPRING
SPEED CONTROL SWITCH
PCM

Always perform the Pre-Diagnostic Troubleshooting procedure before proceeding. (Refer to 9 - ENGINE - DIAGNOSIS AND TESTING).

Diagnostic Test

1. SPEED CONTROL SWITCH VOLTAGE HIGH

NOTE: Do not press any of the Speed Control Switch buttons.

Ignition on, engine not running.

With a scan tool, read the Speed Control voltage.

Is the Speed Control voltage above 4.8 volts?

Yes >> Go To 2

No >> Refer to the INTERMITTENT CONDITION Diagnostic Procedure.
Perform the POWERTRAIN VERIFICATION TEST. (Refer to 9 - ENGINE - STANDARD PROCEDURE)

P0581-SPEED CONTROL SWITCH 1 CIRCUIT HIGH (5.7L) (CONTINUED)

2. SPEED CONTROL SWITCHES

Turn the ignition off.

Remove and disconnect the Speed Control Switches from the steering wheel.

Measure the resistance across each Speed Control Switch.

Monitor the ohmmeter while pressing each function button on each switch.

The following resistance specs are taken between terminals (V37) S/C Switch No.1 Signal and (V937) S/C Switch Return circuits of the Switch when holding the switch button in the following position

Not pressing any switch - 20.5 kohms

On/Off - 0.47 kohms

Set - 5.49 kohms

Coast - 2.94 kohms

Cancel - 1.24 kohms

Resume/Accel - 15.4 kohms

Does the function on the Speed Control Switches have the correct resistance value?

Yes >> Go To 3

No >> Replace the Speed Control Switch that had the incorrect resistance value.
Perform the POWERTRAIN VERIFICATION TEST. (Refer to 9 - ENGINE - STANDARD PROCEDURE)

3. CLOCKSPRING

Disconnect the upper and lower Clockspring harness connector per Service Information.

Measure the resistance of the (V937) Switch Return circuit between the upper and lower clockspring harness connectors.

Measure the resistance of the (V37) S/C Switch No.1 Signal circuit between the upper and lower clockspring harness connectors.

Was the resistance above 5.0 ohms for either circuit?

Yes >> Replace the clockspring.
Perform the POWERTRAIN VERIFICATION TEST. (Refer to 9 - ENGINE - STANDARD PROCEDURE)

No >> Go To 4

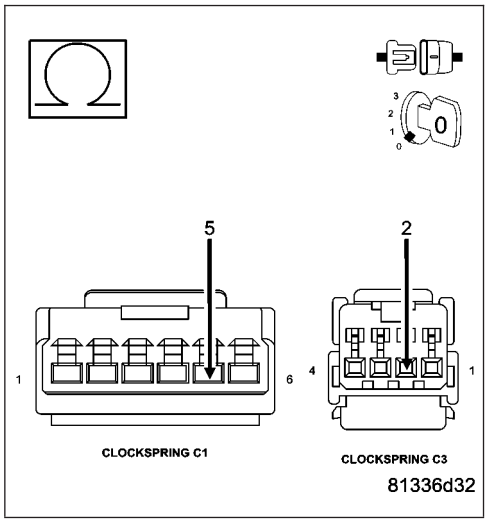

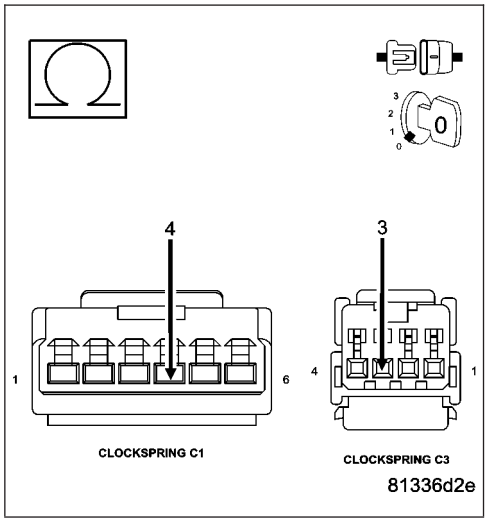

P0581-SPEED CONTROL SWITCH 1 CIRCUIT HIGH (5.7L) (CONTINUED)

4. (V37) S/C SWITCH NO.1 SIGNAL CIRCUIT SHORTED TO BATTERY VOLTAGE

Connect the Clockspring harness connectors per Service Information.
Disconnect the C3 PCM harness connector.
Ignition on, engine not running.
Measure the voltage on the (V37) S/C Switch No.1 Signal circuit in the Speed Control harness connector.

Is the voltage above 5.2 volts?

Yes >> Repair the short to battery voltage in the (V37) S/C Switch No.1 Signal circuit.
Perform the POWERTRAIN VERIFICATION TEST. (Refer to 9 - ENGINE - STANDARD PROCEDURE)

No >> Go To 5

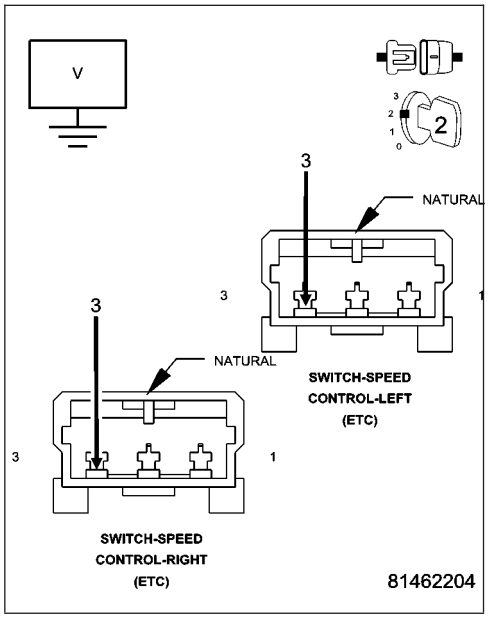

5. (V37) S/C SWITCH NO.1 SIGNAL CIRCUIT OPEN

NOTE: The measurement must be taken from both Speed Control Switch harness connectors.
Turn the ignition off.

CAUTION: Do not probe the PCM harness connectors. Probing the PCM harness connectors will damage the PCM terminals resulting in poor terminal to pin connection. Install Miller Special Tool #8815 to perform diagnosis.
Measure the resistance of the (V37) S/C Switch No.1 Signal circuit from the Speed Control harness connector to the appropriate terminal of special tool #8815.

Is the resistance below 5.0 ohms?

Yes >> Go To 6

No >> Repair the open in the (V37) S/C Switch No.1 Signal circuit.
Perform the POWERTRAIN VERIFICATION TEST. (Refer to 9 - ENGINE - STANDARD PROCEDURE)

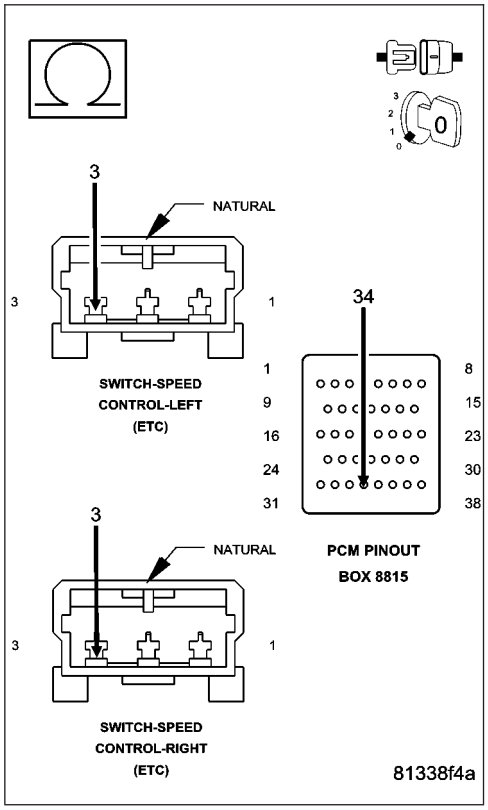

P0581-SPEED CONTROL SWITCH 1 CIRCUIT HIGH (5.7L) (CONTINUED)

6. (V937) SWITCH RETURN CIRCUIT OPEN

NOTE: The measurement must be taken from both Speed Control Switch harness connectors.

Measure the resistance of the (V937) Switch Return circuit from the Speed Control harness connector to the appropriate terminal of special tool #8815.

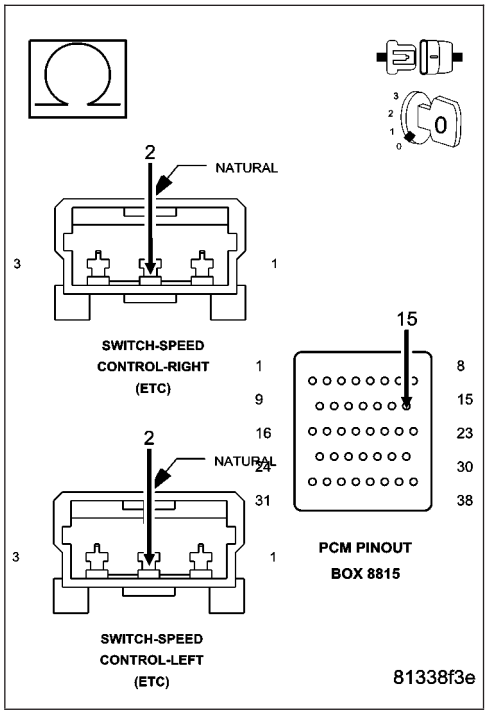

Is the resistance below 5.0 ohms?

Yes >> Go To 7

No >> Repair the open in the (V937) Switch Return circuit. Perform the POWERTRAIN VERIFICATION TEST. (Refer to 9 - ENGINE - STANDARD PROCEDURE)

P0581-SPEED CONTROL SWITCH 1 CIRCUIT HIGH (5.7L) (CONTINUED)

7. SPEED CONTROL SWITCH VOLTAGE VALUES

Allow the engine to idle.

With a scan tool, monitor the S/C Switch voltage readings.

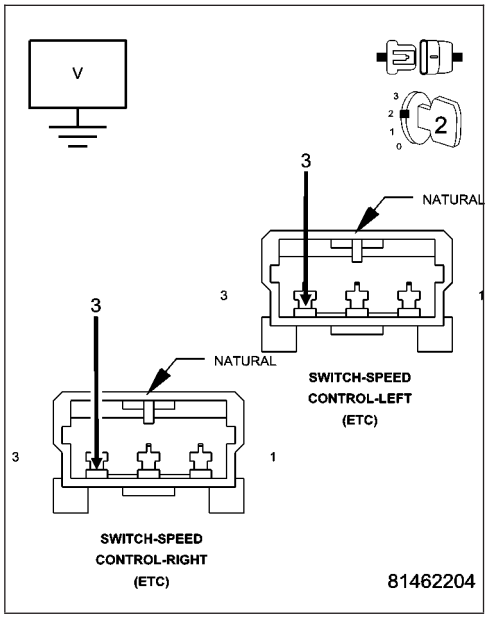

SWITCH POSITION	SWITCH No.1 VOLTAGE VALUE	SWITCH No.2 VOLATGE VALUE
NO SWITCHES PRESSED	4.31 to 4.78 volts	4.31 to 4.78 volts
ON/OFF PRESSED	0.59 to 1.13 volts	3.53 to 3.92 volts
RES/ACCEL PRESSED	3.88 to 4.17 volts	2.04 to 2.47 volts
SET PRESSED	3.16 to 3.56 volts	1.17 to 1.56 volts
COAST PRESSED	2.57 to 2.94 volts	0.77 to 1.09 volts
CANCEL PRESSED	1.59 to 1.99 volts	2.84 to 3.25 volts

Take these same voltage measurements with a voltmeter by back probing the (V37) S/C Switch No.1 Signal circuit at the switches.

Compare the voltage readings on the voltmeter to what the scan tool displayed.

Are the voltage readings out of the listed specification and is there less than a 0.2 of a volt difference between the voltmeter switch values and the scan tool switch value?

Yes >> Replace the Speed Control Switch.
Perform the POWERTRAIN VERIFICATION TEST. (Refer to 9 - ENGINE - STANDARD PROCEDURE)

No >> Go To 8

---

8. PCM

NOTE: Before continuing, check the PCM harness connector terminals for corrosion, damage, or terminal push out. Repair as necessary.

Using the schematics as a guide, inspect the wire harness and connectors. Pay particular attention to all Power and Ground circuits.

Were there any problems found?

Yes >> Repair as necessary.
Perform the POWERTRAIN VERIFICATION TEST. (Refer to 9 - ENGINE - STANDARD PROCEDURE)

No >> Replace and program the Powertrain Control Module per Service Information.
Perform the POWERTRAIN VERIFICATION TEST. (Refer to 9 - ENGINE - STANDARD PROCEDURE)

P0582-SPEED CONTROL VACUUM CONTROL CIRCUIT

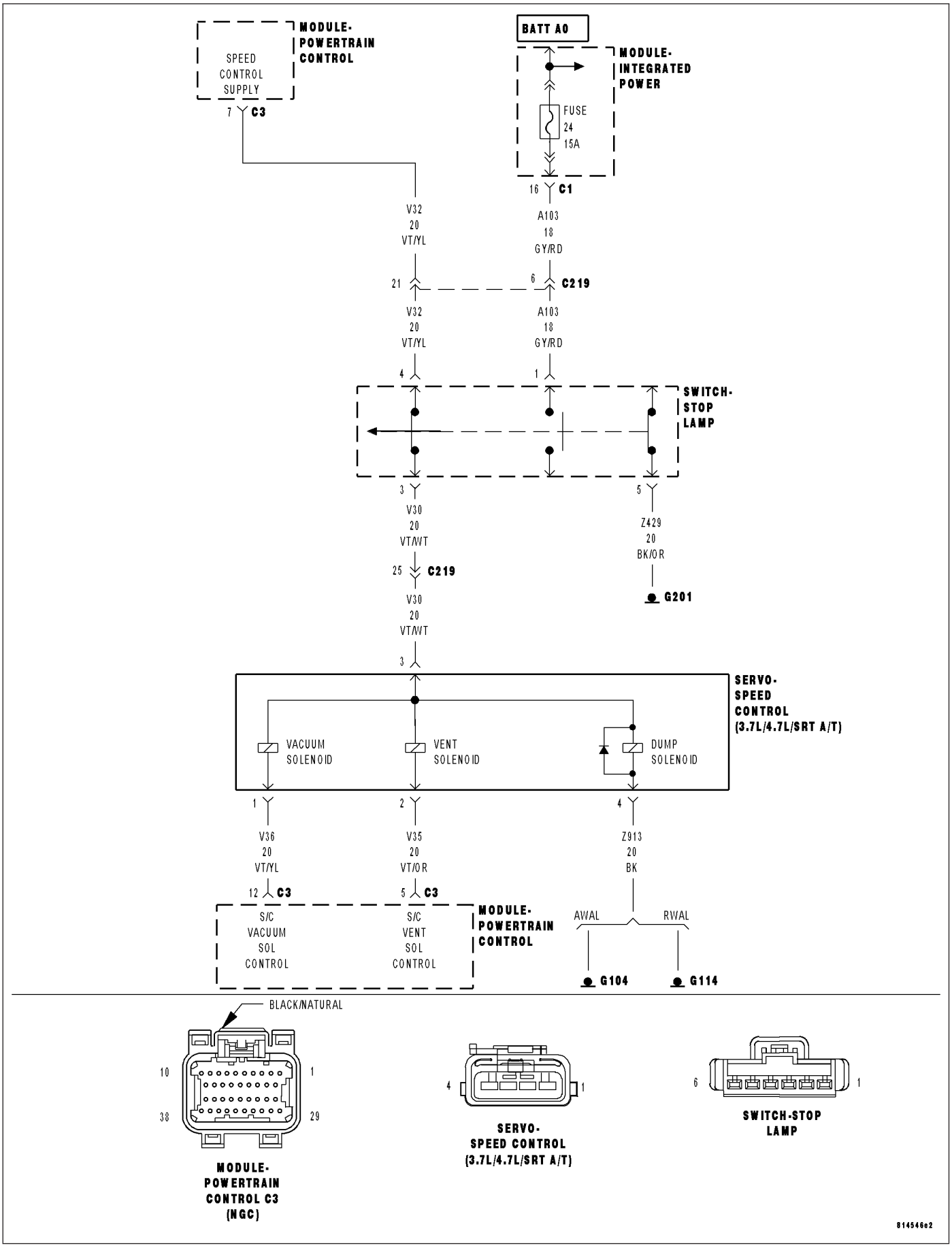

P0582-SPEED CONTROL VACUUM CONTROL CIRCUIT (CONTINUED)

For the Engine circuit diagram (Refer to 9 - ENGINE - SCHEMATICS AND DIAGRAMS).

For a complete wiring diagram **Refer to Section 8W**.

- **When Monitored:**
  Ignition on and battery voltage greater than 10 volts.
- **Set Condition:**
  An open or shorted condition detected in the Speed control vacuum solenoid control circuit. One Trip Fault. Three good trips to turn off the MIL.

Possible Causes
(V32) S/C SUPPLY CIRCUIT OPEN
(V32) S/C SUPPLY SHORT TO GROUND
(V36) S/C VACUUM SOL CONTROL CIRCUIT SHORTED TO GROUND
(V36) S/C VACUUM SOL CONTROL CIRCUIT OPEN
(Z913) GROUND CIRCUIT OPEN
SPEED CONTROL VACUUM SOLENOID
PCM

Always perform the Pre-Diagnostic Troubleshooting procedure before proceeding. (Refer to 9 - ENGINE - DIAGNOSIS AND TESTING).

Diagnostic Test

1. SPEED CONTROL VACUUM CONTROL

Ignition on, engine not running.

With the scan tool, read DTCs and record the related Freeze Frame data.

With the scan tool, actuate the Speed Control Vacuum Solenoid and note operation.

Does the Speed Control Vacuum Solenoid actuate properly?

Yes >> Refer to the INTERMITTENT CONDITION symptom in the Driveability category.
Perform the POWERTRAIN VERIFICATION TEST. (Refer to 9 - ENGINE - STANDARD PROCEDURE)

No >> Go To 2

---

2. (V30) S/C BRAKE SWITCH OUTPUT CIRCUIT

Turn the ignition off.

Disconnect the S/C Servo harness connector.

Ignition on, engine not running.

Using the scan tool, actuate the S/C Vacuum Solenoid.

Using a test light connected to ground, probe the (V30) S/C Brake Switch Output circuit in the S/C Servo harness connector.

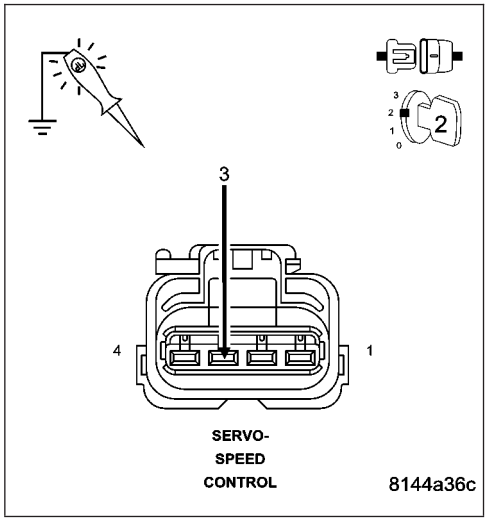

Does the test light illuminate brightly and flash on and off?

Yes >> Go To 5

No >> Go To 3

P0582-SPEED CONTROL VACUUM CONTROL CIRCUIT (CONTINUED)

3. (V32) S/C SUPPLY CIRCUIT

Turn the ignition off.

Connect the S/C Servo harness connector.

Disconnect the Stop Lamp Switch harness connector.

Ignition on, engine not running.

Using the scan tool, actuate the S/C Vacuum Solenoid.

Using a test light connected to ground, probe the (V32) S/C Supply circuit in the Stop Lamp Switch harness connector.

Does the test light illuminate brightly?

Yes >> Go To 4

No >> Go To 8

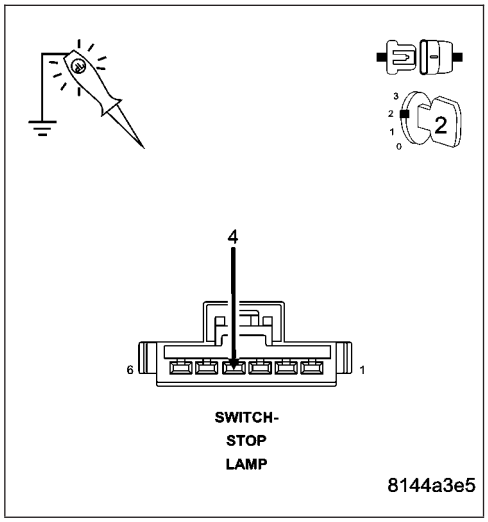

4. (Z913) S/C GROUND CIRCUIT OPEN

Turn the ignition off.

Disconnect the S/C Servo harness connector.

Measure the resistance of the (Z913) S/C Ground circuit at the S/C Servo harness connector to ground.

Is the resistance below 5.0 ohms?

Yes >> Go To 5

No >> Repair the open in the (Z913) S/C Ground circuit.
Perform the POWERTRAIN VERIFICATION TEST. (Refer to 9 - ENGINE - STANDARD PROCEDURE)

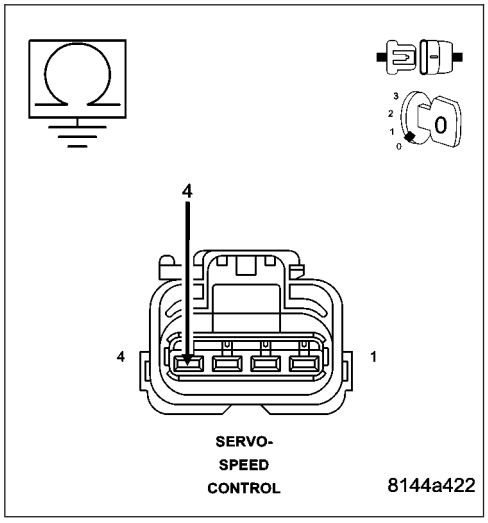

P0582-SPEED CONTROL VACUUM CONTROL CIRCUIT (CONTINUED)

5. SPEED CONTROL VACUUM SOLENOID

Ignition on, engine not running.

With the scan tool, actuate the Speed Control Vacuum Solenoid.

Using a 12-volt test light connected to battery voltage, probe the (V36) S/C Vacuum Control circuit.

Does the test light illuminate brightly and flash on and off?

Yes >> Replace the Speed Control Servo.
Perform the POWERTRAIN VERIFICATION TEST. (Refer to 9 - ENGINE - STANDARD PROCEDURE)

No >> Go To 6

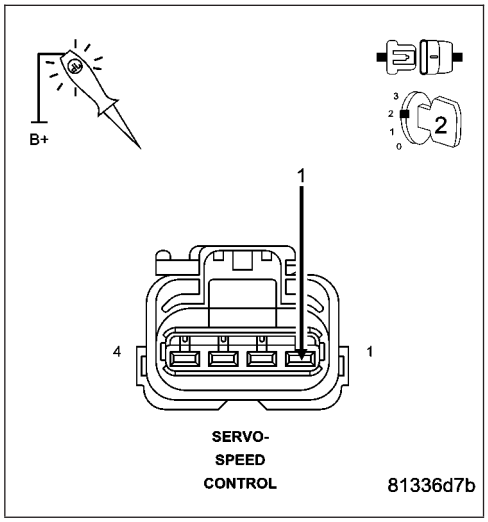

6. (V36) S/C VACUUM SOL CONTROL CIRCUIT OPEN

Turn the ignition off.

Disconnect the C3 PCM harness connector.

CAUTION: Do not probe the PCM harness connectors. Probing the PCM harness connectors will damage the PCM terminals resulting in poor terminal to pin connection. Install Miller Special Tool #8815 to perform diagnosis.

Measure the resistance of the (V36) S/C Vacuum Sol Control circuit from the Speed Control Servo harness connector to the appropriate terminal of special tool #8815.

Is the resistance below 5.0 ohms?

Yes >> Go To 7

No >> Repair the open/high resistance in the (V36) S/C Vacuum Sol Control circuit.
Perform the POWERTRAIN VERIFICATION TEST. (Refer to 9 - ENGINE - STANDARD PROCEDURE)

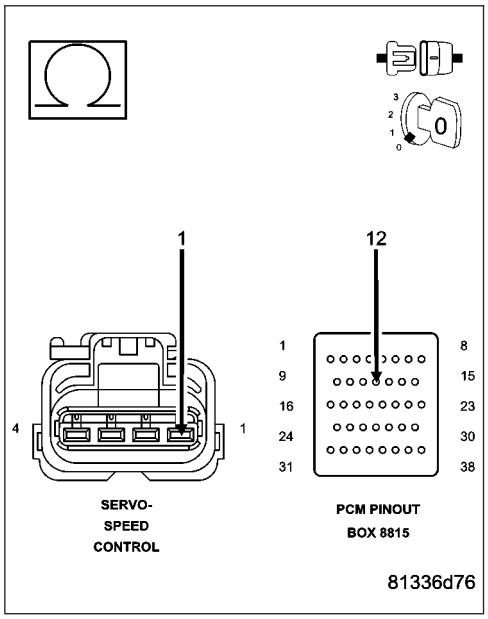

P0582-SPEED CONTROL VACUUM CONTROL CIRCUIT (CONTINUED)

7. (V36) SPEED CONTROL VACUUM SOLENOID CONTROL CIRCUIT SHORTED TO GROUND

Measure the resistance between ground and the (V36) S/C Vacuum Solenoid Control circuit at the Speed Control Servo harness connector.

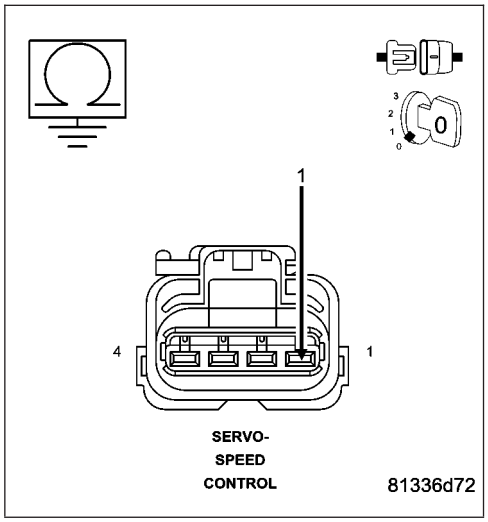

Is the resistance below 100 ohms?

Yes >> Repair the short to ground in the (V36) S/C Vacuum Sol Control circuit.
Perform the POWERTRAIN VERIFICATION TEST. (Refer to 9 - ENGINE - STANDARD PROCEDURE)

No >> Go To 10

---

8. (V32) S/C SUPPLY OPEN

Turn the ignition off.

Disconnect the C3 PCM harness connector.

CAUTION: Do not probe the PCM harness connectors. Probing the PCM harness connectors will damage the PCM terminals resulting in poor terminal to pin connection. Install Miller Special Tool #8815 to perform diagnosis.

Measure the resistance of the (V32) S/C Supply circuit from the Stop Lamp Switch harness connector to the appropriate terminal of special tool #8815.

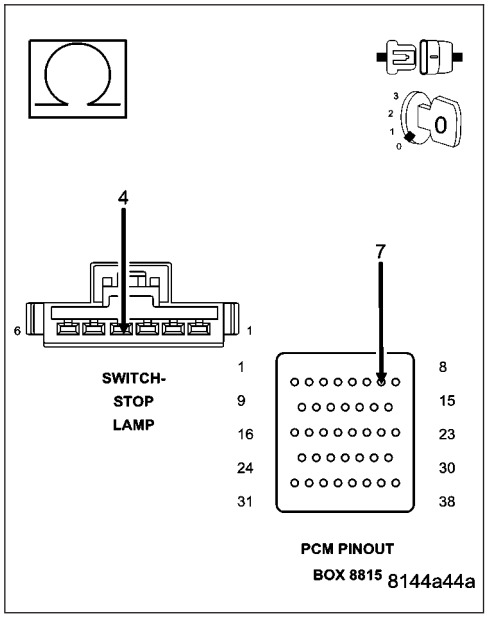

Is the resistance below 5.0 ohms?

Yes >> Go To 9

No >> Repair the open/high resistance in the (V32) S/C Supply circuit.
Perform the POWERTRAIN VERIFICATION TEST. (Refer to 9 - ENGINE - STANDARD PROCEDURE)

P0582-SPEED CONTROL VACUUM CONTROL CIRCUIT (CONTINUED)

9. (V32) S/C SUPPLY CIRCUIT SHORTED TO GROUND

Measure the resistance between ground and the (V32) S/C Supply circuit at the Speed Control Servo harness connector.

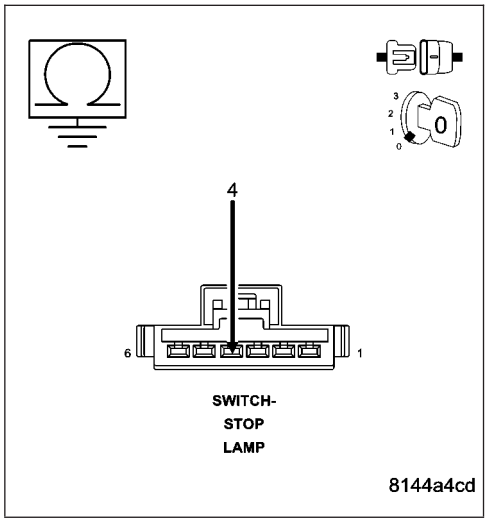

Is the resistance below 100 ohms?

Yes >> Repair the short to ground in the (V32) S/C Supply circuit. Perform the POWERTRAIN VERIFICATION TEST. (Refer to 9 - ENGINE - STANDARD PROCEDURE)

No >> Go To 10

---

10. PCM

NOTE: Before continuing, check the PCM harness connector terminals for corrosion, damage, or terminal push out. Repair as necessary.

Were there any problems found?

Yes >> Repair as necessary.
Perform the POWERTRAIN VERIFICATION TEST. (Refer to 9 - ENGINE - STANDARD PROCEDURE)

No >> Replace and program the Powertrain Control Module per Service Information.
Perform the POWERTRAIN VERIFICATION TEST. (Refer to 9 - ENGINE - STANDARD PROCEDURE)

P0585-SPEED CONTROL SWITCH 1/2 CORRELATION (5.7L)

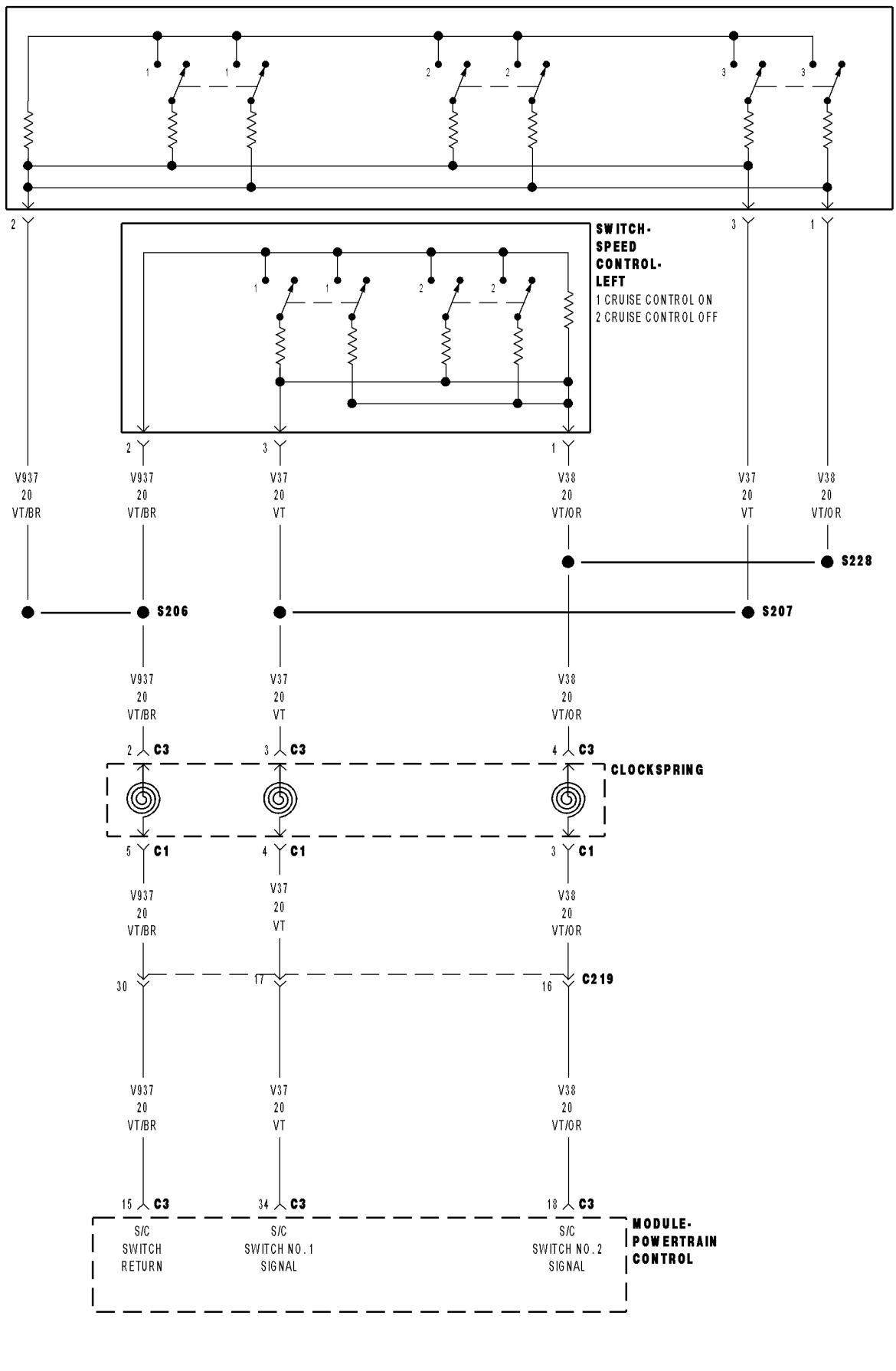

P0585-SPEED CONTROL SWITCH 1/2 CORRELATION (5.7L) (CONTINUED)

For the Engine circuit diagram (Refer to 9 - ENGINE - SCHEMATICS AND DIAGRAMS).

For a complete wiring diagram **Refer to Section 8W**.

- **When Monitored:**
  Ignition on.
- **Set Condition:**
  Cruise Switch inputs are not coherent with each other. Example: PCM is reading Switch No.1 as Accel and Switch No.2 as Coast at the same time. One trip fault.

Possible Causes
S/C SWITCH SIGNAL CIRCUITS SHORTED TO BATTERY VOLTAGE
RESISTANCE IN THE S/C SWITCH SIGNAL CIRCUITS
RESISTANCE IN THE (V937) SWITCH RETURN CIRCUIT
S/C SWITCH SIGNAL CIRCUITS SHORTED TO THE (V937) SWITCH RETURN CIRCUIT
(V37) S/C SWITCH NO.1 SIGNAL CIRCUIT SHORTED TO THE (V38) S/C SWITCH NO.2 SIGNAL CIRCUIT
S/C SWITCH SIGNAL CIRCUITS SHORTED TO GROUND
CLOCKSPRING
SPEED CONTROL ON/OFF SWITCH
SPEED CONTROL RESUME/ACCEL SWITCH
PCM

Always perform the Pre-Diagnostic Troubleshooting procedure before proceeding. (Refer to 9 - ENGINE - DIAGNOSIS AND TESTING).

Diagnostic Test

1. ACTIVE DTC

Ignition on, engine not running.

NOTE: This DTC may be the result of pressing two Speed Control Switch buttons simultaneously for more than 450 msec.

Ask the customer if it is possible that two buttons were pressed at the same time before this DTC set. If this is the case, no repair is necessary.

Is the DTC active a this time?

Yes >> Go To 2

No >> Refer to the INTERMITTENT CONDITION Diagnostic Procedure.
Perform the POWERTRAIN VERIFICATION TEST. (Refer to 9 - ENGINE - STANDARD PROCEDURE)

---

2. SPEED CONTROL ON/OFF SWITCH

With the scan tool, monitor the Speed Control Switch voltage.

Disconnect the Speed Control On/Off Switch harness connector.

Did the voltage change to above 4.8 volts?

Yes >> Replace the Speed Control On/Off Switch.
Perform the POWERTRAIN VERIFICATION TEST. (Refer to 9 - ENGINE - STANDARD PROCEDURE)

No >> Go To 3

P0585-SPEED CONTROL SWITCH 1/2 CORRELATION (5.7L) (CONTINUED)

3. SPEED CONTROL RESUME/ACCEL SWITCH

With the scan tool, monitor the Speed Control Switch voltage.

Disconnect the Speed Control Resume/Accel Switch harness connector.

Did the voltage change to above 4.8 volts?

Yes >> Replace the Speed Control Resume/Accel Switch.
Perform the POWERTRAIN VERIFICATION TEST. (Refer to 9 - ENGINE - STANDARD PROCEDURE)

No >> Go To 4

---

4. SPEED CONTROL SWITCHES

Turn the ignition off.

Remove and disconnect the Speed Control Switches from the steering wheel per Service Information.

Measure the resistance across each Speed Control Switch.

Monitor the ohmmeter while pressing each function button on each switch.

The following resistance specs are taken between terminals (V38) S/C Switch No.2 Signal and (V937) S/C Switch Return circuits of the Switch when holding the switch button in the following position.

Not pressing any switch - 20.5 kohms

On/Off - 8.87 kohms

Set - 0.825 kohms

Coast - 0.47 kohms

Cancel - 3.92 kohms

Resume/Accel - 1.87 kohms

The following resistance specs are taken between terminals (V37) S/C Switch No.1 Signal and (V937) S/C Switch Return circuits of the Switch when holding the switch button in the following position

Not pressing any switch - 20.5 kohms

On/Off - 0.47 kohms

Set - 5.49 kohms

Coast - 2.94 kohms

Cancel - 1.24 kohms

Resume/Accel - 15.4 kohms

Does the function on the Speed Control Switches have the correct resistance value?

Yes >> Go To 5

No >> Replace the Speed Control Switch that had the incorrect resistance value.
Perform the POWERTRAIN VERIFICATION TEST. (Refer to 9 - ENGINE - STANDARD PROCEDURE)

P0585-SPEED CONTROL SWITCH 1/2 CORRELATION (5.7L) (CONTINUED)

5. S/C SWITCH SIGNAL CIRCUIT SHORTED TO BATTERY VOLTAGE

Disconnect the C3 PCM harness connector.

Measure the voltage on the (V37) and (V38) S/C Switch Signal circuits at both Speed Control harness connectors.

Is the voltage above 5.0 volts?

Yes >> Repair the short to battery voltage in the (V37) or (V38) S/C Switch Signal circuit.

Perform the POWERTRAIN VERIFICATION TEST. (Refer to 9 - ENGINE - STANDARD PROCEDURE)

No >> Go To 6

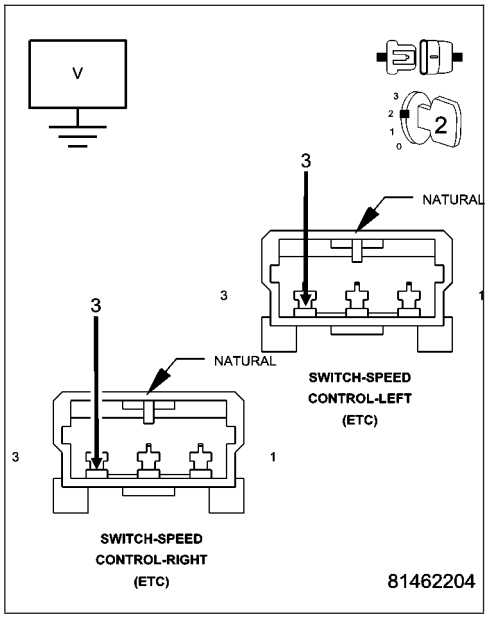

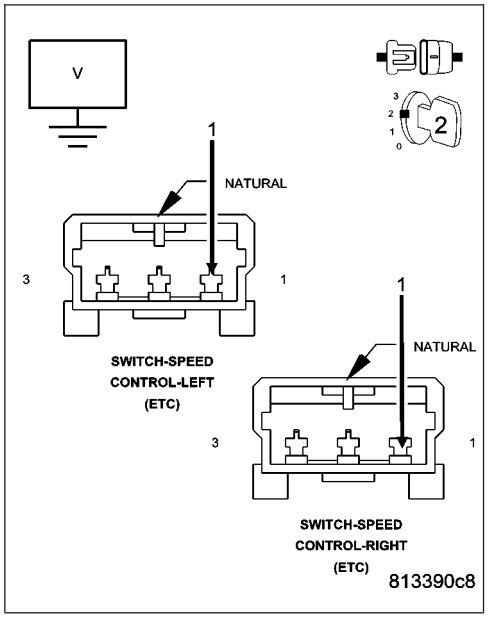

P0585-SPEED CONTROL SWITCH 1/2 CORRELATION (5.7L) (CONTINUED)

6. CLOCKSPRING

Turn the ignition off.

Disconnect the upper and lower clockspring harness connectors per Service Information.

Measure the resistance of the (V37) and (V38) S/C Switch Signal circuits between the upper and lower clockspring harness connectors.

Measure the resistance of the (V937) Switch Return circuit between the upper and lower clockspring harness connectors.

Is the resistance above 5.0 ohms?

Yes >> Replace the Clockspring per Service Information.
Perform the POWERTRAIN VERIFICATION TEST. (Refer to 9 - ENGINE - STANDARD PROCEDURE)

No >> Go To 7

NOTE: Connect the Clockspring harness connectors per Service Information before continuing.

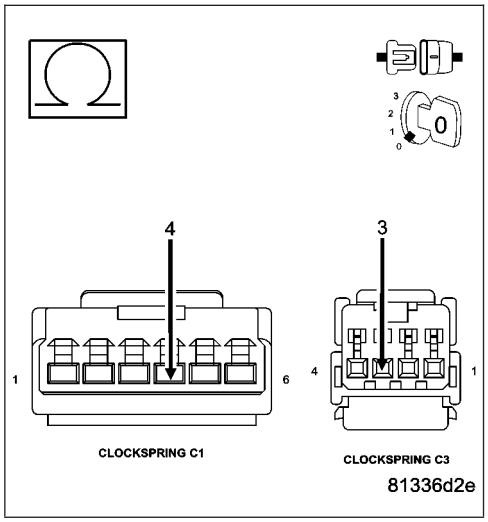

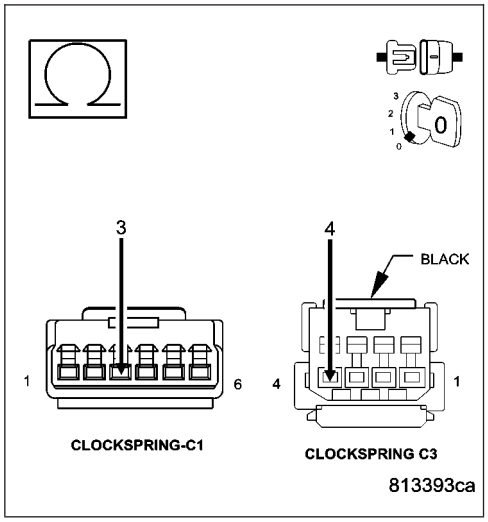

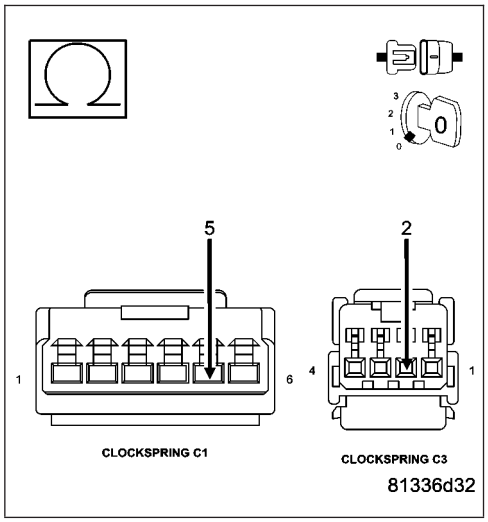

P0585-SPEED CONTROL SWITCH 1/2 CORRELATION (5.7L) (CONTINUED)

7. S/C SWITCH SIGNAL CIRCUIT OPEN

CAUTION: Do not probe the PCM harness connectors. Probing the PCM harness connectors will damage the PCM terminals resulting in poor terminal to pin connection. Install Miller Special Tool #8815 to perform diagnosis.

Measure the resistance of the (V37) and (V38) S/C Switch Signal circuits from both Speed Control harness connectors to the appropriate terminals of special tool #8815.

Is the resistance below 5.0 ohms for each measurement?

Yes >> Go To 8

No >> Repair the excessive resistance in the (V37) or (V38) S/C Switch Signal circuit.

Perform the POWERTRAIN VERIFICATION TEST. (Refer to 9 - ENGINE - STANDARD PROCEDURE)

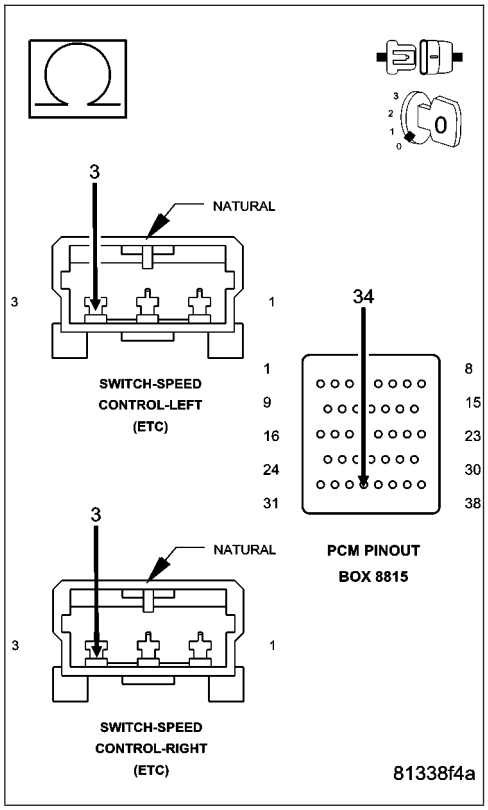

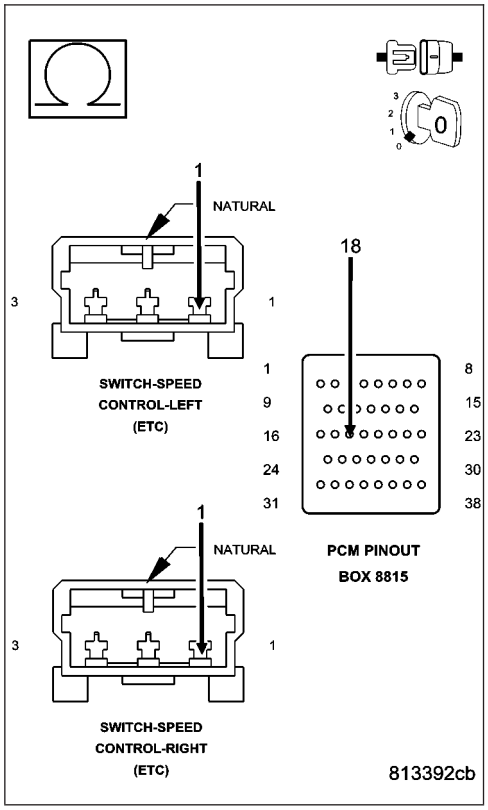

P0585-SPEED CONTROL SWITCH 1/2 CORRELATION (5.7L) (CONTINUED)

8. (V937) SWITCH RETURN CIRCUIT OPEN

NOTE: The measurement must be taken from both Speed Control Switch harness connectors.

Measure the resistance of the (V937) Switch Return circuit from both Speed Control harness connector to the appropriate terminal of special tool #8815.

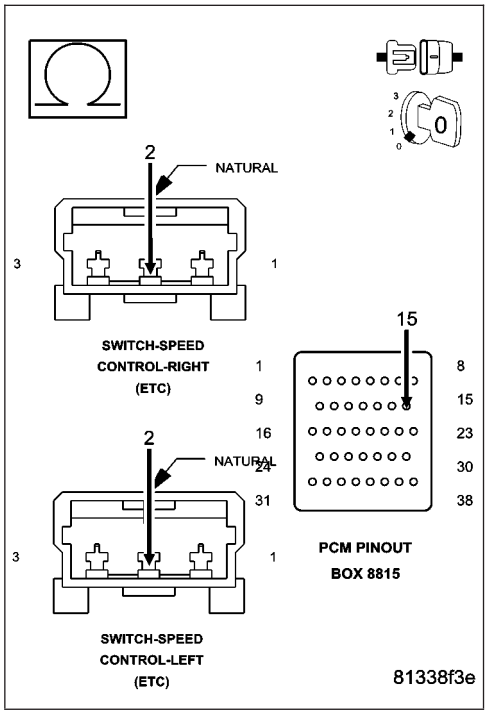

Is the resistance below 5.0 ohms for both measurements?

Yes >> Go To 9

No >> Repair the excessive resistance in the (V937) Switch Return circuit.

Perform the POWERTRAIN VERIFICATION TEST. (Refer to 9 - ENGINE - STANDARD PROCEDURE)

P0585-SPEED CONTROL SWITCH 1/2 CORRELATION (5.7L) (CONTINUED)

9. S/C SWITCH SIGNAL CIRCUITS SHORTED TO THE (V937) SWITCH RETURN CIRCUIT

Measure the resistance between the (V937) Switch Return circuit and both of the (V37) and (V38) S/C Switch Signal circuits in the Speed Control harness connector.

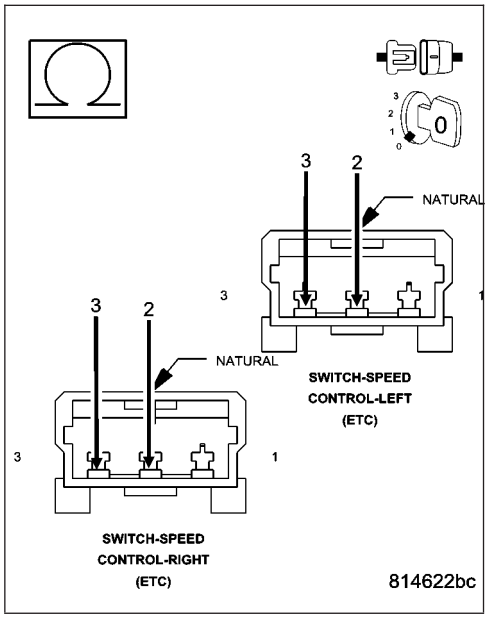

Is the resistance below 5.0 ohms?

Yes >> Repair the short between the (V937) Switch Return circuit and the (V37) or (V38) S/C Switch Signal circuit.

Perform the POWERTRAIN VERIFICATION TEST. (Refer to 9 - ENGINE - STANDARD PROCEDURE)

No >> Go To 10

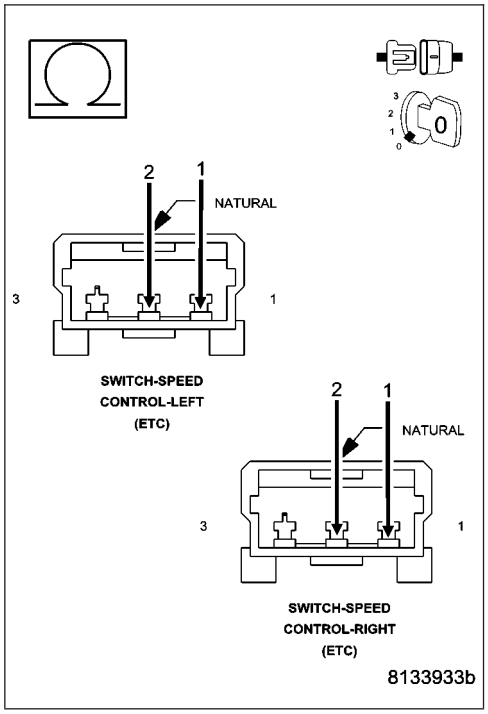

P0585-SPEED CONTROL SWITCH 1/2 CORRELATION (5.7L) (CONTINUED)

10. (V37) S/C SWITCH NO.1 SIGNAL CIRCUIT SHORTED TO THE (V38) S/C SWITCH NO.2 SIGNAL CIRCUIT

Measure the resistance between the (V37) S/C Switch No.1 Signal circuit and the (V38) S/C Switch No.2 Signal circuit at both Speed Control harness connectors.

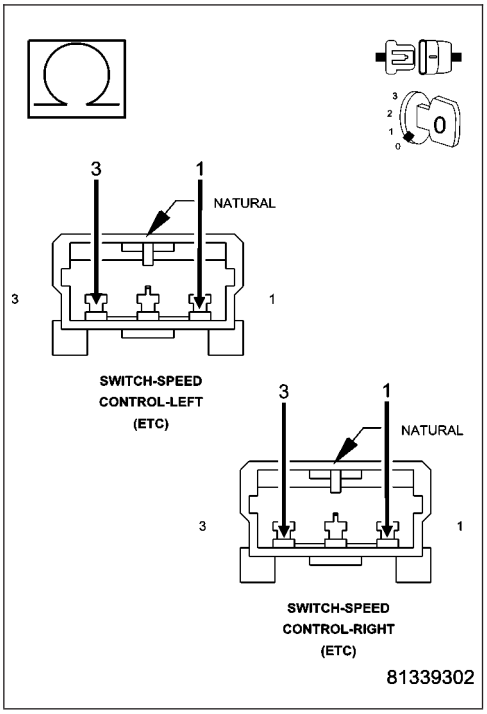

Is the resistance below 100 ohms for each circuit?

Yes >> Repair the short between the (V38) S/C Switch No.2 Signal circuit and the (V37) S/C Switch No.1 Signal circuit.
Perform the POWERTRAIN VERIFICATION TEST. (Refer to 9 - ENGINE - STANDARD PROCEDURE)

No >> Go To 11

P0585-SPEED CONTROL SWITCH 1/2 CORRELATION (5.7L) (CONTINUED)

11. S/C SWITCH SIGNAL CIRCUITS SHORTED TO GROUND

Measure the resistance between ground and the (V37) and (V38) S/C Switch Signal circuits at both Switch harness connectors.

Is the resistance below 100 ohms?

Yes >> Repair the short to ground in the (V37) or (V38) S/C Switch Signal circuit.

Perform the POWERTRAIN VERIFICATION TEST. (Refer to 9 - ENGINE - STANDARD PROCEDURE)

No >> Go To 12

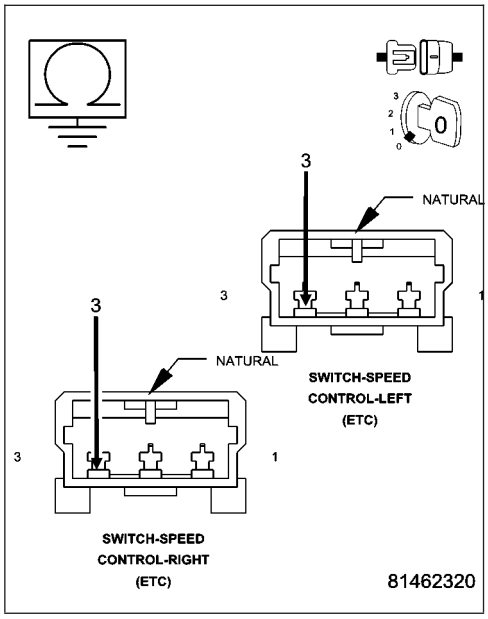

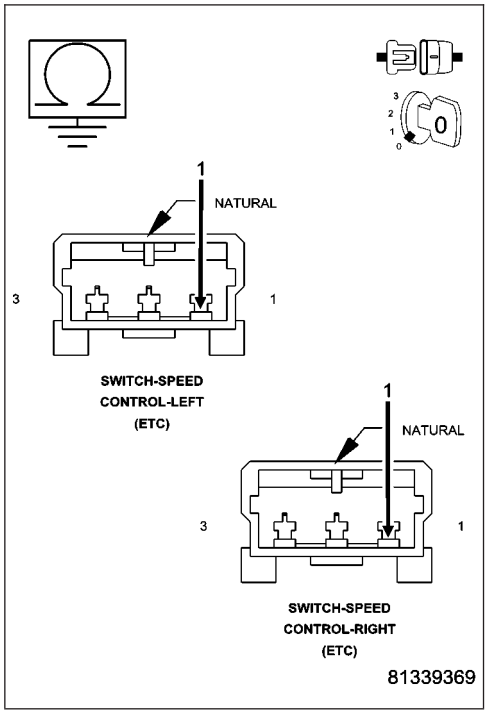

P0585-SPEED CONTROL SWITCH 1/2 CORRELATION (5.7L) (CONTINUED)

12. SPEED CONTROL SWITCH VOLTAGE VALUES

Allow the engine to idle.
With a scan tool, monitor the S/C Switch voltage readings.

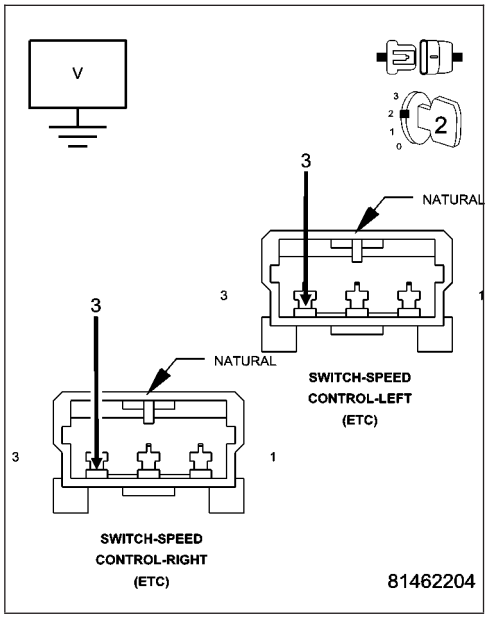

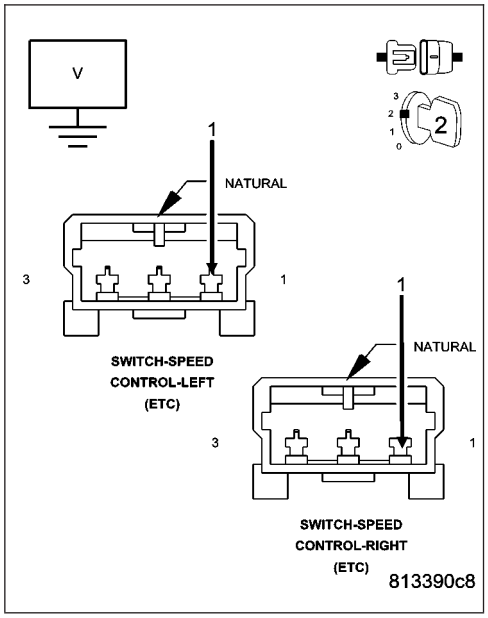

SWITCH POSITION	SWITCH No.1 VOLTAGE VALUE	SWITCH No.2 VOLATGE VALUE
NO SWITCHES PRESSED	4.31 to 4.78 volts	4.31 to 4.78 volts
ON/OFF PRESSED	0.59 to 1.13 volts	3.53 to 3.92 volts
RES/ACCEL PRESSED	3.88 to 4.17 volts	2.04 to 2.47 volts
SET PRESSED	3.16 to 3.56 volts	1.17 to 1.56 volts
COAST PRESSED	2.57 to 2.94 volts	0.77 to 1.09 volts
CANCEL PRESSED	1.59 to 1.99 volts	2.84 to 3.25 volts

P0585-SPEED CONTROL SWITCH 1/2 CORRELATION (5.7L) (CONTINUED)

Take these same voltage measurements with a voltmeter by back probing the (V37) S/C Switch No.1 Signal circuit and the (V38) S/C Switch No.2 Signal circuit at the switches.

Compare the voltage readings on the voltmeter to what the scan tool displayed.

Are the voltage readings out of the listed specification and is there less than a 0.2 of a volt difference between the voltmeter switch values and the scan tool switch values?

Yes >> Replace the Speed Control Switch.
Perform the POWERTRAIN VERIFICATION TEST. (Refer to 9 - ENGINE - STANDARD PROCEDURE)

No >> Go To 13

---

13. PCM

NOTE: Before continuing, check the PCM harness connector terminals for corrosion, damage, or terminal push out. Repair as necessary.

Using the schematics as a guide, inspect the wire harness and connectors. Pay particular attention to all Power and Ground circuits.

Were there any problems found?

Yes >> Repair as necessary.
Perform the POWERTRAIN VERIFICATION TEST. (Refer to 9 - ENGINE - STANDARD PROCEDURE)

No >> Replace and program the Powertrain Control Module per Service Information.
Perform the POWERTRAIN VERIFICATION TEST. (Refer to 9 - ENGINE - STANDARD PROCEDURE)

P0586-SPEED CONTROL VENT CONTROL CIRCUIT

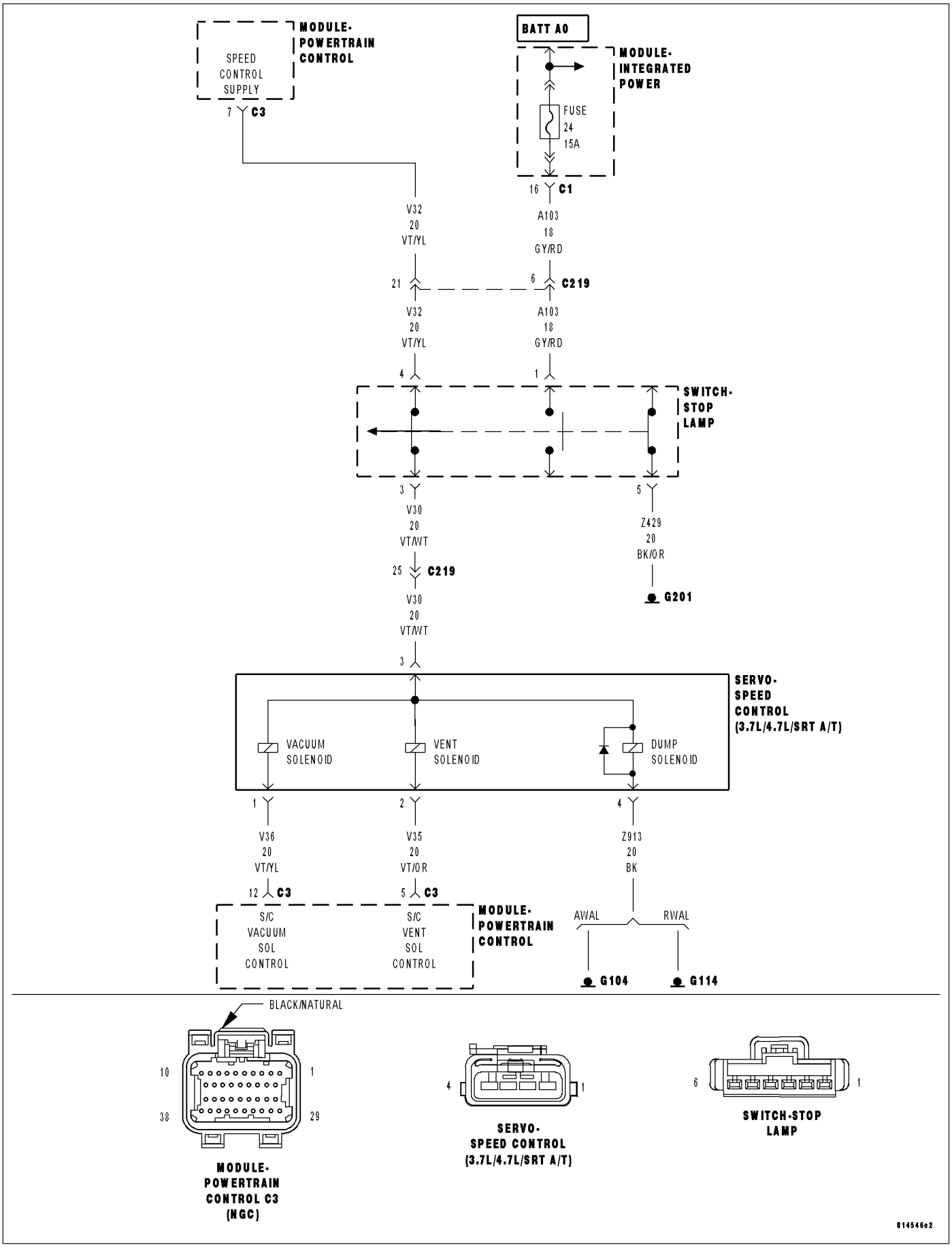

P0586-SPEED CONTROL VENT CONTROL CIRCUIT (CONTINUED)

For the Engine circuit diagram (Refer to 9 - ENGINE - SCHEMATICS AND DIAGRAMS).

For a complete wiring diagram **Refer to Section 8W**.

- **When Monitored:**
  Ignition on and battery voltage greater than 10 volts.
- **Set Condition:**
  An open or shorted condition detected in the Speed control vent solenoid control circuit. One Trip Fault. Three good trips to turn off the MIL.

Possible Causes
(V32) S/C SUPPLY CIRCUIT OPEN
(V32) S/C SUPPLY SHORT TO GROUND
(V35) S/C VENT SOL CONTROL CIRCUIT SHORTED TO GROUND
(V35) S/C VENT SOL CONTROL CIRCUIT OPEN
(Z913) GROUND CIRCUIT OPEN
SPEED CONTROL VENT SOLENOID
PCM

Always perform the Pre-Diagnostic Troubleshooting procedure before proceeding. (Refer to 9 - ENGINE - DIAGNOSIS AND TESTING).

Diagnostic Test

1. SPEED CONTROL VENT CONTROL

Ignition on, engine not running.

With the scan tool, read DTCs and record the related Freeze Frame data.

With the scan tool, actuate the Speed Control Vent Solenoid and note operation.

Does the Speed Control Vacuum Solenoid actuate properly?

Yes >> Refer to the INTERMITTENT CONDITION symptom in the Driveability category.
Perform the POWERTRAIN VERIFICATION TEST. (Refer to 9 - ENGINE - STANDARD PROCEDURE)

No >> Go To 2

---

2. (V30) S/C BRAKE SWITCH OUTPUT CIRCUIT

Turn the ignition off.

Disconnect the S/C Servo harness connector.

Ignition on, engine not running.

Using the scan tool, actuate the S/C Vent Solenoid.

Using a test light connected to ground, probe the (V30) S/C Brake Switch Output circuit in the S/C Servo harness connector.

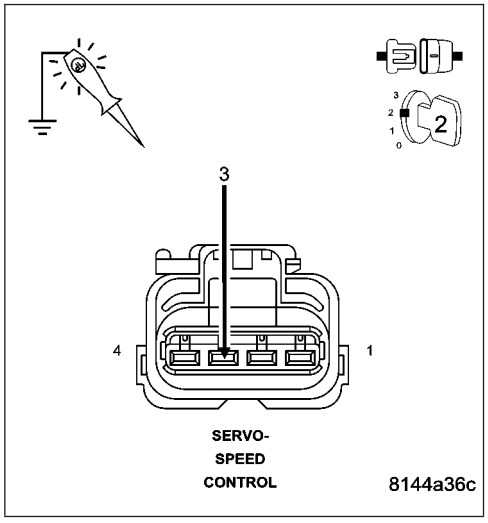

Does the test light illuminate brightly and flash on and off?

Yes >> Go To 5

No >> Go To 3

P0586-SPEED CONTROL VENT CONTROL CIRCUIT (CONTINUED)

3. (V32) S/C SUPPLY CIRCUIT

Turn the ignition off.

Connect the S/C Servo harness connector.

Disconnect the Stop Lamp Switch harness connector.

Ignition on, engine not running.

Using the scan tool, actuate the S/C Vent Solenoid.

Using a test light connected to ground, probe the (V32) S/C Supply circuit in the Stop Lamp Switch harness connector.

Does the test light illuminate brightly?

Yes >> Go To 4

No >> Go To 8

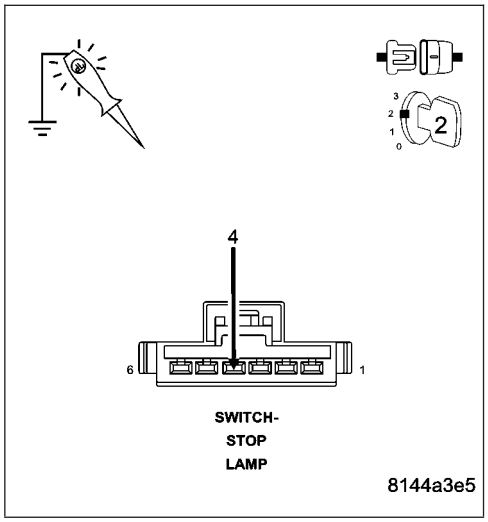

4. (Z913) S/C GROUND CIRCUIT OPEN

Turn the ignition off.

Disconnect the S/C Servo harness connector.

Measure the resistance of the (Z913) S/C Ground circuit at the S/C Servo harness connector to ground.

Is the resistance below 5.0 ohms?

Yes >> Go To 5

No >> Repair the open in the (Z913) S/C Ground circuit.
Perform the POWERTRAIN VERIFICATION TEST. (Refer to 9 - ENGINE - STANDARD PROCEDURE)

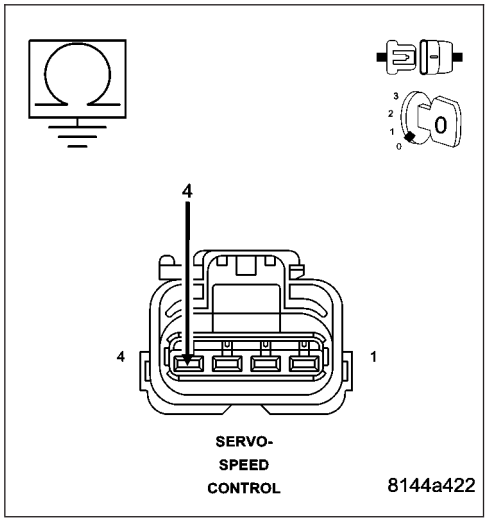

P0586-SPEED CONTROL VENT CONTROL CIRCUIT (CONTINUED)

5. SPEED CONTROL VENT SOLENOID

Ignition on, engine not running.

With the scan tool, actuate the Speed Control Vent Solenoid.

Using a 12-volt test light connected to battery voltage, probe the (V36) S/C Vent Control circuit.

Does the test light illuminate brightly and flash on and off?

Yes >> Replace the Speed Control Servo.
Perform the POWERTRAIN VERIFICATION TEST. (Refer to 9 - ENGINE - STANDARD PROCEDURE)

No >> Go To 6

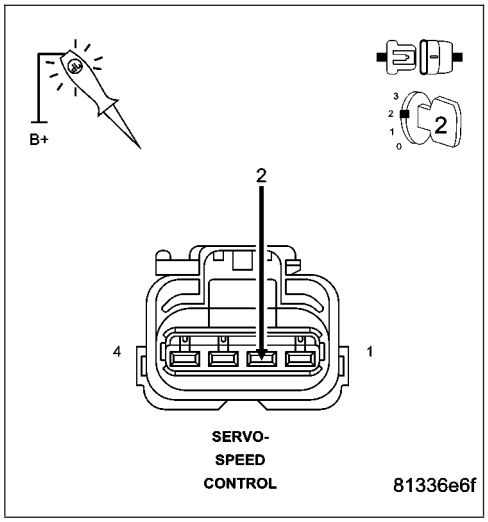

6. (V35) S/C VENT CONTROL CIRCUIT OPEN

Turn the ignition off.

Disconnect the C3 PCM harness connector.

CAUTION: Do not probe the PCM harness connectors. Probing the PCM harness connectors will damage the PCM terminals resulting in poor terminal to pin connection. Install Miller Special Tool #8815 to perform diagnosis.

Measure the resistance of the (V35) S/C Vent Sol Control circuit from the Speed Control Servo harness connector to the appropriate terminal of special tool # 8815.

Is the resistance below 5.0 ohms?

Yes >> Go To 7

No >> Repair the open/high resistance in the (V35) S/C Vent Sol Control circuit.
Perform the POWERTRAIN VERIFICATION TEST. (Refer to 9 - ENGINE - STANDARD PROCEDURE)

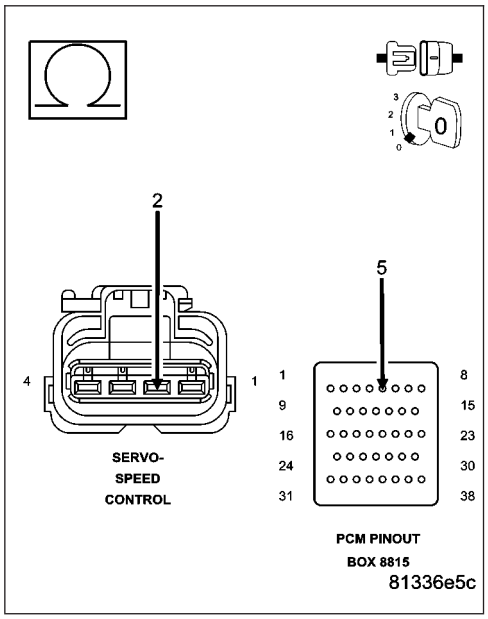

P0586-SPEED CONTROL VENT CONTROL CIRCUIT (CONTINUED)

7. (V35) SPEED CONTROL VENT SOLENOID CONTROL CIRCUIT SHORTED TO GROUND

Measure the resistance between ground and the (V35) S/C Vent Solenoid Control circuit at the Speed Control Servo harness connector.

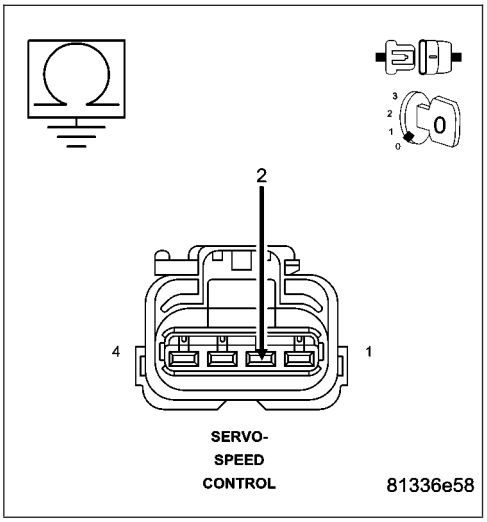

Is the resistance below 100 ohms?

Yes >> Repair the short to ground in the (V35) S/C Vent Sol Control circuit.
Perform the POWERTRAIN VERIFICATION TEST. (Refer to 9 - ENGINE - STANDARD PROCEDURE)

No >> Go To 10

---

8. (V32) S/C SUPPLY OPEN

Turn the ignition off.

Disconnect the C3 PCM harness connector.

CAUTION: Do not probe the PCM harness connectors. Probing the PCM harness connectors will damage the PCM terminals resulting in poor terminal to pin connection. Install Miller Special Tool #8815 to perform diagnosis.

Measure the resistance of the (V32) S/C Supply circuit from the Stop Lamp Switch harness connector to the appropriate terminal of special tool #8815.

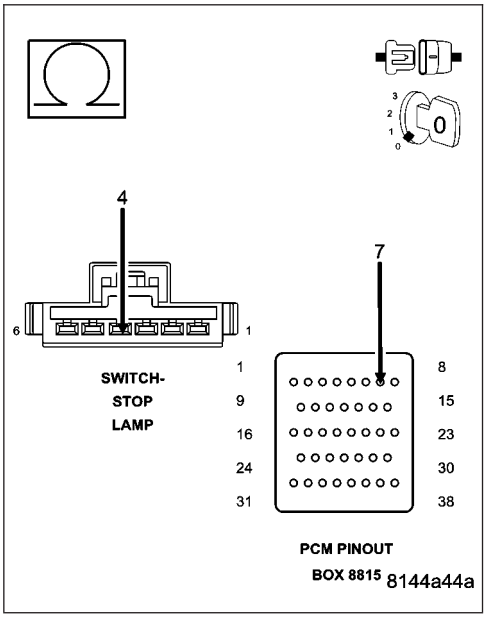

Is the resistance below 5.0 ohms?

Yes >> Go To 9

No >> Repair the open/high resistance in the (V32) S/C Supply circuit.
Perform the POWERTRAIN VERIFICATION TEST. (Refer to 9 - ENGINE - STANDARD PROCEDURE)

P0586-SPEED CONTROL VENT CONTROL CIRCUIT (CONTINUED)

9. (V32) S/C SUPPLY CIRCUIT SHORTED TO GROUND

Measure the resistance between ground and the (V32) S/C Supply circuit at the Speed Control Servo harness connector.

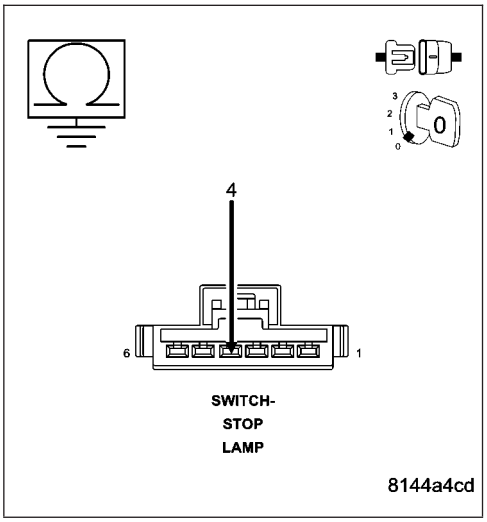

Is the resistance below 100 ohms?

Yes >> Repair the short to ground in the (V32) S/C Supply circuit. Perform the POWERTRAIN VERIFICATION TEST. (Refer to 9 - ENGINE - STANDARD PROCEDURE)

No >> Go To 10

---

10. PCM

NOTE: Before continuing, check the PCM harness connector terminals for corrosion, damage, or terminal push out. Repair as necessary.

Were there any problems found?

Yes >> Repair as necessary.
Perform the POWERTRAIN VERIFICATION TEST. (Refer to 9 - ENGINE - STANDARD PROCEDURE)

No >> Replace and program the Powertrain Control Module per Service Information.
Perform the POWERTRAIN VERIFICATION TEST. (Refer to 9 - ENGINE - STANDARD PROCEDURE)

P0591-SPEED CONTROL SWITCH 2 PERFORMANCE

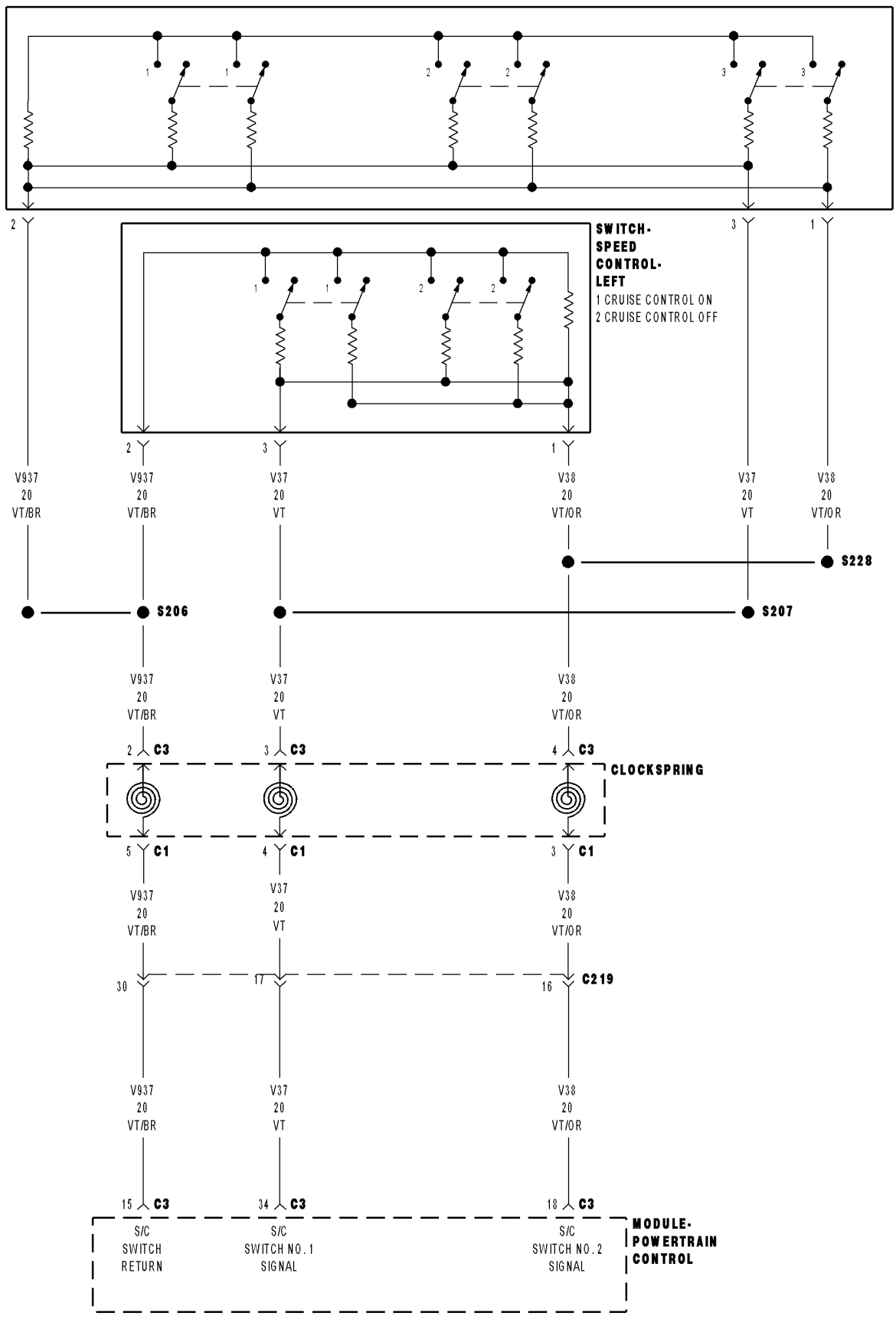

P0591-SPEED CONTROL SWITCH 2 PERFORMANCE (CONTINUED)

For the Engine circuit diagram (Refer to 9 - ENGINE - SCHEMATICS AND DIAGRAMS).

For a complete wiring diagram **Refer to Section 8W**.

- **When Monitored:**
  With the ignition key on.
- **Set Condition:**
  Cruise switch voltage output is not out of range but it does not equal any of the values for any of the button positions.

Possible Causes
(V38) S/C SWITCH NO.2 SIGNAL CIRCUIT OPEN
(V38) S/C SWITCH NO.2 SIGNAL CIRCUIT SHORTED TO BATTERY VOLTAGE
(V937) SWITCH RETURN CIRCUIT OPEN
(V38) S/C SWITCH NO.2 SIGNAL CIRCUIT SHORTED TO GROUND
(V38) S/C SWITCH NO.2 SIGNAL CIRCUIT SHORTED TO THE (V937) SWITCH RETURN CIRCUIT
SPEED CONTROL SWITCH
CLOCKSPRING
PCM

Always perform the Pre-Diagnostic Troubleshooting procedure before proceeding. (Refer to 9 - ENGINE - DIAGNOSIS AND TESTING).

Diagnostic Test

1. SPEED CONTROL SWITCH STATUS

Start the engine.
With a scan tool, monitor each which function for the Speed Control Switches.
Press and release each Speed Control Button.
- Resume/Accel
- Cancel
- Decel (Coast)
- On/Off
- Set

Does each switch function change status when pressing and then depressing each switch?

Yes >> Refer to the INTERMITTENT CONDITION Diagnostic Procedure.
Perform the POWERTRAIN VERIFICATION TEST. (Refer to 9 - ENGINE - STANDARD PROCEDURE)

No >> Go To 2

P0591-SPEED CONTROL SWITCH 2 PERFORMANCE (CONTINUED)

2. SPEED CONTROL SWITCHES

Turn the ignition off.

Remove the Speed Control Switches from the steering wheel.

Measure the resistance across each Speed Control Switch.

Monitor the ohmmeter while pressing each function button on each switch.

The following resistance specs are taken between terminals (V38) S/C Switch No.2 Signal and (V937) S/C Switch Return circuits of the Switch when holding the switch button in the following position.

Not pressing any switch - 20.5 kohms

On/Off - 8.87 kohms

Set - 0.825 kohms

Coast - 0.47 kohms

Cancel - 3.92 kohms

Resume/Accel - 1.87 kohms

The following resistance specs are taken between terminals (V37) S/C Switch No.1 Signal and (V937) S/C Switch Return circuits of the Switch when holding the switch button in the following position

Not pressing any switch - 20.5 kohms

On/Off - 0.47 kohms

Set - 5.49 kohms

Coast - 2.94 kohms

Cancel - 1.24 kohms

Resume/Accel - 15.4 kohms

Does the function on the Speed Control Switches have the correct resistance value?

Yes >> Go To 3

No >> Replace the Speed Control Switch that had the incorrect resistance value.
Perform the POWERTRAIN VERIFICATION TEST. (Refer to 9 - ENGINE - STANDARD PROCEDURE)

---

3. (V38) S/C SWITCH NO.2 SIGNAL CIRCUIT SHORTED TO BATTERY VOLTAGE

Disconnect the C3 PCM harness connector.

Ignition on, engine not running.

Measure the voltage of the (V38) S/C Switch No.2 Signal circuit in the S/C Switch harness connector.

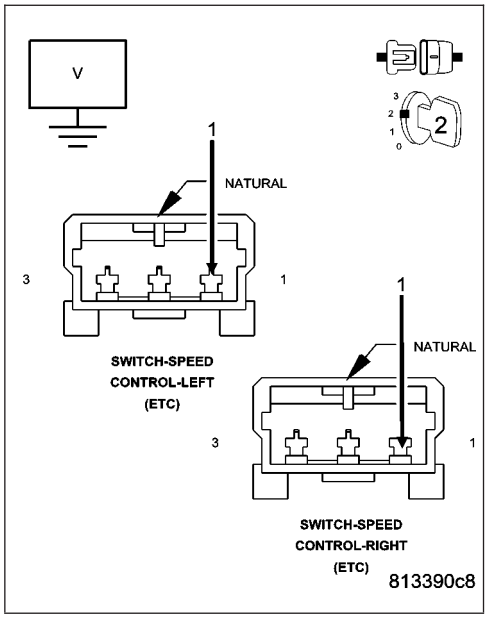

Is the voltage above 5.0 volts?

Yes >> Repair the short to battery voltage in the (V38) S/C Switch No.2 Signal circuit.
Perform the POWERTRAIN VERIFICATION TEST. (Refer to 9 - ENGINE - STANDARD PROCEDURE)

No >> Go To 4

P0591-SPEED CONTROL SWITCH 2 PERFORMANCE (CONTINUED)

4. CLOCKSPRING

Turn the ignition off.

Disconnect the upper and lower clockspring harness connectors per Service Information.

Measure the resistance of the (V38) S/C Switch No.2 Signal circuit between the upper and lower clockspring harness connectors.

Measure the resistance of the (V937) Switch Return circuit between the upper and lower clockspring harness connectors.

Is the resistance above 5.0 ohms?

Yes >> Replace the Clockspring per Service Information.
Perform the POWERTRAIN VERIFICATION TEST. (Refer to 9 - ENGINE - STANDARD PROCEDURE)

No >> Go To 5

NOTE: Connect the Clockspring harness connectors per Service Information before continuing.

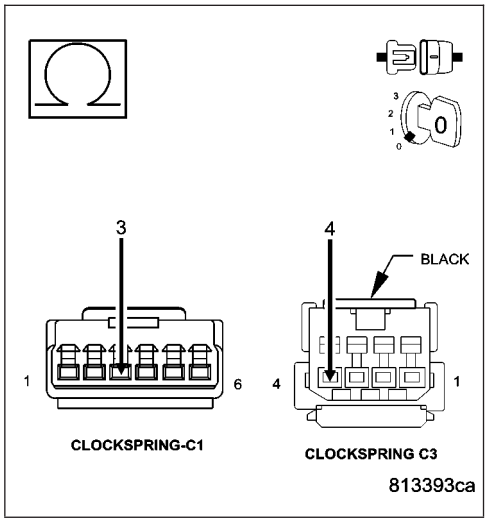

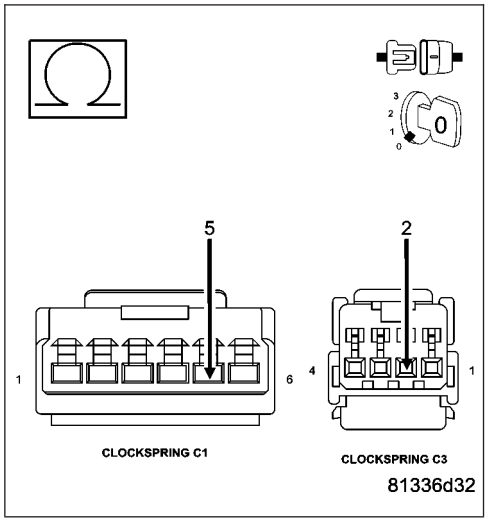

P0591-SPEED CONTROL SWITCH 2 PERFORMANCE (CONTINUED)

5. (V38) S/C SWITCH NO.2 SIGNAL CIRCUIT OPEN

Turn the ignition off.

CAUTION: Do not probe the PCM harness connectors. Probing the PCM harness connectors will damage the PCM terminals resulting in poor terminal to pin connection. Install Miller Special Tool #8815 to perform diagnosis.

Measure the resistance of the (V38) S/C Switch No.2 Signal circuit from both Speed Control harness connectors to the appropriate terminal of special tool #8815.

Is the resistance below 5.0 ohms for both measurements?

Yes >> Go To 6

No >> Repair the open in the (V38) S/C Switch No.2 Signal circuit.
Perform the POWERTRAIN VERIFICATION TEST. (Refer to 9 - ENGINE - STANDARD PROCEDURE)

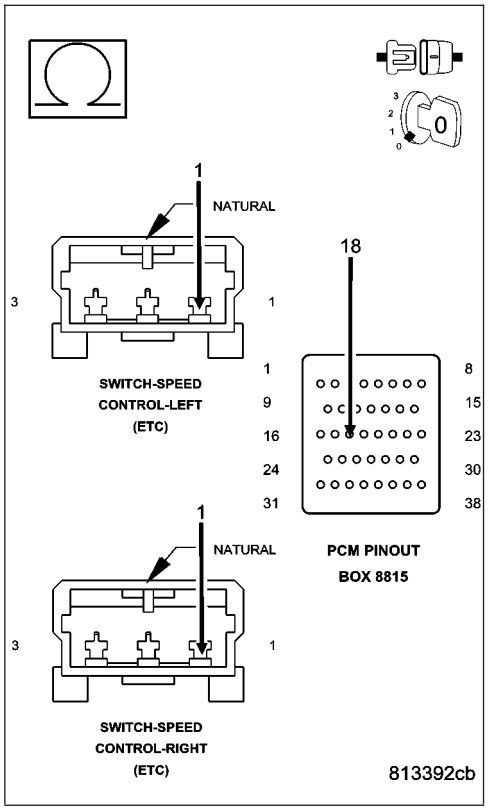

6. (V937) SWITCH RETURN CIRCUIT OPEN

NOTE: The measurement must be taken from both Speed Control Switch harness connectors.

Measure the resistance of the (V937) Switch Return circuit from the Speed Control harness connector to the appropriate terminal of special tool #8815.

Is the resistance below 5.0 ohms for both measurement?

Yes >> Go To 7

No >> Repair the open in the (V937) Switch Return circuit.
Perform the POWERTRAIN VERIFICATION TEST. (Refer to 9 - ENGINE - STANDARD PROCEDURE)

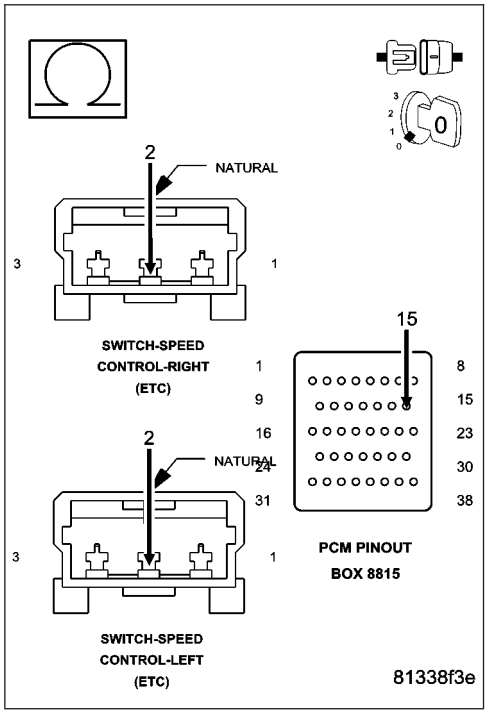

P0591-SPEED CONTROL SWITCH 2 PERFORMANCE (CONTINUED)

7. (V38) S/C SWITCH NO.2 SIGNAL CIRCUIT SHORTED TO GROUND

Measure the resistance between ground and the (V38) S/C Switch No.2 Signal circuit in the Speed Control harness connector.

Is the resistance below 100 ohms?

Yes >> Repair the short to ground in the (V38) S/C Switch No.2 Signal circuit.
Perform the POWERTRAIN VERIFICATION TEST. (Refer to 9 - ENGINE - STANDARD PROCEDURE)

No >> Go To 8

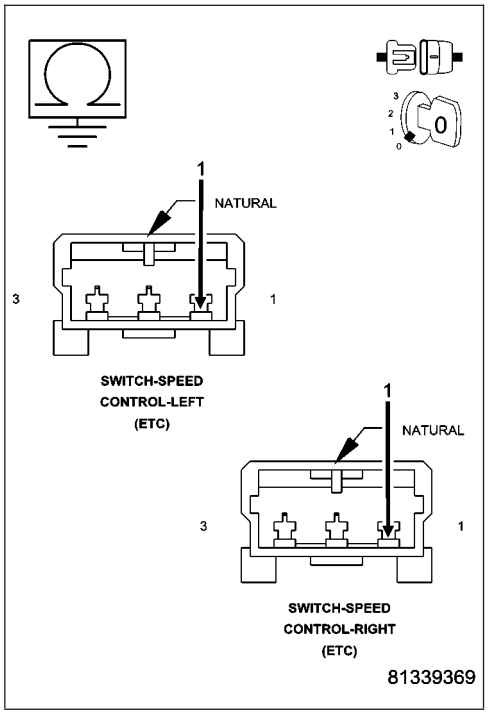

8. (V38) S/C SWITCH NO.2 SIGNAL CIRCUIT SHORTED TO THE (V937) SWITCH RETURN CIRCUIT

Measure the resistance between the (V38) S/C Switch No.2 Signal circuit and the (V937) Switch Return circuit in the Speed Control harness connector.

Is the resistance below 5.0 ohms?

Yes >> Repair the short between the (V38) S/C Switch No.2 Signal circuit and the (V937) Switch Return circuit.
Perform the POWERTRAIN VERIFICATION TEST. (Refer to 9 - ENGINE - STANDARD PROCEDURE)

No >> Go To 9

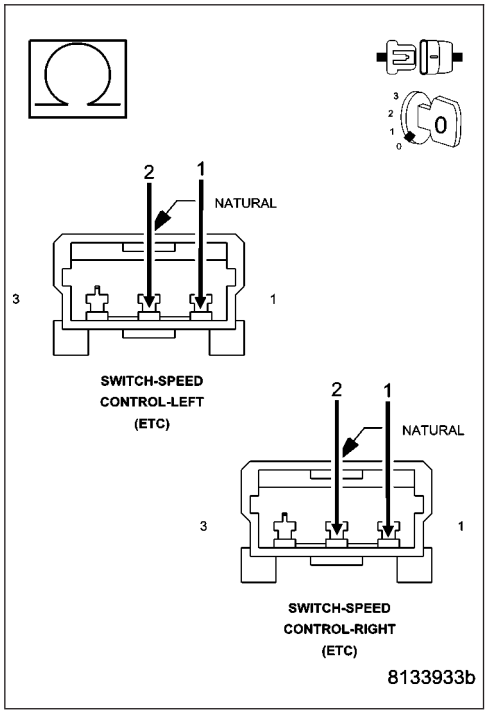

P0591-SPEED CONTROL SWITCH 2 PERFORMANCE (CONTINUED)

9. SPEED CONTROL SWITCH VOLTAGE VALUES

Allow the engine to idle.
With a scan tool, monitor the S/C Switch voltage readings.

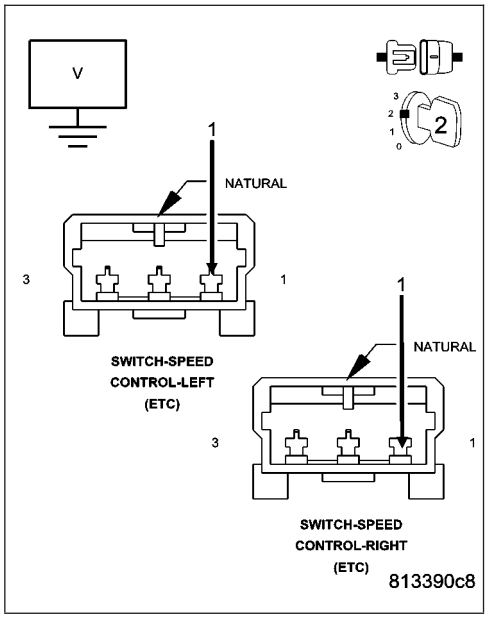

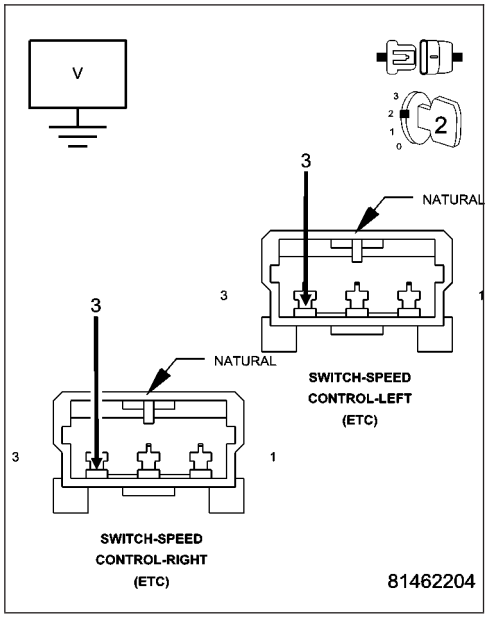

SWITCH POSITION	SWITCH No.1 VOLTAGE VALUE	SWITCH No.2 VOLATGE VALUE
NO SWITCHES PRESSED	4.31 to 4.78 volts	4.31 to 4.78 volts
ON/OFF PRESSED	0.59 to 1.13 volts	3.53 to 3.92 volts
RES/ACCEL PRESSED	3.88 to 4.17 volts	2.04 to 2.47 volts
SET PRESSED	3.16 to 3.56 volts	1.17 to 1.56 volts
COAST PRESSED	2.57 to 2.94 volts	0.77 to 1.09 volts
CANCEL PRESSED	1.59 to 1.99 volts	2.84 to 3.25 volts

P0591-SPEED CONTROL SWITCH 2 PERFORMANCE (CONTINUED)

Take these same voltage measurements with a voltmeter by back probing the (V37) S/C Switch No.1 Signal circuit and the (V38) S/C Switch No.2 Signal circuit at the switches.

Compare the voltage readings on the voltmeter to what the scan tool displayed.

Are the voltage readings out of the listed specification and is there less than a 0.2 of a volt difference between the voltmeter switch values and the scan tool switch values?

Yes >> Replace the Speed Control Switch.
Perform the POWERTRAIN VERIFICATION TEST. (Refer to 9 - ENGINE - STANDARD PROCEDURE)

No >> Go To 10

---

10. PCM

NOTE: Before continuing, check the PCM harness connector terminals for corrosion, damage, or terminal push out. Repair as necessary.

Using the schematics as a guide, inspect the wire harness and connectors. Pay particular attention to all Power and Ground circuits.

Were there any problems found?

Yes >> Repair as necessary.
Perform the POWERTRAIN VERIFICATION TEST. (Refer to 9 - ENGINE - STANDARD PROCEDURE)

No >> Replace and program the Powertrain Control Module per Service Information.
Perform the POWERTRAIN VERIFICATION TEST. (Refer to 9 - ENGINE - STANDARD PROCEDURE)

P0592-SPEED CONTROL SWITCH 2 CIRCUIT LOW

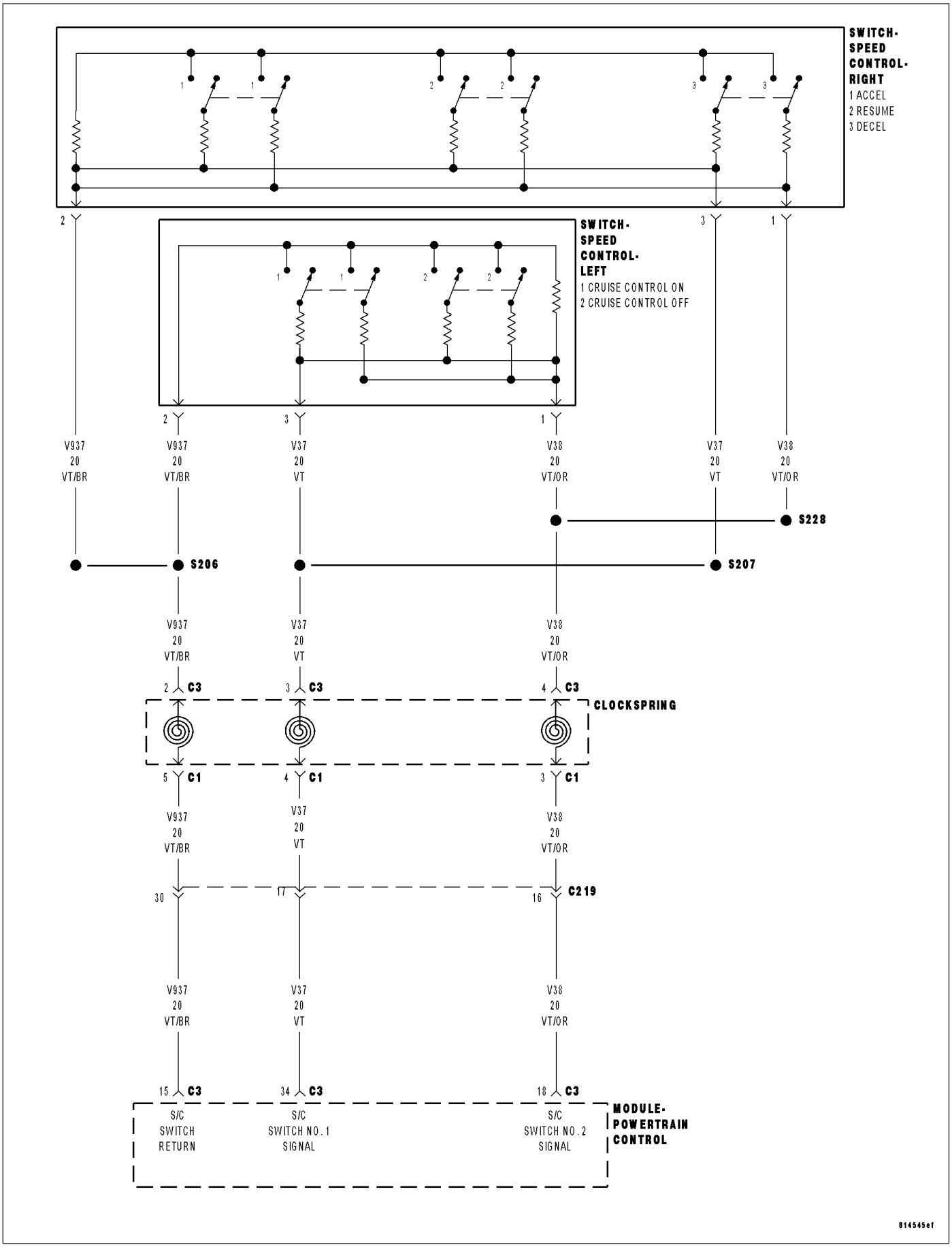

P0592-SPEED CONTROL SWITCH 2 CIRCUIT LOW (CONTINUED)

For the Engine circuit diagram (Refer to 9 - ENGINE - SCHEMATICS AND DIAGRAMS).

For a complete wiring diagram **Refer to Section 8W**.

- **When Monitored:**
  With the ignition key on.
- **Set Condition:**
  Speed control switch input No.2 is below the minimum acceptable voltage at the PCM. One trip fault.

Possible Causes
(V38) S/C SWITCH NO.2 SIGNAL CIRCUIT SHORTED TO GROUND
(V38) S/C SWITCH NO.2 SIGNAL CIRCUIT SHORTED TO THE (V937) SWITCH RETURN CIRCUIT
CLOCKSPRING
SPEED CONTROL RESUME/ACCEL SWITCH
SPEED CONTROL ON/OFF SWITCH
PCM

Always perform the Pre-Diagnostic Troubleshooting procedure before proceeding. (Refer to 9 - ENGINE - DIAGNOSIS AND TESTING).

Diagnostic Test

1. SPEED CONTROL SWITCH VOLTAGE LOW

NOTE: Do not press any of the Speed Control Switch buttons.
Ignition on, engine not running.
With a scan tool, read the Speed Control voltage.

Is the Speed Control voltage below 1.0 volt?

Yes >> Go To 2

No >> Refer to the INTERMITTENT CONDITION Diagnostic Procedure.
Perform the POWERTRAIN VERIFICATION TEST. (Refer to 9 - ENGINE - STANDARD PROCEDURE)

2. SPEED CONTROL ON/OFF SWITCH

With the scan tool, monitor the Speed Control Switch voltage.
Disconnect the Speed Control On/Off Switch harness connector.

Did the voltage change to above 4.7 volts?

Yes >> Replace the Speed Control On/Off Switch.
Perform the POWERTRAIN VERIFICATION TEST. (Refer to 9 - ENGINE - STANDARD PROCEDURE)

No >> Go To 3

3. SPEED CONTROL RESUME/ACCEL SWITCH

With the scan tool, monitor the Speed Control Switch voltage.
Disconnect the Speed Control Resume/Accel Switch harness connector.

Did the voltage change to above 4.7 volts?

Yes >> Replace the Speed Control Resume/Accel Switch.
Perform the POWERTRAIN VERIFICATION TEST. (Refer to 9 - ENGINE - STANDARD PROCEDURE)

No >> Go To 4

P0592-SPEED CONTROL SWITCH 2 CIRCUIT LOW (CONTINUED)

4. CLOCKSPRING

Turn the ignition off.

Disconnect the clockspring harness connector (instrument panel wiring side) per Service Information.

Ignition on, engine not running.

With the scan tool, read the S/C Switch voltage.

Did the S/C Switch volts change to 5.0 volts?

Yes >> Replace the Clockspring.
Perform the POWERTRAIN VERIFICATION TEST. (Refer to 9 - ENGINE - STANDARD PROCEDURE)

No >> Go To 5

---

5. (V38) S/C SWITCH NO.2 SIGNAL CIRCUIT SHORTED TO GROUND

Turn the ignition off.

Connect the Clockspring harness connectors per Service Information.

Disconnect the C3 PCM harness connector.

CAUTION: Do not probe the PCM harness connectors. Probing the PCM harness connectors will damage the PCM terminals resulting in poor terminal to pin connection. Install Miller Special Tool #8815 to perform diagnosis.

Measure the resistance between ground and the (V38) S/C Switch No.2 Signal circuit to the appropriate terminal of special tool #8815.

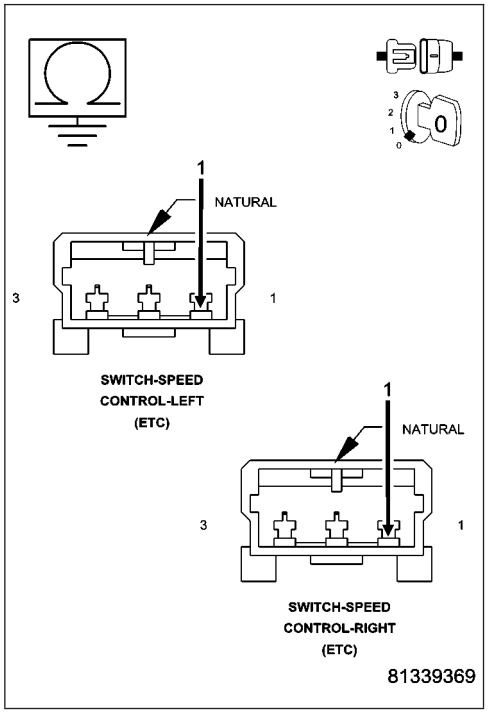

Is the resistance below 100 ohms?

Yes >> Repair the short to ground in the (V38) S/C Switch No.2 Signal circuit.
Perform the POWERTRAIN VERIFICATION TEST. (Refer to 9 - ENGINE - STANDARD PROCEDURE)

No >> Go To 6

P0592-SPEED CONTROL SWITCH 2 CIRCUIT LOW (CONTINUED)

6. (V38) S/C SWITCH NO.2 SIGNAL CIRCUIT SHORTED TO THE (V937) SWITCH RETURN CIRCUIT

Measure the resistance between the (V937) Switch Return circuit and the (V38) S/C Switch No.2 Signal circuit in the Speed Control Switch.

Is the resistance below 5.0 ohms?

Yes >> Repair the short between the (V38) S/C Switch No.2 Signal circuit and the (V937) Switch Return circuit.
Perform the POWERTRAIN VERIFICATION TEST. (Refer to 9 - ENGINE - STANDARD PROCEDURE)

No >> Go To 7

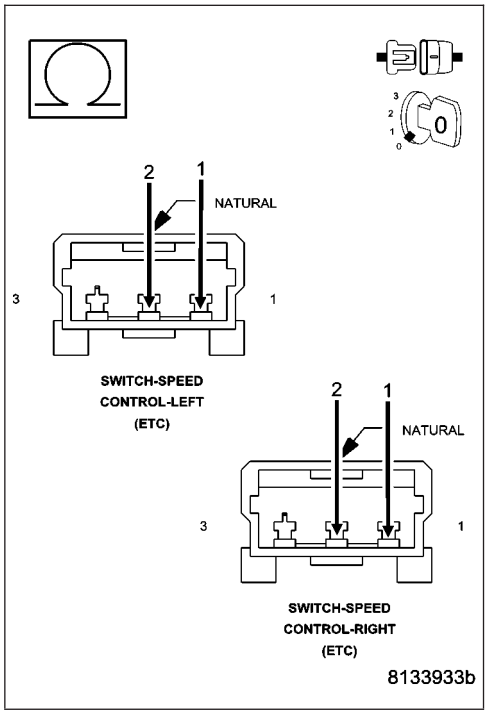

P0592-SPEED CONTROL SWITCH 2 CIRCUIT LOW (CONTINUED)

7. SPEED CONTROL SWITCH VOLTAGE VALUES

Allow the engine to idle.

With a scan tool, monitor the S/C Switch voltage readings.

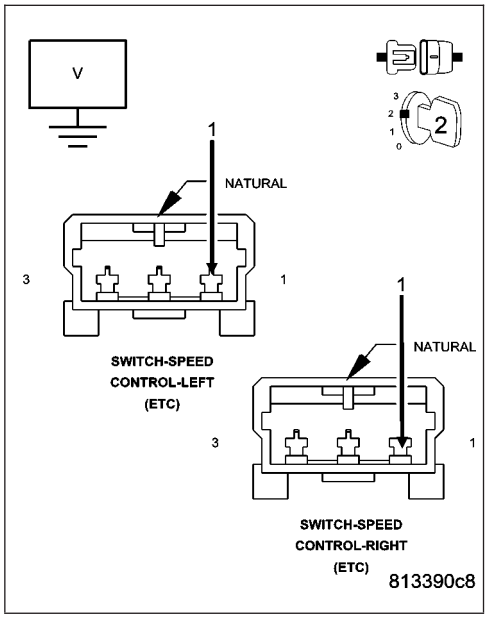

SWITCH POSITION	SWITCH No.1 VOLTAGE VALUE	SWITCH No.2 VOLATGE VALUE
NO SWITCHES PRESSED	4.31 to 4.78 volts	4.31 to 4.78 volts
ON/OFF PRESSED	0.59 to 1.13 volts	3.53 to 3.92 volts
RES/ACCEL PRESSED	3.88 to 4.17 volts	2.04 to 2.47 volts
SET PRESSED	3.16 to 3.56 volts	1.17 to 1.56 volts
COAST PRESSED	2.57 to 2.94 volts	0.77 to 1.09 volts
CANCEL PRESSED	1.59 to 1.99 volts	2.84 to 3.25 volts

Take these same voltage measurements with a voltmeter by back probing the (V38) S/C Switch No.2 Signal circuit at the switches.

Compare the voltage readings on the voltmeter to what the scan tool displayed.

Are the voltage readings out of the listed specification and is there less than a 0.2 of a volt difference between the voltmeter switch values and the scan tool switch values?

Yes >> Replace the Speed Control Switch.
Perform the POWERTRAIN VERIFICATION TEST. (Refer to 9 - ENGINE - STANDARD PROCEDURE)

No >> Go To 8

---

8. PCM

NOTE: Before continuing, check the PCM harness connector terminals for corrosion, damage, or terminal push out. Repair as necessary.

Using the schematics as a guide, inspect the wire harness and connectors. Pay particular attention to all Power and Ground circuits.

Were there any problems found?

Yes >> Repair as necessary.
Perform the POWERTRAIN VERIFICATION TEST. (Refer to 9 - ENGINE - STANDARD PROCEDURE)

No >> Replace and program the Powertrain Control Module per Service Information.
Perform the POWERTRAIN VERIFICATION TEST. (Refer to 9 - ENGINE - STANDARD PROCEDURE)

P0593-SPEED CONTROL SWITCH 2 CIRCUIT HIGH

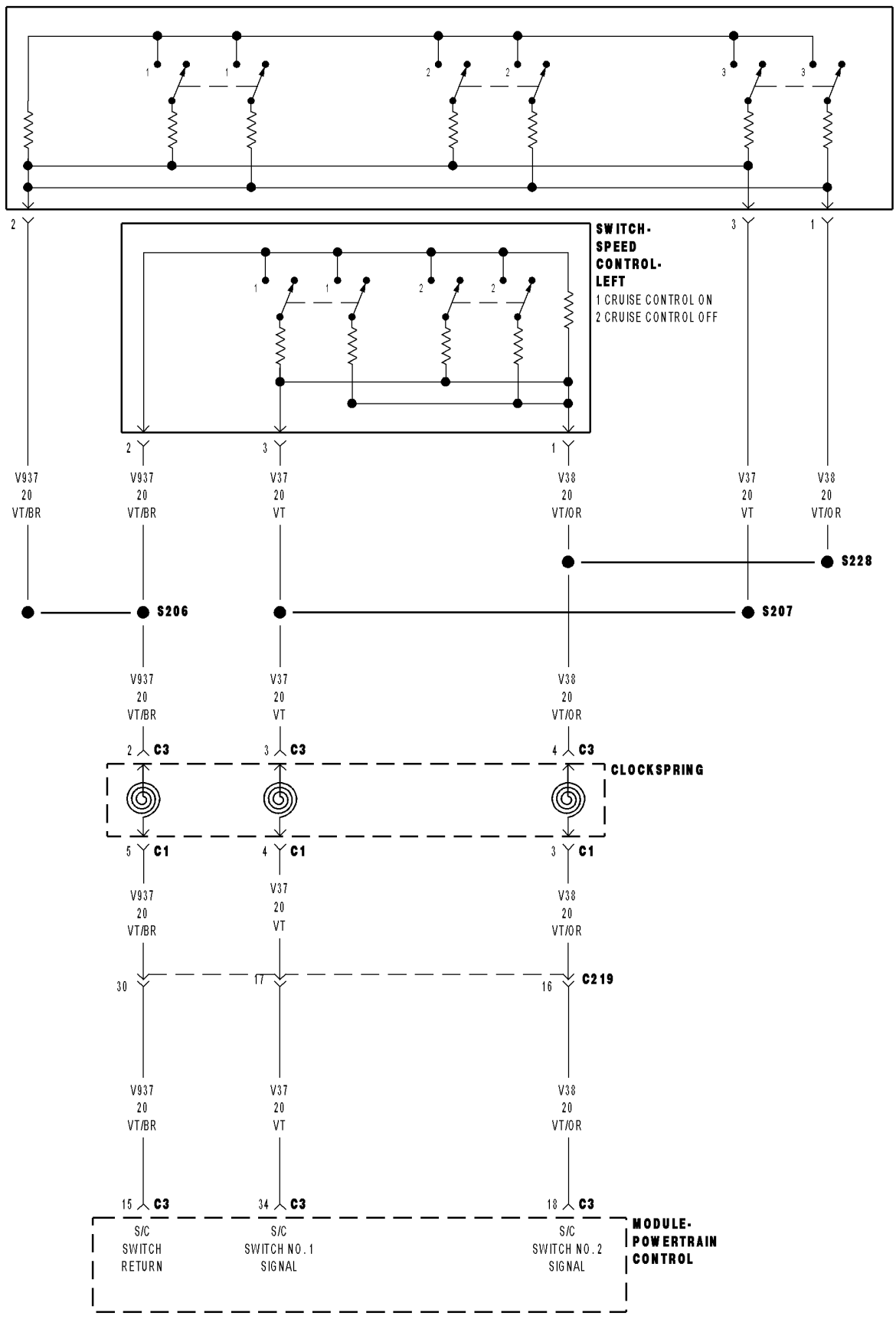

P0593-SPEED CONTROL SWITCH 2 CIRCUIT HIGH (CONTINUED)

For the Engine circuit diagram (Refer to 9 - ENGINE - SCHEMATICS AND DIAGRAMS).

For a complete wiring diagram **Refer to Section 8W**.

- **When Monitored:**
  With the ignition key on.
- **Set Condition:**
  Speed Control Switch No.2 input above the maximum acceptable voltage at the PCM. One trip fault.

Possible Causes
(V38) S/C SIGNAL NO.2 CIRCUIT SHORTED TO VOLTAGE
(V38) S/C SWITCH NO.2 SIGNAL CIRCUIT OPEN BETWEEN THE PCM AND CLOCKSPRING
(V937) SWITCH RETURN CIRCUIT OPEN BETWEEN PCM AND CLOCKSPRING
(V38) S/C SWITCH NO.2 SIGNAL CIRCUIT OPEN BETWEEN THE CLOCKSPRING AND S/C SWITCH
(V937) SWITCH RETURN CIRCUIT OPEN BETWEEN CLOCKSPRING AND S/C SWITCH
CLOCKSPRING
SPEED CONTROL SWITCH
PCM

Always perform the Pre-Diagnostic Troubleshooting procedure before proceeding. (Refer to 9 - ENGINE - DIAGNOSIS AND TESTING).

Diagnostic Test

1. SPEED CONTROL SWITCH VOLTAGE HIGH

NOTE: Do not press any of the Speed Control Switch buttons.

Ignition on, engine not running.

With a scan tool, read the Speed Control voltage.

Is the Speed Control voltage above 4.8 volts?

Yes >> Go To 2

No >> Refer to the INTERMITTENT CONDITION Diagnostic Procedure.
Perform the POWERTRAIN VERIFICATION TEST. (Refer to 9 - ENGINE - STANDARD PROCEDURE)

P0593-SPEED CONTROL SWITCH 2 CIRCUIT HIGH (CONTINUED)

2. SPEED CONTROL SWITCHES

Disconnect and remove the Speed Control Switches from the steering wheel.

Measure the resistance across each Speed Control Switch.

Monitor the ohmmeter while pressing each function button on each switch.

The following resistance specs are taken between terminals (V38) S/C Switch No.2 Signal and (V937) S/C Switch Return circuits of the Switch when holding the switch button in the following position.

Not pressing any switch - 20.5 kohms

On/Off - 8.87 kohms

Set - 0.825 kohms

Coast - 0.47 kohms

Cancel - 3.92 kohms

Resume/Accel - 1.87 kohms

Does the function on the Speed Control Switches have the correct resistance value?

Yes >> Go To 3

No >> Replace the Speed Control Switch that had the incorrect resistance value.
Perform the POWERTRAIN VERIFICATION TEST. (Refer to 9 - ENGINE - STANDARD PROCEDURE)

3. CLOCKSPRING

Disconnect the upper and lower Clockspring harness connector per Service Information.

Measure the resistance of the (V937) Switch Return circuit between the upper and lower clockspring harness connectors.

Measure the resistance of the (V38) S/C Switch No.2 Signal circuit between the upper and lower clockspring harness connectors.

Was the resistance above 5.0 ohms for either circuit?

Yes >> Replace the clockspring.
Perform the POWERTRAIN VERIFICATION TEST. (Refer to 9 - ENGINE - STANDARD PROCEDURE)

No >> Go To 4

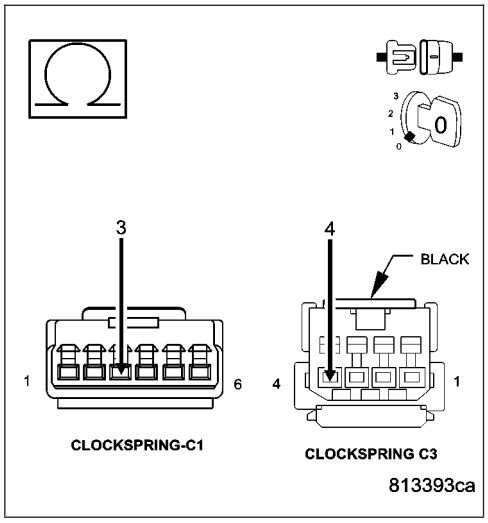

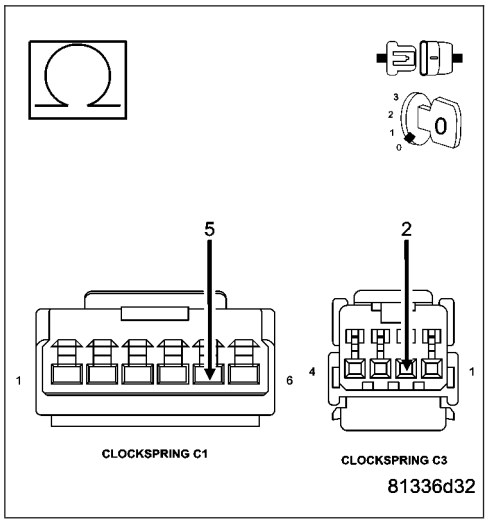

P0593-SPEED CONTROL SWITCH 2 CIRCUIT HIGH (CONTINUED)

4. (V38) SIGNAL NO.2 CIRCUIT SHORTED TO BATTERY VOLTAGE

Connect the Upper and Lower Clockspring harness connectors per Service Information.

Disconnect the C3 PCM harness connector.

Measure the voltage on the (V38) S/C Signal No.2 circuit in the Speed Control harness connector.

Ignition on, engine not running.

Is the voltage above 5.2 volts?

Yes >> Repair the short to battery voltage in the (V38) S/C Signal No.2 circuit.

Perform the POWERTRAIN VERIFICATION TEST. (Refer to 9 - ENGINE - STANDARD PROCEDURE)

No >> Go To 5

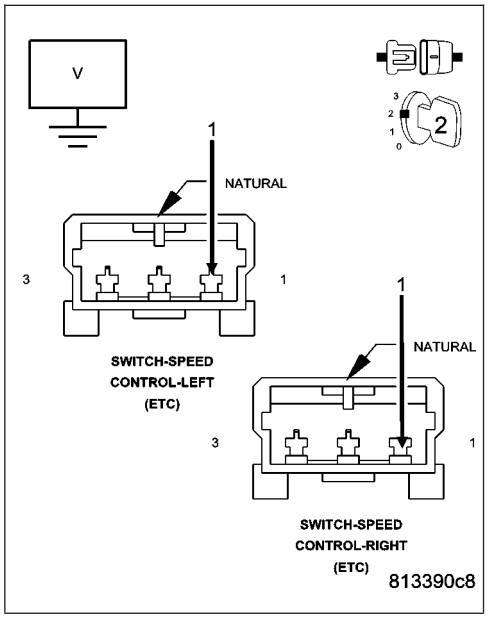

5. (V38) S/C SWITCH NO.2 SIGNAL CIRCUIT OPEN

Turn the ignition off.

CAUTION: Do not probe the PCM harness connectors. Probing the PCM harness connectors will damage the PCM terminals resulting in poor terminal to pin connection. Install Miller Special Tool #8815 to perform diagnosis.

Measure the resistance of the (V38) S/C Switch No.2 Signal circuit from the both Switch harness connectors to the appropriate terminal of special tool #8815.

Is the resistance below 5.0 ohms?

Yes >> Go To 6

No >> Repair the open in the (V38) S/C Switch No.2 Signal circuit.

Perform the POWERTRAIN VERIFICATION TEST. (Refer to 9 - ENGINE - STANDARD PROCEDURE)

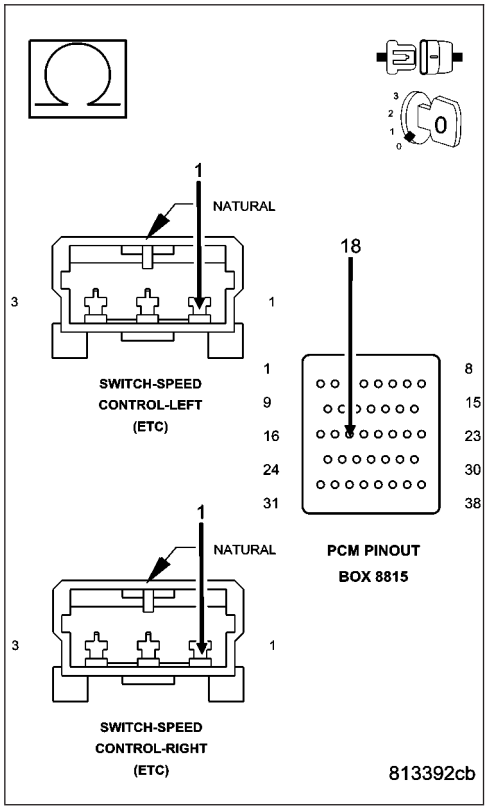

P0593-SPEED CONTROL SWITCH 2 CIRCUIT HIGH (CONTINUED)

6. (V937) SWITCH RETURN CIRCUIT OPEN

Measure the resistance of the (V937) Switch Return circuit from the both Switch harness connectors to the appropriate terminal of special tool #8815.

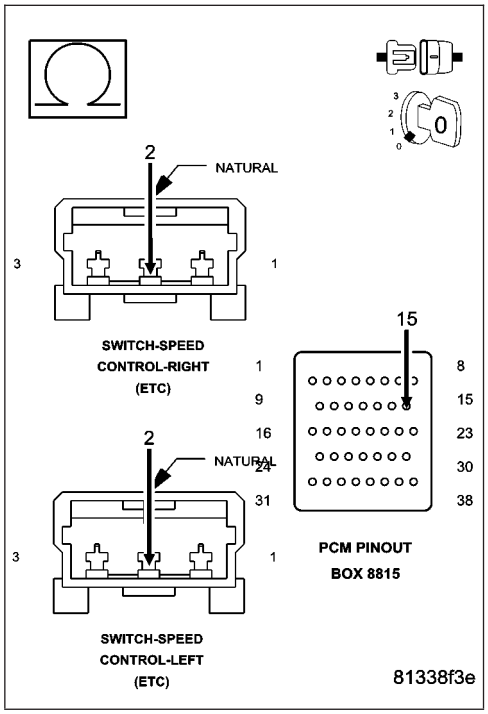

Is the resistance below 5.0 ohms?

Yes >> Go To 7

No >> Repair the open in the (V937) Switch Return circuit.
Perform the POWERTRAIN VERIFICATION TEST. (Refer to 9 - ENGINE - STANDARD PROCEDURE)

---

7. PCM

NOTE: Before continuing, check the PCM harness connector terminals for corrosion, damage, or terminal push out. Repair as necessary.

Using the schematics as a guide, inspect the wire harness and connectors. Pay particular attention to all Power and Ground circuits.

Were there any problems found?

Yes >> Repair as necessary.
Perform the POWERTRAIN VERIFICATION TEST. (Refer to 9 - ENGINE - STANDARD PROCEDURE)

No >> Replace and program the Powertrain Control Module per Service Information.
Perform the POWERTRAIN VERIFICATION TEST. (Refer to 9 - ENGINE - STANDARD PROCEDURE)

P0594-SPEED CONTROL SERVO POWER RELAY CIRCUIT

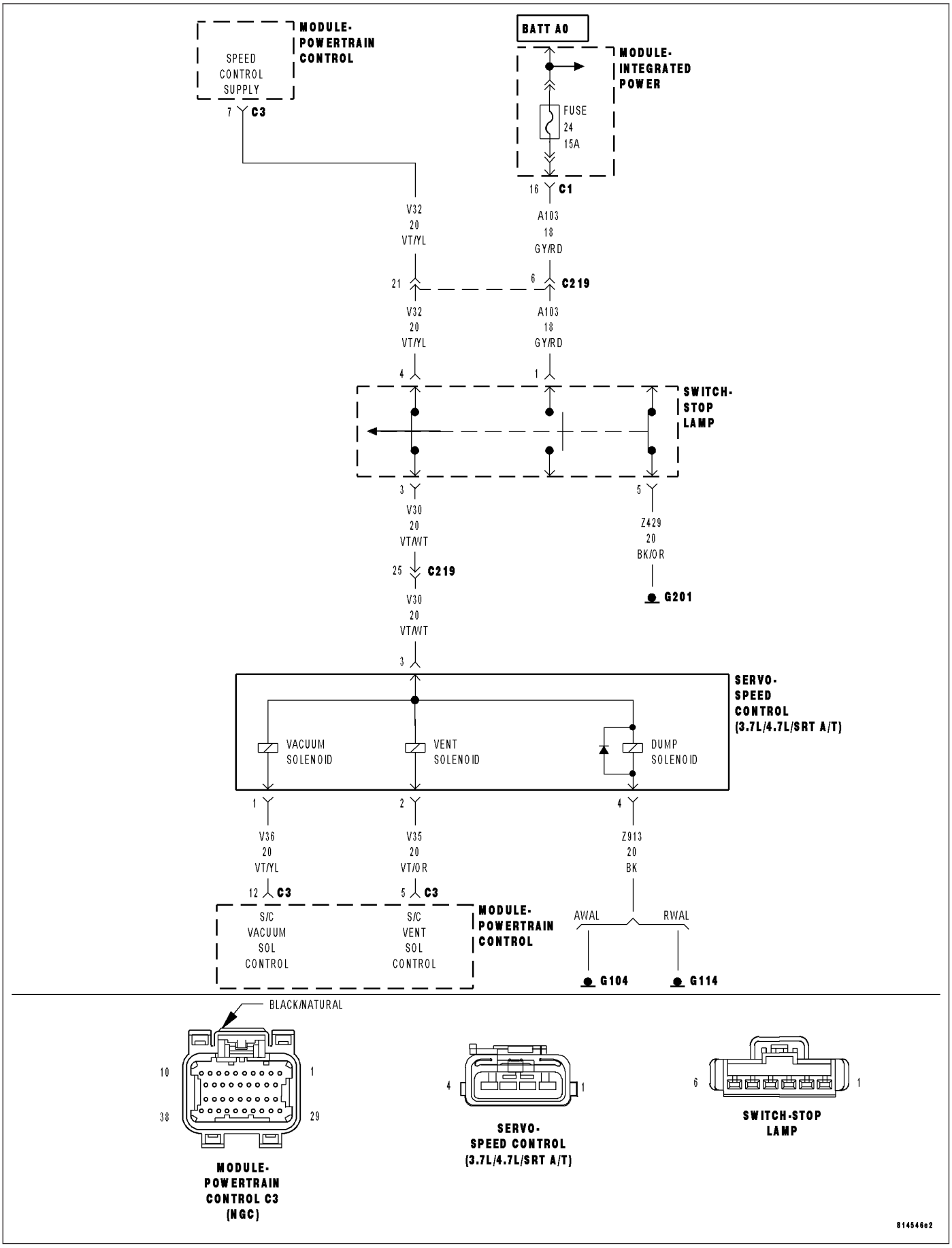

P0594-SPEED CONTROL SERVO POWER RELAY CIRCUIT (CONTINUED)

For the Engine circuit diagram (Refer to 9 - ENGINE - SCHEMATICS AND DIAGRAMS).

For a complete wiring diagram **Refer to Section 8W**.

- **When Monitored:**
  With the ignition key on. The speed control switched on.
- **Set Condition:**
  The speed control power supply circuit is either open or shorted to ground for more than 2.6 seconds. One Trip Fault. Three good trips to turn off the MIL.

Possible Causes
(V32) S/C SUPPLY CIRCUIT OPEN
(V32) S/C SUPPLY CIRCUIT SHORTED TO GROUND
(V30) S/C BRAKE SWITCH OUTPUT CIRCUIT OPEN
(V30) S/C BRAKE SWITCH OUTPUT CIRCUIT SHORTED TO GROUND
STOP LAMP SWITCH
PCM

Always perform the Pre-Diagnostic Troubleshooting procedure before proceeding. (Refer to 9 - ENGINE - DIAGNOSIS AND TESTING).

Diagnostic Test

1. ACTIVE DTC

NOTE: If this code is setting on a vehicle that doesn't have a S/C Servo, flash the correct code into the PCM or the wrong PCM may have previously been installed.

Ignition on, engine not running.

With a scan tool, read DTCs.

Is the DTC active at this time?

Yes >> Go To 2

No >> Refer to the INTERMITTENT CONDITION Diagnostic Procedure.
Perform the POWERTRAIN VERIFICATION TEST. (Refer to 9 - ENGINE - STANDARD PROCEDURE)

---

2. (V32) S/C SUPPLY CIRCUIT

Turn the ignition off.

Disconnect the Stop Lamp Switch harness connector.

Using a 12-volt test light connected to ground, probe the (V32) S/C Supply circuit in the Switch harness connector while holding the Cruise Switch in the ON position.

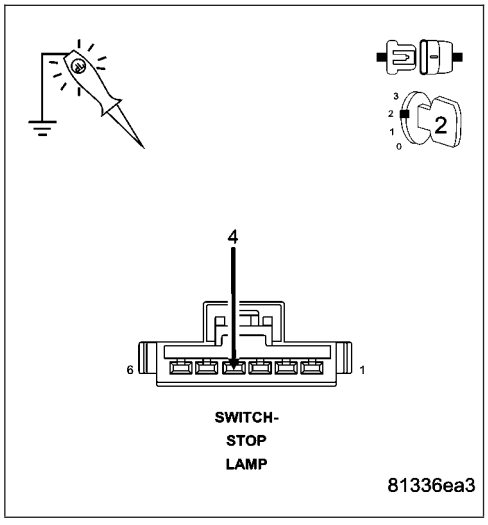

Does the test light illuminate brightly?

Yes >> Go To 3

No >> Go To 7

P0594-SPEED CONTROL SERVO POWER RELAY CIRCUIT (CONTINUED)

3. STOP LAMP SWITCH

Disconnect and remove the Stop Lamp Switch.

Measure the resistance across the (V32) S/C Supply circuit terminal and the (V30) S/C Brake Switch Output circuit terminal in the Stop Lamp Switch.

Push the Plunger of the Switch in and let it out.

Does the resistance change from below 5.0 ohms to an open circuit?

Yes >> Go To 4

No >> Replace the Stop Lamp Switch.
Perform the POWERTRAIN VERIFICATION TEST. (Refer to 9 - ENGINE - STANDARD PROCEDURE)

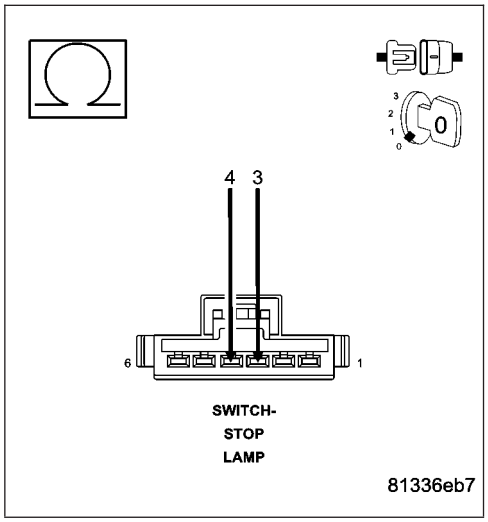

4. (V30) S/C BRAKE SWITCH OUTPUT

Turn the ignition off.

Connect the Stop Lamp Switch harness connector and install the Switch.

Disconnect the Speed Control Servo harness connector.

Ignition on, engine not running.

NOTE: It is necessary to PRESS and HOLD the Speed Control Switch in the ON position while checking for voltage.

Using a 12-volt test light connected to ground, probe the (V30) S/C Brake Switch Output circuit in the Servo Harness connector.

Does the test light illuminate brightly?

Yes >> Replace the S/C Servo.
Perform the POWERTRAIN VERIFICATION TEST. (Refer to 9 - ENGINE - STANDARD PROCEDURE)

No >> Go To 5

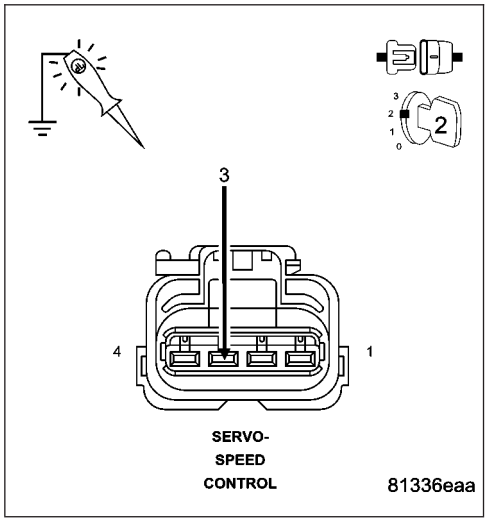

P0594-SPEED CONTROL SERVO POWER RELAY CIRCUIT (CONTINUED)

5. (V30) S/C BRAKE SWITCH OUTPUT CIRCUIT OPEN

Turn the ignition off.

Disconnect the Brake Lamp Switch harness connector.

Measure the resistance of the (V30) S/C Brake Switch Output circuit from the Stop Lamp Switch harness connector to the S/C Servo harness connector.

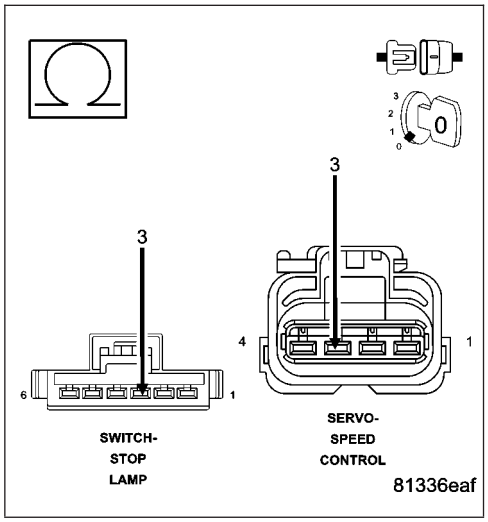

Is the resistance below 5.0 ohms?

Yes >> Repair the excessive resistance in the (V30) S/C Brake Switch Output circuit.
Perform the POWERTRAIN VERIFICATION TEST. (Refer to 9 - ENGINE - STANDARD PROCEDURE)

No >> Go To 6

6. (V30) S/C BRAKE SWITCH OUTPUT CIRCUIT SHORTED TO GROUND

Measure the resistance between ground and the (V30) S/C Brake Switch Output circuit in the Speed Control Servo harness connector.

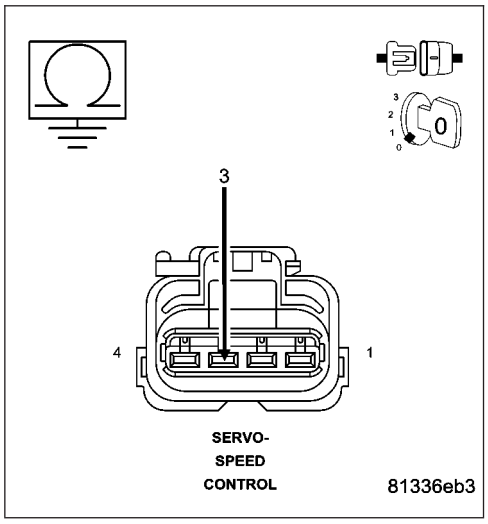

Is the resistance below 100 ohms?

Yes >> Repair the short to ground in the (V30) S/C Brake Switch Output circuit.
Perform the POWERTRAIN VERIFICATION TEST. (Refer to 9 - ENGINE - STANDARD PROCEDURE)

No >> Go To 9

P0594-SPEED CONTROL SERVO POWER RELAY CIRCUIT (CONTINUED)

7. (V32) S/C SUPPLY CIRCUIT OPEN

Turn the ignition off.

Disconnect the C3 PCM harness connector.

CAUTION: Do not probe the PCM harness connectors. Probing the PCM harness connectors will damage the PCM terminals resulting in poor terminal to pin connection. Install Miller Special Tool #8815 to perform diagnosis.

Measure the resistance of the (V32) S/C Supply circuit from the Stop Lamp Switch harness connector to the appropriate terminal of special tool #8815.

Is the resistance above 5.0 ohms?

Yes >> Repair the open in the (V32) S/C Supply circuit. Perform the POWERTRAIN VERIFICATION TEST. (Refer to 9 - ENGINE - STANDARD PROCEDURE)

No >> Go To 8

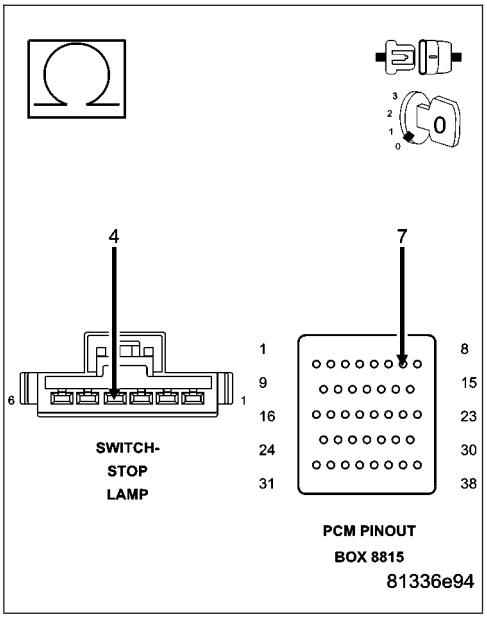

8. (V32) S/C SUPPLY CIRCUIT SHORTED TO GROUND

Measure the resistance between ground and the (V32) S/C Supply circuit in the Stop Lamp Switch harness connector.

Is the resistance below 100 ohms?

Yes >> Repair the short to ground in the (V32) S/C Supply circuit. Perform the POWERTRAIN VERIFICATION TEST. (Refer to 9 - ENGINE - STANDARD PROCEDURE)

No >> Go To 9

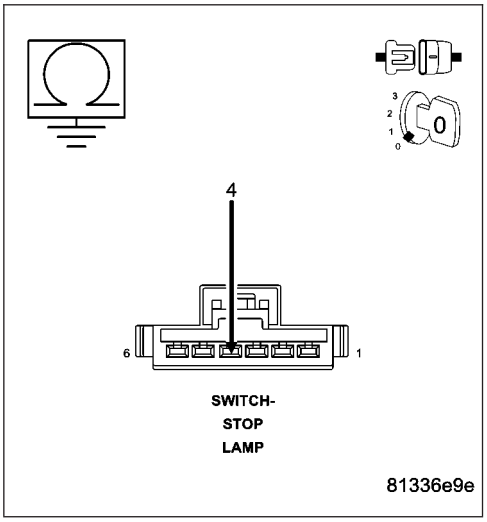

P0594-SPEED CONTROL SERVO POWER RELAY CIRCUIT (CONTINUED)

9. **PCM**

NOTE: Before continuing, check the PCM harness connector terminals for corrosion, damage, or terminal push out. Repair as necessary.

Using the schematics as a guide, inspect the wire harness and connectors. Pay particular attention to all Power and Ground circuits.

Were there any problems found?

Yes >> Repair as necessary.
Perform the POWERTRAIN VERIFICATION TEST. (Refer to 9 - ENGINE - STANDARD PROCEDURE)

No >> Replace and program the Powertrain Control Module per Service Information.
Perform the POWERTRAIN VERIFICATION TEST. (Refer to 9 - ENGINE - STANDARD PROCEDURE)

P0600-SERIAL COMMUNICATION LINK

For the Engine circuit diagram (Refer to 9 - ENGINE - SCHEMATICS AND DIAGRAMS).

For a complete wiring diagram **Refer to Section 8W**.

- **When Monitored:**
  With the ignition on.
- **Set Condition:**
  Internal Bus communication failure between processors. One Trip Fault. Three Global Good Trips to Clear.

Possible Causes
PCM

Always perform the Pre-Diagnostic Troubleshooting procedure before proceeding. (Refer to 9 - ENGINE - DIAGNOSIS AND TESTING).

Diagnostic Test

1. PCM

NOTE: Diagnose any CMP or CKP Sensor faults before continuing. Check for intermittent loose CMP or CKP connections.

The Powertrain Control Module is reporting internal errors, view repair to continue.

Repair

Replace and program the Powertrain Control Module per Service Information.

Perform the POWERTRAIN VERIFICATION TEST. (Refer to 9 - ENGINE - STANDARD PROCEDURE)

P0601-INTERNAL MEMORY CHECKSUM INVALID

For the Engine circuit diagram (Refer to 9 - ENGINE - SCHEMATICS AND DIAGRAMS).

For a complete wiring diagram **Refer to Section 8W**.

- **When Monitored:**
  With the ignition on.
- **Set Condition:**
  Internal checksum for software failed, does not match calculated value. One Trip Fault, Three Good Trips to clear.

Possible Causes
PCM

Always perform the Pre-Diagnostic Troubleshooting procedure before proceeding. (Refer to 9 - ENGINE - DIAGNOSIS AND TESTING).

Diagnostic Test

1. PCM

NOTE: Diagnose any CMP or CKP Sensor faults before continuing. Check for intermittent loose CMP or CKP connections.

The Powertrain Control Module is reporting internal errors, view repair to continue.

Repair

Replace and program the Powertrain Control Module per Service Information.
Perform the POWERTRAIN VERIFICATION TEST. (Refer to 9 - ENGINE - STANDARD PROCEDURE)

P0606-INTERNAL ECM PROCESSOR

For the Engine circuit diagram (Refer to 9 - ENGINE - SCHEMATICS AND DIAGRAMS).

For a complete wiring diagram **Refer to Section 8W**.

- **When Monitored:**
  Engine running.
- **Set Condition:**
  When the PCM recognizes an internal failure to communicate with the ECM or the CMP and CKP Sensor count periods are too short. One trip fault. ETC light is flashing.

Possible Causes
PCM

Always perform the Pre-Diagnostic Troubleshooting procedure before proceeding. (Refer to 9 - ENGINE - DIAGNOSIS AND TESTING).

Diagnostic Test

1. PCM

NOTE: Diagnose any CMP or CKP Sensor faults before continuing. Check for intermittent loose CMP or CKP connections.

The Powertrain Control Module is reporting internal errors, view repair to continue.

Repair

Replace and program the Powertrain Control Module per Service Information.
Perform the POWERTRAIN VERIFICATION TEST. (Refer to 9 - ENGINE - STANDARD PROCEDURE)

P060B-ETC A/D GROUND PERFORMANCE

For the Engine circuit diagram (Refer to 9 - ENGINE - SCHEMATICS AND DIAGRAMS).

For a complete wiring diagram **Refer to Section 8W**.

- **When Monitored:**
  When the Throttle Motor is powered.
- **Set Condition:**
  When A2D reading does not return to ground within a set period of time of test activation, this fault sets. The test typically runs a couple of times per second, and is the reason why APP2 signal spikes to ground a couple of times per second in normal running. Reprogramming the module may not always fix this fault. ETC lamp will flash.

Possible Causes
PCM NEEDS TO BE PROGRAMMED
PCM

Always perform the Pre-Diagnostic Troubleshooting procedure before proceeding. (Refer to 9 - ENGINE - DIAGNOSIS AND TESTING).

Diagnostic Test

1. PROGRAM THE POWERTRAIN CONTROL MODULE

Verify the PCM is at the latest calibration (flash level).

NOTE: An intermittent loss of power to the PCM without performing an ETC Relearn procedure may cause this DTC to set.

NOTE: Diagnose any other DTCs that may have set with the P060B.

Flash the Powertrain Control Module per Service Information if any updates are available.

Start the engine.

Allow the engine to reach normal operating temperature.

Operate the accelerator pedal. (do not exceed 3500 rpm)

With a scan tool, read DTCs.

Does this DTC reset by itself?

Yes >> Replace and reprogram the Powertrain Control Module per Service Information.
Perform the POWERTRAIN VERIFICATION TEST. (Refer to 9 - ENGINE - STANDARD PROCEDURE)

No >> Test Complete.

P060D-ETC LEVEL 2 APP PERFORMANCE

For the Engine circuit diagram (Refer to 9 - ENGINE - SCHEMATICS AND DIAGRAMS).

For a complete wiring diagram **Refer to Section 8W**.

- **When Monitored:**
  Throttle motor is powered and no matured faults related to APP Sensors.
- **Set Condition:**
  When secondary software determines that APPS 1 and APPS 2 signals do not match for a period of time. ETC lamp will flash

Possible Causes
PCM NEEDS TO BE PROGRAMMED
PCM

Always perform the Pre-Diagnostic Troubleshooting procedure before proceeding. (Refer to 9 - ENGINE - DIAGNOSIS AND TESTING).

Diagnostic Test

1. PROGRAM THE POWERTRAIN CONTROL MODULE

Verify the PCM is at the latest calibration (flash level).

NOTE: An intermittent loss of power to the PCM without performing an ETC Relearn procedure may cause this DTC to set.

Flash the Powertrain Control Module per Service Information if any updates are available.

Start the engine.

Allow the engine to reach normal operating temperature.

Operate the accelerator pedal. (do not exceed 3500 rpm)

With a scan tool, read DTCs.

NOTE: Diagnose any other DTCs that may have set with the P060D.

Does this DTC reset by itself?

Yes >> Replace and reprogram the Powertrain Control Module per Service Information.
Perform the POWERTRAIN VERIFICATION TEST. (Refer to 9 - ENGINE - STANDARD PROCEDURE)

No >> Test Complete.

P060E-ETC LEVEL 2 TPS PERFORMANCE

For the Engine circuit diagram (Refer to 9 - ENGINE - SCHEMATICS AND DIAGRAMS).

For a complete wiring diagram **Refer to Section 8W**.

- **When Monitored:**
  Throttle motor is powered and no matured faults related to TP Sensors.
- **Set Condition:**
  When secondary software determines that TPS 1 and TPS 2 signals do not match for a period of time. ETC lamp will flash.

Possible Causes
PCM NEEDS TO BE PROGRAMMED
PCM

Always perform the Pre-Diagnostic Troubleshooting procedure before proceeding. (Refer to 9 - ENGINE - DIAGNOSIS AND TESTING).

Diagnostic Test

1. PROGRAM THE POWERTRAIN CONTROL MODULE

Verify the PCM is at the latest calibration (flash level).

NOTE: An intermittent loss of power to the PCM without performing an ETC Relearn procedure may cause this DTC to set.

Flash the Powertrain Control Module per Service Information if any updates are available.

Start the engine.

Allow the engine to reach normal operating temperature.

Operate the accelerator pedal. (do not exceed 3500 rpm)

With a scan tool, read DTCs.

NOTE: Diagnose any other DTCs that may have set with the P060E.

Does this DTC reset by itself?

Yes >> Replace and reprogram the Powertrain Control Module per Service Information.
Perform the POWERTRAIN VERIFICATION TEST. (Refer to 9 - ENGINE - STANDARD PROCEDURE)

No >> Test Complete.

P060F-ETC LEVEL 2 ECT PERFORMANCE

For the Engine circuit diagram (Refer to 9 - ENGINE - SCHEMATICS AND DIAGRAMS).

For a complete wiring diagram **Refer to Section 8W**.

- **When Monitored:**
  Throttle motor is powered and no matured faults related to the Engine Coolant Temp Sensor.
- **Set Condition:**
  When secondary software determines that the Coolant Temperature is implausible for a period of time. ETC lamp will flash.

Possible Causes
PCM NEEDS TO BE PROGRAMMED
PCM

Always perform the Pre-Diagnostic Troubleshooting procedure before proceeding. (Refer to 9 - ENGINE - DIAGNOSIS AND TESTING).

Diagnostic Test

1. PROGRAM THE POWERTRAIN CONTROL MODULE

NOTE: Diagnose any Engine Coolant Temperature Sensor DTCs before continuing.
Verify the PCM is at the latest calibration (flash level).

NOTE: An intermittent loss of power to the PCM without performing an ETC Relearn procedure may cause this DTC to set.
Flash the Powertrain Control Module per Service Information if any updates are available.
Start the engine.
Allow the engine to reach normal operating temperature.
Operate the accelerator pedal. (do not exceed 3500 rpm)
With a scan tool, read DTCs.

NOTE: Diagnose any other DTCs that may have set with the P060F.

Does this DTC reset by itself?

Yes >> Replace and reprogram the Powertrain Control Module per Service Information.
Perform the POWERTRAIN VERIFICATION TEST. (Refer to 9 - ENGINE - STANDARD PROCEDURE)

No >> Test Complete.

P061A-ETC LEVEL 2 TORQUE PERFORMANCE

For the Engine circuit diagram (Refer to 9 - ENGINE - SCHEMATICS AND DIAGRAMS).

For a complete wiring diagram **Refer to Section 8W**.

- **When Monitored:**
  Throttle motor is powered.
- **Set Condition:**
  When secondary software determines that the customer requested output is not being achieved by the engine for a period of time. ETC lamp will flash.

Possible Causes
PCM NEEDS TO BE PROGRAMMED
PCM

Always perform the Pre-Diagnostic Troubleshooting procedure before proceeding. (Refer to 9 - ENGINE - DIAGNOSIS AND TESTING).

Diagnostic Test

1. PROGRAM THE POWERTRAIN CONTROL MODULE

NOTE: Check the engine for air/vacuum leaks and diagnose any Fuel System Lean/Rich as well as MAP Sensor DTCs before continuing.
Verify the PCM is at the latest calibration (flash level).

NOTE: An intermittent loss of power to the PCM without performing an ETC Relearn procedure may cause this DTC to set.
Flash the Powertrain Control Module per Service Information if any updates are available.
Start the engine.
Allow the engine to reach normal operating temperature.
Operate the accelerator pedal. (do not exceed 3500 rpm)
With a scan tool, read DTCS.

NOTE: Diagnose any other DTCs that may have set with the P061A.

Does this DTC reset by itself?

Yes >> Replace and reprogram the Powertrain Control Module per Service Information.
Perform the POWERTRAIN VERIFICATION TEST. (Refer to 9 - ENGINE - STANDARD PROCEDURE)

No >> Test Complete.

P061C-ETC LEVEL 2 RPM PERFORMANCE

For the Engine circuit diagram (Refer to 9 - ENGINE - SCHEMATICS AND DIAGRAMS).

For a complete wiring diagram **Refer to Section 8W**.

- **When Monitored:**
  Throttle motor is powered and no camshaft or crankshaft electrical signal related DTCs are set.
- **Set Condition:**
  When secondary software determines that the engine speed is implausible for a period of time. ETC lamp will flash.

Possible Causes
PCM NEEDS TO BE PROGRAMMED
PCM

Always perform the Pre-Diagnostic Troubleshooting procedure before proceeding. (Refer to 9 - ENGINE - DIAGNOSIS AND TESTING).

Diagnostic Test

1. PROGRAM THE POWERTRAIN CONTROL MODULE

NOTE: Diagnose any Camshaft Position and Crankshaft Position Sensor DTCs before continuing.
Verify the PCM is at the latest calibration (flash level).

NOTE: An intermittent loss of power to the PCM without performing an ETC Relearn procedure may cause this DTC to set.
Flash the Powertrain Control Module per Service Information if any updates are available.
Start the engine.
Allow the engine to reach normal operating temperature.
Operate the accelerator pedal. (do not exceed 3500 rpm)
With a scan tool, read DTCs.

NOTE: Diagnose any other DTCs that may have set with the P061C.

Does this DTC reset by itself?

Yes >> Replace and reprogram the Powertrain Control Module per Service Information.
Perform the POWERTRAIN VERIFICATION TEST. (Refer to 9 - ENGINE - STANDARD PROCEDURE)

No >> Test Complete.

P0622-GENERATOR FIELD CONTROL CIRCUIT

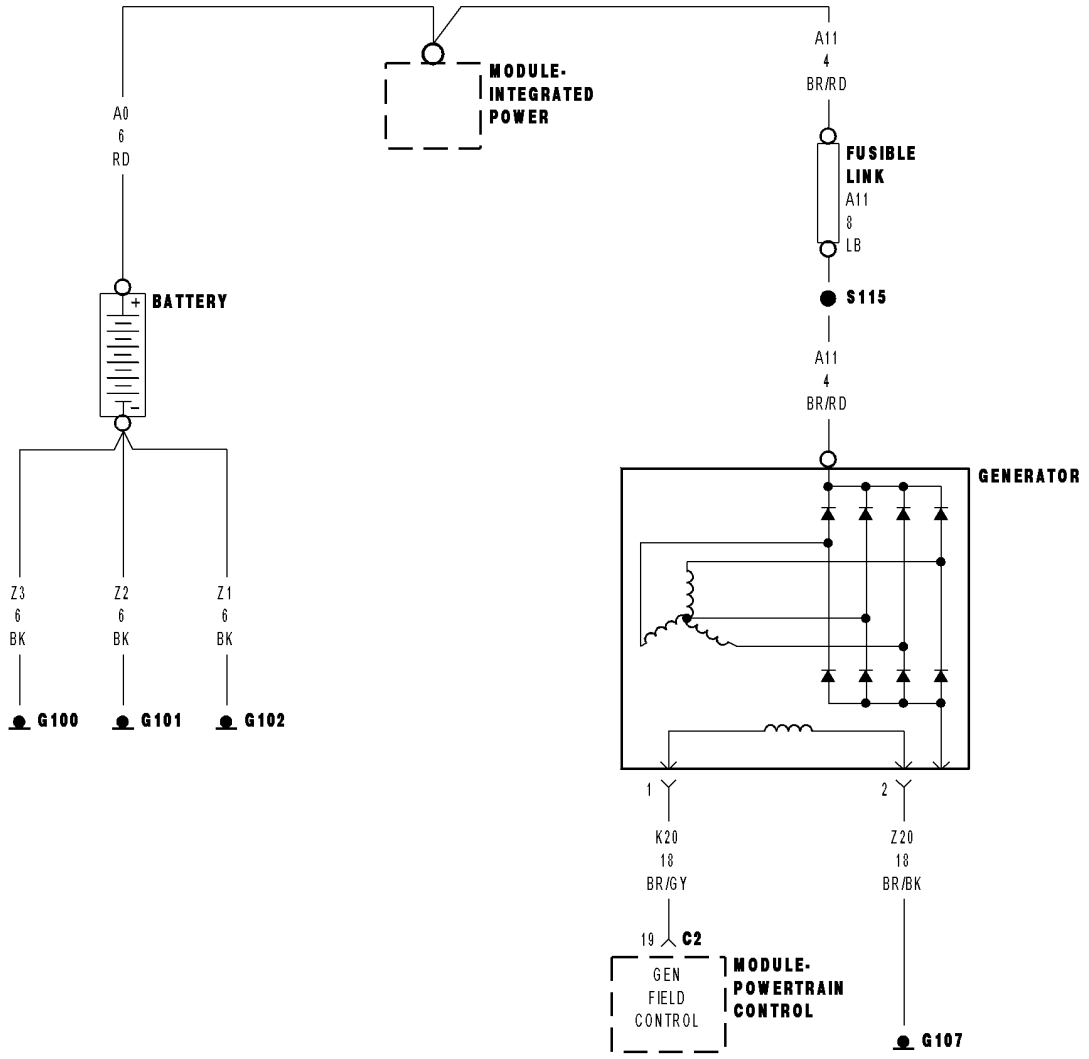

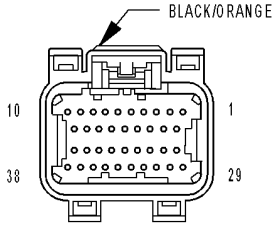

MODULE-
POWERTRAIN
CONTROL C2
(NGC)

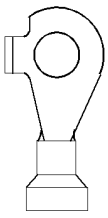

GENERATOR
(5.7L)

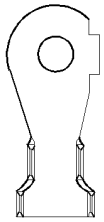

GENERATOR
(DIESEL/3.7L/4.7L/SRT)

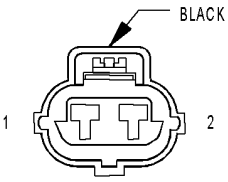

GENERATOR
(EXCEPT SRT)

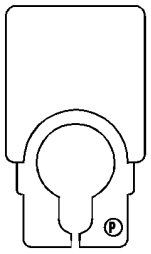

BATTERY-
POSITIVE
(3.7L/4.7L)

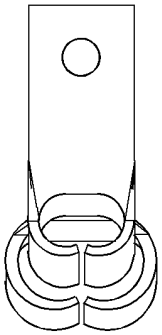

BATTERY
POSITIVE
(5.7L EXCEPT OFF ROAD/SRT)

81454554

P0622-GENERATOR FIELD CONTROL CIRCUIT (CONTINUED)

For the Engine circuit diagram (Refer to 9 - ENGINE - SCHEMATICS AND DIAGRAMS).

For a complete wiring diagram **Refer to Section 8W**.

- **When Monitored:**
  With the ignition on. Engine running.
- **Set Condition:**
  When the PCM tries to regulate the generator field with no result during monitoring. One Trip Fault. Three good trips to turn off the MIL.

Possible Causes
(K20) GEN FIELD CONTROL CIRCUIT SHORTED TO BATTERY VOLTAGE
(K20) GEN FIELD CONTROL CIRCUIT OPEN
(K20) GEN FIELD CONTROL CIRCUIT SHORTED TO GROUND
(Z20) GROUND CIRCUIT OPEN
GENERATOR
PCM

Always perform the Pre-Diagnostic Troubleshooting procedure before proceeding. (Refer to 9 - ENGINE - DIAGNOSIS AND TESTING).

Diagnostic Test

1. ACTIVE DTC

Ignition on, engine not running.

With a scan tool, read DTCs.

Is the DTC active at this time?

Yes >> Go To 2

No >> Refer to the INTERMITTENT CONDITION Diagnostic Procedure.
Perform the POWERTRAIN VERIFICATION TEST. (Refer to 9 - ENGINE - STANDARD PROCEDURE)

---

2. GENERATOR OPERATION

Turn the ignition off.

Disconnect the Generator Field harness connector.

Using a 12-volt test light, jump it across the Generator Field harness connector.

Ignition on, engine not running.

With the scan tool, actuate the Generator Field Control circuit.

Does the test light illuminate brightly and flash on and off?

Yes >> Replace the Generator.
Perform the POWERTRAIN VERIFICATION TEST. (Refer to 9 - ENGINE - STANDARD PROCEDURE)

No >> Go To 3

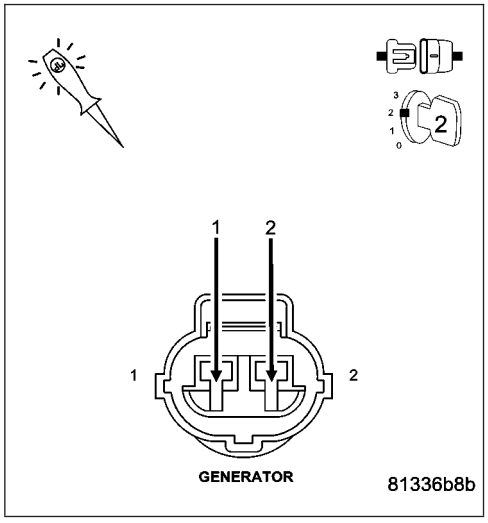

P0622-GENERATOR FIELD CONTROL CIRCUIT (CONTINUED)

3. (K20) GEN FIELD CIRCUIT SHORTED BATTERY VOLTAGE

Turn the ignition off.

Disconnect the C2 PCM harness connector.

Ignition on, engine not running.

Measure the voltage on the (K20) Gen Field Control circuit in the Generator Field harness connector.

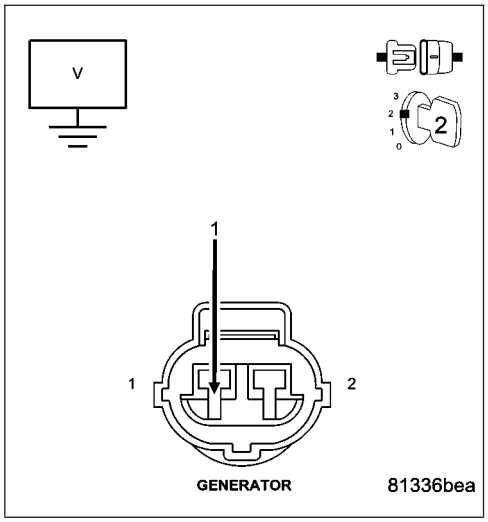

Is the voltage above 1.0 volt?

Yes >> Repair the short to battery voltage in the (K20) Gen Field Control circuit.
Perform the POWERTRAIN VERIFICATION TEST. (Refer to 9 - ENGINE - STANDARD PROCEDURE)

No >> Go To 4

4. (K20) GEN FIELD CIRCUIT OPEN

Turn the ignition off.

CAUTION: Do not probe the PCM harness connectors. Probing the PCM harness connectors will damage the PCM terminals resulting in poor terminal to pin connection. Install Miller Special Tool #8815 to perform diagnosis.

Measure the resistance of the (K20) Gen Field Control circuit from the Generator Field harness connector to appropriate terminal of the special tool #8815.

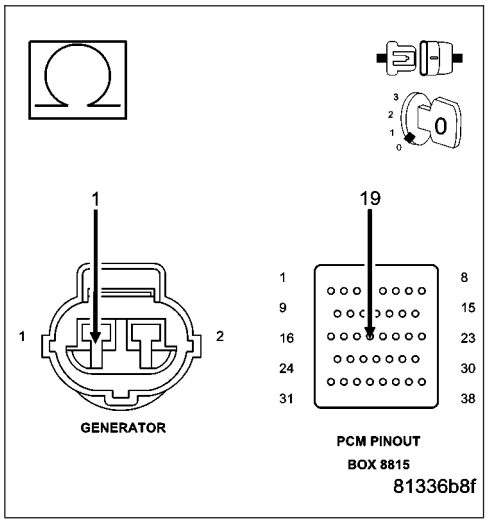

Is the resistance below 5.0 ohms?

Yes >> Go To 5

No >> Repair the open in the (K20) Gen Field Control circuit.
Perform the POWERTRAIN VERIFICATION TEST. (Refer to 9 - ENGINE - STANDARD PROCEDURE)

P0622-GENERATOR FIELD CONTROL CIRCUIT (CONTINUED)

5. (K20) GEN FIELD CIRCUIT SHORTED TO GROUND

Measure the resistance between ground and the (K20) Gen Field Control circuit in the Generator Field harness connector.

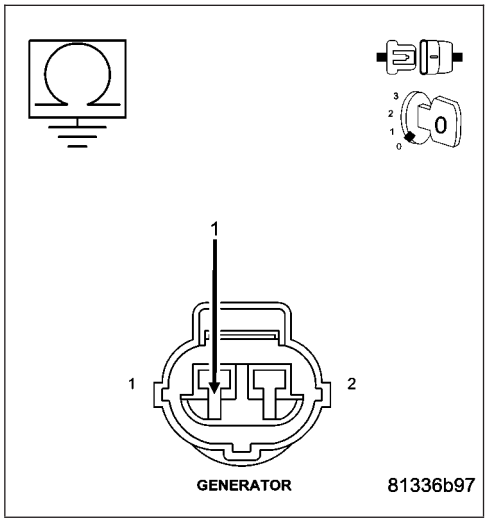

Is the resistance below 100 ohms?

Yes >> Repair the short to ground in the (K20) Gen Field Control circuit.
Perform the POWERTRAIN VERIFICATION TEST. (Refer to 9 - ENGINE - STANDARD PROCEDURE)

No >> Go To 6

6. (Z20) GROUND CIRCUIT OPEN

Using a 12-volt test light connected to battery voltage, probe the (Z20) Ground circuit in the Gen Field harness connector.

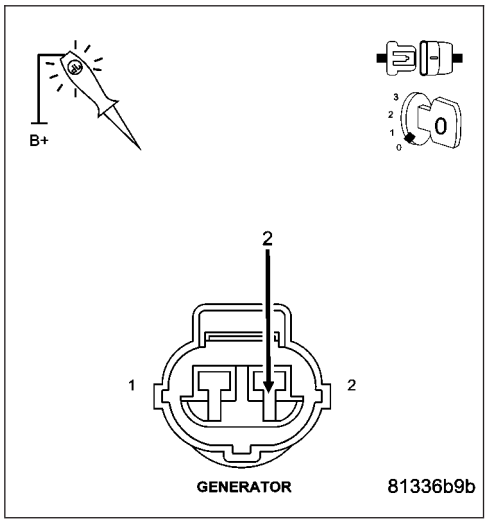

Does the test light illuminate brightly?

Yes >> Go To 7

No >> Repair the open in the (Z20) Ground circuit.
Perform the POWERTRAIN VERIFICATION TEST. (Refer to 9 - ENGINE - STANDARD PROCEDURE)

7. PCM

NOTE: Before continuing, check the PCM harness connector terminals for corrosion, damage, or terminal push out. Repair as necessary.
Using the schematics as a guide, inspect the wire harness and connectors. Pay particular attention to all Power and Ground circuits.

Were there any problems found?

Yes >> Repair as necessary.
Perform the POWERTRAIN VERIFICATION TEST. (Refer to 9 - ENGINE - STANDARD PROCEDURE)

No >> Replace and program the Powertrain Control Module per Service Information.
Perform the POWERTRAIN VERIFICATION TEST. (Refer to 9 - ENGINE - STANDARD PROCEDURE)

P0627-FUEL PUMP RELAY CIRCUIT

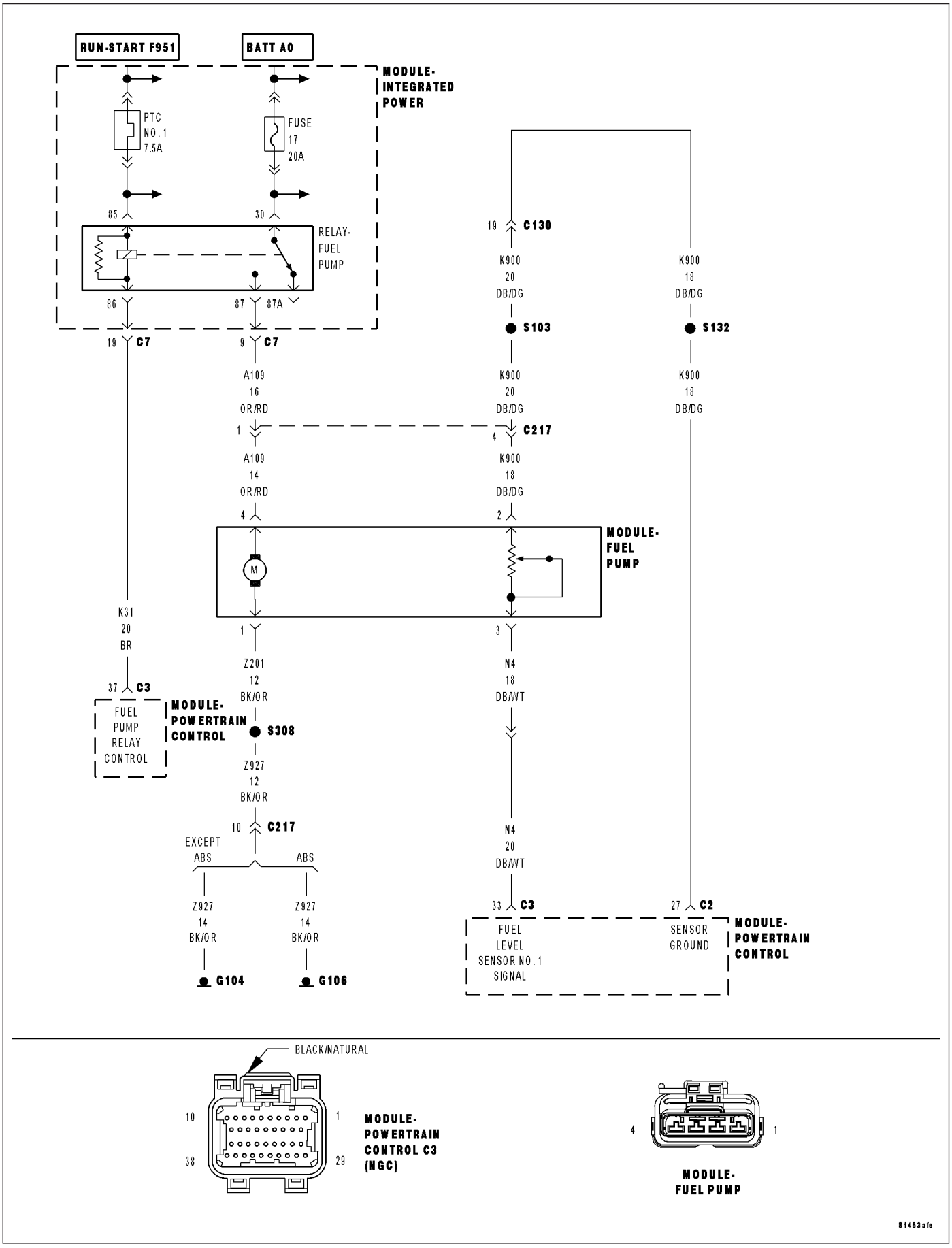

P0627-FUEL PUMP RELAY CIRCUIT (CONTINUED)

For the Engine circuit diagram (Refer to 9 - ENGINE - SCHEMATICS AND DIAGRAMS).

For a complete wiring diagram **Refer to Section 8W**.

- **When Monitored:**
  With the ignition on. Battery voltage greater than 10.4 volts and the ASD sense switch is on.
- **Set Condition:**
  Actual Fuel Pump Relay state is not equal to desired state. One Trip Fault. Three good trips to turn off the MIL.

Possible Causes
INTERNAL FUSED IGNITION SWITCH OUTPUT CIRCUIT
(K31) FUEL PUMP RELAY CONTROL CIRCUIT
(K31) FUEL PUMP RELAY CONTROL CIRCUIT SHORTED TO GROUND
FUEL PUMP RELAY
PCM

Always perform the Pre-Diagnostic Troubleshooting procedure before proceeding. (Refer to 9 - ENGINE - DIAGNOSIS AND TESTING).

Diagnostic Test

1. FUEL PUMP RELAY OPERATION

Ignition on, engine not running.

With a scan tool, actuate the Fuel Pump Relay.

Is the Fuel Pump Relay operating?

Yes >> Refer to the INTERMITTENT CONDITION Diagnostic Procedure.
Perform the POWERTRAIN VERIFICATION TEST. (Refer to 9 - ENGINE - STANDARD PROCEDURE)

No >> Go To 2

---

2. FUEL PUMP RELAY

Turn the ignition off.

Remove the Fuel Pump Relay from the IPM.

Measure the resistance of the Fuel Pump Relay Coil.

Is the resistance between 70 to 90 ohms?

Yes >> Go To 3

No >> Replace the Fuel Pump Relay.
Perform the POWERTRAIN VERIFICATION TEST. (Refer to 9 - ENGINE - STANDARD PROCEDURE)

P0627-FUEL PUMP RELAY CIRCUIT (CONTINUED)

3. INTERNAL FUSED IGNITION SWITCH AND FUSED B+ OUTPUT CIRCUITS

Ignition on, engine not running.

Using a 12-volt test light connected to ground, probe the Internal Fused Ignition Switch Output circuit and Fused B+ circuit.

Does the test light illuminate brightly?

Yes >> Go To 4

No >> Repair the open or short to ground in the Internal Fused Ignition Switch Output circuit or the Fused B+ circuit. Inspect the related fuse and repair as necessary.

Perform the POWERTRAIN VERIFICATION TEST. (Refer to 9 - ENGINE - STANDARD PROCEDURE)

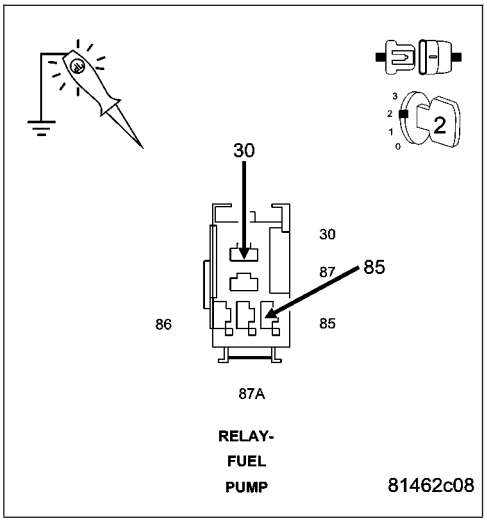

4. (K31) FUEL PUMP RELAY CONTROL CIRCUIT OPEN

Turn the ignition off.

Disconnect the C3 PCM harness connector.

CAUTION: Do not probe the PCM harness connectors. Probing the PCM harness connectors will damage the PCM terminals resulting in poor terminal to pin connection. Install Miller Special Tool #8815 to perform diagnosis.

Measure the resistance of the (K31) Fuel Pump Relay Control circuit from the IPM to the appropriate terminal of special tool #8815.

Is the resistance below 5.0 ohms?

Yes >> Go To 5

No >> Repair the open in the (K31) Fuel Pump Relay Control circuit.

Perform the POWERTRAIN VERIFICATION TEST. (Refer to 9 - ENGINE - STANDARD PROCEDURE)

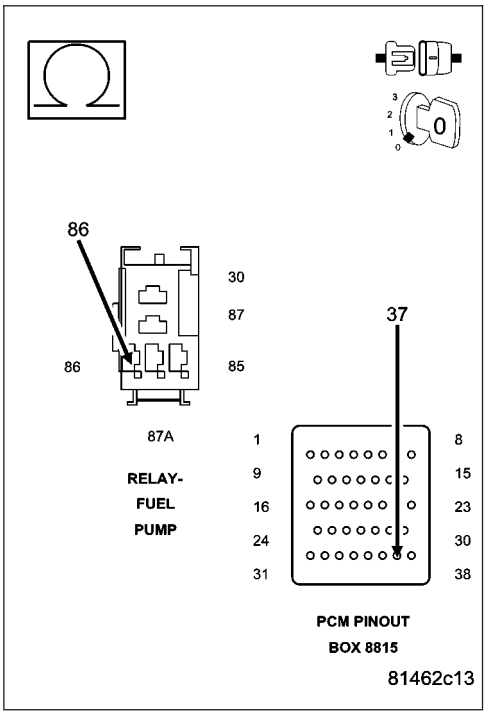

P0627-FUEL PUMP RELAY CIRCUIT (CONTINUED)

5. (K31) FUEL PUMP RELAY CONTROL CIRCUIT SHORTED TO GROUND

Measure the resistance between ground and the (K31) Fuel Pump Relay Control circuit in the IPM.

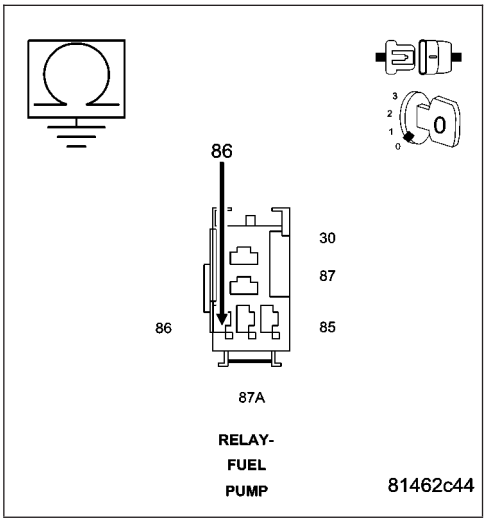

Is the resistance below 100 ohms?

Yes >> Repair the short to ground in the (K31) Fuel Pump Relay Control circuit.
Perform the POWERTRAIN VERIFICATION TEST. (Refer to 9 - ENGINE - STANDARD PROCEDURE)

No >> Go To 6

6. PCM

NOTE: Before continuing, check the PCM harness connector terminals for corrosion, damage, or terminal push out. Repair as necessary.
Using the schematics as a guide, inspect the wire harness and connectors. Pay particular attention to all Power and Ground circuits.

Were there any problems found?

Yes >> Repair as necessary.
Perform the POWERTRAIN VERIFICATION TEST. (Refer to 9 - ENGINE - STANDARD PROCEDURE)

No >> Replace and program the Powertrain Control Module per Service Information.
Perform the POWERTRAIN VERIFICATION TEST. (Refer to 9 - ENGINE - STANDARD PROCEDURE)

P062C-ETC LEVEL 2 MPH PERFORMANCE

For the Engine circuit diagram (Refer to 9 - ENGINE - SCHEMATICS AND DIAGRAMS).

For a complete wiring diagram **Refer to Section 8W**.

- **When Monitored:**
  Throttle motor is powered and no vehicle speed related DTCs have matured.
- **Set Condition:**
  When secondary software determines that the vehicle speed is implausible for a period of time. ETC lamp will flash.

Possible Causes
PCM NEEDS TO BE PROGRAMMED
PCM

Always perform the Pre-Diagnostic Troubleshooting procedure before proceeding. (Refer to 9 - ENGINE - DIAGNOSIS AND TESTING).

Diagnostic Test

1. PROGRAM THE POWERTRAIN CONTROL MODULE

Verify the PCM is at the latest calibration (flash level).

NOTE: An intermittent loss of power to the PCM without performing an ETC Relearn procedure may cause this DTC to set.

Flash the Powertrain Control Module per Service Information if any updates are available.

Start the engine.

Allow the engine to reach normal operating temperature.

Operate the accelerator pedal. (do not exceed 3500 rpm)

With a scan tool, read DTCs.

NOTE: Diagnose any other DTCs that may have set with the P062C.

Does this DTC reset by itself?

Yes >> Replace and reprogram the Powertrain Control Module per Service Information.
Perform the POWERTRAIN VERIFICATION TEST. (Refer to 9 - ENGINE - STANDARD PROCEDURE)

No >> Test Complete.

P0630-VIN NOT PROGRAMMED IN PCM

For the Engine circuit diagram (Refer to 9 - ENGINE - SCHEMATICS AND DIAGRAMS).

For a complete wiring diagram **Refer to Section 8W**.

- **When Monitored:**
  At initialization.
- **Set Condition:**
  The VIN has not been programmed into the PCM. One Trip Fault. Three good trips to turn off the MIL.

Possible Causes
PROGRAMMING VIN INTO PCM
PCM

Always perform the Pre-Diagnostic Troubleshooting procedure before proceeding. (Refer to 9 - ENGINE - DIAGNOSIS AND TESTING).

Diagnostic Test

1. PROGRAMMING VIN INTO THE PCM

Ignition on, engine not running.

Using the scan tool, program VIN into the PCM.

Start the engine.

NOTE: If the engine will not start, crank the engine over for 15 seconds. Crank at least 2 times with the ignition switch returning to the off position each time.

Allow the engine to reach normal operating temperature.

With the scan tool, read DTCs.

Does the DTC reset?

Yes >> Replace and program the Powertrain Control Module per Service Information.
Perform the POWERTRAIN VERIFICATION TEST. (Refer to 9 - ENGINE - STANDARD PROCEDURE)

No >> The VIN has been successfully programmed into the PCM. Test is complete.
Perform the POWERTRAIN VERIFICATION TEST. (Refer to 9 - ENGINE - STANDARD PROCEDURE)

P0632-ODOMETER NOT PROGRAMMED IN PCM

For the Engine circuit diagram (Refer to 9 - ENGINE - SCHEMATICS AND DIAGRAMS).

For a complete wiring diagram **Refer to Section 8W**.

- **When Monitored:**
  Ignition on.
- **Set Condition:**
  Odometer is not programed into the PCM. One Trip Fault. Three good trips to turn off the MIL.

Possible Causes
PROGRAMMING MILEAGE INTO THE PCM
PCM

Always perform the Pre-Diagnostic Troubleshooting procedure before proceeding. (Refer to 9 - ENGINE - DIAGNOSIS AND TESTING).

Diagnostic Test

1. PROGRAMMING MILEAGE INTO THE PCM

Ignition on, engine not running.
With the scan tool, erase DTCs.
Using a scan tool, program the mileage into the PCM.
Start the engine.
Allow the engine to reach normal operating temperature.
With a scan tool, read DTCs.

Does the DTC reset?

Yes >> Replace and program the Powertrain Control Module per Service Information.
Perform the POWERTRAIN VERIFICATION TEST. (Refer to 9 - ENGINE - STANDARD PROCEDURE)

No >> The mileage has been successfully programmed into the PCM. Test is complete.
Perform the POWERTRAIN VERIFICATION TEST. (Refer to 9 - ENGINE - STANDARD PROCEDURE)

P0633-SKIM KEY NOT PROGRAMMED IN PCM

For the Engine circuit diagram (Refer to 9 - ENGINE - SCHEMATICS AND DIAGRAMS).

For a complete wiring diagram **Refer to Section 8W**.

- **When Monitored:**
  Ignition on.
- **Set Condition:**
  The SKIM Key information has not been programmed into the PCM. One Trip Fault. Three good trips to turn off the MIL.

Possible Causes
PROGRAMMING SKIM KEY INTO THE PCM
PCM

Always perform the Pre-Diagnostic Troubleshooting procedure before proceeding. (Refer to 9 - ENGINE - DIAGNOSIS AND TESTING).

Diagnostic Test

1. PROGRAMMING SKIM KEY INTO THE PCM

Ignition on, engine not running.

With a scan tool, erase DTCs.

Using the scan tool, program the SKIM Key information into the PCM.

Start the engine.

NOTE: If the engine will not start, crank the engine over for 15 seconds. Crank at least 2 times with the ignition switch returning to the off position each time.

Allow the engine to reach normal operating temperature.

With the scan tool, read DTCs.

Does the DTC reset?

Yes >> Replace and program the Powertrain Control Module per Service Information.
Perform the POWERTRAIN VERIFICATION TEST. (Refer to 9 - ENGINE - STANDARD PROCEDURE)

No >> The SKIM KEY information has been successfully programmed into the PCM. Test is complete.
Perform the POWERTRAIN VERIFICATION TEST. (Refer to 9 - ENGINE - STANDARD PROCEDURE)

P0642-SENSOR REFERENCE VOLTAGE 1 CIRCUIT LOW

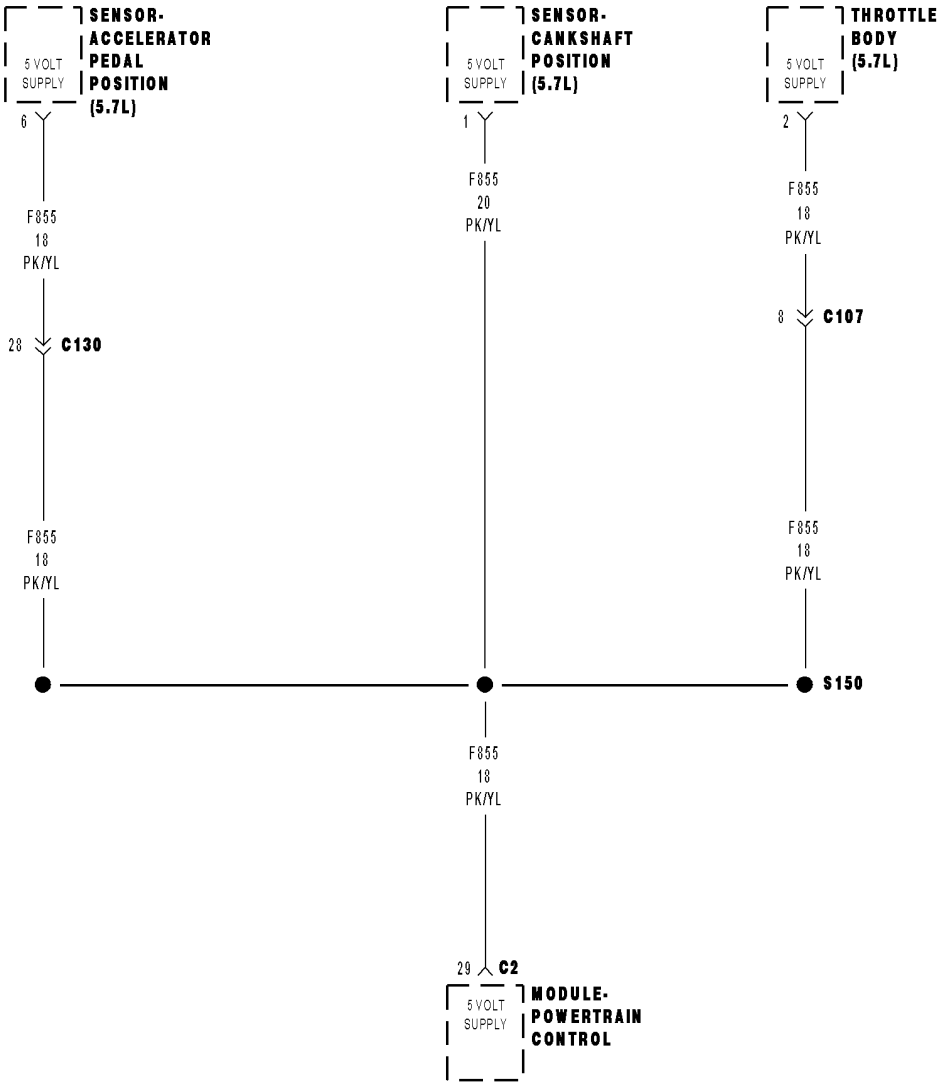

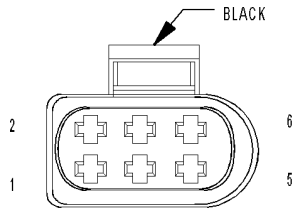

THROTTLE
BODY
(5.7L)

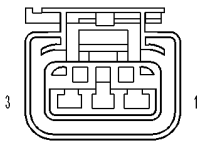

SENSOR-
CRANKSHAFT
POSITION
(5.7L/SRT)

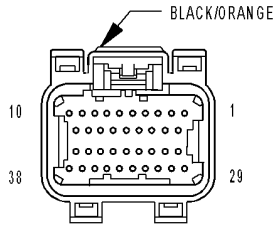

MODULE-
POWERTRAIN
CONTROL C2
(NGC)

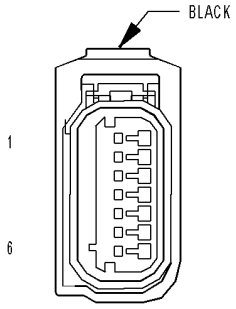

SENSOR-
ACCELERATOR
PEDAL
POSITION

81454897

P0642-SENSOR REFERENCE VOLTAGE 1 CIRCUIT LOW (CONTINUED)

For the Engine circuit diagram (Refer to 9 - ENGINE - SCHEMATICS AND DIAGRAMS).

For a complete wiring diagram **Refer to Section 8W**.

- **When Monitored:**
  Ignition on.
- **Set Condition:**
  When the PCM recognizes the Primary 5-volt Supply circuit voltage is too low. One Trip Fault. ETC light is flashing.

Possible Causes
(F855) PRIMARY 5-VOLT SUPPLY SHORTED TO GROUND
SENSOR SHORTED TO GROUND
5-VOLT SENSOR
PCM

Always perform the Pre-Diagnostic Troubleshooting procedure before proceeding. (Refer to 9 - ENGINE - DIAGNOSIS AND TESTING).

Diagnostic Test

1. ACTIVE DTC

Ignition on, engine not running.

With a scan tool, read DTCs.

NOTE: Improperly installed aftermarket accessories can cause this DTC to set. Check for wiring added by customer.

Is the DTC active at this time?

Yes >> Go To 2

No >> Refer to the INTERMITTENT CONDITION Diagnostic Procedure.
Perform the POWERTRAIN VERIFICATION TEST. (Refer to 9 - ENGINE - STANDARD PROCEDURE)

2. (F855) PRIMARY 5-VOLT SUPPLY CIRCUIT SHORTED TO GROUND

Turn the ignition off.

Disconnect the C2 PCM harness connector.

Disconnect all the Sensors that share the (F855) Primary 5-volt Supply circuit.

Measure the resistance between ground and the (F855) Primary 5-volt Supply circuit in the CKP Sensor harness connector.

Is the resistance below 100 ohms?

Yes >> Repair the short to ground in the (F855) Primary 5-volt Supply circuit.
Perform the POWERTRAIN VERIFICATION TEST. (Refer to 9 - ENGINE - STANDARD PROCEDURE)

No >> Go To 3

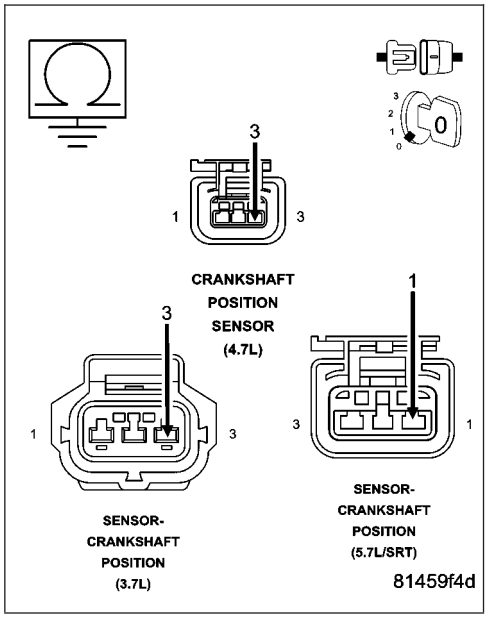

P0642-SENSOR REFERENCE VOLTAGE 1 CIRCUIT LOW (CONTINUED)

3. 5-VOLT SENSOR

Turn the ignition off.

Reconnect all the previously disconnected Sensors except for the CKP Sensor harness connector.

Ignition on, engine not running.

Measure the voltage on the (F855) Primary 5-volt Supply circuit in the CKP Sensor harness connector.

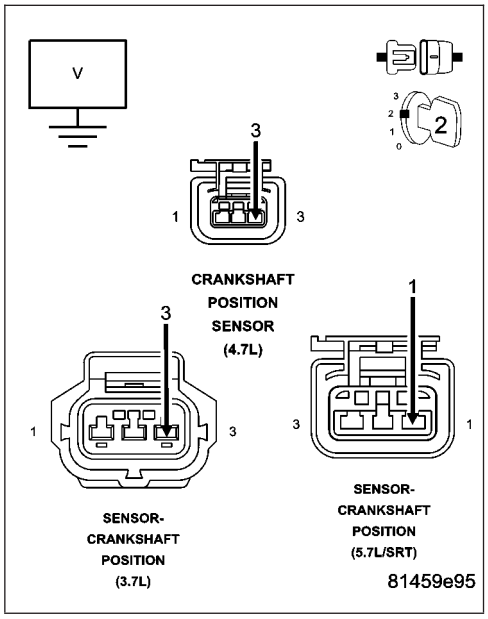

Is the voltage below 4.5 volts?

Yes >> Go To 4

No >> Replace the CKP Sensor.

Perform the POWERTRAIN VERIFICATION TEST. (Refer to 9 - ENGINE - STANDARD PROCEDURE)

4. 5-VOLT SENSOR SHORTED TO GROUND

Measure the voltage on the (F855) Primary 5-volt Supply circuit at the CKP Sensor harness connector.

CAUTION: You must Turn the Ignition OFF when disconnecting any of the Sensor harness connectors and Turn the Ignition On to check the voltage readings.

While monitoring the voltage, disconnect each Sensor harness connector that shares the (F855) Primary 5-volt Supply circuit, one at a time.

NOTE: Reconnect all the Sensors and clear all trouble codes before continuing.

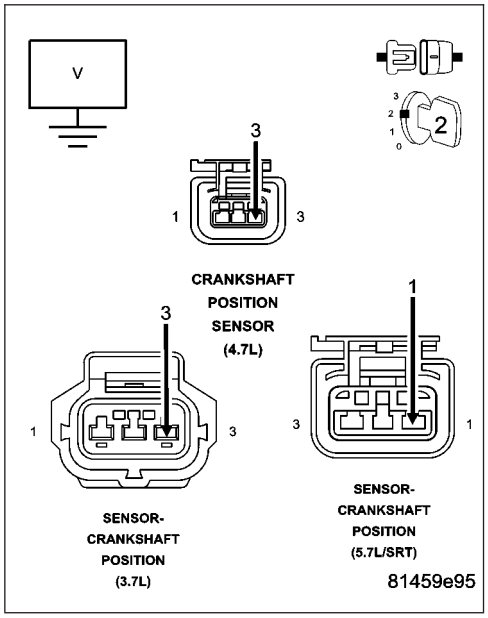

Does the voltage increase above 4.5 volts when disconnecting any of the remaining Sensors?

Yes >> Replace the Sensor that causes the (F855) Primary 5-volt Supply circuit voltage to increase when disconnected.

Perform the POWERTRAIN VERIFICATION TEST. (Refer to 9 - ENGINE - STANDARD PROCEDURE)

No >> Go To 5

P0642-SENSOR REFERENCE VOLTAGE 1 CIRCUIT LOW (CONTINUED)

5. **PCM**

NOTE: Before continuing, check the PCM harness connector terminals for corrosion, damage, or terminal push out. Repair as necessary.

Using the schematics as a guide, inspect the wire harness and connectors. Pay particular attention to all Power and Ground circuits.

Were there any problems found?

Yes >> Repair as necessary.
Perform the POWERTRAIN VERIFICATION TEST. (Refer to 9 - ENGINE - STANDARD PROCEDURE)

No >> Replace and program the Powertrain Control Module per Service Information.
Perform the POWERTRAIN VERIFICATION TEST. (Refer to 9 - ENGINE - STANDARD PROCEDURE)

P0643-PRIMARY 5-VOLT SUPPLY CIRCUIT HIGH

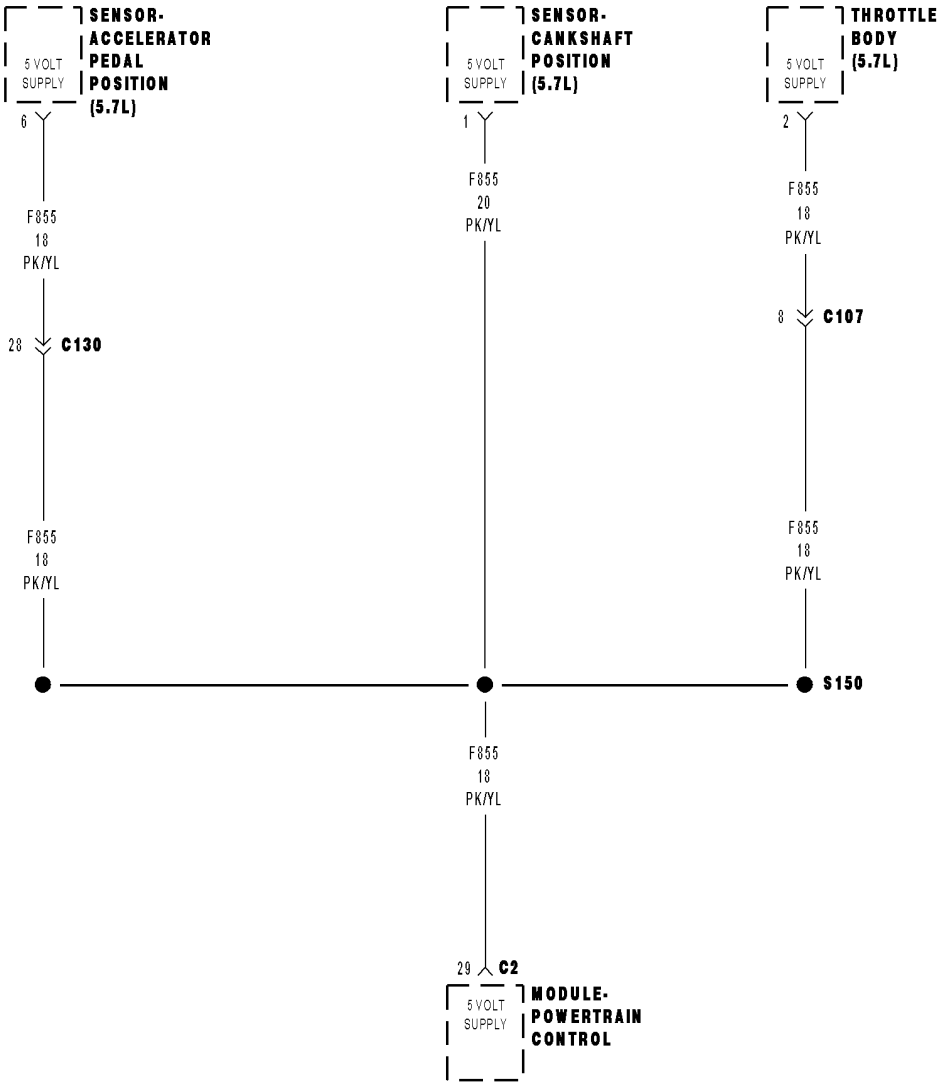

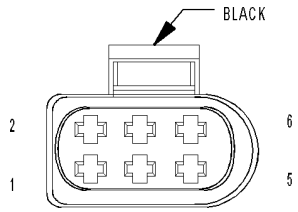

THROTTLE
BODY
(5.7L)

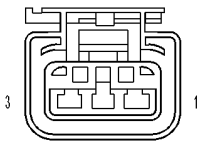

SENSOR-
CRANKSHAFT
POSITION
(5.7L/SRT)

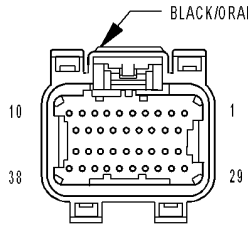

MODULE-
POWERTRAIN
CONTROL C2
(NGC)

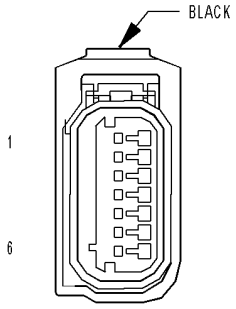

SENSOR-
ACCELERATOR
PEDAL
POSITION

81454897

P0643-PRIMARY 5-VOLT SUPPLY CIRCUIT HIGH (CONTINUED)

For the Engine circuit diagram (Refer to 9 - ENGINE - SCHEMATICS AND DIAGRAMS).

For a complete wiring diagram **Refer to Section 8W**.

- **When Monitored:**
  Ignition on.
- **Set Condition:**
  When the PCM recognizes the Primary 5-volt Supply circuit voltage is too high. One Trip Fault. ETC light is flashing.

Possible Causes
(F855) PRIMARY 5-VOLT SUPPLY SHORTED TO BATTERY VOLTAGE
PCM

Always perform the Pre-Diagnostic Troubleshooting procedure before proceeding. (Refer to 9 - ENGINE - DIAGNOSIS AND TESTING).

Diagnostic Test

1. ACTIVE DTC

Ignition on, engine not running.

With a scan tool, read DTCs.

Is the DTC active at this time?

Yes >> Go To 2

No >> Refer to the INTERMITTENT CONDITION Diagnostic Procedure.
Perform the POWERTRAIN VERIFICATION TEST. (Refer to 9 - ENGINE - STANDARD PROCEDURE)

---

2. (F855) PRIMARY 5-VOLT SUPPLY SHORTED TO BATTERY VOLTAGE

Turn the ignition off.

Disconnect the C2 PCM harness connector.

Disconnect all the Sensors that share the (F855) Primary 5-volt Supply circuit.

NOTE: Improperly installed aftermarket accessories can cause this DTC to set. Check for wiring added by customer.

Ignition on, engine not running.

Measure the voltage on the (F855) Primary 5-volt Supply circuit at the CKP Sensor harness connector.

Is the voltage above 5.2 volts?

Yes >> Repair the short to battery voltage in the (F855) Primary 5-volt Supply circuit.
Perform the POWERTRAIN VERIFICATION TEST. (Refer to 9 - ENGINE - STANDARD PROCEDURE)

No >> Go To 3

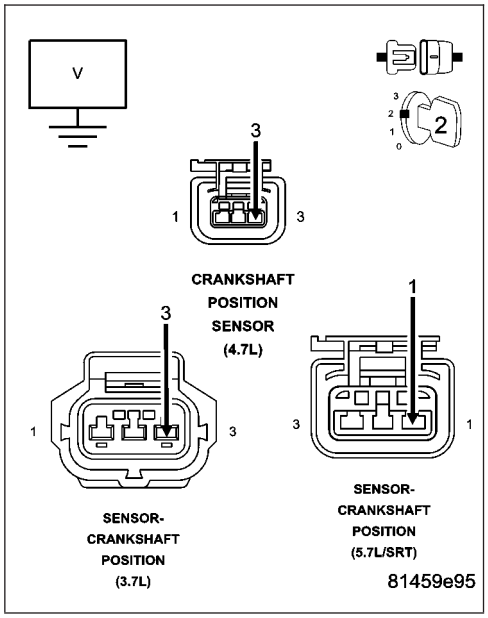

P0643-PRIMARY 5-VOLT SUPPLY CIRCUIT HIGH (CONTINUED)

3. **PCM**

NOTE: Before continuing, check the PCM harness connector terminals for corrosion, damage, or terminal push out. Repair as necessary.

Using the schematics as a guide, inspect the wire harness and connectors. Pay particular attention to all Power and Ground circuits.

Were there any problems found?

Yes >> Repair as necessary.
Perform the POWERTRAIN VERIFICATION TEST. (Refer to 9 - ENGINE - STANDARD PROCEDURE)

No >> Replace and program the Powertrain Control Module per Service Information.
Perform the POWERTRAIN VERIFICATION TEST. (Refer to 9 - ENGINE - STANDARD PROCEDURE)

P0645-A/C CLUTCH RELAY CIRCUIT

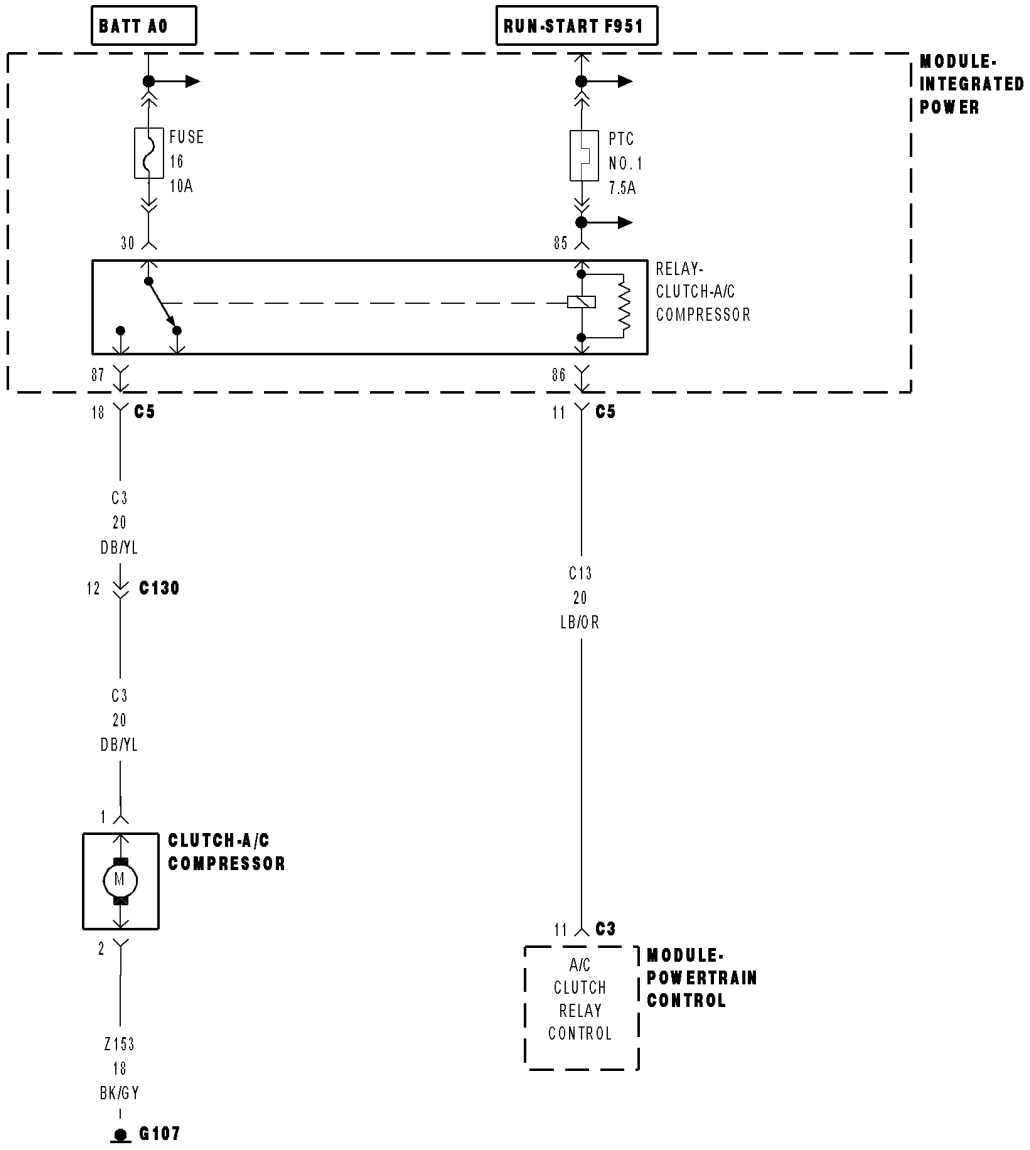

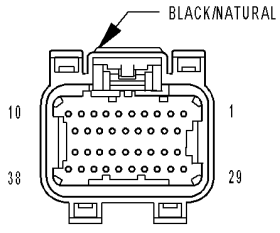

MODULE-
POWERTRAIN
CONTROL C3
(NGC)

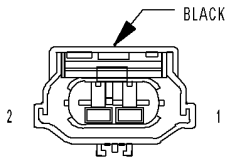

CLUTCH-A/C
COMPRESSOR
(GAS)

814548fc

P0645-A/C CLUTCH RELAY CIRCUIT (CONTINUED)

For the Engine circuit diagram (Refer to 9 - ENGINE - SCHEMATICS AND DIAGRAMS).

For a complete wiring diagram **Refer to Section 8W**.

- **When Monitored:**
  With the ignition on. Battery voltage greater than 10 volts. A/C Switch on.
- **Set Condition:**
  An open or shorted condition is detected in the A/C clutch relay control circuit. One Trip Fault. Three good trips to turn off the MIL.

Possible Causes
INTERNAL FUSED IGNITION SWITCH OUTPUT CIRCUIT
INTERNAL FUSED B+ CIRCUIT
(C13) A/C CLUTCH RELAY CONTROL CIRCUIT OPEN
(C13) A/C CLUTCH RELAY CONTROL CIRCUIT SHORTED TO GROUND
A/C CLUTCH RELAY
PCM

Always perform the Pre-Diagnostic Troubleshooting procedure before proceeding. (Refer to 9 - ENGINE - DIAGNOSIS AND TESTING).

Diagnostic Test

1. A/C CLUTCH RELAY OPERATION

Ignition on, engine not running.

With a scan tool, actuate the A/C Clutch Relay.

Is the A/C Clutch Relay operating?

Yes >> Refer to the INTERMITTENT CONDITION Diagnostic Procedure.
Perform the POWERTRAIN VERIFICATION TEST. (Refer to 9 - ENGINE - STANDARD PROCEDURE)

No >> Go To 2

---

2. A/C CLUTCH RELAY RESISTANCE

Turn the ignition off.

Remove the A/C Clutch Relay from the IPM.

Measure the resistance of the A/C Clutch Relay Coil.

Is the resistance between 60 to 80 ohms?

Yes >> Go To 3

No >> Replace the A/C Clutch Relay.
Perform the POWERTRAIN VERIFICATION TEST. (Refer to 9 - ENGINE - STANDARD PROCEDURE)

P0645-A/C CLUTCH RELAY CIRCUIT (CONTINUED)

3. INTERNAL FUSED IGNITION SWITCH OUTPUT CIRCUIT AND FUSED B+ CIRCUIT

Ignition on, engine not running.

Using a 12-volt test light connected to ground, probe the Internal Fused Ignition Switch Output circuit and the Fused B+ circuit in the connection.

Does the test light illuminate brightly?

Yes >> Go To 4

No >> Repair the open or short to ground in the Fused Ignition Switch Output circuit or the Fused B+ circuit. Check and replace any open fuses.

Perform the POWERTRAIN VERIFICATION TEST. (Refer to 9 - ENGINE - STANDARD PROCEDURE)

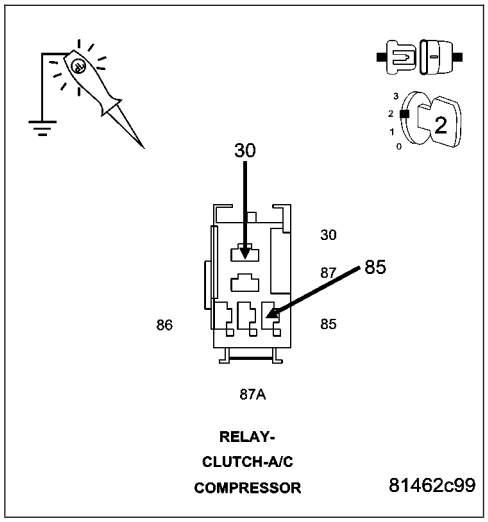

4. (C13) A/C CLUTCH RELAY CONTROL CIRCUIT OPEN

Turn the ignition off.

Disconnect the C3 PCM harness connector.

CAUTION: Do not probe the PCM harness connectors. Probing the PCM harness connectors will damage the PCM terminals resulting in poor terminal to pin connection. Install Miller Special Tool #8815 to perform diagnosis.

Measure the resistance of the (C13) A/C Clutch Relay Control circuit from the relay connection to the appropriate terminal of special tool #8815.

Is the resistance below 5.0 ohms?

Yes >> Go To 5

No >> Repair the open in the (C13) A/C Clutch Relay Control circuit.

Perform the POWERTRAIN VERIFICATION TEST. (Refer to 9 - ENGINE - STANDARD PROCEDURE)

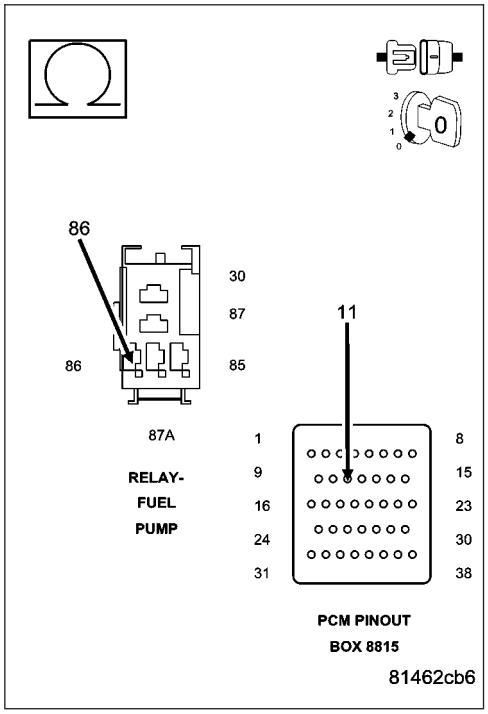

P0645-A/C CLUTCH RELAY CIRCUIT (CONTINUED)

5. (C13) A/C CLUTCH RELAY CONTROL CIRCUIT SHORTED TO GROUND

Measure the resistance between ground and the (C13) A/C Clutch Relay Control circuit at the IPM.

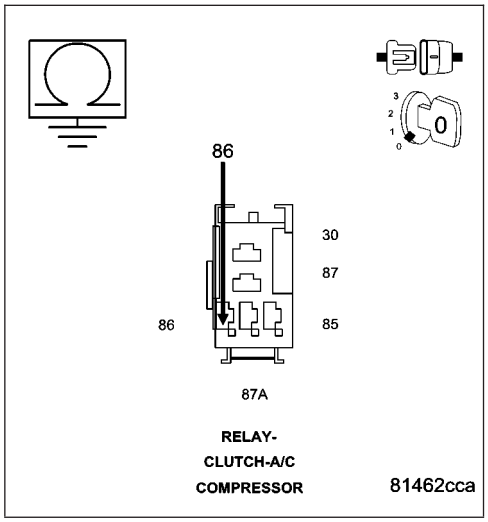

Is the resistance below 5.0 ohms?

Yes >> Repair the short to ground in the (C13) A/C Relay Clutch Control circuit.
Perform the POWERTRAIN VERIFICATION TEST. (Refer to 9 - ENGINE - STANDARD PROCEDURE)

No >> Go To 6

---

6. PCM

NOTE: Before continuing, check the PCM harness connector terminals for corrosion, damage, or terminal push out. Repair as necessary.
Using the schematics as a guide, inspect the wire harness and connectors. Pay particular attention to all Power and Ground circuits.

Were there any problems found?

Yes >> Repair as necessary.
Perform the POWERTRAIN VERIFICATION TEST. (Refer to 9 - ENGINE - STANDARD PROCEDURE)

No >> Replace and program the Powertrain Control Module per Service Information.
Perform the POWERTRAIN VERIFICATION TEST. (Refer to 9 - ENGINE - STANDARD PROCEDURE)

P0652-SENSOR REFERENCE VOLTAGE 2 CIRCUIT LOW

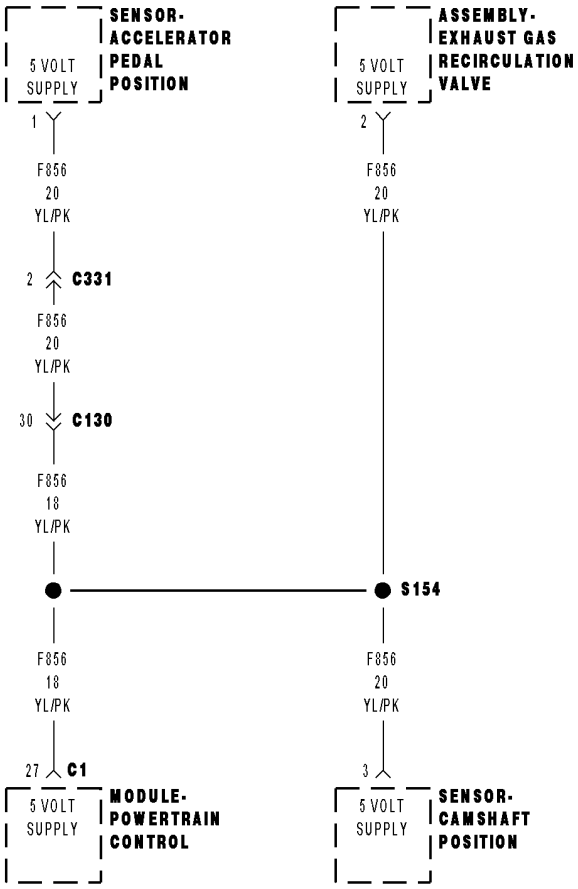

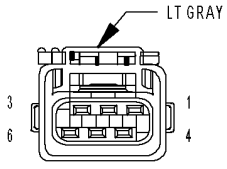

ASSEMBLY-
EXHAUST GAS
RECIRCULATION
VALVE
(4.7L/5.7L LIGHT DUTY)

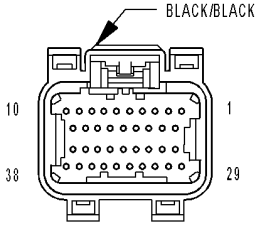

MODULE-
POWERTRAIN
CONTROL C1
(NGC)

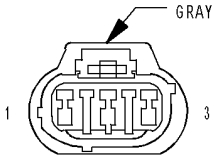

SENSOR-
CAMSHAFT
POSITION
(GAS)

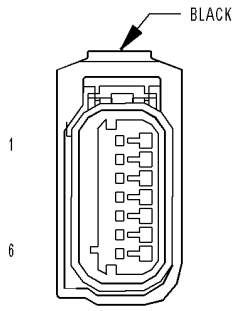

SENSOR-
ACCELERATOR
PEDAL
POSITION

8145491c

P0652-SENSOR REFERENCE VOLTAGE 2 CIRCUIT LOW (CONTINUED)

For the Engine circuit diagram (Refer to 9 - ENGINE - SCHEMATICS AND DIAGRAMS).

For a complete wiring diagram **Refer to Section 8W**.

- **When Monitored:**
  Ignition on.
- **Set Condition:**
  When the PCM recognizes the Auxiliary 5-volt Supply circuit voltage is too low. One Trip Fault. ETC light is flashing.

Possible Causes
(F856) AUXILIARY 5-VOLT SUPPLY SHORTED TO GROUND
SENSOR SHORTED TO GROUND
CAM POSITION SENSOR
PCM

Always perform the Pre-Diagnostic Troubleshooting procedure before proceeding. (Refer to 9 - ENGINE - DIAGNOSIS AND TESTING).

Diagnostic Test

1. ACTIVE DTC

Ignition on, engine not running.

With a scan tool, read DTCs.

NOTE: Improperly installed aftermarket accessories can cause this DTC to set. Check for wiring added by customer.

Is the DTC active at this time?

Yes >> Go To 2

No >> Refer to the INTERMITTENT CONDITION Diagnostic Procedure.
Perform the POWERTRAIN VERIFICATION TEST. (Refer to 9 - ENGINE - STANDARD PROCEDURE)

---

2. (F856) AUXILIARY 5-VOLT SUPPLY SHORTED TO GROUND

Turn the ignition off.

Disconnect the C1 PCM harness connector.

Disconnect all the Sensors that share the (F856) Auxiliary 5-volt Supply circuit.

Measure the resistance between ground and the (F856) Auxiliary 5-volt Supply circuit in the CMP Sensor harness connector.

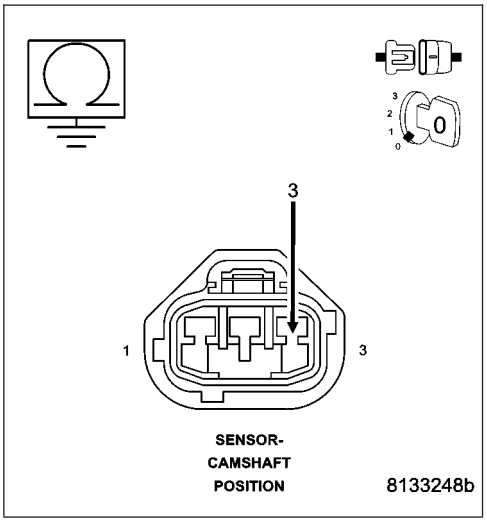

Is the resistance below 100 ohms?

Yes >> Repair the short to ground in the (F856) Auxiliary 5-volt Supply circuit.
Perform the POWERTRAIN VERIFICATION TEST. (Refer to 9 - ENGINE - STANDARD PROCEDURE)

No >> Go To 3

P0652-SENSOR REFERENCE VOLTAGE 2 CIRCUIT LOW (CONTINUED)

3. CMP SENSOR

Turn the ignition off.

Reconnect all the previously disconnected Sensors except for the CMP Sensor harness connector.

Ignition on, engine not running.

Measure the voltage on the (F856) Auxiliary 5-volt Supply circuit in the CMP Sensor harness connector.

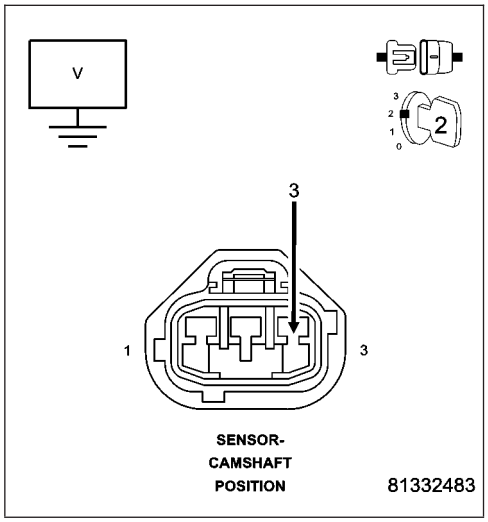

Is the voltage below 4.5 volts?

Yes >> Go To 4

No >> Replace the Cam Position Sensor.
Perform the POWERTRAIN VERIFICATION TEST. (Refer to 9 - ENGINE - STANDARD PROCEDURE)

4. 5-VOLT SENSOR SHORTED TO GROUND

Measure the voltage on the (F856) Auxiliary 5-volt Supply circuit at the CMP Sensor harness connector.

CAUTION: You must Turn the Ignition OFF when disconnecting any of the Sensor harness connectors and Turn the Ignition On to check the voltage readings.

While monitoring the voltage, disconnect each Sensor harness connector that shares the (F856) Auxiliary 5-volt Supply circuit, one at a time.

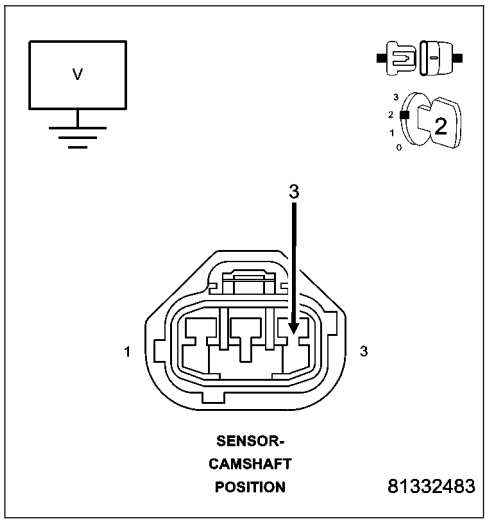

Does the voltage increase above 4.5 volts when disconnecting any of the Sensor harness connectors?

Yes >> Replace the Sensor that causes the (F856) Auxiliary 5-volt Supply circuit voltage to increase when disconnected.
Perform the POWERTRAIN VERIFICATION TEST. (Refer to 9 - ENGINE - STANDARD PROCEDURE)

No >> Go To 5

5. PCM

NOTE: Before continuing, check the PCM harness connector terminals for corrosion, damage, or terminal push out. Repair as necessary.

Using the schematics as a guide, inspect the wire harness and connectors. Pay particular attention to all Power and Ground circuits.

Were there any problems found?

Yes >> Repair as necessary.
Perform the POWERTRAIN VERIFICATION TEST. (Refer to 9 - ENGINE - STANDARD PROCEDURE)

No >> Replace and program the Powertrain Control Module per Service Information.
Perform the POWERTRAIN VERIFICATION TEST. (Refer to 9 - ENGINE - STANDARD PROCEDURE)

P0653-SENSOR REFERENCE VOLTAGE 2 CIRCUIT HIGH

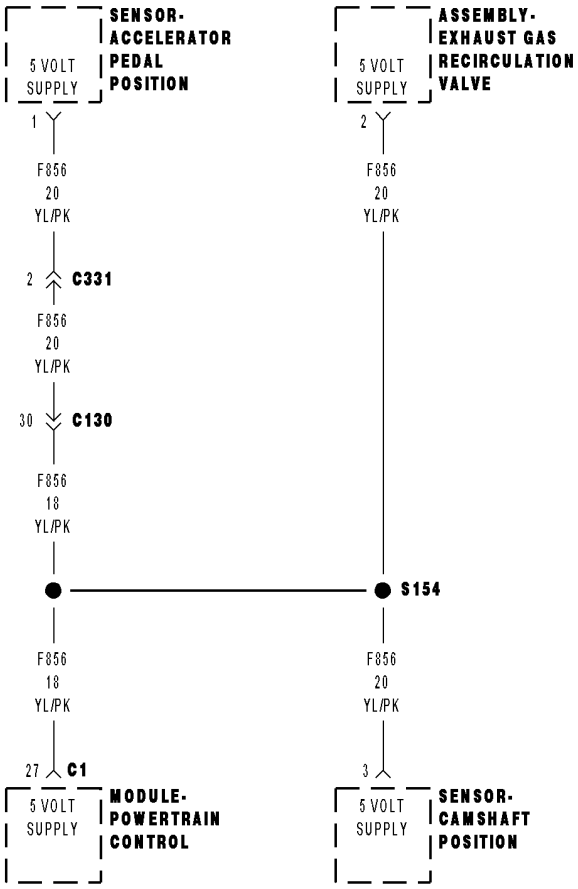

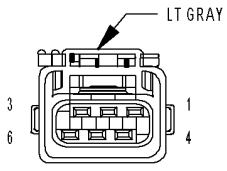

ASSEMBLY-
EXHAUST GAS
RECIRCULATION
VALVE
(4.7L/5.7L LIGHT DUTY)

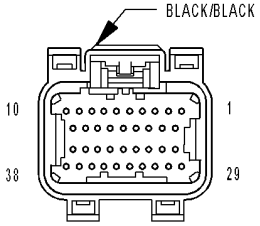

MODULE-
POWERTRAIN
CONTROL C1
(NGC)

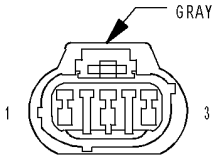

SENSOR-
CAMSHAFT
POSITION
(GAS)

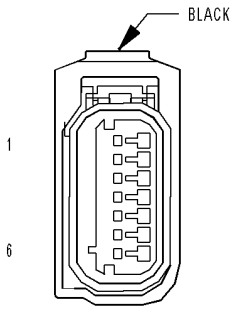

SENSOR-
ACCELERATOR
PEDAL
POSITION

8145491c

P0653-SENSOR REFERENCE VOLTAGE 2 CIRCUIT HIGH (CONTINUED)

For the Engine circuit diagram (Refer to 9 - ENGINE - SCHEMATICS AND DIAGRAMS).

For a complete wiring diagram **Refer to Section 8W**.

- **When Monitored:**
  Ignition on.
- **Set Condition:**
  When the PCM recognizes the Auxiliary 5-volt Supply circuit voltage is too high. One Trip Fault. ETC light is flashing.

Possible Causes
(F856) AUXILIARY 5-VOLT SUPPLY SHORTED TO BATTERY VOLTAGE
PCM

Always perform the Pre-Diagnostic Troubleshooting procedure before proceeding. (Refer to 9 - ENGINE - DIAGNOSIS AND TESTING).

Diagnostic Test

1. ACTIVE DTC

Ignition on, engine not running.

With a scan tool, read DTCs.

Is the DTC active at this time?

Yes >> Go To 2

No >> Refer to the INTERMITTENT CONDITION Diagnostic Procedure.
Perform the POWERTRAIN VERIFICATION TEST. (Refer to 9 - ENGINE - STANDARD PROCEDURE)

---

2. (F856) AUXILIARY 5-VOLT SUPPLY SHORTED TO BATTERY VOLTAGE

Turn the ignition off.

Disconnect the C1 PCM harness connector.

Disconnect all the Sensors that share the (F856) Auxiliary 5-volt Supply circuit.

NOTE: Improperly installed aftermarket accessories can cause this DTC to set. Check for wiring added by customer.

Ignition on, engine not running.

Measure the voltage on the (F856) Auxiliary 5-volt Supply circuit at the CMP Sensor harness connector.

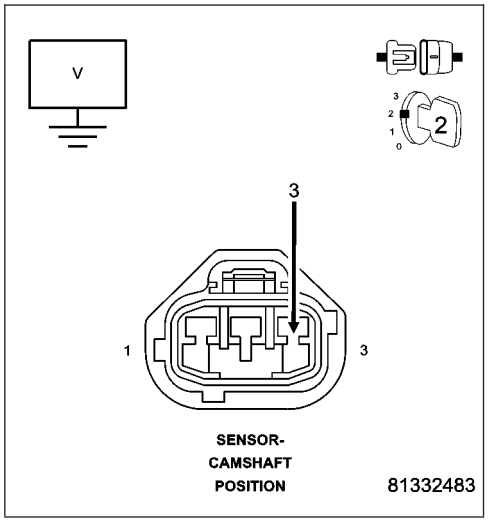

Is the voltage above 0 volts?

Yes >> Repair the short to battery voltage in the (F856) Auxiliary 5-volt Supply circuit.
Perform the POWERTRAIN VERIFICATION TEST. (Refer to 9 - ENGINE - STANDARD PROCEDURE)

No >> Go To 3

P0653-SENSOR REFERENCE VOLTAGE 2 CIRCUIT HIGH (CONTINUED)

3. **PCM**

NOTE: Before continuing, check the PCM harness connector terminals for corrosion, damage, or terminal push out. Repair as necessary.

Using the schematics as a guide, inspect the wire harness and connectors. Pay particular attention to all Power and Ground circuits.

Were there any problems found?

Yes >> Repair as necessary.
Perform the POWERTRAIN VERIFICATION TEST. (Refer to 9 - ENGINE - STANDARD PROCEDURE)

No >> Replace and program the Powertrain Control Module per Service Information.
Perform the POWERTRAIN VERIFICATION TEST. (Refer to 9 - ENGINE - STANDARD PROCEDURE)

P0685-AUTO SHUTDOWN RELAY CONTROL CIRCUIT

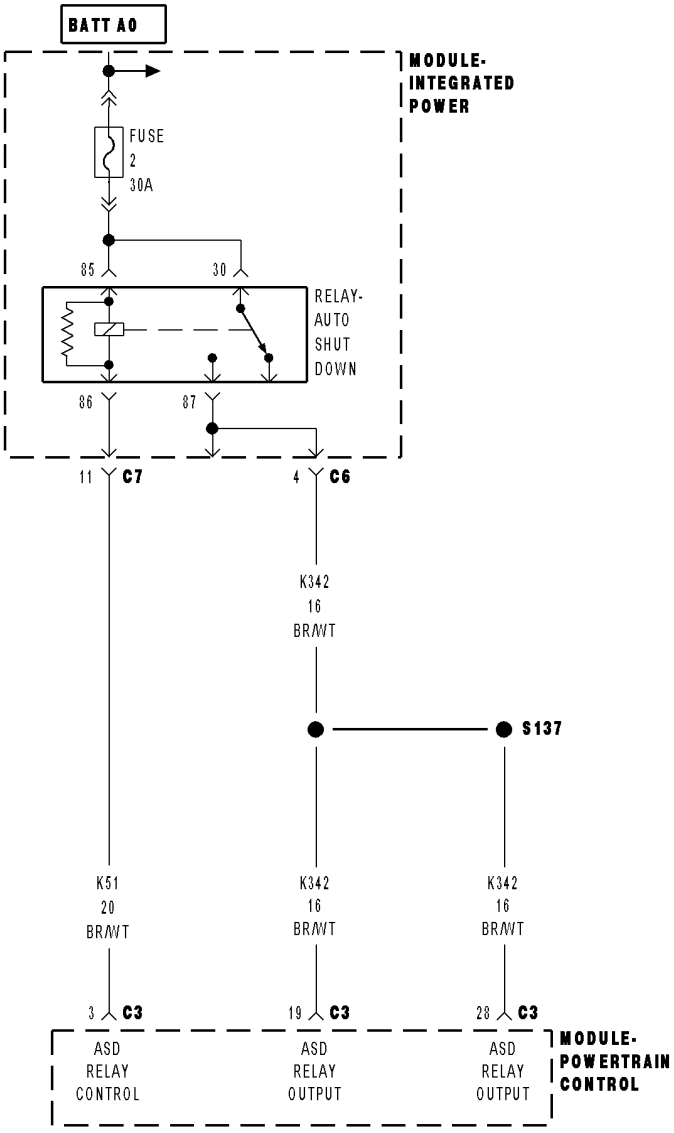

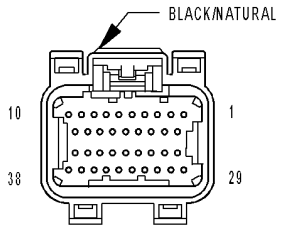

MODULE-
POWERTRAIN
CONTROL C3
(NGC)

8145496a

P0685-AUTO SHUTDOWN RELAY CONTROL CIRCUIT (CONTINUED)

For the Engine circuit diagram (Refer to 9 - ENGINE - SCHEMATICS AND DIAGRAMS).

For a complete wiring diagram **Refer to Section 8W**.

- **When Monitored:**
  With ignition on. Battery voltage above 10 volts.
- **Set Condition:**
  The actual ASD state is not equal to the desired ASD state. One Trip Fault. Three good trips to turn off the MIL.

Possible Causes
INTERNAL FUSED B+ CIRCUITS
(K51) ASD RELAY CONTROL CIRCUIT OPEN
(K51) ASD RELAY CONTROL CIRCUIT SHORTED TO GROUND
ASD RELAY
PCM

Always perform the Pre-Diagnostic Troubleshooting procedure before proceeding. (Refer to 9 - ENGINE - DIAGNOSIS AND TESTING).

Diagnostic Test

1. ASD RELAY OPERATION

Ignition on, engine not running.

With a scan tool, actuate the ASD Relay.

Is the ASD Relay operating?

Yes >> Refer to the INTERMITTENT CONDITION Diagnostic Procedure.
Perform the POWERTRAIN VERIFICATION TEST. (Refer to 9 - ENGINE - STANDARD PROCEDURE)

No >> Go To 2

---

2. INTERNAL FUSED B+ CIRCUITS

Turn the ignition off.

Remove the ASD Relay from the IPM.

Using a 12-volt test light connected to ground, probe the Internal Fused B+ circuits in the IPM.

Does the test light illuminate brightly?

Yes >> Go To 3

No >> Repair the open or short to ground in the Internal Fused B+ circuits. Inspect and replace any open fuses.
Perform the POWERTRAIN VERIFICATION TEST. (Refer to 9 - ENGINE - STANDARD PROCEDURE)

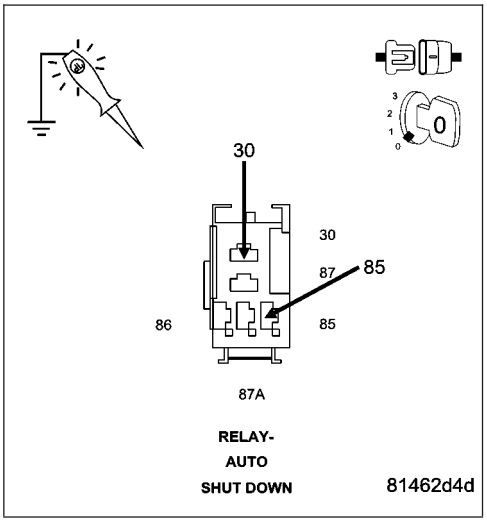

P0685-AUTO SHUTDOWN RELAY CONTROL CIRCUIT (CONTINUED)

3. ASD RELAY

Measure the resistance of the ASD Relay Coil.

Is the resistance between 60 to 80 ohms?

Yes >> Go To 4

No >> Replace the ASD Relay.
Perform the POWERTRAIN VERIFICATION TEST. (Refer to 9 - ENGINE - STANDARD PROCEDURE)

---

4. (K51) ASD RELAY CONTROL CIRCUIT OPEN

Disconnect the C3 PCM harness connector.

CAUTION: Do not probe the PCM harness connectors. Probing the PCM harness connectors will damage the PCM terminals resulting in poor terminal to pin connection. Install Miller Special Tool #8815 to perform diagnosis.
Measure the resistance of the (K51) ASD Relay Control circuit from the IPM to the appropriate terminals of special tool #8815.

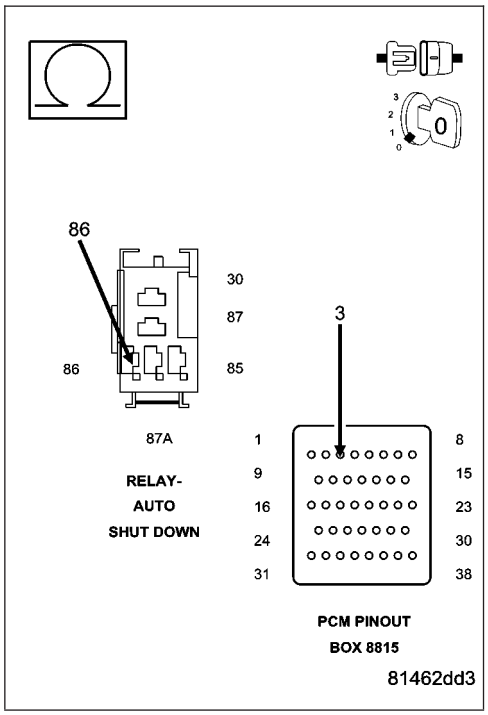

Is the resistance below 5.0 ohms?

Yes >> Go To 5

No >> Repair the open in the (K51) ASD Relay Control circuit.
Perform the POWERTRAIN VERIFICATION TEST. (Refer to 9 - ENGINE - STANDARD PROCEDURE)

---

5. (K51) ASD RELAY CONTROL CIRCUIT SHORTED TO GROUND

Measure the resistance between ground and the (K51) ASD Relay Control circuit in the IPM.

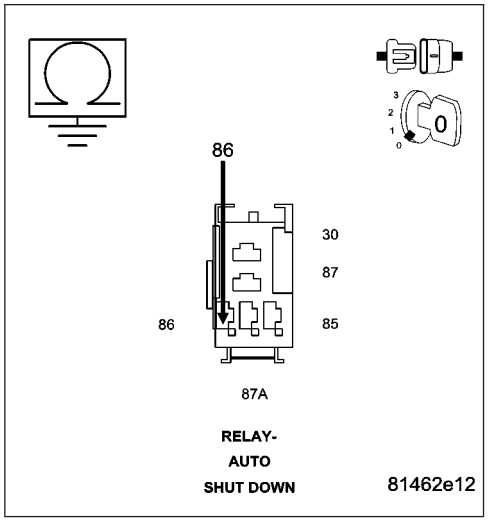

Is the resistance below 100 ohms?

Yes >> Repair the short to ground in the (K51) ASD Relay Control circuit.
Perform the POWERTRAIN VERIFICATION TEST. (Refer to 9 - ENGINE - STANDARD PROCEDURE)

No >> Go To 6

P0685-AUTO SHUTDOWN RELAY CONTROL CIRCUIT (CONTINUED)

6. PCM

NOTE: Before continuing, check the PCM harness connector terminals for corrosion, damage, or terminal push out. Repair as necessary.

Using the schematics as a guide, inspect the wire harness and connectors. Pay particular attention to all Power and Ground circuits.

Were there any problems found?

Yes >> Repair as necessary.
Perform the POWERTRAIN VERIFICATION TEST. (Refer to 9 - ENGINE - STANDARD PROCEDURE)

No >> Replace and program the Powertrain Control Module per Service Information.
Perform the POWERTRAIN VERIFICATION TEST. (Refer to 9 - ENGINE - STANDARD PROCEDURE)

P0688-AUTO SHUTDOWN RELAY SENSE CIRCUIT LOW

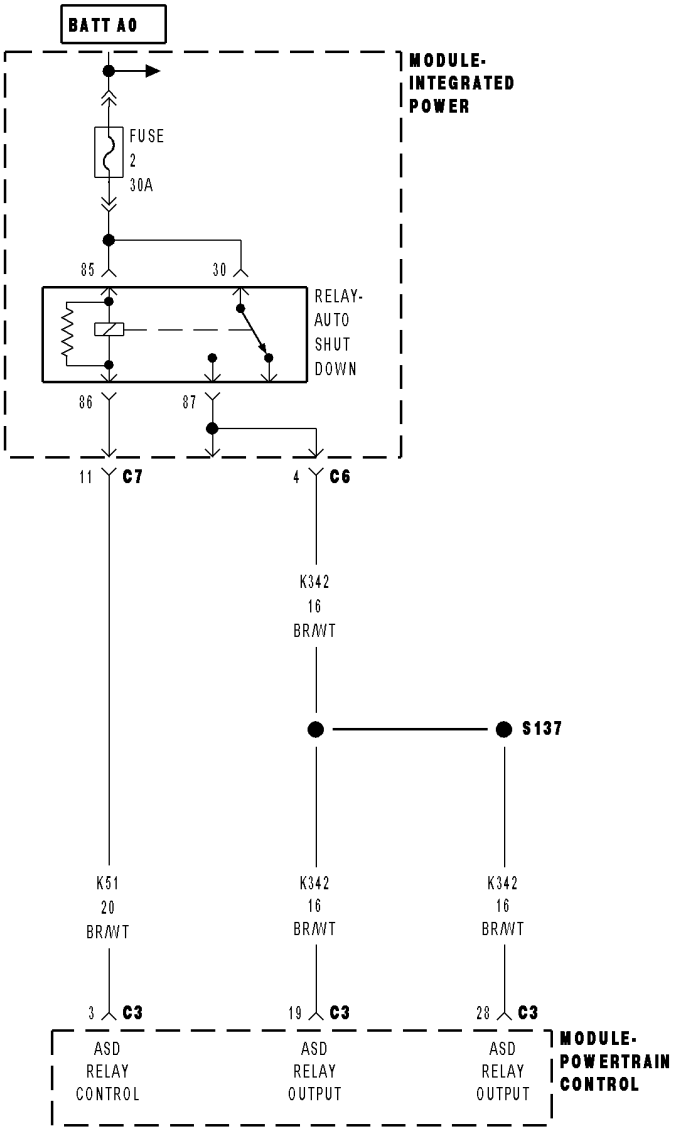

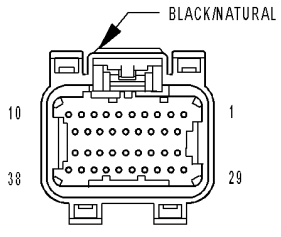

MODULE-
POWERTRAIN
CONTROL C3
(NGC)

8145496a

P0688-AUTO SHUTDOWN RELAY SENSE CIRCUIT LOW (CONTINUED)

For the Engine circuit diagram (Refer to 9 - ENGINE - SCHEMATICS AND DIAGRAMS).

For a complete wiring diagram **Refer to Section 8W**.

- **When Monitored:**
  With ignition key on. Battery voltage greater than 10 volts.
- **Set Condition:**
  No voltage sensed at the PCM when the ASD relay is energized. One Trip Fault. Three good trips to turn off the MIL.

Possible Causes
INTERNAL FUSED B+ CIRCUITS
(K342) ASD RELAY OUTPUT CIRCUIT OPEN
ASD RELAY
PCM

Always perform the Pre-Diagnostic Troubleshooting procedure before proceeding. (Refer to 9 - ENGINE - DIAGNOSIS AND TESTING).

Diagnostic Test

1. VERIFY ASD DTC

NOTE: Diagnose P0685 - Auto Shutdown Relay Control Circuit first if it set along with this DTC.
With a scan tool, erase the DTC.

Attempt to start the engine. If the engine will not start, crank the engine for at least 15 seconds. It may be necessary to repeat several times.

Does the DTC reset?

Yes >> Go To 2

No >> Refer to the INTERMITTENT CONDITION Diagnostic Procedure.
Perform the POWERTRAIN VERIFICATION TEST. (Refer to 9 - ENGINE - STANDARD PROCEDURE)

---

2. ENGINE OPERATION

Attempt to start the engine.

Does the engine start?

Yes >> Go To 3

No >> Go To 4

P0688-AUTO SHUTDOWN RELAY SENSE CIRCUIT LOW (CONTINUED)

3. (K342) ASD RELAY OUTPUT CIRCUIT OPEN

Turn the ignition off.
Remove the ASD Relay.
Disconnect the C3 PCM harness connector.

CAUTION: Do not probe the PCM harness connectors. Probing the PCM harness connectors will damage the PCM terminals resulting in poor terminal to pin connection. Install Miller Special Tool #8815 to perform diagnosis.
Measure the resistance of the (K342) ASD Relay Output circuit from the Relay connection to the appropriate terminals of special tool #8815.

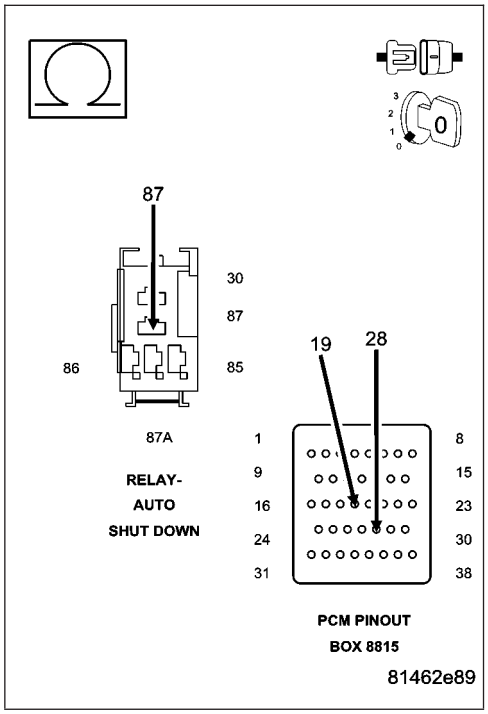

Is the resistance below 5.0 ohms?

Yes >> Go To 7

No >> Repair the open in the (K342) ASD Relay Output circuit.
Perform the POWERTRAIN VERIFICATION TEST. (Refer to 9 - ENGINE - STANDARD PROCEDURE)

4. ASD RELAY

Turn the ignition off.
Install a substitute relay in place of the ASD Relay.
Ignition on, engine not running.
With a scan tool, erase DTCs.
Attempt to start the engine.
With a scan tool, read DTCs.

Does the DTC reset?

Yes >> Go To 5

No >> Replace the ASD Relay.
Perform the POWERTRAIN VERIFICATION TEST. (Refer to 9 - ENGINE - STANDARD PROCEDURE)

P0688-AUTO SHUTDOWN RELAY SENSE CIRCUIT LOW (CONTINUED)

5. INTERNAL FUSED B+ CIRCUITS

Turn the ignition off.

Using a 12-volt test light connected to ground, probe the Internal Fused B+ circuits at the Relay connection.

Does the test light illuminate brightly?

Yes >> Go To 6

No >> Repair the open or short to ground in the Internal Fused B+ circuits. Inspect the related fuse and repair as necessary.

Perform the POWERTRAIN VERIFICATION TEST. (Refer to 9 - ENGINE - STANDARD PROCEDURE)

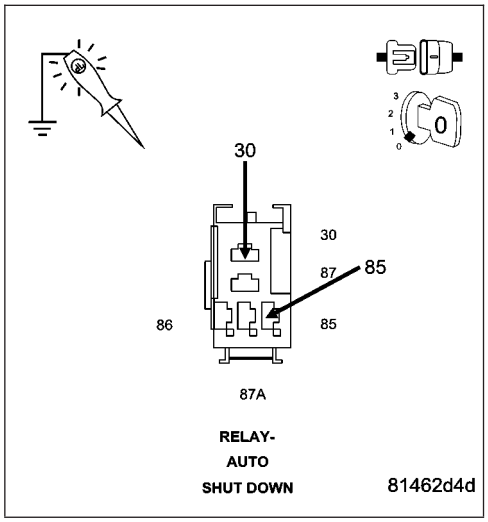

6. (K342) ASD RELAY OUTPUT CIRCUIT OPEN

Disconnect the C3 PCM harness connector.

CAUTION: Do not probe the PCM harness connectors. Probing the PCM harness connectors will damage the PCM terminals resulting in poor terminal to pin connection. Install Miller Special Tool #8815 to perform diagnosis.

Measure the resistance of the (K342) ASD Relay Output circuit from the Relay connection to the appropriate terminals of special tool #8815.

Is the resistance below 5.0 ohms?

Yes >> Go To 7

No >> Repair the open in the (K342) ASD Relay Output circuit.

Perform the POWERTRAIN VERIFICATION TEST. (Refer to 9 - ENGINE - STANDARD PROCEDURE)

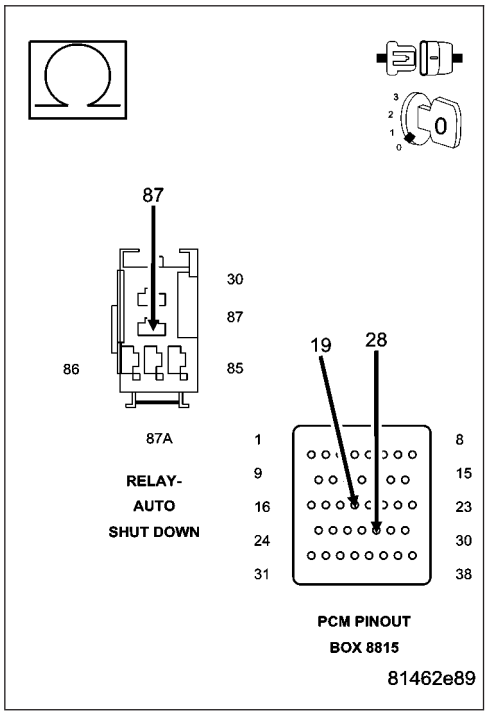

P0688-AUTO SHUTDOWN RELAY SENSE CIRCUIT LOW (CONTINUED)

7. **PCM**

NOTE: Before continuing, check the PCM harness connector terminals for corrosion, damage, or terminal push out. Repair as necessary.

Using the schematics as a guide, inspect the wire harness and connectors. Pay particular attention to all Power and Ground circuits.

Were there any problems found?

Yes >> Repair as necessary.
Perform the POWERTRAIN VERIFICATION TEST. (Refer to 9 - ENGINE - STANDARD PROCEDURE)

No >> Replace and program the Powertrain Control Module per Service Information.
Perform the POWERTRAIN VERIFICATION TEST. (Refer to 9 - ENGINE - STANDARD PROCEDURE)

P0700-TRANSMISSION CONTROL SYSTEM (MIL REQUEST)

For the Engine circuit diagram (Refer to 9 - ENGINE - SCHEMATICS AND DIAGRAMS).

For a complete wiring diagram **Refer to Section 8W**.

- **When Monitored:**
  Ignition on and battery voltage greater than 10 volts.
- **Set Condition:**
  An active DTC is stored in the TCM. One Trip Fault. Three good trips to turn off the MIL.

Possible Causes
DTC PRESENT IN THE TRANSMISSION CONTROL MODULE

Always perform the Pre-Diagnostic Troubleshooting procedure before proceeding. (Refer to 9 - ENGINE - DIAGNOSIS AND TESTING).

Diagnostic Test

1. DTC PRESENT IN EATX CONTROLLER

This is an informational DTC letting you know that a DTC(s) is stored in the Transmission Control Module.

Erase this DTC from the PCM after all Transmission DTC(s) have been repaired.

Using a scan tool, read the Transmission Controller DTC and refer to the Transmission Category and perform the appropriate symptom.

PCM Diagnostic Information complete.

Continue

Test Complete.

P0703-BRAKE SWITCH 2 PERFORMANCE

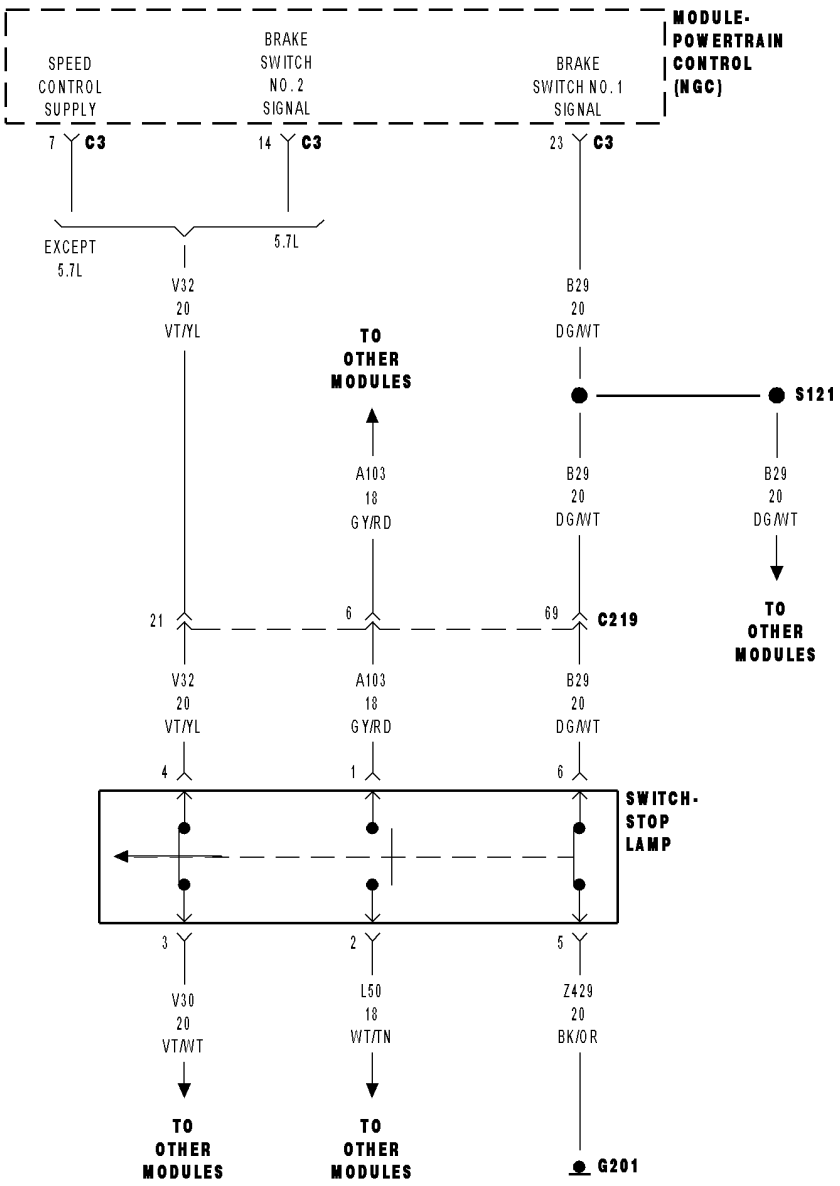

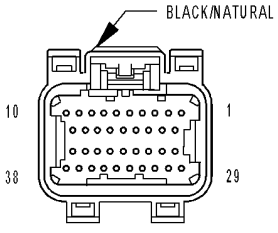

MODULE-
POWERTRAIN
CONTROL C3
(NGC)

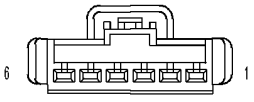

SWITCH-STOP
LAMP

814545c3

P0703-BRAKE SWITCH 2 PERFORMANCE (CONTINUED)

For the Engine circuit diagram (Refer to 9 - ENGINE - SCHEMATICS AND DIAGRAMS).

For a complete wiring diagram **Refer to Section 8W**.

- **When Monitored:**
  Ignition on.
- **Set Condition:**
  When the PCM recognizes Brake Switch No.2 voltage is not equal to the applied value at the PCM when Brake Switch No.1 is applied. This could be a normal condition. If this condition is seen repeatedly by the PCM the fault is set. Cruise will not work for the rest of the key cycle.

Possible Causes
(V30) FUSED IGNITION SWITCH OUTPUT CIRCUIT
(V32) BRAKE SWITCH NO.2 SIGNAL CIRCUIT OPEN
(V32) BRAKE SWITCH NO.2 SIGNAL CIRCUIT SHORTED TO BATTERY VOLTAGE
(V32) BRAKE SWITCH NO.2 SIGNAL CIRCUIT SHORTED TO GROUND
(B29) BRAKE SWITCH NO.1 SIGNAL CIRCUIT OPEN
STOP LAMP SWITCH
PCM

Always perform the Pre-Diagnostic Troubleshooting procedure before proceeding. (Refer to 9 - ENGINE - DIAGNOSIS AND TESTING).

Diagnostic Test

1. ACTIVE DTC

NOTE: Make sure the Stop Lamp Switch is adjusted properly before continuing.

NOTE: Make sure the Stop Lamp Switch is properly wired, such as (B29) Brake Switch No.1 and (L50) Brake Lamp Switch Output are not switched at the harness connector.

Ignition on, engine not running.

With a scan tool, read DTCs.

Is the DTC active at this time?

Yes >> Go To 2

No >> Refer to the INTERMITTENT CONDITION Diagnostic Procedure.
Perform the POWERTRAIN VERIFICATION TEST. (Refer to 9 - ENGINE - STANDARD PROCEDURE)

P0703-BRAKE SWITCH 2 PERFORMANCE (CONTINUED)

2. (V30) FUSED IGNITION SWITCH OUTPUT CIRCUIT

Turn the ignition off.

Disconnect the Stop Lamp Switch harness connector.

Using a 12-volt test light connected to ground, probe the (V30) Fused Ignition Switch Output circuit in the Stop Lamp Switch harness connector.

Does the test light illuminate brightly?

Yes >> Go To 3

No >> Repair the open or short to ground in the (V30) Fused Ignition Switch Output circuit. Inspect the related fuse and repair as necessary.

Perform the POWERTRAIN VERIFICATION TEST. (Refer to 9 - ENGINE - STANDARD PROCEDURE)

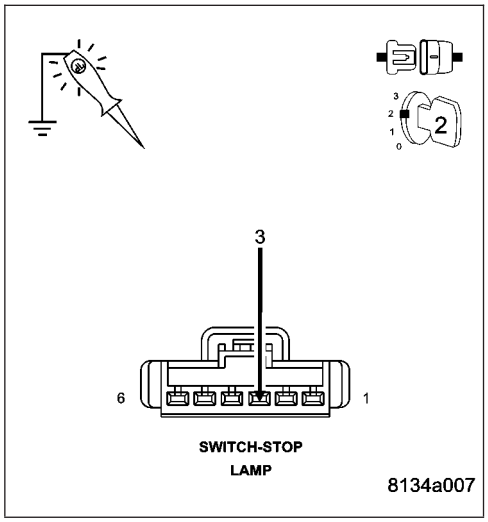

3. STOP LAMP SWITCH

Turn the ignition off.

Measure the resistance between the (V30) Fused Ignition Switch circuit terminal and the (V32) Brake Switch No.2 Signal terminal in the Stop Lamp Switch.

Measure the resistance between the (Z429) Ground circuit terminal and the (B29) Brake Switch No.1 Signal terminal in the Stop Lamp Switch.

Apply and release the Stop Lamp Switchl while monitoring the ohmmeter.

Does the resistance change from below 5.0 ohms to open circuit for each circuit check?

Yes >> Go To 4

No >> Replace the Stop Lamp Switch.

Perform the POWERTRAIN VERIFICATION TEST. (Refer to 9 - ENGINE - STANDARD PROCEDURE)

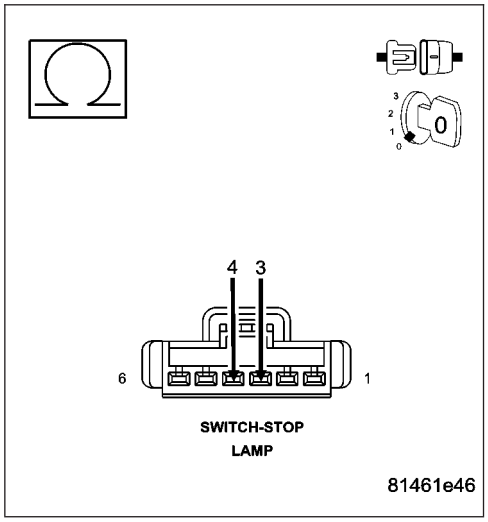

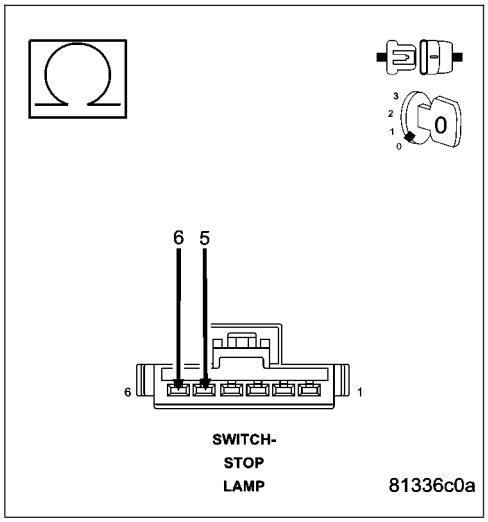

P0703-BRAKE SWITCH 2 PERFORMANCE (CONTINUED)

4. (V32) BRAKE SWITCH NO.2 SIGNAL CIRCUIT SHORTED TO BATTERY VOLTAGE

Disconnect the C3 PCM harness connector.

CAUTION: Do not probe the PCM harness connectors. Probing the PCM harness connectors will damage the PCM terminals resulting in poor terminal to pin connection. Install Miller Special Tool #8815 to perform diagnosis.

Measure the voltage on the (V32) Brake Switch No.2 Signal circuit in the Stop Lamp Switch harness connector.

Ignition on, engine not running.

Is the voltage above 0 volts?

Yes >> Repair the short to battery voltage in the (V32) Brake Switch No.2 Signal circuit.

Perform the POWERTRAIN VERIFICATION TEST. (Refer to 9 - ENGINE - STANDARD PROCEDURE)

No >> Go To 5

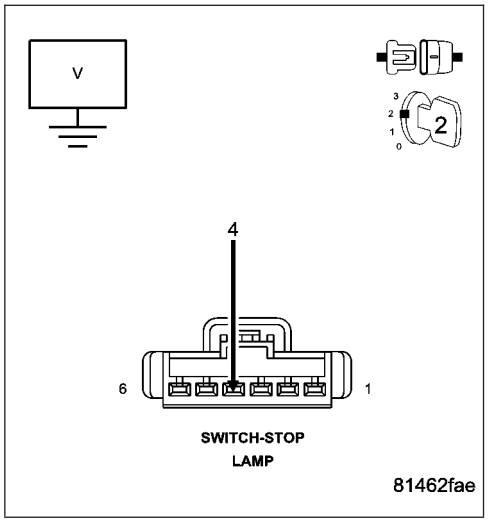

5. (V32) BRAKE SWITCH NO.2 SIGNAL CIRCUIT OPEN

Turn the ignition off.

Measure the resistance of the (V32) Brake Switch No.2 Signal circuit from the Stop Lamp Switch harness connector to the appropriate terminal of special tool #8815.

Is the resistance below 5.0 ohms?

Yes >> Go To 6

No >> Repair the open in the (V32) Brake Switch No.2 Signal circuit.

Perform the POWERTRAIN VERIFICATION TEST. (Refer to 9 - ENGINE - STANDARD PROCEDURE)

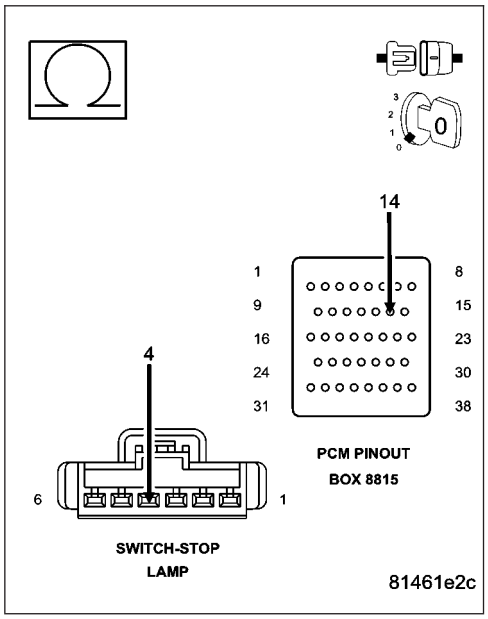

P0703-BRAKE SWITCH 2 PERFORMANCE (CONTINUED)

6. (V32) BRAKE SWITCH NO.2 SIGNAL CIRCUIT SHORTED TO GROUND

Measure the resistance between ground and the (V32) Brake Switch No.2 Signal circuit in the Stop Lamp Switch harness connector.

Is the resistance below 5.0 ohms?

Yes >> Repair the short to ground in the (V32) Brake Switch No.2 Signal circuit.
Perform the POWERTRAIN VERIFICATION TEST. (Refer to 9 - ENGINE - STANDARD PROCEDURE)

No >> Go To 7

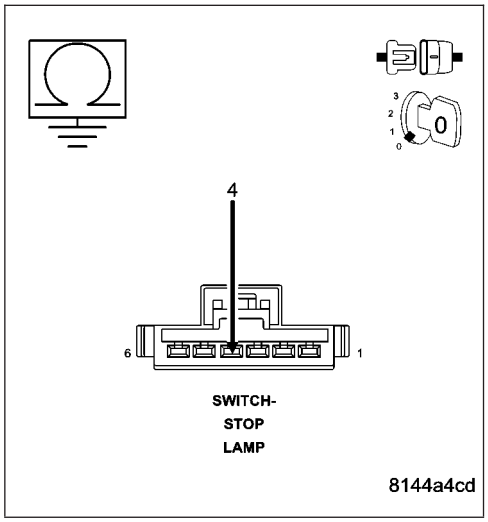

7. (B29) BRAKE SWITCH NO.1 SIGNAL CIRCUIT OPEN

Measure the resistance of the (B29) Brake Switch No.1 Signal circuit from the Stop Lamp Switch harness connector to the appropriate terminal of special tool #8815.

Is the resistance below 5.0 ohms?

Yes >> Go To 8

No >> Repair the open in the (B29) Brake Switch No.1 Signal circuit.
Perform the POWERTRAIN VERIFICATION TEST. (Refer to 9 - ENGINE - STANDARD PROCEDURE)

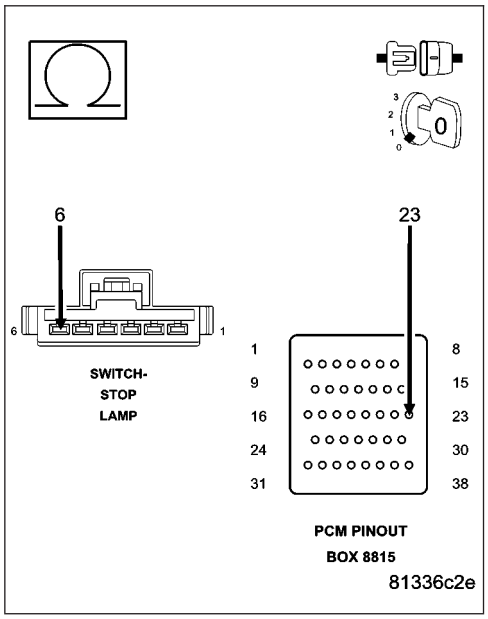

P0703-BRAKE SWITCH 2 PERFORMANCE (CONTINUED)

8. **PCM**

NOTE: Before continuing, check the PCM harness connector terminals for corrosion, damage, or terminal push out. Repair as necessary.

Using the schematics as a guide, inspect the wire harness and connectors. Pay particular attention to all Power and Ground circuits.

Were there any problems found?

Yes >> Repair as necessary.
Perform the POWERTRAIN VERIFICATION TEST. (Refer to 9 - ENGINE - STANDARD PROCEDURE)

No >> Replace and program the Powertrain Control Module per Service Information.
Perform the POWERTRAIN VERIFICATION TEST. (Refer to 9 - ENGINE - STANDARD PROCEDURE)

P0850-PARK/NEUTRAL SWITCH PERFORMANCE

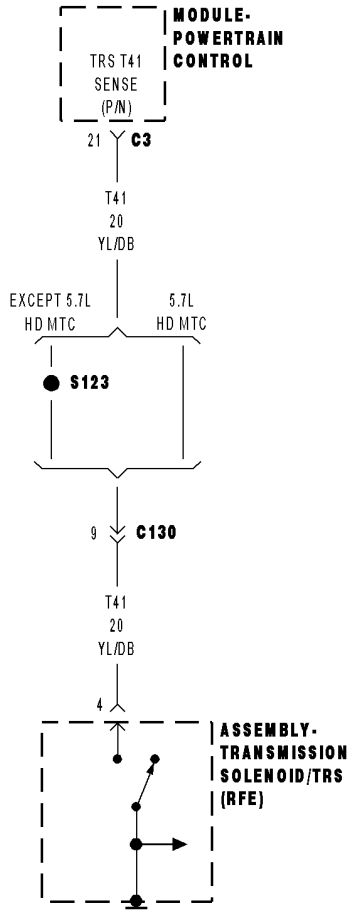

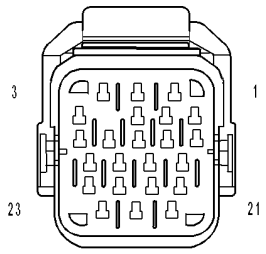

ASSEMBLY-
TRANSMISSION
SOLENOID/TRS
(RFE)

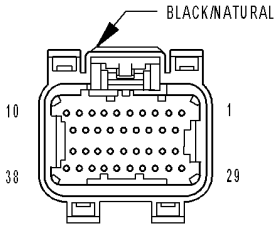

MODULE-
POWERTRAIN
CONTROL C3
(NGC)

814549a5

P0850-PARK/NEUTRAL SWITCH PERFORMANCE (CONTINUED)

For the Engine circuit diagram (Refer to 9 - ENGINE - SCHEMATICS AND DIAGRAMS).

For a complete wiring diagram **Refer to Section 8W**.

Theory of Operation

The Park Neutral switch rationality test is enabled only for vehicles equipped with a 4/5 speed automatic transmission. This diagnostic checks if the park/neutral switch is incorrectly stuck in the neutral position during driving conditions by comparing Vehicle Speed, Engine Speed, Throttle Position, and Pressure Ratio to the fail thresholds and by looking at the state of the Park/Neutral Switch. The stuck in drive condition is not explicitly checked as the starter relay does not energize and therefore render the vehicle inoperable.

- **When Monitored:**
  Continuously with the transmission in Park, Neutral, or Drive and NOT in Limp-in mode.
- **Set Condition:**
  This code will set if the PCM detects an incorrect Park/Neutral switch state for a given mode of vehicle operation. One trip fault. Three good trips to turn off the MIL.

Possible Causes
TRS (T41) SENSE (P/N SENSE) CIRCUIT OPEN
TRS (T41) SENSE (P/N SENSE) CIRCUIT SHORTED TO GROUND
TRANSMISSION RANGE SENSOR
PCM

Always perform the Pre-Diagnostic Troubleshooting procedure before proceeding. (Refer to 9 - ENGINE - DIAGNOSIS AND TESTING).

Diagnostic Test

1. P/N & D/R NOT IN CORRECT POSITION

NOTE: Check the TCM for DTCs, if P0706 is set in the TCM diagnose the TCM code before continuing.
Ignition on, engine not running.

With the scan tool, read the Park/Neutral Position Switch input state.

While moving the gear selector through all gear positions (Park to 1 and back to Park), monitor the scan tool display.

Did the scan tool display show P/N and D/R in the correct gear positions?

Yes >> Refer to the INTERMITTENT CONDITION Diagnostic Procedure.
Perform the POWERTRAIN VERIFICATION TEST. (Refer to 9 - ENGINE - STANDARD PROCEDURE)

No >> Go To 2

P0850-PARK/NEUTRAL SWITCH PERFORMANCE (CONTINUED)

2. TRS (T41) SENSE (P/N SENSE) CIRCUIT OPEN

Turn the ignition off.

Disconnect the C3 PCM harness connector.

Disconnect the Transmission Range Sensor harness connector.

CAUTION: Do not probe the PCM harness connectors. Probing the PCM harness connectors will damage the PCM terminals resulting in poor terminal to pin connection. Install Miller Special Tool #8815 to perform diagnosis.

Measure the resistance of the TRS (T41) Sense (P/N Sense) circuit from the TRS harness connector to the appropriate terminal of special tool #8815.

Is the resistance below 5.0 ohms?

Yes >> Go To 3

No >> Repair the open in the TRS (T41) Sense (P/N Sense) circuit.

Perform the POWERTRAIN VERIFICATION TEST. (Refer to 9 - ENGINE - STANDARD PROCEDURE)

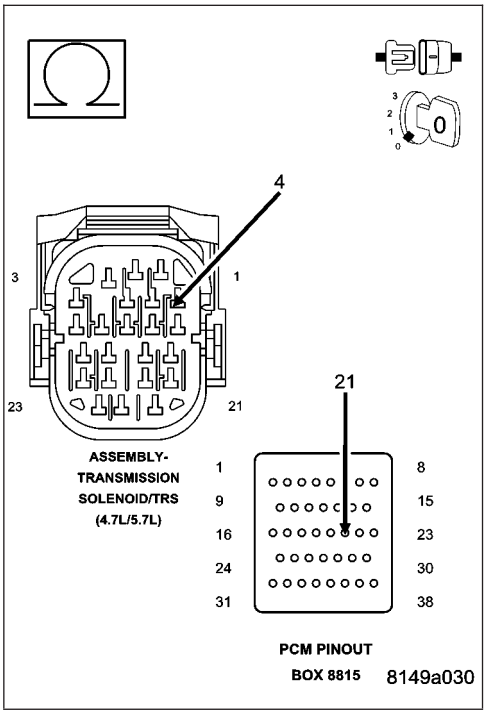

3. TRS (T41) SIGNAL CIRCUIT SHORTED TO GROUND

Measure the resistance between ground and the TRS (T41) Sense (P/N Sense) circuit at the TRS harness connector.

Is the resistance above 100k ohms?

Yes >> Go To 4

No >> Repair the short to ground in the TRS (T41) Sense (P/N Sense) circuit.

Perform the POWERTRAIN VERIFICATION TEST. (Refer to 9 - ENGINE - STANDARD PROCEDURE)

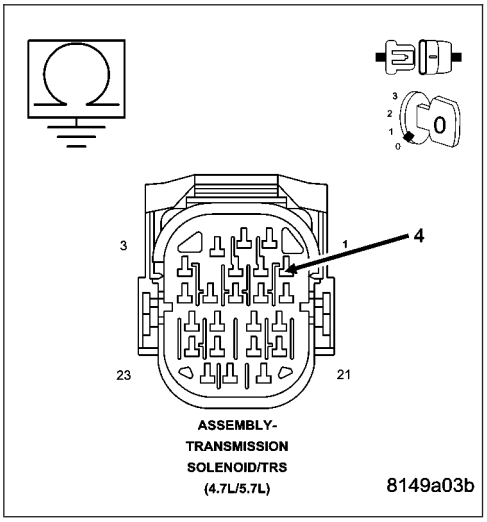

P0850-PARK/NEUTRAL SWITCH PERFORMANCE (CONTINUED)

4. TRANSMISSION RANGE SENSOR

Measure the resistance between ground and the (T41) TRS Sense (P/N Sense) circuit while moving the gear selector through each gear in the TRS connector.

NOTE: The circuit is grounded in Park and Neutral and open in the other positions.

Did the resistance change from above 100 kohms (open) to below 10.0 ohms (grounded)?

Yes >> Go To 5

No >> Replace the Transmission Range Sensor.
Perform the POWERTRAIN VERIFICATION TEST. (Refer to 9 - ENGINE - STANDARD PROCEDURE)

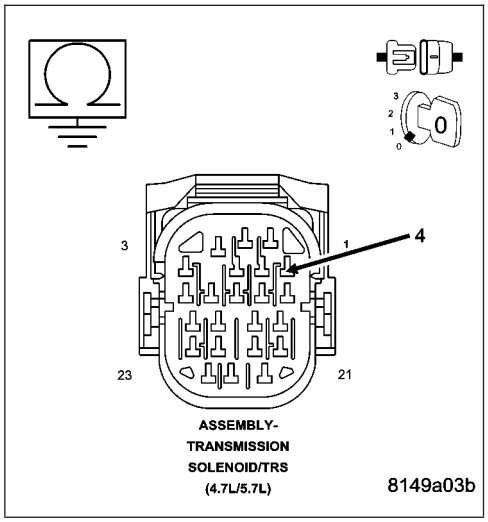

5. PCM

NOTE: Before continuing, check the PCM harness connector terminals for corrosion, damage, or terminal push out. Repair as necessary.
Using the schematics as a guide, inspect the wire harness and connectors. Pay particular attention to all Power and Ground circuits.

Were there any problems found?

Yes >> Repair as necessary.
Perform the POWERTRAIN VERIFICATION TEST. (Refer to 9 - ENGINE - STANDARD PROCEDURE)

No >> Replace and program the Powertrain Control Module per Service Information.
Perform the POWERTRAIN VERIFICATION TEST. (Refer to 9 - ENGINE - STANDARD PROCEDURE)

P1115-GENERAL TEMPERATURE RATIONALITY

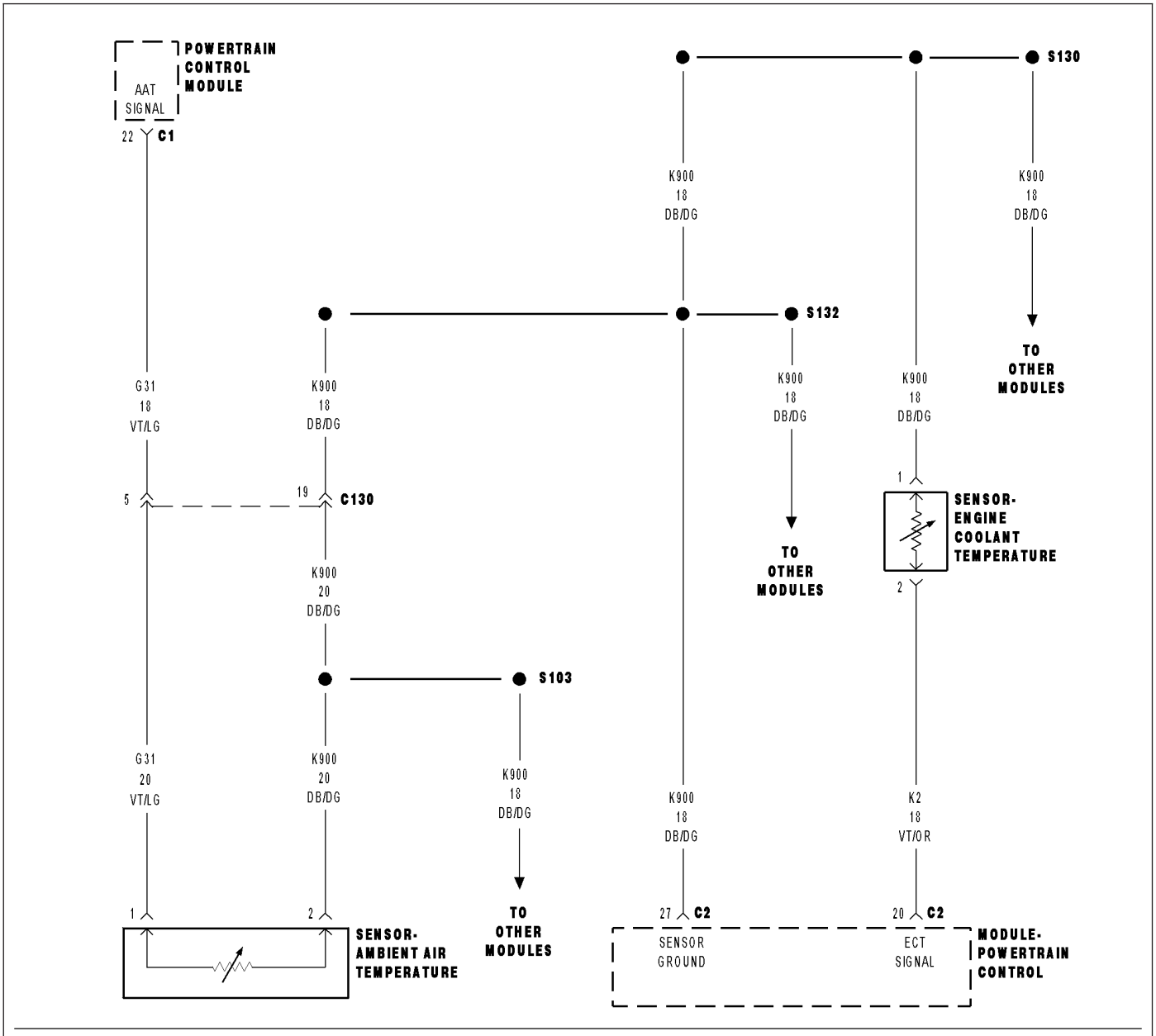

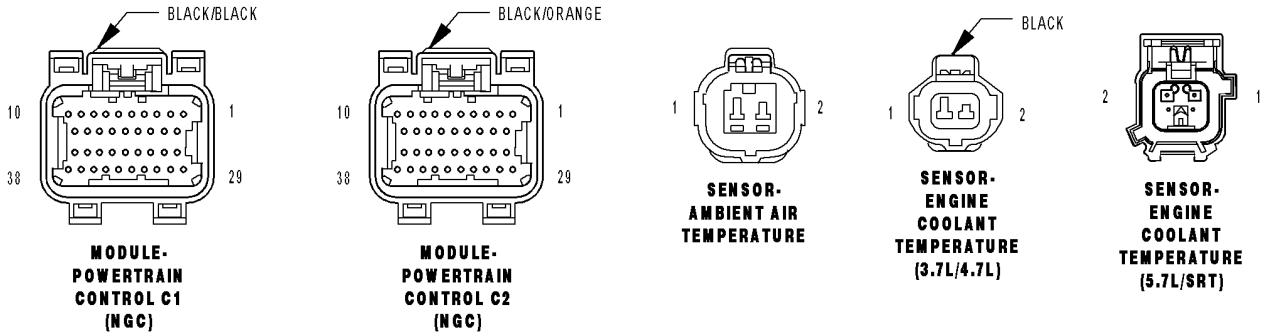

81452dd2

P1115-GENERAL TEMPERATURE RATIONALITY (CONTINUED)

For the Engine circuit diagram (Refer to 9 - ENGINE - SCHEMATICS AND DIAGRAMS).

For a complete wiring diagram **Refer to Section 8W**.

Theory of Operation

The General Temperature Rationality looks at the outputs of the three temperature sensors and compare them under cold start conditions. Following a start to run delay time, the outputs of the ambient, engine coolant, and intake air temperature sensors will be compared. If two sensors agree but not the third, the third sensor is declared as irrational. If all three sensors are irrational the General Temperature Sensor Rationality is failed.

- **When Monitored:**
  Ignition on and battery voltage greater than 10 volts.
- **Set Condition:**
  Ambient Air, Engine Coolant, and Intake Air Temp sensor inputs are compared under cold start conditions. After start up the temp readings are monitored. If two of the three readings agree and the third doesn't, a DTC is stored. Two Trip Fault. Three good trips to turn off the MIL.

Possible Causes
EXCESSIVE RESISTANCE IN THE SENSOR SIGNAL CIRCUIT
EXCESSIVE RESISTANCE IN THE (K900) SENSOR GROUND CIRCUIT
TEMPERATURE SENSOR
PCM

Always perform the Pre-Diagnostic Troubleshooting procedure before proceeding. (Refer to 9 - ENGINE - DIAGNOSIS AND TESTING).

Diagnostic Test

1. ACTIVE DTC

Ignition on, engine not running.

With a scan tool, read the DTCs.

NOTE: All ECT, Intake Air, and Ambient Air Temperature Sensor codes must be diagnosed and repaired before continuing.

NOTE: In cold weather, this DTC could be set by a high powered block heater and no repair would be required.

Is the DTC active at this time?

Yes >> Go To 2

No >> Refer to the INTERMITTENT CONDITION Diagnostic Procedure.
Perform the POWERTRAIN VERIFICATION TEST. (Refer to 9 - ENGINE - STANDARD PROCEDURE)

---

2. TEMPERATURE SENSOR CIRCUIT

With a scan tool, read the ECT, Ambient Air Temp, and Intake Air Temp Sensor temp values.

Start the engine.

Allow the engine to reach normal operating temperature while monitoring the three Sensor temperature values.

Is the temperature for each of the Sensors increasing properly?

Yes >> Refer to the INTERMITTENT CONDITION Diagnostic Procedure.
Perform the POWERTRAIN VERIFICATION TEST. (Refer to 9 - ENGINE - STANDARD PROCEDURE)

No >> Go To 3

P1115-GENERAL TEMPERATURE RATIONALITY (CONTINUED)

3. TEMPERATURE SENSOR

Ignition on, engine not running.

Disconnect the suspected sensor.

Connect a jumper wire between the Sensor Signal circuit and the (K900) Sensor ground circuit.

With the scan tool, read the voltage of the suspected Sensor.

Did the voltage reading start at 4.8 to 5.0 volts and decrease to 0 volts when the jumper wire was installed?

Yes >> Replace the Sensor.
Perform the POWERTRAIN VERIFICATION TEST. (Refer to 9 - ENGINE - STANDARD PROCEDURE)

No >> Go To 4

NOTE: Remove the jumper wire before continuing.

4. EXCESSIVE RESISTANCE IN THE TEMPERATURE SENSOR SIGNAL CIRCUIT

Turn the ignition off.

Disconnect the PCM harness connectors.

CAUTION: Do not probe the PCM harness connectors. Probing the PCM harness connectors will damage the PCM terminals resulting in poor terminal to pin connection. Install Miller Special Tool #8815 to perform diagnosis.

Measure the resistance of the Sensor Signal circuit from the Sensor harness connector to the appropriate terminal of special tool #8815.

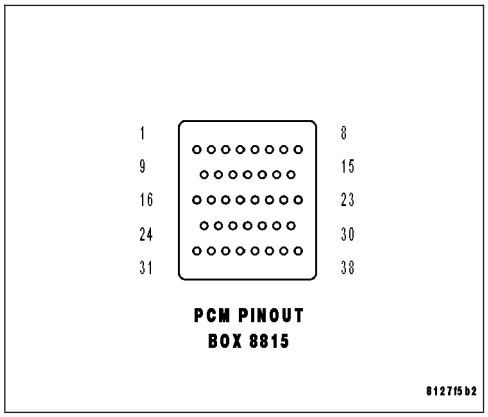

Is the resistance above 5.0 ohms.

Yes >> Repair the excessive resistance in the Temperature Sensor Signal circuit.
Perform the POWERTRAIN VERIFICATION TEST. (Refer to 9 - ENGINE - STANDARD PROCEDURE)

No >> Go To 5

5. EXCESSIVE RESISTANCE IN THE (K900) SENSOR GROUND CIRCUIT

Measure the resistance of the (K900) Sensor ground circuit from the Sensor harness connector to the appropriate terminal of special tool #8815.

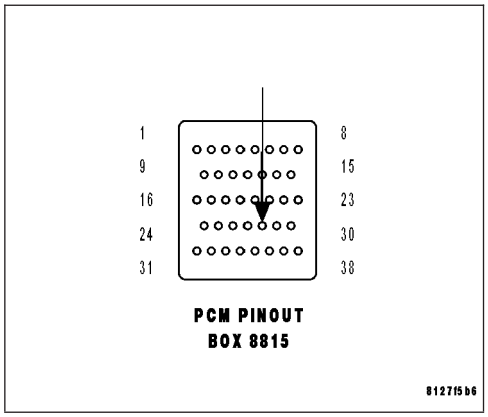

Is the resistance above 5.0 ohms.

Yes >> Repair the excessive resistance in the (K900) Sensor ground circuit.
Perform the POWERTRAIN VERIFICATION TEST. (Refer to 9 - ENGINE - STANDARD PROCEDURE)

No >> Go To 6

P1115-GENERAL TEMPERATURE RATIONALITY (CONTINUED)

6. PCM

NOTE: Before continuing, check the PCM harness connector terminals for corrosion, damage, or terminal push out. Repair as necessary.

Using the schematics as a guide, inspect the wire harness and connectors. Pay particular attention to all Power and Ground circuits.

Were there any problems found?

Yes >> Repair as necessary.
Perform the POWERTRAIN VERIFICATION TEST. (Refer to 9 - ENGINE - STANDARD PROCEDURE)

No >> Replace and program the Powertrain Control Module per Service Information.
Perform the POWERTRAIN VERIFICATION TEST. (Refer to 9 - ENGINE - STANDARD PROCEDURE)

P1501-VEHICLE SPEED SENSOR 1/2 CORRELATION - DRIVE WHEELS

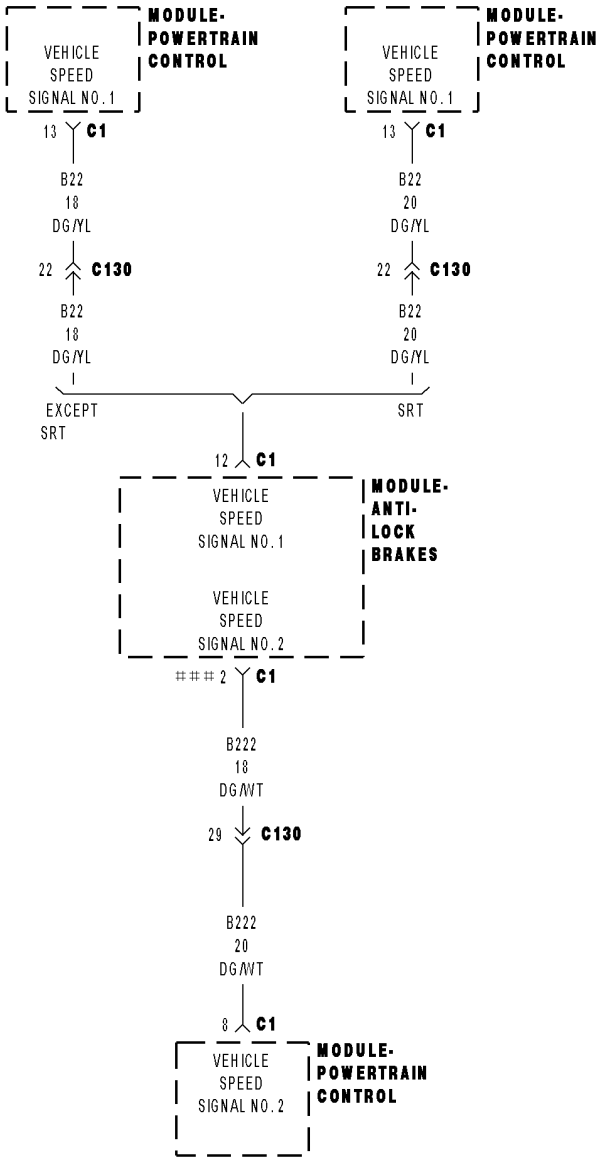

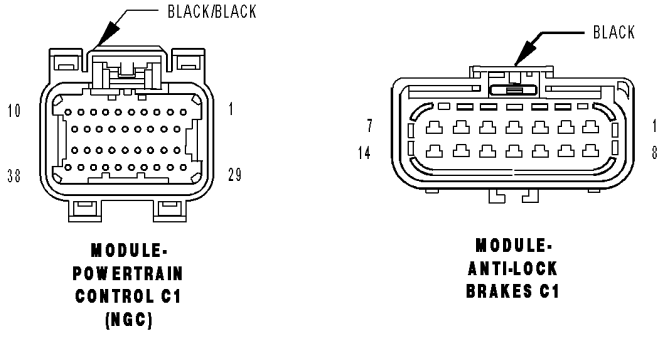

81453b7e

P1501-VEHICLE SPEED SENSOR 1/2 CORRELATION - DRIVE WHEELS (CONTINUED)

For the Engine circuit diagram (Refer to 9 - ENGINE - SCHEMATICS AND DIAGRAMS).

For a complete wiring diagram **Refer to Section 8W**.

- **When Monitored:**
  Ignition on and vehicle moving. Cruise is learned and customer is trying to use the Cruise.
- **Set Condition:**
  The PCM recognizes rear wheel speed is greater than front wheel speed.

Possible Causes
VEHICLE SPEED SIGNAL CIRCUITS SHORTED TO VOLTAGE
EXCESSIVE RESISTANCE IN THE VEHICLE SPEED SIGNAL CIRCUITS
VEHICLE SPEED SIGNAL CIRCUITS SHORTED TO GROUND
TIRE CIRCUMFERENCE
PCM

Always perform the Pre-Diagnostic Troubleshooting procedure before proceeding. (Refer to 9 - ENGINE - DIAGNOSIS AND TESTING).

Diagnostic Test

1. ACTIVE DTC

Ignition on, engine not running.

With a scan tool, read DTCs.

Is the DTC active at this time?

Yes >> Go To 2

No >> Refer to the INTERMITTENT CONDITION Diagnostic Procedure.
Perform the POWERTRAIN VERIFICATION TEST. (Refer to 9 - ENGINE - STANDARD PROCEDURE)

---

2. VISUAL INSPECTION

NOTE: This code can set due to tire circumference differences and from the front or rear wheels being on a slippery surface while the opposite tires are not.

This code may also set on a hard acceleration on loose gravel or during other off road driving conditions.

Check tire pressure of all the tires.

Check tire wear on all the tires.

Ask the customer what the road and driving conditions were like when the fault set.

Were any problems found?

Yes >> Repair as necessary. If the code set during a front OR rear wheel spin condition, no repair is necessary.
Perform the POWERTRAIN VERIFICATION TEST. (Refer to 9 - ENGINE - STANDARD PROCEDURE)

No >> Go To 3

P1501-VEHICLE SPEED SENSOR 1/2 CORRELATION - DRIVE WHEELS (CONTINUED)

3. VSS SIGNAL CIRCUITS SHORTED TO VOLTAGE

Turn the ignition off.

Disconnect the C1 ABS Module harness connector.

Disconnect the C1 PCM harness connector.

CAUTION: Do not probe the PCM harness connectors. Probing the PCM harness connectors will damage the PCM terminals resulting in poor terminal to pin connection. Install Miller Special Tool #8815 to perform diagnosis.

Ignition on, engine not running.

Measure the voltage of the (B22) and (B222) Vehicle Speed Signal circuits at the appropriate terminals of special tool #8815.

Is the voltage above 6.0 volts?

Yes >> Repair the short to voltage in the (B22) or (B222) Vehicle Speed Signal circuit.

Perform the POWERTRAIN VERIFICATION TEST. (Refer to 9 - ENGINE - STANDARD PROCEDURE)

No >> Go To 4

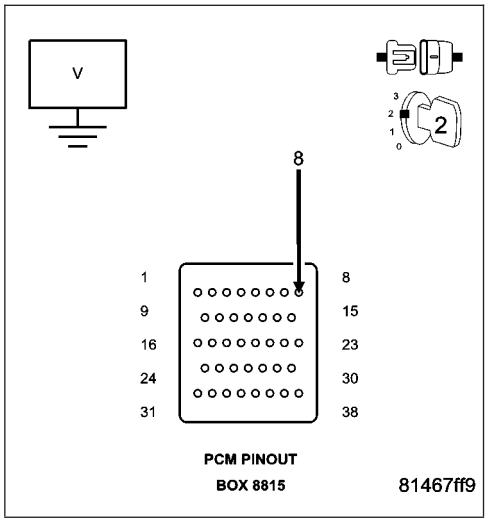

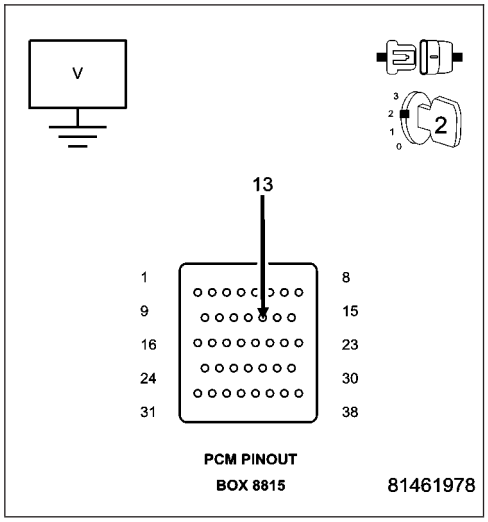

P1501-VEHICLE SPEED SENSOR 1/2 CORRELATION - DRIVE WHEELS (CONTINUED)

4. EXCESSIVE RESISTANCE IN THE VEHICLE SPEED SIGNAL CIRCUITS

Measure the resistance of the (B22) and (B222) Vehicle Speed Signal circuits from the CAB Module harness connector to the appropriate terminals of special tool #8815.

Is the resistance below 5.0 ohms?

Yes >> Go To 5

No >> Repair the excessive resistance in the (B22) or (B222) Vehicle Speed Signal circuit.
Perform the POWERTRAIN VERIFICATION TEST. (Refer to 9 - ENGINE - STANDARD PROCEDURE)

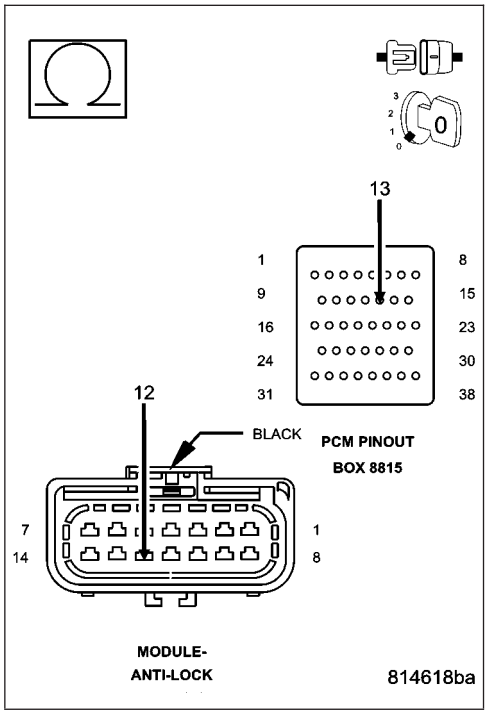

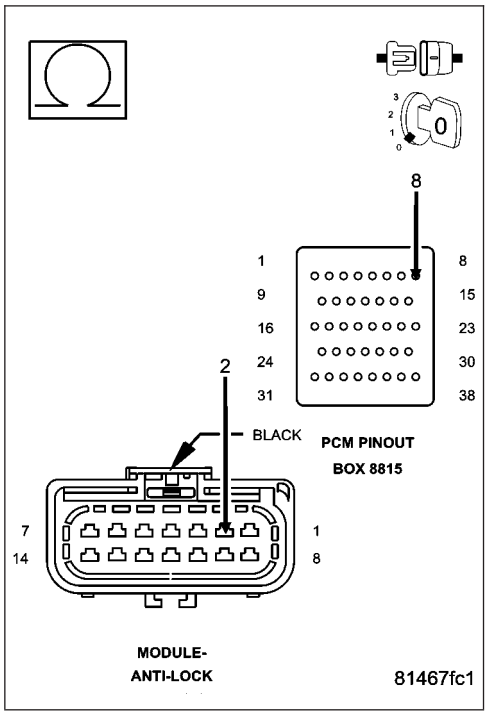

P1501-VEHICLE SPEED SENSOR 1/2 CORRELATION - DRIVE WHEELS (CONTINUED)

5. VEHICLE SPEED SIGNAL CIRCUIT SHORTED TO GROUND

Measure the resistance between ground and the (B22) and (B222) Vehicle Speed Signal circuits in the CAB module harness connector.

Is the resistance below 100 ohms?

Yes >> Repair the short to ground in the (B22) or (B222) Vehicle Speed Signal circuit.
Perform the POWERTRAIN VERIFICATION TEST. (Refer to 9 - ENGINE - STANDARD PROCEDURE)

No >> Go To 6

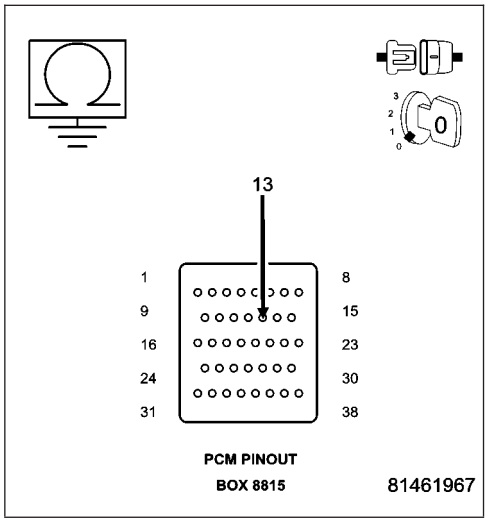

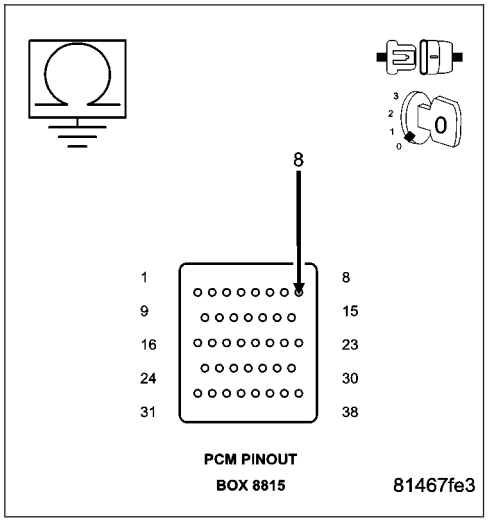

6. PCM

NOTE: Before continuing, check the PCM harness connector terminals for corrosion, damage, or terminal push out. Repair as necessary.
Using the schematics as a guide, inspect the wire harness and connectors. Pay particular attention to all Power and Ground circuits.

Were there any problems found?

Yes >> Repair as necessary.
Perform the POWERTRAIN VERIFICATION TEST. (Refer to 9 - ENGINE - STANDARD PROCEDURE)

No >> Replace and program the Powertrain Control Module per Service Information.
Perform the POWERTRAIN VERIFICATION TEST. (Refer to 9 - ENGINE - STANDARD PROCEDURE)

P1502-VEHICLE SPEED SENSOR 1/2 CORRELATION - NON DRIVE WHEELS

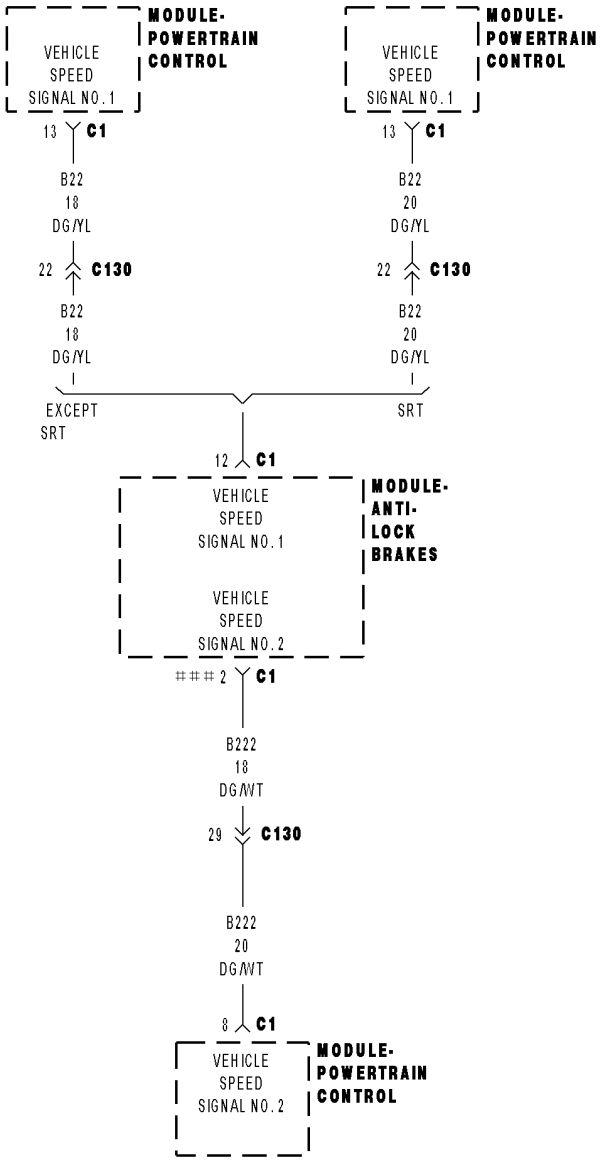

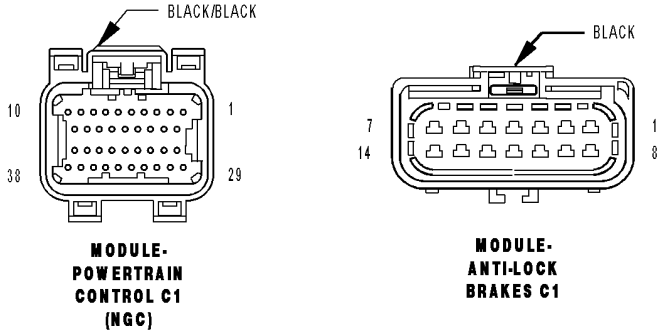

81453b7e

P1502-VEHICLE SPEED SENSOR 1/2 CORRELATION - NON DRIVE WHEELS (CONTINUED)

For the Engine circuit diagram (Refer to 9 - ENGINE - SCHEMATICS AND DIAGRAMS).

For a complete wiring diagram **Refer to Section 8W**.

- **When Monitored:**
  Ignition on and vehicle moving. Cruise is learned and customer is trying to use the Cruise.
- **Set Condition:**
  The PCM recognizes rear wheel speed is greater than front wheel speed.

Possible Causes
VEHICLE SPEED SIGNAL CIRCUITS SHORTED TO VOLTAGE
EXCESSIVE RESISTANCE IN THE VEHICLE SPEED SIGNAL CIRCUITS
VEHICLE SPEED SIGNAL CIRCUITS SHORTED TO GROUND
TIRE CIRCUMFERENCE
PCM

Always perform the Pre-Diagnostic Troubleshooting procedure before proceeding. (Refer to 9 - ENGINE - DIAGNOSIS AND TESTING).

Diagnostic Test

1. ACTIVE DTC

Ignition on, engine not running.

With a scan tool, read DTCs.

Is the DTC active at this time?

Yes >> Go To 2

No >> Refer to the INTERMITTENT CONDITION Diagnostic Procedure.
Perform the POWERTRAIN VERIFICATION TEST. (Refer to 9 - ENGINE - STANDARD PROCEDURE)

---

2. VISUAL INSPECTION

NOTE: This code can set due to tire circumference differences and from the front or rear wheels being on a slippery surface while the opposite tires are not.

This code may also set on a hard acceleration on loose gravel or during other off road driving conditions.

Check tire pressure of all the tires.

Check tire wear on all the tires.

Ask the customer what the road and driving conditions were like when the fault set.

Were any problems found?

Yes >> Repair as necessary. If the code set during a front OR rear wheel spin condition, no repair is necessary.
Perform the POWERTRAIN VERIFICATION TEST. (Refer to 9 - ENGINE - STANDARD PROCEDURE)

No >> Go To 3

P1502-VEHICLE SPEED SENSOR 1/2 CORRELATION - NON DRIVE WHEELS (CONTINUED)

3. VSS SIGNAL CIRCUITS SHORTED TO VOLTAGE

Turn the ignition off.

Disconnect the ABS Module harness connector.

CAUTION: Do not probe the PCM harness connectors. Probing the PCM harness connectors will damage the PCM terminals resulting in poor terminal to pin connection. Install Miller Special Tool #8815 to perform diagnosis.

Disconnect the C1 PCM harness connector.

Ignition on, engine not running.

Measure the voltage of the (B22) and (B222) Vehicle Speed Signal circuit at the appropriate terminals of special tool #8815.

Is the voltage above 6.0 volts?

Yes >> Repair the short to voltage in the (B22) or (B222) Vehicle Speed Signal circuit.

Perform the POWERTRAIN VERIFICATION TEST. (Refer to 9 - ENGINE - STANDARD PROCEDURE)

No >> Go To 4

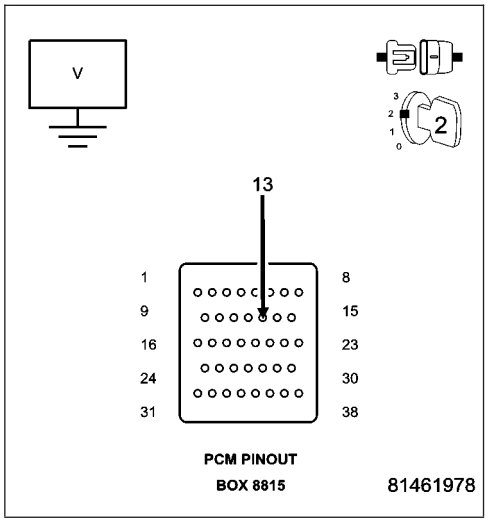

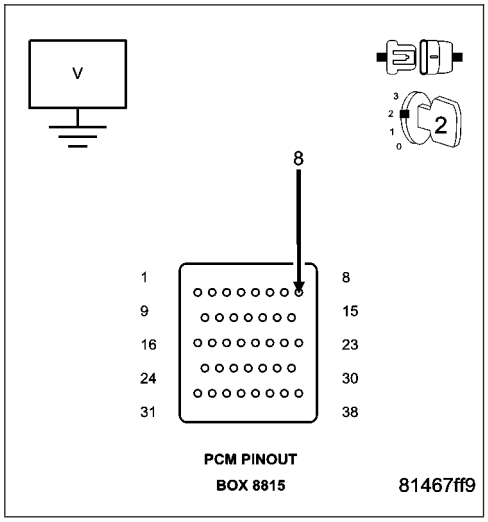

P1502-VEHICLE SPEED SENSOR 1/2 CORRELATION - NON DRIVE WHEELS (CONTINUED)

4. EXCESSIVE RESISTANCE IN THE VEHICLE SPEED SIGNAL CIRCUITS

Measure the resistance of the (B22) and (B222) Vehicle Speed Signal circuits from the CAB Module harness connector to the appropriate terminals of special tool #8815.

Is the resistance below 5.0 ohms?

Yes >> Go To 5

No >> Repair the excessive resistance in the (B22) or (B222) Vehicle Speed Signal circuit.

Perform the POWERTRAIN VERIFICATION TEST. (Refer to 9 - ENGINE - STANDARD PROCEDURE)

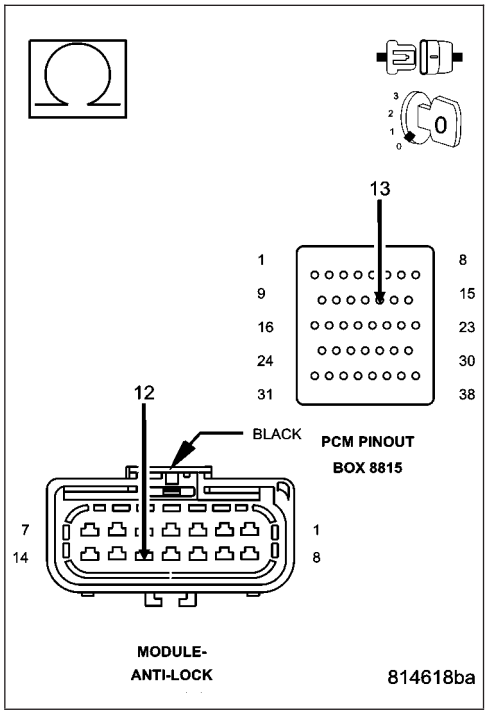

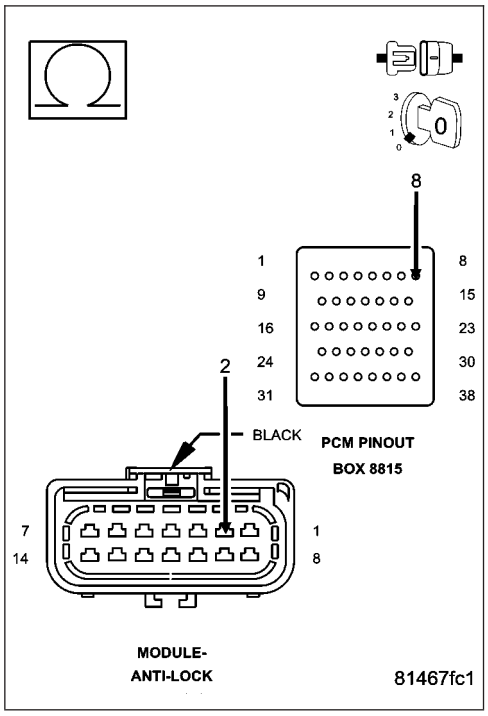

P1502-VEHICLE SPEED SENSOR 1/2 CORRELATION - NON DRIVE WHEELS (CONTINUED)

5. VEHICLE SPEED SIGNAL CIRCUIT SHORTED TO GROUND

Measure the resistance between ground and the (B22) and (B222) Vehicle Speed Signal circuits at the appropriate terminals of special tool #8815.

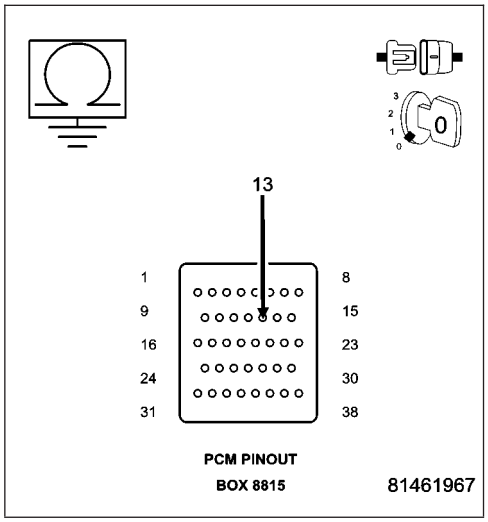

Is the resistance below 100 ohms?

Yes >> Repair the short to ground in the (B22) or (B222) Vehicle Speed Signal circuit.
Perform the POWERTRAIN VERIFICATION TEST. (Refer to 9 - ENGINE - STANDARD PROCEDURE)

No >> Go To 6

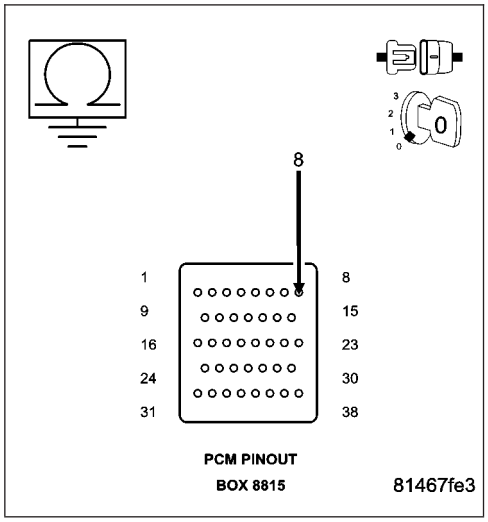

6. PCM

NOTE: Before continuing, check the PCM harness connector terminals for corrosion, damage, or terminal push out. Repair as necessary.
Using the schematics as a guide, inspect the wire harness and connectors. Pay particular attention to all Power and Ground circuits.

Were there any problems found?

Yes >> Repair as necessary.
Perform the POWERTRAIN VERIFICATION TEST. (Refer to 9 - ENGINE - STANDARD PROCEDURE)

No >> Replace and program the Powertrain Control Module per Service Information.
Perform the POWERTRAIN VERIFICATION TEST. (Refer to 9 - ENGINE - STANDARD PROCEDURE)

P1572-BRAKE PEDAL STUCK ON

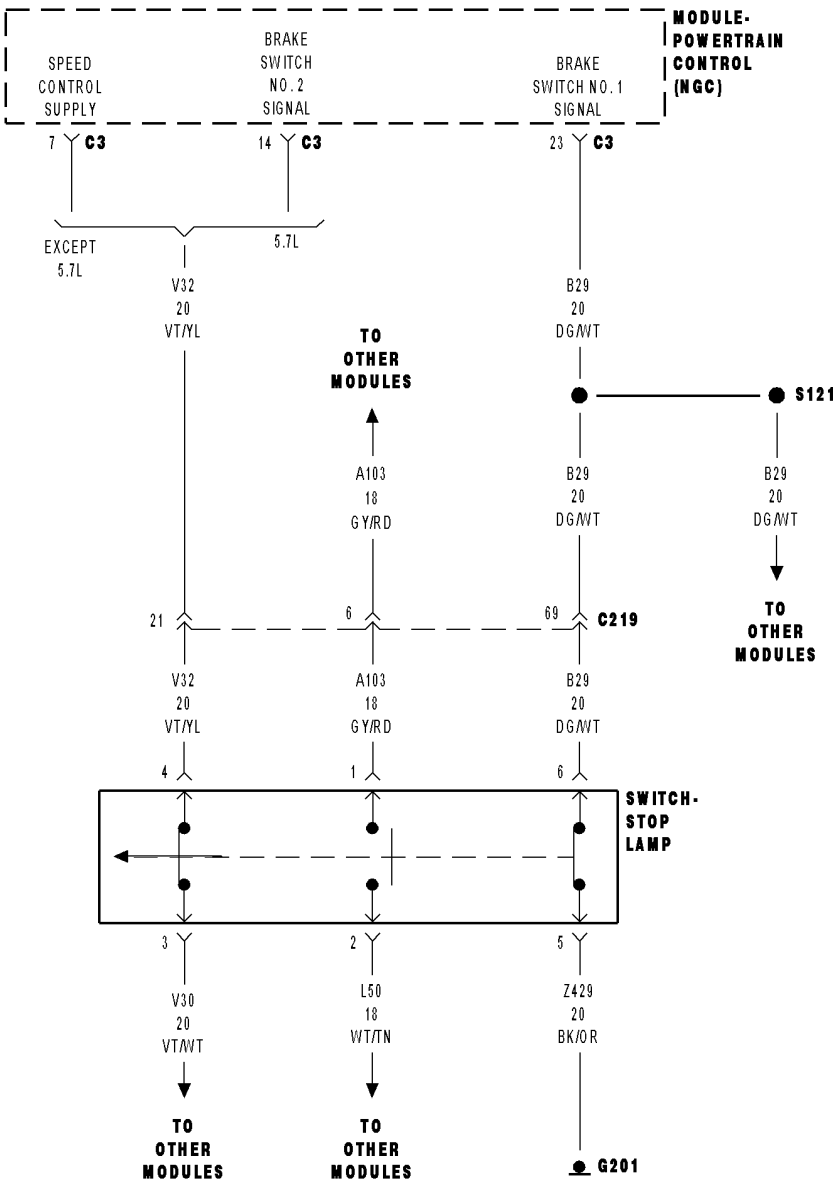

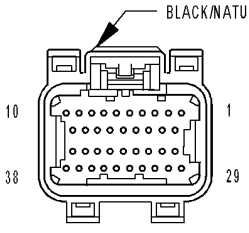

MODULE-
POWERTRAIN
CONTROL C3
(NGC)

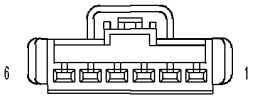

SWITCH-STOP
LAMP

814545c3

P1572-BRAKE PEDAL STUCK ON (CONTINUED)

For the Engine circuit diagram (Refer to 9 - ENGINE - SCHEMATICS AND DIAGRAMS).

For a complete wiring diagram **Refer to Section 8W**.

- **When Monitored:**
  Ignition on. In plant mode only.
- **Set Condition:**
  PCM recognizes the Brake Pedal could not electrically indicate the applied (On) position with both switch inputs. One trip fault.

Possible Causes
(B29) BRAKE SWITCH NO.1 SIGNAL CIRCUIT OPEN
(V32) BRAKE SWITCH NO.2 SIGNAL CIRCUIT OPEN
STOP LAMP SWITCH
PCM

Always perform the Pre-Diagnostic Troubleshooting procedure before proceeding. (Refer to 9 - ENGINE - DIAGNOSIS AND TESTING).

Diagnostic Test

1. ACTIVE DTC

NOTE: Make sure the Stop Lamp Switch is adjusted properly before continuing.
Ignition on, engine not running.
With a scan tool, read DTCs.

Is the DTC active at this time?

Yes >> Go To 2

No >> Refer to the INTERMITTENT CONDITION Diagnostic Procedure.
Perform the POWERTRAIN VERIFICATION TEST. (Refer to 9 - ENGINE - STANDARD PROCEDURE)

---

2. STOP LAMP SWITCH OPERATION

Turn the ignition off.
Disconnect the Stop Lamp Switch harness connector.
Measure the resistance between the (Z429) Ground circuit terminal and the (B29) Brake Switch No.1 Signal terminal in the Stop Lamp Switch.
Apply and release the brake pedal while monitoring the ohmmeter.

Does the resistance change from below 5.0 ohms to open circuit when pressing and releasing the brake pedal switch?

Yes >> Go To 3

No >> Replace the Stop Lamp Switch.
Perform the POWERTRAIN VERIFICATION TEST. (Refer to 9 - ENGINE - STANDARD PROCEDURE)

P1572-BRAKE PEDAL STUCK ON (CONTINUED)

3. STOP LAMP SWITCH OPERATION

Measure the resistance between the (V30) Fused Igniton Switch Output terminal and the (V32) Brake Switch No.2 Signal circuit terminal in the Stop Lamp Switch.

Apply and release the brake pedal while monitoring the ohmmeter.

Does the resistance change from below 5.0 ohms to open circuit when pressing and releasing the Stop Lamp switch?

Yes >> Go To 4

No >> Replace the Stop Lamp Switch.
Perform the POWERTRAIN VERIFICATION TEST. (Refer to 9 - ENGINE - STANDARD PROCEDURE)

---

4. (B29) BRAKE SWITCH NO.1 SIGNAL CIRCUIT OPEN

Disconnect the C3 PCM harness connector.

CAUTION: Do not probe the PCM harness connectors. Probing the PCM harness connectors will damage the PCM terminals resulting in poor terminal to pin connection. Install Miller Special Tool #8815 to perform diagnosis.

Measure the resistance of the (B29) Brake Switch No.1 Signal circuit from the Stop Lamp Switch harness connector to the appropriate terminal of special tool #8815.

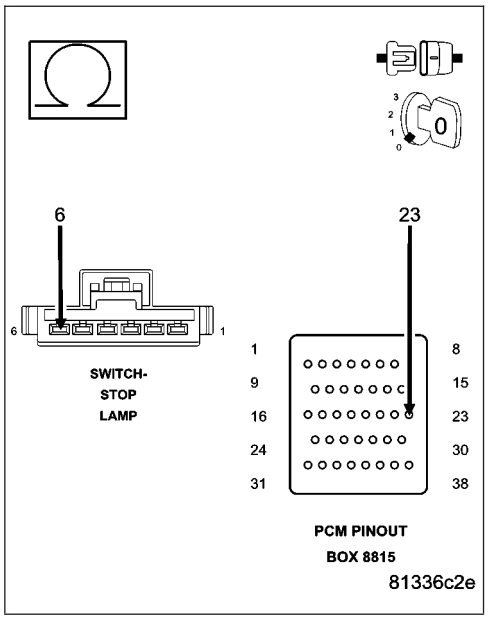

Is the resistance below 5.0 ohms?

Yes >> Go To 5

No >> Repair the open in the (B29) Brake Switch No.1 Signal circuit.
Perform the POWERTRAIN VERIFICATION TEST. (Refer to 9 - ENGINE - STANDARD PROCEDURE)

P1572-BRAKE PEDAL STUCK ON (CONTINUED)

5. (V32) BRAKE SWITCH NO.2 SIGNAL CIRCUIT OPEN

Measure the resistance of the (V32) Brake Switch No.2 Signal circuit from the Stop Lamp Switch harness connector to the C1 FCM harness connector.

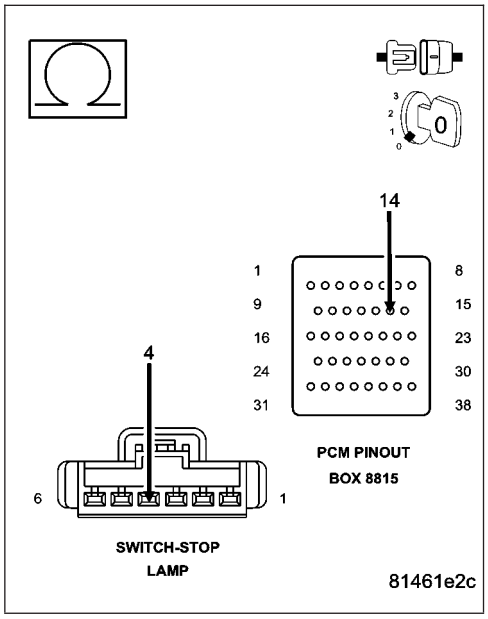

Is the resistance below 5.0 ohms?

Yes >> Go To 6

No >> Repair the open in the (L50) Brake Lamp Switch Output circuit.
Perform the POWERTRAIN VERIFICATION TEST. (Refer to 9 - ENGINE - STANDARD PROCEDURE)

---

6. PCM

NOTE: Before continuing, check the PCM harness connector terminals for corrosion, damage, or terminal push out. Repair as necessary.

Using the schematics as a guide, inspect the wire harness and connectors. Pay particular attention to all Power and Ground circuits.

Were there any problems found?

Yes >> Repair as necessary.
Perform the POWERTRAIN VERIFICATION TEST. (Refer to 9 - ENGINE - STANDARD PROCEDURE)

No >> Replace and program the Powertrain Control Module per Service Information.
Perform the POWERTRAIN VERIFICATION TEST. (Refer to 9 - ENGINE - STANDARD PROCEDURE)

P1573-BRAKE PEDAL STUCK OFF

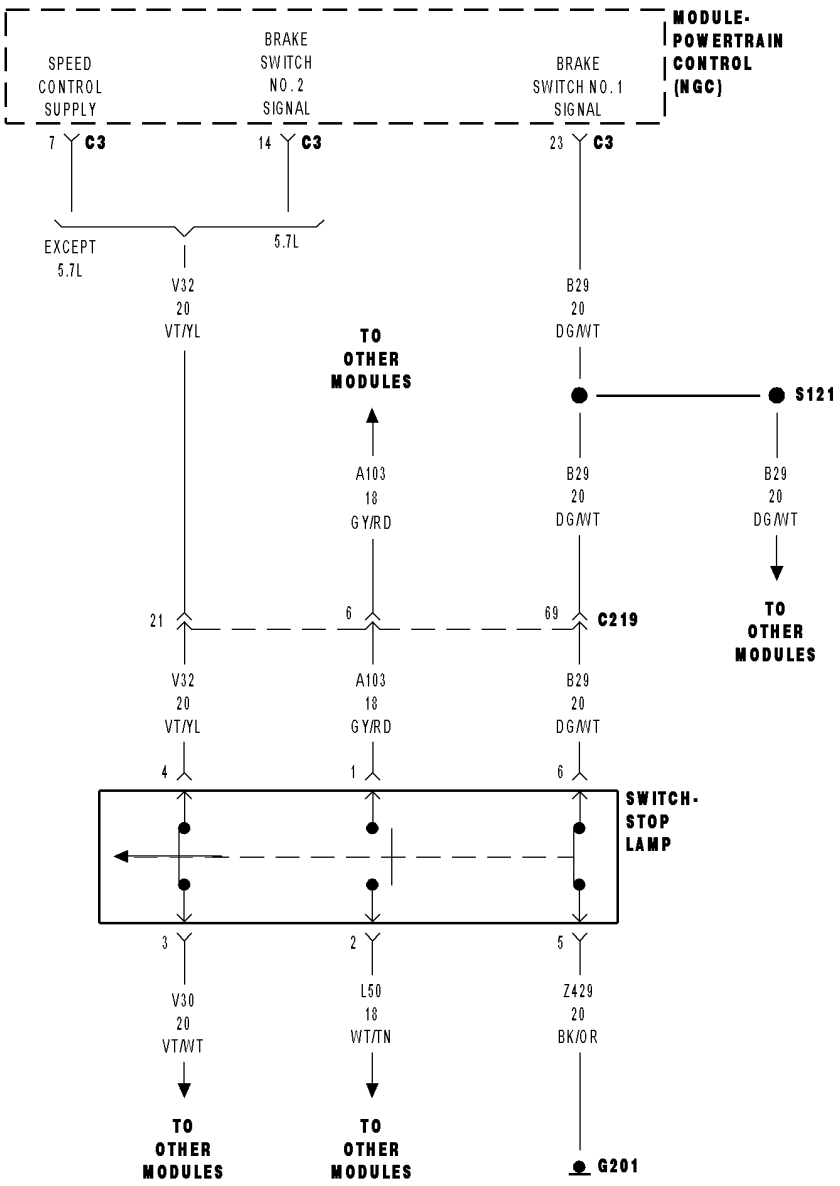

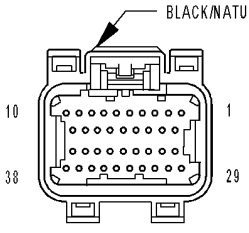

MODULE-
POWERTRAIN
CONTROL C3
(NGC)

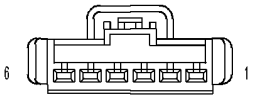

SWITCH-STOP
LAMP

814545c3

P1573-BRAKE PEDAL STUCK OFF (CONTINUED)

For the Engine circuit diagram (Refer to 9 - ENGINE - SCHEMATICS AND DIAGRAMS).

For a complete wiring diagram **Refer to Section 8W**.

- **When Monitored:**
  Ignition on, In plant mode passed the Applied test.
- **Set Condition:**
  PCM recognizes the Brake Pedal could not electronically indicate the released (Off) position with both switches. If P1572 sets, P1573 will also set. One trip fault.

Possible Causes
(V32) BRAKE SWITCH NO.2 SIGNAL CIRCUIT SHORTED TO BATTERY VOLTAGE
(B29) BRAKE SWITCH NO.1 SIGNAL CIRCUIT SHORTED TO GROUND
STOP LAMP SWITCH
PCM

Always perform the Pre-Diagnostic Troubleshooting procedure before proceeding. (Refer to 9 - ENGINE - DIAGNOSIS AND TESTING).

Diagnostic Test

1. ACTIVE DTC

NOTE: Make sure the Stop Lamp Switch is adjusted properly before continuing.
Ignition on, engine not running.
With a scan tool, read DTCs.

Is the DTC active at this time?

Yes >> Go To 2

No >> Refer to the INTERMITTENT CONDITION Diagnostic Procedure.
Perform the POWERTRAIN VERIFICATION TEST. (Refer to 9 - ENGINE - STANDARD PROCEDURE)

---

2. STOP LAMP SWITCH OPERATION

Turn the ignition off.
Disconnect the Stop Lamp Switch harness connectors.
Measure the resistance between the (Z429) Ground circuit terminal and the (B29) Brake Switch No.1 Signal terminal in the Stop Lamp Switch.
Apply and release the brake pedal while monitoring the ohmmeter.

Does the resistance change from below 5.0 ohms to an open circuit when pressing and releasing the brake switch?

Yes >> Go To 3

No >> Replace the Stop Lamp Switch.
Perform the POWERTRAIN VERIFICATION TEST. (Refer to 9 - ENGINE - STANDARD PROCEDURE)

P1573-BRAKE PEDAL STUCK OFF (CONTINUED)

3. STOP LAMP SWITCH OPERATION

Measure the resistance between the (V30) Fused Ignition Switch Output circuit terminal and the (V32) Brake Switch No.2 Signal terminal in the Stop Lamp Switch.

Apply and release the brake pedal while monitoring the ohmmeter.

Does the resistance change from below 5.0 ohms to an open circuit when pressing and releasing the Stop Lamp switch?

Yes >> Go To 4

No >> Replace the Stop Lamp Switch.
Perform the POWERTRAIN VERIFICATION TEST. (Refer to 9 - ENGINE - STANDARD PROCEDURE)

4. (V32) BRAKE SWITCH NO.2 SIGNAL CIRCUIT SHORTED TO BATTERY VOLTAGE

Disconnect the C2 PCM harness connector.

Ignition on, engine not running.

Measure the voltage on the (V32) Brake Switch No.2 Signal circuit in the Stop Lamp Switch harness connector.

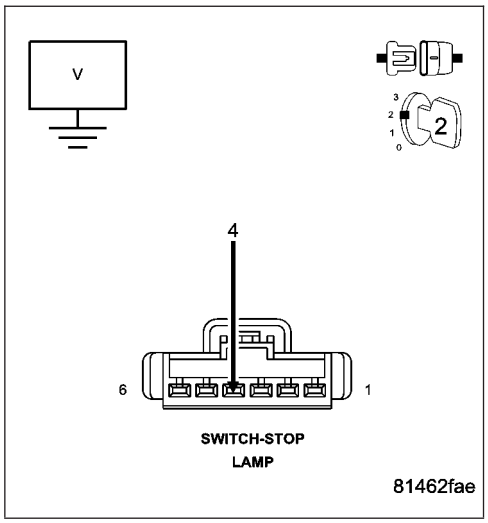

Is the voltage above 1.0 volt?

Yes >> Repair the short to battery voltage in the (V32) Brake Switch No.2 Signal circuit.
Perform the POWERTRAIN VERIFICATION TEST. (Refer to 9 - ENGINE - STANDARD PROCEDURE)

No >> Go To 5

5. (B29) BRAKE SWITCH NO.1 SIGNAL CIRCUIT SHORTED TO GROUND

Turn the ignition off.

Measure the resistance between ground and the (B29) Brake Switch No.1 Signal circuit in the Stop Lamp Switch harness connector.

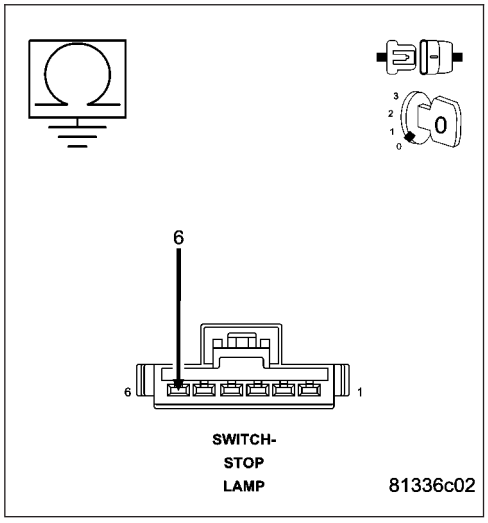

Is the resistance below 100 ohms?

Yes >> Repair the short to ground in the (B29) Brake Switch No.1 Signal circuit.
Perform the POWERTRAIN VERIFICATION TEST. (Refer to 9 - ENGINE - STANDARD PROCEDURE)

No >> Go To 6

P1573-BRAKE PEDAL STUCK OFF (CONTINUED)

6. **PCM**

NOTE: Before continuing, check the PCM harness connector terminals for corrosion, damage, or terminal push out. Repair as necessary.

Using the schematics as a guide, inspect the wire harness and connectors. Pay particular attention to all Power and Ground circuits.

Were there any problems found?

Yes >> Repair as necessary.
Perform the POWERTRAIN VERIFICATION TEST. (Refer to 9 - ENGINE - STANDARD PROCEDURE)

No >> Replace and program the Powertrain Control Module per Service Information.
Perform the POWERTRAIN VERIFICATION TEST. (Refer to 9 - ENGINE - STANDARD PROCEDURE)

P1593-SPEED CONTROL SWITCH 1/2 STUCK

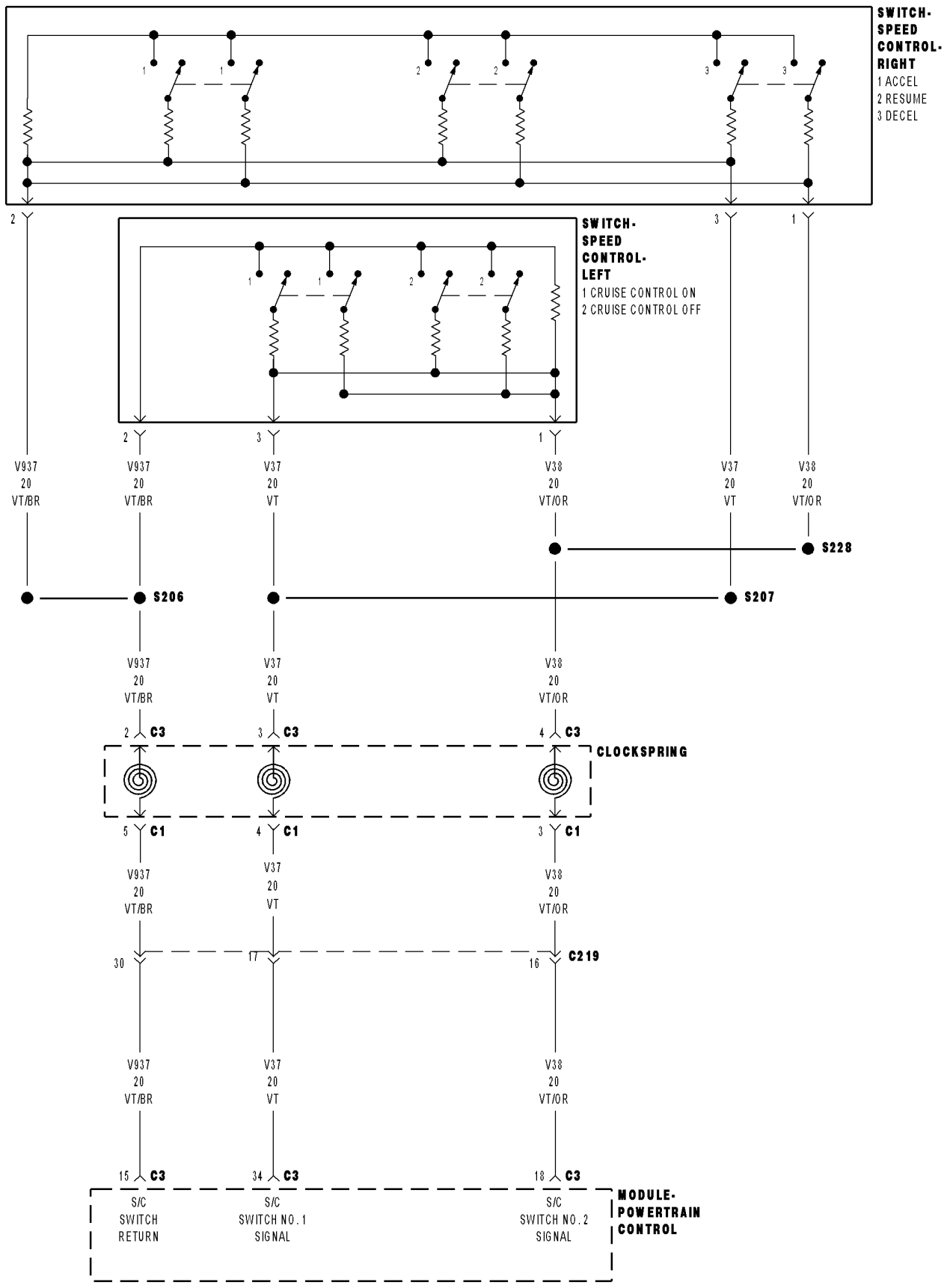

P1593-SPEED CONTROL SWITCH 1/2 STUCK (CONTINUED)

For the Engine circuit diagram (Refer to 9 - ENGINE - SCHEMATICS AND DIAGRAMS).

For a complete wiring diagram **Refer to Section 8W**.

- **When Monitored:**
  Ignition on.
- **Set Condition:**
  One of the S/C Switches is mechanically stuck in the On/Off, Resume/Accel, or Set position for too long. One trip fault.

Possible Causes
(V37) S/C SWITCH NO.1 SIGNAL CIRCUIT OPEN
(V38) S/C SWITCH NO.2 SIGNAL CIRCUIT OPEN
(V937) SWITCH RETURN CIRCUIT OPEN
(V37) S/C SWITCH NO.1 SIGNAL CIRCUIT SHORTED TO BATTERY VOLTAGE
(V38) S/C SWITCH NO.2 SIGNAL CIRCUIT SHORTED TO BATTERY VOLTAGE
(V37) S/C SWITCH NO.1 SIGNAL CIRCUIT SHORTED TO GROUND
(V38) S/C SWITCH NO.2 SIGNAL CIRCUIT SHORTED TO GROUND
(V37) S/C SWITCH NO.1 SIGNAL CIRCUIT SHORTED TO THE (V937) S/C SWITCH RETURN CIRCUIT
(V38) S/C SWITCH NO.2 SIGNAL CIRCUIT SHORTED TO THE (V937) S/C SWITCH RETURN CIRCUIT
SPEED CONTROL SWITCH
PCM

Always perform the Pre-Diagnostic Troubleshooting procedure before proceeding. (Refer to 9 - ENGINE - DIAGNOSIS AND TESTING).

Diagnostic Test

1. SPEED CONTROL SWITCH NO.1 STUCK

Start the engine.

With a scan tool, monitor each switch function for the Speed Control Switches.

Press and release each Speed Control Button.

Is Switch No.1 Stuck?

Yes >> Replace the Speed Control Switch.
Perform the POWERTRAIN VERIFICATION TEST. (Refer to 9 - ENGINE - STANDARD PROCEDURE)

No >> Go To 2

P1593-SPEED CONTROL SWITCH 1/2 STUCK (CONTINUED)

2. SPEED CONTROL SWITCH STATUS

Start the engine.

With a scan tool, monitor each switch function for the Speed Control Switches.

Press and release each Speed Control Button.

- Resume/Accel
- Cancel
- Decel (Coast)
- On/Off
- Set

Does each switch function change status when pressing and releasing each switch?

Yes >> Refer to the INTERMITTENT CONDITION Diagnostic Procedure.
Perform the POWERTRAIN VERIFICATION TEST. (Refer to 9 - ENGINE - STANDARD PROCEDURE)

No >> Go To 3

---

3. SPEED CONTROL SWITCHES

Turn the ignition off.

Remove the Speed Control Switches from the steering wheel.

Measure the resistance across each Speed Control Switch.

Monitor the ohmmeter while pressing each function button on each switch.

The following resistance specs are taken between terminals (V38) S/C Switch No.2 Signal and (V937) S/C Switch Return circuit of the Switch when holding the switch button in the following position.

On/Off - 8.87 kohms

Set - 0.825 kohms

Coast - 0.47 kohms

Cancel - 3.92 kohms

Resume/Accel - 1.87 kohms

The following resistance specs are taken between terminals (V37) S/C Switch No.1 Signal and (V937) S/C Switch Return circuits of the Switch when holding the switch button in the following position

On/Off - 0.47 kohms

Set - 5.49 kohms

Coast - 2.94 kohms

Cancel - 1.24 kohms

Resume/Accel - 15.4 kohms

Does the function on the Speed Control Switches have the correct resistance value?

Yes >> Go To 4

No >> Replace the Speed Control Switch that had the incorrect resistance value.
Perform the POWERTRAIN VERIFICATION TEST. (Refer to 9 - ENGINE - STANDARD PROCEDURE)

P1593-SPEED CONTROL SWITCH 1/2 STUCK (CONTINUED)

4. (V37) S/C SWITCH NO.1 SIGNAL CIRCUIT SHORTED TO BATTERY VOLTAGE

Turn the ignition off.

Disconnect the C3 PCM harness connector.

Ignition on, engine not running.

Measure the voltage of the (V37) S/C Switch No.1 Signal circuit in the S/C Switch harness connector.

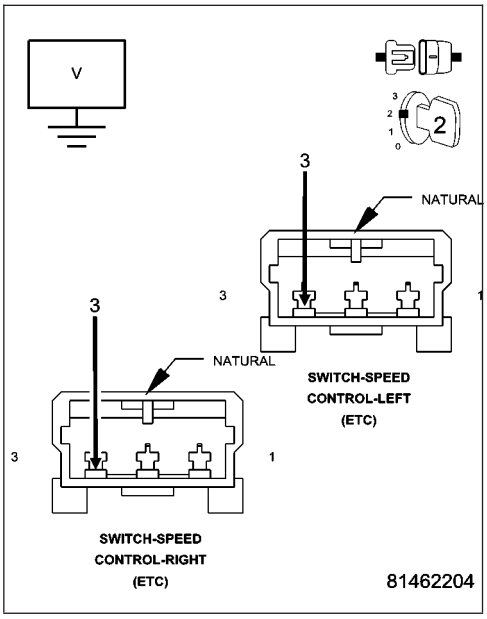

Is the voltage above 5.0 volts?

Yes >> Repair the short to voltage in the (V37) S/C Switch No.1 Signal circuit.
Perform the POWERTRAIN VERIFICATION TEST. (Refer to 9 - ENGINE - STANDARD PROCEDURE)

No >> Go To 5

5. (V38) S/C SWITCH NO.2 SIGNAL CIRCUIT SHORTED TO BATTERY VOLTAGE

Measure the voltage of the (V38) S/C Switch No.2 Signal circuit in the S/C Switch harness connector.

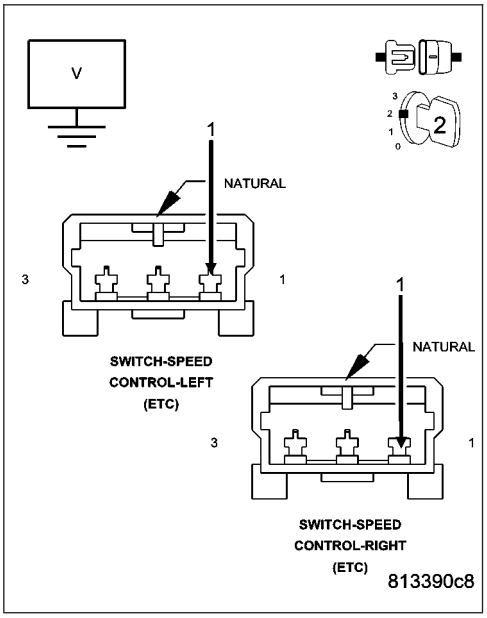

Is the voltage above 5.0 volts?

Yes >> Repair the short to voltage in the (V38) S/C Switch No.2 Signal circuit.
Perform the POWERTRAIN VERIFICATION TEST. (Refer to 9 - ENGINE - STANDARD PROCEDURE)

No >> Go To 6

P1593-SPEED CONTROL SWITCH 1/2 STUCK (CONTINUED)

6. (V37) S/C SWITCH NO.1 SIGNAL CIRCUIT OPEN

Turn the ignition off.

CAUTION: Do not probe the PCM harness connectors. Probing the PCM harness connectors will damage the PCM terminals resulting in poor terminal to pin connection. Install Miller Special Tool #8815 to perform diagnosis.

Measure the resistance of the (V37) S/C Switch No.1 Signal circuit from both Speed Control harness connectors to the appropriate terminals of special tool #8815.

Is the resistance below 5.0 ohms for both measurements?

Yes >> Go To 7

No >> Repair the open in the (V37) S/C Switch No.1 Signal circuit.

Perform the POWERTRAIN VERIFICATION TEST. (Refer to 9 - ENGINE - STANDARD PROCEDURE)

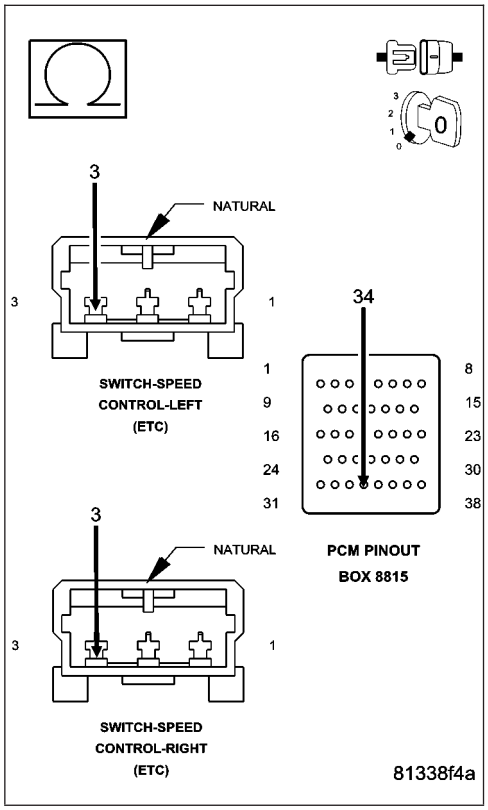

7. (V38) S/C SWITCH NO.2 SIGNAL CIRCUIT OPEN

Measure the resistance of the (V38) S/C Switch No.2 Signal circuit from both Speed Control harness connectors to the appropriate terminals of special tool #8815.

Is the resistance below 5.0 ohms for both measurements?

Yes >> Go To 8

No >> Repair the open in the (V38) S/C Switch No.2 Signal circuit.

Perform the POWERTRAIN VERIFICATION TEST. (Refer to 9 - ENGINE - STANDARD PROCEDURE)

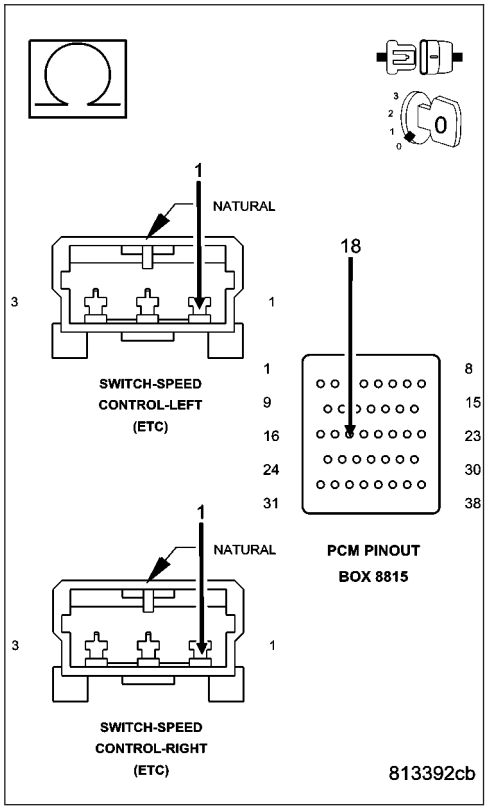

P1593-SPEED CONTROL SWITCH 1/2 STUCK (CONTINUED)

8. (V937) SWITCH RETURN OPEN

NOTE: The measurement must be taken from both Speed Control Switch harness connectors.

Measure the resistance of the (V937) Switch Return circuit from the Speed Control harness connector to the appropriate terminal of special tool #8815.

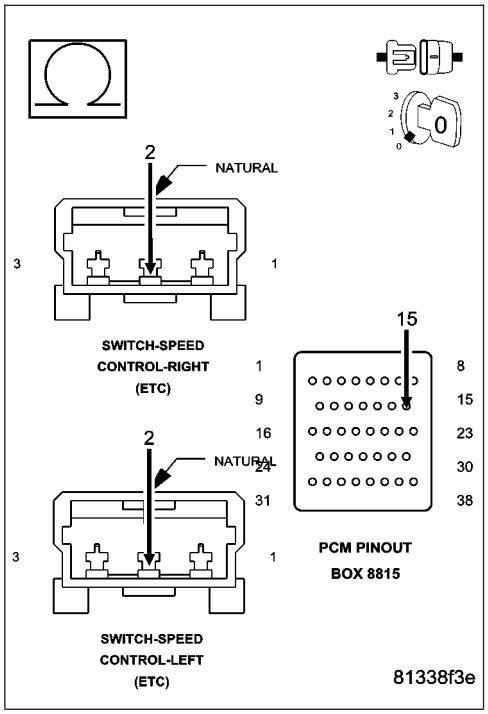

Is the resistance below 5.0 ohms for both measurements?

Yes >> Go To 9

No >> Repair the open in the (V937) Switch Return circuit.
Perform the POWERTRAIN VERIFICATION TEST. (Refer to 9 - ENGINE - STANDARD PROCEDURE)

9. (V37) S/C SWITCH NO.1 SIGNAL CIRCUIT SHORTED TO GROUND

Measure the resistance between ground and the (V37) S/C Switch No.1 Signal circuit in the Speed Control harness connector.

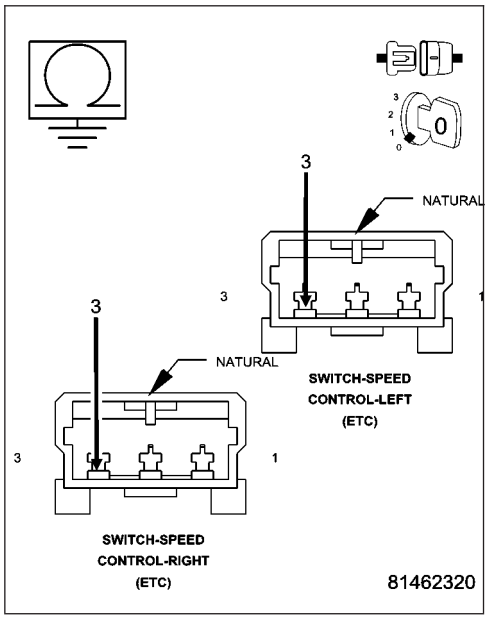

Is the resistance below 100 ohms?

Yes >> Repair the short to ground in the (V37) S/C Switch No.1 Signal circuit.
Perform the POWERTRAIN VERIFICATION TEST. (Refer to 9 - ENGINE - STANDARD PROCEDURE)

No >> Go To 10

P1593-SPEED CONTROL SWITCH 1/2 STUCK (CONTINUED)

10. (V38) S/C SWITCH NO.2 SIGNAL CIRCUIT SHORTED TO GROUND

Measure the resistance between ground and the (V38) S/C Switch No.2 Signal circuit in the Speed Control harness connector.

Is the resistance below 100 ohms?

Yes >> Repair the short to ground in the (V38) S/C Switch No.2 Signal circuit.
Perform the POWERTRAIN VERIFICATION TEST. (Refer to 9 - ENGINE - STANDARD PROCEDURE)

No >> Go To 11

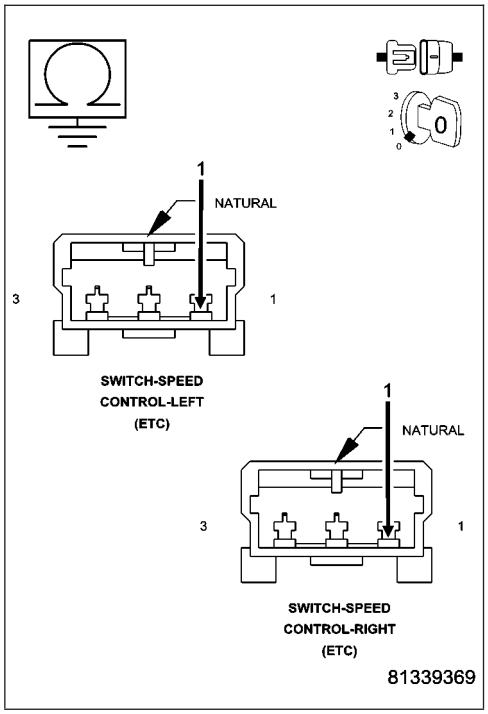

11. (V37) S/C SWITCH NO.1 SIGNAL CIRCUIT SHORTED TO THE (V937) SWITCH RETURN CIRCUIT

Measure the resistance between the (V37) S/C Switch No.1 Signal circuit and the (V937) Switch Return circuit in the Speed Control harness connector.

Is the resistance below 5.0 ohms?

Yes >> Repair the short between the (V937) Switch Return circuit and the (V37) S/C Switch No.1 Signal circuit.
Perform the POWERTRAIN VERIFICATION TEST. (Refer to 9 - ENGINE - STANDARD PROCEDURE)

No >> Go To 12

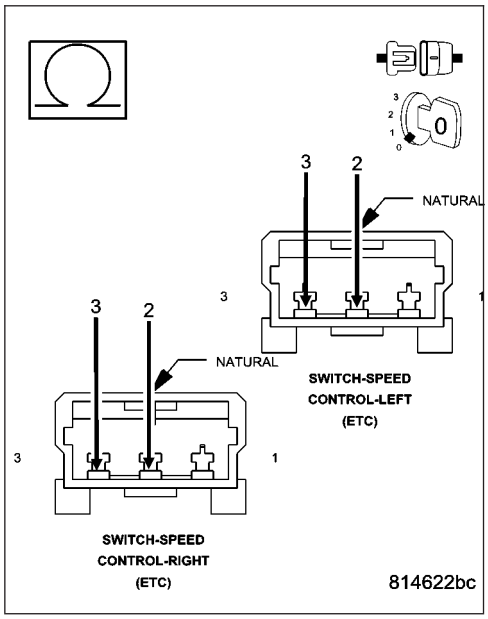

P1593-SPEED CONTROL SWITCH 1/2 STUCK (CONTINUED)

12. (V38) S/C SWITCH NO.2 SIGNAL CIRCUIT SHORTED TO THE (V937) SWITCH RETURN CIRCUIT

Measure the resistance between the (V38) S/C Switch No.2 Signal circuit and the (V937) Switch Return circuit in the Speed Control harness connector.

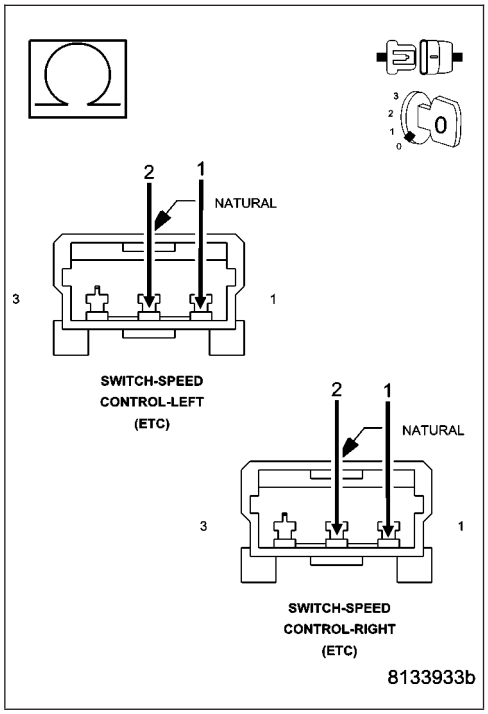

Is the resistance below 5.0 ohms?

Yes >> Repair the short between the (V937) Switch Return circuit and the (V38) S/C Switch No.2 Signal circuit.

Perform the POWERTRAIN VERIFICATION TEST. (Refer to 9 - ENGINE - STANDARD PROCEDURE)

No >> Go To 13

P1593-SPEED CONTROL SWITCH 1/2 STUCK (CONTINUED)

13. SPEED CONTROL SWITCH VOLTAGE VALUES

Allow the engine to idle.
With a scan tool, monitor the S/C Switch voltage readings.

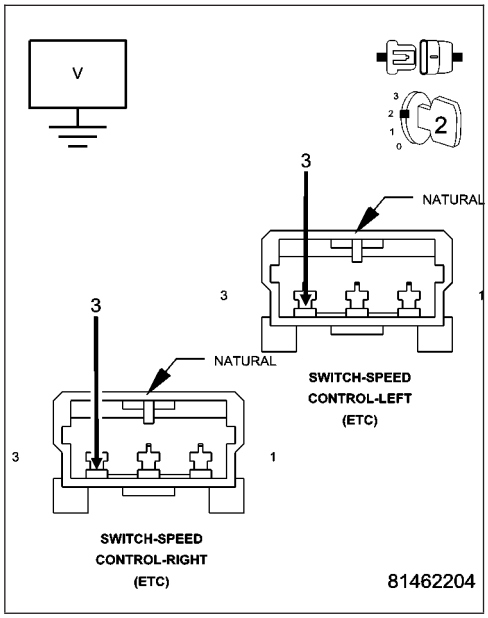

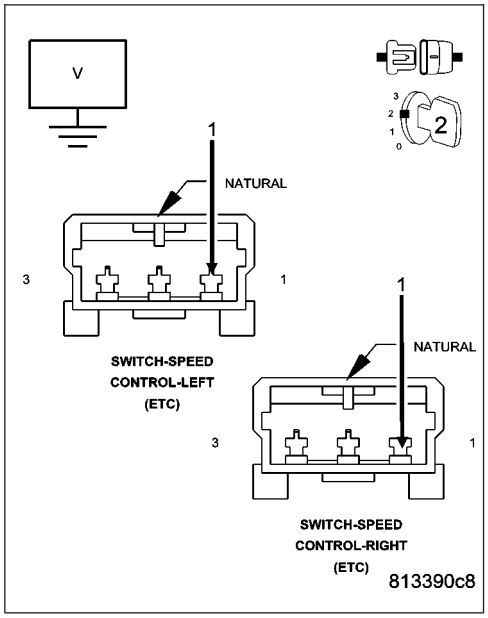

SWITCH POSITION	SWITCH No.1 VOLTAGE VALUE	SWITCH No.2 VOLATGE VALUE
NO SWITCHES PRESSED	4.31 to 4.78 volts	4.31 to 4.78 volts
ON/OFF PRESSED	0.59 to 1.13 volts	3.53 to 3.92 volts
RES/ACCEL PRESSED	3.88 to 4.17 volts	2.04 to 2.47 volts
SET PRESSED	3.16 to 3.56 volts	1.17 to 1.56 volts
COAST PRESSED	2.57 to 2.94 volts	0.77 to 1.09 volts
CANCEL PRESSED	1.59 to 1.99 volts	2.84 to 3.25 volts

P1593-SPEED CONTROL SWITCH 1/2 STUCK (CONTINUED)

Take these same voltage measurements with a voltmeter by back probing the (V37) S/C Switch No.1 Signal circuit and the (V38) S/C Switch No.2 Signal circuit at the switches.

Compare the voltage readings on the voltmeter to what the scan tool displayed.

Are the voltage readings out of the listed specification and do you less than a 0.2 of a volt difference between the voltmeter switch values and the scan tool switch value?

Yes >> Replace the Speed Control Switch.
Perform the POWERTRAIN VERIFICATION TEST. (Refer to 9 - ENGINE - STANDARD PROCEDURE)

No >> Go To 14

---

14. PCM

NOTE: Before continuing, check the PCM harness connector terminals for corrosion, damage, or terminal push out. Repair as necessary.

Using the schematics as a guide, inspect the wire harness and connectors. Pay particular attention to all Power and Ground circuits.

Were there any problems found?

Yes >> Repair as necessary.
Perform the POWERTRAIN VERIFICATION TEST. (Refer to 9 - ENGINE - STANDARD PROCEDURE)

No >> Replace and program the Powertrain Control Module per Service Information.
Perform the POWERTRAIN VERIFICATION TEST. (Refer to 9 - ENGINE - STANDARD PROCEDURE)

P1593-SPEED CONTROL SWITCH 1 STUCK (3.7L, 4.7L)

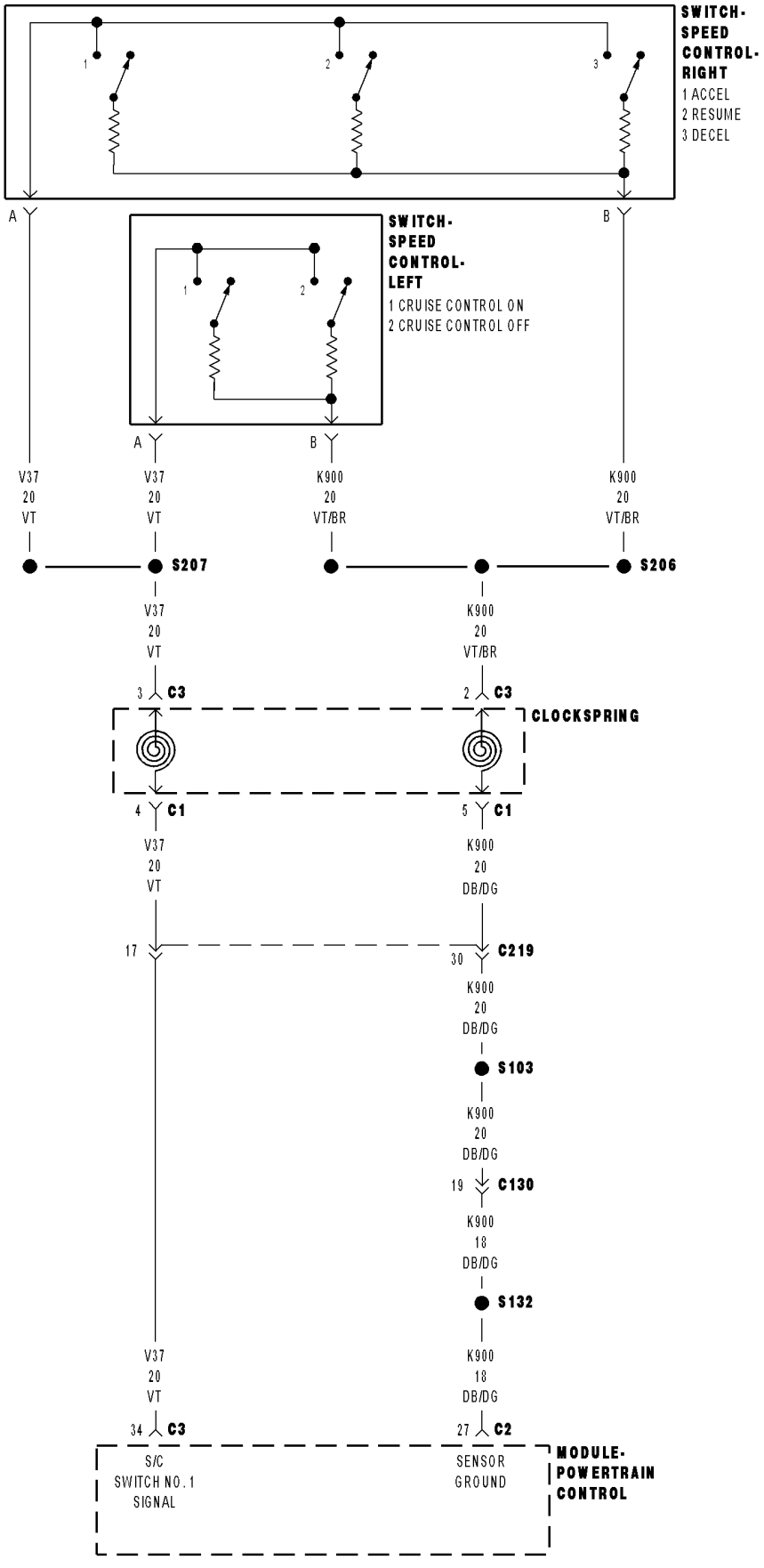

P1593-SPEED CONTROL SWITCH 1 STUCK (3.7L, 4.7L) (CONTINUED)

For the Engine circuit diagram (Refer to 9 - ENGINE - SCHEMATICS AND DIAGRAMS).

For a complete wiring diagram **Refer to Section 8W**.

- **When Monitored:**
  Ignition on.
- **Set Condition:**
  S/C Switch No.1 is mechanically stuck in the On/Off, Resume/Accel, or Set position for too long. One trip fault.

Possible Causes
(V37) S/C SIGNAL CIRCUIT SHORTED TO BATTERY VOLTAGE
(V37) S/C SIGNAL CIRCUIT OPEN
(K900) SENSOR GROUND OPEN
(V37) S/C SIGNAL CIRCUIT SHORTED TO GROUND
(V37) S/C SIGNAL CIRCUIT SHORTED TO THE (K900) SENSOR GROUND
SPEED CONTROL SWITCH
PCM

Always perform the Pre-Diagnostic Troubleshooting procedure before proceeding. (Refer to 9 - ENGINE - DIAGNOSIS AND TESTING).

Diagnostic Test

1. SPEED CONTROL SWITCH STATUS

Start the engine.
With a scan tool, monitor each which function for the Speed Control Switches.
Press and release each Speed Control Button.
- Resume/Accel
- Cancel
- Decel (Coast)
- On/Off
- Set

Does each switch function change status when pressing each switch?

Yes >> Refer to the INTERMITTENT CONDITION Diagnostic Procedure.
Perform the POWERTRAIN VERIFICATION TEST. (Refer to 9 - ENGINE - STANDARD PROCEDURE)

No >> Go To 2

P1593-SPEED CONTROL SWITCH 1 STUCK (3.7L, 4.7L) (CONTINUED)

2. SPEED CONTROL SWITCHES

Turn the ignition off.

Disconnect and remove the Speed Control Switches from the steering wheel per Service Information.

Measure the resistance across each Speed Control Switch.

Monitor the ohmmeter while pressing each function button on each switch.

Resume/Accel - 15.4 kohms

Cancel - 1.24 kohms

Coast - 2.94 kohms

On/Off -0.47 kohms

Set - 5.49 kohms

Does the function on the Speed Control Switches have the correct resistance value?

Yes >> Go To 3

No >> Replace the Speed Control Switch that had the incorrect resistance value.
Perform the POWERTRAIN VERIFICATION TEST. (Refer to 9 - ENGINE - STANDARD PROCEDURE)

---

3. (V37) S/C SWITCH NO.1 SIGNAL CIRCUIT SHORTED TO BATTERY VOLTAGE

Turn the ignition off.

Disconnect the C2 and C3 PCM harness connectors.

Measure the voltage of the (V37) S/C Switch No.1 Signal circuit in the Speed Control harness connector.

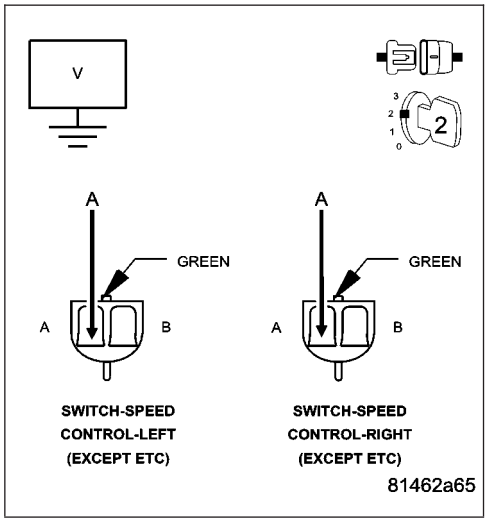

Is the voltage above 5.0 volts?

Yes >> Repair the short to battery voltage in the (V37) S/C Signal No.1 circuit.
Perform the POWERTRAIN VERIFICATION TEST. (Refer to 9 - ENGINE - STANDARD PROCEDURE)

No >> Go To 4

P1593-SPEED CONTROL SWITCH 1 STUCK (3.7L, 4.7L) (CONTINUED)

4. (V37) S/C SWITCH NO.1 SIGNAL CIRCUIT OPEN

NOTE: The measurement must be taken from both Speed Control Switch harness connectors.
Turn the ignition off.

CAUTION: Do not probe the PCM harness connectors. Probing the PCM harness connectors will damage the PCM terminals resulting in poor terminal to pin connection. Install Miller Special Tool #8815 to perform diagnosis.
Measure the resistance of the (V37) S/C Switch No.1 Signal circuit from the Speed Control harness connector to the appropriate terminal of special tool #8815.

Is the resistance below 5.0 ohms for both measurements?

Yes >> Go To 5

No >> Repair the open in the (V37) S/C Switch No.1 Signal circuit.
Perform the POWERTRAIN VERIFICATION TEST. (Refer to 9 - ENGINE - STANDARD PROCEDURE)

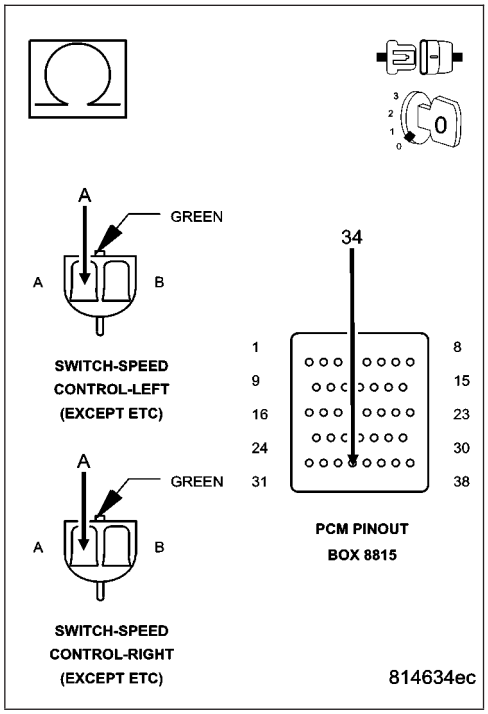

5. (K900) SENSOR GROUND CIRCUIT OPEN

NOTE: The measurement must be taken from both Speed Control Switch harness connectors.
Measure the resistance of the (K900) Sensor ground circuit from the Speed Control harness connector to the appropriate terminal of special tool #8815.

Is the resistance below 5.0 ohms for both measurements?

Yes >> Go To 6

No >> Repair the open in the (K900) Sensor ground circuit.
Perform the POWERTRAIN VERIFICATION TEST. (Refer to 9 - ENGINE - STANDARD PROCEDURE)

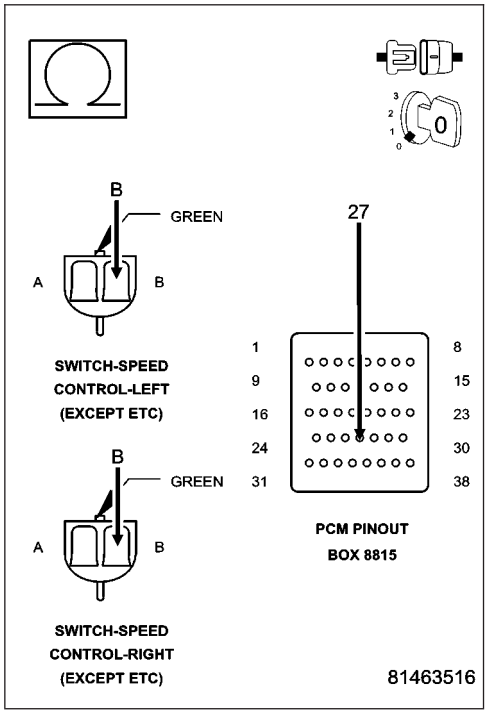

P1593-SPEED CONTROL SWITCH 1 STUCK (3.7L, 4.7L) (CONTINUED)

6. (V37) S/C SWITCH NO.1 SIGNAL CIRCUIT SHORTED TO GROUND

Measure the resistance between ground and the (V37) S/C Switch No.1 Signal circuit in the Speed Control harness connector.

Is the resistance below 100 ohms?

Yes >> Repair the short to ground in the (V37) S/C Switch No.1 Signal circuit.
Perform the POWERTRAIN VERIFICATION TEST. (Refer to 9 - ENGINE - STANDARD PROCEDURE)

No >> Go To 7

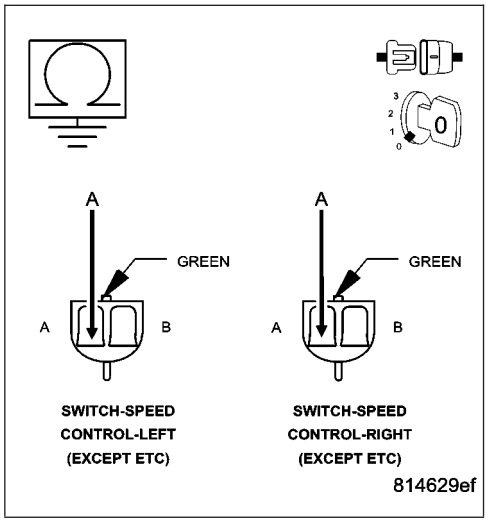

7. (V37) S/C SWITCH NO.1 SIGNAL CIRCUIT SHORTED TO THE (K900) SENSOR GROUND CIRCUIT

Measure the resistance between the (V37) S/C Switch No.1 Signal circuit and the (K900) Sensor ground circuit in the Speed Control harness connector.

Is the resistance below 5.0 ohms?

Yes >> Repair the short between the (V37) S/C Switch No.1 Signal circuit and the (K900) Sensor ground circuit.
Perform the POWERTRAIN VERIFICATION TEST. (Refer to 9 - ENGINE - STANDARD PROCEDURE)

No >> Go To 8

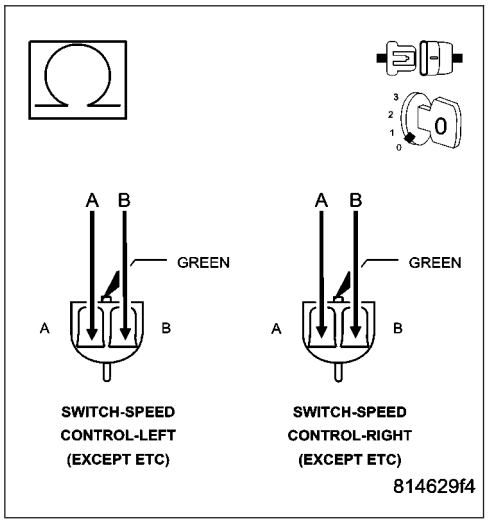

8. PCM

NOTE: Before continuing, check the PCM harness connector terminals for corrosion, damage, or terminal push out. Repair as necessary.
Using the schematics as a guide, inspect the wire harness and connectors. Pay particular attention to all Power and Ground circuits.

Were there any problems found?

Yes >> Repair as necessary.
Perform the POWERTRAIN VERIFICATION TEST. (Refer to 9 - ENGINE - STANDARD PROCEDURE)

No >> Replace and program the Powertrain Control Module per Service Information.
Perform the POWERTRAIN VERIFICATION TEST. (Refer to 9 - ENGINE - STANDARD PROCEDURE)

P1602–PCM NOT PROGRAMMED

For the Engine circuit diagram (Refer to 9 - ENGINE - SCHEMATICS AND DIAGRAMS).

For a complete wiring diagram **Refer to Section 8W**.

- **When Monitored:**
  Ignition on and battery voltage greater than 10 volts.
- **Set Condition:**
  The PCM has not been programmed.

Possible Causes
PCM

Always perform the Pre-Diagnostic Troubleshooting procedure before proceeding. (Refer to 9 - ENGINE - DIAGNOSIS AND TESTING).

Diagnostic Test

1. PCM PROGRAMMED

Ignition on, engine not running.
With a scan tool, erase DTCs.
With a scan tool program the PCM.
Start the engine.
Allow the engine to reach normal operating temperature.
With a scan tool, read DTCs.

Does the DTC reset?

Yes >> Replace and program the Powertrain Control Module per Service Information.
Perform the POWERTRAIN VERIFICATION TEST. (Refer to 9 - ENGINE - STANDARD PROCEDURE)

No >> The PCM has been successfully programmed. Test is complete.
Perform the POWERTRAIN VERIFICATION TEST. (Refer to 9 - ENGINE - STANDARD PROCEDURE)

P1603-PCM INTERNAL DUAL-PORT RAM COMMUNICATION FAILURE

For the Engine circuit diagram (Refer to 9 - ENGINE - SCHEMATICS AND DIAGRAMS).

For a complete wiring diagram **Refer to Section 8W**.

- **When Monitored:**
  Ignition on and battery voltage greater than 10 volts.
- **Set Condition:**
  Internal PCM failure detected. One Trip Fault. Three good trips to turn off the MIL.

Possible Causes
PCM FUSED IGNITION SWITCH CIRCUIT
PCM INTERNAL

Always perform the Pre-Diagnostic Troubleshooting procedure before proceeding. (Refer to 9 - ENGINE - DIAGNOSIS AND TESTING).

Diagnostic Test

1. PCM IGNITION CIRCUITS

Turn the ignition off.

Disconnect the C1 PCM harness connector.

Ignition on, engine not running.

CAUTION: Do not probe the PCM harness connectors. Probing the PCM harness connectors will damage the PCM terminals resulting in poor terminal to pin connection. Install Miller Special Tool #8815 to perform diagnosis.

With a 12-volt test light connected to ground and with special tool #8815 installed, probe the (F202), (F1), and (T751) Fused Ignition Switch circuits.

Perform the above check with the Ignition key in the off lock position, Ignition on, engine not running position, and during cranking.

Wiggle the related wire harness while probing the special tool with the test light to try to interrupt the circuit.

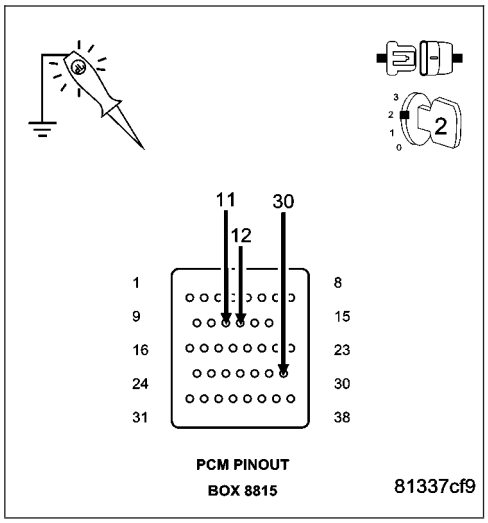

Does the test light illuminate brightly?

Yes >> Go To 2

No >> Repair the open or excessive resistance in the (F202), (F1), and (T751) Fused Ignition Switch (Offf, Run, Start) circuits. Inspect the related fuse, if the fuse is open check the circuits for a short to ground. Perform the POWERTRAIN VERIFICATION TEST. (Refer to 9 - ENGINE - STANDARD PROCEDURE)

P1603-PCM INTERNAL DUAL-PORT RAM COMMUNICATION FAILURE (CONTINUED)

2. PCM

The Powertrain Control Module is reporting internal errors.

NOTE: Before continuing, check the PCM harness connector terminals for corrosion, damage, or terminal push out. Repair as necessary.

Using the schematics as a guide, inspect the wire harness and connectors. Pay particular attention to all Power and Ground circuits.

Were there any problems found?

Yes >> Repair as necessary.
Perform the POWERTRAIN VERIFICATION TEST. (Refer to 9 - ENGINE - STANDARD PROCEDURE)

No >> Replace and program the Powertrain Control Module per Service Information.
Perform the POWERTRAIN VERIFICATION TEST. (Refer to 9 - ENGINE - STANDARD PROCEDURE)

P1604-PCM INTERNAL DUAL-PORT RAM READ/WRITE INTEGRITY FAILURE

For the Engine circuit diagram (Refer to 9 - ENGINE - SCHEMATICS AND DIAGRAMS).

For a complete wiring diagram **Refer to Section 8W**.

- **When Monitored:**
  Ignition on and battery voltage greater than 10 volts.
- **Set Condition:**
  Internal PCM failure detected. One Trip Fault. Three good trips to turn off the MIL.

Possible Causes
PCM FUSED IGNITION SWITCH CIRCUIT
PCM INTERNAL

Always perform the Pre-Diagnostic Troubleshooting procedure before proceeding. (Refer to 9 - ENGINE - DIAGNOSIS AND TESTING).

Diagnostic Test

1. PCM IGNITION CIRCUITS

Turn the ignition off.

Disconnect the C1 PCM harness connector.

Ignition on, engine not running.

CAUTION: Do not probe the PCM harness connectors. Probing the PCM harness connectors will damage the PCM terminals resulting in poor terminal to pin connection. Install Miller Special Tool #8815 to perform diagnosis.

With a 12-volt test light connected to ground and with special tool #8815 installed, probe the (F202), (F1), and (T751) Fused Ignition Switch circuits.

Perform the above check with the Ignition key in the off lock position, Ignition on, engine not running position, and during cranking.

Wiggle the related wire harness while probing the special tool with the test light to try to interrupt the circuit.

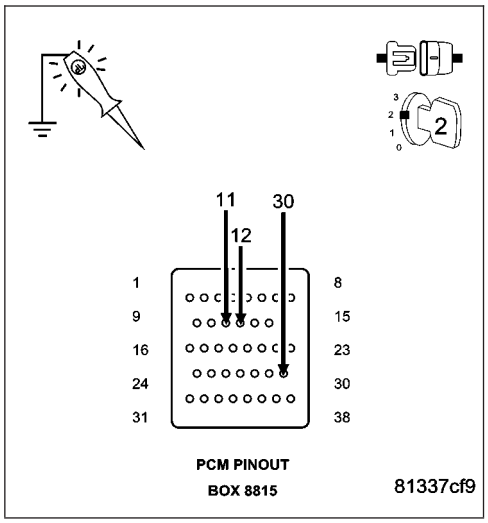

Does the test light illuminate brightly?

Yes >> Go To 2

No >> Repair the open or excessive resistance in the (F202), (F1), and (T751) Fused Ignition Switch (Off, Run, Start) circuits. Inspect the related fuse, if the fuse is open check the circuits for a short to ground.
Perform the POWERTRAIN VERIFICATION TEST. (Refer to 9 - ENGINE - STANDARD PROCEDURE)

P1604-PCM INTERNAL DUAL-PORT RAM READ/WRITE INTEGRITY FAILURE (CONTINUED)

2. **PCM**

The Powertrain Control Module is reporting internal errors.

NOTE: Before continuing, check the PCM harness connector terminals for corrosion, damage, or terminal push out. Repair as necessary.

Using the schematics as a guide, inspect the wire harness and connectors. Pay particular attention to all Power and Ground circuits.

Were there any problems found?

Yes >> Repair as necessary.
Perform the POWERTRAIN VERIFICATION TEST. (Refer to 9 - ENGINE - STANDARD PROCEDURE)

No >> Replace and program the Powertrain Control Module per Service Information.
Perform the POWERTRAIN VERIFICATION TEST. (Refer to 9 - ENGINE - STANDARD PROCEDURE)

P1607-PCM INTERNAL SHUTDOWN TIMER RATIONALITY

For the Engine circuit diagram (Refer to 9 - ENGINE - SCHEMATICS AND DIAGRAMS).

For a complete wiring diagram **Refer to Section 8W**.

- **When Monitored:**
  Ignition on and battery voltage greater than 10 volts.
- **Set Condition:**
  Internal PCM failure detected. One Trip Fault. Three good trips to turn off the MIL.

Possible Causes
PCM FUSED IGNITION SWITCH CIRCUIT
PCM INTERNAL

Always perform the Pre-Diagnostic Troubleshooting procedure before proceeding. (Refer to 9 - ENGINE - DIAGNOSIS AND TESTING).

Diagnostic Test

1. PCM IGNITION CIRCUITS

Turn the ignition off.

Disconnect the C1 PCM harness connector.

CAUTION: Do not probe the PCM harness connectors. Probing the PCM harness connectors will damage the PCM terminals resulting in poor terminal to pin connection. Install Miller Special Tool #8815 to perform diagnosis.

With a 12-volt test light connected to ground and with special tool #8815 installed, probe the (F202), (F1), and (T751) Fused Ignition Switch circuits.

Perform the above check with the Ignition key in the off lock position, Ignition on, engine not running position, and during cranking.

Wiggle the related wire harness while probing the special tool with the test light to try to interrupt the circuit.

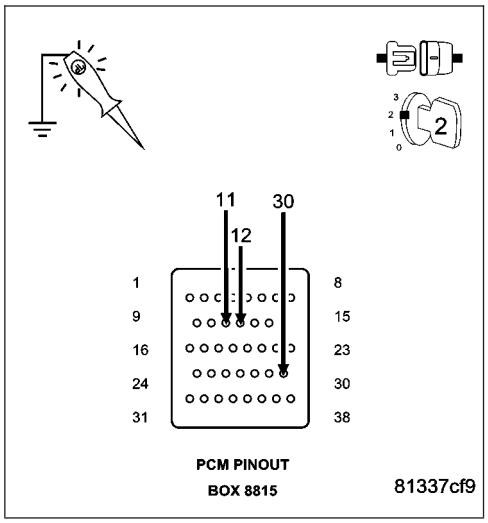

Does the test light illuminate brightly?

Yes >> Go To 2

No >> Repair the open or excessive resistance in the (F202), (F1), and (T751) Fused Ignition Switch (Off, Run, Start) circuits. Inspect the related fuse, if the fuse is open check the circuits for a short to ground.
Perform the POWERTRAIN VERIFICATION TEST. (Refer to 9 - ENGINE - STANDARD PROCEDURE)

---

2. PCM

The Powertrain Control Module is reporting internal errors.

NOTE: Before continuing, check the PCM harness connector terminals for corrosion, damage, or terminal push out. Repair as necessary.

Using the schematics as a guide, inspect the wire harness and connectors. Pay particular attention to all Power and Ground circuits.

Were there any problems found?

Yes >> Repair as necessary.
Perform the POWERTRAIN VERIFICATION TEST. (Refer to 9 - ENGINE - STANDARD PROCEDURE)

No >> Replace and program the Powertrain Control Module per Service Information.
Perform the POWERTRAIN VERIFICATION TEST. (Refer to 9 - ENGINE - STANDARD PROCEDURE)

P1618-SENSOR REFERENCE VOLTAGE 1 CIRCUIT ERRATIC

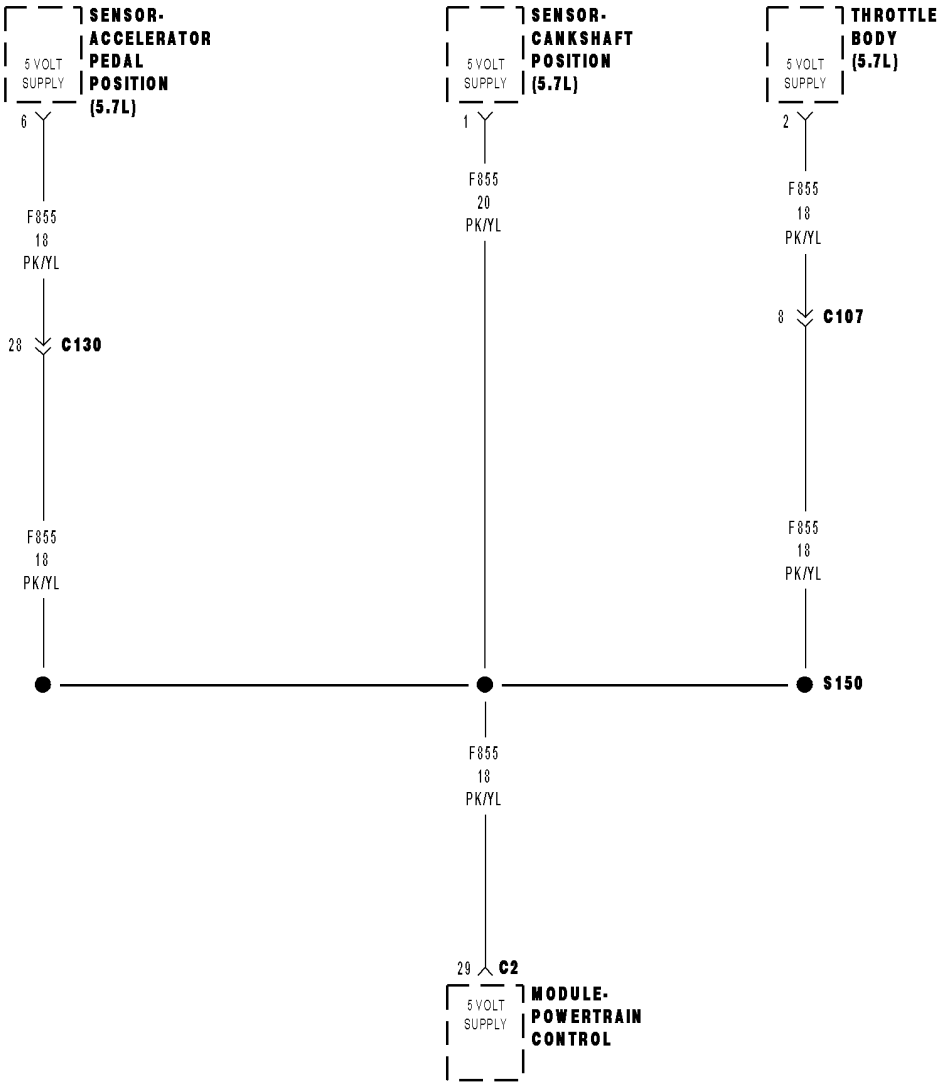

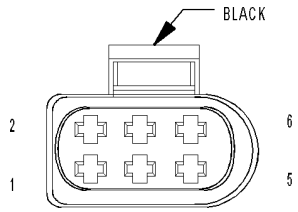

THROTTLE
BODY
(5.7L)

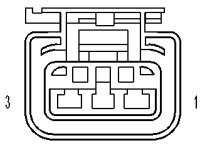

SENSOR-
CRANKSHAFT
POSITION
(5.7L/SRT)

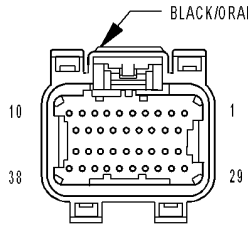

MODULE-
POWERTRAIN
CONTROL C2
(NGC)

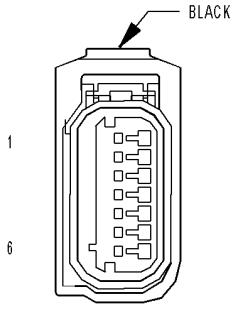

SENSOR-
ACCELERATOR
PEDAL
POSITION

81454897

P1618-SENSOR REFERENCE VOLTAGE 1 CIRCUIT ERRATIC (CONTINUED)

For the Engine circuit diagram (Refer to 9 - ENGINE - SCHEMATICS AND DIAGRAMS).

For a complete wiring diagram **Refer to Section 8W**.

- **When Monitored:**
  Ignition on.
- **Set Condition:**
  When the PCM recognizes the Primary 5-volt Supply circuit voltage is varying too much too quickly. One Trip Fault. ETC light is flashing.

Possible Causes
(F855) PRIMARY 5-VOLT SUPPLY SHORTED TO GROUND
(F855) PRIMARY 5-VOLT SUPPLY SHORTED TO BATTERY VOLTAGE
(F855) PRIMARY 5-VOLT SUPPLY CIRCUIT OPEN
5-VOLT SENSOR
PCM

Always perform the Pre-Diagnostic Troubleshooting procedure before proceeding. (Refer to 9 - ENGINE - DIAGNOSIS AND TESTING).

Diagnostic Test

1. ACTIVE DTC

Ignition on, engine not running.

With a scan tool, read DTCs.

Is the DTC active at this time?

Yes >> Go To 2

No >> Refer to the INTERMITTENT CONDITION Diagnostic Procedure.
Perform the POWERTRAIN VERIFICATION TEST. (Refer to 9 - ENGINE - STANDARD PROCEDURE)

---

2. (F855) PRIMARY 5-VOLT SUPPLY CIRCUIT SHORTED TO GROUND

Turn the ignition off.

Disconnect the C2 PCM harness connector.

Disconnect all the Sensors that share the (F855) Primary 5-volt Supply circuit.

NOTE: This code can be caused by the improper installation of after market accessories that may be causing excessive noise on the (F855) 5-volt Supply circuit.

Measure the resistance between ground and the (F855) Primary 5-volt Supply circuit in the CKP Sensor harness connector.

Is the resistance below 100 ohms?

Yes >> Repair the short to ground in the (F855) Primary 5-volt Supply circuit.
Perform the POWERTRAIN VERIFICATION TEST. (Refer to 9 - ENGINE - STANDARD PROCEDURE)

No >> Go To 3

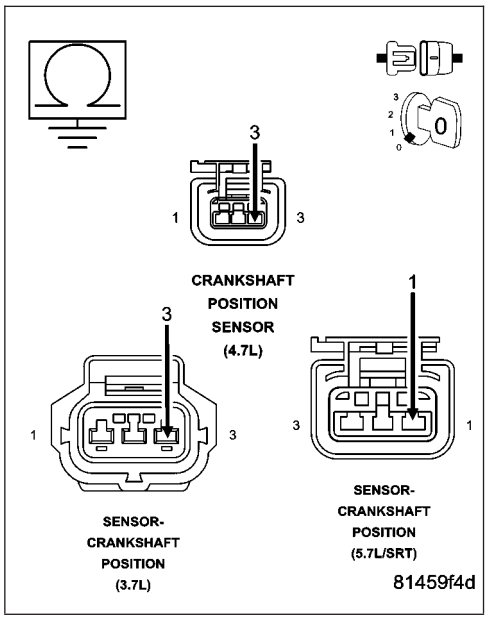

P1618-SENSOR REFERENCE VOLTAGE 1 CIRCUIT ERRATIC (CONTINUED)

3. SENSOR SHORTED TO GROUND

Connect the C2 PCM harness connector and all the previously disconnected Sensor except for the CKP Sensor harness connector.

Ignition on, engine not running.

Measure the voltage on the (F855) Primary 5-volt Supply circuit at the Throttle Body harness connector.

CAUTION: You must Turn the Ignition Off when disconnecting any of the Sensor harness connectors and Turn the Ignition On to check the voltage readings.

While monitoring the voltage, disconnect each Sensor harness connector that shares the (F855) Primary 5-volt Supply circuit, one at a time.

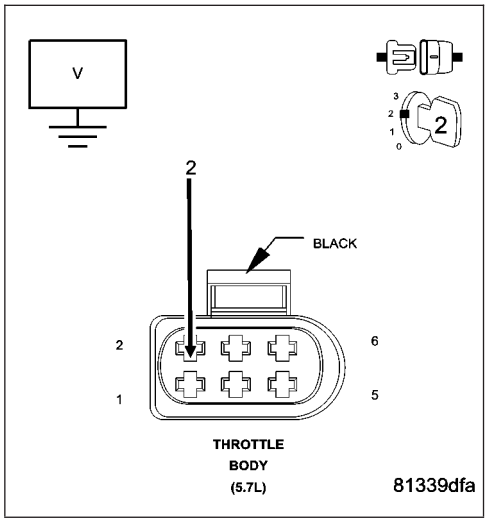

Does the voltage increase above 4.5 volts when disconnecting any of the Sensor harness connectors?

Yes >> Replace the Sensor that causes the (F855) Primary 5-volt Supply circuit voltage to increase when disconnected.
Perform the POWERTRAIN VERIFICATION TEST. (Refer to 9 - ENGINE - STANDARD PROCEDURE)

No >> Go To 4

---

4. 5-VOLT SENSOR

Turn the ignition off.

Connect all the previously disconnected Sensors except for the CKP Sensor harness connector.

Ignition on, engine not running.

Measure the voltage on the (F855) Primary 5-volt Supply circuit at the CKP Sensor harness connector.

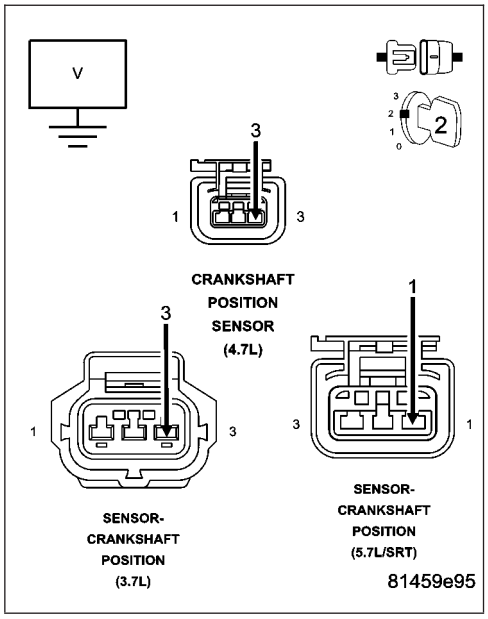

Is the voltage between 4.8 and 5.2 volts?

Yes >> Replace the Crank Position Sensor.
Perform the POWERTRAIN VERIFICATION TEST. (Refer to 9 - ENGINE - STANDARD PROCEDURE)

No >> Go To 5

P1618-SENSOR REFERENCE VOLTAGE 1 CIRCUIT ERRATIC (CONTINUED)

5. (F855) PRIMARY 5-VOLT SUPPLY SHORTED TO BATTERY VOLTAGE

Turn the ignition off.

Disconnect the C2 PCM harness connector.

Disconnect all the Sensors that share the (F855) Primary 5-volt Supply circuit.

Ignition on, engine not running.

Measure the voltage on the (F855) Primary 5-volt Supply circuit in the CKP Sensor harness connector.

Is the voltage above 0 volts?

Yes >> Repair the short to battery voltage in the (F855) Primary 5-volt Supply circuit.
Perform the POWERTRAIN VERIFICATION TEST. (Refer to 9 - ENGINE - STANDARD PROCEDURE)

No >> Go To 6

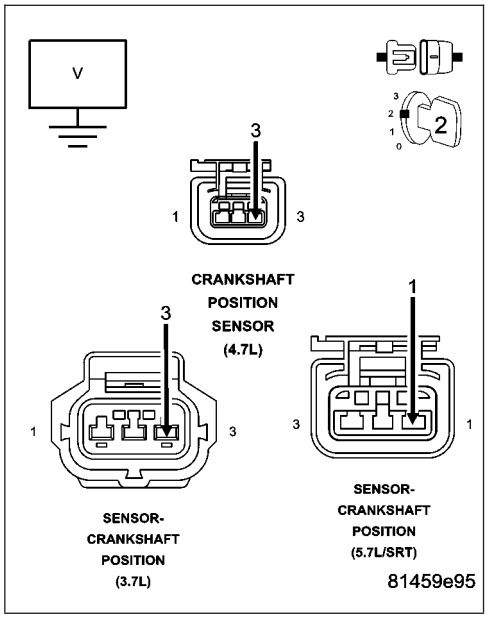

6. (F855) PRIMARY 5-VOLT SUPPLY CIRCUIT OPEN

Turn the ignition off.

Reconnect all the sensors that were disconnected in the previous step except for the CKP Sensor harness connector.

CAUTION: Do not probe the PCM harness connectors. Probing the PCM harness connectors will damage the PCM terminals resulting in poor terminal to pin connection. Install Miller Special Tool #8815 to perform diagnosis.

Measure the resistance in the (F855) Primary 5-volt Supply circuit from the Sensor harness connector to the appropriate terminal of special tool #8815.

It may be necessary to perform this test from every sensor that uses the (F855) Primary 5-volt Supply circuit.

Is the resistance below 5.0 ohms?

Yes >> Go To 7

No >> Repair the open in the (F855) Primary 5-volt Supply circuit.
Perform the POWERTRAIN VERIFICATION TEST. (Refer to 9 - ENGINE - STANDARD PROCEDURE)

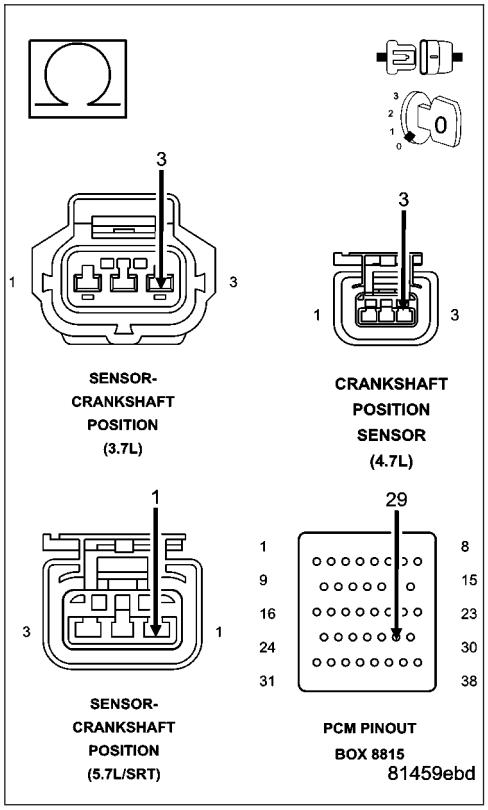

P1618-SENSOR REFERENCE VOLTAGE 1 CIRCUIT ERRATIC (CONTINUED)

7. **PCM**

NOTE: Before continuing, check the PCM harness connector terminals for corrosion, damage, or terminal push out. Repair as necessary.

Using the schematics as a guide, inspect the wire harness and connectors. Pay particular attention to all Power and Ground circuits.

Were there any problems found?

Yes >> Repair as necessary.
Perform the POWERTRAIN VERIFICATION TEST. (Refer to 9 - ENGINE - STANDARD PROCEDURE)

No >> Replace and program the Powertrain Control Module per Service Information.
Perform the POWERTRAIN VERIFICATION TEST. (Refer to 9 - ENGINE - STANDARD PROCEDURE)

P1628-SENSOR REFERENCE VOLTAGE 2 CIRCUIT ERRATIC

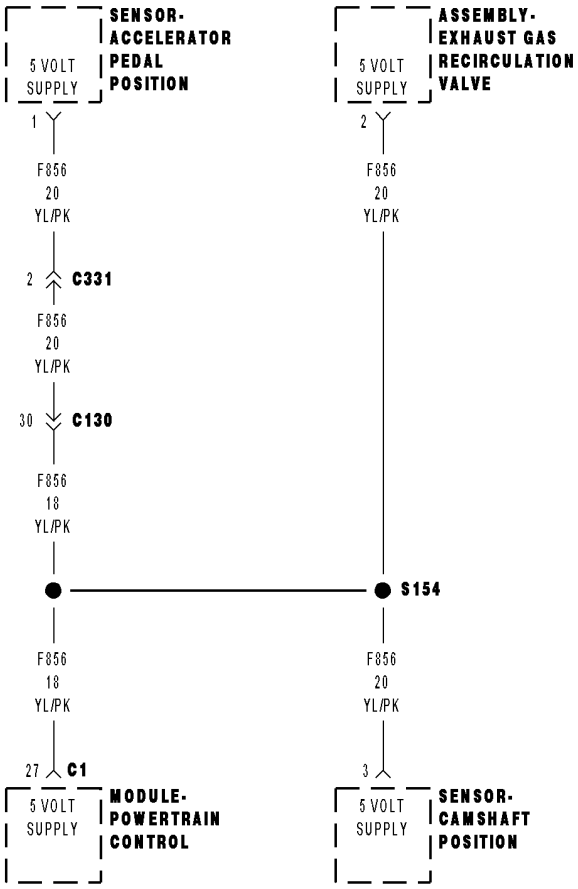

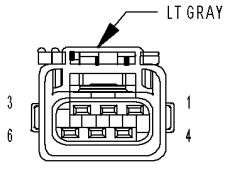

ASSEMBLY-
EXHAUST GAS
RECIRCULATION
VALVE
(4.7L/5.7L LIGHT DUTY)

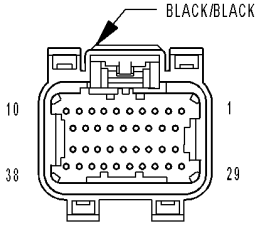

MODULE-
POWERTRAIN
CONTROL C1
(NGC)

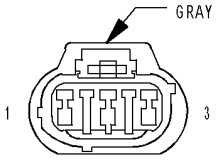

SENSOR-
CAMSHAFT
POSITION
(GAS)

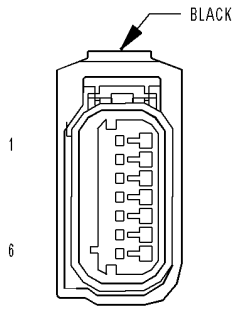

SENSOR-
ACCELERATOR
PEDAL
POSITION

8145491c

P1628-SENSOR REFERENCE VOLTAGE 2 CIRCUIT ERRATIC (CONTINUED)

For the Engine circuit diagram (Refer to 9 - ENGINE - SCHEMATICS AND DIAGRAMS).

For a complete wiring diagram **Refer to Section 8W**.

- **When Monitored:**
  Ignition on.
- **Set Condition:**
  When the PCM recognizes the Auxiliary 5-volt Supply circuit voltage is varying too much too quickly. One Trip Fault. ETC light is flashing.

Possible Causes
(F856) AUXILIARY 5-VOLT SUPPLY CIRCUIT SHORTED TO GROUND
(F856) AUXILIARY 5-VOLT SUPPLY CIRCUIT SHORTED TO BATTERY VOLTAGE
(F856) AUXILIARY 5-VOLT SUPPLY CIRCUIT OPEN
5-VOLT SENSOR
PCM

Always perform the Pre-Diagnostic Troubleshooting procedure before proceeding. (Refer to 9 - ENGINE - DIAGNOSIS AND TESTING).

Diagnostic Test

1. ACTIVE DTC

Ignition on, engine not running.

With a scan tool, read DTCs.

Is the DTC active at this time?

Yes >> Go To 2

No >> Refer to the INTERMITTENT CONDITION Diagnostic Procedure.
Perform the POWERTRAIN VERIFICATION TEST. (Refer to 9 - ENGINE - STANDARD PROCEDURE)

---

2. (F856) AUXILIARY 5-VOLT SUPPLY CIRCUIT SHORTED TO GROUND

Turn the ignition off.

Disconnect the C1 PCM harness connector.

Disconnect all the Sensors that share the (F856) Auxiliary 5-volt Supply circuit.

NOTE: This code can be caused by the improper installation of after market accessories that may be causing excessive noise on the (F856) 5-volt Supply circuit.

Measure the resistance between ground and the (F856) Auxiliary 5-volt Supply circuit at the CMP Sensor harness connector.

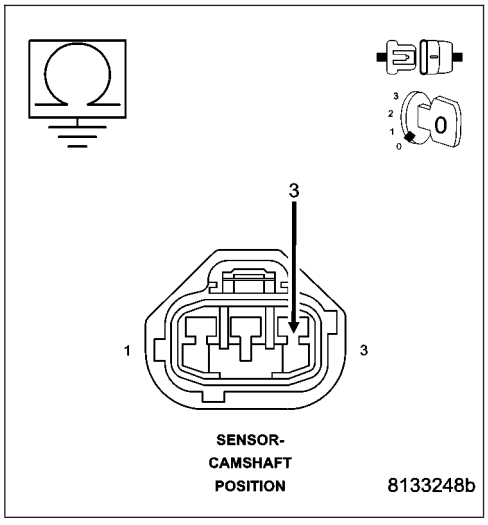

Is the resistance below 100 ohms?

Yes >> Repair the short to ground in the (F856) Auxiliary 5-volt Supply circuit.
Perform the POWERTRAIN VERIFICATION TEST. (Refer to 9 - ENGINE - STANDARD PROCEDURE)

No >> Go To 3

P1628-SENSOR REFERENCE VOLTAGE 2 CIRCUIT ERRATIC (CONTINUED)

3. SENSOR SHORTED TO GROUND

Connect the C1 PCM harness connector and all the previously disconnected Sensor except for the CMP Sensor harness connector.

Ignition on, engine not running.

Measure the voltage on the (F856) Auxiliary 5-volt Supply circuit in the CMP Sensor harness connector.

CAUTION: You must Turn the Ignition OFF when disconnecting any of the Sensor harness connectors and Turn the Ignition On to check the voltage readings.

While monitoring the voltage, disconnect each Sensor harness connector that shares the (F856) Auxiliary 5-volt Supply circuit, one at a time.

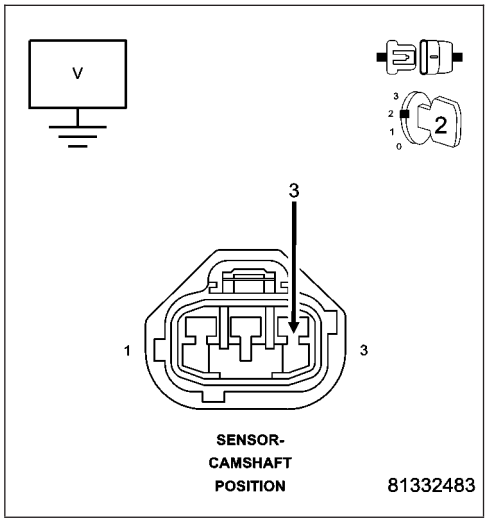

Does the voltage increase above 4.5 volts when disconnecting any of the Sensor harness connectors?

Yes >> Replace the Sensor that causes the (F856) Auxiliary 5-volt Supply circuit voltage to increase when disconnected.
Perform the POWERTRAIN VERIFICATION TEST. (Refer to 9 - ENGINE - STANDARD PROCEDURE)

No >> Go To 4

4. 5-VOLT SENSOR

Turn the ignition off.

Connect all the previously disconnected Sensors except for the CMP Sensor harness connector.

Ignition on, engine not running.

Measure the voltage on the (F856) Auxiliary 5-volt Supply circuit in the CMP Sensor harness connector.

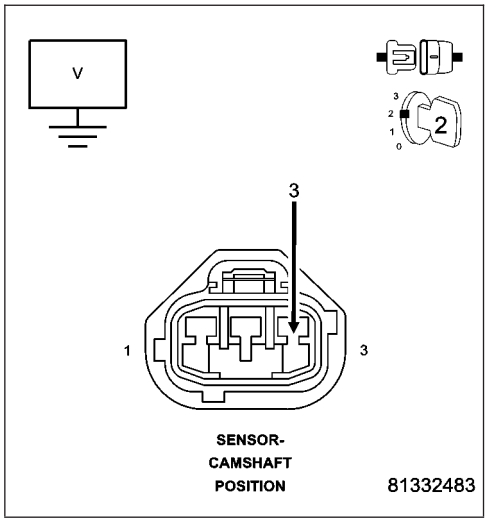

Is the voltage below 4.5 volts?

Yes >> Go To 5

No >> Replace the Cam Position Sensor.
Perform the POWERTRAIN VERIFICATION TEST. (Refer to 9 - ENGINE - STANDARD PROCEDURE)

P1628-SENSOR REFERENCE VOLTAGE 2 CIRCUIT ERRATIC (CONTINUED)

5. (F856) AUXILIARY 5-VOLT SUPPLY CIRCUIT SHORTED TO BATTERY VOLTAGE

Turn the ignition off.

Disconnect the C1 PCM harness connector.

Disconnect all the Sensors that share the (F856) Auxiliary 5-volt Supply circuit.

Ignition on, engine not running.

Measure the voltage on the (F856) Auxiliary 5-volt Supply circuit at the CMP Sensor harness connector.

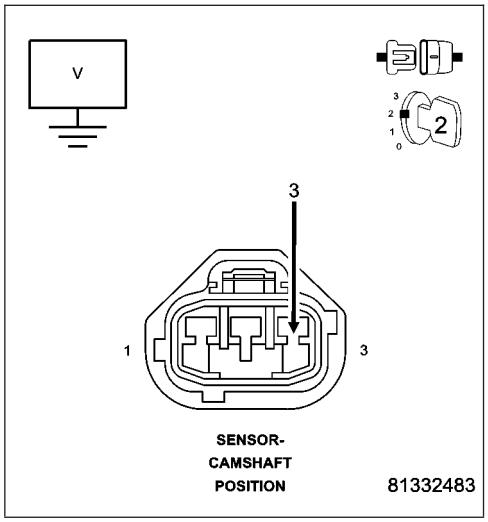

Is the voltage above 0 volts?

Yes >> Repair the short to battery voltage in the (F856) Auxiliary 5-volt Supply circuit.
Perform the POWERTRAIN VERIFICATION TEST. (Refer to 9 - ENGINE - STANDARD PROCEDURE)

No >> Go To 6

6. (F856) AUXILIARY 5-VOLT SUPPLY CIRCUIT OPEN

Turn the ignition off.

Reconnect all the sensors that were disconnected in the previous step except the CMP Sensor harness connector.

CAUTION: Do not probe the PCM harness connectors. Probing the PCM harness connectors will damage the PCM terminals resulting in poor terminal to pin connection. Install Miller Special Tool #8815 to perform diagnosis.

Measure the resistance in the (F856) Auxiliary 5-volt Supply circuit from the Sensor harness connector to the appropriate terminal of special tool #8815.

It may be necessary to perform this test from every sensor that uses the (F856) Auxiliary 5-volt Supply circuit.

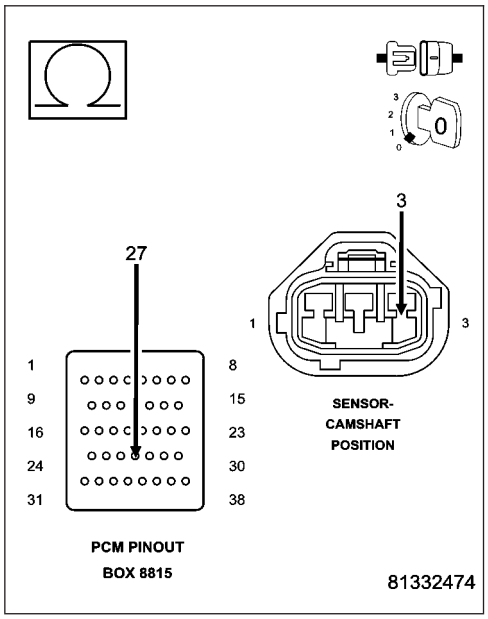

Is the resistance below 5.0 ohms?

Yes >> Go To 7

No >> Repair the open in the (F856) Auxiliary 5-volt Supply circuit.
Perform the POWERTRAIN VERIFICATION TEST. (Refer to 9 - ENGINE - STANDARD PROCEDURE)

P1628-SENSOR REFERENCE VOLTAGE 2 CIRCUIT ERRATIC (CONTINUED)

7. **PCM**

NOTE: Before continuing, check the PCM harness connector terminals for corrosion, damage, or terminal push out. Repair as necessary.

Using the schematics as a guide, inspect the wire harness and connectors. Pay particular attention to all Power and Ground circuits.

Were there any problems found?

Yes >> Repair as necessary.
Perform the POWERTRAIN VERIFICATION TEST. (Refer to 9 - ENGINE - STANDARD PROCEDURE)

No >> Replace and program the Powertrain Control Module per Service Information.
Perform the POWERTRAIN VERIFICATION TEST. (Refer to 9 - ENGINE - STANDARD PROCEDURE)

P1696-EEPROM MEMORY WRITE DENIED/INVALID

For the Engine circuit diagram (Refer to 9 - ENGINE - SCHEMATICS AND DIAGRAMS).

For a complete wiring diagram **Refer to Section 8W**.

- **When Monitored:**
  Continuously with the ignition on.
- **Set Condition:**
  An attempt to program/write to the internal EEPROM failed, Also checks at power down. One Trip Fault. Three good trips to turn off the MIL.

Possible Causes
PCM

Always perform the Pre-Diagnostic Troubleshooting procedure before proceeding. (Refer to 9 - ENGINE - DIAGNOSIS AND TESTING).

Diagnostic Test

1. SCAN TOOL DISPLAYS A WRITE FAILURE

With a scan tool, perform the SRI Memory Test.

Does scan tool display Write Failure?

Yes >> Replace and program the Powertrain Control Module per Service Information.
Perform the POWERTRAIN VERIFICATION TEST. (Refer to 9 - ENGINE - STANDARD PROCEDURE)

No >> Go To 2

---

2. SCAN TOOL DISPLAYS A WRITE REFUSED

With the a scan tool, perform the SRI Memory Test.

Does the scan tool display Write Refused?

Yes >> Go To 3

No >> Go To 4

---

3. PCM REFUSED 2ND TEST

With a scan tool, perform the SRI Memory Test a third time.

NOTE: Retest the SRI Memory two more times.

Does the scan tool display Write Refused again?

Yes >> Replace and program the Powertrain Control Module per Service Information.
Perform the POWERTRAIN VERIFICATION TEST. (Refer to 9 - ENGINE - STANDARD PROCEDURE)

No >> Test Complete.

---

4. SCAN TOOL DISPLAYS SRI MILEAGE INVALID

With a scan tool, perform the SRI Memory Test.

Does the scan tool display SRI Mileage Invalid?

Yes >> Update the mileage and retest the SRI Memory.
Perform the POWERTRAIN VERIFICATION TEST. (Refer to 9 - ENGINE - STANDARD PROCEDURE)

No >> Go To 5

P1696-EEPROM MEMORY WRITE DENIED/INVALID (CONTINUED)

5. **COMPARE SRI MILEAGE WITH ODOMETER**

Compare the SRI Mileage stored with the Instrument Panel Odometer.

Is the mileage within the specified range displayed on the scan tool?

Yes >> Test Complete.

No >> Update the mileage and retest the SRI Memory.
Perform the POWERTRAIN VERIFICATION TEST. (Refer to 9 - ENGINE - STANDARD PROCEDURE)

P1697-EMR (SRI) MILEAGE NOT STORED

For the Engine circuit diagram (Refer to 9 - ENGINE - SCHEMATICS AND DIAGRAMS).

For a complete wiring diagram **Refer to Section 8W**.

- **When Monitored:**
  Continuously with the ignition on.
- **Set Condition:**
  An attempt to program/write to the internal EEPROM failed, Also checks at powerdown. One Trip Fault. Three good trips to turn off the MIL.

Possible Causes
PCM

Always perform the Pre-Diagnostic Troubleshooting procedure before proceeding. (Refer to 9 - ENGINE - DIAGNOSIS AND TESTING).

Diagnostic Test

1. SCAN TOOL DISPLAYS A WRITE FAILURE

With a scan tool, perform the SRI Memory Test.

Does scan tool display Write Failure?

Yes >> Replace and program the Powertrain Control Module per Service Information.
Perform the POWERTRAIN VERIFICATION TEST. (Refer to 9 - ENGINE - STANDARD PROCEDURE)

No >> Go To 2

---

2. SCAN TOOL DISPLAYS A WRITE REFUSED

With the a scan tool, perform the SRI Memory Test.

Does the scan tool display Write Refused?

Yes >> Go To 3

No >> Go To 4

---

3. PCM REFUSED 2ND TEST

With a scan tool, perform the SRI Memory Test a third time.

NOTE: Retest the SRI Memory two more times.

Does the scan tool display Write Refused again?

Yes >> Replace and program the Powertrain Control Module per Service Information.
Perform the POWERTRAIN VERIFICATION TEST. (Refer to 9 - ENGINE - STANDARD PROCEDURE)

No >> Test Complete.

---

4. SCAN TOOL DISPLAYS SRI MILEAGE INVALID

With a scan tool, perform the SRI Memory Test.

Does the scan tool display SRI Mileage Invalid?

Yes >> Update the mileage and retest the SRI Memory.
Perform the POWERTRAIN VERIFICATION TEST. (Refer to 9 - ENGINE - STANDARD PROCEDURE)

No >> Go To 5

P1697-EMR (SRI) MILEAGE NOT STORED (CONTINUED)

5. COMPARE SRI MILEAGE WITH ODOMETER

Compare the SRI Mileage stored with the Instrument Panel Odometer.

Is the mileage within the specified range displayed on the scan tool?

Yes >> Test Complete.

No >> Update the mileage and retest the SRI Memory.
Perform the POWERTRAIN VERIFICATION TEST. (Refer to 9 - ENGINE - STANDARD PROCEDURE)

P2072-ELECTRONIC THROTTLE CONTROL SYSTEM - ICE BLOCKAGE

For the Engine circuit diagram (Refer to 9 - ENGINE - DIAGNOSIS AND TESTING).

For a complete wiring diagram **Refer to Section 8W**.

- **When Monitored:**
  Ignition on.
- **Set Condition:**
  The PCM recognizes the Throttle plate is stuck during extremely cold Ambient Temperature operation. The throttle plate goes through a de-icing procedure. If the throttle blade still doesn't move this fault sets. The MIL will not illuminate. The vehicle will be in Limp home condition, limiting rpm and vehicle speed.

Possible Causes
THROTTLE PLATE FROZEN

Diagnostic Test

1. THROTTLE BODY INSPECTION

Ignition on, engine not running.

With a scan tool, read DTCs and record the related Freeze Frame data.

NOTE: This DTC sets in extreme cold Ambient Temperatures with the throttle plate stuck by the time the vehicle gets to the dealership the condition may be corrected.

NOTE: Diagnose any other DTCs that may also be set before continuing.

Turn the ignition off.

Remove the Air Cleaner Assembly from the Throttle Body.

Check for any signs of a foreign material (ice or dirt) on the Throttle Plate or in the bore causing the Throttle Plate to stick.

Is the throttle blade still stuck because it is frozen?

Yes >> Allow the Throttle Body to thaw naturally in a room temperature climate.
Perform the POWERTRAIN VERIFICATION TEST. (Refer to 9 - ENGINE - STANDARD PROCEDURE)

No >> Test Complete.

P2074-MAP/TPS CORRELLATION - HIGH AIRFLOW/VACUUM LEAK DETECTED

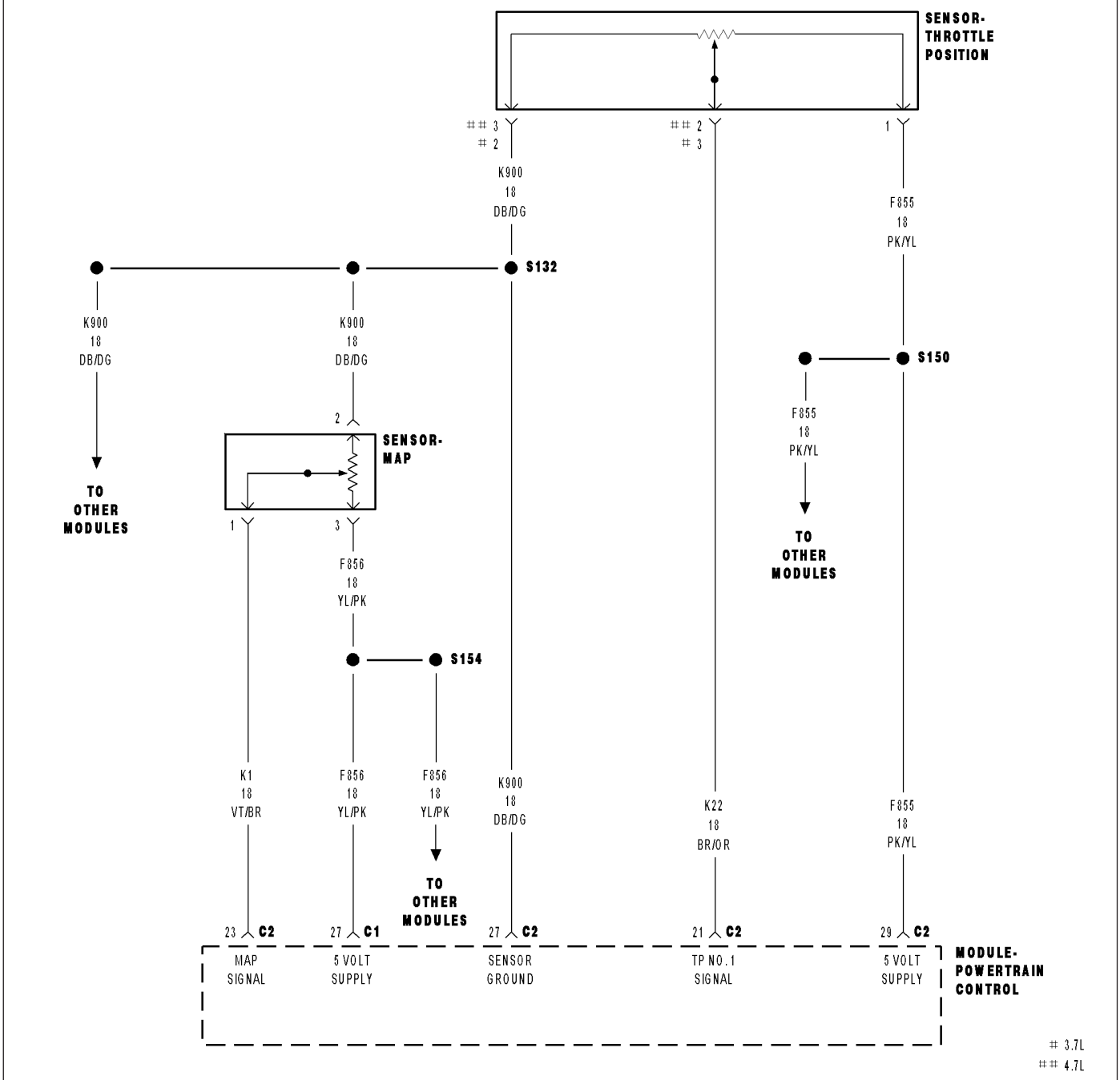

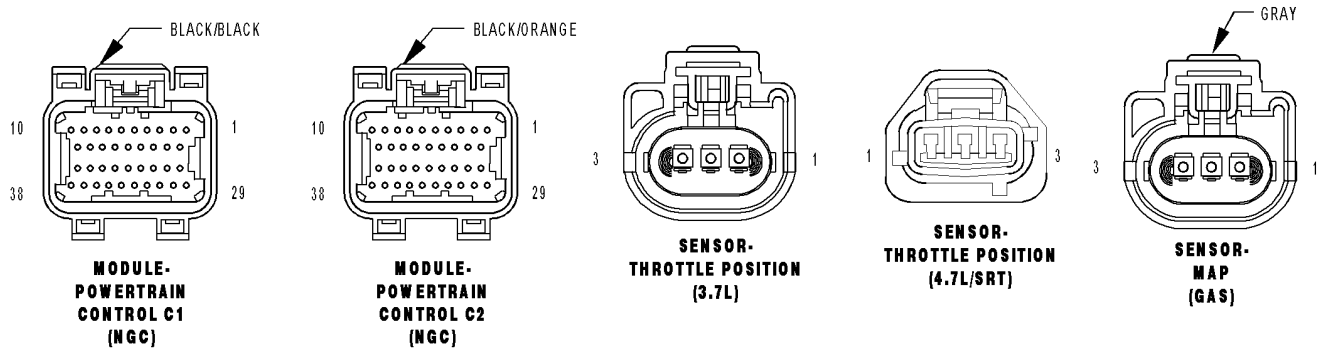

81452c0a

P2074-MAP/TPS CORRELLATION - HIGH AIRFLOW/VACUUM LEAK DETECTED (CONTINUED)

For the Engine circuit diagram (Refer to 9 - ENGINE - SCHEMATICS AND DIAGRAMS).

For a complete wiring diagram **Refer to Section 8W**.

Theory of Operation

This DTC sets when an unexpected high intake manifold air flow condition exists that can lead to increased engine speed and puts the NGC into a High Air flow Protection limiting mode. The High Air flow Protection feature includes RPM limits for when a Throttle and/or MAP sensor limp-in fault is present.

- **When Monitored:**
  During all drive modes
- **Set Condition:**
  If vacuum drops below 1.5″Hg with engine RPM greater than 2000 RPM and closed throttle. One Trip Fault. Three good trips to turn off the MIL.

Possible Causes
VACUUM LEAK
RESISTANCE IN THE (F856) 5-VOLT SUPPLY CIRCUIT
(F856) 5-VOLT SUPPLY CIRCUIT SHORTED TO GROUND
RESISTANCE IN THE (K1) MAP SIGNAL CIRCUIT
(K1) MAP SIGNAL CIRCUIT SHORTED TO GROUND
RESISTANCE IN THE (F855) 5-VOLT SUPPLY CIRCUIT
(F855) 5-VOLT SUPPLY CIRCUIT SHORTED TO GROUND
RESISTANCE IN THE (K22) TP SENSOR NO.1 SIGNAL CIRCUIT
(K22) TP SENSOR NO.1 SIGNAL CIRCUIT SHORTED TO GROUND
RESISTANCE IN THE (K900) SENSOR GROUND CIRCUIT
MAP SENSOR
THROTTLE POSITION SENSOR
PCM

Always perform the Pre-Diagnostic Troubleshooting procedure before proceeding. (Refer to 9 - ENGINE - DIAGNOSIS AND TESTING).

Diagnostic Test

1. ACTIVE DTC

NOTE: Diagnose any TP Sensor or MAP Sensor component DTCs before continuing.

NOTE: If the P0501 - No Vehicle Speed Signal is set long with this DTC, refer to the P0501 diagnostics before continuing.

NOTE: The throttle plate and linkage should be free from binding and carbon build up.

NOTE: Make sure the throttle plate is at the idle position.

Ignition on, engine not running.

With a scan tool, read DTCs.

Is the DTC active at this time?

Yes >> Go To 2

No >> Refer to the INTERMITTENT CONDITION Diagnostic Procedure.
Perform the POWERTRAIN VERIFICATION TEST. (Refer to 9 - ENGINE - STANDARD PROCEDURE)

P2074-MAP/TPS CORRELLATION - HIGH AIRFLOW/VACUUM LEAK DETECTED (CONTINUED)

2. VACUUM LEAK

NOTE: This code is enabled on engines with a plastic intake manifold and is intended to shut down the engine if a large crack occurs.

NOTE: A large vacuum leak is most likely the cause of this DTC.

Inspect the Intake Manifold for leaks and cracks.

Inspect the Power Brake Booster for any vacuum leaks.

Inspect the PCV system for proper operation and vacuum leaks.

Inspect the throttle plate to see if it is bent and will close entirely, if it is bent it may need to be replaced.

Inspect the MAP Sensor for proper installation.

Verify the engine is free from any mechanical failures.

Were any vacuum leaks found?

Yes >> Repair the vacuum leak as necessary.
Perform the POWERTRAIN VERIFICATION TEST. (Refer to 9 - ENGINE - STANDARD PROCEDURE)

No >> Go To 3

---

3. MAP SENSOR OPERATION

Start the engine.

With a scan tool, monitor the MAP Sensor voltage.

Snap the throttle.

Does the MAP Sensor voltage vary from below 2.0 volts at idle to above 3.5 volts at wide open throttle?

Yes >> Go To 4

No >> Go To 11

---

4. TP SENSOR OPERATION

Ignition on, engine not running.

With a scan tool, monitor the TP Sensor voltage while slowly pressing the throttle pedal from closed to wide open throttle.

Does voltage start at approximately 0.8 of a volt and go above 3.5 volts with a smooth transition?

Yes >> Refer to the INTERMITTENT CONDITION Diagnostic Procedure.
Perform the POWERTRAIN VERIFICATION TEST. (Refer to 9 - ENGINE - STANDARD PROCEDURE)

No >> Go To 5

P2074-MAP/TPS CORRELLATION - HIGH AIRFLOW/VACUUM LEAK DETECTED (CONTINUED)

5. EXCESSIVE RESISTANCE IN THE (F855) 5-VOLT SUPPLY CIRCUIT

Turn the ignition off.

Disconnect the TP Sensor harness connector.

Disconnect the C2 PCM harness connector.

CAUTION: Do not probe the PCM harness connectors. Probing the PCM harness connectors will damage the PCM terminals resulting in poor terminal to pin connection. Install Miller Special Tool #8815 to perform diagnosis.

Measure the resistance of the (F855) 5-volt Supply circuit from the TP Sensor harness connector to the appropriate terminal of special tool #8815.

Is the resistance below 5.0 ohms?

Yes >> Go To 6

No >> Repair the excessive resistance in the (F855) 5-volt Supply circuit.

Perform the POWERTRAIN VERIFICATION TEST. (Refer to 9 - ENGINE - STANDARD PROCEDURE)

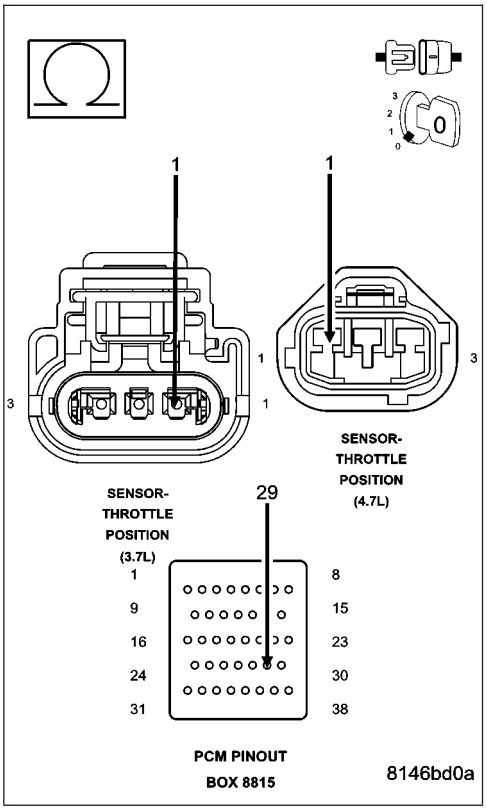

6. (F855) 5-VOLT SUPPLY CIRCUIT SHORTED TO GROUND

Measure the resistance between ground and (F855) 5-volt Supply circuit in the TP Sensor harness connector.

Is the resistance below 100 ohms?

Yes >> Repair the short to ground in the (F855) 5-volt Supply circuit.

Perform the POWERTRAIN VERIFICATION TEST. (Refer to 9 - ENGINE - STANDARD PROCEDURE)

No >> Go To 7

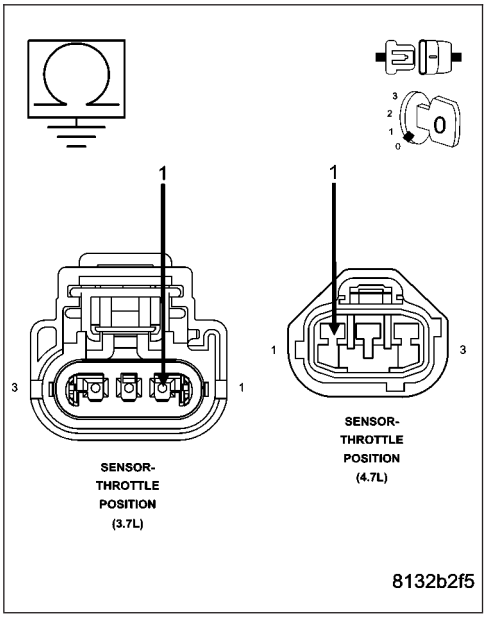

P2074-MAP/TPS CORRELLATION - HIGH AIRFLOW/VACUUM LEAK DETECTED (CONTINUED)

7. THROTTLE POSITION SENSOR

Connect the C2 PCM harness connector.

Ignition on, engine not running.

With a scan tool, monitor the TP Sensor voltage.

Connect a jumper wire between the (K22) TP Sensor No.1 Signal circuit and the (K900) Sensor ground circuit in the Sensor harness connector.

Does the TP Sensor voltage change from approximately 4.9 volts to below 0.5 of a volt with the jumper wire installed?

Yes >> Replace the Throttle Position Sensor.
Perform the POWERTRAIN VERIFICATION TEST. (Refer to 9 - ENGINE - STANDARD PROCEDURE)

No >> Go To 8

NOTE: Remove the jumper wire before continuing.

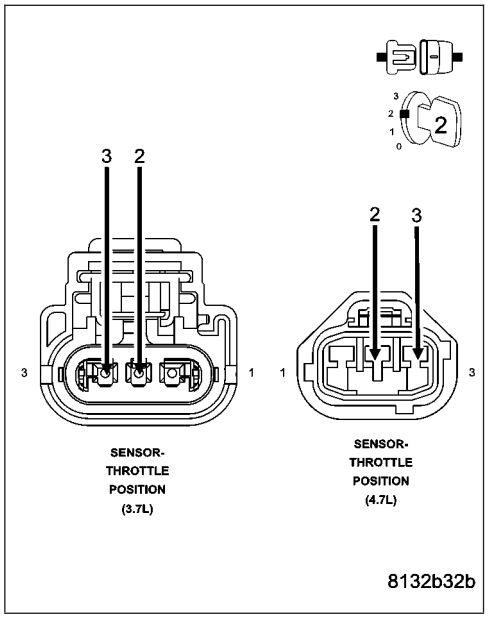

8. EXCESSIVE RESISTANCE IN THE (K22) TP NO.1 SIGNAL CIRCUIT

Turn the ignition off.

Disconnect the C2 PCM harness connector.

CAUTION: Do not probe the PCM harness connectors. Probing the PCM harness connectors will damage the PCM terminals resulting in poor terminal to pin connection. Install Miller Special Tool #8815 to perform diagnosis.

Measure the resistance of the (K22) TP Sensor No.1 Signal circuit from the TP Sensor harness connector to the appropriate terminal of special tool #8815.

Is the resistance below 5.0 ohms?

Yes >> Go To 9

No >> Repair the excessive resistance in the (K22) TP Sensor No.1 Signal circuit.
Perform the POWERTRAIN VERIFICATION TEST. (Refer to 9 - ENGINE - STANDARD PROCEDURE)

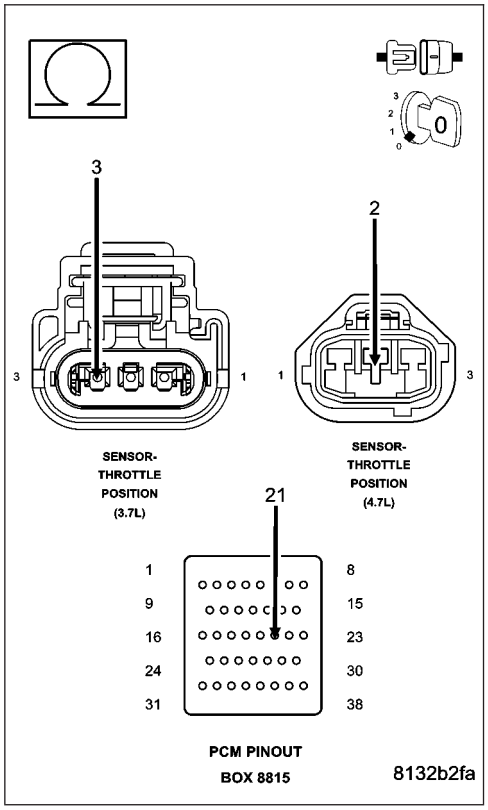

P2074-MAP/TPS CORRELLATION - HIGH AIRFLOW/VACUUM LEAK DETECTED (CONTINUED)

9. (K22) TP SENSOR NO.1 SIGNAL CIRCUIT SHORTED TO GROUND

Measure the resistance between ground and the (K22) TP Sensor No.1 Signal circuit in the TP Sensor harness connector.

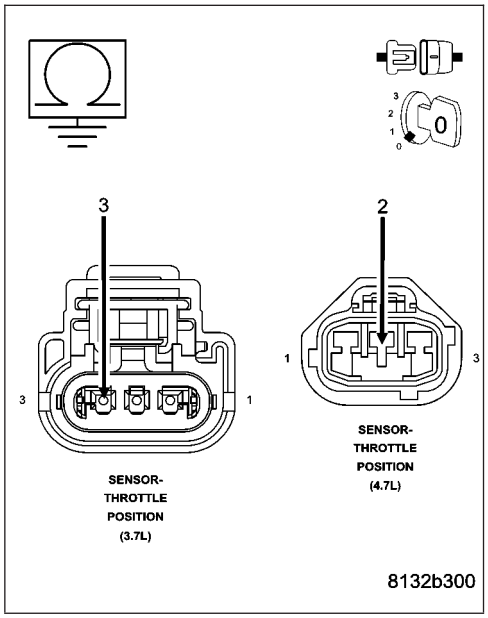

Is the resistance below 100 ohms?

Yes >> Repair the short to ground in the (K22) TP Sensor No.1 Signal circuit.
Perform the POWERTRAIN VERIFICATION TEST. (Refer to 9 - ENGINE - STANDARD PROCEDURE)

No >> Go To 10

10. EXCESSIVE RESISTANCE IN THE (K900) SENSOR GROUND CIRCUIT

CAUTION: Do not probe the PCM harness connectors. Probing the PCM harness connectors will damage the PCM terminals resulting in poor terminal to pin connection. Install Miller Special Tool #8815 to perform diagnosis.
Measure the resistance of the (K900) Sensor ground circuit from the TP Sensor harness connector to the appropriate terminal of special tool #8815.

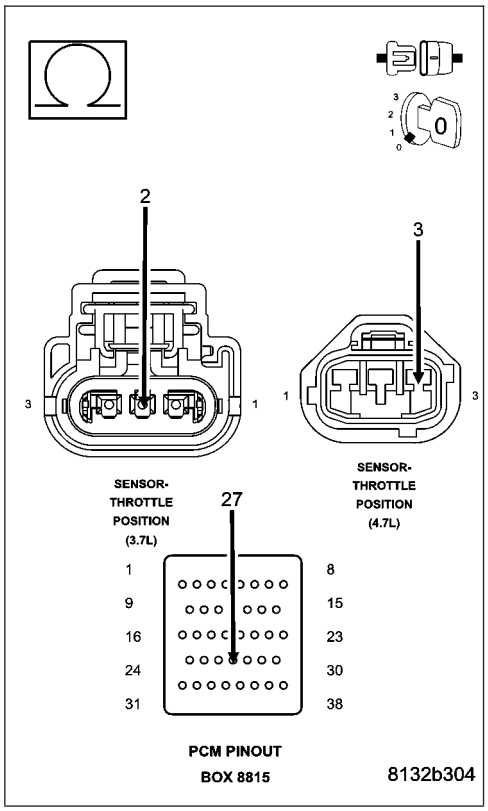

Is the resistance below 5.0 ohms?

Yes >> Go To 17

No >> Repair the excessive resistance in the (K900) Sensor ground circuit.
Perform the POWERTRAIN VERIFICATION TEST. (Refer to 9 - ENGINE - STANDARD PROCEDURE)

P2074-MAP/TPS CORRELLATION - HIGH AIRFLOW/VACUUM LEAK DETECTED (CONTINUED)

11. EXCESSIVE RESISTANCE IN THE (F856) 5-VOLT SUPPLY CIRCUIT

Turn the ignition off.

Disconnect the MAP Sensor harness connector.

Disconnect the C1 PCM harness connector.

CAUTION: Do not probe the PCM harness connectors. Probing the PCM harness connectors will damage the PCM terminals resulting in poor terminal to pin connection. Install Miller Special Tool #8815 to perform diagnosis.

Measure the resistance of the (F856) 5-volt Supply circuit from the MAP Sensor harness connector to the appropriate terminal of special tool #8815.

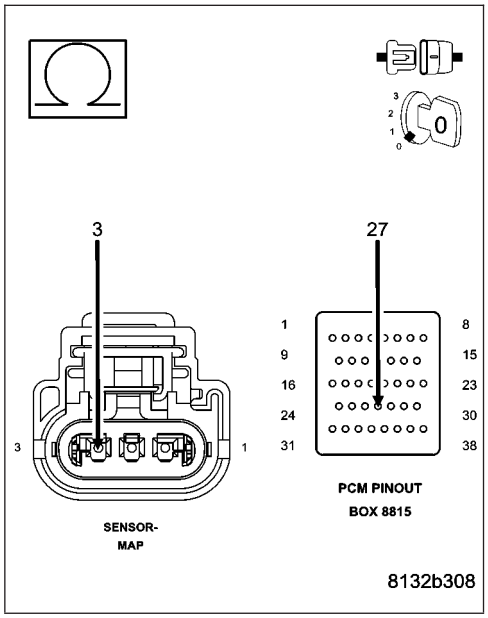

Is the resistance below 5.0 ohms?

Yes >> Go To 12

No >> Repair the excessive resistance in the (F856) 5-volt Supply circuit.

Perform the POWERTRAIN VERIFICATION TEST. (Refer to 9 - ENGINE - STANDARD PROCEDURE)

12. (F856) 5-VOLT SUPPLY CIRCUIT SHORTED TO GROUND

Measure the resistance between ground and the (F856) 5-volt Supply circuit in the MAP Sensor harness connector.

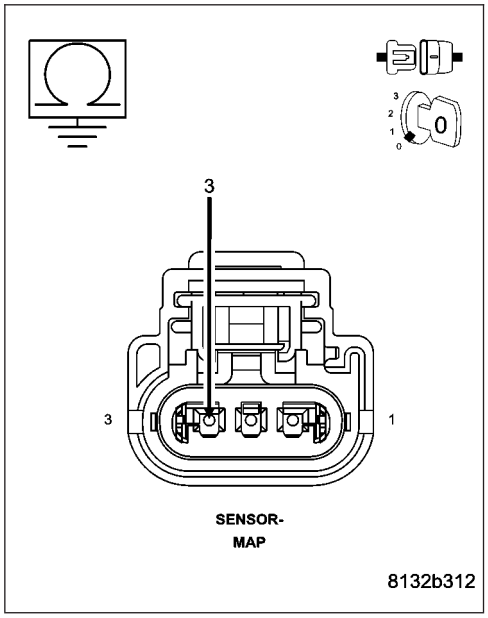

Is the resistance above 100k ohms?

Yes >> Go To 13

No >> Repair the short to ground in the (F856) 5-volt Supply circuit.

Perform the POWERTRAIN VERIFICATION TEST. (Refer to 9 - ENGINE - STANDARD PROCEDURE)

P2074-MAP/TPS CORRELLATION - HIGH AIRFLOW/VACUUM LEAK DETECTED (CONTINUED)

13. MAP SENSOR

Turn the ignition off.

Connect the C1 PCM harness connector.

Ignition on, engine not running.

With a scan tool, monitor the MAP Sensor voltage.

Connect a jumper wire between the (K1) MAP Signal circuit and the (K900) Sensor ground circuit.

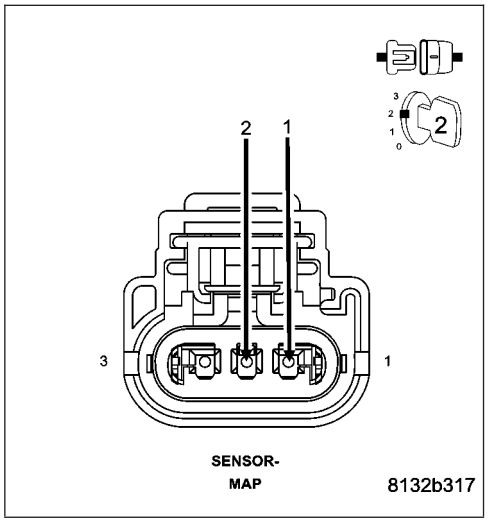

Does the scan tool display MAP voltage from approximately 4.9 volts to below 0.5 of a volt with the jumper wire installed?

Yes >> Replace the MAP Sensor.
Perform the POWERTRAIN VERIFICATION TEST. (Refer to 9 - ENGINE - STANDARD PROCEDURE)

No >> Go To 14

NOTE: Remove the jumper wire before continuing.

14. EXCESSIVE RESISTANCE IN THE (K1) MAP SIGNAL CIRCUIT

Turn the ignition off.

Disconnect the C2 PCM harness connector.

CAUTION: Do not probe the PCM harness connectors. Probing the PCM harness connectors will damage the PCM terminals resulting in poor terminal to pin connection. Install Miller Special Tool #8815 to perform diagnosis.

Measure the resistance of the (K1) MAP Signal circuit from the MAP Sensor harness connector to the appropriate terminal of special tool #8815.

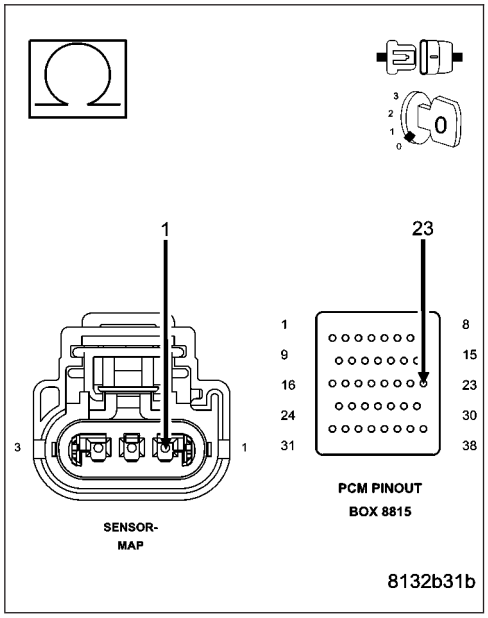

Is the resistance below 5.0 ohms?

Yes >> Go To 15

No >> Repair the excessive resistance in the (K1) MAP Signal circuit
Perform the POWERTRAIN VERIFICATION TEST. (Refer to 9 - ENGINE - STANDARD PROCEDURE)

P2074-MAP/TPS CORRELLATION - HIGH AIRFLOW/VACUUM LEAK DETECTED (CONTINUED)

15. (K1) MAP SIGNAL CIRCUIT SHORTED TO GROUND

Measure the resistance between ground and the (K1) MAP Signal circuit in the MAP Sensor harness connector.

Is the resistance below 100 ohms?

Yes >> Repair the short to ground in the (K1) MAP Signal circuit. Perform the POWERTRAIN VERIFICATION TEST. (Refer to 9 - ENGINE - STANDARD PROCEDURE)

No >> Go To 16

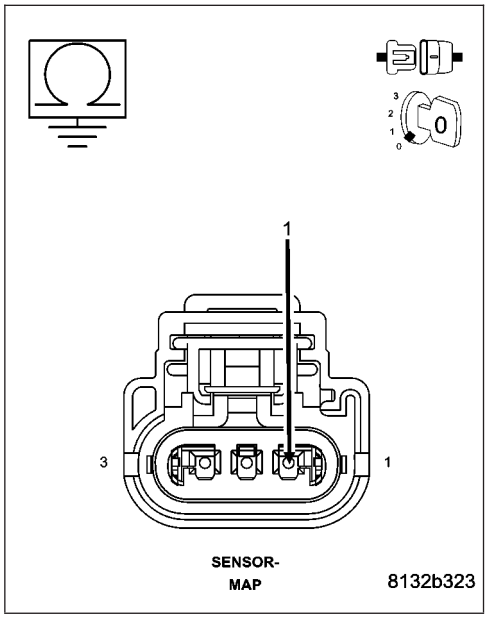

16. EXCESSIVE RESISTANCE IN THE (K900) SENSOR GROUND CIRCUIT

CAUTION: Do not probe the PCM harness connectors. Probing the PCM harness connectors will damage the PCM terminals resulting in poor terminal to pin connection. Install Miller Special Tool #8815 to perform diagnosis.

Measure the resistance of the (K900) Sensor ground circuit from the MAP Sensor harness connector to the appropriate terminal of special tool #8815.

Is the resistance below 5.0 ohms?

Yes >> Go To 17

No >> Repair the excessive resistance in the (K900) Sensor ground circuit.
Perform the POWERTRAIN VERIFICATION TEST. (Refer to 9 - ENGINE - STANDARD PROCEDURE)

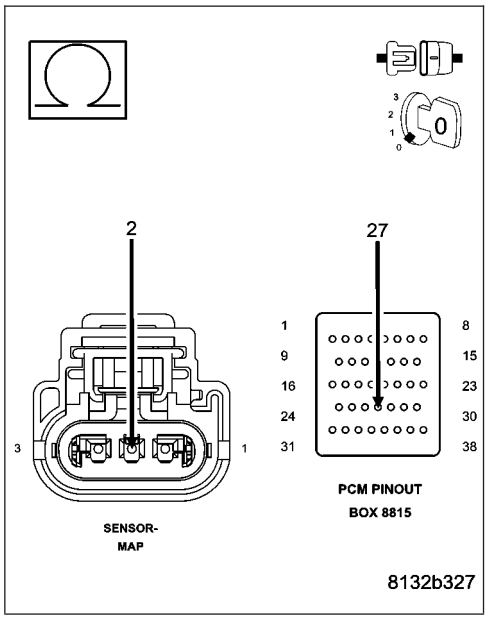

P2074-MAP/TPS CORRELLATION - HIGH AIRFLOW/VACUUM LEAK DETECTED (CONTINUED)

17. PCM

NOTE: Before continuing, check the PCM harness connector terminals for corrosion, damage, or terminal push out. Repair as necessary.

Using the schematics as a guide, inspect the wire harness and connectors. Pay particular attention to all Power and Ground circuits.

Were there any problems found?

Yes >> Repair as necessary.
Perform the POWERTRAIN VERIFICATION TEST. (Refer to 9 - ENGINE - STANDARD PROCEDURE)

No >> Replace and program the Powertrain Control Module per Service Information.
Perform the POWERTRAIN VERIFICATION TEST. (Refer to 9 - ENGINE - STANDARD PROCEDURE)

P2096-DOWNSTREAM FUEL TRIM SYSTEM 1 LEAN

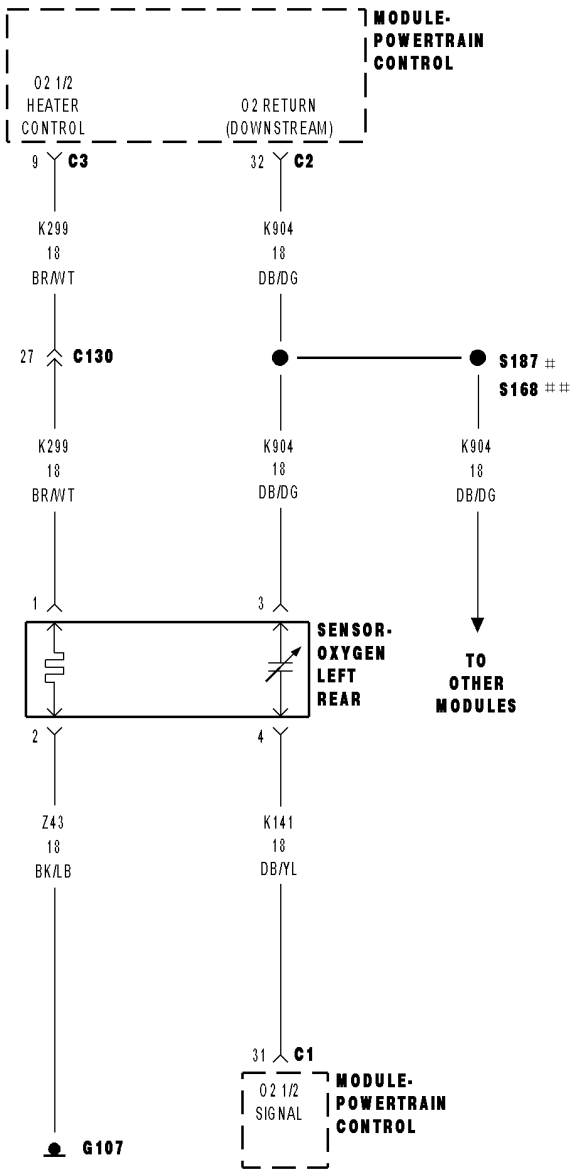

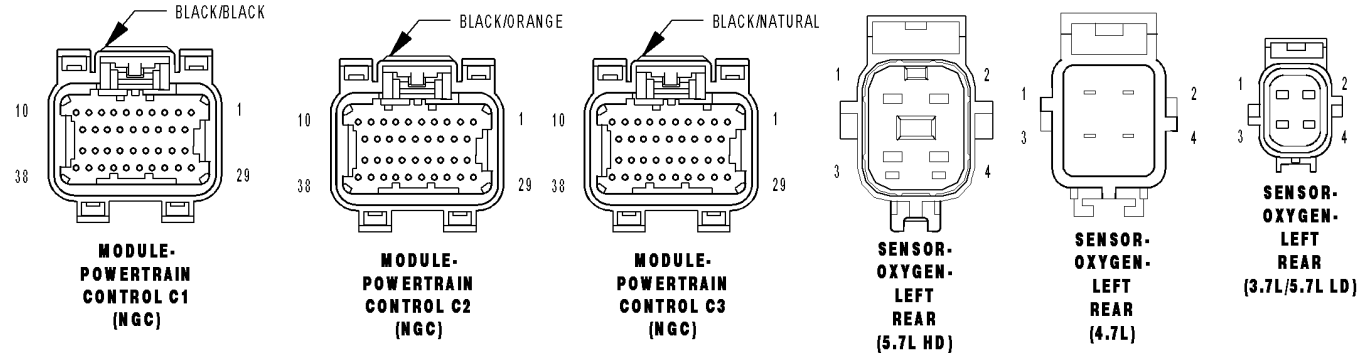

81452b26

P2096-DOWNSTREAM FUEL TRIM SYSTEM 1 LEAN (CONTINUED)

For the Engine circuit diagram (Refer to 9 - ENGINE - SCHEMATICS AND DIAGRAMS).

For a complete wiring diagram **Refer to Section 8W**.

- **When Monitored:**
  With the engine running in closed loop mode, the ambient/battery temperature above (-7°C) 20°F, altitude below 8500 ft.
- **Set Condition:**
  If the PCM multiplies short term compensation by long term adaptive as well as a purge fuel multiplier and the result is below a certain value for 30 seconds over two trips, a freeze frame is stored, the MIL illuminates and a trouble code is stored. Two Trip Fault. Three good trips to turn off the MIL.

Possible Causes
EXHAUST LEAK
ENGINE MECHANICAL
1/2 O2 SENSOR
(K141) O2 SENSOR 1/2 SIGNAL CIRCUIT
(K299) O2 1/2 HEATER CONTROL CIRCUIT
(K904) O2 RETURN DOWNSTREAM CIRCUIT
FUEL CONTAMINATION

Always perform the Pre-Diagnostic Troubleshooting procedure before proceeding. (Refer to 9 - ENGINE - DIAGNOSIS AND TESTING).

Diagnostic Test

1. ACTIVE DTC

NOTE: Check the vehicle repair history. If the 1/2 O2 has been replaced make sure that the O2 sensor was properly installed and meets OEM specification.

NOTE: Check for contaminants that may have damaged the O2 Sensor: contaminated fuel, unapproved silicone, oil and coolant.

Ignition on, engine not running.

With a scan tool, read DTCs.

Is the DTC active at this time?

Yes >> Go To 2

No >> Refer to the INTERMITTENT CONDITION Diagnostic Procedure.
Perform the POWERTRAIN VERIFICATION TEST. (Refer to 9 - ENGINE - STANDARD PROCEDURE)

P2096-DOWNSTREAM FUEL TRIM SYSTEM 1 LEAN (CONTINUED)

2. EXHAUST LEAK

Turn the ignition off.

WARNING: To avoid personal injury from the exhaust system being hot, allow the exhaust to cool down to a safe temperature before performing a physical inspection. Failure to follow these instructions can result in personal injury or death.

Visually and Physically inspect the exhaust system for holes, cracks and blockage in the exhaust system.

Is the exhaust system is good condition?

Yes >> Go To 3

No >> Repair or Replace as necessary.
Perform the POWERTRAIN VERIFICATION TEST. (Refer to 9 - ENGINE - STANDARD PROCEDURE)

---

3. ENGINE MECHANICAL

Check for any of the following conditions/mechanical problems.
AIR INDUCTION SYSTEM - must be free from leaks
ENGINE VACUUM - must be at least 13 inches in neutral
ENGINE VALVE TIMING - must be within specifications
ENGINE COMPRESSION - must be within specifications
ENGINE EXHAUST SYSTEM - must be free of any restrictions or leaks
ENGINE PCV SYSTEM - must flow freely
TORQUE CONVERTER STALL SPEED - must be within specifications
POWER BRAKE BOOSTER - no internal vacuum leaks
FUEL - must be free of contamination
FUEL INJECTOR - plugged or restricted injector; control wire not connected to correct injector

Are there any engine mechanical problems?

Yes >> Repair as necessary.
Perform the POWERTRAIN VERIFICATION TEST. (Refer to 9 - ENGINE - STANDARD PROCEDURE)

No >> Go To 4

P2096-DOWNSTREAM FUEL TRIM SYSTEM 1 LEAN (CONTINUED)

4. O2 SENSOR

Ignition on, engine not running.

Disconnect the 1/2 O2 Sensor harness connector.

With the scan tool, monitor the 1/2 O2 Sensor voltage.

The O2 Sensor voltage should read 5.0 volts on the scan tool with the connector disconnected.

Using a jumper wire, jump the (K141) O2 Sensor 1/2 Signal circuit to the (K904) O2 Return Downstream circuit in the O2 Sensor harness connector.

NOTE: The voltage should drop from 5.0 volts to 2.5 volts with the jumper wire in place.

Did the O2 Sensor volts change from 5.0 volts to 2.5 volts?

Yes >> Replace the O2 Sensor
Perform the POWERTRAIN VERIFICATION TEST. (Refer to 9 - ENGINE - STANDARD PROCEDURE)

No >> Go To 5

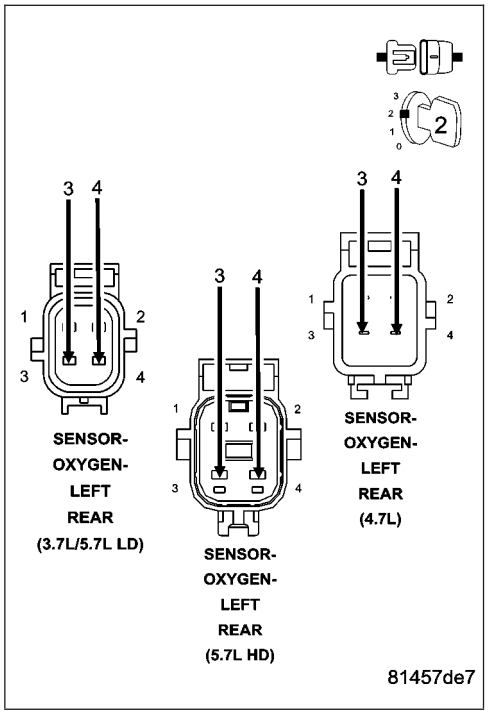

P2096-DOWNSTREAM FUEL TRIM SYSTEM 1 LEAN (CONTINUED)

5. (K141) O2 SENSOR 1/2 SIGNAL CIRCUIT

Remove the jump wire.

Ignition on, engine not running.

With the scan tool, monitor the 1/2 O2 Sensor voltage.

Is the voltage above 4.8 volts?

Yes >> Go To 6

No >> Check the (K141) O2 Sensor 1/2 Signal circuit for an open or short to voltage. Inspect the O2 Sensor connector and the PCM harness connector. If OK, replace and program the Powertrain Control Module per Service Information.

Perform the POWERTRAIN VERIFICATION TEST. (Refer to 9 - ENGINE - STANDARD PROCEDURE)

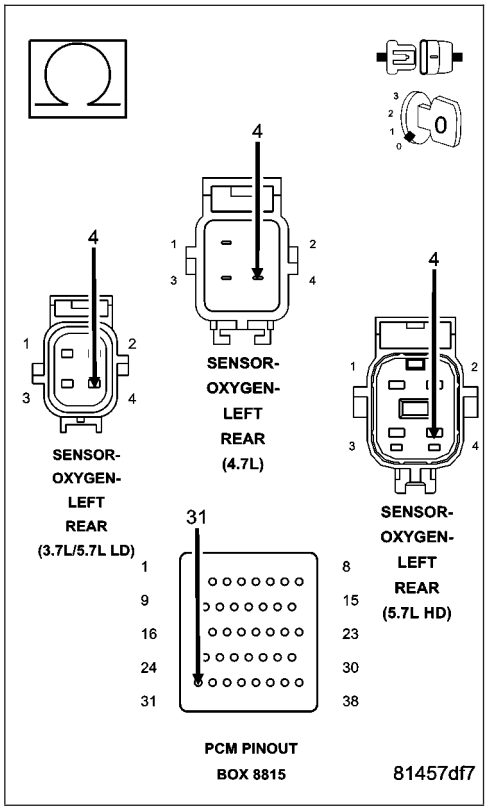

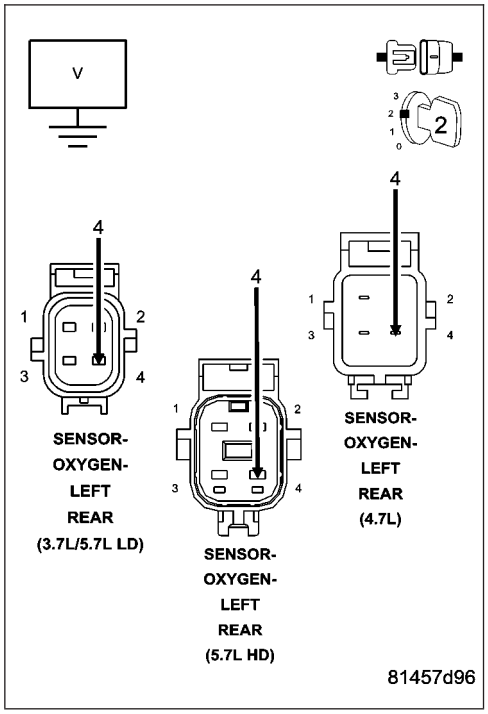

P2096-DOWNSTREAM FUEL TRIM SYSTEM 1 LEAN (CONTINUED)

6. (K299) O2 SENSOR 1/2 HEATER CONTROL CIRCUIT SHORTED TO GROUND

Turn the ignition off.

Disconnect the C3 PCM harness connector.

Measure the resistance between ground and the (K299) O2 Sensor 1/2 Heater Control circuit from the O2 Sensor harness connector.

Is the resistance below 5.0 ohms?

Yes >> Repair the short to ground in the (K299) O2 Sensor 1/2 Heater Control circuit.

Perform the POWERTRAIN VERIFICATION TEST. (Refer to 9 - ENGINE - STANDARD PROCEDURE)

No >> Go To 7

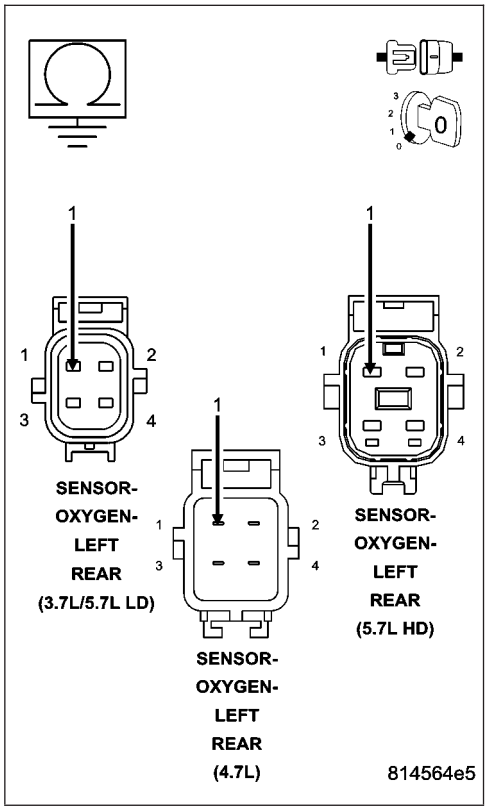

P2096-DOWNSTREAM FUEL TRIM SYSTEM 1 LEAN (CONTINUED)

7. (K904) O2 RETURN DOWNSTREAM CIRCUIT

Measure the voltage on the (K904) O2 Return Downstream circuit in the O2 Sensor harness connector.

Is the voltage at 2.5 volts?

Yes >> Check the fuel system for contaminants.
Perform the POWERTRAIN VERIFICATION TEST. (Refer to 9 - ENGINE - STANDARD PROCEDURE)

No >> Check the (K904) O2 Return Downstream circuit for a short to ground, open, or short to voltage. Inspect the O2 Sensor connector and the PCM harness connector. If OK, replace and program the Powertrain Control Module per Service Information.
Perform the POWERTRAIN VERIFICATION TEST. (Refer to 9 - ENGINE - STANDARD PROCEDURE)

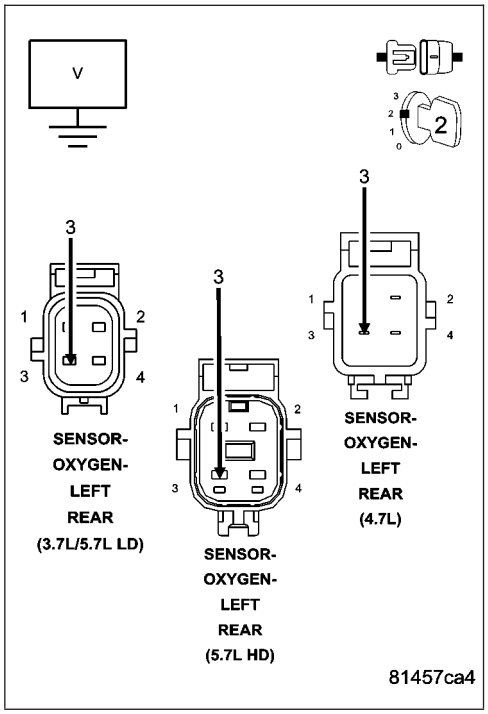

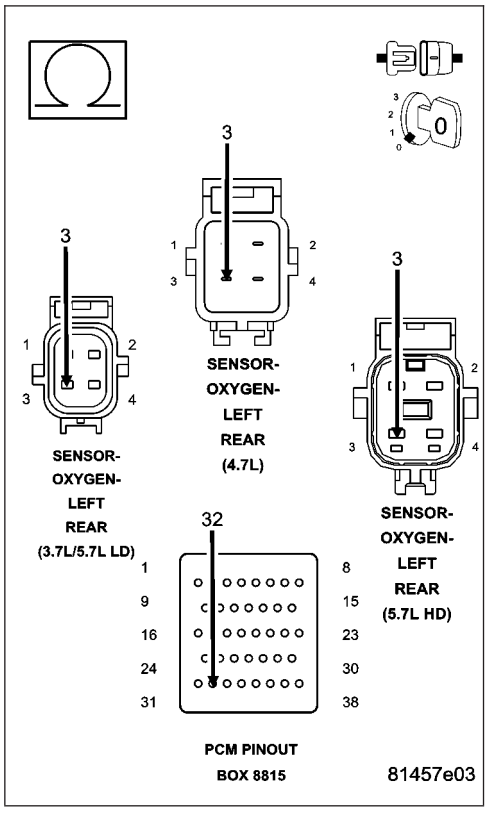

P2097-DOWNSTREAM FUEL TRIM SYSTEM 1 RICH

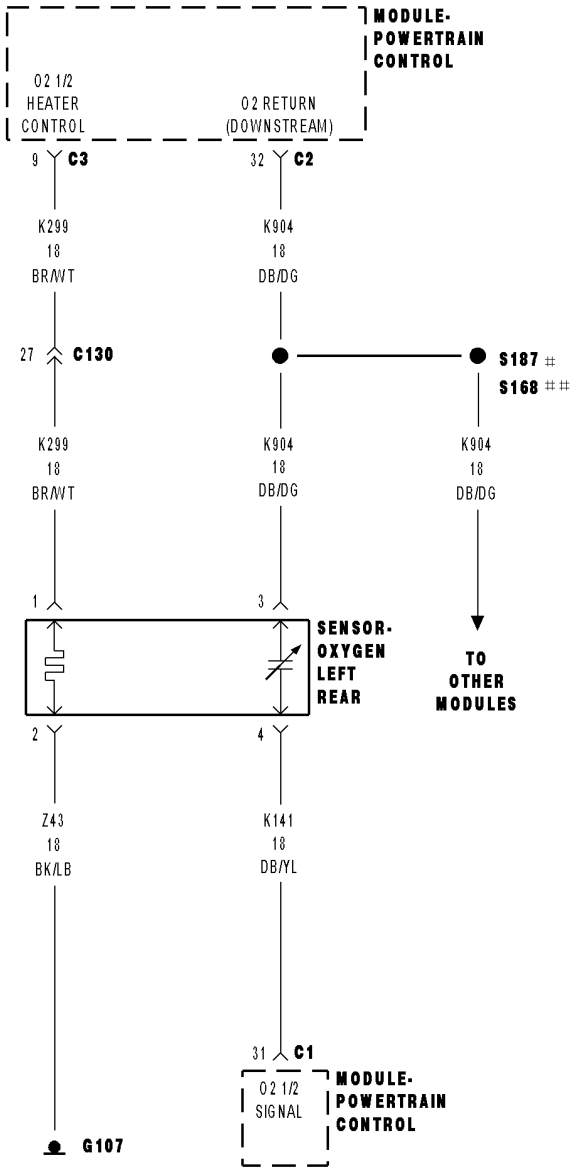

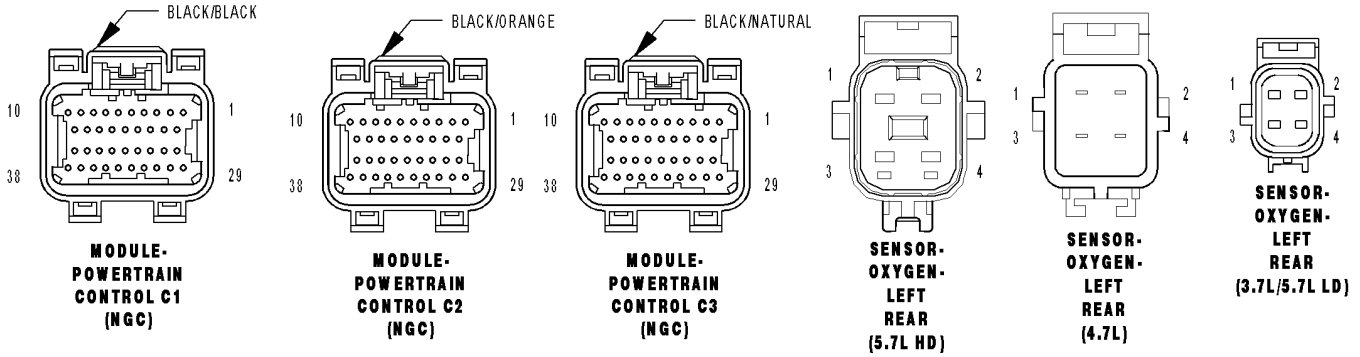

81452b26

P2097-DOWNSTREAM FUEL TRIM SYSTEM 1 RICH (CONTINUED)

For the Engine circuit diagram (Refer to 9 - ENGINE - SCHEMATICS AND DIAGRAMS).

For a complete wiring diagram **Refer to Section 8W**.

- **When Monitored:**
  With the engine running in closed loop mode, the ambient/battery temperature above (-7°) 20°F, altitude below 8500 ft.
- **Set Condition:**
  If the PCM multiplies short term compensation by long term adaptive as well as a purge fuel multiplier and the result is below a certain value for 30 seconds over two trips, a freeze frame is stored, the MIL illuminates and a trouble code is stored. Two Trip Fault. Three good trips to turn off the MIL.

Possible Causes
EXHAUST LEAK
ENGINE MECHANICAL
1/2 O2 SENSOR
(K141) O2 SENSOR 1/2 SIGNAL CIRCUIT
(K299) O2 HEATER 1/2 CONTROL CIRCUIT
(K904) O2 RETURN DOWNSTREAM CIRCUIT
FUEL CONTAMINATION

Always perform the Pre-Diagnostic Troubleshooting procedure before proceeding. (Refer to 9 - ENGINE - DIAGNOSIS AND TESTING).

Diagnostic Test

1. ACTIVE DTC

NOTE: Check the vehicle repair history. If the 1/2 O2 has been replaced make sure that the O2 sensor was properly installed and meets OEM specification.

NOTE: Check for contaminants that may have damaged the O2 Sensor: contaminated fuel, unapproved silicone, oil and coolant.

Ignition on, engine not running.

With a scan tool, read DTCs.

Is the DTC active at this time?

Yes >> Go To 2

No >> Refer to the INTERMITTENT CONDITION Diagnostic Procedure.
Perform the POWERTRAIN VERIFICATION TEST. (Refer to 9 - ENGINE - STANDARD PROCEDURE)

P2097-DOWNSTREAM FUEL TRIM SYSTEM 1 RICH (CONTINUED)

2. EXHAUST LEAK

Turn the ignition off.

WARNING: To avoid personal injury from the exhaust system being hot, allow the exhaust to cool down to a safe temperature before performing a physical inspection. Failure to follow these instructions can result in personal injury or death.

Visually and Physically inspect the exhaust system for holes, cracks and blockage in the exhaust system.

Is the exhaust system is good condition?

Yes >> Go To 3

No >> Repair or Replace as necessary.
Perform the POWERTRAIN VERIFICATION TEST. (Refer to 9 - ENGINE - STANDARD PROCEDURE)

---

3. ENGINE MECHANICAL

Check for any of the following conditions/mechanical problems
AIR INDUCTION SYSTEM - must be free from leaks.
ENGINE VACUUM - must be at least 13 inches in neutral
ENGINE VALVE TIMING - must be within specifications
ENGINE COMPRESSION - must be within specifications
ENGINE EXHAUST SYSTEM - must be free of any restrictions or leaks
ENGINE PCV SYSTEM - must flow freely
TORQUE CONVERTER STALL SPEED - must be within specifications
POWER BRAKE BOOSTER - no internal vacuum leaks
FUEL - must be free of contamination
FUEL INJECTOR - plugged or restricted injector; control wire not connected to correct injector

Are there any engine mechanical problems?

Yes >> Repair as necessary.
Perform the POWERTRAIN VERIFICATION TEST. (Refer to 9 - ENGINE - STANDARD PROCEDURE)

No >> Go To 4

P2097-DOWNSTREAM FUEL TRIM SYSTEM 1 RICH (CONTINUED)

4. O2 SENSOR

Ignition on, engine not running.

Disconnect the 1/2 O2 Sensor harness connector.

With the scan tool, monitor the 1/2 O2 Sensor voltage.

The O2 Sensor voltage should read 5.0 volts on the scan tool with the connector disconnected.

Using a jumper wire, jump the (K141) O2 Sensor 1/2 Signal circuit to the (K904) O2 Return Downstream circuit in the O2 Sensor harness connector.

NOTE: The voltage should drop from 5.0 volts to 2.5 volts with the jumper wire in place.

Did the O2 Sensor volts change from 5.0 volts to 2.5 volts?

Yes >> Replace the O2 Sensor.
Perform the POWERTRAIN VERIFICATION TEST. (Refer to 9 - ENGINE - STANDARD PROCEDURE)

No >> Go To 5

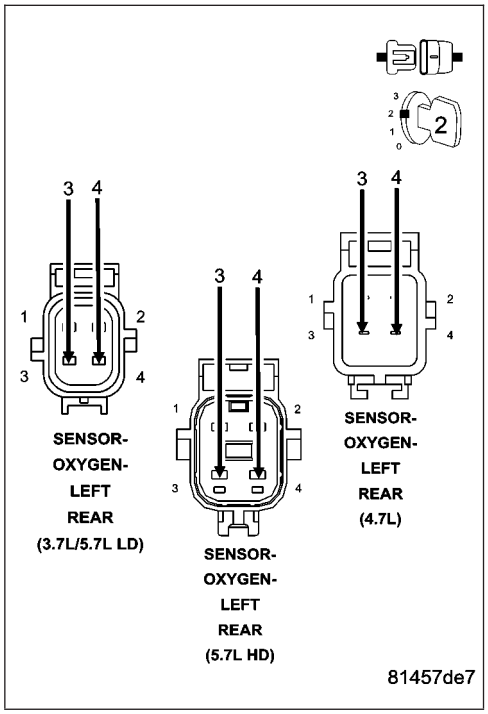

P2097-DOWNSTREAM FUEL TRIM SYSTEM 1 RICH (CONTINUED)

5. (K141) O2 SENSOR 1/2 SIGNAL CIRCUIT

Remove the jump wire.

Ignition on, engine not running.

With the scan tool, monitor the 1/2 O2 Sensor voltage.

Is the voltage above 4.8 volts?

Yes >> Go To 6

No >> Check the (K141) O2 Sensor 1/2 Signal circuit for an open or short to voltage. Inspect the O2 Sensor connector and the PCM harness connector. If OK, replace and program the Powertrain Control Module per Service Information.

Perform the POWERTRAIN VERIFICATION TEST. (Refer to 9 - ENGINE - STANDARD PROCEDURE)

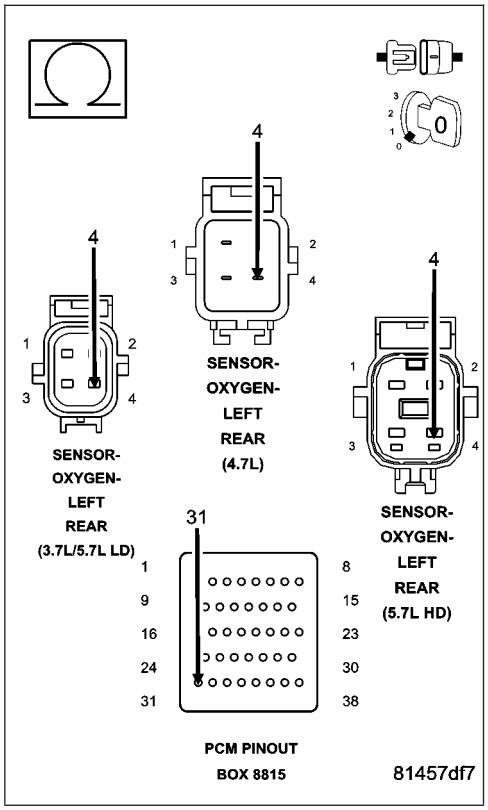

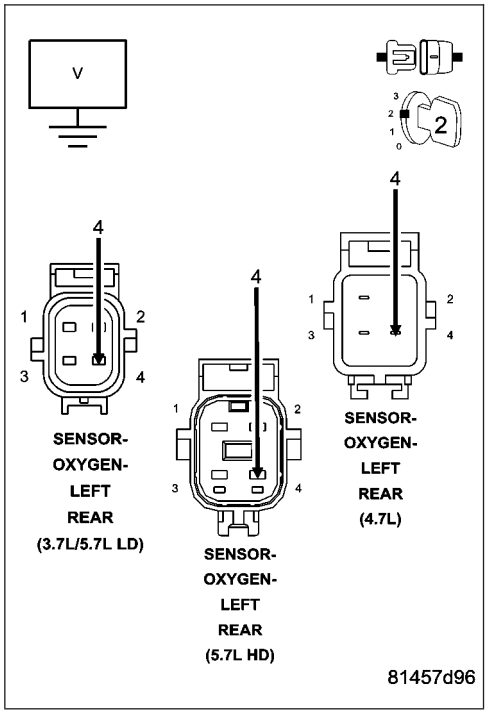

P2097-DOWNSTREAM FUEL TRIM SYSTEM 1 RICH (CONTINUED)

6. (K299) O2 SENSOR 1/2 HEATER CONTROL CIRCUIT OPEN

Turn the ignition off.

Disconnect the C3 PCM harness connector.

Measure the resistance of the (K299) O2 Sensor 1/2 Heater Control circuit from the O2 Sensor harness connector to the appropriate terminal of special tool #8815.

Is the resistance below 5.0 ohms?

Yes >> Go To 7

No >> Repair the open in the (K299) O2 Sensor 1/2 Heater Control circuit.

Perform the POWERTRAIN VERIFICATION TEST. (Refer to 9 - ENGINE - STANDARD PROCEDURE)

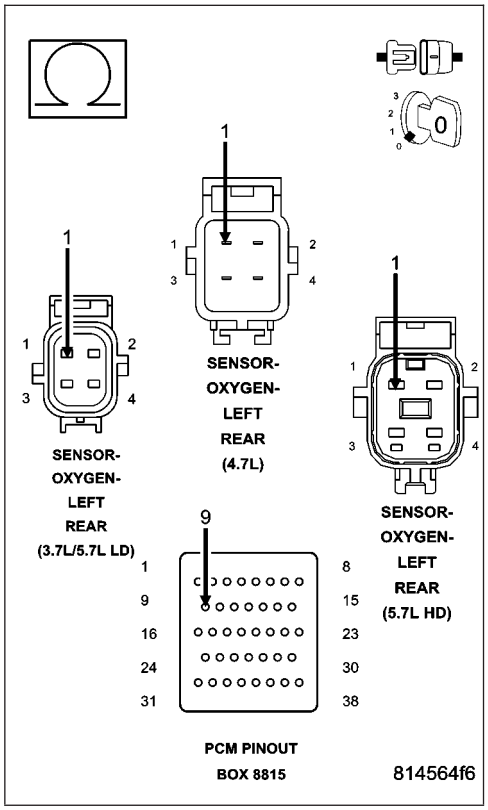

P2097-DOWNSTREAM FUEL TRIM SYSTEM 1 RICH (CONTINUED)

7. (K904) O2 RETURN DOWNSTREAM CIRCUIT

Measure the voltage on the (K904) O2 Return Downstream circuit in the O2 Sensor harness connector.

Is the voltage at 2.5 volts?

Yes >> Check the fuel system for contaminants.
Perform the POWERTRAIN VERIFICATION TEST. (Refer to 9 - ENGINE - STANDARD PROCEDURE)

No >> Check the (K904) O2 Return Downstream circuit for a short to ground, open, or short to voltage. Inspect the O2 Sensor connector and the PCM harness connector. If OK, replace and program the Powertrain Control Module per Service Information.
Perform the POWERTRAIN VERIFICATION TEST. (Refer to 9 - ENGINE - STANDARD PROCEDURE)

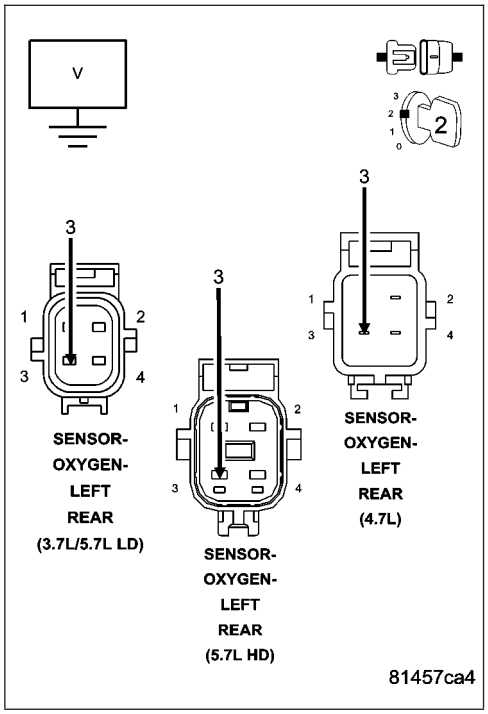

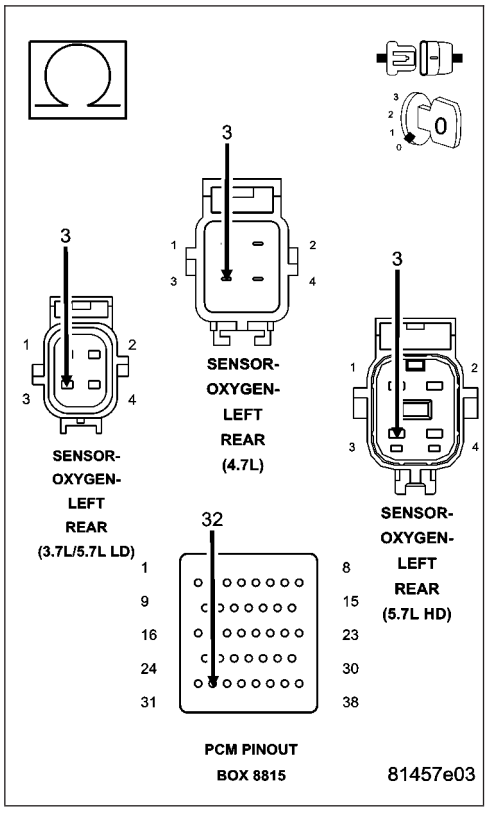

P2098-DOWNSTREAM FUEL TRIM SYSTEM 2 LEAN

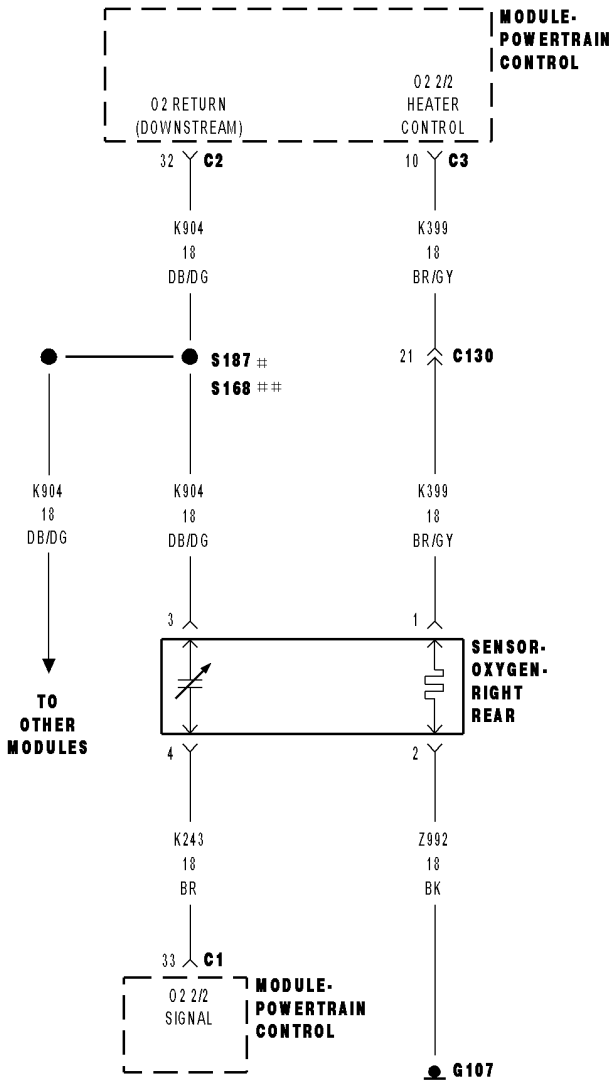

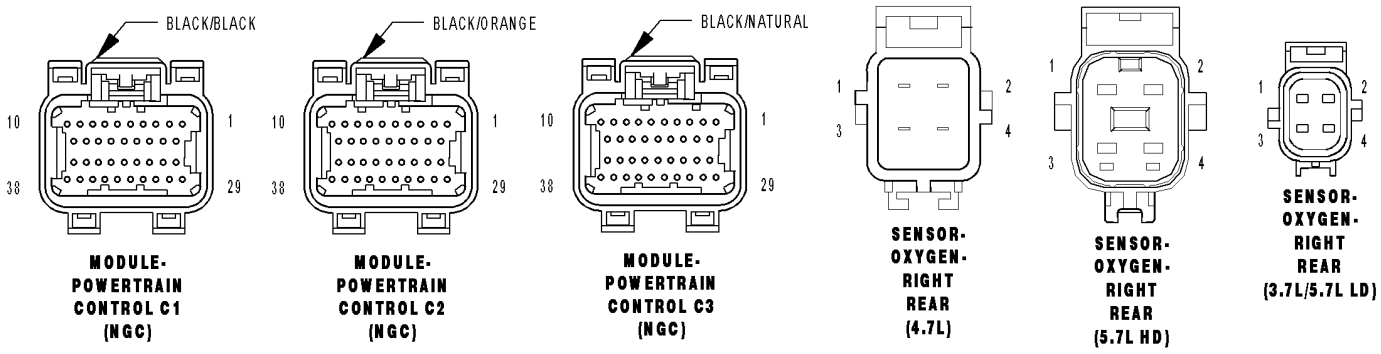

81452bb4

P2098-DOWNSTREAM FUEL TRIM SYSTEM 2 LEAN (CONTINUED)

For the Engine circuit diagram (Refer to 9 - ENGINE - SCHEMATICS AND DIAGRAMS).

For a complete wiring diagram **Refer to Section 8W**.

- **When Monitored:**
  With the engine running in closed loop mode, the ambient/battery temperature above (-7°C) 20°F, altitude below 8500 ft and fuel level greater than 15%.
- **Set Condition:**
  If the PCM multiplies short term compensation by long term adaptive and a certain percentage is exceeded for two trips, a freeze frame is stored, the MIL illuminates and a trouble code is stored. Two Trip Fault. Three good trips to turn off the MIL.

Possible Causes
EXHAUST LEAK
ENGINE MECHANICAL
2/2 O2 SENSOR
(K243) O2 2/2 SIGNAL CIRCUIT
(K399) O2 HEATER 2/2 CONTROL CIRCUIT
(K904) O2 RETURN DOWNSTREAM CIRCUIT
FUEL CONTAMINATION

Always perform the Pre-Diagnostic Troubleshooting procedure before proceeding. (Refer to 9 - ENGINE - DIAGNOSIS AND TESTING).

Diagnostic Test

1. ACTIVE DTC

NOTE: Check the vehicle repair history. If the 2/2 O2 has been replaced make sure that the O2 sensor was properly installed and meets OEM specification.

NOTE: Check for contaminants that may have damaged the O2 Sensor: contaminated fuel, unapproved silicone, oil and coolant.

Ignition on, engine not running.

With a scan tool, read DTCs.

Is the DTC active at this time?

Yes >> Go To 2

No >> Refer to the INTERMITTENT CONDITION Diagnostic Procedure.
Perform the POWERTRAIN VERIFICATION TEST. (Refer to 9 - ENGINE - STANDARD PROCEDURE)

P2098-DOWNSTREAM FUEL TRIM SYSTEM 2 LEAN (CONTINUED)

2. EXHAUST LEAK

Turn the ignition off.

WARNING: To avoid personal injury from the exhaust system being hot, allow the exhaust to cool down to a safe temperature before performing a physical inspection. Failure to follow these instructions can result in personal injury or death.

Visually and Physically inspect the exhaust system for holes, cracks and blockage in the exhaust system.

Is the exhaust system is good condition?

Yes >> Go To 3

No >> Repair or Replace as necessary.
Perform the POWERTRAIN VERIFICATION TEST. (Refer to 9 - ENGINE - STANDARD PROCEDURE)

---

3. ENGINE MECHANICAL

Check for any of the following conditions/mechanical problems.
AIR INDUCTION SYSTEM - must be free from leaks
ENGINE VACUUM - must be at least 13 inches in neutral
ENGINE VALVE TIMING - must be within specifications
ENGINE COMPRESSION - must be within specifications
ENGINE EXHAUST SYSTEM - must be free of any restrictions or leaks
ENGINE PCV SYSTEM - must flow freely
TORQUE CONVERTER STALL SPEED - must be within specifications
POWER BRAKE BOOSTER - no internal vacuum leaks
FUEL - must be free of contamination
FUEL INJECTOR - plugged or restricted injector; control wire not connected to correct injector

Are there any engine mechanical problems?

Yes >> Repair as necessary.
Perform the POWERTRAIN VERIFICATION TEST. (Refer to 9 - ENGINE - STANDARD PROCEDURE)

No >> Go To 4

P2098-DOWNSTREAM FUEL TRIM SYSTEM 2 LEAN (CONTINUED)

4. O2 SENSOR

Ignition on, engine not running.

Disconnect the 2/2 O2 Sensor harness connector.

With the scan tool, monitor the 2/2 O2 Sensor voltage.

The O2 Sensor voltage should read 5.0 volts on the scan tool with the connector disconnected.

Using a jumper wire, jump the (K243) O2 Sensor 2/2 Signal circuit to the (K904) O2 Return Downstream circuit in the O2 Sensor harness connector.

NOTE: The voltage should drop from 5.0 volts to 2.5 volts with the jumper wire in place.

Did the O2 Sensor volts change from 5.0 volts to 2.5 volts?

Yes >> Replace the O2 Sensor
Perform the POWERTRAIN VERIFICATION TEST. (Refer to 9 - ENGINE - STANDARD PROCEDURE)

No >> Go To 5

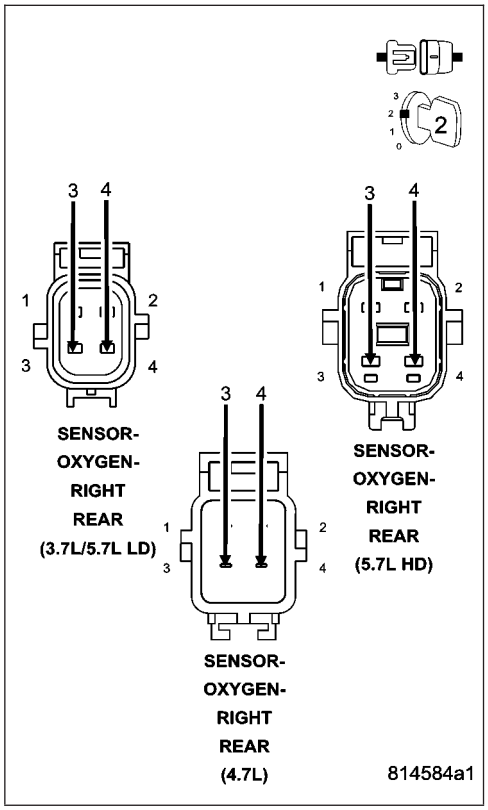

P2098-DOWNSTREAM FUEL TRIM SYSTEM 2 LEAN (CONTINUED)

5. (K243) O2 SENSOR 2/2 SIGNAL CIRCUIT

Remove the jump wire.
Ignition on, engine not running.
With the scan tool, monitor the O2 Sensor voltage.

Is the voltage above 4.8 volts?

Yes >> Go To 6

No >> Check the (K243) O2 Sensor 2/2 Signal circuit for a open or short to voltage. Inspect the O2 Sensor connector and the PCM harness connector. If OK, replace and program the Powertrain Control Module per Service Information.
Perform the POWERTRAIN VERIFICATION TEST. (Refer to 9 - ENGINE - STANDARD PROCEDURE)

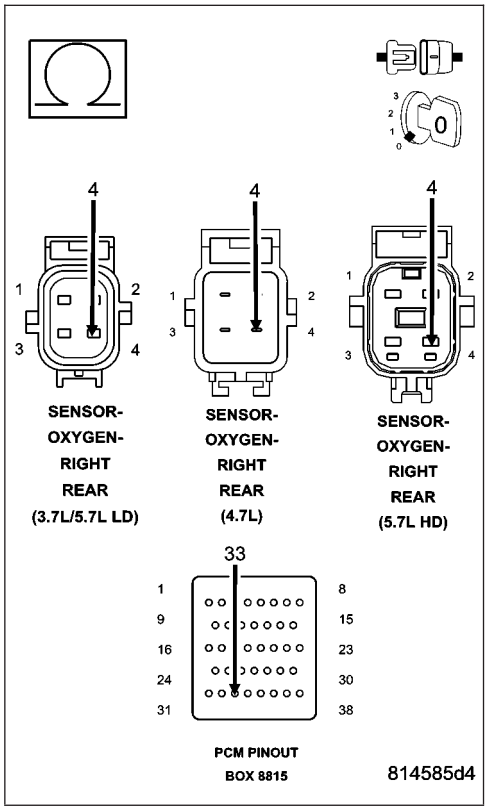

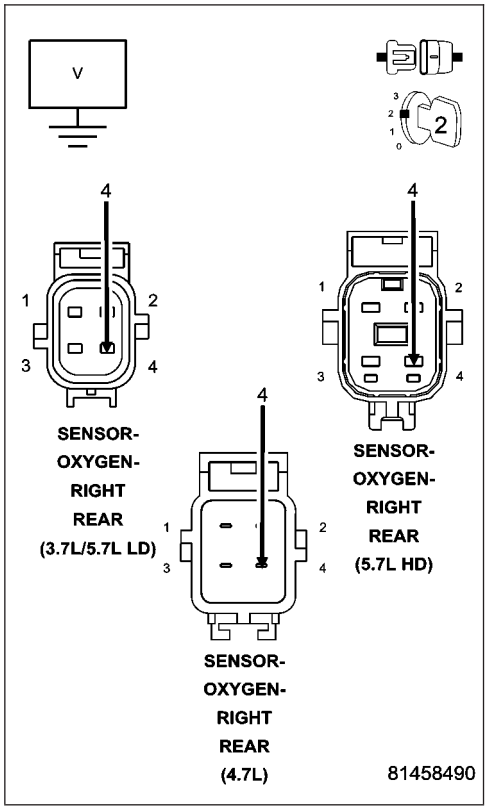

P2098-DOWNSTREAM FUEL TRIM SYSTEM 2 LEAN (CONTINUED)

6. (K399) O2 SENSOR 2/2 HEATER CONTROL CIRCUIT SHORTED TO GROUND

Turn the ignition off.

Disconnect the C3 PCM harness connector.

Measure the resistance between ground and the (K399) O2 Sensor 2/2 Heater Control circuit in the O2 Sensor harness connector.

Is the resistance below 5.0 ohms?

Yes >> Repair the short to ground in the (K399) O2 Sensor 2/2 Heater Control circuit.

Perform the POWERTRAIN VERIFICATION TEST. (Refer to 9 - ENGINE - STANDARD PROCEDURE)

No >> Go To 7

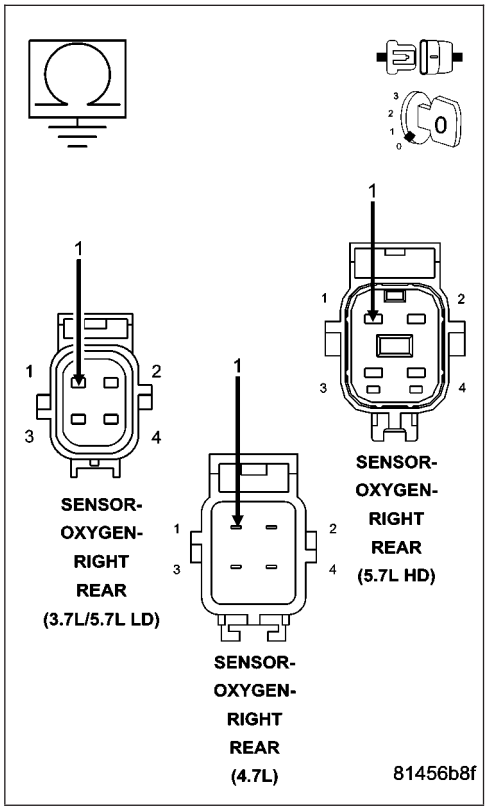

P2098-DOWNSTREAM FUEL TRIM SYSTEM 2 LEAN (CONTINUED)

7. (K904) O2 RETURN DOWNSTREAM CIRCUIT

Measure the voltage on the (K904) O2 Return Downstream circuit in the O2 Sensor harness connector.

Is the voltage at 2.5 volts?

Yes >> Check the fuel system for contaminants.
Perform the POWERTRAIN VERIFICATION TEST. (Refer to 9 - ENGINE - STANDARD PROCEDURE)

No >> Check the (K904) O2 Downstream Return circuit for a short to ground, open, or short to voltage. Inspect the O2 Sensor connector and the PCM harness connector. If OK, replace and program the Powertrain Control Module per Service Information.
Perform the POWERTRAIN VERIFICATION TEST. (Refer to 9 - ENGINE - STANDARD PROCEDURE)

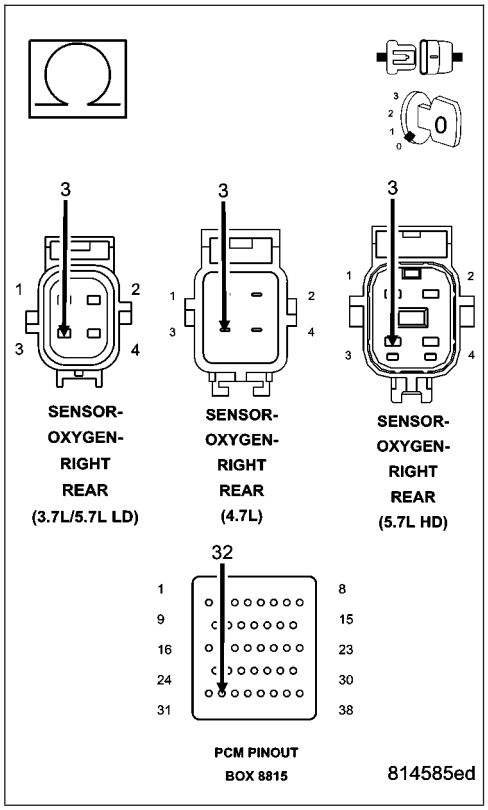

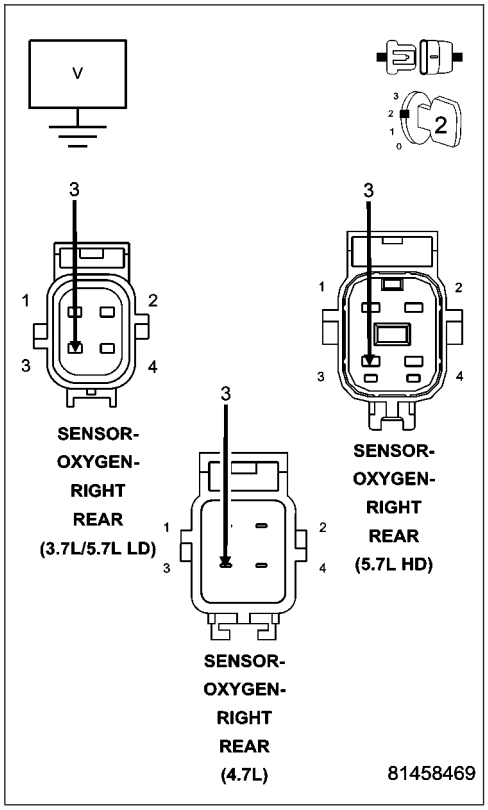

P2099-DOWNSTREAM FUEL TRIM SYSTEM 2 RICH

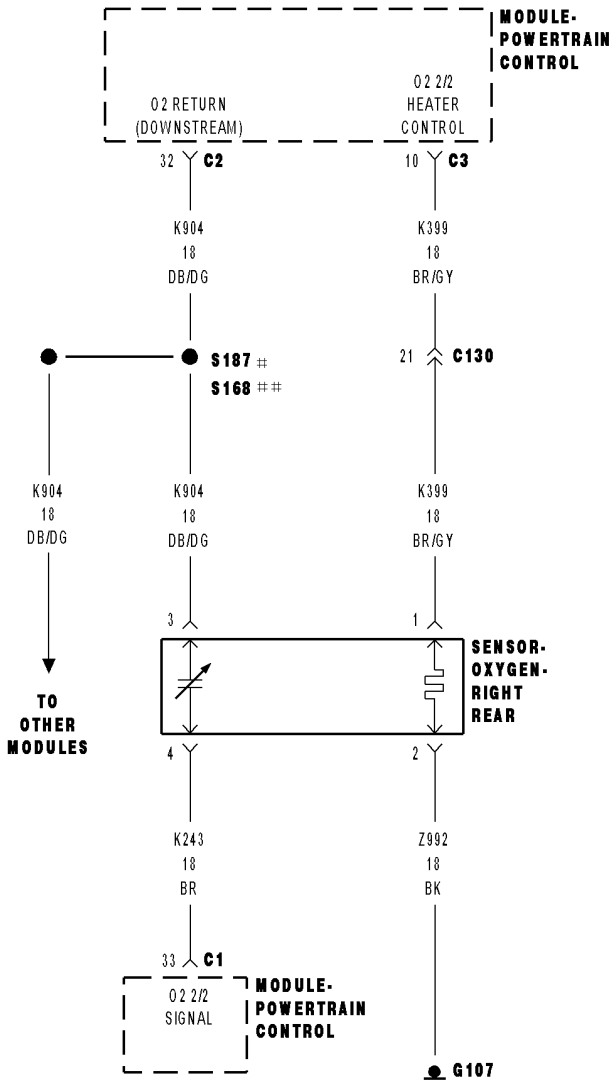

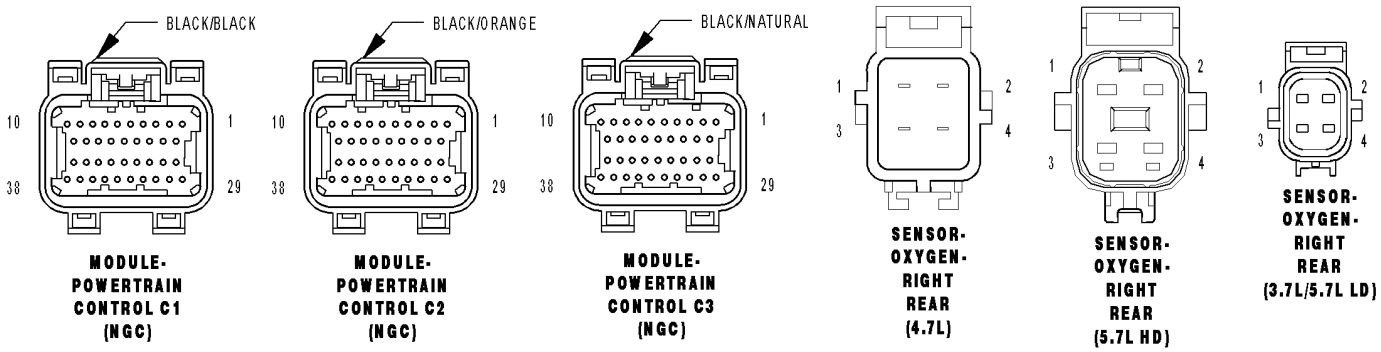

81452bb4

P2099-DOWNSTREAM FUEL TRIM SYSTEM 2 RICH (CONTINUED)

For the Engine circuit diagram (Refer to 9 - ENGINE - SCHEMATICS AND DIAGRAMS).

For a complete wiring diagram **Refer to Section 8W**.

- **When Monitored:**
  With the engine running in closed loop mode, the ambient/battery temperature above (-7°C) 20°F, altitude below 8500 ft.
- **Set Condition:**
  If the PCM multiplies short term compensation by long term adaptive as well as a purge fuel multiplier and the result is below a certain value for 30 seconds over two trips, a freeze frame is stored, the MIL illuminates and a trouble code is stored. Two Trip Fault. Three good trips to turn off the MIL.

Possible Causes
EXHAUST LEAK
ENGINE MECHANICAL
2/2 O2 SENSOR
(K342) O2 SENSOR 2/2 SIGNAL CIRCUIT
(K399) O2 SENSOR 2/2 HEATER CONTROL CIRCUIT
(K904) O2 RETURN DOWNSTREAM CIRCUIT
FUEL CONTAMINATION

Always perform the Pre-Diagnostic Troubleshooting procedure before proceeding. (Refer to 9 - ENGINE - DIAGNOSIS AND TESTING).

Diagnostic Test

1. ACTIVE DTC

NOTE: Check the vehicle repair history. If the 2/2 O2 has been replaced make sure that the O2 sensor was properly installed and meets OEM specification.

NOTE: Check for contaminants that may have damaged the O2 Sensor: contaminated fuel, unapproved silicone, oil and coolant.

Ignition on, engine not running.

With a scan tool, read DTCs.

Is the DTC active at this time?

Yes >> Go To 2

No >> Refer to the INTERMITTENT CONDITION Diagnostic Procedure.
Perform the POWERTRAIN VERIFICATION TEST. (Refer to 9 - ENGINE - STANDARD PROCEDURE)

P2099-DOWNSTREAM FUEL TRIM SYSTEM 2 RICH (CONTINUED)

2. EXHAUST LEAK

Turn the ignition off.

WARNING: To avoid personal injury from the exhaust system being hot, allow the exhaust to cool down to a safe temperature before performing a physical inspection. Failure to follow these instructions can result in personal injury or death.

Visually and Physically inspect the exhaust system for holes, cracks and blockage in the exhaust system.

Is the exhaust system is good condition?

Yes >> Go To 3

No >> Repair or Replace as necessary.
Perform the POWERTRAIN VERIFICATION TEST. (Refer to 9 - ENGINE - STANDARD PROCEDURE)

---

3. ENGINE MECHANICAL

Check for any of the following conditions/mechanical problems.
AIR INDUCTION SYSTEM - must be free from leaks
ENGINE VACUUM - must be at least 13 inches in neutral
ENGINE VALVE TIMING - must be within specifications
ENGINE COMPRESSION - must be within specifications
ENGINE EXHAUST SYSTEM - must be free of any restrictions or leaks
ENGINE PCV SYSTEM - must flow freely
TORQUE CONVERTER STALL SPEED - must be within specifications
POWER BRAKE BOOSTER - no internal vacuum leaks
FUEL - must be free of contamination
FUEL INJECTOR - plugged or restricted injector; control wire not connected to correct injector

Are there any engine mechanical problems?

Yes >> Repair as necessary.
Perform the POWERTRAIN VERIFICATION TEST. (Refer to 9 - ENGINE - STANDARD PROCEDURE)

No >> Go To 4

P2099-DOWNSTREAM FUEL TRIM SYSTEM 2 RICH (CONTINUED)

4. O2 SENSOR

Ignition on, engine not running.

Disconnect the 2/2 O2 Sensor harness connector.

With the scan tool, monitor the 2/2 O2 Sensor voltage.

The O2 Sensor voltage should read 5.0 volts on the scan tool with the connector disconnected.

Using a jumper wire, jump the (K243) O2 Signal 2/2 circuit to the (K904) O2 Return Downstream circuit in the O2 Sensor harness connector.

NOTE: The voltage should drop from 5.0 volts to 2.5 volts with the jumper wire in place.

Did the O2 Sensor volts change from 5.0 volts to 2.5 volts?

Yes >> Replace the O2 Sensor
Perform the POWERTRAIN VERIFICATION TEST. (Refer to 9 - ENGINE - STANDARD PROCEDURE)

No >> Go To 5

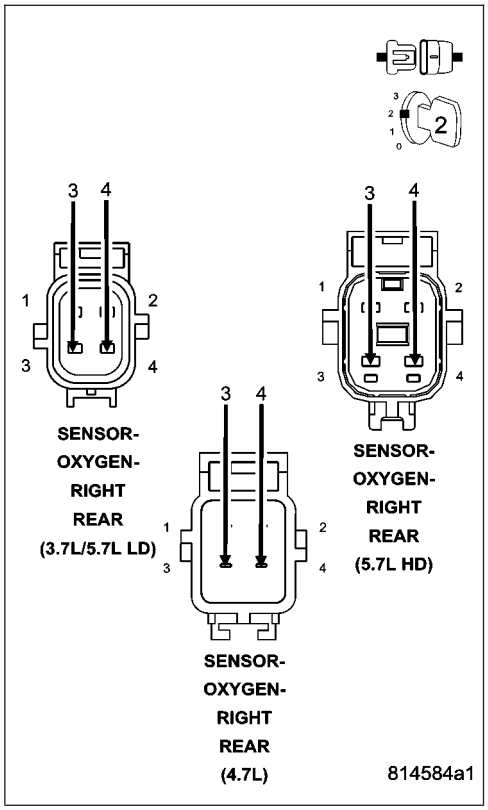

P2099-DOWNSTREAM FUEL TRIM SYSTEM 2 RICH (CONTINUED)

5. (K243) O2 SENSOR 2/2 SIGNAL CIRCUIT

Remove the jump wire.

Ignition on, engine not running.

With the scan tool, monitor the 2/2 O2 Sensor voltage.

Is the voltage above 4.8 volts?

Yes >> Check the (K243) O2 Sensor 2/2 Signal circuit for an open or short to battery voltage. Inspect the O2 Sensor connector and the PCM harness connector. If OK, replace and program the Powertrain Control Module per Service Information.

Perform the POWERTRAIN VERIFICATION TEST. (Refer to 9 - ENGINE - STANDARD PROCEDURE)

No >> Go To 6

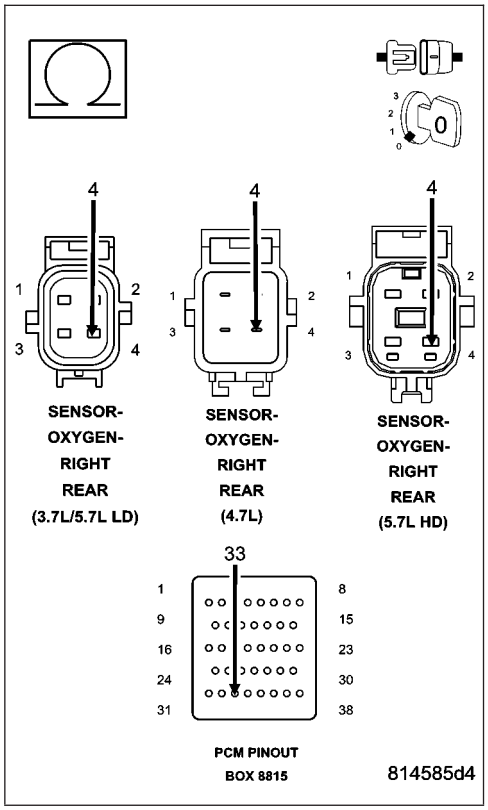

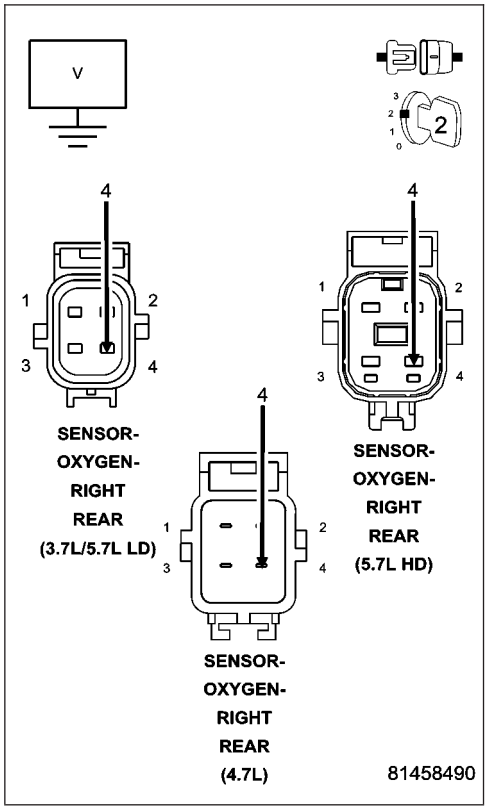

P2099-DOWNSTREAM FUEL TRIM SYSTEM 2 RICH (CONTINUED)

6. (K399) O2 SENSOR 2/2 HEATER CONTROL CIRCUIT OPEN

Turn the ignition off.

Disconnect the C3 PCM harness connector.

Measure the resistance of the (K399) O2 Sensor 2/2 Heater Control circuit from the O2 Sensor harness connector to the appropriate terminal of special tool #8815.

Is the resistance below 5.0 ohms?

Yes >> Go To 7

No >> Repair the open in the (K399) O2 Sensor 2/2 Heater Control circuit.

Perform the POWERTRAIN VERIFICATION TEST. (Refer to 9 - ENGINE - STANDARD PROCEDURE)

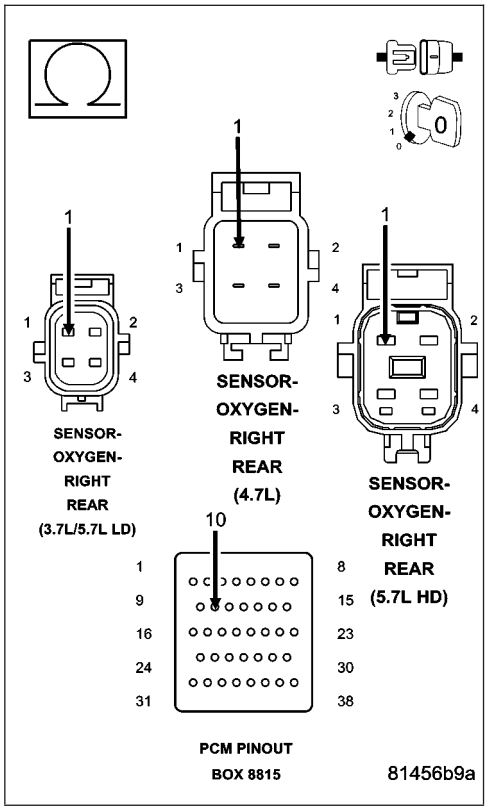

P2099-DOWNSTREAM FUEL TRIM SYSTEM 2 RICH (CONTINUED)

7. (K904) O2 RETURN DOWNSTREAM CIRCUIT

Measure the voltage on the (K904) O2 Return Downstream circuit in the O2 Sensor harness connector.

Is the voltage at 2.5 volts?

Yes >> Check the fuel system for contaminants.
Perform the POWERTRAIN VERIFICATION TEST. (Refer to 9 - ENGINE - STANDARD PROCEDURE)

No >> Check the (K904) O2 Downstream Return circuit for a short to ground, open, or short to voltage. Inspect the O2 Sensor connector and the PCM harness connector. If OK, replace and program the Powertrain Control Module per Service Information.
Perform the POWERTRAIN VERIFICATION TEST. (Refer to 9 - ENGINE - STANDARD PROCEDURE)

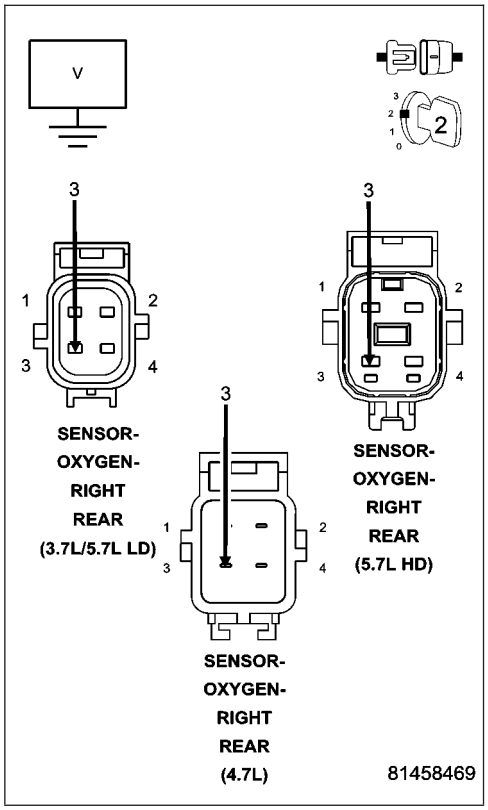

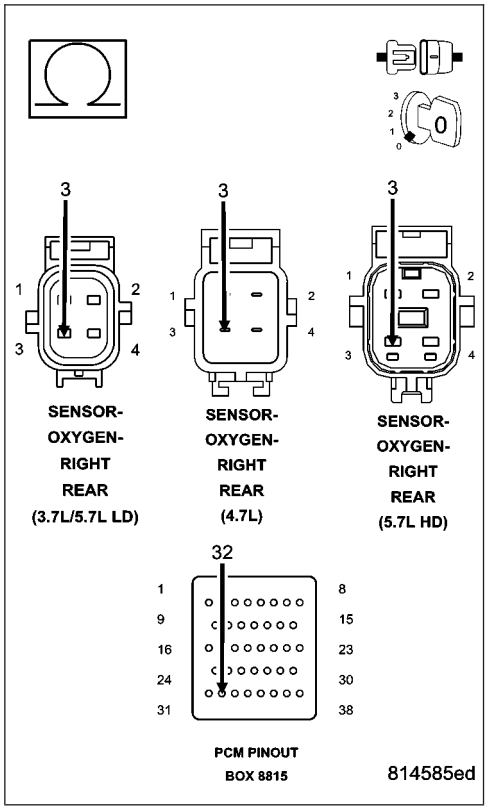

P2100-ELECTRONIC THROTTLE CONTROL MOTOR CIRCUIT

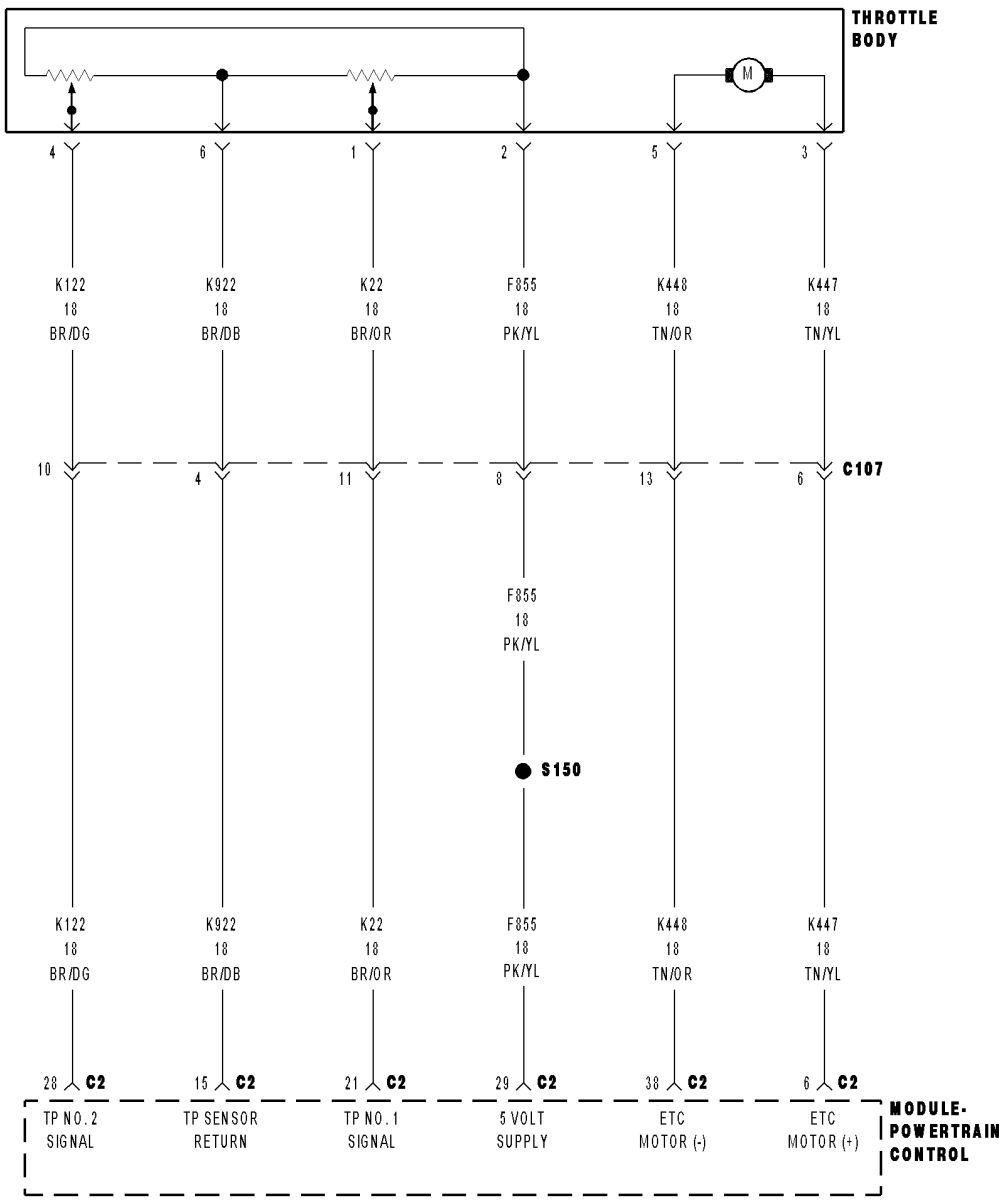

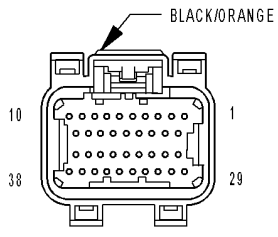

MODULE- POWERTRAIN CONTROL C2 (NGC)

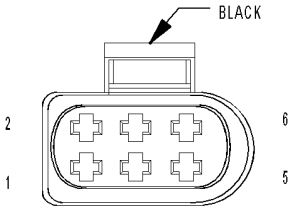

THROTTLE BODY (5.7L)

81454caa

P2100-ELECTRONIC THROTTLE CONTROL MOTOR CIRCUIT (CONTINUED)

For the Engine circuit diagram (Refer to 9 - ENGINE - SCHEMATICS AND DIAGRAMS).

For a complete wiring diagram **Refer to Section 8W**.

- **When Monitored:**
  With the ignition on and the ETC Motor is not in Limp Home mode.
- **Set Condition:**
  When the PCM detects an internal error or a short between the ETC Motor- and ETC Motor + circuits in the ETC Motor Driver. One trip fault. ETC light is flashing.

Possible Causes
THROTTLE PLATE / BORE INSPECTION
(K447) ETC POSITIVE CIRCUIT SHORTED TO BATTERY VOLTAGE
(K448) ETC NEGATIVE CIRCUIT SHORTED TO BATTERY VOLTAGE
(K447) ETC POSITIVE CIRCUIT SHORTED TO THE (K448) ETC NEGATIVE CIRCUIT
(K447) ETC POSITIVE CIRCUIT OPEN
(K447) ETC POSITIVE CIRCUIT SHORTED TO GROUND
(K448) ETC NEGATIVE CIRCUIT OPEN
(K448) ETC NEGATIVE CIRCUIT SHORTED TO GROUND
LOW BATTERY VOLTAGE
ETC MOTOR/THROTTLE BODY
PCM

Always perform the Pre-Diagnostic Troubleshooting procedure before proceeding. (Refer to 9 - ENGINE - DIAGNOSIS AND TESTING).

Diagnostic Test

1. ACTIVE DTC

Ignition on, engine not running.

NOTE: If the P2100 is intermittent, it is possible that the controller is overheating in extreme hot temperatures, and this is considered a normal protection operation. No repair is necessary.

NOTE: Low battery voltage can also cause excessive current draw, in very hot and very cold ambient temperatures. Make sure the battery can pass a load test before continuing.

With a scan tool, read DTCs.

Look closely at the temperatures at which this DTC set.

Is the DTC active at this time?

Yes >> Go To 2

No >> Refer to the INTERMITTENT CONDITION Diagnostic Procedure.
Perform the POWERTRAIN VERIFICATION TEST. (Refer to 9 - ENGINE - STANDARD PROCEDURE)

P2100-ELECTRONIC THROTTLE CONTROL MOTOR CIRCUIT (CONTINUED)

2. THROTTLE PLATE INSPECTION

Turn the ignition off.

Remove the Air Cleaner Assembly from the Throttle Body.

Check for any signs of a foreign material (ice or dirt) on the Throttle Plate or in the bore causing the Throttle Plate to stick.

Were any signs of foreign material or scoring of the throttle plate or bore found?

Yes >> Remove the debris if possible or replace the Throttle Body Assembly. Disconnect the Battery when replacing the Throttle Body Assembly. After installation is complete, use a scan tool and select the ETC RELEARN function.

Perform the POWERTRAIN VERIFICATION TEST. (Refer to 9 - ENGINE - STANDARD PROCEDURE)

No >> Go To 3

3. (K447) ETC POSITIVE CIRCUIT SHORTED TO BATTERY VOLTAGE

Turn the ignition off.

Disconnect the Throttle Body harness connector.

Disconnect the C2 PCM harness connector.

Ignition on, engine not running.

CAUTION: Do not probe the PCM harness connectors. Probing the PCM harness connectors will damage the PCM terminals resulting in poor terminal to pin connection. Install Miller Special Tool #8815 to perform the diagnostics.

With a 12-volt test light connected to ground, probe the (K447) ETC Positive circuit at the appropriate terminal of special tool #8815.

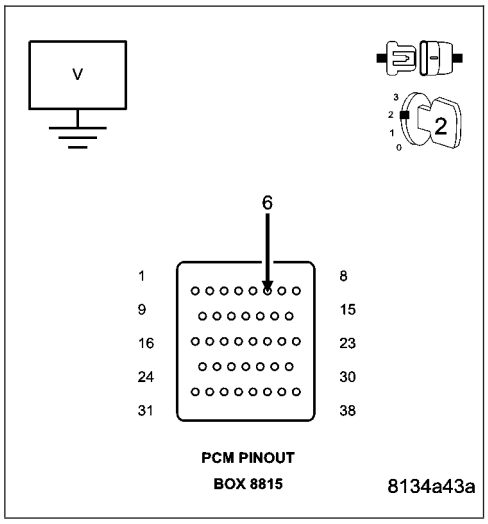

Does the test light illuminate brightly?

Yes >> Repair the short to battery voltage on the (K447) ETC Positive circuit.

Perform the POWERTRAIN VERIFICATION TEST. (Refer to 9 - ENGINE - STANDARD PROCEDURE)

No >> Go To 4

4. (K448) ETC NEGATIVE CIRCUIT SHORTED TO BATTERY VOLTAGE

Using a 12-volt test light connected to ground, probe the (K448) ETC Negative circuit at the appropriate terminal of special tool #8815.

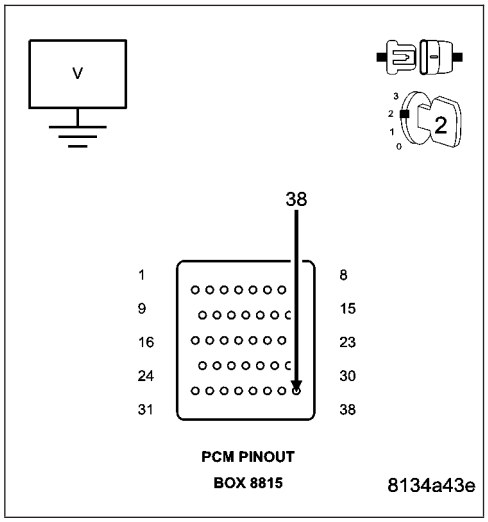

Does the test light illuminate brightly?

Yes >> Repair the short to battery voltage in the (K448) ETC Negative circuit.

Perform the POWERTRAIN VERIFICATION TEST. (Refer to 9 - ENGINE - STANDARD PROCEDURE)

No >> Go To 5

P2100-ELECTRONIC THROTTLE CONTROL MOTOR CIRCUIT (CONTINUED)

5. (K447) ETC POSITIVE CIRCUIT SHORTED TO THE (K448) ETC NEGATIVE CIRCUIT

Measure the resistance between the (K447) ETC Positive circuit and the (K448) ETC Negative circuit at the appropriate terminals of special tool #8815.

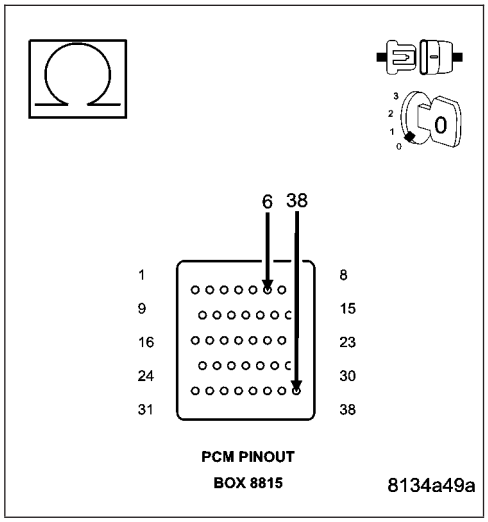

Is the resistance below 100 ohms?

Yes >> Repair the short to between the (K447) ETC Positive circuit and the (K448) ETC Negative circuit.
Perform the POWERTRAIN VERIFICATION TEST. (Refer to 9 - ENGINE - STANDARD PROCEDURE)

No >> Go To 6

6. (K447) ETC POSITIVE CIRCUIT OPEN

Turn the ignition off.

Measure the resistance of the (K447) ETC Positive circuit from the Throttle Body harness connector to the appropriate terminal of special tool #8815.

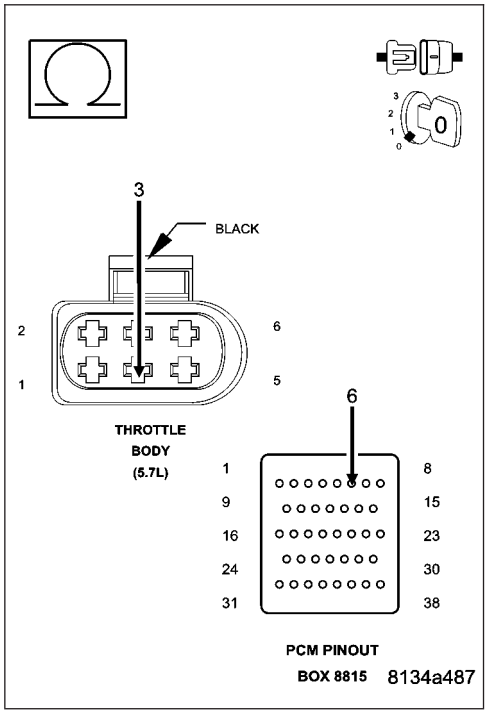

Is the resistance below 5.0 ohms?

Yes >> Go To 7

No >> Repair the open in the (K447) ETC Positive circuit.
Perform the POWERTRAIN VERIFICATION TEST. (Refer to 9 - ENGINE - STANDARD PROCEDURE)

P2100-ELECTRONIC THROTTLE CONTROL MOTOR CIRCUIT (CONTINUED)

7. (K447) ETC POSITIVE CIRCUIT SHORTED TO GROUND

Measure the resistance between ground and the (K447) ETC Positive circuit between the appropriate terminals of special tool #8815.

Is the resistance below 100 ohms?

Yes >> Repair the short to ground in the (K447) ETC Positive circuit.
Perform the POWERTRAIN VERIFICATION TEST. (Refer to 9 - ENGINE - STANDARD PROCEDURE)

No >> Go To 8

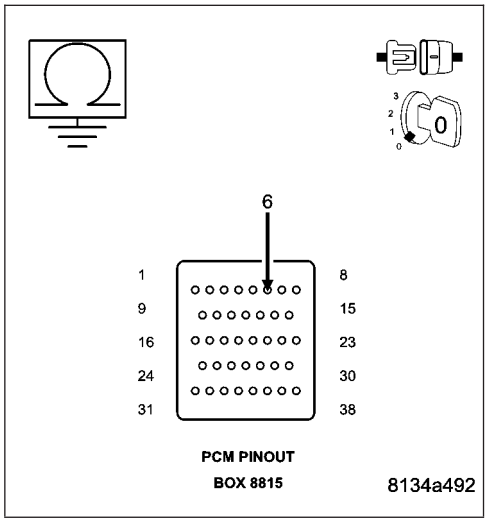

8. (K448) ETC NEGATIVE CIRCUIT OPEN

Measure the resistance of the (K448) ETC Negative circuit from the Throttle Body harness connector to the appropriate terminal of special tool #8815.

Is the resistance below 5.0 ohms?

Yes >> Go To 9

No >> Repair the open in the (K448) ETC Negative circuit.
Perform the POWERTRAIN VERIFICATION TEST. (Refer to 9 - ENGINE - STANDARD PROCEDURE)

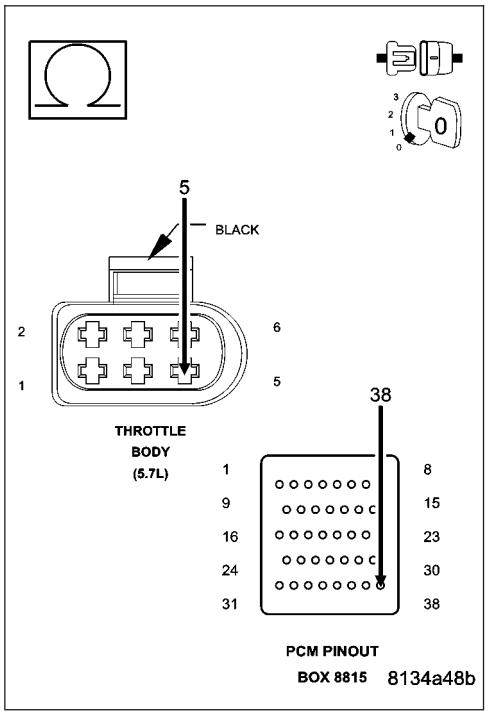

P2100-ELECTRONIC THROTTLE CONTROL MOTOR CIRCUIT (CONTINUED)

9. (K448) ETC NEGATIVE CIRCUIT SHORTED TO GROUND

Measure the resistance between ground and the (K448) ETC Negative circuit using the appropriate terminal of special tool #8815.

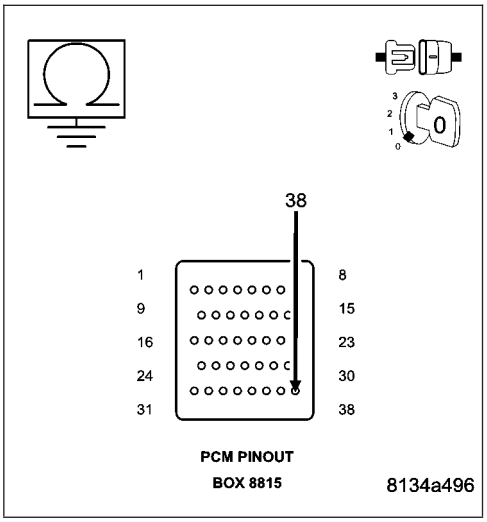

Is the resistance below 100 ohms?

Yes >> Repair the short to ground in the (K448) ETC Negative circuit.
Perform the POWERTRAIN VERIFICATION TEST. (Refer to 9 - ENGINE - STANDARD PROCEDURE)

No >> Go To 10

10. ETC MOTOR

NOTE: Take the following measurement using special tool #8815 to avoid possible damage to the Throttle Body harness connector.
Measure the resistance of the ETC Motor between the (K447) ETC Positive circuit and the (K448) ETC Negative circuit at the appropriate terminals of special tool #8815.

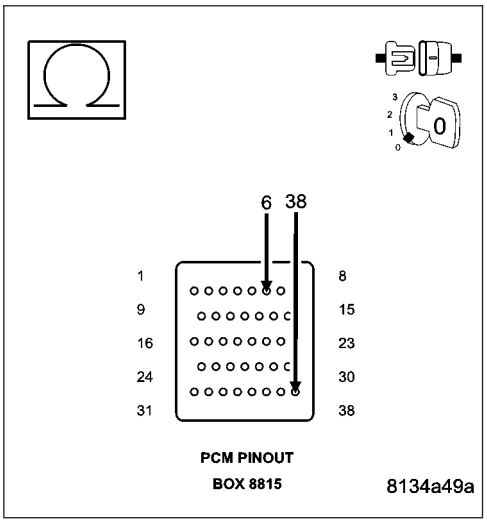

Is the resistance between 2.5 and 25 ohms at closed throttle?

Yes >> Go To 11

No >> Replace the Throttle Body Assembly. Disconnect the Battery when replacing the Throttle Body Assembly. After installation is complete, use a scan tool and select the ETC RELEARN function.
Perform the POWERTRAIN VERIFICATION TEST. (Refer to 9 - ENGINE - STANDARD PROCEDURE)

11. PCM

NOTE: Before continuing, check the PCM harness connector terminals for corrosion, damage, or terminal push out. Repair as necessary.
Using the schematics as a guide, inspect the wire harness and connectors. Pay particular attention to all Power and Ground circuits.

Were there any problems found?

Yes >> Repair as necessary.
Perform the POWERTRAIN VERIFICATION TEST. (Refer to 9 - ENGINE - STANDARD PROCEDURE)

No >> Replace and program the Powertrain Control Module per Service Information.
Perform the POWERTRAIN VERIFICATION TEST. (Refer to 9 - ENGINE - STANDARD PROCEDURE)

P2101-ELECTRONIC THROTTLE CONTROL MOTOR PERFORMANCE

For the Engine circuit diagram (Refer to 9 - ENGINE - SCHEMATICS AND DIAGRAMS).

For a complete wiring diagram **Refer to Section 8W**.

- **When Monitored:**
  With the vehicle running, ETC Motor not in Limp Home mode, and the TPS adaptation is complete.
- **Set Condition:**
  The PCM recognizes too large of an error between the actual position of the Throttle Plate and the Set Point position. One trip fault and the code will set within 5 seconds. Three good trips to turn off the MIL ETC light is flashing.

Possible Causes
THROTTLE BODY ASSEMBLY
LOW BATTERY VOLTAGE
PCM

Always perform the Pre-Diagnostic Troubleshooting procedure before proceeding. (Refer to 9 - ENGINE - DIAGNOSIS AND TESTING).

Diagnostic Test

1. ACTIVE DTC

NOTE: Before continuing visually inspect the throttle blade and bore for any obstructions. Icing of the throttle body may have caused this code to set.

NOTE: Low battery voltage can also cause excessive current draw, in very hot and very cold ambient temperature. Make sure the battery can pass a Load test before continuing.

NOTE: Diagnose any 5-Volt Supply, Battery, and TP Sensor DTCs before continuing.

Ignition on, engine not running.

With a scan tool, read DTCs.

Is the DTC active at this time?

Yes >> Go To 2

No >> Refer to the INTERMITTENT CONDITION Diagnostic Procedure.
Perform the POWERTRAIN VERIFICATION TEST. (Refer to 9 - ENGINE - STANDARD PROCEDURE)

---

2. THROTTLE PLATE INSPECTION

Turn the ignition off.

Remove the Air Cleaner Assembly from the Throttle Body.

Check for any signs of a foreign material (ice or dirt) on the Throttle Plate or in the bore causing the Throttle Plate to stick.

Manually open and close the throttle plate using your hands.

Does the Throttle Plate move?

Yes >> Go To 3

No >> Remove the debris if possible or replace the Throttle Body Assembly. Disconnect the Battery when replacing the Throttle Body Assembly. After installation is complete, use a scan tool and select the ETC RELEARN function.
Perform the POWERTRAIN VERIFICATION TEST. (Refer to 9 - ENGINE - STANDARD PROCEDURE)

P2101-ELECTRONIC THROTTLE CONTROL MOTOR PERFORMANCE (CONTINUED)

3. THROTTLE POSITION WITHIN 2° DEGREES OF DESIRED THROTTLE POSITION

Start the engine.

Allow the engine to reach normal operating temperature.

With a scan tool, monitor the Actual Throttle Position and Desired Throttle Position.

Compare the Actual Throttle Position and the Set Point Throttle Position.

Is the Actual Throttle Position within 2° degrees of the Desired Throttle Position?

Yes >> Go To 4

No >> Replace the Throttle Body Assembly. Disconnect the Battery when replacing the Throttle Body Assembly. After installation is complete, use a scan tool and select the ETC RELEARN function.
Perform the POWERTRAIN VERIFICATION TEST. (Refer to 9 - ENGINE - STANDARD PROCEDURE)

---

4. ETC OPERATION

Ignition on, engine not running.

With a scan tool, actuate the Electronic Throttle Control Motor.

NOTE: It may be necessary to use a mirror to see the throttle blade.
Observe the throttle blade.

NOTE: Make sure the motion of the throttle blade is smooth and that it opens and closes.

Did the ETC motor operate properly?

Yes >> Refer to the INTERMITTENT CONDITION Diagnostic Procedure.
Perform the POWERTRAIN VERIFICATION TEST. (Refer to 9 - ENGINE - STANDARD PROCEDURE)

No >> Replace the Throttle Body Assembly. Disconnect the Battery when replacing the Throttle Body Assembly. After installation is complete, use a scan tool and select the ETC RELEARN function.
Perform the POWERTRAIN VERIFICATION TEST. (Refer to 9 - ENGINE - STANDARD PROCEDURE)

P2107-ELECTRONIC THROTTLE CONTROL MODULE PROCESSOR

For the Engine circuit diagram (Refer to 9 - ENGINE - SCHEMATICS AND DIAGRAMS).

For a complete wiring diagram **Refer to Section 8W**.

- **When Monitored:**
  Ignition on.
- **Set Condition:**
  Internal PCM failure. Module will attempt to reset, so you will be able to hear the throttle relearning. If the condition is continuous, the vehicle may not be driveable. One trip fault. ETC light is flashing.

Possible Causes
POWERTRAIN CONTROL MODULE NEEDS TO BE REPROGRAMMED

Always perform the Pre-Diagnostic Troubleshooting procedure before proceeding. (Refer to 9 - ENGINE - DIAGNOSIS AND TESTING) .

Diagnostic Test

1. REPROGRAM THE POWERTRAIN CONTROL MODULE

Check for any related TSBs.

Verify the PCM is at the latest calibration (flash level).

NOTE: An intermittent loss of power to the PCM without performing an ETC Relearn procedure may cause this DTC to set.

Flash the Powertrain Control Module per Service Information if any updates are available.

Start the engine.

Allow the engine to reach normal operating temperature.

Operate the accelerator pedal. (do not exceed 3500 rpm)

Test drive the vehicle for 10 miles on a flat road surface.

Does this DTC reset?

Yes >> Replace and reprogram the Powertrain Control Module per Service Information.
Perform the POWERTRAIN VERIFICATION TEST. (Refer to 9 - ENGINE - STANDARD PROCEDURE)

No >> Test Complete.

P2108-ELECTRONIC THROTTLE CONTROL MODULE PERFORMANCE

For the Engine circuit diagram (Refer to 9 - ENGINE - SCHEMATICS AND DIAGRAMS).

For a complete wiring diagram **Refer to Section 8W**.

- **When Monitored:**
  Ignition on.
- **Set Condition:**
  Internal PCM failure. Customer may experience an extended cranking condition with limited driving and a rough idle. One trip fault and the code will set within 5 seconds. ETC light is flashing.

Possible Causes
POWERTRAIN CONTROL MODULE NEEDS TO BE REPROGRAMMED

Always perform the Pre-Diagnostic Troubleshooting procedure before proceeding. (Refer to 9 - ENGINE - DIAGNOSIS AND TESTING).

Diagnostic Test

1. REPROGRAM THE POWERTRAIN CONTROL MODULE

Check for any related TSBs.

Verify the PCM is at the latest calibration (flash level).

NOTE: Inspect the Intake Manifold components for vacuum leaks, repair as necessary

NOTE: An intermittent loss of power to the PCM without performing an ETC Relearn procedure may cause this DTC to set.

NOTE: Diagnose any other DTCs that may have set with the P2108.

Flash the Powertrain Control Module per Service Information if any updates are available.

Start the engine.

Allow the engine to reach normal operating temperature.

Operate the accelerator pedal. (do not exceed 3500 rpm)

Test drive the vehicle for 10 miles on a flat road surface.

Does this DTC reset by itself?

Yes >> Replace and reprogram the Powertrain Control Module per Service Information.
Perform the POWERTRAIN VERIFICATION TEST. (Refer to 9 - ENGINE - STANDARD PROCEDURE)

No >> Test Complete.

P2110-ELECTRONIC THROTTLE CONTROL - FORCED LIMITED RPM

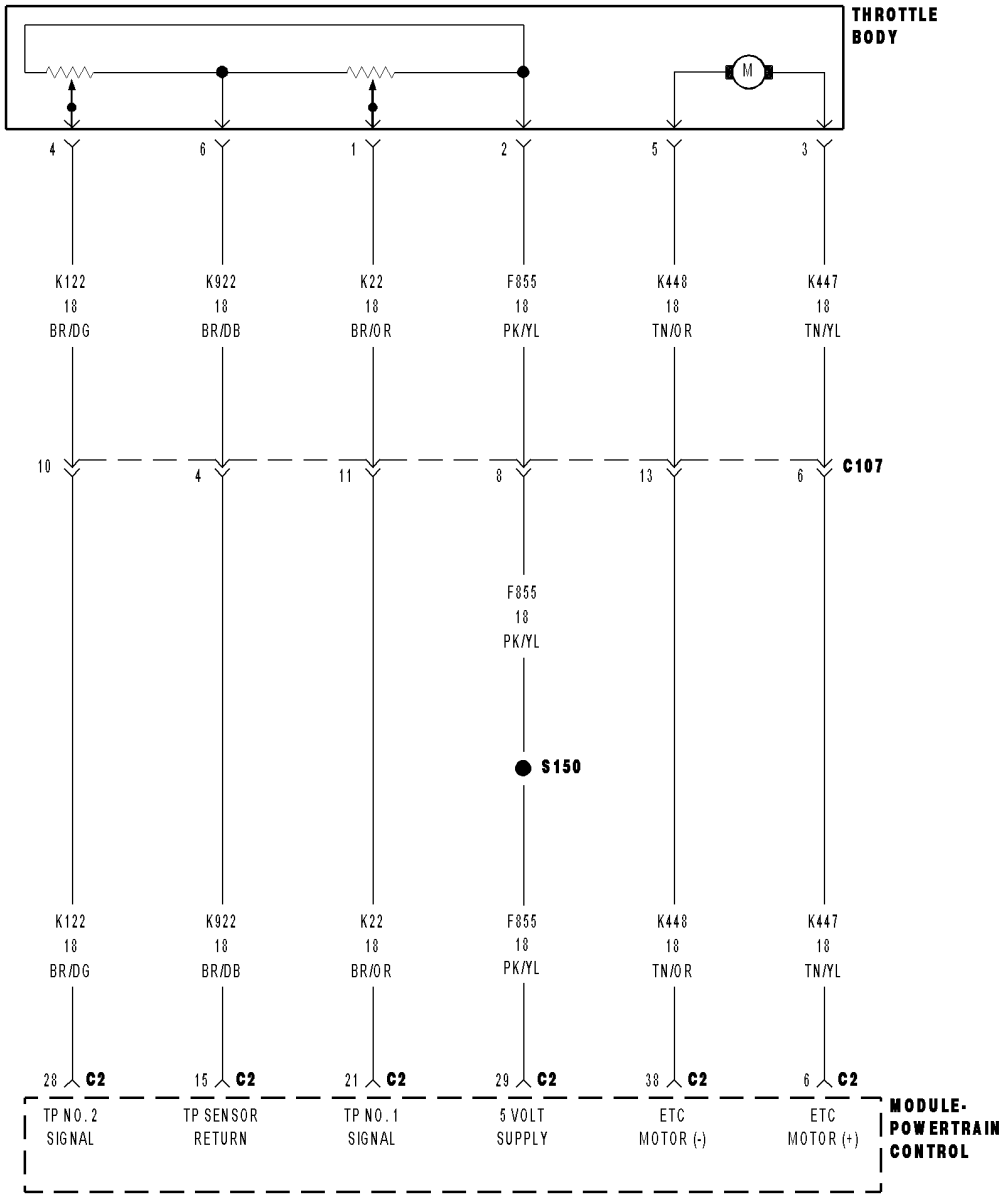

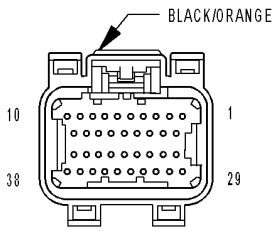

MODULE-POWERTRAIN CONTROL C2 (NGC)

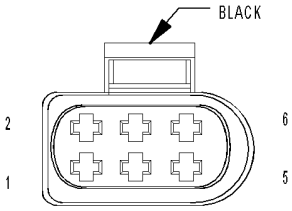

THROTTLE BODY (5.7L)

81454caa

P2110-ELECTRONIC THROTTLE CONTROL - FORCED LIMITED RPM (CONTINUED)

For the Engine circuit diagram (Refer to 9 - ENGINE - SCHEMATICS AND DIAGRAMS).

For a complete wiring diagram **Refer to Section 8W**.

- **When Monitored:**
  Ignition on and ETC motor is working.
- **Set Condition:**
  When the PCM requests to limit engine speed if PWM is too high for 20.5 seconds and before P2118 sets. One trip fault and the code will set within 5 seconds. ETC light is illuminated.

Possible Causes
THROTTLE PLATE STUCK
(K447) ETC POSITIVE CIRCUIT OPEN
(K448) ETC NEGATIVE CIRCUIT OPEN
(K447) ETC POSITIVE CIRCUIT SHORTED TO GROUND
(K448) ETC NEGATIVE CIRCUIT SHORTED TO GROUND
ETC MOTOR
PCM

Always perform the Pre-Diagnostic Troubleshooting procedure before proceeding. (Refer to 9 - ENGINE - DIAGNOSIS AND TESTING).

Diagnostic Test

1. ACTIVE DTC

Ignition on, engine not running.

With a scan tool read DTCs.

In the Freeze Frame data, look at the temperature at which the fault occurred. If it occurred in extreme cold temperatures, Icing of the throttle body may have caused this code to set.

NOTE: Diagnose any TP Sensor faults, 5-Volt Supply faults, and Battery Voltage High or Low DTCs before continuing.

Is the DTC active at this time?

Yes >> Go To 2

No >> Refer to the INTERMITTENT CONDITION Diagnostic Procedure.
Perform the POWERTRAIN VERIFICATION TEST. (Refer to 9 - ENGINE - STANDARD PROCEDURE)

---

2. THROTTLE PLATE STUCK

Turn the ignition off.

Remove the Air Cleaner Assembly from the Throttle Body.

Check for any signs of a foreign material (ice or dirt) causing the Throttle to stick.

Manually open and close the throttle plate using your hands.

Does the Throttle Plate move?

Yes >> Go To 3

No >> Remove the debris if possible or replace the Throttle Body Assembly if signs of physical damage are present. Disconnect the Battery when replacing the Throttle Body Assembly. After installation is complete, use a scan tool and select the ETC RELEARN function.
Perform the POWERTRAIN VERIFICATION TEST. (Refer to 9 - ENGINE - STANDARD PROCEDURE)

P2110-ELECTRONIC THROTTLE CONTROL - FORCED LIMITED RPM (CONTINUED)

3. (K447) ETC POSITIVE CIRCUIT OPEN

Turn the ignition off.

Disconnect the Throttle Body harness connector.

Disconnect the C2 PCM harness connector.

CAUTION: Do not probe the PCM harness connectors. Probing the PCM harness connectors will damage the PCM terminals resulting in poor terminal to pin connection. Install Miller Special Tool #8815 to perform diagnosis.

Measure the resistance of the (K447) ETC Positive circuit from the Throttle Body harness connector to the appropriate terminal of special tool #8815.

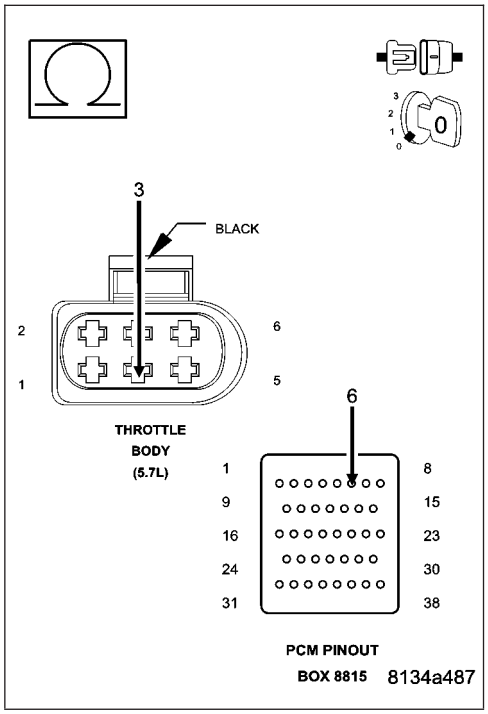

Is the resistance below 5.0 ohms?

Yes >> Go To 4

No >> Repair the open in the (K447) ETC Positive circuit.
Perform the POWERTRAIN VERIFICATION TEST. (Refer to 9 - ENGINE - STANDARD PROCEDURE)

4. (K448) ETC NEGATIVE CIRCUIT OPEN

Measure the resistance of the (K448) ETC Negative circuit from the Throttle Body harness connector to the appropriate terminal of special tool #8815.

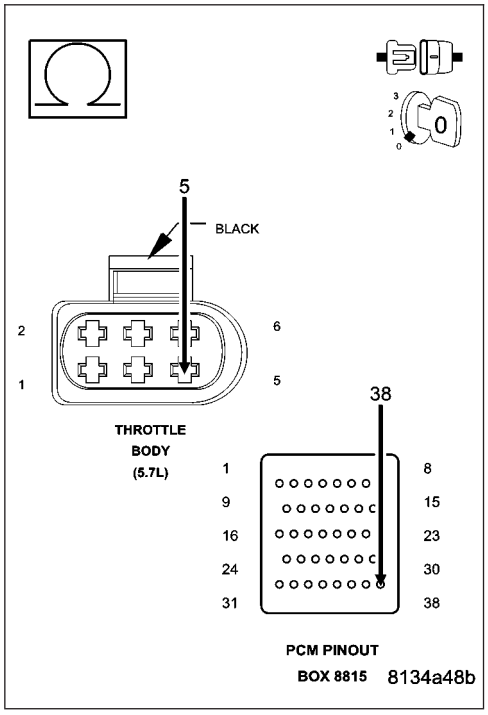

Is the resistance below 5.0 ohms?

Yes >> Go To 5

No >> Repair the open in the (K448) ETC Negative circuit.
Perform the POWERTRAIN VERIFICATION TEST. (Refer to 9 - ENGINE - STANDARD PROCEDURE)

P2110-ELECTRONIC THROTTLE CONTROL - FORCED LIMITED RPM (CONTINUED)

5. (K447) ETC POSITIVE CIRCUIT SHORTED TO GROUND

Measure the resistance between a known good ground and the (K447) ETC Positive circuit at the appropriate terminal of special tool #8815.

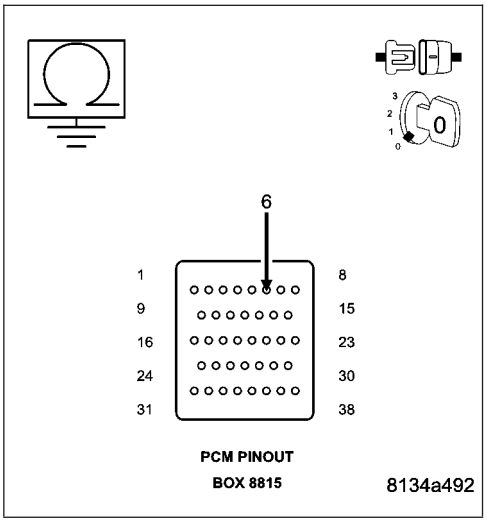

Is the resistance below 100 ohms?

Yes >> Repair the short to ground in the (K447) ETC Positive circuit.
Perform the POWERTRAIN VERIFICATION TEST. (Refer to 9 - ENGINE - STANDARD PROCEDURE)

No >> Go To 6

6. (K448) ETC NEGATIVE CIRCUIT SHORTED TO GROUND

Measure the resistance between a known good ground and the (K448) ETC Negative circuit at the appropriate terminal of special tool #8815.

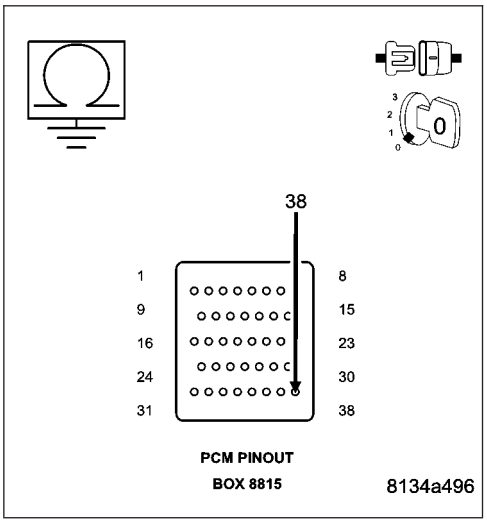

Is the resistance below 100 ohms?

Yes >> Repair the short to ground in the (K448) ETC Negative circuit.
Perform the POWERTRAIN VERIFICATION TEST. (Refer to 9 - ENGINE - STANDARD PROCEDURE)

No >> Go To 7

P2110-ELECTRONIC THROTTLE CONTROL - FORCED LIMITED RPM (CONTINUED)

7. ETC MOTOR

NOTE: Take the following measurement using special tool #8815 to avoid possible damage to the Throttle Body harness connector.

Measure the resistance of the ETC Motor between the (K447) ETC Positive circuit and the (K448) ETC Negative circuit at the appropriate terminals of special tool #8815.

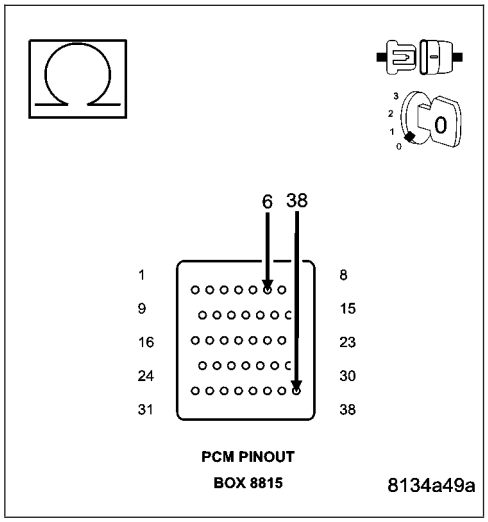

Is the resistance between 2.5 and 25 ohms at closed throttle?

Yes >> Go To 8

No >> Replace the Throttle Body Assembly. Disconnect the Battery when replacing the Throttle Body Assembly. After installation is complete, use a scan tool and select the ETC RELEARN function.

Perform the POWERTRAIN VERIFICATION TEST. (Refer to 9 - ENGINE - STANDARD PROCEDURE)

---

8. PCM

NOTE: Before continuing, check the PCM harness connector terminals for corrosion, damage, or terminal push out. Repair as necessary.

Using the schematics as a guide, inspect the wire harness and connectors. Pay particular attention to all Power and Ground circuits.

Were there any problems found?

Yes >> Repair as necessary.

Perform the POWERTRAIN VERIFICATION TEST. (Refer to 9 - ENGINE - STANDARD PROCEDURE)

No >> Replace and program the Powertrain Control Module per Service Information.

Perform the POWERTRAIN VERIFICATION TEST. (Refer to 9 - ENGINE - STANDARD PROCEDURE)

P2111-ELECTRONIC THROTTLE CONTROL - UNABLE TO CLOSE

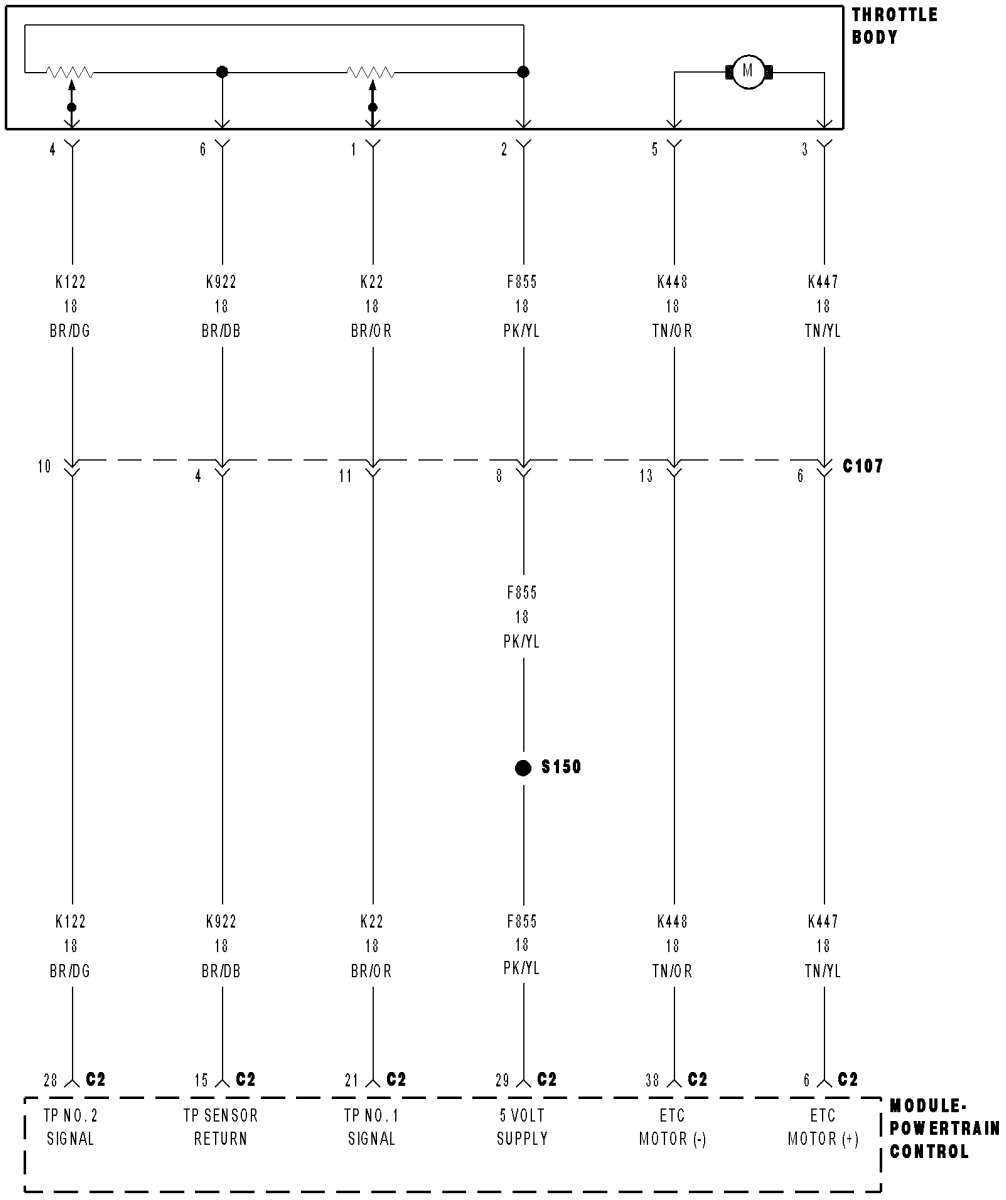

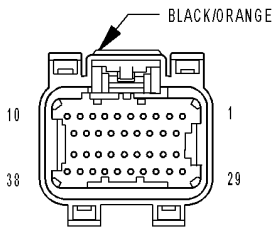

MODULE-POWERTRAIN CONTROL C2 (NGC)

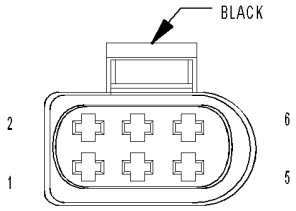

THROTTLE BODY (5.7L)

81454caa

P2111-ELECTRONIC THROTTLE CONTROL - UNABLE TO CLOSE (CONTINUED)

For the Engine circuit diagram (Refer to 9 - ENGINE - SCHEMATICS AND DIAGRAMS).

For a complete wiring diagram **Refer to Section 8W**.

- **When Monitored:**
  Ignition on and battery voltage greater than 10 volts.
- **Set Condition:**
  Just after key on, the throttle is opened and closed to test the system. If the TP Sensor does not return to Limp Home Position at the end of this test, this DTC will set. One trip fault and the code will set within 5 seconds. ETC light is flashing.

Possible Causes
THROTTLE PLATE STUCK ABOVE LIMP HOME POSITION
TP SENSOR NO.1 AND TP SENSOR NO.2 BOTH READ 2.5 VOLTS
(K447) ETC POSITIVE CIRCUIT SHORTED TO BATTERY VOLTAGE
(K447) ETC POSITIVE CIRCUIT OPEN
(K448) ETC NEGATIVE CIRCUIT OPEN
(K447) ETC POSITIVE CIRCUIT SHORTED TO GROUND
(K448) ETC NEGATIVE CIRCUIT SHORTED TO GROUND
PCM

Always perform the Pre-Diagnostic Troubleshooting procedure before proceeding. (Refer to 9 - ENGINE - DIAGNOSIS AND TESTING).

Diagnostic Test

1. ACTIVE DTC

NOTE: Maximum engine speed could be reduced while this fault is active, it just depends where the throttle gets stuck.

Ignition on, engine not running.

NOTE: The PCM tests the ETC Motor by opening and closing the Throttle Plate before starting the engine. If during this test the Throttle plate does not return to the closed position this DTC sets.

With a scan tool read DTCs.

NOTE: Diagnose any TP Sensor or 5-Volt Supply DTCs before continuing.

Is the DTC active at this time?

Yes >> Go To 2

No >> Refer to the INTERMITTENT CONDITION Diagnostic Procedure.
Perform the POWERTRAIN VERIFICATION TEST. (Refer to 9 - ENGINE - STANDARD PROCEDURE)

P2111-ELECTRONIC THROTTLE CONTROL - UNABLE TO CLOSE (CONTINUED)

2. THROTTLE PLATE STUCK OPEN

Turn the ignition off.

NOTE: The PCM tests the ETC Motor by opening and closing the Throttle Plate before starting the engine. If during this test the Throttle plate does not return to the closed position this DTC sets.

Remove the Air Cleaner Assembly from the Throttle Body.

Check for any signs of a foreign material causing the Throttle to remain open.

Using a scan tool actuate the ETC Motor.

Does the Throttle Plate move?

Yes >> Go To 3

No >> Remove the debris if possible or replace the Throttle Body Assembly if signs of physical damage are present. Disconnect the Battery when replacing the Throttle Body Assembly. After installation is complete, use a scan tool and perform the ETC RELEARN function.

Perform the POWERTRAIN VERIFICATION TEST. (Refer to 9 - ENGINE - STANDARD PROCEDURE)

---

3. TP SENSOR NO.1 AND TP SENSOR NO.2 BOTH EQUAL 2.5 VOLTS

With a scan tool, perform the Throttle Follower test while reading both TP Sensor voltage readings.

Are both TP Sensor readings stuck at 2.5 volts?

Yes >> Check the TP Sensor Signal circuits for excessive resistance, being shorted to each other, or shorted to the Sensor Return circuit.

Perform the POWERTRAIN VERIFICATION TEST. (Refer to 9 - ENGINE - STANDARD PROCEDURE)

No >> Go To 4

---

4. (K447) ETC POSITIVE CIRCUIT SHORTED TO BATTERY VOLTAGE

Turn the ignition off.

Disconnect the Throttle Body harness connector.

Disconnect the C2 PCM harness connector.

CAUTION: Do not probe the PCM harness connectors. Probing the PCM harness connectors will damage the PCM terminals resulting in poor terminal to pin connection. Install Miller Special Tool #8815 to perform the diagnostics.

Ignition on, engine not running.

With a 12-volt test light connected to ground, probe the (K447) ETC Positive circuit at the appropriate terminal of special tool #8815.

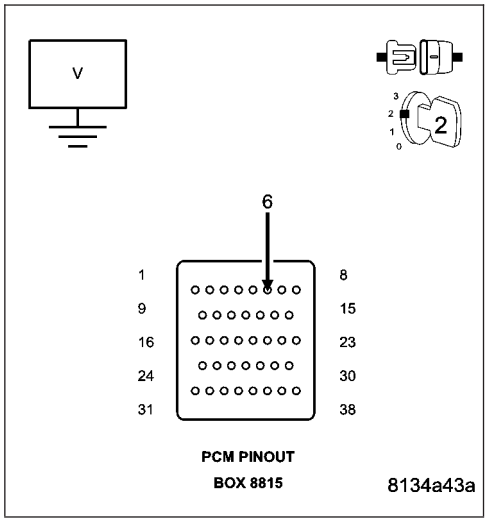

Does the test light illuminate brightly?

Yes >> Repair the short to battery voltage on the (K447) ETC Positive circuit.

Perform the POWERTRAIN VERIFICATION TEST. (Refer to 9 - ENGINE - STANDARD PROCEDURE)

No >> Go To 5

P2111-ELECTRONIC THROTTLE CONTROL - UNABLE TO CLOSE (CONTINUED)

5. (K447) ETC POSITIVE CIRCUIT OPEN

Turn the ignition off.

Measure the resistance of the (K447) ETC Positive circuit from the Throttle Body harness connector to the appropriate terminal of special tool #8815.

Is the resistance below 5.0 ohms?

Yes >> Go To 6

No >> Repair the open in the (K447) ETC Positive circuit. Perform the POWERTRAIN VERIFICATION TEST. (Refer to 9 - ENGINE - STANDARD PROCEDURE)

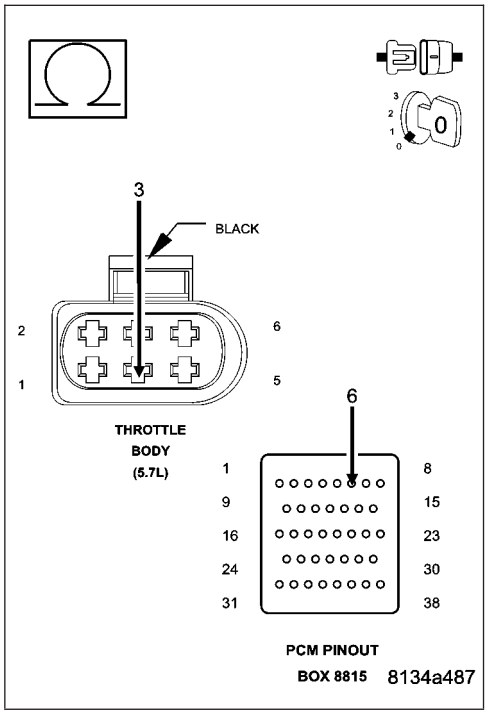

6. (K448) ETC NEGATIVE CIRCUIT OPEN

Measure the resistance of the (K448) ETC Negative circuit from the Throttle Body harness connector to the appropriate terminal of special tool #8815.

Is the resistance below 5.0 ohms?

Yes >> Go To 7

No >> Repair the open in the (K448) ETC Negative circuit. Perform the POWERTRAIN VERIFICATION TEST. (Refer to 9 - ENGINE - STANDARD PROCEDURE)

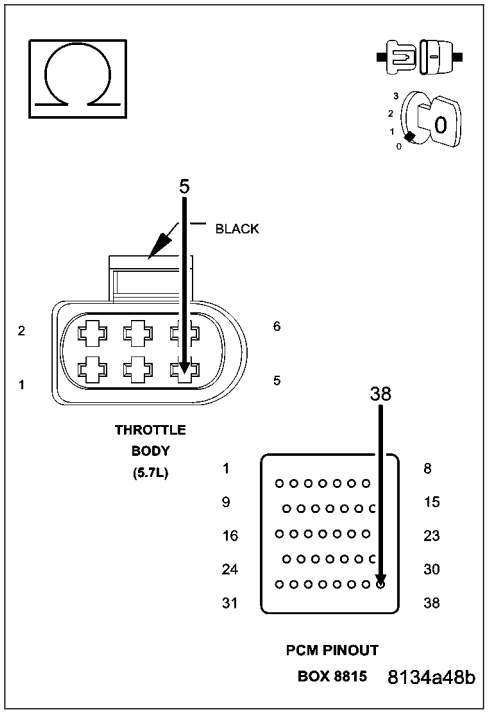

P2111-ELECTRONIC THROTTLE CONTROL - UNABLE TO CLOSE (CONTINUED)

7. (K447) ETC POSITIVE CIRCUIT SHORTED TO GROUND

Measure the resistance between a known good ground and the (K447) ETC Positive circuit at the appropriate terminal of special tool #8815.

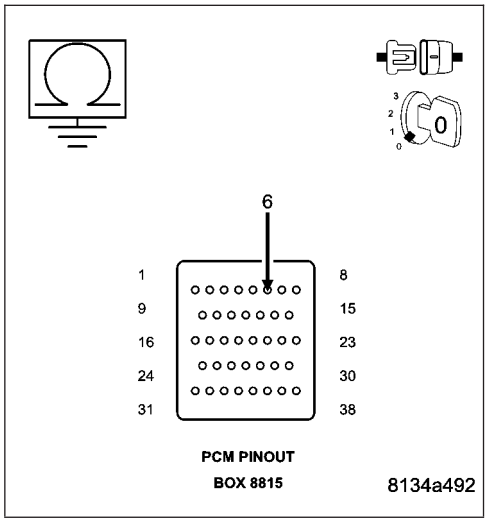

Is the resistance below 100 ohms?

Yes >> Repair the short to ground in the (K447) ETC Positive circuit.
Perform the POWERTRAIN VERIFICATION TEST. (Refer to 9 - ENGINE - STANDARD PROCEDURE)

No >> Go To 8

8. (K448) ETC NEGATIVE CIRCUIT SHORTED TO GROUND

Measure the resistance between a known good ground and the (K448) ETC Negative circuit at the appropriate terminal of special tool #8815.

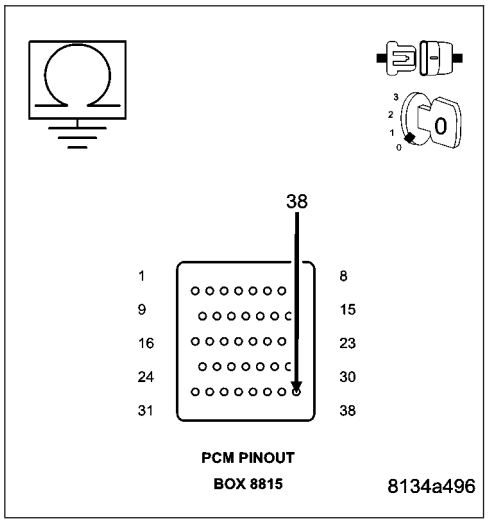

Is the resistance below 100 ohms?

Yes >> Repair the short to ground in the (K448) ETC Negative circuit.
Perform the POWERTRAIN VERIFICATION TEST. (Refer to 9 - ENGINE - STANDARD PROCEDURE)

No >> Go To 9

9. PCM

NOTE: Before continuing, check the PCM harness connector terminals for corrosion, damage, or terminal push out. Repair as necessary.
Using the schematics as a guide, inspect the wire harness and connectors. Pay particular attention to all Power and Ground circuits.

Were there any problems found?

Yes >> Repair as necessary.
Perform the POWERTRAIN VERIFICATION TEST. (Refer to 9 - ENGINE - STANDARD PROCEDURE)

No >> Replace and program the Powertrain Control Module per Service Information.
Perform the POWERTRAIN VERIFICATION TEST. (Refer to 9 - ENGINE - STANDARD PROCEDURE)

P2112-ELECTRONIC THROTTLE CONTROL - UNABLE TO OPEN

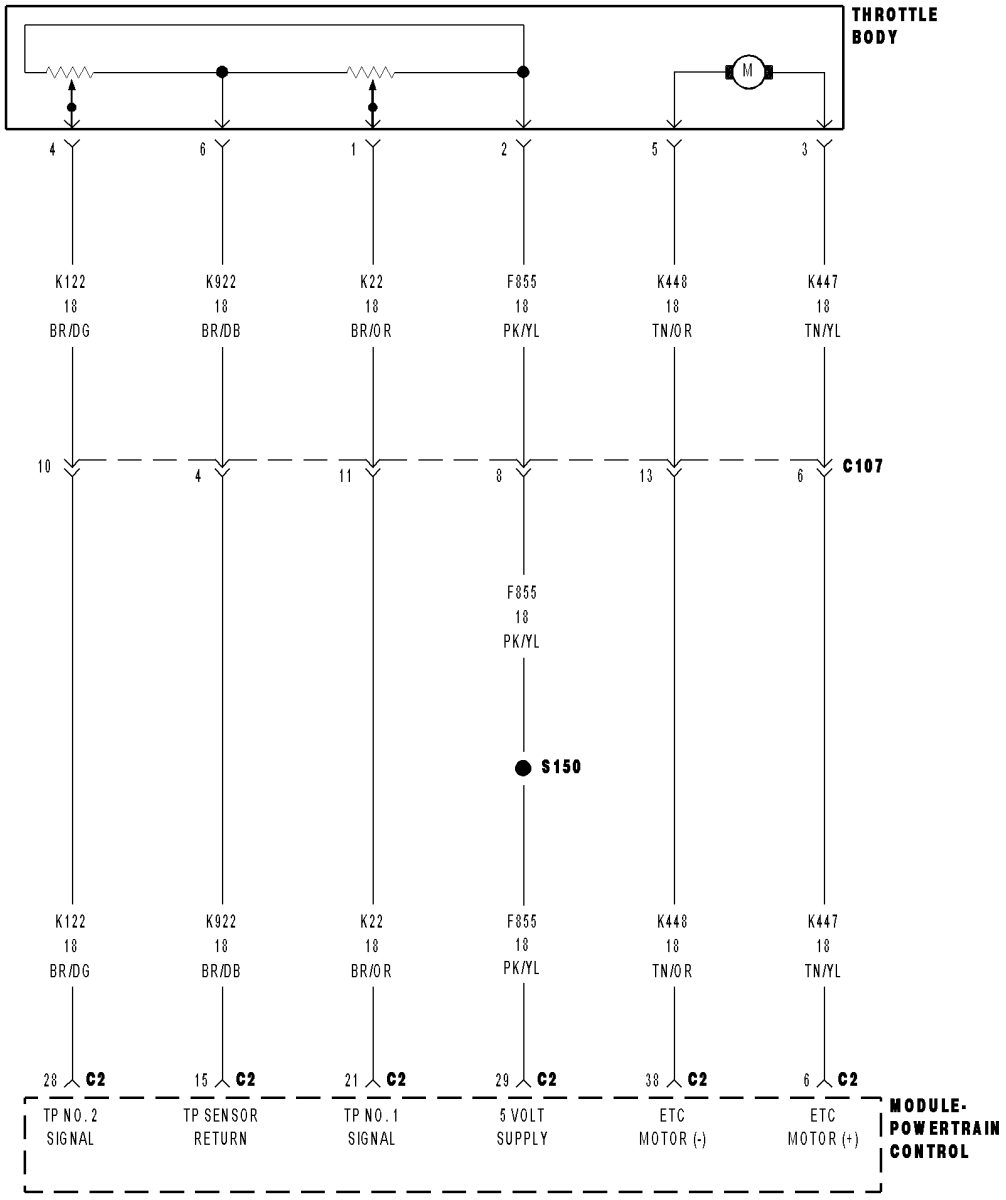

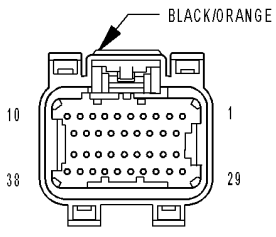

MODULE-POWERTRAIN CONTROL C2 (NGC)

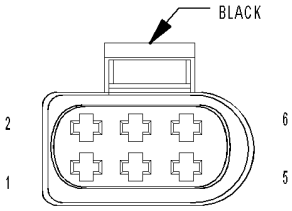

THROTTLE BODY (5.7L)

81454caa

P2112-ELECTRONIC THROTTLE CONTROL - UNABLE TO OPEN (CONTINUED)

For the Engine circuit diagram (Refer to 9 - ENGINE - SCHEMATICS AND DIAGRAMS).

For a complete wiring diagram **Refer to Section 8W**.

- **When Monitored:**
  Ignition on and battery voltage greater than 10 volts.
- **Set Condition:**
  Just after key on, the throttle is opened and closed to test the system. If the TP Sensor does not return to Limp Home Position at the end of this test, this DTC will set. One trip fault and the code will set within 5 seconds. ETC light is flashing.

Possible Causes
THROTTLE PLATE STUCK AT OR BELOW LIMP HOME POSITION
(K448) ETC NEGATIVE CIRCUIT SHORTED TO BATTERY VOLTAGE
(K447) ETC POSITIVE CIRCUIT OPEN
(K448) ETC NEGATIVE CIRCUIT OPEN
(K447) ETC POSITIVE CIRCUIT SHORTED TO GROUND
(K448) ETC NEGATIVE CIRCUIT SHORTED TO GROUND
PCM

Always perform the Pre-Diagnostic Troubleshooting procedure before proceeding. (Refer to 9 - ENGINE - DIAGNOSIS AND TESTING).

Diagnostic Test

1. ACTIVE DTC

Ignition on, engine not running.

NOTE: The PCM tests the ETC Motor by opening and closing the Throttle Plate before starting the engine. If during this test the Throttle plate does not return to the closed position this DTC sets.

With a scan tool read DTCs.

NOTE: Diagnose any TP Sensor, Battery Voltage, and 5-Volt Supply DTCs before continuing.

Is the DTC active at this time?

Yes >> Go To 2

No >> Refer to the INTERMITTENT CONDITION Diagnostic Procedure.
Perform the POWERTRAIN VERIFICATION TEST. (Refer to 9 - ENGINE - STANDARD PROCEDURE)

P2112-ELECTRONIC THROTTLE CONTROL - UNABLE TO OPEN (CONTINUED)

2. THROTTLE PLATE STUCK OPEN

Turn the ignition off.

NOTE: The PCM tests the ETC Motor by opening and closing the Throttle Plate before starting the engine. If during this test the Throttle plate does not open this DTC sets.

Remove the Air Cleaner Assembly from the Throttle Body.

Check for any signs of a foreign material causing the Throttle to remain open.

Using a scan tool actuate the ETC Motor.

Does the Throttle Plate move?

Yes >> Go To 3

No >> Remove the debris if possible or replace the Throttle Body Assembly. Disconnect the Battery when replacing the Throttle Body Assembly. After installation is complete, use a scan tool and select the ETC RELEARN function.

Perform the POWERTRAIN VERIFICATION TEST. (Refer to 9 - ENGINE - STANDARD PROCEDURE)

---

3. (K448) ETC NEGATIVE CIRCUIT SHORTED TO BATTERY VOLTAGE

Turn the ignition off.

Disconnect the Throttle Body harness connector.

Disconnect the C2 PCM harness connector.

CAUTION: Do not probe the PCM harness connectors. Probing the PCM harness connectors will damage the PCM terminals resulting in poor terminal to pin connection. Install Miller Special Tool #8815 to perform diagnosis.

Ignition on, engine not running.

With a 12-volt test light connected to ground, probe the (K448) ETC Negative circuit at the appropriate terminal of special tool #8815.

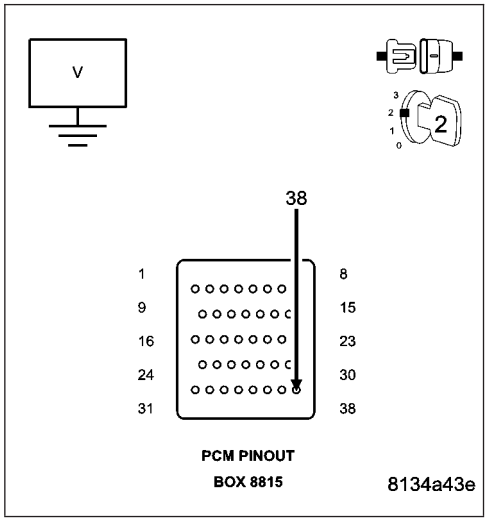

Does the test light illuminate brightly?

Yes >> Repair the short to battery voltage on the (K448) ETC Negative circuit.

Perform the POWERTRAIN VERIFICATION TEST. (Refer to 9 - ENGINE - STANDARD PROCEDURE)

No >> Go To 4

P2112-ELECTRONIC THROTTLE CONTROL - UNABLE TO OPEN (CONTINUED)

4. (K447) ETC POSITIVE CIRCUIT OPEN

Turn the ignition off.

Measure the resistance of the (K447) ETC Positive circuit from the Throttle Body harness connector to the appropriate terminal of special tool #8815.

Is the resistance below 5.0 ohms?

Yes >> Go To 5

No >> Repair the open in the (K447) ETC Positive circuit. Perform the POWERTRAIN VERIFICATION TEST. (Refer to 9 - ENGINE - STANDARD PROCEDURE)

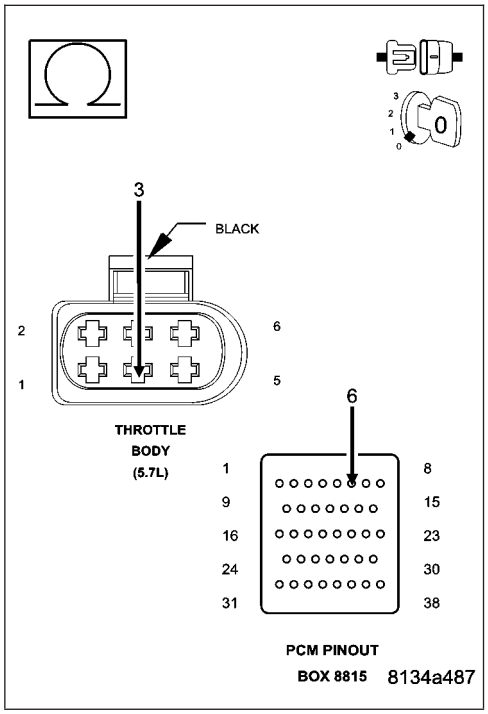

5. (K448) ETC NEGATIVE CIRCUIT OPEN

Measure the resistance of the (K448) ETC Negative circuit from the Throttle Body harness connector to the appropriate terminal of special tool #8815.

Is the resistance below 5.0 ohms?

Yes >> Go To 6

No >> Repair the open in the (K448) ETC Negative circuit. Perform the POWERTRAIN VERIFICATION TEST. (Refer to 9 - ENGINE - STANDARD PROCEDURE)

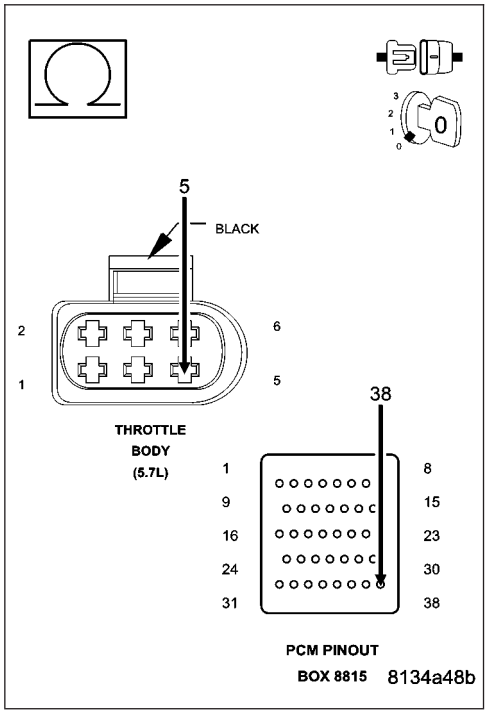

P2112-ELECTRONIC THROTTLE CONTROL - UNABLE TO OPEN (CONTINUED)

6. (K447) ETC POSITIVE CIRCUIT SHORTED TO GROUND

Measure the resistance between a known good ground and the (K447) ETC Positive circuit at the appropriate terminal of special tool #8815.

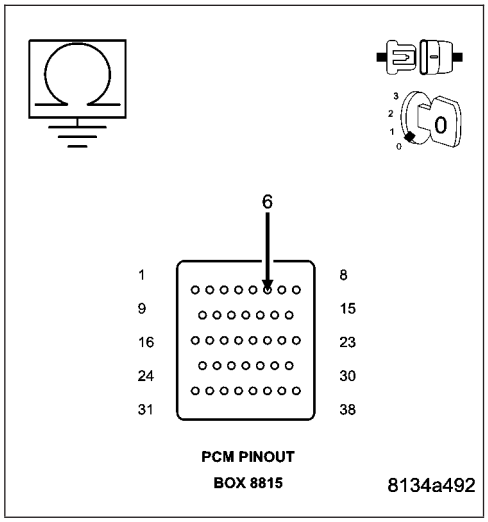

Is the resistance below 100 ohms?

Yes >> Repair the short to ground in the (K447) ETC Positive circuit.
Perform the POWERTRAIN VERIFICATION TEST. (Refer to 9 - ENGINE - STANDARD PROCEDURE)

No >> Go To 7

7. (K448) ETC NEGATIVE CIRCUIT SHORTED TO GROUND

Measure the resistance between a known good ground and the (K448) ETC Negative circuit at the appropriate terminal of special tool #8815.

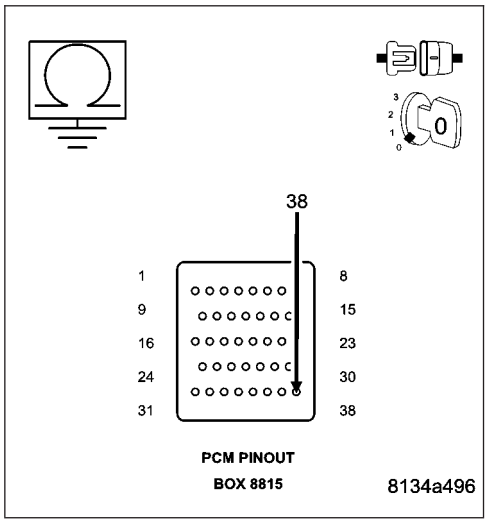

Is the resistance below 100 ohms?

Yes >> Repair the short to ground in the (K448) ETC Negative circuit.
Perform the POWERTRAIN VERIFICATION TEST. (Refer to 9 - ENGINE - STANDARD PROCEDURE)

No >> Go To 8

8. PCM

NOTE: Before continuing, check the PCM harness connector terminals for corrosion, damage, or terminal push out. Repair as necessary.
Using the schematics as a guide, inspect the wire harness and connectors. Pay particular attention to all Power and Ground circuits.

Were there any problems found?

Yes >> Repair as necessary.
Perform the POWERTRAIN VERIFICATION TEST. (Refer to 9 - ENGINE - STANDARD PROCEDURE)

No >> Replace and program the Powertrain Control Module per Service Information.
Perform the POWERTRAIN VERIFICATION TEST. (Refer to 9 - ENGINE - STANDARD PROCEDURE)

P2115-ACCELERATOR PEDAL POSITION SENSOR 1 MINIMUM STOP PERFORMANCE

For the Engine circuit diagram (Refer to 9 - ENGINE - SCHEMATICS AND DIAGRAMS).

For a complete wiring diagram **Refer to Section 8W**.

- **When Monitored:**
  Ignition on. During in plant mode the APP Sensors need to be checked to make sure that idle and full pedal travel can be reached on both sensors. The test for P2115 is only enabled once test for P2166 has passed.
- **Set Condition:**
  APPS No.1 has failed to achieve the required minimum value during In Plant testing. One trip fault and the code will set within 5 seconds. Engine will only idle.

Possible Causes
IN PLANT TEST FAILURE
APPS RELEARN

Always perform the Pre-Diagnostic Troubleshooting procedure before proceeding. (Refer to 9 - ENGINE - DIAGNOSIS AND TESTING).

Diagnostic Test

1. IN PLANT TEST FAILURE

Ignition on, engine not running.

NOTE: This DTC is set when the APP Sensors are learned in plant but do not reach the Minimum or Maximum voltage range.

With a scan tool read DTCs.

With the scan tool, erase DTCs.

Start the engine.

With the scan tool, read DTCs.

NOTE: Diagnose any APPS out of Range and 5-Volt Supply DTCs before continuing.

Is the DTC active at this time?

Yes >> Go To 2

No >> Refer to the INTERMITTENT CONDITION Diagnostic Procedure.
Perform the POWERTRAIN VERIFICATION TEST. (Refer to 9 - ENGINE - STANDARD PROCEDURE)

---

2. APPS RELEARN

With a scan tool select the ETC RELEARN function.

Next, erase DTCs.

Start the engine.

Does the DTC return?

Yes >> Replace the APPS Assembly per Service Information. After installation is complete, use a scan tool and select the ETC RELEARN function.
Perform the POWERTRAIN VERIFICATION TEST. (Refer to 9 - ENGINE - STANDARD PROCEDURE)

No >> Test Complete.

P2116-ACCELERATOR PEDAL POSITION SENSOR 2 MINIMUM STOP PERFORMANCE

For the Engine circuit diagram (Refer to 9 - ENGINE - SCHEMATICS AND DIAGRAMS).

For a complete wiring diagram **Refer to Section 8W**.

- **When Monitored:**
  Ignition on. During in plant mode the APP Sensors need to be checked to make sure that idle and full pedal travel can be reached on both sensors. The test for P2116 is only enabled once test for P2167 has passed.
- **Set Condition:**
  APPS No.2 has failed to achieve the required minimum value during In Plant testing. One trip fault and the code will be stored within 5 seconds. Engine will only idle.

Possible Causes
IN PLANT TEST FAILURE
APPS RELEARN

Always perform the Pre-Diagnostic Troubleshooting procedure before proceeding. (Refer to 9 - ENGINE - DIAGNOSIS AND TESTING).

Diagnostic Test

1. IN PLANT TEST FAILURE

Ignition on, engine not running.

NOTE: This DTC is set when the APP Sensors are learned in plant but do not reach the Minimum or Maximum voltage range.

With a scan tool read DTCs and record the related Freeze Frame data.

With a scan tool, erase DTCs.

Start the engine.

With a scan tool, read DTCs.

Is the DTC active at this time?

Yes >> Go To 2

No >> Refer to the INTERMITTENT CONDITION Diagnostic Procedure.
Perform the POWERTRAIN VERIFICATION TEST. (Refer to 9 - ENGINE - STANDARD PROCEDURE)

---

2. APPS RELEARN

With a scan tool select the ETC RELEARN function.

Next, erase DTCs.

Start the engine.

Does the DTC return?

Yes >> Replace the APPS Assembly per Service Information. After installation is complete, use a scan tool and select the ETC RELEARN function.
Perform the POWERTRAIN VERIFICATION TEST. (Refer to 9 - ENGINE - STANDARD PROCEDURE)

No >> Test Complete.

P2118-ELECTRONIC THROTTLE CONTROL MOTOR CIRCUIT

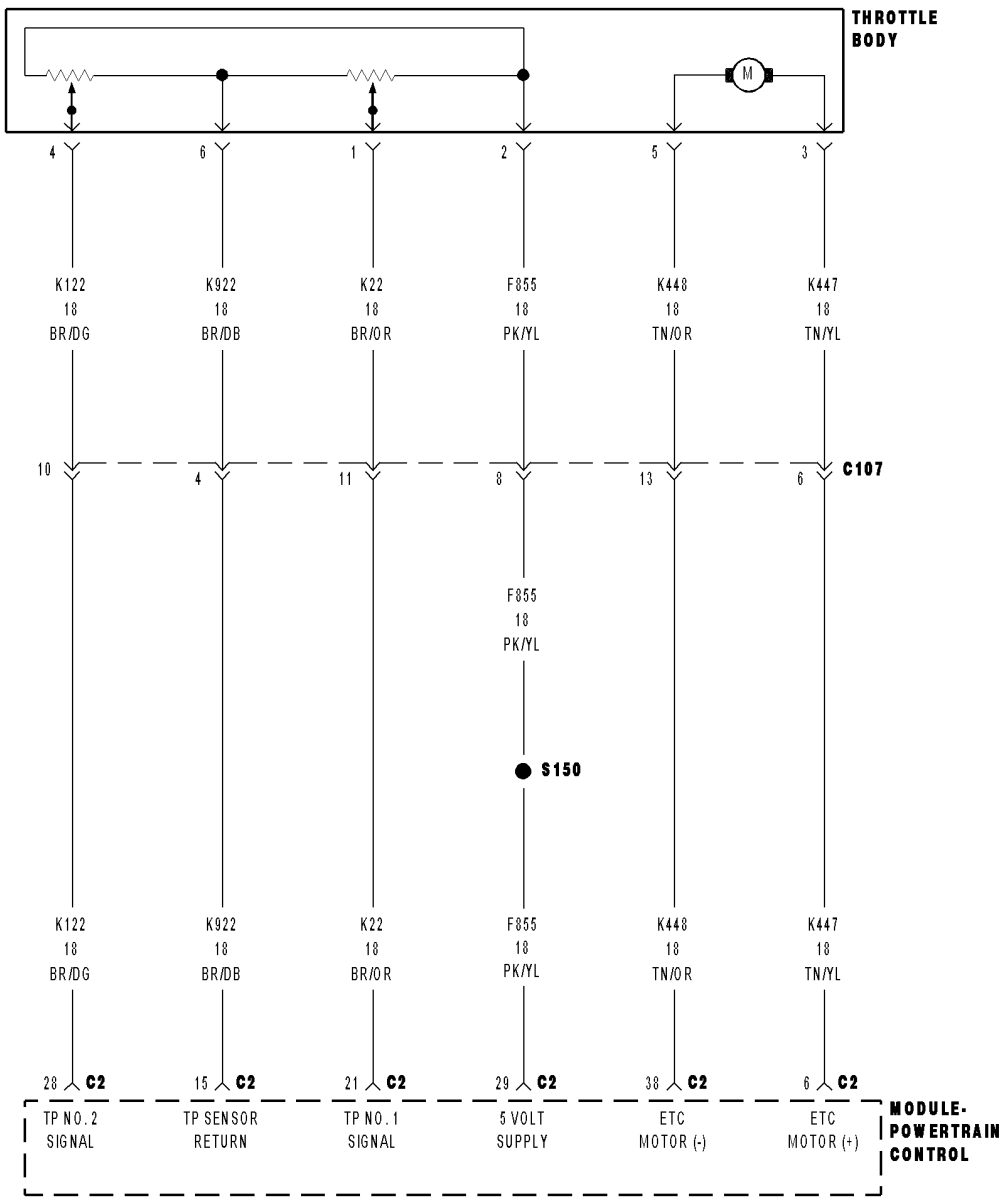

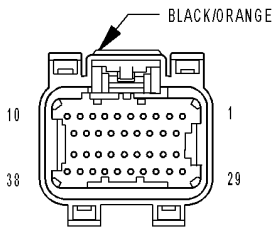

MODULE-POWERTRAIN CONTROL C2 (NGC)

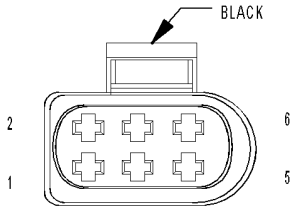

THROTTLE BODY (5.7L)

81454caa

P2118-ELECTRONIC THROTTLE CONTROL MOTOR CIRCUIT (CONTINUED)

For the Engine circuit diagram (Refer to 9 - ENGINE - SCHEMATICS AND DIAGRAMS).

For a complete wiring diagram **Refer to Section 8W**.

- **When Monitored:**
  With the ignition on and the ETC Motor is not in Limp Home mode.
- **Set Condition:**
  When the PCM detects an internal error or a short between the ETC Motor- and ETC Motor + circuits in the ETC Motor Driver. One trip fault. ETC light is flashing.

Possible Causes
THROTTLE PLATE / BORE INSPECTION
(K447) ETC POSITIVE CIRCUIT SHORTED TO BATTERY VOLTAGE
(K448) ETC NEGATIVE CIRCUIT SHORTED TO BATTERY VOLTAGE
(K447) ETC POSITIVE CIRCUIT SHORTED TO THE (K448) ETC NEGATIVE CIRCUIT
(K447) ETC POSITIVE CIRCUIT OPEN
(K447) ETC POSITIVE CIRCUIT SHORTED TO GROUND
(K448) ETC NEGATIVE CIRCUIT OPEN
(K448) ETC NEGATIVE CIRCUIT SHORTED TO GROUND
ETC MOTOR
PCM

Always perform the Pre-Diagnostic Troubleshooting procedure before proceeding. (Refer to 9 - ENGINE - DIAGNOSIS AND TESTING).

Diagnostic Test

1. ACTIVE DTC

Ignition on, engine not running.

NOTE: If the P2118 is intermittent, it is possible that the controller is overheating in extreme hot temperatures, and this is considered a normal protection operation. No repair is necessary.

With a scan tool, read DTCs.

Look closely at the temperatures at which this DTC set.

Is the DTC active at this time?

Yes >> Go To 2

No >> Refer to the INTERMITTENT CONDITION Diagnostic Procedure.
Perform the POWERTRAIN VERIFICATION TEST. (Refer to 9 - ENGINE - STANDARD PROCEDURE)

P2118-ELECTRONIC THROTTLE CONTROL MOTOR CIRCUIT (CONTINUED)

2. THROTTLE PLATE INSPECTION

Turn the ignition off.

Remove the Air Cleaner Assembly from the Throttle Body.

Check for any signs of a foreign material (ice or dirt) on the Throttle Plate or in the bore causing the Throttle Plate to stick.

Were any signs of foreign material or scoring of the throttle plate or bore found?

Yes >> Remove the debris if possible or replace the Throttle Body Assembly. Disconnect the Battery when replacing the Throttle Body Assembly. After installation is complete, use a scan tool and select the ETC RELEARN function.

Perform the POWERTRAIN VERIFICATION TEST. (Refer to 9 - ENGINE - STANDARD PROCEDURE)

No >> Go To 3

---

3. (K447) ETC POSITIVE CIRCUIT SHORTED TO BATTERY VOLTAGE

Turn the ignition off.

Disconnect the Throttle Body harness connector.

Disconnect the C2 PCM harness connector.

Ignition on, engine not running.

CAUTION: Do not probe the PCM harness connectors. Probing the PCM harness connectors will damage the PCM terminals resulting in poor terminal to pin connection. Install Miller Special Tool #8815 to perform diagnosis.

With a 12-volt test light connected to ground, probe the (K447) ETC Positive circuit at the appropriate terminal of special tool #8815.

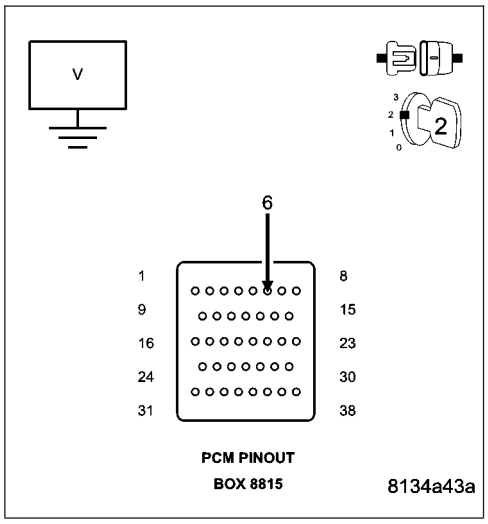

Does the test light illuminate brightly?

Yes >> Repair the short to battery voltage on the (K447) ETC Positive circuit.

Perform the POWERTRAIN VERIFICATION TEST. (Refer to 9 - ENGINE - STANDARD PROCEDURE)

No >> Go To 4

---

4. (K448) ETC NEGATIVE CIRCUIT SHORTED TO BATTERY VOLTAGE

Using a 12-volt test light connected to ground, probe the (K448) ETC Negative circuit at the appropriate terminal of special tool #8815.

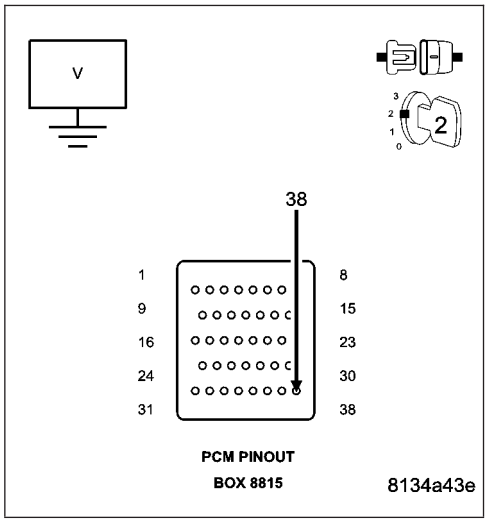

Does the test light illuminate brightly?

Yes >> Repair the short to battery voltage in the (K448) ETC Negative circuit.

Perform the POWERTRAIN VERIFICATION TEST. (Refer to 9 - ENGINE - STANDARD PROCEDURE)

No >> Go To 5

P2118-ELECTRONIC THROTTLE CONTROL MOTOR CIRCUIT (CONTINUED)

5. (K447) ETC POSITIVE CIRCUIT SHORTED TO THE (K448) ETC NEGATIVE CIRCUIT

Measure the resistance between the (K447) ETC Positive circuit and the (K448) ETC Negative circuit at the appropriate terminals of special tool #8815.

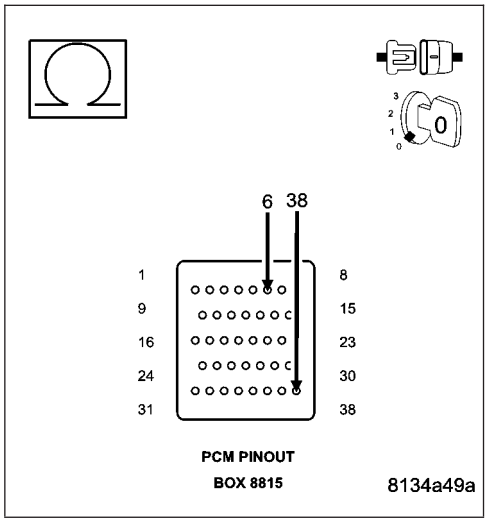

Is the resistance below 100 ohms?

Yes >> Repair the short to between the (K447) ETC Positive circuit and the (K448) ETC Negative circuit.
Perform the POWERTRAIN VERIFICATION TEST. (Refer to 9 - ENGINE - STANDARD PROCEDURE)

No >> Go To 6

6. (K447) ETC POSITIVE CIRCUIT OPEN

Turn the ignition off.

Measure the resistance of the (K447) ETC Positive circuit from the Throttle Body harness connector to the appropriate terminal of special tool #8815.

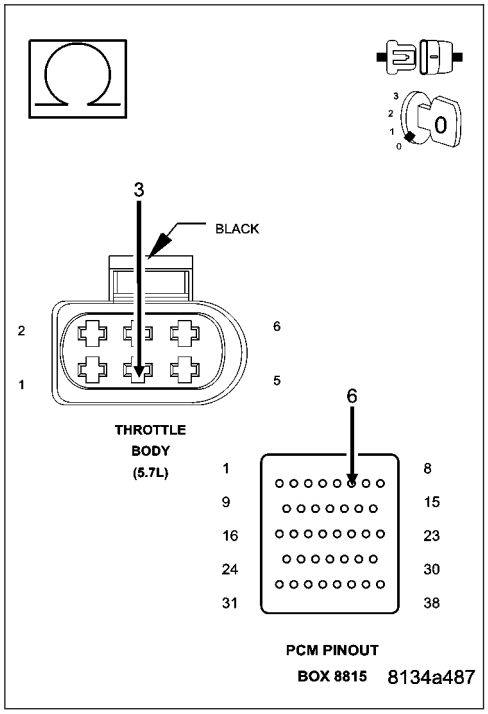

Is the resistance below 5.0 ohms?

Yes >> Go To 7

No >> Repair the open in the (K447) ETC Positive circuit.
Perform the POWERTRAIN VERIFICATION TEST. (Refer to 9 - ENGINE - STANDARD PROCEDURE)

P2118-ELECTRONIC THROTTLE CONTROL MOTOR CIRCUIT (CONTINUED)

7. (K447) ETC POSITIVE CIRCUIT SHORTED TO GROUND

Measure the resistance between ground and the (K447) ETC Positive circuit between the appropriate terminals of special tool #8815.

Is the resistance below 100 ohms?

Yes >> Repair the short to ground in the (K447) ETC Positive circuit.
Perform the POWERTRAIN VERIFICATION TEST. (Refer to 9 - ENGINE - STANDARD PROCEDURE)

No >> Go To 8

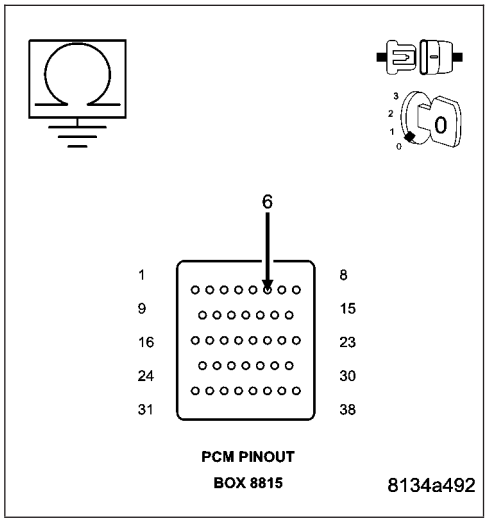

8. (K448) ETC NEGATIVE CIRCUIT OPEN

Measure the resistance of the (K448) ETC Negative circuit from the Throttle Body harness connector to the appropriate terminal of special tool #8815.

Is the resistance below 5.0 ohms?

Yes >> Go To 9

No >> Repair the open in the (K448) ETC Negative circuit.
Perform the POWERTRAIN VERIFICATION TEST. (Refer to 9 - ENGINE - STANDARD PROCEDURE)

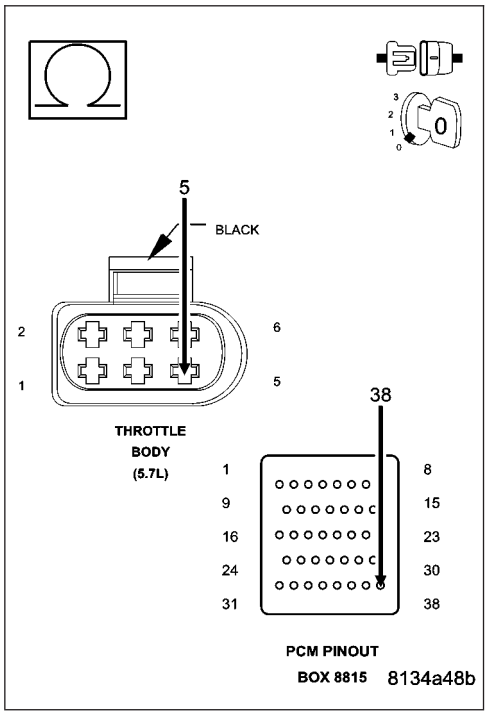

P2118-ELECTRONIC THROTTLE CONTROL MOTOR CIRCUIT (CONTINUED)

9. (K448) ETC NEGATIVE CIRCUIT SHORTED TO GROUND

Measure the resistance between ground and the (K448) ETC Negative circuit between the appropriate terminals of special tool #8815.

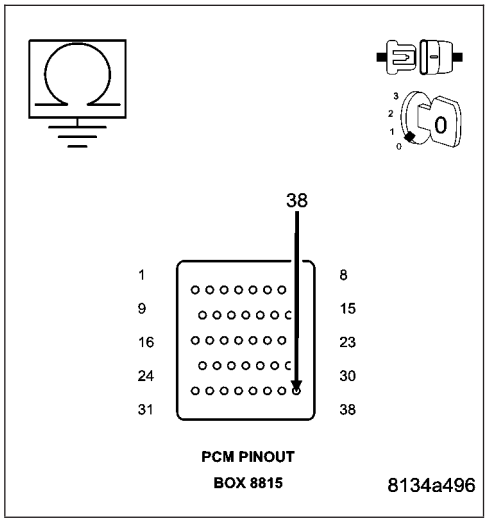

Is the resistance below 100 ohms?

Yes >> Repair the short to ground in the (K448) ETC Negative circuit.
Perform the POWERTRAIN VERIFICATION TEST. (Refer to 9 - ENGINE - STANDARD PROCEDURE)

No >> Go To 10

10. ETC MOTOR

NOTE: Take the following measurement using special tool #8815 to avoid possible damage to the Throttle Body harness connector.
Measure the resistance of the ETC Motor between the (K447) ETC Positive circuit and the (K448) ETC Negative circuit at the appropriate terminals of special tool #8815.

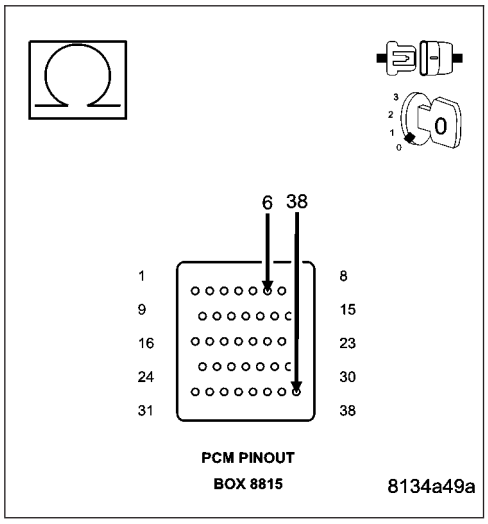

Is the resistance between 2.5 and 25 ohms at closed throttle?

Yes >> Go To 11

No >> Replace the Throttle Body Assembly. Disconnect the Battery when replacing the Throttle Body Assembly. After installation is complete, use a scan tool and select the ETC RELEARN function.
Perform the POWERTRAIN VERIFICATION TEST. (Refer to 9 - ENGINE - STANDARD PROCEDURE)

11. PCM

NOTE: Before continuing, check the PCM harness connector terminals for corrosion, damage, or terminal push out. Repair as necessary.
Using the schematics as a guide, inspect the wire harness and connectors. Pay particular attention to all Power and Ground circuits.

Were there any problems found?

Yes >> Repair as necessary.
Perform the POWERTRAIN VERIFICATION TEST. (Refer to 9 - ENGINE - STANDARD PROCEDURE)

No >> Replace and program the Powertrain Control Module per Service Information.
Perform the POWERTRAIN VERIFICATION TEST. (Refer to 9 - ENGINE - STANDARD PROCEDURE)

P2122-ACCELERATOR PEDAL POSITION SENSOR 1 CIRCUIT LOW

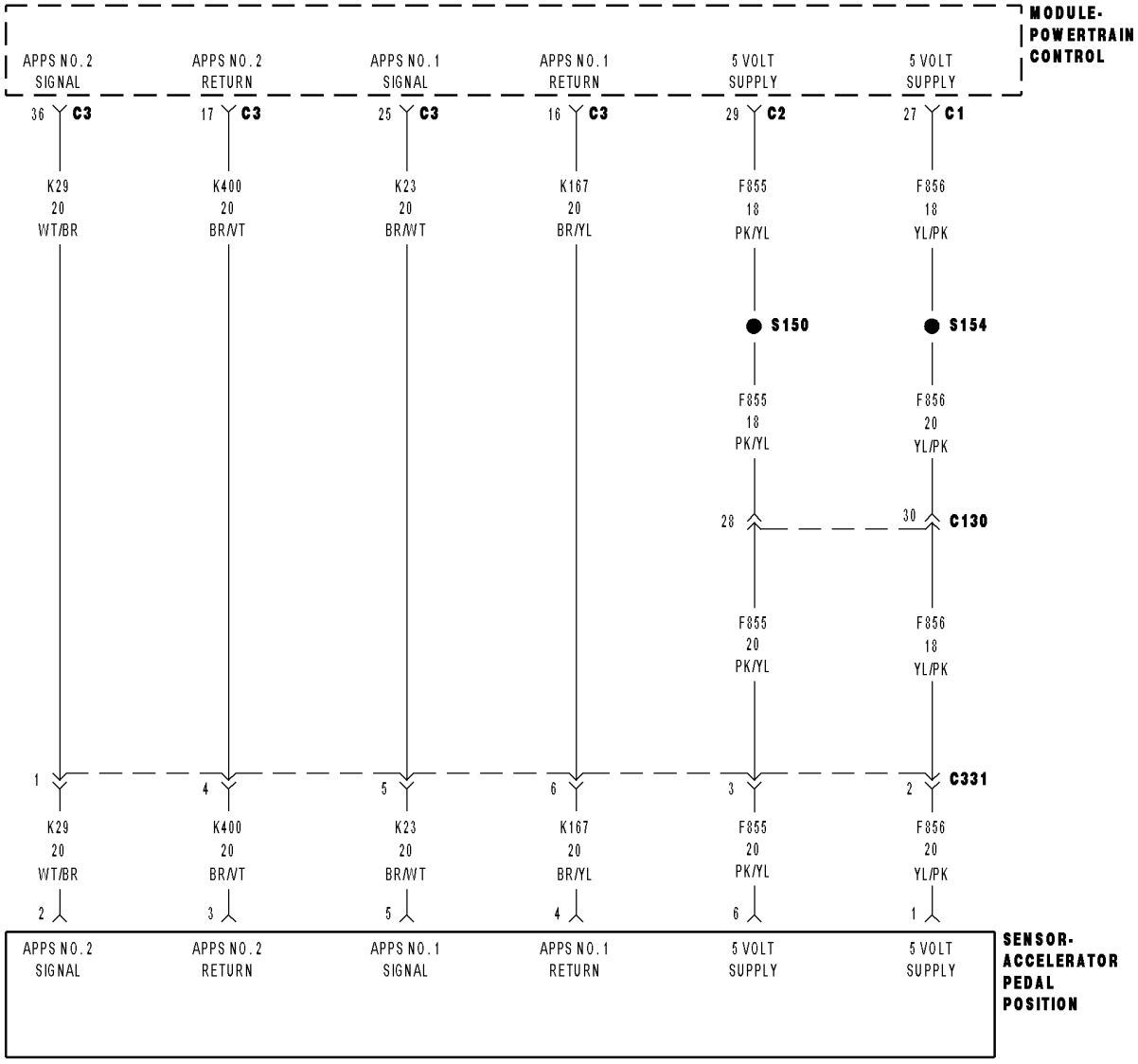

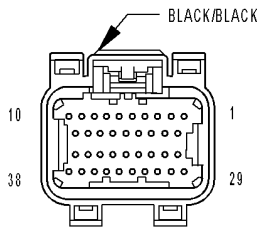

MODULE-POWERTRAIN CONTROL C1 (NGC)

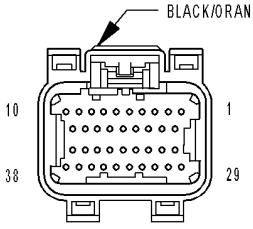

MODULE-POWERTRAIN CONTROL C2 (NGC)

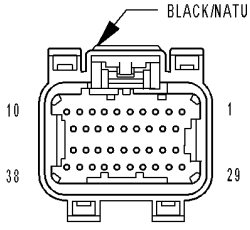

MODULE-POWERTRAIN CONTROL C3 (NGC)

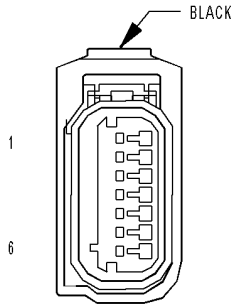

SENSOR-ACCELERATOR PEDAL POSITION

81454f1d

P2122-ACCELERATOR PEDAL POSITION SENSOR 1 CIRCUIT LOW (CONTINUED)

For the Engine circuit diagram (Refer to 9 - ENGINE - SCHEMATICS AND DIAGRAMS).

For a complete wiring diagram **Refer to Section 8W**.

- **When Monitored:**
  With the ignition on and no other APPS No.1 DTCs present.
- **Set Condition:**
  When the APP Sensor No.1 voltage is too low. Engine will additionally idle if the brake pedal is pressed or has failed. Acceleration rate and Engine output are limited. One trip fault and the code will set within 5 seconds. ETC light is flashing.

Possible Causes
(F855) 5-VOLT SUPPLY CIRCUIT OPEN
(F855) 5-VOLT SUPPLY CIRCUIT SHORTED TO GROUND
(K23) APP SENSOR NO.1 SIGNAL CIRCUIT OPEN
(K23) APP SENSOR NO.1 SIGNAL CIRCUIT SHORTED TO GROUND
(K23) APP SENSOR NO.1 SIGNAL CIRCUIT SHORTED TO THE (K167) APP SENSOR NO.1 RETURN CIRCUIT
(K23) APP SENSOR NO.1 SIGNAL CIRCUIT SHORTED TO THE (K400) APP SENSOR NO.2 RETURN CIRCUIT
APP SENSOR
PCM

Always perform the Pre-Diagnostic Troubleshooting procedure before proceeding. (Refer to 9 - ENGINE - DIAGNOSIS AND TESTING).

Diagnostic Test

1. APP SENSOR BELOW 0.25 OF A VOLT

Ignition on, engine not running.

With a scan tool, read the APP Sensor No.1 voltage.

Is the voltage below 0.25 of a volt?

Yes >> Go To 2

No >> Go To 11

---

2. (F855) 5-VOLT SUPPLY CIRCUIT

Turn the ignition off.

Disconnect the APP Sensor harness connector.

Ignition on, engine not running.

Measure the voltage on the (F855) 5-volt Supply circuit in the APP Sensor harness connector.

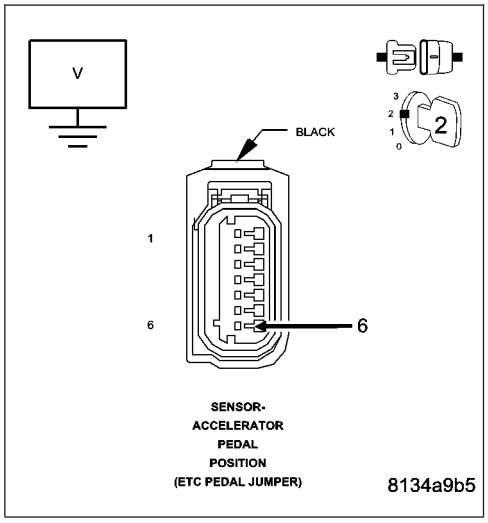

Is the voltage between 4.5 and 5.2 volts?

Yes >> Go To 3

No >> Go To 8

P2122-ACCELERATOR PEDAL POSITION SENSOR 1 CIRCUIT LOW (CONTINUED)

3. ACCELERATOR PEDAL POSITION SENSOR

Connect a jumper wire between the (F855) 5-volt Supply circuit and the (K23) APP Sensor No.1 Signal circuit in the Sensor harness connector.

With a scan tool, monitor the APP Sensor No.1 voltage.

Is the voltage above 4.5 volts?

Yes >> Replace the APP Sensor Assembly per Service Information. After installation is complete, use a scan tool and select the ETC RELEARN function to relearn the APPS values.

Perform the POWERTRAIN VERIFICATION TEST. (Refer to 9 - ENGINE - STANDARD PROCEDURE)

No >> Go To 4

NOTE: Remove the jumper wire before continuing.

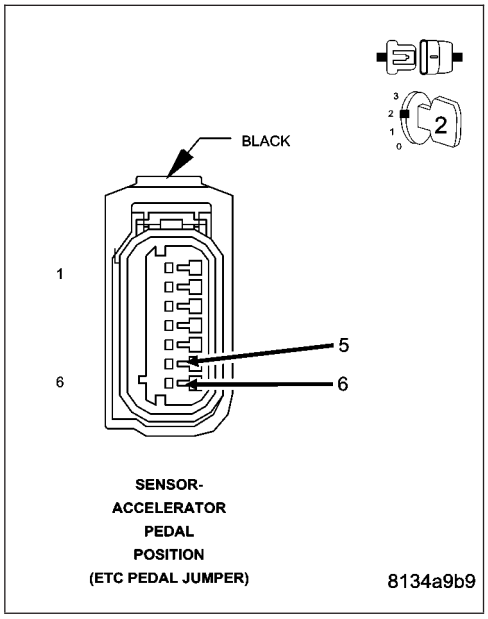

4. (K23) APP SENSOR NO.1 SIGNAL CIRCUIT OPEN

Turn the ignition off.

Disconnect the C3 PCM harness connector.

CAUTION: Do not probe the PCM harness connectors. Probing the PCM harness connectors will damage the PCM terminals resulting in poor terminal to pin connection. Install Miller Special Tool #8815 to perform diagnosis.

Measure the resistance of the (K23) APP Sensor No.1 Signal circuit from the APP Sensor harness connector to the appropriate terminal of special tool #8815.

Is the resistance below 5.0 ohms?

Yes >> Go To 5

No >> Repair the open in the (K23) APP Sensor No.1 Signal circuit.

Perform the POWERTRAIN VERIFICATION TEST. (Refer to 9 - ENGINE - STANDARD PROCEDURE)

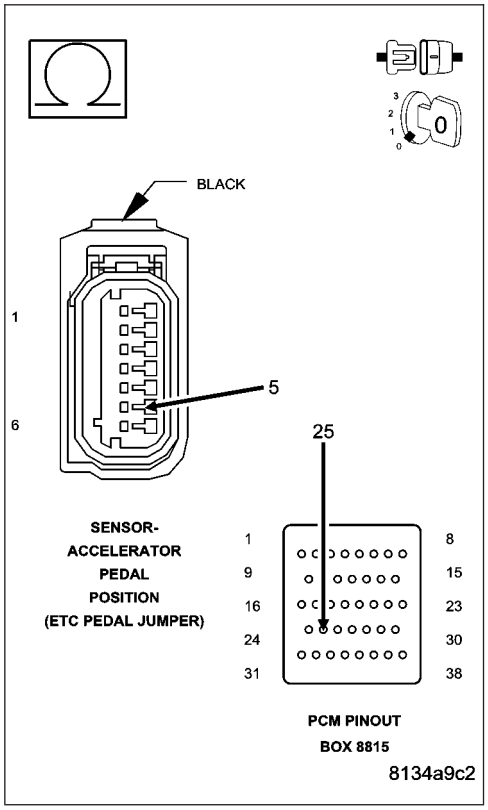

P2122-ACCELERATOR PEDAL POSITION SENSOR 1 CIRCUIT LOW (CONTINUED)

5. (K23) APP SENSOR NO.1 SIGNAL CIRCUIT SHORTED TO GROUND

Measure the resistance between ground and the (K23) APP Sensor No.1 Signal circuit in the APP Sensor harness connector.

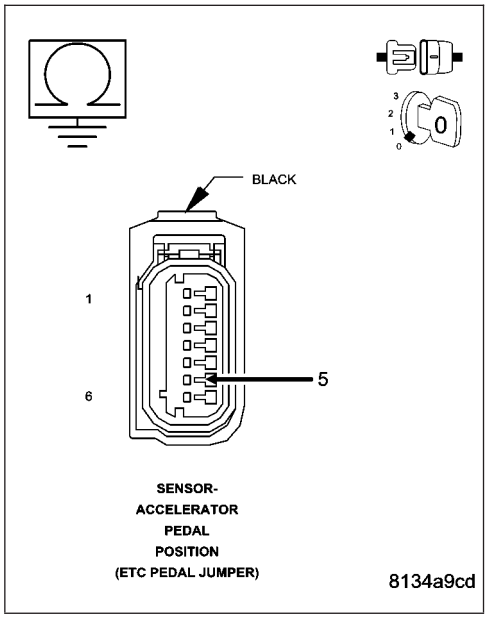

Is the resistance below 100 ohms?

Yes >> Repair the short to ground in the (K23) APP Sensor No.1 Signal circuit.
Perform the POWERTRAIN VERIFICATION TEST. (Refer to 9 - ENGINE - STANDARD PROCEDURE)

No >> Go To 6

6. (K23) APP SENSOR NO.1 SIGNAL CIRCUIT SHORTED TO THE (K167) APP SENSOR NO.1 RETURN CIRCUIT

Measure the resistance between the (K23) APP Sensor No.1 Signal circuit and the (K167) Sensor No.1 Return circuit at the APP Sensor harness connector.

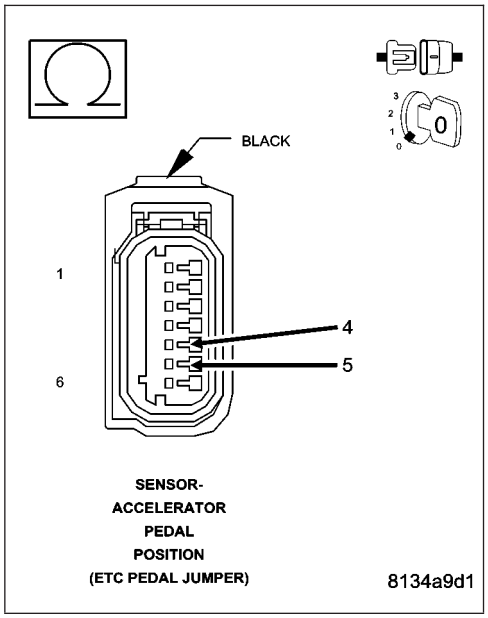

Is the resistance below 100 ohms?

Yes >> Repair the short between the (K167) App Sensor No.1 Return circuit and the (K23) APP Sensor No.1 Signal circuit.
Perform the POWERTRAIN VERIFICATION TEST. (Refer to 9 - ENGINE - STANDARD PROCEDURE)

No >> Go To 7

P2122-ACCELERATOR PEDAL POSITION SENSOR 1 CIRCUIT LOW (CONTINUED)

7. (K23) APP SENSOR NO.1 SIGNAL CIRCUIT SHORTED TO THE (K400) APP SENSOR NO.2 RETURN CIRCUIT

Measure the resistance between the (K23) APP Sensor No.1 Signal circuit and the (K400) Sensor No.2 Return circuit in the APP Sensor harness connector.

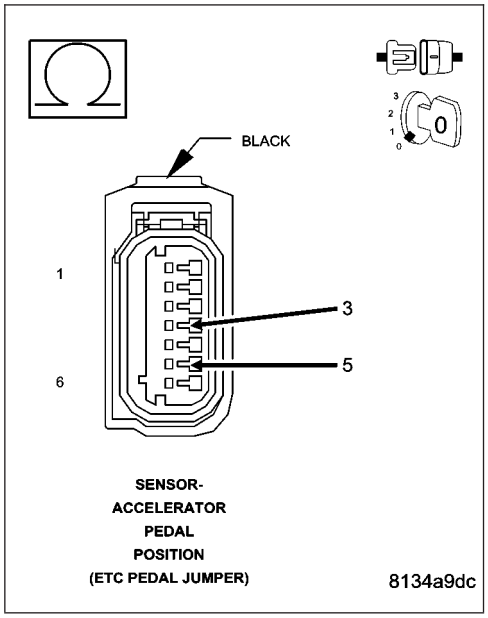

Is the resistance below 100 ohms?

Yes >> Repair the short between the (K400) App Sensor No.2 Return circuit and the (K23) APP Sensor No.1 Signal circuit.
Perform the POWERTRAIN VERIFICATION TEST. (Refer to 9 - ENGINE - STANDARD PROCEDURE)

No >> Go To 10

8. (F855) 5-VOLT SUPPLY CIRCUIT OPEN

Turn the ignition off.

Disconnect the C2 PCM harness connector.

CAUTION: Do not probe the PCM harness connectors. Probing the PCM harness connectors will damage the PCM terminals resulting in poor terminal to pin connection. Install Miller Special Tool #8815 to perform diagnosis.

Measure the resistance of the (F855) 5-volt Supply circuit from the Sensor harness connector to the appropriate terminal of special tool #8815.

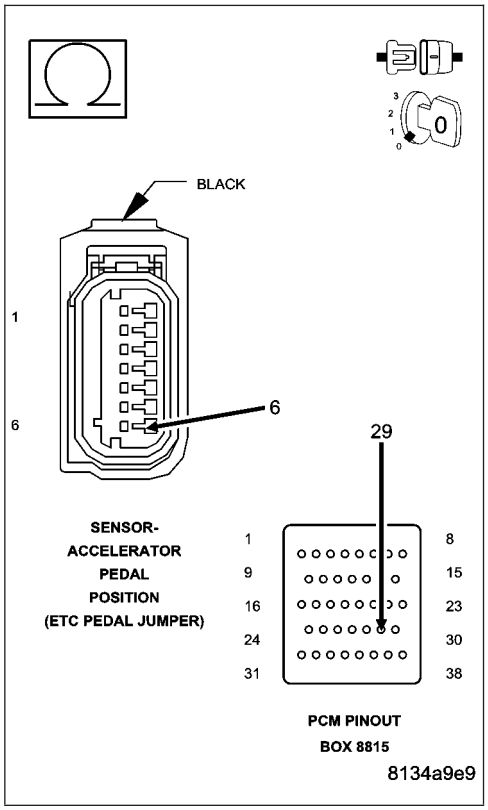

Is the resistance below 5.0 ohms?

Yes >> Go To 9

No >> Repair the open in the (F855) 5-volt Supply circuit.
Perform the POWERTRAIN VERIFICATION TEST. (Refer to 9 - ENGINE - STANDARD PROCEDURE)

P2122-ACCELERATOR PEDAL POSITION SENSOR 1 CIRCUIT LOW (CONTINUED)

9. (F855) 5-VOLT SUPPLY CIRCUIT SHORTED TO GROUND

Measure the resistance between ground and the (F855) 5-volt Supply circuit in the APP Sensor harness connector.

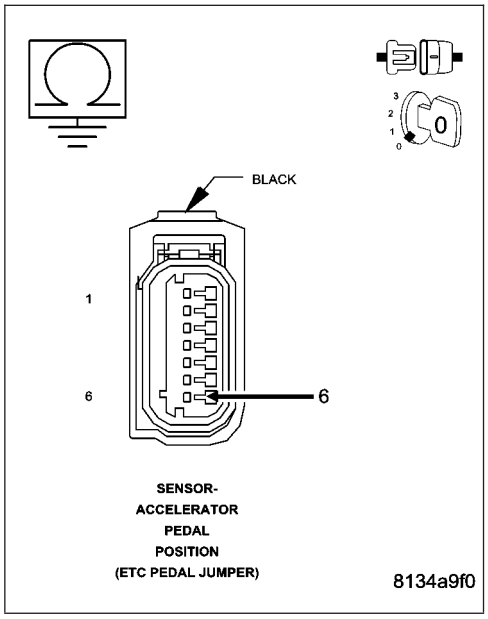

Is the resistance below 100 ohms?

Yes >> Repair the short to ground in the (F855) 5-volt Supply circuit.
Perform the POWERTRAIN VERIFICATION TEST. (Refer to 9 - ENGINE - STANDARD PROCEDURE)

No >> Go To 10

10. PCM

NOTE: Before continuing, check the PCM harness connector terminals for corrosion, damage, or terminal push out. Repair as necessary.

Using the schematics as a guide, inspect the wire harness and connectors. Pay particular attention to all Power and Ground circuits.

Were there any problems found?

Yes >> Repair as necessary.
Perform the POWERTRAIN VERIFICATION TEST. (Refer to 9 - ENGINE - STANDARD PROCEDURE)

No >> Replace and program the Powertrain Control Module per Service Information.
Perform the POWERTRAIN VERIFICATION TEST. (Refer to 9 - ENGINE - STANDARD PROCEDURE)

11. APP SENSOR SWEEP

Ignition on, engine not running.

With a scan tool, monitor the APP Sensor No.1 voltage.

Slowly press the Accelerator pedal down.

Does voltage start at approximately 0.45 of a volt and go above 4.6 volts with a smooth transition?

Yes >> Refer to the INTERMITTENT CONDITION Diagnostic Procedure.
Perform the POWERTRAIN VERIFICATION TEST. (Refer to 9 - ENGINE - STANDARD PROCEDURE)

No >> Replace the APP Sensor Assembly per Service Information. After installation is complete, use a scan tool and select the ETC RELEARN function to relearn the APPS values.
Perform the POWERTRAIN VERIFICATION TEST. (Refer to 9 - ENGINE - STANDARD PROCEDURE)

P2123-ACCELERATOR PEDAL POSITION SENSOR 1 CIRCUIT HIGH

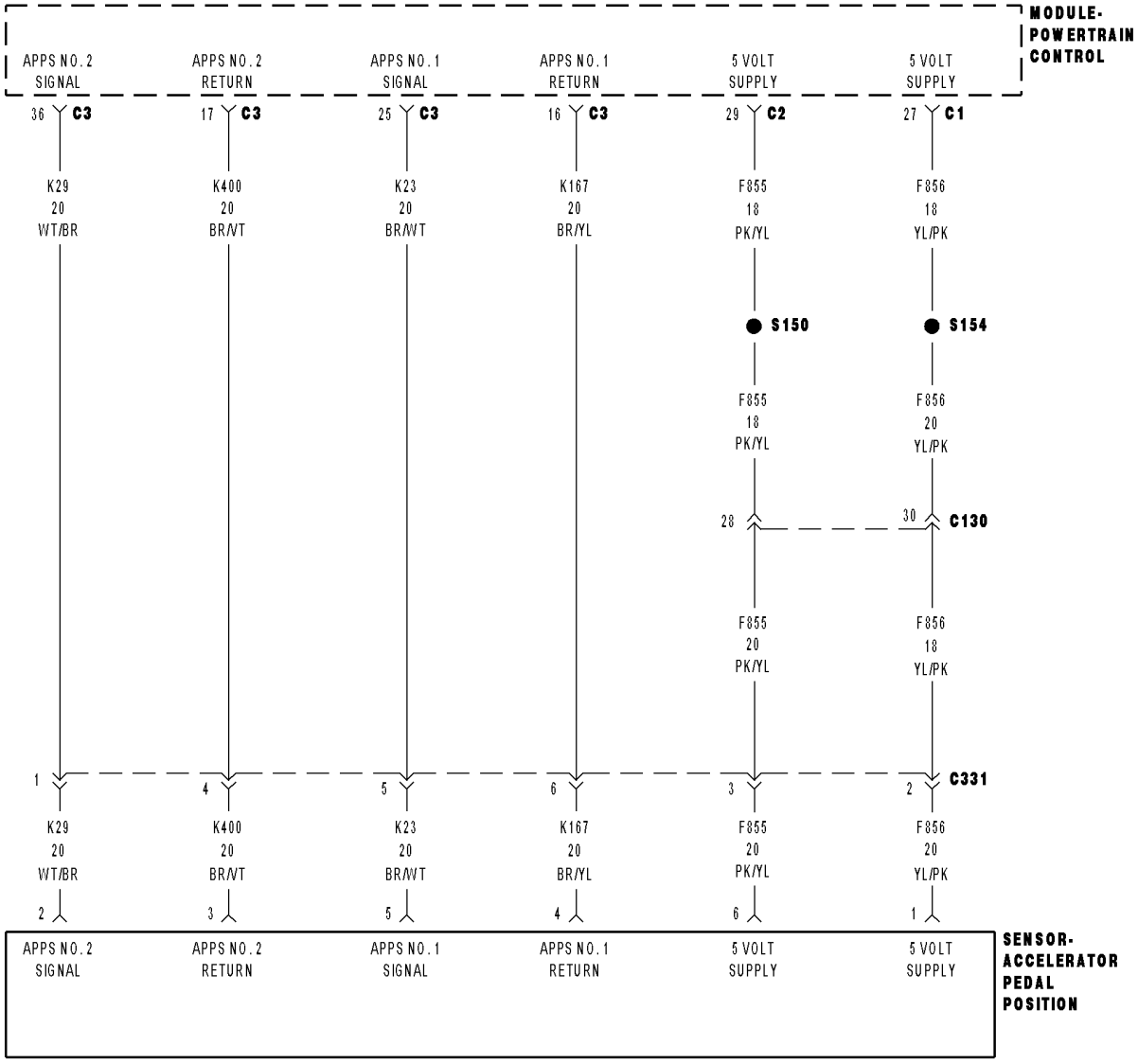

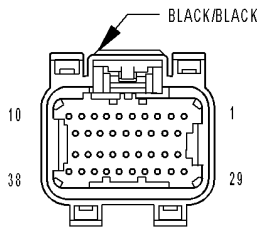

MODULE-POWERTRAIN CONTROL C1 (NGC)

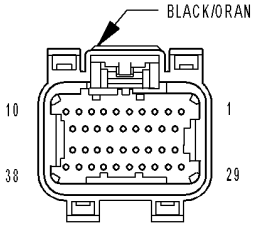

MODULE-POWERTRAIN CONTROL C2 (NGC)

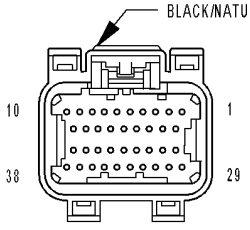

MODULE-POWERTRAIN CONTROL C3 (NGC)

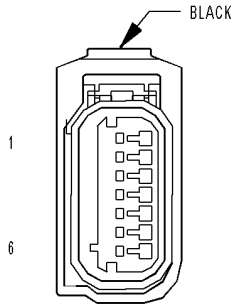

SENSOR-ACCELERATOR PEDAL POSITION

81454f1d

P2123-ACCELERATOR PEDAL POSITION SENSOR 1 CIRCUIT HIGH (CONTINUED)

For the Engine circuit diagram (Refer to 9 - ENGINE - SCHEMATICS AND DIAGRAMS).

For a complete wiring diagram **Refer to Section 8W**.

- **When Monitored:**
  With the ignition on and no other APPS No.1 DTCs present.
- **Set Condition:**
  When APP Sensor No.1 voltage is too high. Engine will additionally idle if the brake pedal is pressed or has failed. Acceleration rate and Engine output are limited. One trip fault and the code will set within 5 seconds. ETC light is flashing.

Possible Causes
(K23) APP SENSOR NO.1 SIGNAL CIRCUIT SHORTED TO BATTERY VOLTAGE
(K23) APP SENSOR NO.1 SIGNAL SHORTED TO THE (F855) 5-VOLT SUPPLY CIRCUIT
(K23) APP SENSOR NO.1 SIGNAL SHORTED TO THE (F856) 5-VOLT SUPPLY CIRCUIT
(K167) APP SENSOR NO.1 RETURN CIRCUIT OPEN
APP SENSOR
PCM

Always perform the Pre-Diagnostic Troubleshooting procedure before proceeding. (Refer to 9 - ENGINE - DIAGNOSIS AND TESTING).

Diagnostic Test

1. APPS NO.1 VOLTAGE ABOVE 4.8 VOLTS

Ignition on, engine not running.

With a scan tool, read the APP Sensor No.1 voltage.

Is the voltage above 4.8 volts?

Yes >> Go To 2

No >> Go To 8

---

2. ACCELERATOR PEDAL POSITION SENSOR

Turn the ignition off.

Disconnect the APP Sensor harness connector.

Ignition on, engine not running.

With a scan tool, monitor the Accelerator Pedal Position Sensor voltage.

Is the voltage between 4.5 and 5.2 volts?

Yes >> Go To 3

No >> Replace the APP Sensor Assembly per Service Information. After installation is complete, use a scan tool and select the ETC RELEARN function to relearn the APPS values.
Perform the POWERTRAIN VERIFICATION TEST. (Refer to 9 - ENGINE - STANDARD PROCEDURE)

P2123-ACCELERATOR PEDAL POSITION SENSOR 1 CIRCUIT HIGH (CONTINUED)

3. (K23) APP SENSOR NO.1 SIGNAL CIRCUIT SHORTED TO BATTERY VOLTAGE

Turn the ignition off.

Disconnect the C1, C2, and C3 PCM harness connectors.

Ignition on, engine not running.

Measure the voltage on the (K23) APP Sensor No.1 Signal circuit in the APP Sensor harness connector.

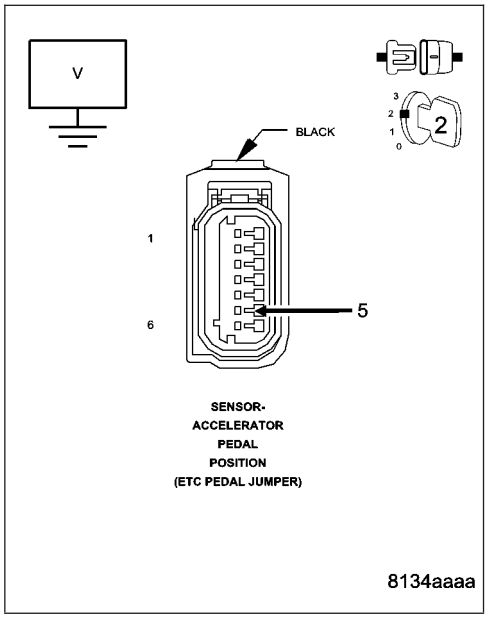

Is the voltage above 0 volts?

Yes >> Repair the short to battery voltage in the (K23) APP Sensor No.1 Signal circuit.
Perform the POWERTRAIN VERIFICATION TEST. (Refer to 9 - ENGINE - STANDARD PROCEDURE)

No >> Go To 4

4. (K23) APPS NO.1 SIGNAL CIRCUIT SHORTED TO THE (F855) 5-VOLT SUPPLY CIRCUIT

Turn the ignition off.

Measure the resistance between the (K23) APP Sensor No.1 Signal circuit and the (F855) 5-volt Supply circuit in the APP Sensor harness connector.

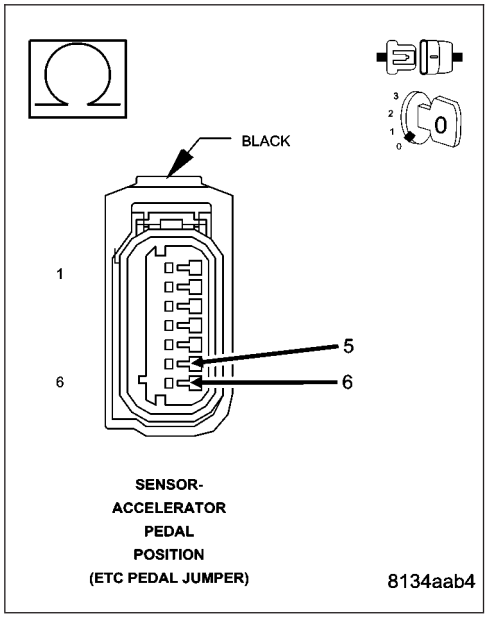

Is the resistance below 100 ohms?

Yes >> Repair the short between the (K23) APP Sensor No.1 Signal circuit and the (F855) 5-volt Supply circuit.
Perform the POWERTRAIN VERIFICATION TEST. (Refer to 9 - ENGINE - STANDARD PROCEDURE)

No >> Go To 5

P2123-ACCELERATOR PEDAL POSITION SENSOR 1 CIRCUIT HIGH (CONTINUED)

5. (K23) APPS NO.1 SIGNAL CIRCUIT SHORTED TO THE (F856) 5-VOLT SUPPLY CIRCUIT

Measure the resistance between the (K23) APP Sensor No.1 Signal circuit and the (F856) 5-volt Supply circuit in the APP Sensor harness connector.

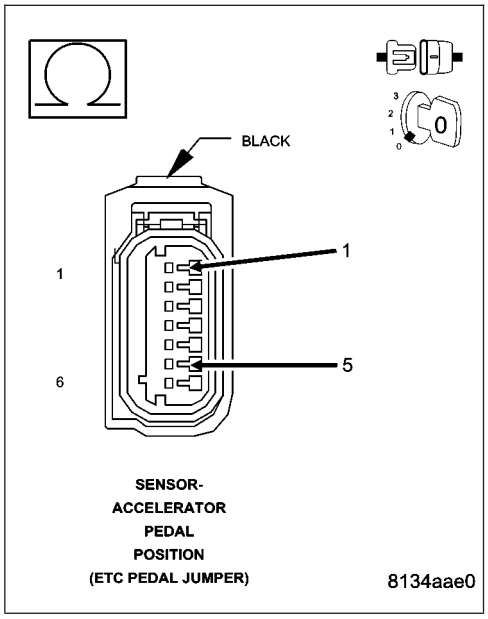

Is the resistance below 100 ohms?

Yes >> Repair the short between the (K23) APP Sensor No.1 Signal circuit and the (F856) 5-volt Supply circuit.
Perform the POWERTRAIN VERIFICATION TEST. (Refer to 9 - ENGINE - STANDARD PROCEDURE)

No >> Go To 6

---

6. (K167) APP SENSOR NO.1 RETURN CIRCUIT OPEN

CAUTION: Do not probe the PCM harness connectors. Probing the PCM harness connectors will damage the PCM terminals resulting in poor terminal to pin connection. Install Miller Special Tool #8815 to perform diagnosis.

Measure the resistance of the (K167) APP Sensor No.1 Return circuit from the APP Sensor harness connector to the appropriate terminal of special tool #8815.

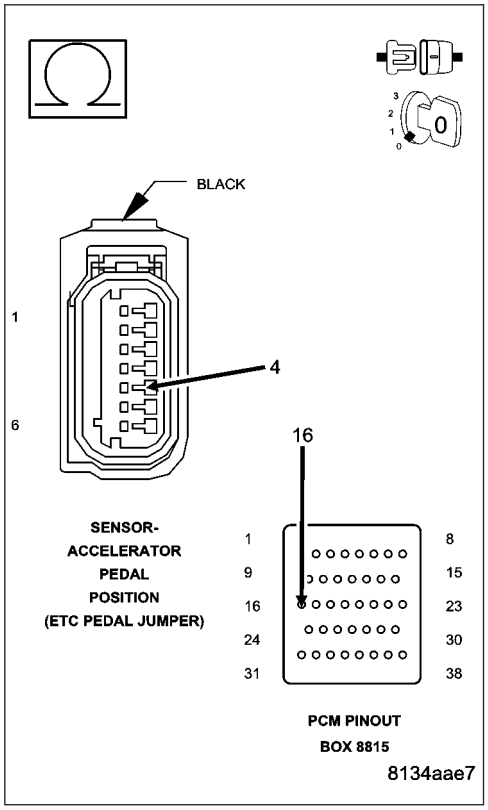

Is the resistance below 5.0 ohms?

Yes >> Go To 7

No >> Repair the open in the (K167) APP Sensor No.1 Return circuit.
Perform the POWERTRAIN VERIFICATION TEST. (Refer to 9 - ENGINE - STANDARD PROCEDURE)

P2123-ACCELERATOR PEDAL POSITION SENSOR 1 CIRCUIT HIGH (CONTINUED)

7. PCM

NOTE: Before continuing, check the PCM harness connector terminals for corrosion, damage, or terminal push out. Repair as necessary.

Using the schematics as a guide, inspect the wire harness and connectors. Pay particular attention to all Power and Ground circuits.

Were there any problems found?

Yes >> Repair as necessary.
Perform the POWERTRAIN VERIFICATION TEST. (Refer to 9 - ENGINE - STANDARD PROCEDURE)

No >> Replace and program the Powertrain Control Module per Service Information.
Perform the POWERTRAIN VERIFICATION TEST. (Refer to 9 - ENGINE - STANDARD PROCEDURE)

---

8. APP SENSOR NO.1 SWEEP

Ignition on, engine not running.

With a scan tool, monitor the Accelerator Pedal Position Sensor voltage.

Slowly press the Accelerator Pedal down.

Does voltage start at approximately 0.45 of a volt and go above 4.6 volts with a smooth transition?

Yes >> Refer to the INTERMITTENT CONDITION Diagnostic Procedure.
Perform the POWERTRAIN VERIFICATION TEST. (Refer to 9 - ENGINE - STANDARD PROCEDURE)

No >> Replace the APP Sensor Assembly per Service Information. After installation is complete, use a scan tool and select the ETC RELEARN function to relearn the APPS values.
Perform the POWERTRAIN VERIFICATION TEST. (Refer to 9 - ENGINE - STANDARD PROCEDURE)

P2127-ACCELERATOR PEDAL POSITION SENSOR 2 CIRCUIT LOW

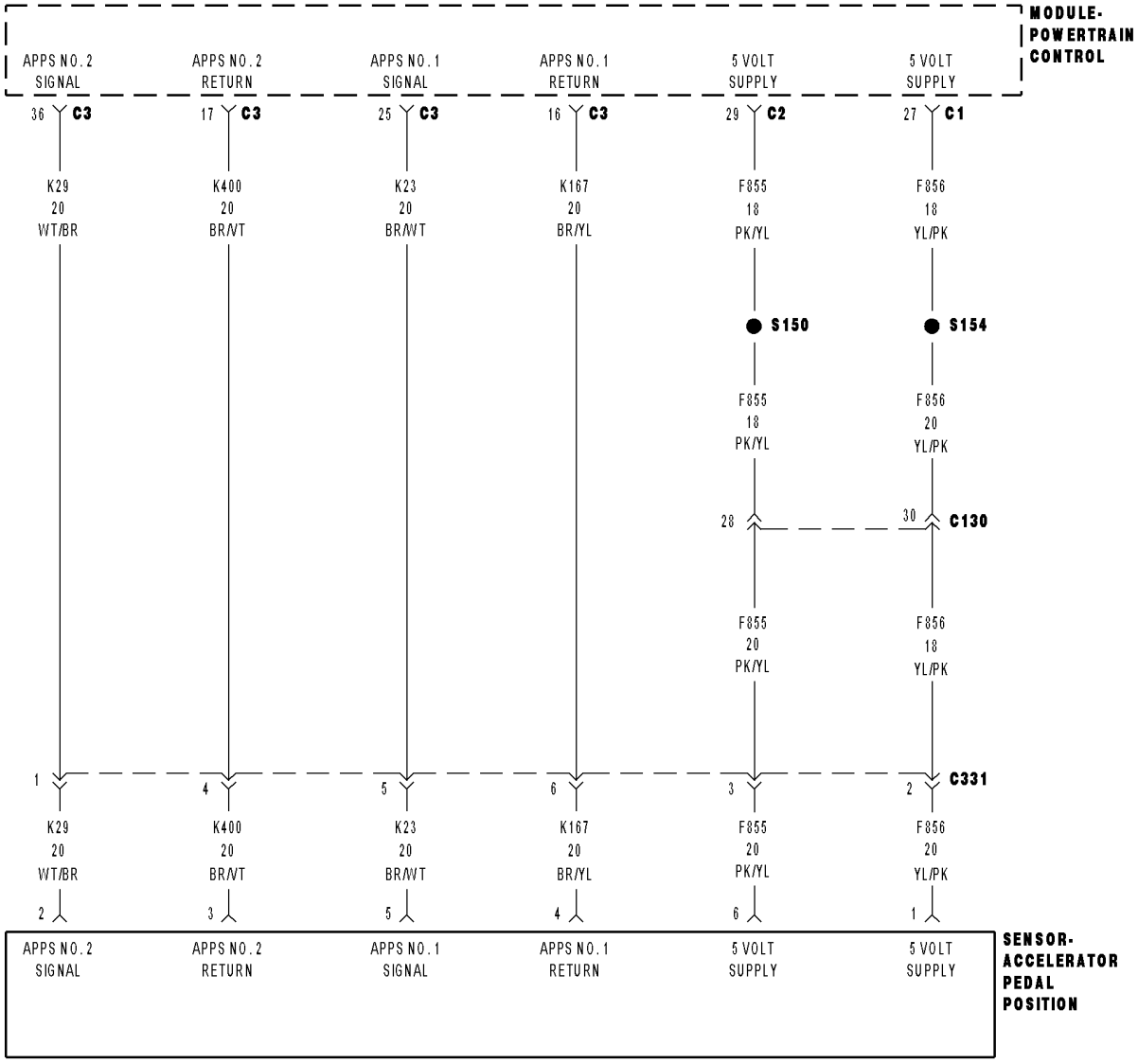

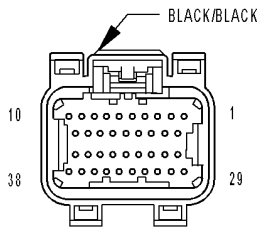

MODULE-POWERTRAIN CONTROL C1 (NGC)

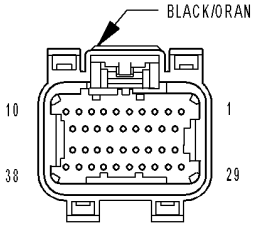

MODULE-POWERTRAIN CONTROL C2 (NGC)

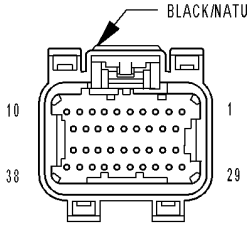

MODULE-POWERTRAIN CONTROL C3 (NGC)

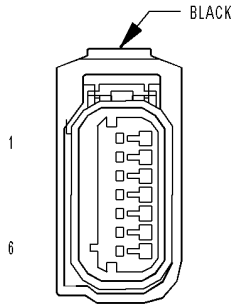

SENSOR-ACCELERATOR PEDAL POSITION

81454f1d

P2127-ACCELERATOR PEDAL POSITION SENSOR 2 CIRCUIT LOW (CONTINUED)

For the Engine circuit diagram (Refer to 9 - ENGINE - SCHEMATICS AND DIAGRAMS).

For a complete wiring diagram **Refer to Section 8W**.

- **When Monitored:**
  With the ignition on and no other APPS No.2 DTCs present.
- **Set Condition:**
  When the APP Sensor No.2 voltage is too low. Engine will only idle if the Brake pedal is Pressed or has failed. Acceleration rate and Engine output are limited. One trip fault and the code will set within 5 seconds. ETC light is flashing.

Possible Causes
(F856) 5-VOLT SUPPLY CIRCUIT OPEN
(F856) 5-VOLT SUPPLY CIRCUIT SHORTED TO GROUND
(K29) APP SENSOR NO.2 SIGNAL CIRCUIT OPEN
(K29) APP SENSOR NO.2 SIGNAL CIRCUIT SHORTED TO GROUND
(K29) APP SENSOR NO.2 SIGNAL CIRCUIT SHORTED TO THE (K167) APP SENSOR NO.1 RETURN CIRCUIT
(K29) APP SENSOR NO.2 SIGNAL CIRCUIT SHORTED TO THE (K400) APP SENSOR NO.2 RETURN CIRCUIT
APP SENSOR
PCM

Always perform the Pre-Diagnostic Troubleshooting procedure before proceeding. (Refer to 9 - ENGINE - DIAGNOSIS AND TESTING).

Diagnostic Test

1. APP SENSOR BELOW 0.25 OF A VOLT

Ignition on, engine not running.

With a scan tool, read the APP Sensor No.1 voltage.

NOTE: Sensor No. 2 is pulled low by the PCM as part of its system testing. This test happens a couple of times a second. So you can expect to see voltages close to zero occasionally with a normal sensor.

Is the voltage consistently below 0.25 of a volt?

Yes >> Go To 2

No >> Go To 11

P2127-ACCELERATOR PEDAL POSITION SENSOR 2 CIRCUIT LOW (CONTINUED)

2. (F856) 5-VOLT SUPPLY CIRCUIT

Turn the ignition off.

Disconnect the APP Sensor harness connector.

Ignition on, engine not running.

Measure the voltage on the (F856) 5-volt Supply circuit in the APP Sensor harness connector.

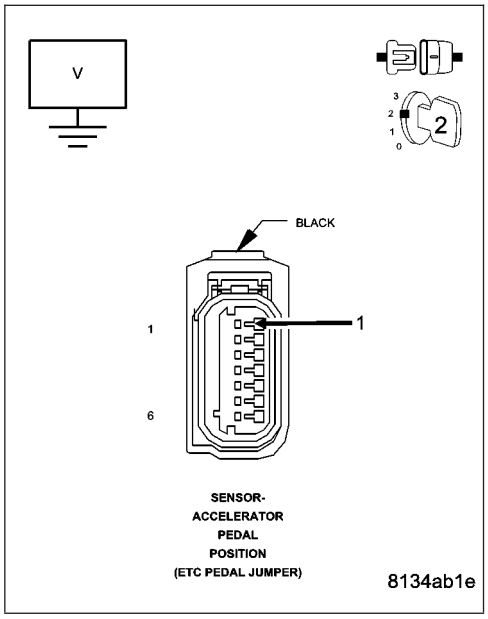

Is the voltage between 4.5 and 5.2 volts?

Yes >> Go To 3

No >> Go To 8

3. ACCELERATOR PEDAL POSITION SENSOR

Connect a jumper wire between the (F856) 5-volt Supply circuit and the (K29) APP Sensor No.2 Signal circuit in the Sensor harness connector.

With a scan tool, monitor the APP Sensor No.2 voltage.

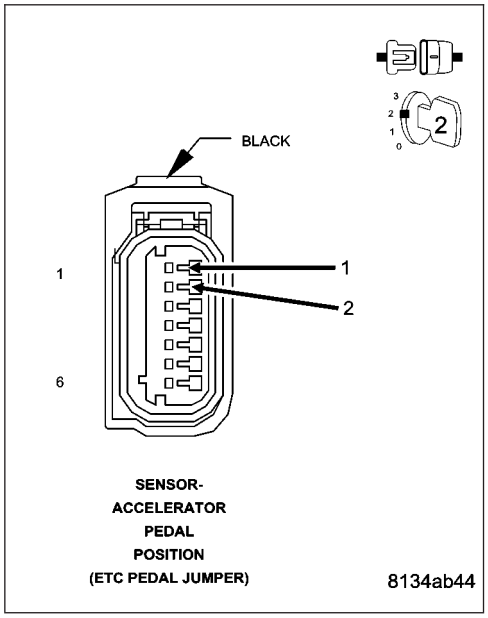

Is the voltage above 4.5 volts with the jumper wire installed?

Yes >> Replace the APP Sensor Assembly per Service Information. After installation is complete, use a scan tool and select the ETC RELEARN function to relearn the APPS values.

Perform the POWERTRAIN VERIFICATION TEST. (Refer to 9 - ENGINE - STANDARD PROCEDURE)

No >> Go To 4

NOTE: Remove the jumper wire before continuing.

P2127-ACCELERATOR PEDAL POSITION SENSOR 2 CIRCUIT LOW (CONTINUED)

4. (K29) APP SENSOR NO.2 SIGNAL CIRCUIT OPEN

Turn the ignition off.

Disconnect the C3 PCM harness connector.

CAUTION: Do not probe the PCM harness connectors. Probing the PCM harness connectors will damage the PCM terminals resulting in poor terminal to pin connection. Install Miller Special Tool #8815 to perform diagnosis.

Measure the resistance of the (K29) APP Sensor No.2 Signal circuit from the APP Sensor harness connector to the appropriate terminal of special tool #8815.

Is the resistance below 5.0 ohms?

Yes >> Go To 5

No >> Repair the open in the (K29) APP Sensor No.2 Signal circuit.

Perform the POWERTRAIN VERIFICATION TEST. (Refer to 9 - ENGINE - STANDARD PROCEDURE)

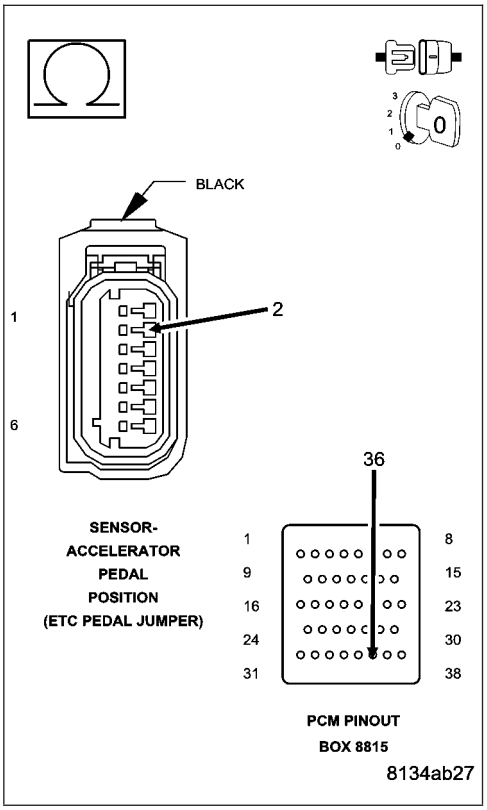

5. (K29) APP SENSOR NO.2 SIGNAL CIRCUIT SHORTED TO GROUND

Measure the resistance between ground and the (K29) APP Sensor No.2 Signal circuit in the APP Sensor harness connector.

Is the resistance below 100 ohms?

Yes >> Repair the short to ground in the (K29) APP Sensor No.2 Signal circuit.

Perform the POWERTRAIN VERIFICATION TEST. (Refer to 9 - ENGINE - STANDARD PROCEDURE)

No >> Go To 6

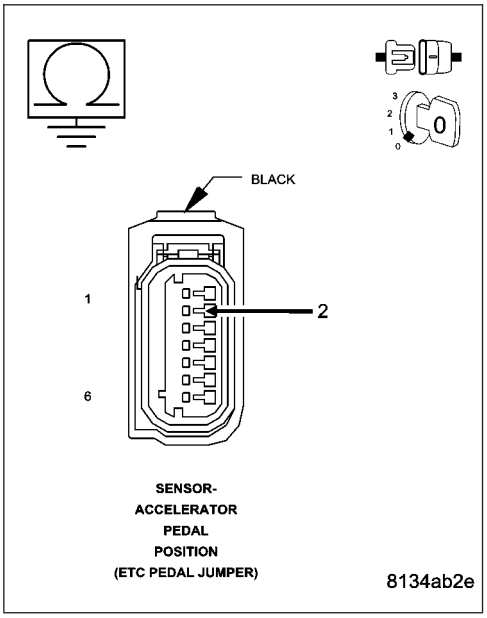

P2127-ACCELERATOR PEDAL POSITION SENSOR 2 CIRCUIT LOW (CONTINUED)

6. (K29) APP SENSOR NO.2 SIGNAL CIRCUIT SHORTED TO THE (K400) APP SENSOR NO.2 RETURN CIRCUIT

Measure the resistance between the (K29) APP Sensor No.2 Signal circuit and the (K400) Sensor No.2 Return circuit in the APP Sensor harness connector.

Is the resistance below 100 ohms?

Yes >> Repair the short between the (K400) App Sensor No.2 Return circuit and the (K29) APP Sensor No.2 Signal circuit.

Perform the POWERTRAIN VERIFICATION TEST. (Refer to 9 - ENGINE - STANDARD PROCEDURE)

No >> Go To 7

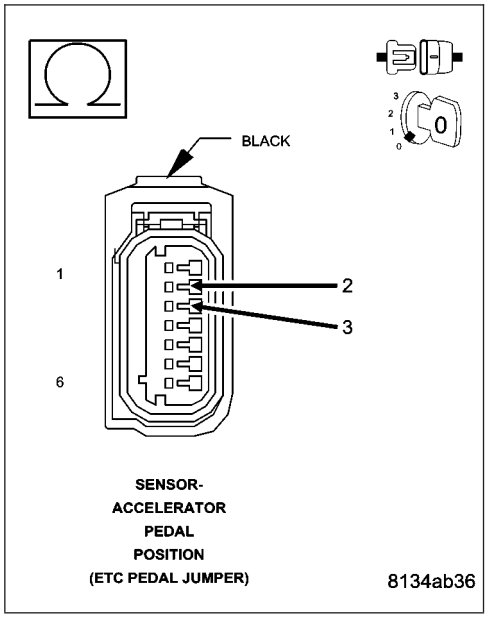

7. (K29) APP SENSOR NO.2 SIGNAL CIRCUIT SHORTED TO THE (K167) APP SENSOR NO.1 RETURN CIRCUIT

Measure the resistance between the (K29) APP Sensor No.2 Signal circuit and the (K167) Sensor No.1 Return circuit in the APP Sensor harness connector.

Is the resistance below 100 ohms?

Yes >> Repair the short between the (K167) App Sensor No.1 Return circuit and the (K29) APP Sensor No.2 Signal circuit.

Perform the POWERTRAIN VERIFICATION TEST. (Refer to 9 - ENGINE - STANDARD PROCEDURE)

No >> Go To 10

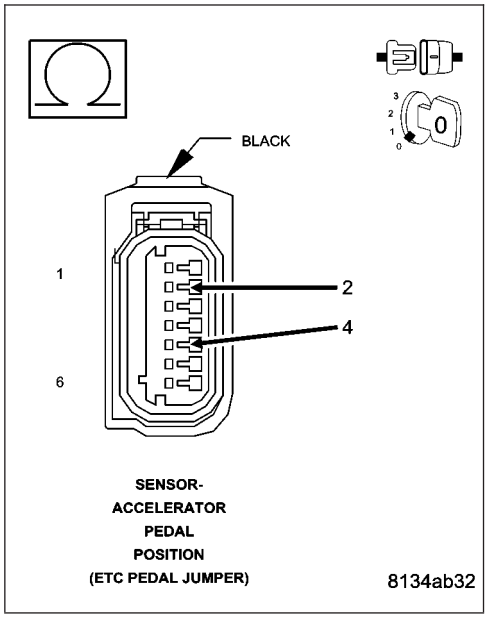

P2127-ACCELERATOR PEDAL POSITION SENSOR 2 CIRCUIT LOW (CONTINUED)

8. (F856) 5-VOLT SUPPLY CIRCUIT OPEN

Turn the ignition off.

Disconnect the C1 PCM harness connector.

CAUTION: Do not probe the PCM harness connectors. Probing the PCM harness connectors will damage the PCM terminals resulting in poor terminal to pin connection. Install Miller Special Tool #8815 to perform diagnosis.

Measure the resistance of the (F856) 5-volt Supply circuit from the Sensor harness connector to the appropriate terminal of special tool #8815.

Is the resistance below 5.0 ohms?

Yes >> Go To 9

No >> Repair the open in the (F856) 5-volt Supply circuit.
Perform the POWERTRAIN VERIFICATION TEST. (Refer to 9 - ENGINE - STANDARD PROCEDURE)

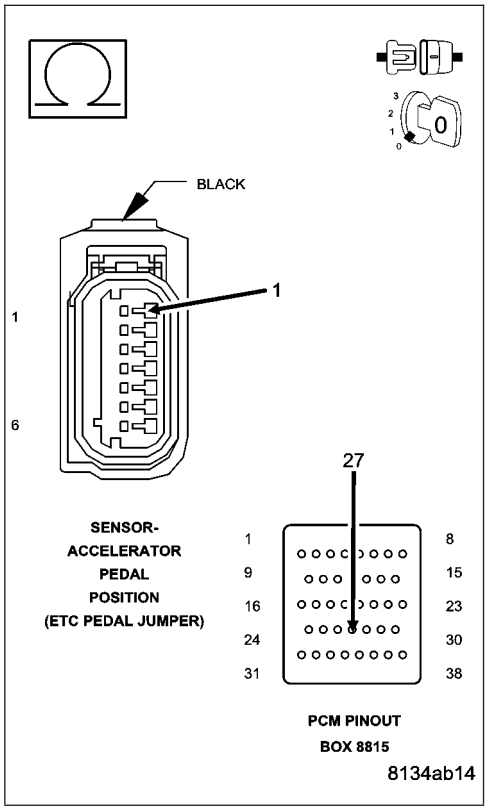

9. (F856) 5-VOLT SUPPLY CIRCUIT SHORTED TO GROUND

Measure the resistance between ground and the (F856) 5-volt Supply circuit in the APP Sensor harness connector.

Is the resistance below 100 ohms?

Yes >> Repair the short to ground in the (F856) 5-volt Supply circuit.
Perform the POWERTRAIN VERIFICATION TEST. (Refer to 9 - ENGINE - STANDARD PROCEDURE)

No >> Go To 10

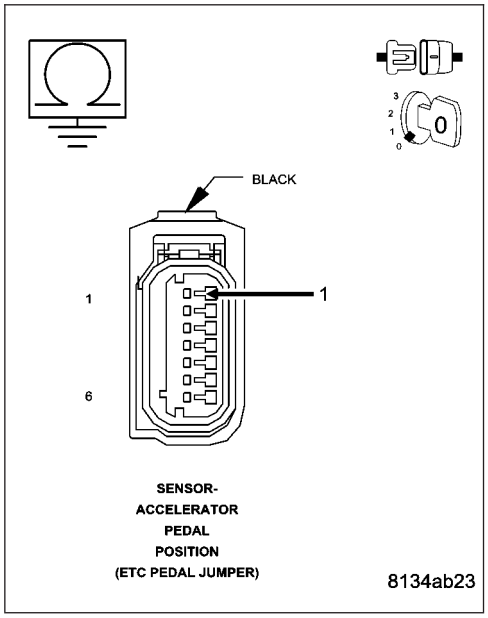

P2127-ACCELERATOR PEDAL POSITION SENSOR 2 CIRCUIT LOW (CONTINUED)

10. PCM

NOTE: Before continuing, check the PCM harness connector terminals for corrosion, damage, or terminal push out. Repair as necessary.

Using the schematics as a guide, inspect the wire harness and connectors. Pay particular attention to all Power and Ground circuits.

Were there any problems found?

Yes >> Repair as necessary.
Perform the POWERTRAIN VERIFICATION TEST. (Refer to 9 - ENGINE - STANDARD PROCEDURE)

No >> Replace and program the Powertrain Control Module per Service Information.
Perform the POWERTRAIN VERIFICATION TEST. (Refer to 9 - ENGINE - STANDARD PROCEDURE)

---

11. APP SENSOR SWEEP

Ignition on, engine not running.

With a scan tool, monitor the APP Sensor No.2 voltage.

Slowly press the Accelerator pedal down.

Does voltage start at approximately 0.22 of a volt and go above 2.31 volts with a smooth transition?

Yes >> Refer to the INTERMITTENT CONDITION Diagnostic Procedure.
Perform the POWERTRAIN VERIFICATION TEST. (Refer to 9 - ENGINE - STANDARD PROCEDURE)

No >> Replace the APP Sensor Assembly per Service Information. After installation is complete, use a scan tool and select the ETC RELEARN function to relearn the APPS values.
Perform the POWERTRAIN VERIFICATION TEST. (Refer to 9 - ENGINE - STANDARD PROCEDURE)

P2128-ACCELERATOR PEDAL POSITION SENSOR 2 CIRCUIT HIGH

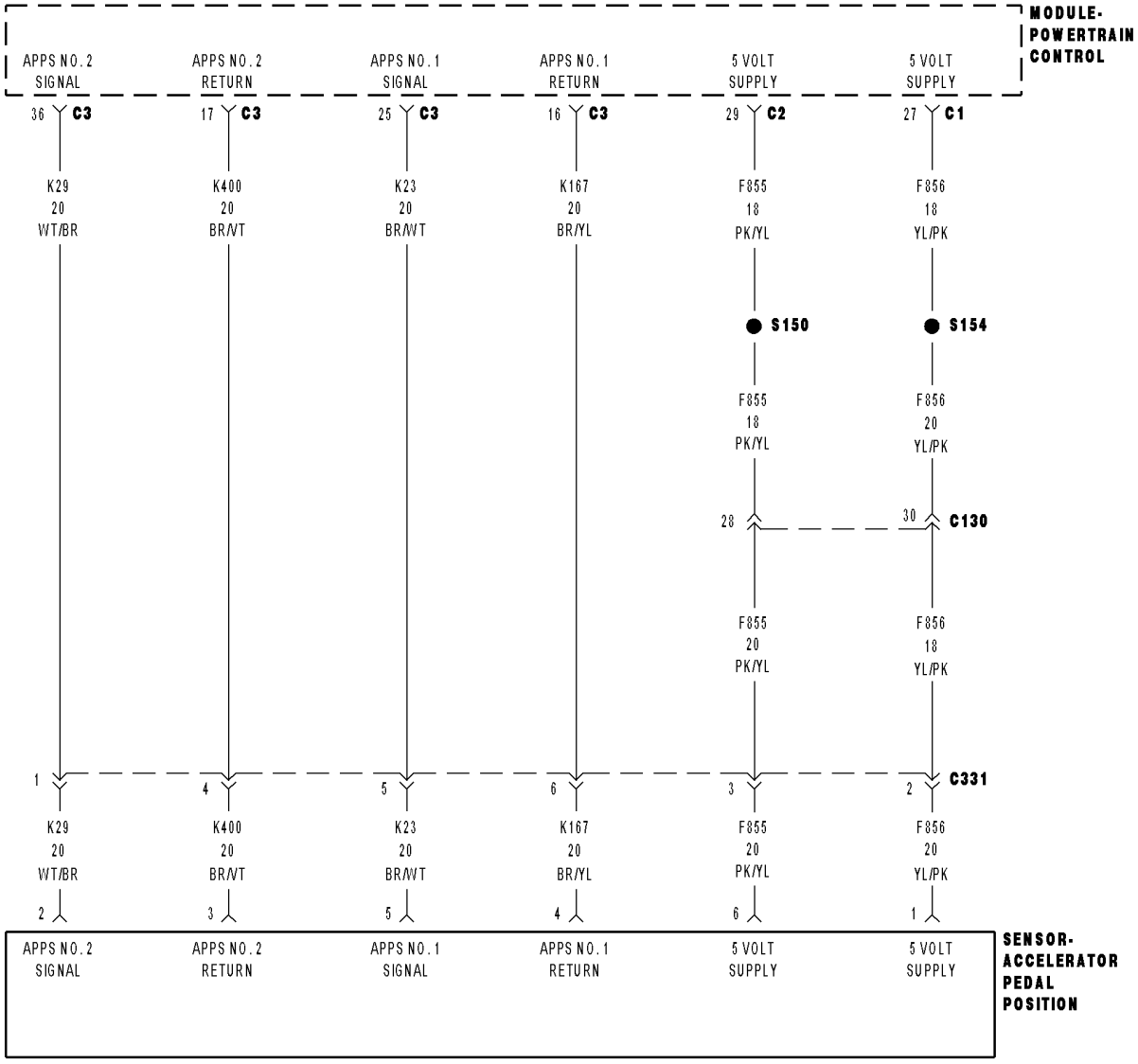

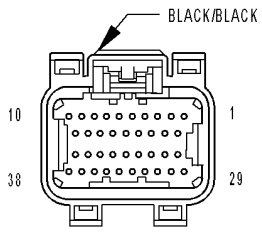

MODULE-POWERTRAIN CONTROL C1 (NGC)

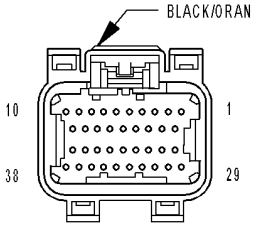

MODULE-POWERTRAIN CONTROL C2 (NGC)

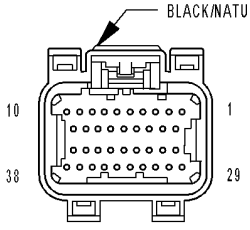

MODULE-POWERTRAIN CONTROL C3 (NGC)

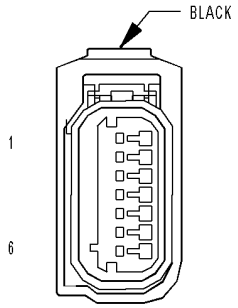

SENSOR-ACCELERATOR PEDAL POSITION

81454f11d

P2128-ACCELERATOR PEDAL POSITION SENSOR 2 CIRCUIT HIGH (CONTINUED)

For the Engine circuit diagram (Refer to 9 - ENGINE - SCHEMATICS AND DIAGRAMS).

For a complete wiring diagram **Refer to Section 8W**.

- **When Monitored:**
  With the ignition on and no other APPS No.2 DTCs present.
- **Set Condition:**
  When APP Sensor No.2 voltage is too high. Idle is additionally forced any time the brake is applied or failed. Acceleration rate and Engine output are limited. One trip fault and the code will set within 5 seconds. ETC light is flashing.

Possible Causes
(K29) APP SENSOR NO.2 SIGNAL CIRCUIT SHORTED TO BATTERY VOLTAGE
(K29) APP SENSOR NO.2 SIGNAL SHORTED TO THE (F856) 5-VOLT SUPPLY CIRCUIT
(K29) APP SENSOR NO.2 SIGNAL SHORTED TO THE (F855) 5-VOLT SUPPLY CIRCUIT
(K400) APP SENSOR NO.2 RETURN CIRCUIT OPEN
APP SENSOR
PCM

Always perform the Pre-Diagnostic Troubleshooting procedure before proceeding. (Refer to 9 - ENGINE - DIAGNOSIS AND TESTING).

Diagnostic Test

1. APPS NO.2 VOLTAGE ABOVE 3.0 VOLTS

Ignition on, engine not running.

With a scan tool, read the APP Sensor No.2 voltage.

NOTE: Diagnose any 5-Volt Supply DTCs before continuing.

Is the voltage above 3.0 volts?

Yes >> Go To 2

No >> Go To 8

---

2. ACCELERATOR PEDAL POSITION SENSOR

Turn the ignition off.

Disconnect the APPS harnesss connector.

Ignition on, engine not running.

With a scan tool, monitor the Accelerator Pedal Position Sensor voltage.

Is the voltage above 3.0 volts?

Yes >> Go To 3

No >> Replace the APP Sensor Assembly per Service Information. After installation is complete, use a scan tool and select the ETC RELEARN function to relearn the APPS values.
Perform the POWERTRAIN VERIFICATION TEST. (Refer to 9 - ENGINE - STANDARD PROCEDURE)

P2128-ACCELERATOR PEDAL POSITION SENSOR 2 CIRCUIT HIGH (CONTINUED)

3. (K29) APP SENSOR NO.2 SIGNAL CIRCUIT SHORTED TO BATTERY VOLTAGE

Turn the ignition off.

Disconnect the C3 PCM harness connector.

Ignition on, engine not running.

Measure the voltage on the (K29) APP Sensor No.2 Signal circuit in the APP Sensor harness connector.

Is the voltage above 0 volts?

Yes >> Repair the short to battery voltage in the (K29) APP Sensor No.2 Signal circuit.
Perform the POWERTRAIN VERIFICATION TEST. (Refer to 9 - ENGINE - STANDARD PROCEDURE)

No >> Go To 4

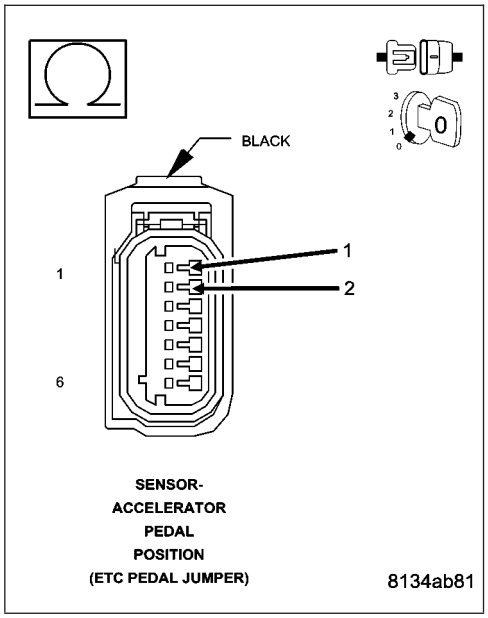

4. (K29) APPS NO.2 SIGNAL CIRCUIT SHORTED TO THE (F856) 5-VOLT SUPPLY CIRCUIT

Turn the ignition off.

Measure the resistance between the (K29) APP Sensor No.2 Signal circuit and the (F856) 5-volt Supply circuit in the APP Sensor harness connector.

Is the resistance below 10 ohms?

Yes >> Repair the short between the (K29) APP Sensor No.2 Signal circuit and the (F856) 5-volt Supply circuit.
Perform the POWERTRAIN VERIFICATION TEST. (Refer to 9 - ENGINE - STANDARD PROCEDURE)

No >> Go To 5

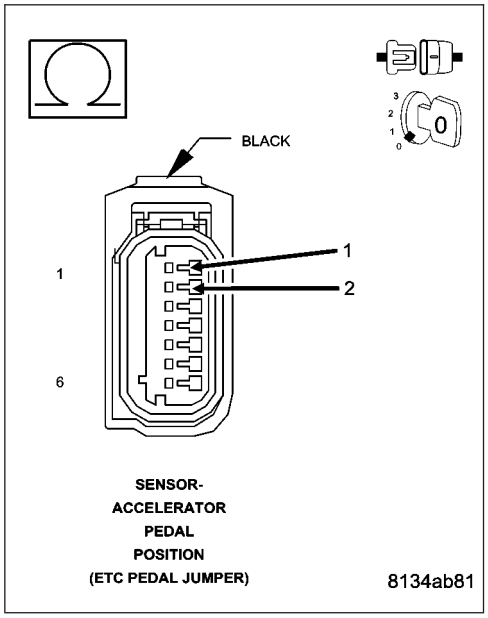

P2128-ACCELERATOR PEDAL POSITION SENSOR 2 CIRCUIT HIGH (CONTINUED)

5. (K29) APPS NO.2 SIGNAL CIRCUIT SHORTED TO THE (F855) 5-VOLT SUPPLY CIRCUIT

Measure the resistance between the (K29) APP Sensor No.2 Signal circuit and the (F855) 5-volt Supply circuit in the APP Sensor harness connector.

Is the resistance below 10 ohms?

Yes >> Repair the short between the (K29) APP Sensor No.2 Signal circuit and the (F855) 5-volt Supply circuit.
Perform the POWERTRAIN VERIFICATION TEST. (Refer to 9 - ENGINE - STANDARD PROCEDURE)

No >> Go To 6

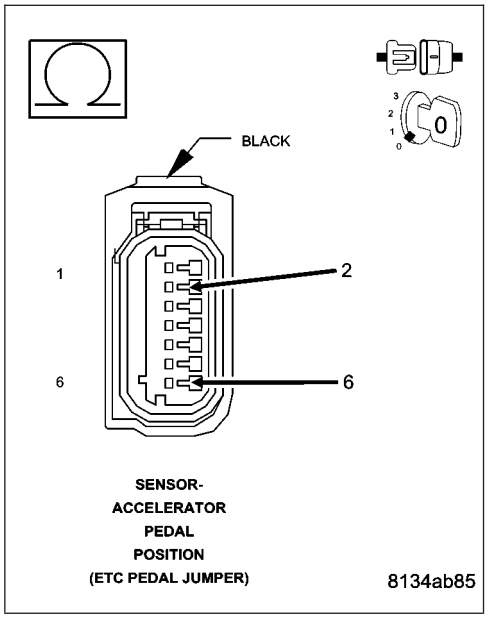

6. (K400) APP SENSOR NO.2 RETURN CIRCUIT OPEN

CAUTION: Do not probe the PCM harness connectors. Probing the PCM harness connectors will damage the PCM terminals resulting in poor terminal to pin connection. Install Miller Special Tool #8815 to perform diagnosis.
Measure the resistance of the (K400) APP Sensor No.2 Return circuit from the APP Sensor harness connector to the appropriate terminal of special tool #8815.

Is the resistance below 5.0 ohms?

Yes >> Go To 7

No >> Repair the open in the (K400) APP Sensor No.2 Return circuit.
Perform the POWERTRAIN VERIFICATION TEST. (Refer to 9 - ENGINE - STANDARD PROCEDURE)

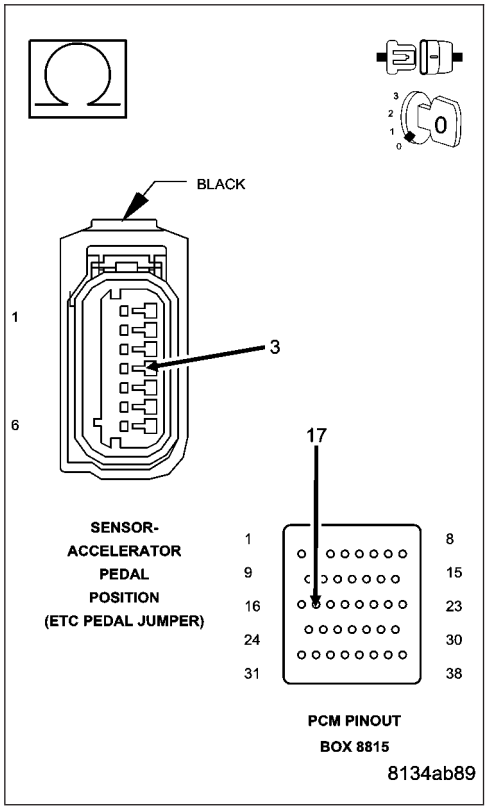

P2128-ACCELERATOR PEDAL POSITION SENSOR 2 CIRCUIT HIGH (CONTINUED)

7. PCM

NOTE: Before continuing, check the PCM harness connector terminals for corrosion, damage, or terminal push out. Repair as necessary.

Using the schematics as a guide, inspect the wire harness and connectors. Pay particular attention to all Power and Ground circuits.

Were there any problems found?

Yes >> Repair as necessary.
Perform the POWERTRAIN VERIFICATION TEST. (Refer to 9 - ENGINE - STANDARD PROCEDURE)

No >> Replace and program the Powertrain Control Module per Service Information.
Perform the POWERTRAIN VERIFICATION TEST. (Refer to 9 - ENGINE - STANDARD PROCEDURE)

---

8. APP SENSOR NO.2 SWEEP

Ignition on, engine not running.

With a scan tool, monitor the Accelerator Pedal Position Sensor voltage.

Slowly press the Accelerator Pedal down.

Does voltage start at approximately 0.22 of a volt and go above 2.31 volts with a smooth transition?

Yes >> Refer to the INTERMITTENT CONDITION Diagnostic Procedure.
Perform the POWERTRAIN VERIFICATION TEST. (Refer to 9 - ENGINE - STANDARD PROCEDURE)

No >> Replace the APP Sensor Assembly per Service Information. After installation is complete, use a scan tool and select the ETC RELEARN function to relearn the APPS values.
Perform the POWERTRAIN VERIFICATION TEST. (Refer to 9 - ENGINE - STANDARD PROCEDURE)

P2135-THROTTLE POSITION SENSOR 1/2 CORRELATION

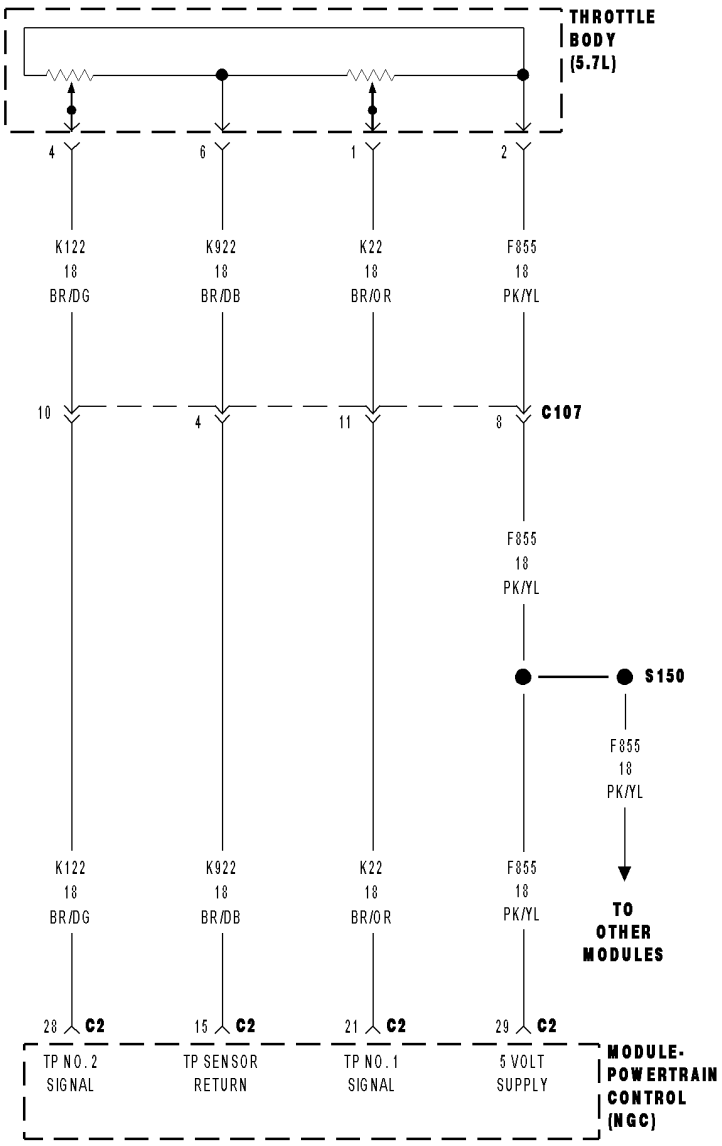

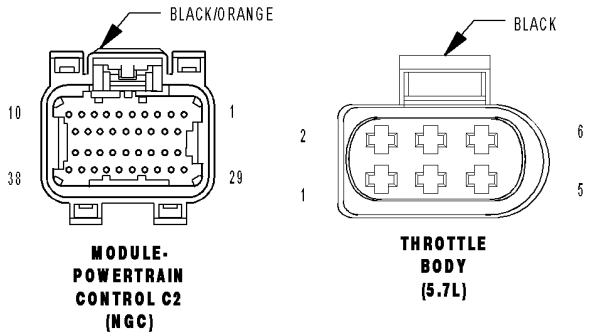

81452d8c

P2135-THROTTLE POSITION SENSOR 1/2 CORRELATION (CONTINUED)

For the Engine System Schematic circuit diagram (Refer to 9 - ENGINE - SCHEMATICS AND DIAGRAMS).

For a complete wiring diagram **Refer to Section 8W**.

- **When Monitored:**
  With the ignition on and no other DTCs present for TP Sensor No.1 or No.2.
- **Set Condition:**
  PCM recognizes TP Sensors No.1 and No.2 are not coherent. One trip fault and the code will set within 5 seconds. ETC light is illuminated.

Possible Causes
(K22) TP SENSOR NO.1 OR (K122) TP SENSOR NO.2 SIGNAL CIRCUIT SHORTED TO BATTERY VOLTAGE
RESISTANCE IN THE (K22) TP SENSOR NO.1 OR (K122) TP SENSOR NO.2 SIGNAL CIRCUIT
(K22) TP SENSOR NO.1 OR (K122) TP SENSOR NO.2 SIGNAL CIRCUIT SHORTED TO GROUND
RESISTANCE IN (F855) 5-VOLT SUPPLY CIRCUIT
(F855) 5-VOLT SUPPLY CIRCUIT SHORTED TO GROUND
RESISTANCE IN THE (K922) SENSOR GROUND CIRCUIT
(K22) TP SENSOR NO.1 SIGNAL CIRCUIT SHORTED TO THE (K122) TP SENSOR NO.2 SIGNAL CIRCUIT
THROTTLE POSITION SENSOR
PCM

Always perform the Pre-Diagnostic Troubleshooting procedure before proceeding. (Refer to 9 - ENGINE - DIAGNOSIS AND TESTING).

Diagnostic Test

1. ACTIVE DTC

NOTE: The throttle plate and linkage should be free from binding and carbon build up.

NOTE: Make sure the throttle plate is at the idle position.
Ignition on, engine not running.

NOTE: Inspect the engine for vacuum leaks.
With a scan tool, read DTCs.

Is the DTC active at this time?

Yes >> Go To 2

No >> Go To 11

P2135-THROTTLE POSITION SENSOR 1/2 CORRELATION (CONTINUED)

2. (K22) TP SENSOR NO.1 OR (K122) TP SENSOR NO.2 SIGNAL CIRCUIT SHORTED TO BATTERY VOLTAGE

Turn the ignition off.

Disconnect the C2 PCM harness connector.

Disconnect the Throttle Body harness connector.

Ignition on, engine not running.

Measure the voltage on the (K22) TP No.1 Signal and the (K122) TP No.2 Signal circuits in the Throttle Body harness connector.

Is the voltage above 5.2 volts?

Yes >> Repair the short to battery voltage in the (K22) TP Sensor No.1 or (K122) TP Sensor No.2 Signal circuit.
Perform the POWERTRAIN VERIFICATION TEST. (Refer to 9 - ENGINE - STANDARD PROCEDURE)

No >> Go To 3

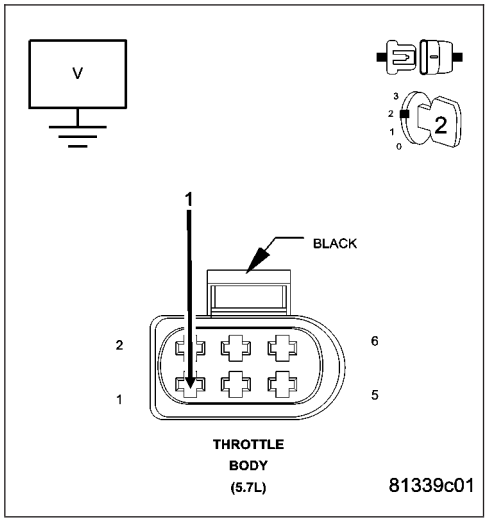

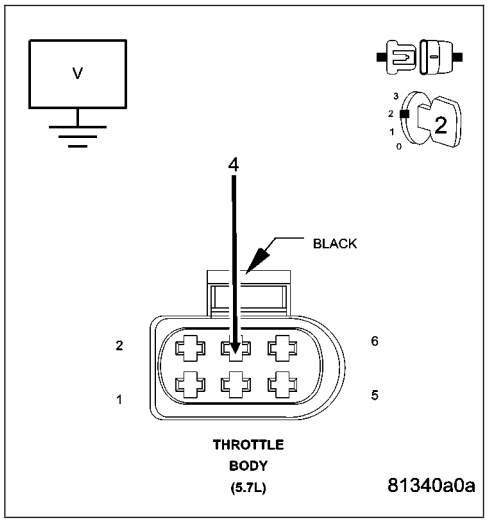

P2135-THROTTLE POSITION SENSOR 1/2 CORRELATION (CONTINUED)

3. THROTTLE POSITION SENSOR

Turn the ignition off.

Connect the C2 PCM harness connector.

Ignition on, engine not running.

With a scan tool, monitor the TP Sensor No.1 and No.2 voltage.

Connect a jumper wire between the (K922) Sensor Return circuit and the (K22) TP Sensor No.1 Signal circuit.

TP Sensor No.1 voltage should change from approximately 4.5 volts to 0.5 of a volt?

For TP Sensor No.2, connect a jumper wire between (F855) 5-volt supply circuit and the (K122) TP Sensor No.2 signal circuit.

TP Sensor No.2 voltage should change from approximately 0 volts to 5.0 volts?

Is the voltage reading within the listed specification with the jumper wire installed?

Yes >> Replace the Throttle Body Assembly.
Perform the POWERTRAIN VERIFICATION TEST. (Refer to 9 - ENGINE - STANDARD PROCEDURE)

No >> Go To 4

NOTE: Remove the jumper wire before continuing.

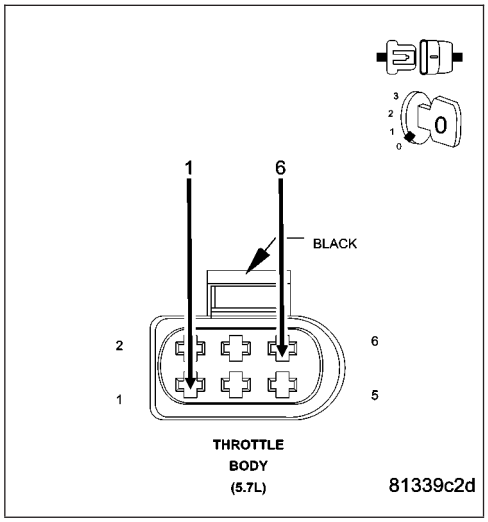

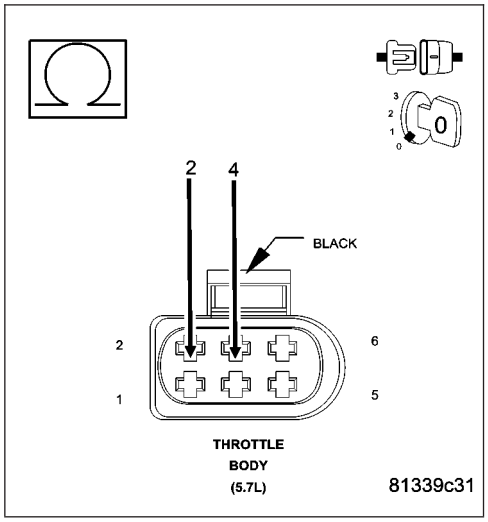

P2135-THROTTLE POSITION SENSOR 1/2 CORRELATION (CONTINUED)

4. EXCESSIVE RESISTANCE IN THE (K22) TP SENSOR NO.1 OR (K122) TP SENSOR NO.2 SIGNAL CIRCUIT

Turn the ignition off.

Disconnect the C2 PCM harness connector.

CAUTION: Do not probe the PCM harness connectors. Probing the PCM harness connectors will damage the PCM terminals resulting in poor terminal to pin connection. Install Miller Special Tool #8815 to perform diagnosis.

Measure the resistance of the (K22) TP Sensor No.1 Signal circuit from the Throttle Body harness connector to the appropriate terminal of special tool #8815.Measure the resistance of the (K122) TP Sensor No.2 Signal circuit from the Throttle Body harness connector to the appropriate terminal of special tool #8815.

Is the resistance below 5.0 ohms for each circuit?

Yes >> Go To 5

No >> Repair the excessive resistance in the (K22) TP Sensor No.1 or (K122) TP Sensor No.2 Signal circuit.
Perform the POWERTRAIN VERIFICATION TEST. (Refer to 9 - ENGINE - STANDARD PROCEDURE)

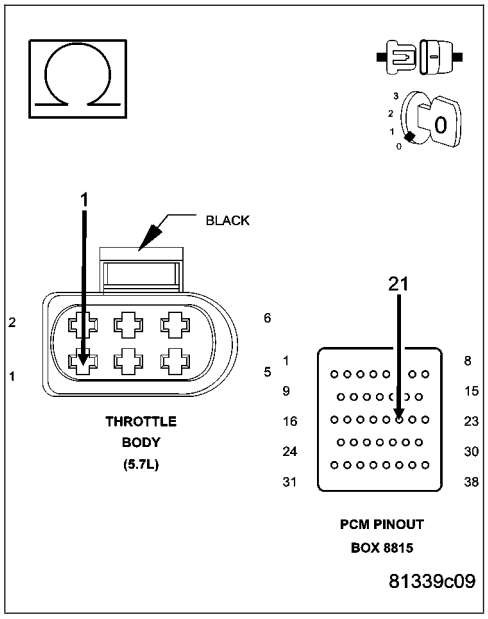

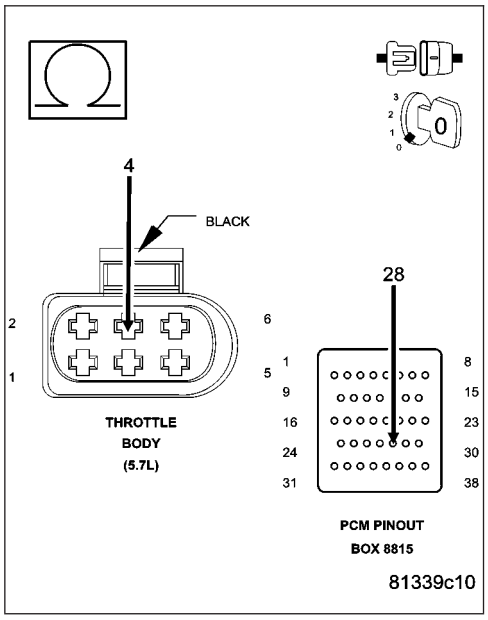

P2135-THROTTLE POSITION SENSOR 1/2 CORRELATION (CONTINUED)

5. (K22) TP SENSOR NO.1 OR (K122) TP SENSOR NO.1 SIGNAL CIRCUIT SHORTED TO GROUND

Measure the resistance between ground and the (K22) TP Sensor No.1 Signal circuit and the (K122) TP Sensor No.2 Signal circuit at the appropriate terminals of special tool #8815.

Is the resistance below 100 ohms for either circuit?

Yes >> Repair the short to ground in the (K22) TP No.1 Signal or (K122) TP No.2 Signal circuit.
Perform the POWERTRAIN VERIFICATION TEST. (Refer to 9 - ENGINE - STANDARD PROCEDURE)

No >> Go To 6

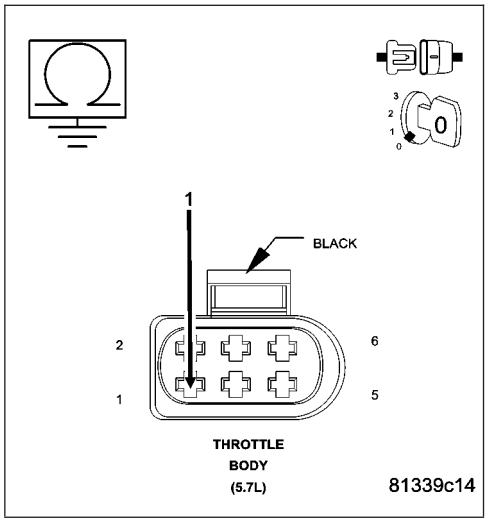

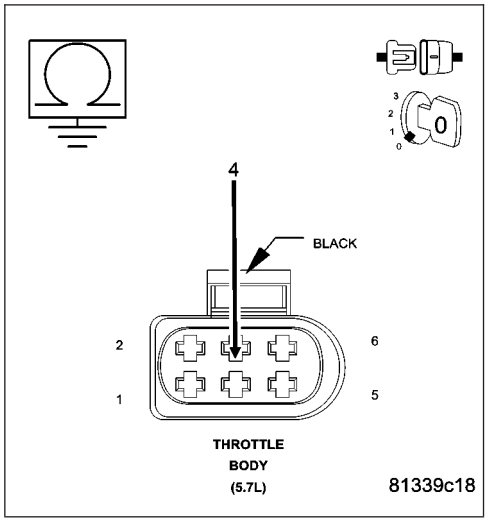

6. EXCESSIVE RESISTANCE IN THE (F855) 5-VOLT SUPPLY CIRCUIT

CAUTION: Do not probe the PCM harness connectors. Probing the PCM harness connectors will damage the PCM terminals resulting in poor terminal to pin connection. Install Miller Special Tool #8815 to perform diagnosis.
Measure the resistance of the (F855) 5-volt Supply circuit from the Throttle Body harness connector to the appropriate terminal of special tool #8815.

Is the resistance below 5.0 ohms?

Yes >> Go To 7

No >> Repair the excessive resistance in the (F855) 5-volt Supply circuit.
Perform the POWERTRAIN VERIFICATION TEST. (Refer to 9 - ENGINE - STANDARD PROCEDURE)

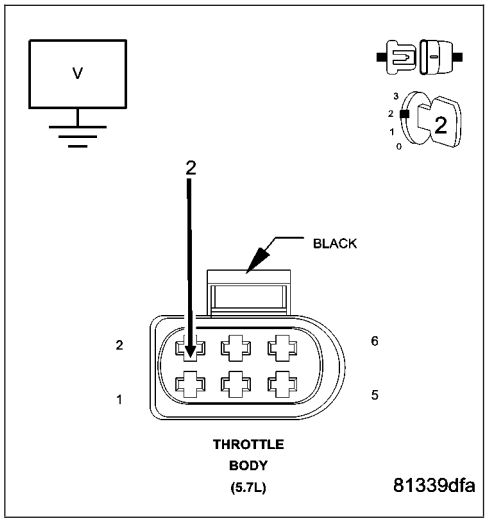

P2135-THROTTLE POSITION SENSOR 1/2 CORRELATION (CONTINUED)

7. (F855) 5-VOLT SUPPLY SHORTED TO GROUND

Measure the resistance between ground and the (F855) 5-volt Supply circuit at the appropriate terminals of special tool #8815.

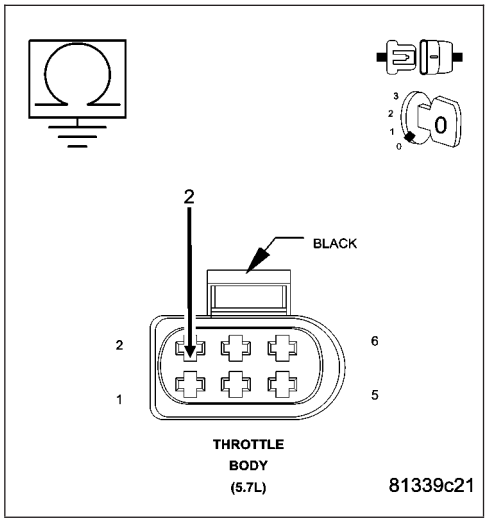

Is the resistance below 100 ohms?

Yes >> Repair the short to ground in the (F855) 5-volt Supply circuit.
Perform the POWERTRAIN VERIFICATION TEST. (Refer to 9 - ENGINE - STANDARD PROCEDURE)

No >> Go To 8

8. EXCESSIVE RESISTANCE IN THE (K922) SENSOR RETURN CIRCUIT

CAUTION: Do not probe the PCM harness connectors. Probing the PCM harness connectors will damage the PCM terminals resulting in poor terminal to pin connection. Install Miller Special Tool #8815 to perform diagnosis.

Measure the resistance of the (K922) Sensor Return circuit from the Throttle Body harness connector to the appropriate terminal of special tool #8815.

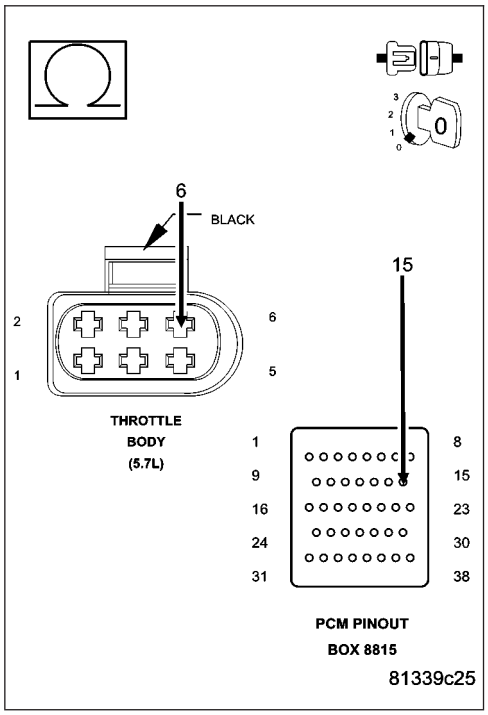

Is the resistance below 5.0 ohms?

Yes >> Go To 9

No >> Repair the excessive resistance in the (K922) Sensor Return circuit.
Perform the POWERTRAIN VERIFICATION TEST. (Refer to 9 - ENGINE - STANDARD PROCEDURE)

P2135-THROTTLE POSITION SENSOR 1/2 CORRELATION (CONTINUED)

9. (K22) TP SENSOR NO.1 SIGNAL SHORTED TO (K122) TP SENSOR NO.2 SIGNAL

Measure the resistance between the (K22) TP Sensor No.1 Signal circuit and the (K122) TP Sensor No.2 Signal circuit between the appropriate terminals of special tool #8815.

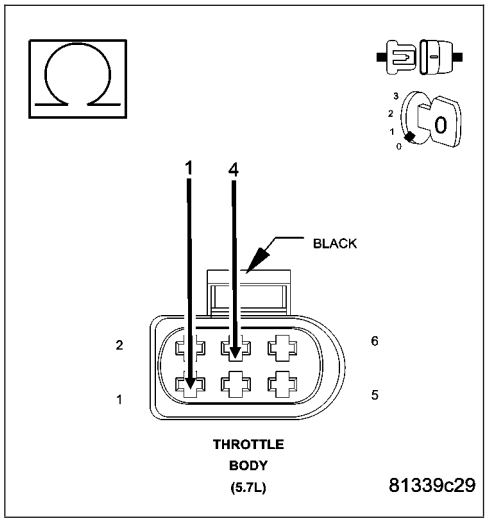

Is the resistance below 5.0 ohms?

Yes >> Repair the short between the (K122) TP Sensor No.2 Signal circuit and the (K22) TP Sensor No.1 Signal circuit.
Perform the POWERTRAIN VERIFICATION TEST. (Refer to 9 - ENGINE - STANDARD PROCEDURE)

No >> Go To 10

---

10. PCM

NOTE: Before continuing, check the PCM harness connector terminals for corrosion, damage, or terminal push out. Repair as necessary.
Using the schematics as a guide, inspect the wire harness and connectors. Pay particular attention to all Power and Ground circuits.

Were there any problems found?

Yes >> Repair as necessary.
Perform the POWERTRAIN VERIFICATION TEST. (Refer to 9 - ENGINE - STANDARD PROCEDURE)

No >> Replace and program the Powertrain Control Module per Service Information.
Perform the POWERTRAIN VERIFICATION TEST. (Refer to 9 - ENGINE - STANDARD PROCEDURE)

---

11. THROTTLE FOLLOWER TEST

Ignition on, engine not running.
With a scan tool, perform the Throttle Follower Test and monitor the TP Sensor No.1 or No.2 voltage.
Slowly press the throttle pedal down.
The voltage for TP Sensor No.1 should start at approximately 0.8 of a volt and increase to above 4.2 volts.
The voltage for TP Sensor No.2 should start at approximately 4.2 volts and decrease to approximately 0.8 of a volt.

Is the voltage within the range of the listed specification for the appropriate Sensor?

Yes >> Refer to the INTERMITTENT CONDITION Diagnostic Procedure.
Perform the POWERTRAIN VERIFICATION TEST. (Refer to 9 - ENGINE - STANDARD PROCEDURE)

No >> Disconnect the Battery when replacing the Throttle Body Assembly. Replace the Throttle Body Assembly. After installation is complete, use a scan tool and select the ETC RELEARN function.
Perform the POWERTRAIN VERIFICATION TEST. (Refer to 9 - ENGINE - STANDARD PROCEDURE)

P2138-ACCELERATOR PEDAL POSITION SENSOR 1/2 CORRELATION

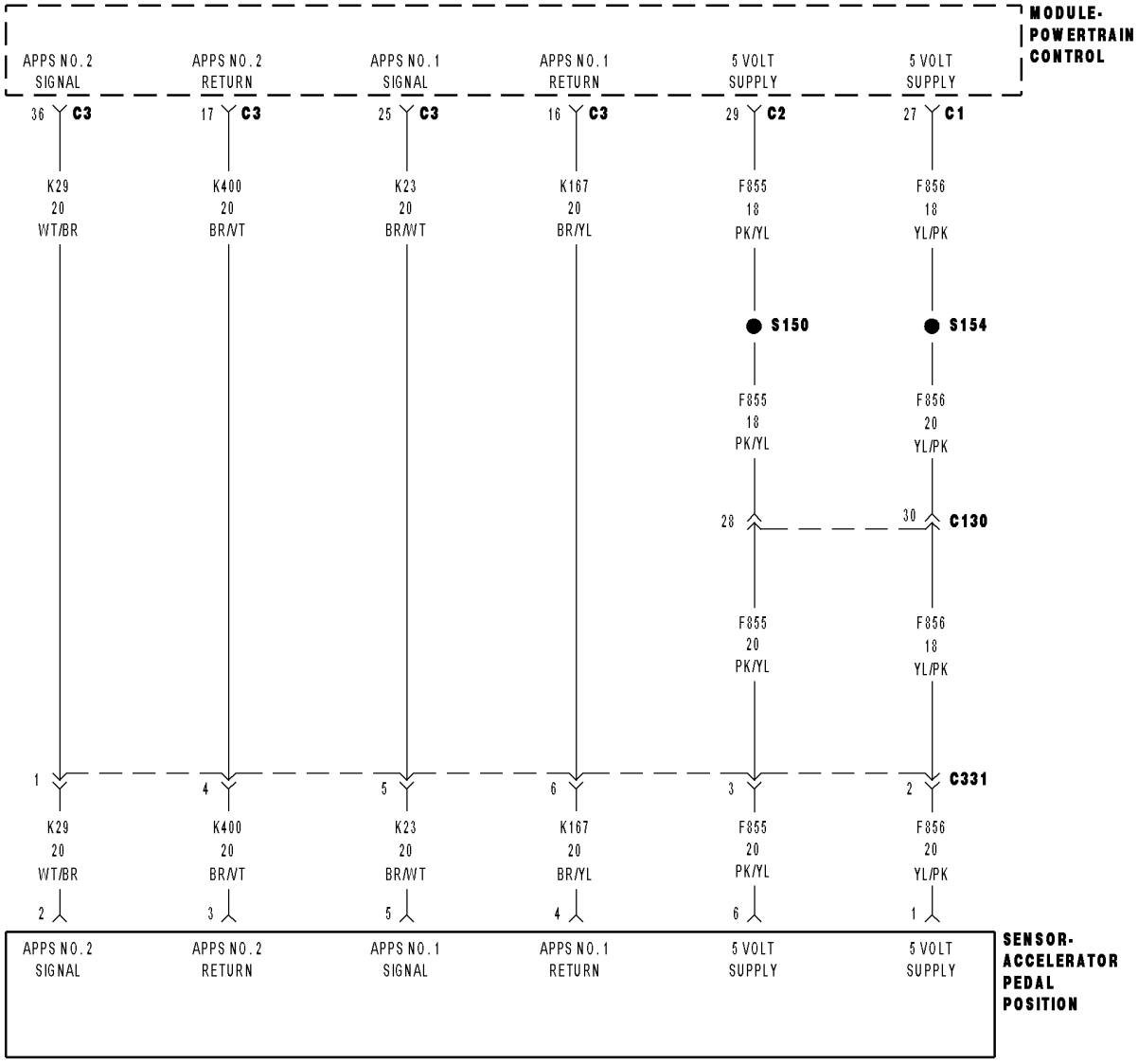

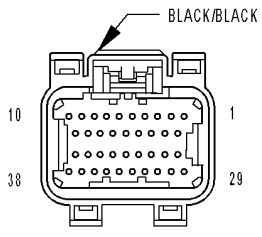

MODULE-POWERTRAIN CONTROL C1 (NGC)

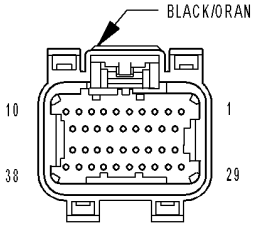

MODULE-POWERTRAIN CONTROL C2 (NGC)

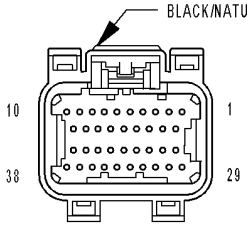

MODULE-POWERTRAIN CONTROL C3 (NGC)

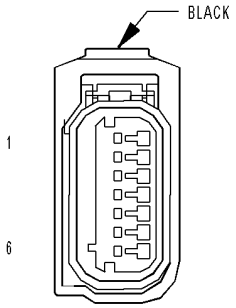

SENSOR-ACCELERATOR PEDAL POSITION

81454f1d

P2138-ACCELERATOR PEDAL POSITION SENSOR 1/2 CORRELATION (CONTINUED)

For the Engine circuit diagram (Refer to 9 - ENGINE - SCHEMATICS AND DIAGRAMS).

For a complete wiring diagram **Refer to Section 8W**.

- **When Monitored:**
  With the ignition on and no APPS No.1 and APPS No.2 DTC present.
- **Set Condition:**
  APPS values No.1 and No.2 are not coherent. Idle is additionally forced when the brake pedal is pressed or failed. Acceleration rate and Engine output are limited. One trip fault and the code will set within 5 seconds. ETC light is flashing.

Possible Causes
EXCESSIVE RESISTANCE IN THE (F855) 5-VOLT SUPPLY CIRCUIT
EXCESSIVE RESISTANCE IN THE (F856) 5-VOLT SUPPLY CIRCUIT
EXCESSIVE RESISTANCE IN THE (K167) SENSOR NO.1 RETURN CIRCUIT
EXCESSIVE RESISTANCE IN THE (K400) SENSOR NO.2 RETURN CIRCUIT
EXCESSIVE RESISTANCE IN THE (K23) APP SENSOR NO.1 SIGNAL CIRCUIT
EXCESSIVE RESISTANCE IN THE (K29) APP SENSOR NO.2 SIGNAL CIRCUIT
APP SENSOR
PCM

Always perform the Pre-Diagnostic Troubleshooting procedure before proceeding. (Refer to 9 - ENGINE - DIAGNOSIS AND TESTING).

Diagnostic Test

1. ACTIVE DTC

Ignition on, engine not running.
With a scan tool, read DTCs.

NOTE: Repair any other 5-Volt Supply or APPS High and Low DTCs before diagnosing P2138.

Is the DTC active at this time?

Yes >> Go To 2

No >> Refer to the INTERMITTENT CONDITION Diagnostic Procedure.
Perform the POWERTRAIN VERIFICATION TEST. (Refer to 9 - ENGINE - STANDARD PROCEDURE)

P2138-ACCELERATOR PEDAL POSITION SENSOR 1/2 CORRELATION (CONTINUED)

2. EXCESSIVE RESISTANCE IN THE (K23) APPS NO.1 SIGNAL CIRCUIT

CAUTION: Do not probe the PCM harness connectors. Probing the PCM harness connectors will damage the PCM terminals resulting in poor terminal to pin connection. Install Miller Special Tool #8815 to perform diagnosis.

Turn the ignition off.

Disconnect the C3 PCM harness connector.

Disconnect the APP Sensor harness connector.

Measure the resistance of (K23) APP Sensor No.1 Signal circuit from the APP Sensor harness connector to the appropriate terminals of special tool #8815.

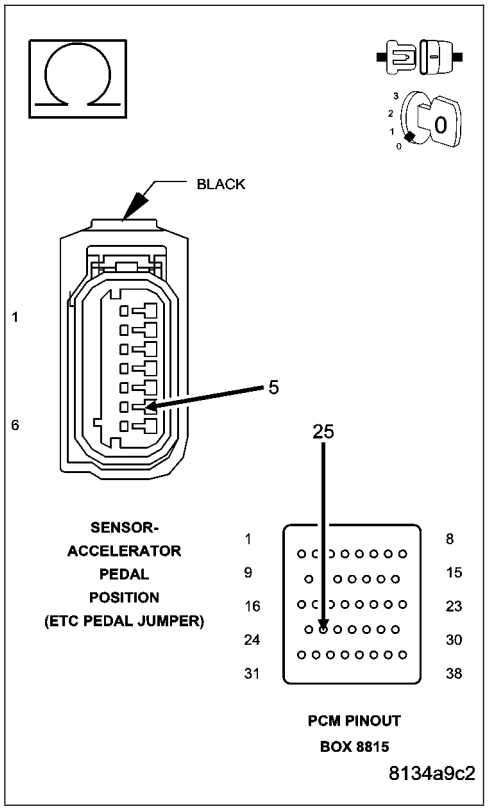

Is the resistance below 5.0 ohms?

Yes >> Go To 3

No >> Repair the excessive resistance in the (K23) APP Sensor No.1 Signal circuit.

Perform the POWERTRAIN VERIFICATION TEST. (Refer to 9 - ENGINE - STANDARD PROCEDURE)

3. EXCESSIVE RESISTANCE IN THE (K29) APPS NO.2 SIGNAL CIRCUIT

Measure the resistance of (K29) APPS No.2 Signal circuit from the APP Sensor harness connector to the appropriate terminals of special tool #8815.

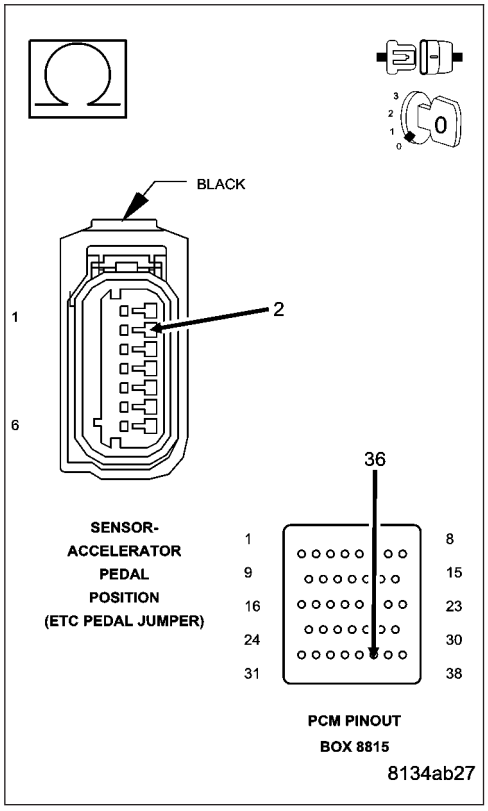

Is the resistance below 5.0 ohms?

Yes >> Go To 4

No >> Repair the excessive resistance in the (K29) APP Sensor No.2 Signal circuit.

Perform the POWERTRAIN VERIFICATION TEST. (Refer to 9 - ENGINE - STANDARD PROCEDURE)

P2138-ACCELERATOR PEDAL POSITION SENSOR 1/2 CORRELATION (CONTINUED)

4. EXCESSIVE RESISTANCE IN THE (F855) 5-VOLT SUPPLY CIRCUIT

Disconnect the C2 PCM harness connector.

Measure the resistance of the (F855) 5-volt Supply circuit from the APP Sensor harness connector to the appropriate terminal of special tool #8815.

Is the resistance above 5.0 ohms?

Yes >> Repair the excessive resistance in the (F855) 5-volt Supply circuit.
Perform the POWERTRAIN VERIFICATION TEST. (Refer to 9 - ENGINE - STANDARD PROCEDURE)

No >> Go To 5

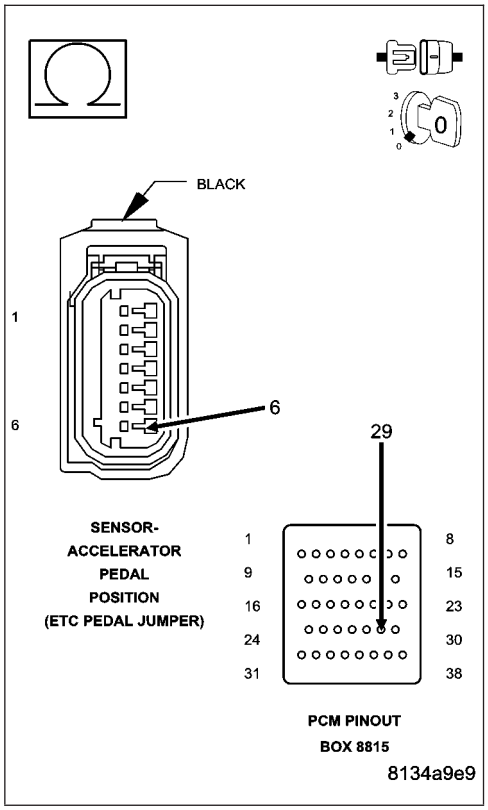

5. EXCESSIVE RESISTANCE IN THE (F856) 5-VOLT SUPPLY CIRCUIT

Disconnect the C1 PCM harness connector.

Measure the resistance of the (F856) 5-volt Supply circuit from the APP Sensor harness connector to the appropriate terminal of special tool #8815.

Is the resistance above 5.0 ohms?

Yes >> Repair the excessive resistance in the (F856) 5-volt Supply circuit.
Perform the POWERTRAIN VERIFICATION TEST. (Refer to 9 - ENGINE - STANDARD PROCEDURE)

No >> Go To 6

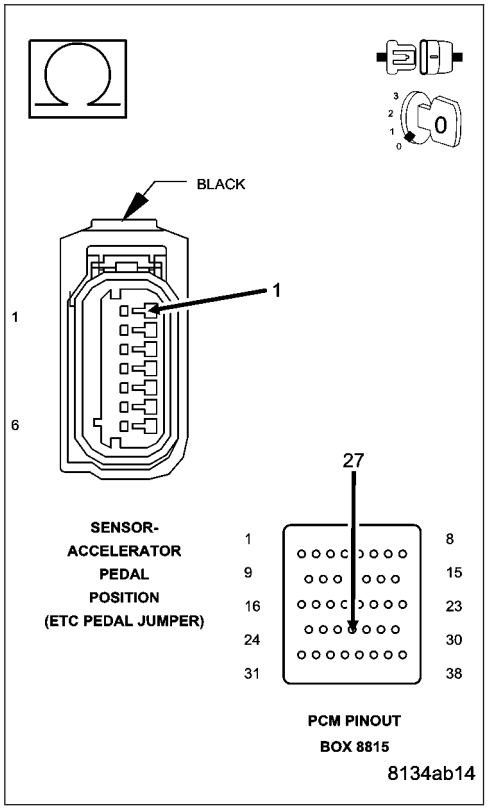

P2138-ACCELERATOR PEDAL POSITION SENSOR 1/2 CORRELATION (CONTINUED)

6. EXCESSIVE RESISTANCE IN THE (K167) SENSOR NO.1 RETURN CIRCUIT

Measure the resistance of the (K167) APP Sensor No.1 Return circuit from the APP Sensor harness connector to the appropriate terminal of special tool #8815.

Is the resistance above 5.0 ohms?

Yes >> Repair the excessive resistance in the (K167) Sensor No.1 Return circuit.
Perform the POWERTRAIN VERIFICATION TEST. (Refer to 9 - ENGINE - STANDARD PROCEDURE)

No >> Go To 7

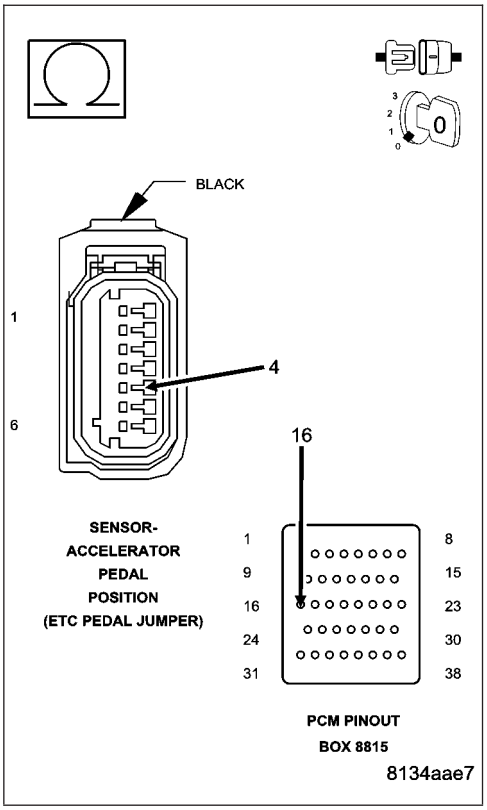

7. EXCESSIVE RESISTANCE IN THE (K400) SENSOR NO.2 RETURN CIRCUIT

Measure the resistance of the (K400) APP Sensor No.2 Return circuit from the APP Sensor harness connector to the appropriate terminal special tool #8815.

Is the resistance above 5.0 ohms?

Yes >> Repair the excessive resistance in the (K400) Sensor No.2 Return circuit.
Perform the POWERTRAIN VERIFICATION TEST. (Refer to 9 - ENGINE - STANDARD PROCEDURE)

No >> Go To 8

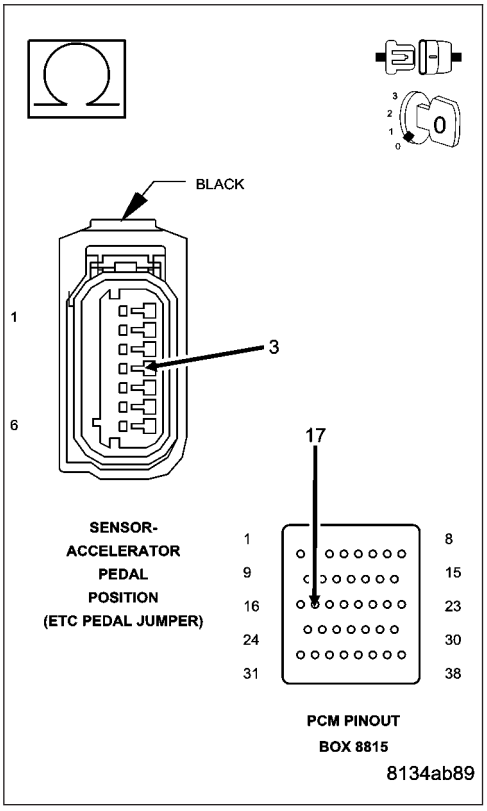

P2138-ACCELERATOR PEDAL POSITION SENSOR 1/2 CORRELATION (CONTINUED)

8. CHECKING APPS NO.1 AND NO.2 WITH A LAB SCOPE

Ignition on, engine not running.

Set up a lab scope in a way that you can view two graphs simultaneously.

Backprobe (K23) APP Sensor No.1 Signal circuit using Channel 1 at the APP Sensor harness connector.

Backprobe (K29) APP Sensor No.2 Signal circuit using Channel 2 at the APP Sensor harness connector.

Slowly press and release the Accelerator Pedal while monitoring the lab scope screen.

Does the scope pattern show any missing or erratic signals?

Yes >> Replace the APP Sensor Assembly per Service Information. After installation is complete, use a scan tool and select the ETC RELEARN function to relearn the APPS values.
Perform the POWERTRAIN VERIFICATION TEST. (Refer to 9 - ENGINE - STANDARD PROCEDURE)

No >> Go To 9

---

9. PCM

NOTE: Before continuing, check the PCM harness connector terminals for corrosion, damage, or terminal push out. Repair as necessary.

Using the schematics as a guide, inspect the wire harness and connectors. Pay particular attention to all Power and Ground circuits.

Were there any problems found?

Yes >> Repair as necessary.
Perform the POWERTRAIN VERIFICATION TEST. (Refer to 9 - ENGINE - STANDARD PROCEDURE)

No >> Replace and program the Powertrain Control Module per Service Information.
Perform the POWERTRAIN VERIFICATION TEST. (Refer to 9 - ENGINE - STANDARD PROCEDURE)

P2161-VEHICLE SPEED SENSOR 2 ERRATIC

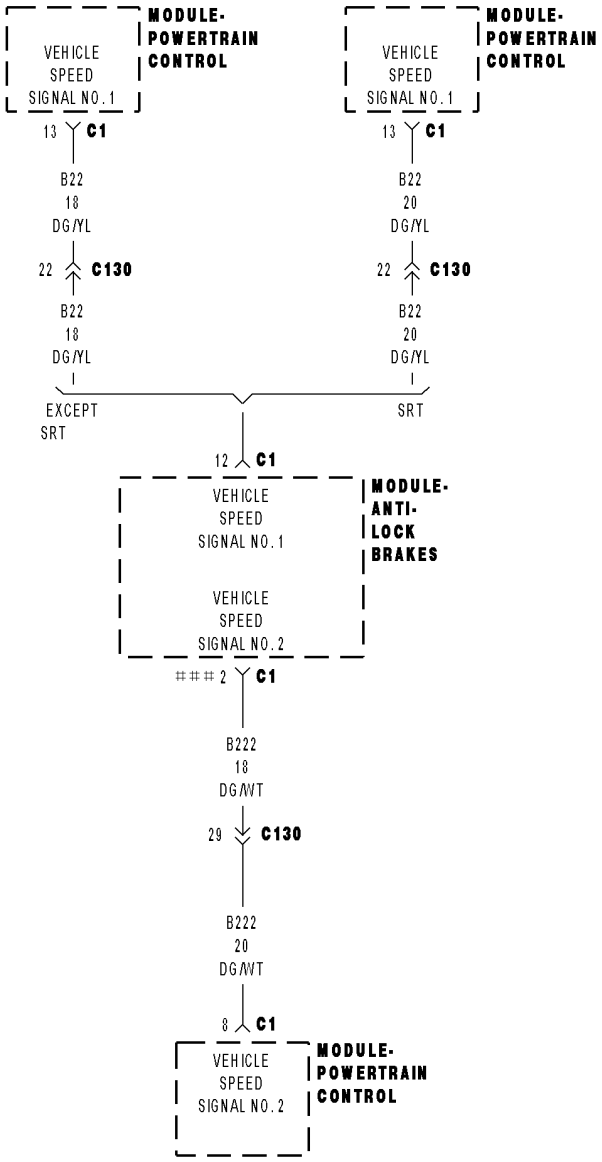

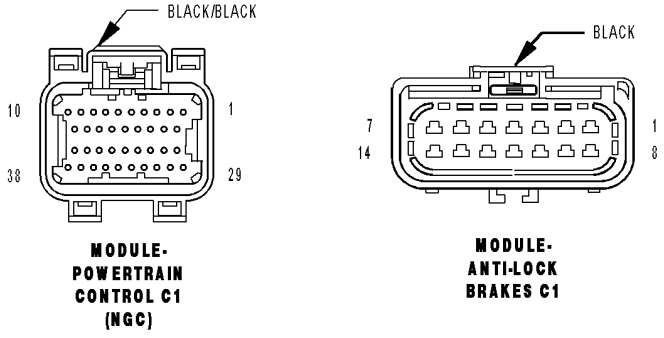

81453b7e

P2161-VEHICLE SPEED SENSOR 2 ERRATIC (CONTINUED)

For the Engine circuit diagram (Refer to 9 - ENGINE - SCHEMATICS AND DIAGRAMS).

For a complete wiring diagram **Refer to Section 8W**.

- **When Monitored:**
  Ignition on.
- **Set Condition:**
  PCM recognizes Vehicle speed input No.2 erratic or high. VSS No.2 is based on the average of the Front Wheel Speeds. One trip fault and the code will set within 5 seconds. No MIL and No ETC light. Cruise is disabled.

Possible Causes
(B222) VEHICLE SPEED NO.2 SIGNAL CIRCUIT SHORTED TO VOLTAGE
(B222) VEHICLE SPEED NO.2 SIGNAL CIRCUIT OPEN
(B222) VEHICLE SPEED NO.2 SIGNAL CIRCUIT SHORTED TO GROUND
TIRE CIRCUMFERENCE
PCM

Always perform the Pre-Diagnostic Troubleshooting procedure before proceeding. (Refer to 9 - ENGINE - DIAGNOSIS AND TESTING).

Diagnostic Test

1. ACTIVE DTC

Ignition on, engine not running.

NOTE: Check for any Bus Communication DTCs. If no Bus or Communication DTCs are set, check for active DTCs stored in the Ant-Lock Brake Module. Any bus or communication DTCs or VSS DTCs in the Ant-Lock Brake Module must be properly diagnosed before continuing.

With a scan tool, read DTCs.

Is the DTC active at this time?

Yes >> Go To 2

No >> Refer to the INTERMITTENT CONDITION Diagnostic Procedure.
Perform the POWERTRAIN VERIFICATION TEST. (Refer to 9 - ENGINE - STANDARD PROCEDURE)

---

2. VISUAL INSPECTION

NOTE: This code can set due to tire circumference differences and from the front or rear wheels being on a slippery surface while the opposite tires are not.

This code may also set on a hard acceleration on loose gravel or during other off road driving conditions.

Check tire pressure of all the tires.

Check tire wear on all the tires.

Ask the customer what the road and driving conditions were like when the fault set.

Were any problems found?

Yes >> Repair as necessary. If the code set during a front OR rear wheel spin condition, no repair is necessary.
Perform the POWERTRAIN VERIFICATION TEST. (Refer to 9 - ENGINE - STANDARD PROCEDURE)

No >> Go To 3

P2161-VEHICLE SPEED SENSOR 2 ERRATIC (CONTINUED)

3. (B222) VEHICLE SPEED NO.2 SIGNAL CIRCUIT SHORTED TO VOLTAGE

Turn the ignition off.

Disconnect the ABS Module harness connector.

Disconnect the C1 PCM harness connector.

CAUTION: Do not probe the PCM harness connectors. Probing the PCM harness connectors will damage the PCM terminals resulting in poor terminal to pin connection. Install Miller Special Tool #8815 to perform diagnosis.

Ignition on, engine not running.

Measure the voltage of the (B222) Vehicle Speed No.2 Signal circuit at the appropriate terminals of special tool #8815.

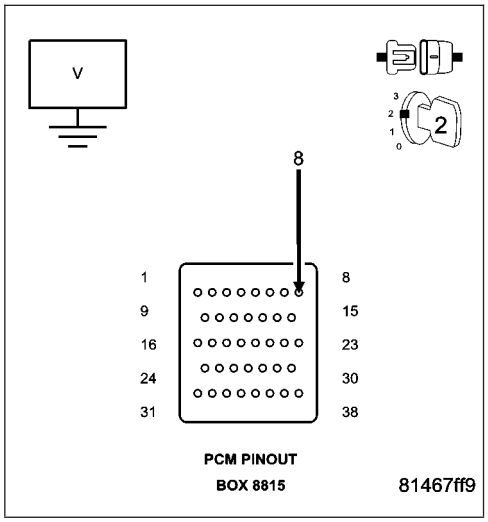

Is the voltage above 6.0 volts?

Yes >> Repair the short to voltage in the (B222) Vehicle Speed No.2 Signal circuit.
Perform the POWERTRAIN VERIFICATION TEST. (Refer to 9 - ENGINE - STANDARD PROCEDURE)

No >> Go To 4

---

4. (B222) VEHICLE SPEED NO.2 SIGNAL CIRCUIT OPEN

Turn the ignition off.

Measure the resistance of the (B222) Vehicle Speed No.2 Signal circuit from the ABS Module harness connector to the appropriate terminal special tool #8815.

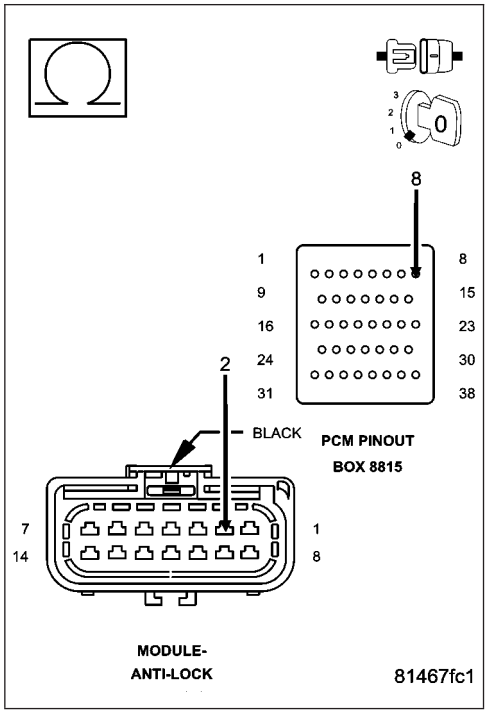

Is the resistance below 5.0 ohms?

Yes >> Go To 5

No >> Repair the open in the (B222) Vehicle Speed No.2 Signal circuit.
Perform the POWERTRAIN VERIFICATION TEST. (Refer to 9 - ENGINE - STANDARD PROCEDURE)

P2161-VEHICLE SPEED SENSOR 2 ERRATIC (CONTINUED)

5. (B222) VEHICLE SPEED NO.2 SIGNAL CIRCUIT SHORTED TO GROUND

Measure the resistance between ground and the (B222) Vehicle Speed No.2 Signal circuit at the appropriate terminals of special tool #8815.

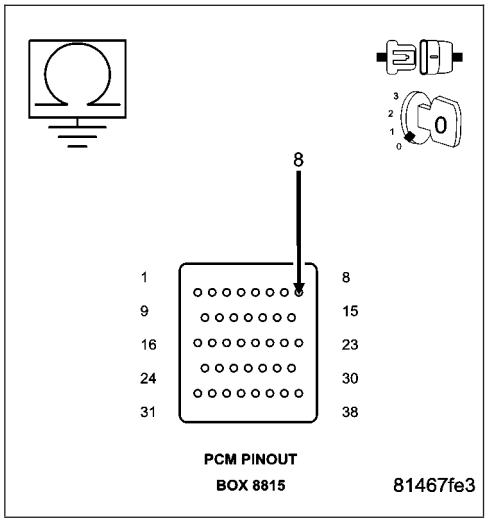

Is the resistance below 100 ohms?

Yes >> Repair the short to ground in the (B222) Vehicle Speed No.2 Signal circuit.
Perform the POWERTRAIN VERIFICATION TEST. (Refer to 9 - ENGINE - STANDARD PROCEDURE)

No >> Go To 6

---

6. PCM

NOTE: Before continuing, check the PCM harness connector terminals for corrosion, damage, or terminal push out. Repair as necessary.
Using the schematics as a guide, inspect the wire harness and connectors. Pay particular attention to all Power and Ground circuits.

Were there any problems found?

Yes >> Repair as necessary.
Perform the POWERTRAIN VERIFICATION TEST. (Refer to 9 - ENGINE - STANDARD PROCEDURE)

No >> Replace and program the Powertrain Control Module per Service Information.
Perform the POWERTRAIN VERIFICATION TEST. (Refer to 9 - ENGINE - STANDARD PROCEDURE)

P2166-ACCELERATOR PEDAL POSITION SENSOR 1 MAXIMUM STOP PERFORMANCE

For the Engine circuit diagram (Refer to 9 - ENGINE - SCHEMATICS AND DIAGRAMS).

For a complete wiring diagram **Refer to Section 8W**.

- **When Monitored:**
  Ignition on. During in plant mode the APP Sensors need to be checked to make sure that idle and full pedal travel can be reached on both sensors.
- **Set Condition:**
  APPS No.1 has failed to achieve the required maximum value during In Plant testing. One trip fault and the code will set within 5 seconds. Engine will only idle.

Possible Causes
IN PLANT TEST FAILURE
APPS RELEARN

Always perform the Pre-Diagnostic Troubleshooting procedure before proceeding. (Refer to 9 - ENGINE - DIAGNOSIS AND TESTING).

Diagnostic Test

1. IN PLANT TEST FAILURE

Ignition on, engine not running.

NOTE: This DTC is set when the APP Sensors are learned in plant but do not reach the Minimum or Maximum voltage range.

With a scan tool read DTCs.

With the scan tool, erase DTCs.

Start the engine.

With the scan tool, read DTCs.

Is the DTC active at this time?

Yes >> Go To 2

No >> Refer to the INTERMITTENT CONDITION Diagnostic Procedure.
Perform the POWERTRAIN VERIFICATION TEST. (Refer to 9 - ENGINE - STANDARD PROCEDURE)

---

2. APPS RELEARN

With a scan tool select the ETC RELEARN function.

Next, erase DTCs.

Start the engine.

Does the DTC return?

Yes >> Replace the APPS Assembly per Service Information. After installation is complete, use a scan tool and select the ETC RELEARN function.
Perform the POWERTRAIN VERIFICATION TEST. (Refer to 9 - ENGINE - STANDARD PROCEDURE)

No >> Test Complete.

P2167-ACCELERATOR PEDAL POSITION SENSOR 2 MAXIMUM STOP PERFORMANCE

For the Engine circuit diagram (Refer to 9 - ENGINE - SCHEMATICS AND DIAGRAMS).

For a complete wiring diagram **Refer to Section 8W**.

- **When Monitored:**
  Ignition on. During in plant mode the APP Sensors need to be checked to make sure that idle and full pedal travel can be reached on both sensors.
- **Set Condition:**
  APPS No.2 has failed to achieve the required maximum value during In Plant testing. One trip fault and the code will set within 5 seconds. Engine will only idle.

Possible Causes
IN PLANT TEST FAILURE
APPS RELEARN

Diagnostic Test

1. IN PLANT TEST FAILURE

Ignition on, engine not running.

NOTE: This DTC is set when the APP Sensors are learned in plant but do not reach the Minimum or Maximum voltage range.

With a scan tool read DTCs.

With the scan tool, erase DTCs.

Start the engine.

With the scan tool, read DTCs.

Is the DTC active at this time?

Yes >> Go To 2

No >> Refer to the INTERMITTENT CONDITION Diagnostic Procedure.
Perform the POWERTRAIN VERIFICATION TEST. (Refer to 9 - ENGINE - STANDARD PROCEDURE)

---

2. APPS RELEARN

With a scan tool select the ETC RELEARN function.

Next, erase DTCs.

Start the engine.

Does the DTC return?

Yes >> Replace the APPS Assembly per Service Information. After installation is complete, use a scan tool and select the ETC RELEARN function.
Perform the POWERTRAIN VERIFICATION TEST. (Refer to 9 - ENGINE - STANDARD PROCEDURE)

No >> Test Complete.

P2172-HIGH AIRFLOW/VACUUM LEAK DETECTED (INSTANTANEOUS ACCUMULATION)

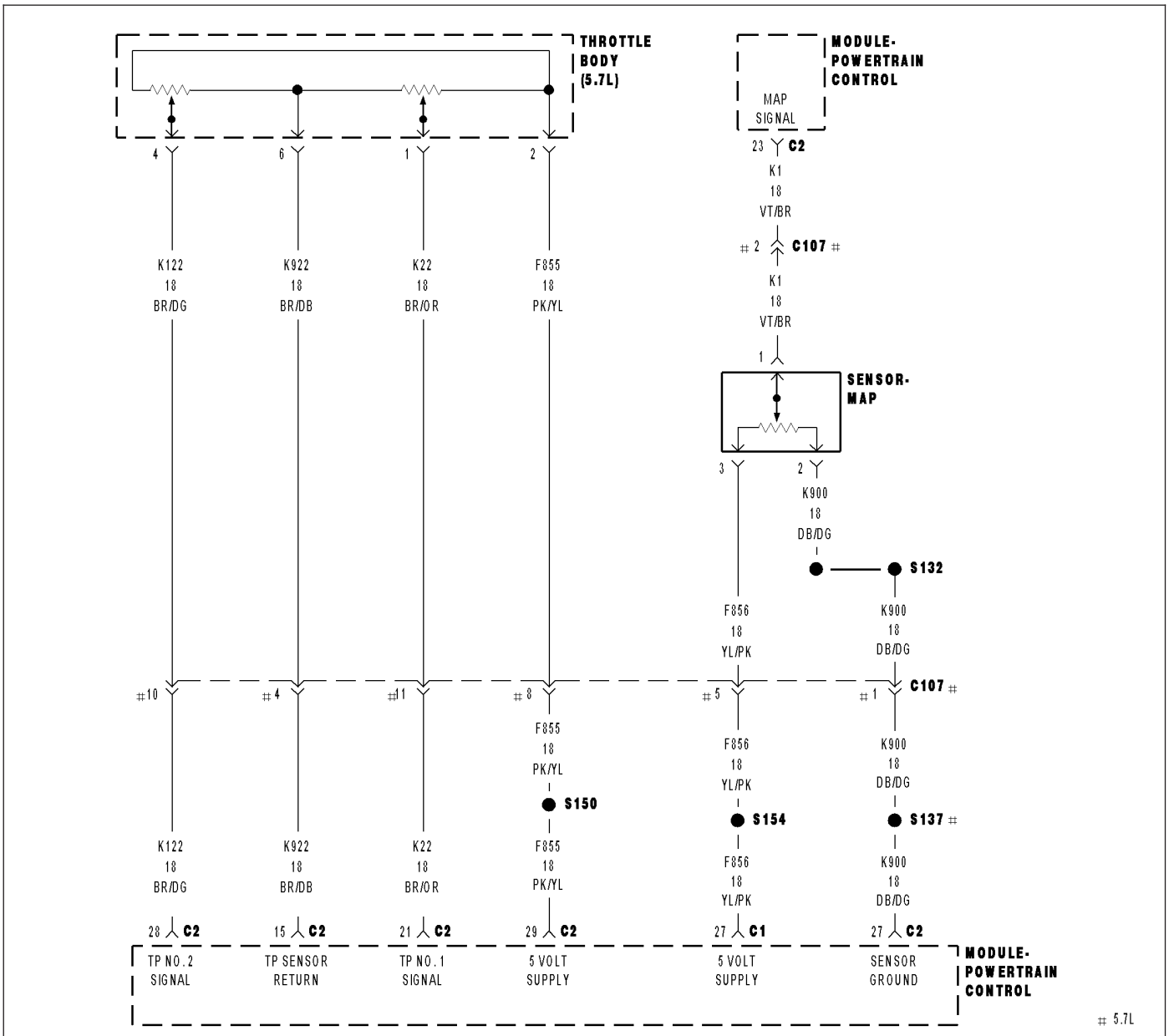

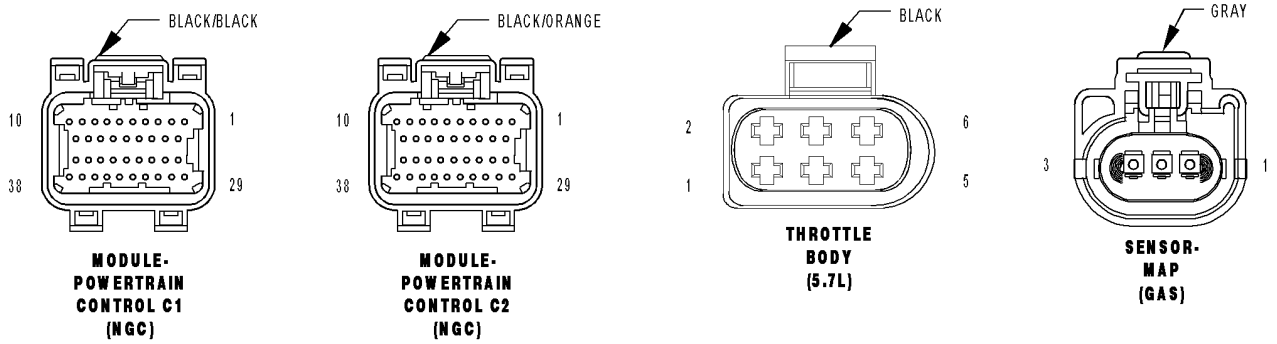

81455202

P2172-HIGH AIRFLOW/VACUUM LEAK DETECTED (INSTANTANEOUS ACCUMULATION) (CONTINUED)

For the Engine circuit diagram (Refer to 9 - ENGINE - SCHEMATICS AND DIAGRAMS).

For a complete wiring diagram **Refer to Section 8W**.

- **When Monitored:**
  Ignition on and engine running with no MAP Sensor DTCs.
- **Set Condition:**
  A large vacuum leak has been detected or both of the TP Sensors have failed based on their position being 2.5 volts and the calculated MAP value is less than the actual MAP minus an Offset value. One trip fault and the code will set within 5 seconds. ETC light will flash.

Possible Causes
VACUUM LEAK
RESISTANCE IN THE (F856) 5-VOLT SUPPLY CIRCUIT
(F856) 5-VOLT SUPPLY CIRCUIT SHORTED TO GROUND
RESISTANCE IN THE (K1) MAP SIGNAL CIRCUIT
(K1) MAP SIGNAL CIRCUIT SHORTED TO GROUND
RESISTANCE IN (K900) SENSOR GROUND CIRCUIT
RESISTANCE IN THE (F855) 5-VOLT SUPPLY CIRCUIT
(F855) 5-VOLT SUPPLY CIRCUIT SHORTED TO GROUND
RESISTANCE IN THE TP SENSOR SIGNAL CIRCUIT
TP SENSOR SIGNAL CIRCUIT SHORTED TO GROUND
RESISTANCE IN THE (K922) TP SENSOR RETURN CIRCUIT
MAP SENSOR
TP SENSOR
PCM

Always perform the Pre-Diagnostic Troubleshooting procedure before proceeding. (Refer to 9 - ENGINE - DIAGNOSIS AND TESTING).

Diagnostic Test

1. ACTIVE DTC

NOTE: The most likely cause of this DTC is a vacuum leak.

NOTE: Diagnose any 5-Volt Supply, TP Sensor, Fuel System Lean or Rich, or MAP Sensor DTCs before continuing.

NOTE: The throttle plate should be free from binding and carbon build up.

Ignition on, engine not running.

With a scan tool, read DTCs.

Is the DTC active at this time?

Yes >> Go To 2

No >> Refer to the INTERMITTENT CONDITION Diagnostic Procedure.
Perform the POWERTRAIN VERIFICATION TEST. (Refer to 9 - ENGINE - STANDARD PROCEDURE)

P2172-HIGH AIRFLOW/VACUUM LEAK DETECTED (INSTANTANEOUS ACCUMULATION) (CONTINUED)

2. VACUUM LEAK

NOTE: This code is enabled on engines with a plastic intake manifold and is intended to limit the maximum engine speed if a large crack occurs.

NOTE: A large vacuum leak is most likely the cause of this DTC.

Inspect the Intake Manifold and Throttle body for leaks and cracks.

Inspect the Power Brake Booster for any vacuum leaks.

Inspect the PCV system for proper operation or any vacuum leaks.

Inspect the MAP Sensor for proper installation.

Were any vacuum leaks found?

Yes >> Repair the vacuum leak as necessary.
Perform the POWERTRAIN VERIFICATION TEST. (Refer to 9 - ENGINE - STANDARD PROCEDURE)

No >> Go To 3

---

3. MAP SENSOR OPERATION

Start the engine.

With a scan tool, monitor the MAP Sensor voltage.

Snap the Accelerator pedal.

Does the MAP Sensor voltage vary from below 2.0 volts at idle to above 3.5 volts at Wide Open Throttle?

Yes >> Go To 4

No >> Go To 11

---

4. TP SENSOR OPERATION

Ignition on, engine not running.

With a scan tool, perform the Throttle Follower Test.

TP Sensor No.1 should start at approximately 0.8 of a volt and increase to 4.2 volts.

TP Sensor No.2 should start at approximately 4.2 volts and decrease to 0.8 of a volt.

Is the voltage transition smooth between the appropriate values?

Yes >> Refer to the INTERMITTENT CONDITION Diagnostic Procedure.
Perform the POWERTRAIN VERIFICATION TEST. (Refer to 9 - ENGINE - STANDARD PROCEDURE)

No >> Go To 5

P2172-HIGH AIRFLOW/VACUUM LEAK DETECTED (INSTANTANEOUS ACCUMULATION) (CONTINUED)

5. RESISTANCE IN THE (F855) 5-VOLT SUPPLY CIRCUIT

Turn the ignition off.

Disconnect the Throttle Body harness connector.

Disconnect the C2 PCM harness connector.

CAUTION: Do not probe the PCM harness connectors. Probing the PCM harness connectors will damage the PCM terminals resulting in poor terminal to pin connection. Install Miller Special Tool #8815 to perform diagnosis.

Measure the resistance of the (F855) 5-volt Supply circuit from the Throttle Body harness connector to the appropriate terminal of special tool #8815.

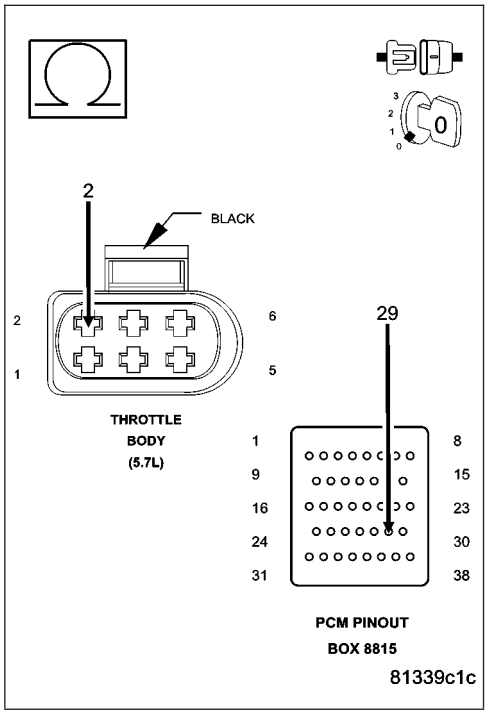

Is the resistance above 100 ohms?

Yes >> Go To 6

No >> Repair the excessive resistance in the (F855) 5-volt Supply circuit.

Perform the POWERTRAIN VERIFICATION TEST. (Refer to 9 - ENGINE - STANDARD PROCEDURE)

6. (F855) 5-VOLT SUPPLY CIRCUIT SHORTED TO GROUND

Measure the resistance between ground and (F855) 5-volt Supply circuit between the appropriate terminals of special tool #8815.

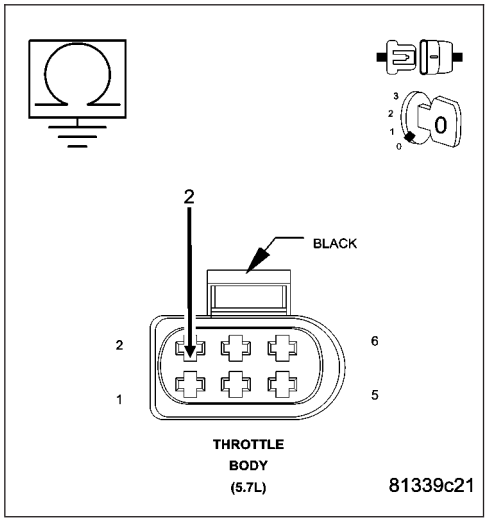

Is the resistance above 100 ohms?

Yes >> Go To 7

No >> Repair the short to ground in the (F855) 5-volt Supply circuit.

Perform the POWERTRAIN VERIFICATION TEST. (Refer to 9 - ENGINE - STANDARD PROCEDURE)

P2172-HIGH AIRFLOW/VACUUM LEAK DETECTED (INSTANTANEOUS ACCUMULATION) (CONTINUED)

7. TP SENSOR

Connect the C2 PCM harness connector.

Ignition on, engine not running.

With a scan tool, monitor the TP Sensor voltage.

Connect a jumper wire between the (K22) TP Sensor No.1 Signal circuit and the (K922) Sensor Return circuit in the Throttle Body harness connector.

TP Sensor No.1 voltage should start at approximately 4.8 volts and decrease to 0.2 of a volt.

Connect a jumper wire between the (K122) TP Sensor No.2 Signal circuit and the (F855) 5-volt Supply circuit in the Throttle Body harness connector.

TP Sensor No.2 voltage should start at approximately 0 volts and increase to 4.8 to 5.2 volts.

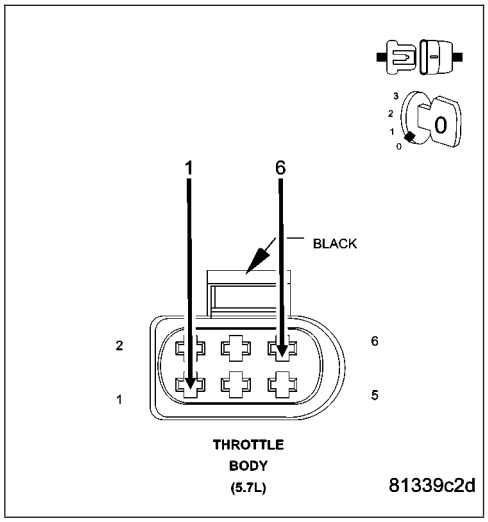

Does the TP Sensor voltage change to the appropriate voltage with the jumper wire installed?

Yes >> Disconnect the Battery before replacing the Throttle Body Assembly. Replace the Throttle Body Assembly. After installation is complete, use a scan tool and select the ETC RELEARN function

Perform the POWERTRAIN VERIFICATION TEST. (Refer to 9 - ENGINE - STANDARD PROCEDURE)

No >> Go To 8

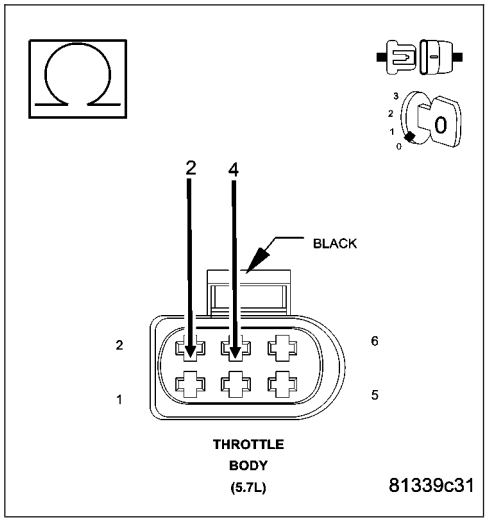

P2172-HIGH AIRFLOW/VACUUM LEAK DETECTED (INSTANTANEOUS ACCUMULATION) (CONTINUED)

8. RESISTANCE IN THE TP SENSOR SIGNAL CIRCUIT

Turn the ignition off.

Disconnect the C2 PCM harness connector.

Measure the resistance of the (K22) and (K122) TP Signal circuits from the Throttle Body harness connector to the appropriate terminals of special tool #8815.

Is the resistance below 5.0 ohms for each circuit?

Yes >> Go To 9

No >> Repair the excessive resistance in the (K22) or (K122) TP Sensor Signal circuit.

Perform the POWERTRAIN VERIFICATION TEST. (Refer to 9 - ENGINE - STANDARD PROCEDURE)

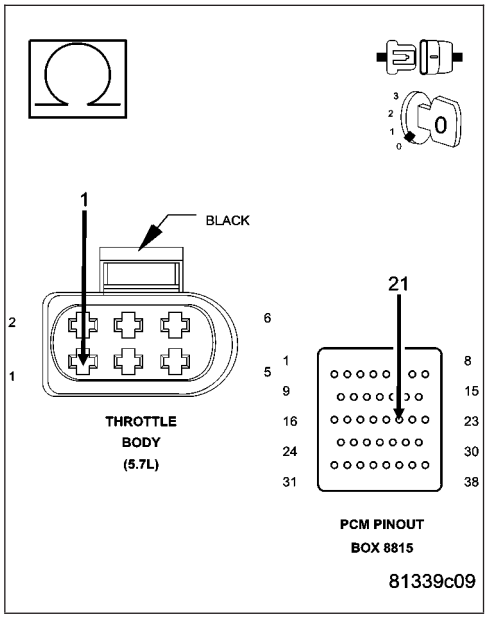

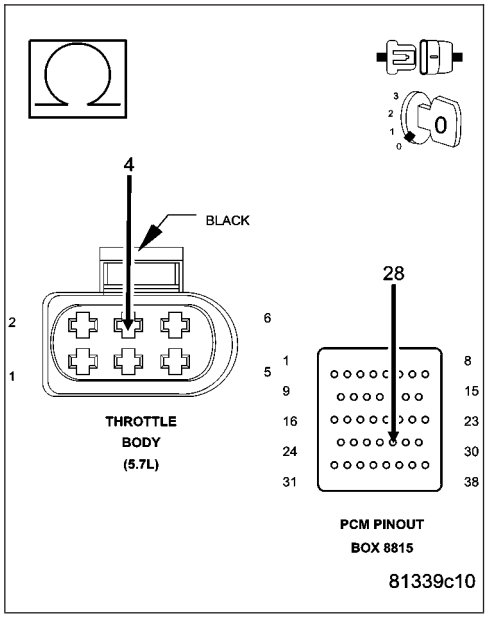

P2172-HIGH AIRFLOW/VACUUM LEAK DETECTED (INSTANTANEOUS ACCUMULATION) (CONTINUED)

9. TP SENSOR SIGNAL CIRCUIT SHORTED TO GROUND

Measure the resistance between ground and the (K22) and (K122) TP Signal circuits at the appropriate terminals of special tool #8815.

Is the resistance above 100 ohms for each circuit?

Yes >> Go To 10

No >> Repair the short to ground in the (K22) or (K122) TP Sensor Signal circuit.
Perform the POWERTRAIN VERIFICATION TEST. (Refer to 9 - ENGINE - STANDARD PROCEDURE)

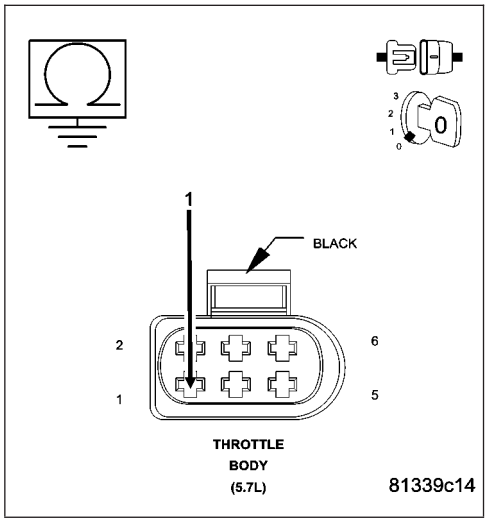

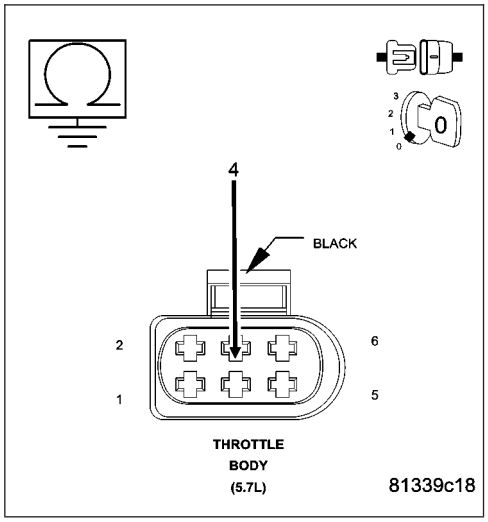

P2172-HIGH AIRFLOW/VACUUM LEAK DETECTED (INSTANTANEOUS ACCUMULATION) (CONTINUED)

10. RESISTANCE IN THE (K922) SENSOR RETURN CIRCUIT

Measure the resistance of the (K922) Sensor Return circuit from the Throttle Body harness connector to the appropriate terminal of special tool #8815.

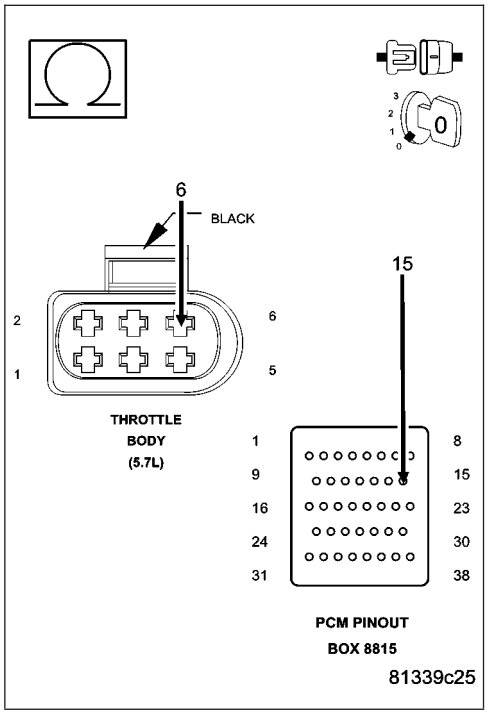

Is the resistance below 5.0 ohms?

Yes >> Go To 17

No >> Repair the excessive resistance in the (K922) Sensor Return circuit.
Perform the POWERTRAIN VERIFICATION TEST. (Refer to 9 - ENGINE - STANDARD PROCEDURE)

11. RESISTANCE IN THE (F856) 5-VOLT SUPPLY CIRCUIT

Turn the ignition off.

Disconnect the MAP Sensor harness connector.

Disconnect the C1 PCM harness connector.

CAUTION: Do not probe the PCM harness connectors. Probing the PCM harness connectors will damage the PCM terminals resulting in poor terminal to pin connection. Install Miller Special Tool #8815 to perform diagnosis.

Measure the resistance of the (F856) 5-volt Supply circuit from the MAP Sensor harness connector to the appropriate terminal of special tool #8815.

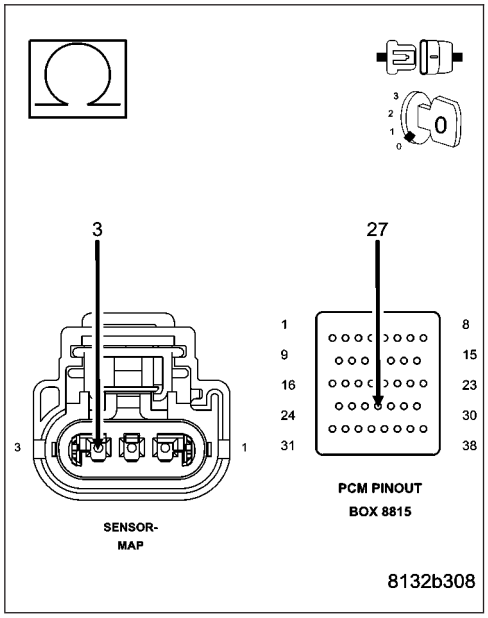

Is the resistance below 5.0 ohms?

Yes >> Go To 12

No >> Repair the excessive resistance in the (F856) 5-volt Supply circuit.
Perform the POWERTRAIN VERIFICATION TEST. (Refer to 9 - ENGINE - STANDARD PROCEDURE)

P2172-HIGH AIRFLOW/VACUUM LEAK DETECTED (INSTANTANEOUS ACCUMULATION) (CONTINUED)

12. (F856) 5-VOLT SUPPLY CIRCUIT SHORTED TO GROUND

Measure the resistance between ground and the (F856) 5-volt Supply circuit in the MAP Sensor harness connector.

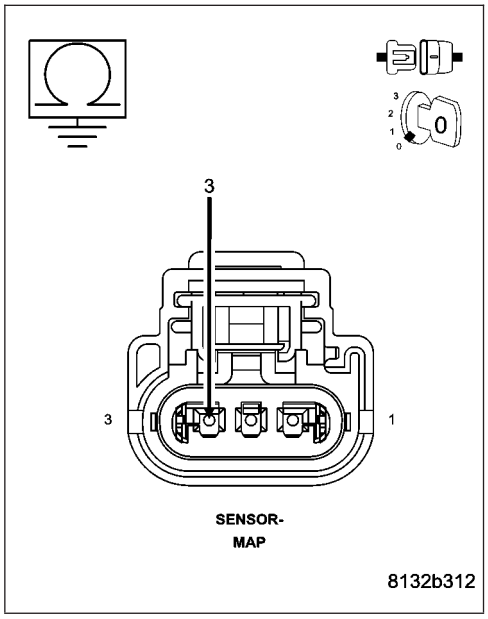

Is the resistance above 100k ohms?

Yes >> Go To 13

No >> Repair the short to ground in the (F856) 5-volt Supply circuit.
Perform the POWERTRAIN VERIFICATION TEST. (Refer to 9 - ENGINE - STANDARD PROCEDURE)

13. MAP SENSOR

Connect the C1 PCM harness connector.

Ignition on, engine not running.

With a scan tool, monitor the MAP Sensor voltage.

Connect a jumper wire between the (K1) MAP Signal circuit and the (K900) Sensor ground circuit in the MAP Sensor harness connector.

Cycle the ignition switch from off to on.

With a scan tool, monitor the MAP Sensor voltage.

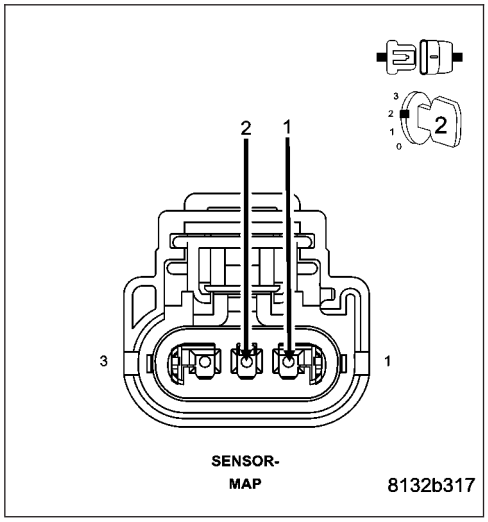

Does the scan tool display MAP voltage from approximately 4.9 volts to below 0.5 volt with the jumper wire installed?

Yes >> Replace the MAP Sensor.
Perform the POWERTRAIN VERIFICATION TEST. (Refer to 9 - ENGINE - STANDARD PROCEDURE)

No >> Go To 14

NOTE: Remove the jumper wire before continuing.

P2172-HIGH AIRFLOW/VACUUM LEAK DETECTED (INSTANTANEOUS ACCUMULATION) (CONTINUED)

14. RESISTANCE IN THE (K1) MAP SIGNAL CIRCUIT

Turn the ignition off.

Disconnect the C2 PCM harness connector.

Measure the resistance of the (K1) MAP Signal circuit from the MAP Sensor harness connector to the appropriate terminal of special tool #8815.

Is the resistance below 5.0 ohms?

Yes >> Go To 15

No >> Repair the excessive resistance in the (K1) MAP Signal circuit

Perform the POWERTRAIN VERIFICATION TEST. (Refer to 9 - ENGINE - STANDARD PROCEDURE)

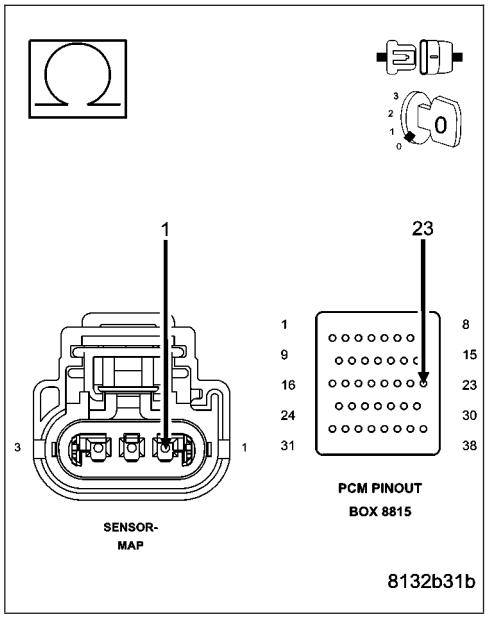

15. (K1) MAP SIGNAL CIRCUIT SHORTED TO GROUND

Measure the resistance between ground and the (K1) MAP Signal circuit in the MAP Sensor harness connector.

Is the resistance above 100k ohms?

Yes >> Go To 16

No >> Repair the short to ground in the (K1) MAP Signal circuit.

Perform the POWERTRAIN VERIFICATION TEST. (Refer to 9 - ENGINE - STANDARD PROCEDURE)

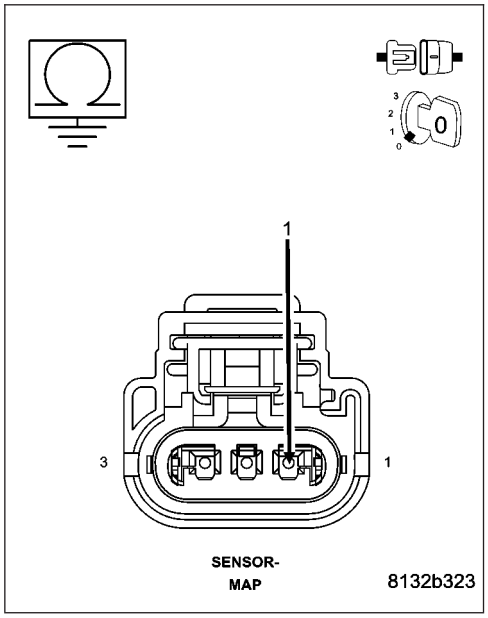

P2172-HIGH AIRFLOW/VACUUM LEAK DETECTED (INSTANTANEOUS ACCUMULATION) (CONTINUED)

16. RESISTANCE IN THE (K900) SENSOR GROUND CIRCUIT

Measure the resistance of the (K900) Sensor ground circuit from the MAP Sensor harness connector to the appropriate terminal of special tool #8815.

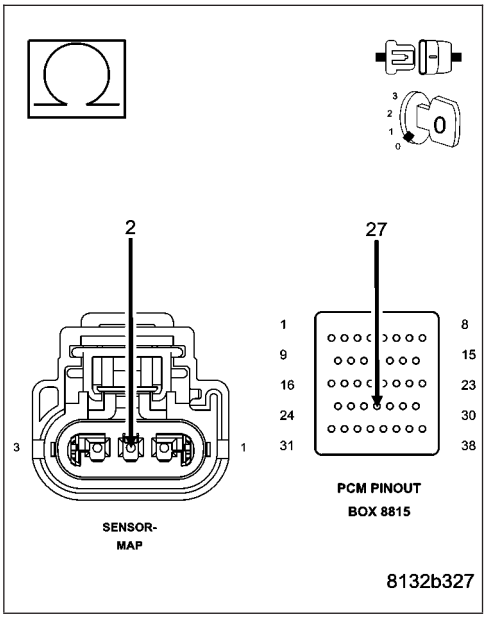

Is the resistance below 5.0 ohms?

Yes >> Go To 17

No >> Repair the excessive resistance in the (K900) Sensor ground circuit.
Perform the POWERTRAIN VERIFICATION TEST. (Refer to 9 - ENGINE - STANDARD PROCEDURE)

17. PCM

NOTE: Before continuing, check the PCM harness connector terminals for corrosion, damage, or terminal push out. Repair as necessary.

Using the schematics as a guide, inspect the wire harness and connectors. Pay particular attention to all Power and Ground circuits.

Were there any problems found?

Yes >> Repair as necessary.
Perform the POWERTRAIN VERIFICATION TEST. (Refer to 9 - ENGINE - STANDARD PROCEDURE)

No >> Replace and program the Powertrain Control Module per Service Information.
Perform the POWERTRAIN VERIFICATION TEST. (Refer to 9 - ENGINE - STANDARD PROCEDURE)

P2173-HIGH AIRFLOW/VACUUM LEAK DETECTED (SLOW ACCUMULATION)

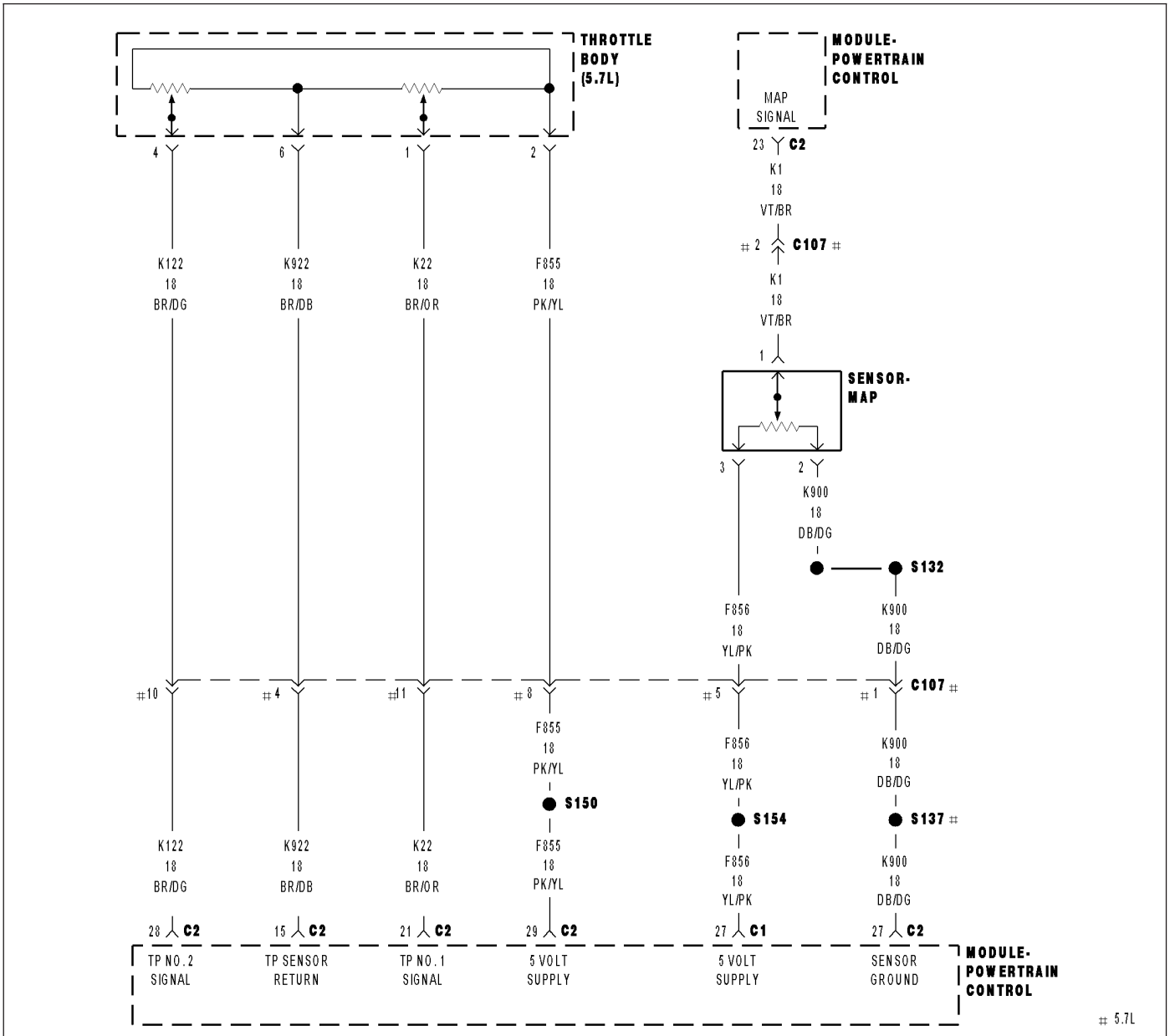

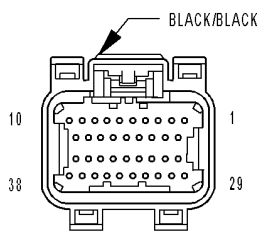

MODULE- POWERTRAIN CONTROL C1 (NGC)

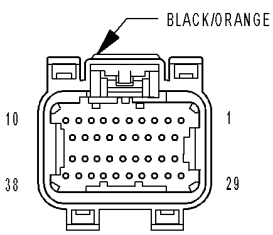

MODULE- POWERTRAIN CONTROL C2 (NGC)

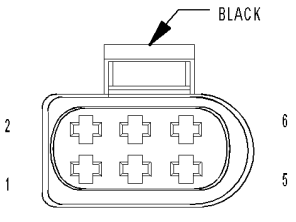

THROTTLE BODY (5.7L)

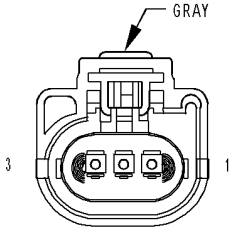

SENSOR- MAP (GAS)

P2173-HIGH AIRFLOW/VACUUM LEAK DETECTED (SLOW ACCUMULATION) (CONTINUED)

For the Engine circuit diagram (Refer to 9 - ENGINE - SCHEMATICS AND DIAGRAMS).

For a complete wiring diagram **Refer to Section 8W**.

- **When Monitored:**
  Ignition on and engine running with no MAP Sensor DTCs.
- **Set Condition:**
  A large vacuum leak has been detected or both of the TP Sensors have failed based on their position being 2.5 volts and the calculated MAP value is less than the Gas Flow Adaptation value is too high. One trip fault the code will set within 5 seconds. ETC light will flash.

Possible Causes
VACUUM LEAK
RESISTANCE IN THE (F856) 5-VOLT SUPPLY CIRCUIT
(F856) 5-VOLT SUPPLY CIRCUIT SHORTED TO GROUND
RESISTANCE IN THE (K1) MAP SIGNAL CIRCUIT
(K1) MAP SIGNAL CIRCUIT SHORTED TO GROUND
RESISTANCE IN (K900) SENSOR GROUND CIRCUIT
RESISTANCE IN THE (F855) 5-VOLT SUPPLY CIRCUIT
(F855) 5-VOLT SUPPLY CIRCUIT SHORTED TO GROUND
RESISTANCE IN THE TP SENSOR SIGNAL CIRCUIT
TP SENSOR SIGNAL CIRCUIT SHORTED TO GROUND
RESISTANCE IN THE (K922) TP SENSOR RETURN CIRCUIT
MAP SENSOR
TP SENSOR
PCM

Always perform the Pre-Diagnostic Troubleshooting procedure before proceeding. (Refer to 9 - ENGINE - DIAGNOSIS AND TESTING).

Diagnostic Test

1. ACTIVE DTC

NOTE: The most likely cause of this DTC is a vacuum leak.

NOTE: Diagnose any 5-Volt Supply, TP Sensor, Oxygen Sensor, Fuel related, or MAP Sensor DTCs before continuing.

NOTE: The throttle plate should be free from binding and carbon build up.

Ignition on, engine not running.

With a scan tool, read DTCs.

Is the DTC active at this time?

Yes >> Go To 2

No >> Refer to the INTERMITTENT CONDITION Diagnostic Procedure.
Perform the POWERTRAIN VERIFICATION TEST. (Refer to 9 - ENGINE - STANDARD PROCEDURE)

P2173-HIGH AIRFLOW/VACUUM LEAK DETECTED (SLOW ACCUMULATION) (CONTINUED)

2. VACUUM LEAK

NOTE: This code is enabled on engines with a plastic intake manifold and is intended to limit the maximum engine speed if a large crack occurs.

NOTE: A large vacuum leak is most likely the cause of this DTC.

Inspect the Intake Manifold and Throttle body for leaks and cracks.

Inspect the Power Brake Booster for any vacuum leaks.

Inspect the PCV system for proper operation or any vacuum leaks.

Inspect the MAP Sensor for proper installation.

Were any vacuum leaks found?

Yes >> Repair the vacuum leak as necessary.
Perform the POWERTRAIN VERIFICATION TEST. (Refer to 9 - ENGINE - STANDARD PROCEDURE)

No >> Go To 3

---

3. MAP SENSOR OPERATION

Start the engine.

With a scan tool, monitor the MAP Sensor voltage.

Snap the Accelerator pedal.

Does the MAP Sensor voltage vary from below 2.0 volts at idle to above 3.5 volts at Wide Open Throttle?

Yes >> Go To 4

No >> Go To 11

---

4. TP SENSOR OPERATION

Ignition on, engine not running.

With a scan tool, perform the Throttle Follower Test.

TP Sensor No.1 should start at approximately 0.8 of a volt and increase to 4.2 volts.

TP Sensor No.2 should start at approximately 4.2 volts and decrease to 0.8 of a volt.

Is the voltage transition smooth between the appropriate values?

Yes >> Refer to the INTERMITTENT CONDITION Diagnostic Procedure.
Perform the POWERTRAIN VERIFICATION TEST. (Refer to 9 - ENGINE - STANDARD PROCEDURE)

No >> Go To 5

P2173-HIGH AIRFLOW/VACUUM LEAK DETECTED (SLOW ACCUMULATION) (CONTINUED)

5. RESISTANCE IN THE (F855) 5-VOLT SUPPLY CIRCUIT

Turn the ignition off.

Disconnect the Throttle Body harness connector.

Disconnect the C2 PCM harness connector.

CAUTION: Do not probe the PCM harness connectors. Probing the PCM harness connectors will damage the PCM terminals resulting in poor terminal to pin connection. Install Miller Special Tool #8815 to perform diagnosis.

Measure the resistance of the (F855) 5-volt Supply circuit from the Throttle Body harness connector to the appropriate terminal of special tool #8815.

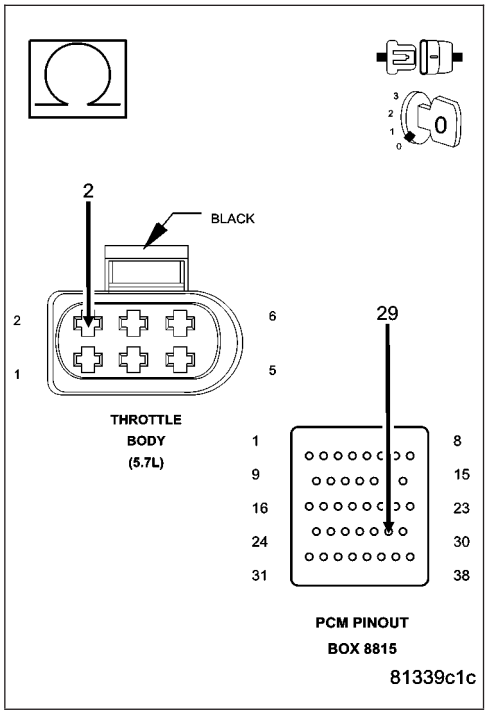

Is the resistance below 100 ohms?

Yes >> Go To 6

No >> Repair the excessive resistance in the (F855) 5-volt Supply circuit.

Perform the POWERTRAIN VERIFICATION TEST. (Refer to 9 - ENGINE - STANDARD PROCEDURE)

6. (F855) 5-VOLT SUPPLY CIRCUIT SHORTED TO GROUND

Measure the resistance between ground and (F855) 5-volt Supply circuit between the appropriate terminals of special tool #8815.

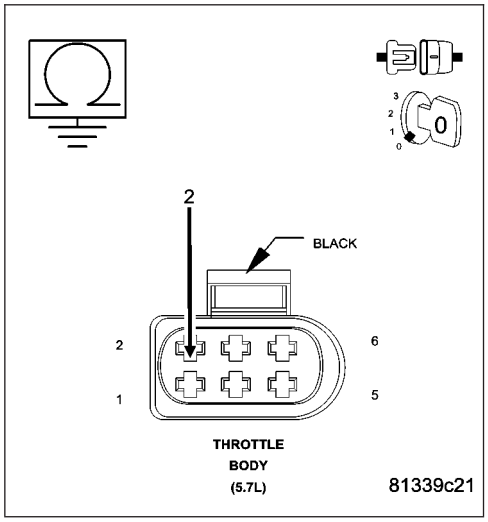

Is the resistance above 100 ohms?

Yes >> Go To 7

No >> Repair the short to ground in the (F855) 5-volt Supply circuit.

Perform the POWERTRAIN VERIFICATION TEST. (Refer to 9 - ENGINE - STANDARD PROCEDURE)

P2173-HIGH AIRFLOW/VACUUM LEAK DETECTED (SLOW ACCUMULATION) (CONTINUED)

7. TP SENSOR

Connect the C2 PCM harness connector.

Ignition on, engine not running.

With a scan tool, monitor the TP Sensor voltage.

Connect a jumper wire between the (K22) TP Sensor No.1 Signal circuit and the (K922) Sensor Return circuit in the Throttle Body harness connector.

TP Sensor No.1 voltage should start at approximately 4.8 volts and decrease to 0.2 of a volt.

Connect a jumper wire between the (K122) TP Sensor No.2 Signal circuit and the (F855) 5-volt Supply circuit in the Throttle Body harness connector.

TP Sensor No.2 voltage should start at approximately 0 volts and increase to 4.8 to 5.2 volts.

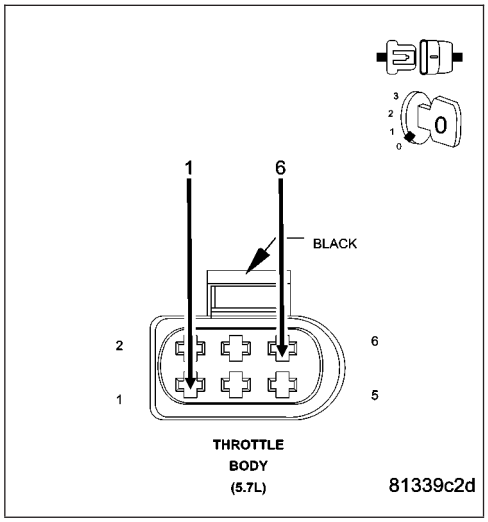

Does the TP Sensor voltage change to the appropriate voltage with the jumper wire installed?

Yes >> Disconnect the Battery before replacing the Throttle Body Assembly. Replace the Throttle Body Assembly. After installation is complete, use a scan tool and select the ETC RELEARN function

Perform the POWERTRAIN VERIFICATION TEST. (Refer to 9 - ENGINE - STANDARD PROCEDURE)

No >> Go To 8

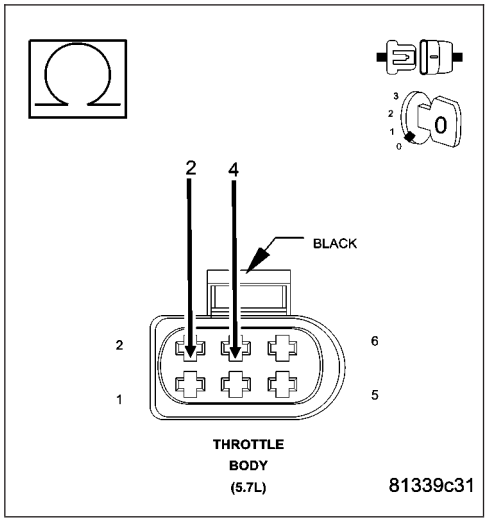

P2173-HIGH AIRFLOW/VACUUM LEAK DETECTED (SLOW ACCUMULATION) (CONTINUED)

8. RESISTANCE IN THE TP SENSOR SIGNAL CIRCUIT

Turn the ignition off.

Disconnect the C2 PCM harness connector.

Measure the resistance of the (K22) and (K122) TP Signal circuits from the Throttle Body harness connector to the appropriate terminals of special tool #8815.

Is the resistance below 5.0 ohms for each circuit?

Yes >> Go To 9

No >> Repair the excessive resistance in the (K22) or (K122) TP Sensor Signal circuit.

Perform the POWERTRAIN VERIFICATION TEST. (Refer to 9 - ENGINE - STANDARD PROCEDURE)

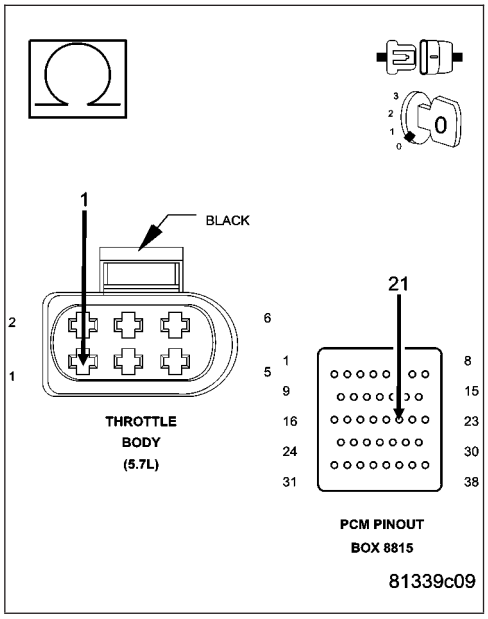

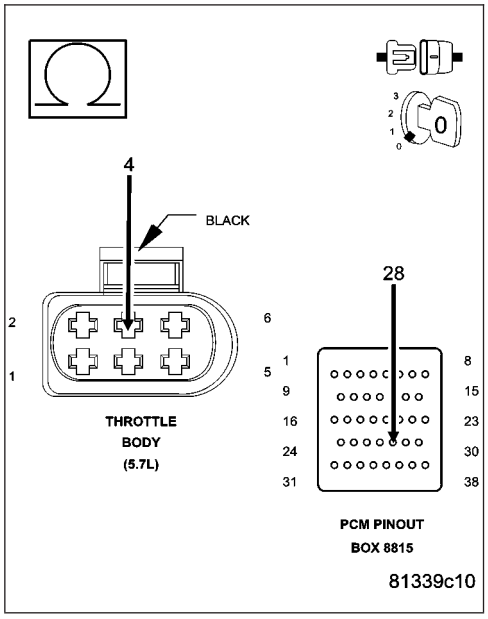

P2173-HIGH AIRFLOW/VACUUM LEAK DETECTED (SLOW ACCUMULATION) (CONTINUED)

9. TP SENSOR SIGNAL CIRCUIT SHORTED TO GROUND

Measure the resistance between ground and the (K22) and (K122) TP Signal circuits at the appropriate terminals of special tool #8815.

Is the resistance above 100k ohms for each circuit?

Yes >> Go To 10

No >> Repair the short to ground in the (K22) or (K122) TP Sensor Signal circuit.
Perform the POWERTRAIN VERIFICATION TEST. (Refer to 9 - ENGINE - STANDARD PROCEDURE)

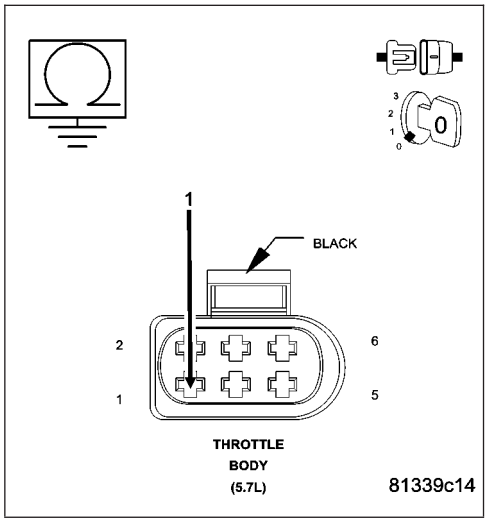

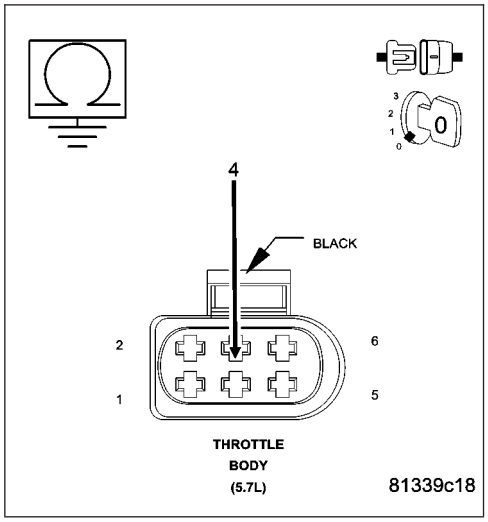

P2173-HIGH AIRFLOW/VACUUM LEAK DETECTED (SLOW ACCUMULATION) (CONTINUED)

10. RESISTANCE IN THE (K922) SENSOR RETURN CIRCUIT

Measure the resistance of the (K922) Sensor Return circuit from the Throttle Body harness connector to the appropriate terminal of special tool #8815.

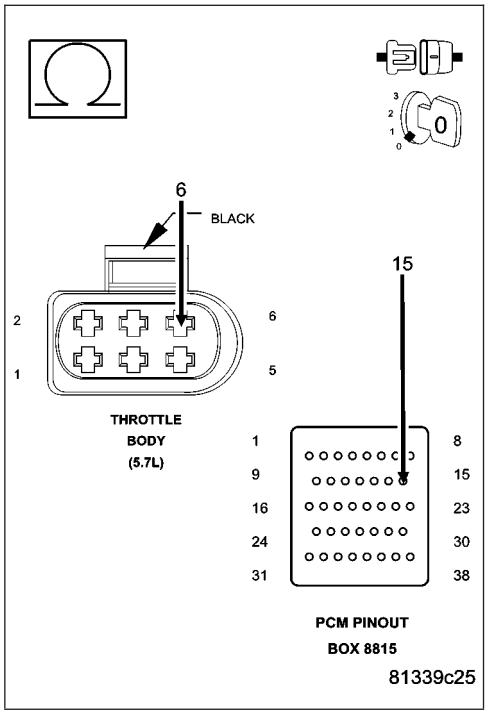

Is the resistance below 5.0 ohms?

Yes >> Go To 17

No >> Repair the excessive resistance in the (K922) Sensor Return circuit.
Perform the POWERTRAIN VERIFICATION TEST. (Refer to 9 - ENGINE - STANDARD PROCEDURE)

11. RESISTANCE IN THE (F856) 5-VOLT SUPPLY CIRCUIT

Turn the ignition off.

Disconnect the MAP Sensor harness connector.

Disconnect the C1 PCM harness connector.

CAUTION: Do not probe the PCM harness connectors. Probing the PCM harness connectors will damage the PCM terminals resulting in poor terminal to pin connection. Install Miller Special Tool #8815 to perform diagnosis.

Measure the resistance of the (F856) 5-volt Supply circuit from the MAP Sensor harness connector to the appropriate terminal of special tool #8815.

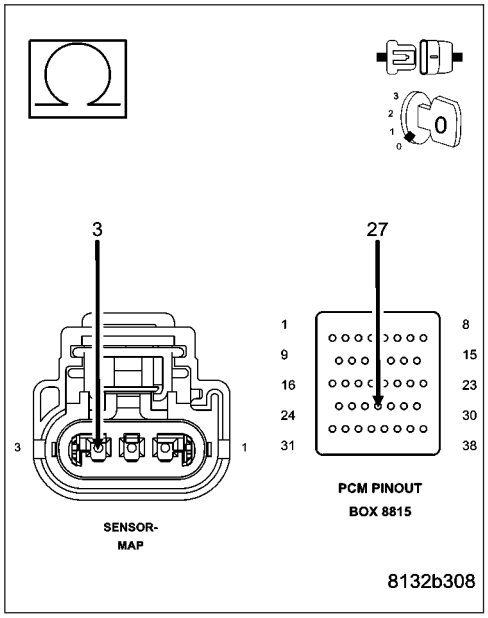

Is the resistance below 5.0 ohms?

Yes >> Go To 12

No >> Repair the excessive resistance in the (F856) 5-volt Supply circuit.
Perform the POWERTRAIN VERIFICATION TEST. (Refer to 9 - ENGINE - STANDARD PROCEDURE)

P2173-HIGH AIRFLOW/VACUUM LEAK DETECTED (SLOW ACCUMULATION) (CONTINUED)

12. (F856) 5-VOLT SUPPLY CIRCUIT SHORTED TO GROUND

Measure the resistance between ground and the (F856) 5-volt Supply circuit in the MAP Sensor harness connector.

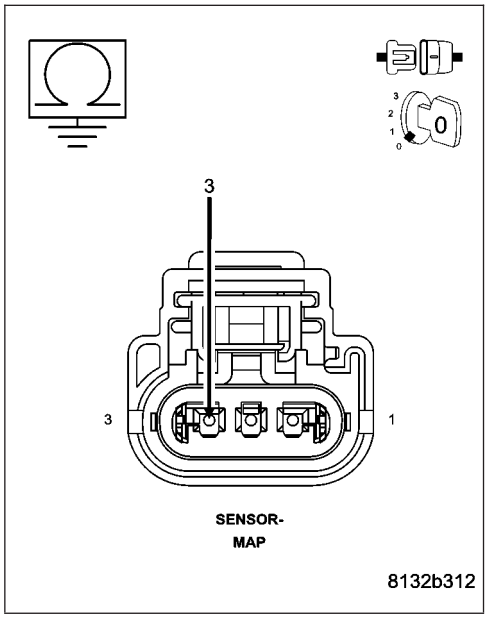

Is the resistance above 100k ohms?

Yes >> Go To 13

No >> Repair the short to ground in the (F856) 5-volt Supply circuit.
Perform the POWERTRAIN VERIFICATION TEST. (Refer to 9 - ENGINE - STANDARD PROCEDURE)

13. MAP SENSOR

Connect the C1 PCM harness connector.

Ignition on, engine not running.

With a scan tool, monitor the MAP Sensor voltage.

Connect a jumper wire between the (K1) MAP Signal circuit and the (K900) Sensor ground circuit in the MAP Sensor harness connector.

Cycle the ignition switch from off to on.

With a scan tool, monitor the MAP Sensor voltage.

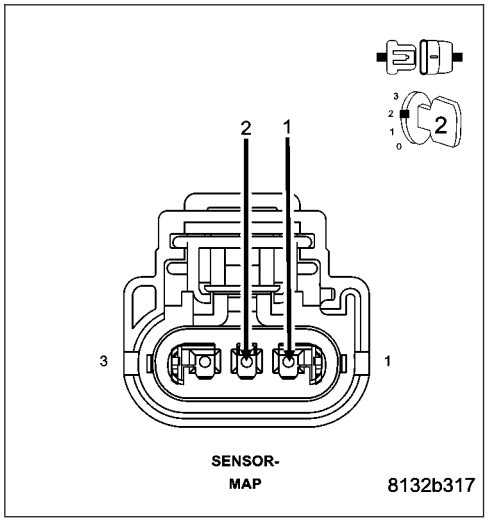

Does the scan tool display MAP voltage from approximately 4.9 volts to below 0.5 volt with the jumper wire installed?

Yes >> Replace the MAP Sensor.
Perform the POWERTRAIN VERIFICATION TEST. (Refer to 9 - ENGINE - STANDARD PROCEDURE)

No >> Go To 14

NOTE: Remove the jumper wire before continuing.

P2173-HIGH AIRFLOW/VACUUM LEAK DETECTED (SLOW ACCUMULATION) (CONTINUED)

14. RESISTANCE IN THE (K1) MAP SIGNAL CIRCUIT

Turn the ignition off.

Disconnect the C2 PCM harness connector.

Measure the resistance of the (K1) MAP Signal circuit from the MAP Sensor harness connector to the appropriate terminal of special tool #8815.

Is the resistance below 5.0 ohms?

Yes >> Go To 15

No >> Repair the excessive resistance in the (K1) MAP Signal circuit.

Perform the POWERTRAIN VERIFICATION TEST. (Refer to 9 - ENGINE - STANDARD PROCEDURE)

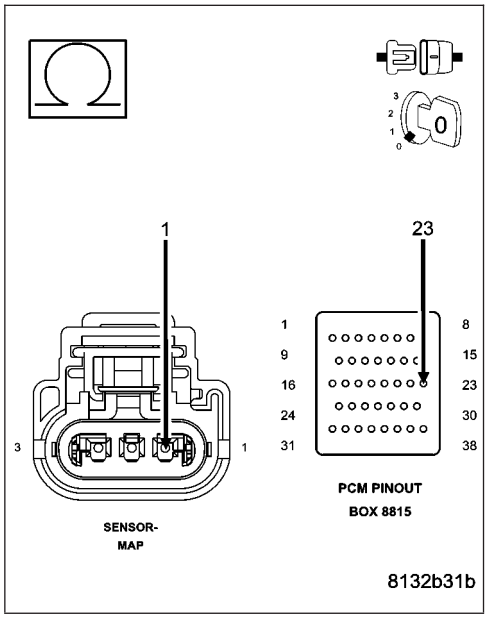

15. (K1) MAP SIGNAL CIRCUIT SHORTED TO GROUND

Measure the resistance between ground and the (K1) MAP Signal circuit at the MAP Sensor harness connector.

Is the resistance above 100k ohms?

Yes >> Go To 16

No >> Repair the short to ground in the (K1) MAP Signal circuit.

Perform the POWERTRAIN VERIFICATION TEST. (Refer to 9 - ENGINE - STANDARD PROCEDURE)

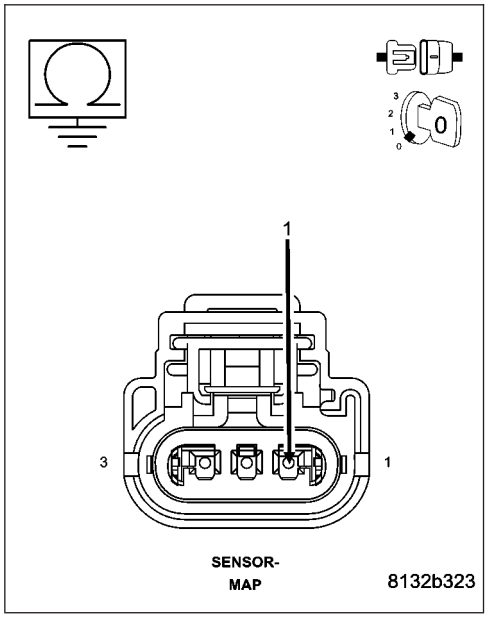

P2173-HIGH AIRFLOW/VACUUM LEAK DETECTED (SLOW ACCUMULATION) (CONTINUED)

16. RESISTANCE IN THE (K900) SENSOR GROUND CIRCUIT

Measure the resistance of the (K900) Sensor ground circuit from the MAP Sensor harness connector to the appropriate terminal of special tool #8815.

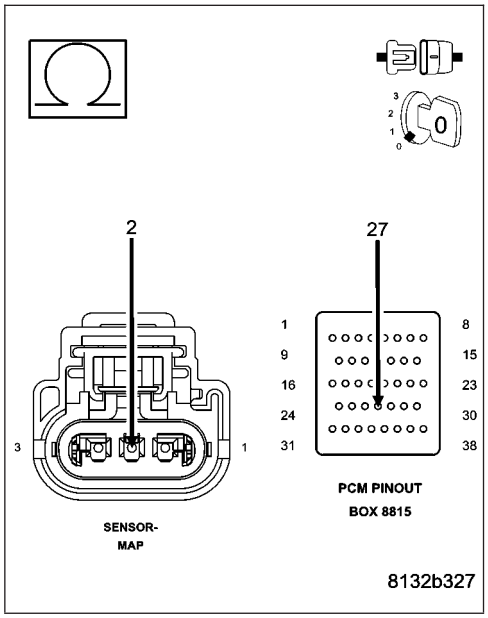

Is the resistance below 5.0 ohms?

Yes >> Go To 17

No >> Repair the excessive resistance in the (K900) Sensor ground circuit.
Perform the POWERTRAIN VERIFICATION TEST. (Refer to 9 - ENGINE - STANDARD PROCEDURE)

17. PCM

NOTE: Before continuing, check the PCM harness connector terminals for corrosion, damage, or terminal push out. Repair as necessary.

Using the schematics as a guide, inspect the wire harness and connectors. Pay particular attention to all Power and Ground circuits.

Were there any problems found?

Yes >> Repair as necessary.
Perform the POWERTRAIN VERIFICATION TEST. (Refer to 9 - ENGINE - STANDARD PROCEDURE)

No >> Replace and program the Powertrain Control Module per Service Information.
Perform the POWERTRAIN VERIFICATION TEST. (Refer to 9 - ENGINE - STANDARD PROCEDURE)

P2174-LOW AIRFLOW/RESTRICTION DETECTED (INSTANTANEOUS ACCUMULATION)

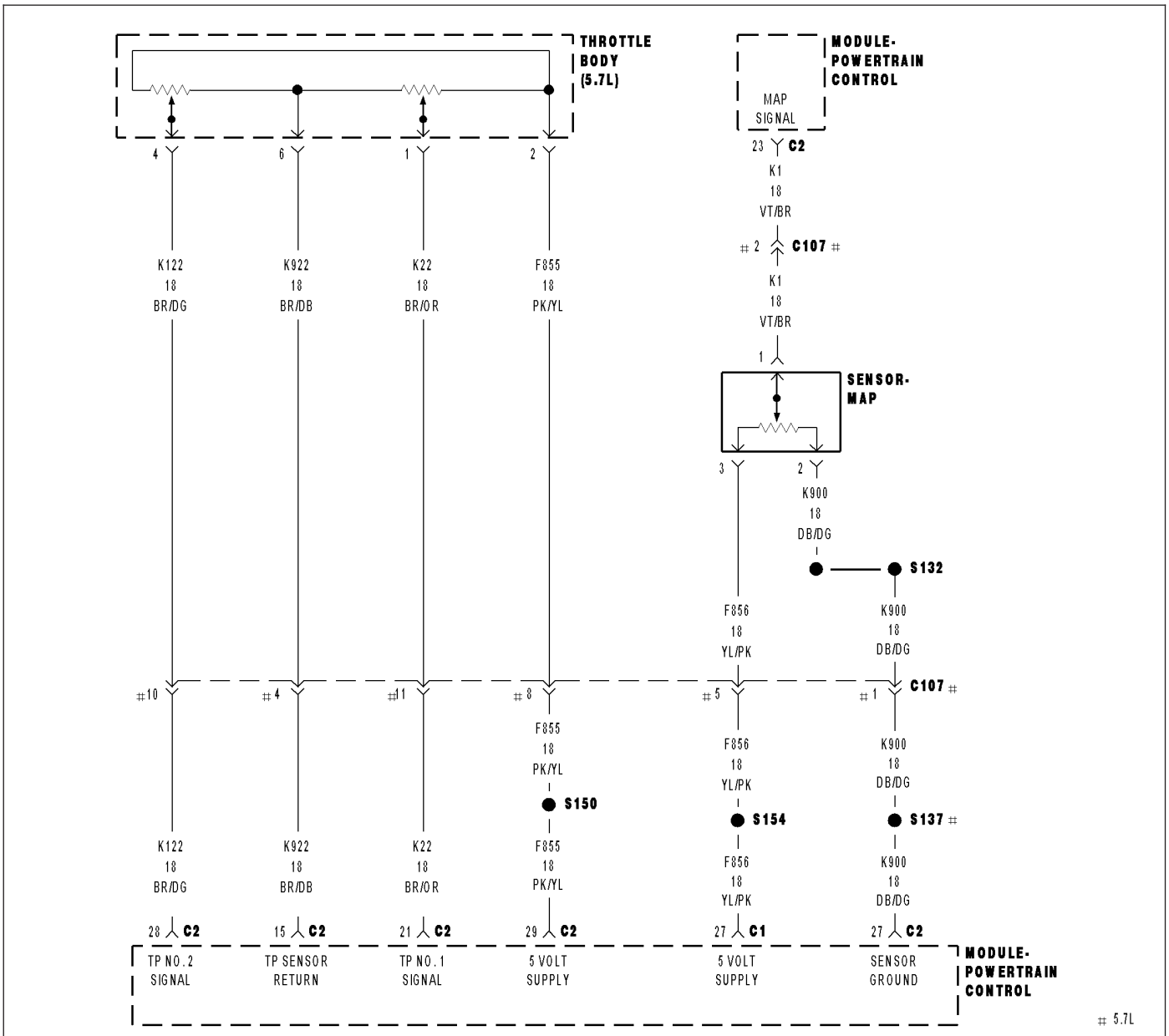

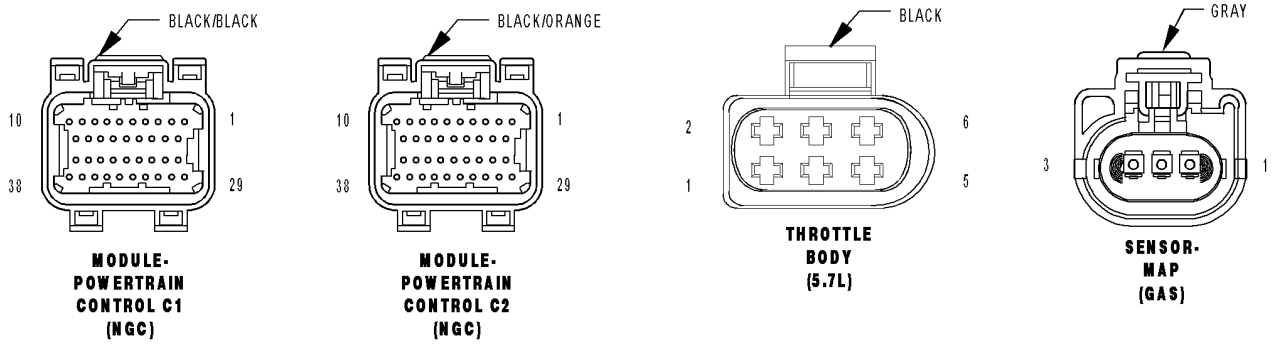

814552b2

P2174-LOW AIRFLOW/RESTRICTION DETECTED (INSTANTANEOUS ACCUMULATION) (CONTINUED)

For the Engine circuit diagram (Refer to 9 - ENGINE - SCHEMATICS AND DIAGRAMS).

For a complete wiring diagram **Refer to Section 8W**.

- **When Monitored:**
  Ignition on and engine running with no MAP Sensor DTCs.
- **Set Condition:**
  PCM calculated MAP value is greater than actual MAP value plus an offset value. One trip fault. Three good trips to turn of the mil. ETC light will flash.

Possible Causes
RESTRICTED AIR INLET SYSTEM
RESISTANCE IN THE (F856) 5-VOLT SUPPLY CIRCUIT
(F856) 5-VOLT SUPPLY CIRCUIT SHORTED TO GROUND
RESISTANCE IN THE (K1) MAP SIGNAL CIRCUIT
(K1) MAP SIGNAL CIRCUIT SHORTED TO GROUND
RESISTANCE IN (K900) SENSOR GROUND CIRCUIT
RESISTANCE IN THE (F855) 5-VOLT SUPPLY CIRCUIT
(F855) 5-VOLT SUPPLY CIRCUIT SHORTED TO GROUND
RESISTANCE IN THE TP SENSOR SIGNAL CIRCUIT
TP SENSOR SIGNAL CIRCUIT SHORTED TO GROUND
RESISTANCE IN THE (K922) TP SENSOR RETURN CIRCUIT
MAP SENSOR
TP SENSOR
PCM

Always perform the Pre-Diagnostic Troubleshooting procedure before proceeding. (Refer to 9 - ENGINE - DIAGNOSIS AND TESTING).

Diagnostic Test

1. ACTIVE DTC

NOTE: The most likely cause of this DTC is a plugged intake air system or Dirty Throttle Body. Check for TSB's before continuing.

NOTE: Diagnose any 5-Volt Supply, TP Sensor, Fuel System Lean or Rich, or MAP Sensor DTCs before continuing.

NOTE: The throttle plate should be free from binding and carbon build up.

NOTE: Question the customer about weather conditions, as ICE build up on the blade can cause this fault when ambient is around +4 to -10 Celsius range.

Ignition on, engine not running.

With a scan tool, read DTCs.

Is the DTC active at this time?

Yes >> Go To 2

No >> Refer to the INTERMITTENT CONDITION Diagnostic Procedure.
Perform the POWERTRAIN VERIFICATION TEST. (Refer to 9 - ENGINE - STANDARD PROCEDURE)

P2174-LOW AIRFLOW/RESTRICTION DETECTED (INSTANTANEOUS ACCUMULATION) (CONTINUED)

2. RESTRICTED AIR INLET SYSTEM

Turn the ignition off.
Remove the Air Cleaner Assembly.
Remove the Air Filter.
Inspect the Throttle Body opening for signs of any foreign materials.
Check the intake tube / aircleaner for obstructions - include snow packing questions to customer.

Were any restrictions found?

Yes >> Repair the restriction as necessary.
Perform the POWERTRAIN VERIFICATION TEST. (Refer to 9 - ENGINE - STANDARD PROCEDURE)

No >> Go To 3

---

3. MAP SENSOR OPERATION

Start the engine.
With a scan tool, monitor the MAP Sensor voltage.
Snap the Accelerator pedal.

Does the MAP Sensor voltage vary from below 2.0 volts at idle to above 3.5 volts at Wide Open Throttle?

Yes >> Go To 4

No >> Go To 11

---

4. TP SENSOR OPERATION

Ignition on, engine not running.
With a scan tool, perform the Throttle Follower Test.
TP Sensor No.1 should start at approximately 0.8 of a volt and increase to 4.2 volts.
TP Sensor No.2 should start at approximately 4.2 volts and decrease to 0.8 of a volt.

Is the voltage transition smooth between the appropriate values?

Yes >> Refer to the INTERMITTENT CONDITION Diagnostic Procedure.
Perform the POWERTRAIN VERIFICATION TEST. (Refer to 9 - ENGINE - STANDARD PROCEDURE)

No >> Go To 5

P2174-LOW AIRFLOW/RESTRICTION DETECTED (INSTANTANEOUS ACCUMULATION) (CONTINUED)

5. RESISTANCE IN THE (F855) 5-VOLT SUPPLY CIRCUIT

Turn the ignition off.

Disconnect the Throttle Body harness connector.

Disconnect the C2 PCM harness connector.

CAUTION: Do not probe the PCM harness connectors. Probing the PCM harness connectors will damage the PCM terminals resulting in poor terminal to pin connection. Install Miller Special Tool #8815 to perform diagnosis.

Measure the resistance of the (F855) 5-volt Supply circuit from the Throttle Body harness connector to the appropriate terminal of special tool #8815.

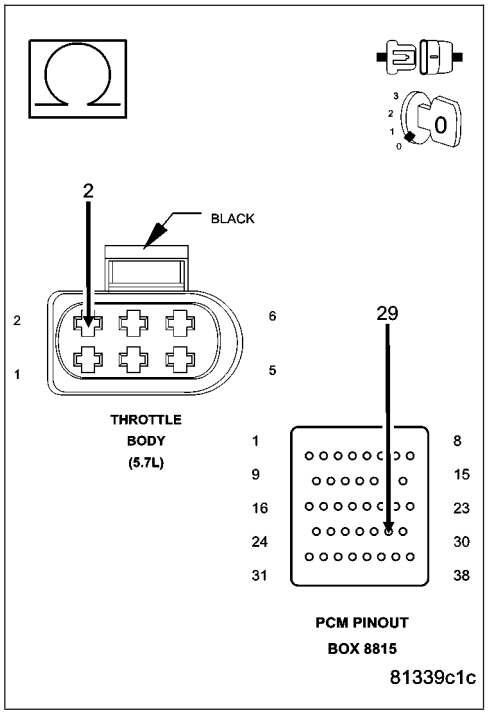

Is the resistance below 100 ohms?

Yes >> Go To 6

No >> Repair the excessive resistance in the (F855) 5-volt Supply circuit.

Perform the POWERTRAIN VERIFICATION TEST. (Refer to 9 - ENGINE - STANDARD PROCEDURE)

6. (F855) 5-VOLT SUPPLY CIRCUIT SHORTED TO GROUND

Measure the resistance between ground and (F855) 5-volt Supply circuit between the appropriate terminals of special tool #8815.

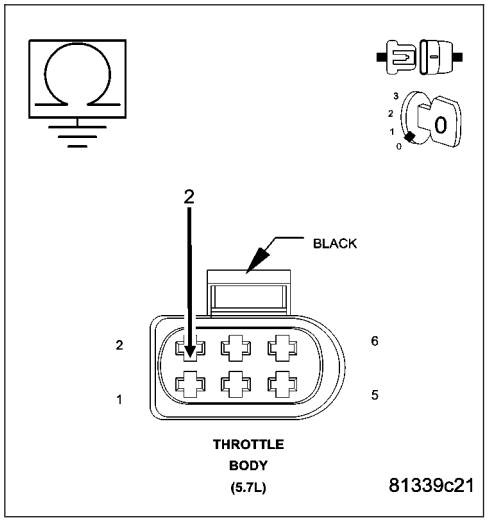

Is the resistance above 100k ohms?

Yes >> Go To 7

No >> Repair the short to ground in the (F855) 5-volt Supply circuit.

Perform the POWERTRAIN VERIFICATION TEST. (Refer to 9 - ENGINE - STANDARD PROCEDURE)

P2174-LOW AIRFLOW/RESTRICTION DETECTED (INSTANTANEOUS ACCUMULATION) (CONTINUED)

7. TP SENSOR

Connect the PCM harness connectors.

Ignition on, engine not running.

With a scan tool, monitor the TP Sensor voltage.

Connect a jumper wire between the (K22) TP Sensor No.1 Signal circuit and the (K922) Sensor Return circuit in the Throttle Body harness connector.

TP Sensor No.1 voltage should start at approximately 4.8 volts and decrease to 0.2 of a volt.

Connect a jumper wire between the (K122) TP Sensor No.2 Signal circuit and the (F855) 5-volt Supply circuit in the Throttle Body harness connector.

TP Sensor No.2 voltage should start at approximately 0 volts and increase to 4.8 to 5.2 volts.

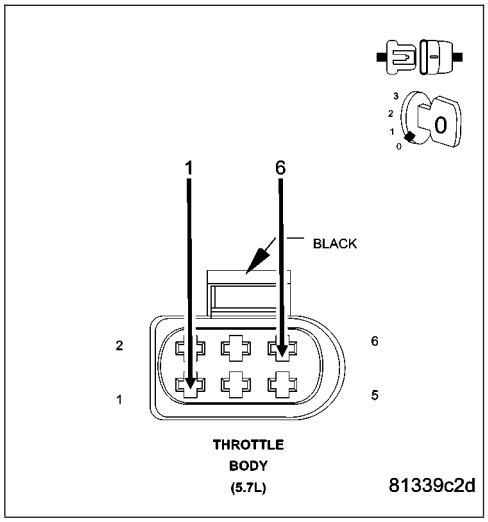

Does the TP Sensor voltage change to the appropriate voltage with the jumper wire installed?

Yes >> Disconnect the Battery before replacing the Throttle Body Assembly. Replace the Throttle Body Assembly. After installation is complete, use a scan tool and select the ETC RELEARN function

Perform the POWERTRAIN VERIFICATION TEST. (Refer to 9 - ENGINE - STANDARD PROCEDURE)

No >> Go To 8

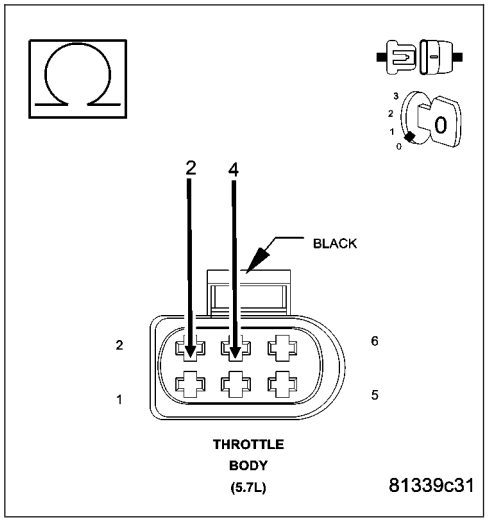

P2174-LOW AIRFLOW/RESTRICTION DETECTED (INSTANTANEOUS ACCUMULATION) (CONTINUED)

8. RESISTANCE IN THE TP SENSOR SIGNAL CIRCUIT

Turn the ignition off.

Disconnect the C2 PCM harness connector.

Measure the resistance of the (K22) and (K122) TP Signal circuits from the Throttle Body harness connector to the appropriate terminals of special tool #8815.

Is the resistance below 5.0 ohms for each circuit?

Yes >> Go To 9

No >> Repair the excessive resistance in the (K22) or (K122) TP Sensor Signal circuit.

Perform the POWERTRAIN VERIFICATION TEST. (Refer to 9 - ENGINE - STANDARD PROCEDURE)

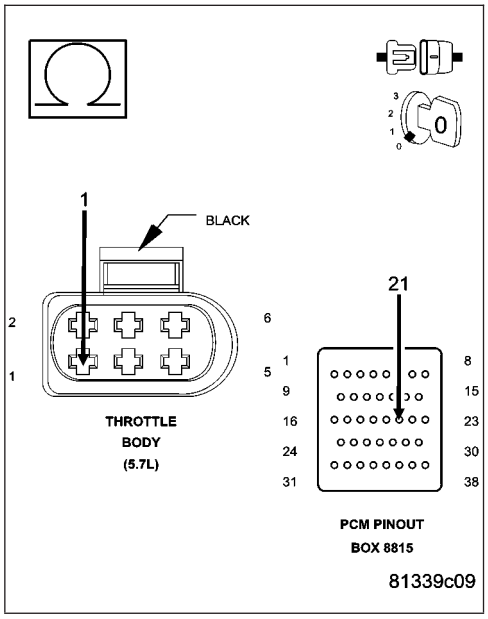

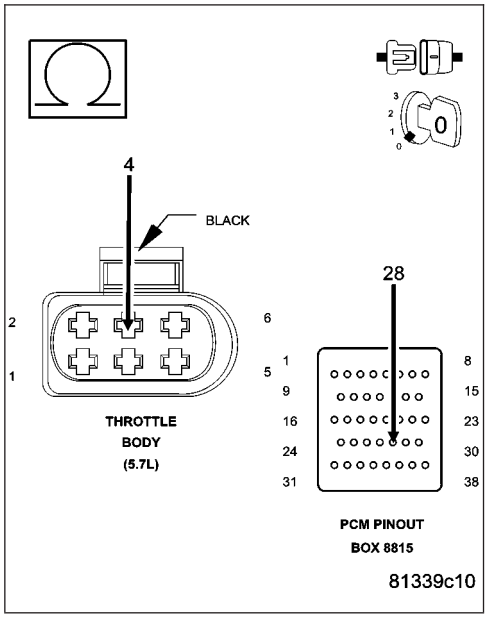

P2174-LOW AIRFLOW/RESTRICTION DETECTED (INSTANTANEOUS ACCUMULATION) (CONTINUED)

9. TP SENSOR SIGNAL CIRCUIT SHORTED TO GROUND

Measure the resistance between ground and the (K22) and (K122) TP Signal circuits at the appropriate terminals of special tool #8815.

Is the resistance above 100k ohms for each circuit?

Yes >> Go To 10

No >> Repair the short to ground in the (K22) or (K122) TP Sensor Signal circuit.
Perform the POWERTRAIN VERIFICATION TEST. (Refer to 9 - ENGINE - STANDARD PROCEDURE)

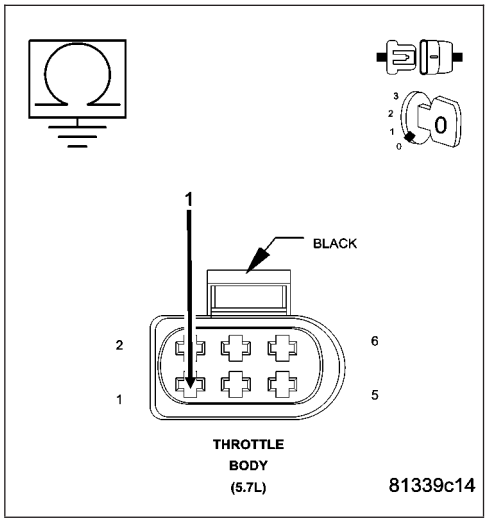

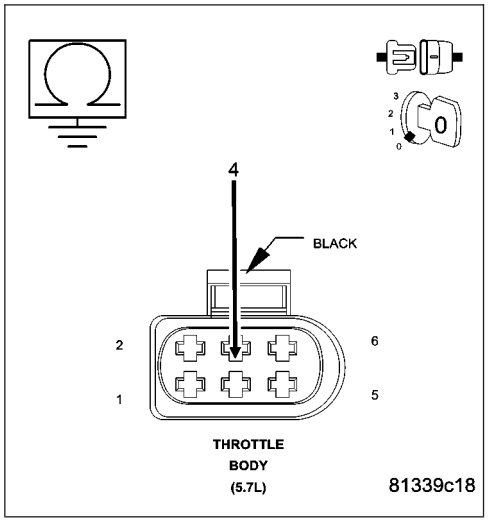

P2174-LOW AIRFLOW/RESTRICTION DETECTED (INSTANTANEOUS ACCUMULATION) (CONTINUED)

10. RESISTANCE IN (K922) SENSOR RETURN CIRCUIT

Measure the resistance of the (K922) Sensor Return circuit from the Throttle Body harness connector to the appropriate terminal of special tool #8815.

Is the resistance below 5.0 ohms?

Yes >> Go To 17

No >> Repair the excessive resistance in the (K922) Sensor Return circuit.
Perform the POWERTRAIN VERIFICATION TEST. (Refer to 9 - ENGINE - STANDARD PROCEDURE)

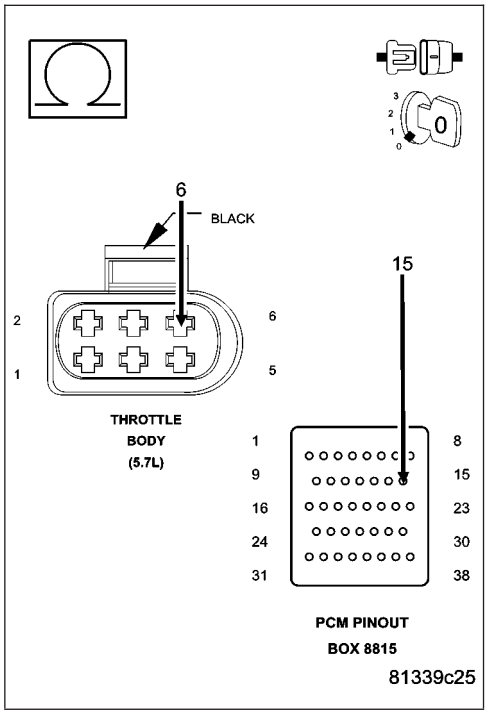

11. RESISTANCE IN THE (F856) 5-VOLT SUPPLY CIRCUIT

Turn the ignition off.

Disconnect the MAP Sensor harness connector.

Disconnect the C1 PCM harness connector.

CAUTION: Do not probe the PCM harness connectors. Probing the PCM harness connectors will damage the PCM terminals resulting in poor terminal to pin connection. Install Miller Special Tool #8815 to perform diagnosis.

Measure the resistance of the (F856) 5-volt Supply circuit from the MAP Sensor harness connector to the appropriate terminal of special tool #8815.

Is the resistance below 5.0 ohms?

Yes >> Go To 12

No >> Repair the excessive resistance in the (F856) 5-volt Supply circuit.
Perform the POWERTRAIN VERIFICATION TEST. (Refer to 9 - ENGINE - STANDARD PROCEDURE)

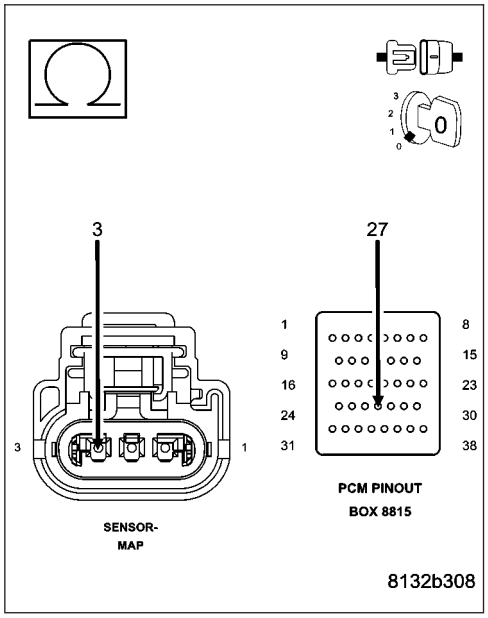

P2174-LOW AIRFLOW/RESTRICTION DETECTED (INSTANTANEOUS ACCUMULATION) (CONTINUED)

12. (F856) 5-VOLT SUPPLY CIRCUIT SHORTED TO GROUND

Measure the resistance between ground and the (F856) 5-volt Supply circuit in the MAP Sensor harness connector.

Is the resistance above 100k ohms?

Yes >> Go To 13

No >> Repair the short to ground in the (F856) 5-volt Supply circuit.
Perform the POWERTRAIN VERIFICATION TEST. (Refer to 9 - ENGINE - STANDARD PROCEDURE)

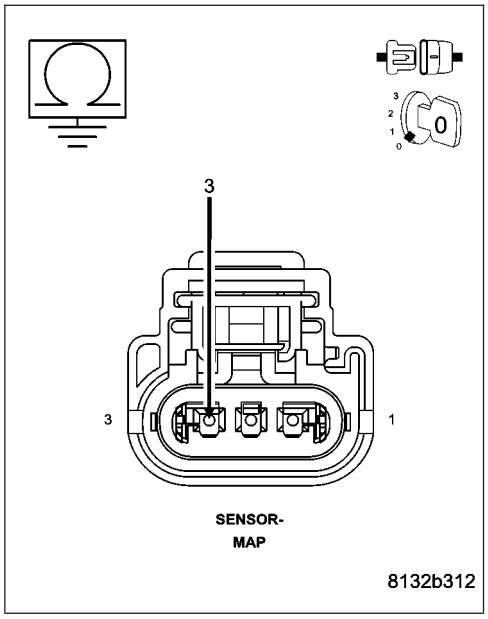

13. MAP SENSOR

Connect the PCM harness connectors.

Ignition on, engine not running.

With a scan tool, monitor the MAP Sensor voltage.

Connect a jumper wire between the (K1) MAP Signal circuit and the (K900) Sensor ground circuit.

Cycle the ignition switch from off to on.

With a scan tool, monitor the MAP Sensor voltage.

Does the scan tool display MAP voltage from approximately 4.9 volts to below 0.5 volt with the jumper wire installed?

Yes >> Replace the MAP Sensor.
Perform the POWERTRAIN VERIFICATION TEST. (Refer to 9 - ENGINE - STANDARD PROCEDURE)

No >> Go To 14

NOTE: Remove the jumper wire before continuing.

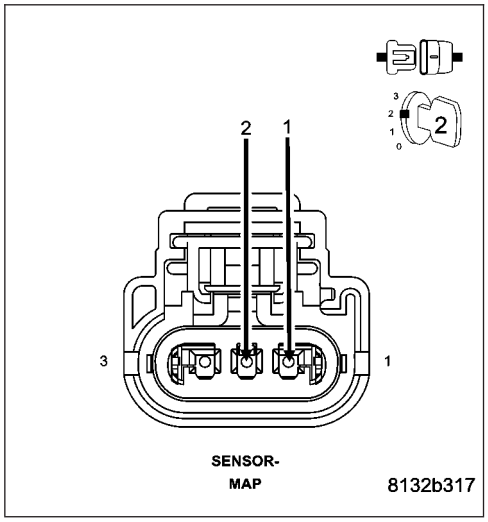

P2174-LOW AIRFLOW/RESTRICTION DETECTED (INSTANTANEOUS ACCUMULATION) (CONTINUED)

14. RESISTANCE IN THE (K1) MAP SIGNAL CIRCUIT

Turn the ignition off.

Disconnect the C2 PCM harness connector.

Measure the resistance of the (K1) MAP Signal circuit from the MAP Sensor harness connector to the appropriate terminal of special tool #8815.

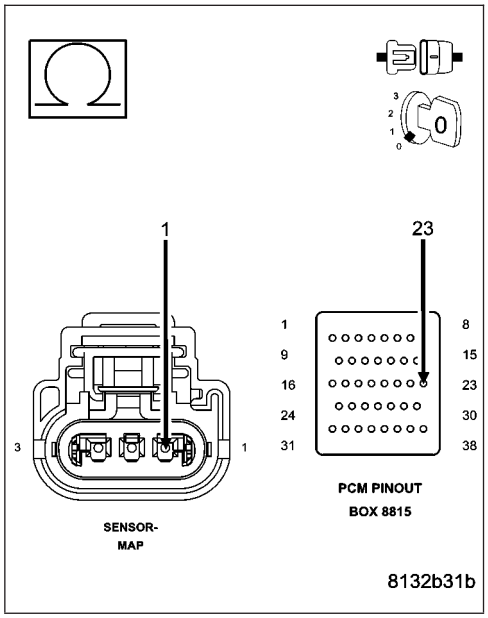

Is the resistance below 5.0 ohms?

Yes >> Go To 15

No >> Repair the excessive resistance in the (K1) MAP Signal circuit

Perform the POWERTRAIN VERIFICATION TEST. (Refer to 9 - ENGINE - STANDARD PROCEDURE)

---

15. (K1) MAP SIGNAL CIRCUIT SHORTED TO GROUND

Measure the resistance between ground and the (K1) MAP Signal circuit in the MAP Sensor harness connector.

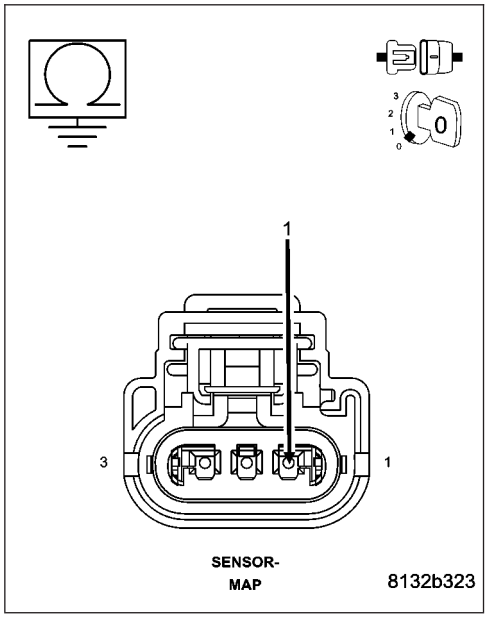

Is the resistance above 100k ohms?

Yes >> Go To 16

No >> Repair the short to ground in the (K1) MAP Signal circuit.

Perform the POWERTRAIN VERIFICATION TEST. (Refer to 9 - ENGINE - STANDARD PROCEDURE)

P2174-LOW AIRFLOW/RESTRICTION DETECTED (INSTANTANEOUS ACCUMULATION) (CONTINUED)

16. RESISTANCE IN (K900) SENSOR GROUND CIRCUIT

Measure the resistance of the (K900) Sensor ground circuit from the MAP Sensor harness connector to the appropriate terminal of special tool #8815.

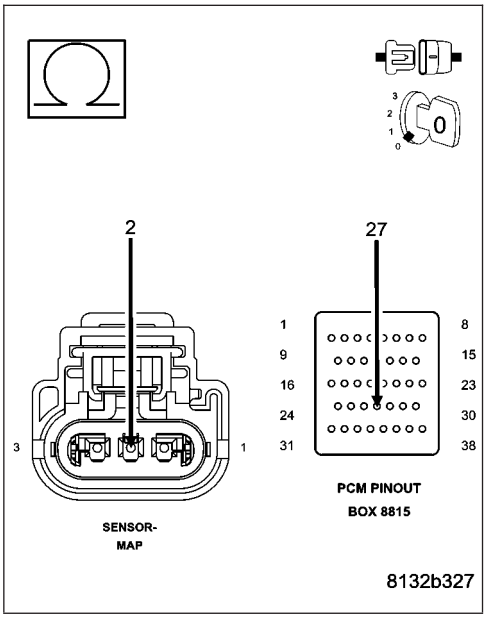

Is the resistance below 5.0 ohms?

Yes >> Go To 17

No >> Repair the excessive resistance in the (K900) Sensor ground circuit.
Perform the POWERTRAIN VERIFICATION TEST. (Refer to 9 - ENGINE - STANDARD PROCEDURE)

17. PCM

NOTE: Before continuing, check the PCM harness connector terminals for corrosion, damage, or terminal push out. Repair as necessary.

Using the schematics as a guide, inspect the wire harness and connectors. Pay particular attention to all Power and Ground circuits.

Were there any problems found?

Yes >> Repair as necessary.
Perform the POWERTRAIN VERIFICATION TEST. (Refer to 9 - ENGINE - STANDARD PROCEDURE)

No >> Replace and program the Powertrain Control Module per Service Information.
Perform the POWERTRAIN VERIFICATION TEST. (Refer to 9 - ENGINE - STANDARD PROCEDURE)

P2175-LOW AIRFLOW/RESTRICTION DETECTED (SLOW ACCUMULATION)

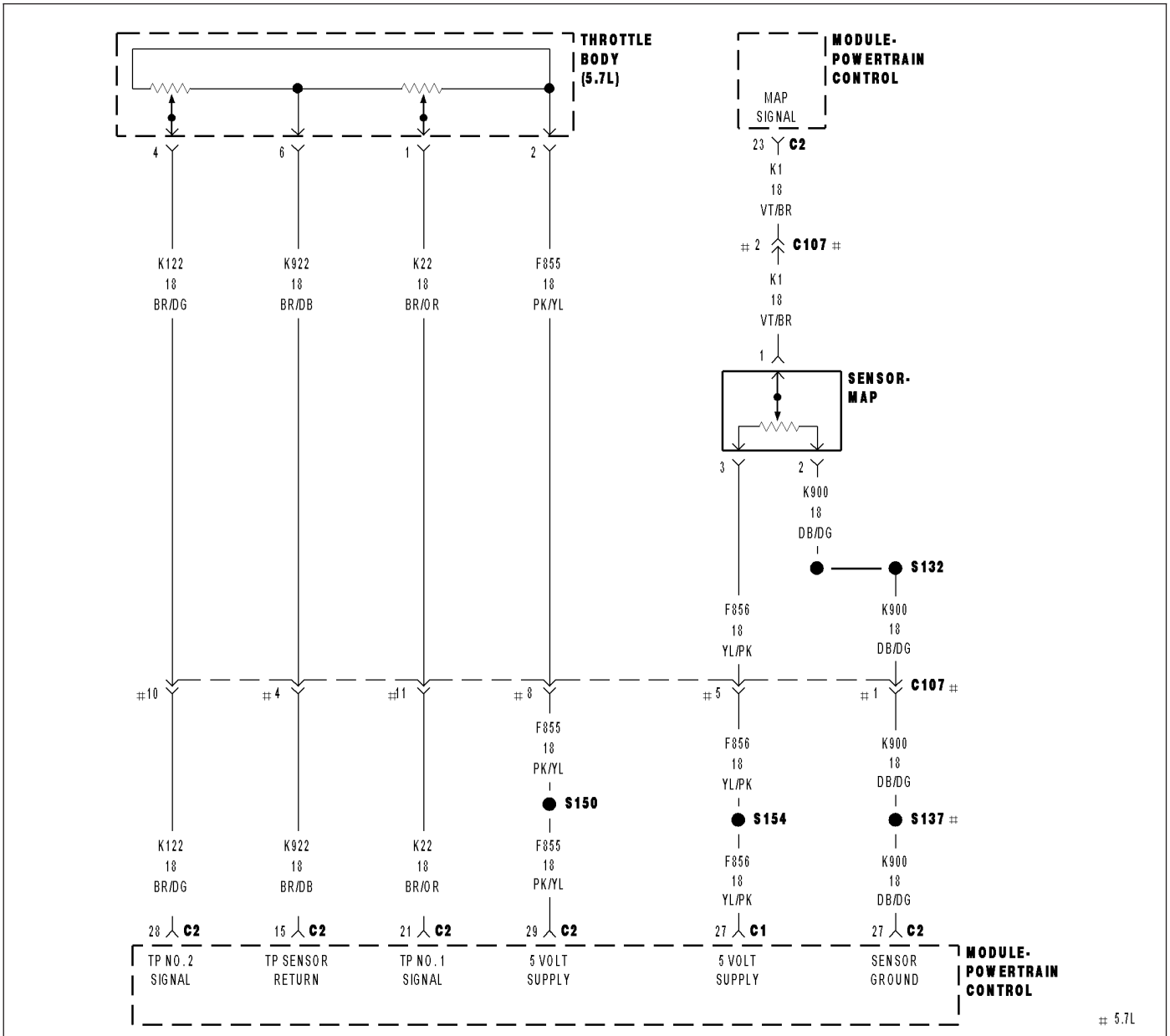

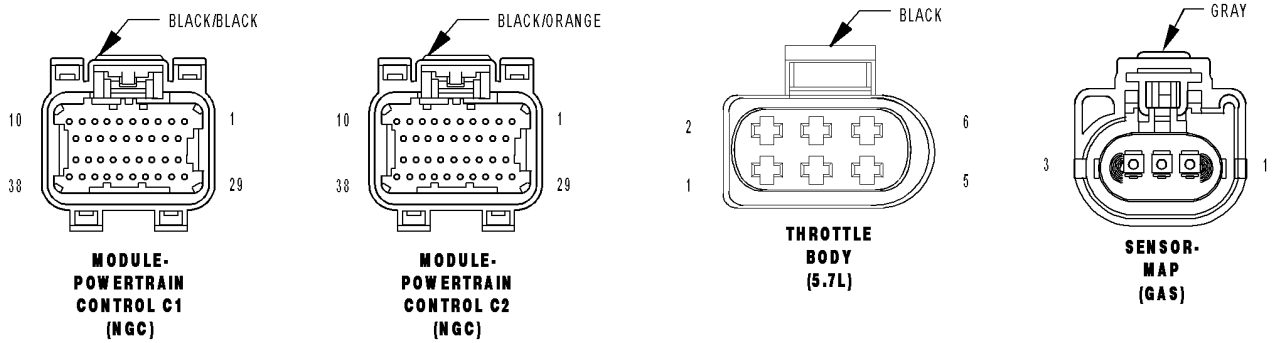

P2175-LOW AIRFLOW/RESTRICTION DETECTED (SLOW ACCUMULATION) (CONTINUED)

For the Engine circuit diagram (Refer to 9 - ENGINE - SCHEMATICS AND DIAGRAMS).

For a complete wiring diagram **Refer to Section 8W**.

- **When Monitored:**
  Ignition on and engine running with no MAP Sensor DTCs.
- **Set Condition:**
  PCM calculated MAP value is greater than actual MAP value plus an offset value. One trip fault and the code will set within 5 seconds. Three good trips to turn of the mil. ETC light will flash.

Possible Causes
RESTRICTED AIR INLET SYSTEM
RESISTANCE IN THE (F856) 5-VOLT SUPPLY CIRCUIT
(F856) 5-VOLT SUPPLY CIRCUIT SHORTED TO GROUND
RESISTANCE IN THE (K1) MAP SIGNAL CIRCUIT
(K1) MAP SIGNAL CIRCUIT SHORTED TO GROUND
RESISTANCE IN (K900) SENSOR GROUND CIRCUIT
RESISTANCE IN THE (F855) 5-VOLT SUPPLY CIRCUIT
(F855) 5-VOLT SUPPLY CIRCUIT SHORTED TO GROUND
RESISTANCE IN THE TP SENSOR SIGNAL CIRCUIT
TP SENSOR SIGNAL CIRCUIT SHORTED TO GROUND
RESISTANCE IN THE (K922) TP SENSOR RETURN CIRCUIT
MAP SENSOR
TP SENSOR
PCM

Always perform the Pre-Diagnostic Troubleshooting procedure before proceeding. (Refer to 9 - ENGINE - DIAGNOSIS AND TESTING).

Diagnostic Test

1. ACTIVE DTC

NOTE: The most likely cause of this DTC is a plugged intake air system or dirty Throttle Body. Check for any TSB's before continuing.

NOTE: Diagnose any 5-Volt Supply, TP Sensor, Oxygen Sensor, Fuel related or MAP Sensor DTCs before continuing.

NOTE: The throttle plate should be free from binding and carbon build up.

NOTE: Question the customer about weather conditions, as ICE build up on the blade can cause this fault when ambient is around +4 to -10 Celsius range.

Ignition on, engine not running.

With a scan tool, read DTCs.

Is the DTC active at this time?

Yes >> Go To 2

No >> Refer to the INTERMITTENT CONDITION Diagnostic Procedure.
Perform the POWERTRAIN VERIFICATION TEST. (Refer to 9 - ENGINE - STANDARD PROCEDURE)

P2175-LOW AIRFLOW/RESTRICTION DETECTED (SLOW ACCUMULATION) (CONTINUED)

2. RESTRICTED AIR INLET SYSTEM

Turn the ignition off.
Remove the Air Cleaner Assembly.
Remove the Air Filter.
Inspect the Throttle Body opening for signs of any foreign materials.
Check the intake tube / air cleaner for obstructions - include snow packing questions to customer.

Were any restrictions found?

Yes >> Repair the restriction as necessary.
Perform the POWERTRAIN VERIFICATION TEST. (Refer to 9 - ENGINE - STANDARD PROCEDURE)

No >> Go To 3

---

3. MAP SENSOR OPERATION

Start the engine.
With a scan tool, monitor the MAP Sensor voltage.
Snap the Accelerator pedal.

Does the MAP Sensor voltage vary from below 2.0 volts at idle to above 3.5 volts at Wide Open Throttle?

Yes >> Go To 4

No >> Go To 11

---

4. TP SENSOR OPERATION

Ignition on, engine not running.
With a scan tool, perform the Throttle Follower Test.
TP Sensor No.1 should start at approximately 0.8 of a volt and increase to 4.2 volts.
TP Sensor No.2 should start at approximately 4.2 volts and decrease to 0.8 of a volt.

Is the voltage transition smooth between the appropriate values?

Yes >> Refer to the INTERMITTENT CONDITION Diagnostic Procedure.
Perform the POWERTRAIN VERIFICATION TEST. (Refer to 9 - ENGINE - STANDARD PROCEDURE)

No >> Go To 5

P2175-LOW AIRFLOW/RESTRICTION DETECTED (SLOW ACCUMULATION) (CONTINUED)

5. RESISTANCE IN THE (F855) 5-VOLT SUPPLY CIRCUIT

Turn the ignition off.

Disconnect the Throttle Body harness connector.

Disconnect the C2 PCM harness connector.

CAUTION: Do not probe the PCM harness connectors. Probing the PCM harness connectors will damage the PCM terminals resulting in poor terminal to pin connection. Install Miller Special Tool #8815 to perform diagnosis.

Measure the resistance of the (F855) 5-volt Supply circuit from the Throttle Body harness connector to the appropriate terminal of special tool #8815.

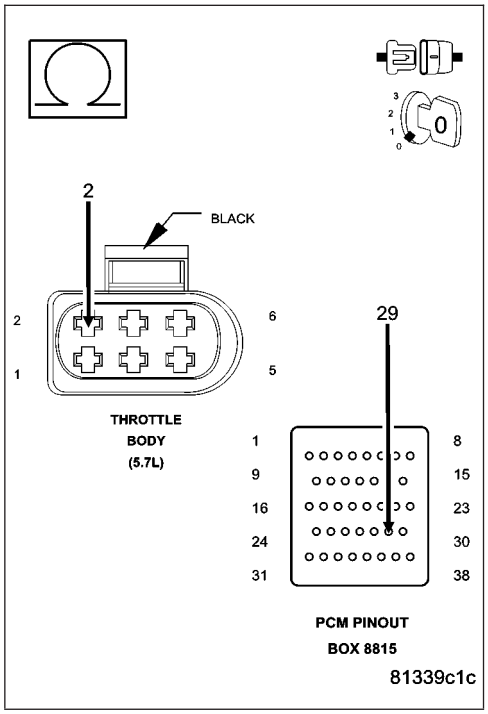

Is the resistance below 100 ohms?

Yes >> Go To 6

No >> Repair the excessive resistance in the (F855) 5-volt Supply circuit.

Perform the POWERTRAIN VERIFICATION TEST. (Refer to 9 - ENGINE - STANDARD PROCEDURE)

6. (F855) 5-VOLT SUPPLY CIRCUIT SHORTED TO GROUND

Measure the resistance between ground and (F855) 5-volt Supply circuit between the appropriate terminals of special tool #8815.

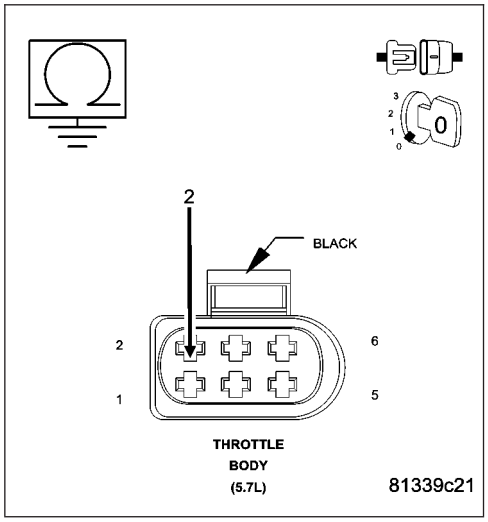

Is the resistance above 100k ohms?

Yes >> Go To 7

No >> Repair the short to ground in the (F855) 5-volt Supply circuit.

Perform the POWERTRAIN VERIFICATION TEST. (Refer to 9 - ENGINE - STANDARD PROCEDURE)

P2175-LOW AIRFLOW/RESTRICTION DETECTED (SLOW ACCUMULATION) (CONTINUED)

7. TP SENSOR

Connect the PCM harness connector.

Ignition on, engine not running.

With a scan tool, monitor the TP Sensor voltage.

Connect a jumper wire between the (K22) TP Sensor No.1 Signal circuit and the (K922) Sensor Return circuit in the Throttle Body harness connector.

TP Sensor No.1 voltage should start at approximately 4.8 volts and decrease to 0.2 of a volt.

Connect a jumper wire between the (K122) TP Sensor No.2 Signal circuit and the (F855) 5-volt Supply circuit in the Throttle Body harness connector.

TP Sensor No.2 voltage should start at approximately 0 volts and increase to 4.8 to 5.2 volts.

Does the TP Sensor voltage change to the appropriate voltage with the jumper wire installed?

Yes >> Disconnect the Battery before replacing the Throttle Body Assembly. Replace the Throttle Body Assembly. After installation is complete, use a scan tool and select the ETC RELEARN function

Perform the POWERTRAIN VERIFICATION TEST. (Refer to 9 - ENGINE - STANDARD PROCEDURE)

No >> Go To 8

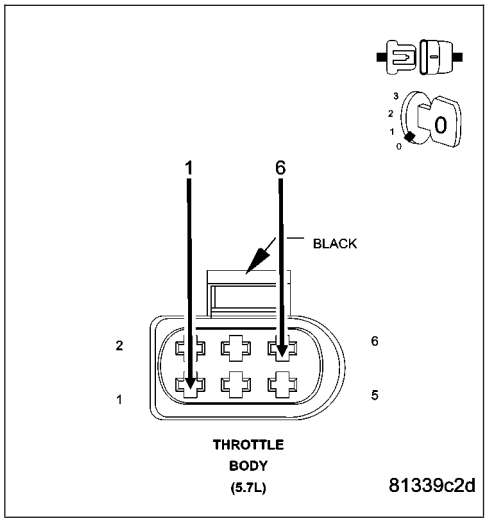

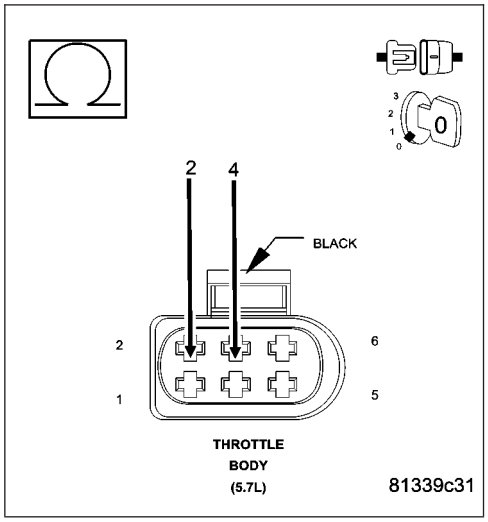

P2175-LOW AIRFLOW/RESTRICTION DETECTED (SLOW ACCUMULATION) (CONTINUED)

8. RESISTANCE IN THE TP SENSOR SIGNAL CIRCUIT

Turn the ignition off.

Disconnect the C2 PCM harness connector.

Measure the resistance of the (K22) and (K122) TP Signal circuits from the Throttle Body harness connector to the appropriate terminals of special tool #8815.

Is the resistance below 5.0 ohms for each circuit?

Yes >> Go To 9

No >> Repair the excessive resistance in the (K22) or (K122) TP Sensor Signal circuit.

Perform the POWERTRAIN VERIFICATION TEST. (Refer to 9 - ENGINE - STANDARD PROCEDURE)

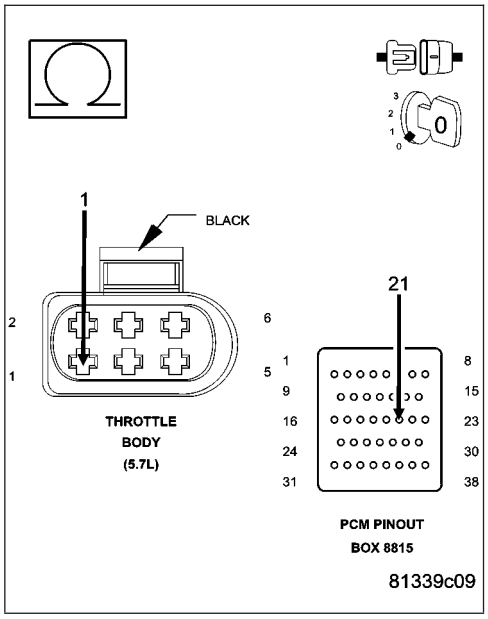

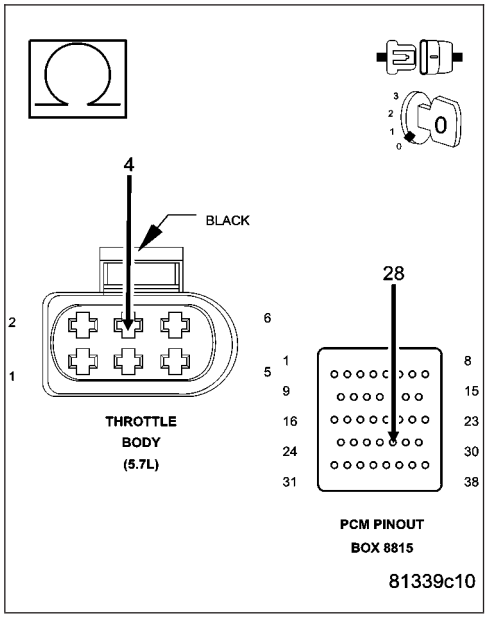

P2175-LOW AIRFLOW/RESTRICTION DETECTED (SLOW ACCUMULATION) (CONTINUED)

9. TP SENSOR SIGNAL CIRCUIT SHORTED TO GROUND

Measure the resistance between ground and the (K22) and (K122) TP Signal circuits at the appropriate terminals of special tool #8815.

Is the resistance above 100k ohms for each circuit?

Yes >> Go To 10

No >> Repair the short to ground in the (K22) or (K122) TP Sensor Signal circuit.
Perform the POWERTRAIN VERIFICATION TEST. (Refer to 9 - ENGINE - STANDARD PROCEDURE)

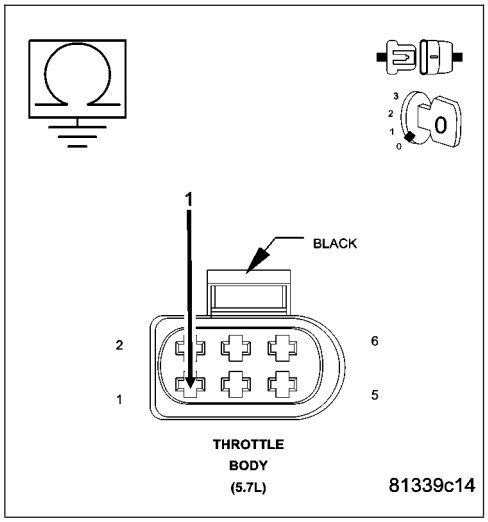

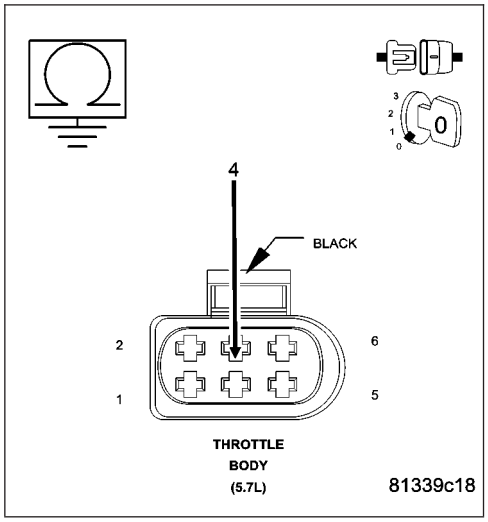

10. RESISTANCE IN THE (K922) SENSOR RETURN CIRCUIT

Measure the resistance of the (K922) Sensor Return circuit from the Throttle Body harness connector to the appropriate terminal of special tool #8815.

Is the resistance below 5.0 ohms?

Yes >> Go To 17

No >> Repair the excessive resistance in the (K922) Sensor Return circuit.
Perform the POWERTRAIN VERIFICATION TEST. (Refer to 9 - ENGINE - STANDARD PROCEDURE)

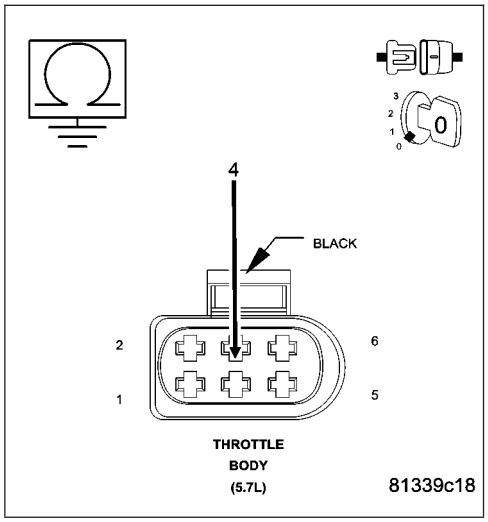

P2175-LOW AIRFLOW/RESTRICTION DETECTED (SLOW ACCUMULATION) (CONTINUED)

11. RESISTANCE IN THE (F856) 5-VOLT SUPPLY CIRCUIT

Turn the ignition off.

Disconnect the MAP Sensor harness connector.

Disconnect the C1 PCM harness connector.

CAUTION: Do not probe the PCM harness connectors. Probing the PCM harness connectors will damage the PCM terminals resulting in poor terminal to pin connection. Install Miller Special Tool #8815 to perform diagnosis.

Measure the resistance of the (F856) 5-volt Supply circuit from the MAP Sensor harness connector to the appropriate terminal of special tool #8815.

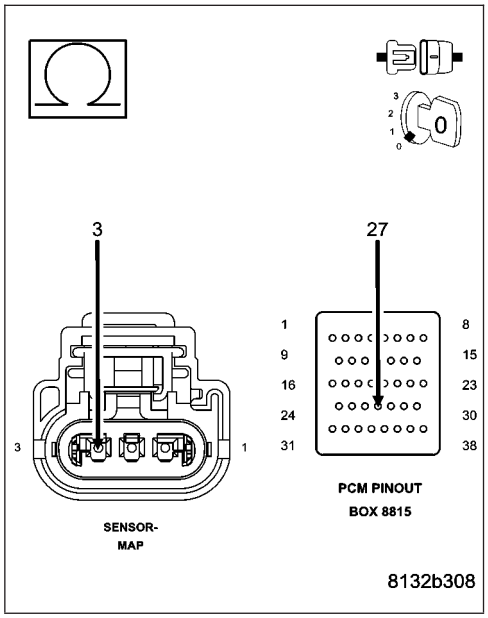

Is the resistance below 5.0 ohms?

Yes >> Go To 12

No >> Repair the excessive resistance in the (F856) 5-volt Supply circuit.

Perform the POWERTRAIN VERIFICATION TEST. (Refer to 9 - ENGINE - STANDARD PROCEDURE)

12. (F856) 5-VOLT SUPPLY CIRCUIT SHORTED TO GROUND

Measure the resistance between ground and the (F856) 5-volt Supply circuit in the MAP Sensor harness connector.

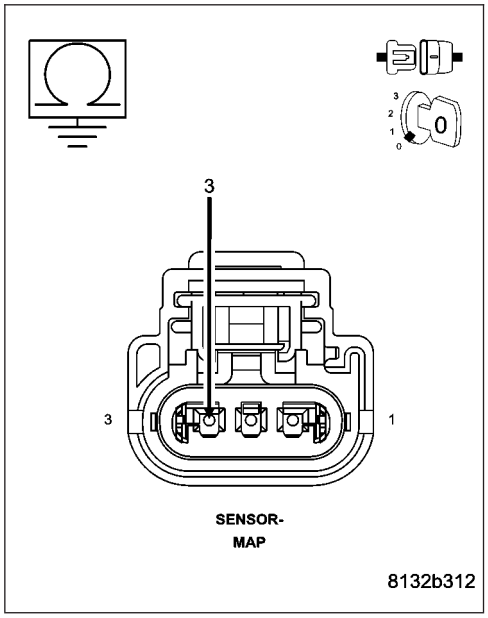

Is the resistance above 100k ohms?

Yes >> Go To 13

No >> Repair the short to ground in the (F856) 5-volt Supply circuit.

Perform the POWERTRAIN VERIFICATION TEST. (Refer to 9 - ENGINE - STANDARD PROCEDURE)

P2175-LOW AIRFLOW/RESTRICTION DETECTED (SLOW ACCUMULATION) (CONTINUED)

13. MAP SENSOR

Connect the C1 PCM harness connector.

Ignition on, engine not running.

With a scan tool, monitor the MAP Sensor voltage.

Connect a jumper wire between the (K1) MAP Signal circuit and the (K900) Sensor ground circuit.

Cycle the ignition switch from off to on.

With a scan tool, monitor the MAP Sensor voltage.

Does the scan tool display MAP voltage from approximately 4.9 volts to below 0.5 volt with the jumper wire installed?

Yes >> Replace the MAP Sensor.
Perform the POWERTRAIN VERIFICATION TEST. (Refer to 9 - ENGINE - STANDARD PROCEDURE)

No >> Go To 14

NOTE: Remove the jumper wire before continuing.

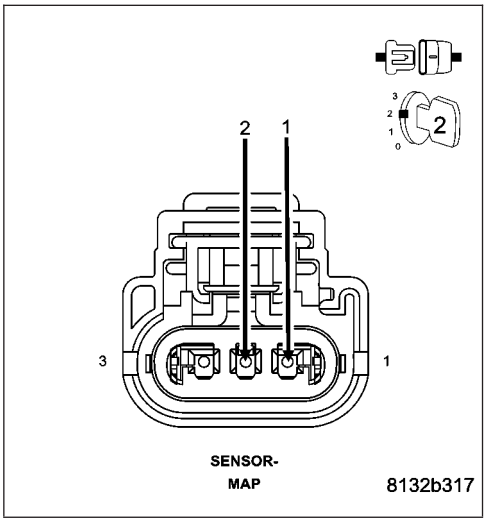

14. RESISTANCE IN THE (K1) MAP SIGNAL CIRCUIT

Turn the ignition off.

Disconnect the C2 PCM harness connector.

Measure the resistance of the (K1) MAP Signal circuit from the MAP Sensor harness connector to the appropriate terminal of special tool #8815.

Is the resistance below 5.0 ohms?

Yes >> Go To 15

No >> Repair the excessive resistance in the (K1) MAP Signal circuit
Perform the POWERTRAIN VERIFICATION TEST. (Refer to 9 - ENGINE - STANDARD PROCEDURE)

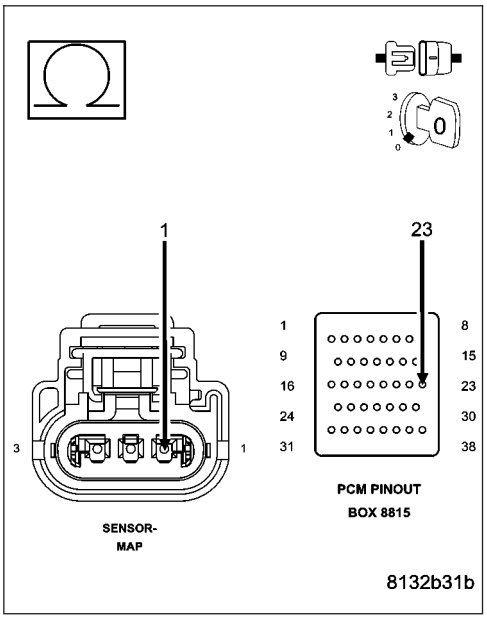

P2175-LOW AIRFLOW/RESTRICTION DETECTED (SLOW ACCUMULATION) (CONTINUED)

15. (K1) MAP SIGNAL CIRCUIT SHORTED TO GROUND

Measure the resistance between ground and the (K1) MAP Signal circuit in the MAP Sensor harness connector.

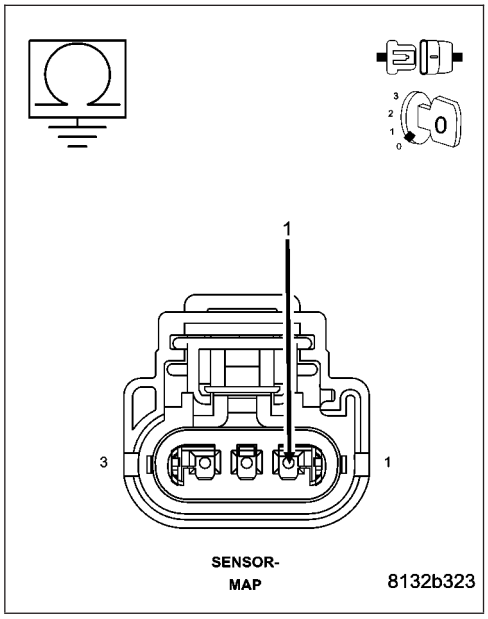

Is the resistance above 100k ohms?

Yes >> Go To 16

No >> Repair the short to ground in the (K1) MAP Signal circuit.
Perform the POWERTRAIN VERIFICATION TEST. (Refer to 9 - ENGINE - STANDARD PROCEDURE)

16. RESISTANCE IN THE (K900) SENSOR GROUND CIRCUIT

Measure the resistance of the (K900) Sensor ground circuit from the MAP Sensor harness connector to the appropriate terminal of special tool #8815.

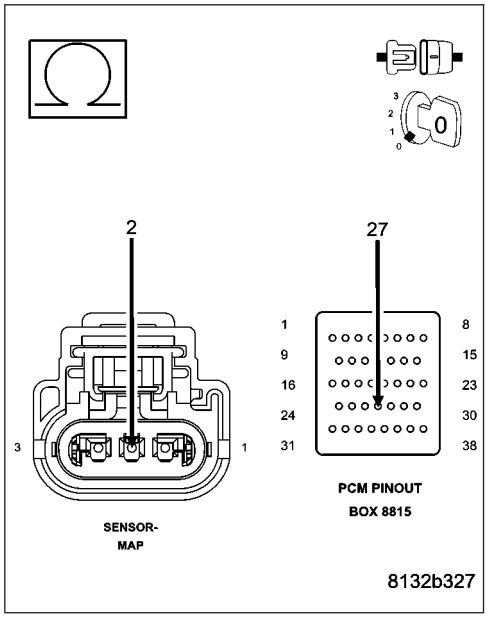

Is the resistance below 5.0 ohms?

Yes >> Go To 17

No >> Repair the excessive resistance in the (K900) Sensor ground circuit.
Perform the POWERTRAIN VERIFICATION TEST. (Refer to 9 - ENGINE - STANDARD PROCEDURE)

P2175-LOW AIRFLOW/RESTRICTION DETECTED (SLOW ACCUMULATION) (CONTINUED)

17. PCM

NOTE: Before continuing, check the PCM harness connector terminals for corrosion, damage, or terminal push out. Repair as necessary.

Using the schematics as a guide, inspect the wire harness and connectors. Pay particular attention to all Power and Ground circuits.

Were there any problems found?

Yes >> Repair as necessary.
Perform the POWERTRAIN VERIFICATION TEST. (Refer to 9 - ENGINE - STANDARD PROCEDURE)

No >> Replace and program the Powertrain Control Module per Service Information.
Perform the POWERTRAIN VERIFICATION TEST. (Refer to 9 - ENGINE - STANDARD PROCEDURE)

P2181-COOLING SYSTEM PERFORMANCE

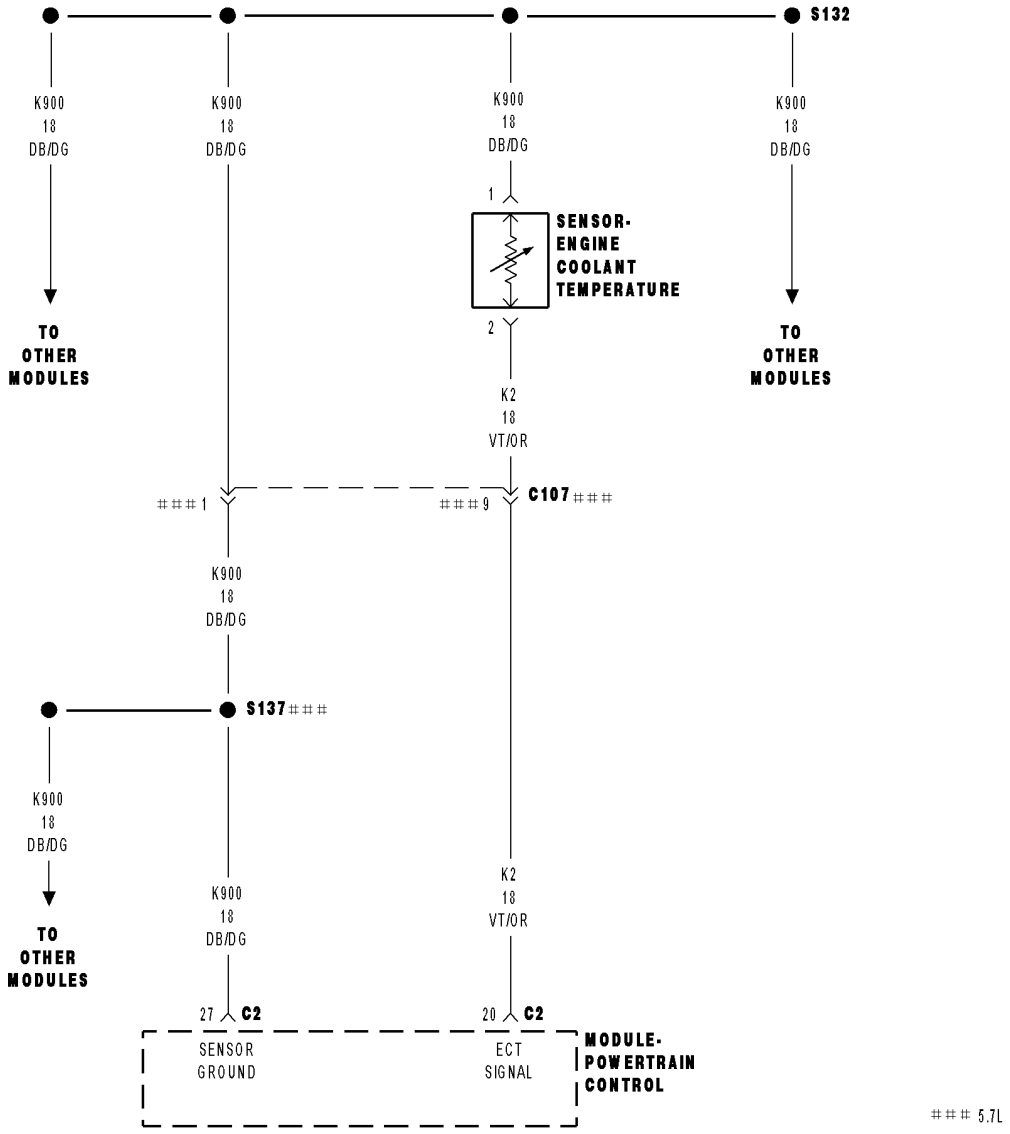

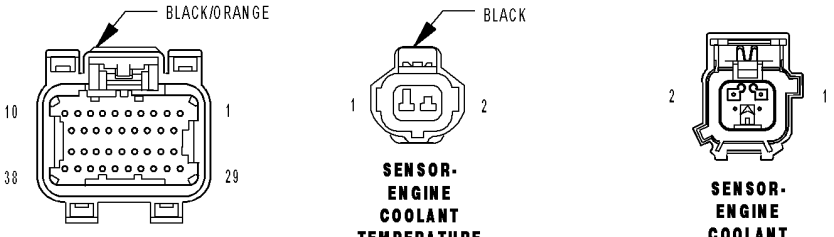

81452d65

P2181-COOLING SYSTEM PERFORMANCE (CONTINUED)

For the Engine circuit diagram (Refer to 9 - ENGINE - SCHEMATICS AND DIAGRAMS).

For a complete wiring diagram **Refer to Section 8W**.

- **When Monitored:**
  Ignition on, Engine running, and no ECT DTCs present.
- **Set Condition:**
  PCM recognizes that the ECT has failed its self coherence test. The coolant temp should only change at a certain rate, if this rate is too slow or too fast this fault will set. Two trip fault. Three good trips to clear MIL. ETC light will illuminate on first trip failure.

Possible Causes
LOW COOLANT LEVEL
(K2) ECT SIGNAL CIRCUIT SHORTED TO BATTERY VOLTAGE
(K2) ECT SIGNAL CIRCUIT OPEN
(K900) SENSOR GROUND CIRCUIT OPEN
(K2) ECT SIGNAL CIRCUIT SHORTED TO GROUND
(K2) ECT SIGNAL CIRCUIT SHORTED TO THE (K900) SENSOR GROUND
THERMOSTAT
ECT SENSOR
PCM

Always perform the Pre-Diagnostic Troubleshooting procedure before proceeding. (Refer to 9 - ENGINE - DIAGNOSIS AND TESTING).

Diagnostic Test

1. ACTIVE DTC

Ignition on, engine not running.

NOTE: If this code sets during extreme ambient temperatures, improper installation of a block heater could be the cause of this DTC.

With a scan tool, read DTCs.

Diagnose all other ECT and Cooling System codes before continuing.

Is the DTC active at this time?

Yes >> Go To 2

No >> Refer to the INTERMITTENT CONDITION Diagnostic Procedure.
Perform the POWERTRAIN VERIFICATION TEST. (Refer to 9 - ENGINE - STANDARD PROCEDURE)

P2181-COOLING SYSTEM PERFORMANCE (CONTINUED)

2. LOW COOLANT LEVEL

NOTE: If a Engine Coolant Temperature (ECT) DTC is set along with this code, diagnose the ECT DTC first.

NOTE: Inspect the ECT terminals and related PCM terminals. Ensure the terminals are free from corrosion and damage.

NOTE: The best way to diagnose this DTC is to allow the vehicle to sit overnight outside in order to have a totally cold soaked engine.

NOTE: Extremely cold outside ambient temperatures may have caused this DTC to set.

NOTE: Need to make sure that no Cooling System DTCs are set or changes that would make the warm up much slower or much faster: broken water pump can set this, addition of aftermarket auxiliary cooler can set this DTC.

WARNING: Never open the cooling system when the engine is hot. The system is under pressure. Failure to follow these instructions can result in personal injury or death. Allow the engine to cool before opening the cooling system.

Inspect the coolant system for proper level and condition.

Is the coolant level and condition OK?

Yes >> Go To 3

No >> Inspect the vehicle for a coolant leak and add the necessary amount of coolant.
Perform the POWERTRAIN VERIFICATION TEST. (Refer to 9 - ENGINE - STANDARD PROCEDURE)

---

3. THERMOSTAT

NOTE: This test works best if performed on a cold engine (cold soak).

Ignition on, engine not running.

With a scan tool, read the Eng Coolant Tmp Deg value. If the engine was allowed to sit overnight (cold soak), the temperature value should be a sensible value that is somewhere close to the ambient temperature.

NOTE: If engine coolant temperature is above 82°C (180°F), allow the engine to cool until 65°C (150°F) is reached.

Start the Engine.

During engine warm-up monitor the Eng Coolant Tmp Deg value. The temp deg value change should be a smooth transition from start up to normal operating temp 82°C (180°F). Also monitor the actual coolant temperature with a thermometer.

NOTE: As the engine warms up to operating temperature, the actual coolant temperature (thermometer reading) and the Eng Coolant Tmp Deg on the scan tool should stay relatively close to each other.

Using the appropriate service information, determine the proper opening temperature of the thermostat.

Did the thermostat open at the proper temperature?

Yes >> Go To 4

No >> Replace the thermostat.
Perform the POWERTRAIN VERIFICATION TEST. (Refer to 9 - ENGINE - STANDARD PROCEDURE)

P2181-COOLING SYSTEM PERFORMANCE (CONTINUED)

4. ECT SENSOR

Connect a jumper between the (K2) ECT Signal circuit and the (K900) Sensor ground circuit in the ECT Sensor harness connector.

Turn the ignition off.

Disconnect the ECT Sensor harness connector.

With a scan tool, read the ECT voltage.

Is the voltage below 1.0 volt?

Yes >> Replace the ECT Sensor.
Perform the POWERTRAIN VERIFICATION TEST. (Refer to 9 - ENGINE - STANDARD PROCEDURE)

No >> Go To 5

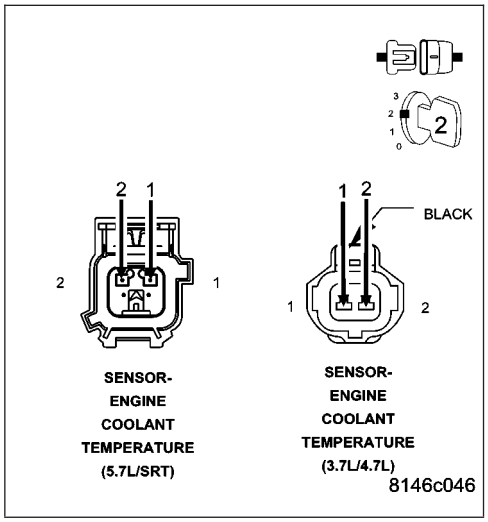

5. (K2) ECT SIGNAL CIRCUIT SHORTED TO BATTERY VOLTAGE

Turn the ignition off.

Disconnect the C2 PCM harness connector.

Ignition on, engine not running.

Measure the voltage on the (K2) ECT Signal circuit in the ECT Sensor harness connector.

Is the voltage above 5.2 volts?

Yes >> Repair the short to battery voltage in the (K2) ECT Signal circuit.
Perform the POWERTRAIN VERIFICATION TEST. (Refer to 9 - ENGINE - STANDARD PROCEDURE)

No >> Go To 6

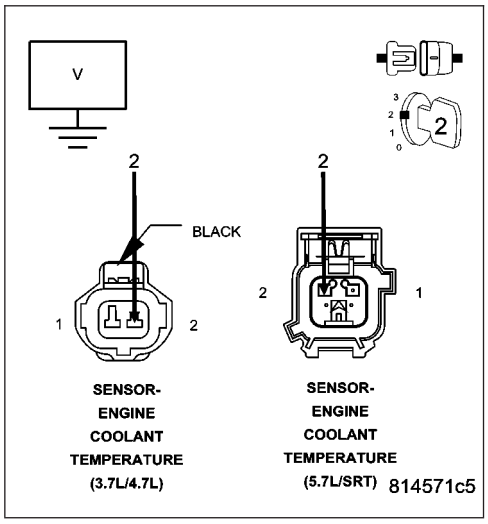

P2181-COOLING SYSTEM PERFORMANCE (CONTINUED)

6. (K2) ECT SIGNAL CIRCUIT OPEN

Turn the ignition off.

CAUTION: Do not probe the PCM harness connectors. Probing the PCM harness connectors will damage the PCM terminals resulting in poor terminal to pin connection. Install Miller Special Tool #8815 to perform diagnosis.

Measure the resistance of the (K2) ECT Signal circuit from the ECT Sensor harness connector to the appropriate terminal of special tool #8815.

Is the resistance below 5.0 ohms?

Yes >> Go To 7

No >> Repair the open in the (K2) ECT Signal circuit.
Perform the POWERTRAIN VERIFICATION TEST. (Refer to 9 - ENGINE - STANDARD PROCEDURE)

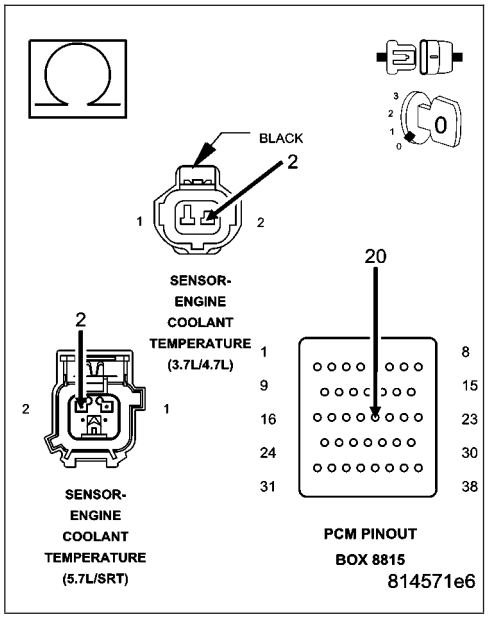

7. (K900) SENSOR GROUND CIRCUIT OPEN

Measure the resistance of the (K900) Sensor ground circuit from the ECT Sensor harness connector to the appropriate terminal of special tool #8815.

Is the resistance below 5.0 ohms?

Yes >> Go To 8

No >> Repair the open in the (K900) Sensor ground circuit.
Perform the POWERTRAIN VERIFICATION TEST. (Refer to 9 - ENGINE - STANDARD PROCEDURE)

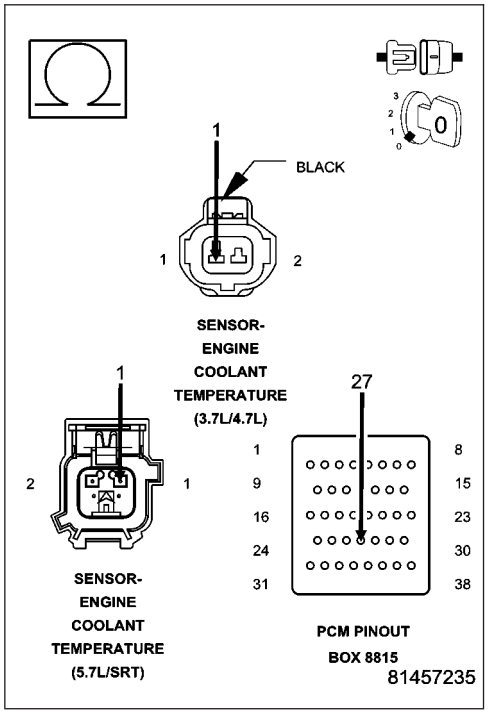

P2181-COOLING SYSTEM PERFORMANCE (CONTINUED)

8. (K2) ECT SIGNAL CIRCUIT SHORTED TO GROUND

Measure the resistance between ground and the (K2) ECT Signal circuit in the ECT Sensor harness connector.

Is the resistance below 100 ohms?

Yes >> Repair the short to ground in the (K2) ECT Signal circuit. Perform the POWERTRAIN VERIFICATION TEST. (Refer to 9 - ENGINE - STANDARD PROCEDURE)

No >> Go To 9

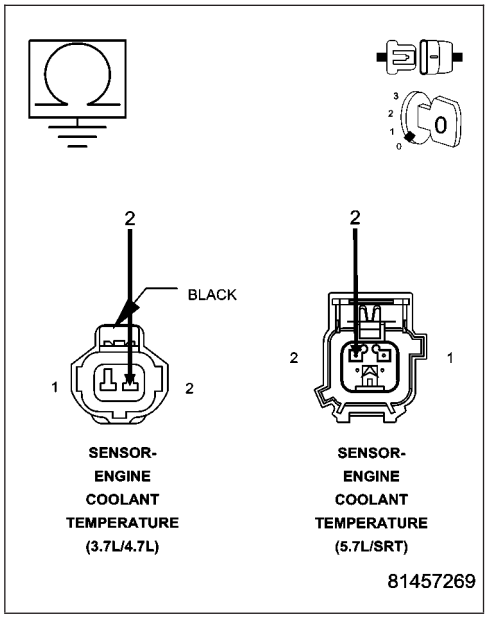

9. (K2) ECT SIGNAL CIRCUIT SHORTED TO THE (K900) SENSOR GROUND CIRCUIT

Measure the resistance between the (K2) ECT Signal circuit and the (K900) Sensor ground circuit in the ECT Sensor harness connector.

Is the resistance below 5.0 ohms?

Yes >> Repair the short between the (K900) Sensor ground and the (K2) ECT Signal circuit.
Perform the POWERTRAIN VERIFICATION TEST. (Refer to 9 - ENGINE - STANDARD PROCEDURE)

No >> Go To 10

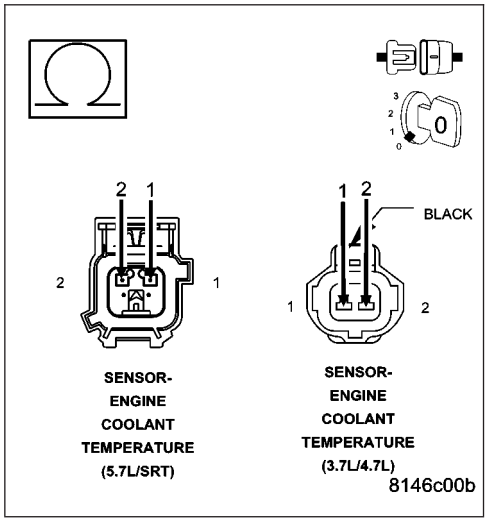

P2181-COOLING SYSTEM PERFORMANCE (CONTINUED)

10. **PCM**

NOTE: Before continuing, check the PCM harness connector terminals for corrosion, damage, or terminal push out. Repair as necessary.

Using the schematics as a guide, inspect the wire harness and connectors. Pay particular attention to all Power and Ground circuits.

Were there any problems found?

Yes >> Repair as necessary.
Perform the POWERTRAIN VERIFICATION TEST. (Refer to 9 - ENGINE - STANDARD PROCEDURE)

No >> Replace and program the Powertrain Control Module per Service Information.
Perform the POWERTRAIN VERIFICATION TEST. (Refer to 9 - ENGINE - STANDARD PROCEDURE)

P2299-BRAKE PEDAL POSITION / ACCELERATOR PEDAL POSITION INCOMPATIBLE

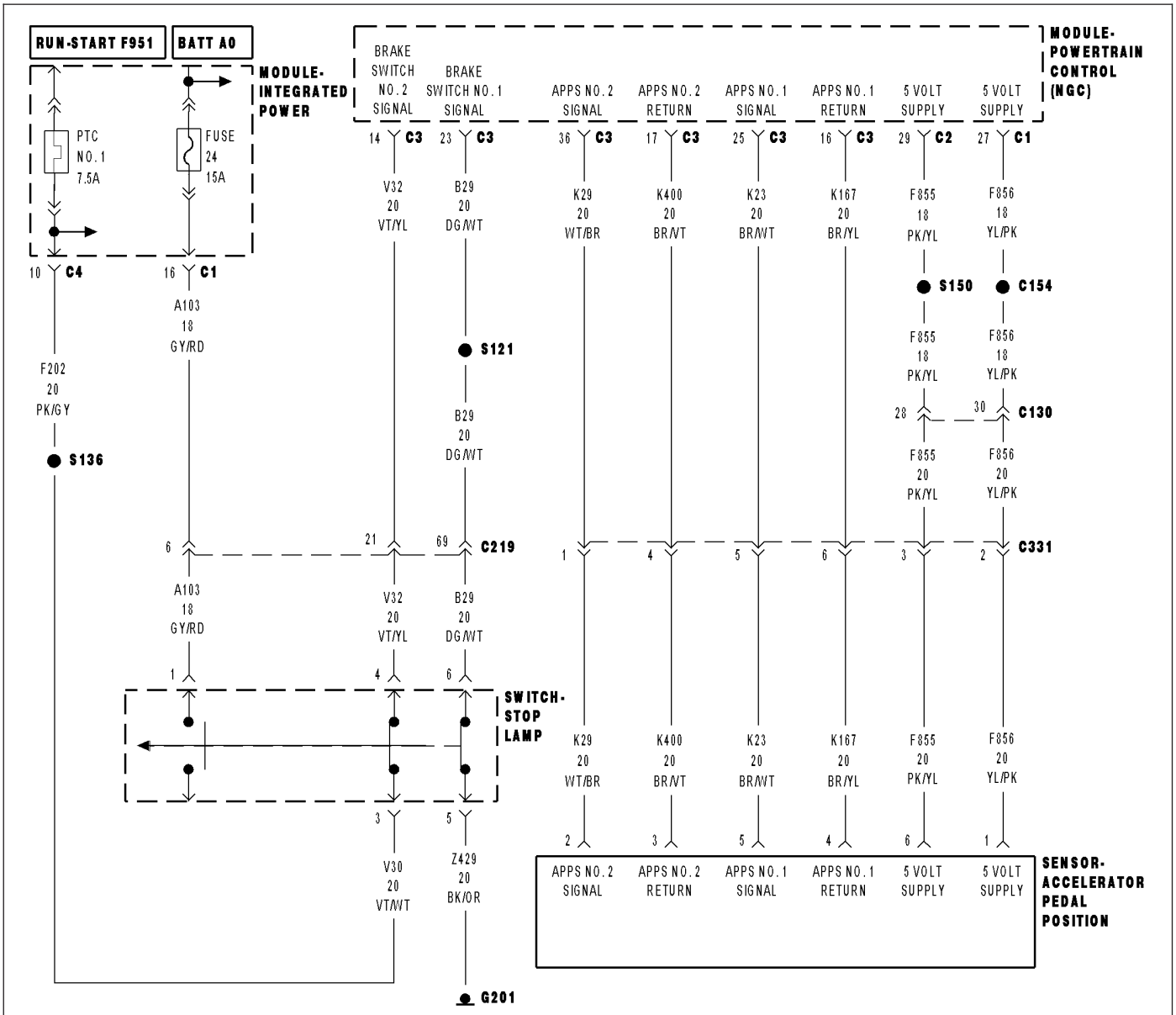

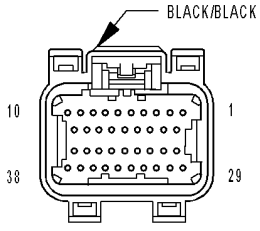

MODULE-POWERTRAIN CONTROL C1 (NGC)

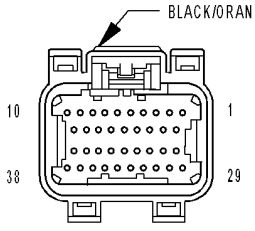

MODULE-POWERTRAIN CONTROL C2 (NGC)

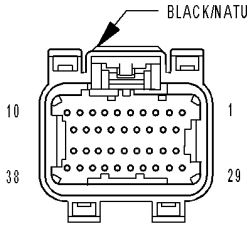

MODULE-POWERTRAIN CONTROL C3 (NGC)

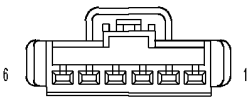

SWITCH-STOP LAMP

814553a6

P2299-BRAKE PEDAL POSITION / ACCELERATOR PEDAL POSITION INCOMPATIBLE (CONTINUED)

For the Engine circuit diagram (Refer to 9 - ENGINE - SCHEMATICS AND DIAGRAMS).

For a complete wiring diagram **Refer to Section 8W**.

- **When Monitored:**
  Ignition on. No Break or APPS faults present.
- **Set Condition:**
  The PCM recognizes a brake application following the APPS showing a fixed pedal opening. Temporary or permanent. Internally the PCM will reduce throttle opening below driver demand. One trip fault and the code will be set within 5 seconds. ETC light will illuminate, the light will only stay illuminated while DTC is active.

Possible Causes
CUSTOMER PRESSING ACCLERATOR PEDAL, THEN PRESSING BRAKE PEDAL, AND CONTINUES HOLDING THEM DOWN SIMULTANEOUSLY
STOP LAMP SWITCH
APP SENSOR

Always perform the Pre-Diagnostic Troubleshooting procedure before proceeding. (Refer to 9 - ENGINE - DIAGNOSIS AND TESTING).

Diagnostic Test

1. DTC INFORMATION

NOTE: If a pedal assembly becomes mechanically stuck the voltage output will stay fixed, if this is also Followed by a long application of the brakes this code will set.

NOTE: When this code sets the pedal position in the PCM software will ramp to idle. If the Pedal voltage changes OR the brake pedal is released, the pedal position in the PCM software will ramp up to the pedal position and the ETC light will go out.

With a scan tool, read DTCs and record the related Freeze Frame data.

Diagnose all other Stop Lamp Switch and APP Sensor codes before continuing.

This code can be set by a driver who uses both feet while driving, one for the Accelerator Pedal and the other for the Brake Pedal.

NOTE: The most likely cause of this DTC is caused by the customer Brake Torquing the engine by pressing the Accelerator pedal and the pressing the Brake Pedal.

Ask the driver of the vehicle if these conditions apply to their driving habits.

Are the listed conditions part of the customers driving habits?

Yes >> Advise the customer of what caused the DTC. This is normal operation of a ETC equipped vehicle because of safety issues.
Perform the POWERTRAIN VERIFICATION TEST. (Refer to 9 - ENGINE - STANDARD PROCEDURE)

No >> Go To 2

---

2. STOP LAMP SWITCH OPERATION

With a scan tool, read both Stop Lamp Switch statuses while pressing and releasing the Brake Pedal.

Does the scan tool display the Pressed and Released while pressing and releasing the Pedal?

Yes >> Go To 3

No >> Check the Stop Lamp Switch for proper installation and check the related circuits for opens and shorts using the appropriate wiring diagram. If OK, replace the Stop Lamp Switch assembly.
Perform the POWERTRAIN VERIFICATION TEST. (Refer to 9 - ENGINE - STANDARD PROCEDURE)

P2299-BRAKE PEDAL POSITION / ACCELERATOR PEDAL POSITION INCOMPATIBLE (CONTINUED)

3. APP SENSOR SWEEP

Ignition on, engine not running.

With a scan tool, monitor both APP Sensor voltage readings.

Slowly press the accelerator pedal from idle until it reaches the end stop near the floor.

APPS No.1 voltage should start at approximately 0.45 of a volt and increase to approximately 4.6 volts with a smooth transition.

APPS No.2 voltage should start at approximately 0.22 of a volt and increase to approximately 2.31 volts with a smooth transition.

Does the voltage for the appropriate sensor follow the list specification?

Yes >> Refer to the INTERMITTENT CONDITION Diagnostic Procedure.
Perform the POWERTRAIN VERIFICATION TEST. (Refer to 9 - ENGINE - STANDARD PROCEDURE)

No >> Check the Signal and Return circuits for opens and shorts. If OK, Replace the APP Sensor Assembly per Service Information. After installation is complete, with a scan tool select the ETC RELEARN function to relearn the APPS values.
Perform the POWERTRAIN VERIFICATION TEST. (Refer to 9 - ENGINE - STANDARD PROCEDURE)

P2302-IGNITION COIL 1 SECONDARY CIRCUIT- INSUFFICIENT IONIZATION

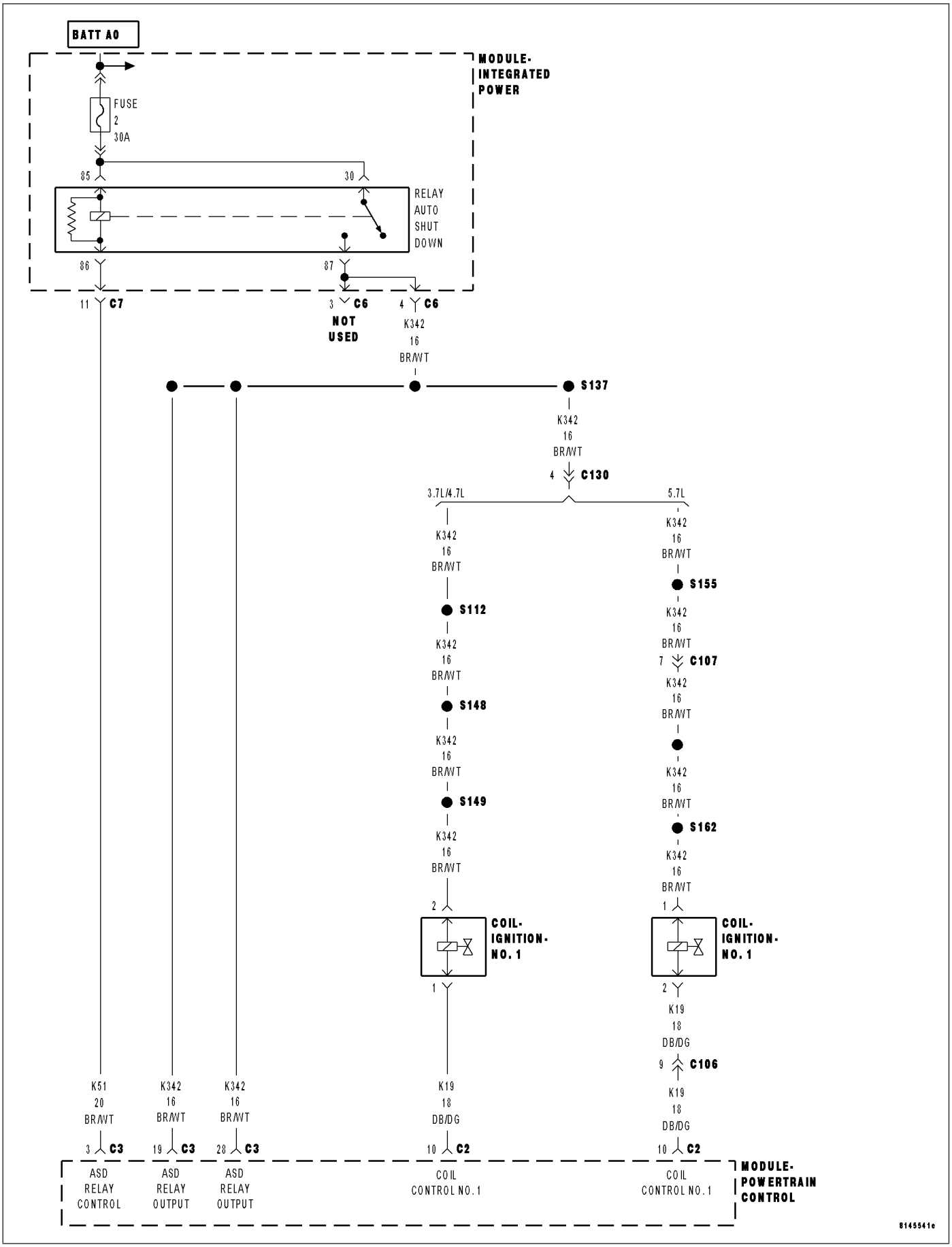

P2302-IGNITION COIL 1 SECONDARY CIRCUIT- INSUFFICIENT IONIZATION (CONTINUED)

For the Engine circuit diagram (Refer to 9 - ENGINE - SCHEMATICS AND DIAGRAMS).

For a complete wiring diagram **Refer to Section 8W**.

- **When Monitored:**
  Engine running and battery voltage greater than 10 volts.
- **Set Condition:**
  If PCM detects that the secondary ignition burn time is incorrect, too short, or not present, an error is detected. One Trip Fault. Three good trips to turn off the MIL.

Possible Causes
(K342) ASD RELAY OUTPUT CIRCUIT
(K19) COIL CONTROL NO.1 CIRCUIT OPEN
(K19) COIL CONTROL NO.1 CIRCUIT SHORTED TO GROUND
COIL ON PLUG
PCM

Always perform the Pre-Diagnostic Troubleshooting procedure before proceeding. (Refer to 9 - ENGINE - DIAGNOSIS AND TESTING).

Diagnostic Test

1. ACTIVE DTC

Ignition on, engine not running.

With a scan tool, read DTCs.

Is the DTC active at this time?

Yes >> Go To 2

No >> Refer to the INTERMITTENT CONDITION Diagnostic Procedure.
Perform the POWERTRAIN VERIFICATION TEST. (Refer to 9 - ENGINE - STANDARD PROCEDURE)

---

2. (K342) ASD RELAY OUTPUT CIRCUIT

Turn the ignition off.

Disconnect the Coil on Plug harness connector.

Ignition on, engine not running.

With a scan tool, actuate the ASD Relay.

Using a 12-volt test light connected to ground, probe the (K342) ASD Relay Output circuit in the Coil on Plug harness connector.

Does the test light illuminate brightly?

Yes >> Go To 3

No >> Repair the open or short to ground in the (K342) ASD Relay Output circuit between the IPM and Coil harness connector.
Perform the POWERTRAIN VERIFICATION TEST. (Refer to 9 - ENGINE - STANDARD PROCEDURE)

NOTE: Stop All Actuations.

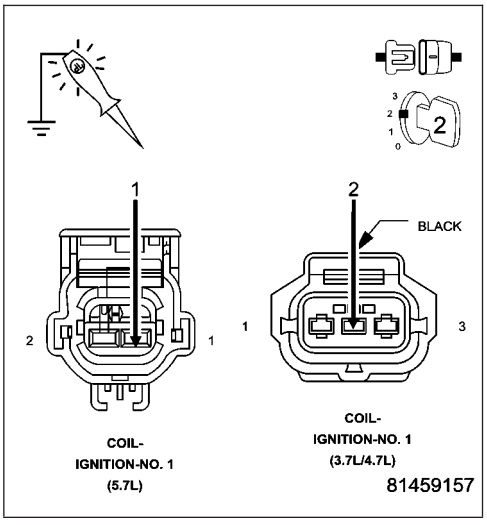

P2302-IGNITION COIL 1 SECONDARY CIRCUIT- INSUFFICIENT IONIZATION (CONTINUED)

3. COIL ON PLUG RESISTANCE

Turn the ignition off.

NOTE: The following resistance measurement should be taken at 70°-80° F.

Measure the resistance of the Coil on Plug.

4.7L and 3.7L Primary Ignition Coil resistance is 0.6 to 0.9 of an ohm at 77°F (25°C).

5.7L Primary Ignition Coil resistance is 0.558 to 0.682 of an ohm at 77°F (25°C).

Is the resistance within the given specification for the Ignition Coil being tested?

Yes >> Go To 4

No >> Replace the Coil on plug.
Perform the POWERTRAIN VERIFICATION TEST. (Refer to 9 - ENGINE - STANDARD PROCEDURE)

---

4. IGNITION COIL

Using a 12-volt test light connected to a 12-volt source, probe the (K19) Coil Control No.1 circuit.

Crank the engine for 5 seconds while observing the test light.

What is the condition of the test light while cranking the engine?

Brightly blinking.
Replace the Coil on plug.
Perform the POWERTRAIN VERIFICATION TEST. (Refer to 9 - ENGINE - STANDARD PROCEDURE)

ON constantly.
Go To 5

OFF constantly.
Go To 6

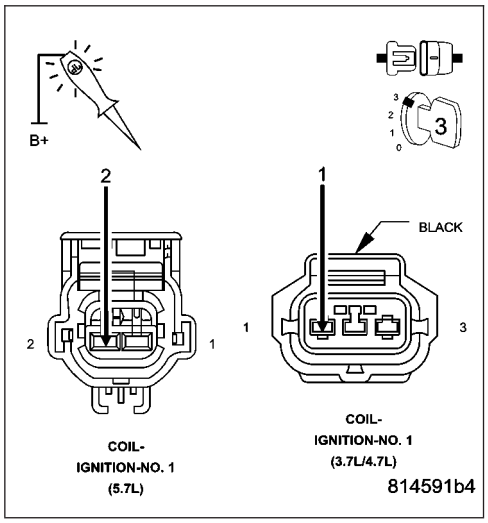

---

5. (K19) COIL CONTROL NO.1 CIRCUIT SHORTED TO GROUND

Turn the ignition off.

Disconnect the C2 PCM harness connector.

Measure the resistance between ground and the (K19) Coil Control No.1 circuit in the Coil on Plug harness connector.

Is the resistance below 100 ohms?

Yes >> Repair the short to ground in the (K19) Coil Control No.1 circuit.
Perform the POWERTRAIN VERIFICATION TEST. (Refer to 9 - ENGINE - STANDARD PROCEDURE)

No >> Go To 7

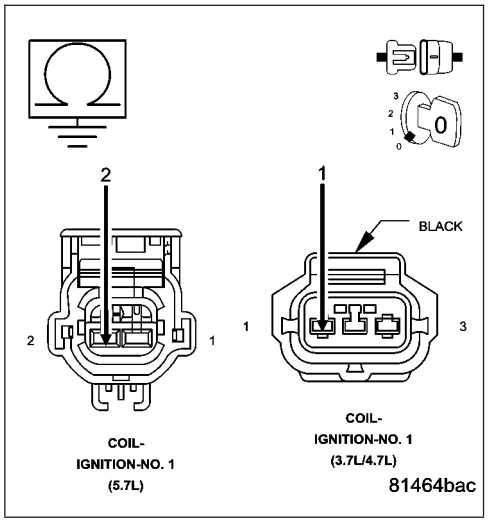

P2302-IGNITION COIL 1 SECONDARY CIRCUIT- INSUFFICIENT IONIZATION (CONTINUED)

6. (K19) COIL CONTROL NO.1 CIRCUIT OPEN

Turn the ignition off.

Disconnect the C2 PCM harness connector.

CAUTION: Do not probe the PCM harness connectors. Probing the PCM harness connectors will damage the PCM terminals resulting in poor terminal to pin connection. Install Miller Special Tool #8815 to perform diagnosis.

Measure the resistance of the (K19) Coil Control No.1 circuit from the Coil on Plug harness connector to the appropriate terminal of special tool #8815.

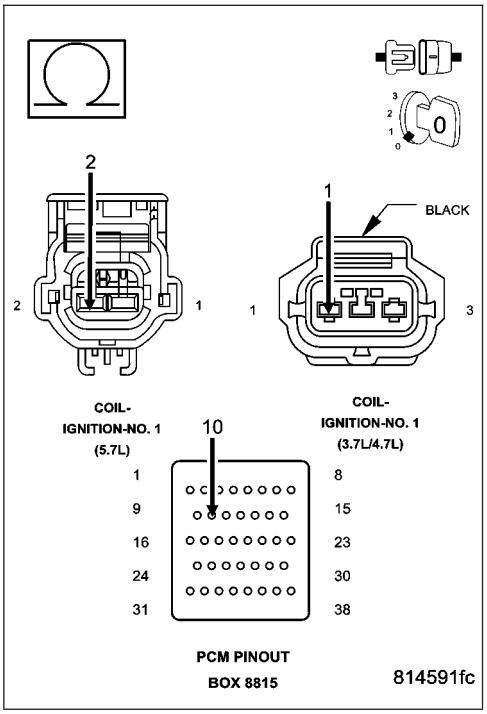

Is the resistance below 5.0 ohms?

Yes >> Go To 7

No >> Repair the open in the (K19) Coil Control No.1 circuit.
Perform the POWERTRAIN VERIFICATION TEST. (Refer to 9 - ENGINE - STANDARD PROCEDURE)

---

7. PCM

NOTE: Before continuing, check the PCM harness connector terminals for corrosion, damage, or terminal push out. Repair as necessary.

Using the schematics as a guide, inspect the wire harness and connectors. Pay particular attention to all Power and Ground circuits.

Were there any problems found?

Yes >> Repair as necessary.
Perform the POWERTRAIN VERIFICATION TEST. (Refer to 9 - ENGINE - STANDARD PROCEDURE)

No >> Replace and program the Powertrain Control Module per Service Information.
Perform the POWERTRAIN VERIFICATION TEST. (Refer to 9 - ENGINE - STANDARD PROCEDURE)

P2305-IGNITION COIL 2 SECONDARY CIRCUIT- INSUFFICIENT IONIZATION

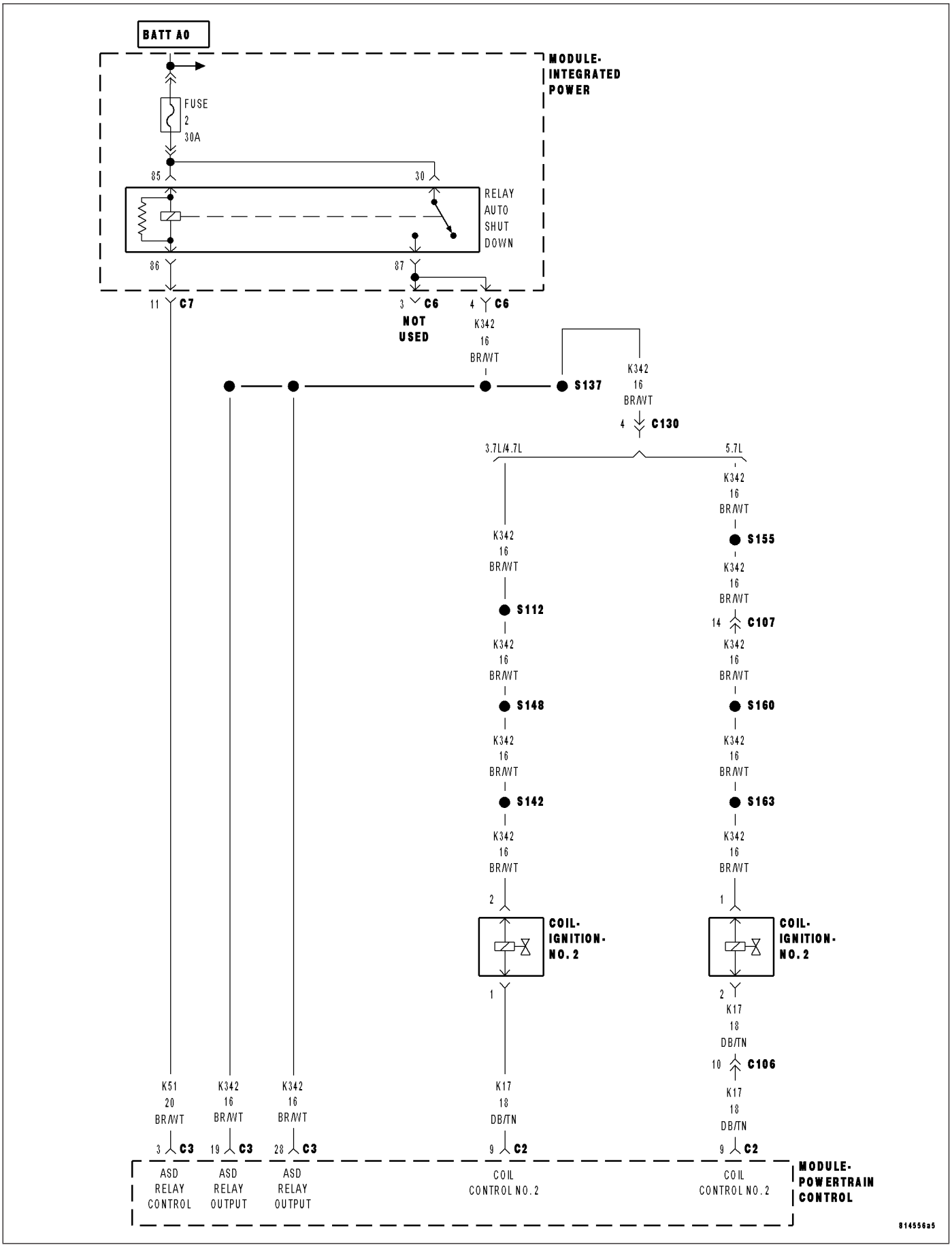

P2305-IGNITION COIL 2 SECONDARY CIRCUIT- INSUFFICIENT IONIZATION (CONTINUED)

For the Engine circuit diagram (Refer to 9 - ENGINE - SCHEMATICS AND DIAGRAMS).

For a complete wiring diagram **Refer to Section 8W**.

- **When Monitored:**
  Engine running and battery voltage greater than 10 volts.
- **Set Condition:**
  If PCM detects that the secondary ignition burn time is incorrect, too short, or not present, an error is detected. One Trip Fault. Three good trips to turn off the MIL.

Possible Causes
(K342) ASD RELAY OUTPUT CIRCUIT
(K17) COIL CONTROL NO.2 CIRCUIT OPEN
(K17) COIL CONTROL NO.2 CIRCUIT SHORTED TO GROUND
COIL ON PLUG
PCM

Always perform the Pre-Diagnostic Troubleshooting procedure before proceeding. (Refer to 9 - ENGINE - DIAGNOSIS AND TESTING).

Diagnostic Test

1. ACTIVE DTC

Ignition on, engine not running.

With a scan tool, read DTCs.

Is the DTC active at this time?

Yes >> Go To 2

No >> Refer to the INTERMITTENT CONDITION Diagnostic Procedure.
Perform the POWERTRAIN VERIFICATION TEST. (Refer to 9 - ENGINE - STANDARD PROCEDURE)

---

2. (K342) ASD RELAY OUTPUT CIRCUIT

Turn the ignition off.

Disconnect the Coil on Plug harness connector.

Ignition on, engine not running.

With a scan tool, actuate the ASD Relay.

Using a 12-volt test light connected to ground, probe the (K342) ASD Relay Output circuit in the Coil on Plug harness connector.

Does the test light illuminate brightly?

Yes >> Go To 3

No >> Repair the open or short to ground in the (K342) ASD Relay Output circuit between the IPM and Coil harness connector.
Perform the POWERTRAIN VERIFICATION TEST. (Refer to 9 - ENGINE - STANDARD PROCEDURE)

NOTE: Stop All Actuations.

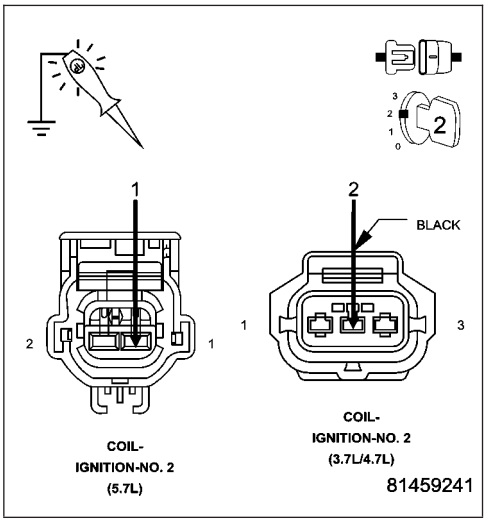

P2305-IGNITION COIL 2 SECONDARY CIRCUIT- INSUFFICIENT IONIZATION (CONTINUED)

3. COIL ON PLUG RESISTANCE

Turn the ignition off.

NOTE: The following resistance measurement should be taken at 70°-80° F.

Measure the resistance of the Coil on Plug.

4.7L and 3.7L Primary Ignition Coil resistance is 0.6 to 0.9 of an ohm at 77°F (25°C).

Is the resistance within the given specification for the Ignition Coil being tested?

Yes >> Go To 4

No >> Replace the Coil on plug.
Perform the POWERTRAIN VERIFICATION TEST. (Refer to 9 - ENGINE - STANDARD PROCEDURE)

---

4. IGNITION COIL

Using a 12-volt test light connected to a 12-volt source, probe the (K17) Coil Control No.2 circuit.

Crank the engine for 5 seconds while observing the test light.

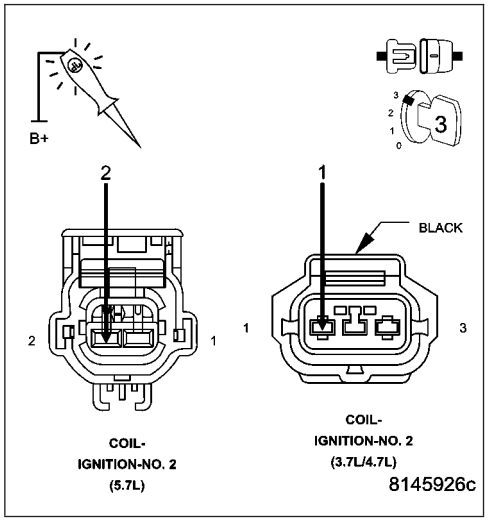

What is the state of the test light while cranking the engine?

Brightly blinking.
Replace the Coil on plug.
Perform the POWERTRAIN VERIFICATION TEST. (Refer to 9 - ENGINE - STANDARD PROCEDURE)

ON constantly.
Go To 5

OFF constantly.
Go To 6

---

5. (K17) COIL CONTROL NO.2 CIRCUIT SHORTED TO GROUND

Turn the ignition off.

Disconnect the C2 PCM harness connector.

Measure the resistance between ground and the (K17) Coil Control No.2 circuit in the Coil on Plug harness connector.

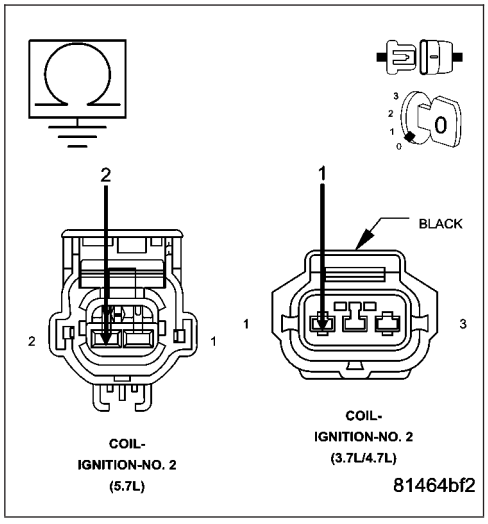

Is the resistance below 100 ohms?

Yes >> Repair the short to ground in the (K17) Coil Control No.2 circuit.
Perform the POWERTRAIN VERIFICATION TEST. (Refer to 9 - ENGINE - STANDARD PROCEDURE)

No >> Go To 7

P2305-IGNITION COIL 2 SECONDARY CIRCUIT- INSUFFICIENT IONIZATION (CONTINUED)

6. (K17) COIL CONTROL NO.2 CIRCUIT OPEN

Turn the ignition off.

Disconnect the C2 PCM harness connector.

CAUTION: Do not probe the PCM harness connectors. Probing the PCM harness connectors will damage the PCM terminals resulting in poor terminal to pin connection. Install Miller Special Tool #8815 to perform diagnosis.

Measure the resistance of the (K17) Coil Control No.2 circuit from the Coil on Plug harness connector to the appropriate terminal of special tool #8815.

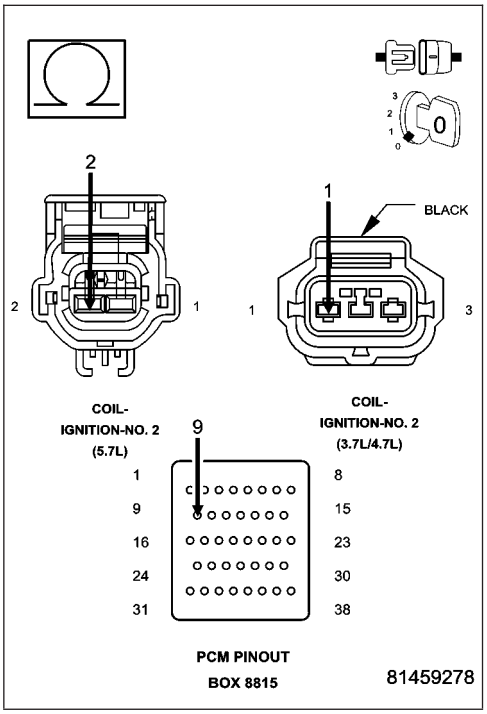

Is the resistance below 5.0 ohms?

Yes >> Go To 7

No >> Repair the open in the (K17) Coil Control No.2 circuit.
Perform the POWERTRAIN VERIFICATION TEST. (Refer to 9 - ENGINE - STANDARD PROCEDURE)

---

7. PCM

NOTE: Before continuing, check the PCM harness connector terminals for corrosion, damage, or terminal push out. Repair as necessary.

Using the schematics as a guide, inspect the wire harness and connectors. Pay particular attention to all Power and Ground circuits.

Were there any problems found?

Yes >> Repair as necessary.
Perform the POWERTRAIN VERIFICATION TEST. (Refer to 9 - ENGINE - STANDARD PROCEDURE)

No >> Replace and program the Powertrain Control Module per Service Information.
Perform the POWERTRAIN VERIFICATION TEST. (Refer to 9 - ENGINE - STANDARD PROCEDURE)

P2308-IGNITION COIL 3 SECONDARY CIRCUIT- INSUFFICIENT IONIZATION

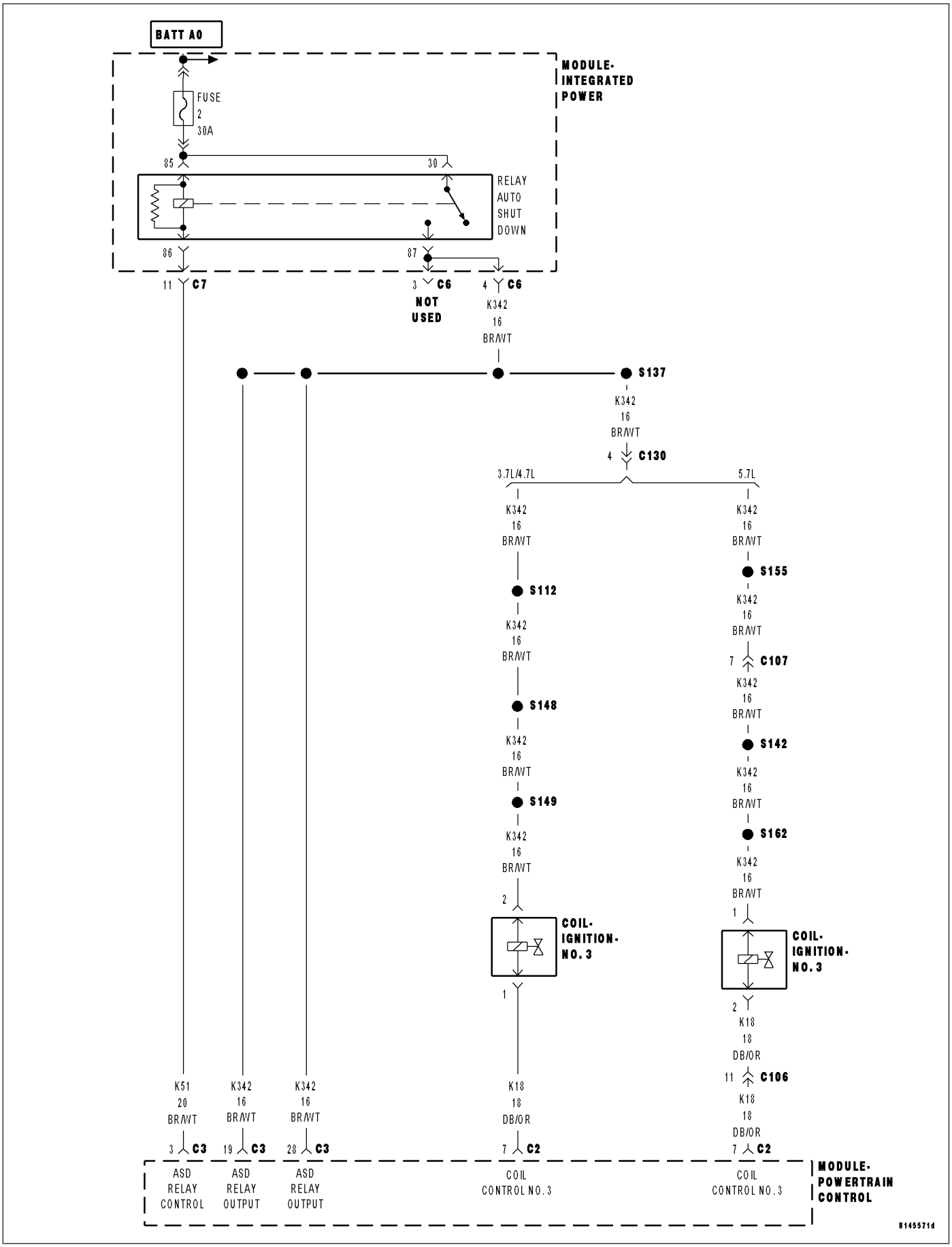

P2308-IGNITION COIL 3 SECONDARY CIRCUIT- INSUFFICIENT IONIZATION (CONTINUED)

For the Engine circuit diagram (Refer to 9 - ENGINE - SCHEMATICS AND DIAGRAMS).

For a complete wiring diagram **Refer to Section 8W**.

- **When Monitored:**
  Engine running and battery voltage greater than 10 volts.
- **Set Condition:**
  If PCM detects that the secondary ignition burn time is incorrect, too short, or not present, an error is detected. One Trip Fault. Three good trips to turn off the MIL.

Possible Causes
(K342) ASD RELAY OUTPUT CIRCUIT
(K18) COIL CONTROL NO.3 CIRCUIT OPEN
(K18) COIL CONTROL NO.3 CIRCUIT SHORTED TO GROUND
COIL ON PLUG
PCM

Always perform the Pre-Diagnostic Troubleshooting procedure before proceeding. (Refer to 9 - ENGINE - DIAGNOSIS AND TESTING).

Diagnostic Test

1. ACTIVE DTC

Ignition on, engine not running.

With a scan tool, read DTCs.

Is the DTC active at this time?

Yes >> Go To 2

No >> Refer to the INTERMITTENT CONDITION Diagnostic Procedure.
Perform the POWERTRAIN VERIFICATION TEST. (Refer to 9 - ENGINE - STANDARD PROCEDURE)

---

2. (K342) ASD RELAY OUTPUT CIRCUIT

Turn the ignition off.

Disconnect the Coil on Plug harness connector.

Ignition on, engine not running.

With a scan tool, actuate the ASD Relay.

Using a 12-volt test light connected to ground, probe the (K342) ASD Relay Output circuit in the Coil on Plug harness connector.

Does the test light illuminate brightly?

Yes >> Go To 3

No >> Repair the open or short to ground in the (K342) ASD Relay Output circuit between the IPM and Coil harness connector.
Perform the POWERTRAIN VERIFICATION TEST. (Refer to 9 - ENGINE - STANDARD PROCEDURE)

NOTE: Stop All Actuations.

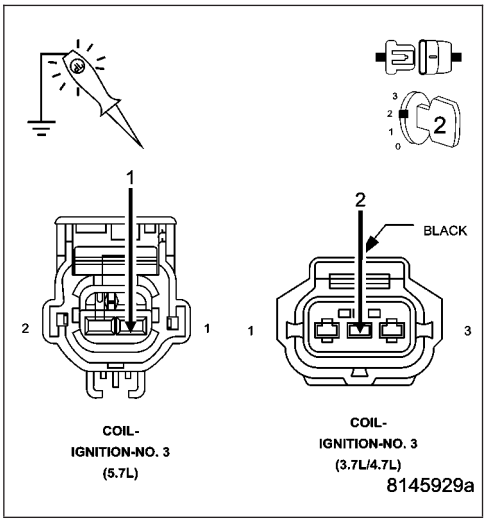

P2308-IGNITION COIL 3 SECONDARY CIRCUIT- INSUFFICIENT IONIZATION (CONTINUED)

3. COIL ON PLUG RESISTANCE

Turn the ignition off.

NOTE: The following resistance measurement should be taken at 70°-80° F.

Measure the resistance of the Coil on Plug.

4.7L and 3.7L Primary Ignition Coil resistance is 0.6 to 0.9 of an ohm at 77°F (25°C).

Is the resistance within the given specification for the Ignition Coil being tested?

Yes >> Go To 4

No >> Replace the Coil on plug.
Perform the POWERTRAIN VERIFICATION TEST. (Refer to 9 - ENGINE - STANDARD PROCEDURE)

---

4. IGNITION COIL

Using a 12-volt test light connected to a 12-volt source, probe the (K18) Coil Control No.3 circuit.

Crank the engine for 5 seconds while observing the test light.

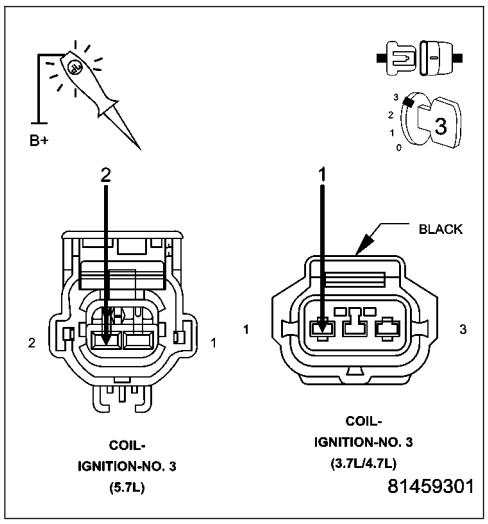

What is the state of the test light while cranking the engine?

Brightly blinking.
Replace the Coil on plug.
Perform the POWERTRAIN VERIFICATION TEST. (Refer to 9 - ENGINE - STANDARD PROCEDURE)

ON constantly.
Go To 5

OFF constantly.
Go To 6

---

5. (K18) COIL CONTROL NO.3 CIRCUIT SHORTED TO GROUND

Turn the ignition off.

Disconnect the C2 PCM harness connector.

Measure the resistance between ground and the (K18) Coil Control No.3 circuit in the Coil on Plug harness connector.

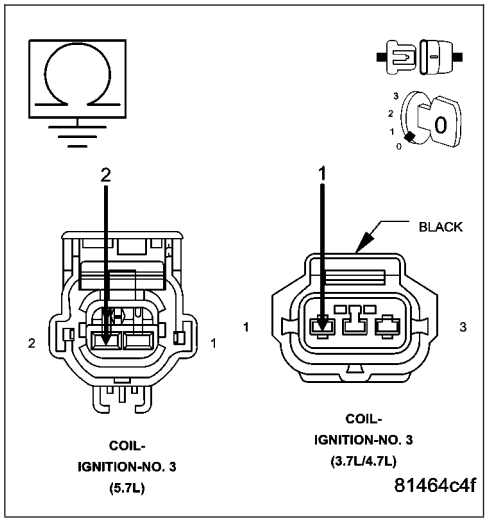

Is the resistance below 100 ohms?

Yes >> Repair the short to ground in the (K18) Coil Control No.3 circuit.
Perform the POWERTRAIN VERIFICATION TEST. (Refer to 9 - ENGINE - STANDARD PROCEDURE)

No >> Go To 7

P2308-IGNITION COIL 3 SECONDARY CIRCUIT- INSUFFICIENT IONIZATION (CONTINUED)

6. (K18) COIL CONTROL NO.3 CIRCUIT OPEN

Turn the ignition off.

Disconnect the C2 PCM harness connector.

CAUTION: Do not probe the PCM harness connectors. Probing the PCM harness connectors will damage the PCM terminals resulting in poor terminal to pin connection. Install Miller Special Tool #8815 to perform diagnosis.

Measure the resistance of the (K18) Coil Control No.3 circuit from the Coil on Plug harness connector to the appropriate terminal of special tool #8815.

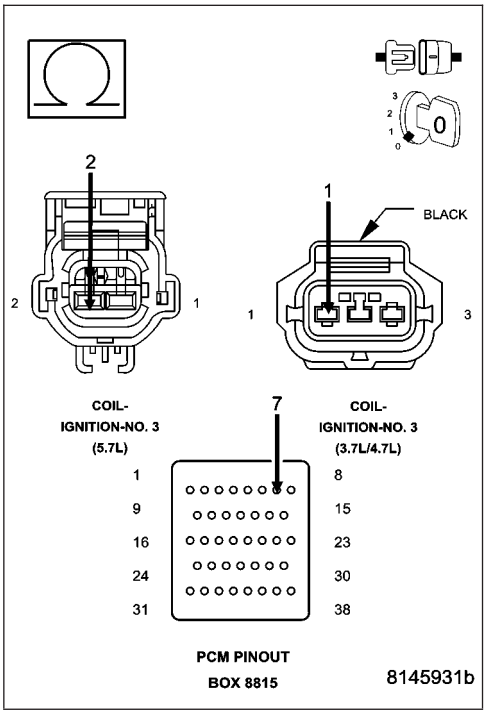

Is the resistance below 5.0 ohms?

Yes >> Go To 7

No >> Repair the open in the (K18) Coil Control No.3 circuit.
Perform the POWERTRAIN VERIFICATION TEST. (Refer to 9 - ENGINE - STANDARD PROCEDURE)

---

7. PCM

NOTE: Before continuing, check the PCM harness connector terminals for corrosion, damage, or terminal push out. Repair as necessary.

Using the schematics as a guide, inspect the wire harness and connectors. Pay particular attention to all Power and Ground circuits.

Were there any problems found?

Yes >> Repair as necessary.
Perform the POWERTRAIN VERIFICATION TEST. (Refer to 9 - ENGINE - STANDARD PROCEDURE)

No >> Replace and program the Powertrain Control Module per Service Information.
Perform the POWERTRAIN VERIFICATION TEST. (Refer to 9 - ENGINE - STANDARD PROCEDURE)

P2311-IGNITION COIL 4 SECONDARY CIRCUIT- INSUFFICIENT IONIZATION

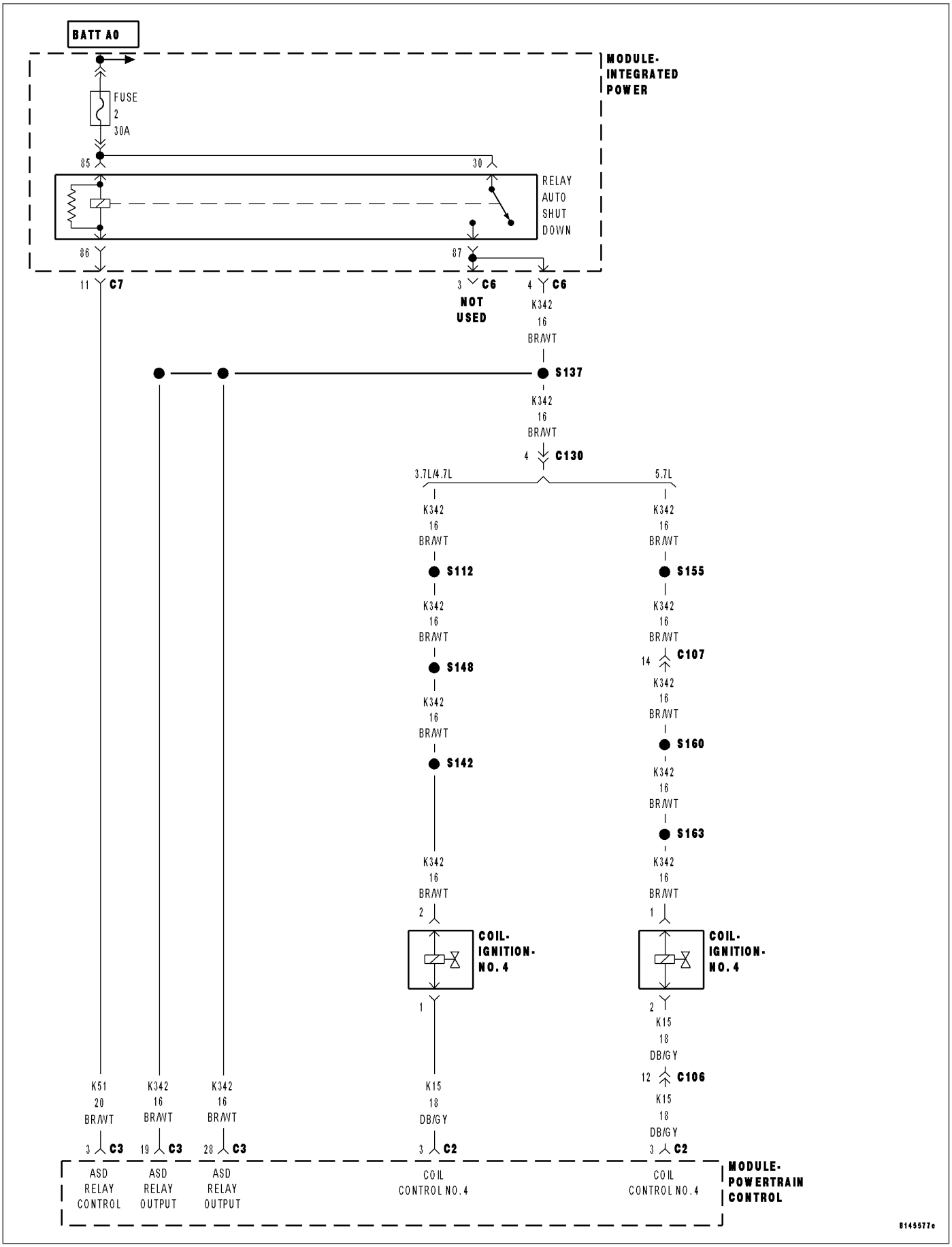

P2311-IGNITION COIL 4 SECONDARY CIRCUIT- INSUFFICIENT IONIZATION (CONTINUED)

For the Engine circuit diagram (Refer to 9 - ENGINE - SCHEMATICS AND DIAGRAMS).

For a complete wiring diagram **Refer to Section 8W**.

- **When Monitored:**
  Engine running and battery voltage greater than 10 volts.
- **Set Condition:**
  If PCM detects that the secondary ignition burn time is incorrect, too short, or not present, an error is detected. One Trip Fault. Three good trips to turn off the MIL.

Possible Causes
(K342) ASD RELAY OUTPUT CIRCUIT
(K15) COIL CONTROL NO.4 CIRCUIT OPEN
(K15) COIL CONTROL NO.4 CIRCUIT SHORTED TO GROUND
COIL ON PLUG
PCM

Always perform the Pre-Diagnostic Troubleshooting procedure before proceeding. (Refer to 9 - ENGINE - DIAGNOSIS AND TESTING).

Diagnostic Test

1. ACTIVE DTC

Ignition on, engine not running.

With a scan tool, read DTCs.

Is the DTC active at this time?

Yes >> Go To 2

No >> Refer to the INTERMITTENT CONDITION Diagnostic Procedure.
Perform the POWERTRAIN VERIFICATION TEST. (Refer to 9 - ENGINE - STANDARD PROCEDURE)

---

2. (K342) ASD RELAY OUTPUT CIRCUIT

Turn the ignition off.

Disconnect the Coil on Plug harness connector.

Ignition on, engine not running.

With a scan tool, actuate the ASD Relay.

Using a 12-volt test light connected to ground, probe the (K342) ASD Relay Output circuit in the Coil on Plug harness connector.

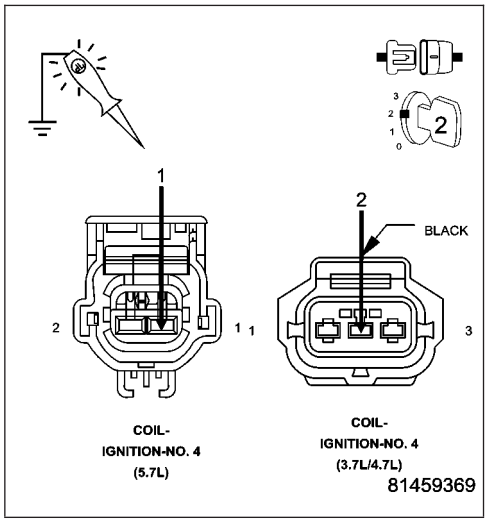

Does the test light illuminate brightly?

Yes >> Go To 3

No >> Repair the open or short to ground in the (K342) ASD Relay Output circuit between the IPM and Coil harness connector.
Perform the POWERTRAIN VERIFICATION TEST. (Refer to 9 - ENGINE - STANDARD PROCEDURE)

NOTE: Stop All Actuations.

P2311-IGNITION COIL 4 SECONDARY CIRCUIT- INSUFFICIENT IONIZATION (CONTINUED)

3. COIL ON PLUG RESISTANCE

Turn the ignition off.

NOTE: The following resistance measurement should be taken at 70°-80° F.

Measure the resistance of the Coil on Plug.

4.7L and 3.7L Primary Ignition Coil resistance is 0.6 to 0.9 of an ohm at 77°F (25°C).

Is the resistance within the given specification for the Ignition Coil being tested?

Yes >> Go To 4

No >> Replace the Coil on plug.
Perform the POWERTRAIN VERIFICATION TEST. (Refer to 9 - ENGINE - STANDARD PROCEDURE)

---

4. IGNITION COIL

Using a 12-volt test light connected to a 12-volt source, probe the (K15) Coil Control No.4 circuit.

Crank the engine for 5 seconds while observing the test light.

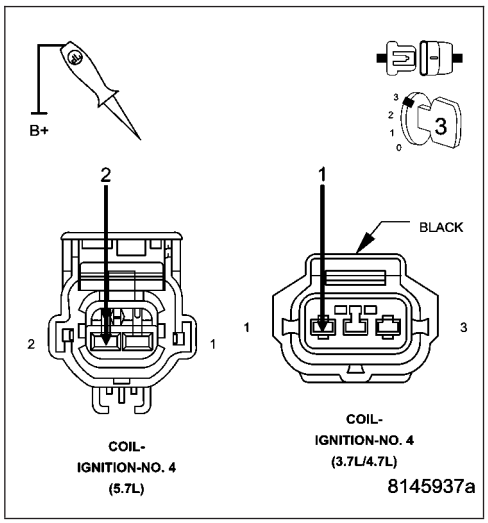

What is the state of the test light while cranking the engine?

Brightly blinking.
Replace the Coil on plug.
Perform the POWERTRAIN VERIFICATION TEST. (Refer to 9 - ENGINE - STANDARD PROCEDURE)

ON constantly.
Go To 5

OFF constantly.
Go To 6

---

5. (K15) COIL CONTROL NO.4 CIRCUIT SHORTED TO GROUND

Turn the ignition off.

Disconnect the C2 PCM harness connector.

Measure the resistance between ground and the (K15) Coil Control No.4 circuit in the Coil on Plug harness connector.

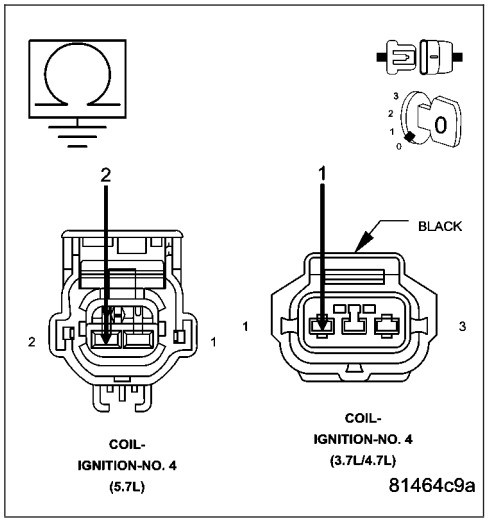

Is the resistance below 100 ohms?

Yes >> Repair the short to ground in the (K15) Coil Control No.4 circuit.
Perform the POWERTRAIN VERIFICATION TEST. (Refer to 9 - ENGINE - STANDARD PROCEDURE)

No >> Go To 7

P2311-IGNITION COIL 4 SECONDARY CIRCUIT- INSUFFICIENT IONIZATION (CONTINUED)

6. (K15) COIL CONTROL NO.4 CIRCUIT OPEN

Turn the ignition off.

Disconnect the C2 PCM harness connector.

CAUTION: Do not probe the PCM harness connectors. Probing the PCM harness connectors will damage the PCM terminals resulting in poor terminal to pin connection. Install Miller Special Tool #8815 to perform diagnosis.

Measure the resistance of the (K15) Coil Control No.4 circuit from the Coil on Plug harness connector to the appropriate terminal of special tool #8815.

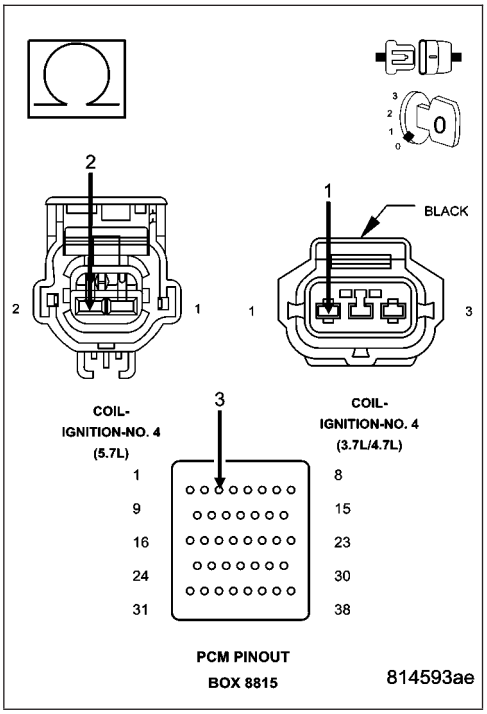

Is the resistance below 5.0 ohms?

Yes >> Go To 7

No >> Repair the open in the (K15) Coil Control No.4 circuit.
Perform the POWERTRAIN VERIFICATION TEST. (Refer to 9 - ENGINE - STANDARD PROCEDURE)

7. PCM

NOTE: Before continuing, check the PCM harness connector terminals for corrosion, damage, or terminal push out. Repair as necessary.

Using the schematics as a guide, inspect the wire harness and connectors. Pay particular attention to all Power and Ground circuits.

Were there any problems found?

Yes >> Repair as necessary.
Perform the POWERTRAIN VERIFICATION TEST. (Refer to 9 - ENGINE - STANDARD PROCEDURE)

No >> Replace and program the Powertrain Control Module per Service Information.
Perform the POWERTRAIN VERIFICATION TEST. (Refer to 9 - ENGINE - STANDARD PROCEDURE)

P2314-IGNITION COIL 5 SECONDARY CIRCUIT- INSUFFICIENT IONIZATION

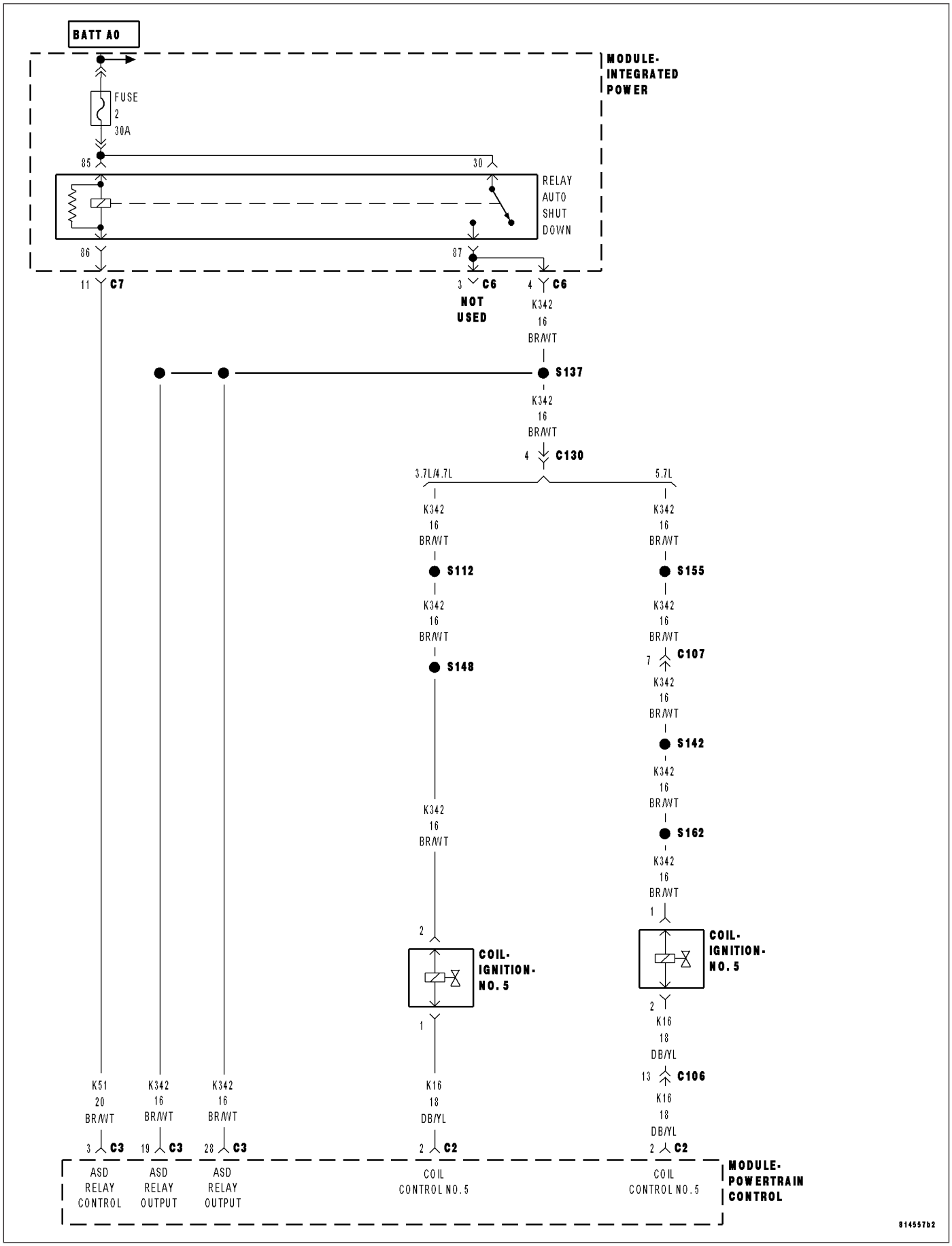

P2314-IGNITION COIL 5 SECONDARY CIRCUIT- INSUFFICIENT IONIZATION (CONTINUED)

For the Engine circuit diagram (Refer to 9 - ENGINE - SCHEMATICS AND DIAGRAMS).

For a complete wiring diagram **Refer to Section 8W**.

- **When Monitored:**
  Engine running and battery voltage greater than 10 volts.
- **Set Condition:**
  If PCM detects that the secondary ignition burn time is incorrect, too short, or not present, an error is detected. One Trip Fault. Three good trips to turn off the MIL.

Possible Causes
(K342) ASD RELAY OUTPUT CIRCUIT
(K16) COIL CONTROL NO.5 CIRCUIT OPEN
(K16) COIL CONTROL NO.5 CIRCUIT SHORTED TO GROUND
COIL ON PLUG
PCM

Always perform the Pre-Diagnostic Troubleshooting procedure before proceeding. (Refer to 9 - ENGINE - DIAGNOSIS AND TESTING).

Diagnostic Test

1. ACTIVE DTC

Ignition on, engine not running.

With a scan tool, read DTCs.

Is the DTC active at this time?

Yes >> Go To 2

No >> Refer to the INTERMITTENT CONDITION Diagnostic Procedure.
Perform the POWERTRAIN VERIFICATION TEST. (Refer to 9 - ENGINE - STANDARD PROCEDURE)

---

2. (K342) ASD RELAY OUTPUT CIRCUIT

Turn the ignition off.

Disconnect the Coil on Plug harness connector.

Ignition on, engine not running.

With a scan tool, actuate the ASD Relay.

Using a 12-volt test light connected to ground, probe the (K342) ASD Relay Output circuit in the Coil on Plug harness connector.

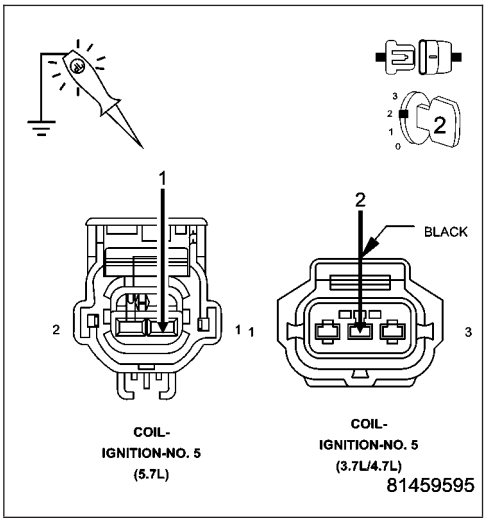

Does the test light illuminate brightly?

Yes >> Go To 3

No >> Repair the open or short to ground in the (K342) ASD Relay Output circuit between the IPM and Coil harness connector.
Perform the POWERTRAIN VERIFICATION TEST. (Refer to 9 - ENGINE - STANDARD PROCEDURE)

NOTE: Stop All Actuations.

P2314-IGNITION COIL 5 SECONDARY CIRCUIT- INSUFFICIENT IONIZATION (CONTINUED)

3. COIL ON PLUG RESISTANCE

Turn the ignition off.

NOTE: The following resistance measurement should be taken at 70°-80° F.

Measure the resistance of the Coil on Plug.

4.7L and 3.7L Primary Ignition Coil resistance is 0.6 to 0.9 of an ohm at 77°F (25°C).

Is the resistance within the given specification for the Ignition Coil being tested?

Yes >> Go To 4

No >> Replace the Coil on plug.
Perform the POWERTRAIN VERIFICATION TEST. (Refer to 9 - ENGINE - STANDARD PROCEDURE)

---

4. IGNITION COIL

Using a 12-volt test light connected to a 12-volt source, probe the (K16) Coil Control No.5 circuit.

Crank the engine for 5 seconds while observing the test light.

What is the state of the test light while cranking the engine?

Brightly blinking.
Replace the Coil on plug.
Perform the POWERTRAIN VERIFICATION TEST. (Refer to 9 - ENGINE - STANDARD PROCEDURE)

ON constantly.
Go To 5

OFF constantly.
Go To 6

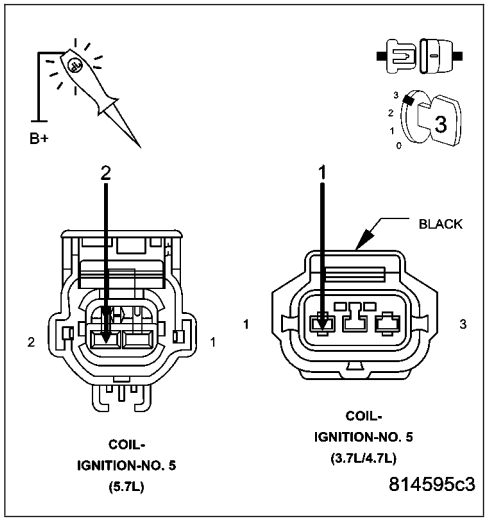

---

5. (K16) COIL CONTROL NO.5 CIRCUIT SHORTED TO GROUND

Turn the ignition off.

Disconnect the C2 PCM harness connector.

Measure the resistance between ground and the (K16) Coil Control No.5 circuit in the Coil on Plug harness connector.

Is the resistance below 100 ohms?

Yes >> Repair the short to ground in the (K16) Coil Control No.5 circuit.
Perform the POWERTRAIN VERIFICATION TEST. (Refer to 9 - ENGINE - STANDARD PROCEDURE)

No >> Go To 7

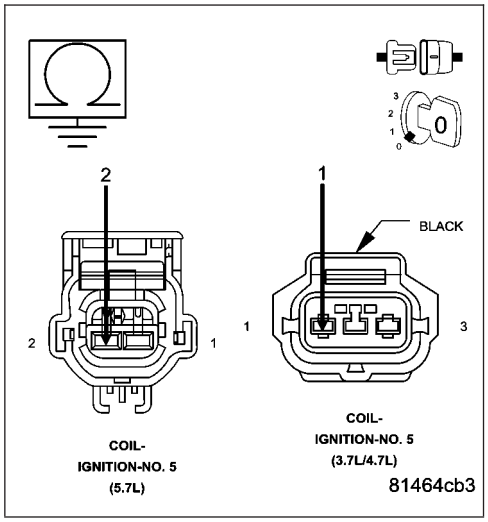

P2314-IGNITION COIL 5 SECONDARY CIRCUIT- INSUFFICIENT IONIZATION (CONTINUED)

6. (K16) COIL CONTROL NO.5 CIRCUIT OPEN

Turn the ignition off.

Disconnect the C2 PCM harness connector.

CAUTION: Do not probe the PCM harness connectors. Probing the PCM harness connectors will damage the PCM terminals resulting in poor terminal to pin connection. Install Miller Special Tool #8815 to perform diagnosis.

Measure the resistance of the (K16) Coil Control No.5 circuit from the Coil on Plug harness connector to the appropriate terminal of special tool #8815.

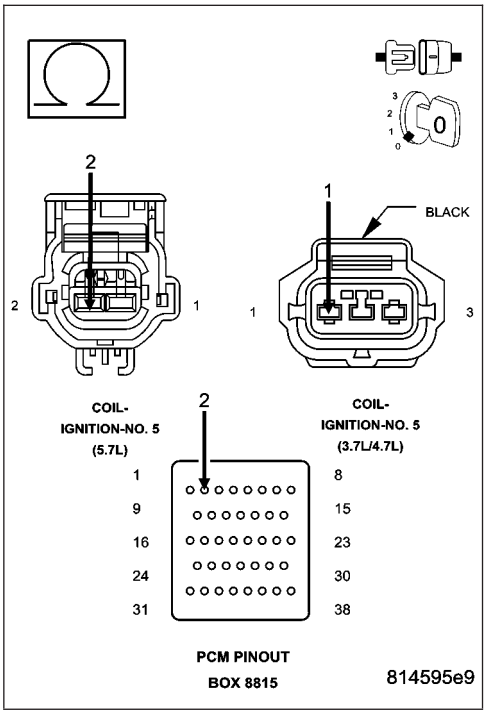

Is the resistance below 5.0 ohms?

Yes >> Go To 7

No >> Repair the open in the (K16) Coil Control No.5 circuit.
Perform the POWERTRAIN VERIFICATION TEST. (Refer to 9 - ENGINE - STANDARD PROCEDURE)

7. PCM

NOTE: Before continuing, check the PCM harness connector terminals for corrosion, damage, or terminal push out. Repair as necessary.

Using the schematics as a guide, inspect the wire harness and connectors. Pay particular attention to all Power and Ground circuits.

Were there any problems found?

Yes >> Repair as necessary.
Perform the POWERTRAIN VERIFICATION TEST. (Refer to 9 - ENGINE - STANDARD PROCEDURE)

No >> Replace and program the Powertrain Control Module per Service Information.
Perform the POWERTRAIN VERIFICATION TEST. (Refer to 9 - ENGINE - STANDARD PROCEDURE)

P2317-IGNITION COIL 6 SECONDARY CIRCUIT- INSUFFICIENT IONIZATION

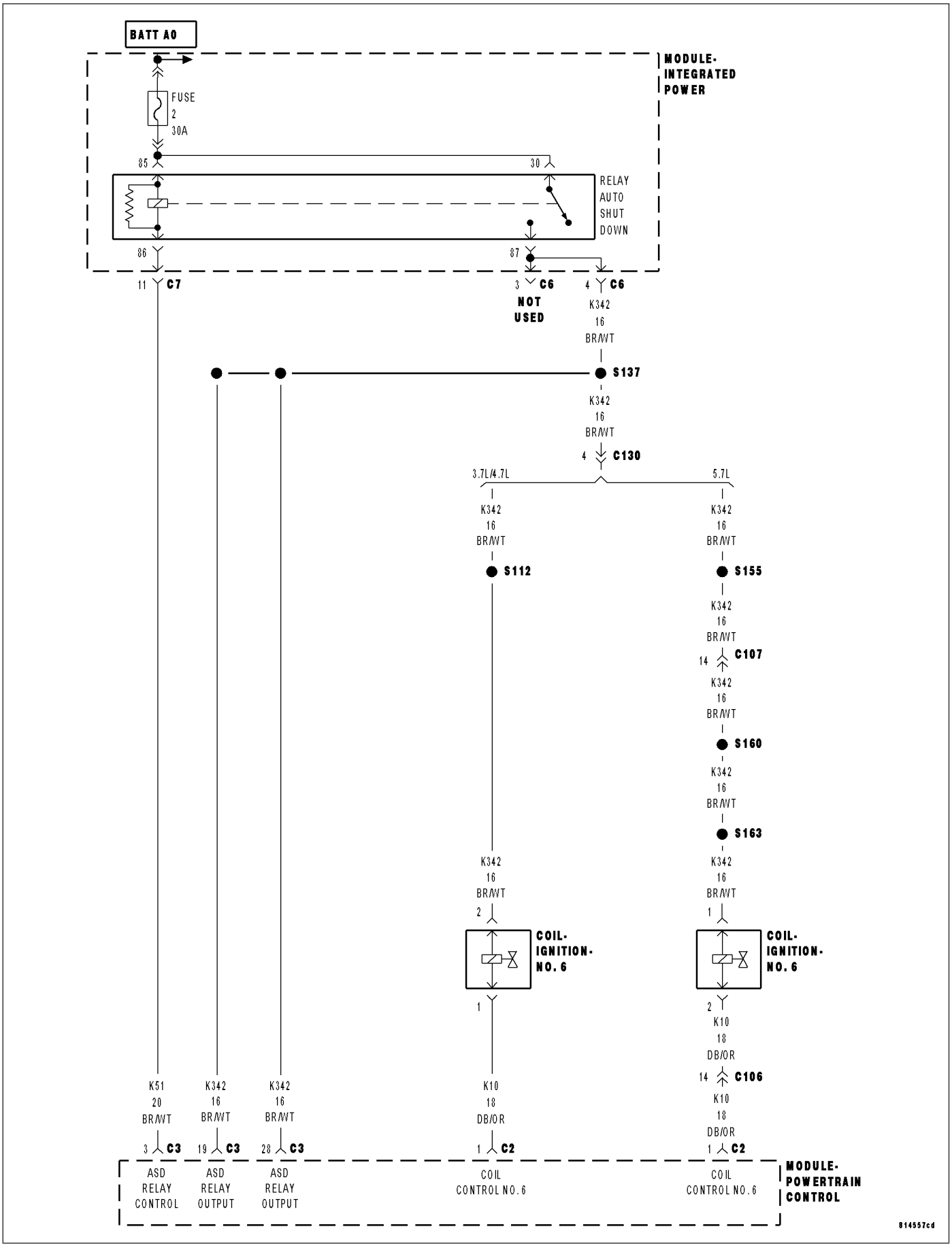

P2317-IGNITION COIL 6 SECONDARY CIRCUIT- INSUFFICIENT IONIZATION (CONTINUED)

For the Engine circuit diagram (Refer to 9 - ENGINE - SCHEMATICS AND DIAGRAMS).

For a complete wiring diagram **Refer to Section 8W**.

- **When Monitored:**
  Engine running and battery voltage greater than 10 volts.
- **Set Condition:**
  If PCM detects that the secondary ignition burn time is incorrect, too short, or not present, an error is detected. One Trip Fault. Three good trips to turn off the MIL.

Possible Causes
(K342) ASD RELAY OUTPUT CIRCUIT
(K10) COIL CONTROL NO.6 CIRCUIT OPEN
(K10) COIL CONTROL NO.6 CIRCUIT SHORTED TO GROUND
COIL ON PLUG
PCM

Always perform the Pre-Diagnostic Troubleshooting procedure before proceeding. (Refer to 9 - ENGINE - DIAGNOSIS AND TESTING).

Diagnostic Test

1. ACTIVE DTC

Ignition on, engine not running.

With a scan tool, read DTCs.

Is the DTC active at this time?

Yes >> Go To 2

No >> Refer to the INTERMITTENT CONDITION Diagnostic Procedure.
Perform the POWERTRAIN VERIFICATION TEST. (Refer to 9 - ENGINE - STANDARD PROCEDURE)

---

2. (K342) ASD RELAY OUTPUT CIRCUIT

Turn the ignition off.

Disconnect the Coil on Plug harness connector.

Ignition on, engine not running.

With a scan tool, actuate the ASD Relay.

Using a 12-volt test light connected to ground, probe the (K342) ASD Relay Output circuit in the Coil on Plug harness connector.

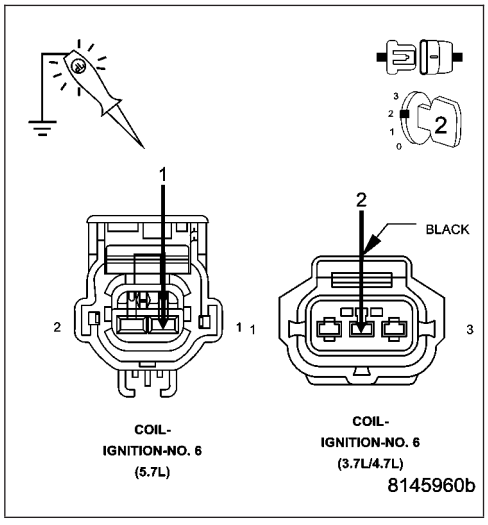

Does the test light illuminate brightly?

Yes >> Go To 3

No >> Repair the open or short to ground in the (K342) ASD Relay Output circuit between the IPM and Coil harness connector.
Perform the POWERTRAIN VERIFICATION TEST. (Refer to 9 - ENGINE - STANDARD PROCEDURE)

NOTE: Stop All Actuations.

P2317-IGNITION COIL 6 SECONDARY CIRCUIT- INSUFFICIENT IONIZATION (CONTINUED)

3. COIL ON PLUG RESISTANCE

Turn the ignition off.

NOTE: The following resistance measurement should be taken at 70°-80° F.

Measure the resistance of the Coil on Plug.

4.7L and 3.7L Primary Ignition Coil resistance is 0.6 to 0.9 of an ohm at 77°F (25°C).

Is the resistance within the given specification for the Ignition Coil being tested?

Yes >> Go To 4

No >> Replace the Coil on plug.
Perform the POWERTRAIN VERIFICATION TEST. (Refer to 9 - ENGINE - STANDARD PROCEDURE)

---

4. IGNITION COIL

Using a 12-volt test light connected to a 12-volt source, probe the (K10) Coil Control No.6 circuit.

Crank the engine for 5 seconds while observing the test light.

What is the state of the test light while cranking the engine?

Brightly blinking.
Replace the Coil on plug.
Perform the POWERTRAIN VERIFICATION TEST. (Refer to 9 - ENGINE - STANDARD PROCEDURE)

ON constantly.
Go To 5

OFF constantly.
Go To 6

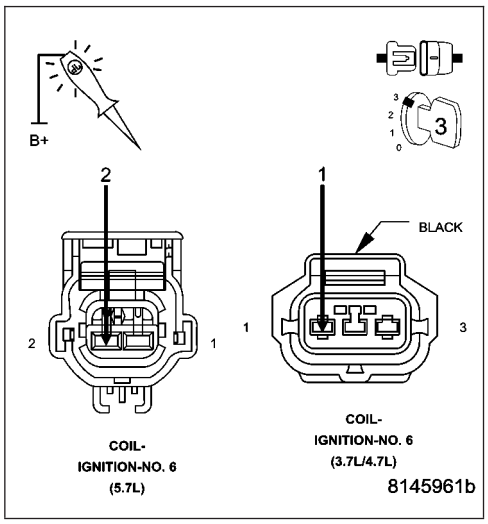

---

5. (K10) COIL CONTROL NO.6 CIRCUIT SHORTED TO GROUND

Turn the ignition off.

Disconnect the C2 PCM harness connector.

Measure the resistance between ground and the (K10) Coil Control No.6 circuit in the Coil on Plug harness connector.

Is the resistance below 100 ohms?

Yes >> Repair the short to ground in the (K10) Coil Control No.6 circuit.
Perform the POWERTRAIN VERIFICATION TEST. (Refer to 9 - ENGINE - STANDARD PROCEDURE)

No >> Go To 7

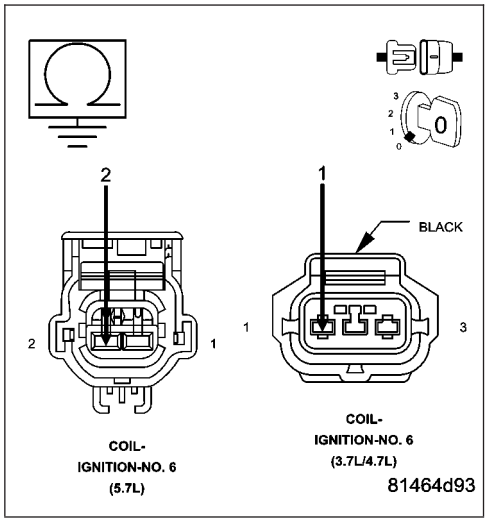

P2317-IGNITION COIL 6 SECONDARY CIRCUIT- INSUFFICIENT IONIZATION (CONTINUED)

6. (K10) COIL CONTROL NO.6 CIRCUIT OPEN

Turn the ignition off.

Disconnect the C2 PCM harness connectors.

CAUTION: Do not probe the PCM harness connectors. Probing the PCM harness connectors will damage the PCM terminals resulting in poor terminal to pin connection. Install Miller Special Tool #8815 to perform diagnosis.

Measure the resistance of the (K10) Coil Control No.6 circuit from the Coil on Plug harness connector to the appropriate terminal of special tool #8815.

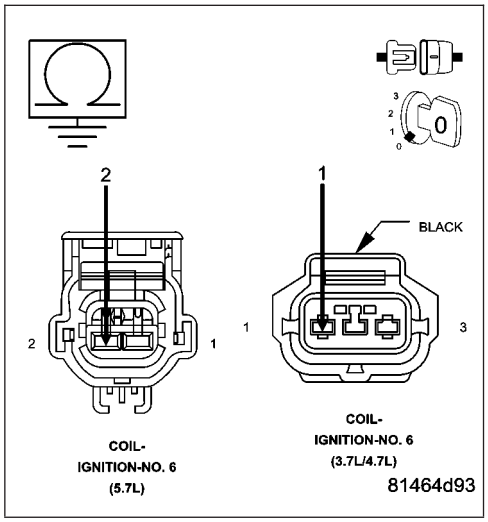

Is the resistance below 5.0 ohms?

Yes >> Go To 7

No >> Repair the open in the (K10) Coil Control No.6 circuit.
Perform the POWERTRAIN VERIFICATION TEST. (Refer to 9 - ENGINE - STANDARD PROCEDURE)

7. PCM

NOTE: Before continuing, check the PCM harness connector terminals for corrosion, damage, or terminal push out. Repair as necessary.

Using the schematics as a guide, inspect the wire harness and connectors. Pay particular attention to all Power and Ground circuits.

Were there any problems found?

Yes >> Repair as necessary.
Perform the POWERTRAIN VERIFICATION TEST. (Refer to 9 - ENGINE - STANDARD PROCEDURE)

No >> Replace and program the Powertrain Control Module per Service Information.
Perform the POWERTRAIN VERIFICATION TEST. (Refer to 9 - ENGINE - STANDARD PROCEDURE)

P2320-IGNITION COIL 7 SECONDARY CIRCUIT- INSUFFICIENT IONIZATION

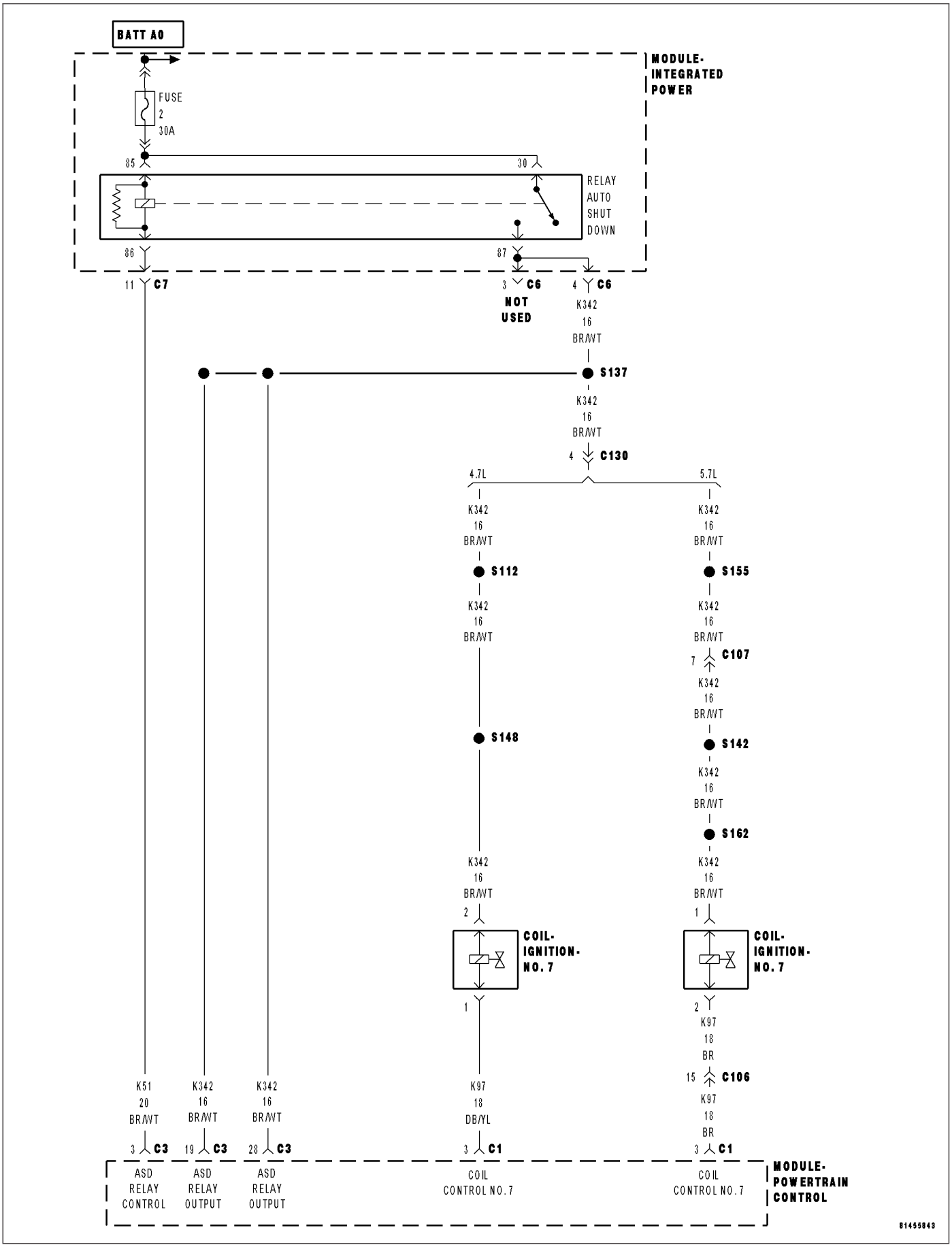

P2320-IGNITION COIL 7 SECONDARY CIRCUIT- INSUFFICIENT IONIZATION (CONTINUED)

For the Engine circuit diagram (Refer to 9 - ENGINE - SCHEMATICS AND DIAGRAMS).

For a complete wiring diagram **Refer to Section 8W**.

- **When Monitored:**
  Engine running and battery voltage greater than 10 volts.
- **Set Condition:**
  If PCM detects that the secondary ignition burn time is incorrect, too short, or not present, an error is detected. One Trip Fault. Three good trips to turn off the MIL.

Possible Causes
(K342) ASD RELAY OUTPUT CIRCUIT
(K97) COIL CONTROL NO.7 CIRCUIT OPEN
(K97) COIL CONTROL NO.7 CIRCUIT SHORTED TO GROUND
COIL ON PLUG
PCM

Always perform the Pre-Diagnostic Troubleshooting procedure before proceeding. (Refer to 9 - ENGINE - DIAGNOSIS AND TESTING).

Diagnostic Test

1. ACTIVE DTC

Ignition on, engine not running.

With a scan tool, read DTCs.

Is the DTC active at this time?

Yes >> Go To 2

No >> Refer to the INTERMITTENT CONDITION Diagnostic Procedure.
Perform the POWERTRAIN VERIFICATION TEST. (Refer to 9 - ENGINE - STANDARD PROCEDURE)

---

2. (K342) ASD RELAY OUTPUT CIRCUIT

Turn the ignition off.

Disconnect the Coil on Plug harness connector.

Ignition on, engine not running.

With a scan tool, actuate the ASD Relay.

Using a 12-volt test light connected to ground, probe the (K342) ASD Relay Output circuit in the Coil on Plug harness connector.

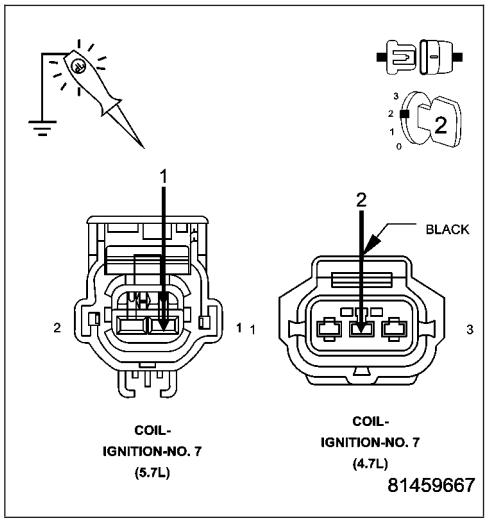

Does the test light illuminate brightly?

Yes >> Go To 3

No >> Repair the open or short to ground in the (K342) ASD Relay Output circuit between the IPM and Coil harness connector.
Perform the POWERTRAIN VERIFICATION TEST. (Refer to 9 - ENGINE - STANDARD PROCEDURE)

NOTE: Stop All Actuations.

P2320-IGNITION COIL 7 SECONDARY CIRCUIT- INSUFFICIENT IONIZATION (CONTINUED)

3. COIL ON PLUG RESISTANCE

Turn the ignition off.

NOTE: The following resistance measurement should be taken at 70°-80° F.

Measure the resistance of the Coil on Plug.

4.7L Primary Ignition Coil resistance is 0.6 to 0.9 of an ohm at 77°F (25°C).

Is the resistance within the given specification for the Ignition Coil being tested?

Yes >> Go To 4

No >> Replace the Coil on plug.
Perform the POWERTRAIN VERIFICATION TEST. (Refer to 9 - ENGINE - STANDARD PROCEDURE)

---

4. IGNITION COIL

Using a 12-volt test light connected to a 12-volt source, probe the (K97) Coil Control No.7 circuit.

Crank the engine for 5 seconds while observing the test light.

What is the state of the test light while cranking the engine?

Brightly blinking.
Replace the Coil on plug.
Perform the POWERTRAIN VERIFICATION TEST. (Refer to 9 - ENGINE - STANDARD PROCEDURE)

ON constantly.
Go To 5

OFF constantly.
Go To 6

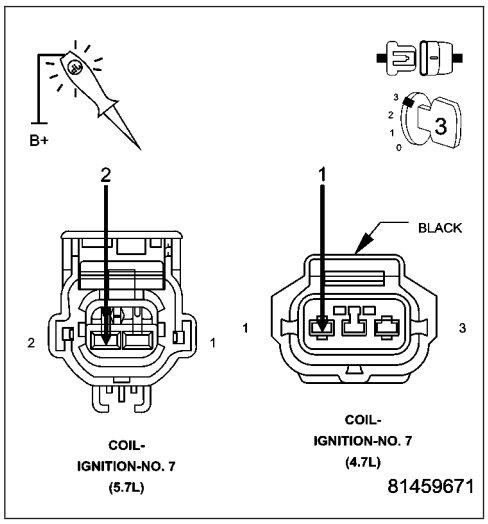

---

5. (K97) COIL CONTROL NO.7 CIRCUIT SHORTED TO GROUND

Turn the ignition off.

Disconnect the C1 PCM harness connector.

Measure the resistance between ground and the (K97) Coil Control No.7 circuit in the Coil on Plug harness connector.

Is the resistance below 100 ohms?

Yes >> Repair the short to ground in the (K97) Coil Control No.7 circuit.
Perform the POWERTRAIN VERIFICATION TEST. (Refer to 9 - ENGINE - STANDARD PROCEDURE)

No >> Go To 7

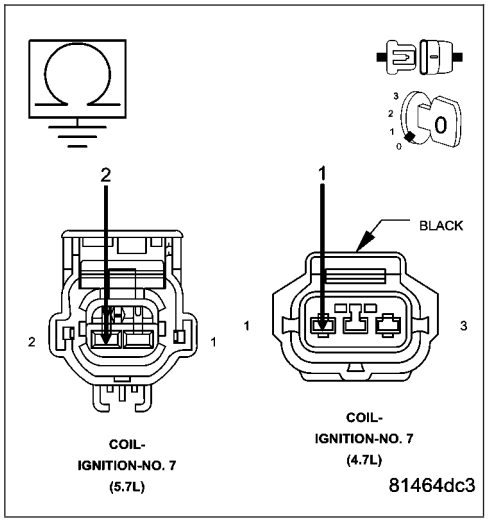

P2320-IGNITION COIL 7 SECONDARY CIRCUIT- INSUFFICIENT IONIZATION (CONTINUED)

6. (K97) COIL CONTROL NO.7 CIRCUIT OPEN

Turn the ignition off.

Disconnect the C1 PCM harness connector.

CAUTION: Do not probe the PCM harness connectors. Probing the PCM harness connectors will damage the PCM terminals resulting in poor terminal to pin connection. Install Miller Special Tool #8815 to perform diagnosis.

Measure the resistance of the (K97) Coil Control No.7 circuit from the Coil on Plug connector to the appropriate terminal of special tool #8815.

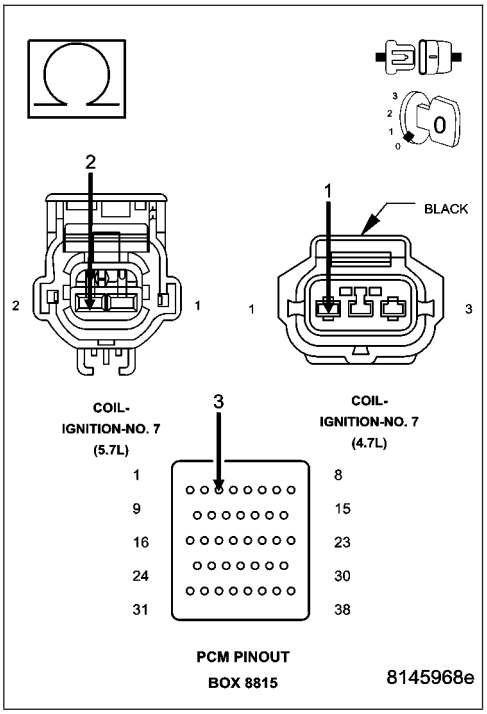

Is the resistance below 5.0 ohms?

Yes >> Go To 7

No >> Repair the open in the (K97) Coil Control No.7 circuit.
Perform the POWERTRAIN VERIFICATION TEST. (Refer to 9 - ENGINE - STANDARD PROCEDURE)

---

7. PCM

NOTE: Before continuing, check the PCM harness connector terminals for corrosion, damage, or terminal push out. Repair as necessary.

Using the schematics as a guide, inspect the wire harness and connectors. Pay particular attention to all Power and Ground circuits.

Were there any problems found?

Yes >> Repair as necessary.
Perform the POWERTRAIN VERIFICATION TEST. (Refer to 9 - ENGINE - STANDARD PROCEDURE)

No >> Replace and program the Powertrain Control Module per Service Information.
Perform the POWERTRAIN VERIFICATION TEST. (Refer to 9 - ENGINE - STANDARD PROCEDURE)

P2323-IGNITION COIL 8 SECONDARY CIRCUIT- INSUFFICIENT IONIZATION

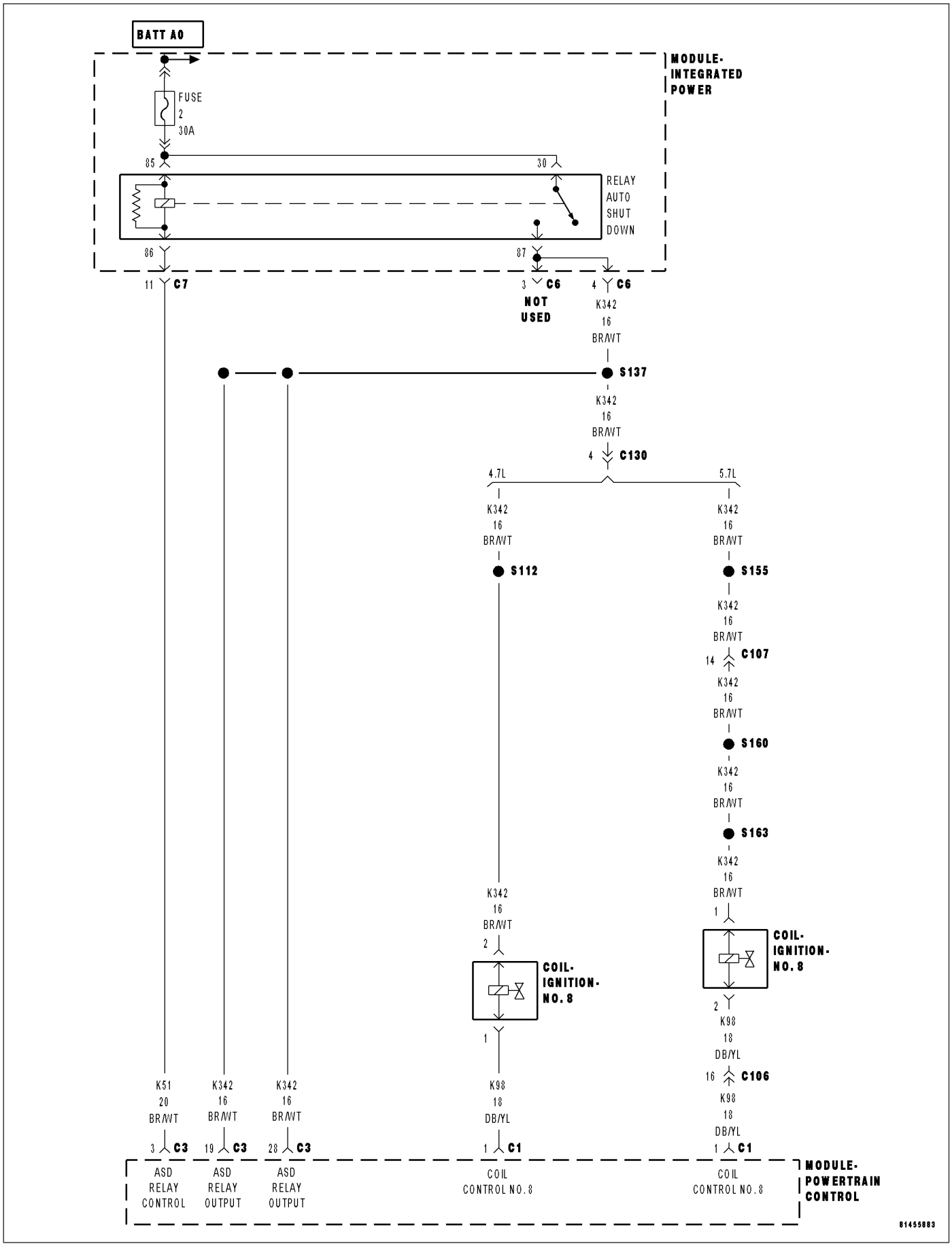

P2323-IGNITION COIL 8 SECONDARY CIRCUIT- INSUFFICIENT IONIZATION (CONTINUED)

For the Engine circuit diagram (Refer to 9 - ENGINE - SCHEMATICS AND DIAGRAMS).

For a complete wiring diagram **Refer to Section 8W**.

- **When Monitored:**
  Engine running and battery voltage greater than 10 volts.
- **Set Condition:**
  If PCM detects that the secondary ignition burn time is incorrect, to short, or not present, an error is detected. One Trip Fault. Three good trips to turn off the MIL.

Possible Causes
(K342) ASD RELAY OUTPUT CIRCUIT
(K98) COIL CONTROL NO.8 CIRCUIT OPEN
(K98) COIL CONTROL NO.8 CIRCUIT SHORTED TO GROUND
COIL ON PLUG
PCM

Always perform the Pre-Diagnostic Troubleshooting procedure before proceeding. (Refer to 9 - ENGINE - DIAGNOSIS AND TESTING).

Diagnostic Test

1. ACTIVE DTC

Ignition on, engine not running.

With a scan tool, read DTCs.

Is the DTC active at this time?

Yes >> Go To 2

No >> Refer to the INTERMITTENT CONDITION Diagnostic Procedure.
Perform the POWERTRAIN VERIFICATION TEST. (Refer to 9 - ENGINE - STANDARD PROCEDURE)

---

2. (K342) ASD RELAY OUTPUT CIRCUIT

Turn the ignition off.

Disconnect the Coil on Plug harness connector.

Ignition on, engine not running.

With a scan tool, actuate the ASD Relay.

Using a 12-volt test light connected to ground, probe the (K342) ASD Relay Output circuit in the Coil on Plug harness connector.

Does the test light illuminate brightly?

Yes >> Go To 3

No >> Repair the open or short to ground in the (K342) ASD Relay Output circuit between the IPM and Coil harness connector.
Perform the POWERTRAIN VERIFICATION TEST. (Refer to 9 - ENGINE - STANDARD PROCEDURE)

NOTE: Stop All Actuations.

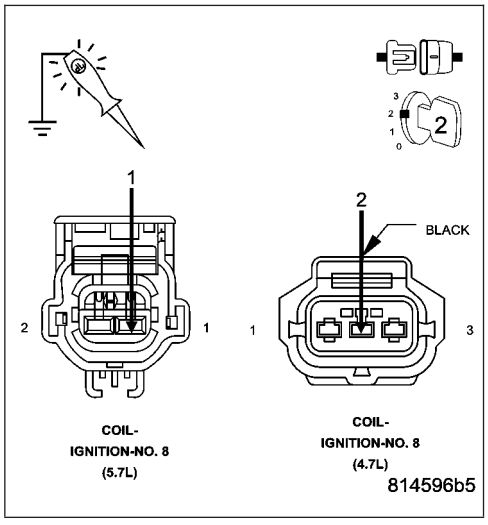

P2323-IGNITION COIL 8 SECONDARY CIRCUIT- INSUFFICIENT IONIZATION (CONTINUED)

3. COIL ON PLUG RESISTANCE

Turn the ignition off.

NOTE: The following resistance measurement should be taken at 70°-80° F.

Measure the resistance of the Coil on Plug.

4.7L Primary Ignition Coil resistance is 0.6 to 0.9 of an ohm at 77°F (25°C).

Is the resistance within the given specification for the Ignition Coil being tested?

Yes >> Go To 4

No >> Replace the Coil on plug.
Perform the POWERTRAIN VERIFICATION TEST. (Refer to 9 - ENGINE - STANDARD PROCEDURE)

---

4. IGNITION COIL

Using a 12-volt test light connected to a 12-volt source, probe the (K98) Coil Control No.8 circuit.

Crank the engine for 5 seconds while observing the test light.

What is the state of the test light while cranking the engine?

Brightly blinking.
Replace the Coil on plug.
Perform the POWERTRAIN VERIFICATION TEST. (Refer to 9 - ENGINE - STANDARD PROCEDURE)

ON constantly.
Go To 5

OFF constantly.
Go To 6

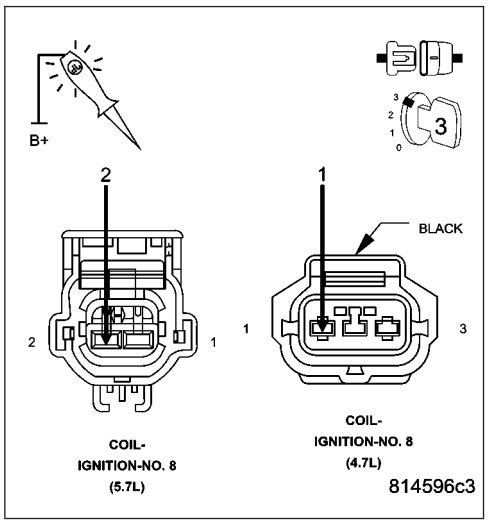

---

5. (K98) COIL CONTROL NO.8 CIRCUIT SHORTED TO GROUND

Turn the ignition off.

Disconnect the C1 PCM harness connector.

Measure the resistance between ground and the (K98) Coil Control No.8 circuit in the Coil on Plug harness connector.

Is the resistance below 100 ohms?

Yes >> Repair the short to ground in the (K98) Coil Control No.8 circuit.
Perform the POWERTRAIN VERIFICATION TEST. (Refer to 9 - ENGINE - STANDARD PROCEDURE)

No >> Go To 7

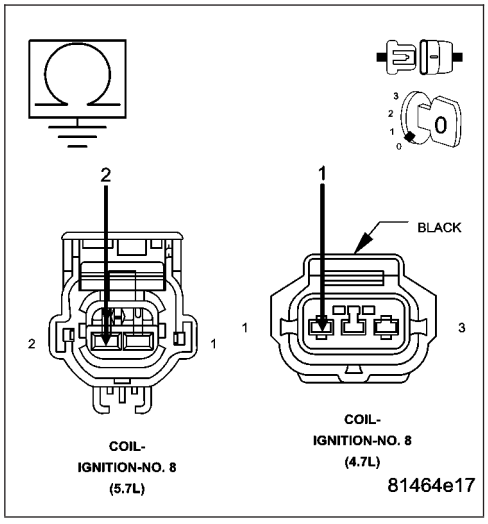

P2323-IGNITION COIL 8 SECONDARY CIRCUIT- INSUFFICIENT IONIZATION (CONTINUED)

6. (K98) COIL CONTROL NO.8 CIRCUIT OPEN

Turn the ignition off.

Disconnect the C1 PCM harness connector.

CAUTION: Do not probe the PCM harness connectors. Probing the PCM harness connectors will damage the PCM terminals resulting in poor terminal to pin connection. Install Miller Special Tool #8815 to perform diagnosis.

Measure the resistance of the (K98) Coil Control No.8 circuit from the Coil on Plug harness connector to the appropriate terminal of special tool #8815.

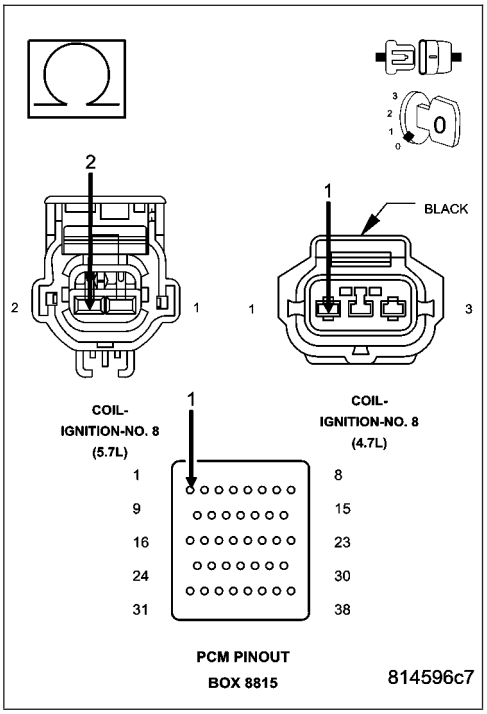

Is the resistance below 5.0 ohms?

Yes >> Go To 7

No >> Repair the open in the (K98) Coil Control No.8 circuit.
Perform the POWERTRAIN VERIFICATION TEST. (Refer to 9 - ENGINE - STANDARD PROCEDURE)

---

7. PCM

NOTE: Before continuing, check the PCM harness connector terminals for corrosion, damage, or terminal push out. Repair as necessary.

Using the schematics as a guide, inspect the wire harness and connectors. Pay particular attention to all Power and Ground circuits.

Were there any problems found?

Yes >> Repair as necessary.
Perform the POWERTRAIN VERIFICATION TEST. (Refer to 9 - ENGINE - STANDARD PROCEDURE)

No >> Replace and program the Powertrain Control Module per Service Information.
Perform the POWERTRAIN VERIFICATION TEST. (Refer to 9 - ENGINE - STANDARD PROCEDURE)

P2503-CHARGING SYSTEM OUTPUT LOW

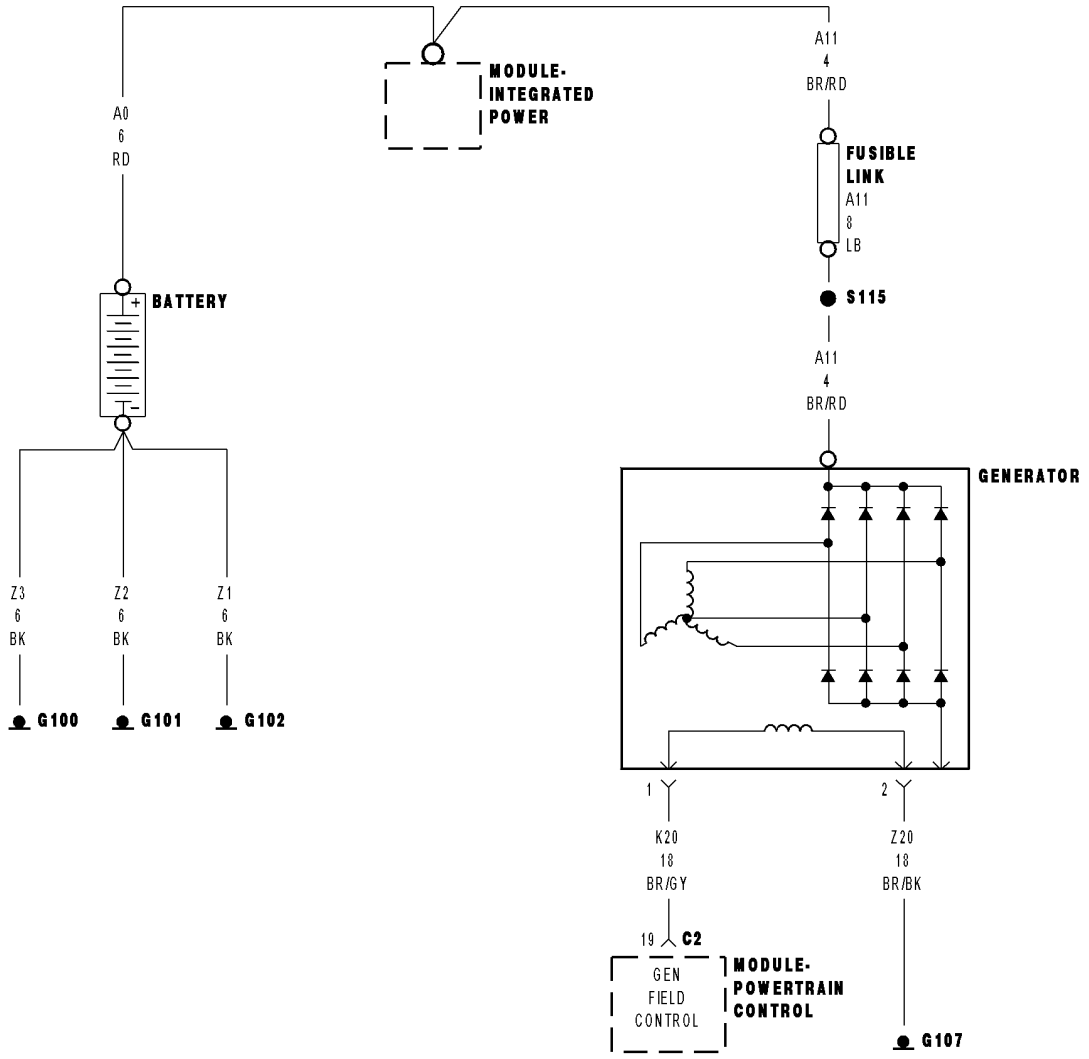

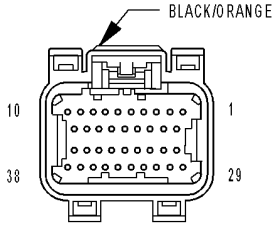

MODULE-
POWERTRAIN
CONTROL C2
(NGC)

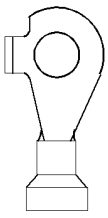

GENERATOR
(5.7L)

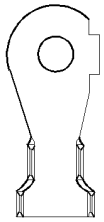

GENERATOR
(DIESEL/3.7L/4.7L/SRT)

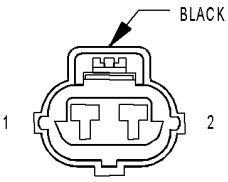

GENERATOR
(EXCEPT SRT)

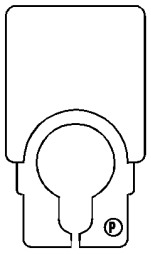

BATTERY-
POSITIVE
(3.7L/4.7L)

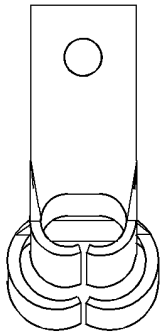

BATTERY
POSITIVE
(5.7L EXCEPT OFF ROAD/SRT)

81454554

P2503-CHARGING SYSTEM OUTPUT LOW (CONTINUED)

For the Engine circuit diagram (Refer to 9 - ENGINE - SCHEMATICS AND DIAGRAMS).

For a complete wiring diagram **Refer to Section 8W**.

- **When Monitored:**
  The engine running. The engine speed greater than 1157 RPM.
- **Set Condition:**
  The battery sensed voltage is 1 volt below the charging goal for 13.47 seconds. The PCM senses the battery voltage turns off the field driver and senses the battery voltage again. If the voltages are the same, the code is set. One Trip Fault. Three good trips to turn off the MIL.

Possible Causes
EXCESSIVE RESISTANCE IN THE BATTERY POSITIVE CIRCUIT
EXCESSIVE RESISTANCE IN THE CASE GROUND
(K20) GEN FIELD CONTROL CIRCUIT SHORTED TO VOLTAGE
(K20) GEN FIELD CONTROL CIRCUIT OPEN
(K20) GEN FIELD CONTROL CIRCUIT SHORTED TO GROUND
(Z20) GEN GROUND CIRCUIT OPEN
GENERATOR
PCM

Always perform the Pre-Diagnostic Troubleshooting procedure before proceeding. (Refer to 9 - ENGINE - DIAGNOSIS AND TESTING).

Diagnostic Test

1. ACTIVE DTC

NOTE: Inspect the vehicle for aftermarket accessories that may exceed the Generator System output.
Ignition on, engine not running.

NOTE: The battery must be fully charged.

NOTE: The Generator belt tension and condition must be checked before continuing.
With a scan tool, read DTCs.
With a scan tool, erase DTCs.
Start the engine.
Allow the idle to stabilize.
Ignition on, engine not running.
With the scan tool, read DTCs.

Is the DTC active at this time?

Yes >> Go To 2

No >> Refer to the INTERMITTENT CONDITION Diagnostic Procedure.
Perform the POWERTRAIN VERIFICATION TEST. (Refer to 9 - ENGINE - STANDARD PROCEDURE)

P2503-CHARGING SYSTEM OUTPUT LOW (CONTINUED)

2. FUSED B+ CIRCUIT HIGH RESISTANCE

WARNING: When the engine is operating, do not stand in direct line with the fan. Do not put your hands near the pulleys, belts, or fan. Do not wear loose clothing. Failure to follow these instructions can result in personal injury or death.

Ignition on, engine not running.

Measure the voltage between the Generator B+ Output Terminal and the Battery+ Post.

Start the engine.

Is the voltage above 0.4 of a volt?

Yes >> Repair the excessive resistance in the battery positive circuit between the Generator and Battery.
Perform the POWERTRAIN VERIFICATION TEST. (Refer to 9 - ENGINE - STANDARD PROCEDURE)

No >> Go To 3

---

3. EXCESSIVE RESISTANCE IN THE CASE GROUND

WARNING: When the engine is operating, do not stand in direct line with the fan. Do not put your hands near the pulleys, belts, or fan. Do not wear loose clothing. Failure to follow these instructions can result in personal injury or death.

Start the engine.

Warm the engine to operating temperature.

NOTE: Make sure all wires are clear of the engine's moving parts.

Measure the voltage between the Generator Case and Battery ground post.

Is the voltage above 0.1 of a volt?

Yes >> Repair the excessive resistance in the Generator Case Ground.
Perform the POWERTRAIN VERIFICATION TEST. (Refer to 9 - ENGINE - STANDARD PROCEDURE)

No >> Go To 4

---

4. GENERATOR OPERATION

Turn the ignition off.

Disconnect the Generator Field harness connector.

Using a 12-volt test light, jump across the Generator Field harness connector.

Ignition on, engine not running.

With a scan tool, actuate the Generator Field Driver.

Does the test light illuminate brightly and flash on and off?

Yes >> Replace the Generator.
Perform the POWERTRAIN VERIFICATION TEST. (Refer to 9 - ENGINE - STANDARD PROCEDURE)

No >> Go To 5

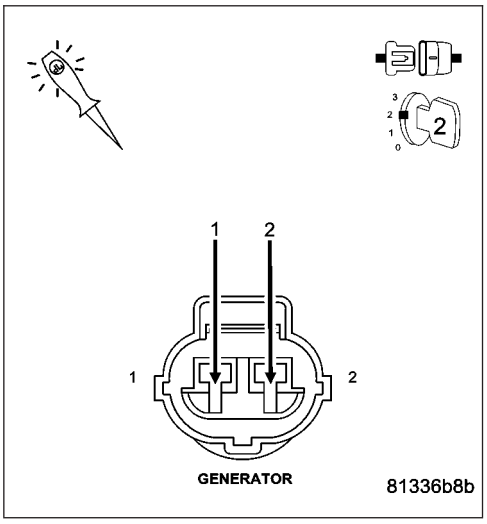

P2503-CHARGING SYSTEM OUTPUT LOW (CONTINUED)

5. (K20) GEN FIELD CONTROL CIRCUIT SHORTED TO BATTERY VOLTAGE

Turn the ignition off.

Disconnect the C2 PCM harness connector.

Ignition on, engine not running.

Measure the voltage on the (K20) Gen Field Control circuit in the Generator Field harness connector.

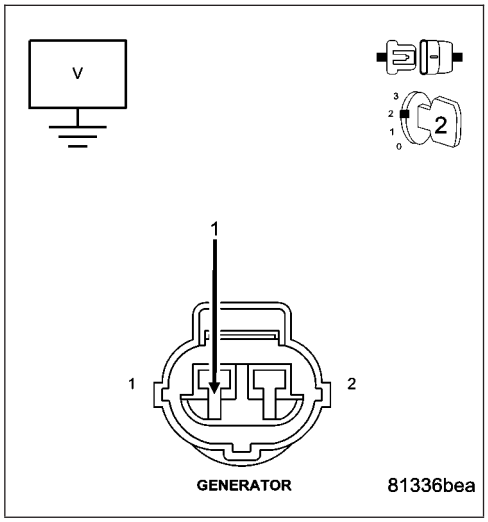

Is the voltage above 1.0 volt?

Yes >> Repair the short to battery voltage in the (K20) Gen Field Control circuit.
Perform the POWERTRAIN VERIFICATION TEST. (Refer to 9 - ENGINE - STANDARD PROCEDURE)

No >> Go To 6

6. (K20) FIELD CONTROL CIRCUIT OPEN

Turn the ignition off.

CAUTION: Do not probe the PCM harness connectors. Probing the PCM harness connectors will damage the PCM terminals resulting in poor terminal to pin connection. Install Miller Special Tool #8815 to perform diagnosis.

Measure the resistance of the (K20) Gen Field Control circuit from the Generator Field harness connector to the appropriate terminal of special tool #8815.

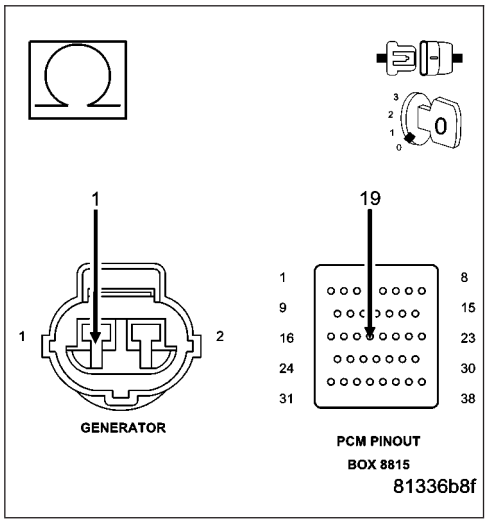

Is the resistance below 5.0 ohms?

Yes >> Go To 7

No >> Repair the open in the (K20) Gen Field Control circuit.
Perform the POWERTRAIN VERIFICATION TEST. (Refer to 9 - ENGINE - STANDARD PROCEDURE)

P2503-CHARGING SYSTEM OUTPUT LOW (CONTINUED)

7. (K20) GEN FIELD CONTROL CIRCUIT SHORTED TO GROUND

Measure the resistance between ground and the (K20) Gen Field Control circuit in the Generator Field harness connector.

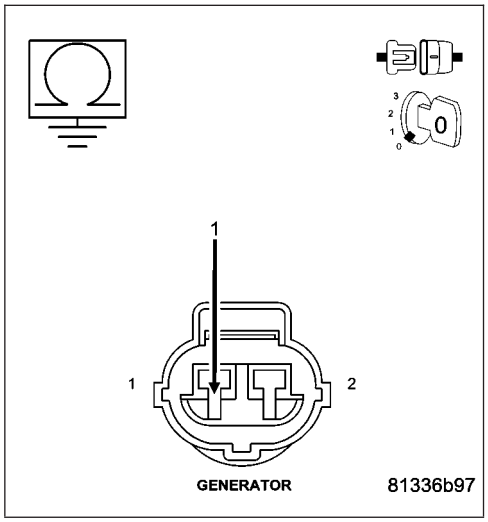

Is the resistance below 100 ohms?

Yes >> Repair the short to ground in the (K20) Gen Field Control circuit.
Perform the POWERTRAIN VERIFICATION TEST. (Refer to 9 - ENGINE - STANDARD PROCEDURE)

No >> Go To 8

8. (Z20) GROUND CIRCUIT OPEN

Using a 12-volt test light connected to battery voltage, probe the (Z20) Ground circuit in the Generator Field harness connector.

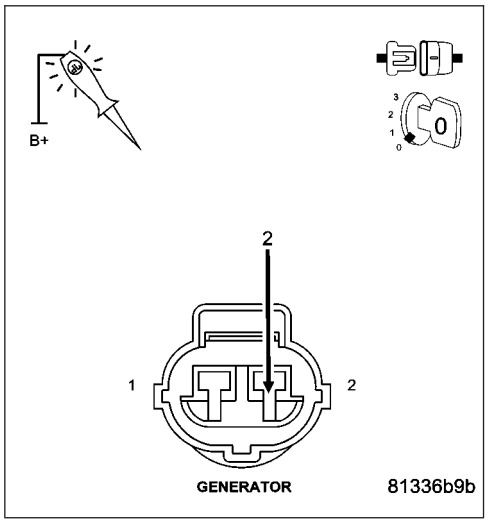

Does the test light illuminate brightly?

Yes >> Go To 9

No >> Repair the open in the (Z346) Generator Ground circuit.
Perform the POWERTRAIN VERIFICATION TEST. (Refer to 9 - ENGINE - STANDARD PROCEDURE)

9. PCM

NOTE: Before continuing, check the PCM harness connector terminals for corrosion, damage, or terminal push out. Repair as necessary.
Using the schematics as a guide, inspect the wire harness and connectors. Pay particular attention to all Power and Ground circuits.

Were there any problems found?

Yes >> Repair as necessary.
Perform the POWERTRAIN VERIFICATION TEST. (Refer to 9 - ENGINE - STANDARD PROCEDURE)

No >> Replace and program the Powertrain Control Module per Service Information.
Perform the POWERTRAIN VERIFICATION TEST. (Refer to 9 - ENGINE - STANDARD PROCEDURE)

U0101-LOST COMMUNICATION WITH TCM

For a complete wiring diagram **Refer to Section 8W**.

- **When Monitored:**
  Ignition run time is greater than 1 second. Battey voltage between 9 and 16 volts. Engine run time greater than 3 seconds.
- **Set Condition:**
  The PCM doesn't receive a Bus Message from the Transmission Control Module for 7 consecutive seconds. The circuit is continuously monitored.

Possible Causes
PCM FUSED IGNITION SWITCH OUTPUT CIRCUIT CHECK
BUS FAILURE OPEN OR SHORTED CONDITION
PCI BUS UNABLE TO COMMUNICATE WITH THE SCAN TOOL
PCM

Refer to 8 - ELECTRICAL/ELECTRONIC CONTROL MODULES - DIAGNOSIS AND TESTING for diagnostic procedures and for further possible causes.

Diagnostic Test

1. ACTIVE DTC

Ignition on, engine not running.
With the scan tool, erase DTCs.
Cycle the ignition key on and off several times. Leaving the ignition on for at least 20 seconds.
With the scan tool, read DTCs.

Does the DTC reset?

Yes >> Go To 2

No >> Refer to the INTERMITTENT CONDITION Symptom (Diagnostic Procedure).
Perform the POWERTRAIN VERIFICATION TEST. (Refer to 9 - ENGINE - STANDARD PROCEDURE)

U0101-LOST COMMUNICATION WITH TCM (CONTINUED)

2. PCM FUSED IGNITION SWITCH OUTPUT CIRCUIT

Turn the ignition off.

Disconnect the C1 PCM harness connector.

CAUTION: Do not probe the PCM harness connectors. Probing the PCM harness connectors will damage the PCM terminals resulting in poor terminal to pin connection. Install Miller Special Tool #8815 to perform diagnosis.

With a 12-volt test light connected to ground and with special tool #8815 installed, probe the (F202), (F1), and (T751) Fused Ignition Switch Output circuit.

Perform the above check with the Ignition key in the off lock position, Ignition on, engine not running position, and during cranking.

Wiggle the related wire harness while probing the special tool with the test light to try to interrupt the circuit.

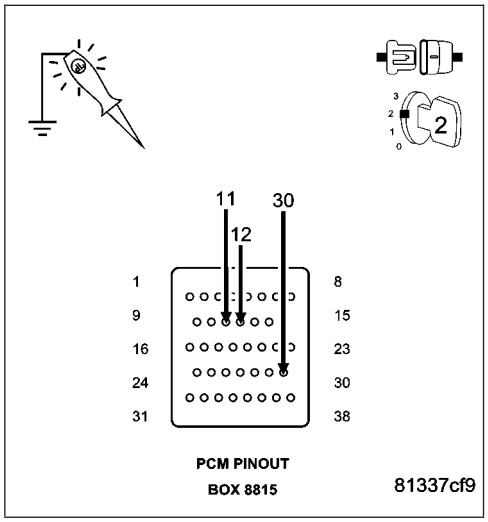

Does the test light illuminate brightly?

Yes >> Go To 3

No >> Repair the excessive resistance in the (F202), (F1), and (T751) Fused Ignition Switch (Offf, Run, Start) circuit. Inspect the related fuse, if the fuse is open check the circuit for a short to ground.
Perform the POWERTRAIN VERIFICATION TEST. (Refer to 9 - ENGINE - STANDARD PROCEDURE)

---

3. PCI BUS UNABLE TO COMMUNICATE WITH THE SCAN TOOL

NOTE: Determine which modules this vehicle is equipped with before beginning.

NOTE: When attempting to communicate with any of the modules on this vehicle, the scan tool will display 1 of 2 different communication errors: a NO RESPONSE message or a BUS +/- SIGNALS OPEN MESSAGE.

Ignition on, engine not running.

Use the scan tool, attempt to communicate with the remaining control modules.

Was the scan tool able to communicate with one or more of the Modules?

Yes >> Replace and program the Powertrain Control Module per Service Information.
Perform the POWERTRAIN VERIFICATION TEST. (Refer to 9 - ENGINE - STANDARD PROCEDURE)

No >> Refer to 8 - ELECTRICAL/ELECTRONIC CONTROL MODULES - DIAGNOSIS AND TESTING for diagnostic procedures and for further possible causes.
Perform the POWERTRAIN VERIFICATION TEST. (Refer to 9 - ENGINE - STANDARD PROCEDURE)

U0155-NO CLUSTER BUS MESSAGE

For the Engine circuit diagram (Refer to 9 - ENGINE - SCHEMATICS AND DIAGRAMS).

For a complete wiring diagram **Refer to Section 8W**.

- **When Monitored:**
  Ignition key on and battery voltage greater than 10.4 volts.
- **Set Condition:**
  No messages received from the MIC (Instrument Cluster) for more than 20 seconds. One Trip Fault. Three good trips to turn off the MIL.

Possible Causes
BUS CIRCUIT OPEN OR SHORTED
INSTRUMENT CLUSTER
PCM

Refer to 8 - ELECTRICAL/ELECTRONIC CONTROL MODULES - DIAGNOSIS AND TESTING for diagnostic procedures and for further possible causes.

Always perform the Pre-Diagnostic Troubleshooting procedure before proceeding (Refer to 9 - ENGINE - DIAGNOSIS AND TESTING).

Diagnostic Test

1. ACTIVE DTC

Ignition on, engine not running.
With the scan tool, erase DTCs.
Cycle the ignition key on and off several times.
With the scan tool, read DTCs.

Does the DTC reset?

Yes >> Go To 2

No >> Refer to the INTERMITTENT CONDITION Symptom (Diagnostic Procedure).
Perform the POWERTRAIN VERIFICATION TEST. (Refer to 9 - ENGINE - STANDARD PROCEDURE)

---

2. COMMUNICATE WITH CLUSTER

With the scan tool, attempt to communicate with the Instrument cluster.

Can communication be established with the Instrument Cluster?

Yes >> Go To 3

No >> Refer to 8 - ELECTRICAL/ELECTRONIC CONTROL MODULES - DIAGNOSIS AND TESTING for diagnostic procedures and for further possible causes.
Perform the POWERTRAIN VERIFICATION TEST. (Refer to 9 - ENGINE - STANDARD PROCEDURE)

U0155-NO CLUSTER BUS MESSAGE (CONTINUED)

3. **INSTRUMENT CLUSTER OPERATION**

Start the engine

Allow the engine to idle.

Is the correct engine speed display in the instrument cluster (Tach)?

Yes >> Replace and program the Powertrain Control Module per Service Information.
Perform the POWERTRAIN VERIFICATION TEST. (Refer to 9 - ENGINE - STANDARD PROCEDURE)

No >> Refer to the Instrument Category and perform the appropriate symptom.
Perform the POWERTRAIN VERIFICATION TEST. (Refer to 9 - ENGINE - STANDARD PROCEDURE)

U0168-NO SKIM BUS MESSAGE

For the Engine circuit diagram (Refer to 9 - ENGINE - SCHEMATICS AND DIAGRAMS).

For a complete wiring diagram **Refer to Section 8W**.

- **When Monitored:**
  Ignition on and battery voltage greater than 10 volts.
- **Set Condition:**
  No J1850 messages received from the Smart Key Immobilizer Module (SKIM) One Trip Fault. Three good trips to turn off the MIL.

Possible Causes
NO RESPONCE FROM SKIM
BUS CIRCUIT OPEN OR SHORTED
SKIM
PCM

Refer to 8 - ELECTRICAL/ELECTRONIC CONTROL MODULES - DIAGNOSIS AND TESTING for diagnostic procedures and for further possible causes.

Always perform the Pre-Diagnostic Troubleshooting procedure before proceeding (Refer to 9 - ENGINE - DIAGNOSIS AND TESTING).

Diagnostic Test

1. ACTIVE DTC

Ignition on, engine not running.

With the scan tool, read the DTCs and record the related Freeze Frame data.

Is the DTC active at this time?

Yes >> Go To 2

No >> Refer to the INTERMITTENT CONDITION Symptom (Diagnostic Procedure).
Perform SKIS VERIFICATION. (Refer to 8 - ELECTRICAL/VEHICLE THEFT SECURITY - STANDARD PROCEDURE)

---

2. NO RESPONSE FROM SKIM

With the scan tool , attempt to communicate with the SKIM.

NOTE: NOTE: This test will indicate if the Bus is operational from the DLC to the SKIM.

Was the scan tool able to communicate with the SKIM?

Yes >> Go To 3

No >> Refer to 8 - ELECTRICAL/ELECTRONIC CONTROL MODULES - DIAGNOSIS AND TESTING for diagnostic procedures and for further possible causes.
Refer to symptom BUS +/- SIGNAL OPEN FROM SKIM in the COMMUNICATION category.
Perform SKIS VERIFICATION. (Refer to 8 - ELECTRICAL/VEHICLE THEFT SECURITY - STANDARD PROCEDURE)

U0168-NO SKIM BUS MESSAGE (CONTINUED)

3. PCI BUS CIRCUIT OPEN FROM PCM TO SKIM

Turn the ignition off.

Disconnect the C1 PCM harness connector.

Disconnect the SKIM harness connector.

CAUTION: Do not probe the PCM harness connectors. Probing the PCM harness connectors will damage the PCM terminals resulting in poor terminal to pin connection. Install Miller Special Tool #8815 to perform diagnosis.

Measure the resistance of the PCI Bus circuit from the SKIM harness connector to the appropriate terminal of special tool #8815.

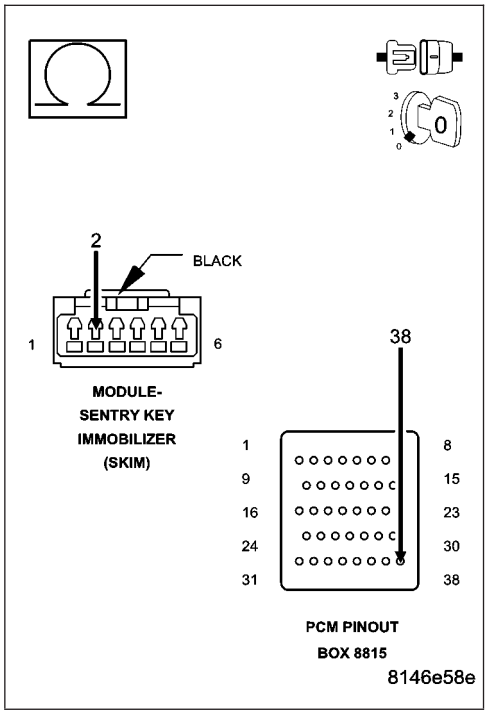

Is the resistance below 5.0 ohms?

Yes >> Go To 4

No >> Repair the open in the PCI Bus circuit between the PCM and the SKIM.
Perform SKIS VERIFICATION. (Refer to 8 - ELECTRICAL/ VEHICLE THEFT SECURITY - STANDARD PROCEDURE)

---

4. SKIM/PCM

Replace the Sentry Key Immobilizer Module per Service Information.

Ignition on, engine not running.

Display and erase all PCM and SKIM DTCs.

Perform 5 ignition key cycles leaving the ignition key on for 90 seconds per cycle.

With the scan tool, display PCM DTCs.

Does the scan tool display the same DTC?

Yes >> Replace and program the Powertrain Control Module per Service Information.
Perform SKIS VERIFICATION. (Refer to 8 - ELECTRICAL/VEHICLE THEFT SECURITY - STANDARD PROCEDURE)

No >> Test Complete the conditions that set this DTC are no longer present.

---

*5.7L INTERMITTENT NO CRANK CONDITION

For the Engine circuit diagram (Refer to 9 - ENGINE - SCHEMATICS AND DIAGRAMS).

For a complete wiring diagram **Refer to Section 8W**.

Possible Causes
ETC STARTER INHIBIT

Diagnostic Test

1. ETC STARTER INHIBIT

NOTE: This 5.7L engine will try to relearn ETC position when the key is left in the on position for an extended period of time and will not allow the starter to crank during this procedure. This procedure can take up to 2.5 seconds.

To verify the cause of the no crank condition or delayed crank use the scan tool, and read the ETC Starter Inhibit mileage.

The controller will store the mileage at which the no start condition occurred because of the ETC testing procedure.

This is considered normal operation for a vehicle equipped with an Electronic Throttle Control System and no repairs are necessary.

Is a mileage stored under the ETC Starter Inhibit?

Yes >> Test Complete.

No >> Refer to the appropriate diagnostic procedure for further assistance if any other DTC's are set. Perform the POWERTRAIN VERIFICATION TEST. (Refer to 9 - ENGINE - STANDARD PROCEDURE)

*CHECKING THE FUEL DELIVERY SYSTEM

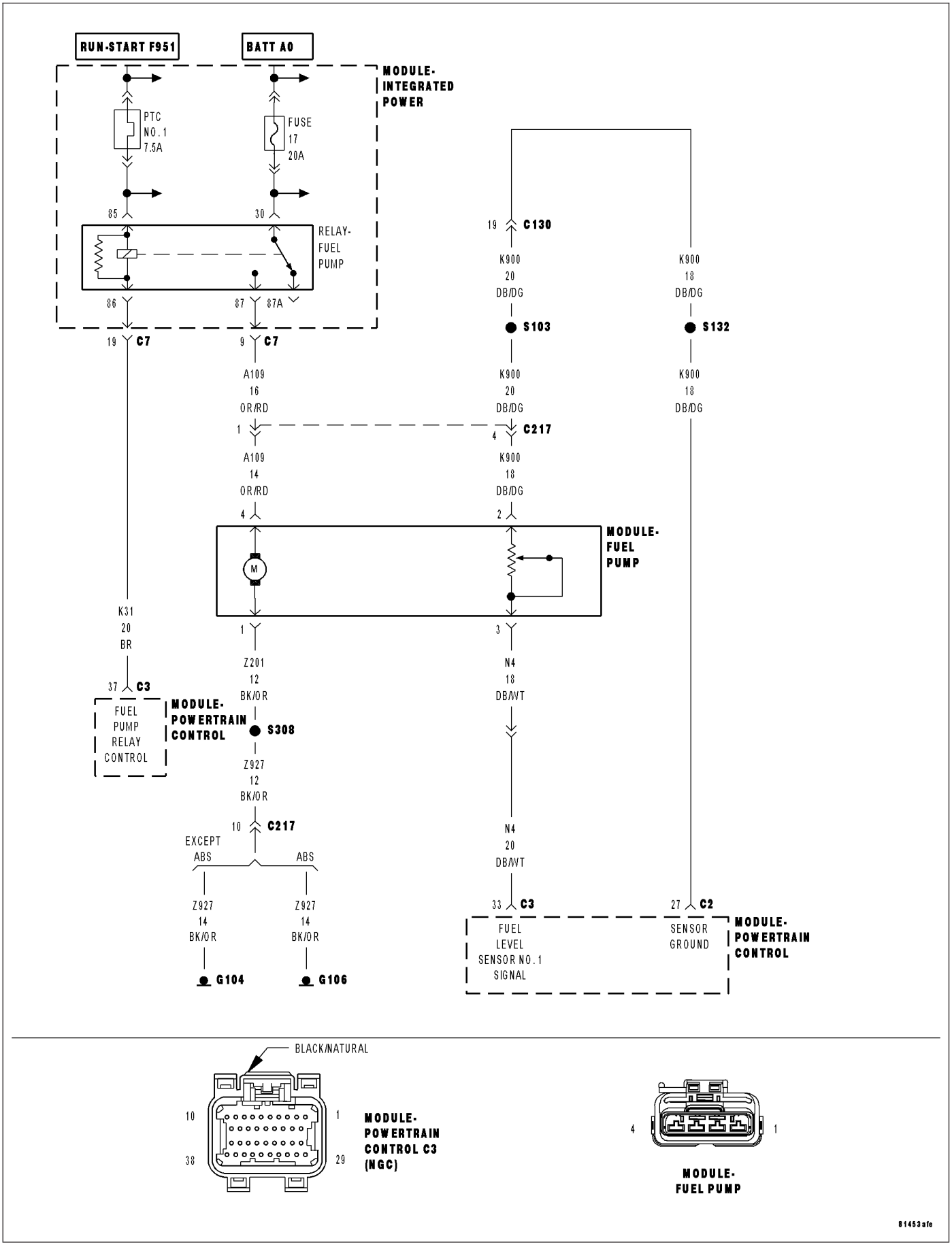

***CHECKING THE FUEL DELIVERY SYSTEM (CONTINUED)**

For the Engine circuit diagram (Refer to 9 - ENGINE - SCHEMATICS AND DIAGRAMS).

For a complete wiring diagram **Refer to Section 8W**.

Possible Causes
RESTRICTED FUEL SUPPLY LINE
FUEL PUMP INLET STRAINER PLUGGED
(N1) FUEL PUMP RELAY OUTPUT CIRCUIT OPEN
FUEL PUMP RELAY
FUEL PUMP

Diagnostic Test

1. FUEL PUMP OPERATION

Ignition on, engine not running.

With a scan tool, actuate the Fuel System test.

NOTE: It may be necessary to use a mechanics stethoscope in the next step.
Listen for fuel pump operation at the fuel tank.

CAUTION: Stop All Actuations.

Does the Fuel Pump operate?

Yes >> Go To 2

No >> Go To 5

---

2. FUEL PRESSURE

Turn the ignition off.

WARNING: The fuel system is under a constant pressure (even with the engine off). Before testing or servicing any fuel system hose, fitting or line, the fuel system pressure must be released. Failure to follow these instructions can result in personal injury or death.
Install a fuel pressure gauge at the engine.

Ignition on, engine not running.

With the scan tool, actuate the ASD Fuel System test and observe the fuel pressure gauge.

NOTE: NOTE: Fuel pressure specification is 407 KPa +/- 34 KPa (59 psi +/- 5 psi).

CAUTION: Stop All Actuations.

Choose a conclusion that best matches your fuel pressure reading.

Below Specification
Go To 3

Within Specification
Test Complete.

Above Specification
Replace the fuel filter/fuel pressure regulator.
Perform the POWERTRAIN VERIFICATION TEST. (Refer to 9 - ENGINE - STANDARD PROCEDURE)

***CHECKING THE FUEL DELIVERY SYSTEM (CONTINUED)**

3. RESTRICTED FUEL SUPPLY LINE

Turn the ignition off.

WARNING: The fuel system is under a constant pressure even with the engine off. Before testing or servicing any fuel system hose, fitting or line, the fuel system pressure must be released.

Raise vehicle on hoist, and disconnect the fuel pressure line at the fuel pump module.

Install special tool #6539 (5/16″) or #6631(3/8″) fuel line adapter and the fuel pressure gauge between the fuel supply line and the fuel pump module.

Ignition on, engine not running.

With the scan tool, actuate the ASD Fuel System test and observe the fuel pressure gauge.

NOTE: Fuel pressure specification is 407 KPa +/- 34 KPa (59 psi +/- 5 psi).

CAUTION: Stop All Actuations.

Is the fuel pressure within specification now?

Yes >> Repair/replace fuel supply line as necessary.
Perform the POWERTRAIN VERIFICATION TEST. (Refer to 9 - ENGINE - STANDARD PROCEDURE)

No >> Go To 4

---

4. CHECKING FUEL INLET STRAINER

Turn the ignition off.

WARNING: The fuel system is under a constant pressure (even with the engine off). Before testing or servicing any fuel system hose, fitting or line, the fuel system pressure must be released. Failure to follow these instructions can result in personal injury or death.

Remove the Fuel Pump Module and inspect the Fuel Inlet Strainer.

Is the Fuel Inlet Strainer plugged?

Yes >> Replace the Fuel Pump Inlet Strainer.
Perform the POWERTRAIN VERIFICATION TEST. (Refer to 9 - ENGINE - STANDARD PROCEDURE)

No >> Replace the Fuel Pump Module.
Perform the POWERTRAIN VERIFICATION TEST. (Refer to 9 - ENGINE - STANDARD PROCEDURE)

---

5. (N1) FUEL PUMP RELAY OUTPUT CIRCUIT OPEN

Turn the ignition off.

Remove the Fuel Pump Relay from the IPM.

Disconnect the Fuel Pump Module harness connector.

Measure the resistance of the (N1) Fuel Pump Relay Output circuit from the relay connector to the fuel pump module connector.

Is the resistance below 5.0 ohms?

Yes >> Replace the Fuel Pump Relay.
Perform the POWERTRAIN VERIFICATION TEST. (Refer to 9 - ENGINE - STANDARD PROCEDURE)

No >> Repair the open in the (N1) Fuel Pump Relay Output circuit.
Perform the POWERTRAIN VERIFICATION TEST. (Refer to 9 - ENGINE - STANDARD PROCEDURE)

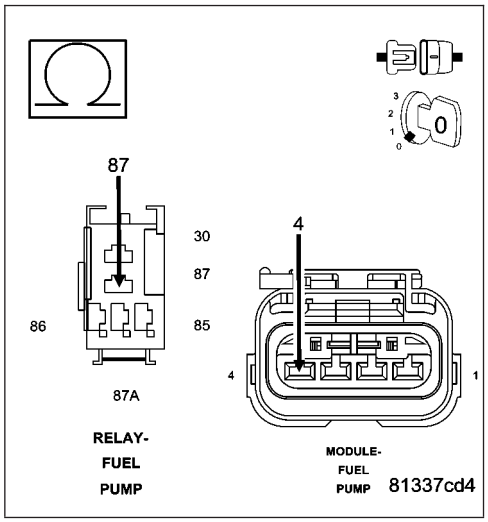

*HARD START FUEL SYSTEM

For the Engine circuit diagram (Refer to 9 - ENGINE - SCHEMATICS AND DIAGRAMS).

For a complete wiring diagram **Refer to Section 8W**.

Possible Causes
FUEL CONTAMINATION
RESTRICTED FUEL SUPPLY LINE
FUEL PUMP INLET STRAINER PLUGGED
FUEL PUMP MODULE
FUEL INJECTOR(S)

Diagnostic Test

1. CHECKING FUEL PRESSURE

Turn the ignition off.

WARNING: The fuel system is under a constant pressure (even with the engine off). Before testing or servicing any fuel system hose, fitting or line, the fuel system pressure must be released. Failure to follow these instructions can result in personal injury or death.

Install a fuel pressure gauge at the engine.

Ignition on, engine not running.

With a scan tool, actuate the ASD Fuel System test and observe the fuel pressure gauge.

NOTE: NOTE: Fuel pressure specification is 407 KPa +/- 34 KPa (59 psi +/- 5 psi).

Choose a conclusion that best matches your fuel pressure reading.

Below Specification
Go To 2

Within Specification
Go To 4

---

2. RESTRICTED FUEL SUPPLY LINE

Turn the ignition off.

WARNING: The fuel system is under a constant pressure (even with the engine off). Before testing or servicing any fuel system hose, fitting or line, the fuel system pressure must be released. Failure to follow these instructions can result in personal injury or death.

Raise vehicle on hoist, and disconnect the fuel supply line at the fuel pump module.

Install special tool #6539 (5/16″) #6631(3/8″) fuel line adapter and the fuel pressure gauge between the fuel supply line and the fuel pump module.

Ignition on, engine not running.

With the scan tool, actuate the ASD Fuel System test and observe the fuel pressure gauge.

NOTE: Fuel pressure specification is 407 KPa +/- 34 KPa (59 psi +/- 5 psi).

Is the fuel pressure within specification?

Yes >> Visually and physically inspect the fuel supply lines between the fuel tank and the fuel rail. Repair/replace as necessary.
Perform the POWERTRAIN VERIFICATION TEST. (Refer to 9 - ENGINE - STANDARD PROCEDURE)

No >> Go To 3

***HARD START FUEL SYSTEM (CONTINUED)**

3. CHECKING THE FUEL INLET STRAINER

Turn the ignition off.

WARNING: The fuel system is under a constant pressure (even with the engine off). Before testing or servicing any fuel system hose, fitting or line, the fuel system pressure must be released. Failure to follow these instructions can result in personal injury or death.

Remove the Fuel Pump Module and inspect the Fuel Inlet Strainer.

Is the Fuel Inlet Strainer plugged?

Yes >> Replace the Fuel Pump Inlet Strainer.
Perform the POWERTRAIN VERIFICATION TEST. (Refer to 9 - ENGINE - STANDARD PROCEDURE)

No >> Replace the Fuel Pump Module.
Perform the POWERTRAIN VERIFICATION TEST. (Refer to 9 - ENGINE - STANDARD PROCEDURE)

---

4. FUEL PUMP MODULE

NOTE: Before continuing visually and physically inspect the fuel delivery system for external leaks or damage. Repair / replace as necessary.

Turn the ignition off.

WARNING: The fuel system is under a constant pressure (even with the engine off). Before testing or servicing any fuel system hose, fitting or line, the fuel system pressure must be released. Failure to follow these instructions can result in personal injury or death.

Install special tool #6539 (5/16″) or #6631 (3/8″) fuel line adapter.

Install the fuel pressure gauge.

Start the engine and allow the fuel system to reach maximum pressure.

Turn the ignition off.

NOTE: Fuel specification is 407 KPa +/- 34 KPa (59 psi +/- 5 psi).

Using special tool #C4390, Hose Clamp Pliers, pinch the rubber fuel line between the fuel pressure gauge and the engine.

Monitor the fuel pressure gauge for a minimum of 5 minutes.

NOTE: The pressure should not fall below 241 KPa (35 psi)

Does the fuel pressure drop?

Yes >> Replace Fuel Pump Module.
Perform the POWERTRAIN VERIFICATION TEST. (Refer to 9 - ENGINE - STANDARD PROCEDURE)

No >> Go To 5

***HARD START FUEL SYSTEM (CONTINUED)**

5. FUEL INJECTOR(S)

WARNING: The fuel system is under a constant pressure (even with the engine off). Before testing or servicing any fuel system hose, fitting or line, the fuel system pressure must be released. Failure to follow these instructions can result in personal injury or death.

Remove special tool #C4390.

Start the engine and allow the fuel system to reach maximum pressure.

Turn the ignition off.

NOTE: Fuel specification is 407 KPa +/- 34 KPa (59 psi +/- 5 psi).

Move special tool #C4390, Hose Clamp Pliers, from between the fuel pressure gauge and the engine to between the fuel pressure gauge and fuel pump module.

Monitor the fuel pressure gauge for a minimum of 5 minutes.

NOTE: The pressure should not fall below 241 KPa (35 psi)

Does the fuel pressure drop?

Yes >> Replace the leaking fuel injectors.
Perform the POWERTRAIN VERIFICATION TEST. (Refer to 9 - ENGINE - STANDARD PROCEDURE)

No >> Check the fuel for contaminants.
Perform the POWERTRAIN VERIFICATION TEST. (Refer to 9 - ENGINE - STANDARD PROCEDURE)

*ENGINE CRANKS BUT DOES NOT START

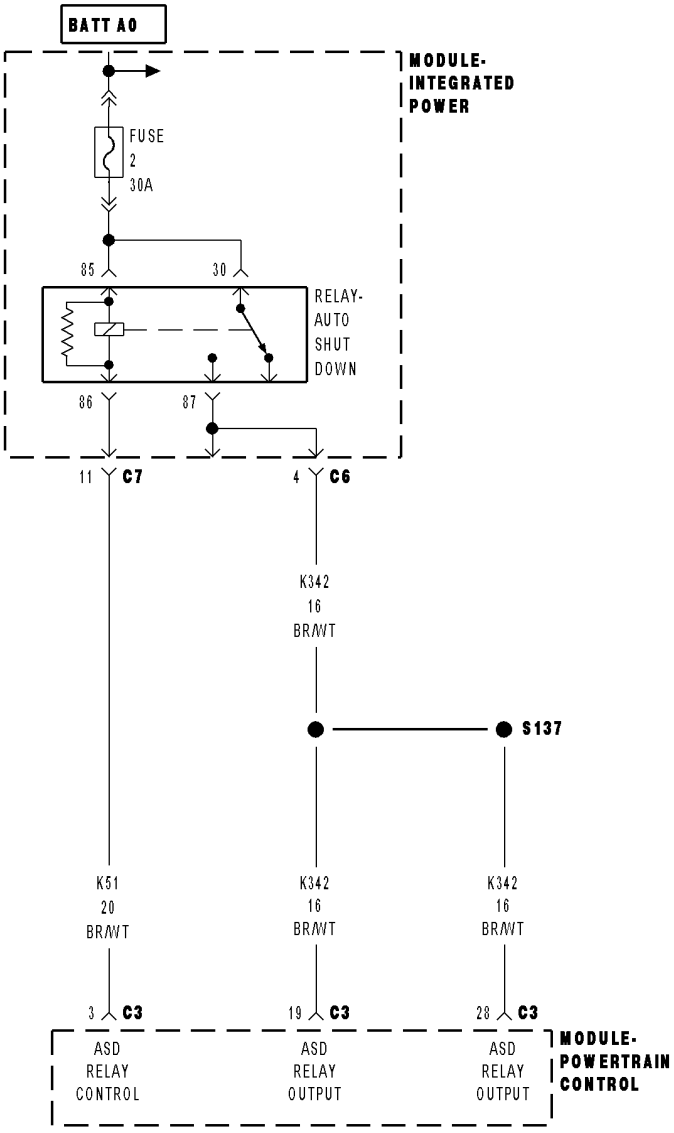

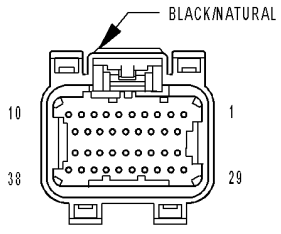

MODULE-
POWERTRAIN
CONTROL C3
(NGC)

8145496a

***ENGINE CRANKS BUT DOES NOT START (CONTINUED)**

For the Engine circuit diagram (Refer to 9 - ENGINE - SCHEMATICS AND DIAGRAMS).

For a complete wiring diagram **Refer to Section 8W**.

Possible Causes
NO START PRE-TEST
POWERTRAIN FUSES OPEN
SECONDARY INDICATORS PRESENT
ENGINE MECHANICAL
(K342) ASD RELAY OUTPUT CIRCUITS OPEN
FUEL CONTAMINATION

Diagnostic Test

1. NO START PRE-TEST

NOTE: The following list of items must be checked before continuing with any no start tests.

The battery must be fully charged and in good condition. A low charged battery may produce invalid test results. If the battery is low, charge the battery and then attempt to start the vehicle by cranking the engine for 15 seconds, 3 consecutive times.

This will allow any DTCs to set that may have been erased due to a dead battery.

Try to communicate with PCM if not able to communicate check fuses.

Make sure the Powers and Ground to the PCM are OK.

Make sure the PCM communicates with the scan tool and that there are no DTCs stored in the PCM memory. If the PCM reports a No Response condition, refer to section 8 Electrical Electronic Control Module Electrical Diagnostics for the proper tests.

Read the PCM DTCs with the scan tool. If any DTCs are present, they must be repaired before continuing with any other No Start diagnostic tests. Refer to the Table of Contents for the related P-code that is reported by the PCM.

Make sure that the Bus is functional. Attempt to communicate with the Instrument Cluster and VTSS, If you are unable to establish communications refer to 8 Electrical Electronic Control Module Electrical Diagnostics for the proper Diagnostic procedures.

The Sentry Key Immobilizer System must be operating properly. Check for proper communication with the scan tool and check for DTCs that may be stored in the Sentry Key Immobilizer Module (SKIM). Repair the DTC(s) before continuing.

If no DTCs are found, using the scan tool, select Clear PCM (BATT Disconnect).

Crank the engine several times. Using the scan tool, read DTCs. If a DTC is present perform the DTC diagnostics before continuing.

Were any problems found?

Yes >> Repair as necessary.
Perform the POWERTRAIN VERIFICATION TEST. (Refer to 9 - ENGINE - STANDARD PROCEDURE)

No >> Go To 2

***ENGINE CRANKS BUT DOES NOT START (CONTINUED)**

2. OPEN FUSE

Check for any open fuses in the IPM or Junction Block that may be related to the No Start condition.

Are any of the fuses open?

Yes >> Replace the open fuse and check the related circuit(s) for a short to ground.
Perform the POWERTRAIN VERIFICATION TEST. (Refer to 9 - ENGINE - STANDARD PROCEDURE)

No >> Go To 3

---

3. SECONDARY INDICATORS PRESENT

Ignition on, engine not running.
With the scan tool, under DTCs & Related Functions, read the Secondary Indicators while cranking the engine.

Are there any Secondary Indicators present while cranking the engine?

Yes >> Refer to the Engine Electrical Diagnostics group and perform the tests related to the secondary indicator that is reported by the scan tool.
Perform the POWERTRAIN VERIFICATION TEST. (Refer to 9 - ENGINE - STANDARD PROCEDURE)

No >> Go To 4

---

4. ENGINE MECHANICAL

Check for any of the following conditions/mechanical problems.
ENGINE VALVE TIMING - must be within specifications, check for broken timing components
ENGINE COMPRESSION - must be within specifications
ENGINE EXHAUST SYSTEM - must be free of any restrictions or leaks.

Are there any engine mechanical problems?

Yes >> Repair as necessary.
Perform the POWERTRAIN VERIFICATION TEST. (Refer to 9 - ENGINE - STANDARD PROCEDURE)

No >> Go To 5

***ENGINE CRANKS BUT DOES NOT START (CONTINUED)**

5. (K342) ASD RELAY OUTPUT CIRCUIT OPEN

Turn the ignition off.

Remove the ASD relay from the IPM.

Disconnect the C3 PCM harness connector.

Verify the ASD Relay is getting voltage on the Fused B+ circuits before continuing.

CAUTION: Do not probe the PCM harness connectors. Probing the PCM harness connectors will damage the PCM terminals resulting in poor terminal to pin connection. Install Miller Special Tool #8815 to perform diagnosis.

Measure the resistance of the ASD Relay Output circuit from the ASD Relay connector to the appropriate terminals of special tool #8815, Ignition coil, and the fuel injectors.

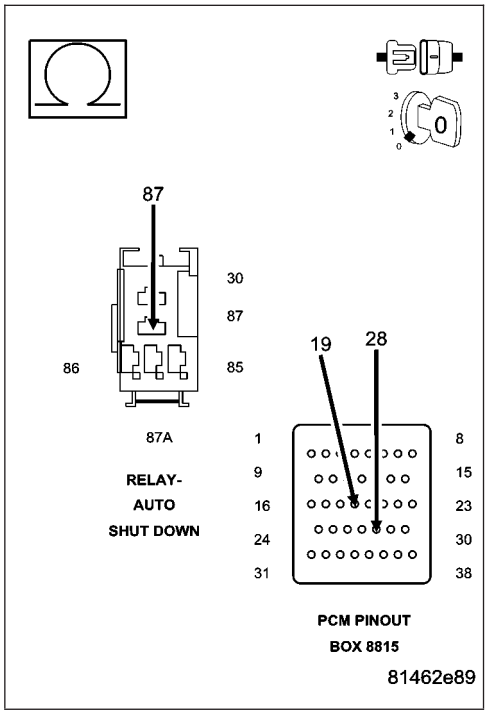

Is the resistance below 5.0 ohms?

Yes >> Go To 6

No >> Repair the open in the (K342) ASD Relay Output circuits. Perform the POWERTRAIN VERIFICATION TEST. (Refer to 9 - ENGINE - STANDARD PROCEDURE)

6. FUEL PUMP DELIVERY

Verify that the Fuel tank is not empty before continuing.

Follow the diagnostics for Checking Fuel Delivery in the Driveability section of this manual.

Was the No Start condition solved after following the above diagnostic test?

Yes >> Test Complete.

No >> Check for contamination/water in the fuel. Make sure the fuel being used in this vehicle meets manufactures Fuel Requirement, refer to the service manual.
Perform the POWERTRAIN VERIFICATION TEST. (Refer to 9 - ENGINE - STANDARD PROCEDURE)

*FUEL PRESSURE LEAK DOWN

For the Engine circuit diagram (Refer to 9 - ENGINE - SCHEMATICS AND DIAGRAMS).

For a complete wiring diagram **Refer to Section 8W**.

Possible Causes
FUEL PUMP MODULE
FUEL INJECTOR(S)

Diagnostic Test

1. FUEL PUMP MODULE

NOTE: Before continuing visually and physically inspect the fuel delivery system for external leaks or damage. Repair / replace as necessary.

Turn the ignition off.

WARNING: The fuel system is under a constant pressure (even with the engine off). Before testing or servicing any fuel system hose, fitting or line, the fuel system pressure must be released. Failure to follow these instructions can result in personal injury or death.

Install special tool #6539 (5/16″) or #6631 (3/8″) fuel line adapter.

Install the fuel pressure gauge.

Start the engine and allow the fuel system to reach maximum pressure.

Turn the ignition off.

NOTE: Fuel specification is 407 KPa +/- 34 KPa (59 psi +/- 5 psi).

Using special tool #C4390, Hose Clamp Pliers, pinch the rubber fuel line between the fuel pressure gauge and the engine.

Monitor the fuel pressure gauge for a minimum of 5 minutes.

NOTE: The pressure should not fall below 241 KPa (35 psi)

Does the fuel pressure drop?

Yes >> Replace Fuel Pump Module.
Perform the POWERTRAIN VERIFICATION TEST. (Refer to 9 - ENGINE - STANDARD PROCEDURE)

No >> Go To 2

***FUEL PRESSURE LEAK DOWN (CONTINUED)**

2. FUEL INJECTOR(S)

WARNING: The fuel system is under a constant pressure (even with the engine off). Before testing or servicing any fuel system hose, fitting or line, the fuel system pressure must be released. Failure to follow these instructions can result in personal injury or death.

Remove special tool #C4390.

Start the engine and allow the fuel system to reach maximum pressure.

Turn the ignition off.

NOTE: NOTE: Fuel specification is 407 KPa +/- 34 KPa (59 psi +/- 5 psi).

Move special tool #C4390, Hose Clamp Pliers, from between the fuel pressure gauge and the engine to between the fuel pressure gauge and fuel pump module.

Monitor the fuel pressure gauge for a minimum of 5 minutes.

NOTE: The pressure should not fall below 241 KPa (35 psi)

Does the fuel pressure drop?

Yes >> Replace the leaking fuel injectors.
Perform the POWERTRAIN VERIFICATION TEST. (Refer to 9 - ENGINE - STANDARD PROCEDURE)

No >> Test Complete.

*NO CRANK CONDITION

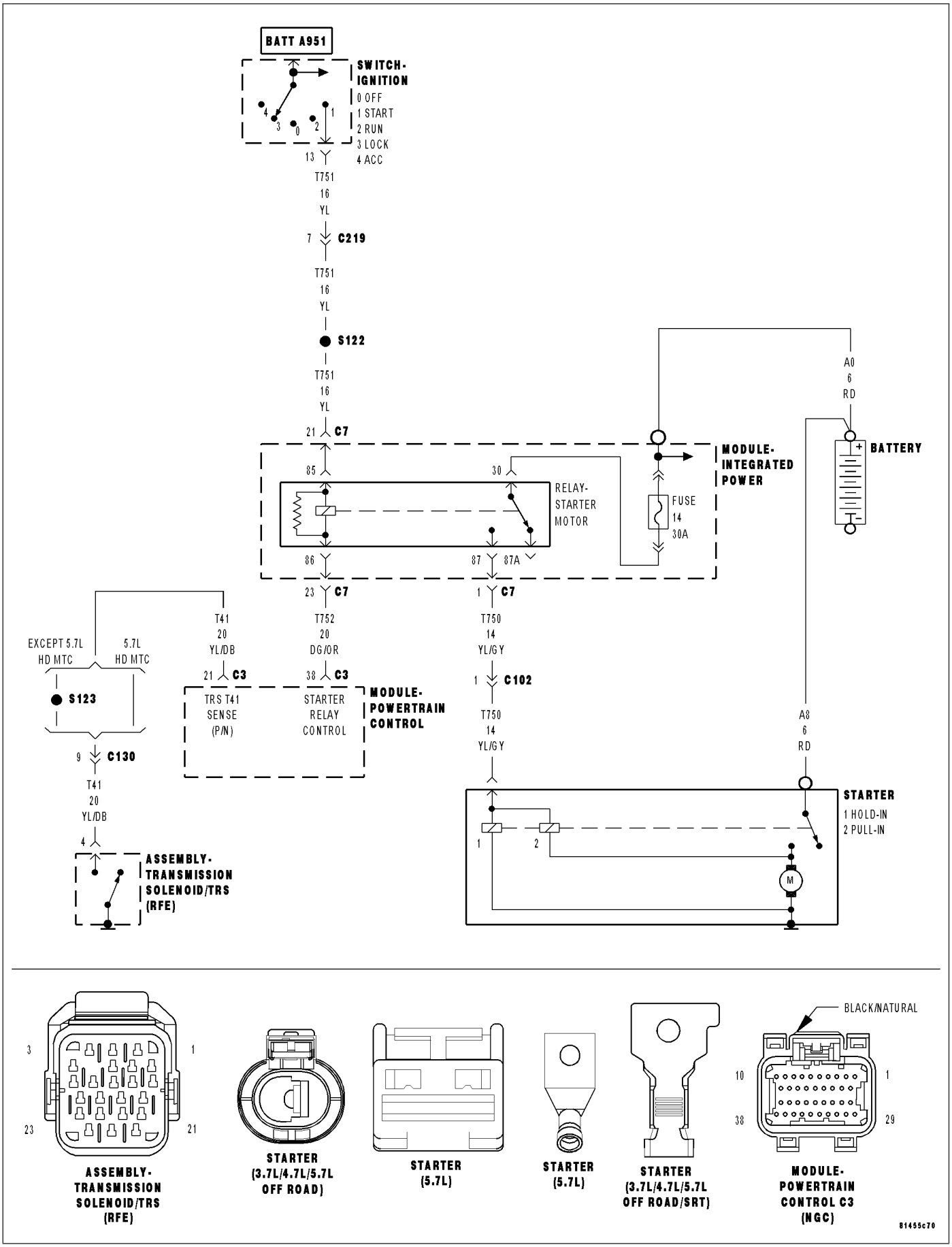

***NO CRANK CONDITION (CONTINUED)**

For the Engine circuit diagram (Refer to 9 - ENGINE - SCHEMATICS AND DIAGRAMS).

For a complete wiring diagram **Refer to Section 8W**.

Possible Causes
MECHANICAL CONDITION
BATTERY CIRCUIT RESISTANCE TOO HIGH
FUSED IGNITION SWITCH OUTPUT CIRCUITS
FUSED B+ CIRCUIT OPEN
(T752) STARTER RELAY CONTROL CIRCUIT OPEN
(T750) STARTER RELAY OUTPUT CIRCUIT OPEN
TRANSMISSION RANGE SENSOR
STARTER RELAY
STARTER

Diagnostic Test

1. MECHANICAL CONDITION

NOTE: Verify the battery is fully charged and capable of passing a load test before continuing.

WARNING: Make sure the battery is disconnected, then wait two minutes before proceeding. Failure to do so may result in personal injury or possible death.

Turn the engine over by hand to make sure the engine is not seized.

Is the engine able to turn over?

Yes >> Go To 2

No >> Repair the mechanical condition preventing the starter motor from cranking.
Perform the POWERTRAIN VERIFICATION TEST. (Refer to 9 - ENGINE - STANDARD PROCEDURE)

---

2. TRANSMISSION RANGE SENSOR

Turn the ignition off.

Disconnect the TRS harness connectors.

Move the Gear selector through all gear positions, from Park to 1st and back.

While moving the gear selector through each gear, measure the resistance between ground and the TRS (T41) Sense (P/NSense) circuit at the TRS connector.

NOTE: The circuit is grounded in Park and Neutral and open in the other positions.

Did the resistance change from above 100 kohms (open) to below 10.0 ohms (grounded) ?

Yes >> Go To 3

No >> Replace the Transmission Range Sensor.
Perform the POWERTRAIN VERIFICATION TEST. (Refer to 9 - ENGINE - STANDARD PROCEDURE)

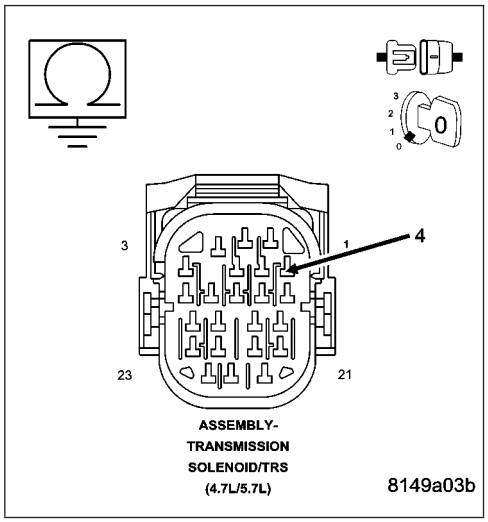

***NO CRANK CONDITION (CONTINUED)**

3. EXCESSIVE RESISTANCE IN THE BATTERY CIRCUIT

Turn the ignition off.

Check the Battery Cables for excessive resistance using the service information procedure.

Did either Battery Cable have a voltage drop greater than 0.2 of a volt?

Yes >> Repair the excessive resistance in the Battery circuit.
Perform the POWERTRAIN VERIFICATION TEST. (Refer to 9 - ENGINE - STANDARD PROCEDURE)

No >> Go To 4

---

4. STARTER RELAY

Turn ignition off.

Remove the Starter Relay from IPM.

CAUTION: The Parking Brake must be on and the Transmission must be in park for a vehicle equipped with an automatic transmission.

WARNING: When the engine is operating, do not stand in direct line with the fan. Do not put your hands near the pulleys, belts, or fan. Do not wear loose clothing. Failure to follow these instructions can result in personal injury or death.

Briefly connect a jumper wire from the Internal Fused B+ circuit to the (T750) Starter Relay Output circuit.

Did the Starter Motor crank the engine?

Yes >> Go To 5

No >> Go To 7

---

5. (T751) FUSED IGNITION SWITCH OUTPUT CIRCUIT

Ignition on, engine not running.

Using a 12-volt test light, probe the (T751) Fused Ignition Switch Output circuit in the Starter Relay connector.

While observing 12-volt test light, hold ignition key in the start position.

Does the test light illuminate brightly?

Yes >> Go To 6

No >> Repair the excessive resistance in the (T751) Fused Ignition Switch Output circuit. Inspect related fuses and repair as necessary.
Perform the POWERTRAIN VERIFICATION TEST. (Refer to 9 - ENGINE - STANDARD PROCEDURE)

***NO CRANK CONDITION (CONTINUED)**

6. (T752) STARTER RELAY CONTROL CIRCUIT OPEN

Turn the ignition off.

Remove the Starter Relay from the IPM.

Disconnect the C3 PCM harness connector.

Measure the resistance in the (T752) Starter Relay Control circuit from the Relay terminal to the appropriate terminals of special tool #8815.

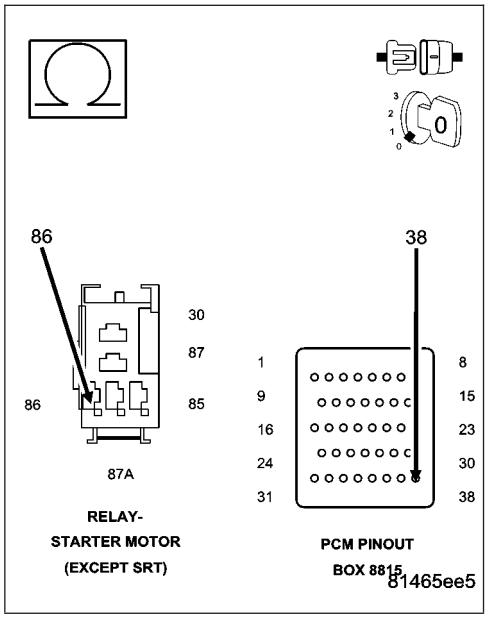

Is the resistance below 5.0 ohms?

Yes >> Replace the Starter Motor Relay.
Perform the POWERTRAIN VERIFICATION TEST. (Refer to 9 - ENGINE - STANDARD PROCEDURE)

No >> Repair the open in the (T752) Starter Relay Control circuit.
Perform the POWERTRAIN VERIFICATION TEST. (Refer to 9 - ENGINE - STANDARD PROCEDURE)

---

7. INTERNAL FUSED B+ CIRCUIT OPEN

Turn the ignition off.

Using a 12-volt test light connected to ground, probe the Internal Fused B+ circuit at the Starter Relay terminal.

Does the test light illuminate brightly?

Yes >> Go To 8

No >> Repair the excessive resistance in the Internal Fused B+ circuit. Inspect related fuses and repair as necessary.
Perform the POWERTRAIN VERIFICATION TEST. (Refer to 9 - ENGINE - STANDARD PROCEDURE)

***NO CRANK CONDITION (CONTINUED)**

8. (T750) STARTER RELAY OUTPUT CIRCUIT OPEN

Disconnect the Starter Relay Output connector from the Starter Solenoid.

Measure the resistance of the (T750) Starter Relay Output circuit between the Relay and the Solenoid harness connector.

Is the resistance below 5.0 ohms?

Yes >> Go To 9

No >> Repair the open in the Starter Relay Output circuit.
Perform the POWERTRAIN VERIFICATION TEST. (Refer to 9 - ENGINE - STANDARD PROCEDURE)

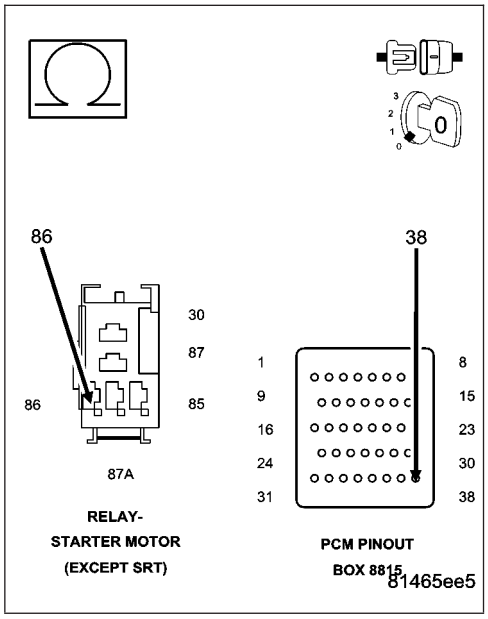

9. STARTER

If there are no other possible causes remaining, review repair.

Repair

Replace the Starter.

Perform the POWERTRAIN VERIFICATION TEST. (Refer to 9 - ENGINE - STANDARD PROCEDURE)

*NO RESPONSE WITH A NO START CONDITION

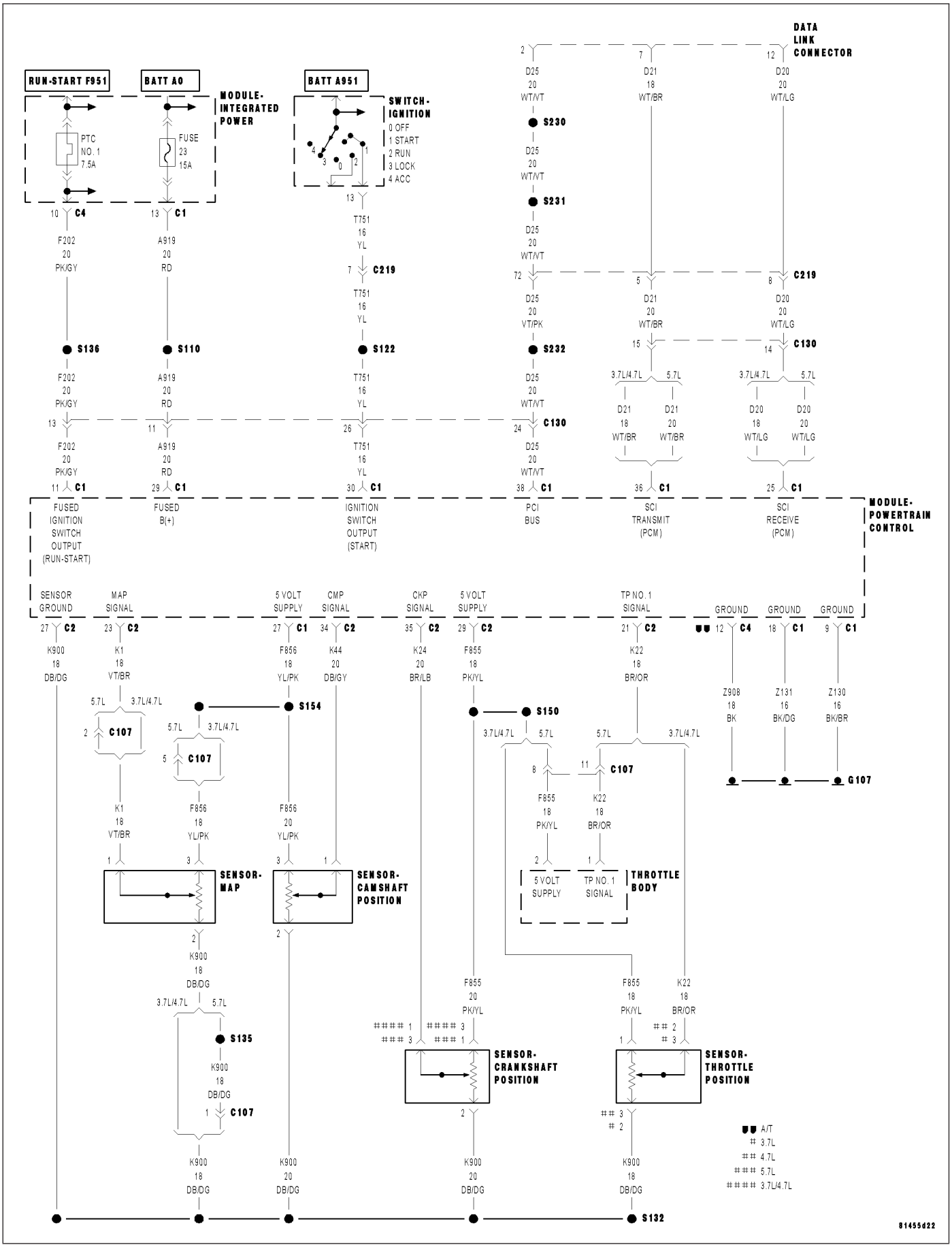

***NO RESPONSE WITH A NO START CONDITION (CONTINUED)**

For the Engine circuit diagram (Refer to 9 - ENGINE - SCHEMATICS AND DIAGRAMS).

For a complete wiring diagram **Refer to Section 8W**.

Possible Causes
(A919) PCM FUSED B+ CIRCUIT
PCM NO RESPONSE
(F202) (F1) (T751) PCM FUSED IGNITION SWITCH OUTPUT CIRCUITS
(Z130) (Z131) PCM GROUND CIRCUITS
CRANKSHAFT POSITION SENSOR
(F855) 5-VOLT SENSOR OPEN/SHORTED
(F855) 5-VOLT SUPPLY CIRCUIT SHORTED TO GROUND
(F856) 5-VOLT SUPPLY CIRCUIT SHORTED TO GROUND
PCM

Diagnostic Test

1. (A919) PCM FUSED B+ CIRCUIT

NOTE: The scan tool and cable must be operating properly for the results of this test to be valid.

NOTE: Make sure the ignition switch was on while trying to communicate with the PCM.

Turn the ignition off.

Disconnect the PCM harness connectors.

CAUTION: Do not probe the PCM harness connectors. Probing the PCM harness connectors will damage the PCM terminals resulting in poor terminal to pin connection. Install Miller Special Tool #8815 to perform diagnosis.

Using a 12-volt test light connected to ground probe the appropriate terminal of special tool #8815.

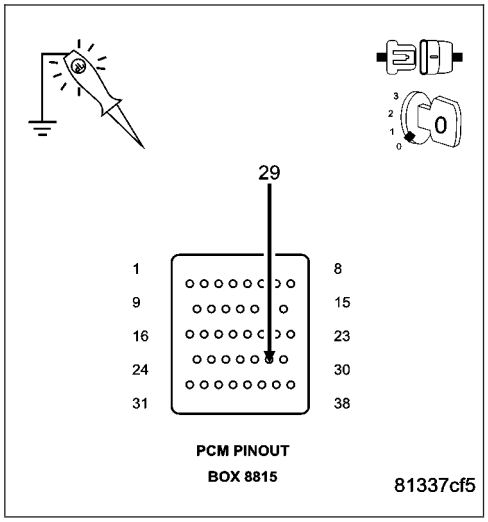

Does the test light illuminate brightly?

Yes >> Go To 2

No >> Repair the open or short to ground in the (A919) Fused B+ circuit. Inspect and replace fuses as necessary.

Perform the POWERTRAIN VERIFICATION TEST. (Refer to 9 - ENGINE - STANDARD PROCEDURE)

***NO RESPONSE WITH A NO START CONDITION (CONTINUED)**

2. (F202), (F1), (T751) PCM FUSED IGNITION SWITCH CIRCUITS

Using a 12-volt test light connected to ground, probe the PCM Fused Ignition Switch Output circuit in the appropriate terminals of special tool #8815.

Does the test light illuminate brightly?

Yes >> Go To 3

No >> Repair the (F202) (F924) Ignition Switch Output circuit. Inspect and replace fuses as necessary.
Perform the POWERTRAIN VERIFICATION TEST. (Refer to 9 - ENGINE - STANDARD PROCEDURE)

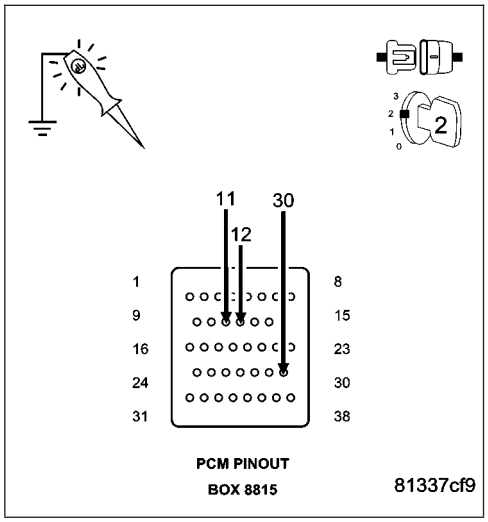

3. (Z130) AND (Z131) PCM GROUND CIRCUITS

Using a 12-volt test light connected to battery voltage, probe the (Z130) (Z131) PCM ground circuits in the appropriate terminals of special tool #8815.

Does the test light illuminate brightly?

Yes >> Go To 4

No >> Repair the PCM ground circuits.
Perform the POWERTRAIN VERIFICATION TEST. (Refer to 9 - ENGINE - STANDARD PROCEDURE)

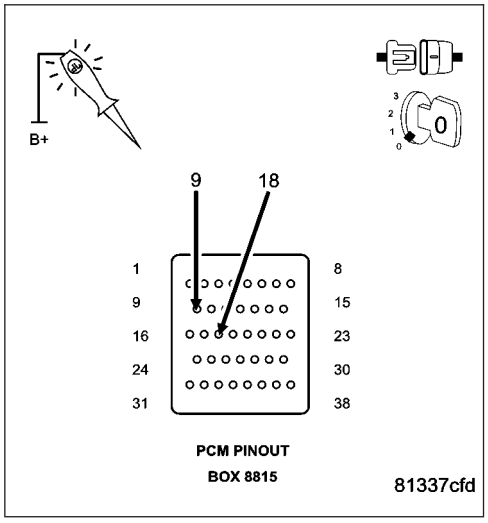

***NO RESPONSE WITH A NO START CONDITION (CONTINUED)**

4. (F855) 5-VOLT SUPPLY CIRCUIT

Turn the ignition off.
Connect the PCM harness connectors.
Disconnect the Crankshaft Position Sensor harness connector.
Ignition on, engine not running.
Measure the voltage on the (F855) 5-volt Supply circuit.

Is the voltage between 4.5 and 5.2 volts?

Yes >> Go To 5

No >> Go To 6

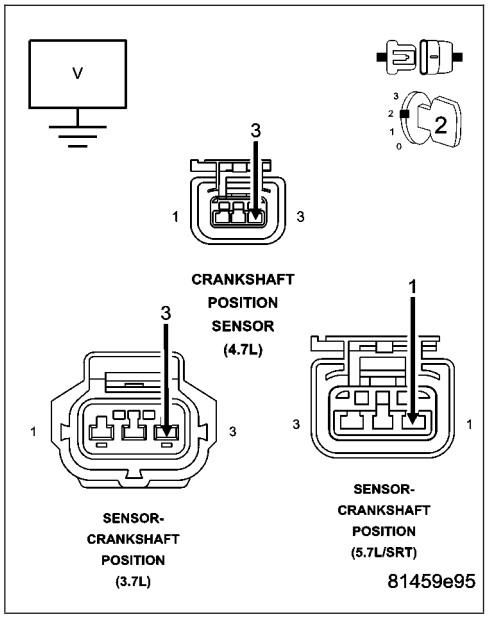

***NO RESPONSE WITH A NO START CONDITION (CONTINUED)**

5. CKP SENSOR

Turn the ignition off.

Disconnect the TP Sensor harness connector on 3.7L and 4.7L vehicles.

Disconnect the Throttle Body Harness connector on 5.7L vehicles.

Ignition on, engine not running.

Measure the voltage on the (F855) 5-volt Supply circuit in the TP Sensor or Throttle Body harness connector.

Is the voltage between 4.5 and 5.2 volts?

Yes >> If communication is available with a PCM on a like vehicle, replace and program the Powertrain Control Module per Service Information.

Perform the POWERTRAIN VERIFICATION TEST. (Refer to 9 - ENGINE - STANDARD PROCEDURE)

No >> Replace the Crankshaft Position Sensor.

Perform the POWERTRAIN VERIFICATION TEST. (Refer to 9 - ENGINE - STANDARD PROCEDURE)

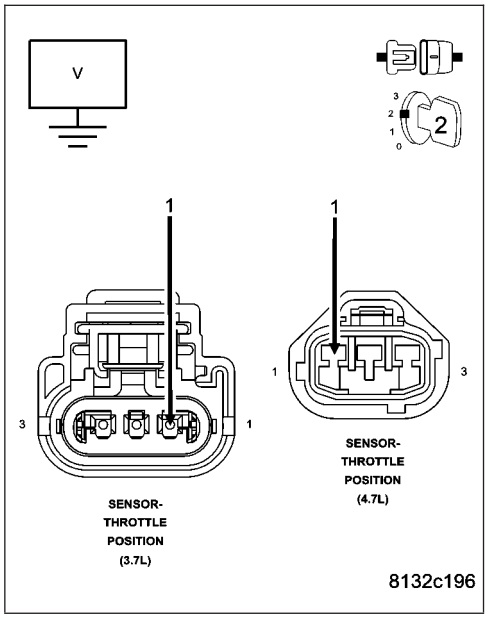

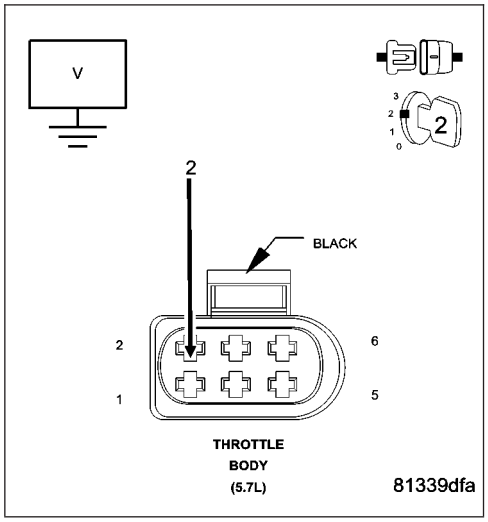

***NO RESPONSE WITH A NO START CONDITION (CONTINUED)**

6. (F855) 5-VOLT SENSOR OPEN/SHORTED

Turn the ignition off.
Disconnect the TP Sensor/Throttle Body harness connector.
Ignition on, engine not running.
Measure the voltage on the (F855) 5-volt Supply circuit.
Disconnect all the sensors that use the (F855) 5-volt Supply circuit.

Did the voltage return to 4.5 to 5.2 volts when disconnecting any of the sensors.

Yes >> Replace the sensor that is pulling down the (F855) 5-volt supply.
Perform the POWERTRAIN VERIFICATION TEST. (Refer to 9 - ENGINE - STANDARD PROCEDURE)

No >> Go To 7

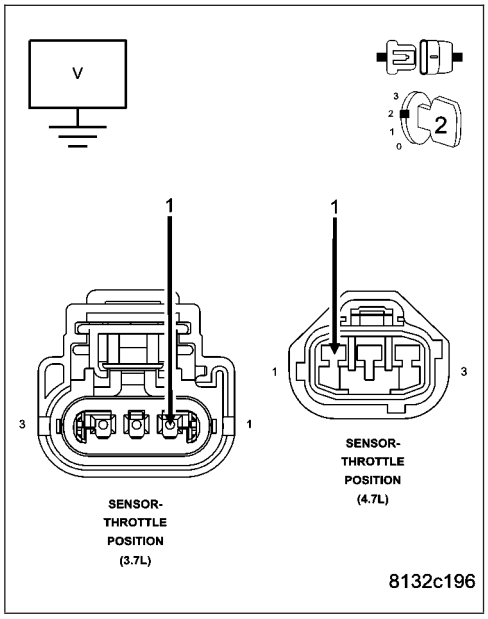

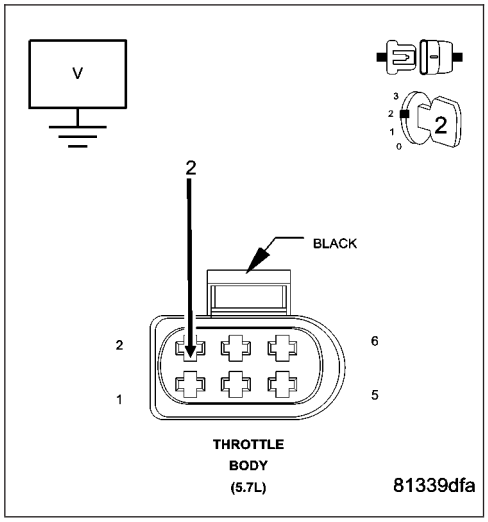

7. (F855) 5-VOLT SUPPLY CIRCUIT SHORTED TO GROUND

Turn the ignition off.
Disconnect C2 PCM harness connector.
Disconnect all the sensors that share the (F855) 5-volt Supply circuit.
Measure the resistance between ground and the (F855) 5-volt Supply circuit at one of the sensor harness connectors.

Is the resistance below 100 ohms?

Yes >> Repair the short to ground in the (F855) 5-volt Supply circuit.
Perform the POWERTRAIN VERIFICATION TEST. (Refer to 9 - ENGINE - STANDARD PROCEDURE)

No >> Go To 8

***NO RESPONSE WITH A NO START CONDITION (CONTINUED)**

8. (F856) 5-VOLT SUPPLY CIRCUIT SHORTED TO GROUND

Disconnect all the sensors that share the (F856) 5-volt Supply circuit.

Measure the resistance between ground and the (F856) 5-volt Supply circuit at one of the sensor harness connectors.

Is the resistance below 100 ohms?

Yes >> Repair the short to ground in the (F856) 5-volt Supply circuit.
Perform the POWERTRAIN VERIFICATION TEST. (Refer to 9 - ENGINE - STANDARD PROCEDURE)

No >> Go To 9

---

9. PCM

NOTE: Before continuing, check the PCM harness connector terminals for corrosion, damage, or terminal push out. Repair as necessary.

Using the schematics as a guide, inspect the wire harness and connectors. Pay particular attention to all Power and Ground circuits.

Were there any problems found?

Yes >> Repair as necessary.
Perform the POWERTRAIN VERIFICATION TEST. (Refer to 9 - ENGINE - STANDARD PROCEDURE)

No >> Replace and program the Powertrain Control Module per Service Information.
Perform the POWERTRAIN VERIFICATION TEST. (Refer to 9 - ENGINE - STANDARD PROCEDURE)

---

*START AND STALL CONDITION

For the Engine circuit diagram (Refer to 9 - ENGINE - SCHEMATICS AND DIAGRAMS).

For a complete wiring diagram **Refer to Section 8W**.

Possible Causes
CURRENT PCM DTCS
CURRENT SKIM DTCS
THROTTLE POSITION SENSOR SWEEP
TP SENSOR NO.1 VOLTAGE GREATER THAN 0.92 VOLTS WITH THROTTLE CLOSED
ECT SENSOR
OTHER POSSIBLE CAUSES FOR START AND STALL CONDITON
FUEL CONTAMINATION

Diagnostic Test

1. CHECKING DTCS

Ignition on, engine not running.

With a scan tool, read DTCs.

Are any DTCs present?

Yes >> Refer to the appropriate Diagnostic Procedure.
Perform the POWERTRAIN VERIFICATION TEST. (Refer to 9 - ENGINE - STANDARD PROCEDURE)

No >> Go To 2

---

2. CHECKING SKREEM DTCS

NOTE: If you are unable to communicate with the SKIM/SKREEM, refer to the VEHICLE THEFT AND SECURITY ELECTRICAL DIAGNOSTICS in Section 8 and perform the appropriate diagnostics.

With the scan tool, read the SKIM codes.

Are there any SKIM DTCs?

Yes >> Refer to the Sentry Key Vehicle Theft Security Electrical Diagnostics in Section 8.
Perform the POWERTRAIN VERIFICATION TEST. (Refer to 9 - ENGINE - STANDARD PROCEDURE)

No >> Go To 3

---

3. TP SENSOR SWEEP

Ignition on, engine not running.

With the scan tool read TP Sensor voltage.

While monitoring the scan tool, slowly open and close the Throttle on vehicles equipped with a 3.7L or 4.7L engine.

On vehicles equipped with a 5.7L engine, using a scan tool perform the pedal follower test and monitor both TP Sensor voltage readings.

Was the voltage change smooth?

Yes >> Go To 4

No >> Replace the Throttle Position Sensor on a 3.7L and 4.7L engines or the Throttle Body Assembly on a 5.7L engine.
Perform the POWERTRAIN VERIFICATION TEST. (Refer to 9 - ENGINE - STANDARD PROCEDURE)

***START AND STALL CONDITION (CONTINUED)**

4. TP SENSOR NO.1 VOLTAGE GREATER THAN 0.92 VOLTS WITH THROTTLE CLOSED

With the scan tool, read Throttle Position Sensor No.1 voltage.

Throttle must be against its stop.

Is the voltage 0.92 or less with the Throttle closed?

Yes >> Go To 5

No >> Check for a binding throttle condition. If OK, replace the Throttle Position Sensor or the Throttle Body Assembly on a 5.7L.
Perform the POWERTRAIN VERIFICATION TEST. (Refer to 9 - ENGINE - STANDARD PROCEDURE)

---

5. ECT SENSOR OPERATION

NOTE: For this test to be valid, the thermostat must be operating correctly.

NOTE: This test works best if performed on a cold engine (cold soaked).

NOTE: If the vehicle was allowed to sit over night with no engine start, coolant temperature should be near ambient temperatures.

Ignition on, engine not running.

With the scan tool, read the ECT value.

NOTE: If engine coolant temperature is above 82° C (180° F), allow the engine to cool until 65° C (150° F) is reached.

Start the engine.

During engine warm-up, monitor the Engine Coolant Temperature value. The temperature value change should be a smooth transition from start up to normal operating temp 82° C (180° F). The value should reach at least 82° C (180° F).

Did the Engine Temperature value increase smoothly and did it reach at least 82° C (180° F)?

Yes >> Go To 6

No >> Replace the Engine Coolant Temperature Sensor.
Perform the POWERTRAIN VERIFICATION TEST. (Refer to 9 - ENGINE - STANDARD PROCEDURE)

---

6. OTHER POSSIBLE CAUSES OF START AND STALL CONDITION

The following additional items should be checked as a possible cause for a start and stall condition.

Refer to any Technical Service Bulletins (TSBs) that may apply to the symptom.

The exhaust system must be free of any restrictions.

The engine compression must be within specifications.

The engine valve timing must be within specifications.

The engine must be free from vacuum leaks.

The throttle body must be free of carbon buildup and dirt.

Do any of the above conditions exist?

Yes >> Repair as necessary.
Perform the POWERTRAIN VERIFICATION TEST. (Refer to 9 - ENGINE - STANDARD PROCEDURE)

No >> Go To 7

***START AND STALL CONDITION (CONTINUED)**

7. FUEL PUMP DELIVERY

Verify that the Fuel tank is not empty before continuing.

Follow the diagnostics for Checking Fuel Delivery in this manual.

Was the No Start condition solved after following the above diagnostic test?

Yes >> Test Complete.

No >> Check for contamination/water in the fuel. Ensure the fuel being used in this vehicle meets manufactures Fuel Requirement, refer to the service manual.

Perform the POWERTRAIN VERIFICATION TEST. (Refer to 9 - ENGINE - STANDARD PROCEDURE)

STANDARD PROCEDURE

POWERTRAIN VERIFICATION TEST

For the Engine circuit diagram (Refer to 9 - ENGINE - SCHEMATICS AND DIAGRAMS)

For a complete wiring diagram **Refer to Section 8W**.

Diagnostic Test

1. SELECTING THE PROPER VERIFICATION TEST

The following verification test are for different repairs. Select the appropriate Verification test for the repair that has been completed.

Speed Control repair
Go To 2

Charging System repair
Go To 3

NVLD System repair
Go To 4

All other repairs
Go To 5

POWERTRAIN VERIFICATION TEST (CONTINUED)

2. POWERTRAIN VERIFICATION TEST 1

NOTE: If this vehicle is equipped with an Electronic Throttle Control system, and the APP Sensors, PCM, or Throttle Body Assembly have been replaced, use the scan tool to perform the ETC RELEARN function.

NOTE: 2. After completing the Powertrain Verification Test the Transmission Verification Test must be performed.

NOTE: 3. If the PCM has been replaced and the correct VIN and mileage have not been programmed, a DTC will set in the ABS Module, Airbag Module and the SKIM/SKREEM.

NOTE: 4. If the vehicle is equipped with a Sentry Key Remote Entry, Secret Key data must be updated. Refer to the Service Information for the PCM, SKIM/SKREEM and the Transponder (ignition key) for programming information. Using the scan tool, program the Secret Key information into the PCM using the PCM replaced function under the WCM menu.

5. Inspect the vehicle to make sure that all engine components are properly installed and connected.

6. Connect the scan tool to the data link connector and erase all codes.

7. Turn the speed control ON (if equipped, cruise light will be on).

8. Depress and release the SET Switch when the vehicle speed is greater than 35 MPH. The speed control should engage and hold the selected speed.

9. Press and hold the RESUME/ACCEL Switch. The vehicle speed should increase by at least 2 MPH.

10. Press and hold the COAST switch. The vehicle speed should decrease.

11. Using caution, press and release the brake pedal. The speed control should disengage.

12. Bring the vehicle speed back up to 35 MPH.

13. Press the RESUME/ACCEL switch. The speed control should resume the previously set speed.

14. Hold down the SET switch. The vehicle should decelerate.

15. Make sure vehicle speed is greater than 35 mph and release the SET Switch. The vehicle should adjust and set a new vehicle speed.

16. Press and release the CANCEL switch. The speed control should disengage.

17. Bring the vehicle speed back up above 35 mph and engage speed control.

18. Turn the Speed Control Off. (Cruise light will be off). The speed control should disengage.

NOTE: OVERSHOOT/UNDERSHOOT FOLLOWING SPEED CONTROL SET.

20. If the vehicle operator repeatedly presses and releases the SET button with their foot off of the accelerator (referred to as ″lift foot set″), the vehicle may accelerate and exceed the desired set speed by up to 5 mph (8 km/h).

21. It may also decelerate to less than the desired set speed, before finally achieving the desired set speed.

22. The Speed Control System has an adaptive strategy that compensates for vehicle-to-vehicle variations in speed control cable lengths.

23. When the speed control is set with the vehicles operators foot off of the accelerator pedal, the speed control thinks there is excessive speed control cable slack and adapts accordingly.

24. If the ″lift foot sets″ are continually used, a speed control overshoot/undershoot condition will develop.

25. To ″unlearn″ the overshoot/undershoot condition, the vehicle operator has to press and release the set button while maintaining the desired set speed using the accelerator pedal (not decelerating or accelerating).

26. Then turn the cruise control switch to the OFF position (or press the CANCEL button if equipped) after waiting 10 seconds.

27. This procedure must be performed approximately 10-15 times to completely unlearn the overshoot/undershoot condition.

Did the Speed Control pass the above test?

Yes >> Repair is complete.

No >> Check for any related Technical Service Bulletins and/or refer to the appropriate Diagnostic Procedure.

POWERTRAIN VERIFICATION TEST (CONTINUED)

3. POWERTRAIN VERIFICATION TEST 2

1. If this vehicle is equipped with an Electronic Throttle Control system, and the APP Sensors, PCM, or Throttle Body Assembly has been replaced use a scan tool to perform the ETC RELEARN function.

NOTE: 2. After completing the Powertrain Verification Test the Transmission Verification Test must be performed.

NOTE: 3. If the PCM has been replaced and the correct VIN and mileage have not been programmed, a DTC will set in the ABS Module, Airbag Module and the SKIM/SKREEM.

NOTE: 4. If the vehicle is equipped with a Sentry Key Remote Entry, Secret Key data must be updated. Refer to the Service Information for the PCM, SKIM/SKREEM and the Transponder (ignition key) for programming information. Using the scan tool, program the Secret Key information into the PCM using the PCM replaced function under the WCM menu.

5. Inspect the vehicle to make sure that all components related to the repair are properly installed and connected.
6. With the scan tool, clear DTCs.
7. Perform generator output test. Refer to the appropriate service information as necessary.
8. Start the engine and set engine speed to 2000 RPM for at least thirty seconds.
9. Cycle the ignition key off and on.
10. With the scan tool, read the DTCs.

Are any DTCs or symptoms remaining?

Yes >> Check for any Technical Service Bulletins and/or refer to the appropriate Diagnostic Procedure.

No >> Repair is complete.

---

4. POWERTRAIN VERIFICATION TEST 3

1. Install the Miller Tool #8404 Evaporative Emission Leak Detector (EELD) according to the instructions in the previous DTC table.
2. Set the smoke/air control switch to AIR.
3. Insert the tester's AIR supply tip (clear hose) into the appropriate calibration orifice on the tester's control panel (based on DTC leak size).
4. Press the remote smoke/air start button.
5. Position the red flag on the air flow meter so it is aligned with the indicator ball.
6. When the calibration is complete, release the remote button. The EELD flow meter is now calibrated in liters per minute to the size of leak indicated by the DTC set in the PCM.
7. Install the service port adapter #8404-14 on the vehicle's service port.
8. Connect the Air supply hose from the EELD to the vehicle.
9. Press the remote button to activate AIR flow.

NOTE: 10. Larger volume fuel tanks, lower fuel levels or if the vehicle is equipped with a Flow Management Valve may indicate high flow and will require 4 to 5 minutes to fill.

11. Compare the flow meter indicator ball reading to the red flag.
12. ABOVE the red flag indicates a leak present.
13. BELOW the red flag indicates a sealed system.

NOTE: If this vehicle is equipped with an Electronic Throttle Control system, and the APP Sensors, PCM, or Throttle Body Assembly have been replaced, use the scan tool to perform the ETC RELEARN function.

15. If the indicator ball shows a leak present, perform the smoke test indicated in the previous test and identify the leak and repair. Perform this verification test when the repair is complete.

Did the indicator ball indicate the a leak is present?

Yes >> Repeat the DTC test to identify the leak and repair.

No >> Repair is complete.

POWERTRAIN VERIFICATION TEST (CONTINUED)

5. POWERTRAIN VERIFICATION TEST 4

NOTE: 1. After completing the Powertrain Verification Test the Transmission Verification Test must be performed.

NOTE: 2. If the PCM has been replaced and the correct VIN and mileage have not been programmed, a DTC will set in the ABS Module, Airbag Module and the SKIM/SKREEM.

NOTE: 3. If the vehicle is equipped with a Sentry Key Remote Entry, Secret Key data must be updated. Refer to the Service Information for the PCM, SKIM/SKREEM and the Transponder (ignition key) for programming information. Using the scan tool, program the Secret Key information into the PCM using the PCM replaced function under the WCM menu.

NOTE: 4. If this vehicle is equipped with an Electronic Throttle Control system, and the APP Sensors, PCM, or Throttle Body Assembly have been replaced, use the scan tool to perform the ETC RELEARN function.

NOTE: 5. When replacing an O2 Sensor, the PCM RAM memory must be cleared, either by disconnecting the PCM C1 connector or momentarily disconnecting the Battery negative terminal.

6. The NGC learns the characteristics of each O2 heater element and these old values should be cleared when installing a new O2 sensor. The customer may experience driveability issues if this is not performed.

7. Inspect the vehicle to make sure that all engine components are properly installed and connected. Reassemble and reconnect components as necessary.

8. Connect the scan tool to the data link connector.

9. Make sure the fuel tank has at least a quarter tank of fuel. Turn off all accessories.

10. If the Catalyst was replaced, with the scan tool go to the Miscellaneous Menu Option ″Catalyst Replaced″ and press enter.

11. If a Comprehensive Component DTC was repaired, perform steps 12 - 14. If a Major OBDII Monitor DTC was repaired skip those steps and continue verification.

12. After the ignition has been off for at least 10 seconds, restart the vehicle and run 2 minutes.

13. With the scan tool, monitor the appropriate pre-test enabling conditions until all conditions have been met. Once the conditions have been met, switch screen to the appropriate OBDII monitor, (Audible beeps when the monitor is running).

14. If the repaired OBDII trouble code has reset or was seen in the monitor while on the road test, the repair is not complete. Check for any related technical service bulletins or flash updates and return to Engine Electrical Diagnostic List.

15. If the conditions cannot be duplicated, erase all DTCs with the Scan tool.

16. If another DTC has set, return to the Engine Electrical Diagnostic List and follow the path specified for that DTC.

Did the OBDII Monitor run successfully and has the Good Trip Counter changed to one or more?

Yes >> Repair is complete.

No >> Check for any related Technical Service Bulletins and/or refer to the appropriate Diagnostic Procedure.

SCHEMATICS AND DIAGRAMS

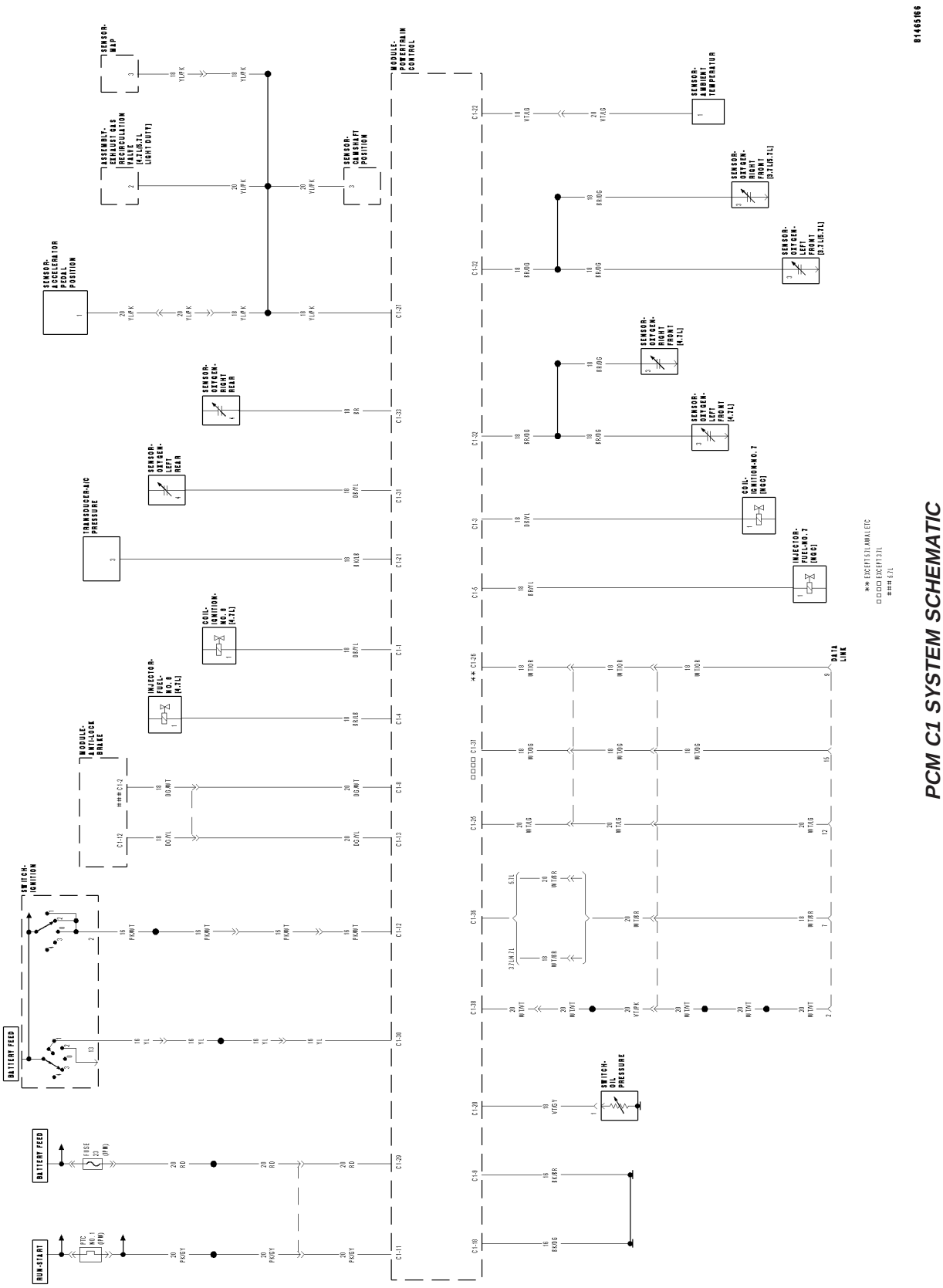

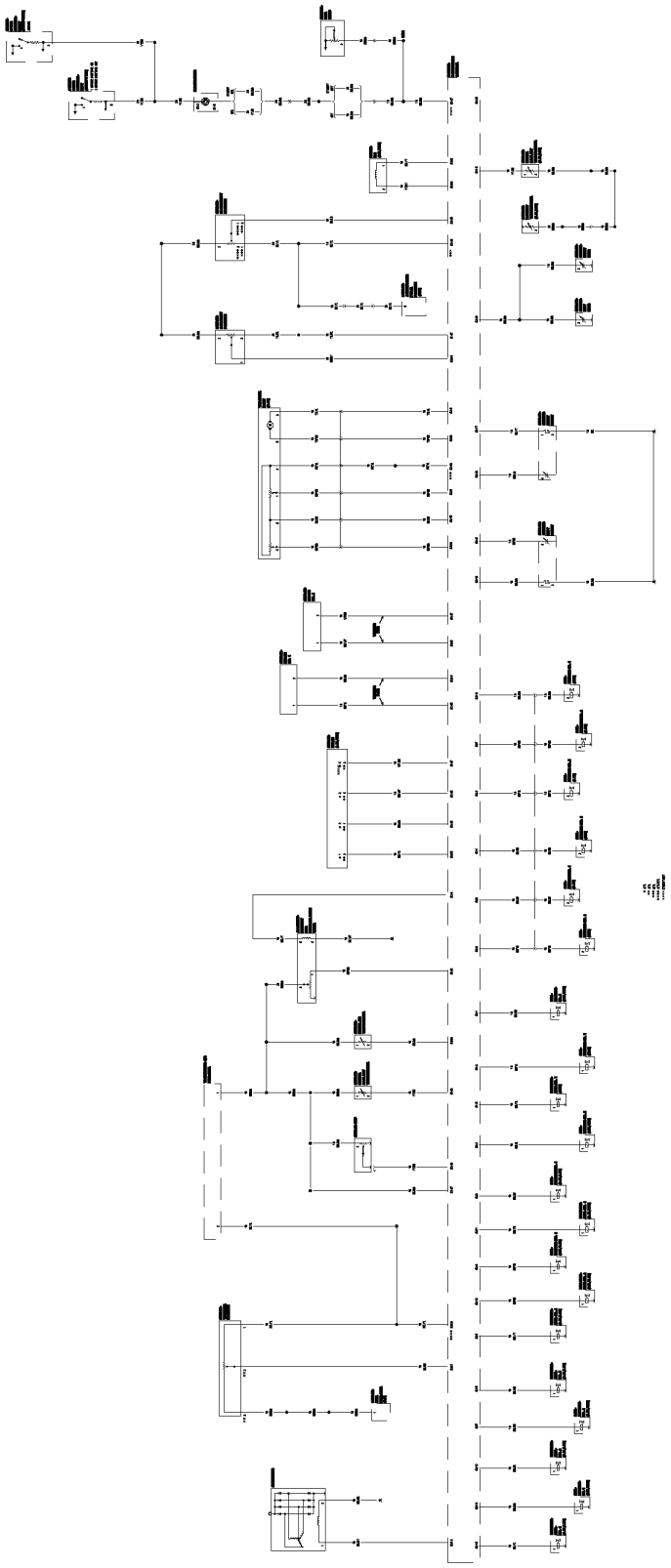

PCM C2 SYSTEM SCHEMATIC

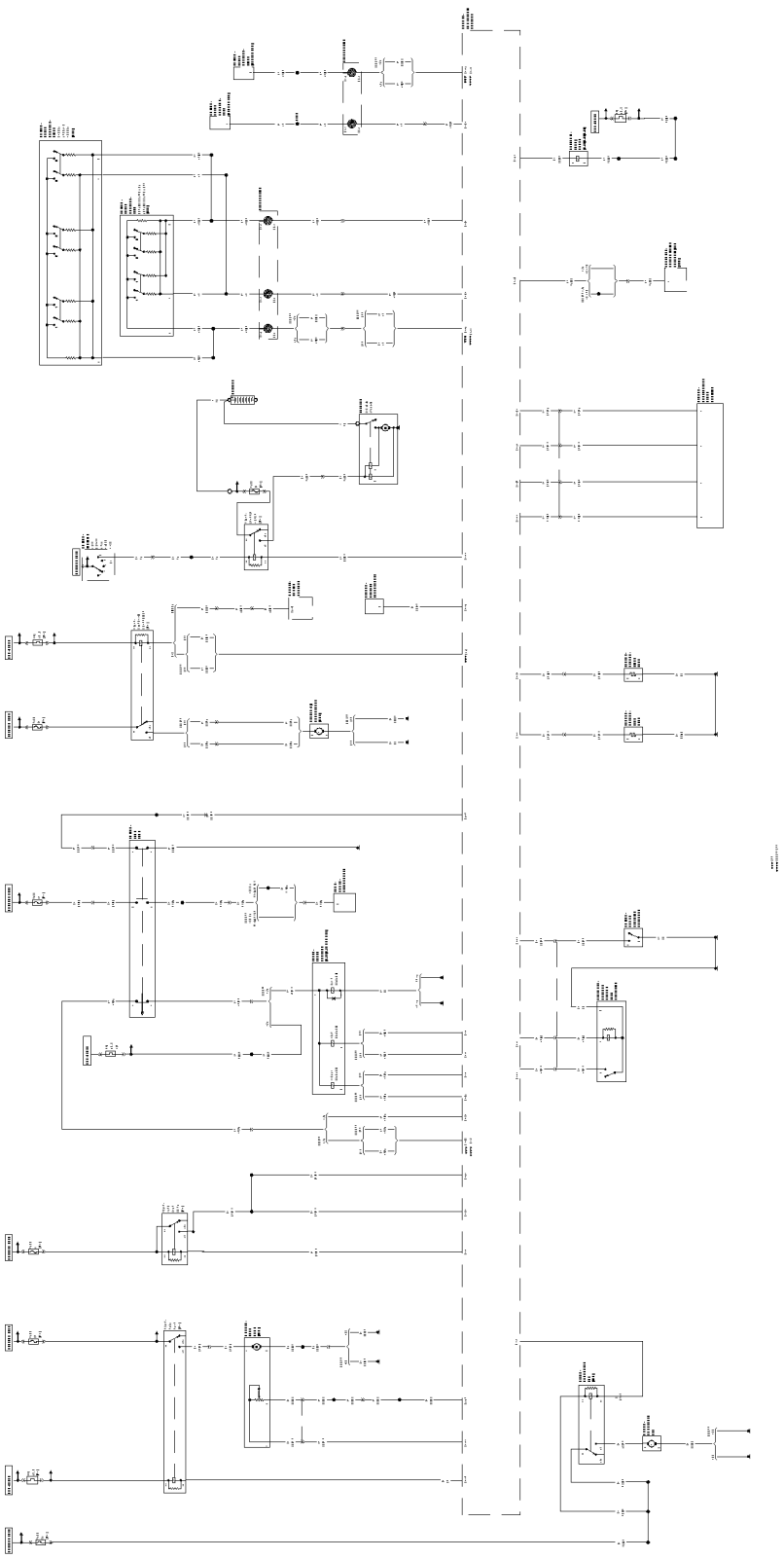

PCM C3 SYSTEM SCHEMATIC

ENGINE - ELECTRICAL DIAGNOSTICS - DIESEL

TABLE OF CONTENTS

page

ENGINE - ELECTRICAL DIAGNOSTICS - DIESEL
CAUTION
P0016-ENGINE SPEED SIGNAL MISMATCH 1048
DIAGNOSIS AND TESTING
PRE-DIAGNOSTIC TROUBLESHOOTING PROCEDURE 1051
POWERTRAIN VERIFICATION TEST VER - 1 (DIESEL) 1053
POWERTRAIN VERIFICATION TEST VER - 2 (DIESEL) 1054
POWERTRAIN VERIFICATION TEST VER - 4 (DIESEL) 1055
POWERTRAIN VERIFICATION TEST VER - 5 (DIESEL) 1057
INTERMITTENT CONDITION 1058
P0069-BOOST KEY ON RATIONALITY 1059
P0071-INLET AIR TEMP SENSOR RATIONALITY 1062
P0072-INLET AIR TEMP SENSOR VOLTAGE TOO LOW 1064
P0073-INLET AIR TEMP SENSOR VOLTAGE TOO HIGH 1069
P0088-FUEL RAIL PRESSURE SIGNAL IS ABOVE MAX LIMIT 1074
P0106-INLET AIR PRESSURE SENSOR RATIONALITY 1076
P0107-INLET AIR PRESSURE SENSOR VOLTAGE TOO LOW 1078
P0108-INLET AIR Pressure Sensor Voltage Too high 1085
P0111-INTAKE AIR TEMPERATURE (IAT) SENSOR RATIONALITY 1091
P0112-INTAKE AIR TEMPERATURE (IAT) SENSOR VOLTAGE TOO LOW 1093
P0113-INTAKE AIR TEMPERATURE (IAT) SENSOR VOLTAGE TOO HIGH 1098
P0116-ENGINE COOLANT TEMPERATURE (ECT) SENSOR RATIONALITY 1103
P0117-ENGINE COOLANT TEMPERATURE (ECT) SENSOR VOLTAGE TOO LOW 1106
P0118-ENGINE COOLANT TEMPERATURE (ECT) SENSOR VOLTAGE TOO HIGH 1110
P0128-THERMOSTAT RATIONALITY 1115
P0148-HIGH PRESSURE COMMON RAIL (HPCR) CHECKSUM 1116
P0169-WATER IN FUEL (WIF) LIGHT ON TOO LONG 1119
P0191-FUEL RAIL PRESSURE SENSOR PERFORMANCE 1121
P0192-FUEL PRESSURE SENSOR VOLTAGE TOO LOW 1124
P0193-FUEL PRESSURE SENSOR VOLTAGE TOO HIGH 1130
P0201-INJECTOR #1 CONTROL CIRCUIT . 1135
P0202-INJECTOR #2 CONTROL CIRCUIT . 1139
P0203-INJECTOR #3 CONTROL CIRCUIT . 1143
P0204-INJECTOR #4 CONTROL CIRCUIT . 1147
P0205-INJECTOR #5 CONTROL CIRCUIT . 1151
P0206-INJECTOR #6 CONTROL CIRCUIT . 1155
P0217-DECREASED ENGINE PERFORMANCE DUE TO ENGINE OVERHEAT CONDITION 1159
P0219-CRANKSHAFT POSITION SENSOR OVER SPEED SIGNAL 1161
P0234-TURBOCHARGER OVERBOOST CONDITION 1163
P0236-MAP SENSOR TOO HIGH TOO LONG 1165
P0237-MAP SENSOR VOLTAGE TOO LOW . . 1168
P0238-MAP SENSOR VOLTAGE TOO HIGH 1174
P0243-WASTEGATE PRESSURE CONTROL PWM 1179
P0251-CP3 PUMP REGULATOR CONTROL 1185
P0299-BOOST IN RANGE LOW 1192
P0300-MULTIPLE CYLINDER MISFIRE 1196
P0301-CYLINDER # 1 MISFIRE 1199
P0302-CYLINDER # 2 MISFIRE 1202
P0303-CYLINDER # 3 MISFIRE 1205
P0304-CYLINDER # 4 MISFIRE 1208
P0305-CYLINDER # 5 MISFIRE 1211
P0306-CYLINDER # 6 MISFIRE 1214
P0335-CRANKSHAFT POSITION (CKP) LOST 1217
P0336-CRANKSHAFT POSITION (CKP) SENSOR SIGNAL 1224
P0337-CRANKSHAFT POSITION (CKP) SENSOR VOLTAGE TOO LOW 1231
P0338-CRANKSHAFT POSITION (CKP) SENSOR VOLTAGE TOO HIGH 1234
P0340-CAMSHAFT POSITION (CMP) LOST 1237
P0341-CAMSHAFT POSITION (CMP) SENSOR SIGNAL 1243
P0381-WAIT TO START LAMP INOPERATIVE 1250
P0461-Fuel Level Unit No Change Over Time 1252

P0462-LOW VOLTAGE DETECTED AT THE FUEL LEVEL SENSOR 1255
P0463-HIGH VOLTAGE DETECTED AT THE FUEL LEVEL SENSOR 1259
P0477-LOW VOLTAGE ON THE ENGINE BRAKE DRIVER 1262
P0478-HIGH VOLTAGE ON THE ENGINE BRAKE DRIVER 1265
P0480-FAN CLUTCH 1267
P0483-FAN SPEED 1272
P0500-NO VEHICLE SPEED SENSOR SIGNAL 1280
P0514-BAT TEMPERATURE SENSOR RATIONALITY 1284
P0516-LOW VOLTAGE AT THE BAT TEMP SENSOR 1286
P0517-HIGH VOLTAGE AT THE BAT TEMP SENSOR 1290
P0521-OIL PRESSURE SWITCH RATIONALITY 1295
P0524-OIL PRESSURE TOO LOW 1298
P0532-A/C SENDING UNIT VOLTS TOO LOW 1301
P0533-A/C SENDING UNIT VOLTS TOO HIGH 1308
P0541-LOW VOLTAGE ON THE #1 INTAKE AIR HEATER RELAY 1313
P0542-HIGH VOLTAGE ON THE #1 INTAKE AIR HEATER RELAY 1316
P0562-BATTERY VOLTAGE LOW 1319
P0563-BATTERY VOLTAGE HIGH 1323
P0572-LOW VOLTAGE DETECTED AT THE BRAKE SWITCH. 1326
P0573-HIGH VOLTAGE DETECTED AT THE BRAKE SWITCH. 1330
P0580-LOW VOLTAGE DETECTED AT THE SPEED CONTROL SWITCH 1333
P0581-HIGH VOLTAGE DETECTED AT THE SPEED CONTROL SWITCH 1337
P0602-CHECKSUM ERROR 1343
P0604-ECM SOFTWARE ERROR 1344
P0606-ECM HARDWARE ERROR 1345
P0607-ECM INTERNAL FAILURE 1346
P0622-GENERATOR FIELD NOT SWITCHING PROPERLY 1347
P0628-LOW VOLTAGE DETECTED AT THE FUEL LIFT PUMP 1351
P0629-HIGH VOLTAGE DETECTED AT THE FUEL LIFT PUMP 1355
P0630-VIN NOT ENTERED ERROR 1359
P0633-SKIM SECRET KEY NOT ENTERED . . 1360
P0642-LOW VOLTAGE AT THE #2 SENSOR SUPPLY CIRCUIT. 1361
P0643-HIGH VOLTAGE AT THE #2 SENSOR SUPPLY CIRCUIT. 1365
P0646-LOW VOLTAGE DETECTED AT THE A/C CLUTCH RELAY 1368
P0647-HIGH VOLTAGE DETECTED AT THE A/C CLUTCH RELAY 1372
P0652-LOW VOLTAGE AT THE #1 SENSOR SUPPLY CIRCUIT. 1375
P0653-HIGH VOLTAGE AT THE #1 SENSOR SUPPLY CIRCUIT. 1379
P0698-ACCELERATOR PEDAL POSITION SENSOR (APPS) SUPPLY VOLTAGE TOO LOW 1382
P0699-ACCELERATOR PEDAL POSITION SENSOR (APPS) SUPPLY VOLTAGE TOO HIGH 1386
P1652-J1850 SHORT TO GROUND 1389
P2121-PPS CONFORMANCE ERROR 1392
P2122-PPS 1 VOLTAGE TOO LOW 1404
P2123-PPS 1 VOLTAGE TOO HIGH 1410
P2127-PPS 2 VOLTAGE TOO LOW 1414
P2128-PPS 2 VOLTAGE TOO HIGH 1420
P2146-BANK 1 (CYLINDERS 1-3) SHORTED HIGH OR LOW. 1424
P2149-BANK 2 (CYLINDERS 4-6) SHORTED HIGH OR LOW. 1433
P2266-WATER IN FUEL (WIF) SENSOR VOLTAGE TOO LOW 1442
P2269-WATER IN FUEL (WIF) 1445
P2502-CHARGING SYSTEM ERROR 1448
P2503-CHARGING SYSTEM OUTPUT LOW . . 1452
P2504-CHARGING SYSTEM OUTPUT HIGH . . 1455
P2509-POWERDOWN DATA LOST ERROR . . 1459
P2607-LOW VOLTAGE AT THE #2 INTAKE AIR HEATER RELAY 1463
P2608-HIGH VOLTAGE AT THE #2 INTAKE AIR HEATER RELAY 1467
P2609-NO VOLTAGE DROP SEEN FROM INTAKE AIR HEATERS 1470
*ENGINE SPEED SURGES UNDER LOAD OR IN OPERATING RANGE 1473
*ENGINE SPEED SURGES LOW OR HIGH IDLE. 1474
*ENGINE DIFFICULT TO START OR WILL NOT START (NO EXHAUST SMOKE WHILE CRANKING) 1475
*ENGINE DIFFICULT TO START OR WILL NOT START (EXHAUST SMOKE) 1476
*ENGINE SPEED SURGES IN PTO OR CRUISE CONTROL 1477
*CHECKING THE ACCELERATOR PEDAL SENSOR CALIBRATION 1478
*CHECKING THE ECM POWER AND GROUNDS 1479
*CHECKING PRESSURE LIMITING VALVE ON THE FUEL RAIL FOR INTERNAL LEAKS 1480
*FUEL HEATER THERMOSTAT TEST 1481
*FUEL PUMP RETURN FLOW TEST 1482
*HIGH PRESSURE FUEL PUMP PERFORMANCE TEST. 1483
*INJECTOR RETURN FLOW TEST 1484
*INTAKE AIR SYSTEM PRESSURE TEST . 1485

ENGINE - ELECTRICAL DIAGNOSTICS - DIESEL

CAUTION

P0016-ENGINE SPEED SIGNAL MISMATCH

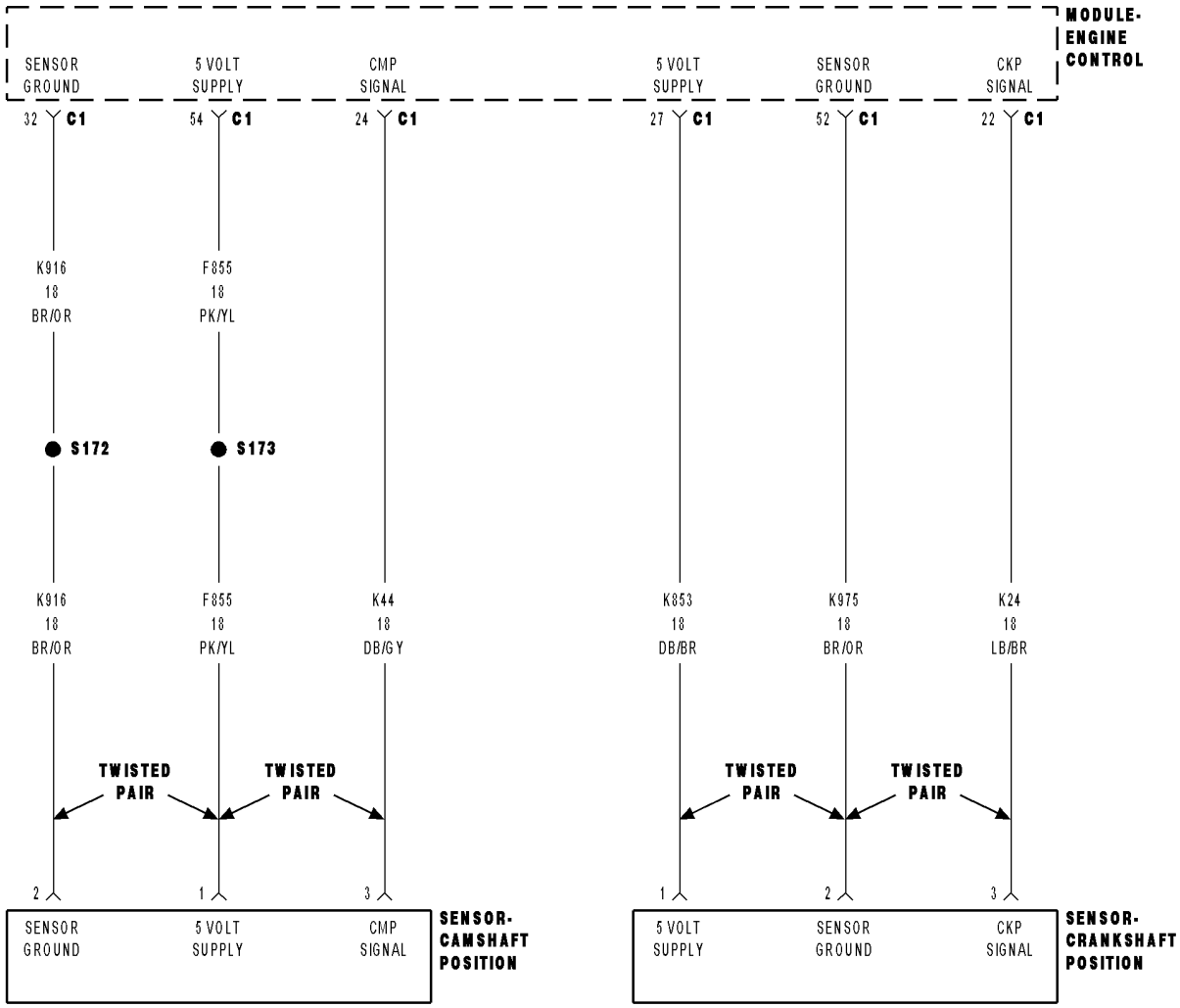

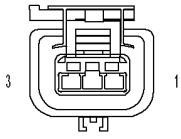

SENSOR-
CAMSHAFT
POSITION
(DIESEL)

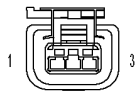

SENSOR-
CRANKSHAFT
POSITION
(DIESEL)

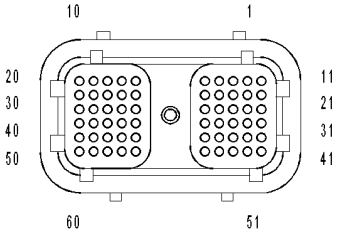

MODULE-ENGINE
CONTROL C1

813f9e4

P0016-ENGINE SPEED SIGNAL MISMATCH (CONTINUED)

For the Engine circuit diagram (Refer to 9 - ENGINE - SCHEMATICS AND DIAGRAMS).

For a complete wiring diagram **Refer to Section 8W**.

- **When Monitored:**
  While Engine is running.
- **Set Condition:**
  When the engine speed detected by the Engine Position Sensor (cam) and the Engine Speed Sensor (crank) differ by a specified RPM amount.

Possible Causes
DAMAGE TO THE ESS OR EPS
MECHANICAL MISALIGNMENT OF THE ESS OR EPS
MECHANICAL MISALIGNMENT OF THE CAMSHAFT AND CRANKSHAFT GEARS
INTERMITTENT CONDITION

Diagnostic Test

1. DAMAGE TO THE ESS OR EPS

Visually inspect the condition of the tone wheel, ESS, and EPS for damage.

Are any of the components damaged?

Yes >> Repair or replace any damaged component.
Perform POWERTRAIN VERIFICATION TEST VER - 1 (DIESEL). (Refer to 9 - ENGINE - DIAGNOSIS AND TESTING)

No >> Go To 2

---

2. MECHANICAL MISALIGNMENT OF THE ESS OR EPS

Verify the speed indicator ring is properly positioned relative to the locating pin in the front face of the crankshaft.

Is the speed indicator ring properly installed?

Yes >> Go To 3

No >> Repair the speed ring indicator ring installation.
Perform POWERTRAIN VERIFICATION TEST VER - 1 (DIESEL). (Refer to 9 - ENGINE - DIAGNOSIS AND TESTING)

---

3. Test Mechanical misalignment of the camshaft and crankshaft gears.

Check the mechanical alignment of the camshaft gear to the crankshaft gear. Refer to service manual for assistance.

Are the gear teeth in proper alignment?

Yes >> Refer to the INTERMITTENT CONDITION Symptom (Diagnostic Procedure). (Refer to 9 - ENGINE - DIAGNOSIS AND TESTING)

No >> Repair the gear alignment.
Perform POWERTRAIN VERIFICATION TEST VER - 1 (DIESEL). (Refer to 9 - ENGINE - DIAGNOSIS AND TESTING)

DIAGNOSIS AND TESTING

PRE-DIAGNOSTIC TROUBLESHOOTING PROCEDURE

For the Engine circuit diagram (Refer to 9 - ENGINE - SCHEMATICS AND DIAGRAMS).

For a complete wiring diagram **Refer to Section 8W**.

Diagnostic Test

1. NO RESPONSE

Make sure the scan tool will communicate with the appropriate modules.

Are you currently experiencing a NO RESPONSE condition?

Yes >> The NO RESPONSE condition must be properly diagnosed before continuing.
Refer to the appropriate BUS Communication test in Section 8 ELECTRONIC CONTROL MODULES - ELECTRICAL DIAGNOSTICS.

No >> Go To 2

---

2. NO START

Is the customer complaint a NO START condition?

Yes >> Check the vehicle for any NO START related PCM DTC(s) or Vehicle Theft Security related DTC(s).
If no Theft related DTC(s) are present, refer to the Non DTC Diagnostic Procedures that relate to Fuel and Starting.

No >> Go To 3

---

3. VEHICLE HISTORY AND TSB(s)

Continue by reading PCM DTC(s) and record the related Freeze Frame data if any DTC(s) are present.

Whether or not any DTC(s) are present you will want to check the following items which may assist in repairing the customers complaint successfully.

Check the vehicles repair history.

If the vehicle has a repair history that pertains to the customer's current complaint, review the repair.

Inpect the vehicle for any aftermarket accessories that may have been installed incorrectly.

Check for any TSB(s) related to the customer's complaint or DTC(s).

If a TSB applies, follow the instructions per the TSB.

Choose the following scenario that best applies.

The TSB repaired the customers complaint.
Testing complete.

A DTC is present, no TSB applies, or the TSB didn't repair the customers complaint.
Go To 4

No DTC(s) are present.
Refer to the INTERMITTENT CONDITION Diagnostic Procedure.

PRE-DIAGNOSTIC TROUBLESHOOTING PROCEDURE (CONTINUED)

4. WIRE HARNESS INSPECTION

Clear the DTC(s).

Attempt to duplicate the customer complaint.

Whether the customer complaint can be duplicated or not, make a quick wire harness inspection related to the DTC(s) that were previously cleared.

Check the Powertrain Control Module connectors, the suspected component connection, in-line connectors, wire harness splices, PCM power and ground circuits, and any related fuses.

If the DTC(s) are fuel or air related, check the fuel level and quality.

Were any repairs made that fixed the customer's complaint?

Yes >> Testing complete.

No >> Refer to the diagnostic test procedure related to the DTC.

POWERTRAIN VERIFICATION TEST VER - 1 (DIESEL)

Diagnostic Test

1. POWERTRAIN VERIFICATION TEST VER - 1 (DIESEL)

1. Clear the DTC before continuing.
2. Check if any of the following conditions exist.
3. The ECM has been disconnected or replaced.
4. The battery power has been disconnected.
5. If the ECM has been replaced, do the following: (Other go to step 12).

NOTE: 8. If the Engine Control Module has been replaced and the correct VIN and mileage have not been programmed, a DTC will be set in the ABS, Airbag Modules and SKIM module.

6. For ABS and Airbag Systems: Action: Enter correct VIN and Mileage in PCM. Erase ABS and Airbag Module codes.
7. If the ECM has not been replaced, do the following.
8. Inspect the vehicles to ensure that all engine components are connected. Reassemble and reconnect components as necessary.
9. Attempt to start the engine.
10. If the engine is unable to start, look for any Technical Service Bulletins that may relate to this condition. Return to Symptom list if necessary.
11. If the there are no DTCs present and all components are functional, the repair is complete.

Are any DTC(s) present?

Yes >> Repair is not complete, refer to appropriate symptom.

No >> Repair is complete.

POWERTRAIN VERIFICATION TEST VER - 2 (DIESEL)

Diagnostic Test

1. POWERTRAIN VERIFICATION TEST VER - 2 (DIESEL)

1. Check if any of the following conditions exist.
2. The ECM has been disconnected or replace.
3. The Battery power has been disconnected.
4. If the PCM has been replaced, do the following: (Otherwise go to step 12)

NOTE: 5. If the Engine Control Module has been changed and the correct VIN andmileage have not been programmed, a DTC will be set in the ABS and Airbag Module.

6. For ABS and Airbag Systems: Action: Enter correct VIN and Mileage in the ECM. Erase ABS and Airbag Module codes.
7. If the ECM has been replace, do the following.
8. If this verification procedure is being performed after a No Trouble Code repair, do the following.
9. Check to see if the initial symptom still exists. If the initial or another symptom exists, the repair is not complete. Check all pertinent Technical Service Bulletins and return to the Symptom list if necessary.
10. If this verification procedure is being performed after a Trouble Code repair, do the following.
11. Connect the scan tool to the data link connector and erase trouble codes.
12. With the scan tool, reset all memory values.
13. If this test is for an A/C trouble code, ensure it is operating during the following road test.
14. Drive the vehicle for at least five minutes, For some of the drive, go at least 40 MPH; at some point stop the vehicle and turn the engine off for 10 seconds or more; then restart and continue. Ensure the transmission shifts through all gears.
15. Upon completion of the road test, turn the engine off and read trouble codes with the scan tool. If a trouble code has been set, return to the Symptom list and follow the path specified.

Is there any DTC(s) present?

Yes >> Repair is not complete, refer to appropriate symptom.

No >> Repair is complete.

POWERTRAIN VERIFICATION TEST VER - 4 (DIESEL)

1. POWERTRAIN VERIFICATION TEST VER - 4 (DIESEL)

1. Check if any of the following conditions exist.

2. The ECM has been disconnected or replace.

3. The Battery power has been disconnected.

4. Inspect the vehicle to ensure that all engine components are properly installed and connected. Reassemble and reconnect components as necessary.

5. With the DRBIII®, erase DTCs.

6. If the ECM has been replaced, perform steps 11 through 13, then continue with the verification.

7. If ECM has been changed and correct VIN and mileage have not been programmed, a DTC will be set in ABS and Air bag modules. In addition, if vehicle is equipped with a Sentry Key Immobilizer Module (SKIM), Secret Key data must be updated to enable start.

8. For ABS and Air Bag systems: Enter correct VIN and Mileage in ECM. Erase codes in ABS and Air Bag modules.

9. For SKIM theft alarm: Connect DRBIII® to data link conn. Go to Theft Alarm, SKIM, Misc. and place SKIM in secured access mode, by using the appropriate PIN code for this vehicle. Select Update the Secret Key data. Data will be transferred from SKIM to PCM

10. Turn the speed control ON (if equipped, cruise light will be on).

11. Depress and release the SET Switch. If the speed control did not engage, the repair is not complete. Check for TSBs that pertain to speed control problem and then, if necessary, return to Symptom List.

12. Depress and hold the RESUME/ACCEL Switch. If the vehicle speed did not increase by at least 2 mph, the repair is not complete. Check for TSBs that pertain to speed control problem and then, if necessary, return to Symptom List.

13. Press and hold the COAST switch. The vehicle speed should decrease. If it did not decrease, the repair is not complete. Check for TSBs that pertain to speed control problem and then, if necessary, return to Symptom List.

14. Using caution, depress and release the brake pedal. If the speed control did not disengage, the repair is not complete. Check for TSBs that pertain to speed control problem and then, if necessary, return to Symptom List.

15. Bring the vehicle speed back up to 35 MPH.

16. Depress the RESUME/ACCEL switch. If the speed control did not resume the previously set speed, the repair is not complete. Check for TSBs that pertain to speed control problem and then, if necessary, return to Symptom List.

17. Hold down the SET switch. If the vehicle did not decelerate, the repair is not complete. Check for TSBs that pertain to speed control problem and then, if necessary, return to Symptom List.

18. Ensure vehicle speed is greater than 35 mph and release the SET Switch. If vehicle did not adjust and set a new vehicle speed, the repair is not complete. Check for TSBs that pertain to speed control problem and then, if necessary, return to Symptom List.

19. Depress and release the CANCEL switch. If the speed control did not disengage, the repair is not complete. Check for TSBs that pertain to speed control problem and then, if necessary, return to Symptom List.

20. Bring the vehicle speed back up above 35 mph and engage speed control.

21. Depress the OFF switch to turn OFF, (Cruise light will be off). If the speed control did not disengage, the repair is not complete. Check for TSBs that pertain to speed control problem and then, if necessary, return to Symptom List.

22. If the vehicle successfully passed all of the previous tests, the speed control system is now functioning as designed. The repair is now complete.

23. NOTE: OVERSHOOT/UNDERSHOOT FOLLOWING SPEED CONTROL SET.

24. If the vehicle operator repeatedly presses and releases the SET button with their foot off of the accelerator (referred to as ″lift foot set″), the vehicle may accelerate and exceed the desired set speed by up to 5 mph (8 km/h).

POWERTRAIN VERIFICATION TEST VER - 4 (DIESEL) (CONTINUED)

25. It may also decelerate to less than the desired set speed, before finally achieving the desired set speed.

26. The Speed Control System has an adaptive strategy that compensates for vehicle-to-vehicle variations in speed control cable lengths.

27. When the speed control is set with the vehicles operators foot off of the accelerator pedal, the speed control thinks there is excessive speed control cable slack and adapts accordingly.

28. If the ″lift foot sets″ are continually used, a speed control overshoot/undershoot condition will develop.

29. To ″unlearn″ the overshoot/undershoot condition, the vehicle operator has to press and release the set button while maintaining the desired set speed using the accelerator pedal (not decelerating or accelerating).

30. Then turning the cruise control switch to the OFF position (or press the CANCEL button if equipped) after waiting 10 seconds.

31. This procedure must be performed approximately 10-15 times to completely unlearn the overshoot/undershoot condition.

Did the Speed Control pass the above test?

Yes >> Repair is not complete, refer to appropriate symptom.

No >> Repair is complete.

POWERTRAIN VERIFICATION TEST VER - 5 (DIESEL)

Diagnostic Test

1. POWERTRAIN VERIFICATION TEST VER - 5 (DIESEL)

1. Check if any of the following conditions exist.
2. The ECM has been disconnected or replace.
3. The Battery power has been disconnected.
4. Inspect the vehicle to ensure that all engine components are properly installed and connected. Reassemble and reconnect components as necessary.
5. If any existing diagnostic trouble codes have not been repaired, go to Symptom List and follow path specified.
6. Connect the scan tool to the data link connector.
7. Ensure the fuel tank has at least a quarter tank of fuel. Turn off all accessories.
8. Perform steps 15 through 17 if the PCM has been replaced. Then proceed with the verification. If the ECM has not been replaced skip those steps and continue verification.
9. If ECM has been changed and correct VIN and mileage have not been programmed, a DTC will be set in ABS and Air bag modules. In addition, if vehicle is equipped with a Sentry Key Immobilizer Module (SKIM), Secret Key data must be updated to enable start.
10. For ABS and Air Bag systems: Enter correct VIN and Mileage in ECM. Erase codes in ABS and Air Bag modules.
11. For SKIM theft alarm: Connect scan tool to data link connector to Theft Alarm, SKIM, Misc. and place SKIM in secured access mode by using appropriate PIN code for this vehicle. Select Update the Secret Key data. Data will be transferred from SKIM to PCM.
12. If a Comprehensive Component DTC was repaired, perform steps 10-13. If a Major OBDII Monitor DTC was repaired skip those steps and continue verification.
13. After the ignition has been off for at least 10 seconds, restart the vehicle and run 2 minutes.
14. If there are no new DTC's, the repair was successful and is now complete. Erase DTC's and disconnect the scan tool.
15. If the repaired DTC has reset, the repair is not complete. Check for any related TSB's or flash updates and return to the Symptom list.
16. If another DTC has set, return to the Symptom List and follow the path specified for that DTC.
17. With the scan tool, monitor the appropriate pre-test enabling conditions until all conditions have been met. Once the conditions have been met, switch screen to the appropriate OBDII monitor, (Audible beeps when the monitor is running).
18. If the monitor ran, the repair was successful and is now complete. Erase DTC's and disconnect the scan tool.
19. If the repaired OBDII trouble code has reset or was seen in the monitor while on the road test, the repair is not complete. Check for any related technical service bulletins or flash updates and return to Symptom List.
20. If another DTC has set, return to the Symptom List and follow the path specified for that DTC.

Is any DTC(s) present?

Yes >> Repair is not complete, refer to appropriate symptom.

No >> Repair is complete.

INTERMITTENT CONDITION

For the Engine circuit diagrams (Refer to 9 - ENGINE - SCHEMATICS AND DIAGRAMS).

For a complete wiring diagram **Refer to Section 8W**.

POSSIBLE CAUSES
INTERMITTENT CONDITION

Diagnostic Test

1. INTERMITTENT CONDITION

NOTE: The conditions that set the DTC are not present at this time. The following list may help in identifying the intermittent condition.

WARNING: When the engine is operating, do not stand in direct line with the fan. Do not put your hands near the pulleys, belts, or fan. Do not wear loose clothing. Failure to follow these instructions can result in personal injury or death.

Refer to any Technical Service Bulletins (TSBs) that may apply.

Review the scan tool Freeze Frame information. If possible, try to duplicate the conditions under which the DTC set.

With the engine running at normal operating temperature, monitor the scan tool parameters related to the DTC while wiggling the wire harness. Look for parameter values to change and/or a DTC to set.

Turn the ignition off.

Visually inspect the related wire harness. Disconnect all the related harness connectors. Look for any chafed, pierced, pinched, partially broken wires and broken, bent, pushed out, or corroded terminals.

Perform a voltage drop test on the related circuits between the suspected faulty component and the ECM.

Inspect and clean all ECM, engine, and chassis grounds that are related to the most current DTC.

If numerous trouble codes were set, use a wire schematic and look for any common ground or supply circuits.

For any Relay DTCs, actuate the Relay with the scan tool and wiggle the related wire harness to try to interrupt the actuation.

For intermittent Evaporative Emission trouble codes perform a visual and physical inspection of the related parts including hoses and the Fuel Filler cap.

For intermittent Misfire DTC's check for restrictions in the Intake and Exhaust system, proper installation of Sensors, vacuum leaks, and binding components that are run by the accessory drive belt.

Use the scan tool to perform a System Test if one applies to failing component.

A co-pilot, data recorder, and/or lab scope should be used to help diagnose intermittent conditions.

Were any problems found during the above inspections?

Yes >> Perform the necessary repairs.
Perform POWERTRAIN VERIFICATION TEST VER - 1 (DIESEL).

No >> Test Complete.

P0069-BOOST KEY ON RATIONALITY

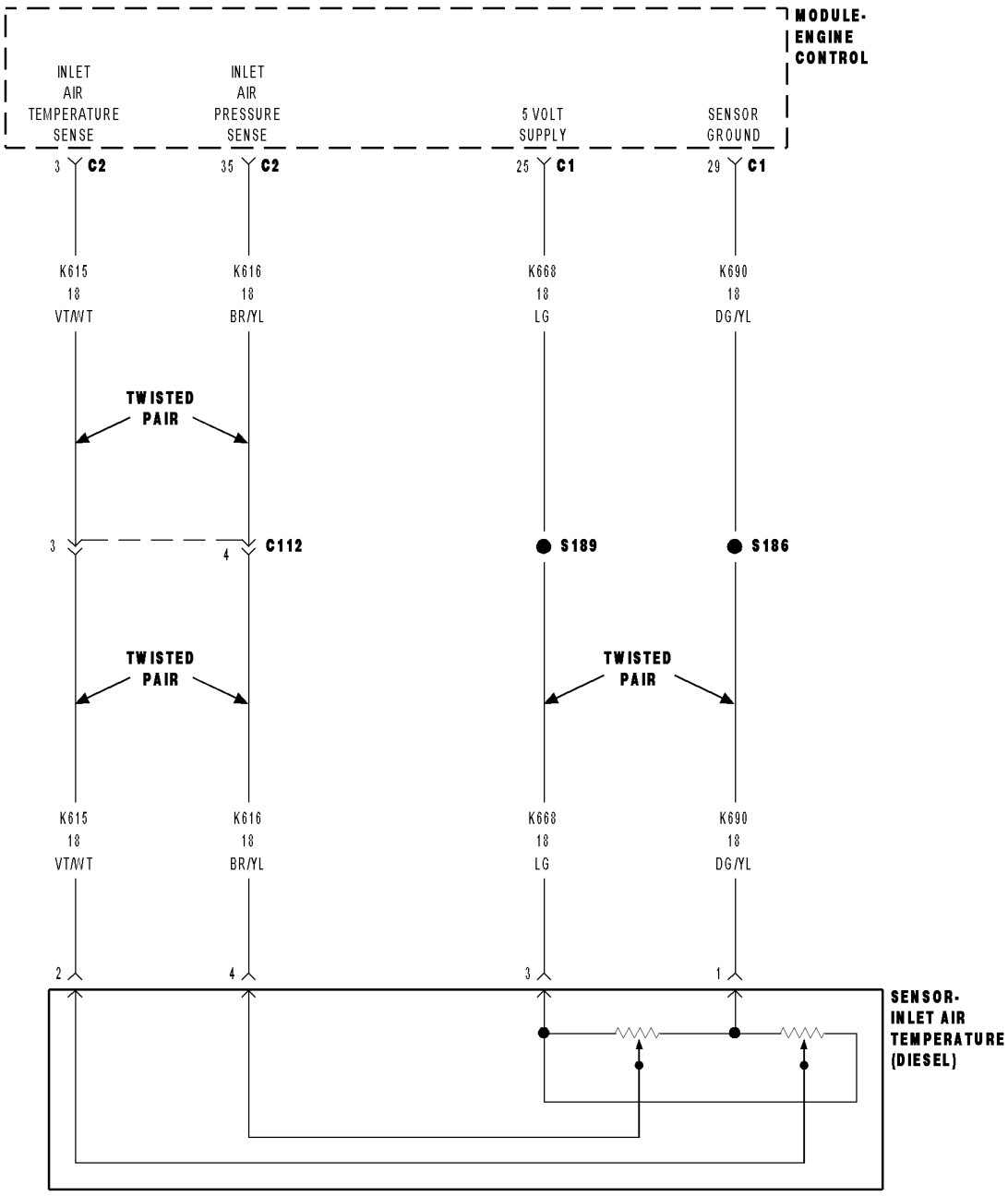

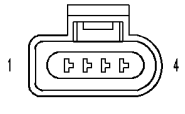

SENSOR-
INLET AIR
TEMPERATURE
(DIESEL)

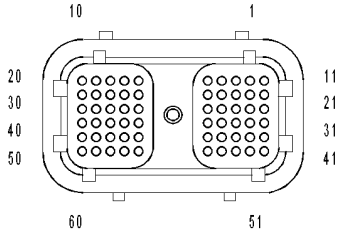

MODULE-ENGINE
CONTROL C1

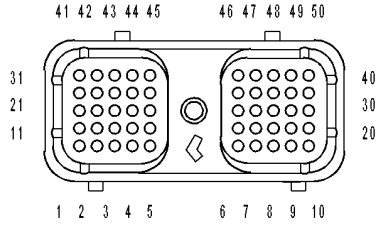

MODULE-ENGINE
CONTROL C2

813c6dea

P0069-BOOST KEY ON RATIONALITY (CONTINUED)

For the Engine circuit diagram (Refer to 9 - ENGINE - SCHEMATICS AND DIAGRAMS)

For a complete wiring diagram **Refer to Section 8W**.

- **When Monitored:**
  While the key is on.
- **Set Condition:**
  The boost pressure recorded at key on is not within a calibrated range from the inlet air pressure sensor.

Possible Causes
OTHER DTC'S PRESENT
INLET AIR PRESSURE SENSOR
BOOST PRESSURE SENSOR
INTERMITTENT CONDITION

Always perform the Pre-Diagnostic Troubleshooting procedure before proceeding. (Refer to 9 - ENGINE - DIAGNOSIS AND TESTING)

Diagnostic Test

1. OTHER DTC'S PRESENT

With the scan tool, read DTCs.

Are any DTC's present for Inlet air pressure or boost pressure?

Yes >> Repair other DTC's first.
Perform POWERTRAIN VERIFICATION TEST VER - 1 (DIESEL). (Refer to 9 - ENGINE - DIAGNOSIS AND TESTING)

No >> Go To 2

---

2. COMPARE THE INLET AIR PRESSURE

Using the scan tool, compare the inlet air pressure (barometric pressure) sensor reading to the boost pressure sensor reading.

Are the pressure readings within 6 in hg of each other?

Yes >> Go To 5

No >> Go To 3

---

3. INLET AIR PRESSURE SENSOR

Turn the ignition on, engine off.

Using the scan tool, read the inlet air pressure sensor value.

Is the inlet air pressure sensor reading consistent with the barometric pressure for the geographic region?

Yes >> Go To 4

No >> Relace the inlet air pressure sensor.
Perform POWERTRAIN VERIFICATION TEST VER - 1 (DIESEL). (Refer to 9 - ENGINE - DIAGNOSIS AND TESTING)

P0069-BOOST KEY ON RATIONALITY (CONTINUED)

4. BOOST PRESSURE SENSOR

Using the scan tool, read the boost pressure sensor value.

Is the Boost pressure sensor reading consistent with the barometric pressure for the geographic region?

Yes >> Go To 5

No >> Relace the Boost pressure sensor.
Perform POWERTRAIN VERIFICATION TEST VER - 1 (DIESEL). (Refer to 9 - ENGINE - DIAGNOSIS AND TESTING)

---

5. INTERMITTENT CONDITION

The conditions necessary to set this DTC are not present at this time.
Using the schematics as a guide, inspect the wiring and connectors specific to this circuit.
Wiggle the wiring and connectors while checking for any possible open or shorted circuits.
Check for any Service Information Tune-ups or Technical Service Bulletins that may apply.

Were there any problems found?

Yes >> Repair as necessary.
Perform POWERTRAIN VERIFICATION TEST VER - 1 (DIESEL). (Refer to 9 - ENGINE - DIAGNOSIS AND TESTING)

No >> Test Complete.

P0071-INLET AIR TEMP SENSOR RATIONALITY

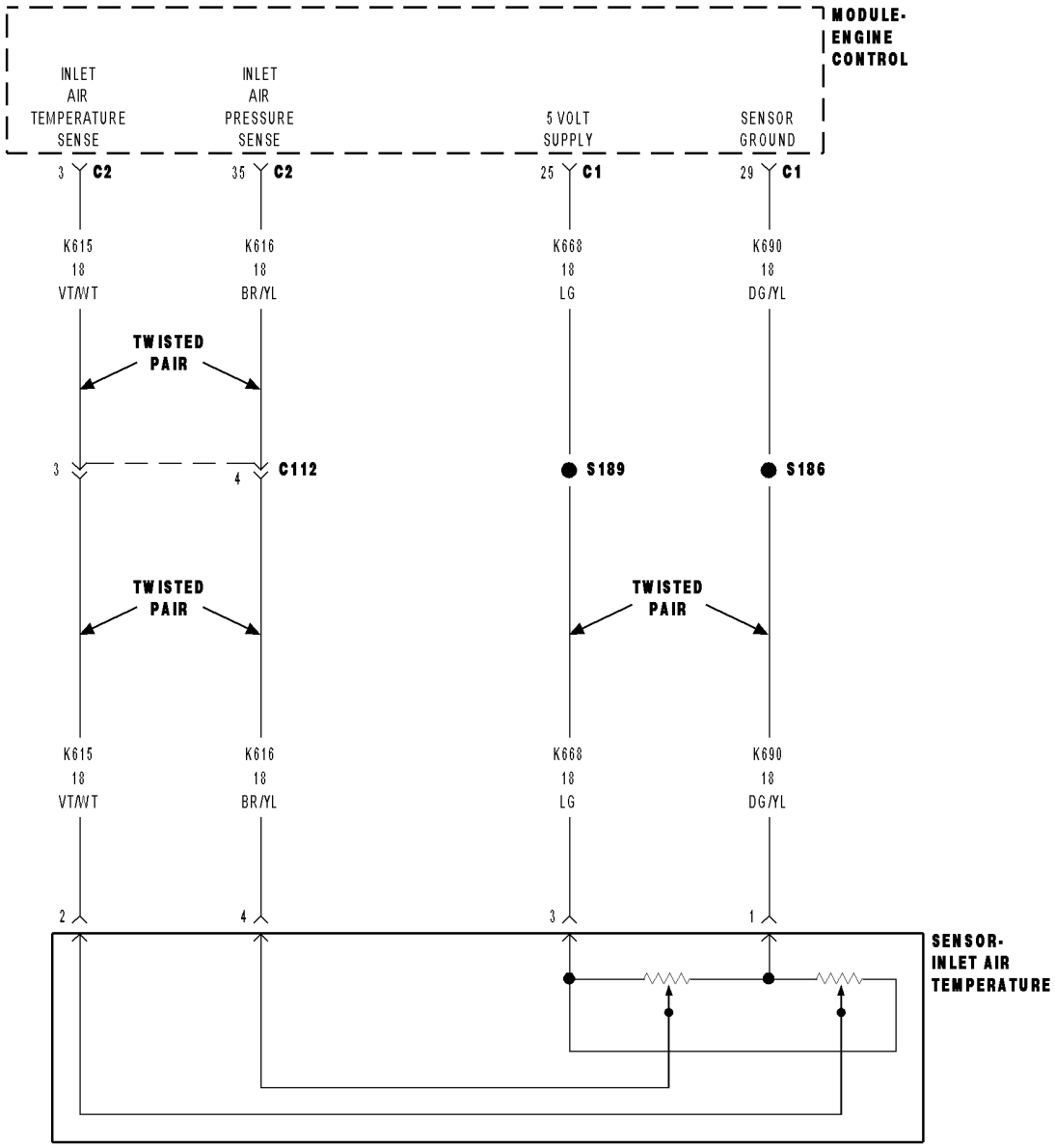

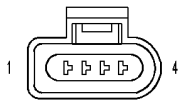

SENSOR-
INLET AIR
TEMPERATURE
(DIESEL)

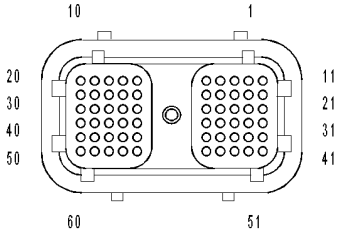

MODULE-ENGINE
CONTROL C1

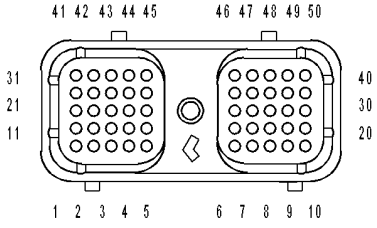

MODULE-ENGINE
CONTROL C2

813cc1a2

P0071-INLET AIR TEMP SENSOR RATIONALITY (CONTINUED)

For the Engine circuit diagram (Refer to 9 - ENGINE - SCHEMATICS AND DIAGRAMS)

For a complete wiring diagram **Refer to Section 8W**.

- **When Monitored:**
  While the engine is running.
- **Set Condition:**
  The ECM does not read a change in value from the sensor over time.

Possible Causes
INLET AIR TEMPERATURE SENSOR
INTERMITTENT CONDITION

Always perform the Pre-Diagnostic Troubleshooting procedure before proceeding. (Refer to 9 - ENGINE - DIAGNOSIS AND TESTING)

Diagnostic Test

1. INLET AIR TEMPERATURE SENSOR

Remove the temperature sensor and reconnect the wiring to the sensor.

With the scan tool in Sensors, Monitor the inlet Air Temperature.

While heating the sensor with an external heat source (DO NOT USE OPEN FLAME).

Does the reading from the sensor increase at least 5 degrees F. on the scan tool?

Yes >> Refer to the INTERMITTENT CONDITION Symptom (Diagnostic Procedure).
Perform POWERTRAIN VERIFICATION TEST VER - 1 (DIESEL). (Refer to 9 - ENGINE - DIAGNOSIS AND TESTING)

No >> Replace the inlet air temperature sensor.
Perform POWERTRAIN VERIFICATION TEST VER - 1 (DIESEL). (Refer to 9 - ENGINE - DIAGNOSIS AND TESTING)

P0072-INLET AIR TEMP SENSOR VOLTAGE TOO LOW

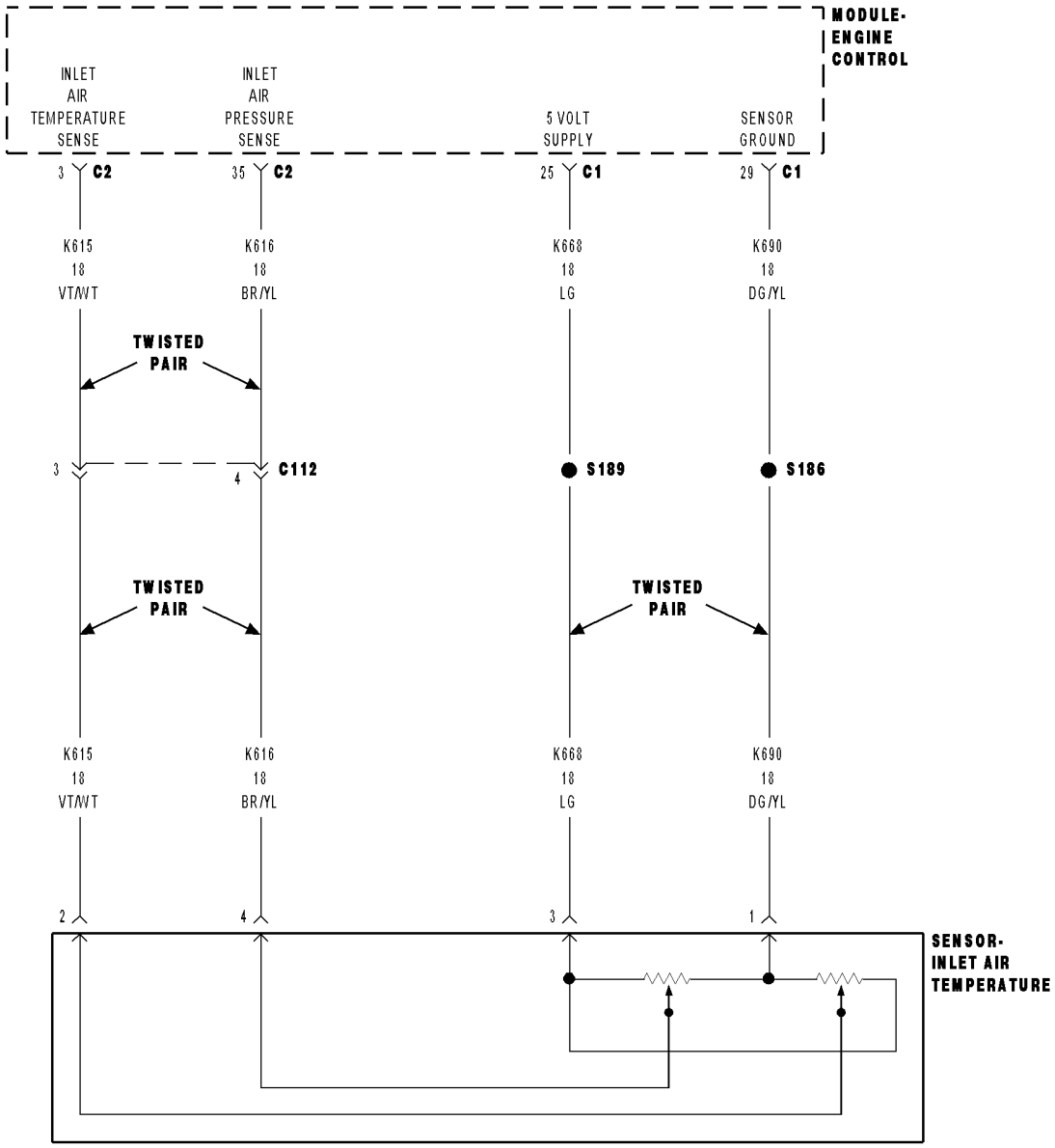

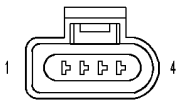

SENSOR-
INLET AIR
TEMPERATURE
(DIESEL)

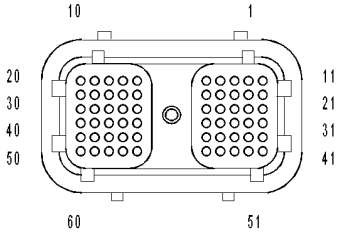

MODULE-ENGINE
CONTROL C1

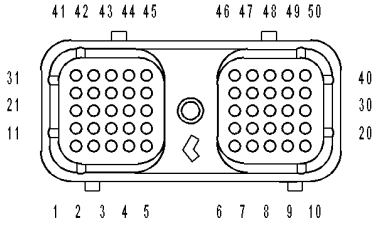

MODULE-ENGINE
CONTROL C2

813cc1a2

P0072-INLET AIR TEMP SENSOR VOLTAGE TOO LOW (CONTINUED)

For the Engine circuit diagram (Refer to 9 - ENGINE - SCHEMATICS AND DIAGRAMS)

For a complete wiring diagram **Refer to Section 8W**.

- **When Monitored:**
  With the ignition on and battery voltage greater than 10.4 volts.
- **Set Condition:**
  The circuit voltage to the ECM falls below a calibrated threshold for a certain period of time.

Possible Causes
SENSOR OUT OF SPEC
HARNESS SHORTED (SENSOR SIDE)
(Y501) 5-VOLT SUPPLY OPEN
HARNESS SHORTED (ECM SIDE)
INTERMITTENT CONDITION
ECM

Always perform the Pre-Diagnostic Troubleshooting procedure before proceeding. (Refer to 9 - ENGINE - DIAGNOSIS AND TESTING)

Diagnostic Test

1. INLET AIR TEMP SENSOR OUT OF SPEC

Turn the ignition off.
Disconnect the Inlet Air Temp sensor harness connector.
Check connectors - Clean/repair as necessary.
Measure the resistance of the temperature sensor.

Is the resistance between 300 and 90k ohms?

Yes >> Go To 2

No >> Replace the sensor.
Perform POWERTRAIN VERIFICATION TEST VER - 1 (DIESEL). (Refer to 9 - ENGINE - DIAGNOSIS AND TESTING)

---

2. INTERMITTENT CONDITION

Reconnect the Inlet Air Temp Sensor harness connector.
Turn the ignition on.
With the scan tool, erase DTCs.
With the scan tool, read DTCs.

Did the DTC return?

Yes >> Go To 3

No >> Refer to the INTERMITTENT CONDITION Symptom (Diagnostic Procedure). (Refer to 9 - ENGINE - DIAGNOSIS AND TESTING)

P0072-INLET AIR TEMP SENSOR VOLTAGE TOO LOW (CONTINUED)

3. HARNESS SHORTED (INLET AIR TEMPERATURE SENSOR SIDE)

Turn the ignition off.

Disconnect the inlet Air Temp sensor harness connector.

Disconnect the ECM harness connector.

Check connectors - Clean/repair as necessary.

Measure the resistance between the engine ground and the (K615) temperature sensor signal circuit at the sensor connector.

Is the resistance more than 100 k ohms?

Yes >> Go To 4

No >> Repair or replace the Engine harness shorted.
Perform POWERTRAIN VERIFICATION TEST VER - 1 (DIESEL). (Refer to 9 - ENGINE - DIAGNOSIS AND TESTING)

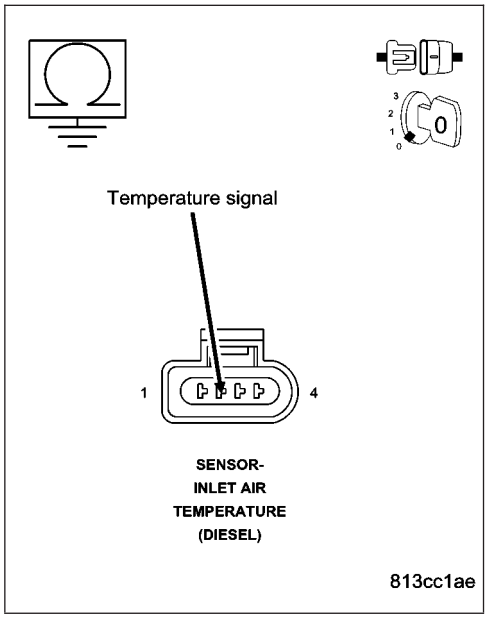

4. HARNESS SHORTED (ECM SIDE)

Measure the resistance between the (K615) signal circuit and all other circuits at the ECM harness connector.

Is the resistance more than 100 k ohms?

Yes >> Go To 5

No >> Repair or replace the ECM harness shorted.
Perform POWERTRAIN VERIFICATION TEST VER - 1 (DIESEL). (Refer to 9 - ENGINE - DIAGNOSIS AND TESTING)

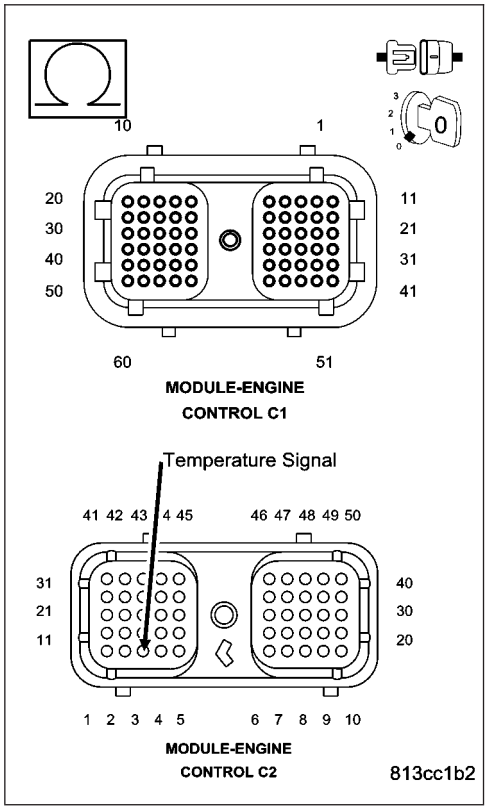

P0072-INLET AIR TEMP SENSOR VOLTAGE TOO LOW (CONTINUED)

5. (K668) 5-VOLT SUPPLY CIRCUIT

Reconnect the ECM harness connector.

Turn the ignition on.

Measure the voltage between the (K668) supply circuit and the (K690) return circuit in the Air Temp sensor harness connector.

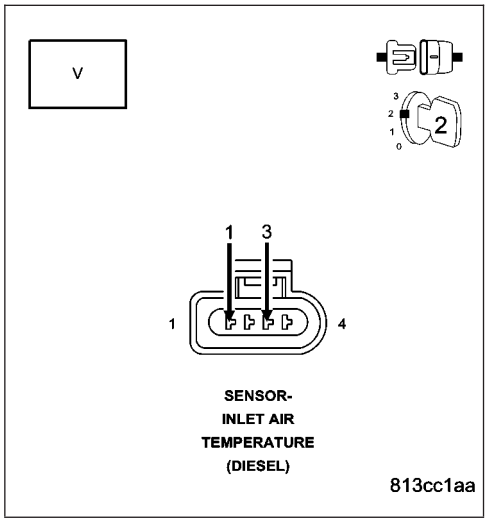

Is the voltage between 4.5 and 5.5 volts?

Yes >> Go To 6

No >> Go To 7

6. ECM

Reconnect the Air Temp sensor harness connector.

Reconnect the ECM harness connector.

With the scan tool, erase DTCs.

While monitoring with scan tool, disconnect the Air Temp sensor harness connector.

Did the DTC P0073 set?

Yes >> Refer to the INTERMITTENT CONDITION Symptom (Diagnostic Procedure) (Refer to 9 - ENGINE - DIAGNOSIS AND TESTING).

No >> Replace the ECM.
Perform POWERTRAIN VERIFICATION TEST VER - 1 (DIESEL). (Refer to 9 - ENGINE - DIAGNOSIS AND TESTING)

P0072-INLET AIR TEMP SENSOR VOLTAGE TOO LOW (CONTINUED)

7. (K668) 5-VOLT SUPPLY OPEN

Disconnect the ECM harness connectors.

Measure the voltage at the (K668) 5-volt supply circuit at the ECM harness connector.

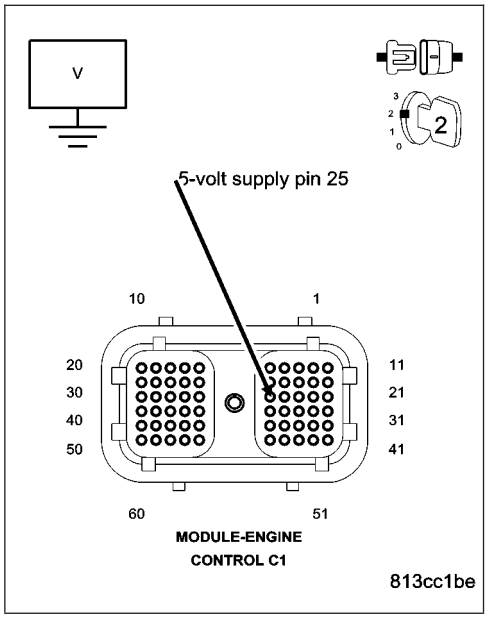

Is the voltage between 4.5 and 5.5 volts?

Yes >> Fix or repair the (K668) 5-volt supply circuit shorted to voltage.

Perform POWERTRAIN VERIFICATION TEST VER - 1 (DIESEL). (Refer to 9 - ENGINE - DIAGNOSIS AND TESTING)

No >> Replace the ECM.

Perform POWERTRAIN VERIFICATION TEST VER - 1 (DIESEL). (Refer to 9 - ENGINE - DIAGNOSIS AND TESTING)

P0073-INLET AIR TEMP SENSOR VOLTAGE TOO HIGH

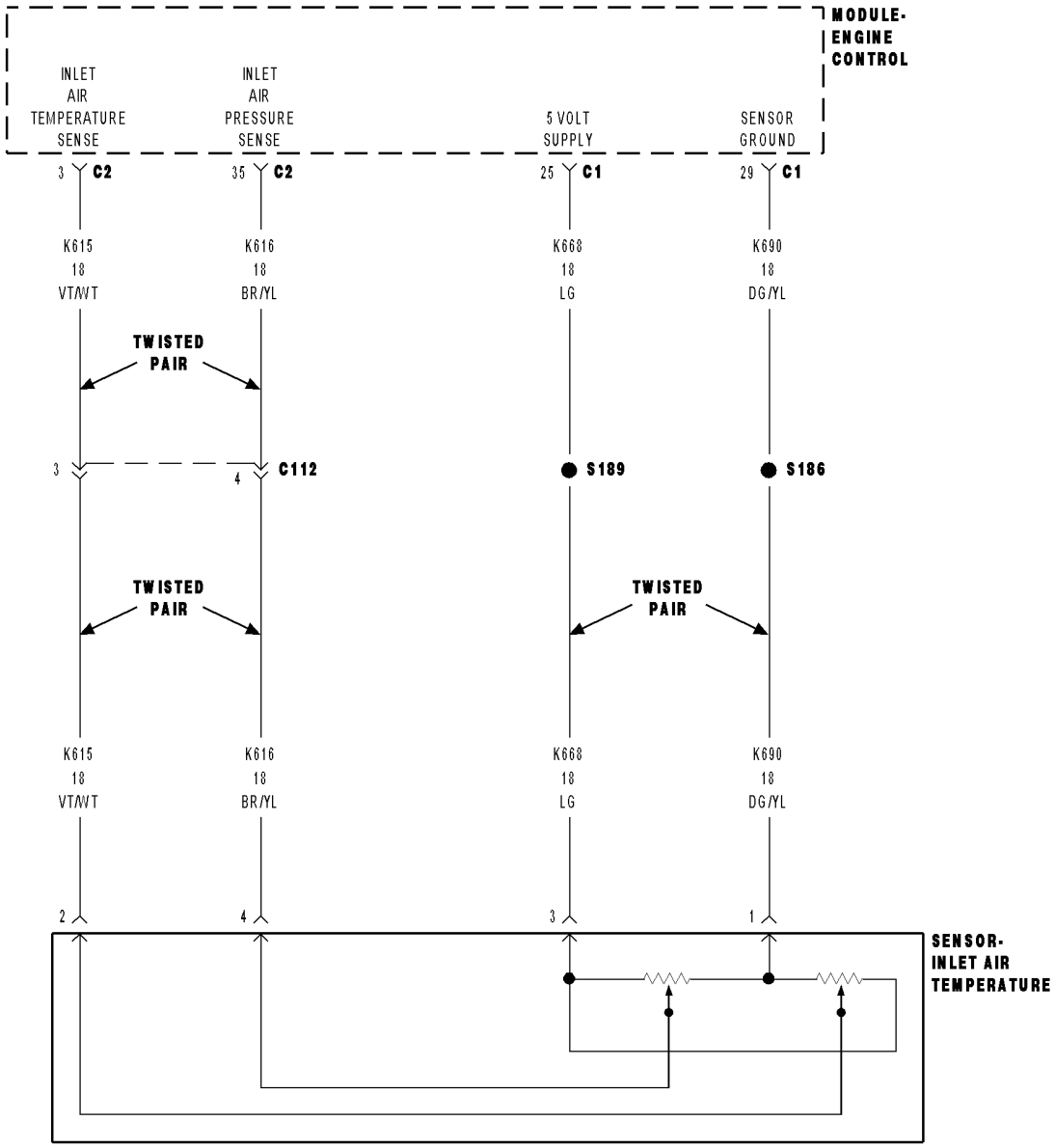

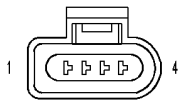

SENSOR-
INLET AIR
TEMPERATURE
(DIESEL)

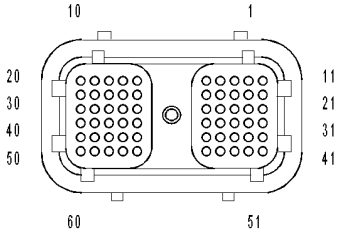

MODULE-ENGINE
CONTROL C1

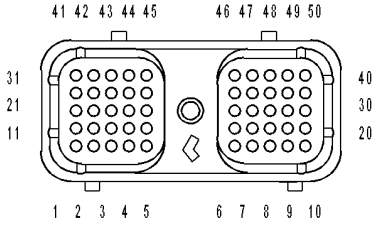

MODULE-ENGINE
CONTROL C2

813cc1a2

P0073-INLET AIR TEMP SENSOR VOLTAGE TOO HIGH (CONTINUED)

For the Engine circuit diagram (Refer to 8 - ELECTRICAL/ELECTRONIC CONTROL MODULES/ENGINE CONTROL MODULE - SCHEMATIC - ELECTRICAL)

For a complete wiring diagram **Refer to Section 8W**.

- **When Monitored:**
  With ignition on and battery voltage greater than 10.4 volts.
- **Set Condition:**
  The circuit voltage to the ECM is above a calibrated threshold for a certain period of time.

Possible Causes
DTC RETURNS
INLET AIR TEMPERATURE SENSOR
(K69) SIGNAL CIRCUIT OPEN
(Y502) RETURN CIRCUIT OPEN
(K69) SIGNAL CIRCUIT SHORTED
INTERMITTENT CONDITION
ECM

Always perform the Pre-Diagnostic Troubleshooting procedure before proceeding. (Refer to 9 - ENGINE - DIAGNOSIS AND TESTING)

Diagnostic Test

1. DTC RETURNS

Turn the ignition on.
With the scan tool, erase DTCs.
With the scan tool, read DTCs.
With the scan tool, record all Freeze frame data.

Did the DTC return?

Yes >> Go To 2

No >> Refer to the INTERMITTENT CONDITION Symptom (Diagnostic Procedure). (Refer to 9 - ENGINE - DIAGNOSIS AND TESTING)

---

2. INLET AIR TEMPERATURE SENSOR

Turn the ignition off.
Disconnect the Inlet Air Temp sensor harness connector.
Check connectors - Clean/repair as necessary.
Measure the resistance of the Inlet Air temp sensor

Is the resistance between 300 and 90k ohms?

Yes >> Go To 3

No >> Replace the Inlet air temperature sensor.
Perform POWERTRAIN VERIFICATION TEST VER - 1 (DIESEL). (Refer to 8 - ELECTRICAL/ELECTRONIC CONTROL MODULES/ENGINE CONTROL MODULE - DIAGNOSIS AND TESTING).

P0073-INLET AIR TEMP SENSOR VOLTAGE TOO HIGH (CONTINUED)

3. RESISTANCE CHECK

Disconnect the ECM harness connector.

Check connectors - Clean/repair as necessary.

Reconnect the Inlet Air Temp sensor harness connector.

Measure the resistance between the (K615) inlet air temperature sensor signal circuit and (K690) return circuit at the ECM connector.

Is the resistance between 300 and 90k ohms?

Yes >> Go To 6

No >> Go To 4

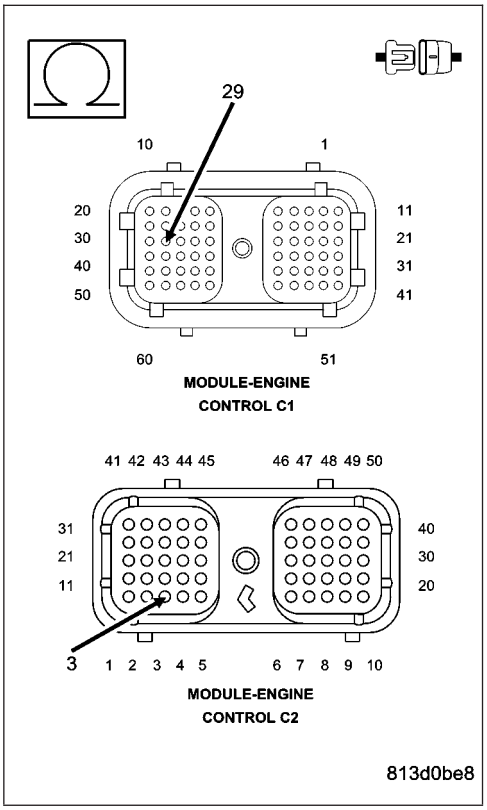

4. (K615) INLET AIR TEMPERATURE SIGNAL CIRCUIT OPEN

Disconnect the inlet Air Temp sensor harness connector.

Measure the resistance of the (K615) inlet air temperature sensor signal circuit between the sensor harness connector and the ECM harness connector.

Is the resistance less than 10 Ohms?

Yes >> Go To 5

No >> Repair or replace the harness.

Perform POWERTRAIN VERIFICATION TEST VER - 1 (DIESEL). (Refer to 8 - ELECTRICAL/ELECTRONIC CONTROL MODULES/ENGINE CONTROL MODULE - DIAGNOSIS AND TESTING)

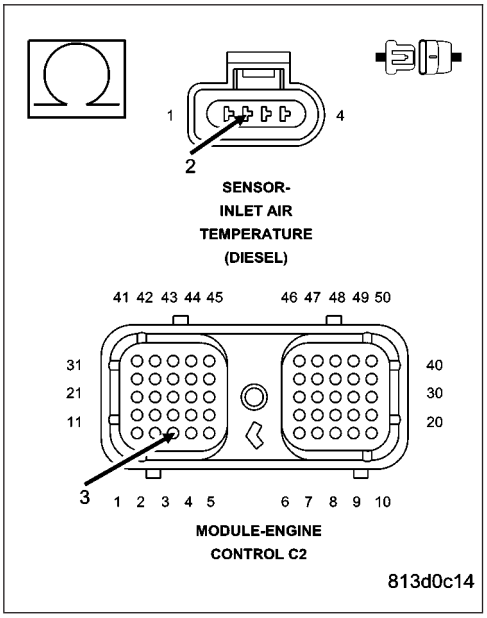

P0073-INLET AIR TEMP SENSOR VOLTAGE TOO HIGH (CONTINUED)

5. (K690) RETURN CIRCUIT OPEN

Measure the resistance of the sensor (K690) return circuit between the sensor harness connector and the ECM harness connector.

Is the resistance less than 10 Ohms?

Yes >> Go To 6

No >> Repair or replace the harness.
Perform POWERTRAIN VERIFICATION TEST VER - 1 (DIESEL). (Refer to 8 - ELECTRICAL/ELECTRONIC CONTROL MODULES/ENGINE CONTROL MODULE - DIAGNOSIS AND TESTING)

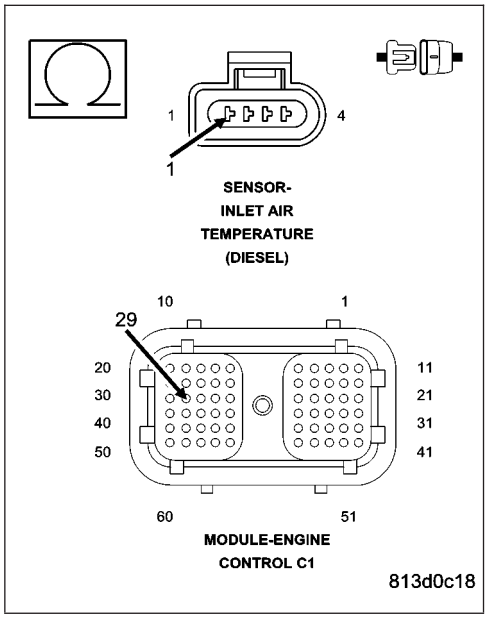

6. (K615) SIGNAL CIRCUIT SHORTED

Check for a short circuit from the (K615) signal circuit to all other circuits at the ECM harness connector.

Is the resistance more than 100 k ohms?

Yes >> Go To 7

No >> Repair or replace the harness for a short to ground in the signal circuit.
Perform POWERTRAIN VERIFICATION TEST VER - 1 (DIESEL). (Refer to 8 - ELECTRICAL/ELECTRONIC CONTROL MODULES/ENGINE CONTROL MODULE - DIAGNOSIS AND TESTING)

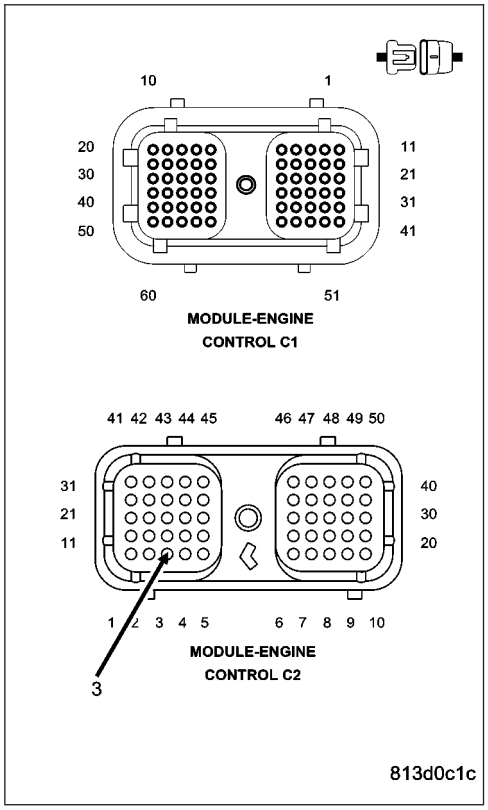

P0073-INLET AIR TEMP SENSOR VOLTAGE TOO HIGH (CONTINUED)

7. ECM

Reconnect the ECM harness connector.

Turn the ignition on.

With the scan tool, erase DTCs.

While monitoring with scan tool, use a jumper wire and connect the sensor (K615) signal circuit to the sensor (K690) return circuit at the sensor connector.

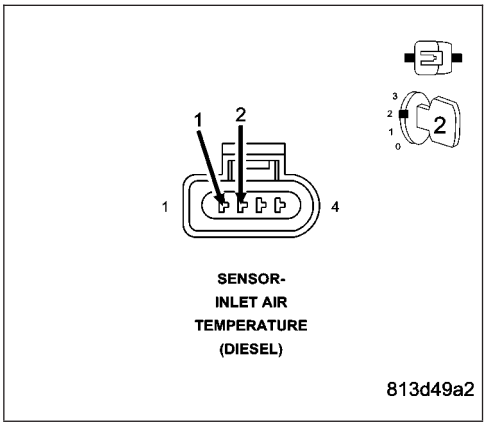

Did the DTC P0072 set?

Yes >> Refer to the INTERMITTENT CONDITION Symptom (Diagnostic Procedure). (Refer to 9 - ENGINE - DIAGNOSIS AND TESTING)

Perform POWERTRAIN VERIFICATION TEST VER - 1 (DIESEL). (Refer to 8 - ELECTRICAL/ELECTRONIC CONTROL MODULES/ENGINE CONTROL MODULE - DIAGNOSIS AND TESTING)

No >> Replace the ECM.

Perform POWERTRAIN VERIFICATION TEST VER - 1 (DIESEL). (Refer to 8 - ELECTRICAL/ELECTRONIC CONTROL MODULES/ENGINE CONTROL MODULE - DIAGNOSIS AND TESTING)

P0088-FUEL RAIL PRESSURE SIGNAL IS ABOVE MAX LIMIT

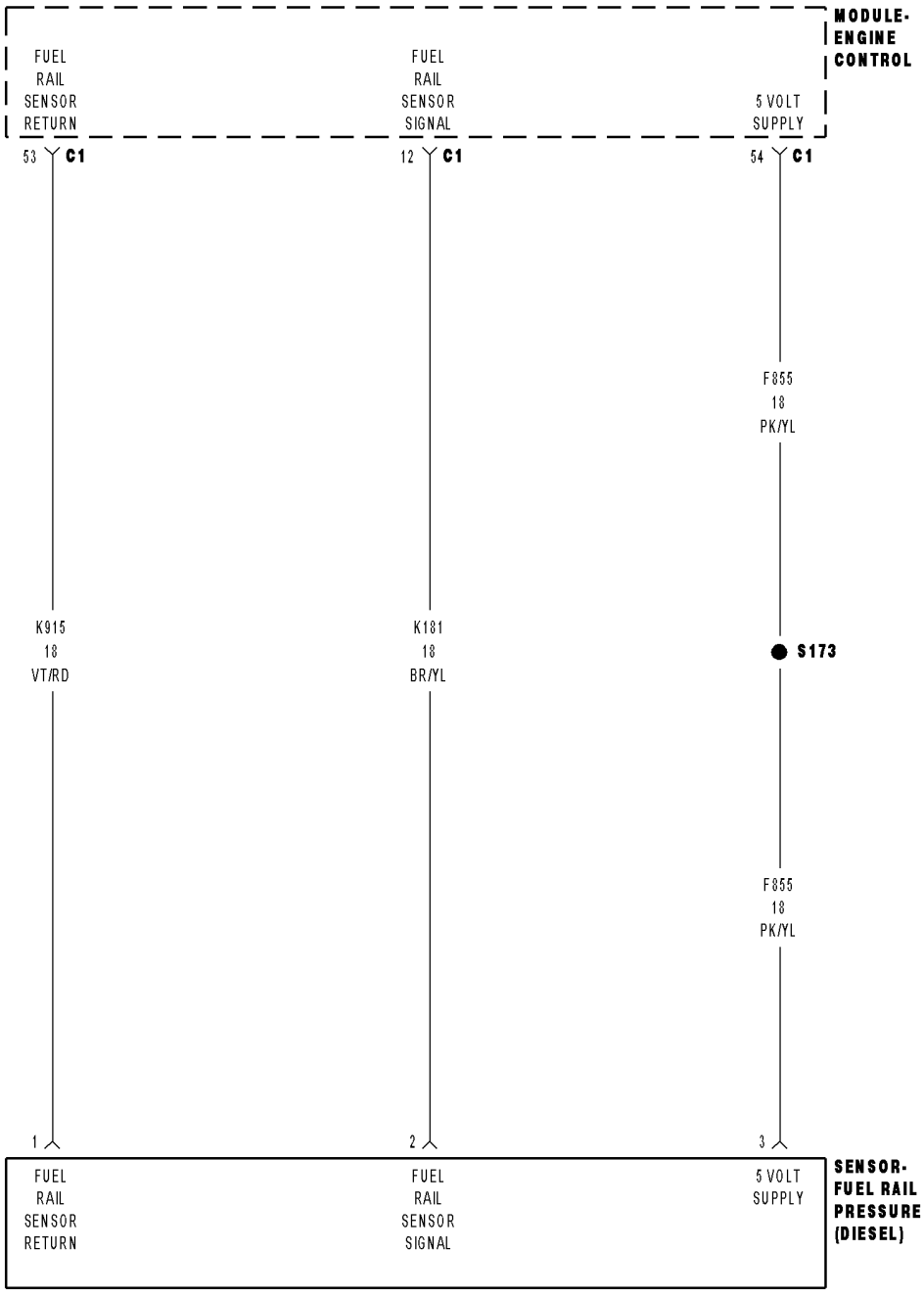

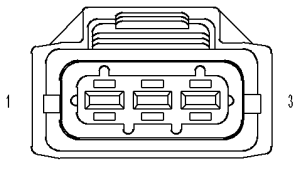

SENSOR-
FUEL RAIL
PRESSURE
(DIESEL)

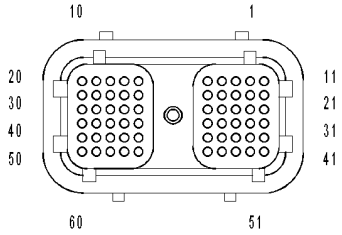

MODULE-ENGINE
CONTROL C1

813d4a27

P0088-FUEL RAIL PRESSURE SIGNAL IS ABOVE MAX LIMIT (CONTINUED)

For the Engine circuit diagram (Refer to 8 - ELECTRICAL/ELECTRONIC CONTROL MODULES/ENGINE CONTROL MODULE - SCHEMATIC - ELECTRICAL)

For a complete wiring diagram **Refer to Section 8W**.

- **When Monitored:**
  Engine running.
- **Set Condition:**
  Fuel pressure is above a calibrated value for a calibrated amount of time.

Possible Causes
FUEL CONTROL ACTUATOR (FCA)
FUEL PRESSURE SENSOR
INTERMITTENT CONDITION

Always perform the Pre-Diagnostic Troubleshooting procedure before proceeding. (Refer to 9 - ENGINE - DIAGNOSIS AND TESTING)

Diagnostic Test

1. Fuel Pressure Sensor

Using the scan tool, compare the scan tool reading for fuel pressure set point to the scan tool reading for actual fuel pressure.

Does the actual fuel pressure correlate with the fuel pressure setpoint while operating the engine over various operating conditions?

Yes >> Go To 2

No >> Check the electrical connector of the Fuel Control Actuator, if the connection is tight, replace the fuel control actuator.
Perform POWERTRAIN VERIFICATION TEST VER - 2 (DIESEL). (Refer to 8 - ELECTRICAL/ELECTRONIC CONTROL MODULES/ENGINE CONTROL MODULE - DIAGNOSIS AND TESTING).

---

2. FUEL PUMP

Turn the ignition on.

Disconnect the Electronic Fuel Control Actuator connector.

Connect an incandescent test light across the Fuel Control Actuator driver pin and the Fuel Control Actuator return wire at the fuel control actuator connector.

Observe the test light.

The ECM will perform a self test of the circuit which should momentarily flash the test light brightly, one time, approximately 20 seconds after being connected.

NOTE: Compare test light brightness to that of a direct connection to the battery.

Did the light flash brightly?

Yes >> Replace the fuel pump.
Perform POWERTRAIN VERIFICATION TEST VER - 2 (DIESEL). (Refer to 8 - ELECTRICAL/ELECTRONIC CONTROL MODULES/ENGINE CONTROL MODULE - DIAGNOSIS AND TESTING)

No >> Refer to the INTERMITTENT CONDITION Symptom (Diagnostic Procedure). (Refer to 9 - ENGINE - DIAGNOSIS AND TESTING)

P0106-INLET AIR PRESSURE SENSOR RATIONALITY

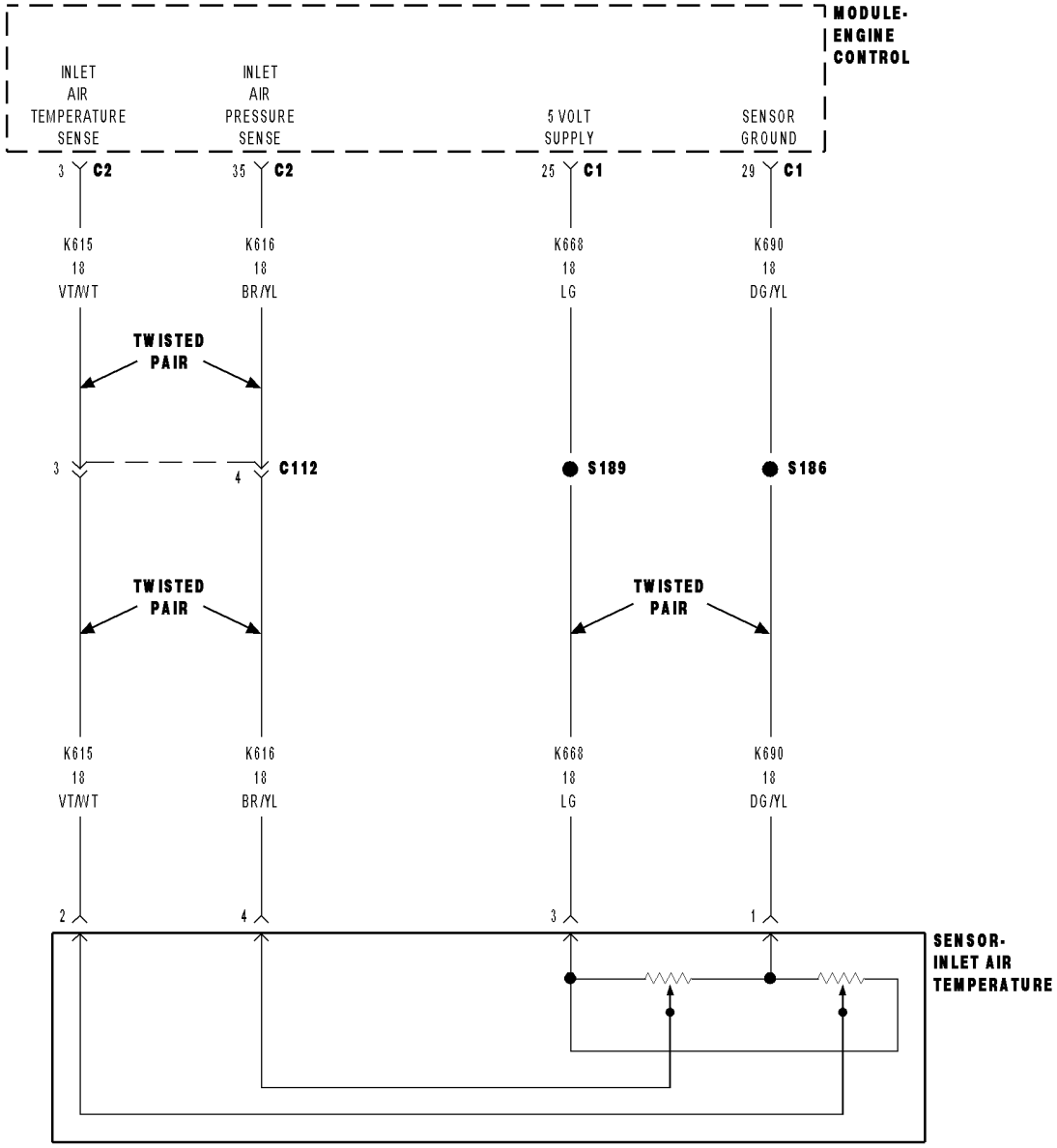

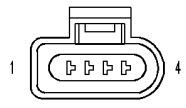

SENSOR-
INLET AIR
TEMPERATURE
(DIESEL)

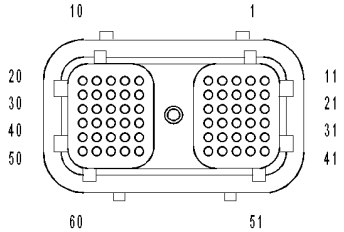

MODULE-ENGINE
CONTROL C1

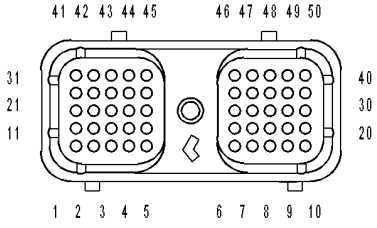

MODULE-ENGINE
CONTROL C2

813cc1a2

P0106-INLET AIR PRESSURE SENSOR RATIONALITY (CONTINUED)

For the Engine circuit diagram (Refer to 8 - ELECTRICAL/ELECTRONIC CONTROL MODULES/ENGINE CONTROL MODULE - SCHEMATIC - ELECTRICAL)

For a complete wiring diagram **Refer to Section 8W**.

- **When Monitored:**
  When the ignition is on.
- **Set Condition:**
  The Inlet air pressure is above a calibrated threshold.

Possible Causes
INLET AIR PRESSURE SENSOR
INTERMITTENT CONDITION
TROUBLESHOOT OTHER DTC'S FIRST

Always perform the Pre-Diagnostic Troubleshooting procedure before proceeding. (Refer to 9 - ENGINE - DIAGNOSIS AND TESTING)

Diagnostic Test

1. Troubleshoot other DTC's First

Using the Scan tool, check for additional DTC's.

Do you have any other air pressure related DTC's?

Yes >> Troubleshoot other DTC's First.
Perform POWERTRAIN VERIFICATION TEST VER - 1 (DIESEL). (Refer to 8 - ELECTRICAL/ELECTRONIC CONTROL MODULES/ENGINE CONTROL MODULE - DIAGNOSIS AND TESTING)

No >> Go To 2

---

2. INLET AIR PRESSURE SENSOR

Using the scan tool, monitor the Inlet air pressure sensor values.

Do the readings on the scan tool fluctuate slightly?

No >> Replace the Inlet Air Temperature/ Pressure sensor.
Perform POWERTRAIN VERIFICATION TEST VER - 1 (DIESEL). (Refer to 8 - ELECTRICAL/ELECTRONIC CONTROL MODULES/ENGINE CONTROL MODULE - DIAGNOSIS AND TESTING)

Yes >> Refer to the INTERMITTENT CONDITION Symptom (Diagnostic Procedure).
Perform POWERTRAIN VERIFICATION TEST VER - 1 (DIESEL). (Refer to 8 - ELECTRICAL/ELECTRONIC CONTROL MODULES/ENGINE CONTROL MODULE - DIAGNOSIS AND TESTING)

P0107-INLET AIR PRESSURE SENSOR VOLTAGE TOO LOW

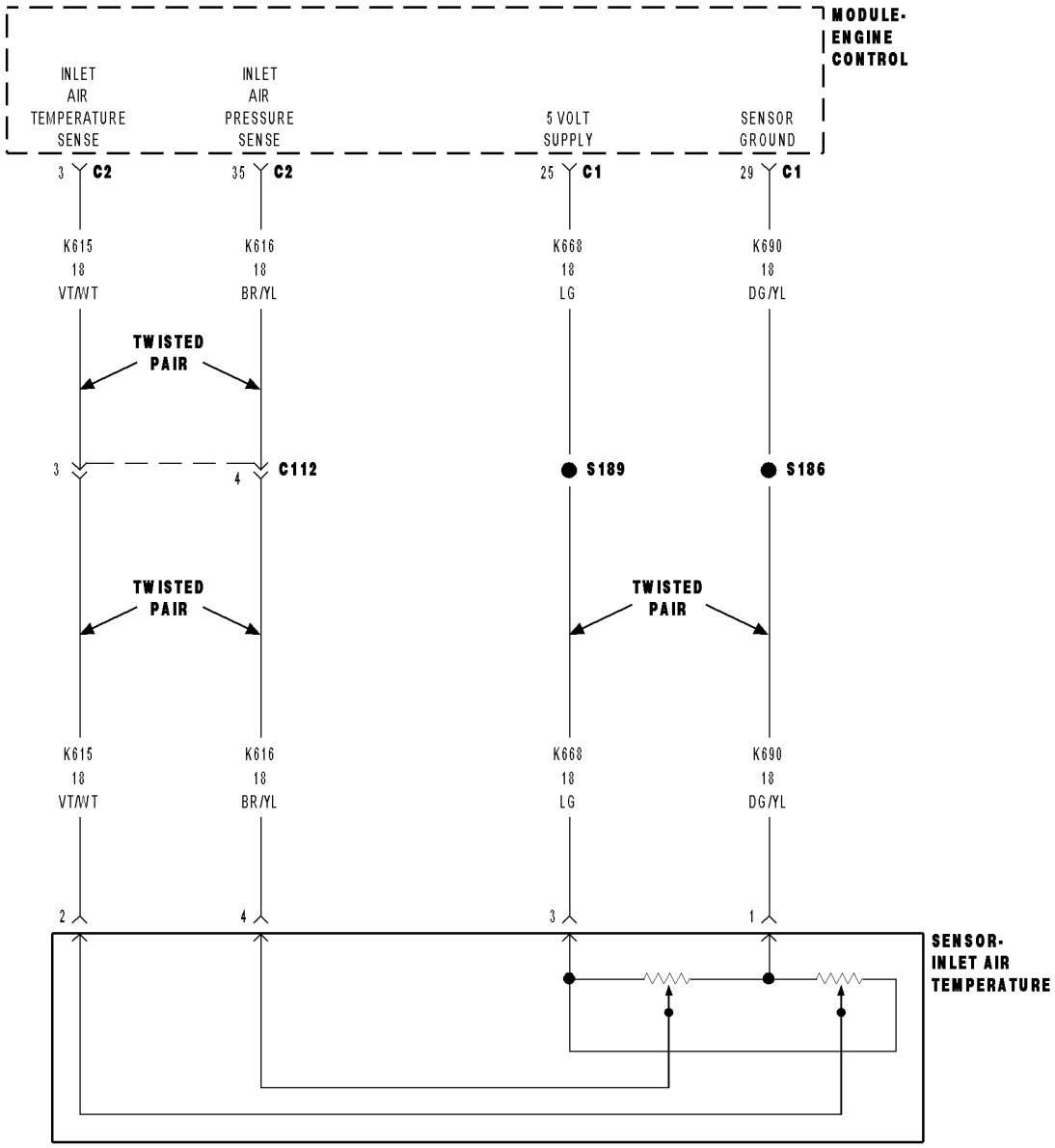

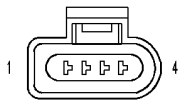

SENSOR-
INLET AIR
TEMPERATURE
(DIESEL)

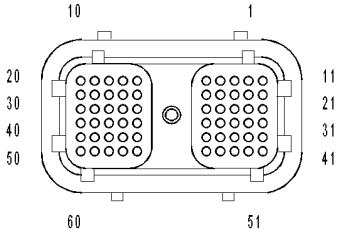

MODULE-ENGINE
CONTROL C1

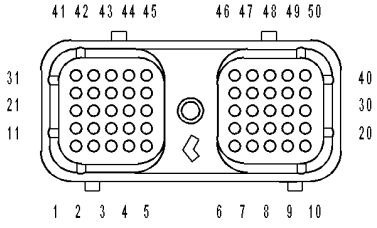

MODULE-ENGINE
CONTROL C2

813cc1a2

P0107-INLET AIR PRESSURE SENSOR VOLTAGE TOO LOW (CONTINUED)

For the Engine circuit diagram (Refer to 8 - ELECTRICAL/ELECTRONIC CONTROL MODULES/ENGINE CONTROL MODULE - SCHEMATIC - ELECTRICAL)

For a complete wiring diagram **Refer to Section 8W**.

- **When Monitored:**
  With the ignition on and battery voltage greater than 10.4 volts.
- **Set Condition:**
  The circuit voltage to the ECM falls below a calibrated threshold for a certain period of time.

Possible Causes
OTHER DTC'S PRESENT
INLET AIR PRESSURE SENSOR
INLET AIR SENSOR (K616) SIGNAL CIRCUIT SHORTED TO THE (Y502) RETURN CIRCUIT
INLET AIR PRESSURE SENSOR (K668) SUPPLY CIRCUIT SHORTED TO THE RETURN CIRCUIT
(K616) SIGNAL CIRCUIT OPEN
(K668) 5-VOLT SUPPLY CIRCUIT OPEN
(K616) SIGNAL CIRCUIT SHORTED TO GROUND
(K668) 5-VOLT SUPPLY CIRCUIT SHORTED TO GROUND
ECM
INTERMITTENT CONDITION

Always perform the Pre-Diagnostic Troubleshooting procedure before proceeding. (Refer to 9 - ENGINE - DIAGNOSIS AND TESTING)

Diagnostic Test

1. OTHER DTC'S PRESENT

Ignition on, engine not running.
With the scan tool, read DTCs.

Do you have multiple DTC's?

Yes >> Repair other DTC's first.
Perform POWERTRAIN VERIFICATION TEST VER - 1 (DIESEL). (Refer to 8 - ELECTRICAL/ELECTRONIC CONTROL MODULES/ENGINE CONTROL MODULE - DIAGNOSIS AND TESTING)

No >> Go To 2

P0107-INLET AIR PRESSURE SENSOR VOLTAGE TOO LOW (CONTINUED)

2. SENSOR VOLTAGE

Disconnect the Inlet Air Pressure sensor harness connector.

Check connectors - Clean/repair as necessary.

Measure the voltage between the (K668) 5-volt supply circuit and (Y502) return circuit of the sensor harness connector.

Is the voltage between 4.5 and 5.5 volts?

Yes >> Go To 3

No >> Go To 5

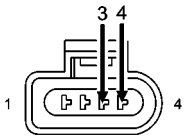

SENSOR-
INLET AIR
TEMPERATURE
(DIESEL)

813d7133

3. INLET AIR PRESSURE SENSOR

While monitoring scan tool, use a jumper wire to connect the (K668) 5-volt supply circuit with the (K616) signal circuit at the sensor harness connector.

Does the scan tool show a pressure sensor out of range high DTC?

Yes >> Replace the Inlet Air Temperature/Pressure sensor.
Perform POWERTRAIN VERIFICATION TEST VER - 1 (DIESEL). (Refer to 8 - ELECTRICAL/ELECTRONIC CONTROL MODULES/ENGINE CONTROL MODULE - DIAGNOSIS AND TESTING)

No >> Go To 4

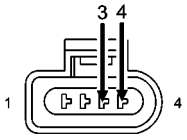

SENSOR-
INLET AIR
TEMPERATURE
(DIESEL)

813d7133

P0107-INLET AIR PRESSURE SENSOR VOLTAGE TOO LOW (CONTINUED)

4. INLET AIR PRESSURE SENSOR SIGNAL CIRCUIT SHORTED TO THE RETURN CIRCUIT

Turn the ignition off.

Disconnect the ECM harness connector.

Check connectors - Clean/repair as necessary.

Measure the resistance between the (K616) signal circuit and (Y502) return circuit in the Inlet Air pressure sensor harness connector.

Is the resistance greater than 100K Ohms?

Yes >> Go To 5

No >> Repair or replace wiring harness.

Perform POWERTRAIN VERIFICATION TEST VER - 1 (DIESEL). (Refer to 8 - ELECTRICAL/ELECTRONIC CONTROL MODULES/ENGINE CONTROL MODULE - DIAGNOSIS AND TESTING)

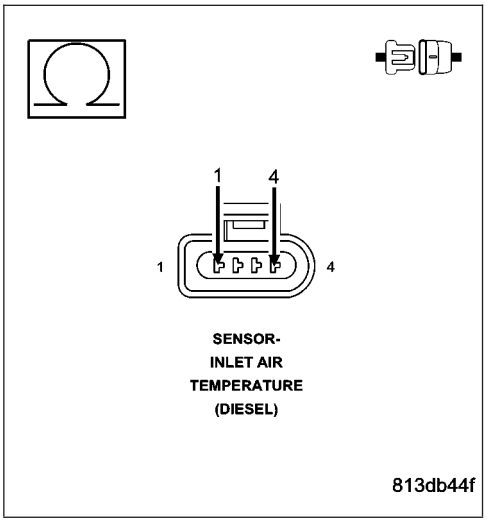

5. SENSOR (K668) 5-VOLT SUPPLY CIRCUIT SHORTED TO THE (Y502) RETURN CIRCUIT

Measure the resistance between the (K668) 5-volt supply circuit and (Y502) return circuit in the Inlet Air Pressure sensor harness connector.

Is the resistance greater than 100K Ohms?

Yes >> Go To 6

No >> Repair the short or replace the harness.

Perform POWERTRAIN VERIFICATION TEST VER - 1 (DIESEL). (Refer to 8 - ELECTRICAL/ELECTRONIC CONTROL MODULES/ENGINE CONTROL MODULE - DIAGNOSIS AND TESTING)

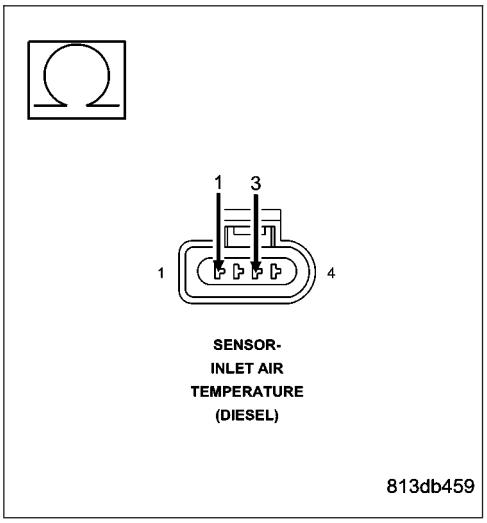

P0107-INLET AIR PRESSURE SENSOR VOLTAGE TOO LOW (CONTINUED)

6. (K616) SIGNAL CIRCUIT OPEN

Measure the resistance between the (K616) signal circuit in the Inlet Air Pressure sensor harness connector and the (K616) signal circuit in the ECM harness connector.

Is the resistance less than 10 Ohms?

Yes >> Go To 7

No >> Repair or replace the open wiring harness.
Perform POWERTRAIN VERIFICATION TEST VER - 1 (DIESEL). (Refer to 8 - ELECTRICAL/ELECTRONIC CONTROL MODULES/ENGINE CONTROL MODULE - DIAGNOSIS AND TESTING)

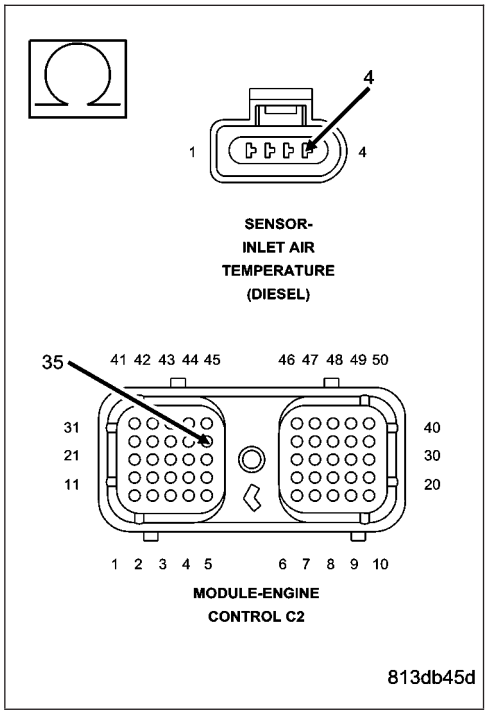

7. (K668) 5-VOLT SUPPLY CIRCUIT OPEN

Measure the resistance between the (K668) 5-volt supply circuit in the Inlet Air Pressure sensor harness connector with the (K668) 5-volt supply circuit in the ECM harness connector.

Is the resistance less than 10 Ohms?

Yes >> Go To 8

No >> Repair or replace the Engine harness.
Perform POWERTRAIN VERIFICATION TEST VER - 1 (DIESEL). (Refer to 8 - ELECTRICAL/ELECTRONIC CONTROL MODULES/ENGINE CONTROL MODULE - DIAGNOSIS AND TESTING)

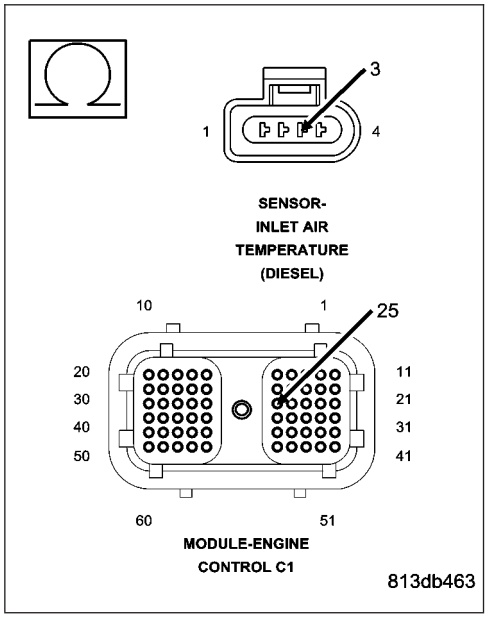

P0107-INLET AIR PRESSURE SENSOR VOLTAGE TOO LOW (CONTINUED)

8. (K616) SIGNAL CIRCUIT SHORTED TO GROUND

Measure the resistance between the (K616) signal circuit in the inlet Air Pressure sensor connector and battery negative.

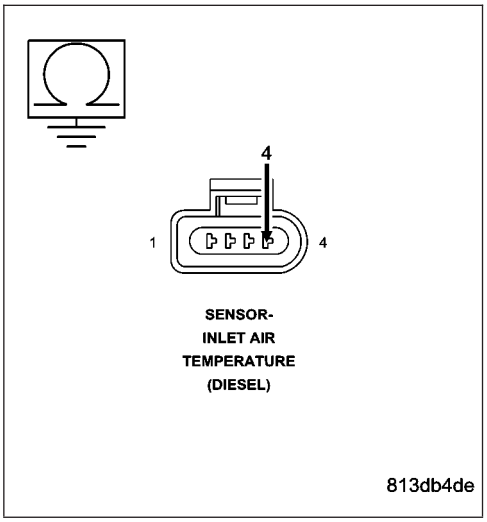

Is the resistance greater than 100 K Ohms?

Yes >> Go To 9

No >> Repair the (K616) signal circuit shorted to ground or replace the wire harness.

Perform POWERTRAIN VERIFICATION TEST VER - 1 (DIESEL). (Refer to 8 - ELECTRICAL/ELECTRONIC CONTROL MODULES/ENGINE CONTROL MODULE - DIAGNOSIS AND TESTING)

9. (K668) 5-VOLT SUPPLY CIRCUIT SHORTED TO GROUND

Measure the resistance between the (K668) 5-volt supply Circuit in the Inlet Air Pressure sensor harness connector and battery negative.

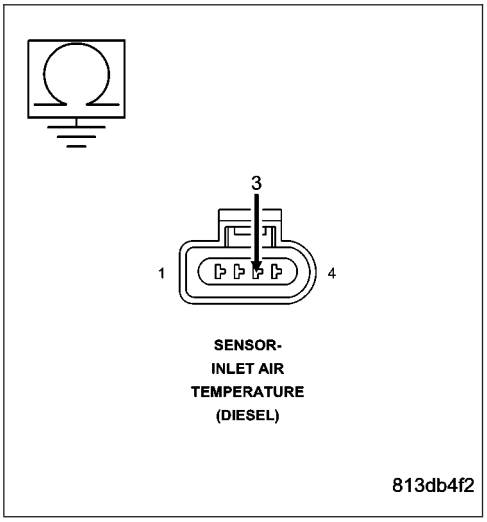

Is the resistance greater than 100 K Ohms?

Yes >> Go To 10

No >> Repair the (K668) 5-volt supply circuit shorted to ground or replace the wire harness. (Refer to 8 - ELECTRICAL/ELECTRONIC CONTROL MODULES/ENGINE CONTROL MODULE - DIAGNOSIS AND TESTING)

Perform POWERTRAIN VERIFICATION TEST VER - 1 (DIESEL). (Refer to 8 - ELECTRICAL/ELECTRONIC CONTROL MODULES/ENGINE CONTROL MODULE - DIAGNOSIS AND TESTING)

P0107-INLET AIR PRESSURE SENSOR VOLTAGE TOO LOW (CONTINUED)

10. ECM

Install the ECM harness connector.

Turn the ignition on.

While monitoring scan tool, use a jumper wire to connect the (K668) 5-volt supply circuit with the (K616) signal circuit at the sensor harness connector.

Does the scan tool show a pressure sensor out of range high DTC?

Yes >> Refer to the INTERMITTENT CONDITION Symptom (Diagnostic Procedure). (Refer to 9 - ENGINE - DIAGNOSIS AND TESTING)

No >> Replace the ECM.

Perform POWERTRAIN VERIFICATION TEST VER - 1 (DIESEL). (Refer to 8 - ELECTRICAL/ELECTRONIC CONTROL MODULES/ENGINE CONTROL MODULE - DIAGNOSIS AND TESTING)

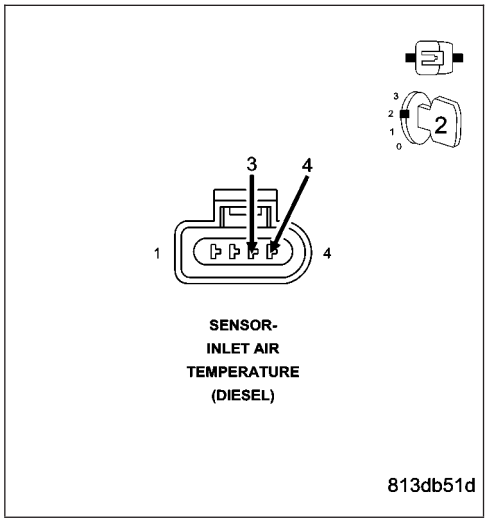

P0108-INLET AIR Pressure Sensor Voltage Too high

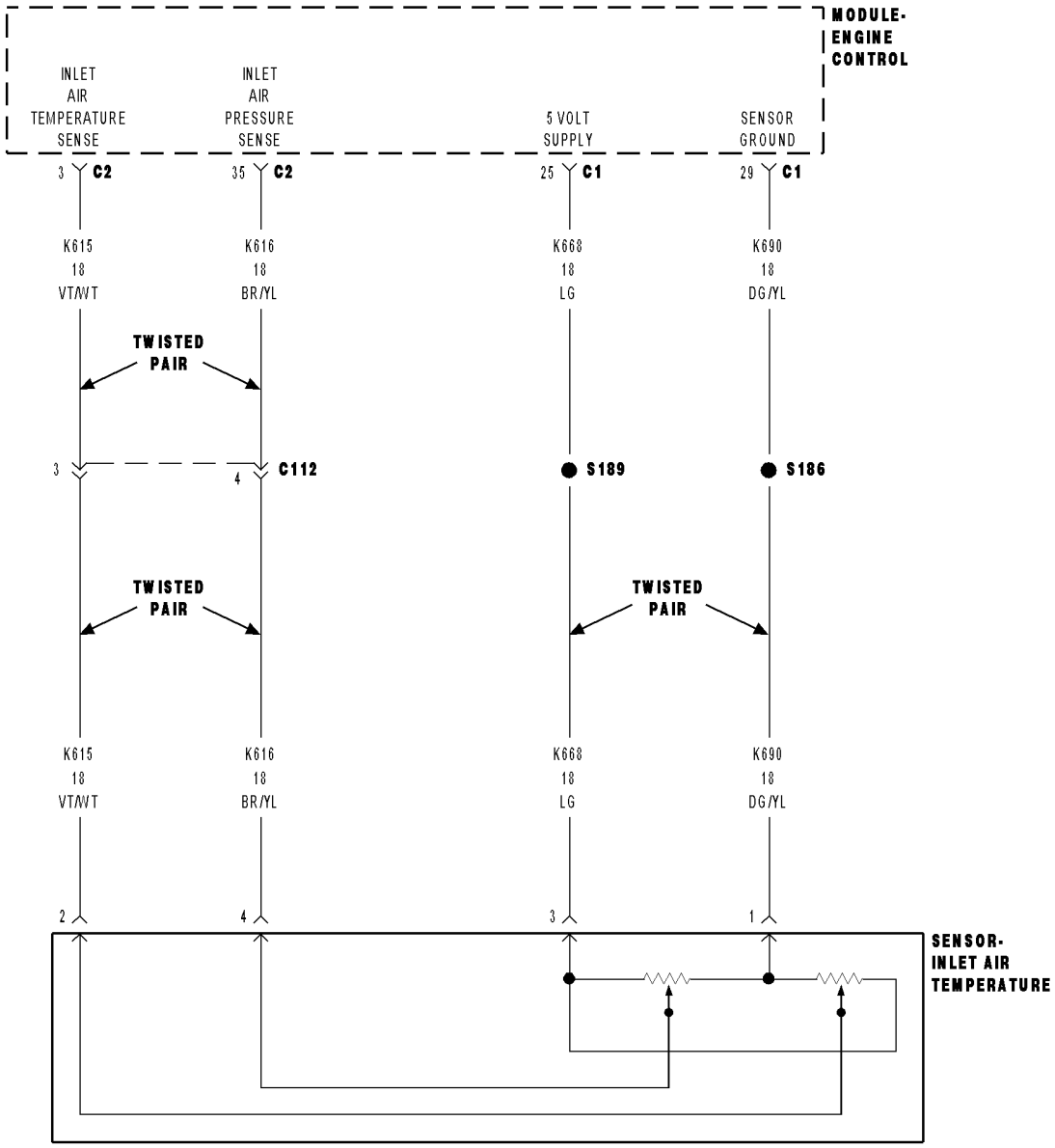

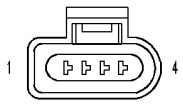

SENSOR-
INLET AIR
TEMPERATURE
(DIESEL)

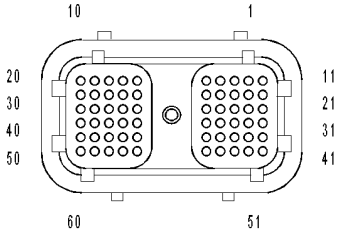

MODULE-ENGINE
CONTROL C1

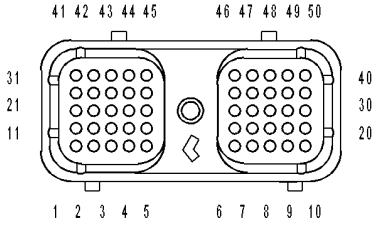

MODULE-ENGINE
CONTROL C2

813cc1a2

P0108-INLET AIR Pressure Sensor Voltage Too high (CONTINUED)

For the Engine circuit diagram (Refer to 8 - ELECTRICAL/ELECTRONIC CONTROL MODULES/ENGINE CONTROL MODULE - SCHEMATIC - ELECTRICAL)

For a complete wiring diagram **Refer to Section 8W**.

- **When Monitored:**
  With the ignition on and battery voltage greater than 10.4 volts.
- **Set Condition:**
  The circuit voltage to the ECM is above a calibrated threshold for a certain period of time.

Possible Causes
OTHER DTC'S PRESENT
INLET AIR PRESSURE SENSOR
INLET AIR PRESSURE SENSOR (K616) SIGNAL CIRCUIT SHORTED TO VOLTAGE
INLET AIR SENSOR (K668) 5-VOLT SUPPLY CIRCUIT SHORTED TO VOLTAGE
(K616) SIGNAL CIRCUIT SHORTED TO (K668) 5-VOLT SUPPLY
(K690) RETURN CIRCUIT OPEN
ECM
INTERMITTENT CONDITION

Always perform the Pre-Diagnostic Troubleshooting procedure before proceeding. (Refer to 9 - ENGINE - DIAGNOSIS AND TESTING)

Diagnostic Test

1. OTHER DTC'S PRESENT

Ignition on, engine not running.
With the scan tool, read DTCs.

Do you have multiple DTC's?

Yes >> Repair other DTC's first.
Perform POWERTRAIN VERIFICATION TEST VER - 1 (DIESEL). (Refer to 8 - ELECTRICAL/ELECTRONIC CONTROL MODULES/ENGINE CONTROL MODULE - DIAGNOSIS AND TESTING)

No >> Go To 2

P0108-INLET AIR Pressure Sensor Voltage Too high (CONTINUED)

2. CHECKING (K668) 5-VOLT SUPPLY CIRCUIT AND THE (K690) RETURN CIRCUIT

Disconnect the Inlet Air Pressure sensor harness connector.

Measure the voltage between the (K668) 5-volt supply circuit and (K690) return circuit of the Inlet Air Pressure sensor harness connector.

Is the voltage between 4.5 and 5.5 volts?

Yes >> Go To 3

No >> Go To 4

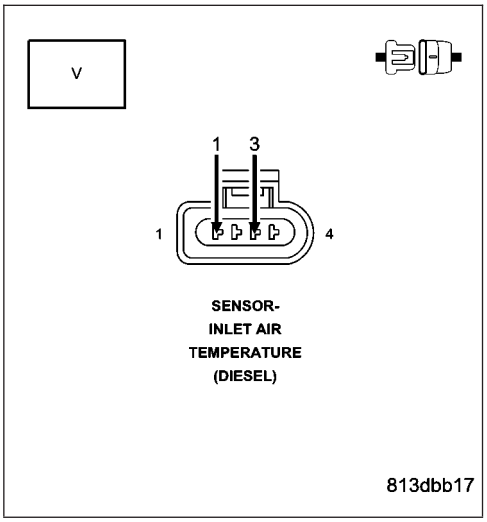

3. INLET AIR PRESSURE SENSOR

While monitoring scan tool, use a jumper wire to connect the (K690) Return circuit to the (K616) signal circuit at the Inlet Air Pressure sensor harness connector.

Does the scan tool show a P0107 Inlet Air Pressure Sensor Low DTC.

Yes >> Replace the Inlet Air Temperature/Pressure sensor.
Perform POWERTRAIN VERIFICATION TEST VER - 1 (DIESEL). (Refer to 8 - ELECTRICAL/ELECTRONIC CONTROL MODULES/ENGINE CONTROL MODULE - DIAGNOSIS AND TESTING)

No >> Go To 4

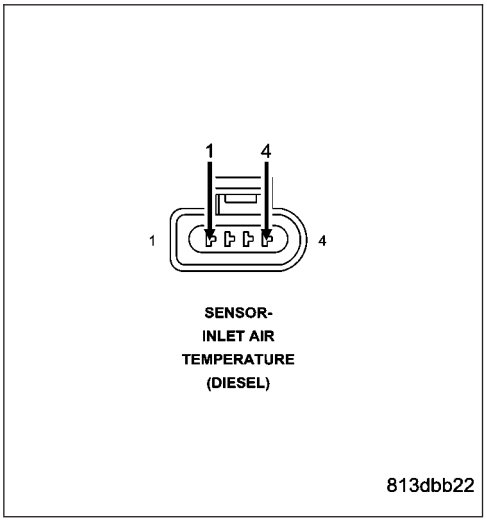

P0108-INLET AIR Pressure Sensor Voltage Too high (CONTINUED)

4. INLET AIR SENSOR (K616) SIGNAL CIRCUIT SHORTED TO VOLTAGE

Disconnect the ECM harness connectors.

NOTE: Check connectors - Clean/repair as necessary.
Measure the voltage between the (K616) signal circuit of the Inlet Air Pressure sensor connector and battery negative.

Is the voltage less than 1 volt?

Yes >> Go To 5

No >> Repair or replace short to voltage.
Perform POWERTRAIN VERIFICATION TEST VER - 1 (DIESEL). (Refer to 8 - ELECTRICAL/ELECTRONIC CONTROL MODULES/ENGINE CONTROL MODULE - DIAGNOSIS AND TESTING)

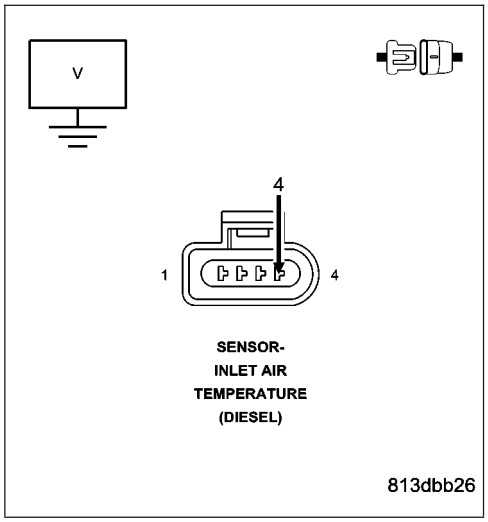

5. (K668) 5-VOLT SUPPLY CIRCUIT SHORTED TO VOLTAGE

Measure the voltage between the (K668) 5-volt supply circuit of the sensor connector and battery negative.

Is the voltage less than 1 volt?

Yes >> Go To 6

No >> Repair the short to voltage or replace the harness.
Perform POWERTRAIN VERIFICATION TEST VER - 1 (DIESEL). (Refer to 8 - ELECTRICAL/ELECTRONIC CONTROL MODULES/ENGINE CONTROL MODULE - DIAGNOSIS AND TESTING)

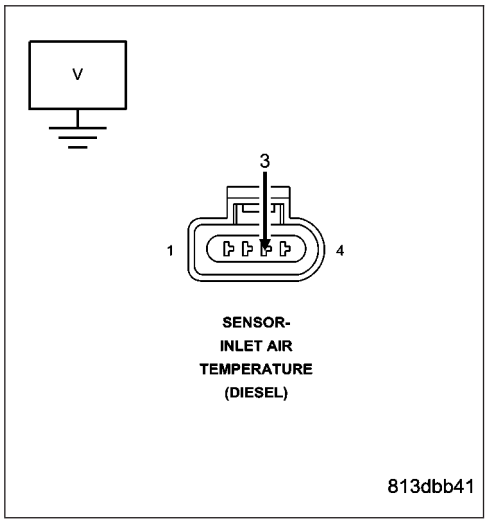

P0108-INLET AIR Pressure Sensor Voltage Too high (CONTINUED)

6. SIGNAL CIRCUIT SORTED TO (K668) 5-VOLT SUPPLY

Turn the ignition off.

Measure the resistance between the (K616) signal circuit and the (K668) 5-volt supply circuit of the Inlet Air Pressure sensor harness connector.

Is the resistance less than 10 Ohms?

Yes >> Go To 7

No >> Repair or replace the shorted wiring harness.
Perform POWERTRAIN VERIFICATION TEST VER - 1 (DIESEL). (Refer to 8 - ELECTRICAL/ELECTRONIC CONTROL MODULES/ENGINE CONTROL MODULE - DIAGNOSIS AND TESTING)

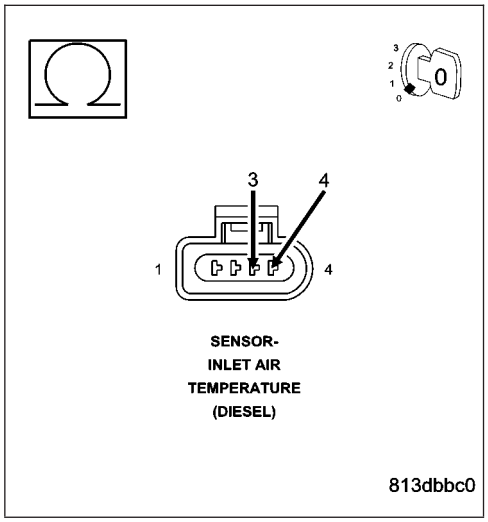

7. (K690) RETURN CIRCUIT OPEN

Disconnect the ECM harness connector.

Check connectors - Clean/repair as necessary.

Measure the resistance between the (K690) return circuit in the Inlet Air Pressure sensor harness connector with the (K690) return circuit in the ECM harness connector.

Is the resistance less than 10 Ohms?

Yes >> Go To 8

No >> Repair or replace the Engine harness.
Perform POWERTRAIN VERIFICATION TEST VER - 1 (DIESEL). (Refer to 8 - ELECTRICAL/ELECTRONIC CONTROL MODULES/ENGINE CONTROL MODULE - DIAGNOSIS AND TESTING)

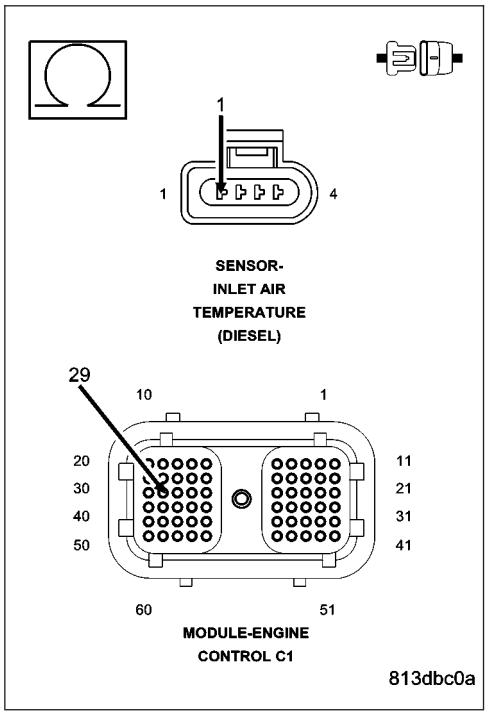

P0108-INLET AIR Pressure Sensor Voltage Too high (CONTINUED)

8. ECM

Install the ECM harness connector.

Turn the ignition on.

While monitoring scan tool, use a jumper wire to connect the (K916) Return circuit with the (K616) signal circuit at the Inlet Air Pressure sensor harness connector.

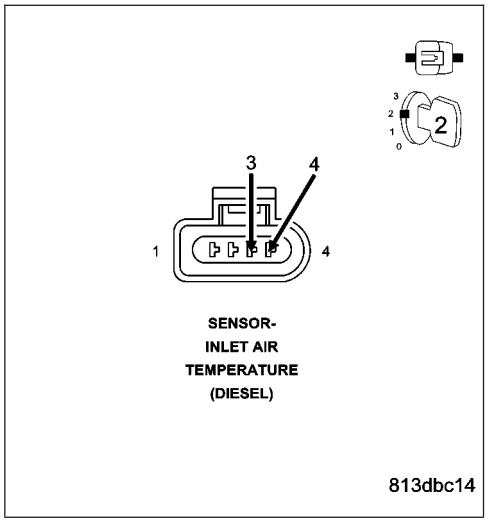

Did DTC P0107 set?

Yes >> Refer to the INTERMITTENT CONDITION Symptom (Diagnostic Procedure).

Perform POWERTRAIN VERIFICATION TEST VER - 1 (DIESEL). (Refer to 8 - ELECTRICAL/ELECTRONIC CONTROL MODULES/ENGINE CONTROL MODULE - DIAGNOSIS AND TESTING) 0

No >> Replace the ECM.

Perform POWERTRAIN VERIFICATION TEST VER - 1 (DIESEL). (Refer to 8 - ELECTRICAL/ELECTRONIC CONTROL MODULES/ENGINE CONTROL MODULE - DIAGNOSIS AND TESTING)

P0111-INTAKE AIR TEMPERATURE (IAT) SENSOR RATIONALITY

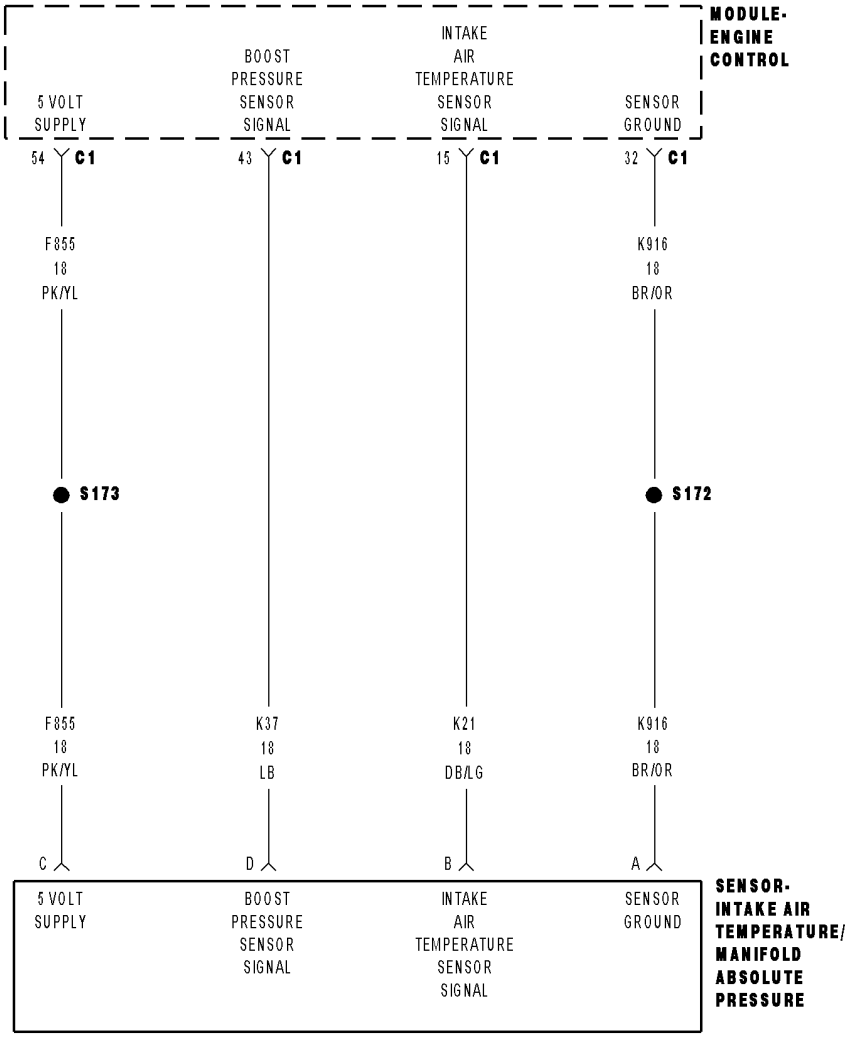

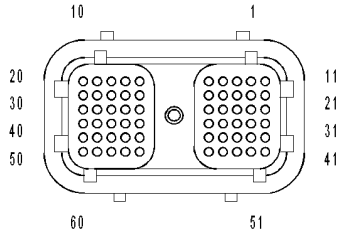

MODULE-ENGINE
CONTROL C1

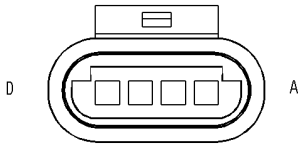

SENSOR-
INTAKE AIR
TEMPERATURE/
MANIFOLD
ABSOLUTE
PRESSURE
(DIESEL)

813dc004

P0111-INTAKE AIR TEMPERATURE (IAT) SENSOR RATIONALITY (CONTINUED)

For the Engine circuit diagram (Refer to 8 - ELECTRICAL/ELECTRONIC CONTROL MODULES/ENGINE CONTROL MODULE - SCHEMATIC - ELECTRICAL)

For a complete wiring diagram **Refer to Section 8W**.

- **When Monitored:**
  While the engine is running.
- **Set Condition:**
  The ECM does not read a change in value from the sensor over time.

Possible Causes
FAILED IAT SENSOR
INTERMITTENT CONDITION

Always perform the Pre-Diagnostic Troubleshooting procedure before proceeding. (Refer to 9 - ENGINE - DIAGNOSIS AND TESTING)

Diagnostic Test

1. FAILED IAT SENSOR

Remove the temperature sensor and reconnect the wiring to the sensor. Monitor scan tool, while heating the sensor with an external heat source (DO NOT USE OPEN FLAME).

Does the reading from the sensor increase at least 5 degrees F. on the scan tool?

Yes >> Refer to the INTERMITTENT CONDITION Symptom (Diagnostic Procedure). (Refer to 9 - ENGINE - DIAGNOSIS AND TESTING)

Perform POWERTRAIN VERIFICATION TEST VER - 1 (DIESEL). (Refer to 8 - ELECTRICAL/ELECTRONIC CONTROL MODULES/ENGINE CONTROL MODULE - DIAGNOSIS AND TESTING)

No >> Replace the Intake air temp sensor/MAP sensor.

Perform POWERTRAIN VERIFICATION TEST VER - 1 (DIESEL). (Refer to 8 - ELECTRICAL/ELECTRONIC CONTROL MODULES/ENGINE CONTROL MODULE - DIAGNOSIS AND TESTING)

P0112-INTAKE AIR TEMPERATURE (IAT) SENSOR VOLTAGE TOO LOW

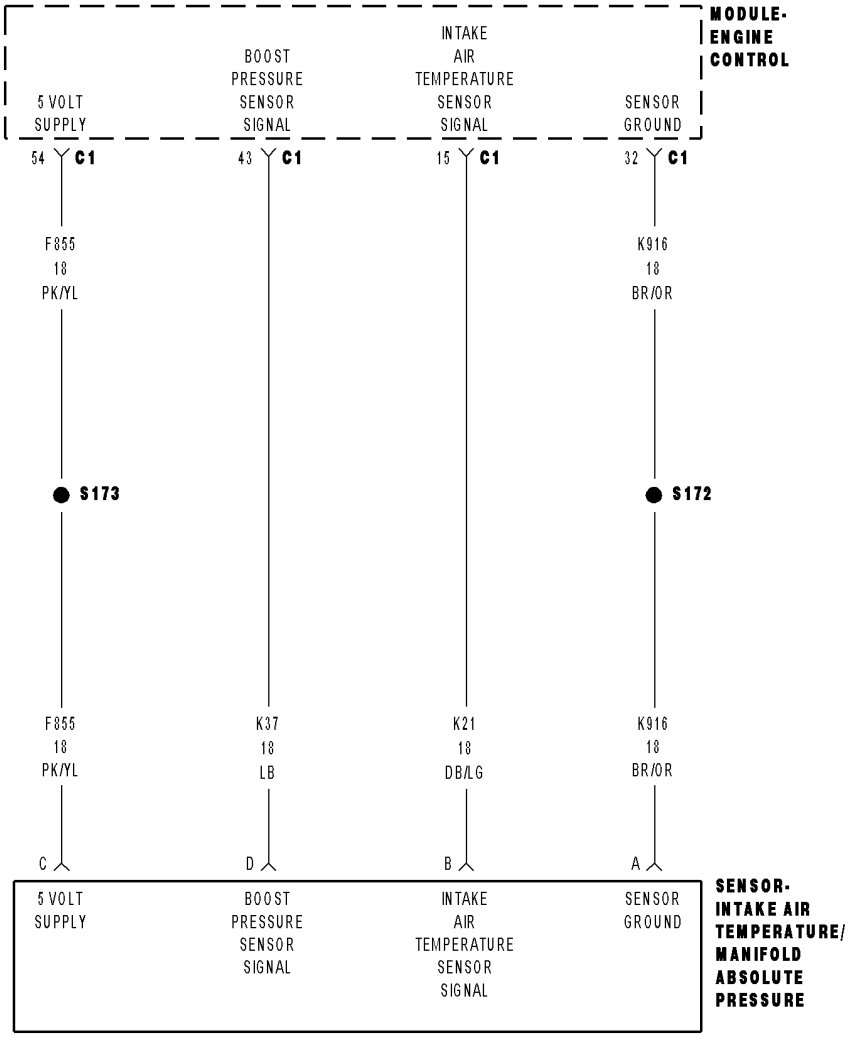

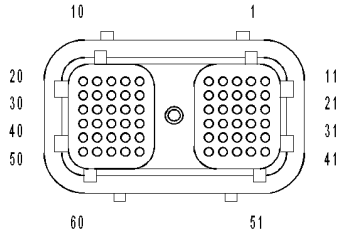

MODULE-ENGINE
CONTROL C1

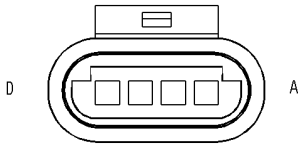

SENSOR-
INTAKE AIR
TEMPERATURE/
MANIFOLD
ABSOLUTE
PRESSURE
(DIESEL)

813dc004

P0112-INTAKE AIR TEMPERATURE (IAT) SENSOR VOLTAGE TOO LOW (CONTINUED)

For the Engine circuit diagram (Refer to 8 - ELECTRICAL/ELECTRONIC CONTROL MODULES/ENGINE CONTROL MODULE - SCHEMATIC - ELECTRICAL)

For a complete wiring diagram **Refer to Section 8W**.

- **When Monitored:**
  With the ignition on and battery voltage greater than 10.4 volts.
- **Set Condition:**
  The circuit voltage to the ECM falls below a calibrated threshold for a certain period of time.

Possible Causes
INTAKE AIR TEMP SENSOR OUT OF SPEC
INTERMITTENT CONDITION
(K21) SENSOR SIGNAL CIRCUIT SHORTED TO GROUND CIRCUIT
WIRING HARNESS SHORTED
(F855) 5-VOLT SUPPLY CIRCUIT OPEN
ECM
ECM

Always perform the Pre-Diagnostic Troubleshooting procedure before proceeding. (Refer to 9 - ENGINE - DIAGNOSIS AND TESTING)

1. INTAKE AIR TEMP SENSOR OUT OF SPEC

Disconnect the Intake Air Temperature sensor harness connector.
Check connectors - Clean/repair as necessary.
Measure the resistance of the Intake Air Temp sensor.

Is the resistance between 300 and 90k ohms?

Yes >> Go To 2

No >> Replace the Intake Air temperature sensor/MAP sensor.
Perform POWERTRAIN VERIFICATION TEST VER - 1 (DIESEL). (Refer to 8 - ELECTRICAL/ELECTRONIC CONTROL MODULES/ENGINE CONTROL MODULE - DIAGNOSIS AND TESTING)

---

2. INTERMITTENT CONDITION

Reconnect the circuit.
Turn the ignition on.
With the scan tool, erase DTCs.
With the scan tool, read DTCs.

Did the DTC reappear?

Yes >> Refer to the INTERMITTENT CONDITION Symptom (Diagnostic Procedure). (Refer to 9 - ENGINE - DIAGNOSIS AND TESTING)
Perform POWERTRAIN VERIFICATION TEST VER - 1 (DIESEL). (Refer to 8 - ELECTRICAL/ELECTRONIC CONTROL MODULES/ENGINE CONTROL MODULE - DIAGNOSIS AND TESTING)

No >> Go To 3

P0112-INTAKE AIR TEMPERATURE (IAT) SENSOR VOLTAGE TOO LOW (CONTINUED)

3. (K21) SIGNAL CIRCUIT SHORTED TO GROUND CIRCUIT

Turn the ignition off.

Disconnect the ECM harness connector.

Check connectors - Clean/repair as necessary.

Measure the resistance between the engine ground and the temperature sensor (K21) signal circuit at the sensor harness connector.

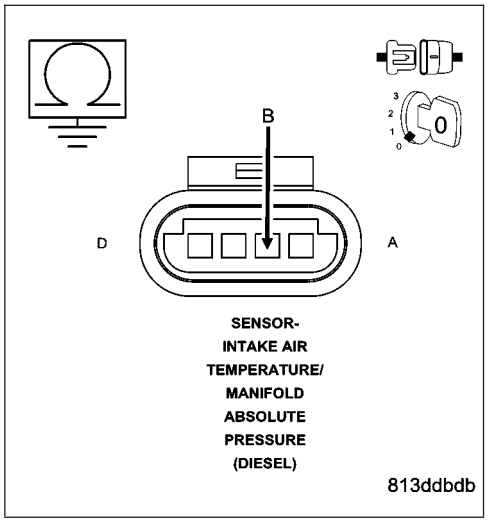

Is the resistance more than 100 k ohms?

Yes >> Go To 4

No >> Repair or replace the engine wiring harness.

Perform POWERTRAIN VERIFICATION TEST VER - 1 (DIESEL). (Refer to 8 - ELECTRICAL/ELECTRONIC CONTROL MODULES/ENGINE CONTROL MODULE - DIAGNOSIS AND TESTING)

4. WIRING HARNESS SHORTED

Measure the resistance between the (K21) signal circuit and all other circuits at the ECM harness connector.

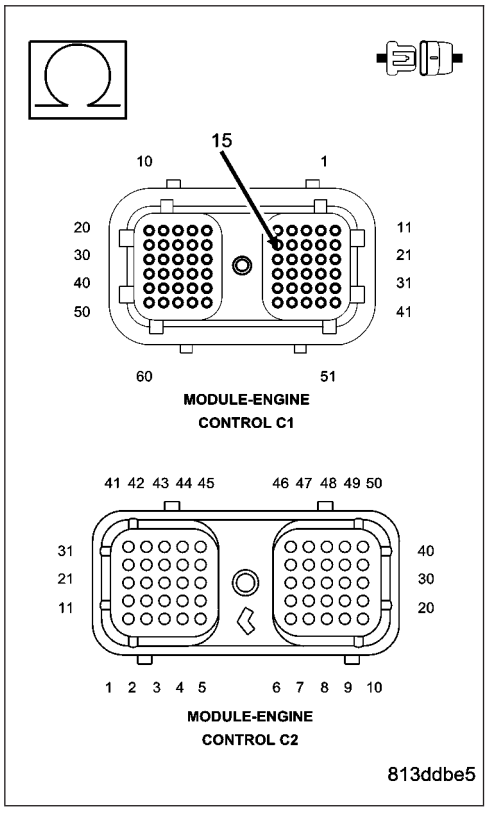

Is the resistance more than 100 k ohms?

Yes >> Go To 5

No >> Repair or replace the shorted wiring harness.

Perform POWERTRAIN VERIFICATION TEST VER - 1 (DIESEL). (Refer to 8 - ELECTRICAL/ELECTRONIC CONTROL MODULES/ENGINE CONTROL MODULE - DIAGNOSIS AND TESTING)

P0112-INTAKE AIR TEMPERATURE (IAT) SENSOR VOLTAGE TOO LOW (CONTINUED)

5. (F855) 5-VOLT SUPPLY CIRCUIT SHORTED TO (k916) RETURN CIRCUIT

Reconnect the ECM harness connector connected.

Turn the ignition on.

Measure the voltage between the (F855) 5-volt supply circuit and the (k916) return circuit the sensor harness connector.

Is the voltage between 4.5 and 5.5 volts?

Yes >> Go To 7

No >> Go To 6

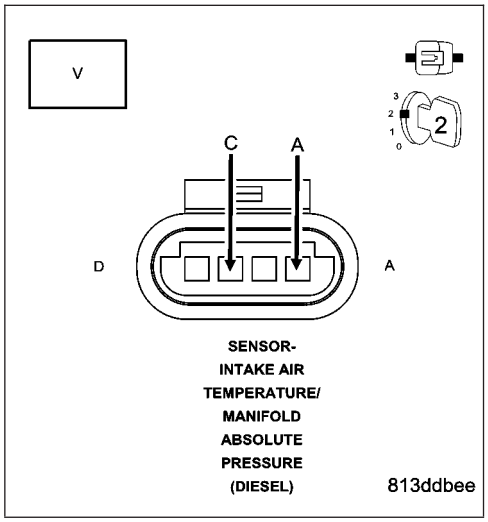

6. (F855) 5-VOLT SUPPLY CIRCUIT OPEN

Turn the ignition off.

Disconnect the ECM harness connector.

Measure the voltage at the (F855) 5-volt supply circuit of the sensor harness connector.

Is the voltage between 4.5 and 5.5 volts?

Yes >> Repair the open (F855) 5-volt supply circuit.
Perform POWERTRAIN VERIFICATION TEST VER - 1 (DIESEL). (Refer to 8 - ELECTRICAL/ELECTRONIC CONTROL MODULES/ENGINE CONTROL MODULE - DIAGNOSIS AND TESTING)

No >> Go To 7

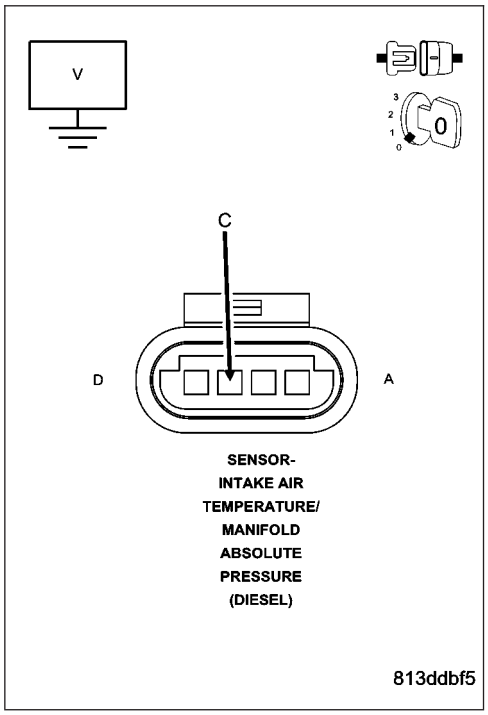

P0112-INTAKE AIR TEMPERATURE (IAT) SENSOR VOLTAGE TOO LOW (CONTINUED)

7. ECM

Reconnect the ECM harness connector.
Reconnect the intake air temp sensor harness connector.
Turn the ignition on.
While monitoring with scan tool, disconnect the temperature sensor

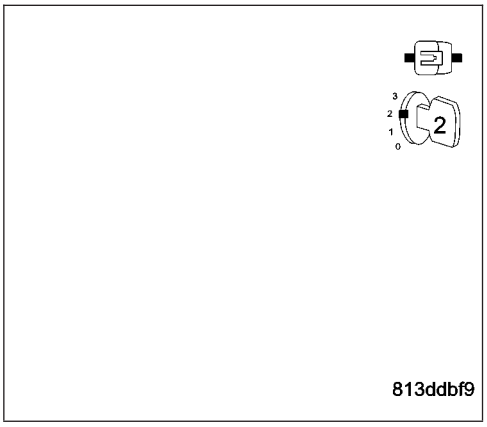

Did the DTC P0113 set?

Yes >> Clear DTC's, repair complete.
Perform POWERTRAIN VERIFICATION TEST VER - 1 (DIESEL). (Refer to 8 - ELECTRICAL/ELECTRONIC CONTROL MODULES/ENGINE CONTROL MODULE - DIAGNOSIS AND TESTING)

No >> Replace the ECM.
Perform POWERTRAIN VERIFICATION TEST VER - 1 (DIESEL). (Refer to 8 - ELECTRICAL/ELECTRONIC CONTROL MODULES/ENGINE CONTROL MODULE - DIAGNOSIS AND TESTING)

P0113-INTAKE AIR TEMPERATURE (IAT) SENSOR VOLTAGE TOO HIGH

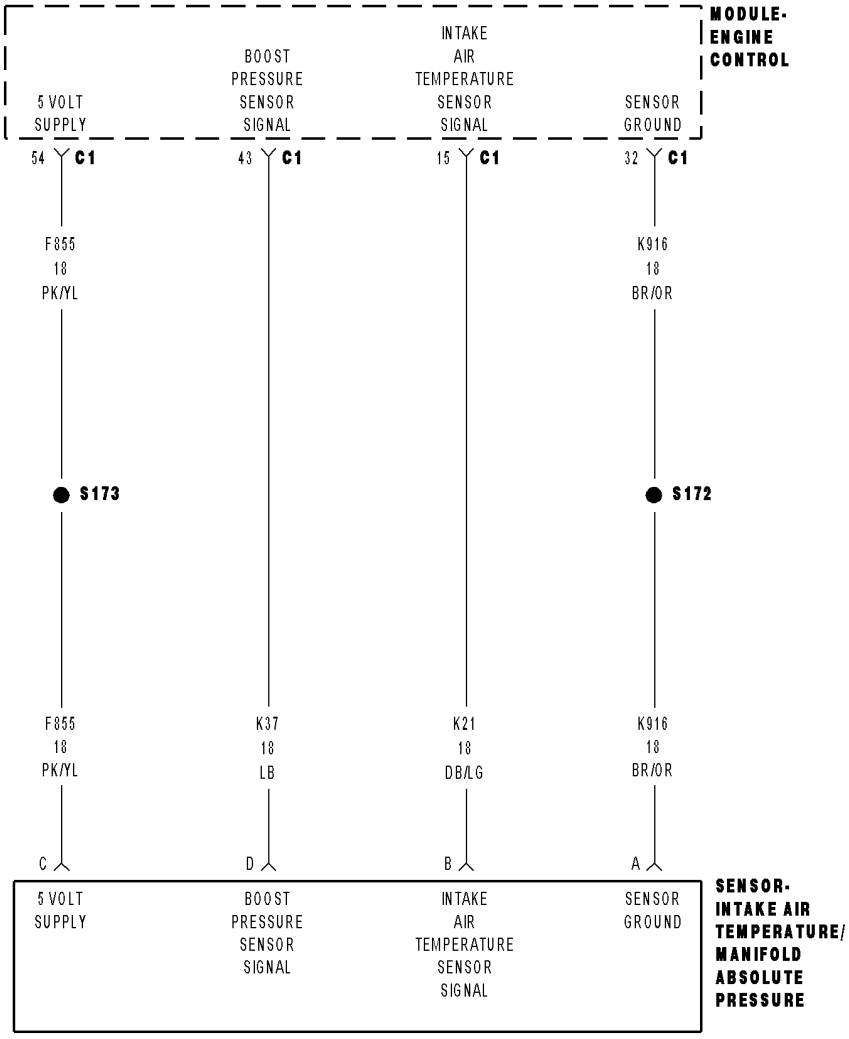

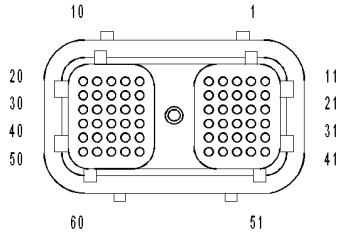

MODULE-ENGINE
CONTROL C1

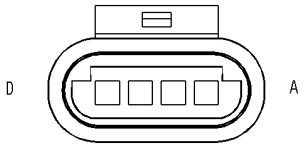

SENSOR-
INTAKE AIR
TEMPERATURE/
MANIFOLD
ABSOLUTE
PRESSURE
(DIESEL)

813dc004

P0113-INTAKE AIR TEMPERATURE (IAT) SENSOR VOLTAGE TOO HIGH (CONTINUED)

For the Engine circuit diagram (Refer to 8 - ELECTRICAL/ELECTRONIC CONTROL MODULES/ENGINE CONTROL MODULE - SCHEMATIC - ELECTRICAL)

For a complete wiring diagram **Refer to Section 8W**.

- **When Monitored:**
  With ignition on and battery voltage greater than 10.4 volts.
- **Set Condition:**
  The circuit voltage to the ECM is above a calibrated threshold for a certain period of time.

Possible Causes
FAILED SENSOR
INTERMITTENT CONDITION
(K21) SENSOR SIGNAL CIRCUIT OPEN
(K916) RETURN CIRCUIT OPEN
SHORT IN HARNESS
ECM
ECM

Always perform the Pre-Diagnostic Troubleshooting procedure before proceeding. (Refer to 9 - ENGINE - DIAGNOSIS AND TESTING)

Diagnostic Test

1. Failed sensor

Turn the ignition off.
Disconnect the IAT sensor harness connector.
Check connectors - Clean/repair as necessary.
Measure the resistance of the IAT sensor.

Is the resistance between 300 and 90k ohms?

Yes >> Go To 2

No >> Replace the Intake Air Temperature Sensor/map sensor.
Perform POWERTRAIN VERIFICATION TEST VER - 1 (DIESEL). (Refer to 8 - ELECTRICAL/ELECTRONIC CONTROL MODULES/ENGINE CONTROL MODULE - DIAGNOSIS AND TESTING)

---

2. INTERMITTENT CONDITION

Reconnect the IAT harness connector.
Turn the ignition on.
With the scan tool, erase DTCs.
With the scan tool, read DTCs.

Is P0113 still set?

Yes >> Go To 3

No >> Refer to the INTERMITTENT CONDITION Symptom (Diagnostic Procedure). (Refer to 9 - ENGINE - DIAGNOSIS AND TESTING)
Perform POWERTRAIN VERIFICATION TEST VER - 1 (DIESEL). (Refer to 8 - ELECTRICAL/ELECTRONIC CONTROL MODULES/ENGINE CONTROL MODULE - DIAGNOSIS AND TESTING)

P0113-INTAKE AIR TEMPERATURE (IAT) SENSOR VOLTAGE TOO HIGH (CONTINUED)

3. HIGH RESISTANCE OF SENSOR CONNECTOR

Turn the ignition off.

Disconnect the ECM harness connector(s).

Measure the resistance between the temperature sensor (K21) signal and (K916) return circuit at the ECM harness connector with the sensor connected

Is the resistance between 300 and 90k ohms?

Yes >> Go To 6

No >> Go To 4

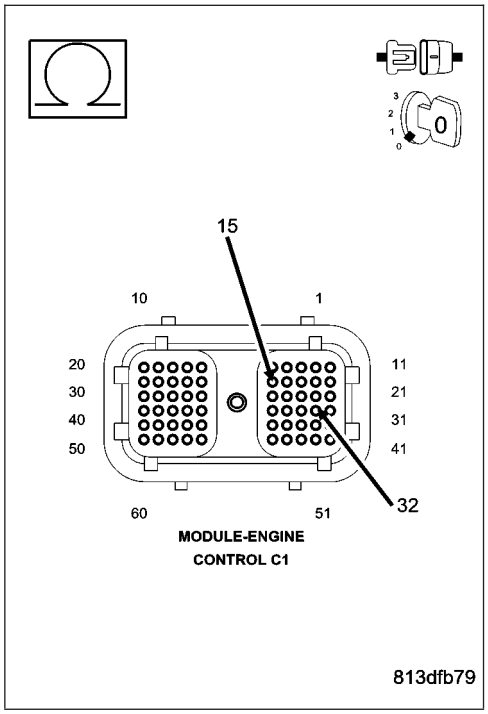

4. (K21) SIGNAL CIRCUIT OPEN

Measure the resistance of the sensor (K21) signal circuit between the sensor harness connector and the ECM harness connector.

Is the resistance less than 10 Ohms?

Yes >> Go To 5

No >> Repair the open Sensor (K21) signal circuit or the harness.

Perform POWERTRAIN VERIFICATION TEST VER - 1 (DIESEL). (Refer to 8 - ELECTRICAL/ELECTRONIC CONTROL MODULES/ENGINE CONTROL MODULE - DIAGNOSIS AND TESTING)

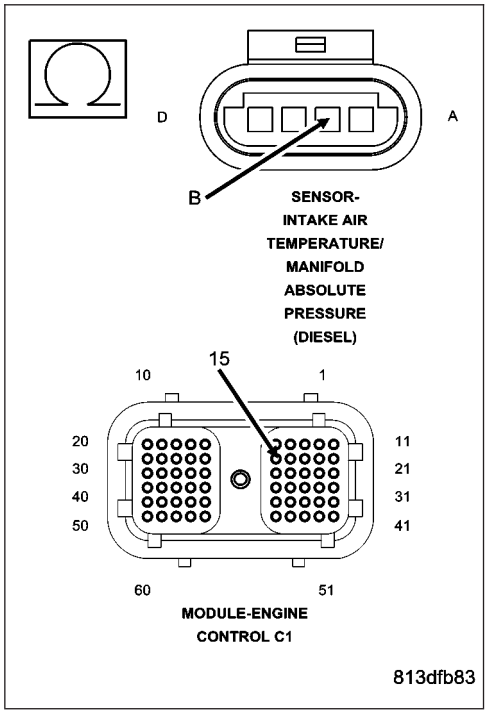

P0113-INTAKE AIR TEMPERATURE (IAT) SENSOR VOLTAGE TOO HIGH (CONTINUED)

5. (K916) RETURN CIRCUIT OPEN

Measure the resistance of the sensor (K916) Return circuit between the sensor harness connector and the ECM harness connector.

Is the resistance less than 10 Ohms?

Yes >> Go To 6

No >> Repair the open (K916) return circuit or the harness.
Perform POWERTRAIN VERIFICATION TEST VER - 1 (DIESEL). (Refer to 8 - ELECTRICAL/ELECTRONIC CONTROL MODULES/ENGINE CONTROL MODULE - DIAGNOSIS AND TESTING)

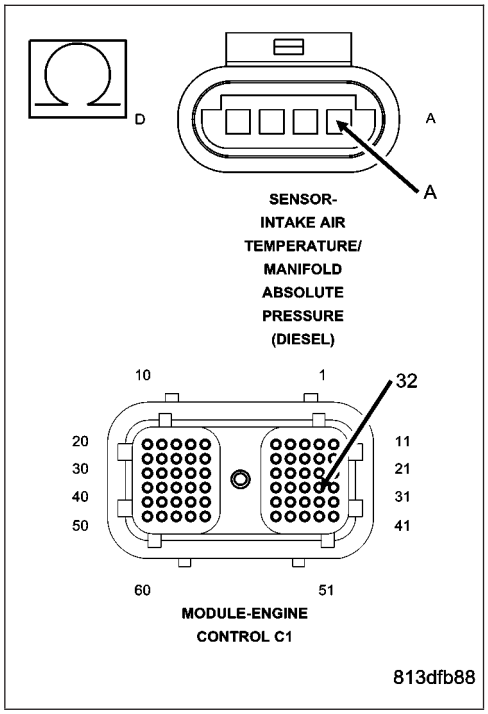

6. SHORT IN HARNESS

Check for a short circuit from (K21) signal circuit to all other circuits at the ECM harness connector.

Is the resistance more than 100 k ohms?

Yes >> Go To 7

No >> Repair the short in the wiring harness or replace the harness.
Perform POWERTRAIN VERIFICATION TEST VER - 1 (DIESEL). (Refer to 8 - ELECTRICAL/ELECTRONIC CONTROL MODULES/ENGINE CONTROL MODULE - DIAGNOSIS AND TESTING)

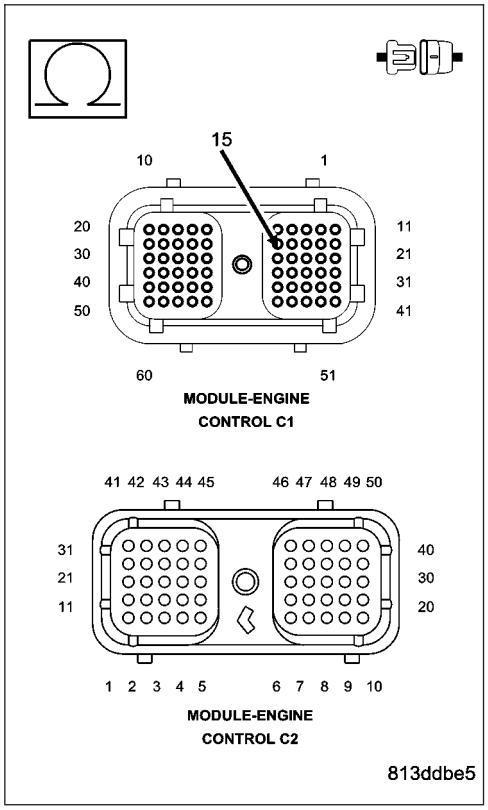

P0113-INTAKE AIR TEMPERATURE (IAT) SENSOR VOLTAGE TOO HIGH (CONTINUED)

7. ECM

Reconnect the ECM harness connectors.

Turn the ignition on.

With the scan tool, erase DTCs.

While monitoring with scan tool, use a jumper wire and connect the sensor (K21) signal circuit to the sensor (K916) return circuit at the sensor harness connector.

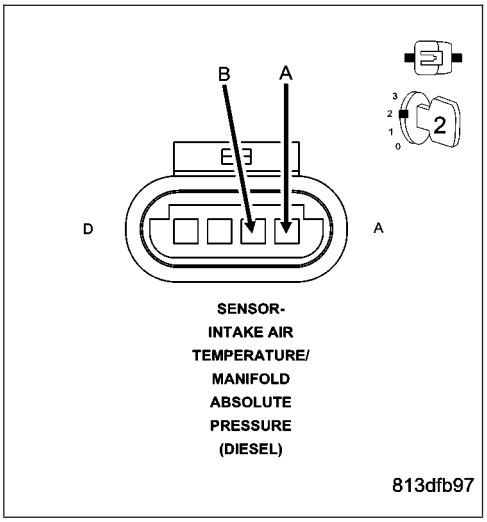

Did the DTC P0112 set?

Yes >> Refer to the INTERMITTENT CONDITION Symptom (Diagnostic Procedure). (Refer to 9 - ENGINE - DIAGNOSIS AND TESTING)

Perform POWERTRAIN VERIFICATION TEST VER - 1 (DIESEL). (Refer to 8 - ELECTRICAL/ELECTRONIC CONTROL MODULES/ENGINE CONTROL MODULE - DIAGNOSIS AND TESTING)

No >> Replace the ECM.

Perform POWERTRAIN VERIFICATION TEST VER - 1 (DIESEL). (Refer to 8 - ELECTRICAL/ELECTRONIC CONTROL MODULES/ENGINE CONTROL MODULE - DIAGNOSIS AND TESTING)

P0116-ENGINE COOLANT TEMPERATURE (ECT) SENSOR RATIONALITY

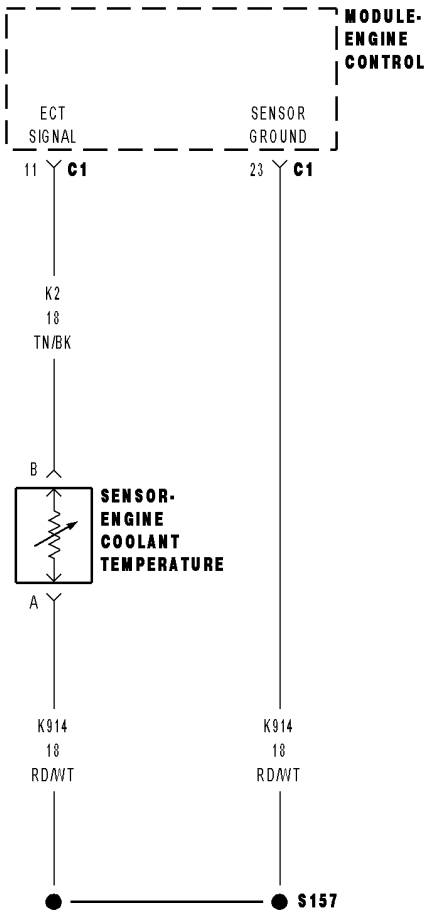

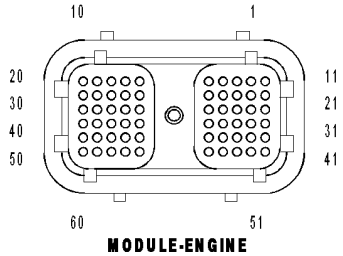

MODULE-ENGINE
CONTROL C1

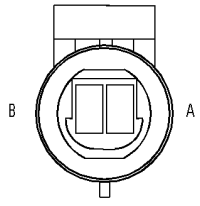

SENSOR-
ENGINE
COOLANT
TEMPERATURE
(DIESEL)

813e2e6b

P0116-ENGINE COOLANT TEMPERATURE (ECT) SENSOR RATIONALITY (CONTINUED)

For the Engine circuit diagram (Refer to 8 - ELECTRICAL/ELECTRONIC CONTROL MODULES/ENGINE CONTROL MODULE - SCHEMATIC - ELECTRICAL)

For a complete wiring diagram **Refer to Section 8W**.

- **When Monitored:**
  While the engine is running.
- **Set Condition:**
  The ECM does not read a change in value from the sensor over time.

Possible Causes
LOW COOLANT LEVEL
COOLANT TEMPERATURE SENSOR
THERMOSTAT
INTERMITTENT CONDITION

Always perform the Pre-Diagnostic Troubleshooting procedure before proceeding. (Refer to 9 - ENGINE - DIAGNOSIS AND TESTING)

Diagnostic Test

1. LOW COOLANT LEVEL

With the engine cold, verify the level of coolant in the radiator.

Is the radiator full of coolant?

Yes >> Go To 2

No >> Fill the radiator with coolant- refer to the owners manual for assistance.
Perform POWERTRAIN VERIFICATION TEST VER - 1 (DIESEL). (Refer to 8 - ELECTRICAL/ELECTRONIC CONTROL MODULES/ENGINE CONTROL MODULE - DIAGNOSIS AND TESTING)

---

2. COOLANT TEMPERATURE SENSOR

Remove the temperature sensor and reconnect the wiring to the sensor.

Turn the ignition on.

Monitor scan tool, while heating the sensor with an external heat source (DO NOT USE OPEN FLAME).

Does the reading from the sensor increase at least 5 degrees F. on the scan tool?

Yes >> Go To 3

No >> Replace the coolant temp sensor.
Perform POWERTRAIN VERIFICATION TEST VER - 1 (DIESEL). (Refer to 8 - ELECTRICAL/ELECTRONIC CONTROL MODULES/ENGINE CONTROL MODULE - DIAGNOSIS AND TESTING)

P0116-ENGINE COOLANT TEMPERATURE (ECT) SENSOR RATIONALITY (CONTINUED)

3. THERMOSTAT

NOTE: refer to the no trouble code test" *Thermostat Test" to ensure the thermostat is operating properly.

Is the thermostat operating properly?

Yes >> Refer to the INTERMITTENT CONDITION Symptom (Diagnostic Procedure). (Refer to 9 - ENGINE - DIAGNOSIS AND TESTING)

Perform POWERTRAIN VERIFICATION TEST VER - 1 (DIESEL). (Refer to 8 - ELECTRICAL/ELECTRONIC CONTROL MODULES/ENGINE CONTROL MODULE - DIAGNOSIS AND TESTING)

No >> Replace the Thermostat.

Perform POWERTRAIN VERIFICATION TEST VER - 1 (DIESEL). (Refer to 8 - ELECTRICAL/ELECTRONIC CONTROL MODULES/ENGINE CONTROL MODULE - DIAGNOSIS AND TESTING)

P0117-ENGINE COOLANT TEMPERATURE (ECT) SENSOR VOLTAGE TOO LOW

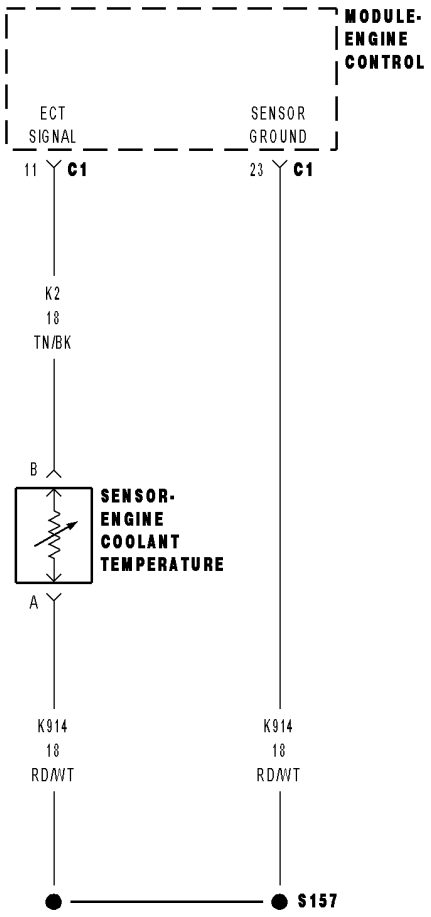

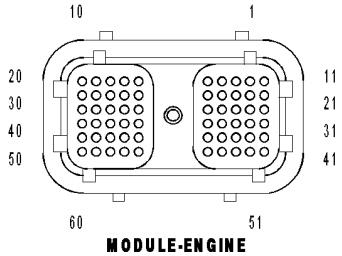

MODULE-ENGINE
CONTROL C1

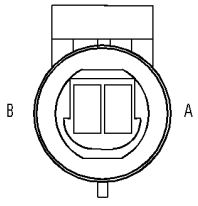

SENSOR-
ENGINE
COOLANT
TEMPERATURE
(DIESEL)

813e2e6b

P0117-ENGINE COOLANT TEMPERATURE (ECT) SENSOR VOLTAGE TOO LOW (CONTINUED)

For the Engine circuit diagram (Refer to 8 - ELECTRICAL/ELECTRONIC CONTROL MODULES/ENGINE CONTROL MODULE - SCHEMATIC - ELECTRICAL)

For a complete wiring diagram **Refer to Section 8W**.

- **When Monitored:**
  With ignition on and battery voltage greater than 10.4 volts.
- **Set Condition:**
  The circuit voltage to the ECM falls below a calibrated threshold for a certain period of time.

Possible Causes
COOLANT TEMPERATURE SENSOR
INTERMITTENT CONDITION
(K2) SENSOR SIGNAL CIRCUIT SHORTED TO GROUND OR (K104) RETURN CIRCUIT
WIRING HARNESS SHORTED
ECM

Always perform the Pre-Diagnostic Troubleshooting procedure before proceeding. (Refer to 9 - ENGINE - DIAGNOSIS AND TESTING)

Diagnostic Test

1. COOLANT TEMPERATURE SENSOR

Turn the ignition off.

Disconnect the Coolant Temp sensor harness connector.

Check connectors - Clean/repair as necessary.

Measure the resistance of the Temp sensor.

Is the resistance between 300 and 90k ohms?

Yes >> Go To 2

No >> Replace the Coolant Temperature sensor.
Perform POWERTRAIN VERIFICATION TEST VER - 1 (DIESEL). (Refer to 8 - ELECTRICAL/ELECTRONIC CONTROL MODULES/ENGINE CONTROL MODULE - DIAGNOSIS AND TESTING)

---

2. INTERMITTENT CONDITION

Reconnect the coolant temp sensor connected.

Turn the ignition on.

With the scan tool, erase DTCs.

With the scan tool, read DTCs.

Did the DTC reset?

Yes >> Refer to the INTERMITTENT CONDITION Symptom (Diagnostic Procedure). (Refer to 9 - ENGINE - DIAGNOSIS AND TESTING)

No >> Go To 3

P0117-ENGINE COOLANT TEMPERATURE (ECT) SENSOR VOLTAGE TOO LOW (CONTINUED)

3. (K2) SENSOR SIGNAL CIRCUIT SHORTED TO GROUND

Turn the ignition off.

Disconnect the ECM harness connector.

Check connectors - Clean/repair as necessary.

Measure the resistance between the engine ground and the (K2) temperature sensor signal circuit at the sensor harness connector.

Is the resistance more than 100 k ohms?

Yes >> Go To 4

No >> Repair or replace the short harness.

Perform POWERTRAIN VERIFICATION TEST VER - 1 (DIESEL). (Refer to 8 - ELECTRICAL/ELECTRONIC CONTROL MODULES/ENGINE CONTROL MODULE - DIAGNOSIS AND TESTING)

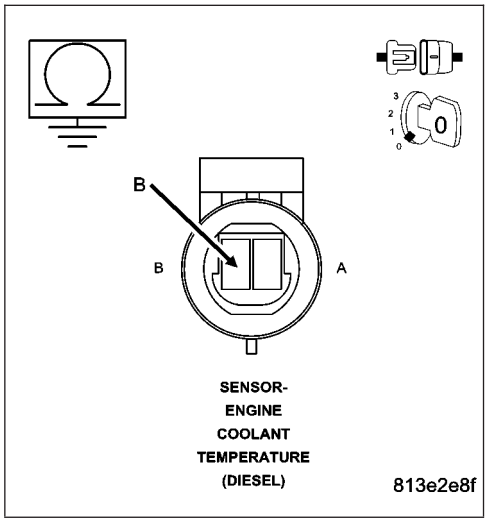

4. WIRING HARNESS SHORTED

Measure the resistance between the (K2) signal circuit and all other circuits at the ECM harness connector.

Is the resistance more than 100k ohms?

Yes >> Go To 5

No >> Repair or replace shorted wiring harness

Perform POWERTRAIN VERIFICATION TEST VER - 1 (DIESEL). (Refer to 8 - ELECTRICAL/ELECTRONIC CONTROL MODULES/ENGINE CONTROL MODULE - DIAGNOSIS AND TESTING)

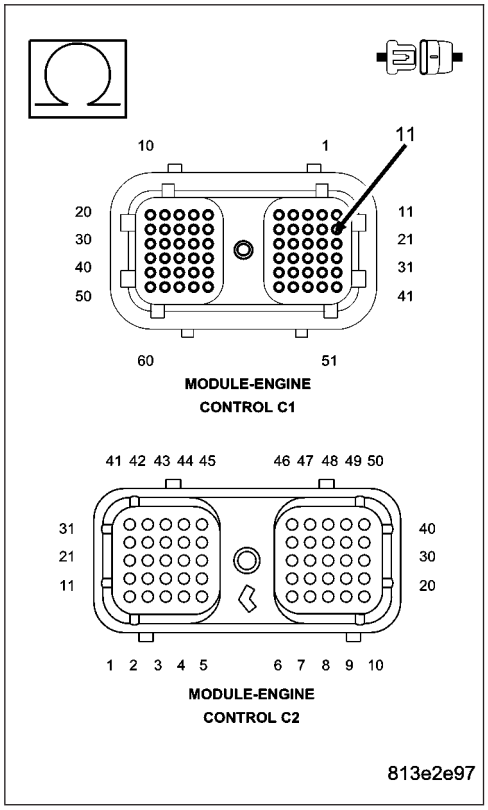

P0117-ENGINE COOLANT TEMPERATURE (ECT) SENSOR VOLTAGE TOO LOW (CONTINUED)

5. **ECM**

Reconnect the ECM harness connectors.

Turn the ignition on.

With the scan tool, erase DTCs.

While monitoring the scan tool, Disconnect the temperature sensor harness connector.

Did the DTC P0118 set?

Yes >> Refer to the INTERMITTENT CONDITION Symptom (Diagnostic Procedure). (Refer to 9 - ENGINE - DIAGNOSIS AND TESTING)

No >> Replace the ECM.

Perform POWERTRAIN VERIFICATION TEST VER - 1 (DIESEL). (Refer to 8 - ELECTRICAL/ELECTRONIC CONTROL MODULES/ENGINE CONTROL MODULE - DIAGNOSIS AND TESTING)

P0118-ENGINE COOLANT TEMPERATURE (ECT) SENSOR VOLTAGE TOO HIGH

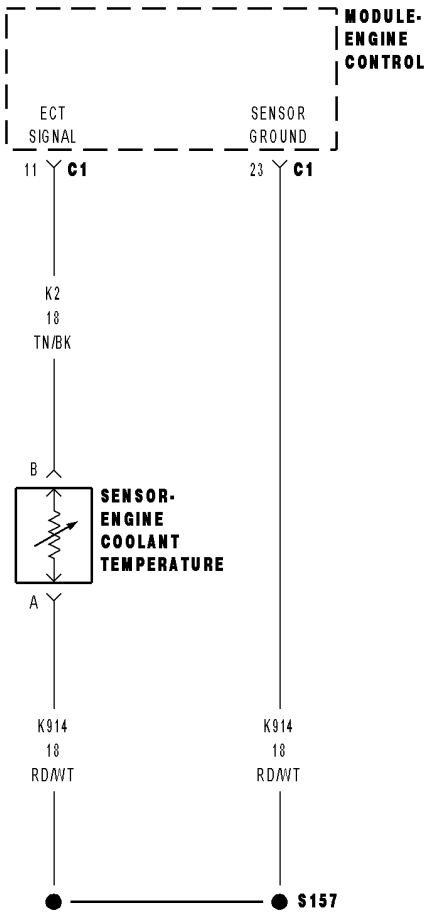

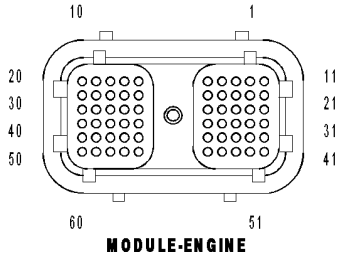

MODULE-ENGINE
CONTROL C1

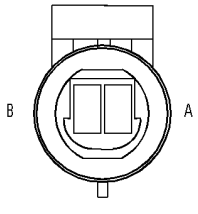

SENSOR-
ENGINE
COOLANT
TEMPERATURE
(DIESEL)

813e2e6b

P0118-ENGINE COOLANT TEMPERATURE (ECT) SENSOR VOLTAGE TOO HIGH (CONTINUED)

For the Engine circuit diagram (Refer to 8 - ELECTRICAL/ELECTRONIC CONTROL MODULES/ENGINE CONTROL MODULE - SCHEMATIC - ELECTRICAL)

For a complete wiring diagram **Refer to Section 8W**.

- **When Monitored:**
  With ignition on and battery voltage greater than 10.4 volts.
- **Set Condition:**
  The circuit voltage to the ECM is above a calibrated threshold for a certain period of time.

Possible Causes
COOLANT TEMPERATURE SENSOR
INTERMITTENT CONDITION
(K2) SIGNAL CIRCUIT OPEN
(K914) SENSOR RETURN CIRCUIT OPEN
(K2) SIGNAL CIRCUIT SHORTED
ECM

Always perform the Pre-Diagnostic Troubleshooting procedure before proceeding. (Refer to 9 - ENGINE - DIAGNOSIS AND TESTING)

Diagnostic Test

1. COOLANT TEMPERATURE SENSOR

Disconnect the coolant temperature sensor harness connector.

Check connectors - Clean/repair as necessary.

Measure the resistance of the coolant temperature sensor.

Is the resistance between 300 and 90k ohms?

Yes >> Go To 2

No >> Replace the coolant temperature sensor.
Perform POWERTRAIN VERIFICATION TEST VER - 1 (DIESEL). (Refer to 8 - ELECTRICAL/ELECTRONIC CONTROL MODULES/ENGINE CONTROL MODULE - DIAGNOSIS AND TESTING)

---

2. INTERMITTENT CONDITION

Reconnect the disconnected coolant temp sensor harness connector.

With the scan tool, erase DTCs.

With the scan tool, read DTCs.

Did the DTC return?

Yes >> Go To 3

No >> Refer to the INTERMITTENT CONDITION Symptom (Diagnostic Procedure). (Refer to 9 - ENGINE - DIAGNOSIS AND TESTING)

P0118-ENGINE COOLANT TEMPERATURE (ECT) SENSOR VOLTAGE TOO HIGH (CONTINUED)

3. HIGH RESISTANCE IN CIRCUIT

Turn the ignition off.

Disconnect the ECM harness connector.

Check connectors - Clean/repair as necessary.

Measure the resistance between the (K2) temperature sensor signal and (K914) return circuit at the ECM harness connector with the coolant temp sensor harness connected.

Is the resistance between 300 and 90k ohms?

Yes >> Go To 6

No >> Go To 4

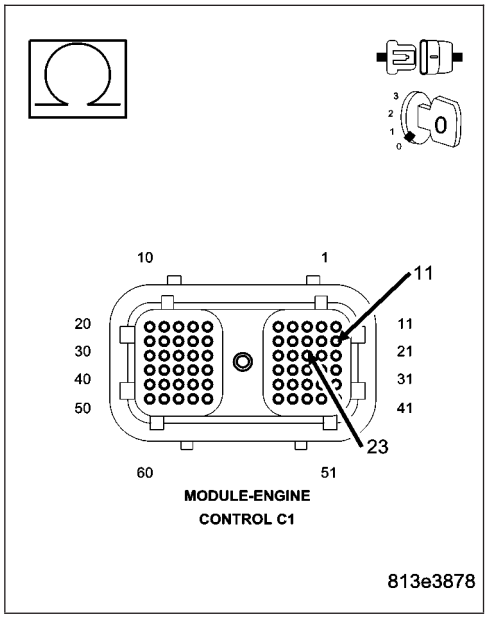

4. (K2) SIGNAL CIRCUIT OPEN

Disconnect the coolant temperature sensor harness connector.

Measure the resistance of the (K2) coolant temperature sensor signal circuit between the coolant temperature sensor connector and the ECM connector.

Is the resistance less than 10 Ohms?

Yes >> Go To 5

No >> Repair or replace the open (K2) signal circuit.

Perform POWERTRAIN VERIFICATION TEST VER - 1 (DIESEL). (Refer to 8 - ELECTRICAL/ELECTRONIC CONTROL MODULES/ENGINE CONTROL MODULE - DIAGNOSIS AND TESTING)

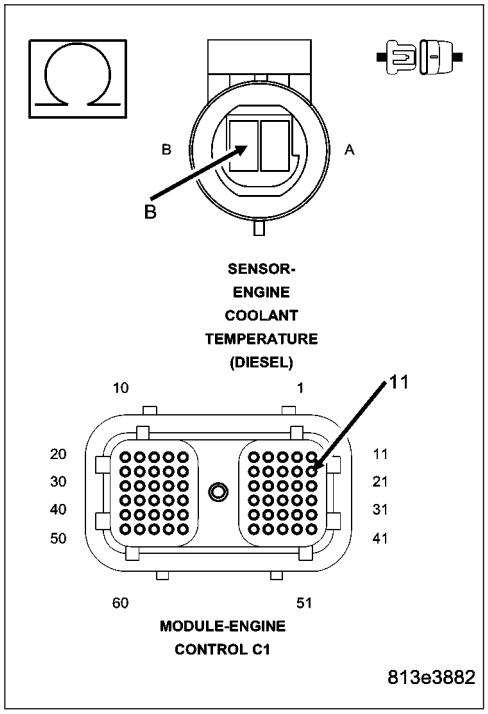

P0118-ENGINE COOLANT TEMPERATURE (ECT) SENSOR VOLTAGE TOO HIGH (CONTINUED)

5. (K914) SENSOR RETURN CIRCUIT OPEN

Measure the resistance of the (K914) coolant temperature sensor return circuit between the coolant temperature sensor connector and the ECM connector.

Is the resistance less than 10 Ohms?

Yes >> Go To 6

No >> Repair or replace the open (K914) sensor return circuit.
Perform POWERTRAIN VERIFICATION TEST VER - 1 (DIESEL). (Refer to 8 - ELECTRICAL/ELECTRONIC CONTROL MODULES/ENGINE CONTROL MODULE - DIAGNOSIS AND TESTING)

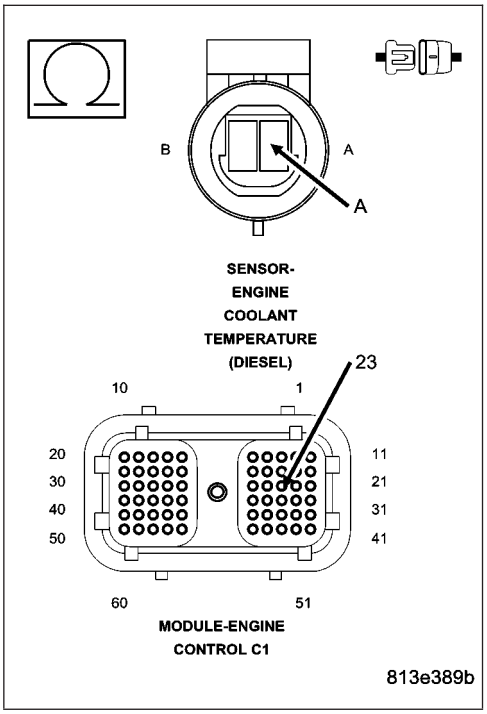

6. (K2) SIGNAL CIRCUIT SHORTED

Measure the resistance of (K2) signal circuit to all other circuits at the ECM harness connector.

Is the resistance more than 100k ohms?

Yes >> Go To 7

No >> Repair or replace the (K2) coolant temperature sensor signal circuit.
Perform POWERTRAIN VERIFICATION TEST VER - 1 (DIESEL). (Refer to 8 - ELECTRICAL/ELECTRONIC CONTROL MODULES/ENGINE CONTROL MODULE - DIAGNOSIS AND TESTING)

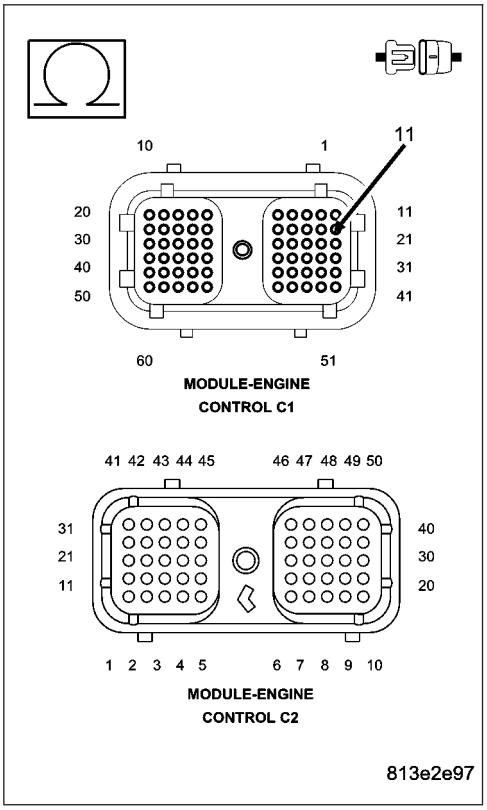

P0118-ENGINE COOLANT TEMPERATURE (ECT) SENSOR VOLTAGE TOO HIGH (CONTINUED)

7. ECM

Reconnect the ECM harness connectors.

Turn the ignition on.

With the scan tool, erase DTCs.

While monitoring with scan tool, use a jumper wire and connect the sensor (K2) signal circuit to the (K914) sensor return circuit at the sensor connector.

Did the DTC P0117 set?

Yes >> Test Complete.

No >> Replace the ECM.

Perform POWERTRAIN VERIFICATION TEST VER - 1 (DIESEL). (Refer to 8 - ELECTRICAL/ELECTRONIC CONTROL MODULES/ENGINE CONTROL MODULE - DIAGNOSIS AND TESTING)

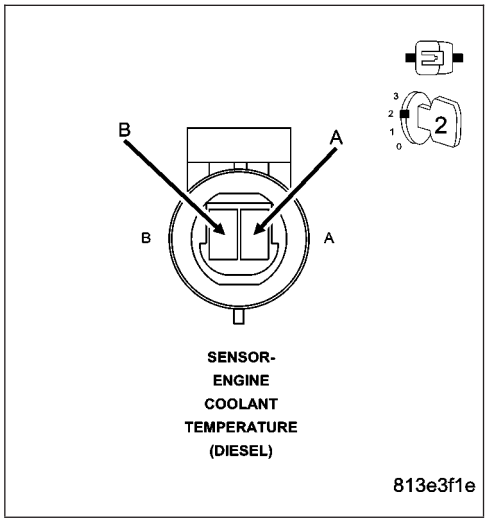

P0128-THERMOSTAT RATIONALITY

For the Engine circuit diagram (Refer to 8 - ELECTRICAL/ELECTRONIC CONTROL MODULES/ENGINE CONTROL MODULE - SCHEMATIC - ELECTRICAL)

For a complete wiring diagram **Refer to Section 8W**.

- **When Monitored:**
  While the engine is running.
- **Set Condition:**
  The coolant temperature does not rise by a calibrated amount over a calibrated amount of time.

Possible Causes
COOLING FAN
COOLANT TEMPERATURE SENSOR
THERMOSTAT

Always perform the Pre-Diagnostic Troubleshooting procedure before proceeding. (Refer to 9 - ENGINE - DIAGNOSIS AND TESTING)

Diagnostic Test

1. COOLING FAN

NOTE: refer to the no trouble code test"*Fan Operation Test" to ensure the fan is operating properly.

Is the cooling fan operating properly?

Yes >> Go To 2

No >> Repair the cooling fan.
Perform POWERTRAIN VERIFICATION TEST VER - 2 (DIESEL). (Refer to 8 - ELECTRICAL/ELECTRONIC CONTROL MODULES/ENGINE CONTROL MODULE - DIAGNOSIS AND TESTING)

---

2. COOLANT TEMPERATURE SENSOR

Operate the engine for 10 minutes while monitoring the coolant temperature with the scan tool.

Did the coolant temperature change over time while the engine was running?

Yes >> Go To 3

No >> Replace the coolant temperature sensor.
Perform POWERTRAIN VERIFICATION TEST VER - 2 (DIESEL). (Refer to 8 - ELECTRICAL/ELECTRONIC CONTROL MODULES/ENGINE CONTROL MODULE - DIAGNOSIS AND TESTING)

---

3. THERMOSTAT

NOTE: refer to the no trouble code test"*Thermostat Test" to ensure the thermostat is operating properly.

is the thermostat operating properly?

Yes >> Test Complete.

No >> Replace the thermostat.
Perform POWERTRAIN VERIFICATION TEST VER - 2 (DIESEL). (Refer to 8 - ELECTRICAL/ELECTRONIC CONTROL MODULES/ENGINE CONTROL MODULE - DIAGNOSIS AND TESTING)

P0148-HIGH PRESSURE COMMON RAIL (HPCR) CHECKSUM

For the Engine circuit diagram (Refer to 8 - ELECTRICAL/ELECTRONIC CONTROL MODULES/ENGINE CONTROL MODULE - SCHEMATIC - ELECTRICAL)

For a complete wiring diagram **Refer to Section 8W**.

- **When Monitored:**
  While the engine is running.
- **Set Condition:**
  A deviation between the fuel pressure set point and the actual fuel pressure.

Possible Causes
OTHERS DTC'S PRESENT
FUEL LEAKS
FUEL CONTROL ACTUATOR
FUEL PRESSURE SENSOR
CASCADE OVERFLOW VALVE
CHECK VALVE DAMAGED OR BLOCKED
FUEL RETURN LINES OBSTRUCTION, DAMAGE, OR DEBRIS.
LIFT PUMP FLOW
AIR IN FUEL SYSTEM
LEAKING FUEL INJECTORS OR HIGH PRESSURE CONNECTORS
PRESSURE LIMITING VALVE
HIGH PRESSURE FUEL PUMP
INTERMITTENT CONDITION

Always perform the Pre-Diagnostic Troubleshooting procedure before proceeding. (Refer to 9 - ENGINE - DIAGNOSIS AND TESTING)

Diagnostic Test

1. OTHERS DTC'S PRESENT

With the scan tool, read DTCs.

Are any other DTC's present?

Yes >> Repair other DTC's first.
Perform POWERTRAIN VERIFICATION TEST VER - 1 (DIESEL).

No >> Go To 2

---

2. FUEL LEAKS

Ensure that the fuel level is above 15% using the scan tool.

Visually inspect the low and high pressure side of the fuel system for fuel leaks or damaged components.

Do you have any fuel leaks or damaged components?

Yes >> Repair the fuel leak.
Perform POWERTRAIN VERIFICATION TEST VER - 1 (DIESEL). (Refer to 8 - ELECTRICAL/ELECTRONIC CONTROL MODULES/ENGINE CONTROL MODULE - DIAGNOSIS AND TESTING)

No >> Go To 3

P0148-HIGH PRESSURE COMMON RAIL (HPCR) CHECKSUM (CONTINUED)

3. FUEL CONTROL ACTUATOR

Check for a mechanically stuck Fuel Control Actuator (FCA). Using the scan tool, actuate the fuel control actuator.

NOTE: The fuel control actuator will only click when cycled off..

Do you hear a click from the actuator when you cycle the actuator off with the scan tool?

Yes >> Go To 4

No >> Replace the fuel Injector pump.
Perform POWERTRAIN VERIFICATION TEST VER - 1 (DIESEL). (Refer to 8 - ELECTRICAL/ELECTRONIC CONTROL MODULES/ENGINE CONTROL MODULE - DIAGNOSIS AND TESTING)

---

4. FUEL PRESSURE SENSOR

Using the scan tool, monitor the fuel pressure reading from the fuel rail pressure sensor at idle and at 2000 RPM

Is the fuel rail pressure reading higher at 2000 RPM than at idle?

Yes >> Go To 5

No >> Replace the fuel pressure sensor.
Perform POWERTRAIN VERIFICATION TEST VER - 1 (DIESEL). (Refer to 8 - ELECTRICAL/ELECTRONIC CONTROL MODULES/ENGINE CONTROL MODULE - DIAGNOSIS AND TESTING)

---

5. HIGH FUEL PRESSURE

Using the scan tool compare the fuel rail pressure set point with the actual fuel rail pressure.

Is the actual fuel rail pressure higher than the fuel rail pressure set point?

Yes >> Go To 6

No >> Go To 9

---

6. CASCADE OVERFLOW VALVE

Perform the no trouble code test ″*fuel pump return flow test″. (Refer to 9 - ENGINE - DIAGNOSIS AND TESTING)

Did the fuel injection pump pass the test?

Yes >> Go To 7

No >> Replace the Fuel pump.
Perform POWERTRAIN VERIFICATION TEST VER - 1 (DIESEL). (Refer to 8 - ELECTRICAL/ELECTRONIC CONTROL MODULES/ENGINE CONTROL MODULE - DIAGNOSIS AND TESTING)

---

7. CHECK VALVE DAMAGED OR BLOCKED

Check the fuel drain line check valve in the rear of the cylinder head for signs of damage, blockage, or debris.

Is the check valve damaged or blocked?

Yes >> Repair the cause of the damaged or blocked check valve or replace the valve.
Perform POWERTRAIN VERIFICATION TEST VER - 1 (DIESEL). (Refer to 8 - ELECTRICAL/ELECTRONIC CONTROL MODULES/ENGINE CONTROL MODULE - DIAGNOSIS AND TESTING)

No >> Go To 8

P0148-HIGH PRESSURE COMMON RAIL (HPCR) CHECKSUM (CONTINUED)

8. FUEL RETURN LINE OBSTRUCTION, DAMAGED OR DEBRIS

Check the fuel return lines for signs of obstruction, damage, or debris.

Are the fuel drain lines damaged or blocked?

Yes >> Repair cause of high fuel drain line restriction.
Perform POWERTRAIN VERIFICATION TEST VER - 1 (DIESEL). (Refer to 8 - ELECTRICAL/ELECTRONIC CONTROL MODULES/ENGINE CONTROL MODULE - DIAGNOSIS AND TESTING)

No >> Go To 9

---

9. LIFT PUMP FLOW

Perform the no trouble code ″Lift Pump flow test″. (Refer to 9 - ENGINE - DIAGNOSIS AND TESTING)

Did the Lift pump pass the test?

Yes >> Go To 10

No >> Replace the Lift Pump.
Perform POWERTRAIN VERIFICATION TEST VER - 1 (DIESEL). (Refer to 8 - ELECTRICAL/ELECTRONIC CONTROL MODULES/ENGINE CONTROL MODULE - DIAGNOSIS AND TESTING)

---

10. PRESSURE LIMITING VALVE

Perform the no trouble code test ″ Pressure Limiting Valve on the Fuel Rail for internal leaks″.

Did the pressure limiting valve pass the test procedure?

Yes >> Go To 11

No >> Replace the Pressure Limiting Valve.
Perform POWERTRAIN VERIFICATION TEST VER - 1 (DIESEL). (Refer to 8 - ELECTRICAL/ELECTRONIC CONTROL MODULES/ENGINE CONTROL MODULE - DIAGNOSIS AND TESTING)

---

11. LEAKING FUEL INJECTORS OR HIGH PRESSURE CONNECTORS

Perform the no trouble test ″*Injector return flow test″. (Refer to 9 - ENGINE - DIAGNOSIS AND TESTING)

Are any Injectors leaking or high pressure connectors leaking?

Yes >> Replace or repair the leaking fuel injectors or high pressure connectors.
Perform POWERTRAIN VERIFICATION TEST VER - 1 (DIESEL). (Refer to 8 - ELECTRICAL/ELECTRONIC CONTROL MODULES/ENGINE CONTROL MODULE - DIAGNOSIS AND TESTING)

No >> Go To 12

---

12. HIGH PRESSURE FUEL PUMP

Perform the no trouble code test ″HIGH PRESSURE FUEL PUMP PERFORMANCE TEST″. (Refer to 9 - ENGINE - DIAGNOSIS AND TESTING)

Did the fuel pump pass the high pressure fuel pump performance test?

Yes >> Refer to the INTERMITTENT CONDITION Symptom (Diagnostic Procedure). (Refer to 9 - ENGINE - DIAGNOSIS AND TESTING)

No >> Replace the High pressure fuel pump.
Perform POWERTRAIN VERIFICATION TEST VER - 1 (DIESEL). (Refer to 8 - ELECTRICAL/ELECTRONIC CONTROL MODULES/ENGINE CONTROL MODULE - DIAGNOSIS AND TESTING)

P0169-WATER IN FUEL (WIF) LIGHT ON TOO LONG

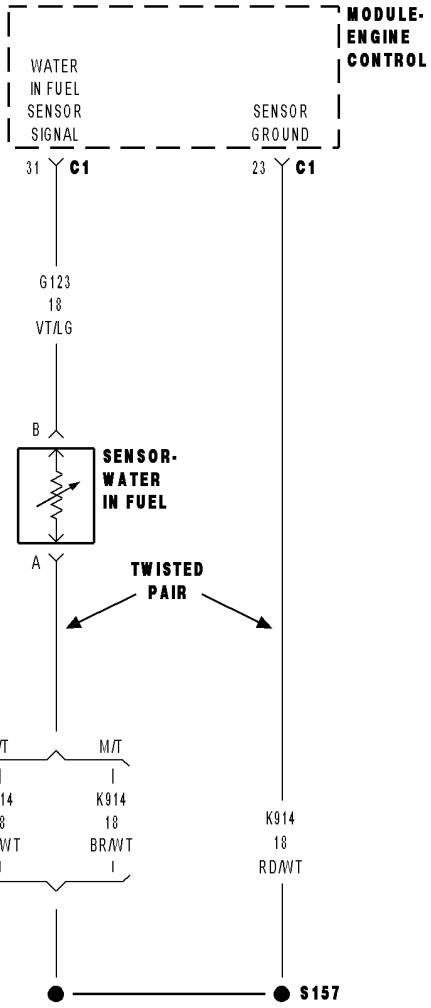

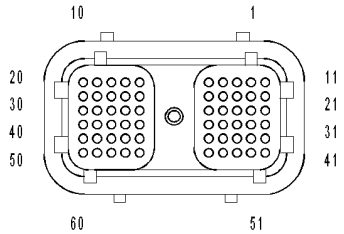

MODULE-ENGINE
CONTROL C1

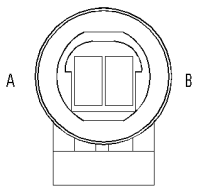

SENSOR- WATER
IN FUEL

813e57a2

P0169-WATER IN FUEL (WIF) LIGHT ON TOO LONG (CONTINUED)

For the Engine circuit diagram (Refer to 8 - ELECTRICAL/ELECTRONIC CONTROL MODULES/ENGINE CONTROL MODULE - SCHEMATIC - ELECTRICAL)

For a complete wiring diagram **Refer to Section 8W**.

- **When Monitored:**
  While the engine is running.
- **Set Condition:**
  Water in fuel light was on for a calibrated amount of time.

Possible Causes
OTHER DTC'S PRESENT
WATER IN FUEL

Always perform the Pre-Diagnostic Troubleshooting procedure before proceeding. (Refer to 9 - ENGINE - DIAGNOSIS AND TESTING)

Diagnostic Test

1. OTHER DTC'S PRESENT

With the scan tool, read DTCs.

Is P2269 displayed?

Yes >> Repair P2269 DTC first.
Perform POWERTRAIN VERIFICATION TEST VER - 1 (DIESEL). (Refer to 8 - ELECTRICAL/ELECTRONIC CONTROL MODULES/ENGINE CONTROL MODULE - DIAGNOSIS AND TESTING)

No >> Drain water in fuel.

P0191-FUEL RAIL PRESSURE SENSOR PERFORMANCE

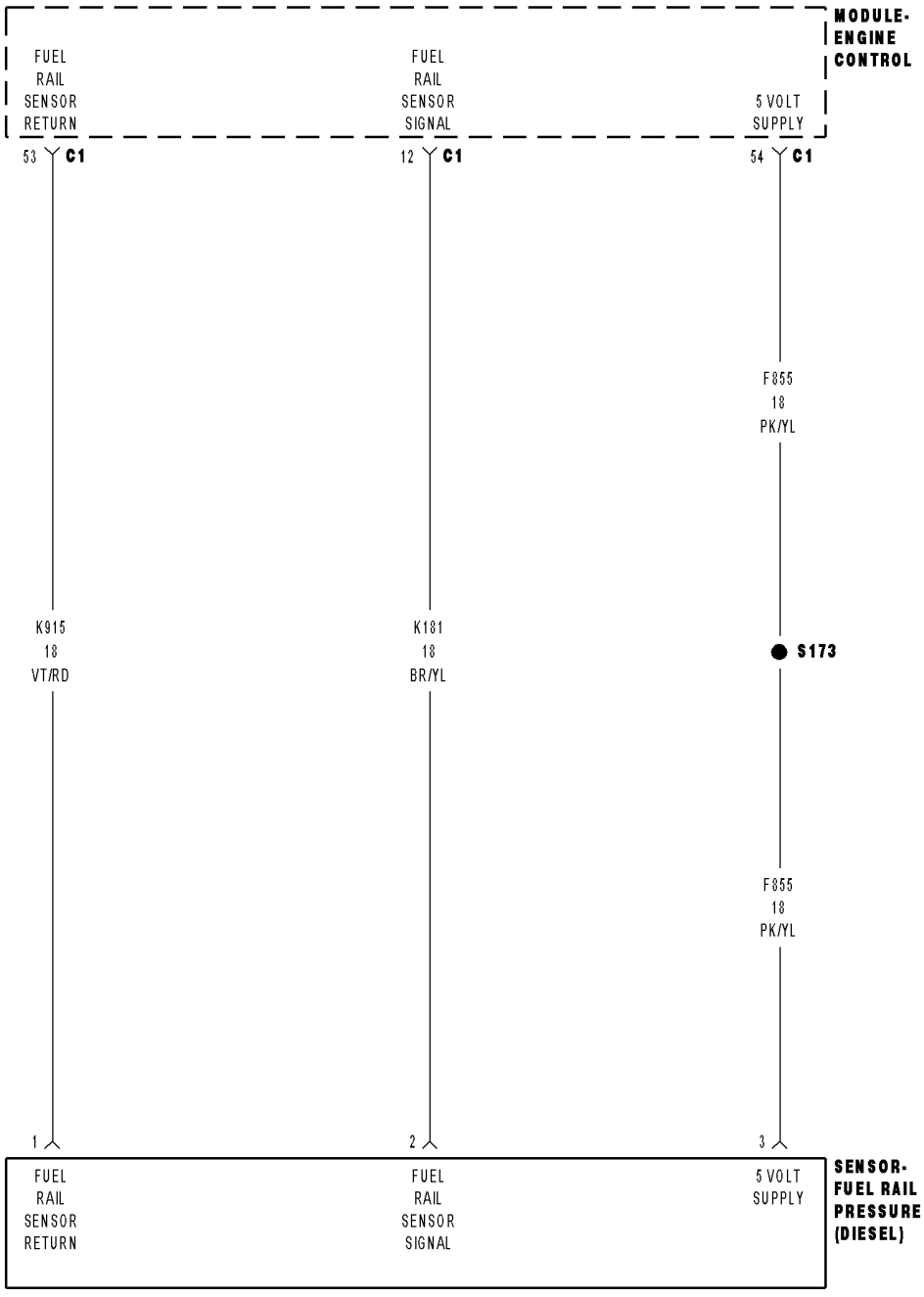

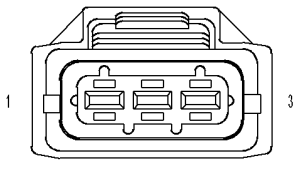

SENSOR-
FUEL RAIL
PRESSURE
(DIESEL)

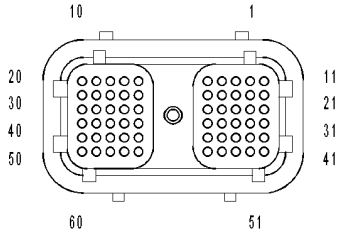

MODULE-ENGINE
CONTROL C1

813e5a09

P0191-FUEL RAIL PRESSURE SENSOR PERFORMANCE (CONTINUED)

For the Engine circuit diagram (Refer to 8 - ELECTRICAL/ELECTRONIC CONTROL MODULES/ENGINE CONTROL MODULE - SCHEMATIC - ELECTRICAL)

For a complete wiring diagram **Refer to Section 8W**.

- **When Monitored:**
  At key on.
- **Set Condition:**
  The fuel pressure sensor reading at key on does not match the expected fuel pressure reading at key on.

Possible Causes
OTHER DTC'S PRESENT
FUEL RAIL PRESSURE SENSOR
FUEL SYSTEM TAMPERING
INTERMITTENT CONDITION

Always perform the Pre-Diagnostic Troubleshooting procedure before proceeding. (Refer to 9 - ENGINE - DIAGNOSIS AND TESTING)

Diagnostic Test

1. OTHER DTC'S PRESENT

With the scan tool, read DTCs.

Are any DTC's present?

Yes >> Repair other DTC's first.
Perform POWERTRAIN VERIFICATION TEST VER - 1 (DIESEL). (Refer to 8 - ELECTRICAL/ELECTRONIC CONTROL MODULES/ENGINE CONTROL MODULE - DIAGNOSIS AND TESTING)

No >> Go To 2

---

2. FUEL PRESSURE READING

Using the scan tool, monitor the actual fuel pressure reading while the key is on and engine is not running.

Is the actual fuel pressure reading greater than 870 psi?

Yes >> Go To 3

No >> Refer to the INTERMITTENT CONDITION Symptom (Diagnostic Procedure). (Refer to 9 - ENGINE - DIAGNOSIS AND TESTING)
Perform POWERTRAIN VERIFICATION TEST VER - 1 (DIESEL). (Refer to 8 - ELECTRICAL/ELECTRONIC CONTROL MODULES/ENGINE CONTROL MODULE - DIAGNOSIS AND TESTING)

P0191-FUEL RAIL PRESSURE SENSOR PERFORMANCE (CONTINUED)

3. FUEL RAIL PRESSURE SENSOR

Visually inspect the fuel system components for signs of tampering, pay particular attention to the fuel pressure sensor on the fuel rail and the fuel pressure sensor wiring harness.

Were any signs of tampering discovered?

No >> Replace the Fuel rail pressure sensor.
Perform POWERTRAIN VERIFICATION TEST VER - 1 (DIESEL). (Refer to 8 - ELECTRICAL/ELECTRONIC CONTROL MODULES/ENGINE CONTROL MODULE - DIAGNOSIS AND TESTING)

Yes >> Restore Fuel system to original condition.
Perform POWERTRAIN VERIFICATION TEST VER - 1 (DIESEL). (Refer to 8 - ELECTRICAL/ELECTRONIC CONTROL MODULES/ENGINE CONTROL MODULE - DIAGNOSIS AND TESTING)

P0192-FUEL PRESSURE SENSOR VOLTAGE TOO LOW

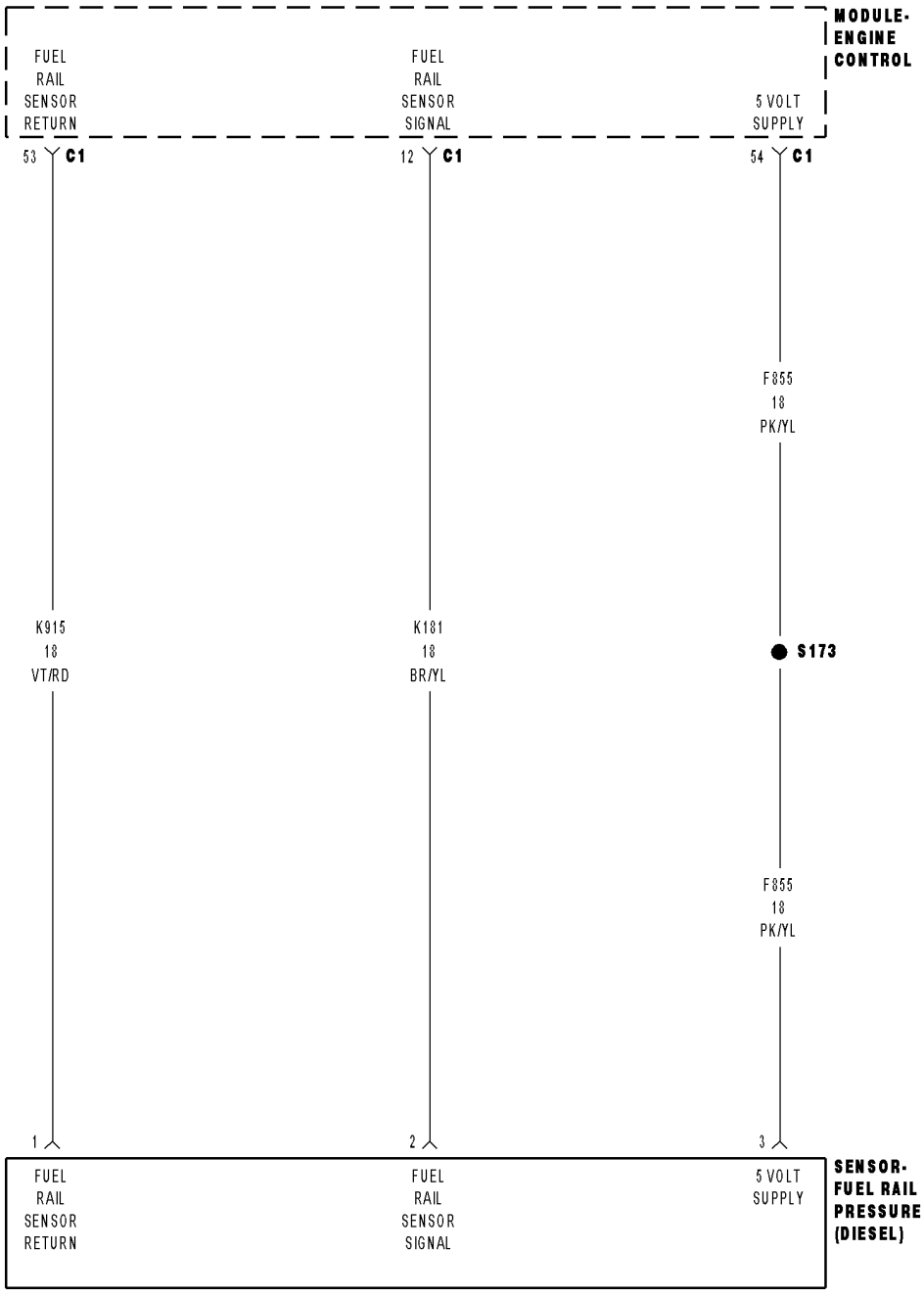

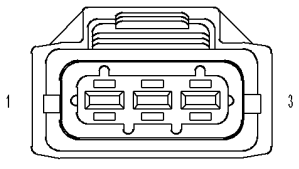

SENSOR-
FUEL RAIL
PRESSURE
(DIESEL)

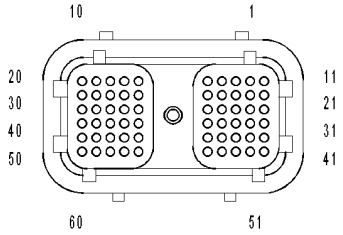

MODULE-ENGINE
CONTROL C1

813e5a09

P0192-FUEL PRESSURE SENSOR VOLTAGE TOO LOW (CONTINUED)

For the Engine circuit diagram (Refer to 8 - ELECTRICAL/ELECTRONIC CONTROL MODULES/ENGINE CONTROL MODULE - SCHEMATIC - ELECTRICAL)

For a complete wiring diagram **Refer to Section 8W**.

- **When Monitored:**
  With the ignition on and battery voltage greater than 10.4 volts.
- **Set Condition:**
  The circuit voltage to the ECM falls below a calibrated threshold for a certain period of time.

Possible Causes
OTHER DTC'S
FUEL PRESSURE SENSOR
(F855) 5-VOLT SUPPLY CIRCUIT SHORTED TO (G910) RETURN CIRCUIT
(K181) SIGNAL CIRCUIT SHORTED TO (G910) RETURN CIRCUIT
(K181) SIGNAL CIRCUIT OPEN
(F855) 5-VOLT SUPPLY CIRCUIT OPEN
(K181) SIGNAL CIRCUIT SHORTED TO GROUND
(F855) 5-VOLT SUPPLY CIRCUIT SHORTED TO GROUND
ECM
INTERMITTENT CONDITION

Always perform the Pre-Diagnostic Troubleshooting procedure before proceeding. (Refer to 9 - ENGINE - DIAGNOSIS AND TESTING)

Diagnostic Test

1. OTHER DTC'S

Ignition on, engine not running.
With the scan tool, read DTCs.

Do you have multiple DTC's?

Yes >> Repair other DTC's first.
Perform POWERTRAIN VERIFICATION TEST VER - 1 (DIESEL). (Refer to 8 - ELECTRICAL/ELECTRONIC CONTROL MODULES/ENGINE CONTROL MODULE - DIAGNOSIS AND TESTING)

No >> Go To 2

P0192-FUEL PRESSURE SENSOR VOLTAGE TOO LOW (CONTINUED)

2. (F855) 5-VOLT SUPPLY AND (K915) RETURN CIRCUIT

Turn the ignition off.

Disconnect the Fuel Pressure sensor harness connector.

NOTE: Check connectors - Clean/repair as necessary.

Ignition on, engine not running.

Measure the voltage between the (F855) 5-volt supply and (K915) return circuits of the Fuel pressure sensor harness connector.

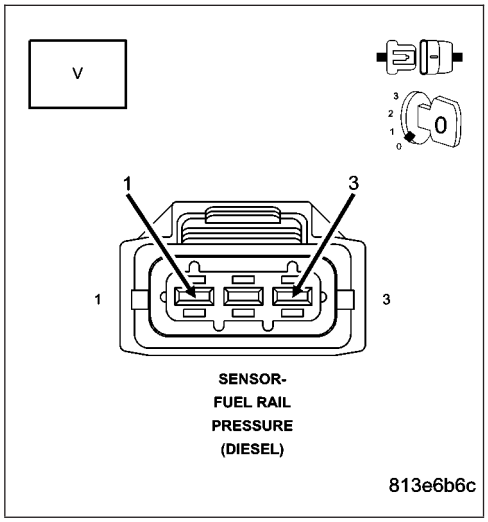

Is the voltage between 4.5 and 5.5 volts?

Yes >> Go To 3

No >> Go To 4

3. FUEL PRESSURE SENSOR

Reconnect the disconnected Fuel Pressure Sensor harness connector.

While monitoring scan tool, disconnect the Fuel Pressure sensor harness connector.

Does the DTC P0193 set?

Yes >> Replace the Fuel Pressure Sensor.

Perform POWERTRAIN VERIFICATION TEST VER - 1 (DIESEL). (Refer to 8 - ELECTRICAL/ELECTRONIC CONTROL MODULES/ENGINE CONTROL MODULE - DIAGNOSIS AND TESTING)

No >> Go To 4

4. (F855) 5-VOLT SUPPLY CIRCUIT SHORTED TO (K915) RETURN CIRCUIT

Turn the ignition off.

Disconnect the ECM harness connectors.

Disconnect the Fuel Pressure sensor harness connector.

Check connectors - Clean/repair as necessary.

Measure the resistance between the (F855) 5-volt supply circuit and (K915) return circuit in the sensor harness connector.

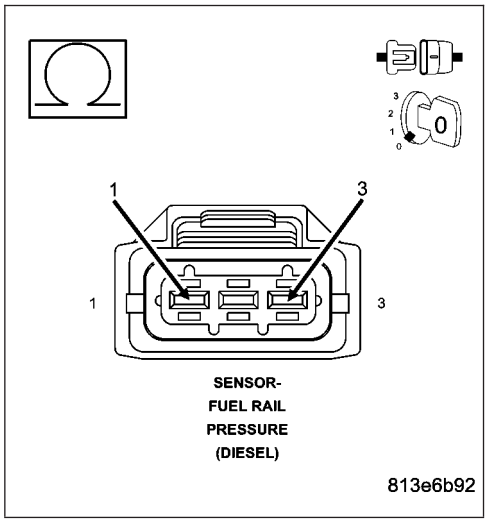

Is the resistance greater than 100 K Ohms?

Yes >> Go To 5

No >> Repair the shorted circuits.

Perform POWERTRAIN VERIFICATION TEST VER - 1 (DIESEL). (Refer to 8 - ELECTRICAL/ELECTRONIC CONTROL MODULES/ENGINE CONTROL MODULE - DIAGNOSIS AND TESTING)

P0192-FUEL PRESSURE SENSOR VOLTAGE TOO LOW (CONTINUED)

5. (K181) SIGNAL CIRCUIT SHORTED TO (K915) RETURN CIRCUIT

Measure the resistance between the (K181) signal circuit and (K915) return circuit in the sensor connector.

Is the resistance greater than 100 K Ohms?

Yes >> Go To 6

No >> Repair the shorted circuits.
Perform POWERTRAIN VERIFICATION TEST VER - 1 (DIESEL). (Refer to 8 - ELECTRICAL/ELECTRONIC CONTROL MODULES/ENGINE CONTROL MODULE - DIAGNOSIS AND TESTING)

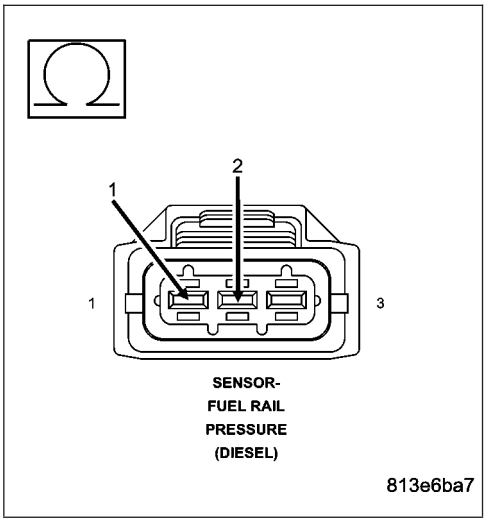

6. (K181) SIGNAL CIRCUIT OPEN

Measure the resistance between the signal (K181) circuit in the sensor harness connector with the (K181) signal circuit in the ECM harness connector.

Is the resistance less than 10 Ohms?

Yes >> Go To 7

No >> Repair the open (K181) signal circuit.
Perform POWERTRAIN VERIFICATION TEST VER - 1 (DIESEL). (Refer to 8 - ELECTRICAL/ELECTRONIC CONTROL MODULES/ENGINE CONTROL MODULE - DIAGNOSIS AND TESTING)

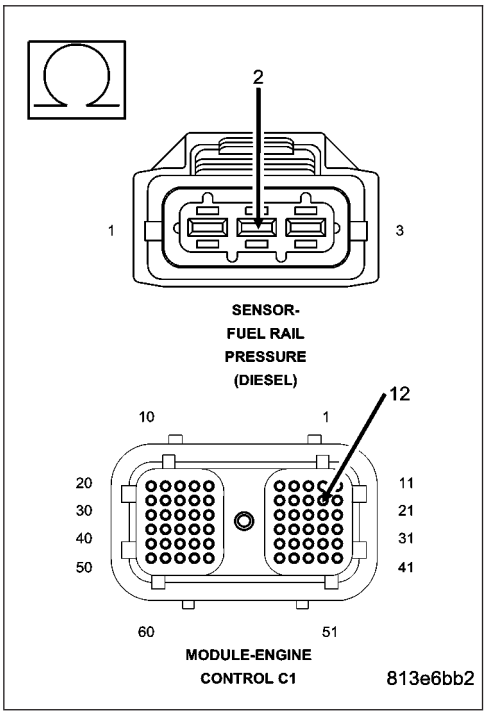

P0192-FUEL PRESSURE SENSOR VOLTAGE TOO LOW (CONTINUED)

7. (F855) 5-VOLT SUPPLY CIRCUIT OPEN

Measure the resistance between the supply (F855) circuit in the sensor harness connector with the (F855) 5-volt supply circuit in the ECM harness connector.

Is the resistance less than 10 Ohms?

Yes >> Go To 8

No >> Repair the open (F855) 5-volt supply circuit.
Perform POWERTRAIN VERIFICATION TEST VER - 1 (DIESEL). (Refer to 8 - ELECTRICAL/ELECTRONIC CONTROL MODULES/ENGINE CONTROL MODULE - DIAGNOSIS AND TESTING)

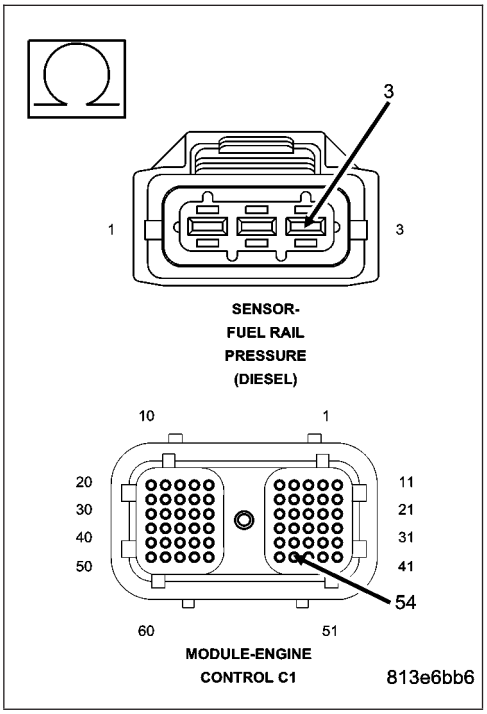

8. (K181) SIGNAL CIRCUIT SHORTED TO GROUND

Measure the resistance between the (K181) signal circuit in the sensor harness connector and battery negative.

Is the resistance greater than 100 K Ohms?

Yes >> Go To 9

No >> Repair (K181) signal circuit shorted to ground.
Perform POWERTRAIN VERIFICATION TEST VER - 1 (DIESEL). (Refer to 8 - ELECTRICAL/ELECTRONIC CONTROL MODULES/ENGINE CONTROL MODULE - DIAGNOSIS AND TESTING)

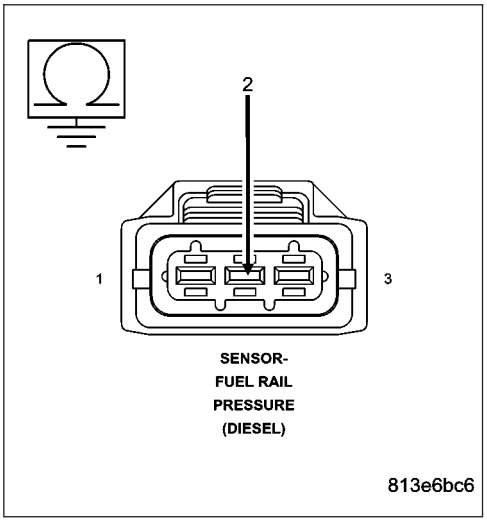

P0192-FUEL PRESSURE SENSOR VOLTAGE TOO LOW (CONTINUED)

9. (F855) 5-VOLT SUPPLY CIRCUIT SHORTED TO GROUND

Measure the resistance between the (F855) 5-volt supply circuit in the sensor harness connector and battery negative.

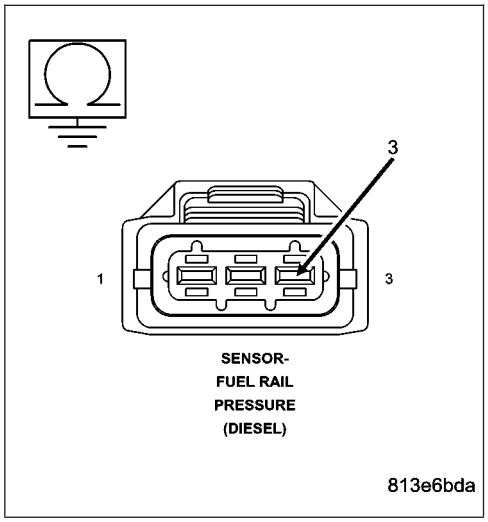

Is the resistance greater than 100 K Ohms?

Yes >> Go To 10

No >> Repair (F855) 5-volt Supply circuit shorted to ground.
Perform POWERTRAIN VERIFICATION TEST VER - 1 (DIESEL). (Refer to 8 - ELECTRICAL/ELECTRONIC CONTROL MODULES/ENGINE CONTROL MODULE - DIAGNOSIS AND TESTING)

10. ECM

Reconnect the disconnected Fuel pressure sensor harness connector and ECM harness connectors.
While monitoring scan tool, disconnect the Fuel Pressure sensor connector.

Does the DTC P0193 set?

Yes >> Test Complete.
Perform POWERTRAIN VERIFICATION TEST VER - 1 (DIESEL). (Refer to 8 - ELECTRICAL/ELECTRONIC CONTROL MODULES/ENGINE CONTROL MODULE - DIAGNOSIS AND TESTING)

No >> Replace the ECM.
Perform POWERTRAIN VERIFICATION TEST VER - 1 (DIESEL). (Refer to 8 - ELECTRICAL/ELECTRONIC CONTROL MODULES/ENGINE CONTROL MODULE - DIAGNOSIS AND TESTING)

P0193-FUEL PRESSURE SENSOR VOLTAGE TOO HIGH

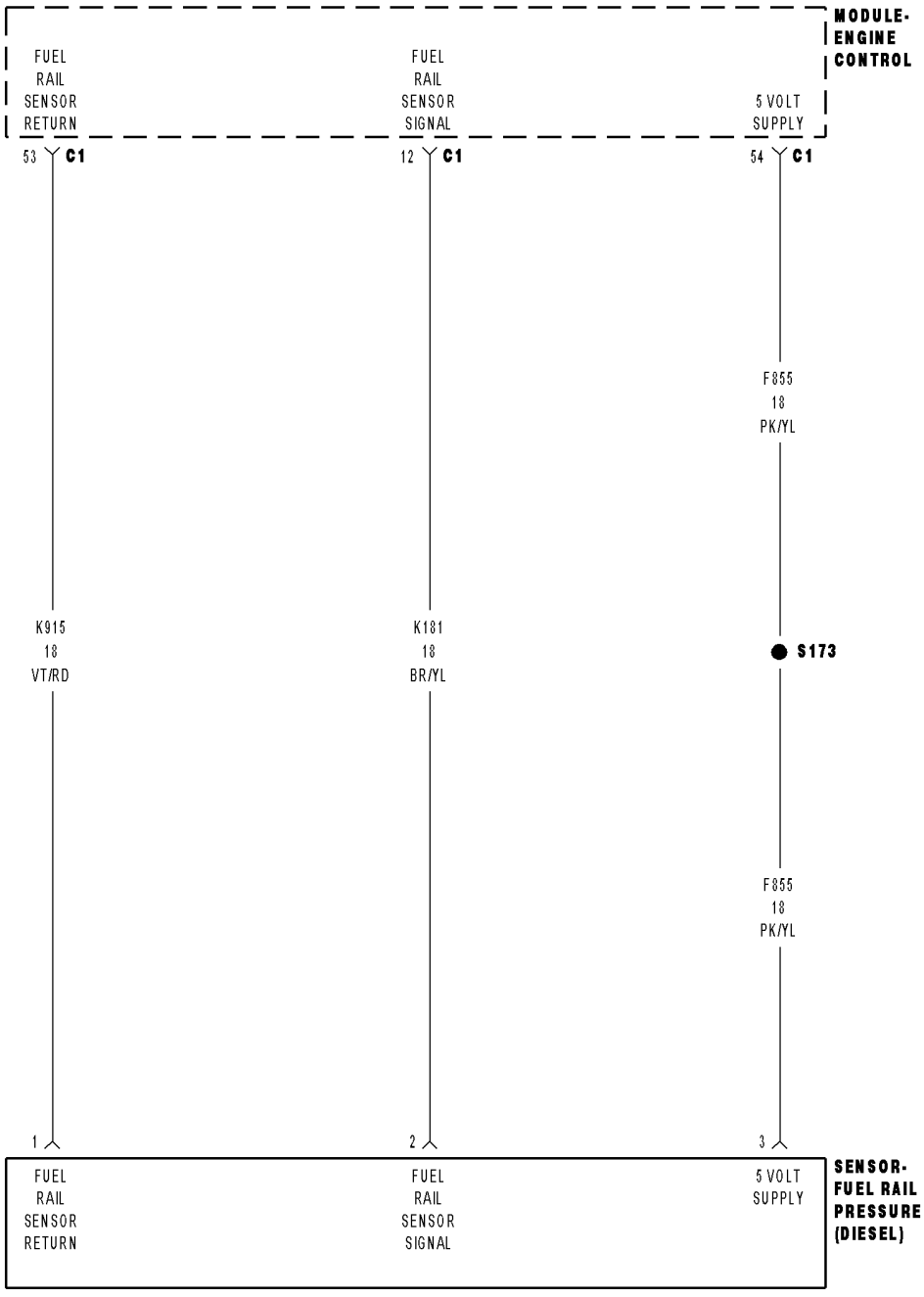

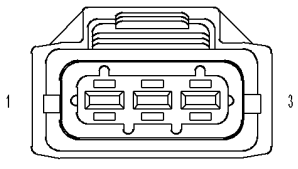

SENSOR-
FUEL RAIL
PRESSURE
(DIESEL)

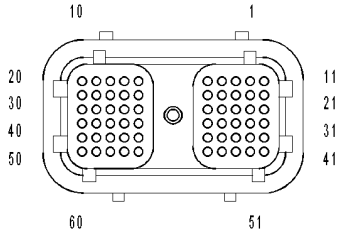

MODULE-ENGINE
CONTROL C1

813e5a09

P0193-FUEL PRESSURE SENSOR VOLTAGE TOO HIGH (CONTINUED)

For the Engine circuit diagram (Refer to 8 - ELECTRICAL/ELECTRONIC CONTROL MODULES/ENGINE CONTROL MODULE - SCHEMATIC - ELECTRICAL)

For a complete wiring diagram **Refer to Section 8W**.

- **When Monitored:**
  With the ignition on and battery voltage greater than 10.4 volts.
- **Set Condition:**
  The circuit voltage to the ECM is above a calibrated threshold for a certain period of time.

Possible Causes
OTHER DTC'S
FUEL PRESSURE SENSOR
(K181) SIGNAL CIRCUIT SHORTED TO VOLTAGE
(F855) 5-VOLT SUPPLY CIRCUIT SHORTED TO VOLTAGE
(K181) SIGNAL CIRCUIT SHORTED TO (K72E) 5-VOLT SUPPLY CIRCUIT
(K915) RETURN CIRCUIT OPEN
ECM
INTERMITTENT CONDITION

Always perform the Pre-Diagnostic Troubleshooting procedure before proceeding. (Refer to 9 - ENGINE - DIAGNOSIS AND TESTING)

Diagnostic Test

1. OTHER DTC'S

Ignition on, engine not running.
With the scan tool, read DTCs.

Do you have multiple DTC's?

Yes >> Refer to multiple fault troubleshooting tree.
Perform POWERTRAIN VERIFICATION TEST VER - 1 (DIESEL). (Refer to 8 - ELECTRICAL/ELECTRONIC CONTROL MODULES/ENGINE CONTROL MODULE - DIAGNOSIS AND TESTING)

No >> Go To 2

---

2. (F855) 5-VOLT SUPPLY AND (K915) RETURN CIRCUIT

Turn the ignition off.

Disconnect the Fuel Pressure sensor harness connector.

NOTE: Check connectors - Clean/repair as necessary.

Ignition on, engine not running.

Measure the voltage between the (F855) 5-volt supply and (K915) return circuits of the Fuel pressure sensor harness connector.

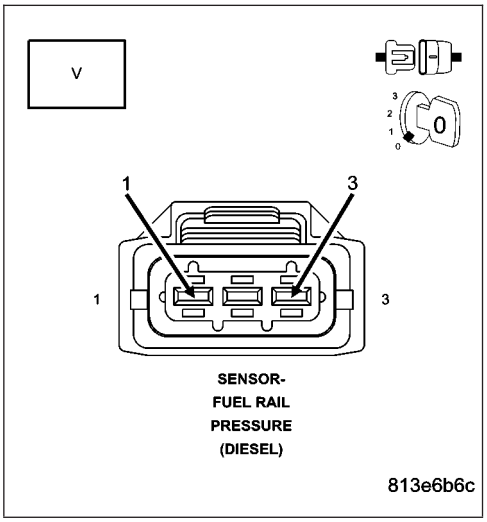

Is the voltage between 4.5 and 5.5 volts?

Yes >> Go To 3

No >> Go To 4

P0193-FUEL PRESSURE SENSOR VOLTAGE TOO HIGH (CONTINUED)

3. FUEL PRESSURE SENSOR

While monitoring scan tool, connect a jumper wire between the (K181) signal circuit and the (K915) return circuit of the Fuel Pressure sensor connector.

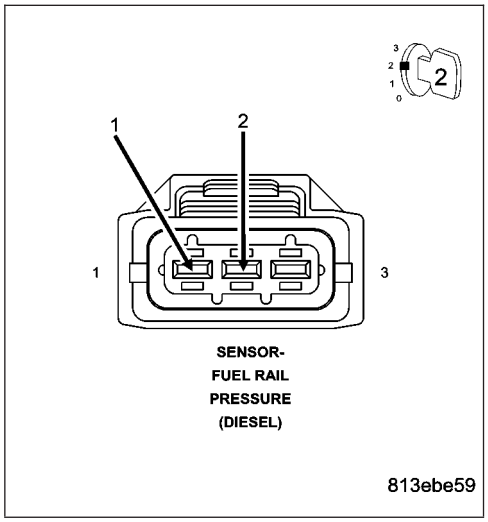

Does the DTC P0192 set?

Yes >> Replace the Fuel Pressure Sensor.
Perform POWERTRAIN VERIFICATION TEST VER - 1 (DIESEL). (Refer to 8 - ELECTRICAL/ELECTRONIC CONTROL MODULES/ENGINE CONTROL MODULE - DIAGNOSIS AND TESTING)

No >> Go To 4

4. (K181) SIGNAL CIRCUIT SHORTED TO VOLTAGE

Turn the ignition off.

Disconnect the Fuel Pressure sensor harness connector.

Disconnect the ECM harness connectors.

Check connectors - Clean/repair as necessary.

Turn the ignition on.

Measure the voltage between the (K181) signal circuit of the sensor harness connector and battery negative.

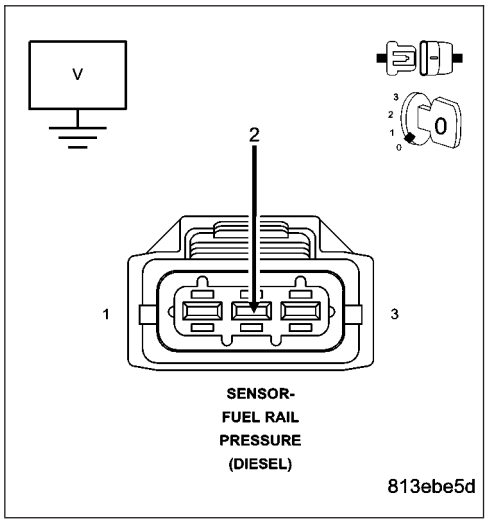

Is the voltage less than 1 volt?

Yes >> Go To 5

No >> Repair the (K181) signal circuit shorted to voltage.
Perform POWERTRAIN VERIFICATION TEST VER - 1 (DIESEL). (Refer to 8 - ELECTRICAL/ELECTRONIC CONTROL MODULES/ENGINE CONTROL MODULE - DIAGNOSIS AND TESTING)

P0193-FUEL PRESSURE SENSOR VOLTAGE TOO HIGH (CONTINUED)

5. (F855) 5-VOLT SUPPLY CIRCUIT SHORTED TO VOLTAGE

Measure the voltage between the (F855) 5-volt supply circuit of the sensor harness connector and battery negative.

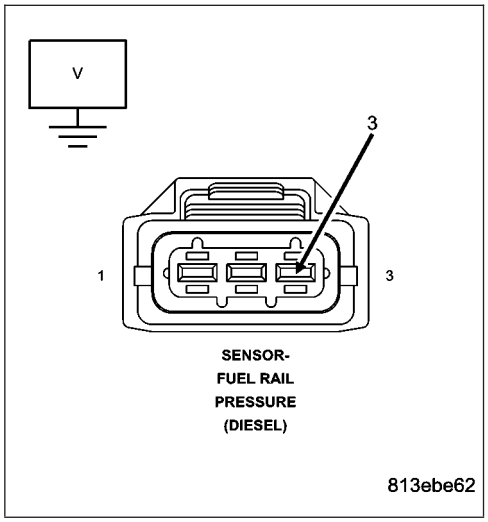

Is the voltage less than 1 volt?

Yes >> Go To 6

No >> Repair the (F855) 5-volt supply circuit shorted to voltage.
Perform POWERTRAIN VERIFICATION TEST VER - 1 (DIESEL). (Refer to 8 - ELECTRICAL/ELECTRONIC CONTROL MODULES/ENGINE CONTROL MODULE - DIAGNOSIS AND TESTING)

6. (K181) SIGNAL CIRCUIT SHORTED TO (F855) 5-VOLT SUPPLY CIRCUIT

Turn the ignition off.

Measure the resistance between the (K181) signal circuit and (F855) 5-volt supply circuit in the sensor connector.

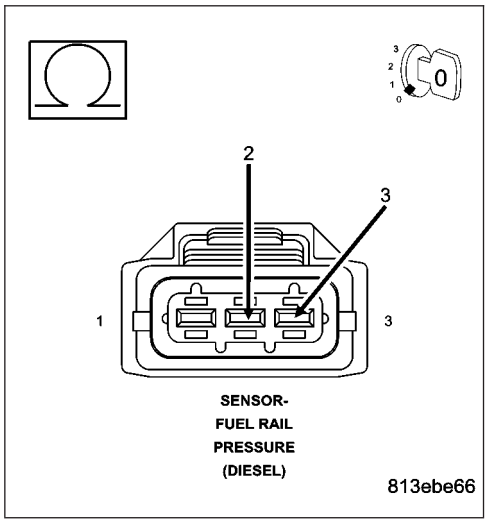

Is the resistance greater than 10 K Ohms?

Yes >> Go To 7

No >> Repair the shorted circuits.
Perform POWERTRAIN VERIFICATION TEST VER - 1 (DIESEL). (Refer to 8 - ELECTRICAL/ELECTRONIC CONTROL MODULES/ENGINE CONTROL MODULE - DIAGNOSIS AND TESTING)

P0193-FUEL PRESSURE SENSOR VOLTAGE TOO HIGH (CONTINUED)

7. (K915) RETURN CIRCUIT OPEN

Measure the resistance between the (K915) return circuit in the sensor harness connector with the (K915) return circuit in the ECM harness connector.

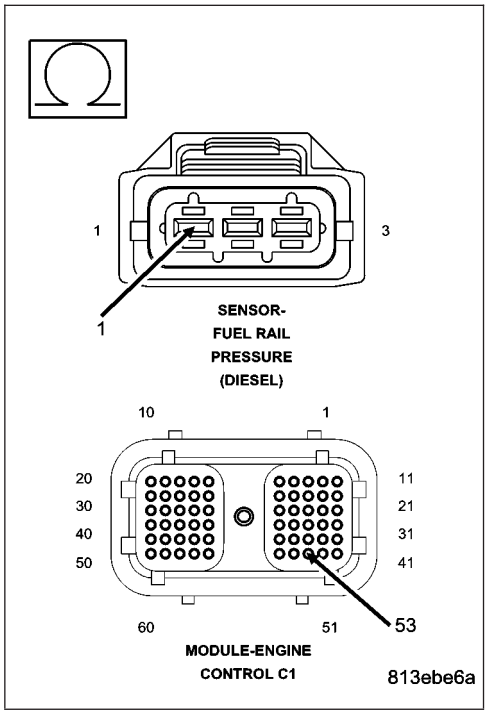

Is the resistance less than 10 Ohms?

Yes >> Go To 8

No >> Repair the open (K915) return circuit.
Perform POWERTRAIN VERIFICATION TEST VER - 1 (DIESEL). (Refer to 8 - ELECTRICAL/ELECTRONIC CONTROL MODULES/ENGINE CONTROL MODULE - DIAGNOSIS AND TESTING)

8. ECM

Reconnect the disconnected ECM harness connectors.

While monitoring scan tool, connect a jumper wire between the (K181) signal circuit of the sensor connector and the (K915) return circuit of the sensor connector.

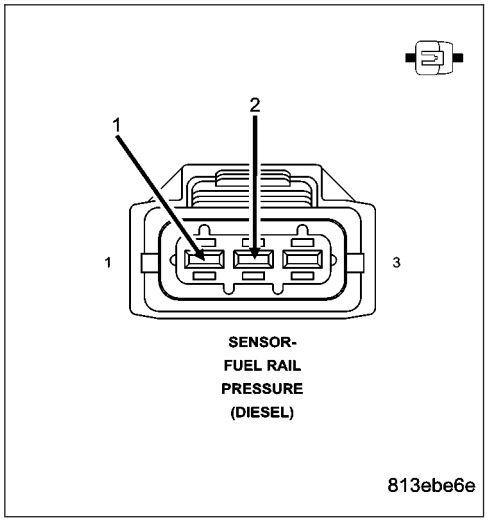

Does the DTC P0192 set?

Yes >> Refer to the INTERMITTENT CONDITION Symptom (Diagnostic Procedure). (Refer to 9 - ENGINE - DIAGNOSIS AND TESTING)
Perform POWERTRAIN VERIFICATION TEST VER - 1 (DIESEL). (Refer to 8 - ELECTRICAL/ELECTRONIC CONTROL MODULES/ENGINE CONTROL MODULE - DIAGNOSIS AND TESTING)

No >> Replace the ECM.
Perform POWERTRAIN VERIFICATION TEST VER - 1 (DIESEL). (Refer to 8 - ELECTRICAL/ELECTRONIC CONTROL MODULES/ENGINE CONTROL MODULE - DIAGNOSIS AND TESTING)

P0201-INJECTOR #1 CONTROL CIRCUIT

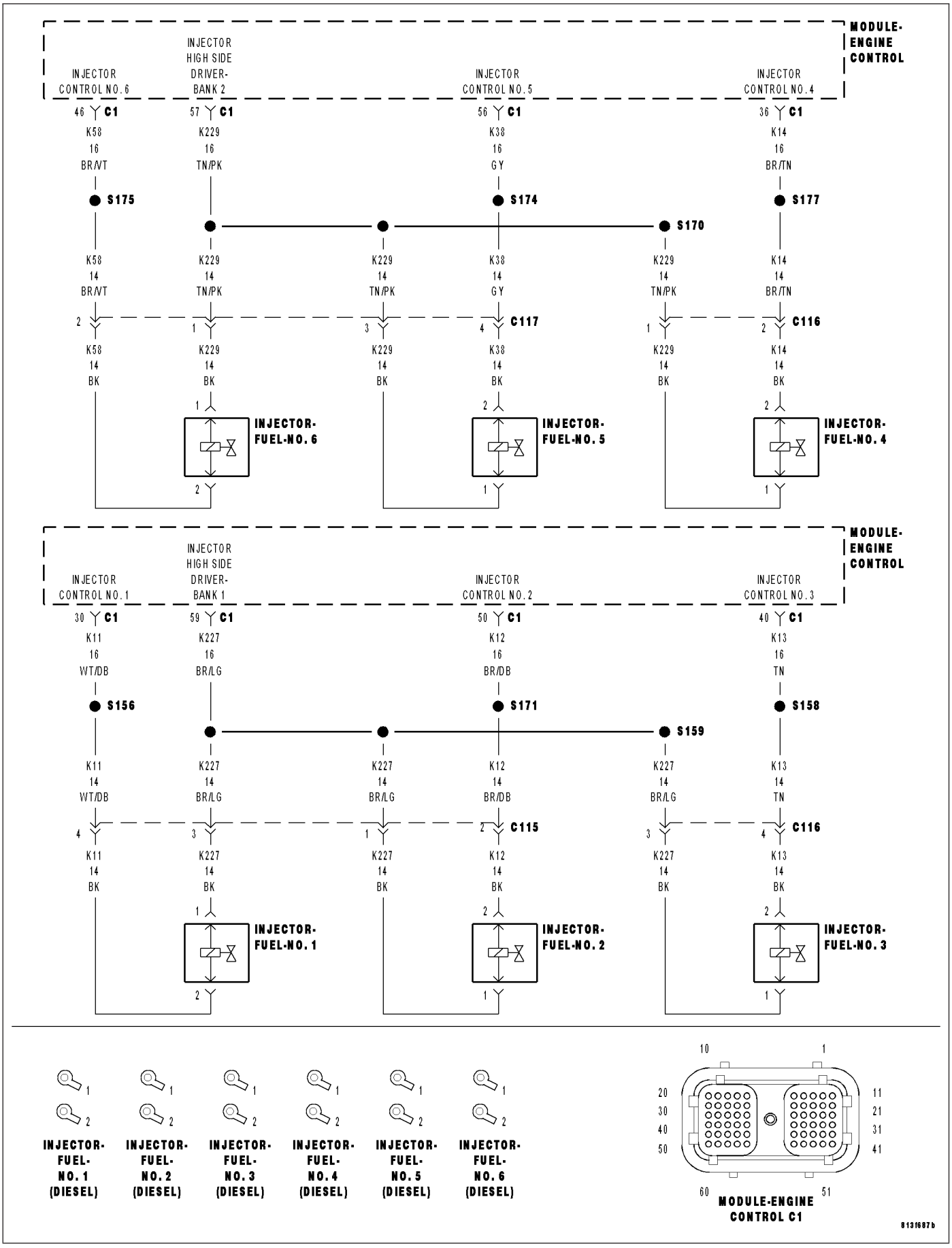

P0201-INJECTOR #1 CONTROL CIRCUIT (CONTINUED)

For the Engine circuit diagram (Refer to 8 - ELECTRICAL/ELECTRONIC CONTROL MODULES/ENGINE CONTROL MODULE - SCHEMATIC - ELECTRICAL)

For a complete wiring diagram **Refer to Section 8W**.

- **When Monitored:**
  While the engine is running.
- **Set Condition:**
  When the injector current falls below a calibrated threshold.

Possible Causes
PASS TROUGH CONNECTORS OPEN
FUEL INJECTOR
INJECTOR HARNESS OPEN
HIGH SIDE DRIVER HARNESS OPEN
LOW SIDE DRIVER HARNESS OPEN
ECM

Always perform the Pre-Diagnostic Troubleshooting procedure before proceeding. (Refer to 9 - ENGINE - DIAGNOSIS AND TESTING)

Diagnostic Test

1. OTHER DTC'S

With the scan tool, read DTCs.

Are all 6 of the injector DTC's (P0201 - P0206) present?

Yes >> Go To 2

No >> Go To 3

---

2. PASS TROUGH CONNECTORS OPEN

Inspect wiring harness for signs of multiple open circuits between the ECM and the injector pass through connectors. Inspect the wiring harness between the pass through connectors to the injectors.

Are there open circuits in the wiring harness?

Yes >> Repair or replace the open connectors or wiring.
Perform POWERTRAIN VERIFICATION TEST VER - 1 (DIESEL). (Refer to 8 - ELECTRICAL/ELECTRONIC CONTROL MODULES/ENGINE CONTROL MODULE - DIAGNOSIS AND TESTING)

No >> Go To 3

P0201-INJECTOR #1 CONTROL CIRCUIT (CONTINUED)

3. FUEL INJECTOR

Turn the ignition off.

Disconnect the pigtail nuts from the suspect injector. Using an Ohmmeter, measure the resistance between the solenoid posts of the injector.

NOTE: Be sure to zero the ohm meter prior to checking the injector circuit.

Is the resistance less than 1 ohm and greater than 0 ohms?

Yes >> Go To 4

No >> Replace the fuel injector.
Perform POWERTRAIN VERIFICATION TEST VER - 1 (DIESEL). (Refer to 8 - ELECTRICAL/ELECTRONIC CONTROL MODULES/ENGINE CONTROL MODULE - DIAGNOSIS AND TESTING)

---

4. INJECTOR HARNESS OPEN

Connect the pigtail nuts for the suspect injector.

Disconnect the injector harness connector for the suspect injector.

Measure the resistance of the injector harness circuit between the high side driver circuit and the low side driver circuit for the suspect injector at the injector harness connector.

NOTE: Be sure to zero the ohm meter prior to checking the injector circuit.

Is the resistance less than 1 ohm and greater than 0 ohms?

Yes >> Go To 5

No >> Replace or repair the injector harness.
Perform POWERTRAIN VERIFICATION TEST VER - 1 (DIESEL). (Refer to 8 - ELECTRICAL/ELECTRONIC CONTROL MODULES/ENGINE CONTROL MODULE - DIAGNOSIS AND TESTING)

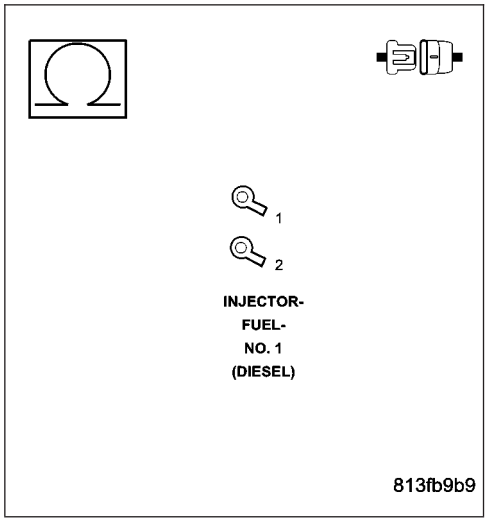

P0201-INJECTOR #1 CONTROL CIRCUIT (CONTINUED)

5. HIGH SIDE DRIVER HARNESS OPEN

Disconnect the ECM harness connectors.

Disconnect the Injector harness connector.

Check connectors - Clean/repair as necessary.

Measure the resistance of the Bank 1 high side driver circuit between the ECM connector and the injector harness connector.

Is the resistance less than 10 Ohms?

Yes >> Go To 6

No >> Replace or repair the open engine harness.

Perform POWERTRAIN VERIFICATION TEST VER - 1 (DIESEL). (Refer to 8 - ELECTRICAL/ELECTRONIC CONTROL MODULES/ENGINE CONTROL MODULE - DIAGNOSIS AND TESTING)

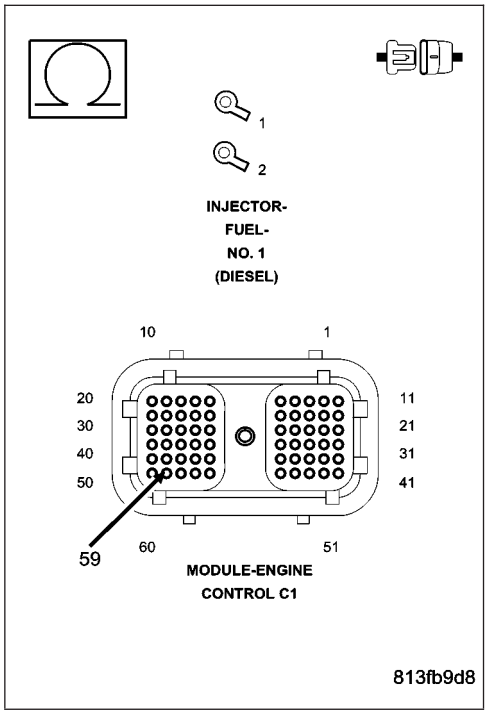

6. LOW SIDE DRIVER HARNESS OPEN

Measure the resistance of the Bank 1 low side driver circuit between the ECM connector and the injector harness connector.

Is the resistance less than 10 Ohms?

Yes >> Test Complete.

Perform POWERTRAIN VERIFICATION TEST VER - 1 (DIESEL). (Refer to 8 - ELECTRICAL/ELECTRONIC CONTROL MODULES/ENGINE CONTROL MODULE - DIAGNOSIS AND TESTING)

No >> Replace or repair the open engine harness.

Perform POWERTRAIN VERIFICATION TEST VER - 1 (DIESEL). (Refer to 8 - ELECTRICAL/ELECTRONIC CONTROL MODULES/ENGINE CONTROL MODULE - DIAGNOSIS AND TESTING)

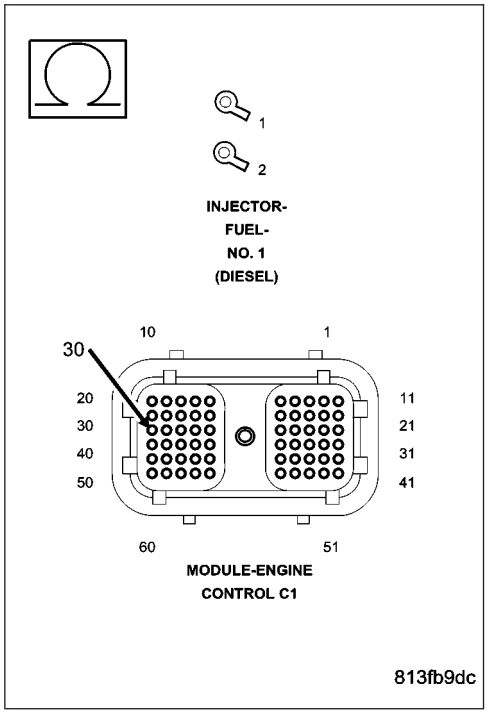

P0202-INJECTOR #2 CONTROL CIRCUIT

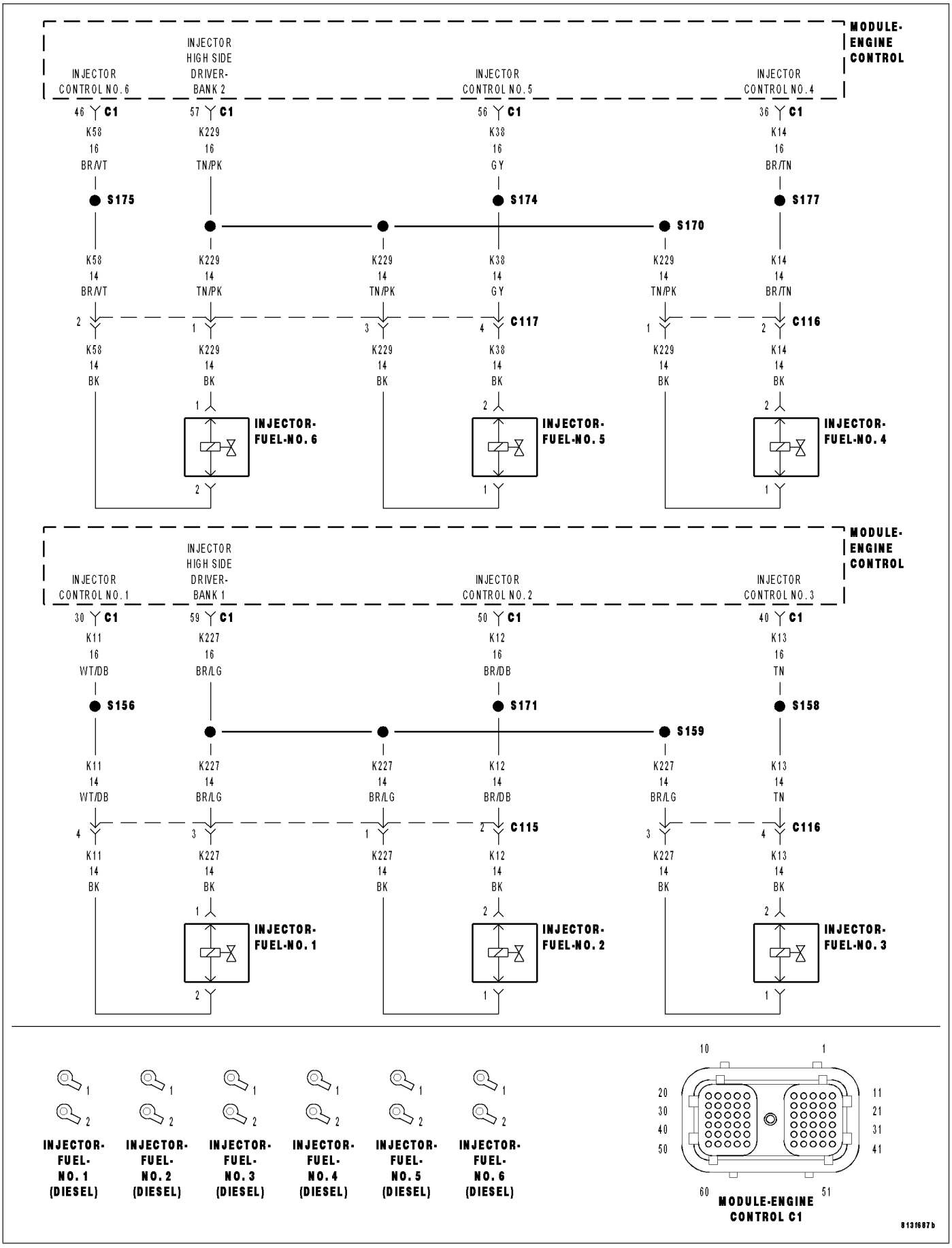

P0202-INJECTOR #2 CONTROL CIRCUIT (CONTINUED)

For the Engine circuit diagram (Refer to 8 - ELECTRICAL/ELECTRONIC CONTROL MODULES/ENGINE CONTROL MODULE - SCHEMATIC - ELECTRICAL)

For a complete wiring diagram **Refer to Section 8W**.

- **When Monitored:**
  While the engine is running.
- **Set Condition:**
  When the injector current falls below a calibrated threshold.

Possible Causes
PASS TROUGH CONNECTORS OPEN
FUEL INJECTOR
INJECTOR HARNESS OPEN
HIGH SIDE DRIVER HARNESS OPEN
LOW SIDE DRIVER HARNESS OPEN
ECM

Always perform the Pre-Diagnostic Troubleshooting procedure before proceeding. (Refer to 9 - ENGINE - DIAGNOSIS AND TESTING)

Diagnostic Test

1. OTHER DTC'S

With the scan tool, read DTCs.

Are all 6 of the injector DTC's (P0201 - P0206) present?

Yes >> Go To 2

No >> Go To 3

---

2. PASS TROUGH CONNECTORS OPEN

Inspect wiring harness for signs of multiple open circuits between the ECM and the injector pass through connectors. Inspect the wiring harness between the pass through connectors to the injectors.

Are there open circuits in the wiring harness?

Yes >> Repair or replace the open connectors or wiring.
Perform POWERTRAIN VERIFICATION TEST VER - 1 (DIESEL). (Refer to 8 - ELECTRICAL/ELECTRONIC CONTROL MODULES/ENGINE CONTROL MODULE - DIAGNOSIS AND TESTING)

No >> Go To 3

P0202-INJECTOR #2 CONTROL CIRCUIT (CONTINUED)

3. FUEL INJECTOR

Turn the ignition off.

Disconnect the pigtail nuts from the suspect injector. Using an Ohmmeter, measure the resistance between the solenoid posts of the injector.

NOTE: Be sure to zero the ohm meter prior to checking the injector circuit.

Is the resistance less than 1 ohm and greater than 0 ohms?

Yes >> Go To 4

No >> Replace the fuel injector.
Perform POWERTRAIN VERIFICATION TEST VER - 1 (DIESEL). (Refer to 8 - ELECTRICAL/ELECTRONIC CONTROL MODULES/ENGINE CONTROL MODULE - DIAGNOSIS AND TESTING)

---

4. INJECTOR HARNESS OPEN

Connect the pigtail nuts for the suspect injector.

Disconnect the injector harness connector for the suspect injector.

Measure the resistance of the injector harness circuit between the high side driver circuit and the low side driver circuit for the suspect injector at the injector harness connector.

NOTE: Be sure to zero the ohm meter prior to checking the injector circuit.

Is the resistance less than 1 ohm and greater than 0 ohms?

Yes >> Go To 5

No >> Replace or repair the injector harness.
Perform POWERTRAIN VERIFICATION TEST VER - 1 (DIESEL). (Refer to 8 - ELECTRICAL/ELECTRONIC CONTROL MODULES/ENGINE CONTROL MODULE - DIAGNOSIS AND TESTING)

---

5. HIGH SIDE DRIVER HARNESS OPEN

Disconnect the ECM harness connectors.

Disconnect the Injector harness connector.

Check connectors - Clean/repair as necessary.

Measure the resistance of the Bank 1 high side driver circuit between the ECM connector and the injector harness connector.

Is the resistance less than 10 Ohms?

Yes >> Go To 6

No >> Replace or repair the open engine harness.
Perform POWERTRAIN VERIFICATION TEST VER - 1 (DIESEL). (Refer to 8 - ELECTRICAL/ELECTRONIC CONTROL MODULES/ENGINE CONTROL MODULE - DIAGNOSIS AND TESTING)

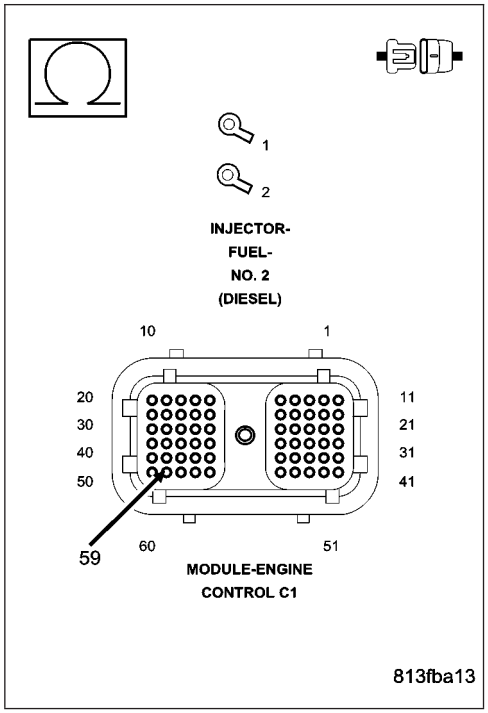

P0202-INJECTOR #2 CONTROL CIRCUIT (CONTINUED)

6. LOW SIDE DRIVER HARNESS OPEN

Measure the resistance of the Bank 1 low side driver circuit between the ECM connector and the injector harness connector.

Is the resistance less than 10 Ohms?

Yes >> Test Complete.
Perform POWERTRAIN VERIFICATION TEST VER - 1 (DIESEL). (Refer to 8 - ELECTRICAL/ELECTRONIC CONTROL MODULES/ENGINE CONTROL MODULE - DIAGNOSIS AND TESTING)

No >> Replace or repair the open engine harness.
Perform POWERTRAIN VERIFICATION TEST VER - 1 (DIESEL). (Refer to 8 - ELECTRICAL/ELECTRONIC CONTROL MODULES/ENGINE CONTROL MODULE - DIAGNOSIS AND TESTING)

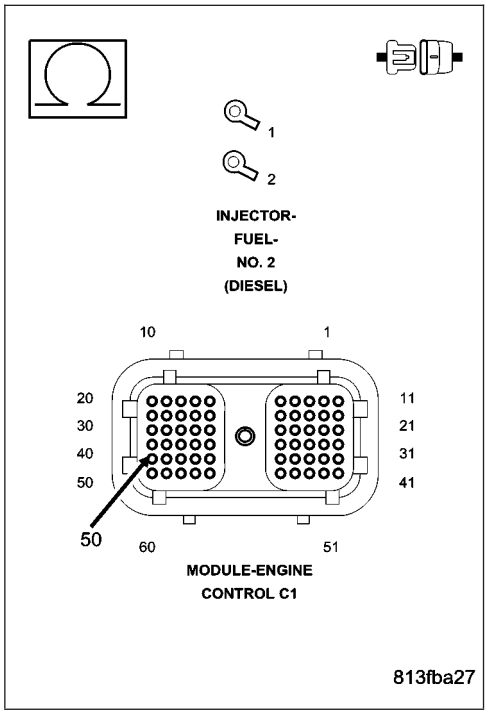

P0203-INJECTOR #3 CONTROL CIRCUIT

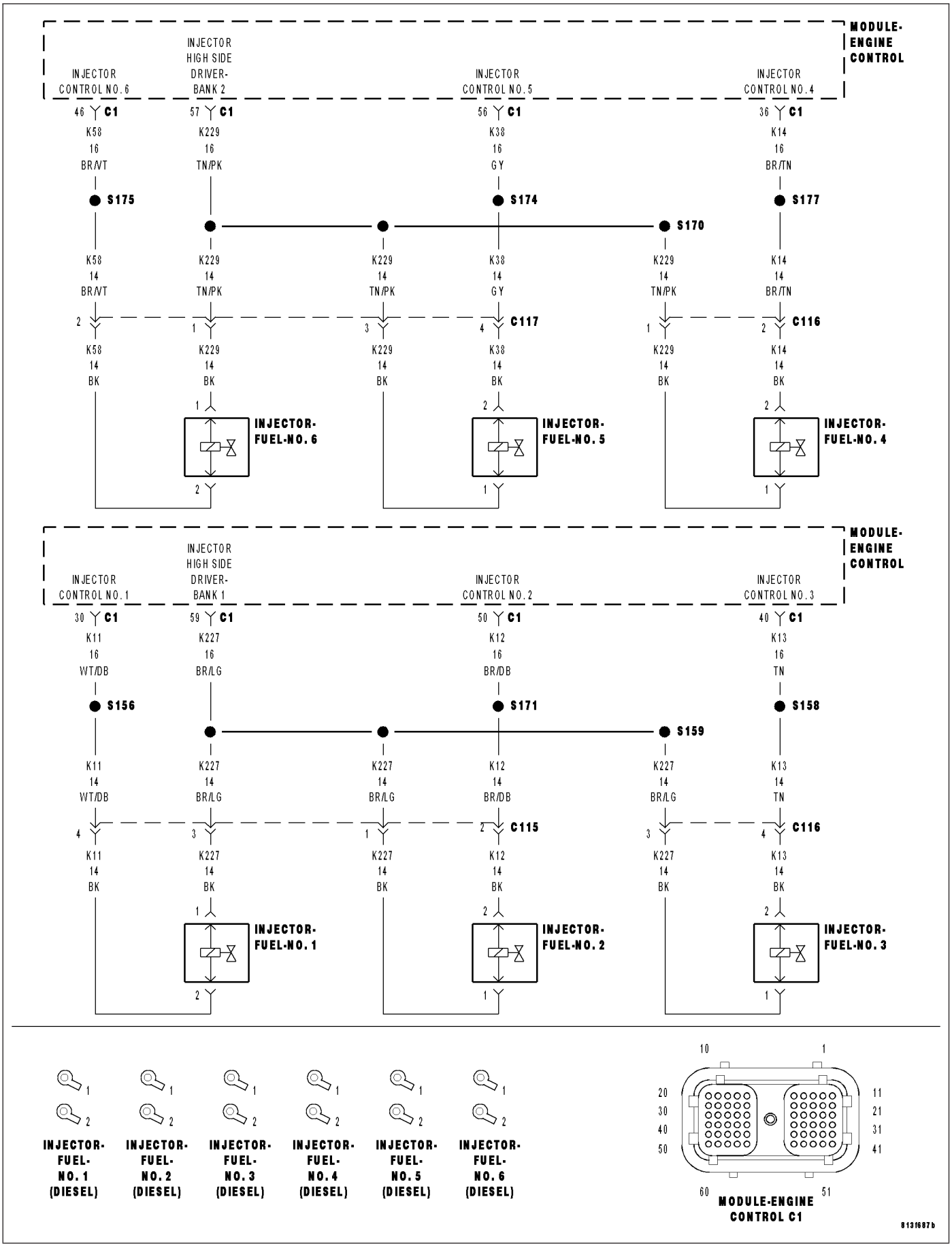

P0203-INJECTOR #3 CONTROL CIRCUIT (CONTINUED)

For the Engine circuit diagram (Refer to 8 - ELECTRICAL/ELECTRONIC CONTROL MODULES/ENGINE CONTROL MODULE - SCHEMATIC - ELECTRICAL)

For a complete wiring diagram **Refer to Section 8W**.

- **When Monitored:**
  While the engine is running.
- **Set Condition:**
  When the injector current falls below a calibrated threshold.

Possible Causes
PASS TROUGH CONNECTORS OPEN
FUEL INJECTOR
INJECTOR HARNESS OPEN
HIGH SIDE DRIVER HARNESS OPEN
LOW SIDE DRIVER HARNESS OPEN
ECM

Always perform the Pre-Diagnostic Troubleshooting procedure before proceeding. (Refer to 9 - ENGINE - DIAGNOSIS AND TESTING)

Diagnostic Test

1. OTHER DTC'S

With the scan tool, read DTCs.

Are all 6 of the injector DTC's (P0201 - P0206) present?

Yes >> Go To 2

No >> Go To 3

---

2. PASS TROUGH CONNECTORS OPEN

Inspect wiring harness for signs of multiple open circuits between the ECM and the injector pass through connectors. Inspect the wiring harness between the pass through connectors to the injectors.

Are there open circuits in the wiring harness?

Yes >> Repair or replace the open connectors or wiring.
Perform POWERTRAIN VERIFICATION TEST VER - 1 (DIESEL). (Refer to 8 - ELECTRICAL/ELECTRONIC CONTROL MODULES/ENGINE CONTROL MODULE - DIAGNOSIS AND TESTING)

No >> Go To 3

P0203-INJECTOR #3 CONTROL CIRCUIT (CONTINUED)

3. FUEL INJECTOR

Turn the ignition off.

Disconnect the pigtail nuts from the suspect injector. Using an Ohmmeter, measure the resistance between the solenoid posts of the injector.

NOTE: Be sure to zero the ohm meter prior to checking the injector circuit.

Is the resistance less than 1 ohm and greater than 0 ohms?

Yes >> Go To 4

No >> Replace the fuel injector.
Perform POWERTRAIN VERIFICATION TEST VER - 1 (DIESEL). (Refer to 8 - ELECTRICAL/ELECTRONIC CONTROL MODULES/ENGINE CONTROL MODULE - DIAGNOSIS AND TESTING)

---

4. INJECTOR HARNESS OPEN

Connect the pigtail nuts for the suspect injector.

Disconnect the injector harness connector for the suspect injector.

Measure the resistance of the injector harness circuit between the high side driver circuit and the low side driver circuit for the suspect injector at the injector harness connector.

NOTE: Be sure to zero the ohm meter prior to checking the injector circuit.

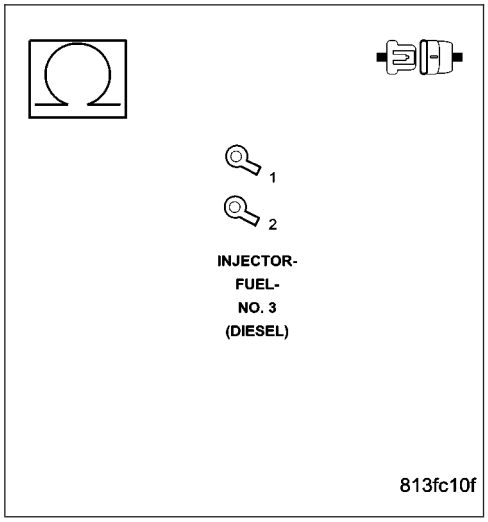

Is the resistance less than 1 ohm and greater than 0 ohms?

Yes >> Go To 5

No >> Replace or repair the injector harness.
Perform POWERTRAIN VERIFICATION TEST VER - 1 (DIESEL). (Refer to 8 - ELECTRICAL/ELECTRONIC CONTROL MODULES/ENGINE CONTROL MODULE - DIAGNOSIS AND TESTING)

P0203-INJECTOR #3 CONTROL CIRCUIT (CONTINUED)

5. HIGH SIDE DRIVER HARNESS OPEN

Disconnect the ECM harness connectors.

Disconnect the Injector harness connector.

Check connectors - Clean/repair as necessary.

Measure the resistance of the Bank 1 high side driver circuit between the ECM connector and the injector harness connector.

Is the resistance less than 10 Ohms?

Yes >> Go To 6

No >> Replace or repair the open engine harness.

Perform POWERTRAIN VERIFICATION TEST VER - 1 (DIESEL). (Refer to 8 - ELECTRICAL/ELECTRONIC CONTROL MODULES/ENGINE CONTROL MODULE - DIAGNOSIS AND TESTING)

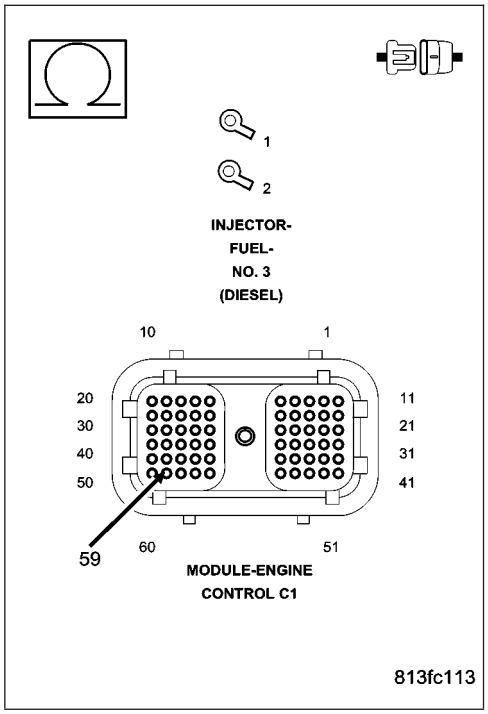

6. LOW SIDE DRIVER HARNESS OPEN

Measure the resistance of the Bank 1 low side driver circuit between the ECM connector and the injector harness connector.

Is the resistance less than 10 Ohms?

Yes >> Test Complete.

Perform POWERTRAIN VERIFICATION TEST VER - 1 (DIESEL). (Refer to 8 - ELECTRICAL/ELECTRONIC CONTROL MODULES/ENGINE CONTROL MODULE - DIAGNOSIS AND TESTING)

No >> Replace or repair the open engine harness.

Perform POWERTRAIN VERIFICATION TEST VER - 1 (DIESEL). (Refer to 8 - ELECTRICAL/ELECTRONIC CONTROL MODULES/ENGINE CONTROL MODULE - DIAGNOSIS AND TESTING)

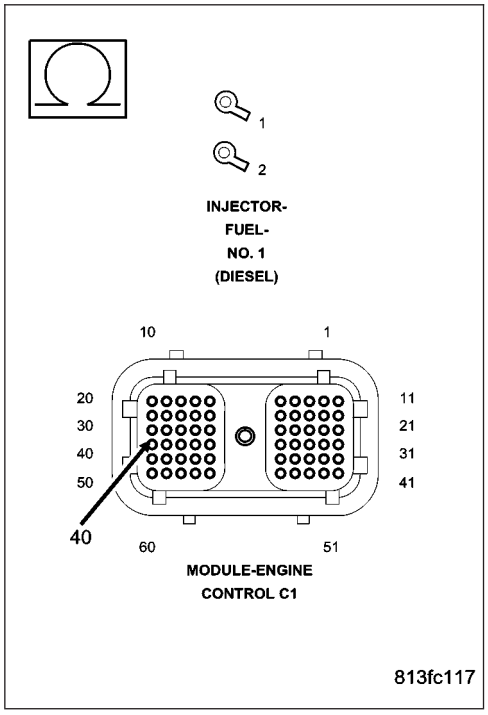

P0204-INJECTOR #4 CONTROL CIRCUIT

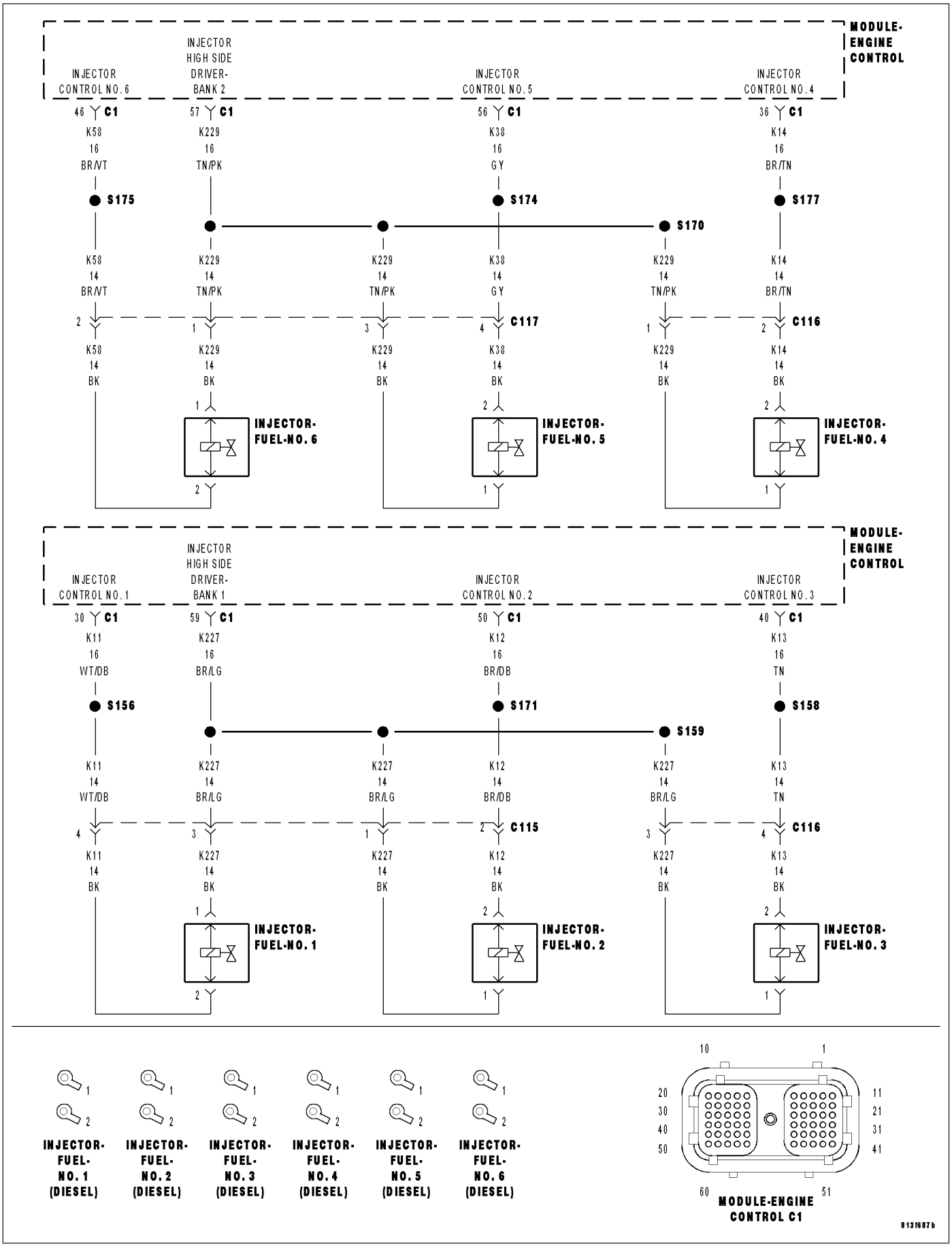

P0204-INJECTOR #4 CONTROL CIRCUIT (CONTINUED)

For the Engine circuit diagram (Refer to 8 - ELECTRICAL/ELECTRONIC CONTROL MODULES/ENGINE CONTROL MODULE - SCHEMATIC - ELECTRICAL)

For a complete wiring diagram **Refer to Section 8W**.

- **When Monitored:**
  While the engine is running.
- **Set Condition:**
  When the injector current falls below a calibrated threshold.

Possible Causes
PASS TROUGH CONNECTORS OPEN
FUEL INJECTOR
INJECTOR HARNESS OPEN
HIGH SIDE DRIVER HARNESS OPEN
LOW SIDE DRIVER HARNESS OPEN
ECM

Always perform the Pre-Diagnostic Troubleshooting procedure before proceeding. (Refer to 9 - ENGINE - DIAGNOSIS AND TESTING)

Diagnostic Test

1. OTHER DTC'S

With the scan tool, read DTCs.

Are all 6 of the injector DTC's (P0201 - P0206) present?

Yes >> Go To 2

No >> Go To 3

---

2. PASS TROUGH CONNECTORS OPEN

Inspect wiring harness for signs of multiple open circuits between the ECM and the injector pass through connectors. Inspect the wiring harness between the pass through connectors to the injectors.

Are there open circuits in the wiring harness?

Yes >> Repair or replace the open connectors or wiring.
Perform POWERTRAIN VERIFICATION TEST VER - 1 (DIESEL). (Refer to 8 - ELECTRICAL/ELECTRONIC CONTROL MODULES/ENGINE CONTROL MODULE - DIAGNOSIS AND TESTING)

No >> Go To 3

P0204-INJECTOR #4 CONTROL CIRCUIT (CONTINUED)

3. FUEL INJECTOR

Turn the ignition off.

Disconnect the pigtail nuts from the suspect injector. Using an Ohmmeter, measure the resistance between the solenoid posts of the injector.

NOTE: Be sure to zero the ohm meter prior to checking the injector circuit.

Is the resistance less than 1 ohm and greater than 0 ohms?

Yes >> Go To 4

No >> Replace the fuel injector.
Perform POWERTRAIN VERIFICATION TEST VER - 1 (DIESEL). (Refer to 8 - ELECTRICAL/ELECTRONIC CONTROL MODULES/ENGINE CONTROL MODULE - DIAGNOSIS AND TESTING)

---

4. INJECTOR HARNESS OPEN

Connect the pigtail nuts for the suspect injector.

Disconnect the injector harness connector for the suspect injector.

Measure the resistance of the injector harness circuit between the high side driver circuit and the low side driver circuit for the suspect injector at the injector harness connector.

NOTE: Be sure to zero the ohm meter prior to checking the injector circuit.

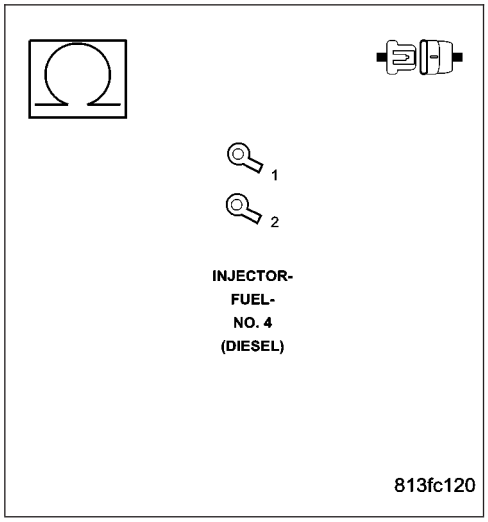

Is the resistance less than 1 ohm and greater than 0 ohms?

Yes >> Go To 5

No >> Replace or repair the injector harness.
Perform POWERTRAIN VERIFICATION TEST VER - 1 (DIESEL). (Refer to 8 - ELECTRICAL/ELECTRONIC CONTROL MODULES/ENGINE CONTROL MODULE - DIAGNOSIS AND TESTING)

P0204-INJECTOR #4 CONTROL CIRCUIT (CONTINUED)

5. HIGH SIDE DRIVER HARNESS OPEN

Disconnect the ECM harness connectors.

Disconnect the Injector harness connector.

Check connectors - Clean/repair as necessary.

Measure the resistance of the Bank 2 high side driver circuit between the ECM connector and the injector harness connector.

Is the resistance less than 10 Ohms?

Yes >> Go To 6

No >> Replace or repair the open engine harness.

Perform POWERTRAIN VERIFICATION TEST VER - 1 (DIESEL). (Refer to 8 - ELECTRICAL/ELECTRONIC CONTROL MODULES/ENGINE CONTROL MODULE - DIAGNOSIS AND TESTING)

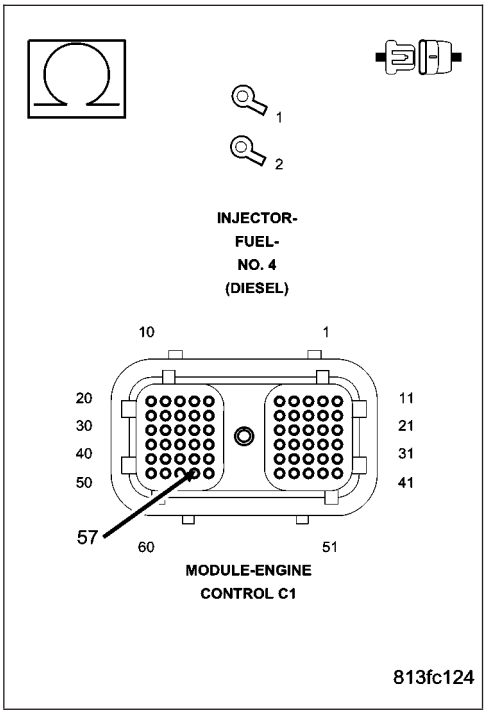

6. LOW SIDE DRIVER HARNESS OPEN

Measure the resistance of the Bank 2 low side driver circuit between the ECM connector and the injector harness connector.

Is the resistance less than 10 Ohms?

Yes >> Test Complete.

Perform POWERTRAIN VERIFICATION TEST VER - 1 (DIESEL). (Refer to 8 - ELECTRICAL/ELECTRONIC CONTROL MODULES/ENGINE CONTROL MODULE - DIAGNOSIS AND TESTING)

No >> Replace or repair the open engine harness.

Perform POWERTRAIN VERIFICATION TEST VER - 1 (DIESEL). (Refer to 8 - ELECTRICAL/ELECTRONIC CONTROL MODULES/ENGINE CONTROL MODULE - DIAGNOSIS AND TESTING)

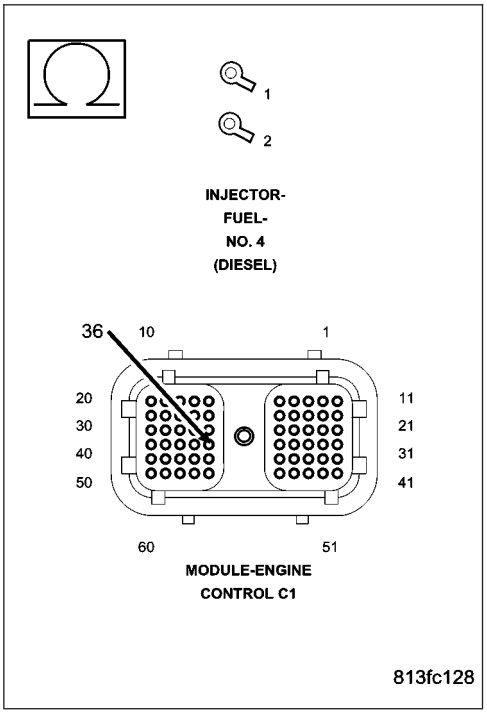

P0205-INJECTOR #5 CONTROL CIRCUIT

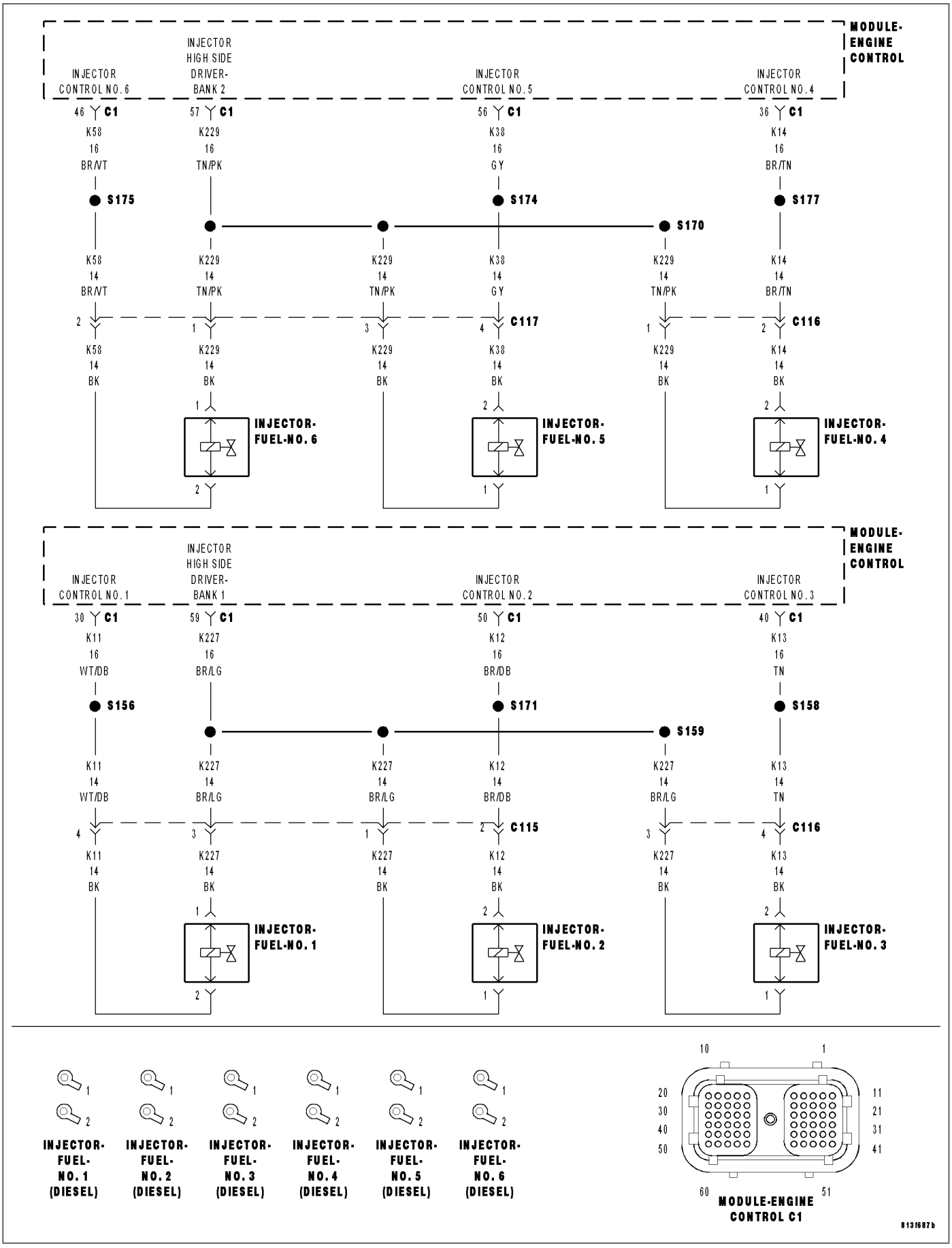

P0205-INJECTOR #5 CONTROL CIRCUIT (CONTINUED)

For the Engine circuit diagram (Refer to 8 - ELECTRICAL/ELECTRONIC CONTROL MODULES/ENGINE CONTROL MODULE - SCHEMATIC - ELECTRICAL)

For a complete wiring diagram **Refer to Section 8W**.

- **When Monitored:**
  While the engine is running.
- **Set Condition:**
  When the injector current falls below a calibrated threshold.

Possible Causes
PASS TROUGH CONNECTORS OPEN
FUEL INJECTOR
INJECTOR HARNESS OPEN
HIGH SIDE DRIVER HARNESS OPEN
LOW SIDE DRIVER HARNESS OPEN
ECM

Always perform the Pre-Diagnostic Troubleshooting procedure before proceeding. (Refer to 9 - ENGINE - DIAGNOSIS AND TESTING)

Diagnostic Test

1. OTHER DTC'S

With the scan tool, read DTCs.

Are all 6 of the injector DTC's (P0201 - P0206) present?

Yes >> Go To 2

No >> Go To 3

---

2. PASS TROUGH CONNECTORS OPEN

Inspect wiring harness for signs of multiple open circuits between the ECM and the injector pass through connectors. Inspect the wiring harness between the pass through connectors to the injectors.

Are there open circuits in the wiring harness?

Yes >> Repair or replace the open connectors or wiring.
Perform POWERTRAIN VERIFICATION TEST VER - 1 (DIESEL). (Refer to 8 - ELECTRICAL/ELECTRONIC CONTROL MODULES/ENGINE CONTROL MODULE - DIAGNOSIS AND TESTING)

No >> Go To 3

P0205-INJECTOR #5 CONTROL CIRCUIT (CONTINUED)

3. FUEL INJECTOR

Turn the ignition off.

Disconnect the pigtail nuts from the suspect injector. Using an Ohmmeter, measure the resistance between the solenoid posts of the injector.

NOTE: Be sure to zero the ohm meter prior to checking the injector circuit.

Is the resistance less than 1 ohm and greater than 0 ohms?

Yes >> Go To 4

No >> Replace the fuel injector.
Perform POWERTRAIN VERIFICATION TEST VER - 1 (DIESEL). (Refer to 8 - ELECTRICAL/ELECTRONIC CONTROL MODULES/ENGINE CONTROL MODULE - DIAGNOSIS AND TESTING)

---

4. INJECTOR HARNESS OPEN

Connect the pigtail nuts for the suspect injector.

Disconnect the injector harness connector for the suspect injector.

Measure the resistance of the injector harness circuit between the high side driver circuit and the low side driver circuit for the suspect injector at the injector harness connector.

NOTE: Be sure to zero the ohm meter prior to checking the injector circuit.

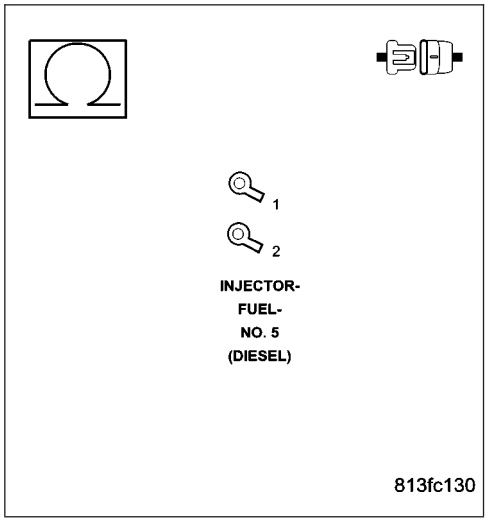

Is the resistance less than 1 ohm and greater than 0 ohms?

Yes >> Go To 5

No >> Replace or repair the injector harness.
Perform POWERTRAIN VERIFICATION TEST VER - 1 (DIESEL). (Refer to 8 - ELECTRICAL/ELECTRONIC CONTROL MODULES/ENGINE CONTROL MODULE - DIAGNOSIS AND TESTING)

P0205-INJECTOR #5 CONTROL CIRCUIT (CONTINUED)

5. HIGH SIDE DRIVER HARNESS OPEN

Disconnect the ECM harness connectors.

Disconnect the Injector harness connector.

Check connectors - Clean/repair as necessary.

Measure the resistance of the Bank 2 high side driver circuit between the ECM connector and the injector harness connector.

Is the resistance less than 10 Ohms?

Yes >> Go To 6

No >> Replace or repair the open engine harness.

Perform POWERTRAIN VERIFICATION TEST VER - 1 (DIESEL). (Refer to 8 - ELECTRICAL/ELECTRONIC CONTROL MODULES/ENGINE CONTROL MODULE - DIAGNOSIS AND TESTING)

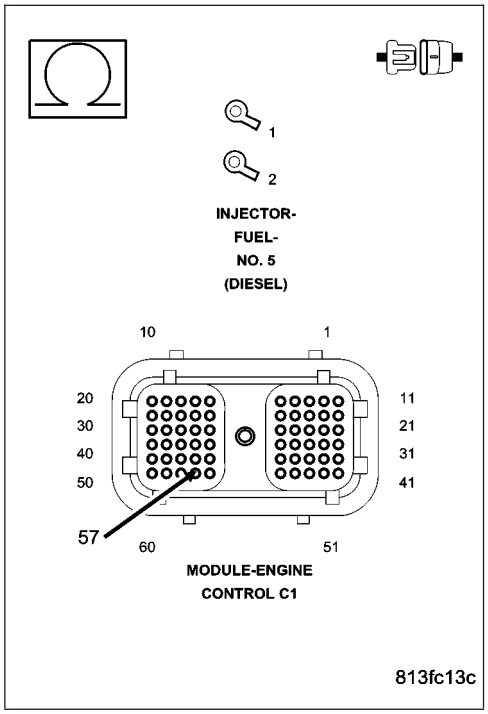

6. LOW SIDE DRIVER HARNESS OPEN

Measure the resistance of the Bank 2 low side driver circuit between the ECM connector and the injector harness connector.

Is the resistance less than 10 Ohms?

Yes >> Test Complete.

Perform POWERTRAIN VERIFICATION TEST VER - 1 (DIESEL). (Refer to 8 - ELECTRICAL/ELECTRONIC CONTROL MODULES/ENGINE CONTROL MODULE - DIAGNOSIS AND TESTING)

No >> Replace or repair the open engine harness.

Perform POWERTRAIN VERIFICATION TEST VER - 1 (DIESEL). (Refer to 8 - ELECTRICAL/ELECTRONIC CONTROL MODULES/ENGINE CONTROL MODULE - DIAGNOSIS AND TESTING)

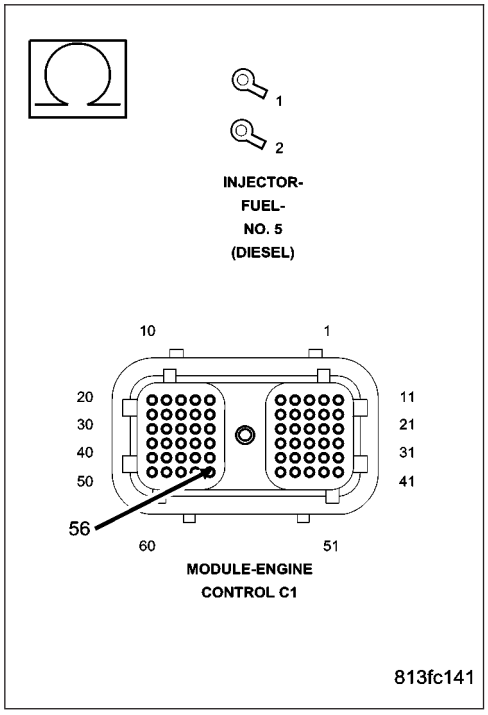

P0206-INJECTOR #6 CONTROL CIRCUIT

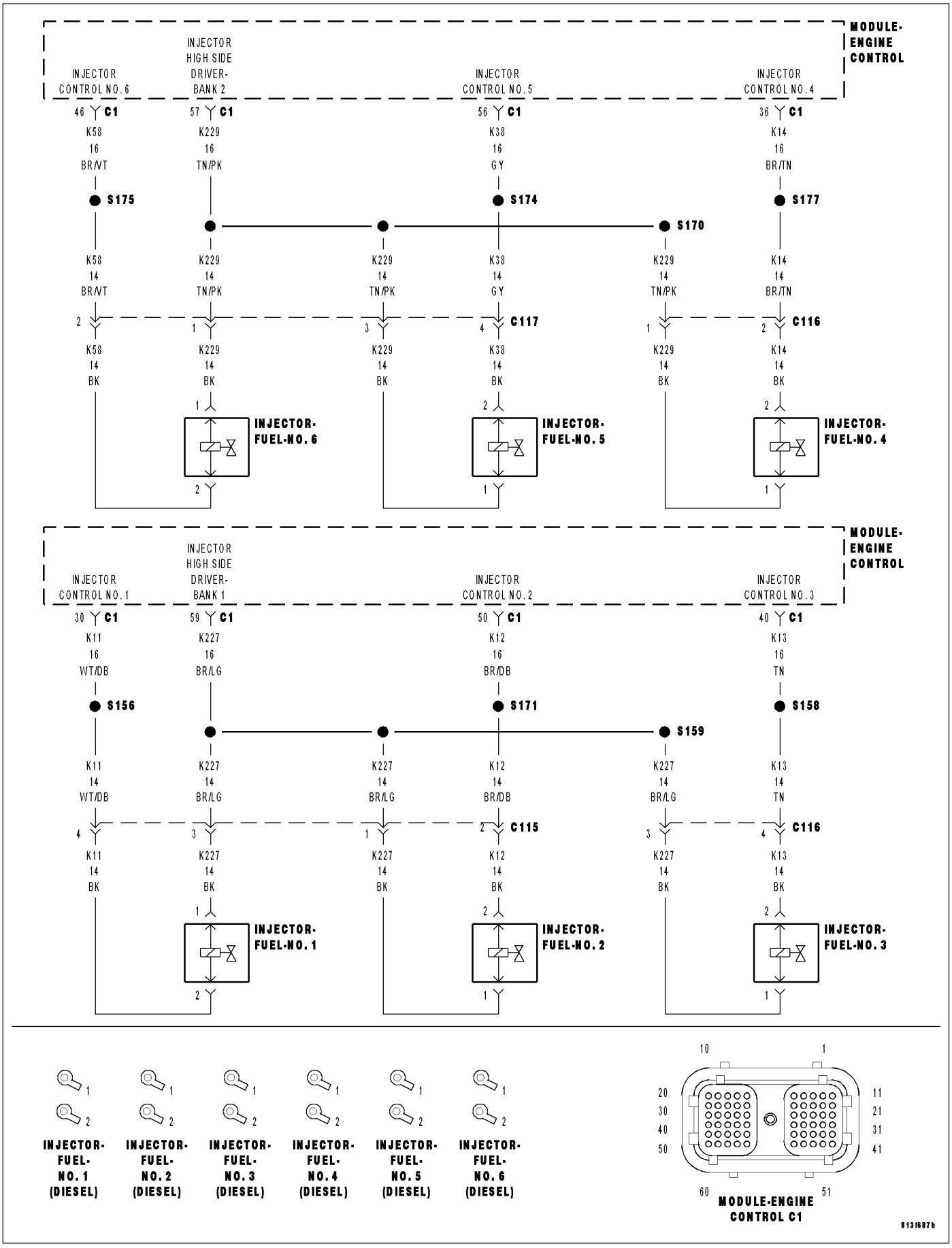

P0206-INJECTOR #6 CONTROL CIRCUIT (CONTINUED)

For the Engine circuit diagram (Refer to 8 - ELECTRICAL/ELECTRONIC CONTROL MODULES/ENGINE CONTROL MODULE - SCHEMATIC - ELECTRICAL)

For a complete wiring diagram **Refer to Section 8W**.

- **When Monitored:**
  While the engine is running.
- **Set Condition:**
  When the injector current falls below a calibrated threshold.

Possible Causes
PASS TROUGH CONNECTORS OPEN
FUEL INJECTOR
INJECTOR HARNESS OPEN
HIGH SIDE DRIVER HARNESS OPEN
LOW SIDE DRIVER HARNESS OPEN
ECM

Always perform the Pre-Diagnostic Troubleshooting procedure before proceeding. (Refer to 9 - ENGINE - DIAGNOSIS AND TESTING)

Diagnostic Test

1. OTHER DTC'S

With the scan tool, read DTCs.

Are all 6 of the injector DTC's (P0201 - P0206) present?

Yes >> Go To 2

No >> Go To 3

---

2. PASS TROUGH CONNECTORS OPEN

Inspect wiring harness for signs of multiple open circuits between the ECM and the injector pass through connectors. Inspect the wiring harness between the pass through connectors to the injectors.

Are there open circuits in the wiring harness?

Yes >> Repair or replace the open connectors or wiring.
Perform POWERTRAIN VERIFICATION TEST VER - 1 (DIESEL). (Refer to 8 - ELECTRICAL/ELECTRONIC CONTROL MODULES/ENGINE CONTROL MODULE - DIAGNOSIS AND TESTING)

No >> Go To 3

P0206-INJECTOR #6 CONTROL CIRCUIT (CONTINUED)

3. FUEL INJECTOR

Turn the ignition off.

Disconnect the pigtail nuts from the suspect injector. Using an Ohmmeter, measure the resistance between the solenoid posts of the injector.

NOTE: Be sure to zero the ohm meter prior to checking the injector circuit.

Is the resistance less than 1 ohm and greater than 0 ohms?

Yes >> Go To 4

No >> Replace the fuel injector.
Perform POWERTRAIN VERIFICATION TEST VER - 1 (DIESEL). (Refer to 8 - ELECTRICAL/ELECTRONIC CONTROL MODULES/ENGINE CONTROL MODULE - DIAGNOSIS AND TESTING)

---

4. INJECTOR HARNESS OPEN

Connect the pigtail nuts for the suspect injector.

Disconnect the injector harness connector for the suspect injector.

Measure the resistance of the injector harness circuit between the high side driver circuit and the low side driver circuit for the suspect injector at the injector harness connector.

NOTE: Be sure to zero the ohm meter prior to checking the injector circuit.

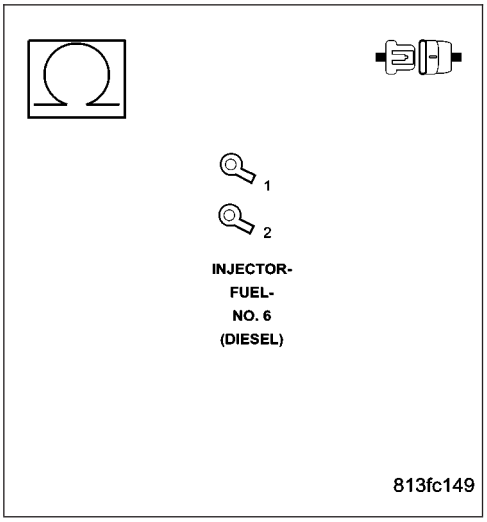

Is the resistance less than 1 ohm and greater than 0 ohms?

Yes >> Go To 5

No >> Replace or repair the injector harness.
Perform POWERTRAIN VERIFICATION TEST VER - 1 (DIESEL). (Refer to 8 - ELECTRICAL/ELECTRONIC CONTROL MODULES/ENGINE CONTROL MODULE - DIAGNOSIS AND TESTING)

P0206-INJECTOR #6 CONTROL CIRCUIT (CONTINUED)

5. HIGH SIDE DRIVER HARNESS OPEN

Disconnect the ECM harness connectors.

Disconnect the Injector harness connector.

Check connectors - Clean/repair as necessary.

Measure the resistance of the Bank 2 high side driver circuit between the ECM connector and the injector harness connector.

Is the resistance less than 10 Ohms?

Yes >> Go To 6

No >> Replace or repair the open engine harness.

Perform POWERTRAIN VERIFICATION TEST VER - 1 (DIESEL). (Refer to 8 - ELECTRICAL/ELECTRONIC CONTROL MODULES/ENGINE CONTROL MODULE - DIAGNOSIS AND TESTING)

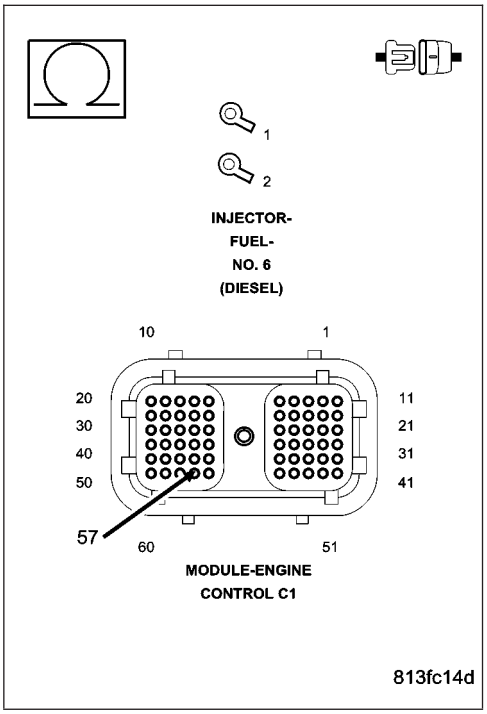

6. LOW SIDE DRIVER HARNESS OPEN

Measure the resistance of the Bank 2 low side driver circuit between the ECM connector and the injector harness connector.

Is the resistance less than 10 Ohms?

Yes >> Test Complete.

Perform POWERTRAIN VERIFICATION TEST VER - 1 (DIESEL). (Refer to 8 - ELECTRICAL/ELECTRONIC CONTROL MODULES/ENGINE CONTROL MODULE - DIAGNOSIS AND TESTING)

No >> Replace or repair the open engine harness.

Perform POWERTRAIN VERIFICATION TEST VER - 1 (DIESEL). (Refer to 8 - ELECTRICAL/ELECTRONIC CONTROL MODULES/ENGINE CONTROL MODULE - DIAGNOSIS AND TESTING)

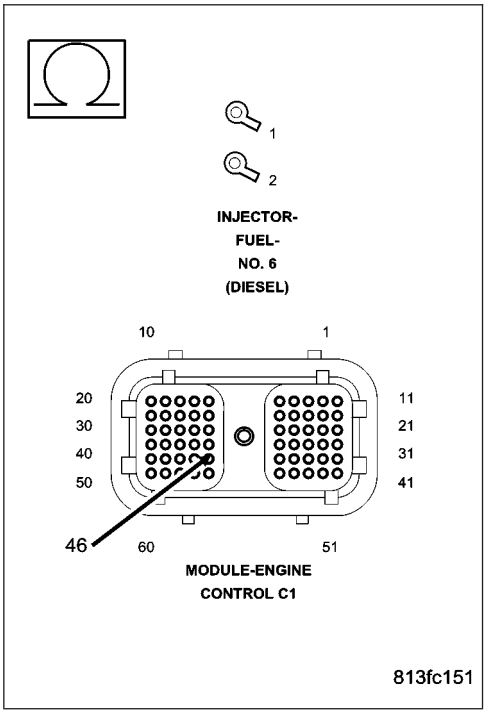

P0217-DECREASED ENGINE PERFORMANCE DUE TO ENGINE OVERHEAT CONDITION

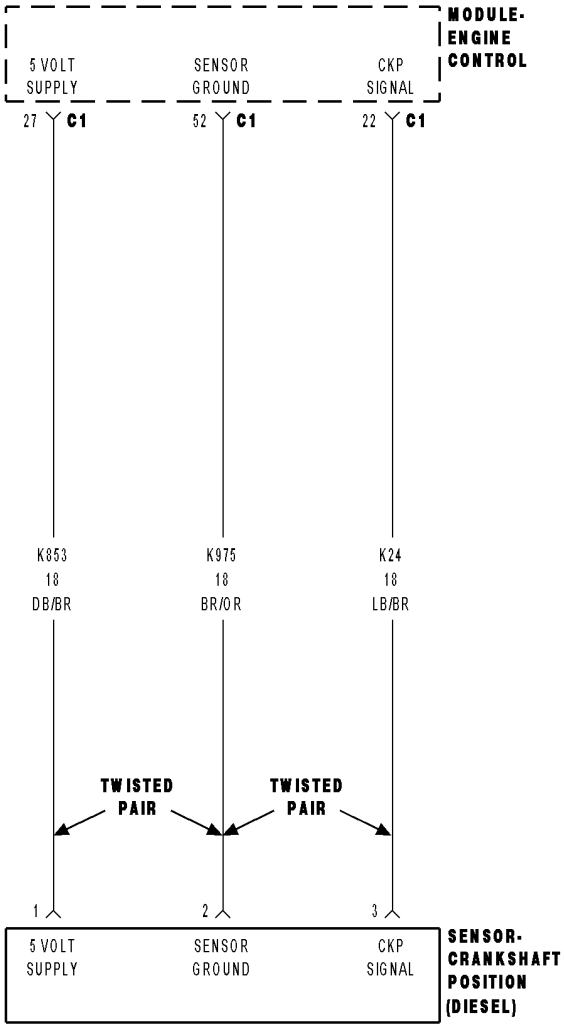

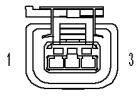

SENSOR-
CRANKSHAFT
POSITION
(DIESEL)

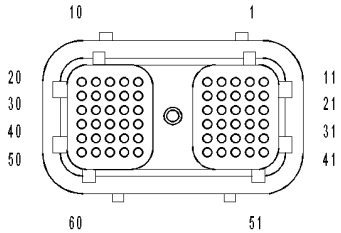

MODULE-ENGINE
CONTROL C1

813fc1d1

P0217-DECREASED ENGINE PERFORMANCE DUE TO ENGINE OVERHEAT CONDITION (CONTINUED)

For the Engine circuit diagram (Refer to 8 - ELECTRICAL/ELECTRONIC CONTROL MODULES/ENGINE CONTROL MODULE - SCHEMATIC - ELECTRICAL)

For a complete wiring diagram **Refer to Section 8W**.

- **When Monitored:**
  While the engine is running. .
- **Set Condition:**
  The engine coolant temperature is above a calibrated value for a calibrated amount of time.

Possible Causes
ECT SENSOR
OTHER DTC'S
MECHANICAL FAILURE

Always perform the Pre-Diagnostic Troubleshooting procedure before proceeding. (Refer to 9 - ENGINE - DIAGNOSIS AND TESTING)

Diagnostic Test

1. OTHER DTC'S

With the scan tool, read DTCs.

Are other Cooling system DTC's present?

Yes >> Trouble shoot the other DTC's first.
Perform POWERTRAIN VERIFICATION TEST VER - 1 (DIESEL). (Refer to 8 - ELECTRICAL/ELECTRONIC CONTROL MODULES/ENGINE CONTROL MODULE - DIAGNOSIS AND TESTING)

No >> Go To 2

---

2. ECT SENSOR

Allow the engine to reach normal operating temperature.

Use a temperature probe and measure the engine temperature near the ECT Sensor.

With the scan tool, read the Engine Temperature.

Compare the temperature probe reading with the scan tool reading.

Are the readings within 10°F of each other?

Yes >> Repair the cause of mechanical failure.
Perform POWERTRAIN VERIFICATION TEST VER - 1 (DIESEL). (Refer to 8 - ELECTRICAL/ELECTRONIC CONTROL MODULES/ENGINE CONTROL MODULE - DIAGNOSIS AND TESTING)

No >> Replace the coolant temp sensor.
Perform POWERTRAIN VERIFICATION TEST VER - 1 (DIESEL). (Refer to 8 - ELECTRICAL/ELECTRONIC CONTROL MODULES/ENGINE CONTROL MODULE - DIAGNOSIS AND TESTING)

P0219-CRANKSHAFT POSITION SENSOR OVER SPEED SIGNAL

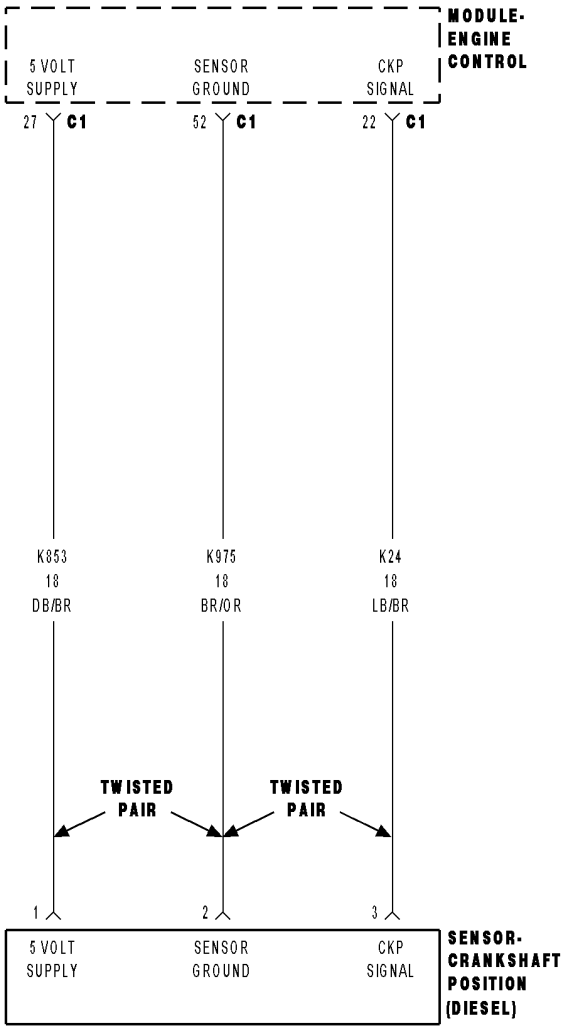

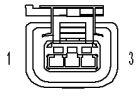

SENSOR-
CRANKSHAFT
POSITION
(DIESEL)

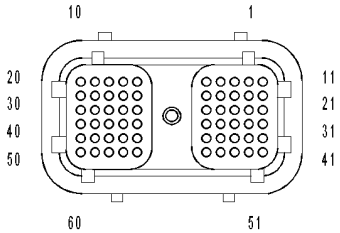

MODULE-ENGINE
CONTROL C1

813fc1d1

P0219-CRANKSHAFT POSITION SENSOR OVER SPEED SIGNAL (CONTINUED)

For the Engine circuit diagram (Refer to 8 - ELECTRICAL/ELECTRONIC CONTROL MODULES/ENGINE CONTROL MODULE - SCHEMATIC - ELECTRICAL)

For a complete wiring diagram **Refer to Section 8W**.

- **When Monitored:**
  While the engine is running.
- **Set Condition:**
  The ECM detects engine speed is above a calibrated threshold.

Possible Causes
OTHER DTC'S
MECHANICAL OVERSPEED OF ENGINE
INTERMITTENT CONDITION

Always perform the Pre-Diagnostic Troubleshooting procedure before proceeding. (Refer to 9 - ENGINE - DIAGNOSIS AND TESTING)

Diagnostic Test

1. OTHER DTC'S

Turn the ignition on.

With the scan tool, read and record the freeze frame data.

With the scan tool, read the Engine DTC's.

Is there other Crankshaft position sensor DTC's set?

Yes >> Refer to symptom list for problems related to the other Crankshaft position sensor DTC's.

No >> Go To 2

---

2. MECHANICAL OVERSPEED OF ENGINE

Visually inspect the engine for signs of mechanical overspeed. Such as, bent push rod, broken rocker arms, bent valves, etc.

Did you notice any overspeed damage?

Yes >> Repair or replace any damaged components.
Perform POWERTRAIN VERIFICATION TEST VER - 1 (DIESEL). (Refer to 8 - ELECTRICAL/ELECTRONIC CONTROL MODULES/ENGINE CONTROL MODULE - DIAGNOSIS AND TESTING)

No >> Test Complete.

P0234-TURBOCHARGER OVERBOOST CONDITION

For the Engine circuit diagram (Refer to 8 - ELECTRICAL/ELECTRONIC CONTROL MODULES/ENGINE CONTROL MODULE - SCHEMATIC - ELECTRICAL)

For a complete wiring diagram **Refer to Section 8W**.

- **When Monitored:**
  While running.
- **Set Condition:**
  The intake air pressure is above a calibrated value for a calibrated amount of time.

Possible Causes
OTHER DTC'S
WASTEGATE STUCK
TURBOCHARGER AND/OR WASTEGATE DAMAGE
WASTEGATE
TURBOCHARGER
WASTEGATE CONTROL VALVE

Always perform the Pre-Diagnostic Troubleshooting procedure before proceeding. (Refer to 9 - ENGINE - DIAGNOSIS AND TESTING)

Diagnostic Test

1. OTHER DTC'S

With the scan tool, read DTCs.

Do you have additional DTC's?

Yes >> Repair all other DTC's first.
Perform POWERTRAIN VERIFICATION TEST VER - 1 (DIESEL). (Refer to 8 - ELECTRICAL/ELECTRONIC CONTROL MODULES/ENGINE CONTROL MODULE - DIAGNOSIS AND TESTING)

No >> Go To 2

---

2. TURBOCHARGER AND/OR WASTEGATE DAMAGE

Visually inspect the turbocharger assembly for signs of damage. Pay particular attention to the Wastegate area and linkage.

Was any damage noticed?

Yes >> Repair or replace the Turbocharger or Wastegate.
Perform POWERTRAIN VERIFICATION TEST VER - 1 (DIESEL). (Refer to 8 - ELECTRICAL/ELECTRONIC CONTROL MODULES/ENGINE CONTROL MODULE - DIAGNOSIS AND TESTING)

No >> Go To 3

P0234-TURBOCHARGER OVERBOOST CONDITION (CONTINUED)

3. WASTEGATE

Pressure the Intake air system per test *INTAKE AIR SYSTEM PRESSURE TEST.

Pay particular attention to the Wastegate signal line and the Wastegate actuator canister area for leaks.

Were any leaks detected?

Yes >> Repair as necessary.
Perform POWERTRAIN VERIFICATION TEST VER - 1 (DIESEL). (Refer to 8 - ELECTRICAL/ELECTRONIC CONTROL MODULES/ENGINE CONTROL MODULE - DIAGNOSIS AND TESTING)

No >> Go To 4

---

4. TURBOCHARGER

Disconnect the wiring connector at the Wastegate Control Valve.

Remove the Wastegate Control Valve from the turbo.

Inspect the o-rings and the valve for damage.

Replace any damaged o-rings or a damaged valve.

Using a pressure/vacuum hand pump, apply vacuum to the tip of the Wastegate Control Valve.

Use your fingers to cover and seal the two radial holes located between the two small o-rings on the tip of the valve.

The valve should hold vacuum.

Does the Wastegate Control Valve hold vacuum?

Yes >> Repair or replace the Turbocharger.
Perform POWERTRAIN VERIFICATION TEST VER - 1 (DIESEL). (Refer to 8 - ELECTRICAL/ELECTRONIC CONTROL MODULES/ENGINE CONTROL MODULE - DIAGNOSIS AND TESTING)

No >> Replace the Wastegate Control Valve.
Perform POWERTRAIN VERIFICATION TEST VER - 1 (DIESEL). (Refer to 8 - ELECTRICAL/ELECTRONIC CONTROL MODULES/ENGINE CONTROL MODULE - DIAGNOSIS AND TESTING)

P0236-MAP SENSOR TOO HIGH TOO LONG

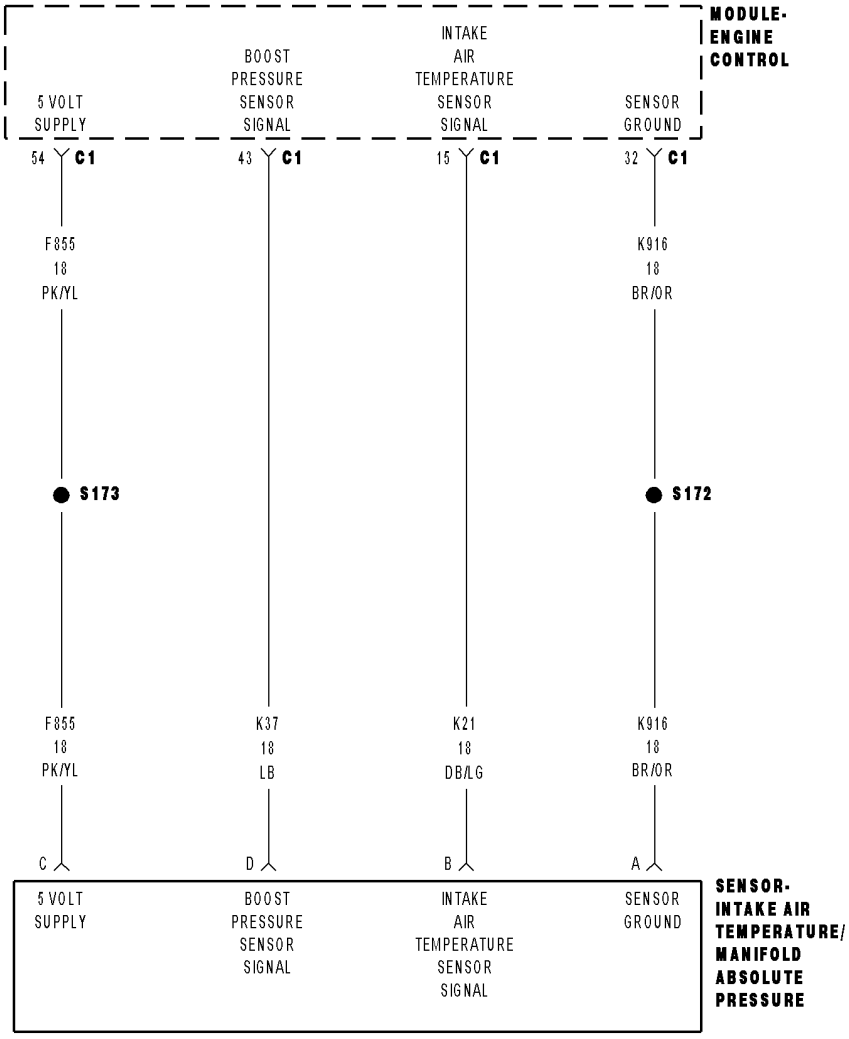

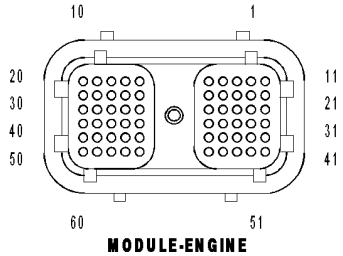

MODULE-ENGINE
CONTROL C1

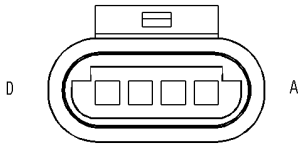

SENSOR-
INTAKE AIR
TEMPERATURE/
MANIFOLD
ABSOLUTE
PRESSURE
(DIESEL)

813dc004

P0236-MAP SENSOR TOO HIGH TOO LONG (CONTINUED)

For the Engine circuit diagram (Refer to 8 - ELECTRICAL/ELECTRONIC CONTROL MODULES/ENGINE CONTROL MODULE - SCHEMATIC - ELECTRICAL)

For a complete wiring diagram **Refer to Section 8W**.

- **When Monitored:**
  Ignition on.
- **Set Condition:**
  The intake air pressure is above a calibrated value past a calibrated amount of time.

Possible Causes
OTHER CODES
MAP SENSOR
INTERMITTENT CONDITION

Always perform the Pre-Diagnostic Troubleshooting procedure before proceeding. (Refer to 9 - ENGINE - DIAGNOSIS AND TESTING)

Diagnostic Test

1. OTHER DTC'S

Turn the ignition on.

With the scan tool, read the Engine DTC's.

Are there any other MAP Sensor related DTC's.

Yes >> Repair other MAP Sensor DTC's.
Perform POWERTRAIN VERIFICATION TEST VER - 1 (DIESEL). (Refer to 8 - ELECTRICAL/ELECTRONIC CONTROL MODULES/ENGINE CONTROL MODULE - DIAGNOSIS AND TESTING)

No >> Go To 2

---

2. MAP SENSOR

Start the engine.

With the scan tool, read the MAP Sensor voltage.

Is the pressure reading of the MAP sensor less than 17.6 psia?

Yes >> Go To 3

No >> Replace the MAP Sensor.
Perform POWERTRAIN VERIFICATION TEST VER - 1 (DIESEL). (Refer to 8 - ELECTRICAL/ELECTRONIC CONTROL MODULES/ENGINE CONTROL MODULE - DIAGNOSIS AND TESTING)

P0236-MAP SENSOR TOO HIGH TOO LONG (CONTINUED)

3. **MAP SENSOR**

Operate the engine under normal driving conditions (no load) for at least 30 seconds.

Monitor the MAP sensor reading with the scan tool.

Did the pressure reading from the MAP sensor go above 29.6 psia for more than 2.5 seconds?

Yes >> Replace the Map sensor.
Perform POWERTRAIN VERIFICATION TEST VER - 1 (DIESEL). (Refer to 8 - ELECTRICAL/ELECTRONIC CONTROL MODULES/ENGINE CONTROL MODULE - DIAGNOSIS AND TESTING)

No >> Refer to the INTERMITTENT CONDITION Symptom (Diagnostic Procedure). (Refer to 9 - ENGINE - DIAGNOSIS AND TESTING)

P0237-MAP SENSOR VOLTAGE TOO LOW

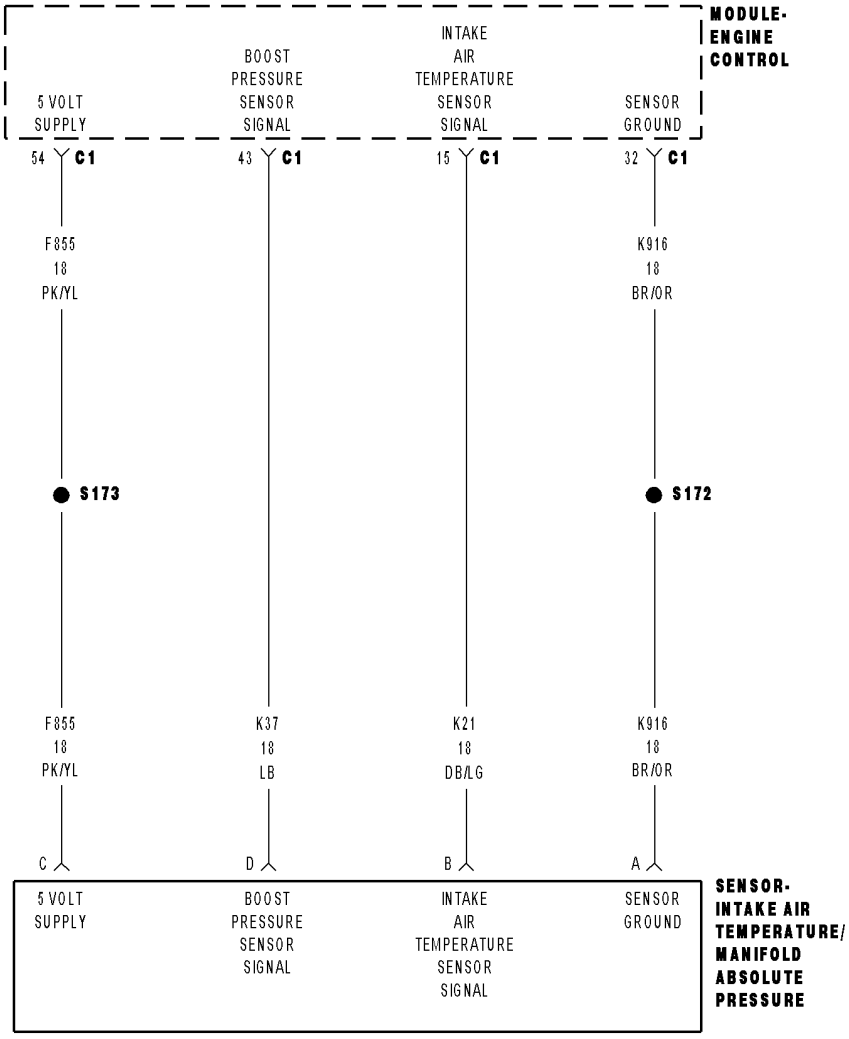

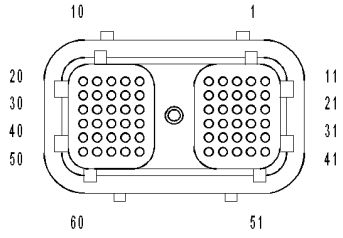

MODULE-ENGINE
CONTROL C1

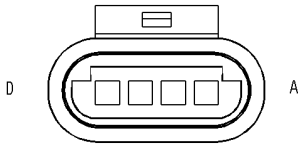

SENSOR-
INTAKE AIR
TEMPERATURE/
MANIFOLD
ABSOLUTE
PRESSURE
(DIESEL)

813dc004

P0237-MAP SENSOR VOLTAGE TOO LOW (CONTINUED)

For the Engine circuit diagram (Refer to 8 - ELECTRICAL/ELECTRONIC CONTROL MODULES/ENGINE CONTROL MODULE - SCHEMATIC - ELECTRICAL)

For a complete wiring diagram **Refer to Section 8W**.

- **When Monitored:**
  With the ignition on and battery voltage greater than 10.4 volts.
- **Set Condition:**
  The circuit voltage to the ECM falls below a calibrated threshold for a certain period of time.

Possible Causes
OTHER DTC'S
(K37) SIGNAL CIRCUIT SHORTED TO (K916) SENSOR RETURN CIRCUIT
(F855) 5-VOLT SUPPLY CIRCUIT SHORTED TO (K916) SENSOR RETURN CIRCUIT
MAP SENSOR
(K37) SIGNAL CIRCUIT OPEN
(F855) 5-VOLT SUPPLY CIRCUIT OPEN
MAP SENSOR (K37) SIGNAL CIRCUIT SHORT TO GROUND
ECM

Always perform the Pre-Diagnostic Troubleshooting procedure before proceeding. (Refer to 9 - ENGINE - DIAGNOSIS AND TESTING)

Diagnostic Test

1. OTHER DTC'S

Turn the ignition on.

With the scan tool, read the Engine DTC's.

Is there a 5-volt Supply DTC set?

Yes >> Refer to symptom list for problems related to the 5-volt Supply DTC.
Perform POWERTRAIN VERIFICATION TEST VER - 1 (DIESEL). (Refer to 8 - ELECTRICAL/ELECTRONIC CONTROL MODULES/ENGINE CONTROL MODULE - DIAGNOSIS AND TESTING)

No >> Go To 2

---

2. HIGH VOLTAGE

Turn the ignition off.

Disconnect the Map sensor harness connector.

Check connectors - Clean/repair as necessary.

Turn the ignition on.

Measure the voltage between the (F855) 5-volt supply circuit and sensor (K916)) return circuit of the Map sensor harness connector.

Is the voltage between 4.5 and 5.5 volts?

Yes >> Go To 3

No >> Go To 4

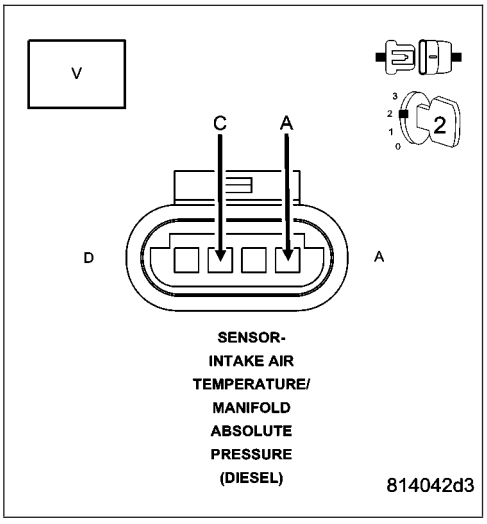

P0237-MAP SENSOR VOLTAGE TOO LOW (CONTINUED)

3. MAP SENSOR

While monitoring the scan tool, jumper the (F855) 5-volt supply circuit to the (K37) signal circuit in the Map sensor harness connector.

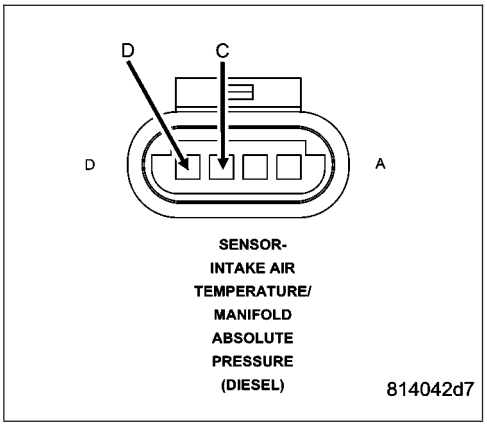

Did the P0238-MAP SENSOR VOLTAGE TOO HIGH, DTC set?

Yes >> Replace the MAP sensor.
Perform POWERTRAIN VERIFICATION TEST VER - 1 (DIESEL). (Refer to 8 - ELECTRICAL/ELECTRONIC CONTROL MODULES/ENGINE CONTROL MODULE - DIAGNOSIS AND TESTING)

No >> Go To 4

---

4. (K37) SIGNAL CIRCUIT SHORTED TO (K916)) SENSOR RETURN CIRCUIT

Turn the ignition off.

Disconnect the ECM harness 60 pin connector.

NOTE: Check connectors - Clean/repair as necessary.

Measure the resistance between the (K37) signal circuit and (K916)) sensor return circuit in the MAP sensor harness connector.

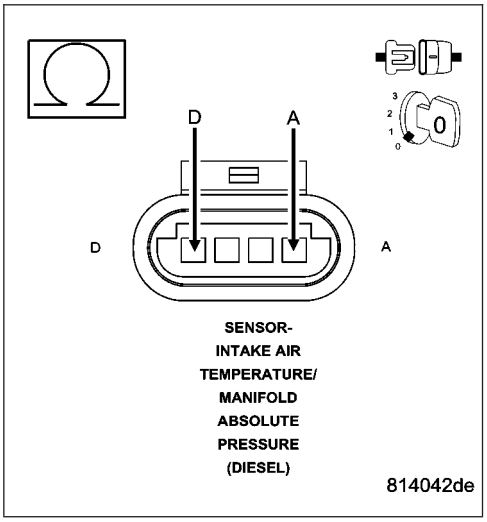

Is the resistance greater than 100 K Ohms?

No >> Repair (K37) signal circuit shorted to (K916)) sensor return circuit or replace harness.
Perform POWERTRAIN VERIFICATION TEST VER - 1 (DIESEL). (Refer to 8 - ELECTRICAL/ELECTRONIC CONTROL MODULES/ENGINE CONTROL MODULE - DIAGNOSIS AND TESTING)

Yes >> Go To 5

P0237-MAP SENSOR VOLTAGE TOO LOW (CONTINUED)

5. (F855) 5-VOLT SUPPLY CIRCUIT SHORTED TO (K916)) SENSOR RETURN CIRCUIT

Measure the resistance between the (F855) 5-volt supply circuit and (K916)) sensor return circuit in the MAP sensor harness connector.

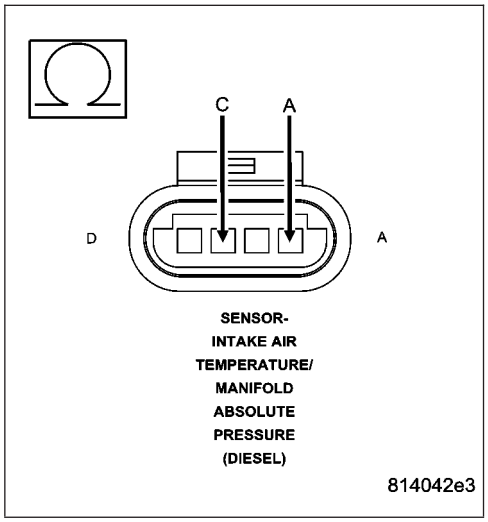

Is the resistance greater than 100 K Ohms?

No >> Repair (F855) 5-volt supply circuit shorted to (K916)) sensor return circuit or replace harness.
Perform POWERTRAIN VERIFICATION TEST VER - 1 (DIESEL). (Refer to 8 - ELECTRICAL/ELECTRONIC CONTROL MODULES/ENGINE CONTROL MODULE - DIAGNOSIS AND TESTING)

Yes >> Go To 6

6. (K37) SIGNAL CIRCUIT OPEN

Measure the resistance between the signal (K37) circuit in the Map sensor harness connector with the (K37) signal circuit in the ECM harness connector.

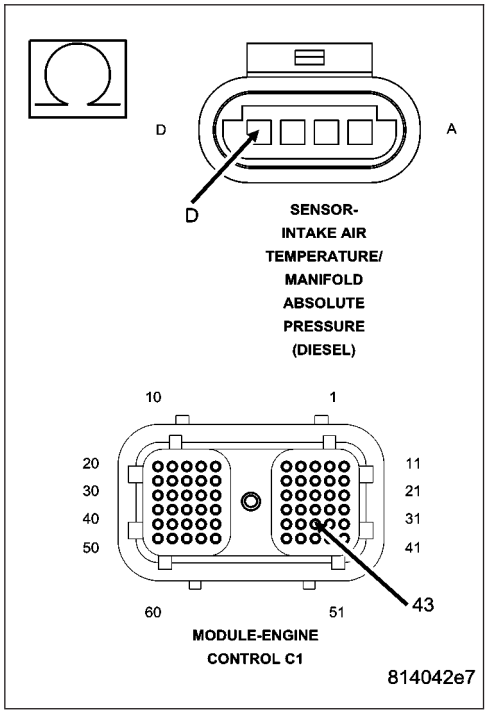

Is the resistance less than 10 Ohms?

Yes >> Go To 7

No >> Repair or replace the engine harness.
Perform POWERTRAIN VERIFICATION TEST VER - 1 (DIESEL). (Refer to 8 - ELECTRICAL/ELECTRONIC CONTROL MODULES/ENGINE CONTROL MODULE - DIAGNOSIS AND TESTING)

P0237-MAP SENSOR VOLTAGE TOO LOW (CONTINUED)

7. (F855) 5-VOLT SUPPLY CIRCUIT OPEN

Measure the resistance between the (F855) 5-volt supply circuit in the Map sensor harness connector with the (F855) 5-volt supply circuit in the ECM harness connector.

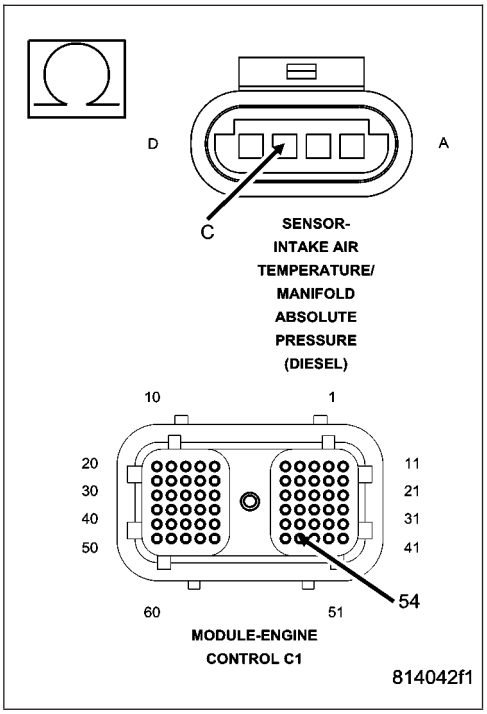

Is the resistance less than 10 Ohms?

Yes >> Go To 8

No >> Repair or replace the engine harness.
Perform POWERTRAIN VERIFICATION TEST VER - 1 (DIESEL). (Refer to 8 - ELECTRICAL/ELECTRONIC CONTROL MODULES/ENGINE CONTROL MODULE - DIAGNOSIS AND TESTING)

8. MAP SENSOR SIGNAL (K37) CIRCUIT SHORTED TO GROUND

Measure the resistance between the MAP Sensor Signal (K37) circuit and the Battery negative terminal.

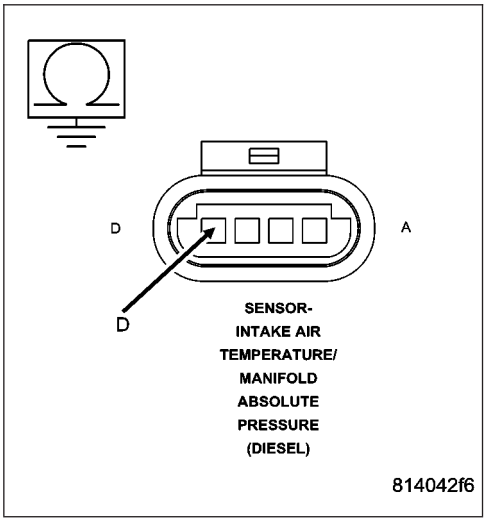

Is the resistance above 100k ohms?

Yes >> Go To 9

No >> Repair the MAP Sensor (K37) Signal circuit for a short to ground.
Perform POWERTRAIN VERIFICATION TEST VER - 1 (DIESEL). (Refer to 8 - ELECTRICAL/ELECTRONIC CONTROL MODULES/ENGINE CONTROL MODULE - DIAGNOSIS AND TESTING)

P0237-MAP SENSOR VOLTAGE TOO LOW (CONTINUED)

9. (F855) 5-VOLT SUPPLY CIRCUIT SHORTED TO (K916)) RETURN CIRCUIT OR GROUND

Measure the resistance between the (F855) 5-volt supply circuit in the sensor harness connector and battery negative.

Is the resistance above 100k ohms?

Yes >> Go To 10

No >> Test Complete.

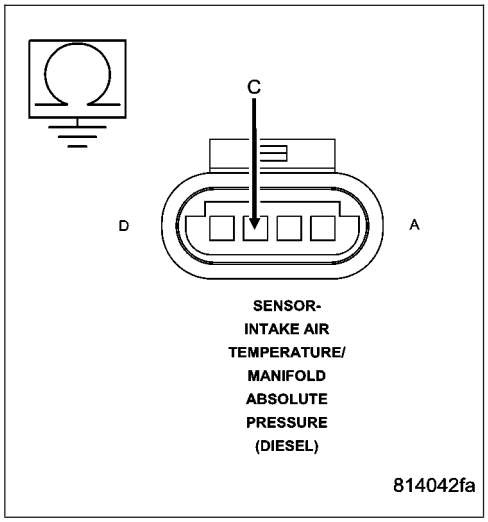

10. ECM

Reconnect the ECM harness 60 pin connector.

While monitoring the scan tool, jumper the (F855) 5-volt supply circuit to the (K37) signal circuit in the map sensor harness connector.

Did the P0238-MAP SENSOR VOLTAGE TOO HIGH, DTC set?

Yes >> Test Complete.

No >> Replace and program the ECM in accordance with the Service Information.

Perform POWERTRAIN VERIFICATION TEST VER - 1 (DIESEL). (Refer to 8 - ELECTRICAL/ELECTRONIC CONTROL MODULES/ENGINE CONTROL MODULE - DIAGNOSIS AND TESTING)

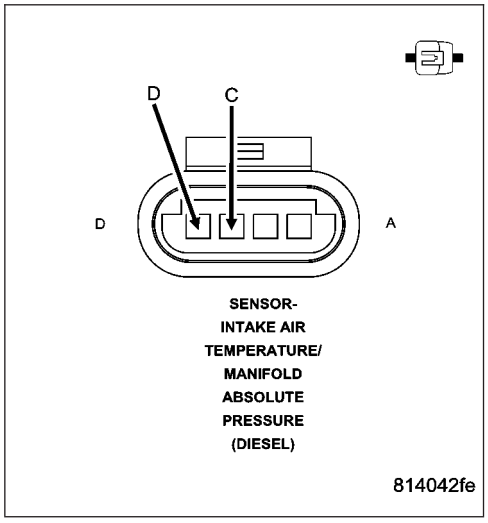

P0238-MAP SENSOR VOLTAGE TOO HIGH

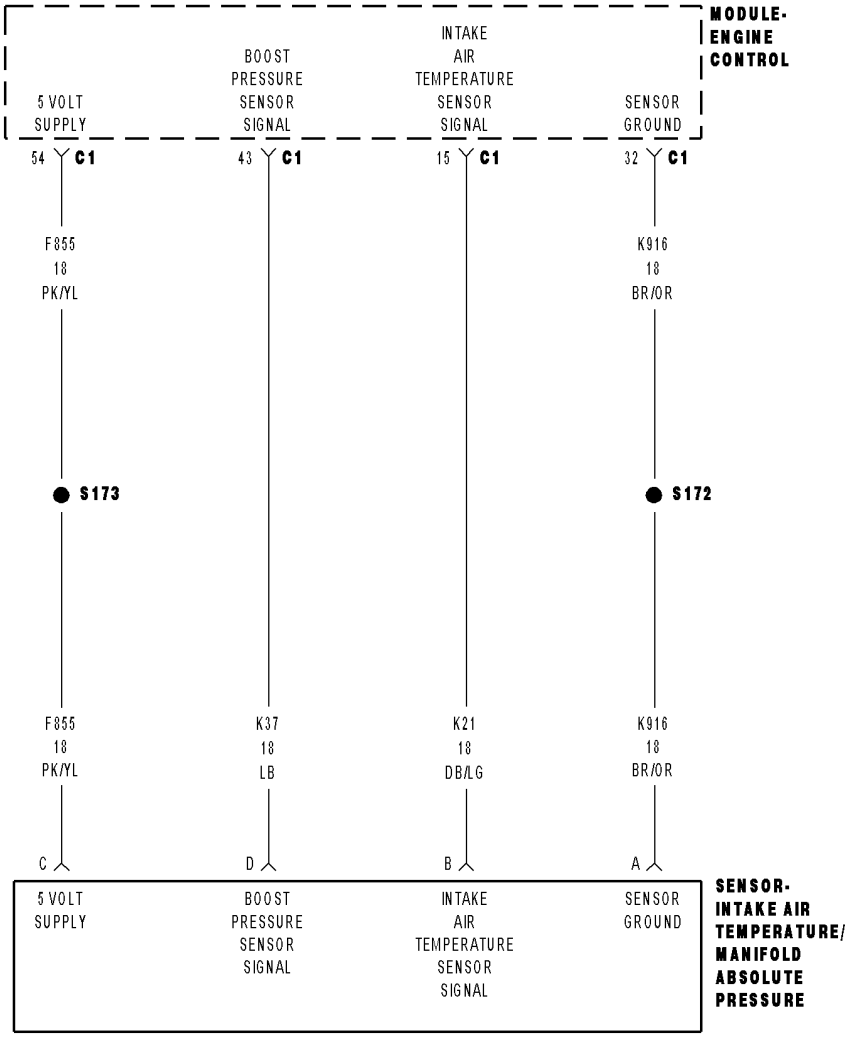

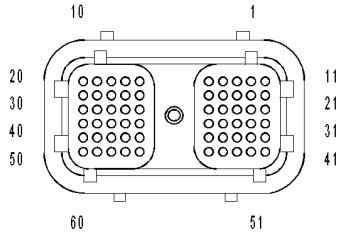

MODULE-ENGINE
CONTROL C1

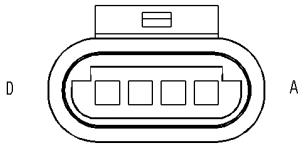

SENSOR-
INTAKE AIR
TEMPERATURE/
MANIFOLD
ABSOLUTE
PRESSURE
(DIESEL)

813dc004

P0238-MAP SENSOR VOLTAGE TOO HIGH (CONTINUED)

For the Engine circuit diagram (Refer to 8 - ELECTRICAL/ELECTRONIC CONTROL MODULES/ENGINE CONTROL MODULE - SCHEMATIC - ELECTRICAL)

For a complete wiring diagram **Refer to Section 8W**.

- **When Monitored:**
  With the ignition on and battery voltage greater than 10.4 volts.
- **Set Condition:**
  The circuit voltage to the ECM is above a calibrated threshold for a certain period of time.

Possible Causes
OTHER DTC'S
(K37) SIGNAL CIRCUIT SHORTED TO BATTERY
(F855) 5-VOLT SUPPLY CIRCUIT SHORTED TO BATTERY
MAP SENSOR
(K37) SIGNAL CIRCUIT SHORT TO SUPPLY
(F855) 5-VOLT SUPPLY CIRCUIT SHORT TO BATTERY
INTERMITTENT
ECM

Always perform the Pre-Diagnostic Troubleshooting procedure before proceeding. (Refer to 9 - ENGINE - DIAGNOSIS AND TESTING)

Diagnostic Test

1. OTHER DTC'S

Turn the ignition on.

With the scan tool, read the Engine DTC's.

Is there a 5-volt Supply DTC set?

Yes >> Refer to symptom list for problems related to the 5-volt Supply DTC.
Perform POWERTRAIN VERIFICATION TEST VER - 1 (DIESEL). (Refer to 8 - ELECTRICAL/ELECTRONIC CONTROL MODULES/ENGINE CONTROL MODULE - DIAGNOSIS AND TESTING)

No >> Go To 2

---

2. HIGH VOLTAGE

Turn the ignition off.

Disconnect the Map sensor harness connector.

Check connectors - Clean/repair as necessary.

Turn the ignition on.

Measure the voltage between the (F855) 5-volt supply circuit and (K916) sensor return circuit of the Map sensor harness connector.

Is the voltage between 4.5 and 5.5 volts?

Yes >> Go To 3

No >> Go To 4

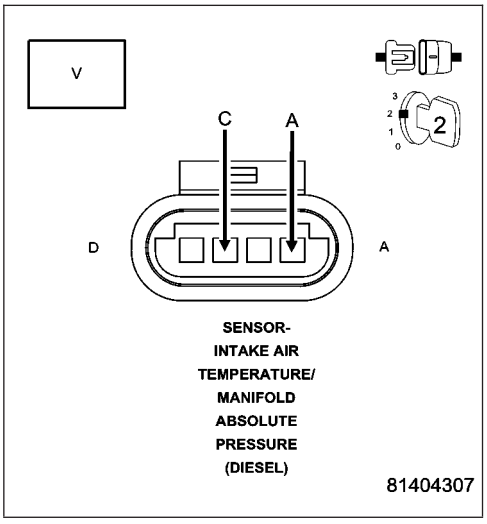

P0238-MAP SENSOR VOLTAGE TOO HIGH (CONTINUED)

3. MAP SENSOR

While monitoring scan tool, use a jumper wire to connect the (K916) return circuit with the (K37) signal circuit at the sensor connector.

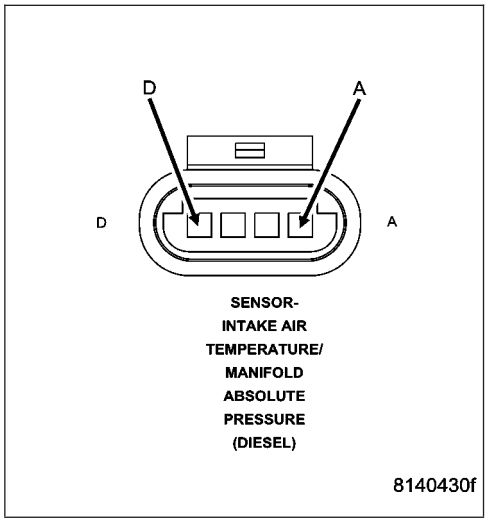

Did the P0237-MAP SENSOR VOLTAGE TOO LOW, DTC set?

Yes >> Go To 4

No >> Replace the MAP sensor.
Perform POWERTRAIN VERIFICATION TEST VER - 1 (DIESEL). (Refer to 8 - ELECTRICAL/ELECTRONIC CONTROL MODULES/ENGINE CONTROL MODULE - DIAGNOSIS AND TESTING)

4. (K37) SIGNAL CIRCUIT SHORTED TO BATTERY

Disconnect the ECM harness connectors.

Check connectors - Clean/repair as necessary.

Measure the voltage between the (K37) signal circuit at the MAP sensor harness connector and Battery Negative.

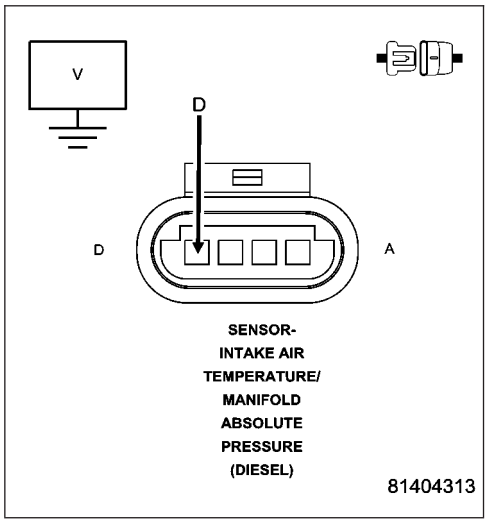

Is the voltage greater than 1 volt?

Yes >> Repair (K37) signal circuit shorted to Battery or replace harness.
Perform POWERTRAIN VERIFICATION TEST VER - 1 (DIESEL). (Refer to 8 - ELECTRICAL/ELECTRONIC CONTROL MODULES/ENGINE CONTROL MODULE - DIAGNOSIS AND TESTING)

No >> Go To 5

P0238-MAP SENSOR VOLTAGE TOO HIGH (CONTINUED)

5. (F855) 5-VOLT SUPPLY CIRCUIT SHORTED TO BATTERY

Measure the voltage between the (F855) 5-volt supply circuit at the MAP sensor harness connector and Battery negative.

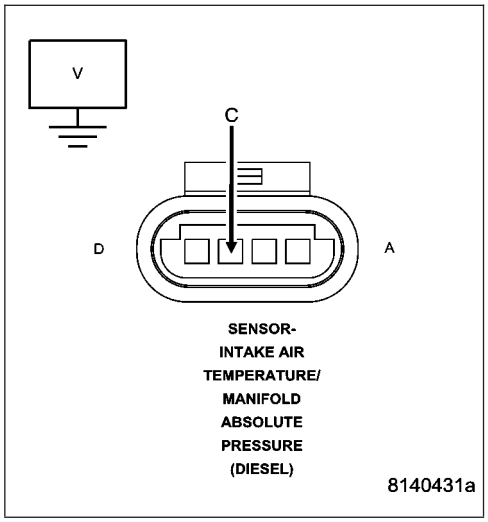

Is the voltage greater than 1 volt?

Yes >> Repair (F855) 5-volt supply circuit shorted to Battery or replace harness.
Perform POWERTRAIN VERIFICATION TEST VER - 1 (DIESEL). (Refer to 8 - ELECTRICAL/ELECTRONIC CONTROL MODULES/ENGINE CONTROL MODULE - DIAGNOSIS AND TESTING)

No >> Go To 6

6. (K37) SIGNAL CIRCUIT SHORT TO 5–VOLT SUPPLY

Turn the ignition off.

Disconnect the ECM harness connectors.

Measure the resistance between the (K37) signal circuit of the sensor harness connector and the (F855) 5-volt supply circuit of the sensor harness connector.

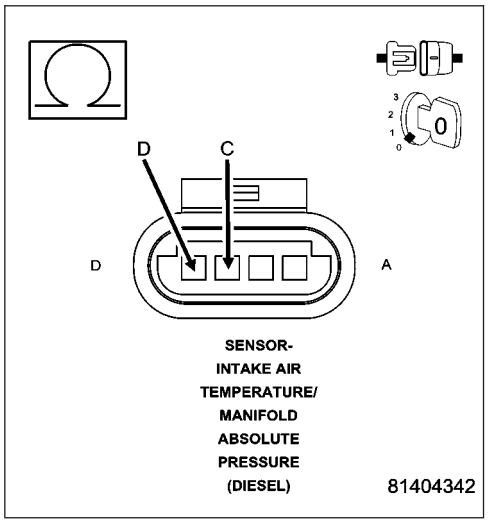

Is the resistance less than 10 Ohms?

No >> Go To 7

Yes >> Repair or replace the engine harness.
Perform POWERTRAIN VERIFICATION TEST VER - 1 (DIESEL). (Refer to 8 - ELECTRICAL/ELECTRONIC CONTROL MODULES/ENGINE CONTROL MODULE - DIAGNOSIS AND TESTING)

P0238-MAP SENSOR VOLTAGE TOO HIGH (CONTINUED)

7. (F855) SENSOR RETURN CIRCUIT OPEN

Measure the resistance between the (K916) sensor return circuit in the Map sensor harness connector with the (K916) sensor return circuit in the ECM harness connector.

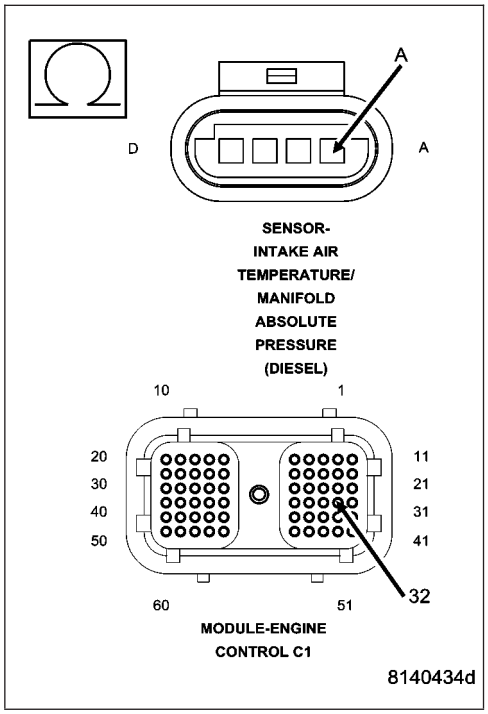

Is the resistance less than 10 Ohms?

Yes >> Go To 8

No >> Repair or replace the engine harness.
Perform POWERTRAIN VERIFICATION TEST VER - 1 (DIESEL). (Refer to 8 - ELECTRICAL/ELECTRONIC CONTROL MODULES/ENGINE CONTROL MODULE - DIAGNOSIS AND TESTING)

8. INTERMITTENT CONDITION

Reconnect the ECM harness connector.

Turn the ignition on.

While monitoring scan tool, connect a jumper wire between the (K37) signal circuit of the sensor harness connector and the (K916) return circuit of the sensor harness connector.

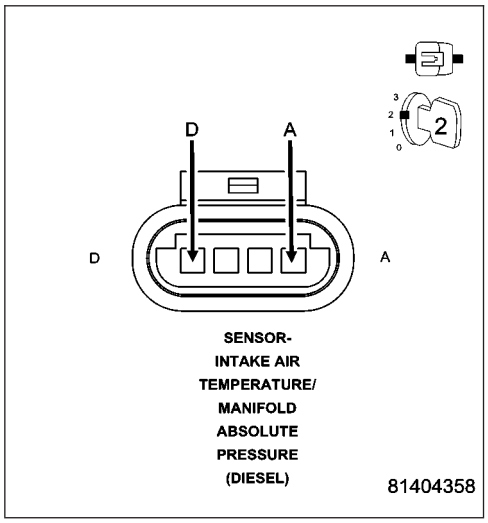

Does the scan tool show P0237-Map Sensor Voltage Too Low DTC?

Yes >> Refer to the INTERMITTENT CONDITION Symptom (Diagnostic Procedure).
(Refer to 9 - ENGINE - DIAGNOSIS AND TESTING)

No >> Replace and program the ECM in accordance with the Service Information.
Perform POWERTRAIN VERIFICATION TEST VER - 1 (DIESEL). (Refer to 8 - ELECTRICAL/ELECTRONIC CONTROL MODULES/ENGINE CONTROL MODULE - DIAGNOSIS AND TESTING)

P0243-WASTEGATE PRESSURE CONTROL PWM

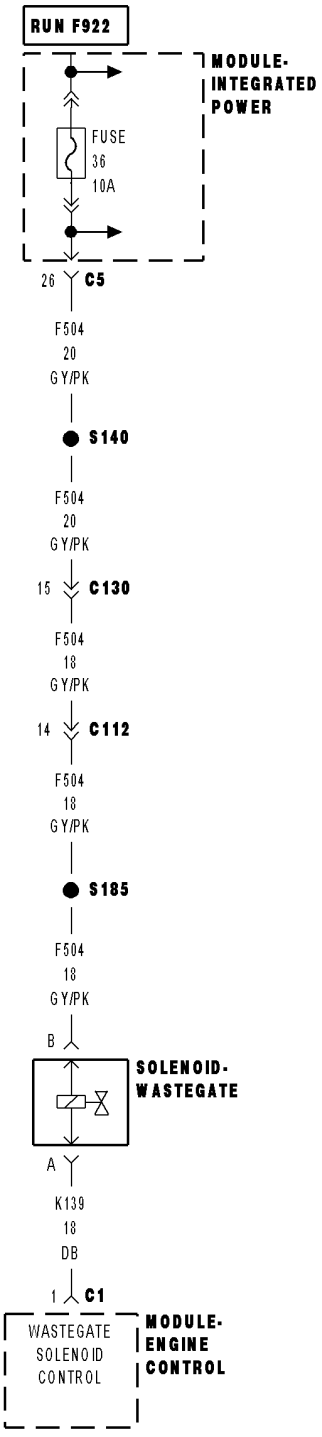

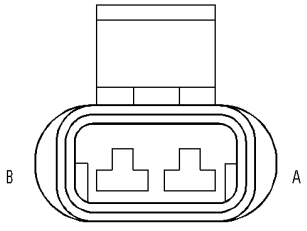

SOLENOID-
WASTEGATE
(DIESEL)

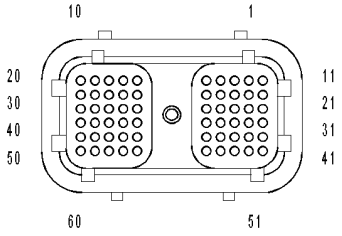

MODULE-ENGINE
CONTROL C1

81407eee

P0243-WASTEGATE PRESSURE CONTROL PWM (CONTINUED)

For the Engine circuit diagram (Refer to 8 - ELECTRICAL/ELECTRONIC CONTROL MODULES/ENGINE CONTROL MODULE - SCHEMATIC - ELECTRICAL)

For a complete wiring diagram **Refer to Section 8W**.

- **When Monitored:**
  When the ignition is on.
- **Set Condition:**
  The ECM detects an open or short circuit in the Wastegate solenoid circuit.

Possible Causes
DAMAGED WIRING HARNESS OR CONNECTORS
WASTEGATE SOLENOID
(F504) FUSED IGNITION SWITCH OUTPUT OPEN
(K139) WASTEGATE SOLENOID DRIVER CIRCUIT OPEN
(K139) WASTEGATE SOLENOID CIRCUIT SHORTED TO GROUND
(K139) WASTEGATE SOLENOID DRIVER SHORTED TO VOLTAGE
(K139) WASTEGATE SOLENOID DRIVER CIRCUIT SHORTED TO ANOTHER CIRCUIT
ECM
INTERMITTENT CONDITION

Always perform the Pre-Diagnostic Troubleshooting procedure before proceeding. (Refer to 9 - ENGINE - DIAGNOSIS AND TESTING)

Diagnostic Test

1. Damaged wiring harness or connectors

Turn Ignition off.

Disconnect the ECM harness connectors.

Disconnect the Wastegate Solenoid harness connector.

NOTE: Check connectors - Clean/repair as necessary.

Are any wires or pins damaged?

Yes >> Repair or replace any damaged wire or connectors.
Perform POWERTRAIN VERIFICATION TEST VER - 1 (DIESEL). (Refer to 8 - ELECTRICAL/ELECTRONIC CONTROL MODULES/ENGINE CONTROL MODULE - DIAGNOSIS AND TESTING)

No >> Go To 2

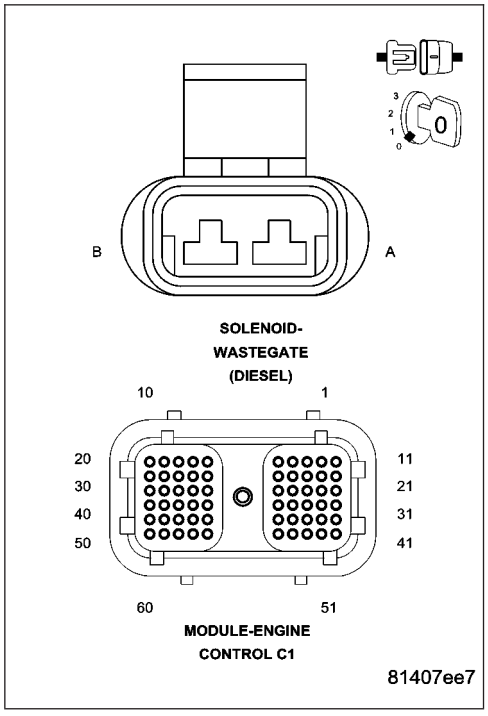

P0243-WASTEGATE PRESSURE CONTROL PWM (CONTINUED)

2. WASTEGATE SOLENOID

Reconnect the ECM harness connector.

Reconnect the disconnected Wastegate Solenoid harness connector.

Turn the Ignition on, engine not running.

Disconnect the Wastegate Solenoid harness connector.

Connect an incandescent test light across the supply and driver pins at the Wastegate Solenoid harness connector.

NOTE: The ECM will perform a self check of the circuit after approximately 30 seconds, which should light the incandescent test light.

Does the light illuminate brightly after 30 seconds of being connected?

Yes >> Replace the Wastegate Solenoid.
Perform POWERTRAIN VERIFICATION TEST VER - 1 (DIESEL). (Refer to 8 - ELECTRICAL/ELECTRONIC CONTROL MODULES/ENGINE CONTROL MODULE - DIAGNOSIS AND TESTING)

No >> Go To 3

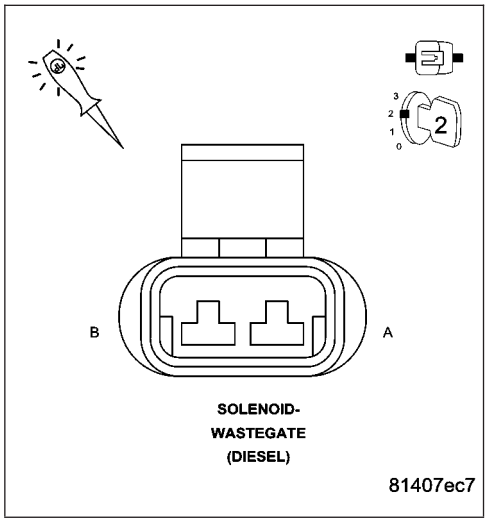

3. (F504) FUSED IGNITION SWITCH OUTPUT OPEN

Connect an test light between the Wastegate Solenoid connector Fused ignition switch output circuit and battery negative.

Compare the test light brightness to that of a direct connection to the battery.

Does the light illuminate brightly?

Yes >> Go To 4

No >> Repair the open (F504) Fused Ignition switch output circuit.
Perform POWERTRAIN VERIFICATION TEST VER - 1 (DIESEL). (Refer to 8 - ELECTRICAL/ELECTRONIC CONTROL MODULES/ENGINE CONTROL MODULE - DIAGNOSIS AND TESTING)

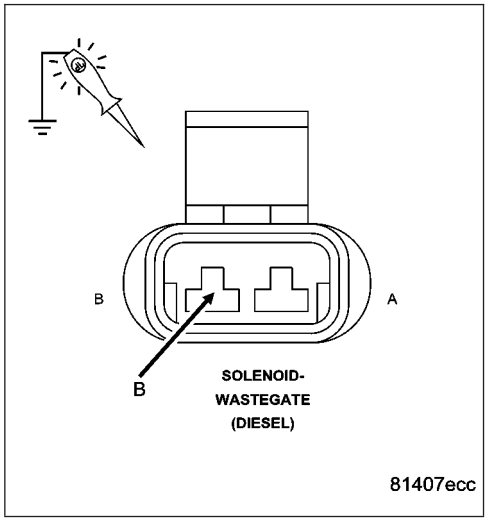

P0243-WASTEGATE PRESSURE CONTROL PWM (CONTINUED)

4. (K139) WASTEGATE SOLENOID DRIVER CIRCUIT OPEN

Disconnect the ECM harness connectors.

Measure the resistance of the Wastegate Solenoid driver circuit between the Wastegate Solenoid harness connector and the ECM harness connector.

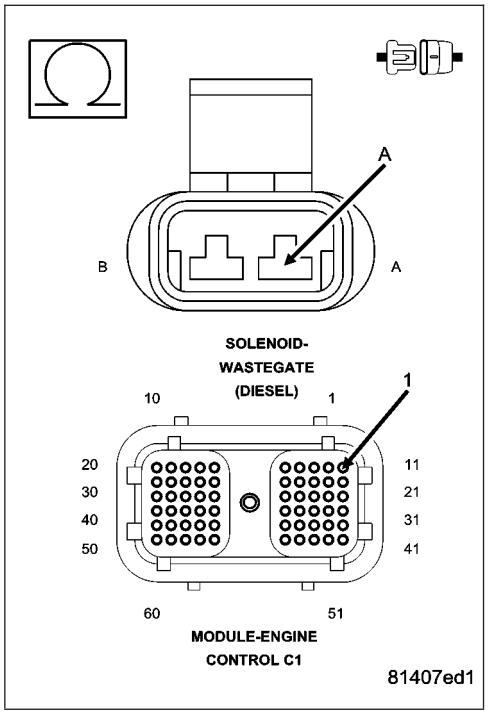

Is the resistance less than 10 Ohms?

Yes >> Go To 5

No >> Repair the open (K139) Wastegate Solenoid control circuit.
Perform POWERTRAIN VERIFICATION TEST VER - 1 (DIESEL). (Refer to 8 - ELECTRICAL/ELECTRONIC CONTROL MODULES/ENGINE CONTROL MODULE - DIAGNOSIS AND TESTING)

5. (K139) WASTEGATE SOLENOID CIRCUIT SHORTED TO GROUND

Measure the resistance of the (K139) Wastegate Solenoid driver circuit between the Wastegate Solenoid harness connector and battery negative.

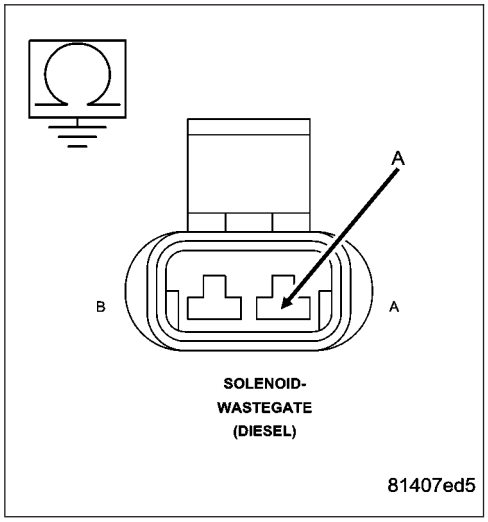

Is the resistance less than 10 Ohms?

Yes >> Repair the (K139) Wastegate solenoid circuit shorted to ground.
Perform POWERTRAIN VERIFICATION TEST VER - 1 (DIESEL). (Refer to 8 - ELECTRICAL/ELECTRONIC CONTROL MODULES/ENGINE CONTROL MODULE - DIAGNOSIS AND TESTING)

No >> Go To 6

P0243-WASTEGATE PRESSURE CONTROL PWM (CONTINUED)

6. (K139) WASTEGATE SOLENOID DRIVER SHORTED TO VOLTAGE

Measure the voltage between the (K139) Wastegate Solenoid driver circuit at the Wastegate Solenoid connector and battery negative.

Is the voltage less than 1 volt?

Yes >> Go To 7

No >> Repair the (K139) Wastegate solenoid driver shorted to voltage.

Perform POWERTRAIN VERIFICATION TEST VER - 1 (DIESEL). (Refer to 8 - ELECTRICAL/ELECTRONIC CONTROL MODULES/ENGINE CONTROL MODULE - DIAGNOSIS AND TESTING)

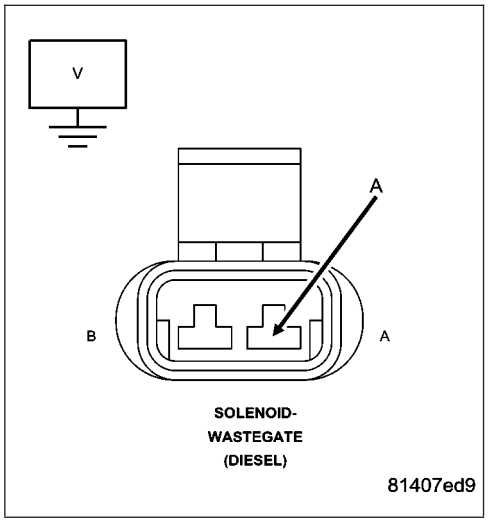

7. (K139) WASTEGATE SOLENOID DRIVER CIRCUIT SHORTED TO ANOTHER CIRCUIT

Measure the resistance between the (K139) Wastegate Solenoid driver circuit in the ECM harness connector and all other circuits in the ECM harness connectors.

Is the resistance less than 10 Ohms?

Yes >> Repair the (K139) Wastegate solenoid circuit shorted to another circuit.

Perform POWERTRAIN VERIFICATION TEST VER - 1 (DIESEL).

No >> Go To 8

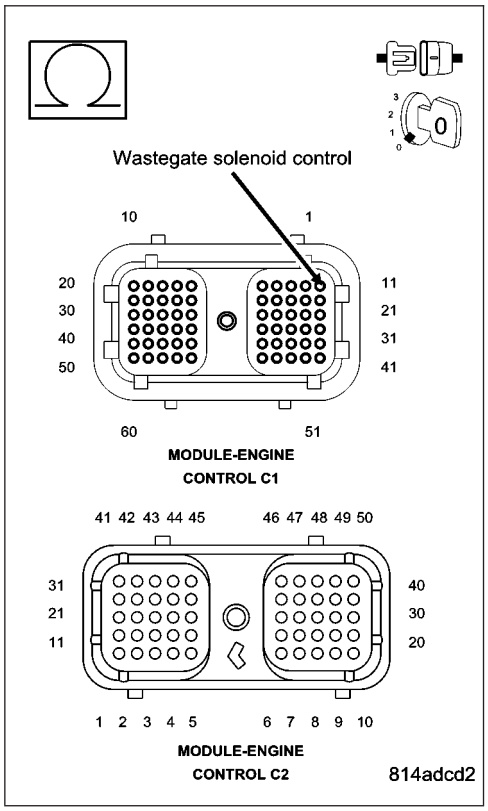

P0243-WASTEGATE PRESSURE CONTROL PWM (CONTINUED)

8. WASTEGATE SOLENOID

Reconnect the ECM harness connector.

Reconnect the disconnected Wastegate Solenoid harness connector.

Turn the Ignition on, engine not running.

Disconnect the Wastegate Solenoid harness connector.

Connect an incandescent test light across the supply and driver pins at the Wastegate Solenoid harness connector.

NOTE: The ECM will perform a self check of the circuit after approximately 30 seconds, which should light the incandescent test light.

Does the light illuminate brightly after 30 seconds of being connected?

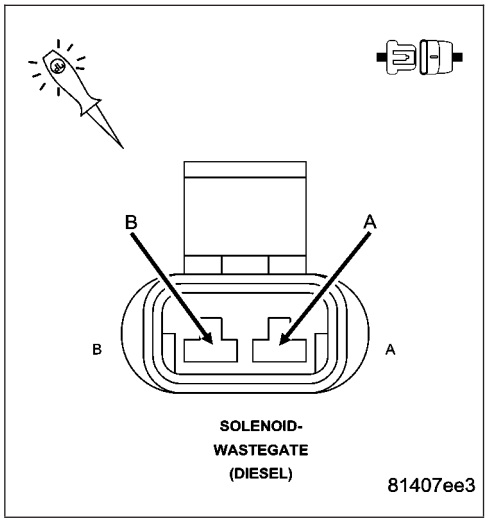

Yes >> Refer to the INTERMITTENT CONDITION Symptom (Diagnostic Procedure). (Refer to 9 - ENGINE - DIAGNOSIS AND TESTING)

No >> Replace the ECM.

Perform POWERTRAIN VERIFICATION TEST VER - 1 (DIESEL). (Refer to 8 - ELECTRICAL/ELECTRONIC CONTROL MODULES/ENGINE CONTROL MODULE - DIAGNOSIS AND TESTING)

P0251-CP3 PUMP REGULATOR CONTROL

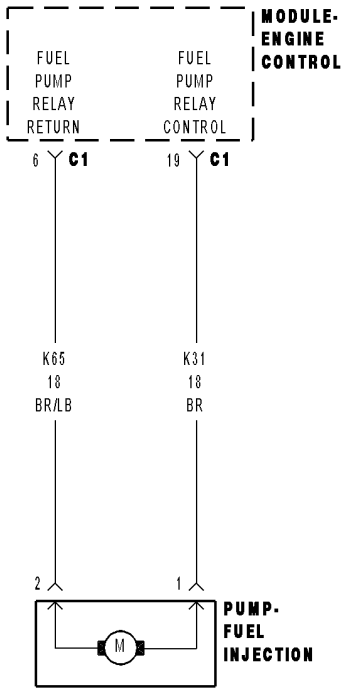

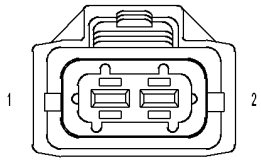

PUMP-
FUEL INJECTION
(DIESEL)

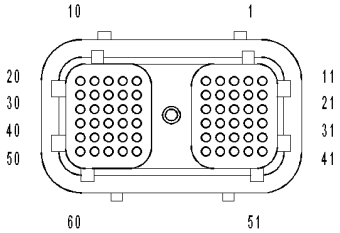

MODULE-ENGINE
CONTROL C1

8140929e

P0251-CP3 PUMP REGULATOR CONTROL (CONTINUED)

For the Engine circuit diagram (Refer to 8 - ELECTRICAL/ELECTRONIC CONTROL MODULES/ENGINE CONTROL MODULE - SCHEMATIC - ELECTRICAL)

For a complete wiring diagram **Refer to Section 8W**.

- **When Monitored:**
  When the ignition is on.
- **Set Condition:**
  The ECM detects a discrepancy between the PWM supplied to the Electronic Fuel Control Actuator and the PWM returned from the Electronic Fuel Control Actuator.

Possible Causes
FUEL PUMP
(K181) FUEL CONTROL ACTUATOR DRIVER OPEN
(K31) RETURN CIRCUIT OPEN FROM FCA TO ECM
(K181) FUEL CONTROL ACTUATOR DRIVER CIRCUIT SHORTED TO EXTERNAL VOLTAGE
(K31) FUEL CONTROL ACTUATOR RETURN CIRCUIT SHORTED TO EXTERNAL VOLTAGE
(K31) FCA RETURN CIRCUIT SHORTED TO (K181) FCA DRIVER CIRCUIT
(K181) FUEL CONTROL ACTUATOR DRIVER CIRCUIT SHORTED TO GROUND
(K181) FUEL CONTROL ACTUATOR DRIVER CIRCUIT SHORTED TO ANOTHER CIRCUIT
(K31) FUEL CONTROL ACTUATOR RETURN CIRCUIT SHORTED TO ANOTHER CIRCUIT
INTERMITTENT CONDITION
ECM

Always perform the Pre-Diagnostic Troubleshooting procedure before proceeding. (Refer to 9 - ENGINE - DIAGNOSIS AND TESTING)

Diagnostic Test

1. FUEL PUMP

Ignition on, engine not running.

Disconnect the Fuel Control Actuator (FCA) harness connector.

Connect an incandescent test light across the Fuel Control Actuator driver circuit and the Fuel Control Actuator return circuit at the fuel control actuator harness connector.

Observe the test light.

The ECM will perform a self test of the circuit which should momentarily flash the test light brightly, one time, approximately 20 seconds after being connected.

NOTE: Check connectors - Clean/repair as necessary.

NOTE: Compare test light brightness to that of a direct connection to the battery.

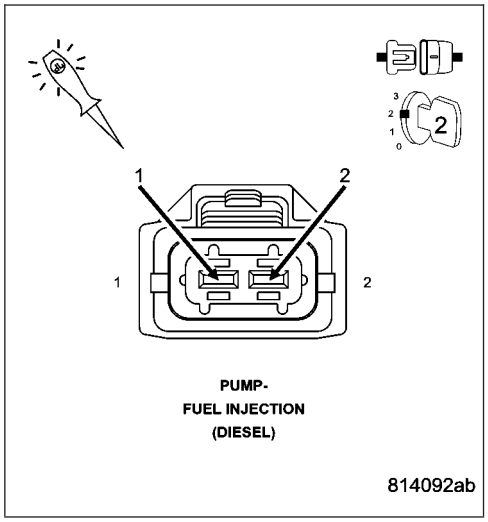

Did the light flash brightly?

Yes >> Replace the Fuel Pump.
Perform POWERTRAIN VERIFICATION TEST VER - 1 (DIESEL). (Refer to 8 - ELECTRICAL/ELECTRONIC CONTROL MODULES/ENGINE CONTROL MODULE - DIAGNOSIS AND TESTING)

No >> Go To 2

P0251-CP3 PUMP REGULATOR CONTROL (CONTINUED)

2. (K181) FUEL CONTROL ACTUATOR DRIVER OPEN

Turn the ignition off.

Disconnect the ECM harness connectors.

NOTE: Check connectors - Clean/repair as necessary.

Measure the resistance of the FCA driver circuit between the electronic fuel control actuator harness connector and the ECM harness connector.

Is the resistance less than 10 Ohms?

Yes >> Go To 3

No >> Repair the (K181) Fuel Control Actuator Driver circuit OPEN.

Perform POWERTRAIN VERIFICATION TEST VER - 1 (DIESEL). (Refer to 8 - ELECTRICAL/ELECTRONIC CONTROL MODULES/ENGINE CONTROL MODULE - DIAGNOSIS AND TESTING)

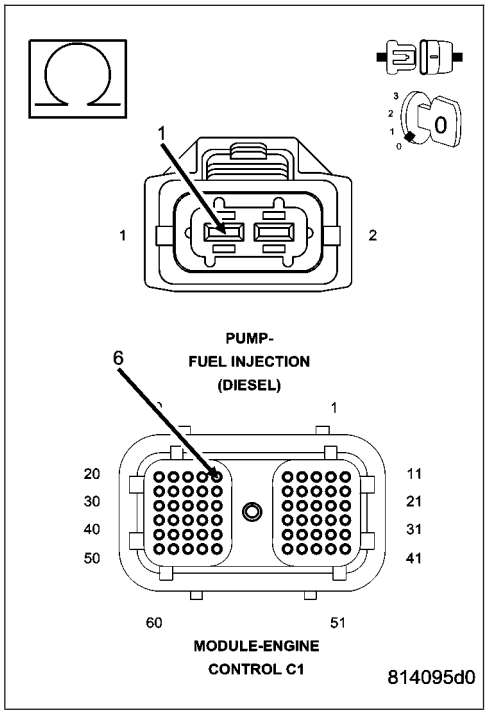

3. (K31) RETURN CIRCUIT OPEN

Measure the resistance of the (K31) return circuit between the FCA harness connector and the ECM harness connector.

Is the resistance less than 10 Ohms?

Yes >> Go To 4

No >> Repair or replace the engine wiring harness.

Perform POWERTRAIN VERIFICATION TEST VER - 1 (DIESEL). (Refer to 8 - ELECTRICAL/ELECTRONIC CONTROL MODULES/ENGINE CONTROL MODULE - DIAGNOSIS AND TESTING)

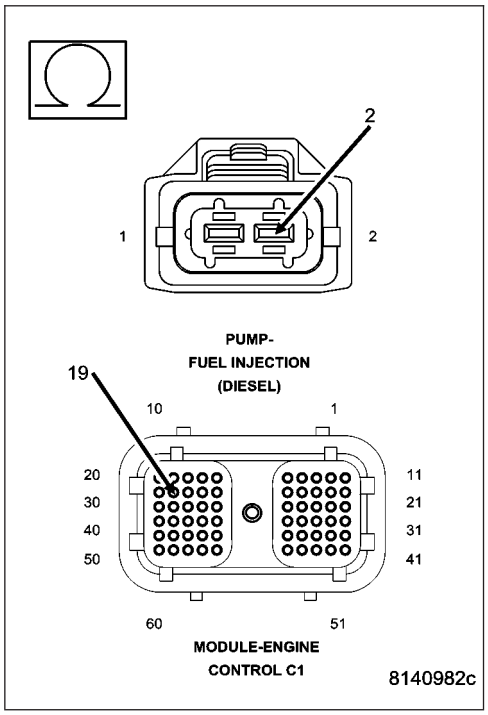

P0251-CP3 PUMP REGULATOR CONTROL (CONTINUED)

4. (K181) FUEL CONTROL ACTUATOR DRIVER CIRCUIT SHORTED TO EXTERNAL VOLTAGE

Measure the voltage between the (K181) FCA driver circuit in the FCA harness connector and battery negative.

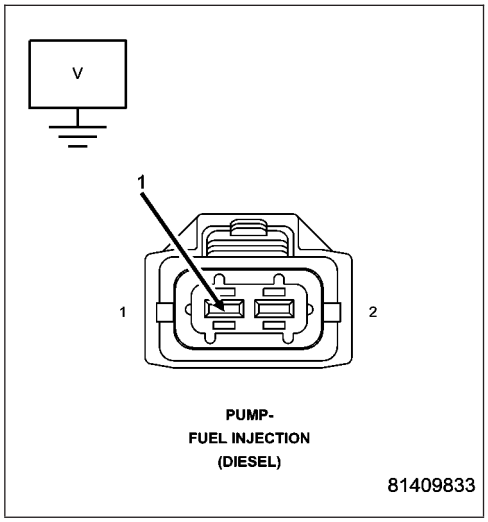

Is the voltage greater than 1 volts?

Yes >> Repair the (K181) FCA driver circuit shorted to external voltage.

No >> Go To 5

5. (K31) FUEL CONTROL ACTUATOR RETURN CIRCUIT SHORTED TO EXTERNAL VOLTAGE

Measure the voltage between the (K31) FCA return circuit in the FCA harness connector and battery negative.

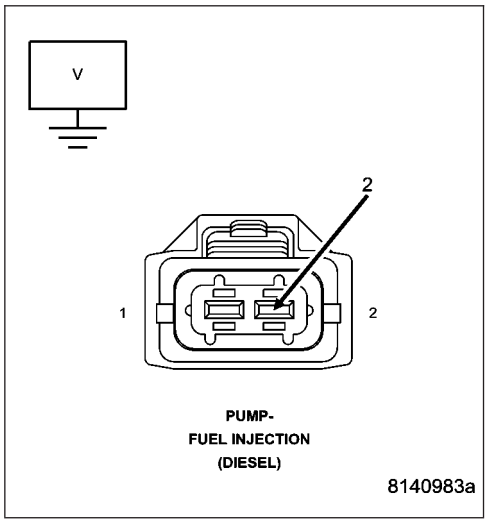

Is the voltage greater than 1 volts?

Yes >> Repair the (K31) FCA return circuit shorted to external voltage.

Perform POWERTRAIN VERIFICATION TEST VER - 1 (DIESEL). (Refer to 8 - ELECTRICAL/ELECTRONIC CONTROL MODULES/ENGINE CONTROL MODULE - DIAGNOSIS AND TESTING)

No >> Go To 6

P0251-CP3 PUMP REGULATOR CONTROL (CONTINUED)

6. (K31) FCA RETURN CIRCUIT SHORTED TO (K181) FCA DRIVER CIRCUIT

Measure the Resistance between the return circuit in the FCA harness connector and Driver circuit.

Is the resistance less than 10 Ohms?

Yes >> Repair the (K31) FCA Return circuit shorted to (K181) FCA Driver circuit.
Perform POWERTRAIN VERIFICATION TEST VER - 1 (DIESEL). (Refer to 8 - ELECTRICAL/ELECTRONIC CONTROL MODULES/ENGINE CONTROL MODULE - DIAGNOSIS AND TESTING)

No >> Go To 7

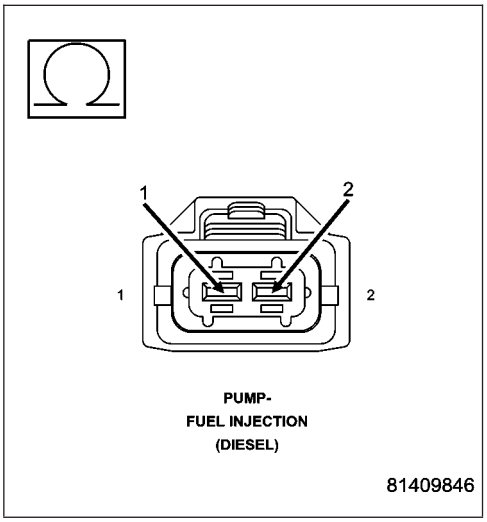

7. (K181) FUEL CONTROL ACTUATOR DRIVER CIRCUIT SHORTED TO GROUND

Measure the resistance between the (K181) FCA driver circuit in the FCA harness connector and battery negative.

Is the resistance less than 10 Ohms?

Yes >> Repair the (K181) FCA driver circuit shorted to ground.
Perform POWERTRAIN VERIFICATION TEST VER - 1 (DIESEL). (Refer to 8 - ELECTRICAL/ELECTRONIC CONTROL MODULES/ENGINE CONTROL MODULE - DIAGNOSIS AND TESTING)

No >> Go To 8

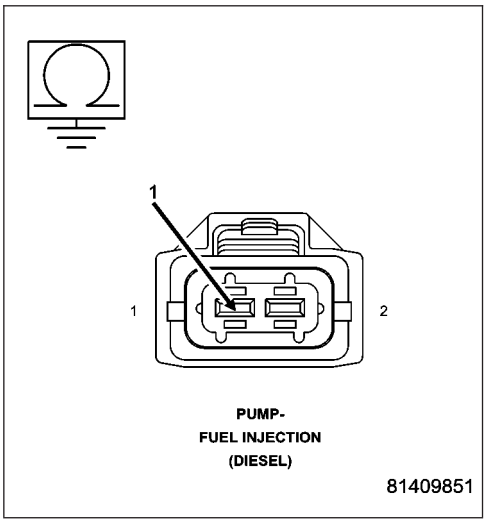

P0251-CP3 PUMP REGULATOR CONTROL (CONTINUED)

8. (K181) FUEL CONTROL ACTUATOR DRIVER CIRCUIT SHORTED TO ANOTHER CIRCUIT

Measure the resistance between the (K181) FCA driver circuit in the ECM harness connector and all other circuits in the ECM connectors.

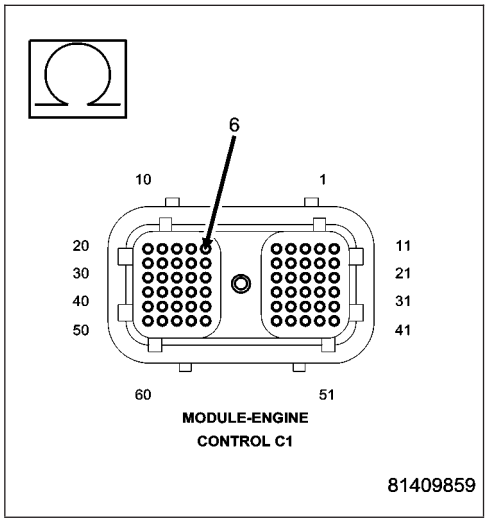

Is the resistance less than 10 Ohms?

No >> Go To 9

Yes >> Repair the (K181) FCA driver circuit shorted to another circuit.

Perform POWERTRAIN VERIFICATION TEST VER - 1 (DIESEL). (Refer to 8 - ELECTRICAL/ELECTRONIC CONTROL MODULES/ENGINE CONTROL MODULE - DIAGNOSIS AND TESTING)

9. (K31) FUEL CONTROL ACTUATOR RETURN CIRCUIT SHORTED TO ANOTHER CIRCUIT

Measure the resistance between the (K31) FCA Return circuit in the ECM harness connector and all other circuits in the ECM connectors.′

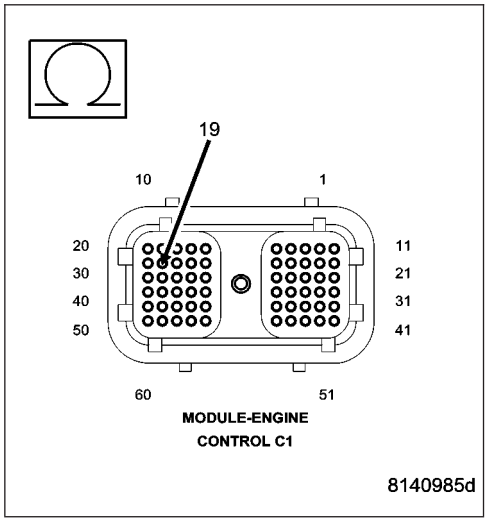

Is the resistance less than 10 Ohms?

No >> Go To 10

Yes >> Repair the (K31) FCA Return circuit shorted to another circuit.

Perform POWERTRAIN VERIFICATION TEST VER - 1 (DIESEL). (Refer to 8 - ELECTRICAL/ELECTRONIC CONTROL MODULES/ENGINE CONTROL MODULE - DIAGNOSIS AND TESTING)

P0251-CP3 PUMP REGULATOR CONTROL (CONTINUED)

10. ECM

Reconnect the ECM harness connectors.

Ignition on, engine not running.

Disconnect the Electronic Fuel Control Actuator connector.

Connect an incandescent test light across the Fuel Control Actuator driver pin and the Fuel Control Actuator return wire at the fuel control actuator connector.

Observe the test light.

The ECM will perform a self test of the circuit which should momentarily flash the test light brightly, one time, approximately 20 seconds after being connected.

NOTE: Compare test light brightness to that of a direct connection to the battery.

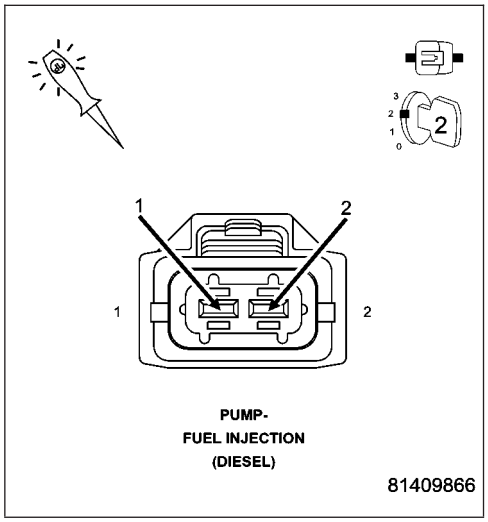

Did the light flash brightly?

Yes >> Refer to the INTERMITTENT CONDITION Symptom (Diagnostic Procedure). (Refer to 9 - ENGINE - DIAGNOSIS AND TESTING)

No >> Replace the ECM.

Perform POWERTRAIN VERIFICATION TEST VER - 1 (DIESEL). (Refer to 8 - ELECTRICAL/ELECTRONIC CONTROL MODULES/ENGINE CONTROL MODULE - DIAGNOSIS AND TESTING)

P0299-BOOST IN RANGE LOW

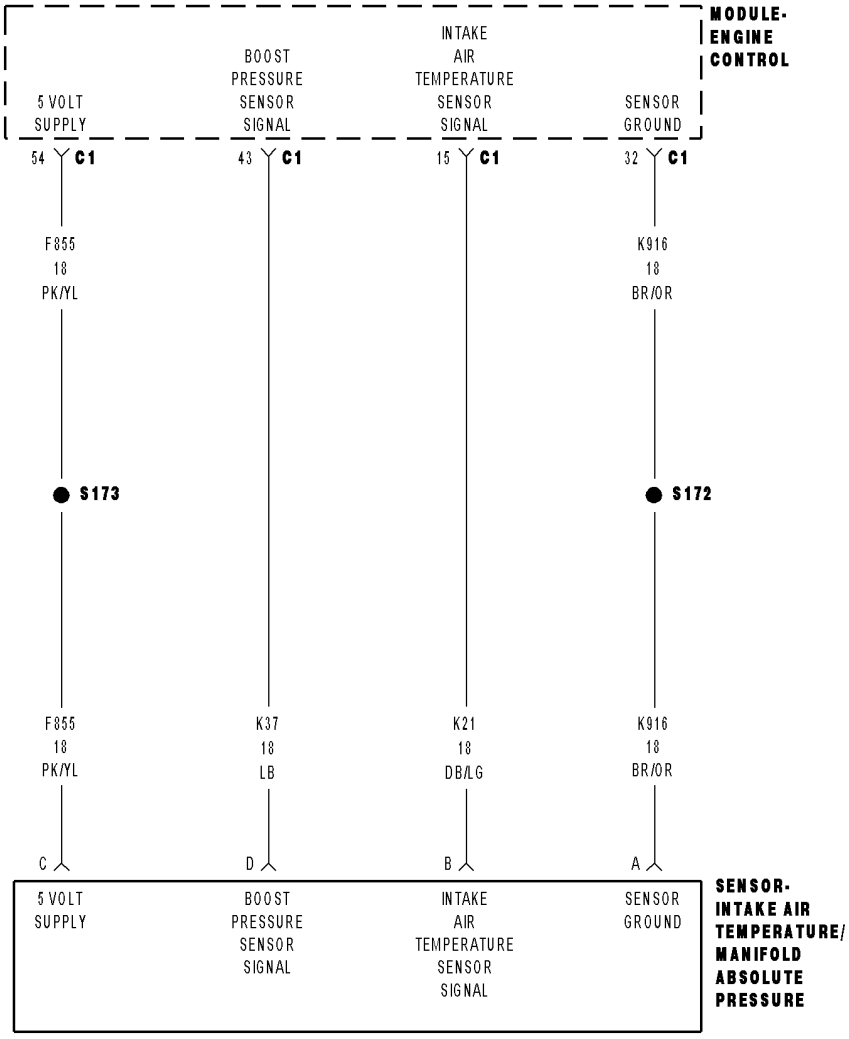

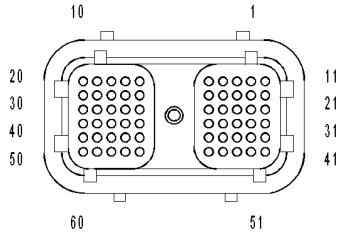

MODULE-ENGINE
CONTROL C1

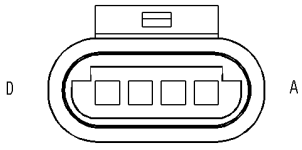

SENSOR-
INTAKE AIR
TEMPERATURE/
MANIFOLD
ABSOLUTE
PRESSURE
(DIESEL)

813dc004

P0299-BOOST IN RANGE LOW (CONTINUED)

For the Engine circuit diagram (Refer to 8 - ELECTRICAL/ELECTRONIC CONTROL MODULES/ENGINE CONTROL MODULE - SCHEMATIC - ELECTRICAL)

For a complete wiring diagram **Refer to Section 8W**.

- **When Monitored:**
  While engine is running.
- **Set Condition:**
  The boost pressure is lower than the expected boost pressure based on engine operating conditions.

Possible Causes
OTHER DTC'S
INTAKE AIR SYSTEM RESTRICTION
TURBO CHARGER DAMAGED
INTAKE AIR SYSTEM LEAK
BOOST PRESSURE SENSOR
BOOST PRESSURE SENSOR
TURBOCHARGER
INTERMITTENT CONDITION

Always perform the Pre-Diagnostic Troubleshooting procedure before proceeding. (Refer to 9 - ENGINE - DIAGNOSIS AND TESTING)

Diagnostic Test

1. OTHER DTC'S

Turn the ignition on.
With the scan tool, read the Engine DTC's.

Do you have other DTC's?

Yes >> Repair other boost related DTC's first.
Perform POWERTRAIN VERIFICATION TEST VER - 1 (DIESEL). (Refer to 8 - ELECTRICAL/ELECTRONIC CONTROL MODULES/ENGINE CONTROL MODULE - DIAGNOSIS AND TESTING)

No >> Go To 2

---

2. INTAKE AIR SYSTEM RESTRICTION

Inspect the air filter and intake air system for signs of restriction.

Were any restrictions found?

Yes >> Replace the Air Filter or repair the Intake air system for restriction.
Perform POWERTRAIN VERIFICATION TEST VER - 1 (DIESEL). (Refer to 8 - ELECTRICAL/ELECTRONIC CONTROL MODULES/ENGINE CONTROL MODULE - DIAGNOSIS AND TESTING)

No >> Go To 3

P0299-BOOST IN RANGE LOW (CONTINUED)

3. TURBO CHARGER DAMAGED

Disconnect the air cleaner connection to the turbo charger.

Using the service manual as a guide, visually inspect the turbo charger blades and turbo housing for signs of damage.

Was any damaged found?

Yes >> Replace The Turbo charger.
Perform POWERTRAIN VERIFICATION TEST VER - 1 (DIESEL). (Refer to 8 - ELECTRICAL/ELECTRONIC CONTROL MODULES/ENGINE CONTROL MODULE - DIAGNOSIS AND TESTING)

No >> Go To 4

---

4. INTAKE AIR SYSTEM LEAK

Using Miller Special tool # 9022, pressurize the intake air system and inspect for leakage.

Use the service manual as a guide.

Were any leaks detected?

Yes >> Repair leaking intake air system.
Perform POWERTRAIN VERIFICATION TEST VER - 1 (DIESEL). (Refer to 8 - ELECTRICAL/ELECTRONIC CONTROL MODULES/ENGINE CONTROL MODULE - DIAGNOSIS AND TESTING)

No >> Go To 5

---

5. BOOST PRESSURE SENSOR

Using the scan tool, compare the boost pressure sensor reading with the ambient air pressure sensor with the ignition turned on.

Are the boost pressure and ambient air pressure sensors within 6 in hg of each other?

Yes >> Go To 6

No >> Replace the Boost pressure sensor.
Perform POWERTRAIN VERIFICATION TEST VER - 1 (DIESEL). (Refer to 8 - ELECTRICAL/ELECTRONIC CONTROL MODULES/ENGINE CONTROL MODULE - DIAGNOSIS AND TESTING)

---

6. BOOST PRESSURE SENSOR

Turn the ignition off.

Install Miller special tool #9022.

Ignition on, engine not running.

Use the scan tool and compare boost pressure reading to the regulated air pressure for tool #9022.

NOTE: The reading on the boost pressure sensor may be slightly lower than the regulated pressure.
Does the boost pressure sensor reading increase with the regulated air pressure?

Does the boost pressure sensor reading increase with the regulated air pressure?

Yes >> Go To 7

No >> Replace the Boost Pressure sensor.
Perform POWERTRAIN VERIFICATION TEST VER - 1 (DIESEL). (Refer to 8 - ELECTRICAL/ELECTRONIC CONTROL MODULES/ENGINE CONTROL MODULE - DIAGNOSIS AND TESTING)

P0299-BOOST IN RANGE LOW (CONTINUED)

7. TURBOCHARGER

Disconnect the exhaust outlet connection.

Visually inspect the Wastegate flap in the turbocharger turbine housing

Is the Wastegate seized in the open position?

Yes >> Replace the Turbocharger.
Perform POWERTRAIN VERIFICATION TEST VER - 1 (DIESEL). (Refer to 8 - ELECTRICAL/ELECTRONIC CONTROL MODULES/ENGINE CONTROL MODULE - DIAGNOSIS AND TESTING)

No >> Test Complete.

P0300-MULTIPLE CYLINDER MISFIRE

For the Engine circuit diagram (Refer to 8 - ELECTRICAL/ELECTRONIC CONTROL MODULES/ENGINE CONTROL MODULE - SCHEMATIC - ELECTRICAL)

For a complete wiring diagram **Refer to Section 8W**.

- **When Monitored:**
  While the engine is idling.
- **Set Condition:**
  Misfire detected on multiple cylinders.

Possible Causes
LOW FUEL
OTHER DTC'S
DAMAGED FUEL LINES
VALVE TRAIN
OBSTRUCTED FUEL INJECTOR SUPPLY LINES
DAMAGED OR OBSTRUCTED HIGH PRESSURE CONNECTORS
EXTERNAL DAMAGED FUEL INJECTORS
INTERNAL DAMAGED FUEL INJECTOR
NO COMPRESSION
EXCESSIVE ENGINE LEAK DOWN

Always perform the Pre-Diagnostic Troubleshooting procedure before proceeding. (Refer to 9 - ENGINE - DIAGNOSIS AND TESTING)

Diagnostic Test

1. LOW FUEL

Using the scan tool, verify that the fuel level is above 15%.

Is the fuel level above 15%?

Yes >> Go To 2

No >> Add fuel go to step 2.
Perform POWERTRAIN VERIFICATION TEST VER - 1 (DIESEL). (Refer to 8 - ELECTRICAL/ELECTRONIC CONTROL MODULES/ENGINE CONTROL MODULE - DIAGNOSIS AND TESTING)

---

2. OTHER DTC'S

Read the Freeze frame data.

Is the DTC equal to the freeze frame DTC?

Yes >> Go To 3

No >> Repair any other DTC's first.
Perform POWERTRAIN VERIFICATION TEST VER - 1 (DIESEL). (Refer to 8 - ELECTRICAL/ELECTRONIC CONTROL MODULES/ENGINE CONTROL MODULE - DIAGNOSIS AND TESTING)

P0300-MULTIPLE CYLINDER MISFIRE (CONTINUED)

3. DAMAGED FUEL LINES

Visually inspect the injector supply lines for damage.

Do you have any kinked or bent fuel lines?

Yes >> Repair or replace damaged fuel lines.
Perform POWERTRAIN VERIFICATION TEST VER - 1 (DIESEL). (Refer to 8 - ELECTRICAL/ELECTRONIC CONTROL MODULES/ENGINE CONTROL MODULE - DIAGNOSIS AND TESTING)

No >> Go To 4

---

4. VALVE TRAIN

Visually inspect the valve train and check the valve lash on the suspect cylinders.

Is the valve train functional and the lash within the specifications listed in the service manual?

Yes >> Go To 5

No >> Adjust the lash or fix or repair any damaged component(s).
Perform POWERTRAIN VERIFICATION TEST VER - 1 (DIESEL). (Refer to 8 - ELECTRICAL/ELECTRONIC CONTROL MODULES/ENGINE CONTROL MODULE - DIAGNOSIS AND TESTING)

---

5. OBSTRUCTED FUEL INJECTOR SUPPLY

Remove the fuel injector supply lines for the suspect cylinders.
Inspect both ends of the fuel injector supply lines for damage.
Using shop air pressure, blow out the fuel injector supply lines to verify that they are not obstructed.

Are the fuel lines free of debris or damage?

Yes >> Go To 6

No >> Replace the damaged or obstructed fuel injector supply lines.
Perform POWERTRAIN VERIFICATION TEST VER - 1 (DIESEL). (Refer to 8 - ELECTRICAL/ELECTRONIC CONTROL MODULES/ENGINE CONTROL MODULE - DIAGNOSIS AND TESTING)

---

6. DAMAGED OR OBSTRUCTED HIGH PRESSURE CONNECTORS

Remove the high pressure connectors for the suspect cylinders.
Inspect both ends of the high pressure connectors for signs of damage.
Using shop air pressure, blow out the high pressure connectors to verify that they are not obstructed.

Are the high pressure connectors free of debris or damage?

Yes >> Go To 7

No >> Replace the damaged or obstructed high pressure connectors.
Perform POWERTRAIN VERIFICATION TEST VER - 1 (DIESEL). (Refer to 8 - ELECTRICAL/ELECTRONIC CONTROL MODULES/ENGINE CONTROL MODULE - DIAGNOSIS AND TESTING)

P0300-MULTIPLE CYLINDER MISFIRE (CONTINUED)

7. FUEL INJECTORS

Remove the suspect fuel injectors.

Are the fuel injectors damaged?

Yes >> Replace the external damaged fuel injectors & high pressure connectors.
Perform POWERTRAIN VERIFICATION TEST VER - 1 (DIESEL). (Refer to 8 - ELECTRICAL/ELECTRONIC CONTROL MODULES/ENGINE CONTROL MODULE - DIAGNOSIS AND TESTING)

No >> Go To 8

---

8. INTERNAL DAMAGED FUEL INJECTOR

With the scan tool, erase DTCs.

Switch the misfiring injectors & high pressure connectors with injectors & high pressure connectors from cylinders that are firing properly.

Operate the vehicle.

Did the misfire DTC follow the suspect injectors & high pressure connectors?

Yes >> Replace the internal damaged fuel injector and high pressure connector.
Perform POWERTRAIN VERIFICATION TEST VER - 1 (DIESEL). (Refer to 8 - ELECTRICAL/ELECTRONIC CONTROL MODULES/ENGINE CONTROL MODULE - DIAGNOSIS AND TESTING)

No >> Go To 9

---

9. INTERNAL ENGINE DAMAGE

Perform engine compression test

Did the suspect cylinders pass the compression test?

Yes >> Go To 10

No >> Repair the internal damage to the engine.
Perform POWERTRAIN VERIFICATION TEST VER - 1 (DIESEL). (Refer to 8 - ELECTRICAL/ELECTRONIC CONTROL MODULES/ENGINE CONTROL MODULE - DIAGNOSIS AND TESTING)

---

10. INTERNAL ENGINE DAMAGE

Perform engine leak down test

Did the suspect cylinders pass the leak down test?

Yes >> Test Complete.

No >> Repair the internal damage to the engine.
Perform POWERTRAIN VERIFICATION TEST VER - 1 (DIESEL). (Refer to 8 - ELECTRICAL/ELECTRONIC CONTROL MODULES/ENGINE CONTROL MODULE - DIAGNOSIS AND TESTING)

P0301-CYLINDER # 1 MISFIRE

For the Engine circuit diagram (Refer to 8 - ELECTRICAL/ELECTRONIC CONTROL MODULES/ENGINE CONTROL MODULE - SCHEMATIC - ELECTRICAL)

For a complete wiring diagram **Refer to Section 8W**.

- **When Monitored:**
  While the engine is idling at operating temperature.
- **Set Condition:**
  Misfire detected on this cylinder.

Possible Causes
LOW FUEL
OTHER DTC'S
DAMAGED FUEL LINE
VALVE TRAIN
OBSTRUCTED FUEL INJECTOR SUPPLY LINE
DAMAGED OR OBSTRUCTED HIGH PRESSURE CONNECTOR
EXTERNAL DAMAGED FUEL INJECTOR
INTERNAL DAMAGED FUEL INJECTOR
NO COMPRESSION
EXCESSIVE ENGINE LEAK DOWN

Always perform the Pre-Diagnostic Troubleshooting procedure before proceeding. (Refer to 9 - ENGINE - DIAGNOSIS AND TESTING)

Diagnostic Test

1. LOW FUEL

Using the scan tool, verify that the fuel level is above 15%.

Is the fuel level above 15%?

Yes >> Go To 2

No >> Add fuel go to step 2.
Perform POWERTRAIN VERIFICATION TEST VER - 1 (DIESEL). (Refer to 8 - ELECTRICAL/ELECTRONIC CONTROL MODULES/ENGINE CONTROL MODULE - DIAGNOSIS AND TESTING)

---

2. OTHER DTC'S

Read the Freeze frame data.

Is the DTC equal to the freeze frame DTC?

Yes >> Go To 3

No >> Repair any other DTC's first.
Perform POWERTRAIN VERIFICATION TEST VER - 1 (DIESEL). (Refer to 8 - ELECTRICAL/ELECTRONIC CONTROL MODULES/ENGINE CONTROL MODULE - DIAGNOSIS AND TESTING)

P0301-CYLINDER # 1 MISFIRE (CONTINUED)

3. DAMAGED FUEL LINE

Visually inspect the injector supply line for damage.

Do you have any kinked or bent fuel lines?

Yes >> Repair or replace the damaged fuel line.
Perform POWERTRAIN VERIFICATION TEST VER - 1 (DIESEL). (Refer to 8 - ELECTRICAL/ELECTRONIC CONTROL MODULES/ENGINE CONTROL MODULE - DIAGNOSIS AND TESTING)

No >> Go To 4

---

4. VALVE TRAIN

Visually inspect the valve train and check the valve lash on the suspect cylinder.

Is the valve train functional and the lash within the specifications listed in the service manual?

Yes >> Go To 5

No >> Adjust the lash or fix or repair any damaged component(s).
Perform POWERTRAIN VERIFICATION TEST VER - 1 (DIESEL). (Refer to 8 - ELECTRICAL/ELECTRONIC CONTROL MODULES/ENGINE CONTROL MODULE - DIAGNOSIS AND TESTING)

---

5. OBSTRUCTED FUEL INJECTOR SUPPLY

Remove the fuel injector supply line for the suspect cylinder.
Inspect both ends of the fuel injector supply line for damage.
Using shop air pressure, blow out the fuel injector supply line to verify that they are not obstructed.

Are the fuel lines free of debris or damage?

Yes >> Go To 6

No >> Replace the damaged or obstructed fuel injector supply line.
Perform POWERTRAIN VERIFICATION TEST VER - 1 (DIESEL). (Refer to 8 - ELECTRICAL/ELECTRONIC CONTROL MODULES/ENGINE CONTROL MODULE - DIAGNOSIS AND TESTING)

---

6. DAMAGED OR OBSTRUCTED HIGH PRESSURE CONNECTOR

Remove the high pressure connector for the suspect cylinder.
Inspect both ends of the high pressure connector for signs of damage.
Using shop air pressure, blow out the high pressure connector to verify that it is not obstructed.

Are the high pressure connectors free of debris or damage?

Yes >> Go To 7

No >> Replace the damaged or obstructed high pressure connector.
Perform POWERTRAIN VERIFICATION TEST VER - 1 (DIESEL). (Refer to 8 - ELECTRICAL/ELECTRONIC CONTROL MODULES/ENGINE CONTROL MODULE - DIAGNOSIS AND TESTING)

P0301-CYLINDER # 1 MISFIRE (CONTINUED)

7. FUEL INJECTOR

Remove the suspect fuel injector.

Are the fuel injectors damaged?

Yes >> Replace the external damaged fuel injector & high pressure connector.
Perform POWERTRAIN VERIFICATION TEST VER - 1 (DIESEL). (Refer to 8 - ELECTRICAL/ELECTRONIC CONTROL MODULES/ENGINE CONTROL MODULE - DIAGNOSIS AND TESTING)

No >> Go To 8

---

8. INTERNAL DAMAGED FUEL INJECTOR

With the scan tool, erase DTCs.

Switch the misfiring injector & high pressure connector with an injector & high pressure connector from a cylinder that is firing properly.

Operate the vehicle.

Did the misfire DTC follow the suspect injectors & high pressure connectors?

Yes >> Replace the internal damaged fuel injector and high pressure connector.
Perform POWERTRAIN VERIFICATION TEST VER - 1 (DIESEL). (Refer to 8 - ELECTRICAL/ELECTRONIC CONTROL MODULES/ENGINE CONTROL MODULE - DIAGNOSIS AND TESTING)

No >> Go To 9

---

9. INTERNAL ENGINE DAMAGE

Perform engine compression test

Did the suspect cylinders pass the compression test?

Yes >> Go To 10

No >> Repair the internal damage to the engine.
Perform POWERTRAIN VERIFICATION TEST VER - 1 (DIESEL). (Refer to 8 - ELECTRICAL/ELECTRONIC CONTROL MODULES/ENGINE CONTROL MODULE - DIAGNOSIS AND TESTING)

---

10. INTERNAL ENGINE DAMAGE

Perform engine leak down test

Did the suspect cylinders pass the leak down test?

Yes >> Test Complete.

No >> Repair the internal damage to the engine.
Perform POWERTRAIN VERIFICATION TEST VER - 1 (DIESEL). (Refer to 8 - ELECTRICAL/ELECTRONIC CONTROL MODULES/ENGINE CONTROL MODULE - DIAGNOSIS AND TESTING)

P0302-CYLINDER # 2 MISFIRE

For the Engine circuit diagram (Refer to 8 - ELECTRICAL/ELECTRONIC CONTROL MODULES/ENGINE CONTROL MODULE - SCHEMATIC - ELECTRICAL)

For a complete wiring diagram **Refer to Section 8W**.

- **When Monitored:**
  While the engine is idling at operating temperature.
- **Set Condition:**
  Misfire detected on this cylinder.

Possible Causes
LOW FUEL
OTHER DTC'S
DAMAGED FUEL LINE
VALVE TRAIN
OBSTRUCTED FUEL INJECTOR SUPPLY LINE
DAMAGED OR OBSTRUCTED HIGH PRESSURE CONNECTOR
EXTERNAL DAMAGED FUEL INJECTOR
INTERNAL DAMAGED FUEL INJECTOR
NO COMPRESSION
EXCESSIVE ENGINE LEAK DOWN

Always perform the Pre-Diagnostic Troubleshooting procedure before proceeding. (Refer to 9 - ENGINE - DIAGNOSIS AND TESTING)

Diagnostic Test

1. LOW FUEL

Using the scan tool, verify that the fuel level is above 15%.

Is the fuel level above 15%?

Yes >> Go To 2

No >> Add fuel go to step 2.
Perform POWERTRAIN VERIFICATION TEST VER - 1 (DIESEL). (Refer to 8 - ELECTRICAL/ELECTRONIC CONTROL MODULES/ENGINE CONTROL MODULE - DIAGNOSIS AND TESTING)

---

2. OTHER DTC'S

Read the Freeze frame data.

Is the DTC equal to the freeze frame DTC?

Yes >> Go To 3

No >> Repair any other DTC's first.
Perform POWERTRAIN VERIFICATION TEST VER - 1 (DIESEL). (Refer to 8 - ELECTRICAL/ELECTRONIC CONTROL MODULES/ENGINE CONTROL MODULE - DIAGNOSIS AND TESTING)

P0302-CYLINDER # 2 MISFIRE (CONTINUED)

3. DAMAGED FUEL LINE

Visually inspect the injector supply line for damage.

Do you have any kinked or bent fuel line?

Yes >> Repair or replace the damaged fuel line.
Perform POWERTRAIN VERIFICATION TEST VER - 1 (DIESEL). (Refer to 8 - ELECTRICAL/ELECTRONIC CONTROL MODULES/ENGINE CONTROL MODULE - DIAGNOSIS AND TESTING)

No >> Go To 4

---

4. VALVE TRAIN

Visually inspect the valve train and check the valve lash on the suspect cylinder.

Is the valve train functional and the lash within the specifications listed in the service manual?

Yes >> Go To 5

No >> Adjust the lash or fix or repair any damaged component(s).
Perform POWERTRAIN VERIFICATION TEST VER - 1 (DIESEL). (Refer to 8 - ELECTRICAL/ELECTRONIC CONTROL MODULES/ENGINE CONTROL MODULE - DIAGNOSIS AND TESTING)

---

5. OBSTRUCTED FUEL INJECTOR SUPPLY

Remove the fuel injector supply line for the suspect cylinder.
Inspect both ends of the fuel injector supply line for damage.
Using shop air pressure, blow out the fuel injector supply line to verify that they are not obstructed.

Are the fuel lines free of debris or damage?

Yes >> Go To 6

No >> Replace the damaged or obstructed fuel injector supply line.
Perform POWERTRAIN VERIFICATION TEST VER - 1 (DIESEL). (Refer to 8 - ELECTRICAL/ELECTRONIC CONTROL MODULES/ENGINE CONTROL MODULE - DIAGNOSIS AND TESTING)

---

6. DAMAGED OR OBSTRUCTED HIGH PRESSURE CONNECTOR

Remove the high pressure connector for the suspect cylinder.
Inspect both ends of the high pressure connector for signs of damage.
Using shop air pressure, blow out the high pressure connector to verify that it is not obstructed.

Are the high pressure connectors free of debris or damage?

Yes >> Go To 7

No >> Replace the damaged or obstructed high pressure connector.
Perform POWERTRAIN VERIFICATION TEST VER - 1 (DIESEL). (Refer to 8 - ELECTRICAL/ELECTRONIC CONTROL MODULES/ENGINE CONTROL MODULE - DIAGNOSIS AND TESTING)

P0302-CYLINDER # 2 MISFIRE (CONTINUED)

7. FUEL INJECTOR

Remove the suspect fuel injector.

Is the fuel injector damaged?

Yes >> Replace the external damaged fuel injector & high pressure connector.
Perform POWERTRAIN VERIFICATION TEST VER - 1 (DIESEL). (Refer to 8 - ELECTRICAL/ELECTRONIC CONTROL MODULES/ENGINE CONTROL MODULE - DIAGNOSIS AND TESTING)

No >> Go To 8

---

8. INTERNAL DAMAGED FUEL INJECTOR

With the scan tool, erase DTCs.

Switch the misfiring injector & high pressure connector with an injector & high pressure connector from a cylinder that is firing properly.

Operate the vehicle.

Did the misfire DTC follow the suspect injector & high pressure connector?

Yes >> Replace the internal damaged fuel injector and high pressure connector.
Perform POWERTRAIN VERIFICATION TEST VER - 1 (DIESEL). (Refer to 8 - ELECTRICAL/ELECTRONIC CONTROL MODULES/ENGINE CONTROL MODULE - DIAGNOSIS AND TESTING)

No >> Go To 9

---

9. INTERNAL ENGINE DAMAGE

Perform engine compression test

Did the suspect cylinders pass the compression test?

Yes >> Go To 10

No >> Repair the internal damage to the engine.
Perform POWERTRAIN VERIFICATION TEST VER - 1 (DIESEL). (Refer to 8 - ELECTRICAL/ELECTRONIC CONTROL MODULES/ENGINE CONTROL MODULE - DIAGNOSIS AND TESTING)

---

10. INTERNAL ENGINE DAMAGE

Perform engine leak down test

Did the suspect cylinders pass the leak down test?

Yes >> Test Complete.

No >> Repair the internal damage to the engine.
Perform POWERTRAIN VERIFICATION TEST VER - 1 (DIESEL). (Refer to 8 - ELECTRICAL/ELECTRONIC CONTROL MODULES/ENGINE CONTROL MODULE - DIAGNOSIS AND TESTING)

P0303-CYLINDER # 3 MISFIRE

For the Engine circuit diagram (Refer to 8 - ELECTRICAL/ELECTRONIC CONTROL MODULES/ENGINE CONTROL MODULE - SCHEMATIC - ELECTRICAL)

For a complete wiring diagram **Refer to Section 8W**.

- **When Monitored:**
  While the engine is idling at operating temperature.
- **Set Condition:**
  Misfire detected on this cylinder.

Possible Causes
LOW FUEL
OTHER DTC'S
DAMAGED FUEL LINE
VALVE TRAIN
OBSTRUCTED FUEL INJECTOR SUPPLY LINE
DAMAGED OR OBSTRUCTED HIGH PRESSURE CONNECTOR
EXTERNAL DAMAGED FUEL INJECTOR
INTERNAL DAMAGED FUEL INJECTOR
NO COMPRESSION
EXCESSIVE ENGINE LEAK DOWN

Always perform the Pre-Diagnostic Troubleshooting procedure before proceeding. (Refer to 9 - ENGINE - DIAGNOSIS AND TESTING)

Diagnostic Test

1. LOW FUEL

Using the scan tool, verify that the fuel level is above 15%.

Is the fuel level above 15%?

Yes >> Go To 2

No >> Add fuel go to step 2.
Perform POWERTRAIN VERIFICATION TEST VER - 1 (DIESEL). (Refer to 8 - ELECTRICAL/ELECTRONIC CONTROL MODULES/ENGINE CONTROL MODULE - DIAGNOSIS AND TESTING)

---

2. OTHER DTC'S

Read the Freeze frame data.

Is the DTC equal to the freeze frame DTC?

Yes >> Go To 3

No >> Repair any other DTC's first.
Perform POWERTRAIN VERIFICATION TEST VER - 1 (DIESEL). (Refer to 8 - ELECTRICAL/ELECTRONIC CONTROL MODULES/ENGINE CONTROL MODULE - DIAGNOSIS AND TESTING)

P0303-CYLINDER # 3 MISFIRE (CONTINUED)

3. DAMAGED FUEL LINE

Visually inspect the injector supply line for damage.

Do you have any kinked or bent fuel line?

Yes >> Repair or replace the damaged fuel line.
Perform POWERTRAIN VERIFICATION TEST VER - 1 (DIESEL). (Refer to 8 - ELECTRICAL/ELECTRONIC CONTROL MODULES/ENGINE CONTROL MODULE - DIAGNOSIS AND TESTING)

No >> Go To 4

---

4. VALVE TRAIN

Visually inspect the valve train and check the valve lash on the suspect cylinder.

Is the valve train functional and the lash within the specifications listed in the service manual?

Yes >> Go To 5

No >> Adjust the lash or fix or repair any damaged component(s).
Perform POWERTRAIN VERIFICATION TEST VER - 1 (DIESEL). (Refer to 8 - ELECTRICAL/ELECTRONIC CONTROL MODULES/ENGINE CONTROL MODULE - DIAGNOSIS AND TESTING)

---

5. OBSTRUCTED FUEL INJECTOR SUPPLY

Remove the fuel injector supply line for the suspect cylinder.

Inspect both ends of the fuel injector supply lines for damage.

Using shop air pressure, blow out the fuel injector supply lines to verify that they are not obstructed.

Are the fuel lines free of debris or damage?

Yes >> Go To 6

No >> Replace the damaged or obstructed fuel injector supply line.
Perform POWERTRAIN VERIFICATION TEST VER - 1 (DIESEL). (Refer to 8 - ELECTRICAL/ELECTRONIC CONTROL MODULES/ENGINE CONTROL MODULE - DIAGNOSIS AND TESTING)

---

6. DAMAGED OR OBSTRUCTED HIGH PRESSURE CONNECTOR

Remove the high pressure connector for the suspect cylinder.

Inspect both ends of the high pressure connector for signs of damage.

Using shop air pressure, blow out the high pressure connector to verify that it is not obstructed.

Are the high pressure connectors free of debris or damage?

Yes >> Go To 7

No >> Replace the damaged or obstructed high pressure connector.
Perform POWERTRAIN VERIFICATION TEST VER - 1 (DIESEL). (Refer to 8 - ELECTRICAL/ELECTRONIC CONTROL MODULES/ENGINE CONTROL MODULE - DIAGNOSIS AND TESTING)

P0303-CYLINDER # 3 MISFIRE (CONTINUED)

7. FUEL INJECTOR

Remove the suspect fuel injector.

Are the fuel injectors damaged?

Yes >> Replace the external damaged fuel injector & high pressure connector.
Perform POWERTRAIN VERIFICATION TEST VER - 1 (DIESEL). (Refer to 8 - ELECTRICAL/ELECTRONIC CONTROL MODULES/ENGINE CONTROL MODULE - DIAGNOSIS AND TESTING)

No >> Go To 8

---

8. INTERNAL DAMAGED FUEL INJECTOR

With the scan tool, erase DTCs.

Switch the misfiring injector & high pressure connector with an injector & high pressure connector from a cylinder that are firing properly.

Operate the vehicle.

Did the misfire DTC follow the suspect injectors & high pressure connectors?

Yes >> Replace the internal damaged fuel injector and high pressure connector.
Perform POWERTRAIN VERIFICATION TEST VER - 1 (DIESEL). (Refer to 8 - ELECTRICAL/ELECTRONIC CONTROL MODULES/ENGINE CONTROL MODULE - DIAGNOSIS AND TESTING)

No >> Go To 9

---

9. INTERNAL ENGINE DAMAGE

Perform engine compression test

Did the suspect cylinders pass the compression test?

Yes >> Go To 10

No >> Repair the internal damage to the engine.
Perform POWERTRAIN VERIFICATION TEST VER - 1 (DIESEL). (Refer to 8 - ELECTRICAL/ELECTRONIC CONTROL MODULES/ENGINE CONTROL MODULE - DIAGNOSIS AND TESTING)

---

10. INTERNAL ENGINE DAMAGE

Perform engine leak down test

Did the suspect cylinders pass the leak down test?

Yes >> Test Complete.

No >> Repair the internal damage to the engine.
Perform POWERTRAIN VERIFICATION TEST VER - 1 (DIESEL). (Refer to 8 - ELECTRICAL/ELECTRONIC CONTROL MODULES/ENGINE CONTROL MODULE - DIAGNOSIS AND TESTING)

P0304-CYLINDER # 4 MISFIRE

For the Engine circuit diagram (Refer to 8 - ELECTRICAL/ELECTRONIC CONTROL MODULES/ENGINE CONTROL MODULE - SCHEMATIC - ELECTRICAL)

For a complete wiring diagram **Refer to Section 8W**.

- **When Monitored:**
  While the engine is idling at operating temperature.
- **Set Condition:**
  Misfire detected on this cylinder.

Possible Causes
LOW FUEL
OTHER DTC'S
DAMAGED FUEL LINE
VALVE TRAIN
OBSTRUCTED FUEL INJECTOR SUPPLY LINE
DAMAGED OR OBSTRUCTED HIGH PRESSURE CONNECTOR
EXTERNAL DAMAGED FUEL INJECTOR
INTERNAL DAMAGED FUEL INJECTOR
NO COMPRESSION
EXCESSIVE ENGINE LEAK DOWN

Always perform the Pre-Diagnostic Troubleshooting procedure before proceeding. (Refer to 9 - ENGINE - DIAGNOSIS AND TESTING)

Diagnostic Test

1. LOW FUEL

Using the scan tool, verify that the fuel level is above 15%.

Is the fuel level above 15%?

Yes >> Go To 2

No >> Add fuel go to step 2.
Perform POWERTRAIN VERIFICATION TEST VER - 1 (DIESEL). (Refer to 8 - ELECTRICAL/ELECTRONIC CONTROL MODULES/ENGINE CONTROL MODULE - DIAGNOSIS AND TESTING)

---

2. OTHER DTC'S

Read the Freeze frame data.

Is the DTC equal to the freeze frame DTC?

Yes >> Go To 3

No >> Repair any other DTC's first.
Perform POWERTRAIN VERIFICATION TEST VER - 1 (DIESEL). (Refer to 8 - ELECTRICAL/ELECTRONIC CONTROL MODULES/ENGINE CONTROL MODULE - DIAGNOSIS AND TESTING)

P0304-CYLINDER # 4 MISFIRE (CONTINUED)

3. DAMAGED FUEL LINE

Visually inspect the injector supply line for damage.

Do you have any kinked or bent fuel line?

Yes >> Repair or replace the damaged fuel line.
Perform POWERTRAIN VERIFICATION TEST VER - 1 (DIESEL). (Refer to 8 - ELECTRICAL/ELECTRONIC CONTROL MODULES/ENGINE CONTROL MODULE - DIAGNOSIS AND TESTING)

No >> Go To 4

---

4. VALVE TRAIN

Visually inspect the valve train and check the valve lash on the suspect cylinder.

Is the valve train functional and the lash within the specifications listed in the service manual?

Yes >> Go To 5

No >> Adjust the lash or fix or repair any damaged component(s).
Perform POWERTRAIN VERIFICATION TEST VER - 1 (DIESEL). (Refer to 8 - ELECTRICAL/ELECTRONIC CONTROL MODULES/ENGINE CONTROL MODULE - DIAGNOSIS AND TESTING)

---

5. OBSTRUCTED FUEL INJECTOR SUPPLY

Remove the fuel injector supply line for the suspect cylinder.
Inspect both ends of the fuel injector supply line for damage.
Using shop air pressure, blow out the fuel injector supply lines to verify that they are not obstructed.

Are the fuel lines free of debris or damage?

Yes >> Go To 6

No >> Replace the damaged or obstructed fuel injector supply line.
Perform POWERTRAIN VERIFICATION TEST VER - 1 (DIESEL). (Refer to 8 - ELECTRICAL/ELECTRONIC CONTROL MODULES/ENGINE CONTROL MODULE - DIAGNOSIS AND TESTING)

---

6. DAMAGED OR OBSTRUCTED HIGH PRESSURE CONNECTOR

Remove the high pressure connector for the suspect cylinder.
Inspect both ends of the high pressure connector for signs of damage.
Using shop air pressure, blow out the high pressure connectors to verify that it is not obstructed.

Are the high pressure connectors free of debris or damage?

Yes >> Go To 7

No >> Replace the damaged or obstructed high pressure connector.
Perform POWERTRAIN VERIFICATION TEST VER - 1 (DIESEL). (Refer to 8 - ELECTRICAL/ELECTRONIC CONTROL MODULES/ENGINE CONTROL MODULE - DIAGNOSIS AND TESTING)

P0304-CYLINDER # 4 MISFIRE (CONTINUED)

7. FUEL INJECTOR

Remove the suspect fuel injector.

Are the fuel injectors damaged?

Yes >> Replace the external damaged fuel injector & high pressure connector.
Perform POWERTRAIN VERIFICATION TEST VER - 1 (DIESEL). (Refer to 8 - ELECTRICAL/ELECTRONIC CONTROL MODULES/ENGINE CONTROL MODULE - DIAGNOSIS AND TESTING)

No >> Go To 8

---

8. INTERNAL DAMAGED FUEL INJECTOR

With the scan tool, erase DTCs.

Switch the misfiring injectors & high pressure connector with an injector & high pressure connector from a cylinder that is firing properly.

Operate the vehicle.

Did the misfire DTC follow the suspect injectors & high pressure connectors?

Yes >> Replace the internal damaged fuel injector and high pressure connector.
Perform POWERTRAIN VERIFICATION TEST VER - 1 (DIESEL). (Refer to 8 - ELECTRICAL/ELECTRONIC CONTROL MODULES/ENGINE CONTROL MODULE - DIAGNOSIS AND TESTING)

No >> Go To 9

---

9. INTERNAL ENGINE DAMAGE

Perform engine compression test

Did the suspect cylinders pass the compression test?

Yes >> Go To 10

No >> Repair the internal damage to the engine.
Perform POWERTRAIN VERIFICATION TEST VER - 1 (DIESEL). (Refer to 8 - ELECTRICAL/ELECTRONIC CONTROL MODULES/ENGINE CONTROL MODULE - DIAGNOSIS AND TESTING)

---

10. INTERNAL ENGINE DAMAGE

Perform engine leak down test

Did the suspect cylinders pass the leak down test?

Yes >> Test Complete.

No >> Repair the internal damage to the engine.
Perform POWERTRAIN VERIFICATION TEST VER - 1 (DIESEL). (Refer to 8 - ELECTRICAL/ELECTRONIC CONTROL MODULES/ENGINE CONTROL MODULE - DIAGNOSIS AND TESTING)

P0305-CYLINDER # 5 MISFIRE

For the Engine circuit diagram (Refer to 8 - ELECTRICAL/ELECTRONIC CONTROL MODULES/ENGINE CONTROL MODULE - SCHEMATIC - ELECTRICAL)

For a complete wiring diagram **Refer to Section 8W**.

- **When Monitored:**
  While the engine is idling at operating temperature.
- **Set Condition:**
  Misfire detected on this cylinder.

Possible Causes
LOW FUEL
OTHER DTC'S
DAMAGED FUEL LINE
VALVE TRAIN
OBSTRUCTED FUEL INJECTOR SUPPLY LINE
DAMAGED OR OBSTRUCTED HIGH PRESSURE CONNECTOR
EXTERNAL DAMAGED FUEL INJECTOR
INTERNAL DAMAGED FUEL INJECTOR
NO COMPRESSION
EXCESSIVE ENGINE LEAK DOWN

Always perform the Pre-Diagnostic Troubleshooting procedure before proceeding. (Refer to 9 - ENGINE - DIAGNOSIS AND TESTING)

Diagnostic Test

1. LOW FUEL

Using the scan tool, verify that the fuel level is above 15%.

Is the fuel level above 15%?

Yes >> Go To 2

No >> Add fuel go to step 2.
Perform POWERTRAIN VERIFICATION TEST VER - 1 (DIESEL). (Refer to 8 - ELECTRICAL/ELECTRONIC CONTROL MODULES/ENGINE CONTROL MODULE - DIAGNOSIS AND TESTING)

---

2. OTHER DTC'S

Read the Freeze frame data.

Is the DTC equal to the freeze frame DTC?

Yes >> Go To 3

No >> Repair any other DTC's first.
Perform POWERTRAIN VERIFICATION TEST VER - 1 (DIESEL). (Refer to 8 - ELECTRICAL/ELECTRONIC CONTROL MODULES/ENGINE CONTROL MODULE - DIAGNOSIS AND TESTING)

P0305-CYLINDER # 5 MISFIRE (CONTINUED)

3. DAMAGED FUEL LINE

Visually inspect the injector supply line for damage.

Do you have any kinked or bent fuel line?

Yes >> Repair or replace the damaged fuel line.
Perform POWERTRAIN VERIFICATION TEST VER - 1 (DIESEL). (Refer to 8 - ELECTRICAL/ELECTRONIC CONTROL MODULES/ENGINE CONTROL MODULE - DIAGNOSIS AND TESTING)

No >> Go To 4

---

4. VALVE TRAIN

Visually inspect the valve train and check the valve lash on the suspect cylinder.

Is the valve train functional and the lash within the specifications listed in the service manual?

Yes >> Go To 5

No >> Adjust the lash or fix or repair any damaged component(s).
Perform POWERTRAIN VERIFICATION TEST VER - 1 (DIESEL). (Refer to 8 - ELECTRICAL/ELECTRONIC CONTROL MODULES/ENGINE CONTROL MODULE - DIAGNOSIS AND TESTING)

---

5. OBSTRUCTED FUEL INJECTOR SUPPLY

Remove the fuel injector supply lines for the suspect cylinder.
Inspect both ends of the fuel injector supply lines for damage.
Using shop air pressure, blow out the fuel injector supply lines to verify that they are not obstructed.

Are the fuel lines free of debris or damage?

Yes >> Go To 6

No >> Replace the damaged or obstructed fuel injector supply lines.
Perform POWERTRAIN VERIFICATION TEST VER - 1 (DIESEL). (Refer to 8 - ELECTRICAL/ELECTRONIC CONTROL MODULES/ENGINE CONTROL MODULE - DIAGNOSIS AND TESTING)

---

6. DAMAGED OR OBSTRUCTED HIGH PRESSURE CONNECTOR

Remove the high pressure connectors for the suspect cylinder.
Inspect both ends of the high pressure connector for signs of damage.
Using shop air pressure, blow out the high pressure connector to verify that they are not obstructed.

Are the high pressure connector free of debris or damage?

Yes >> Go To 7

No >> Replace the damaged or obstructed high pressure connector.
Perform POWERTRAIN VERIFICATION TEST VER - 1 (DIESEL). (Refer to 8 - ELECTRICAL/ELECTRONIC CONTROL MODULES/ENGINE CONTROL MODULE - DIAGNOSIS AND TESTING)

P0305-CYLINDER # 5 MISFIRE (CONTINUED)

7. FUEL INJECTOR

Remove the suspect fuel injector.

Are the fuel injectors damaged?

Yes >> Replace the external damaged fuel injector & high pressure connector.
Perform POWERTRAIN VERIFICATION TEST VER - 1 (DIESEL). (Refer to 8 - ELECTRICAL/ELECTRONIC CONTROL MODULES/ENGINE CONTROL MODULE - DIAGNOSIS AND TESTING)

No >> Go To 8

---

8. INTERNAL DAMAGED FUEL INJECTOR

With the scan tool, erase DTCs.

Switch the misfiring injector & high pressure connector with an injector & high pressure connector from a cylinder that is firing properly.

Operate the vehicle.

Did the misfire DTC follow the suspect injector & high pressure connector?

Yes >> Replace the internal damaged fuel injector and high pressure connector.
Perform POWERTRAIN VERIFICATION TEST VER - 1 (DIESEL). (Refer to 8 - ELECTRICAL/ELECTRONIC CONTROL MODULES/ENGINE CONTROL MODULE - DIAGNOSIS AND TESTING)

No >> Go To 9

---

9. INTERNAL ENGINE DAMAGE

Perform engine compression test

Did the suspect cylinders pass the compression test?

Yes >> Go To 10

No >> Repair the internal damage to the engine.
Perform POWERTRAIN VERIFICATION TEST VER - 1 (DIESEL). (Refer to 8 - ELECTRICAL/ELECTRONIC CONTROL MODULES/ENGINE CONTROL MODULE - DIAGNOSIS AND TESTING)

---

10. INTERNAL ENGINE DAMAGE

Perform engine leak down test

Did the suspect cylinders pass the leak down test?

Yes >> Test Complete.

No >> Repair the internal damage to the engine.
Perform POWERTRAIN VERIFICATION TEST VER - 1 (DIESEL). (Refer to 8 - ELECTRICAL/ELECTRONIC CONTROL MODULES/ENGINE CONTROL MODULE - DIAGNOSIS AND TESTING)

P0306-CYLINDER # 6 MISFIRE

For the Engine circuit diagram (Refer to 8 - ELECTRICAL/ELECTRONIC CONTROL MODULES/ENGINE CONTROL MODULE - SCHEMATIC - ELECTRICAL)

For a complete wiring diagram **Refer to Section 8W**.

- **When Monitored:**
  While the engine is idling at operating temperature.
- **Set Condition:**
  Misfire detected on this cylinder.

Possible Causes
LOW FUEL
OTHER DTC'S
DAMAGED FUEL LINE
VALVE TRAIN
OBSTRUCTED FUEL INJECTOR SUPPLY LINE
DAMAGED OR OBSTRUCTED HIGH PRESSURE CONNECTOR
EXTERNAL DAMAGED FUEL INJECTOR
INTERNAL DAMAGED FUEL INJECTOR
NO COMPRESSION
EXCESSIVE ENGINE LEAK DOWN

Always perform the Pre-Diagnostic Troubleshooting procedure before proceeding. (Refer to 9 - ENGINE - DIAGNOSIS AND TESTING)

Diagnostic Test

1. LOW FUEL

Using the scan tool, verify that the fuel level is above 15%.

Is the fuel level above 15%?

Yes >> Go To 2

No >> Add fuel go to step 2.
Perform POWERTRAIN VERIFICATION TEST VER - 1 (DIESEL). (Refer to 8 - ELECTRICAL/ELECTRONIC CONTROL MODULES/ENGINE CONTROL MODULE - DIAGNOSIS AND TESTING)

---

2. OTHER DTC'S

Read the Freeze frame data.

Is the DTC equal to the freeze frame DTC?

Yes >> Go To 3

No >> Repair any other DTC's first.
Perform POWERTRAIN VERIFICATION TEST VER - 1 (DIESEL). (Refer to 8 - ELECTRICAL/ELECTRONIC CONTROL MODULES/ENGINE CONTROL MODULE - DIAGNOSIS AND TESTING)

P0306-CYLINDER # 6 MISFIRE (CONTINUED)

3. DAMAGED FUEL LINE

Visually inspect the injector supply line for damage.

Do you have any kinked or bent fuel line?

Yes >> Repair or replace the damaged fuel line.
Perform POWERTRAIN VERIFICATION TEST VER - 1 (DIESEL). (Refer to 8 - ELECTRICAL/ELECTRONIC CONTROL MODULES/ENGINE CONTROL MODULE - DIAGNOSIS AND TESTING)

No >> Go To 4

---

4. VALVE TRAIN

Visually inspect the valve train and check the valve lash on the suspect cylinder.

Is the valve train functional and the lash within the specifications listed in the service manual?

Yes >> Go To 5

No >> Adjust the lash or fix or repair any damaged component(s).
Perform POWERTRAIN VERIFICATION TEST VER - 1 (DIESEL). (Refer to 8 - ELECTRICAL/ELECTRONIC CONTROL MODULES/ENGINE CONTROL MODULE - DIAGNOSIS AND TESTING)

---

5. OBSTRUCTED FUEL INJECTOR SUPPLY

Remove the fuel injector supply line for the suspect cylinder.
Inspect both ends of the fuel injector supply lines for damage.
Using shop air pressure, blow out the fuel injector supply line to verify that it is not obstructed.

Are the fuel lines free of debris or damage?

Yes >> Go To 6

No >> Replace the damaged or obstructed fuel injector supply line.
Perform POWERTRAIN VERIFICATION TEST VER - 1 (DIESEL). (Refer to 8 - ELECTRICAL/ELECTRONIC CONTROL MODULES/ENGINE CONTROL MODULE - DIAGNOSIS AND TESTING)

---

6. DAMAGED OR OBSTRUCTED HIGH PRESSURE CONNECTOR

Remove the high pressure connector for the suspect cylinder.
Inspect both ends of the high pressure connectors for signs of damage.
Using shop air pressure, blow out the high pressure connector to verify that they are not obstructed.

Are the high pressure connectors free of debris or damage?

Yes >> Go To 7

No >> Replace the damaged or obstructed high pressure connector.
Perform POWERTRAIN VERIFICATION TEST VER - 1 (DIESEL). (Refer to 8 - ELECTRICAL/ELECTRONIC CONTROL MODULES/ENGINE CONTROL MODULE - DIAGNOSIS AND TESTING)

P0306-CYLINDER # 6 MISFIRE (CONTINUED)

7. FUEL INJECTOR

Remove the suspect fuel injector.

Are the fuel injectors damaged?

Yes >> Replace the external damaged fuel injector & high pressure connector.
Perform POWERTRAIN VERIFICATION TEST VER - 1 (DIESEL). (Refer to 8 - ELECTRICAL/ELECTRONIC CONTROL MODULES/ENGINE CONTROL MODULE - DIAGNOSIS AND TESTING)

No >> Go To 8

---

8. INTERNAL DAMAGED FUEL INJECTOR

With the scan tool, erase DTCs.

Switch the misfiring injector & high pressure connector with an injector & high pressure connector from a cylinder that is firing properly.

Operate the vehicle.

Did the misfire DTC follow the suspect injectors & high pressure connectors?

Yes >> Replace the internal damaged fuel injector and high pressure connector.
Perform POWERTRAIN VERIFICATION TEST VER - 1 (DIESEL). (Refer to 8 - ELECTRICAL/ELECTRONIC CONTROL MODULES/ENGINE CONTROL MODULE - DIAGNOSIS AND TESTING)

No >> Go To 9

---

9. INTERNAL ENGINE DAMAGE

Perform engine compression test

Did the suspect cylinders pass the compression test?

Yes >> Go To 10

No >> Repair the internal damage to the engine.
Perform POWERTRAIN VERIFICATION TEST VER - 1 (DIESEL). (Refer to 8 - ELECTRICAL/ELECTRONIC CONTROL MODULES/ENGINE CONTROL MODULE - DIAGNOSIS AND TESTING)

---

10. INTERNAL ENGINE DAMAGE

Perform engine leak down test

Did the suspect cylinders pass the leak down test?

Yes >> Test Complete.

No >> Repair the internal damage to the engine.
Perform POWERTRAIN VERIFICATION TEST VER - 1 (DIESEL). (Refer to 8 - ELECTRICAL/ELECTRONIC CONTROL MODULES/ENGINE CONTROL MODULE - DIAGNOSIS AND TESTING)

P0335-CRANKSHAFT POSITION (CKP) LOST

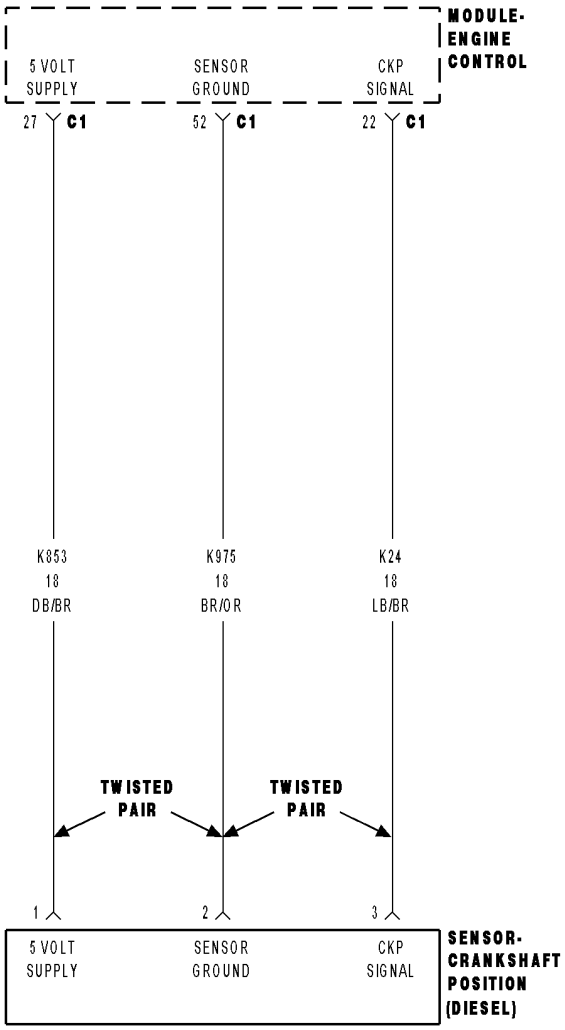

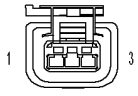

SENSOR-
CRANKSHAFT
POSITION
(DIESEL)

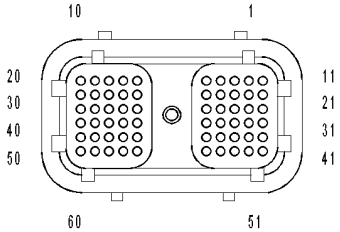

MODULE-ENGINE
CONTROL C1

813fc1d1

P0335-CRANKSHAFT POSITION (CKP) LOST (CONTINUED)

For the Engine circuit diagram (Refer to 8 - ELECTRICAL/ELECTRONIC CONTROL MODULES/ENGINE CONTROL MODULE - SCHEMATIC - ELECTRICAL)

For a complete wiring diagram **Refer to Section 8W**.

- **When Monitored:**
  While the engine is running.
- **Set Condition:**
  The ECM no longer detects a signal from the Crankshaft Position Sensor.

Possible Causes
OTHER DTC'S
P0337 PRESENT
CKP SENSOR
VISUAL DAMAGE
(K24) SIGNAL CIRCUIT OPEN
(K853) 5-VOLT SUPPLY CIRCUIT OPEN
(K167) RETURN CIRCUIT OPEN
(K24) SIGNAL CIRCUIT SHORTED TO (K975) RETURN CIRCUIT
(K853) 5-VOLT SUPPLY CIRCUIT SHORTED TO (K975) RETURN CIRCUIT
(K24) SIGNAL CIRCUIT SHORTED TO (K853) 5-VOLT SUPPLY CIRCUIT
(K24) SIGNAL CIRCUIT SHORTED TO GROUND
(K853) 5-VOLT SUPPLY CIRCUIT SHORTED TO BATTERY NEGATIVE
INTERMITTENT CONDITION
ECM

Always perform the Pre-Diagnostic Troubleshooting procedure before proceeding. (Refer to 9 - ENGINE - DIAGNOSIS AND TESTING)

Diagnostic Test

1. OTHER DTC'S

With the scan tool, read DTCs.

Is DTC P2146 and/or P2149 present?

Yes >> Repair other DTC's.
Perform POWERTRAIN VERIFICATION TEST VER - 1 (DIESEL). (Refer to 8 - ELECTRICAL/ELECTRONIC CONTROL MODULES/ENGINE CONTROL MODULE - DIAGNOSIS AND TESTING)

No >> Go To 2

---

2. P0337 PRESENT

With the scan tool, read DTCs.

Is P0337 present?

Yes >> Repair P0337 first.
Perform POWERTRAIN VERIFICATION TEST VER - 1 (DIESEL). (Refer to 8 - ELECTRICAL/ELECTRONIC CONTROL MODULES/ENGINE CONTROL MODULE - DIAGNOSIS AND TESTING)

No >> Go To 3

P0335-CRANKSHAFT POSITION (CKP) LOST (CONTINUED)

3. VISUAL DAMAGE

Visually inspect the sensor, engine belt, sensor connector, and the ECM connector.

Is there any damage?

Yes >> Repair or replace the sensor, engine belt, harness, or the ECM.
Perform POWERTRAIN VERIFICATION TEST VER - 1 (DIESEL). (Refer to 8 - ELECTRICAL/ELECTRONIC CONTROL MODULES/ENGINE CONTROL MODULE - DIAGNOSIS AND TESTING)

No >> Go To 4

---

4. CKP SENSOR

Disconnect the CKP sensor harness connector.

NOTE: Check connectors - Clean/repair as necessary.
Measure the resistance between the (K853) 5-volt supply circuit and the (K24) signal circuit of the sensor.

Is the resistance between 900 and 1100 ohms?

Yes >> Go To 5

No >> Replace the CKP sensor.
Perform POWERTRAIN VERIFICATION TEST VER - 1 (DIESEL). (Refer to 8 - ELECTRICAL/ELECTRONIC CONTROL MODULES/ENGINE CONTROL MODULE - DIAGNOSIS AND TESTING)

---

5. (K24) SIGNAL CIRCUIT OPEN

Disconnect the ECM harness connectors.

Disconnect the CKP sensor harness connector.

Check connectors - Clean/repair as necessary.

Measure the resistance of the (K24) signal circuit between the ECM harness connector and the CKP sensor harness connector.

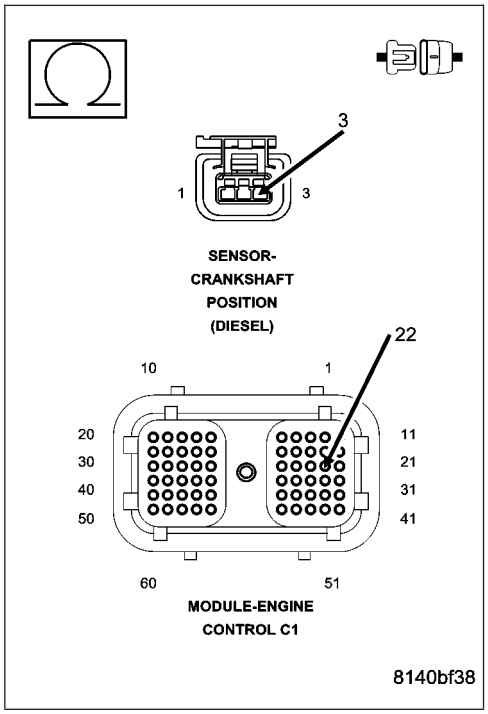

Is the resistance less than 10 ohms?

Yes >> Go To 6

No >> Repair the open (K24) signal circuit.
Perform POWERTRAIN VERIFICATION TEST VER - 1 (DIESEL). (Refer to 8 - ELECTRICAL/ELECTRONIC CONTROL MODULES/ENGINE CONTROL MODULE - DIAGNOSIS AND TESTING)

P0335-CRANKSHAFT POSITION (CKP) LOST (CONTINUED)

6. (K853) 5-VOLT SUPPLY CIRCUIT OPEN

Measure the resistance of the (K853) 5-volt supply circuit between the ECM harness connector and the CKP sensor harness connector.

Is the resistance less than 10 ohms?

Yes >> Go To 7

No >> Repair the open (K853) 5-volt supply circuit.
Perform POWERTRAIN VERIFICATION TEST VER - 1 (DIESEL). (Refer to 8 - ELECTRICAL/ELECTRONIC CONTROL MODULES/ENGINE CONTROL MODULE - DIAGNOSIS AND TESTING)

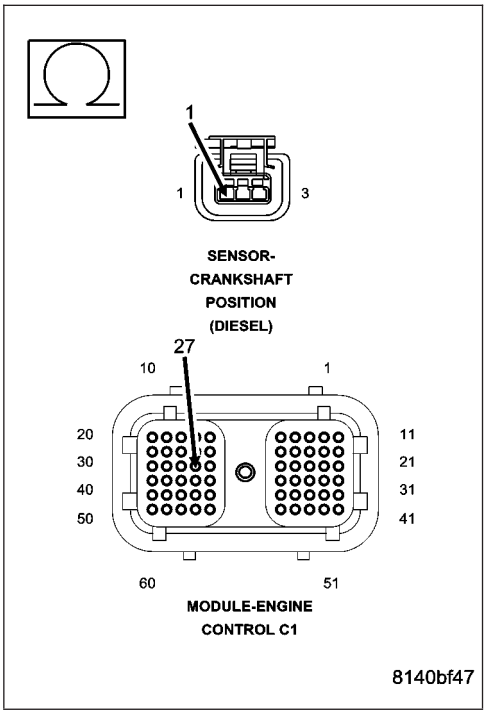

7. (K975) RETURN CIRCUIT OPEN

Measure the resistance of the (K975) return circuit between the ECM harness connector and the CKP sensor harness connector.

Is the resistance less than 10 ohms?

Yes >> Go To 8

No >> Repair the open (K975) return circuit.
Perform POWERTRAIN VERIFICATION TEST VER - 1 (DIESEL). (Refer to 8 - ELECTRICAL/ELECTRONIC CONTROL MODULES/ENGINE CONTROL MODULE - DIAGNOSIS AND TESTING)

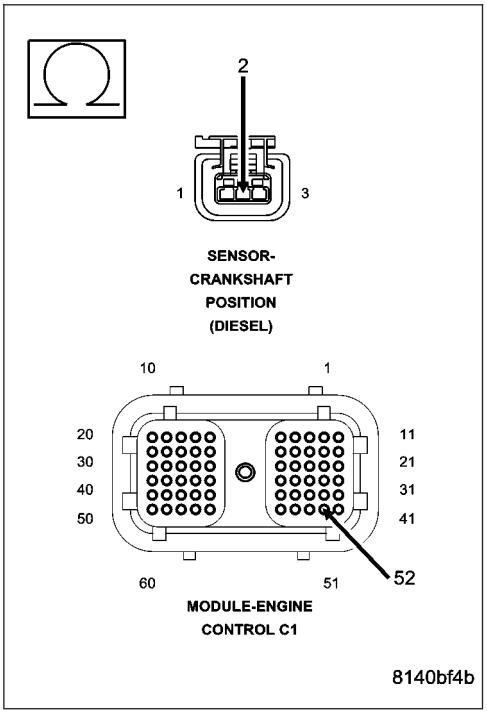

P0335-CRANKSHAFT POSITION (CKP) LOST (CONTINUED)

8. (K24) SIGNAL CIRCUIT SHORTED TO (K975) RETURN CIRCUIT

Measure the resistance between the (K24) signal circuit and the (K975) return circuit in the sensor connector.

Is the resistance greater than 100k Ohms?

Yes >> Go To 9

No >> Repair the short circuit or replace the engine harness.
Perform POWERTRAIN VERIFICATION TEST VER - 1 (DIESEL). (Refer to 8 - ELECTRICAL/ELECTRONIC CONTROL MODULES/ENGINE CONTROL MODULE - DIAGNOSIS AND TESTING)

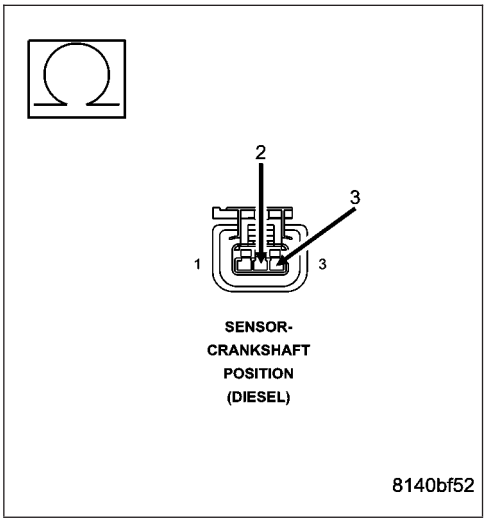

9. (K853) 5-VOLT SUPPLY CIRCUIT SHORTED TO (K975) RETURN CIRCUIT

Measure the resistance between the (K853) 5-volt supply circuit and the (K975) return circuit in the sensor connector.

Is the resistance greater than 100k Ohms?

Yes >> Go To 10

No >> Repair the short circuit or replace the engine harness.
Perform POWERTRAIN VERIFICATION TEST VER - 1 (DIESEL). (Refer to 8 - ELECTRICAL/ELECTRONIC CONTROL MODULES/ENGINE CONTROL MODULE - DIAGNOSIS AND TESTING)

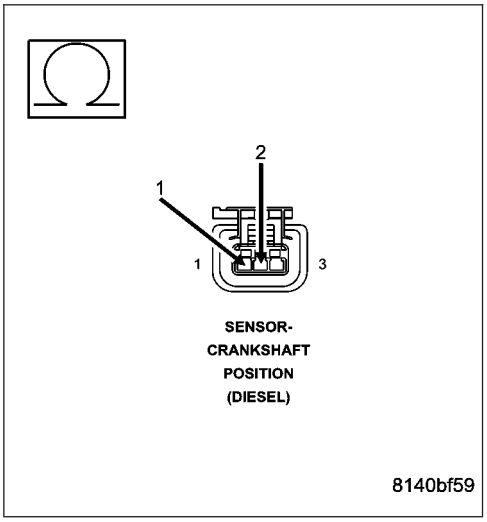

P0335-CRANKSHAFT POSITION (CKP) LOST (CONTINUED)

10. (K24) SIGNAL CIRCUIT SHORTED GROUND

Measure the resistance between the (K24) signal circuit and ground.

Is the resistance greater than 100k Ohms?

Yes >> Go To 11

No >> Repair the short circuit or replace the engine harness. Perform POWERTRAIN VERIFICATION TEST VER - 1 (DIESEL). (Refer to 8 - ELECTRICAL/ELECTRONIC CONTROL MODULES/ENGINE CONTROL MODULE - DIAGNOSIS AND TESTING)

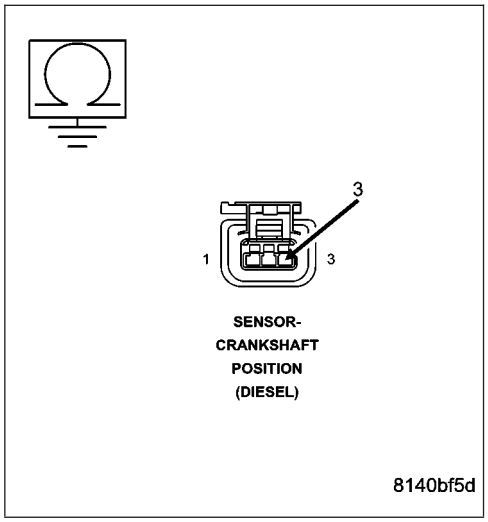

11. (K853) 5-VOLT SUPPLY CIRCUIT SHORTED TO GROUND

Measure the resistance between the (K853) 5-volt supply circuit and ground.

Is the resistance greater than 100k Ohms?

Yes >> Go To 12

No >> Repair the short circuit or replace the engine harness. Perform POWERTRAIN VERIFICATION TEST VER - 1 (DIESEL). (Refer to 8 - ELECTRICAL/ELECTRONIC CONTROL MODULES/ENGINE CONTROL MODULE - DIAGNOSIS AND TESTING)

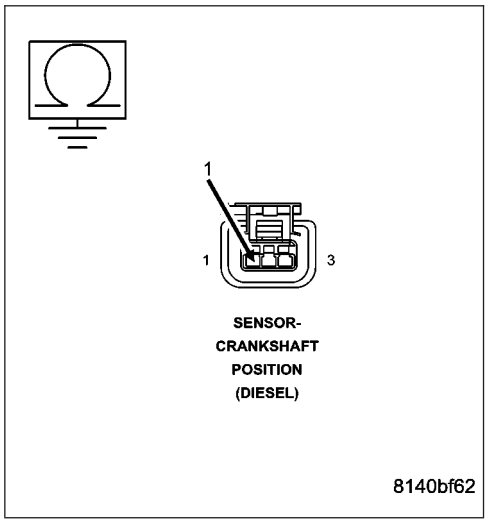

P0335-CRANKSHAFT POSITION (CKP) LOST (CONTINUED)

12. (K24) SIGNAL CIRCUIT SHORTED TO (K853) 5-VOLT SUPPLY CIRCUIT

Measure the resistance between the (K24) signal circuit and the (K853) 5-volt supply circuit in the sensor connector.

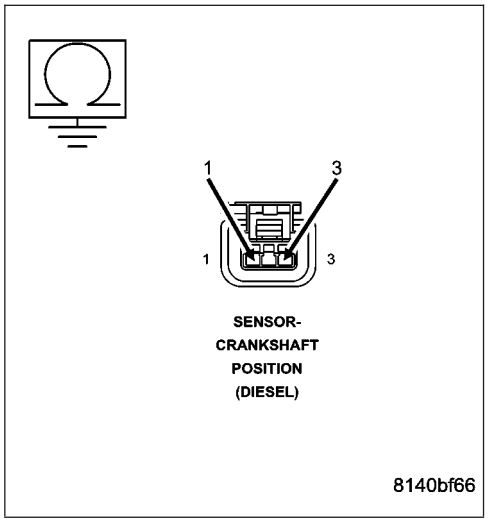

Is the resistance greater than 100k Ohms?

Yes >> Go To 13

No >> Repair the short circuit or replace the engine harness.
Perform POWERTRAIN VERIFICATION TEST VER - 1 (DIESEL). (Refer to 8 - ELECTRICAL/ELECTRONIC CONTROL MODULES/ENGINE CONTROL MODULE - DIAGNOSIS AND TESTING)

13. ECM

Reconnect the ECM harness connectors.

Ignition on, engine not running.

With the scan tool, erase DTCs.

Connect a jumper wire between the sensor supply circuit and the sensor return circuit in the sensor harness connector.

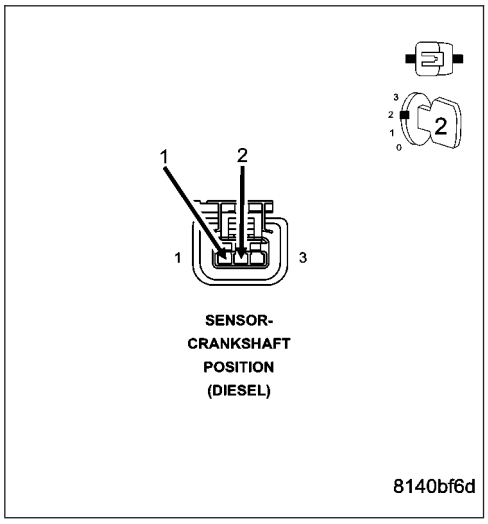

Did DTC P0337 set?

Yes >> Refer to the INTERMITTENT CONDITION Symptom (Diagnostic Procedure).
(Refer to 9 - ENGINE - DIAGNOSIS AND TESTING)

No >> Replace the ECM.
Perform POWERTRAIN VERIFICATION TEST VER - 1 (DIESEL). (Refer to 8 - ELECTRICAL/ELECTRONIC CONTROL MODULES/ENGINE CONTROL MODULE - DIAGNOSIS AND TESTING)

P0336-CRANKSHAFT POSITION (CKP) SENSOR SIGNAL

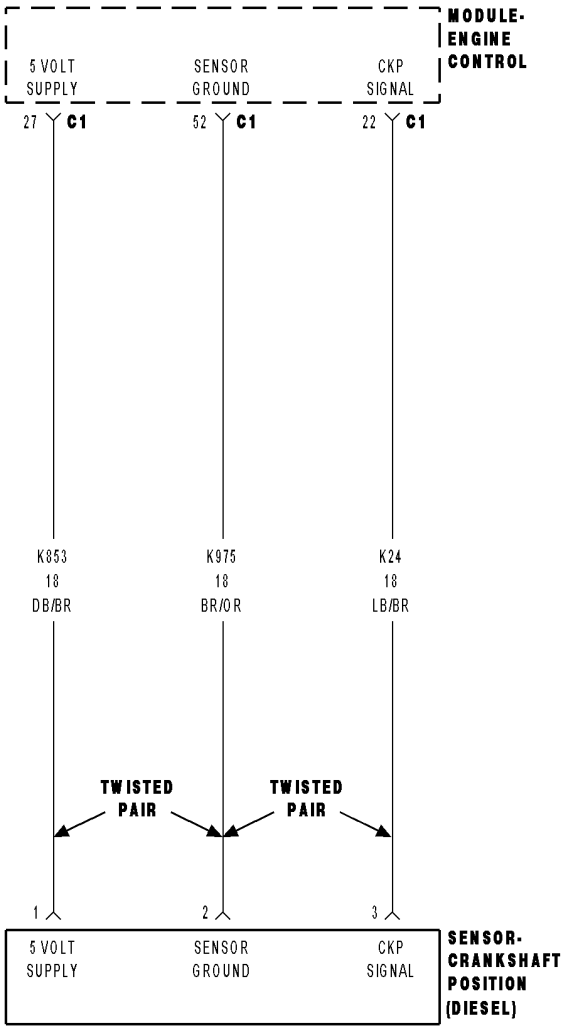

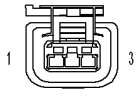

SENSOR-
CRANKSHAFT
POSITION
(DIESEL)

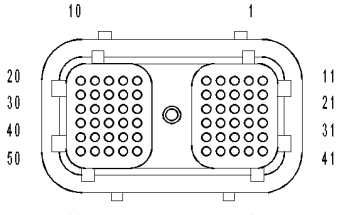

MODULE-ENGINE
CONTROL C1

813fc1d1

P0336-CRANKSHAFT POSITION (CKP) SENSOR SIGNAL (CONTINUED)

For the Engine circuit diagram (Refer to 8 - ELECTRICAL/ELECTRONIC CONTROL MODULES/ENGINE CONTROL MODULE - SCHEMATIC - ELECTRICAL)

For a complete wiring diagram **Refer to Section 8W**.

- **When Monitored:**
  With the key on.
- **Set Condition:**
  The voltage detected at the Crankshaft position sensor is below a calibrated value.

Possible Causes
CKP SENSOR
(K24) SIGNAL CIRCUIT OPEN
(K853) 5-VOLT SUPPLY CIRCUIT OPEN
(K975) RETURN CIRCUIT OPEN
(K24) SIGNAL CIRCUIT SHORTED TO (K975) RETURN CIRCUIT
(K853) 5-VOLT SUPPLY CIRCUIT SHORTED TO (K975) RETURN CIRCUIT
(K24) SIGNAL CIRCUIT SHORTED TO (K853) 5-VOLT SUPPLY CIRCUIT
(K24) SIGNAL CIRCUIT SHORTED TO GROUND
(K853) 5-VOLT SUPPLY CIRCUIT SHORTED TO BATTERY NEGATIVE
INTERMITTENT CONDITION
ECM

Always perform the Pre-Diagnostic Troubleshooting procedure before proceeding. (Refer to 9 - ENGINE - DIAGNOSIS AND TESTING)

Diagnostic Test

1. CKP SENSOR

Disconnect the CKP sensor harness connector.

NOTE: Check connectors - Clean/repair as necessary.

Measure the resistance between the (K853) 5-volt supply circuit and the (K24) signal circuit of the sensor.

Is the resistance between 900 and 1100 ohms?

Yes >> Go To 2

No >> Replace the CKP sensor.
Perform POWERTRAIN VERIFICATION TEST VER - 1 (DIESEL). (Refer to 8 - ELECTRICAL/ELECTRONIC CONTROL MODULES/ENGINE CONTROL MODULE - DIAGNOSIS AND TESTING)

P0336-CRANKSHAFT POSITION (CKP) SENSOR SIGNAL (CONTINUED)

2. (K24) SIGNAL CIRCUIT OPEN

Disconnect the ECM harness connectors.

Disconnect the CKP sensor harness connector.

Check connectors - Clean/repair as necessary.

Measure the resistance of the (K24) signal circuit between the ECM harness connector and the CKP sensor harness connector.

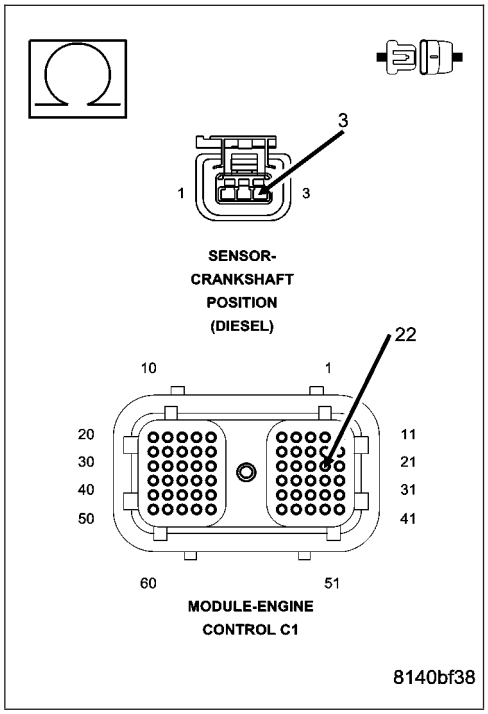

Is the resistance less than 10 ohms?

Yes >> Go To 3

No >> Repair the open (K24) signal circuit.

Perform POWERTRAIN VERIFICATION TEST VER - 1 (DIESEL). (Refer to 8 - ELECTRICAL/ELECTRONIC CONTROL MODULES/ENGINE CONTROL MODULE - DIAGNOSIS AND TESTING)

3. (K853) 5-VOLT SUPPLY CIRCUIT OPEN

Measure the resistance of the (K853) 5-volt supply circuit between the ECM harness connector and the CKP sensor harness connector.

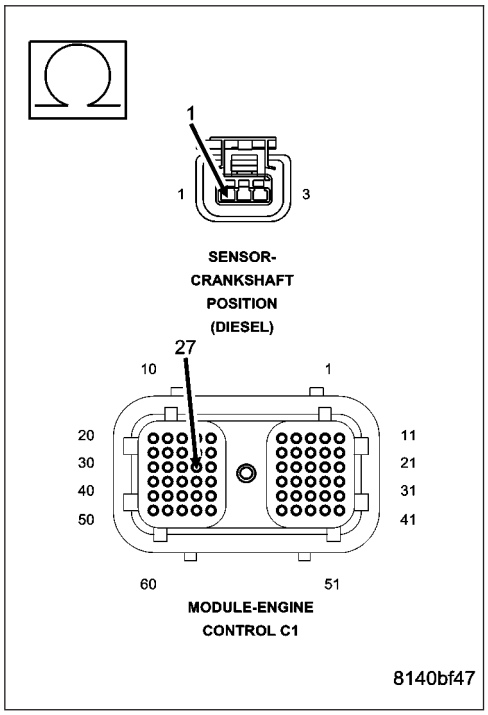

Is the resistance less than 10 ohms?

Yes >> Go To 4

No >> Repair the open (K853) 5-volt supply circuit.

Perform POWERTRAIN VERIFICATION TEST VER - 1 (DIESEL). (Refer to 8 - ELECTRICAL/ELECTRONIC CONTROL MODULES/ENGINE CONTROL MODULE - DIAGNOSIS AND TESTING)

P0336-CRANKSHAFT POSITION (CKP) SENSOR SIGNAL (CONTINUED)

4. (K975) RETURN CIRCUIT OPEN

Measure the resistance of the (K975) return circuit between the ECM harness connector and the CKP sensor harness connector.

Is the resistance less than 10 ohms?

Yes >> Go To 5

No >> Repair the open (K975) return circuit.
Perform POWERTRAIN VERIFICATION TEST VER - 1 (DIESEL). (Refer to 8 - ELECTRICAL/ELECTRONIC CONTROL MODULES/ENGINE CONTROL MODULE - DIAGNOSIS AND TESTING)

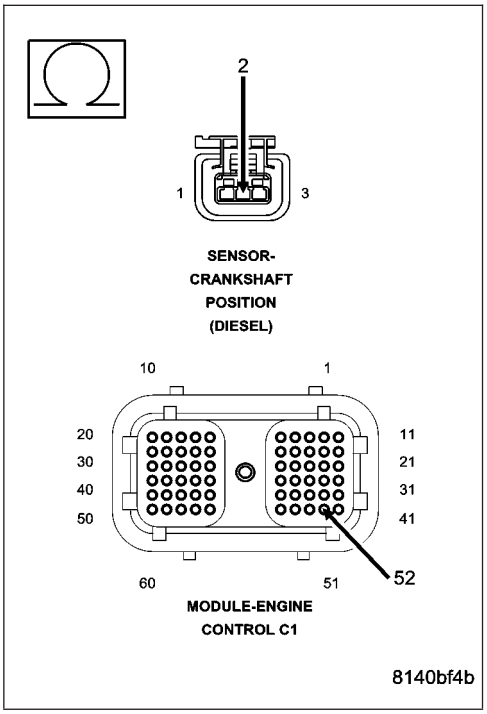

5. (K24) SIGNAL CIRCUIT SHORTED TO (K975) RETURN CIRCUIT

Measure the resistance between the (K24) signal circuit and the (K975) return circuit in the sensor connector.

Is the resistance greater than 100k Ohms?

Yes >> Go To 6

No >> Repair the short circuit or replace the engine harness.
Perform POWERTRAIN VERIFICATION TEST VER - 1 (DIESEL). (Refer to 8 - ELECTRICAL/ELECTRONIC CONTROL MODULES/ENGINE CONTROL MODULE - DIAGNOSIS AND TESTING)

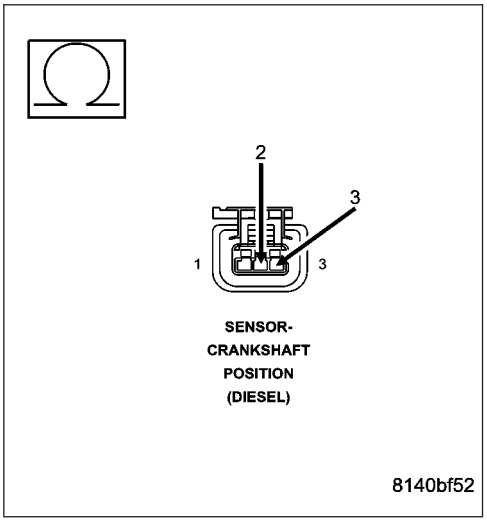

P0336-CRANKSHAFT POSITION (CKP) SENSOR SIGNAL (CONTINUED)

6. (K853) 5-VOLT SUPPLY CIRCUIT SHORTED TO (K975) RETURN CIRCUIT

Measure the resistance between the (K853) 5-volt supply circuit and the (K975) return circuit in the sensor connector.

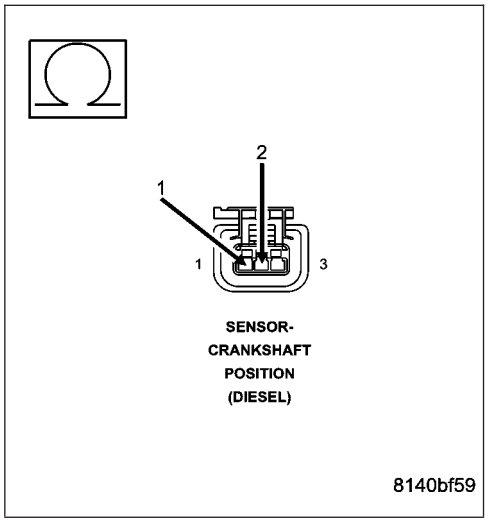

Is the resistance greater than 100k Ohms?

Yes >> Go To 7

No >> Repair the short circuit or replace the engine harness.
Perform POWERTRAIN VERIFICATION TEST VER - 1 (DIESEL). (Refer to 8 - ELECTRICAL/ELECTRONIC CONTROL MODULES/ENGINE CONTROL MODULE - DIAGNOSIS AND TESTING)

7. (K24) SIGNAL CIRCUIT SHORTED GROUND

Measure the resistance between the (K24) signal circuit and ground.

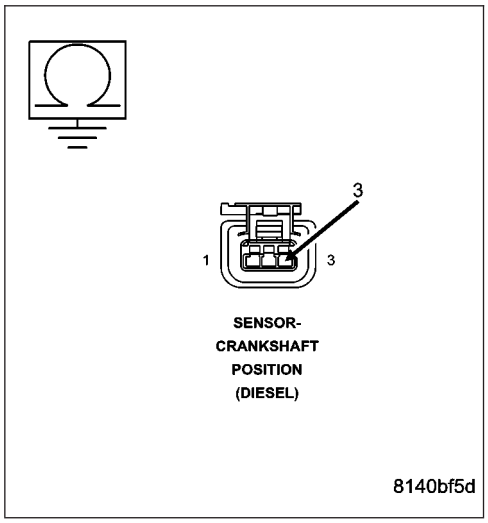

Is the resistance greater than 100k Ohms?

Yes >> Go To 8

No >> Repair the short circuit or replace the engine harness.
Perform POWERTRAIN VERIFICATION TEST VER - 1 (DIESEL). (Refer to 8 - ELECTRICAL/ELECTRONIC CONTROL MODULES/ENGINE CONTROL MODULE - DIAGNOSIS AND TESTING)

P0336-CRANKSHAFT POSITION (CKP) SENSOR SIGNAL (CONTINUED)

8. (K853) 5-VOLT SUPPLY CIRCUIT SHORTED TO GROUND

Measure the resistance between the (K853) 5-volt supply circuit and ground.

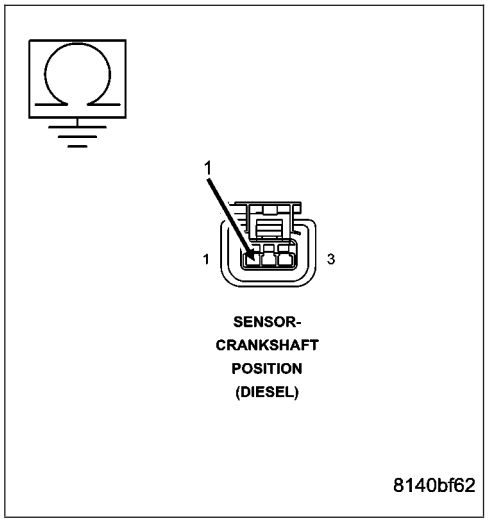

Is the resistance greater than 100k Ohms?

Yes >> Go To 9

No >> Repair the short circuit or replace the engine harness.
Perform POWERTRAIN VERIFICATION TEST VER - 1 (DIESEL). (Refer to 8 - ELECTRICAL/ELECTRONIC CONTROL MODULES/ENGINE CONTROL MODULE - DIAGNOSIS AND TESTING)

9. (K24) SIGNAL CIRCUIT SHORTED TO (K853) 5-VOLT SUPPLY CIRCUIT

Measure the resistance between the (K24) signal circuit and the (K853) 5-volt supply circuit in the sensor connector.

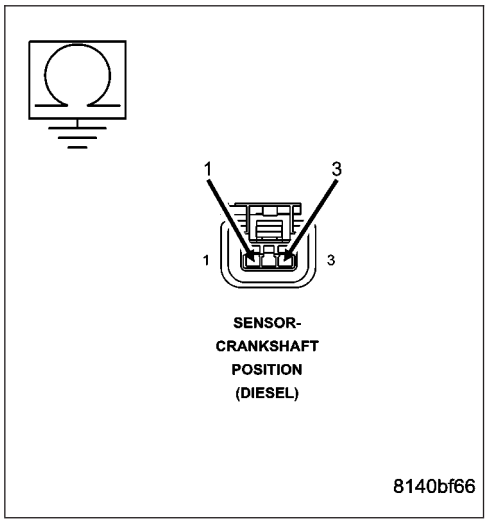

Is the resistance greater than 100k Ohms?

Yes >> Go To 10

No >> Repair the short circuit or replace the engine harness.
Perform POWERTRAIN VERIFICATION TEST VER - 1 (DIESEL). (Refer to 8 - ELECTRICAL/ELECTRONIC CONTROL MODULES/ENGINE CONTROL MODULE - DIAGNOSIS AND TESTING)

P0336-CRANKSHAFT POSITION (CKP) SENSOR SIGNAL (CONTINUED)

10. ECM

Reconnect the ECM harness connectors.

Ignition on, engine not running.

With the scan tool, erase DTCs.

Connect a jumper wire between the sensor supply circuit and the sensor return circuit in the sensor harness connector.

Did DTC P0337 set?

Yes >> Refer to the INTERMITTENT CONDITION Symptom (Diagnostic Procedure).
(Refer to 9 - ENGINE - DIAGNOSIS AND TESTING)

No >> Replace the ECM.
Perform POWERTRAIN VERIFICATION TEST VER - 1 (DIESEL). (Refer to 8 - ELECTRICAL/ELECTRONIC CONTROL MODULES/ENGINE CONTROL MODULE - DIAGNOSIS AND TESTING)

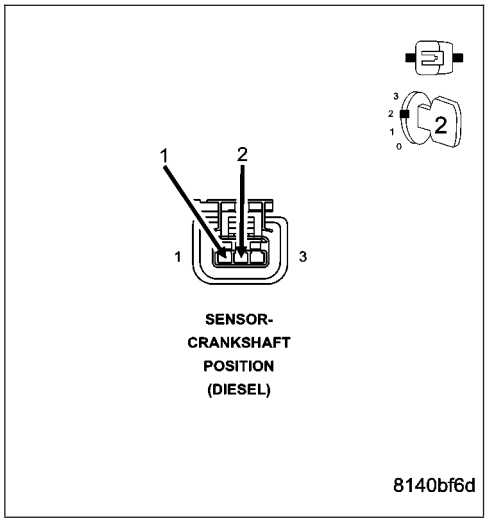

P0337-CRANKSHAFT POSITION (CKP) SENSOR VOLTAGE TOO LOW

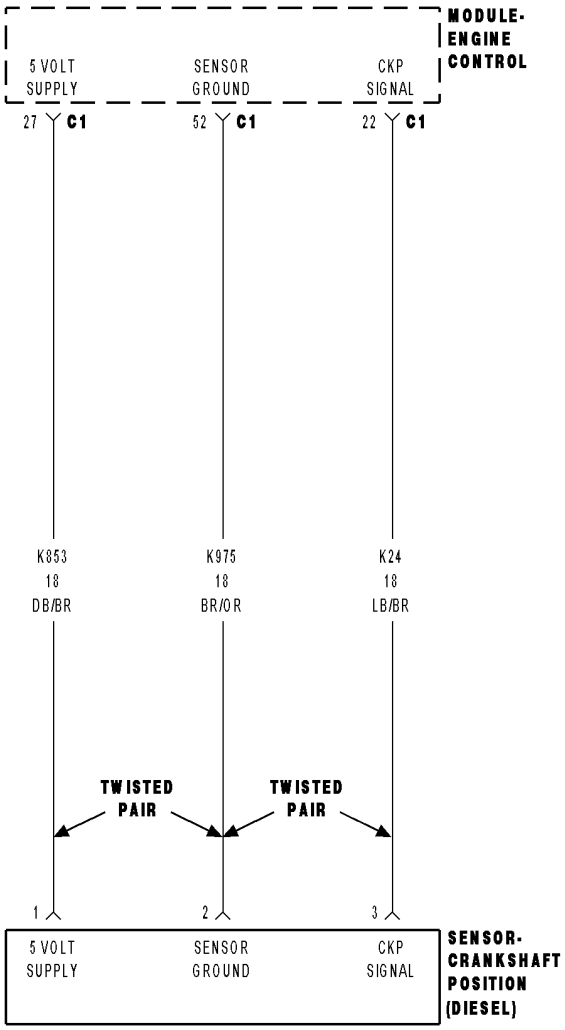

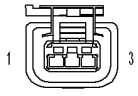

SENSOR-
CRANKSHAFT
POSITION
(DIESEL)

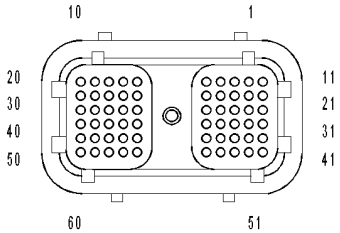

MODULE-ENGINE
CONTROL C1

813fc1d1

P0337-CRANKSHAFT POSITION (CKP) SENSOR VOLTAGE TOO LOW (CONTINUED)

For the Engine circuit diagram (Refer to 8 - ELECTRICAL/ELECTRONIC CONTROL MODULES/ENGINE CONTROL MODULE - SCHEMATIC - ELECTRICAL)

For a complete wiring diagram **Refer to Section 8W**.

- **When Monitored:**
  With the key on.
- **Set Condition:**
  Voltage detected at the CKP is below a calibrated value for a calibrated amount of time.

Possible Causes
CKP SENSOR
(K853) 5-VOLT SUPPLY CIRCUIT SHORTED TO (K975) RETURN CIRCUIT
(K853) 5-VOLT SUPPLY CIRCUIT SHORTED BATTERY NEGATIVE
INTERMITTENT CONDITION
ECM

Always perform the Pre-Diagnostic Troubleshooting procedure before proceeding. (Refer to 9 - ENGINE - DIAGNOSIS AND TESTING)

Diagnostic Test

1. CKP SENSOR

Disconnect the CKP sensor harness connector.

Check connectors - Clean/repair as necessary.

Measure the resistance between the (K853) 5-volt supply circuit and the (K24) signal circuit of the sensor.

Is the resistance between 900 and 1100 ohms?

Yes >> Go To 2

No >> Replace the CKP sensor.
Perform POWERTRAIN VERIFICATION TEST VER - 1 (DIESEL). (Refer to 8 - ELECTRICAL/ELECTRONIC CONTROL MODULES/ENGINE CONTROL MODULE - DIAGNOSIS AND TESTING)

---

2. (K853) 5-VOLT SUPPLY CIRCUIT SHORTED TO (K975) RETURN CIRCUIT

Disconnect the ECM harness connectors.

NOTE: Check connectors - Clean/repair as necessary.
Measure the resistance between the (K853) 5-volt supply circuit and the (K975) return circuit in the sensor connector.

Is the resistance greater than 100k Ohms?

Yes >> Go To 3

No >> Repair the short circuit or replace the engine harness.
Perform POWERTRAIN VERIFICATION TEST VER - 1 (DIESEL). (Refer to 8 - ELECTRICAL/ELECTRONIC CONTROL MODULES/ENGINE CONTROL MODULE - DIAGNOSIS AND TESTING)

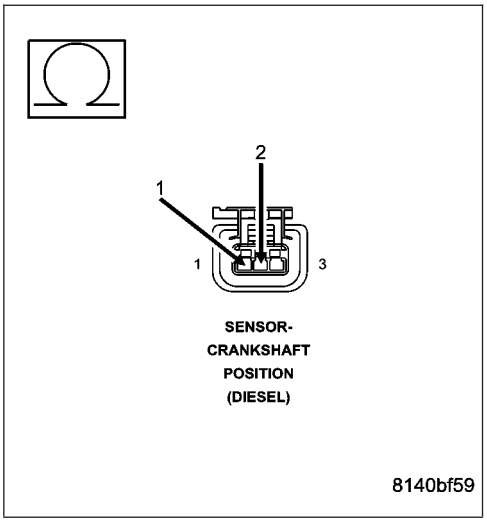

P0337-CRANKSHAFT POSITION (CKP) SENSOR VOLTAGE TOO LOW (CONTINUED)

3. (K853) 5-VOLT SUPPLY CIRCUIT SHORTED BATTERY NEGATIVE

Measure the resistance between the (K853) 5-volt supply circuit and battery negative.

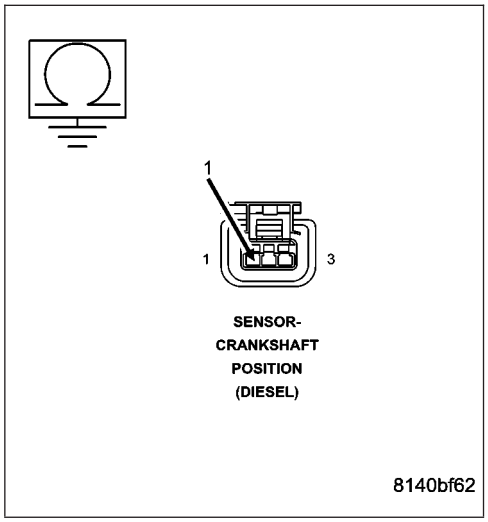

Is the resistance greater than 100k Ohms?

Yes >> Go To 4

No >> Repair the short circuit or replace the engine harness.
Perform POWERTRAIN VERIFICATION TEST VER - 1 (DIESEL). (Refer to 8 - ELECTRICAL/ELECTRONIC CONTROL MODULES/ENGINE CONTROL MODULE - DIAGNOSIS AND TESTING)

4. ECM

Reconnect the ECM harness connectors.

Ignition on, engine not running.

Connect a jumper wire between the sensor (K853) 5-volt supply circuit in the sensor harness connector 12-volts.

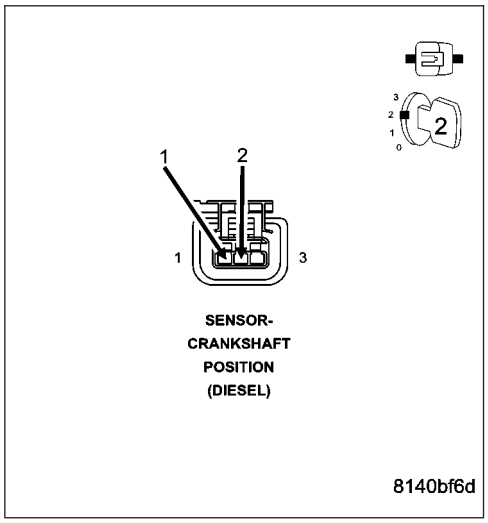

Did DTC P0338 set?

Yes >> Refer to the INTERMITTENT CONDITION Symptom (Diagnostic Procedure). (Refer to 9 - ENGINE - DIAGNOSIS AND TESTING)

No >> Replace the ECM.
Perform POWERTRAIN VERIFICATION TEST VER - 1 (DIESEL). (Refer to 8 - ELECTRICAL/ELECTRONIC CONTROL MODULES/ENGINE CONTROL MODULE - DIAGNOSIS AND TESTING)

P0338-CRANKSHAFT POSITION (CKP) SENSOR VOLTAGE TOO HIGH

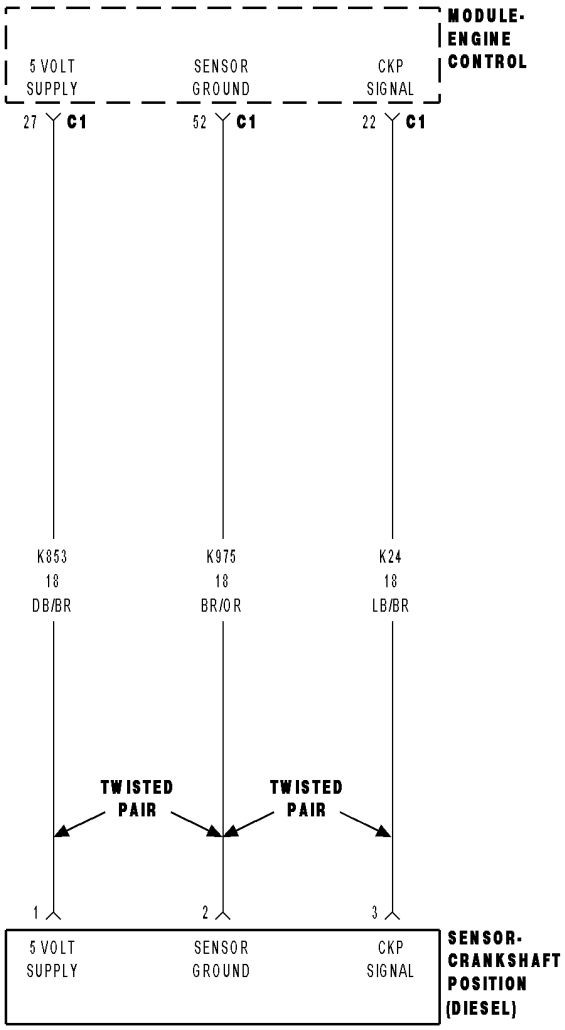

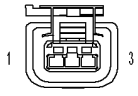

SENSOR-
CRANKSHAFT
POSITION
(DIESEL)

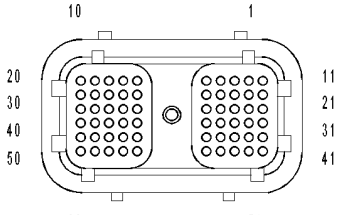

MODULE-ENGINE
CONTROL C1

813fc1d1

P0338-CRANKSHAFT POSITION (CKP) SENSOR VOLTAGE TOO HIGH (CONTINUED)

For the Engine circuit diagram (Refer to 8 - ELECTRICAL/ELECTRONIC CONTROL MODULES/ENGINE CONTROL MODULE - SCHEMATIC - ELECTRICAL)

For a complete wiring diagram **Refer to Section 8W**.

- **When Monitored:**
  With the key on.
- **Set Condition:**
  Voltage detected at the CKP is above a calibrated value for a calibrated amount of time.

Possible Causes
(K853) 5-VOLT SUPPLY CIRCUIT SHORTED TO VOLTAGE
INTERMITTENT CONDITION
ECM

Always perform the Pre-Diagnostic Troubleshooting procedure before proceeding. (Refer to 9 - ENGINE - DIAGNOSIS AND TESTING)

Diagnostic Test

1. (K853) 5-VOLT SUPPLY CIRCUIT SHORTED TO VOLTAGE

Turn the ignition off.

Disconnect the ECM harness connector(s).

Disconnect the CKP sensor harness connector.

Check connectors - Clean/repair as necessary.

Measure voltage between the (K853) 5-volt supply circuit in the sensor harness connector and battery negative.

Is the voltage greater than 1 volt?

Yes >> Repair or replace the shorted wiring harness.
Perform POWERTRAIN VERIFICATION TEST VER - 1 (DIESEL). (Refer to 8 - ELECTRICAL/ELECTRONIC CONTROL MODULES/ENGINE CONTROL MODULE - DIAGNOSIS AND TESTING)

No >> Go To 2

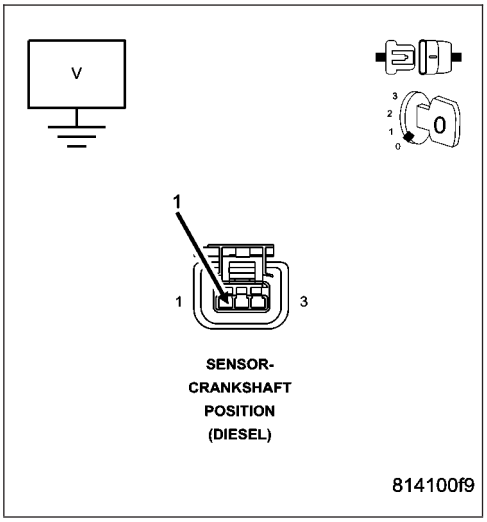

P0338-CRANKSHAFT POSITION (CKP) SENSOR VOLTAGE TOO HIGH (CONTINUED)

2. ECM

Reconnect the ECM harness connectors.

Ignition on, engine not running.

Connect a jumper wire between the sensor (K853) 5-volt supply circuit and the sensor (K975) return in the sensor harness connector.

Did DTC P0337 set?

Yes >> Refer to the INTERMITTENT CONDITION Symptom (Diagnostic Procedure).

Perform POWERTRAIN VERIFICATION TEST VER - 1 (DIESEL). (Refer to 8 - ELECTRICAL/ELECTRONIC CONTROL MODULES/ENGINE CONTROL MODULE - DIAGNOSIS AND TESTING)

No >> Replace the ECM.

Perform POWERTRAIN VERIFICATION TEST VER - 1 (DIESEL). (Refer to 8 - ELECTRICAL/ELECTRONIC CONTROL MODULES/ENGINE CONTROL MODULE - DIAGNOSIS AND TESTING)

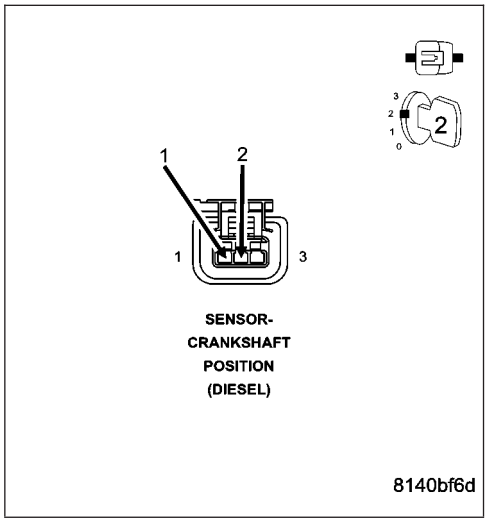

P0340-CAMSHAFT POSITION (CMP) LOST

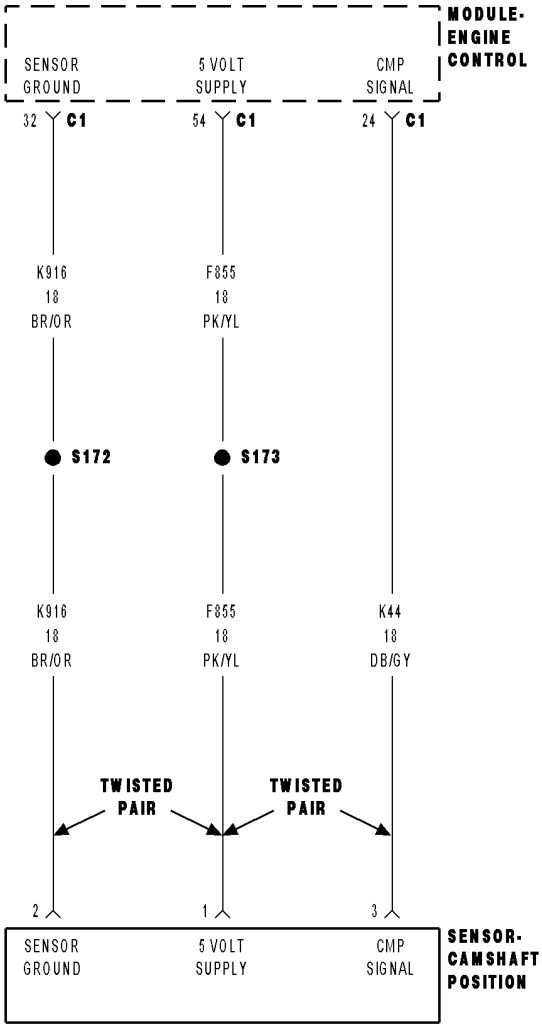

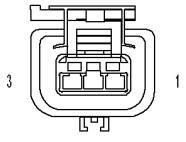

SENSOR-
CAMSHAFT
POSITION
(DIESEL)

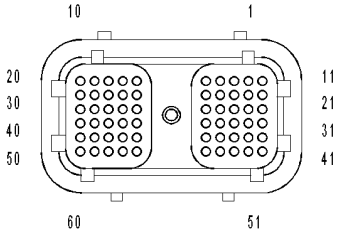

MODULE-ENGINE
CONTROL C1

81413b02

P0340-CAMSHAFT POSITION (CMP) LOST (CONTINUED)

For the Engine circuit diagram (Refer to 8 - ELECTRICAL/ELECTRONIC CONTROL MODULES/ENGINE CONTROL MODULE - SCHEMATIC - ELECTRICAL)

For a complete wiring diagram **Refer to Section 8W**.

- **When Monitored:**
  While the engine is running.
- **Set Condition:**
  The ECM no longer detects a signal from the Engine Position Sensor.

Possible Causes
INJECTOR DTC'S PRESENT
OTHER DTC'S
CAMSHAFT SENSOR
(F855) 5-VOLT SUPPLY CIRCUIT OPEN
(K916) RETURN CIRCUIT OPEN
(K44) SIGNAL CIRCUIT SHORTED TO GROUND
(K44) SIGNAL CIRCUIT SHORTED TO SUPPLY (F855) CIRCUIT
(K44) SIGNAL CIRCUIT SHORTED TO (K916) RETURN CIRCUIT
(K44) SIGNAL CIRCUIT SHORT TO VOLTAGE
ECM
INTERMITTENT CONDITION

Always perform the Pre-Diagnostic Troubleshooting procedure before proceeding. (Refer to 9 - ENGINE - DIAGNOSIS AND TESTING)

Diagnostic Test

1. INJECTOR DTC'S PRESENT

With the scan tool, read DTCs.

Do you have a DTC for P2146 or P2149?

Yes >> Repair injector DTC's first.
Perform POWERTRAIN VERIFICATION TEST VER - 1 (DIESEL). (Refer to 8 - ELECTRICAL/ELECTRONIC CONTROL MODULES/ENGINE CONTROL MODULE - DIAGNOSIS AND TESTING)

No >> Go To 2

---

2. OTHER DTC'S

With the scan tool, read DTCs.

Is any other DTC's present?

Yes >> Repair other DTC's first.
Perform POWERTRAIN VERIFICATION TEST VER - 1 (DIESEL). (Refer to 8 - ELECTRICAL/ELECTRONIC CONTROL MODULES/ENGINE CONTROL MODULE - DIAGNOSIS AND TESTING)

No >> Go To 3

P0340-CAMSHAFT POSITION (CMP) LOST (CONTINUED)

3. CAMSHAFT SENSOR

Turn the ignition off.

Disconnect the cam sensor harness connector.

Check connectors - Clean/repair as necessary.

Measure the resistance between the (F855) 5-volt supply circuit and the (K44) signal circuit of the sensor.

Is the resistance between 900 and 1100 ohms?

Yes >> Go To 4

No >> Replace the camshaft sensor.

Perform POWERTRAIN VERIFICATION TEST VER - 1 (DIESEL). (Refer to 8 - ELECTRICAL/ELECTRONIC CONTROL MODULES/ENGINE CONTROL MODULE - DIAGNOSIS AND TESTING)

---

4. (F855) 5-VOLT SUPPLY CIRCUIT OPEN

Disconnect the ECM harness connectors.

Check connectors - Clean/repair as necessary.

Measure the resistance of the (F855) 5-volt supply circuit between the ECM harness connector and the cam sensor harness connector.

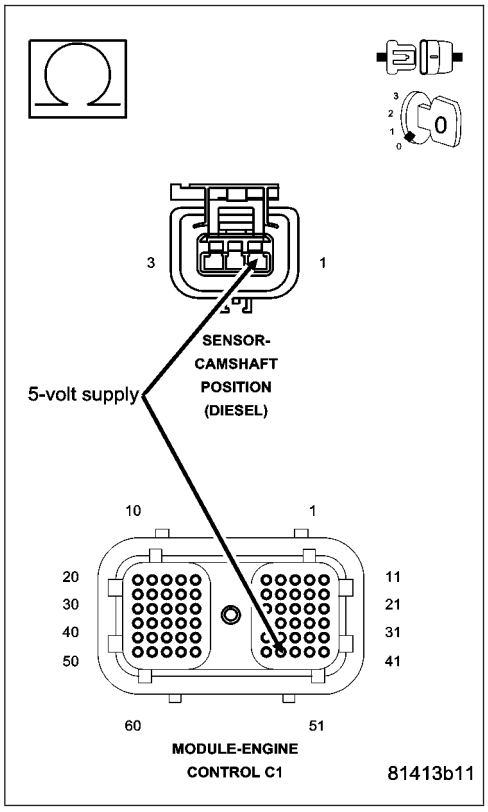

Is the resistance less than 10 ohms?

Yes >> Go To 5

No >> Repair the open (F855) 5-volt supply circuit.

Perform POWERTRAIN VERIFICATION TEST VER - 1 (DIESEL). (Refer to 8 - ELECTRICAL/ELECTRONIC CONTROL MODULES/ENGINE CONTROL MODULE - DIAGNOSIS AND TESTING)

P0340-CAMSHAFT POSITION (CMP) LOST (CONTINUED)

5. (K916) RETURN CIRCUIT OPEN

Measure the resistance of the (K916) return circuit between the ECM harness connector and the cam sensor harness connector.

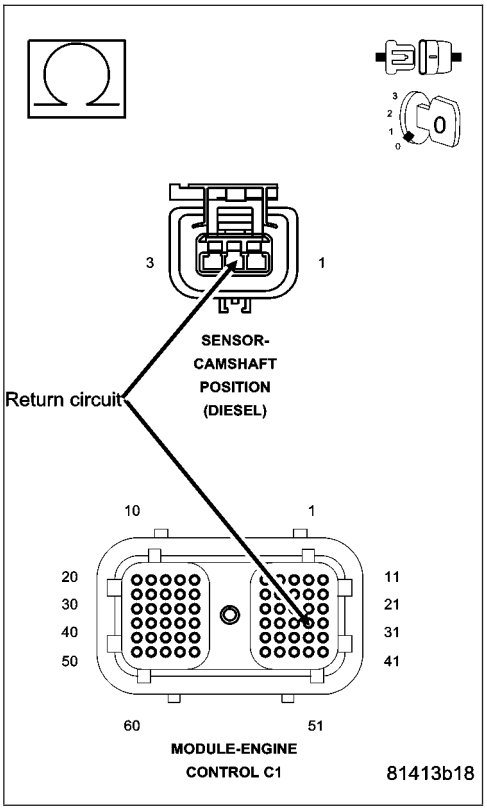

Is the resistance less than 10 ohms?

Yes >> Go To 6

No >> Repair the open (K916) return circuit.
Perform POWERTRAIN VERIFICATION TEST VER - 1 (DIESEL). (Refer to 8 - ELECTRICAL/ELECTRONIC CONTROL MODULES/ENGINE CONTROL MODULE - DIAGNOSIS AND TESTING)

6. (K44) SIGNAL CIRCUIT SHORTED TO GROUND

Measure the resistance between the (K44) signal circuit in the sensor harness connector and battery negative.

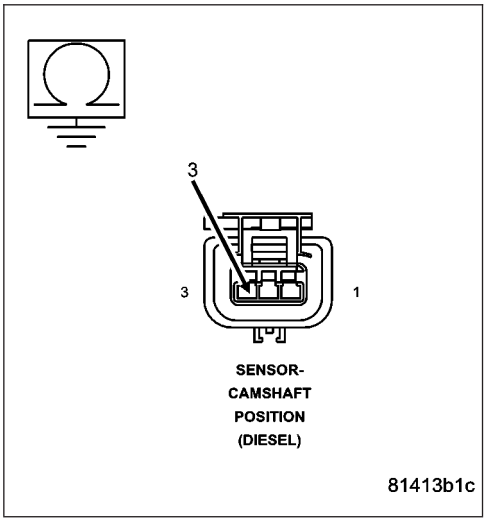

Is the resistance greater than 100k ohms?

Yes >> Go To 7

No >> Repair (K44) signal circuit shorted to ground.
Perform POWERTRAIN VERIFICATION TEST VER - 1 (DIESEL). (Refer to 8 - ELECTRICAL/ELECTRONIC CONTROL MODULES/ENGINE CONTROL MODULE - DIAGNOSIS AND TESTING)

P0340-CAMSHAFT POSITION (CMP) LOST (CONTINUED)

7. (K44) SIGNAL CIRCUIT SHORTED TO (F855) 5-VOLT SUPPLY CIRCUIT

Measure the resistance between the (K44) signal circuit and the (F855) 5-volt supply circuit in the sensor harness connector.

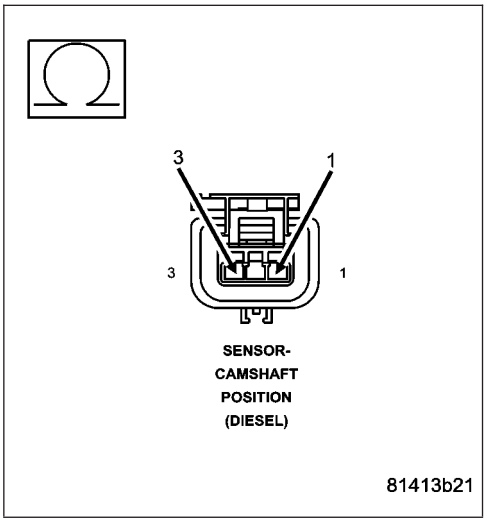

Is the resistance greater than 100k ohms?

Yes >> Go To 8

No >> Repair (K44) signal circuit shorted to the (F855) 5-volt supply circuit.

Perform POWERTRAIN VERIFICATION TEST VER - 1 (DIESEL). (Refer to 8 - ELECTRICAL/ELECTRONIC CONTROL MODULES/ENGINE CONTROL MODULE - DIAGNOSIS AND TESTING)

8. (K44) SIGNAL CIRCUIT SHORTED TO (K916) RETURN CIRCUIT

Measure the resistance between the (K44) signal circuit and the (K916) return circuit in the sensor harness connector.

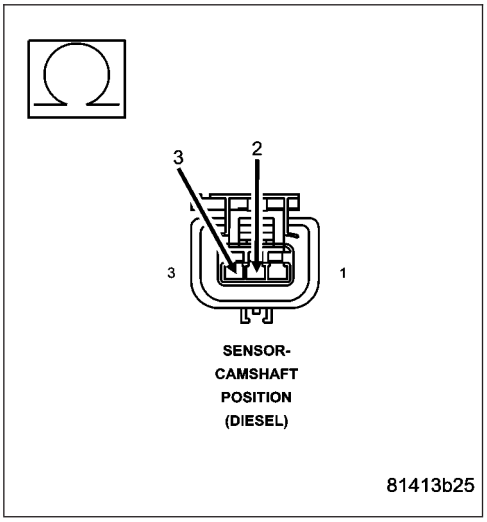

Is the resistance greater than 100k ohms?

Yes >> Go To 9

No >> Repair (K44) signal circuit shorted to the (K916) return circuit.

Perform POWERTRAIN VERIFICATION TEST VER - 1 (DIESEL). (Refer to 8 - ELECTRICAL/ELECTRONIC CONTROL MODULES/ENGINE CONTROL MODULE - DIAGNOSIS AND TESTING)

P0340-CAMSHAFT POSITION (CMP) LOST (CONTINUED)

9. (K44) SIGNAL CIRCUIT SHORT TO VOLTAGE

Measure the voltage between the (K44) signal circuit in the sensor harness connector and battery negative.

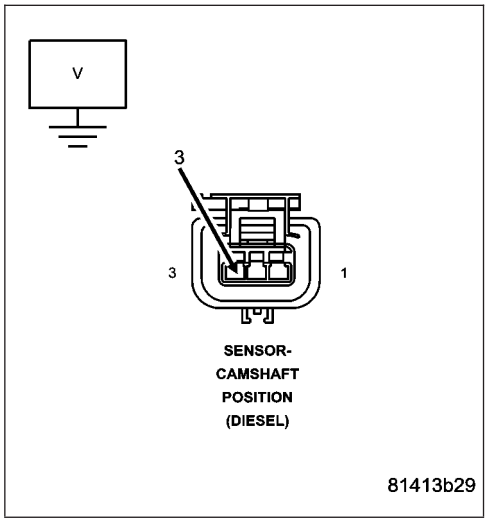

Is the voltage less than 1 volt?

Yes >> Go To 10

No >> Repair (K44) signal circuit shorted to voltage.
Perform POWERTRAIN VERIFICATION TEST VER - 1 (DIESEL). (Refer to 8 - ELECTRICAL/ELECTRONIC CONTROL MODULES/ENGINE CONTROL MODULE - DIAGNOSIS AND TESTING)

10. ECM

Reconnect the ECM harness connectors.

Measure the voltage between the (K44) signal circuit in the sensor harness connector and battery negative.

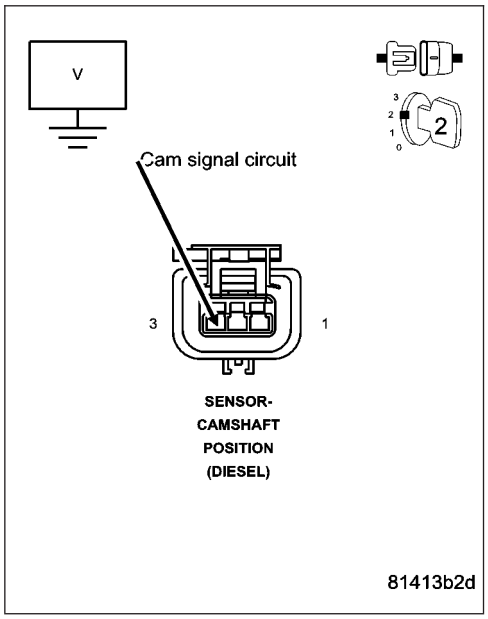

Is the voltage less than 1 volt?

Yes >> Refer to the INTERMITTENT CONDITION Symptom (Diagnostic Procedure). (Refer to 9 - ENGINE - DIAGNOSIS AND TESTING)

No >> Replace the ECM.
Perform POWERTRAIN VERIFICATION TEST VER - 1 (DIESEL). (Refer to 8 - ELECTRICAL/ELECTRONIC CONTROL MODULES/ENGINE CONTROL MODULE - DIAGNOSIS AND TESTING)

P0341-CAMSHAFT POSITION (CMP) SENSOR SIGNAL

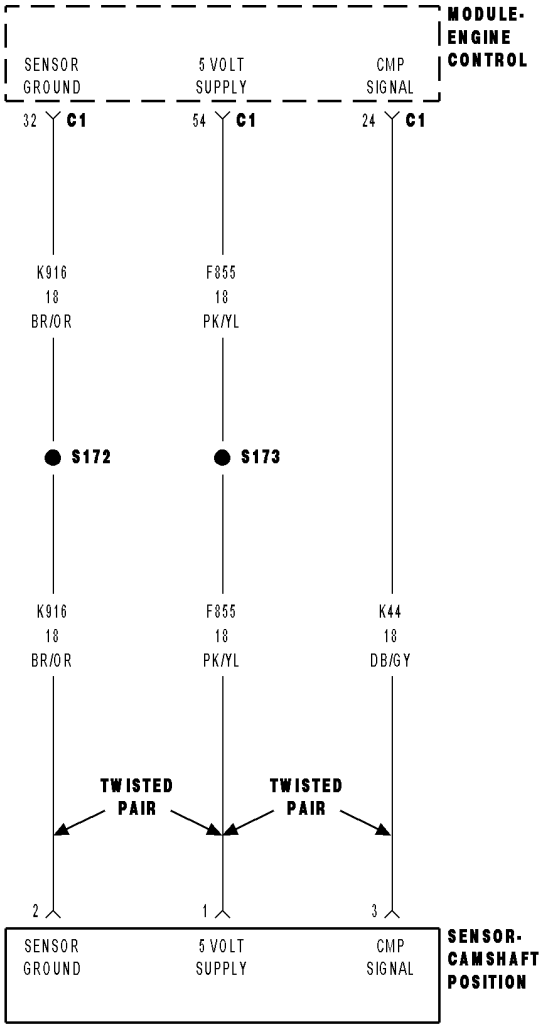

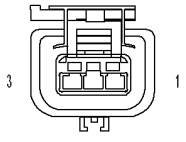

SENSOR-
CAMSHAFT
POSITION
(DIESEL)

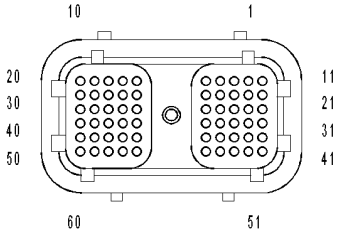

MODULE-ENGINE
CONTROL C1

81413b02

P0341-CAMSHAFT POSITION (CMP) SENSOR SIGNAL (CONTINUED)

For the Engine circuit diagram (Refer to 8 - ELECTRICAL/ELECTRONIC CONTROL MODULES/ENGINE CONTROL MODULE - SCHEMATIC - ELECTRICAL)

For a complete wiring diagram **Refer to Section 8W**.

- **When Monitored:**
  While the engine is running.
- **Set Condition:**
  The ECM no longer detects a signal from the Engine Position Sensor.

Possible Causes
INJECTOR DTC'S PRESENT
OTHER DTC'S
CAMSHAFT SENSOR
(K44) SIGNAL CIRCUIT OPEN
(F855) 5-VOLT SUPPLY CIRCUIT OPEN
(K916) RETURN CIRCUIT OPEN
(K44) SIGNAL CIRCUIT SHORTED TO GROUND
(K44) SIGNAL CIRCUIT SHORTED TO (F855) 5-VOLT SUPPLY CIRCUIT
(K44) SIGNAL CIRCUIT SHORTED TO (K916) RETURN CIRCUIT
(K44) SIGNAL CIRCUIT SHORT TO VOLTAGE
ECM
INTERMITTENT CONDITION

Always perform the Pre-Diagnostic Troubleshooting procedure before proceeding. (Refer to 9 - ENGINE - DIAGNOSIS AND TESTING)

Diagnostic Test

1. INJECTOR DTC'S PRESENT

With the scan tool, read DTCs.

Do you have a DTC for P2146 or P2149?

Yes >> Repair injector DTC's first.
Perform POWERTRAIN VERIFICATION TEST VER - 1 (DIESEL). (Refer to 8 - ELECTRICAL/ELECTRONIC CONTROL MODULES/ENGINE CONTROL MODULE - DIAGNOSIS AND TESTING)

No >> Go To 2

---

2. OTHER DTC'S

With the scan tool, read DTCs.

Is any other DTC's present?

Yes >> Repair other DTC's first.
Perform POWERTRAIN VERIFICATION TEST VER - 1 (DIESEL). (Refer to 8 - ELECTRICAL/ELECTRONIC CONTROL MODULES/ENGINE CONTROL MODULE - DIAGNOSIS AND TESTING)

No >> Go To 3

P0341-CAMSHAFT POSITION (CMP) SENSOR SIGNAL (CONTINUED)

3. CAMSHAFT SENSOR

Turn the ignition off.

Disconnect the cam sensor harness connector.

Check connectors - Clean/repair as necessary.

Measure the resistance between the (F855) 5-volt supply circuit and the (K44) signal circuit of the sensor.

Is the resistance between 900 and 1100 ohms?

Yes >> Go To 4

No >> Replace the camshaft sensor.

Perform POWERTRAIN VERIFICATION TEST VER - 1 (DIESEL). (Refer to 8 - ELECTRICAL/ELECTRONIC CONTROL MODULES/ENGINE CONTROL MODULE - DIAGNOSIS AND TESTING)

---

4. (K44) SIGNAL CIRCUIT OPEN

Disconnect the ECM harness connectors.

Measure the resistance of the (K44) signal circuit between the ECM harness connector and the sensor harness connector.

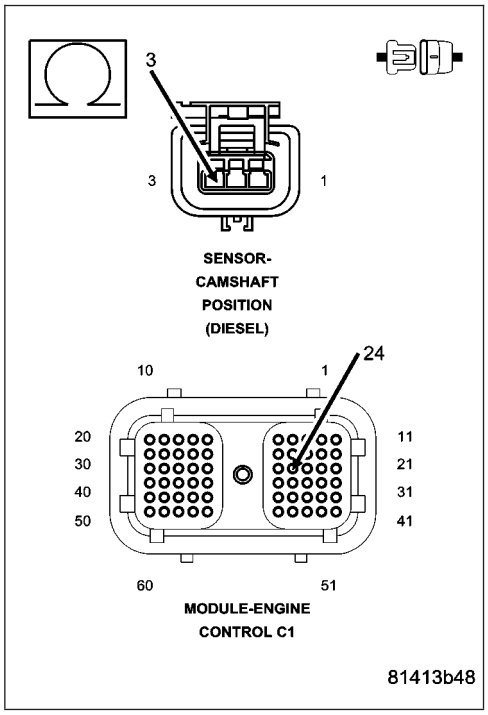

Is the resistance less than 10 ohms?

Yes >> Go To 5

No >> Repair the open (K44) signal circuit.

Perform POWERTRAIN VERIFICATION TEST VER - 1 (DIESEL). (Refer to 8 - ELECTRICAL/ELECTRONIC CONTROL MODULES/ENGINE CONTROL MODULE - DIAGNOSIS AND TESTING)

P0341-CAMSHAFT POSITION (CMP) SENSOR SIGNAL (CONTINUED)

5. Diagnostic Test Topic Goes Here

Measure the resistance of the (F855) 5-volt supply circuit between the ECM harness connector and the sensor harness connector.

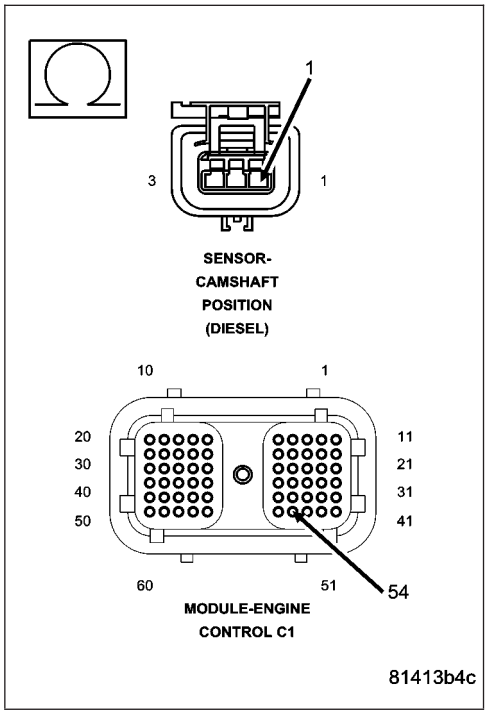

Is the resistance less than 10 ohms?

Yes >> Go To 6

No >> Repair the open (F855) 5-volt supply circuit.

Perform POWERTRAIN VERIFICATION TEST VER - 1 (DIESEL). (Refer to 8 - ELECTRICAL/ELECTRONIC CONTROL MODULES/ENGINE CONTROL MODULE - DIAGNOSIS AND TESTING)

6. (K916) RETURN CIRCUIT OPEN

Measure the resistance of the (K916) return circuit between the ECM harness connector and the sensor harness connector.

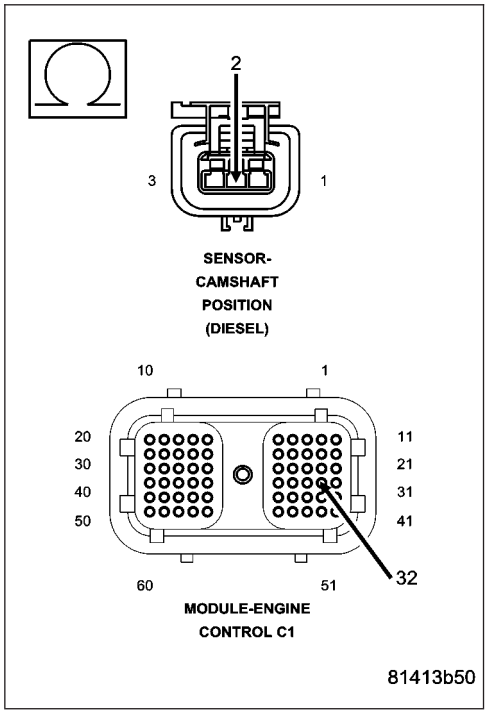

Is the resistance less than 10 ohms?

Yes >> Go To 7

No >> Repair the open (K916) return circuit.

Perform POWERTRAIN VERIFICATION TEST VER - 1 (DIESEL). (Refer to 8 - ELECTRICAL/ELECTRONIC CONTROL MODULES/ENGINE CONTROL MODULE - DIAGNOSIS AND TESTING)

P0341-CAMSHAFT POSITION (CMP) SENSOR SIGNAL (CONTINUED)

7. (K44) SIGNAL CIRCUIT SHORTED TO GROUND

Measure the resistance between the (K44) signal circuit in the sensor harness connector and battery negative.

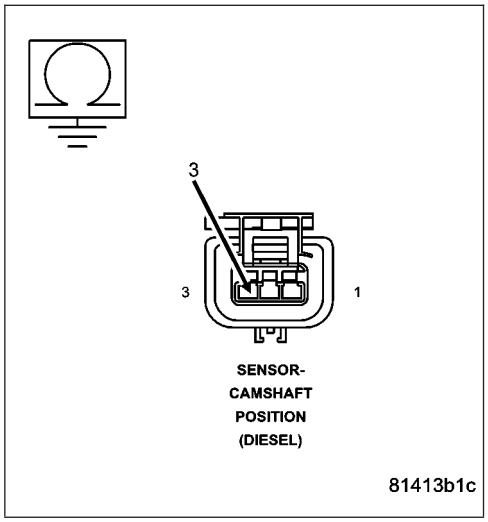

Is the resistance greater than 100k ohms?

Yes >> Go To 8

No >> Repair (K44) signal circuit shorted to ground.
Perform POWERTRAIN VERIFICATION TEST VER - 1 (DIESEL). (Refer to 8 - ELECTRICAL/ELECTRONIC CONTROL MODULES/ENGINE CONTROL MODULE - DIAGNOSIS AND TESTING)

8. (K44) SIGNAL CIRCUIT SHORTED TO (F855) 5-VOLT SUPPLY CIRCUIT

Measure the resistance between the (K44) signal circuit and the (F855) 5-volt supply circuit in the sensor harness connector.

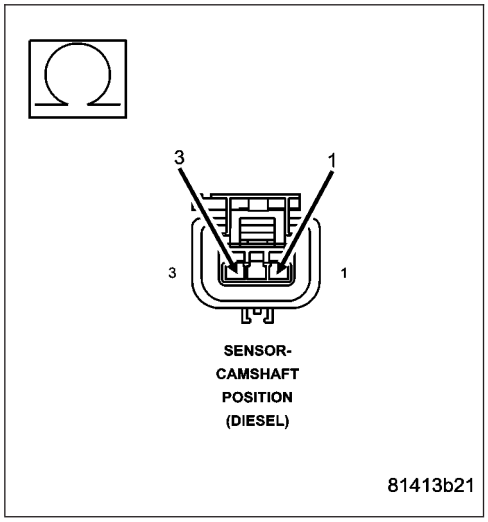

Is the resistance greater than 100k ohms?

Yes >> Go To 9

No >> Repair (K44) signal circuit shorted to the (F855) 5-volt supply circuit.
Perform POWERTRAIN VERIFICATION TEST VER - 1 (DIESEL). (Refer to 8 - ELECTRICAL/ELECTRONIC CONTROL MODULES/ENGINE CONTROL MODULE - DIAGNOSIS AND TESTING)

P0341-CAMSHAFT POSITION (CMP) SENSOR SIGNAL (CONTINUED)

9. (K44) SIGNAL CIRCUIT SHORTED TO (K916) RETURN CIRCUIT

Measure the resistance between the (K44) signal circuit and the (K916) return circuit in the sensor harness connector.

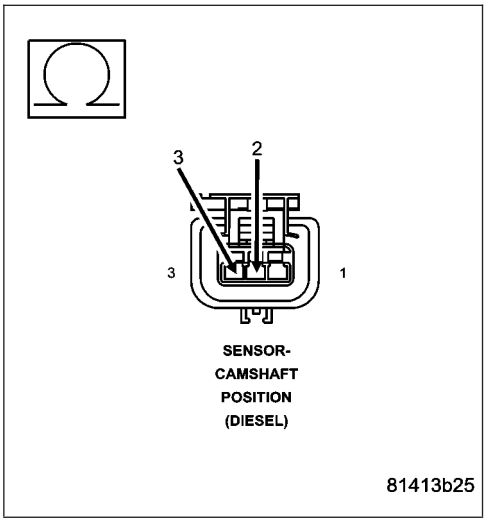

Is the resistance greater than 100k ohms?

Yes >> Go To 10

No >> Repair (K44) signal circuit shorted to the (K916) return circuit.

Perform POWERTRAIN VERIFICATION TEST VER - 1 (DIESEL). (Refer to 8 - ELECTRICAL/ELECTRONIC CONTROL MODULES/ENGINE CONTROL MODULE - DIAGNOSIS AND TESTING)

10. (K44) SIGNAL CIRCUIT SHORT TO VOLTAGE

Measure the voltage between the (K44) signal circuit in the sensor harness connector and battery negative.

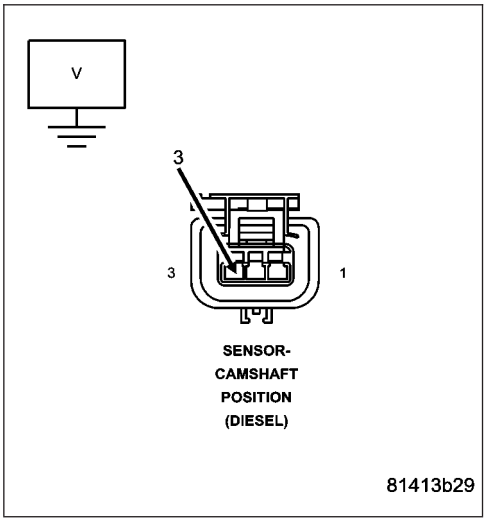

Is the voltage less than 1 volt?

Yes >> Go To 11

No >> Repair (K44) signal circuit shorted to voltage.

Perform POWERTRAIN VERIFICATION TEST VER - 1 (DIESEL). (Refer to 8 - ELECTRICAL/ELECTRONIC CONTROL MODULES/ENGINE CONTROL MODULE - DIAGNOSIS AND TESTING)

P0341-CAMSHAFT POSITION (CMP) SENSOR SIGNAL (CONTINUED)

11. ECM

Reconnect the ECM harness connectors.

Measure the voltage between the (K44) signal circuit in the sensor harness connector and battery negative.

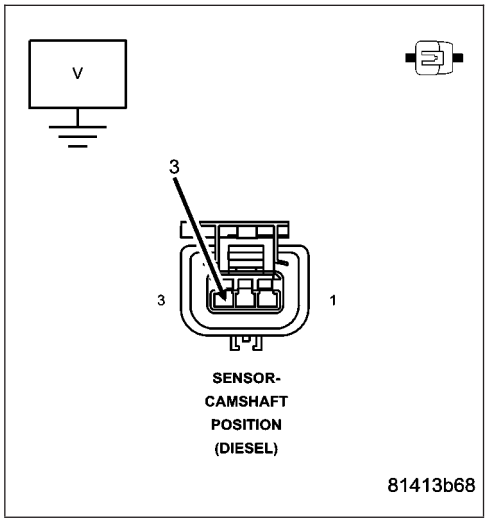

Is the voltage less than 1 volt?

Yes >> Test Complete.

No >> Replace the ECM.
Perform POWERTRAIN VERIFICATION TEST VER - 1 (DIESEL). (Refer to 8 - ELECTRICAL/ELECTRONIC CONTROL MODULES/ENGINE CONTROL MODULE - DIAGNOSIS AND TESTING)

P0381-WAIT TO START LAMP INOPERATIVE

For the Engine circuit diagram (Refer to 8 - ELECTRICAL/ELECTRONIC CONTROL MODULES/ENGINE CONTROL MODULE - SCHEMATIC - ELECTRICAL)

For a complete wiring diagram **Refer to Section 8W**.

- **When Monitored:**
  Ignition on.
- **Set Condition:**
  The cluster sends a signal to the ECM that it has detected a failed wait to start lamp.

Possible Causes
FUSED IGNITION SWITCH OUTPUT CIRCUIT OPEN
WAIT-TO-START LIGHT BULB
WIRING/CONNECTOR PROBLEM
ECM

Always perform the Pre-Diagnostic Troubleshooting procedure before proceeding. (Refer to 9 - ENGINE - DIAGNOSIS AND TESTING)

Diagnostic Test

1. WAIT-TO-START LAMP DOES NOT COME ON

Turn the ignition off.

While watching the wait-to-start lamp, turn the ignition key on.

Did the wait-to-start lamp light?

Yes >> Go To 2

No >> Go To 3

---

2. WAIT-TO-START LAMP STAYS ON ALL THE TIME

Turn the ignition off.

While watching the wait-to-start lamp, turn the ignition key on.

Does the wait-to-start lamp stay on all the time?

Yes >> Go To 3

No >> Wait-to-start Lamp operating normally. Test passed.
Perform POWERTRAIN VERIFICATION TEST VER - 1 (DIESEL). (Refer to 8 - ELECTRICAL/ELECTRONIC CONTROL MODULES/ENGINE CONTROL MODULE - DIAGNOSIS AND TESTING)

P0381-WAIT TO START LAMP INOPERATIVE (CONTINUED)

3. FUSED IGNITION SWITCH OUTPUT CIRCUIT OPEN

Turn the ignition off.

Remove the cluster.

NOTE: Check connectors - Clean/repair as necessary.

Turn the ignition on.

Using a 12-Volt test Light, check the Fused Ignition Switch Run/Start circuit.

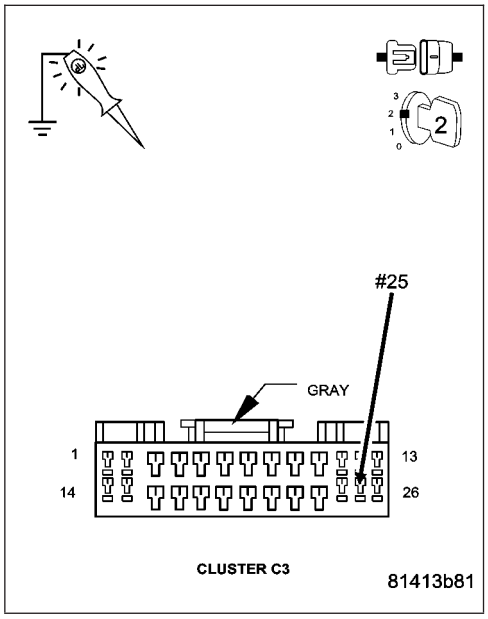

Is the light illuminated and bright?

Yes >> Go To 4

No >> Repair the open fused Ignition Switch Output circuit.
Perform POWERTRAIN VERIFICATION TEST VER - 1 (DIESEL). (Refer to 8 - ELECTRICAL/ELECTRONIC CONTROL MODULES/ENGINE CONTROL MODULE - DIAGNOSIS AND TESTING)

---

4. WAIT-TO-START LIGHT BULB

Remove and inspect the Wait-to-Start Bulb.

Is the Bulb Ok?

Yes >> Test complete.

No >> Replace the Wait-to-Start Bulb.
Perform POWERTRAIN VERIFICATION TEST VER - 1 (DIESEL). (Refer to 8 - ELECTRICAL/ELECTRONIC CONTROL MODULES/ENGINE CONTROL MODULE - DIAGNOSIS AND TESTING)

P0461-Fuel Level Unit No Change Over Time

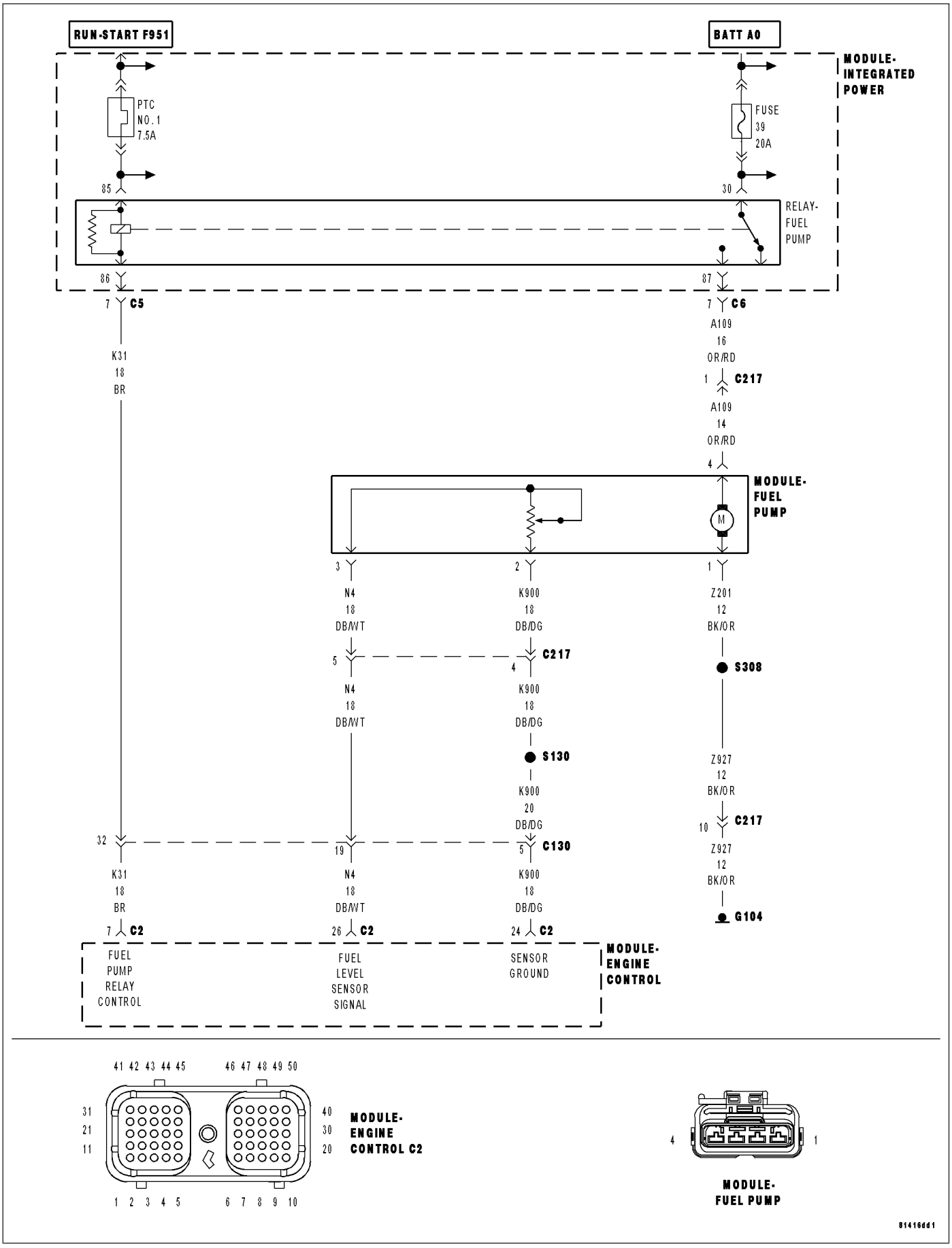

P0461-Fuel Level Unit No Change Over Time (CONTINUED)

For the Engine circuit diagram (Refer to 8 - ELECTRICAL/ELECTRONIC CONTROL MODULES/ENGINE CONTROL MODULE - SCHEMATIC - ELECTRICAL)

For a complete wiring diagram **Refer to Section 8W**.

- **When Monitored:**
  While the engine is running.
- **Set Condition:**
  Fuel level does not change by a calibrated amount over a calibrated amount of time.

Possible Causes
EXTERNAL DAMAGE TO FUEL TANK
FUEL LEVEL SENSOR
INSIDE OF FUEL TANK OBSTRUCTED DAMAGED
INTERMITTENT CONDITION

Always perform the Pre-Diagnostic Troubleshooting procedure before proceeding. (Refer to 9 - ENGINE - DIAGNOSIS AND TESTING)

Diagnostic Test

1. EXTERNAL DAMAGE TO FUEL TANK

Visually inspect the fuel tank for external damage.

Is the fuel tank damaged from the outside?

Yes >> Fix or replace the fuel tank.
Perform POWERTRAIN VERIFICATION TEST VER - 1 (DIESEL). (Refer to 8 - ELECTRICAL/ELECTRONIC CONTROL MODULES/ENGINE CONTROL MODULE - DIAGNOSIS AND TESTING)

No >> Go To 2

---

2. FUEL LEVEL SENSOR

Disconnect the wiring harness from the fuel level sensor.

NOTE: Check connectors - Clean/repair as necessary.
Remove the fuel level sensor from the fuel tank.

Does the fuel level float move freely?

Yes >> Go To 3

No >> Replace the fuel level sensor.
Perform POWERTRAIN VERIFICATION TEST VER - 1 (DIESEL). (Refer to 8 - ELECTRICAL/ELECTRONIC CONTROL MODULES/ENGINE CONTROL MODULE - DIAGNOSIS AND TESTING)

P0461-Fuel Level Unit No Change Over Time (CONTINUED)

3. FUEL LEVEL SENSOR

Measure the resistance between the sensor (N4) signal circuit and (K900) return circuit while moving the sensor float arm.

Does the resistance level change as you move the sensor arm?

Yes >> Go To 4

No >> Replace the fuel level sensor.
Perform POWERTRAIN VERIFICATION TEST VER - 1 (DIESEL). (Refer to 8 - ELECTRICAL/ELECTRONIC CONTROL MODULES/ENGINE CONTROL MODULE - DIAGNOSIS AND TESTING)

---

4. INSIDE OF FUEL TANK OBSTRUCTED DAMAGED

Visually inspect the inside of the fuel tank for obstructions.

Is the inside of the fuel tank damaged or obstructing the fuel level sensor?

Yes >> Test Complete.

No >> Replace the fuel tank.
Perform POWERTRAIN VERIFICATION TEST VER - 1 (DIESEL). (Refer to 8 - ELECTRICAL/ELECTRONIC CONTROL MODULES/ENGINE CONTROL MODULE - DIAGNOSIS AND TESTING)

P0462-LOW VOLTAGE DETECTED AT THE FUEL LEVEL SENSOR

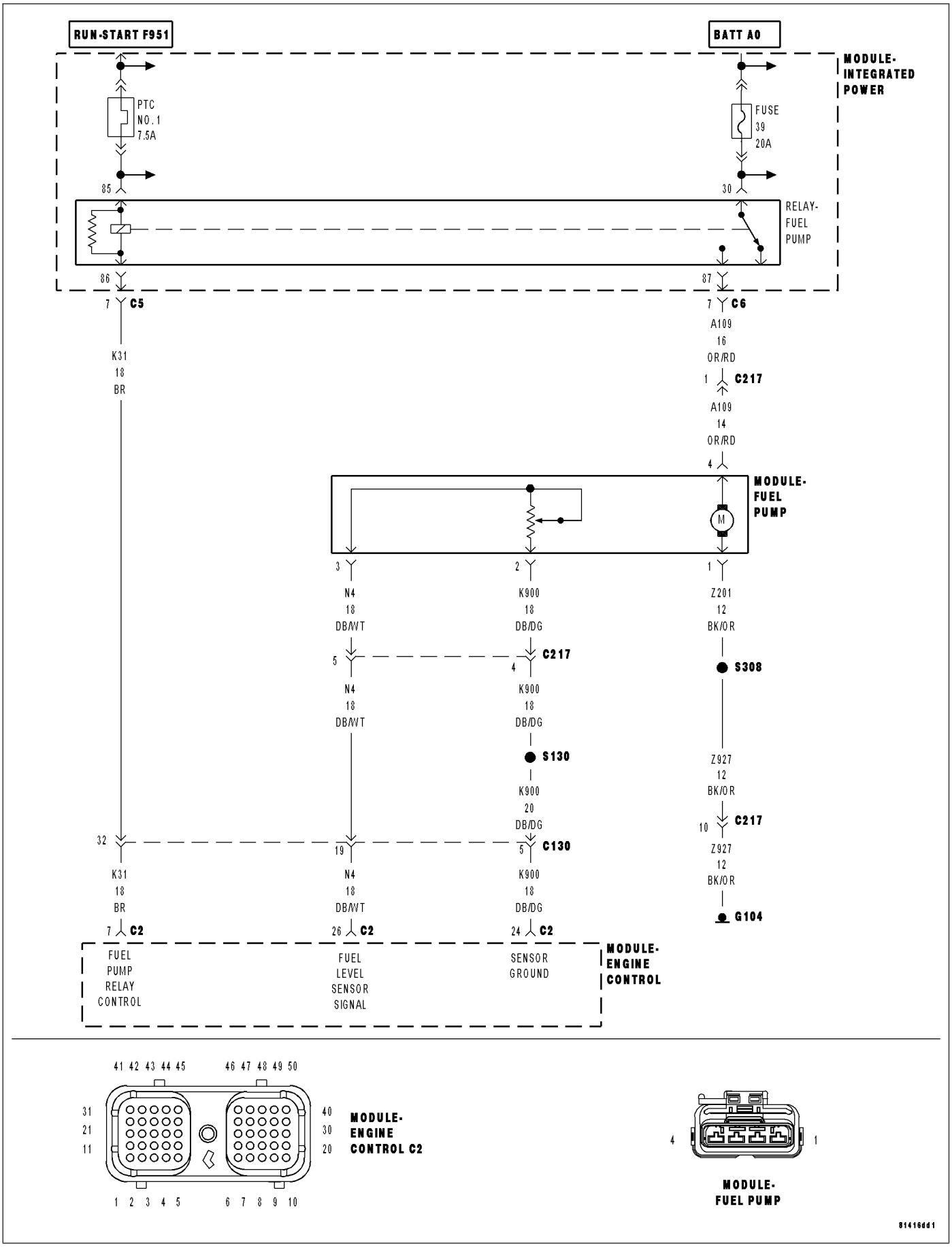

P0462-LOW VOLTAGE DETECTED AT THE FUEL LEVEL SENSOR (CONTINUED)

For the Engine circuit diagram (Refer to 8 - ELECTRICAL/ELECTRONIC CONTROL MODULES/ENGINE CONTROL MODULE - SCHEMATIC - ELECTRICAL)

For a complete wiring diagram **Refer to Section 8W**.

- **When Monitored:**
  Ignition on and battery voltage above 10.4 volts.
- **Set Condition:**
  The signal voltage from the sensor falls below a calibrated value for a calibrated amount of time.

Possible Causes
FUEL LEVEL SENSOR
(N4) SIGNAL CIRCUIT OPEN
(N4) SIGNAL CIRCUIT SHORTED TO VOLTAGE
INTERMITTENT CONDITION
ECM

Always perform the Pre-Diagnostic Troubleshooting procedure before proceeding. (Refer to 9 - ENGINE - DIAGNOSIS AND TESTING)

Diagnostic Test

1. FUEL LEVEL SENSOR

Turn the ignition off.

Disconnect the Fuel Level Sensor harness connector.

NOTE: Check connectors - Clean/repair as necessary.

Measure the resistance of the sensor across the (N4) signal circuit and (K900) return circuit.

Is the resistance less than 10 ohms?

Yes >> Go To 2

No >> Replace the fuel level sensor.
Perform POWERTRAIN VERIFICATION TEST VER - 1 (DIESEL). (Refer to 8 - ELECTRICAL/ELECTRONIC CONTROL MODULES/ENGINE CONTROL MODULE - DIAGNOSIS AND TESTING)

P0462-LOW VOLTAGE DETECTED AT THE FUEL LEVEL SENSOR (CONTINUED)

2. (G8) SIGNAL CIRCUIT OPEN

Disconnect the ECM harness connectors.

NOTE: Check connectors - Clean/repair as necessary.
Measure the resistance of the (N4) signal circuit between the ECM harness connector and the sensor harness connector.

Is the resistance less than 10 ohms?

Yes >> Go To 3

No >> Repair the open (N4) signal circuit.
Perform POWERTRAIN VERIFICATION TEST VER - 1 (DIESEL). (Refer to 8 - ELECTRICAL/ELECTRONIC CONTROL MODULES/ENGINE CONTROL MODULE - DIAGNOSIS AND TESTING)

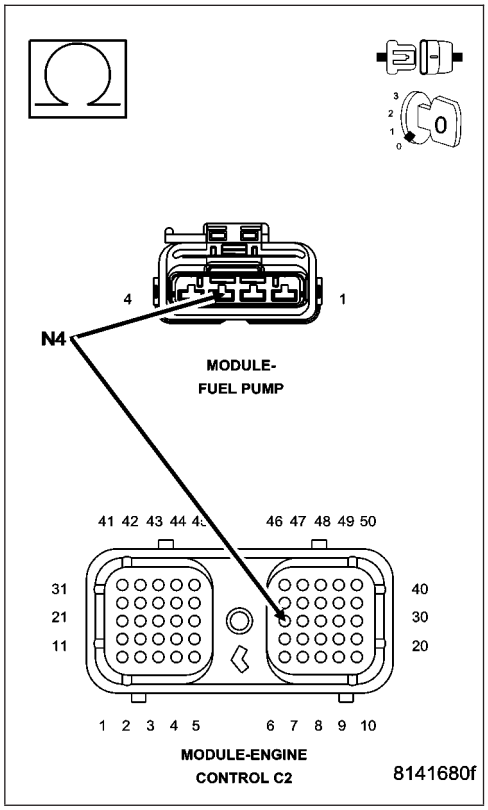

3. (G8) SIGNAL CIRCUIT SHORTED TO VOLTAGE

Measure the voltage between the (N4) signal circuit and battery negative.

Is the voltage greater than 1 volt?

Yes >> Repair the (N4) signal circuit shorted to voltage.
Perform POWERTRAIN VERIFICATION TEST VER - 1 (DIESEL). (Refer to 8 - ELECTRICAL/ELECTRONIC CONTROL MODULES/ENGINE CONTROL MODULE - DIAGNOSIS AND TESTING)

No >> Go To 4

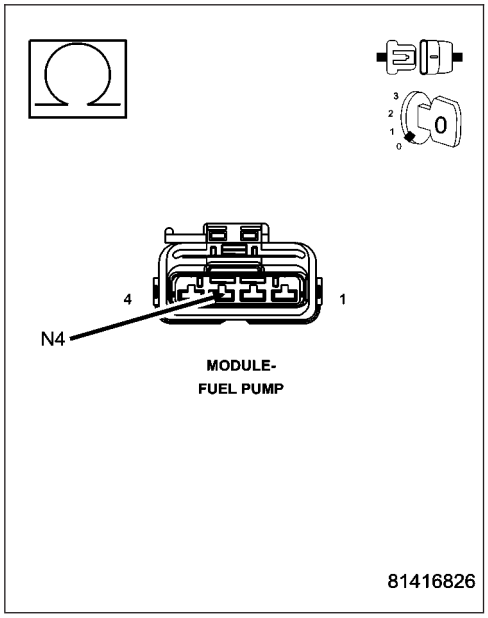

P0462-LOW VOLTAGE DETECTED AT THE FUEL LEVEL SENSOR (CONTINUED)

4. ECM

Reconnect the ECM harness connector.

While monitoring with the scan tool, connect a jumper wire between the (N4) signal circuit in the sensor harness connector and battery negative.

Did the DTC P0463 set?

Yes >> Test Complete.

No >> Replace the ECM.
Perform POWERTRAIN VERIFICATION TEST VER - 1 (DIESEL). (Refer to 8 - ELECTRICAL/ELECTRONIC CONTROL MODULES/ENGINE CONTROL MODULE - DIAGNOSIS AND TESTING)

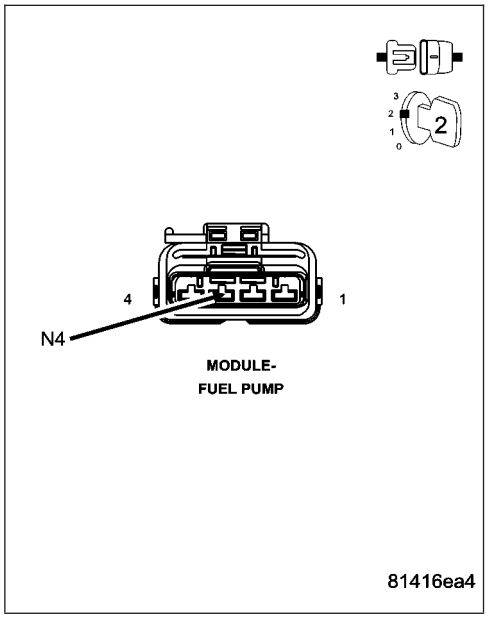

P0463-HIGH VOLTAGE DETECTED AT THE FUEL LEVEL SENSOR

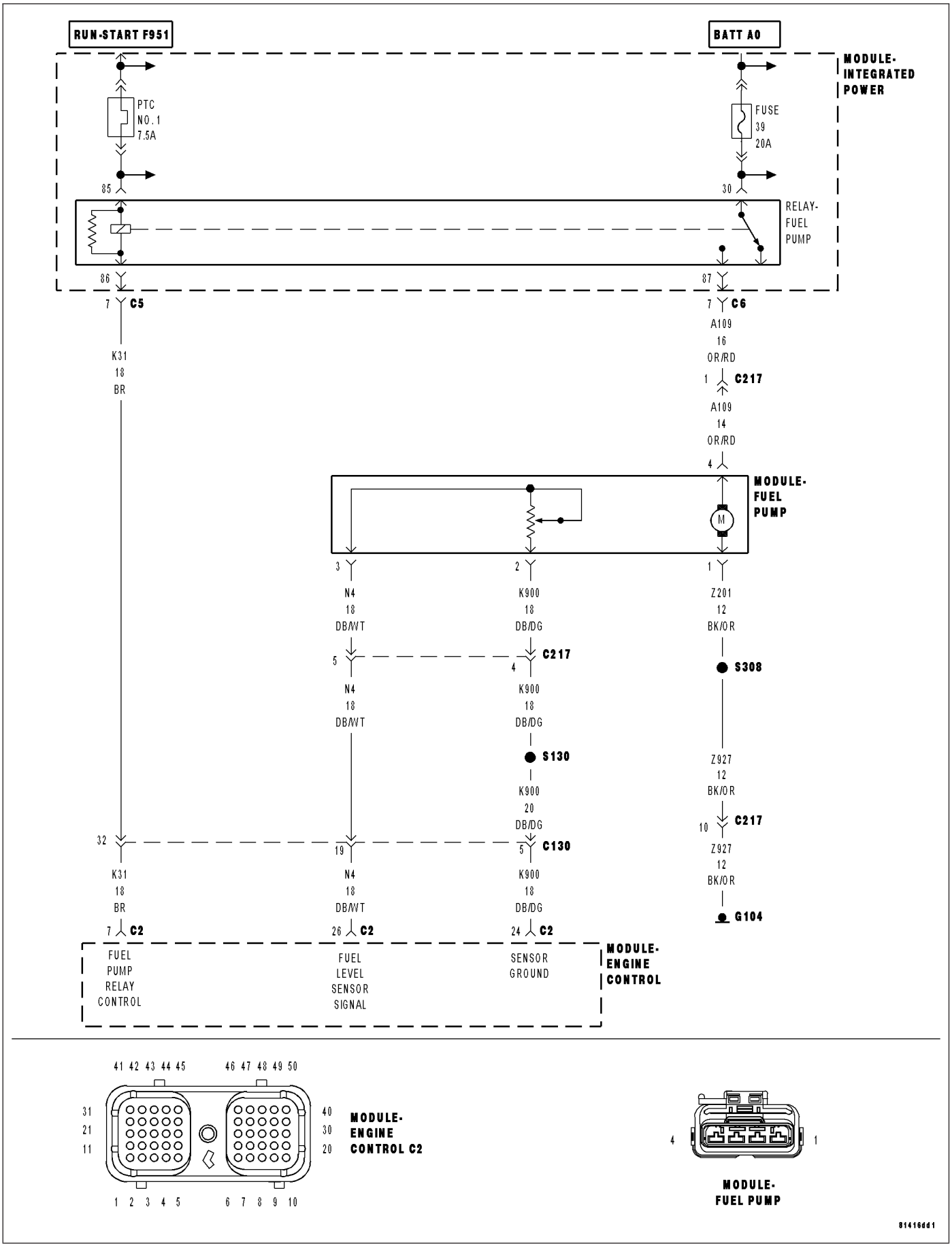

P0463-HIGH VOLTAGE DETECTED AT THE FUEL LEVEL SENSOR (CONTINUED)

For the Engine circuit diagram (Refer to 8 - ELECTRICAL/ELECTRONIC CONTROL MODULES/ENGINE CONTROL MODULE - SCHEMATIC - ELECTRICAL)

For a complete wiring diagram **Refer to Section 8W**.

- **When Monitored:**
  Ignition on and battery voltage above 10.4 volts.
- **Set Condition:**
  The signal voltage from the sensor goes above a calibrated value for a calibrated amount of time.

Possible Causes
FUEL LEVEL SENSOR
(N4) SIGNAL CIRCUIT SHORTED TO GROUND
INTERMITTENT CONDITION
ECM

Always perform the Pre-Diagnostic Troubleshooting procedure before proceeding. (Refer to 9 - ENGINE - DIAGNOSIS AND TESTING)

Diagnostic Test

1. FUEL LEVEL SENSOR

Disconnect the ECM harness connectors.

Disconnect the Fuel level sensor harness connector.

NOTE: Check connectors - Clean/repair as necessary.

Measure the resistance of the Fuel level sensor across the (N4) signal circuit and (K900) return circuit.

Is the resistance less than 10 ohms?

Yes >> Go To 2

No >> Replace the Fuel level sensor.
Perform POWERTRAIN VERIFICATION TEST VER - 1 (DIESEL). (Refer to 8 - ELECTRICAL/ELECTRONIC CONTROL MODULES/ENGINE CONTROL MODULE - DIAGNOSIS AND TESTING)

P0463-HIGH VOLTAGE DETECTED AT THE FUEL LEVEL SENSOR (CONTINUED)

2. (N4) SIGNAL CIRCUIT SHORTED TO GROUND

Measure the resistance between the (N4) signal circuit in the sensor harness connector and battery negative.

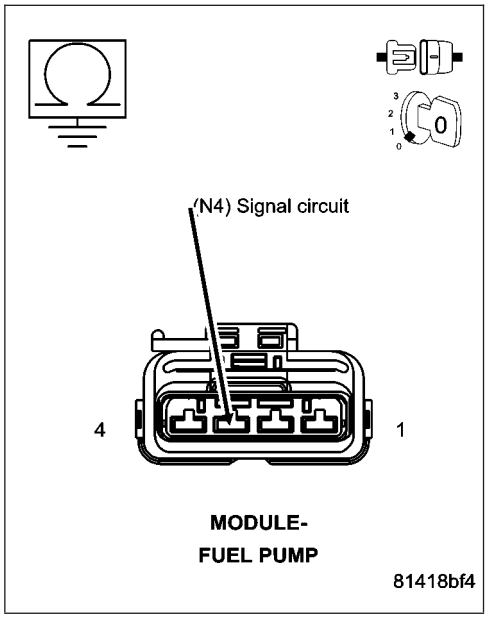

Is the resistance less than 10 Ohms?

Yes >> Repair the (N4) signal circuit shorted to ground.
Perform POWERTRAIN VERIFICATION TEST VER - 1 (DIESEL). (Refer to 8 - ELECTRICAL/ELECTRONIC CONTROL MODULES/ENGINE CONTROL MODULE - DIAGNOSIS AND TESTING)

No >> Go To 3

3. ECM

Reconnect the ECM harness connector.

While monitoring with the scan tool, disconnect the Fuel level sensor harness connector.

Did the DTC P0462 set?

Yes >> Test Complete.

No >> Replace the ECM.
Perform POWERTRAIN VERIFICATION TEST VER - 1 (DIESEL). (Refer to 8 - ELECTRICAL/ELECTRONIC CONTROL MODULES/ENGINE CONTROL MODULE - DIAGNOSIS AND TESTING)

P0477-LOW VOLTAGE ON THE ENGINE BRAKE DRIVER

For the Engine circuit diagram (Refer to 8 - ELECTRICAL/ELECTRONIC CONTROL MODULES/ENGINE CONTROL MODULE - SCHEMATIC - ELECTRICAL)

For a complete wiring diagram **Refer to Section 8W**.

- **When Monitored:**
  When the ignition is on.
- **Set Condition:**
  When the signal from the engine brake driver output does not match the signal from the engine brake driver feedback.

Possible Causes
WIRING HARNESS
ENGINE BRAKE DRIVER RELAY
FUSED B+ OPEN
ENGINE BRAKE DRIVER SIGNAL CIRCUIT OPEN
INTERMITTENT CONDITION
ENGINE BRAKE DRIVER SIGNAL CIRCUIT SHORTED TO BATTERY NEGATIVE
ECM

Always perform the Pre-Diagnostic Troubleshooting procedure before proceeding. (Refer to 9 - ENGINE - DIAGNOSIS AND TESTING)

Diagnostic Test

1. RELAY CLICKING

Turn the engine off (ignition on).

With the scan tool, actuate the exhaust brake relay.

Can you hear the Relay clicking?

Yes >> Go To 2

No >> Go To 3

---

2. WIRING HARNESS

With the scan tool, actuate the exhaust brake relay.

While the relay is clicking, wiggle the wiring harness and connectors throughout the circuit.

Does this interrupt the clicking?

Yes >> Repair or replace the wiring harness.
Perform POWERTRAIN VERIFICATION TEST VER - 1 (DIESEL). (Refer to 8 - ELECTRICAL/ELECTRONIC CONTROL MODULES/ENGINE CONTROL MODULE - DIAGNOSIS AND TESTING)

No >> Go To 3

P0477-LOW VOLTAGE ON THE ENGINE BRAKE DRIVER (CONTINUED)

3. Engine Brake Driver Relay

Remove the Engine Brake Driver Relay.

Check connectors - Clean/repair as necessary.

Measure the resistance between terminals 86 and 85 of the engine brake relay.

Is the resistance less than 100 Ohms?

Yes >> Go To 4

No >> Replace the Engine Brake Driver Relay.
Perform POWERTRAIN VERIFICATION TEST VER - 1 (DIESEL). (Refer to 8 - ELECTRICAL/ELECTRONIC CONTROL MODULES/ENGINE CONTROL MODULE - DIAGNOSIS AND TESTING)

---

4. FUSED B+ OPEN

Ignition on, engine not running.

Measure the voltage of the Fused B+ Supply circuit at the Engine Brake Relay.

Is the voltage within 10% of battery voltage?

Yes >> Go To 5

No >> Repair the open B+ circuit.
Perform POWERTRAIN VERIFICATION TEST VER - 1 (DIESEL). (Refer to 8 - ELECTRICAL/ELECTRONIC CONTROL MODULES/ENGINE CONTROL MODULE - DIAGNOSIS AND TESTING)

---

5. ENGINE BRAKE DRIVER SIGNAL CIRCUIT OPEN

Turn the ignition off.

Disconnect the ECM harness connectors.

Check connectors - Clean/repair as necessary.

Measure the resistance of the Engine Brake Driver signal circuit between the Relay harness connector and the ECM harness connector.

Is the resistance less than 10 Ohms?

Yes >> Go To 6

No >> Repair the open Engine Brake driver circuit open from relay to ECM.
Perform POWERTRAIN VERIFICATION TEST VER - 1 (DIESEL). (Refer to 8 - ELECTRICAL/ELECTRONIC CONTROL MODULES/ENGINE CONTROL MODULE - DIAGNOSIS AND TESTING)

---

6. ENGINE BRAKE DRIVER SIGNAL CIRCUIT SHORTED TO BATTERY NEGATIVE

Measure the resistance of the Engine Brake Driver signal circuit between the Relay connector and battery negative.

Is the resistance greater than 100k Ohms?

Yes >> Go To 7

No >> Repair Engine brake driver shorted to Battery negative.
Perform POWERTRAIN VERIFICATION TEST VER - 1 (DIESEL). (Refer to 8 - ELECTRICAL/ELECTRONIC CONTROL MODULES/ENGINE CONTROL MODULE - DIAGNOSIS AND TESTING)

P0477-LOW VOLTAGE ON THE ENGINE BRAKE DRIVER (CONTINUED)

7. ECM

Reconnect the ECM harness connectors.

Using the scan tool, actuate the Engine Brake Driver Relay.

While monitoring with the scan tool, use a jumper wire to connect 12 volts to the relay signal circuit with the relay disconnected.

Did the DTC P0478?

Yes >> Refer to the INTERMITTENT CONDITION Symptom (Diagnostic Procedure). (Refer to 9 - ENGINE - DIAGNOSIS AND TESTING)

No >> Replace ECM.

Perform POWERTRAIN VERIFICATION TEST VER - 1 (DIESEL). (Refer to 8 - ELECTRICAL/ELECTRONIC CONTROL MODULES/ENGINE CONTROL MODULE - DIAGNOSIS AND TESTING)

P0478-HIGH VOLTAGE ON THE ENGINE BRAKE DRIVER

For the Engine circuit diagram (Refer to 8 - ELECTRICAL/ELECTRONIC CONTROL MODULES/ENGINE CONTROL MODULE - SCHEMATIC - ELECTRICAL)

For a complete wiring diagram **Refer to Section 8W**.

- **When Monitored:**
  When the ignition is on.
- **Set Condition:**
  When the signal from the engine brake driver output does not match the signal from the engine brake driver feedback.

Possible Causes
RELAY LOOSE
ENGINE BRAKE DRIVER CONTROL CIRCUIT SHORTED TO VOLTAGE
ENGINE BRAKE RELAY
INTERMITTENT CONDITION
ECM

Always perform the Pre-Diagnostic Troubleshooting procedure before proceeding. (Refer to 9 - ENGINE - DIAGNOSIS AND TESTING)

Diagnostic Test

1. RELAY

Ignition on, engine not running.

With the scan tool, actuate the Engine Brake Driver Relay.

Can you hear the Relay clicking?

Yes >> Go To 2

No >> Go To 3

---

2. RELAY LOOSE

While the relay is clicking, wiggle the wiring harness and connectors.

Does this interrupt the clicking?

Yes >> Repair the loose connection.
Perform POWERTRAIN VERIFICATION TEST VER - 1 (DIESEL). (Refer to 8 - ELECTRICAL/ELECTRONIC CONTROL MODULES/ENGINE CONTROL MODULE - DIAGNOSIS AND TESTING)

No >> Go To 3

P0478-HIGH VOLTAGE ON THE ENGINE BRAKE DRIVER (CONTINUED)

3. Engine Brake Driver Control Circuit

Turn the ignition off.
Remove the Engine Brake Driver Relay.
Disconnect the ECM harness connectors.
Check connectors - Clean/repair as necessary.
Measure the voltage of the Engine Brake Driver Control Circuit between the relay terminal and battery negative.

Is the voltage less than 1 volt?

Yes >> Go To 4

No >> Repair Engine Brake Driver Control Circuit shorted to voltage.
Perform POWERTRAIN VERIFICATION TEST VER - 1 (DIESEL). (Refer to 8 - ELECTRICAL/ELECTRONIC CONTROL MODULES/ENGINE CONTROL MODULE - DIAGNOSIS AND TESTING)

---

4. Engine brake relay

Measure the resistance between terminals 85 and 86 of the engine brake relay.

Is the resistance less than 10 ohms?

Yes >> Replace the engine brake relay.
Perform POWERTRAIN VERIFICATION TEST VER - 1 (DIESEL). (Refer to 8 - ELECTRICAL/ELECTRONIC CONTROL MODULES/ENGINE CONTROL MODULE - DIAGNOSIS AND TESTING)

No >> Go To 5

---

5. ECM

Reconnect the ECM harness connectors.
Reinstall the Engine Brake relay.
Ignition on, engine not running.
While monitoring with the scan tool, remove the Engine Brake Driver Relay.

Did P0477 set?

Yes >> Refer to the INTERMITTENT CONDITION Symptom (Diagnostic Procedure). (Refer to 9 - ENGINE - DIAGNOSIS AND TESTING)

No >> Replace the ECM.
Perform POWERTRAIN VERIFICATION TEST VER - 1 (DIESEL). (Refer to 8 - ELECTRICAL/ELECTRONIC CONTROL MODULES/ENGINE CONTROL MODULE - DIAGNOSIS AND TESTING)

P0480-FAN CLUTCH

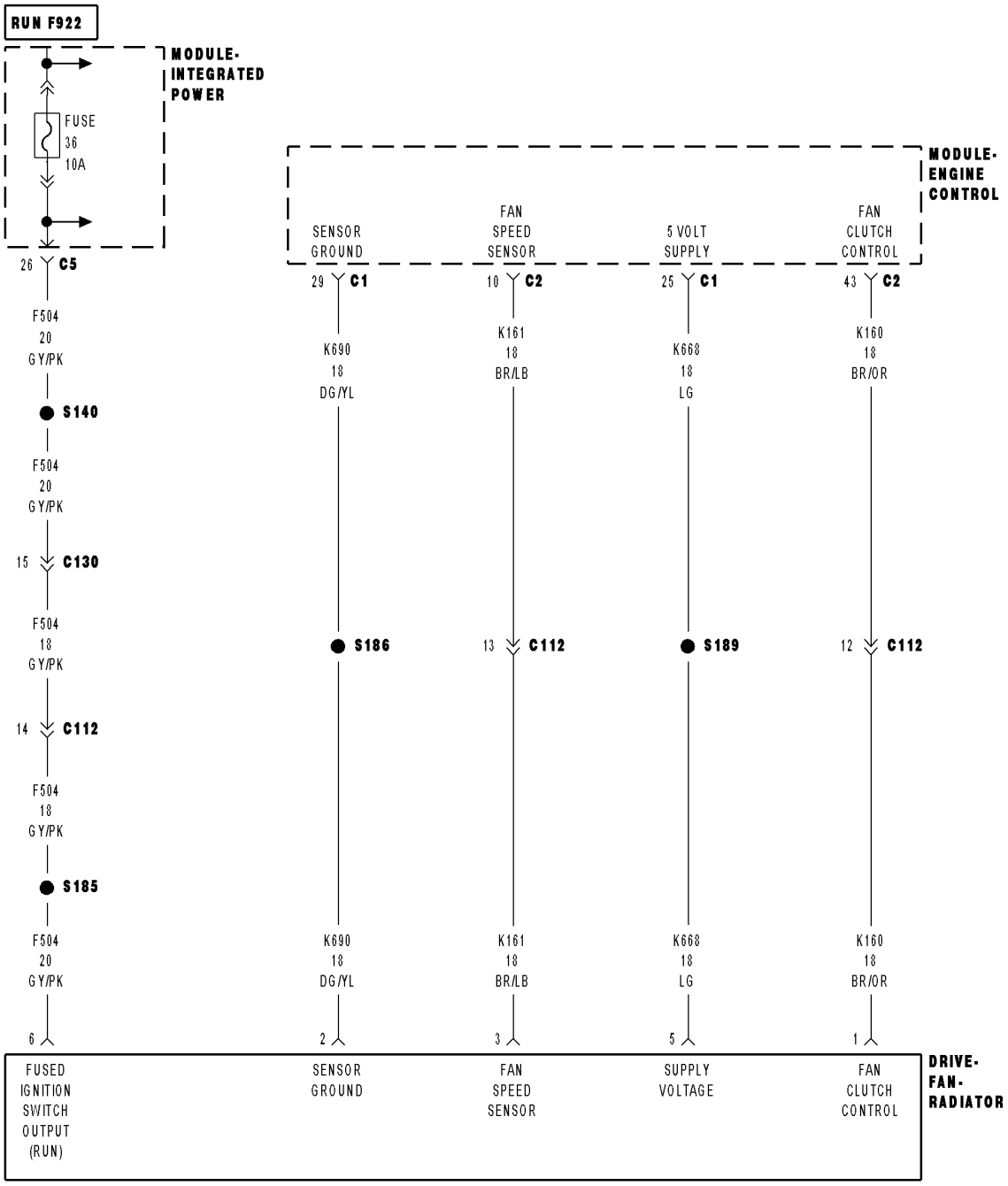

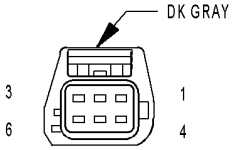

DRIVE-FAN-
RADIATOR
(DIESEL)

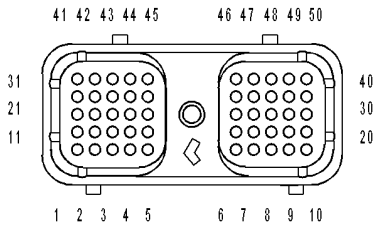

MODULE-ENGINE
CONTROL C2

814191a2

P0480-FAN CLUTCH (CONTINUED)

For the Engine circuit diagram (Refer to 8 - ELECTRICAL/ELECTRONIC CONTROL MODULES/ENGINE CONTROL MODULE - SCHEMATIC - ELECTRICAL)

For a complete wiring diagram **Refer to Section 8W**.

- **When Monitored:**
  When the ignition is on.
- **Set Condition:**
  The PWM signal to the fan clutch does not match the PWM signal from the fan clutch.

Possible Causes
FAN CLUTCH
WIRE HARNESS DAMAGED
OPEN FAN CLUTCH (K160) DRIVER CIRCUIT
(K160) DRIVER CIRCUIT SHORTED TO (K690) RETURN CIRCUIT
(K160) DRIVER CIRCUIT SHORTED TO BATTERY NEGATIVE
INTERMITTENT CONDITION
ECM

Always perform the Pre-Diagnostic Troubleshooting procedure before proceeding. (Refer to 9 - ENGINE - DIAGNOSIS AND TESTING)

Diagnostic Test

1. FAN CLUTCH

Disconnect the fan clutch harness connector.

Check connectors - Clean/repair as necessary.

Measure the resistance between the fan clutch (K160) driver circuit and the fan speed (K690) sensor return circuit on the fan clutch assembly.

Is the resistance less than 10 Ohms?

Yes >> Replace the fan clutch.
Perform POWERTRAIN VERIFICATION TEST VER - 1 (DIESEL). (Refer to 8 - ELECTRICAL/ELECTRONIC CONTROL MODULES/ENGINE CONTROL MODULE - DIAGNOSIS AND TESTING)

No >> Go To 2

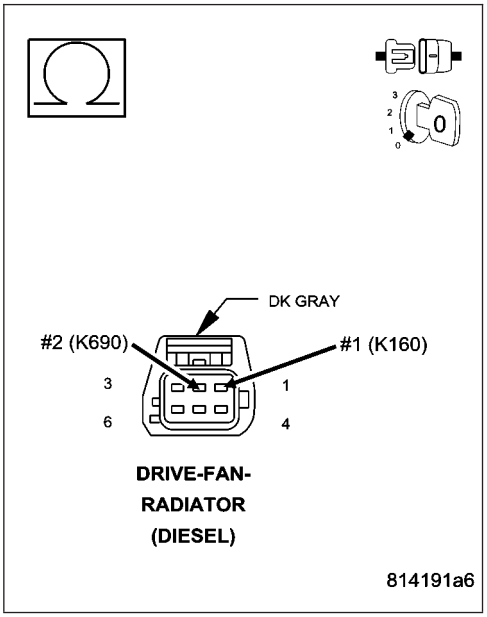

P0480-FAN CLUTCH (CONTINUED)

2. FAN CLUTCH

Disconnect the Fan Clutch harness connectors.

NOTE: Check connectors - Clean/repair as necessary.

Measure the resistance between the fan clutch (K160) driver circuit and the fan clutch (F504) battery supply circuit on the fan clutch assembly.

Is the resistance less than 6 Ohms or greater than 10 Ohms?

Yes >> Replace the fan clutch.
Perform POWERTRAIN VERIFICATION TEST VER - 1 (DIESEL). (Refer to 8 - ELECTRICAL/ELECTRONIC CONTROL MODULES/ENGINE CONTROL MODULE - DIAGNOSIS AND TESTING)

No >> Go To 3

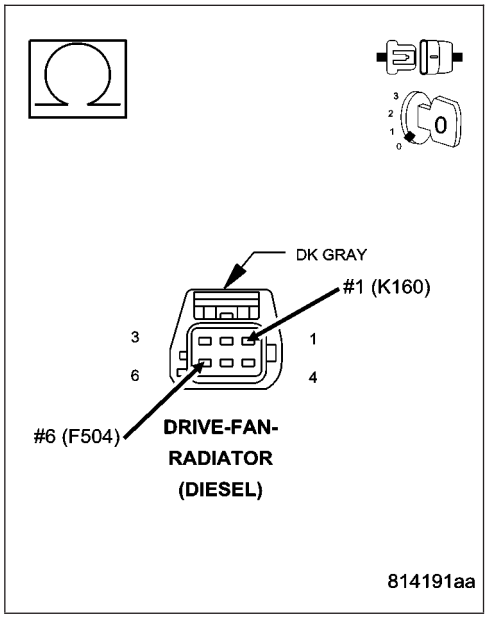

3. OPEN FAN CLUTCH (K160) DRIVER CIRCUIT

Disconnect the ECM harness connectors.

Check connectors - Clean/repair as necessary.

Measure the resistance of the fan clutch (K160) driver circuit between the ECM harness connector and the fan clutch harness connector.

Is the resistance less than 10 Ohms?

Yes >> Go To 4

No >> Repair the open fan clutch (K160) river circuit.
Perform POWERTRAIN VERIFICATION TEST VER - 1 (DIESEL). (Refer to 8 - ELECTRICAL/ELECTRONIC CONTROL MODULES/ENGINE CONTROL MODULE - DIAGNOSIS AND TESTING)

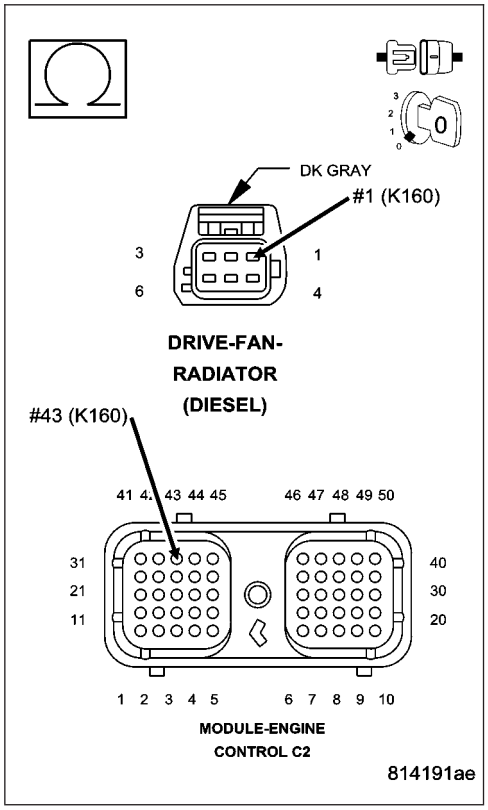

P0480-FAN CLUTCH (CONTINUED)

4. (K160) DRIVER CIRCUIT SHORTED TO (K690) RETURN CIRCUIT

Measure the resistance between the fan clutch (K160) driver circuit and the fan speed sensor (K690) return circuit at the sensor harness connector.

Is the resistance greater than 100K Ohms?

Yes >> Go To 5

No >> Repair the (K160) Driver circuit shorted to (K690) Return circuit.

Perform POWERTRAIN VERIFICATION TEST VER - 1 (DIESEL). (Refer to 8 - ELECTRICAL/ELECTRONIC CONTROL MODULES/ENGINE CONTROL MODULE - DIAGNOSIS AND TESTING)

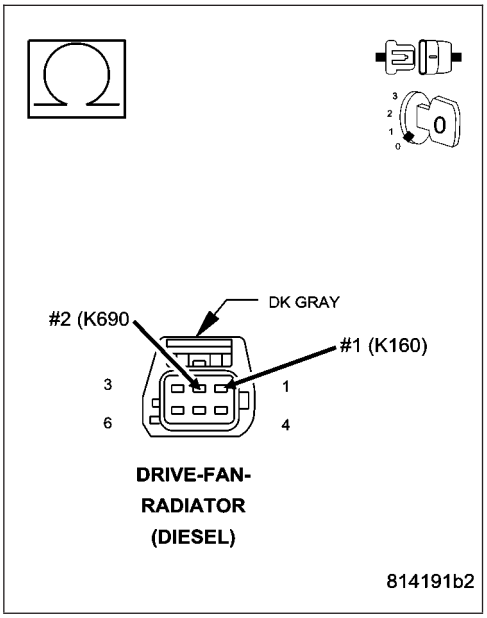

5. (K160) DRIVER CIRCUIT SHORTED TO BATTERY NEGATIVE

Measure the resistance between the fan clutch (K160) driver circuit and the battery negative.

Is the resistance greater than 100k Ohms?

Yes >> Go To 6

No >> Repair the (K160) Driver circuit shorted to battery negative.

Perform POWERTRAIN VERIFICATION TEST VER - 1 (DIESEL). (Refer to 8 - ELECTRICAL/ELECTRONIC CONTROL MODULES/ENGINE CONTROL MODULE - DIAGNOSIS AND TESTING)

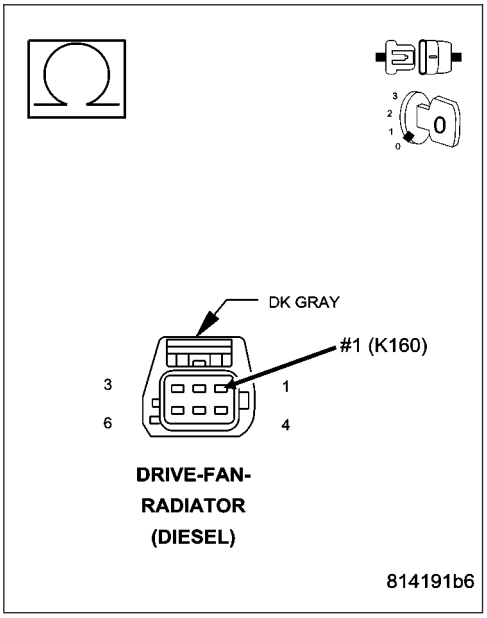

P0480-FAN CLUTCH (CONTINUED)

6. ECM

Reconnect the ECM harness connectors.

Measure the resistance of the fan clutch (K160) driver circuit between the fan clutch connector and battery negative.

Is the resistance greater than 100k Ohms?

Yes >> Refer to the INTERMITTENT CONDITION Symptom (Diagnostic Procedure). (Refer to 9 - ENGINE - DIAGNOSIS AND TESTING)

No >> replace the ECM.

Perform POWERTRAIN VERIFICATION TEST VER - 1 (DIESEL). (Refer to 8 - ELECTRICAL/ELECTRONIC CONTROL MODULES/ENGINE CONTROL MODULE - DIAGNOSIS AND TESTING)

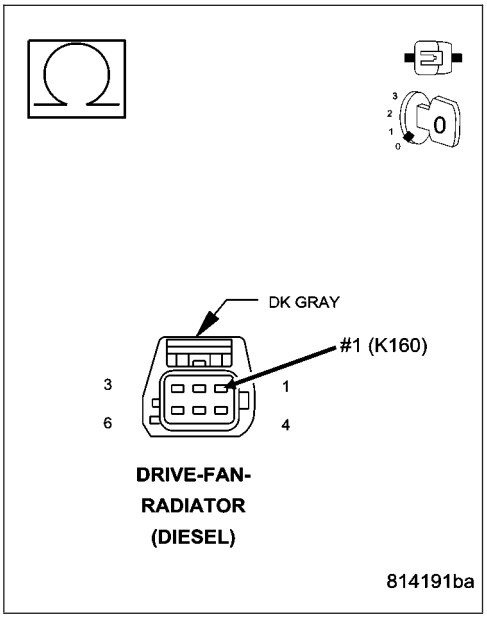

P0483-FAN SPEED

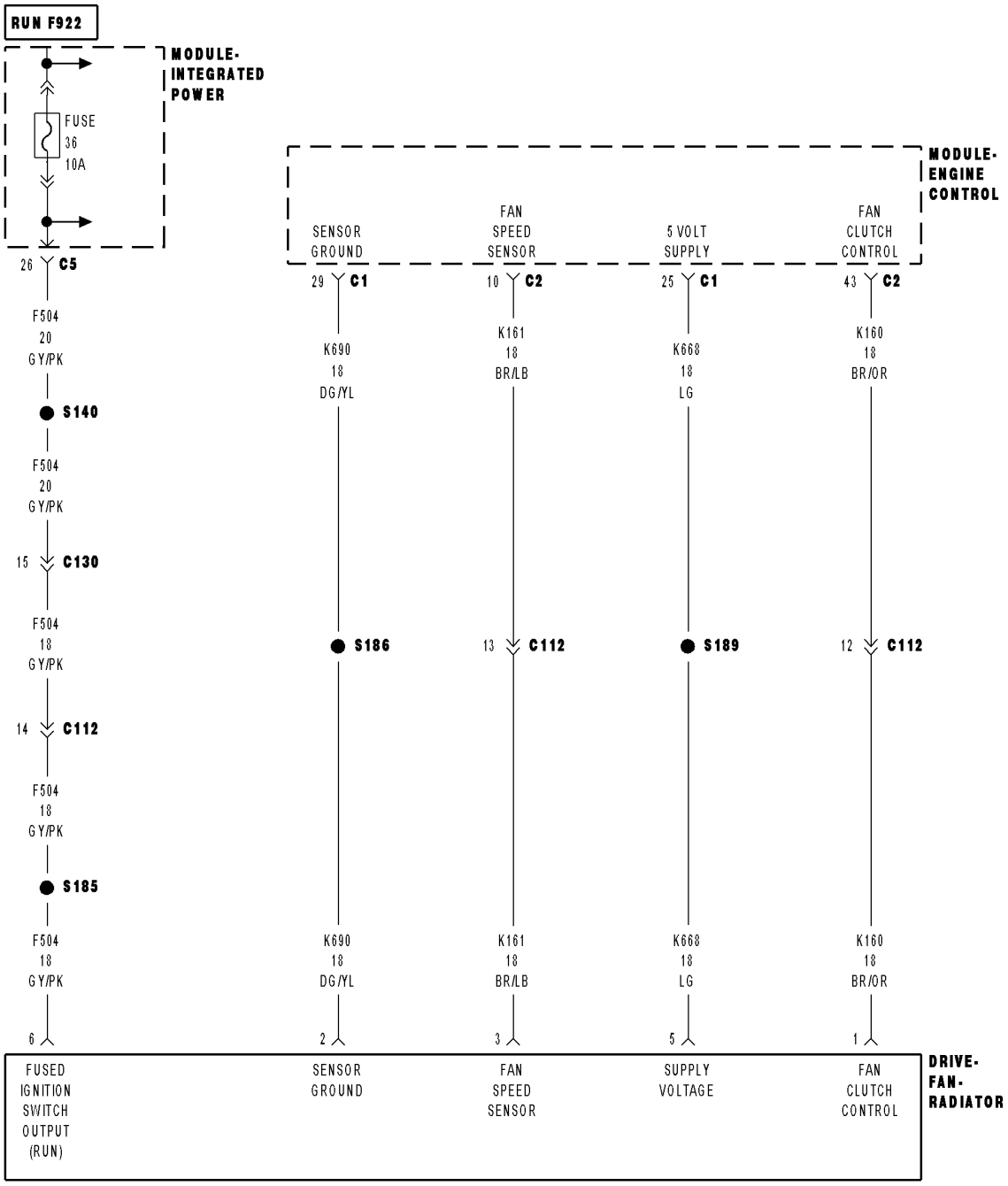

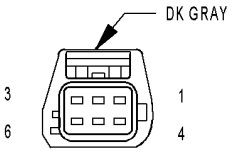

DRIVE-FAN-
RADIATOR
(DIESEL)

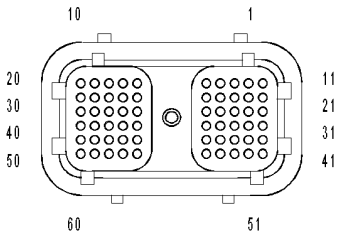

MODULE-ENGINE
CONTROL C1

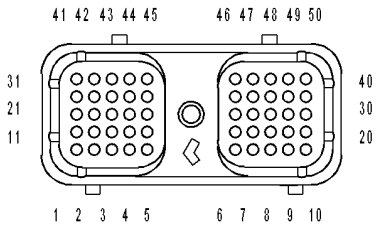

MODULE-ENGINE
CONTROL C2

8141d1d0

P0483-FAN SPEED (CONTINUED)

For the Engine circuit diagram (Refer to 8 - ELECTRICAL/ELECTRONIC CONTROL MODULES/ENGINE CONTROL MODULE - SCHEMATIC - ELECTRICAL)

For a complete wiring diagram **Refer to Section 8W**.

- **When Monitored:**
  While the engine is running.
- **Set Condition:**
  The actual fan speed is less than 75 RPM or more than 4000 RPM.

Possible Causes
OTHER DTC'S
(K161) SIGNAL CIRCUIT SHORT TO (K668) 5-VOLT SUPPLY CIRCUIT
(K161) SIGNAL CIRCUIT OPEN FROM ECM TO FAN CLUTCH ASSEMBLY
(K668) 5-VOLT SUPPLY CKT OPEN FROM ECM HARNESS CONNECTOR TO FAN CLUTCH HARNESS CONNECTOR
INTERMITTENT CONDITION
(K161) SIGNAL CIRCUIT SHORTED TO (690) RETURN IN THE HARNESS
(K161) SIGNAL CIRCUIT SHORTED TO VOLTAGE
(K161) SIGNAL CIRCUIT IN ECM SHORTED TO GROUND INSIDE ECM
(K161) SIGNAL CIRCUIT SHORTED TO VOLTAGE IN THE ECM
(K668) 5-VOLT SUPPLY CIRCUIT IN ECM

Always perform the Pre-Diagnostic Troubleshooting procedure before proceeding. (Refer to 9 - ENGINE - DIAGNOSIS AND TESTING)

Diagnostic Test

1. OTHER DTC'S PRESENT

With the scan tool, read DTCs.

Is DTC P0480 present?

Yes >> Repair other DTC's first.
Perform POWERTRAIN VERIFICATION TEST VER - 1 (DIESEL). (Refer to 8 - ELECTRICAL/ELECTRONIC CONTROL MODULES/ENGINE CONTROL MODULE - DIAGNOSIS AND TESTING)

No >> Go To 2

---

2. FAN CLUTCH SHORTED

Disconnect the wiring harness from the fan clutch assembly.

NOTE: Check connectors - Clean/repair as necessary.

Measure the resistance between the signal circuit in the fan clutch assembly and the return circuit in the fan clutch assembly.

Is the resistance less than 10 Ohms?

Yes >> Replace the fan clutch assembly.
Perform POWERTRAIN VERIFICATION TEST VER - 1 (DIESEL). (Refer to 8 - ELECTRICAL/ELECTRONIC CONTROL MODULES/ENGINE CONTROL MODULE - DIAGNOSIS AND TESTING)

No >> Go To 3

P0483-FAN SPEED (CONTINUED)

3. FAN CLUTCH ASSEMBLEY SHORTED TO GROUND

Measure the resistance between the signal circuit in the fan clutch assembly and battery negative.

Is the resistance less than 10 Ohms?

Yes >> Replace the fan clutch assembly.
Perform POWERTRAIN VERIFICATION TEST VER - 1 (DIESEL). (Refer to 8 - ELECTRICAL/ELECTRONIC CONTROL MODULES/ENGINE CONTROL MODULE - DIAGNOSIS AND TESTING)

No >> Go To 4

---

4. (K161) SIGNAL CIRCUIT SHORT TO (K668) 5-VOLT SUPPLY CIRCUIT

Disconnect the Fan clutch connector.

NOTE: Check connectors - Clean/repair as necessary.
Measure the resistance between the (K161) signal circuit in the fan clutch assembly and the battery (K668) 5-volt supply circuit in the fan clutch assembly.

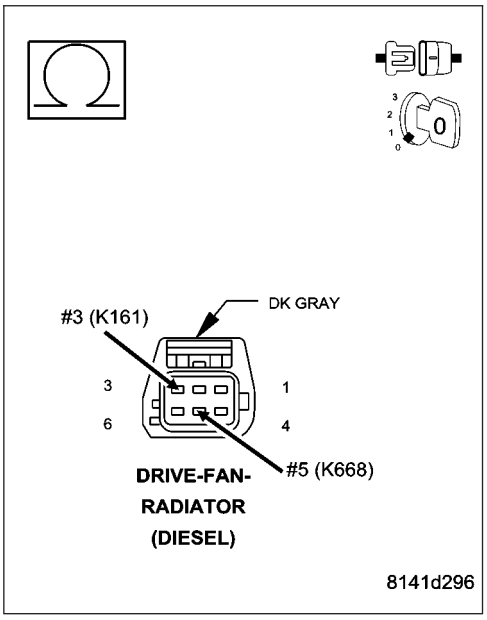

Is the resistance less than 10 Ohms?

Yes >> Replace the Fan clutch assembly.
Perform POWERTRAIN VERIFICATION TEST VER - 1 (DIESEL). (Refer to 8 - ELECTRICAL/ELECTRONIC CONTROL MODULES/ENGINE CONTROL MODULE - DIAGNOSIS AND TESTING)

No >> Go To 5

P0483-FAN SPEED (CONTINUED)

5. (K161) SIGNAL CIRCUIT OPEN FROM ECM TO FAN CLUTCH ASSEMBLY

Disconnect the ECM harness connectors.

Check connectors - Clean/repair as necessary.

Measure the resistance of the (K161) signal circuit between the ECM harness connector and the fan clutch assembly harness connector.

Is the resistance less than 10 Ohms?

Yes >> Go To 6

No >> Repair the open (K161) circuit from the ECM harness connector to the Fan clutch harness connector.

Perform POWERTRAIN VERIFICATION TEST VER - 1 (DIESEL). (Refer to 8 - ELECTRICAL/ELECTRONIC CONTROL MODULES/ENGINE CONTROL MODULE - DIAGNOSIS AND TESTING)

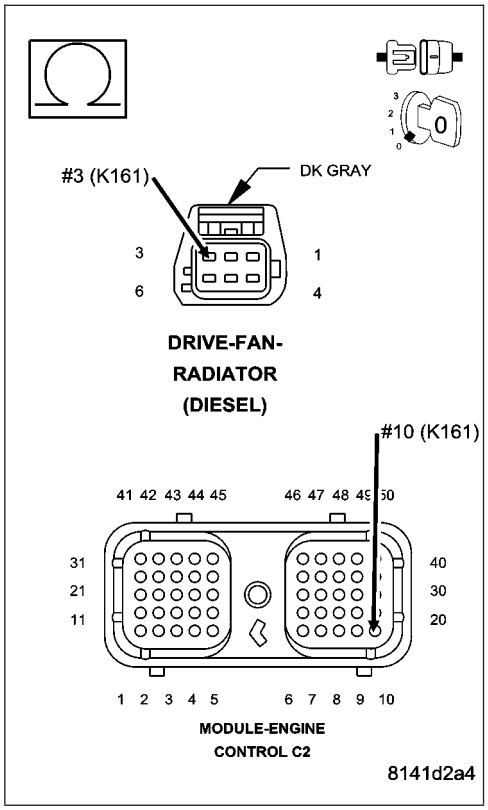

P0483-FAN SPEED (CONTINUED)

6. (K668) 5-VOLT SUPPLY CIRCUIT OPEN FROM ECM HARNESS CONNECTOR TO FAN CLUTCH HARNESS

Measure the resistance of the (K668) 5-volt supply circuit between the ECM harness connector and the fan clutch assembly harness connector.

Is the resistance less than 10 Ohms?

Yes >> Go To 7

No >> Repair the open (K668) circuit from ECM harness connector to Fan clutch connector.

Perform POWERTRAIN VERIFICATION TEST VER - 1 (DIESEL). (Refer to 8 - ELECTRICAL/ELECTRONIC CONTROL MODULES/ENGINE CONTROL MODULE - DIAGNOSIS AND TESTING)

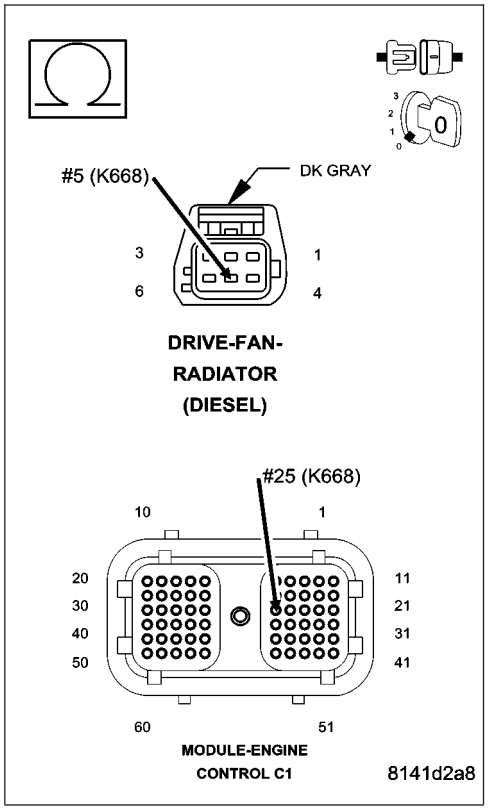

7. (K161) SIGNAL CIRCUIT SHORTED TO RETURN IN THE HARNESS

Measure the resistance between the (K161) signal circuit in the fan clutch assembly harness connector and the return circuit in the fan clutch assembly harness connector.

Is the resistance less than 10 Ohms?

Yes >> Repair the shorted (K161) circuit.

Perform POWERTRAIN VERIFICATION TEST VER - 1 (DIESEL). (Refer to 8 - ELECTRICAL/ELECTRONIC CONTROL MODULES/ENGINE CONTROL MODULE - DIAGNOSIS AND TESTING)

No >> Go To 8

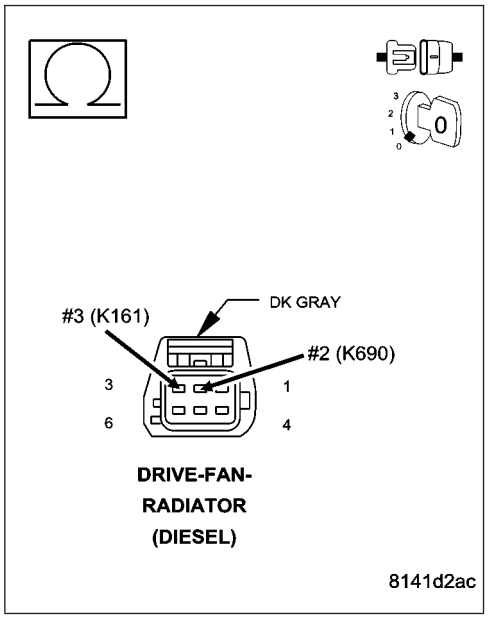

P0483-FAN SPEED (CONTINUED)

8. (K161) SIGNAL CIRCUIT SHORTED TO VOLTAGE

Measure the voltage between the (K161) signal circuit in the fan clutch assembly harness connector and battery negative.

Is the voltage greater than 1 volt?

Yes >> Repair the (K161) signal circuit shorted to voltage.
Perform POWERTRAIN VERIFICATION TEST VER - 1 (DIESEL). (Refer to 8 - ELECTRICAL/ELECTRONIC CONTROL MODULES/ENGINE CONTROL MODULE - DIAGNOSIS AND TESTING)

No >> Go To 9

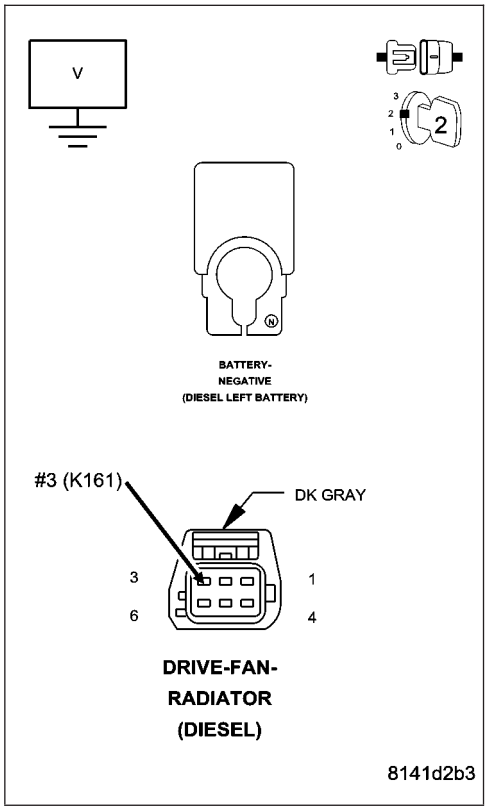

9. (K161) SIGNAL CIRCUIT IN ECM SHORTED TO GROUND INSIDE ECM

Reconnect the ECM harness connectors.

Measure the resistance between the (K161) signal circuit in the fan clutch assembly harness connector and battery negative.

Is the resistance less than 10 Ohms?

Yes >> Replace the ECM.
Perform POWERTRAIN VERIFICATION TEST VER - 1 (DIESEL). (Refer to 8 - ELECTRICAL/ELECTRONIC CONTROL MODULES/ENGINE CONTROL MODULE - DIAGNOSIS AND TESTING)

No >> Go To 10

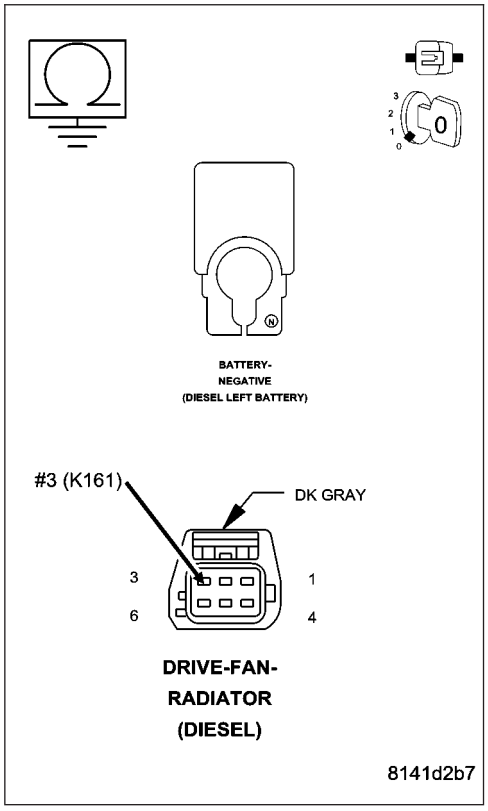

P0483-FAN SPEED (CONTINUED)

10. (K161) SIGNAL CIRCUIT SHORTED TO VOLTAGE IN THE ECM

Reconnect the fan harness connector.

Turn the ignition on.

While back probing the fan connector measure the voltage between the fan speed (K161) signal circuit in the fan clutch assembly harness connector and battery negative while manually rotating the fan blade.

Did voltage go from less than 0.7 volts to 4.7 to 5.7 volts?

Yes >> Repair the Fan Speed (K161) Signal circuit in the engine harness.

Perform POWERTRAIN VERIFICATION TEST VER - 1 (DIESEL). (Refer to 8 - ELECTRICAL/ELECTRONIC CONTROL MODULES/ENGINE CONTROL MODULE - DIAGNOSIS AND TESTING)

No >> Go To 11

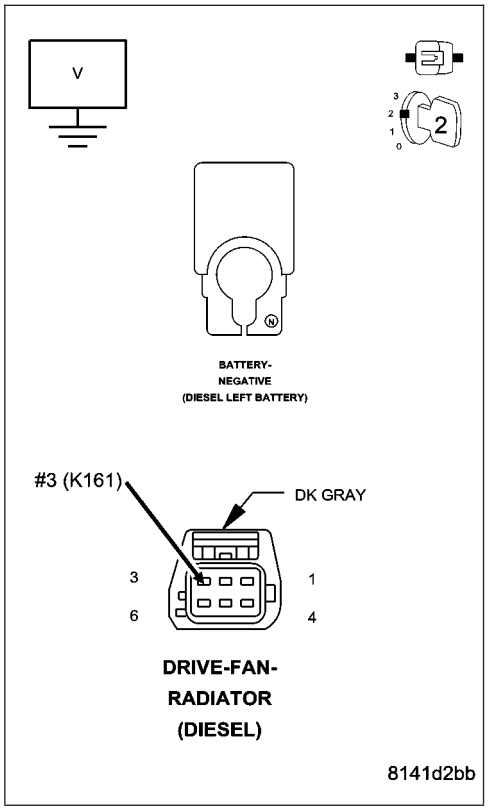

P0483-FAN SPEED (CONTINUED)

11. (K668) 5-VOLT SUPPLY CIRCUIT IN ECM

Turn the ignition on.

Measure the voltage between the (K668) 5-volt supply circuit in the fan clutch assembly harness connector and battery negative.

Is the voltage between 4.5 and 5.5 volts?

Yes >> Refer to the INTERMITTENT CONDITION Symptom (Diagnostic Procedure). (Refer to 9 - ENGINE - DIAGNOSIS AND TESTING)

No >> Replace the ECM.

Perform POWERTRAIN VERIFICATION TEST VER - 1 (DIESEL). (Refer to 8 - ELECTRICAL/ELECTRONIC CONTROL MODULES/ENGINE CONTROL MODULE - DIAGNOSIS AND TESTING)

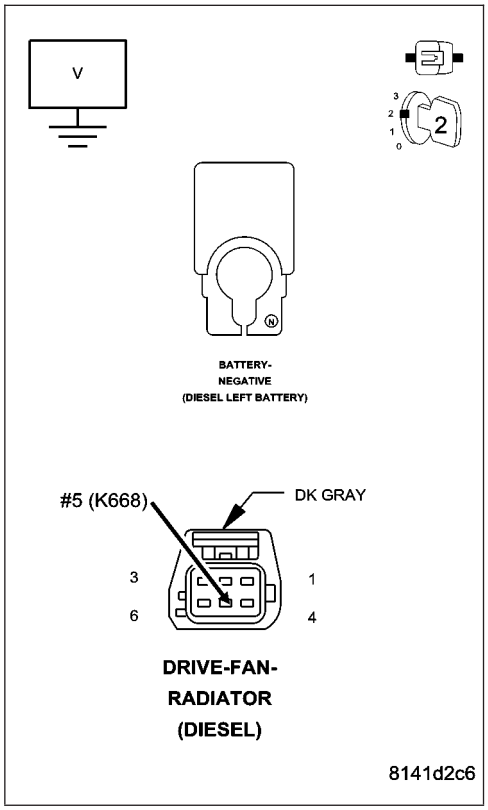

P0500-NO VEHICLE SPEED SENSOR SIGNAL

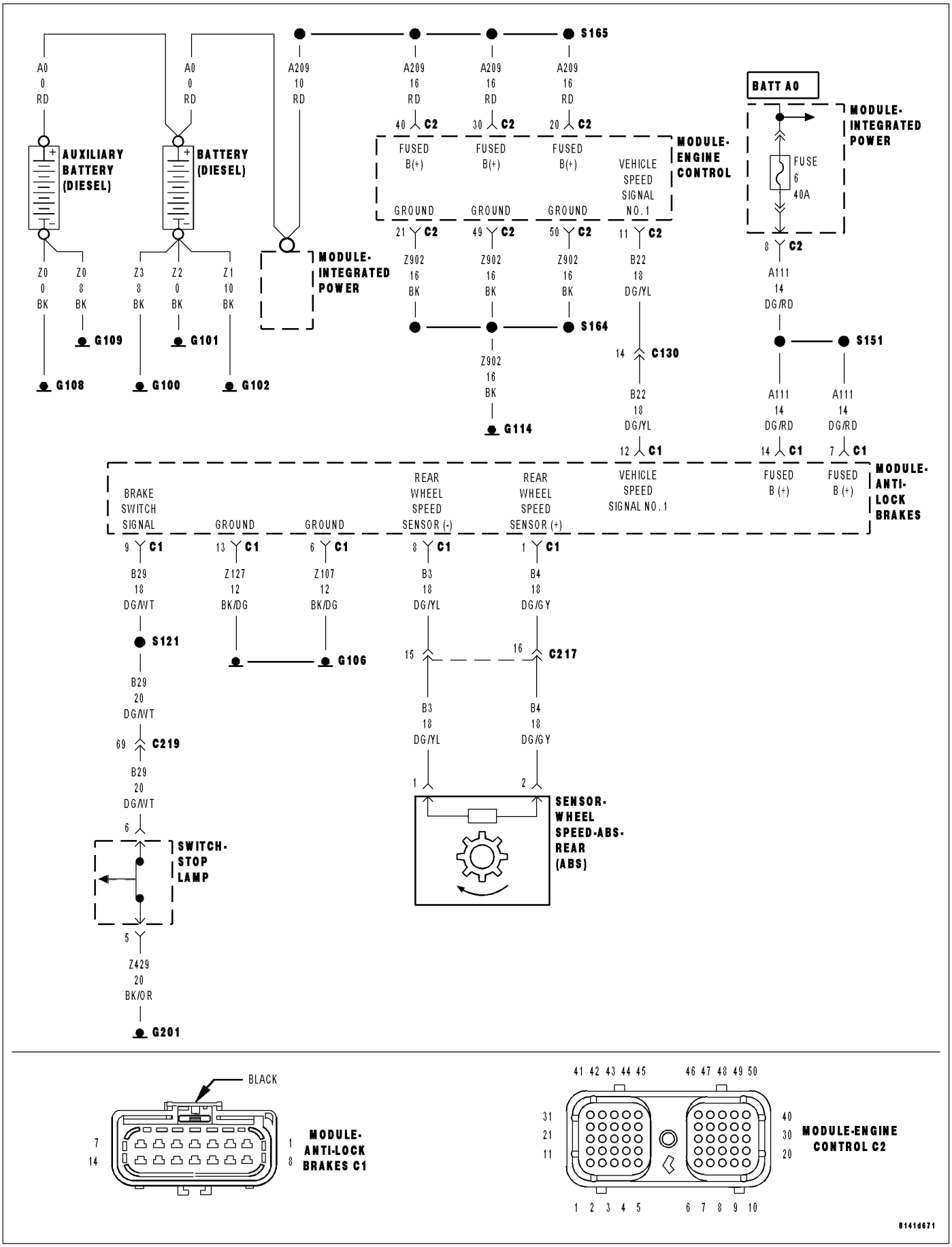

P0500-NO VEHICLE SPEED SENSOR SIGNAL (CONTINUED)

For the Engine circuit diagram (Refer to 8 - ELECTRICAL/ELECTRONIC CONTROL MODULES/ENGINE CONTROL MODULE - SCHEMATIC - ELECTRICAL)

For a complete wiring diagram **Refer to Section 8W**.

- **When Monitored:**
  While the engine is running.
- **Set Condition:**
  The ECM indicates signals of motion; however, the VSS does not.

Possible Causes
VEHICLE SPEED (B22) SIGNAL CIRCUIT SHORTED TO VOLTAGE
VEHICLE SPEED (B22) SIGNAL CIRCUIT OPEN BETWEEN CAB AND ECM
VEHICLE SPEED (B22) SIGNAL CIRCUIT SHORTED TO GROUND
ECM

Always perform the Pre-Diagnostic Troubleshooting procedure before proceeding. (Refer to 9 - ENGINE - DIAGNOSIS AND TESTING)

Diagnostic Test

1. VEHICLE SPEED SENSOR (B22) SIGNAL CIRCUIT SHORT TO VOLTAGE

Turn the ignition off.

Disconnect the ECM harness connectors.

Disconnect the ABS/RWAL Module harness connector.

Ignition on, engine not running.

Measure the voltage of the Vehicle Speed (B22) signal circuit in the ABS/RWAL or ECM harness connector.

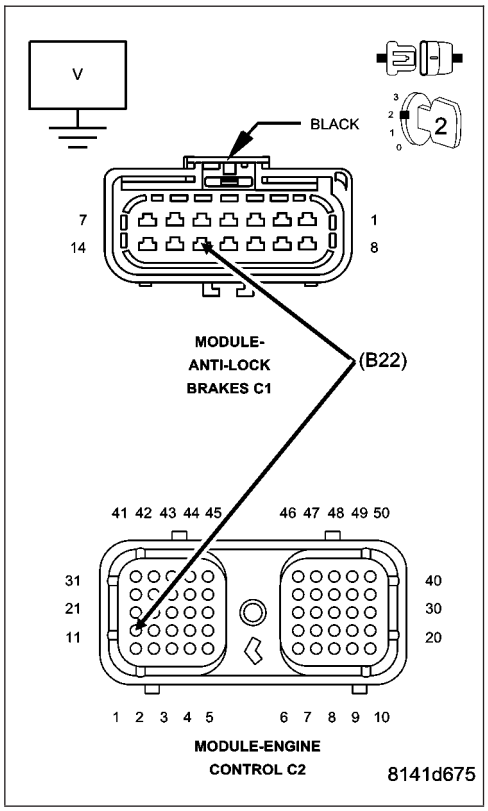

Is the voltage above 4.9 volts?

Yes >> Repair the short to voltage in the Vehicle Speed (B22) Signal circuit between the CAB and ECM.
Perform POWERTRAIN VERIFICATION TEST VER - 1 (DIESEL). (Refer to 8 - ELECTRICAL/ELECTRONIC CONTROL MODULES/ENGINE CONTROL MODULE - DIAGNOSIS AND TESTING)

No >> Go To 2

P0500-NO VEHICLE SPEED SENSOR SIGNAL (CONTINUED)

2. VEHICLE SPEED SENSOR (B22) SIGNAL CIRCUIT OPEN BETWEEN CAB AND ECM

Turn the ignition off.

Measure the resistance of the Vehicle Speed (B22) signal circuit between the ECM harness connector and the ABS/RWAL harness connector.

Is the resistance above 5.0 ohms?

Yes >> Repair the open in the Vehicle Speed (B22) signal circuit between the CAB and ECM.

Perform POWERTRAIN VERIFICATION TEST VER - 1 (DIESEL). (Refer to 8 - ELECTRICAL/ELECTRONIC CONTROL MODULES/ENGINE CONTROL MODULE - DIAGNOSIS AND TESTING)

No >> Go To 3

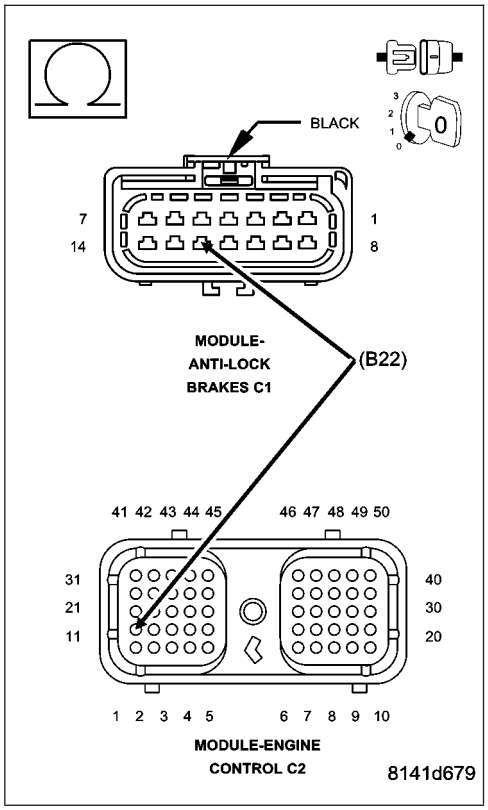

3. VEHICLE SPEED SENSOR (B22) SIGNAL CIRCUIT SHORT TO GROUND

Measure the resistance between ground and the Vehicle Speed (B22) signal circuit at the ECM harness connector.

Is the resistance below 100 ohms?

Yes >> Repair the short to ground in the Vehicle Speed (B22) signal circuit between the CAB and ECM.

Perform POWERTRAIN VERIFICATION TEST VER - 1 (DIESEL). (Refer to 8 - ELECTRICAL/ELECTRONIC CONTROL MODULES/ENGINE CONTROL MODULE - DIAGNOSIS AND TESTING)

No >> Go To 4

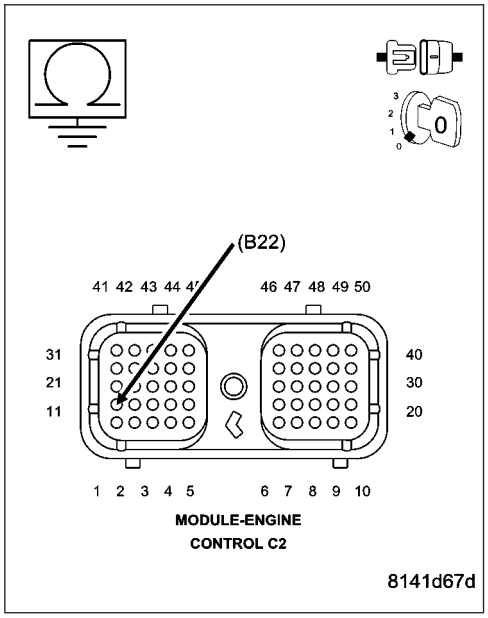

P0500-NO VEHICLE SPEED SENSOR SIGNAL (CONTINUED)

4. **ECM**

NOTE: Before continuing, check the ECM harness connector terminals for corrosion, damage, or terminal push out. Repair as necessary.

Using the schematics as a guide, inspect the wire harness and connectors. Pay particular attention to all Power and Ground circuits.

If there are no possible causes remaining, view repair.

Repair

Replace and program the ECM per Service Information.

Perform POWERTRAIN VERIFICATION TEST VER - 1 (DIESEL). (Refer to 8 - ELECTRICAL/ELECTRONIC CONTROL MODULES/ENGINE CONTROL MODULE - DIAGNOSIS AND TESTING)

P0514-BAT TEMPERATURE SENSOR RATIONALITY

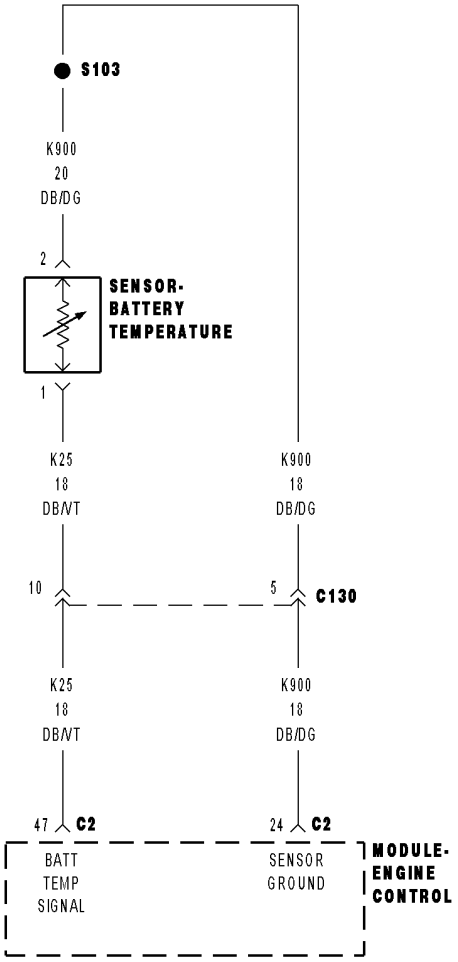

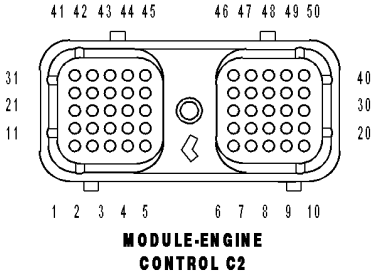

MODULE-ENGINE
CONTROL C2

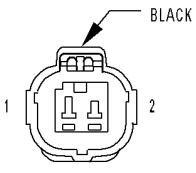

SENSOR-
BATTERY
TEMPERATURE

8141d6b5

P0514-BAT TEMPERATURE SENSOR RATIONALITY (CONTINUED)

For the Engine circuit diagram (Refer to 8 - ELECTRICAL/ELECTRONIC CONTROL MODULES/ENGINE CONTROL MODULE - SCHEMATIC - ELECTRICAL)

For a complete wiring diagram **Refer to Section 8W**.

- **When Monitored:**
  While the engine is running.
- **Set Condition:**
  The ECM does not read a change in value from the sensor over time.

Possible Causes
BATTERY TEMP SENSOR
INTERMITTENT CONDITION

Always perform the Pre-Diagnostic Troubleshooting procedure before proceeding. (Refer to 9 - ENGINE - DIAGNOSIS AND TESTING)

Diagnostic Test

1. BATTERY TEMP SENSOR

Remove the temperature sensor and reconnect the wiring harness connector to the sensor.

Monitor scan tool, while heating the sensor with an external heat source (DO NOT USE OPEN FLAME).

Does the reading from the sensor increase at least 5 degrees F. on the scan tool?

Yes >> Refer to the INTERMITTENT CONDITION Symptom (Diagnostic Procedure). (Refer to 9 - ENGINE - DIAGNOSIS AND TESTING)

No >> Replace the battery temperature sensor.
Perform POWERTRAIN VERIFICATION TEST VER - 1 (DIESEL). (Refer to 8 - ELECTRICAL/ELECTRONIC CONTROL MODULES/ENGINE CONTROL MODULE - DIAGNOSIS AND TESTING)

P0516-LOW VOLTAGE AT THE BAT TEMP SENSOR

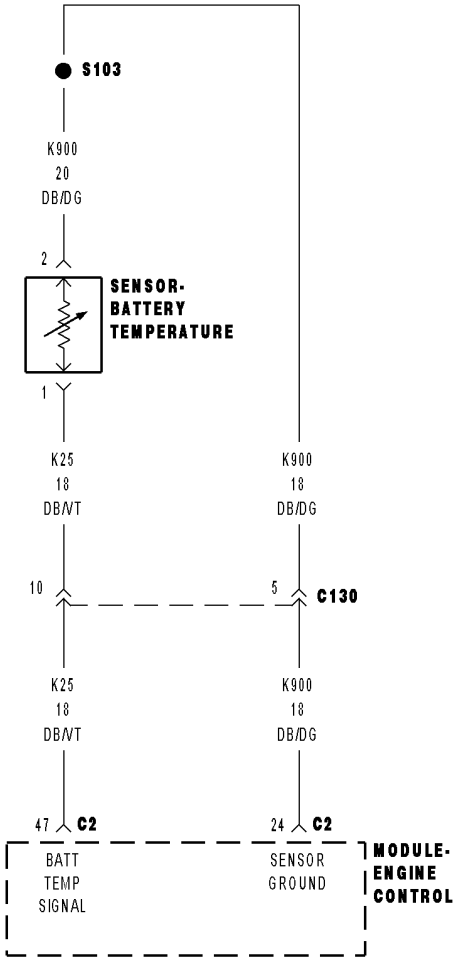

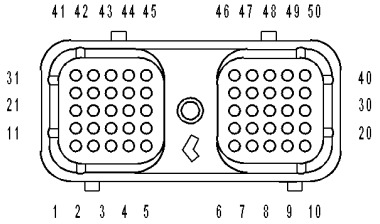

MODULE-ENGINE
CONTROL C2

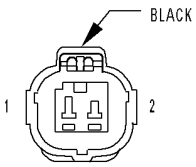

SENSOR-
BATTERY
TEMPERATURE

8141d6bc

P0516-LOW VOLTAGE AT THE BAT TEMP SENSOR (CONTINUED)

For the Engine circuit diagram (Refer to 8 - ELECTRICAL/ELECTRONIC CONTROL MODULES/ENGINE CONTROL MODULE - SCHEMATIC - ELECTRICAL)

For a complete wiring diagram **Refer to Section 8W**.

- **When Monitored:**
  With the ignition on and battery voltage greater than 10.4 volts.
- **Set Condition:**
  The circuit voltage to the ECM falls below a calibrated threshold for a certain period of time.

Possible Causes
BATTERY TEMP SENSOR
(K25) SIGNAL CIRCUIT SHORTED TO GROUND
(K25) SIGNAL CIRCUIT SHORTED
INTERMITTENT CONDITION
ECM

Always perform the Pre-Diagnostic Troubleshooting procedure before proceeding. (Refer to 9 - ENGINE - DIAGNOSIS AND TESTING)

Diagnostic Test

1. BATTERY TEMP SENSOR

Turn the ignition off.

Disconnect the Battery temp sensor harness connector.

Check connectors - Clean/repair as necessary.

Measure the resistance of the Battery temp sensor.

Is the resistance between 300 and 90k ohms?

Yes >> Go To 2

No >> Replace the battery temp sensor.
Perform POWERTRAIN VERIFICATION TEST VER - 1 (DIESEL). (Refer to 8 - ELECTRICAL/ELECTRONIC CONTROL MODULES/ENGINE CONTROL MODULE - DIAGNOSIS AND TESTING)

P0516-LOW VOLTAGE AT THE BAT TEMP SENSOR (CONTINUED)

2. (K25) SIGNAL CIRCUIT SHORTED TO GROUND

Disconnect the ECM harness connectors.

Check connectors - Clean/repair as necessary.

Measure the resistance between the engine ground and the temperature sensor (K25) signal circuit at the sensor connector.

Is the resistance more than 100 k ohms?

Yes >> Go To 3

No >> Repair the Battery temp sensor (K25)signal circuit shorted to ground.

Perform POWERTRAIN VERIFICATION TEST VER - 1 (DIESEL). (Refer to 8 - ELECTRICAL/ELECTRONIC CONTROL MODULES/ENGINE CONTROL MODULE - DIAGNOSIS AND TESTING)

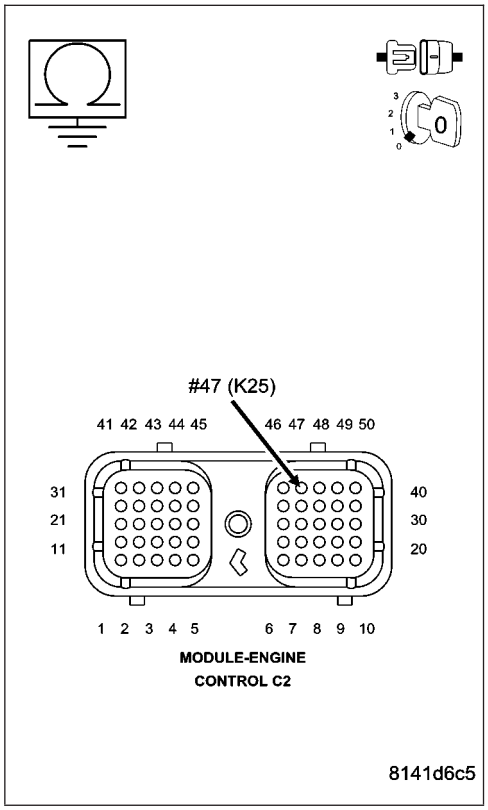

3. (K25) SIGNAL CIRCUIT SHORTED

Measure the resistance between the Battery temp sensor (K25) signal circuit and all other circuits in the ECM harness connector of the engine harness.

Is the resistance more than 100k ohms?

Yes >> Go To 4

No >> Repair the (K25) signal circuit shorted to another circuit.

Perform POWERTRAIN VERIFICATION TEST VER - 1 (DIESEL). (Refer to 8 - ELECTRICAL/ELECTRONIC CONTROL MODULES/ENGINE CONTROL MODULE - DIAGNOSIS AND TESTING)

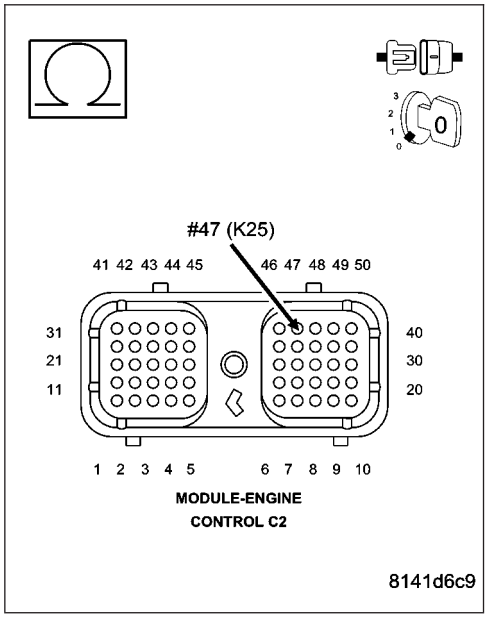

P0516-LOW VOLTAGE AT THE BAT TEMP SENSOR (CONTINUED)

4. INTERMITTENT CONDITION

Reconnect the disconnected Battery temp sensor harness connector.

While monitoring with scan tool, disconnect the temperature sensor harness connector.

Did P0517 set?

Yes >> Refer to the INTERMITTENT CONDITION Symptom (Diagnostic Procedure). (Refer to 9 - ENGINE - DIAGNOSIS AND TESTING)

No >> Replace the ECM.
Perform POWERTRAIN VERIFICATION TEST VER - 1 (DIESEL). (Refer to 8 - ELECTRICAL/ELECTRONIC CONTROL MODULES/ENGINE CONTROL MODULE - DIAGNOSIS AND TESTING)

P0517-HIGH VOLTAGE AT THE BAT TEMP SENSOR

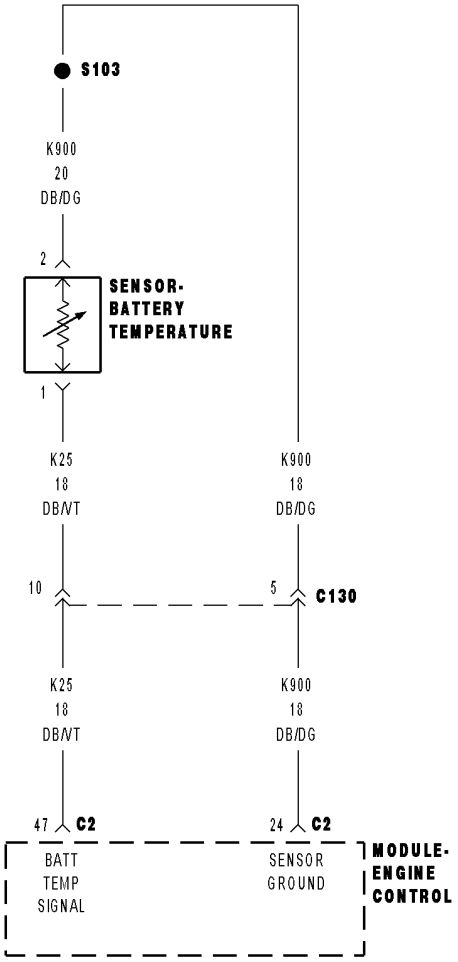

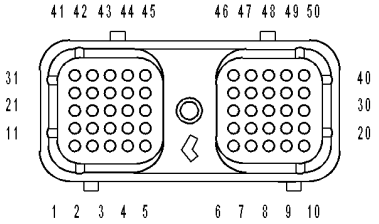

MODULE-ENGINE
CONTROL C2

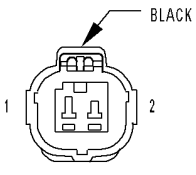

SENSOR-
BATTERY
TEMPERATURE

8141d6bc

P0517-HIGH VOLTAGE AT THE BAT TEMP SENSOR (CONTINUED)

For the Engine circuit diagram (Refer to 8 - ELECTRICAL/ELECTRONIC CONTROL MODULES/ENGINE CONTROL MODULE - SCHEMATIC - ELECTRICAL)

For a complete wiring diagram **Refer to Section 8W**.

- **When Monitored:**
  With ignition on and battery voltage greater than 10.4 volts.
- **Set Condition:**
  The circuit voltage to the ECM is above a calibrated threshold for a certain period of time.

Possible Causes
BATTERY TEMP SENSOR
(K25) SIGNAL CIRCUIT OPEN
(K900) RETURN CIRCUIT OPEN
(K25) SIGNAL CIRCUIT SHORTED
ECM
INTERMITTENT CONDITION

Always perform the Pre-Diagnostic Troubleshooting procedure before proceeding. (Refer to 9 - ENGINE - DIAGNOSIS AND TESTING)

Diagnostic Test

1. BATTERY TEMP SENSOR

Disconnect the Battery temp sensor harness connector.

Check connectors - Clean/repair as necessary.

Measure the resistance of the Battery temp sensor

Is the resistance between 300 and 90k ohms?

Yes >> Go To 2

No >> Replace the Battery temp sensor.
Perform POWERTRAIN VERIFICATION TEST VER - 1 (DIESEL). (Refer to 8 - ELECTRICAL/ELECTRONIC CONTROL MODULES/ENGINE CONTROL MODULE - DIAGNOSIS AND TESTING)

P0517-HIGH VOLTAGE AT THE BAT TEMP SENSOR (CONTINUED)

2. OPEN CIRCUIT

Reconnect the disconnected Battery temp sensor harness connector.

Disconnect the ECM harness connectors.

Check connectors - Clean/repair as necessary.

Measure the resistance between the temperature sensor (K25) signal and (K900) return circuits at the ECM harness connector.

Is the resistance between 300 and 90k ohms?

Yes >> Go To 5

No >> Go To 3

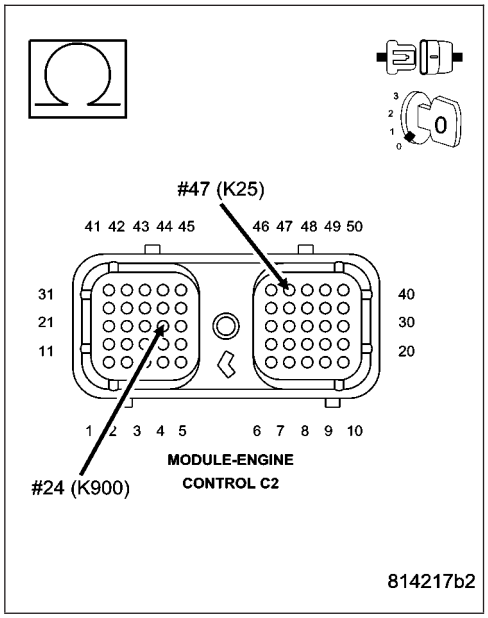

3. (K25) SIGNAL CIRCUIT OPEN

Disconnect the Battery temp sensor harness connector.

Measure the resistance of the sensor (K25) signal circuit between the sensor harness connector and the ECM harness connector.

Is the resistance less than 10 Ohms?

Yes >> Go To 4

No >> Repair the open (K25) signal circuit.
Perform POWERTRAIN VERIFICATION TEST VER - 1 (DIESEL). (Refer to 8 - ELECTRICAL/ELECTRONIC CONTROL MODULES/ENGINE CONTROL MODULE - DIAGNOSIS AND TESTING)

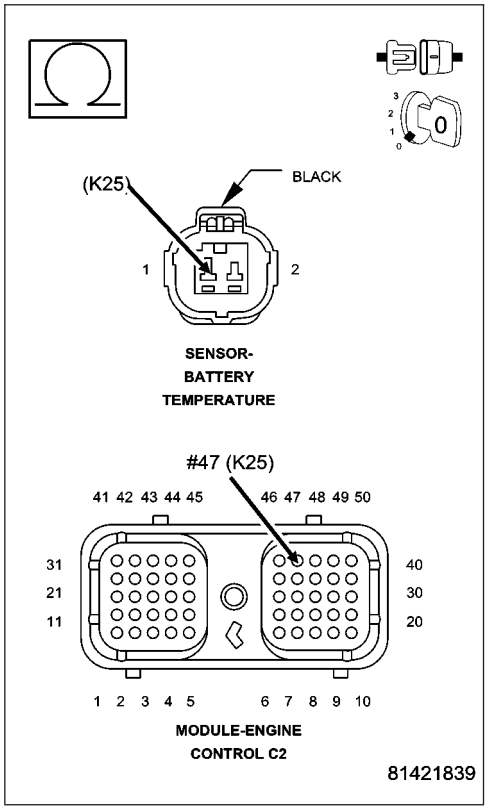

P0517-HIGH VOLTAGE AT THE BAT TEMP SENSOR (CONTINUED)

4. (K900) RETURN CIRCUIT OPEN

Measure the resistance of the sensor (K900) return circuit between the sensor harness connector and the ECM harness connector.

Is the resistance less than 10 Ohms?

Yes >> Go To 5

No >> Repair the open (K900) return circuit.
Perform POWERTRAIN VERIFICATION TEST VER - 1 (DIESEL). (Refer to 8 - ELECTRICAL/ELECTRONIC CONTROL MODULES/ENGINE CONTROL MODULE - DIAGNOSIS AND TESTING)

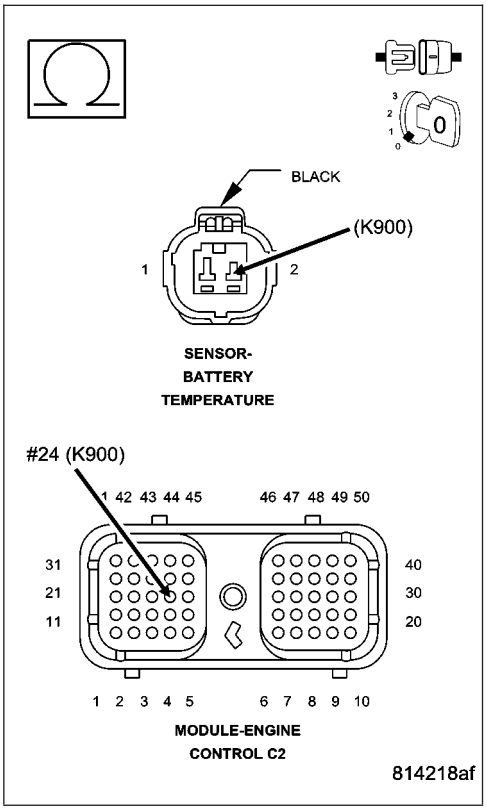

5. (K25) SIGNAL CIRCUIT SHORTED

Check for a short circuit from (K25) signal circuit to all other circuits at the ECM harness connector.

Is the resistance more than 100k ohms?

Yes >> Go To 6

No >> Repair the shorted (K25) signal circuit.
Perform POWERTRAIN VERIFICATION TEST VER - 1 (DIESEL). (Refer to 8 - ELECTRICAL/ELECTRONIC CONTROL MODULES/ENGINE CONTROL MODULE - DIAGNOSIS AND TESTING)

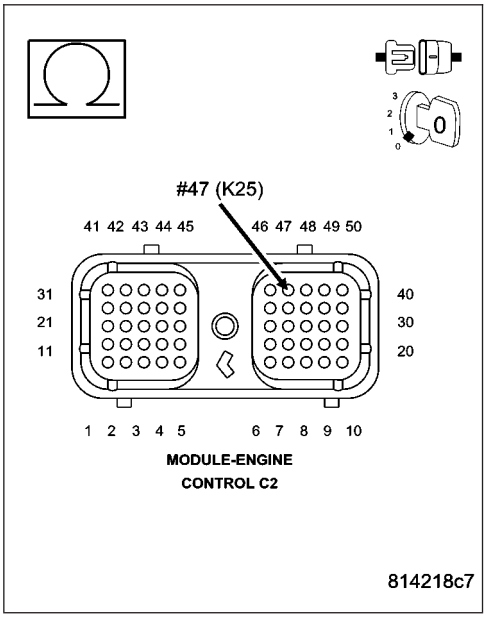

P0517-HIGH VOLTAGE AT THE BAT TEMP SENSOR (CONTINUED)

6. ECM

Reconnect the ECM harness connectors.

While monitoring with the scan tool, use a jumper wire and connect the sensor (K25) signal circuit to the sensor (K900) return circuit at the sensor harness connector.

Did P0516 set?

Yes >> Refer to the INTERMITTENT CONDITION Symptom (Diagnostic Procedure). (Refer to 9 - ENGINE - DIAGNOSIS AND TESTING)

No >> Replace the ECM.

Perform POWERTRAIN VERIFICATION TEST VER - 1 (DIESEL). (Refer to 8 - ELECTRICAL/ELECTRONIC CONTROL MODULES/ENGINE CONTROL MODULE - DIAGNOSIS AND TESTING)

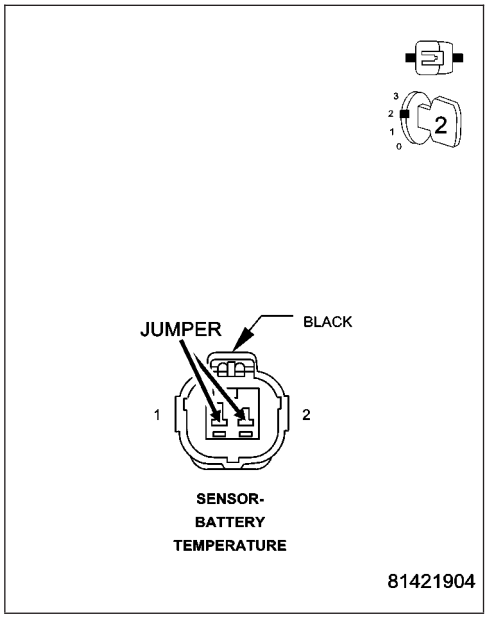

P0521-OIL PRESSURE SWITCH RATIONALITY

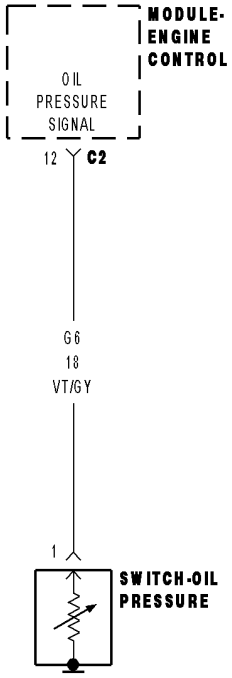

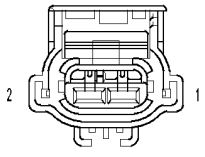

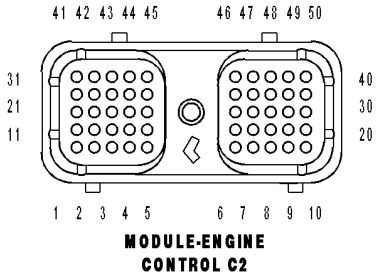

81427838

P0521-OIL PRESSURE SWITCH RATIONALITY (CONTINUED)

For the Engine circuit diagram (Refer to 8 - ELECTRICAL/ELECTRONIC CONTROL MODULES/ENGINE CONTROL MODULE - SCHEMATIC - ELECTRICAL)

For a complete wiring diagram **Refer to Section 8W**.

- **When Monitored:**
  While the key is on.
- **Set Condition:**
  Oil pressure is detected with engine RPM = 0 for 30 seconds.

Possible Causes
OIL PRESSURE SWITCH
(G6) SIGNAL CIRCUIT OPEN
INTERMITTENT CONDITION
ECM

Always perform the Pre-Diagnostic Troubleshooting procedure before proceeding. (Refer to 9 - ENGINE - DIAGNOSIS AND TESTING)

Diagnostic Test

1. OIL PRESSURE SWITCH

Turn the ignition off.

Disconnect the Oil pressure switch harness connector.

Check connectors - Clean/repair as necessary.

Measure the resistance between the oil pressure switch terminal and ground.

Is the resistance less than 10 ohms?

Yes >> Go To 2

No >> Replace the oil pressure switch.
Perform POWERTRAIN VERIFICATION TEST VER - 1 (DIESEL). (Refer to 8 - ELECTRICAL/ELECTRONIC CONTROL MODULES/ENGINE CONTROL MODULE - DIAGNOSIS AND TESTING)

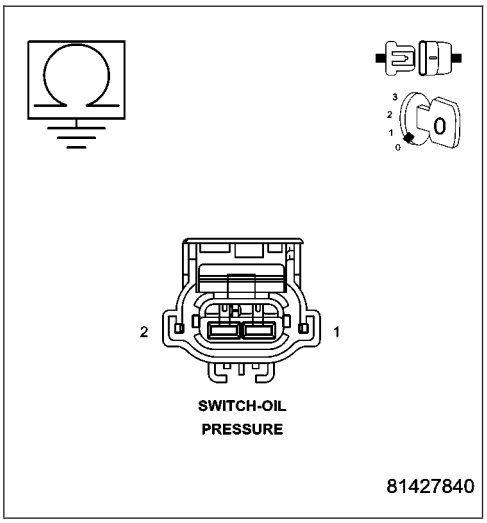

P0521-OIL PRESSURE SWITCH RATIONALITY (CONTINUED)

2. (G6) SIGNAL CIRCUIT OPEN

Disconnect the ECM harness connectors.

Check connectors - Clean/repair as necessary.

Measure the resistance of the oil pressure switch (G6) signal circuit between the oil pressure switch harness connector and the ECM harness connector.

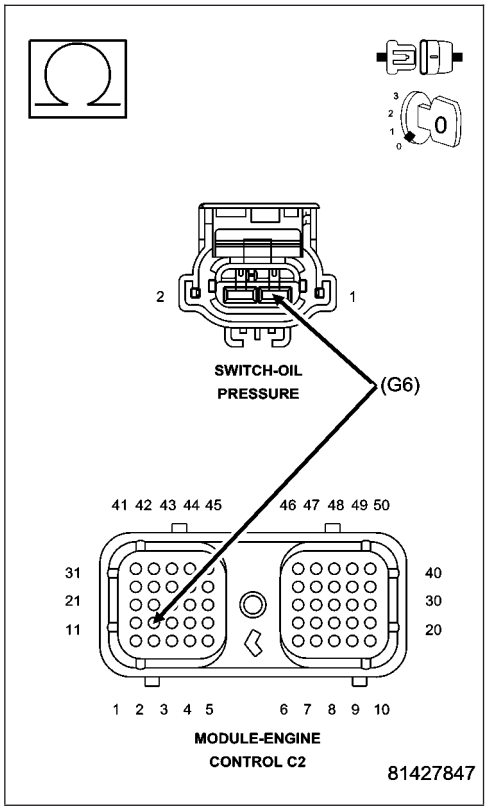

Is the resistance less than 10 ohms?

Yes >> Go To 3

No >> Repair the open Oil pressure (G6) signal circuit.

Perform POWERTRAIN VERIFICATION TEST VER - 1 (DIESEL). (Refer to 8 - ELECTRICAL/ELECTRONIC CONTROL MODULES/ENGINE CONTROL MODULE - DIAGNOSIS AND TESTING)

3. ECM

Reconnect the ECM harness connectors.

Turn the ignition on.

Measure the voltage between the oil pressure (G6) signal circuit at the oil pressure switch harness connector and ground.

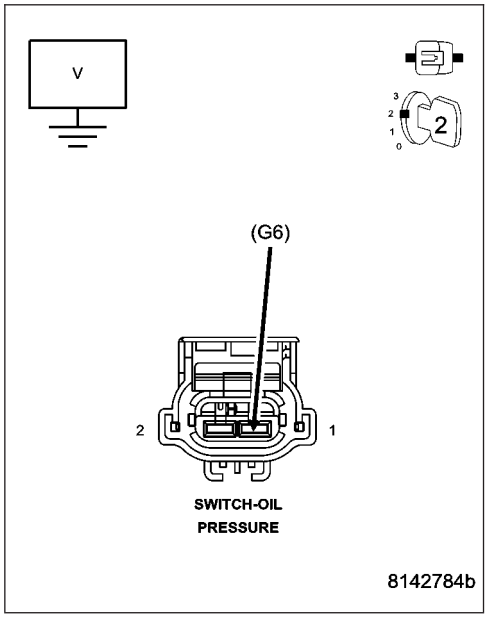

Is the voltage between 4.5 and 5.5 volts?

Yes >> Refer to the INTERMITTENT CONDITION Symptom (Diagnostic Procedure). (Refer to 9 - ENGINE - DIAGNOSIS AND TESTING)

No >> Replace the ECM.

Perform POWERTRAIN VERIFICATION TEST VER - 1 (DIESEL). (Refer to 8 - ELECTRICAL/ELECTRONIC CONTROL MODULES/ENGINE CONTROL MODULE - DIAGNOSIS AND TESTING)

P0524-OIL PRESSURE TOO LOW

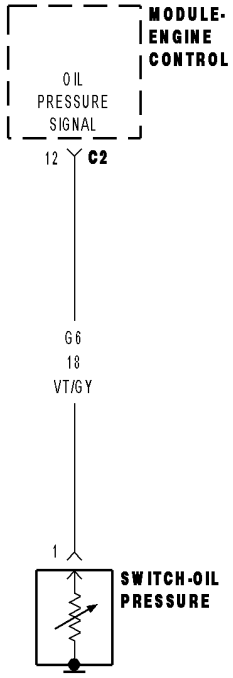

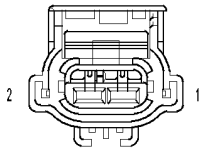

SWITCH-OIL
PRESSURE

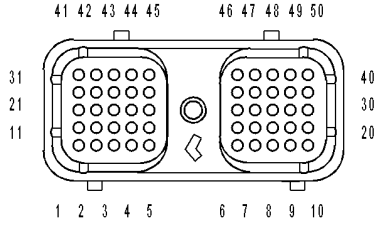

MODULE-ENGINE
CONTROL C2

81427838

P0524-OIL PRESSURE TOO LOW (CONTINUED)

For the Engine circuit diagram (Refer to 8 - ELECTRICAL/ELECTRONIC CONTROL MODULES/ENGINE CONTROL MODULE - SCHEMATIC - ELECTRICAL)

For a complete wiring diagram **Refer to Section 8W**.

- **When Monitored:**
  While the engine is running.
- **Set Condition:**
  The oil pressure detected by the ECM is less than a calibrated value.

Possible Causes
LOW OIL LEVEL
(G6) SIGNAL CIRCUIT SHORT TO GROUND
OIL PRESSURE SWITCH
INTERNAL ENGINE DAMAGE

Always perform the Pre-Diagnostic Troubleshooting procedure before proceeding. (Refer to 9 - ENGINE - DIAGNOSIS AND TESTING)

Diagnostic Test

1. LOW OIL LEVEL

Check the engine oil level.

Is the engine oil in the safe operating range?

Yes >> Go To 2

No >> Repair any condition that may cause the oil level to be above or below the safe operating range.
Perform POWERTRAIN VERIFICATION TEST VER - 1 (DIESEL). (Refer to 8 - ELECTRICAL/ELECTRONIC CONTROL MODULES/ENGINE CONTROL MODULE - DIAGNOSIS AND TESTING)

---

2. SIGNAL CIRCUIT SHORT TO GROUND

With the scan tool, erase DTCs.
Turn the ignition off.
Disconnect the oil pressure switch harness connector.
Turn the ignition on for 1 minute.

Did DTC P0521 set?

Yes >> Go To 3

No >> Repair the (G6) signal circuit shorted to ground.
Perform POWERTRAIN VERIFICATION TEST VER - 1 (DIESEL). (Refer to 8 - ELECTRICAL/ELECTRONIC CONTROL MODULES/ENGINE CONTROL MODULE - DIAGNOSIS AND TESTING)

P0524-OIL PRESSURE TOO LOW (CONTINUED)

3. OIL PRESSURE SWITCH

Measure the engine oil pressure with a mechanical gauge.

Is the oil pressure within the acceptable operating range?

Yes >> Replace the oil pressure switch.
Perform POWERTRAIN VERIFICATION TEST VER - 1 (DIESEL). (Refer to 8 - ELECTRICAL/ELECTRONIC CONTROL MODULES/ENGINE CONTROL MODULE - DIAGNOSIS AND TESTING)

No >> Repair internal engine damage.
Perform POWERTRAIN VERIFICATION TEST VER - 1 (DIESEL). (Refer to 8 - ELECTRICAL/ELECTRONIC CONTROL MODULES/ENGINE CONTROL MODULE - DIAGNOSIS AND TESTING)

P0532-A/C SENDING UNIT VOLTS TOO LOW

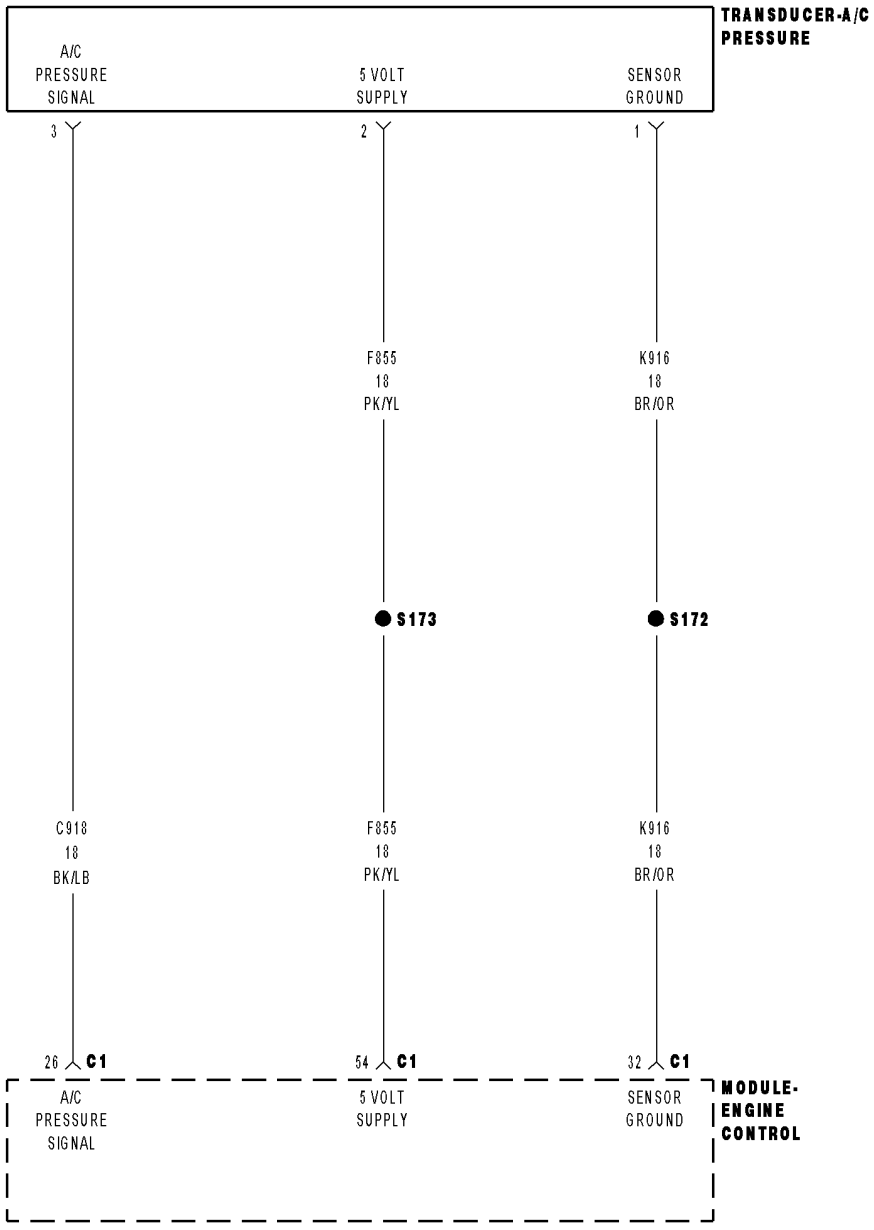

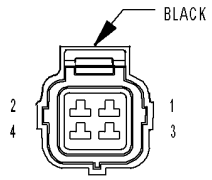

TRANSDUCER-A/C PRESSURE (DIESEL)

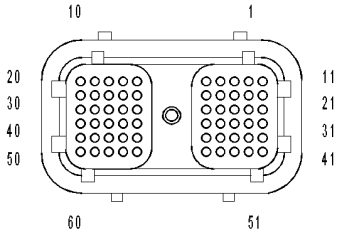

MODULE-ENGINE CONTROL C1

81427c48

P0532-A/C SENDING UNIT VOLTS TOO LOW (CONTINUED)

For the Engine circuit diagram (Refer to 8 - ELECTRICAL/ELECTRONIC CONTROL MODULES/ENGINE CONTROL MODULE - SCHEMATIC - ELECTRICAL)

For a complete wiring diagram **Refer to Section 8W**.

- **When Monitored:**
  With the ignition on and battery voltage greater than 10.4 volts.
- **Set Condition:**
  The circuit voltage to the ECM falls below a calibrated threshold for a certain period of time.

Possible Causes
OTHER DTC'S
A/C PRESSURE SENSOR
(C918) SIGNAL CIRCUIT SHORTED TO (K55) RETURN CIRCUIT
(F855) 5-VOLT SUPPLY CIRCUIT SHORTED TO (K55) RETURN CIRCUIT
(C918) SIGNAL CIRCUIT OPEN FROM ECM HARNESS CONNECTOR TO A/C HARNESS CONNECTOR
(F855) 5-VOLT SUPPLY CIRCUIT OPEN FROM ECM HARNESS TO A/C HARNESS CONNECTORS
(C918) SIGNAL CIRCUIT SHORTED TO GROUND
(F855) 5-VOLT SUPPLY CIRCUIT SHORTED TO GROUND
ECM
INTERMITTENT CONDITION

Always perform the Pre-Diagnostic Troubleshooting procedure before proceeding. (Refer to 9 - ENGINE - DIAGNOSIS AND TESTING)

Diagnostic Test

1. OTHER DTC'S

Turn the ignition on.
With the scan tool, read DTCs.

Are other DTC's present?

Yes >> Repair other DTC's first.
Perform POWERTRAIN VERIFICATION TEST VER - 1 (DIESEL). (Refer to 8 - ELECTRICAL/ELECTRONIC CONTROL MODULES/ENGINE CONTROL MODULE - DIAGNOSIS AND TESTING)

No >> Go To 2

P0532-A/C SENDING UNIT VOLTS TOO LOW (CONTINUED)

2. HARNESS OPEN

Disconnect the A/C pressure sending unit harness connector.

Check connectors - Clean/repair as necessary.

Measure the voltage between the (F855) 5-volt supply and (K916) return circuits of the sensor harness connector.

Is the voltage between 4.5 and 5.5 volts?

Yes >> Go To 3

No >> Go To 4

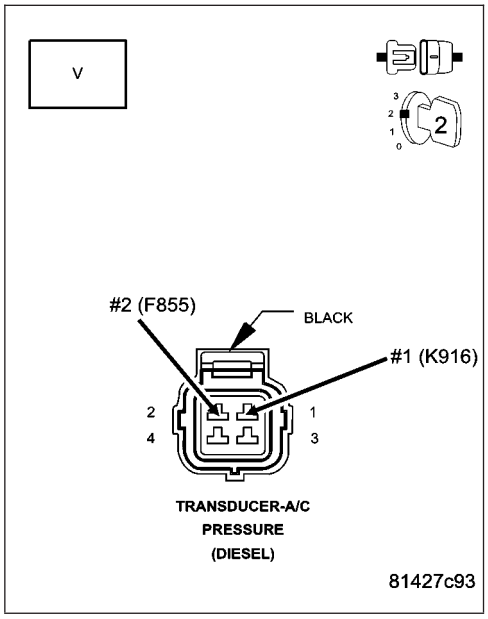

3. A/C PRESSURE SENSOR

While monitoring scan tool, use a jumper wire to connect the (F855) 5-volt supply circuit to the (C918) signal circuit at the sensor harness connector.

Did P0533 set?

Yes >> Replace the A/C pressure sensor.
Perform POWERTRAIN VERIFICATION TEST VER - 1 (DIESEL). (Refer to 8 - ELECTRICAL/ELECTRONIC CONTROL MODULES/ENGINE CONTROL MODULE - DIAGNOSIS AND TESTING)

No >> Go To 4

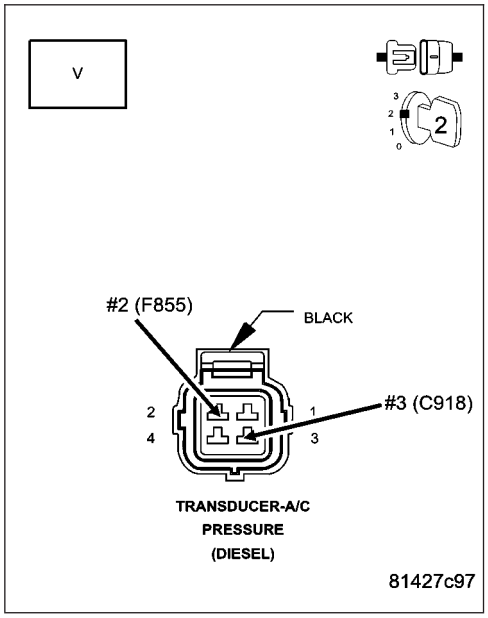

P0532-A/C SENDING UNIT VOLTS TOO LOW (CONTINUED)

4. (C918) SIGNAL CIRCUIT SHORTED TO THE (K916) RETURN CIRCUIT

Turn the ignition off.

Disconnect the ECM harness connectors.

Measure the resistance between the (C918) signal circuit and (K916) return circuit in the sensor harness connector.

Is the resistance greater than 100k Ohms?

Yes >> Go To 5

No >> Repair the (C918) signal circuit shorted to the (K916) return circuit.

Perform POWERTRAIN VERIFICATION TEST VER - 1 (DIESEL). (Refer to 8 - ELECTRICAL/ELECTRONIC CONTROL MODULES/ENGINE CONTROL MODULE - DIAGNOSIS AND TESTING)

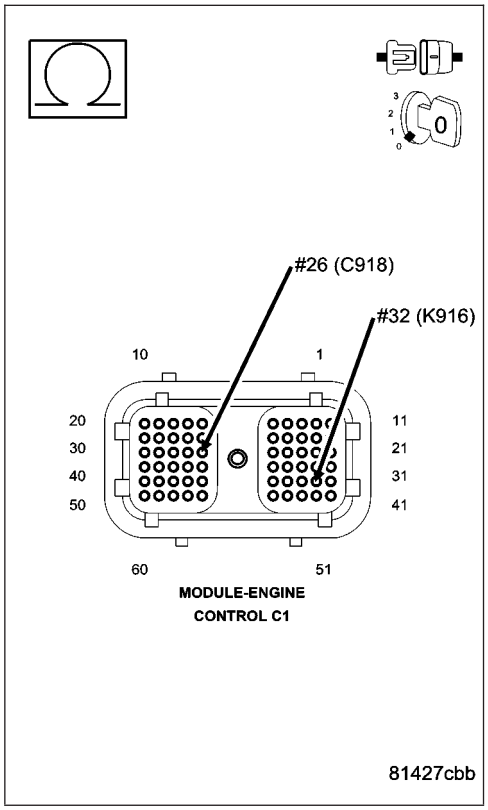

5. (F855) 5-VOLT SUPPLY CIRCUIT SHORTED TO THE (K916) RETURN CIRCUIT

Measure the resistance between the (F855) 5-volt supply circuit and (K916) return circuit in the sensor harness connector.

Is the resistance greater than 100k Ohms?

Yes >> Go To 6

No >> Repair the (F855) 5-volt supply circuit shorted to the (K916) return circuit.

Perform POWERTRAIN VERIFICATION TEST VER - 1 (DIESEL). (Refer to 8 - ELECTRICAL/ELECTRONIC CONTROL MODULES/ENGINE CONTROL MODULE - DIAGNOSIS AND TESTING)

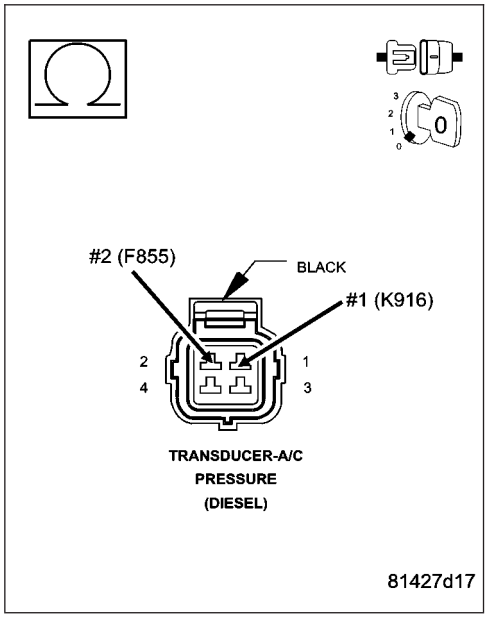

P0532-A/C SENDING UNIT VOLTS TOO LOW (CONTINUED)

6. (C918) SIGNAL CIRCUIT OPEN FROM ECM HARNESS CONNECTOR TO A/C HARNESS CONNECTOR

Measure the resistance of the (C918) signal circuit between the sensor harness connector and the ECM harness connector.

Is the resistance less than 10 Ohms?

Yes >> Go To 7

No >> Repair the open (C918) signal circuit.
Perform POWERTRAIN VERIFICATION TEST VER - 1 (DIESEL). (Refer to 8 - ELECTRICAL/ELECTRONIC CONTROL MODULES/ENGINE CONTROL MODULE - DIAGNOSIS AND TESTING)

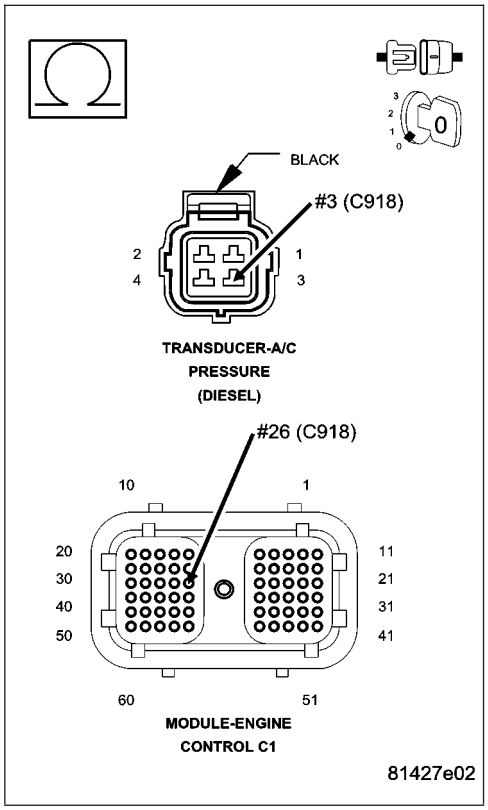

7. (F855) 5-VOLT SUPPLY CIRCUIT OPEN FROM ECM HARNESS CONNECTOR TO A/C HARNESS CONN

Measure the resistance of the (F855) 5-volt supply circuit between the sensor harness connector and the ECM harness connector.

Is the resistance less than 10 Ohms?

Yes >> Go To 8

No >> Repair the open (F855) 5-volt supply circuit.
Perform POWERTRAIN VERIFICATION TEST VER - 1 (DIESEL). (Refer to 8 - ELECTRICAL/ELECTRONIC CONTROL MODULES/ENGINE CONTROL MODULE - DIAGNOSIS AND TESTING)

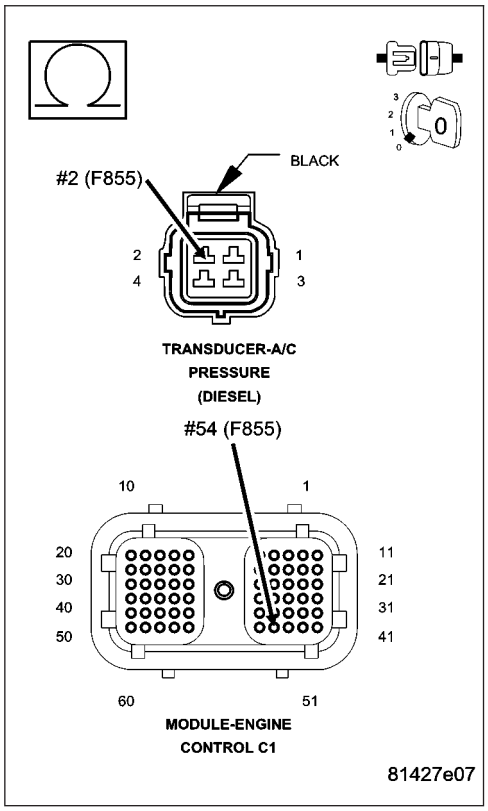

P0532-A/C SENDING UNIT VOLTS TOO LOW (CONTINUED)

8. (C918) SIGNAL CIRCUIT SHORTED TO GROUND

Measure the resistance between the (C918) signal circuit in the sensor harness connector and battery negative.

Is the resistance greater than 100k Ohms?

Yes >> Go To 9

No >> Repair the (C918) signal circuit shorted to ground.
Perform POWERTRAIN VERIFICATION TEST VER - 1 (DIESEL). (Refer to 8 - ELECTRICAL/ELECTRONIC CONTROL MODULES/ENGINE CONTROL MODULE - DIAGNOSIS AND TESTING)

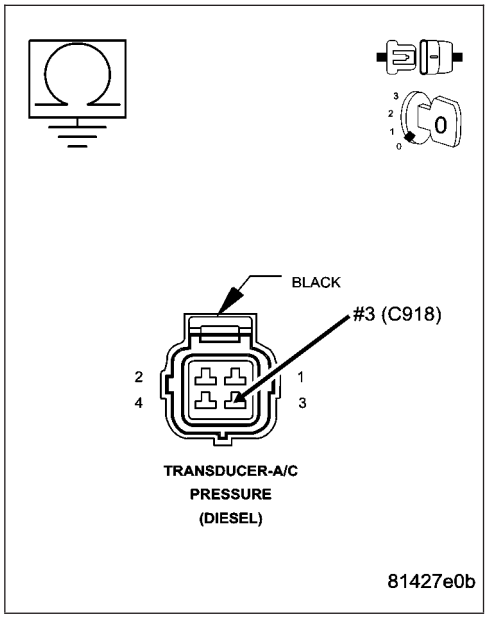

9. (F855) 5-VOLT SUPPLY CIRCUIT SHORTED TO GROUND

Measure the resistance between the (F855) 5-volt supply circuit in the sensor harness connector and battery negative.

Is the resistance greater than 100k Ohms?

Yes >> Go To 10

No >> Repair the (F855) 5-volt supply circuit shorted to ground.
Perform POWERTRAIN VERIFICATION TEST VER - 1 (DIESEL). (Refer to 8 - ELECTRICAL/ELECTRONIC CONTROL MODULES/ENGINE CONTROL MODULE - DIAGNOSIS AND TESTING)

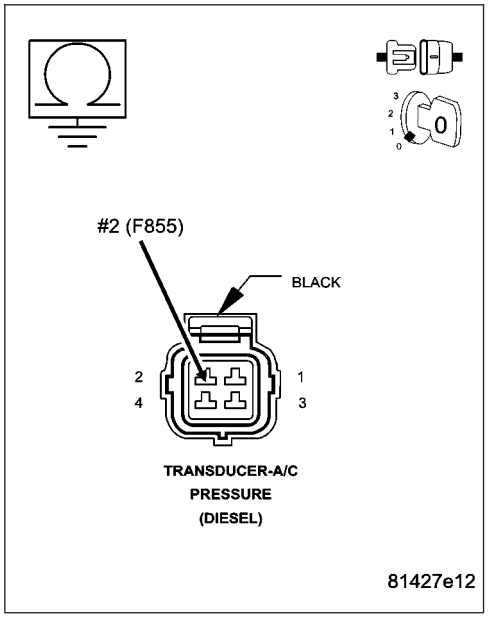

P0532-A/C SENDING UNIT VOLTS TOO LOW (CONTINUED)

10. ECM

Reconnect the ECM harness connectors.

Turn the ignition on.

While monitoring scan tool, use a jumper wire to connect the (F855) 5-volt supply circuit with the (C918) signal circuit at the sensor harness connector.

Did DTC P0533 set?

Yes >> Test Complete.

No >> Replace the ECM.

Perform POWERTRAIN VERIFICATION TEST VER - 1 (DIESEL). (Refer to 8 - ELECTRICAL/ELECTRONIC CONTROL MODULES/ENGINE CONTROL MODULE - DIAGNOSIS AND TESTING)

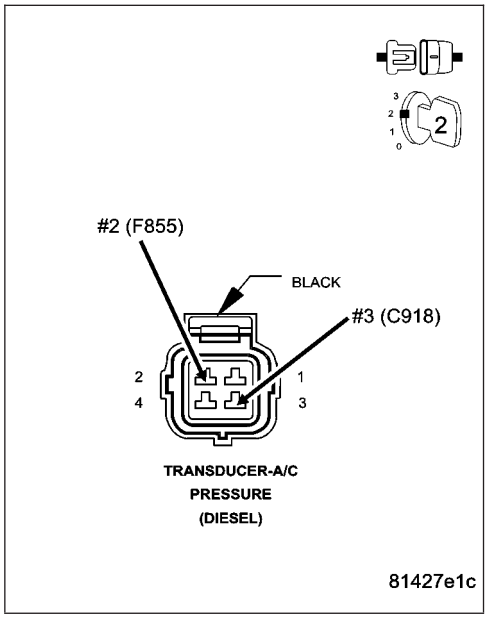

P0533-A/C SENDING UNIT VOLTS TOO HIGH

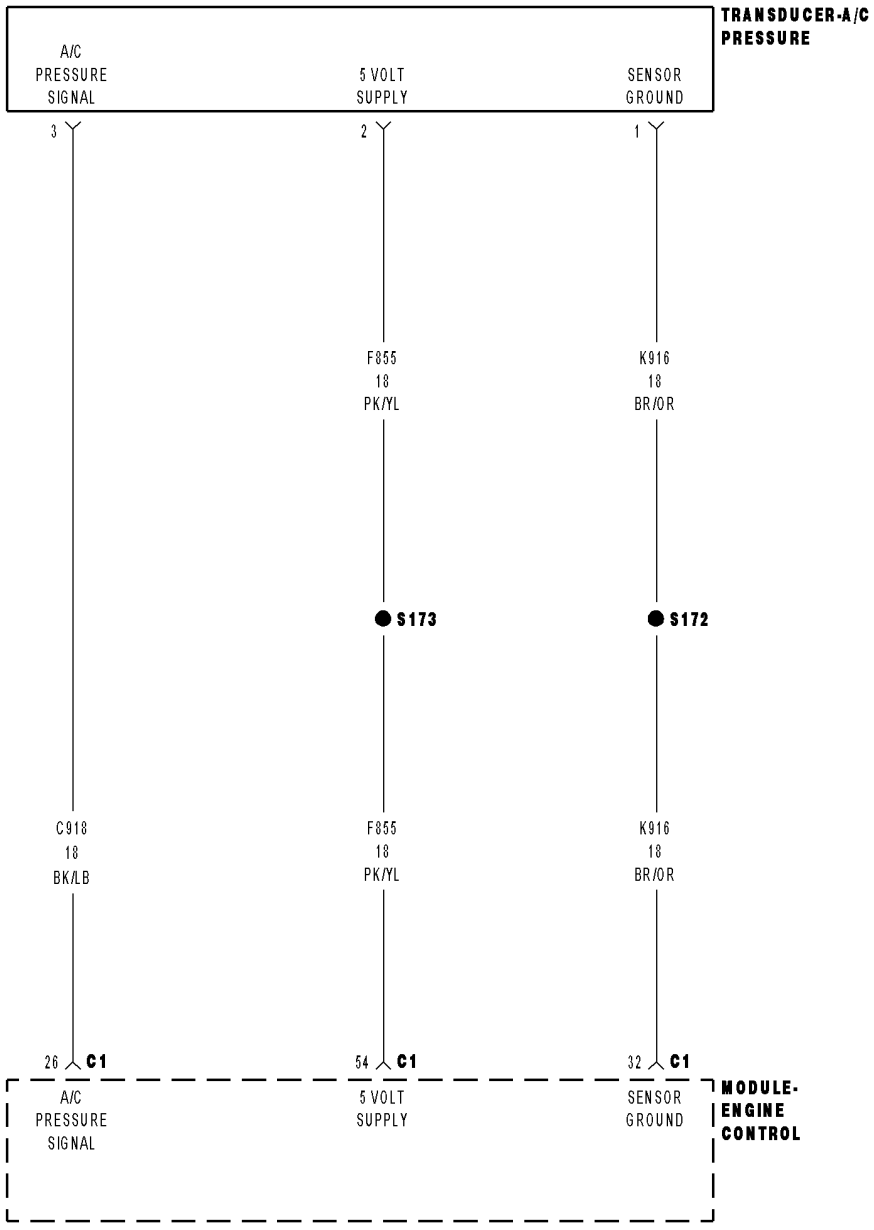

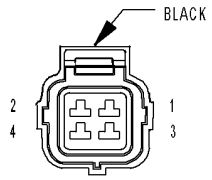

TRANSDUCER-A/C PRESSURE (DIESEL)

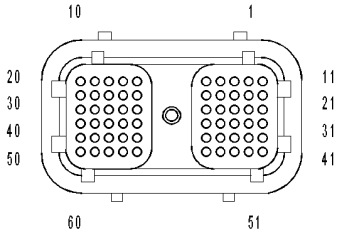

MODULE-ENGINE CONTROL C1

81427c48

P0533-A/C SENDING UNIT VOLTS TOO HIGH (CONTINUED)

For the Engine circuit diagram (Refer to 8 - ELECTRICAL/ELECTRONIC CONTROL MODULES/ENGINE CONTROL MODULE - SCHEMATIC - ELECTRICAL)

For a complete wiring diagram **Refer to Section 8W**.

- **When Monitored:**
  With the ignition on and battery voltage greater than 10.4 volts.
- **Set Condition:**
  The circuit voltage to the ECM is above a calibrated threshold for a certain period of time.

Possible Causes
OTHER DTC'S
A/C PRESSURE SENSOR
(C918) SIGNAL CIRCUIT SHORTED TO BATTERY POSITIVE
(F855) 5-VOLT SUPPLY CIRCUIT SHORTED TO BATTERY POSITIVE
(K916) RETURN CIRCUIT OPEN FROM ECM HARNESS CONNECTOR TO A/C HARNESS CONNECTOR
ECM
INTERMITTENT CONDITION

Always perform the Pre-Diagnostic Troubleshooting procedure before proceeding. (Refer to 9 - ENGINE - DIAGNOSIS AND TESTING)

Diagnostic Test

1. OTHER DTC'S

Turn the ignition on.
With the scan tool, read DTCs.

Are other DTC's present?

Yes >> Repair other DTC's first.
Perform POWERTRAIN VERIFICATION TEST VER - 1 (DIESEL). (Refer to 8 - ELECTRICAL/ELECTRONIC CONTROL MODULES/ENGINE CONTROL MODULE - DIAGNOSIS AND TESTING)

No >> Go To 2

P0533-A/C SENDING UNIT VOLTS TOO HIGH (CONTINUED)

2. HARNESS OPEN

Turn the ignition off.

Disconnect the A/C pressure sensing unit harness connector.

Check connectors - Clean/repair as necessary.

Turn the ignition on.

Measure the voltage between the (F855) 5-volt supply circuit and (K916) return circuit of the sensor harness connector.

Is the voltage between 4.5 and 5.5 volts?

Yes >> Go To 3

No >> Go To 4

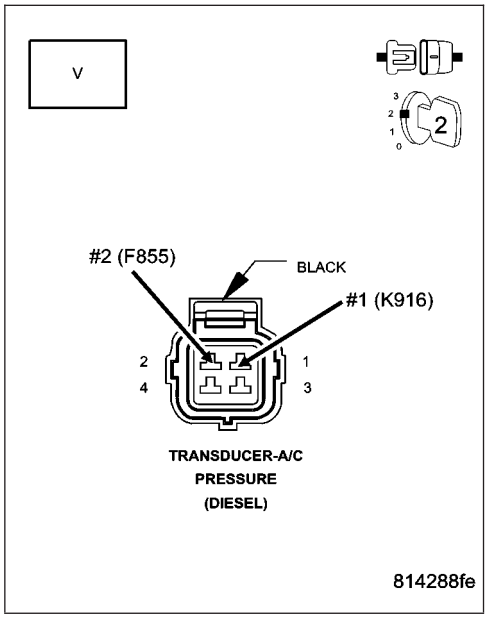

3. A/C PRESSURE SENSOR

While monitoring scan tool, use a jumper wire to connect the (K916) return circuit to the (C918) signal circuit at the sensor harness connector.

Did P0532 set?

Yes >> Replace the A/C pressure sensor.
Perform POWERTRAIN VERIFICATION TEST VER - 1 (DIESEL). (Refer to 8 - ELECTRICAL/ELECTRONIC CONTROL MODULES/ENGINE CONTROL MODULE - DIAGNOSIS AND TESTING)

No >> Go To 4

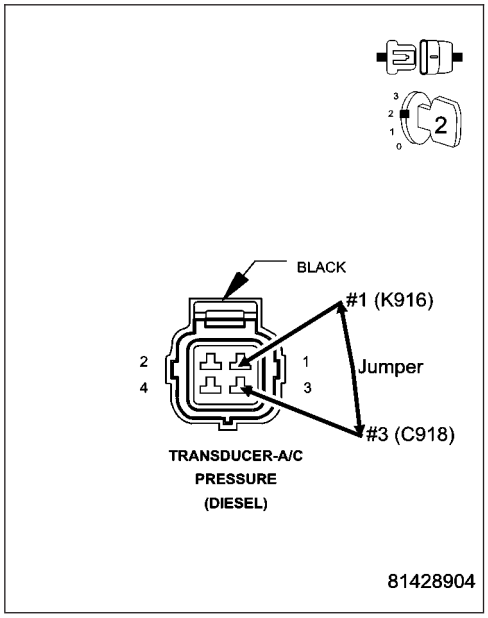

P0533-A/C SENDING UNIT VOLTS TOO HIGH (CONTINUED)

4. (F855) 5-VOLT SUPPLY CIRCUIT SHORTED TO BATTERY NEGATIVE

Turn the ignition off.

Disconnect the ECM harness connectors.

Check connectors - Clean/repair as necessary.

Measure the voltage between the (F855) 5-volt supply circuit at the harness connector and battery negative.

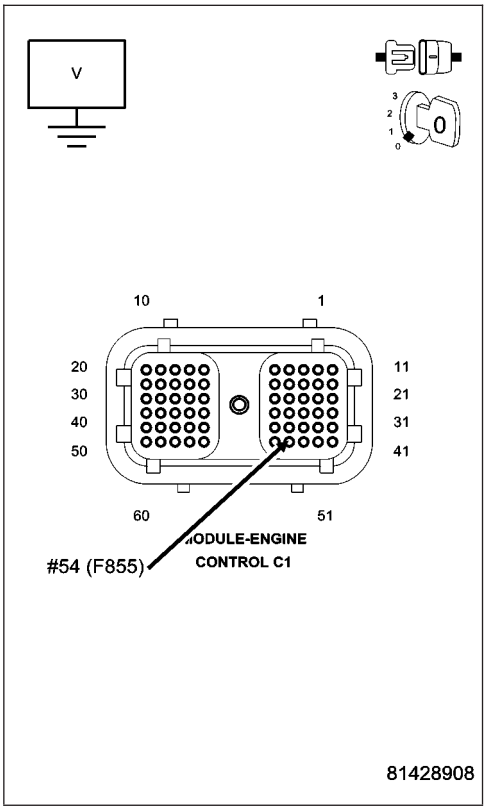

Is the voltage less than 1 volt?

Yes >> Go To 5

No >> Repair the (F855) 5-volt supply circuit shorted to the battery negative.

Perform POWERTRAIN VERIFICATION TEST VER - 1 (DIESEL). (Refer to 8 - ELECTRICAL/ELECTRONIC CONTROL MODULES/ENGINE CONTROL MODULE - DIAGNOSIS AND TESTING)

5. (C918) SIGNAL CIRCUIT SHORTED TO BATTERY NEGATIVE

Measure the voltage between the (C918) signal circuit at the harness connector and battery negative.

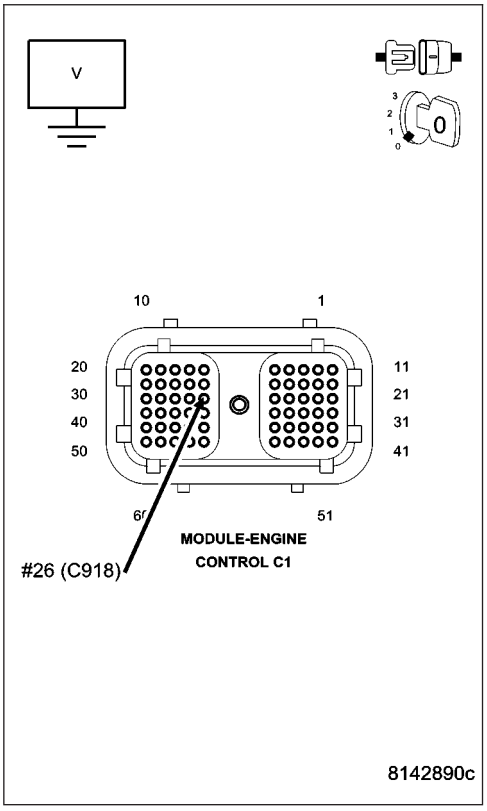

Is the voltage less than 1 volt?

Yes >> Go To 6

No >> Repair the (C918) signal circuit shorted to the battery negative.

Perform POWERTRAIN VERIFICATION TEST VER - 1 (DIESEL). (Refer to 8 - ELECTRICAL/ELECTRONIC CONTROL MODULES/ENGINE CONTROL MODULE - DIAGNOSIS AND TESTING)

P0533-A/C SENDING UNIT VOLTS TOO HIGH (CONTINUED)

6. (K916) RETURN CIRCUIT OPEN FROM ECM HARNESS CONNECTOR TO A/C HARNESS CONNECTOR

Measure the resistance of the (K916) return circuit between the sensor harness connector and the ECM harness connector.

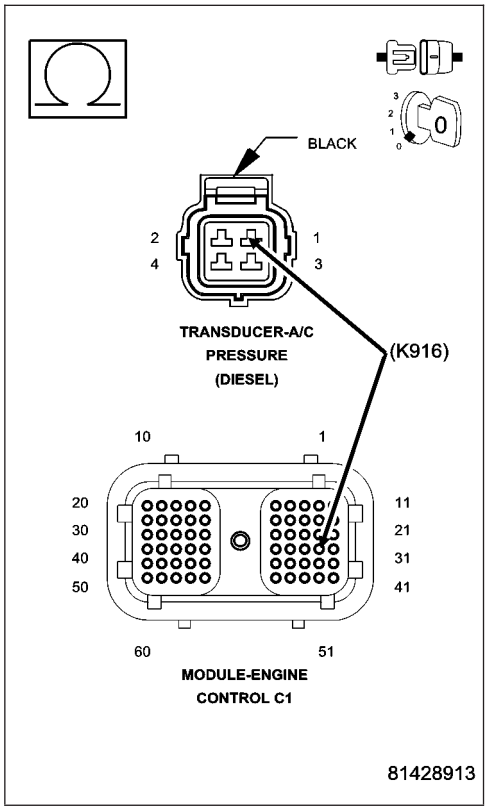

Is the resistance less than 10 Ohms?

Yes >> Go To 7

No >> Repair the open (K916) return circuit.

Perform POWERTRAIN VERIFICATION TEST VER - 1 (DIESEL). (Refer to 8 - ELECTRICAL/ELECTRONIC CONTROL MODULES/ENGINE CONTROL MODULE - DIAGNOSIS AND TESTING)

7. ECM

Reconnect the ECM harness connectors.

Turn the ignition on.

While monitoring scan tool, use a jumper wire to connect the (K916) return circuit with the (C918) signal circuit at the sensor harness connector.

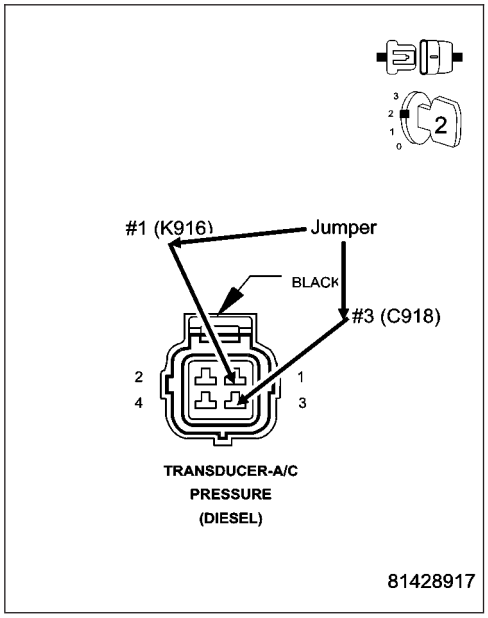

Did DTC P0532 set?

Yes >> Refer to the INTERMITTENT CONDITION Symptom (Diagnostic Procedure). (Refer to 9 - ENGINE - DIAGNOSIS AND TESTING)

No >> Replace the ECM.

Perform POWERTRAIN VERIFICATION TEST VER - 1 (DIESEL). (Refer to 8 - ELECTRICAL/ELECTRONIC CONTROL MODULES/ENGINE CONTROL MODULE - DIAGNOSIS AND TESTING)

P0541-LOW VOLTAGE ON THE #1 INTAKE AIR HEATER RELAY

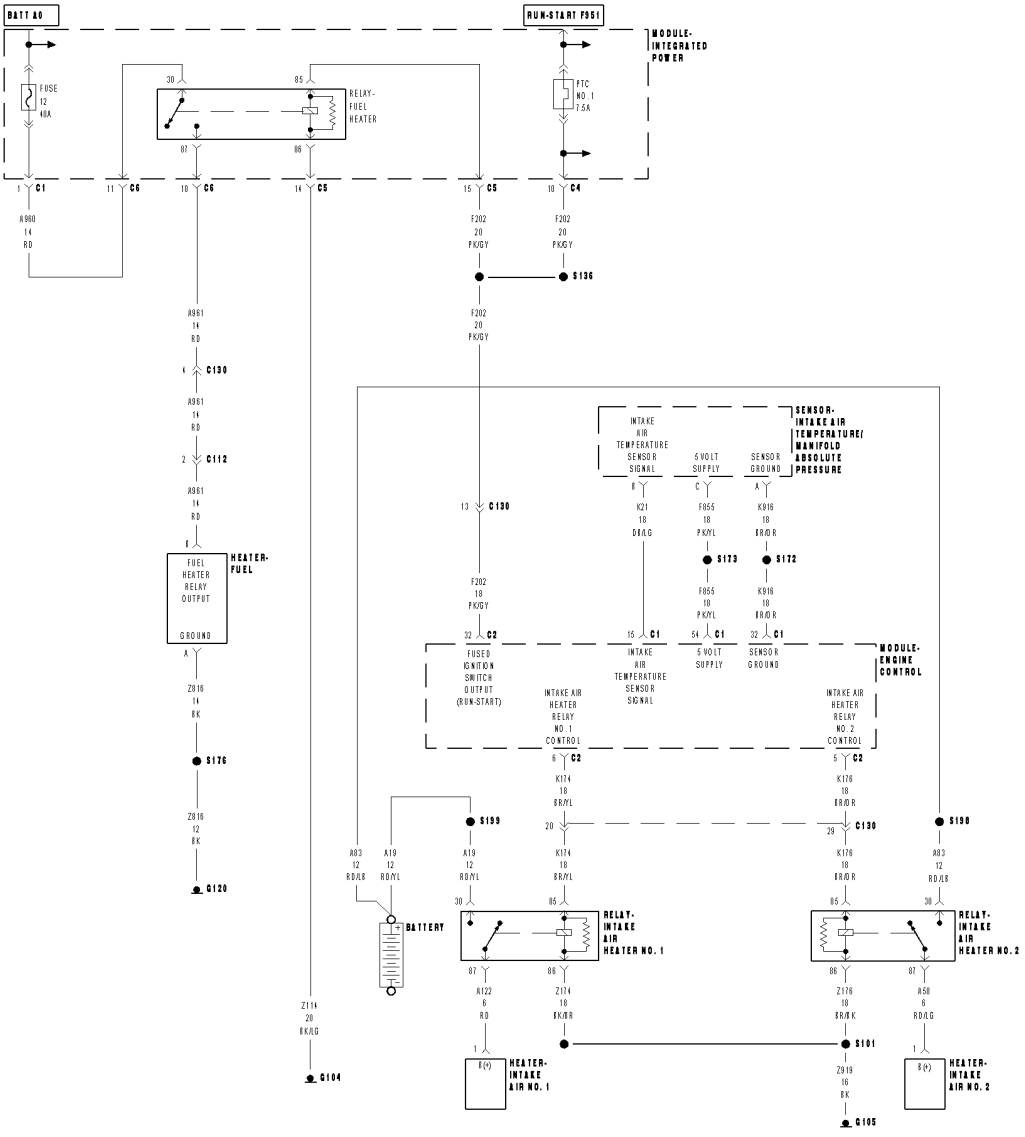

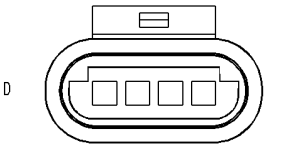

SENSOR-INTAKE AIR TEMPERATURE/ MANIFOLD ABSOLUTE PRESSURE (DIESEL)

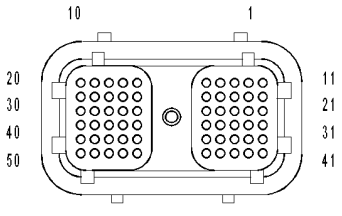

MODULE-ENGINE CONTROL C1

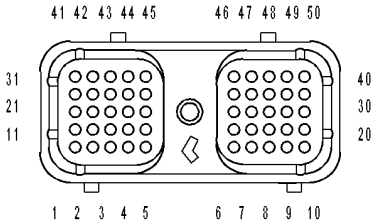

MODULE-ENGINE CONTROL C2

81429064

P0541-LOW VOLTAGE ON THE #1 INTAKE AIR HEATER RELAY (CONTINUED)

For the Engine circuit diagram (Refer to 8 - ELECTRICAL/ELECTRONIC CONTROL MODULES/ENGINE CONTROL MODULE - SCHEMATIC - ELECTRICAL)

For a complete wiring diagram **Refer to Section 8W**.

- **When Monitored:**
  When the ignition is on.
- **Set Condition:**
  When the signal from the #1 intake air heater output does not match the signal from the #1 intake air heater feedback.

Possible Causes
LOOSE CONNECTION
INTAKE AIR HEATER RELAY
SIGNAL CIRCUIT OPEN FROM RELAY TO ECM
SIGNAL CIRCUIT SHORTED TO BATTERY NEGATIVE
ECM
INTERMITTENT CONDITION

Always perform the Pre-Diagnostic Troubleshooting procedure before proceeding. (Refer to 9 - ENGINE - DIAGNOSIS AND TESTING)

Diagnostic Test

1. RELAY CLICKING

Ignition on, engine not running.

With the scan tool, actuate the #1 Intake Air Heater.

Can you hear the Relay clicking?

Yes >> Go To 2

No >> Go To 3

---

2. LOOSE CONNECTION

While the relay is clicking , wiggle the wiring harness and connectors.

Does this interrupt the clicking?

Yes >> Repair the poor connection.
Perform POWERTRAIN VERIFICATION TEST VER - 1 (DIESEL). (Refer to 8 - ELECTRICAL/ELECTRONIC CONTROL MODULES/ENGINE CONTROL MODULE - DIAGNOSIS AND TESTING)

No >> Go To 3

P0541-LOW VOLTAGE ON THE #1 INTAKE AIR HEATER RELAY (CONTINUED)

3. INTAKE AIR HEATER RELAY

Turn the ignition off.

Remove the Intake Air Heater #1 Relay.

Check connectors - Clean/repair as necessary.

Measure the resistance between the signal and return posts of the intake air heater relay.

Is the resistance between 15 and 25 Ohms?

Yes >> Go To 4

No >> Replace the Intake Air Heater #1 relay.
Perform POWERTRAIN VERIFICATION TEST VER - 1 (DIESEL). (Refer to 8 - ELECTRICAL/ELECTRONIC CONTROL MODULES/ENGINE CONTROL MODULE - DIAGNOSIS AND TESTING)

---

4. SIGNAL CIRCUIT OPEN FROM RELAY TO ECM

Disconnect the ECM harness connectors.

Check connectors - Clean/repair as necessary.

Measure the resistance of the intake air heater relay signal circuit between the ECM connector and the intake air heater relay connector.

Is the resistance less than 10 Ohms?

Yes >> Go To 5

No >> Repair the open signal circuit from PDC to ECM harness connector.
Perform POWERTRAIN VERIFICATION TEST VER - 1 (DIESEL). (Refer to 8 - ELECTRICAL/ELECTRONIC CONTROL MODULES/ENGINE CONTROL MODULE - DIAGNOSIS AND TESTING)

---

5. SIGNAL CIRCUIT SHORTED TO BATTERY NEGATIVE

Measure the voltage between the signal circuit of the intake air heater relay and battery negative.

Is the voltage greater than 1 volts?

Yes >> Repair the signal circuit shorted to Battery negative.
Perform POWERTRAIN VERIFICATION TEST VER - 1 (DIESEL). (Refer to 8 - ELECTRICAL/ELECTRONIC CONTROL MODULES/ENGINE CONTROL MODULE - DIAGNOSIS AND TESTING)

No >> Go To 6

---

6. ECM

Reconnect the ECM harness connectors.

Disconnect the intake air heater relay signal wire and use a jumper to connect it to battery negative.

Turn the ignition on.

With the scan tool, read DTCs.

Did DTC P0542 set?

Yes >> Refer to the INTERMITTENT CONDITION Symptom (Diagnostic Procedure). (Refer to 9 - ENGINE - DIAGNOSIS AND TESTING)

No >> Replace the ECM.
Perform POWERTRAIN VERIFICATION TEST VER - 1 (DIESEL). (Refer to 8 - ELECTRICAL/ELECTRONIC CONTROL MODULES/ENGINE CONTROL MODULE - DIAGNOSIS AND TESTING)

P0542-HIGH VOLTAGE ON THE #1 INTAKE AIR HEATER RELAY

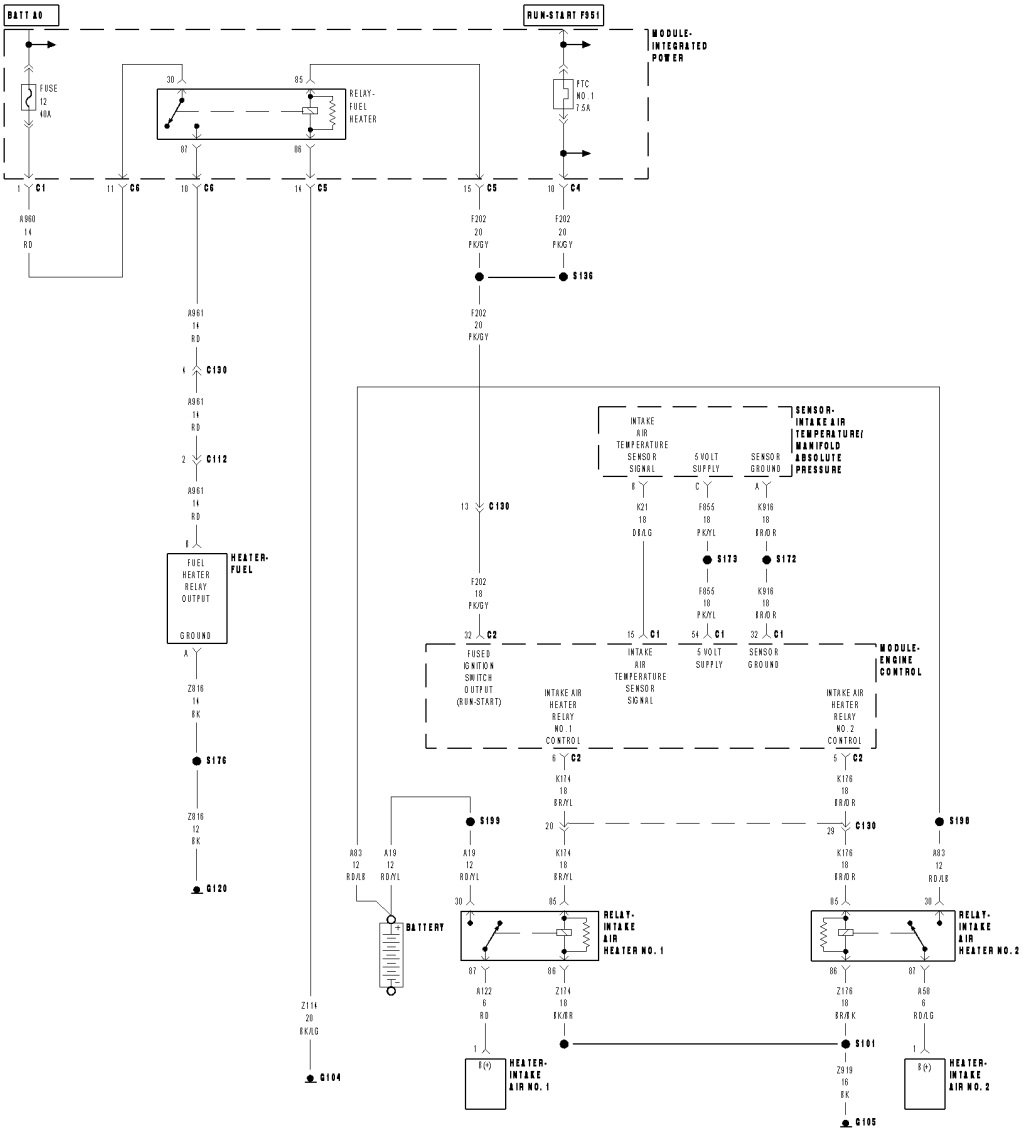

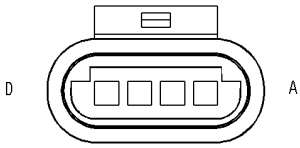

SENSOR-INTAKE AIR TEMPERATURE/MANIFOLD ABSOLUTE PRESSURE (DIESEL)

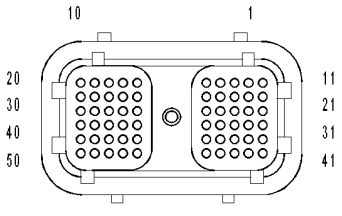

MODULE-ENGINE CONTROL C1

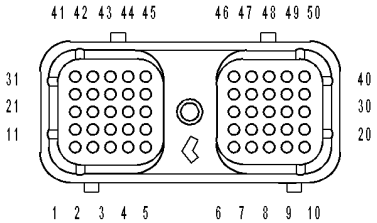

MODULE-ENGINE CONTROL C2

81429064

P0542-HIGH VOLTAGE ON THE #1 INTAKE AIR HEATER RELAY (CONTINUED)

For the Engine circuit diagram (Refer to 8 - ELECTRICAL/ELECTRONIC CONTROL MODULES/ENGINE CONTROL MODULE - SCHEMATIC - ELECTRICAL)

For a complete wiring diagram **Refer to Section 8W**.

- **When Monitored:**
  When the ignition is on.
- **Set Condition:**
  When the signal from the #1 Intake Air Heater output does not match the signal from the #1 Intake Air Heater feedback.

Possible Causes
LOOSE CONNECTION
INTAKE AIR HEATER RELAY
SIGNAL CIRCUIT SHORTED TO BATTERY NEGATIVE
ECM
INTERMITTENT CONDITION

Always perform the Pre-Diagnostic Troubleshooting procedure before proceeding. (Refer to 9 - ENGINE - DIAGNOSIS AND TESTING)

Diagnostic Test

1. RELAY CLICKING

Ignition on, engine not running.

With the scan tool, actuate the Intake Air Heater relay.

Can you hear the Relay clicking?

Yes >> Go To 2

No >> Go To 3

---

2. LOOSE CONNECTION

While the relay is clicking , wiggle the wiring harness and connectors.

Does this interrupt the clicking?

Yes >> Repair the poor connection.
Perform POWERTRAIN VERIFICATION TEST VER - 1 (DIESEL). (Refer to 8 - ELECTRICAL/ELECTRONIC CONTROL MODULES/ENGINE CONTROL MODULE - DIAGNOSIS AND TESTING)

No >> Go To 3

P0542-HIGH VOLTAGE ON THE #1 INTAKE AIR HEATER RELAY (CONTINUED)

3. INTAKE AIR HEATER RELAY

Turn the ignition off.

Remove the Intake Air Heater Relay.

NOTE: Check connectors - Clean/repair as necessary.

Measure the resistance between the signal and return posts of the intake air heater relay.

Is the resistance between 15 and 25 Ohms?

Yes >> Go To 4

No >> Replace the Intake Air Heater relay.
Perform POWERTRAIN VERIFICATION TEST VER - 1 (DIESEL). (Refer to 8 - ELECTRICAL/ELECTRONIC CONTROL MODULES/ENGINE CONTROL MODULE - DIAGNOSIS AND TESTING)

---

4. SIGNAL CIRCUIT SHORTED TO BATTERY NEGATIVE

Disconnect the ECM harness connector(s).

NOTE: Check connectors - Clean/repair as necessary.

Measure the resistance between the signal circuit of the intake air heater relay and battery negative.

Is the resistance greater than 100 K ohms?

Yes >> Go To 5

No >> Repair signal circuit shorted to battery negative.
Perform POWERTRAIN VERIFICATION TEST VER - 1 (DIESEL). (Refer to 8 - ELECTRICAL/ELECTRONIC CONTROL MODULES/ENGINE CONTROL MODULE - DIAGNOSIS AND TESTING)

---

5. SIGNAL CIRCUIT SHORTED TO OTHER CIRCUITS

Measure the resistance between the signal circuit of the intake air heater relay and all other circuits in the ECM harness connector.

Is the resistance greater than 100 K ohms?

Yes >> Go To 6

No >> Repair signal circuit shorted to other circuits.
Perform POWERTRAIN VERIFICATION TEST VER - 1 (DIESEL). (Refer to 8 - ELECTRICAL/ELECTRONIC CONTROL MODULES/ENGINE CONTROL MODULE - DIAGNOSIS AND TESTING)

---

6. ECM

Reconnect the ECM harness connectors.

Turn the ignition on.

Disconnect the intake air heater relay signal wire.

Did DTC P0542 or 2608 set?

Yes >> Refer to the INTERMITTENT CONDITION Symptom (Diagnostic Procedure). (Refer to 9 - ENGINE - DIAGNOSIS AND TESTING)

No >> Replace the ECM.
Perform POWERTRAIN VERIFICATION TEST VER - 1 (DIESEL). (Refer to 8 - ELECTRICAL/ELECTRONIC CONTROL MODULES/ENGINE CONTROL MODULE - DIAGNOSIS AND TESTING)

P0562-BATTERY VOLTAGE LOW

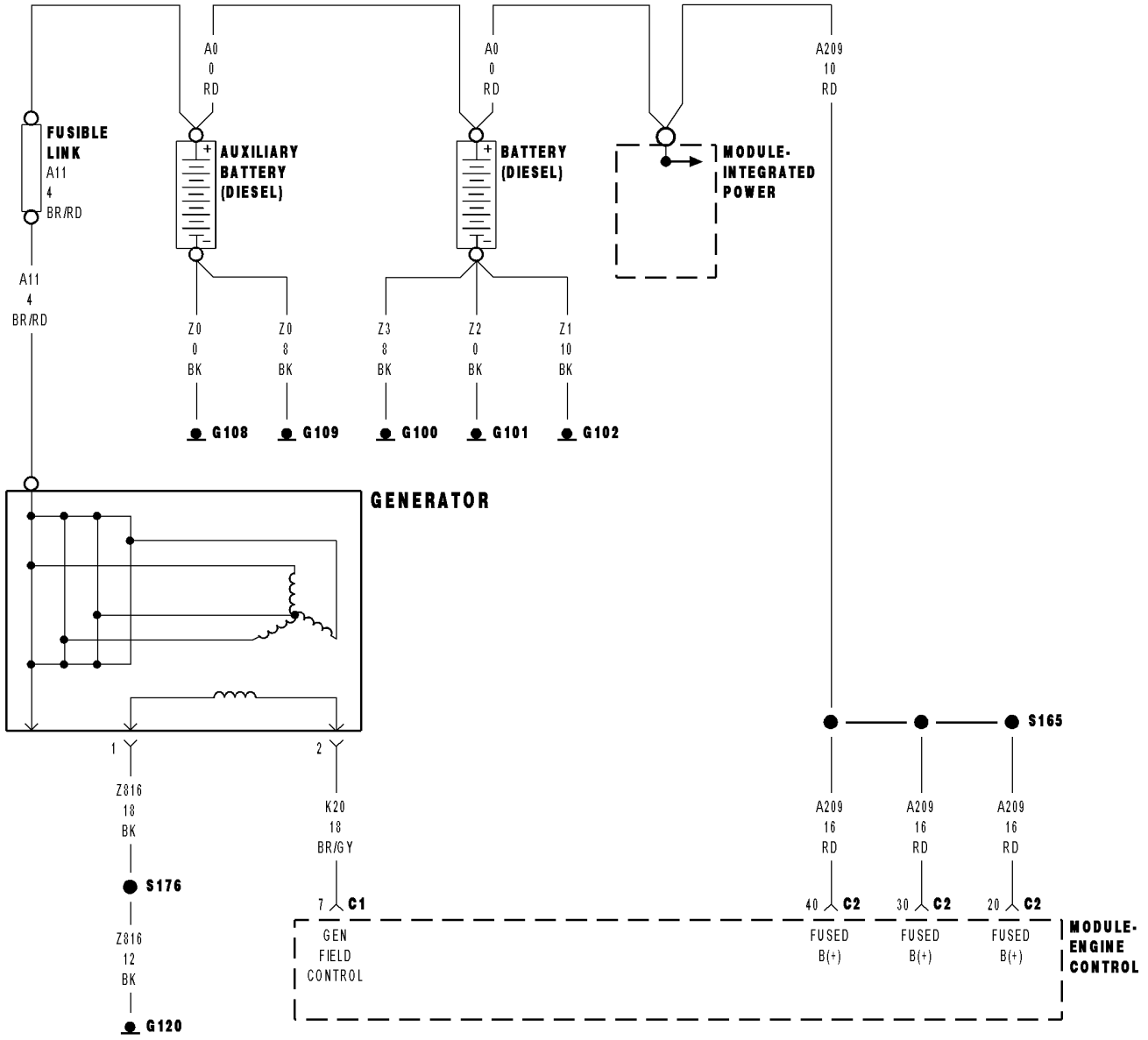

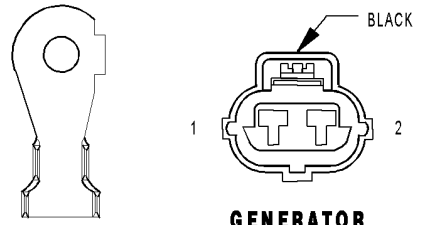

GENERATOR
(DIESEL/3.7L/4.7L/SRT)

GENERATOR
(EXCEPT SRT)

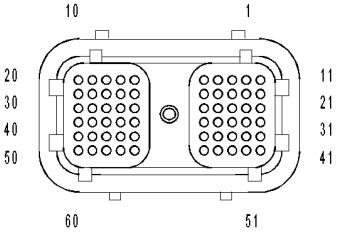

MODULE-ENGINE
CONTROL C1

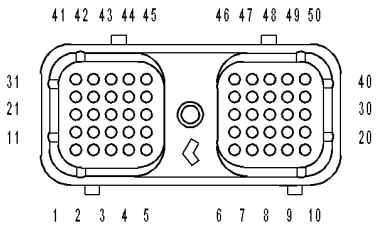

MODULE-ENGINE
CONTROL C2

8142cf39

P0562-BATTERY VOLTAGE LOW (CONTINUED)

For the Engine circuit diagram (Refer to 8 - ELECTRICAL/ELECTRONIC CONTROL MODULES/ENGINE CONTROL MODULE - SCHEMATIC - ELECTRICAL)

For a complete wiring diagram **Refer to Section 8W**.

- **When Monitored:**
  With the key on or the engine running.
- **Set Condition:**
  The battery voltage detected by the ECM is less than a calibrated value.

Possible Causes
P0622 PRESENT
P2502 PRESENT
P2503 PRESENT
BATTERY TERMINAL CONNECTIONS
ACCESSORY WIRING
BATTERY
HIGH RESISTANCE IN WIRE HARNESS
ECM
INTERMITTENT CONDITION

Always perform the Pre-Diagnostic Troubleshooting procedure before proceeding. (Refer to 9 - ENGINE - DIAGNOSIS AND TESTING)

Diagnostic Test

1. P0622 PRESENT

With the scan tool, read DTCs.

Is P0622 set?

Yes >> Repair P0622 first.
Perform POWERTRAIN VERIFICATION TEST VER - 1 (DIESEL). (Refer to 8 - ELECTRICAL/ELECTRONIC CONTROL MODULES/ENGINE CONTROL MODULE - DIAGNOSIS AND TESTING)

No >> Go To 2

---

2. P2502 PRESENT

With the scan tool, read DTCs.

Is P2502 set?

Yes >> Repair P2502 first.
Perform POWERTRAIN VERIFICATION TEST VER - 1 (DIESEL). (Refer to 8 - ELECTRICAL/ELECTRONIC CONTROL MODULES/ENGINE CONTROL MODULE - DIAGNOSIS AND TESTING)

No >> Go To 3

P0562-BATTERY VOLTAGE LOW (CONTINUED)

3. P2503 PRESENT

With the scan tool, read DTCs.

Is P2503 set?

Yes >> Repair P2503 first.
Perform POWERTRAIN VERIFICATION TEST VER - 1 (DIESEL). (Refer to 8 - ELECTRICAL/ELECTRONIC CONTROL MODULES/ENGINE CONTROL MODULE - DIAGNOSIS AND TESTING)

No >> Go To 4

---

4. BATTERY TERMINAL CONNECTIONS

Visually inspect the positive and negative connections at the batteries and inspect the battery negative connections at the engine block.

Are the connections free of corrosion and are they tight?

Yes >> Go To 5

No >> Repair the poor connections.
Perform POWERTRAIN VERIFICATION TEST VER - 1 (DIESEL). (Refer to 8 - ELECTRICAL/ELECTRONIC CONTROL MODULES/ENGINE CONTROL MODULE - DIAGNOSIS AND TESTING)

---

5. ACCESSORY WIRING

Check for add-on or accessory wiring at positive (+) terminal of the battery

Are there any damaged wires at the battery?

Yes >> Repair accessory wiring.
Perform POWERTRAIN VERIFICATION TEST VER - 1 (DIESEL). (Refer to 8 - ELECTRICAL/ELECTRONIC CONTROL MODULES/ENGINE CONTROL MODULE - DIAGNOSIS AND TESTING)

No >> Go To 6

---

6. BATTERY(S)

Perform battery load test using the Midtronics Micro 420 battery system tester.

Did the battery(s) pass the test?

Yes >> Go To 7

No >> Replace the weak battery or batteries.
Perform POWERTRAIN VERIFICATION TEST VER - 1 (DIESEL). (Refer to 8 - ELECTRICAL/ELECTRONIC CONTROL MODULES/ENGINE CONTROL MODULE - DIAGNOSIS AND TESTING)

P0562-BATTERY VOLTAGE LOW (CONTINUED)

7. HIGH RESISTANCE IN WIRE HARNESS

Turn the ignition off.

Disconnect the ECM harness connectors.

Disconnect the battery terminals.

Measure the resistance from the positive and negative battery posts to the appropriate circuits in the ECM harness connector

Is the resistance less than 10 Ohms?

Yes >> Go To 8

No >> Repair the high resistance in the wire harness.

Perform POWERTRAIN VERIFICATION TEST VER - 1 (DIESEL). (Refer to 8 - ELECTRICAL/ELECTRONIC CONTROL MODULES/ENGINE CONTROL MODULE - DIAGNOSIS AND TESTING)

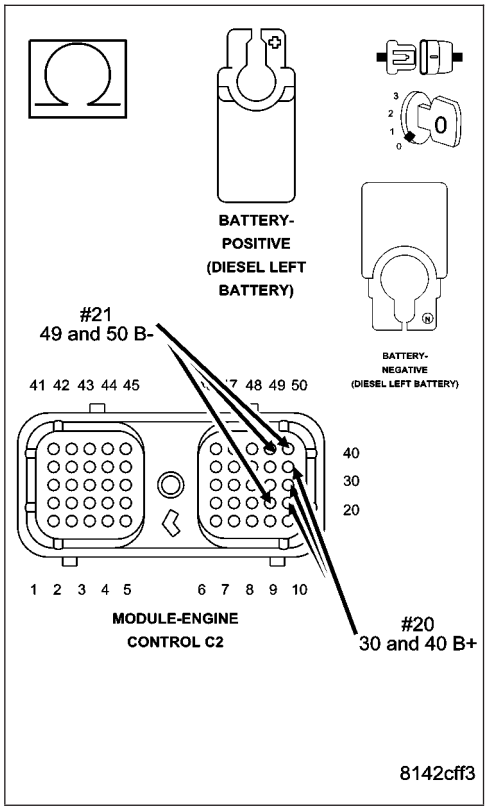

8. ECM

Reconnect the battery terminals.

Measure and record the voltage between battery positive pins of the ECM connector and the battery negative circuits of the ECM harness connector.

Reconnect the ECM harness connectors.

Use the scan tool to measure and record battery voltage.

Are the readings within 3 volts of each other?

Yes >> Refer to the INTERMITTENT CONDITION Symptom (Diagnostic Procedure). (Refer to 9 - ENGINE - DIAGNOSIS AND TESTING)

No >> Replace the ECM.

Perform POWERTRAIN VERIFICATION TEST VER - 1 (DIESEL). (Refer to 8 - ELECTRICAL/ELECTRONIC CONTROL MODULES/ENGINE CONTROL MODULE - DIAGNOSIS AND TESTING)

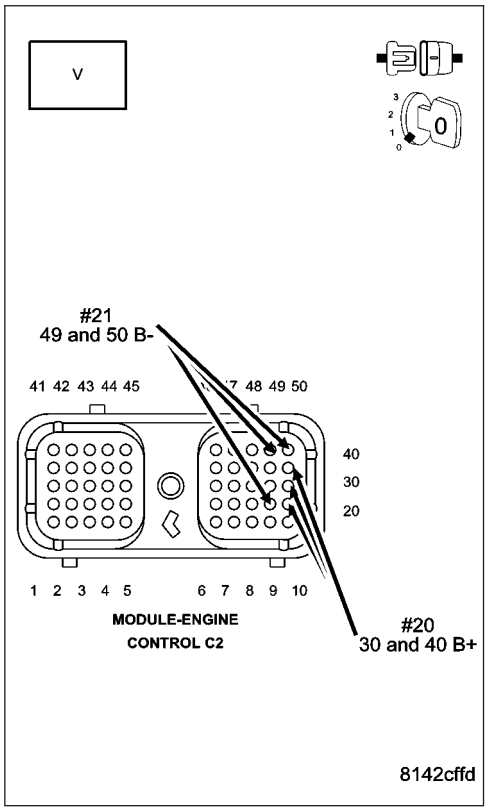

P0563-BATTERY VOLTAGE HIGH

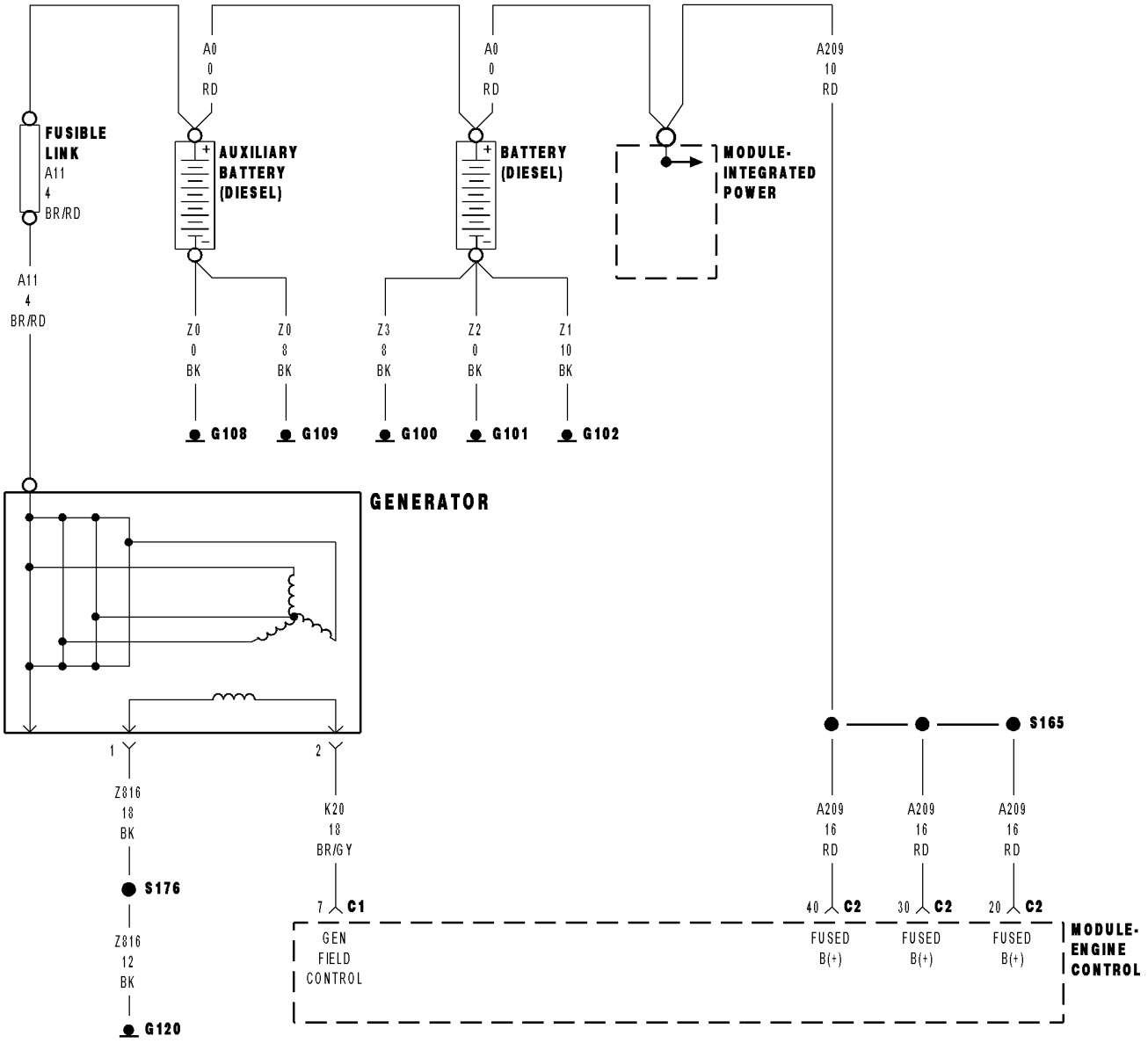

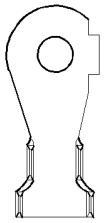

GENERATOR
(DIESEL/3.7L/4.7L/SRT)

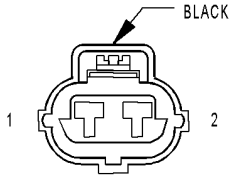

GENERATOR
(EXCEPT SRT)

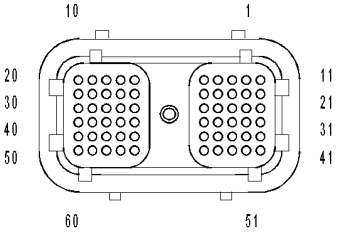

MODULE-ENGINE
CONTROL C1

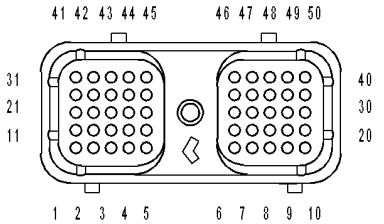

MODULE-ENGINE
CONTROL C2

8142cf39

P0563-BATTERY VOLTAGE HIGH (CONTINUED)

For the Engine circuit diagram (Refer to 8 - ELECTRICAL/ELECTRONIC CONTROL MODULES/ENGINE CONTROL MODULE - SCHEMATIC - ELECTRICAL)

For a complete wiring diagram **Refer to Section 8W**.

- **When Monitored:**
  With the key on or the engine running.
- **Set Condition:**
  The battery voltage detected by the ECM is greater than a calibrated value.

Possible Causes
P0622 PRESENT
P2502 PRESENT
P2504 PRESENT
BATTERIES IMPROPERLY INSTALLED
ECM
INTERMITTENT CONDITION

Always perform the Pre-Diagnostic Troubleshooting procedure before proceeding. (Refer to 9 - ENGINE - DIAGNOSIS AND TESTING)

Diagnostic Test

1. P0622 PRESENT

With the scan tool, read DTCs.

Is P0622 set?

Yes >> Repair P0622 first.
Perform POWERTRAIN VERIFICATION TEST VER - 1 (DIESEL). (Refer to 8 - ELECTRICAL/ELECTRONIC CONTROL MODULES/ENGINE CONTROL MODULE - DIAGNOSIS AND TESTING)

No >> Go To 2

---

2. P2502 PRESENT

With the scan tool, read DTCs.

Is P2502 set?

Yes >> Repair P2502 first.
Perform POWERTRAIN VERIFICATION TEST VER - 1 (DIESEL). (Refer to 8 - ELECTRICAL/ELECTRONIC CONTROL MODULES/ENGINE CONTROL MODULE - DIAGNOSIS AND TESTING)

No >> Go To 3

---

3. P2504 PRESENT

With the scan tool, read DTCs.

Is P2504 set?

Yes >> Repair P2504 first.
Perform POWERTRAIN VERIFICATION TEST VER - 1 (DIESEL). (Refer to 8 - ELECTRICAL/ELECTRONIC CONTROL MODULES/ENGINE CONTROL MODULE - DIAGNOSIS AND TESTING)

No >> Go To 4

P0563-BATTERY VOLTAGE HIGH (CONTINUED)

4. BATTERIES IMPROPERLY INSTALLED

Disconnect the ECM harness connectors.

Measure the battery voltage between the positive circuits and ground of the ECM harness connector.

Is the voltage less than 19 volts?

Yes >> Go To 5

No >> Install the battery system correctly.

Perform POWERTRAIN VERIFICATION TEST VER - 1 (DIESEL). (Refer to 8 - ELECTRICAL/ELECTRONIC CONTROL MODULES/ENGINE CONTROL MODULE - DIAGNOSIS AND TESTING)

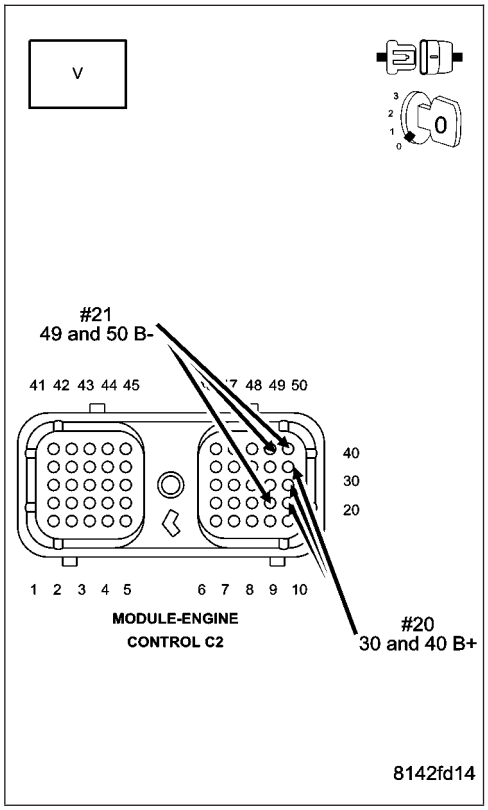

5. ECM

Reconnect the battery terminals.

Measure and record the voltage between battery positive pins of the ECM connector and the battery negative circuits of the ECM harness connector.

Reconnect the ECM harness connectors.

Use the scan tool to measure and record battery voltage.

Are the readings within 3 volts of each other?

Yes >> Refer to the INTERMITTENT CONDITION Symptom (Diagnostic Procedure). (Refer to 9 - ENGINE - DIAGNOSIS AND TESTING)

No >> Replace the ECM.

Perform POWERTRAIN VERIFICATION TEST VER - 1 (DIESEL). (Refer to 8 - ELECTRICAL/ELECTRONIC CONTROL MODULES/ENGINE CONTROL MODULE - DIAGNOSIS AND TESTING)

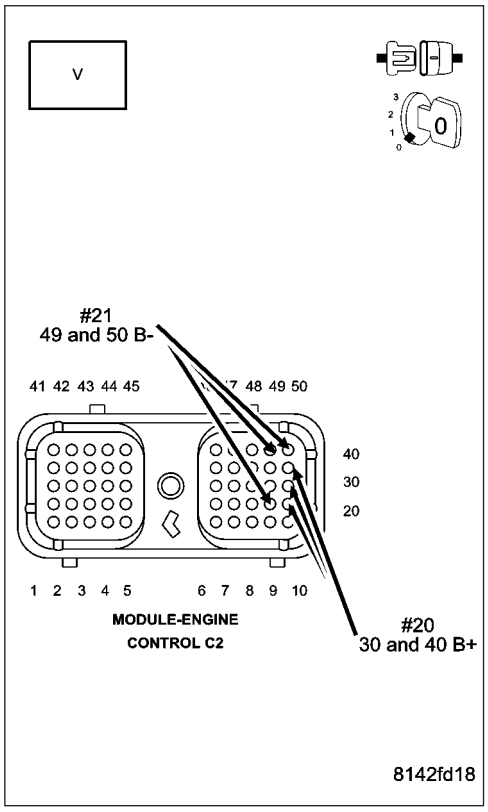

P0572-LOW VOLTAGE DETECTED AT THE BRAKE SWITCH

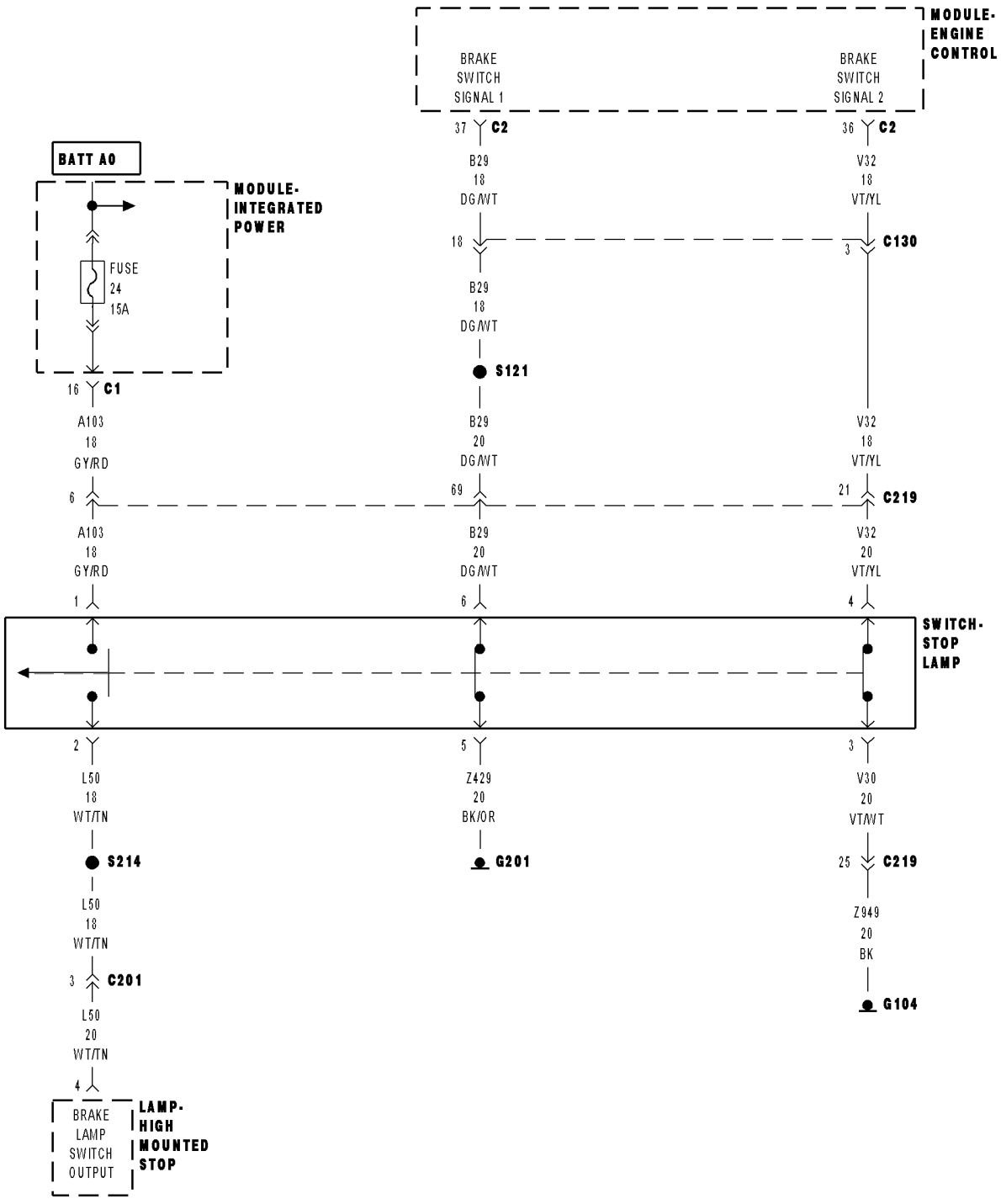

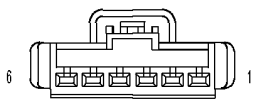

SWITCH-STOP LAMP

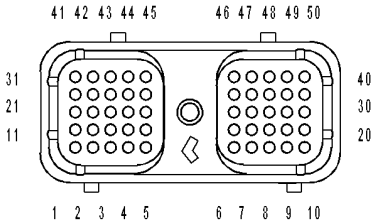

MODULE-ENGINE CONTROL C2

8142fe89

P0572-LOW VOLTAGE DETECTED AT THE BRAKE SWITCH (CONTINUED)

For the Engine circuit diagram (Refer to 8 - ELECTRICAL/ELECTRONIC CONTROL MODULES/ENGINE CONTROL MODULE - SCHEMATIC - ELECTRICAL)

For a complete wiring diagram **Refer to Section 8W**.

- **When Monitored:**
  While the ignition is on
- **Set Condition:**
  The brake switch status is = to OFF and the not brake switch status is = to ON for a calibrated amount of time..

Possible Causes
DAMAGED WIRING HARNESS OR CONNECTORS
BRAKE SWITCH CIRCUIT SHORTED TO GROUND (BRAKE SWITCH WILL ALWAYS BE OFF)
BRAKE SWITCH
ECM

Always perform the Pre-Diagnostic Troubleshooting procedure before proceeding. (Refer to 9 - ENGINE - DIAGNOSIS AND TESTING)

1. BRAKE SWITCH CIRCUIT SHORTED TO GROUND

Turn the ignition off.

Disconnect the brake switch connection. Inspect the pins and connector for damage, corrosion, etc.

Disconnect the ECM connectors. Inspect the pins and connector for damage, corrosion, etc.

NOTE: Check connectors - Clean/repair as necessary.
Measure the resistance between the brake switch circuit in the ECM connector and battery negative.

Is the resistance less than 10 ohms?

Yes >> Repair the Brake switch circuit shorted to ground.
Perform POWERTRAIN VERIFICATION TEST VER - 1 (DIESEL). (Refer to 8 - ELECTRICAL/ELECTRONIC CONTROL MODULES/ENGINE CONTROL MODULE - DIAGNOSIS AND TESTING)

No >> Go To 2

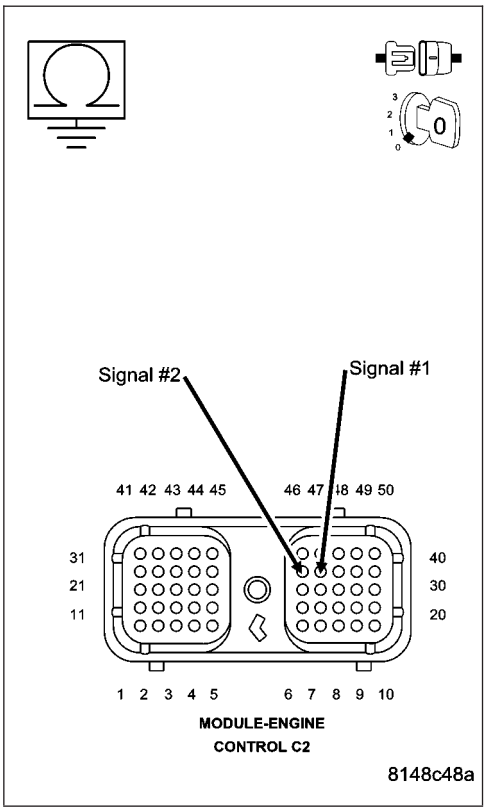

P0572-LOW VOLTAGE DETECTED AT THE BRAKE SWITCH (CONTINUED)

2. BRAKE SWITCH CIRCUIT SHORTED TO OTHER CIRCUITS IN HARNESS

Measure the resistance between the brake switch wire in the ECM connector and all other pins in the ECM connector.

Is the resistance less than 10 ohms?

Yes >> Repair or replace the harness.
Perform POWERTRAIN VERIFICATION TEST VER - 1 (DIESEL). (Refer to 8 - ELECTRICAL/ELECTRONIC CONTROL MODULES/ENGINE CONTROL MODULE - DIAGNOSIS AND TESTING)

No >> Go To 3

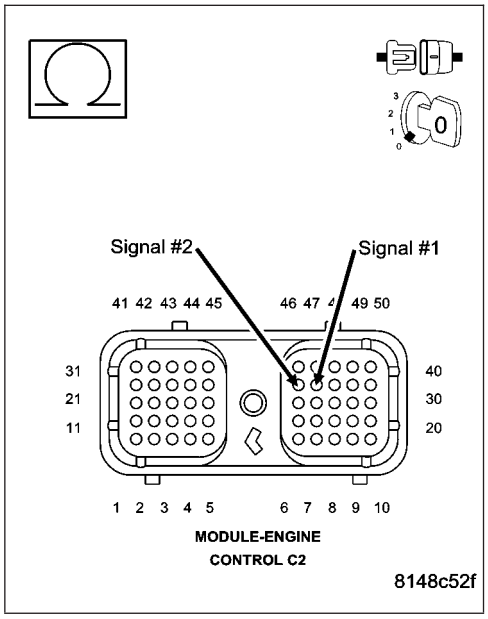

3. ECM

Reconnect the ECM connectors.

Measure the resistance between the brake switch circuit at the switch connector and battery negative.

Is the resistance less than 10 ohms?

Yes >> Replace the ECM.
Perform POWERTRAIN VERIFICATION TEST VER - 1 (DIESEL). (Refer to 8 - ELECTRICAL/ELECTRONIC CONTROL MODULES/ENGINE CONTROL MODULE - DIAGNOSIS AND TESTING)

No >> Go To 4

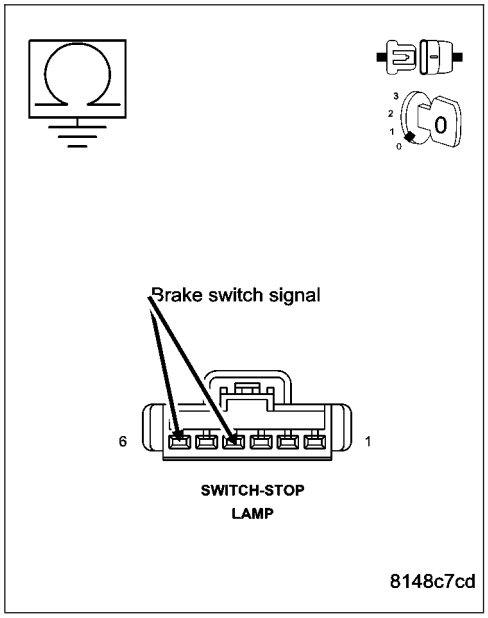

P0572-LOW VOLTAGE DETECTED AT THE BRAKE SWITCH (CONTINUED)

4.

Reconnect the brake switch connector.
Using the scan tool, clear the DTC's.
Turn the ignition on.
Cycle the brake pedal several times.
Using the scan tool, read the DTC's.

Has the brake switch low DTC returned?

Yes >> Replace the brake switch.
Perform POWERTRAIN VERIFICATION TEST VER - 1 (DIESEL). (Refer to 8 - ELECTRICAL/ELECTRONIC CONTROL MODULES/ENGINE CONTROL MODULE - DIAGNOSIS AND TESTING)

No >> Perform Intermittent condition test. (Refer to 9 - ENGINE - DIAGNOSIS AND TESTING)

P0573-HIGH VOLTAGE DETECTED AT THE BRAKE SWITCH

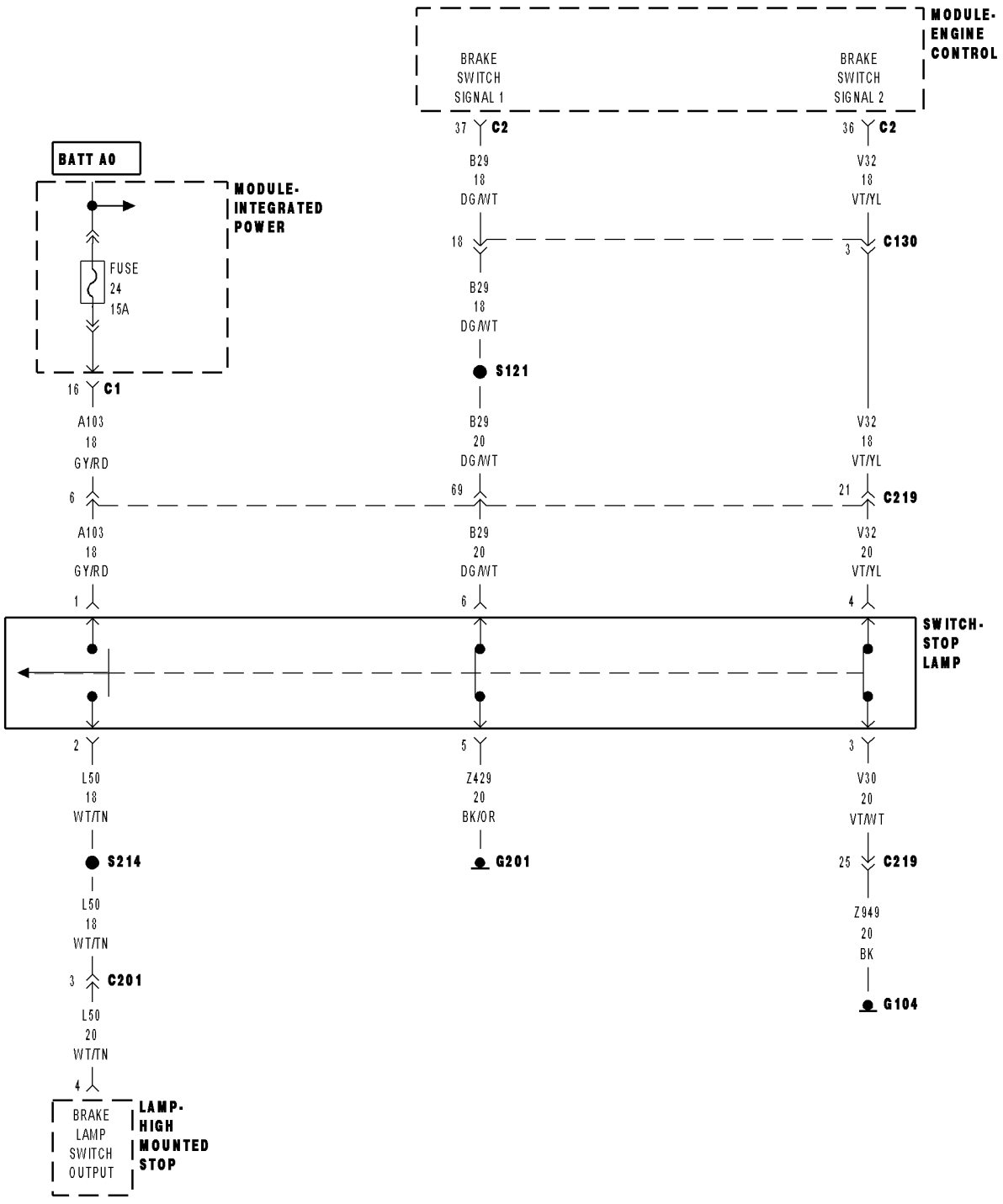

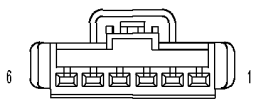

SWITCH-STOP LAMP

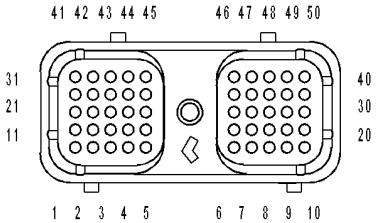

MODULE-ENGINE CONTROL C2

8142fe89

P0573-HIGH VOLTAGE DETECTED AT THE BRAKE SWITCH (CONTINUED)

For the Engine circuit diagram (Refer to 8 - ELECTRICAL/ELECTRONIC CONTROL MODULES/ENGINE CONTROL MODULE - SCHEMATIC - ELECTRICAL)

For a complete wiring diagram **Refer to Section 8W**.

- **When Monitored:**
  While the ignition is on.
- **Set Condition:**
  The brake switch status is = to ON and the not brake switch status is = to OFF for a calibrated amount of time.

Possible Causes
DAMAGED WIRING HARNESS OR CONNECTORS
BRAKE SWITCH CIRCUIT OPEN (BRAKE SWITCH WILL ALWAYS BE ON)
BRAKE SWITCH CIRCUIT SHORTED TO BATTERY VOLTAGE (BRAKE SWITCH WILL ALWAYS BE ON)
BRAKE SWITCH
ECM

Always perform the Pre-Diagnostic Troubleshooting procedure before proceeding. (Refer to 9 - ENGINE - DIAGNOSIS AND TESTING)

1. BRAKE SWITCH CIRCUIT OPEN

Turn the ignition off.

Disconnect the brake switch connection. Inspect the pins and connector for damage, corrosion, etc.

Disconnect the ECM connectors. Inspect the pins and connector for damage, corrosion, etc.

NOTE: Check connectors - Clean/repair as necessary.
Measure the resistance between the brake switch signal circuits in the ECM connector and the brake switch connector.

Is the resistance less than 10 ohms?

Yes >> Go To 2

No >> Repair the open brake switch circuits.
Perform POWERTRAIN VERIFICATION TEST VER - 1 (DIESEL). (Refer to 8 - ELECTRICAL/ELECTRONIC CONTROL MODULES/ENGINE CONTROL MODULE - DIAGNOSIS AND TESTING)

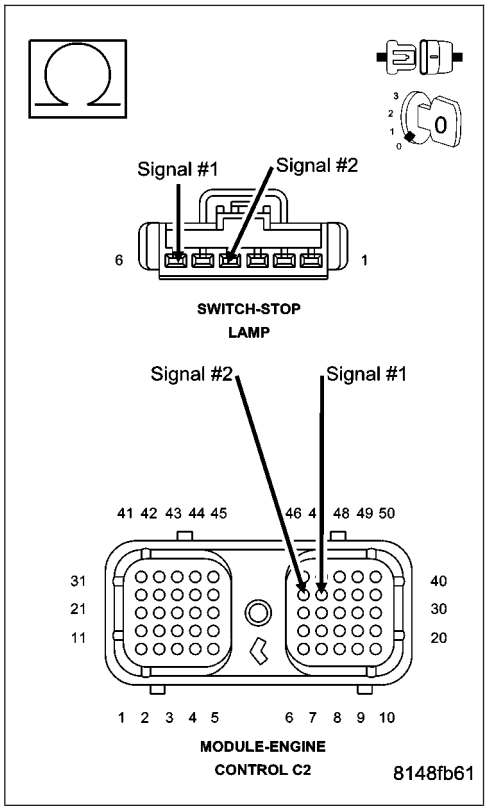

P0573-HIGH VOLTAGE DETECTED AT THE BRAKE SWITCH (CONTINUED)

2. BRAKE SWITCH CIRCUIT SHORTED TO VOLTAGE

Measure the voltage between the brake switch circuits in the ECM connector and battery negative.

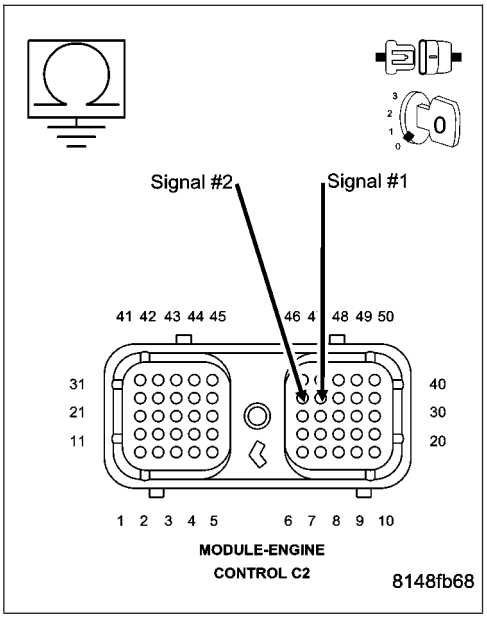

Is the voltage less than 1 volt?

Yes >> Go To 3

No >> Repair the open circuit.
Perform POWERTRAIN VERIFICATION TEST VER - 1 (DIESEL). (Refer to 8 - ELECTRICAL/ELECTRONIC CONTROL MODULES/ENGINE CONTROL MODULE - DIAGNOSIS AND TESTING)

---

3. ECM

Reconnect the ECM connectors.
Install a jumper wire in the brake switch connector between signal circuit and to ground.
Turn the ignition on.
Cycle the brake pedal several times.
Using the scan tool, read the DTC's.

Is the DTC for brake switch low voltage present?

Yes >> Go To 4

No >> Replace the ECM.
Perform POWERTRAIN VERIFICATION TEST VER - 1 (DIESEL). (Refer to 8 - ELECTRICAL/ELECTRONIC CONTROL MODULES/ENGINE CONTROL MODULE - DIAGNOSIS AND TESTING)

---

4. BRAKE SWITCH

Reconnect the brake switch connector.
Using the scan tool, clear the DTC's.
Turn the ignition on.
Cycle the brake pedal several times.
Using the scan tool, read the DTC's.

Has the brake switch High DTC returned?

Yes >> Replace the brake switch.
Perform POWERTRAIN VERIFICATION TEST VER - 1 (DIESEL). (Refer to 8 - ELECTRICAL/ELECTRONIC CONTROL MODULES/ENGINE CONTROL MODULE - DIAGNOSIS AND TESTING)

No >> Perform Intermittent condition test. (Refer to 9 - ENGINE - DIAGNOSIS AND TESTING)

P0580-LOW VOLTAGE DETECTED AT THE SPEED CONTROL SWITCH

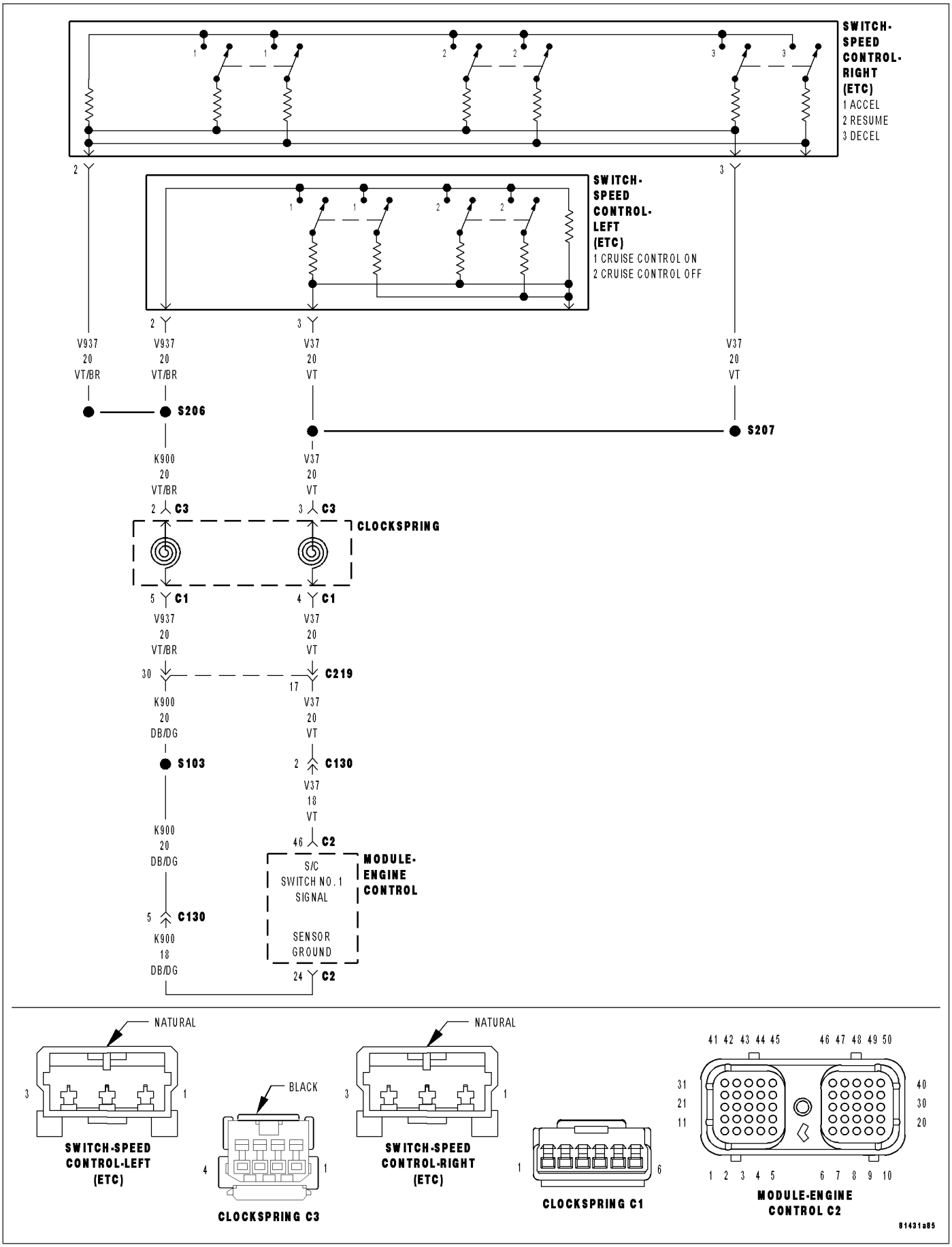

P0580-LOW VOLTAGE DETECTED AT THE SPEED CONTROL SWITCH (CONTINUED)

For the Engine circuit diagram (Refer to 8 - ELECTRICAL/ELECTRONIC CONTROL MODULES/ENGINE CONTROL MODULE - SCHEMATIC - ELECTRICAL)

For a complete wiring diagram **Refer to Section 8W**.

- **When Monitored:**
  While the ignition is on
- **Set Condition:**
  Speed control MUX switch below 1.0 volts for 5 seconds.

Possible Causes
S/C WIRING HARNESS OBSERVABLE PROBLEM
S/C SWITCH (ON/OFF)
CLOCKSPRING SHORTED TO GROUND
S/C SWITCH (RESUME/ACCEL)
S/C SWITCH SIGNAL CIRCUIT SHORTED TO GROUND
S/C SIGNAL CIRCUIT SHORTED TO SENSOR GROUND
ECM

Always perform the Pre-Diagnostic Troubleshooting procedure before proceeding. (Refer to 9 - ENGINE - DIAGNOSIS AND TESTING)

Diagnostic Test

1. S/C SWITCH VOLTAGE BELOW 1.0 VOLT

Turn the ignition on.

With the scan tool, read the S/C Switch volts status in the ECM.

Is the S/C Switch voltage below 1.0 volt?

Yes >> Go To 3

No >> Go To 2

---

2. S/C WIRING HARNESS OBSERVABLE PROBLEM

Turn the ignition off.

Using the Schematics as a guide, inspect the Wiring and Connectors.

Were any problems found?

Yes >> Repair as necessary.
Perform POWERTRAIN VERIFICATION TEST VER - 1 (DIESEL). (Refer to 8 - ELECTRICAL/ELECTRONIC CONTROL MODULES/ENGINE CONTROL MODULE - DIAGNOSIS AND TESTING)

No >> Go To 3

P0580-LOW VOLTAGE DETECTED AT THE SPEED CONTROL SWITCH (CONTINUED)

3. S/C SWITCH (ON/OFF)

Turn the ignition off.

Disconnect the S/C ON/OFF Switch harness connector.

NOTE: Check connectors - Clean/repair as necessary.

Turn the ignition on.

With the scan tool in Sensors, read the S/C Switch volts in the ECM.

Did the S/C Switch volts change to 5.0 volts?

Yes >> Replace the S/C ON/OFF Switch.
Perform POWERTRAIN VERIFICATION TEST VER - 1 (DIESEL). (Refer to 8 - ELECTRICAL/ELECTRONIC CONTROL MODULES/ENGINE CONTROL MODULE - DIAGNOSIS AND TESTING)

No >> Go To 4

---

4. S/C SWITCH (RESUME/ACCEL)

Turn the ignition off.

Disconnect the S/C RESUME/ACCEL Switch harness connector.

NOTE: Check connectors - Clean/repair as necessary.

Ignition on, engine not running.

With the scan tool in Sensors, read the S/C Switch volts in the ECM.

Did the S/C Switch volts go above 4.0 volts?

Yes >> Replace the Resume/Accel Switch.
Perform POWERTRAIN VERIFICATION TEST VER - 1 (DIESEL). (Refer to 8 - ELECTRICAL/ELECTRONIC CONTROL MODULES/ENGINE CONTROL MODULE - DIAGNOSIS AND TESTING)

No >> Go To 5

---

5. CLOCKSPRING SHORTED TO GROUND

Turn the ignition off.

Disconnect the clockspring 6-way harness connector (instrument panel wiring side).

Turn the ignition on.

With the scan tool in Sensors, read the S/C Switch volts in the ECM.

Did the S/C Switch volts change to 5.0 volts?

Yes >> Replace the Clockspring.
Perform POWERTRAIN VERIFICATION TEST VER - 1 (DIESEL). (Refer to 8 - ELECTRICAL/ELECTRONIC CONTROL MODULES/ENGINE CONTROL MODULE - DIAGNOSIS AND TESTING)

No >> Go To 6

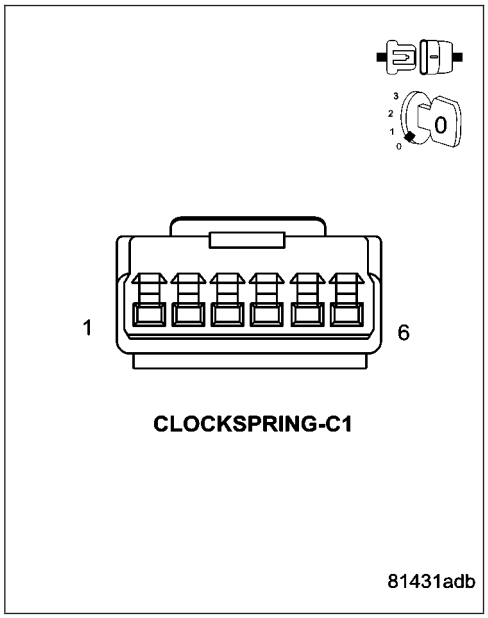

P0580-LOW VOLTAGE DETECTED AT THE SPEED CONTROL SWITCH (CONTINUED)

6. S/C SWITCH SIGNAL CIRCUIT SHORTED TO GROUND

Turn the ignition off.

Disconnect the S/C ON/OFF Switch harness connector.

Disconnect the ECM harness connectors.

NOTE: Check connectors - Clean/repair as necessary.

Measure the resistance between the S/C Switch Signal circuit and ground (B-) at S/C ON/OFF Switch harness connector.

Is the resistance below 5.0 ohms?

Yes >> Repair S/C Switch Signal Circuit for a short to ground.
Perform POWERTRAIN VERIFICATION TEST VER - 1 (DIESEL). (Refer to 8 - ELECTRICAL/ELECTRONIC CONTROL MODULES/ENGINE CONTROL MODULE - DIAGNOSIS AND TESTING)

No >> Go To 7

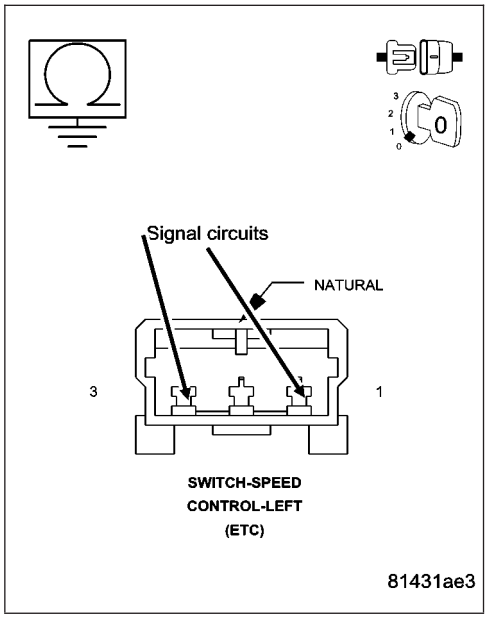

7. S/C SIGNAL CIRCUIT SHORTED TO SENSOR GROUND

Measure the resistance between the S/C Signal Circuit and the Sensor Ground Circuit at the ON/OFF switch harness connector.

Is the resistance below 5.0 ohms?

Yes >> Repair S/C Signal Circuit shorted to Sensor Ground.
Perform POWERTRAIN VERIFICATION TEST VER - 1 (DIESEL). (Refer to 8 - ELECTRICAL/ELECTRONIC CONTROL MODULES/ENGINE CONTROL MODULE - DIAGNOSIS AND TESTING)

No >> Replace and program the ECM in accordance with the Service Information.
Perform POWERTRAIN VERIFICATION TEST VER - 1 (DIESEL). (Refer to 8 - ELECTRICAL/ELECTRONIC CONTROL MODULES/ENGINE CONTROL MODULE - DIAGNOSIS AND TESTING)

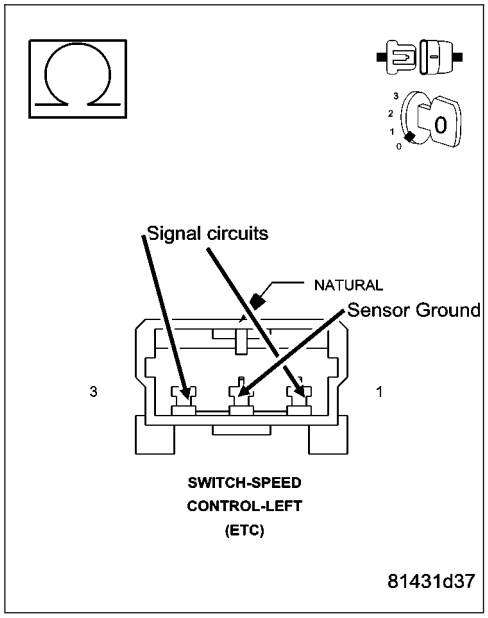

P0581-HIGH VOLTAGE DETECTED AT THE SPEED CONTROL SWITCH

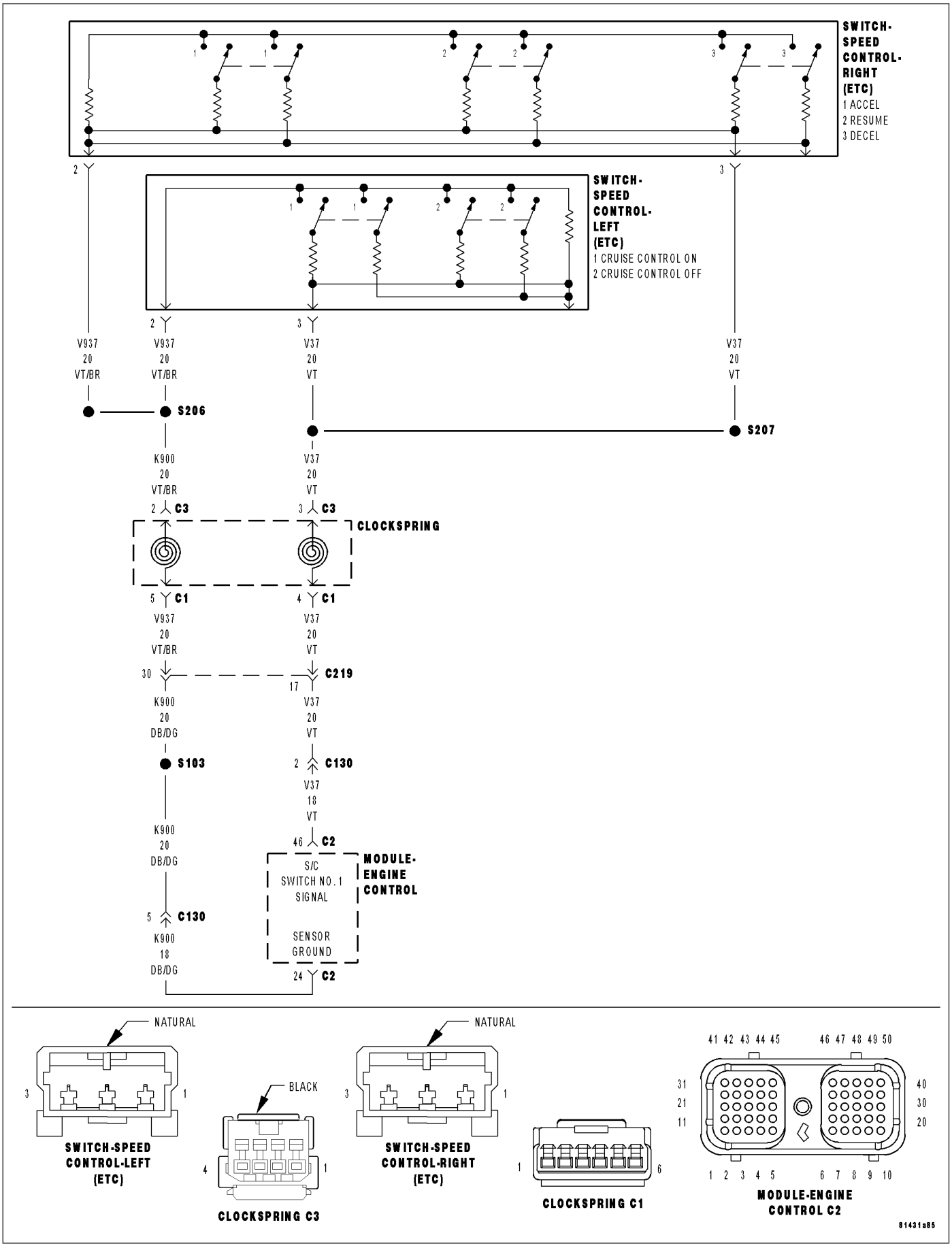

P0581-HIGH VOLTAGE DETECTED AT THE SPEED CONTROL SWITCH (CONTINUED)

For the Engine circuit diagram (Refer to 8 - ELECTRICAL/ELECTRONIC CONTROL MODULES/ENGINE CONTROL MODULE - SCHEMATIC - ELECTRICAL)

For a complete wiring diagram **Refer to Section 8W**.

- **When Monitored:**
  Key on or Engine running.
- **Set Condition:**
  Speed Control MUX switch above 11.5 volts for 5 seconds.

Possible Causes
S/C WIRING HARNESS OBSERVABLE PROBLEM
CLOCKSPRING SIGNAL/GROUND CIRCUIT OPEN
SPEED CONTROL ON/OFF SWITCH
S/C SWITCH SIGNAL CKT SHORTED TO VOLTAGE
S/C SWITCH SIGNAL CIRCUIT OPEN ECM TO CLOCK SPRING
S/C SWITCH SIGNAL CIRCUIT OPEN CLOCKSPRING TO S/C SWITCH
S/C SWITCH GROUND CIRCUIT OPEN CLOCKSPRING TO S/C SWITCH
S/C SWITCH GROUND CIRCUIT OPEN ECM TO CLOCKSPRING
ECM

Always perform the Pre-Diagnostic Troubleshooting procedure before proceeding. (Refer to 9 - ENGINE - DIAGNOSIS AND TESTING)

Diagnostic Test

1. Scan tool SHOWS SPEED CONTROL SWITCH ON/OFF

Turn the ignition on.
With the scan tool in Inputs/Outputs, read the Speed Control inputs state in ECM.
While monitoring the scan tool, push the Speed Control On/Off Switch several times, then leave it on.

Did the scan tool show Speed Control Switch off and on?

Yes >> Go To 2

No >> Test Complete.

---

2. S/C WIRING HARNESS OBSERVABLE PROBLEM

Turn the ignition off.
Using the Schematics as a guide, inspect the Wiring and Connectors.

Were any problems found?

Yes >> Repair as necessary.
Perform POWERTRAIN VERIFICATION TEST VER - 1 (DIESEL). (Refer to 8 - ELECTRICAL/ELECTRONIC CONTROL MODULES/ENGINE CONTROL MODULE - DIAGNOSIS AND TESTING)

No >> Go To 3

P0581-HIGH VOLTAGE DETECTED AT THE SPEED CONTROL SWITCH (CONTINUED)

3. CLOCKSPRING SIGNAL/GROUND CIRCUIT OPEN

Disconnect the upper and lower clockspring harness connectors.

NOTE: Check connectors - Clean/repair as necessary.
Measure the resistance of the sensor ground circuit between the upper and lower clockspring harness connectors.

Measure the resistance of the speed control switch signal circuit between the upper and lower clockspring harness connectors.

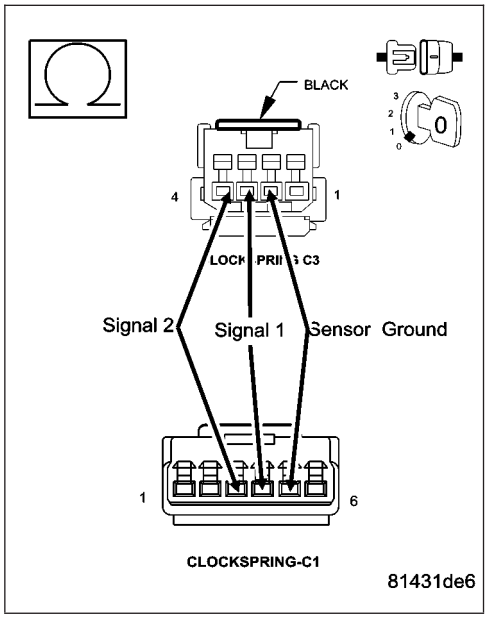

Was the resistance above 5.0 ohms for either circuit?

Yes >> Replace the clockspring.
Perform POWERTRAIN VERIFICATION TEST VER - 1 (DIESEL). (Refer to 8 - ELECTRICAL/ELECTRONIC CONTROL MODULES/ENGINE CONTROL MODULE - DIAGNOSIS AND TESTING)

No >> Go To 4

4. SPEED CONTROL ON/OFF SWITCH

Disconnect the Speed Control On/Off Switch 2-way harness connector only.

NOTE: Check connectors - Clean/repair as necessary.
Measure the resistance across the S/C On/Off Switch.

Is the resistance between 20.3K and 20.7K ohms?

Yes >> Go To 5

No >> Replace the On/Off Switch.
Perform POWERTRAIN VERIFICATION TEST VER - 1 (DIESEL). (Refer to 8 - ELECTRICAL/ELECTRONIC CONTROL MODULES/ENGINE CONTROL MODULE - DIAGNOSIS AND TESTING)

P0581-HIGH VOLTAGE DETECTED AT THE SPEED CONTROL SWITCH (CONTINUED)

5. S/C SWITCH SIGNAL CKT SHORTED TO VOLTAGE

Turn the ignition on.

Measure the voltage of the S/C Switch Signal Circuit at the On/Off Switch 2-way connector.

Is the voltage above 6.0 volts?

Yes >> Repair the Speed Control Switch Signal Circuit for a short to voltage.

Perform POWERTRAIN VERIFICATION TEST VER - 1 (DIESEL). (Refer to 8 - ELECTRICAL/ELECTRONIC CONTROL MODULES/ENGINE CONTROL MODULE - DIAGNOSIS AND TESTING)

No >> Go To 6

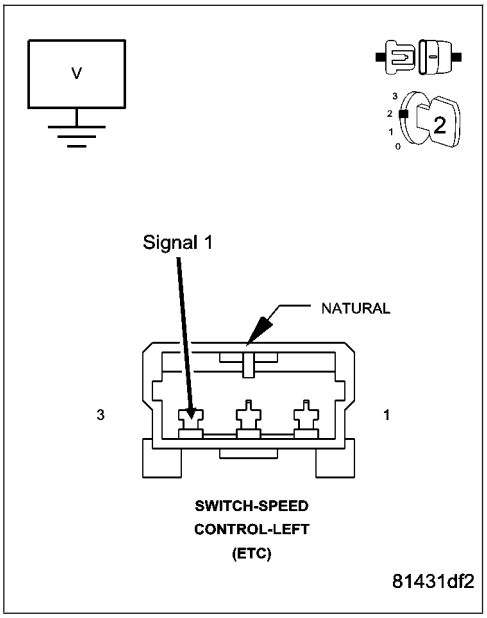

6. S/C SWITCH SIGNAL CIRCUIT OPEN ECM TO CLOCK SPRING

Turn the ignition off.

Disconnect the ECM harness connector.

NOTE: Check connectors - Clean/repair as necessary.

Measure the resistance of the S/C Switch Signal Circuit between the ECM connector and the Clockspring Connector.

Is the resistance below 5.0 ohms?

Yes >> Go To 7

No >> Repair open Speed Control Switch Signal Circuit ECM to Clockspring.

Perform POWERTRAIN VERIFICATION TEST VER - 1 (DIESEL). (Refer to 8 - ELECTRICAL/ELECTRONIC CONTROL MODULES/ENGINE CONTROL MODULE - DIAGNOSIS AND TESTING)

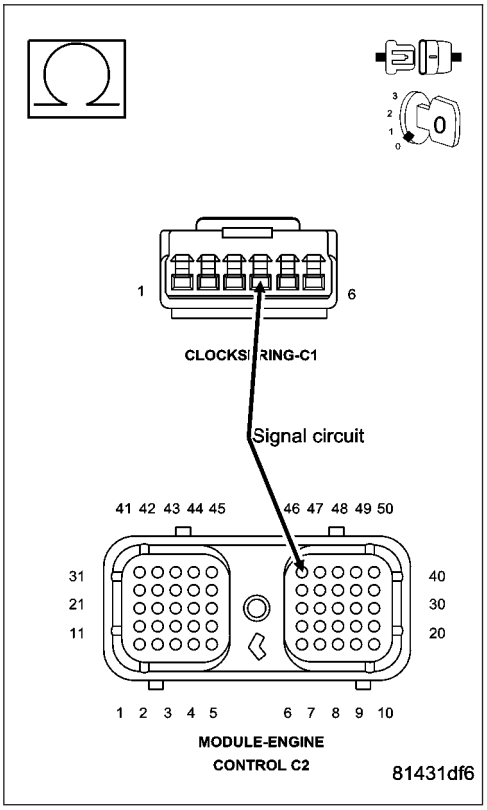

P0581-HIGH VOLTAGE DETECTED AT THE SPEED CONTROL SWITCH (CONTINUED)

7. S/C SWITCH SIGNAL CIRCUIT OPEN CLOCKSPRING TO S/C SWITCH

Measure the resistance of the S/C Switch Signal Circuit from the clockspring harness connector to the On/Off switch harness connector.

Is the resistance below 5.0 ohms?

Yes >> Go To 8

No >> Repair the open Speed Control Switch Signal Circuit Clockspring to S/C switch.
Perform POWERTRAIN VERIFICATION TEST VER - 1 (DIESEL). (Refer to 8 - ELECTRICAL/ELECTRONIC CONTROL MODULES/ENGINE CONTROL MODULE - DIAGNOSIS AND TESTING)

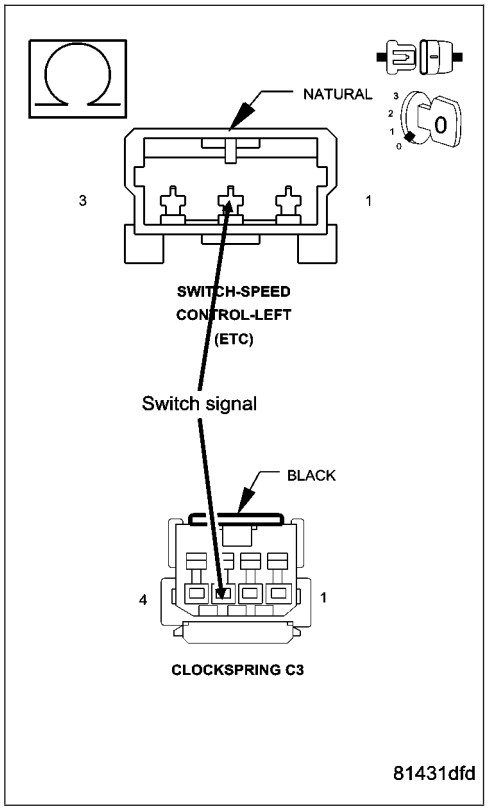

8. S/C SWITCH GROUND CIRCUIT OPEN CLOCKSPRING TO S/C SWITCH

Measure the resistance of the S/C Switch Sensor Ground Circuit between the On/Off Switch 2-way harness connector to the clockspring harness connector.

Is the resistance below 5.0 ohms?

Yes >> Go To 9

No >> Repair open ground circuit from clockspring to S/C switch.
Perform POWERTRAIN VERIFICATION TEST VER - 1 (DIESEL). (Refer to 8 - ELECTRICAL/ELECTRONIC CONTROL MODULES/ENGINE CONTROL MODULE - DIAGNOSIS AND TESTING)

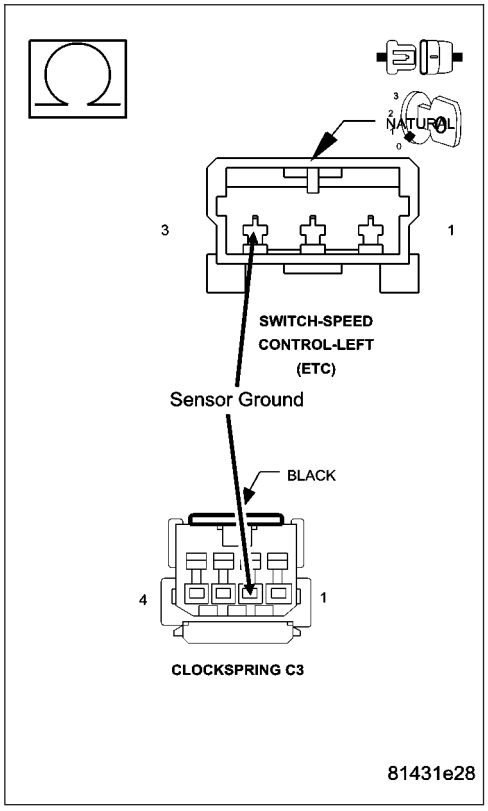

P0581-HIGH VOLTAGE DETECTED AT THE SPEED CONTROL SWITCH (CONTINUED)

9. S/C SWITCH GROUND CIRCUIT OPEN ECM TO CLOCKSPRING

Measure the resistance of the S/C Switch Sensor Ground Circuit between the ECM harness connector to the clockspring harness connector.

Is the resistance below 5.0 ohms?

Yes >> Replace and program the ECM in accordance with the Service Information.

Perform POWERTRAIN VERIFICATION TEST VER - 1 (DIESEL). (Refer to 8 - ELECTRICAL/ELECTRONIC CONTROL MODULES/ENGINE CONTROL MODULE - DIAGNOSIS AND TESTING)

No >> Repair open ground circuit from ECM to clockspring.

Perform POWERTRAIN VERIFICATION TEST VER - 1 (DIESEL). (Refer to 8 - ELECTRICAL/ELECTRONIC CONTROL MODULES/ENGINE CONTROL MODULE - DIAGNOSIS AND TESTING)

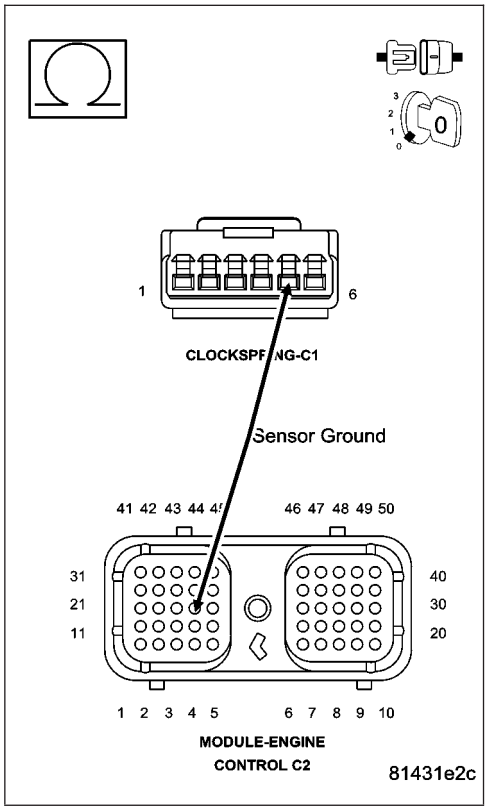

P0602-CHECKSUM ERROR

For the Engine circuit diagram (Refer to 9 - ENGINE - SCHEMATICS AND DIAGRAMS)

For a complete wiring diagram **Refer to Section 8W**.

- **When Monitored:**
  While the ignition is on.
- **Set Condition:**
  A deviation between the ECM memory and a stored calibration.

Possible Causes
FLASH ECM
ECM

Always perform the Pre-Diagnostic Troubleshooting procedure before proceeding. (Refer to 9 - ENGINE - DIAGNOSIS AND TESTING)

Diagnostic Test

1. FLASH ECM

Using the scan tool, reflash the ECM with the proper calibration for the particular truck.

Is the flash successful?

Yes >> Repair complete.

No >> Go To 2

---

2. ECM

With the scan tool, read DTCs.

Did P0602 set after the reflash?

Yes >> Replace the ECM.

No >> Test Complete.
Perform POWERTRAIN VERIFICATION TEST VER - 1 (DIESEL). (Refer to 8 - ELECTRICAL/ELECTRONIC CONTROL MODULES/ENGINE CONTROL MODULE - DIAGNOSIS AND TESTING)

P0604-ECM SOFTWARE ERROR

For the Engine circuit diagram (Refer to 9 - ENGINE - SCHEMATICS AND DIAGRAMS)

For a complete wiring diagram **Refer to Section 8W**.

- **When Monitored:**
  While the key is on.
- **Set Condition:**
  Internal ECM software error.

Possible Causes
REFLASH ECM
ECM

Always perform the Pre-Diagnostic Troubleshooting procedure before proceeding. (Refer to 9 - ENGINE - DIAGNOSIS AND TESTING)

Diagnostic Test

1. REFLASH ECM

Using the scan tool, reflash the module with latest calibration

Was the flash successful?

Yes >> Go To 2

No >> Replace the ECM.
Perform POWERTRAIN VERIFICATION TEST VER - 1 (DIESEL). (Refer to 8 - ELECTRICAL/ELECTRONIC CONTROL MODULES/ENGINE CONTROL MODULE - DIAGNOSIS AND TESTING)

---

2. ECM

Run the engine for one minute and shut off.

With the scan tool, read DTCs.

Did P0604 set?

Yes >> Replace the ECM.
Perform POWERTRAIN VERIFICATION TEST VER - 1 (DIESEL). (Refer to 8 - ELECTRICAL/ELECTRONIC CONTROL MODULES/ENGINE CONTROL MODULE - DIAGNOSIS AND TESTING)

No >> Test Complete.

P0606-ECM HARDWARE ERROR

For the Engine circuit diagram (Refer to 9 - ENGINE - SCHEMATICS AND DIAGRAMS)

For a complete wiring diagram **Refer to Section 8W**.

- **When Monitored:**
  With the key on or engine running.
- **Set Condition:**
  ECM had detected internal failures.

Possible Causes
ECM

Always perform the Pre-Diagnostic Troubleshooting procedure before proceeding. (Refer to 9 - ENGINE - DIAGNOSIS AND TESTING)

Diagnostic Test

1. ECM

Turn the ignition on.

NOTE: This DTC is caused by an internal Engine Control Module failure. Repairs are not possible to the ECM.

With the scan tool, erase DTCs.

Is the DTC still set?

Yes >> Replace and program the ECM in accordance with the Service Information.
Perform POWERTRAIN VERIFICATION TEST VER - 1 (DIESEL). (Refer to 8 - ELECTRICAL/ELECTRONIC CONTROL MODULES/ENGINE CONTROL MODULE - DIAGNOSIS AND TESTING)

No >> Test Complete.

P0607-ECM INTERNAL FAILURE

For the Engine circuit diagram (Refer to 9 - ENGINE - SCHEMATICS AND DIAGRAMS)

For a complete wiring diagram **Refer to Section 8W**.

- **When Monitored:**
  With the key on or engine running.
- **Set Condition:**
  ECM had detected internal failures.

Possible Causes
ECM

Always perform the Pre-Diagnostic Troubleshooting procedure before proceeding. (Refer to 9 - ENGINE - DIAGNOSIS AND TESTING)

Diagnostic Test

1. ECM

Turn the ignition on.

NOTE: This DTC is caused by an internal Engine Control Module failure. Repairs are not possible to the ECM.

Is the DTC P0606 set?

Yes >> Replace and program the ECM in accordance with the Service Information.
Perform POWERTRAIN VERIFICATION TEST VER - 1 (DIESEL). (Refer to 8 - ELECTRICAL/ELECTRONIC CONTROL MODULES/ENGINE CONTROL MODULE - DIAGNOSIS AND TESTING)

No >> Test Complete.

P0622-GENERATOR FIELD NOT SWITCHING PROPERLY

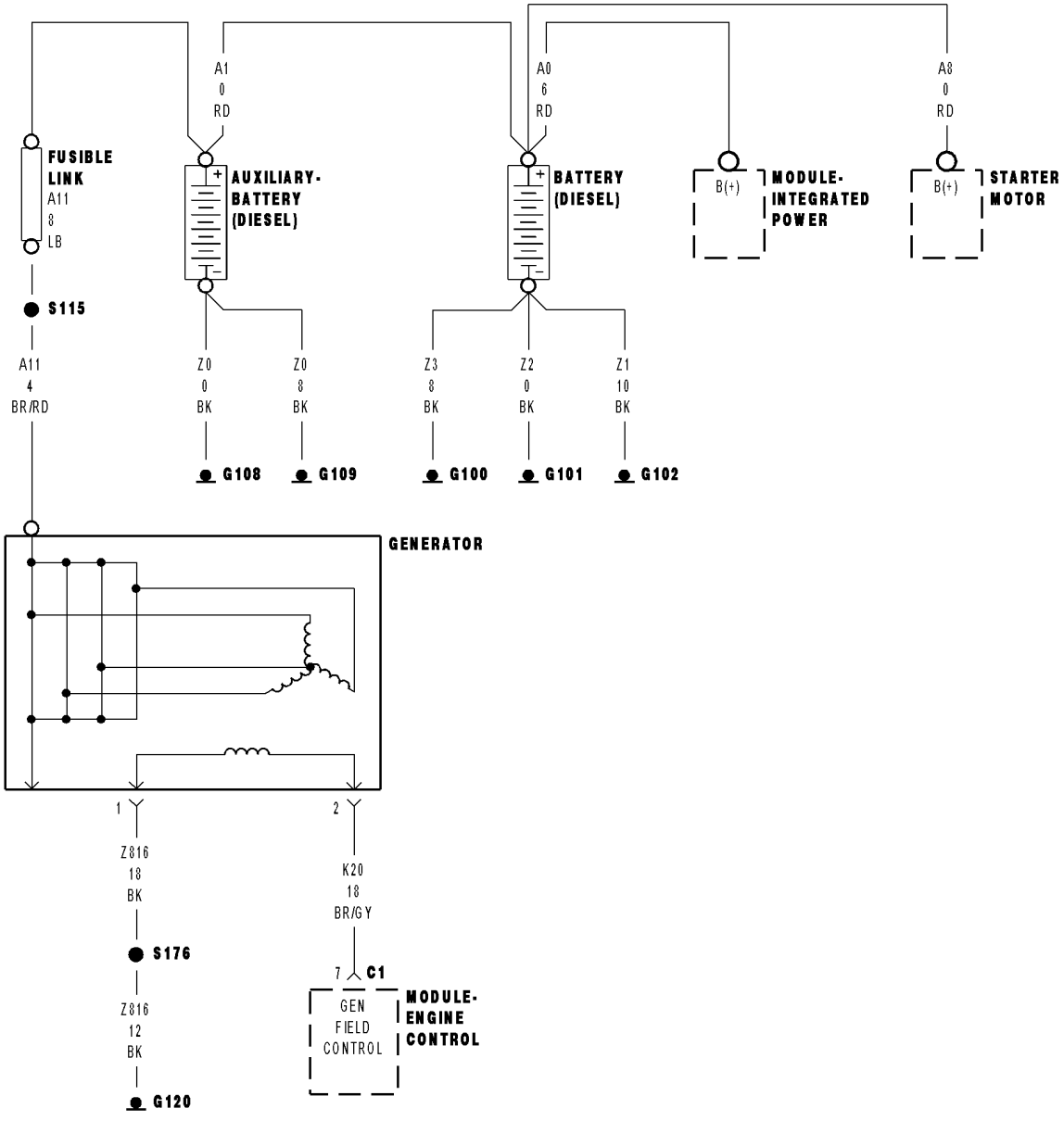

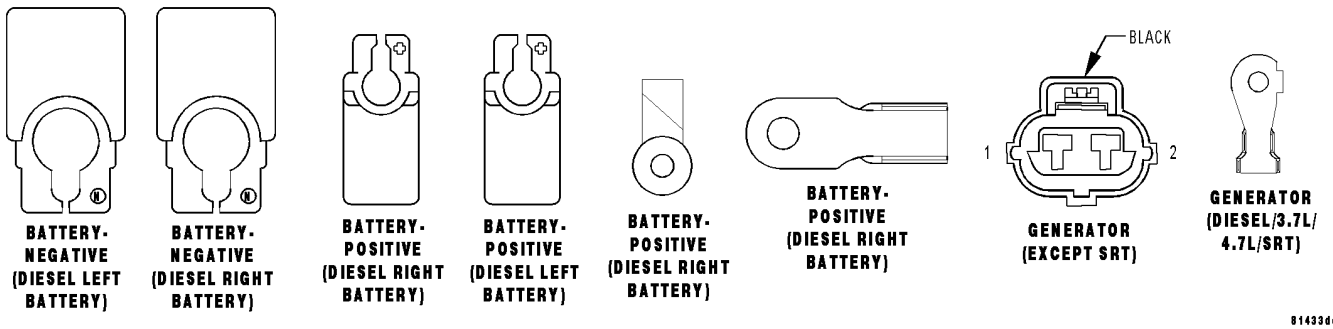

P0622-GENERATOR FIELD NOT SWITCHING PROPERLY (CONTINUED)

For the Engine circuit diagram (Refer to 9 - ENGINE - SCHEMATICS AND DIAGRAMS)

For a complete wiring diagram **Refer to Section 8W**.

- **When Monitored:**
  When the ignition is on.
- **Set Condition:**
  The feedback signal does not match the commanded signal for the voltage regulator.

Possible Causes
GENERATOR
OPEN DRIVER CIRCUIT
GEN SOURCE SHORTED TO BATTERY NEGATIVE
(K20) FIELD DRIVER CIRCUIT SHORTED TO VOLTAGE
GEN SOURCE OPEN
ECM

Always perform the Pre-Diagnostic Troubleshooting procedure before proceeding. (Refer to 9 - ENGINE - DIAGNOSIS AND TESTING)

Diagnostic Test

1. GENERATOR

Turn the ignition off.

Disconnect the Generator field harness connector.

Check connectors - Clean/repair as necessary.

Measure the resistance between the generator field terminals.

Is the resistance between .5 and 15 Ohms?

Yes >> Go To 2

No >> Replace the Generator.
Perform POWERTRAIN VERIFICATION TEST VER - 1 (DIESEL). (Refer to 8 - ELECTRICAL/ELECTRONIC CONTROL MODULES/ENGINE CONTROL MODULE - DIAGNOSIS AND TESTING)

P0622-GENERATOR FIELD NOT SWITCHING PROPERLY (CONTINUED)

2. OPEN DRIVER CIRCUIT

Disconnect the ECM harness connectors.

Check connectors - Clean/repair as necessary.

Measure the resistance of the generator driver wire between the generator harness connector and the ECM harness connector.

Is the resistance less than 10 ohms.

Yes >> Go To 3

No >> Repair the open driver circuit.

Perform POWERTRAIN VERIFICATION TEST VER - 1 (DIESEL). (Refer to 8 - ELECTRICAL/ELECTRONIC CONTROL MODULES/ENGINE CONTROL MODULE - DIAGNOSIS AND TESTING)

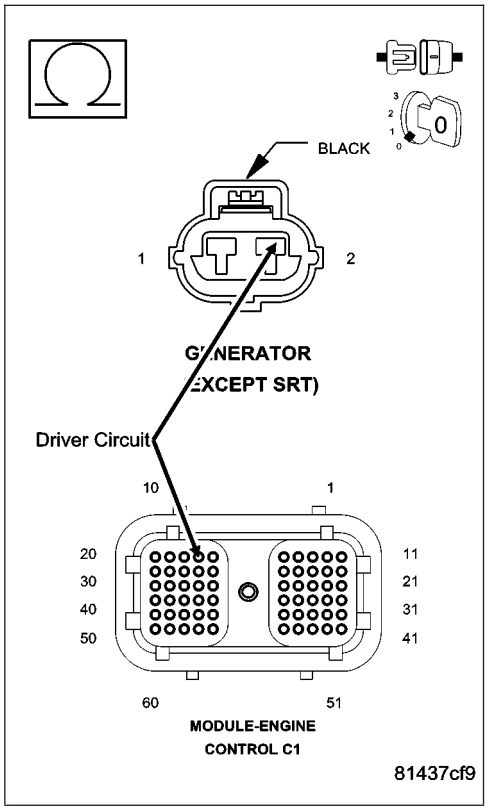

3. GENERATOR FIELD CIRCUIT OPEN

Measure the resistance of the generator field return circuit between the generator harness connector and battery negative.

Is the resistance less than 10 ohms.

No >> Repair the Generator field return shorted to Battery negative.

Perform POWERTRAIN VERIFICATION TEST VER - 1 (DIESEL). (Refer to 8 - ELECTRICAL/ELECTRONIC CONTROL MODULES/ENGINE CONTROL MODULE - DIAGNOSIS AND TESTING)

Yes >> Go To 4

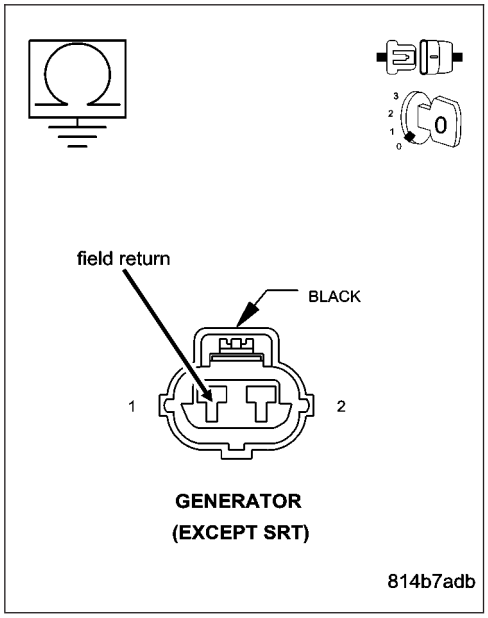

P0622-GENERATOR FIELD NOT SWITCHING PROPERLY (CONTINUED)

4. FIELD DRIVER CIRCUIT SHORTED TO VOLTAGE

Measure the voltage between the (K20) generator field driver circuit in the generator harness connector and battery negative.

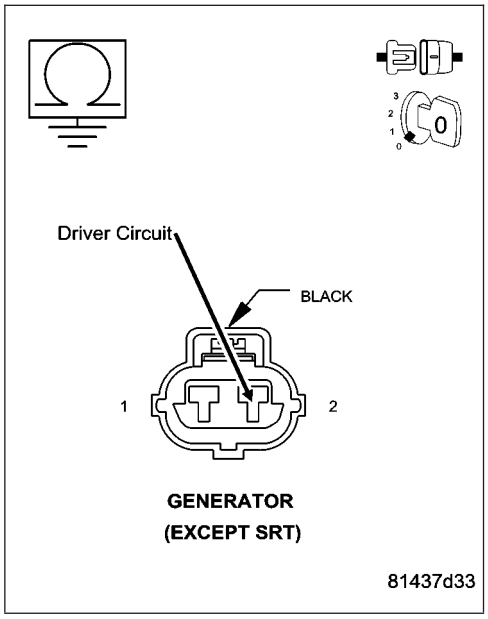

Is the voltage greater than 1 volt?

Yes >> Repair the (K20) Generator field driver circuit shorted to voltage.

No >> Go To 5

5. ECM

While monitoring with scan tool, connect a jumper wire between the driver circuit and the return circuit in the alternator connector.

Did the DTC return?

Yes >> Replace the ECM.
Perform POWERTRAIN VERIFICATION TEST VER - 1 (DIESEL). (Refer to 8 - ELECTRICAL/ELECTRONIC CONTROL MODULES/ENGINE CONTROL MODULE - DIAGNOSIS AND TESTING)

No >> Repair complete.
Perform POWERTRAIN VERIFICATION TEST VER - 1 (DIESEL). (Refer to 8 - ELECTRICAL/ELECTRONIC CONTROL MODULES/ENGINE CONTROL MODULE - DIAGNOSIS AND TESTING)

P0628-LOW VOLTAGE DETECTED AT THE FUEL LIFT PUMP

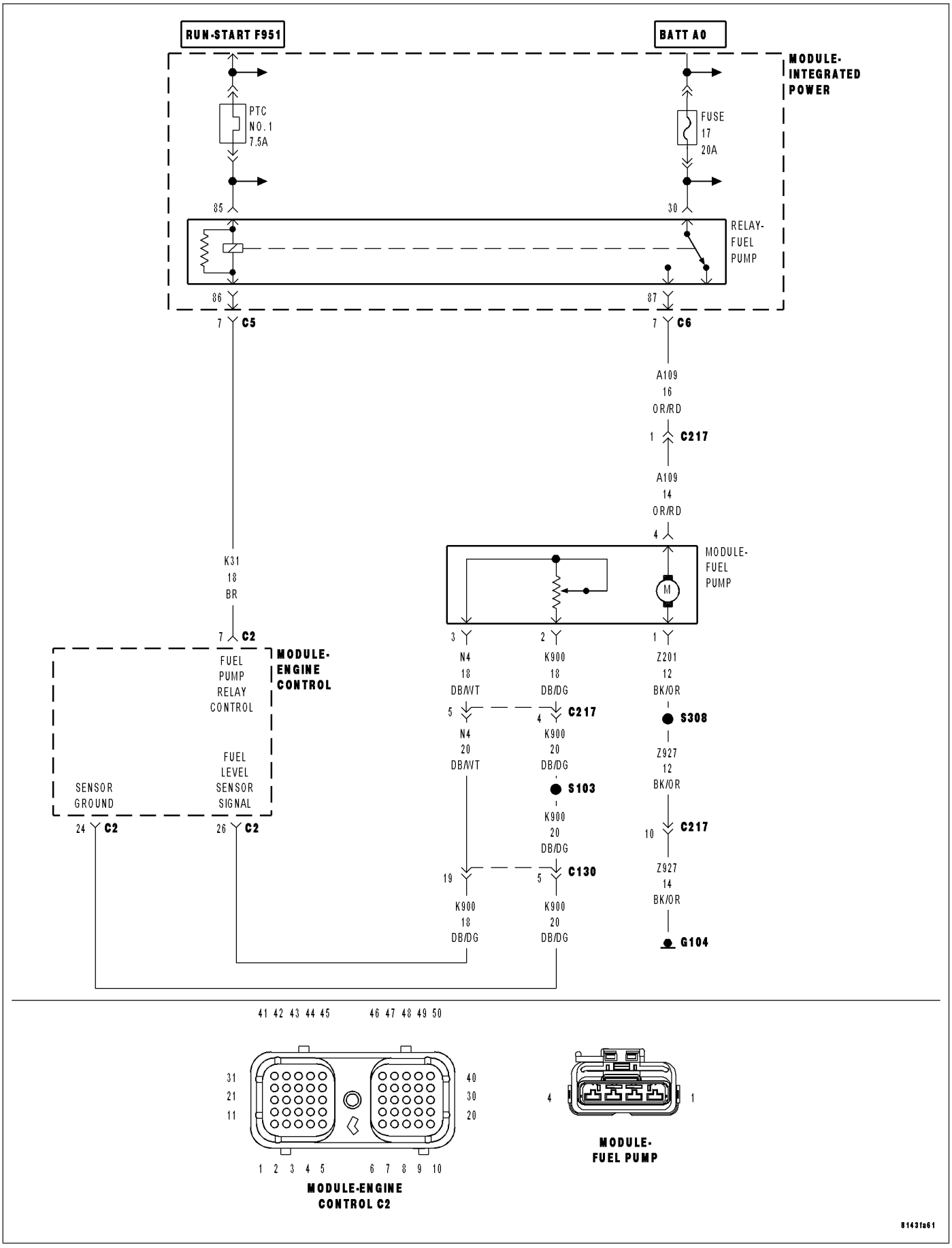

P0628-LOW VOLTAGE DETECTED AT THE FUEL LIFT PUMP (CONTINUED)

For the Engine circuit diagram (Refer to 9 - ENGINE - SCHEMATICS AND DIAGRAMS)

For a complete wiring diagram **Refer to Section 8W**.

- **When Monitored:**
  While the key is on.
- **Set Condition:**
  The commanded signal to the fuel lift pump relay does not match the feedback signal from the fuel lift pump relay.

Possible Causes
WIRING HARNESS
FUEL LIFT PUMP RELAY
FUEL LIFT PUMP RELAY DRIVER CIRCUIT SHORTED TO EXTERNAL VOLTAGE
FUEL LIFT PUMP RELAY DRIVER CIRCUIT OPEN
FUEL LIFT PUMP RELAY GROUND CIRCUIT OPEN
FUEL LIFT PUMP RELAY GROUND CIRCUIT SHORTED TO EXTERNAL VOLTAGE
ECM

Always perform the Pre-Diagnostic Troubleshooting procedure before proceeding. (Refer to 9 - ENGINE - DIAGNOSIS AND TESTING)

Diagnostic Test

1. LIFT PUMP RUNS

Remove the cover to the PDC.
Turn the ignition on, engine off.
With the scan tool, in system test actuate the lift pump relay.

Does the fuel lift pump relay click when the lift pump is actuated?

Yes >> Test complete.
Perform Intermittent Condition test. (Refer to 9 - ENGINE - DIAGNOSIS AND TESTING)

No >> Go To 2

---

2. LIFT PUMP RELAY DOES NOT CLICK

Turn Ignition off.
Remove the lift pump relay from the PDC.
Turn the ignition on.
Connect one end of an incandescent test light to battery negative.
Connect the other end of the test light to the relay driver pin in the PDC.
With the scan tool, in system test actuate the lift pump relay.

Does the test light illuminate brightly?

Yes >> Go To 3

No >> Go To 5

P0628-LOW VOLTAGE DETECTED AT THE FUEL LIFT PUMP (CONTINUED)

3. FUEL LIFT PUMP GROUND CIRCUIT OPEN

Connect one end of an incandescent test light to battery postive.

Connect the other end of the test light to the relay ground pin in the PDC.

Is the resistance less than 1 Ohms?

Yes >> Go To 4

No >> Repair the open ground circuit.
Perform POWERTRAIN VERIFICATION TEST VER - 1 (DIESEL). (Refer to 8 - ELECTRICAL/ELECTRONIC CONTROL MODULES/ENGINE CONTROL MODULE - DIAGNOSIS AND TESTING)

---

4. LIFT PUMP RELAY

Install a know good relay in place of the fuel lift pump relay.

With the scan tool, in system test actuate the lift pump relay.

Does the fuel lift pump relay click when the lift pump is actuated?

No >> Go To 5

Yes >> Replace the lift pump relay.
Perform POWERTRAIN VERIFICATION TEST VER - 1 (DIESEL). (Refer to 8 - ELECTRICAL/ELECTRONIC CONTROL MODULES/ENGINE CONTROL MODULE - DIAGNOSIS AND TESTING)

---

5. FUEL LIFT PUMP DRIVER CIRCUIT OPEN

Turn Ignition off.

Disconnect the ECM connectors.

NOTE: Check connectors - Clean/repair as necessary.

Using an ohmmeter, measure the resistance of the lift pump relay driver wire between the ECM connector and the PDC.

Is the resistance less than 10 Ohms?

No >> Repair the Fuel lift pump driver circuit open.
Perform POWERTRAIN VERIFICATION TEST VER - 1 (DIESEL). (Refer to 8 - ELECTRICAL/ELECTRONIC CONTROL MODULES/ENGINE CONTROL MODULE - DIAGNOSIS AND TESTING)

Yes >> Go To 6

---

6. FUEL LIFT PUMP RELAY DRIVER CIRCUIT SHORTED TO EXTERNAL VOLTAGE

Measure the voltage between battery negative and the relay driver circuit in the PDC.

Is the voltage greater than 1 volt?

Yes >> Repair the Fuel lift pump Relay driver circuit shorted to voltage.
Perform POWERTRAIN VERIFICATION TEST VER - 1 (DIESEL). (Refer to 8 - ELECTRICAL/ELECTRONIC CONTROL MODULES/ENGINE CONTROL MODULE - DIAGNOSIS AND TESTING)

No >> Go To 7

P0628-LOW VOLTAGE DETECTED AT THE FUEL LIFT PUMP (CONTINUED)

7. FUEL LIFT PUMP RELAY DRIVER CIRCUIT SHORTED TO OTHER CIRCUITS

Measure the resistance between the lift pump relay driver circuit in the ECM connector and all other circuits in the ECM connectors.

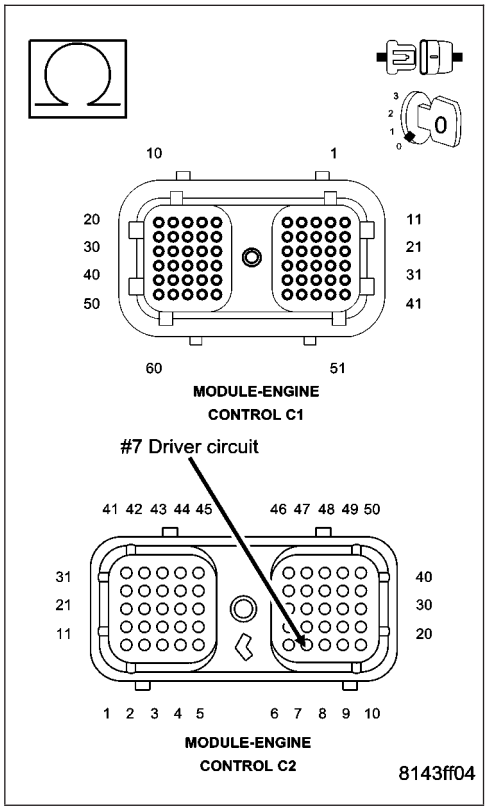

Is the resistance less than 10 Ohms?

Yes >> Repair the Fuel lift pump Relay driver circuit shorted to another circuit.

Perform POWERTRAIN VERIFICATION TEST VER - 1 (DIESEL). (Refer to 8 - ELECTRICAL/ELECTRONIC CONTROL MODULES/ENGINE CONTROL MODULE - DIAGNOSIS AND TESTING)

No >> Go To 8

---

8. ECM

Reconnect the ECM connectors.

Turn the ignition on, engine off.

Connect one end of an incandescent test light to battery negative.

Connect the other end of the test light to the relay driver pin in the PDC.

Using the scan tool, actuate the lift pump.

Does the test light illuminate brightly?

Yes >> Repair complete.

Perform POWERTRAIN VERIFICATION TEST VER - 1 (DIESEL). (Refer to 8 - ELECTRICAL/ELECTRONIC CONTROL MODULES/ENGINE CONTROL MODULE - DIAGNOSIS AND TESTING)

No >> Replace the ECM.

Perform POWERTRAIN VERIFICATION TEST VER - 1 (DIESEL). (Refer to 8 - ELECTRICAL/ELECTRONIC CONTROL MODULES/ENGINE CONTROL MODULE - DIAGNOSIS AND TESTING)

P0629-HIGH VOLTAGE DETECTED AT THE FUEL LIFT PUMP

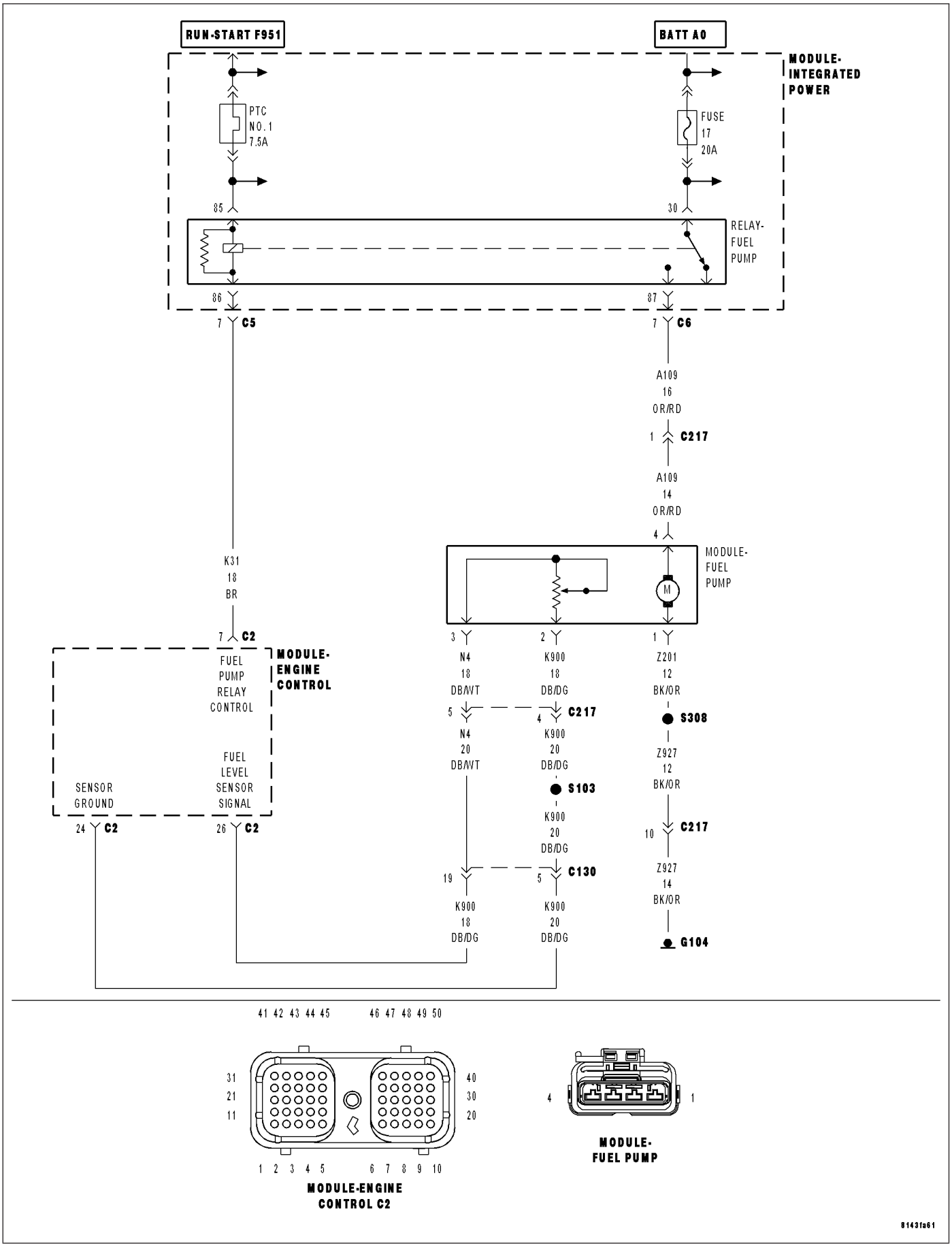

P0629-HIGH VOLTAGE DETECTED AT THE FUEL LIFT PUMP (CONTINUED)

For the Engine circuit diagram (Refer to 9 - ENGINE - SCHEMATICS AND DIAGRAMS)

For a complete wiring diagram **Refer to Section 8W**.

- **When Monitored:**
  While the key is on.
- **Set Condition:**
  The commanded signal to the fuel lift pump relay does not match the feedback signal from the fuel lift pump relay.

Possible Causes
DAMAGED WIRRING HARNESS
LIFT PUMP RELAY DRIVER CIRCUIT SHORTED TO GROUND
LIFT PUMP RELAY
ECM

Always perform the Pre-Diagnostic Troubleshooting procedure before proceeding. (Refer to 9 - ENGINE - DIAGNOSIS AND TESTING)

Diagnostic Test

1. LIFT PUMP RUNS

Remove the cover to the PDC.
Turn the ignition on, engine off.
With the scan tool, in system test actuate the lift pump relay.

Does the fuel lift pump relay click when the lift pump is actuated?

Yes >> Test complete.
Perform Intermittent Condition test. (Refer to 9 - ENGINE - DIAGNOSIS AND TESTING)

No >> Go To 2

---

2. LIFT PUMP RELAY DOES NOT CLICK

Turn Ignition off.
Remove the lift pump relay from the PDC.
Turn the ignition on.
Connect one end of an incandescent test light to battery negative.
Connect the other end of the test light to the relay driver pin in the PDC.
With the scan tool, in system test actuate the lift pump relay.

Does the test light illuminate brightly?

Yes >> Go To 3

No >> Go To 5

P0629-HIGH VOLTAGE DETECTED AT THE FUEL LIFT PUMP (CONTINUED)

3. LIFT PUMP RELAY

Install a know good relay in place of the fuel lift pump relay.

With the scan tool, in system test actuate the lift pump relay.

Does the fuel lift pump relay click when the lift pump is actuated?

No >> Go To 4

Yes >> Replace the lift pump relay.

Perform POWERTRAIN VERIFICATION TEST VER - 1 (DIESEL). (Refer to 8 - ELECTRICAL/ELECTRONIC CONTROL MODULES/ENGINE CONTROL MODULE - DIAGNOSIS AND TESTING)

---

4. FUEL LIFT PUMP RELAY DRIVER CIRCUIT SHORTED TO GROUND

Measure the resistance between battery negative and the relay driver circuit in the PDC.

Is the resistance less than 10 ohms?

Yes >> Repair the Fuel lift pump Relay driver circuit shorted to ground.

Perform POWERTRAIN VERIFICATION TEST VER - 1 (DIESEL). (Refer to 8 - ELECTRICAL/ELECTRONIC CONTROL MODULES/ENGINE CONTROL MODULE - DIAGNOSIS AND TESTING)

No >> Go To 5

---

5. FUEL LIFT PUMP RELAY DRIVER CIRCUIT SHORTED TO OTHER CIRCUITS

Measure the resistance between the lift pump relay driver circuit in the ECM connector and all other circuits in the ECM connectors.

Is the resistance less than 10 Ohms?

Yes >> Repair the Fuel lift pump Relay driver circuit shorted to another circuit.

Perform POWERTRAIN VERIFICATION TEST VER - 1 (DIESEL). (Refer to 8 - ELECTRICAL/ELECTRONIC CONTROL MODULES/ENGINE CONTROL MODULE - DIAGNOSIS AND TESTING)

No >> Go To 6

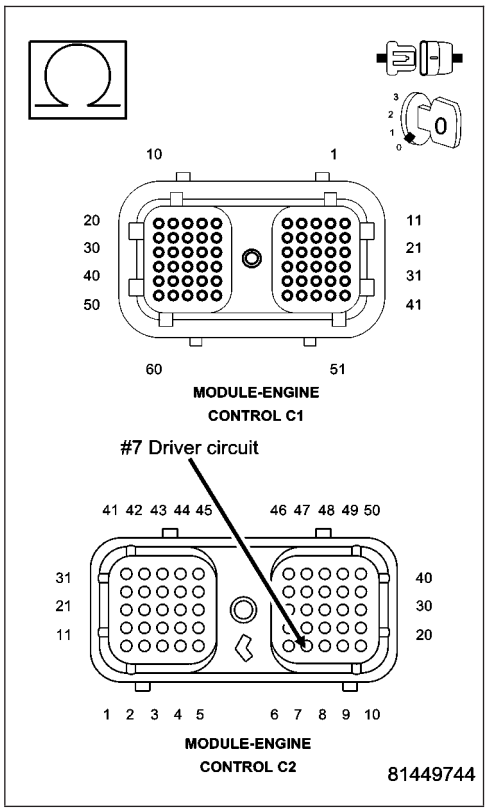

P0629-HIGH VOLTAGE DETECTED AT THE FUEL LIFT PUMP (CONTINUED)

6. ECM

Reconnect the ECM connectors.

Turn the ignition on, engine off.

Connect one end of an incandescent test light to battery negative.

Connect the other end of the test light to the relay driver pin in the PDC.

Using the scan tool, actuate the lift pump.

Does the test light illuminate brightly?

Yes >> Repair complete.
Perform POWERTRAIN VERIFICATION TEST VER - 1 (DIESEL). (Refer to 8 - ELECTRICAL/ELECTRONIC CONTROL MODULES/ENGINE CONTROL MODULE - DIAGNOSIS AND TESTING)

No >> Replace the ECM.
Perform POWERTRAIN VERIFICATION TEST VER - 1 (DIESEL). (Refer to 8 - ELECTRICAL/ELECTRONIC CONTROL MODULES/ENGINE CONTROL MODULE - DIAGNOSIS AND TESTING)

P0630-VIN NOT ENTERED ERROR

For the Engine circuit diagram (Refer to 9 - ENGINE - SCHEMATICS AND DIAGRAMS)

For a complete wiring diagram **Refer to Section 8W**.

- **When Monitored:**
  While the key is on.
- **Set Condition:**
  The VIN was not calibrated into the ECM.

Possible Causes
VIN NOT CALIBRATED INTO ECM

Always perform the Pre-Diagnostic Troubleshooting procedure before proceeding. (Refer to 9 - ENGINE - DIAGNOSIS AND TESTING)

Diagnostic Test

1. VIN NOT CALIBRATED INTO ECM

Using the scan tool, recalibrate the ECM with the proper VIN.

Did the DTC P0630 reset?

Yes >> Replace the ECM.
Perform POWERTRAIN VERIFICATION TEST VER - 1 (DIESEL). (Refer to 8 - ELECTRICAL/ELECTRONIC CONTROL MODULES/ENGINE CONTROL MODULE - DIAGNOSIS AND TESTING)

No >> Test Complete.

P0633-SKIM SECRET KEY NOT ENTERED

For the Engine circuit diagram (Refer to 9 - ENGINE - SCHEMATICS AND DIAGRAMS)

For a complete wiring diagram **Refer to Section 8W**.

- **When Monitored:**
  While the key is on.
- **Set Condition:**
  The SKIM secret key was not calibrated into the ECM.

Possible Causes
IMPROPER IGNITION KEY IS BEING USED
SKIM DTC'S
SKIM NOT CALIBRATED PROPERLY

Always perform the Pre-Diagnostic Troubleshooting procedure before proceeding. (Refer to 9 - ENGINE - DIAGNOSIS AND TESTING)

Diagnostic Test

1. SKIM DTC'S

With the scan tool, read SKIM DTCs.

Are any SKIM DTC's present?

Yes >> Repair all SKIM DTC's first.
Perform POWERTRAIN VERIFICATION TEST VER - 1 (DIESEL). (Refer to 8 - ELECTRICAL/ELECTRONIC CONTROL MODULES/ENGINE CONTROL MODULE - DIAGNOSIS AND TESTING)

No >> Go To 2

---

2. IMPROPER IGNITION KEY IS BEING USED

Verify that the proper ignition key is in the ignition lock on the steering column.

Are the proper keys being used?

Yes >> Go To 3

No >> Use the proper key for the vehicle.
Perform POWERTRAIN VERIFICATION TEST VER - 1 (DIESEL). (Refer to 8 - ELECTRICAL/ELECTRONIC CONTROL MODULES/ENGINE CONTROL MODULE - DIAGNOSIS AND TESTING)

---

3. SKIM NOT CALIBRATED PROPERLY

Using the scan tool, recalibrate the ECM with the proper SKIM secret key.
With the scan tool, erase DTCs.
Cycle the ignition switch from on to off to on.
With the scan tool, read DTCs.

Did the DTC reset?

No >> Test Complete.

Yes >> Verify information is correct and replace ECM.
Perform POWERTRAIN VERIFICATION TEST VER - 1 (DIESEL). (Refer to 8 - ELECTRICAL/ELECTRONIC CONTROL MODULES/ENGINE CONTROL MODULE - DIAGNOSIS AND TESTING)

P0642-LOW VOLTAGE AT THE #2 SENSOR SUPPLY CIRCUIT

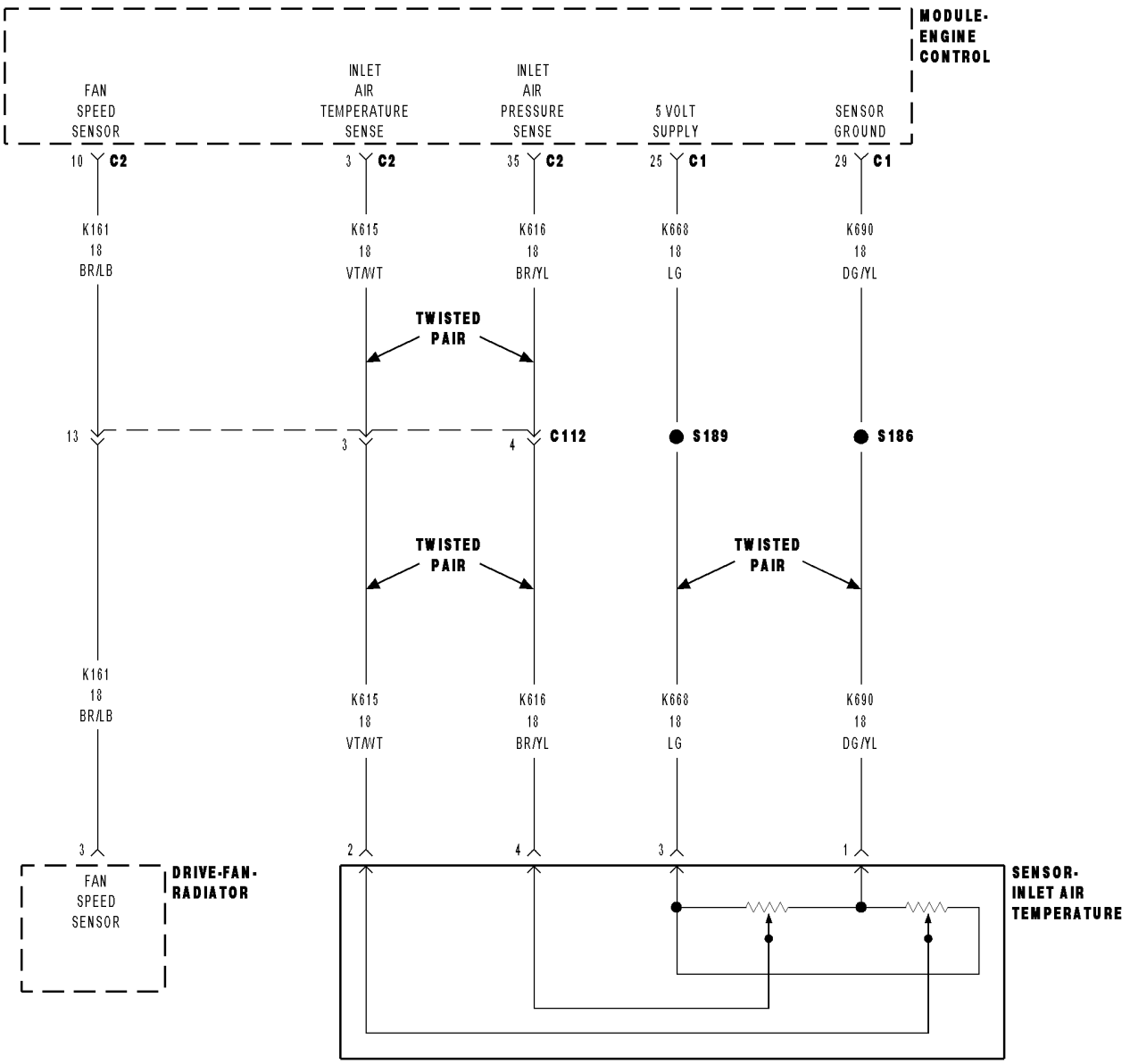

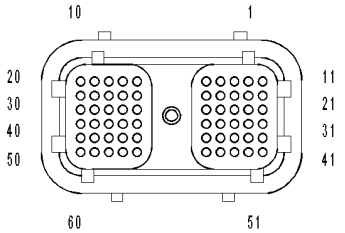

MODULE-ENGINE
CONTROL C1

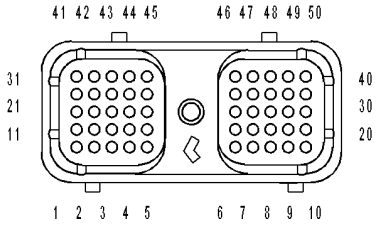

MODULE-ENGINE
CONTROL C2

81449944

P0642-LOW VOLTAGE AT THE #2 SENSOR SUPPLY CIRCUIT (CONTINUED)

For the Engine circuit diagram (Refer to 9 - ENGINE - SCHEMATICS AND DIAGRAMS)

For a complete wiring diagram **Refer to Section 8W**.

- **When Monitored:**
  With the key on.
- **Set Condition:**
  Voltage detected on the #2 sensor supply circuit is below a calibrated value.

Possible Causes
FAN CLUTCH ASSEMBLY
(K668) 5-VOLT SHORTED TO GROUND
(K668) 5-VOLT SUPPLY SHORTED TO ANOTHER CIRCUIT
FAN DTC
INTERMITTENT CONDITION
ECM

Always perform the Pre-Diagnostic Troubleshooting procedure before proceeding. (Refer to 9 - ENGINE - DIAGNOSIS AND TESTING)

Diagnostic Test

1. FAN CLUTCH ASSEMBLY

Disconnect the Fan clutch harness connector.

NOTE: Check connectors - Clean/repair as necessary.
With the scan tool, read DTCs.

Did P0483 set?

Yes >> Replace the Fan clutch assembly.
Perform POWERTRAIN VERIFICATION TEST VER - 1 (DIESEL). (Refer to 8 - ELECTRICAL/ELECTRONIC CONTROL MODULES/ENGINE CONTROL MODULE - DIAGNOSIS AND TESTING)

No >> Go To 2

P0642-LOW VOLTAGE AT THE #2 SENSOR SUPPLY CIRCUIT (CONTINUED)

2. (K668) 5-VOLT SHORTED TO GROUND

Turn the ignition off.

Disconnect the ECM harness connector.

NOTE: Check connectors - Clean/repair as necessary.

Measure the resistance between the (K668) #2 5-volt supply (fan speed sensor power) circuit in the sensor harness connector and battery negative.

Is the resistance greater than 100k Ohms?

Yes >> Go To 3

No >> Repair the #2 (K668) 5-volt supply shorted to ground.
Perform POWERTRAIN VERIFICATION TEST VER - 1 (DIESEL). (Refer to 8 - ELECTRICAL/ELECTRONIC CONTROL MODULES/ENGINE CONTROL MODULE - DIAGNOSIS AND TESTING)

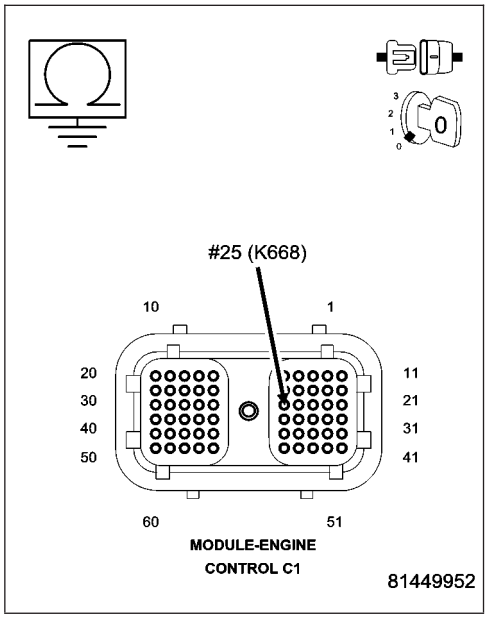

3. (K668) 5-VOLT SUPPLY SHORTED TO ANOTHER CIRCUIT

Measure the resistance between the sensor (K668) #2 5-volt supply (fan speed sensor power) circuit in the ECM harness connector to all other circuits in the ECM harness connectors

Is the resistance greater than 100k Ohms?

Yes >> Go To 4

No >> Repair the 5-volt supply shorted to another circuit.
Perform POWERTRAIN VERIFICATION TEST VER - 1 (DIESEL). (Refer to 8 - ELECTRICAL/ELECTRONIC CONTROL MODULES/ENGINE CONTROL MODULE - DIAGNOSIS AND TESTING)

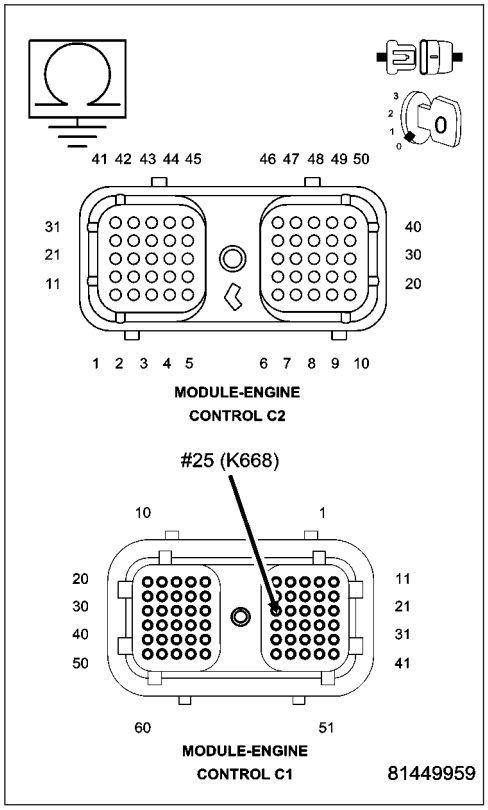

P0642-LOW VOLTAGE AT THE #2 SENSOR SUPPLY CIRCUIT (CONTINUED)

4. FAN DTC

Reconnect the ECM harness connectors.

Reconnect the disconnected Fan harness connector.

Turn the ignition on.

With the scan tool, read DTCs.

Is DTC P0483 set?

Yes >> Repair the Fan DTC.
Perform POWERTRAIN VERIFICATION TEST VER - 1 (DIESEL). (Refer to 8 - ELECTRICAL/ELECTRONIC CONTROL MODULES/ENGINE CONTROL MODULE - DIAGNOSIS AND TESTING)

No >> Go To 5

5. ECM

Turn the ignition off.

Disconnect the Fan harness connector.

Turn the ignition on.

Measure the voltage between the sensor (K668) #2 5-volt supply (fan speed sensor power) circuit at the fan clutch harness connector and the fan speed sensor ground.

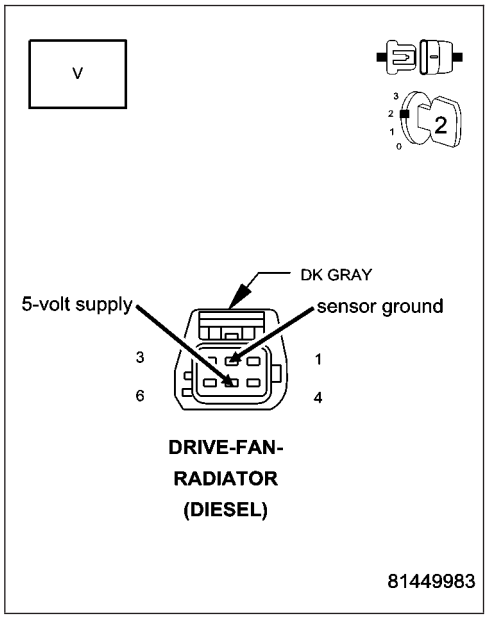

Is the voltage between 4.5 and 5.5 volts?

Yes >> Refer to the INTERMITTENT CONDITION Symptom (Diagnostic Procedure). (Refer to 9 - ENGINE - DIAGNOSIS AND TESTING)

No >> Replace the ECM.
Perform POWERTRAIN VERIFICATION TEST VER - 1 (DIESEL). (Refer to 8 - ELECTRICAL/ELECTRONIC CONTROL MODULES/ENGINE CONTROL MODULE - DIAGNOSIS AND TESTING)

P0643-HIGH VOLTAGE AT THE #2 SENSOR SUPPLY CIRCUIT

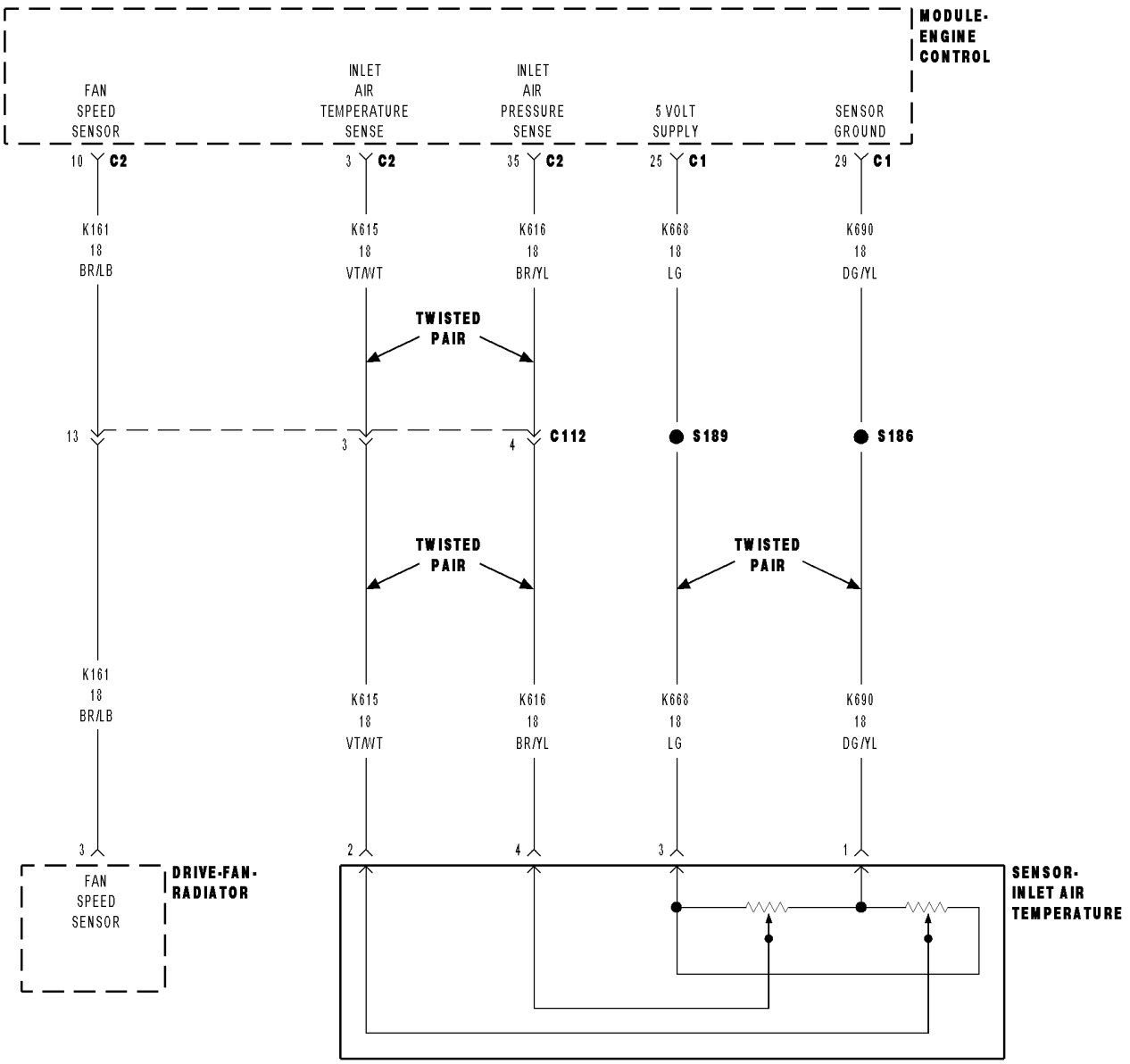

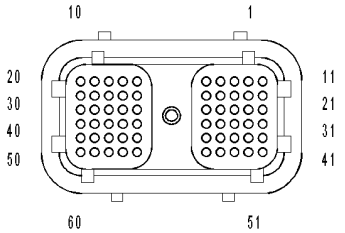

MODULE-ENGINE
CONTROL C1

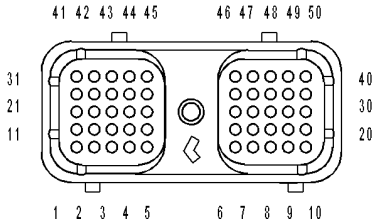

MODULE-ENGINE
CONTROL C2

81449944

P0643-HIGH VOLTAGE AT THE #2 SENSOR SUPPLY CIRCUIT (CONTINUED)

For the Engine circuit diagram (Refer to 9 - ENGINE - SCHEMATICS AND DIAGRAMS)

For a complete wiring diagram **Refer to Section 8W**.

- **When Monitored:**
  With the key on.
- **Set Condition:**
  Voltage detected on the #2 sensor supply circuit was above a calibrated value.

Possible Causes
FAN CLUTCH ASSEMBLY
(K668) 5-VOLT SHORTED TO VOLTAGE
INTERMITTENT CONDITION
ECM

Always perform the Pre-Diagnostic Troubleshooting procedure before proceeding. (Refer to 9 - ENGINE - DIAGNOSIS AND TESTING)

Diagnostic Test

1. FAN CLUTCH ASSEMBLY

Disconnect the Fan clutch harness connector.

NOTE: Check connectors - Clean/repair as necessary.
With the scan tool, read DTCs.

Did P0483 set?

Yes >> Replace the Fan clutch assembly.
Perform POWERTRAIN VERIFICATION TEST VER - 1 (DIESEL). (Refer to 8 - ELECTRICAL/ELECTRONIC CONTROL MODULES/ENGINE CONTROL MODULE - DIAGNOSIS AND TESTING)

No >> Go To 2

P0643-HIGH VOLTAGE AT THE #2 SENSOR SUPPLY CIRCUIT (CONTINUED)

2. (K668) 5-VOLT SHORTED TO VOLTAGE

Disconnect the ECM harness connectors.

Disconnect the Fan harness connector.

NOTE: Check connectors - Clean/repair as necessary.

Measure the voltage between the fan speed sensor (K668) 5-volt supply circuit and battery negative.

Is the voltage greater than 1 volt?

Yes >> Repair the (K668) 5-volt supply shorted to voltage.
Perform POWERTRAIN VERIFICATION TEST VER - 1 (DIESEL). (Refer to 8 - ELECTRICAL/ELECTRONIC CONTROL MODULES/ENGINE CONTROL MODULE - DIAGNOSIS AND TESTING)

No >> Go To 3

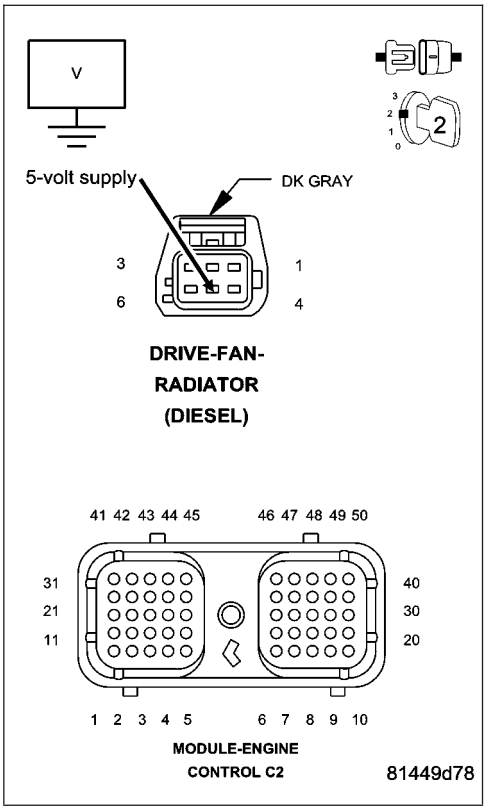

3. ECM

Turn the ignition off.

Reconnect the ECM harness connectors.

Turn the ignition on.

Measure the voltage between the (K668) 5-volt supply circuit in the sensor harness connector and battery negative.

Is the voltage greater than 6 volts?

Yes >> Replace the ECM.
Perform POWERTRAIN VERIFICATION TEST VER - 1 (DIESEL). (Refer to 8 - ELECTRICAL/ELECTRONIC CONTROL MODULES/ENGINE CONTROL MODULE - DIAGNOSIS AND TESTING)

No >> Refer to the INTERMITTENT CONDITION Symptom (Diagnostic Procedure). (Refer to 9 - ENGINE - DIAGNOSIS AND TESTING)

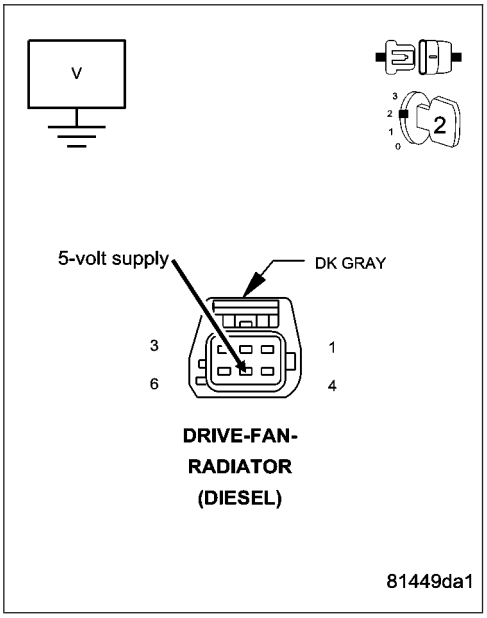

P0646-LOW VOLTAGE DETECTED AT THE A/C CLUTCH RELAY

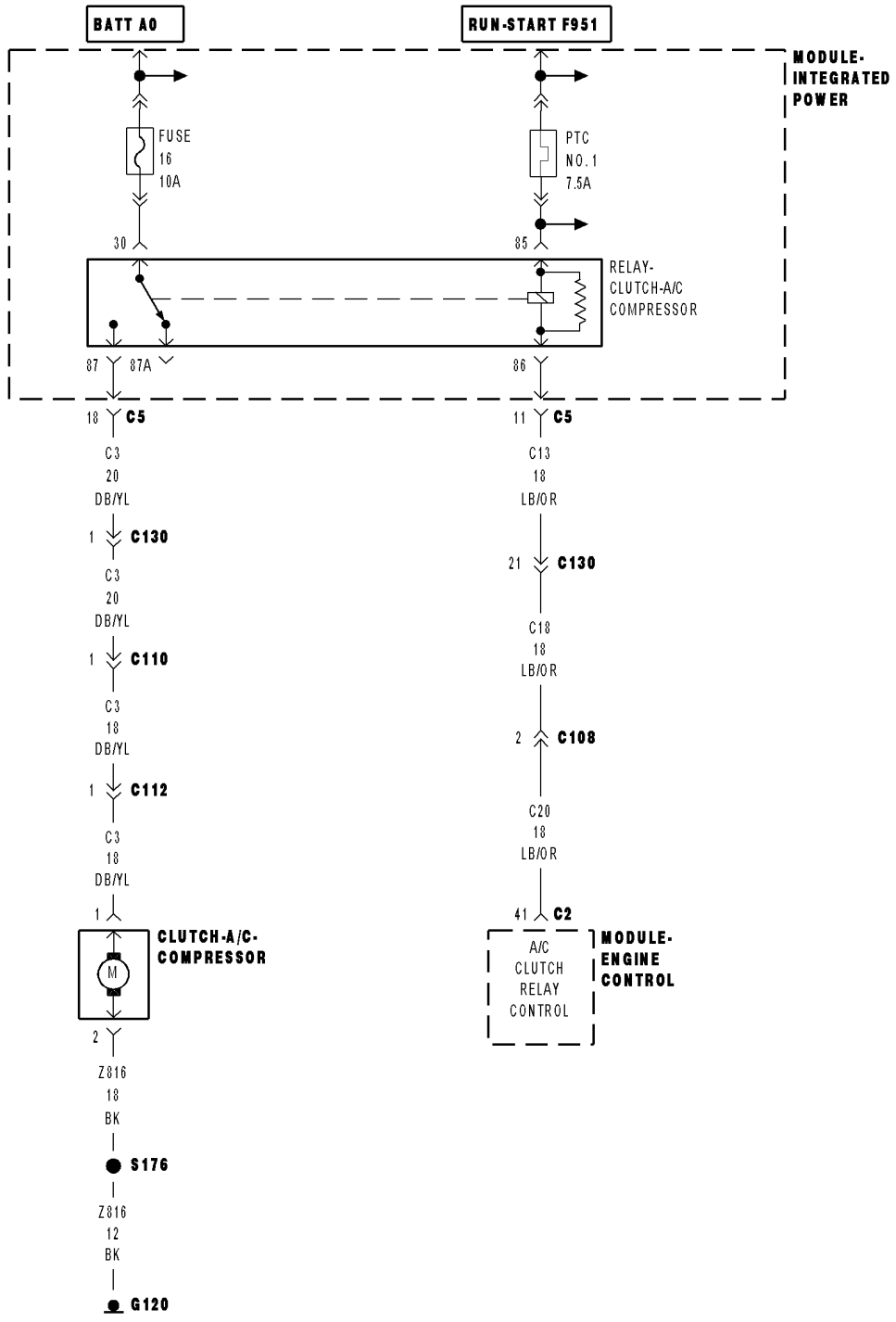

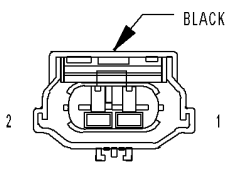

CLUTCH-A/C COMPRESSOR (DIESEL)

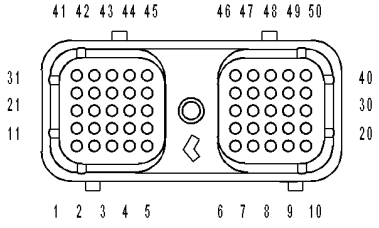

MODULE-ENGINE CONTROL C2

81449e87

P0646-LOW VOLTAGE DETECTED AT THE A/C CLUTCH RELAY (CONTINUED)

For the Engine circuit diagram (Refer to 9 - ENGINE - SCHEMATICS AND DIAGRAMS)

For a complete wiring diagram **Refer to Section 8W**.

- **When Monitored:**
  When the ignition is on.
- **Set Condition:**
  When the signal from the A/C Clutch output does not match the signal from the A/C Clutch feedback.

Possible Causes
A/C CLUTCH RELAY
LOOSE CONNECTION
FUSED BATTERY SUPPLY
(C13) A/C SIGNAL CIRCUIT OPEN
(C13) A/C SIGNAL CIRCUIT SHORTED TO GROUND
INTERMITTENT CONDITION
ECM

Always perform the Pre-Diagnostic Troubleshooting procedure before proceeding. (Refer to 9 - ENGINE - DIAGNOSIS AND TESTING)

Diagnostic Test

1. CLUTCH CLICKING

Ignition on, engine not running.

With the scan tool, actuate the A/C clutch relay.

Can you hear the Relay clicking?

Yes >> Go To 2

No >> Go To 3

---

2. LOOSE CONNECTION

Actuation still running.

While the relay is clicking, wiggle the wiring harness and connectors throughout the circuit.

Does this interrupt the clicking?

Yes >> Repair the loose connection.
Perform POWERTRAIN VERIFICATION TEST VER - 1 (DIESEL). (Refer to 8 - ELECTRICAL/ELECTRONIC CONTROL MODULES/ENGINE CONTROL MODULE - DIAGNOSIS AND TESTING)

No >> Go To 3

P0646-LOW VOLTAGE DETECTED AT THE A/C CLUTCH RELAY (CONTINUED)

3. A/C CLUTCH RELAY

Remove the A/C Clutch Relay from the PDC.

NOTE: Check connectors - Clean/repair as necessary.
Measure the resistance between terminals 85 and 86 of the A/C Clutch Relay.

Is the resistance less than 100 Ohms?

Yes >> Go To 4

No >> Replace the A/C clutch relay.
Perform POWERTRAIN VERIFICATION TEST VER - 1 (DIESEL). (Refer to 8 - ELECTRICAL/ELECTRONIC CONTROL MODULES/ENGINE CONTROL MODULE - DIAGNOSIS AND TESTING)

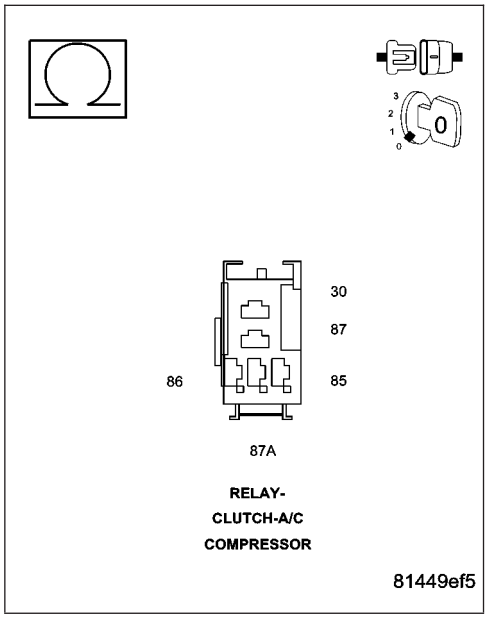

4. FUSED BATTERY SUPPLY

Ignition on, engine not running.
Measure the voltage on the Fused Battery Supply circuit in the PDC.

Is the voltage within 1 volt of battery voltage?

Yes >> Go To 5

No >> Repair the open Fused battery supply.
Perform POWERTRAIN VERIFICATION TEST VER - 1 (DIESEL). (Refer to 8 - ELECTRICAL/ELECTRONIC CONTROL MODULES/ENGINE CONTROL MODULE - DIAGNOSIS AND TESTING)

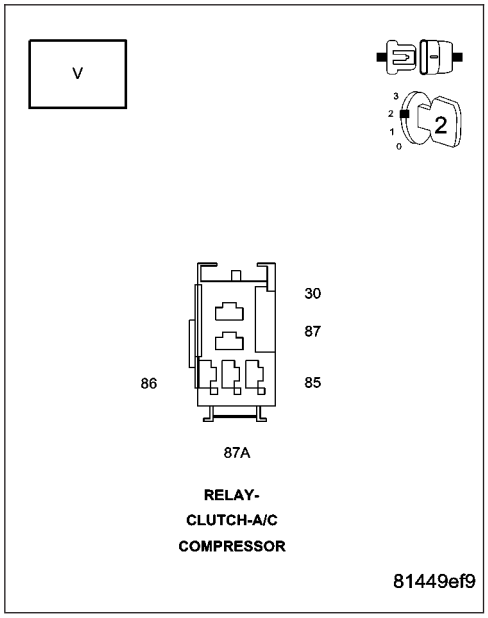

P0646-LOW VOLTAGE DETECTED AT THE A/C CLUTCH RELAY (CONTINUED)

5. (C13) A/C SIGNAL CIRCUIT OPEN

Turn the ignition off.

Disconnect the ECM harness connectors.

NOTE: Check connectors - Clean/repair as necessary.

Measure the resistance of the (C13) A/C Clutch signal circuit between the PDC and the ECM harness connector.

Is the resistance less than 10 Ohms?

Yes >> Go To 6

No >> Repair the open (C13) A/C signal circuit.
Perform POWERTRAIN VERIFICATION TEST VER - 1 (DIESEL). (Refer to 8 - ELECTRICAL/ELECTRONIC CONTROL MODULES/ENGINE CONTROL MODULE - DIAGNOSIS AND TESTING)

---

6. (C13) A/C SIGNAL CIRCUIT SHORTED TO GROUND

Measure the resistance of the (C13) A/C Clutch signal circuit between the PDC and battery negative.

Is the resistance greater than 100k Ohms?

Yes >> Go To 7

No >> Repair the (C13) A/C signal circuit shorted to ground.
Perform POWERTRAIN VERIFICATION TEST VER - 1 (DIESEL). (Refer to 8 - ELECTRICAL/ELECTRONIC CONTROL MODULES/ENGINE CONTROL MODULE - DIAGNOSIS AND TESTING)

---

7. ECM

Reconnect the ECM harness connectors.

Using the scan tool, actuate the A/C Clutch Relay

While monitoring with the scan tool, use a jumper wire to connect 12 volts to the relay signal cavity (85) in the PDC with the relay disconnected.

Did DTC P0647 set?

Yes >> Refer to the INTERMITTENT CONDITION Symptom (Diagnostic Procedure). (Refer to 9 - ENGINE - DIAGNOSIS AND TESTING)

No >> Replace the ECM.
Perform POWERTRAIN VERIFICATION TEST VER - 1 (DIESEL). (Refer to 8 - ELECTRICAL/ELECTRONIC CONTROL MODULES/ENGINE CONTROL MODULE - DIAGNOSIS AND TESTING)

P0647-HIGH VOLTAGE DETECTED AT THE A/C CLUTCH RELAY

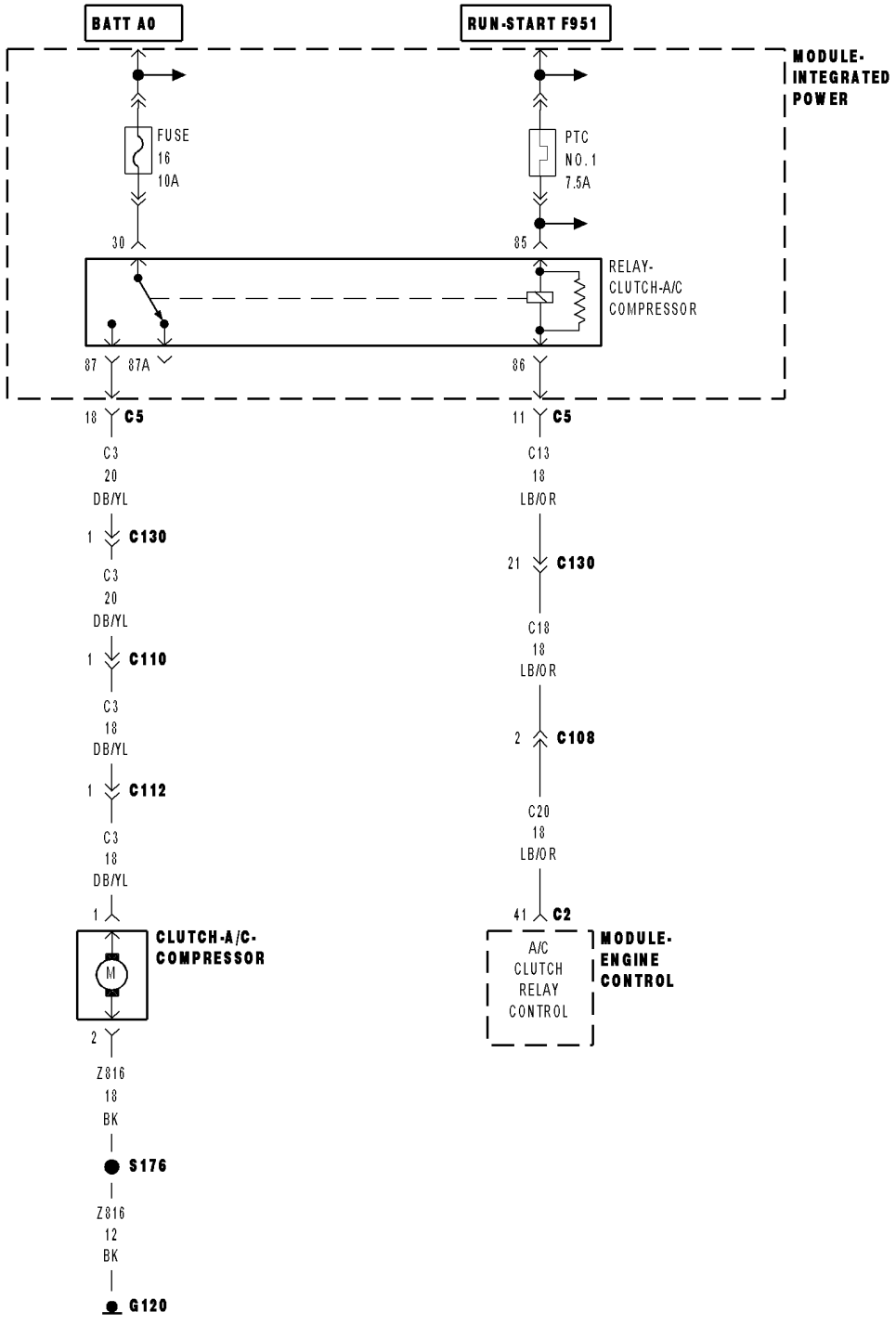

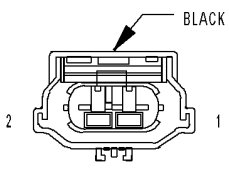

CLUTCH-A/C
COMPRESSOR
(DIESEL)

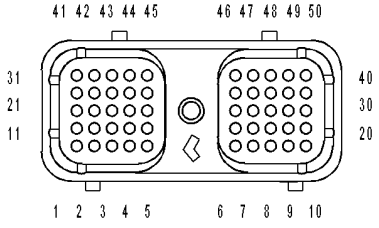

MODULE-ENGINE
CONTROL C2

81449e87

P0647-HIGH VOLTAGE DETECTED AT THE A/C CLUTCH RELAY (CONTINUED)

For the Engine circuit diagram (Refer to 9 - ENGINE - SCHEMATICS AND DIAGRAMS)

For a complete wiring diagram **Refer to Section 8W**.

- **When Monitored:**
  When the ignition is on.
- **Set Condition:**
  When the signal from the A/C Clutch output does not match the signal from the A/C Clutch feedback.

Possible Causes
LOOSE CONNECTION
SHORTED TO EXTERNAL VOLTAGE
FUSED BATTERY SUPPLY
A/C CLUTCH RELAY
INTERMITTENT CONDITION
ECM

Always perform the Pre-Diagnostic Troubleshooting procedure before proceeding. (Refer to 9 - ENGINE - DIAGNOSIS AND TESTING)

Diagnostic Test

1. CLUTCH CLICKING

Ignition on, engine not running.

With the scan tool, actuate the A/C clutch relay.

Can you hear the Relay clicking?

Yes >> Go To 2

No >> Go To 3

---

2. LOOSE CONNECTION

Actuation still running.

While the relay is clicking, wiggle the wiring harness and connectors throughout the circuit.

Does this interrupt the clicking?

Yes >> Repair the loose connection.
Perform POWERTRAIN VERIFICATION TEST VER - 1 (DIESEL). (Refer to 8 - ELECTRICAL/ELECTRONIC CONTROL MODULES/ENGINE CONTROL MODULE - DIAGNOSIS AND TESTING)

No >> Go To 3

P0647-HIGH VOLTAGE DETECTED AT THE A/C CLUTCH RELAY (CONTINUED)

3. FUSED BATTERY SUPPLY

Ignition off.

Disconnect the ECM connectors.

Remove the A/C clutch relay.

NOTE: Check connectors - Clean/repair as necessary.

Ignition on, engine not running.

Measure the voltage on the Fused Battery Supply circuit between the PDC and battery negative.

Is the voltage less than 1 volt?

Yes >> Go To 4

No >> Repair the short to voltage.

Perform POWERTRAIN VERIFICATION TEST VER - 1 (DIESEL). (Refer to 8 - ELECTRICAL/ELECTRONIC CONTROL MODULES/ENGINE CONTROL MODULE - DIAGNOSIS AND TESTING)

---

4. A/C CLUTCH RELAY

Remove the A/C Clutch Relay from the PDC.

NOTE: Check connectors - Clean/repair as necessary.

Measure the resistance between terminals 85 and 86 of the A/C Clutch Relay.

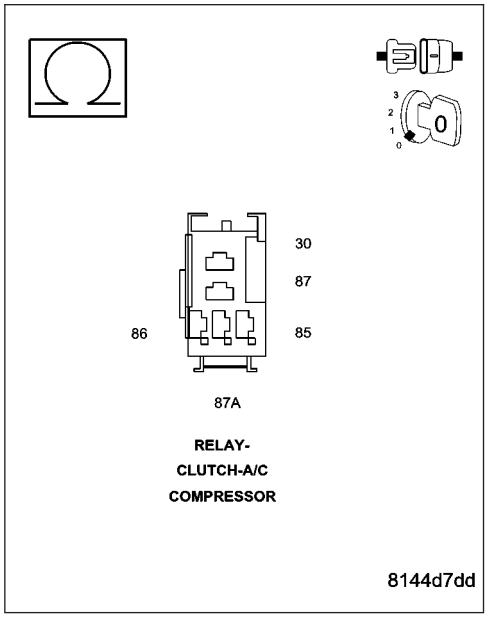

Is the resistance less than 10 Ohms?

Yes >> Go To 5

No >> Replace the A/C clutch relay.

Perform POWERTRAIN VERIFICATION TEST VER - 1 (DIESEL). (Refer to 8 - ELECTRICAL/ELECTRONIC CONTROL MODULES/ENGINE CONTROL MODULE - DIAGNOSIS AND TESTING)

---

5. ECM

Reconnect the ECM harness connectors.

Reinstall the A/C clutch relay.

With the scan tool, actuate the A/C clutch relay.

Turn the ignition on.

While monitoring with the scan tool, disconnect the A/C Clutch Relay from the PDC.

Did DTC P0646 set?

Yes >> Refer to the INTERMITTENT CONDITION Symptom (Diagnostic Procedure). (Refer to 9 - ENGINE - DIAGNOSIS AND TESTING)

No >> Replace the ECM.

Perform POWERTRAIN VERIFICATION TEST VER - 1 (DIESEL). (Refer to 8 - ELECTRICAL/ELECTRONIC CONTROL MODULES/ENGINE CONTROL MODULE - DIAGNOSIS AND TESTING)

P0652-LOW VOLTAGE AT THE #1 SENSOR SUPPLY CIRCUIT

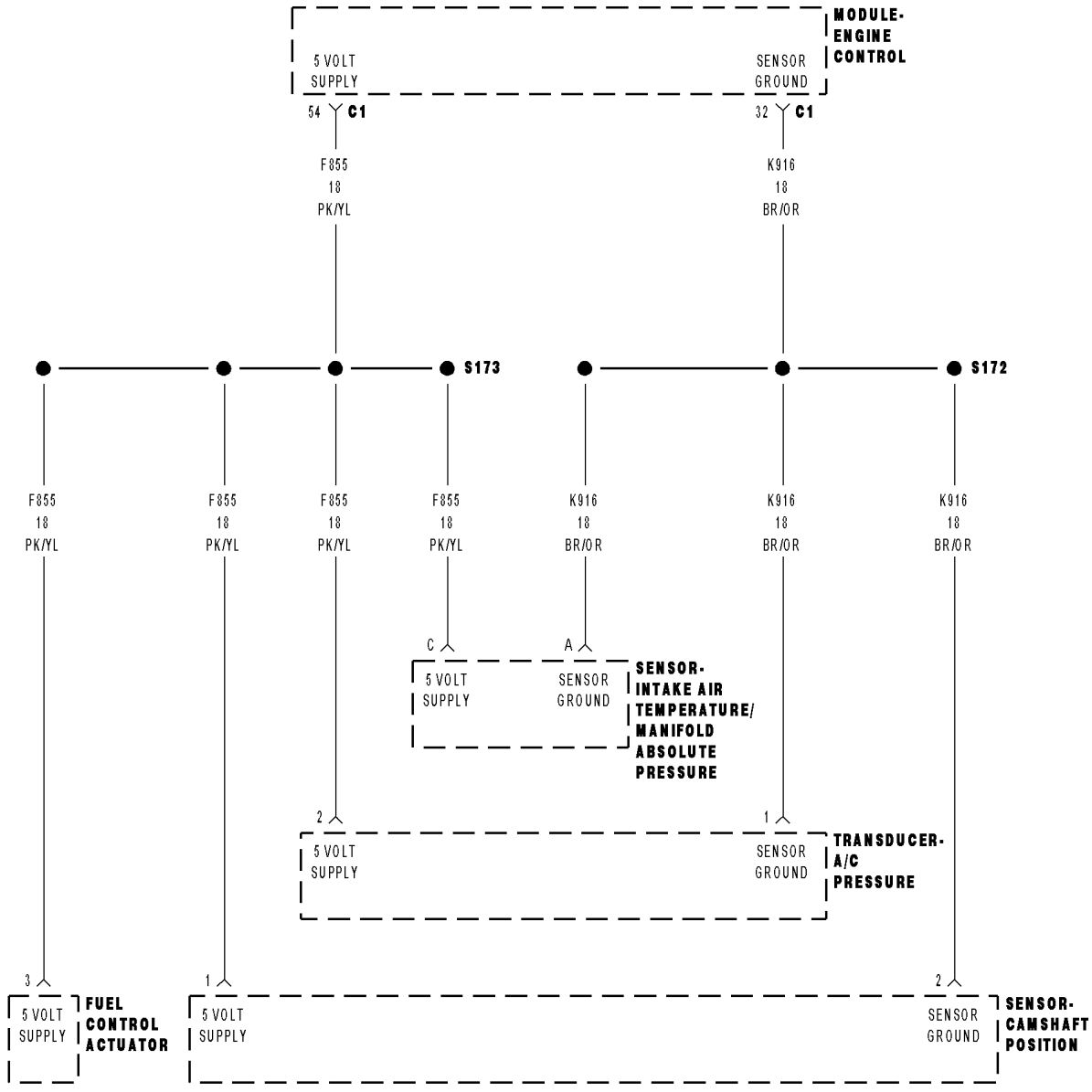

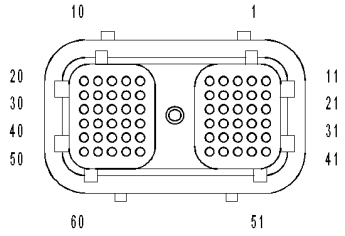

MODULE-ENGINE
CONTROL C1

8144e883

P0652-LOW VOLTAGE AT THE #1 SENSOR SUPPLY CIRCUIT (CONTINUED)

For the Engine circuit diagram (Refer to 9 - ENGINE - SCHEMATICS AND DIAGRAMS)

For a complete wiring diagram **Refer to Section 8W**.

- **When Monitored:**
  With the key on.
- **Set Condition:**
  Voltage detected on the sensor supply is below a calibrated value.

Possible Causes
ECM
(F855) #1 5-VOLT SUPPLY SHORTED TO GROUND
(F855) #1 5-VOLT SUPPLY SHORTED
FUEL RAIL PRESSURE
A/C PRESSURE SENSOR
MAP SENSOR
CAMSHAFT POSITION SENSOR
INTERMITTENT CONDITION

Always perform the Pre-Diagnostic Troubleshooting procedure before proceeding. (Refer to 9 - ENGINE - DIAGNOSIS AND TESTING)

Diagnostic Test

1. ECM

Turn the ignition off.

Disconnect the ECM 60 pin harness connector.

NOTE: Check connectors - Clean/repair as necessary.

Turn the ignition on.

Measure the voltage between the Sensor (F855) #1 5-volt Supply and the Sensor (K916) #1 Return pin at the ECM.

Is the voltage between 4.5 and 5.5 volts?

Yes >> Go To 2

No >> Replace and program the ECM in accordance with the Service Information.

Perform POWERTRAIN VERIFICATION TEST VER - 1 (DIESEL). (Refer to 8 - ELECTRICAL/ELECTRONIC CONTROL MODULES/ENGINE CONTROL MODULE - DIAGNOSIS AND TESTING)

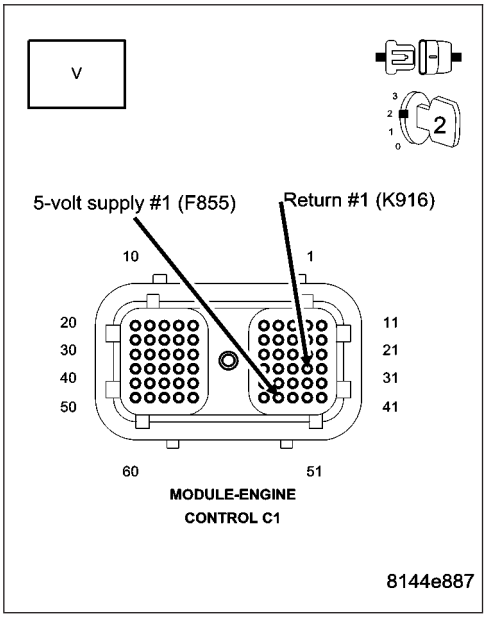

P0652-LOW VOLTAGE AT THE #1 SENSOR SUPPLY CIRCUIT (CONTINUED)

2. (F855) #1 5-VOLT SUPPLY SHORTED TO GROUND

Disconnect the Pressure sensors harness connectors and the engine position sensor.

Measure the resistance between the (F855) #1 sensor supply circuits at the ECM harness connector and battery negative.

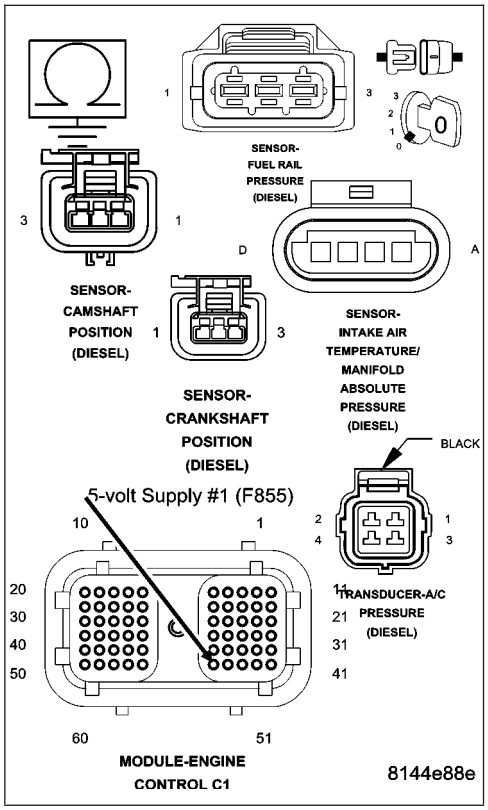

Is the resistance greater than 100K Ohms?

Yes >> Go To 3

No >> Repair the harness.

Perform POWERTRAIN VERIFICATION TEST VER - 1 (DIESEL). (Refer to 8 - ELECTRICAL/ELECTRONIC CONTROL MODULES/ENGINE CONTROL MODULE - DIAGNOSIS AND TESTING)

---

3. FUEL RAIL PRESSURE

Reconnect the ECM harness connector.

While monitoring with the scan tool, disconnect the fuel rail pressure sensor.

Is DTC P0652 set?

Yes >> Go To 4

No >> Replace the Fuel rail pressure sensor.

Perform POWERTRAIN VERIFICATION TEST VER - 1 (DIESEL). (Refer to 8 - ELECTRICAL/ELECTRONIC CONTROL MODULES/ENGINE CONTROL MODULE - DIAGNOSIS AND TESTING)

---

4. A/C PRESSURE SENSOR

While monitoring with the scan tool, disconnect the A/C pressure sensor.

Is DTC P0652 set?

Yes >> Go To 5

No >> Replace the A/C pressure sensor.

Perform POWERTRAIN VERIFICATION TEST VER - 1 (DIESEL). (Refer to 8 - ELECTRICAL/ELECTRONIC CONTROL MODULES/ENGINE CONTROL MODULE - DIAGNOSIS AND TESTING)

P0652-LOW VOLTAGE AT THE #1 SENSOR SUPPLY CIRCUIT (CONTINUED)

5. MAP SENSOR

While monitoring with the scan tool, disconnect the map sensor.

Is DTC P0652 set?

Yes >> Go To 6

No >> Replace the MAP sensor.
Perform POWERTRAIN VERIFICATION TEST VER - 1 (DIESEL). (Refer to 8 - ELECTRICAL/ELECTRONIC CONTROL MODULES/ENGINE CONTROL MODULE - DIAGNOSIS AND TESTING)

---

6. CAMSHAFT POSITION SENSOR

While monitoring with the scan tool, disconnect the Camshaft position sensor.

Is DTC P0652 set?

Yes >> Go To 7

No >> Replace the Camshaft position sensor.
Perform POWERTRAIN VERIFICATION TEST VER - 1 (DIESEL). (Refer to 8 - ELECTRICAL/ELECTRONIC CONTROL MODULES/ENGINE CONTROL MODULE - DIAGNOSIS AND TESTING)

---

7. (F855) #1 5-VOLT SUPPLY SHORTED

Measure the resistance between the (F855) #1 sensor supply circuit of the ECM harness connector and all other circuits in both ECM harness connectors.

Is the resistance greater than 100K Ohms?

Yes >> Refer to the INTERMITTENT CONDITION Symptom (Diagnostic Procedure). (Refer to 9 - ENGINE - DIAGNOSIS AND TESTING)

No >> Repair the shorted circuit.
Perform POWERTRAIN VERIFICATION TEST VER - 1 (DIESEL). (Refer to 8 - ELECTRICAL/ELECTRONIC CONTROL MODULES/ENGINE CONTROL MODULE - DIAGNOSIS AND TESTING)

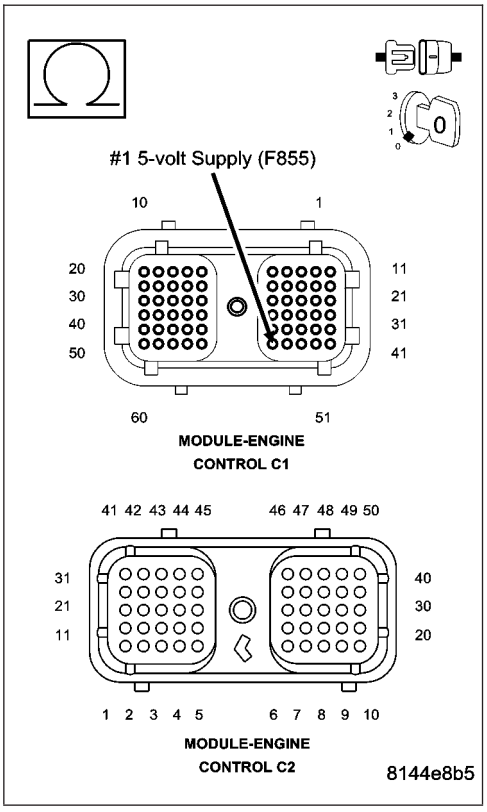

P0653-HIGH VOLTAGE AT THE #1 SENSOR SUPPLY CIRCUIT

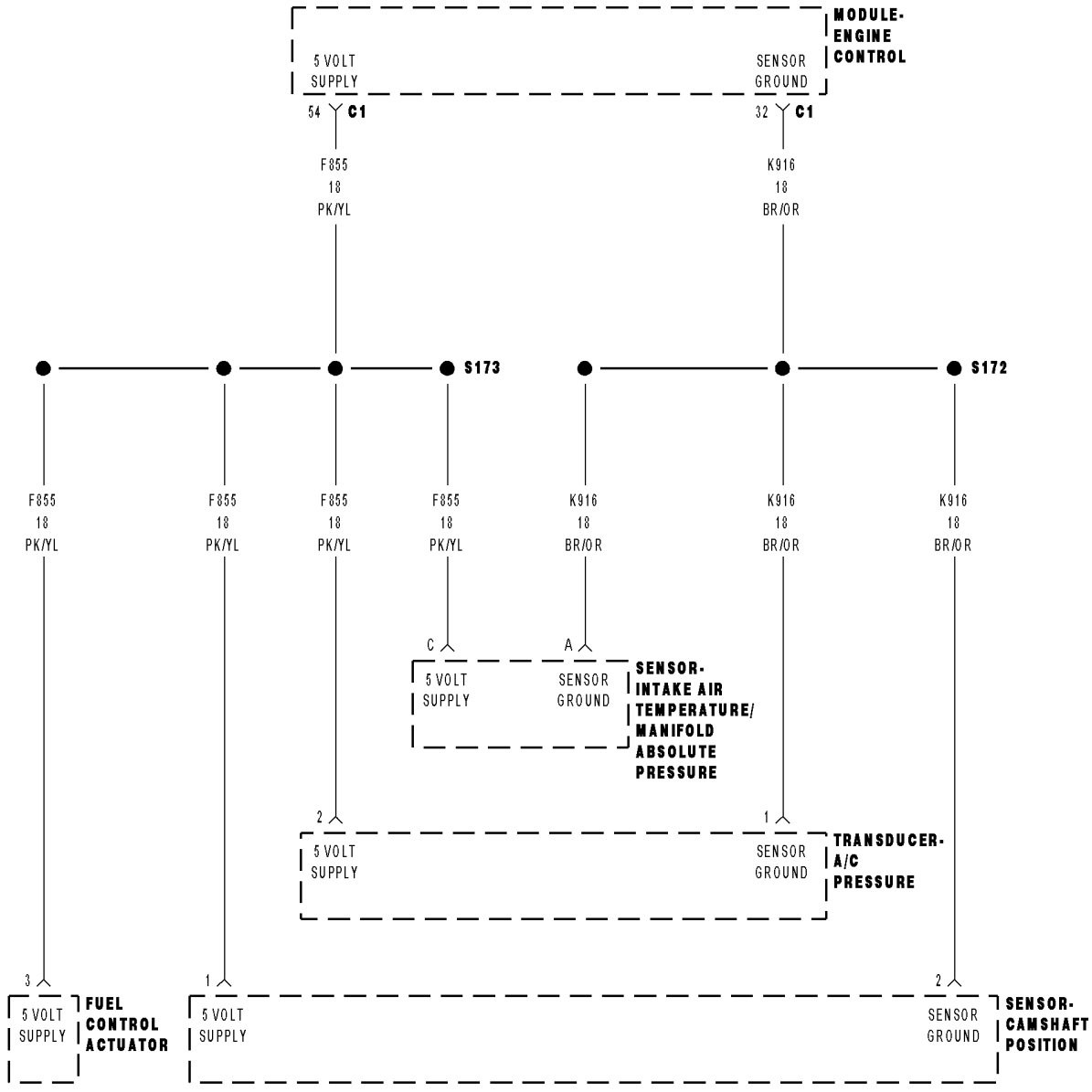

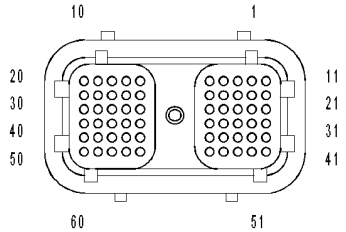

MODULE-ENGINE CONTROL C1

8144e883

P0653-HIGH VOLTAGE AT THE #1 SENSOR SUPPLY CIRCUIT (CONTINUED)

For the Engine circuit diagram (Refer to 9 - ENGINE - SCHEMATICS AND DIAGRAMS)

For a complete wiring diagram **Refer to Section 8W**.

- **When Monitored:**
  While the engine is running.
- **Set Condition:**
  Voltage detected on the sensor supply is above a calibrated value.

Possible Causes
ECM
(F855) 5-VOLT SUPPLY SHORTED TO VOLTAGE
INTERMITTENT CONDITION

Always perform the Pre-Diagnostic Troubleshooting procedure before proceeding. (Refer to 9 - ENGINE - DIAGNOSIS AND TESTING)

Diagnostic Test

1. ECM

Turn the ignition off.

Disconnect the ECM 60 pin harness connector.

NOTE: Check connectors - Clean/repair as necessary.

Turn the ignition on.

Measure the voltage between the Sensor (F855) #1 5-volt Supply and the Sensor #1 Return pin at the ECM.

Is the voltage between 4.5 and 5.5 volts?

Yes >> Go To 2

No >> Replace and program the ECM in accordance with the Service Information.

Perform POWERTRAIN VERIFICATION TEST VER - 1 (DIESEL). (Refer to 8 - ELECTRICAL/ELECTRONIC CONTROL MODULES/ENGINE CONTROL MODULE - DIAGNOSIS AND TESTING)

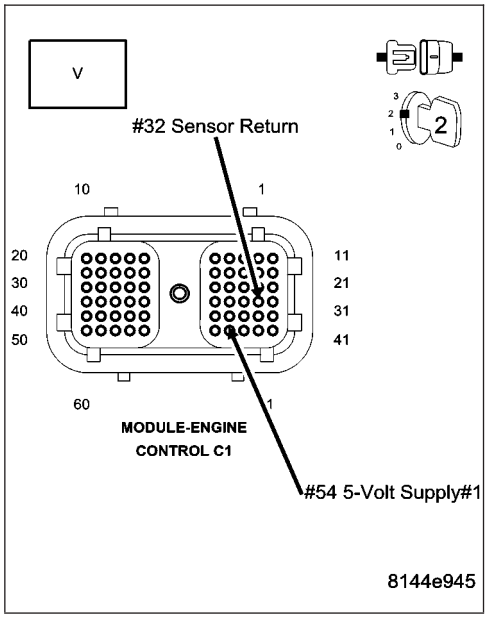

P0653-HIGH VOLTAGE AT THE #1 SENSOR SUPPLY CIRCUIT (CONTINUED)

2. (F855) 5-VOLT SUPPLY SHORTED TO VOLTAGE

Key off.

Disconnect the sensor connectors for each pressure sensor, and the engine position sensor.

Disconnect the ECM 50 way harness connector.

NOTE: Check connectors - Clean/repair as necessary.

Ignition on, engine off.

Measure the voltage between the supply circuit at each pressure sensor harness connector and battery negative.

Measure voltage between the (F853) 5-volt supply circuit at the engine position sensor harness connector and battery negative.

Is the voltage less than 1 volt?

Yes >> Go To 3

No >> Repair the (F855) 5-volt supply shorted to voltage.
Perform POWERTRAIN VERIFICATION TEST VER - 1 (DIESEL). (Refer to 8 - ELECTRICAL/ELECTRONIC CONTROL MODULES/ENGINE CONTROL MODULE - DIAGNOSIS AND TESTING)

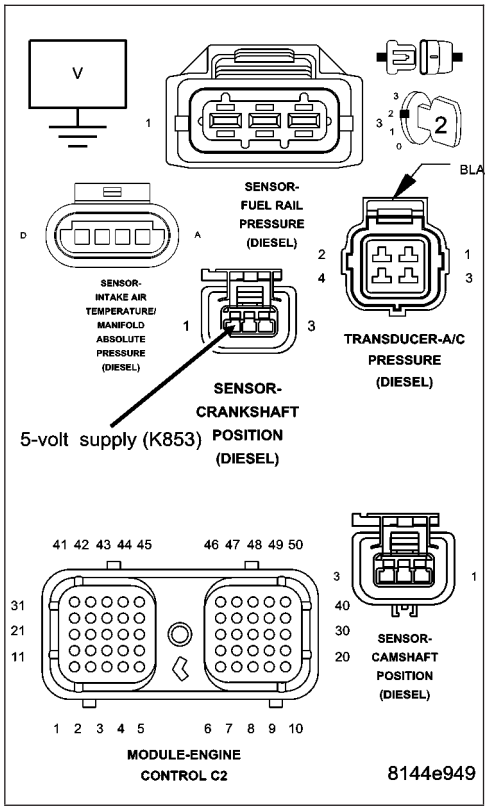

3. SENSOR SUPPLY SHORTED TO VOLTAGE IN HARNESS

Measure the resistance between the #1 sensor supply circuit and all other circuit in the ECM connectors.

Is the resistance less than 10 ohms?

Yes >> Refer to the INTERMITTENT CONDITION Symptom (Diagnostic Procedure). (Refer to 9 - ENGINE - DIAGNOSIS AND TESTING)

No >> Repair the harness shorted to voltage.

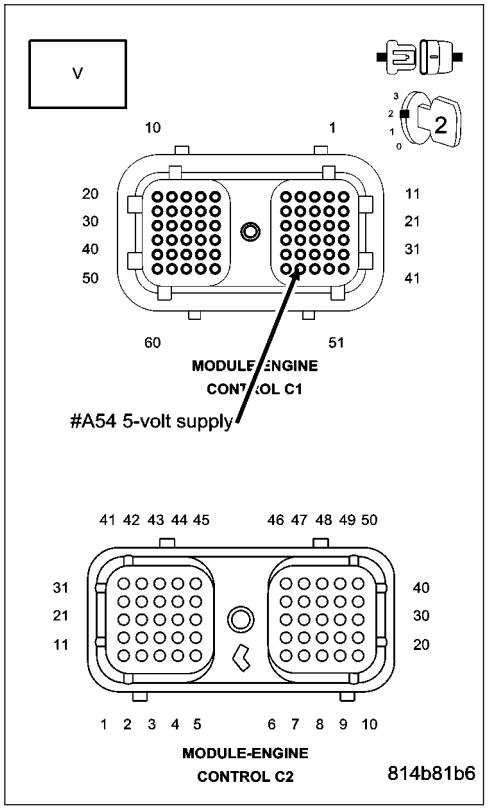

P0698-ACCELERATOR PEDAL POSITION SENSOR (APPS) SUPPLY VOLTAGE TOO LOW

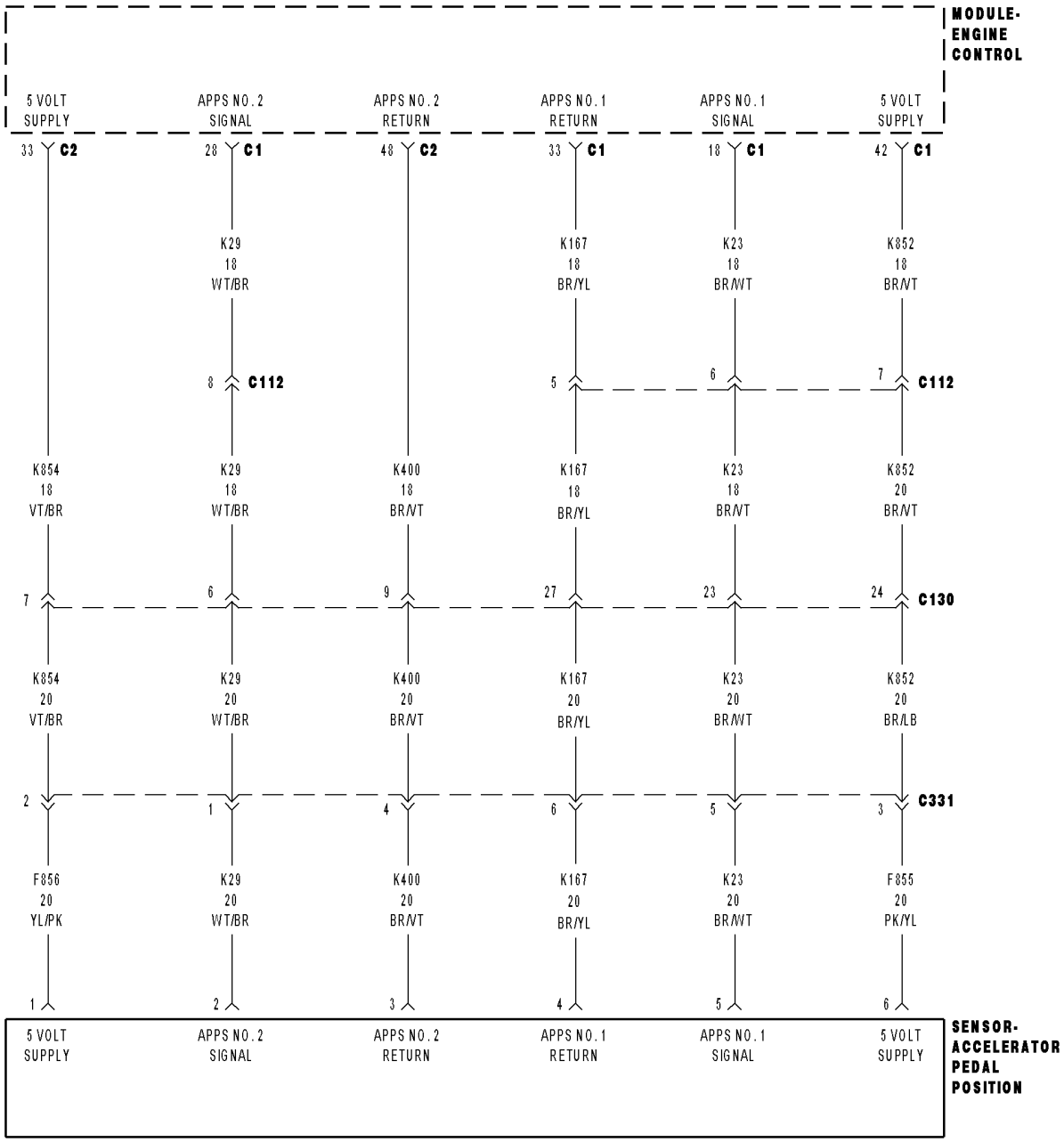

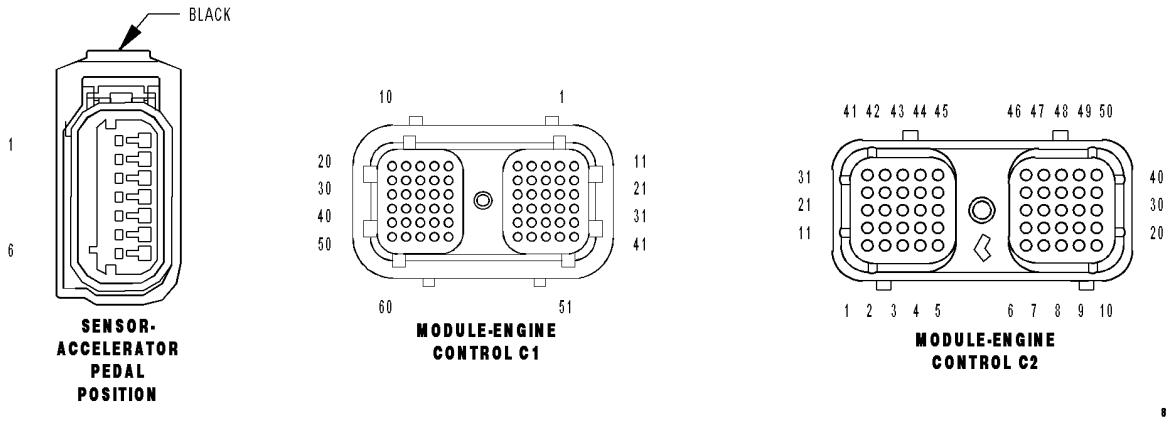

8144ca54

P0698-ACCELERATOR PEDAL POSITION SENSOR (APPS) SUPPLY VOLTAGE TOO LOW (CONTINUED)

For the Engine circuit diagram (Refer to 9 - ENGINE - SCHEMATICS AND DIAGRAMS)

For a complete wiring diagram **Refer to Section 8W**.

- **When Monitored:**
  With engine running.
- **Set Condition:**
  Low voltage detected at the APPS supply circuit or low voltage detected at the APPS 1 5–volt supply.

Possible Causes
(F855) APPS 5-VOLT SUPPLY OPEN
APPS HIGH RESISTANCE
(F855) 5-VOLT SUPPLY CIRCUIT SHORTED TO (K922) RETURN CIRCUIT
(F855) 5-VOLT SUPPLY CIRCUIT SHORTED TO BATTERY NEGATIVE
ECM
INTERMITTENT CONDITION
(F855) 5-VOLT SUPPLY CIRCUIT SHORTED TO OTHER CIRCUITS
APPS

Always perform the Pre-Diagnostic Troubleshooting procedure before proceeding. (Refer to 9 - ENGINE - DIAGNOSIS AND TESTING)

1. (F855) 5-VOLT SUPPLY CIRCUIT SHORTED TO BATTERY NEGATIVE

Turn the ignition off.

Disconnect the ECM harness connectors.

Disconnect the APPS harness connector.

Check connectors - Clean/repair as necessary.

Measure the resistance of the APPS 1 (F855) 5-volt supply circuit between the sensor harness connector and battery negative

Is the resistance greater than 100 k ohms?

Yes >> Go To 2

No >> Repair the (F855) 5-volt supply circuit shorted to battery negative.

Perform POWERTRAIN VERIFICATION TEST VER - 1 (DIESEL). (Refer to 8 - ELECTRICAL/ELECTRONIC CONTROL MODULES/ENGINE CONTROL MODULE - DIAGNOSIS AND TESTING)

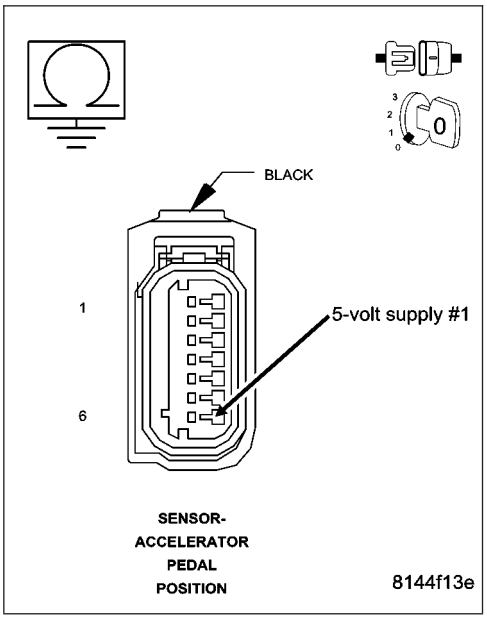

P0698-ACCELERATOR PEDAL POSITION SENSOR (APPS) SUPPLY VOLTAGE TOO LOW (CONTINUED)

2. (F855) 5-VOLT SUPPLY CIRCUIT SHORTED TO OTHER CIRCUITS

Measure the resistance between the (F855) APPS 1 5-volt supply circuit at the ECM harness connector and all other circuits in the ECM connector.

Is the resistance greater than 100k ohms?

Yes >> Go To 3

No >> Repair the APPS #1 (F855) 5-volt supply circuit shorted to other circuits.

Perform POWERTRAIN VERIFICATION TEST VER - 1 (DIESEL). (Refer to 8 - ELECTRICAL/ELECTRONIC CONTROL MODULES/ENGINE CONTROL MODULE - DIAGNOSIS AND TESTING)

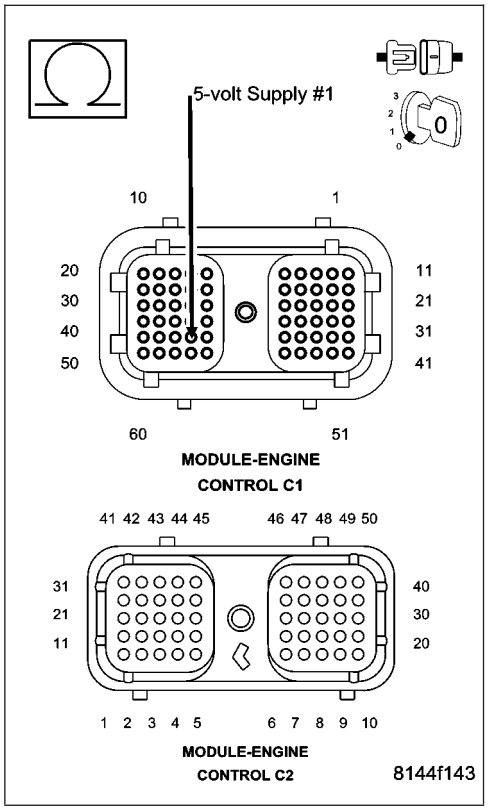

3. INTERNAL ECM

Reconnect the ECM harness connectors.

Turn ignition on, engine off.

While monitoring with the scan tool, connect a jumper wire between the (K23) APPS 1 signal circuit at the sensor harness connector and the (F855) APPS 1 supply circuit at the sensor harness connector.

NOTE: With the APPS disconnected it is normal to have a APPS 1 and APPS 2 low voltage DTC set.

Did a APPS 1 voltage too high DTC set?

Yes >> Go To 4

No >> Replace and program the ECM in accordance with the Service Information.

Perform POWERTRAIN VERIFICATION TEST VER - 1 (DIESEL). (Refer to 8 - ELECTRICAL/ELECTRONIC CONTROL MODULES/ENGINE CONTROL MODULE - DIAGNOSIS AND TESTING)

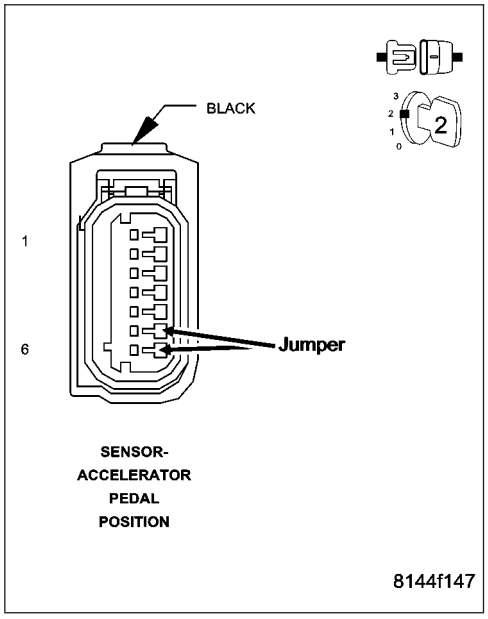

P0698-ACCELERATOR PEDAL POSITION SENSOR (APPS) SUPPLY VOLTAGE TOO LOW (CONTINUED)

4. APPS

Reconnect the APPS harness connector.

Ignition on, engine not running.

Monitor the APPS 1 and APPS 2 voltage with the scan tool while depressing the throttle pedal.

Is the voltage transition shown on the scan tool smooth while depressing the throttle and is the volt swing smooth?

Yes >> Refer to the INTERMITTENT CONDITION Symptom (Diagnostic Procedure). (Refer to 9 - ENGINE - DIAGNOSIS AND TESTING)

No >> Replace the APPS.
Perform POWERTRAIN VERIFICATION TEST VER - 1 (DIESEL). (Refer to 8 - ELECTRICAL/ELECTRONIC CONTROL MODULES/ENGINE CONTROL MODULE - DIAGNOSIS AND TESTING)

P0699-ACCELERATOR PEDAL POSITION SENSOR (APPS) SUPPLY VOLTAGE TOO HIGH

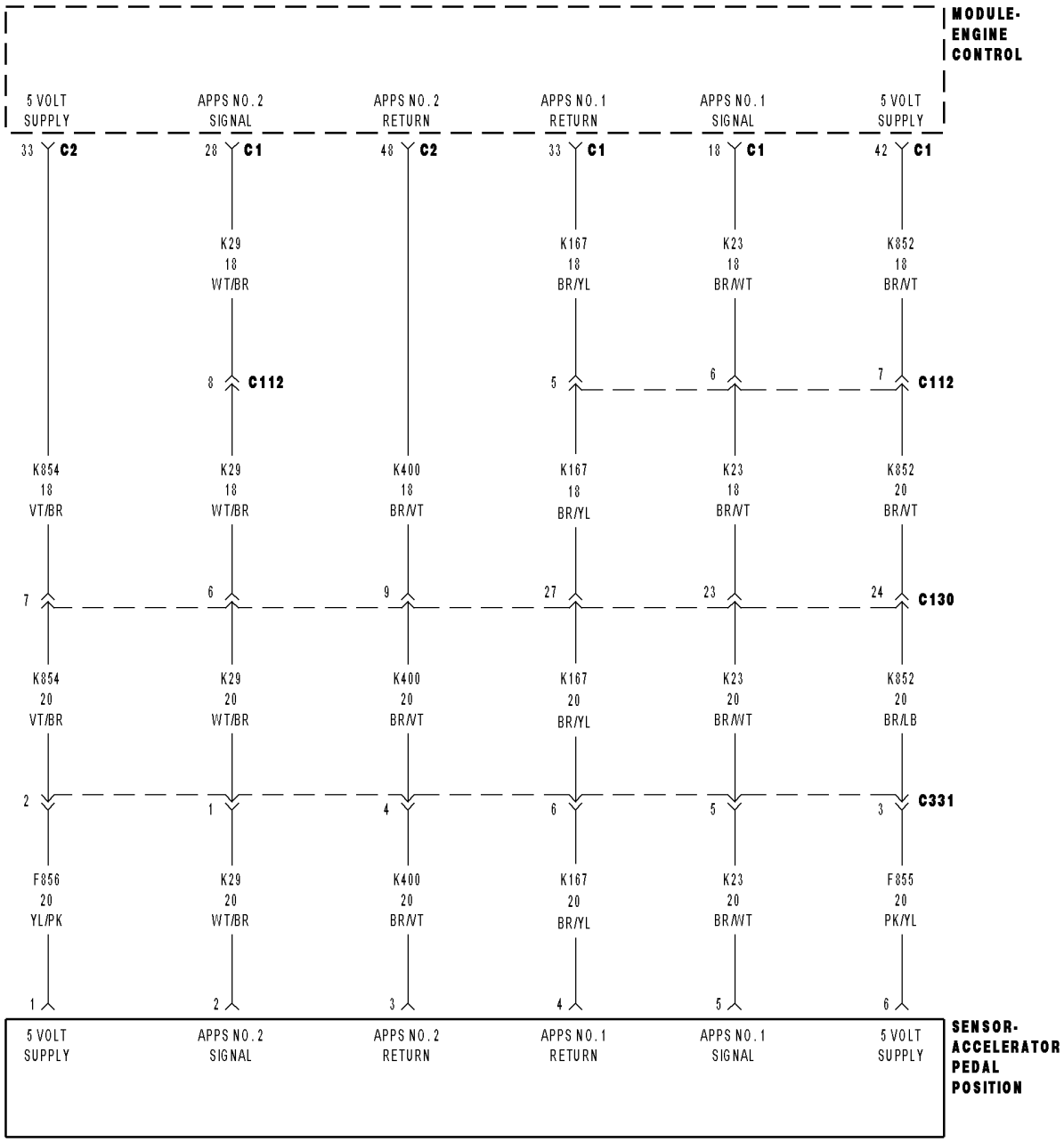

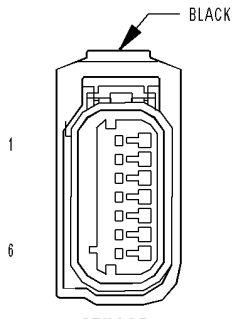

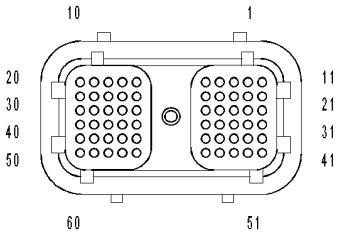

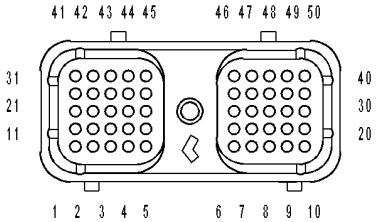

8144ca54

P0699-ACCELERATOR PEDAL POSITION SENSOR (APPS) SUPPLY VOLTAGE TOO HIGH (CONTINUED)

For the Engine circuit diagram (Refer to 9 - ENGINE - SCHEMATICS AND DIAGRAMS)

For a complete wiring diagram **Refer to Section 8W**.

- **When Monitored:**
  While engine is running.
- **Set Condition:**
  High voltage detected at the APPS supply circuit.

Possible Causes
(F855) 5-VOLT SUPPLY OPEN
(F855) 5-VOLT SUPPLY SHORT TO VOLTAGE
ECM
INTERMITTENT CONDITION

Always perform the Pre-Diagnostic Troubleshooting procedure before proceeding. (Refer to 9 - ENGINE - DIAGNOSIS AND TESTING)

1. (F855) 5-VOLT SUPPLY OPEN

Turn the ignition off.

Disconnect the APPS harness connector.

NOTE: Check connectors - Clean/repair as necessary.

Ignition on, engine not running.

Measure the voltage between the (F855) APPS #1 5-volt supply circuit at the sensor connector and battery negative.

Is the voltage between 4.5 and 5.5 volts?

Yes >> Replace the APPS.
Perform POWERTRAIN VERIFICATION TEST VER - 1 (DIESEL). (Refer to 8 - ELECTRICAL/ELECTRONIC CONTROL MODULES/ENGINE CONTROL MODULE - DIAGNOSIS AND TESTING)

No >> Go To 2

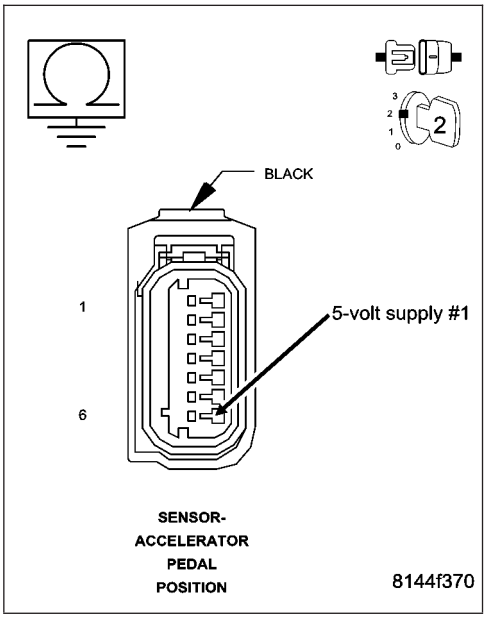

P0699-ACCELERATOR PEDAL POSITION SENSOR (APPS) SUPPLY VOLTAGE TOO HIGH (CONTINUED)

2. (F855) 5-VOLT SUPPLY SHORT TO VOLTAGE

Turn the ignition off.

Disconnect the ECM harness connector(s).

NOTE: Check connectors - Clean/repair as necessary.

Ignition on, engine not running.

Measure the voltage between the (F855) APPS #1 5-volt supply circuit in the sensor harness connector and battery negative.

Is the voltage less than 1 volt?

Yes >> Go To 3

No >> Repair or replace the wiring harness.

Perform POWERTRAIN VERIFICATION TEST VER - 1 (DIESEL). (Refer to 8 - ELECTRICAL/ELECTRONIC CONTROL MODULES/ENGINE CONTROL MODULE - DIAGNOSIS AND TESTING)

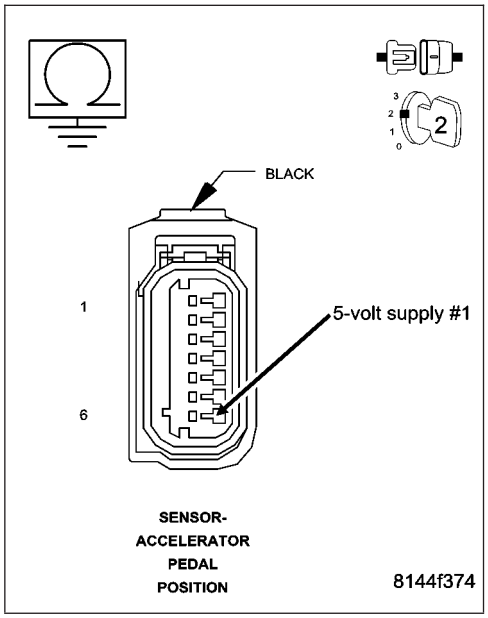

3. ECM

Turn the ignition off.

Reconnect the ECM harness connector(s).

Ignition on, engine not running.

Measure the voltage between the (F855) APPS #1 5-volt supply circuit at the sensor harness connector and battery negative.

Is the voltage greater than 6 volts?

Yes >> Replace and program the ECM in accordance with the Service Information.

Perform POWERTRAIN VERIFICATION TEST VER - 1 (DIESEL). (Refer to 8 - ELECTRICAL/ELECTRONIC CONTROL MODULES/ENGINE CONTROL MODULE - DIAGNOSIS AND TESTING)

No >> Refer to the INTERMITTENT CONDITION Symptom (Diagnostic Procedure). (Refer to 9 - ENGINE - DIAGNOSIS AND TESTING)

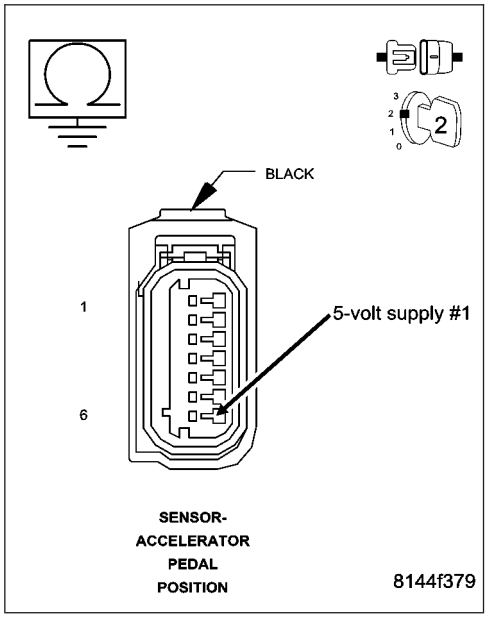

P1652-J1850 SHORT TO GROUND

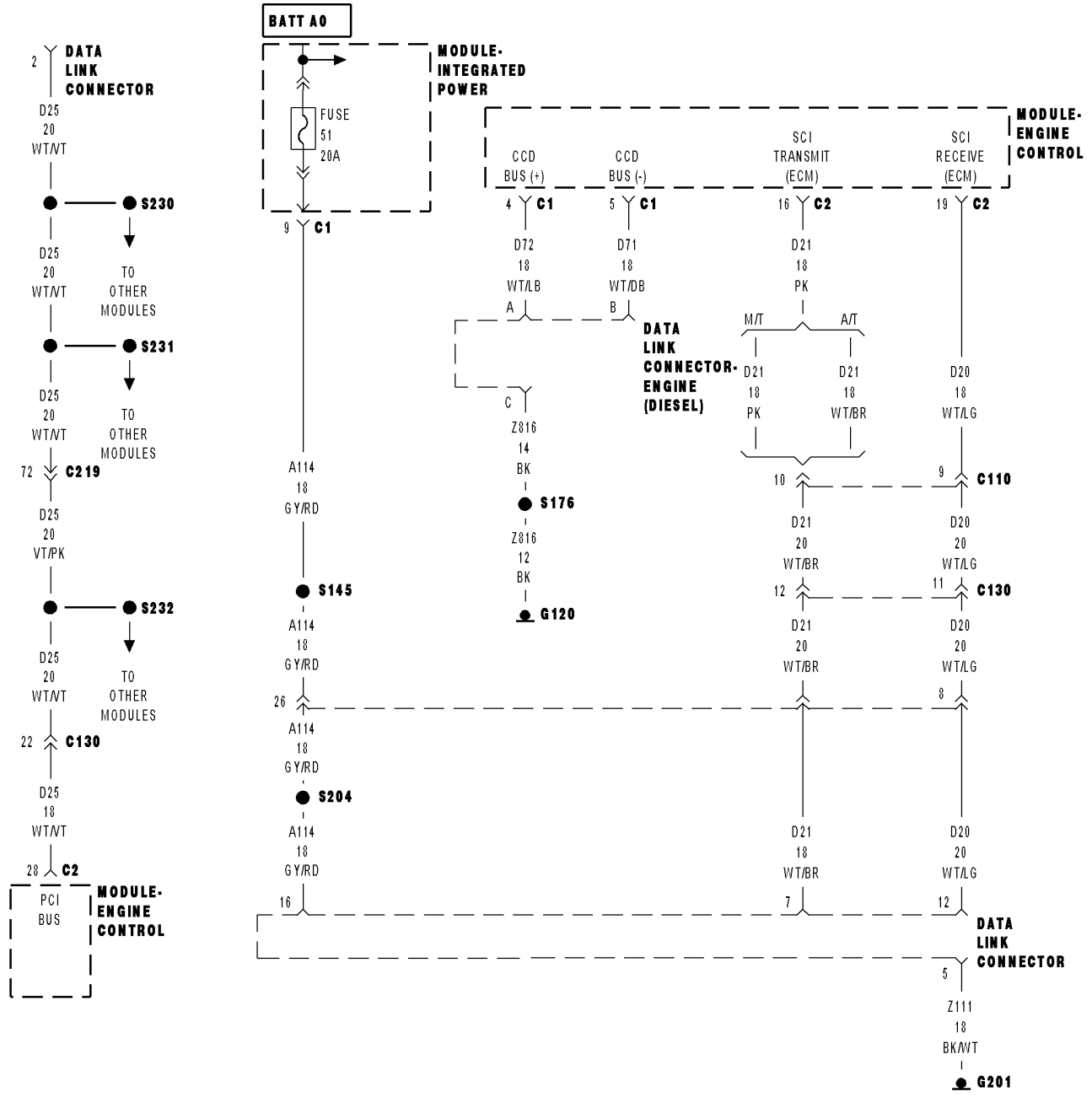

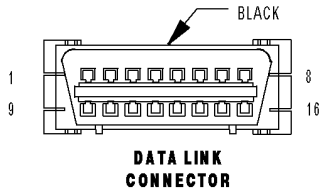

DATA LINK CONNECTOR

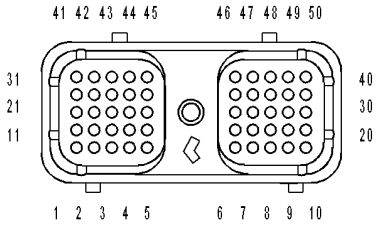

MODULE-ENGINE CONTROL C2

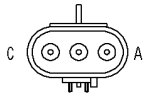

DATA LINK CONNECTOR (DIESEL)

81441f3e4

P1652-J1850 SHORT TO GROUND (CONTINUED)

For the Engine circuit diagram (Refer to 9 - ENGINE - SCHEMATICS AND DIAGRAMS)

For a complete wiring diagram **Refer to Section 8W**.

- **When Monitored:**
  While the ignition is on.
- **Set Condition:**
  The ECM detects a short to ground on the J1850.

Possible Causes
ECM
(D25) J1850 SHORTED
COMMUNICATION

Always perform the Pre-Diagnostic Troubleshooting procedure before proceeding. (Refer to 9 - ENGINE - DIAGNOSIS AND TESTING)

Diagnostic Test

1. ECM

Turn the ignition off.

Disconnect the ECM harness connectors.

NOTE: Check connectors - Clean/repair as necessary.
Measure the resistance between the (D25) J1850 circuit in the ECM harness connector and battery negative.

Is the resistance less than 10 Ohms?

Yes >> Go To 2

No >> Replace the ECM.
Perform POWERTRAIN VERIFICATION TEST VER - 1 (DIESEL). (Refer to 8 - ELECTRICAL/ELECTRONIC CONTROL MODULES/ENGINE CONTROL MODULE - DIAGNOSIS AND TESTING)

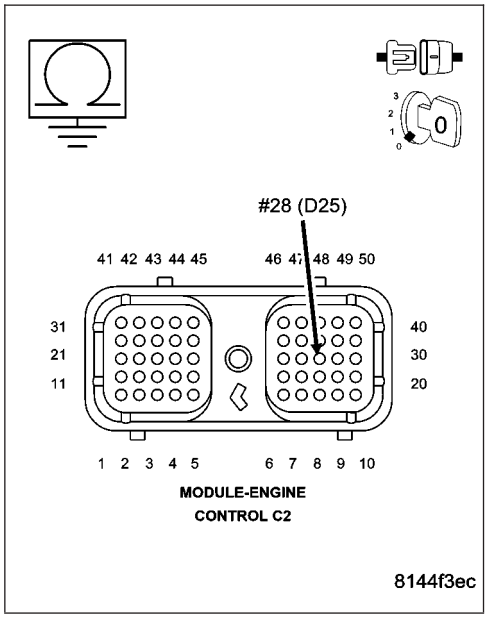

P1652-J1850 SHORT TO GROUND (CONTINUED)

2. (D25) J1850 SHORTED

Measure the resistance between the (D25) J1850 circuit and all other circuits in both ECM connectors.

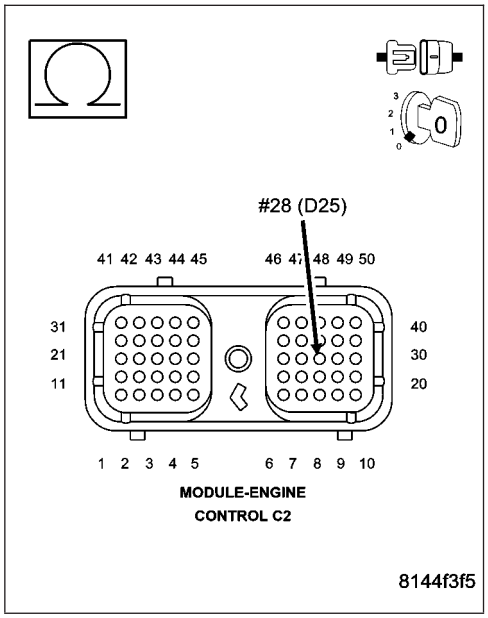

Is the resistance greater than 100k ohms?

Yes >> Refer to the Body Diagnostic book Communications section.

No >> Repair (D25) J1850 shorted to another circuit.

Perform POWERTRAIN VERIFICATION TEST VER - 1 (DIESEL). (Refer to 8 - ELECTRICAL/ELECTRONIC CONTROL MODULES/ENGINE CONTROL MODULE - DIAGNOSIS AND TESTING)

P2121-PPS CONFORMANCE ERROR

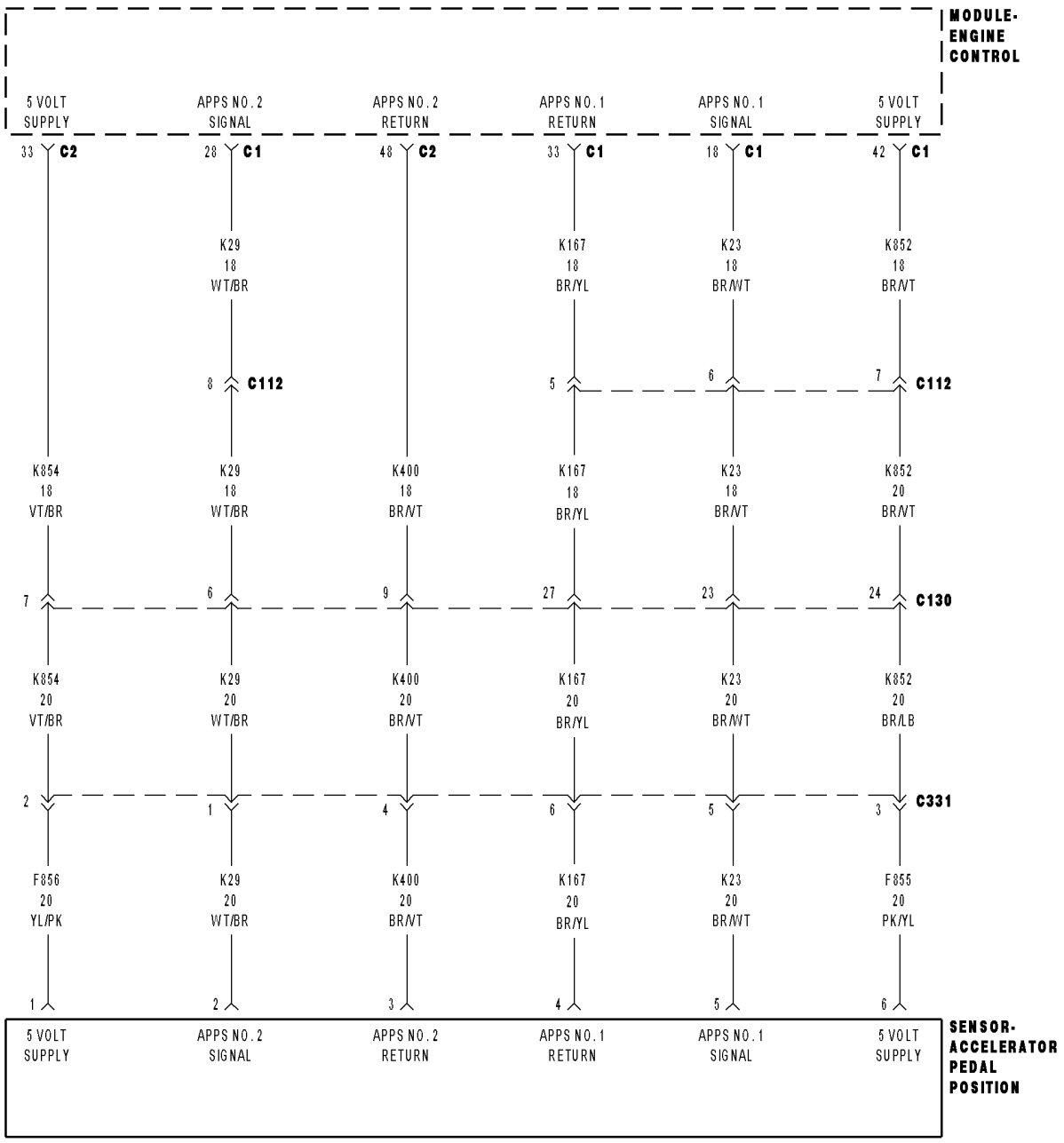

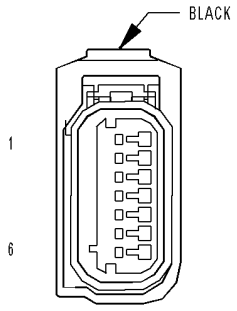

SENSOR-ACCELERATOR PEDAL POSITION

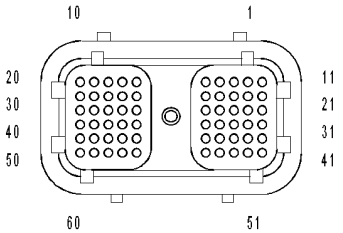

MODULE-ENGINE CONTROL C1

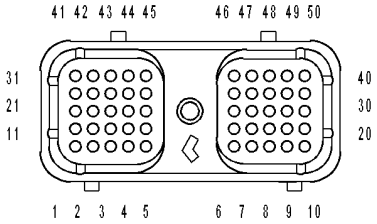

MODULE-ENGINE CONTROL C2

81450680

P2121-PPS CONFORMANCE ERROR (CONTINUED)

For the Engine circuit diagram (Refer to 9 - ENGINE - SCHEMATICS AND DIAGRAMS)

For a complete wiring diagram **Refer to Section 8W**.

- **When Monitored:**
  While the engine is running
- **Set Condition:**
  The ECM detected a conformance error between PPS 1 and PPS 2

Possible Causes
OTHER DTC'S
WIRING HARNESS OR CONNECTOR DAMAGED
APPS
INTERMITTENT CONDITION
ECM

Always perform the Pre-Diagnostic Troubleshooting procedure before proceeding. (Refer to 9 - ENGINE - DIAGNOSIS AND TESTING)

Diagnostic Test

1. OTHER DTC'S PRESENT

Using the scan tool, check for any additional APPS fault codes

Do you have any additiona APPS faults?

Yes >> troubleshoot other DTC's first, Go To 2

No >> Go To 12

---

2. APPS HARNESS

Verify that the APPS is connected.

Inspect the harness and the APPS connector.

Are any pins damaged?

Yes >> Repair or replace the harness.

No >> Go To 3

---

3. APPS

Monitor the APPS 1 and APPS 2 voltage with the scan tool while depressing the acceralator pedal.

Is the voltage transition shown on the scan tool smooth while depressing the acceralator pedal and is the voltage from APPS 1 twice as much as the voltage from APPS 2?

Yes >> Go To 4

No >> Replace the APPS.
Perform POWERTRAIN VERIFICATION TEST VER - 1 (DIESEL). (Refer to 8 - ELECTRICAL/ELECTRONIC CONTROL MODULES/ENGINE CONTROL MODULE - DIAGNOSIS AND TESTING)

P2121-PPS CONFORMANCE ERROR (CONTINUED)

4. OPEN SIGNAL CIRCUIT

Disconnect the ECM connectors.

Disconnect the APPS connector.

NOTE: Check connectors - Clean/repair as necessary.

Measure the resistance of the APPS 1 signal circuit between the APPS sensor connector and the ECM connector.

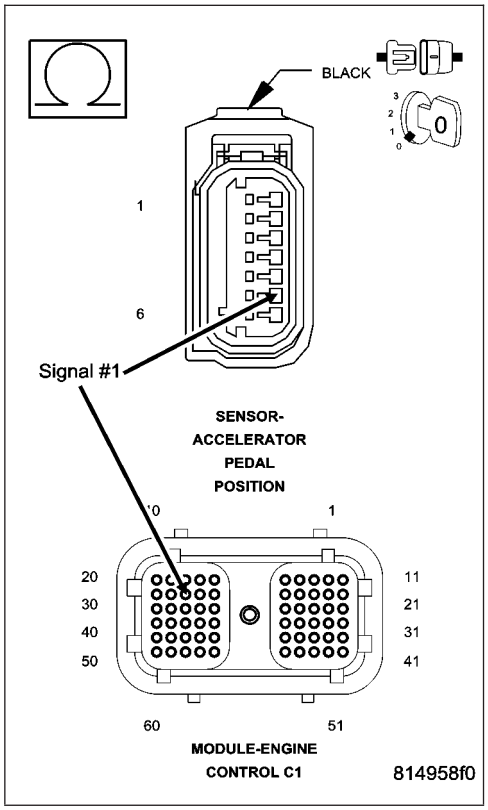

Yes >> Go To 5

No >> Repair or Replace the harness.
Perform POWERTRAIN VERIFICATION TEST VER - 1 (DIESEL). (Refer to 8 - ELECTRICAL/ELECTRONIC CONTROL MODULES/ENGINE CONTROL MODULE - DIAGNOSIS AND TESTING)

5. OPEN SUPPLY CIRCUIT

Measure the resistance of the APPS 1 supply circuit between the APPS sensor connector and the ECM connector.

Is the resistance less than 10 ohms?

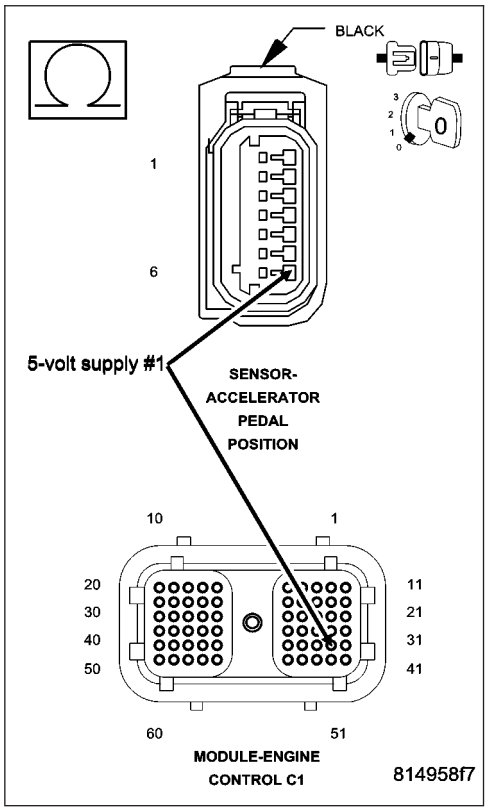

Yes >> Go To 6

No >> Repair or replace the open harness.
Perform POWERTRAIN VERIFICATION TEST VER - 1 (DIESEL). (Refer to 8 - ELECTRICAL/ELECTRONIC CONTROL MODULES/ENGINE CONTROL MODULE - DIAGNOSIS AND TESTING)

P2121-PPS CONFORMANCE ERROR (CONTINUED)

6. SIGNAL CIRCUIT SHORTED TO GROUND

Measure the resistance between the APPS 1 signal circuit at the sensor connector and battery negative.

Is the resistance greater than 100 K ohms?

Yes >> Go To 7

No >> Repair the shorted harness.

Perform POWERTRAIN VERIFICATION TEST VER - 1 (DIESEL). (Refer to 8 - ELECTRICAL/ELECTRONIC CONTROL MODULES/ENGINE CONTROL MODULE - DIAGNOSIS AND TESTING)

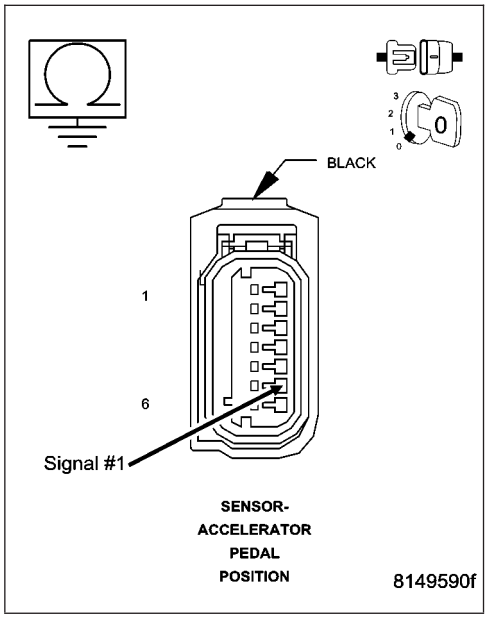

7. SIGNAL CIRCUIT SHORTED TO OTHER CIRCUITS

Measure the resistance between the APPS 1 signal circuit at the ECM connector and all other circuits in the ECM connector.

Is the resistance greater than 100 K ohms?

Yes >> Go To 8

No >> Repair the shorted signal circuit.

Perform POWERTRAIN VERIFICATION TEST VER - 1 (DIESEL). (Refer to 8 - ELECTRICAL/ELECTRONIC CONTROL MODULES/ENGINE CONTROL MODULE - DIAGNOSIS AND TESTING)

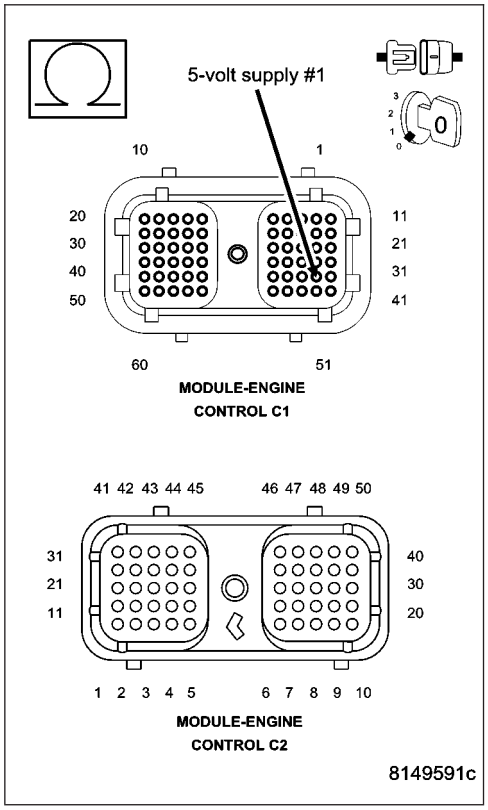

P2121-PPS CONFORMANCE ERROR (CONTINUED)

8. SUPPLY CIRCUIT SHORTED TO GROUND

Measure the resistance between the APPS 1 supply circuit at the sensor connector and battery negative.

Is the resistance greater than 100 K ohms?

Yes >> Go To 9

No >> Repair the Supply circuit shorted to ground.
Perform POWERTRAIN VERIFICATION TEST VER - 1 (DIESEL). (Refer to 8 - ELECTRICAL/ELECTRONIC CONTROL MODULES/ENGINE CONTROL MODULE - DIAGNOSIS AND TESTING)

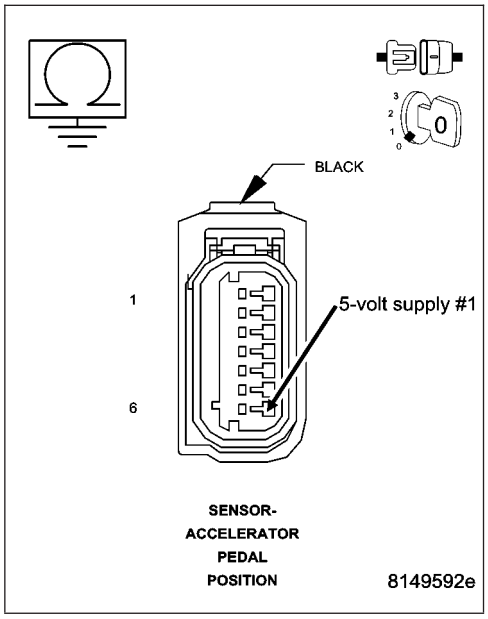

9. SUPPLY CIRCUIT SHORTED TO OTHER CIRCUITS

Measure the resistance between the APPS 1 supply circuit at the ECM connector and all other circuits in the ECM connector.

Is the resistance greater than 100 K ohms?

Yes >> Go To 10

No >> Repair the supply circuit shorted to other circuits.
Perform POWERTRAIN VERIFICATION TEST VER - 1 (DIESEL). (Refer to 8 - ELECTRICAL/ELECTRONIC CONTROL MODULES/ENGINE CONTROL MODULE - DIAGNOSIS AND TESTING)

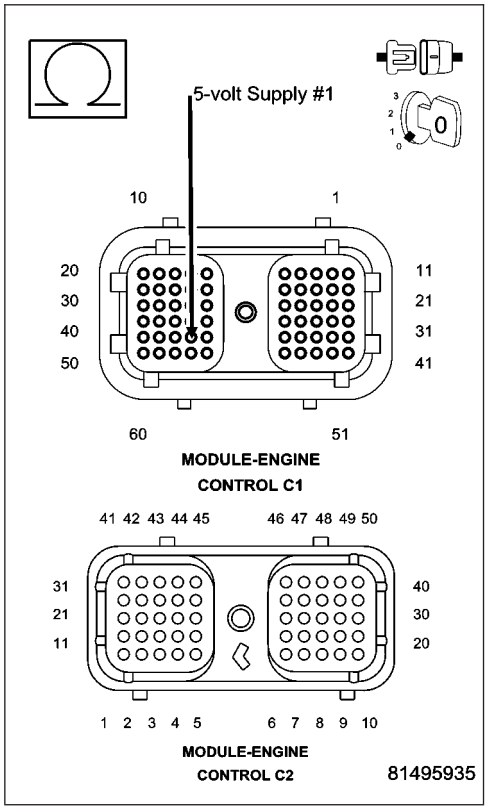

P2121-PPS CONFORMANCE ERROR (CONTINUED)

10. RETURN CIRCUIT OPEN

Measure the resistance on the APPS 1 return circuit between the sensor connector and the ECM connector.

Is the resistance less than 10 ohms?

Yes >> Go To 11

No >> Repair the open return circuit.
Perform POWERTRAIN VERIFICATION TEST VER - 1 (DIESEL). (Refer to 8 - ELECTRICAL/ELECTRONIC CONTROL MODULES/ENGINE CONTROL MODULE - DIAGNOSIS AND TESTING)

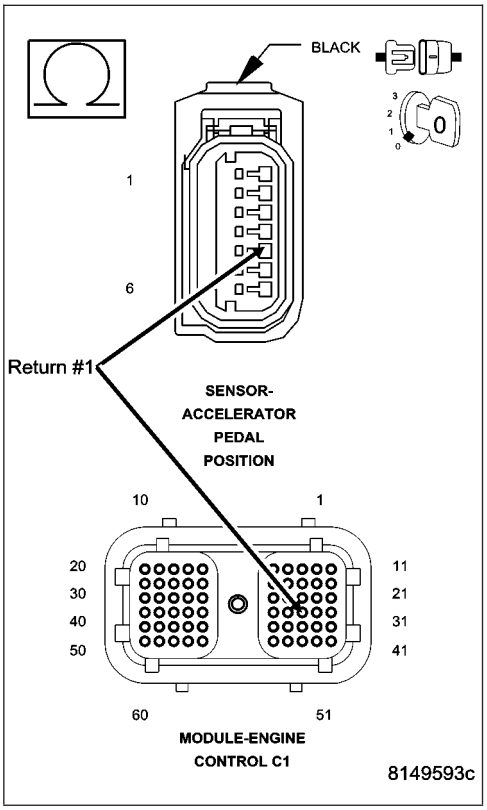

11. SIGANAL CIRCUIT SHORTED TO SUPPLY CIRCUIT

Measure the resistance between the APPS 1 signal circuit in the sensor connector and the PPS 1 supply circuit in the sensor connector.

Is the resistance greater than 100 K ohms?

Yes >> Go To 12

No >> Repair the signal circuit shorted to the supply.
Perform POWERTRAIN VERIFICATION TEST VER - 1 (DIESEL). (Refer to 8 - ELECTRICAL/ELECTRONIC CONTROL MODULES/ENGINE CONTROL MODULE - DIAGNOSIS AND TESTING)

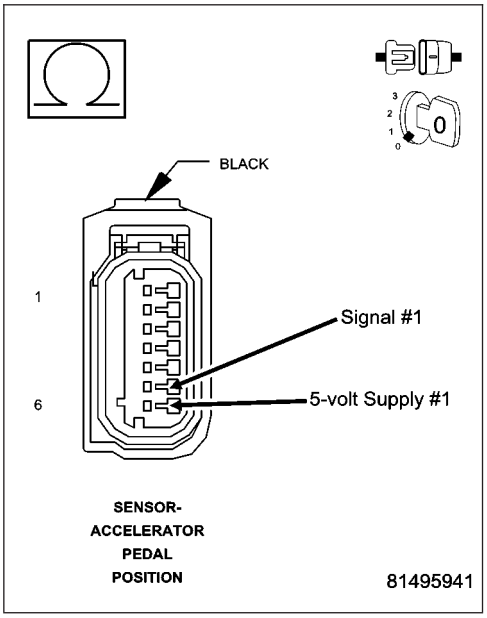

P2121-PPS CONFORMANCE ERROR (CONTINUED)

12. RETURN CIRCUIT SHORTED TO OTHER CIRCUITS

Measure the resistance between the APPS 1 return circuit at the ECM connector and all other circuits in the ECM connector.

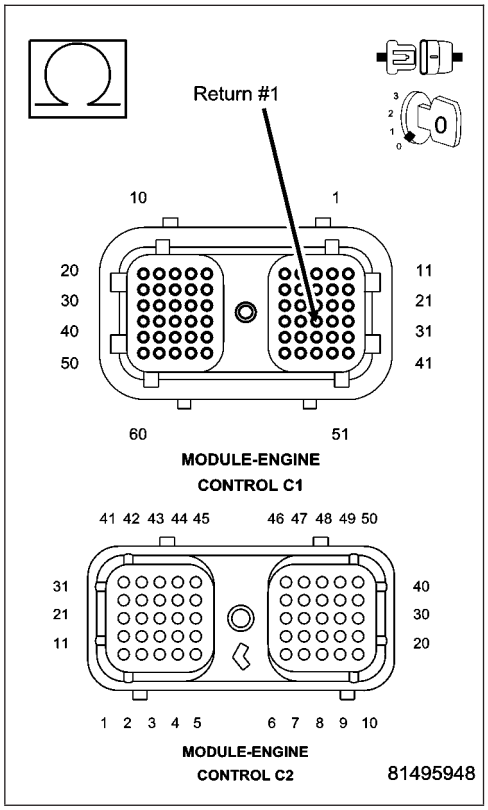

Yes >> Go To 13

No >> Repair the return circuit shorted to other circuits.
Perform POWERTRAIN VERIFICATION TEST VER - 1 (DIESEL). (Refer to 8 - ELECTRICAL/ELECTRONIC CONTROL MODULES/ENGINE CONTROL MODULE - DIAGNOSIS AND TESTING)

13. OPEN SIGNAL CIRCUIT

Measure the resistance of the APPS 2 signal circuit between the APPS sensor connector and the ECM connector.

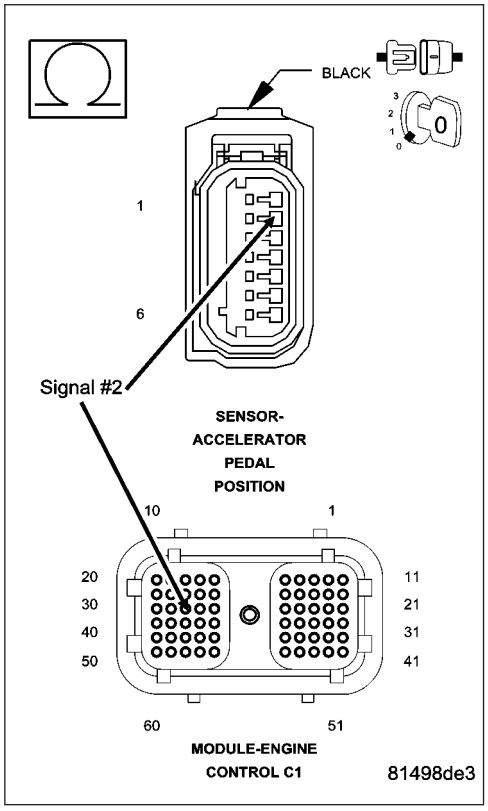

Yes >> Go To 14

No >> Repair or Replace the harness.
Perform POWERTRAIN VERIFICATION TEST VER - 1 (DIESEL). (Refer to 8 - ELECTRICAL/ELECTRONIC CONTROL MODULES/ENGINE CONTROL MODULE - DIAGNOSIS AND TESTING)

P2121-PPS CONFORMANCE ERROR (CONTINUED)

14. OPEN SUPPLY CIRCUIT

Measure the resistance of the APPS 2 supply circuit between the APPS sensor connector and the ECM connector.

Is the resistance less than 10 ohms?

Yes >> Go To 15

No >> Repair or replace the open harness.

Perform POWERTRAIN VERIFICATION TEST VER - 1 (DIESEL). (Refer to 8 - ELECTRICAL/ELECTRONIC CONTROL MODULES/ENGINE CONTROL MODULE - DIAGNOSIS AND TESTING)

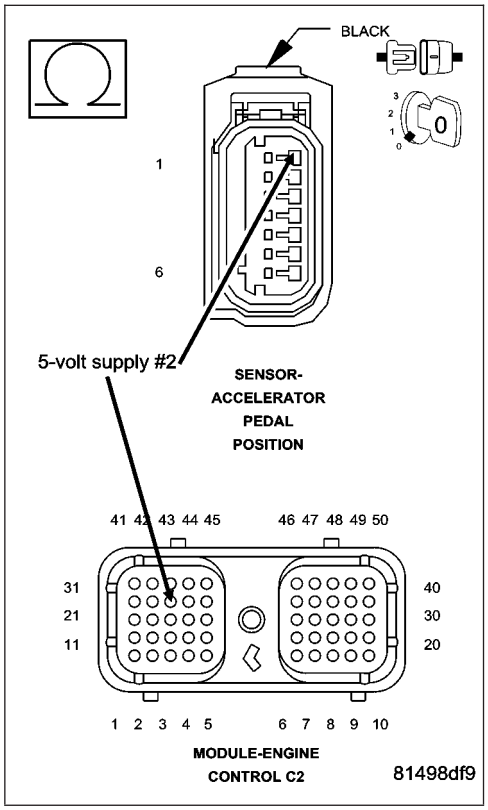

15. SIGNAL CIRCUIT SHORTED TO GROUND

Measure the resistance between the APPS 2 signal circuit at the sensor connector and battery negative.

Is the resistance greater than 100 K ohms?

Yes >> Go To 16

No >> Repair the shorted harness.

Perform POWERTRAIN VERIFICATION TEST VER - 1 (DIESEL). (Refer to 8 - ELECTRICAL/ELECTRONIC CONTROL MODULES/ENGINE CONTROL MODULE - DIAGNOSIS AND TESTING)

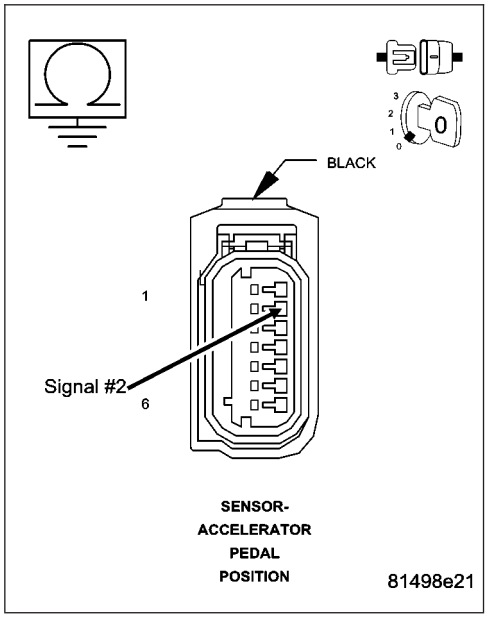

P2121-PPS CONFORMANCE ERROR (CONTINUED)

16. SIGNAL CIRCUIT SHORTED TO OTHER CIRCUITS

Measure the resistance between the APPS 2 signal circuit at the ECM connector and all other circuits in the ECM connector.

Is the resistance greater than 100 K ohms?

Yes >> Go To 17

No >> Repair the shorted signal circuit.
Perform POWERTRAIN VERIFICATION TEST VER - 1 (DIESEL). (Refer to 8 - ELECTRICAL/ELECTRONIC CONTROL MODULES/ENGINE CONTROL MODULE - DIAGNOSIS AND TESTING)

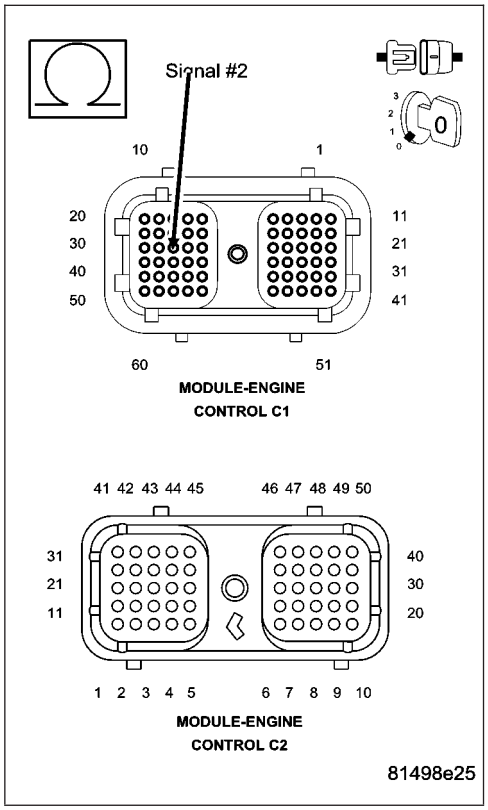

17. SUPPLY CIRCUIT SHORTED TO GROUND

Measure the resistance between the APPS 2 supply circuit at the sensor connector and battery negative.

Is the resistance greater than 100 K ohms?

Yes >> Go To 18

No >> Repair the Supply circuit shorted to ground.
Perform POWERTRAIN VERIFICATION TEST VER - 1 (DIESEL). (Refer to 8 - ELECTRICAL/ELECTRONIC CONTROL MODULES/ENGINE CONTROL MODULE - DIAGNOSIS AND TESTING)

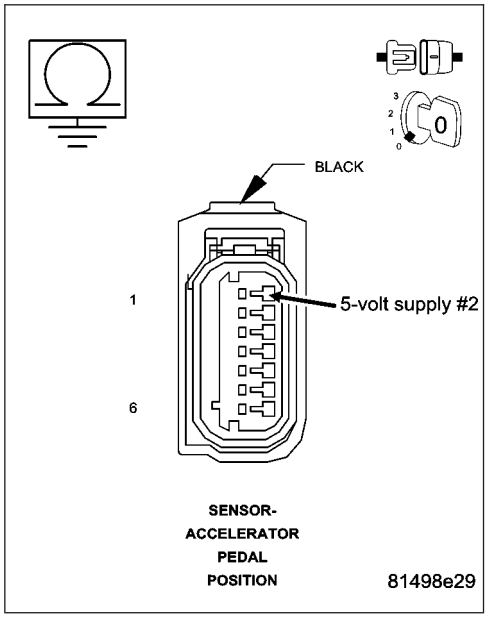

P2121-PPS CONFORMANCE ERROR (CONTINUED)

18. SUPPLY CIRCUIT SHORTED TO OTHER CIRCUITS

Measure the resistance between the APPS 2 supply circuit at the ECM connector and all other circuits in the ECM connector.

Is the resistance greater than 100 K ohms?

Yes >> Go To 19

No >> Repair the supply circuit shorted to other circuits.
Perform POWERTRAIN VERIFICATION TEST VER - 1 (DIESEL). (Refer to 8 - ELECTRICAL/ELECTRONIC CONTROL MODULES/ENGINE CONTROL MODULE - DIAGNOSIS AND TESTING)

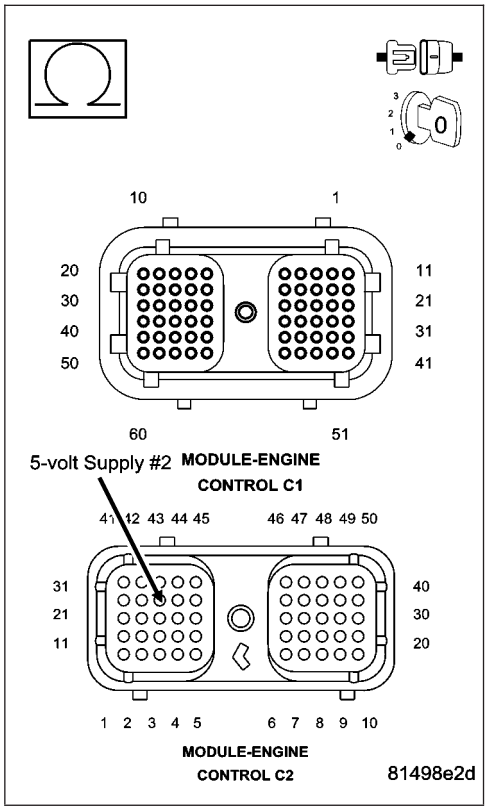

19. RETURN CIRCUIT OPEN

Measure the resistance on the APPS 2 return circuit between the sensor connector and the ECM connector.

Is the resistance less than 10 ohms?

Yes >> Go To 20

No >> Repair the open return circuit.
Perform POWERTRAIN VERIFICATION TEST VER - 1 (DIESEL). (Refer to 8 - ELECTRICAL/ELECTRONIC CONTROL MODULES/ENGINE CONTROL MODULE - DIAGNOSIS AND TESTING)

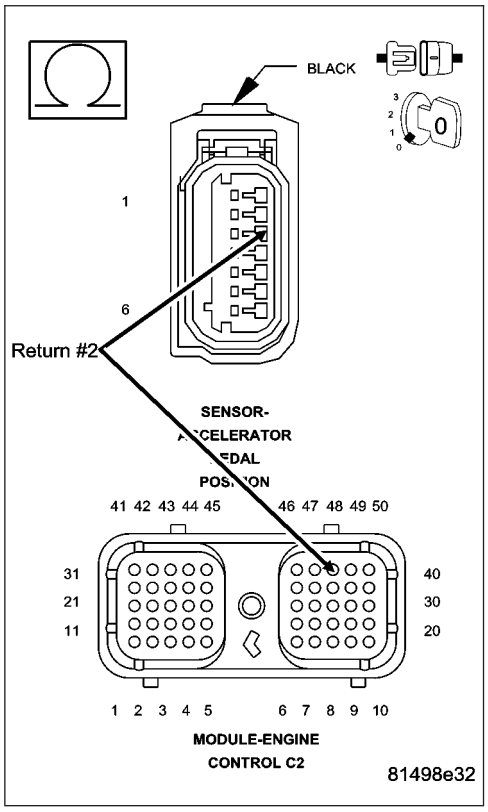

P2121-PPS CONFORMANCE ERROR (CONTINUED)

20. SIGANAL CIRCUIT SHORTED TO SUPPLY CIRCUIT

Measure the resistance between the APPS 2 signal circuit in the sensor connector and the PPS 2 supply circuit in the sensor connector.

Is the resistance greater than 100 K ohms?

Yes >> Go To 21

No >> Repair the signal circuit shorted to the supply.
Perform POWERTRAIN VERIFICATION TEST VER - 1 (DIESEL). (Refer to 8 - ELECTRICAL/ELECTRONIC CONTROL MODULES/ENGINE CONTROL MODULE - DIAGNOSIS AND TESTING)

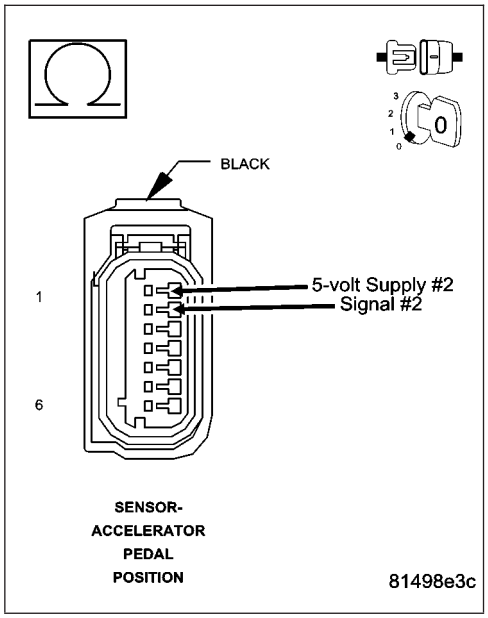

21. RETURN CIRCUIT SHORTED TO OTHER CIRCUITS

Measure the resistance between the APPS 2 return circuit at the ECM connector and all other circuits in the ECM connector.

Yes >> Go To 22

No >> Repair the return circuit shorted to other circuits.
Perform POWERTRAIN VERIFICATION TEST VER - 1 (DIESEL). (Refer to 8 - ELECTRICAL/ELECTRONIC CONTROL MODULES/ENGINE CONTROL MODULE - DIAGNOSIS AND TESTING)

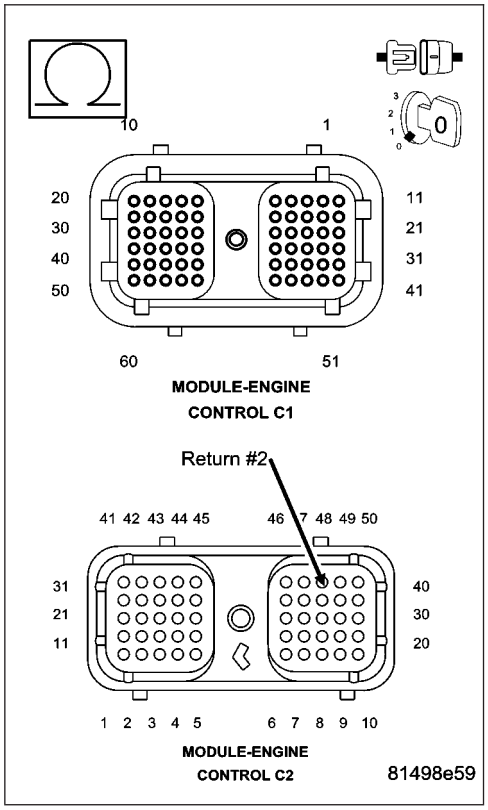

P2121-PPS CONFORMANCE ERROR (CONTINUED)

22. ECM

Reconnect the ECM connectors.

Reconnect the APPS connector.

Turn Ignition on, engine off.

While monitoring with the scan tool, disconnect the sensor connector.

Did a APPS 1 and APPS 2 voltage too low DTC set?

Yes >> Go To 23

No >> Replace the ECM.

Perform POWERTRAIN VERIFICATION TEST VER - 1 (DIESEL). (Refer to 8 - ELECTRICAL/ELECTRONIC CONTROL MODULES/ENGINE CONTROL MODULE - DIAGNOSIS AND TESTING)

---

23. APPS

Reconnect the APPS connector.

Monitor the APPS 1 and APPS 2 voltage with the scan tool while depressing the acceralator pedal.

Is the voltage transition shown on the scan tool smooth while depressing the acceraaltor and is the voltage from APPS 1 twice as much as the voltage from APPS 2?

Yes >> Refer to the INTERMITTENT CONDITION Symptom (Diagnostic Procedure). (Refer to 9 - ENGINE - DIAGNOSIS AND TESTING)

No >> Replace the APPS.

Perform POWERTRAIN VERIFICATION TEST VER - 1 (DIESEL). (Refer to 8 - ELECTRICAL/ELECTRONIC CONTROL MODULES/ENGINE CONTROL MODULE - DIAGNOSIS AND TESTING)

P2122-PPS 1 VOLTAGE TOO LOW

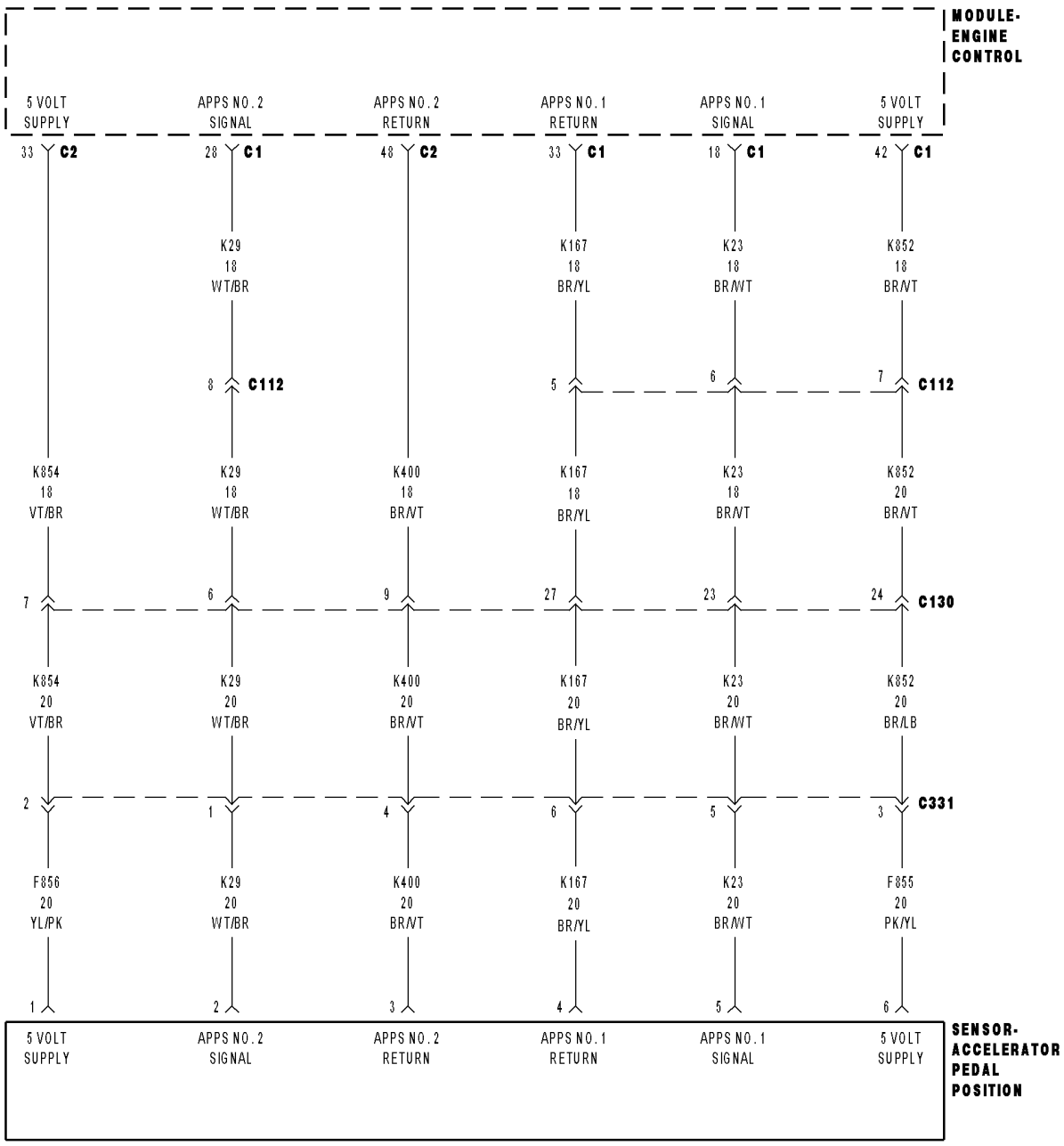

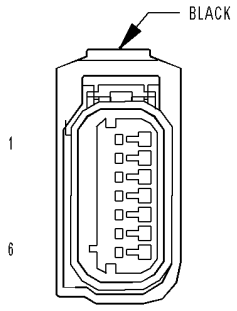

SENSOR-ACCELERATOR PEDAL POSITION

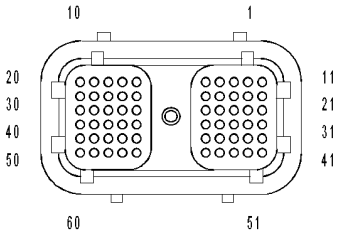

MODULE-ENGINE CONTROL C1

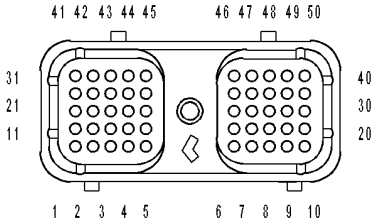

MODULE-ENGINE CONTROL C2

81450680

P2122-PPS 1 VOLTAGE TOO LOW (CONTINUED)

For the Engine circuit diagram (Refer to 9 - ENGINE - SCHEMATICS AND DIAGRAMS)

For a complete wiring diagram **Refer to Section 8W**.

- **When Monitored:**
  While the key is on and during engine operation.
- **Set Condition:**
  The APPS circuit voltage at the ECM goes below 0.13 volt for more than 2 seconds.

Possible Causes
APPS
ECM
(K23) APPS NO. 1 SIGNAL CIRCUIT OPEN
(F855) APPS NO. 1 5-VOLT SUPPLY OPEN
(K23) APPS NO. 1 SIGNAL CIRCUIT SHORTED TO GROUND
(K23) APPS NO. 1 SIGNAL CIRCUIT SHORTED TO OTHER CIRCUITS
(F855) APPS NO. 1 5-VOLT SUPPLY CIRCUIT SHORTED TO GROUND
(F855) APPS NO. 1 5-VOLT SUPPLY CIRCUIT SHORTED TO OTHER CIRCUITS
INTERMITTENT CONDITION

Always perform the Pre-Diagnostic Troubleshooting procedure before proceeding. (Refer to 9 - ENGINE - DIAGNOSIS AND TESTING)

Diagnostic Test

1. (K23) APPS NO. 1 SIGNAL CIRCUIT OPEN

Turn the ignition off.

Disconnect the ECM harness connectors.

Disconnect the APPS harness connector.

NOTE: Check connectors - Clean/repair as necessary.

Measure the resistance of the (K23) APPS No. 1 signal circuit between the APPS sensor harness connector and the ECM harness connector.

Is the resistance less than 10 ohms?

Yes >> Go To 2

No >> Repair the (K23) APPS No. 1 signal circuit open.
Perform POWERTRAIN VERIFICATION TEST VER - 1 (DIESEL). (Refer to 8 - ELECTRICAL/ELECTRONIC CONTROL MODULES/ENGINE CONTROL MODULE - DIAGNOSIS AND TESTING)

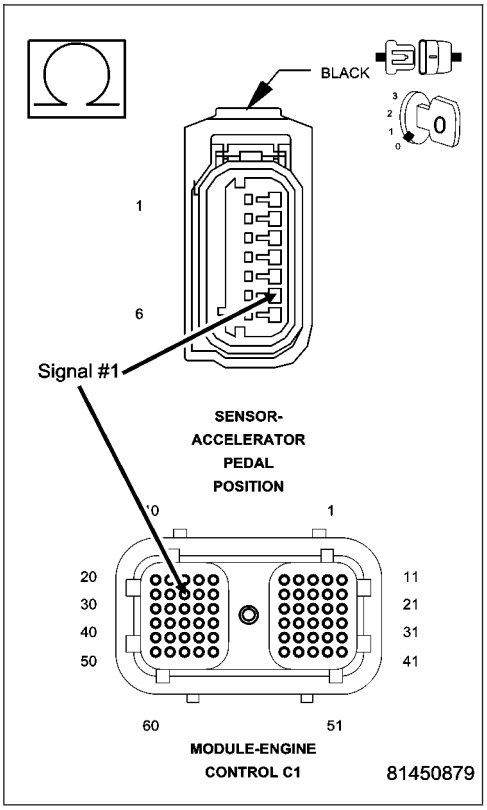

P2122-PPS 1 VOLTAGE TOO LOW (CONTINUED)

2. (F855) APPS NO. 1 5-VOLT SUPPLY OPEN

Measure the resistance of the (F855) APPS No. 1 5-volt supply circuit between the APPS sensor harness connector and the ECM harness connector.

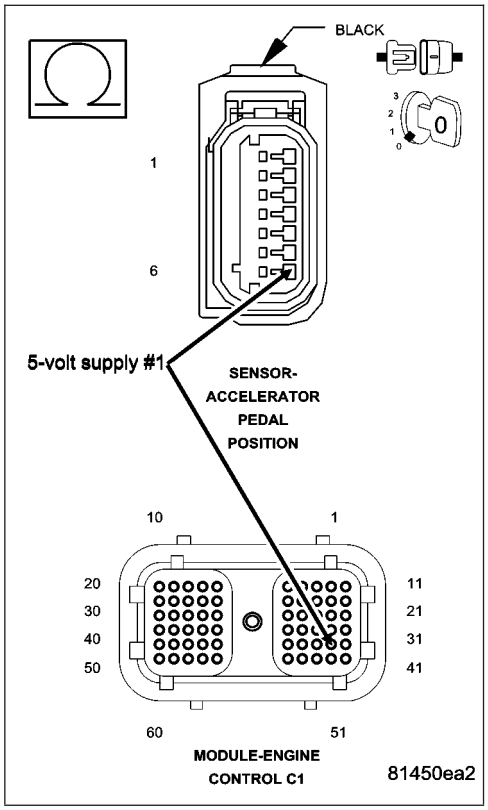

Is the resistance less than 10 ohms?

Yes >> Go To 3

No >> Repair the (F855) APPS No. 1 5-volt supply open.
Perform POWERTRAIN VERIFICATION TEST VER - 1 (DIESEL). (Refer to 8 - ELECTRICAL/ELECTRONIC CONTROL MODULES/ENGINE CONTROL MODULE - DIAGNOSIS AND TESTING)

3. (K23) APPS NO. 1 SIGNAL CIRCUIT SHORTED TO GROUND

Measure the resistance between the (K23) APPS No. 1 signal circuit at the sensor harness connector and battery negative.

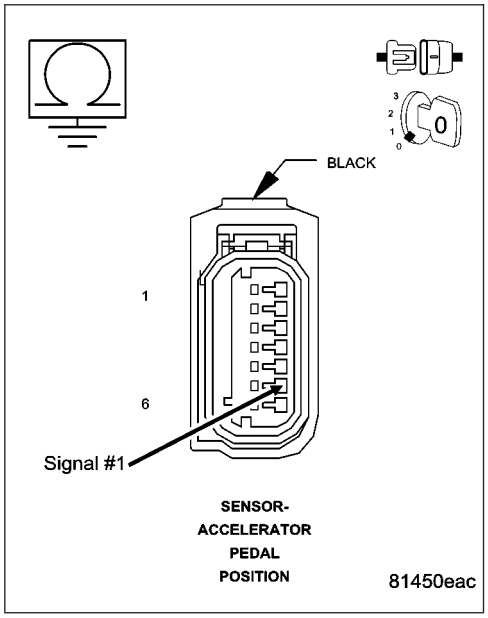

Is the resistance greater than 100 k ohms?

Yes >> Go To 4

No >> Repair the (K23) APPS No. 1 signal circuit shorted to ground.
Perform POWERTRAIN VERIFICATION TEST VER - 1 (DIESEL). (Refer to 8 - ELECTRICAL/ELECTRONIC CONTROL MODULES/ENGINE CONTROL MODULE - DIAGNOSIS AND TESTING)

P2122-PPS 1 VOLTAGE TOO LOW (CONTINUED)

4. (K23) APPS NO. 1 SIGNAL CIRCUIT SHORTED TO OTHER CIRCUITS

Measure the resistance between the (K23) APPS No. 1 signal circuit at the sensor harness connector and all other circuits in the ECM harness connector.

Is the resistance greater than 100 k ohms?

Yes >> Go To 5

No >> Repair the (K23) APPS No. 1 signal circuit shorted to other circuits.

Perform POWERTRAIN VERIFICATION TEST VER - 1 (DIESEL). (Refer to 8 - ELECTRICAL/ELECTRONIC CONTROL MODULES/ENGINE CONTROL MODULE - DIAGNOSIS AND TESTING)

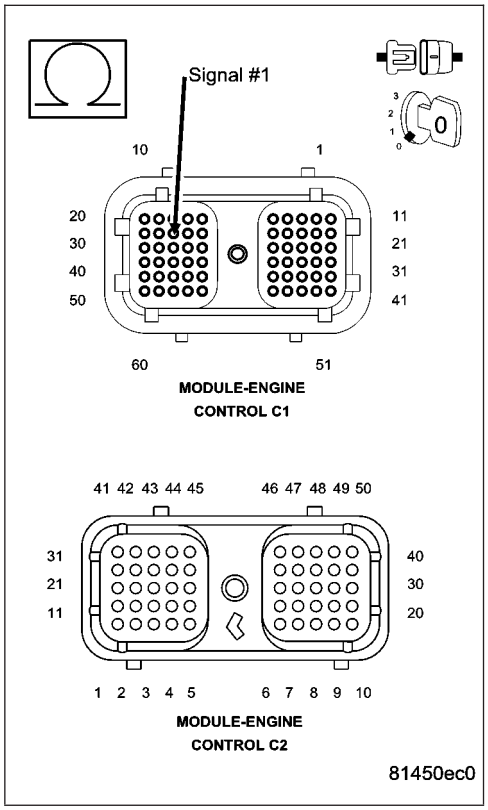

5. (F855) APPS NO. 1 5-VOLT SUPPLY CIRCUIT SHORTED TO GROUND

Measure the resistance between the (F855) APPS No. 1 5-volt supply circuit at the sensor harness connector and battery negative.

Is the resistance greater than 100 k ohms?

Yes >> Go To 6

No >> Repair the (F855) APPS No. 1 5-volt supply circuit shorted to ground.

Perform POWERTRAIN VERIFICATION TEST VER - 1 (DIESEL). (Refer to 8 - ELECTRICAL/ELECTRONIC CONTROL MODULES/ENGINE CONTROL MODULE - DIAGNOSIS AND TESTING)

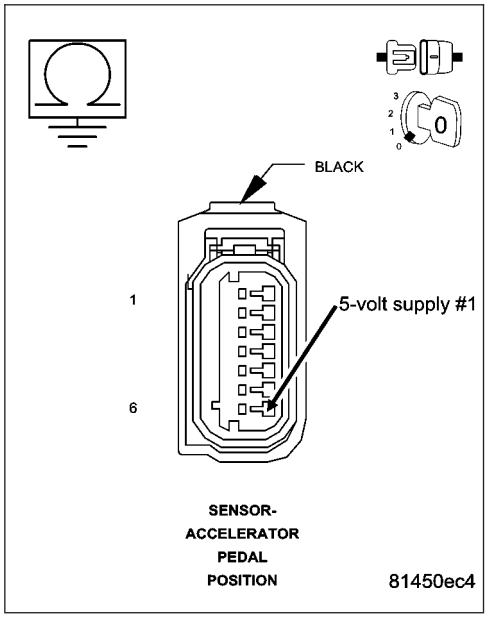

P2122-PPS 1 VOLTAGE TOO LOW (CONTINUED)

6. (F855) APPS NO. 1 5-VOLT SUPPLY CIRCUIT SHORTED TO OTHER CIRCUITS

Measure the resistance between the (F855) APPS No. 1 5-volt supply circuit at the sensor harness connector and all other circuits in the ECM harness connector.

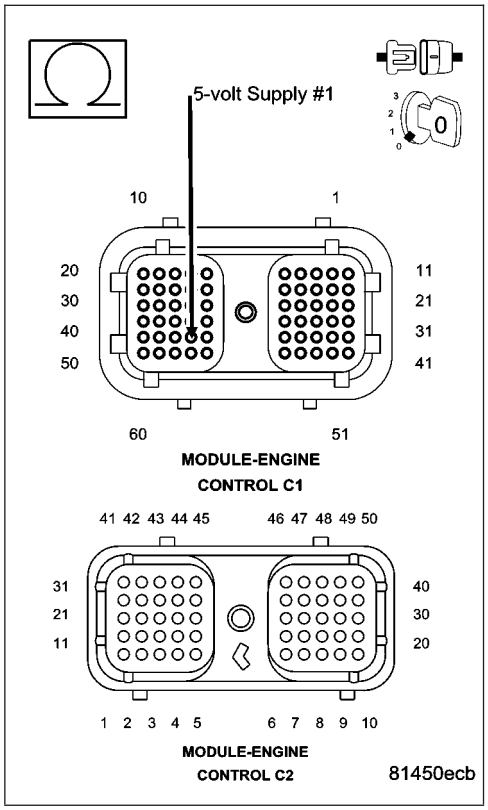

Is the resistance greater than 100 k ohms?

Yes >> Go To 7

No >> Repair the (F855) APPS No. 1 5-volt supply circuit shorted to other circuits.

Perform POWERTRAIN VERIFICATION TEST VER - 1 (DIESEL). (Refer to 8 - ELECTRICAL/ELECTRONIC CONTROL MODULES/ENGINE CONTROL MODULE - DIAGNOSIS AND TESTING)

---

7. ECM

Reconnect the ECM harness connectors.

Turn the ignition on.

While monitoring with the scan tool, connect a jumper wire between the (K23) APPS No. 1 signal circuit at the sensor harness connector and the (F855) APPS No. 1 5-volt supply circuit at the sensor harness connector.

NOTE: With the sensor disconnected it is normal to have a APPS 1 and APPS 2 low voltage DTC set.

Did DTC P2123 set?

Yes >> Go To 8

No >> Replace and program the ECM in accordance with the Service Information.

Perform POWERTRAIN VERIFICATION TEST VER - 1 (DIESEL). (Refer to 8 - ELECTRICAL/ELECTRONIC CONTROL MODULES/ENGINE CONTROL MODULE - DIAGNOSIS AND TESTING)

P2122-PPS 1 VOLTAGE TOO LOW (CONTINUED)

8. APPS

Reconnect the APPS harness connector.

Monitor the APPS 1 and APPS 2 voltage with the scan tool while depressing the throttle pedal.

Is the voltage transition shown on the scan tool smooth while depressing the throttle and is the volta

Yes >> Refer to the INTERMITTENT CONDITION Symptom (Diagnostic Procedure). (Refer to 9 - ENGINE - DIAGNOSIS AND TESTING)

No >> Replace the APPS.
Perform POWERTRAIN VERIFICATION TEST VER - 1 (DIESEL). (Refer to 8 - ELECTRICAL/ELECTRONIC CONTROL MODULES/ENGINE CONTROL MODULE - DIAGNOSIS AND TESTING)

P2123-PPS 1 VOLTAGE TOO HIGH

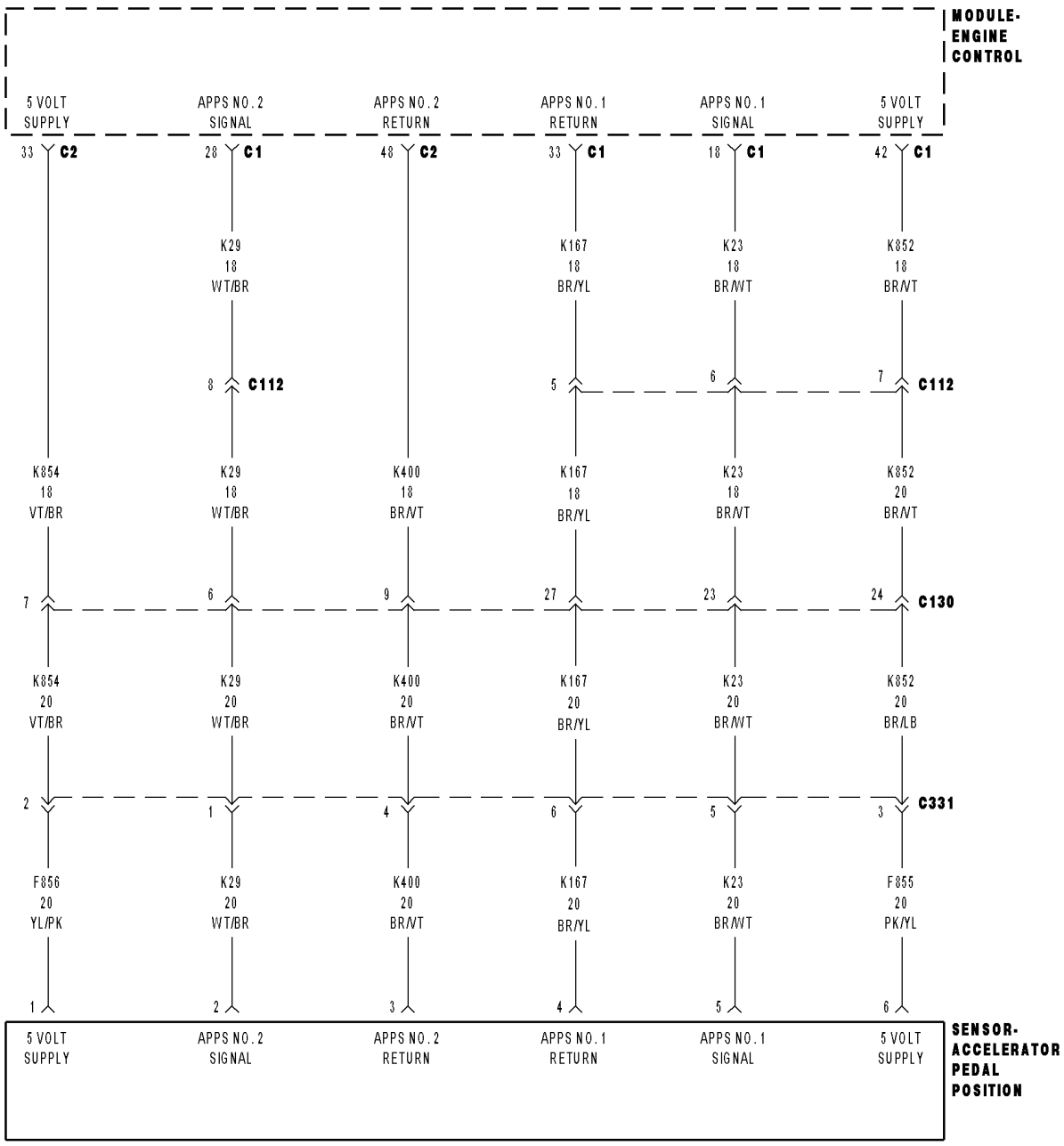

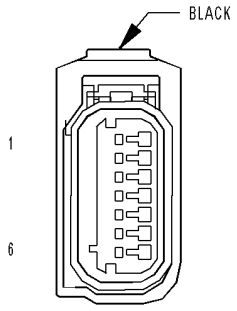

SENSOR-ACCELERATOR PEDAL POSITION

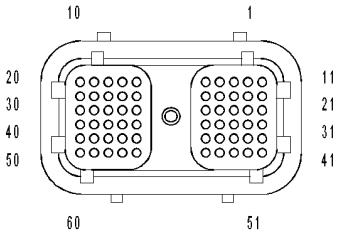

MODULE-ENGINE CONTROL C1

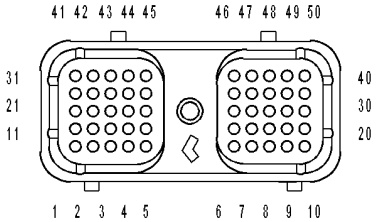

MODULE-ENGINE CONTROL C2

81450680

P2123-PPS 1 VOLTAGE TOO HIGH (CONTINUED)

For the Engine circuit diagram (Refer to 9 - ENGINE - SCHEMATICS AND DIAGRAMS)

For a complete wiring diagram **Refer to Section 8W**.

- **When Monitored:**
  While the key is on and during engine operation.
- **Set Condition:**
  The APPS signal circuit voltage at the ECM goes above 4.24 volts for more than 2 seconds.

Possible Causes
(K167) APPS NO. 1 RETURN CIRCUIT OPEN
(K23) APPS NO. 1 SIGNAL CIRCUIT SHORTED TO (K852) APPS NO. 1 5-VOLT SUPPLY
(K23) APPS SIGNAL CIRCUIT SHORTED TO ANOTHER CIRCUIT
ECM
APPS
INTERMITTENT CONDITION

Always perform the Pre-Diagnostic Troubleshooting procedure before proceeding. (Refer to 9 - ENGINE - DIAGNOSIS AND TESTING)

Diagnostic Test

1. (K167) APPS NO. 1 RETURN CIRCUIT OPEN

Turn the ignition off.

Disconnect the APPS harness connector.

Disconnect the ECM harness connectors.

NOTE: Check connectors - Clean/repair as necessary.

Measure the resistance on the (K167) APPS No. 1 return circuit between the sensor harness connector and the ECM harness connector.

Is the resistance less than 10 ohms?

Yes >> Go To 2

No >> Repair the (K167) APPS No. 1 return circuit open.
Perform POWERTRAIN VERIFICATION TEST VER - 1 (DIESEL). (Refer to 8 - ELECTRICAL/ELECTRONIC CONTROL MODULES/ENGINE CONTROL MODULE - DIAGNOSIS AND TESTING)

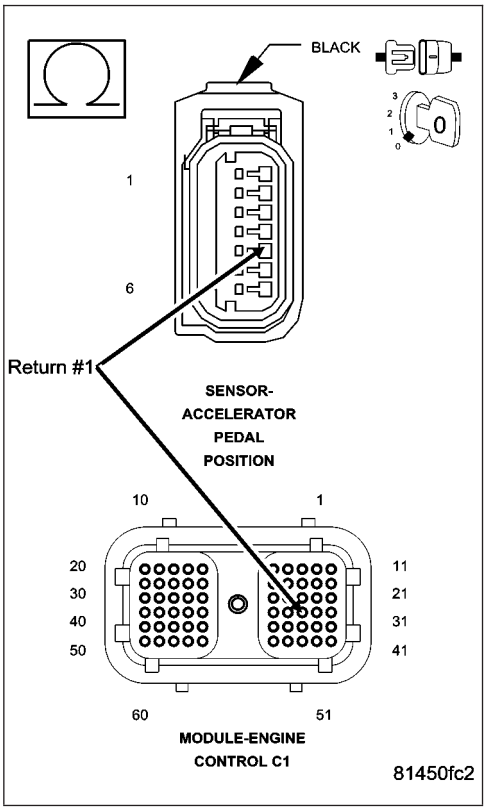

P2123-PPS 1 VOLTAGE TOO HIGH (CONTINUED)

2. (K23) APPS NO. 1 SIGNAL CIRCUIT SHORTED TO (K852) APPS NO. 1 5-VOLT SUPPLY

Measure the resistance between the (K23) APPS No. 1 signal circuit in the sensor harness connector and the (K852) APPS No. 1 5-volt supply circuit in the sensor harness connector.

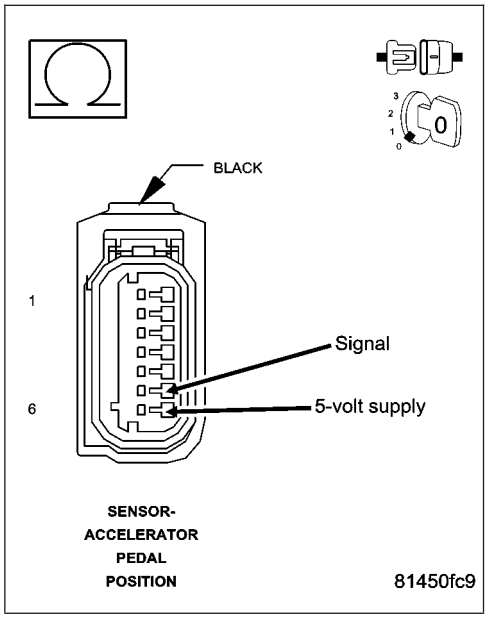

Is the resistance greater than 100 K ohms?

Yes >> Go To 3

No >> Repair the (K23) APPS No. 1 signal circuit shorted to the (K852) 5-volt supply circuit.

Perform POWERTRAIN VERIFICATION TEST VER - 1 (DIESEL). (Refer to 8 - ELECTRICAL/ELECTRONIC CONTROL MODULES/ENGINE CONTROL MODULE - DIAGNOSIS AND TESTING)

3. (K23) APPS SIGNAL CIRCUIT SHORTED TO ANOTHER CIRCUIT

Measure the resistance between the APPS No. 1 signal circuit at the ECM harness connector and all other circuits in the ECM harness connector.

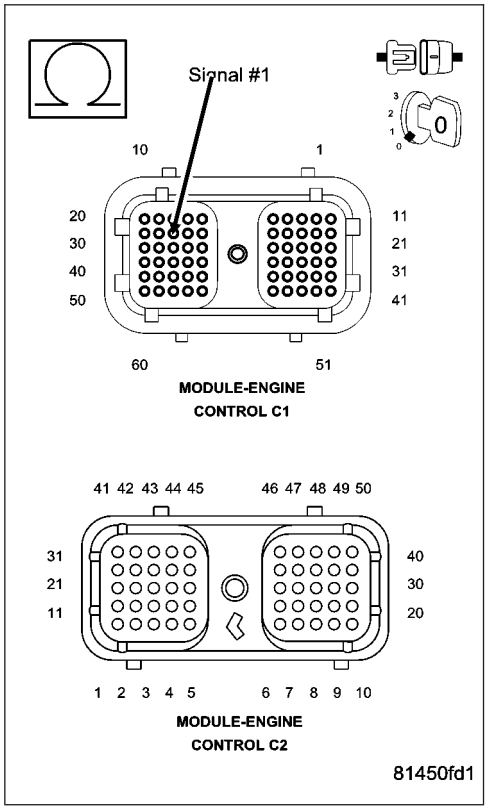

Is the resistance greater than 100 k ohms?

Yes >> Go To 4

No >> Repair the (K23) APPS No. 1 signal circuit shorted to another circuit in the engine harness.

Perform POWERTRAIN VERIFICATION TEST VER - 1 (DIESEL). (Refer to 8 - ELECTRICAL/ELECTRONIC CONTROL MODULES/ENGINE CONTROL MODULE - DIAGNOSIS AND TESTING)

P2123-PPS 1 VOLTAGE TOO HIGH (CONTINUED)

4. ECM

Reconnect the ECM harness connectors.

Reconnect the APPS harness connector.

While monitoring with the scan tool, disconnect the sensor connector.

Did a APPS No. 1 and APPS No. 2 voltage too low DTC set?

Yes >> Go To 5

No >> Replace and program the ECM in accordance with the Service Information.
Perform POWERTRAIN VERIFICATION TEST VER - 1 (DIESEL). (Refer to 8 - ELECTRICAL/ELECTRONIC CONTROL MODULES/ENGINE CONTROL MODULE - DIAGNOSIS AND TESTING)

---

5. APPS

Reconnect the APPS harness connector.

Monitor the APPS No. 1 and APPS No. 2 voltage with the scan tool while depressing the throttle pedal.

Is the voltage transition shown on the scan tool smooth while depressing the throttle and is the voltage from APPS 1 twice as much as from APPS2?

Yes >> Refer to the INTERMITTENT CONDITION Symptom (Diagnostic Procedure). (Refer to 9 - ENGINE - DIAGNOSIS AND TESTING)

No >> Replace the APPS.
Perform POWERTRAIN VERIFICATION TEST VER - 1 (DIESEL). (Refer to 8 - ELECTRICAL/ELECTRONIC CONTROL MODULES/ENGINE CONTROL MODULE - DIAGNOSIS AND TESTING)

P2127-PPS 2 VOLTAGE TOO LOW

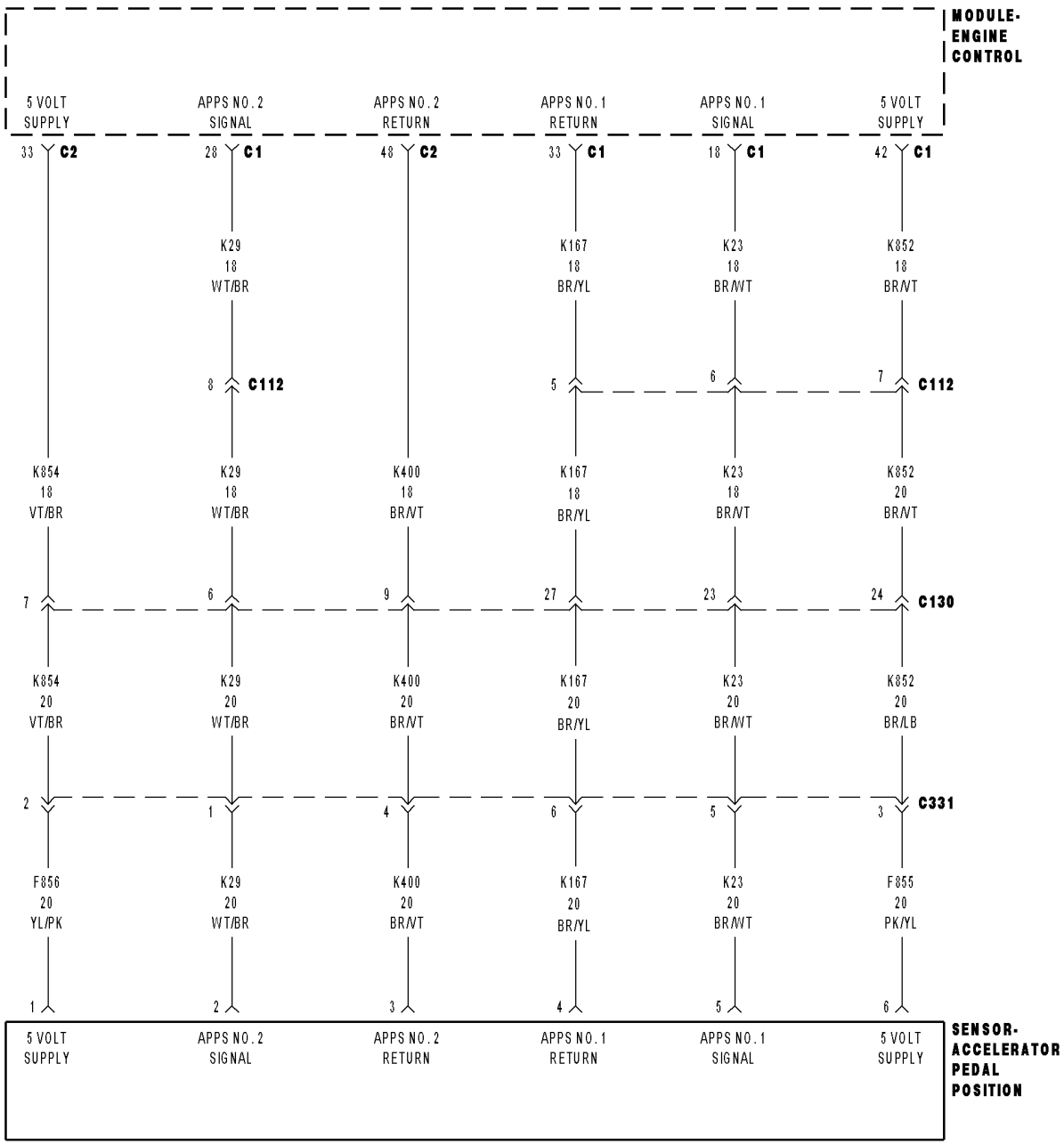

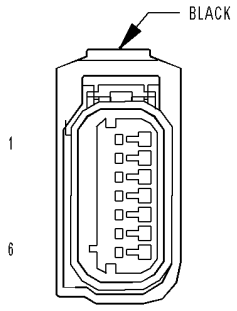

SENSOR-ACCELERATOR PEDAL POSITION

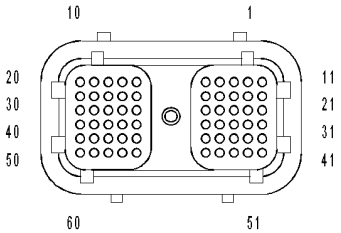

MODULE-ENGINE CONTROL C1

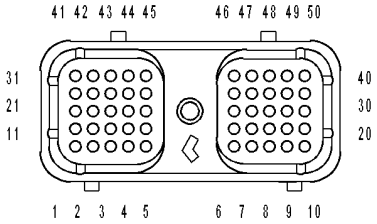

MODULE-ENGINE CONTROL C2

81450680

P2127-PPS 2 VOLTAGE TOO LOW (CONTINUED)

For the Engine circuit diagram (Refer to 9 - ENGINE - SCHEMATICS AND DIAGRAMS)

For a complete wiring diagram **Refer to Section 8W**.

- **When Monitored:**
  While the key is on and during engine operation.
- **Set Condition:**
  The APPS circuit voltage at the ECM goes below 0.13 volt for more than 2 seconds.

Possible Causes
APPS
ECM
(K29) APPS NO. 2 SIGNAL CIRCUIT OPEN
(F856) APPS NO. 2 5-VOLT SUPPLY OPEN
(K29) APPS NO. 2 SIGNAL CIRCUIT SHORTED TO GROUND
(K29) APPS NO. 2 SIGNAL CIRCUIT SHORTED TO OTHER CIRCUITS
(F856) APPS NO. 2 5-VOLT SUPPLY CIRCUIT SHORTED TO GROUND
(F856) APPS NO. 2 5-VOLT SUPPLY CIRCUIT SHORTED TO OTHER CIRCUITS
INTERMITTENT CONDITION

Always perform the Pre-Diagnostic Troubleshooting procedure before proceeding. (Refer to 9 - ENGINE - DIAGNOSIS AND TESTING)

Diagnostic Test

1. (K29) APPS NO. 2 SIGNAL CIRCUIT OPEN

Turn the ignition off.

Disconnect the ECM harness connectors.

Disconnect the APPS harness connector.

NOTE: Check connectors - Clean/repair as necessary.

Measure the resistance of the (K29) APPS No. 2 signal circuit between the APPS sensor harness connector and the ECM harness connector.

Is the resistance less than 10 ohms?

Yes >> Go To 2

No >> Repair the (K29) APPS No. 2 signal circuit open.
Perform POWERTRAIN VERIFICATION TEST VER - 1 (DIESEL). (Refer to 8 - ELECTRICAL/ELECTRONIC CONTROL MODULES/ENGINE CONTROL MODULE - DIAGNOSIS AND TESTING)

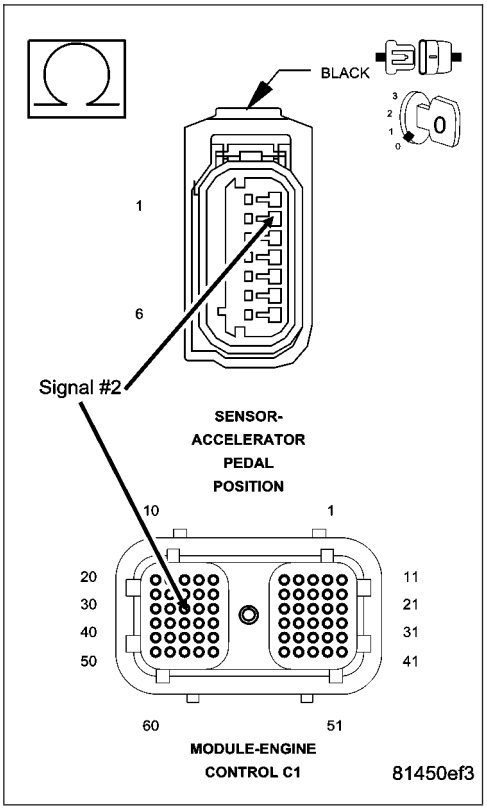

P2127-PPS 2 VOLTAGE TOO LOW (CONTINUED)

2. (F856) APPS NO. 2 5-VOLT SUPPLY OPEN

Measure the resistance of the (F856) APPS No. 2 5-volt supply circuit between the APPS sensor harness connector and the ECM harness connector.

Is the resistance less than 10 ohms?

Yes >> Go To 3

No >> Repair the (F856) APPS No. 2 5-volt supply open.
Perform POWERTRAIN VERIFICATION TEST VER - 1 (DIESEL). (Refer to 8 - ELECTRICAL/ELECTRONIC CONTROL MODULES/ENGINE CONTROL MODULE - DIAGNOSIS AND TESTING)

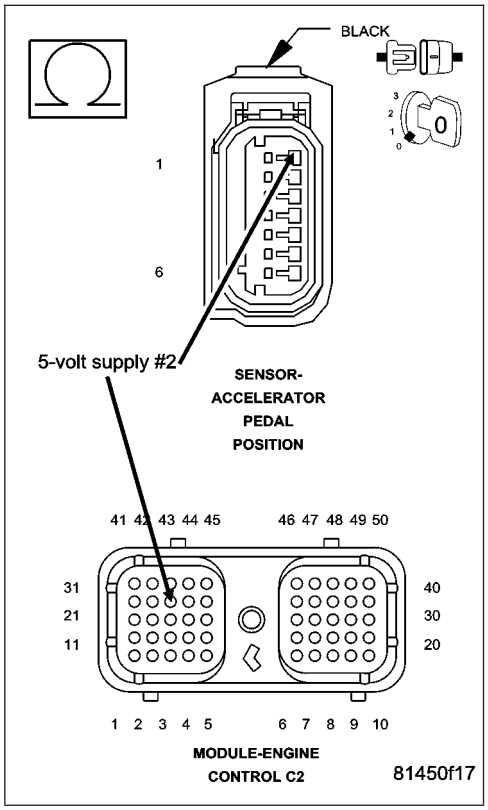

3. (K29) APPS NO. 2 SIGNAL CIRCUIT SHORTED TO GROUND

Measure the resistance between the (K29) APPS No. 2 signal circuit at the sensor harness connector and battery negative.

Is the resistance greater than 100 k ohms?

Yes >> Go To 4

No >> Repair the (K29) APPS No. 2 signal circuit shorted to ground.
Perform POWERTRAIN VERIFICATION TEST VER - 1 (DIESEL). (Refer to 8 - ELECTRICAL/ELECTRONIC CONTROL MODULES/ENGINE CONTROL MODULE - DIAGNOSIS AND TESTING)

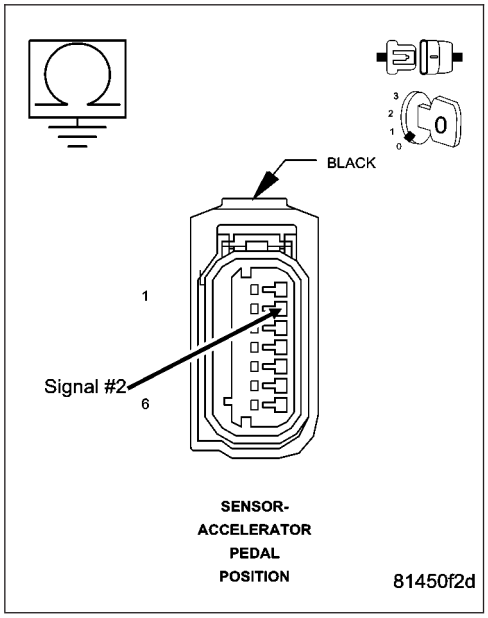

P2127-PPS 2 VOLTAGE TOO LOW (CONTINUED)

4. (K29) APPS NO. 2 SIGNAL CIRCUIT SHORTED TO OTHER CIRCUITS

Measure the resistance between the (K29) APPS No. 2 signal circuit at the ECM harness connector and all other circuits in the ECM harness connectors.

Is the resistance greater than 100 k ohms?

Yes >> Go To 5

No >> Repair the (K29) APPS No. 2 signal circuit shorted to other circuits.

Perform POWERTRAIN VERIFICATION TEST VER - 1 (DIESEL). (Refer to 8 - ELECTRICAL/ELECTRONIC CONTROL MODULES/ENGINE CONTROL MODULE - DIAGNOSIS AND TESTING)

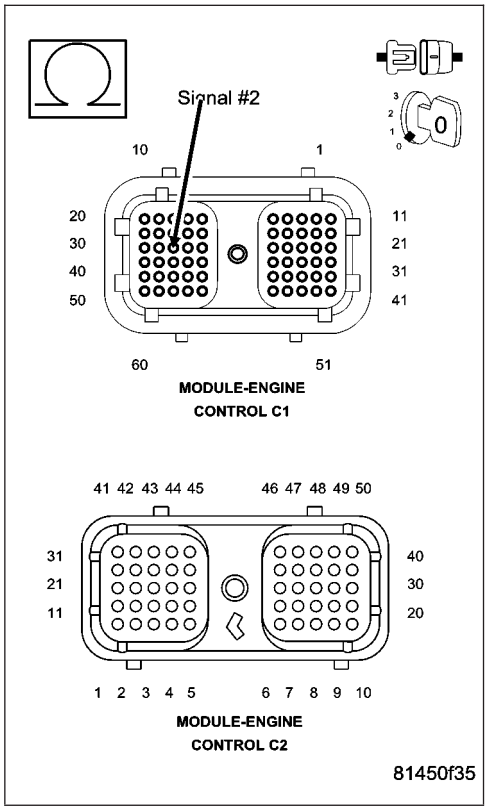

5. (F856) APPS NO. 2 5-VOLT SUPPLY CIRCUIT SHORTED TO GROUND

Measure the resistance between the (F856) APPS No. 2 5-volt supply circuit at the sensor harness connector and battery negative.

Is the resistance greater than 100 k ohms?

Yes >> Go To 6

No >> Repair the (F856) APPS No. 2 5-volt supply circuit shorted to ground.

Perform POWERTRAIN VERIFICATION TEST VER - 1 (DIESEL). (Refer to 8 - ELECTRICAL/ELECTRONIC CONTROL MODULES/ENGINE CONTROL MODULE - DIAGNOSIS AND TESTING)

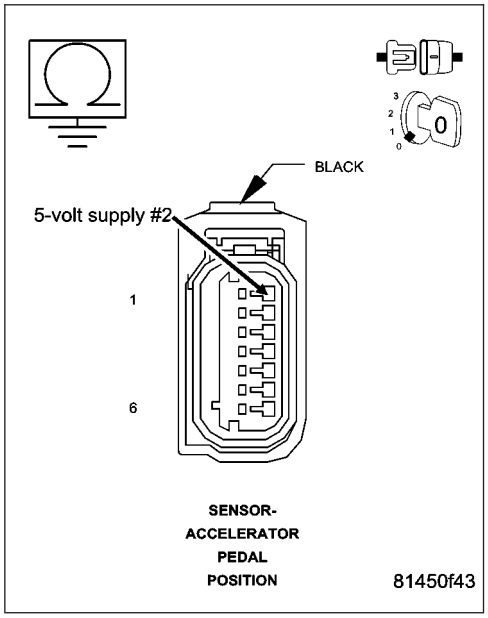

P2127-PPS 2 VOLTAGE TOO LOW (CONTINUED)

6. (F856) APPS NO. 2 5-VOLT SUPPLY CIRCUIT SHORTED TO OTHER CIRCUITS

Measure the resistance between the (F856) APPS No. 2 5-volt supply circuit at the sensor harness connector and all other circuits in the ECM harness connector.

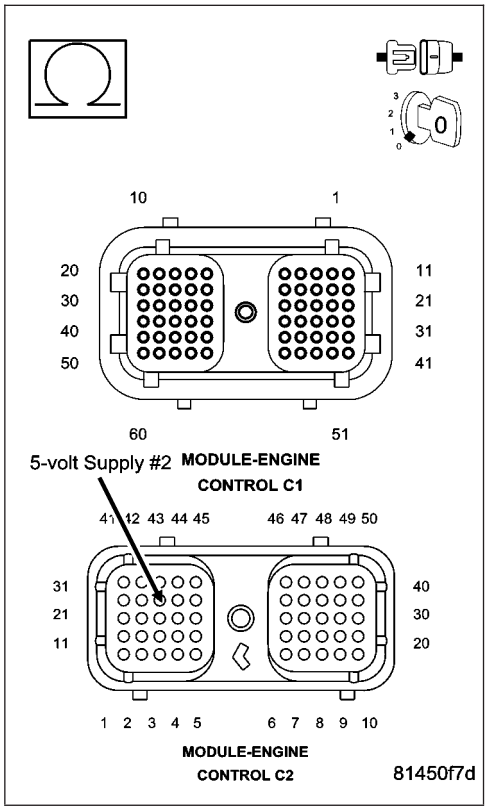

Is the resistance greater than 100 k ohms?

Yes >> Go To 7

No >> Repair the (F856) APPS No. 2 5-volt supply circuit shorted to other circuits.

Perform POWERTRAIN VERIFICATION TEST VER - 1 (DIESEL). (Refer to 8 - ELECTRICAL/ELECTRONIC CONTROL MODULES/ENGINE CONTROL MODULE - DIAGNOSIS AND TESTING)

---

7. ECM

Reconnect the ECM harness connectors.

Turn the ignition on.

While monitoring with the scan tool, connect a jumper wire between the (K29) APPS No. 2 signal circuit at the sensor harness connector and the (F856) APPS No. 2 5-volt supply circuit at the sensor harness connector.

NOTE: With the sensor disconnected it is normal to have a APPS 1 and APPS 2 low voltage DTC set.

Did DTC P2128 set?

Yes >> Go To 8

No >> Replace and program the ECM in accordance with the Service Information.

Perform POWERTRAIN VERIFICATION TEST VER - 1 (DIESEL). (Refer to 8 - ELECTRICAL/ELECTRONIC CONTROL MODULES/ENGINE CONTROL MODULE - DIAGNOSIS AND TESTING)

P2127-PPS 2 VOLTAGE TOO LOW (CONTINUED)

8. APPS

Reconnect the APPS harness connector.

Monitor the APPS 1 and APPS 2 voltage with the scan tool while depressing the throttle pedal.

Is the voltage transition shown on the scan tool smooth while depressing the throttle and is the voltage swing smooth?

Yes >> Refer to the INTERMITTENT CONDITION Symptom (Diagnostic Procedure). (Refer to 9 - ENGINE - DIAGNOSIS AND TESTING)

No >> Replace the APPS.
Perform POWERTRAIN VERIFICATION TEST VER - 1 (DIESEL). (Refer to 8 - ELECTRICAL/ELECTRONIC CONTROL MODULES/ENGINE CONTROL MODULE - DIAGNOSIS AND TESTING)

P2128-PPS 2 VOLTAGE TOO HIGH

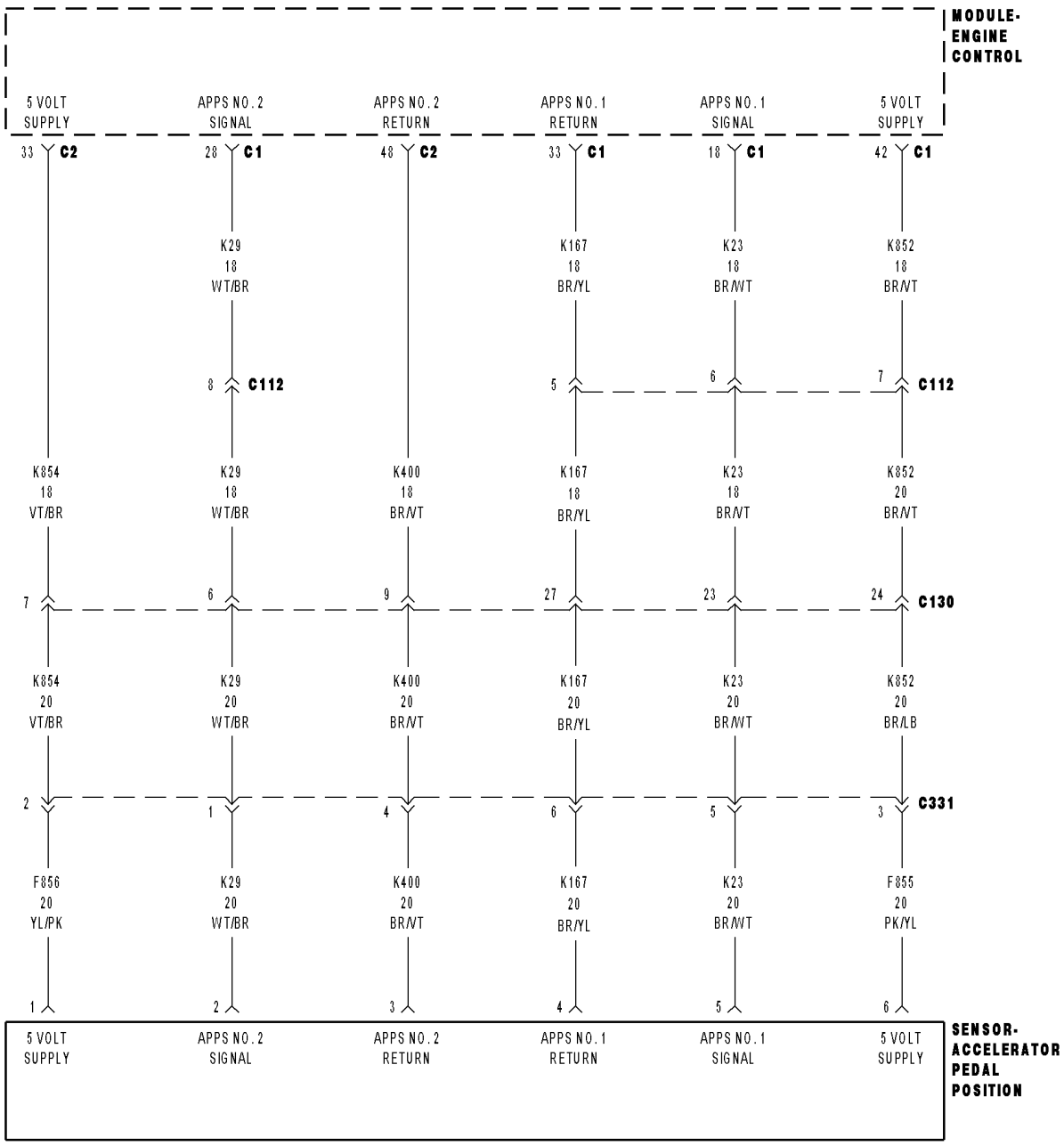

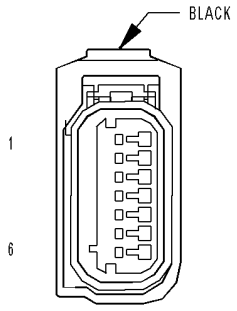

SENSOR-ACCELERATOR PEDAL POSITION

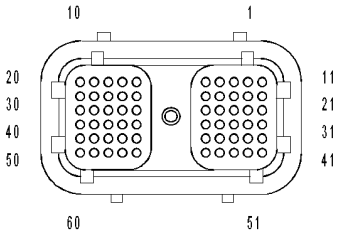

MODULE-ENGINE CONTROL C1

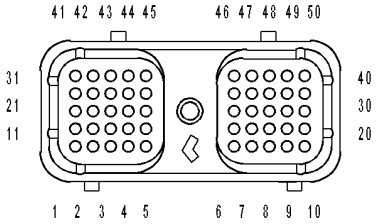

MODULE-ENGINE CONTROL C2

81450680

P2128-PPS 2 VOLTAGE TOO HIGH (CONTINUED)

For the Engine circuit diagram (Refer to 9 - ENGINE - SCHEMATICS AND DIAGRAMS)

For a complete wiring diagram **Refer to Section 8W**.

- **When Monitored:**
  While the key is on and during engine operation.
- **Set Condition:**
  The APPS signal circuit voltage at the ECM goes above 4.24 volts for more than 2 seconds.

Possible Causes
(K400) APPS NO. 1 RETURN CIRCUIT OPEN
(K29) APPS NO. 2 SIGNAL CIRCUIT SHORTED TO (K854) APPS NO. 2 5-VOLT SUPPLY
(K29) APPS SIGNAL CIRCUIT SHORTED TO ANOTHER CIRCUIT
ECM
APPS
INTERMITTENT CONDITION

Always perform the Pre-Diagnostic Troubleshooting procedure before proceeding. (Refer to 9 - ENGINE - DIAGNOSIS AND TESTING)

Diagnostic Test

1. (K400) APPS NO. 2 RETURN CIRCUIT OPEN

Turn the ignition off.

Disconnect the APPS harness connector.

Disconnect the ECM harness connectors.

NOTE: Check connectors - Clean/repair as necessary.

Measure the resistance on the (K400) APPS No. 2 return circuit between the sensor harness connector and the ECM harness connector.

Is the resistance less than 10 ohms?

Yes >> Go To 2

No >> Repair the (K400) APPS No. 2 return circuit open.
Perform POWERTRAIN VERIFICATION TEST VER - 1 (DIESEL). (Refer to 8 - ELECTRICAL/ELECTRONIC CONTROL MODULES/ENGINE CONTROL MODULE - DIAGNOSIS AND TESTING)

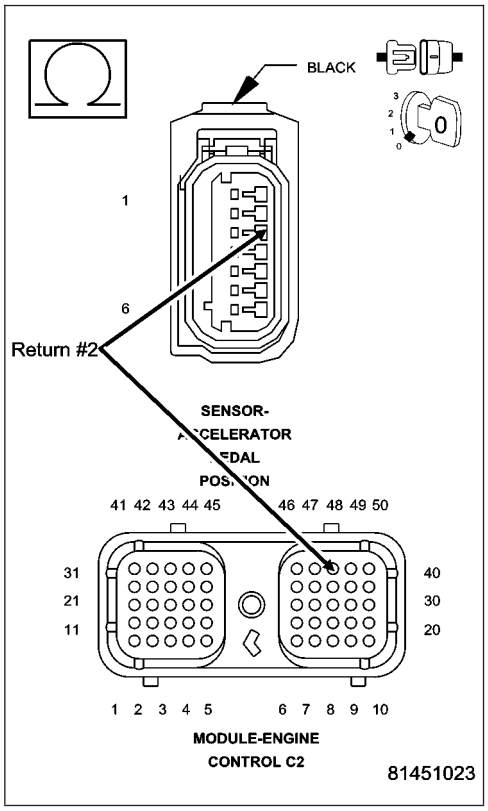

P2128-PPS 2 VOLTAGE TOO HIGH (CONTINUED)

2. (K29) APPS NO. 2 SIGNAL CIRCUIT SHORTED TO (F856)APPS NO. 1 5-VOLT SUPPLY

Measure the resistance between the (K29) APPS No. 2 signal circuit in the sensor harness connector and the (F856)APPS No. 2 5-volt supply circuit in the sensor harness connector.

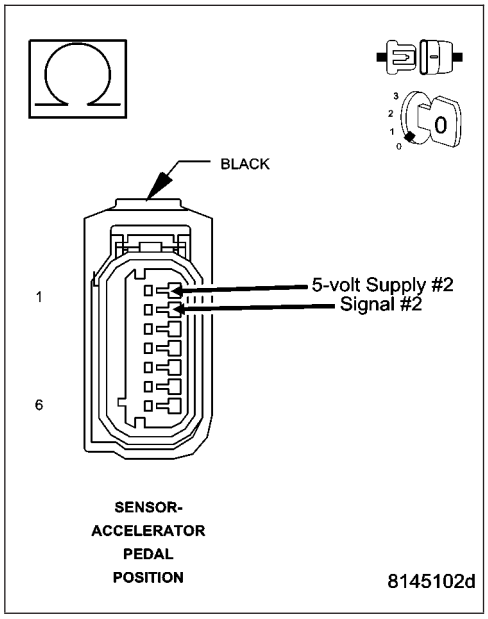

Is the resistance greater than 100 K ohms?

Yes >> Go To 3

No >> Repair the (K29) APPS No. 2 signal circuit shorted to the (F856)5-volt supply circuit.

Perform POWERTRAIN VERIFICATION TEST VER - 1 (DIESEL). (Refer to 8 - ELECTRICAL/ELECTRONIC CONTROL MODULES/ENGINE CONTROL MODULE - DIAGNOSIS AND TESTING)

3. (K29) APPS SIGNAL CIRCUIT SHORTED TO ANOTHER CIRCUIT

Measure the resistance between the APPS No. 2 signal circuit at the ECM harness connector and all other circuits in the ECM harness connector.

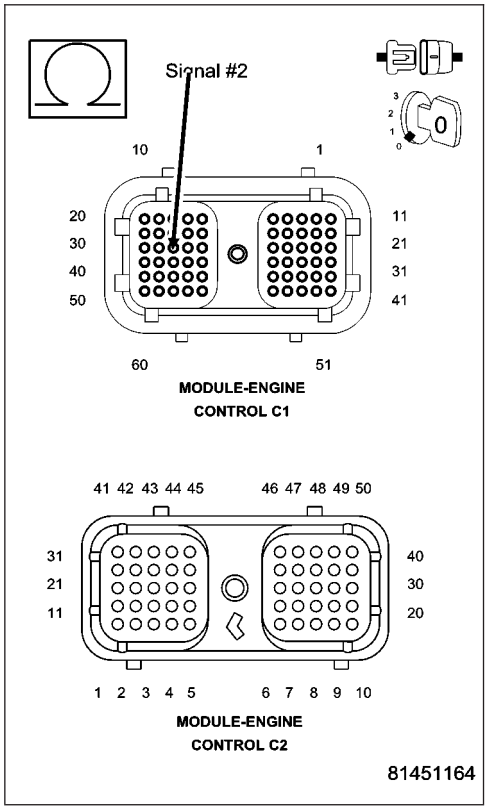

Is the resistance greater than 100 k ohms?

Yes >> Go To 4

No >> Repair the (K29) APPS No. 2 signal circuit shorted to another circuit in the engine harness.

Perform POWERTRAIN VERIFICATION TEST VER - 1 (DIESEL). (Refer to 8 - ELECTRICAL/ELECTRONIC CONTROL MODULES/ENGINE CONTROL MODULE - DIAGNOSIS AND TESTING)

P2128-PPS 2 VOLTAGE TOO HIGH (CONTINUED)

4. ECM

Reconnect the ECM harness connectors.

Reconnect the APPS harness connector.

While monitoring with the scan tool, disconnect the sensor connector.

Did a APPS No. 1 and APPS No. 2 voltage too low DTC set?

Yes >> Go To 5

No >> Replace and program the ECM in accordance with the Service Information.
Perform POWERTRAIN VERIFICATION TEST VER - 1 (DIESEL). (Refer to 8 - ELECTRICAL/ELECTRONIC CONTROL MODULES/ENGINE CONTROL MODULE - DIAGNOSIS AND TESTING)

---

5. APPS

Reconnect the APPS harness connector.

Monitor the APPS No. 1 and APPS No. 2 voltage with the scan tool while depressing the throttle pedal.

Is the voltage transition shown on the scan tool smooth while depressing the throttle and is the voltage from APPS 1 twice as much as from APPS2

Yes >> Refer to the INTERMITTENT CONDITION Symptom (Diagnostic Procedure). (Refer to 9 - ENGINE - DIAGNOSIS AND TESTING)

No >> Replace the APPS.
Perform POWERTRAIN VERIFICATION TEST VER - 1 (DIESEL). (Refer to 8 - ELECTRICAL/ELECTRONIC CONTROL MODULES/ENGINE CONTROL MODULE - DIAGNOSIS AND TESTING)

P2146-BANK 1 (CYLINDERS 1-3) SHORTED HIGH OR LOW

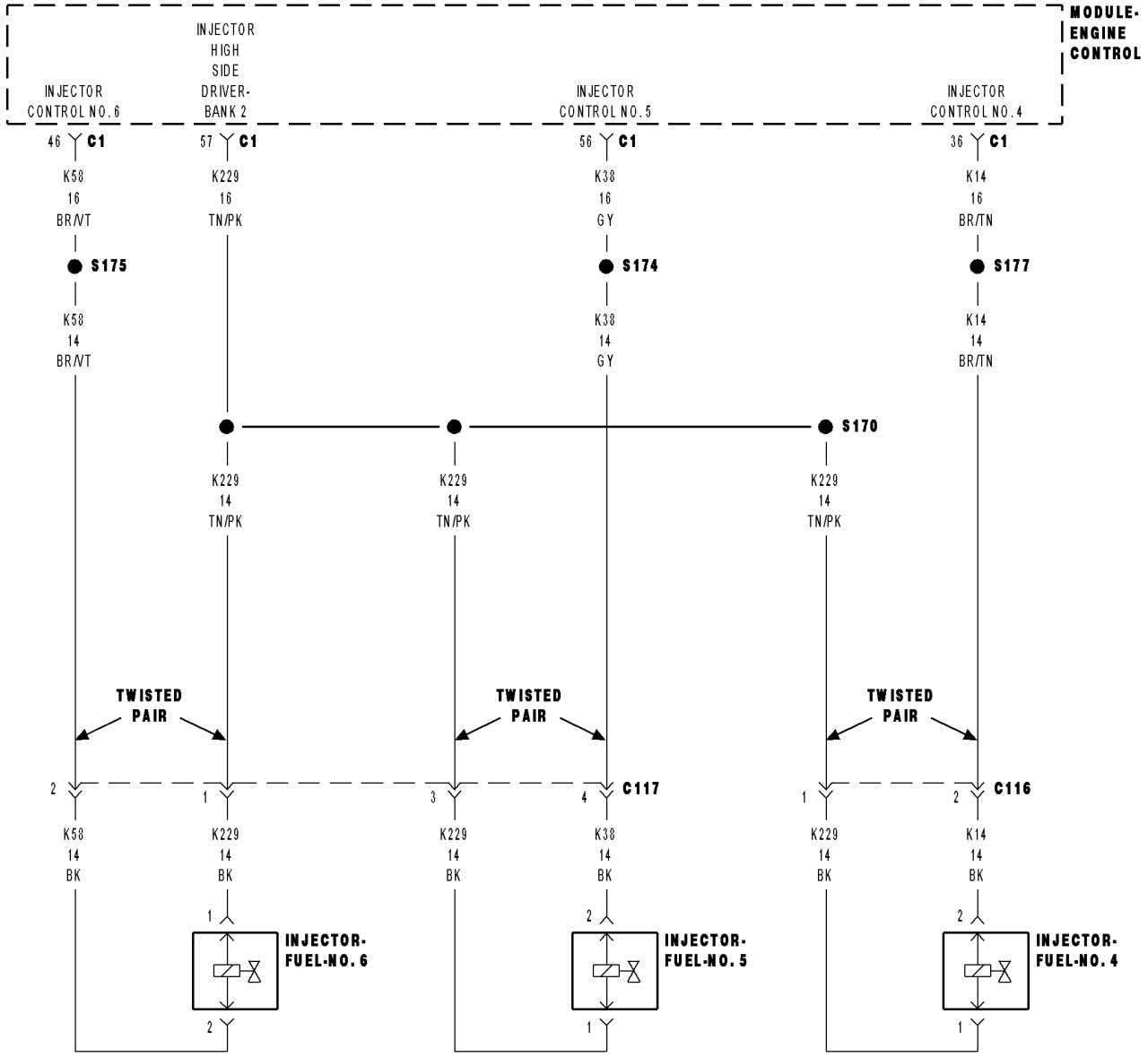

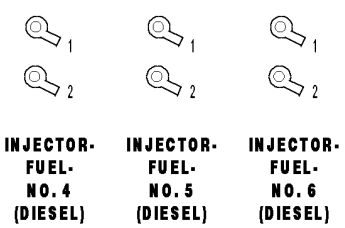

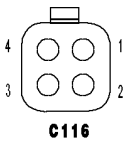

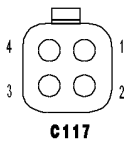





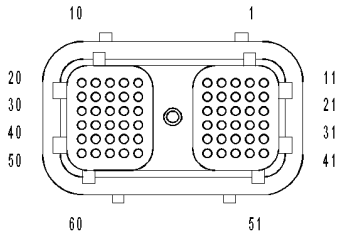

81453955

P2146-BANK 1 (CYLINDERS 1-3) SHORTED HIGH OR LOW (CONTINUED)

For the Engine circuit diagram (Refer to 9 - ENGINE - SCHEMATICS AND DIAGRAMS)

For a complete wiring diagram **Refer to Section 8W**.

- **When Monitored:**
  While the engine is running.
- **Set Condition:**
  A circuit failure detected at cylinders 1,2, or 3 or any combination of cylinders 1,2, or 3.

Possible Causes
OTHER DTC'S
HIGH SIDE DRIVER CIRCUIT OPEN
LOW SIDE DRIVER CIRCUIT OPEN
HIGH SIDE DRIVER SHORTED TO LOW SIDE DRIVER
HIGH SIDE DRIVERS SHORTED LOW
LOW SIDE DRIVER CIRCUIT SHORTED OTHER LOW SIDE DRIVER CIRCUIT
LOW SIDE DRIVERS SHORTED LOW
HIGH SIDE DRIVER SHORTED TO VOLTAGE
LOW SIDE DRIVER SHORTED TO VOLTAGE
LOW SIDE DRIVER CIRCUIT SHORTED IN INJECTOR HARNESS
INJECTOR
INJECTOR HARNESS
INTERMITTENT CONDITION
ECM

Always perform the Pre-Diagnostic Troubleshooting procedure before proceeding. (Refer to 9 - ENGINE - DIAGNOSIS AND TESTING)

Diagnostic Test

1. OTHER DTC'S

With the scan tool, read DTCs.

Do you have any combination of DTC's P0201, P0202, or P0203?

Yes >> Repair other DTC's first.
Perform POWERTRAIN VERIFICATION TEST VER - 1 (DIESEL). (Refer to 8 - ELECTRICAL/ELECTRONIC CONTROL MODULES/ENGINE CONTROL MODULE - DIAGNOSIS AND TESTING)

No >> Go To 2

P2146-BANK 1 (CYLINDERS 1-3) SHORTED HIGH OR LOW (CONTINUED)

2. HIGH SIDE DRIVER CIRCUIT OPEN

Turn the ignition off.

Disconnect the ECM harness connectors.

Disconnect the Injector 1-3 harness connector.

NOTE: Check connectors - Clean/repair as necessary.

Measure the resistance of the injector high side driver circuit between the Bank 1 high side driver circuit in the ECM harness connector and the high side driver circuit in the injector harness connectors for cylinders 1-3.

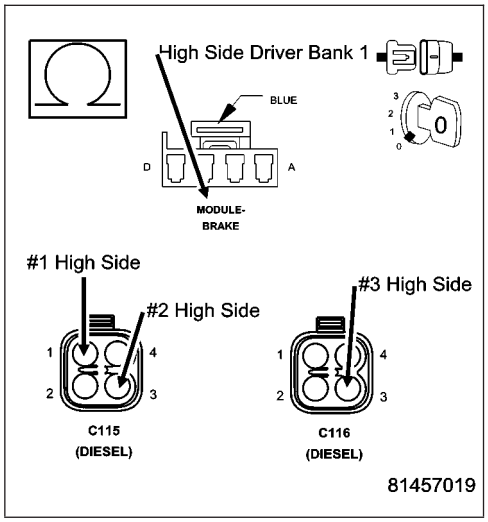

Is the resistance less than 10 Ohms?

Yes >> Go To 3

No >> Repair the open high side driver circuit from ECM harness connector to the Injector harness connector.

Perform POWERTRAIN VERIFICATION TEST VER - 1 (DIESEL). (Refer to 8 - ELECTRICAL/ELECTRONIC CONTROL MODULES/ENGINE CONTROL MODULE - DIAGNOSIS AND TESTING)

---

3. LOW SIDE DRIVER CIRCUIT OPEN

Measure the resistance of the #1,#2, and #3 injector low side driver circuits between the ECM harness connector and the injector harness connectors.

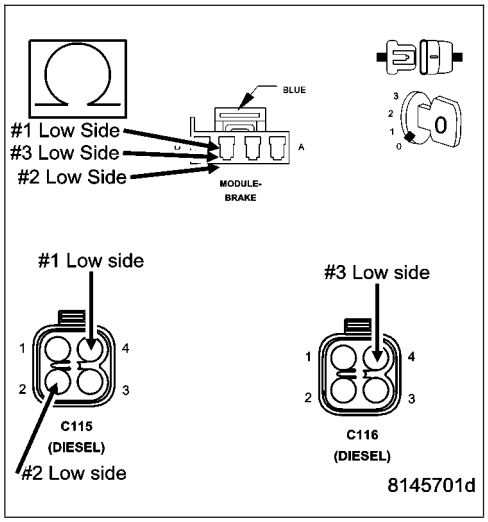

Is the resistance less than 10 Ohms?

Yes >> Go To 4

No >> Repair the open low side driver circuit.

Perform POWERTRAIN VERIFICATION TEST VER - 1 (DIESEL). (Refer to 8 - ELECTRICAL/ELECTRONIC CONTROL MODULES/ENGINE CONTROL MODULE - DIAGNOSIS AND TESTING)

P2146-BANK 1 (CYLINDERS 1-3) SHORTED HIGH OR LOW (CONTINUED)

4. HIGH SIDE DRIVER SHORTED TO LOW SIDE DRIVER

Measure the resistance between the Bank 1 high side driver circuit at the ECM harness connector and the low side driver circuit for injectors 1-3 at the ECM harness connector.

Is the resistance more than 100k Ohms?

Yes >> Go To 5

No >> Repair the High side circuit shorted to the low side circuit. Perform POWERTRAIN VERIFICATION TEST VER - 1 (DIESEL). (Refer to 8 - ELECTRICAL/ELECTRONIC CONTROL MODULES/ENGINE CONTROL MODULE - DIAGNOSIS AND TESTING)

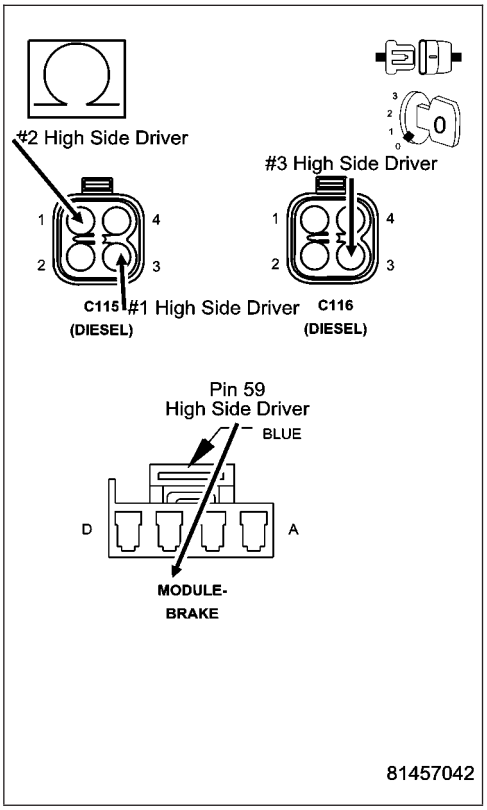

5. HIGH SIDE DRIVERS SHORTED LOW

Measure the resistance of the injector harness connector high side driver circuits to battery negative for injectors 1-3.

Is the resistance more than 100k Ohms?

Yes >> Go To 6

No >> Repair the High side driver shorted low in the harness. Perform POWERTRAIN VERIFICATION TEST VER - 1 (DIESEL). (Refer to 8 - ELECTRICAL/ELECTRONIC CONTROL MODULES/ENGINE CONTROL MODULE - DIAGNOSIS AND TESTING)

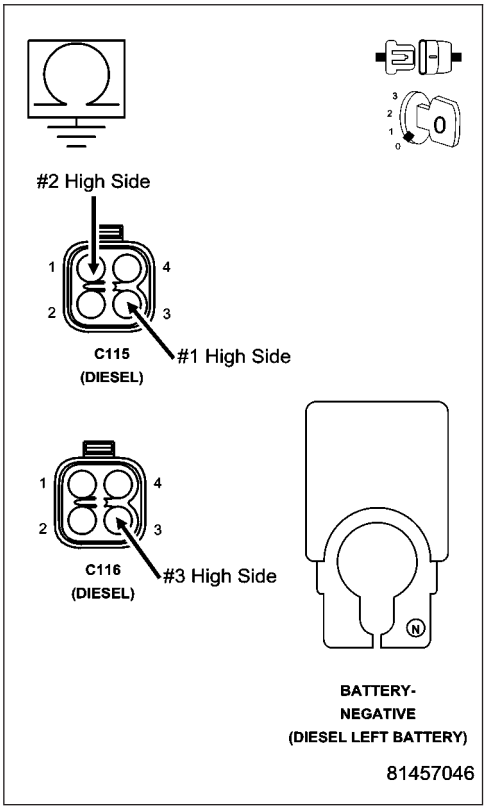

P2146-BANK 1 (CYLINDERS 1-3) SHORTED HIGH OR LOW (CONTINUED)

6. LOW SIDE DRIVERS SHORTED LOW

Measure the resistance of the injector harness connector Low side driver circuits to battery negative for injectors 1-3.

Is the resistance more than 100k Ohms?

Yes >> Go To 7

No >> Repair the Low side driver shorted low in the harness.
Perform POWERTRAIN VERIFICATION TEST VER - 1 (DIESEL). (Refer to 8 - ELECTRICAL/ELECTRONIC CONTROL MODULES/ENGINE CONTROL MODULE - DIAGNOSIS AND TESTING)

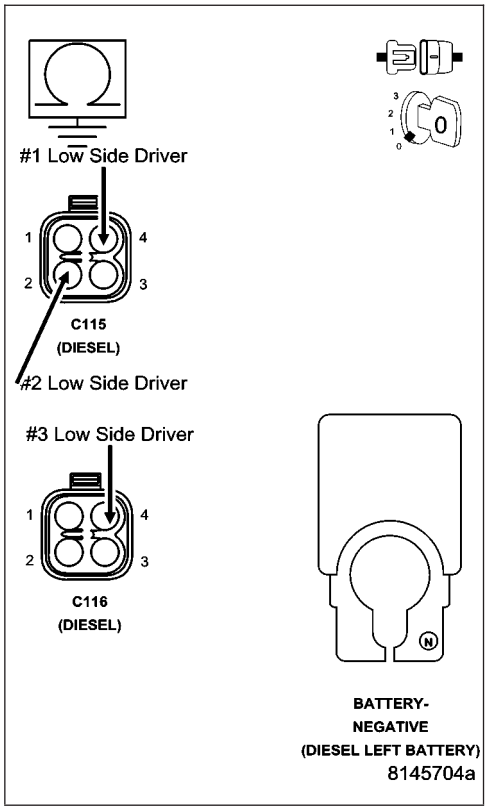

7. HIGH SIDE DRIVER SHORTED TO VOLTAGE

Measure the voltage between the high side driver circuit in the engine harness and battery negative.

Is the voltage less than 1 volt?

Yes >> Go To 8

No >> Repair the high side driver shorted to voltage.
Perform POWERTRAIN VERIFICATION TEST VER - 1 (DIESEL). (Refer to 8 - ELECTRICAL/ELECTRONIC CONTROL MODULES/ENGINE CONTROL MODULE - DIAGNOSIS AND TESTING)

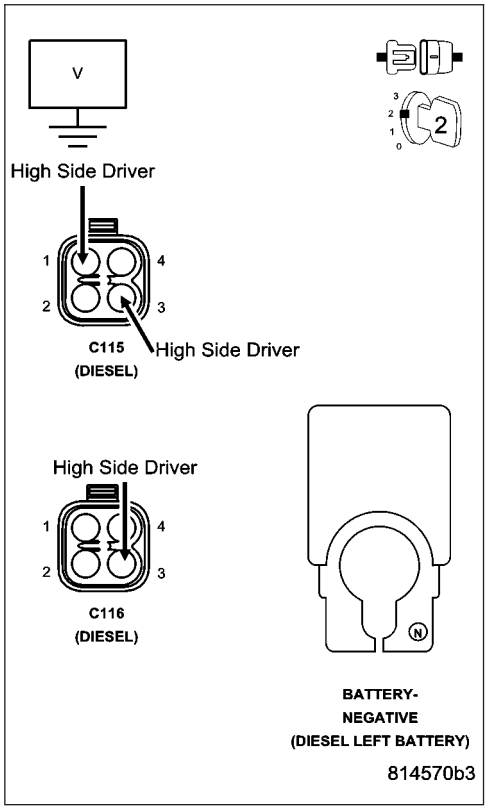

P2146-BANK 1 (CYLINDERS 1-3) SHORTED HIGH OR LOW (CONTINUED)

8. LOW SIDE DRIVER SHORTED TO VOLTAGE

Measure the voltage between the low side driver circuit in the engine harness and battery negative for cylinders 1-3.

Is the voltage less than 1 volt?

Yes >> Go To 9

No >> Repair the low side driver shorted to voltage.
Perform POWERTRAIN VERIFICATION TEST VER - 1 (DIESEL). (Refer to 8 - ELECTRICAL/ELECTRONIC CONTROL MODULES/ENGINE CONTROL MODULE - DIAGNOSIS AND TESTING)

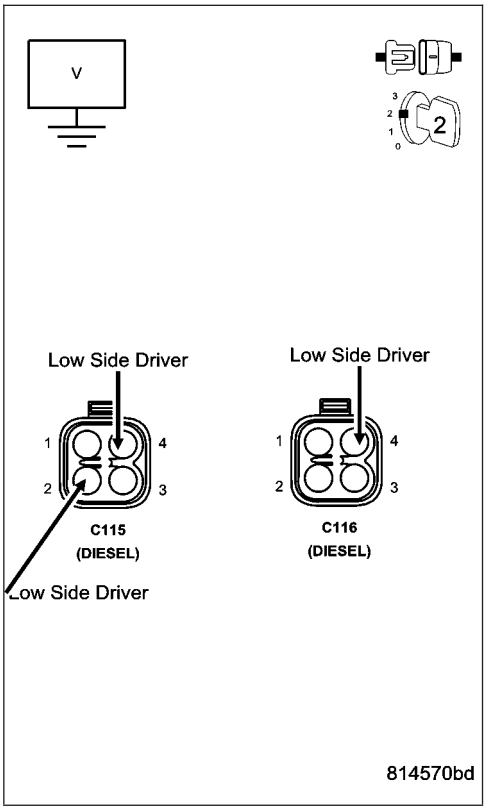

9. LOW SIDE DRIVER CIRCUIT SHORTED OTHER LOW SIDE DRIVER CIRCUIT

Measure the resistance of each of the Bank 1 low side driver circuit to all other Bank 1 low side driver circuits at the ECM harness connector.

Is the resistance greater than 100k ohms?

Yes >> Go To 10

No >> Repair Low side driver circuit shorted to other Low side driver circuit.
Perform POWERTRAIN VERIFICATION TEST VER - 1 (DIESEL). (Refer to 8 - ELECTRICAL/ELECTRONIC CONTROL MODULES/ENGINE CONTROL MODULE - DIAGNOSIS AND TESTING)

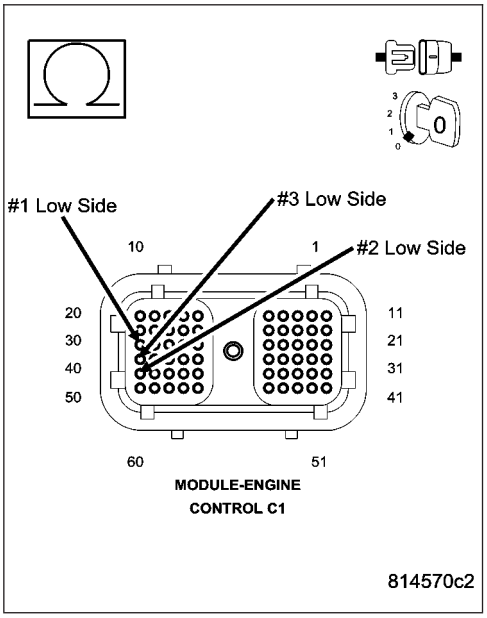

P2146-BANK 1 (CYLINDERS 1-3) SHORTED HIGH OR LOW (CONTINUED)

10. LOW SIDE DRIVER CIRCUIT SHORTED IN INJECTOR HARNESS

Reconnect the disconnected injector harness connector.

Measure the resistance of each of the Bank 1 low side driver circuit to all other Bank 1 low side driver circuit at the ECM harness connector.

Is the resistance greater than 100k ohms?

Yes >> Go To 11

No >> Replace the injector harness.
Perform POWERTRAIN VERIFICATION TEST VER - 1 (DIESEL). (Refer to 8 - ELECTRICAL/ELECTRONIC CONTROL MODULES/ENGINE CONTROL MODULE - DIAGNOSIS AND TESTING)

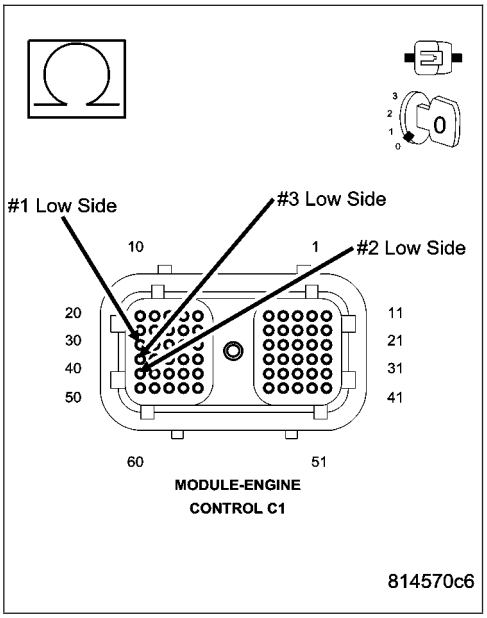

11. INJECTOR CIRCUITS SHORTED INSIDE ENGINE

Disconnect the injector through head harness connector.

Measure the resistance of each injector from the through head connector.

NOTE: Be sure to zero the ohm meter prior to checking the injector circuit.

Is the resistance greater than 0 ohms and less than 1 ohm?

Yes >> Go To 12

No >> Go To 14

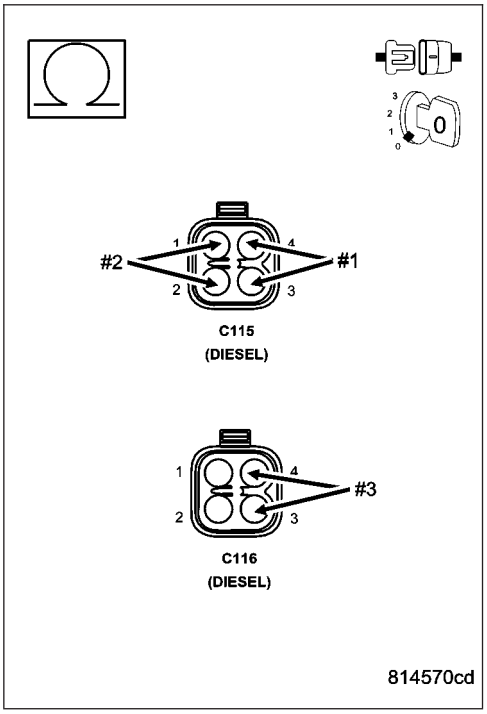

P2146-BANK 1 (CYLINDERS 1-3) SHORTED HIGH OR LOW (CONTINUED)

12. INJECTOR

Disconnect the pigtail nuts from injectors 1-3.

NOTE: Check connectors - Clean/repair as necessary.

Measure the resistance between the solenoid posts of each injector.

NOTE: Be sure to zero the ohm meter prior to checking the injector circuit.

Is the resistance less than 1 ohm and greater than 0 ohms?

Yes >> Go To 13

No >> Replace the fuel injector or injectors. Perform POWERTRAIN VERIFICATION TEST VER - 1 (DIESEL). (Refer to 8 - ELECTRICAL/ELECTRONIC CONTROL MODULES/ENGINE CONTROL MODULE - DIAGNOSIS AND TESTING)

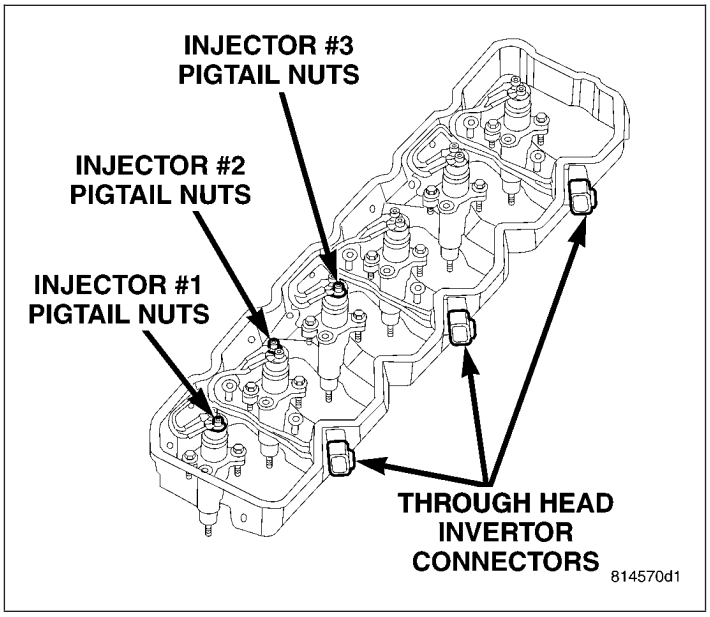

13. INJECTOR HARNESS

Measure resistance of each circuit in the injector harness from pigtail side to injector harness connector.

Is resistance above 1 ohm?

Yes >> Replace the injector harness. Perform POWERTRAIN VERIFICATION TEST VER - 1 (DIESEL). (Refer to 8 - ELECTRICAL/ELECTRONIC CONTROL MODULES/ENGINE CONTROL MODULE - DIAGNOSIS AND TESTING)

No >> Refer to the INTERMITTENT CONDITION Symptom (Diagnostic Procedure). (Refer to 9 - ENGINE - DIAGNOSIS AND TESTING)

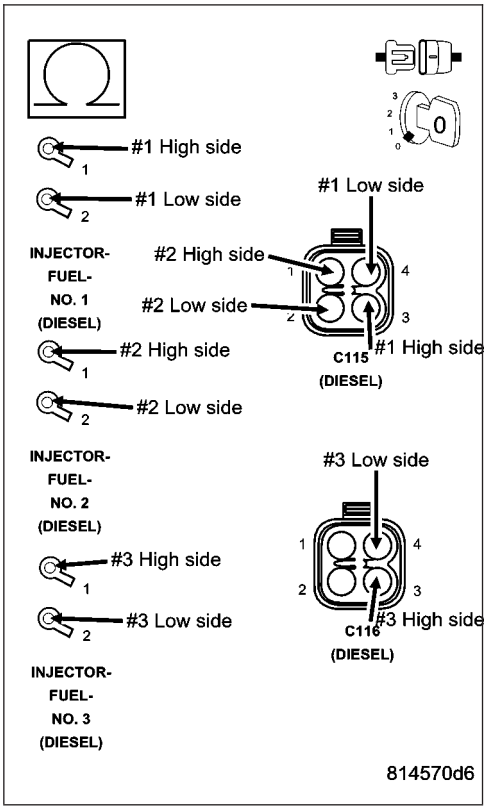

P2146-BANK 1 (CYLINDERS 1-3) SHORTED HIGH OR LOW (CONTINUED)

14. ECM

Reconnect the all injector pig tails harness connector.
Reconnect the ECM harness connector.
Reconnect the Injector harness connector.
Start the engine.
With the scan tool, read DTCs.

Did the DTC return?

Yes >> Replace and program the ECM in accordance with the Service Information.
Perform POWERTRAIN VERIFICATION TEST VER - 1 (DIESEL). (Refer to 8 - ELECTRICAL/ELECTRONIC CONTROL MODULES/ENGINE CONTROL MODULE - DIAGNOSIS AND TESTING)

No >> Refer to the INTERMITTENT CONDITION Symptom (Diagnostic Procedure). (Refer to 9 - ENGINE - DIAGNOSIS AND TESTING)

P2149-BANK 2 (CYLINDERS 4-6) SHORTED HIGH OR LOW

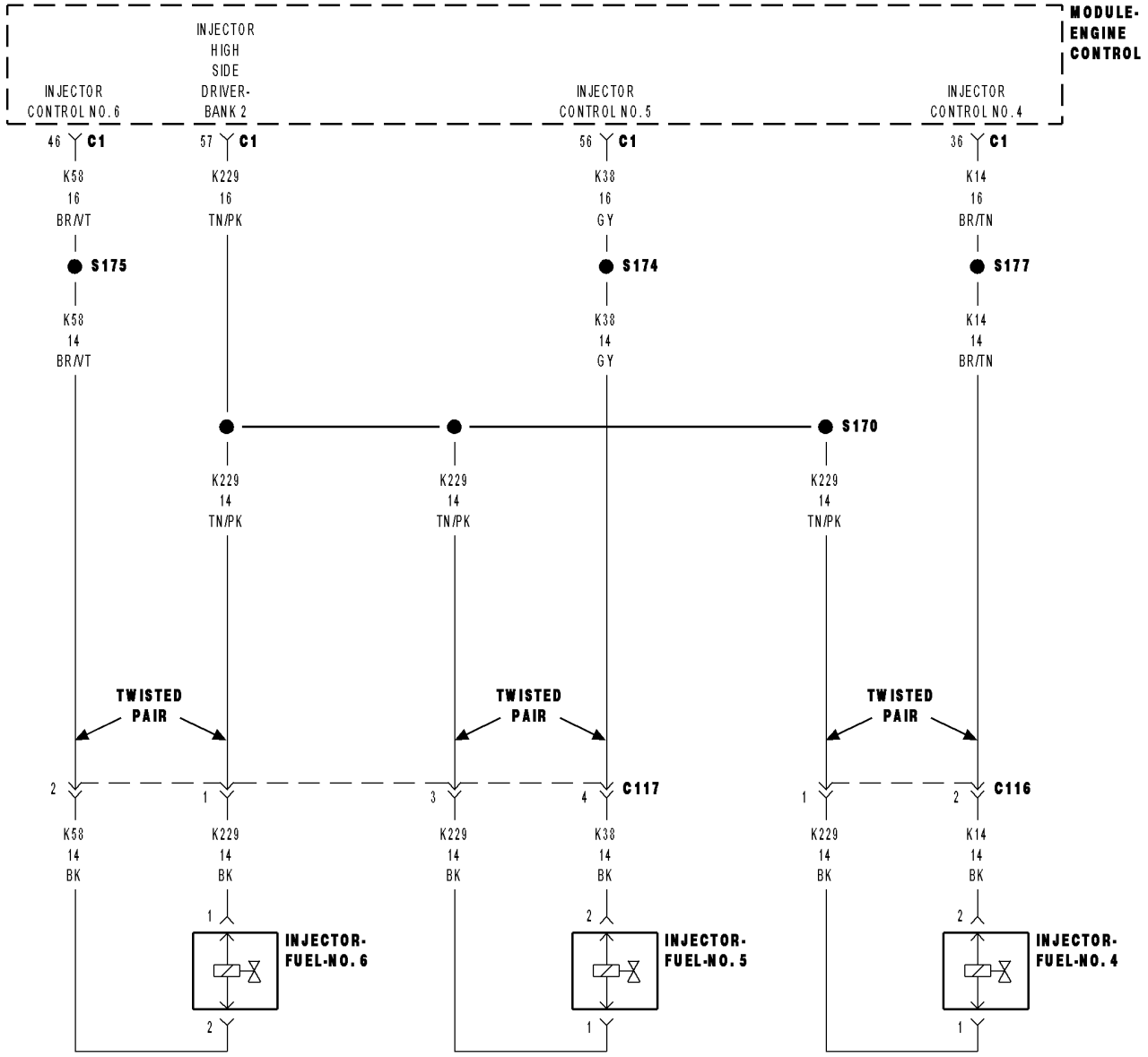

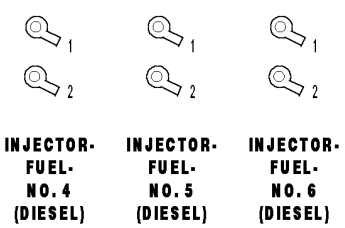

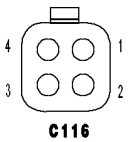

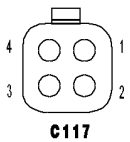





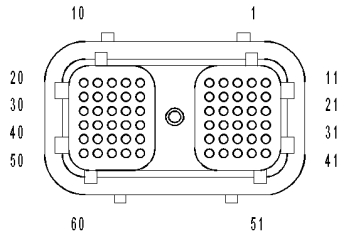

81453955

P2149-BANK 2 (CYLINDERS 4-6) SHORTED HIGH OR LOW (CONTINUED)

For the Engine circuit diagram (Refer to 9 - ENGINE - SCHEMATICS AND DIAGRAMS)

For a complete wiring diagram **Refer to Section 8W**.

- **When Monitored:**
  While the engine is running.
- **Set Condition:**
  A misfire detected at cylinders 4,5, or 6 or any combination of cylinders 4,5, or 6.

Possible Causes
OTHER DTC'S
HIGH SIDE DRIVER CIRCUIT OPEN
LOW SIDE DRIVER CIRCUIT OPEN
HIGH SIDE DRIVER SHORTED TO LOW SIDE DRIVER
HIGH SIDE DRIVERS SHORTED LOW
LOW SIDE DRIVER CIRCUIT SHORTED OTHER LOW SIDE DRIVER CIRCUIT
LOW SIDE DRIVERS SHORTED LOW
HIGH SIDE DRIVER SHORTED TO VOLTAGE
LOW SIDE DRIVER SHORTED TO VOLTAGE
LOW SIDE DRIVER CIRCUIT SHORTED IN INJECTOR HARNESS
INJECTOR
INJECTOR HARNESS
ECM
INTERMITTENT CONDITION

Always perform the Pre-Diagnostic Troubleshooting procedure before proceeding. (Refer to 9 - ENGINE - DIAGNOSIS AND TESTING)

Diagnostic Test

1. OTHER DTC'S

With the scan tool, read DTCs.

Do you have any combination of DTC's P0204, P0205, or P0206?

Yes >> Repair other DTC's first.
Perform POWERTRAIN VERIFICATION TEST VER - 1 (DIESEL). (Refer to 8 - ELECTRICAL/ELECTRONIC CONTROL MODULES/ENGINE CONTROL MODULE - DIAGNOSIS AND TESTING)

No >> Go To 2

P2149-BANK 2 (CYLINDERS 4-6) SHORTED HIGH OR LOW (CONTINUED)

2. HIGH SIDE DRIVER CIRCUIT OPEN

Turn the ignition off.

Disconnect the ECM harness connectors.

Disconnect the Injector 4-6 harness connector.

NOTE: Check connectors - Clean/repair as necessary.

Measure the resistance of the injector high side driver circuit between the Bank 2 high side driver circuit in the ECM harness connector and the high side driver circuit in the injector harness connectors for cylinders 4-6.

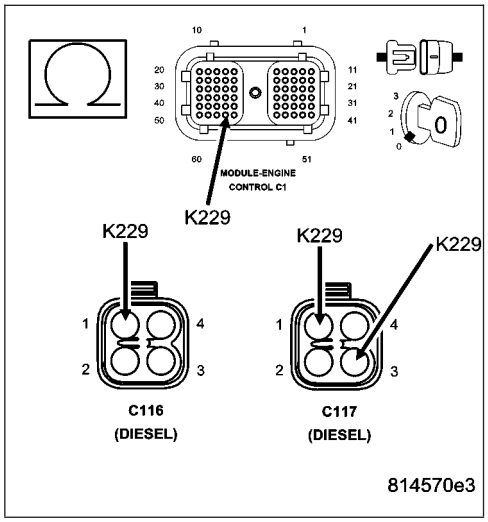

Is the resistance less than 10 Ohms?

Yes >> Go To 3

No >> Repair the open high side driver circuit from ECM harness connector to the Injector harness connector.

Perform POWERTRAIN VERIFICATION TEST VER - 1 (DIESEL). (Refer to 8 - ELECTRICAL/ELECTRONIC CONTROL MODULES/ENGINE CONTROL MODULE - DIAGNOSIS AND TESTING)

3. LOW SIDE DRIVER CIRCUIT OPEN

Measure the resistance of the #4,#5, and #6 injector low side driver circuits between the ECM harness connector and the injector harness connectors.

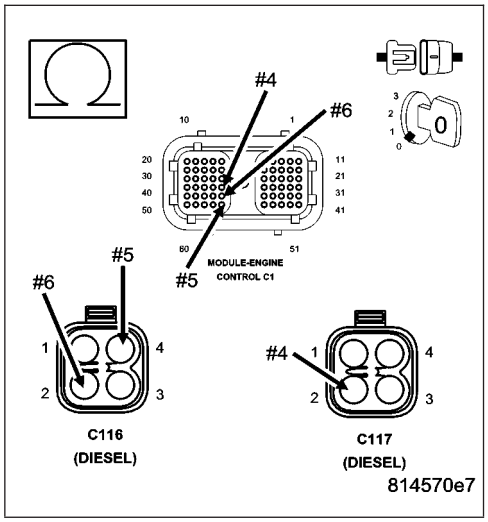

Is the resistance less than 10 Ohms?

Yes >> Go To 4

No >> Repair the open low side driver circuit.

Perform POWERTRAIN VERIFICATION TEST VER - 1 (DIESEL). (Refer to 8 - ELECTRICAL/ELECTRONIC CONTROL MODULES/ENGINE CONTROL MODULE - DIAGNOSIS AND TESTING)

P2149-BANK 2 (CYLINDERS 4-6) SHORTED HIGH OR LOW (CONTINUED)

4. HIGH SIDE DRIVER SHORTED TO LOW SIDE DRIVER

Measure the resistance between the Bank 2 high side driver circuit at the ECM harness connector and the low side driver circuit for injectors 4-6 at the ECM harness connector.

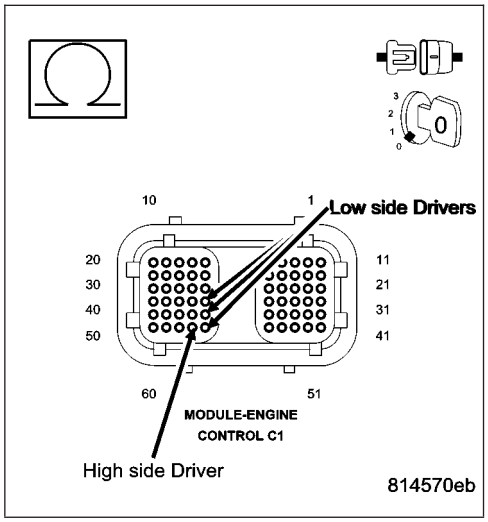

Is the resistance more than 100k Ohms?

Yes >> Go To 5

No >> Repair the High side circuit shorted to the low side circuit. Perform POWERTRAIN VERIFICATION TEST VER - 1 (DIESEL). (Refer to 8 - ELECTRICAL/ELECTRONIC CONTROL MODULES/ENGINE CONTROL MODULE - DIAGNOSIS AND TESTING)

5. HIGH SIDE DRIVERS SHORTED LOW

Measure the resistance of the injector harness connector high side driver circuits to battery negative for injectors 4-6.

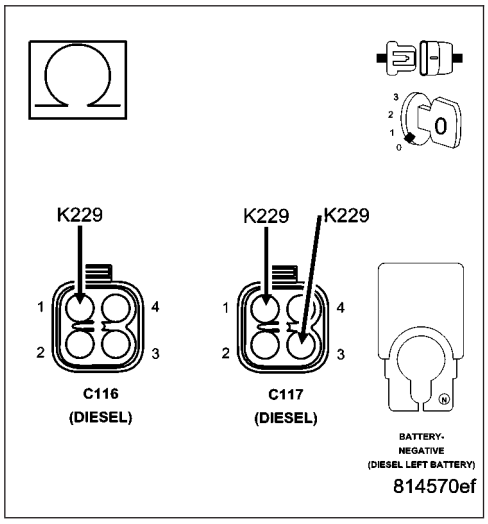

Is the resistance more than 100k Ohms?

Yes >> Go To 6

No >> Repair the High side driver shorted low in the harness. Perform POWERTRAIN VERIFICATION TEST VER - 1 (DIESEL). (Refer to 8 - ELECTRICAL/ELECTRONIC CONTROL MODULES/ENGINE CONTROL MODULE - DIAGNOSIS AND TESTING)

P2149-BANK 2 (CYLINDERS 4-6) SHORTED HIGH OR LOW (CONTINUED)

6. LOW SIDE DRIVERS SHORTED LOW

Measure the resistance of the injector harness connector Low side driver circuits to battery negative for injectors 4-6.

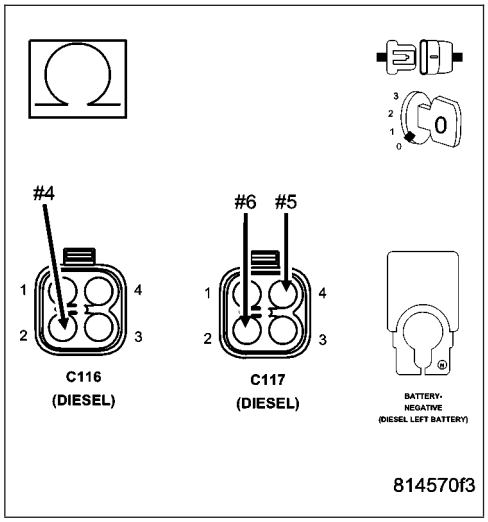

Is the resistance more than 100k Ohms?

Yes >> Go To 7

No >> Repair the Low side driver shorted low in the harness.
Perform POWERTRAIN VERIFICATION TEST VER - 1 (DIESEL). (Refer to 8 - ELECTRICAL/ELECTRONIC CONTROL MODULES/ENGINE CONTROL MODULE - DIAGNOSIS AND TESTING)

7. HIGH SIDE DRIVER SHORTED TO VOLTAGE

Turn Ingition on, engine off.

Measure the voltage between the high side driver circuit in the engine harness and battery negative.

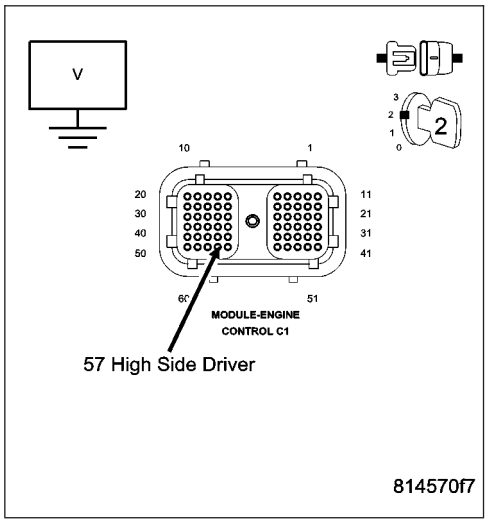

Is the voltage less than 1 volt?

Yes >> Go To 8

No >> Repair the high side driver shorted to voltage.
Perform POWERTRAIN VERIFICATION TEST VER - 1 (DIESEL). (Refer to 8 - ELECTRICAL/ELECTRONIC CONTROL MODULES/ENGINE CONTROL MODULE - DIAGNOSIS AND TESTING)

P2149-BANK 2 (CYLINDERS 4-6) SHORTED HIGH OR LOW (CONTINUED)

8. LOW SIDE DRIVER SHORTED TO VOLTAGE

Measure the voltage between the low side driver circuit in the engine harness and battery negative for cylinders 4-6.

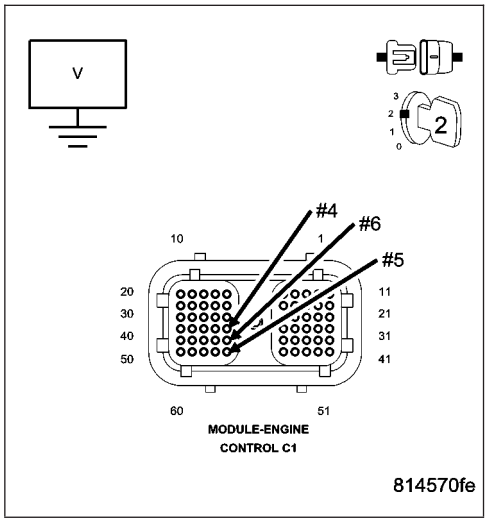

Is the voltage less than 1 volt?

Yes >> Go To 9

No >> Repair the low side driver shorted to voltage.

Perform POWERTRAIN VERIFICATION TEST VER - 1 (DIESEL). (Refer to 8 - ELECTRICAL/ELECTRONIC CONTROL MODULES/ENGINE CONTROL MODULE - DIAGNOSIS AND TESTING)

9. LOW SIDE DRIVER CIRCUIT SHORTED OTHER LOW SIDE DRIVER CIRCUIT

Measure the resistance of each of the Bank 2 low side driver circuit to all other Bank 2 low side driver circuits at the ECM harness connector.

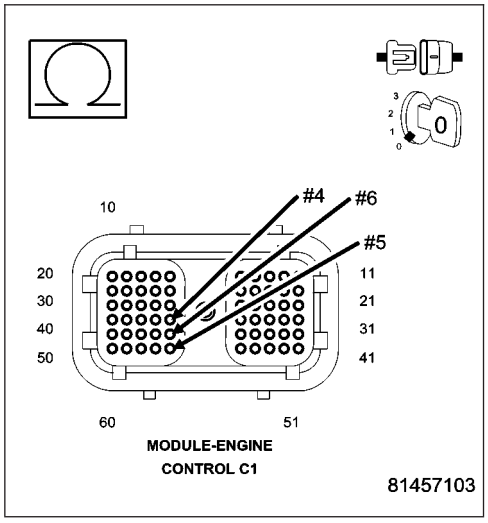

Is the resistance greater than 100k ohms?

Yes >> Go To 10

No >> Repair Low side driver circuit shorted to other Low side driver circuit.

Perform POWERTRAIN VERIFICATION TEST VER - 1 (DIESEL). (Refer to 8 - ELECTRICAL/ELECTRONIC CONTROL MODULES/ENGINE CONTROL MODULE - DIAGNOSIS AND TESTING)

P2149-BANK 2 (CYLINDERS 4-6) SHORTED HIGH OR LOW (CONTINUED)

10. LOW SIDE DRIVER CIRCUIT SHORTED IN INJECTOR HARNESS

Reconnect the disconnected injector harness connector.

Measure the resistance of each of the Bank 2 low side driver circuit to all other Bank 2 low side driver circuit at the ECM harness connector.

Is the resistance greater than 100k ohms?

Yes >> Go To 11

No >> Replace the injector harness.
Perform POWERTRAIN VERIFICATION TEST VER - 1 (DIESEL). (Refer to 8 - ELECTRICAL/ELECTRONIC CONTROL MODULES/ENGINE CONTROL MODULE - DIAGNOSIS AND TESTING)

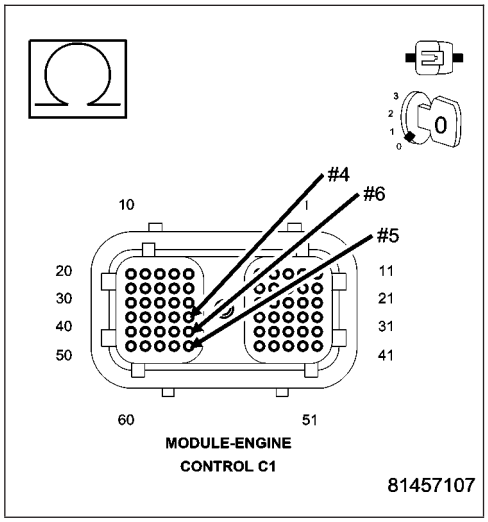

11. INJECTOR CIRCUITS SHORTED INSIDE ENGINE

Measure the resistance of each injector from the through head connector.

NOTE: Be sure to zero the ohm meter prior to checking the injector circuit.

Is the resistance greater than zero and less than 1 ohm?

Yes >> Go To 12

No >> Go To 14

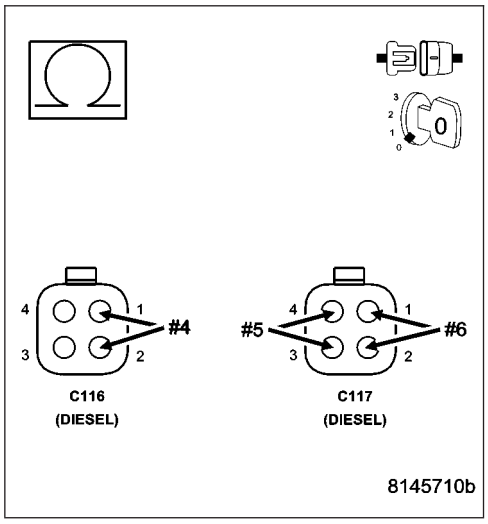

P2149-BANK 2 (CYLINDERS 4-6) SHORTED HIGH OR LOW (CONTINUED)

12. INJECTOR

Disconnect the pigtail nuts from injectors 4-6.

NOTE: Check connectors - Clean/repair as necessary.

Measure the resistance between the solenoid posts of each injector.

NOTE: Be sure to zero the ohm meter prior to checking the injector circuit.

Is the resistance less than 1 ohm and greater than 0 ohms?

Yes >> Go To 13

No >> Replace the fuel injector or injectors.
Perform POWERTRAIN VERIFICATION TEST VER - 1 (DIESEL). (Refer to 8 - ELECTRICAL/ELECTRONIC CONTROL MODULES/ENGINE CONTROL MODULE - DIAGNOSIS AND TESTING)

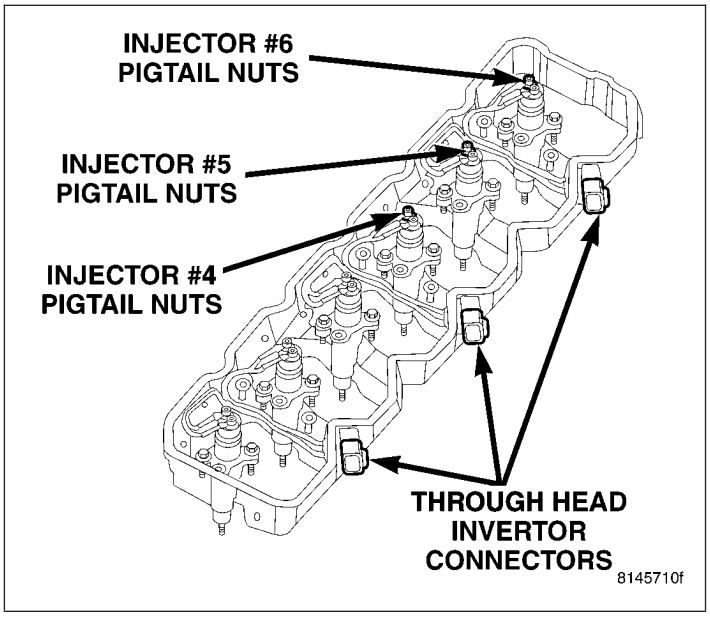

13. INJECTOR HARNESS

Measure resistance of each circuit in the injector harness from pigtail side to injector harness connector.

Is resistance above 1 ohm?

Yes >> Replace the injector harness.
Perform POWERTRAIN VERIFICATION TEST VER - 1 (DIESEL). (Refer to 8 - ELECTRICAL/ELECTRONIC CONTROL MODULES/ENGINE CONTROL MODULE - DIAGNOSIS AND TESTING)

No >> Refer to the INTERMITTENT CONDITION Symptom (Diagnostic Procedure). (Refer to 9 - ENGINE - DIAGNOSIS AND TESTING)

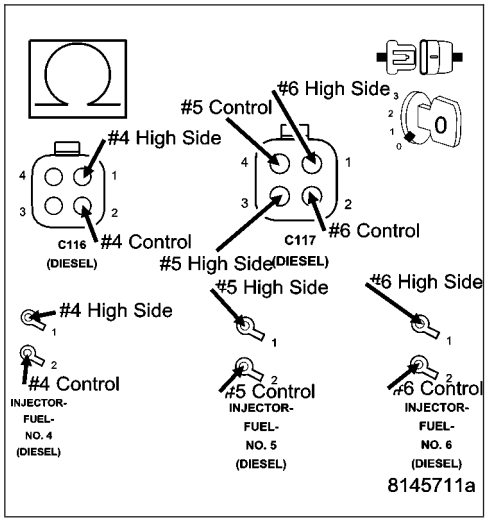

P2149-BANK 2 (CYLINDERS 4-6) SHORTED HIGH OR LOW (CONTINUED)

14. ECM

Reconnect all the injector pig tail harness connectors to the Injectors.
Reconnect the ECM harness connector.
Reconnect the Injector harness connector.
Start the engine.
With the scan tool, read DTCs.

Did the DTC return?

Yes >> Replace and program the ECM in accordance with the Service Information.
Perform POWERTRAIN VERIFICATION TEST VER - 1 (DIESEL). (Refer to 8 - ELECTRICAL/ELECTRONIC CONTROL MODULES/ENGINE CONTROL MODULE - DIAGNOSIS AND TESTING)

No >> Test Complete.

P2266-WATER IN FUEL (WIF) SENSOR VOLTAGE TOO LOW

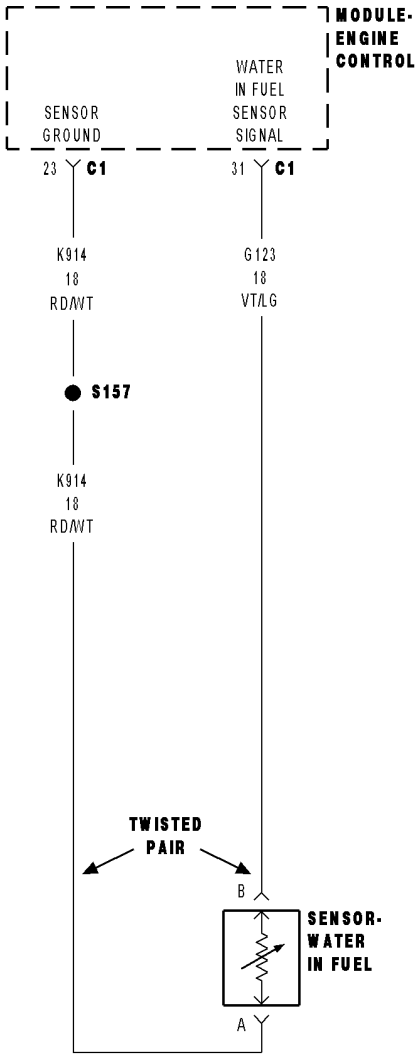

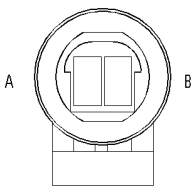

SENSOR- WATER
IN FUEL

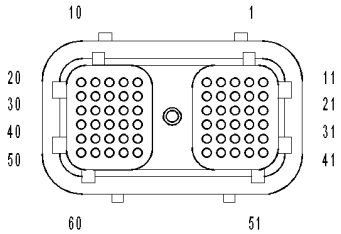

MODULE-ENGINE
CONTROL C1

8145757b

P2266-WATER IN FUEL (WIF) SENSOR VOLTAGE TOO LOW (CONTINUED)

For the Engine circuit diagram (Refer to 8 - ELECTRICAL/ELECTRONIC CONTROL MODULES/ENGINE CONTROL MODULE - SCHEMATIC - ELECTRICAL)

For a complete wiring diagram **Refer to Section 8W**.

- **When Monitored:**
  Ignition on.
- **Set Condition:**
  Low voltage detected at the WIF signal circuit at the ECM.

Possible Causes
WATER IN FUEL SENSOR
ECM
(G123) WATER IN FUEL SENSOR SIGNAL CIRCUIT SHORTED TO (K914) RETURN CIRCUIT

Always perform the Pre-Diagnostic Troubleshooting procedure before proceeding. (Refer to 9 - ENGINE - DIAGNOSIS AND TESTING)

Diagnostic Test

1. WATER IN FUEL SENSOR

Turn the ignition off.

Disconnect the Water in fuel sensor harness connector.

Ignition on, engine not running.

NOTE: Check connectors - Clean/repair as necessary.

Measure the voltage between the signal circuit and return circuit of the WIF sensor harness connector.

Is the voltage between 4.5 and 5.5 volts?

Yes >> Replace the Water in fuel sensor.
Perform POWERTRAIN VERIFICATION TEST VER - 1 (DIESEL). (Refer to 8 - ELECTRICAL/ELECTRONIC CONTROL MODULES/ENGINE CONTROL MODULE - DIAGNOSIS AND TESTING)

No >> Go To 2

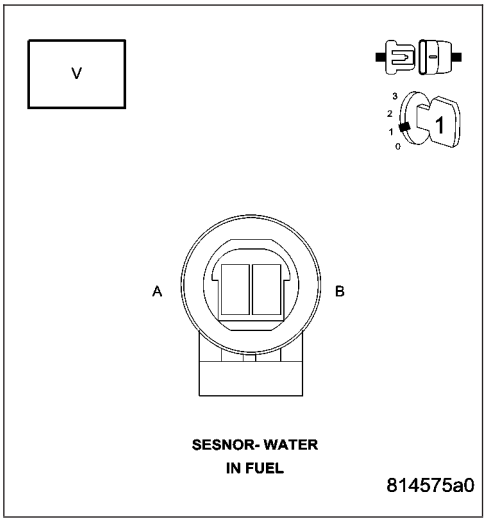

P2266-WATER IN FUEL (WIF) SENSOR VOLTAGE TOO LOW (CONTINUED)

2. SIGNAL CIRCUIT SHORTED TO RETURN CIRCUIT

Disconnect the ECM connector.

NOTE: Check connectors - Clean/repair as necessary.
Measure the resistance between the signal circuit of the sensor connector and the return circuit of the sensor connector.

Is the resistance less than 10 ohms?

Yes >> Repair or replace the harness.
Perform POWERTRAIN VERIFICATION TEST VER - 1 (DIESEL). (Refer to 8 - ELECTRICAL/ELECTRONIC CONTROL MODULES/ENGINE CONTROL MODULE - DIAGNOSIS AND TESTING)

No >> Go To 3

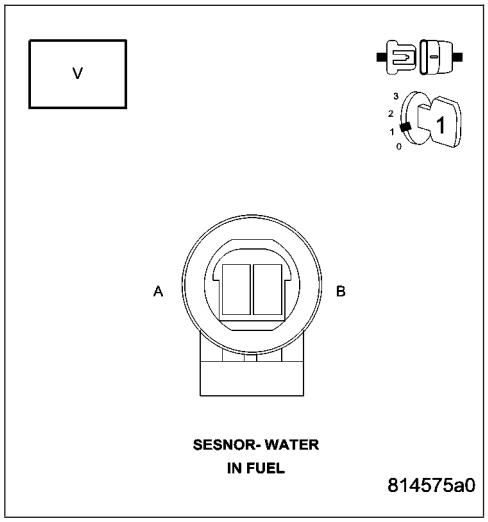

3. ECM

Reconnect the ECM connector.
Measure the resistance between the signal circuit of the sensor connector and the return circuit of the sensor connector.

Is the resistance less than 10 ohms?

Yes >> Replace the ECM.

No >> Test Complete.

P2269-WATER IN FUEL (WIF)

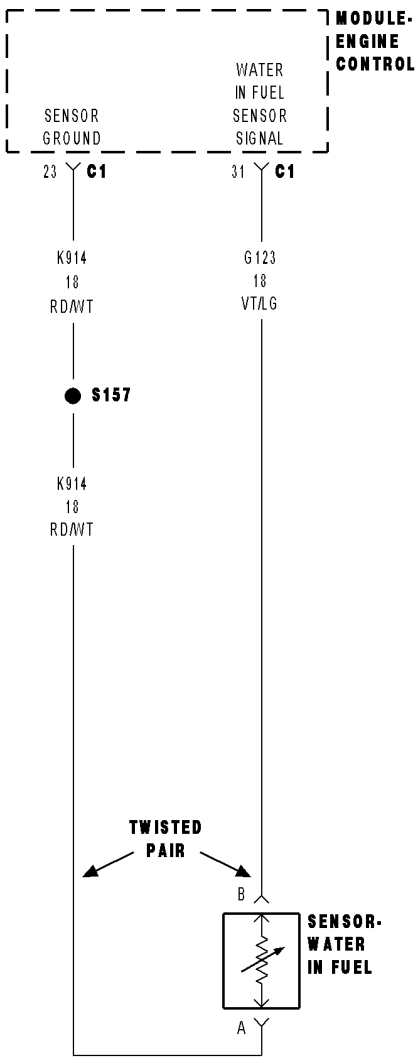

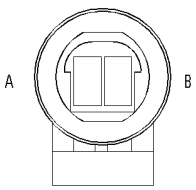

SENSOR- WATER
IN FUEL

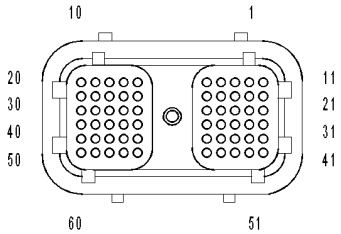

MODULE-ENGINE
CONTROL C1

8145757b

P2269-WATER IN FUEL (WIF) (CONTINUED)

For the Engine circuit diagram (Refer to 8 - ELECTRICAL/ELECTRONIC CONTROL MODULES/ENGINE CONTROL MODULE - SCHEMATIC - ELECTRICAL)

For a complete wiring diagram **Refer to Section 8W**.

- **When Monitored:**
  Ignition on.
- **Set Condition:**
  Low voltage detected at the WIF signal circuit at the ECM.

Possible Causes
OTHER DTC'S PRESENT
WATER IN FUEL
ECM
INTERMITTENT CONDITION

Always perform the Pre-Diagnostic Troubleshooting procedure before proceeding. (Refer to 9 - ENGINE - DIAGNOSIS AND TESTING)

Diagnostic Test

1. OTHER DTC'S PRESENT

With the scan tool, read DTCs.

Do you have any additional water in fuel DTC's?

Yes >> Repair other Water in fuel sensor DTC's first.
Perform POWERTRAIN VERIFICATION TEST VER - 1 (DIESEL). (Refer to 8 - ELECTRICAL/ELECTRONIC CONTROL MODULES/ENGINE CONTROL MODULE - DIAGNOSIS AND TESTING)

No >> Go To 2

---

2. WATER IN FUEL

Using the service publications as a guide, drain the water in fuel separator.

Did the DTC become inactive after draining the water in fuel separator?

Yes >> Clear DTC, repair complete.
Perform POWERTRAIN VERIFICATION TEST VER - 1 (DIESEL). (Refer to 8 - ELECTRICAL/ELECTRONIC CONTROL MODULES/ENGINE CONTROL MODULE - DIAGNOSIS AND TESTING)

No >> Go To 3

P2269-WATER IN FUEL (WIF) (CONTINUED)

3. ECM

Disconnect the WIF sensor harness connector.

NOTE: Check connectors - Clean/repair as necessary.
Using the scan tool, monitor for DTC's while connecting a jumper wire between the (G123) signal circuit of the water in fuel sensor and battery voltage.

Did the water in fuel light go out?

Yes >> Refer to the INTERMITTENT CONDITION Symptom (Diagnostic Procedure). (Refer to 9 - ENGINE - DIAGNOSIS AND TESTING)

No >> Replace and program the ECM in accordance with the Service Information.

Perform POWERTRAIN VERIFICATION TEST VER - 1 (DIESEL). (Refer to 8 - ELECTRICAL/ELECTRONIC CONTROL MODULES/ENGINE CONTROL MODULE - DIAGNOSIS AND TESTING)

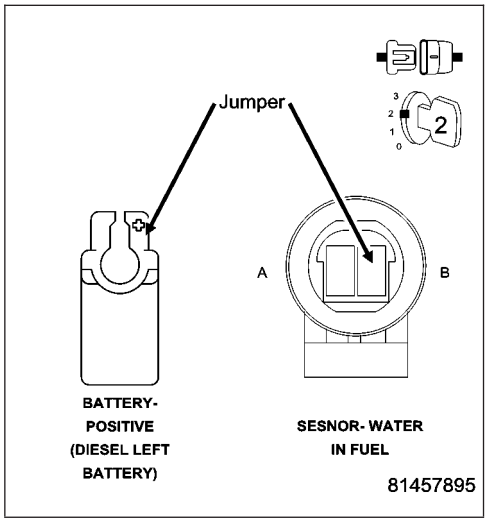

P2502-CHARGING SYSTEM ERROR

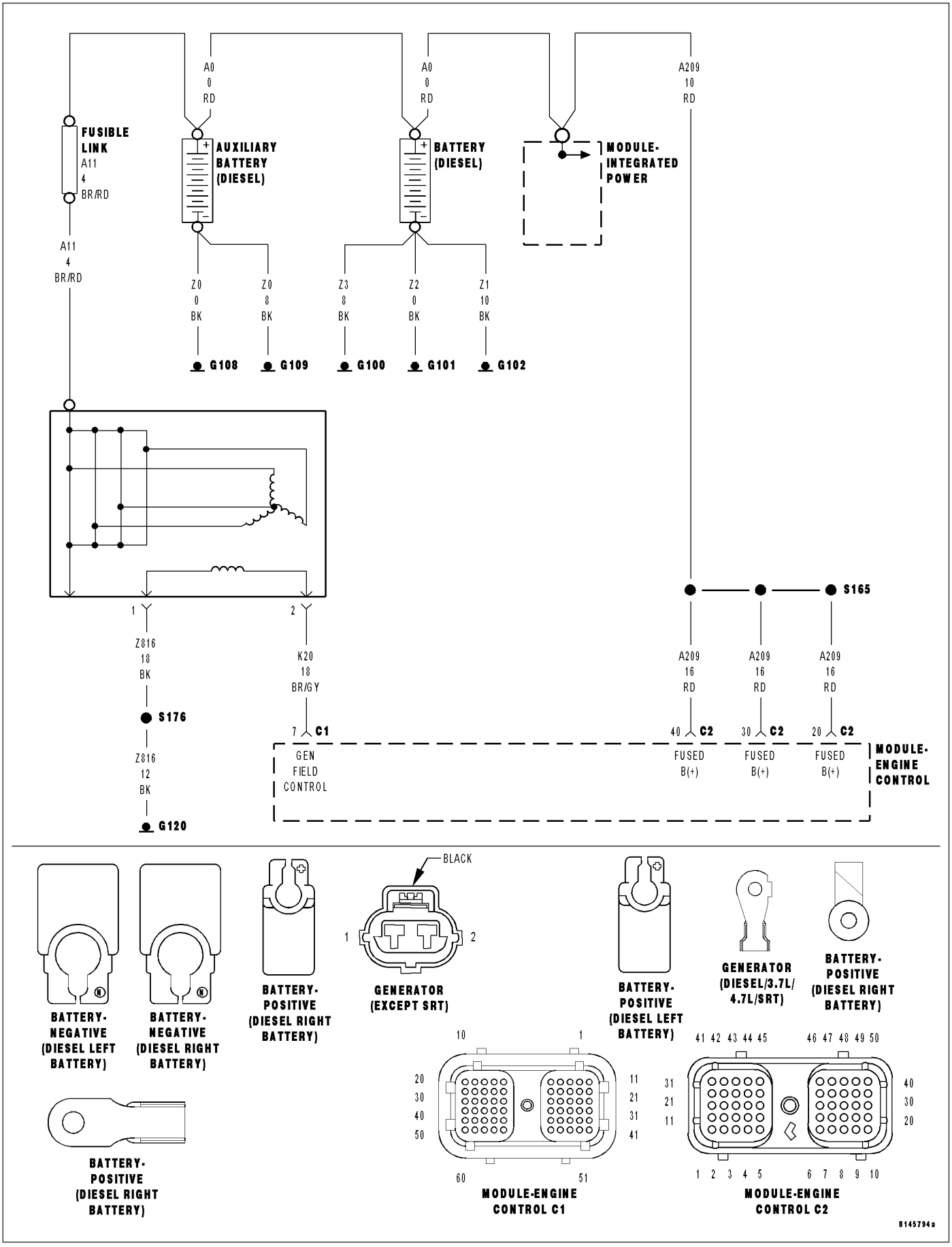

P2502-CHARGING SYSTEM ERROR (CONTINUED)

For the Engine circuit diagram (Refer to 8 - ELECTRICAL/ELECTRONIC CONTROL MODULES/ENGINE CONTROL MODULE - SCHEMATIC - ELECTRICAL)

For a complete wiring diagram **Refer to Section 8W**.

- **When Monitored:**
  While the engine is running.
- **Set Condition:**
  The ECM cycles the voltage regulator in the generator while monitoring for a change in output voltage. If the voltage does not drop when the regulator is off, the fault is set.

Possible Causes
DIRTY OR LOOSE CONNECTIONS
HIGH RESISTANCE IN THE B+ CIRCUIT
HIGH RESISTANCE IN THE B+ CROSS OVER CABLE
HIGH RESISTANCE IN THE GROUND CIRCUIT
GENERATOR
ECM
INTERMITTENT CONDITION

Always perform the Pre-Diagnostic Troubleshooting procedure before proceeding. (Refer to 9 - ENGINE - DIAGNOSIS AND TESTING)

Diagnostic Test

1. DIRTY OR LOOSE CONNECTIONS

Visually inspect the positive and negative connections at the battery.

Visually inspect the battery negative connections at the engine block.

Are the connections free of corrosion and are they tight?

Yes >> Go To 2

No >> Clean and/or tighten the connections.
Perform POWERTRAIN VERIFICATION TEST VER - 1 (DIESEL). (Refer to 8 - ELECTRICAL/ELECTRONIC CONTROL MODULES/ENGINE CONTROL MODULE - DIAGNOSIS AND TESTING)

---

2. HIGH RESISTANCE IN THE B+ CIRCUIT

Measure the voltage between the B+ post of the generator and the B+ post of the battery while the engine is running.

Is the voltage above .4 volts?

Yes >> Repair the high resistance in the B+ circuit from battery to the generator.
Perform POWERTRAIN VERIFICATION TEST VER - 1 (DIESEL). (Refer to 8 - ELECTRICAL/ELECTRONIC CONTROL MODULES/ENGINE CONTROL MODULE - DIAGNOSIS AND TESTING)

No >> Go To 3

P2502-CHARGING SYSTEM ERROR (CONTINUED)

3. HIGH RESISTANCE IN THE B+ CROSS OVER CABLE

Measure the voltage between the B+ post of the generator and the B+ post of the right side battery to the left side battery while the engine is running.

Is the voltage above .4 volts?

Yes >> Repair the high resistance in the B+ cross over cable from right side battery to left side battery.
Perform POWERTRAIN VERIFICATION TEST VER - 1 (DIESEL). (Refer to 8 - ELECTRICAL/ELECTRONIC CONTROL MODULES/ENGINE CONTROL MODULE - DIAGNOSIS AND TESTING)

No >> Go To 4

---

4. HIGH RESISTANCE IN THE GROUND CIRCUIT

Measure the voltage between the generator case and the B- post of the battery.

Is the voltage above .1 volts?

Yes >> Repair the high resistance in the ground circuit.
Perform POWERTRAIN VERIFICATION TEST VER - 1 (DIESEL). (Refer to 8 - ELECTRICAL/ELECTRONIC CONTROL MODULES/ENGINE CONTROL MODULE - DIAGNOSIS AND TESTING)

No >> Go To 5

---

5. GENERATOR

Disconnect the Generator field harness connector.

NOTE: Check connectors - Clean/repair as necessary.
Measure the resistance between the generator field terminals.

Is the resistance between .5 and 15 Ohms?

Yes >> Go To 6

No >> Replace the generator.
Perform POWERTRAIN VERIFICATION TEST VER - 1 (DIESEL). (Refer to 8 - ELECTRICAL/ELECTRONIC CONTROL MODULES/ENGINE CONTROL MODULE - DIAGNOSIS AND TESTING)

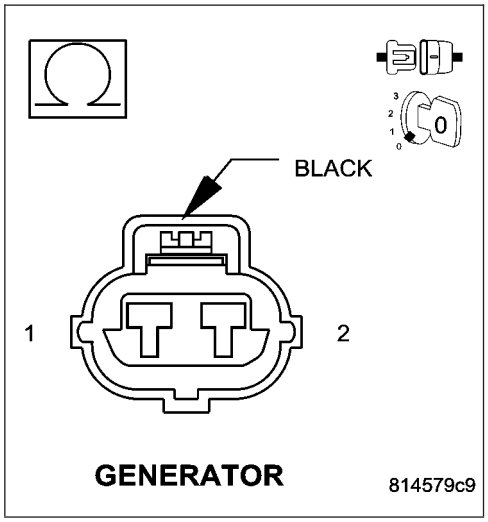

P2502-CHARGING SYSTEM ERROR (CONTINUED)

6. **All**

Turn the ignition off.

Reconnect the Generator field harness connector.

Disconnect the ECM harness connectors.

NOTE: Check connectors - Clean/repair as necessary.

Ignition on, engine not running.

Measure and record the voltage between battery positive circuits of the ECM harness connector and the battery negative circuits of the ECM harness connector.

Turn the ignition off.

Reconnect the ECM harness connectors.

Start the engine.

Use the scan tool to measure and record battery voltage.

Compare the voltage reading from the voltmeter with that of the scan tool.

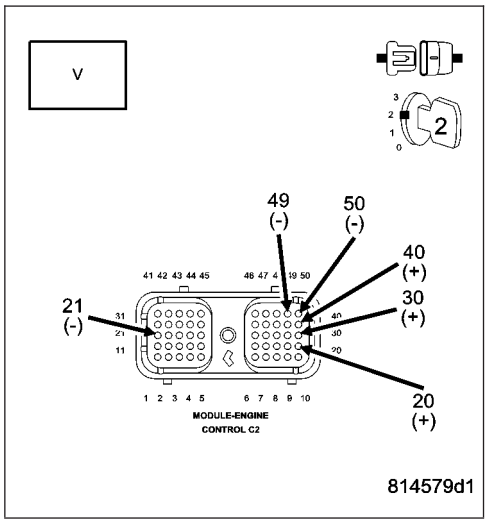

Are the readings within 3 volts of each other?

Yes >> Test Complete.

No >> Replace and program the ECM in accordance with the Service Information.
Perform POWERTRAIN VERIFICATION TEST VER - 1 (DIESEL). (Refer to 8 - ELECTRICAL/ELECTRONIC CONTROL MODULES/ENGINE CONTROL MODULE - DIAGNOSIS AND TESTING)

P2503-CHARGING SYSTEM OUTPUT LOW

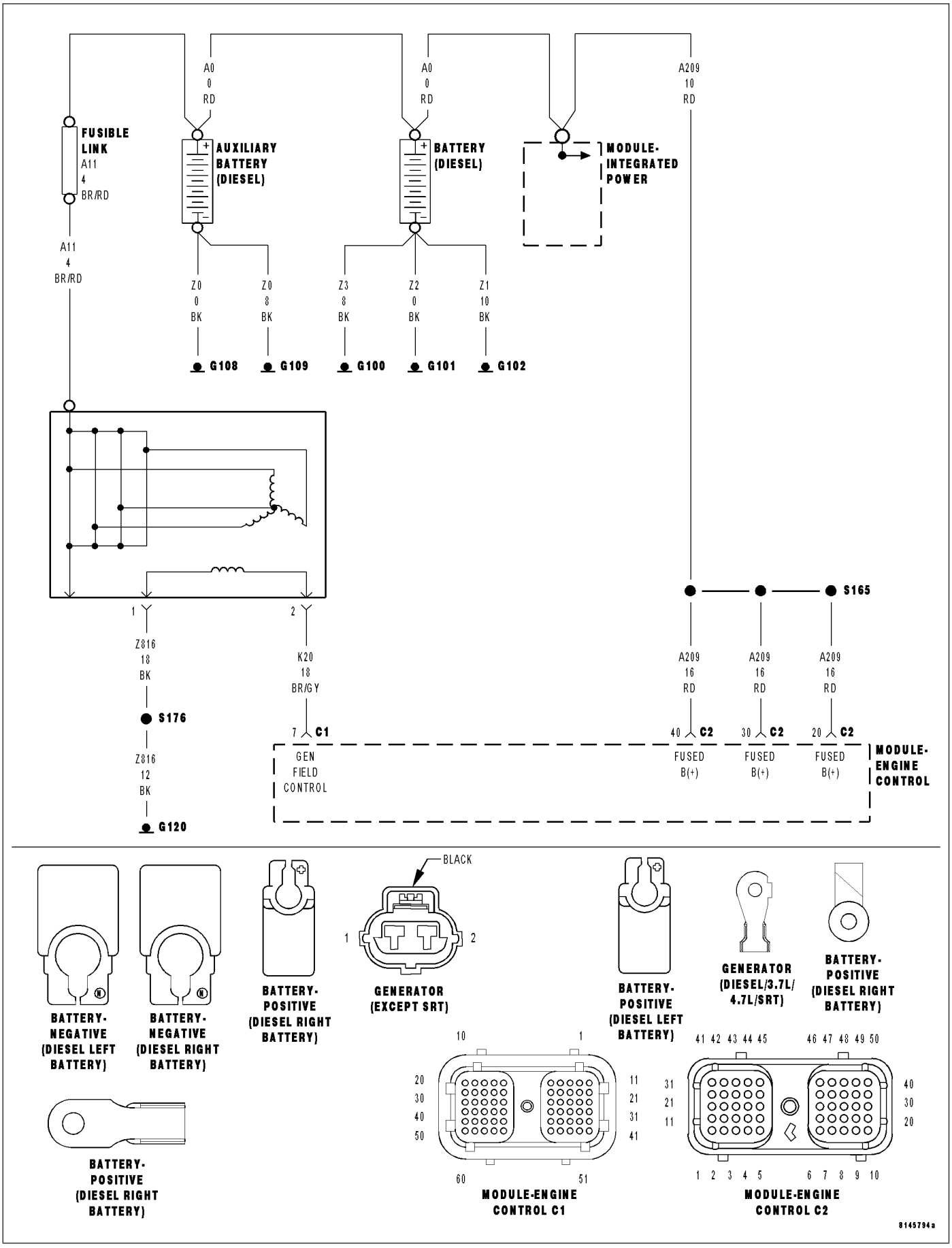

P2503-CHARGING SYSTEM OUTPUT LOW (CONTINUED)

For the Engine circuit diagram (Refer to 8 - ELECTRICAL/ELECTRONIC CONTROL MODULES/ENGINE CONTROL MODULE - SCHEMATIC - ELECTRICAL)

For a complete wiring diagram **Refer to Section 8W**.

- **When Monitored:**
  While the engine is running.
- **Set Condition:**
  The battery voltage exceeds target voltage by more than a calibrated value.

Possible Causes
OTHER DTC'S PRESENT
GENERATOR
FIELD DRIVER CIRCUIT SHORTED TO GROUND
ECM
INTERMITTENT CONDITION

Always perform the Pre-Diagnostic Troubleshooting procedure before proceeding. (Refer to 9 - ENGINE - DIAGNOSIS AND TESTING)

Diagnostic Test

1. OTHER DTC'S PRESENT

With the scan tool, read DTCs.

Is DTC P2502 set?

Yes >> Repair other DTC's first.
Perform POWERTRAIN VERIFICATION TEST VER - 1 (DIESEL). (Refer to 8 - ELECTRICAL/ELECTRONIC CONTROL MODULES/ENGINE CONTROL MODULE - DIAGNOSIS AND TESTING)

No >> Go To 2

---

2. GENERATOR

Disconnect the Generator field harness connector.

NOTE: Check connectors - Clean/repair as necessary.
Measure the resistance between the generator field terminals at the generator.

Is the resistance between .5 and 15 Ohms?

Yes >> Go To 3

No >> Replace the generator.
Perform POWERTRAIN VERIFICATION TEST VER - 1 (DIESEL). (Refer to 8 - ELECTRICAL/ELECTRONIC CONTROL MODULES/ENGINE CONTROL MODULE - DIAGNOSIS AND TESTING)

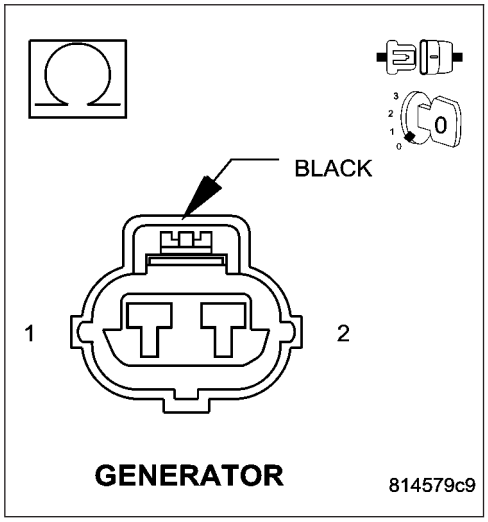

P2503-CHARGING SYSTEM OUTPUT LOW (CONTINUED)

3. FIELD DRIVER CIRCUIT SHORTED TO GROUND

Disconnect the ECM harness connectors.

NOTE: Check connectors - Clean/repair as necessary.
Measure the resistance of the generator field driver circuit between the generator and battery negative.

Is the resistance greater than 100 ohms?

Yes >> Go To 4

No >> Repair the generator field driver circuit shorted to ground. Perform POWERTRAIN VERIFICATION TEST VER - 1 (DIESEL). (Refer to 8 - ELECTRICAL/ELECTRONIC CONTROL MODULES/ENGINE CONTROL MODULE - DIAGNOSIS AND TESTING)

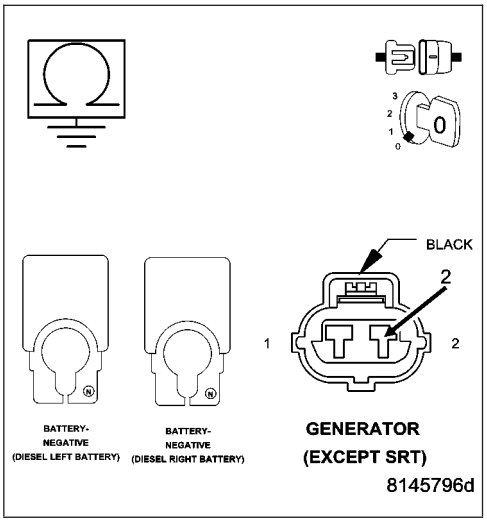

4. ECM

Measure and record the voltage between battery positive circuit of the ECM harness connector and the battery negative circuits of the ECM harness connector.

Reconnect the ECM connectors.

Use the scan tool to measure and record battery voltage.

Compare the voltage reading from the voltmeter with that of the scan tool.

Are the readings within 3 volts of each other?

Yes >> Refer to the INTERMITTENT CONDITION Symptom (Diagnostic Procedure). (Refer to 9 - ENGINE - DIAGNOSIS AND TESTING)

No >> Replace and program the ECM in accordance with the Service Information.
Perform POWERTRAIN VERIFICATION TEST VER - 1 (DIESEL). (Refer to 8 - ELECTRICAL/ELECTRONIC CONTROL MODULES/ENGINE CONTROL MODULE - DIAGNOSIS AND TESTING)

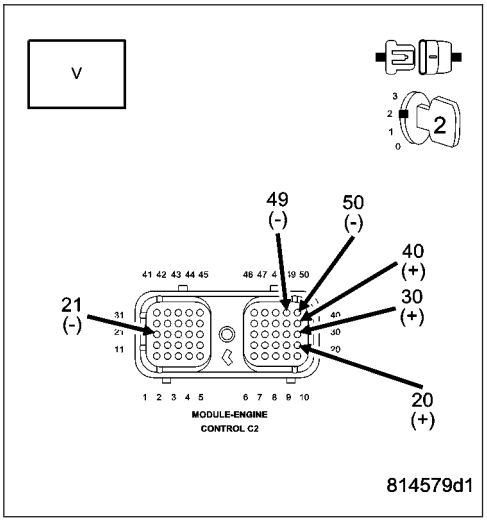

P2504-CHARGING SYSTEM OUTPUT HIGH

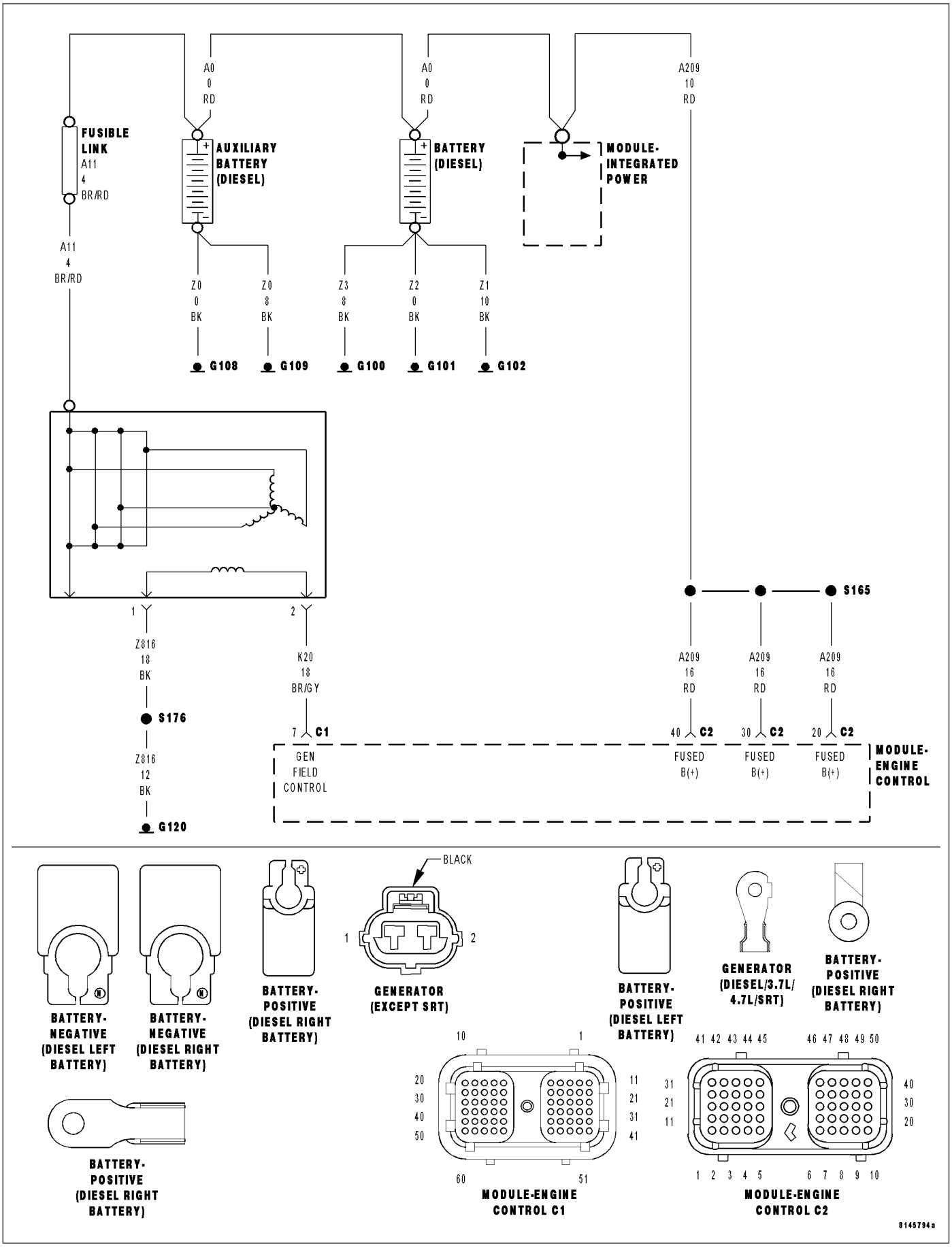

P2504-CHARGING SYSTEM OUTPUT HIGH (CONTINUED)

For the Engine circuit diagram (Refer to 9 - ENGINE - SCHEMATICS AND DIAGRAMS)

For a complete wiring diagram **Refer to Section 8W**.

- **When Monitored:**
  While the engine is running.
- **Set Condition:**
  Battery voltage is less than 11.5 volts for more than 8 seconds. Battery voltage must exceed 12 volts for more than 5 seconds for fault to become inactive.

Possible Causes
OTHER DTC'S PRESENT
DIRTY OR LOOSE CONNECTIONS
ADD-ON OR ACCESSORY WIRES AT BATTERY TERMINAL
HIGH RESISTANCE IN THE B+ CIRCUIT
HIGH RESISTANCE IN THE B+ CROSS OVER CABLE
HIGH RESISTANCE IN THE GROUND CIRCUIT
GENERATOR
ECM
INTERMITTENT CONDITION

Always perform the Pre-Diagnostic Troubleshooting procedure before proceeding. (Refer to 9 - ENGINE - DIAGNOSIS AND TESTING)

Diagnostic Test

1. OTHER DTC'S PRESENT

With the scan tool, read DTCs.

Is DTC P2502 set?

Yes >> Repair other DTC's first.
Perform POWERTRAIN VERIFICATION TEST VER - 1 (DIESEL). (Refer to 8 - ELECTRICAL/ELECTRONIC CONTROL MODULES/ENGINE CONTROL MODULE - DIAGNOSIS AND TESTING)

No >> Go To 2

---

2. DIRTY OR LOOSE CONNECTIONS

Visually inspect the positive and negative connections at the battery.

Visually inspect the battery negative connections at the engine block.

Are the connections free of corrosion and are they tight?

Yes >> Go To 3

No >> Clean and/or tighten the connections.
Perform POWERTRAIN VERIFICATION TEST VER - 1 (DIESEL). (Refer to 8 - ELECTRICAL/ELECTRONIC CONTROL MODULES/ENGINE CONTROL MODULE - DIAGNOSIS AND TESTING)

P2504-CHARGING SYSTEM OUTPUT HIGH (CONTINUED)

3. ADD-ON OR ACCESSORY WIRES AT BATTERY TERMINAL

Check for add-on or accessory wiring at positive (+) terminal of the battery.

Are there any damaged wires at the battery?

Yes >> Remove defective or miss wired add-on or accessory wiring from battery.
Perform POWERTRAIN VERIFICATION TEST VER - 1 (DIESEL). (Refer to 8 - ELECTRICAL/ELECTRONIC CONTROL MODULES/ENGINE CONTROL MODULE - DIAGNOSIS AND TESTING)

No >> Go To 4

---

4. HIGH RESISTANCE IN THE B+ CIRCUIT

Measure the voltage between the B+ post of the generator and the B+ post of the battery while the engine is running.

Is the voltage above .4 volts?

Yes >> Repair the high resistance in the B+ circuit from battery to the generator.
Perform POWERTRAIN VERIFICATION TEST VER - 1 (DIESEL). (Refer to 8 - ELECTRICAL/ELECTRONIC CONTROL MODULES/ENGINE CONTROL MODULE - DIAGNOSIS AND TESTING)

No >> Go To 5

---

5. HIGH RESISTANCE IN THE B+ CROSS OVER CABLE

Measure the voltage between the B+ post of the generator and the B+ post of the right side battery to the left side battery while the engine is running.

Is the voltage above .4 volts?

Yes >> Repair the high resistance in the B+ cross over cable from right side battery to left side battery.
Perform POWERTRAIN VERIFICATION TEST VER - 1 (DIESEL). (Refer to 8 - ELECTRICAL/ELECTRONIC CONTROL MODULES/ENGINE CONTROL MODULE - DIAGNOSIS AND TESTING)

No >> Go To 6

---

6. HIGH RESISTANCE IN THE GROUND CIRCUIT

Measure the voltage between the generator case and the B- post of the battery.

Is the voltage above .1 volts?

Yes >> Repair the high resistance in the ground circuit.
Perform POWERTRAIN VERIFICATION TEST VER - 1 (DIESEL). (Refer to 8 - ELECTRICAL/ELECTRONIC CONTROL MODULES/ENGINE CONTROL MODULE - DIAGNOSIS AND TESTING)

No >> Go To 7

P2504-CHARGING SYSTEM OUTPUT HIGH (CONTINUED)

7. GENERATOR

Disconnect the Generator field harness connector.

NOTE: Check connectors - Clean/repair as necessary.
Measure the resistance between the generator field terminals at the generator.

Is the resistance between .5 and 15 Ohms?

Yes >> Go To 8

No >> Replace the generator.
Perform POWERTRAIN VERIFICATION TEST VER - 1 (DIESEL). (Refer to 8 - ELECTRICAL/ELECTRONIC CONTROL MODULES/ENGINE CONTROL MODULE - DIAGNOSIS AND TESTING)

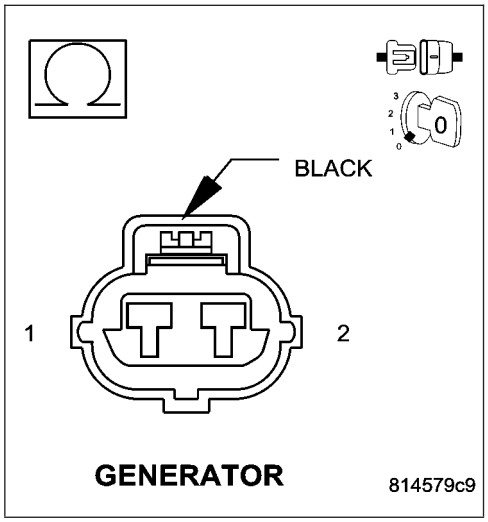

8. ECM

Measure and record the voltage between battery positive circuit of the ECM harness connector and the battery negative circuits of the ECM harness connector.

Reconnect the ECM connectors.

Use the scan tool to measure and record battery voltage.

Compare the voltage reading from the voltmeter with that of the scan tool.

Are the readings within 3 volts of each other?

Yes >> Refer to the INTERMITTENT CONDITION Symptom (Diagnostic Procedure). (Refer to 9 - ENGINE - DIAGNOSIS AND TESTING)

No >> Replace and program the ECM in accordance with the Service Information.
Perform POWERTRAIN VERIFICATION TEST VER - 1 (DIESEL). (Refer to 8 - ELECTRICAL/ELECTRONIC CONTROL MODULES/ENGINE CONTROL MODULE - DIAGNOSIS AND TESTING)

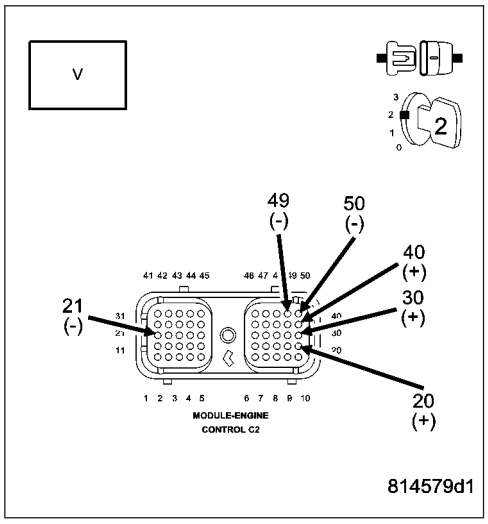

P2509-POWERDOWN DATA LOST ERROR

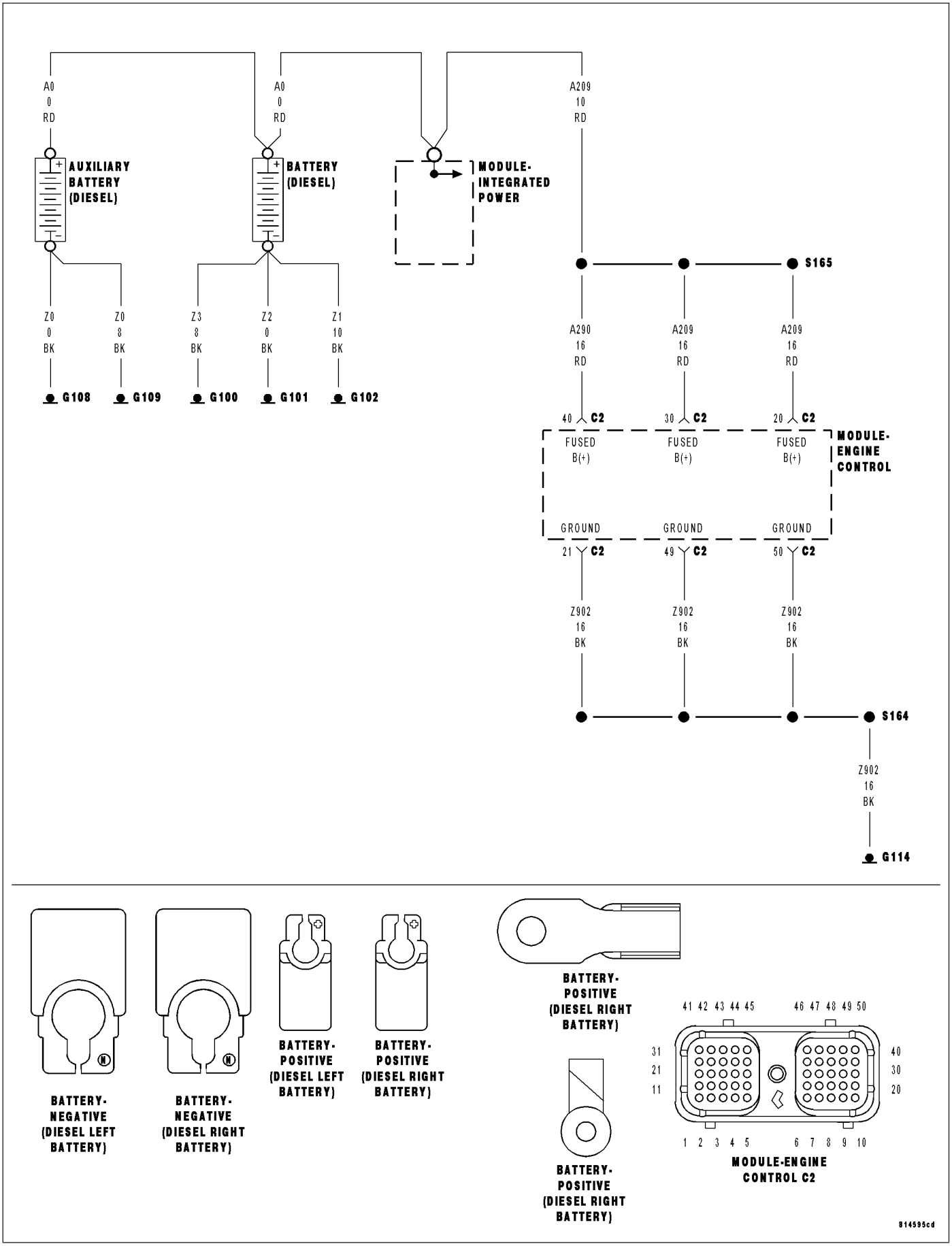

P2509-POWERDOWN DATA LOST ERROR (CONTINUED)

For the Engine circuit diagram (Refer to 8 - ELECTRICAL/ELECTRONIC CONTROL MODULES/ENGINE CONTROL MODULE - SCHEMATIC - ELECTRICAL)

For a complete wiring diagram **Refer to Section 8W**.

- **When Monitored:**
  Continuous - key on or key off.
- **Set Condition:**
  Loss of voltage detected at the ECM for a calibrated amount of time.

Possible Causes
POOR CONNECTIONS AT THE BATTERIES
LOW BATTERY VOLTAGE
OPEN FUSED B+ TO ECM
OPEN GROUND CIRCUIT
BATTERY + SHORTED TO OTHER CIRCUITS
RETURN CIRCUIT SHORTED
BATTERY + SHORTED TO GROUND
INTERMITTENT CONDITION

Always perform the Pre-Diagnostic Troubleshooting procedure before proceeding. (Refer to 9 - ENGINE - DIAGNOSIS AND TESTING)

Diagnostic Test

1. POOR CONNECTIONS AT THE BATTERIES

Visually inspect the wiring at the battery for damaged wires, or corrosion.

Are the connections tight and free of corrosion?

Yes >> Go To 2

No >> Repair the poor connections at the batteries.
Perform POWERTRAIN VERIFICATION TEST VER - 1 (DIESEL). (Refer to 8 - ELECTRICAL/ELECTRONIC CONTROL MODULES/ENGINE CONTROL MODULE - DIAGNOSIS AND TESTING)

---

2. LOW BATTERY VOLTAGE

Measure the voltage between the positive and negative posts of the batteries.

Is the battery voltages both above 12 volts?

Yes >> Go To 3

No >> Recharge or replace the battery (s).
Perform POWERTRAIN VERIFICATION TEST VER - 1 (DIESEL). (Refer to 8 - ELECTRICAL/ELECTRONIC CONTROL MODULES/ENGINE CONTROL MODULE - DIAGNOSIS AND TESTING)

P2509-POWERDOWN DATA LOST ERROR (CONTINUED)

3. OPEN FUSED B+ TO ECM

Turn the ignition off.

Disconnect the ECM harness connectors.

Turn the ignition on.

Measure the resistance between the positive battery post and the ECM supply circuits.

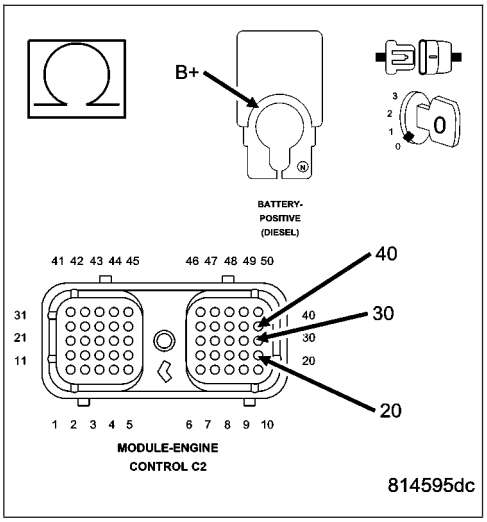

Is the resistance less than 10 Ohms?

Yes >> Go To 4

No >> Repair the open fused B+ circuit to ECM.

Perform POWERTRAIN VERIFICATION TEST VER - 1 (DIESEL). (Refer to 8 - ELECTRICAL/ELECTRONIC CONTROL MODULES/ENGINE CONTROL MODULE - DIAGNOSIS AND TESTING)

4. OPEN GROUND CIRCUIT

Measure the resistance between the negative battery post and the ECM ground circuits.

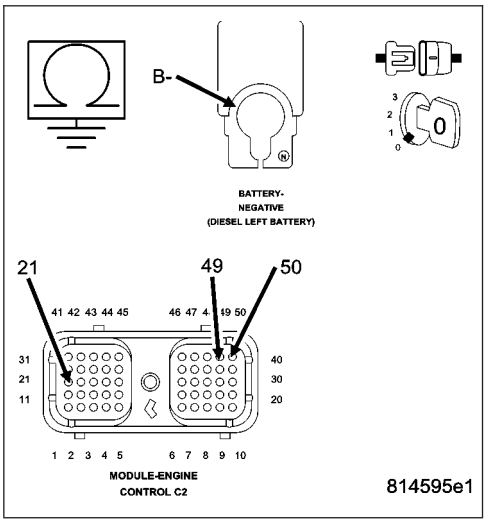

Is the resistance less than 10 Ohms?

Yes >> Go To 5

No >> Repair the open ground circuit.

Perform POWERTRAIN VERIFICATION TEST VER - 1 (DIESEL). (Refer to 8 - ELECTRICAL/ELECTRONIC CONTROL MODULES/ENGINE CONTROL MODULE - DIAGNOSIS AND TESTING)

P2509-POWERDOWN DATA LOST ERROR (CONTINUED)

5. BATTERY + SHORTED TO OTHER CIRCUITS

Measure the resistance between the ECM supply circuits and all other circuits in the ECM harness connector, except other supply circuits.

Is the resistance greater than 100k Ohms?

Yes >> Go To 6

No >> Repair the battery circuit short to other circuits in engine harness.

Perform POWERTRAIN VERIFICATION TEST VER - 1 (DIESEL). (Refer to 8 - ELECTRICAL/ELECTRONIC CONTROL MODULES/ENGINE CONTROL MODULE - DIAGNOSIS AND TESTING)

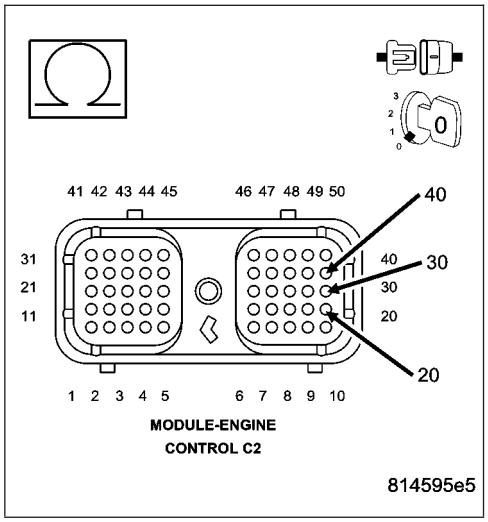

6. RETURN CIRCUIT SHORTED

Measure the resistance between the ECM return circuits and all other circuits in the ECM harness connector, except other return circuits.

Is the resistance greater than 100k Ohms?

Yes >> Go To 7

No >> Repair or replace the engine harness.

Perform POWERTRAIN VERIFICATION TEST VER - 1 (DIESEL). (Refer to 8 - ELECTRICAL/ELECTRONIC CONTROL MODULES/ENGINE CONTROL MODULE - DIAGNOSIS AND TESTING)

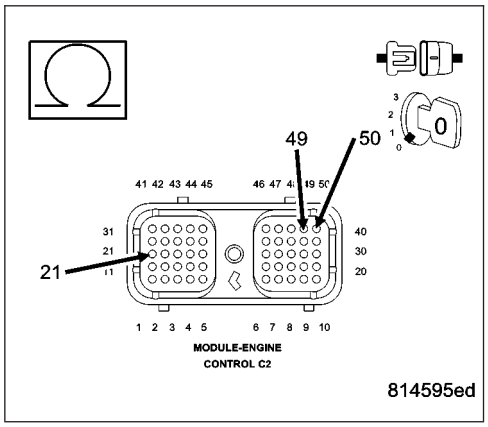

7. BATTERY + SHORTED TO GROUND

Measure the resistance between the ECM B+ supply circuits and ground.

Is the resistance greater than 100k Ohms?

Yes >> Refer to the INTERMITTENT CONDITION Symptom (Diagnostic Procedure). (Refer to 9 - ENGINE - DIAGNOSIS AND TESTING)

No >> Repair Battery + shorted to ground.

Perform POWERTRAIN VERIFICATION TEST VER - 1 (DIESEL). (Refer to 8 - ELECTRICAL/ELECTRONIC CONTROL MODULES/ENGINE CONTROL MODULE - DIAGNOSIS AND TESTING)

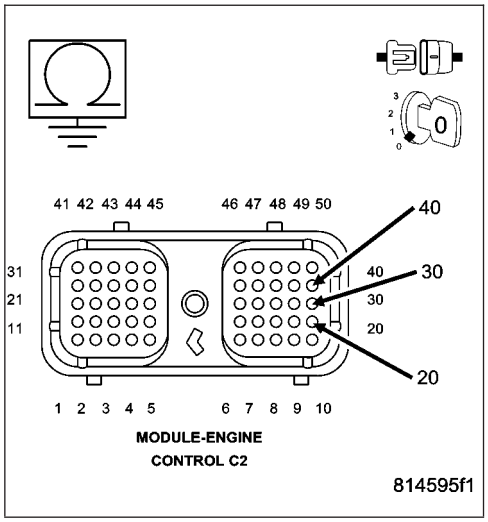

P2607-LOW VOLTAGE AT THE #2 INTAKE AIR HEATER RELAY

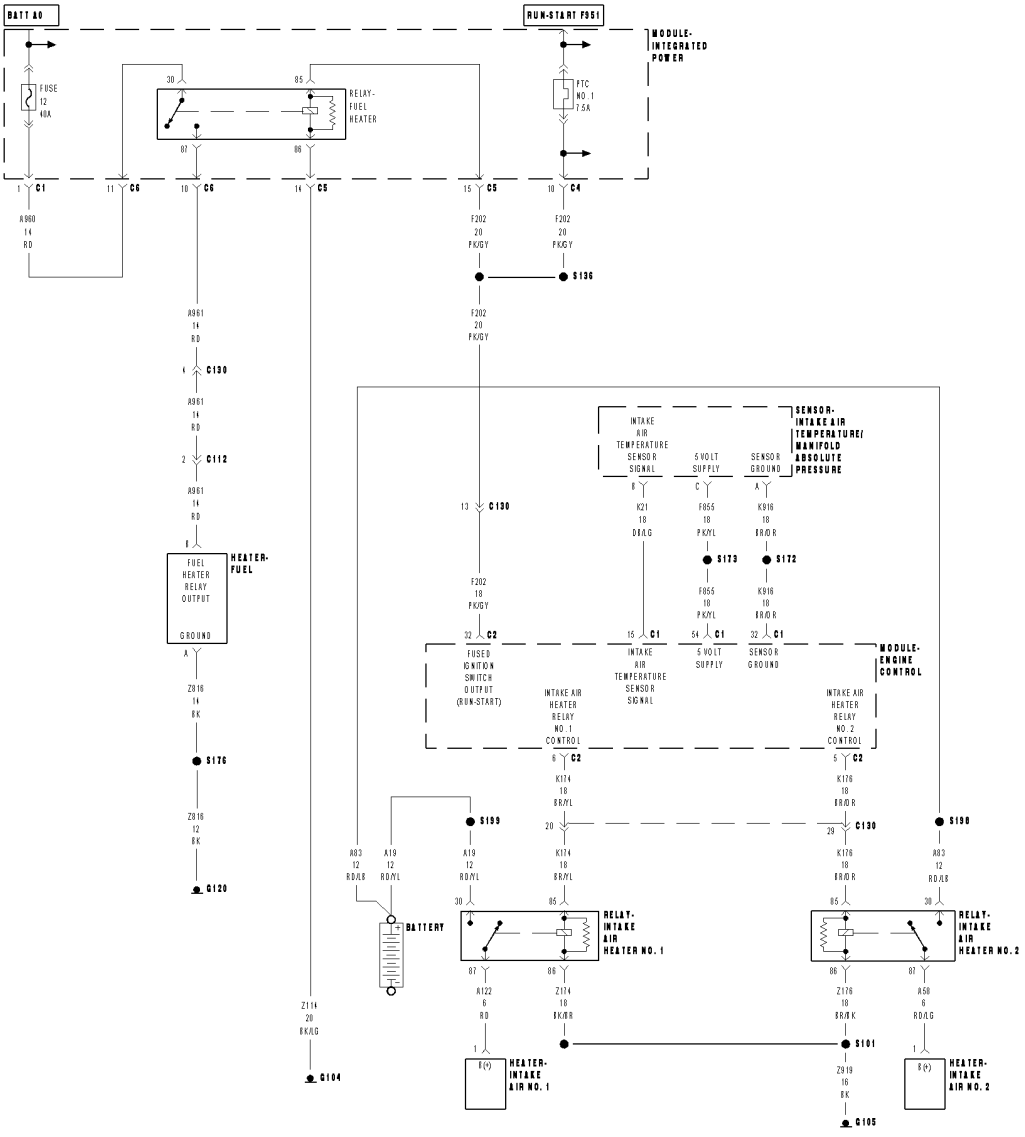

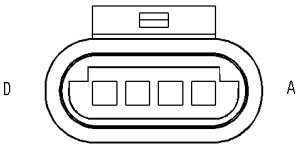

SENSOR-INTAKE AIR TEMPERATURE/ MANIFOLD ABSOLUTE PRESSURE (DIESEL)

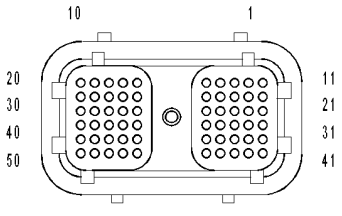

MODULE-ENGINE CONTROL C1

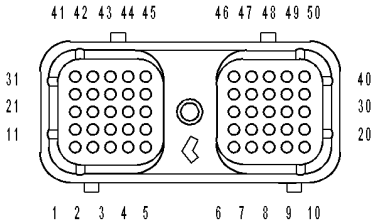

MODULE-ENGINE CONTROL C2

81429064

P2607-LOW VOLTAGE AT THE #2 INTAKE AIR HEATER RELAY (CONTINUED)

For the Engine circuit diagram (Refer to 9 - ENGINE - SCHEMATICS AND DIAGRAMS)

For a complete wiring diagram **Refer to Section 8W**.

- **When Monitored:**
  When the ignition is on.
- **Set Condition:**
  When the signal from the #2 intake air heater output does not match the signal from the #2 intake air heater feedback.

Possible Causes
LOOSE CONNECTION
INTAKE AIR HEATER RELAY
SIGNAL CIRCUIT OPEN FROM RELAY TO ECM
SIGNAL CIRCUIT SHORTED TO BATTERY NEGATIVE
ECM
INTERMITTENT CONDITION

Always perform the Pre-Diagnostic Troubleshooting procedure before proceeding. (Refer to 9 - ENGINE - DIAGNOSIS AND TESTING)

Diagnostic Test

1. RELAY CLICKING

Ignition on, engine not running.

With the scan tool, actuate the #1 Intake Air Heater.

Can you hear the Relay clicking?

Yes >> Go To 2

No >> Go To 3

---

2. LOOSE CONNECTION

While the relay is clicking , wiggle the wiring harness and connectors.

Does this interrupt the clicking?

Yes >> Repair the poor connection.
Perform POWERTRAIN VERIFICATION TEST VER - 1 (DIESEL). (Refer to 8 - ELECTRICAL/ELECTRONIC CONTROL MODULES/ENGINE CONTROL MODULE - DIAGNOSIS AND TESTING)

No >> Go To 3

P2607-LOW VOLTAGE AT THE #2 INTAKE AIR HEATER RELAY (CONTINUED)

3. INTAKE AIR HEATER RELAY

Turn the ignition off.

Remove the Intake Air Heater #1 Relay.

Check connectors - Clean/repair as necessary.

Measure the resistance between the signal and return posts of the intake air heater relay.

Is the resistance between 15 and 25 Ohms?

Yes >> Go To 4

No >> Replace the Intake Air Heater #1 relay.
Perform POWERTRAIN VERIFICATION TEST VER - 1 (DIESEL). (Refer to 8 - ELECTRICAL/ELECTRONIC CONTROL MODULES/ENGINE CONTROL MODULE - DIAGNOSIS AND TESTING)

---

4. SIGNAL CIRCUIT OPEN FROM RELAY TO ECM

Disconnect the ECM harness connectors.

Check connectors - Clean/repair as necessary.

Measure the resistance of the intake air heater relay signal circuit between the ECM connector and the intake air heater relay connector.

Is the resistance less than 10 Ohms?

Yes >> Go To 5

No >> Repair the open signal circuit from PDC to ECM harness connector.
Perform POWERTRAIN VERIFICATION TEST VER - 1 (DIESEL). (Refer to 8 - ELECTRICAL/ELECTRONIC CONTROL MODULES/ENGINE CONTROL MODULE - DIAGNOSIS AND TESTING)

---

5. RETURN CIRCUIT SHORTED TO BATTERY NEGATIVE

Measure the resistance of the return circuit between the intake air heater relay connector and battery negative.

I s resistance less than 10 ohms?

Yes >> Go To 6

No >> Repair the return circuit shorted to battery negative.

---

6. SIGNAL CIRCUIT SHORTED TO BATTERY NEGATIVE

Measure the voltage between the signal circuit of the intake air heater relay and battery negative.

Is the voltage greater than 1 volts?

Yes >> Repair the signal circuit shorted to Battery negative.
Perform POWERTRAIN VERIFICATION TEST VER - 1 (DIESEL). (Refer to 8 - ELECTRICAL/ELECTRONIC CONTROL MODULES/ENGINE CONTROL MODULE - DIAGNOSIS AND TESTING)

No >> Go To 7

P2607-LOW VOLTAGE AT THE #2 INTAKE AIR HEATER RELAY (CONTINUED)

7. ECM

Reconnect the ECM harness connectors.

Disconnect the intake air heater relay signal wire and use a jumper to connect it to battery negative.

Turn the ignition on.

With the scan tool, read DTCs.

Did DTC P2608?

Yes >> Refer to the INTERMITTENT CONDITION Symptom (Diagnostic Procedure). (Refer to 9 - ENGINE - DIAGNOSIS AND TESTING)

No >> Replace the ECM.

Perform POWERTRAIN VERIFICATION TEST VER - 1 (DIESEL). (Refer to 8 - ELECTRICAL/ELECTRONIC CONTROL MODULES/ENGINE CONTROL MODULE - DIAGNOSIS AND TESTING)

P2608-HIGH VOLTAGE AT THE #2 INTAKE AIR HEATER RELAY

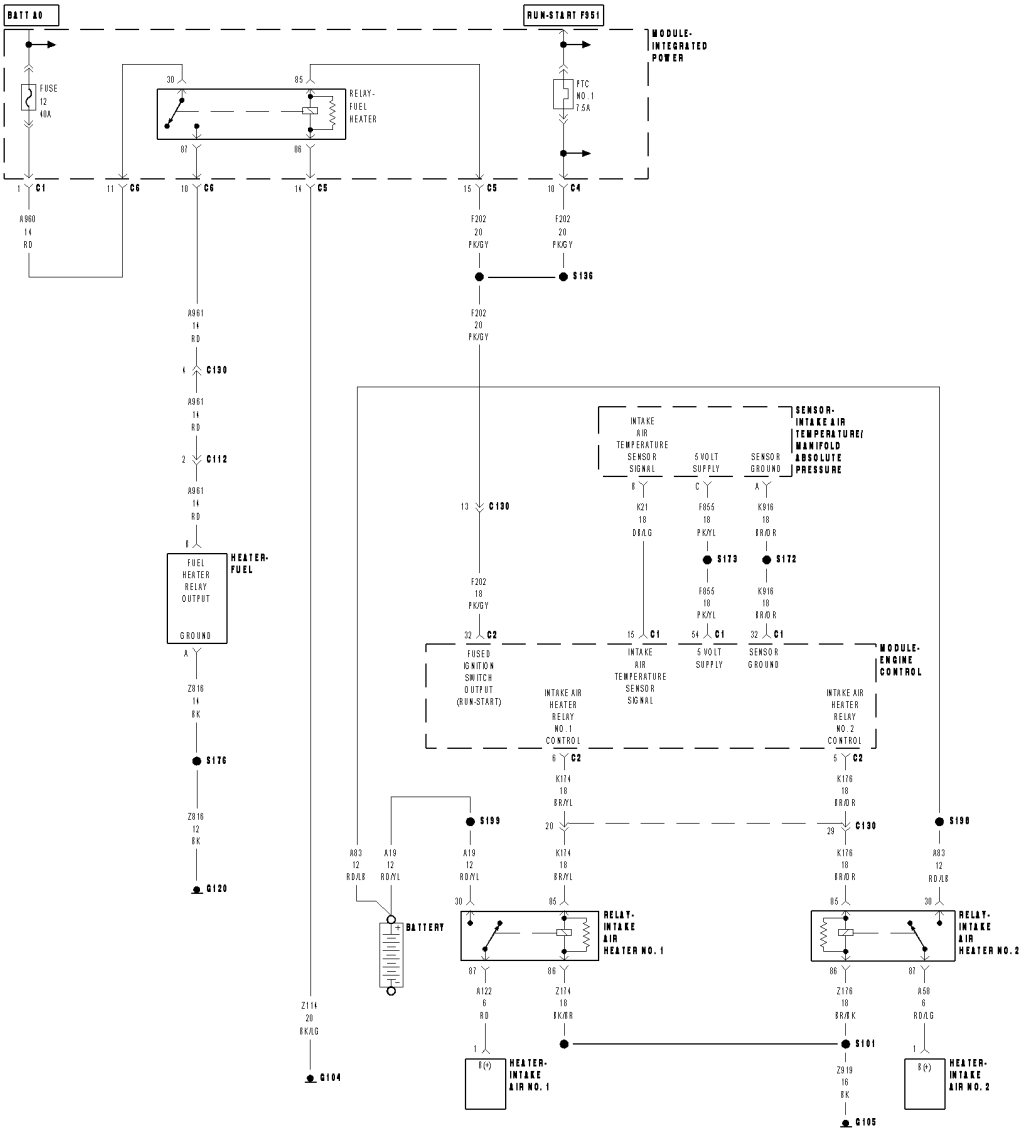

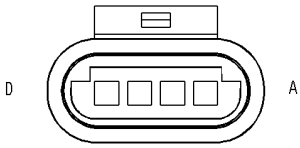

SENSOR-INTAKE AIR TEMPERATURE/ MANIFOLD ABSOLUTE PRESSURE (DIESEL)

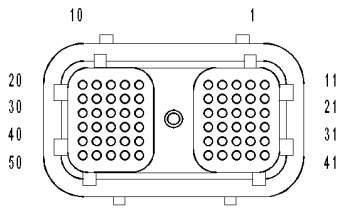

MODULE-ENGINE CONTROL C1

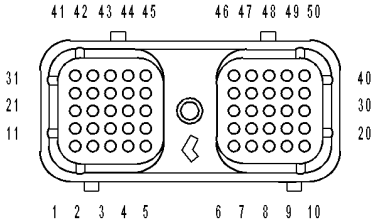

MODULE-ENGINE CONTROL C2

81429064

P2608-HIGH VOLTAGE AT THE #2 INTAKE AIR HEATER RELAY (CONTINUED)

For the Engine circuit diagram (Refer to 9 - ENGINE - SCHEMATICS AND DIAGRAMS)

For a complete wiring diagram **Refer to Section 8W**.

- **When Monitored:**
  When the ignition is on.
- **Set Condition:**
  When the signal from the #2 Intake Air Heater output does not match the signal from the #2 Intake Air Heater feedback.

Possible Causes
LOOSE CONNECTION
INTAKE AIR HEATER RELAY
SIGNAL CIRCUIT SHORTED TO BATTERY NEGATIVE
ECM
INTERMITTENT CONDITION

Always perform the Pre-Diagnostic Troubleshooting procedure before proceeding. (Refer to 9 - ENGINE - DIAGNOSIS AND TESTING)

Diagnostic Test

1. RELAY CLICKING

Ignition on, engine not running.

With the scan tool, actuate the Intake Air Heater relay.

Can you hear the Relay clicking?

Yes >> Go To 2

No >> Go To 3

---

2. LOOSE CONNECTION

While the relay is clicking , wiggle the wiring harness and connectors.

Does this interrupt the clicking?

Yes >> Repair the poor connection.
Perform POWERTRAIN VERIFICATION TEST VER - 1 (DIESEL). (Refer to 8 - ELECTRICAL/ELECTRONIC CONTROL MODULES/ENGINE CONTROL MODULE - DIAGNOSIS AND TESTING)

No >> Go To 3

P2608-HIGH VOLTAGE AT THE #2 INTAKE AIR HEATER RELAY (CONTINUED)

3. INTAKE AIR HEATER RELAY

Turn the ignition off.

Remove the Intake Air Heater Relay.

Check connectors - Clean/repair as necessary.

Measure the resistance between the signal and return posts of the intake air heater relay.

Is the resistance between 15 and 25 Ohms?

Yes >> Go To 4

No >> Replace the Intake Air Heater relay.
Perform POWERTRAIN VERIFICATION TEST VER - 1 (DIESEL). (Refer to 8 - ELECTRICAL/ELECTRONIC CONTROL MODULES/ENGINE CONTROL MODULE - DIAGNOSIS AND TESTING)

---

4. SIGNAL CIRCUIT SHORTED TO BATTERY NEGATIVE

Disconnect the ECM harness connector(s).

NOTE: Check connectors - Clean/repair as necessary.

Measure the resistance between the signal circuit of the intake air heater relay and battery negative.

Is the resistance greater than 100 K ohms?

Yes >> Go To 5

No >> Repair signal circuit shorted to battery negative.
Perform POWERTRAIN VERIFICATION TEST VER - 1 (DIESEL). (Refer to 8 - ELECTRICAL/ELECTRONIC CONTROL MODULES/ENGINE CONTROL MODULE - DIAGNOSIS AND TESTING)

---

5. HARNESS SHORTED

Measure the resistance between intake air heater relay signal circuit and all other ECM circuits in the ECM connectors.

Is the resistance greater than 100k ohms?

Yes >> Go To 6

No >> Repair the shorted harness.

---

6. ECM

Reconnect the ECM harness connectors.

Turn the ignition on.

Disconnect the intake air heater relay signal wire.

Did DTC P0542 or 2608 set?

Yes >> Refer to the INTERMITTENT CONDITION Symptom (Diagnostic Procedure). (Refer to 9 - ENGINE - DIAGNOSIS AND TESTING)

No >> Replace the ECM.
Perform POWERTRAIN VERIFICATION TEST VER - 1 (DIESEL). (Refer to 8 - ELECTRICAL/ELECTRONIC CONTROL MODULES/ENGINE CONTROL MODULE - DIAGNOSIS AND TESTING)

P2609-NO VOLTAGE DROP SEEN FROM INTAKE AIR HEATERS

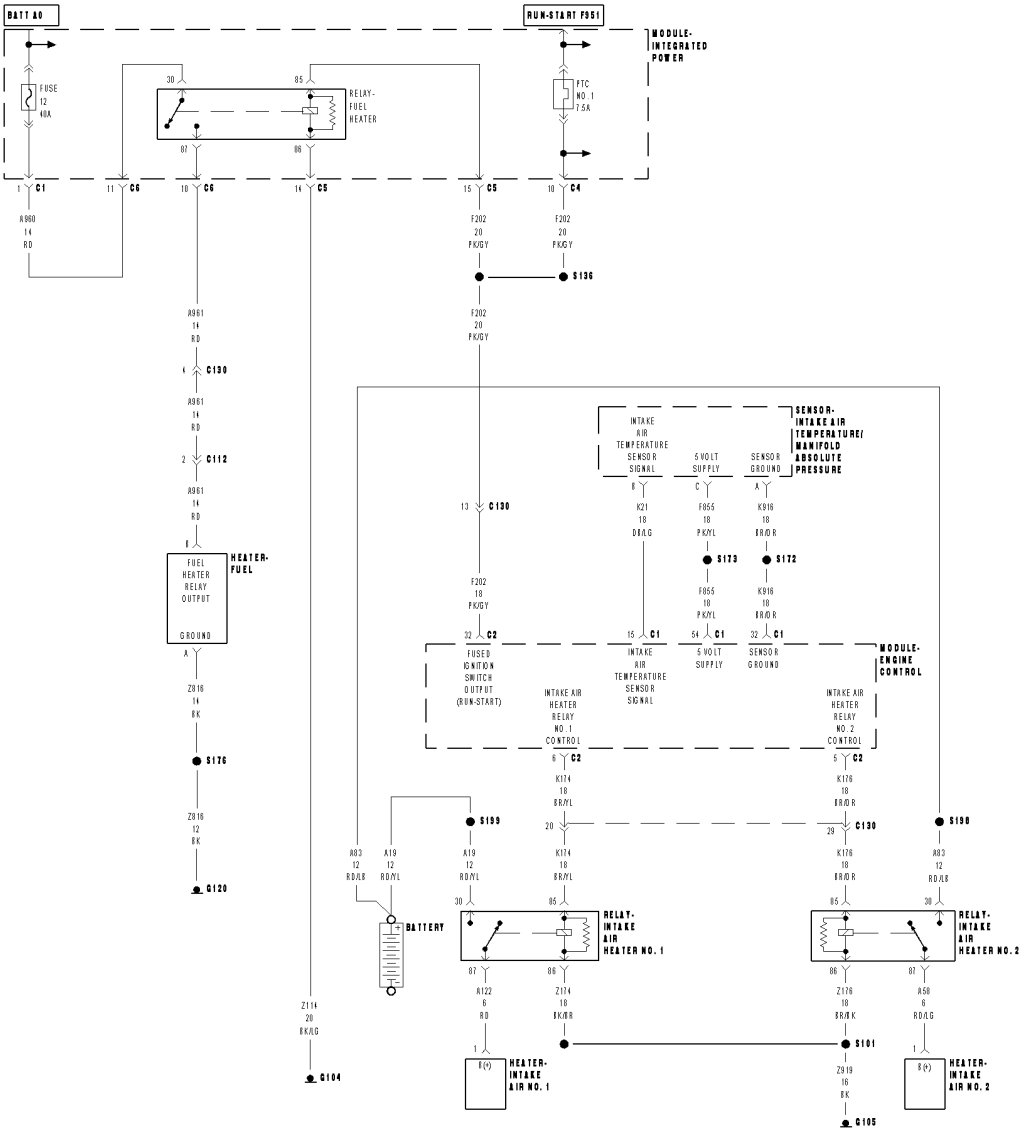

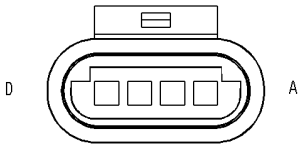

SENSOR-INTAKE AIR TEMPERATURE/ MANIFOLD ABSOLUTE PRESSURE (DIESEL)

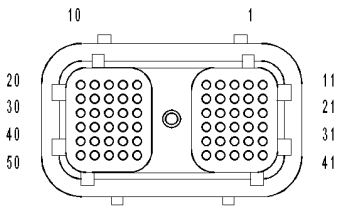

MODULE-ENGINE CONTROL C1

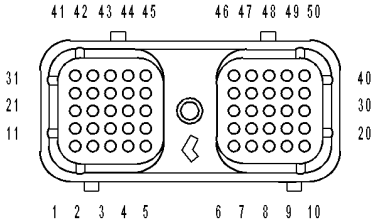

MODULE-ENGINE CONTROL C2

81429064

P2609-NO VOLTAGE DROP SEEN FROM INTAKE AIR HEATERS (CONTINUED)

For the Engine circuit diagram (Refer to 9 - ENGINE - SCHEMATICS AND DIAGRAMS)

For a complete wiring diagram **Refer to Section 8W**.

- **When Monitored:**
  First 15 seconds of engine operation.
- **Set Condition:**
  The ECM does not detect a voltage drop on the intake air heater circuit.

Possible Causes
INTAKE AIR HEATER OPEN
INTAKE AIR HEATER GROUND OPEN
OPEN BATTERY CABLE FROM INTAKE AIR HEATER RELAY
BATTERY CABLE OPEN
#1 INTAKE AIR HEATER RELAY
#2 INTAKE AIR HEATER RELAY
INTERMITTENT CONDITION

Always perform the Pre-Diagnostic Troubleshooting procedure before proceeding. (Refer to 9 - ENGINE - DIAGNOSIS AND TESTING)

Diagnostic Test

1. INTAKE AIR HEATER OPEN

Measure the resistance between the intake air heater supply and ground terminal on each intake air heater.

Is the resistance less than 10 Ohms?

Yes >> Go To 2

No >> Replace the open Intake Air Heater.
Perform POWERTRAIN VERIFICATION TEST VER - 1 (DIESEL). (Refer to 8 - ELECTRICAL/ELECTRONIC CONTROL MODULES/ENGINE CONTROL MODULE - DIAGNOSIS AND TESTING)

---

2. INTAKE AIR HEATER GROUND OPEN

Measure the resistance of the intake air heater ground circuit between the intake air heater terminal and the intake manifold cover ground connection.

NOTE: The intake air heater circuit is grounded through a conductive gasket on the top and bottom of the air heater (grey colored gaskets).

Is the resistance less than 10 Ohms?

Yes >> Go To 3

No >> Repair the open Intake Air heater ground or replace both heater gaskets with the proper conductive gaskets..
Perform POWERTRAIN VERIFICATION TEST VER - 1 (DIESEL). (Refer to 8 - ELECTRICAL/ELECTRONIC CONTROL MODULES/ENGINE CONTROL MODULE - DIAGNOSIS AND TESTING)

P2609-NO VOLTAGE DROP SEEN FROM INTAKE AIR HEATERS (CONTINUED)

3. OPEN BATTERY CABLE FROM INTAKE AIR HEATER RELAY

Measure the resistance of the battery cable between the intake air heater and the intake air heater relay for both intake air heaters.

Is the resistance less than 10 Ohms?

Yes >> Go To 4

No >> Repair The open or high resistance battery cable from the intake heater relay to heater.
Perform POWERTRAIN VERIFICATION TEST VER - 1 (DIESEL). (Refer to 8 - ELECTRICAL/ELECTRONIC CONTROL MODULES/ENGINE CONTROL MODULE - DIAGNOSIS AND TESTING)

---

4. BATTERY CABLE OPEN

Measure the resistance of the battery cable between the battery and the intake air heater relay for both relays.

Is the resistance less than 10 Ohms?

Yes >> Go To 5

No >> Replace the battery cable from the battery to the Intake Air Heater Relay.
Perform POWERTRAIN VERIFICATION TEST VER - 1 (DIESEL). (Refer to 8 - ELECTRICAL/ELECTRONIC CONTROL MODULES/ENGINE CONTROL MODULE - DIAGNOSIS AND TESTING)

---

5. #1 INTAKE AIR HEATER RELAY

Disconnect the #1 intake air heater relay signal wire.

Connect a jumper wire from the signal terminal of the #1 intake air heater relay to battery positive.

Did the relay click when 12 volts was applied?

Yes >> Go To 6

No >> Replace #1 Intake Air Heater Relay.
Perform POWERTRAIN VERIFICATION TEST VER - 1 (DIESEL). (Refer to 8 - ELECTRICAL/ELECTRONIC CONTROL MODULES/ENGINE CONTROL MODULE - DIAGNOSIS AND TESTING)

---

6. #2 INTAKE AIR HEATER RELAY

Disconnect the #2 intake air heater relay signal wire.

Connect a jumper wire from the signal terminal of the #2 intake air heater relay to battery positive.

Did the relay click when 12 volts was applied?

Yes >> Refer to the INTERMITTENT CONDITION Symptom (Diagnostic Procedure).

No >> Replace #2 Intake Air Heater Relay.
Perform POWERTRAIN VERIFICATION TEST VER - 1 (DIESEL). (Refer to 8 - ELECTRICAL/ELECTRONIC CONTROL MODULES/ENGINE CONTROL MODULE - DIAGNOSIS AND TESTING)

---

*ENGINE SPEED SURGES UNDER LOAD OR IN OPERATING RANGE

Possible Causes
POSSIBLE CAUSES

Diagnostic Test

1. POSSIBLE CAUSES

This is a list of possible causes:
Check for any TSBs for ECM calibration updates that my apply.
Fuel level low.
Fuel filter plugged.
Poor quality or improper grade of fuel.
Fuel tank venting.
Low fuel pressure.
Air in fuel system
Fuel Lift Pump malfunctioning.
Fuel Inlet restriction.
Fuel line kinked or restricted.
Fuel return passage or fuel return line kinked or restricted.
Injectors are incorrect.
Injector shim thickness is incorrect.
Injector malfunction.
Fuel connector leaking fuel.
Accelerator pedal is restricted or out of calibration.
Crankshaft position sensor (CKP) or Camshaft position sensor (CMP) and/or circuit malfunction.
Vehicle Speed sensor (VSS) and/or circuit malfunction.
Incorrect Transmission Clutch operation.
Check vehicle brakes for dragging, transmission malfunction, cooling fan operation cycle time and engine driven devices.
Check for proper turbocharger, turbo charger wheel clearance is out of specifications, waste gate for correct operation.
Bus communication problems.
Moisture in harness connectors or corroded terminals.
Internal engine damage.
Fuel control actuator
Speed indicator ring
Pressure Limiting valve
Air inlet restriction
External fuel leaks
Injector circuit
High pressure fuel pump

View repair

Repair

Repair as necessary. Refer to Service Information for the related symptom(s).

Perform POWERTRAIN VERIFICATION TEST VER - 1 (DIESEL). (Refer to 8 - ELECTRICAL/ELECTRONIC CONTROL MODULES/ENGINE CONTROL MODULE - DIAGNOSIS AND TESTING)

*ENGINE SPEED SURGES LOW OR HIGH IDLE

Possible Causes
POSSIBLE CAUSES

Diagnostic Test

1. POSSIBLE CAUSES

This is a list of possible causes:
Check for any TSBs for ECM calibration updates that my apply.
Fuel level low.
Fuel filter plugged.
Poor quality or improper grade of fuel.
Fuel tank venting.
Low fuel pressure.
Air in fuel system
Fuel Lift Pump malfunctioning.
Fuel Inlet restriction.
Fuel line kinked or restricted.
Fuel return passage or fuel return line kinked or restricted.
Injectors are incorrect.
Injector shim thickness is incorrect.
Injector malfunction.
Fuel connector leaking fuel.
High pressure Fuel pump.
Accelerator pedal is restricted or out of calibration.
Vibration damper is damaged.
Crankshaft position sensor (CKP) or Camshaft position sensor (CMP) and/or circuit malfunction.
Vehicle Speed sensor (VSS) and/or circuit malfunction.
Incorrect Transmission Clutch operation.
Check vehicle brakes for dragging, transmission malfunction, cooling fan operation cycle time and engine driven devices.
Check for proper turbocharger, turbo charger wheel clearance is out of specifications, waste gate for correct operation.
Bus communication problems.
Moisture in harness connectors or corroded terminals.
Internal engine damage.
Electronic noise.
Idling with excessive load.
Clutch is malfunctioning or incorrect.
Speed indicator ring
Injector circuit

View repair.

Repair

Repair as necessary. Refer to Service Information for the related symptom(s).

Perform POWERTRAIN VERIFICATION TEST VER - 1 (DIESEL). (Refer to 8 - ELECTRICAL/ELECTRONIC CONTROL MODULES/ENGINE CONTROL MODULE - DIAGNOSIS AND TESTING)

*ENGINE DIFFICULT TO START OR WILL NOT START (NO EXHAUST SMOKE WHILE CRANKING)

Possible Causes
POSSIBLE CAUSES

Diagnostic Test

1. POSSIBLE CAUSES

This is a list of possible causes:
Check for any TSBs for ECM calibration updates that my apply.
Fuel level low.
Poor quality or improper grade of fuel.
Fuel filter plugged.
Fuel tank venting.
Low fuel pressure.
Air in fuel system
Fuel Lift Pump malfunctioning.
Fuel Inlet restriction.
Fuel injection pump supply voltage open or low voltage.
Fuel inlet line kinked or restricted.
Fuel return passage or fuel return line kinked or restricted.
Injectors are incorrect.
Injector shim thickness is incorrect.
Injector malfunction.
Fuel connector leaking fuel.
Crankshaft position sensor (CKP) or Camshaft position sensor (CMP) and/or circuit malfunction.
Moisture in harness connectors or corroded terminals.
Skim issues.
Battery voltage low.
Ignition switch supply voltage low or open.
Battery voltage to ECM is low or open.
Electrical noise.
Fuel injection pump.
Engine Control Module.
Internal engine damage.

View repair.

Repair

Repair as necessary. Refer to Service Information for the related symptom(s).

Perform POWERTRAIN VERIFICATION TEST VER - 1 (DIESEL). (Refer to 8 - ELECTRICAL/ELECTRONIC CONTROL MODULES/ENGINE CONTROL MODULE - DIAGNOSIS AND TESTING)

*ENGINE DIFFICULT TO START OR WILL NOT START (EXHAUST SMOKE)

Possible Causes
POSSIBLE CAUSES

Diagnostic Test

1. POSSIBLE CAUSES

This is a list of possible causes:
Check for any TSBs for ECM calibration updates that my apply.
Fuel level low.
Battery voltage low.
Fuel filter plugged.
Poor quality or improper grade of fuel.
Fuel tank venting.
Low fuel pressure.
Air in fuel system
Fuel Lift Pump malfunctioning.
Fuel Inlet restriction.
Fuel line kinked or restricted.
Fuel return passage or fuel return line kinked or restricted.
Injectors are incorrect.
Injector shim thickness is incorrect.
Injector malfunction.
Fuel connector leaking fuel.
Crankshaft position sensor (CKP) or Camshaft position sensor (CMP) and/or circuit malfunction.
Moisture in harness connectors or corroded terminals.
Internal engine damage.
Air intake restriction.
Exhaust restriction.
Fuel inlet temperature high.
Overhead adjustments.
Ignition switch output voltage low and/or open.
Starting accessories for cold weather such as engine block heaters, fuel heaters if equipped.
Engine cranking speed is low.
Electrical noise.
Fuel control actuator circuit
Speed indicator ring
Pressure limiting valve
Injector circuit
Air inlet restriction
External fuel leaks

View repair

Repair

Repair as necessary. Refer to Service Information for the related symptom(s).

Perform POWERTRAIN VERIFICATION TEST VER - 1 (DIESEL). (Refer to 8 - ELECTRICAL/ELECTRONIC CONTROL MODULES/ENGINE CONTROL MODULE - DIAGNOSIS AND TESTING)

*ENGINE SPEED SURGES IN PTO OR CRUISE CONTROL

Possible Causes
POSSIBLE CAUSES

Diagnostic Test

1. POSSIBLE CAUSES

This is a list of possible causes:

Check for any TSBs for ECM calibration updates that my apply.

Fuel filter plugged.

Fuel Inlet restriction.

Fuel line kinked or restricted.

Fuel return passage or fuel return line kinked or restricted.

Accelerator pedal is restricted or out of calibration.

Vehicle Speed sensor (VSS) and/or circuit malfunction.

Transmission gear shift.

Check vehicle brakes for dragging, transmission malfunction, cooling fan operation cycle time and engine driven devices.

Moisture in harness connectors or corroded terminals.

ECM control, PTO speed governor.

Engine overload.

Air Inlet restriction

View repair

Repair

Repair as necessary. Refer to Service Information for the related symptom(s).

Perform POWERTRAIN VERIFICATION TEST VER - 1 (DIESEL). (Refer to 8 - ELECTRICAL/ELECTRONIC CONTROL MODULES/ENGINE CONTROL MODULE - DIAGNOSIS AND TESTING)

*CHECKING THE ACCELERATOR PEDAL SENSOR CALIBRATION

Possible Causes
MIS-WIRED APPS
VOLTAGE NOT CHANGING DURING SWEEP
THROTTLE PEDAL NOT MOVING FREELY
APPS

Diagnostic Test

1. MIS-WIRED APPS

Turn the ignition off.

Remove the APPS cover.

Inspect both APPS connector and ECM for proper wiring.

Are both connectors wired correctly?

Yes >> Go To 2

No >> Repair mis-wired APPS connector at APPS or ECM.
Perform POWERTRAIN VERIFICATION TEST VER - 1 (DIESEL). (Refer to 8 - ELECTRICAL/ELECTRONIC CONTROL MODULES/ENGINE CONTROL MODULE - DIAGNOSIS AND TESTING)

---

2. THROTTLE PEDAL NOT MOVING FREELY

Ignition on, engine not running.

Look for proper Throttle operation.

Does the Throttle Pedal move freely between the upper and lower stops?

Yes >> Replace the APPS.
Perform POWERTRAIN VERIFICATION TEST VER - 1 (DIESEL). (Refer to 8 - ELECTRICAL/ELECTRONIC CONTROL MODULES/ENGINE CONTROL MODULE - DIAGNOSIS AND TESTING)

No >> Repair as necessary.
Perform POWERTRAIN VERIFICATION TEST VER - 1 (DIESEL). (Refer to 8 - ELECTRICAL/ELECTRONIC CONTROL MODULES/ENGINE CONTROL MODULE - DIAGNOSIS AND TESTING)

---

*CHECKING THE ECM POWER AND GROUNDS

Possible Causes
ECM GROUND CIRCUIT(S) OPEN
FUSED B+ CIRCUIT OPEN
FUSED IGNITION SWITCH OUTPUT CIRCUIT OPEN

Always perform the Pre-Diagnostic Troubleshooting procedure before proceeding. (Refer to 9 - ENGINE - DIAGNOSIS AND TESTING)

Diagnostic Test

1. ECM GROUND CIRCUIT(S) OPEN

Turn the ignition off.

Disconnect the ECM harness connectors.

Using a 12-volt test light connected to 12-volts, check each of the ECM ground circuits in ECM harness connector.

Did the test light illuminate for each cavity?

Yes >> Go To 2

No >> Repair the ECM Ground circuit(s) for an open.

Perform POWERTRAIN VERIFICATION TEST VER - 1 (DIESEL). (Refer to 8 - ELECTRICAL/ELECTRONIC CONTROL MODULES/ENGINE CONTROL MODULE - DIAGNOSIS AND TESTING)

---

2. FUSED IGNITION SWITCH OUTPUT CIRCUIT OPEN

Turn the ignition off.

Disconnect the ECM harness connectors.

Turn the ignition on.

Using a 12-volt test light connected to ground, check the Fused Ignition Switch Output circuit in ECM harness connector.

Is the test light on?

Yes >> Go To 3

No >> Repair the Fused Ignition Switch Output circuit for an open.

Perform POWERTRAIN VERIFICATION TEST VER - 1 (DIESEL). (Refer to 8 - ELECTRICAL/ELECTRONIC CONTROL MODULES/ENGINE CONTROL MODULE - DIAGNOSIS AND TESTING)

---

3. FUSED B+ CIRCUIT OPEN

Turn the ignition off.

Disconnect the ECM harness connectors.

Using a 12-volt test light connected to ground, check each Fused B+ circuit in the ECM harness connector.

Does the test light illuminate brightly for each circuit?

Yes >> Test Complete.

Perform POWERTRAIN VERIFICATION TEST VER - 1 (DIESEL). (Refer to 8 - ELECTRICAL/ELECTRONIC CONTROL MODULES/ENGINE CONTROL MODULE - DIAGNOSIS AND TESTING)

No >> Repair the Fused B+ Output circuit for an open.

Perform POWERTRAIN VERIFICATION TEST VER - 1 (DIESEL). (Refer to 8 - ELECTRICAL/ELECTRONIC CONTROL MODULES/ENGINE CONTROL MODULE - DIAGNOSIS AND TESTING)

---

*CHECKING PRESSURE LIMITING VALVE ON THE FUEL RAIL FOR INTERNAL LEAKS

Possible Causes
PRESSURE LIMITING VALVE DIAGNOSTICS

Always perform the Pre-Diagnostic Troubleshooting procedure before proceeding. (Refer to 9 - ENGINE - DIAGNOSIS AND TESTING)

Diagnostic Test

1. PRESSURE LIMITING VALVE

Using the scan tool, measure the rail pressure and determine if the rail pressure is excessive (above 185,000 kpa/ 26,831 psi), if it is, troubleshoot for excessive rail pressure first.

Remove the banjo bolt from the pressure-limiting valve on the fuel rail.

Install fuel system test fitting (9013) into the pressure-limiting valve.

Attach one end of a fuel hose to the fuel fitting and put the other end of the fuel hose into a container.

Perform the tests listed below to determine if the pressure-limiting valve is leaking.

a. Operate the engine at idle and watch for fuel flow into the fuel container.

b. Operate the engine at idle and actuate the high pressure safety valve test with the scan tool. Watch for fuel flow into the fuel container.

If fuel flows into the fuel container, replace the pressure-limiting valve. If fuel does not leak from the pressure-limiting valve, the test is complete.

NOTE: do not drive the vehicle with any portion of this test kit installed.

view repair

Yes >> Repair complete

Perform POWERTRAIN VERIFICATION TEST VER - 1 (DIESEL). (Refer to 8 - ELECTRICAL/ELECTRONIC CONTROL MODULES/ENGINE CONTROL MODULE - DIAGNOSIS AND TESTING)

*FUEL HEATER THERMOSTAT TEST

Possible Causes
FUEL HEATER THERMOSTAT TEST

Diagnostic Test

1. FUEL HEATER THERMOSTAT TEST

To check the operating resistance levels on the thermostat and fuel heater perform the following:

1. Unplug the wiring harness from the thermostat.
2. Check the resistance across the two pins of the thermostat with an Ohm meter.
3. The ambient temperature must be below the ″Circuit close temperature; 1° +/- 3° C″ to perform this check.
4. If necessary, induce this ambient temperature by placing ice packs on the thermostat to produce an ″effective ambient temperature″ below the circuit close temperature.
5. The resistance across the two pins should be within the range of 0.3 Ohms to 0.45 Ohms for a properly operating thermostat and heater.
6. If the resistance from step 2 is out of range, remove the thermostat and check the resistance across the terminal connections of the heater (the heater can be checked at room temperatures).
7. The resistance across the terminal pins of the heater should be within the same range of step 2.
8. Replace the heater if resistance is not within the proper operation range.
9. Replace the heater if resistance is not within the proper operation range. Re-install the thermostat with a new o-ring.
10. If the heater resistance is within the proper operating.
11. Circuit close temperature; 1° +/- 3° C
12. Circuit open temperature; 18° +/- 4° C
13. Fuel Heater Thermostat 0.3 - 0.45 Ohms at less than 1 degree C
14. Fuel Heater 0.3 - 0.45 Ohms at room temperature

View Repair

Repair

Test complete.

Perform POWERTRAIN VERIFICATION TEST VER - 1 (DIESEL). (Refer to 8 - ELECTRICAL/ELECTRONIC CONTROL MODULES/ENGINE CONTROL MODULE - DIAGNOSIS AND TESTING)

*FUEL PUMP RETURN FLOW TEST

Possible Causes
EXCESSIVE FUEL PUMP RETURN FLOW

Diagnostic Test

1. FUEL PUMP RETURN FLOW TEST

Using the scan tool, idle the engine and measure the rail pressure and determine if the rail pressure is excessive (above 185,00 kpa/26,831 psi), if it is, troubleshoot for excessive rail pressure first.

Remove the banjo bolt from the pressure-limiting valve on the fuel rail.

Install fuel system test fitting #9013 into the pressure-limiting valve.

Attach one end of a fuel hose to the fuel fitting and put the other end of the fuel hose into a container

Perform the tests listed below to determine if the pressure-limiting valve is leaking.

a. Operate the engine at idle and watch for fuel flow into the fuel container.

b. Operate the engine at idle and actuate the high pressure safety valve test with the scan tool. Watch for fuel flow into the fuel container.

If fuel flows into the fuel container, replace the pressure-limiting valve. If fuel does not leak from the pressure-limiting valve, the test is complete.

NOTE: do not drive the vehicle with any portion of this test kit installed

Operate the engine until the engine is at operating temperature.

Remove the banjo connector from the fuel drain tube at the rear of the fuel filter housing

Install fuel system test fitting #9012 in place of the banjo connector.

Install a piece of fuel line onto the test fitting and put the open end into the graduated cylinder.

Start the engine and let it idle for one minute.

Measure the amount of fuel in the graduated cylinder.

If the flow is less than 1000-ml/minute at idle, the test has successfully passed.

If the flow is greater than 1000 ml/minute at idle, replace the fuel injection pump.

Retest to confirm repair.

View Repair

Repair

Test Complete.

Perform POWERTRAIN VERIFICATION TEST VER - 1 (DIESEL). (Refer to 8 - ELECTRICAL/ELECTRONIC CONTROL MODULES/ENGINE CONTROL MODULE - DIAGNOSIS AND TESTING)

*HIGH PRESSURE FUEL PUMP PERFORMANCE TEST

Possible Causes
*HIGH PRESSURE FUEL PUMP PERFORMANCE TEST

Diagnostic Test

1. *HIGH PRESSURE FUEL PUMP PERFORMANCE TEST

Monitor rail pressure with scan tool while cranking the engine

Compare the fuel pressure set point with the actual fuel pressure reading.

If the engine is not generating fuel pressure, use the scan tool to check for fuel pressure sensor fault codes.

If no fuel pressure sensor faults are present, verify that the engine has adequate fuel delivery using the fuel lift pump flow test.

Monitor rail pressure with scan tool while cranking the engine.

If the engine is not generating fuel pressure, check the torque on the fuel pump drive gear. Torque - 105 Nm.

Retest to confirm fix.

Test complete

Repair

Test complete.

Perform POWERTRAIN VERIFICATION TEST VER - 1 (DIESEL). (Refer to 8 - ELECTRICAL/ELECTRONIC CONTROL MODULES/ENGINE CONTROL MODULE - DIAGNOSIS AND TESTING)

*INJECTOR RETURN FLOW TEST

Possible Causes
*INJECTOR RETURN FLOW TEST

Diagnostic Test

1. * INJECTOR RETURN FLOW TEST

1. Operate the engine until the engine is at operating temperature.
2. Remove the banjo connector from the fuel drain tube at the rear of the fuel filter housing.
3. Install fuel system test fitting (9012) in place of the banjo connector.
4. Remove the vehicle fuel return line from the engine fuel drain tube.
5. Install a piece of fuel line onto the test fitting and into a fuel container or into the fuel tank.
6. Install one end of a test hose onto the fuel drain tube. Place the other end of the test hose into a graduated cylinder.
7. Start the engine and let it idle for one minute.
8. Measure the amount of fuel in the graduated cylinder.
9. If the flow is less than 180-ml/minute, the test has successfully passed.
10. If the flow is greater than 180 ml/minute, shut off the engine and remove all of the fuel injector supply lines. Re torque all of the high-pressure connector nuts. Install all of the fuel injector supply lines.
11. Start the engine and idle for one minute. Measure the amount of fuel in the graduated cylinder.
12. If the flow is less than 180ml/minute, the condition has been fixed.
13. If the flow is greater than 180 ml/minute after step 12, shut off the engine and remove the #1 fuel injector supply line. Re torque the high-pressure connector nut. Cap the #1 fuel port using tool #9011 on the fuel rail and the #1 high pressure connector.
14. Start the engine. Measure the amount of fuel in the graduated cylinder.
15. If the amount of fuel is less than 180 ml/minute, shut off the engine and remove the #1 high pressure connector and the #1 fuel injector. Inspect for damage, repair/replace as necessary.
16. If the amount of fuel is not less than 180-ml/minute, repeat steps 14-16 for cylinders 2-6.
17. Install all high-pressure connectors, fuel injectors, and fuel injector supply lines. Repeat steps 1-8 to confirm repair.

SPECIFICATION:Less than 180 ml/minute total fuel return flow

Repair

Test Complete.

Perform POWERTRAIN VERIFICATION TEST VER - 1 (DIESEL). (Refer to 8 - ELECTRICAL/ELECTRONIC CONTROL MODULES/ENGINE CONTROL MODULE - DIAGNOSIS AND TESTING)

*INTAKE AIR SYSTEM PRESSURE TEST

Possible Causes
CHARGE AIR COOLER PRESSURE TEST

Diagnostic Test

1. CHARGE AIR COOLER PRESSURE TEST

Loosen air inlet tube clamp at the turbocharger.

Remove the air filter housing and the inlet tube from the vehicle as an assembly.

Install the CAC Pressure Tester #9022 into the inner diameter of the turbocharger, securing it in place with the supplied three-fingered band clamp, tighten tool clamp to 8n.m (72 in lbs).

NOTE: NEVER ATTEMPT TO START OR RUN THE VEHICLE AT ANY TIME DURING THIS TEST, ENGINE DAMAGE MAY OCCUR.

Fasten the safety chain around a solid surface behind the turbocharger. Warning: Never run CAC Pressure test without the safety chain securely fastened.

Before attaching shop air to the pressure regulator verify that the regulator is at its lowest pressure setting (0 psi).

Attach an air supply to the regulator and slowly increase the pressure until the pressure gauge reads 20 psi.

WARNING: WARNING: Never apply more than 20 PSI.

Using a solution of soap and water spray the Turbocharger, Turbocharger wastegate, Charge Air Cooler Heat Exchange and CAC Hoses while watching for leaks.

Before any attempt to repair the CAC system is made, its necessary to completely discharge the system. This can be accomplished by turning the regulator knob counter-clockwise.

Allow for adequate time to pass before removing the CAC Pressure tester from the turbo charger inlet.

Position the Air Filter Housing over the three mounting studs located on the inside front fender well and press down firmly to lock housing into place.

Install Air Inlet Tube over the Turbocharger inlet and torque the band clamp to 35 in.lbs.

View Repair

Repair

Test complete.

Perform POWERTRAIN VERIFICATION TEST VER - 1 (DIESEL). (Refer to 8 - ELECTRICAL/ELECTRONIC CONTROL MODULES/ENGINE CONTROL MODULE - DIAGNOSIS AND TESTING)

ENGINE - ELECTRICAL DIAGNOSTICS - SRT-10

TABLE OF CONTENTS

page

ENGINE - ELECTRICAL DIAGNOSTICS - SRT-10
DIAGNOSIS AND TESTING
PRE-DIAGNOSTIC TROUBLESHOOTING PROCEDURE 1488
INTERMITTENT CONDITION 1490
P0031-O2 SENSOR 1/1 HEATER CIRCUIT LOW 1491
P0032-O2 SENSOR 1/1 HEATER CIRCUIT HIGH 1496
P0051-O2 SENSOR 2/1 HEATER CIRCUIT LOW 1501
P0052-O2 SENSOR 2/1 HEATER CIRCUIT HIGH 1506
P0071-AMBIENT/BATTERY TEMP SENSOR PERFORMANCE 1511
P0107-MAP SENSOR VOLTAGE TOO LOW 1516
P0108–MAP SENSOR VOLTAGE TOO HIGH 1521
P0111-INTAKE AIR TEMP PERFORMANCE 1526
P0112-INTAKE AIR TEMP SENSOR VOLTAGE TOO LOW 1530
P0113-INTAKE AIR TEMPERATURE SENSOR CIRCUIT HIGH 1534
P0117-ENGINE COOLANT TEMPERATURE SENSOR CIRCUIT LOW 1539
P0118-ENGINE COOLANT TEMP SENSOR VOLTAGE TOO HIGH 1543
P0121-TP SENSOR VOLTAGE DOES NOT AGREE WITH MAP 1548
P0122-THROTTLE POSITION SENSOR #1 VOLTAGE TOO LOW 1557
P0123-THROTTLE POSITION SENSOR #1 VOLTAGE TOO HIGH 1562
P0125-INSUFFICIENT COOLANT TEMP FOR CLOSED-LOOP FUEL CONTROL 1567
P0131-O2 SENSOR 1/1 CIRCUIT VOLTAGE TOO LOW 1570
P0132-O2 SENSOR 1/1 CIRCUIT VOLTAGE TOO HIGH 1573
P0133-O2 SENSOR 1/1 SLOW RESPONSE 1579
P0135-O2 SENSOR 1/1 HEATER PERFORMANCE 1582
P0136-O2 SENSOR 1/2 HEATER CIRCUIT MALFUNCTION 1586
P0137-O2 SENSOR 1/2 CIRCUIT LOW . . . 1590
P0138-O2 SENSOR 1/2 CIRCUIT HIGH . . . 1594
P0139-O2 SENSOR 1/2 SLOW RESPONSE 1599
P0141-O2 SENSOR 1/2 HEATER PERFORMANCE 1602
P0151-O2 SENSOR 2/1 CIRCUIT LOW . . . 1606
P0152-O2 SENSOR 2/1 CIRCUIT HIGH . . . 1609
P0153-O2 SENSOR 2/1 SLOW RESPONSE 1615
P0155-O2 SENSOR 2/1 HEATER PERFORMANCE 1618
P0157-O2 SENSOR 2/2 CIRCUIT VOLTAGE TOO LOW 1622
P0158-O2 SENSOR 2/2 CIRCUIT VOLTAGE TOO HIGH 1626
P0159-O2 SENSOR 2/2 SLOW RESPONSE 1631
P0161-O2 SENSOR 2/2 HEATER PERFORMANCE 1634
P0171-FUEL SYSTEM 1/1 LEAN 1638
P0172-FUEL SYSTEM 1/1 RICH 1645
P0174-FUEL SYSTEM 2/1 LEAN 1653
P0175-FUEL SYSTEM 2/1 RICH 1660
P0197-ENGINE OIL TEMPERATURE SENSOR VOLTAGE TOO LOW 1667
P0198-ENGINE OIL TEMPERATURE SENSOR VOLTAGE TOO HIGH 1670
P0201-FUEL INJECTOR 1 CIRCUIT 1674
P0202-FUEL INJECTOR 2 CIRCUIT 1678
P0203-FUEL INJECTOR 3 CIRCUIT 1682
P0204-FUEL INJECTOR 4 CIRCUIT 1686
P0205-FUEL INJECTOR 5 CIRCUIT 1690
P0206-FUEL INJECTOR 6 CIRCUIT 1694
P0207-FUEL INJECTOR 7 CIRCUIT 1698
P0208-FUEL INJECTOR 8 CIRCUIT 1702
P0209-FUEL INJECTOR 9 CIRCUIT 1706
P0210-FUEL INJECTOR 10 CIRCUIT 1710
P0300-MULTIPLE CYLINDER MISFIRE . . . 1714
P0301-CYLINDER #1 MISFIRE 1721
P0302-CYLINDER #2 MISFIRE 1731
P0303-CYLINDER #3 MISFIRE 1740
P0304-CYLINDER #4 MISFIRE 1750
P0305-CYLINDER #5 MISFIRE 1760
P0306-CYLINDER #6 MISFIRE 1769
P0307-CYLINDER #7 MISFIRE 1779
P0308-CYLINDER #8 MISFIRE 1789
P0309-CYLINDER #9 MISFIRE 1799
P0310-CYLINDER #10 MISFIRE 1809
P0320–NO CANK REFERENCE SIGNAL AT PCM 1818
P0325-KNOCK SENSOR 1 CIRCUIT 1827
P0330-KNOCK SENSOR 2 CIRCUIT 1832
P0340-CAMSHAFT POSITION SENSOR CIRCUIT 1837

P0351-IGNITION COIL #1 PRIMARY CIRCUIT 1845
P0352-IGNITION COIL #2 PRIMARY CIRCUIT 1849
P0353-IGNITION COIL #3 PRIMARY CIRCUIT 1853
P0354-IGNITION COIL #4 PRIMARY CIRCUIT 1857
P0355-IGNITION COIL #5 PRIMARY CIRCUIT 1861
P0420-1/1 CATALYTIC CONVERTER EFFICIENCY 1865
P0432-2/1 CATALYTIC CONVERTER EFFICIENCY 1868
P0441-EVAP PURGE FLOW MONITOR . . . 1871
P0442-EVAP LEAK MONITOR MEDIUM (0.040) LEAK DETECTED 1875
P0443-EVAP PURGE SOLENOID CIRCUIT . 1879
P0455-EVAP LEAK MONITOR LARGE LEAK DETECTED 1883
P0460-FUEL LEVEL SENDING UNIT NO CHANGE OVER MILES 1887
P0462-FUEL LEVEL SENDING UNIT VOLTS TOO LOW 1888
P0463-FUEL LEVEL SENSOR 1 CIRCUIT HIGH 1891
P0500-NO VEHICLE SPEED SIGNAL 1896
P0505-IDLE AIR CONTROL MOTOR CIRCUITS 1899
P0522-OIL PRESSURE CIRCUIT LOW 1904
P0523-OIL PRESSURE CIRCUIT HIGH . . . 1908
P0601-PCM INTERNAL CONTROLLER FAILURE 1911
P0622-GENERATOR FIELD NOT SWITCHING PROPERLY 1912
P0645-A/C CLUTCH RELAY CIRCUIT 1916
P0801-REVERSE GEAR LOCKOUT CIRCUIT OPEN OR SHORTED 1920
P1195-O2 SENSOR 1/1 SLOW DURING CATALYST MONITOR 1924
P1196-O2 SENSOR 2/1 SLOW DURING CATALYST MONITOR 1927
P1281-ENGINE IS COLD TOO LONG 1930
P1282-FUEL PUMP/SYSTEM RELAY CONTROL CIRCUIT 1931
P1294-TARGET IDLE NOT REACHED 1934
P1296-NO 5-VOLTS TO MAP SENSOR . . . 1938
P1297-NO CHANGE IN MAP FROM START TO RUN 1943
P1388-AUTO SHUTDOWN RELAY CONTROL CIRCUIT 1949
P1389-NO ASD RELAY OUTPUT VOLTAGE AT PCM 1952
P1391-INTERMITTENT LOSS OF CMP OR CKP 1956
P1398-MIS-FIRE ADAPTIVE NUMERATOR AT LIMIT 1960
P1486-EVAP LEAK MONITOR PINCHED HOSE FOUND 1963
P1492-AMBIENT/BATTERY TEMPERATURE SENSOR VOLTAGE TOO HIGH 1966
P1493-AMBIENT/BATTERY TEMPERATURE SENSOR VOLTAGE TOO LOW 1970
P1494-LEAK DETECTION PUMP SWITCH OR MECHANICAL FAULT 1973
P1495-LEAK DETECTION PUMP SOLENOID CIRCUIT 1977
P1499-HYDRAULIC FAN SOLENOID CIRCUIT 1982
P1594-CHARGING SYSTEM VOLTAGE TOO HIGH 1986
P1598-A/C PRESSURE SENSOR VOLTAGE TOO HIGH 1989
P1599-A/C PRESSURE SENSOR VOLTAGE TOO LOW 1994
P1682-CHARGING SYSTEM VOLTAGE TOO LOW 1999
P1687-NO CLUSTER BUS MESSAGE 2004
P1695-BUS MESSAGE FROM BODY CONTROL MODULE 2007
P1696-PCM FAILURE EEPROM WRITE DENIED 2010
*BRAKE SWITCH SENSE STATUS DOES NOT CHANGE ON THE SCAN TOOL 2012
*CANNOT SHIFT INTO REVERSE 2016
*CHECKING A/C SYSTEM OPERATION WITH NO DTCS 2018
*CHECKING CHARGING SYSTEM OPERATION WITH NO DTCS 2023
*CHECKING RADIATOR FAN OPERATION 2028
*CHECKING THE PCM POWER AND GROUNDS 2030
STANDARD PROCEDURE
POWERTRAIN VERIFICATION TEST 2033

ENGINE - ELECTRICAL DIAGNOSTICS - SRT-10

DIAGNOSIS AND TESTING

PRE-DIAGNOSTIC TROUBLESHOOTING PROCEDURE

For the Engine circuit diagram (Refer to 9 - ENGINE - SCHEMATICS AND DIAGRAMS).

For a complete wiring diagram **Refer to Section 8W**.

Diagnostic Test

1. NO RESPONSE

Make sure the scan tool will communicate with the appropriate modules.

Are you currently experiencing a NO RESPONSE condition?

Yes >> The NO RESPONSE condition must be properly diagnosed before continuing.
Refer to the appropriate BUS Communication test in Section 8 ELECTRONIC CONTROL MODULES - ELECTRICAL DIAGNOSTICS.

No >> Go To 2

---

2. NO START

Is the customer complaint a NO START condition?

Yes >> Check the vehicle for any NO START related PCM DTC(s) or Vehicle Theft Security related DTC(s).
If no Theft related DTC(s) are present, refer to the Non DTC Diagnostic Procedures that relate to Fuel and Starting.

No >> Go To 3

---

3. VEHICLE HISTORY AND TSB(s)

Continue by reading PCM DTC(s) and record the related Freeze Frame data if any DTC(s) are present.

Whether or not any DTC(s) are present you will want to check the following items which may assist in repairing the customers complaint successfully.

Check the vehicles repair history.

If the vehicle has a repair history that pertains to the customer's current complaint, review the repair.

Inpect the vehicle for any aftermarket accessories that may have been installed incorrectly.

Check for any TSB(s) related to the customer's complaint or DTC(s).

If a TSB applies, follow the instructions per the TSB.

Choose the following scenario that best applies.

The TSB repaired the customers complaint.
Testing complete.

A DTC is present, no TSB applies, or the TSB didn't repair the customers complaint.
Go To 4

No DTC(s) are present.
Refer to the INTERMITTENT CONDITION Diagnostic Procedure.

PRE-DIAGNOSTIC TROUBLESHOOTING PROCEDURE (CONTINUED)

4. WIRE HARNESS INSPECTION

Clear the DTC(s).

Attempt to duplicate the customer complaint.

Whether the customer complaint can be duplicated or not, make a quick wire harness inspection related to the DTC(s) that were previously cleared.

Check the Powertrain Control Module connectors, the suspected component connection, in-line connectors, wire harness splices, PCM power and ground circuits, and any related fuses.

If the DTC(s) are fuel or air related, check the fuel level and quality.

Were any repairs made that fixed the customer's complaint?

Yes >> Testing complete.

No >> Refer to the diagnostic test procedure related to the DTC.

INTERMITTENT CONDITION

For the Engine circuit diagrams (Refer to 9 - ENGINE - SCHEMATICS AND DIAGRAMS).

For a complete wiring diagram **Refer to Section 8W**.

POSSIBLE CAUSES
INTERMITTENT CONDITION

Diagnostic Test

1. INTERMITTENT CONDITION

NOTE: The conditions that set the DTC are not present at this time. The following list may help in identifying the intermittent condition.

WARNING: When the engine is operating, do not stand in direct line with the fan. Do not put your hands near the pulleys, belts, or fan. Do not wear loose clothing. Failure to follow these instructions can result in personal injury or death.

Refer to any Technical Service Bulletins (TSBs) that may apply.

Review the scan tool Freeze Frame information. If possible, try to duplicate the conditions under which the DTC set.

With the engine running at normal operating temperature, monitor the scan tool parameters related to the DTC while wiggling the wire harness. Look for parameter values to change and/or a DTC to set.

Turn the ignition off.

Visually inspect the related wire harness. Disconnect all the related harness connectors. Look for any chafed, pierced, pinched, partially broken wires and broken, bent, pushed out, or corroded terminals.

Perform a voltage drop test on the related circuits between the suspected faulty component and the PCM.

Inspect and clean all PCM, engine, and chassis grounds that are related to the most current DTC.

If numerous trouble codes were set, use a wire schematic and look for any common ground or supply circuits.

For any Relay DTCs, actuate the Relay with the scan tool and wiggle the related wire harness to try to interrupt the actuation.

For intermittent Evaporative Emission trouble codes perform a visual and physical inspection of the related parts including hoses and the Fuel Filler cap.

For intermittent Misfire DTC's check for restrictions in the Intake and Exhaust system, proper installation of Sensors, vacuum leaks, and binding components that are run by the accessory drive belt.

Use the scan tool to perform a System Test if one applies to failing component.

A co-pilot, data recorder, and/or lab scope should be used to help diagnose intermittent conditions.

Were any problems found during the above inspections?

Yes >> Perform the necessary repairs.
Perform POWERTRAIN VERIFICATION TEST VER - 1.

No >> Test Complete.

P0031-O2 SENSOR 1/1 HEATER CIRCUIT LOW

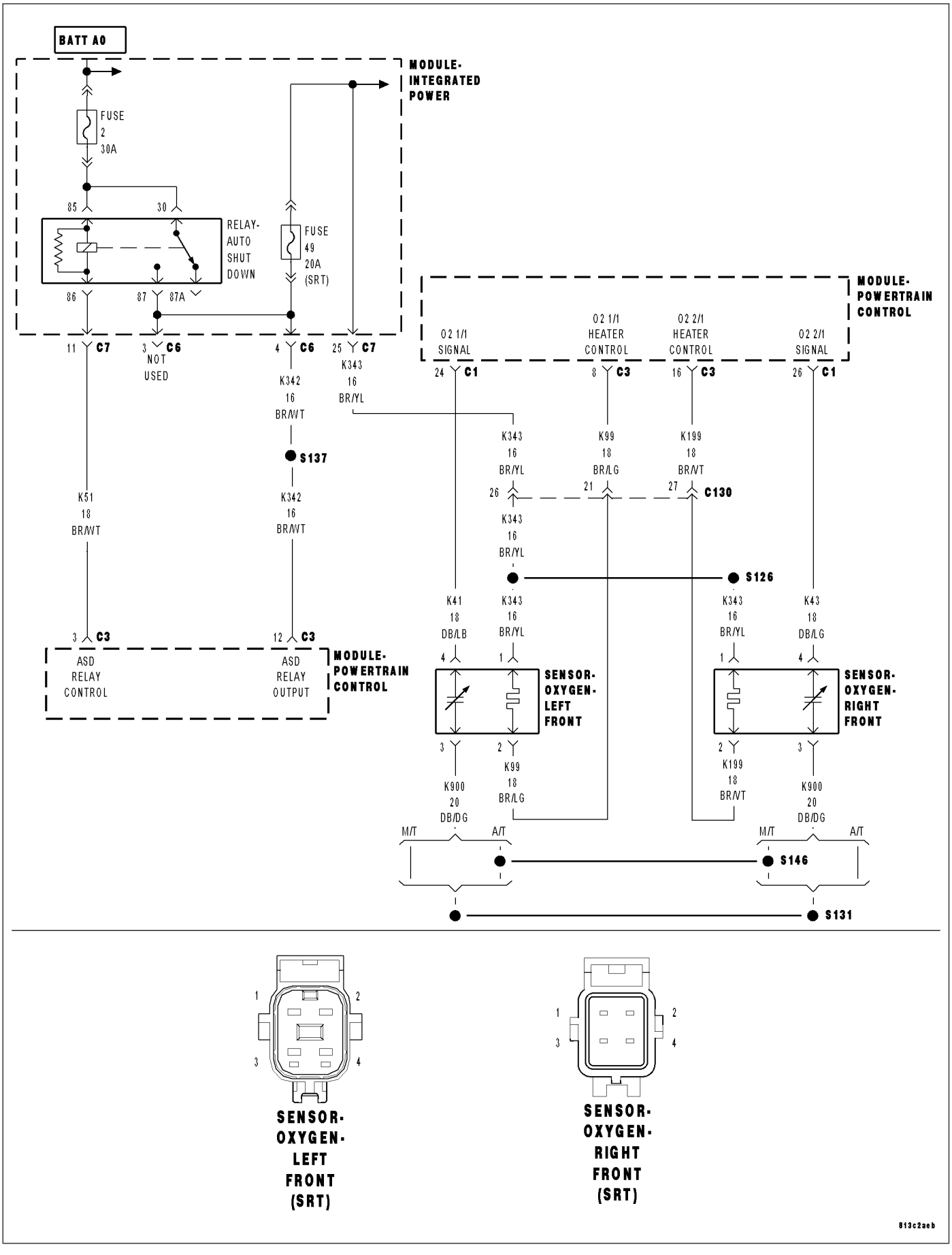

P0031-O2 SENSOR 1/1 HEATER CIRCUIT LOW (CONTINUED)

For the Engine circuit diagram (Refer to 8 - ELECTRICAL/ELECTRONIC CONTROL MODULES/ENGINE CONTROL MODULE - SCHEMATIC - ELECTRICAL)

For a complete wiring diagram **Refer to Section 8W**.

- **When Monitored:**
  Battery voltage above 10.6 volts, ASD is powered up, and O2 heater is on.
- **Set Condition:**
  Desired state does not match Actual state.

Possible Causes
O2 HEATER TEST
O2 SENSOR HEATER ELEMENT
(K343) FUSED ASD RELAY OUTPUT CIRCUIT
(K99) HEATER CONTROL CIRCUIT OPEN
(K99) HEATER CONTROL CIRCUIT SHORTED TO GROUND
PCM

Always perform the Pre-Diagnostic Troubleshooting procedure before proceeding. (Refer to 9 - ENGINE - DIAGNOSIS AND TESTING)

1. O2 HEATER TEST

Ignition on, engine not running.
With the scan tool, read DTCs and record the related Freeze Frame data.
With the scan tool, actuate the O2 Heater test.
Monitor the O2 Heater Voltage for 5 minutes.

Did the voltage drop down close to zero during the Heater test?

Yes >> Refer to the INTERMITTENT CONDITION Diagnostic Procedure.
Perform POWERTRAIN VERIFICATION TEST. (Refer to 9 - ENGINE - STANDARD PROCEDURE)

No >> Go To 2

NOTE: Stop the actuation before continuing.

P0031-O2 SENSOR 1/1 HEATER CIRCUIT LOW (CONTINUED)

2. O2 HEATER ELEMENT

Turn the ignition off.

Disconnect the O2 Sensor harness connector.

Measure the resistance of the O2 Heater element at the O2 Sensor connector (component side).

On a four O2 Sensor system the resistance value for 1/1 and 2/1 O2 Heater elements is between 3.3 and 4.1 ohms and the 1/2 and 2/2 O2 Heater elements is between 4.0 and 5.0 ohms at 70° F(21.1°C).

NOTE: The resistance value will increase with warmer temperatures.

Is the resistance within the listed specifications?

Yes >> Go To 3

No >> Replace the O2 Sensor.
Perform POWERTRAIN VERIFICATION TEST. (Refer to 9 - ENGINE - STANDARD PROCEDURE)

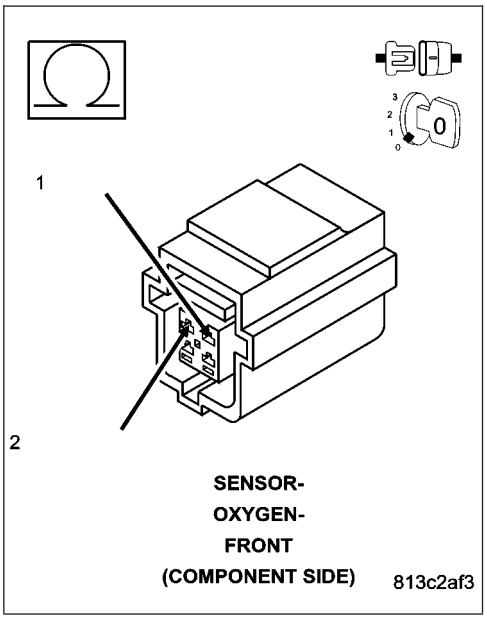

3. (K343) FUSED ASD RELAY OUTPUT CIRCUIT OPEN

Ignition on, engine not running.

With the scan tool, actuate the O2 Heater Test.

Using a 12-volt test light connected to ground, probe the (K343) Fused ASD Relay Output circuit at the O2 Sensor harness connector.

Did the test light illuminate brightly?

Yes >> Go To 4

No >> Repair the open or short to ground in the (K343) Fused ASD Relay Output circuit. Inspect the related fuse and repair as necessary.
Perform POWERTRAIN VERIFICATION TEST. (Refer to 9 - ENGINE - STANDARD PROCEDURE)

NOTE: Stop the actuation before continuing.

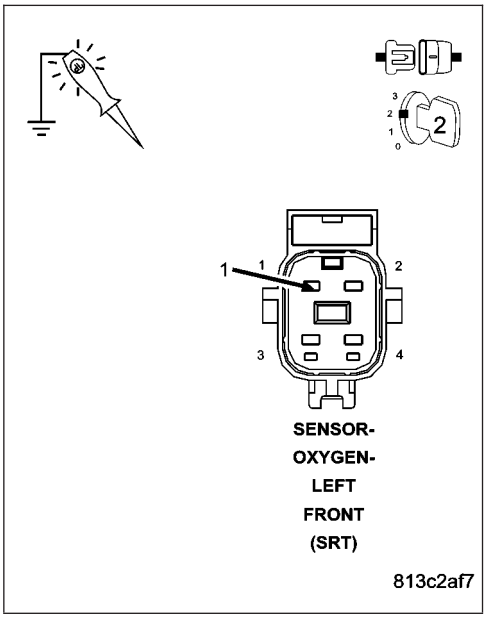

P0031-O2 SENSOR 1/1 HEATER CIRCUIT LOW (CONTINUED)

4. (K99) O2 1/1 HEATER CONTROL CIRCUIT OPEN

Turn the ignition off.

Disconnect the PCM harness connectors.

Measure the resistance of the (K99) O2 Heater Control circuit (PWM) from the O2 Sensor to the PCM harness connector.

Is the resistance below 5.0 ohms?

Yes >> Go To 5

No >> Repair the open in the (K99) O2 Heater Control (PWM) circuit.

Perform POWERTRAIN VERIFICATION TEST. (Refer to 9 - ENGINE - STANDARD PROCEDURE)

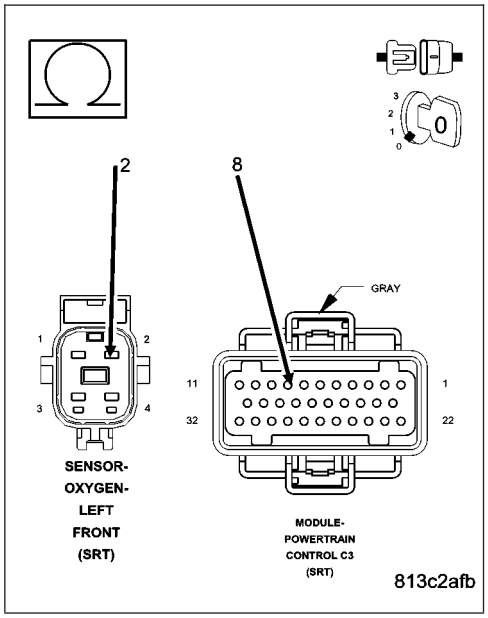

5. (K99) HEATER CONTROL CIRCUIT SHORTED TO GROUND

Measure the resistance between ground and the (K99) O2 Heater Control (PWM) circuit.

Is the resistance below 100 ohms?

Yes >> Repair the short to ground in the Heater Control (PWM) circuit or the Heater Relay Control circuit depending on the O2 Sensor being tested.

Perform POWERTRAIN VERIFICATION TEST. (Refer to 9 - ENGINE - STANDARD PROCEDURE)

No >> Go To 6

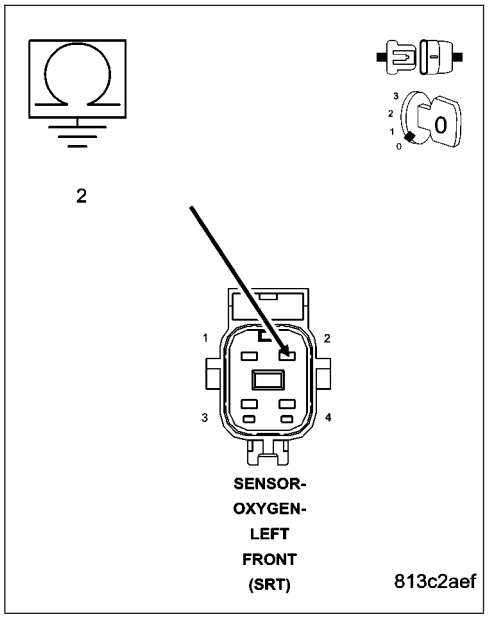

P0031-O2 SENSOR 1/1 HEATER CIRCUIT LOW (CONTINUED)

6. **PCM**

NOTE: Before continuing, check the PCM harness connector terminals for corrosion, damage, or terminal push out. Repair as necessary.

Using the schematics as a guide, inspect the wire harness and connectors. Pay particular attention to all Power and Ground circuits.

If there are no possible causes remaining, view repair.

Repair

Replace and program the Powertrain Control Module per Service Information.

Perform POWERTRAIN VERIFICATION TEST. (Refer to 9 - ENGINE - STANDARD PROCEDURE)

P0032-O2 SENSOR 1/1 HEATER CIRCUIT HIGH

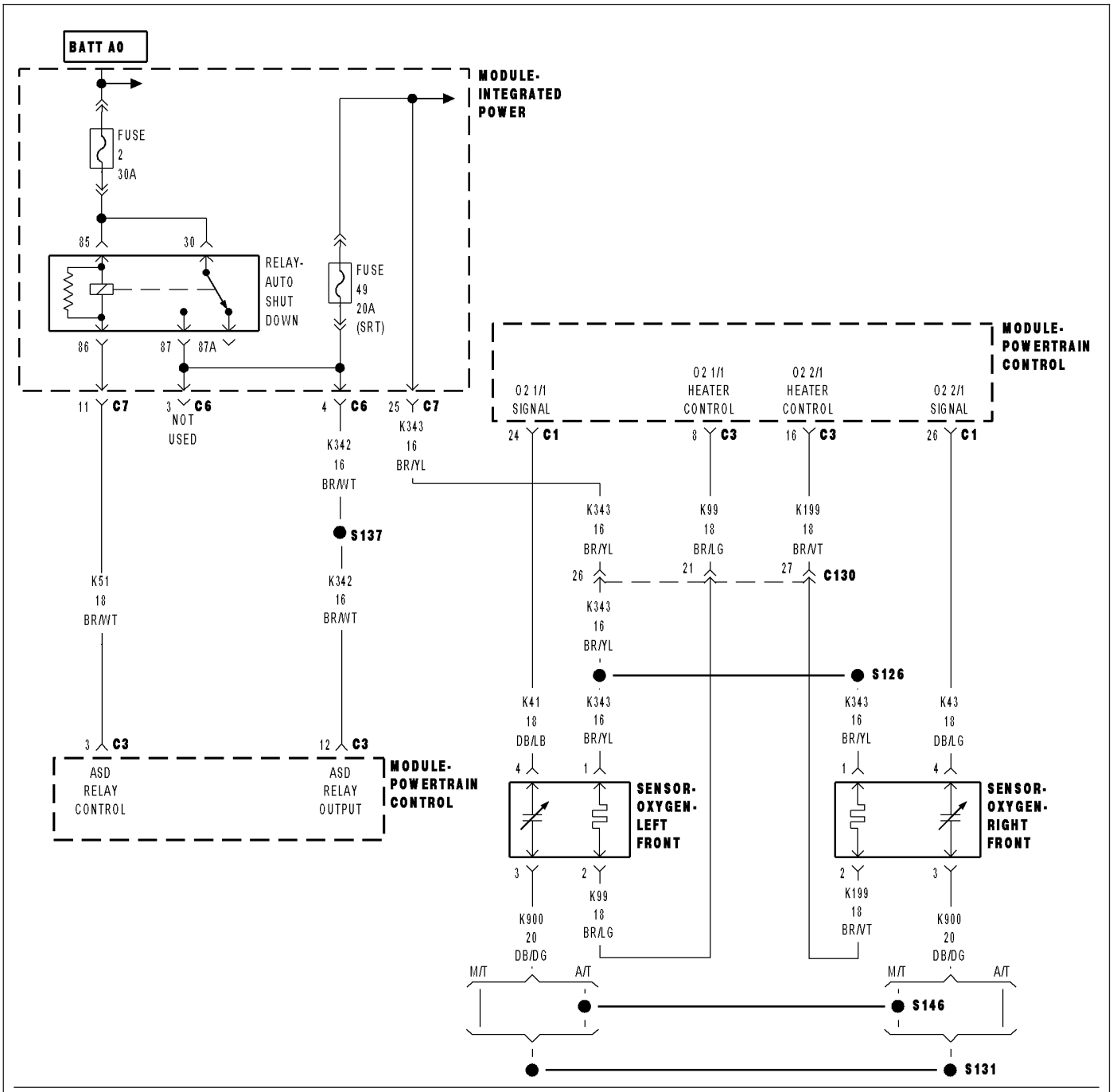

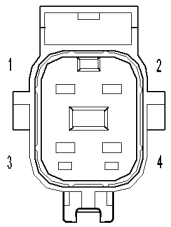

SENSOR-
OXYGEN-
LEFT
FRONT
(SRT)

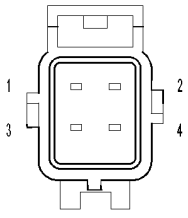

SENSOR-
OXYGEN-
RIGHT
FRONT
(SRT)

813c2aeb

P0032-O2 SENSOR 1/1 HEATER CIRCUIT HIGH (CONTINUED)

For the Engine circuit diagram (Refer to 8 - ELECTRICAL/ELECTRONIC CONTROL MODULES/ENGINE CONTROL MODULE - SCHEMATIC - ELECTRICAL)

For a complete wiring diagram **Refer to Section 8W**.

- **When Monitored:**
  Battery voltage above 10.6 volts, ASD is powered up, and O2 heater is on.
- **Set Condition:**
  Desired state does not match Actual state.

Possible Causes
O2 HEATER TEST
O2 SENSOR HEATER ELEMENT
(K343) FUSED ASD RELAY OUTPUT CIRCUIT
HEATER CONTROL CIRCUIT OPEN
HEATER CONTROL CIRCUIT SHORTED TO GROUND
PCM

Always perform the Pre-Diagnostic Troubleshooting procedure before proceeding. (Refer to 9 - ENGINE - DIAGNOSIS AND TESTING)

1. O2 HEATER TEST

Ignition on, engine not running.
With the scan tool, read DTCs and record the related Freeze Frame data.
With the scan tool, actuate the O2 Heater test.
Monitor the O2 Heater Voltage for 5 minutes.

Did the voltage drop down close to zero during the Heater test?

Yes >> Refer to the INTERMITTENT CONDITION Diagnostic Procedure.
Perform POWERTRAIN VERIFICATION TEST. (Refer to 9 - ENGINE - STANDARD PROCEDURE)

No >> Go To 2

NOTE: Stop the actuation before continuing.

P0032-O2 SENSOR 1/1 HEATER CIRCUIT HIGH (CONTINUED)

2. O2 HEATER ELEMENT

Turn the ignition off.

Disconnect the O2 Sensor harness connector.

Measure the resistance of the O2 Heater element at the O2 Sensor connector (component side).

On a four O2 Sensor system the resistance value for 1/1 and 2/1 O2 Heater elements is between 3.3 and 4.1 ohms and the 1/2 and 2/2 O2 Heater elements is between 4.0 and 5.0 ohms at 70° F(21.1°C).

NOTE: The resistance value will increase with warmer temperatures.

Is the resistance within the listed specifications?

Yes >> Go To 3

No >> Replace the O2 Sensor.
Perform POWERTRAIN VERIFICATION TEST. (Refer to 9 - ENGINE - STANDARD PROCEDURE)

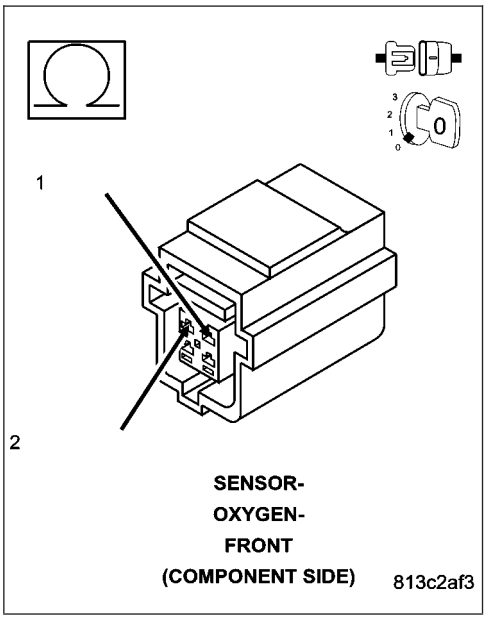

3. (K342) FUSED ASD RELAY OUTPUT CIRCUIT OPEN

Ignition on, engine not running.

With the scan tool, actuate the O2 Heater Test.

Using a 12-volt test light connected to ground, probe the (K342) Fused ASD Relay Output circuit at the O2 Sensor harness connector.

Did the test light illuminate brightly?

Yes >> Go To 4

No >> Repair the open or short to ground in the (K342) Fused ASD Relay Output circuit. Inspect the related fuse and repair as necessary.
Perform POWERTRAIN VERIFICATION TEST. (Refer to 9 - ENGINE - STANDARD PROCEDURE)

NOTE: Stop the actuation before continuing.

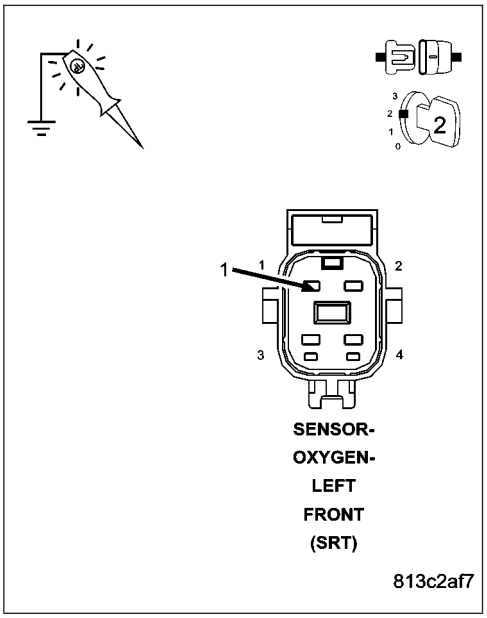

P0032-O2 SENSOR 1/1 HEATER CIRCUIT HIGH (CONTINUED)

4. HEATER CONTROL CIRCUIT OPEN

Turn the ignition off.

Disconnect the PCM harness connectors.

Measure the resistance of the O2 Heater Control circuit (PWM) from the O2 Sensor to the PCM harness connector.

Is the resistance below 5.0 ohms?

Yes >> Go To 5

No >> Repair the open in the O2 Heater Control (PWM) circuit.
Perform POWERTRAIN VERIFICATION TEST. (Refer to 9 - ENGINE - STANDARD PROCEDURE)

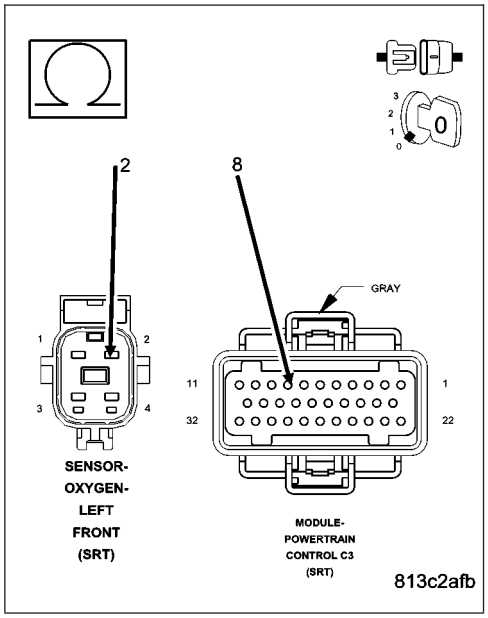

5. HEATER CONTROL CIRCUIT SHORTED TO GROUND

Measure the resistance between ground and the O2 Heater Control (PWM) circuit.

Is the resistance below 100 ohms?

Yes >> Repair the short to ground in the Heater Control (PWM) circuit or the Heater Relay Control circuit depending on the O2 Sensor being tested.
Perform POWERTRAIN VERIFICATION TEST. (Refer to 9 - ENGINE - STANDARD PROCEDURE)

No >> Go To 6

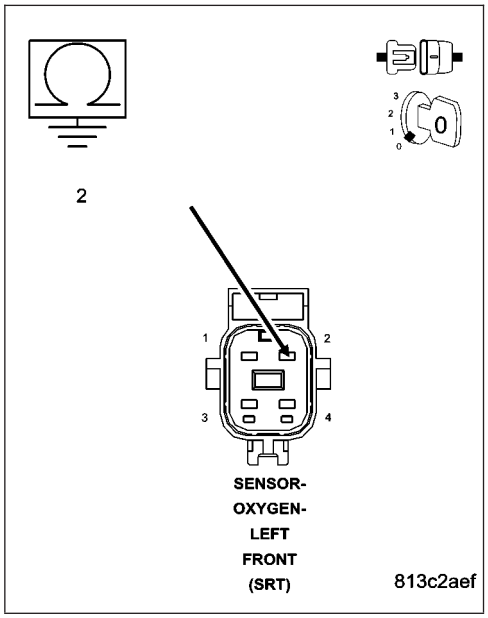

P0032-O2 SENSOR 1/1 HEATER CIRCUIT HIGH (CONTINUED)

6. **PCM**

NOTE: Before continuing, check the PCM harness connector terminals for corrosion, damage, or terminal push out. Repair as necessary.

Using the schematics as a guide, inspect the wire harness and connectors. Pay particular attention to all Power and Ground circuits.

If there are no possible causes remaining, view repair.

Repair

Replace and program the Powertrain Control Module per Service Information.

Perform POWERTRAIN VERIFICATION TEST. (Refer to 9 - ENGINE - STANDARD PROCEDURE)

P0051-O2 SENSOR 2/1 HEATER CIRCUIT LOW

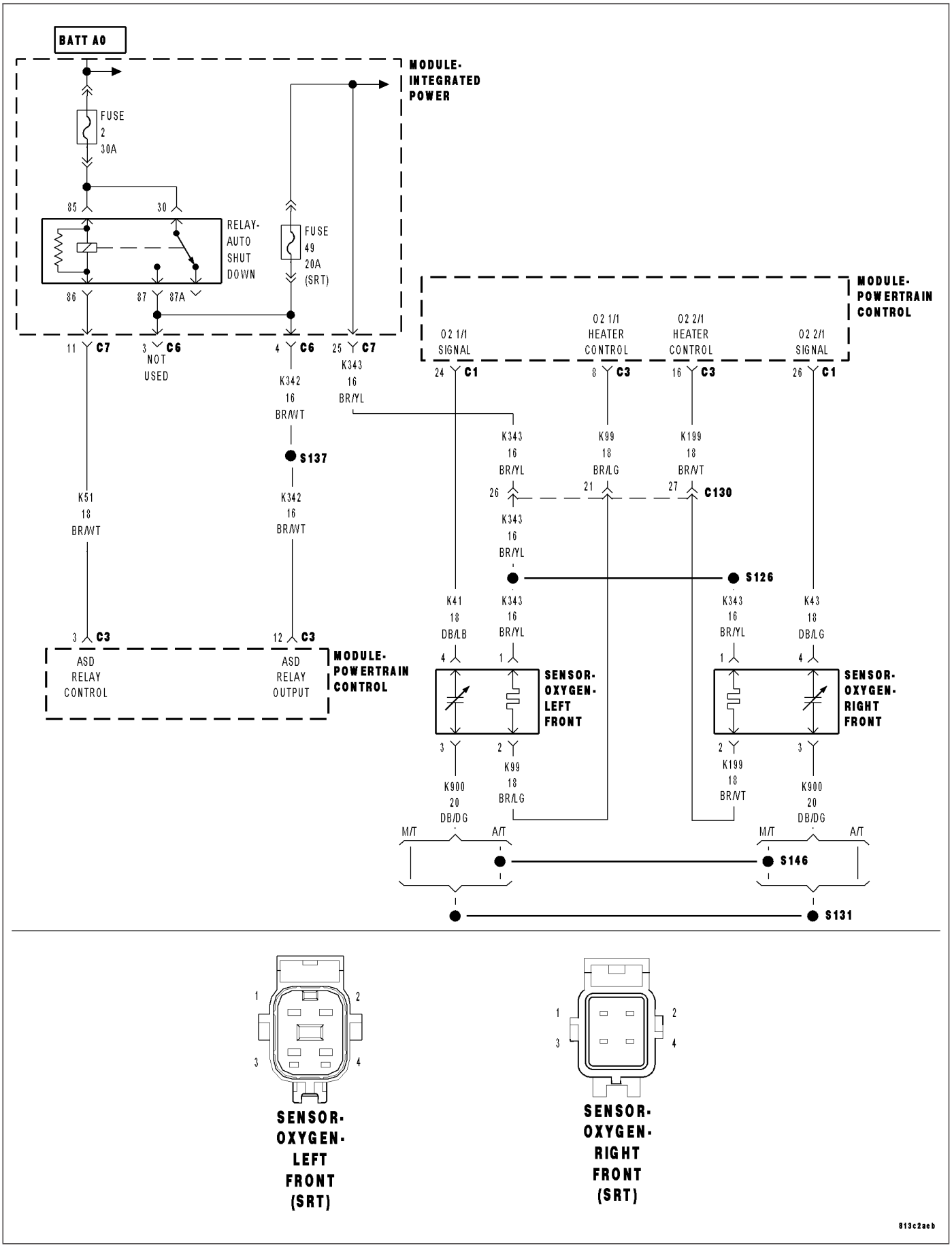

P0051-O2 SENSOR 2/1 HEATER CIRCUIT LOW (CONTINUED)

For the Engine circuit diagram (Refer to 8 - ELECTRICAL/ELECTRONIC CONTROL MODULES/ENGINE CONTROL MODULE - SCHEMATIC - ELECTRICAL)

For a complete wiring diagram **Refer to Section 8W**.

- **When Monitored:**
  Battery voltage above 10.6 volts, ASD is powered up, and O2 heater is on.
- **Set Condition:**
  Desired state does not match Actual state.

Possible Causes
O2 HEATER TEST
O2 SENSOR HEATER ELEMENT
(K343) FUSED ASD RELAY OUTPUT CIRCUIT
(K199) HEATER CONTROL CIRCUIT OPEN
(K199) HEATER CONTROL CIRCUIT SHORTED TO GROUND
PCM

Always perform the Pre-Diagnostic Troubleshooting procedure before proceeding. (Refer to 9 - ENGINE - DIAGNOSIS AND TESTING)

1. O2 HEATER TEST

Ignition on, engine not running.
With the scan tool, read DTCs and record the related Freeze Frame data.
With the scan tool, actuate the O2 Heater test.
Monitor the O2 Heater Voltage for 5 minutes.

Did the voltage drop down close to zero during the Heater test?

Yes >> Refer to the INTERMITTENT CONDITION Diagnostic Procedure.
Perform the POWERTRAIN VERIFICATION TEST. (Refer to 9 - ENGINE - STANDARD PROCEDURE)

No >> Go To 2

NOTE: Stop the actuation before continuing.

P0051-O2 SENSOR 2/1 HEATER CIRCUIT LOW (CONTINUED)

2. O2 HEATER ELEMENT

Turn the ignition off.

Disconnect the O2 Sensor harness connector.

Measure the resistance of the O2 Heater element at the O2 Sensor connector (component side).

On a four O2 Sensor system the resistance value for 1/1 and 2/1 O2 Heater elements is between 3.3 and 4.1 ohms and the 1/2 and 2/2 O2 Heater elements is between 4.0 and 5.0 ohms at 70° F(21.1°C).

NOTE: The resistance value will increase with warmer temperatures.

Is the resistance within the listed specifications?

Yes >> Go To 3

No >> Replace the O2 Sensor.
Perform the POWERTRAIN VERIFICATION TEST. (Refer to 9 - ENGINE - STANDARD PROCEDURE)

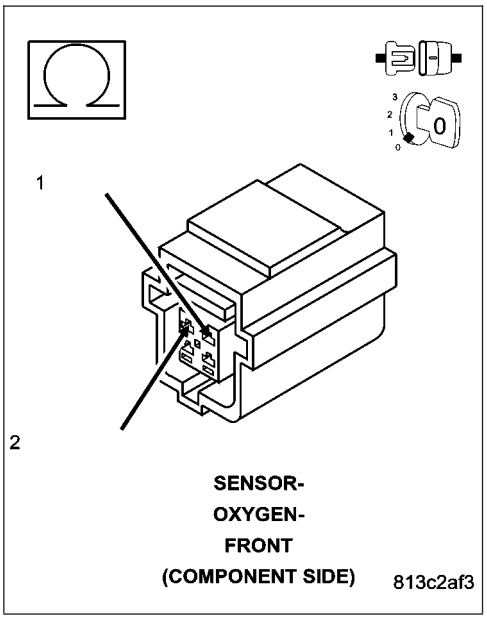

3. (K343) FUSED ASD RELAY OUTPUT CIRCUIT OPEN

Ignition on, engine not running.

With the scan tool, actuate the O2 Heater Test.

Using a 12-volt test light connected to ground, probe the (K343) Fused ASD Relay Output circuit at the O2 Sensor harness connector.

Did the test light illuminate brightly?

Yes >> Go To 4

NOTE: Stop the actuation before continuing.

No >> Repair the open or short to ground in the (K343) Fused ASD Relay Output circuit. Inspect the related fuse and repair as necessary.
Perform the POWERTRAIN VERIFICATION TEST. (Refer to 9 - ENGINE - STANDARD PROCEDURE)

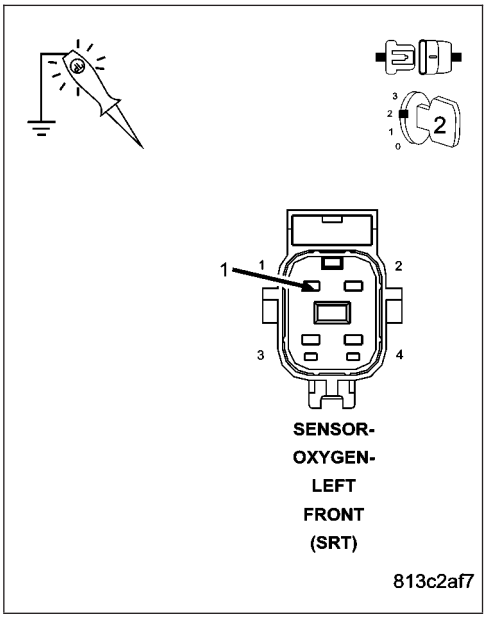

P0051-O2 SENSOR 2/1 HEATER CIRCUIT LOW (CONTINUED)

4. (K199) HEATER CONTROL CIRCUIT OPEN

Turn the ignition off.

Disconnect the PCM harness connectors.

Measure the resistance of the (K199) O2 Heater Control circuit from the O2 Sensor to the PCM harness connector.

Is the resistance below 5.0 ohms?

Yes >> Go To 5

No >> Repair the open in the (K199) O2 Heater Control circuit.
Perform the POWERTRAIN VERIFICATION TEST. (Refer to 9 - ENGINE - STANDARD PROCEDURE)

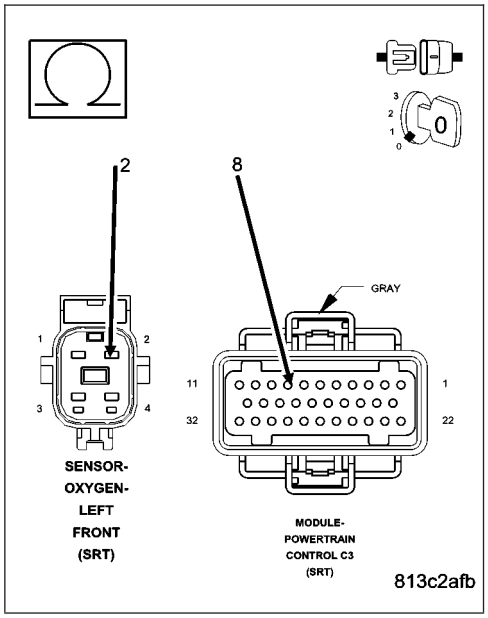

5. (K199) HEATER CONTROL CIRCUIT SHORTED TO GROUND

Measure the resistance between ground and the (K199) O2 Heater Control (PWM) circuit.

Is the resistance below 100 ohms?

Yes >> Repair the short to ground in the (K199) Heater Control (PWM) circuit or the Heater Relay Control circuit depending on the O2 Sensor being tested.
Perform the POWERTRAIN VERIFICATION TEST. (Refer to 9 - ENGINE - STANDARD PROCEDURE)

No >> Go To 6

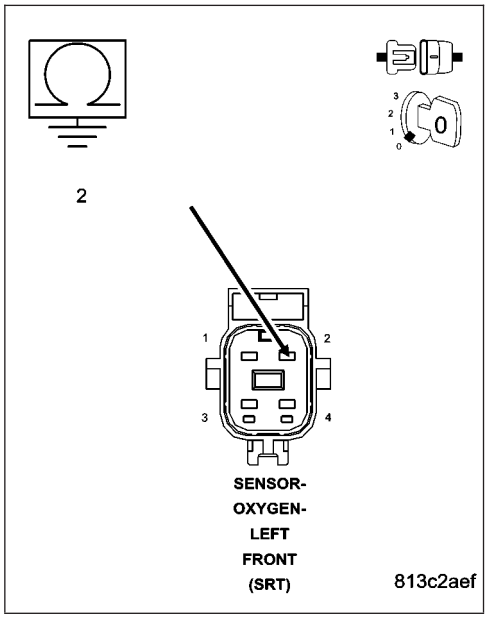

P0051-O2 SENSOR 2/1 HEATER CIRCUIT LOW (CONTINUED)

6. **PCM**

NOTE: Before continuing, check the PCM harness connector terminals for corrosion, damage, or terminal push out. Repair as necessary.

Using the schematics as a guide, inspect the wire harness and connectors. Pay particular attention to all Power and Ground circuits.

If there are no possible causes remaining, view repair.

Repair

Replace and program the Powertrain Control Module per Service Information.

Perform the POWERTRAIN VERIFICATION TEST. (Refer to 9 - ENGINE - STANDARD PROCEDURE)

P0052-O2 SENSOR 2/1 HEATER CIRCUIT HIGH

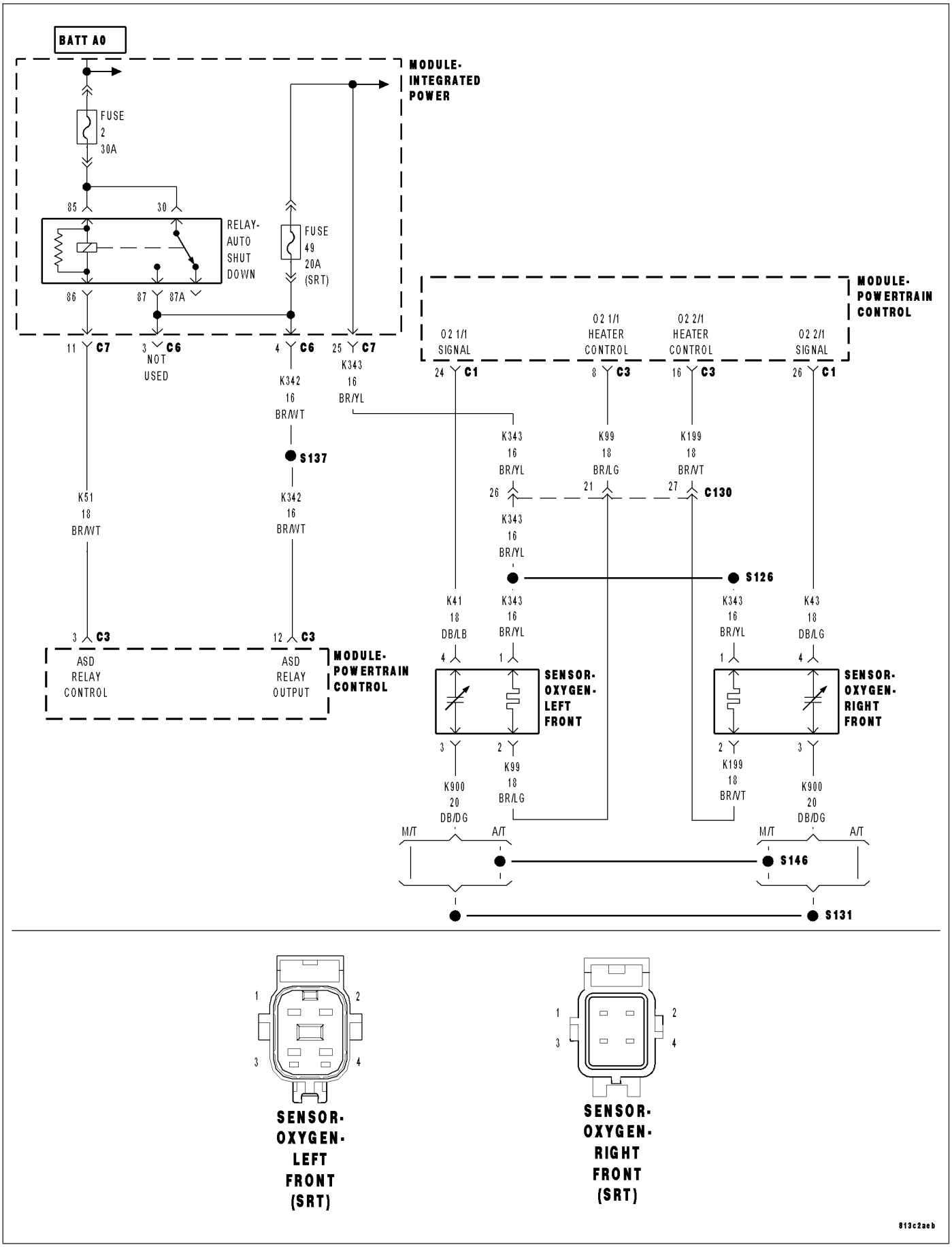

P0052-O2 SENSOR 2/1 HEATER CIRCUIT HIGH (CONTINUED)

For the Engine circuit diagram (Refer to 9 - ENGINE - SCHEMATICS AND DIAGRAMS)

For a complete wiring diagram **Refer to Section 8W**.

- **When Monitored:**
  Battery voltage above 10.6 volts, ASD is powered up, and O2 heater is on.
- **Set Condition:**
  Desired state does not match Actual state.

Possible Causes
O2 HEATER TEST
O2 SENSOR HEATER ELEMENT
(K343) FUSED ASD RELAY OUTPUT CIRCUIT
(K199) HEATER CONTROL CIRCUIT OPEN
(K199) HEATER CONTROL CIRCUIT SHORTED TO GROUND
PCM

Always perform the Pre-Diagnostic Troubleshooting procedure before proceeding. (Refer to 9 - ENGINE - DIAGNOSIS AND TESTING)

1. O2 HEATER TEST

Ignition on, engine not running.
With the scan tool, read DTCs and record the related Freeze Frame data.
With the scan tool, actuate the O2 Heater test.
Monitor the O2 Heater Voltage for 5 minutes.

Did the voltage drop down close to zero during the Heater test?

Yes >> Refer to the INTERMITTENT CONDITION Diagnostic Procedure.
Perform the POWERTRAIN VERIFICATION TEST. (Refer to 9 - ENGINE - STANDARD PROCEDURE)

No >> Go To 2

NOTE: Stop the actuation before continuing.

P0052-O2 SENSOR 2/1 HEATER CIRCUIT HIGH (CONTINUED)

2. O2 HEATER ELEMENT

Turn the ignition off.

Disconnect the O2 Sensor harness connector.

Measure the resistance of the O2 Heater element at the O2 Sensor connector (component side).

On a four O2 Sensor system the resistance value for 1/1 and 2/1 O2 Heater elements is between 3.3 and 4.1 ohms and the 1/2 and 2/2 O2 Heater elements is between 4.0 and 5.0 ohms at 70° F(21.1°C).

NOTE: The resistance value will increase with warmer temperatures.

Is the resistance within the listed specifications?

Yes >> Go To 3

No >> Replace the O2 Sensor.
Perform the POWERTRAIN VERIFICATION TEST. (Refer to 9 - ENGINE - STANDARD PROCEDURE)

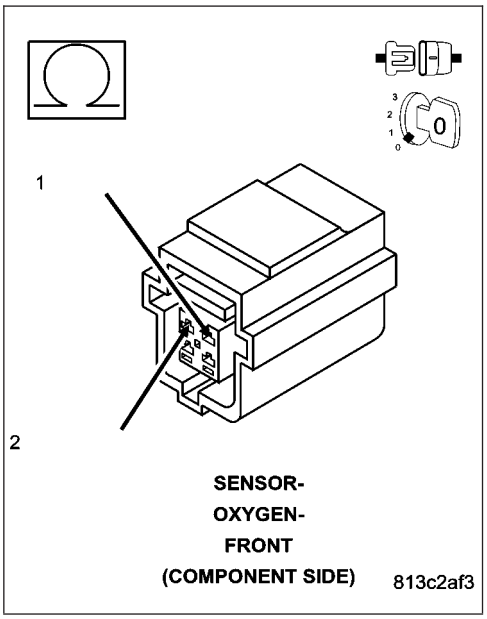

3. (K343) FUSED ASD RELAY OUTPUT CIRCUIT OPEN

Ignition on, engine not running.

With the scan tool, actuate the O2 Heater Test.

Using a 12-volt test light connected to ground, probe the (K343) Fused ASD Relay Output circuit at the O2 Sensor harness connector.

Did the test light illuminate brightly?

Yes >> Go To 4

No >> Repair the open or short to ground in the (K343) Fused ASD Relay Output circuit. Inspect the related fuse and repair as necessary.
Perform the POWERTRAIN VERIFICATION TEST. (Refer to 9 - ENGINE - STANDARD PROCEDURE)

NOTE: Stop the actuation before continuing.

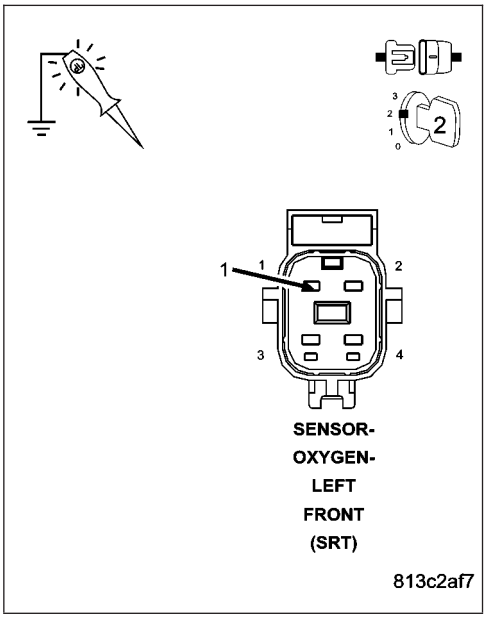

P0052-O2 SENSOR 2/1 HEATER CIRCUIT HIGH (CONTINUED)

4. HEATER CONTROL CIRCUIT OPEN

Turn the ignition off.

Disconnect the PCM harness connectors.

Measure the resistance of the (K199) O2 Heater Control circuit from the O2 Sensor to the PCM harness connector.

Is the resistance below 5.0 ohms?

Yes >> Go To 5

No >> Repair the open in the (K199) O2 Heater Control circuit.
Perform the POWERTRAIN VERIFICATION TEST. (Refer to 9 - ENGINE - STANDARD PROCEDURE)

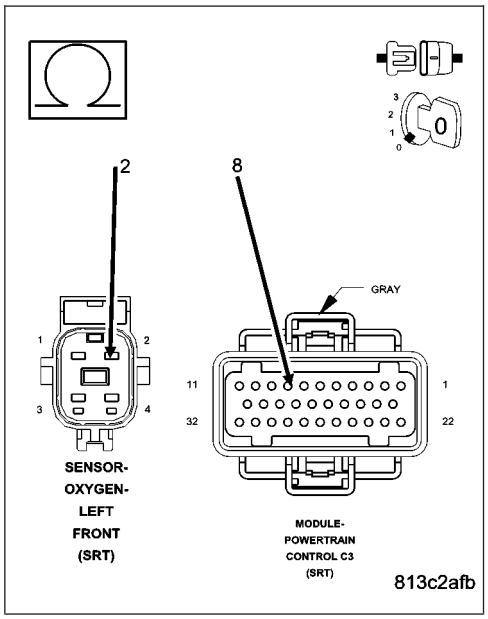

5. (K199) HEATER CONTROL CIRCUIT SHORTED TO GROUND

Measure the resistance between ground and the (K199) O2 Heater Control (PWM) circuit.

Is the resistance below 100 ohms?

Yes >> Repair the short to ground in the (K199) Heater Control (PWM) circuit or the Heater Relay Control circuit depending on the O2 Sensor being tested.
Perform the POWERTRAIN VERIFICATION TEST. (Refer to 9 - ENGINE - STANDARD PROCEDURE)

No >> Go To 6

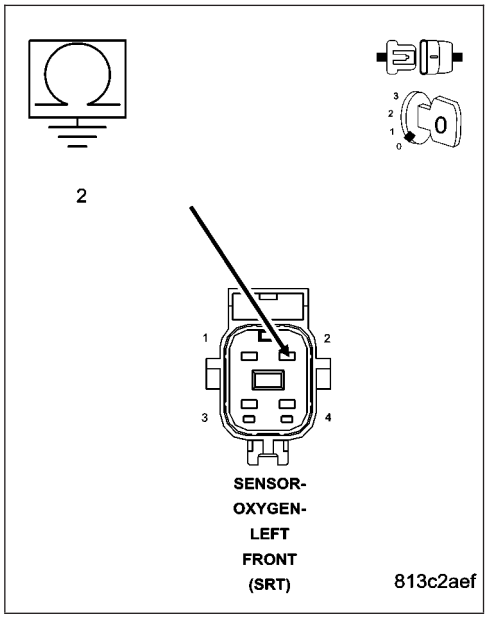

P0052-O2 SENSOR 2/1 HEATER CIRCUIT HIGH (CONTINUED)

6. **PCM**

NOTE: Before continuing, check the PCM harness connector terminals for corrosion, damage, or terminal push out. Repair as necessary.

Using the schematics as a guide, inspect the wire harness and connectors. Pay particular attention to all Power and Ground circuits.

If there are no possible causes remaining, view repair.

Repair

Replace and program the Powertrain Control Module per Service Information.

Perform the POWERTRAIN VERIFICATION TEST. (Refer to 9 - ENGINE - STANDARD PROCEDURE)

P0071-AMBIENT/BATTERY TEMP SENSOR PERFORMANCE

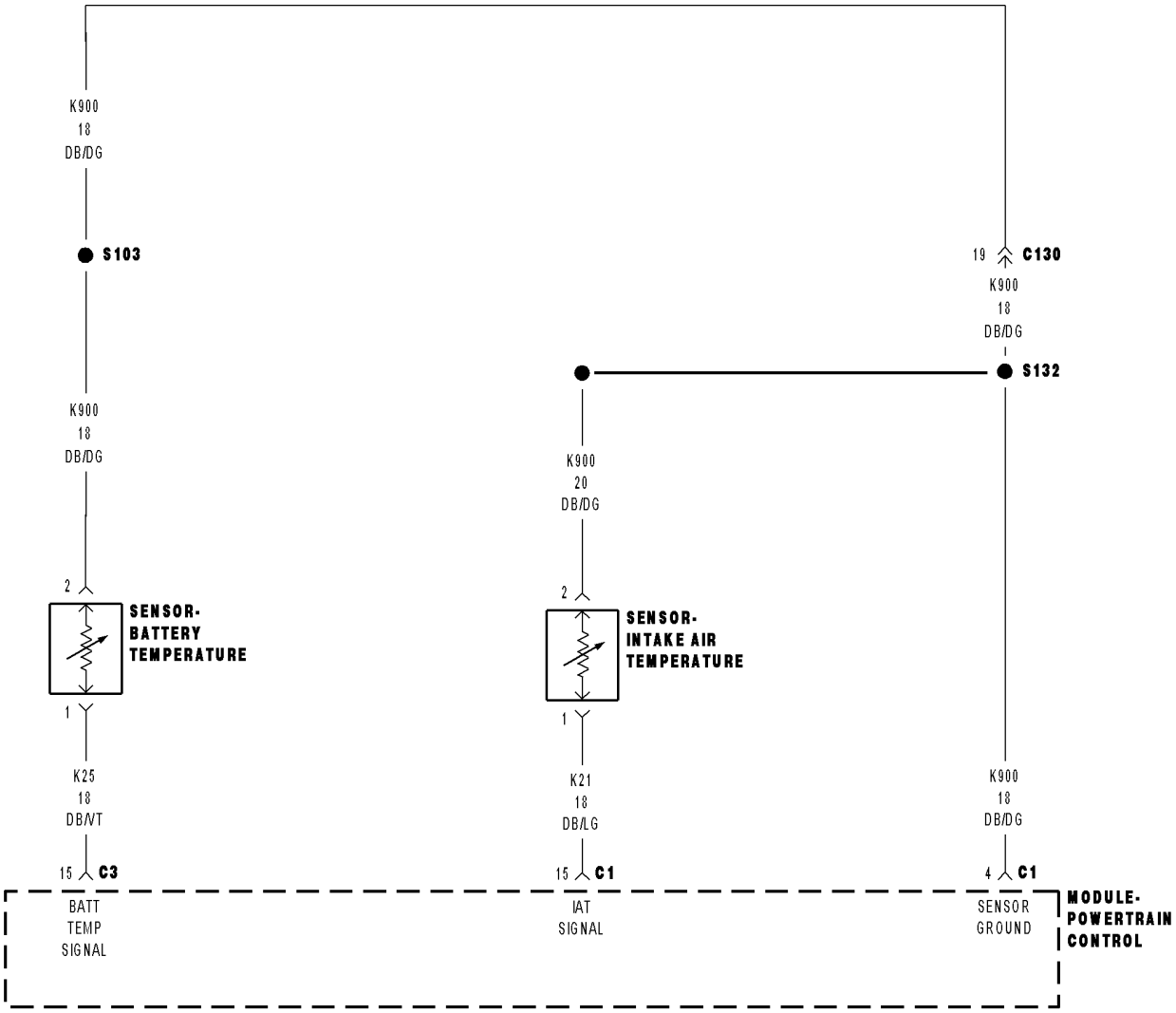

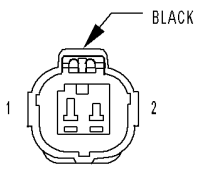

SENSOR-
BATTERY
TEMPERATURE

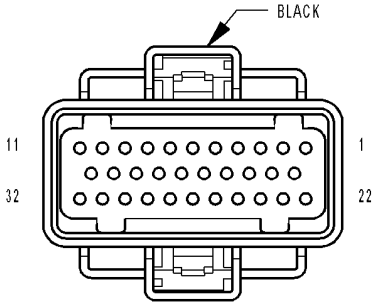

MODULE-
POWERTRAIN
CONTROL C1
(SRT)

81512bee

P0071-AMBIENT/BATTERY TEMP SENSOR PERFORMANCE (CONTINUED)

For the Engine circuit diagram (Refer to 8 - ELECTRICAL/ELECTRONIC CONTROL MODULES/ENGINE CONTROL MODULE - SCHEMATIC - ELECTRICAL)

For a complete wiring diagram **Refer to Section 8W**.

- **When Monitored:**
  With the ignition on and no Battery Temperature Sensor Open or Short Faults present.
- **Set Condition:**
  After 5 warm cycles have occurred (coolant increases at least 22°C (40°F) to a minimum of 71°C (160°F) and the odometer mileage has increased 196.6 miles and the Battery Temperature has changed less than 4°C (7.2°F) change in temperature. One trip fault.

Possible Causes
GOOD TRIP EQUAL TO ZERO
(K25) BATTERY TEMP SIGNAL CIRCUIT SHORTED TO VOLTAGE
BATTERY TEMPERATURE SENSOR
RESISTANCE IN THE (K25) BATTERY TEMP SENSOR SIGNAL CIRCUIT
RESISTANCE IN THE (K900) SENSOR GROUND CIRCUIT
(K25) BATTERY TEMP SENSOR SIGNAL CIRCUIT SHORTED TO GROUND
PCM

Always perform the Pre-Diagnostic Troubleshooting procedure before proceeding. (Refer to 9 - ENGINE - DIAGNOSIS AND TESTING)

1. GOOD TRIP EQUAL TO ZERO

Ignition on, engine not running.

With the scan tool, read DTCs and record the related Freeze Frame data.

Is the Good Trip Counter equal to zero?

Yes >> Go To 2

No >> Refer to the INTERMITTENT CONDITION Symptom. (Refer to 9 - ENGINE - DIAGNOSIS AND TESTING)

P0071-AMBIENT/BATTERY TEMP SENSOR PERFORMANCE (CONTINUED)

2. (K25) BATTERY TEMP SIGNAL CIRCUIT SHORTED TO VOLTAGE

Turn the ignition off.

Disconnect the Battery Temp Sensor harness connector.

Ignition on, engine not running.

Measure the voltage on the (K25) Battery Temp Signal circuit at the Sensor connector.

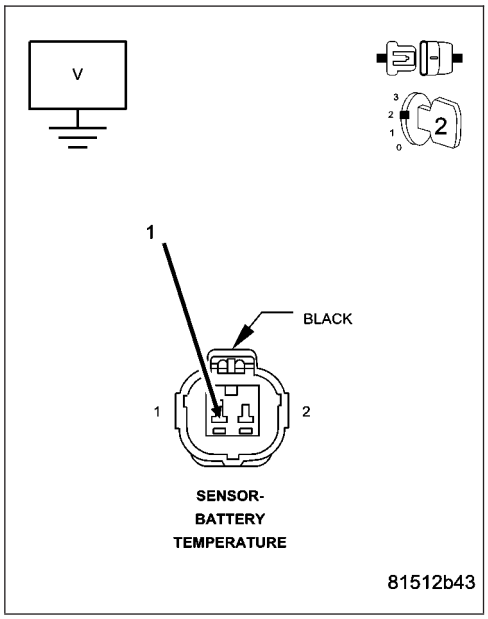

Is the voltage above 5.2 volts?

Yes >> Repair the short to voltage on the (K25) Batt Temp Signal circuit.
Perform POWERTRAIN VERIFICATION TEST. (Refer to 9 - ENGINE - STANDARD PROCEDURE)

No >> Go To 3

3. (K25) BATTERY TEMP SENSOR SIGNAL

With the scan tool, read the Battery Temp Sensor voltage with the Batt Temp Sensor still disconnected.

Is the voltage above 4.6 volts?

Yes >> Go To 4

No >> Go To 7

4. BATTERY TEMPERATURE SENSOR

Connect a jumper wire between the (K25) Battery Temp Signal circuit and the (K900) Sensor ground circuit at the Sensor harness connector.

With the scan tool, read the Battery Temp Sensor voltage.

Is the voltage below 1.0 volt?

Yes >> Replace the Battery Temperature Sensor.
Perform POWERTRAIN VERIFICATION TEST. (Refer to 9 - ENGINE - STANDARD PROCEDURE)

No >> Go To 5

NOTE: Remove the jumper wire before continuing.

P0071-AMBIENT/BATTERY TEMP SENSOR PERFORMANCE (CONTINUED)

5. RESISTANCE IN THE (K25) BATTERY TEMP SENSOR SIGNAL CIRCUIT

Turn the ignition off.

Connect the Battery Temp Sensor harness connector.

NOTE: Make sure the voltmeter leads meet the terminals in the connector and that there is good terminal to wire connection.

NOTE: Make sure the voltmeter leads are connected for positive polarity

Backprobe the (K25) Battery Temp Sensor Signal circuit at the Sensor harness connector and the PCM harness connector with both voltmeter leads.

Start the engine.

Allow the engine to idle.

Is the voltage below 0.10 of a volt?

Yes >> Go To 6

No >> Repair the excessive resistance in the (K25) Battery Temp Sensor Signal circuit.
Perform POWERTRAIN VERIFICATION TEST. (Refer to 9 - ENGINE - STANDARD PROCEDURE)

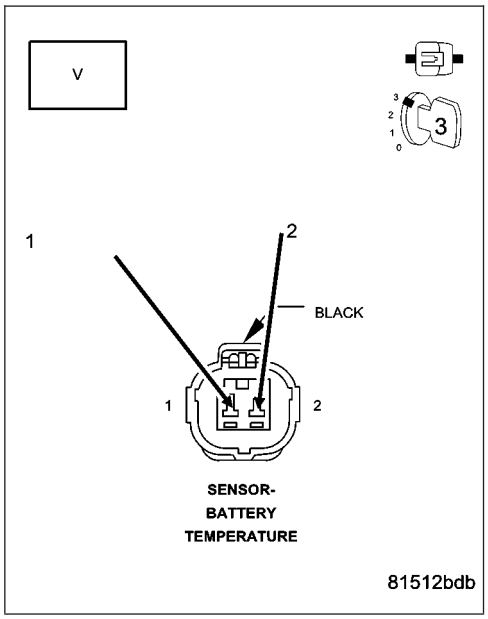

6. RESISTANCE IN THE (K900) SENSOR GROUND CIRCUIT

Turn the ignition off.

NOTE: Make sure the voltmeter leads meet the terminals in the connector and that there is good terminal to wire connection.

NOTE: Make sure the voltmeter leads are connected for positive polarity

Backprobe the (K900) Sensor ground circuit at the Battery Temperature Sensor harness connector and the PCM harness connector using both volt meter leads.

Start the engine.

Allow the engine to idle.

Is the voltage below 0.10 of a volt?

Yes >> Go To 8

No >> Repair the excessive resistance in the (K900) Sensor ground circuit.
Perform POWERTRAIN VERIFICATION TEST. (Refer to 9 - ENGINE - STANDARD PROCEDURE)

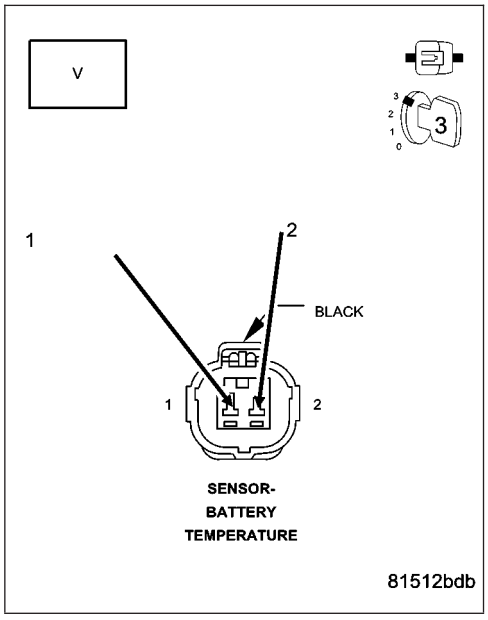

P0071-AMBIENT/BATTERY TEMP SENSOR PERFORMANCE (CONTINUED)

7. (K25) BATTERY TEMP SENSOR SIGNAL CIRCUIT SHORTED TO GROUND

Turn the ignition off.

Disconnect the Battery Temp Sensor harness connector.

Disconnect the PCM harness connectors.

Measure the resistance between ground and the (K25) Battery Temp Signal circuit.

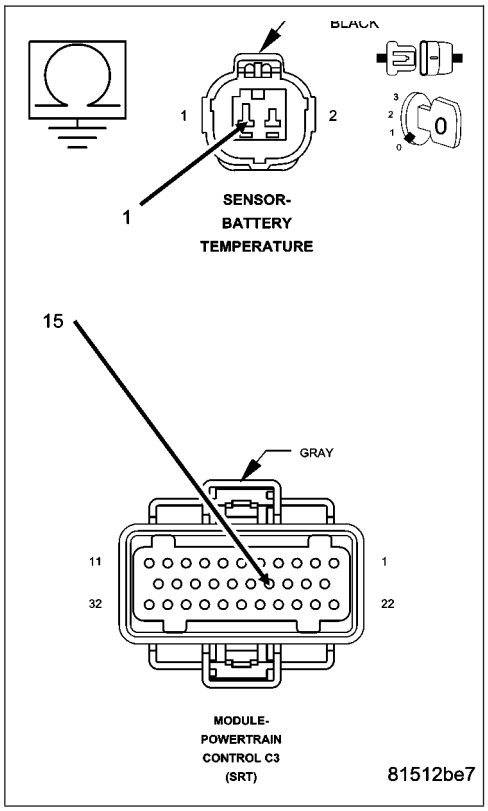

Is the resistance below 100 ohms?

Yes >> Repair the short to ground in the (K25) Battery Temp Signal circuit.

Perform POWERTRAIN VERIFICATION TEST. (Refer to 9 - ENGINE - STANDARD PROCEDURE)

No >> Go To 8

---

8. PCM

NOTE: Before continuing, check the PCM harness connector terminals for corrosion, damage, or terminal push out. Repair as necessary.

Using the schematics as a guide, inspect the wire harness and connectors. Pay particular attention to all Power and Ground circuits.

If there are no possible causes remaining, view repair.

Repair

Replace and program the Powertrain Control Module per Service Information.

Perform POWERTRAIN VERIFICATION TEST. (Refer to 9 - ENGINE - STANDARD PROCEDURE)

P0107-MAP SENSOR VOLTAGE TOO LOW

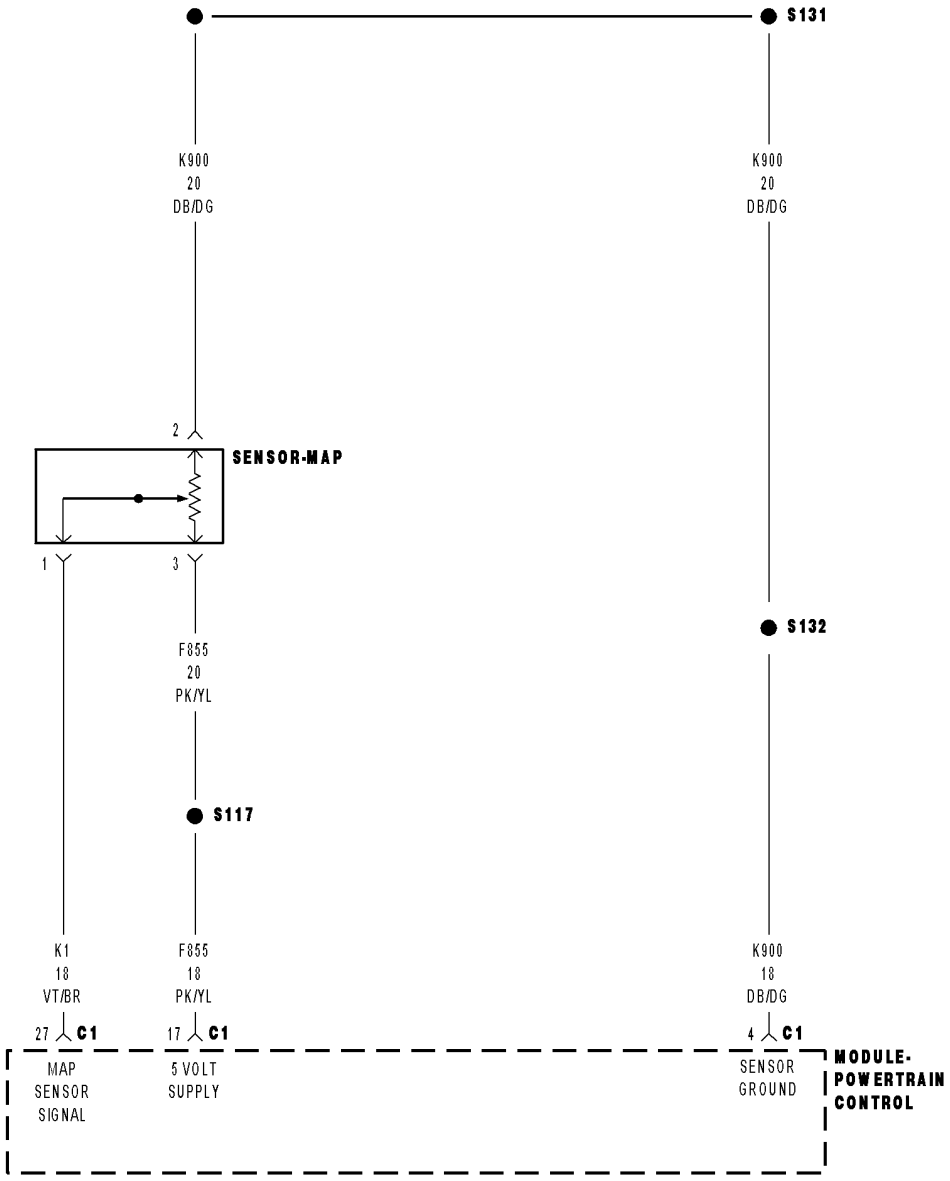

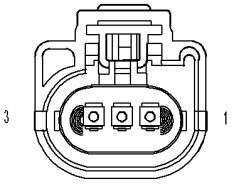

SENSOR-
MAP
(SRT)

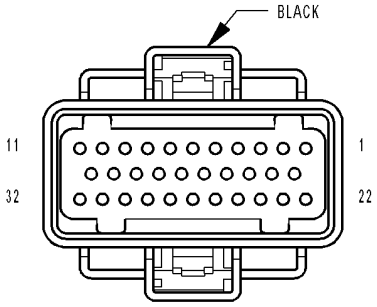

MODULE-
POWERTRAIN
CONTROL C1
(SRT)

81512c2e

P0107-MAP SENSOR VOLTAGE TOO LOW (CONTINUED)

For the Engine circuit diagram (Refer to 9 - ENGINE - SCHEMATICS AND DIAGRAMS).

For a complete wiring diagram **Refer to Section 8W**.

- **When Monitored:**
  With the engine RPM above 416 but less than 1500, the TPS voltage less than 1.13 volts, and battery voltage greater than 10.4 volts.
- **Set Condition:**
  The MAP Sensor signal voltage is below 0.1 of a volt for 2.0 seconds with the engine running.

Possible Causes
(F855) 5-VOLT SUPPLY CIRCUIT OPEN
(F855) 5-VOLT SUPPLY CIRCUIT SHORTED TO GROUND
(K1) MAP SIGNAL CIRCUIT SHORTED TO GROUND
(K1) MAP SIGNAL CIRCUIT SHORTED TO THE (K900) SENSOR GROUND CIRCUIT
MAP SENSOR
PCM

Always perform the Pre-Diagnostic Troubleshooting procedure before proceeding. (Refer to 9 - ENGINE - DIAGNOSIS AND TESTING).

Diagnostic Test

1. MAP SENSOR VOLTAGE BELOW 0.08 OF A VOLT

Ignition on, engine not running.

With a scan tool, read the MAP Sensor voltage.

Is the voltage below 0.08 of a volt?

Yes >> Go To 2

No >> Refer to the INTERMITTENT CONDITION Diagnostic Procedure. (Refer to 9 - ENGINE - DIAGNOSIS AND TESTING)

2. (F855) 5-VOLT SUPPLY CIRCUIT

Turn the ignition off.

Disconnect the MAP Sensor harness connector.

Ignition on, engine not running.

Measure the voltage on the (F855) 5-volt Supply circuit in the MAP Sensor harness connector.

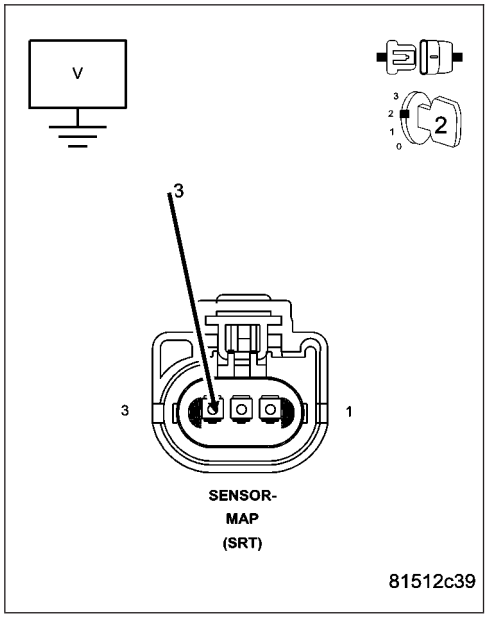

Is the voltage between 4.5 to 5.2 volts?

Yes >> Go To 3

No >> Go To 6

P0107-MAP SENSOR VOLTAGE TOO LOW (CONTINUED)

3. MAP SENSOR

With a scan tool, monitor the MAP Sensor voltage with the Sensor harness connector disconnected.

Is the voltage above 4.5 volts?

Yes >> Replace the MAP Sensor.
Perform the POWERTRAIN VERIFICATION TEST. (Refer to 9 - ENGINE - STANDARD PROCEDURE)

No >> Go To 4

4. (K1) MAP SIGNAL CIRCUIT SHORTED TO GROUND

Turn the ignition off.

Disconnect the C1 PCM harness connector.

Measure the resistance between ground and the (K1) MAP Signal circuit in the MAP Sensor harness connector.

Is the resistance below 100 ohms?

Yes >> Repair the short to ground in the (K1) MAP Signal circuit.
Perform the POWERTRAIN VERIFICATION TEST. (Refer to 9 - ENGINE - STANDARD PROCEDURE)

No >> Go To 5

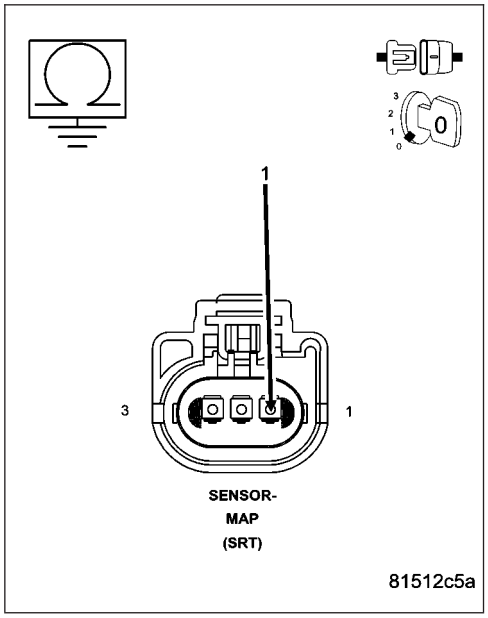

5. (K1) MAP SIGNAL CIRCUIT SHORTED TO THE (K900) SENSOR GROUND CIRCUIT

Measure the resistance between the (K1) MAP Signal circuit and the (K900) Sensor ground circuit in the MAP Sensor harness connector.

Is the resistance below 100 ohms?

Yes >> Repair the short between the (K900) Sensor ground and the (K1) MAP Signal circuit.
Perform the POWERTRAIN VERIFICATION TEST. (Refer to 9 - ENGINE - STANDARD PROCEDURE)

No >> Go To 8

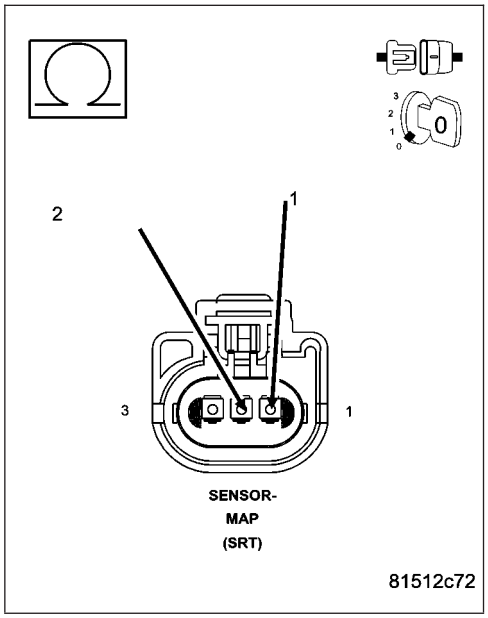

P0107-MAP SENSOR VOLTAGE TOO LOW (CONTINUED)

6. (F855) 5-VOLT SUPPLY CIRCUIT OPEN

Turn the ignition off.

Disconnect the C1 PCM harness connector.

Measure the resistance of the (F855) 5-volt Supply circuit from the MAP Sensor harness connector to the PCM harness connector.

Is the resistance below 5.0 ohms?

Yes >> Go To 7

No >> Repair the open in the (F855) 5-volt Supply circuit.
Perform the POWERTRAIN VERIFICATION TEST. (Refer to 9 - ENGINE - STANDARD PROCEDURE)

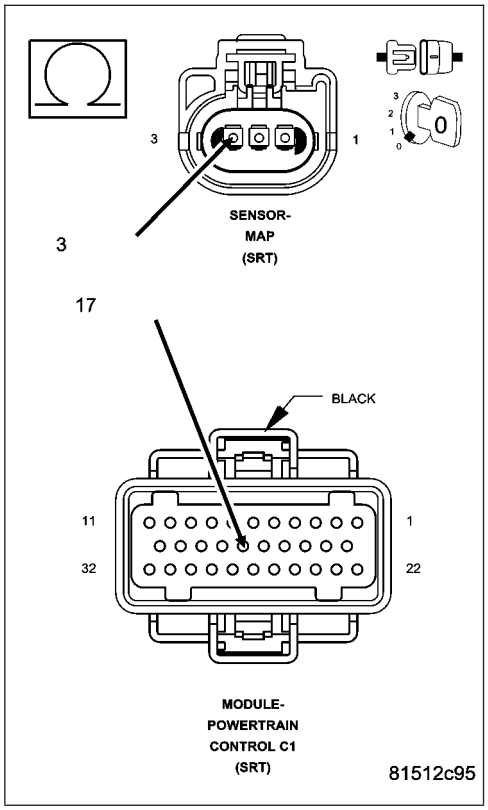

7. (F855) 5-VOLT SUPPLY CIRCUIT SHORTED TO GROUND

Measure the resistance between ground and the (F855) 5-volt Supply circuit in the MAP Sensor harness connector.

Is the resistance below 100 ohms?

Yes >> Repair the short to ground in the (F855) 5-volt Supply circuit.
Perform the POWERTRAIN VERIFICATION TEST. (Refer to 9 - ENGINE - STANDARD PROCEDURE)

No >> Go To 8

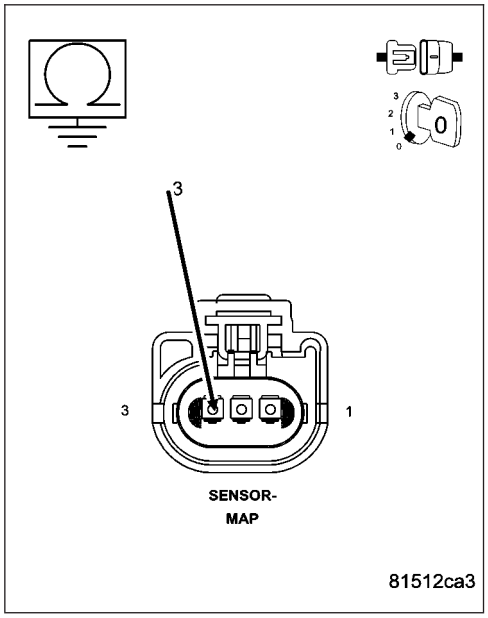

P0107-MAP SENSOR VOLTAGE TOO LOW (CONTINUED)

8. **PCM**

NOTE: Before continuing, check the PCM harness connector terminals for corrosion, damage, or terminal push out. Repair as necessary.

Using the schematics as a guide, inspect the wire harness and connectors. Pay particular attention to all Power and Ground circuits.

Were there any problems found?

Yes >> Repair as necessary.
Perform the POWERTRAIN VERIFICATION TEST. (Refer to 9 - ENGINE - STANDARD PROCEDURE)

No >> Replace and program the Powertrain Control Module per Service Information.
Perform the POWERTRAIN VERIFICATION TEST. (Refer to 9 - ENGINE - STANDARD PROCEDURE)

P0108–MAP SENSOR VOLTAGE TOO HIGH

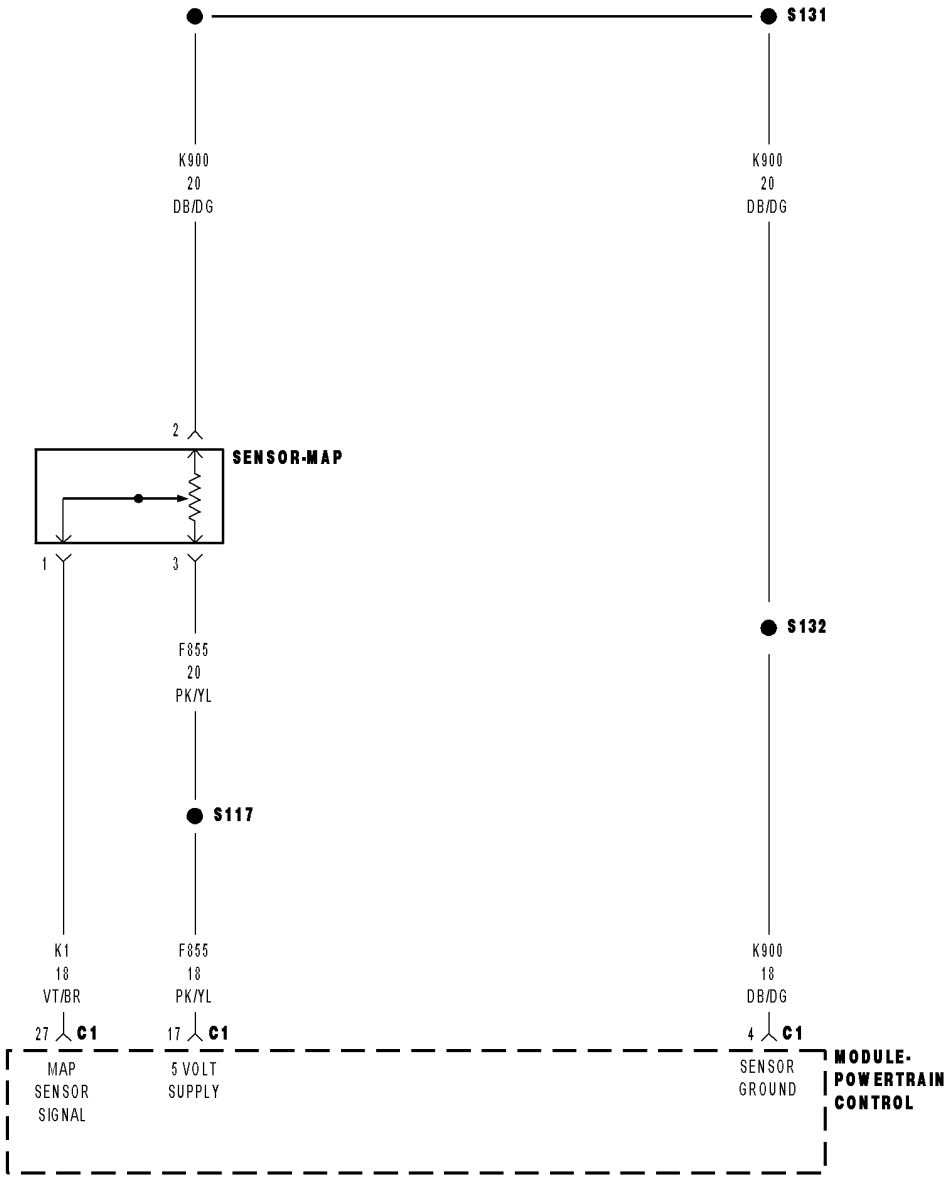

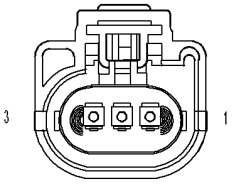

SENSOR-
MAP
(SRT)

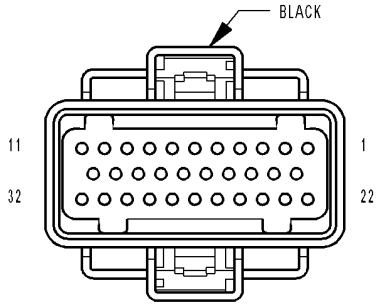

MODULE-
POWERTRAIN
CONTROL C1
(SRT)

81512c2e

P0108–MAP SENSOR VOLTAGE TOO HIGH (CONTINUED)

For the Engine circuit diagram (Refer to 9 - ENGINE - SCHEMATICS AND DIAGRAMS).

For a complete wiring diagram **Refer to Section 8W**.

- **When Monitored:**
  With the engine RPM above 400, the TPS voltage less than 1.13 volts, and battery voltage greater than 10.4 volts
- **Set Condition:**
  With the engine RPM above 400, the TPS voltage less than 1.13 volts, and battery voltage greater than 10.4 volts

Possible Causes
(K1) MAP SIGNAL CIRCUIT SHORTED TO BATTERY VOLTAGE
(K1) MAP SIGNAL CIRCUIT OPEN
(K1) MAP SIGNAL CIRCUIT SHORTED TO THE (F856) 5-VOLT SUPPLY CIRCUIT
(K900) SENSOR GROUND CIRCUIT OPEN
MAP SENSOR
PCM

Always perform the Pre-Diagnostic Troubleshooting procedure before proceeding. (Refer to 9 - ENGINE - DIAGNOSIS AND TESTING).

Diagnostic Test

1. MAP SENSOR VOLTAGE ABOVE 4.92 VOLTS

Start the engine.

With a scan tool, read the MAP Sensor voltage.

Is the voltage above 4.92 volts?

Yes >> Go To 2

No >> Refer to the INTERMITTENT CONDITION Diagnostic Procedure. (Refer to 9 - ENGINE - DIAGNOSIS AND TESTING)

P0108–MAP SENSOR VOLTAGE TOO HIGH (CONTINUED)

2. MAP SENSOR

Turn the ignition off.

Disconnect the MAP Sensor harness connector.

Connect a jumper wire between the (K1) MAP Signal circuit and the (K900) Sensor ground circuit in the Sensor harness connector.

Ignition on, engine not running.

With a scan tool, monitor the MAP Sensor voltage.

Is the voltage below 1.0 volt with the jumper wire installed?

Yes >> Replace the MAP Sensor.
Perform the POWERTRAIN VERIFICATION TEST. (Refer to 9 - ENGINE - STANDARD PROCEDURE)

No >> Go To 3

NOTE: Remove the jumper wire before continuing.

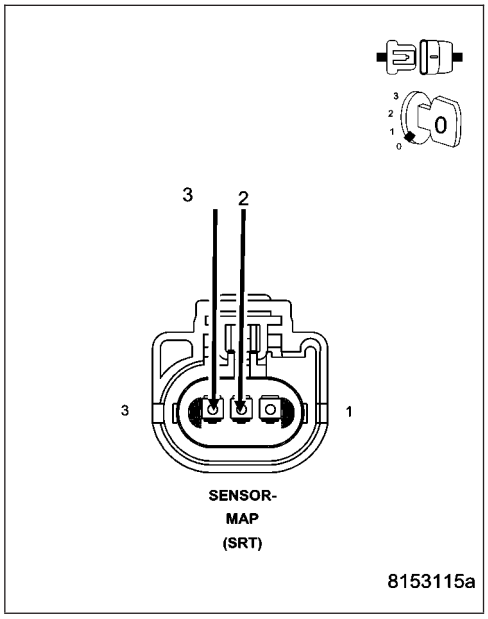

3. (K1) MAP SIGNAL CIRCUIT SHORTED TO BATTERY VOLTAGE

Turn the ignition off.

Disconnect the C1 and C2 PCM harness connectors.

Ignition on, engine not running.

Measure the voltage on the (K1) MAP Signal circuit in the MAP Sensor harness connector.

Is the voltage above 0 volts?

Yes >> Repair the short to battery voltage in the (K1) MAP Signal circuit.
Perform the POWERTRAIN VERIFICATION TEST. (Refer to 9 - ENGINE - STANDARD PROCEDURE)

No >> Go To 4

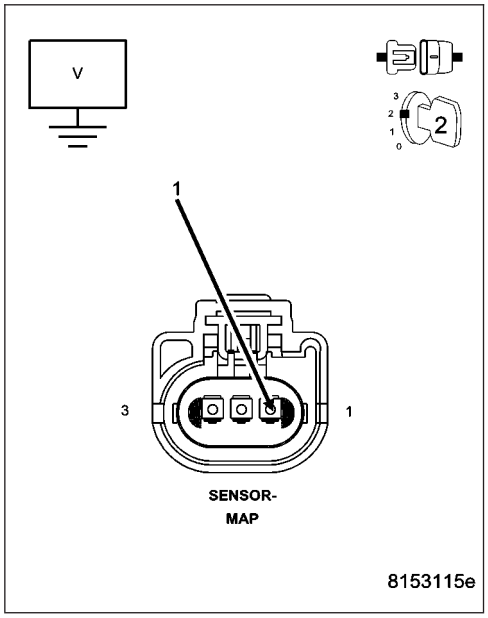

P0108–MAP SENSOR VOLTAGE TOO HIGH (CONTINUED)

4. (K1) MAP SIGNAL CIRCUIT OPEN

Turn the ignition off.

CAUTION: Do not probe the PCM harness connectors. Probing the PCM harness connectors will damage the PCM terminals resulting in poor terminal to pin connection. Install Miller Special Tool #8815 to perform diagnosis.

Measure the resistance of the (K1) MAP Signal circuit from the MAP Sensor harness connector to the appropriate terminal of special tool #8815.

Is the resistance below 5.0 ohms?

Yes >> Go To 5

No >> Repair the open in the (K1) MAP Signal circuit.
Perform the POWERTRAIN VERIFICATION TEST. (Refer to 9 - ENGINE - STANDARD PROCEDURE)

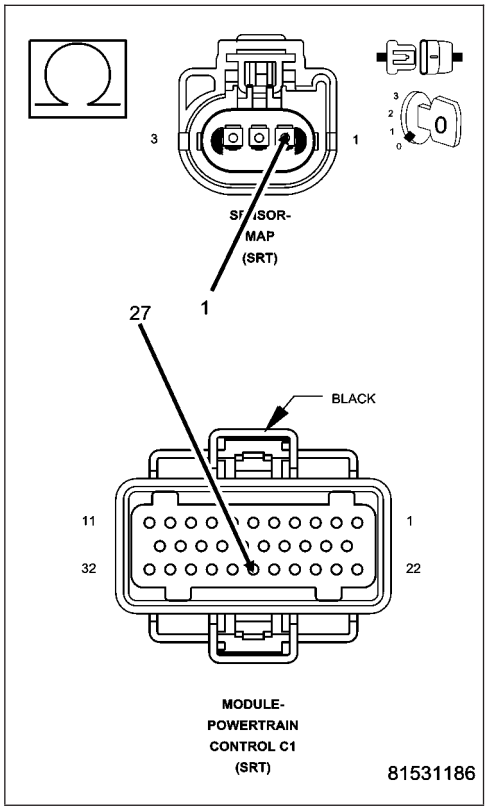

5. (K1) MAP SIGNAL CIRCUIT SHORTED TO THE (F856) 5-VOLT SUPPLY CIRCUIT

Measure the resistance between the (K1) MAP Signal circuit and the (F856) 5-volt Supply circuit in the MAP Sensor harness connector.

Is the resistance below 100 ohms?

Yes >> Repair the short between the (F856) 5-volt Supply circuit and the (K1) MAP Signal circuit.
Perform the POWERTRAIN VERIFICATION TEST. (Refer to 9 - ENGINE - STANDARD PROCEDURE)

No >> Go To 6

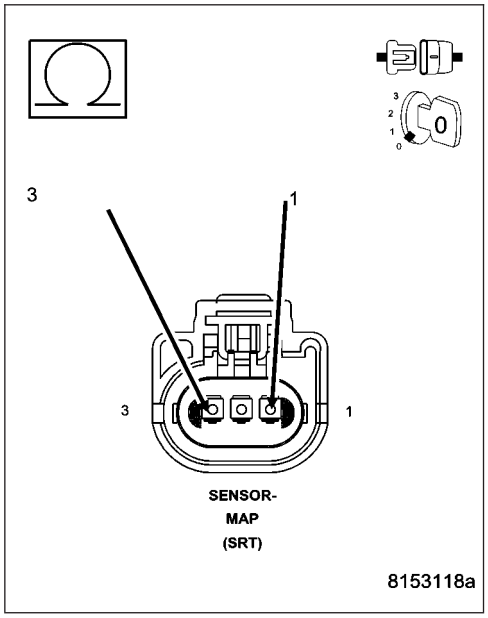

P0108–MAP SENSOR VOLTAGE TOO HIGH (CONTINUED)

6. (K900) SENSOR GROUND CIRCUIT OPEN

Measure the resistance of the (K900) Sensor ground circuit from the MAP Sensor harness connector to the appropriate terminal of special tool #8815.

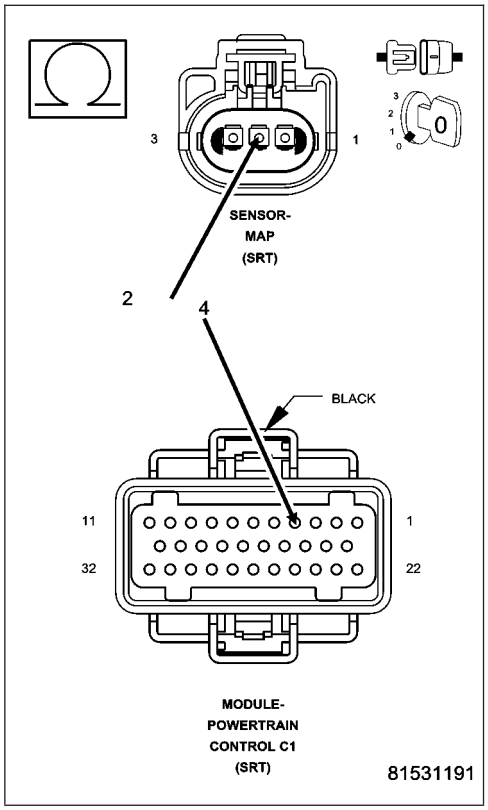

Is the resistance below 5.0 ohms?

Yes >> Go To 7

No >> Repair the open in the (K900) Sensor ground circuit.
Perform the POWERTRAIN VERIFICATION TEST. (Refer to 9 - ENGINE - STANDARD PROCEDURE)

7. PCM

NOTE: Before continuing, check the PCM harness connector terminals for corrosion, damage, or terminal push out. Repair as necessary.

Using the schematics as a guide, inspect the wire harness and connectors. Pay particular attention to all Power and Ground circuits.

Were there any problems found?

Yes >> Repair as necessary.
Perform the POWERTRAIN VERIFICATION TEST. (Refer to 9 - ENGINE - STANDARD PROCEDURE)

No >> Replace and program the Powertrain Control Module per Service Information.
Perform the POWERTRAIN VERIFICATION TEST. (Refer to 9 - ENGINE - STANDARD PROCEDURE)

P0111-INTAKE AIR TEMP PERFORMANCE

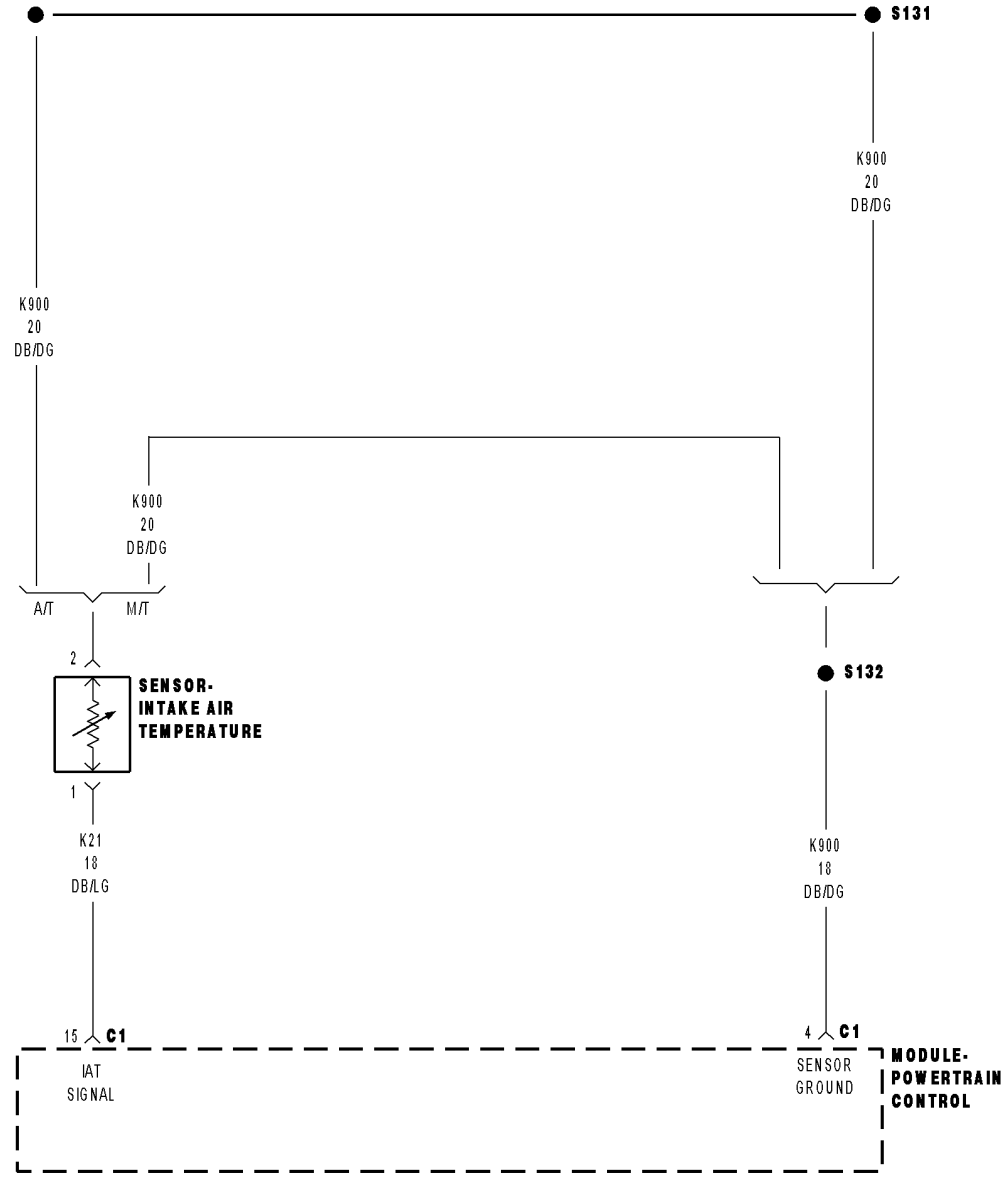

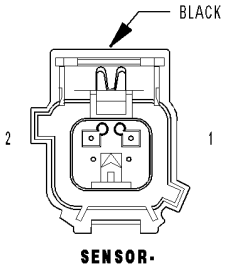

SENSOR-
INTAKE AIR
TEMPERATURE
(SRT)

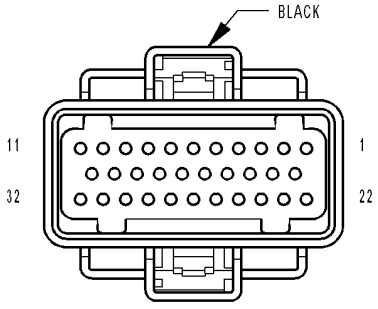

MODULE-
POWERTRAIN
CONTROL C1
(SRT)

81532317

P0111-INTAKE AIR TEMP PERFORMANCE (CONTINUED)

For the Engine circuit diagram (Refer to 8 - ELECTRICAL/ELECTRONIC CONTROL MODULES/ENGINE CONTROL MODULE - SCHEMATIC - ELECTRICAL)

For a complete wiring diagram **Refer to Section 8W**.

- **When Monitored:**
  With the ignition on and no Intake Air Temperature Sensor open/shorted faults present.
- **Set Condition:**
  After 5 warm cycles have occurred (coolant increases at least 22°C (40°F) to a minimum of 71°C (160°F) and the odometer mileage has increased 196.6 miles and the Intake Air Temperature has had less than 5°C (9°F) change in temperature.

Possible Causes
RESISTANCE IN THE (K21) IAT SENSOR SIGNAL CIRCUIT
RESISTANCE IN THE (K900) SENSOR GROUND CIRCUIT
IAT SENSOR
PCM

Always perform the Pre-Diagnostic Troubleshooting procedure before proceeding. (Refer to 9 - ENGINE - DIAGNOSIS AND TESTING)

1. GOOD TRIP EQUAL TO ZERO

Ignition on, engine not running.

With the scan tool, read DTCs and record the related Freeze Frame data.

Is the Good Trip Counter equal to zero?

Yes >> Go To 2

No >> Refer to the INTERMITTENT CONDITION Diagnostic Procedure. (Refer to 9 - ENGINE - DIAGNOSIS AND TESTING)

---

2. IAT SENSOR VOLTAGE ABOVE 4.6 VOLTS

Turn the ignition off.

Disconnect the Intake Air Temperature Sensor harness connector.

Ignition on, engine not running.

With the scan tool, read the IAT voltage.

Is the voltage above 4.6 volts?

Yes >> Go To 3

No >> Go To 5

P0111-INTAKE AIR TEMP PERFORMANCE (CONTINUED)

3. IAT SENSOR VOLTAGE BELOW 1.0 VOLT

Turn the ignition off.

Connect a jumper wire across the IAT Sensor harness connector.

Ignition on, engine not running.

With the scan tool, read the IAT voltage.

Is the voltage below 1.0 volt?

Yes >> Replace the Intake Air Temperature Sensor.
Perform POWERTRAIN VERIFICATION TEST. (Refer to 9 - ENGINE - STANDARD PROCEDURE)

No >> Go To 4

NOTE: Remove the jumper wire and connect the Sensor harness connector before continuing.

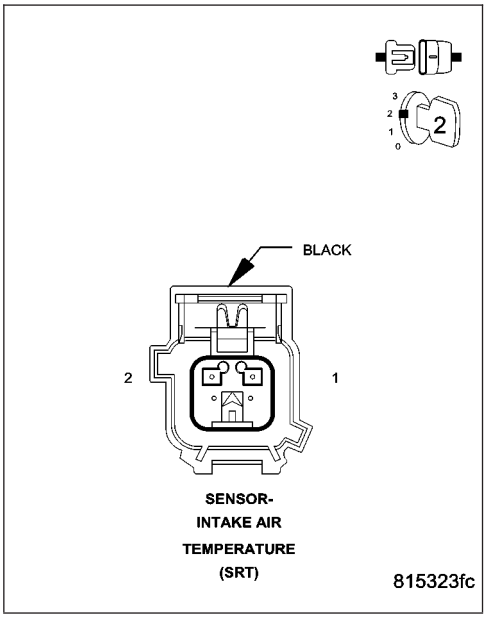

4. RESISTANCE IN THE (K21) IAT SENSOR SIGNAL CIRCUIT

Turn the ignition off.

NOTE: Make sure the voltmeter leads meet the terminals in the connector and that there is good terminal to wire connection.

NOTE: Make sure the voltmeter leads are connected for positive polarity

Backprobe the (K21) IAT Sensor Signal circuit at the IAT Sensor harness connector and PCM harness connector with the voltmeter leads.

Start the engine.

Allow the engine to idle.

Is the voltage below 0.10 of a volt?

Yes >> Go To 6

No >> Repair the excessive resistance in the (K21) IAT Sensor Signal circuit.
Perform POWERTRAIN VERIFICATION TEST. (Refer to 9 - ENGINE - STANDARD PROCEDURE)

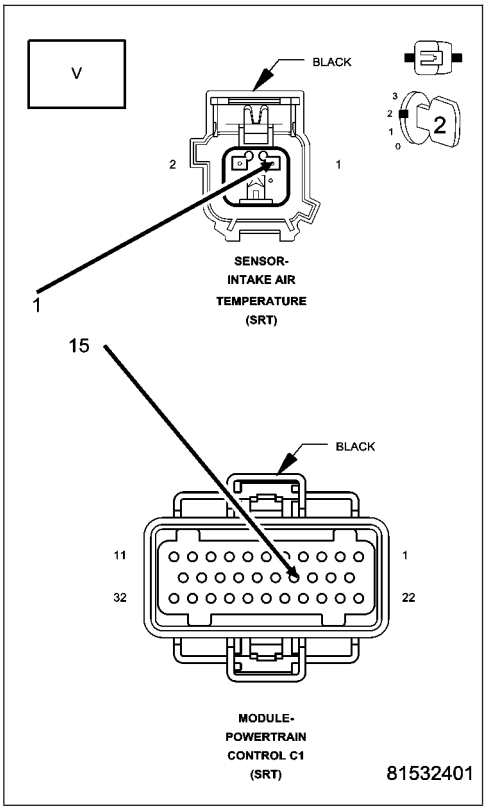

P0111-INTAKE AIR TEMP PERFORMANCE (CONTINUED)

5. RESISTANCE IN THE (K900) SENSOR GROUND CIRCUIT

Turn the ignition off.

NOTE: Make sure the voltmeter leads meet the terminals in the connector and that there is good terminal to wire connection.

NOTE: Make sure the voltmeter leads are connected for positive polarity

Backprobe the (K900) Sensor ground circuit at the IAT Sensor harness connector and PCM harness connector with both leads of a voltmeter.

Start the engine.

Allow the engine to idle.

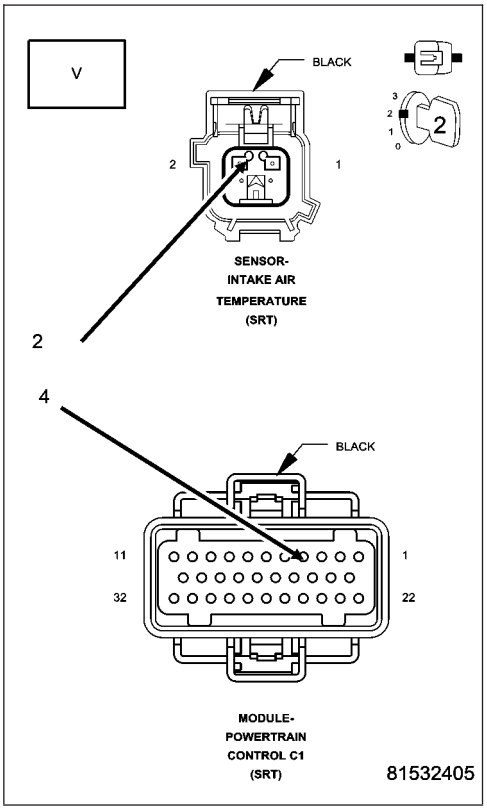

Is the voltage below 0.10 of a volt?

Yes >> Go To 6

No >> Repair the excessive resistance in the (K900) Sensor ground circuit.

Perform POWERTRAIN VERIFICATION TEST. (Refer to 9 - ENGINE - STANDARD PROCEDURE)

NOTE: Turn the ignition off before continuing.

6. PCM

NOTE: Before continuing, check the PCM harness connector terminals for corrosion, damage, or terminal push out. Repair as necessary.

Using the schematics as a guide, inspect the wire harness and connectors. Pay particular attention to all Power and Ground circuits.

If there are no possible causes remaining, view repair.

Repair

Replace and program the Powertrain Control Module per Service Information.

Perform POWERTRAIN VERIFICATION TEST. (Refer to 9 - ENGINE - STANDARD PROCEDURE)

P0112-INTAKE AIR TEMP SENSOR VOLTAGE TOO LOW

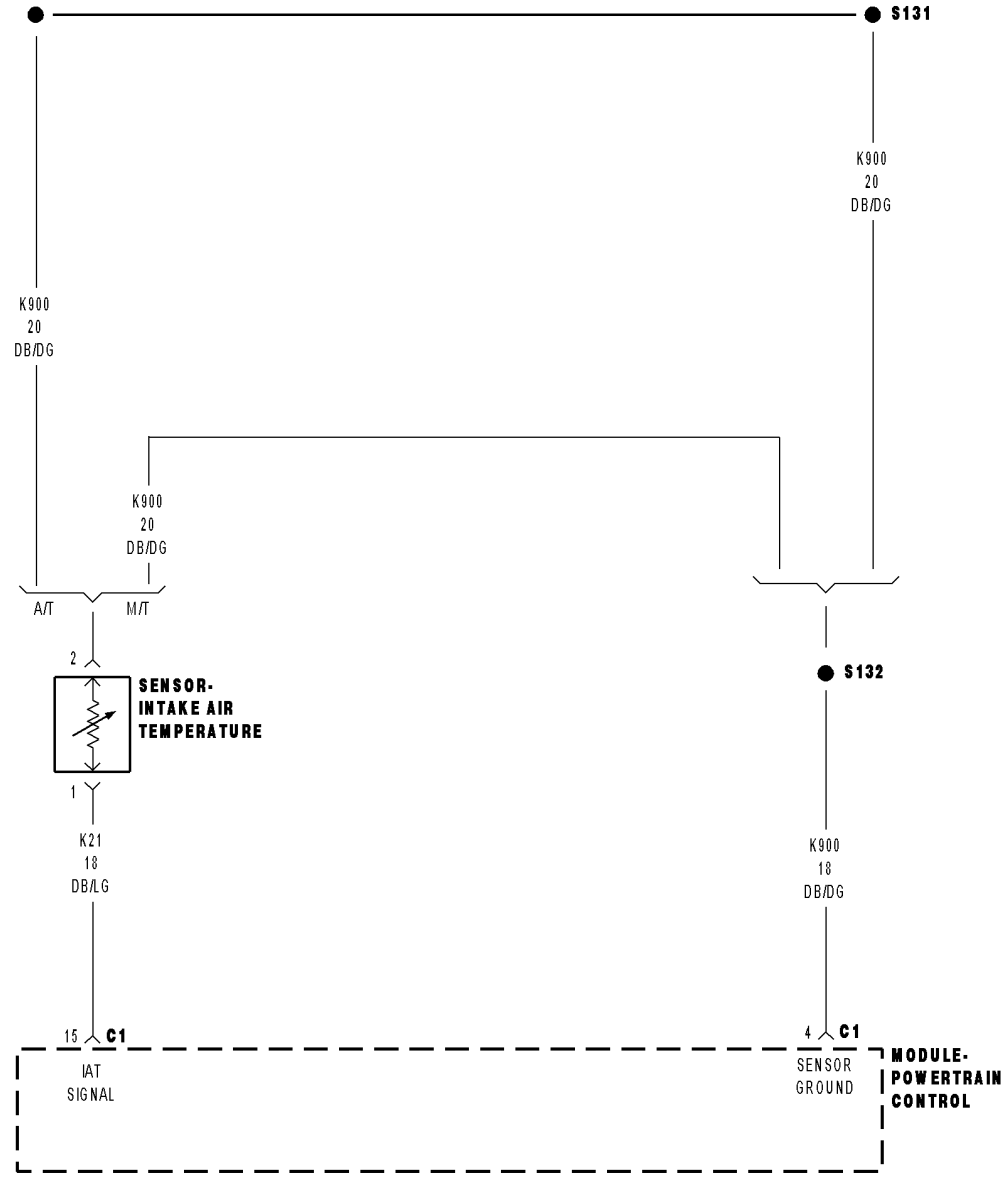

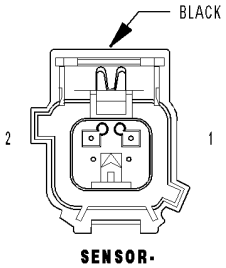

SENSOR-
INTAKE AIR
TEMPERATURE
(SRT)

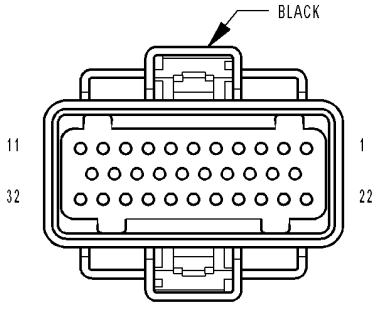

MODULE-
POWERTRAIN
CONTROL C1
(SRT)

81532317

P0112-INTAKE AIR TEMP SENSOR VOLTAGE TOO LOW (CONTINUED)

For the Engine System Schematic circuit diagram (Refer to 9 - ENGINE - SCHEMATICS AND DIAGRAMS).

For a complete wiring diagram **Refer to Section 8W**.

- **When Monitored:**
  With the ignition on and battery voltage greater than 10.4 volts.
- **Set Condition:**
  When the Inlet Air Temp Sensor Signal circuit voltage is less than 0.8 of a volt.

Possible Causes
(K21) IAT SIGNAL CIRCUIT SHORTED TO GROUND
(K21) IAT SIGNAL CIRCUIT SHORTED TO THE (K900) SENSOR GROUND CIRCUIT
INTAKE AIR TEMPERATURE SENSOR
PCM

Always perform the Pre-Diagnostic Troubleshooting procedure before proceeding. (Refer to 9 - ENGINE - DIAGNOSIS AND TESTING).

Diagnostic Test

1. IAT SENSOR VOLTAGE BELOW 0.078 OF A VOLT

Ignition on, engine not running.

With a scan tool, read the IAT voltage.

Is the voltage below 0.078 of a volt?

Yes >> Go To 2

No >> Refer to the INTERMITTENT CONDITION Diagnostic Procedure. (Refer to 9 - ENGINE - DIAGNOSIS AND TESTING)

---

2. IAT SENSOR

Turn the ignition off.

Disconnect the IAT Sensor harness connector.

Ignition on, engine not running.

With a scan tool, read IAT voltage.

Is the voltage above 0.05 of a volt?

Yes >> Replace the Intake Air Temperature Sensor.
Perform the POWERTRAIN VERIFICATION TEST. (Refer to 9 - ENGINE - STANDARD PROCEDURE)

No >> Go To 3

P0112-INTAKE AIR TEMP SENSOR VOLTAGE TOO LOW (CONTINUED)

3. (K21) IAT SIGNAL CIRCUIT SHORTED TO GROUND

Turn the ignition off.

Disconnect the C2 PCM harness connector.

Measure the resistance between ground and the (K21) IAT Signal circuit in the IAT Sensor harness connector.

Is the resistance below 100 ohms?

Yes >> Repair the short to ground in the (K21) IAT Signal circuit. Perform the POWERTRAIN VERIFICATION TEST. (Refer to 9 - ENGINE - STANDARD PROCEDURE)

No >> Go To 4

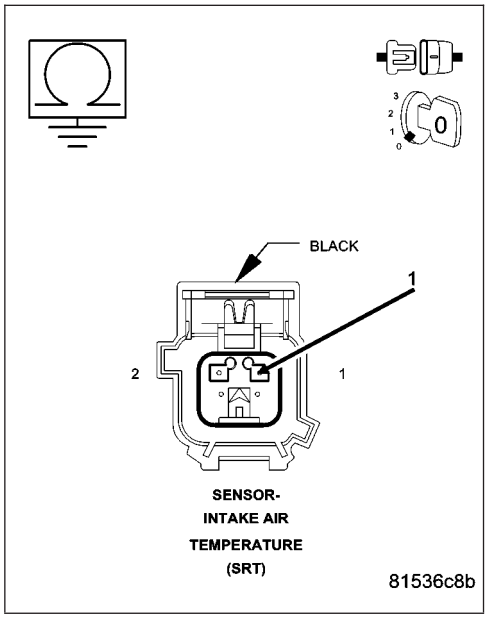

4. (K21) IAT SIGNAL CIRCUIT SHORTED TO THE (K900) SENSOR GROUND CIRCUIT

Measure the resistance between the (K21) IAT Signal circuit and the (K900) Sensor ground circuit in the IAT Sensor harness connector.

Is the resistance below 100 ohms?

Yes >> Repair the short between the (K900) Sensor ground circuit and the (K21) IAT Sensor Signal circuit.
Perform the POWERTRAIN VERIFICATION TEST. (Refer to 9 - ENGINE - STANDARD PROCEDURE)

No >> Go To 5

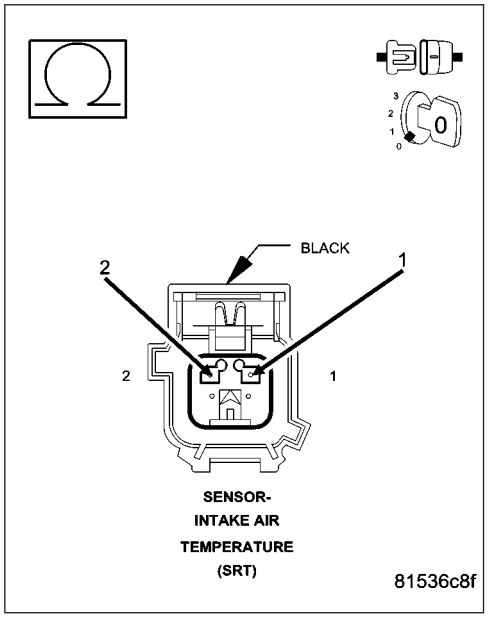

P0112-INTAKE AIR TEMP SENSOR VOLTAGE TOO LOW (CONTINUED)

5. **PCM**

NOTE: Before continuing, check the PCM harness connector terminals for corrosion, damage, or terminal push out. Repair as necessary.

Using the schematics as a guide, inspect the wire harness and connectors. Pay particular attention to all Power and Ground circuits.

Were there any problems found?

Yes >> Repair as necessary.
Perform the POWERTRAIN VERIFICATION TEST. (Refer to 9 - ENGINE - STANDARD PROCEDURE)

No >> Replace and program the Powertrain Control Module per Service Information.
Perform the POWERTRAIN VERIFICATION TEST. (Refer to 9 - ENGINE - STANDARD PROCEDURE)

P0113-INTAKE AIR TEMPERATURE SENSOR CIRCUIT HIGH

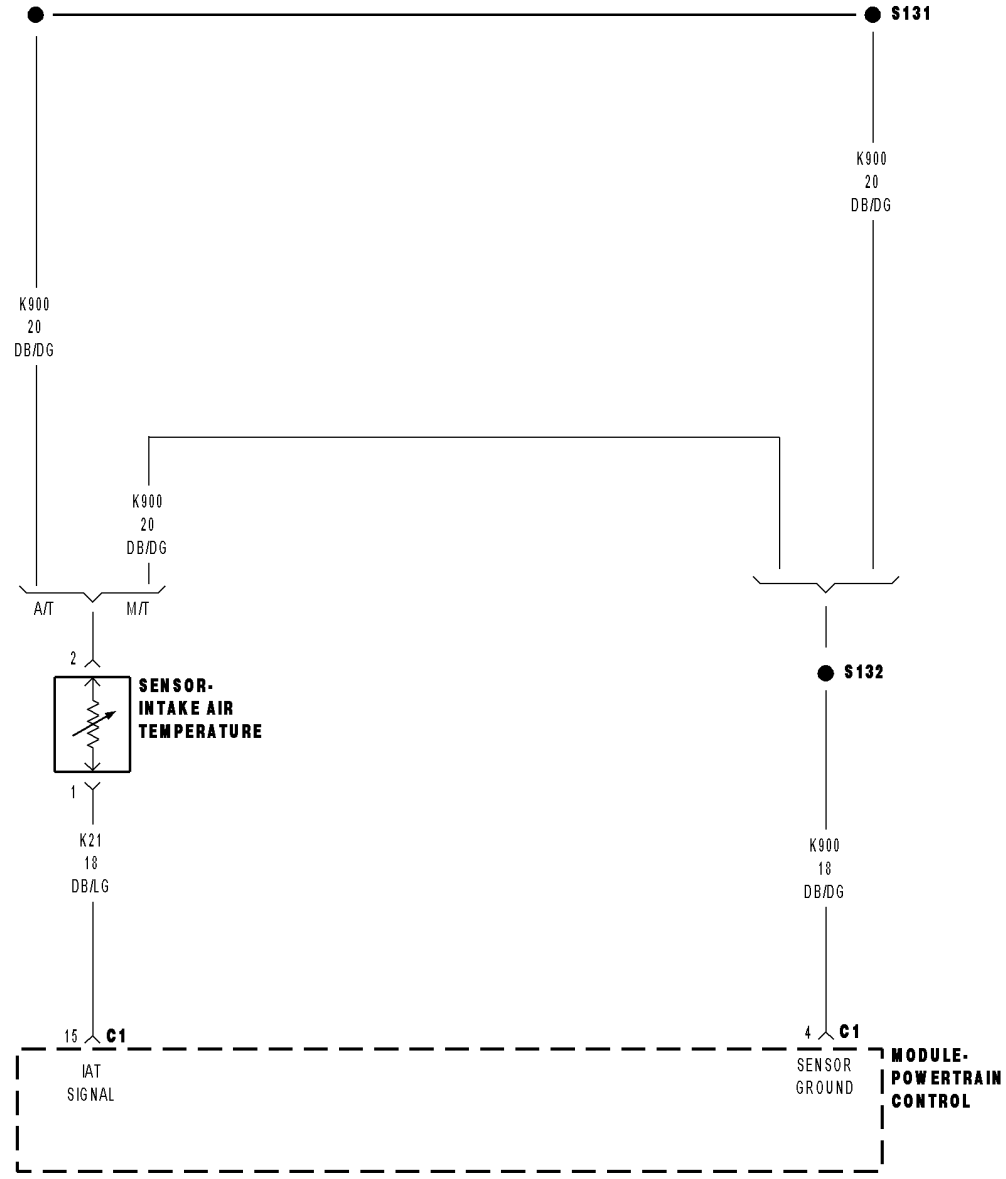

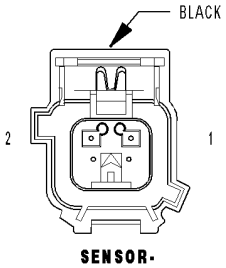

SENSOR-
INTAKE AIR
TEMPERATURE
(SRT)

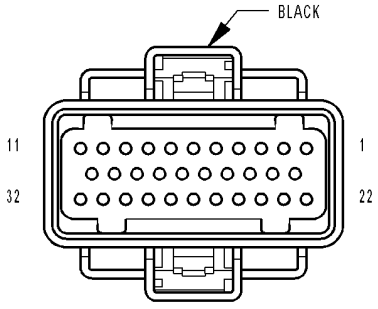

MODULE-
POWERTRAIN
CONTROL C1
(SRT)

81532317

P0113-INTAKE AIR TEMPERATURE SENSOR CIRCUIT HIGH (CONTINUED)

For the Engine System Schematic circuit diagram. (Refer to 9 - ENGINE - SCHEMATICS AND DIAGRAMS)

For a complete wiring diagram **Refer to Section 8W**.

- **When Monitored:**
  With the ignition on. Battery voltage greater than 10.4 volts.
- **Set Condition:**
  The Intake Air Temperature (IAT) sensor circuit voltage at the PCM goes above 4.98 volts for 2.8 seconds. One Trip Fault. Three good trips to turn off the MIL.

Possible Causes
(K21) IAT SIGNAL CIRCUIT SHORTED TO BATTERY VOLTAGE
(K21) IAT SIGNAL CIRCUIT OPEN
(K900) SENSOR GROUND CIRCUIT OPEN
IAT SENSOR
PCM

Always perform the Pre-Diagnostic Troubleshooting procedure before proceeding. (Refer to 9 - ENGINE - DIAGNOSIS AND TESTING).

Diagnostic Test

1. IAT SENSOR VOLTAGE ABOVE 4.98 VOLTS

Ignition on, engine not running.

With a scan tool, read the Intake Air Temperature Sensor voltage.

Is the voltage above 4.98 volts?

Yes >> Go To 2

No >> Refer to the INTERMITTENT CONDITION Diagnostic Procedure.
Perform the POWERTRAIN VERIFICATION TEST. (Refer to 9 - ENGINE - STANDARD PROCEDURE)

P0113-INTAKE AIR TEMPERATURE SENSOR CIRCUIT HIGH (CONTINUED)

2. IAT SENSOR

Turn the ignition off.

Disconnect the Intake Air Temperature Sensor harness connector.

Connect a jumper wire between the (K21) IAT Signal circuit and the (K900) Sensor ground circuit in the IAT Sensor harness connector.

Ignition on, engine not running.

With a scan tool, read the IAT Sensor voltage.

Is the voltage below 1.0 volt with the jumper wire installed?

Yes >> Replace the IAT Sensor.
Perform the POWERTRAIN VERIFICATION TEST. (Refer to 9 - ENGINE - STANDARD PROCEDURE)

No >> Go To 3

NOTE: Remove the jumper wire before continuing.

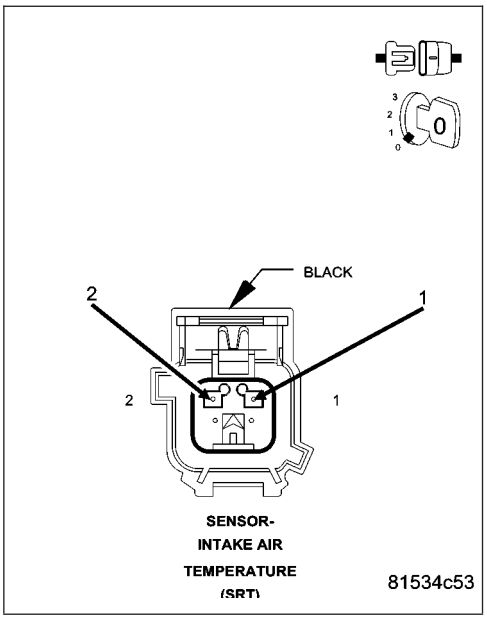

3. (K21) IAT SIGNAL CIRCUIT SHORTED TO BATTERY VOLTAGE

Disconnect the C2 PCM harness connector.

Ignition on, engine not running.

Measure the voltage on the (K21) IAT Signal circuit in the IAT Sensor harness connector.

Is the voltage above 0 volts?

Yes >> Repair the short to battery voltage in the (K21) IAT Signal circuit.
Perform the POWERTRAIN VERIFICATION TEST. (Refer to 9 - ENGINE - STANDARD PROCEDURE)

No >> Go To 4

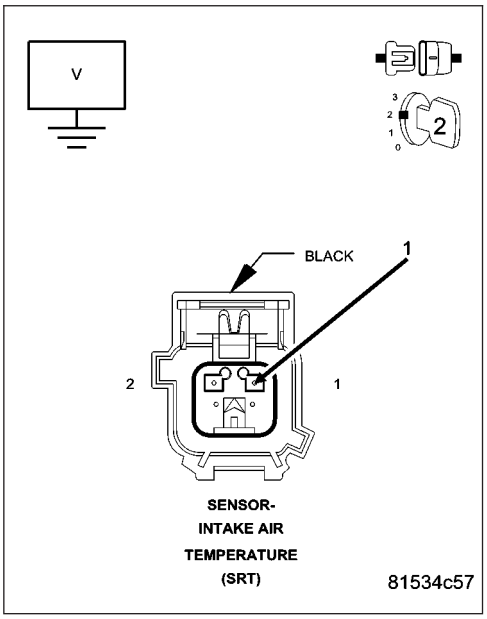

P0113-INTAKE AIR TEMPERATURE SENSOR CIRCUIT HIGH (CONTINUED)

4. (K21) IAT SIGNAL CIRCUIT OPEN

Turn the ignition off.

CAUTION: Do not probe the PCM harness connectors. Probing the PCM harness connectors will damage the PCM terminals resulting in poor terminal to pin connection. Install Miller Special Tool #8815 to perform diagnosis.

Measure the resistance of the (K21) IAT Signal circuit from the IAT Sensor harness connector to the appropriate terminal of special tool #8815.

Is the resistance below 5.0 ohms?

Yes >> Go To 5

No >> Repair the open in the (K21) IAT Signal circuit.
Perform the POWERTRAIN VERIFICATION TEST. (Refer to 9 - ENGINE - STANDARD PROCEDURE)

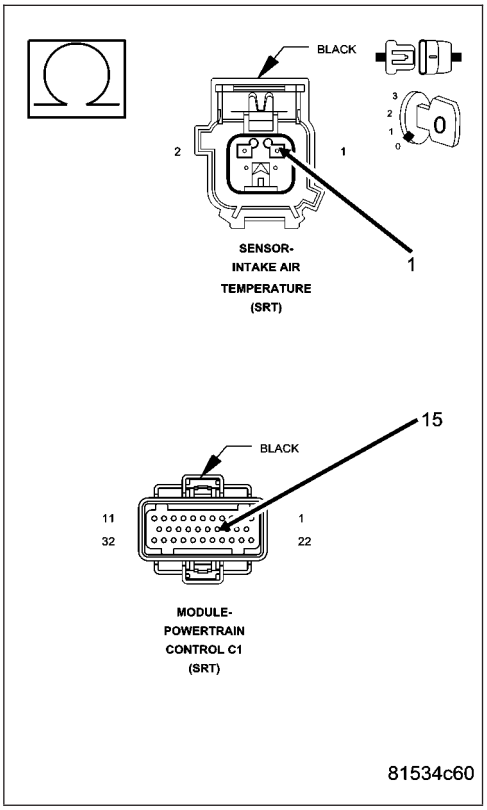

5. (K900) SENSOR GROUND CIRCUIT OPEN

Measure the resistance of the (K900) Sensor ground circuit from the IAT Sensor harness connector to the appropriate terminal of special tool #8815.

Is the resistance below 5.0 ohms?

Yes >> Go To 6

No >> Repair the open in the (K900) Sensor ground circuit.
Perform the POWERTRAIN VERIFICATION TEST. (Refer to 9 - ENGINE - STANDARD PROCEDURE)

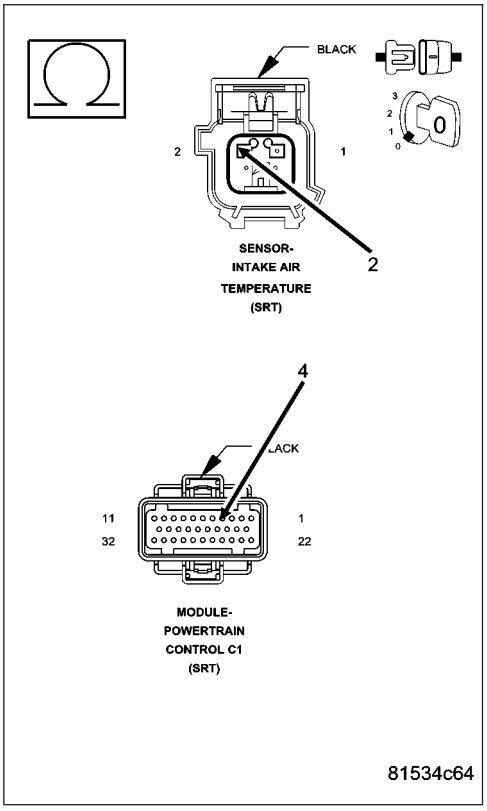

P0113-INTAKE AIR TEMPERATURE SENSOR CIRCUIT HIGH (CONTINUED)

6. **PCM**

NOTE: Before continuing, check the PCM harness connector terminals for corrosion, damage, or terminal push out. Repair as necessary.

Using the schematics as a guide, inspect the wire harness and connectors. Pay particular attention to all Power and Ground circuits.

Were there any problems found?

Yes >> Repair as necessary.
Perform the POWERTRAIN VERIFICATION TEST. (Refer to 9 - ENGINE - STANDARD PROCEDURE)

No >> Replace and program the Powertrain Control Module per Service Information.
Perform the POWERTRAIN VERIFICATION TEST. (Refer to 9 - ENGINE - STANDARD PROCEDURE)

P0117-ENGINE COOLANT TEMPERATURE SENSOR CIRCUIT LOW

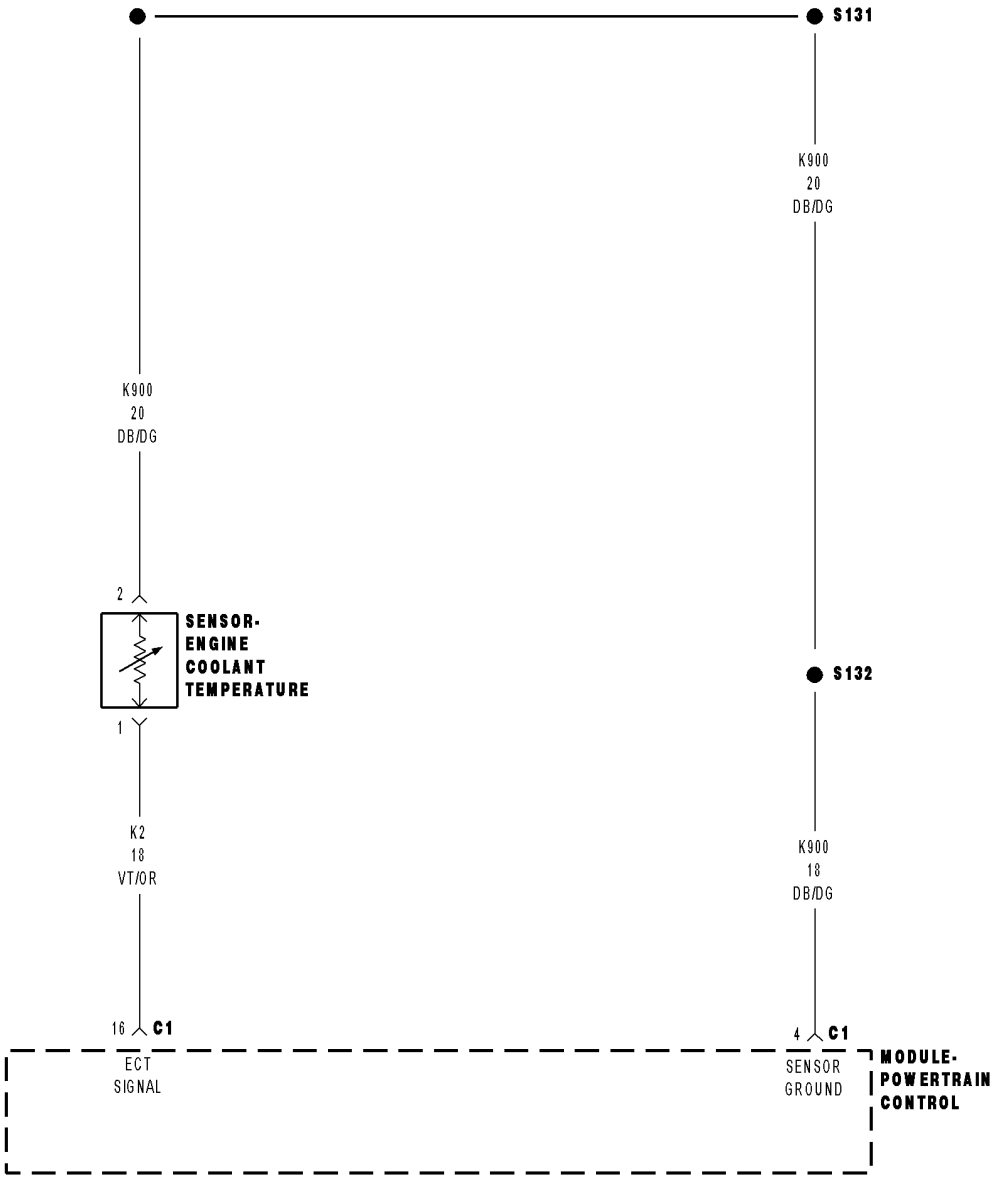

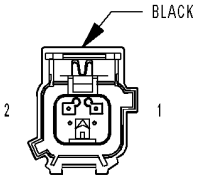

SENSOR-
ENGINE
COOLANT
TEMPERATURE
(5.7L/SRT)

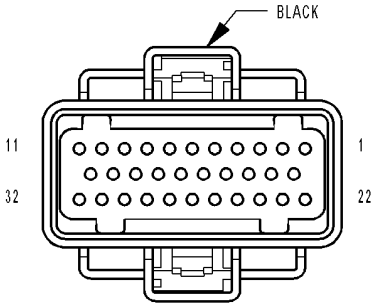

MODULE-
POWERTRAIN
CONTROL C1
(SRT)

81536f8b

P0117-ENGINE COOLANT TEMPERATURE SENSOR CIRCUIT LOW (CONTINUED)

For the Engine System Schematic circuit diagram (Refer to 9 - ENGINE - SCHEMATICS AND DIAGRAMS).

For a complete wiring diagram **Refer to Section 8W**.

Theory of Operation

The engine coolant temperature sensor is a negative temperature coefficient thermistor-type sensor whose resistance varies inversely with temperature. At cold temperatures the sensor resistance is high so the voltage is high. As the coolant temperature increases the resistance decreases and the voltage becomes low.

- **When Monitored:**
  With the ignition on. Battery voltage greater than 10.4 volts.
- **Set Condition:**
  The Engine Coolant Temperature (ECT) Signal circuit voltage at the PCM goes below 0.8 of a volt for more than 3 seconds.

Possible Causes
(K2) ECT SIGNAL CIRCUIT SHORTED TO GROUND
(K2) ECT SIGNAL CIRCUIT SHORTED TO THE (K900) SENSOR GROUND CIRCUIT
ECT SENSOR
PCM

Always perform the Pre-Diagnostic Troubleshooting procedure before proceeding. (Refer to 9 - ENGINE - DIAGNOSIS AND TESTING).

Diagnostic Test

1. ECT SENSOR VOLTAGE BELOW 1.0 OF A VOLT

Ignition on, engine not running.

With a scan tool, read the ECT voltage.

Is the voltage below 1.0 of a volt?

Yes >> Go To 2

No >> Refer to the INTERMITTENT CONDITION Symptom. (Refer to 9 - ENGINE - DIAGNOSIS AND TESTING)

---

2. ECT SENSOR

Turn the ignition off.

Disconnect the ECT harness connector.

Ignition on, engine not running.

With a scan tool, read ECT voltage.

Is the voltage above 1.0 volt?

Yes >> Replace the ECT Sensor.
Perform the POWERTRAIN VERIFICATION TEST. (Refer to 9 - ENGINE - STANDARD PROCEDURE)

No >> Go To 3

P0117-ENGINE COOLANT TEMPERATURE SENSOR CIRCUIT LOW (CONTINUED)

3. (K2) ECT SIGNAL CIRCUIT SHORTED TO THE (K900) SENSOR GROUND CIRCUIT

Turn the ignition off.

Disconnect the C1 PCM harness connector.

Measure the resistance between the (K900) Sensor ground circuit and the (K2) ECT Signal circuit in the ECT Sensor harness connector.

Is the resistance below 5.0 ohms?

Yes >> Repair the short to between the (K900) Sensor ground circuit and the (K2) ECT Signal circuit.
Perform the POWERTRAIN VERIFICATION TEST. (Refer to 9 - ENGINE - STANDARD PROCEDURE)

No >> Go To 4

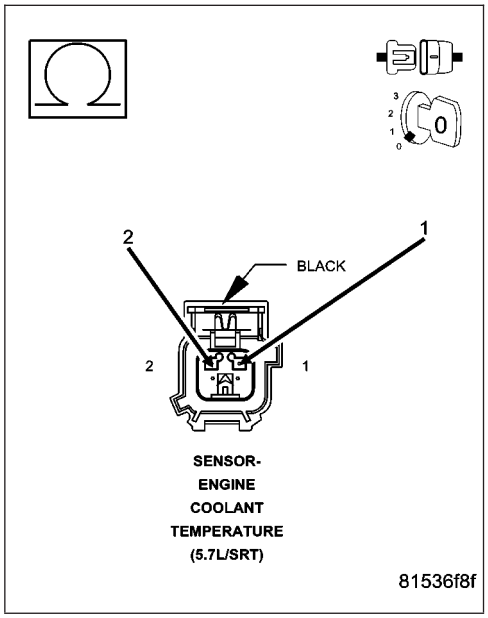

4. (K2) ECT SIGNAL CIRCUIT SHORTED GROUND

Measure the resistance between ground and the (K2) ECT Signal circuit in the ECT Sensor harness connector.

Is the resistance below 100 ohms?

Yes >> Repair the short to ground in the (K2) ECT Signal circuit.
Perform the POWERTRAIN VERIFICATION TEST. (Refer to 9 - ENGINE - STANDARD PROCEDURE)

No >> Go To 5

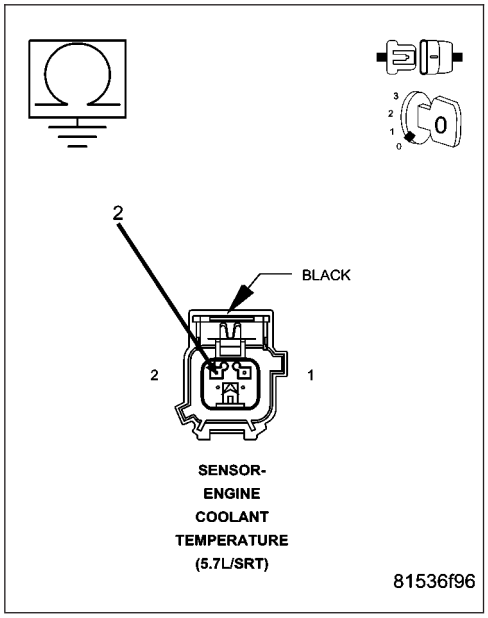

P0117-ENGINE COOLANT TEMPERATURE SENSOR CIRCUIT LOW (CONTINUED)

5. **PCM**

NOTE: Before continuing, check the PCM harness connector terminals for corrosion, damage, or terminal push out. Repair as necessary.

Using the schematics as a guide, inspect the wire harness and connectors. Pay particular attention to all Power and Ground circuits.

Were there any problems found?

Yes >> Repair as necessary.
Perform the POWERTRAIN VERIFICATION TEST. (Refer to 9 - ENGINE - STANDARD PROCEDURE)

No >> Replace and program the Powertrain Control Module per Service Information.
Perform the POWERTRAIN VERIFICATION TEST. (Refer to 9 - ENGINE - STANDARD PROCEDURE)

P0118-ENGINE COOLANT TEMP SENSOR VOLTAGE TOO HIGH

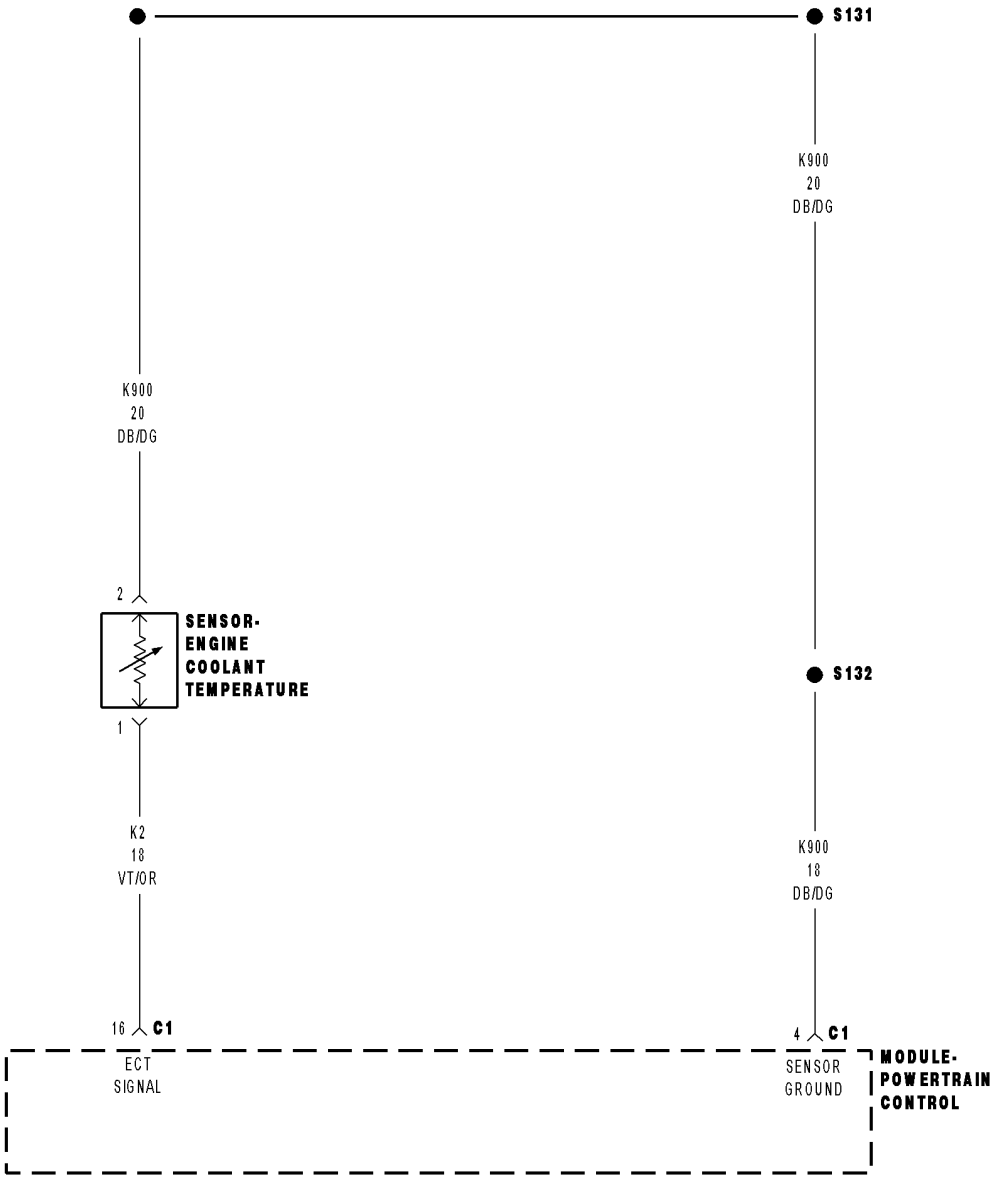

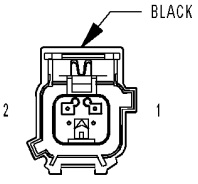

SENSOR-
ENGINE
COOLANT
TEMPERATURE
(5.7L/SRT)

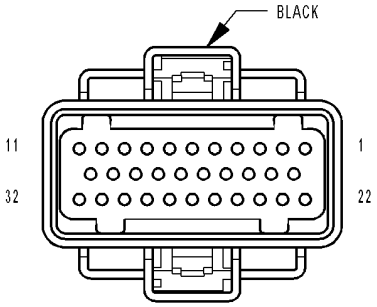

MODULE-
POWERTRAIN
CONTROL C1
(SRT)

81536f8b

P0118-ENGINE COOLANT TEMP SENSOR VOLTAGE TOO HIGH (CONTINUED)

For the Engine System Schematic circuit diagram (Refer to 9 - ENGINE - SCHEMATICS AND DIAGRAMS).

For a complete wiring diagram **Refer to Section 8W**.

- **When Monitored:**
  With the ignition on. Battery voltage greater than 10.4 volts.
- **Set Condition:**
  The Engine Coolant Temperature (ECT) sensor circuit voltage at the PCM is greater than 4.94 volts for more than 3.0 seconds.

Possible Causes
(K2) ECT SIGNAL CIRCUIT SHORTED TO BATTERY VOLTAGE
(K2) ECT SIGNAL CIRCUIT OPEN
(K900) SENSOR GROUND CIRCUIT OPEN
ECT SENSOR
PCM

Always perform the Pre-Diagnostic Troubleshooting procedure before proceeding. (Refer to 9 - ENGINE - DIAGNOSIS AND TESTING).

Diagnostic Test

1. ECT SENSOR VOLTAGE ABOVE 4.94 VOLTS

Ignition on, engine not running.

With a scan tool, read the ECT voltage.

Is the voltage above 4.94 volts?

Yes >> Go To 2

No >> Refer to the INTERMITTENT CONDITION Symptom. (Refer to 9 - ENGINE - DIAGNOSIS AND TESTING)

P0118-ENGINE COOLANT TEMP SENSOR VOLTAGE TOO HIGH (CONTINUED)

2. ECT SENSOR

Turn the ignition off.

Disconnect the ECT harness connector.

Connect a jumper wire between the (K2) ECT Signal circuit and the (K900) Sensor ground circuit in the ECT harness connector.

Ignition on, engine not running.

With a scan tool, read ECT voltage.

Is the voltage below 1.0 volt with the jumper wire installed?

Yes >> Replace the ECT Sensor.
Perform the POWERTRAIN VERIFICATION TEST. (Refer to 9 - ENGINE - STANDARD PROCEDURE)

No >> Go To 3

NOTE: Remove the jumper wire before continuing.

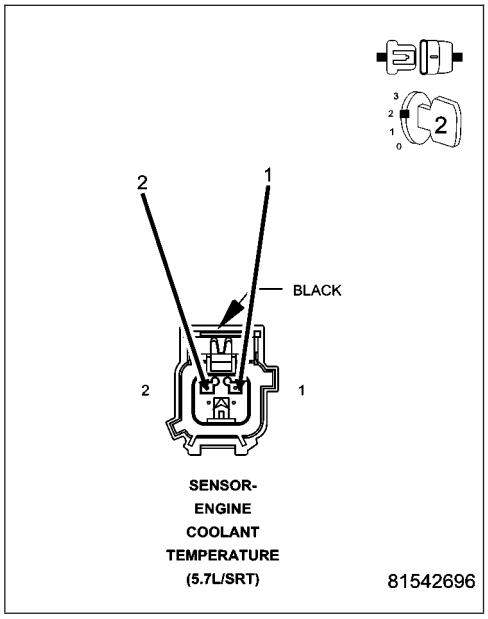

3. (K2) ECT SIGNAL CIRCUIT SHORTED TO BATTERY VOLTAGE

Turn the ignition off.

Disconnect the C1 PCM harness connector.

Ignition on, engine not running.

Measure the voltage on the (K2) ECT Signal circuit in the ECT Sensor harness connector.

Is the voltage above 0 volts?

Yes >> Repair the short to battery voltage in the (K2) ECT Signal circuit.
Perform the POWERTRAIN VERIFICATION TEST. (Refer to 9 - ENGINE - STANDARD PROCEDURE)

No >> Go To 4

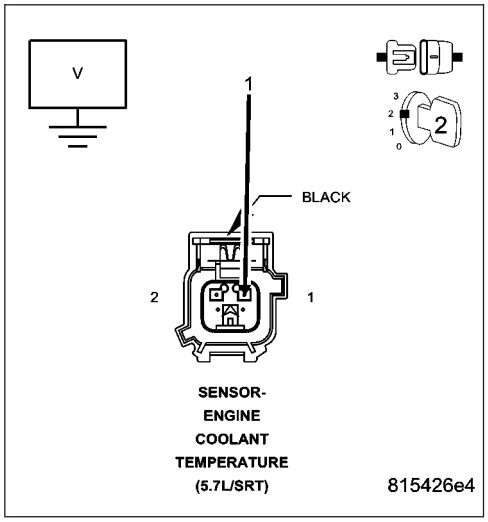

P0118-ENGINE COOLANT TEMP SENSOR VOLTAGE TOO HIGH (CONTINUED)

4. (K2) ECT SIGNAL CIRCUIT OPEN

Turn the ignition off.

Measure the resistance of the (K2) ECT Signal circuit from the ECT Sensor harness connector to the PCM harness connector.

Is the resistance below 5.0 ohms?

Yes >> Go To 5

No >> Repair the open in the (K2) ECT Signal circuit.
Perform the POWERTRAIN VERIFICATION TEST. (Refer to 9 - ENGINE - STANDARD PROCEDURE)

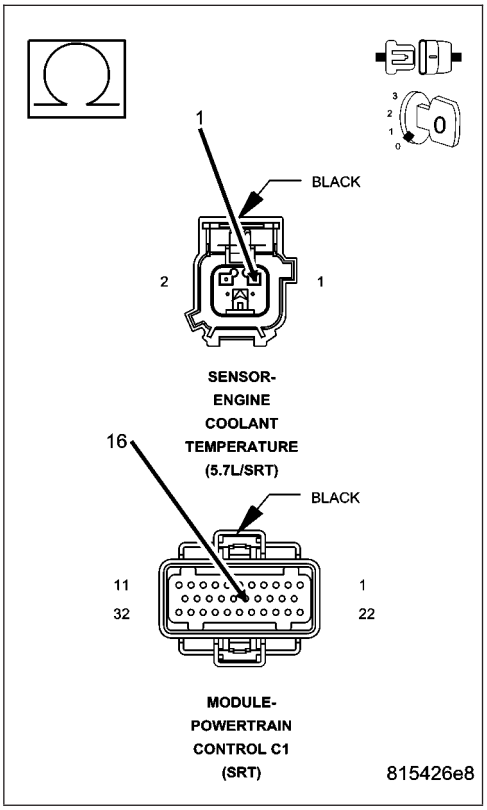

5. (K900) SENSOR GROUND CIRCUIT OPEN

Measure the resistance of the (K900) Sensor ground circuit from the ECT Sensor harness connector to the PCM harness connector.

Is the resistance below 5.0 ohms?

Yes >> Go To 6

No >> Repair the open in the (K900) Sensor ground circuit.
Perform the POWERTRAIN VERIFICATION TEST. (Refer to 9 - ENGINE - STANDARD PROCEDURE)

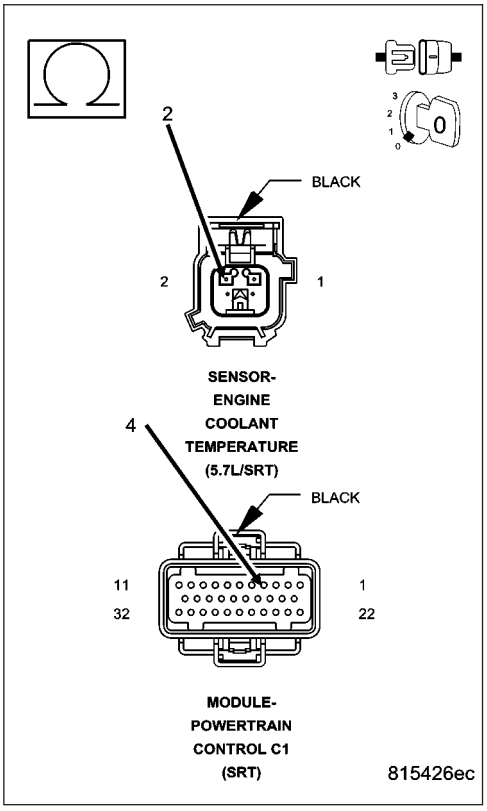

P0118-ENGINE COOLANT TEMP SENSOR VOLTAGE TOO HIGH (CONTINUED)

6. **PCM**

NOTE: Before continuing, check the PCM harness connector terminals for corrosion, damage, or terminal push out. Repair as necessary.

Using the schematics as a guide, inspect the wire harness and connectors. Pay particular attention to all Power and Ground circuits.

Were there any problems found?

Yes >> Repair as necessary.
Perform the POWERTRAIN VERIFICATION TEST. (Refer to 9 - ENGINE - STANDARD PROCEDURE)

No >> Replace and program the Powertrain Control Module per Service Information.
Perform the POWERTRAIN VERIFICATION TEST. (Refer to 9 - ENGINE - STANDARD PROCEDURE)

P0121-TP SENSOR VOLTAGE DOES NOT AGREE WITH MAP

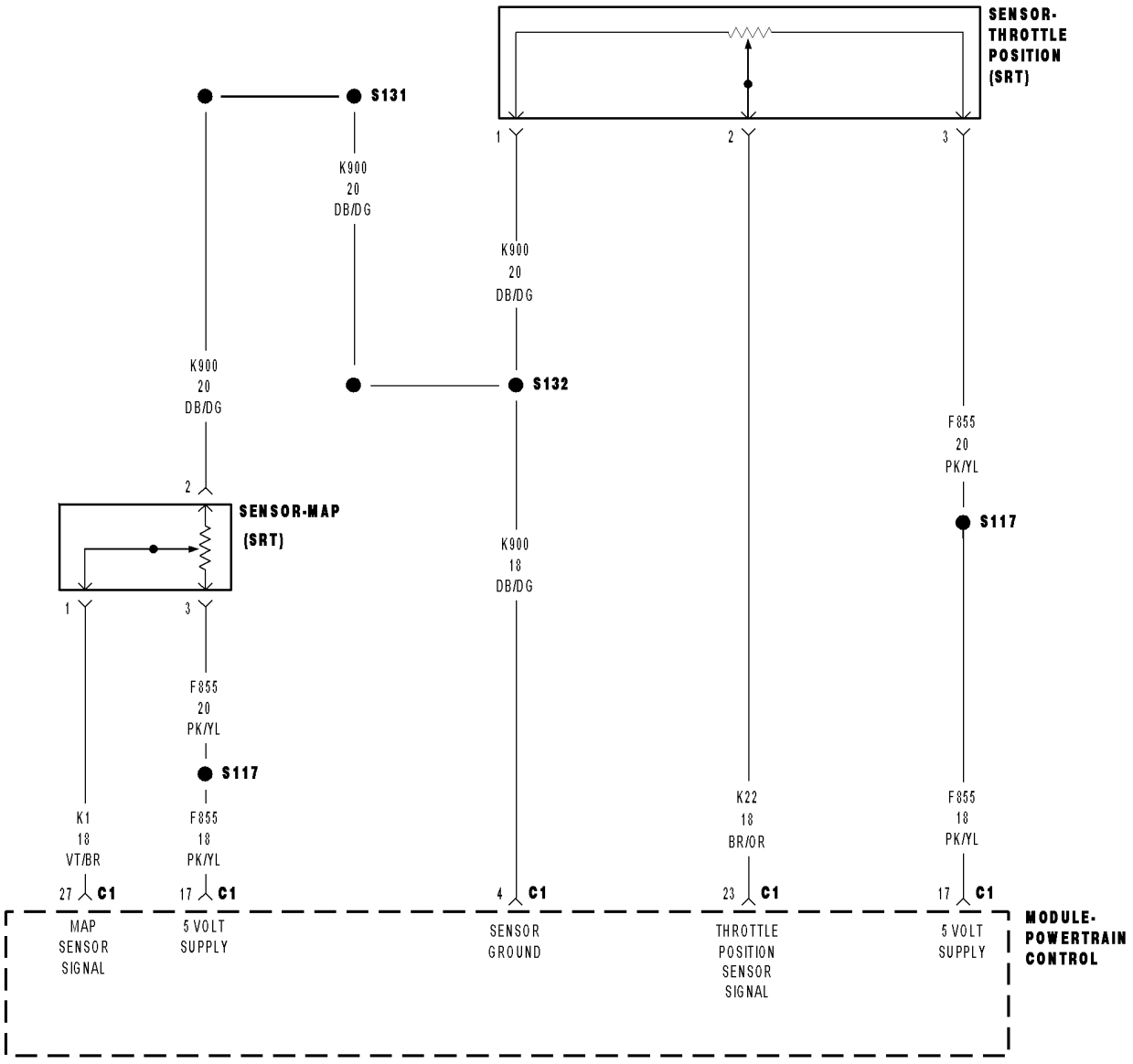

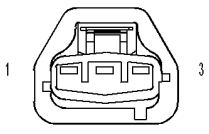

SENSOR-
THROTTLE
POSITION
(SRT)

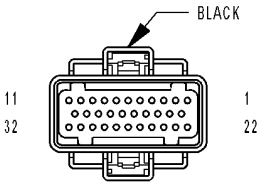

MODULE-
POWERTRAIN
CONTROL C1
(SRT)

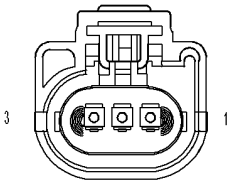

SENSOR-
MAP
(SRT)

8155c540

P0121-TP SENSOR VOLTAGE DOES NOT AGREE WITH MAP (CONTINUED)
For the engine circuit diagram (Refer to 9 - ENGINE - SCHEMATICS AND DIAGRAMS).

For a complete wiring diagram **Refer to Section 8W**.

- **When Monitored:**
  With the engine running and no MAP Sensor or TP Sensor DTC's set. Engine speed must be greater than 1600 RPM.
- **Set Condition:**
  The PCM performs two separate tests. When the manifold vacuum is high, the TP Sensor should be low. When the manifold vacuum is low, the TP Sensor signal should be high. If the proper TP Sensor voltage is not detected when the two conditions are met, a DTC will be set after 4 seconds.

Possible Causes
RESISTANCE IN THE (F855) 5-VOLT SUPPLY CIRCUIT
(F855) 5-VOLT SUPPLY CIRCUIT SHORTED TO GROUND
MAP SENSOR
RESISTANCE IN THE (K1) MAP SENSOR SIGNAL CIRCUIT
(K1) MAP SENSOR SIGNAL CIRCUIT SHORTED TO GROUND
RESISTANCE IN THE (K900) SENSOR GROUND CIRCUIT
TP SENSOR OPERATION
RESISTANCE IN THE TP SENSOR (F855) 5-VOLT SUPPLY
TP SENSOR (F855) 5-VOLT SUPPLY SHORTED TO GROUND
THROTTLE POSITION SENSOR
RESISTANCE IN THE (K22) TP SENSOR NO.1 SIGNAL CIRCUIT
RESISTANCE BETWEEN GROUND AND THE (K22) TP SENSOR NO.1 SIGNAL CIRCUIT
RESISTANCE IN THE (K900) SENSOR GROUND CIRCUIT
PCM

Always perform the Pre-Diagnostic Troubleshooting procedure before proceeding. (Refer to 9 - ENGINE - DIAGNOSIS AND TESTING)

Diagnostic Test

1. GOOD TRIP EQUAL TO ZERO

NOTE: Diagnose any TP Sensor or MAP component DTCs first before continuing.

NOTE: If the P0500 - No Vehicle Speed Signal is set along with this DTC, refer to the P0500 diagnostics before continuing.

NOTE: The throttle plate and linkage should be free of binding and carbon build up.

NOTE: Make sure the throttle plate is at the idle position.
Ignition on, engine not running.

NOTE: Repair any vacuum leaks that are present before continuing.
With the scan tool, read DTCs and record the related Freeze Frame data.

Is the Good Trip Counter displayed and equal to zero?

Yes >> Go To 2

No >> Refer to the INTERMITTENT CONDITION Diagnostic Procedure.
Perform the POWERTRAIN VERIFICATION TEST. (Refer to 9 - ENGINE - STANDARD PROCEDURE)

P0121-TP SENSOR VOLTAGE DOES NOT AGREE WITH MAP (CONTINUED)

2. MAP SENSOR OPERATION

Start the engine.

With the scan tool, monitor the MAP Sensor voltage.

Snap the throttle.

Does the scan tool display MAP voltage from below 2.0 volts at idle to above 3.5 volts at WOT?

Yes >> Go To 3

No >> Go To 10

---

3. TP SENSOR OPERATION

Ignition on, engine not running.

With the scan tool, monitor the TP Sensor voltage while slowly depressing the throttle pedal from the idle position to the wide open throttle position.

Does voltage start at approximately 0.8 of a volt and go above 3.5 volts with a smooth transition?

Yes >> Refer to the INTERMITTENT CONDITION Diagnostic Procedure. (Refer to 9 - ENGINE - DIAGNOSIS AND TESTING)

Perform the POWERTRAIN VERIFICATION TEST. (Refer to 9 - ENGINE - STANDARD PROCEDURE)

No >> Go To 4

---

4. RESISTANCE IN THE (F855) 5-VOLT SUPPLY CIRCUIT

Turn the ignition off.

Disconnect the TP Sensor harness connector.

Disconnect the PCM harness connectors.

Measure the resistance of the (F855) 5-volt Supply circuit from the TP Sensor harness connector to the PCM harness connector.

Is the resistance below 5.0 ohms?

Yes >> Go To 5

No >> Repair the excessive resistance in the (F855) 5-volt Supply circuit.

Perform the POWERTRAIN VERIFICATION TEST. (Refer to 9 - ENGINE - STANDARD PROCEDURE)

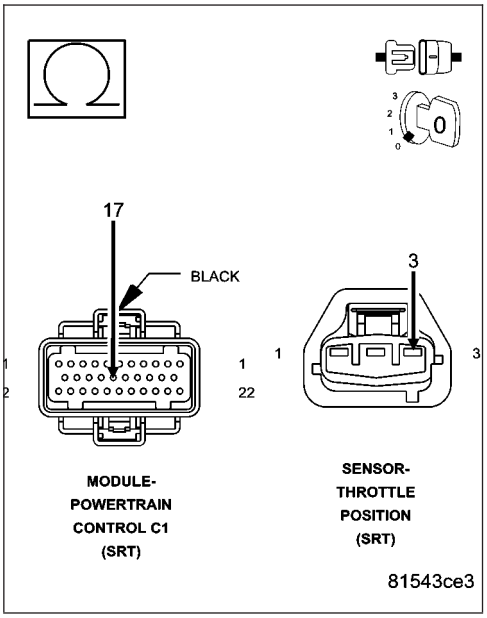

P0121-TP SENSOR VOLTAGE DOES NOT AGREE WITH MAP (CONTINUED)

5. TP SENSOR (F855) 5-VOLT SUPPLY CIRCUIT SHORTED TO GROUND

Measure the resistance between ground and the (F855) 5-volt Supply circuit at the TP Sensor harness connector.

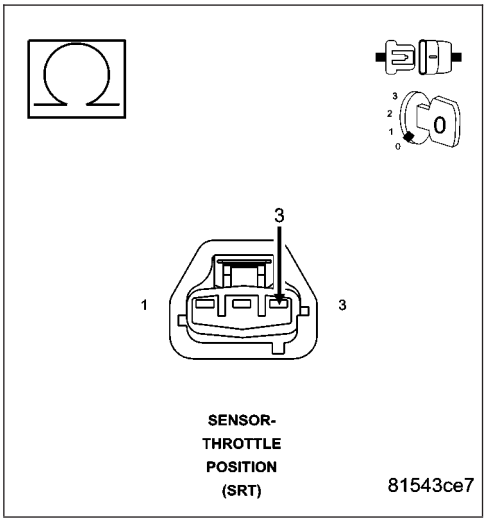

Is the resistance below 100 ohms?

Yes >> Repair the short to ground in the (F855) 5-volt Supply circuit.
Perform the POWERTRAIN VERIFICATION TEST. (Refer to 9 - ENGINE - STANDARD PROCEDURE)

No >> Go To 6

6. THROTTLE POSITION SENSOR

Connect the PCM harness connectors.

With the scan tool, monitor the TP Sensor voltage.

Ignition on, engine not running.

Connect a jumper wire between the (K22) TP Sensor No.1 Signal circuit and the (K900) Sensor ground circuit.

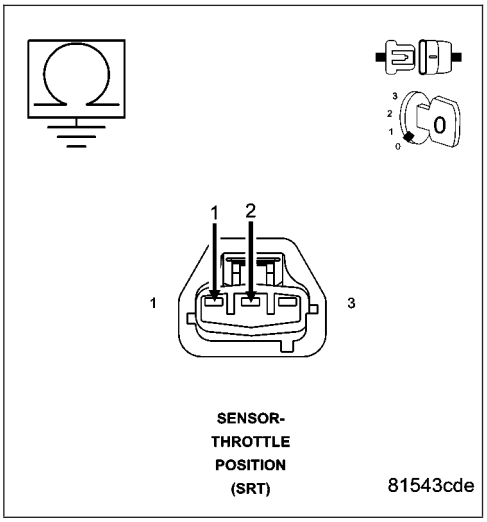

Did the TP Sensor voltage change from approximately 4.9 volts to below 0.5 of a volt with the jumper

Yes >> Replace the Throttle Position Sensor.
Perform the POWERTRAIN VERIFICATION TEST. (Refer to 9 - ENGINE - STANDARD PROCEDURE)

No >> Go To 7

NOTE: Remove the jumper wire before continuing.

P0121-TP SENSOR VOLTAGE DOES NOT AGREE WITH MAP (CONTINUED)

7. RESISTANCE IN THE (K22) TP SENSOR SIGNAL CIRCUIT

Turn the ignition off.

Disconnect the PCM harness connectors.

Measure the resistance of the (K22) TP Sensor No.1 Signal circuit from the TP Sensor harness connector to the PCM harness connector.

Is the resistance below 5.0 ohms?

Yes >> Go To 8

No >> Repair the excessive resistance in the (K22) TP Sensor No.1 Signal circuit.

Perform the POWERTRAIN VERIFICATION TEST. (Refer to 9 - ENGINE - STANDARD PROCEDURE)

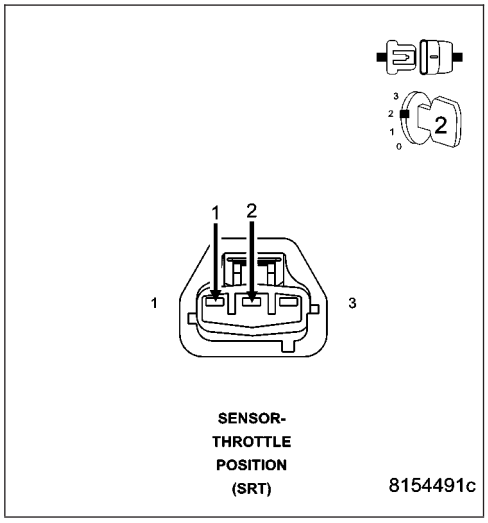

8. (K22) TP SENSOR NO.1 SIGNAL CIRCUIT SHORTED TO GROUND

Measure the resistance between ground and the (K22) TP Sensor No.1 Signal circuit at the TP Sensor harness connector.

Is the resistance below 5.0 ohms?

Yes >> Repair the short to ground in the (K22) TP Sensor No.1 Signal circuit.

Perform the POWERTRAIN VERIFICATION TEST. (Refer to 9 - ENGINE - STANDARD PROCEDURE)

No >> Go To 9

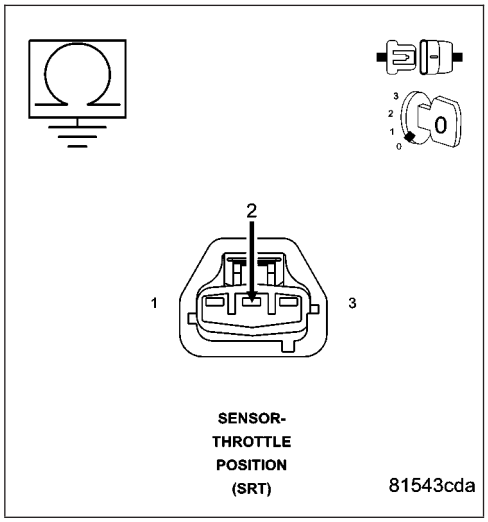

P0121-TP SENSOR VOLTAGE DOES NOT AGREE WITH MAP (CONTINUED)

9. RESISTANCE IN (K900) SENSOR GROUND CIRCUIT

Measure the resistance of the (K900) Sensor ground circuit from the TP Sensor harness connector to the PCM harness connector.

Is the resistance below 5.0 ohms?

Yes >> Go To 16

No >> Repair the excessive resistance in the (K900) Sensor ground circuit.
Perform the POWERTRAIN VERIFICATION TEST. (Refer to 9 - ENGINE - STANDARD PROCEDURE)

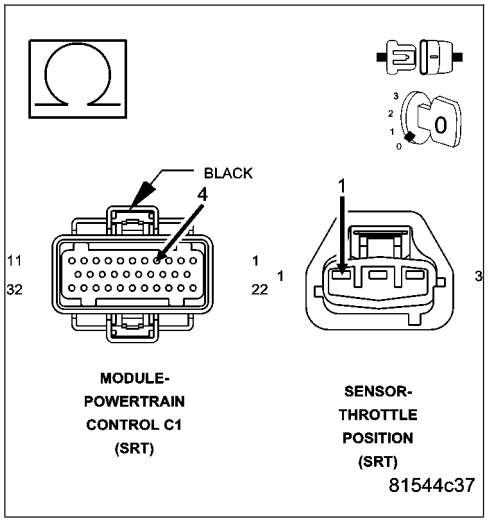

10. EXCESSIVE RESISTANCE IN THE (F855) 5-VOLT SUPPLY CIRCUIT

Turn the ignition off.

Disconnect the MAP Sensor harness connector.

Disconnect the PCM harness connectors.

Measure the resistance of the (F855) 5-volt Supply circuit from the MAP Sensor harness connector to the PCM harness connector.

Is the resistance below 5.0 ohms?

Yes >> Go To 11

No >> Repair the excessive resistance in the (F855) 5-volt Supply circuit.
Perform the POWERTRAIN VERIFICATION TEST. (Refer to 9 - ENGINE - STANDARD PROCEDURE)

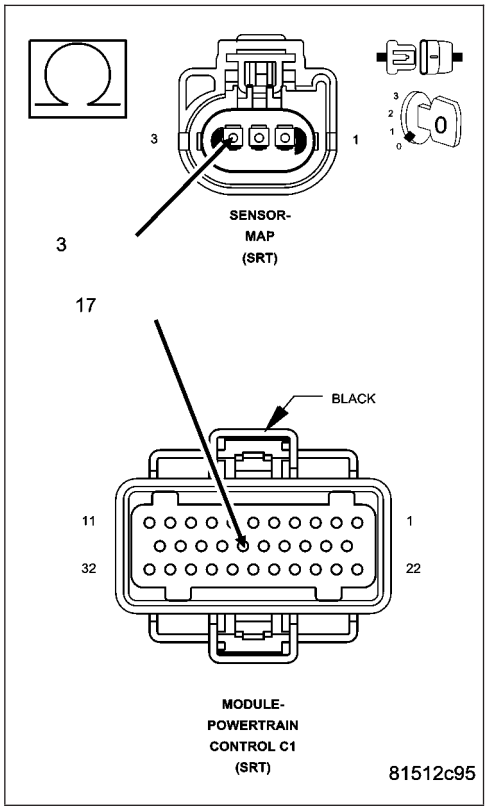

P0121-TP SENSOR VOLTAGE DOES NOT AGREE WITH MAP (CONTINUED)

11. MAP (F855) 5-VOLT SUPPLY CIRCUIT SHORTED TO GROUND

Measure the resistance between ground and the (F855) 5-volt Supply circuit at the MAP Sensor harness connector.

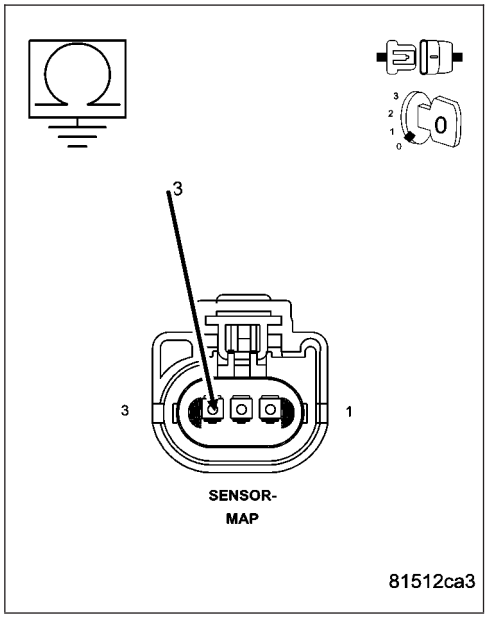

Is the resistance above 100k ohms?

Yes >> Go To 12

No >> Repair the short to ground in the (F855) 5-volt Supply circuit.

Perform the POWERTRAIN VERIFICATION TEST. (Refer to 9 - ENGINE - STANDARD PROCEDURE)

---

12. MAP SENSOR

Connect the PCM harness connectors.

Ignition on, engine not running.

With the scan tool, monitor the MAP Sensor voltage.

Connect a jumper wire between the (K1) MAP Sensor Signal circuit and the (K900) Sensor ground circuit.

Cycle the ignition switch from off to on.

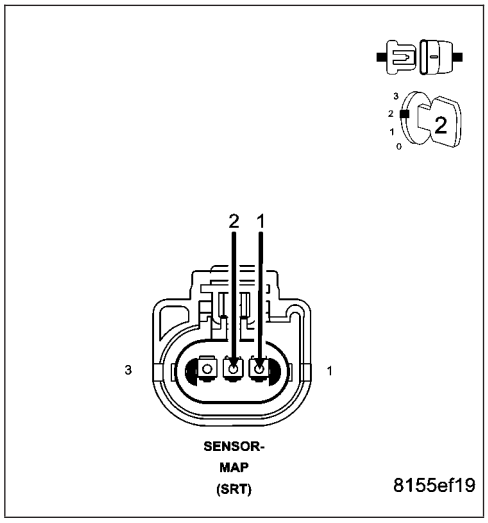

Did the voltage change from approximately 4.9 volts to below 0.5 of a volt with the jumper wire inst

Yes >> Replace the MAP Sensor.

Perform the POWERTRAIN VERIFICATION TEST. (Refer to 9 - ENGINE - STANDARD PROCEDURE)

No >> Go To 13

NOTE: Remove the jumper wire before continuing.

P0121-TP SENSOR VOLTAGE DOES NOT AGREE WITH MAP (CONTINUED)

13. EXCESSIVE RESISTANCE IN THE (K1) MAP SENSOR SIGNAL CIRCUIT

Turn the ignition off.

Disconnect the PCM harness connectors.

Measure the resistance of the (K1) MAP Sensor Signal circuit from the MAP Sensor harness connector to the PCM harness connector.

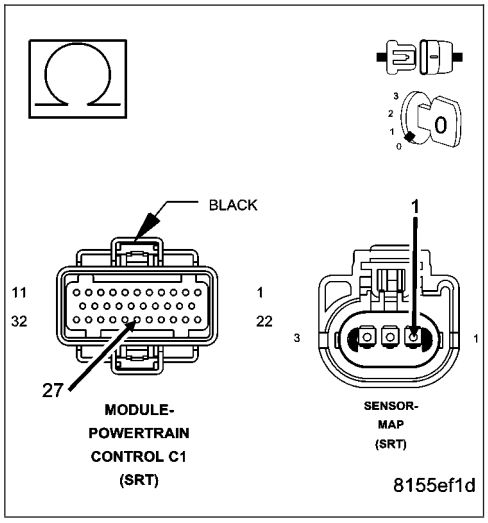

Is the resistance below 5.0 ohms?

Yes >> Go To 14

No >> Repair the excessive resistance in the (K1) MAP Sensor Signal circuit.

Perform the POWERTRAIN VERIFICATION TEST. (Refer to 9 - ENGINE - STANDARD PROCEDURE)

14. SHORT TO GROUND IN THE (K1) MAP SENSOR SIGNAL CIRCUIT

Measure the resistance between ground and the (K1) MAP Sensor Signal circuit at the MAP Sensor harness connector.

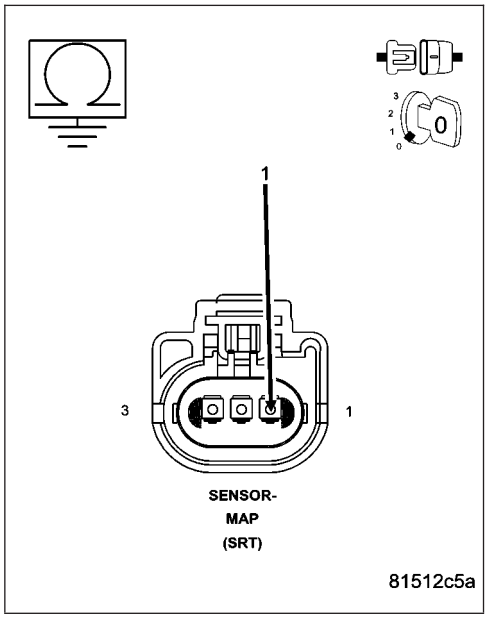

Is the resistance below 100 ohms?

Yes >> Go To 15

No >> Repair the short to ground in the (K1) MAP Sensor Signal circuit.

Perform the POWERTRAIN VERIFICATION TEST. (Refer to 9 - ENGINE - STANDARD PROCEDURE)

P0121-TP SENSOR VOLTAGE DOES NOT AGREE WITH MAP (CONTINUED)

15. RESISTANCE IN MAP (K900) SENSOR GROUND CIRCUIT

Measure the resistance of the (K900) Sensor ground circuit from the MAP Sensor harness connector to the PCM harness connector.

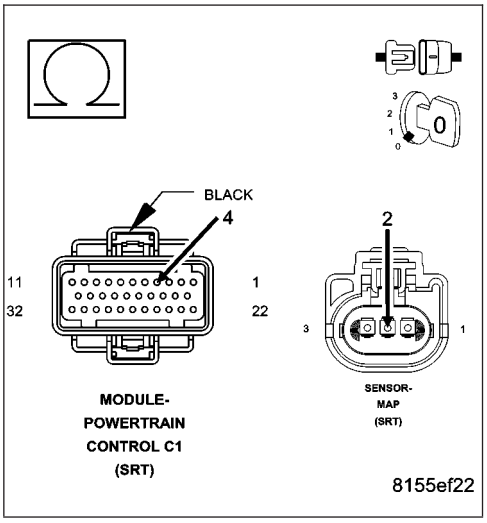

Is the resistance below 5.0 ohms?

Yes >> Go To 16

No >> Repair the excessive resistance in the (K900) Sensor ground circuit.
Perform the POWERTRAIN VERIFICATION TEST. (Refer to 9 - ENGINE - STANDARD PROCEDURE)

---

16. PCM

NOTE: Before continuing, check the PCM harness connector terminals for corrosion, damage, or terminal push out. Repair as necessary.
Using the schematics as a guide, inspect the wire harness and connectors. Pay particular attention to all Power and Ground circuits.

If there are no possible causes remaining, view repair.

Repair

Replace and program the Powertrain Control Module per Service Information.
Perform the POWERTRAIN VERIFICATION TEST. (Refer to 9 - ENGINE - STANDARD PROCEDURE)

P0122-THROTTLE POSITION SENSOR #1 VOLTAGE TOO LOW

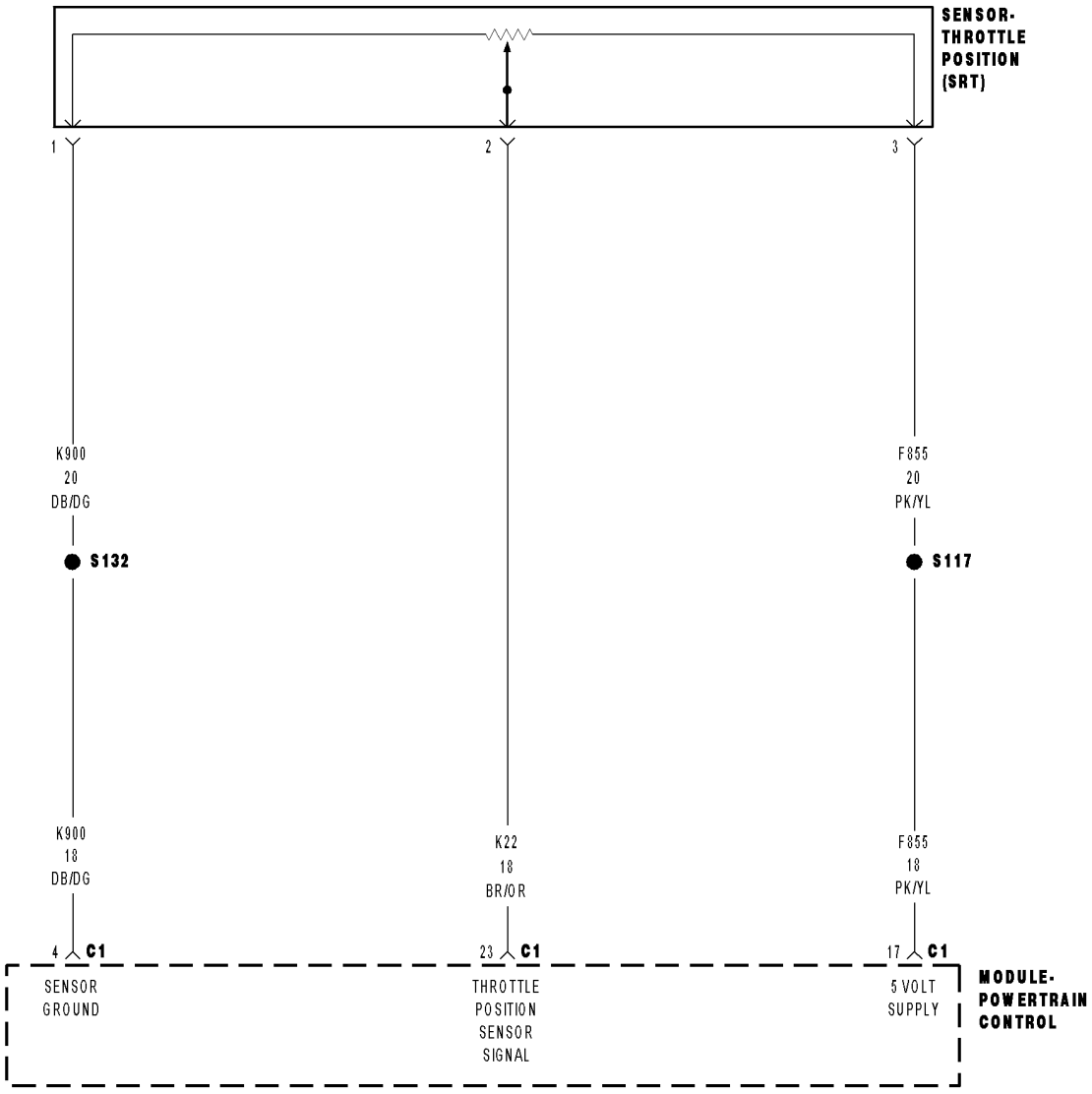

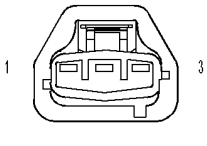

SENSOR-
THROTTLE
POSITION
(SRT)

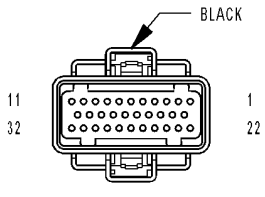

MODULE-
POWERTRAIN
CONTROL C1
(SRT)

81543b32

P0122-THROTTLE POSITION SENSOR #1 VOLTAGE TOO LOW (CONTINUED)

For the Engine System Schematic circuit diagram (Refer to 9 - ENGINE - SCHEMATICS AND DIAGRAMS).

For a complete wiring diagram **Refer to Section 8W**.

- **When Monitored:**
  With the ignition on. Battery voltage greater than 10.4 volts.
- **Set Condition:**
  Throttle Position Sensor voltage at the PCM is less than 0.1 of a volt for 1.3 seconds.

Possible Causes
(F855) 5-VOLT SUPPLY CIRCUIT OPEN
(F855) 5-VOLT SUPPLY CIRCUIT SHORTED TO GROUND
(K22) TP SENSOR NO.1 SIGNAL CIRCUIT SHORTED TO GROUND
(K22) TP SENSOR NO.1 SIGNAL CIRCUIT SHORTED TO THE (K900) SENSOR GROUND CIRCUIT
THROTTLE POSITION SENSOR
PCM

Always perform the Pre-Diagnostic Troubleshooting procedure before proceeding. (Refer to 9 - ENGINE - DIAGNOSIS AND TESTING).

Diagnostic Test

1. THROTTLE POSITION SENSOR VOLTAGE BELOW 0.098 OF A VOLT

Ignition on, engine not running.

With a scan tool, read the TP Sensor voltage.

Is the voltage below 0.2 of a volt?

Yes >> Go To 2

No >> Go To 9

---

2. (F855) 5-VOLT SUPPLY CIRCUIT

Turn the ignition off.

Disconnect the TP Sensor harness connector.

Ignition on, engine not running.

Measure the voltage on the (F855) 5-volt Supply circuit in the TP Sensor harness connector.

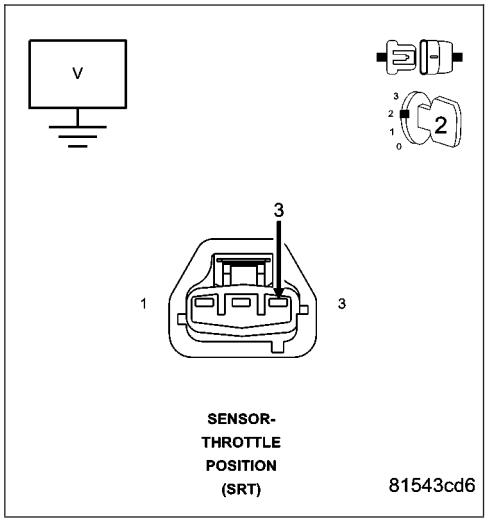

Is the voltage between 4.5 to 5.2 volts?

Yes >> Go To 3

No >> Go To 6

P0122-THROTTLE POSITION SENSOR #1 VOLTAGE TOO LOW (CONTINUED)

3. THROTTLE POSITION SENSOR

With the a scan tool, monitor the TP Sensor voltage with the Sensor harness connector disconnected.

Is the voltage above 4.5 volts?

Yes >> Replace the Throttle Position Sensor.
Perform the POWERTRAIN VERIFICATION TEST. (Refer to 9 - ENGINE - STANDARD PROCEDURE)

No >> Go To 4

---

4. (K22) TP SENSOR NO.1 SIGNAL CIRCUIT SHORTED TO GROUND

Turn the ignition off.

Disconnect the C2 PCM harness connector.

Measure the resistance between ground and the (K22) TP Sensor Signal circuit in the TP Sensor harness connector.

Is the resistance below 100 ohms?

Yes >> Repair the short to ground in the (K22) TP Sensor Signal circuit.
Perform the POWERTRAIN VERIFICATION TEST. (Refer to 9 - ENGINE - STANDARD PROCEDURE)

No >> Go To 5

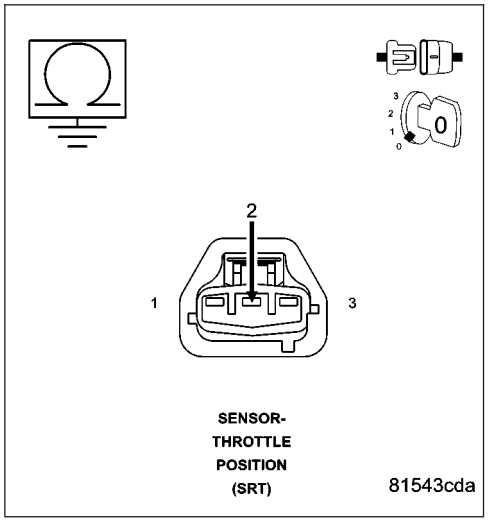

---

5. (K22) TP SENSOR NO.1 SIGNAL CIRCUIT SHORTED TO THE (K900) SENSOR GROUND CIRCUIT

Measure the resistance between the (K22) TP Sensor Signal circuit and the (K900) Sensor ground circuit in the TP Sensor harness connector.

Is the resistance below 100 ohms?

Yes >> Repair the short between the (K900) Sensor ground and the (K22) TP Sensor Signal circuit.
Perform the POWERTRAIN VERIFICATION TEST. (Refer to 9 - ENGINE - STANDARD PROCEDURE)

No >> Go To 8

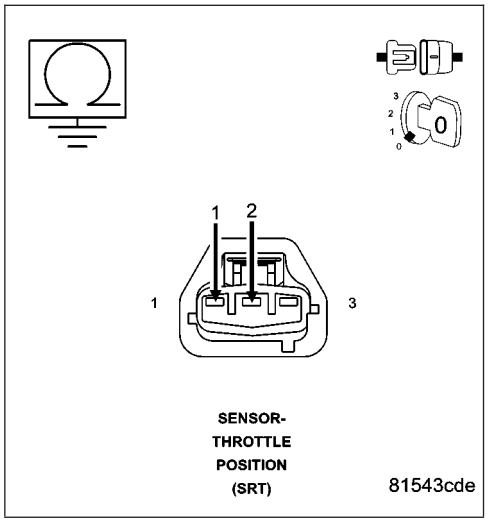

P0122-THROTTLE POSITION SENSOR #1 VOLTAGE TOO LOW (CONTINUED)

6. (F855) 5-VOLT SUPPLY CIRCUIT OPEN

Turn the ignition off.

Disconnect the PCM harness connector.

Measure the resistance of the (F855) 5-volt Supply circuit from the TP Sensor harness connector to the appropriate terminal of the PCM.

Is the resistance below 5.0 ohms?

Yes >> Go To 7

No >> Repair the open in the (F855) 5-volt Supply circuit.
Perform the POWERTRAIN VERIFICATION TEST. (Refer to 9 - ENGINE - STANDARD PROCEDURE)

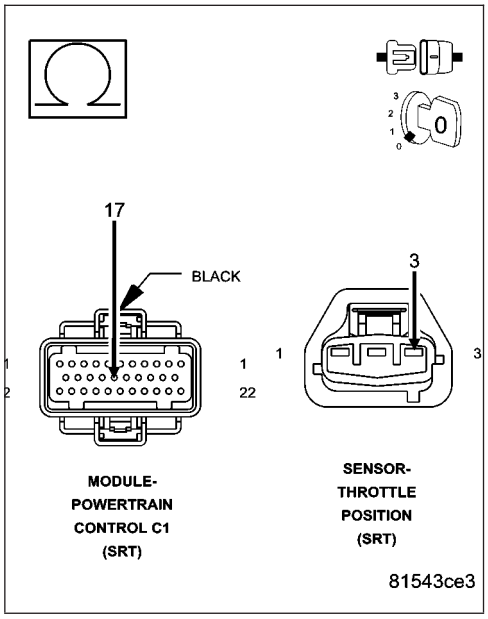

7. (F855) 5-VOLT SUPPLY CIRCUIT SHORTED TO GROUND

Measure the resistance between ground and the (F855) 5-volt Supply circuit in the TP Sensor harness connector.

Is the resistance below 100 ohms?

Yes >> Repair the short to ground in the (F855) 5-volt Supply circuit.
Perform the POWERTRAIN VERIFICATION TEST. (Refer to 9 - ENGINE - STANDARD PROCEDURE)

No >> Go To 8

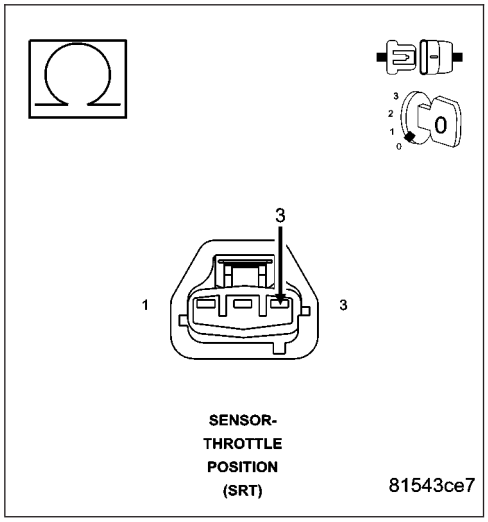

P0122-THROTTLE POSITION SENSOR #1 VOLTAGE TOO LOW (CONTINUED)

8. PCM

NOTE: Before continuing, check the PCM harness connector terminals for corrosion, damage, or terminal push out. Repair as necessary.

Using the schematics as a guide, inspect the wire harness and connectors. Pay particular attention to all Power and Ground circuits.

Were there any problems found?

Yes >> Repair as necessary.
Perform the POWERTRAIN VERIFICATION TEST. (Refer to 9 - ENGINE - STANDARD PROCEDURE)

No >> Replace and program the Powertrain Control Module per Service Information.
Perform the POWERTRAIN VERIFICATION TEST. (Refer to 9 - ENGINE - STANDARD PROCEDURE)

---

9. THROTTLE POSITION SENSOR SWEEP

With a scan tool, monitor the Throttle Position Sensor voltage.

Slowly open the throttle from the idle position to the wide open throttle position.

Does voltage start at approximately 0.8 of a volt and go above 3.5 volts with a smooth transition?

Yes >> Refer to the INTERMITTENT CONDITION Diagnostic Procedure.
Perform the POWERTRAIN VERIFICATION TEST. (Refer to 9 - ENGINE - STANDARD PROCEDURE)

No >> Replace the Throttle Position Sensor.
Perform the POWERTRAIN VERIFICATION TEST. (Refer to 9 - ENGINE - STANDARD PROCEDURE)

P0123-THROTTLE POSITION SENSOR #1 VOLTAGE TOO HIGH

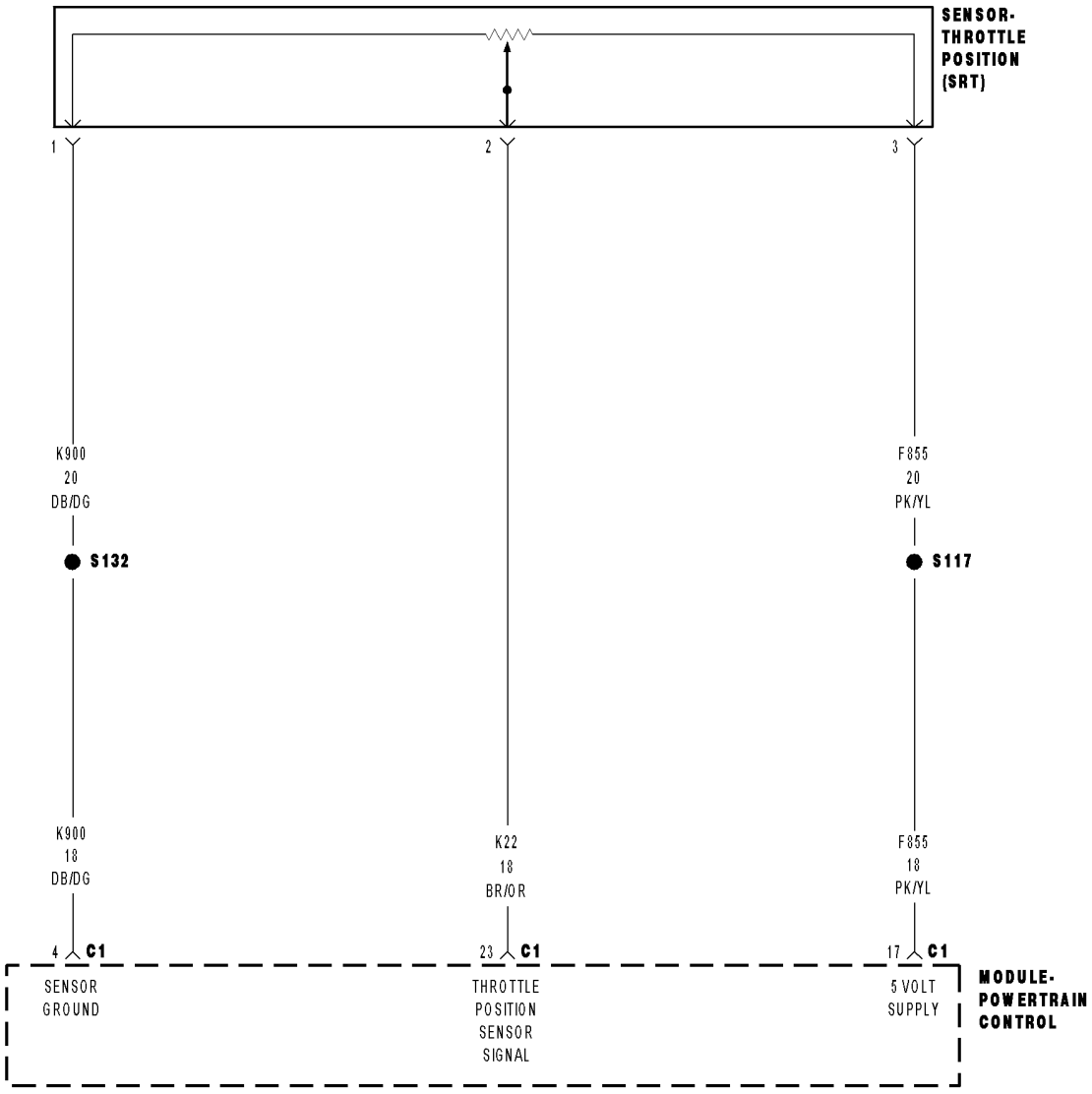

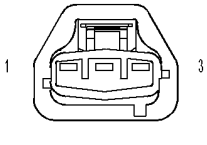

SENSOR-
THROTTLE
POSITION
(SRT)

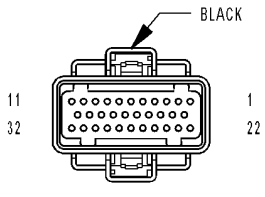

MODULE-
POWERTRAIN
CONTROL C1
(SRT)

81543b32

P0123-THROTTLE POSITION SENSOR #1 VOLTAGE TOO HIGH (CONTINUED)

For the Engine System Schematic circuit diagram (Refer to 9 - ENGINE - SCHEMATICS AND DIAGRAMS).

For a complete wiring diagram **Refer to Section 8W**.

- **When Monitored:**
  With the ignition on. Battery voltage greater than 10.4 volts.
- **Set Condition:**
  Throttle Position Sensor voltage at the PCM is greater than 4.50 volts for 3.2 seconds.

Possible Causes
(K22) TP SENSOR SIGNAL CIRCUIT SHORTED TO BATTERY VOLTAGE
(K22) TP SENSOR SIGNAL CIRCUIT OPEN
(K22) TP SENSOR SIGNAL CIRCUIT SHORTED TO THE (F855) 5-VOLT SUPPLY CIRCUIT
(K900) SENSOR GROUND CIRCUIT OPEN
THROTTLE POSITION SENSOR
PCM

Always perform the Pre-Diagnostic Troubleshooting procedure before proceeding. (Refer to 9 - ENGINE - DIAGNOSIS AND TESTING).

Diagnostic Test

1. TP SENSOR VOLTAGE ABOVE 4.5 VOLTS

NOTE: Make sure the throttle is fully closed and free from binding or carbon build up.
Start the engine.
With a scan tool, read the TP Sensor voltage.

Is the voltage above 4.5 volts?

Yes >> Go To 2
No >> Go To 8

P0123-THROTTLE POSITION SENSOR #1 VOLTAGE TOO HIGH (CONTINUED)

2. THROTTLE POSITION SENSOR

Turn the ignition off.

Disconnect the TP Sensor harness connector.

Connect a jumper wire between the (K22) TP Sensor Signal circuit and the (K900) Sensor ground circuit in the Sensor harness connector.

With a scan tool, monitor the TP Sensor voltage.

Ignition on, engine not running.

Is the voltage below 0.5 of a volt with the jumper wire installed?

Yes >> Replace the Throttle Position Sensor.
Perform the POWERTRAIN VERIFICATION TEST. (Refer to 9 - ENGINE - STANDARD PROCEDURE)

No >> Go To 3

NOTE: Remove the jumper wire before continuing.

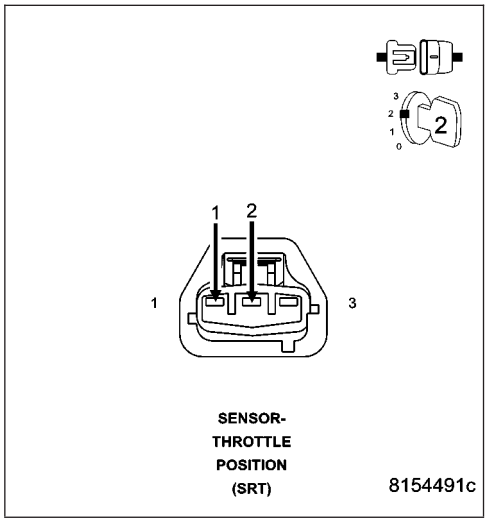

3. (K22) TP SENSOR SIGNAL CIRCUIT SHORTED TO BATTERY VOLTAGE

Turn the ignition off.

Disconnect the PCM harness connector.

Ignition on, engine not running.

Measure the voltage on the (K22) TP Sensor Signal circuit in the TP Sensor harness connector.

Is the voltage above 0 volts?

Yes >> Repair the short to battery voltage in the (K22) TP Sensor Signal circuit.
Perform the POWERTRAIN VERIFICATION TEST. (Refer to 9 - ENGINE - STANDARD PROCEDURE)

No >> Go To 4

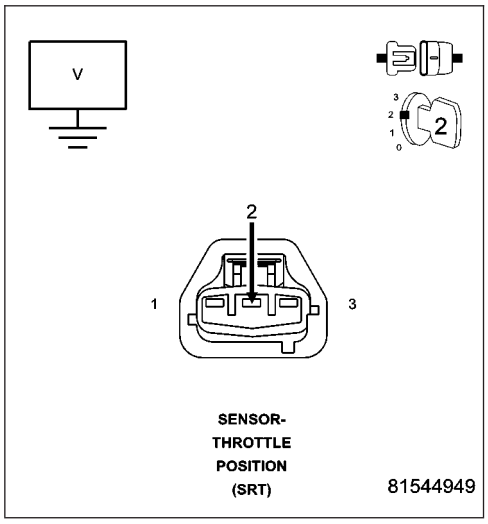

P0123-THROTTLE POSITION SENSOR #1 VOLTAGE TOO HIGH (CONTINUED)

4. (K22) TP SENSOR NO.1 SIGNAL CIRCUIT OPEN

Turn the ignition off.

Measure the resistance of the (K22) TP Sensor Signal circuit from the TP Sensor harness connector to the PCM harness connector.

Is the resistance below 5.0 ohms?

Yes >> Go To 5

No >> Repair the open in the (K22) TP Sensor Signal circuit.
Perform the POWERTRAIN VERIFICATION TEST. (Refer to 9 - ENGINE - STANDARD PROCEDURE)

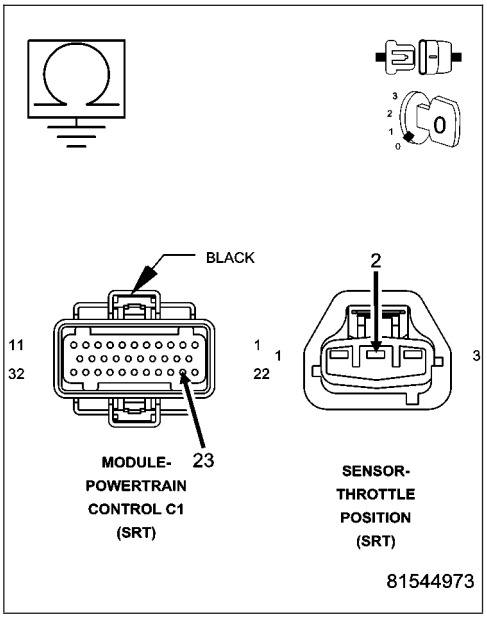

5. (K22) TP SENSOR SIGNAL CIRCUIT SHORTED TO THE (F855) 5-VOLT SUPPLY CIRCUIT

Measure the resistance between the (K22) TP Sensor Signal circuit and the (F855) 5-volt Supply circuit in the TP Sensor harness connector.

Is the resistance below 100 ohms?

Yes >> Repair the short between the (F855) 5-volt Supply circuit and the (K22) TP Sensor Signal circuit.
Perform the POWERTRAIN VERIFICATION TEST. (Refer to 9 - ENGINE - STANDARD PROCEDURE)

No >> Go To 6

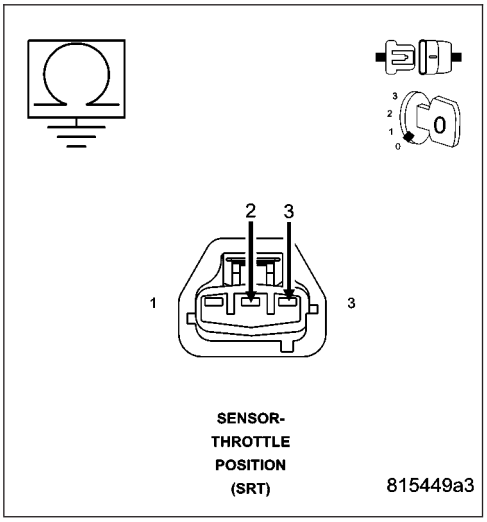

P0123-THROTTLE POSITION SENSOR #1 VOLTAGE TOO HIGH (CONTINUED)

6. (K900) SENSOR GROUND CIRCUIT OPEN

Measure the resistance of the (K900) Sensor ground circuit from the TP Sensor harness connector to the PCM harness connector.

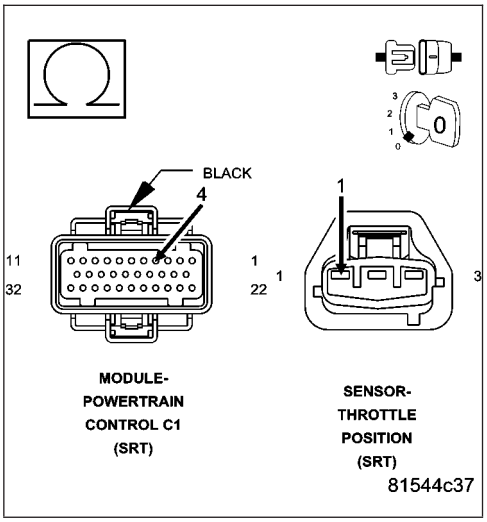

Is the resistance below 5.0 ohms?

Yes >> Go To 7

No >> Repair the open in the (K900) Sensor ground circuit.
Perform the POWERTRAIN VERIFICATION TEST. (Refer to 9 - ENGINE - STANDARD PROCEDURE)

---

7. PCM

NOTE: Before continuing, check the PCM harness connector terminals for corrosion, damage, or terminal push out. Repair as necessary.

Using the schematics as a guide, inspect the wire harness and connectors. Pay particular attention to all Power and Ground circuits.

Were there any problems found?

Yes >> Repair as necessary.
Perform the POWERTRAIN VERIFICATION TEST. (Refer to 9 - ENGINE - STANDARD PROCEDURE)

No >> Replace and program the Powertrain Control Module per Service Information.
Perform the POWERTRAIN VERIFICATION TEST. (Refer to 9 - ENGINE - STANDARD PROCEDURE)

---

8. THROTTLE POSITION SENSOR SWEEP

With a scan tool, monitor the Throttle Position Sensor voltage.

Slowly open the throttle from the idle position to the wide open throttle position.

Does voltage start at approximately 0.8 of a volt and go above 3.5 volts with a smooth transition?

Yes >> Refer to the INTERMITTENT CONDITION Diagnostic Procedure.
Perform the POWERTRAIN VERIFICATION TEST. (Refer to 9 - ENGINE - STANDARD PROCEDURE)

No >> Replace the Throttle Position Sensor.
Perform the POWERTRAIN VERIFICATION TEST. (Refer to 9 - ENGINE - STANDARD PROCEDURE)

P0125-INSUFFICIENT COOLANT TEMP FOR CLOSED-LOOP FUEL CONTROL

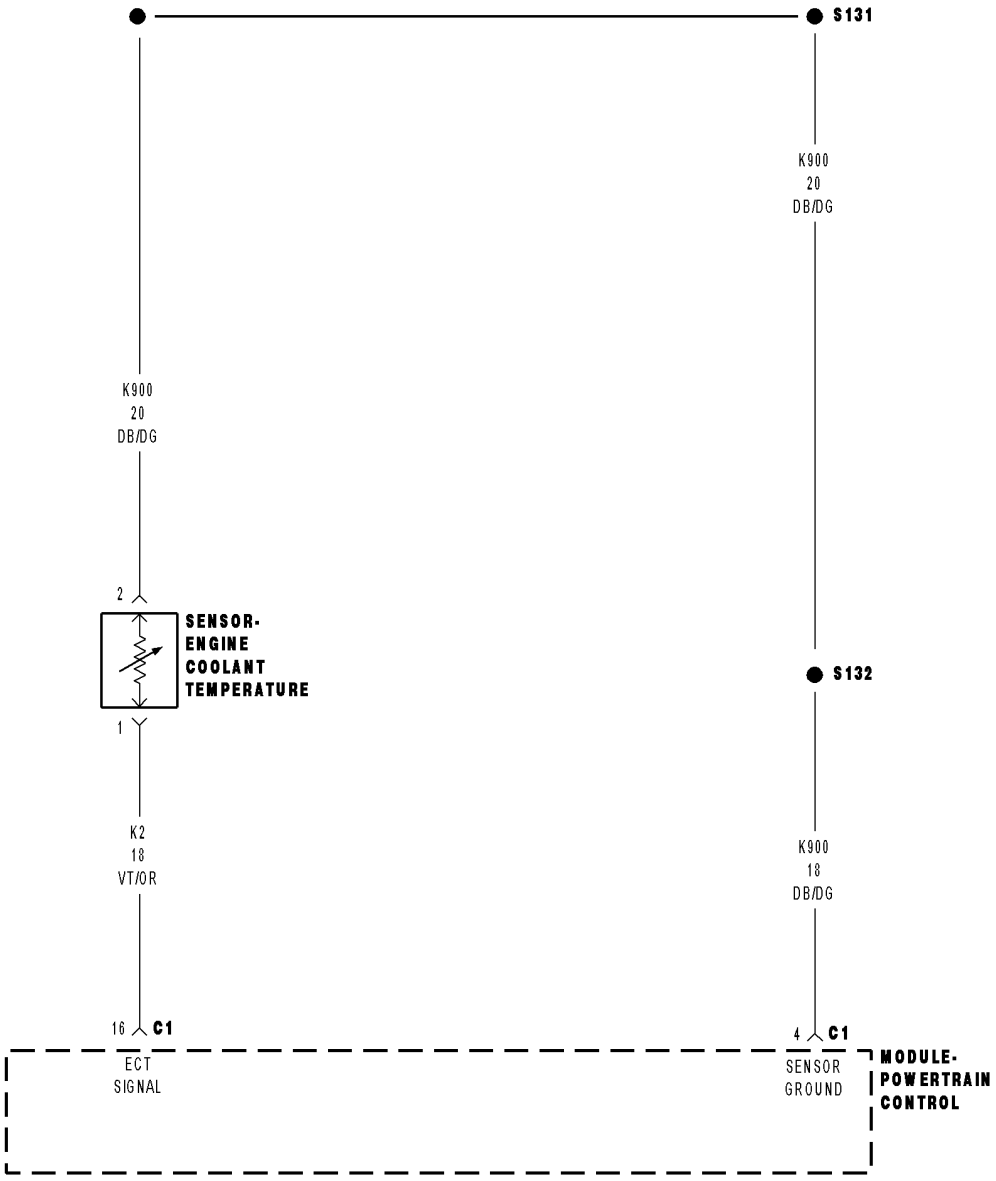

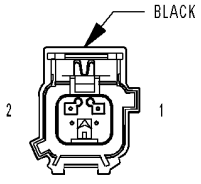

SENSOR-
ENGINE
COOLANT
TEMPERATURE
(5.7L/SRT)

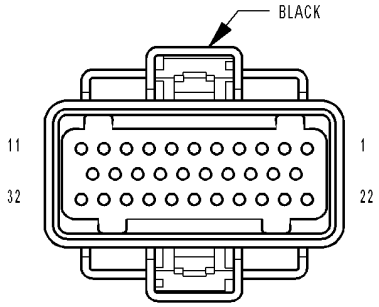

MODULE-
POWERTRAIN
CONTROL C1
(SRT)

81536f8b

P0125-INSUFFICIENT COOLANT TEMP FOR CLOSED-LOOP FUEL CONTROL (CONTINUED)

For the Engine System circuit diagrams Refer to 9 - ENGINE - SCHEMATICS AND DIAGRAMS).

For a complete wiring diagram **Refer to Section 8W**.

Theory of Operation

The engine coolant temperature sensor is a negative temperature coefficient thermistor-type sensor whose resistance varies inversely with temperature. At cold temperatures the sensor resistance is high so the voltage is high. As the coolant temperature increases the resistance decreases and the voltage becomes low. The INSUFFICIENT COOLANT TEMP FOR CLOSED-LOOP FUEL CONTROL determines if the engine coolant temperature will reach the closed loop fueling control temperature limit in a regulated time after start.

- **When Monitored:**
  With battery voltage greater than 10.4 volts and after engine is started.
- **Set Condition:**
  The engine temperature does not go above -10°C (15°F). Failure time depends on start-up coolant temperature and ambient temperature. (i.e. 2 minutes for a start temp of -10°C (15°F) or up to 10 minutes for a vehicle with a start-up temp of -28°C (5°F). Two Trip Fault. Three good trips to turn off the MIL.

Possible Causes
LOW COOLANT LEVEL
THERMOSTAT
ECT SENSOR

Always perform the Pre-Diagnostic Troubleshooting procedure before proceeding. (Refer to 9 - ENGINE - DIAGNOSIS AND TESTING).

Diagnostic Test

1. CHECKING COOLANT LEVEL AND CONDITION

Ignition on, engine not running.

With a scan tool, read DTCs.

NOTE: If an Engine Coolant Temperature (ECT) DTC is set along with this code, diagnose the ECT DTC first.

NOTE: Inspect the ECT terminals and related PCM terminals. Make sure the terminals are free from corrosion and damage.

NOTE: The best way to diagnose this DTC is to allow the vehicle to sit overnight outside in order to have a totally cold soaked engine.

NOTE: Extremely cold outside ambient temperatures may have caused this DTC to set.

WARNING: Never open the cooling system when the engine is hot. The system is under pressure. Extreme burns or scalding may result. Failure to follow these instructions can result in personal injury or death. Allow the engine to cool before opening the cooling system.

Inspect the coolant system for proper level and condition.

Is the coolant level and condition OK?

Yes >> Go To 2

No >> Inspect the vehicle for a coolant leak, make the appropriate repairs, and add the correct amount of coolant.
Perform the POWERTRAIN VERIFICATION TEST. (Refer to 9 - ENGINE - STANDARD PROCEDURE)

P0125-INSUFFICIENT COOLANT TEMP FOR CLOSED-LOOP FUEL CONTROL (CONTINUED)

2. THERMOSTAT OPERATION

NOTE: This test works best if performed on a cold engine (cold soak)

Ignition on, engine not running.

With a scan tool, read the Eng Coolant Tmp Deg value. If the engine was allowed to sit overnight (cold soak), the temperature value should be a sensible value that is somewhere close to the ambient temperature.

NOTE: If engine coolant temperature is above 82°C (180°F), allow the engine to cool until 65°C (150°F) is reached.

Start the Engine.

During engine warm-up monitor the Eng Coolant Tmp Deg value. The temp deg value change should be a smooth transition from start up to normal operating temp 82°C (180°F). Also monitor the actual coolant temperature with a thermometer.

NOTE: As the engine warms up to operating temperature, the actual coolant temperature (thermometer reading) and the scan tool Eng Coolant Tmp Deg values should stay relatively close to each other.

Using the appropriate service information, determine the proper opening temperature of the thermostat.

Did the thermostat open at the proper temperature?

Yes >> Go To 3

No >> Replace the thermostat.
Perform the POWERTRAIN VERIFICATION TEST. (Refer to 9 - ENGINE - STANDARD PROCEDURE)

---

3. ECT SENSOR OPERATION

Ignition on, engine not running.

With a scan tool, read the Eng Coolant Tmp Deg value. If the engine was allowed to sit overnight (cold soak), the temperature value should be a sensible value that is somewhere close to the ambient temperature.

NOTE: If engine coolant temperature is above 82°C (180°F), allow the engine to cool until 65°C (150°F) is reached.

Start the Engine.

During engine warm-up monitor the Eng Coolant Tmp Deg value. The temp deg value change should be a smooth transition from start up to normal operating temp 82°C (180°F). Also monitor the actual coolant temperature with a thermometer.

NOTE: As the engine warms up to operating temperature, the actual coolant temperature (thermometer reading) and the scan tools Eng Coolant Tmp Deg value should stay relatively close to each other.

Is the thermometer reading relatively close to the scan tool ECT reading?

Yes >> Test Complete.

No >> Replace the Engine Coolant Temperature Sensor.
Perform the POWERTRAIN VERIFICATION TEST. (Refer to 9 - ENGINE - STANDARD PROCEDURE)

P0131-O2 SENSOR 1/1 CIRCUIT VOLTAGE TOO LOW

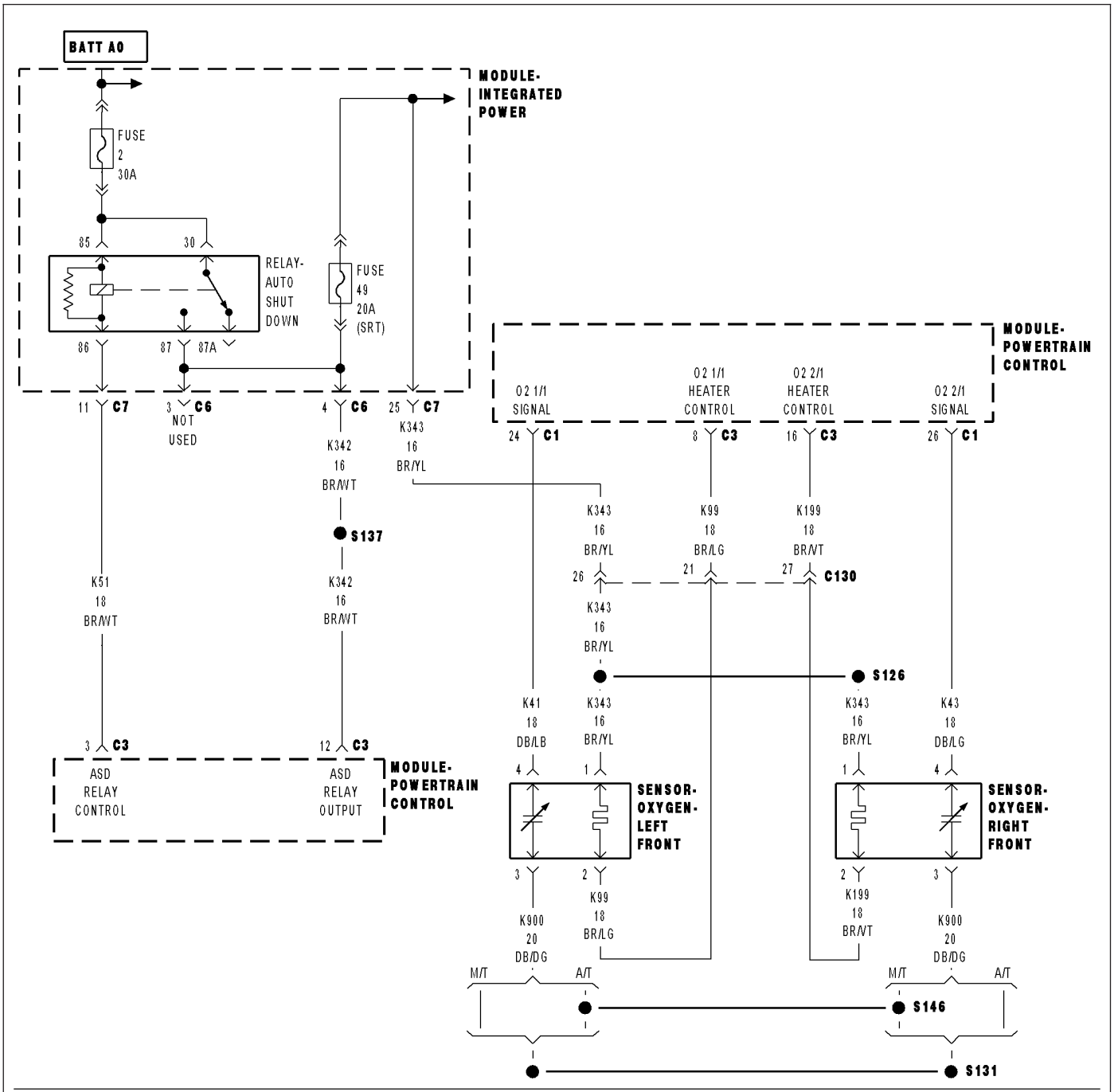

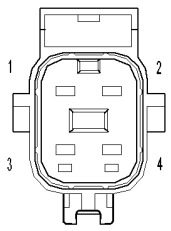

SENSOR-
OXYGEN-
LEFT
FRONT
(SRT)

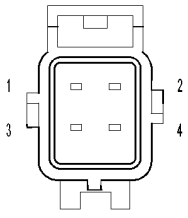

SENSOR-
OXYGEN-
RIGHT
FRONT
(SRT)

813c2aeb

P0131-O2 SENSOR 1/1 CIRCUIT VOLTAGE TOO LOW (CONTINUED)

For the Engine circuit diagrams (Refer to 9 - ENGINE - SCHEMATICS AND DIAGRAMS).

For a complete wiring diagram **Refer to Section 8W**.

- **When Monitored:**
  At a cold start, engine coolant below 98°F, Ambient/Battery Sensor reading within 27°F, and Engine Coolant Temperature above 170°F on the previous key off.
- **Set Condition:**
  The Oxygen Sensor signal voltage is below 0.156 of a volt for 28 seconds after starting engine.

Possible Causes
(K41) O2 1/1 SIGNAL CIRCUIT SHORTED TO GROUND
(K41) O2 1/1 SIGNAL CIRCUIT SHORTED TO THE (K900) SENSOR GROUND CIRCUIT
O2 SENSOR
PCM

Always perform the Pre-Diagnostic Troubleshooting procedure before proceeding. (Refer to 9 - ENGINE - DIAGNOSIS AND TESTING).

Diagnostic Test

1. O2 SENSOR BELOW 0.16 OF A VOLT

Ignition on, engine not running.
With the scan tool, read DTCs and record the related Freeze Frame data.
Start the engine.
Allow the engine to idle for 4 to 5 minutes.
With the scan tool, read the O2 Sensor voltage.

Is the voltage below 0.16 of a volt?

Yes >> Go To 2

No >> Refer to the INTERMITTENT CONDITION Diagnostic Procedure.
Perform the POWERTRAIN VERIFICATION TEST. (Refer to 9 - ENGINE - STANDARD PROCEDURE)

---

2. O2 SENSOR OPERATION

WARNING: When the engine is operating, do not stand in a direct line with the fan. Do not put your hands near the pulleys, belts, or fan. Do no wear loose clothing.
Disconnect the O2 Sensor harness connector.
Start the engine.
With the scan tool, monitor the O2 Sensor voltage.

Is the O2 Sensor voltage above 0.16 of a volt?

Yes >> Replace the O2 Sensor.
Perform the POWERTRAIN VERIFICATION TEST. (Refer to 9 - ENGINE - STANDARD PROCEDURE)

No >> Go To 3

P0131-O2 SENSOR 1/1 CIRCUIT VOLTAGE TOO LOW (CONTINUED)

3. (K41) O2 SENSOR 1/1 SIGNAL CIRCUIT SHORTED TO GROUND

Turn the ignition off.

Disconnect the C1 PCM harness connector.

Measure the resistance between ground and the (K41) O2 Sensor 1/1 Signal circuit at the 1/1 O2 Sensor harness connector.

Is the resistance below 100 ohms?

Yes >> Repair the short to ground in the (K41) O2 Sensor 1/1Signal circuit.
Perform the POWERTRAIN VERIFICATION TEST. (Refer to 9 - ENGINE - STANDARD PROCEDURE)

No >> Go To 4

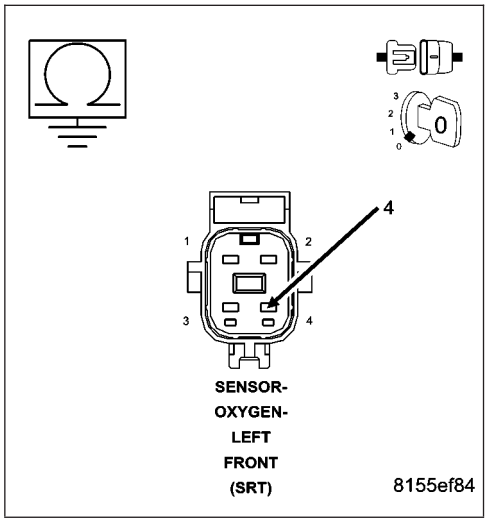

4. (K41) O2 SENSOR 1/1 SIGNAL CIRCUIT SHORTED TO (K900) SENSOR GROUND CIRCUIT

Measure the resistance between the (K41) O2 Sensor 1/1 Signal circuit and the (K900) Sensor ground circuit at the 1/1 O2 Sensor harness connector.

Is the resistance below 100 ohms?

Yes >> Repair the short between the (K900) Sensor ground circuit and the (K41) O2 Sensor 1/1 Signal circuit.
Perform the POWERTRAIN VERIFICATION TEST. (Refer to 9 - ENGINE - STANDARD PROCEDURE)

No >> Go To 5

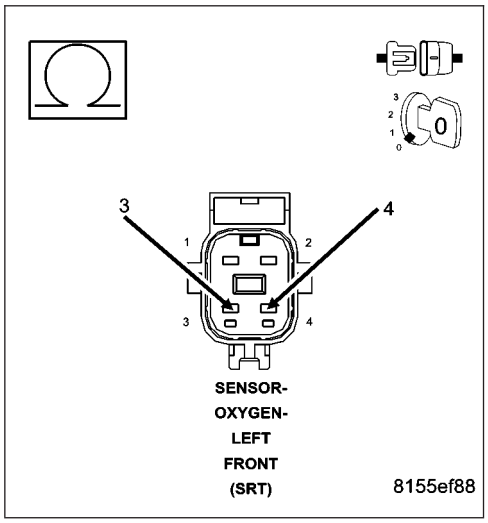

5. PCM

NOTE: Before continuing, check the PCM harness connector terminals for corrosion, damage, or terminal push out. Repair as necessary.

Using the schematics as a guide, inspect the wire harness and connectors. Pay particular attention to all Power and Ground circuits.

Were there any problems found?

Yes >> Repair as necessary.
Perform the POWERTRAIN VERIFICATION TEST. (Refer to 9 - ENGINE - STANDARD PROCEDURE)

No >> Replace and program the Powertrain Control Module per Service Information.
Perform the POWERTRAIN VERIFICATION TEST. (Refer to 9 - ENGINE - STANDARD PROCEDURE)

P0132-O2 SENSOR 1/1 CIRCUIT VOLTAGE TOO HIGH

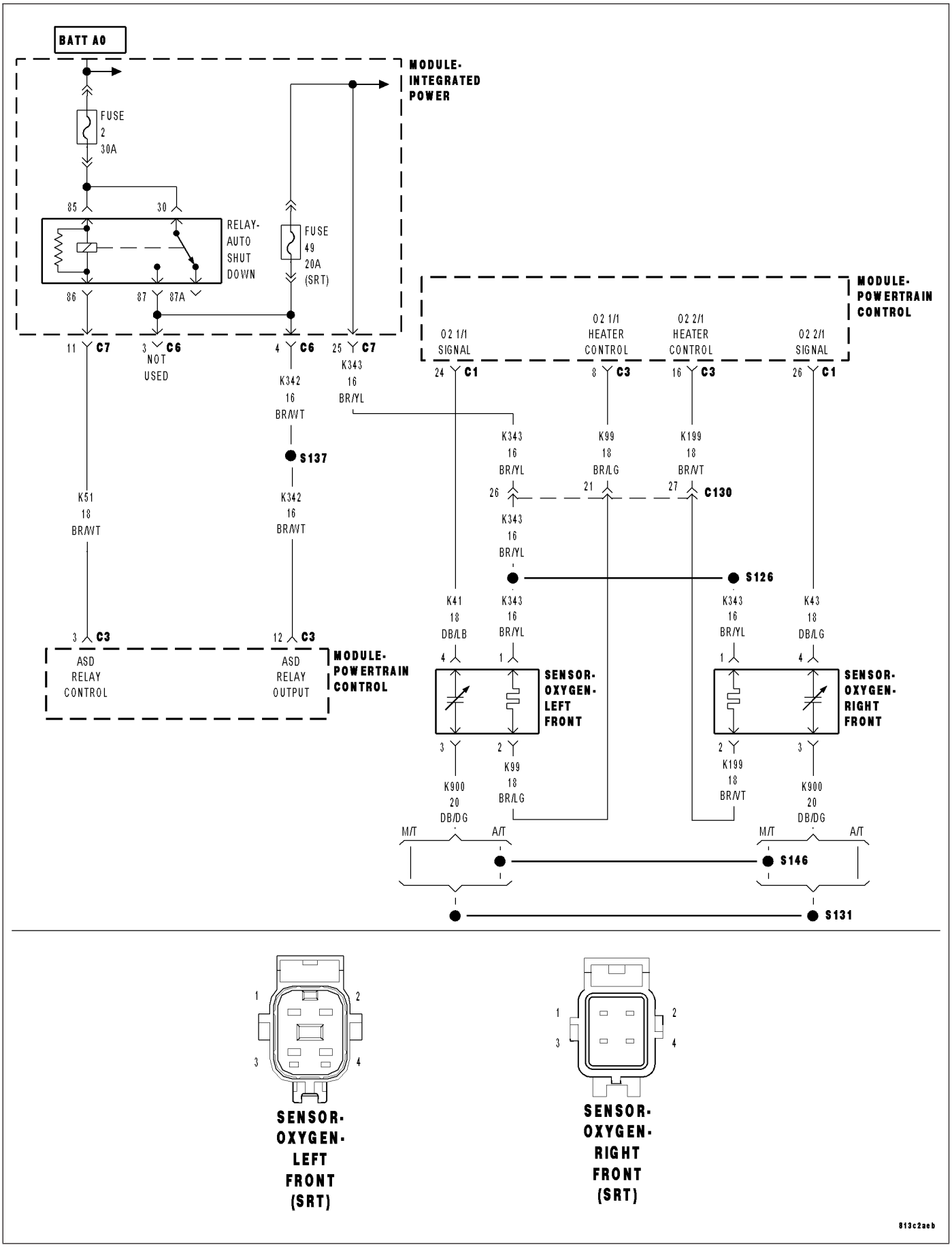

P0132-O2 SENSOR 1/1 CIRCUIT VOLTAGE TOO HIGH (CONTINUED)

For the Engine circuit diagrams (Refer to 9 - ENGINE - SCHEMATICS AND DIAGRAMS).

For a complete wiring diagram **Refer to Section 8W**.

- **When Monitored:**
  With battery voltage greater than 10.4 volts, engine running for more than 4 minutes and coolant temperature above 180°F.
- **Set Condition:**
  The oxygen sensor voltage is above 1.5 volts.

Possible Causes
(K41) O2 1/1 SIGNAL CIRCUIT SHORTED TO VOLTAGE
(K99) O2 SENSOR 1/1 HEATER CONTROL CIRCUIT OPEN
(K41) O2 1/1 SIGNAL CIRCUIT OPEN
(K900) SENSOR GROUND CIRCUIT OPEN
(K343) ASD RELAY OUTPUT CIRCUIT OPEN
(K41) O2 1/1 SIGNAL CIRCUIT SHORTED TO THE (K343) ASD RELAY OUTPUT CIRCUIT
O2 SENSOR
PCM

Always perform the Pre-Diagnostic Troubleshooting procedure before proceeding. (Refer to 9 - ENGINE - DIAGNOSIS AND TESTING).

Diagnostic Test

1. O2 SENSOR ABOVE 1.5 VOLTS

Ignition on, engine not running.
With the scan tool, read DTCs and record the related Freeze Frame data.
Start the engine.
Allow the engine to idle for 4 to 5 minutes.
With the scan tool, read the O2 Sensor voltage.

Is the voltage above 1.5 volts?

Yes >> Go To 2

No >> Refer to the INTERMITTENT CONDITION Diagnostic Procedure.
Perform the POWERTRAIN VERIFICATION TEST. (Refer to 9 - ENGINE - STANDARD PROCEDURE)

P0132-O2 SENSOR 1/1 CIRCUIT VOLTAGE TOO HIGH (CONTINUED)

2. (K41) O2 1/1 SIGNAL CIRCUIT SHORTED TO VOLTAGE

Turn the ignition off.

Disconnect the C1 PCM harness connector.

Ignition on, engine not running.

Using a 12-volt test light connected to ground, probe the (K41) O2 Sensor 1/1 Signal circuit at the 1/1 O2 Sensor harness connector.

Does the test light illuminate brightly?

Yes >> Repair the short to voltage in the (K41) O2 Sensor 1/1 Signal circuit.
Perform the POWERTRAIN VERIFICATION TEST. (Refer to 9 - ENGINE - STANDARD PROCEDURE)

No >> Go To 3

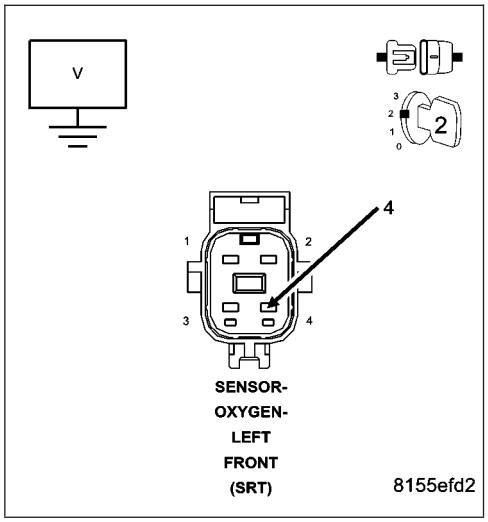

3. (K41) O2 SENSOR 1/1 SIGNAL CIRCUIT OPEN

Turn the ignition off.

Measure the resistance of the (K41) O2 Sensor 1/1 Signal circuit from the O2 Sensor harness connector to the C1 PCM harness connector.

Is the resistance below 5.0 ohms?

Yes >> Go To 4

No >> Repair the open in the (K41) O2 Sensor 1/1 Signal circuit.
Perform the POWERTRAIN VERIFICATION TEST. (Refer to 9 - ENGINE - STANDARD PROCEDURE)

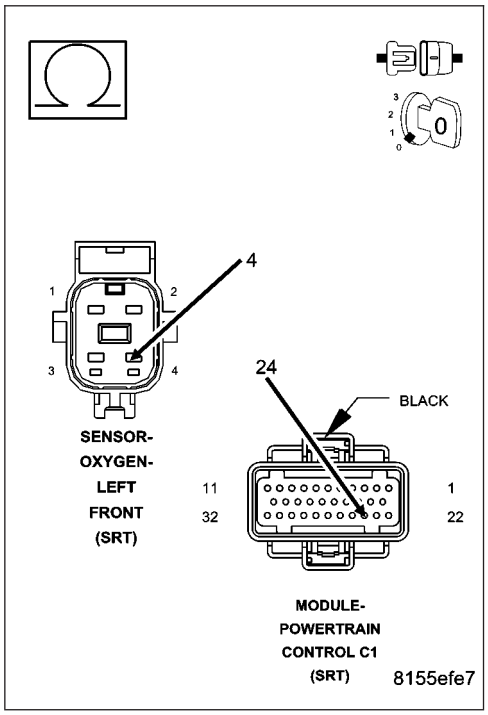

P0132-O2 SENSOR 1/1 CIRCUIT VOLTAGE TOO HIGH (CONTINUED)

4. (K41) O2 SENSOR 1/1 SIGNAL CIRCUIT SHORTED TO THE (K343) ASD RELAY OUTPUT CIRCUIT

Measure the resistance between the (K41) O2 Sensor 1/1 Signal circuit and the (K343) ASD Relay Output circuit at the O2 Sensor harness connector.

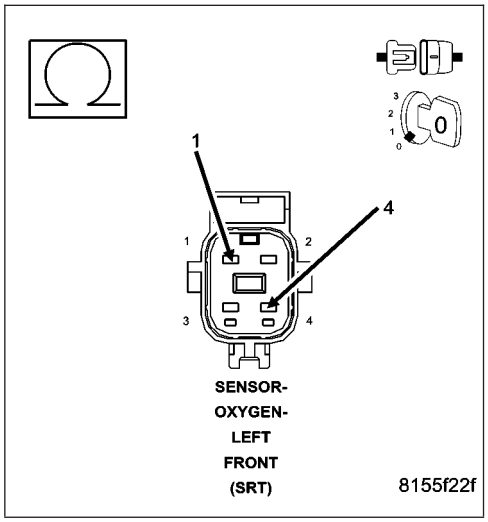

Is the resistance below 100 ohms?

Yes >> Repair the short between the O2 Sensor Signal circuit and the (K343) ASD Relay Output circuit.
Perform the POWERTRAIN VERIFICATION TEST. (Refer to 9 - ENGINE - STANDARD PROCEDURE)

No >> Go To 5

5. (K900) SENSOR GROUND CIRCUIT OPEN

Measure the resistance of the (K900) Sensor ground circuit from the O2 Sensor harness connector to the C1 PCM harness connector.

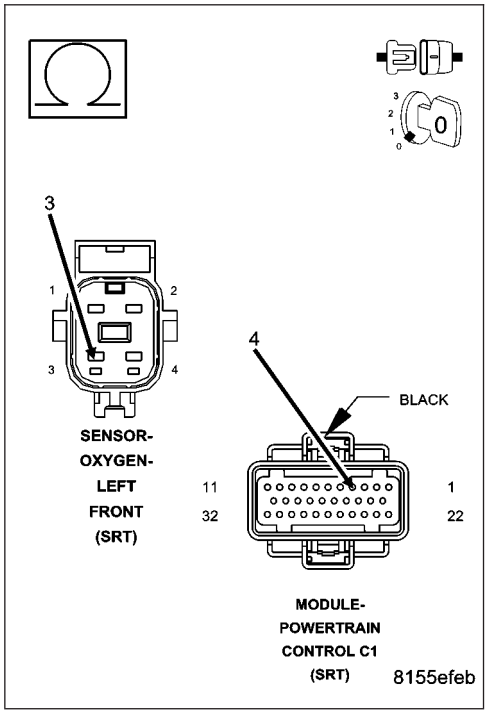

Is the resistance below 5.0 ohms?

Yes >> Go To 6

No >> Repair the open in the (K900) Sensor ground circuit.
Perform the POWERTRAIN VERIFICATION TEST. (Refer to 9 - ENGINE - STANDARD PROCEDURE)

P0132-O2 SENSOR 1/1 CIRCUIT VOLTAGE TOO HIGH (CONTINUED)

6. (K343) ASD RELAY OUTPUT CIRCUIT OPEN

Connect the PCM harness connectors.

Ignition on, engine not running.

With the scan tool actuate the O2 Heater Test.

Using a 12-volt test light connected to ground, probe the (K343) ASD Relay Output circuit.

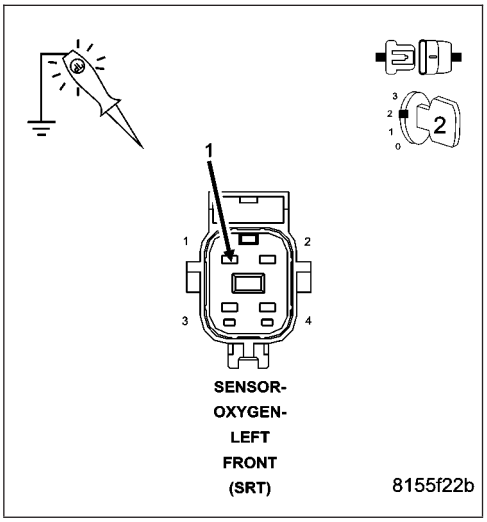

Does the test light illuminate brightly?

Yes >> Go To 7

No >> Repair the open in the (K343) ASD Relay Output circuit.
Perform the POWERTRAIN VERIFICATION TEST. (Refer to 9 - ENGINE - STANDARD PROCEDURE)

7. (K99) O2 SENSOR 1/1 HEATER CONTROL CIRCUIT OPEN

Turn the ignition off.

Disconnect the C3 PCM harness connector.

Measure the resistance of the (K99) O2 Sensor 1/1 Heater Control circuit from the O2 Sensor harness connector to the PCM harness connector.

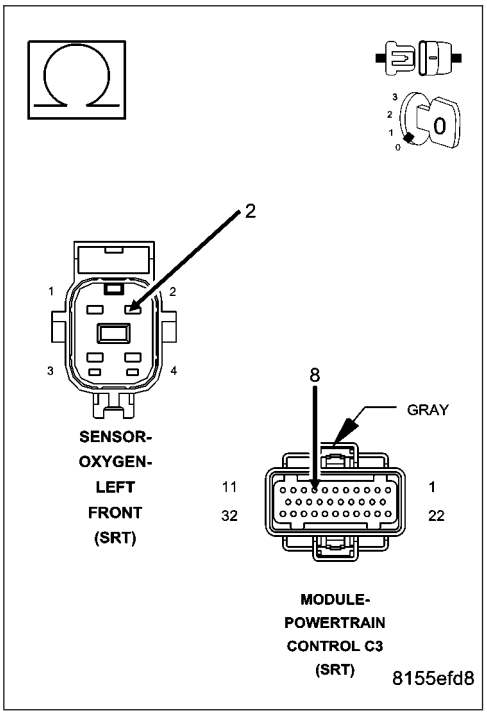

Is the resistance below 5.0 ohms?

Yes >> Go To 8

No >> Repair the open in the (K99) O2 Sensor 1/1 Heater Control Circuit (PWM) circuit.
Perform the POWERTRAIN VERIFICATION TEST. (Refer to 9 - ENGINE - STANDARD PROCEDURE)

P0132-O2 SENSOR 1/1 CIRCUIT VOLTAGE TOO HIGH (CONTINUED)

8. PCM

NOTE: Before continuing, check the PCM harness connector terminals for corrosion, damage, or terminal push out. Repair as necessary.

Using the schematics as a guide, inspect the wire harness and connectors. Pay particular attention to all Power and Ground circuits.

Were there any problems found?

Yes >> Repair as necessary.
Perform the POWERTRAIN VERIFICATION TEST. (Refer to 9 - ENGINE - STANDARD PROCEDURE)

No >> Replace and program the Powertrain Control Module per Service Information.
Perform the POWERTRAIN VERIFICATION TEST. (Refer to 9 - ENGINE - STANDARD PROCEDURE)

P0133-O2 SENSOR 1/1 SLOW RESPONSE

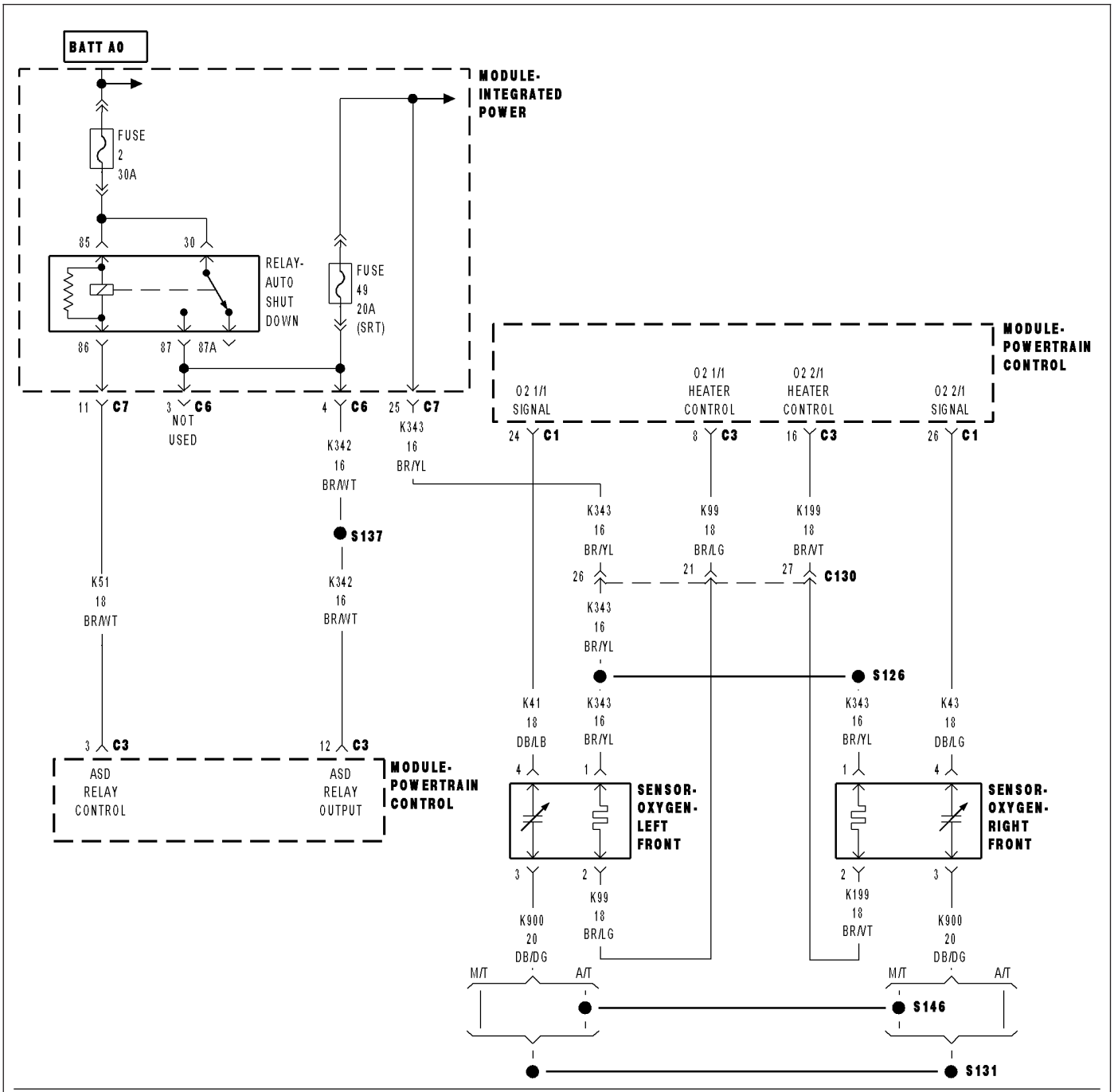

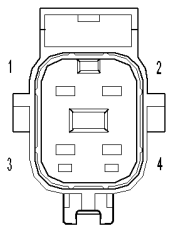

SENSOR-
OXYGEN-
LEFT
FRONT
(SRT)

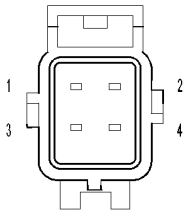

SENSOR-
OXYGEN-
RIGHT
FRONT
(SRT)

813c2aeb

P0133-O2 SENSOR 1/1 SLOW RESPONSE (CONTINUED)

For the Engine circuit diagram (Refer to 9 - ENGINE - SCHEMATICS AND DIAGRAMS).

For a complete wiring diagram **Refer to Section 8W**.

- **When Monitored:**
  With ECT greater than 147°F, after reaching a vehicle speed of 10 mph, and the throttle remaining open (off idle) for 2 minutes, bring the vehicle to a stop and allow the engine to idle with the transmission in DRIVE.
- **Set Condition:**
  The oxygen sensor signal voltage is switching from below 0.27 of a volt to above 0.62 of a volt and back fewer times than required.

Possible Causes
EXHAUST LEAK
(K41) O2 1/1 SIGNAL CIRCUIT
(K900) SENSOR GROUND CIRCUIT
O2 SENSOR

Always perform the Pre-Diagnostic Troubleshooting procedure before proceeding. (Refer to 9 - ENGINE - DIAGNOSIS AND TESTING).

Diagnostic Test

1. ACTIVE DTC

NOTE: Check for contaminants that may have damaged the O2 Sensor: contaminated fuel, unapproved silicone, oil and coolant.
Ignition on, engine not running.

NOTE: After the repairs have been made, verify proper O2 Sensor operation. If all the O2 Sensor voltage readings have not returned to normal, follow the diagnostic procedure for the remaining O2 Sensors.
With a scan tool, read DTCs.

Is the DTC active at this time?

Yes >> Go To 2

No >> Refer to the INTERMITTENT CONDITION Symptom. (Refer to 9 - ENGINE - DIAGNOSIS AND TESTING)

---

2. EXHAUST LEAK

Start the engine.

Inspect the exhaust system for leaks between the engine and the O2 Sensors.

Are there any exhaust leaks?

Yes >> Repair or replace the leaking exhaust parts as necessary.
Perform the POWERTRAIN VERIFICATION TEST. (Refer to 9 - ENGINE - STANDARD PROCEDURE)

No >> Go To 3

P0133-O2 SENSOR 1/1 SLOW RESPONSE (CONTINUED)

3. (K41) O2 1/1 SIGNAL CIRCUIT VOLTAGE DROP

Turn the ignition off.

While backprobing, measure the voltage of the (K41) O2 Sensor 1/1 Signal circuit between the 1/1 O2 Sensor harness connector and PCM harness connector.

NOTE: Make sure the voltmeter leads meet the terminals in the connector and that there is good terminal to wire connection and are connected for positive polarity.

Start the engine.

Allow the engine to idle.

Is the voltage below 0.10 of a volt?

Yes >> Go To 4

No >> Repair the excessive resistance in the (K41) O2 Sensor 1/1 Signal circuit.
Perform the POWERTRAIN VERIFICATION TEST. (Refer to 9 - ENGINE - STANDARD PROCEDURE)

---

4. (K900) SENSOR GROUND CIRCUIT VOLTAGE DROP

Turn the ignition off.

While backprobing, measure the voltage of the (K900) Sensor ground circuit between the 1/1 O2 Sensor harness connector and PCM harness connector.

NOTE: Make sure the voltmeter leads meet the terminals in the connector and that there is good terminal to wire connection.

NOTE: Make sure the voltmeter leads are connected for positive polarity

Start the engine.

Allow the engine to idle.

Is the voltage below 0.10 of a volt?

Yes >> Go To 5

No >> Repair the excessive resistance in the (K900) Sensor ground circuit.
Perform the POWERTRAIN VERIFICATION TEST. (Refer to 9 - ENGINE - STANDARD PROCEDURE)

NOTE: Turn the ignition off before continuing.

---

5. O2 SENSOR

If there are no possible causes remaining, view repair.

Repair

Replace the O2 Sensor
Perform the POWERTRAIN VERIFICATION TEST. (Refer to 9 - ENGINE - STANDARD PROCEDURE)

P0135-O2 SENSOR 1/1 HEATER PERFORMANCE

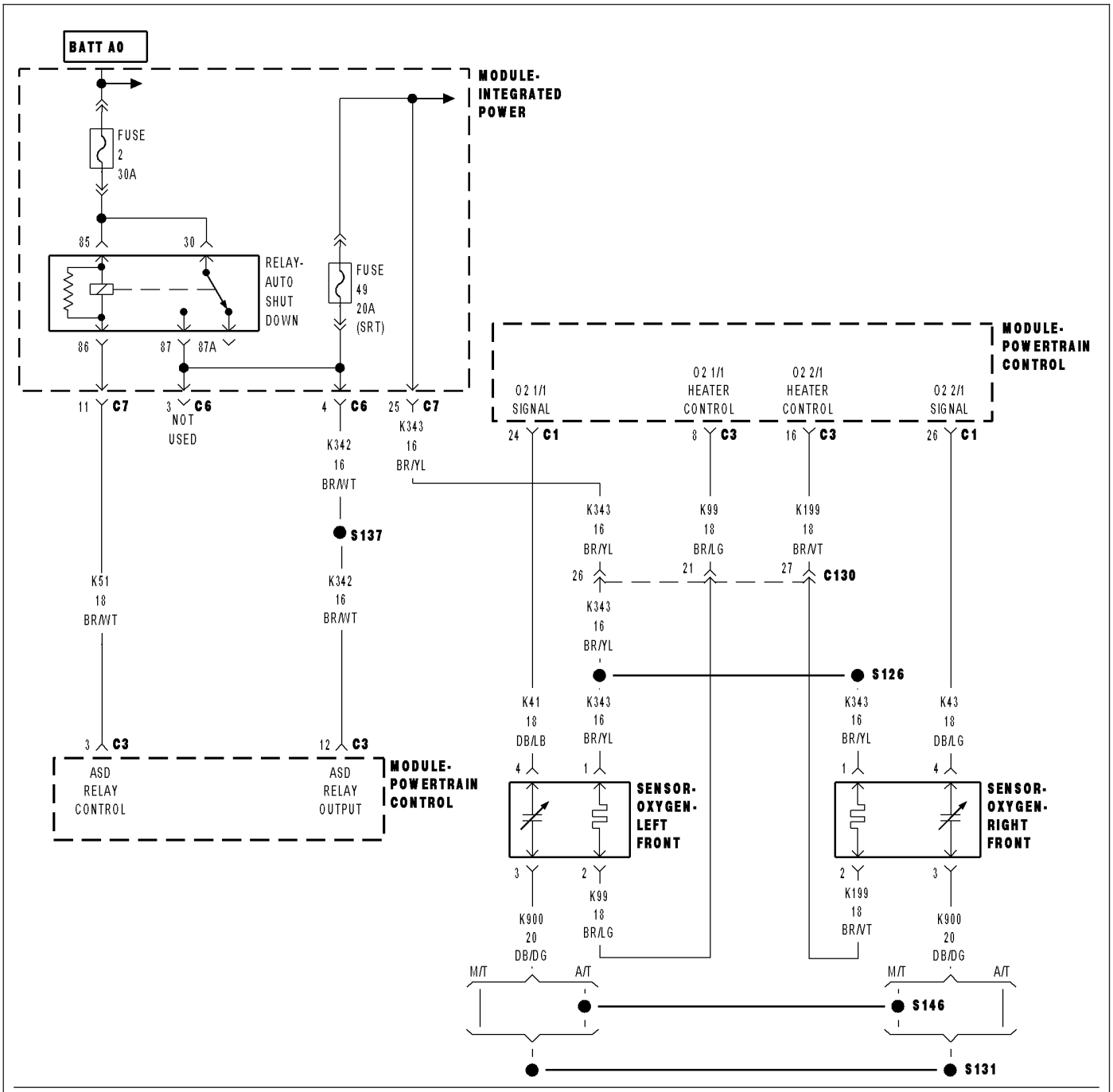

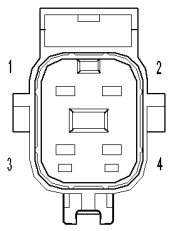

SENSOR-
OXYGEN-
LEFT
FRONT
(SRT)

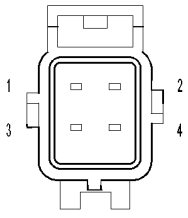

SENSOR-
OXYGEN-
RIGHT
FRONT
(SRT)

813c2aeb

P0135-O2 SENSOR 1/1 HEATER PERFORMANCE (CONTINUED)

For the Engine circuit diagram (Refer to 9 - ENGINE - SCHEMATICS AND DIAGRAMS).

For a complete wiring diagram **Refer to Section 8W**.

- **When Monitored:**
  With battery voltage greater than 9 volts, at a cold start, ECT less than 147°F, battery temperature sensor equal to or less than 27°F, and engine at idle for at least 12 seconds.
- **Set Condition:**
  O2 sensor voltage greater than 3 volts for 30 to 90 seconds.

Possible Causes
(K99) O2 1/1 HEATER CONTROL CIRCUIT OPEN
(K99) O2 1/1 HEATER CONTROL CIRCUIT SHORTED TO GROUND
(K343) O2 FUSED ASD RELAY OUTPUT CIRCUIT OPEN
(K343) O2 FUSED ASD RELAY OUTPUT CIRCUIT SHORTED TO GROUND
O2 SENSOR
PCM

Always perform the Pre-Diagnostic Troubleshooting procedure before proceeding. (Refer to 9 - ENGINE - DIAGNOSIS AND TESTING).

Diagnostic Test

1. O2 SENSOR HEATER OPERATION

Turn the ignition off.

NOTE: Wait a minimum of 8 minutes to allow the O2 Sensor to cool down before continuing the test. Allow the O2 Sensor voltage to stabilize between 4.6 and 5.0 volts.

Ignition on, engine not running.

With a scan tool, actuate the O2 Heater Test.

With the scan tool, monitor 1/1 O2 Sensor voltage for at least 2 minutes.

Does the voltage stay above 4.5 volts?

Yes >> Go To 2

No >> Refer to the INTERMITTENT CONDITION Diagnostic Procedure. (Refer to 9 - ENGINE - DIAGNOSIS AND TESTING)

---

2. O2 SENSOR HEATER ELEMENT

Turn the ignition off.

NOTE: Allow the O2 sensor to cool down to room temperature.

Disconnect the O2 Sensor harness connector.

Measure the resistance of the O2 Heater Element across the 1/1 O2 Sensor connector between the (K99) O2 Heater Control terminal and the (K343) Fused ASD relay output terminal.

NOTE: O2 Heater Element resistance values should be measured at 70°F (21.1°C). The resistance value will vary with different temperature values.

Is the resistance of the O2 Sensor Heater Element between 3.3 and 4.1 ohms?

Yes >> Go To 3

No >> Replace the O2 Sensor.
Perform the POWERTRAIN VERIFICATION TEST. (Refer to 9 - ENGINE - STANDARD PROCEDURE)

P0135-O2 SENSOR 1/1 HEATER PERFORMANCE (CONTINUED)

3. (K99) O2 1/1 HEATER CONTROL CIRCUIT OPEN

Disconnect the C3 PCM harness connector.

Measure the resistance of the (K99) O2 1/1 Heater Control circuit from the O2 harness connector to the PCM harness connector.

Is the resistance below 5 ohmS?

Yes >> Go To 4

No >> Repair the excessive resistance in the (K99) O2 1/1 Heater Control circuit.
Perform the POWERTRAIN VERIFICATION TEST. (Refer to 9 - ENGINE - STANDARD PROCEDURE)

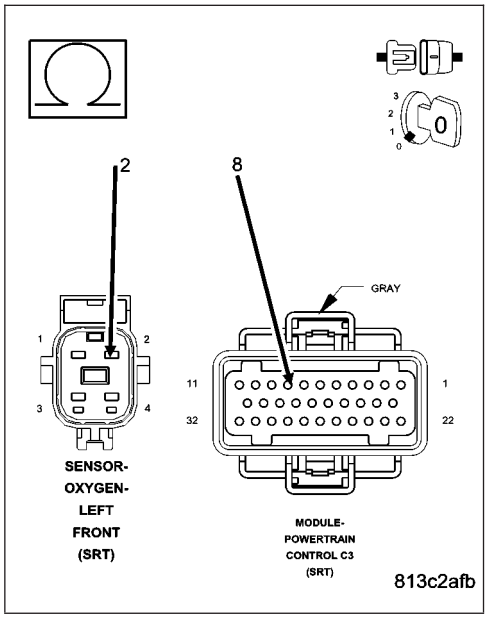

4. (K343) O2 1/1 FUSED ASD RELAY OUTPUT CIRCUIT OPEN

Measure the resistance of the (K343) O2 1/1 Fused ASD Relay Output circuit, from the relay terminal to the O2 Sensor harness connector.

Is the resistance below 5 ohms?

Yes >> Go To 5

No >> Repair the excessive resistance in the (K343) O2 1/1 Fused ASD relay output circuit.
Perform the POWERTRAIN VERIFICATION TEST. (Refer to 9 - ENGINE - STANDARD PROCEDURE)

5. (K343) O2 1/1 FUSED ASD RELAY OUTPUT CIRCUIT SHORTED TO GROUND

Measure the resistance between ground and the (K343) O2 1/1 Fused ASD Relay Output circuit in the O2 Sensor harness connector.

Is the resistance below 5 ohms?

Yes >> Repair the short to ground in the (K343) O2 1/1 Fused ASD Relay Output circuit.
Perform the POWERTRAIN VERIFICATION TEST. (Refer to 9 - ENGINE - STANDARD PROCEDURE)

No >> Go To 6

P0135-O2 SENSOR 1/1 HEATER PERFORMANCE (CONTINUED)

6. PCM

NOTE: Before continuing, check the PCM harness connector terminals for corrosion, damage, or terminal push out. Repair as necessary.

Using the schematics as a guide, inspect the wire harness and connectors. Pay particular attention to all Power and Ground circuits.

Were there any problems found?

Yes >> Repair as necessary.
Perform the POWERTRAIN VERIFICATION TEST. (Refer to 9 - ENGINE - STANDARD PROCEDURE)

No >> Replace and program the Powertrain Control Module per Service Information.
Perform the POWERTRAIN VERIFICATION TEST. (Refer to 9 - ENGINE - STANDARD PROCEDURE)

P0136-O2 SENSOR 1/2 HEATER CIRCUIT MALFUNCTION

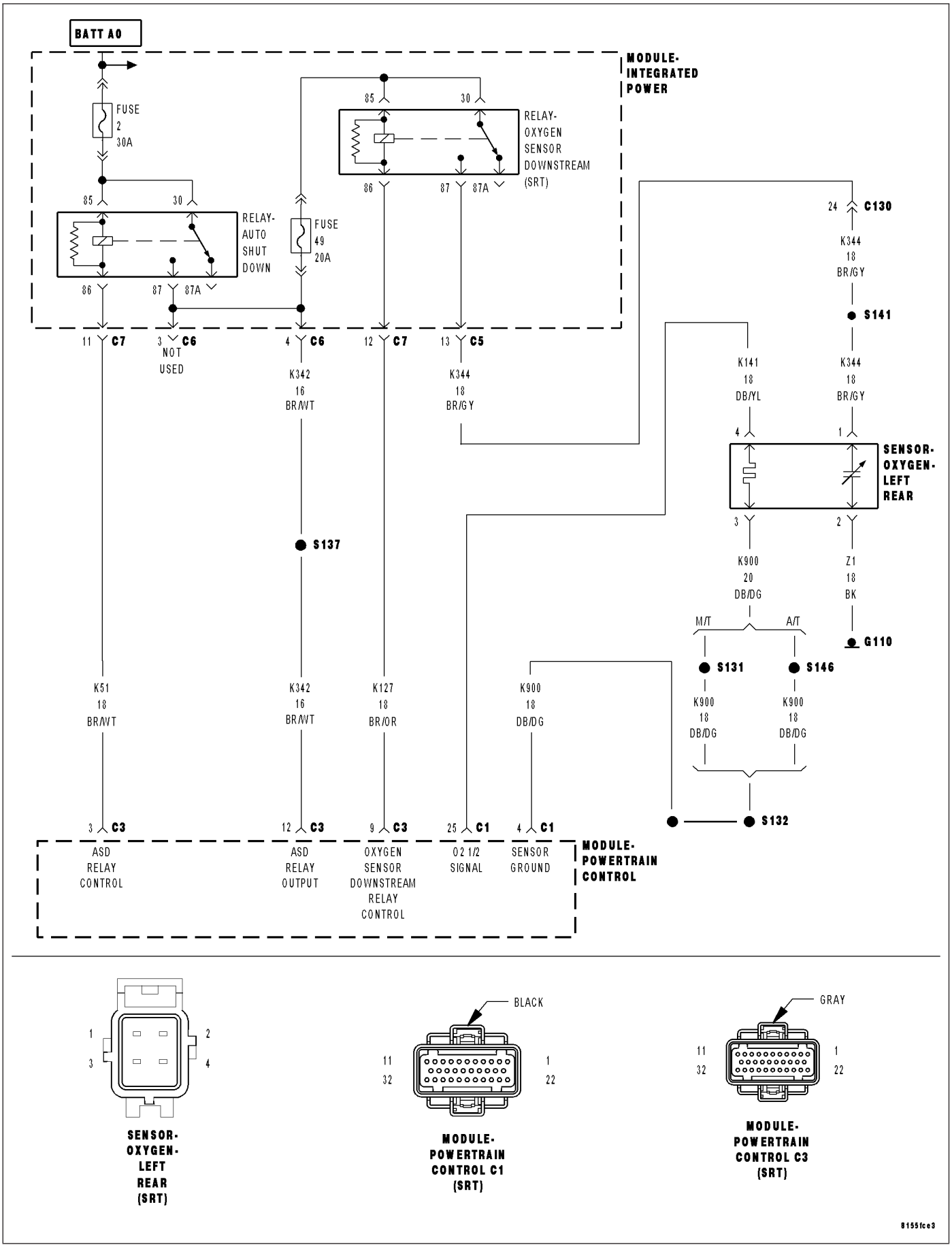

P0136-O2 SENSOR 1/2 HEATER CIRCUIT MALFUNCTION (CONTINUED)

For the Engine circuit diagram (Refer to 8 - ELECTRICAL/ELECTRONIC CONTROL MODULES/ENGINE CONTROL MODULE - SCHEMATIC - ELECTRICAL)

For a complete wiring diagram **Refer to Section 8W**.

- **When Monitored:**
  Ignition ON, with battery voltage greater than 10.4 volts.
- **Set Condition:**
  The state of the PCM relay control circuit, between the PCM and relay coil, does not match the desired state.

Possible Causes
O2 SENSOR HEATER RELAY
(K343) FUSED ASD RELAY OUTPUT CIRCUIT
(K127) O2 HEATER RELAY CONTROL CIRCUIT OPEN
(K127) O2 HEATER RELAY CONTROL CIRCUIT SHORTED TO GROUND
O2 SENSOR
PCM

Always perform the Pre-Diagnostic Troubleshooting procedure before proceeding. (Refer to 9 - ENGINE - DIAGNOSIS AND TESTING)

1. GOOD TRIP EQUAL TO ZERO

Ignition on, engine not running.

With the Scan Tool, read DTCs and record the related Freeze Frame data.

Is the Good Trip Counter displayed and equal to zero?

Yes >> Go To 2

No >> Refer to the INTERMITTENT CONDITION Diagnostic Procedure. (Refer to 9 - ENGINE - STANDARD PROCEDURE)

---

2. O2 SENSOR HEATER RELAY

Turn the ignition off.

Remove the Heater Relay from the PDC.

Measurement is taken at the Heater Relay component.

Measure the resistance of the O2 Sensor Heater Relay Coil.

Is the resistance above 100 ohms?

Yes >> Replace the O2 Sensor Heater Relay.
Perform the POWERTRAIN VERIFICATION TEST. (Refer to 9 - ENGINE - STANDARD PROCEDURE)

No >> Go To 3

P0136-O2 SENSOR 1/2 HEATER CIRCUIT MALFUNCTION (CONTINUED)

3. (K344) FUSED ASD RELAY OUTPUT CIRCUIT

Ignition on, engine not running.

With the Scan Tool, actuate the ASD Relay.

Using a 12-volt test light connected to ground, probe the (K344) Fused ASD Relay Output circuit of the O2 Heater Relay in the PDC.

Does the test light illuminate brightly when the relay actuates?

Yes >> Go To 4

No >> Repair the open or short to ground in the ASD Relay Output circuit. Inspect the related fuse and repair as necessary.
Perform the POWERTRAIN VERIFICATION TEST. (Refer to 9 - ENGINE - STANDARD PROCEDURE)

---

4. (K127) O2 HEATER RELAY CONTROL CIRCUIT OPEN

Turn the ignition off.

Disconnect the PCM harness connectors.

Measure the resistance of the (K127) O2 Heater Relay Control circuit from the PDC (Heater Relay) connector to the PCM harness connector.

Is the resistance below 5.0 ohms?

Yes >> Go To 5

No >> Repair the open in the (K127) O2 Heater Relay Control circuit.
Perform POWERTRAIN VERIFICATION TEST. (Refer to 9 - ENGINE - STANDARD PROCEDURE)

---

5. (K127) O2 HEATER RELAY CONTROL CIRCUIT SHORTED TO GROUND

Measure the resistance between ground and the (K127) O2 Heater Relay Control circuit at the PDC connector.

Is the resistance below 100 ohms?

Yes >> Repair the short to ground in the (K127) O2 Sensor Heater Relay Control circuit.
Perform POWERTRAIN VERIFICATION TEST. (Refer to 9 - ENGINE - STANDARD PROCEDURE)

No >> Go To 6

---

6. O2 HEATER ELEMENT

NOTE: Allow the O2 Sensor to cool to room temperature.

Disconnect the O2 Sensor harness connector.

Measure the resistance across the O2 Sensor Heater element component side.

NOTE: The resistance value will increase with warmer temperatures.

Is the resistance between 4.0 and 5.0 ohms at 70° F (21.1°C)?

Yes >> Go To 7

No >> Replace the O2 Sensor.
Perform POWERTRAIN VERIFICATION TEST. (Refer to 9 - ENGINE - STANDARD PROCEDURE)

P0136-O2 SENSOR 1/2 HEATER CIRCUIT MALFUNCTION (CONTINUED)

7. **PCM**

NOTE: Before continuing, check the PCM harness connector terminals for corrosion, damage, or terminal push out. Repair as necessary.

Using the schematics as a guide, inspect the wire harness and connectors. Pay particular attention to all Power and Ground circuits.

If there are not possible causes remaining, view repair.

Repair

Replace and program the Powertrain Control Module per Service Information.

Perform POWERTRAIN VERIFICATION TEST. (Refer to 9 - ENGINE - STANDARD PROCEDURE)

P0137-O2 SENSOR 1/2 CIRCUIT LOW

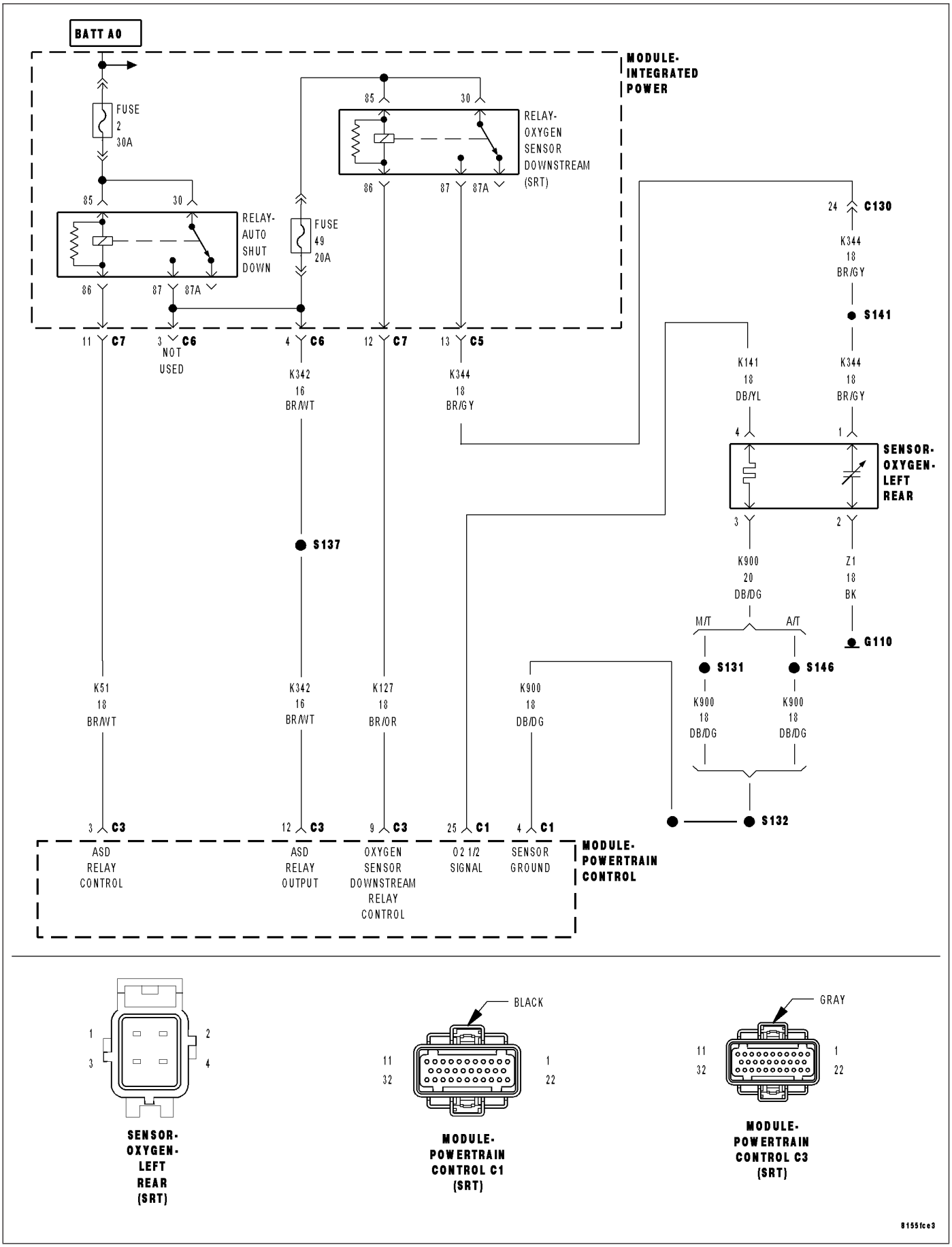

P0137-O2 SENSOR 1/2 CIRCUIT LOW (CONTINUED)

For the Engine circuit diagram (Refer to 9 - ENGINE - SCHEMATICS AND DIAGRAMS).

For a complete wiring diagram **Refer to Section 8W**.

- **When Monitored:**
  At a cold start, engine coolant below 98°F, Ambient/Battery Sensor reading within 27°F, and Engine Coolant Temperature above 170°F on the previous key off.
- **Set Condition:**
  The Oxygen Sensor signal voltage is below 0.156 of a volt for 28 seconds after starting engine.

Possible Causes
(K141) O2 SENSOR 1/2 SIGNAL CIRCUIT SHORTED TO GROUND
(K141) O2 SENSOR 1/2 SIGNAL CIRCUIT SHORTED TO THE (K900) SENSOR GROUND CIRCUIT
(K141) O2 SENSOR 2/1 SIGNAL SHORTED TO THE (Z1) HEATER GROUND CIRCUIT
O2 SENSOR
PCM

Always perform the Pre-Diagnostic Troubleshooting procedure before proceeding. (Refer to 9 - ENGINE - DIAGNOSIS AND TESTING).

Diagnostic Test

1. O2 SENSOR BELOW 0.16 OF A VOLT

Ignition on, engine not running.
With the scan tool, read DTCs and record the related Freeze Frame data.
Start the engine.
Allow the engine to idle for 4 to 5 minutes.
With the scan tool, read the O2 Sensor voltage.

Is the voltage below 0.16 of a volt?

Yes >> Go To 2

No >> Refer to the INTERMITTENT CONDITION Diagnostic Procedure.
Perform the POWERTRAIN VERIFICATION TEST. (Refer to 9 - ENGINE - STANDARD PROCEDURE)

---

2. O2 SENSOR OPERATION

WARNING: When the engine is operating, do not stand in a direct line with the fan. Do not put your hands near the pulleys, belts, or fan. Do not wear loose clothing.
Disconnect the O2 Sensor harness connector.
Start the engine.
With the scan tool, monitor the O2 Sensor voltage.

Is the O2 Sensor voltage above 0.16 of a volt?

Yes >> Replace the O2 Sensor
Perform the POWERTRAIN VERIFICATION TEST. (Refer to 9 - ENGINE - STANDARD PROCEDURE)

No >> Go To 3

P0137-O2 SENSOR 1/2 CIRCUIT LOW (CONTINUED)

3. (K141) O2 SENSOR 1/2 SIGNAL CIRCUIT SHORTED TO GROUND

Turn the ignition off.

Disconnect the PCM harness connectors.

Measure the resistance between ground and the (K141) O2 Sensor 1/2 Signal circuit at the 1/2 O2 Sensor harness connector.

Is the resistance below 100 ohms?

Yes >> Repair the short to ground in the (K141) O2 Sensor 1/2 Signal circuit.
Perform the POWERTRAIN VERIFICATION TEST. (Refer to 9 - ENGINE - STANDARD PROCEDURE)

No >> Go To 4

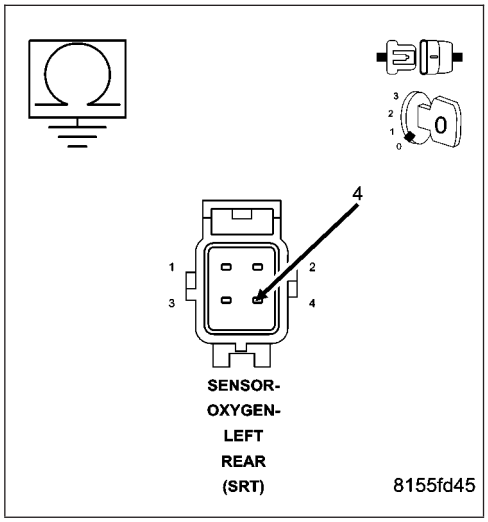

4. (K141) O2 SENSOR 1/2 SIGNAL CIRCUIT SHORTED TO (K900) SENSOR GROUND CIRCUIT

Measure the resistance between the (K141) O2 Sensor 1/2 Signal circuit and the (K900) Sensor ground circuit at the O2 Sensor harness connector.

Is the resistance below 100 ohms?

Yes >> Repair the short between the (K900) Sensor ground circuit and the (K141) O2 Sensor 1/2 Signal circuit.
Perform the POWERTRAIN VERIFICATION TEST. (Refer to 9 - ENGINE - STANDARD PROCEDURE)

No >> Go To 5

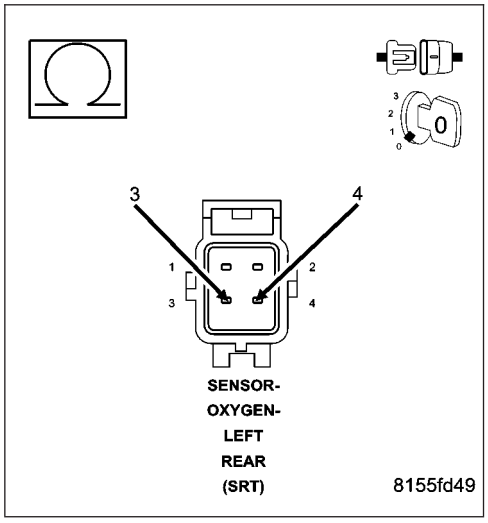

P0137-O2 SENSOR 1/2 CIRCUIT LOW (CONTINUED)

5. (K141) O2 SENSOR 1/2 SIGNAL CIRCUIT SHORTED TO (Z1) HEATER GROUND CIRCUIT

Measure the resistance between the (K141) O2 Sensor 1/2 Signal circuit and the (Z1) O2 Sensor Heater ground circuit if it applies to the O2 Sensor being tested.

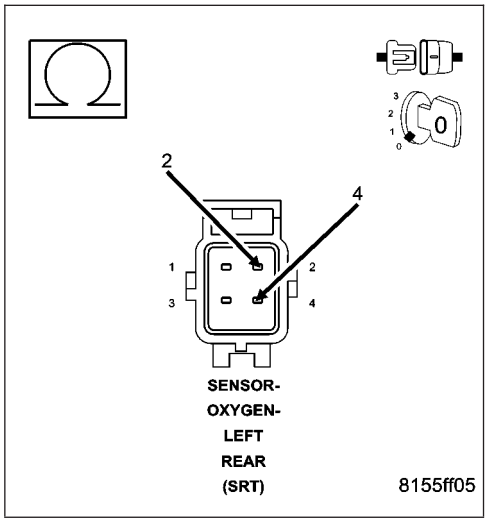

Is the resistance below 100 ohms?

Yes >> Repair the short between the (K141) O2 Sensor 1/2 Signal circuit and the (Z1) Heater ground circuit.
Perform the POWERTRAIN VERIFICATION TEST. (Refer to 9 - ENGINE - STANDARD PROCEDURE)

No >> Go To 6

6. PCM

NOTE: Before continuing, check the PCM harness connector terminals for corrosion, damage, or terminal push out. Repair as necessary.
Using the schematics as a guide, inspect the wire harness and connectors. Pay particular attention to all Power and Ground circuits.

Were there any problems found?

Yes >> Repair as necessary.
Perform the POWERTRAIN VERIFICATION TEST. (Refer to 9 - ENGINE - STANDARD PROCEDURE)

No >> Replace and program the Powertrain Control Module per Service Information.
Perform the POWERTRAIN VERIFICATION TEST. (Refer to 9 - ENGINE - STANDARD PROCEDURE)

P0138-O2 SENSOR 1/2 CIRCUIT HIGH

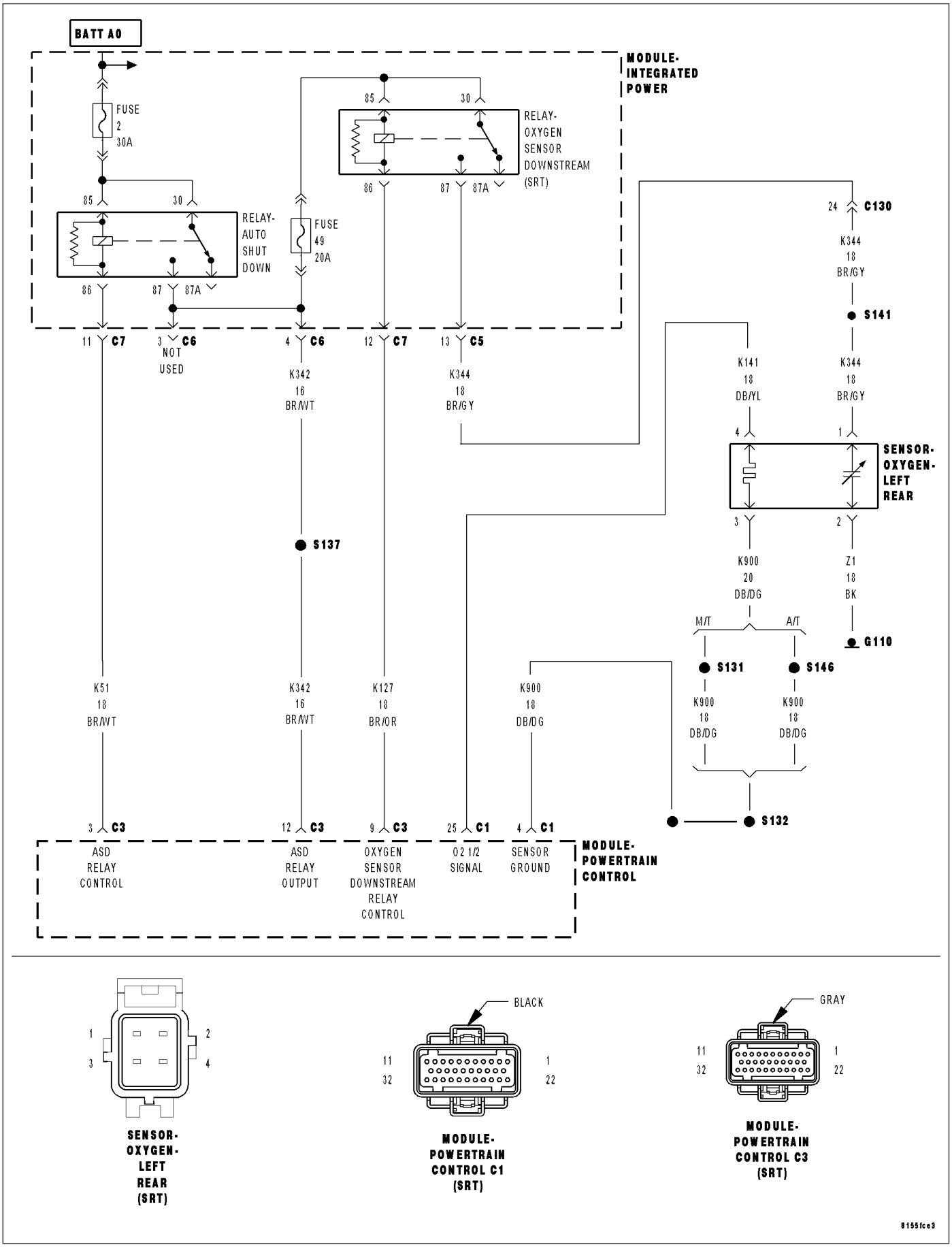

P0138-O2 SENSOR 1/2 CIRCUIT HIGH (CONTINUED)

For the Engine circuit diagram (Refer to 9 - ENGINE - SCHEMATICS AND DIAGRAMS).

For a complete wiring diagram **Refer to Section 8W**.

- **When Monitored:**
  With battery voltage greater than 10.4 volts, engine running for more than 4 minutes and coolant temperature above 180°F.
- **Set Condition:**
  The oxygen sensor voltage is above 1.5 volts.

Possible Causes
(K141) O2 SENSOR 1/2 SIGNAL SHORTED TO VOLTAGE
(K141) O2 SENSOR 1/2 SIGNAL CIRCUIT OPEN
(K141) O2 SENSOR 1/2 SIGNAL CIRCUIT SHORTED TO THE (K344) O2 HEATER RELALY OUPUT CIRCUIT
(K900) SENSOR GROUND CIRCUIT OPEN
(Z1) O2 SENSOR HEATER GROUND CIRCUIT OPEN
O2 SENSOR
PCM

Always perform the Pre-Diagnostic Troubleshooting procedure before proceeding. (Refer to 9 - ENGINE - DIAGNOSIS AND TESTING).

Diagnostic Test

1. O2 SENSOR ABOVE 1.5 VOLTS

Ignition on, engine not running.
With the scan tool, read DTCs and record the related Freeze Frame data.
Start the engine.
Allow the engine to idle for 4 to 5 minutes.
With the scan tool, read the O2 Sensor voltage.

Is the voltage above 1.5 volts?

Yes >> Go To 2

No >> Refer to the INTERMITTENT CONDITION Diagnostic Procedure.
Perform the POWERTRAIN VERIFICATION TEST. (Refer to 9 - ENGINE - STANDARD PROCEDURE)

---

2. O2 SENSOR OPERATION

WARNING: When the engine is operatind, do not stand in a direct line with the fan. Do not put your hands near the pulleys, belts, or fan. Do not wear loose clothing.
Turn the ignition off.
Disconnect the O2 Sensor harness connector.
Start the engine.
With the scan tool, monitor the O2 Sensor voltage.

Is the O2 Sensor voltage below 1.5 volts?

Yes >> Replace the O2 Sensor.
Perform the POWERTRAIN VERIFICATION TEST. (Refer to 9 - ENGINE - STANDARD PROCEDURE)

No >> Go To 3

P0138-O2 SENSOR 1/2 CIRCUIT HIGH (CONTINUED)

3. (K141) O2 SENSOR 1/2 SIGNAL CIRCUIT SHORTED TO VOLTAGE

Turn the ignition off.

Disconnect the PCM harness connectors.

Ignition on, engine not running.

Using a 12-volt test light connected to ground, probe the (K141) O2 Sensor 1/2 Signal circuit at the 1/2 O2 Sensor harness connector.

Does the test light illuminate brightly?

Yes >> Repair the short to voltage in the (K141) O2 Sensor 1/2 Signal circuit.

Perform the POWERTRAIN VERIFICATION TEST. (Refer to 9 - ENGINE - STANDARD PROCEDURE)

No >> Go To 4

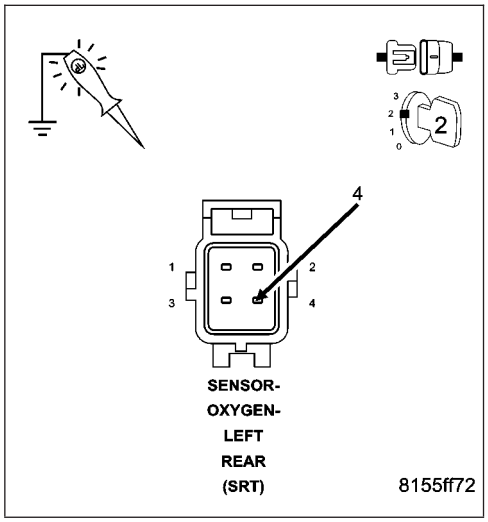

4. (K141) O2 SENSOR 1/2 SIGNAL CIRCUIT OPEN

Turn the ignition off.

Measure the resistance of the (K141) O2 Sensor 1/2 Signal circuit from the 1/2 O2 Sensor harness connector to the PCM harness connector.

Is the resistance below 5.0 ohms?

Yes >> Go To 5

No >> Repair the open in the (K141) O2 Sensor 1/2 Signal circuit.

Perform the POWERTRAIN VERIFICATION TEST. (Refer to 9 - ENGINE - STANDARD PROCEDURE)

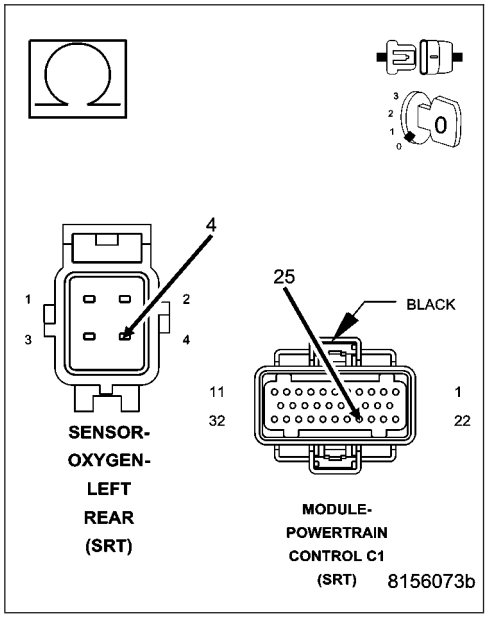

P0138-O2 SENSOR 1/2 CIRCUIT HIGH (CONTINUED)

5. (K141) O2 SENSOR 1/2 SIGNAL CIRCUIT SHORTED TO THE (K344) O2 HEATER RELAY OUTPUT CIRCU IT

Measure the resistance between the (K141) O2 Sensor 1/2 Signal circuit and the (K344) O2 Heater Relay Output circuit at the O2 Sensor harness connector.

Is the resistance below 100 ohms?

Yes >> Repair the short between the (K141) O2 Sensor 1/2 Signal circuit and the (K344) O2 Heater Relay Output circuit. Perform the POWERTRAIN VERIFICATION TEST. (Refer to 9 - ENGINE - STANDARD PROCEDURE)

No >> Go To 6

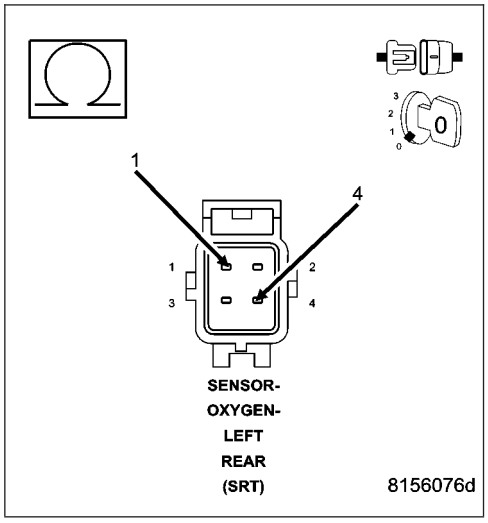

6. (K900) SENSOR GROUND CIRCUIT OPEN

Measure the resistance of the (K900) Sensor ground circuit from the 1/2 O2 Sensor harness connector to the PCM harness connector.

Is the resistance below 5.0 ohms?

Yes >> Go To 7

No >> Repair the open in the (K900) Sensor ground circuit. Perform the POWERTRAIN VERIFICATION TEST. (Refer to 9 - ENGINE - STANDARD PROCEDURE)

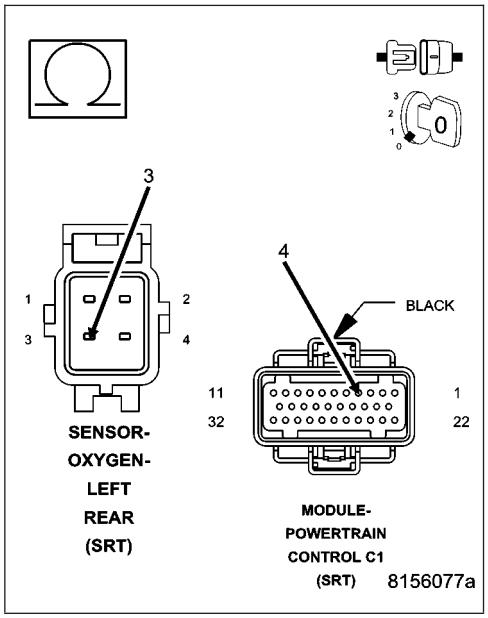

P0138-O2 SENSOR 1/2 CIRCUIT HIGH (CONTINUED)

7. (K344) O2 SENSOR HEATER RELAY OUTPUT CIRCUIT OPEN

Connect the PCM harness connectors.

Ignition on, engine not running.

With the scan tool actuate the O2 Heater Test.

Measure the voltage on the (K344) O2 Sensor Heater Relay Output circuit.

Is the voltage above 11.0 volts?

No >> Repair the open in the (K344) O2 Sensor Heater Relay Output circuit.
Perform the POWERTRAIN VERIFICATION TEST. (Refer to 9 - ENGINE - STANDARD PROCEDURE)

Yes >> Go To 8

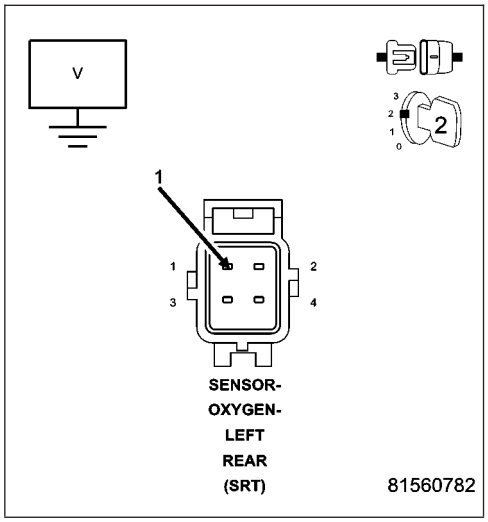

8. (Z1) O2 SENSOR HEATER GROUND CIRCUIT OPEN

Turn the ignition off.

Disconnect the PCM harness connectors.

Measure the resistance between ground and the (Z1) O2 Sensor Heater ground circuit from the 1/2 O2 Sensor harness connector.

Is the resistance below 5.0 ohms?

Yes >> Go To 9

No >> Repair the open in the (Z1) O2 Sensor Heater ground circuit.
Perform the POWERTRAIN VERIFICATION TEST. (Refer to 9 - ENGINE - STANDARD PROCEDURE)

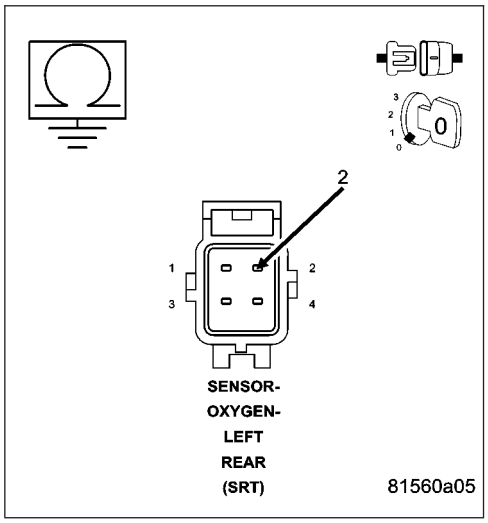

9. PCM

NOTE: Before continuing, check the PCM harness connector terminals for corrosion, damage, or terminal push out. Repair as necessary.

Using the schematics as a guide, inspect the wire harness and connectors. Pay particular attention to all Power and Ground circuits.

Were there any problems found?

Yes >> Repair as necessary.
Perform the POWERTRAIN VERIFICATION TEST. (Refer to 9 - ENGINE - STANDARD PROCEDURE)

No >> Replace and program the Powertrain Control Module per Service Information.
Perform the POWERTRAIN VERIFICATION TEST. (Refer to 9 - ENGINE - STANDARD PROCEDURE)

P0139-O2 SENSOR 1/2 SLOW RESPONSE

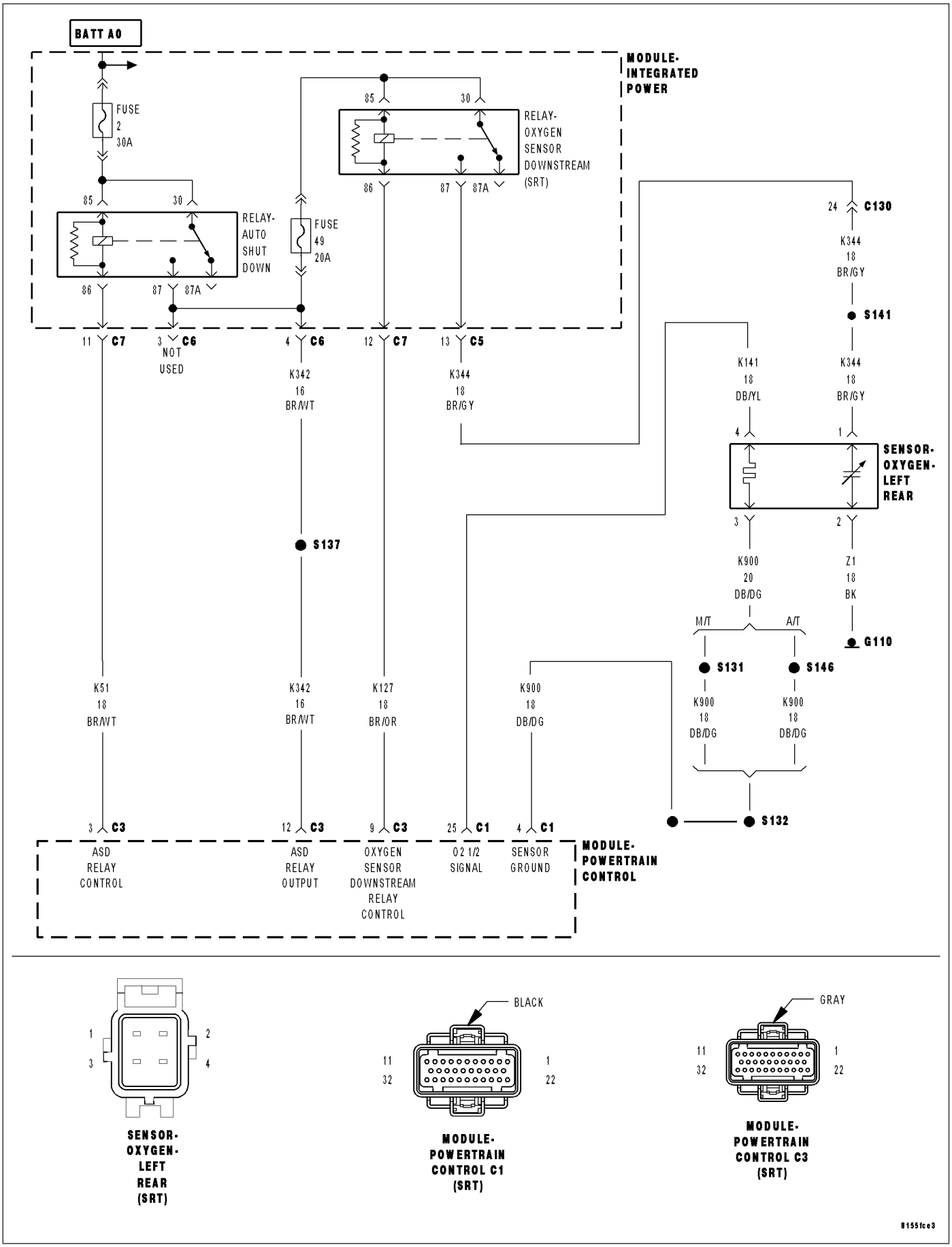

P0139-O2 SENSOR 1/2 SLOW RESPONSE (CONTINUED)

For the Engine circuit diagram (Refer to 9 - ENGINE - SCHEMATICS AND DIAGRAMS).

For a complete wiring diagram **Refer to Section 8W**.

Theory of Operation

The downstream O2 Sensor is located in the exhaust path behind the catalytic converter, is monitored for proper response to assure optimum catalytic converter efficiency. The downstream O2 response monitor is intended to diagnose a downstream O2 sensor that is not moving or stuck in a voltage window and to insure accurate information for catalyst monitor diagnosis.

- **When Monitored:**
  Start engine. Allow engine to idle. For 1st part of test, if limits are exceeded, test passes. If not, 2nd part of test runs. amb/batt temp >44°F, Baro >22.13″ H2O, battery >10.5 volts, MAP >11.79 & <18.15″ H2O, RPM >1350 & <2200 and vss >50 and <65.
- **Set Condition:**
  The oxygen sensor signal voltage is switching from below 0.39 of a volt to above 0.58 of a volt and back fewer times than required.

Possible Causes
EXHAUST LEAK
(K141) O2 1/2 SIGNAL CIRCUIT
(K900) SENSOR GROUND CIRCUIT
O2 SENSOR

Always perform the Pre-Diagnostic Troubleshooting procedure before proceeding. (Refer to 9 - ENGINE - DIAGNOSIS AND TESTING).

Diagnostic Test

1. ACTIVE DTC

NOTE: Check for contaminants that may have damaged the O2 Sensor: contaminated fuel, unapproved silicone, oil and coolant.
Ignition on, engine not running.

NOTE: After the repairs have been made, verify proper O2 Sensor operation. If all the O2 Sensor voltage readings have not returned to normal, follow the diagnostic procedure for the remaining O2 Sensors.
With a scan tool, read DTCs.

Is the DTC active at this time?

Yes >> Go To 2

No >> Refer to the INTERMITTENT CONDITION Symptom. (Refer to 9 - ENGINE - STANDARD PROCEDURE)

---

2. EXHAUST LEAK

Start the engine.

Inspect the exhaust system for leaks between the engine and the O2 Sensors.

Are there any exhaust leaks?

Yes >> Repair or replace the leaking exhaust parts as necessary.
Perform the POWERTRAIN VERIFICATION TEST. (Refer to 9 - ENGINE - STANDARD PROCEDURE)

No >> Go To 3

P0139-O2 SENSOR 1/2 SLOW RESPONSE (CONTINUED)

3. (K141) O2 1/2 SIGNAL CIRCUIT VOLTAGE DROP

Turn the ignition off

Ignition on, engine not running.

With a voltmeter, back probe the (K141) O2 Sensor Signal circuit at the 1/2 O2 Sensor harness connector and the PCM harness connector.

NOTE: Make sure the voltmeter leads meet the terminals in the connector and that there is good terminal to wire connection and are connected for positive polarity.

Start the engine.

Allow the engine to idle.

Is the voltage below 0.10 of a volt?

Yes >> Go To 4

No >> Repair the excessive resistance in the (K141) O2 Sensor 1/2 Signal circuit.
Perform the POWERTRAIN VERIFICATION TEST. (Refer to 9 - ENGINE - STANDARD PROCEDURE)

---

4. (K900) SENSOR GROUND CIRCUIT VOLTAGE DROP

Turn the ignition off.

With a voltmeter, back probe the (K900) Sensor ground circuit at the 1/2 O2 Sensor harness connector and PCM harness connector.

NOTE: Make sure the voltmeter leads meet the terminals in the connector and that there is good terminal to wire connection.

Start the engine.

Allow the engine to idle.

Is the voltage below 0.10 of a volt?

Yes >> Go To 5

NOTE: Turn the ignition off before continuing.

No >> Repair the excessive resistance in the (K900) Sensor ground circuit.
Perform the POWERTRAIN VERIFICATION TEST. (Refer to 9 - ENGINE - STANDARD PROCEDURE)

---

5. O2 SENSOR

If there are no possible causes remaining, view repair.

Repair

Replace the O2 Sensor
Perform the POWERTRAIN VERIFICATION TEST. (Refer to 9 - ENGINE - STANDARD PROCEDURE)

P0141-O2 SENSOR 1/2 HEATER PERFORMANCE

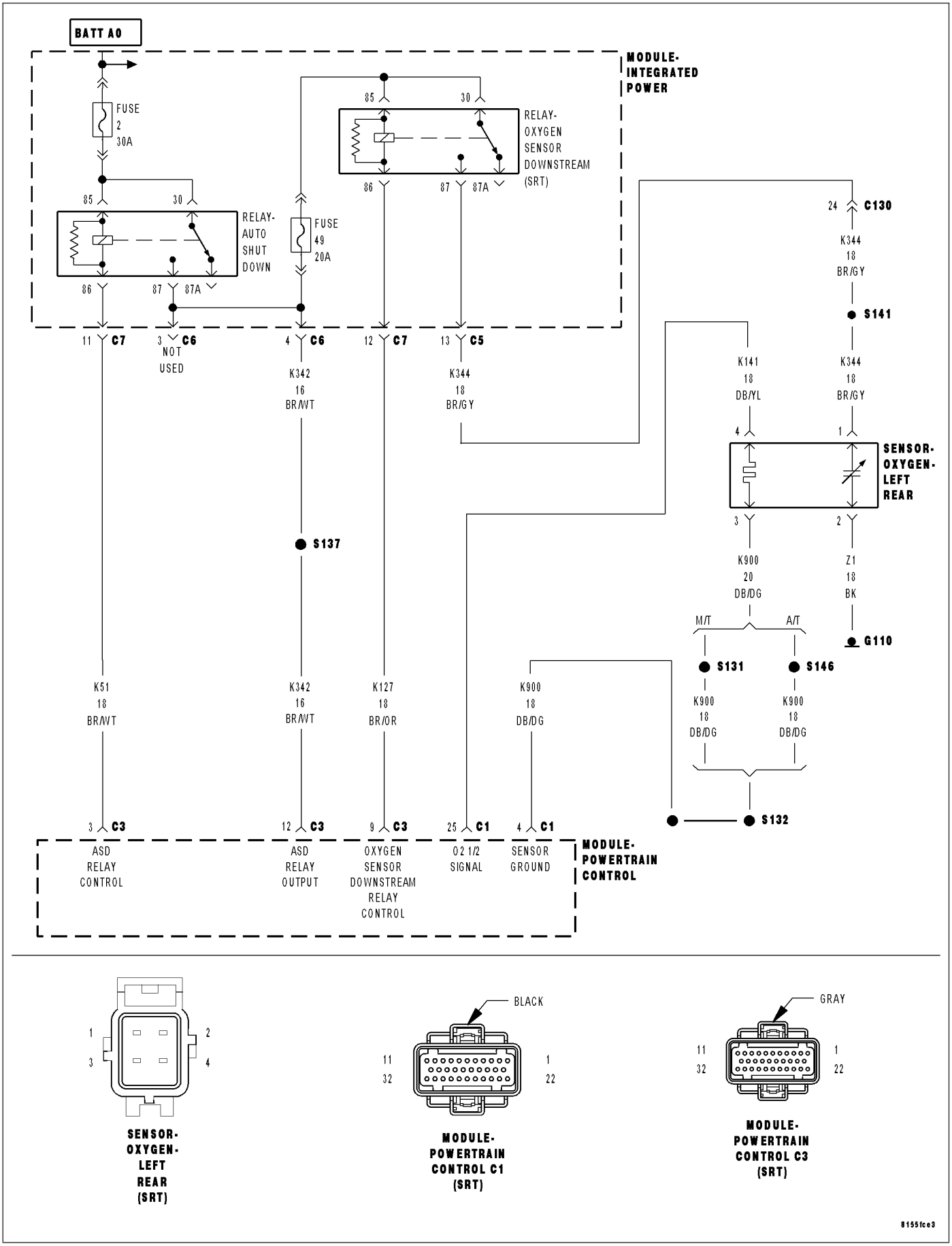

P0141-O2 SENSOR 1/2 HEATER PERFORMANCE (CONTINUED)

For the Engine circuit diagram (Refer to 9 - ENGINE - SCHEMATICS AND DIAGRAMS).

For a complete wiring diagram **Refer to Section 8W**.

Theory of Operation

This diagnostic provides a continuous check of the O2 heater circuit during operation. The heater circuit is momentarily disabled to allow a resistance measurement to be taken to infer heater temperature. The current delivery to the heater is duty cycled to maintain a specific target temperature. The error from the target temperature is continuously monitored to assess heater performance.

- **When Monitored:**
  With battery voltage greater than 10.5 volts, at a cold start, ECT less than 147°F, battery temperature sensor equal to or less than 27°F, and engine at idle for at least 12 seconds.
- **Set Condition:**
  O2 sensor voltage greater than 3 volts for 60 to 240 seconds.

Possible Causes
(K344) O2 SENSOR HEATER RELAY OUTPUT CIRCUIT OPEN
(K344) O2 SENSOR HEATER RELAY OUTPUT CIRCUIT SHORTED TO GROUND
(K127) O2 HEATER RELAY CONTROL CIRCUIT OPEN
(K127) O2 HEATER RELAY CONTROL CIRCUIT SHORTED TO GROUND
(Z1) HEATER GROUND CIRCUIT OPEN
O2 SENSOR
PCM

Always perform the Pre-Diagnostic Troubleshooting procedure before proceeding. (Refer to 9 - ENGINE - DIAGNOSIS AND TESTING).

Diagnostic Test

1. O2 SENSOR HEATER OPERATION

Turn the ignition off.

NOTE: Wait a minimum of 8 minutes to allow the O2 Sensor to cool down before continuing the test.
Ignition on, engine not running.

With the scan tool, actuate the O2 Heater Test.

With the scan tool, monitor O2 Sensor voltage for at least 2 minutes.

Does the voltage stabilize between 0.1 and 0.3 of a volt during the Heater test?

Yes >> Refer to the INTERMITTENT CONDITION Diagnostic Procedure.
Perform the POWERTRAIN VERIFICATION TEST. (Refer to 9 - ENGINE - STANDARD PROCEDURE)

No >> Go To 2

P0141-O2 SENSOR 1/2 HEATER PERFORMANCE (CONTINUED)

2. O2 SENSOR HEATER ELEMENT

Turn the ignition off.

NOTE: Allow the O2 Sensor to cool to room temperature.

Disconnect the O2 Sensor harness connector.

Measure the resistance across the O2 Sensor Heater element component side.

NOTE: The resistance value will increase with warmer temperatures.

Is the resistance between 4.0 and 5.0 ohms at 70° F (21.1°C)?

Yes >> Go To 3

No >> Replace the O2 Sensor.
Perform the POWERTRAIN VERIFICATION TEST. (Refer to 9 - ENGINE - STANDARD PROCEDURE)

---

3. (K344) O2 SENSOR HEATER RELAY OUTPUT CIRCUIT

Ignition on, engine not running and the O2 Sensor still disconnected.

With the scan tool, actuate the O2 Heater Test.

Using a 12-volt test light connected to ground, probe the (K344) O2 Heater Relay Output circuit at the O2 Sensor harness connector.

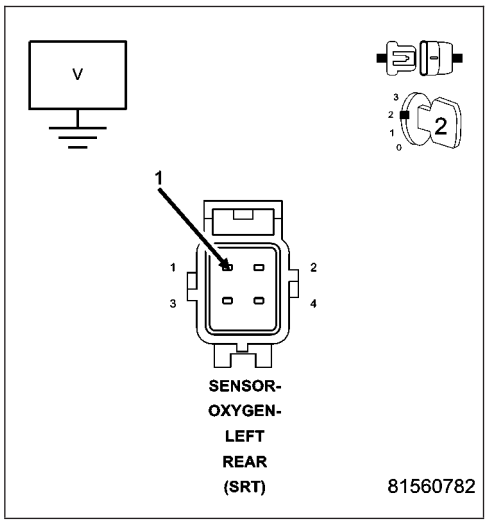

Does the light illuminate brightly?

Yes >> Go To 4

No >> Repair the open or short to ground in the (K344) O2 Heater Relay Output circuit.
Perform the POWERTRAIN VERIFICATION TEST. (Refer to 9 - ENGINE - STANDARD PROCEDURE)

---

4. (K127) O2 HEATER RELAY CONTROL CIRCUIT OPEN

Turn the ignition off.

Disconnect the PCM harness connectors.

Remove the O2 Heater Relay.

Measure the resistance of the (K127) O2 Heater Relay Control circuit from the O2 Heater Relay to the PCM harness connector.

Is the resistance below 5.0 ohms?

Yes >> Go To 5

No >> Repair the excessive resistance in the (K127) O2 Heater Relay Control circuit.
Perform the POWERTRAIN VERIFICATION TEST. (Refer to 9 - ENGINE - STANDARD PROCEDURE)

P0141-O2 SENSOR 1/2 HEATER PERFORMANCE (CONTINUED)

5. (K127) O2 HEATER RELAY CONTROL CIRCUIT SHORTED TO GROUND

Measure the resistance between ground and the (K127) O2 Heater Relay Control circuit at the PCM harness connector.

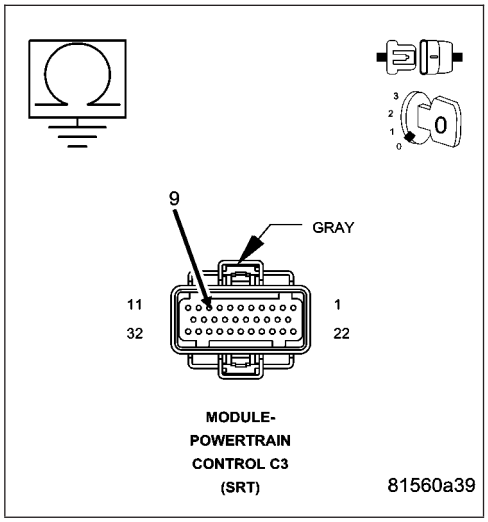

Is the resistance below 100 ohms?

Yes >> Repair the short to ground in the (K127) O2 Heater Relay Control circuit.
Perform the POWERTRAIN VERIFICATION TEST. (Refer to 9 - ENGINE - STANDARD PROCEDURE)

No >> Go To 6

6. (Z1) HEATER GROUND CIRCUIT OPEN

Using a 12-volt test light connected to 12-volts, probe the (Z1) O2 Heater Ground circuit at the O2 Sensor harness connector.

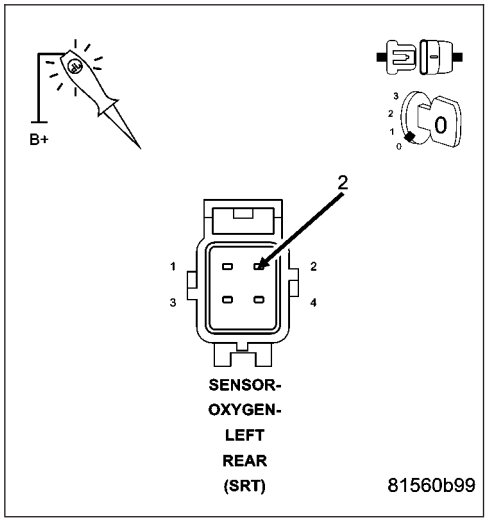

Does the test light illuminate brightly?

Yes >> Go To 7

No >> Repair the open in the (Z1) O2 Sensor Heater ground circuit.
Perform the POWERTRAIN VERIFICATION TEST. (Refer to 9 - ENGINE - STANDARD PROCEDURE)

7. PCM

NOTE: Before continuing, check the PCM harness connector terminals for corrosion, damage, or terminal push out. Repair as necessary.
Using the schematics as a guide, inspect the wire harness and connectors. Pay particular attention to all Power and Ground circuits.

Were there any problems found?

Yes >> Repair as necessary.
Perform the POWERTRAIN VERIFICATION TEST. (Refer to 9 - ENGINE - STANDARD PROCEDURE)

No >> Replace and program the Powertrain Control Module per Service Information.
Perform the POWERTRAIN VERIFICATION TEST. (Refer to 9 - ENGINE - STANDARD PROCEDURE)

P0151-O2 SENSOR 2/1 CIRCUIT LOW

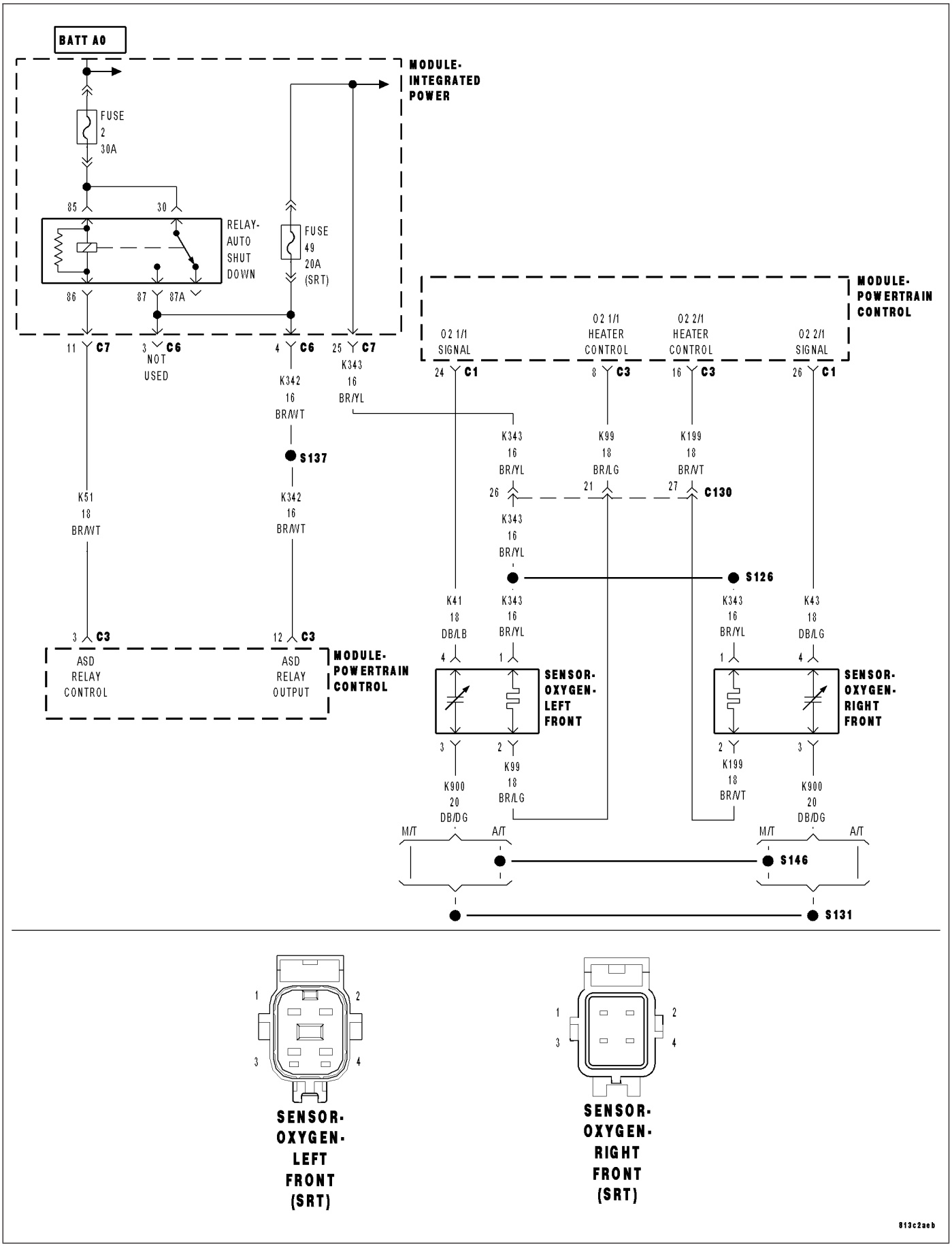

P0151-O2 SENSOR 2/1 CIRCUIT LOW (CONTINUED)

For the Engine circuit diagram (Refer to 9 - ENGINE - SCHEMATICS AND DIAGRAMS).

For a complete wiring diagram **Refer to Section 8W**.

- **When Monitored:**
  At a cold start, engine coolant below 98°F, Ambient/Battery Sensor reading within 27°F, and Engine Coolant Temperature above 170°F on the previous key off.
- **Set Condition:**
  The Oxygen Sensor signal voltage is below 0.156 of a volt for 28 seconds after starting engine.

Possible Causes
(K43) O2 2/1 SIGNAL CIRCUIT SHORTED TO GROUND
(K43) O2 2/1 SIGNAL CIRCUIT SHORTED TO THE (K900) SENSOR GROUND CIRCUIT
O2 SENSOR
PCM

Always perform the Pre-Diagnostic Troubleshooting procedure before proceeding. (Refer to 9 - ENGINE - DIAGNOSIS AND TESTING).

Diagnostic Test

1. O2 SENSOR BELOW 0.16 OF A VOLT

Ignition on, engine not running.
With the scan tool, read DTCs and record the related Freeze Frame data.
Start the engine.
Allow the engine to idle for 4 to 5 minutes.
With the scan tool, read the O2 Sensor voltage.

Is the voltage below 0.16 of a volt?

Yes >> Go To 2

No >> Refer to the INTERMITTENT CONDITION Diagnostic Procedure.
Perform the POWERTRAIN VERIFICATION TEST. (Refer to 9 - ENGINE - STANDARD PROCEDURE)

---

2. O2 SENSOR OPERATION

WARNING: When the engine is operating, do not stand in a direct line with the fan. Do not put your hands near the pulleys, belts, or fan. Do no wear loose clothing.
Disconnect the O2 Sensor harness connector.
Start the engine.
With the scan tool, monitor the O2 Sensor voltage.

Is the O2 Sensor voltage above 0.16 of a volt?

Yes >> Replace the O2 Sensor.
Perform the POWERTRAIN VERIFICATION TEST. (Refer to 9 - ENGINE - STANDARD PROCEDURE)

No >> Go To 3

P0151-O2 SENSOR 2/1 CIRCUIT LOW (CONTINUED)

3. (K43) O2 SENSOR 2/1 SIGNAL CIRCUIT SHORTED TO GROUND

Turn the ignition off.

Disconnect the C1 PCM harness connector.

Measure the resistance between ground and the (K43) O2 Sensor 2/1 Signal circuit at the 2/1 O2 Sensor harness connector.

Is the resistance below 100 ohms?

Yes >> Repair the short to ground in the (K43) O2 Sensor 2/1Signal circuit.
Perform the POWERTRAIN VERIFICATION TEST. (Refer to 9 - ENGINE - STANDARD PROCEDURE)

No >> Go To 4

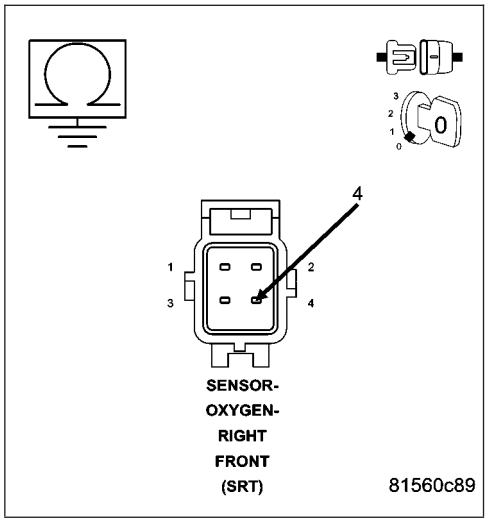

4. (K43) O2 SENSOR 2/1 SIGNAL CIRCUIT SHORTED TO (K900) SENSOR GROUND CIRCUIT

Measure the resistance between the (K43) O2 Sensor 2/1 Signal circuit and the (K900) Sensor ground circuit at the 2/1 O2 Sensor harness connector.

Is the resistance below 100 ohms?

Yes >> Repair the short between the (K900) Sensor ground circuit and the (K43) O2 Sensor 2/1 Signal circuit.
Perform the POWERTRAIN VERIFICATION TEST. (Refer to 9 - ENGINE - STANDARD PROCEDURE)

No >> Go To 5

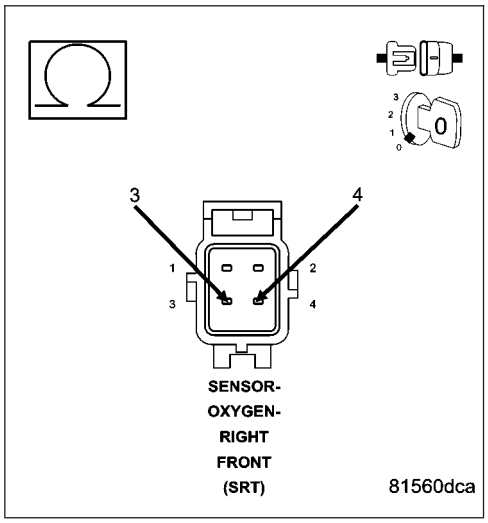

5. PCM

NOTE: Before continuing, check the PCM harness connector terminals for corrosion, damage, or terminal push out. Repair as necessary.

Using the schematics as a guide, inspect the wire harness and connectors. Pay particular attention to all Power and Ground circuits.

Were there any problems found?

Yes >> Repair as necessary.
Perform the POWERTRAIN VERIFICATION TEST. (Refer to 9 - ENGINE - STANDARD PROCEDURE)

No >> Replace and program the Powertrain Control Module per Service Information.
Perform the POWERTRAIN VERIFICATION TEST. (Refer to 9 - ENGINE - STANDARD PROCEDURE)

P0152-O2 SENSOR 2/1 CIRCUIT HIGH

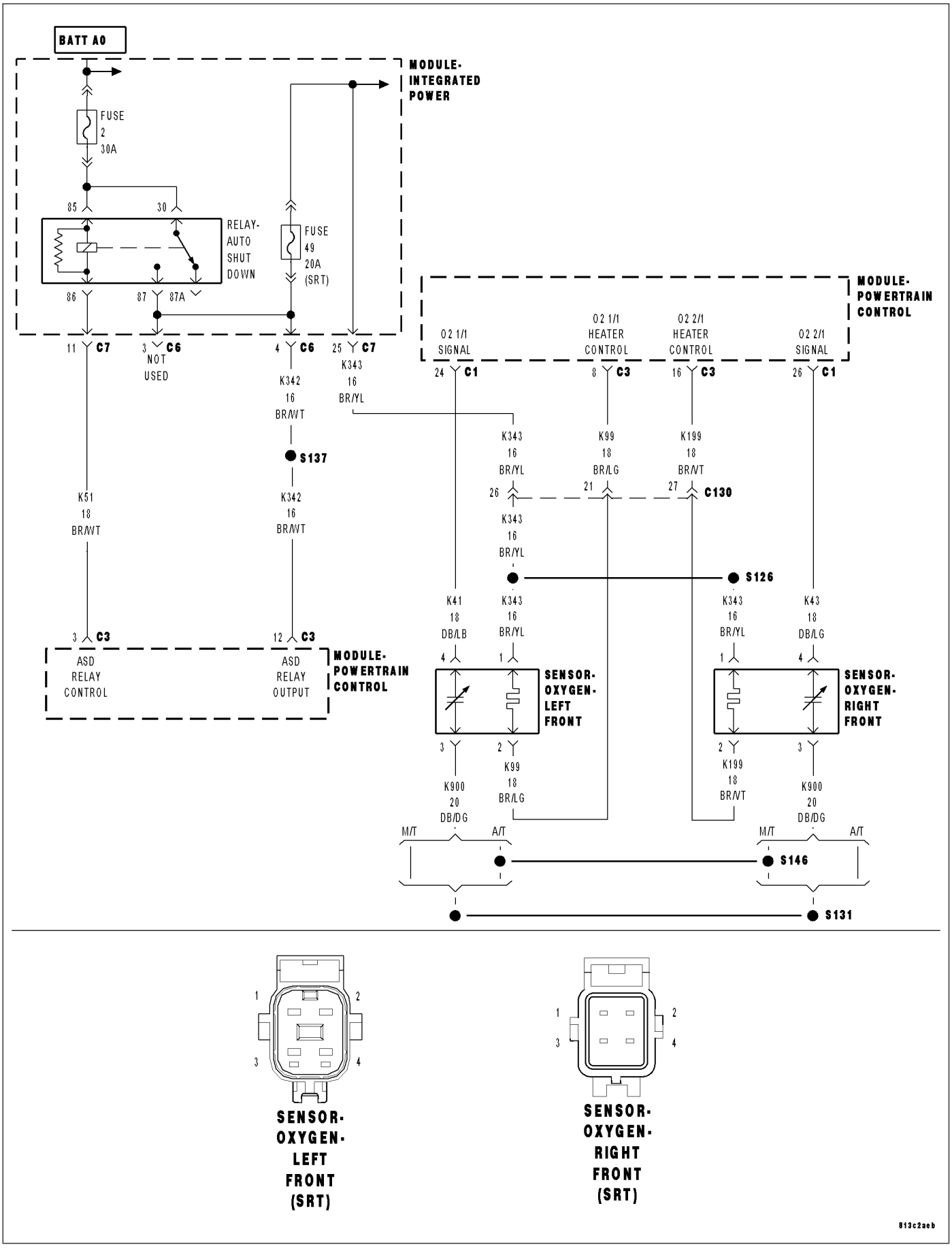

P0152-O2 SENSOR 2/1 CIRCUIT HIGH (CONTINUED)

For the Engine circuit diagram (Refer to 9 - ENGINE - SCHEMATICS AND DIAGRAMS) (Refer to 9 - ENGINE - SCHEMATICS AND DIAGRAMS).

For a complete wiring diagram **Refer to Section 8W**.

- **When Monitored:**
  With battery voltage greater than 10.4 volts, engine running for more than 4 minutes and coolant temperature above 180°F.
- **Set Condition:**
  The oxygen sensor voltage is above 1.5 volts.

Possible Causes
(K43) O2 2/1 SIGNAL CIRCUIT SHORTED TO VOLTAGE
(K199) O2 SENSOR 2/1 HEATER CONTROL CIRCUIT OPEN
(K43) O2 2/1 SIGNAL CIRCUIT OPEN
(K900) SENSOR GROUND CIRCUIT OPEN
(K343) ASD RELAY OUTPUT CIRCUIT OPEN
(K43) O2 2/1 SIGNAL CIRCUIT SHORTED TO THE (K343) ASD RELAY OUTPUT CIRCUIT
O2 SENSOR
PCM

Always perform the Pre-Diagnostic Troubleshooting procedure before proceeding. (Refer to 9 - ENGINE - DIAGNOSIS AND TESTING).

Diagnostic Test

1. O2 SENSOR ABOVE 1.5 VOLTS

Ignition on, engine not running.
With the scan tool, read DTCs and record the related Freeze Frame data.
Start the engine.
Allow the engine to idle for 4 to 5 minutes.
With the scan tool, read the O2 Sensor voltage.

Is the voltage above 1.5 volts?

Yes >> Go To 2

No >> Refer to the INTERMITTENT CONDITION Diagnostic Procedure.
Perform the POWERTRAIN VERIFICATION TEST. (Refer to 9 - ENGINE - STANDARD PROCEDURE)

P0152-O2 SENSOR 2/1 CIRCUIT HIGH (CONTINUED)

2. (K43) O2 2/1 SIGNAL CIRCUIT SHORTED TO VOLTAGE

Turn the ignition off.

Disconnect the C1 PCM harness connector.

Ignition on, engine not running.

Using a 12-volt test light connected to ground, probe the (K43) O2 Sensor 2/1 Signal circuit at the 2/1 O2 Sensor harness connector.

Does the test light illuminate brightly?

Yes >> Repair the short to voltage in the (K43) O2 Sensor 2/1 Signal circuit.
Perform the POWERTRAIN VERIFICATION TEST. (Refer to 9 - ENGINE - STANDARD PROCEDURE)

No >> Go To 3

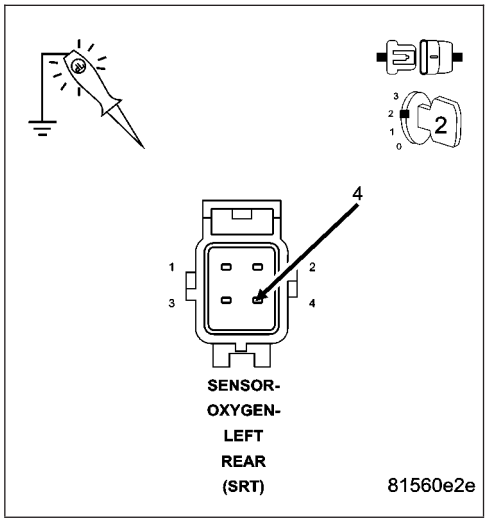

3. (K43) O2 SENSOR 2/1 SIGNAL CIRCUIT OPEN

Turn the ignition off.

Measure the resistance of the (K43) O2 Sensor 2/1 Signal circuit from the O2 Sensor harness connector to the C1 PCM harness connector.

Is the resistance below 5.0 ohms?

Yes >> Go To 4

No >> Repair the open in the (K43) O2 Sensor 2/1 Signal circuit.
Perform the POWERTRAIN VERIFICATION TEST. (Refer to 9 - ENGINE - STANDARD PROCEDURE)

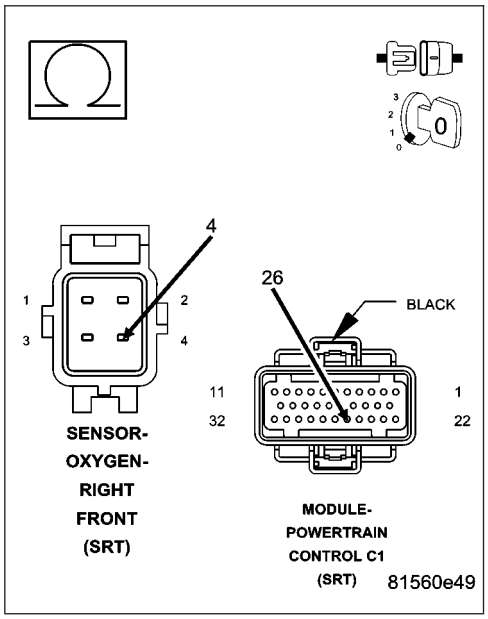

P0152-O2 SENSOR 2/1 CIRCUIT HIGH (CONTINUED)

4. (K43) O2 2/1 SENSOR SIGNAL CIRCUIT SHORTED TO THE (K343) ASD RELAY OUTPUT CIRCUIT

Measure the resistance between the (K43) O2 Sensor 2/1 Signal circuit and the (K343) ASD Relay Output circuit at the O2 Sensor harness connector.

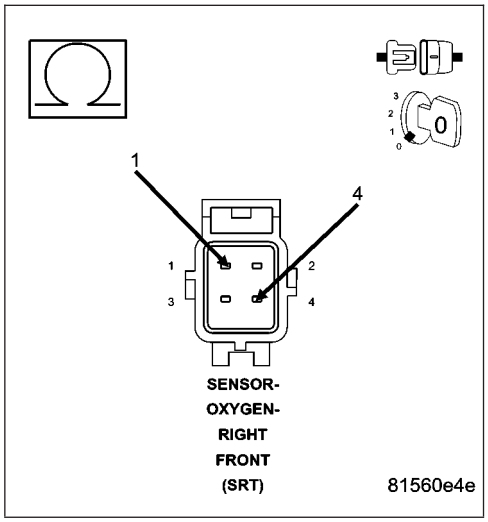

Is the resistance below 100 ohms?

Yes >> Repair the short between the (K43) O2 Sensor 2/1 Signal circuit and the (K343) ASD Relay Output circuit.
Perform the POWERTRAIN VERIFICATION TEST. (Refer to 9 - ENGINE - STANDARD PROCEDURE)

No >> Go To 5

5. (K900) SENSOR GROUND CIRCUIT OPEN

Measure the resistance of the (K900) Sensor ground circuit from the O2 Sensor harness connector to the C1 PCM harness connector.

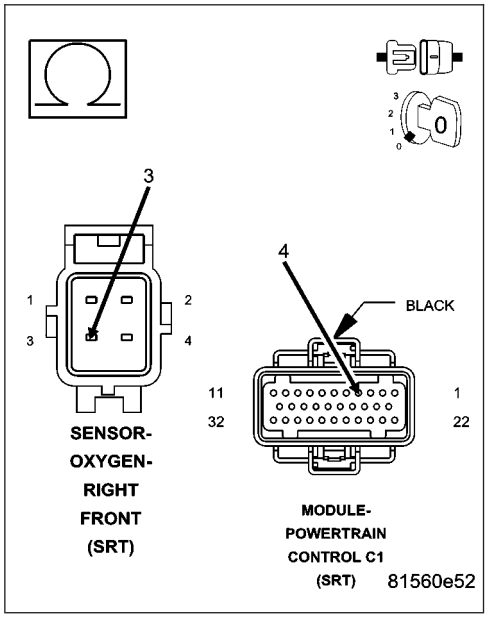

Is the resistance below 5.0 ohms?

Yes >> Go To 6

No >> Repair the open in the (K900) Sensor ground circuit.
Perform the POWERTRAIN VERIFICATION TEST. (Refer to 9 - ENGINE - STANDARD PROCEDURE)

P0152-O2 SENSOR 2/1 CIRCUIT HIGH (CONTINUED)

6. (K343) ASD RELAY OUTPUT CIRCUIT OPEN

Connect the PCM harness connectors.

Ignition on, engine not running.

With the scan tool actuate the O2 Heater Test.

Using a 12-volt test light connected to ground, probe the (K343) ASD Relay Output circuit.

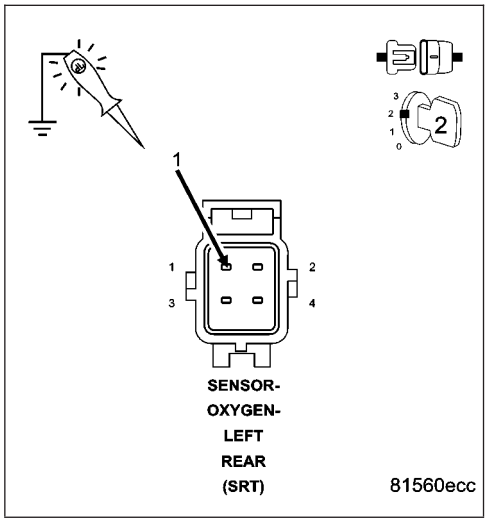

Does the test light illuminate brightly?

Yes >> Go To 7

No >> Repair the open in the (K343) ASD Relay Output circuit.
Perform the POWERTRAIN VERIFICATION TEST. (Refer to 9 - ENGINE - STANDARD PROCEDURE)

7. (K199) O2 SENSOR 2/1 HEATER CONTROL CIRCUIT OPEN

Turn the ignition off.

Disconnect the C3 PCM harness connector.

Measure the resistance of the (K199) O2 Sensor 2/1 Heater Control circuit from the O2 Sensor harness connector to the PCM harness connector.

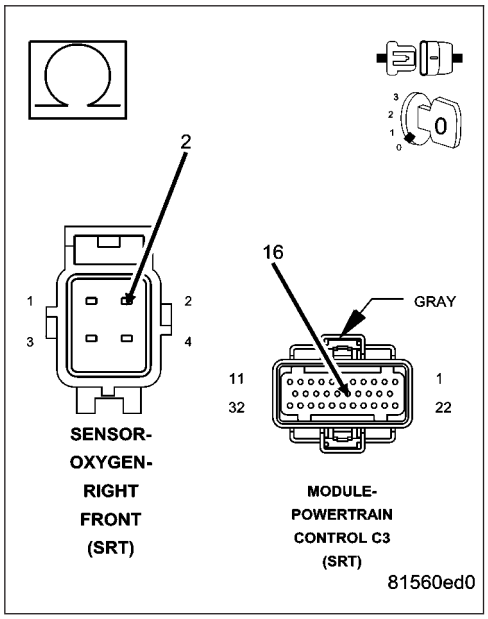

Is the resistance below 5.0 ohms?

Yes >> Go To 8

No >> Repair the open in the (K199) O2 Sensor 2/1 Heater Control Circuit (PWM) circuit.
Perform the POWERTRAIN VERIFICATION TEST. (Refer to 9 - ENGINE - STANDARD PROCEDURE)

P0152-O2 SENSOR 2/1 CIRCUIT HIGH (CONTINUED)

8. **PCM**

NOTE: Before continuing, check the PCM harness connector terminals for corrosion, damage, or terminal push out. Repair as necessary.

Using the schematics as a guide, inspect the wire harness and connectors. Pay particular attention to all Power and Ground circuits.

Were there any problems found?

Yes >> Repair as necessary.
Perform the POWERTRAIN VERIFICATION TEST. (Refer to 9 - ENGINE - STANDARD PROCEDURE)

No >> Replace and program the Powertrain Control Module per Service Information.
Perform the POWERTRAIN VERIFICATION TEST. (Refer to 9 - ENGINE - STANDARD PROCEDURE)

P0153-O2 SENSOR 2/1 SLOW RESPONSE

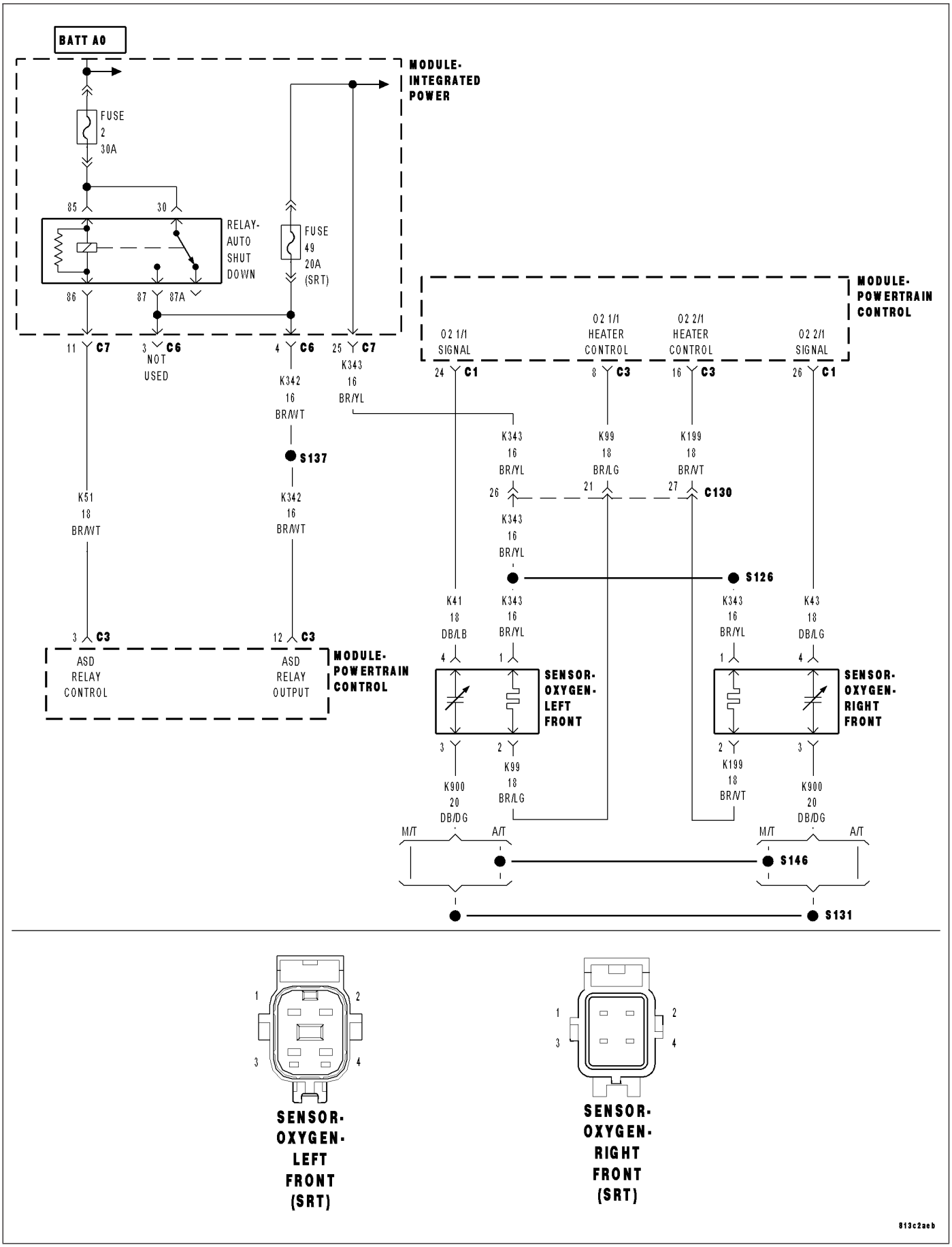

P0153-O2 SENSOR 2/1 SLOW RESPONSE (CONTINUED)

For the Engine circuit diagram (Refer to 9 - ENGINE - SCHEMATICS AND DIAGRAMS).

For a complete wiring diagram **Refer to Section 8W**.

- **When Monitored:**
  With ECT greater than 147°F, after reaching a vehicle speed of 10 mph, and the throttle remaining open (off idle) for 2 minutes, bring the vehicle to a stop and allow the engine to idle with the transmission in DRIVE.
- **Set Condition:**
  The oxygen sensor signal voltage is switching from below 0.27 of a volt to above 0.62 of a volt and back fewer times than required.

Possible Causes
EXHAUST LEAK
(K43) O2 2/1 SIGNAL CIRCUIT
(K900) SENSOR GROUND CIRCUIT
O2 SENSOR

Always perform the Pre-Diagnostic Troubleshooting procedure before proceeding. (Refer to 9 - ENGINE - DIAGNOSIS AND TESTING).

Diagnostic Test

1. ACTIVE DTC

NOTE: Check for contaminants that may have damaged the O2 Sensor: contaminated fuel, unapproved silicone, oil and coolant.
Ignition on, engine not running.

NOTE: After the repairs have been made, verify proper O2 Sensor operation. If all the O2 Sensor voltage readings have not returned to normal, follow the diagnostic procedure for the remaining O2 Sensors.
With a scan tool, read DTCs and record the related Freeze Frame data.

Is the DTC active at this time?

Yes >> Go To 2

No >> Refer to the INTERMITTENT CONDITION Diagnostic Procedure. (Refer to 9 - ENGINE - STANDARD PROCEDURE)

---

2. EXHAUST LEAK

Start the engine.

Inspect the exhaust system for leaks between the engine and the O2 Sensors.

Are there any exhaust leaks?

Yes >> Repair or replace the leaking exhaust parts as necessary.
Perform the POWERTRAIN VERIFICATION TEST. (Refer to 9 - ENGINE - STANDARD PROCEDURE)

No >> Go To 3

P0153-O2 SENSOR 2/1 SLOW RESPONSE (CONTINUED)

3. (K43) O2 2/1 SIGNAL CIRCUIT VOLTAGE DROP

Turn the ignition off.

While backprobing, measure the voltage of the (K43) O2 Sensor 2/1 Signal circuit between the 2/1 O2 Sensor harness connector and PCM harness connector.

NOTE: Make sure the voltmeter leads meet the terminals in the connector and that there is good terminal to wire connection and are connected for positive polarity.

Start the engine.

Allow the engine to idle.

Is the voltage below 0.10 of a volt?

Yes >> Go To 4

No >> Repair the excessive resistance in the (K43) O2 Sensor 2/1 Signal circuit.
Perform the POWERTRAIN VERIFICATION TEST. (Refer to 9 - ENGINE - STANDARD PROCEDURE)

---

4. (K900) SENSOR GROUND CIRCUIT VOLTAGE DROP

Turn the ignition off.

While backprobing, measure the voltage of the (K900) Sensor ground circuit between the O2 Sensor harness connector and PCM harness connector.

NOTE: Make sure the voltmeter leads meet the terminals in the connector and that there is good terminal to wire connection.

NOTE: Make sure the voltmeter leads are connected for positive polarity

Start the engine.

Allow the engine to idle.

Is the voltage below 0.10 of a volt?

Yes >> Go To 5

No >> Repair the excessive resistance in the (K900) Sensor ground circuit.
Perform the POWERTRAIN VERIFICATION TEST. (Refer to 9 - ENGINE - STANDARD PROCEDURE)

NOTE: Turn the ignition off before continuing.

---

5. O2 SENSOR

If there are no possible causes remaining, view repair.

Repair

Replace the O2 Sensor
Perform the POWERTRAIN VERIFICATION TEST. (Refer to 9 - ENGINE - STANDARD PROCEDURE)

P0155-O2 SENSOR 2/1 HEATER PERFORMANCE

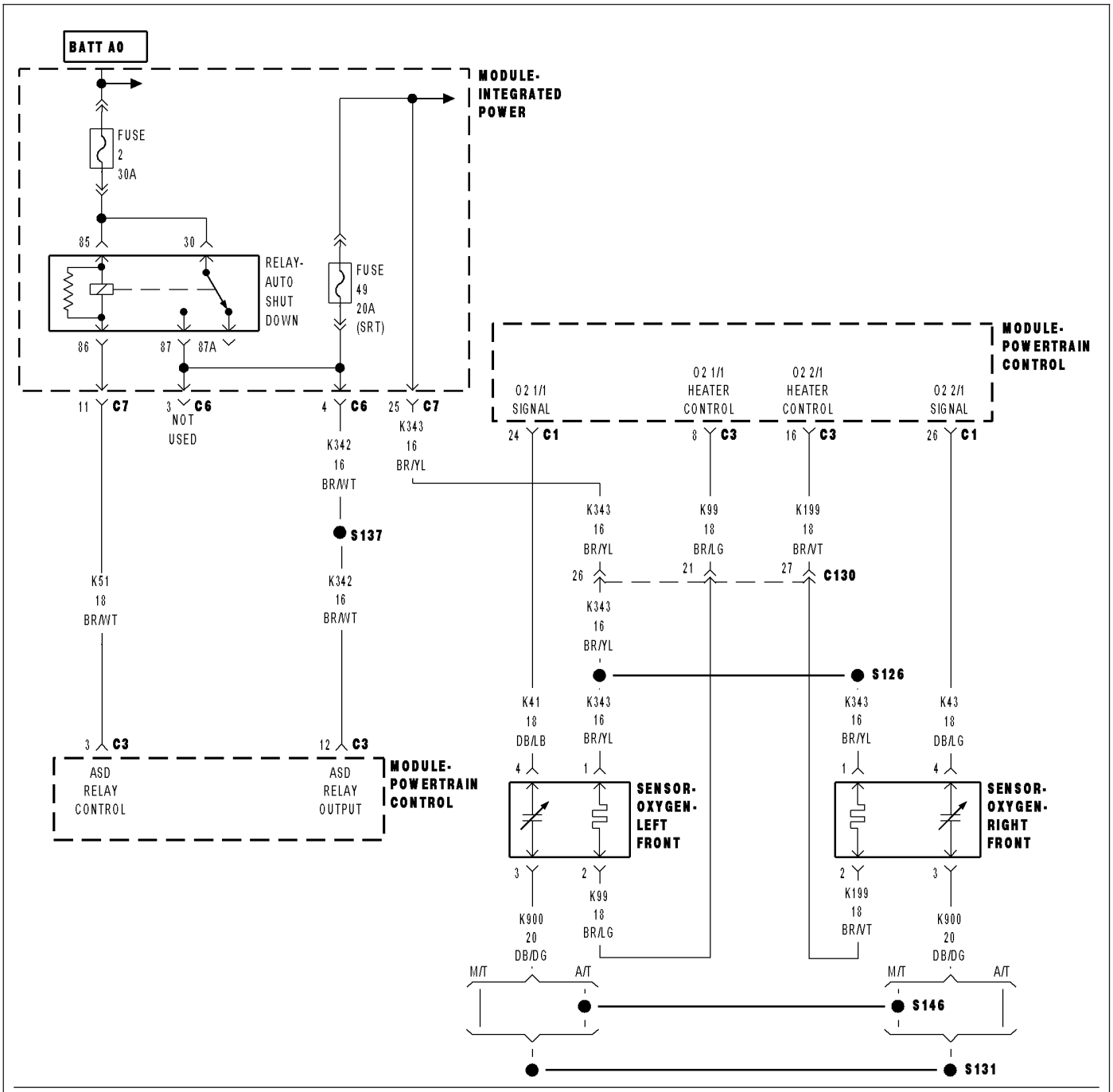

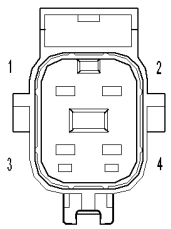

SENSOR-
OXYGEN-
LEFT
FRONT
(SRT)

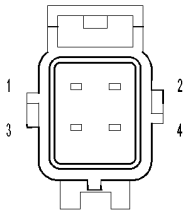

SENSOR-
OXYGEN-
RIGHT
FRONT
(SRT)

813c2aeb

P0155-O2 SENSOR 2/1 HEATER PERFORMANCE (CONTINUED)

For the Engine circuit diagram (Refer to 9 - ENGINE - SCHEMATICS AND DIAGRAMS).

For a complete wiring diagram **Refer to Section 8W**.

- **When Monitored:**
  With battery voltage greater than 9 volts, at a cold start, ECT less than 147°F, battery temperature sensor equal to or less than 27°F, and engine at idle for at least 12 seconds.
- **Set Condition:**
  O2 sensor voltage greater than 3 volts for 30 to 90 seconds.

Possible Causes
(K199) O2 2/1 HEATER CONTROL CIRCUIT OPEN
(K199) O2 2/1 HEATER CONTROL CIRCUIT SHORTED TO GROUND
(K343) O2 FUSED ASD RELAY OUTPUT CIRCUIT OPEN
(K343) O2 FUSED ASD RELAY OUTPUT CIRCUIT SHORTED TO GROUND
O2 SENSOR
PCM

Always perform the Pre-Diagnostic Troubleshooting procedure before proceeding. (Refer to 9 - ENGINE - DIAGNOSIS AND TESTING).

Diagnostic Test

1. O2 SENSOR HEATER OPERATION

Turn the ignition off.

NOTE: Wait a minimum of 8 minutes to allow the O2 Sensor to cool down before continuing the test. Allow the O2 Sensor voltage to stabilize between 4.6 and 5.0 volts.

Ignition on, engine not running.

With a scan tool, actuate the O2 Heater Test.

With the scan tool, monitor 2/1 O2 Sensor voltage for at least 2 minutes.

Does the voltage stay above 4.5 volts?

Yes >> Go To 2

No >> Refer to the INTERMITTENT CONDITION Symptom. (Refer to 9 - ENGINE - DIAGNOSIS AND TESTING)

---

2. O2 SENSOR HEATER ELEMENT

Turn the ignition off.

NOTE: Allow the O2 sensor to cool down to room temperature.

Disconnect the O2 Sensor harness connector.

Measure the resistance of the O2 Heater Element across the 2/1 O2 Sensor connector between the (K199) O2 Heater Control terminal and the (K343) Fused ASD relay output terminal.

NOTE: O2 Heater Element resistance values should be measured at 70°F (21.1°C). The resistance value will vary with different temperature values.

Is the resistance of the O2 Sensor Heater Element between 3.3 and 4.1 ohms?

Yes >> Go To 3

No >> Replace the O2 Sensor.
Perform the POWERTRAIN VERIFICATION TEST. (Refer to 9 - ENGINE - STANDARD PROCEDURE)

P0155-O2 SENSOR 2/1 HEATER PERFORMANCE (CONTINUED)

3. (K199) O2 2/1 HEATER CONTROL CIRCUIT OPEN

Disconnect the C3 PCM harness connector.

Measure the resistance of the (K199) O2 2/1 Heater Control circuit from the O2 harness connector to the PCM harness connector.

Is the resistance below 5 ohmS?

Yes >> Go To 4

No >> Repair the excessive resistance in the (K199) O2 2/1 Heater Control circuit.
Perform the POWERTRAIN VERIFICATION TEST. (Refer to 9 - ENGINE - STANDARD PROCEDURE)

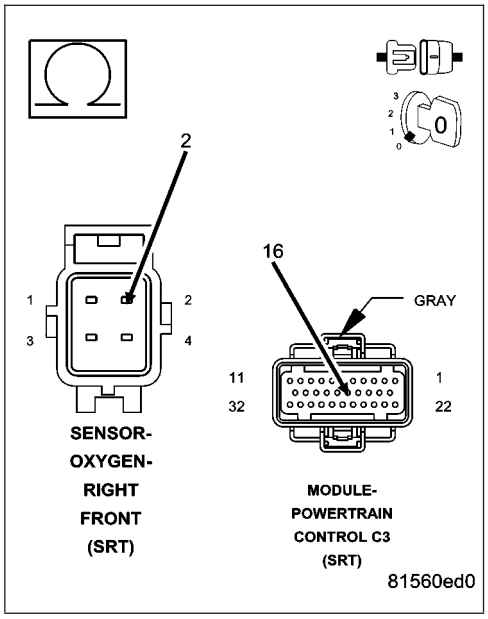

4. (K343) O2 2/1 FUSED ASD RELAY OUTPUT CIRCUIT OPEN

Measure the resistance of the (K343) O2 2/1 Fused ASD Relay Output circuit, from the relay terminal to the O2 Sensor harness connector.

Is the resistance below 5 ohms?

Yes >> Go To 5

No >> Repair the excessive resistance in the (K343) O2 2/1 Fused ASD relay output circuit.
Perform the POWERTRAIN VERIFICATION TEST. (Refer to 9 - ENGINE - STANDARD PROCEDURE)

5. (K343) O2 2/1 FUSED ASD RELAY OUTPUT CIRCUIT SHORTED TO GROUND

Measure the resistance between ground and the (K343) O2 2/1 Fused ASD Relay Output circuit in the O2 Sensor harness connector.

Is the resistance below 5 ohms?

Yes >> Repair the short to ground in the (K343) O2 2/1 Fused ASD Relay Output circuit.
Perform the POWERTRAIN VERIFICATION TEST. (Refer to 9 - ENGINE - STANDARD PROCEDURE)

No >> Go To 6

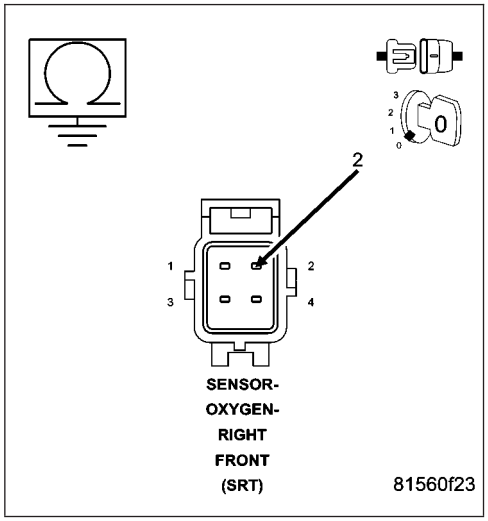

P0155-O2 SENSOR 2/1 HEATER PERFORMANCE (CONTINUED)

6. PCM

NOTE: Before continuing, check the PCM harness connector terminals for corrosion, damage, or terminal push out. Repair as necessary.

Using the schematics as a guide, inspect the wire harness and connectors. Pay particular attention to all Power and Ground circuits.

Were there any problems found?

Yes >> Repair as necessary.
Perform the POWERTRAIN VERIFICATION TEST. (Refer to 9 - ENGINE - STANDARD PROCEDURE)

No >> Replace and program the Powertrain Control Module per Service Information.
Perform the POWERTRAIN VERIFICATION TEST. (Refer to 9 - ENGINE - STANDARD PROCEDURE)

P0157-O2 SENSOR 2/2 CIRCUIT VOLTAGE TOO LOW

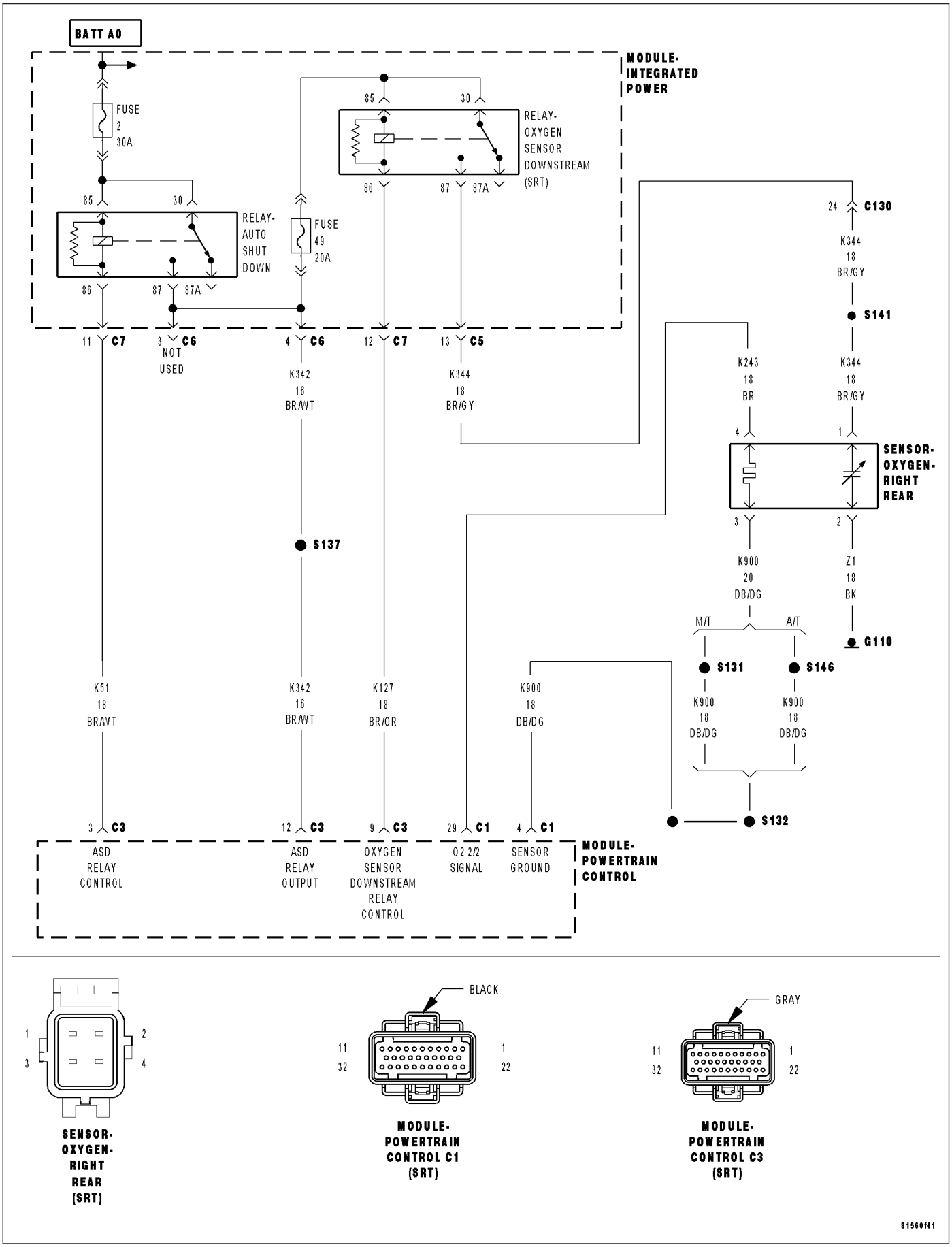

P0157-O2 SENSOR 2/2 CIRCUIT VOLTAGE TOO LOW (CONTINUED)

For the Engine circuit diagram (Refer to 9 - ENGINE - SCHEMATICS AND DIAGRAMS).

For a complete wiring diagram **Refer to Section 8W**.

- **When Monitored:**
  At a cold start, engine coolant below 98°F, Ambient/Battery Sensor reading within 27°F, and Engine Coolant Temperature above 170°F on the previous key off.
- **Set Condition:**
  The Oxygen Sensor signal voltage is below 0.156 of a volt for 28 seconds after starting engine.

Possible Causes
(K243) O2 SENSOR 2/2 SIGNAL CIRCUIT SHORTED TO GROUND
(K243) O2 SENSOR 2/2 SIGNAL CIRCUIT SHORTED TO (K900) SENSOR GROUND CIRCUIT
(K243) O2 SENSOR 2/2 SIGNAL SHORTED TO THE (Z1) HEATER GROUND CIRCUIT
O2 SENSOR
PCM

Always perform the Pre-Diagnostic Troubleshooting procedure before proceeding. (Refer to 9 - ENGINE - DIAGNOSIS AND TESTING).

Diagnostic Test

1. O2 SENSOR BELOW 0.16 OF A VOLT

Ignition on, engine not running.
With the scan tool, read DTCs and record the related Freeze Frame data.
Start the engine.
Allow the engine to idle for 4 to 5 minutes.
With the scan tool, read the O2 Sensor voltage.

Is the voltage below 0.16 of a volt?

Yes >> Go To 2

No >> Refer to the INTERMITTENT CONDITION Diagnostic Procedure.
Perform the POWERTRAIN VERIFICATION TEST. (Refer to 9 - ENGINE - STANDARD PROCEDURE)

---

2. O2 SENSOR OPERATION

WARNING: When the engine is operating, do not stand in a direct line with the fan. Do not put your hands near the pulleys, belts, or fan. Do not wear loose clothing.
Disconnect the O2 Sensor harness connector.
Start the engine.
With the scan tool, monitor the O2 Sensor voltage.

Is the O2 Sensor voltage above 0.16 of a volt?

Yes >> Replace the O2 Sensor
Perform the POWERTRAIN VERIFICATION TEST. (Refer to 9 - ENGINE - STANDARD PROCEDURE)

No >> Go To 3

P0157-O2 SENSOR 2/2 CIRCUIT VOLTAGE TOO LOW (CONTINUED)

3. (K243) O2 SENSOR 2/2 SIGNAL CIRCUIT SHORTED TO GROUND

Turn the ignition off.

Disconnect the PCM harness connectors.

Measure the resistance between ground and the (K243) O2 Sensor 2/2 Signal circuit at the 2/2 O2 Sensor harness connector.

Is the resistance below 100 ohms?

Yes >> Repair the short to ground in the (K243) O2 Sensor 2/2 Signal circuit.
Perform the POWERTRAIN VERIFICATION TEST. (Refer to 9 - ENGINE - STANDARD PROCEDURE)

No >> Go To 4

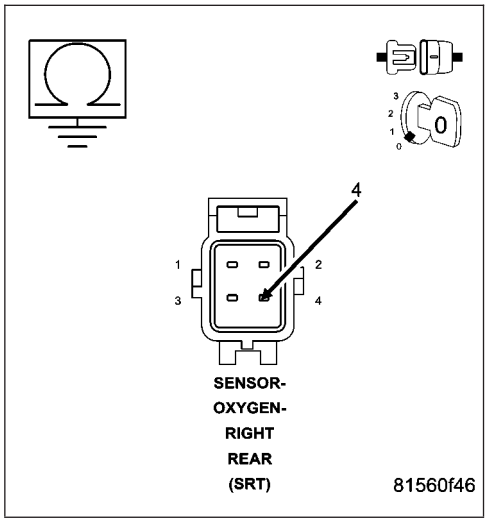

4. (K243) O2 SENSOR 2/2 SIGNAL CIRCUIT SHORTED TO (K900) SENSOR GROUND CIRCUIT

Measure the resistance between the (K243) O2 Sensor 2/2 Signal circuit and the (K900) Sensor ground circuit at the O2 Sensor harness connector.

Is the resistance below 100 ohms?

Yes >> Repair the short between the (K900) Sensor ground circuit and the (K243) O2 Sensor 2/2 Signal circuit.
Perform the POWERTRAIN VERIFICATION TEST. (Refer to 9 - ENGINE - STANDARD PROCEDURE)

No >> Go To 5

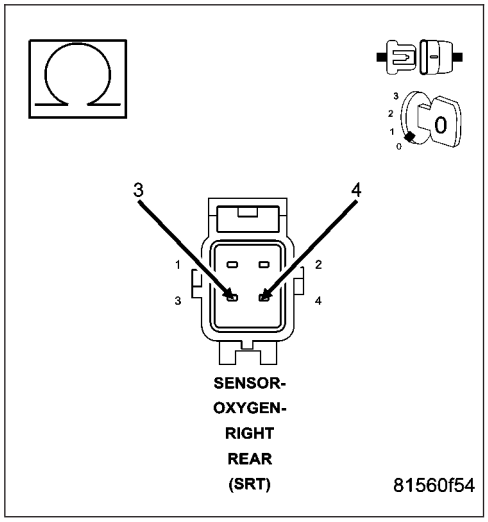

P0157-O2 SENSOR 2/2 CIRCUIT VOLTAGE TOO LOW (CONTINUED)

5. (K243) O2 SENSOR 2/2 SIGNAL CIRCUIT SHORTED TO (Z1) HEATER GROUND CIRCUIT

Measure the resistance between the (K243) O2 Sensor 2/2 Signal circuit and the (Z1) O2 Sensor Heater ground circuit if it applies to the O2 Sensor being tested.

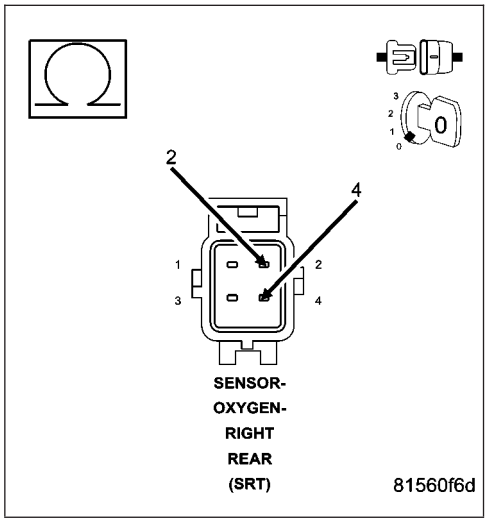

Is the resistance below 100 ohms?

Yes >> Repair the short between the (K243) O2 Sensor 2/2 Signal circuit and the (Z1) Heater ground circuit.
Perform the POWERTRAIN VERIFICATION TEST. (Refer to 9 - ENGINE - STANDARD PROCEDURE)

No >> Go To 6

6. PCM

NOTE: Before continuing, check the PCM harness connector terminals for corrosion, damage, or terminal push out. Repair as necessary.
Using the schematics as a guide, inspect the wire harness and connectors. Pay particular attention to all Power and Ground circuits.

Were there any problems found?

Yes >> Repair as necessary.
Perform the POWERTRAIN VERIFICATION TEST. (Refer to 9 - ENGINE - STANDARD PROCEDURE)

No >> Replace and program the Powertrain Control Module per Service Information.
Perform the POWERTRAIN VERIFICATION TEST. (Refer to 9 - ENGINE - STANDARD PROCEDURE)

P0158-O2 SENSOR 2/2 CIRCUIT VOLTAGE TOO HIGH

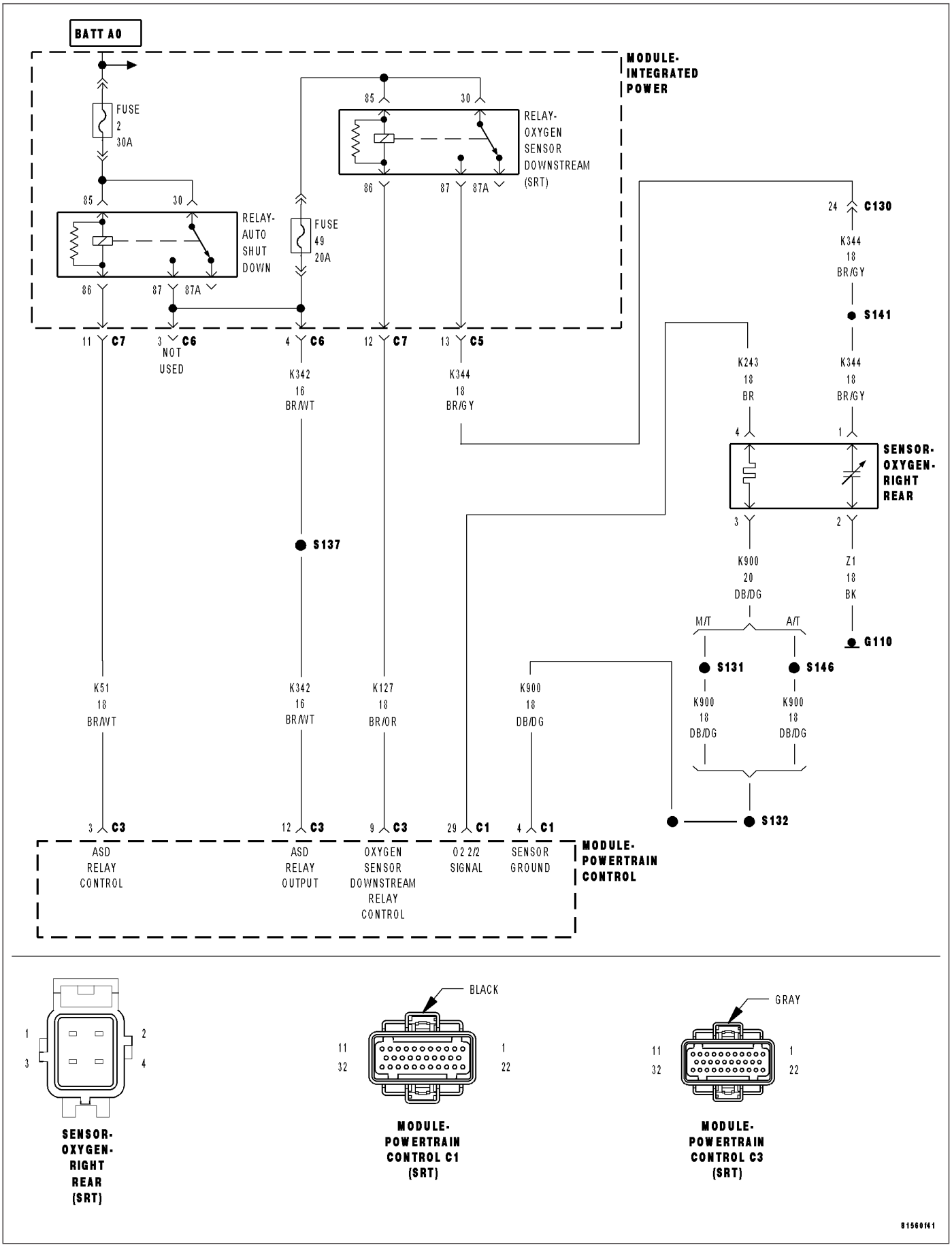

P0158-O2 SENSOR 2/2 CIRCUIT VOLTAGE TOO HIGH (CONTINUED)

For the Engine circuit diagram (Refer to 9 - ENGINE - SCHEMATICS AND DIAGRAMS).

For a complete wiring diagram **Refer to Section 8W**.

- **When Monitored:**
  With battery voltage greater than 10.4 volts, engine running for more than 4 minutes and coolant temperature above 180°F.
- **Set Condition:**
  The oxygen sensor voltage is above 1.5 volts.

Possible Causes
(K243) O2 SENSOR 2/2 SIGNAL SHORTED TO VOLTAGE
(K243) O2 SENSOR 2/2 SIGNAL CIRCUIT OPEN
(K243) O2 SENSOR 2/2 SIGNAL CIRCUIT SHORTED TO THE (K344) O2 HEATER RELALY OUPUT CIRCUIT
(K900) SENSOR GROUND CIRCUIT OPEN
(Z1) O2 SENSOR HEATER GROUND CIRCUIT OPEN
O2 SENSOR
PCM

Always perform the Pre-Diagnostic Troubleshooting procedure before proceeding. (Refer to 9 - ENGINE - DIAGNOSIS AND TESTING).

Diagnostic Test

1. O2 SENSOR ABOVE 1.5 VOLTS

Ignition on, engine not running.
With the scan tool, read DTCs and record the related Freeze Frame data.
Start the engine.
Allow the engine to idle for 4 to 5 minutes.
With the scan tool, read the O2 Sensor voltage.

Is the voltage above 1.5 volts?

Yes >> Go To 2

No >> Refer to the INTERMITTENT CONDITION Diagnostic Procedure.
Perform the POWERTRAIN VERIFICATION TEST. (Refer to 9 - ENGINE - STANDARD PROCEDURE)

---

2. O2 SENSOR OPERATION

WARNING: When the engine is operatind, do not stand in a direct line with the fan. Do not put your hands near the pulleys, belts, or fan. Do not wear loose clothing.
Turn the ignition off.
Disconnect the O2 Sensor harness connector.
Start the engine.
With the scan tool, monitor the O2 Sensor voltage.

Is the O2 Sensor voltage below 1.5 volts?

Yes >> Replace the O2 Sensor.
Perform the POWERTRAIN VERIFICATION TEST. (Refer to 9 - ENGINE - STANDARD PROCEDURE)

No >> Go To 3

P0158-O2 SENSOR 2/2 CIRCUIT VOLTAGE TOO HIGH (CONTINUED)

3. (K243) O2 SENSOR 2/2 SIGNAL CIRCUIT SHORTED TO VOLTAGE

Turn the ignition off.

Disconnect the PCM harness connectors.

Ignition on, engine not running.

Using a 12-volt test light connected to ground, probe the (K243) O2 Sensor 2/2 Signal circuit at the 2/2 O2 Sensor harness connector.

Does the test light illuminate brightly?

Yes >> Repair the short to voltage in the (K243) O2 Sensor 2/2 Signal circuit.

Perform the POWERTRAIN VERIFICATION TEST. (Refer to 9 - ENGINE - STANDARD PROCEDURE)

No >> Go To 4

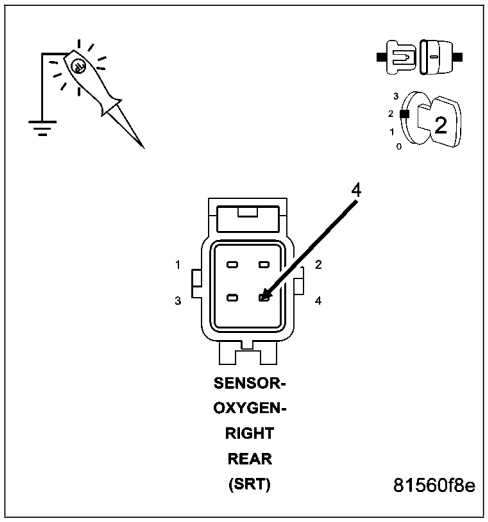

4. (K243) O2 SENSOR 2/2 SIGNAL CIRCUIT OPEN

Turn the ignition off.

Measure the resistance of the (K243) O2 Sensor 2/2 Signal circuit from the 2/2 O2 Sensor harness connector to the PCM harness connector.

Is the resistance below 5.0 ohms?

Yes >> Go To 5

No >> Repair the open in the (K243) O2 Sensor 2/2 Signal circuit.

Perform the POWERTRAIN VERIFICATION TEST. (Refer to 9 - ENGINE - STANDARD PROCEDURE)

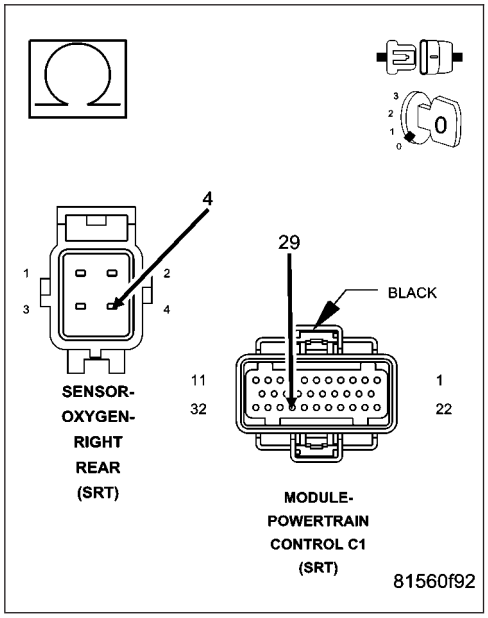

P0158-O2 SENSOR 2/2 CIRCUIT VOLTAGE TOO HIGH (CONTINUED)

5. (K243) O2 SENSOR 2/2 SIGNAL CIRCUIT SHORTED TO THE (K344) O2 HEATER RELAY OUTPUT CIRCU IT

Measure the resistance between the (K243) O2 Sensor 2/2 Signal circuit and the (K344) O2 Heater Relay Output circuit at the O2 Sensor harness connector.

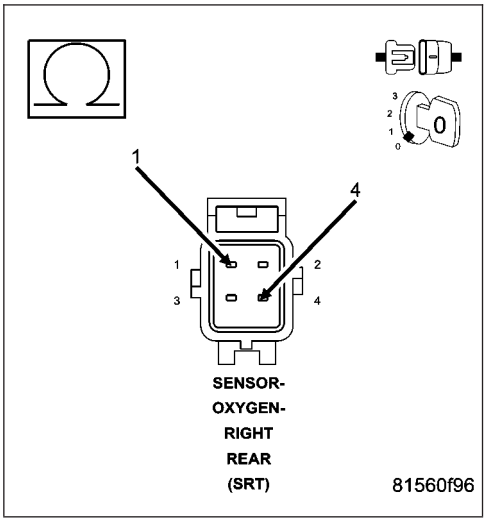

Is the resistance below 100 ohms?

Yes >> Repair the short between the (K243) O2 Sensor 2/2 Signal circuit and the (K344) O2 Heater Relay Output circuit.
Perform the POWERTRAIN VERIFICATION TEST. (Refer to 9 - ENGINE - STANDARD PROCEDURE)

No >> Go To 6

6. (K900) SENSOR GROUND CIRCUIT OPEN

Measure the resistance of the (K900) Sensor ground circuit from the 2/2 O2 Sensor harness connector to the PCM harness connector.

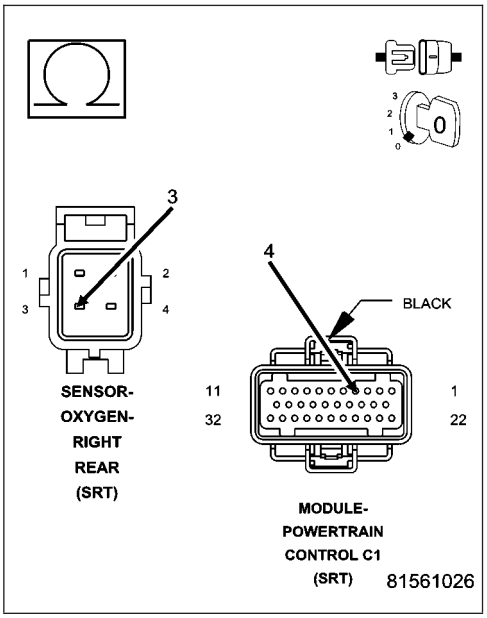

Is the resistance below 5.0 ohms?

Yes >> Go To 7

No >> Repair the open in the (K900) Sensor ground circuit.
Perform the POWERTRAIN VERIFICATION TEST. (Refer to 9 - ENGINE - STANDARD PROCEDURE)

P0158-O2 SENSOR 2/2 CIRCUIT VOLTAGE TOO HIGH (CONTINUED)

7. (K344) O2 SENSOR HEATER RELAY OUTPUT CIRCUIT OPEN

Connect the PCM harness connectors.

Ignition on, engine not running.

With the scan tool actuate the O2 Heater Test.

Measure the voltage on the (K344) O2 Sensor Heater Relay Output circuit.

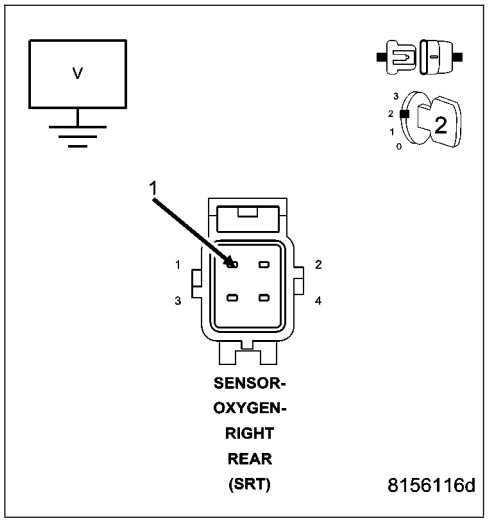

Is the voltage above 11.0 volts?

No >> Repair the open in the (K344) O2 Sensor Heater Relay Output circuit.
Perform the POWERTRAIN VERIFICATION TEST. (Refer to 9 - ENGINE - STANDARD PROCEDURE)

Yes >> Go To 8

---

8. (Z1) O2 SENSOR HEATER GROUND CIRCUIT OPEN

Turn the ignition off.

Disconnect the PCM harness connectors.

Measure the resistance between ground and the (Z1) O2 Sensor Heater ground circuit from the 2/2 O2 Sensor harness connector.

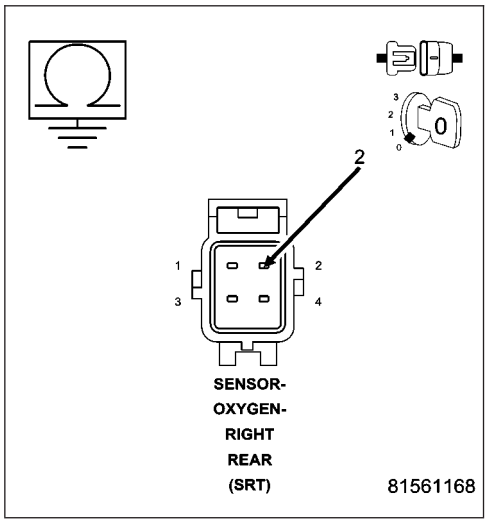

Is the resistance below 5.0 ohms?

Yes >> Go To 9

No >> Repair the open in the (Z1) O2 Sensor Heater ground circuit.
Perform the POWERTRAIN VERIFICATION TEST. (Refer to 9 - ENGINE - STANDARD PROCEDURE)

---

9. PCM

NOTE: Before continuing, check the PCM harness connector terminals for corrosion, damage, or terminal push out. Repair as necessary.

Using the schematics as a guide, inspect the wire harness and connectors. Pay particular attention to all Power and Ground circuits.

Were there any problems found?

Yes >> Repair as necessary.
Perform the POWERTRAIN VERIFICATION TEST. (Refer to 9 - ENGINE - STANDARD PROCEDURE)

No >> Replace and program the Powertrain Control Module per Service Information.
Perform the POWERTRAIN VERIFICATION TEST. (Refer to 9 - ENGINE - STANDARD PROCEDURE)

P0159-O2 SENSOR 2/2 SLOW RESPONSE

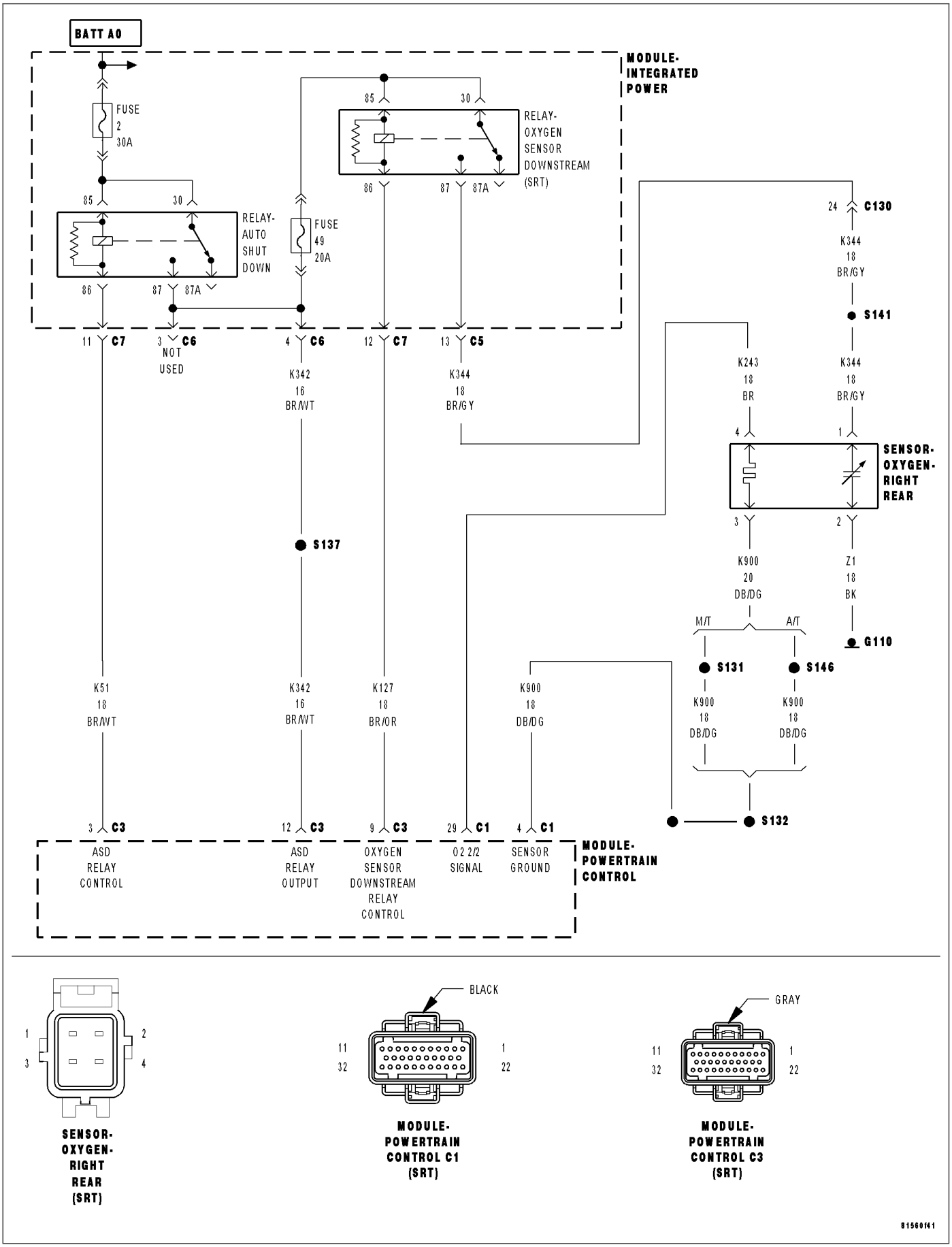

SENSOR-
OXYGEN-
RIGHT
REAR
(SRT)

MODULE-
POWERTRAIN
CONTROL C1
(SRT)

MODULE-
POWERTRAIN
CONTROL C3
(SRT)

81560f41

P0159-O2 SENSOR 2/2 SLOW RESPONSE (CONTINUED)

For the Engine circuit diagram (Refer to 9 - ENGINE - SCHEMATICS AND DIAGRAMS).

For a complete wiring diagram **Refer to Section 8W**.

- **When Monitored:**
  Start engine. Allow engine to idle. For 1st part of test, if limits are exceeded, test passes. If not, 2nd part of test runs. amb/batt temp >44°F, Baro >22.13″ H2O, battery >10.5 volts, MAP >11.79 & <18.15″ H2O, RPM >1350 & <2200 and vss >50 and <65.
- **Set Condition:**
  The oxygen sensor signal voltage is switching from below 0.39 of a volt to above 0.58 of a volt and back fewer times than required.

Possible Causes
EXHAUST LEAK
(K243) O2 2/2 SIGNAL CIRCUIT
(K900) SENSOR GROUND CIRCUIT
O2 SENSOR

Always perform the Pre-Diagnostic Troubleshooting procedure before proceeding. (Refer to 9 - ENGINE - DIAGNOSIS AND TESTING).

Diagnostic Test

1. ACTIVE DTC

NOTE: Check for contaminants that may have damaged the O2 Sensor: contaminated fuel, unapproved silicone, oil and coolant.
Ignition on, engine not running.

NOTE: After the repairs have been made, verify proper O2 Sensor operation. If all the O2 Sensor voltage readings have not returned to normal, follow the diagnostic procedure for the remaining O2 Sensors.
With a scan tool, read DTCs.

Is the DTC active at this time?

Yes >> Go To 2

No >> Refer to the INTERMITTENT CONDITION Symptom. (Refer to 9 - ENGINE - STANDARD PROCEDURE)

---

2. EXHAUST LEAK

Start the engine.

Inspect the exhaust system for leaks between the engine and the O2 Sensors.

Are there any exhaust leaks?

Yes >> Repair or replace the leaking exhaust parts as necessary.
Perform the POWERTRAIN VERIFICATION TEST. (Refer to 9 - ENGINE - STANDARD PROCEDURE)

No >> Go To 3

P0159-O2 SENSOR 2/2 SLOW RESPONSE (CONTINUED)

3. (K243) O2 2/2 SIGNAL CIRCUIT VOLTAGE DROP

Turn the ignition off

Ignition on, engine not running.

With a voltmeter, back probe the (K243) O2 Sensor Signal circuit at the 2/2 O2 Sensor harness connector and the PCM harness connector.

NOTE: Make sure the voltmeter leads meet the terminals in the connector and that there is good terminal to wire connection and are connected for positive polarity.

Start the engine.

Allow the engine to idle.

Is the voltage below 0.10 of a volt?

Yes >> Go To 4

No >> Repair the excessive resistance in the (K243) O2 Sensor 2/2 Signal circuit.
Perform the POWERTRAIN VERIFICATION TEST. (Refer to 9 - ENGINE - STANDARD PROCEDURE)

---

4. (K900) SENSOR GROUND CIRCUIT VOLTAGE DROP

Turn the ignition off.

With a voltmeter, back probe the (K900) Sensor ground circuit at the 2/2 O2 Sensor harness connector and PCM harness connector.

NOTE: Make sure the voltmeter leads meet the terminals in the connector and that there is good terminal to wire connection.

Start the engine.

Allow the engine to idle.

Is the voltage below 0.10 of a volt?

Yes >> Go To 5

NOTE: Turn the ignition off before continuing.

No >> Repair the excessive resistance in the (K900) Sensor ground circuit.
Perform the POWERTRAIN VERIFICATION TEST. (Refer to 9 - ENGINE - STANDARD PROCEDURE)

---

5. O2 SENSOR

If there are no possible causes remaining, view repair.

Repair

Replace the O2 Sensor
Perform the POWERTRAIN VERIFICATION TEST. (Refer to 9 - ENGINE - STANDARD PROCEDURE)

P0161-O2 SENSOR 2/2 HEATER PERFORMANCE

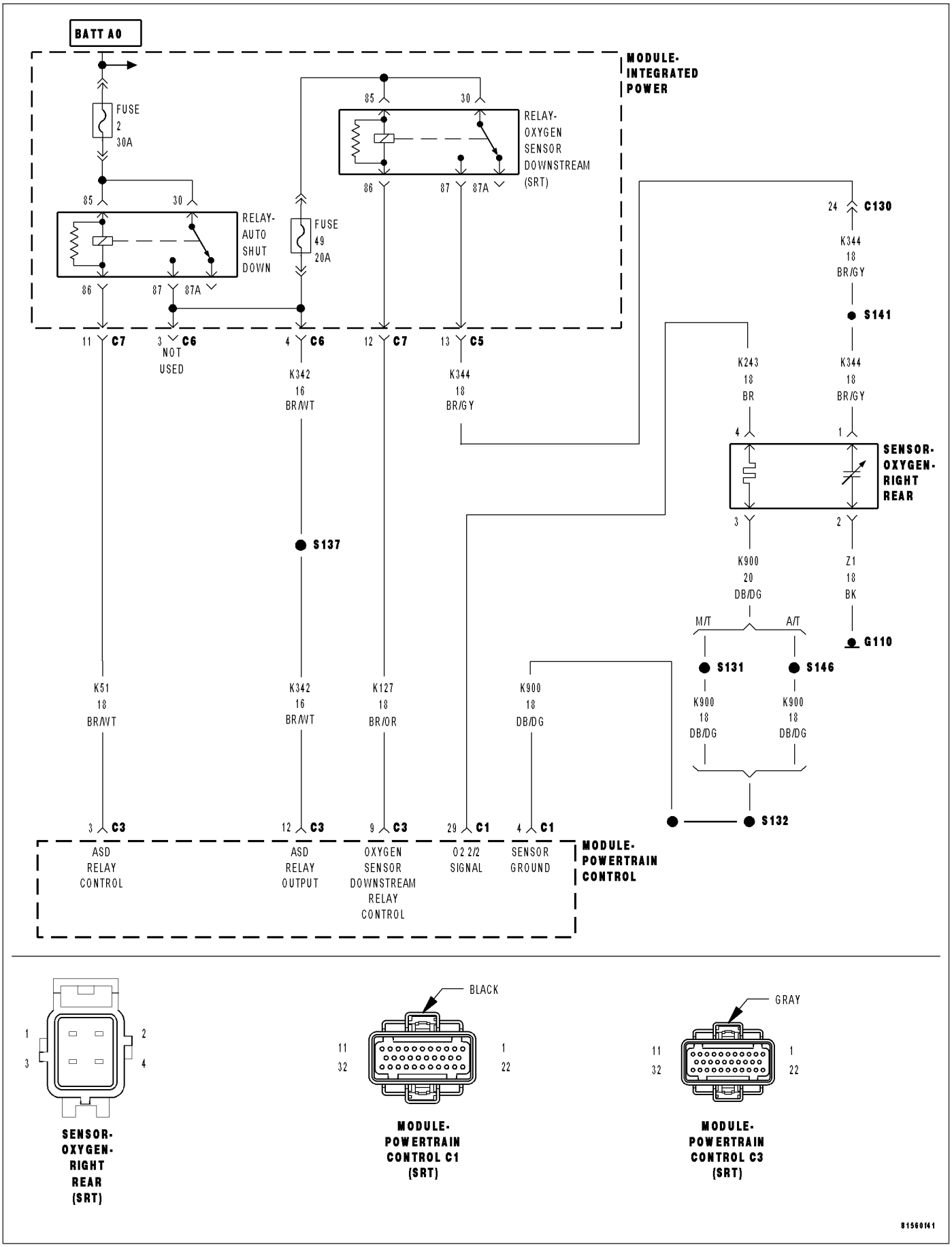

SENSOR-
OXYGEN-
RIGHT
REAR
(SRT)

MODULE-
POWERTRAIN
CONTROL C1
(SRT)

MODULE-
POWERTRAIN
CONTROL C3
(SRT)

81560141

P0161-O2 SENSOR 2/2 HEATER PERFORMANCE (CONTINUED)

For the Engine circuit diagram (Refer to 9 - ENGINE - SCHEMATICS AND DIAGRAMS).

For a complete wiring diagram **Refer to Section 8W**.

- **When Monitored:**
  With battery voltage greater than 9 volts, at a cold start, ECT less than 147°F, battery temperature sensor equal to or less than 27°F, and engine at idle for at least 12 seconds.
- **Set Condition:**
  O2 sensor voltage greater than 3 volts for 60 to 240 seconds.

Possible Causes
(K344) O2 SENSOR HEATER RELAY OUTPUT CIRCUIT OPEN
(K344) O2 SENSOR HEATER RELAY OUTPUT CIRCUIT SHORTED TO GROUND
(K127) O2 HEATER RELAY CONTROL CIRCUIT OPEN
(K127) O2 HEATER RELAY CONTROL CIRCUIT SHORTED TO GROUND
(Z1) HEATER GROUND CIRCUIT OPEN
O2 SENSOR
PCM

Always perform the Pre-Diagnostic Troubleshooting procedure before proceeding. (Refer to 9 - ENGINE - DIAGNOSIS AND TESTING).

Diagnostic Test

1. O2 SENSOR HEATER OPERATION

Turn the ignition off.

NOTE: Wait a minimum of 8 minutes to allow the O2 Sensor to cool down before continuing the test.
Ignition on, engine not running.
With the scan tool, actuate the O2 Heater Test.
With the scan tool, monitor O2 Sensor voltage for at least 2 minutes.

Does the voltage stabilize between 0.1 and 0.3 of a volt during the Heater test?

Yes >> Refer to the INTERMITTENT CONDITION Symptom (Diagnostic Procedure).
Perform the POWERTRAIN VERIFICATION TEST. (Refer to 9 - ENGINE - STANDARD PROCEDURE)

No >> Go To 2

---

2. O2 SENSOR HEATER ELEMENT

Turn the ignition off.

NOTE: Allow the O2 Sensor to cool to room temperature.
Disconnect the O2 Sensor harness connector.
Measure the resistance across the O2 Sensor Heater element component side.

NOTE: The resistance value will increase with warmer temperatures.

Is the resistance between 4.0 and 5.0 ohms at 70° F (21.1°C)?

Yes >> Go To 3

No >> Replace the O2 Sensor.
Perform the POWERTRAIN VERIFICATION TEST. (Refer to 9 - ENGINE - STANDARD PROCEDURE)

P0161-O2 SENSOR 2/2 HEATER PERFORMANCE (CONTINUED)

3. (K344) O2 SENSOR HEATER RELAY OUTPUT CIRCUIT

Ignition on, engine not running and the O2 Sensor still disconnected.

With the scan tool, actuate the O2 Heater Test.

Using a 12-volt test light connected to ground, probe the (K344) O2 Heater Relay Output circuit at the O2 Sensor harness connector.

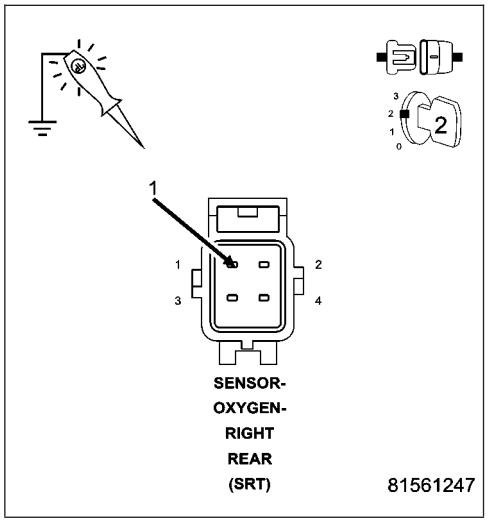

Does the light illuminate brightly?

Yes >> Go To 4

No >> Repair the open or short to ground in the (K344) O2 Heater Relay Output circuit.
Perform the POWERTRAIN VERIFICATION TEST. (Refer to 9 - ENGINE - STANDARD PROCEDURE)

---

4. (K127) O2 HEATER RELAY CONTROL CIRCUIT OPEN

Turn the ignition off.

Disconnect the PCM harness connectors.

Remove the O2 Heater Relay.

Measure the resistance of the (K127) O2 Heater Relay Control circuit from the O2 Heater Relay to the PCM harness connector.

Is the resistance below 5.0 ohms?

Yes >> Go To 5

No >> Repair the excessive resistance in the (K127) O2 Heater Relay Control circuit.
Perform the POWERTRAIN VERIFICATION TEST. (Refer to 9 - ENGINE - STANDARD PROCEDURE)

---

5. (K127) O2 HEATER RELAY CONTROL CIRCUIT SHORTED TO GROUND

Measure the resistance between ground and the (K127) O2 Heater Relay Control circuit at the PCM harness connector.

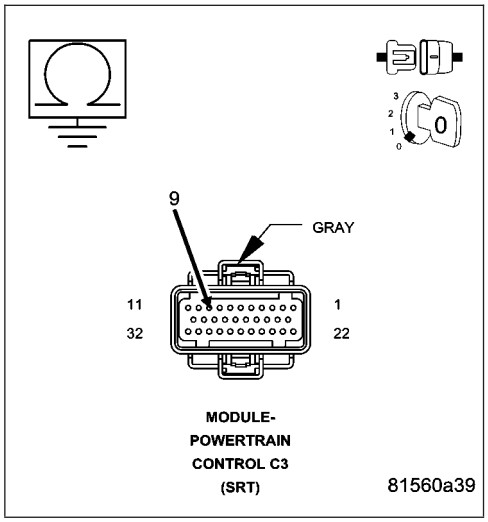

Is the resistance below 100 ohms?

Yes >> Repair the short to ground in the (K127) O2 Heater Relay Control circuit.
Perform the POWERTRAIN VERIFICATION TEST. (Refer to 9 - ENGINE - STANDARD PROCEDURE)

No >> Go To 6

P0161-O2 SENSOR 2/2 HEATER PERFORMANCE (CONTINUED)

6. (Z1) HEATER GROUND CIRCUIT OPEN

Using a 12-volt test light connected to 12-volts, probe the (Z1) O2 Heater Ground circuit at the O2 Sensor harness connector.

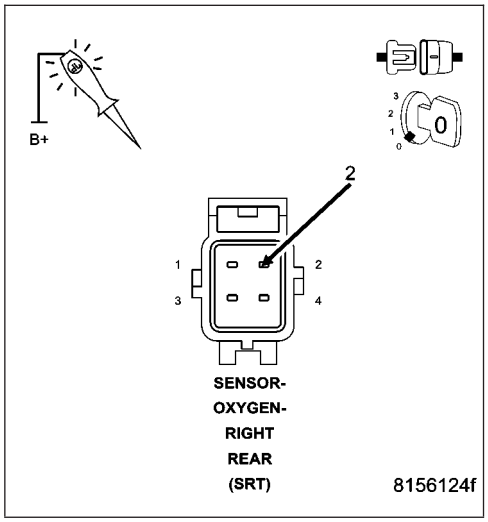

Does the test light illuminate brightly?

Yes >> Go To 7

No >> Repair the open in the (Z1) O2 Sensor Heater ground circuit.
Perform the POWERTRAIN VERIFICATION TEST. (Refer to 9 - ENGINE - STANDARD PROCEDURE)

7. PCM

NOTE: Before continuing, check the PCM harness connector terminals for corrosion, damage, or terminal push out. Repair as necessary.
Using the schematics as a guide, inspect the wire harness and connectors. Pay particular attention to all Power and Ground circuits.

Were there any problems found?

Yes >> Repair as necessary.
Perform the POWERTRAIN VERIFICATION TEST. (Refer to 9 - ENGINE - STANDARD PROCEDURE)

No >> Replace and program the Powertrain Control Module per Service Information.
Perform the POWERTRAIN VERIFICATION TEST. (Refer to 9 - ENGINE - STANDARD PROCEDURE)

P0171-FUEL SYSTEM 1/1 LEAN

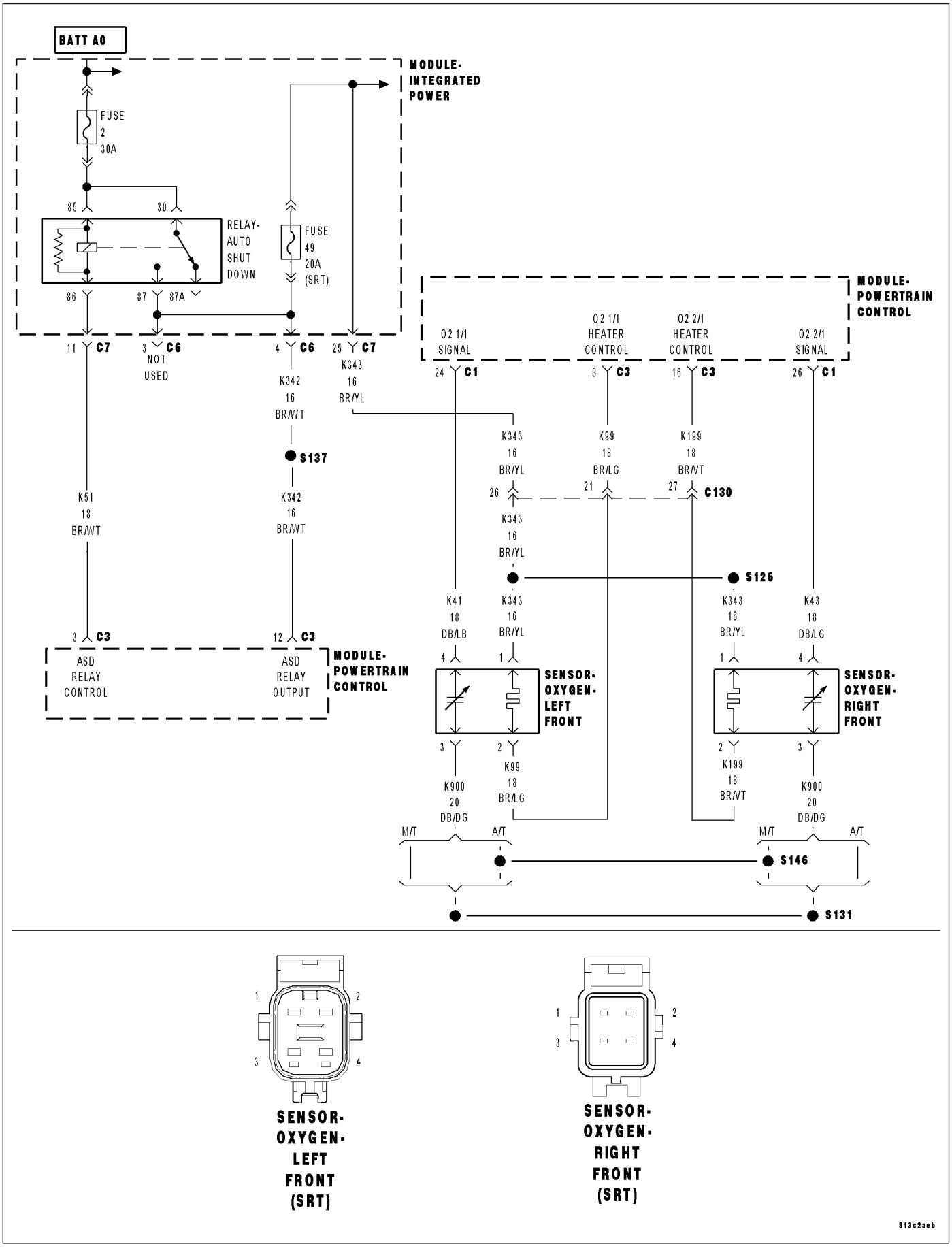

P0171-FUEL SYSTEM 1/1 LEAN (CONTINUED)

For the Engine circuit diagram (Refer to 9 - ENGINE - SCHEMATICS AND DIAGRAMS).

For a complete wiring diagram **Refer to Section 8W**.

Theory of Operation

The fuel feedback system will maintain a stoiciometric fuel/air mixture, 14.7:1, by modifying the injector pulsewidth according to the oxygen content of the exhaust gas. The PCM makes short term and long term fuel corrections to maintain stoiciometric fuel/air ratio for best catalytic converter efficiency. Short term fuel correction is based on upstream O2 sensor output and is designed for quick engine response. The long term fuel correction compensated for variations in the engine specifications, sensor tolerances and component aging and is designed to correct rich and lean conditions over a longer period of time.

- **When Monitored:**
  With the engine running in closed loop mode, the ambient/battery temperature above 20 deg. F and altitude below 8500 ft.
- **Set Condition:**
  If the PCM multiplies short term compensation by long term adaptive and a certain percentage is exceeded for two trips, a freeze frame is stored, the MIL illuminates and a trouble code is stored. Two Trip Fault. Three good trips to turn off the MIL

Possible Causes
FUEL PRESSURE OUT OF SPECS
RESTRICTED FUEL SUPPLY LINE
FUEL PUMP INLET STRAINER PLUGGED
FUEL PUMP MODULE
O2 SENSOR
(K41) O2 SENSOR 1/1 SIGNAL CIRCUIT SHORTED TO GROUND
O2 SENSOR 1/1 HEATER OPERATION
TP SENSOR
MAP SENSOR
ECT SENSOR
ENGINE MECHANICAL CONDITION
FUEL FILTER/PRESSURE REGULATOR
PCM

Always perform the Pre-Diagnostic Troubleshooting procedure before proceeding. (Refer to 9 - ENGINE - DIAGNOSIS AND TESTING).

Diagnostic Test

1. GOOD TRIP EQUAL TO ZERO

NOTE: Check for contaminates that may have damaged the O2 Sensor: contaminated fuel, unapproved silicone, oil and coolant.

Ignition on, engine not running.

With the scan tool, read DTCs and record the related Freeze Frame data.

Is the Good Trip Counter displayed and equal to zero?

Yes >> Go To 2

No >> Refer to the INTERMITTENT CONDITION Diagnostic Procedure.
Perform the POWERTRAIN VERIFICATION TEST. (Refer to 9 - ENGINE - STANDARD PROCEDURE)

P0171-FUEL SYSTEM 1/1 LEAN (CONTINUED)

2. CHECKING FUEL PRESSURE

WARNING: The fuel system is under a constant pressure (even with the engine off). Before testing or servicing any fuel system hose, fitting or line, the fuel system pressure must be released.

Install a fuel pressure gauge.

Ignition on, engine not running.

With the scan tool, actuate the ASD Fuel System test and observe the fuel pressure gauge.

NOTE: Fuel pressure specification is 379 KPa +/- 14 KPa (55 psi +/- 2 psi).

Turn the ignition off.

Choose a conclusion that best matches your fuel pressure reading.

Below Specification
Go To 3

Within Specification
Go To 6

Above Specification
Replace the fuel filter/pressure regulator.
Perform the POWERTRAIN VERIFICATION TEST. (Refer to 9 - ENGINE - STANDARD PROCEDURE)

CAUTION: Stop All Actuations.

---

3. RESTRICTED FUEL SUPPLY LINE

Turn the ignition off.

WARNING: The fuel system is under a constant pressure (even with the engine off). Before testing or servicing any fuel system hose, fitting or line, the fuel system pressure must be released.

Raise vehicle on hoist, and disconnect the fuel pressure line at the fuel pump module.

Install special 5/16 fuel line adapter tool #6539 or #6631 for 3/8 fuel line adapter, between the disconnected fuel line and the fuel pump module.

Attach a fuel pressure test gauge to the T fitting on tool #6539 or #6631.

Ignition on, engine not running.

With the scan tool, actuate the ASD Fuel System test and observe the fuel pressure gauge.

NOTE: Fuel pressure specification is 379 KPa +/- 14 KPa (55 psi +/- 2 psi).

CAUTION: Stop All Actuations.

Is the fuel pressure within specification?

Yes >> Repair or replace fuel supply line as necessary.
Perform the POWERTRAIN VERIFICATION TEST. (Refer to 9 - ENGINE - STANDARD PROCEDURE)

No >> Go To 4

---

4. FUEL PUMP INLET STRAINER

Turn the ignition off.

WARNING: The fuel system is under a constant pressure (even with the engine off). Before testing or servicing any fuel system hose, fitting or line, the fuel system pressure must be released.

Remove the Fuel Pump Module and inspect the Fuel Inlet Strainer.

Is the Fuel Inlet Strainer plugged?

Yes >> Replace the Fuel Pump Inlet Strainer.
Perform the POWERTRAIN VERIFICATION TEST. (Refer to 9 - ENGINE - STANDARD PROCEDURE)

No >> Go To 5

P0171-FUEL SYSTEM 1/1 LEAN (CONTINUED)

5. FUEL PUMP MODULE

If there are no possible causes remaining, view repair.

Repair

Replace the Fuel Pump Module.
Perform the POWERTRAIN VERIFICATION TEST. (Refer to 9 - ENGINE - STANDARD PROCEDURE)

---

6. O2 SENSOR OPERATION

Turn the ignition off.

NOTE: Wait a minimum of 10 minutes to allow the O2 Sensor and Exhaust System to cool down before continuing the test.
Ignition on, engine not running.
With the scan tool, monitor all of the O2 Sensor voltage readings.

Is the voltage above 4.5 volts?

Yes >> Go To 7

No >> Go To 13

---

7. O2 SENSOR HEATER OPERATION

Turn the ignition off.

NOTE: Wait a minimum of 10 minutes to allow the O2 Sensor to cool down before continuing the test.
Ignition on, engine not running.
With the scan tool, actuate the 1/1 O2 Heater Test.
With the scan tool, monitor all O2 Sensor voltage readings for at least 2 minutes.

Does the voltage stay above 4.5 volts for any of the O2 Sensors?

Yes >> Replace the O2 Sensor that had the voltage reading above 4.5 volts.
Perform the POWERTRAIN VERIFICATION TEST. (Refer to 9 - ENGINE - STANDARD PROCEDURE)

No >> Go To 8

---

8. TP SENSOR VOLTAGE GREATER THAN 0.92 OF A VOLT WITH THROTTLE CLOSED

With the scan tool, read TP Sensor voltage.

NOTE: The throttle must be against the stop.

Is the voltage 0.92 of a volt or less with the Throttle closed?

Yes >> Go To 9

No >> Check for a binding throttle condition. If OK, replace the Throttle Position Sensor.
Perform the POWERTRAIN VERIFICATION TEST. (Refer to 9 - ENGINE - STANDARD PROCEDURE)

P0171-FUEL SYSTEM 1/1 LEAN (CONTINUED)

9. TP SENSOR SWEEP

With the scan tool, read the TP Sensor voltage.

While monitoring the scan tool, slowly open and close the throttle.

Does the voltage increase and decrease smoothly?

Yes >> Go To 10

No >> Replace the Throttle Position Sensor.
Perform the POWERTRAIN VERIFICATION TEST. (Refer to 9 - ENGINE - STANDARD PROCEDURE)

---

10. MAP SENSOR OPERATION

Turn the ignition off.

Connect a Vacuum Gauge to a Manifold Vacuum source.

Start the engine.

Allow the engine to idle.

NOTE: If engine will not idle, maintain a constant RPM above idle.

With the scan tool in Sensors, read the MAP Sensor vacuum value.

NOTE: Remove the vacuum gauge before continuing.

Is the scan toolreading within 1″ of the Vacuum Gauge reading?

Yes >> Go To 11

No >> Replace the MAP Sensor.
Perform the POWERTRAIN VERIFICATION TEST. (Refer to 9 - ENGINE - STANDARD PROCEDURE)

---

11. ECT SENSOR OPERATION

NOTE: For this test to be valid, the thermostat must be operating correctly.

NOTE: This test works best if performed on a cold engine (cold soak)

Ignition on, engine not running.

With the scan tool, read the Engine Coolant Temperature Sensor value. If the engine was allowed to sit overnight (cold soak), the temperature value should be a sensible value that is somewhere close to the ambient temperature.

NOTE: If engine coolant temperature is above 82°C (180°F), allow the engine to cool until 65°C (150°F) is reached.

Start the Engine.

During engine warm-up, monitor the Engine Coolant Temperature value. The temp value change should be a smooth transition from start up to normal operating temp 82°C (180°F). The value should reach at least 82°C (180°F).

Did the Engine Coolant Temperature increase smoothly and did it reach at least 82°C (180°F)?

Yes >> Go To 12

No >> Replace the Engine Coolant Temperature Sensor.
Perform the POWERTRAIN VERIFICATION TEST. (Refer to 9 - ENGINE - STANDARD PROCEDURE)

P0171-FUEL SYSTEM 1/1 LEAN (CONTINUED)

12. ENGINE MECHANICAL PROBLEM

Check for any of the following conditions/mechanical problems.
AIR INDUCTION SYSTEM - must be free from leaks.
ENGINE VACUUM - must be at least 13 inches in neutral
ENGINE VALVE TIMING - must be within specifications
ENGINE COMPRESSION - must be within specifications
ENGINE EXHAUST SYSTEM - must be free of any restrictions or leaks.
ENGINE PCV SYSTEM - must flow freely
TORQUE CONVERTER STALL SPEED - must be within specifications
POWER BRAKE BOOSTER - no internal vacuum leaks
FUEL - must be free of contamination
FUEL INJECTOR - plugged or restricted injector; control wire not connected to correct injector

Are there any engine mechanical problems?

Yes >> Repair as necessary.
Perform the POWERTRAIN VERIFICATION TEST. (Refer to 9 - ENGINE - STANDARD PROCEDURE)

No >> Refer to the INTERMITTENT CONDITION Symptom (Diagnostic Procedure).
Perform the POWERTRAIN VERIFICATION TEST. (Refer to 9 - ENGINE - STANDARD PROCEDURE)

---

13. O2 SENSOR

NOTE: Wait a minimum of 10 minutes to allow the O2 Sensor to cool down before continuing the test.
Ignition on, engine not running.
Disconnect the harness connector(s) of the O2 Sensor(s) that had a voltage reading below 4.5 volts in the previous step.
With the scan tool, monitor the O2 Sensor voltage reading(s).

Is the voltage above 4.5 volts for any of the O2 Sensors?

Yes >> Replace the O2 Sensor that had a voltage reading above 4.5 volts.
Perform the POWERTRAIN VERIFICATION TEST. (Refer to 9 - ENGINE - STANDARD PROCEDURE)

No >> Go To 14

P0171-FUEL SYSTEM 1/1 LEAN (CONTINUED)

14. (K41) O2 SENSOR 1/1 SIGNAL CIRCUIT SHORTED TO GROUND

Turn the ignition off.

Disconnect the PCM harness connectors.

Measure the resistance between ground and the (K41) O2 Sensor 1/1 Signal circuit at the PCM harness connector.

Is the resistance below 100 ohms?

Yes >> Repair the short to ground in the (K41) O2 Sensor 1/1 Signal circuit.

Perform the POWERTRAIN VERIFICATION TEST. (Refer to 9 - ENGINE - STANDARD PROCEDURE)

No >> Go To 15

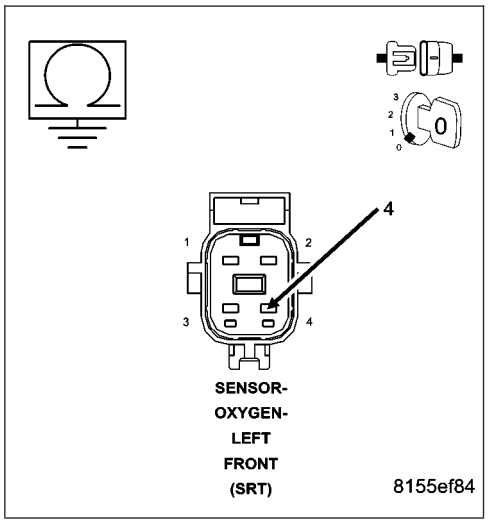

15. PCM

NOTE: Before continuing, check the PCM harness connector terminals for corrosion, damage, or terminal push out. Repair as necessary.

Using the schematics as a guide, inspect the wire harness and connectors. Pay particular attention to all Power and Ground circuits.

If there are no possible causes remaining, view repair.

Repair

Replace and program the Powertrain Control Module per Service Information.

Perform the POWERTRAIN VERIFICATION TEST. (Refer to 9 - ENGINE - STANDARD PROCEDURE)

P0172-FUEL SYSTEM 1/1 RICH

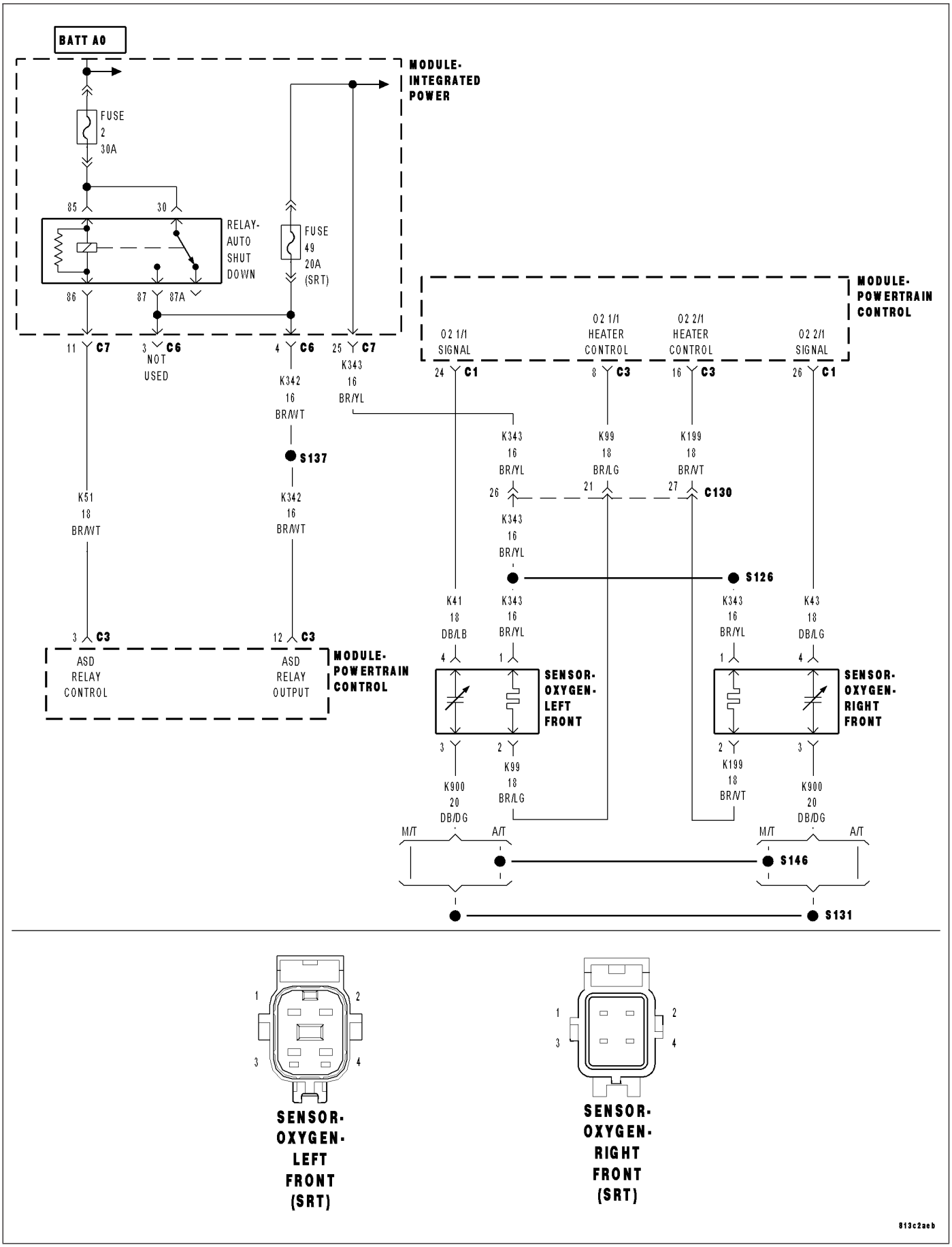

P0172-FUEL SYSTEM 1/1 RICH (CONTINUED)

For the Engine circuit diagram (Refer to 9 - ENGINE - SCHEMATICS AND DIAGRAMS).

For a complete wiring diagram **Refer to Section 8W**.

Theory of Operation

The fuel feedback system will maintain a stoiciometric fuel/air mixture, 14.7:1, by modifying the injector pulsewidth according to the oxygen content of the exhaust gas. The PCM makes short term and long term fuel corrections to maintain stoiciometric fuel/air ratio for best catalytic converter efficiency. Short term fuel correction is based on upstream O2 sensor output and is designed for quick engine response. The long term fuel correction compensated for variations in the engine specifications, sensor tolerances and component aging and is designed to correct rich and lean conditions over a longer period of time.

- **When Monitored:**
  With the engine running in closed loop mode, the ambient/battery temperature above 20 deg. F and altitude below 8500 ft.
- **Set Condition:**
  If the PCM multiplies short term compensation by long term adaptive and a purge fuel multiplier and the result is below a certain value for 30 seconds over two trips, a freeze frame is stored, the MIL illuminates and a trouble code is stored. Two Trip Fault. Three good trips to turn off the MIL.

Possible Causes
O2 SENSOR
(K41) O2 SENSOR 1/1 SIGNAL CIRCUIT OPEN
(K41) O2 SENSOR 1/1 SIGNAL CIRCUIT SHORTED TO VOLTAGE
1/1 O2 SENSOR HEATER OPERATION
EVAP SYSTEM OPERATION
TP SENSOR VOLTAGE GREATER THAN 0.92 OF A VOLT WITH THROTTLE CLOSED
TP SENSOR
FUEL FILTER/PRESSURE REGULATOR
MAP SENSOR
ECT SENSOR
ENGINE MECHANICAL CONDITION
PCM

Always perform the Pre-Diagnostic Troubleshooting procedure before proceeding. (Refer to 9 - ENGINE - DIAGNOSIS AND TESTING).

Diagnostic Test

1. GOOD TRIP EQUAL TO ZERO

NOTE: Check for contaminates that may have damaged the O2 Sensor: contaminated fuel, unapproved silicone, oil and coolant.

Ignition on, engine not running.

With the scan tool, read DTCs and record the related Freeze Frame data.

NOTE: Any O2 Sensor, TPS, ECT, MAP, or EVAP DTCs must be repaired before continuing.

Is the Good Trip Counter displayed and equal to zero?

Yes >> Go To 2

No >> Refer to the INTERMITTENT CONDITION Symptom (Diagnostic Procedure).
Perform the POWERTRAIN VERIFICATION TEST. (Refer to 9 - ENGINE - STANDARD PROCEDURE)

P0172-FUEL SYSTEM 1/1 RICH (CONTINUED)

2. CHECKING FUEL PRESSURE

Turn the ignition off.

WARNING: The fuel system is under a constant pressure (even with the engine off). Before testing or servicing any fuel system hose, fitting or line, the fuel system pressure must be released.

Install a fuel pressure gauge.

Ignition on, engine not running.

With the scan tool, actuate the ASD Fuel System test and observe the fuel pressure gauge.

NOTE: Fuel pressure specification is 379 KPa +/- 14 KPa (55 psi +/- 2 psi).

Choose a conclusion that best matches your fuel pressure reading.

Within Specification

Go To 3

Above Specification

Replace the fuel filter/pressure regulator.

Perform the POWERTRAIN VERIFICATION TEST. (Refer to 9 - ENGINE - STANDARD PROCEDURE)

CAUTION: Stop All Actuations.

---

3. O2 SENSOR OPERATION

Ignition on, engine not running.

With the scan tool, monitor all of the O2 Sensor voltage readings.

Is the voltage above 4.5 volts for all of the O2 Sensors?

Yes >> Go To 4

No >> Go To 11

---

4. O2 SENSOR HEATER OPERATION

Turn the ignition off.

NOTE: Wait a minimum of 10 minutes to allow the O2 Sensor to cool down before continuing the test. Allow the O2 Sensor voltage to stabilize between 4 and 5 volts.

Ignition on, engine not running.

With the scan tool, actuate the O2 Heater Test.

With the scan tool, monitor O2 Sensor voltage for at least 2 minutes.

Does the voltage stay above 4.5 volts?

Yes >> Replace the O2 Sensor that had the voltage reading above 4.5 volts.

Perform the POWERTRAIN VERIFICATION TEST. (Refer to 9 - ENGINE - STANDARD PROCEDURE)

No >> Go To 5

P0172-FUEL SYSTEM 1/1 RICH (CONTINUED)

5. EVAP SYSTEM OPERATION

NOTE: The engine must be at operating temperature and in closed loop to perform this test.
Start the engine.

WARNING: When the engine is operating, do not stand in a direct line with the fan. Do not put your hands near the pulleys, belts, or fan. Do not wear loose clothing.
Allow the engine to reach normal operating temperature.

With the scan tool select System Tests, perform the Purge Vapors Test.

Observe the Short Term Adaptive value and press 3 to flow.

NOTE: Short Term Adaptive value change.

Did the Short Term Adaptive value change?

Yes >> Go To 6

No >> Refer to the Driveability category and perform the appropriate Diagnostic test.
Perform the POWERTRAIN VERIFICATION TEST. (Refer to 9 - ENGINE - STANDARD PROCEDURE)

---

6. TP SENSOR VOLTAGE GREATER THAN 0.92 OF A VOLT WITH THROTTLE CLOSED

Ignition on, engine not running.

With the scan tool, read TP Sensor voltage.

NOTE: The throttle must be against the stop.

Is the voltage 0.92 of a volt or less with the Throttle closed?

Yes >> Go To 7

No >> Check for a binding throttle condition. If OK, replace the Throttle Position Sensor.
Perform the POWERTRAIN VERIFICATION TEST. (Refer to 9 - ENGINE - STANDARD PROCEDURE)

---

7. TP SENSOR SWEEP

With the scan tool, read the TP Sensor voltage.

While monitoring the scan tool, slowly open and close the throttle.

Does the voltage increase and decrease smoothly?

Yes >> Go To 8

No >> Replace the Throttle Position Sensor.
Perform the POWERTRAIN VERIFICATION TEST. (Refer to 9 - ENGINE - STANDARD PROCEDURE)

P0172-FUEL SYSTEM 1/1 RICH (CONTINUED)

8. MAP SENSOR OPERATION

Turn the ignition off.

Connect a Vacuum Gauge to a Manifold Vacuum source.

Start the engine.

Allow the engine to idle.

NOTE: If engine will not idle, maintain a constant RPM above idle.

With the scan tool in Sensors, read the MAP Sensor vacuum value.

Is the scan tool reading within 1″ of the Vacuum Gauge reading?

Yes >> Go To 9

No >> Replace the MAP Sensor.
Perform the POWERTRAIN VERIFICATION TEST. (Refer to 9 - ENGINE - STANDARD PROCEDURE)

NOTE: Remove the vacuum gauge before continuing.

---

9. ECT SENSOR OPERATION

NOTE: For this test to be valid, the thermostat must be operating correctly.

NOTE: This test works best if performed on a cold engine (cold soak)

Ignition on, engine not running.

With the scan tool, read the Engine Coolant Temperature Sensor value. If the engine was allowed to sit overnight (cold soak), the temperature value should be a sensible value that is somewhere close to the ambient temperature.

NOTE: If engine coolant temperature is above 82°C (180°F), allow the engine to cool until 65°C (150°F) is reached.

Start the Engine.

During engine warm-up, monitor the Engine Coolant Temperature value. The temp value change should be a smooth transition from start up to normal operating temp 82°C (180°F). The value should reach at least 82°C (180°F).

Did the Engine Coolant Temperature value increase smoothly and reach at least 82°C?

Yes >> Go To 10

No >> Replace the Engine Coolant Temperature Sensor.
Perform the POWERTRAIN VERIFICATION TEST. (Refer to 9 - ENGINE - STANDARD PROCEDURE)

P0172-FUEL SYSTEM 1/1 RICH (CONTINUED)

10. ENGINE MECHANICAL PROBLEM

Check for any of the following conditions/mechanical problems.
AIR INDUCTION SYSTEM - must be free from restrictions.
ENGINE VACUUM - must be at least 13 inches in neutral
ENGINE VALVE TIMING - must be within specifications
ENGINE COMPRESSION - must be within specifications
ENGINE EXHAUST SYSTEM - must be free of any restrictions or leaks.
ENGINE PCV SYSTEM - must flow freely
TORQUE CONVERTER STALL SPEED - must be within specifications
POWER BRAKE BOOSTER - no internal vacuum leaks
FUEL - must be free of contamination
FUEL INJECTOR - plugged or restricted injector; control wire not connected to correct injector

Are there any engine mechanical problems?

Yes >> Repair as necessary.
Perform the POWERTRAIN VERIFICATION TEST. (Refer to 9 - ENGINE - STANDARD PROCEDURE)

No >> Refer to the INTERMITTENT CONDITION Diagnostic Procedure.
Perform the POWERTRAIN VERIFICATION TEST. (Refer to 9 - ENGINE - STANDARD PROCEDURE)

---

11. O2 SENSOR

Disconnect the sensor harness connector of the O2 Sensor(s) that had a voltage value greater than 4.5 volts in the previous step.
Ignition on, engine not running.
With the scan tool, monitor the O2 Sensor voltage reading(s).

Is the O2 Sensor voltage above 4.5 volts?

Yes >> Replace the O2 Sensor.
Perform the POWERTRAIN VERIFICATION TEST. (Refer to 9 - ENGINE - STANDARD PROCEDURE)

No >> Go To 12

P0172-FUEL SYSTEM 1/1 RICH (CONTINUED)

12. (K41) O2 SENSOR 1/1 SIGNAL CIRCUIT OPEN

Turn the ignition off.

Disconnect the PCM harness connectors.

Measure the resistance of the (K41) O2 Sensor 1/1 Signal circuit from the PCM harness connector to the O2 Sensor harness connector.

Is the resistance below 5.0 ohms?

Yes >> Go To 13

No >> Repair the open in the (K41) O2 Sensor 1/1 Signal circuit. Perform the POWERTRAIN VERIFICATION TEST. (Refer to 9 - ENGINE - STANDARD PROCEDURE)

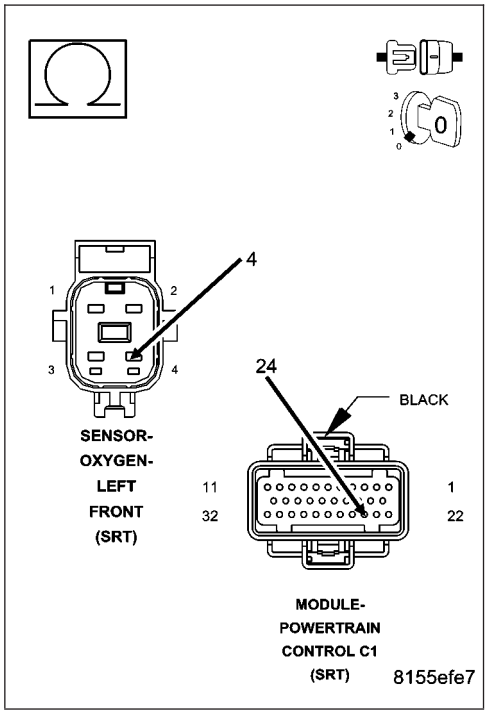

13. (K41) O2 SENSOR 1/1 SIGNAL CIRCUIT SHORTED TO VOLTAGE

Ignition on, engine not running.

Leave the O2 Sensor and PCM harness connectors disconnected.

Measure the voltage on the (K41) O2 Sensor 1/1 Signal circuit at the 1/1 O2 Sensor harness connector.

Is the voltage above 5.2 volts?

Yes >> Repair the short to voltage in the O2 Sensor Signal circuit. Perform the POWERTRAIN VERIFICATION TEST. (Refer to 9 - ENGINE - STANDARD PROCEDURE)

No >> Go To 14

NOTE: Turn the ignition off before continuing.

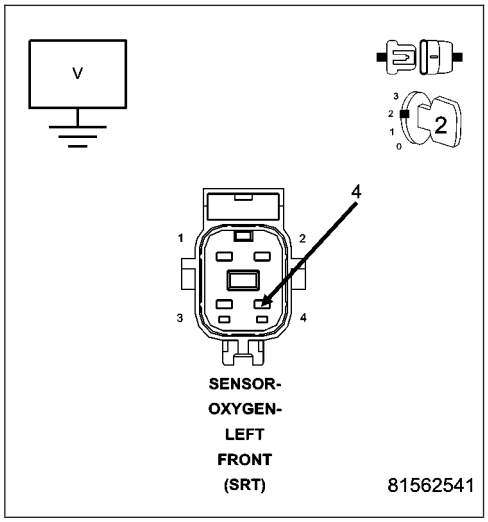

P0172-FUEL SYSTEM 1/1 RICH (CONTINUED)

14. PCM

NOTE: Before continuing, check the PCM harness connector terminals for corrosion, damage, or terminal push out. Repair as necessary.

Using the schematics as a guide, inspect the wire harness and connectors. Pay particular attention to all Power and Ground circuits.

If there are no possible causes remaining, view repair.

Repair

Replace and program the Powertrain Control Module per Service Information.

Perform the POWERTRAIN VERIFICATION TEST. (Refer to 9 - ENGINE - STANDARD PROCEDURE)

P0174-FUEL SYSTEM 2/1 LEAN

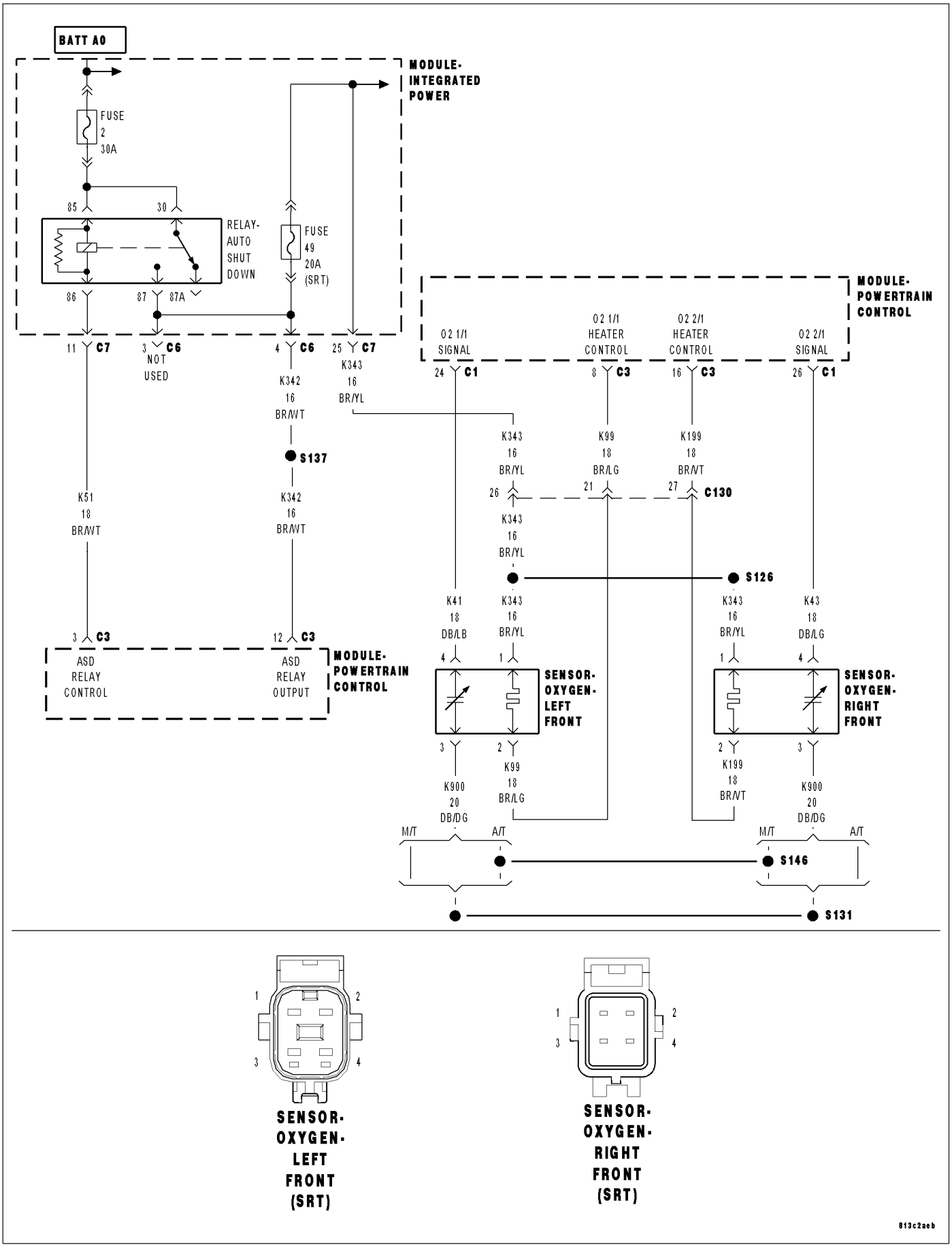

P0174-FUEL SYSTEM 2/1 LEAN (CONTINUED)

For the Engine circuit diagram (Refer to 9 - ENGINE - SCHEMATICS AND DIAGRAMS).

For a complete wiring diagram **Refer to Section 8W**.

Theory of Operation

The fuel feedback system will maintain a stoiciometric fuel/air mixture, 14.7:1, by modifying the injector pulsewidth according to the oxygen content of the exhaust gas. The PCM makes short term and long term fuel corrections to maintain stoiciometric fuel/air ratio for best catalytic converter efficiency. Short term fuel correction is based on upstream O2 sensor output and is designed for quick engine response. The long term fuel correction compensated for variations in the engine specifications, sensor tolerances and component aging and is designed to correct rich and lean conditions over a longer period of time.

- **When Monitored:**
  With the engine running in closed loop mode, the ambient/battery temperature above 20 deg. F and altitude below 8500 ft.
- **Set Condition:**
  If the PCM multiplies short term compensation by long term adaptive and a certain percentage is exceeded for two trips, a freeze frame is stored, the MIL illuminates and a trouble code is stored. Two Trip Fault. Three good trips to turn off the MIL.

Possible Causes
FUEL PRESSURE OUT OF SPECS
RESTRICTED FUEL SUPPLY LINE
FUEL PUMP INLET STRAINER PLUGGED
FUEL PUMP MODULE
O2 SENSOR
(K43) O2 SENSOR 2/1 SIGNAL CIRCUIT SHORTED TO GROUND
O2 SENSOR 2/1 HEATER OPERATION
TP SENSOR
MAP SENSOR
ECT SENSOR
ENGINE MECHANICAL CONDITION
FUEL FILTER/PRESSURE REGULATOR
PCM

Always perform the Pre-Diagnostic Troubleshooting procedure before proceeding. (Refer to 9 - ENGINE - DIAGNOSIS AND TESTING).

Diagnostic Test

1. GOOD TRIP EQUAL TO ZERO

NOTE: Check for contaminates that may have damaged the O2 Sensor: contaminated fuel, unapproved silicone, oil and coolant.

Ignition on, engine not running.

With the scan tool, read DTCs and record the related Freeze Frame data.

Is the Good Trip Counter displayed and equal to zero?

Yes >> Go To 2

No >> Refer to the INTERMITTENT CONDITION Diagnostic Procedure.
Perform the POWERTRAIN VERIFICATION TEST. (Refer to 9 - ENGINE - STANDARD PROCEDURE)

P0174-FUEL SYSTEM 2/1 LEAN (CONTINUED)

2. CHECKING FUEL PRESSURE

WARNING: The fuel system is under a constant pressure (even with the engine off). Before testing or servicing any fuel system hose, fitting or line, the fuel system pressure must be released.

Install a fuel pressure gauge.

Ignition on, engine not running.

With the scan tool, actuate the ASD Fuel System test and observe the fuel pressure gauge.

NOTE: Fuel pressure specification is 379 KPa +/- 14 KPa (55 psi +/- 2 psi).

Turn the ignition off.

CAUTION: Stop All Actuations.

Choose a conclusion that best matches your fuel pressure reading.

Below Specification
Go To 3

Within Specification
Go To 6

Above Specification
Replace the fuel filter/pressure regulator.
Perform the POWERTRAIN VERIFICATION TEST. (Refer to 9 - ENGINE - STANDARD PROCEDURE)

---

3. RESTRICTED FUEL SUPPLY LINE

Turn the ignition off.

WARNING: The fuel system is under a constant pressure (even with the engine off). Before testing or servicing any fuel system hose, fitting or line, the fuel system pressure must be released.

Raise vehicle on hoist, and disconnect the fuel pressure line at the fuel pump module.

Install special 5/16 fuel line adapter tool #6539 or #6631 for 3/8 fuel line adapter, between the disconnected fuel line and the fuel pump module.

Attach a fuel pressure test gauge to the T fitting on tool #6539 or #6631.

Ignition on, engine not running.

With the scan tool, actuate the ASD Fuel System test and observe the fuel pressure gauge.

NOTE: Fuel pressure specification is 379 KPa +/- 14 KPa (55 psi +/- 2 psi).

CAUTION: Stop All Actuations.

Is the fuel pressure within specification?

Yes >> Repair or replace fuel supply line as necessary.
Perform the POWERTRAIN VERIFICATION TEST. (Refer to 9 - ENGINE - STANDARD PROCEDURE)

No >> Go To 4

---

4. FUEL PUMP INLET STRAINER

Turn the ignition off.

WARNING: The fuel system is under a constant pressure (even with the engine off). Before testing or servicing any fuel system hose, fitting or line, the fuel system pressure must be released.

Remove the Fuel Pump Module and inspect the Fuel Inlet Strainer.

Is the Fuel Inlet Strainer plugged?

Yes >> Replace the Fuel Pump Inlet Strainer.
Perform the POWERTRAIN VERIFICATION TEST. (Refer to 9 - ENGINE - STANDARD PROCEDURE)

No >> Go To 5

P0174-FUEL SYSTEM 2/1 LEAN (CONTINUED)

5. FUEL PUMP MODULE

If there are no possible causes remaining, view repair.

Repair

Replace the Fuel Pump Module.
Perform the POWERTRAIN VERIFICATION TEST. (Refer to 9 - ENGINE - STANDARD PROCEDURE)

---

6. O2 SENSOR OPERATION

Turn the ignition off.

NOTE: Wait a minimum of 10 minutes to allow the O2 Sensor and Exhaust System to cool down before continuing the test.
Ignition on, engine not running.
With the scan tool, monitor all of the O2 Sensor voltage readings.

Is the voltage above 4.5 volts?

Yes >> Go To 7

No >> Go To 13

---

7. O2 SENSOR HEATER OPERATION

Turn the ignition off.

NOTE: Wait a minimum of 10 minutes to allow the O2 Sensor to cool down before continuing the test.
Ignition on, engine not running.
With the scan tool, actuate the 1/1 O2 Heater Test.
With the scan tool, monitor all O2 Sensor voltage readings for at least 2 minutes.

Does the voltage stay above 4.5 volts for any of the O2 Sensors?

Yes >> Replace the O2 Sensor that had the voltage reading above 4.5 volts.
Perform the POWERTRAIN VERIFICATION TEST. (Refer to 9 - ENGINE - STANDARD PROCEDURE)

No >> Go To 8

---

8. TP SENSOR VOLTAGE GREATER THAN 0.92 OF A VOLT WITH THROTTLE CLOSED

With the scan tool, read TP Sensor voltage.

NOTE: The throttle must be against the stop.

Is the voltage 0.92 of a volt or less with the Throttle closed?

Yes >> Go To 9

No >> Check for a binding throttle condition. If OK, replace the Throttle Position Sensor.
Perform the POWERTRAIN VERIFICATION TEST. (Refer to 9 - ENGINE - STANDARD PROCEDURE)

P0174-FUEL SYSTEM 2/1 LEAN (CONTINUED)

9. TP SENSOR SWEEP

With the scan tool, read the TP Sensor voltage.

While monitoring the scan tool, slowly open and close the throttle.

Does the voltage increase and decrease smoothly?

Yes >> Go To 10

No >> Replace the Throttle Position Sensor.
Perform the POWERTRAIN VERIFICATION TEST. (Refer to 9 - ENGINE - STANDARD PROCEDURE)

---

10. MAP SENSOR OPERATION

Turn the ignition off.

Connect a Vacuum Gauge to a Manifold Vacuum source.

Start the engine.

Allow the engine to idle.

NOTE: If engine will not idle, maintain a constant RPM above idle.

With the scan tool in Sensors, read the MAP Sensor vacuum value.

Is the scan toolreading within 1″ of the Vacuum Gauge reading?

Yes >> Go To 11

No >> Replace the MAP Sensor.
Perform the POWERTRAIN VERIFICATION TEST. (Refer to 9 - ENGINE - STANDARD PROCEDURE)

NOTE: Remove the vacuum gauge before continuing.

---

11. ECT SENSOR OPERATION

NOTE: For this test to be valid, the thermostat must be operating correctly.

NOTE: This test works best if performed on a cold engine (cold soak)

Ignition on, engine not running.

With the scan tool, read the Engine Coolant Temperature Sensor value. If the engine was allowed to sit overnight (cold soak), the temperature value should be a sensible value that is somewhere close to the ambient temperature.

NOTE: If engine coolant temperature is above 82°C (180°F), allow the engine to cool until 65°C (150°F) is reached.

Start the Engine.

During engine warm-up, monitor the Engine Coolant Temperature value. The temp value change should be a smooth transition from start up to normal operating temp 82°C (180°F). The value should reach at least 82°C (180°F).

Did the Engine Coolant Temperature increase smoothly and did it reach at least 82°C (180°F)?

Yes >> Go To 12

No >> Replace the Engine Coolant Temperature Sensor.
Perform the POWERTRAIN VERIFICATION TEST. (Refer to 9 - ENGINE - STANDARD PROCEDURE)

P0174-FUEL SYSTEM 2/1 LEAN (CONTINUED)

12. ENGINE MECHANICAL PROBLEM

Check for any of the following conditions/mechanical problems.
AIR INDUCTION SYSTEM - must be free from leaks.
ENGINE VACUUM - must be at least 13 inches in neutral
ENGINE VALVE TIMING - must be within specifications
ENGINE COMPRESSION - must be within specifications
ENGINE EXHAUST SYSTEM - must be free of any restrictions or leaks.
ENGINE PCV SYSTEM - must flow freely
TORQUE CONVERTER STALL SPEED - must be within specifications
POWER BRAKE BOOSTER - no internal vacuum leaks
FUEL - must be free of contamination
FUEL INJECTOR - plugged or restricted injector; control wire not connected to correct injector

Are there any engine mechanical problems?

Yes >> Repair as necessary.
Perform the POWERTRAIN VERIFICATION TEST. (Refer to 9 - ENGINE - STANDARD PROCEDURE)

No >> Refer to the INTERMITTENT CONDITION Symptom (Diagnostic Procedure).
Perform the POWERTRAIN VERIFICATION TEST. (Refer to 9 - ENGINE - STANDARD PROCEDURE)

---

13. O2 SENSOR

NOTE: Wait a minimum of 10 minutes to allow the O2 Sensor to cool down before continuing the test.
Ignition on, engine not running.
Disconnect the harness connector(s) of the O2 Sensor(s) that had a voltage reading below 4.5 volts in the previous step.
With the scan tool, monitor the O2 Sensor voltage reading(s).

Is the voltage above 4.5 volts for any of the O2 Sensors?

Yes >> Replace the O2 Sensor that had a voltage reading above 4.5 volts.
Perform the POWERTRAIN VERIFICATION TEST. (Refer to 9 - ENGINE - STANDARD PROCEDURE)

No >> Go To 14

P0174-FUEL SYSTEM 2/1 LEAN (CONTINUED)

14. (K43) O2 SENSOR 2/1 SIGNAL CIRCUIT SHORTED TO GROUND

Turn the ignition off.

Disconnect the PCM harness connectors.

Measure the resistance between ground and the (K43) O2 Sensor 2/1 Signal circuit at the PCM harness connector.

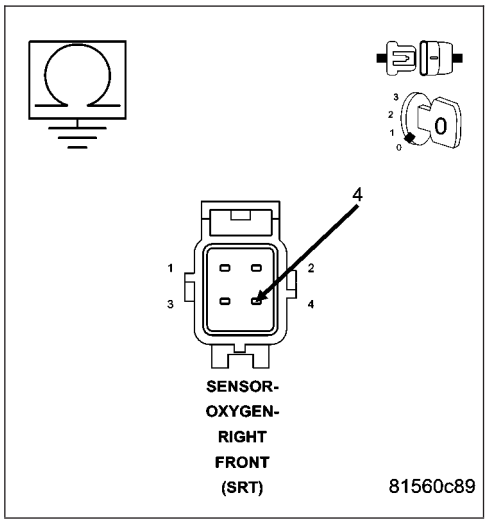

Is the resistance below 100 ohms?

Yes >> Repair the short to ground in the (K43) O2 Sensor 2/1 Signal circuit.

Perform the POWERTRAIN VERIFICATION TEST. (Refer to 9 - ENGINE - STANDARD PROCEDURE)

No >> Go To 15

15. PCM

NOTE: Before continuing, check the PCM harness connector terminals for corrosion, damage, or terminal push out. Repair as necessary.

Using the schematics as a guide, inspect the wire harness and connectors. Pay particular attention to all Power and Ground circuits.

If there are no possible causes remaining, view repair.

Repair

Replace and program the Powertrain Control Module per Service Information.

Perform the POWERTRAIN VERIFICATION TEST. (Refer to 9 - ENGINE - STANDARD PROCEDURE)

P0175-FUEL SYSTEM 2/1 RICH

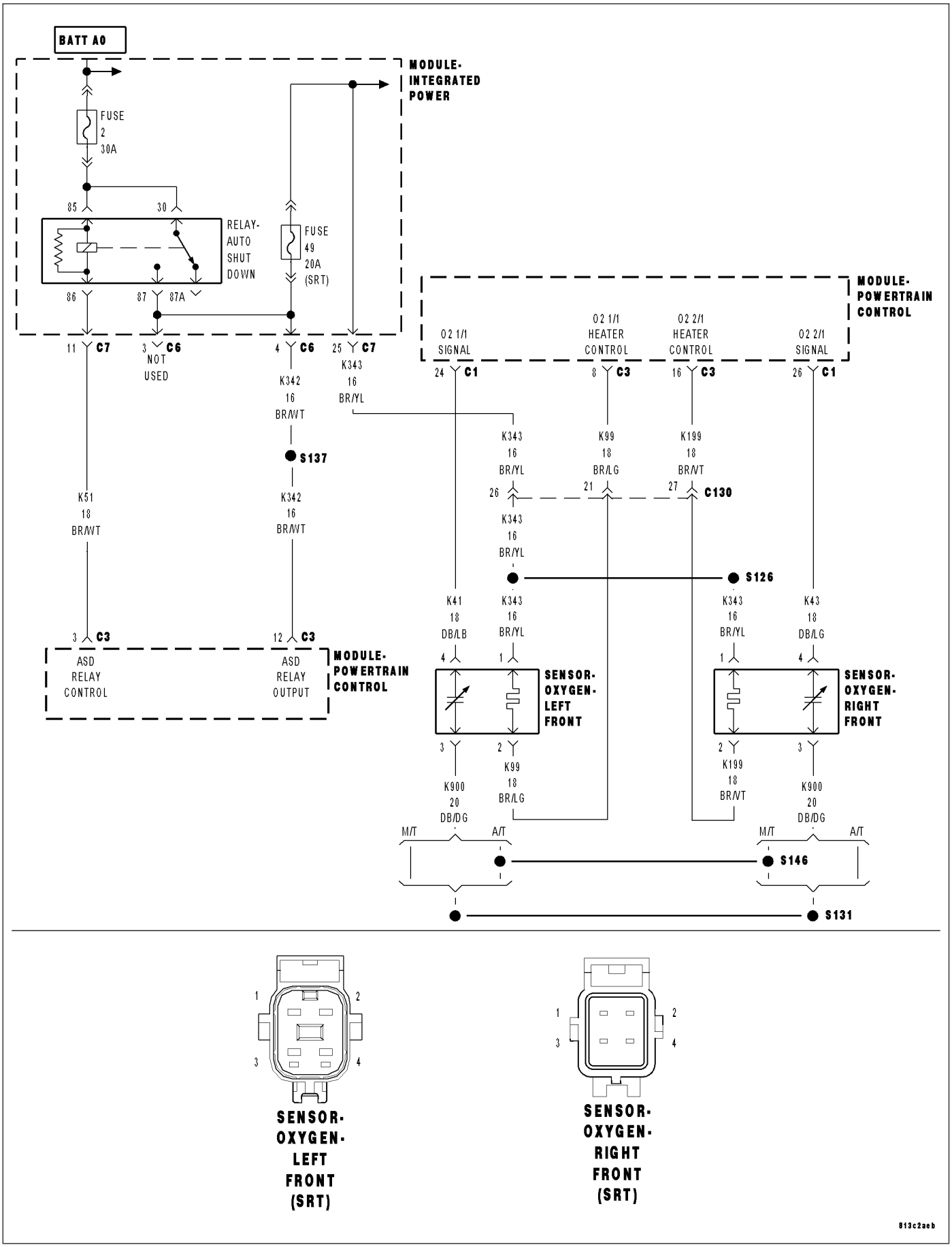

P0175-FUEL SYSTEM 2/1 RICH (CONTINUED)

For the Engine circuit diagram (Refer to 9 - ENGINE - SCHEMATICS AND DIAGRAMS).

For a complete wiring diagram **Refer to Section 8W**.

Theory of Operation

The fuel feedback system will maintain a stoiciometric fuel/air mixture, 14.7:1, by modifying the injector pulsewidth according to the oxygen content of the exhaust gas. The PCM makes short term and long term fuel corrections to maintain stoiciometric fuel/air ratio for best catalytic converter efficiency. Short term fuel correction is based on upstream O2 sensor output and is designed for quick engine response. The long term fuel correction compensated for variations in the engine specifications, sensor tolerances and component aging and is designed to correct rich and lean conditions over a longer period of time.

- **When Monitored:**
  With the engine running in closed loop mode, the ambient/battery temperature above 20 deg. F and altitude below 8500 ft.
- **Set Condition:**
  If the PCM multiplies short term compensation by long term adaptive and a purge fuel multiplier and the result is below a certain value for 30 seconds over two trips, a freeze frame is stored, the MIL illuminates and a trouble code is stored. Two Trip Fault. Three good trips to turn off the MIL.

Possible Causes
O2 SENSOR
(K43) O2 SENSOR 2/1 SIGNAL CIRCUIT OPEN
(K43) O2 SENSOR 2/1 SIGNAL CIRCUIT SHORTED TO VOLTAGE
2/1 O2 SENSOR HEATER OPERATION
EVAP SYSTEM OPERATION
TP SENSOR VOLTAGE GREATER THAN 0.92 OF A VOLT WITH THROTTLE CLOSED
TP SENSOR
FUEL FILTER/PRESSURE REGULATOR
MAP SENSOR
ECT SENSOR
ENGINE MECHANICAL CONDITION
PCM

Always perform the Pre-Diagnostic Troubleshooting procedure before proceeding. (Refer to 9 - ENGINE - DIAGNOSIS AND TESTING).

Diagnostic Test

1. GOOD TRIP EQUAL TO ZERO

NOTE: Check for contaminates that may have damaged the O2 Sensor: contaminated fuel, unapproved silicone, oil and coolant.

Ignition on, engine not running.

With the scan tool, read DTCs and record the related Freeze Frame data.

NOTE: Any O2 Sensor, TPS, ECT, MAP, or EVAP DTCs must be repaired before continuing.

Is the Good Trip Counter displayed and equal to zero?

Yes >> Go To 2

No >> Refer to the INTERMITTENT CONDITION Symptom (Diagnostic Procedure).
Perform the POWERTRAIN VERIFICATION TEST. (Refer to 9 - ENGINE - STANDARD PROCEDURE)

P0175-FUEL SYSTEM 2/1 RICH (CONTINUED)

2. CHECKING FUEL PRESSURE

Turn the ignition off.

WARNING: The fuel system is under a constant pressure (even with the engine off). Before testing or servicing any fuel system hose, fitting or line, the fuel system pressure must be released.

Install a fuel pressure gauge.

Ignition on, engine not running.

With the scan tool, actuate the ASD Fuel System test and observe the fuel pressure gauge.

NOTE: Fuel pressure specification is 379 KPa +/- 14 KPa (55 psi +/- 2 psi).

Choose a conclusion that best matches your fuel pressure reading.

Within Specification

Go To 3

Above Specification

Replace the fuel filter/pressure regulator.

Perform the POWERTRAIN VERIFICATION TEST. (Refer to 9 - ENGINE - STANDARD PROCEDURE)

CAUTION: Stop All Actuations.

---

3. O2 SENSOR OPERATION

Ignition on, engine not running.

With the scan tool, monitor all of the O2 Sensor voltage readings.

Is the voltage above 4.5 volts for all of the O2 Sensors?

Yes >> Go To 4

No >> Go To 11

---

4. O2 SENSOR HEATER OPERATION

Turn the ignition off.

NOTE: Wait a minimum of 10 minutes to allow the O2 Sensor to cool down before continuing the test. Allow the O2 Sensor voltage to stabilize between 4 and 5 volts.

Ignition on, engine not running.

With the scan tool, actuate the O2 Heater Test.

With the scan tool, monitor O2 Sensor voltage for at least 2 minutes.

Does the voltage stay above 4.5 volts?

Yes >> Replace the O2 Sensor that had the voltage reading above 4.5 volts.

Perform the POWERTRAIN VERIFICATION TEST. (Refer to 9 - ENGINE - STANDARD PROCEDURE)

No >> Go To 5

P0175-FUEL SYSTEM 2/1 RICH (CONTINUED)

5. EVAP SYSTEM OPERATION

NOTE: The engine must be at operating temperature and in closed loop to perform this test.
Start the engine.

WARNING: When the engine is operating, do not stand in a direct line with the fan. Do not put your hands near the pulleys, belts, or fan. Do not wear loose clothing.
Allow the engine to reach normal operating temperature.

With the scan tool select System Tests, perform the Purge Vapors Test.

Observe the Short Term Adaptive value and press 3 to flow.

NOTE: Short Term Adaptive value change.

Did the Short Term Adaptive value change?

Yes >> Go To 6

No >> Refer to the Driveability category and perform the appropriate Diagnostic test.
Perform the POWERTRAIN VERIFICATION TEST. (Refer to 9 - ENGINE - STANDARD PROCEDURE)

---

6. TP SENSOR VOLTAGE GREATER THAN 0.92 OF A VOLT WITH THROTTLE CLOSED

Ignition on, engine not running.

With the scan tool, read TP Sensor voltage.

NOTE: The throttle must be against the stop.

Is the voltage 0.92 of a volt or less with the Throttle closed?

Yes >> Go To 7

No >> Check for a binding throttle condition. If OK, replace the Throttle Position Sensor.
Perform the POWERTRAIN VERIFICATION TEST. (Refer to 9 - ENGINE - STANDARD PROCEDURE)

---

7. TP SENSOR SWEEP

With the scan tool, read the TP Sensor voltage.

While monitoring the scan tool, slowly open and close the throttle.

Does the voltage increase and decrease smoothly?

Yes >> Go To 8

No >> Replace the Throttle Position Sensor.
Perform the POWERTRAIN VERIFICATION TEST. (Refer to 9 - ENGINE - STANDARD PROCEDURE)

P0175-FUEL SYSTEM 2/1 RICH (CONTINUED)

8. MAP SENSOR OPERATION

Turn the ignition off.

Connect a Vacuum Gauge to a Manifold Vacuum source.

Start the engine.

Allow the engine to idle.

NOTE: If engine will not idle, maintain a constant RPM above idle.

With the scan tool in Sensors, read the MAP Sensor vacuum value.

Is the scan tool reading within 1″ of the Vacuum Gauge reading?

Yes >> Go To 9

No >> Replace the MAP Sensor.
Perform the POWERTRAIN VERIFICATION TEST. (Refer to 9 - ENGINE - STANDARD PROCEDURE)

NOTE: Remove the vacuum gauge before continuing.

---

9. ECT SENSOR OPERATION

NOTE: For this test to be valid, the thermostat must be operating correctly.

NOTE: This test works best if performed on a cold engine (cold soak)

Ignition on, engine not running.

With the scan tool, read the Engine Coolant Temperature Sensor value. If the engine was allowed to sit overnight (cold soak), the temperature value should be a sensible value that is somewhere close to the ambient temperature.

NOTE: If engine coolant temperature is above 82°C (180°F), allow the engine to cool until 65°C (150°F) is reached.

Start the Engine.

During engine warm-up, monitor the Engine Coolant Temperature value. The temp value change should be a smooth transition from start up to normal operating temp 82°C (180°F). The value should reach at least 82°C (180°F).

Did the Engine Coolant Temperature value increase smoothly and reach at least 82°C?

Yes >> Go To 10

No >> Replace the Engine Coolant Temperature Sensor.
Perform the POWERTRAIN VERIFICATION TEST. (Refer to 9 - ENGINE - STANDARD PROCEDURE)

P0175-FUEL SYSTEM 2/1 RICH (CONTINUED)

10. ENGINE MECHANICAL PROBLEM

Check for any of the following conditions/mechanical problems.
AIR INDUCTION SYSTEM - must be free from restrictions.
ENGINE VACUUM - must be at least 13 inches in neutral
ENGINE VALVE TIMING - must be within specifications
ENGINE COMPRESSION - must be within specifications
ENGINE EXHAUST SYSTEM - must be free of any restrictions or leaks.
ENGINE PCV SYSTEM - must flow freely
TORQUE CONVERTER STALL SPEED - must be within specifications
POWER BRAKE BOOSTER - no internal vacuum leaks
FUEL - must be free of contamination
FUEL INJECTOR - plugged or restricted injector; control wire not connected to correct injector

Are there any engine mechanical problems?

Yes >> Repair as necessary.
Perform the POWERTRAIN VERIFICATION TEST. (Refer to 9 - ENGINE - STANDARD PROCEDURE)

No >> Refer to the INTERMITTENT CONDITION Diagnostic Procedure.
Perform the POWERTRAIN VERIFICATION TEST. (Refer to 9 - ENGINE - STANDARD PROCEDURE)

---

11. O2 SENSOR

Disconnect the sensor harness connector of the O2 Sensor(s) that had a voltage value greater than 4.5 volts in the previous step.
Ignition on, engine not running.
With the scan tool, monitor the O2 Sensor voltage reading(s).

Is the O2 Sensor voltage above 4.5 volts?

Yes >> Replace the O2 Sensor.
Perform the POWERTRAIN VERIFICATION TEST. (Refer to 9 - ENGINE - STANDARD PROCEDURE)

No >> Go To 12

P0175-FUEL SYSTEM 2/1 RICH (CONTINUED)

12. (K43) O2 SENSOR 2/1 SIGNAL CIRCUIT OPEN

Turn the ignition off.

Disconnect the PCM harness connectors.

Measure the resistance of the (K43) O2 Sensor 2/1 Signal circuit from the PCM harness connector to the O2 Sensor harness connector.

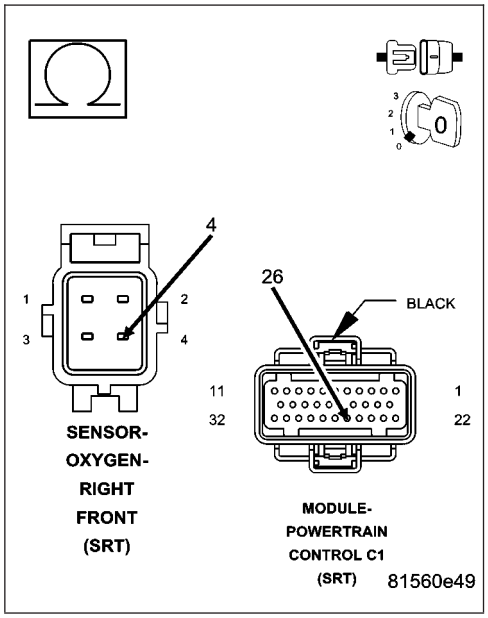

Is the resistance below 5.0 ohms?

Yes >> Go To 13

No >> Repair the open in the (K43) O2 Sensor 2/1 Signal circuit.
Perform the POWERTRAIN VERIFICATION TEST. (Refer to 9 - ENGINE - STANDARD PROCEDURE)

13. (K43) O2 SENSOR 2/1 SIGNAL CIRCUIT SHORTED TO VOLTAGE

Ignition on, engine not running.

Leave the O2 Sensor and PCM harness connectors disconnected.

Measure the voltage on the (K43) O2 Sensor 2/1 Signal circuit at the 2/1 O2 Sensor harness connector.

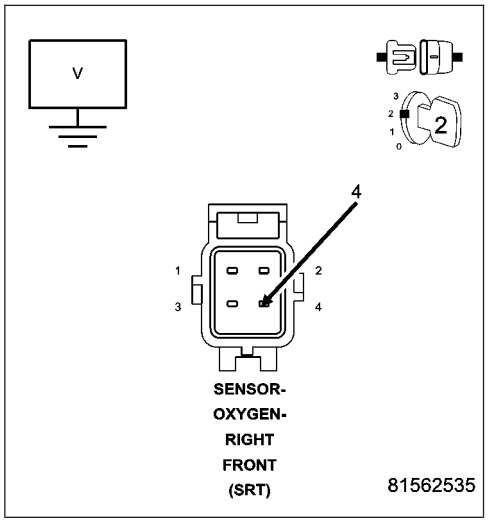

Is the voltage above 5.2 volts?

Yes >> Repair the short to voltage in the (K43) O2 Sensor 2/1 Signal circuit.
Perform the POWERTRAIN VERIFICATION TEST. (Refer to 9 - ENGINE - STANDARD PROCEDURE)

No >> Go To 14

NOTE: Turn the ignition off before continuing.

14. PCM

NOTE: Before continuing, check the PCM harness connector terminals for corrosion, damage, or terminal push out. Repair as necessary.

Using the schematics as a guide, inspect the wire harness and connectors. Pay particular attention to all Power and Ground circuits.

If there are no possible causes remaining, view repair.

Repair

Replace and program the Powertrain Control Module per Service Information.

Perform the POWERTRAIN VERIFICATION TEST. (Refer to 9 - ENGINE - STANDARD PROCEDURE)

P0197-ENGINE OIL TEMPERATURE SENSOR VOLTAGE TOO LOW

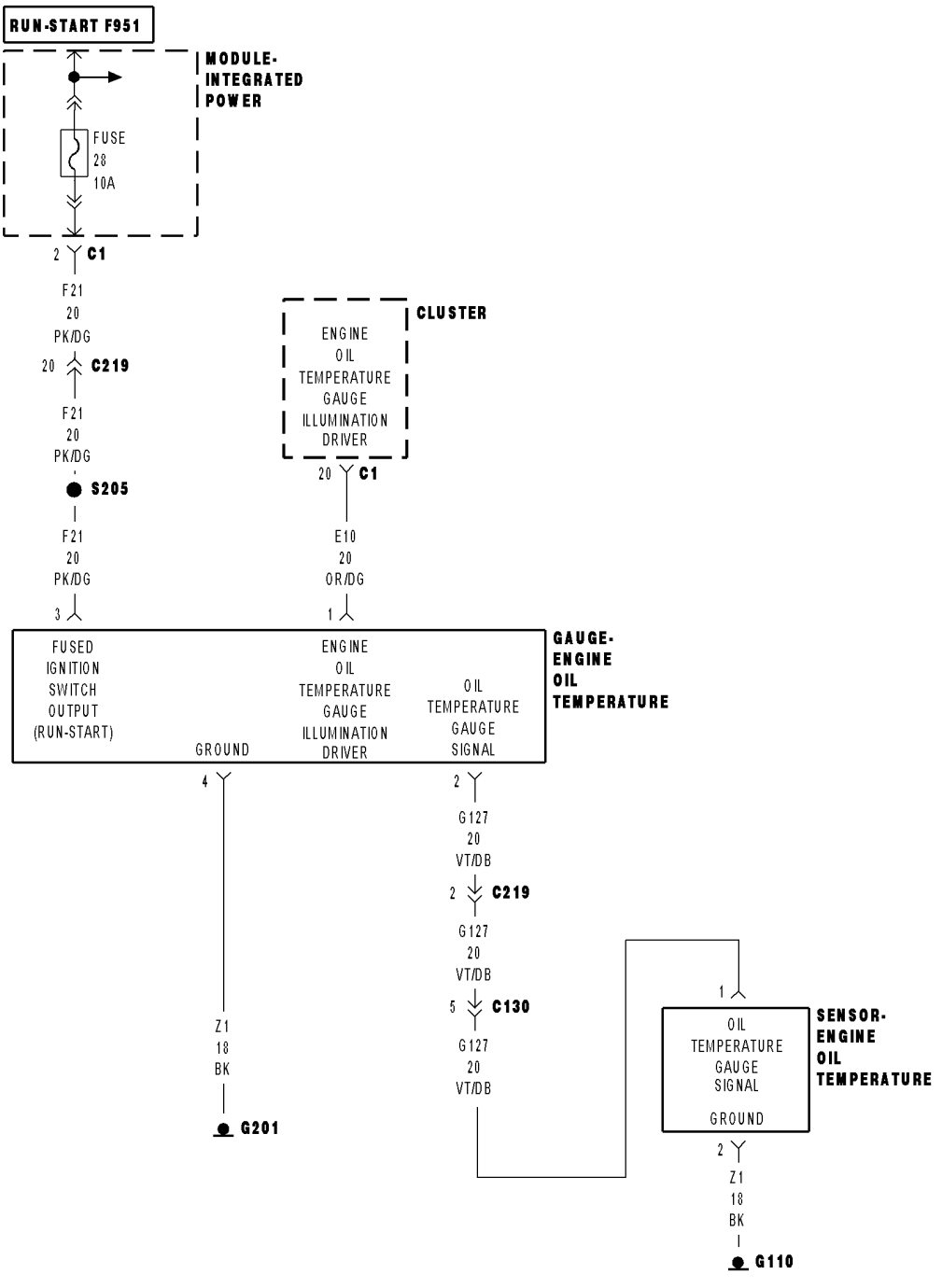

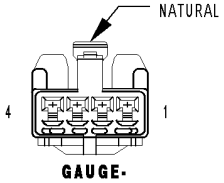

GAUGE-
ENGINE OIL
TEMPERATURE
(SRT)

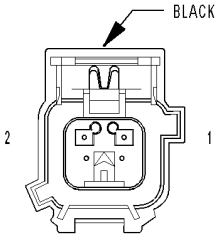

SENSOR-
ENGINE OIL
TEMPERATURE
(SRT)

81550a7c

P0197-ENGINE OIL TEMPERATURE SENSOR VOLTAGE TOO LOW (CONTINUED)

For the Engine circuit diagram (Refer to 8 - ELECTRICAL/ELECTRONIC CONTROL MODULES/ENGINE CONTROL MODULE - SCHEMATIC - ELECTRICAL)

For a complete wiring diagram **Refer to Section 8W**.

- **When Monitored:**
  Ignition on.
- **Set Condition:**
  When the PCM recognizes the engine oil temperature sensor signal goes below a specific value.

Possible Causes
ENGINE OIL TEMP SENSOR
(G127) ENGINE OIL TEMP SENSOR SIGNAL CIRCUIT SHORTED TO GROUND
(G127) ENGINE OIL TEMP SENSOR CIRCUIT SHORTED TO THE (Z1) GROUND CIRCUIT
PCM

Always perform the Pre-Diagnostic Troubleshooting procedure before proceeding. (Refer to 9 - ENGINE - DIAGNOSIS AND TESTING)

1. EOT VOLTAGE BELOW 1.0 VOLT

Ignition on, engine not running.
With the scan tool, read DTCs and record the related Freeze Frame data.
With the scan tool, read the Engine Oil Temp Sensor voltage.

Is the EOT Sensor voltage below 1.0 volt?

Yes >> Go To 2

No >> Refer to the INTERMITTENT CONDITION Symptom (Diagnostic Procedure).
Perform POWERTRAIN VERIFICATION TEST. (Refer to 9 - ENGINE - STANDARD PROCEDURE)

---

2. ENGINE OIL TEMP SENSOR

Turn the ignition off.
Disconnect the Engine Oil Temp harness connector.
Ignition on, engine not running.
With the scan tool, read Engine Oil Temp voltage.

Is the voltage above 1.0 volt?

Yes >> Replace the Engine Oil Temp Sensor.
Perform POWERTRAIN VERIFICATION TEST. (Refer to 9 - ENGINE - STANDARD PROCEDURE)

No >> Go To 3

P0197-ENGINE OIL TEMPERATURE SENSOR VOLTAGE TOO LOW (CONTINUED)

3. (G127) EOT SENSOR SIGNAL CIRCUIT SHORTED TO GROUND

Turn the ignition off.

Disconnect the PCM harness connectors.

Measure the resistance between ground and the (G127) Engine Oil Temp Sensor Signal circuit at the EOT Sensor harness connector.

Is the resistance below 100 ohms?

Yes >> Repair the short to ground in the (G127) Engine Oil Temp Sensor Signal circuit.
Perform POWERTRAIN VERIFICATION TEST. (Refer to 9 - ENGINE - STANDARD PROCEDURE)

No >> Go To 4

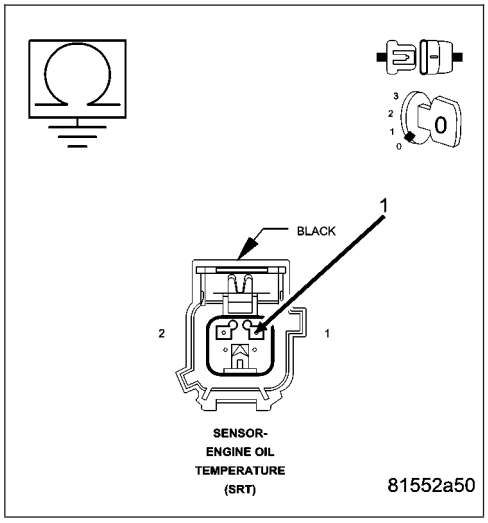

4. (G127) EOT SENSOR SIGNAL CIRCUIT SHORTED TO (Z1) GROUND CIRCUIT

Measure the resistance between the (G127) Engine Oil Temp Sensor Signal circuit and the (Z1) ground circuit at the EOT Sensor harness connector.

Is the resistance below 100 ohms?

Yes >> Repair the short between the (Z1) ground circuit and the (G127) Engine Oil Temp Sensor Signal circuit.
Perform POWERTRAIN VERIFICATION TEST. (Refer to 9 - ENGINE - STANDARD PROCEDURE)

No >> Go To 5

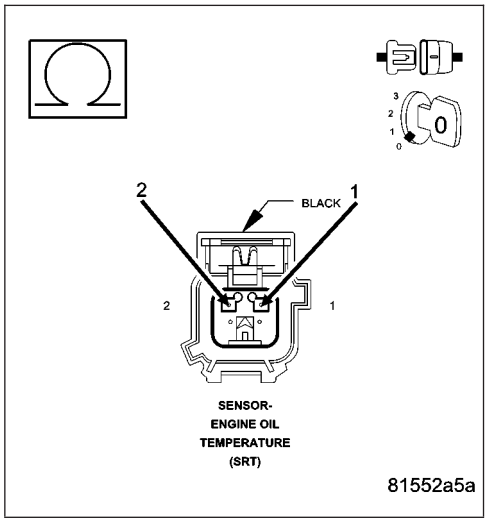

5. PCM

NOTE: Before continuing, check the PCM harness connector terminals for corrosion, damage, or terminal push out. Repair as necessary.

Using the schematics as a guide, inspect the wire harness and connectors. Pay particular attention to all Power and Ground circuits.

If there are no possible causes remaining, view repair.

Repair

Replace and program the Powertrain Control Module per Service Information.

Perform POWERTRAIN VERIFICATION TEST. (Refer to 9 - ENGINE - STANDARD PROCEDURE)

P0198-ENGINE OIL TEMPERATURE SENSOR VOLTAGE TOO HIGH

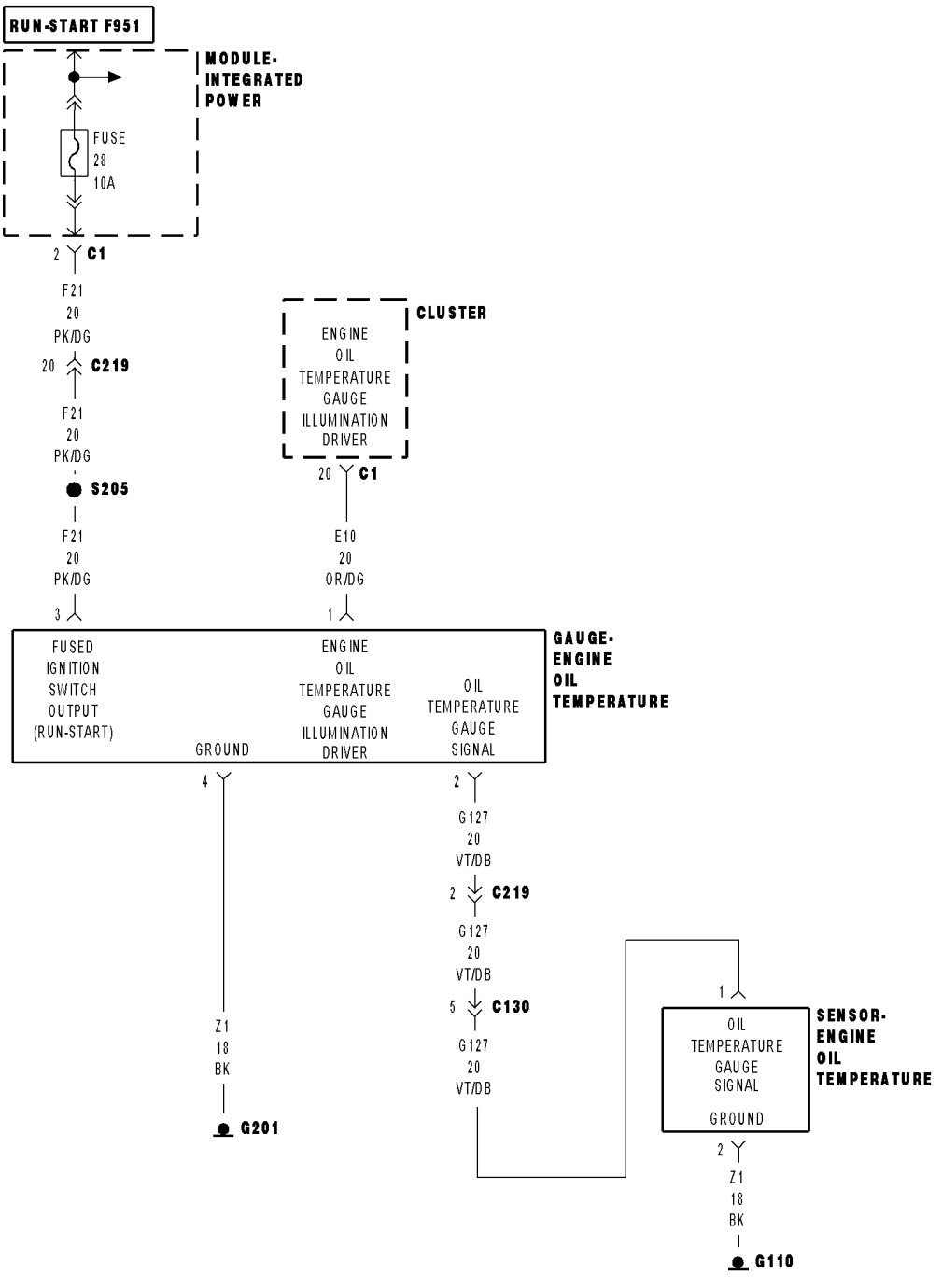

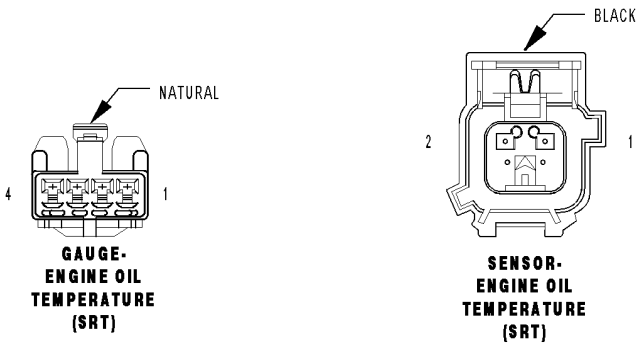

81550a7c

P0198-ENGINE OIL TEMPERATURE SENSOR VOLTAGE TOO HIGH (CONTINUED)

For the Engine circuit diagram (Refer to 8 - ELECTRICAL/ELECTRONIC CONTROL MODULES/ENGINE CONTROL MODULE - SCHEMATIC - ELECTRICAL)

For a complete wiring diagram **Refer to Section 8W**.

- **When Monitored:**
  Ignition on.
- **Set Condition:**
  When the PCM recognizes the engine oil temperature sensor signal above a specific voltage.

Possible Causes
ENGINE OIL TEMP SENSOR
(G127) ENGINE OIL TEMP SENSOR SIGNAL CIRCUIT SHORTED TO VOLTAGE
(G127) ENGINE OIL TEMP SENSOR SIGNAL CIRCUIT OPEN
(Z1) GROUND CIRCUIT OPEN
PCM

Always perform the Pre-Diagnostic Troubleshooting procedure before proceeding. (Refer to 9 - ENGINE - DIAGNOSIS AND TESTING)

1. ENGINE OIL TEMP VOLTAGE ABOVE 4.9 VOLTS

Ignition on, engine not running.

With the scan tool, read DTCs and record the related Freeze Frame data.

With the scan tool, read Engine Oil Temp Sensor voltage.

Is the voltage above 4.9 volts?

Yes >> Go To 2

No >> Refer to the INTERMITTENT CONDITION Symptom (Diagnostic Procedure).
Perform POWERTRAIN VERIFICATION TEST. (Refer to 9 - ENGINE - STANDARD PROCEDURE)

---

2. ENGINE OIL TEMP SENSOR

Turn the ignition off.

Disconnect the Engine Oil Temp Sensor harness connector.

Ignition on, engine not running.

Connect a jumper wire between the (G127) Engine Oil Temp Sensor Signal circuit and the (Z1) ground circuit in the EOT harness connector.

With the scan tool, read the Engine Oil Temp Sensor voltage.

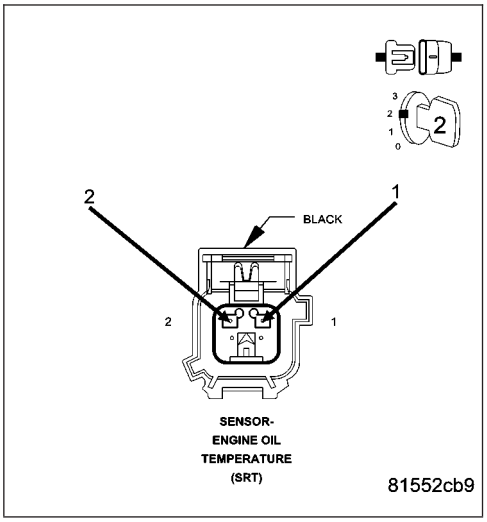

Is the voltage below 1.0 volt?

Yes >> Replace the Engine Oil Temp Sensor.
Perform POWERTRAIN VERIFICATION TEST. (Refer to 9 - ENGINE - STANDARD PROCEDURE)

No >> Go To 3

NOTE: Remove the jumper wire before continuing.

P0198-ENGINE OIL TEMPERATURE SENSOR VOLTAGE TOO HIGH (CONTINUED)

3. (G127) ENGINE OIL TEMP SENSOR SIGNAL CIRCUIT SHORTED TO VOLTAGE

Turn the ignition off.

Disconnect the PCM harness connectors.

Ignition on, engine not running.

Measure the voltage on the (G127) Engine Oil Temp Sensor Signal circuit at the EOT Sensor harness connector.

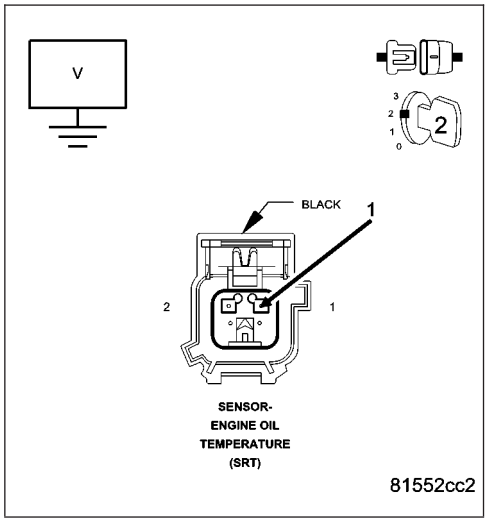

Is the voltage above 5.3 volts?

Yes >> Repair the short to voltage in the (G127) Engine Oil Temp Sensor Signal circuit.
Perform POWERTRAIN VERIFICATION TEST. (Refer to 9 - ENGINE - STANDARD PROCEDURE)

No >> Go To 4

---

4. (G127) ECT SENSOR SIGNAL CIRCUIT OPEN

Turn the ignition off.

Measure the resistance of the (G127) Engine Oil Temp Sensor Signal circuit from the Sensor harness connector to the Engine Oil Temperature Guage.

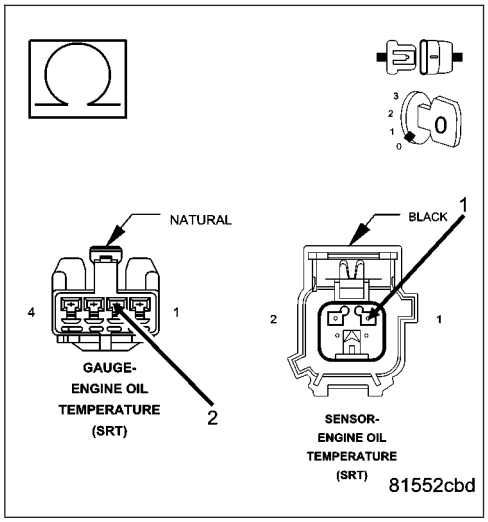

Is the resistance below 5.0 ohms?

Yes >> Go To 5

No >> Repair the open in the (G127) Engine Oil Temp Sensor Signal circuit.
Perform POWERTRAIN VERIFICATION TEST. (Refer to 9 - ENGINE - STANDARD PROCEDURE)

P0198-ENGINE OIL TEMPERATURE SENSOR VOLTAGE TOO HIGH (CONTINUED)

5. (Z1) GROUND CIRCUIT OPEN

Measure the resistance between a known good ground and the (Z1) ground circuit at the Sensor harness connector.

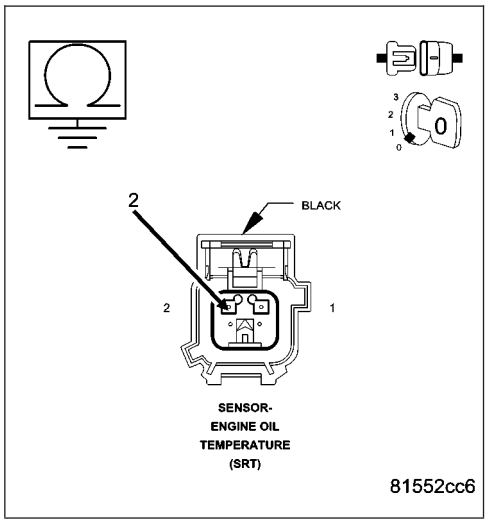

Is the resistance below 5.0 ohms?

Yes >> Go To 6

No >> Repair the open in the (Z1) ground circuit.
Perform POWERTRAIN VERIFICATION TEST. (Refer to 9 - ENGINE - STANDARD PROCEDURE)

---

6. PCM

NOTE: Before continuing, check the PCM harness connector terminals for corrosion, damage, or terminal push out. Repair as necessary.
Using the schematics as a guide, inspect the wire harness and connectors. Pay particular attention to all Power and Ground circuits.

If there are no possible causes remaining, view repair.

Repair

Replace and program the Powertrain Control Module per Service Information.
Perform POWERTRAIN VERIFICATION TEST. (Refer to 9 - ENGINE - STANDARD PROCEDURE)

P0201-FUEL INJECTOR 1 CIRCUIT

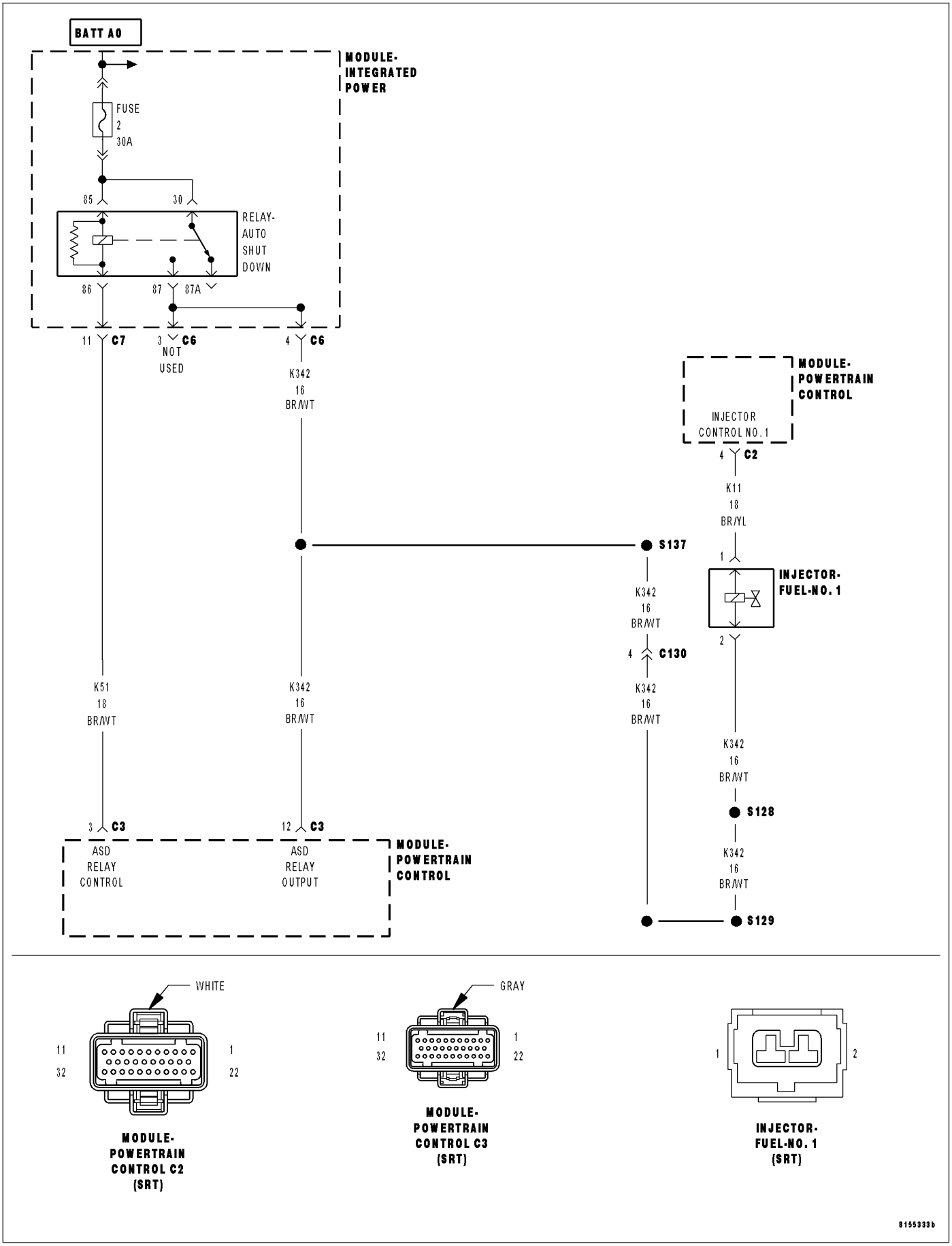

P0201-FUEL INJECTOR 1 CIRCUIT (CONTINUED)

For the Engine circuit diagram (Refer to 9 - ENGINE - SCHEMATICS AND DIAGRAMS).

For a complete wiring diagram **Refer to Section 8W**.

- **When Monitored:**
  With battery voltage greater than 10.4 volts, the auto shutdown relay energized, injector pulse width less than 10ms, and engine speed less than 3000 rpm.
- **Set Condition:**
  This trouble code takes .64 to 10.0 seconds to set when no inductive kick is sensed .18ms after injector turn off, and with no other injectors on.

Possible Causes
(K342) ASD RELAY OUTPUT CIRCUIT
(K11) INJECTOR CONTROL NO.1 CIRCUIT OPEN
(K11) INJECTOR CONTROL NO.1 CIRCUIT SHORTED TO GROUND
FUEL INJECTOR
PCM

Always perform the Pre-Diagnostic Troubleshooting procedure before proceeding. (Refer to 9 - ENGINE - DIAGNOSIS AND TESTING).

Diagnostic Test

1. ACTIVE DTC

Ignition on, engine not running.

With a scan tool, read DTCs.

Is the DTC active at this time?

Yes >> Go To 2

No >> Refer to the INTERMITTENT CONDITION Diagnostic Procedure.
Perform the POWERTRAIN VERIFICATION TEST. (Refer to 9 - ENGINE - STANDARD PROCEDURE)

---

2. (K342) ASD RELAY OUTPUT CIRCUIT

Turn the ignition off.

Disconnect the No.1 Fuel Injector harness connector.

Ignition on, engine not running.

With the scan tool, actuate the ASD Relay.

Using a 12-volt test light connected to ground, probe the (K342) ASD Relay Output circuit in the Fuel Injector harness connector.

Does the test light illuminate brightly?

Yes >> Go To 3

No >> Repair the excessive resistance or short to ground in the (K342) ASD Relay Output circuit.
Perform the POWERTRAIN VERIFICATION TEST. (Refer to 9 - ENGINE - STANDARD PROCEDURE)

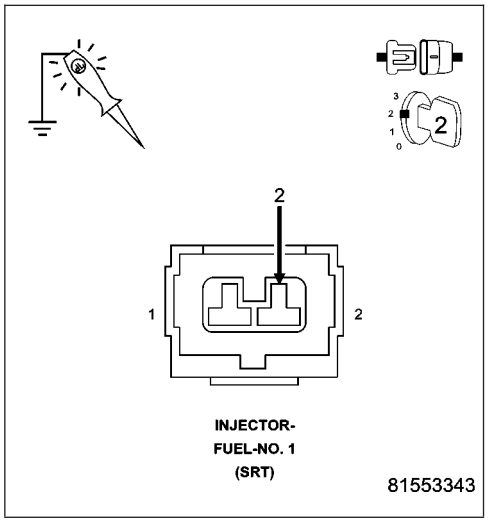

P0201-FUEL INJECTOR 1 CIRCUIT (CONTINUED)

3. FUEL INJECTOR

Using a 12-volt test light connected to 12-volts, probe the (K11) Injector Control No.1 circuit.

With the scan tool, actuate the Fuel Injector.

What is the state of the test light during the actuation?

Brightly Blinking.

Replace the Fuel Injector.

Perform the POWERTRAIN VERIFICATION TEST. (Refer to 9 - ENGINE - STANDARD PROCEDURE)

ON Constantly.

Go To 4

OFF Constantly.

Go To 5

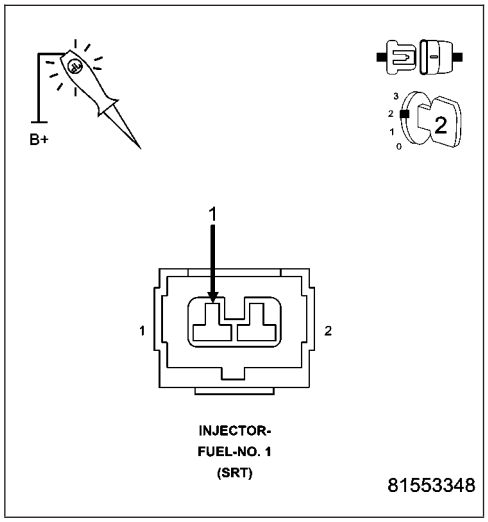

4. (K11) INJECTOR CONTROL NO.1 CIRCUIT SHORTED TO GROUND

Turn the ignition off.

Disconnect the PCM harness connector.

Measure the resistance between ground and the (K11) Injector Control No.1 circuit in the Injector harness connector.

Is the resistance below 100 ohms?

Yes >> Repair the short to ground in the (K11) Injector Control No.1 circuit.

Perform the POWERTRAIN VERIFICATION TEST. (Refer to 9 - ENGINE - STANDARD PROCEDURE)

No >> Go To 6

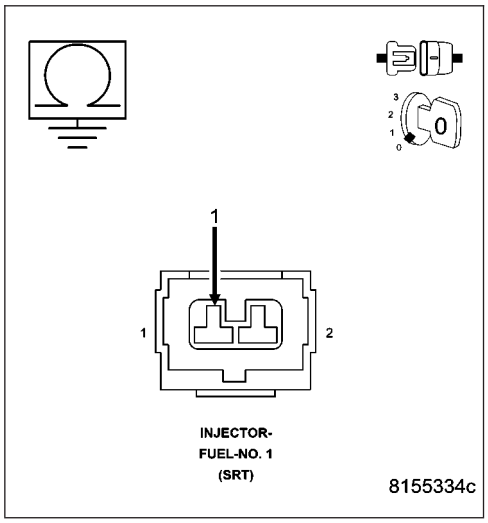

P0201-FUEL INJECTOR 1 CIRCUIT (CONTINUED)

5. (K11) INJECTOR CONTROL NO.1 CIRCUIT OPEN

Turn the ignition off.

Disconnect the PCM harness connector.

Measure the resistance of the (K11) Injector Control No.1 circuit from the Fuel Injector harness connector to the PCM harness connector.

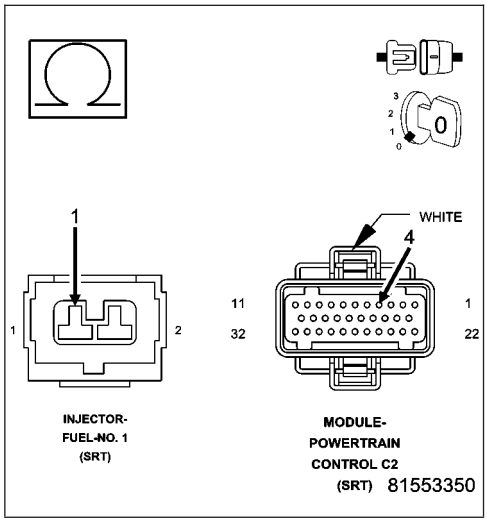

Is the resistance below 5.0 ohms?

Yes >> Go To 6

No >> Repair the open in the (K11) Injector Control No.1 circuit.
Perform the POWERTRAIN VERIFICATION TEST. (Refer to 9 - ENGINE - STANDARD PROCEDURE)

6. PCM

NOTE: Before continuing, check the PCM harness connector terminals for corrosion, damage, or terminal push out. Repair as necessary.

Using the schematics as a guide, inspect the wire harness and connectors. Pay particular attention to all Power and Ground circuits.

Were there any problems found?

Yes >> Repair as necessary.
Perform the POWERTRAIN VERIFICATION TEST. (Refer to 9 - ENGINE - STANDARD PROCEDURE)

No >> Replace and program the Powertrain Control Module per Service Information.
Perform the POWERTRAIN VERIFICATION TEST. (Refer to 9 - ENGINE - STANDARD PROCEDURE)

P0202-FUEL INJECTOR 2 CIRCUIT

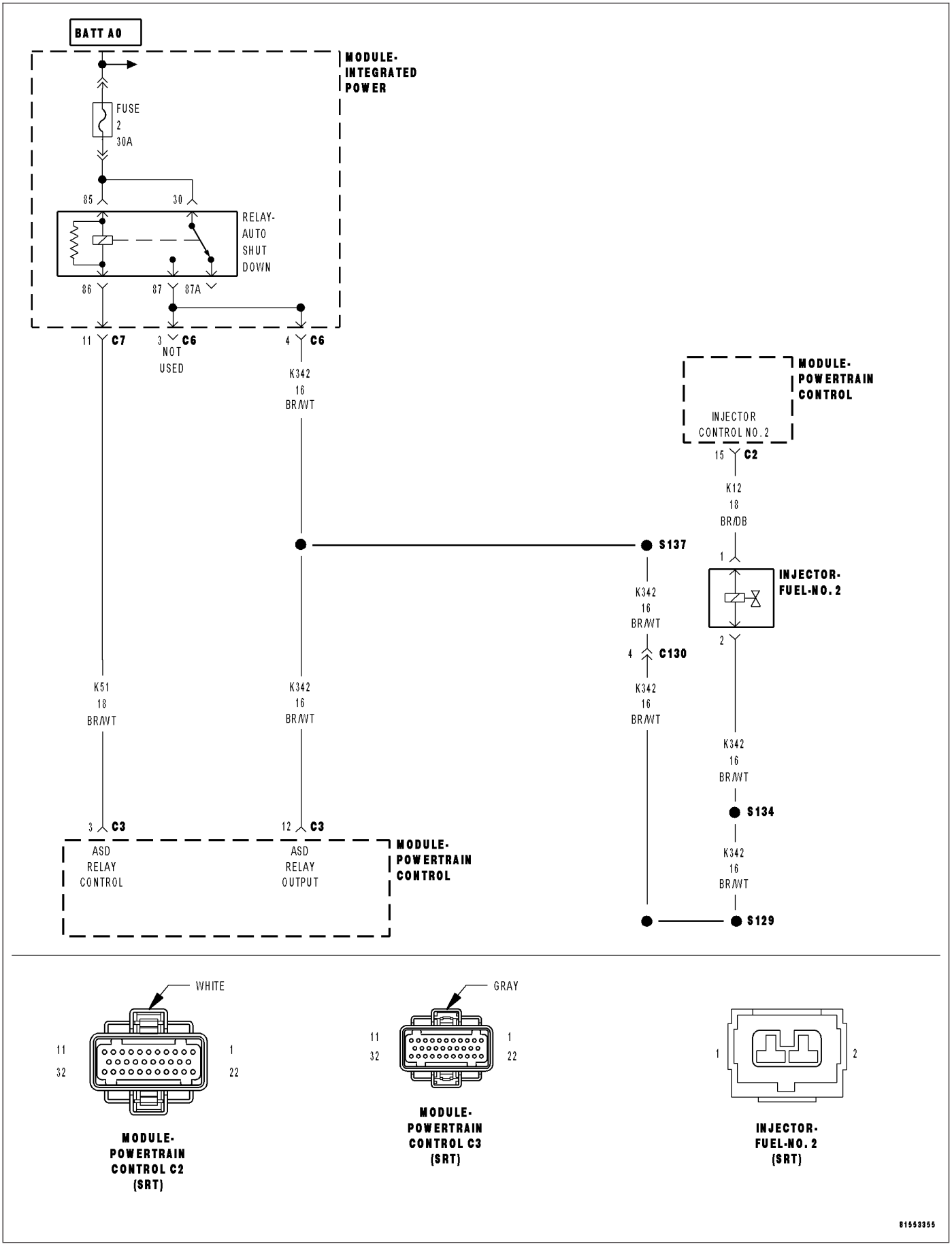

P0202-FUEL INJECTOR 2 CIRCUIT (CONTINUED)

For the Engine circuit diagram (Refer to 9 - ENGINE - SCHEMATICS AND DIAGRAMS).

For a complete wiring diagram **Refer to Section 8W**.

- **When Monitored:**
  With battery voltage greater than 10.4 volts, the auto shutdown relay energized, injector pulse width less than 10ms, and engine speed less than 3000 rpm.
- **Set Condition:**
  This trouble code takes .64 to 10.0 seconds to set when no inductive kick is sensed .18ms after injector turn off, and with no other injectors on.

Possible Causes
(K342) ASD RELAY OUTPUT CIRCUIT
(K12) INJECTOR CONTROL NO.2 CIRCUIT OPEN
(K12) INJECTOR CONTROL NO.2 CIRCUIT SHORTED TO GROUND
FUEL INJECTOR
PCM

Always perform the Pre-Diagnostic Troubleshooting procedure before proceeding. (Refer to 9 - ENGINE - DIAGNOSIS AND TESTING).

Diagnostic Test

1. ACTIVE DTC

Ignition on, engine not running.

With a scan tool, read DTCs.

Is the DTC active at this time?

Yes >> Go To 2

No >> Refer to the INTERMITTENT CONDITION Diagnostic Procedure.
Perform the POWERTRAIN VERIFICATION TEST. (Refer to 9 - ENGINE - STANDARD PROCEDURE)

---

2. (K342) ASD RELAY OUTPUT CIRCUIT

Turn the ignition off.

Disconnect the No.2 Fuel Injector harness connector.

Ignition on, engine not running.

With the scan tool, actuate the ASD Relay.

Using a 12-volt test light connected to ground, probe the (K342) ASD Relay Output circuit in the No.2 Fuel Injector harness connector.

Does the test light illuminate brightly?

Yes >> Go To 3

No >> Repair the excessive resistance or short to ground in the (K342) ASD Relay Output circuit.
Perform the POWERTRAIN VERIFICATION TEST. (Refer to 9 - ENGINE - STANDARD PROCEDURE)

P0202-FUEL INJECTOR 2 CIRCUIT (CONTINUED)

3. FUEL INJECTOR

Using a 12-volt test light connected to 12-volts, probe the (K12) Injector Control No.2 circuit.

With the scan tool, actuate the No.2 Fuel Injector.

What is the state of the test light during the actuation?

Brightly Blinking.

Replace the Fuel Injector.

Perform the POWERTRAIN VERIFICATION TEST. (Refer to 9 - ENGINE - STANDARD PROCEDURE)

ON Constantly.

Go To 4

OFF Constantly.

Go To 5

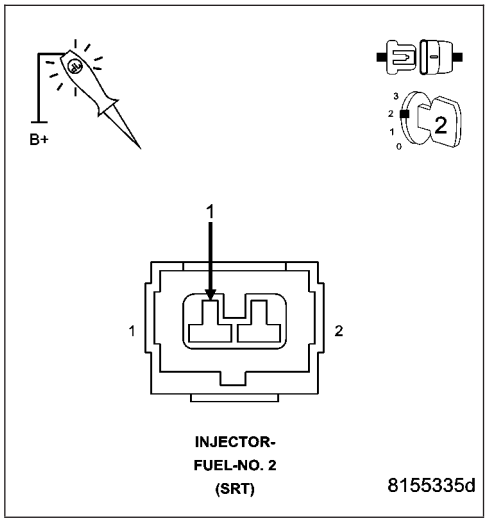

4. (K12) INJECTOR CONTROL NO.2 CIRCUIT SHORTED TO GROUND

Turn the ignition off.

Disconnect the PCM harness connector.

Measure the resistance between ground and the (K12) Injector Control No.2 circuit in the Injector harness connector.

Is the resistance below 100 ohms?

Yes >> Repair the short to ground in the (K12) Injector Control No.2 circuit.

Perform the POWERTRAIN VERIFICATION TEST. (Refer to 9 - ENGINE - STANDARD PROCEDURE)

No >> Go To 6

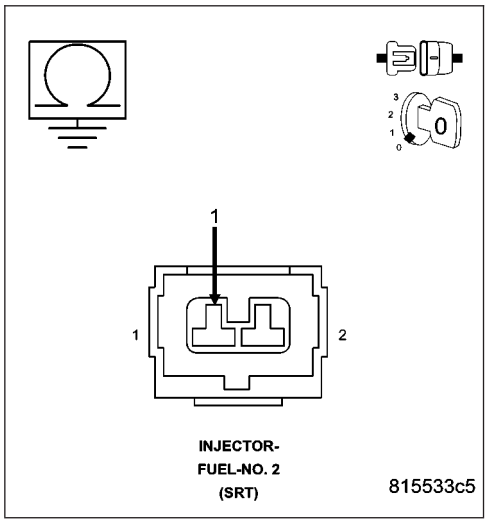

P0202-FUEL INJECTOR 2 CIRCUIT (CONTINUED)

5. (K12) INJECTOR CONTROL NO.2 CIRCUIT OPEN

Turn the ignition off.

Disconnect the PCM harness connector.

Measure the resistance of the (K12) Injector Control No.2 circuit from the Fuel Injector harness connector to the PCM harness connector.

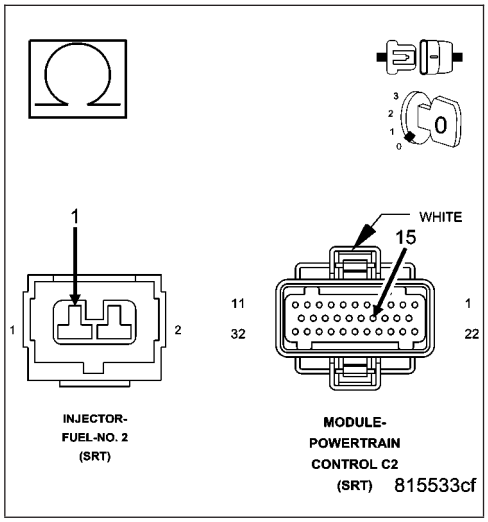

Is the resistance below 5.0 ohms?

Yes >> Go To 6

No >> Repair the open in the (K12) Injector Control No.2 circuit.
Perform the POWERTRAIN VERIFICATION TEST. (Refer to 9 - ENGINE - STANDARD PROCEDURE)

6. PCM

NOTE: Before continuing, check the PCM harness connector terminals for corrosion, damage, or terminal push out. Repair as necessary.

Using the schematics as a guide, inspect the wire harness and connectors. Pay particular attention to all Power and Ground circuits.

Were there any problems found?

Yes >> Repair as necessary.
Perform the POWERTRAIN VERIFICATION TEST. (Refer to 9 - ENGINE - STANDARD PROCEDURE)

No >> Replace and program the Powertrain Control Module per Service Information.
Perform the POWERTRAIN VERIFICATION TEST. (Refer to 9 - ENGINE - STANDARD PROCEDURE)

P0203-FUEL INJECTOR 3 CIRCUIT

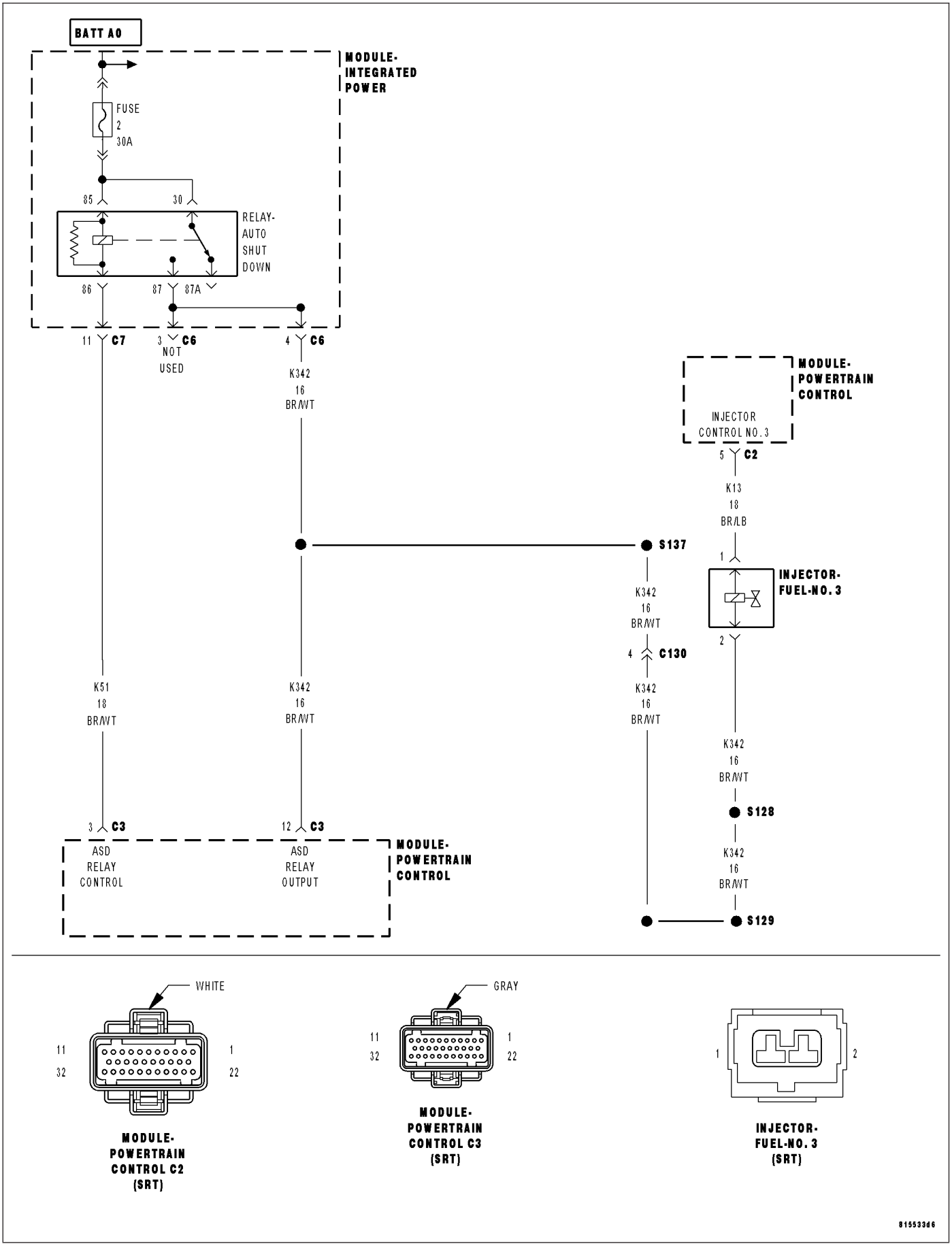

P0203-FUEL INJECTOR 3 CIRCUIT (CONTINUED)

For the Engine circuit diagram (Refer to 9 - ENGINE - SCHEMATICS AND DIAGRAMS).

For a complete wiring diagram **Refer to Section 8W**.

- **When Monitored:**
  With battery voltage greater than 10.4 volts, the auto shutdown relay energized, injector pulse width less than 10ms, and engine speed less than 3000 rpm.
- **Set Condition:**
  This trouble code takes .64 to 10.0 seconds to set when no inductive kick is sensed .18ms after injector turn off, and with no other injectors on.

Possible Causes
(K342) ASD RELAY OUTPUT CIRCUIT
(K13) INJECTOR CONTROL NO.3 CIRCUIT OPEN
(K13) INJECTOR CONTROL NO.3 CIRCUIT SHORTED TO GROUND
FUEL INJECTOR
PCM

Always perform the Pre-Diagnostic Troubleshooting procedure before proceeding. (Refer to 9 - ENGINE - DIAGNOSIS AND TESTING).

Diagnostic Test

1. ACTIVE DTC

Ignition on, engine not running.

With a scan tool, read DTCs.

Is the DTC active at this time?

Yes >> Go To 2

No >> Refer to the INTERMITTENT CONDITION Diagnostic Procedure.
Perform the POWERTRAIN VERIFICATION TEST. (Refer to 9 - ENGINE - STANDARD PROCEDURE)

---

2. (K342) ASD RELAY OUTPUT CIRCUIT

Turn the ignition off.

Disconnect the No.3 Fuel Injector harness connector.

Ignition on, engine not running.

With the scan tool, actuate the ASD Relay.

Using a 12-volt test light connected to ground, probe the (K342) ASD Relay Output circuit in the No.3 Fuel Injector harness connector.

Does the test light illuminate brightly?

Yes >> Go To 3

No >> Repair the excessive resistance or short to ground in the (K342) ASD Relay Output circuit.
Perform the POWERTRAIN VERIFICATION TEST. (Refer to 9 - ENGINE - STANDARD PROCEDURE)

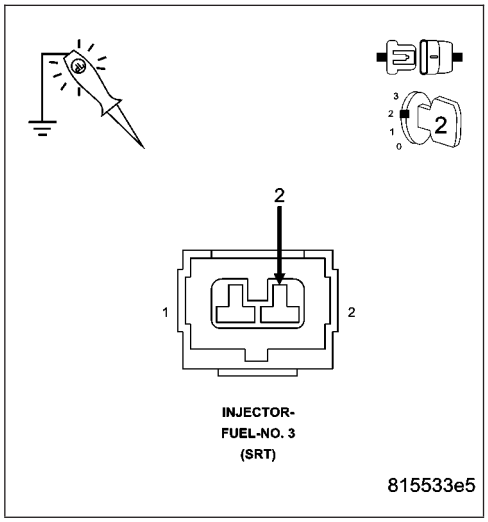

P0203-FUEL INJECTOR 3 CIRCUIT (CONTINUED)

3. FUEL INJECTOR

Using a 12-volt test light connected to 12-volts, probe the (K13) Injector Control No.3 circuit.

With the scan tool, actuate the No.3 Fuel Injector.

What is the state of the test light during the actuation?

Brightly Blinking.

Replace the Fuel Injector.

Perform the POWERTRAIN VERIFICATION TEST. (Refer to 9 - ENGINE - STANDARD PROCEDURE)

ON Constantly.

Go To 4

OFF Constantly.

Go To 5

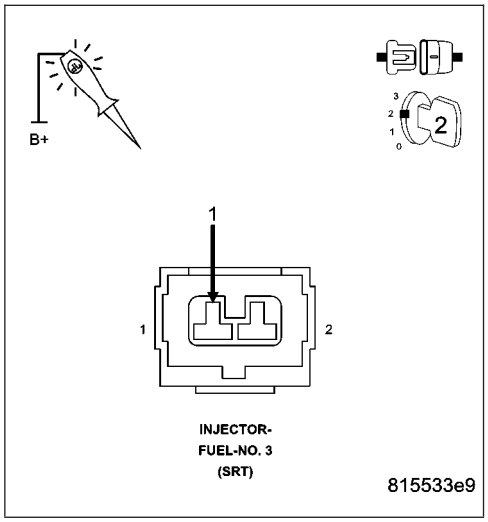

4. (K13) INJECTOR CONTROL NO.3 CIRCUIT SHORTED TO GROUND

Turn the ignition off.

Disconnect the PCM harness connector.

Measure the resistance between ground and the (K13) Injector Control No.3 circuit in the Injector harness connector.

Is the resistance below 100 ohms?

Yes >> Repair the short to ground in the (K13) Injector Control No.3 circuit.

Perform the POWERTRAIN VERIFICATION TEST. (Refer to 9 - ENGINE - STANDARD PROCEDURE)

No >> Go To 6

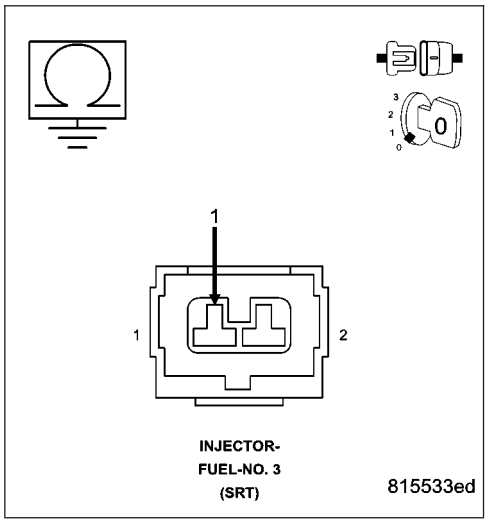

P0203-FUEL INJECTOR 3 CIRCUIT (CONTINUED)

5. (K13) INJECTOR CONTROL NO.3 CIRCUIT OPEN

Turn the ignition off.

Disconnect the PCM harness connector.

Measure the resistance of the (K13) Injector Control No.3 circuit from the Fuel Injector harness connector to the PCM harness connector.

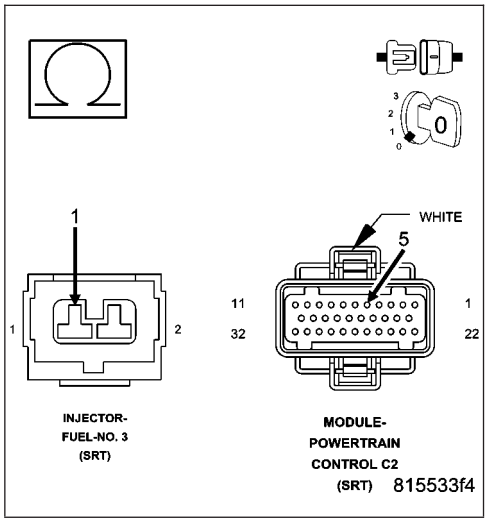

Is the resistance below 5.0 ohms?

Yes >> Go To 6

No >> Repair the open in the (K13) Injector Control No.3 circuit. Perform the POWERTRAIN VERIFICATION TEST. (Refer to 9 - ENGINE - STANDARD PROCEDURE)

6. PCM

NOTE: Before continuing, check the PCM harness connector terminals for corrosion, damage, or terminal push out. Repair as necessary.

Using the schematics as a guide, inspect the wire harness and connectors. Pay particular attention to all Power and Ground circuits.

Were there any problems found?

Yes >> Repair as necessary.
Perform the POWERTRAIN VERIFICATION TEST. (Refer to 9 - ENGINE - STANDARD PROCEDURE)

No >> Replace and program the Powertrain Control Module per Service Information.
Perform the POWERTRAIN VERIFICATION TEST. (Refer to 9 - ENGINE - STANDARD PROCEDURE)

P0204-FUEL INJECTOR 4 CIRCUIT

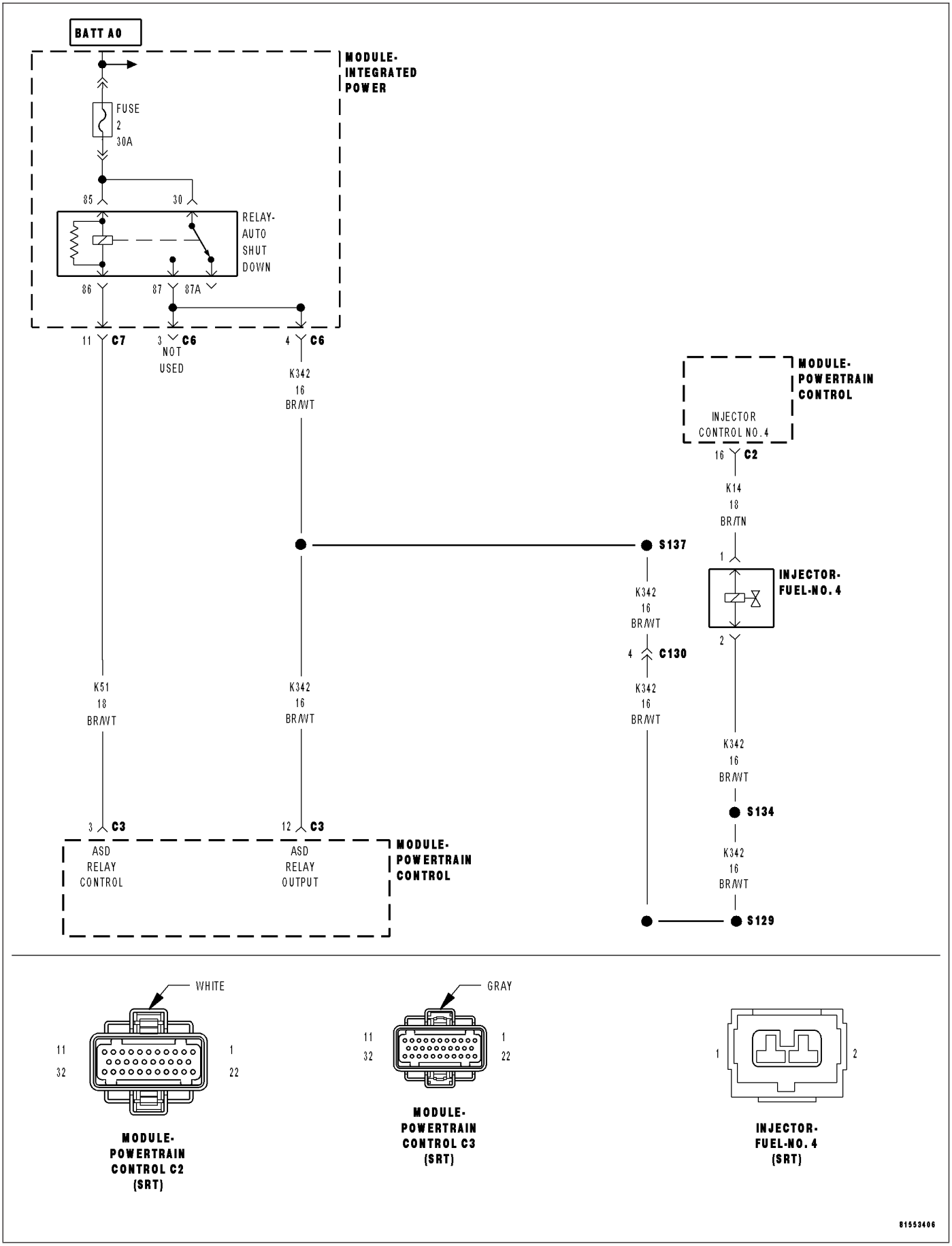

P0204-FUEL INJECTOR 4 CIRCUIT (CONTINUED)

For the Engine circuit diagram (Refer to 9 - ENGINE - SCHEMATICS AND DIAGRAMS).

For a complete wiring diagram **Refer to Section 8W**.

- **When Monitored:**
  With battery voltage greater than 10.4 volts, the auto shutdown relay energized, injector pulse width less than 10ms, and engine speed less than 3000 rpm.
- **Set Condition:**
  This trouble code takes .64 to 10.0 seconds to set when no inductive kick is sensed .18ms after injector turn off, and with no other injectors on.

Possible Causes
(K342) ASD RELAY OUTPUT CIRCUIT
(K14) INJECTOR CONTROL NO.4 CIRCUIT OPEN
(K14) INJECTOR CONTROL NO.4 CIRCUIT SHORTED TO GROUND
FUEL INJECTOR
PCM

Always perform the Pre-Diagnostic Troubleshooting procedure before proceeding. (Refer to 9 - ENGINE - DIAGNOSIS AND TESTING).

Diagnostic Test

1. ACTIVE DTC

Ignition on, engine not running.

With a scan tool, read DTCs.

Is the DTC active at this time?

Yes >> Go To 2

No >> Refer to the INTERMITTENT CONDITION Diagnostic Procedure.
Perform the POWERTRAIN VERIFICATION TEST. (Refer to 9 - ENGINE - STANDARD PROCEDURE)

---

2. (K342) ASD RELAY OUTPUT CIRCUIT

Turn the ignition off.

Disconnect the No.4 Fuel Injector harness connector.

Ignition on, engine not running.

With the scan tool, actuate the ASD Relay.

Using a 12-volt test light connected to ground, probe the (K342) ASD Relay Output circuit in the No.4 Fuel Injector harness connector.

Does the test light illuminate brightly?

Yes >> Go To 3

No >> Repair the excessive resistance or short to ground in the (K342) ASD Relay Output circuit.
Perform the POWERTRAIN VERIFICATION TEST. (Refer to 9 - ENGINE - STANDARD PROCEDURE)

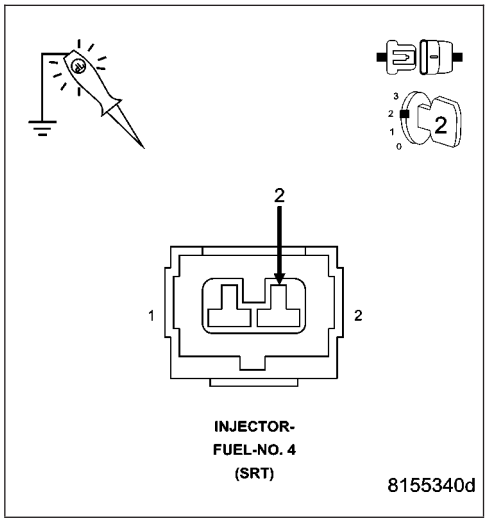

P0204-FUEL INJECTOR 4 CIRCUIT (CONTINUED)

3. FUEL INJECTOR

Using a 12-volt test light connected to 12-volts, probe the (K14) Injector Control No.4 circuit.

With the scan tool, actuate the No.4 Fuel Injector.

What is the state of the test light during the actuation?

Brightly Blinking.

Replace the Fuel Injector.

Perform the POWERTRAIN VERIFICATION TEST. (Refer to 9 - ENGINE - STANDARD PROCEDURE)

ON Constantly.

Go To 4

OFF Constantly.

Go To 5

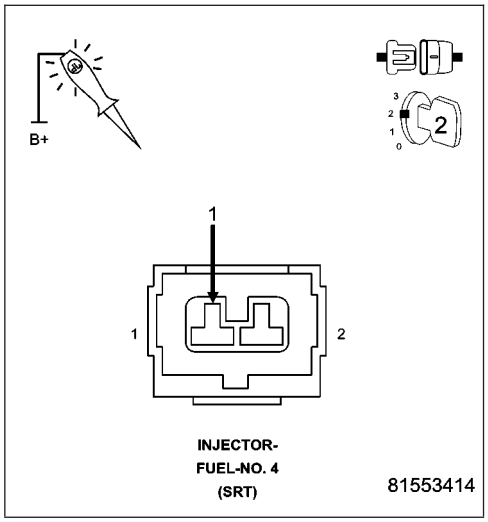

4. (K14) INJECTOR CONTROL NO.4 CIRCUIT SHORTED TO GROUND

Turn the ignition off.

Disconnect the C2 PCM harness connector.

Measure the resistance between ground and the (K14) Injector Control No.4 circuit in the Injector harness connector.

Is the resistance below 100 ohms?

Yes >> Repair the short to ground in the (K14) Injector Control No.4 circuit.

Perform the POWERTRAIN VERIFICATION TEST. (Refer to 9 - ENGINE - STANDARD PROCEDURE)

No >> Go To 6

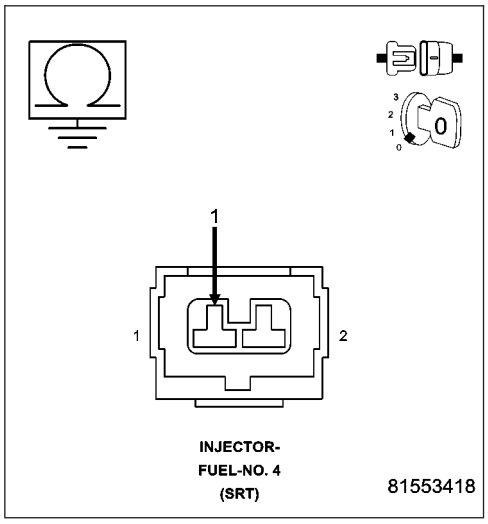

P0204-FUEL INJECTOR 4 CIRCUIT (CONTINUED)

5. (K14) INJECTOR CONTROL NO.4 CIRCUIT OPEN

Turn the ignition off.

Disconnect the PCM harness connector.

Measure the resistance of the (K14) Injector Control No.4 circuit from the Fuel Injector harness connector to the PCM harness connector.

Is the resistance below 5.0 ohms?

Yes >> Go To 6

No >> Repair the open in the (K14) Injector Control No.4 circuit. Perform the POWERTRAIN VERIFICATION TEST. (Refer to 9 - ENGINE - STANDARD PROCEDURE)

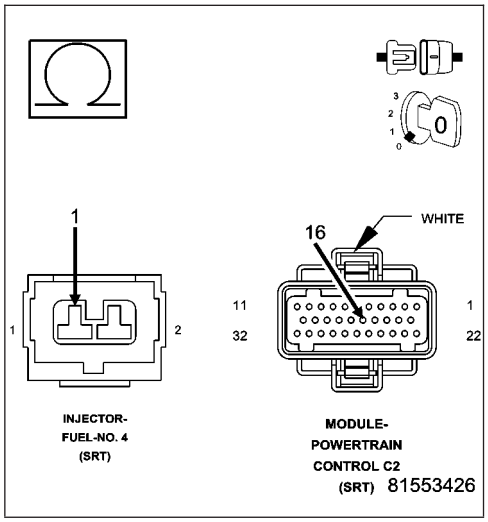

6. PCM

NOTE: Before continuing, check the PCM harness connector terminals for corrosion, damage, or terminal push out. Repair as necessary.

Using the schematics as a guide, inspect the wire harness and connectors. Pay particular attention to all Power and Ground circuits.

Were there any problems found?

Yes >> Repair as necessary.
Perform the POWERTRAIN VERIFICATION TEST. (Refer to 9 - ENGINE - STANDARD PROCEDURE)

No >> Replace and program the Powertrain Control Module per Service Information.
Perform the POWERTRAIN VERIFICATION TEST. (Refer to 9 - ENGINE - STANDARD PROCEDURE)

P0205-FUEL INJECTOR 5 CIRCUIT

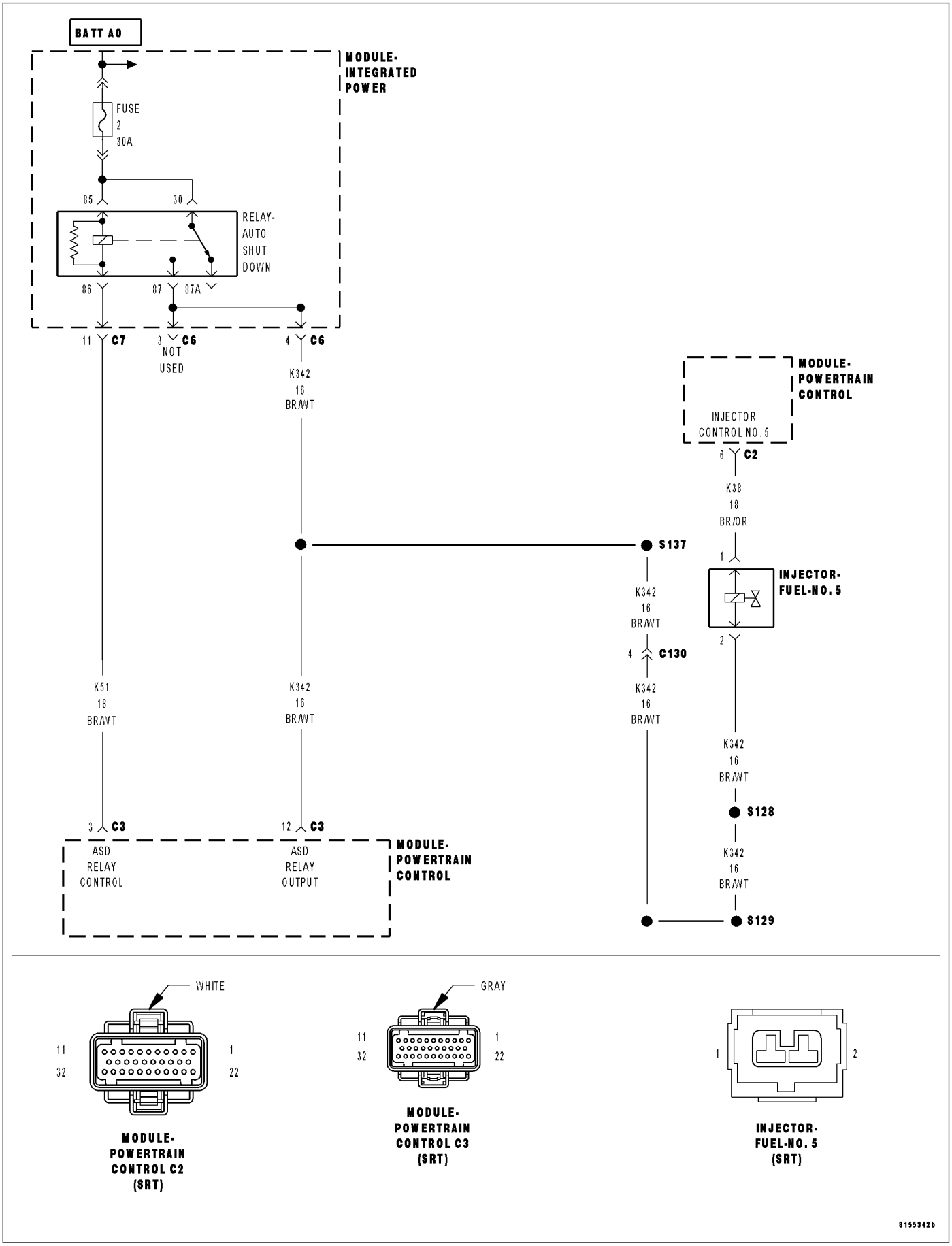

P0205-FUEL INJECTOR 5 CIRCUIT (CONTINUED)

For the Engine circuit diagram (Refer to 9 - ENGINE - SCHEMATICS AND DIAGRAMS).

For a complete wiring diagram **Refer to Section 8W**.

- **When Monitored:**
  With battery voltage greater than 10.4 volts, the auto shutdown relay energized, injector pulse width less than 10ms, and engine speed less than 3000 rpm.
- **Set Condition:**
  This trouble code takes .64 to 10.0 seconds to set when no inductive kick is sensed .18ms after injector turn off, and with no other injectors on.

Possible Causes
(K342) ASD RELAY OUTPUT CIRCUIT
(K38) INJECTOR CONTROL NO.5 CIRCUIT OPEN
(K38) INJECTOR CONTROL NO.5 CIRCUIT SHORTED TO GROUND
FUEL INJECTOR
PCM

Always perform the Pre-Diagnostic Troubleshooting procedure before proceeding. (Refer to 9 - ENGINE - DIAGNOSIS AND TESTING).

Diagnostic Test

1. ACTIVE DTC

Ignition on, engine not running.

With a scan tool, read DTCs.

Is the DTC active at this time?

Yes >> Go To 2

No >> Refer to the INTERMITTENT CONDITION Diagnostic Procedure.
Perform the POWERTRAIN VERIFICATION TEST. (Refer to 9 - ENGINE - STANDARD PROCEDURE)

---

2. (K342) ASD RELAY OUTPUT CIRCUIT

Turn the ignition off.

Disconnect the No.5 Fuel Injector harness connector.

Ignition on, engine not running.

With the scan tool, actuate the ASD Relay.

Using a 12-volt test light connected to ground, probe the (K342) ASD Relay Output circuit in the No.5 Fuel Injector harness connector.

Does the test light illuminate brightly?

Yes >> Go To 3

No >> Repair the excessive resistance or short to ground in the (K342) ASD Relay Output circuit.
Perform the POWERTRAIN VERIFICATION TEST. (Refer to 9 - ENGINE - STANDARD PROCEDURE)

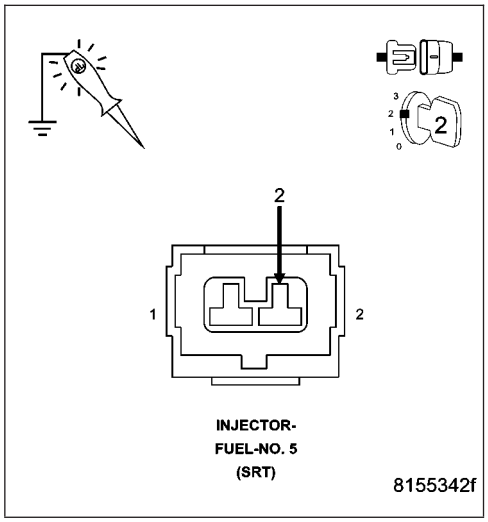

P0205-FUEL INJECTOR 5 CIRCUIT (CONTINUED)

3. FUEL INJECTOR

Using a 12-volt test light connected to 12-volts, probe the (K38) Injector Control No.5 circuit.

With the scan tool, actuate the No.5 Fuel Injector.

What is the state of the test light during the actuation?

Brightly Blinking.

Replace the Fuel Injector.

Perform the POWERTRAIN VERIFICATION TEST. (Refer to 9 - ENGINE - STANDARD PROCEDURE)

ON Constantly.

Go To 4

OFF Constantly.

Go To 5

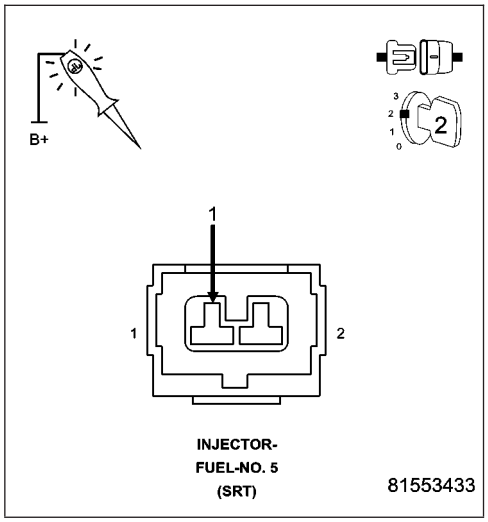

4. (K38) INJECTOR CONTROL NO.5 CIRCUIT SHORTED TO GROUND

Turn the ignition off.

Disconnect the PCM harness connector.

Measure the resistance between ground and the (K38) Injector Control No.5 circuit in the Injector harness connector.

Is the resistance below 100 ohms?

Yes >> Repair the short to ground in the (K38) Injector Control No.5 circuit.

Perform the POWERTRAIN VERIFICATION TEST. (Refer to 9 - ENGINE - STANDARD PROCEDURE)

No >> Go To 6

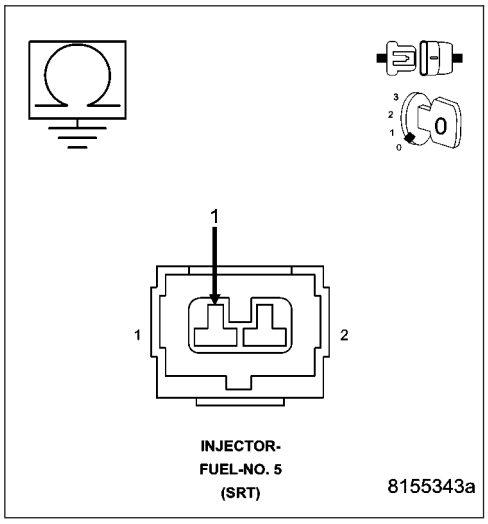

P0205-FUEL INJECTOR 5 CIRCUIT (CONTINUED)

5. (K38) INJECTOR CONTROL NO.5 CIRCUIT OPEN

Turn the ignition off.

Disconnect the PCM harness connector.

Measure the resistance of the (K38) Injector Control No.5 circuit from the Fuel Injector harness connector to the PCM harness connector.

Is the resistance below 5.0 ohms?

Yes >> Go To 6

No >> Repair the open in the (K38) Injector Control No.5 circuit. Perform the POWERTRAIN VERIFICATION TEST. (Refer to 9 - ENGINE - STANDARD PROCEDURE)

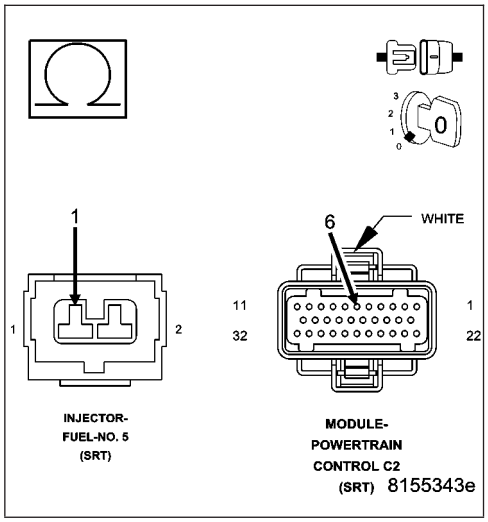

6. PCM

NOTE: Before continuing, check the PCM harness connector terminals for corrosion, damage, or terminal push out. Repair as necessary.

Using the schematics as a guide, inspect the wire harness and connectors. Pay particular attention to all Power and Ground circuits.

Were there any problems found?

Yes >> Repair as necessary.
Perform the POWERTRAIN VERIFICATION TEST. (Refer to 9 - ENGINE - STANDARD PROCEDURE)

No >> Replace and program the Powertrain Control Module per Service Information.
Perform the POWERTRAIN VERIFICATION TEST. (Refer to 9 - ENGINE - STANDARD PROCEDURE)

P0206-FUEL INJECTOR 6 CIRCUIT

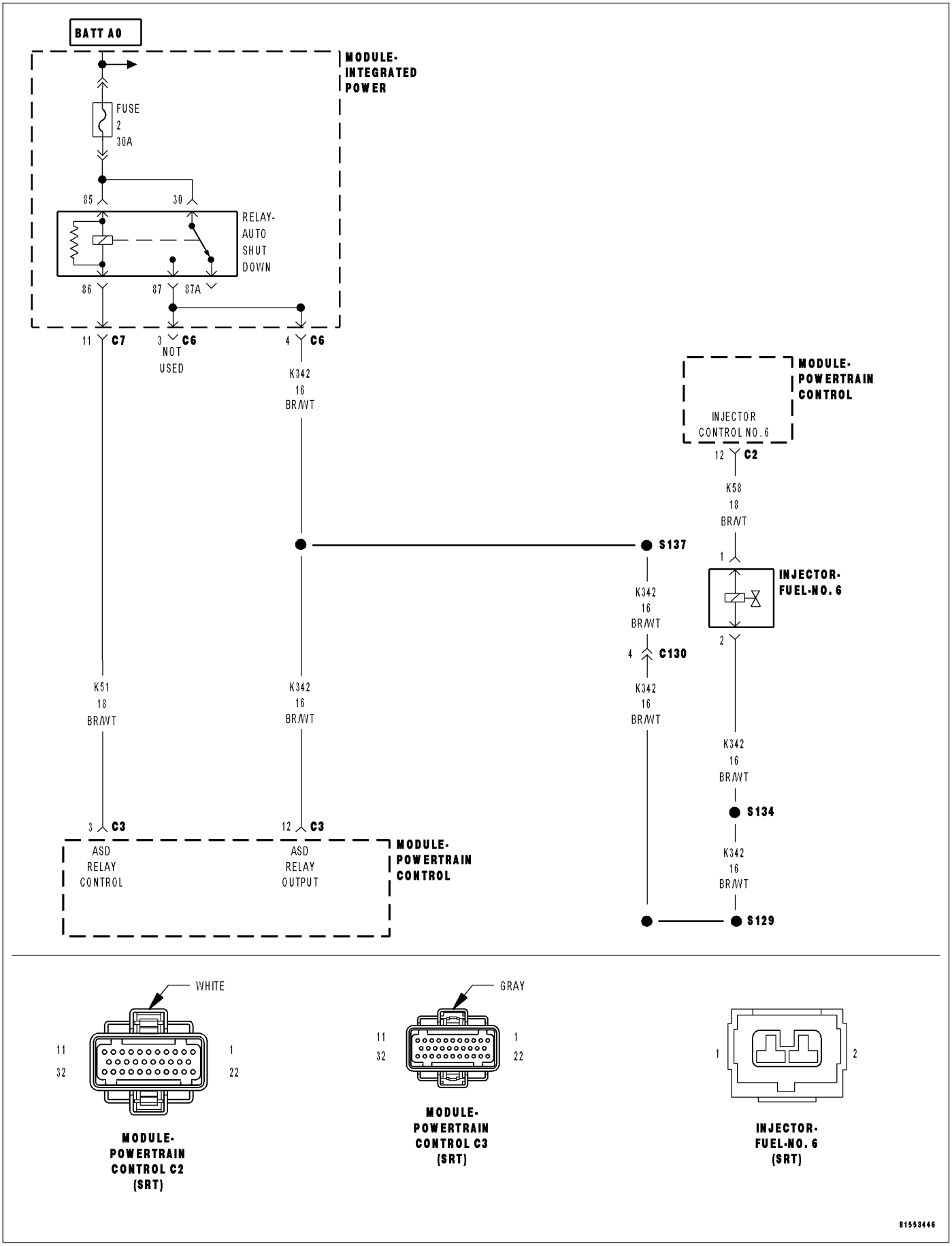

P0206-FUEL INJECTOR 6 CIRCUIT (CONTINUED)

For the Engine circuit diagram (Refer to 9 - ENGINE - SCHEMATICS AND DIAGRAMS).

For a complete wiring diagram **Refer to Section 8W**.

- **When Monitored:**
  With battery voltage greater than 10.4 volts, the auto shutdown relay energized, injector pulse width less than 10ms, and engine speed less than 3000 rpm.
- **Set Condition:**
  This trouble code takes .64 to 10.0 seconds to set when no inductive kick is sensed .18ms after injector turn off, and with no other injectors on.

Possible Causes
(K342) ASD RELAY OUTPUT CIRCUIT
(K58) INJECTOR CONTROL NO.6 CIRCUIT OPEN
(K58) INJECTOR CONTROL NO.6 CIRCUIT SHORTED TO GROUND
FUEL INJECTOR
PCM

Always perform the Pre-Diagnostic Troubleshooting procedure before proceeding. (Refer to 9 - ENGINE - DIAGNOSIS AND TESTING).

Diagnostic Test

1. ACTIVE DTC

Ignition on, engine not running.

With a scan tool, read DTCs.

Is the DTC active at this time?

Yes >> Go To 2

No >> Refer to the INTERMITTENT CONDITION Diagnostic Procedure.
Perform the POWERTRAIN VERIFICATION TEST. (Refer to 9 - ENGINE - STANDARD PROCEDURE)

---

2. (K342) ASD RELAY OUTPUT CIRCUIT

Turn the ignition off.

Disconnect the No.6 Fuel Injector harness connector.

Ignition on, engine not running.

With the scan tool, actuate the ASD Relay.

Using a 12-volt test light connected to ground, probe the (K342) ASD Relay Output circuit in the No.6 Fuel Injector harness connector.

Does the test light illuminate brightly?

Yes >> Go To 3

No >> Repair the excessive resistance or short to ground in the (K342) ASD Relay Output circuit.
Perform the POWERTRAIN VERIFICATION TEST. (Refer to 9 - ENGINE - STANDARD PROCEDURE)

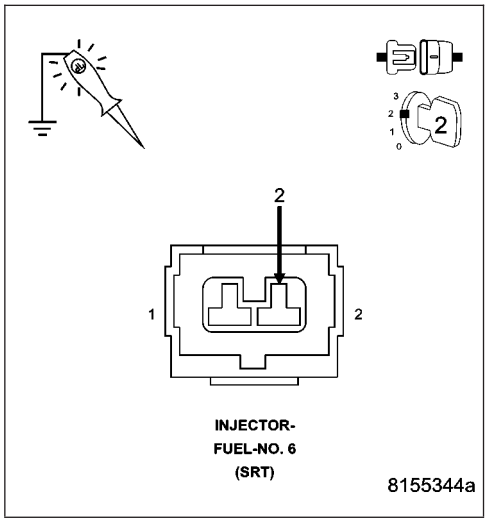

P0206-FUEL INJECTOR 6 CIRCUIT (CONTINUED)

3. FUEL INJECTOR

Using a 12-volt test light connected to 12-volts, probe the (K58) Injector Control No.6 circuit.

With the scan tool, actuate the No.6 Fuel Injector.

What is the state of the test light during the actuation?

Brightly Blinking.

Replace the Fuel Injector.

Perform the POWERTRAIN VERIFICATION TEST. (Refer to 9 - ENGINE - STANDARD PROCEDURE)

ON Constantly.

Go To 4

OFF Constantly.

Go To 5

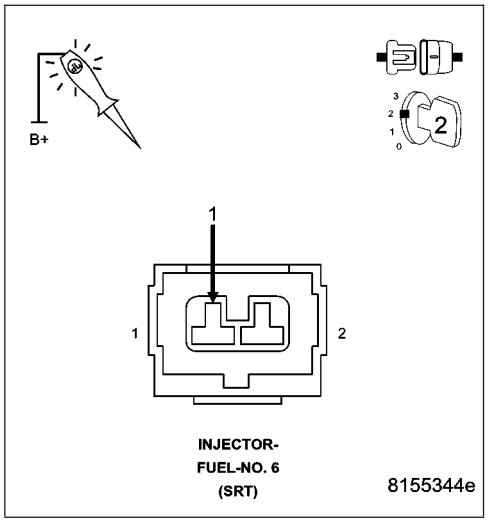

4. (K58) INJECTOR CONTROL NO.6 CIRCUIT SHORTED TO GROUND

Turn the ignition off.

Disconnect the PCM harness connector.

Measure the resistance between ground and the (K58) Injector Control No.6 circuit in the Injector harness connector.

Is the resistance below 100 ohms?

Yes >> Repair the short to ground in the (K58) Injector Control No.6 circuit.

Perform the POWERTRAIN VERIFICATION TEST. (Refer to 9 - ENGINE - STANDARD PROCEDURE)

No >> Go To 6

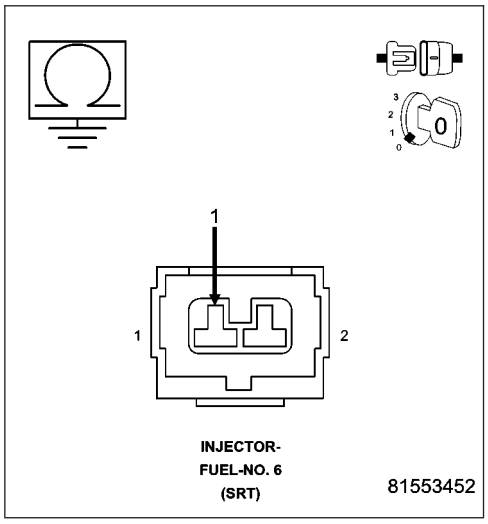

P0206-FUEL INJECTOR 6 CIRCUIT (CONTINUED)

5. (K58) INJECTOR CONTROL NO.6 CIRCUIT OPEN

Turn the ignition off.

Disconnect the PCM harness connector.

Measure the resistance of the (K58) Injector Control No.6 circuit from the Fuel Injector harness connector to the PCM harness connector.

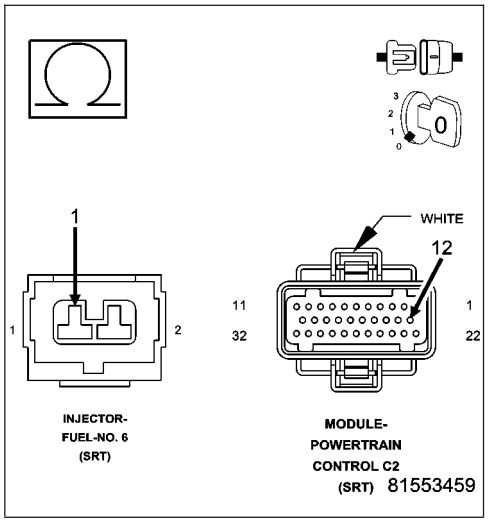

Is the resistance below 5.0 ohms?

Yes >> Go To 6

No >> Repair the open in the (K58) Injector Control No.6 circuit.
Perform the POWERTRAIN VERIFICATION TEST. (Refer to 9 - ENGINE - STANDARD PROCEDURE)

6. PCM

NOTE: Before continuing, check the PCM harness connector terminals for corrosion, damage, or terminal push out. Repair as necessary.

Using the schematics as a guide, inspect the wire harness and connectors. Pay particular attention to all Power and Ground circuits.

Were there any problems found?

Yes >> Repair as necessary.
Perform the POWERTRAIN VERIFICATION TEST. (Refer to 9 - ENGINE - STANDARD PROCEDURE)

No >> Replace and program the Powertrain Control Module per Service Information.
Perform the POWERTRAIN VERIFICATION TEST. (Refer to 9 - ENGINE - STANDARD PROCEDURE)

P0207-FUEL INJECTOR 7 CIRCUIT

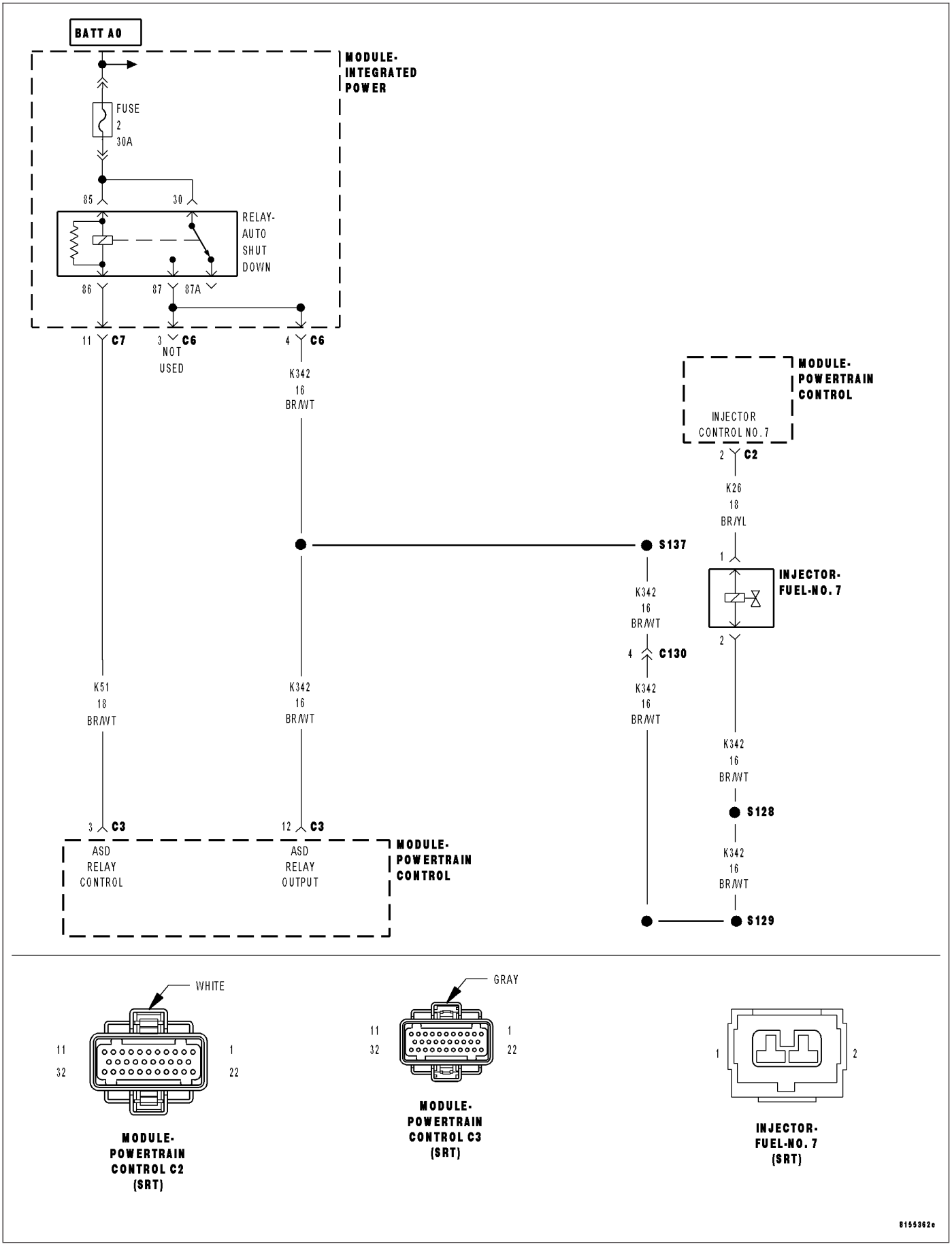

P0207-FUEL INJECTOR 7 CIRCUIT (CONTINUED)

For the Engine circuit diagram (Refer to 9 - ENGINE - SCHEMATICS AND DIAGRAMS).

For a complete wiring diagram **Refer to Section 8W**.

- **When Monitored:**
  With battery voltage greater than 10.4 volts, the auto shutdown relay energized, injector pulse width less than 10ms, and engine speed less than 3000 rpm.
- **Set Condition:**
  This trouble code takes .64 to 10.0 seconds to set when no inductive kick is sensed .18ms after injector turn off, and with no other injectors on.

Possible Causes
(K342) ASD RELAY OUTPUT CIRCUIT
(K26) INJECTOR CONTROL NO.7 CIRCUIT OPEN
(K26) INJECTOR CONTROL NO.7 CIRCUIT SHORTED TO GROUND
FUEL INJECTOR
PCM

Always perform the Pre-Diagnostic Troubleshooting procedure before proceeding. (Refer to 9 - ENGINE - DIAGNOSIS AND TESTING).

Diagnostic Test

1. ACTIVE DTC

Ignition on, engine not running.

With a scan tool, read DTCs.

Is the DTC active at this time?

Yes >> Go To 2

No >> Refer to the INTERMITTENT CONDITION Diagnostic Procedure.
Perform the POWERTRAIN VERIFICATION TEST. (Refer to 9 - ENGINE - STANDARD PROCEDURE)

---

2. (K342) ASD RELAY OUTPUT CIRCUIT

Turn the ignition off.

Disconnect the No.7 Fuel Injector harness connector.

Ignition on, engine not running.

With the scan tool, actuate the ASD Relay.

Using a 12-volt test light connected to ground, probe the (K342) ASD Relay Output circuit in the No.7 Fuel Injector harness connector.

Does the test light illuminate brightly?

Yes >> Go To 3

No >> Repair the excessive resistance or short to ground in the (K342) ASD Relay Output circuit.
Perform the POWERTRAIN VERIFICATION TEST. (Refer to 9 - ENGINE - STANDARD PROCEDURE)

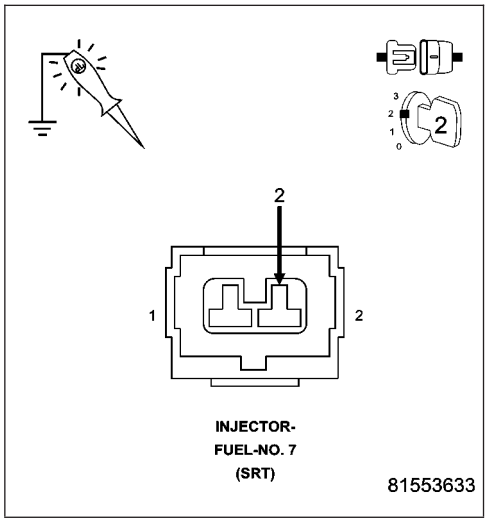

P0207-FUEL INJECTOR 7 CIRCUIT (CONTINUED)

3. FUEL INJECTOR

Using a 12-volt test light connected to 12-volts, probe the (K26) Injector Control No.7 circuit.

With the scan tool, actuate the No.7 Fuel Injector.

What is the state of the test light during the actuation?

Brightly Blinking.

Replace the Fuel Injector.

Perform the POWERTRAIN VERIFICATION TEST. (Refer to 9 - ENGINE - STANDARD PROCEDURE)

ON Constantly.

Go To 4

OFF Constantly.

Go To 5

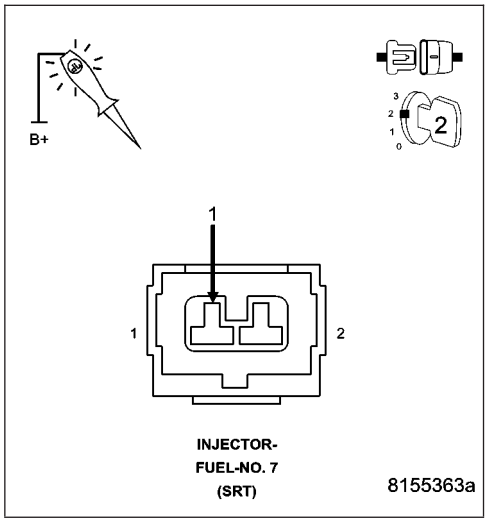

4. (K26) INJECTOR CONTROL NO.7 CIRCUIT SHORTED TO GROUND

Turn the ignition off.

Disconnect the PCM harness connector.

Measure the resistance between ground and the (K26) Injector Control No.7 circuit in the Injector harness connector.

Is the resistance below 100 ohms?

Yes >> Repair the short to ground in the (K26) Injector Control No.7 circuit.

Perform the POWERTRAIN VERIFICATION TEST. (Refer to 9 - ENGINE - STANDARD PROCEDURE)

No >> Go To 6

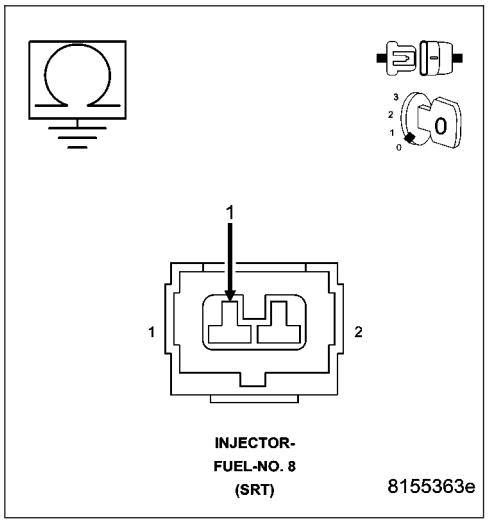

P0207-FUEL INJECTOR 7 CIRCUIT (CONTINUED)

5. (K26) INJECTOR CONTROL NO.7 CIRCUIT OPEN

Turn the ignition off.

Disconnect the PCM harness connector.

Measure the resistance of the (K26) Injector Control No.7 circuit from the Fuel Injector harness connector to the PCM harness connector.

Is the resistance below 5.0 ohms?

Yes >> Go To 6

No >> Repair the open in the (K26) Injector Control No.7 circuit.
Perform the POWERTRAIN VERIFICATION TEST. (Refer to 9 - ENGINE - STANDARD PROCEDURE)

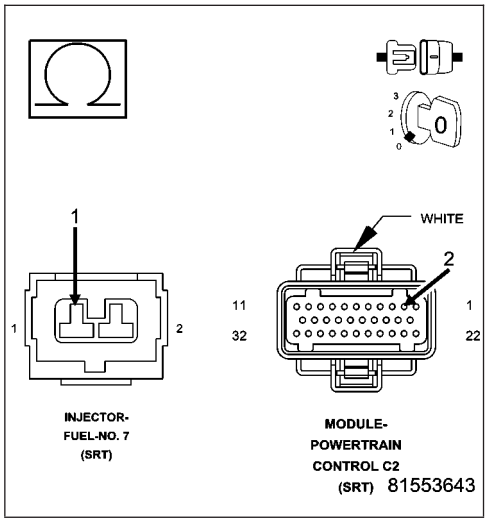

6. PCM

NOTE: Before continuing, check the PCM harness connector terminals for corrosion, damage, or terminal push out. Repair as necessary.

Using the schematics as a guide, inspect the wire harness and connectors. Pay particular attention to all Power and Ground circuits.

Were there any problems found?

Yes >> Repair as necessary.
Perform the POWERTRAIN VERIFICATION TEST. (Refer to 9 - ENGINE - STANDARD PROCEDURE)

No >> Replace and program the Powertrain Control Module per Service Information.
Perform the POWERTRAIN VERIFICATION TEST. (Refer to 9 - ENGINE - STANDARD PROCEDURE)

P0208-FUEL INJECTOR 8 CIRCUIT

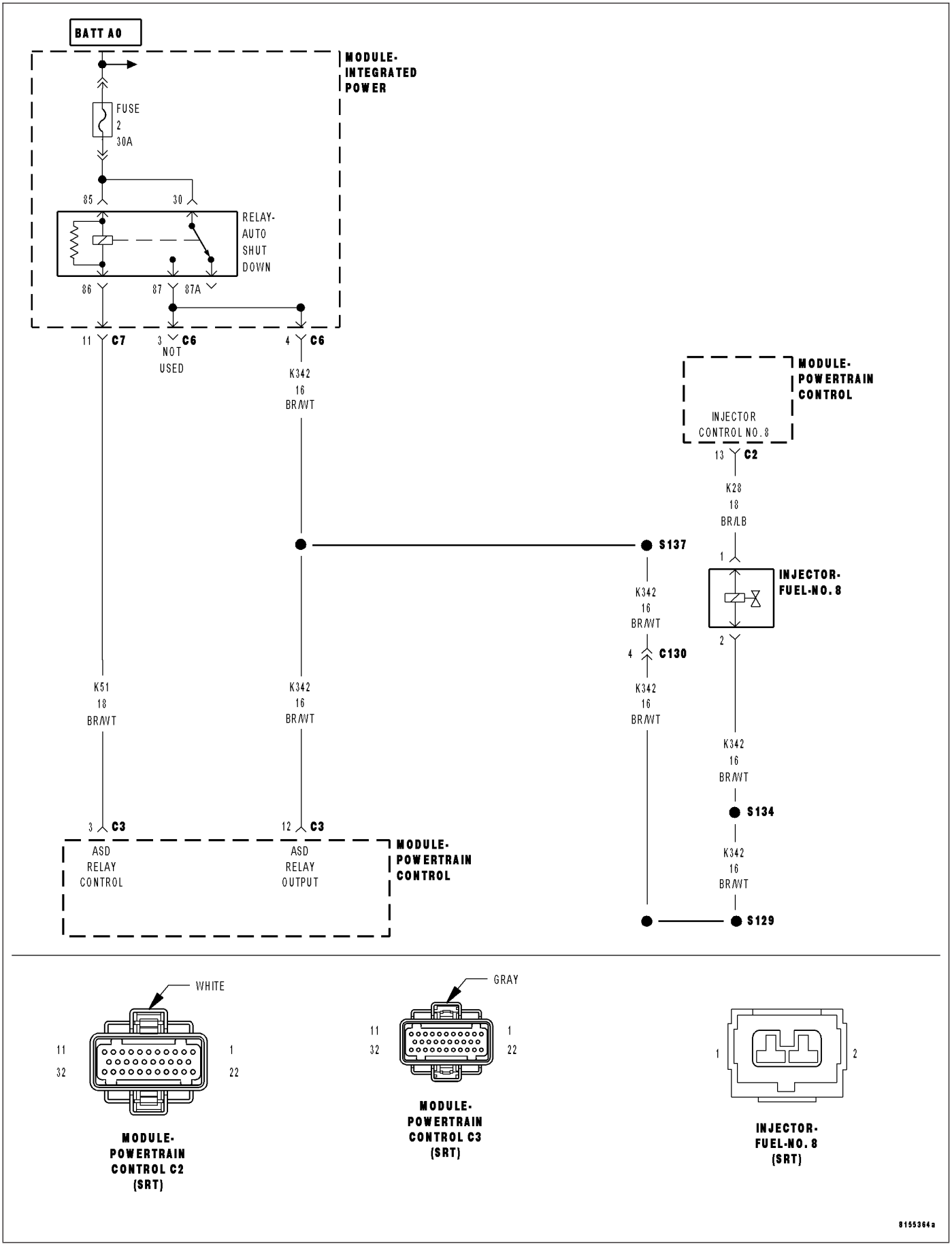

P0208-FUEL INJECTOR 8 CIRCUIT (CONTINUED)

For the Engine circuit diagram (Refer to 9 - ENGINE - SCHEMATICS AND DIAGRAMS).

For a complete wiring diagram **Refer to Section 8W**.

- **When Monitored:**
  With battery voltage greater than 10.4 volts, the auto shutdown relay energized, injector pulse width less than 10ms, and engine speed less than 3000 rpm.
- **Set Condition:**
  This trouble code takes .64 to 10.0 seconds to set when no inductive kick is sensed .18ms after injector turn off, and with no other injectors on.

Possible Causes
(K342) ASD RELAY OUTPUT CIRCUIT
(K28) INJECTOR CONTROL NO.8 CIRCUIT OPEN
(K28) INJECTOR CONTROL NO.8 CIRCUIT SHORTED TO GROUND
FUEL INJECTOR
PCM

Always perform the Pre-Diagnostic Troubleshooting procedure before proceeding. (Refer to 9 - ENGINE - DIAGNOSIS AND TESTING).

Diagnostic Test

1. ACTIVE DTC

Ignition on, engine not running.

With a scan tool, read DTC.

Is the DTC active at this time?

Yes >> Go To 2

No >> Refer to the INTERMITTENT CONDITION Diagnostic Procedure.
Perform the POWERTRAIN VERIFICATION TEST. (Refer to 9 - ENGINE - STANDARD PROCEDURE)

---

2. (K342) ASD RELAY OUTPUT CIRCUIT

Turn the ignition off.

Disconnect the No.8 Fuel Injector harness connector.

Ignition on, engine not running.

With the scan tool, actuate the ASD Relay.

Using a 12-volt test light connected to ground, probe the (K342) ASD Relay Output circuit in the No.8 Fuel Injector harness connector.

Does the test light illuminate brightly?

Yes >> Go To 3

No >> Repair the excessive resistance or short to ground in the (K342) ASD Relay Output circuit.
Perform the POWERTRAIN VERIFICATION TEST. (Refer to 9 - ENGINE - STANDARD PROCEDURE)

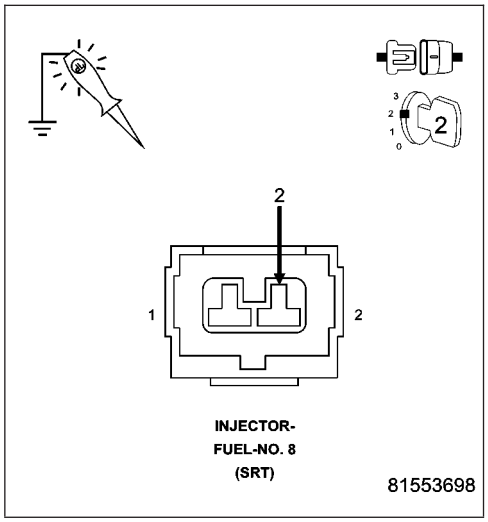

P0208-FUEL INJECTOR 8 CIRCUIT (CONTINUED)

3. FUEL INJECTOR

Using a 12-volt test light connected to 12-volts, probe the (K28) Injector Control No.8 circuit.

With the scan tool, actuate the No.8 Fuel Injector.

What is the state of the test light during the actuation?

Brightly Blinking.

Replace the Fuel Injector.

Perform the POWERTRAIN VERIFICATION TEST. (Refer to 9 - ENGINE - STANDARD PROCEDURE)

ON Constantly.

Go To 4

OFF Constantly.

Go To 5

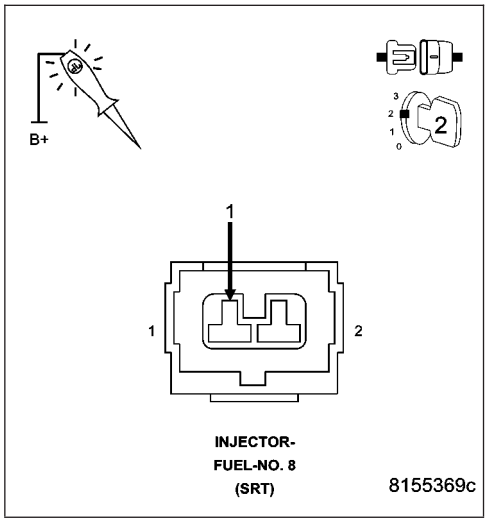

4. (K28) INJECTOR CONTROL NO.8 CIRCUIT SHORTED TO GROUND

Turn the ignition off.

Disconnect the PCM harness connector.

Measure the resistance between ground and the (K28) Injector Control No.8 circuit in the Injector harness connector.

Is the resistance below 100 ohms?

Yes >> Repair the short to ground in the (K28) Injector Control No.8 circuit.

Perform the POWERTRAIN VERIFICATION TEST. (Refer to 9 - ENGINE - STANDARD PROCEDURE)

No >> Go To 6

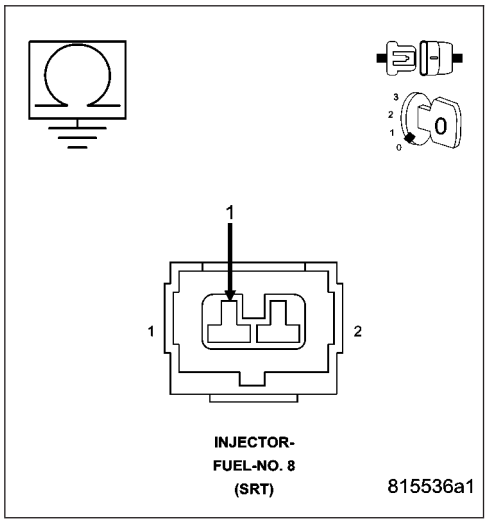

P0208-FUEL INJECTOR 8 CIRCUIT (CONTINUED)

5. (K28) INJECTOR CONTROL NO.8 CIRCUIT OPEN

Turn the ignition off.

Disconnect the PCM harness connector.

Measure the resistance of the (K28) Injector Control No.8 circuit from the Fuel Injector harness connector to the PCM harness connector.

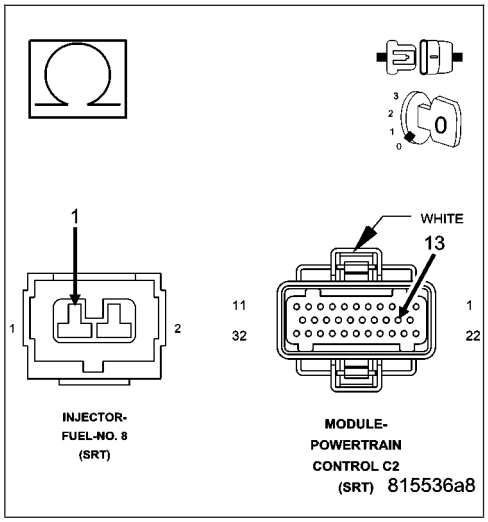

Is the resistance below 5.0 ohms?

Yes >> Go To 6

No >> Repair the open in the (K28) Injector Control No.8 circuit.
Perform the POWERTRAIN VERIFICATION TEST. (Refer to 9 - ENGINE - STANDARD PROCEDURE)

6. PCM

NOTE: Before continuing, check the PCM harness connector terminals for corrosion, damage, or terminal push out. Repair as necessary.

Using the schematics as a guide, inspect the wire harness and connectors. Pay particular attention to all Power and Ground circuits.

Were there any problems found?

Yes >> Repair as necessary.
Perform the POWERTRAIN VERIFICATION TEST. (Refer to 9 - ENGINE - STANDARD PROCEDURE)

No >> Replace and program the Powertrain Control Module per Service Information.
Perform the POWERTRAIN VERIFICATION TEST. (Refer to 9 - ENGINE - STANDARD PROCEDURE)

P0209-FUEL INJECTOR 9 CIRCUIT

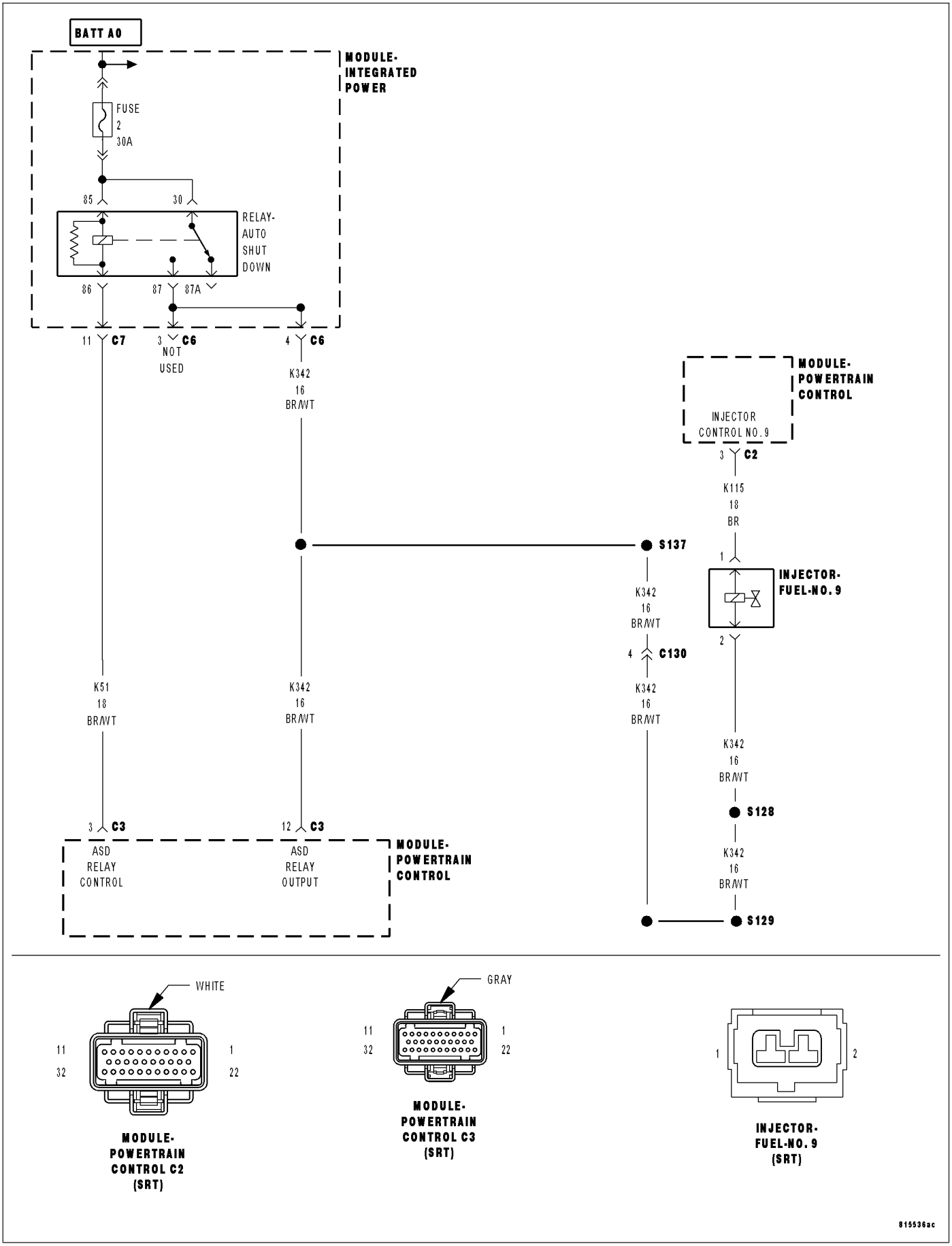

P0209-FUEL INJECTOR 9 CIRCUIT (CONTINUED)

For the Engine circuit diagram (Refer to 9 - ENGINE - SCHEMATICS AND DIAGRAMS).

For a complete wiring diagram **Refer to Section 8W**.

- **When Monitored:**
  With battery voltage greater than 10.4 volts, the auto shutdown relay energized, injector pulse width less than 10ms, and engine speed less than 3000 rpm.
- **Set Condition:**
  This trouble code takes .64 to 10.0 seconds to set when no inductive kick is sensed .18ms after injector turn off, and with no other injectors on.

Possible Causes
(K342) ASD RELAY OUTPUT CIRCUIT
(K115) INJECTOR CONTROL NO.9 CIRCUIT OPEN
(K115) INJECTOR CONTROL NO.9 CIRCUIT SHORTED TO GROUND
FUEL INJECTOR
PCM

Always perform the Pre-Diagnostic Troubleshooting procedure before proceeding. (Refer to 9 - ENGINE - DIAGNOSIS AND TESTING).

Diagnostic Test

1. ACTIVE DTC

Ignition on, engine not running.

With a scan tool, read DTC.

Is the DTC active at this time?

Yes >> Go To 2

No >> Refer to the INTERMITTENT CONDITION Diagnostic Procedure.
Perform the POWERTRAIN VERIFICATION TEST. (Refer to 9 - ENGINE - STANDARD PROCEDURE)

---

2. (K342) ASD RELAY OUTPUT CIRCUIT

Turn the ignition off.

Disconnect the No.9 Fuel Injector harness connector.

Ignition on, engine not running.

With the scan tool, actuate the ASD Relay.

Using a 12-volt test light connected to ground, probe the (K342) ASD Relay Output circuit in the No.9 Fuel Injector harness connector.

Does the test light illuminate brightly?

Yes >> Go To 3

No >> Repair the excessive resistance or short to ground in the (K342) ASD Relay Output circuit.
Perform the POWERTRAIN VERIFICATION TEST. (Refer to 9 - ENGINE - STANDARD PROCEDURE)

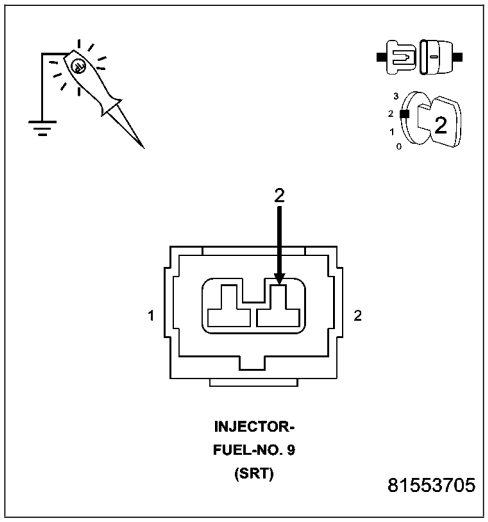

P0209-FUEL INJECTOR 9 CIRCUIT (CONTINUED)

3. FUEL INJECTOR

Using a 12-volt test light connected to 12-volts, probe the (K115) Injector Control No.9 circuit.

With the scan tool, actuate the No.9 Fuel Injector.

What is the state of the test light during the actuation?

Brightly Blinking.

Replace the Fuel Injector.

Perform the POWERTRAIN VERIFICATION TEST. (Refer to 9 - ENGINE - STANDARD PROCEDURE)

ON Constantly.

Go To 4

OFF Constantly.

Go To 5

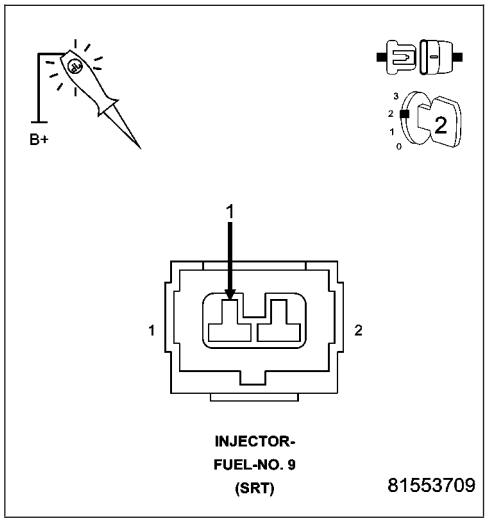

4. (K115) INJECTOR CONTROL NO.9 CIRCUIT SHORTED TO GROUND

Turn the ignition off.

Disconnect the PCM harness connector.

Measure the resistance between ground and the (K115) Injector Control No.9 circuit in the Injector harness connector.

Is the resistance below 100 ohms?

Yes >> Repair the short to ground in the (K115) Injector Control No.9 circuit.

Perform the POWERTRAIN VERIFICATION TEST. (Refer to 9 - ENGINE - STANDARD PROCEDURE)

No >> Go To 6

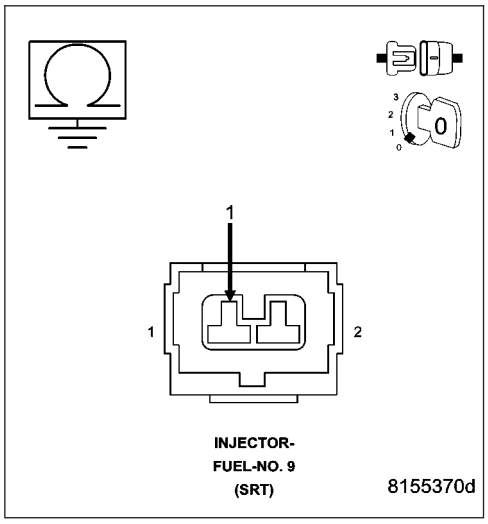

P0209-FUEL INJECTOR 9 CIRCUIT (CONTINUED)

5. (K115) INJECTOR CONTROL NO.9 CIRCUIT OPEN

Turn the ignition off.

Disconnect the PCM harness connector.

Measure the resistance of the (K115) Injector Control No.9 circuit from the Fuel Injector harness connector to the PCM harness connector.

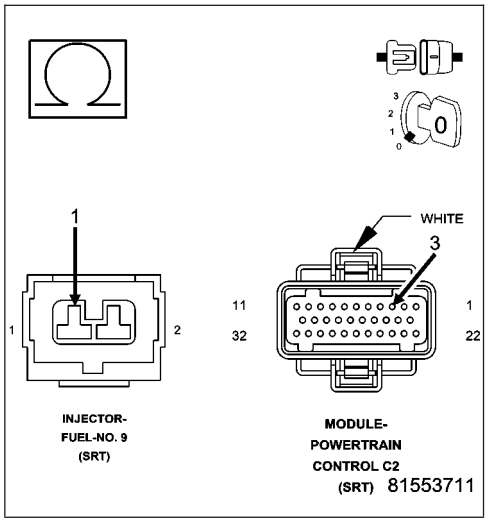

Is the resistance below 5.0 ohms?

Yes >> Go To 6

No >> Repair the open in the (K115) Injector Control No.9 circuit.
Perform the POWERTRAIN VERIFICATION TEST. (Refer to 9 - ENGINE - STANDARD PROCEDURE)

6. PCM

NOTE: Before continuing, check the PCM harness connector terminals for corrosion, damage, or terminal push out. Repair as necessary.

Using the schematics as a guide, inspect the wire harness and connectors. Pay particular attention to all Power and Ground circuits.

Were there any problems found?

Yes >> Repair as necessary.
Perform the POWERTRAIN VERIFICATION TEST. (Refer to 9 - ENGINE - STANDARD PROCEDURE)

No >> Replace and program the Powertrain Control Module per Service Information.
Perform the POWERTRAIN VERIFICATION TEST. (Refer to 9 - ENGINE - STANDARD PROCEDURE)

P0210-FUEL INJECTOR 10 CIRCUIT

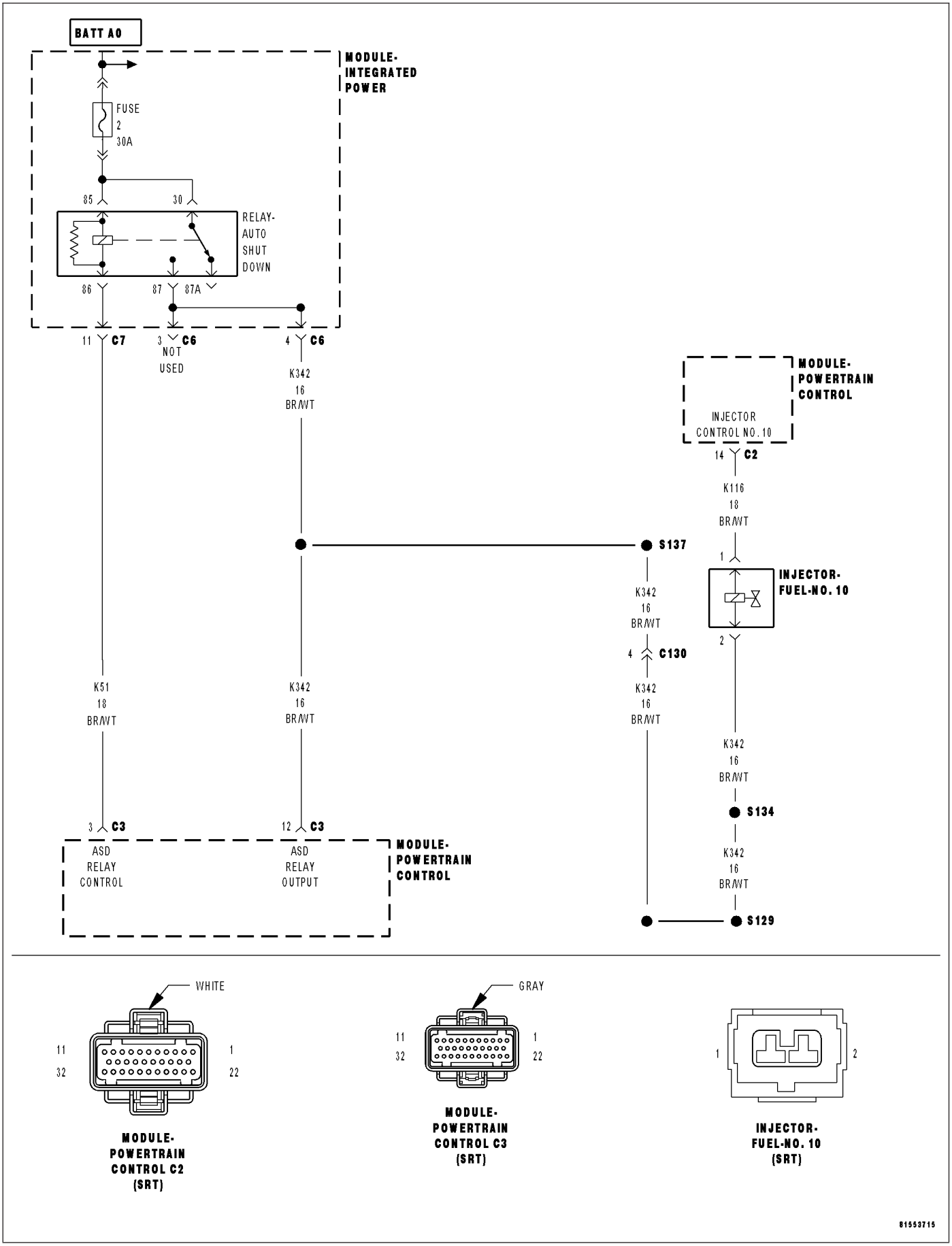

P0210-FUEL INJECTOR 10 CIRCUIT (CONTINUED)

For the Engine circuit diagram (Refer to 9 - ENGINE - SCHEMATICS AND DIAGRAMS).

For a complete wiring diagram **Refer to Section 8W**.

- **When Monitored:**
  With battery voltage greater than 10.4 volts, the auto shutdown relay energized, injector pulse width less than 10ms, and engine speed less than 3000 rpm.
- **Set Condition:**
  This trouble code takes .64 to 10.0 seconds to set when no inductive kick is sensed .18ms after injector turn off, and with no other injectors on.

Possible Causes
(K342) ASD RELAY OUTPUT CIRCUIT
(K116) INJECTOR CONTROL NO.10 CIRCUIT OPEN
(K116) INJECTOR CONTROL NO.10 CIRCUIT SHORTED TO GROUND
FUEL INJECTOR
PCM

Always perform the Pre-Diagnostic Troubleshooting procedure before proceeding. (Refer to 9 - ENGINE - DIAGNOSIS AND TESTING).

Diagnostic Test

1. ACTIVE DTC

Ignition on, engine not running.

With a scan tool, read DTC.

Is the DTC active at this time?

Yes >> Go To 2

No >> Refer to the INTERMITTENT CONDITION Diagnostic Procedure.
Perform the POWERTRAIN VERIFICATION TEST. (Refer to 9 - ENGINE - STANDARD PROCEDURE)

---

2. (K342) ASD RELAY OUTPUT CIRCUIT

Turn the ignition off.

Disconnect the NO.10 Fuel Injector harness connector.

Ignition on, engine not running.

With the scan tool, actuate the ASD Relay.

Using a 12-volt test light connected to ground, probe the (K342) ASD Relay Output circuit in the NO.10 Fuel Injector harness connector.

Does the test light illuminate brightly?

Yes >> Go To 3

No >> Repair the excessive resistance or short to ground in the (K342) ASD Relay Output circuit.
Perform the POWERTRAIN VERIFICATION TEST. (Refer to 9 - ENGINE - STANDARD PROCEDURE)

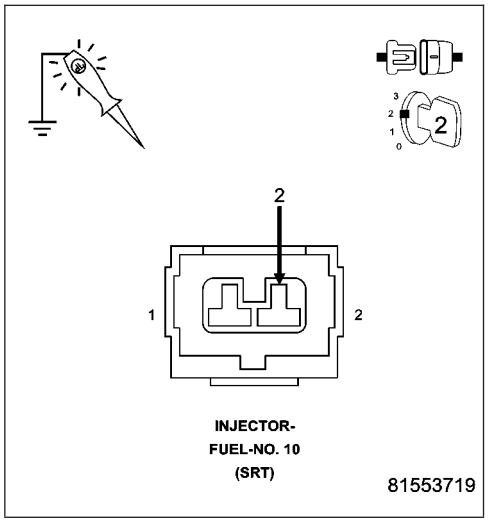

P0210-FUEL INJECTOR 10 CIRCUIT (CONTINUED)

3. FUEL INJECTOR

Using a 12-volt test light connected to 12-volts, probe the (K116) Injector Control NO.10 circuit.

With the scan tool, actuate the NO.10 Fuel Injector.

What is the state of the test light during the actuation?

Brightly Blinking.

Replace the Fuel Injector.

Perform the POWERTRAIN VERIFICATION TEST. (Refer to 9 - ENGINE - STANDARD PROCEDURE)

ON Constantly.

Go To 4

OFF Constantly.

Go To 5

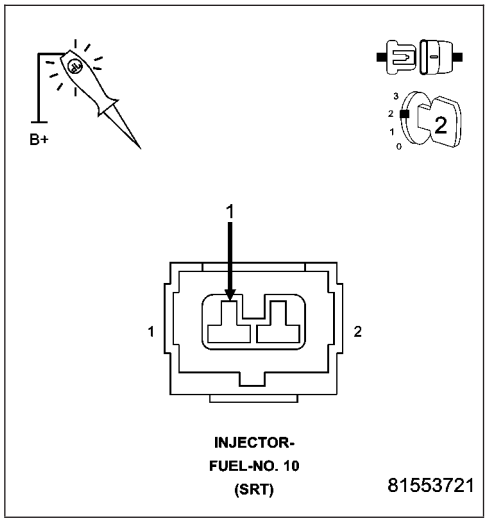

4. (K116) INJECTOR CONTROL NO.10 CIRCUIT SHORTED TO GROUND

Turn the ignition off.

Disconnect the PCM harness connector.

Measure the resistance between ground and the (K116) Injector Control NO.10 circuit in the Injector harness connector.

Is the resistance below 100 ohms?

Yes >> Repair the short to ground in the (K116) Injector Control NO.10 circuit.

Perform the POWERTRAIN VERIFICATION TEST. (Refer to 9 - ENGINE - STANDARD PROCEDURE)

No >> Go To 6

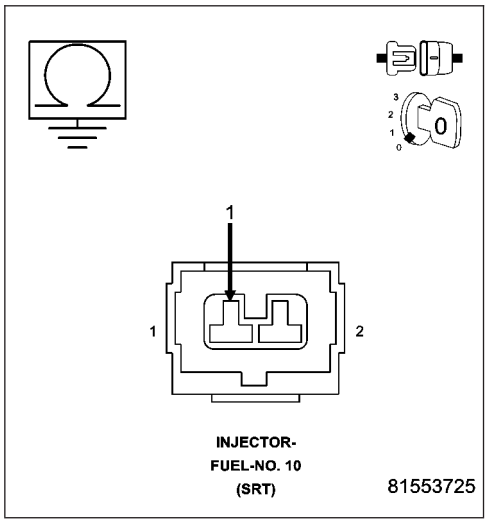

P0210-FUEL INJECTOR 10 CIRCUIT (CONTINUED)

5. (K116) INJECTOR CONTROL NO.10 CIRCUIT OPEN

Turn the ignition off.

Disconnect the PCM harness connector.

Measure the resistance of the (K116) Injector Control NO.10 circuit from the Fuel Injector harness connector to the PCM harness connector.

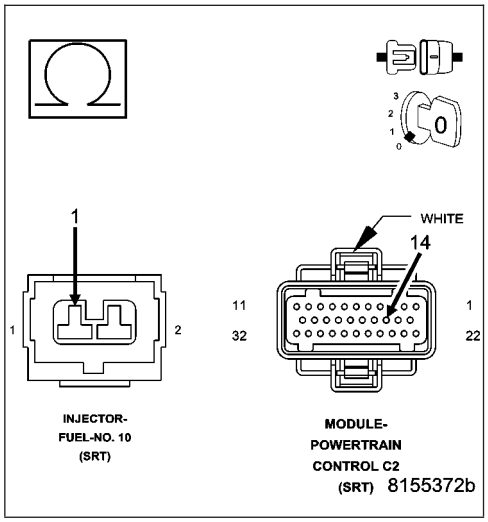

Is the resistance below 5.0 ohms?

Yes >> Go To 6

No >> Repair the open in the (K116) Injector Control NO.10 circuit.
Perform the POWERTRAIN VERIFICATION TEST. (Refer to 9 - ENGINE - STANDARD PROCEDURE)

6. PCM

NOTE: Before continuing, check the PCM harness connector terminals for corrosion, damage, or terminal push out. Repair as necessary.

Using the schematics as a guide, inspect the wire harness and connectors. Pay particular attention to all Power and Ground circuits.

Were there any problems found?

Yes >> Repair as necessary.
Perform the POWERTRAIN VERIFICATION TEST. (Refer to 9 - ENGINE - STANDARD PROCEDURE)

No >> Replace and program the Powertrain Control Module per Service Information.
Perform the POWERTRAIN VERIFICATION TEST. (Refer to 9 - ENGINE - STANDARD PROCEDURE)

P0300-MULTIPLE CYLINDER MISFIRE

For the Engine circuit diagram (Refer to 9 - ENGINE - SCHEMATICS AND DIAGRAMS).

For a complete wiring diagram **Refer to Section 8W**.

- **When Monitored:**
  Any time the engine is running, and the adaptive numerator has been successfully updated.
- **Set Condition:**
  When more than a 2% (2.5% LEV) misfire rate is measured during two trips. Above 3000 RPM 1 trip less than 3000 RPM 2 trip. Three good trips to turn off the MIL.

Possible Causes
(K342) ASD RELAY OUTPUT CIRCUIT
INJECTOR CONTROL CIRCUIT
COIL CONTROL CIRCUIT
IGNITION WIRE
SPARK PLUG
IGNITION COIL
FUEL PUMP INLET STRAINER PLUGGED
RESTRICTED FUEL SUPPLY LINE
FUEL PUMP MODULE
FUEL PRESSURE LEAK DOWN
FUEL INJECTOR
ENGINE MECHANICAL
PCM

Always perform the Pre-Diagnostic Troubleshooting procedure before proceeding. (Refer to 9 - ENGINE - DIAGNOSIS AND TESTING).

Diagnostic Test

1. CYLINDER MIS-FIRE CONDITION ACTIVE

NOTE: Check for any TSB's that apply to a Misfire condition. Review the vehicle repair history for any misfire condition repairs that have been performed.

Star the engine.

Observe the WHICH CYLINDER IS MISFIRING screen for at least one minute on the scan tool.

Is there a misfire present?

Yes >> Go To 2

No >> Refer to the INTERMITTENT CONDITION Diagnostic Procedure.
Perform the POWERTRAIN VERIFICATION TEST. (Refer to 9 - ENGINE - STANDARD PROCEDURE)

P0300-MULTIPLE CYLINDER MISFIRE (CONTINUED)

2. VISUAL INSPECTION

NOTE: Anything that affects the speed of the crankshaft can cause a misfire DTC.

NOTE: When a Misfire is detected for a particular cylinder, the PCM will shut down that cylinders Injector Control circuit.

- Visually inspect the engine for any of the following conditions.
- Worn serpentine belt
- Binding Engine-Driven accessories: A/C Compressor, P/S Pump, Water pump.
- Misalignment of the Water pump, P/S Pump and A/C Compressor pulleys
- Corroded PCM power and ground circuits.
- Improper CKP, CMP, MAP, and TP Sensor mounting
- Poor connector/terminal to component connection. i.e., CKP sensor, Fuel Injector, Ign coil, etc.
- Vacuum leaks
- Restricted Air Induction system or Exhaust system.
- Internal engine component failures.

Were any of the above conditions present?

Yes >> Repair as necessary.
Perform the POWERTRAIN VERIFICATION TEST. (Refer to 9 - ENGINE - STANDARD PROCEDURE)

No >> Go To 3

---

3. (K342) ASD RELAY OUTPUT CIRCUIT

Turn the ignition off.

Disconnect the Ignition Coil harness connector of the misfiring cylinders.

Disconnect the Fuel Injector harness connector of the misfiring cylinders.

Ignition on, engine not running.

With a scan tool, actuate the ASD Relay.

Using a 12-volt test light connected to ground, probe the (K342) ASD Relay Output circuit in the Ignition Coil harness connector and Fuel Injector harness connector while the relay is actuating.

Does the test light illuminate brightly?

Yes >> Go To 4

No >> Repair the excessive resistance or short to ground in the (K342) ASD Relay Output circuit.
Perform the POWERTRAIN VERIFICATION TEST. (Refer to 9 - ENGINE - STANDARD PROCEDURE)

P0300-MULTIPLE CYLINDER MISFIRE (CONTINUED)

4. IGNITION SYSTEM OPERATION

Turn the ignition off.
Connect the Ignition Coil harness connectors.
Remove the Ignition Coils.
Leave the Fuel Injector harness connector of the cylinder being tested disconnected.
Install a spark tester on the Ignition Coil.
While cranking the engine observe the spark coming from the spark tester.

NOTE: A crisp blue spark that is able to jump the gap of the spark tester should be generated.

Is good spark present?

Yes >> Go To 5

No >> Go To 14

NOTE: Connect the Fuel Injector harness connector before continuing.

---

5. SPARK PLUG

Turn the ignition off.
Remove the Spark Plug.
Inspect the Spark Plug for the following conditions.
- Cracks
- Carbon Tracking
- Foreign Material
- Gap size out of specifications
- Loose or broke electrode

NOTE: Lightly tap the bottom of the spark plug on a solid surface. The electrode in the spark plug should not move.

Does the Spark Plug have any problems?

Yes >> Replace the Spark Plug.
Perform the POWERTRAIN VERIFICATION TEST. (Refer to 9 - ENGINE - STANDARD PROCEDURE)

No >> Go To 6

---

6. FUEL PRESSURE CHECK

WARNING: The fuel system is under a constant pressure (even with the engine off). Before testing or servicing any fuel system hose, fitting or line, the fuel system pressure must be released. Failure to follow these instructions can result in personal injury or death.
Install a fuel pressure gauge to the fuel rail.
Start the engine and observe the fuel pressure reading.

NOTE: Fuel pressure specification is 407 KPa +/- 34 KPa (59 psi +/- 5 psi).

Choose a conclusion that best matches your fuel pressure reading.

Within Specification
Go To 7

Below Specification
Go To 12

Above Specification
Replace the fuel filter/pressure regulator.
Perform the POWERTRAIN VERIFICATION TEST. (Refer to 9 - ENGINE - STANDARD PROCEDURE)

P0300-MULTIPLE CYLINDER MISFIRE (CONTINUED)

7. FUEL PRESSURE LEAK DOWN

NOTE: Before continuing visually and physically inspect the fuel delivery system for external leaks or damage. Repair / replace as necessary.

Turn the ignition off.

WARNING: The fuel system is under a constant pressure (even with the engine off). Before testing or servicing any fuel system hose, fitting or line, the fuel system pressure must be released. Failure to follow these instructions can result in personal injury or death

Install special tool #6539 (5/16″) or #6631 (3/8″) fuel line adapter.

Install the fuel pressure gauge.

Start the engine and allow the fuel system to reach maximum pressure.

Turn the ignition off.

NOTE: Fuel specification is 407 KPa +/- 34 KPa (59 psi +/- 5 psi).

Using special tool #C4390, Hose Clamp Pliers, pinch the rubber fuel line between the fuel pressure gauge and the engine.

Monitor the fuel pressure gauge for a minimum of 5 minutes.

NOTE: The pressure should not fall below 241 KPa (35 psi)

Does the pressure fall below the listed specification?

Yes >> Replace the leaking Fuel Injector(s).
Perform the POWERTRAIN VERIFICATION TEST. (Refer to 9 - ENGINE - STANDARD PROCEDURE)

No >> Go To 8

---

8. FUEL INJECTOR OPERATION

WARNING: The fuel system is under a constant pressure (even with the engine off). Before testing or servicing any fuel system hose, fitting or line, the fuel system pressure must be released. Failure to follow these instructions can result in personal injury or death.

CAUTION: After each Fuel Injector actuation, start the engine to clean the cylinder of fuel. Failure to do so could cause engine damage.

Remove special tool #C4390.

Start the engine and allow the fuel pressure to reach maximum pressure.

Ignition on, engine not running.

Using the scan tool, actuate the Fuel Injector for the cylinder that indicated the misfire.

Monitor the fuel pressure gauge.

Does the fuel pressure gauge indicate a drop in fuel pressure?

Yes >> Go To 9

No >> Go To 10

NOTE: Turn the ignition off, remove the Fuel Pressure gauge, and connect the fuel lines before continuing.

P0300-MULTIPLE CYLINDER MISFIRE (CONTINUED)

9. ENGINE MECHANICAL

Check for any of the following conditions/mechanical problems.
ENGINE VACUUM - must be at least 13 inches in neutral
ENGINE VALVE TIMING - must be within specifications
ENGINE COMPRESSION - must be within specifications
ENGINE EXHAUST SYSTEM - must be free of any restrictions or leaks.
ENGINE PCV SYSTEM - must flow freely
TORQUE CONVERTER STALL SPEED - must be within specifications
POWER BRAKE BOOSTER - no internal vacuum leaks
FUEL - must be free of contamination
CAM LOBES - must not be worn excessively
CYLINDER LEAKAGE TEST - must be within specifications
VALVE SPRINGS - cannot be weak or broken

Are there any engine mechanical problems?

Yes >> Repair as necessary.
Perform the POWERTRAIN VERIFICATION TEST. (Refer to 9 - ENGINE - STANDARD PROCEDURE)

No >> Go To 17

---

10. FUEL INJECTOR

Turn the ignition off.
Disconnect the Fuel Injector harness connector of the misfiring cylinder.
Ignition on, engine not running.

NOTE: When a Misfire is detected for a particular cylinder, the PCM will shut down that cylinders Injector Control circuit.
With the scan tool, erase DTCs.
Using a 12-volt test light connected to 12-volts, probe the Injector Control circuit.
With the scan tool, actuate the Fuel Injector.

Does the test light blink/flicker?

Yes >> Replace the Fuel Injector.
Perform the POWERTRAIN VERIFICATION TEST. (Refer to 9 - ENGINE - STANDARD PROCEDURE)

No >> Go To 11

---

11. INJECTOR CONTROL CIRCUIT

Turn the ignition off.
Disconnect the Fuel Injector harness connector.
Disconnect the PCM harness connectors.

CAUTION: Do not probe the PCM harness connectors. Probing the PCM harness connectors will damage the PCM terminals resulting in poor terminal to pin connection. Install Miller Special Tool #8815 to perform diagnosis.
Check the Injector Control circuit for an open, short to ground, and short to voltage.

Was a problem found with the Injector Control circuit?

Yes >> Repair the excessive resistance or short in the Injector Control circuit.
Perform the POWERTRAIN VERIFICATION TEST. (Refer to 9 - ENGINE - STANDARD PROCEDURE)

No >> Go To 17

P0300-MULTIPLE CYLINDER MISFIRE (CONTINUED)

12. FUEL SUPPLY LINE RESTRICTED

Turn the ignition off.

WARNING: The fuel system is under a constant pressure (even with the engine off). Before testing or servicing any fuel system hose, fitting or line, the fuel system pressure must be released. Failure to follow these instructions can result in personal injury or death.

Raise vehicle on hoist, and disconnect the fuel pressure line at the fuel pump module.

Install special tool #6539 (5/16″) #6631(3/8″) fuel line adapter and the fuel pressure gauge between the fuel supply line and the fuel pump module.

Ignition on, engine not running.

With the scan tool, actuate the ASD Fuel System test and observe the fuel pressure gauge.

NOTE: Fuel pressure specification is 407 KPa +/- 34 KPa (59 psi +/- 5 psi).

Is the fuel pressure within specification?

Yes >> Repair or replace fuel supply line as necessary.
Perform the POWERTRAIN VERIFICATION TEST. (Refer to 9 - ENGINE - STANDARD PROCEDURE)

No >> Go To 13

---

13. FUEL PUMP INLET STRAINER

Turn the ignition off.

WARNING: The fuel system is under a constant pressure (even with the engine off). Before testing or servicing any fuel system hose, fitting or line, the fuel system pressure must be released. Failure to follow these instructions can result in personal injury or death.

Remove the Fuel Pump Module and inspect the Fuel Inlet Strainer.

Is the Fuel Inlet Strainer plugged?

Yes >> Replace the Fuel Pump Inlet Strainer.
Perform the POWERTRAIN VERIFICATION TEST. (Refer to 9 - ENGINE - STANDARD PROCEDURE)

No >> Before continuing, check the Fuel Pump Module harness connector terminals for corrosion, damage, or terminal push out. Make sure the ground circuit is functional. Repair as necessary. Replace the Fuel Pump Module.
Perform the POWERTRAIN VERIFICATION TEST. (Refer to 9 - ENGINE - STANDARD PROCEDURE)

---

14. IGNITION WIRE

NOTE: If the vehicle being tested does not have an ignition wire answer YES to this test and continue.

Turn the ignition off.

Remove the ignition wire.

Measure the resistance of the ignition wire.

Is the resistance below 10K ohms?

Yes >> Go To 15

No >> Replace the Ignition Wire.
Perform the POWERTRAIN VERIFICATION TEST. (Refer to 9 - ENGINE - STANDARD PROCEDURE)

P0300-MULTIPLE CYLINDER MISFIRE (CONTINUED)

15. IGNITION COIL

Disconnect the Ignition Coil harness connector.

Remove the Fuel Pump Relay or ASD Relay.

Using a 12-volt test light connected to 12-volts, probe the Ignition Coil Control circuit.

Crank the engine for 5 seconds while observing the test light.

NOTE: The primary resistance of the 3.7L and 4.7L Ignition coil is 0.6 to 0.9 of an ohm and the resistance of a 5.7L Ignition coil is 0.558 to 0.682 of an ohm at 77°F (25°C).

Does the test light brightly blink/flicker?

Yes >> Replace the Ignition Coil.
Perform the POWERTRAIN VERIFICATION TEST. (Refer to 9 - ENGINE - STANDARD PROCEDURE)

No >> Go To 16

---

16. COIL CONTROL CIRCUIT

Turn the ignition off.

Disconnect the Ignition Coil harness connector.

Disconnect the PCM harness connectors.

CAUTION: Do not probe the PCM harness connectors. Probing the PCM harness connectors will damage the PCM terminals resulting in poor terminal to pin connection. Install Miller Special Tool #8815 to perform diagnosis.

Check the Coil Control circuit for an open, short to ground, and short to voltage.

Was a problem found with the Coil Control circuit?

Yes >> Repair the Coil Control circuit.
Perform the POWERTRAIN VERIFICATION TEST. (Refer to 9 - ENGINE - STANDARD PROCEDURE)

No >> Go To 17

---

17. PCM

NOTE: Before continuing, check the PCM harness connector terminals for corrosion, damage, or terminal push out. Repair as necessary.

Using the schematics as a guide, inspect the wire harness and connectors. Pay particular attention to all Power and Ground circuits.

Were there any problems found?

Yes >> Repair as necessary.
Perform the POWERTRAIN VERIFICATION TEST. (Refer to 9 - ENGINE - STANDARD PROCEDURE)

No >> Replace and program the Powertrain Control Module per Service Information.
Perform the POWERTRAIN VERIFICATION TEST. (Refer to 9 - ENGINE - STANDARD PROCEDURE)

P0301-CYLINDER #1 MISFIRE

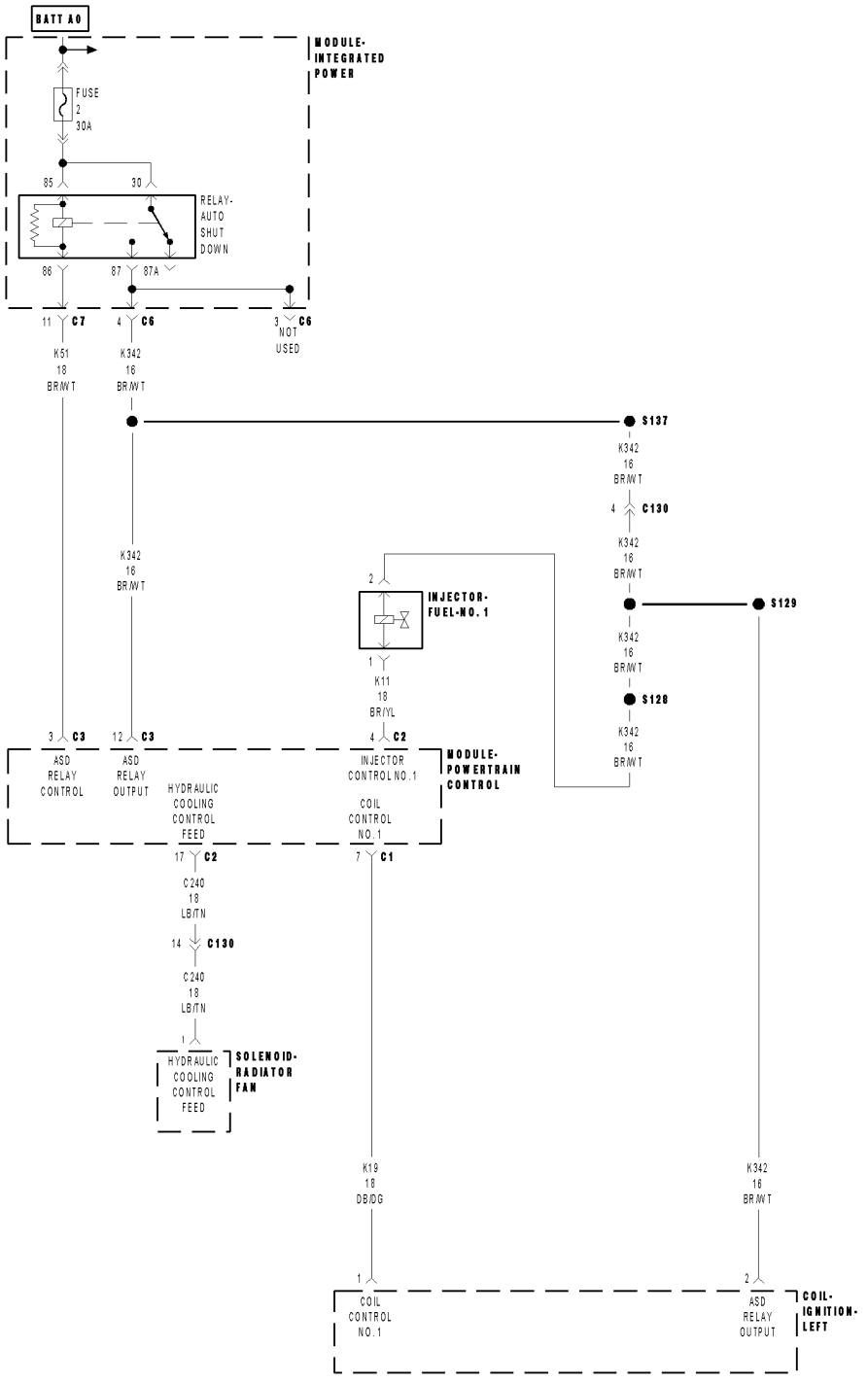

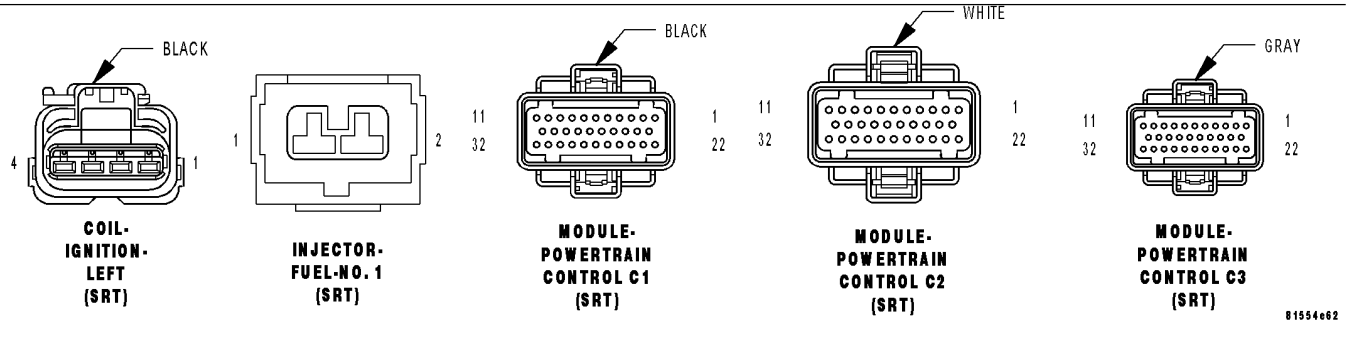

P0301-CYLINDER #1 MISFIRE (CONTINUED)

For the Engine circuit diagram (Refer to 9 - ENGINE - SCHEMATICS AND DIAGRAMS).

For a complete wiring diagram **Refer to Section 8W**.

- **When Monitored:**
  Any time the engine is running, and the adaptive numerator has been successfully updated.
- **Set Condition:**
  When more than a 1% misfire rate is measured during two trips, or with a 6% to 30% misfire rate during one trip.

Possible Causes
(K342) ASD RELAY OUTPUT CIRCUIT
(K11) INJECTOR CONTROL CIRCUIT
(K19) COIL CONTROL CIRCUIT
IGNITION WIRE
SPARK PLUG
IGNITION COIL
FUEL PUMP INLET STRAINER PLUGGED
RESTRICTED FUEL SUPPLY LINE
FUEL PUMP MODULE
FUEL PRESSURE LEAK DOWN
FUEL INJECTOR
ENGINE MECHANICAL
PCM

Always perform the Pre-Diagnostic Troubleshooting procedure before proceeding. (Refer to 9 - ENGINE - DIAGNOSIS AND TESTING).

Diagnostic Test

1. CYLINDER MIS-FIRE CONDITION ACTIVE

Engine running.

Observe the WHICH CYLINDER IS MISFIRING screen for at least one minute on the scan tool.

Is there a misfire present at this time?

Yes >> Go To 2

No >> Refer to the INTERMITTENT CONDITION Diagnostic Procedure.
Perform the POWERTRAIN VERIFICATION TEST. (Refer to 9 - ENGINE - STANDARD PROCEDURE)

P0301-CYLINDER #1 MISFIRE (CONTINUED)

2. VISUAL INSPECTION

NOTE: Anything that affects the speed of the crankshaft can cause a misfire DTC.

NOTE: When a Misfire is detected for a particular cylinder, the PCM will shut down that cylinders Injector Control circuit.

- Visually inspect the engine for any of the following conditions.
- Worn serpentine belt
- Binding Engine-Driven accessories: A/C Compressor, P/S Pump, Water pump.
- Misalignment of the Water pump, P/S Pump and A/C Compressor pulleys
- Corroded PCM power and ground circuits.
- Improper CKP, CMP, MAP, and TP Sensor mounting
- Poor connector/terminal to component connection. i.e., CKP sensor, Fuel Injector, Ign coil, etc.
- Vacuum leaks
- Restricted Air Induction system or Exhaust system.
- Internal engine component failures.

Were any of the above conditions present?

Yes >> Repair as necessary.
Perform the POWERTRAIN VERIFICATION TEST. (Refer to 9 - ENGINE - STANDARD PROCEDURE)

No >> Go To 3

P0301-CYLINDER #1 MISFIRE (CONTINUED)

3. (K342) ASD RELAY OUTPUT CIRCUIT

Turn the ignition off.
Disconnect the Ignition Coil harness connector.
Disconnect the Fuel Injector harness connector.
Ignition on, engine not running.
With the scan tool, actuate the ASD Relay.
Using a 12-volt test light connected to ground, probe the (K342) ASD Relay Output circuit in the Ignition Coil harness connector and Fuel Injector harness connector while the relay is actuating.

Does the test light illuminate brightly?

Yes >> Go To 4

No >> Repair the excessive resistance or short to ground in the (K342) ASD Relay Output circuit.
Perform the POWERTRAIN VERIFICATION TEST. (Refer to 9 - ENGINE - STANDARD PROCEDURE)

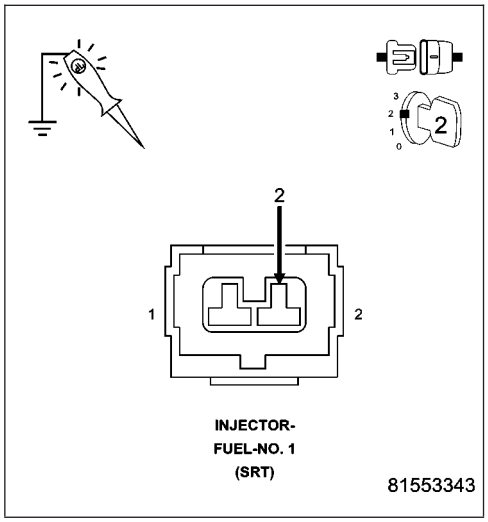

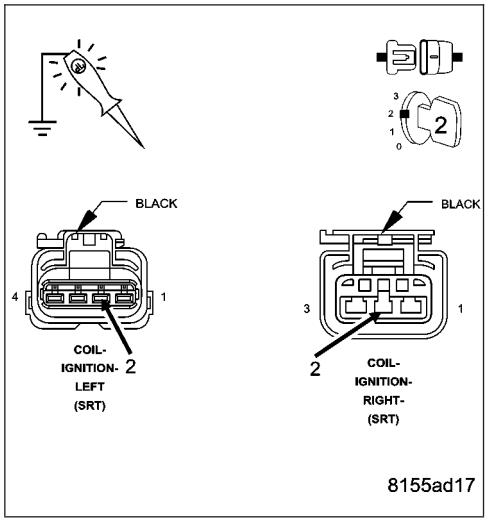

4. IGNITION SYSTEM OPERATION

Turn the ignition off.
Connect the Ignition Coil harness connector.
Remove the Ignition Coil.
Leave the Fuel Injector harness connector of the cylinder being tested disconnected.
Install a spark tester on the Ignition Coil.
While cranking the engine observe the spark coming from the spark tester.

NOTE: A crisp blue spark that is able to jump the gap of the spark tester should be generated.

Is good spark present?

Yes >> Go To 5

No >> Go To 14

NOTE: Connect the Fuel Injector harness connector before continuing.

P0301-CYLINDER #1 MISFIRE (CONTINUED)

5. SPARK PLUG

Turn the ignition off.

Remove the Spark Plug.

Inspect the Spark Plug for the following conditions.

- Cracks
- Carbon Tracking
- Foreign Material
- Gap size out of specifications
- Loose or broke electrode

NOTE: Lightly tap the bottom of the spark plug on a solid surface. The electrode in the spark plug should not move.

Were any of the above conditions present?

Yes >> Replace the Spark Plug.
Perform the POWERTRAIN VERIFICATION TEST. (Refer to 9 - ENGINE - STANDARD PROCEDURE)

No >> Go To 6

---

6. FUEL PRESSURE CHECK

WARNING: The fuel system is under a constant pressure (even with the engine off). Before testing or servicing any fuel system hose, fitting or line, the fuel system pressure must be released. Failure to follow these instructions can result in personal injury or death.

Install a fuel pressure gauge to the fuel rail.

Start the engine and observe the fuel pressure reading.

NOTE: Fuel pressure specification is 407 KPa +/- 34 KPa (59 psi +/- 5 psi).

Choose a conclusion that best matches your fuel pressure reading.

Within Specification
Go To 7

Below Specification
Go To 12

Above Specification
Replace the fuel filter/pressure regulator.
Perform the POWERTRAIN VERIFICATION TEST. (Refer to 9 - ENGINE - STANDARD PROCEDURE)

P0301-CYLINDER #1 MISFIRE (CONTINUED)

7. FUEL PRESSURE LEAK DOWN

NOTE: Before continuing visually and physically inspect the fuel delivery system for external leaks or damage. Repair / replace as necessary.

Turn the ignition off.

WARNING: The fuel system is under a constant pressure (even with the engine off). Before testing or servicing any fuel system hose, fitting or line, the fuel system pressure must be released. Failure to follow these instructions can result in personal injury or death

Install special tool #6539 (5/16″) or #6631 (3/8″) fuel line adapter.

Install the fuel pressure gauge.

Start the engine and allow the fuel system to reach maximum pressure.

Turn the ignition off.

NOTE: Fuel specification is 407 KPa +/- 34 KPa (59 psi +/- 5 psi).

Using special tool #C4390, Hose Clamp Pliers, pinch the rubber fuel line between the fuel pressure gauge and the engine.

Monitor the fuel pressure gauge for a minimum of 5 minutes.

NOTE: The pressure should not fall below 241 KPa (35 psi).

Does the pressure fall below the listed specification?

Yes >> Replace the leaking Fuel Injector(s).
Perform the POWERTRAIN VERIFICATION TEST. (Refer to 9 - ENGINE - STANDARD PROCEDURE)

No >> Go To 8

---

8. FUEL INJECTOR OPERATION

WARNING: The fuel system is under a constant pressure (even with the engine off). Before testing or servicing any fuel system hose, fitting or line, the fuel system pressure must be released. Failure to follow these instructions can result in personal injury or death.

CAUTION: After each Fuel Injector actuation, start the engine to clean the cylinder of fuel. Failure to do so could cause engine damage.

Remove special tool #C4390.

Start the engine and allow the fuel pressure to reach maximum pressure.

Ignition on, engine not running.

Using the scan tool, actuate the Fuel Injector.

Monitor the fuel pressure gauge.

Does the fuel pressure gauge indicate a drop in fuel pressure?

Yes >> Go To 9

No >> Go To 10

NOTE: Turn the ignition off, remove the Fuel Pressure gauge, and connect the fuel lines before continuing.

P0301-CYLINDER #1 MISFIRE (CONTINUED)

9. ENGINE MECHANICAL

Check for any of the following conditions/mechanical problems.
ENGINE VACUUM - must be at least 13 inches in neutral
ENGINE VALVE TIMING - must be within specifications
ENGINE COMPRESSION - must be within specifications
ENGINE EXHAUST SYSTEM - must be free of any restrictions or leaks.
ENGINE PCV SYSTEM - must flow freely
TORQUE CONVERTER STALL SPEED - must be within specifications
POWER BRAKE BOOSTER - no internal vacuum leaks
FUEL - must be free of contamination
CAM LOBES - must not be worn excessively
CYLINDER LEAKAGE TEST - must be within specifications
VALVE SPRINGS - cannot be weak or broken

Are there any engine mechanical problems?

Yes >> Repair as necessary.
Perform the POWERTRAIN VERIFICATION TEST. (Refer to 9 - ENGINE - STANDARD PROCEDURE)

No >> Go To 17

---

10. FUEL INJECTOR

Turn the ignition off.
Disconnect the Fuel Injector harness connector.
Ignition on, engine not running.

NOTE: When a Misfire is detected for a particular cylinder, the PCM will shut down that cylinders Injector Control circuit.
With the scan tool, erase DTCs.
Using a 12-volt test light connected to 12-volts, probe the (K11) Injector Control No.1 circuit.
With the scan tool, actuate the Fuel Injector.

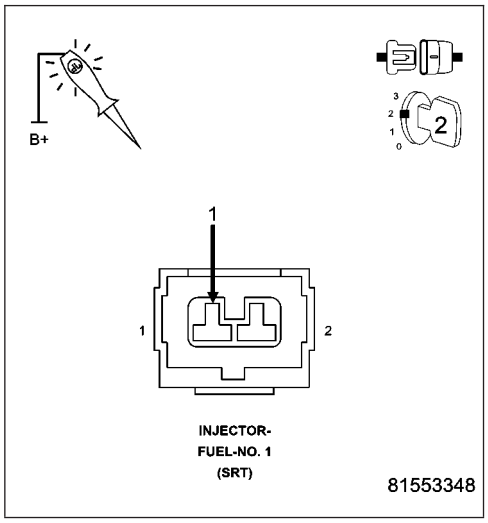

Does the test light blink/flicker?

Yes >> Replace the Fuel Injector.
Perform the POWERTRAIN VERIFICATION TEST. (Refer to 9 - ENGINE - STANDARD PROCEDURE)

No >> Go To 11

P0301-CYLINDER #1 MISFIRE (CONTINUED)

11. (K11) INJECTOR CONTROL CIRCUIT

Turn the ignition off.

Disconnect the PCM harness connector.

Check the (K11) Injector Control circuit for an open or short to ground.

Was a problem found with the Injector Control circuit?

Yes >> Repair the excessive resistance or short in the (K11) Injector Control circuit.
Perform the POWERTRAIN VERIFICATION TEST. (Refer to 9 - ENGINE - STANDARD PROCEDURE)

No >> Go To 17

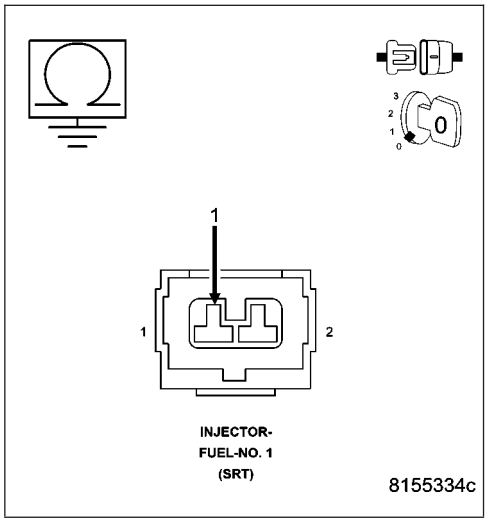

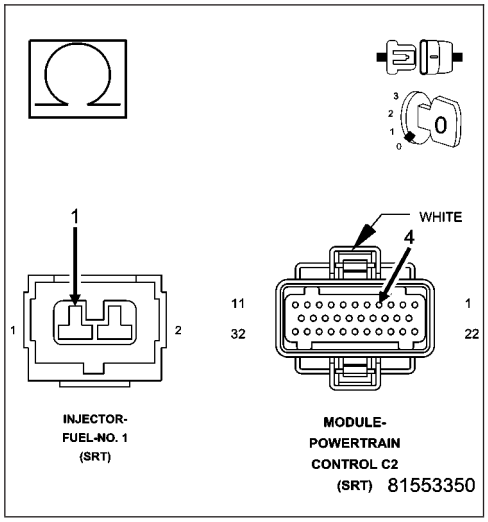

12. FUEL SUPPLY LINE RESTRICTED

Turn the ignition off.

WARNING: The fuel system is under a constant pressure (even with the engine off). Before testing or servicing any fuel system hose, fitting or line, the fuel system pressure must be released. Failure to follow these instructions can result in personal injury or death.

Raise vehicle on hoist, and disconnect the fuel pressure line at the fuel pump module.

Install special tool #6539 (5/16″) #6631(3/8″) fuel line adapter and the fuel pressure gauge between the fuel supply line and the fuel pump module.

Ignition on, engine not running.

With the scan tool, actuate the ASD Fuel System test and observe the fuel pressure gauge.

NOTE: Fuel pressure specification is 379 KPa +/- 14 KPa (55 psi +/- 2 psi).

Is the fuel pressure within specification?

Yes >> Repair or replace fuel supply line as necessary.
Perform the POWERTRAIN VERIFICATION TEST. (Refer to 9 - ENGINE - STANDARD PROCEDURE)

No >> Go To 13

P0301-CYLINDER #1 MISFIRE (CONTINUED)

13. FUEL PUMP INLET STRAINER

Turn the ignition off.

WARNING: The fuel system is under a constant pressure (even with the engine off). Before testing or servicing any fuel system hose, fitting or line, the fuel system pressure must be released. Failure to follow these instructions can result in personal injury or death.

Remove the Fuel Pump Module and inspect the Fuel Inlet Strainer.

Is the Fuel Inlet Strainer plugged?

Yes >> Replace the Fuel Pump Inlet Strainer.
Perform the POWERTRAIN VERIFICATION TEST. (Refer to 9 - ENGINE - STANDARD PROCEDURE)

No >> Before continuing, check the Fuel Pump Module harness connector terminals for corrosion, damage, or terminal push out. Make sure the ground circuit is functional. Repair as necessary. Replace the Fuel Pump Module.
Perform the POWERTRAIN VERIFICATION TEST. (Refer to 9 - ENGINE - STANDARD PROCEDURE)

---

14. IGNITION WIRE

NOTE: If the vehicle being tested does not have an ignition wire answer YES to this test and continue.

Turn the ignition off.

Remove the ignition wire.

Measure the resistance of the ignition wire.

Is the resistance below 10K ohms?

Yes >> Go To 15

No >> Replace the Ignition Wire.
Perform the POWERTRAIN VERIFICATION TEST. (Refer to 9 - ENGINE - STANDARD PROCEDURE)

---

15. IGNITION COIL

Disconnect the Ignition Coil harness connector.

Remove the Fuel Pump Relay.

Using a 12-volt test light connected to 12-volts, probe the (K19) Ignition Coil Control No.1 circuit.

Crank the engine for 5 seconds while observing the test light.

NOTE: The primary resistance of the 8.3L Ignition coil is 0.53 to 0.65 of an ohm at 77°F (25°C).

Does the test light brightly blink/flicker?

Yes >> Replace the Ignition Coil.
Perform the POWERTRAIN VERIFICATION TEST. (Refer to 9 - ENGINE - STANDARD PROCEDURE)

No >> Go To 16

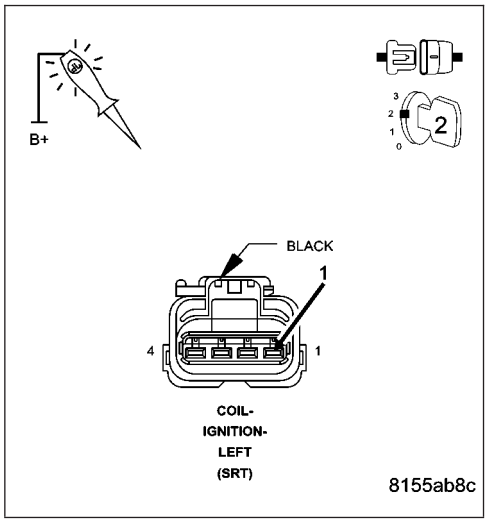

P0301-CYLINDER #1 MISFIRE (CONTINUED)

16. (K19) IGNITION COIL CONTROL NO.1 CIRCUIT

Turn the ignition off.

Disconnect the C1 PCM harness connector.

Check the (K19) Ignition Coil Control No.1 circuit for an open or short to ground.

Was a problem found with the Coil Control circuit?

Yes >> Repair the (K19) Ignition Coil Control No.1 circuit.
Perform the POWERTRAIN VERIFICATION TEST. (Refer to 9 - ENGINE - STANDARD PROCEDURE)

No >> Go To 17

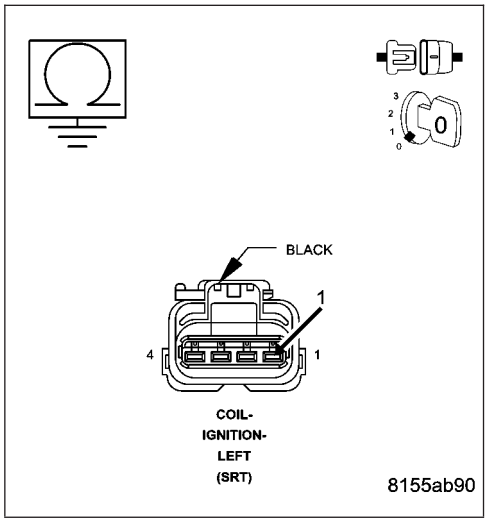

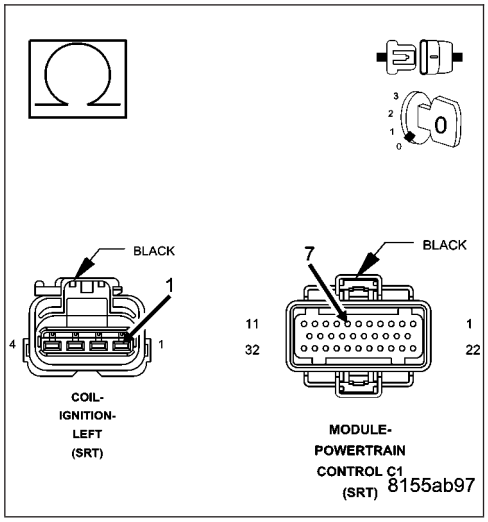

17. PCM

NOTE: Before continuing, check the PCM harness connector terminals for corrosion, damage, or terminal push out. Repair as necessary.

Using the schematics as a guide, inspect the wire harness and connectors. Pay particular attention to all Power and Ground circuits.

Were there any problems found?

Yes >> Repair as necessary.
Perform the POWERTRAIN VERIFICATION TEST. (Refer to 9 - ENGINE - STANDARD PROCEDURE)

No >> Replace and program the Powertrain Control Module per Service Information.
Perform the POWERTRAIN VERIFICATION TEST. (Refer to 9 - ENGINE - STANDARD PROCEDURE)

P0302-CYLINDER #2 MISFIRE

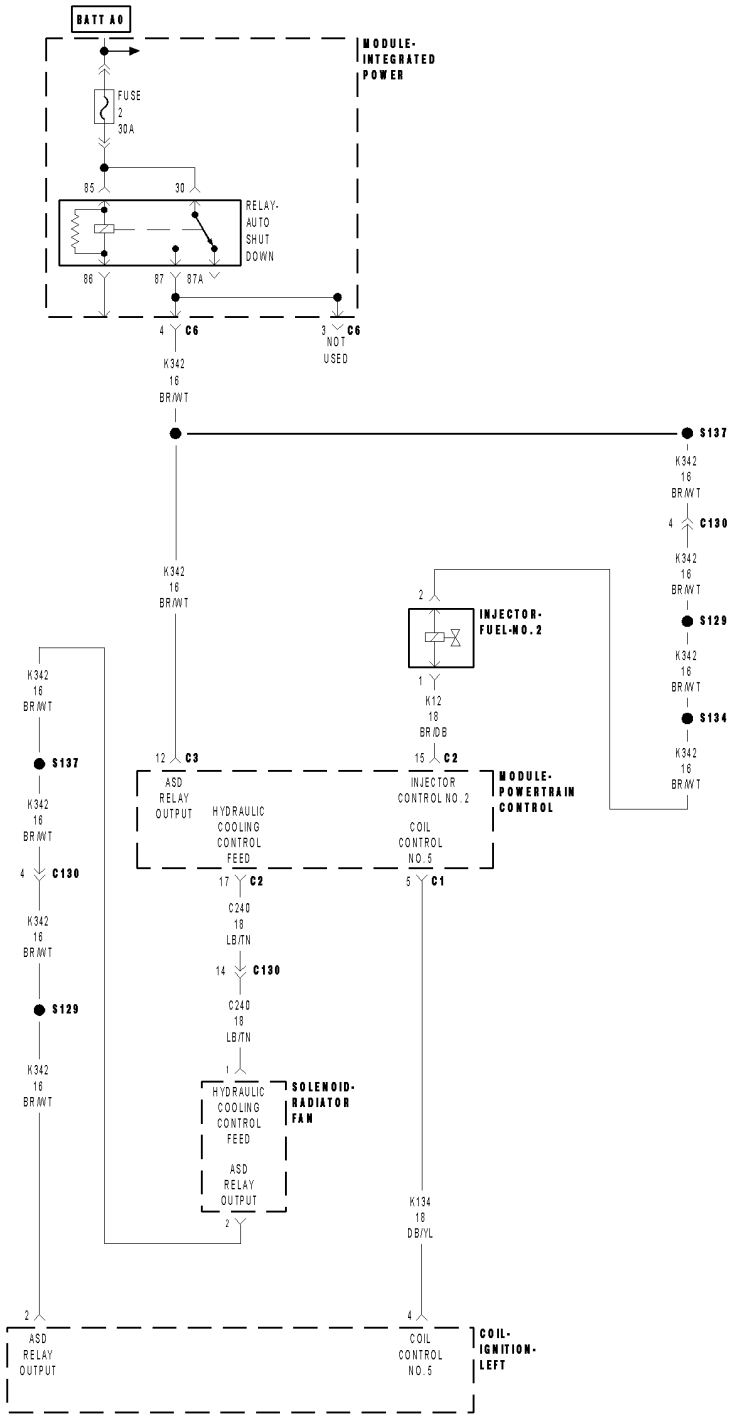

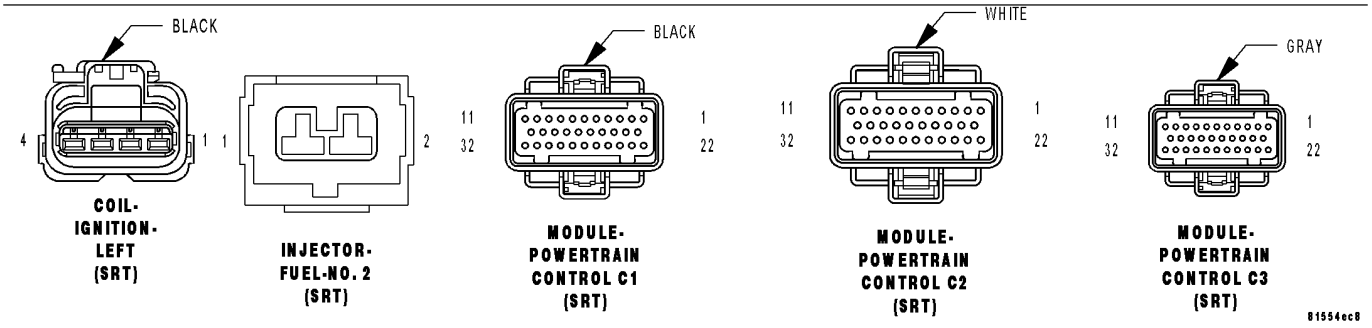

P0302-CYLINDER #2 MISFIRE (CONTINUED)

For the Engine circuit diagram (Refer to 9 - ENGINE - SCHEMATICS AND DIAGRAMS).

For a complete wiring diagram **Refer to Section 8W**.

- **When Monitored:**
  Any time the engine is running, and the adaptive numerator has been successfully updated.
- **Set Condition:**
  When more than a 1% misfire rate is measured during two trips, or with a 6% to 30% misfire rate during one trip.

Possible Causes
(K342) ASD RELAY OUTPUT CIRCUIT
(K12) INJECTOR CONTROL CIRCUIT
(K134) COIL CONTROL CIRCUIT
IGNITION WIRE
SPARK PLUG
IGNITION COIL
FUEL PUMP INLET STRAINER PLUGGED
RESTRICTED FUEL SUPPLY LINE
FUEL PUMP MODULE
FUEL PRESSURE LEAK DOWN
FUEL INJECTOR
ENGINE MECHANICAL
PCM

Always perform the Pre-Diagnostic Troubleshooting procedure before proceeding. (Refer to 9 - ENGINE - DIAGNOSIS AND TESTING).

Diagnostic Test

1. CYLINDER MIS-FIRE CONDITION ACTIVE

Engine running.

Observe the WHICH CYLINDER IS MISFIRING screen for at least one minute on the scan tool.

Is there a misfire present at this time?

Yes >> Go To 2

No >> Refer to the INTERMITTENT CONDITION Diagnostic Procedure.
Perform the POWERTRAIN VERIFICATION TEST. (Refer to 9 - ENGINE - STANDARD PROCEDURE)

P0302-CYLINDER #2 MISFIRE (CONTINUED)

2. VISUAL INSPECTION

NOTE: Anything that affects the speed of the crankshaft can cause a misfire DTC.

NOTE: When a Misfire is detected for a particular cylinder, the PCM will shut down that cylinders Injector Control circuit.

- Visually inspect the engine for any of the following conditions.
- Worn serpentine belt
- Binding Engine-Driven accessories: A/C Compressor, P/S Pump, Water pump.
- Misalignment of the Water pump, P/S Pump and A/C Compressor pulleys
- Corroded PCM power and ground circuits.
- Improper CKP, CMP, MAP, and TP Sensor mounting
- Poor connector/terminal to component connection. i.e., CKP sensor, Fuel Injector, Ign coil, etc.
- Vacuum leaks
- Restricted Air Induction system or Exhaust system.
- Internal engine component failures.

Were any of the above conditions present?

Yes >> Repair as necessary.
Perform the POWERTRAIN VERIFICATION TEST. (Refer to 9 - ENGINE - STANDARD PROCEDURE)

No >> Go To 3

---

3. (K342) ASD RELAY OUTPUT CIRCUIT

Turn the ignition off.

Disconnect the Ignition Coil harness connector.

Disconnect the Fuel Injector harness connector.

Ignition on, engine not running.

With the scan tool, actuate the ASD Relay.

Using a 12-volt test light connected to ground, probe the (K342) ASD Relay Output circuit in the Ignition Coil harness connector and Fuel Injector harness connector while the relay is actuating.

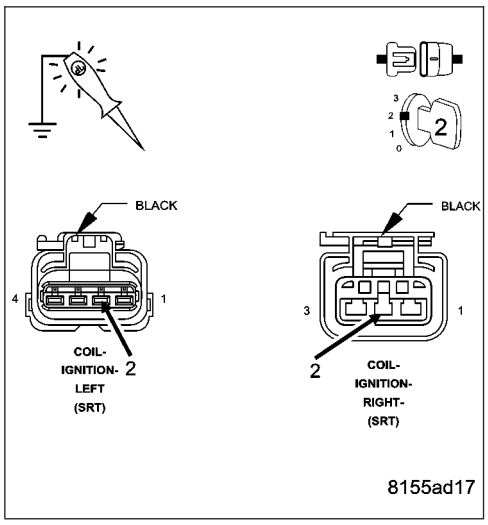

Does the test light illuminate brightly?

Yes >> Go To 4

No >> Repair the excessive resistance or short to ground in the (K342) ASD Relay Output circuit.
Perform the POWERTRAIN VERIFICATION TEST. (Refer to 9 - ENGINE - STANDARD PROCEDURE)

P0302-CYLINDER #2 MISFIRE (CONTINUED)

4. IGNITION SYSTEM OPERATION

Turn the ignition off.
Connect the Ignition Coil harness connector.
Remove the Ignition Coil.
Leave the Fuel Injector harness connector of the cylinder being tested disconnected.
Install a spark tester on the Ignition Coil.
While cranking the engine observe the spark coming from the spark tester.

NOTE: A crisp blue spark that is able to jump the gap of the spark tester should be generated.

Is good spark present?

Yes >> Go To 5

No >> Go To 14

NOTE: Connect the Fuel Injector harness connector before continuing.

---

5. SPARK PLUG

Turn the ignition off.
Remove the Spark Plug.
Inspect the Spark Plug for the following conditions.
- Cracks
- Carbon Tracking
- Foreign Material
- Gap size out of specifications
- Loose or broke electrode

NOTE: Lightly tap the bottom of the spark plug on a solid surface. The electrode in the spark plug should not move.

Were any of the above conditions present?

Yes >> Replace the Spark Plug.
Perform the POWERTRAIN VERIFICATION TEST. (Refer to 9 - ENGINE - STANDARD PROCEDURE)

No >> Go To 6

---

6. FUEL PRESSURE CHECK

WARNING: The fuel system is under a constant pressure (even with the engine off). Before testing or servicing any fuel system hose, fitting or line, the fuel system pressure must be released. Failure to follow these instructions can result in personal injury or death.
Install a fuel pressure gauge to the fuel rail.
Start the engine and observe the fuel pressure reading.

NOTE: Fuel pressure specification is 407 KPa +/- 34 KPa (59 psi +/- 5 psi).

Choose a conclusion that best matches your fuel pressure reading.

Within Specification
Go To 7

Below Specification
Go To 12

Above Specification
Replace the fuel filter/pressure regulator.
Perform the POWERTRAIN VERIFICATION TEST. (Refer to 9 - ENGINE - STANDARD PROCEDURE)

P0302-CYLINDER #2 MISFIRE (CONTINUED)

7. FUEL PRESSURE LEAK DOWN

NOTE: Before continuing visually and physically inspect the fuel delivery system for external leaks or damage. Repair / replace as necessary.

Turn the ignition off.

WARNING: The fuel system is under a constant pressure (even with the engine off). Before testing or servicing any fuel system hose, fitting or line, the fuel system pressure must be released. Failure to follow these instructions can result in personal injury or death

Install special tool #6539 (5/16″) or #6631 (3/8″) fuel line adapter.

Install the fuel pressure gauge.

Start the engine and allow the fuel system to reach maximum pressure.

Turn the ignition off.

NOTE: Fuel specification is 407 KPa +/- 34 KPa (59 psi +/- 5 psi).

Using special tool #C4390, Hose Clamp Pliers, pinch the rubber fuel line between the fuel pressure gauge and the engine.

Monitor the fuel pressure gauge for a minimum of 5 minutes.

NOTE: The pressure should not fall below 241 KPa (35 psi).

Does the pressure fall below the listed specification?

Yes >> Replace the leaking Fuel Injector(s).
Perform the POWERTRAIN VERIFICATION TEST. (Refer to 9 - ENGINE - STANDARD PROCEDURE)

No >> Go To 8

---

8. FUEL INJECTOR OPERATION

WARNING: The fuel system is under a constant pressure (even with the engine off). Before testing or servicing any fuel system hose, fitting or line, the fuel system pressure must be released. Failure to follow these instructions can result in personal injury or death.

CAUTION: After each Fuel Injector actuation, start the engine to clean the cylinder of fuel. Failure to do so could cause engine damage.

Remove special tool #C4390.

Start the engine and allow the fuel pressure to reach maximum pressure.

Ignition on, engine not running.

Using the scan tool, actuate the Fuel Injector.

Monitor the fuel pressure gauge.

Does the fuel pressure gauge indicate a drop in fuel pressure?

Yes >> Go To 9

No >> Go To 10

NOTE: Turn the ignition off, remove the Fuel Pressure gauge, and connect the fuel lines before continuing.

P0302-CYLINDER #2 MISFIRE (CONTINUED)

9. ENGINE MECHANICAL

Check for any of the following conditions/mechanical problems.
ENGINE VACUUM - must be at least 13 inches in neutral
ENGINE VALVE TIMING - must be within specifications
ENGINE COMPRESSION - must be within specifications
ENGINE EXHAUST SYSTEM - must be free of any restrictions or leaks.
ENGINE PCV SYSTEM - must flow freely
TORQUE CONVERTER STALL SPEED - must be within specifications
POWER BRAKE BOOSTER - no internal vacuum leaks
FUEL - must be free of contamination
CAM LOBES - must not be worn excessively
CYLINDER LEAKAGE TEST - must be within specifications
VALVE SPRINGS - cannot be weak or broken

Are there any engine mechanical problems?

Yes >> Repair as necessary.
Perform the POWERTRAIN VERIFICATION TEST. (Refer to 9 - ENGINE - STANDARD PROCEDURE)

No >> Go To 17

---

10. FUEL INJECTOR

Turn the ignition off.
Disconnect the Fuel Injector harness connector.
Ignition on, engine not running.

NOTE: When a Misfire is detected for a particular cylinder, the PCM will shut down that cylinders Injector Control circuit.
With the scan tool, erase DTCs.
Using a 12-volt test light connected to 12-volts, probe the (K12) Injector Control circuit.
With the scan tool, actuate the Fuel Injector.

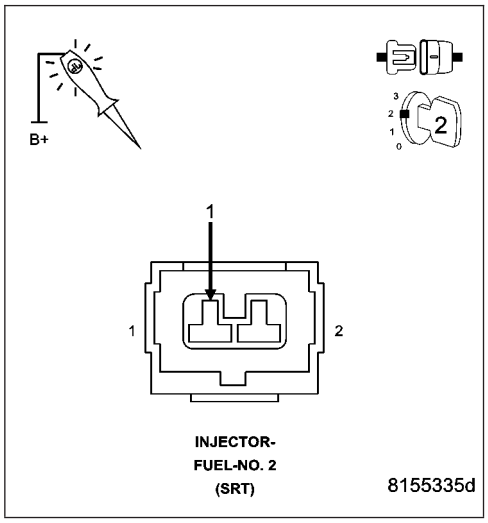

Does the test light blink/flicker?

Yes >> Replace the Fuel Injector.
Perform the POWERTRAIN VERIFICATION TEST. (Refer to 9 - ENGINE - STANDARD PROCEDURE)

No >> Go To 11

P0302-CYLINDER #2 MISFIRE (CONTINUED)

11. INJECTOR CONTROL CIRCUIT

Turn the ignition off.

Disconnect the PCM harness connector.

Check the (K14) Injector Control circuit for an open or short to ground.

Was a problem found with the Injector Control circuit?

Yes >> Repair the excessive resistance or short in the Injector Control circuit.
Perform the POWERTRAIN VERIFICATION TEST. (Refer to 9 - ENGINE - STANDARD PROCEDURE)

No >> Go To 17

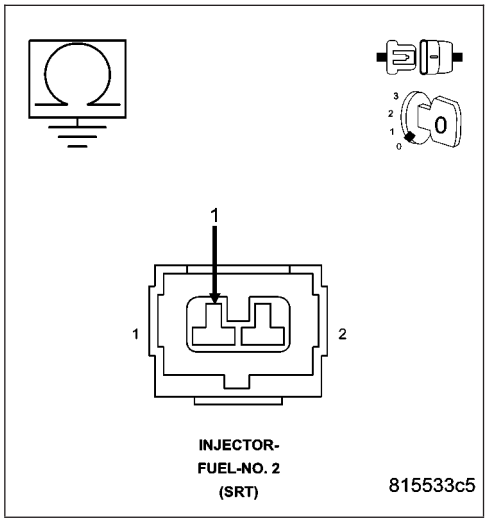

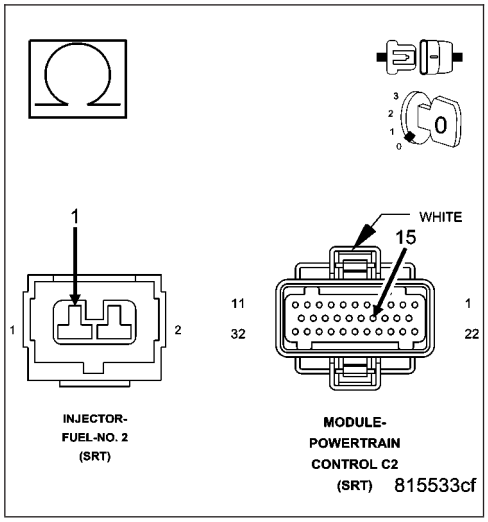

12. FUEL SUPPLY LINE RESTRICTED

Turn the ignition off.

WARNING: The fuel system is under a constant pressure (even with the engine off). Before testing or servicing any fuel system hose, fitting or line, the fuel system pressure must be released. Failure to follow these instructions can result in personal injury or death.

Raise vehicle on hoist, and disconnect the fuel pressure line at the fuel pump module.

Install special tool #6539 (5/16″) #6631(3/8″) fuel line adapter and the fuel pressure gauge between the fuel supply line and the fuel pump module.

Ignition on, engine not running.

With the scan tool, actuate the ASD Fuel System test and observe the fuel pressure gauge.

NOTE: Fuel pressure specification is 379 KPa +/- 14 KPa (55 psi +/- 2 psi).

Is the fuel pressure within specification?

Yes >> Repair or replace fuel supply line as necessary.
Perform the POWERTRAIN VERIFICATION TEST. (Refer to 9 - ENGINE - STANDARD PROCEDURE)

No >> Go To 13

P0302-CYLINDER #2 MISFIRE (CONTINUED)

13. FUEL PUMP INLET STRAINER

Turn the ignition off.

WARNING: The fuel system is under a constant pressure (even with the engine off). Before testing or servicing any fuel system hose, fitting or line, the fuel system pressure must be released. Failure to follow these instructions can result in personal injury or death.

Remove the Fuel Pump Module and inspect the Fuel Inlet Strainer.

Is the Fuel Inlet Strainer plugged?

Yes >> Replace the Fuel Pump Inlet Strainer.
Perform the POWERTRAIN VERIFICATION TEST. (Refer to 9 - ENGINE - STANDARD PROCEDURE)

No >> Before continuing, check the Fuel Pump Module harness connector terminals for corrosion, damage, or terminal push out. Make sure the ground circuit is functional. Repair as necessary. Replace the Fuel Pump Module.
Perform the POWERTRAIN VERIFICATION TEST. (Refer to 9 - ENGINE - STANDARD PROCEDURE)

---

14. IGNITION WIRE

NOTE: If the vehicle being tested does not have an ignition wire answer YES to this test and continue.

Turn the ignition off.

Remove the ignition wire.

Measure the resistance of the ignition wire.

Is the resistance below 10K ohms?

Yes >> Go To 15

No >> Replace the Ignition Wire.
Perform the POWERTRAIN VERIFICATION TEST. (Refer to 9 - ENGINE - STANDARD PROCEDURE)

---

15. IGNITION COIL

Disconnect the Ignition Coil harness connector.

Remove the Fuel Pump Relay.

Using a 12-volt test light connected to 12-volts, probe the (K134) Coil Control circuit.

Crank the engine for 5 seconds while observing the test light.

NOTE: The primary resistance of the 8.3L Ignition coil is 0.53 to 0.65 of an ohm at 77°F (25°C).

Does the test light brightly blink/flicker?

Yes >> Replace the Ignition Coil.
Perform the POWERTRAIN VERIFICATION TEST. (Refer to 9 - ENGINE - STANDARD PROCEDURE)

No >> Go To 16

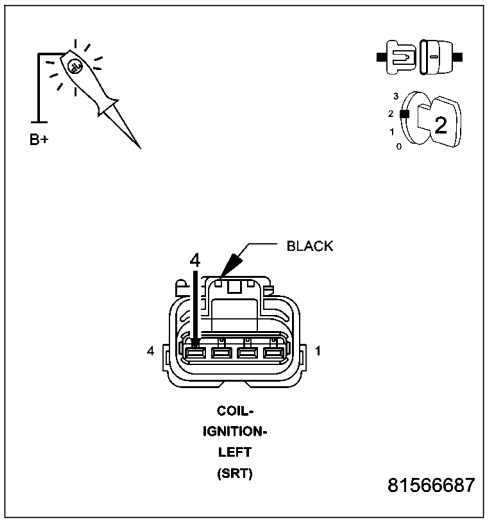

P0302-CYLINDER #2 MISFIRE (CONTINUED)

16. COIL CONTROL CIRCUIT

Turn the ignition off.
Disconnect the PCM harness connector.
Check the (K134) Coil Control circuit for an open or short to ground.

Was a problem found with the Coil Control circuit?

Yes >> Repair the Coil Control circuit.
Perform the POWERTRAIN VERIFICATION TEST. (Refer to 9 - ENGINE - STANDARD PROCEDURE)

No >> Go To 17

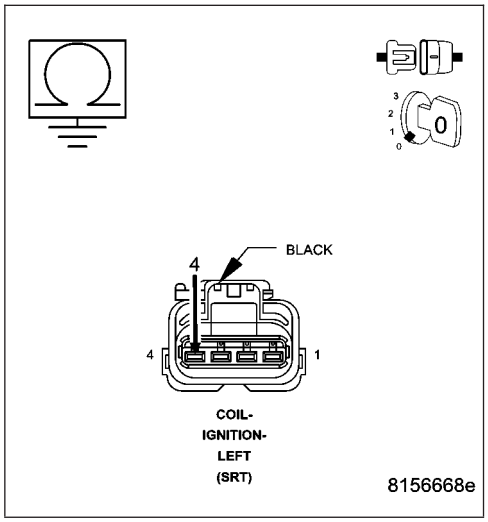

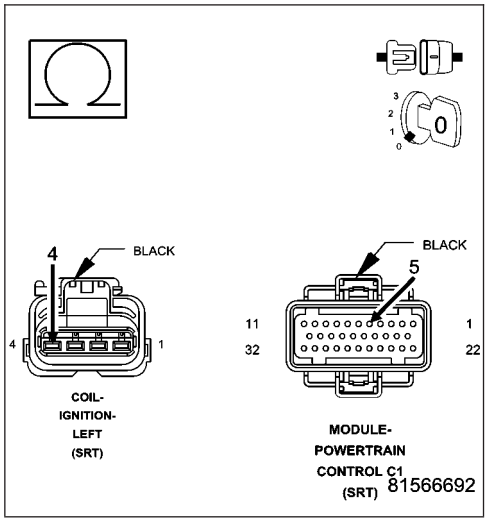

17. PCM

NOTE: Before continuing, check the PCM harness connector terminals for corrosion, damage, or terminal push out. Repair as necessary.
Using the schematics as a guide, inspect the wire harness and connectors. Pay particular attention to all Power and Ground circuits.

Were there any problems found?

Yes >> Repair as necessary.
Perform the POWERTRAIN VERIFICATION TEST. (Refer to 9 - ENGINE - STANDARD PROCEDURE)

No >> Replace and program the Powertrain Control Module per Service Information.
Perform the POWERTRAIN VERIFICATION TEST. (Refer to 9 - ENGINE - STANDARD PROCEDURE)

P0303-CYLINDER #3 MISFIRE

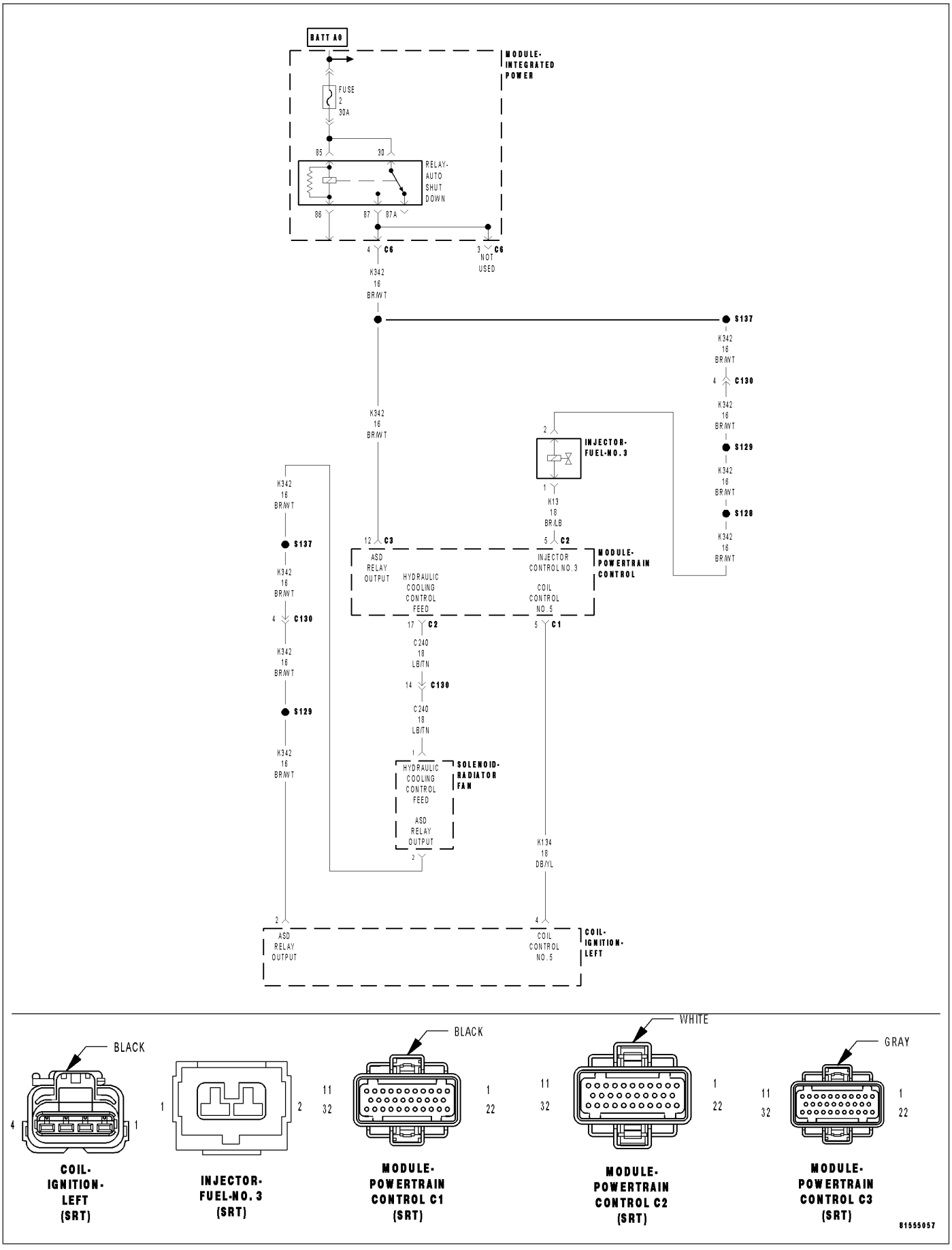

P0303-CYLINDER #3 MISFIRE (CONTINUED)

For the Engine circuit diagram (Refer to 9 - ENGINE - SCHEMATICS AND DIAGRAMS).

For a complete wiring diagram **Refer to Section 8W**.

- **When Monitored:**
  Any time the engine is running, and the adaptive numerator has been successfully updated.
- **Set Condition:**
  When more than a 1% misfire rate is measured during two trips, or with a 6% to 30% misfire rate during one trip.

Possible Causes
(K342) ASD RELAY OUTPUT CIRCUIT
(K13) INJECTOR CONTROL CIRCUIT
(K134) COIL CONTROL CIRCUIT
IGNITION WIRE
SPARK PLUG
IGNITION COIL
FUEL PUMP INLET STRAINER PLUGGED
RESTRICTED FUEL SUPPLY LINE
FUEL PUMP MODULE
FUEL PRESSURE LEAK DOWN
FUEL INJECTOR
ENGINE MECHANICAL
PCM

Always perform the Pre-Diagnostic Troubleshooting procedure before proceeding. (Refer to 9 - ENGINE - DIAGNOSIS AND TESTING).

Diagnostic Test

1. CYLINDER MIS-FIRE CONDITION ACTIVE

Engine running.

Observe the WHICH CYLINDER IS MISFIRING screen for at least one minute on the scan tool.

Is there a misfire present at this time?

Yes >> Go To 2

No >> Refer to the INTERMITTENT CONDITION Diagnostic Procedure.
Perform the POWERTRAIN VERIFICATION TEST. (Refer to 9 - ENGINE - STANDARD PROCEDURE)

P0303-CYLINDER #3 MISFIRE (CONTINUED)

2. VISUAL INSPECTION

NOTE: Anything that affects the speed of the crankshaft can cause a misfire DTC.

NOTE: When a Misfire is detected for a particular cylinder, the PCM will shut down that cylinders Injector Control circuit.

- Visually inspect the engine for any of the following conditions.
- Worn serpentine belt
- Binding Engine-Driven accessories: A/C Compressor, P/S Pump, Water pump.
- Misalignment of the Water pump, P/S Pump and A/C Compressor pulleys
- Corroded PCM power and ground circuits.
- Improper CKP, CMP, MAP, and TP Sensor mounting
- Poor connector/terminal to component connection. i.e., CKP sensor, Fuel Injector, Ign coil, etc.
- Vacuum leaks
- Restricted Air Induction system or Exhaust system.
- Internal engine component failures.

Were any of the above conditions present?

Yes >> Repair as necessary.
Perform the POWERTRAIN VERIFICATION TEST. (Refer to 9 - ENGINE - STANDARD PROCEDURE)

No >> Go To 3

P0303-CYLINDER #3 MISFIRE (CONTINUED)

3. (K342) ASD RELAY OUTPUT CIRCUIT

Turn the ignition off.
Disconnect the Ignition Coil harness connector.
Disconnect the Fuel Injector harness connector.
Ignition on, engine not running.
With the scan tool, actuate the ASD Relay.
Using a 12-volt test light connected to ground, probe the (K342) ASD Relay Output circuit in the Ignition Coil harness connector and Fuel Injector harness connector while the relay is actuating.

Does the test light illuminate brightly?

Yes >> Go To 4

No >> Repair the excessive resistance or short to ground in the (K342) ASD Relay Output circuit.
Perform the POWERTRAIN VERIFICATION TEST. (Refer to 9 - ENGINE - STANDARD PROCEDURE)

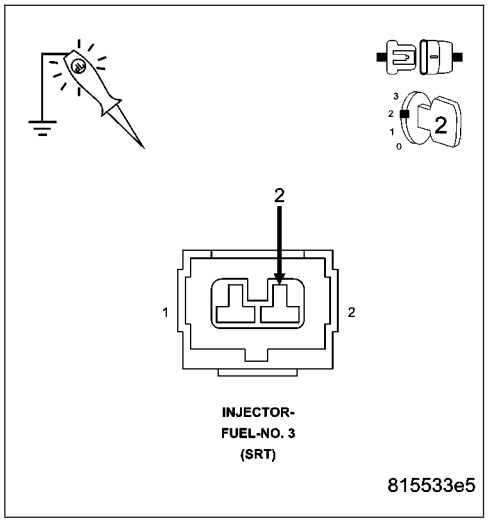

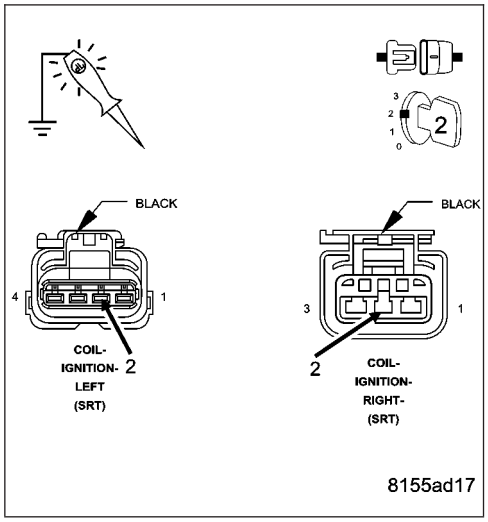

4. IGNITION SYSTEM OPERATION

Turn the ignition off.
Connect the Ignition Coil harness connector.
Remove the Ignition Coil.
Leave the Fuel Injector harness connector of the cylinder being tested disconnected.
Install a spark tester on the Ignition Coil.
While cranking the engine observe the spark coming from the spark tester.

NOTE: A crisp blue spark that is able to jump the gap of the spark tester should be generated.

Is good spark present?

Yes >> Go To 5

No >> Go To 14

NOTE: Connect the Fuel Injector harness connector before continuing.

P0303-CYLINDER #3 MISFIRE (CONTINUED)

5. SPARK PLUG

Turn the ignition off.

Remove the Spark Plug.

Inspect the Spark Plug for the following conditions.

- Cracks
- Carbon Tracking
- Foreign Material
- Gap size out of specifications
- Loose or broke electrode

NOTE: Lightly tap the bottom of the spark plug on a solid surface. The electrode in the spark plug should not move.

Were any of the above conditions present?

Yes >> Replace the Spark Plug.
Perform the POWERTRAIN VERIFICATION TEST. (Refer to 9 - ENGINE - STANDARD PROCEDURE)

No >> Go To 6

---

6. FUEL PRESSURE CHECK

WARNING: The fuel system is under a constant pressure (even with the engine off). Before testing or servicing any fuel system hose, fitting or line, the fuel system pressure must be released. Failure to follow these instructions can result in personal injury or death.

Install a fuel pressure gauge to the fuel rail.

Start the engine and observe the fuel pressure reading.

NOTE: Fuel pressure specification is 407 KPa +/- 34 KPa (59 psi +/- 5 psi).

Choose a conclusion that best matches your fuel pressure reading.

Within Specification
Go To 7

Below Specification
Go To 12

Above Specification
Replace the fuel filter/pressure regulator.
Perform the POWERTRAIN VERIFICATION TEST. (Refer to 9 - ENGINE - STANDARD PROCEDURE)

P0303-CYLINDER #3 MISFIRE (CONTINUED)

7. FUEL PRESSURE LEAK DOWN

NOTE: Before continuing visually and physically inspect the fuel delivery system for external leaks or damage. Repair / replace as necessary.

Turn the ignition off.

WARNING: The fuel system is under a constant pressure (even with the engine off). Before testing or servicing any fuel system hose, fitting or line, the fuel system pressure must be released. Failure to follow these instructions can result in personal injury or death

Install special tool #6539 (5/16″) or #6631 (3/8″) fuel line adapter.

Install the fuel pressure gauge.

Start the engine and allow the fuel system to reach maximum pressure.

Turn the ignition off.

NOTE: Fuel specification is 407 KPa +/- 34 KPa (59 psi +/- 5 psi).

Using special tool #C4390, Hose Clamp Pliers, pinch the rubber fuel line between the fuel pressure gauge and the engine.

Monitor the fuel pressure gauge for a minimum of 5 minutes.

NOTE: The pressure should not fall below 241 KPa (35 psi).

Does the pressure fall below the listed specification?

Yes >> Replace the leaking Fuel Injector(s).
Perform the POWERTRAIN VERIFICATION TEST. (Refer to 9 - ENGINE - STANDARD PROCEDURE)

No >> Go To 8

---

8. FUEL INJECTOR OPERATION

WARNING: The fuel system is under a constant pressure (even with the engine off). Before testing or servicing any fuel system hose, fitting or line, the fuel system pressure must be released. Failure to follow these instructions can result in personal injury or death.

CAUTION: After each Fuel Injector actuation, start the engine to clean the cylinder of fuel. Failure to do so could cause engine damage.

Remove special tool #C4390.

Start the engine and allow the fuel pressure to reach maximum pressure.

Ignition on, engine not running.

Using the scan tool, actuate the Fuel Injector.

Monitor the fuel pressure gauge.

Does the fuel pressure gauge indicate a drop in fuel pressure?

Yes >> Go To 9

No >> Go To 10

NOTE: Turn the ignition off, remove the Fuel Pressure gauge, and connect the fuel lines before continuing.

P0303-CYLINDER #3 MISFIRE (CONTINUED)

9. ENGINE MECHANICAL

Check for any of the following conditions/mechanical problems.
ENGINE VACUUM - must be at least 13 inches in neutral
ENGINE VALVE TIMING - must be within specifications
ENGINE COMPRESSION - must be within specifications
ENGINE EXHAUST SYSTEM - must be free of any restrictions or leaks.
ENGINE PCV SYSTEM - must flow freely
TORQUE CONVERTER STALL SPEED - must be within specifications
POWER BRAKE BOOSTER - no internal vacuum leaks
FUEL - must be free of contamination
CAM LOBES - must not be worn excessively
CYLINDER LEAKAGE TEST - must be within specifications
VALVE SPRINGS - cannot be weak or broken

Are there any engine mechanical problems?

Yes >> Repair as necessary.
Perform the POWERTRAIN VERIFICATION TEST. (Refer to 9 - ENGINE - STANDARD PROCEDURE)

No >> Go To 17

---

10. FUEL INJECTOR

Turn the ignition off.
Disconnect the Fuel Injector harness connector.
Ignition on, engine not running.

NOTE: When a Misfire is detected for a particular cylinder, the PCM will shut down that cylinders Injector Control circuit.
With the scan tool, erase DTCs.
Using a 12-volt test light connected to 12-volts, probe the (K13) Injector Control circuit.
With the scan tool, actuate the Fuel Injector.

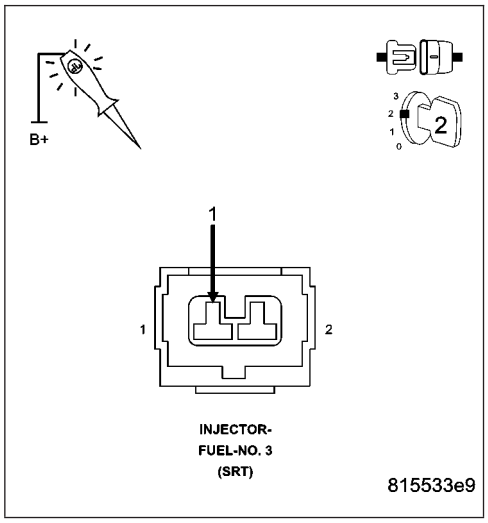

Does the test light blink/flicker?

Yes >> Replace the Fuel Injector.
Perform the POWERTRAIN VERIFICATION TEST. (Refer to 9 - ENGINE - STANDARD PROCEDURE)

No >> Go To 11

P0303-CYLINDER #3 MISFIRE (CONTINUED)

11. INJECTOR CONTROL CIRCUIT

Turn the ignition off.

Disconnect the PCM harness connector.

Check the (K13) Injector Control circuit for an open or short to ground.

Was a problem found with the Injector Control circuit?

Yes >> Repair the excessive resistance or short in the Injector Control circuit.
Perform the POWERTRAIN VERIFICATION TEST. (Refer to 9 - ENGINE - STANDARD PROCEDURE)

No >> Go To 17

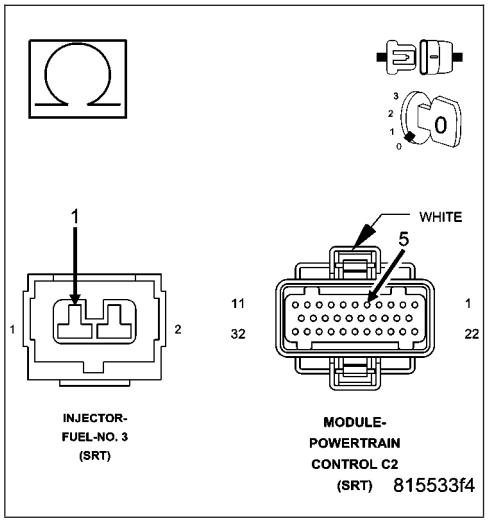

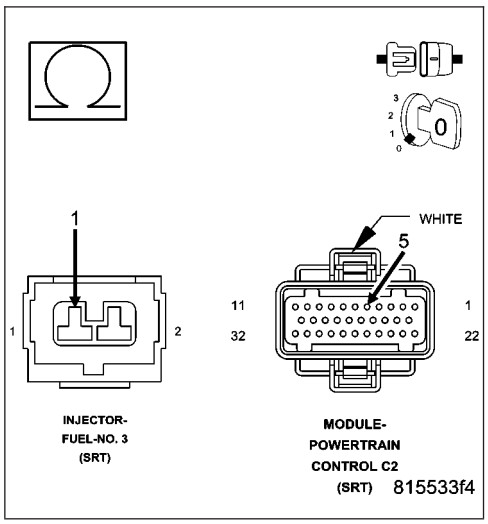

12. FUEL SUPPLY LINE RESTRICTED

Turn the ignition off.

WARNING: The fuel system is under a constant pressure (even with the engine off). Before testing or servicing any fuel system hose, fitting or line, the fuel system pressure must be released. Failure to follow these instructions can result in personal injury or death.

Raise vehicle on hoist, and disconnect the fuel pressure line at the fuel pump module.

Install special tool #6539 (5/16″) #6631(3/8″) fuel line adapter and the fuel pressure gauge between the fuel supply line and the fuel pump module.

Ignition on, engine not running.

With the scan tool, actuate the ASD Fuel System test and observe the fuel pressure gauge.

NOTE: Fuel pressure specification is 379 KPa +/- 14 KPa (55 psi +/- 2 psi).

Is the fuel pressure within specification?

Yes >> Repair or replace fuel supply line as necessary.
Perform the POWERTRAIN VERIFICATION TEST. (Refer to 9 - ENGINE - STANDARD PROCEDURE)

No >> Go To 13

P0303-CYLINDER #3 MISFIRE (CONTINUED)

13. FUEL PUMP INLET STRAINER

Turn the ignition off.

WARNING: The fuel system is under a constant pressure (even with the engine off). Before testing or servicing any fuel system hose, fitting or line, the fuel system pressure must be released. Failure to follow these instructions can result in personal injury or death.

Remove the Fuel Pump Module and inspect the Fuel Inlet Strainer.

Is the Fuel Inlet Strainer plugged?

Yes >> Replace the Fuel Pump Inlet Strainer.
Perform the POWERTRAIN VERIFICATION TEST. (Refer to 9 - ENGINE - STANDARD PROCEDURE)

No >> Before continuing, check the Fuel Pump Module harness connector terminals for corrosion, damage, or terminal push out. Make sure the ground circuit is functional. Repair as necessary. Replace the Fuel Pump Module.
Perform the POWERTRAIN VERIFICATION TEST. (Refer to 9 - ENGINE - STANDARD PROCEDURE)

---

14. IGNITION WIRE

NOTE: If the vehicle being tested does not have an ignition wire answer YES to this test and continue.

Turn the ignition off.

Remove the ignition wire.

Measure the resistance of the ignition wire.

Is the resistance below 10K ohms?

Yes >> Go To 15

No >> Replace the Ignition Wire.
Perform the POWERTRAIN VERIFICATION TEST. (Refer to 9 - ENGINE - STANDARD PROCEDURE)

---

15. IGNITION COIL

Disconnect the Ignition Coil harness connector.

Remove the Fuel Pump Relay.

Using a 12-volt test light connected to 12-volts, probe the (K134) Coil Control circuit.

Crank the engine for 5 seconds while observing the test light.

NOTE: The primary resistance of the 8.3L Ignition coil is 0.53 to 0.65 of an ohm at 77°F (25°C).

Does the test light brightly blink/flicker?

Yes >> Replace the Ignition Coil.
Perform the POWERTRAIN VERIFICATION TEST. (Refer to 9 - ENGINE - STANDARD PROCEDURE)

No >> Go To 16

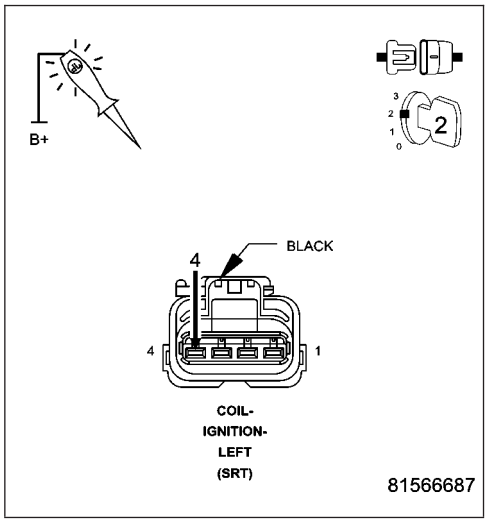

P0303-CYLINDER #3 MISFIRE (CONTINUED)

16. COIL CONTROL CIRCUIT

Turn the ignition off.
Disconnect the PCM harness connector.
Check the (K134) Coil Control circuit for an open or short to ground.

Was a problem found with the Coil Control circuit?

Yes >> Repair the Coil Control circuit.
Perform the POWERTRAIN VERIFICATION TEST. (Refer to 9 - ENGINE - STANDARD PROCEDURE)

No >> Go To 17

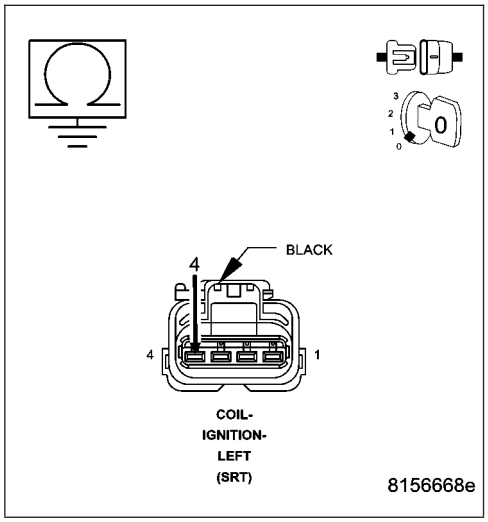

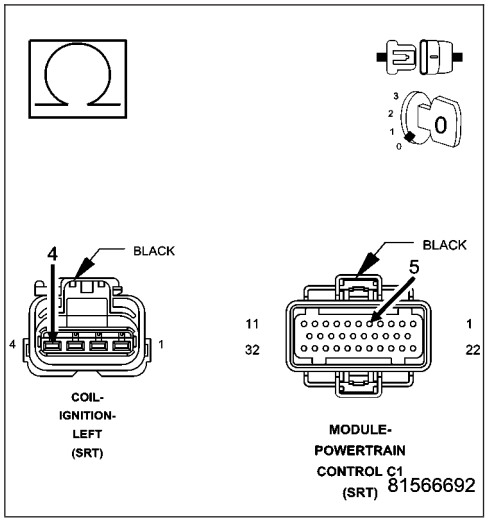

17. PCM

NOTE: Before continuing, check the PCM harness connector terminals for corrosion, damage, or terminal push out. Repair as necessary.
Using the schematics as a guide, inspect the wire harness and connectors. Pay particular attention to all Power and Ground circuits.

Were there any problems found?

Yes >> Repair as necessary.
Perform the POWERTRAIN VERIFICATION TEST. (Refer to 9 - ENGINE - STANDARD PROCEDURE)

No >> Replace and program the Powertrain Control Module per Service Information.
Perform the POWERTRAIN VERIFICATION TEST. (Refer to 9 - ENGINE - STANDARD PROCEDURE)

P0304-CYLINDER #4 MISFIRE

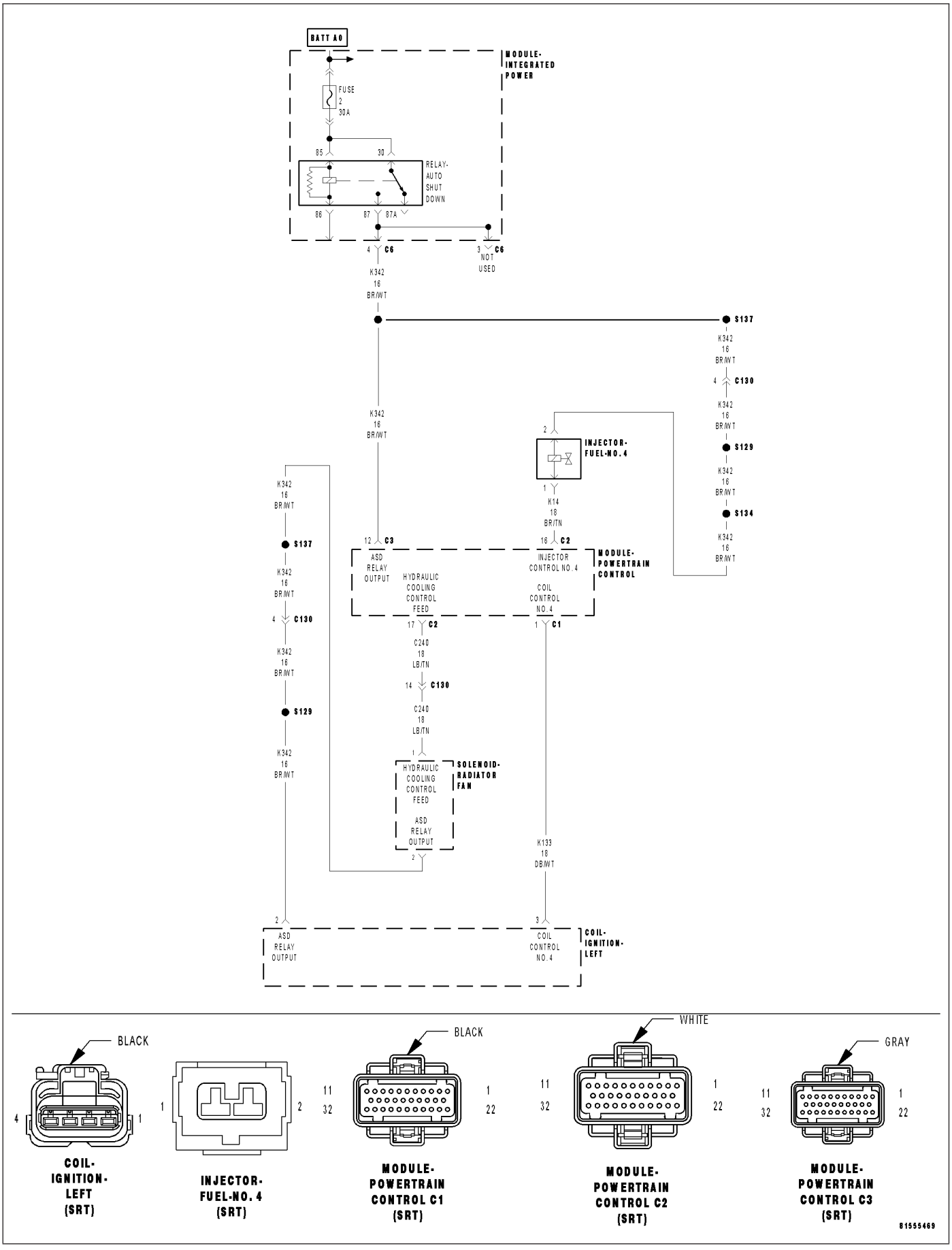

P0304-CYLINDER #4 MISFIRE (CONTINUED)

For the Engine circuit diagram (Refer to 9 - ENGINE - SCHEMATICS AND DIAGRAMS).

For a complete wiring diagram **Refer to Section 8W**.

- **When Monitored:**
  Any time the engine is running, and the adaptive numerator has been successfully updated.
- **Set Condition:**
  When more than a 1% misfire rate is measured during two trips, or with a 6% to 30% misfire rate during one trip.

Possible Causes
(K342) ASD RELAY OUTPUT CIRCUIT
(K14) INJECTOR CONTROL CIRCUIT
(K133) COIL CONTROL CIRCUIT
IGNITION WIRE
SPARK PLUG
IGNITION COIL
FUEL PUMP INLET STRAINER PLUGGED
RESTRICTED FUEL SUPPLY LINE
FUEL PUMP MODULE
FUEL PRESSURE LEAK DOWN
FUEL INJECTOR
ENGINE MECHANICAL
PCM

Always perform the Pre-Diagnostic Troubleshooting procedure before proceeding. (Refer to 9 - ENGINE - DIAGNOSIS AND TESTING).

Diagnostic Test

1. CYLINDER MIS-FIRE CONDITION ACTIVE

Engine running.

Observe the WHICH CYLINDER IS MISFIRING screen for at least one minute on the scan tool.

Is there a misfire present at this time?

Yes >> Go To 2

No >> Refer to the INTERMITTENT CONDITION Diagnostic Procedure.
Perform the POWERTRAIN VERIFICATION TEST. (Refer to 9 - ENGINE - STANDARD PROCEDURE)

P0304-CYLINDER #4 MISFIRE (CONTINUED)

2. VISUAL INSPECTION

NOTE: Anything that affects the speed of the crankshaft can cause a misfire DTC.

NOTE: When a Misfire is detected for a particular cylinder, the PCM will shut down that cylinders Injector Control circuit.

- Visually inspect the engine for any of the following conditions.
- Worn serpentine belt
- Binding Engine-Driven accessories: A/C Compressor, P/S Pump, Water pump.
- Misalignment of the Water pump, P/S Pump and A/C Compressor pulleys
- Corroded PCM power and ground circuits.
- Improper CKP, CMP, MAP, and TP Sensor mounting
- Poor connector/terminal to component connection. i.e., CKP sensor, Fuel Injector, Ign coil, etc.
- Vacuum leaks
- Restricted Air Induction system or Exhaust system.
- Internal engine component failures.

Were any of the above conditions present?

Yes >> Repair as necessary.
Perform the POWERTRAIN VERIFICATION TEST. (Refer to 9 - ENGINE - STANDARD PROCEDURE)

No >> Go To 3

P0304-CYLINDER #4 MISFIRE (CONTINUED)

3. (K342) ASD RELAY OUTPUT CIRCUIT

Turn the ignition off.
Disconnect the Ignition Coil harness connector.
Disconnect the Fuel Injector harness connector.
Ignition on, engine not running.
With the scan tool, actuate the ASD Relay.
Using a 12-volt test light connected to ground, probe the (K342) ASD Relay Output circuit in the Ignition Coil harness connector and Fuel Injector harness connector while the relay is actuating.

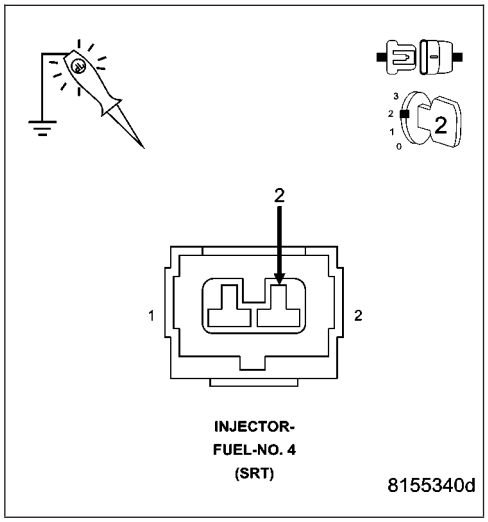

Does the test light illuminate brightly?

Yes >> Go To 4

No >> Repair the excessive resistance or short to ground in the (K342) ASD Relay Output circuit.
Perform the POWERTRAIN VERIFICATION TEST. (Refer to 9 - ENGINE - STANDARD PROCEDURE)

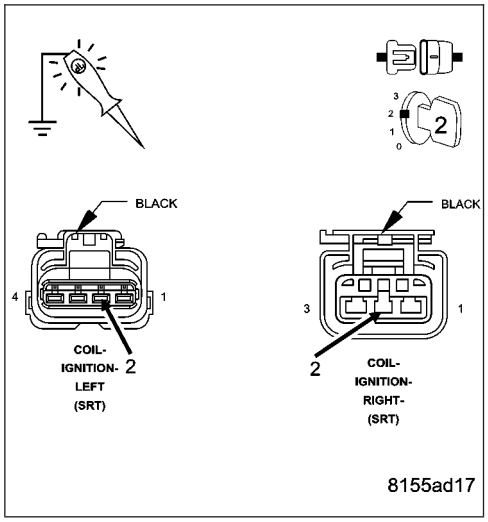

4. IGNITION SYSTEM OPERATION

Turn the ignition off.
Connect the Ignition Coil harness connector.
Remove the Ignition Coil.
Leave the Fuel Injector harness connector of the cylinder being tested disconnected.
Install a spark tester on the Ignition Coil.
While cranking the engine observe the spark coming from the spark tester.

NOTE: A crisp blue spark that is able to jump the gap of the spark tester should be generated.

Is good spark present?

Yes >> Go To 5

No >> Go To 14

NOTE: Connect the Fuel Injector harness connector before continuing.

P0304-CYLINDER #4 MISFIRE (CONTINUED)

5. SPARK PLUG

Turn the ignition off.

Remove the Spark Plug.

Inspect the Spark Plug for the following conditions.

- Cracks
- Carbon Tracking
- Foreign Material
- Gap size out of specifications
- Loose or broke electrode

NOTE: Lightly tap the bottom of the spark plug on a solid surface. The electrode in the spark plug should not move.

Were any of the above conditions present?

Yes >> Replace the Spark Plug.
Perform the POWERTRAIN VERIFICATION TEST. (Refer to 9 - ENGINE - STANDARD PROCEDURE)

No >> Go To 6

---

6. FUEL PRESSURE CHECK

WARNING: The fuel system is under a constant pressure (even with the engine off). Before testing or servicing any fuel system hose, fitting or line, the fuel system pressure must be released. Failure to follow these instructions can result in personal injury or death.

Install a fuel pressure gauge to the fuel rail.

Start the engine and observe the fuel pressure reading.

NOTE: Fuel pressure specification is 407 KPa +/- 34 KPa (59 psi +/- 5 psi).

Choose a conclusion that best matches your fuel pressure reading.

Within Specification
Go To 7

Below Specification
Go To 12

Above Specification
Replace the fuel filter/pressure regulator.
Perform the POWERTRAIN VERIFICATION TEST. (Refer to 9 - ENGINE - STANDARD PROCEDURE)

P0304-CYLINDER #4 MISFIRE (CONTINUED)

7. FUEL PRESSURE LEAK DOWN

NOTE: Before continuing visually and physically inspect the fuel delivery system for external leaks or damage. Repair / replace as necessary.

Turn the ignition off.

WARNING: The fuel system is under a constant pressure (even with the engine off). Before testing or servicing any fuel system hose, fitting or line, the fuel system pressure must be released. Failure to follow these instructions can result in personal injury or death

Install special tool #6539 (5/16″) or #6631 (3/8″) fuel line adapter.

Install the fuel pressure gauge.

Start the engine and allow the fuel system to reach maximum pressure.

Turn the ignition off.

NOTE: Fuel specification is 407 KPa +/- 34 KPa (59 psi +/- 5 psi).

Using special tool #C4390, Hose Clamp Pliers, pinch the rubber fuel line between the fuel pressure gauge and the engine.

Monitor the fuel pressure gauge for a minimum of 5 minutes.

NOTE: The pressure should not fall below 241 KPa (35 psi).

Does the pressure fall below the listed specification?

Yes >> Replace the leaking Fuel Injector(s).
Perform the POWERTRAIN VERIFICATION TEST. (Refer to 9 - ENGINE - STANDARD PROCEDURE)

No >> Go To 8

---

8. FUEL INJECTOR OPERATION

WARNING: The fuel system is under a constant pressure (even with the engine off). Before testing or servicing any fuel system hose, fitting or line, the fuel system pressure must be released. Failure to follow these instructions can result in personal injury or death.

CAUTION: After each Fuel Injector actuation, start the engine to clean the cylinder of fuel. Failure to do so could cause engine damage.

Remove special tool #C4390.

Start the engine and allow the fuel pressure to reach maximum pressure.

Ignition on, engine not running.

Using the scan tool, actuate the Fuel Injector.

Monitor the fuel pressure gauge.

Does the fuel pressure gauge indicate a drop in fuel pressure?

Yes >> Go To 9

No >> Go To 10

NOTE: Turn the ignition off, remove the Fuel Pressure gauge, and connect the fuel lines before continuing.

P0304-CYLINDER #4 MISFIRE (CONTINUED)

9. ENGINE MECHANICAL

Check for any of the following conditions/mechanical problems.
ENGINE VACUUM - must be at least 13 inches in neutral
ENGINE VALVE TIMING - must be within specifications
ENGINE COMPRESSION - must be within specifications
ENGINE EXHAUST SYSTEM - must be free of any restrictions or leaks.
ENGINE PCV SYSTEM - must flow freely
TORQUE CONVERTER STALL SPEED - must be within specifications
POWER BRAKE BOOSTER - no internal vacuum leaks
FUEL - must be free of contamination
CAM LOBES - must not be worn excessively
CYLINDER LEAKAGE TEST - must be within specifications
VALVE SPRINGS - cannot be weak or broken

Are there any engine mechanical problems?

Yes >> Repair as necessary.
Perform the POWERTRAIN VERIFICATION TEST. (Refer to 9 - ENGINE - STANDARD PROCEDURE)

No >> Go To 17

---

10. FUEL INJECTOR

Turn the ignition off.
Disconnect the Fuel Injector harness connector.
Ignition on, engine not running.

NOTE: When a Misfire is detected for a particular cylinder, the PCM will shut down that cylinders Injector Control circuit.
With the scan tool, erase DTCs.
Using a 12-volt test light connected to 12-volts, probe the (K14) Injector Control circuit.
With the scan tool, actuate the Fuel Injector.

Does the test light blink/flicker?

Yes >> Replace the Fuel Injector.
Perform the POWERTRAIN VERIFICATION TEST. (Refer to 9 - ENGINE - STANDARD PROCEDURE)

No >> Go To 11

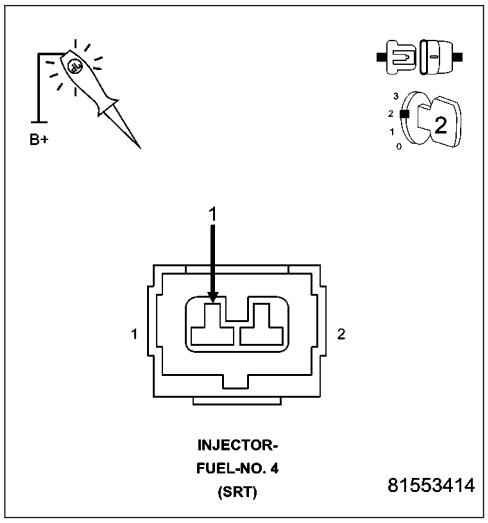

P0304-CYLINDER #4 MISFIRE (CONTINUED)

11. INJECTOR CONTROL CIRCUIT

Turn the ignition off.

Disconnect the PCM harness connector.

Check the Injector Control circuit for an open, short to ground, and short to voltage.

Was a problem found with the Injector Control circuit?

Yes >> Repair the excessive resistance or short in the Injector Control circuit.
Perform the POWERTRAIN VERIFICATION TEST. (Refer to 9 - ENGINE - STANDARD PROCEDURE)

No >> Go To 17

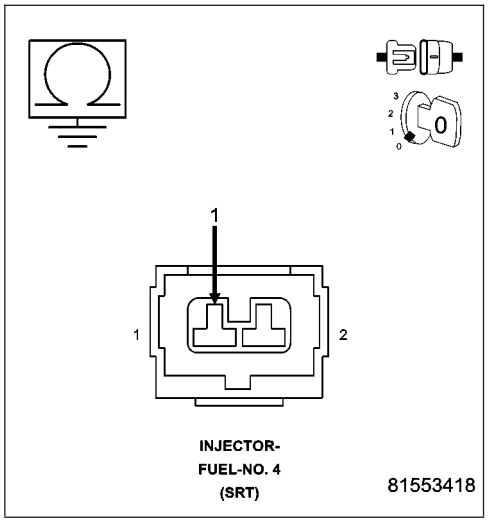

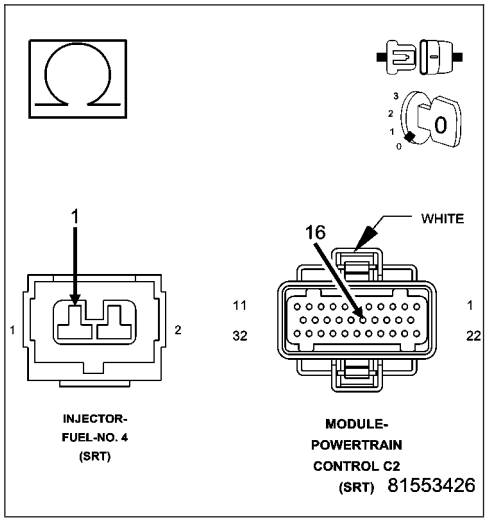

12. FUEL SUPPLY LINE RESTRICTED

Turn the ignition off.

WARNING: The fuel system is under a constant pressure (even with the engine off). Before testing or servicing any fuel system hose, fitting or line, the fuel system pressure must be released. Failure to follow these instructions can result in personal injury or death.

Raise vehicle on hoist, and disconnect the fuel pressure line at the fuel pump module.

Install special tool #6539 (5/16″) #6631(3/8″) fuel line adapter and the fuel pressure gauge between the fuel supply line and the fuel pump module.

Ignition on, engine not running.

With the scan tool, actuate the ASD Fuel System test and observe the fuel pressure gauge.

NOTE: Fuel pressure specification is 379 KPa +/- 14 KPa (55 psi +/- 2 psi).

Is the fuel pressure within specification?

Yes >> Repair or replace fuel supply line as necessary.
Perform the POWERTRAIN VERIFICATION TEST. (Refer to 9 - ENGINE - STANDARD PROCEDURE)

No >> Go To 13

P0304-CYLINDER #4 MISFIRE (CONTINUED)

13. FUEL PUMP INLET STRAINER

Turn the ignition off.

WARNING: The fuel system is under a constant pressure (even with the engine off). Before testing or servicing any fuel system hose, fitting or line, the fuel system pressure must be released. Failure to follow these instructions can result in personal injury or death.

Remove the Fuel Pump Module and inspect the Fuel Inlet Strainer.

Is the Fuel Inlet Strainer plugged?

Yes >> Replace the Fuel Pump Inlet Strainer.
Perform the POWERTRAIN VERIFICATION TEST. (Refer to 9 - ENGINE - STANDARD PROCEDURE)

No >> Before continuing, check the Fuel Pump Module harness connector terminals for corrosion, damage, or terminal push out. Make sure the ground circuit is functional. Repair as necessary. Replace the Fuel Pump Module.
Perform the POWERTRAIN VERIFICATION TEST. (Refer to 9 - ENGINE - STANDARD PROCEDURE)

---

14. IGNITION WIRE

NOTE: If the vehicle being tested does not have an ignition wire answer YES to this test and continue.

Turn the ignition off.

Remove the ignition wire.

Measure the resistance of the ignition wire.

Is the resistance below 10K ohms?

Yes >> Go To 15

No >> Replace the Ignition Wire.
Perform the POWERTRAIN VERIFICATION TEST. (Refer to 9 - ENGINE - STANDARD PROCEDURE)

---

15. IGNITION COIL

Disconnect the Ignition Coil harness connector.

Remove the Fuel Pump Relay.

Using a 12-volt test light connected to 12-volts, probe the (K133) Coil Control circuit.

Crank the engine for 5 seconds while observing the test light.

NOTE: The primary resistance of the 8.3L Ignition coil is 0.53 to 0.65 of an ohm at 77°F (25°C).

Does the test light brightly blink/flicker?

Yes >> Replace the Ignition Coil.
Perform the POWERTRAIN VERIFICATION TEST. (Refer to 9 - ENGINE - STANDARD PROCEDURE)

No >> Go To 16

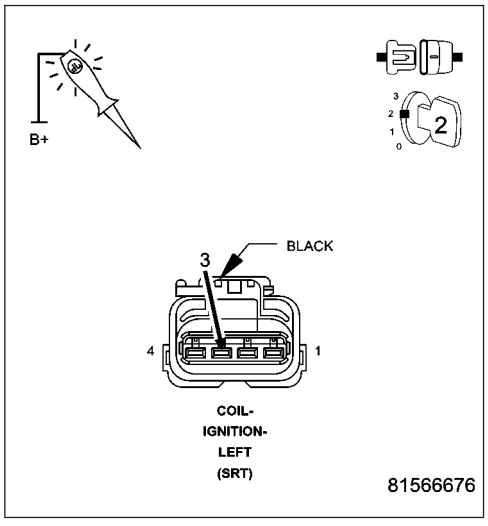

P0304-CYLINDER #4 MISFIRE (CONTINUED)

16. COIL CONTROL CIRCUIT

Turn the ignition off.
Disconnect the PCM harness connector.
Check the (K133) Coil Control circuit for an open or short to ground.

Was a problem found with the Coil Control circuit?

Yes >> Repair the Coil Control circuit.
Perform the POWERTRAIN VERIFICATION TEST. (Refer to 9 - ENGINE - STANDARD PROCEDURE)

No >> Go To 17

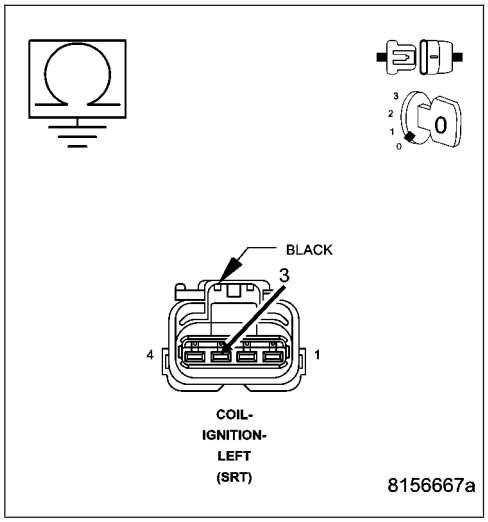

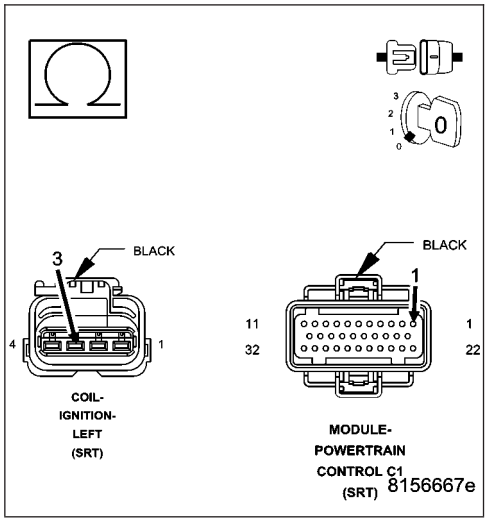

17. PCM

NOTE: Before continuing, check the PCM harness connector terminals for corrosion, damage, or terminal push out. Repair as necessary.
Using the schematics as a guide, inspect the wire harness and connectors. Pay particular attention to all Power and Ground circuits.

Were there any problems found?

Yes >> Repair as necessary.
Perform the POWERTRAIN VERIFICATION TEST. (Refer to 9 - ENGINE - STANDARD PROCEDURE)

No >> Replace and program the Powertrain Control Module per Service Information.
Perform the POWERTRAIN VERIFICATION TEST. (Refer to 9 - ENGINE - STANDARD PROCEDURE)

P0305-CYLINDER #5 MISFIRE

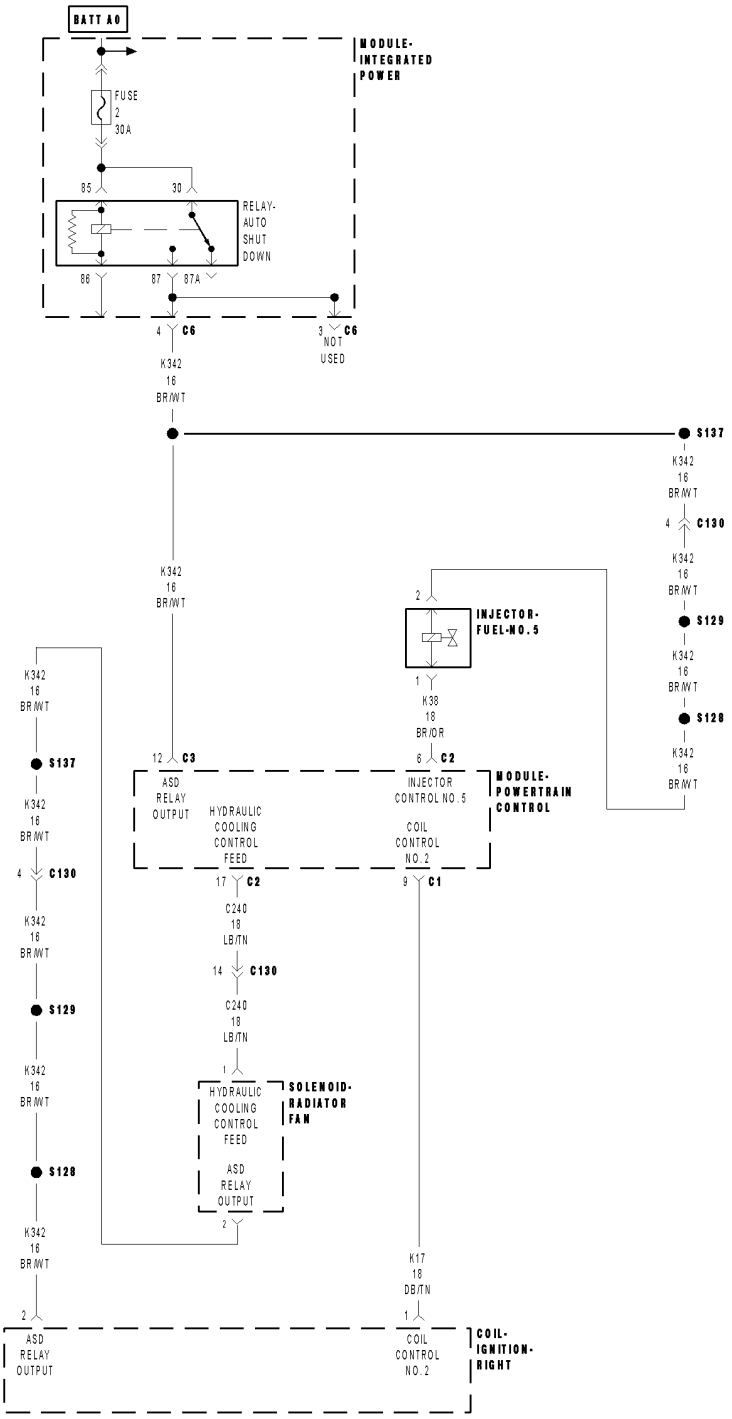

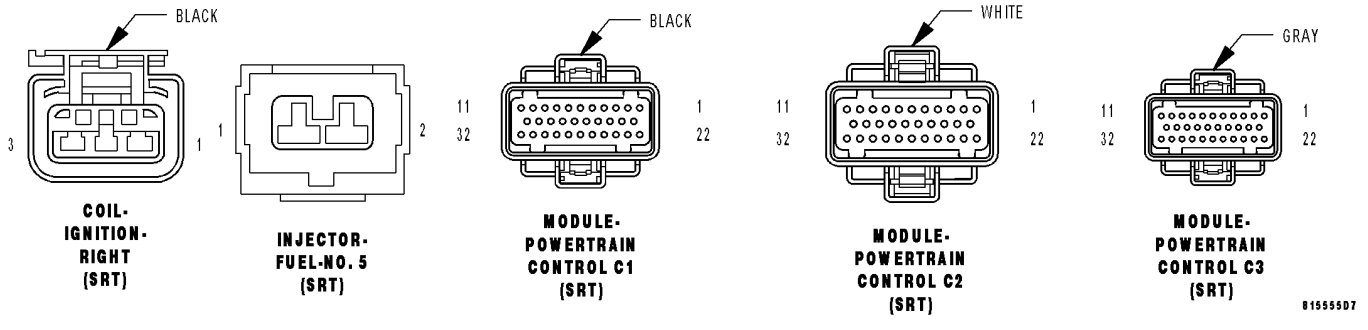

P0305-CYLINDER #5 MISFIRE (CONTINUED)

For the Engine circuit diagram (Refer to 9 - ENGINE - SCHEMATICS AND DIAGRAMS).

For a complete wiring diagram **Refer to Section 8W**.

- **When Monitored:**
  Any time the engine is running, and the adaptive numerator has been successfully updated.
- **Set Condition:**
  When more than a 1% misfire rate is measured during two trips, or with a 6% to 30% misfire rate during one trip.

Possible Causes
(K342) ASD RELAY OUTPUT CIRCUIT
(K38) INJECTOR CONTROL CIRCUIT
(K17) COIL CONTROL CIRCUIT
IGNITION WIRE
SPARK PLUG
IGNITION COIL
FUEL PUMP INLET STRAINER PLUGGED
RESTRICTED FUEL SUPPLY LINE
FUEL PUMP MODULE
FUEL PRESSURE LEAK DOWN
FUEL INJECTOR
ENGINE MECHANICAL
PCM

Always perform the Pre-Diagnostic Troubleshooting procedure before proceeding. (Refer to 9 - ENGINE - DIAGNOSIS AND TESTING).

Diagnostic Test

1. CYLINDER MIS-FIRE CONDITION ACTIVE

Engine running.

Observe the WHICH CYLINDER IS MISFIRING screen for at least one minute on the scan tool.

Is there a misfire present at this time?

Yes >> Go To 2

No >> Refer to the INTERMITTENT CONDITION Diagnostic Procedure.
Perform the POWERTRAIN VERIFICATION TEST. (Refer to 9 - ENGINE - STANDARD PROCEDURE)

P0305-CYLINDER #5 MISFIRE (CONTINUED)

2. VISUAL INSPECTION

NOTE: Anything that affects the speed of the crankshaft can cause a misfire DTC.

NOTE: When a Misfire is detected for a particular cylinder, the PCM will shut down that cylinders Injector Control circuit.

- Visually inspect the engine for any of the following conditions.
- Worn serpentine belt
- Binding Engine-Driven accessories: A/C Compressor, P/S Pump, Water pump.
- Misalignment of the Water pump, P/S Pump and A/C Compressor pulleys
- Corroded PCM power and ground circuits.
- Improper CKP, CMP, MAP, and TP Sensor mounting
- Poor connector/terminal to component connection. i.e., CKP sensor, Fuel Injector, Ign coil, etc.
- Vacuum leaks
- Restricted Air Induction system or Exhaust system.
- Internal engine component failures.

Were any of the above conditions present?

Yes >> Repair as necessary.
Perform the POWERTRAIN VERIFICATION TEST. (Refer to 9 - ENGINE - STANDARD PROCEDURE)

No >> Go To 3

---

3. (K342) ASD RELAY OUTPUT CIRCUIT

Turn the ignition off.

Disconnect the Ignition Coil harness connector.

Disconnect the Fuel Injector harness connector.

Ignition on, engine not running.

With the scan tool, actuate the ASD Relay.

Using a 12-volt test light connected to ground, probe the (K342) ASD Relay Output circuit in the Ignition Coil harness connector and Fuel Injector harness connector while the relay is actuating.

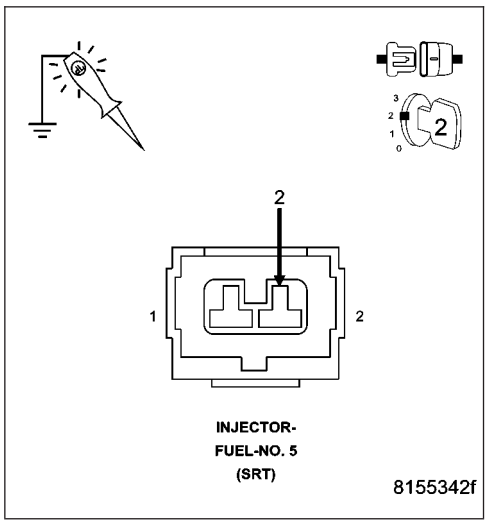

Does the test light illuminate brightly?

Yes >> Go To 4

No >> Repair the excessive resistance or short to ground in the (K342) ASD Relay Output circuit.
Perform the POWERTRAIN VERIFICATION TEST. (Refer to 9 - ENGINE - STANDARD PROCEDURE)

P0305-CYLINDER #5 MISFIRE (CONTINUED)

4. IGNITION SYSTEM OPERATION

Turn the ignition off.
Connect the Ignition Coil harness connector.
Remove the Ignition Coil.
Leave the Fuel Injector harness connector of the cylinder being tested disconnected.
Install a spark tester on the Ignition Coil.
While cranking the engine observe the spark coming from the spark tester.

NOTE: A crisp blue spark that is able to jump the gap of the spark tester should be generated.

Is good spark present?

Yes >> Go To 5

No >> Go To 14

NOTE: Connect the Fuel Injector harness connector before continuing.

---

5. SPARK PLUG

Turn the ignition off.
Remove the Spark Plug.
Inspect the Spark Plug for the following conditions.
- Cracks
- Carbon Tracking
- Foreign Material
- Gap size out of specifications
- Loose or broke electrode

NOTE: Lightly tap the bottom of the spark plug on a solid surface. The electrode in the spark plug should not move.

Were any of the above conditions present?

Yes >> Replace the Spark Plug.
Perform the POWERTRAIN VERIFICATION TEST. (Refer to 9 - ENGINE - STANDARD PROCEDURE)

No >> Go To 6

---

6. FUEL PRESSURE CHECK

WARNING: The fuel system is under a constant pressure (even with the engine off). Before testing or servicing any fuel system hose, fitting or line, the fuel system pressure must be released. Failure to follow these instructions can result in personal injury or death.
Install a fuel pressure gauge to the fuel rail.
Start the engine and observe the fuel pressure reading.

NOTE: Fuel pressure specification is 407 KPa +/- 34 KPa (59 psi +/- 5 psi).

Choose a conclusion that best matches your fuel pressure reading.

Within Specification
Go To 7

Below Specification
Go To 12

Above Specification
Replace the fuel filter/pressure regulator.
Perform the POWERTRAIN VERIFICATION TEST. (Refer to 9 - ENGINE - STANDARD PROCEDURE)

P0305-CYLINDER #5 MISFIRE (CONTINUED)

7. FUEL PRESSURE LEAK DOWN

NOTE: Before continuing visually and physically inspect the fuel delivery system for external leaks or damage. Repair / replace as necessary.

Turn the ignition off.

WARNING: The fuel system is under a constant pressure (even with the engine off). Before testing or servicing any fuel system hose, fitting or line, the fuel system pressure must be released. Failure to follow these instructions can result in personal injury or death

Install special tool #6539 (5/16″) or #6631 (3/8″) fuel line adapter.

Install the fuel pressure gauge.

Start the engine and allow the fuel system to reach maximum pressure.

Turn the ignition off.

NOTE: Fuel specification is 407 KPa +/- 34 KPa (59 psi +/- 5 psi).

Using special tool #C4390, Hose Clamp Pliers, pinch the rubber fuel line between the fuel pressure gauge and the engine.

Monitor the fuel pressure gauge for a minimum of 5 minutes.

NOTE: The pressure should not fall below 241 KPa (35 psi).

Does the pressure fall below the listed specification?

Yes >> Replace the leaking Fuel Injector(s).
Perform the POWERTRAIN VERIFICATION TEST. (Refer to 9 - ENGINE - STANDARD PROCEDURE)

No >> Go To 8

---

8. FUEL INJECTOR OPERATION

WARNING: The fuel system is under a constant pressure (even with the engine off). Before testing or servicing any fuel system hose, fitting or line, the fuel system pressure must be released. Failure to follow these instructions can result in personal injury or death.

CAUTION: After each Fuel Injector actuation, start the engine to clean the cylinder of fuel. Failure to do so could cause engine damage.

Remove special tool #C4390.

Start the engine and allow the fuel pressure to reach maximum pressure.

Ignition on, engine not running.

Using the scan tool, actuate the Fuel Injector.

Monitor the fuel pressure gauge.

Does the fuel pressure gauge indicate a drop in fuel pressure?

Yes >> Go To 9

No >> Go To 10

NOTE: Turn the ignition off, remove the Fuel Pressure gauge, and connect the fuel lines before continuing.

P0305-CYLINDER #5 MISFIRE (CONTINUED)

9. ENGINE MECHANICAL

Check for any of the following conditions/mechanical problems.
ENGINE VACUUM - must be at least 13 inches in neutral
ENGINE VALVE TIMING - must be within specifications
ENGINE COMPRESSION - must be within specifications
ENGINE EXHAUST SYSTEM - must be free of any restrictions or leaks.
ENGINE PCV SYSTEM - must flow freely
TORQUE CONVERTER STALL SPEED - must be within specifications
POWER BRAKE BOOSTER - no internal vacuum leaks
FUEL - must be free of contamination
CAM LOBES - must not be worn excessively
CYLINDER LEAKAGE TEST - must be within specifications
VALVE SPRINGS - cannot be weak or broken

Are there any engine mechanical problems?

Yes >> Repair as necessary.
Perform the POWERTRAIN VERIFICATION TEST. (Refer to 9 - ENGINE - STANDARD PROCEDURE)

No >> Go To 17

---

10. FUEL INJECTOR

Turn the ignition off.
Disconnect the Fuel Injector harness connector.
Ignition on, engine not running.

NOTE: When a Misfire is detected for a particular cylinder, the PCM will shut down that cylinders Injector Control circuit.
With the scan tool, erase DTCs.
Using a 12-volt test light connected to 12-volts, probe the (K38) Injector Control circuit.
With the scan tool, actuate the Fuel Injector.

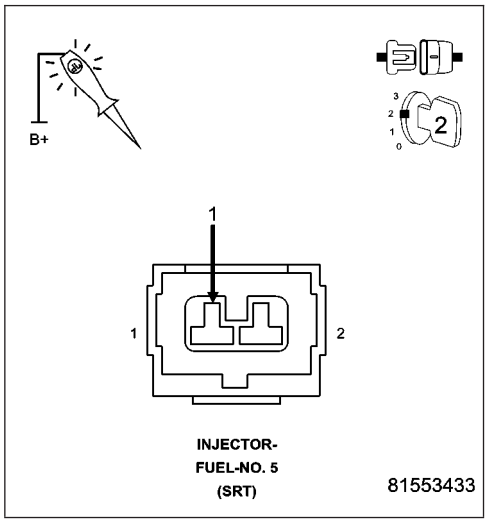

Does the test light blink/flicker?

Yes >> Replace the Fuel Injector.
Perform the POWERTRAIN VERIFICATION TEST. (Refer to 9 - ENGINE - STANDARD PROCEDURE)

No >> Go To 11

P0305-CYLINDER #5 MISFIRE (CONTINUED)

11. INJECTOR CONTROL CIRCUIT

Turn the ignition off.

Disconnect the PCM harness connector.

Check the (K38) Injector Control circuit for an open or short to ground.

Was a problem found with the Injector Control circuit?

Yes >> Repair the excessive resistance or short in the Injector Control circuit.
Perform the POWERTRAIN VERIFICATION TEST. (Refer to 9 - ENGINE - STANDARD PROCEDURE)

No >> Go To 17

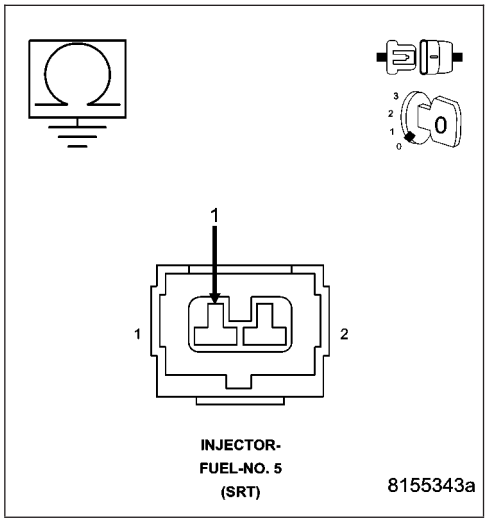

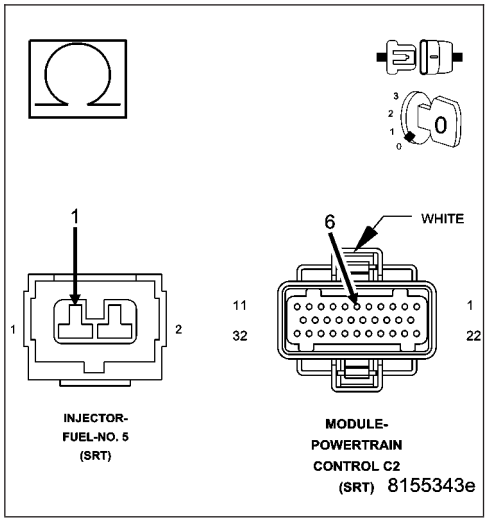

12. FUEL SUPPLY LINE RESTRICTED

Turn the ignition off.

WARNING: The fuel system is under a constant pressure (even with the engine off). Before testing or servicing any fuel system hose, fitting or line, the fuel system pressure must be released. Failure to follow these instructions can result in personal injury or death.

Raise vehicle on hoist, and disconnect the fuel pressure line at the fuel pump module.

Install special tool #6539 (5/16″) #6631(3/8″) fuel line adapter and the fuel pressure gauge between the fuel supply line and the fuel pump module.

Ignition on, engine not running.

With the scan tool, actuate the ASD Fuel System test and observe the fuel pressure gauge.

NOTE: Fuel pressure specification is 379 KPa +/- 14 KPa (55 psi +/- 2 psi).

Is the fuel pressure within specification?

Yes >> Repair or replace fuel supply line as necessary.
Perform the POWERTRAIN VERIFICATION TEST. (Refer to 9 - ENGINE - STANDARD PROCEDURE)

No >> Go To 13

P0305-CYLINDER #5 MISFIRE (CONTINUED)

13. FUEL PUMP INLET STRAINER

Turn the ignition off.

WARNING: The fuel system is under a constant pressure (even with the engine off). Before testing or servicing any fuel system hose, fitting or line, the fuel system pressure must be released. Failure to follow these instructions can result in personal injury or death.

Remove the Fuel Pump Module and inspect the Fuel Inlet Strainer.

Is the Fuel Inlet Strainer plugged?

Yes >> Replace the Fuel Pump Inlet Strainer.
Perform the POWERTRAIN VERIFICATION TEST. (Refer to 9 - ENGINE - STANDARD PROCEDURE)

No >> Before continuing, check the Fuel Pump Module harness connector terminals for corrosion, damage, or terminal push out. Make sure the ground circuit is functional. Repair as necessary. Replace the Fuel Pump Module.
Perform the POWERTRAIN VERIFICATION TEST. (Refer to 9 - ENGINE - STANDARD PROCEDURE)

---

14. IGNITION WIRE

NOTE: If the vehicle being tested does not have an ignition wire answer YES to this test and continue.

Turn the ignition off.

Remove the ignition wire.

Measure the resistance of the ignition wire.

Is the resistance below 10K ohms?

Yes >> Go To 15

No >> Replace the Ignition Wire.
Perform the POWERTRAIN VERIFICATION TEST. (Refer to 9 - ENGINE - STANDARD PROCEDURE)

---

15. IGNITION COIL

Disconnect the Ignition Coil harness connector.

Remove the Fuel Pump Relay.

Using a 12-volt test light connected to 12-volts, probe the (K17) Coil Control circuit.

Crank the engine for 5 seconds while observing the test light.

NOTE: The primary resistance of the 8.3L Ignition coil is 0.53 to 0.65 of an ohm at 77°F (25°C).

Does the test light brightly blink/flicker?

Yes >> Replace the Ignition Coil.
Perform the POWERTRAIN VERIFICATION TEST. (Refer to 9 - ENGINE - STANDARD PROCEDURE)

No >> Go To 16

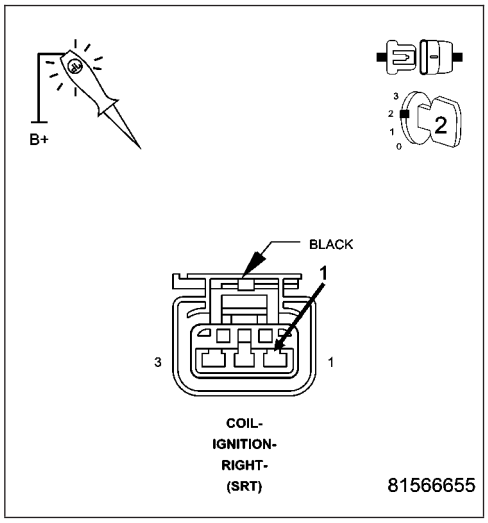

P0305-CYLINDER #5 MISFIRE (CONTINUED)

16. COIL CONTROL CIRCUIT

Turn the ignition off.

Disconnect the PCM harness connector.

Check the (K17) Coil Control circuit for an open, short to ground, and short to voltage.

Was a problem found with the Coil Control circuit?

Yes >> Repair the Coil Control circuit.
Perform the POWERTRAIN VERIFICATION TEST. (Refer to 9 - ENGINE - STANDARD PROCEDURE)

No >> Go To 17

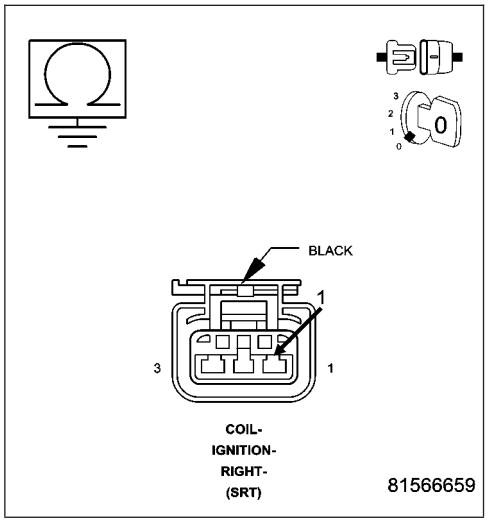

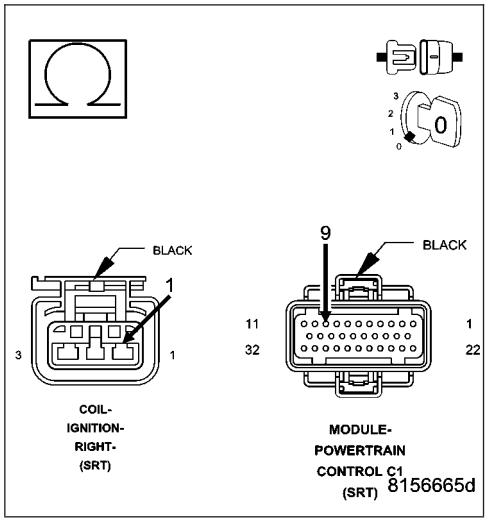

17. PCM

NOTE: Before continuing, check the PCM harness connector terminals for corrosion, damage, or terminal push out. Repair as necessary.

Using the schematics as a guide, inspect the wire harness and connectors. Pay particular attention to all Power and Ground circuits.

Were there any problems found?

Yes >> Repair as necessary.
Perform the POWERTRAIN VERIFICATION TEST. (Refer to 9 - ENGINE - STANDARD PROCEDURE)

No >> Replace and program the Powertrain Control Module per Service Information.
Perform the POWERTRAIN VERIFICATION TEST. (Refer to 9 - ENGINE - STANDARD PROCEDURE)

P0306-CYLINDER #6 MISFIRE

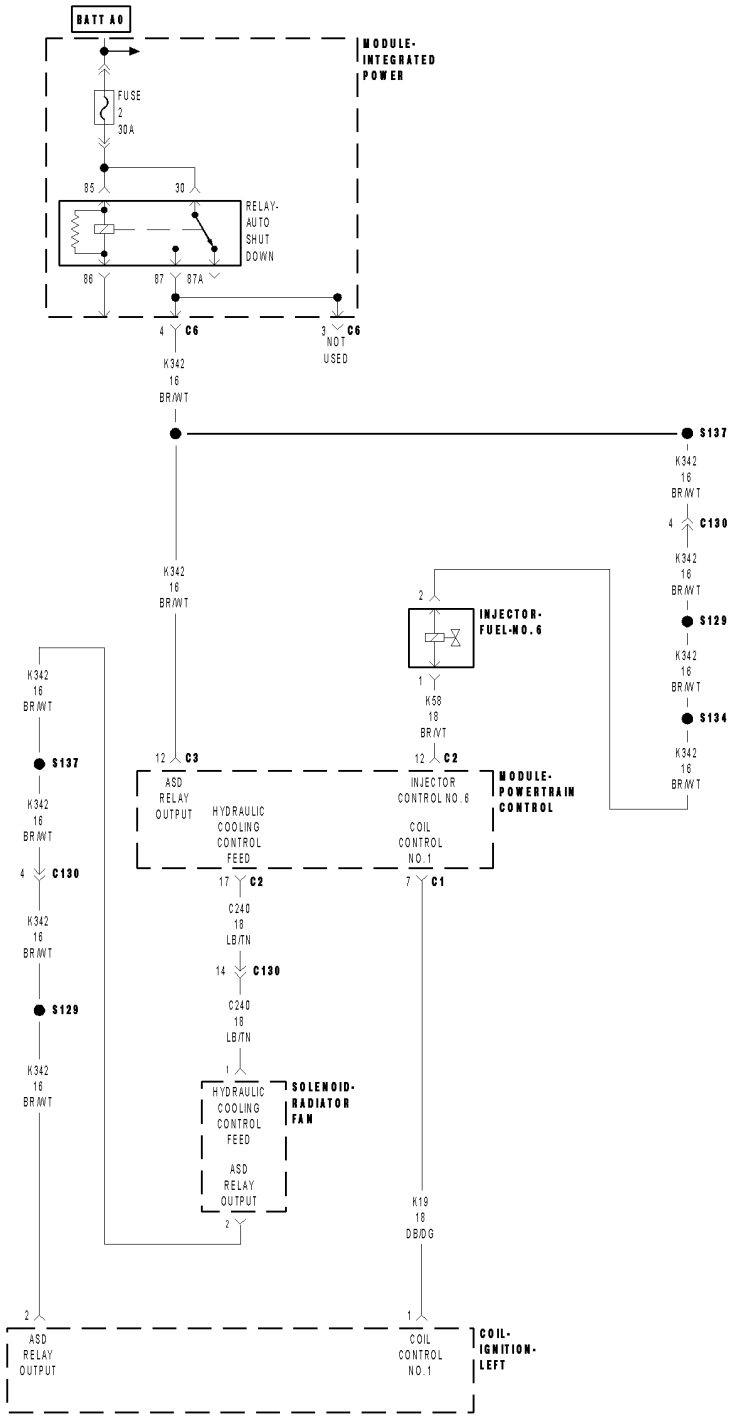

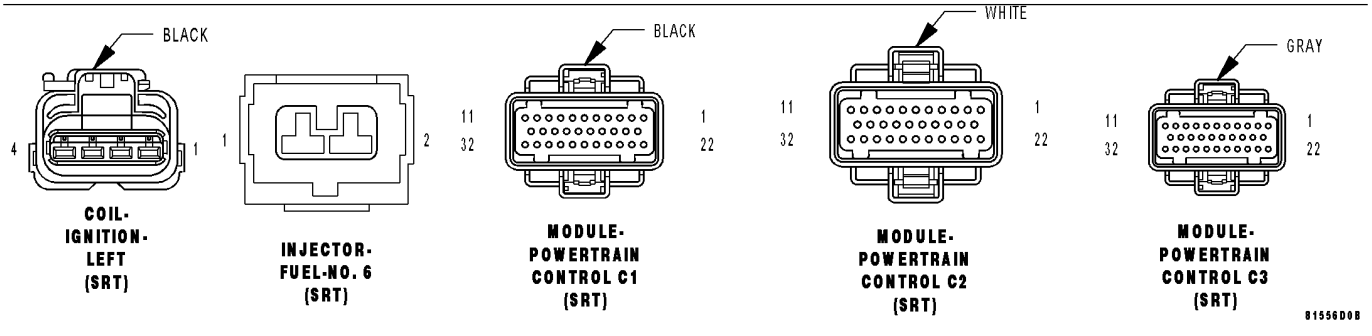

P0306-CYLINDER #6 MISFIRE (CONTINUED)

For the Engine circuit diagram (Refer to 9 - ENGINE - SCHEMATICS AND DIAGRAMS).

For a complete wiring diagram **Refer to Section 8W**.

- **When Monitored:**
  Any time the engine is running, and the adaptive numerator has been successfully updated.
- **Set Condition:**
  When more than a 1% misfire rate is measured during two trips, or with a 6% to 30% misfire rate during one trip.

Possible Causes
(K342) ASD RELAY OUTPUT CIRCUIT
(K58) INJECTOR CONTROL CIRCUIT
(K19) COIL CONTROL CIRCUIT
IGNITION WIRE
SPARK PLUG
IGNITION COIL
FUEL PUMP INLET STRAINER PLUGGED
RESTRICTED FUEL SUPPLY LINE
FUEL PUMP MODULE
FUEL PRESSURE LEAK DOWN
FUEL INJECTOR
ENGINE MECHANICAL
PCM

Always perform the Pre-Diagnostic Troubleshooting procedure before proceeding. (Refer to 9 - ENGINE - DIAGNOSIS AND TESTING).

Diagnostic Test

1. CYLINDER MIS-FIRE CONDITION ACTIVE

Engine running.

Observe the WHICH CYLINDER IS MISFIRING screen for at least one minute on the scan tool.

Is there a misfire present at this time?

Yes >> Go To 2

No >> Refer to the INTERMITTENT CONDITION Diagnostic Procedure.
Perform the POWERTRAIN VERIFICATION TEST. (Refer to 9 - ENGINE - STANDARD PROCEDURE)

P0306-CYLINDER #6 MISFIRE (CONTINUED)

2. VISUAL INSPECTION

NOTE: Anything that affects the speed of the crankshaft can cause a misfire DTC.

NOTE: When a Misfire is detected for a particular cylinder, the PCM will shut down that cylinders Injector Control circuit.

- Visually inspect the engine for any of the following conditions.
- Worn serpentine belt
- Binding Engine-Driven accessories: A/C Compressor, P/S Pump, Water pump.
- Misalignment of the Water pump, P/S Pump and A/C Compressor pulleys
- Corroded PCM power and ground circuits.
- Improper CKP, CMP, MAP, and TP Sensor mounting
- Poor connector/terminal to component connection. i.e., CKP sensor, Fuel Injector, Ign coil, etc.
- Vacuum leaks
- Restricted Air Induction system or Exhaust system.
- Internal engine component failures.

Were any of the above conditions present?

Yes >> Repair as necessary.
Perform the POWERTRAIN VERIFICATION TEST. (Refer to 9 - ENGINE - STANDARD PROCEDURE)

No >> Go To 3

P0306-CYLINDER #6 MISFIRE (CONTINUED)

3. (K342) ASD RELAY OUTPUT CIRCUIT

Turn the ignition off.
Disconnect the Ignition Coil harness connector.
Disconnect the Fuel Injector harness connector.
Ignition on, engine not running.
With the scan tool, actuate the ASD Relay.
Using a 12-volt test light connected to ground, probe the (K342) ASD Relay Output circuit in the Ignition Coil harness connector and Fuel Injector harness connector while the relay is actuating.

Does the test light illuminate brightly?

Yes >> Go To 4

No >> Repair the excessive resistance or short to ground in the (K342) ASD Relay Output circuit.
Perform the POWERTRAIN VERIFICATION TEST. (Refer to 9 - ENGINE - STANDARD PROCEDURE)

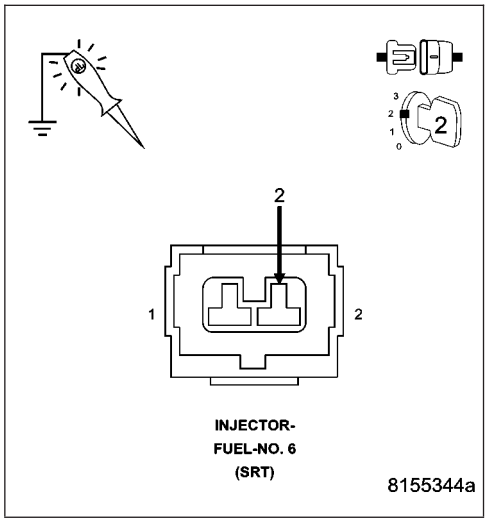

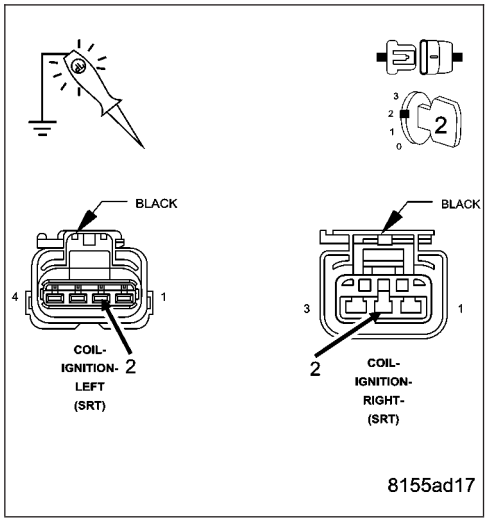

4. IGNITION SYSTEM OPERATION

Turn the ignition off.
Connect the Ignition Coil harness connector.
Remove the Ignition Coil.
Leave the Fuel Injector harness connector of the cylinder being tested disconnected.
Install a spark tester on the Ignition Coil.
While cranking the engine observe the spark coming from the spark tester.

NOTE: A crisp blue spark that is able to jump the gap of the spark tester should be generated.

Is good spark present?

Yes >> Go To 5

No >> Go To 14

NOTE: Connect the Fuel Injector harness connector before continuing.

P0306-CYLINDER #6 MISFIRE (CONTINUED)

5. SPARK PLUG

Turn the ignition off.

Remove the Spark Plug.

Inspect the Spark Plug for the following conditions.

- Cracks
- Carbon Tracking
- Foreign Material
- Gap size out of specifications
- Loose or broke electrode

NOTE: Lightly tap the bottom of the spark plug on a solid surface. The electrode in the spark plug should not move.

Were any of the above conditions present?

Yes >> Replace the Spark Plug.
Perform the POWERTRAIN VERIFICATION TEST. (Refer to 9 - ENGINE - STANDARD PROCEDURE)

No >> Go To 6

---

6. FUEL PRESSURE CHECK

WARNING: The fuel system is under a constant pressure (even with the engine off). Before testing or servicing any fuel system hose, fitting or line, the fuel system pressure must be released. Failure to follow these instructions can result in personal injury or death.

Install a fuel pressure gauge to the fuel rail.

Start the engine and observe the fuel pressure reading.

NOTE: Fuel pressure specification is 407 KPa +/- 34 KPa (59 psi +/- 5 psi).

Choose a conclusion that best matches your fuel pressure reading.

Within Specification
Go To 7

Below Specification
Go To 12

Above Specification
Replace the fuel filter/pressure regulator.
Perform the POWERTRAIN VERIFICATION TEST. (Refer to 9 - ENGINE - STANDARD PROCEDURE)

P0306-CYLINDER #6 MISFIRE (CONTINUED)

7. FUEL PRESSURE LEAK DOWN

NOTE: Before continuing visually and physically inspect the fuel delivery system for external leaks or damage. Repair / replace as necessary.

Turn the ignition off.

WARNING: The fuel system is under a constant pressure (even with the engine off). Before testing or servicing any fuel system hose, fitting or line, the fuel system pressure must be released. Failure to follow these instructions can result in personal injury or death

Install special tool #6539 (5/16″) or #6631 (3/8″) fuel line adapter.

Install the fuel pressure gauge.

Start the engine and allow the fuel system to reach maximum pressure.

Turn the ignition off.

NOTE: Fuel specification is 407 KPa +/- 34 KPa (59 psi +/- 5 psi).

Using special tool #C4390, Hose Clamp Pliers, pinch the rubber fuel line between the fuel pressure gauge and the engine.

Monitor the fuel pressure gauge for a minimum of 5 minutes.

NOTE: The pressure should not fall below 241 KPa (35 psi).

Does the pressure fall below the listed specification?

Yes >> Replace the leaking Fuel Injector(s).
Perform the POWERTRAIN VERIFICATION TEST. (Refer to 9 - ENGINE - STANDARD PROCEDURE)

No >> Go To 8

---

8. FUEL INJECTOR OPERATION

WARNING: The fuel system is under a constant pressure (even with the engine off). Before testing or servicing any fuel system hose, fitting or line, the fuel system pressure must be released. Failure to follow these instructions can result in personal injury or death.

CAUTION: After each Fuel Injector actuation, start the engine to clean the cylinder of fuel. Failure to do so could cause engine damage.

Remove special tool #C4390.

Start the engine and allow the fuel pressure to reach maximum pressure.

Ignition on, engine not running.

Using the scan tool, actuate the Fuel Injector.

Monitor the fuel pressure gauge.

Does the fuel pressure gauge indicate a drop in fuel pressure?

Yes >> Go To 9

No >> Go To 10

NOTE: Turn the ignition off, remove the Fuel Pressure gauge, and connect the fuel lines before continuing.

P0306-CYLINDER #6 MISFIRE (CONTINUED)

9. ENGINE MECHANICAL

Check for any of the following conditions/mechanical problems.
ENGINE VACUUM - must be at least 13 inches in neutral
ENGINE VALVE TIMING - must be within specifications
ENGINE COMPRESSION - must be within specifications
ENGINE EXHAUST SYSTEM - must be free of any restrictions or leaks.
ENGINE PCV SYSTEM - must flow freely
TORQUE CONVERTER STALL SPEED - must be within specifications
POWER BRAKE BOOSTER - no internal vacuum leaks
FUEL - must be free of contamination
CAM LOBES - must not be worn excessively
CYLINDER LEAKAGE TEST - must be within specifications
VALVE SPRINGS - cannot be weak or broken

Are there any engine mechanical problems?

Yes >> Repair as necessary.
Perform the POWERTRAIN VERIFICATION TEST. (Refer to 9 - ENGINE - STANDARD PROCEDURE)

No >> Go To 17

---

10. FUEL INJECTOR

Turn the ignition off.
Disconnect the Fuel Injector harness connector.
Ignition on, engine not running.

NOTE: When a Misfire is detected for a particular cylinder, the PCM will shut down that cylinders Injector Control circuit.
With the scan tool, erase DTCs.
Using a 12-volt test light connected to 12-volts, probe the (K58) Injector Control circuit.
With the scan tool, actuate the Fuel Injector.

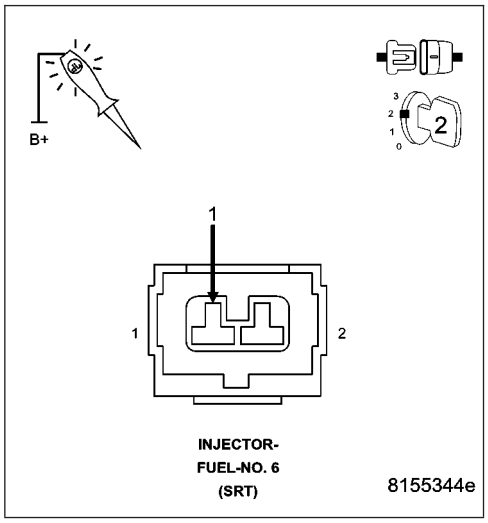

Does the test light blink/flicker?

Yes >> Replace the Fuel Injector.
Perform the POWERTRAIN VERIFICATION TEST. (Refer to 9 - ENGINE - STANDARD PROCEDURE)

No >> Go To 11

P0306-CYLINDER #6 MISFIRE (CONTINUED)

11. INJECTOR CONTROL CIRCUIT

Turn the ignition off.

Disconnect the PCM harness connector.

Check the (K58) Injector Control circuit for an open or short to ground.

Was a problem found with the Injector Control circuit?

Yes >> Repair the excessive resistance or short in the Injector Control circuit.
Perform the POWERTRAIN VERIFICATION TEST. (Refer to 9 - ENGINE - STANDARD PROCEDURE)

No >> Go To 17

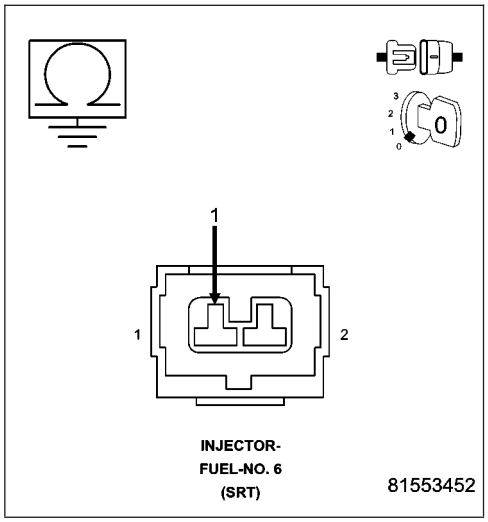

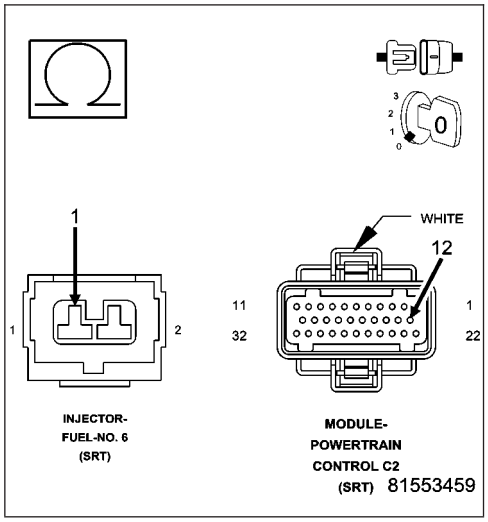

12. FUEL SUPPLY LINE RESTRICTED

Turn the ignition off.

WARNING: The fuel system is under a constant pressure (even with the engine off). Before testing or servicing any fuel system hose, fitting or line, the fuel system pressure must be released. Failure to follow these instructions can result in personal injury or death.

Raise vehicle on hoist, and disconnect the fuel pressure line at the fuel pump module.

Install special tool #6539 (5/16″) #6631(3/8″) fuel line adapter and the fuel pressure gauge between the fuel supply line and the fuel pump module.

Ignition on, engine not running.

With the scan tool, actuate the ASD Fuel System test and observe the fuel pressure gauge.

NOTE: Fuel pressure specification is 379 KPa +/- 14 KPa (55 psi +/- 2 psi).

Is the fuel pressure within specification?

Yes >> Repair or replace fuel supply line as necessary.
Perform the POWERTRAIN VERIFICATION TEST. (Refer to 9 - ENGINE - STANDARD PROCEDURE)

No >> Go To 13

P0306-CYLINDER #6 MISFIRE (CONTINUED)

13. FUEL PUMP INLET STRAINER

Turn the ignition off.

WARNING: The fuel system is under a constant pressure (even with the engine off). Before testing or servicing any fuel system hose, fitting or line, the fuel system pressure must be released. Failure to follow these instructions can result in personal injury or death.

Remove the Fuel Pump Module and inspect the Fuel Inlet Strainer.

Is the Fuel Inlet Strainer plugged?

Yes >> Replace the Fuel Pump Inlet Strainer.
Perform the POWERTRAIN VERIFICATION TEST. (Refer to 9 - ENGINE - STANDARD PROCEDURE)

No >> Before continuing, check the Fuel Pump Module harness connector terminals for corrosion, damage, or terminal push out. Make sure the ground circuit is functional. Repair as necessary. Replace the Fuel Pump Module.
Perform the POWERTRAIN VERIFICATION TEST. (Refer to 9 - ENGINE - STANDARD PROCEDURE)

---

14. IGNITION WIRE

NOTE: If the vehicle being tested does not have an ignition wire answer YES to this test and continue.

Turn the ignition off.

Remove the ignition wire.

Measure the resistance of the ignition wire.

Is the resistance below 10K ohms?

Yes >> Go To 15

No >> Replace the Ignition Wire.
Perform the POWERTRAIN VERIFICATION TEST. (Refer to 9 - ENGINE - STANDARD PROCEDURE)

---

15. IGNITION COIL

Disconnect the Ignition Coil harness connector.

Remove the Fuel Pump Relay.

Using a 12-volt test light connected to 12-volts, probe the (K19) Ignition Coil Control circuit.

Crank the engine for 5 seconds while observing the test light.

NOTE: The primary resistance of the 8.3L Ignition coil is 0.53 to 0.65 of an ohm at 77°F (25°C).

Does the test light brightly blink/flicker?

Yes >> Replace the Ignition Coil.
Perform the POWERTRAIN VERIFICATION TEST. (Refer to 9 - ENGINE - STANDARD PROCEDURE)

No >> Go To 16

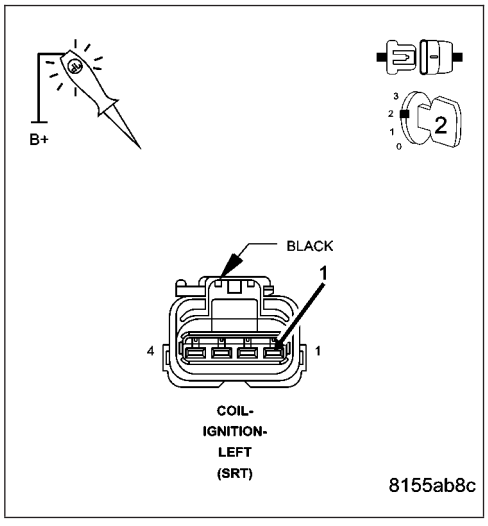

P0306-CYLINDER #6 MISFIRE (CONTINUED)

16. COIL CONTROL CIRCUIT

Turn the ignition off.
Disconnect the PCM harness connector.
Check the (K19) Coil Control circuit for an open or short to ground.

Was a problem found with the Coil Control circuit?

Yes >> Repair the Coil Control circuit.
Perform the POWERTRAIN VERIFICATION TEST. (Refer to 9 - ENGINE - STANDARD PROCEDURE)

No >> Go To 17

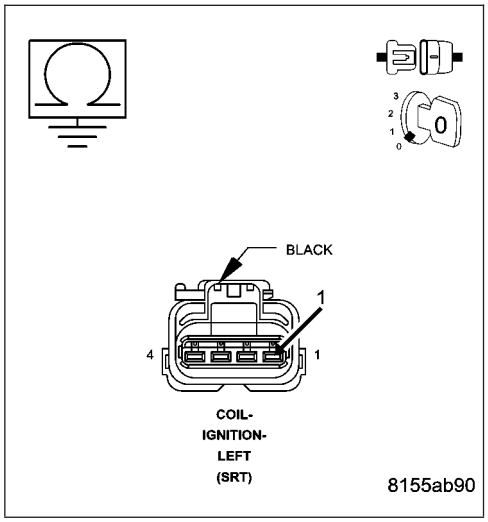

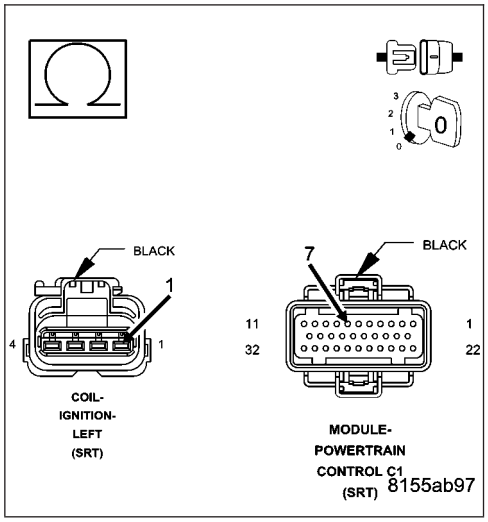

17. PCM

NOTE: Before continuing, check the PCM harness connector terminals for corrosion, damage, or terminal push out. Repair as necessary.
Using the schematics as a guide, inspect the wire harness and connectors. Pay particular attention to all Power and Ground circuits.

Were there any problems found?

Yes >> Repair as necessary.
Perform the POWERTRAIN VERIFICATION TEST. (Refer to 9 - ENGINE - STANDARD PROCEDURE)

No >> Replace and program the Powertrain Control Module per Service Information.
Perform the POWERTRAIN VERIFICATION TEST. (Refer to 9 - ENGINE - STANDARD PROCEDURE)

P0307-CYLINDER #7 MISFIRE

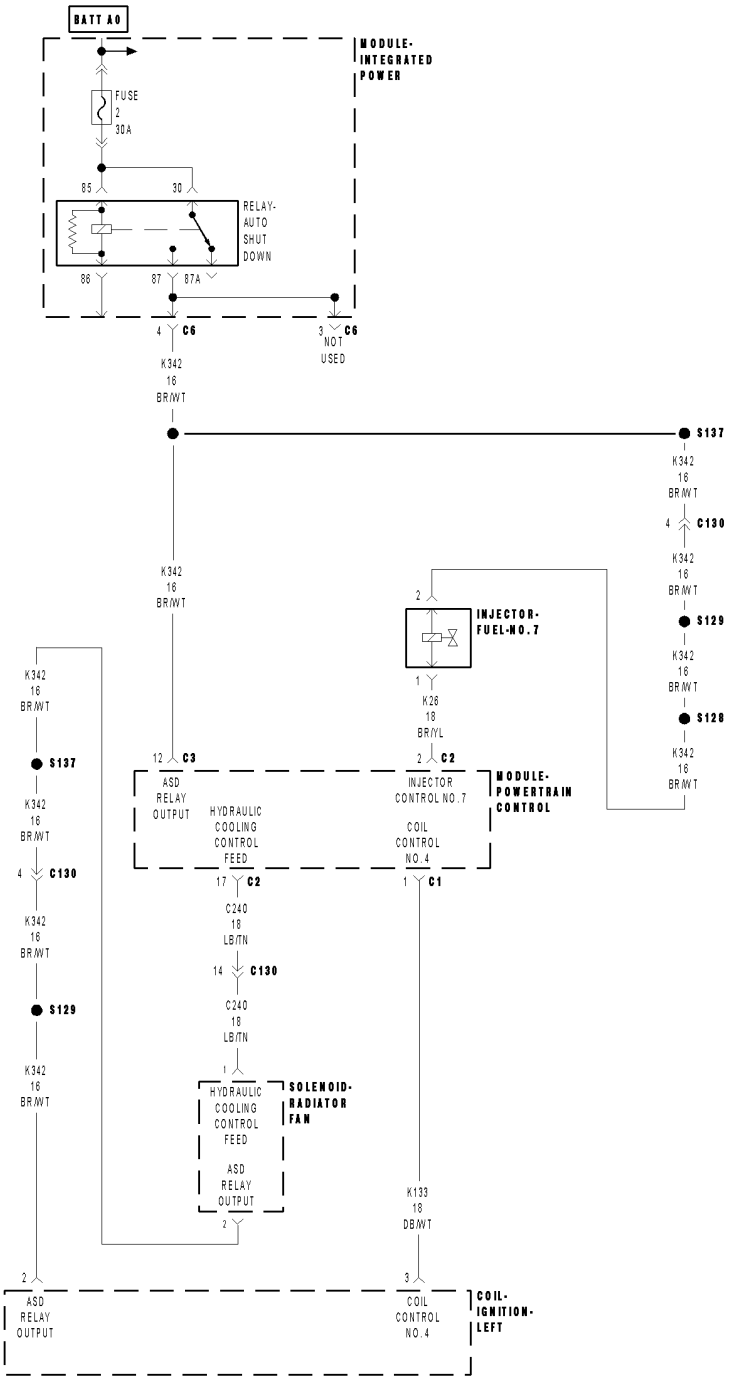

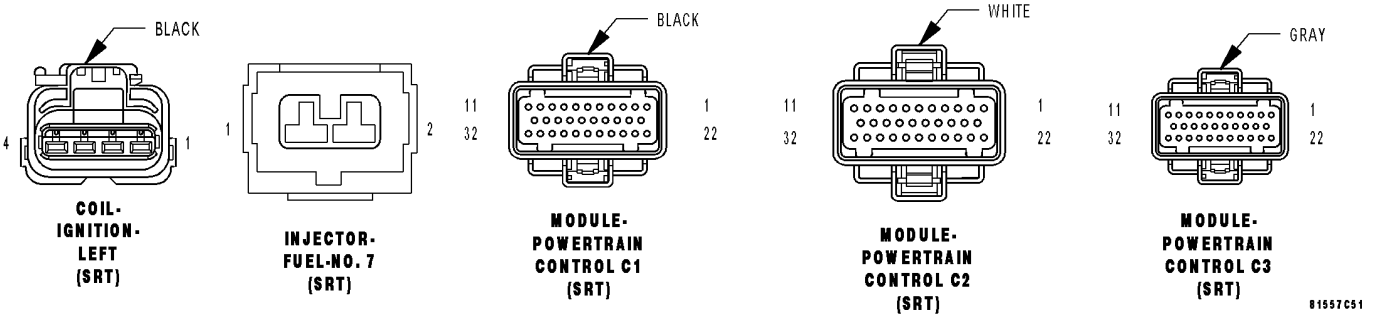

P0307-CYLINDER #7 MISFIRE (CONTINUED)

For the Engine circuit diagram (Refer to 9 - ENGINE - SCHEMATICS AND DIAGRAMS).

For a complete wiring diagram **Refer to Section 8W**.

- **When Monitored:**
  Any time the engine is running, and the adaptive numerator has been successfully updated.
- **Set Condition:**
  When more than a 1% misfire rate is measured during two trips, or with a 6% to 30% misfire rate during one trip.

Possible Causes
(K342) ASD RELAY OUTPUT CIRCUIT
(K26) INJECTOR CONTROL CIRCUIT
(K133) COIL CONTROL CIRCUIT
IGNITION WIRE
SPARK PLUG
IGNITION COIL
FUEL PUMP INLET STRAINER PLUGGED
RESTRICTED FUEL SUPPLY LINE
FUEL PUMP MODULE
FUEL PRESSURE LEAK DOWN
FUEL INJECTOR
ENGINE MECHANICAL
PCM

Always perform the Pre-Diagnostic Troubleshooting procedure before proceeding. (Refer to 9 - ENGINE - DIAGNOSIS AND TESTING).

Diagnostic Test

1. CYLINDER MIS-FIRE CONDITION ACTIVE

Engine running.

Observe the WHICH CYLINDER IS MISFIRING screen for at least one minute on the scan tool.

Is there a misfire present at this time?

Yes >> Go To 2

No >> Refer to the INTERMITTENT CONDITION Diagnostic Procedure.
Perform the POWERTRAIN VERIFICATION TEST. (Refer to 9 - ENGINE - STANDARD PROCEDURE)

P0307-CYLINDER #7 MISFIRE (CONTINUED)

2. VISUAL INSPECTION

NOTE: Anything that affects the speed of the crankshaft can cause a misfire DTC.

NOTE: When a Misfire is detected for a particular cylinder, the PCM will shut down that cylinders Injector Control circuit.

- Visually inspect the engine for any of the following conditions.
- Worn serpentine belt
- Binding Engine-Driven accessories: A/C Compressor, P/S Pump, Water pump.
- Misalignment of the Water pump, P/S Pump and A/C Compressor pulleys
- Corroded PCM power and ground circuits.
- Improper CKP, CMP, MAP, and TP Sensor mounting
- Poor connector/terminal to component connection. i.e., CKP sensor, Fuel Injector, Ign coil, etc.
- Vacuum leaks
- Restricted Air Induction system or Exhaust system.
- Internal engine component failures.

Were any of the above conditions present?

Yes >> Repair as necessary.
Perform the POWERTRAIN VERIFICATION TEST. (Refer to 9 - ENGINE - STANDARD PROCEDURE)

No >> Go To 3

P0307-CYLINDER #7 MISFIRE (CONTINUED)

3. (K342) ASD RELAY OUTPUT CIRCUIT

Turn the ignition off.
Disconnect the Ignition Coil harness connector.
Disconnect the Fuel Injector harness connector.
Ignition on, engine not running.
With the scan tool, actuate the ASD Relay.
Using a 12-volt test light connected to ground, probe the (K342) ASD Relay Output circuit in the Ignition Coil harness connector and Fuel Injector harness connector while the relay is actuating.

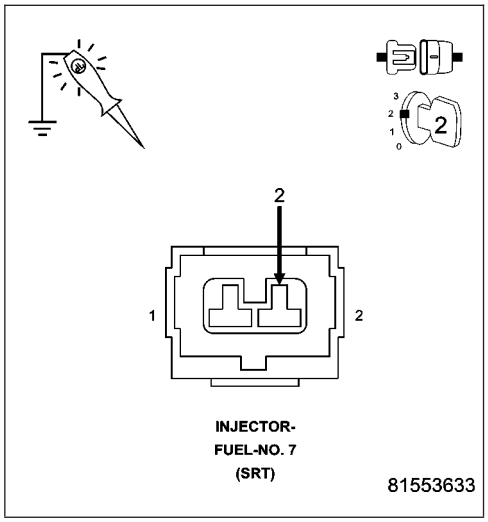

Does the test light illuminate brightly?

Yes >> Go To 4

No >> Repair the excessive resistance or short to ground in the (K342) ASD Relay Output circuit.
Perform the POWERTRAIN VERIFICATION TEST. (Refer to 9 - ENGINE - STANDARD PROCEDURE)

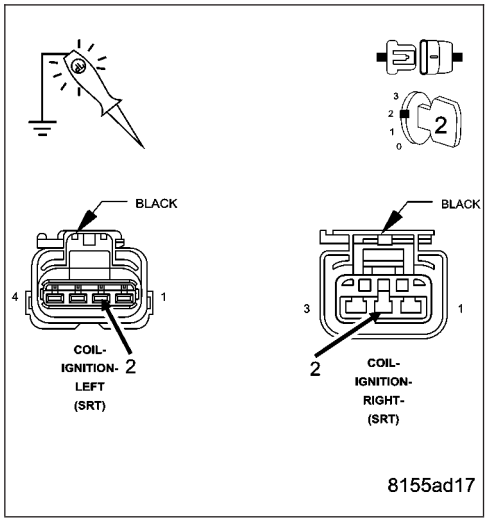

4. IGNITION SYSTEM OPERATION

Turn the ignition off.
Connect the Ignition Coil harness connector.
Remove the Ignition Coil.
Leave the Fuel Injector harness connector of the cylinder being tested disconnected.
Install a spark tester on the Ignition Coil.
While cranking the engine observe the spark coming from the spark tester.

NOTE: A crisp blue spark that is able to jump the gap of the spark tester should be generated.

Is good spark present?

Yes >> Go To 5

No >> Go To 14

NOTE: Connect the Fuel Injector harness connector before continuing.

P0307-CYLINDER #7 MISFIRE (CONTINUED)

5. SPARK PLUG

Turn the ignition off.

Remove the Spark Plug.

Inspect the Spark Plug for the following conditions.

- Cracks
- Carbon Tracking
- Foreign Material
- Gap size out of specifications
- Loose or broke electrode

NOTE: Lightly tap the bottom of the spark plug on a solid surface. The electrode in the spark plug should not move.

Were any of the above conditions present?

Yes >> Replace the Spark Plug.
Perform the POWERTRAIN VERIFICATION TEST. (Refer to 9 - ENGINE - STANDARD PROCEDURE)

No >> Go To 6

---

6. FUEL PRESSURE CHECK

WARNING: The fuel system is under a constant pressure (even with the engine off). Before testing or servicing any fuel system hose, fitting or line, the fuel system pressure must be released. Failure to follow these instructions can result in personal injury or death.

Install a fuel pressure gauge to the fuel rail.

Start the engine and observe the fuel pressure reading.

NOTE: Fuel pressure specification is 407 KPa +/- 34 KPa (59 psi +/- 5 psi).

Choose a conclusion that best matches your fuel pressure reading.

Within Specification
Go To 7

Below Specification
Go To 12

Above Specification
Replace the fuel filter/pressure regulator.
Perform the POWERTRAIN VERIFICATION TEST. (Refer to 9 - ENGINE - STANDARD PROCEDURE)

P0307-CYLINDER #7 MISFIRE (CONTINUED)

7. FUEL PRESSURE LEAK DOWN

NOTE: Before continuing visually and physically inspect the fuel delivery system for external leaks or damage. Repair / replace as necessary.

Turn the ignition off.

WARNING: The fuel system is under a constant pressure (even with the engine off). Before testing or servicing any fuel system hose, fitting or line, the fuel system pressure must be released. Failure to follow these instructions can result in personal injury or death

Install special tool #6539 (5/16″) or #6631 (3/8″) fuel line adapter.

Install the fuel pressure gauge.

Start the engine and allow the fuel system to reach maximum pressure.

Turn the ignition off.

NOTE: Fuel specification is 407 KPa +/- 34 KPa (59 psi +/- 5 psi).

Using special tool #C4390, Hose Clamp Pliers, pinch the rubber fuel line between the fuel pressure gauge and the engine.

Monitor the fuel pressure gauge for a minimum of 5 minutes.

NOTE: The pressure should not fall below 241 KPa (35 psi).

Does the pressure fall below the listed specification?

Yes >> Replace the leaking Fuel Injector(s).
Perform the POWERTRAIN VERIFICATION TEST. (Refer to 9 - ENGINE - STANDARD PROCEDURE)

No >> Go To 8

---

8. FUEL INJECTOR OPERATION

WARNING: The fuel system is under a constant pressure (even with the engine off). Before testing or servicing any fuel system hose, fitting or line, the fuel system pressure must be released. Failure to follow these instructions can result in personal injury or death.

CAUTION: After each Fuel Injector actuation, start the engine to clean the cylinder of fuel. Failure to do so could cause engine damage.

Remove special tool #C4390.

Start the engine and allow the fuel pressure to reach maximum pressure.

Ignition on, engine not running.

Using the scan tool, actuate the Fuel Injector.

Monitor the fuel pressure gauge.

Does the fuel pressure gauge indicate a drop in fuel pressure?

Yes >> Go To 9

No >> Go To 10

NOTE: Turn the ignition off, remove the Fuel Pressure gauge, and connect the fuel lines before continuing.

P0307-CYLINDER #7 MISFIRE (CONTINUED)

9. ENGINE MECHANICAL

Check for any of the following conditions/mechanical problems.
ENGINE VACUUM - must be at least 13 inches in neutral
ENGINE VALVE TIMING - must be within specifications
ENGINE COMPRESSION - must be within specifications
ENGINE EXHAUST SYSTEM - must be free of any restrictions or leaks.
ENGINE PCV SYSTEM - must flow freely
TORQUE CONVERTER STALL SPEED - must be within specifications
POWER BRAKE BOOSTER - no internal vacuum leaks
FUEL - must be free of contamination
CAM LOBES - must not be worn excessively
CYLINDER LEAKAGE TEST - must be within specifications
VALVE SPRINGS - cannot be weak or broken

Are there any engine mechanical problems?

Yes >> Repair as necessary.
Perform the POWERTRAIN VERIFICATION TEST. (Refer to 9 - ENGINE - STANDARD PROCEDURE)

No >> Go To 17

---

10. FUEL INJECTOR

Turn the ignition off.
Disconnect the Fuel Injector harness connector.
Ignition on, engine not running.

NOTE: When a Misfire is detected for a particular cylinder, the PCM will shut down that cylinders Injector Control circuit.
With the scan tool, erase DTCs.
Using a 12-volt test light connected to 12-volts, probe the Injector Control circuit.
With the scan tool, actuate the Fuel Injector.

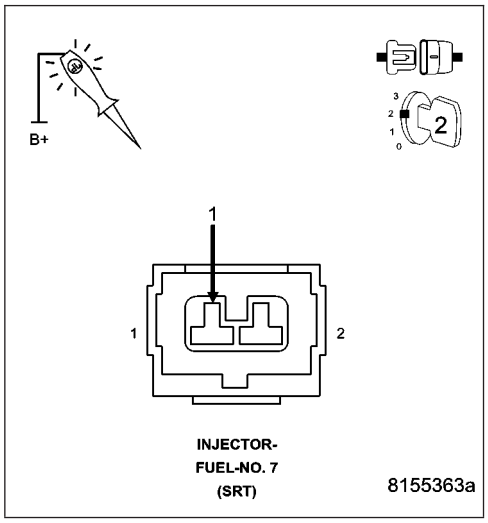

Does the test light blink/flicker?

Yes >> Replace the Fuel Injector.
Perform the POWERTRAIN VERIFICATION TEST. (Refer to 9 - ENGINE - STANDARD PROCEDURE)

No >> Go To 11

P0307-CYLINDER #7 MISFIRE (CONTINUED)

11. INJECTOR CONTROL CIRCUIT

Turn the ignition off.

Disconnect the PCM harness connector.

Check the (K26) Injector Control circuit for an open or short to ground.

Was a problem found with the Injector Control circuit?

Yes >> Repair the excessive resistance or short in the Injector Control circuit.
Perform the POWERTRAIN VERIFICATION TEST. (Refer to 9 - ENGINE - STANDARD PROCEDURE)

No >> Go To 17

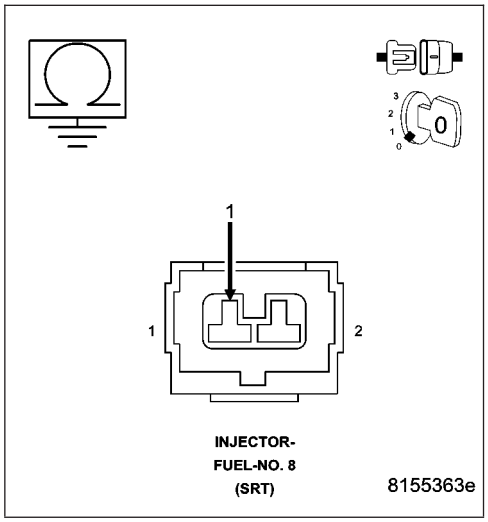

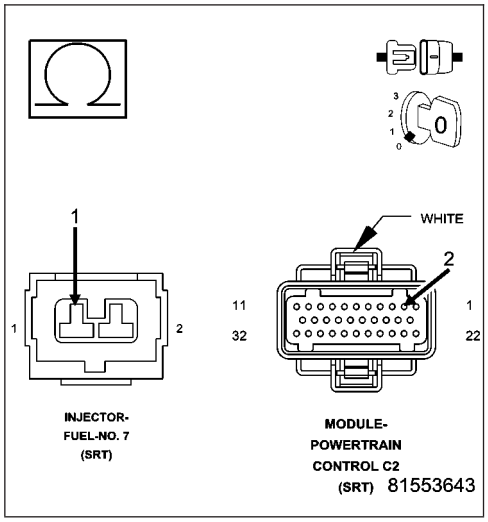

12. FUEL SUPPLY LINE RESTRICTED

Turn the ignition off.

WARNING: The fuel system is under a constant pressure (even with the engine off). Before testing or servicing any fuel system hose, fitting or line, the fuel system pressure must be released. Failure to follow these instructions can result in personal injury or death.

Raise vehicle on hoist, and disconnect the fuel pressure line at the fuel pump module.

Install special tool #6539 (5/16″) #6631(3/8″) fuel line adapter and the fuel pressure gauge between the fuel supply line and the fuel pump module.

Ignition on, engine not running.

With the scan tool, actuate the ASD Fuel System test and observe the fuel pressure gauge.

NOTE: Fuel pressure specification is 379 KPa +/- 14 KPa (55 psi +/- 2 psi).

Is the fuel pressure within specification?

Yes >> Repair or replace fuel supply line as necessary.
Perform the POWERTRAIN VERIFICATION TEST. (Refer to 9 - ENGINE - STANDARD PROCEDURE)

No >> Go To 13

P0307-CYLINDER #7 MISFIRE (CONTINUED)

13. FUEL PUMP INLET STRAINER

Turn the ignition off.

WARNING: The fuel system is under a constant pressure (even with the engine off). Before testing or servicing any fuel system hose, fitting or line, the fuel system pressure must be released. Failure to follow these instructions can result in personal injury or death.

Remove the Fuel Pump Module and inspect the Fuel Inlet Strainer.

Is the Fuel Inlet Strainer plugged?

Yes >> Replace the Fuel Pump Inlet Strainer.
Perform the POWERTRAIN VERIFICATION TEST. (Refer to 9 - ENGINE - STANDARD PROCEDURE)

No >> Before continuing, check the Fuel Pump Module harness connector terminals for corrosion, damage, or terminal push out. Make sure the ground circuit is functional. Repair as necessary. Replace the Fuel Pump Module.
Perform the POWERTRAIN VERIFICATION TEST. (Refer to 9 - ENGINE - STANDARD PROCEDURE)

---

14. IGNITION WIRE

NOTE: If the vehicle being tested does not have an ignition wire answer YES to this test and continue.

Turn the ignition off.

Remove the ignition wire.

Measure the resistance of the ignition wire.

Is the resistance below 10K ohms?

Yes >> Go To 15

No >> Replace the Ignition Wire.
Perform the POWERTRAIN VERIFICATION TEST. (Refer to 9 - ENGINE - STANDARD PROCEDURE)

---

15. IGNITION COIL

Disconnect the Ignition Coil harness connector.

Remove the Fuel Pump Relay.

Using a 12-volt test light connected to 12-volts, probe the (K133) Coil Control circuit.

Crank the engine for 5 seconds while observing the test light.

NOTE: The primary resistance of the 8.3L Ignition coil is 0.53 to 0.65 of an ohm at 77°F (25°C).

Does the test light brightly blink/flicker?

Yes >> Replace the Ignition Coil.
Perform the POWERTRAIN VERIFICATION TEST. (Refer to 9 - ENGINE - STANDARD PROCEDURE)

No >> Go To 16

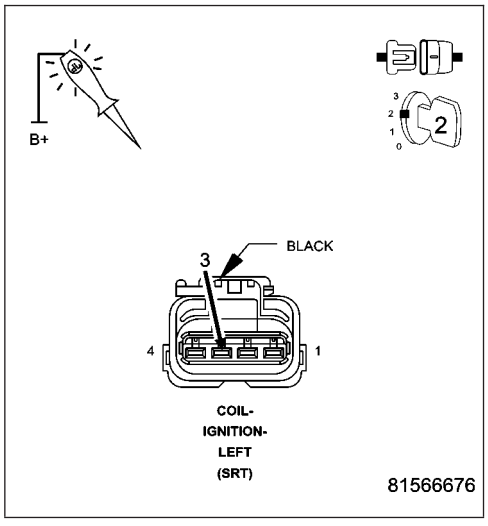

P0307-CYLINDER #7 MISFIRE (CONTINUED)

16. COIL CONTROL CIRCUIT

Turn the ignition off.
Disconnect the PCM harness connector.
Check the (K133) Coil Control circuit for an open or short to ground.

Was a problem found with the Coil Control circuit?

Yes >> Repair the Coil Control circuit.
Perform the POWERTRAIN VERIFICATION TEST. (Refer to 9 - ENGINE - STANDARD PROCEDURE)

No >> Go To 17

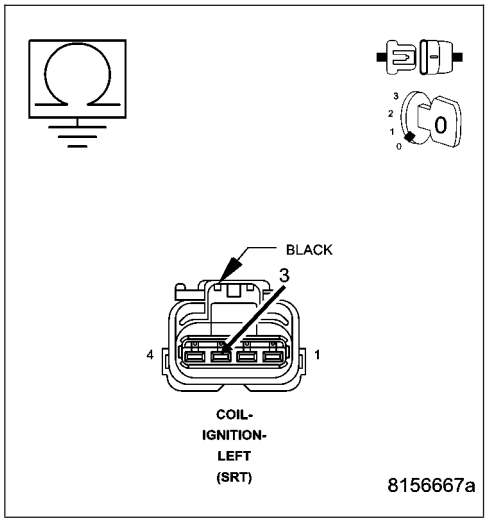

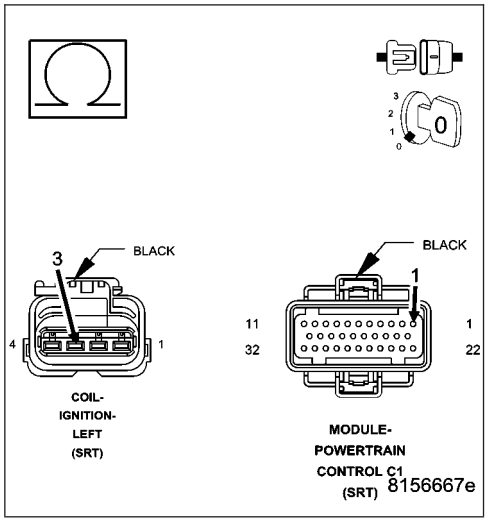

17. PCM

NOTE: Before continuing, check the PCM harness connector terminals for corrosion, damage, or terminal push out. Repair as necessary.
Using the schematics as a guide, inspect the wire harness and connectors. Pay particular attention to all Power and Ground circuits.

Were there any problems found?

Yes >> Repair as necessary.
Perform the POWERTRAIN VERIFICATION TEST. (Refer to 9 - ENGINE - STANDARD PROCEDURE)

No >> Replace and program the Powertrain Control Module per Service Information.
Perform the POWERTRAIN VERIFICATION TEST. (Refer to 9 - ENGINE - STANDARD PROCEDURE)

P0308-CYLINDER #8 MISFIRE

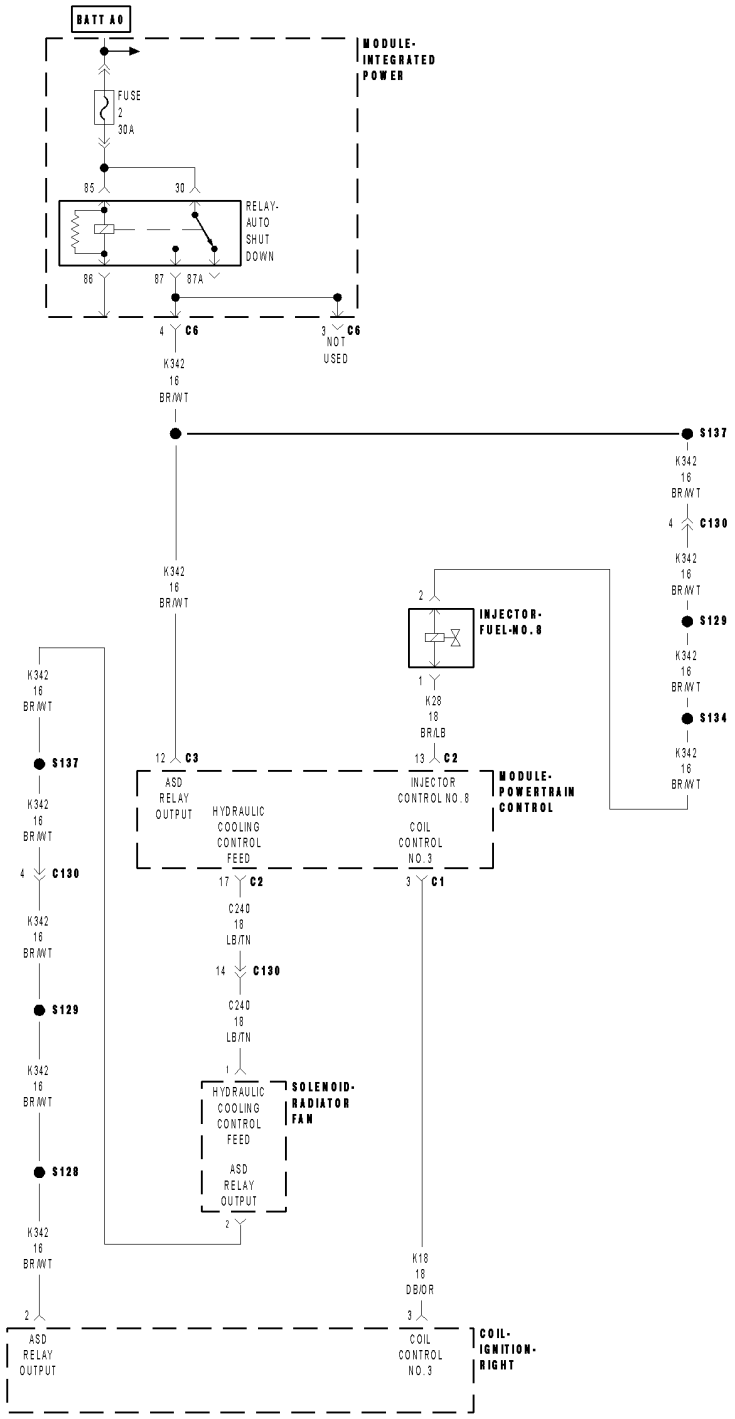

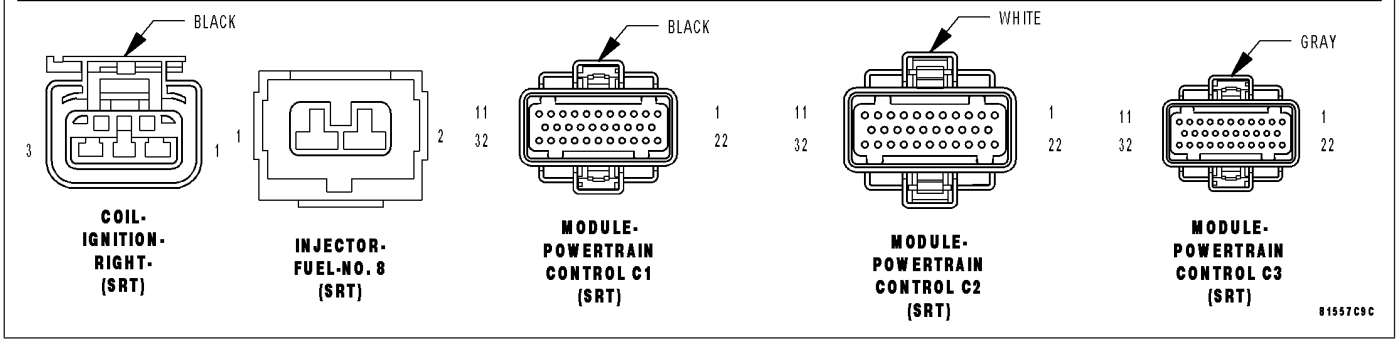

P0308-CYLINDER #8 MISFIRE (CONTINUED)

For the Engine circuit diagram (Refer to 9 - ENGINE - SCHEMATICS AND DIAGRAMS).

For a complete wiring diagram **Refer to Section 8W**.

- **When Monitored:**
  Any time the engine is running, and the adaptive numerator has been successfully updated.
- **Set Condition:**
  When more than a 1% misfire rate is measured during two trips, or with a 6% to 30% misfire rate during one trip.

Possible Causes
(K342) ASD RELAY OUTPUT CIRCUIT
(K28) INJECTOR CONTROL CIRCUIT
(K18) COIL CONTROL CIRCUIT
IGNITION WIRE
SPARK PLUG
IGNITION COIL
FUEL PUMP INLET STRAINER PLUGGED
RESTRICTED FUEL SUPPLY LINE
FUEL PUMP MODULE
FUEL PRESSURE LEAK DOWN
FUEL INJECTOR
ENGINE MECHANICAL
PCM

Always perform the Pre-Diagnostic Troubleshooting procedure before proceeding. (Refer to 9 - ENGINE - DIAGNOSIS AND TESTING).

Diagnostic Test

1. CYLINDER MIS-FIRE CONDITION ACTIVE

Engine running.

Observe the WHICH CYLINDER IS MISFIRING screen for at least one minute on the scan tool.

Is there a misfire present at this time?

Yes >> Go To 2

No >> Refer to the INTERMITTENT CONDITION Diagnostic Procedure.
Perform the POWERTRAIN VERIFICATION TEST. (Refer to 9 - ENGINE - STANDARD PROCEDURE)

P0308-CYLINDER #8 MISFIRE (CONTINUED)

2. VISUAL INSPECTION

NOTE: Anything that affects the speed of the crankshaft can cause a misfire DTC.

NOTE: When a Misfire is detected for a particular cylinder, the PCM will shut down that cylinders Injector Control circuit.

- Visually inspect the engine for any of the following conditions.
- Worn serpentine belt
- Binding Engine-Driven accessories: A/C Compressor, P/S Pump, Water pump.
- Misalignment of the Water pump, P/S Pump and A/C Compressor pulleys
- Corroded PCM power and ground circuits.
- Improper CKP, CMP, MAP, and TP Sensor mounting
- Poor connector/terminal to component connection. i.e., CKP sensor, Fuel Injector, Ign coil, etc.
- Vacuum leaks
- Restricted Air Induction system or Exhaust system.
- Internal engine component failures.

Were any of the above conditions present?

Yes >> Repair as necessary.
Perform the POWERTRAIN VERIFICATION TEST. (Refer to 9 - ENGINE - STANDARD PROCEDURE)

No >> Go To 3

P0308-CYLINDER #8 MISFIRE (CONTINUED)

3. (K342) ASD RELAY OUTPUT CIRCUIT

Turn the ignition off.
Disconnect the Ignition Coil harness connector.
Disconnect the Fuel Injector harness connector.
Ignition on, engine not running.
With the scan tool, actuate the ASD Relay.
Using a 12-volt test light connected to ground, probe the (K342) ASD Relay Output circuit in the Ignition Coil harness connector and Fuel Injector harness connector while the relay is actuating.

Does the test light illuminate brightly?

Yes >> Go To 4

No >> Repair the excessive resistance or short to ground in the (K342) ASD Relay Output circuit.
Perform the POWERTRAIN VERIFICATION TEST. (Refer to 9 - ENGINE - STANDARD PROCEDURE)

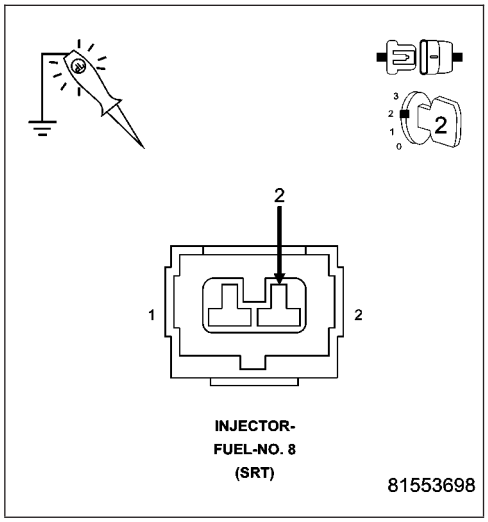

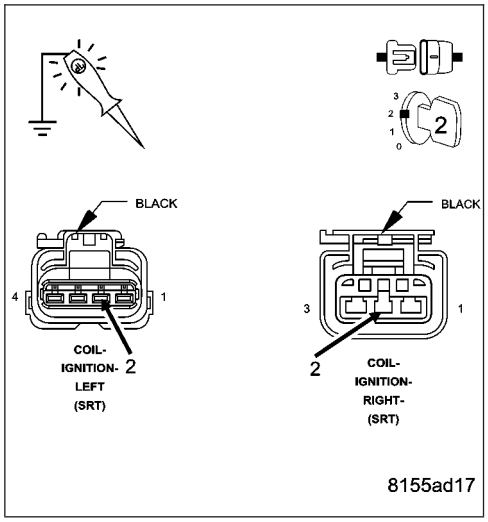

4. IGNITION SYSTEM OPERATION

Turn the ignition off.
Connect the Ignition Coil harness connector.
Remove the Ignition Coil.
Leave the Fuel Injector harness connector of the cylinder being tested disconnected.
Install a spark tester on the Ignition Coil.
While cranking the engine observe the spark coming from the spark tester.

NOTE: A crisp blue spark that is able to jump the gap of the spark tester should be generated.

Is good spark present?

Yes >> Go To 5

No >> Go To 14

NOTE: Connect the Fuel Injector harness connector before continuing.

P0308-CYLINDER #8 MISFIRE (CONTINUED)

5. SPARK PLUG

Turn the ignition off.

Remove the Spark Plug.

Inspect the Spark Plug for the following conditions.

- Cracks
- Carbon Tracking
- Foreign Material
- Gap size out of specifications
- Loose or broke electrode

NOTE: Lightly tap the bottom of the spark plug on a solid surface. The electrode in the spark plug should not move.

Were any of the above conditions present?

Yes >> Replace the Spark Plug.
Perform the POWERTRAIN VERIFICATION TEST. (Refer to 9 - ENGINE - STANDARD PROCEDURE)

No >> Go To 6

---

6. FUEL PRESSURE CHECK

WARNING: The fuel system is under a constant pressure (even with the engine off). Before testing or servicing any fuel system hose, fitting or line, the fuel system pressure must be released. Failure to follow these instructions can result in personal injury or death.

Install a fuel pressure gauge to the fuel rail.

Start the engine and observe the fuel pressure reading.

NOTE: Fuel pressure specification is 407 KPa +/- 34 KPa (59 psi +/- 5 psi).

Choose a conclusion that best matches your fuel pressure reading.

Within Specification
Go To 7

Below Specification
Go To 12

Above Specification
Replace the fuel filter/pressure regulator.
Perform the POWERTRAIN VERIFICATION TEST. (Refer to 9 - ENGINE - STANDARD PROCEDURE)

P0308-CYLINDER #8 MISFIRE (CONTINUED)

7. FUEL PRESSURE LEAK DOWN

NOTE: Before continuing visually and physically inspect the fuel delivery system for external leaks or damage. Repair / replace as necessary.

Turn the ignition off.

WARNING: The fuel system is under a constant pressure (even with the engine off). Before testing or servicing any fuel system hose, fitting or line, the fuel system pressure must be released. Failure to follow these instructions can result in personal injury or death

Install special tool #6539 (5/16″) or #6631 (3/8″) fuel line adapter.

Install the fuel pressure gauge.

Start the engine and allow the fuel system to reach maximum pressure.

Turn the ignition off.

NOTE: Fuel specification is 407 KPa +/- 34 KPa (59 psi +/- 5 psi).

Using special tool #C4390, Hose Clamp Pliers, pinch the rubber fuel line between the fuel pressure gauge and the engine.

Monitor the fuel pressure gauge for a minimum of 5 minutes.

NOTE: The pressure should not fall below 241 KPa (35 psi).

Does the pressure fall below the listed specification?

Yes >> Replace the leaking Fuel Injector(s).
Perform the POWERTRAIN VERIFICATION TEST. (Refer to 9 - ENGINE - STANDARD PROCEDURE)

No >> Go To 8

---

8. FUEL INJECTOR OPERATION

WARNING: The fuel system is under a constant pressure (even with the engine off). Before testing or servicing any fuel system hose, fitting or line, the fuel system pressure must be released. Failure to follow these instructions can result in personal injury or death.

CAUTION: After each Fuel Injector actuation, start the engine to clean the cylinder of fuel. Failure to do so could cause engine damage.

Remove special tool #C4390.

Start the engine and allow the fuel pressure to reach maximum pressure.

Ignition on, engine not running.

Using the scan tool, actuate the Fuel Injector.

Monitor the fuel pressure gauge.

Does the fuel pressure gauge indicate a drop in fuel pressure?

Yes >> Go To 9

No >> Go To 10

NOTE: Turn the ignition off, remove the Fuel Pressure gauge, and connect the fuel lines before continuing.

P0308-CYLINDER #8 MISFIRE (CONTINUED)

9. ENGINE MECHANICAL

Check for any of the following conditions/mechanical problems.
ENGINE VACUUM - must be at least 13 inches in neutral
ENGINE VALVE TIMING - must be within specifications
ENGINE COMPRESSION - must be within specifications
ENGINE EXHAUST SYSTEM - must be free of any restrictions or leaks.
ENGINE PCV SYSTEM - must flow freely
TORQUE CONVERTER STALL SPEED - must be within specifications
POWER BRAKE BOOSTER - no internal vacuum leaks
FUEL - must be free of contamination
CAM LOBES - must not be worn excessively
CYLINDER LEAKAGE TEST - must be within specifications
VALVE SPRINGS - cannot be weak or broken

Are there any engine mechanical problems?

Yes >> Repair as necessary.
Perform the POWERTRAIN VERIFICATION TEST. (Refer to 9 - ENGINE - STANDARD PROCEDURE)

No >> Go To 17

---

10. FUEL INJECTOR

Turn the ignition off.
Disconnect the Fuel Injector harness connector.
Ignition on, engine not running.

NOTE: When a Misfire is detected for a particular cylinder, the PCM will shut down that cylinders Injector Control circuit.
With the scan tool, erase DTCs.
Using a 12-volt test light connected to 12-volts, probe the (K28) Injector Control circuit.
With the scan tool, actuate the Fuel Injector.

Does the test light blink/flicker?

Yes >> Replace the Fuel Injector.
Perform the POWERTRAIN VERIFICATION TEST. (Refer to 9 - ENGINE - STANDARD PROCEDURE)

No >> Go To 11

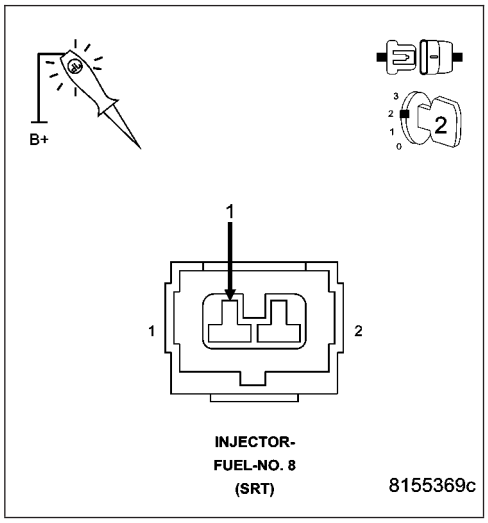

P0308-CYLINDER #8 MISFIRE (CONTINUED)

11. INJECTOR CONTROL CIRCUIT

Turn the ignition off.

Disconnect the PCM harness connector.

Check the (K28) Injector Control circuit for an open or short to ground.

Was a problem found with the Injector Control circuit?

Yes >> Repair the excessive resistance or short in the Injector Control circuit.
Perform the POWERTRAIN VERIFICATION TEST. (Refer to 9 - ENGINE - STANDARD PROCEDURE)

No >> Go To 17

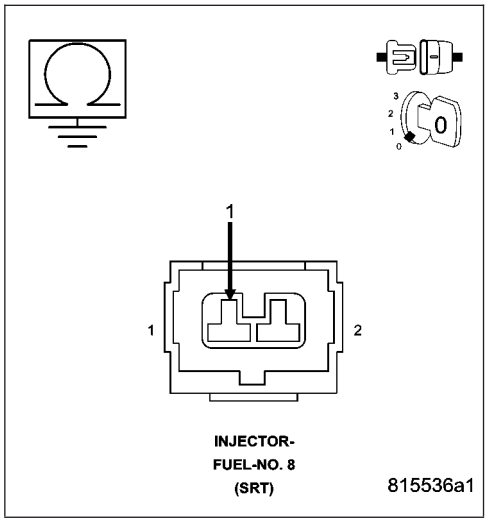

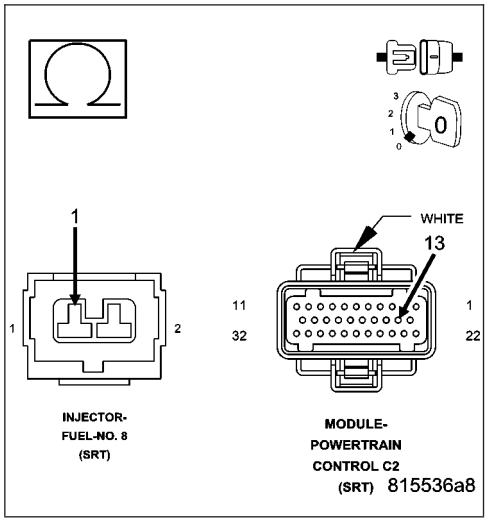

12. FUEL SUPPLY LINE RESTRICTED

Turn the ignition off.

WARNING: The fuel system is under a constant pressure (even with the engine off). Before testing or servicing any fuel system hose, fitting or line, the fuel system pressure must be released. Failure to follow these instructions can result in personal injury or death.

Raise vehicle on hoist, and disconnect the fuel pressure line at the fuel pump module.

Install special tool #6539 (5/16″) #6631(3/8″) fuel line adapter and the fuel pressure gauge between the fuel supply line and the fuel pump module.

Ignition on, engine not running.

With the scan tool, actuate the ASD Fuel System test and observe the fuel pressure gauge.

NOTE: Fuel pressure specification is 379 KPa +/- 14 KPa (55 psi +/- 2 psi).

Is the fuel pressure within specification?

Yes >> Repair or replace fuel supply line as necessary.
Perform the POWERTRAIN VERIFICATION TEST. (Refer to 9 - ENGINE - STANDARD PROCEDURE)

No >> Go To 13

P0308-CYLINDER #8 MISFIRE (CONTINUED)

13. FUEL PUMP INLET STRAINER

Turn the ignition off.

WARNING: The fuel system is under a constant pressure (even with the engine off). Before testing or servicing any fuel system hose, fitting or line, the fuel system pressure must be released. Failure to follow these instructions can result in personal injury or death.

Remove the Fuel Pump Module and inspect the Fuel Inlet Strainer.

Is the Fuel Inlet Strainer plugged?

Yes >> Replace the Fuel Pump Inlet Strainer.
Perform the POWERTRAIN VERIFICATION TEST. (Refer to 9 - ENGINE - STANDARD PROCEDURE)

No >> Before continuing, check the Fuel Pump Module harness connector terminals for corrosion, damage, or terminal push out. Make sure the ground circuit is functional. Repair as necessary. Replace the Fuel Pump Module.
Perform the POWERTRAIN VERIFICATION TEST. (Refer to 9 - ENGINE - STANDARD PROCEDURE)

---

14. IGNITION WIRE

NOTE: If the vehicle being tested does not have an ignition wire answer YES to this test and continue.

Turn the ignition off.

Remove the ignition wire.

Measure the resistance of the ignition wire.

Is the resistance below 10K ohms?

Yes >> Go To 15

No >> Replace the Ignition Wire.
Perform the POWERTRAIN VERIFICATION TEST. (Refer to 9 - ENGINE - STANDARD PROCEDURE)

---

15. IGNITION COIL

Disconnect the Ignition Coil harness connector.

Remove the Fuel Pump Relay.

Using a 12-volt test light connected to 12-volts, probe the (K18) Coil Control circuit.

Crank the engine for 5 seconds while observing the test light.

NOTE: The primary resistance of the 8.3L Ignition coil is 0.53 to 0.65 of an ohm at 77°F (25°C).

Does the test light brightly blink/flicker?

Yes >> Replace the Ignition Coil.
Perform the POWERTRAIN VERIFICATION TEST. (Refer to 9 - ENGINE - STANDARD PROCEDURE)

No >> Go To 16

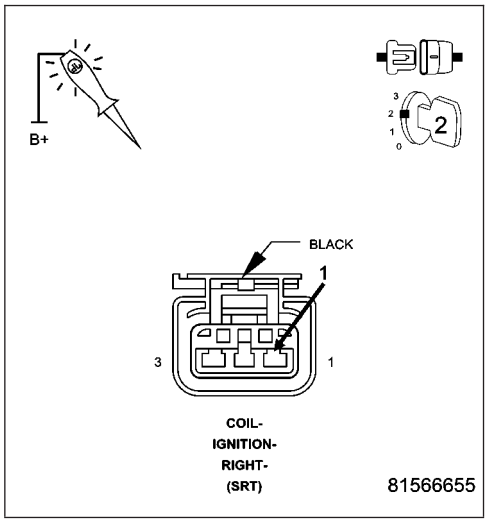

P0308-CYLINDER #8 MISFIRE (CONTINUED)

16. COIL CONTROL CIRCUIT

Turn the ignition off.
Disconnect the PCM harness connector.
Check the (K18) Coil Control circuit for an open or short to ground.

Was a problem found with the Coil Control circuit?

Yes >> Repair the Coil Control circuit.
Perform the POWERTRAIN VERIFICATION TEST. (Refer to 9 - ENGINE - STANDARD PROCEDURE)

No >> Go To 17

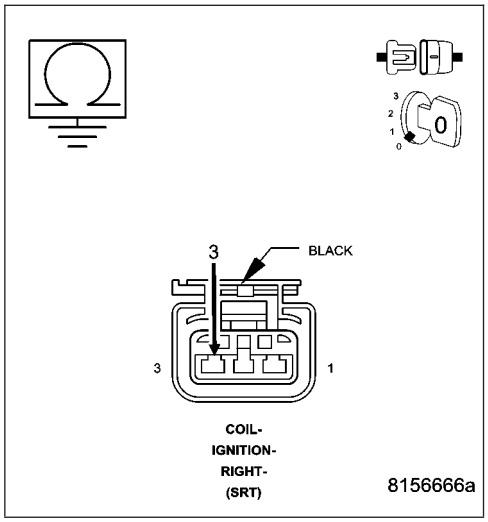

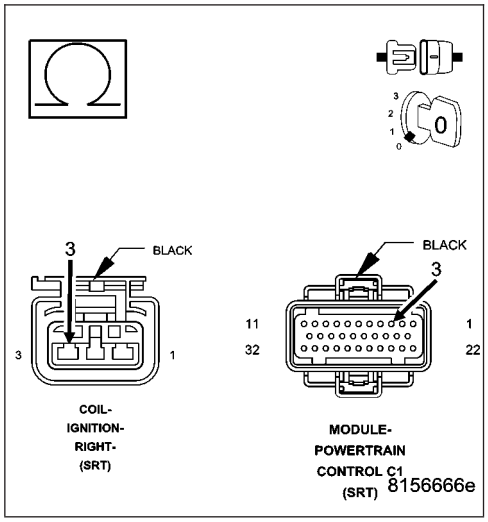

17. PCM

NOTE: Before continuing, check the PCM harness connector terminals for corrosion, damage, or terminal push out. Repair as necessary.
Using the schematics as a guide, inspect the wire harness and connectors. Pay particular attention to all Power and Ground circuits.

Were there any problems found?

Yes >> Repair as necessary.
Perform the POWERTRAIN VERIFICATION TEST. (Refer to 9 - ENGINE - STANDARD PROCEDURE)

No >> Replace and program the Powertrain Control Module per Service Information.
Perform the POWERTRAIN VERIFICATION TEST. (Refer to 9 - ENGINE - STANDARD PROCEDURE)

P0309-CYLINDER #9 MISFIRE

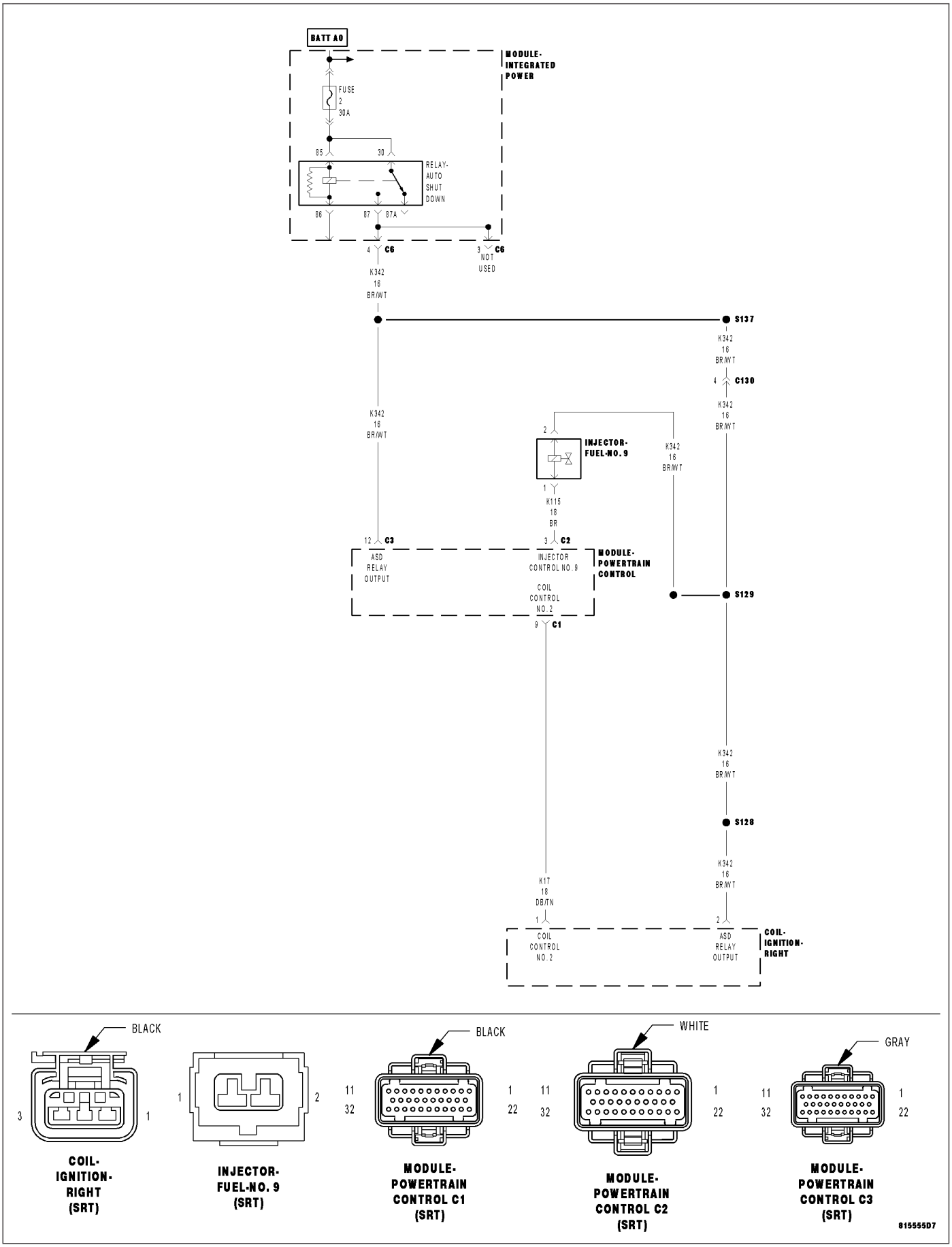

P0309-CYLINDER #9 MISFIRE (CONTINUED)

For the Engine circuit diagram (Refer to 9 - ENGINE - SCHEMATICS AND DIAGRAMS).

For a complete wiring diagram **Refer to Section 8W**.

- **When Monitored:**
  Any time the engine is running, and the adaptive numerator has been successfully updated.
- **Set Condition:**
  When more than a 1% misfire rate is measured during two trips, or with a 6% to 30% misfire rate during one trip.

Possible Causes
(K342) ASD RELAY OUTPUT CIRCUIT
(K115) INJECTOR CONTROL CIRCUIT
(K18) COIL CONTROL CIRCUIT
IGNITION WIRE
SPARK PLUG
IGNITION COIL
FUEL PUMP INLET STRAINER PLUGGED
RESTRICTED FUEL SUPPLY LINE
FUEL PUMP MODULE
FUEL PRESSURE LEAK DOWN
FUEL INJECTOR
ENGINE MECHANICAL
PCM

Always perform the Pre-Diagnostic Troubleshooting procedure before proceeding. (Refer to 9 - ENGINE - DIAGNOSIS AND TESTING).

Diagnostic Test

1. CYLINDER MIS-FIRE CONDITION ACTIVE

Engine running.

Observe the WHICH CYLINDER IS MISFIRING screen for at least one minute on the scan tool.

Is there a misfire present at this time?

Yes >> Go To 2

No >> Refer to the INTERMITTENT CONDITION Diagnostic Procedure.
Perform the POWERTRAIN VERIFICATION TEST. (Refer to 9 - ENGINE - STANDARD PROCEDURE)

P0309-CYLINDER #9 MISFIRE (CONTINUED)

2. VISUAL INSPECTION

NOTE: Anything that affects the speed of the crankshaft can cause a misfire DTC.

NOTE: When a Misfire is detected for a particular cylinder, the PCM will shut down that cylinders Injector Control circuit.

- Visually inspect the engine for any of the following conditions.
- Worn serpentine belt
- Binding Engine-Driven accessories: A/C Compressor, P/S Pump, Water pump.
- Misalignment of the Water pump, P/S Pump and A/C Compressor pulleys
- Corroded PCM power and ground circuits.
- Improper CKP, CMP, MAP, and TP Sensor mounting
- Poor connector/terminal to component connection. i.e., CKP sensor, Fuel Injector, Ign coil, etc.
- Vacuum leaks
- Restricted Air Induction system or Exhaust system.
- Internal engine component failures.

Were any of the above conditions present?

Yes >> Repair as necessary.
Perform the POWERTRAIN VERIFICATION TEST. (Refer to 9 - ENGINE - STANDARD PROCEDURE)

No >> Go To 3

P0309-CYLINDER #9 MISFIRE (CONTINUED)

3. (K342) ASD RELAY OUTPUT CIRCUIT

Turn the ignition off.
Disconnect the Ignition Coil harness connector.
Disconnect the Fuel Injector harness connector.
Ignition on, engine not running.
With the scan tool, actuate the ASD Relay.
Using a 12-volt test light connected to ground, probe the (K342) ASD Relay Output circuit in the Ignition Coil harness connector and Fuel Injector harness connector while the relay is actuating.

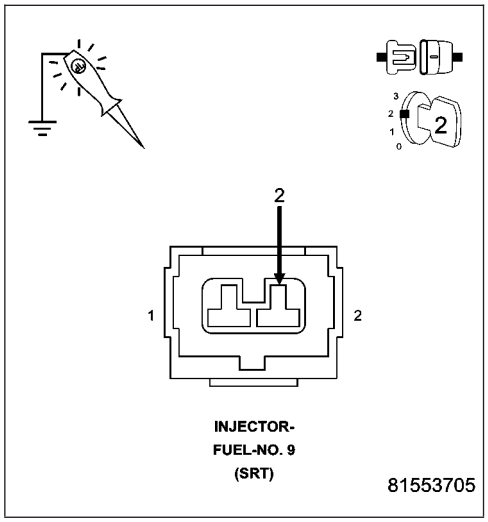

Does the test light illuminate brightly?

Yes >> Go To 4

No >> Repair the excessive resistance or short to ground in the (K342) ASD Relay Output circuit.
Perform the POWERTRAIN VERIFICATION TEST. (Refer to 9 - ENGINE - STANDARD PROCEDURE)

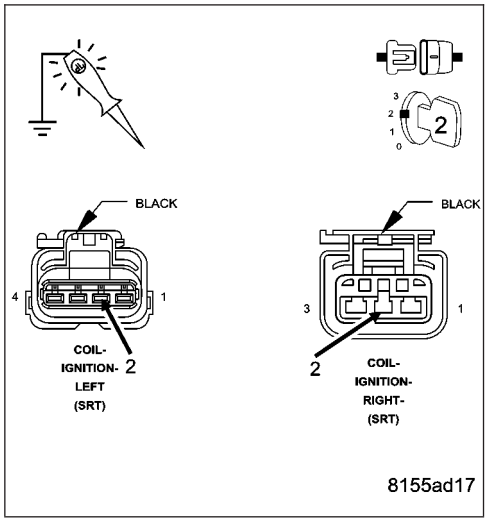

4. IGNITION SYSTEM OPERATION

Turn the ignition off.
Connect the Ignition Coil harness connector.
Remove the Ignition Coil.
Leave the Fuel Injector harness connector of the cylinder being tested disconnected.
Install a spark tester on the Ignition Coil.
While cranking the engine observe the spark coming from the spark tester.

NOTE: A crisp blue spark that is able to jump the gap of the spark tester should be generated.

Is good spark present?

Yes >> Go To 5

No >> Go To 14

NOTE: Connect the Fuel Injector harness connector before continuing.

P0309-CYLINDER #9 MISFIRE (CONTINUED)

5. SPARK PLUG

Turn the ignition off.

Remove the Spark Plug.

Inspect the Spark Plug for the following conditions.

- Cracks
- Carbon Tracking
- Foreign Material
- Gap size out of specifications
- Loose or broke electrode

NOTE: Lightly tap the bottom of the spark plug on a solid surface. The electrode in the spark plug should not move.

Were any of the above conditions present?

Yes >> Replace the Spark Plug.
Perform the POWERTRAIN VERIFICATION TEST. (Refer to 9 - ENGINE - STANDARD PROCEDURE)

No >> Go To 6

---

6. FUEL PRESSURE CHECK

WARNING: The fuel system is under a constant pressure (even with the engine off). Before testing or servicing any fuel system hose, fitting or line, the fuel system pressure must be released. Failure to follow these instructions can result in personal injury or death.

Install a fuel pressure gauge to the fuel rail.

Start the engine and observe the fuel pressure reading.

NOTE: Fuel pressure specification is 407 KPa +/- 34 KPa (59 psi +/- 5 psi).

Choose a conclusion that best matches your fuel pressure reading.

Within Specification
Go To 7

Below Specification
Go To 12

Above Specification
Replace the fuel filter/pressure regulator.
Perform the POWERTRAIN VERIFICATION TEST. (Refer to 9 - ENGINE - STANDARD PROCEDURE)

P0309-CYLINDER #9 MISFIRE (CONTINUED)

7. FUEL PRESSURE LEAK DOWN

NOTE: Before continuing visually and physically inspect the fuel delivery system for external leaks or damage. Repair / replace as necessary.

Turn the ignition off.

WARNING: The fuel system is under a constant pressure (even with the engine off). Before testing or servicing any fuel system hose, fitting or line, the fuel system pressure must be released. Failure to follow these instructions can result in personal injury or death

Install special tool #6539 (5/16″) or #6631 (3/8″) fuel line adapter.

Install the fuel pressure gauge.

Start the engine and allow the fuel system to reach maximum pressure.

Turn the ignition off.

NOTE: Fuel specification is 407 KPa +/- 34 KPa (59 psi +/- 5 psi).

Using special tool #C4390, Hose Clamp Pliers, pinch the rubber fuel line between the fuel pressure gauge and the engine.

Monitor the fuel pressure gauge for a minimum of 5 minutes.

NOTE: The pressure should not fall below 241 KPa (35 psi).

Does the pressure fall below the listed specification?

Yes >> Replace the leaking Fuel Injector(s).
Perform the POWERTRAIN VERIFICATION TEST. (Refer to 9 - ENGINE - STANDARD PROCEDURE)

No >> Go To 8

---

8. FUEL INJECTOR OPERATION

WARNING: The fuel system is under a constant pressure (even with the engine off). Before testing or servicing any fuel system hose, fitting or line, the fuel system pressure must be released. Failure to follow these instructions can result in personal injury or death.

CAUTION: After each Fuel Injector actuation, start the engine to clean the cylinder of fuel. Failure to do so could cause engine damage.

Remove special tool #C4390.

Start the engine and allow the fuel pressure to reach maximum pressure.

Ignition on, engine not running.

Using the scan tool, actuate the Fuel Injector.

Monitor the fuel pressure gauge.

Does the fuel pressure gauge indicate a drop in fuel pressure?

Yes >> Go To 9

No >> Go To 10

NOTE: Turn the ignition off, remove the Fuel Pressure gauge, and connect the fuel lines before continuing.

P0309-CYLINDER #9 MISFIRE (CONTINUED)

9. ENGINE MECHANICAL

Check for any of the following conditions/mechanical problems.
ENGINE VACUUM - must be at least 13 inches in neutral
ENGINE VALVE TIMING - must be within specifications
ENGINE COMPRESSION - must be within specifications
ENGINE EXHAUST SYSTEM - must be free of any restrictions or leaks.
ENGINE PCV SYSTEM - must flow freely
TORQUE CONVERTER STALL SPEED - must be within specifications
POWER BRAKE BOOSTER - no internal vacuum leaks
FUEL - must be free of contamination
CAM LOBES - must not be worn excessively
CYLINDER LEAKAGE TEST - must be within specifications
VALVE SPRINGS - cannot be weak or broken

Are there any engine mechanical problems?

Yes >> Repair as necessary.
Perform the POWERTRAIN VERIFICATION TEST. (Refer to 9 - ENGINE - STANDARD PROCEDURE)

No >> Go To 17

---

10. FUEL INJECTOR

Turn the ignition off.
Disconnect the Fuel Injector harness connector.
Ignition on, engine not running.

NOTE: When a Misfire is detected for a particular cylinder, the PCM will shut down that cylinders Injector Control circuit.
With the scan tool, erase DTCs.
Using a 12-volt test light connected to 12-volts, probe the (K115) Injector Control circuit.
With the scan tool, actuate the Fuel Injector.

Does the test light blink/flicker?

Yes >> Replace the Fuel Injector.
Perform the POWERTRAIN VERIFICATION TEST. (Refer to 9 - ENGINE - STANDARD PROCEDURE)

No >> Go To 11

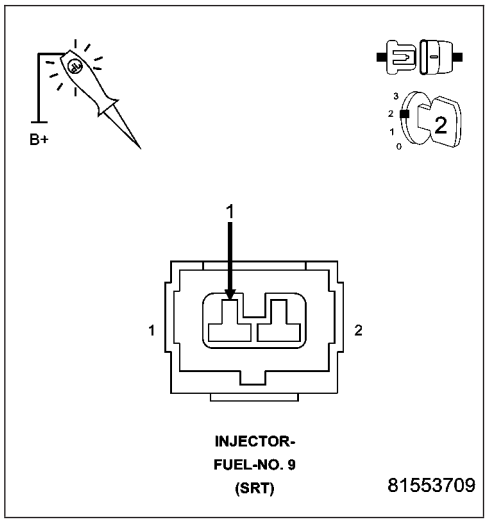

P0309-CYLINDER #9 MISFIRE (CONTINUED)

11. INJECTOR CONTROL CIRCUIT

Turn the ignition off.

Disconnect the PCM harness connector.

Check the (K115) Injector Control circuit for an open, short to ground, and short to voltage.

Was a problem found with the Injector Control circuit?

Yes >> Repair the excessive resistance or short in the Injector Control circuit.
Perform the POWERTRAIN VERIFICATION TEST. (Refer to 9 - ENGINE - STANDARD PROCEDURE)

No >> Go To 17

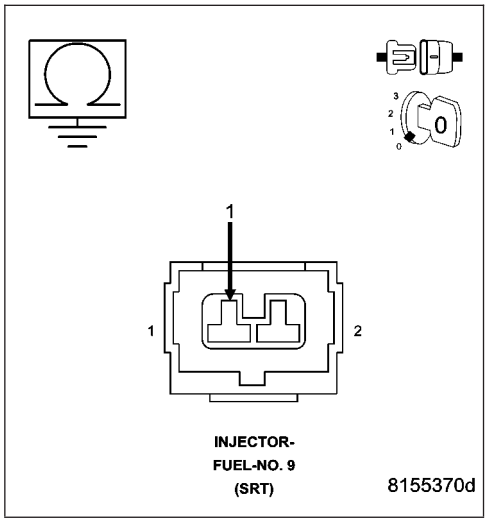

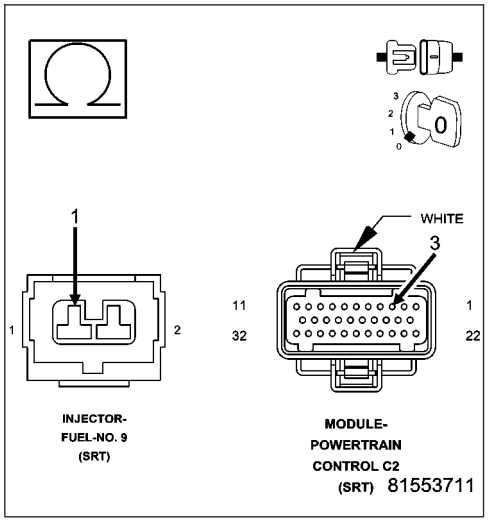

12. FUEL SUPPLY LINE RESTRICTED

Turn the ignition off.

WARNING: The fuel system is under a constant pressure (even with the engine off). Before testing or servicing any fuel system hose, fitting or line, the fuel system pressure must be released. Failure to follow these instructions can result in personal injury or death.

Raise vehicle on hoist, and disconnect the fuel pressure line at the fuel pump module.

Install special tool #6539 (5/16″) #6631(3/8″) fuel line adapter and the fuel pressure gauge between the fuel supply line and the fuel pump module.

Ignition on, engine not running.

With the scan tool, actuate the ASD Fuel System test and observe the fuel pressure gauge.

NOTE: Fuel pressure specification is 379 KPa +/- 14 KPa (55 psi +/- 2 psi).

Is the fuel pressure within specification?

Yes >> Repair or replace fuel supply line as necessary.
Perform the POWERTRAIN VERIFICATION TEST. (Refer to 9 - ENGINE - STANDARD PROCEDURE)

No >> Go To 13

P0309-CYLINDER #9 MISFIRE (CONTINUED)

13. FUEL PUMP INLET STRAINER

Turn the ignition off.

WARNING: The fuel system is under a constant pressure (even with the engine off). Before testing or servicing any fuel system hose, fitting or line, the fuel system pressure must be released. Failure to follow these instructions can result in personal injury or death.

Remove the Fuel Pump Module and inspect the Fuel Inlet Strainer.

Is the Fuel Inlet Strainer plugged?

Yes >> Replace the Fuel Pump Inlet Strainer.
Perform the POWERTRAIN VERIFICATION TEST. (Refer to 9 - ENGINE - STANDARD PROCEDURE)

No >> Before continuing, check the Fuel Pump Module harness connector terminals for corrosion, damage, or terminal push out. Make sure the ground circuit is functional. Repair as necessary. Replace the Fuel Pump Module.
Perform the POWERTRAIN VERIFICATION TEST. (Refer to 9 - ENGINE - STANDARD PROCEDURE)

---

14. IGNITION WIRE

NOTE: If the vehicle being tested does not have an ignition wire answer YES to this test and continue.

Turn the ignition off.

Remove the ignition wire.

Measure the resistance of the ignition wire.

Is the resistance below 10K ohms?

Yes >> Go To 15

No >> Replace the Ignition Wire.
Perform the POWERTRAIN VERIFICATION TEST. (Refer to 9 - ENGINE - STANDARD PROCEDURE)

---

15. IGNITION COIL

Disconnect the Ignition Coil harness connector.

Remove the Fuel Pump Relay.

Using a 12-volt test light connected to 12-volts, probe the (K18) Coil Control circuit.

Crank the engine for 5 seconds while observing the test light.

NOTE: The primary resistance of the 8.3L Ignition coil is 0.53 to 0.65 of an ohm at 77°F (25°C).

Does the test light brightly blink/flicker?

Yes >> Replace the Ignition Coil.
Perform the POWERTRAIN VERIFICATION TEST. (Refer to 9 - ENGINE - STANDARD PROCEDURE)

No >> Go To 16

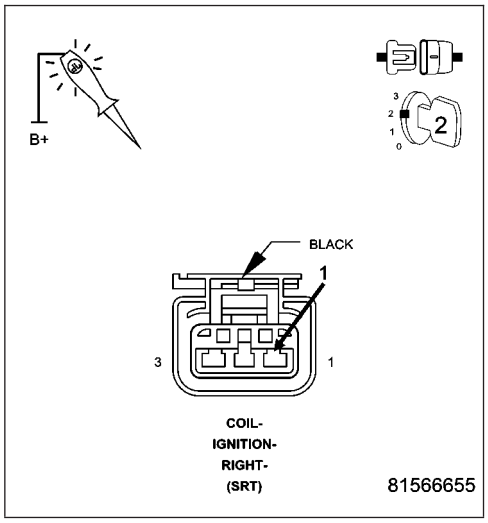

P0309-CYLINDER #9 MISFIRE (CONTINUED)

16. COIL CONTROL CIRCUIT

Turn the ignition off.
Disconnect the PCM harness connector.
Check the Coil Control circuit for an open or short to ground.

Was a problem found with the Coil Control circuit?

Yes >> Repair the Coil Control circuit.
Perform the POWERTRAIN VERIFICATION TEST. (Refer to 9 - ENGINE - STANDARD PROCEDURE)

No >> Go To 17

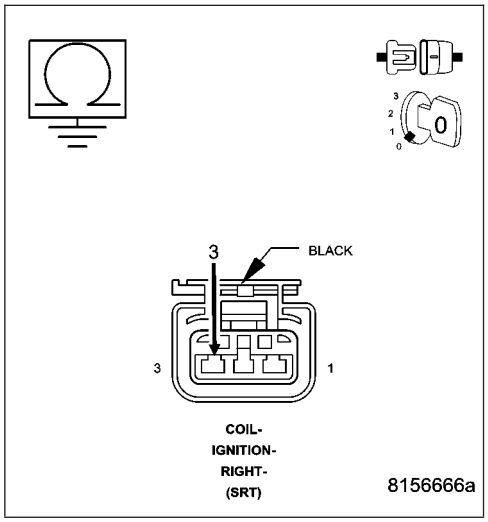

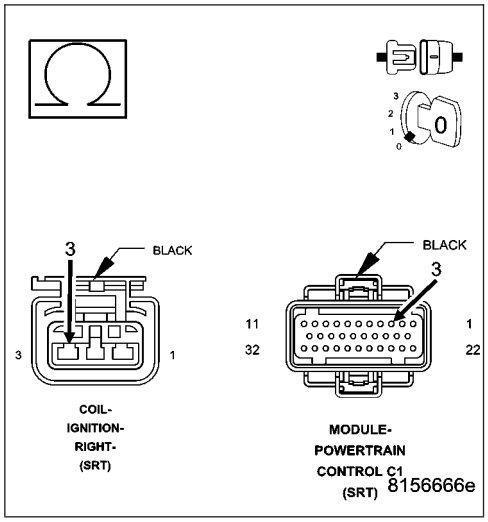

17. PCM

NOTE: Before continuing, check the PCM harness connector terminals for corrosion, damage, or terminal push out. Repair as necessary.
Using the schematics as a guide, inspect the wire harness and connectors. Pay particular attention to all Power and Ground circuits.

Were there any problems found?

Yes >> Repair as necessary.
Perform the POWERTRAIN VERIFICATION TEST. (Refer to 9 - ENGINE - STANDARD PROCEDURE)

No >> Replace and program the Powertrain Control Module per Service Information.
Perform the POWERTRAIN VERIFICATION TEST. (Refer to 9 - ENGINE - STANDARD PROCEDURE)

P0310-CYLINDER #10 MISFIRE

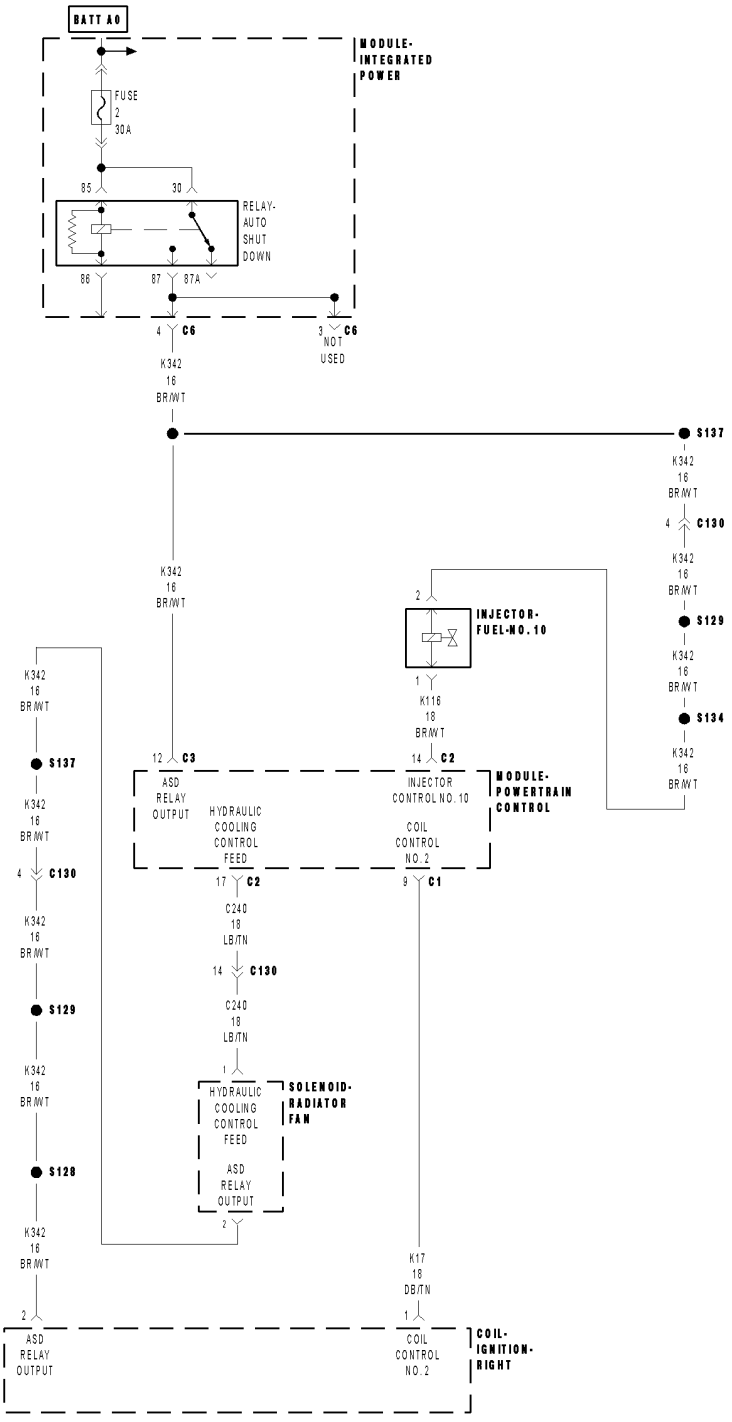

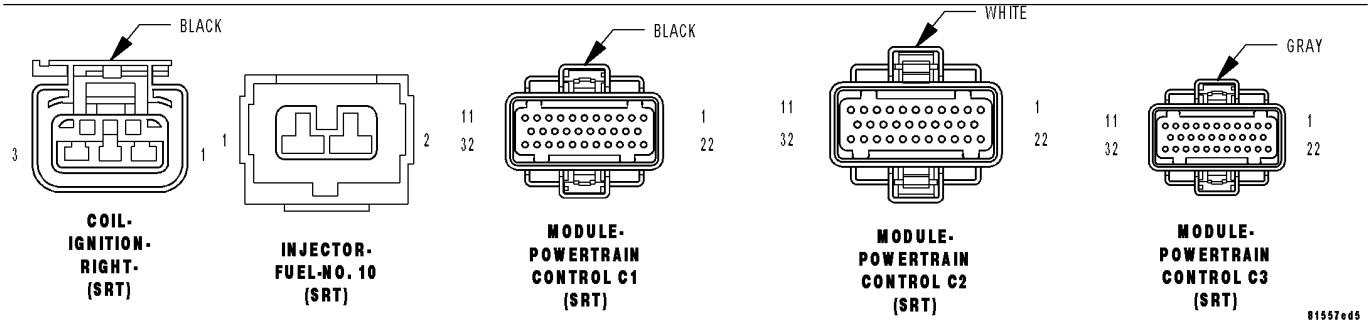

P0310-CYLINDER #10 MISFIRE (CONTINUED)

For the Engine circuit diagram (Refer to 9 - ENGINE - SCHEMATICS AND DIAGRAMS).

For a complete wiring diagram **Refer to Section 8W**.

- **When Monitored:**
  Any time the engine is running, and the adaptive numerator has been successfully updated.
- **Set Condition:**
  When more than a 1% misfire rate is measured during two trips, or with a 6% to 30% misfire rate during one trip.

Possible Causes
(K342) ASD RELAY OUTPUT CIRCUIT
(K116) INJECTOR CONTROL CIRCUIT
(K17) COIL CONTROL CIRCUIT
IGNITION WIRE
SPARK PLUG
IGNITION COIL
FUEL PUMP INLET STRAINER PLUGGED
RESTRICTED FUEL SUPPLY LINE
FUEL PUMP MODULE
FUEL PRESSURE LEAK DOWN
FUEL INJECTOR
ENGINE MECHANICAL
PCM

Always perform the Pre-Diagnostic Troubleshooting procedure before proceeding. (Refer to 9 - ENGINE - DIAGNOSIS AND TESTING).

Diagnostic Test

1. CYLINDER MIS-FIRE CONDITION ACTIVE

Engine running.

Observe the WHICH CYLINDER IS MISFIRING screen for at least one minute on the scan tool.

Is there a misfire present at this time?

Yes >> Go To 2

No >> Refer to the INTERMITTENT CONDITION Diagnostic Procedure.
Perform the POWERTRAIN VERIFICATION TEST. (Refer to 9 - ENGINE - STANDARD PROCEDURE)

P0310-CYLINDER #10 MISFIRE (CONTINUED)

2. VISUAL INSPECTION

NOTE: Anything that affects the speed of the crankshaft can cause a misfire DTC.

NOTE: When a Misfire is detected for a particular cylinder, the PCM will shut down that cylinders Injector Control circuit.

- Visually inspect the engine for any of the following conditions.
- Worn serpentine belt
- Binding Engine-Driven accessories: A/C Compressor, P/S Pump, Water pump.
- Misalignment of the Water pump, P/S Pump and A/C Compressor pulleys
- Corroded PCM power and ground circuits.
- Improper CKP, CMP, MAP, and TP Sensor mounting
- Poor connector/terminal to component connection. i.e., CKP sensor, Fuel Injector, Ign coil, etc.
- Vacuum leaks
- Restricted Air Induction system or Exhaust system.
- Internal engine component failures.

Were any of the above conditions present?

Yes >> Repair as necessary.
Perform the POWERTRAIN VERIFICATION TEST. (Refer to 9 - ENGINE - STANDARD PROCEDURE)

No >> Go To 3

---

3. (K342) ASD RELAY OUTPUT CIRCUIT

Turn the ignition off.

Disconnect the Ignition Coil harness connector.

Disconnect the Fuel Injector harness connector.

Ignition on, engine not running.

With the scan tool, actuate the ASD Relay.

Using a 12-volt test light connected to ground, probe the (K342) ASD Relay Output circuit in the Ignition Coil harness connector and Fuel Injector harness connector while the relay is actuating.

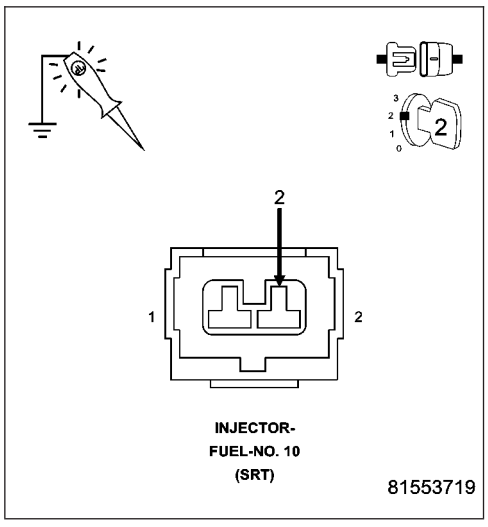

Does the test light illuminate brightly?

Yes >> Go To 4

No >> Repair the excessive resistance or short to ground in the (K342) ASD Relay Output circuit.
Perform the POWERTRAIN VERIFICATION TEST. (Refer to 9 - ENGINE - STANDARD PROCEDURE)

P0310-CYLINDER #10 MISFIRE (CONTINUED)

4. IGNITION SYSTEM OPERATION

Turn the ignition off.
Connect the Ignition Coil harness connector.
Remove the Ignition Coil.
Leave the Fuel Injector harness connector of the cylinder being tested disconnected.
Install a spark tester on the Ignition Coil.
While cranking the engine observe the spark coming from the spark tester.

NOTE: A crisp blue spark that is able to jump the gap of the spark tester should be generated.

Is good spark present?

Yes >> Go To 5

No >> Go To 14

NOTE: Connect the Fuel Injector harness connector before continuing.

---

5. SPARK PLUG

Turn the ignition off.
Remove the Spark Plug.
Inspect the Spark Plug for the following conditions.
- Cracks
- Carbon Tracking
- Foreign Material
- Gap size out of specifications
- Loose or broke electrode

NOTE: Lightly tap the bottom of the spark plug on a solid surface. The electrode in the spark plug should not move.

Were any of the above conditions present?

Yes >> Replace the Spark Plug.
Perform the POWERTRAIN VERIFICATION TEST. (Refer to 9 - ENGINE - STANDARD PROCEDURE)

No >> Go To 6

---

6. FUEL PRESSURE CHECK

WARNING: The fuel system is under a constant pressure (even with the engine off). Before testing or servicing any fuel system hose, fitting or line, the fuel system pressure must be released. Failure to follow these instructions can result in personal injury or death.
Install a fuel pressure gauge to the fuel rail.
Start the engine and observe the fuel pressure reading.

NOTE: Fuel pressure specification is 407 KPa +/- 34 KPa (59 psi +/- 5 psi).

Choose a conclusion that best matches your fuel pressure reading.

Within Specification
Go To 7

Below Specification
Go To 12

Above Specification
Replace the fuel filter/pressure regulator.
Perform the POWERTRAIN VERIFICATION TEST. (Refer to 9 - ENGINE - STANDARD PROCEDURE)

P0310-CYLINDER #10 MISFIRE (CONTINUED)

7. FUEL PRESSURE LEAK DOWN

NOTE: Before continuing visually and physically inspect the fuel delivery system for external leaks or damage. Repair / replace as necessary.

Turn the ignition off.

WARNING: The fuel system is under a constant pressure (even with the engine off). Before testing or servicing any fuel system hose, fitting or line, the fuel system pressure must be released. Failure to follow these instructions can result in personal injury or death

Install special tool #6539 (5/16″) or #6631 (3/8″) fuel line adapter.

Install the fuel pressure gauge.

Start the engine and allow the fuel system to reach maximum pressure.

Turn the ignition off.

NOTE: Fuel specification is 407 KPa +/- 34 KPa (59 psi +/- 5 psi).

Using special tool #C4390, Hose Clamp Pliers, pinch the rubber fuel line between the fuel pressure gauge and the engine.

Monitor the fuel pressure gauge for a minimum of 5 minutes.

NOTE: The pressure should not fall below 241 KPa (35 psi).

Does the pressure fall below the listed specification?

Yes >> Replace the leaking Fuel Injector(s).
Perform the POWERTRAIN VERIFICATION TEST. (Refer to 9 - ENGINE - STANDARD PROCEDURE)

No >> Go To 8

---

8. FUEL INJECTOR OPERATION

WARNING: The fuel system is under a constant pressure (even with the engine off). Before testing or servicing any fuel system hose, fitting or line, the fuel system pressure must be released. Failure to follow these instructions can result in personal injury or death.

CAUTION: After each Fuel Injector actuation, start the engine to clean the cylinder of fuel. Failure to do so could cause engine damage.

Remove special tool #C4390.

Start the engine and allow the fuel pressure to reach maximum pressure.

Ignition on, engine not running.

Using the scan tool, actuate the Fuel Injector.

Monitor the fuel pressure gauge.

Does the fuel pressure gauge indicate a drop in fuel pressure?

Yes >> Go To 9

No >> Go To 10

NOTE: Turn the ignition off, remove the Fuel Pressure gauge, and connect the fuel lines before continuing.

P0310-CYLINDER #10 MISFIRE (CONTINUED)

9. ENGINE MECHANICAL

Check for any of the following conditions/mechanical problems.
ENGINE VACUUM - must be at least 13 inches in neutral
ENGINE VALVE TIMING - must be within specifications
ENGINE COMPRESSION - must be within specifications
ENGINE EXHAUST SYSTEM - must be free of any restrictions or leaks.
ENGINE PCV SYSTEM - must flow freely
TORQUE CONVERTER STALL SPEED - must be within specifications
POWER BRAKE BOOSTER - no internal vacuum leaks
FUEL - must be free of contamination
CAM LOBES - must not be worn excessively
CYLINDER LEAKAGE TEST - must be within specifications
VALVE SPRINGS - cannot be weak or broken

Are there any engine mechanical problems?

Yes >> Repair as necessary.
Perform the POWERTRAIN VERIFICATION TEST. (Refer to 9 - ENGINE - STANDARD PROCEDURE)

No >> Go To 17

---

10. FUEL INJECTOR

Turn the ignition off.
Disconnect the Fuel Injector harness connector.
Ignition on, engine not running.

NOTE: When a Misfire is detected for a particular cylinder, the PCM will shut down that cylinders Injector Control circuit.
With the scan tool, erase DTCs.
Using a 12-volt test light connected to 12-volts, probe the (K116) Injector Control circuit.
With the scan tool, actuate the Fuel Injector.

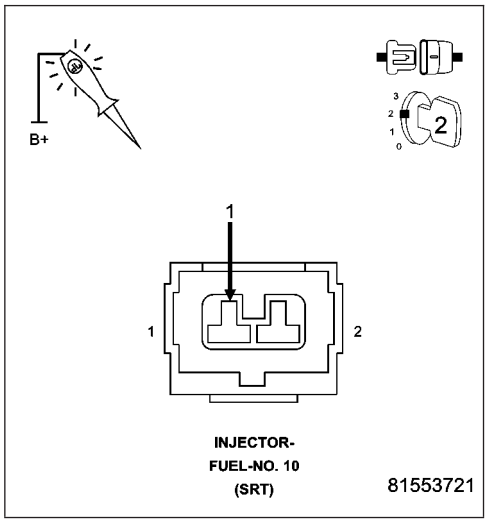

Does the test light blink/flicker?

Yes >> Replace the Fuel Injector.
Perform the POWERTRAIN VERIFICATION TEST. (Refer to 9 - ENGINE - STANDARD PROCEDURE)

No >> Go To 11

P0310-CYLINDER #10 MISFIRE (CONTINUED)

11. INJECTOR CONTROL CIRCUIT

Turn the ignition off.

Disconnect the PCM harness connector.

Check the Injector Control circuit for an open or short to ground.

Was a problem found with the Injector Control circuit?

Yes >> Repair the excessive resistance or short in the Injector Control circuit.
Perform the POWERTRAIN VERIFICATION TEST. (Refer to 9 - ENGINE - STANDARD PROCEDURE)

No >> Go To 17

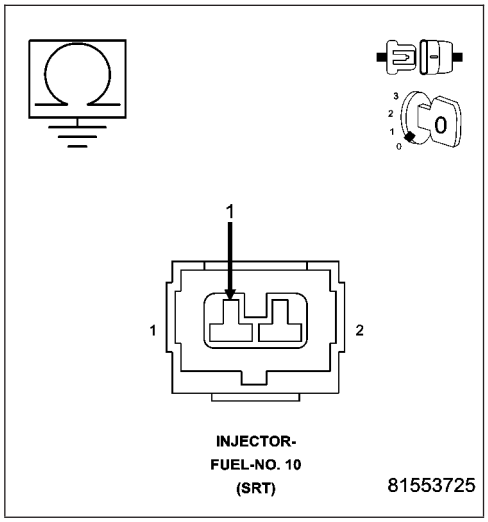

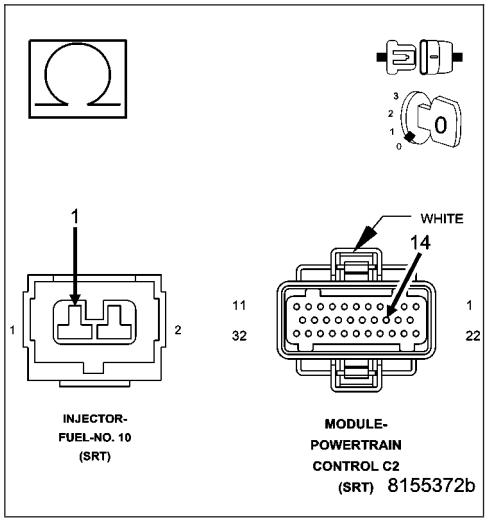

12. FUEL SUPPLY LINE RESTRICTED

Turn the ignition off.

WARNING: The fuel system is under a constant pressure (even with the engine off). Before testing or servicing any fuel system hose, fitting or line, the fuel system pressure must be released. Failure to follow these instructions can result in personal injury or death.

Raise vehicle on hoist, and disconnect the fuel pressure line at the fuel pump module.

Install special tool #6539 (5/16″) #6631(3/8″) fuel line adapter and the fuel pressure gauge between the fuel supply line and the fuel pump module.

Ignition on, engine not running.

With the scan tool, actuate the ASD Fuel System test and observe the fuel pressure gauge.

NOTE: Fuel pressure specification is 379 KPa +/- 14 KPa (55 psi +/- 2 psi).

Is the fuel pressure within specification?

Yes >> Repair or replace fuel supply line as necessary.
Perform the POWERTRAIN VERIFICATION TEST. (Refer to 9 - ENGINE - STANDARD PROCEDURE)

No >> Go To 13

P0310-CYLINDER #10 MISFIRE (CONTINUED)

13. FUEL PUMP INLET STRAINER

Turn the ignition off.

WARNING: The fuel system is under a constant pressure (even with the engine off). Before testing or servicing any fuel system hose, fitting or line, the fuel system pressure must be released. Failure to follow these instructions can result in personal injury or death.

Remove the Fuel Pump Module and inspect the Fuel Inlet Strainer.

Is the Fuel Inlet Strainer plugged?

Yes >> Replace the Fuel Pump Inlet Strainer.
Perform the POWERTRAIN VERIFICATION TEST. (Refer to 9 - ENGINE - STANDARD PROCEDURE)

No >> Before continuing, check the Fuel Pump Module harness connector terminals for corrosion, damage, or terminal push out. Make sure the ground circuit is functional. Repair as necessary. Replace the Fuel Pump Module.
Perform the POWERTRAIN VERIFICATION TEST. (Refer to 9 - ENGINE - STANDARD PROCEDURE)

---

14. IGNITION WIRE

NOTE: If the vehicle being tested does not have an ignition wire answer YES to this test and continue.

Turn the ignition off.

Remove the ignition wire.

Measure the resistance of the ignition wire.

Is the resistance below 10K ohms?

Yes >> Go To 15

No >> Replace the Ignition Wire.
Perform the POWERTRAIN VERIFICATION TEST. (Refer to 9 - ENGINE - STANDARD PROCEDURE)

---

15. IGNITION COIL

Disconnect the Ignition Coil harness connector.

Remove the Fuel Pump Relay.

Using a 12-volt test light connected to 12-volts, probe the (K17) Coil Control circuit.

Crank the engine for 5 seconds while observing the test light.

NOTE: The primary resistance of the 8.3L Ignition coil is 0.53 to 0.65 of an ohm at 77°F (25°C).

Does the test light brightly blink/flicker?

Yes >> Replace the Ignition Coil.
Perform the POWERTRAIN VERIFICATION TEST. (Refer to 9 - ENGINE - STANDARD PROCEDURE)

No >> Go To 16

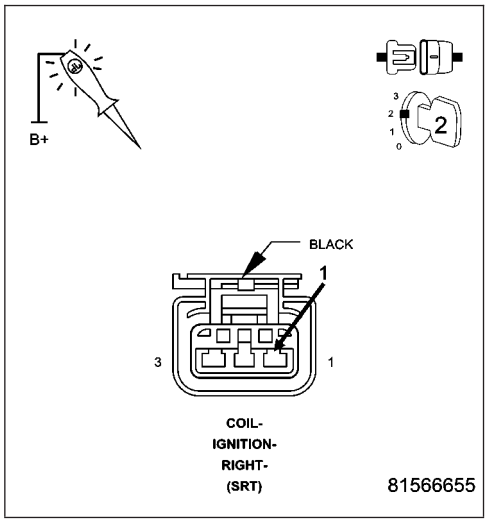

P0310-CYLINDER #10 MISFIRE (CONTINUED)

16. COIL CONTROL CIRCUIT

Turn the ignition off.
Disconnect the PCM harness connector.
Check the (K17) Coil Control circuit for an open or short to ground.

Was a problem found with the Coil Control circuit?

Yes >> Repair the Coil Control circuit.
Perform the POWERTRAIN VERIFICATION TEST. (Refer to 9 - ENGINE - STANDARD PROCEDURE)

No >> Go To 17

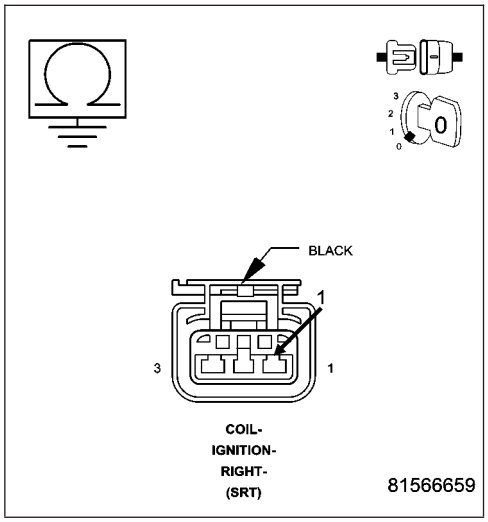

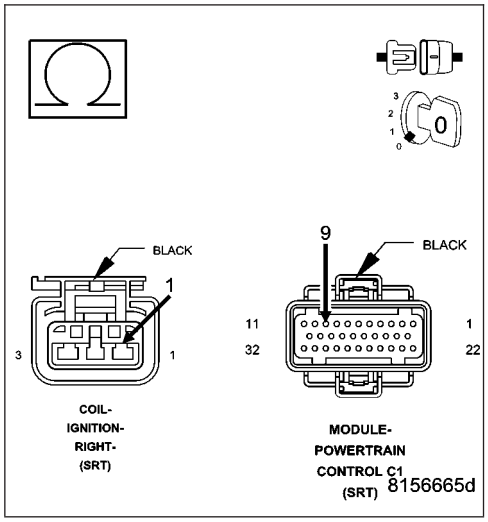

17. PCM

NOTE: Before continuing, check the PCM harness connector terminals for corrosion, damage, or terminal push out. Repair as necessary.
Using the schematics as a guide, inspect the wire harness and connectors. Pay particular attention to all Power and Ground circuits.

Were there any problems found?

Yes >> Repair as necessary.
Perform the POWERTRAIN VERIFICATION TEST. (Refer to 9 - ENGINE - STANDARD PROCEDURE)

No >> Replace and program the Powertrain Control Module per Service Information.
Perform the POWERTRAIN VERIFICATION TEST. (Refer to 9 - ENGINE - STANDARD PROCEDURE)

P0320–NO CANK REFERENCE SIGNAL AT PCM

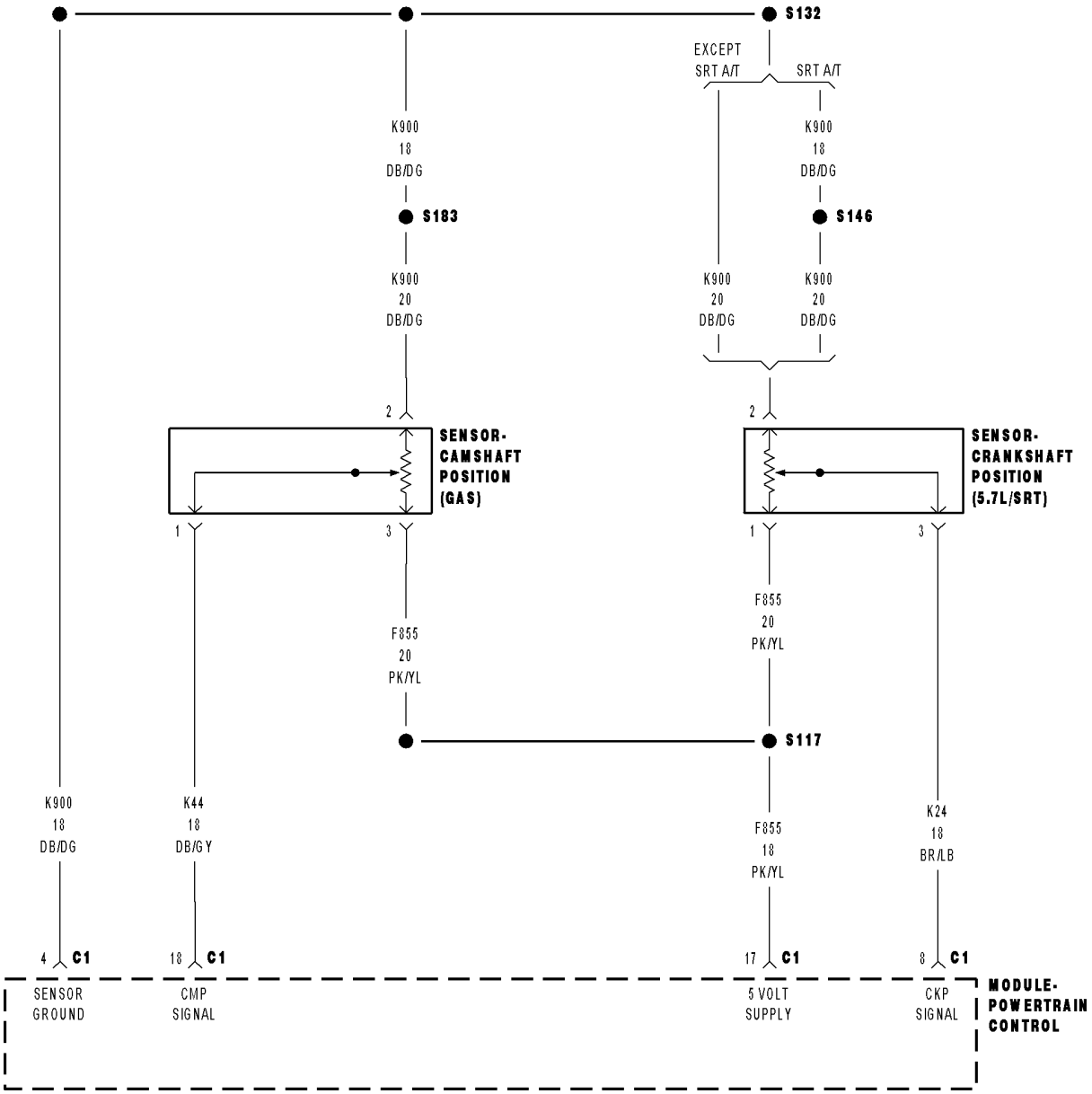

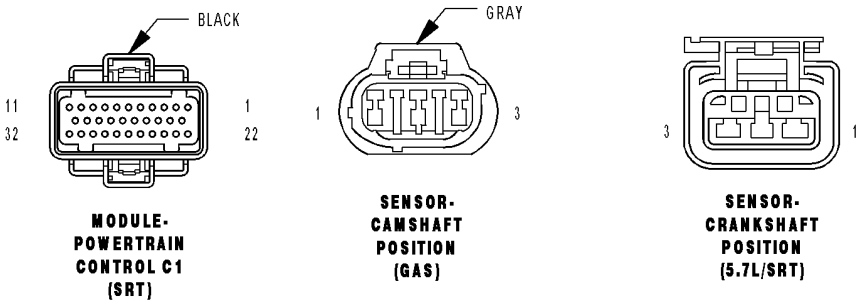

81558518

P0320–NO CANK REFERENCE SIGNAL AT PCM (CONTINUED)

For the Engine circuit diagram (Refer to 9 - ENGINE - SCHEMATICS AND DIAGRAMS).

For a complete wiring diagram **Refer to Section 8W**.

- **When Monitored:**
  Engine cranking.
- **Set Condition:**
  No CKP signal is present during engine cranking, and at least 8 camshaft position sensor signals have occurred. One Trip Fault. Three good trips to turn off the MIL.

Possible Causes
(F855) 5-VOLT SUPPLY CIRCUIT SHORTED TO BATTERY VOLTAGE
(F855) 5-VOLT SUPPLY CIRCUIT OPEN
(F855) 5-VOLT SUPPLY CIRCUIT SHORTED TO GROUND
(K24) CKP SIGNAL CIRCUIT OPEN
(K24) CKP SIGNAL CIRCUIT SHORTED TO BATTERY VOLTAGE
(K24) CKP SIGNAL CIRCUIT SHORTED GROUND
(K24) CKP SIGNAL CIRCUIT SHORTED TO THE (F855) 5-VOLT SUPPLY CIRCUIT
(K900) SENSOR GROUND CIRCUIT OPEN
CRANKSHAFT POSITION SENSOR
CAMSHAFT POSITION SENSOR
PCM

Always perform the Pre-Diagnostic Troubleshooting procedure before proceeding. (Refer to 9 - ENGINE - DIAGNOSIS AND TESTING).

Diagnostic Test

1. ACTIVE DTC

Crank the engine.
Ignition on, engine not running.
With a scan tool, read DTCs.

Is the DTC active at this time?

Yes >> Go To 2

No >> Go To 14

P0320–NO CANK REFERENCE SIGNAL AT PCM (CONTINUED)

2. (F855) 5-VOLT SUPPLY CIRCUIT

Turn the ignition off.

Disconnect the CKP Sensor harness connector.

Ignition on, engine not running.

Measure the voltage on the (F855) 5-volt Supply circuit in the CKP Sensor harness connector.

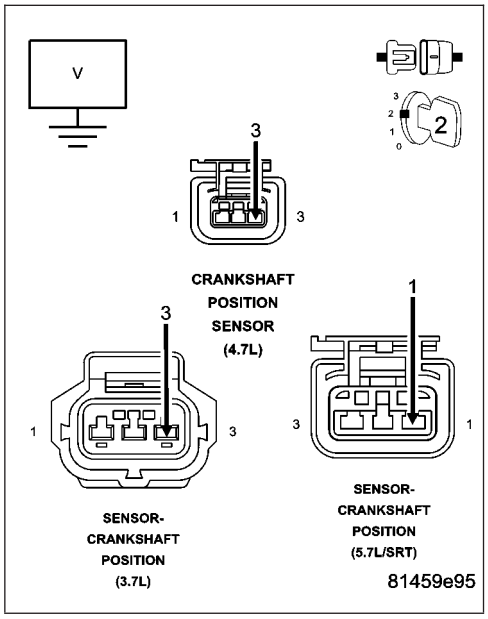

Is the voltage between 4.5 and 5.2 volts?

Yes >> Go To 3

No >> Go To 10

3. (K24) CKP SIGNAL CIRCUIT

Measure the voltage on the (K24) CKP Signal circuit in the CKP Sensor harness connector.

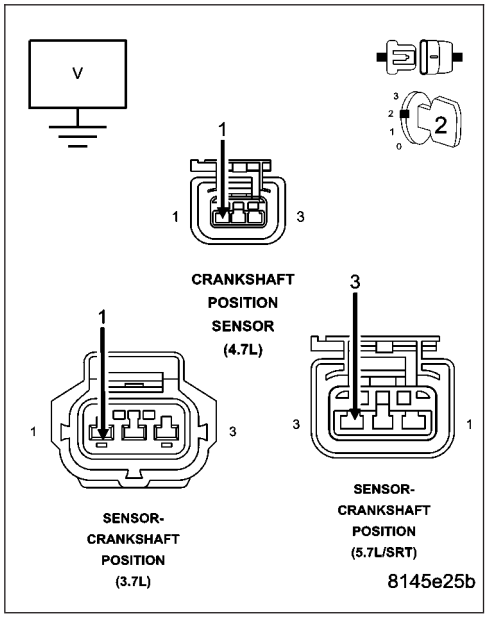

Is the voltage between 4.5 and 5.0 volts?

Yes >> Go To 4

No >> Go To 7

P0320–NO CANK REFERENCE SIGNAL AT PCM (CONTINUED)

4. (K900) SENSOR GROUND CIRCUIT OPEN

Turn the ignition off.

Disconnect the PCM harness connector.

Measure the resistance of the (K900) Sensor ground circuit from the CKP Sensor harness connector to the PCM harness connector.

Is the resistance below 5.0 ohms?

Yes >> Go To 5

No >> Repair the open in the (K900) Sensor ground circuit.
Perform the POWERTRAIN VERIFICATION TEST. (Refer to 9 - ENGINE - STANDARD PROCEDURE)

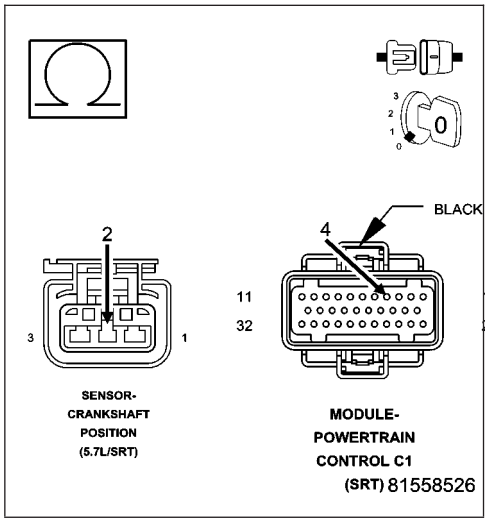

5. (K24) CKP SIGNAL CIRCUIT SHORTED TO THE (F855) 5-VOLT SUPPLY CIRCUIT

Measure the resistance between the (K24) CKP Signal circuit and the (F855) 5-volt Supply circuit in the CKP Sensor harness connector.

Is the resistance below 5.0 ohms?

Yes >> Repair the short between the (K24) CKP Signal circuit and the (F855) 5-volt Supply circuit.
Perform the POWERTRAIN VERIFICATION TEST. (Refer to 9 - ENGINE - STANDARD PROCEDURE)

No >> Go To 6

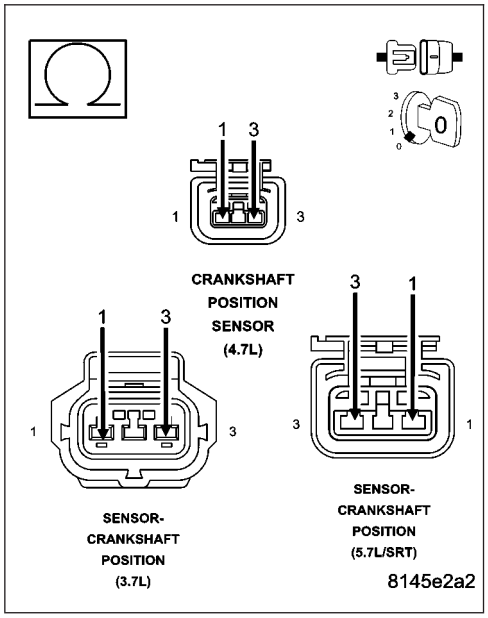

6. CRANKSHAFT POSITION SENSOR

NOTE: Inspect the slots on the flywheel for damage. If a problem is found repair as necessary.

If there are no possible causes remaining, view repair.

Repair

Replace the Crankshaft Position Sensor.
Perform the POWERTRAIN VERIFICATION TEST. (Refer to 9 - ENGINE - STANDARD PROCEDURE)

P0320–NO CANK REFERENCE SIGNAL AT PCM (CONTINUED)

7. (K24) CKP SIGNAL CIRCUIT SHORTED TO BATTERY VOLTAGE

Turn the ignition off.

Disconnect the PCM harness connector.

Ignition on, engine not running.

Measure the voltage on the (K24) CKP Signal circuit in the CKP Sensor harness connector.

Is the voltage above 0 volts?

Yes >> Repair the short to battery voltage in the (K24) CKP Signal circuit.
Perform the POWERTRAIN VERIFICATION TEST. (Refer to 9 - ENGINE - STANDARD PROCEDURE)

No >> Go To 8

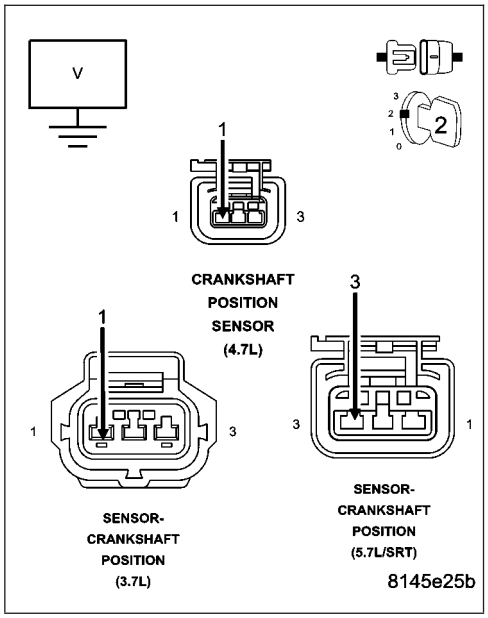

---

8. (K24) CKP SIGNAL CIRCUIT OPEN

Turn the ignition off.

Measure the resistance of the (K24) CKP Signal circuit from the CKP Sensor harness connector to the PCM harness connector.

Is the resistance below 5.0 ohms?

Yes >> Go To 9

No >> Repair the open in the (K24) CKP Signal circuit.
Perform the POWERTRAIN VERIFICATION TEST. (Refer to 9 - ENGINE - STANDARD PROCEDURE)

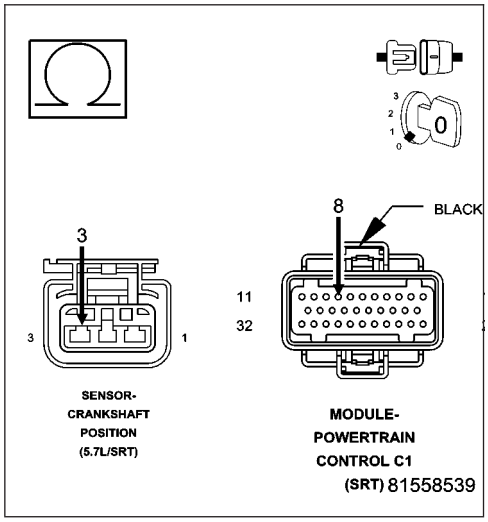

P0320–NO CANK REFERENCE SIGNAL AT PCM (CONTINUED)

9. (K24) CKP SIGNAL CIRCUIT SHORTED TO GROUND

Measure the resistance between ground and the (K24) CKP Signal circuit in the CKP Sensor harness connector.

Is the resistance below 5.0 ohms?

Yes >> Repair the short to ground in the (K24) CKP Signal circuit.
Perform the POWERTRAIN VERIFICATION TEST. (Refer to 9 - ENGINE - STANDARD PROCEDURE)

No >> Go To 13

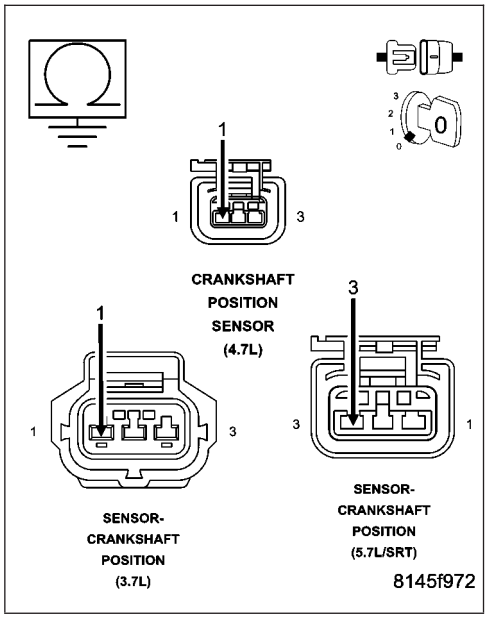

10. (F855) 5-VOLT SUPPLY CIRCUIT SHORTED TO BATTERY VOLTAGE

Turn the ignition off.

Disconnect the PCM harness connector.

Ignition on, engine not running.

Measure the voltage on the (F855) 5-volt Supply circuit in the CKP Sensor harness connector.

Is the voltage above 0 volts?

Yes >> Repair the short to battery voltage in the (F855) 5-volt Supply circuit.
Perform the POWERTRAIN VERIFICATION TEST. (Refer to 9 - ENGINE - STANDARD PROCEDURE)

No >> Go To 11

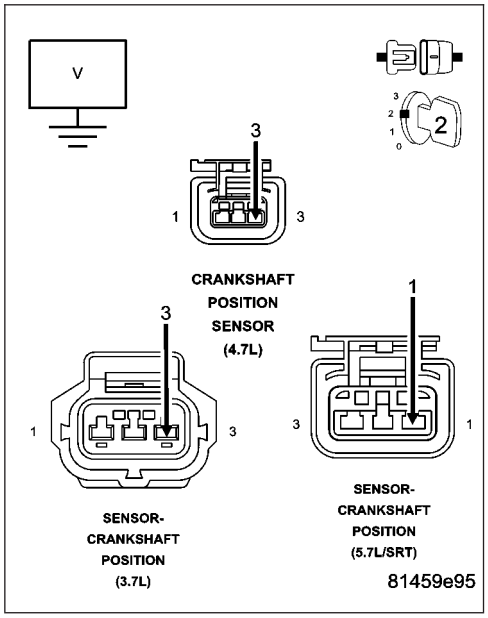

P0320–NO CANK REFERENCE SIGNAL AT PCM (CONTINUED)

11. (F855) 5-VOLT SUPPLY CIRCUIT OPEN

Turn the ignition off.

Measure the resistance of the (F855) 5-volt Supply circuit from the CKP Sensor harness connector to the PCM harness connector.

Is the resistance below 5.0 ohms?

Yes >> Go To 12

No >> Repair the open in the (F855) 5-volt Supply circuit.
Perform the POWERTRAIN VERIFICATION TEST. (Refer to 9 - ENGINE - STANDARD PROCEDURE)

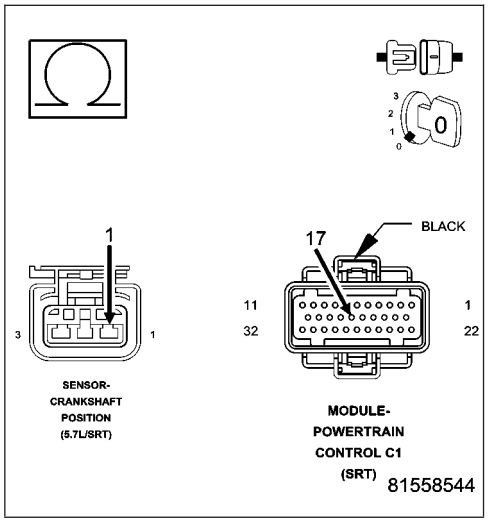

12. (F855) 5-VOLT SUPPLY CIRCUIT SHORTED TO GROUND

Measure the resistance between ground and the (F855) 5-volt Supply circuit in the CKP Sensor harness connector.

Is the resistance below 100 ohms?

Yes >> Repair the short to ground in the (F855) 5-volt Supply circuit.
Perform the POWERTRAIN VERIFICATION TEST. (Refer to 9 - ENGINE - STANDARD PROCEDURE)

No >> Go To 13

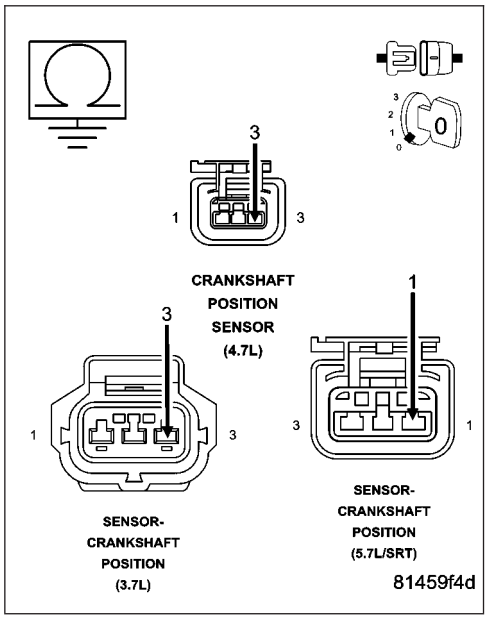

P0320–NO CANK REFERENCE SIGNAL AT PCM (CONTINUED)

13. PCM

NOTE: Before continuing, check the PCM harness connector terminals for corrosion, damage, or terminal push out. Repair as necessary.

Using the schematics as a guide, inspect the wire harness and connectors. Pay particular attention to all Power and Ground circuits.

Were there any problems found?

Yes >> Repair as necessary.
Perform the POWERTRAIN VERIFICATION TEST. (Refer to 9 - ENGINE - STANDARD PROCEDURE)

No >> Replace and program the Powertrain Control Module per Service Information.
Perform the POWERTRAIN VERIFICATION TEST. (Refer to 9 - ENGINE - STANDARD PROCEDURE)

---

14. ERRATIC CKP SENSOR SIGNAL

Turn the ignition off.

With a lab scope probe and the Miller special tool #6801, backprobe the (K24) CKP Signal circuit in the CKP harness connector.

WARNING: When the engine is operating, do not stand in direct line with the fan. Do not put your hands near the pulleys, belts, or fan. Do not wear loose clothing. Failure to follow these instructions can result in personal injury or death.

Ignition on, engine not running.

Wiggle the related wire harness and lightly tap on the Crank Position Sensor.

Observe the lab scope screen.

Look for any pulses generated by the CKP Sensor.

Allow the engine to idle.

Observe the lab scope screen.

Did the CKP Sensor generate any erratic pulses?

Yes >> Inspect the related wire harness and replace the Crankshaft Position Sensor if no wiring problems were found.
Perform the POWERTRAIN VERIFICATION TEST. (Refer to 9 - ENGINE - STANDARD PROCEDURE)

No >> Go To 15

P0320–NO CANK REFERENCE SIGNAL AT PCM (CONTINUED)

15. ERRATIC CMP SIGNAL

Turn the ignition off.

With a lab scope probe and the Miller special tool #6801, backprobe the (K44) CMP Signal circuit in the CMP harness connector.

WARNING: When the engine is operating, do not stand in direct line with the fan. Do not put your hands near the pulleys, belts, or fan. Do not wear loose clothing. Failure to follow these instructions can result in personal injury or death.

Ignition on, engine not running.

Wiggle the related wire harness and lightly tap on the Cam Position Sensor.

Observe the lab scope screen.

Look for any pulses generated by the CMP Sensor.

Allow the engine to idle.

Observe the lab scope screen.

Did the CMP Sensor generate any pulses?

Yes >> Inspect the related wire harness and replace the Camshaft Position Sensor if no wiring problems were found.

Perform the POWERTRAIN VERIFICATION TEST. (Refer to 9 - ENGINE - STANDARD PROCEDURE)

No >> Test complete, the conditions that set this DTC are not present at this time.

P0325-KNOCK SENSOR 1 CIRCUIT

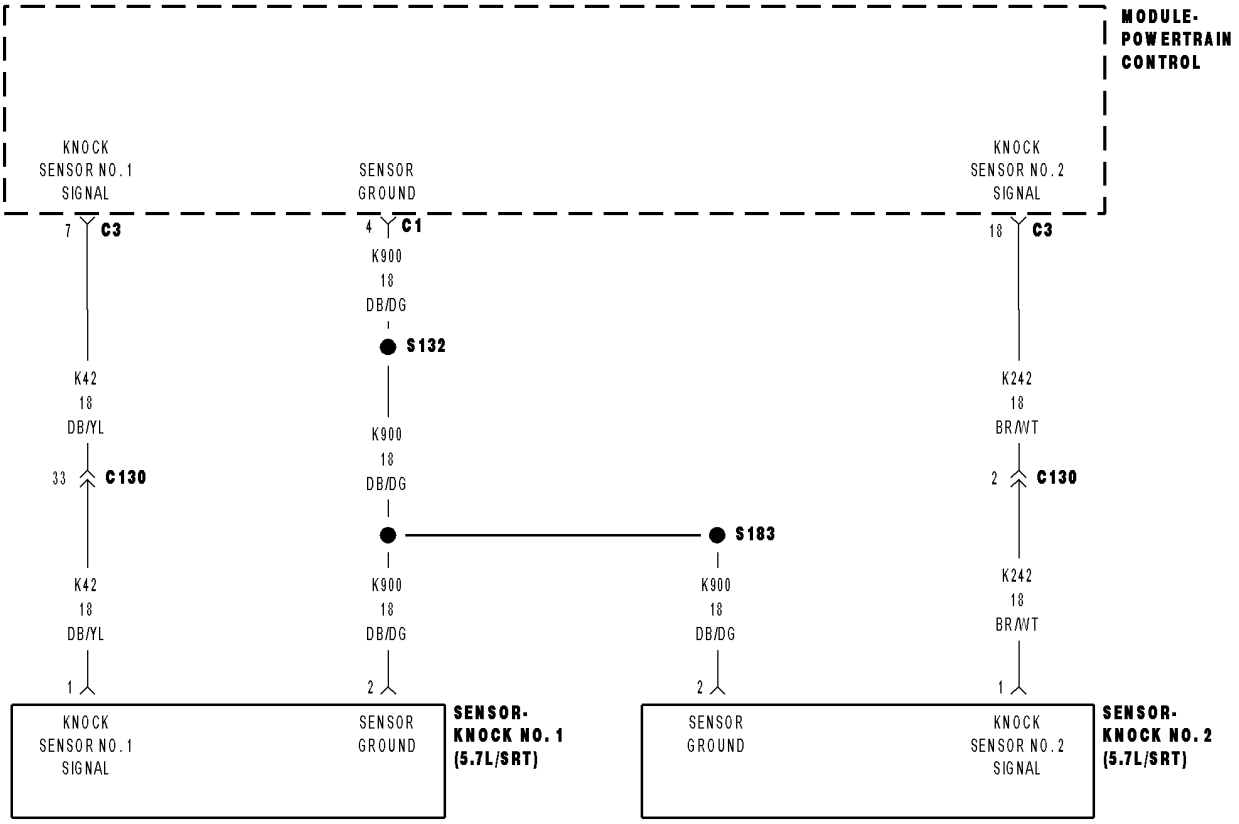

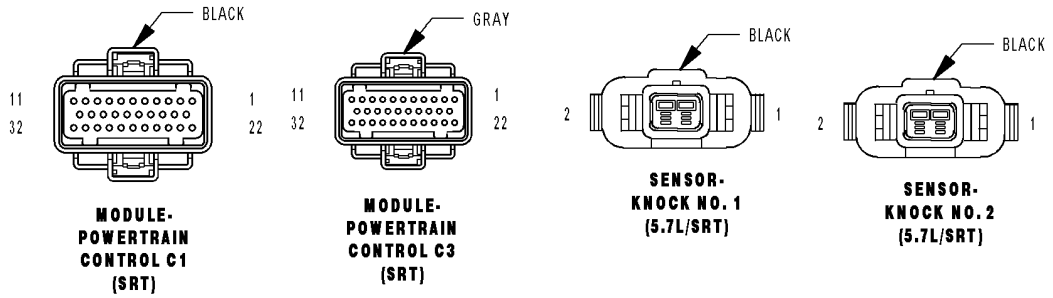

81558977

P0325-KNOCK SENSOR 1 CIRCUIT (CONTINUED)

For the Engine circuit diagram (Refer to 9 - ENGINE - SCHEMATICS AND DIAGRAMS).

For a complete wiring diagram **Refer to Section 8W**.

- **When Monitored:**
  Engine running.
- **Set Condition:**
  The Knock Sensor circuit voltage falls below a minimum value at idle or deceleration. The minimum value is from a look-up table internal to the PCM and is based on engine RPM. DTC will also set if the sensor voltage goes above 5.0 volts. One Trip Fault. Three good trips to turn off the MIL.

Possible Causes
(K42) KNOCK SENSOR NO.1 SIGNAL CIRCUIT SHORTED TO BATTERY VOLTAGE
(K42) KNOCK SENSOR NO.1 SIGNAL CIRCUIT OPEN
(K900) SENSOR GROUND CIRCUIT OPEN
(K42) KNOCK SENSOR NO.1 SIGNAL CIRCUIT SHORTED TO THE (K900) SENSOR GROUND CIRCUIT
(K42) KNOCK SENSOR NO.1 SIGNAL CIRCUIT SHORTED TO GROUND
KNOCK SENSOR
PCM

Always perform the Pre-Diagnostic Troubleshooting procedure before proceeding. (Refer to 9 - ENGINE - DIAGNOSIS AND TESTING).

Diagnostic Test

1. ACTIVE DTC

Ignition on, engine not running.
With a scan tool, read DTCs.

Is the DTC active at this time?

Yes >> Go To 2

No >> Refer to the INTERMITTENT CONDITION Diagnostic Procedure.
Perform the POWERTRAIN VERIFICATION TEST. (Refer to 9 - ENGINE - STANDARD PROCEDURE)

P0325-KNOCK SENSOR 1 CIRCUIT (CONTINUED)

2. (K42) KNOCK SENSOR NO.1 SIGNAL SHORTED TO BATTERY VOLTAGE

Turn the ignition off.

Disconnect the Knock Sensor harness connector.

Disconnect the PCM harness connector.

Ignition on, engine not running.

Measure the voltage on the (K42) Knock Sensor No.1 Signal circuit in the Knock Sensor harness connector.

Is the voltage above 2.0 volts?

Yes >> Repair the short to battery voltage in the (K42) Knock Sensor No.1 Signal circuit.
Perform the POWERTRAIN VERIFICATION TEST. (Refer to 9 - ENGINE - STANDARD PROCEDURE)

No >> Go To 3

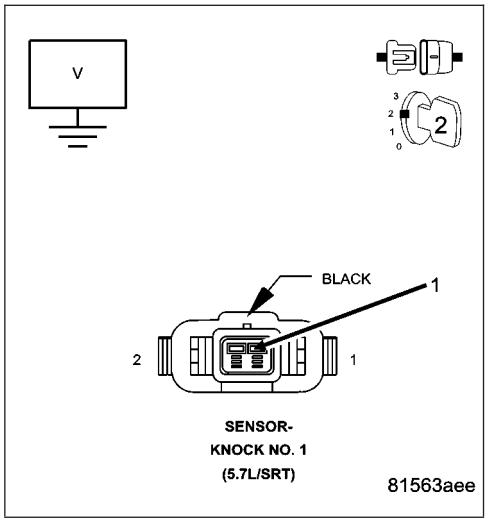

3. (K42) KNOCK SENSOR NO.1 SIGNAL CIRCUIT OPEN

Turn the ignition off.

Measure the resistance of the (K42) Knock Sensor No.1 Signal circuit from the Knock Sensor harness connector to the PCM harness connector.

Is the resistance below 5.0 ohms?

Yes >> Go To 4

No >> Repair the open in the (K42) Knock Sensor No.1 Signal circuit.
Perform the POWERTRAIN VERIFICATION TEST. (Refer to 9 - ENGINE - STANDARD PROCEDURE)

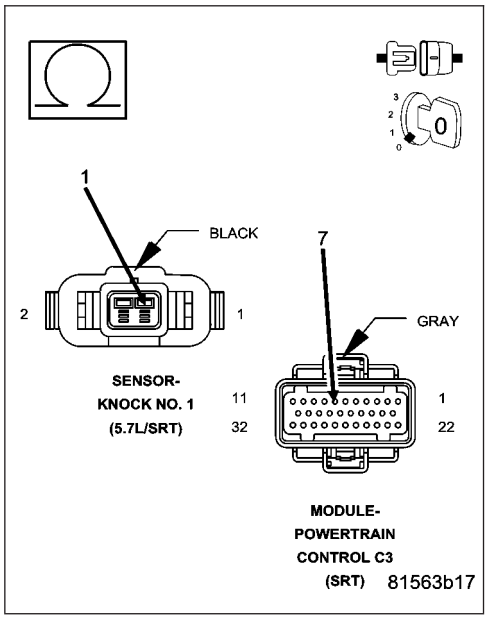

P0325-KNOCK SENSOR 1 CIRCUIT (CONTINUED)

4. (K900) SENSOR GROUND CIRCUIT OPEN

Measure the resistance of the (K900) Sensor ground circuit from the Knock Sensor harness connector to the PCM harness connector.

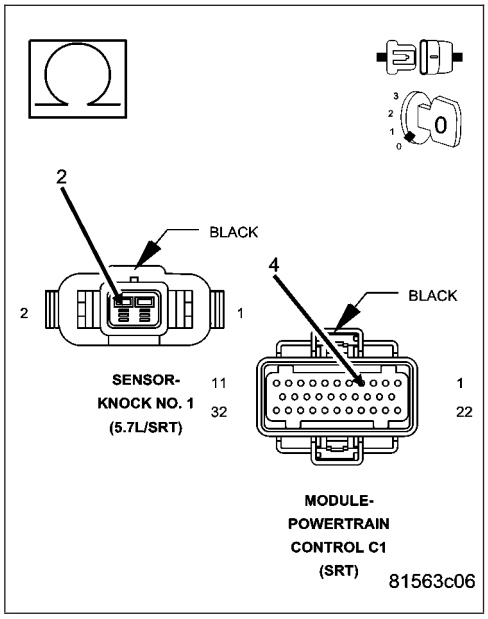

Is the resistance below 5.0 ohms?

Yes >> Go To 5

No >> Repair the open in the (K900) Sensor ground circuit.
Perform the POWERTRAIN VERIFICATION TEST. (Refer to 9 - ENGINE - STANDARD PROCEDURE)

5. (K42) KNOCK SENSOR NO.1 SIGNAL SHORTED TO THE (K900) SENSOR GROUND CIRCUIT

Measure the resistance between the (K42) Knock Sensor No.1 Signal circuit and the (K900) Sensor ground circuit in the Knock Sensor harness connector.

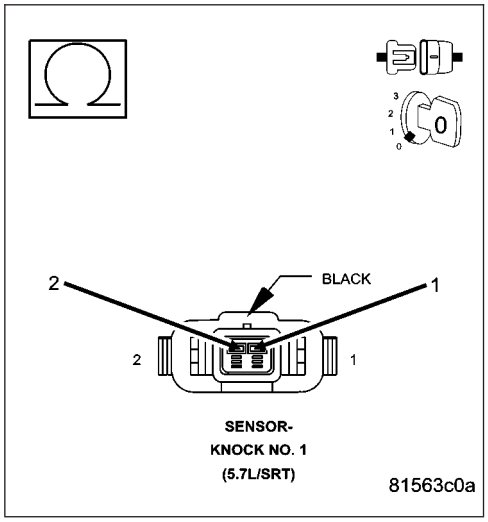

Is the resistance below 100 ohms?

Yes >> Repair the short between the (K42) Knock Sensor No.1 Signal circuit and the (K900) Sensor ground circuit.
Perform the POWERTRAIN VERIFICATION TEST. (Refer to 9 - ENGINE - STANDARD PROCEDURE)

No >> Go To 6

P0325-KNOCK SENSOR 1 CIRCUIT (CONTINUED)

6. (K42) KNOCK SENSOR NO.1 SIGNAL SHORTED TO GROUND

Measure the resistance between ground and the (K42) Knock Sensor No.1 Signal circuit in the Knock Sensor harness connector.

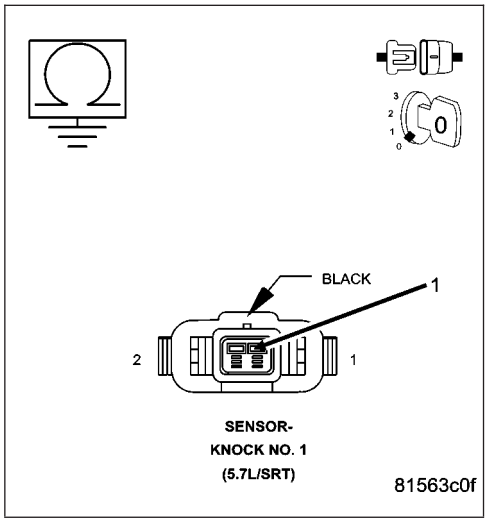

Is the resistance below 100 ohms?

Yes >> Repair the short to ground in the (K42) Knock Sensor No.1 Signal circuit.
Perform the POWERTRAIN VERIFICATION TEST. (Refer to 9 - ENGINE - STANDARD PROCEDURE)

No >> Go To 7

---

7. KNOCK SENSOR

Replace the Knock Sensor.
Ignition on, engine not running.
With the scan tool, erase DTC.
Attempt to operate the vehicle using the information noted in the Freeze Frame.
With the scan tool, read DTCs.

Does the scan tool display the DTC that was previously erased?

Yes >>

NOTE: Before continuing, check the PCM harness connector terminals for corrosion, damage, or terminal push out. Repair as necessary. Replace and program the Powertrain Control Module per Service Information.

Perform the POWERTRAIN VERIFICATION TEST. (Refer to 9 - ENGINE - STANDARD PROCEDURE)

No >> Test Complete.

P0330-KNOCK SENSOR 2 CIRCUIT

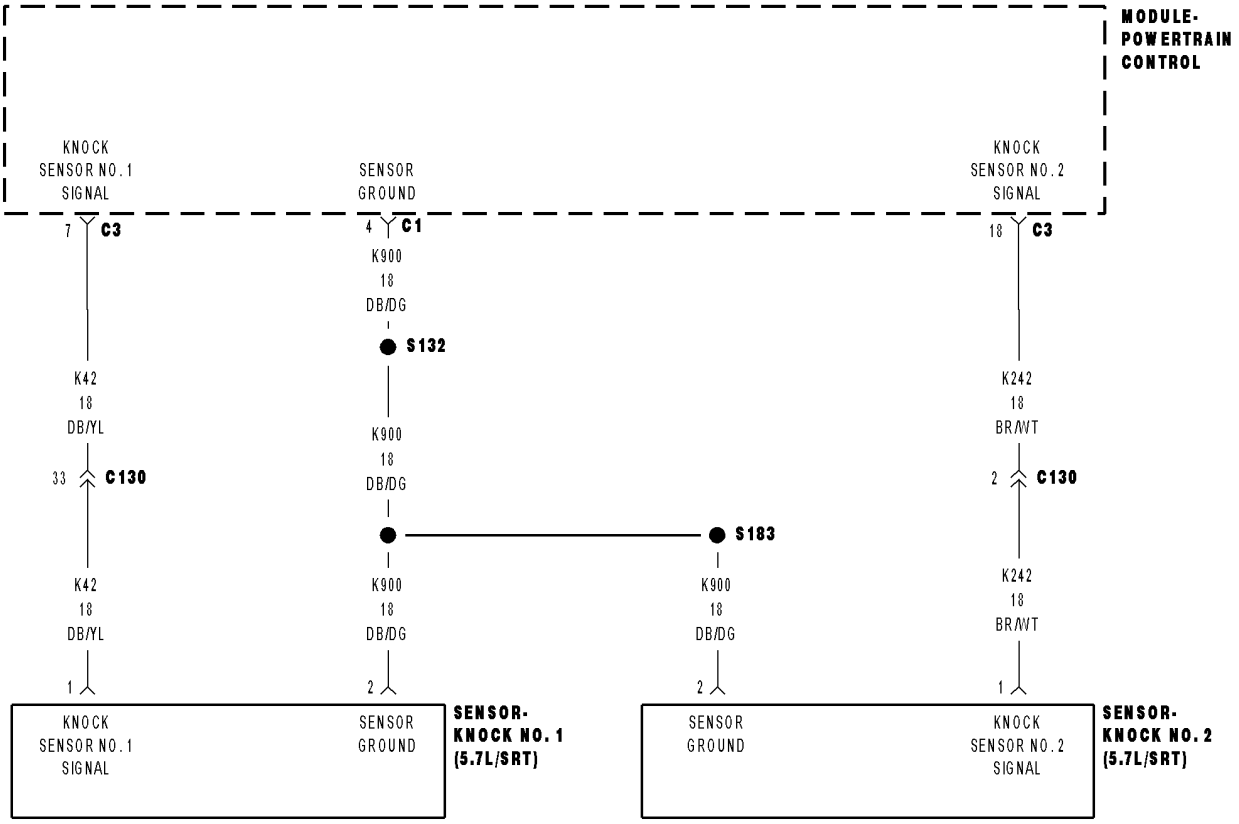

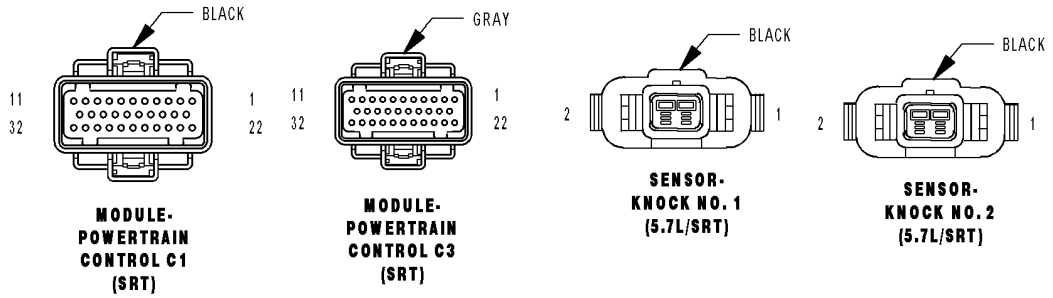

81558977

P0330-KNOCK SENSOR 2 CIRCUIT (CONTINUED)

For the Engine circuit diagram (Refer to 9 - ENGINE - SCHEMATICS AND DIAGRAMS).

For a complete wiring diagram **Refer to Section 8W**.

- **When Monitored:**
  Engine running
- **Set Condition:**
  The Knock Sensor circuit voltage falls below a minimum value at idle or deceleration. The minimum value is from a look-up table internal to the PCM and is based on engine RPM. DTC well also set if the sensor voltage goes above 5.0 volts. One Trip Fault. Three good trips to turn off the MIL. One Trip Fault. Three good trips to turn off the MIL.

Possible Causes
(K242) KNOCK SENSOR NO.2 SIGNAL CIRCUIT SHORTED TO BATTERY VOLTAGE
(K242) KNOCK SENSOR NO.2 SIGNAL CIRCUIT OPEN
(K900) SENSOR GROUND CIRCUIT OPEN
(K242) KNOCK SENSOR NO.2 SIGNAL CIRCUIT SHORTED TO THE (K900) SENSOR GROUND CIRCUIT
(K242) KNOCK SENSOR NO.2 SIGNAL CIRCUIT SHORTED TO GROUND
KNOCK SENSOR
PCM

Always perform the Pre-Diagnostic Troubleshooting procedure before proceeding. (Refer to 9 - ENGINE - DIAGNOSIS AND TESTING).

Diagnostic Test

1. ACTIVE DTC

Ignition on, engine not running.

With a scan tool, read DTCs.

Is the DTC active at this time?

Yes >> Go To 2

No >> Refer to the INTERMITTENT CONDITION Diagnostic Procedure.
Perform the POWERTRAIN VERIFICATION TEST. (Refer to 9 - ENGINE - STANDARD PROCEDURE)

P0330-KNOCK SENSOR 2 CIRCUIT (CONTINUED)

2. (K242) KNOCK SENSOR NO.2 SIGNAL SHORTED TO BATTERY VOLTAGE

Turn the ignition off.

Disconnect the No.2 Knock Sensor harness connector.

Disconnect the C3 PCM harness connector.

Ignition on, engine not running.

Measure the voltage on the (K242) Knock Sensor No.2 Signal circuit in the Knock Sensor harness connector.

Is the voltage above 2.0 volts?

Yes >> Repair the short to battery voltage in the (K242) Knock Sensor No.2 Signal circuit.
Perform the POWERTRAIN VERIFICATION TEST. (Refer to 9 - ENGINE - STANDARD PROCEDURE)

No >> Go To 3

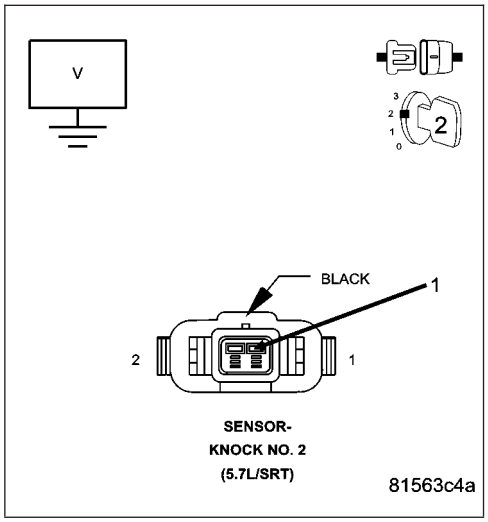

3. (K242) KNOCK SENSOR NO.2 SIGNAL CIRCUIT OPEN

Turn the ignition off.

Measure the resistance of the (K242) Knock Sensor No.2 Signal circuit from the Knock Sensor harness connector to the PCM harness connector.

Is the resistance below 5.0 ohms?

Yes >> Go To 4

No >> Repair the open in the (K242) Knock Sensor No.2 Signal circuit.
Perform the POWERTRAIN VERIFICATION TEST. (Refer to 9 - ENGINE - STANDARD PROCEDURE)

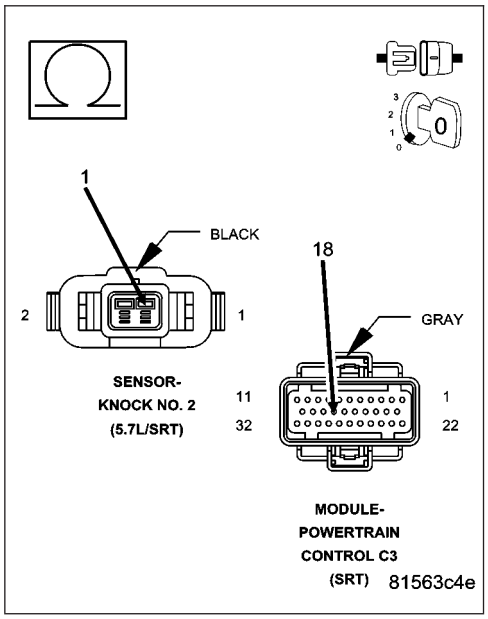

P0330-KNOCK SENSOR 2 CIRCUIT (CONTINUED)

4. (K900) SENSOR GROUND CIRCUIT OPEN

Measure the resistance of the (K900) Sensor ground circuit from the Knock Sensor harness connector to the PCM harness connector.

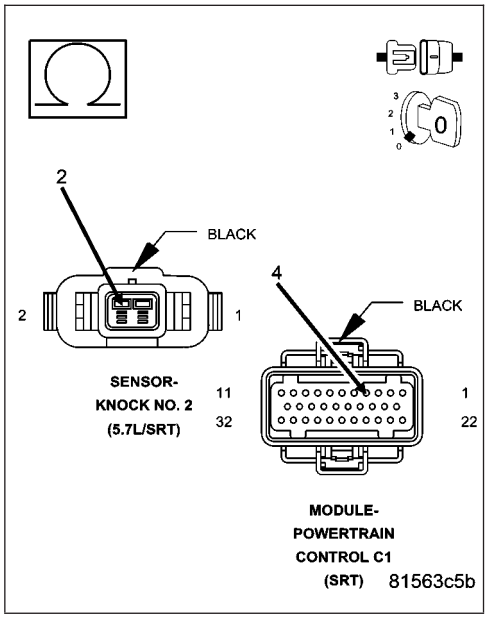

Is the resistance below 5.0 ohms?

Yes >> Go To 5

No >> Repair the open in the (K900) Sensor ground circuit.
Perform the POWERTRAIN VERIFICATION TEST. (Refer to 9 - ENGINE - STANDARD PROCEDURE)

5. (K242) KNOCK SENSOR NO.2 SIGNAL SHORTED TO THE (K900) SENSOR GROUND CIRCUIT

Measure the resistance between the (K242) Knock Sensor No.2 Signal circuit and the (K900) Sensor ground circuit in the Knock Sensor harness connector.

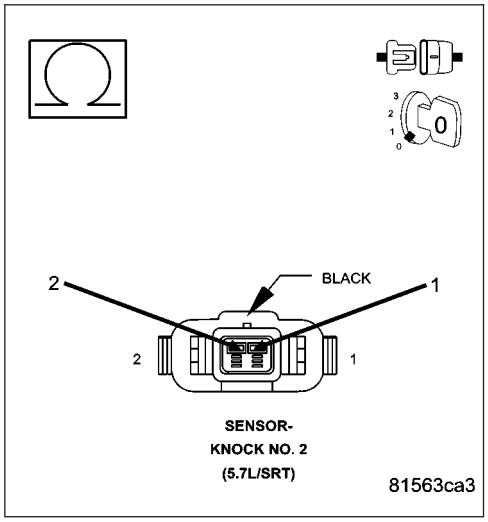

Is the resistance below 100 ohms?

Yes >> Repair the short between the (K242) Knock Sensor No.2 Signal circuit and the (K900) Sensor ground circuit.
Perform the POWERTRAIN VERIFICATION TEST. (Refer to 9 - ENGINE - STANDARD PROCEDURE)

No >> Go To 6

P0330-KNOCK SENSOR 2 CIRCUIT (CONTINUED)

6. (K242) KNOCK SENSOR NO.2 SIGNAL SHORTED TO GROUND

Measure the resistance between ground and the (K242) Knock Sensor No.2 Signal circuit in the Knock Sensor harness connector.

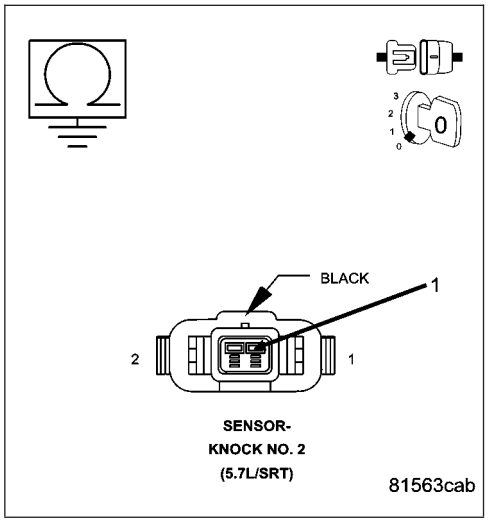

Is the resistance below 100 ohms?

Yes >> Repair the short to ground in the (K242) Knock Sensor No.2 Signal circuit.
Perform the POWERTRAIN VERIFICATION TEST. (Refer to 9 - ENGINE - STANDARD PROCEDURE)

No >> Go To 7

---

7. KNOCK SENSOR

Replace the Knock Sensor.
Ignition on, engine not running.
With the scan tool, erase DTC.
Attempt to operate the vehicle using the information noted in the Freeze Frame.
With the scan tool, read DTCs.

Does the scan tool display the DTC that was previously erased?

Yes >>

NOTE: Before continuing, check the PCM harness connector terminals for corrosion, damage, or terminal push out. Repair as necessary. Replace and program the Powertrain Control Module per Service Information.

Perform the POWERTRAIN VERIFICATION TEST. (Refer to 9 - ENGINE - STANDARD PROCEDURE)

No >> Test Complete.

P0340-CAMSHAFT POSITION SENSOR CIRCUIT

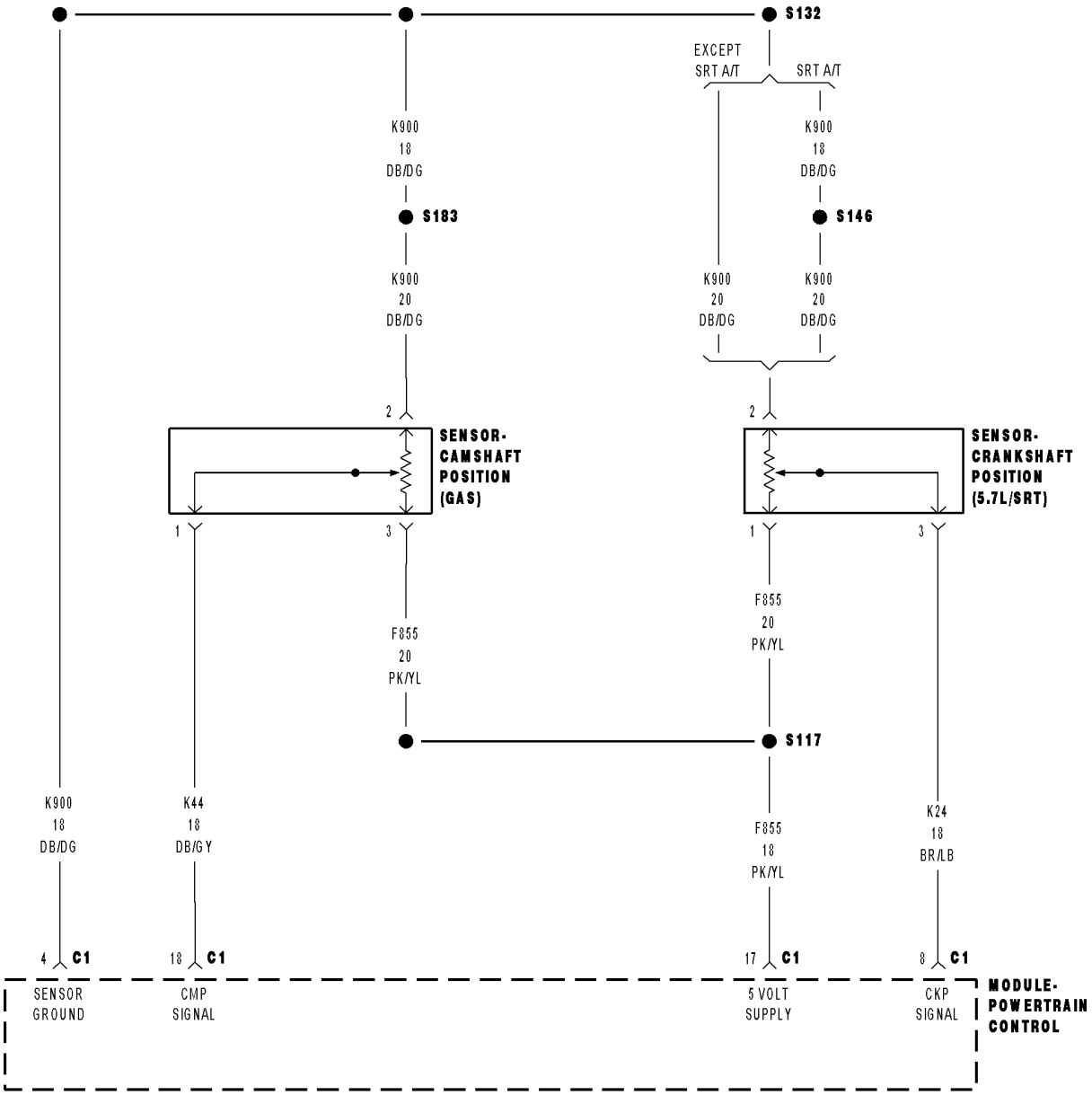

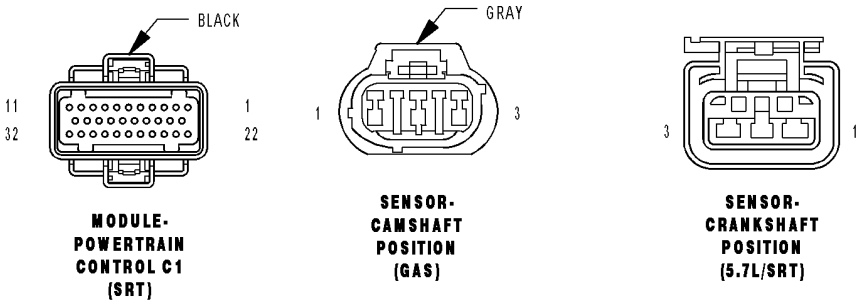

8155933b

P0340-CAMSHAFT POSITION SENSOR CIRCUIT (CONTINUED)

For the Engine circuit diagram (Refer to 9 - ENGINE - SCHEMATICS AND DIAGRAMS).

For a complete wiring diagram **Refer to Section 8W**.

- **When Monitored:**
  During engine cranking and with the engine running. Battery voltage greater than 10 volts.
- **Set Condition:**
  At least 5 seconds or 2.5 engine revolutions have elapsed with crankshaft position sensor signals present but no camshaft position sensor signal. One Trip Fault. Three good trips to turn off the MIL.

Possible Causes
(F855) 5-VOLT SUPPLY CIRCUIT SHORTED TO BATTERY VOLTAGE
(F855) 5-VOLT SUPPLY CIRCUIT OPEN
(F855) 5-VOLT SUPPLY CIRCUIT SHORTED TO GROUND
(K44) CMP SIGNAL CIRCUIT SHORTED TO BATTERY VOLTAGE
(K44) CMP SIGNAL CIRCUIT OPEN
(K44) CMP SIGNAL CIRCUIT SHORTED GROUND
(K44) CMP SIGNAL SHORTED TO THE (F855) 5-VOLT SUPPLY CIRCUIT
(K900) SENSOR GROUND CIRCUIT OPEN
CAMSHAFT POSITION SENSOR
CRANKSHAFT POSITION SENSOR
PCM

Always perform the Pre-Diagnostic Troubleshooting procedure before proceeding. (Refer to 9 - ENGINE - DIAGNOSIS AND TESTING).

Diagnostic Test

1. ACTIVE DTC

Crank the engine.
Ignition on, engine not running.
With a scan tool read the DTCs.

Is the DTC active at this time?

Yes >> Go To 2

No >> Go To 14

P0340-CAMSHAFT POSITION SENSOR CIRCUIT (CONTINUED)

2. (F855) 5-VOLT SUPPLY CIRCUIT

Turn the ignition off.

Disconnect the CMP Sensor harness connector.

Ignition on, engine not running.

Measure the voltage on the (F855) 5-volt Supply circuit in the CMP Sensor harness connector.

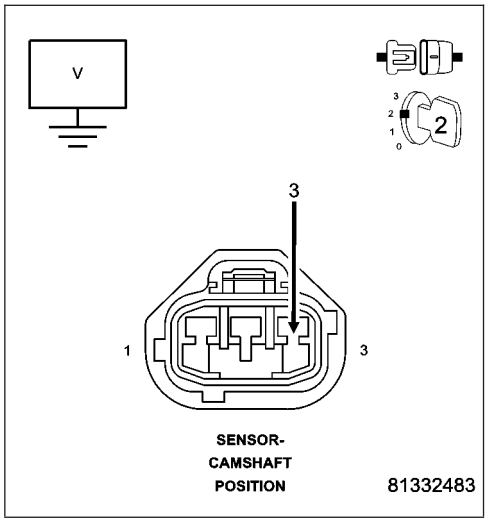

Is the voltage between 4.5 and 5.2 volts?

Yes >> Go To 3

No >> Go To 10

3. (K44) CMP SIGNAL CIRCUIT

Measure the voltage on the (K44) CMP Signal circuit in the CMP Sensor harness connector.

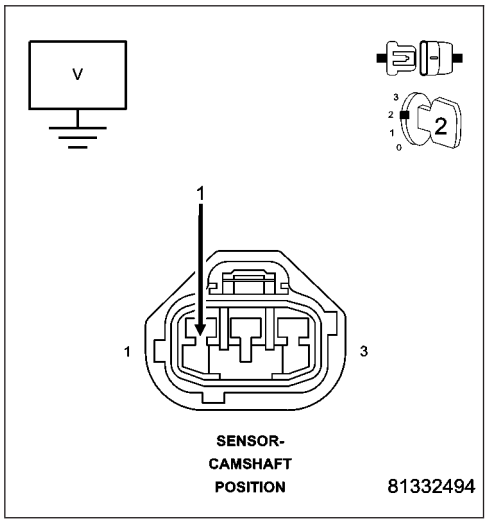

Is the voltage between 4.5 and 5.0 volts?

Yes >> Go To 4

No >> Go To 7

P0340-CAMSHAFT POSITION SENSOR CIRCUIT (CONTINUED)

4. (K900) SENSOR GROUND CIRCUIT OPEN

Turn the ignition off.

Disconnect the PCM harness connector.

Measure the resistance of the (K900) Sensor ground circuit from the CMP Sensor harness connector to the PCM harness connector.

Is the resistance below 5.0 ohms?

Yes >> Go To 5

No >> Repair the open in the (K900) Sensor ground circuit.
Perform the POWERTRAIN VERIFICATION TEST. (Refer to 9 - ENGINE - STANDARD PROCEDURE)

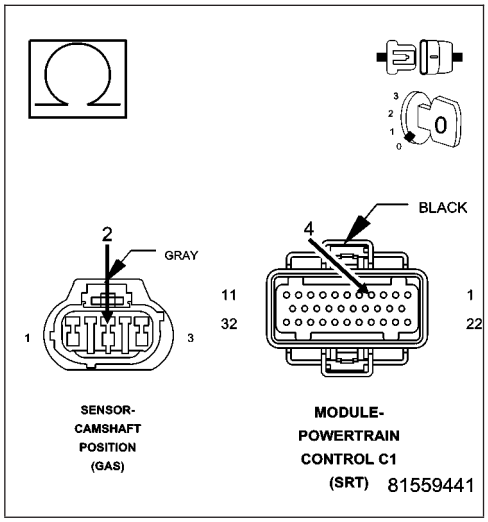

5. (K44) CMP SIGNAL SHORTED TO THE (F855) 5-VOLT SUPPLY CIRCUIT

Measure the resistance between the (K44) CMP Signal circuit and the (F855) 5-volt Supply circuit in the CMP Sensor harness connector.

Is the resistance below 5.0 ohms?

Yes >> Repair the short between the (K44) CMP Signal circuit and the (F855) 5-volt Supply circuit.
Perform the POWERTRAIN VERIFICATION TEST. (Refer to 9 - ENGINE - STANDARD PROCEDURE)

No >> Go To 6

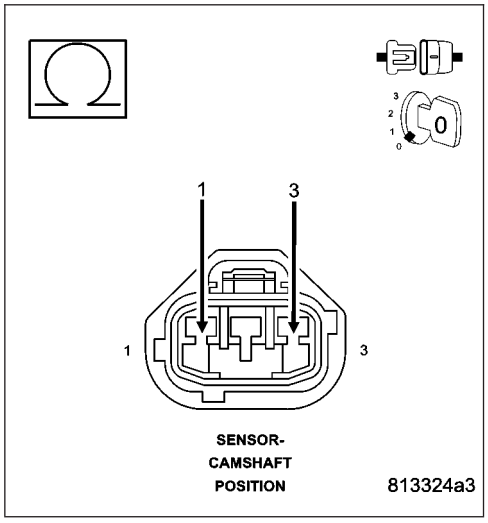

6. CAMSHAFT POSITION SENSOR

NOTE: Inspect the Camshaft sprocket for damage per the Service Information. If a problem is found repair as necessary.

If there are no possible causes remaining, view repair.

Repair

Replace the Camshaft Position Sensor.

Perform the POWERTRAIN VERIFICATION TEST. (Refer to 9 - ENGINE - STANDARD PROCEDURE)

P0340-CAMSHAFT POSITION SENSOR CIRCUIT (CONTINUED)

7. (K44) CMP SIGNAL CIRCUIT SHORTED TO BATTERY VOLTAGE

Turn the ignition off.

Disconnect the PCM harness connector.

Ignition on, engine not running.

Measure the voltage on the (K44) CMP Signal circuit in the CMP Sensor harness connector.

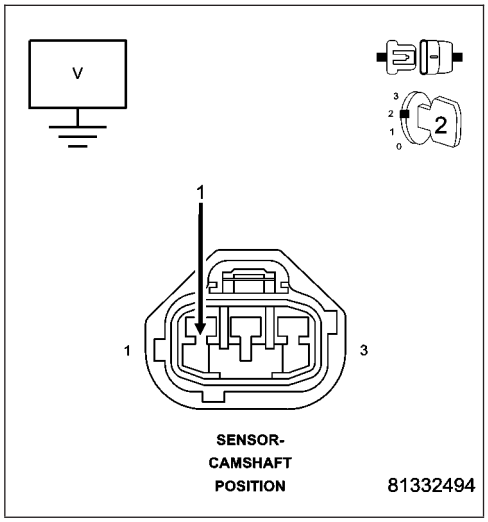

Is the voltage above 0 volts?

Yes >> Repair the short to battery voltage in the (K44) CMP Signal circuit.
Perform the POWERTRAIN VERIFICATION TEST. (Refer to 9 - ENGINE - STANDARD PROCEDURE)

No >> Go To 8

8. (K44) CMP SIGNAL CIRCUIT OPEN

Turn the ignition off.

Measure the resistance of the (K44) CMP Signal circuit from the CMP Sensor harness connector to the PCM harness connector.

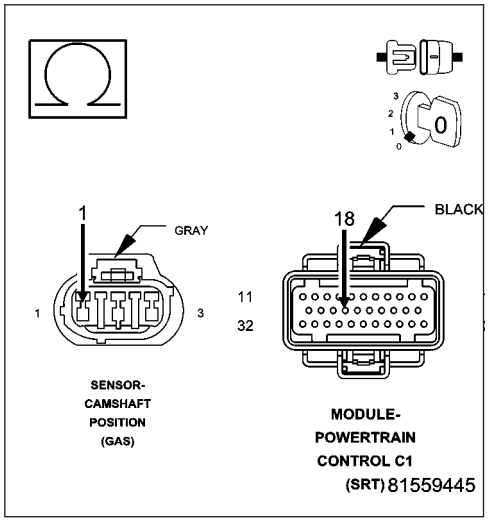

Is the resistance below 5.0 ohms?

Yes >> Go To 9

No >> Repair the open in the (K44) CMP Signal circuit.
Perform the POWERTRAIN VERIFICATION TEST. (Refer to 9 - ENGINE - STANDARD PROCEDURE)

P0340-CAMSHAFT POSITION SENSOR CIRCUIT (CONTINUED)

9. (K44) CMP SIGNAL CIRCUIT SHORTED TO GROUND

Measure the resistance between ground and the (K44) CMP Signal circuit in the CMP Sensor harness connector.

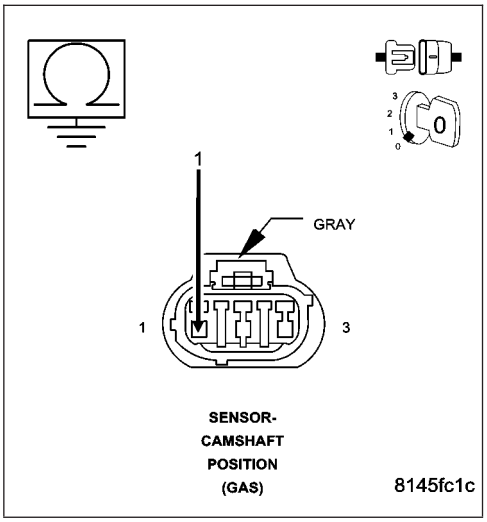

Is the resistance below 100 ohms?

Yes >> Repair the short to ground in the (K44) CMP Signal circuit
Perform the POWERTRAIN VERIFICATION TEST. (Refer to 9 - ENGINE - STANDARD PROCEDURE)

No >> Go To 10

10. (F855) 5-VOLT SUPPLY CIRCUIT SHORTED TO BATTERY VOLTAGE

Turn the ignition off.

Disconnect the PCM harness connector.

Ignition on, engine not running.

Measure the voltage on the (F855) 5-volt Supply circuit in the CMP Sensor harness connector.

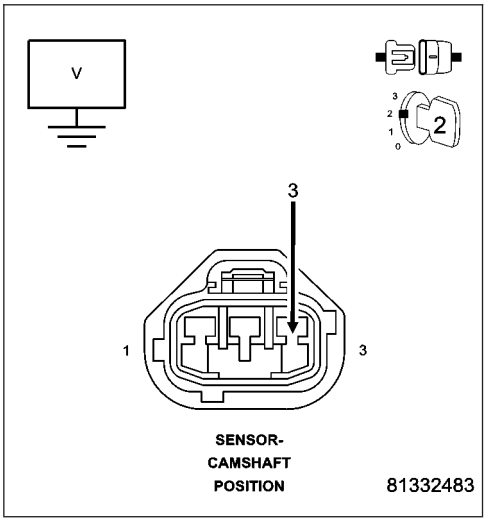

Is the voltage above 0 volts?

Yes >> Repair the short to battery voltage in the (F855) 5-volt Supply circuit.
Perform the POWERTRAIN VERIFICATION TEST. (Refer to 9 - ENGINE - STANDARD PROCEDURE)

No >> Go To 11

P0340-CAMSHAFT POSITION SENSOR CIRCUIT (CONTINUED)

11. (F855) 5-VOLT SUPPLY CIRCUIT OPEN

Turn the ignition off.

Measure the resistance of the (F855) 5-volt Supply circuit between the CMP Sensor harness connector and the PCM harness connector.

Is the resistance below 5.0 ohms?

Yes >> Go To 12

No >> Repair the open in the (F855) 5-volt Supply circuit.
Perform the POWERTRAIN VERIFICATION TEST. (Refer to 9 - ENGINE - STANDARD PROCEDURE)

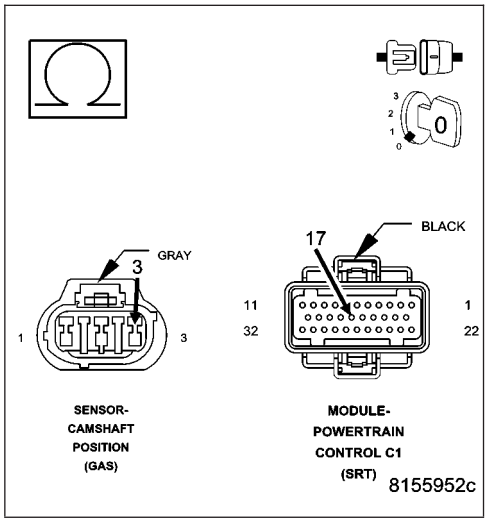

12. (F855) 5-VOLT SUPPLY CIRCUIT SHORTED TO GROUND

Measure the resistance between ground and the (F855) 5-volt Supply circuit in the CMP Sensor harness connector.

Is the resistance below 100 ohms?

Yes >> Repair the short to ground in the (F855) 5-volt Supply circuit.
Perform the POWERTRAIN VERIFICATION TEST. (Refer to 9 - ENGINE - STANDARD PROCEDURE)

No >> Go To 13

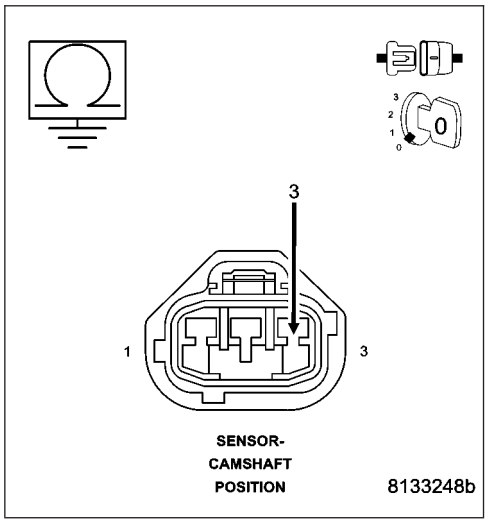

13. PCM

NOTE: Before continuing, check the PCM harness connector terminals for corrosion, damage, or terminal push out. Repair as necessary.

Using the schematics as a guide, inspect the wire harness and connectors. Pay particular attention to all Power and Ground circuits.

Were there any problems found?

Yes >> Repair as necessary.
Perform the POWERTRAIN VERIFICATION TEST. (Refer to 9 - ENGINE - STANDARD PROCEDURE)

No >> Replace and program the Powertrain Control Module per Service Information.
Perform the POWERTRAIN VERIFICATION TEST. (Refer to 9 - ENGINE - STANDARD PROCEDURE)

P0340-CAMSHAFT POSITION SENSOR CIRCUIT (CONTINUED)

14. ERRATIC CMP SIGNAL

With a lab scope probe and the Miller special tool #6801, back probe the (K44) CMP Signal circuit in the CMP harness connector.

WARNING: When the engine is operating, do not stand in direct line with the fan. Do not put your hands near the pulleys, belts, or fan. Do not wear loose clothing. Failure to follow these instructions can result in personal injury or death.

Ignition on, engine not running.

Wiggle the related wire harness and lightly tap the Camshaft Position Sensor.

Observe the lab scope screen.

Allow the engine to idle.

Observe the lab scope screen.

Did the CMP Sensor generate any erratic pulses?

Yes >> Replace the Camshaft Position Sensor.
Perform the POWERTRAIN VERIFICATION TEST. (Refer to 9 - ENGINE - STANDARD PROCEDURE)

No >> Go To 15

---

15. ERRATIC CKP SIGNAL

Turn the ignition off.

With a lab scope probe and the Miller special tool #6801, backprobe the (K24) CKP Signal circuit in the CKP harness connector.

WARNING: When the engine is operating, do not stand in direct line with the fan. Do not put your hands near the pulleys, belts, or fan. Do not wear loose clothing. Failure to follow these instructions can result in personal injury or death.

Ignition on, engine not running.

Wiggle the related wire harness and lightly tap on the Crankshaft Position Sensor.

Observe the lab scope screen.

Allow the engine to idle.

Observe the lab scope screen.

Did the CKP Sensor generate any erratic pulses?

Yes >> Replace the Crankshaft Position Sensor.
Perform the POWERTRAIN VERIFICATION TEST. (Refer to 9 - ENGINE - STANDARD PROCEDURE)

No >> Test complete, the conditions that set this DTC are not present at this time

---

P0351-IGNITION COIL #1 PRIMARY CIRCUIT

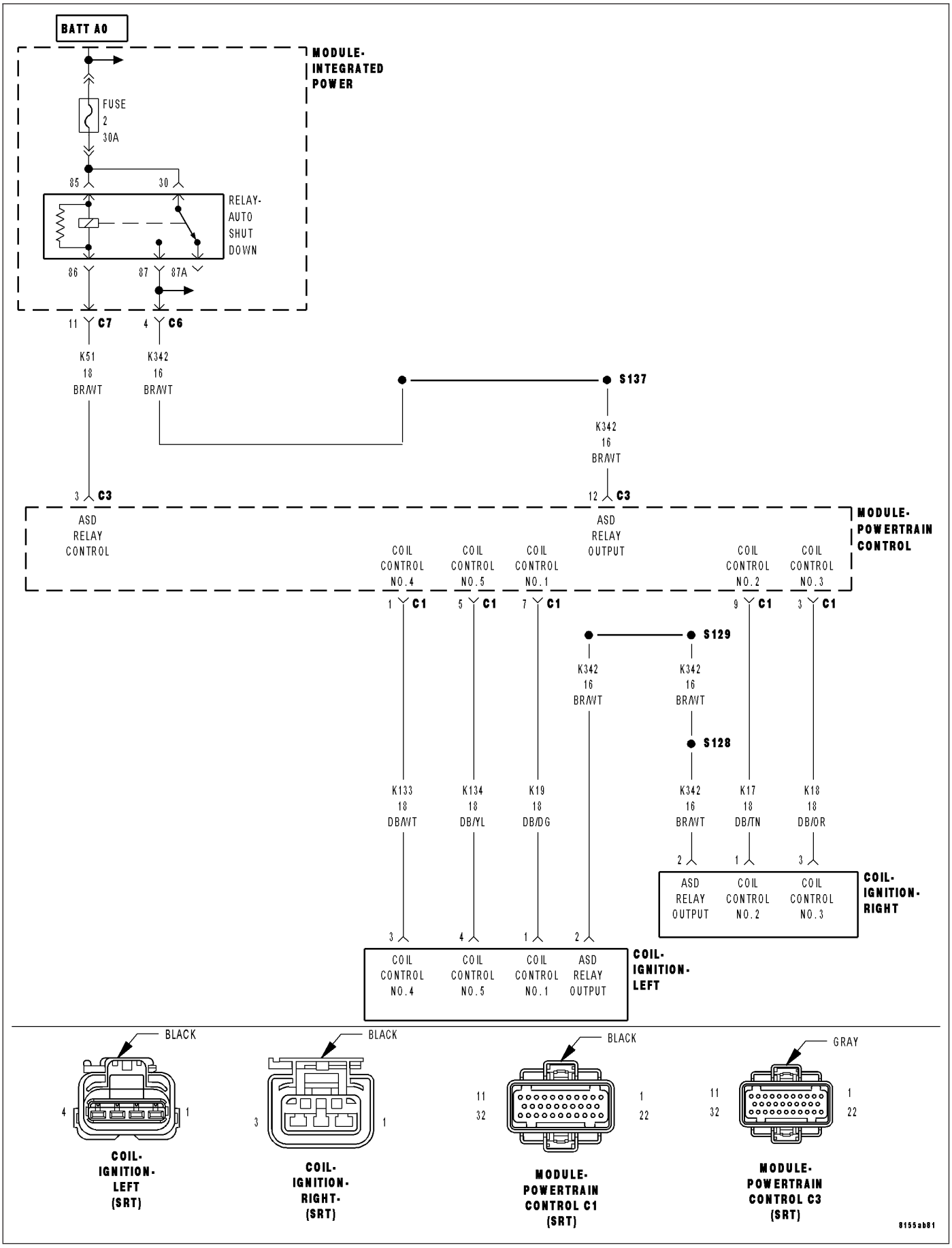

P0351-IGNITION COIL #1 PRIMARY CIRCUIT (CONTINUED)

For the Engine circuit diagram (Refer to 8 - ELECTRICAL/ELECTRONIC CONTROL MODULES/ENGINE CONTROL MODULE - SCHEMATIC - ELECTRICAL)

For a complete wiring diagram **Refer to Section 8W**.

- **When Monitored:**
  With battery voltage greater than 8 volts during engine cranking or greater than 12 volts with engine running, engine rpm less than 2016, and none of the coils in dwell when checked.
- **Set Condition:**
  Peak current is not achieved with battery based dwell plus 1.5 ms of diagnostic offset. It takes less than 3 seconds during cranking or up to 6 seconds while running to set.

Possible Causes
(K343) ASD RELAY OUTPUT CIRCUIT
IGNITION COIL
(K19) IGNITION COIL CONTROL CIRCUIT OPEN
(K19) IIGNITION COIL CONTROL CIRCUIT SHORTED TO GROUND
PCM

Always perform the Pre-Diagnostic Troubleshooting procedure before proceeding. (Refer to 9 - ENGINE - DIAGNOSIS AND TESTING)

1. GOOD TRIP EQUAL TO ZERO

Ignition on, engine not running.

With the scan tool, read DTCs and record the related Freeze Frame data.

Is the Good Trip Counter displayed and equal to zero?

Yes >> Go To 2

No >> Refer to the INTERMITTENT CONDTION Diagnostic Procedure.
Perform POWERTRAIN VERIFICATION TEST. (Refer to 9 - ENGINE - STANDARD PROCEDURE)

---

2. (K343) ASD RELAY OUTPUT CIRCUIT

Turn the ignition off.

Disconnect the Ignition coil harness connector.

Ignition on, engine not running.

Using a 12-volt test light connected to ground, probe the (K343) ASD Relay Output circuit at the coil harness connector.

With the scan tool, actuate the ASD Relay.

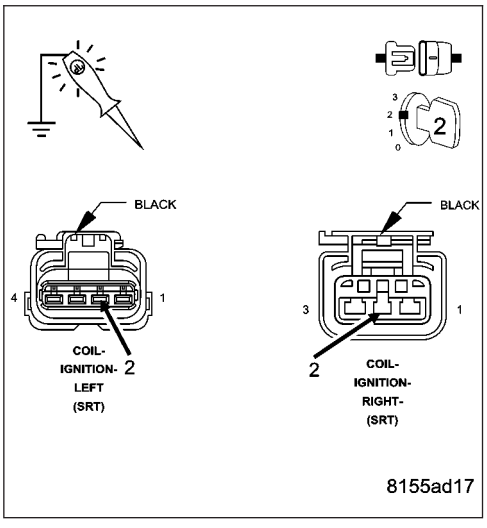

Does the test light illuminate brightly?

Yes >> Go To 3

No >> Inspect the related fuse. Repair the excessive resistance or short to ground in the (K343) ASD Relay Output circuit.
Perform POWERTRAIN VERIFICATION TEST. (Refer to 9 - ENGINE - STANDARD PROCEDURE)

CAUTION: Stop All Actuations

P0351-IGNITION COIL #1 PRIMARY CIRCUIT (CONTINUED)

3. IGNITION COIL RESISTANCE

Turn the ignition off.

The resistance of a 8.3L Primary Ignition coil is 0.53 to 0.65 of an ohm.

Measure the resistance of the primary Ignition coil.

Is the resistance within the appropriate specification?

Yes >> Go To 4

No >> Replace the Ignition coil.
Perform POWERTRAIN VERIFICATION TEST. (Refer to 9 - ENGINE - STANDARD PROCEDURE)

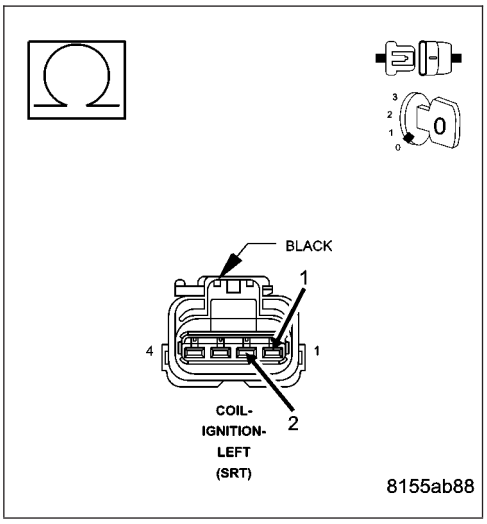

4. IGNITION COIL

Using a 12-volt test light connected to a 12-volt source, probe the (K19) IIgnition Coil Driver circuit.

Crank the engine for 5 seconds while observing the test light.

What is the condition of the test light while cranking the engine?

Brightly blinking.
Replace the Ignition Coil.
Perform POWERTRAIN VERIFICATION TEST. (Refer to 9 - ENGINE - STANDARD PROCEDURE)

ON constantly.
Go To 5

OFF constantly.
Go To 6

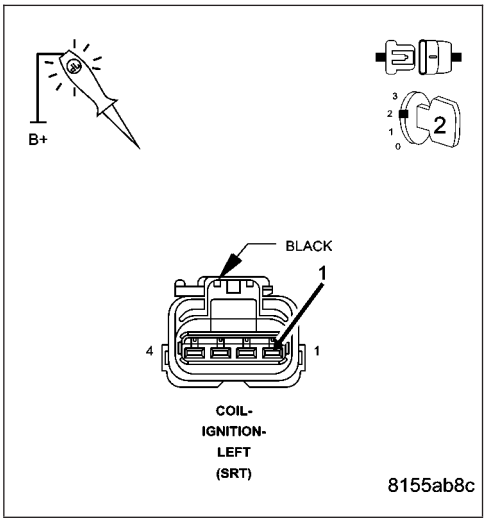

P0351-IGNITION COIL #1 PRIMARY CIRCUIT (CONTINUED)

5. (K19) IGNITION COIL DRIVER CIRCUIT SHORTED TO GROUND

Turn the ignition off.

Disconnect the C1 PCM harness connector.

Measure the resistance between the (K19) Ignition Coil Control circuit and ground.

Is the resistance below 100 ohms?

Yes >> Repair the short to ground in the (K19) Ignition Coil Control circuit.
Perform POWERTRAIN VERIFICATION TEST. (Refer to 9 - ENGINE - STANDARD PROCEDURE)

No >> Go To 7

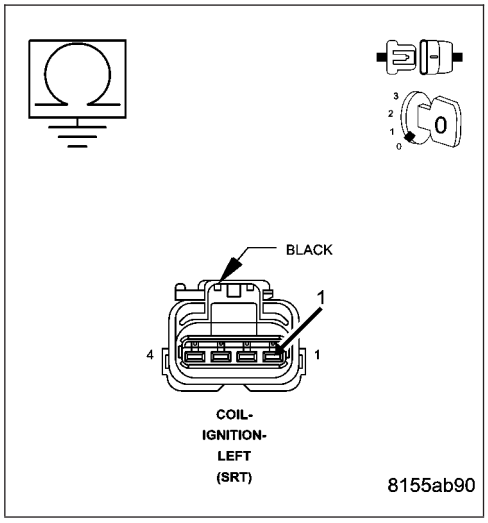

6. (K19) COIL DRIVER CIRCUIT OPEN

Turn the ignition off.

Disconnect the C1 PCM harness connector.

Measure the resistance of the (K19) Ignition Coil Control circuit from the Ignition Coil connector to the PCM connector.

Is the resistance below 5.0 ohms?

Yes >> Go To 7

No >> Repair the open in the (K19) Ignition Coil Control circuit.
Perform POWERTRAIN VERIFICATION TEST. (Refer to 9 - ENGINE - STANDARD PROCEDURE)

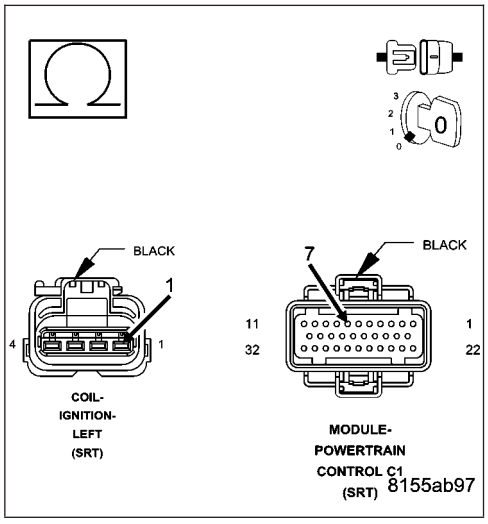

7. PCM

NOTE: Before continuing, check the PCM harness connector terminals for corrosion, damage, or terminal push out. Repair as necessary.

Using the schematics as a guide, inspect the wire harness and connectors. Pay particular attention to all Power and Ground circuits.

If there are no possible causes remaining, view repair.

Repair

Replace and program the Powertrain Control Module per Service Information.

Perform POWERTRAIN VERIFICATION TEST. (Refer to 9 - ENGINE - STANDARD PROCEDURE)

P0352-IGNITION COIL #2 PRIMARY CIRCUIT

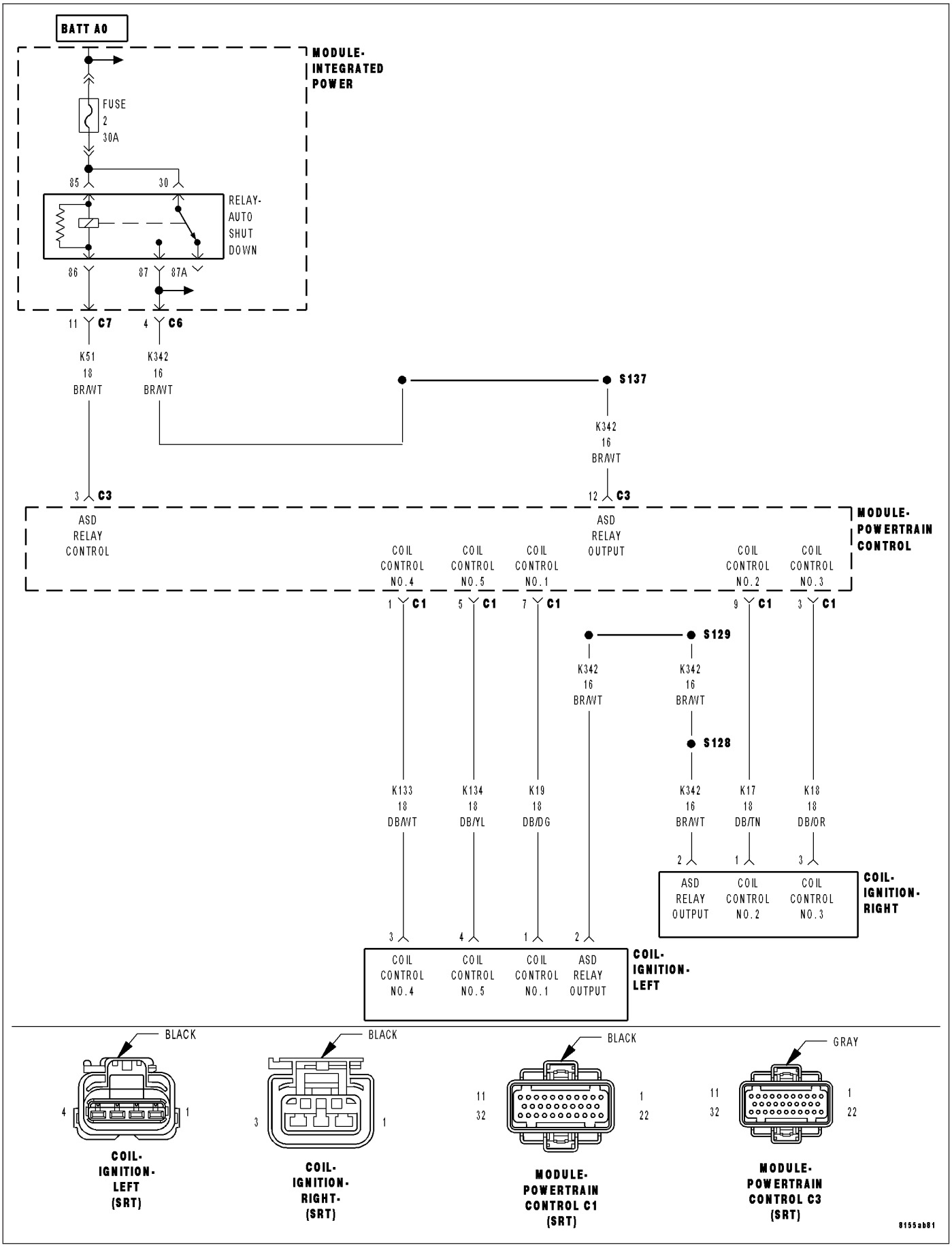

P0352-IGNITION COIL #2 PRIMARY CIRCUIT (CONTINUED)

For the Engine circuit diagram (Refer to 8 - ELECTRICAL/ELECTRONIC CONTROL MODULES/ENGINE CONTROL MODULE - SCHEMATIC - ELECTRICAL)

For a complete wiring diagram **Refer to Section 8W**.

- **When Monitored:**
  With battery voltage greater than 8 volts during engine cranking or greater than 12 volts with engine running, engine rpm less than 2016, and none of the coils in dwell when checked.
- **Set Condition:**
  Peak current is not achieved with battery based dwell plus 1.5 ms of diagnostic offset. It takes less than 3 seconds during cranking or up to 6 seconds while running to set.

Possible Causes
(K343) ASD RELAY OUTPUT CIRCUIT
IGNITION COIL
(K17) IGNITION COIL NO.2 CONTROL CIRCUIT OPEN
(K17) IGNITION COIL NO.2 CONTROL CIRCUIT SHORTED TO GROUND
PCM

Always perform the Pre-Diagnostic Troubleshooting procedure before proceeding. (Refer to 9 - ENGINE - DIAGNOSIS AND TESTING)

1. GOOD TRIP EQUAL TO ZERO

Ignition on, engine not running.

With the scan tool, read DTCs and record the related Freeze Frame data.

Is the Good Trip Counter displayed and equal to zero?

Yes >> Go To 2

No >> Refer to the INTERMITTENT CONDTION Diagnostic Procedure.
Perform POWERTRAIN VERIFICATION TEST. (Refer to 9 - ENGINE - STANDARD PROCEDURE)

---

2. (K343) ASD RELAY OUTPUT CIRCUIT

Turn the ignition off.

Disconnect the Ignition coil harness connector.

Ignition on, engine not running.

Using a 12-volt test light connected to ground, probe the (K343) ASD Relay Output circuit at the coil harness connector.

With the scan tool, actuate the ASD Relay.

Does the test light illuminate brightly?

Yes >> Go To 3

No >> Inspect the related fuse. Repair the excessive resistance or short to ground in the (K343) ASD Relay Output circuit.
Perform POWERTRAIN VERIFICATION TEST. (Refer to 9 - ENGINE - STANDARD PROCEDURE)

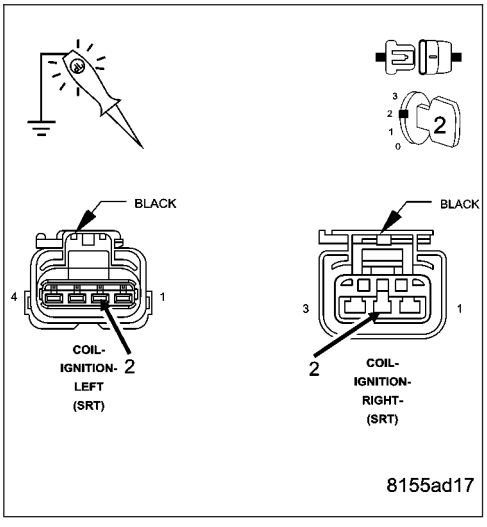

CAUTION: Stop All Actuations.

P0352-IGNITION COIL #2 PRIMARY CIRCUIT (CONTINUED)

3. IGNITION COIL RESISTANCE

Turn the ignition off.

The resistance of a 8.3L Primary Ignition coil is 0.53 to 0.65 of an ohm.

Measure the resistance of the primary Ignition coil.

Is the resistance within the appropriate specification?

Yes >> Go To 4

No >> Replace the Ignition coil.
Perform POWERTRAIN VERIFICATION TEST. (Refer to 9 - ENGINE - STANDARD PROCEDURE)

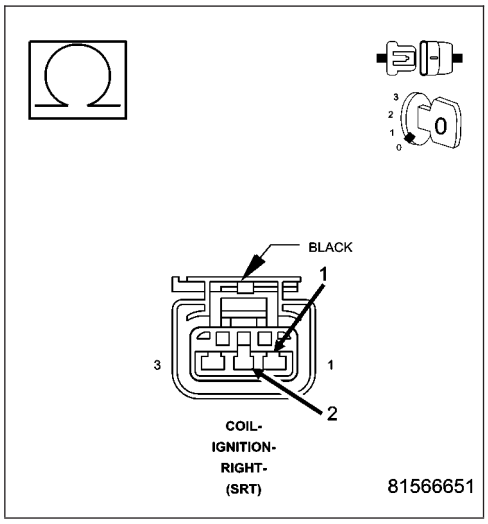

4. IGNITION COIL

Using a 12-volt test light connected to a 12-volt source, probe the (K17) Ignition Coil No.2 Control circuit.

Crank the engine for 5 seconds while observing the test light.

What is the condition of the test light while cranking the engine?

Brightly blinking.
Replace the Ignition Coil.
Perform POWERTRAIN VERIFICATION TEST. (Refer to 9 - ENGINE - STANDARD PROCEDURE)

ON constantly.
Go To 5

OFF constantly.
Go To 6

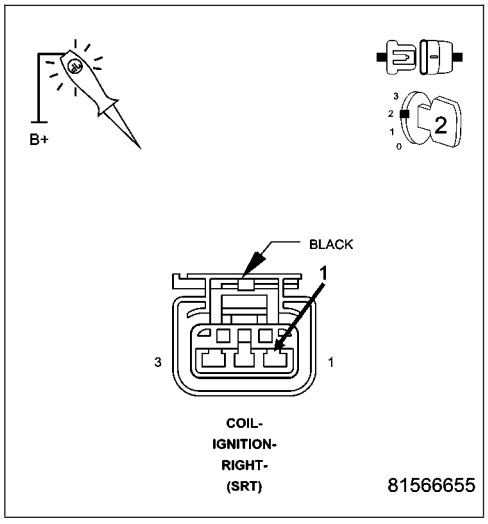

P0352-IGNITION COIL #2 PRIMARY CIRCUIT (CONTINUED)

5. (K17) IGNITION COIL NO.2 CONTROL CIRCUIT SHORTED TO GROUND

Turn the ignition off.

Disconnect the C1 PCM harness connector.

Measure the resistance between the (K17) Ignition Coil No.2 Control circuit and ground.

Is the resistance below 100 ohms?

Yes >> Repair the short to ground in the (K17) Ignition Coil No.2 Control circuit.

Perform POWERTRAIN VERIFICATION TEST. (Refer to 9 - ENGINE - STANDARD PROCEDURE)

No >> Go To 7

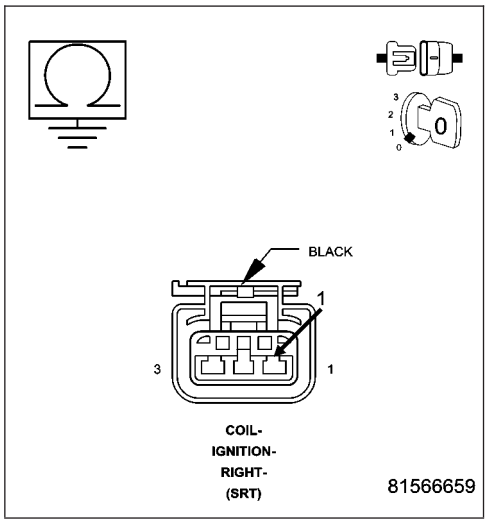

6. (K17) IGNITION COIL NO.2 CONTROL CIRCUIT OPEN

Turn the ignition off.

Disconnect the C1 PCM harness connector.

Measure the resistance of the (K17) Ignition Coil No.2 Control circuit from the Ignition Coil connector to the PCM connector.

Is the resistance below 5.0 ohms?

Yes >> Go To 7

No >> Repair the open in the (K17) Ignition Coil No.2 Control circuit.

Perform POWERTRAIN VERIFICATION TEST. (Refer to 9 - ENGINE - STANDARD PROCEDURE)

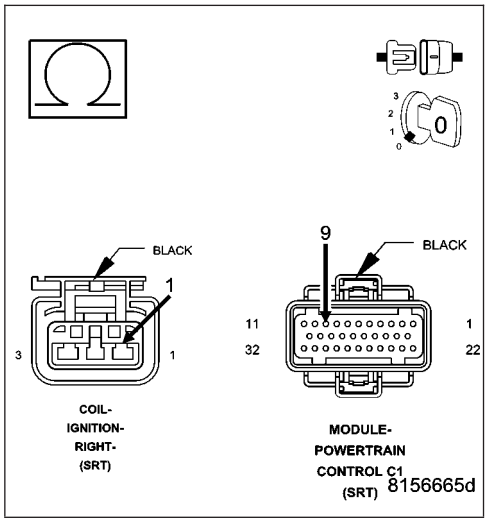

7. PCM

NOTE: Before continuing, check the PCM harness connector terminals for corrosion, damage, or terminal push out. Repair as necessary.

Using the schematics as a guide, inspect the wire harness and connectors. Pay particular attention to all Power and Ground circuits.

If there are no possible causes remaining, view repair.

Repair

Replace and program the Powertrain Control Module per Service Information.

Perform POWERTRAIN VERIFICATION TEST. (Refer to 9 - ENGINE - STANDARD PROCEDURE)

P0353-IGNITION COIL #3 PRIMARY CIRCUIT

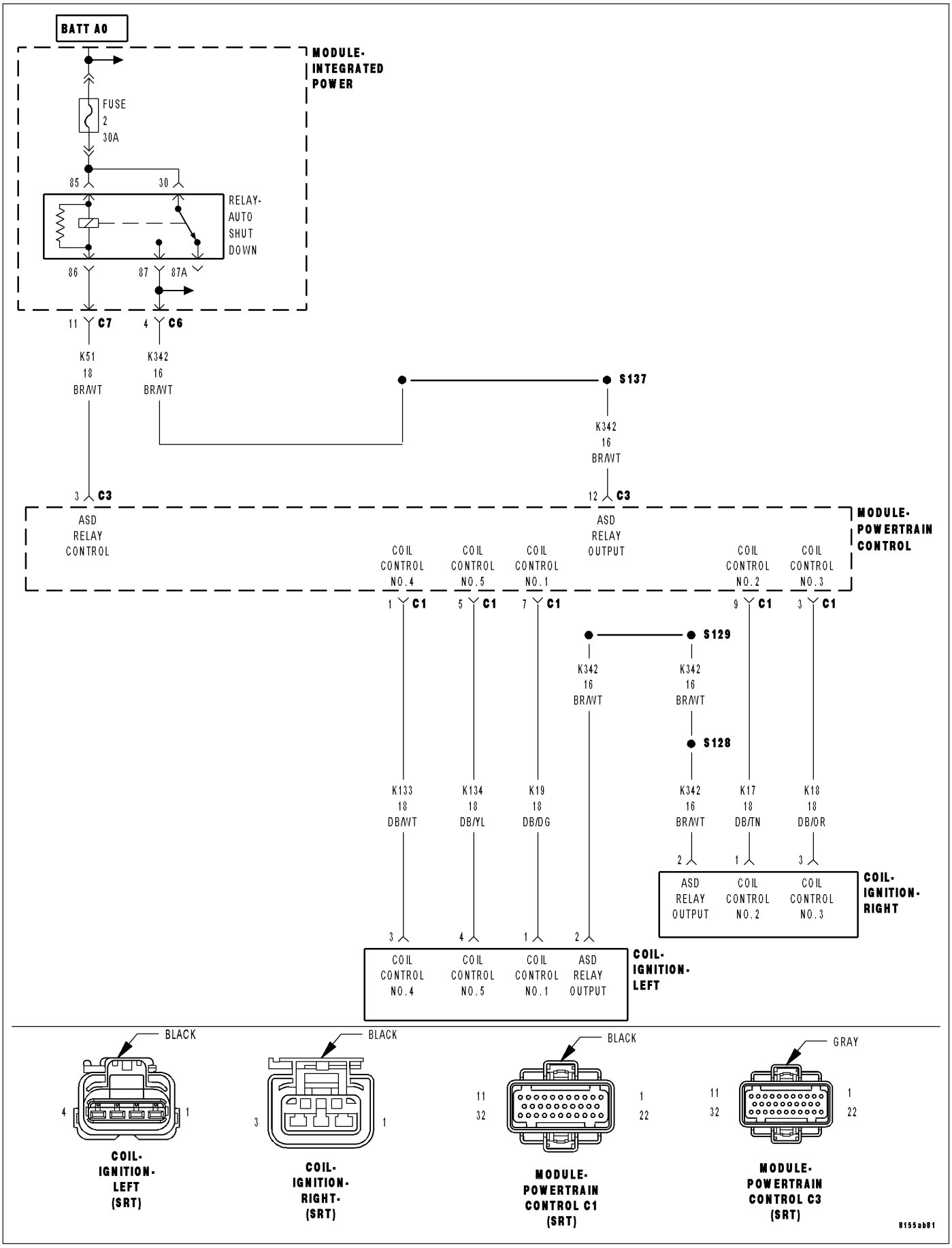

P0353-IGNITION COIL #3 PRIMARY CIRCUIT (CONTINUED)

For the Engine circuit diagram (Refer to 8 - ELECTRICAL/ELECTRONIC CONTROL MODULES/ENGINE CONTROL MODULE - SCHEMATIC - ELECTRICAL)

For a complete wiring diagram **Refer to Section 8W**.

- **When Monitored:**
  With battery voltage greater than 8 volts during engine cranking or greater than 12 volts with engine running, engine rpm less than 2016, and none of the coils in dwell when checked.
- **Set Condition:**
  Peak current is not achieved with battery based dwell plus 1.5 ms of diagnostic offset. It takes less than 3 seconds during cranking or up to 6 seconds while running to set.

Possible Causes
(K343) ASD RELAY OUTPUT CIRCUIT
IGNITION COIL
(K18) IGNITION COIL CONTROL NO.3 CIRCUIT OPEN
(K18) IGNITION COIL CONTROL NO.3 CIRCUIT SHORTED TO GROUND
PCM

Always perform the Pre-Diagnostic Troubleshooting procedure before proceeding. (Refer to 9 - ENGINE - DIAGNOSIS AND TESTING)

1. GOOD TRIP EQUAL TO ZERO

Ignition on, engine not running.

With the scan tool, read DTCs and record the related Freeze Frame data.

Is the Good Trip Counter displayed and equal to zero?

Yes >> Go To 2

No >> Refer to the INTERMITTENT CONDTION Diagnostic Procedure.
Perform POWERTRAIN VERIFICATION TEST. (Refer to 9 - ENGINE - STANDARD PROCEDURE)

---

2. (K343) ASD RELAY OUTPUT CIRCUIT

Turn the ignition off.

Disconnect the Ignition coil harness connector.

Ignition on, engine not running.

Using a 12-volt test light connected to ground, probe the (K343) ASD Relay Output circuit at the coil harness connector.

With the scan tool, actuate the ASD Relay.

Does the test light illuminate brightly?

Yes >> Go To 3

No >> Inspect the related fuse. Repair the excessive resistance or short to ground in the (K343) ASD Relay Output circuit.
Perform POWERTRAIN VERIFICATION TEST. (Refer to 9 - ENGINE - STANDARD PROCEDURE)

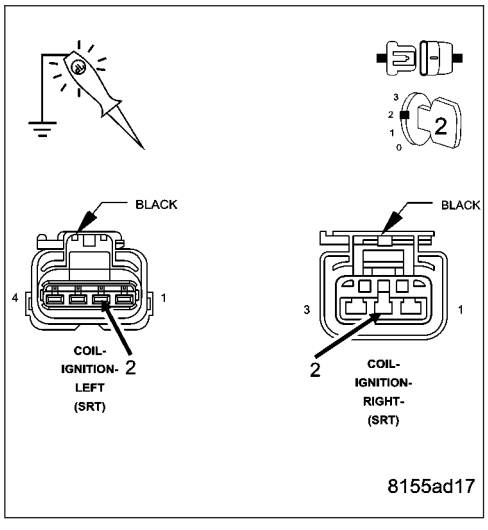

CAUTION: Stop All Actuations

P0353-IGNITION COIL #3 PRIMARY CIRCUIT (CONTINUED)

3. IGNITION COIL RESISTANCE

Turn the ignition off.

The resistance of a 8.3L Primary Ignition coil is 0.53 to 0.65 of an ohm.

Measure the resistance of the primary Ignition coil.

Is the resistance within the appropriate specification?

Yes >> Go To 4

No >> Replace the Ignition coil.
Perform POWERTRAIN VERIFICATION TEST. (Refer to 9 - ENGINE - STANDARD PROCEDURE)

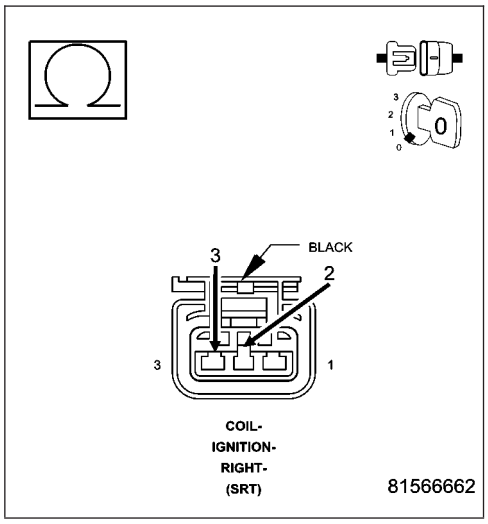

4. IGNITION COIL

Using a 12-volt test light connected to a 12-volt source, probe the Ignition (K18) Igniton Coil No.3 Control circuit.

Crank the engine for 5 seconds while observing the test light.

What is the condition of the test light while cranking the engine?

Brightly blinking.
Replace the Ignition Coil.
Perform POWERTRAIN VERIFICATION TEST. (Refer to 9 - ENGINE - STANDARD PROCEDURE)

ON constantly.
Go To 5

OFF constantly.
Go To 6

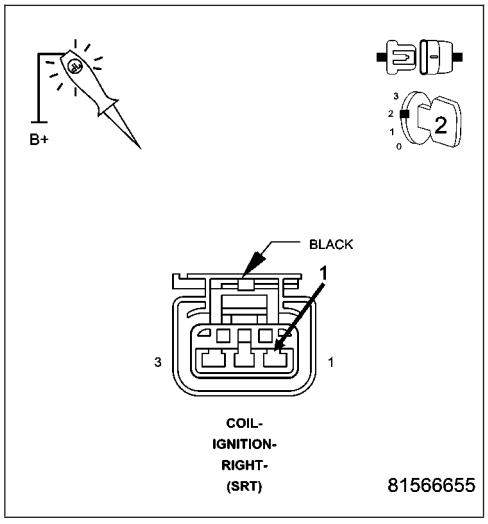

P0353-IGNITION COIL #3 PRIMARY CIRCUIT (CONTINUED)

5. (K18) COIL CONTROL NO.3 CIRCUIT SHORTED TO GROUND

Turn the ignition off.

Disconnect the C1 PCM harness connector.

Measure the resistance between the (K18) Ignition Coil Control No.3 circuit and ground.

Is the resistance below 100 ohms?

Yes >> Repair the short to ground in the (K18) Ignition Coil Control No.3 circuit.

Perform POWERTRAIN VERIFICATION TEST. (Refer to 9 - ENGINE - STANDARD PROCEDURE)

No >> Go To 7

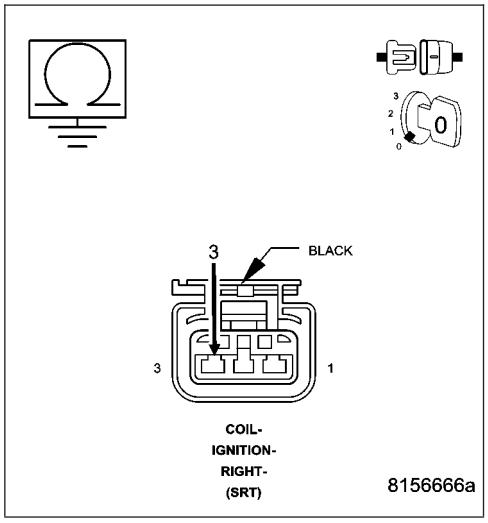

6. (K18) IGNITION COIL CONTROL NO.3 CIRCUIT OPEN

Turn the ignition off.

Disconnect the C1 PCM harness connector.

Measure the resistance of the (K18) Ignition Coil Control No.3 circuit from the Ignition Coil connector to the PCM connector.

Is the resistance below 5.0 ohms?

Yes >> Go To 7

No >> Repair the open in the (K18) Ignition Coil Control No.3 circuit.

Perform POWERTRAIN VERIFICATION TEST. (Refer to 9 - ENGINE - STANDARD PROCEDURE)

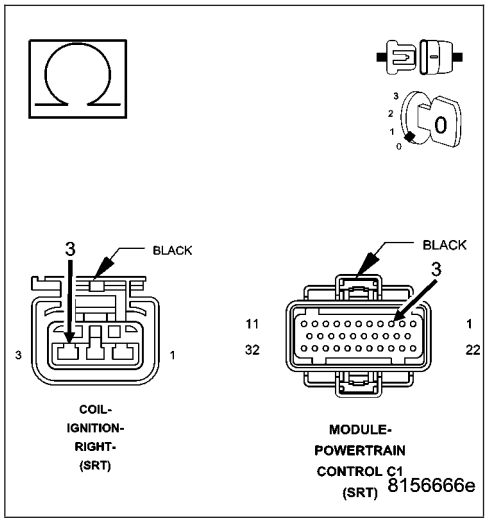

7. PCM

NOTE: Before continuing, check the PCM harness connector terminals for corrosion, damage, or terminal push out. Repair as necessary.

Using the schematics as a guide, inspect the wire harness and connectors. Pay particular attention to all Power and Ground circuits.

If there are no possible causes remaining, view repair.

Repair

Replace and program the Powertrain Control Module per Service Information.

Perform POWERTRAIN VERIFICATION TEST. (Refer to 9 - ENGINE - STANDARD PROCEDURE)

P0354-IGNITION COIL #4 PRIMARY CIRCUIT

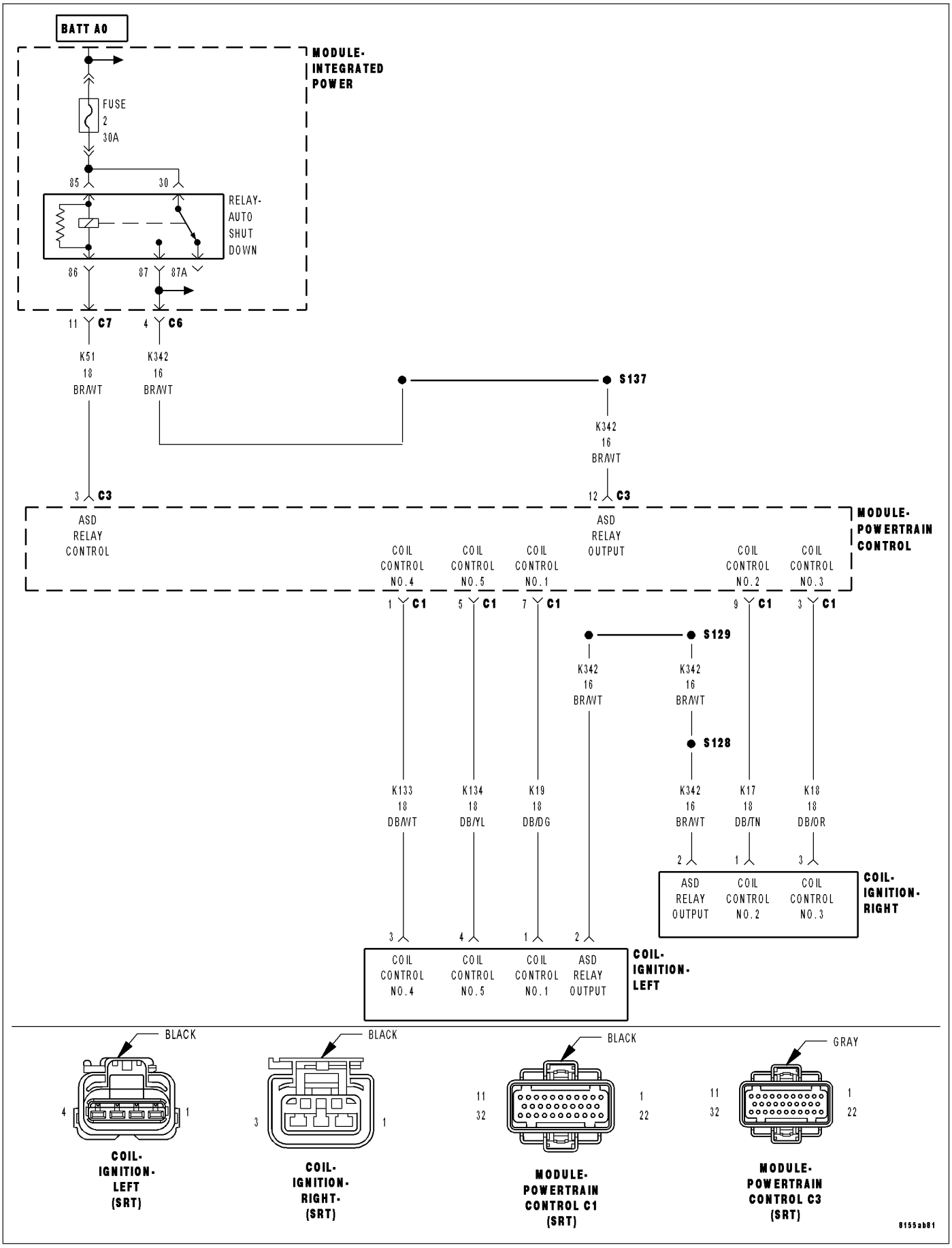

P0354-IGNITION COIL #4 PRIMARY CIRCUIT (CONTINUED)

For the Engine circuit diagram (Refer to 8 - ELECTRICAL/ELECTRONIC CONTROL MODULES/ENGINE CONTROL MODULE - SCHEMATIC - ELECTRICAL)

For a complete wiring diagram **Refer to Section 8W**.

- **When Monitored:**
  With battery voltage greater than 8 volts during engine cranking or greater than 12 volts with engine running, engine rpm less than 2016, and none of the coils in dwell when checked.
- **Set Condition:**
  Peak current is not achieved with battery based dwell plus 1.5 ms of diagnostic offset. It takes less than 3 seconds during cranking or up to 6 seconds while running to set.

Possible Causes
(K343) ASD RELAY OUTPUT CIRCUIT
IGNITION COIL
(K133) IGNITION COIL CONTROL NO.4 CIRCUIT OPEN
(K133) IGNITION COIL CONTROL NO.4 CIRCUIT SHORTED TO GROUND
PCM

Always perform the Pre-Diagnostic Troubleshooting procedure before proceeding. (Refer to 9 - ENGINE - DIAGNOSIS AND TESTING)

1. GOOD TRIP EQUAL TO ZERO

Ignition on, engine not running.

With the scan tool, read DTCs and record the related Freeze Frame data.

Is the Good Trip Counter displayed and equal to zero?

Yes >> Go To 2

No >> Refer to the INTERMITTENT CONDTION Diagnostic Procedure.
Perform POWERTRAIN VERIFICATION TEST. (Refer to 9 - ENGINE - STANDARD PROCEDURE)

---

2. (K343) ASD RELAY OUTPUT CIRCUIT

Turn the ignition off.

Disconnect the Ignition coil harness connector.

Ignition on, engine not running.

Using a 12-volt test light connected to ground, probe the (K343) ASD Relay Output circuit at the coil harness connector.

With the scan tool, actuate the ASD Relay.

Does the test light illuminate brightly?

Yes >> Go To 3

No >> Inspect the related fuse. Repair the excessive resistance or short to ground in the ASD Relay Output circuit.
Perform POWERTRAIN VERIFICATION TEST. (Refer to 9 - ENGINE - STANDARD PROCEDURE)

CAUTION: Stop All Actuations

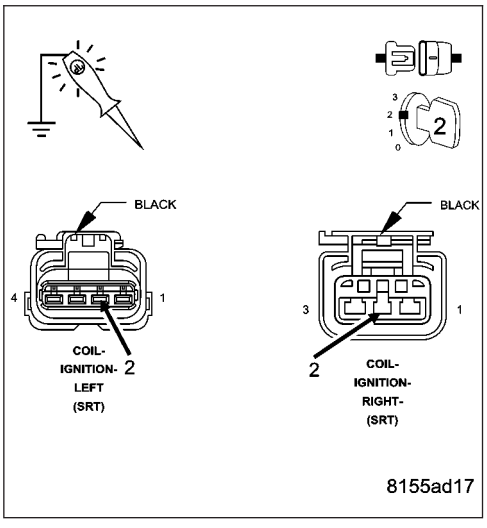

P0354-IGNITION COIL #4 PRIMARY CIRCUIT (CONTINUED)

3. IGNITION COIL RESISTANCE

Turn the ignition off.

The resistance of a 8.3L Primary Ignition coil is 0.53 to 0.65 of an ohm.

Measure the resistance of the primary Ignition coil.

Is the resistance within the appropriate specification?

Yes >> Go To 4

No >> Replace the Ignition coil.
Perform POWERTRAIN VERIFICATION TEST. (Refer to 9 - ENGINE - STANDARD PROCEDURE)

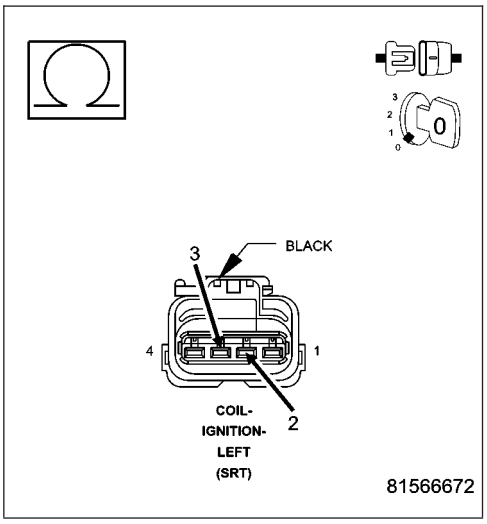

4. IGNITION COIL

Using a 12-volt test light connected to a 12-volt source, probe the (K133) Ignition Coil Control No.4 circuit.

Crank the engine for 5 seconds while observing the test light.

What is the condition of the test light while cranking the engine?

Brightly blinking.
Replace the Ignition Coil.
Perform POWERTRAIN VERIFICATION TEST. (Refer to 9 - ENGINE - STANDARD PROCEDURE)

ON constantly.
Go To 5

OFF constantly.
Go To 6

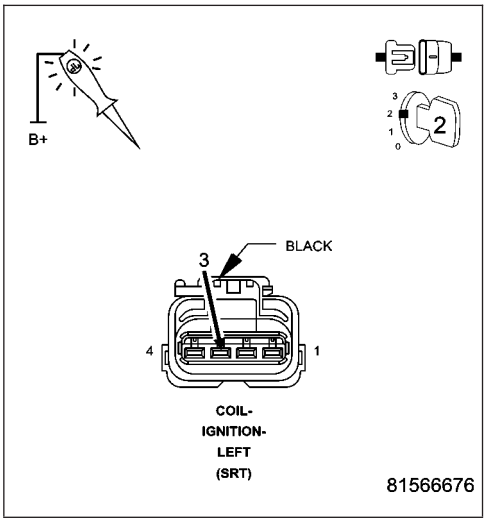

P0354-IGNITION COIL #4 PRIMARY CIRCUIT (CONTINUED)

5. (K133) IGNITION COIL CONTROL NO.4 CIRCUIT SHORTED TO GROUND

Turn the ignition off.

Disconnect the C1 PCM harness connector.

Measure the resistance between the (K133) Ignition Coil Control No.4 circuit and ground.

Is the resistance below 100 ohms?

Yes >> Repair the short to ground in the (K133) Ignition Coil Control No.4 circuit.

Perform POWERTRAIN VERIFICATION TEST. (Refer to 9 - ENGINE - STANDARD PROCEDURE)

No >> Go To 7

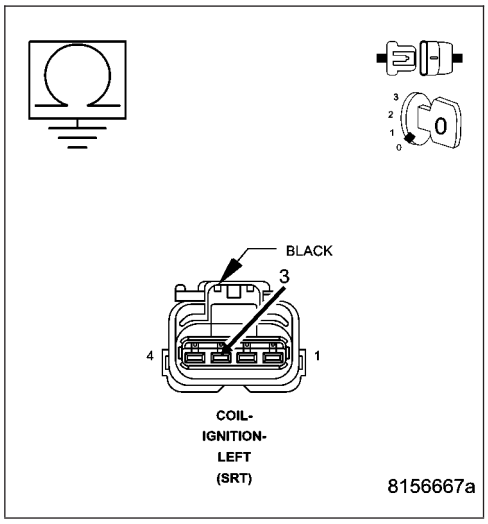

6. (K133) IGNITION COIL CONTROL NO.4 CIRCUIT OPEN

Turn the ignition off.

Disconnect the C1 PCM harness connector.

Measure the resistance of the (K133) Ignition Coil Control No.4 circuit from the Ignition Coil connector to the PCM connector.

Is the resistance below 5.0 ohms?

Yes >> Go To 7

No >> Repair the open in the (K133) Ignition Coil Control No.4 circuit.

Perform POWERTRAIN VERIFICATION TEST. (Refer to 9 - ENGINE - STANDARD PROCEDURE)

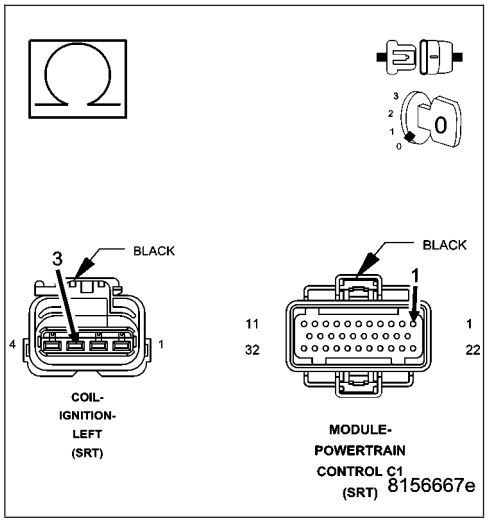

7. PCM

NOTE: Before continuing, check the PCM harness connector terminals for corrosion, damage, or terminal push out. Repair as necessary.

Using the schematics as a guide, inspect the wire harness and connectors. Pay particular attention to all Power and Ground circuits.

If there are no possible causes remaining, view repair.

Repair

Replace and program the Powertrain Control Module per Service Information.

Perform POWERTRAIN VERIFICATION TEST. (Refer to 9 - ENGINE - STANDARD PROCEDURE)

P0355-IGNITION COIL #5 PRIMARY CIRCUIT

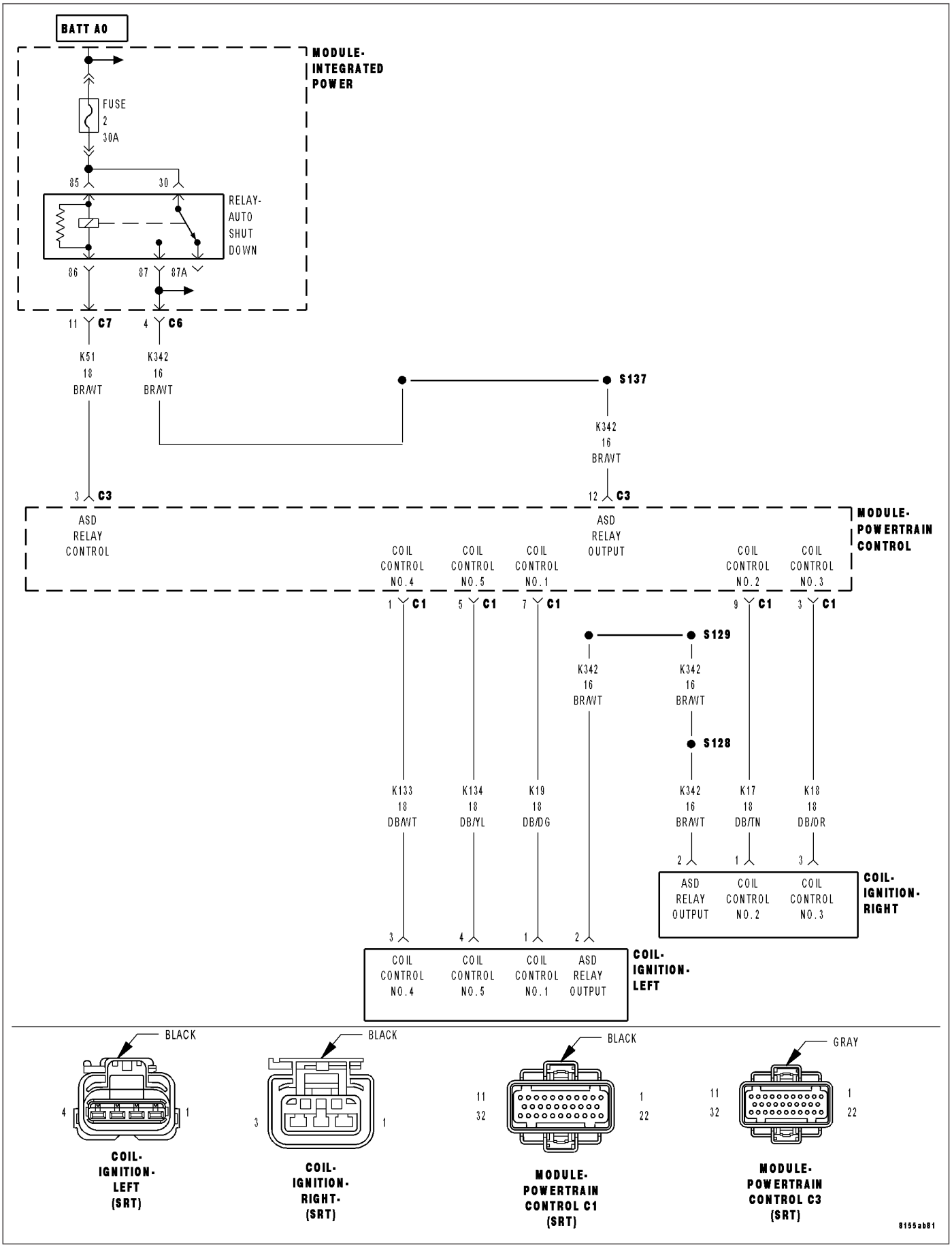

P0355-IGNITION COIL #5 PRIMARY CIRCUIT (CONTINUED)

For the Engine circuit diagram (Refer to 8 - ELECTRICAL/ELECTRONIC CONTROL MODULES/ENGINE CONTROL MODULE - SCHEMATIC - ELECTRICAL)

For a complete wiring diagram **Refer to Section 8W**.

- **When Monitored:**
  With battery voltage greater than 8 volts during engine cranking or greater than 12 volts with engine running, engine rpm less than 2016, and none of the coils in dwell when checked.
- **Set Condition:**
  Peak current is not achieved with battery based dwell plus 1.5 ms of diagnostic offset. It takes less than 3 seconds during cranking or up to 6 seconds while running to set.

Possible Causes
(K343) ASD RELAY OUTPUT CIRCUIT
IGNITION COIL
(K134) IGNITION COIL CONTROL NO.5 CIRCUIT OPEN
(K134) IGNITION COIL CONTROL NO.5 CIRCUIT SHORTED TO GROUND
PCM

Always perform the Pre-Diagnostic Troubleshooting procedure before proceeding. (Refer to 9 - ENGINE - DIAGNOSIS AND TESTING)

1. GOOD TRIP EQUAL TO ZERO

Ignition on, engine not running.

With the scan tool, read DTCs and record the related Freeze Frame data.

Is the Good Trip Counter displayed and equal to zero?

Yes >> Go To 2

No >> Refer to the INTERMITTENT CONDTION Diagnostic Procedure.
Perform POWERTRAIN VERIFICATION TEST. (Refer to 9 - ENGINE - STANDARD PROCEDURE)

---

2. (K343) ASD RELAY OUTPUT CIRCUIT

Turn the Ignition off.

Disconnect the Ignition coil harness connector.

Ignition on, engine not running.

Using a 12-volt test light connected to ground, probe the (K343) ASD Relay Output circuit at the coil harness connector.

With the scan tool, actuate the ASD Relay.

Does the test light illuminate brightly?

Yes >> Go To 3

No >> Inspect the related fuse. Repair the excessive resistance or short to ground in the (K343) ASD Relay Output circuit.
Perform POWERTRAIN VERIFICATION TEST. (Refer to 9 - ENGINE - STANDARD PROCEDURE)

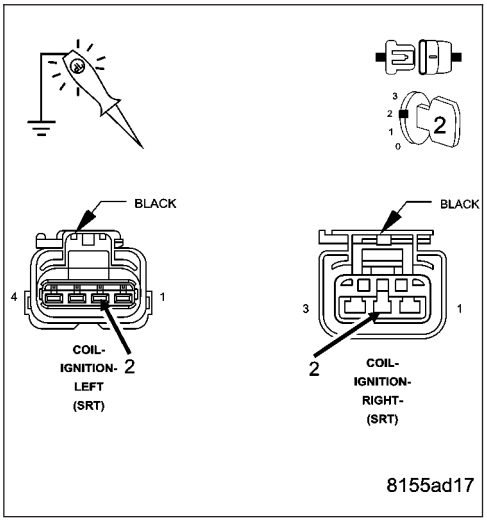

CAUTION: Stop All Actuations

P0355-IGNITION COIL #5 PRIMARY CIRCUIT (CONTINUED)

3. IGNITION COIL RESISTANCE

Turn the Ignition off.

The resistance of a 8.3L Primary Ignition coil is 0.53 to 0.65 of an ohm.

Measure the resistance of the primary Ignition coil.

Is the resistance within the appropriate specification?

Yes >> Go To 4

No >> Replace the Ignition coil.
Perform POWERTRAIN VERIFICATION TEST. (Refer to 9 - ENGINE - STANDARD PROCEDURE)

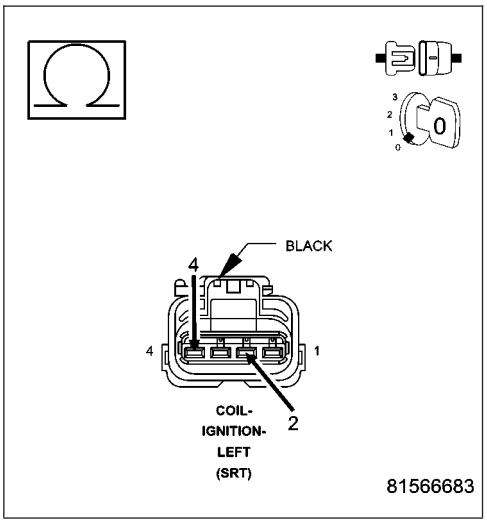

4. IGNITION COIL

Using a 12-volt test light connected to a 12-volt source, probe the (K134) Ignition Coil Control No.5 circuit.

Crank the engine for 5 seconds while observing the test light.

What is the condition of the test light while cranking the engine?

Brightly blinking.
Replace the Ignition Coil.
Perform POWERTRAIN VERIFICATION TEST. (Refer to 9 - ENGINE - STANDARD PROCEDURE)

ON constantly.
Go To 5

OFF constantly.
Go To 6

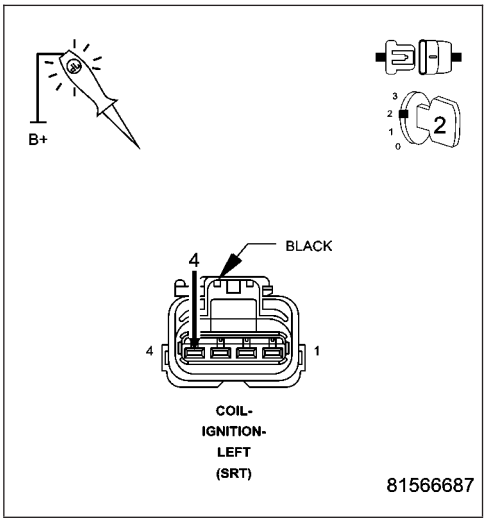

P0355-IGNITION COIL #5 PRIMARY CIRCUIT (CONTINUED)

5. (K134) IGNITION COIL CONTROL NO.5 CIRCUIT SHORTED TO GROUND

Turn the Ignition off.

Disconnect the C1 PCM harness connectors.

Measure the resistance between the (K134) Ignition Coil Control No.5 circuit and ground.

Is the resistance below 100 ohms?

Yes >> Repair the short to ground in the (K134) Ignition Coil Control No.5 circuit.

Perform POWERTRAIN VERIFICATION TEST. (Refer to 9 - ENGINE - STANDARD PROCEDURE)

No >> Go To 7

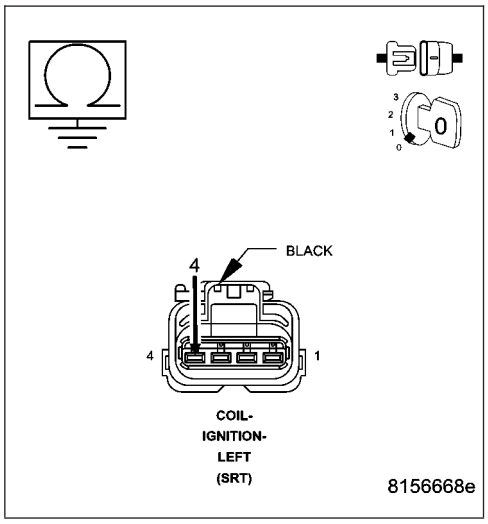

6. (K134) IGNITION COIL CONTROL NO.5 CIRCUIT OPEN

Turn the Ignition off.

Disconnect the PCM harness connectors.

Measure the resistance of the (K134) Ignition Coil Control No.5 circuit from the Ignition Coil connector to the PCM connector.

Is the resistance below 5.0 ohms?

Yes >> Go To 7

No >> Repair the open in the (K134) Ignition Coil Control No.5 circuit.

Perform POWERTRAIN VERIFICATION TEST. (Refer to 9 - ENGINE - STANDARD PROCEDURE)

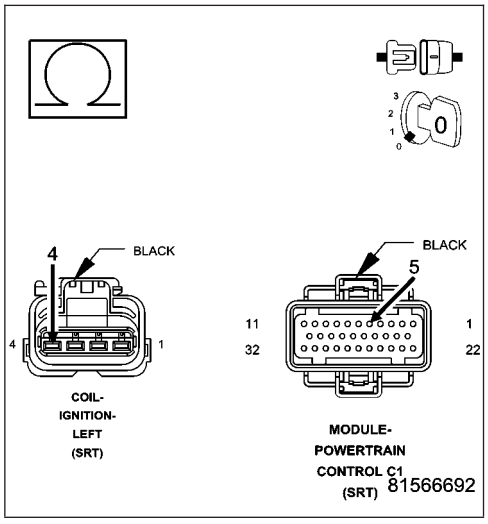

7. PCM

NOTE: Before continuing, check the PCM harness connector terminals for corrosion, damage, or terminal push out. Repair as necessary.

Using the schematics as a guide, inspect the wire harness and connectors. Pay particular attention to all Power and Ground circuits.

If there are no possible causes remaining, view repair.

Repair

Replace and program the Powertrain Control Module per Service Information.

Perform POWERTRAIN VERIFICATION TEST. (Refer to 9 - ENGINE - STANDARD PROCEDURE)

P0420-1/1 CATALYTIC CONVERTER EFFICIENCY

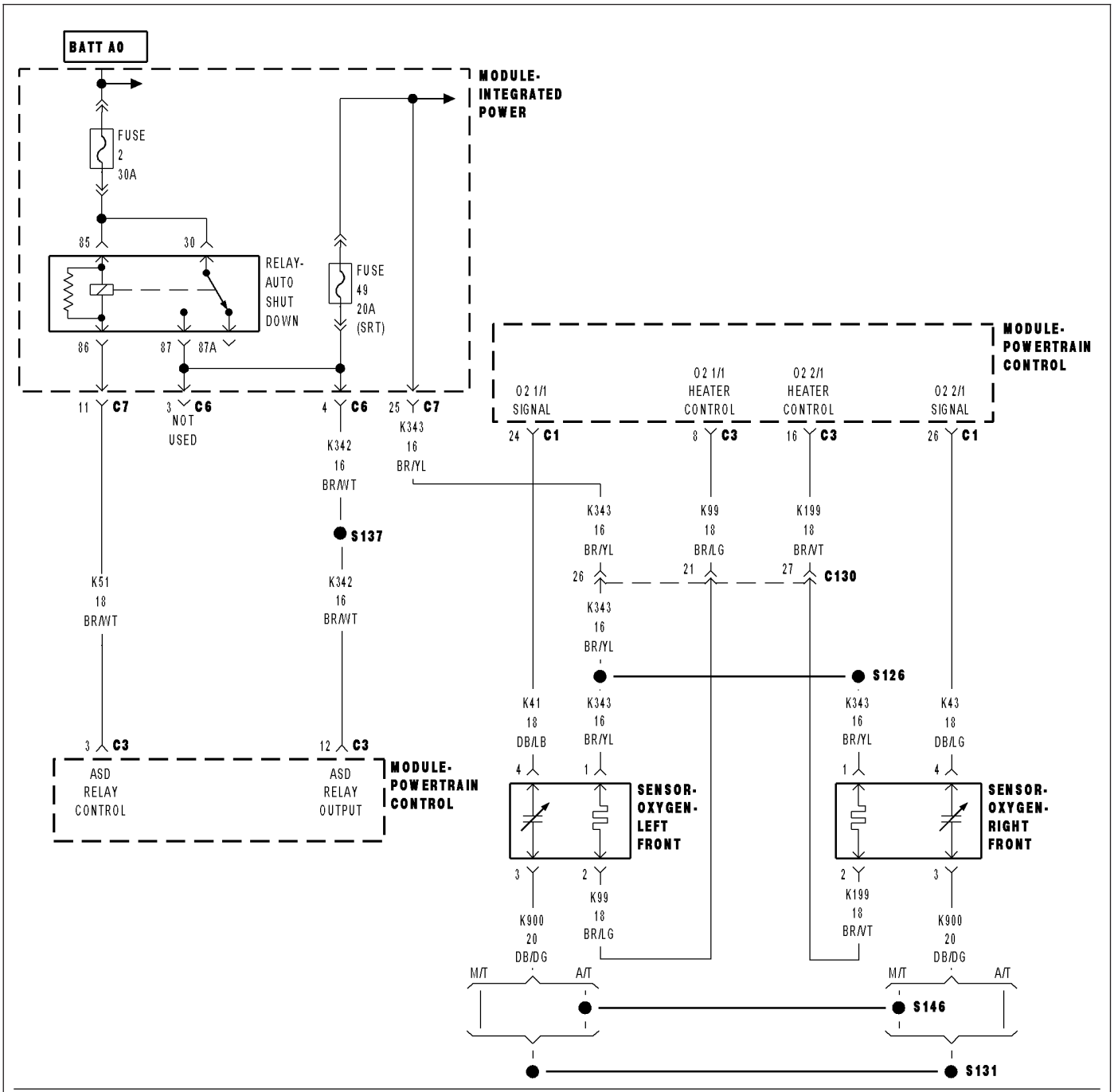

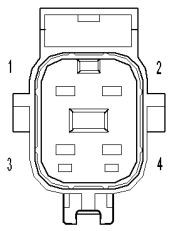

SENSOR-
OXYGEN-
LEFT
FRONT
(SRT)

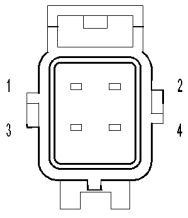

SENSOR-
OXYGEN-
RIGHT
FRONT
(SRT)

813c2aeb

P0420-1/1 CATALYTIC CONVERTER EFFICIENCY (CONTINUED)

For the Engine circuit diagram (Refer to 9 - ENGINE - SCHEMATICS AND DIAGRAMS).

For a complete wiring diagram **Refer to Section 8W**.

Theory of Operation

The upstream O2 sensor is used to detect the amount of oxygen in the exhaust gas before the gas enters the catalytic converter. During the catalyst/O2 monitor test, the response rate (cycles/second) of the upstream O2 sensor determines the sensor's ability to achieve the tailpipe emissions limits. The response rate of the downstream O2 sensor relative to the upstream O2 sensor response rate measures the catalyst's ability to store oxygen and is used to infer the catalyst's ability to achieve the tailpipe emissions limits.

- **When Monitored:**
  After engine warm up to 70°C (158°F), 180 seconds of open throttle operation, at a speed greater than 18 mph and less than 55 mph, with the engine at 1200-1700 rpm and MAP vacuum between 15.0 and 21.0 inches of mercury (Hg).
- **Set Condition:**
  As catalyst efficiency deteriorates, the switch rate of the downstream O2 sensor approaches that of the upstream O2 sensor. If at any point during the test the switch ratio reaches a predetermined value a counter is incremented by one. Three good trips to turn off the MIL.

Possible Causes
EXHAUST LEAK
ENGINE MECHANICAL
AGING O2 SENSOR
CATALYTIC CONVERTER

Always perform the Pre-Diagnostic Troubleshooting procedure before proceeding. (Refer to 9 - ENGINE - DIAGNOSIS AND TESTING).

Diagnostic Test

1. ACTIVE DTC

NOTE: A new rear O2 Sensor along with an aging front O2 Sensor may cause the DTC to set. Review the repair history of the vehicle before continuing.

NOTE: If an O2 Sensor DTC set along with the Catalytic Converter Efficiency DTC diagnose the O2 Sensor DTC(s) before continuing.

NOTE: Check for contaminants that may have damaged the O2 Sensor and Catalytic Converter: contaminated fuel, unapproved silicone, oil and coolant, repair necessary.

Ignition on, engine not running.

With a scan tool, read DTCs.

Is the DTC active at this time?

Yes >> Go To 2

No >> Refer to the INTERMITTENT CONDITION Diagnostic Procedure.
Perform the POWERTRAIN VERIFICATION TEST. (Refer to 9 - ENGINE - STANDARD PROCEDURE)

P0420-1/1 CATALYTIC CONVERTER EFFICIENCY (CONTINUED)

2. VISUALLY INSPECT CATALYTIC CONVERTER

Inspect the Catalytic Converter for the following damage.
Damaged Catalytic Converter, dents or holes.
Severe discoloration caused by overheating the Catalytic Converter.
Catalytic Converter broken internally.
Leaking Catalytic Converter.

Were any problems found?

Yes >> Replace the Catalytic Converter. Repair the condition that may have caused the failure.
Perform the POWERTRAIN VERIFICATION TEST. (Refer to 9 - ENGINE - STANDARD PROCEDURE)

No >> Go To 3

---

3. EXHAUST LEAK

Start the engine.
Inspect the exhaust for leaks between the engine and the 1/1 O2 Sensor.
Inspect the exhaust for leaks between the engine and the 1/2 O2 Sensor.

Are there any exhaust leaks?

Yes >> Repair or replace the leaking exhaust parts as necessary.
Perform the POWERTRAIN VERIFICATION TEST. (Refer to 9 - ENGINE - STANDARD PROCEDURE)

No >> Go To 4

---

4. ENGINE MECHANICAL

Check the exhaust for excessive smoke caused by an internal problem in the engine.

Is an engine mechanical condition present?

Yes >> Repair the engine mechanical condition as necessary.
Perform the POWERTRAIN VERIFICATION TEST. (Refer to 9 - ENGINE - STANDARD PROCEDURE)

No >> Go To 5

---

5. AGING O2 SENSOR

A new rear O2 Sensor along with an aging front O2 Sensor may cause the DTC to set.
Review the vehicles repair history.

Has the rear O2 Sensor been replaced without replacing the front O2 Sensor?

Yes >> Replace the Front O2 Sensor as necessary.
Perform the POWERTRAIN VERIFICATION TEST. (Refer to 9 - ENGINE - STANDARD PROCEDURE)

No >> Go To 6

---

6. CATALYTIC CONVERTER

If there are no possible cause remaining, view repair.

Repair

Replace the Catalytic Converter.
Perform the POWERTRAIN VERIFICATION TEST. (Refer to 9 - ENGINE - STANDARD PROCEDURE)

P0432-2/1 CATALYTIC CONVERTER EFFICIENCY

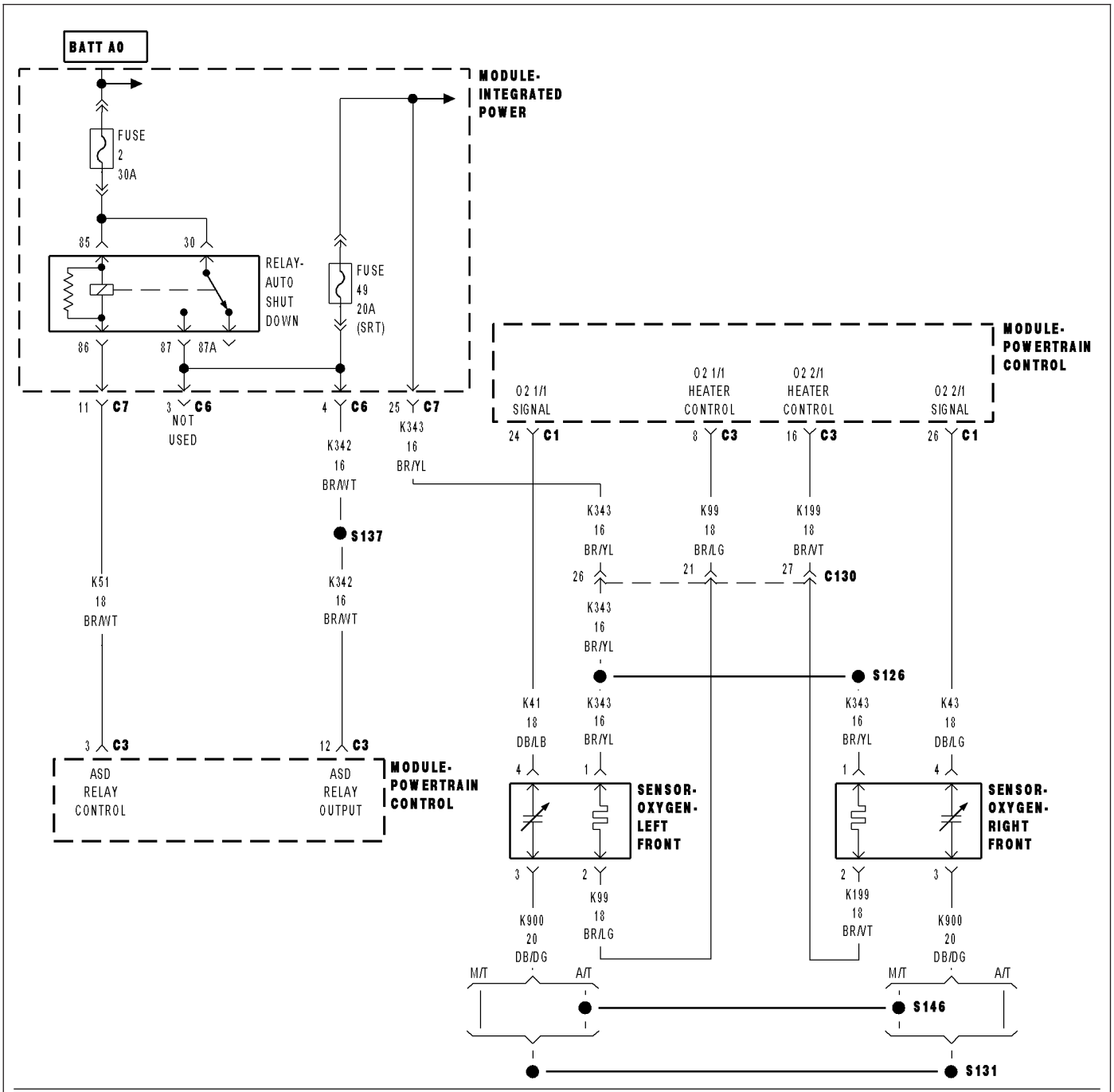

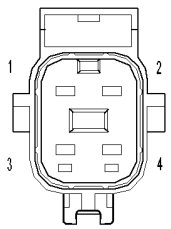

SENSOR-
OXYGEN-
LEFT
FRONT
(SRT)

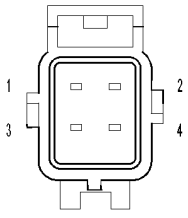

SENSOR-
OXYGEN-
RIGHT
FRONT
(SRT)

813c2aeb

P0432-2/1 CATALYTIC CONVERTER EFFICIENCY (CONTINUED)

For the Engine circuit diagram (Refer to 9 - ENGINE - SCHEMATICS AND DIAGRAMS).

For a complete wiring diagram **Refer to Section 8W**.

Theory of Operation

The upstream O2 sensor is used to detect the amount of oxygen in the exhaust gas before the gas enters the catalytic converter. During the catalyst/O2 monitor test, the response rate (cycles/second) of the upstream O2 sensor determines the sensor's ability to achieve the tailpipe emissions limits. The response rate of the downstream O2 sensor relative to the upstream O2 sensor response rate measures the catalyst's ability to store oxygen and is used to infer the catalyst's ability to achieve the tailpipe emissions limits.

- **When Monitored:**
  After engine warm up to 147 deg. F, 180 seconds of open throttle operation, at a speed greater than 20 mph, with the engine at 1200-1700 rpm and MAP vacuum between 15.0 and 21.0 inches of mercury (Hg).
- **Set Condition:**
  As catalyst efficiency deteriorates, the switch rate of the downstream O2 sensor approaches that of the upstream O2 sensor. If at any point during the test the switch ratio reaches a predetermined value a counter is incremented by one. Three good trips to turn off the MIL.

Possible Causes
EXHAUST LEAK
ENGINE MECHANICAL
AGING O2 SENSOR
CATALYTIC CONVERTER

Always perform the Pre-Diagnostic Troubleshooting procedure before proceeding. (Refer to 9 - ENGINE - DIAGNOSIS AND TESTING).

Diagnostic Test

1. ACTIVE DTC

NOTE: A new rear O2 Sensor along with an aging front O2 Sensor may cause the DTC to set. Review the repair history of the vehicle before continuing.

NOTE: If an O2 Sensor DTC set along with the Catalytic Converter Efficiency DTC diagnose the O2 Sensor DTC(s) before continuing.

NOTE: Check for contaminants that may have damaged the O2 Sensor and Catalytic Converter: contaminated fuel, unapproved silicone, oil and coolant, repair necessary.

Ignition on, engine not running.

With a scan tool, read DTCs.

Is the DTC active at this time?

Yes >> Go To 2

No >> Refer to the INTERMITTENT CONDITION Diagnostic Procedure.
Perform the POWERTRAIN VERIFICATION TEST. (Refer to 9 - ENGINE - STANDARD PROCEDURE)

P0432-2/1 CATALYTIC CONVERTER EFFICIENCY (CONTINUED)

2. VISUALLY INSPECT CATALYTIC CONVERTER

Inspect the Catalytic Converter for the following damage.
Damaged Catalytic Converter, dents or holes.
Severe discoloration caused by overheating the Catalytic Converter.
Catalytic Converter broken internally.
Leaking Catalytic Converter.

Were any problems found?

Yes >> Replace the Catalytic Converter. Repair the condition that may have caused the failure.
Perform the POWERTRAIN VERIFICATION TEST. (Refer to 9 - ENGINE - STANDARD PROCEDURE)

No >> Go To 3

---

3. EXHAUST LEAK

Start the engine.
Inspect the exhaust for leaks between the engine and the 2/1 O2 Sensor.
Inspect the exhaust for leaks between the engine and the 2/2 O2 Sensor.

Are there any exhaust leaks?

Yes >> Repair or replace the leaking exhaust parts as necessary.
Perform the POWERTRAIN VERIFICATION TEST. (Refer to 9 - ENGINE - STANDARD PROCEDURE)

No >> Go To 4

---

4. ENGINE MECHANICAL

Check the exhaust for excessive smoke caused by an internal problem in the engine.

Is an engine mechanical condition present?

Yes >> Repair the engine mechanical condition as necessary.
Perform the POWERTRAIN VERIFICATION TEST. (Refer to 9 - ENGINE - STANDARD PROCEDURE)

No >> Go To 5

---

5. AGING O2 SENSOR

A new rear O2 Sensor along with an aging front O2 Sensor may cause the DTC to set.
Review the vehicles repair history.

Has the rear O2 Sensor been replaced without replacing the front O2 Sensor?

Yes >> Replace the 2/1 O2 Sensor as necessary.
Perform the POWERTRAIN VERIFICATION TEST. (Refer to 9 - ENGINE - STANDARD PROCEDURE)

No >> Go To 6

---

6. CATALYTIC CONVERTER

If there are no possible cause remaining, view repair.

Repair

Replace the Catalytic Converter.
Perform the POWERTRAIN VERIFICATION TEST. (Refer to 9 - ENGINE - STANDARD PROCEDURE)

P0441-EVAP PURGE FLOW MONITOR

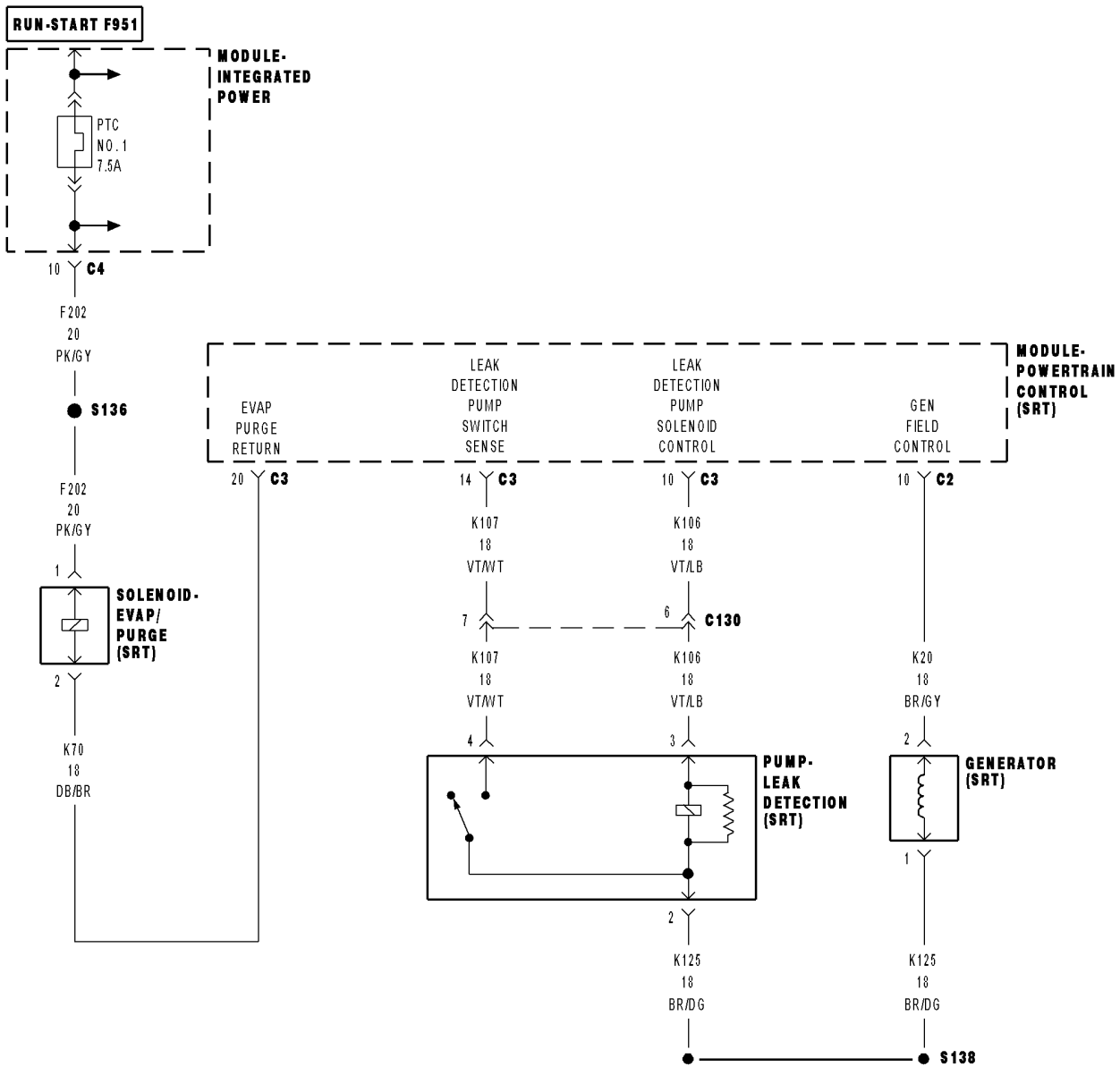

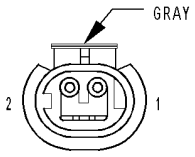

SOLENOID-
EVAP/
PURGE
(SRT)

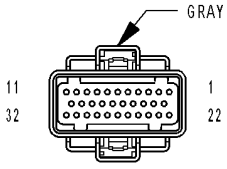

MODULE-
POWERTRAIN
CONTROL C3
(SRT)

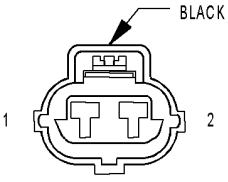

GENERATOR
(SRT)

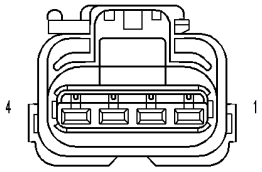

PUMP-
LEAK DETECTION
(SRT)

8155e655

P0441-EVAP PURGE FLOW MONITOR (CONTINUED)

For the Engine circuit diagram (Refer to 8 - ELECTRICAL/ELECTRONIC CONTROL MODULES/ENGINE CONTROL MODULE - SCHEMATIC - ELECTRICAL)

For a complete wiring diagram **Refer to Section 8W**.

- **When Monitored:**
  With engine temperature greater than 170° F, fuel control in closed loop, engine idling for 2 minutes, no low fuel, MAP less than 15.7 inches mercury and barometric altitude less than 8,000 feet.
- **Set Condition:**
  After having passed the Leak Detection Pump (LDP) test, no air flow through the evaporative system is detected by the EVAP monitor.

Possible Causes
EVAP PURGE HOSE (SOLENOID TO CANISTER)
EVAP PURGE HOSE (CANISTER TO FUEL TANK)
EVAP PURGE SOLENOID VACUUM SUPPLY
EVAP PURGE SOLENOID (LEAKS/STUCK OPEN)
EVAP PURGE SOLENOID

For the Engine circuit diagram (Refer to 8 - ELECTRICAL/ELECTRONIC CONTROL MODULES/ENGINE CONTROL MODULE - SCHEMATIC - ELECTRICAL)

1. GOOD TRIP EQUAL TO ZERO

Check for any related TSBs.

Ignition on, engine not running.

With the scan tool, read DTCs and record the related Freeze Frame data.

Is the Good Trip Counter displayed and equal to zero?

Yes >> Go To 2

No >> Refer to the INTERMITTENT CONDITION Diagnostic Procedure.
Perform POWERTRAIN VERIFICATION TEST. (Refer to 9 - ENGINE - STANDARD PROCEDURE)

---

2. VISUAL INSPECTION

Visually inspect the Evap canister. Look for any physical damage or any signs of fuel that has entered the canister. Any signs of fuel may indicate a bad rollover valve.

Were any problems found?

Yes >> Repair or Replace as necessary.
Perform POWERTRAIN VERIFICATION TEST. (Refer to 9 - ENGINE - STANDARD PROCEDURE)

No >> Go To 3

P0441-EVAP PURGE FLOW MONITOR (CONTINUED)

3. VISUAL INSPECTION OF EVAP PURGE HOSE (SOLENOID TO CANISTER)

Visually inspect the Evap purge hose that goes from the Purge Solenoid to the Evap Canister. Look for any physical damage such as a pinched, plugged, ripped or dry rotted hose.

Were any problems found?

Yes >> Repair or replace hose as necessary.
Perform POWERTRAIN VERIFICATION TEST. (Refer to 9 - ENGINE - STANDARD PROCEDURE)

No >> Go To 4

---

4. VISUAL INSPECTION OF EVAP PURGE HOSE (EVAP CANISTER TO FUEL TANK)

Visually inspect the Evap Purge hose that goes between the Evap canister and the fuel tank. Look for any physical damage such as a pinched, plugged, ripped or dry rotted hose.

Were any problems found?

Yes >> Repair or replace hose as necessary.
Perform POWERTRAIN VERIFICATION TEST. (Refer to 9 - ENGINE - STANDARD PROCEDURE)

No >> Go To 5

---

5. EVAP VACUUM SUPPLY HOSE INSPECTION

Carefully inspect the Evap Purge Solenoid vacuum supply hose for proper routing. Also check for a pinched or plugged hose from the throttle body to the Purge Solenoid.

Inspect the vacuum nipple at the throttle body for any damage or plugging.

Make sure vacuum fitting at the purge solenoid is not over installed.

Is the vacuum supply hose and throttle body vacuum nipple free from defects?

Yes >> Go To 6

No >> Repair the vacuum supply hose/tube as necessary.
Perform POWERTRAIN VERIFICATION TEST. (Refer to 9 - ENGINE - STANDARD PROCEDURE)

---

6. EVAP PURGE SOLENOID LEAKS

NOTE: After disconnecting the Evap Purge Solenoid vacuum connections, inspect the lines and solenoid for any signs of contamination from the EVAP Canister. This may indicate a faulty rollover valve. Replace purge solenoid if contamination is found

Disconnect the vacuum hoses at the EVAP Purge Solenoid.

Using a hand vacuum pump, apply 10 inches of vacuum to the Evap Purge Solenoid vacuum source port. (component side)

Does the Evap Purge Solenoid hold vacuum?

Yes >> Go To 7

No >> Replace the Evap Purge Solenoid and the Evap Canister and clean out Evap lines as necessary.
Perform POWERTRAIN VERIFICATION TEST. (Refer to 9 - ENGINE - STANDARD PROCEDURE)

P0441-EVAP PURGE FLOW MONITOR (CONTINUED)

7. EVAP PURGE SOLENOID

Using a hand vacuum pump, apply 10 inches of vacuum to the Evap Purge Solenoid vacuum source port. (component side)

Ignition on, engine not running.

With the scan tool, actuate the EVAP Purge Solenoid and observe the vacuum gauge.

Does the vacuum drop when the solenoid is actuated?

Yes >> Refer to the INTERMITTENT CONDTION Symptom (Diagnostic Procedure).
Perform POWERTRAIN VERIFICATION TEST. (Refer to 9 - ENGINE - STANDARD PROCEDURE)

No >> Replace the Evap Purge Solenoid.
Perform POWERTRAIN VERIFICATION TEST. (Refer to 9 - ENGINE - STANDARD PROCEDURE)

P0442-EVAP LEAK MONITOR MEDIUM (0.040) LEAK DETECTED

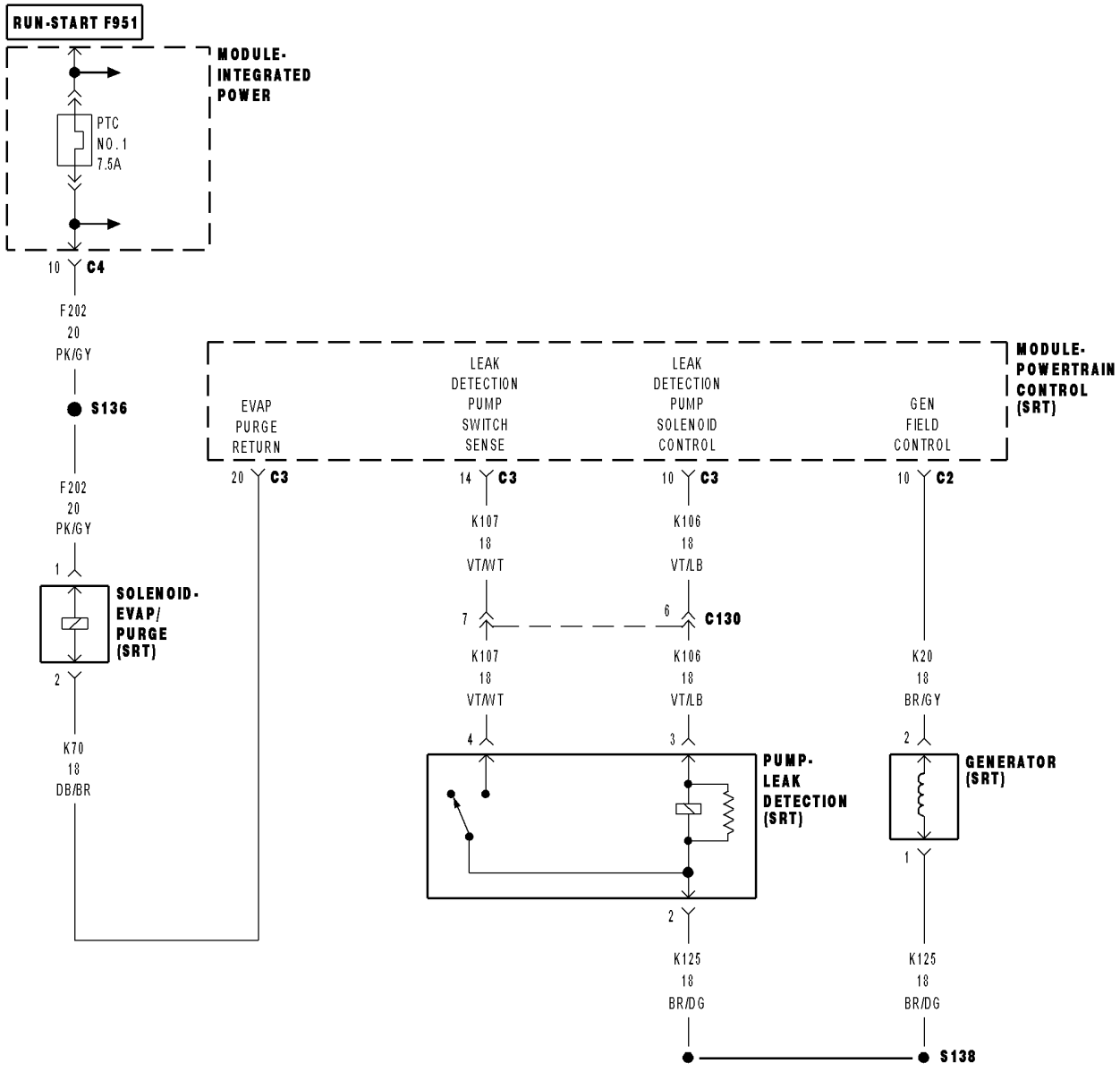

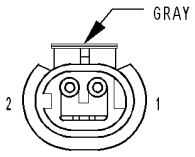

SOLENOID-
EVAP/
PURGE
(SRT)

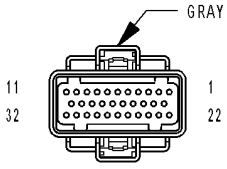

MODULE-
POWERTRAIN
CONTROL C3
(SRT)

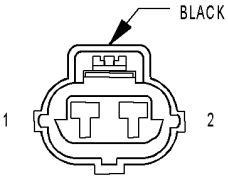

GENERATOR
(SRT)

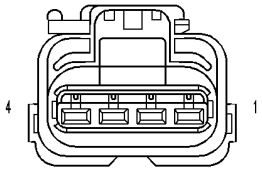

PUMP-
LEAK DETECTION
(SRT)

8155e655

P0442-EVAP LEAK MONITOR MEDIUM (0.040) LEAK DETECTED (CONTINUED)

For the Engine circuit diagram (Refer to 9 - ENGINE - SCHEMATICS AND DIAGRAMS).

For a complete wiring diagram **Refer to Section 8W**.

- **When Monitored:**
  Immediately after a cold start, with battery/ambient temperature between 40° F and 90° F and coolant temperature within 10° F of battery/ambient.
- **Set Condition:**
  If there is a leak larger than 0.040″ and smaller than 0.080″ in the evaporative system.

Possible Causes
EVAP PURGE SYSTEM LEAK
EVAP PURGE SOLENOID
LDP SWITCH

Always perform the Pre-Diagnostic Troubleshooting procedure before proceeding. (Refer to 9 - ENGINE - DIAGNOSIS AND TESTING).

Diagnostic Test

1. ACTIVE DTC

NOTE: Since a hot vehicle can conceal a leak, it is best to perform this test at room temperature.

NOTE: A loose gas cap could have caused this DTC to set. Make sure gas cap is tight and in good condition. Make sure the gas cap meets OEM specifications.

Ignition on, engine not running.

With a scan tool, read DTCs.

Is the DTC active at this time?

Yes >> Go To 2

No >> Refer to the INTERMITTENT CONDITION Diagnostic Procedure.
Perform the POWERTRAIN VERIFICATION TEST. (Refer to 9 - ENGINE - STANDARD PROCEDURE)

---

2. VISUAL AND PHYSICAL INSPECTION

Perform a visual and physical inspection of the entire Evaporative Emission system.

Check for the follow conditions:

- Holes or cracks
- Loose seal points
- Evidence of damaged components
- Incorrect routing of hoses and tubes
- Fuel Cap gasket seal

Were any of the above conditions found?

Yes >> Repair as necessary.
Perform the POWERTRAIN VERIFICATION TEST. (Refer to 9 - ENGINE - STANDARD PROCEDURE)

No >> Go To 3

P0442-EVAP LEAK MONITOR MEDIUM (0.040) LEAK DETECTED (CONTINUED)

3. VERIFY EVAPORATIVE EMISSION LEAK

To continue testing you will need Miller Tool #8404A Evaporative Emission Leak Detector (EELD).

WARNING: Keep lit cigarettes, sparks, flames, and other ignition sources away from the test area to prevent the ignition of explosive gases. Keep the test area well ventilated.

NOTE: The fuel tank should have between 20% and 80% of fuel tank capacity to properly test the Evap system.

Connect the red power lead of the EELD to the battery positive terminal and the black ground lead to battery negative terminal.

Block the vent hose of the canister if using the service port.

Connect shop air to the EELD.

Set the smoke/air control switch to AIR.

Insert the tester's AIR supply tip (clear hose) into the appropriate calibration orifice on the tester's control panel (based on DTC leak size).

Press the remote smoke/air start button.

Position the red flag on the air flow meter so it is aligned with the indicator ball.

When the calibration is complete, release the remote button. The EELD flow meter is now calibrated in liters per minute to the size leak indicated by the DTC set in the PCM.

Install the service port adapter #8404-14 on the vehicle's service port and block the vent hose of the EVAP Canister (if equipped) or install the #8404-ADP service adaptor into the filter line.

Connect the Air supply hose from the EELD to the service port (if equipped) or to the #8404-ADP adapter.

Press the remote button to activate AIR flow.

NOTE: Larger volume fuel tanks, lower fuel levels or if the vehicle is equipped with a Flow Management Valve may indicate high flow and will require 4 to 5 minutes to fill.

Compare the flow meter indicator ball reading to the red flag.

ABOVE the red flag indicates a leak present.

BELOW the red flag indicates a sealed system.

Is the indicator ball above the red flag?

Yes >> Go To 4

No >> Refer to the INTERMITTENT CONDITION Diagnostic Procedure.
Perform the POWERTRAIN VERIFICATION TEST. (Refer to 9 - ENGINE - STANDARD PROCEDURE)

P0442-EVAP LEAK MONITOR MEDIUM (0.040) LEAK DETECTED (CONTINUED)

4. EVAPORATIVE EMISSION LEAK DETECTION

NOTE: A thorough visual inspection of the Evap system hoses, tubes, and connections may save time in your diagnosis. Look for any physical damage or signs of wetness at connections. The strong smell of fuel vapors may also aid diagnosis.

To continue testing, you will need Miller Tool #8404A Evaporative Emissions Leak Detector (EELD).

Remove the Air supply hose from the service port (if equipped) or from the #8404-ADP adapter.

Connect the SMOKE supply tip (black hose) to the service port (if equipped) or to the #8404-ADP adapter.

Set the smoke/air control switch to SMOKE.

NOTE: The flow meter indicator ball will not move in the smoke mode.

Press the remote smoke/air start button.

NOTE: Make sure that smoke has filled the EVAP system by continuing to press the remote smoke/air start button, remove the vehicle fuel cap, and wait for the smoke to exit. Once smoke is indicated reinstall the fuel cap.

NOTE: For optimal performance, introduce smoke into the system for an additional 60 seconds; continue introducing smoke at 15 second intervals, as necessary.

While still holding the remote smoke/air start button, use the white light (#8404-CLL) to follow the EVAP system path, and look for the source of the leak indicated by exiting smoke.

If a leak is concealed from view (i.e., top of fuel tank), release the remote smoke/air start button, and use the ultra-violet (UV) black light #8404-UVL and the yellow goggles 8404-20 to look for residual traces of dye that is left behind by the smoke.

The exiting smoke deposits a residual fluid that is either bright green or bright yellow in color when viewed with a UV light.

NOTE: Carefully inspect the vent side of the EVAP Canister. Due to the filtering system in the canister the smoke may not be as thick. Introducing smoke into the filtered side of the canister may assist in locating the leak.

Was a leak found?

Yes >> Repair or replace the leaking component as necessary.
Perform the POWERTRAIN VERIFICATION TEST. (Refer to 9 - ENGINE - STANDARD PROCEDURE)

No >> Go To 5

---

5. EVAP PURGE SOLENOID OPERATION

NOTE: After disconnecting the Evap Purge Solenoid vacuum connections, inspect the lines and solenoid for any signs of contamination from the EVAP Canister. This may indicate a faulty check valve. Replace/repair as necessary.

Turn the ignition off.

Disconnect the vacuum hoses at the Evap Purge Solenoid.

Using a hand vacuum pump, apply 10 in Hg to the ″CAN″ of the EVAP Purge Solenoid.

NOTE: Monitor the vacuum gauge for at least 15 seconds.

Does the EVAP Purge Solenoid hold vacuum?

Yes >> Test Complete.

No >> Replace the Evap Purge Solenoid.
Perform the POWERTRAIN VERIFICATION TEST. (Refer to 9 - ENGINE - STANDARD PROCEDURE)

P0443-EVAP PURGE SOLENOID CIRCUIT

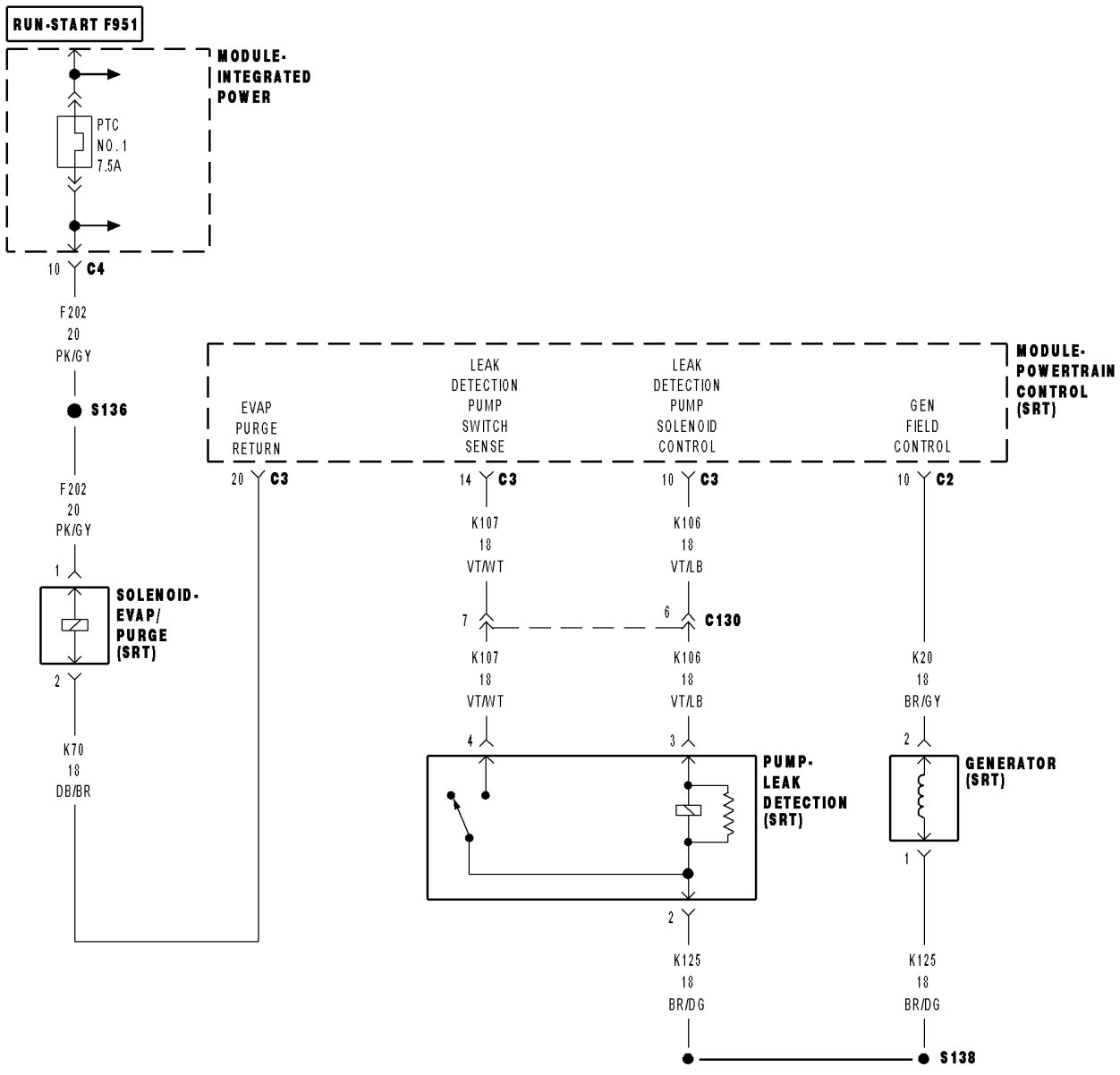

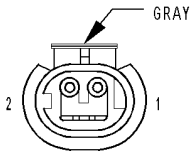

SOLENOID-
EVAP/
PURGE
(SRT)

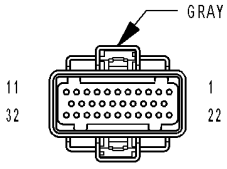

MODULE-
POWERTRAIN
CONTROL C3
(SRT)

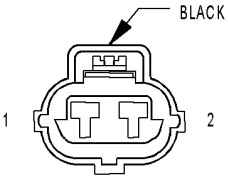

GENERATOR
(SRT)

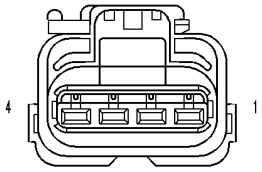

PUMP-
LEAK DETECTION
(SRT)

8155e655

P0443-EVAP PURGE SOLENOID CIRCUIT (CONTINUED)

For the Engine circuit diagram (Refer to 8 - ELECTRICAL/ELECTRONIC CONTROL MODULES/ENGINE CONTROL MODULE - SCHEMATIC - ELECTRICAL)

For a complete wiring diagram **Refer to Section 8W**.

- **When Monitored:**
  Continuously after the ignition is turned on and the battery voltage is above 10.4 volts.
- **Set Condition:**
  Not powering down, not in limp-in and time since last solenoid activation is greater than 72 micro seconds. The PCM will set a trouble code if the actual state of the solenoid does not match the intended state on two consecutive key cycles.

Possible Causes
(F202) FUSED IGNITION SWITCH OUTPUT CIRCUIT OPEN
EVAP PURGE SOLENOID
(K70) EVAP PURGE SOLENOID CONTROL CIRCUIT OPEN
(K70) EVAP PURGE SOLENOID CONTROL CIRCUIT SHORTED TO GROUND
PCM

Always perform the Pre-Diagnostic Troubleshooting procedure before proceeding. (Refer to 9 - ENGINE - DIAGNOSIS AND TESTING)

1. GOOD TRIP EQUAL TO ZERO

Check for any related TSBs.
Ignition on, engine not running.
With the scan tool, read DTCs and record the related Freeze Frame data.

Is the Good Trip Counter displayed and equal to zero?

Yes >> Go To 2

No >> Refer to the INTERMITTENT CONDITION Symptom (Diagnostic Procedure).
Perform POWERTRAIN VERIFICATION TEST. (Refer to 9 - ENGINE - STANDARD PROCEDURE)

---

2. EVAP PURGE SOLENOID

Turn the ignition off.
Disconnect the Evap Purge Solenoid connector.
Measure the resistance between the terminals of the Evap Purge Solenoid.

Is the resistance between 29.0 and 44.0 ohms?

Yes >> Go To 3

No >> Replace the Evap Purge Solenoid.
Perform POWERTRAIN VERIFICATION TEST. (Refer to 9 - ENGINE - STANDARD PROCEDURE)

P0443-EVAP PURGE SOLENOID CIRCUIT (CONTINUED)

3. (F202) FUSED IGNITION SWITCH OUTPUT CIRCUIT OPEN

Ignition on, engine not running.

Using a 12-volt test light connected to ground, probe the (F202) Fused Ignition Switch Output circuit.

Does the test light illuminate brightly?

Yes >> Go To 4

No >> Repair the excessive resistance or short to ground in the (F202) Fused Ignition Switch Output circuit. Inspect related fuse and repair as necessary.

Perform POWERTRAIN VERIFICATION TEST. (Refer to 9 - ENGINE - STANDARD PROCEDURE)

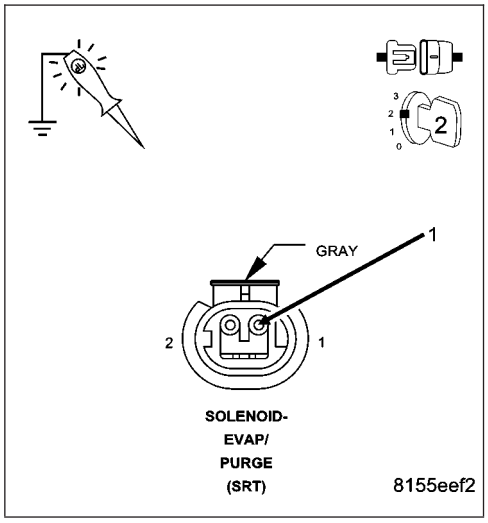

4. (K70) EVAP PURGE SOLENOID CONTROL CIRCUIT OPEN

Turn the ignition off.

Disconnect the C3 PCM harness connector.

NOTE: Check connectors - Clean/repair as necessary.

Measure the resistance of the (K70) Evap Purge Solenoid Control circuit from the PCM harness connector to the Evap Purge Solenoid harness connector.

Is the resistance below 5.0 ohms?

Yes >> Go To 5

No >> Repair the open in the (K70) Evap Purge Solenoid Control circuit.

Perform POWERTRAIN VERIFICATION TEST. (Refer to 9 - ENGINE - STANDARD PROCEDURE)

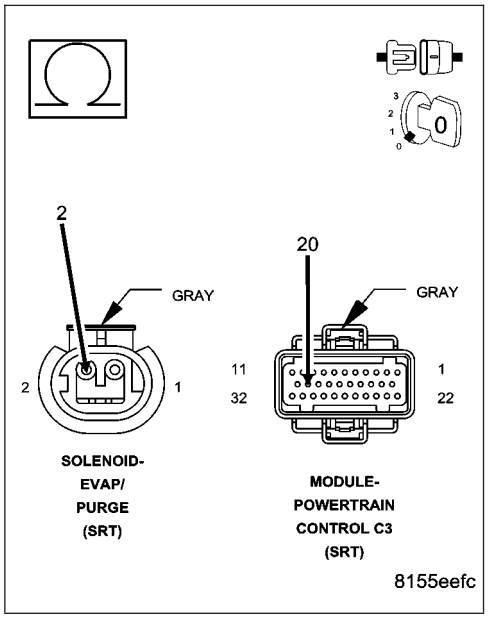

P0443-EVAP PURGE SOLENOID CIRCUIT (CONTINUED)

5. (K70) EVAP PURGE SOLENOID CONTROL CIRCUIT SHORT TO GROUND

Measure the resistance between ground and the (K70) Evap Purge Solenoid Control circuit.

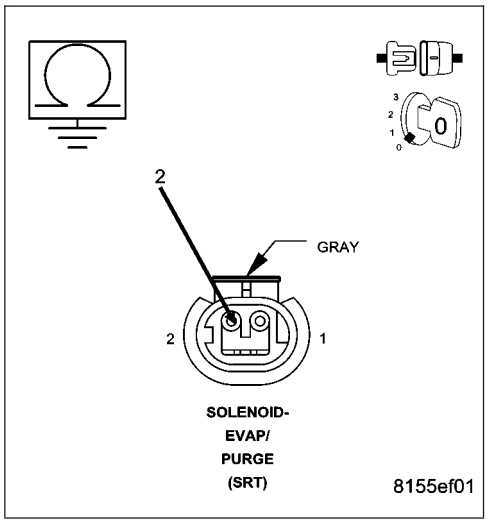

Is the resistance below 100 ohms?

Yes >> Repair the short to ground in the (K70) Evap Purge Solenoid Control circuit.
Perform POWERTRAIN VERIFICATION TEST. (Refer to 9 - ENGINE - STANDARD PROCEDURE)

No >> Go To 6

---

6. PCM

NOTE: Before continuing, check the PCM harness connector terminals for corrosion, damage, or terminal push out. Repair as necessary.
Using the schematics as a guide, inspect the wire harness and connectors. Pay particular attention to all Power and Ground circuits.

If there are no possible causes remaining, view repair.

Repair
Replace and program the Powertrain Control Module per Service Information.
Perform POWERTRAIN VERIFICATION TEST. (Refer to 9 - ENGINE - STANDARD PROCEDURE)

P0455-EVAP LEAK MONITOR LARGE LEAK DETECTED

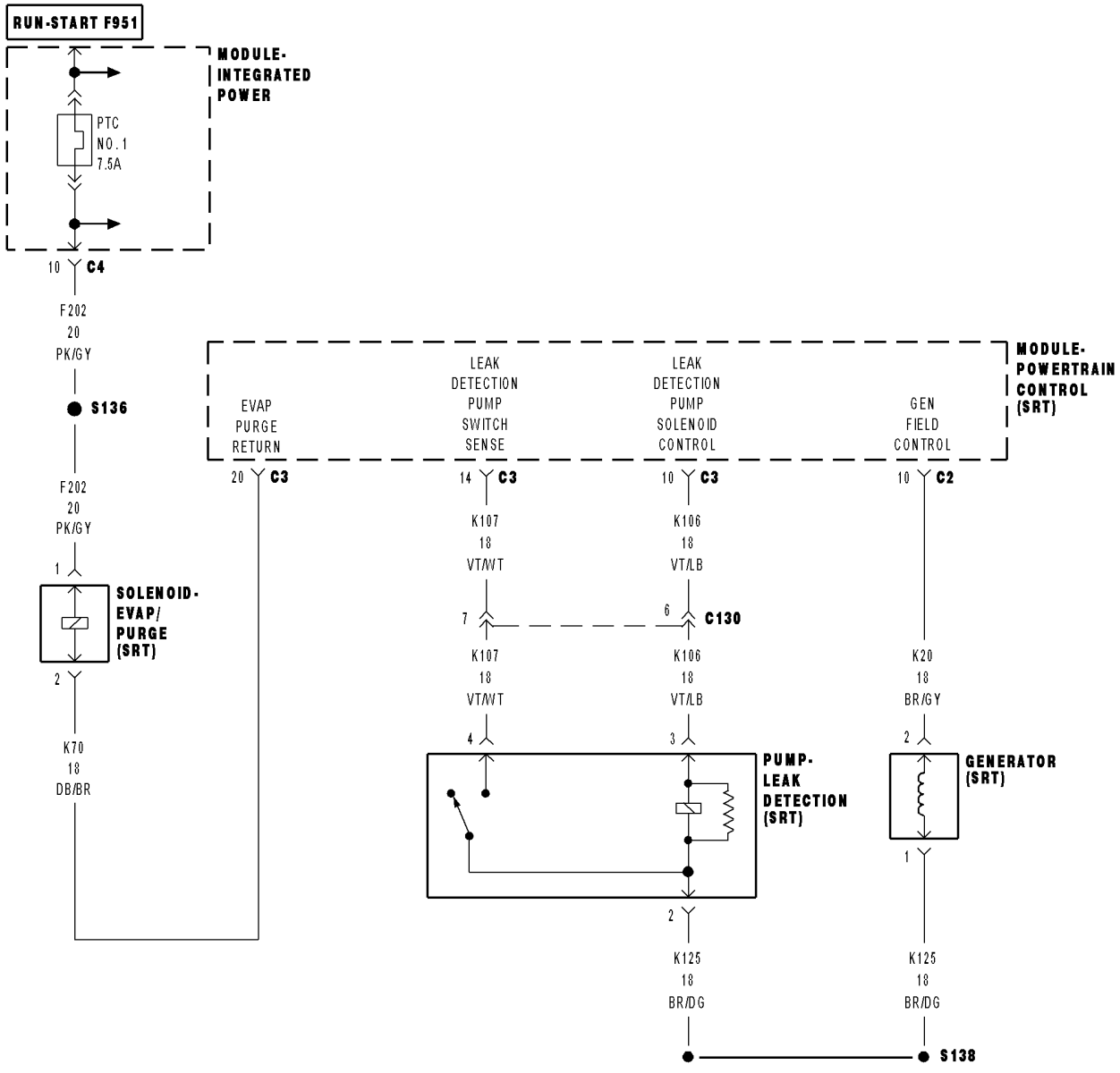

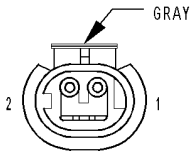

SOLENOID-
EVAP/
PURGE
(SRT)

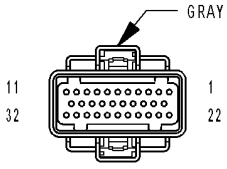

MODULE-
POWERTRAIN
CONTROL C3
(SRT)

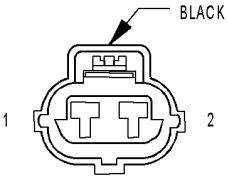

GENERATOR
(SRT)

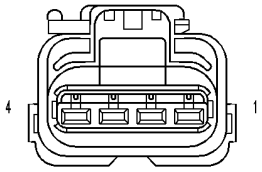

PUMP-
LEAK DETECTION
(SRT)

8155e655

P0455-EVAP LEAK MONITOR LARGE LEAK DETECTED (CONTINUED)

For the Engine circuit diagram (Refer to 9 - ENGINE - SCHEMATICS AND DIAGRAMS).

For a complete wiring diagram **Refer to Section 8W**.

- **When Monitored:**
  Immediately after a cold start, with battery/ambient temperature between 40° F and 90° F and coolant temperature within 10° F of battery/ambient.
- **Set Condition:**
  If there is a leak larger than 0.080″ in the evaporative system.

Possible Causes
EVAP PURGE SYSTEM LEAK
EVAP PURGE SOLENOID
LDP SWITCH

Always perform the Pre-Diagnostic Troubleshooting procedure before proceeding. (Refer to 9 - ENGINE - DIAGNOSIS AND TESTING).

Diagnostic Test

1. ACTIVE DTC

NOTE: Since a hot vehicle can conceal a leak, it is best to perform this test at room temperature.

NOTE: A loose gas cap could have caused this DTC to set. Make sure gas cap is tight and in good condition. Make sure the gas cap meets OEM specifications.

Ignition on, engine not running.

With a scan tool, read DTCs.

Is the DTC active at this time?

Yes >> Go To 2

No >> Refer to the INTERMITTENT CONDITION Diagnostic Procedure.
Perform the POWERTRAIN VERIFICATION TEST. (Refer to 9 - ENGINE - STANDARD PROCEDURE)

---

2. VISUAL AND PHYSICAL INSPECTION

Perform a visual and physical inspection of the entire Evaporative Emission system.

Check for the follow conditions:

- Holes or cracks
- Loose seal points
- Evidence of damaged components
- Incorrect routing of hoses and tubes
- Fuel Cap gasket seal

Were any of the above conditions found?

Yes >> Repair as necessary.
Perform the POWERTRAIN VERIFICATION TEST. (Refer to 9 - ENGINE - STANDARD PROCEDURE)

No >> Go To 3

P0455-EVAP LEAK MONITOR LARGE LEAK DETECTED (CONTINUED)

3. VERIFY EVAPORATIVE EMISSION LEAK

To continue testing you will need Miller Tool #8404A Evaporative Emission Leak Detector (EELD).

WARNING: Keep lit cigarettes, sparks, flames, and other ignition sources away from the test area to prevent the ignition of explosive gases. Keep the test area well ventilated.

NOTE: The fuel tank should have between 20% and 80% of fuel tank capacity to properly test the Evap system.

Connect the red power lead of the EELD to the battery positive terminal and the black ground lead to battery negative terminal.

Block the vent hose of the canister if using the service port.

Connect shop air to the EELD.

Set the smoke/air control switch to AIR.

Insert the tester's AIR supply tip (clear hose) into the appropriate calibration orifice on the tester's control panel (based on DTC leak size).

Press the remote smoke/air start button.

Position the red flag on the air flow meter so it is aligned with the indicator ball.

When the calibration is complete, release the remote button. The EELD flow meter is now calibrated in liters per minute to the size leak indicated by the DTC set in the PCM.

Install the service port adapter #8404-14 on the vehicle's service port and block the vent hose of the EVAP Canister (if equipped) or install the #8404-ADP service adaptor into the filter line.

Connect the Air supply hose from the EELD to the service port (if equipped) or to the #8404-ADP adapter.

Press the remote button to activate AIR flow.

NOTE: Larger volume fuel tanks, lower fuel levels or if the vehicle is equipped with a Flow Management Valve may indicate high flow and will require 4 to 5 minutes to fill.

Compare the flow meter indicator ball reading to the red flag.

ABOVE the red flag indicates a leak present.

BELOW the red flag indicates a sealed system.

Is the indicator ball above the red flag?

Yes >> Go To 4

No >> Refer to the INTERMITTENT CONDITION Diagnostic Procedure.
Perform the POWERTRAIN VERIFICATION TEST. (Refer to 9 - ENGINE - STANDARD PROCEDURE)

P0455-EVAP LEAK MONITOR LARGE LEAK DETECTED (CONTINUED)

4. EVAPORATIVE EMISSION LEAK DETECTION

NOTE: A thorough visual inspection of the Evap system hoses, tubes, and connections may save time in your diagnosis. Look for any physical damage or signs of wetness at connections. The strong smell of fuel vapors may also aid diagnosis.

To continue testing, you will need Miller Tool #8404A Evaporative Emissions Leak Detector (EELD).

Remove the Air supply hose from the service port (if equipped) or from the #8404-ADP adapter.

Connect the SMOKE supply tip (black hose) to the service port (if equipped) or to the #8404-ADP adapter.

Set the smoke/air control switch to SMOKE.

NOTE: The flow meter indicator ball will not move in the smoke mode.

Press the remote smoke/air start button.

NOTE: Make sure that smoke has filled the EVAP system by continuing to press the remote smoke/air start button, remove the vehicle fuel cap, and wait for the smoke to exit. Once smoke is indicated reinstall the fuel cap.

NOTE: For optimal performance, introduce smoke into the system for an additional 60 seconds; continue introducing smoke at 15 second intervals, as necessary.

While still holding the remote smoke/air start button, use the white light (#8404-CLL) to follow the EVAP system path, and look for the source of the leak indicated by exiting smoke.

If a leak is concealed from view (i.e., top of fuel tank), release the remote smoke/air start button, and use the ultra-violet (UV) black light #8404-UVL and the yellow goggles 8404-20 to look for residual traces of dye that is left behind by the smoke.

The exiting smoke deposits a residual fluid that is either bright green or bright yellow in color when viewed with a UV light.

NOTE: Carefully inspect the vent side of the EVAP Canister. Due to the filtering system in the canister the smoke may not be as thick. Introducing smoke into the filtered side of the canister may assist in locating the leak.

Was a leak found?

Yes >> Repair or replace the leaking component as necessary.
Perform the POWERTRAIN VERIFICATION TEST. (Refer to 9 - ENGINE - STANDARD PROCEDURE)

No >> Go To 5

---

5. EVAP PURGE SOLENOID OPERATION

NOTE: After disconnecting the Evap Purge Solenoid vacuum connections, inspect the lines and solenoid for any signs of contamination from the EVAP Canister. This may indicate a faulty check valve. Replace/repair as necessary.

Turn the ignition off.

Disconnect the vacuum hoses at the Evap Purge Solenoid.

Using a hand vacuum pump, apply 10 in Hg to the ″CAN″ of the EVAP Purge Solenoid.

NOTE: Monitor the vacuum gauge for at least 15 seconds.

Does the EVAP Purge Solenoid hold vacuum?

Yes >> Test Complete.

No >> Replace the Evap Purge Solenoid.
Perform the POWERTRAIN VERIFICATION TEST. (Refer to 9 - ENGINE - STANDARD PROCEDURE)

P0460-FUEL LEVEL SENDING UNIT NO CHANGE OVER MILES

For the Engine circuit diagram (Refer to 8 - ELECTRICAL/ELECTRONIC CONTROL MODULES/ENGINE CONTROL MODULE - SCHEMATIC - ELECTRICAL)

For a complete wiring diagram **Refer to Section 8W**.

- **When Monitored:**
  Engine running and fuel level either below 15% or above 85% of capacity.
- **Set Condition:**
  The PCM sees low fuel, less than 15%, for more than 120 miles or fuel level does not change by at least 4% for more than 250 miles.

Possible Causes
PHYSICALLY DAMAGED/DEFORMED/OBSTRUCTED FUEL TANK
FUEL LEVEL SENSOR

Always perform the Pre-Diagnostic Troubleshooting procedure before proceeding. (Refer to 9 - ENGINE - DIAGNOSIS AND TESTING)

1. CHECKING FOR A DAMAGED/DEFORMED/OBSTRUCTED FUEL TANK

Turn the ignition off.

WARNING: WARNING: The fuel system is under a constant pressure, even with the engine off. Before testing or servicing any fuel system hose, fitting or line, the fuel system pressure must be released.

Inspect the outside of the fuel tank for defects.

Remove the fuel tank.

Remove the fuel pump module from the fuel tank.

Inspect the inside of the fuel tank for any obstructions or deformities.

Is the fuel tank free from defects?

Yes >> Go To 2

No >> Repair or replace the fuel tank as necessary.
Perform POWERTRAIN VERIFICATION TEST. (Refer to 9 - ENGINE - STANDARD PROCEDURE)

---

2. FUEL LEVEL SENSOR

If there are no possible causes remaining, view repair.

Repair

Replace the Fuel Level Sensor.
Perform POWERTRAIN VERIFICATION TEST. (Refer to 9 - ENGINE - STANDARD PROCEDURE)

P0462-FUEL LEVEL SENDING UNIT VOLTS TOO LOW

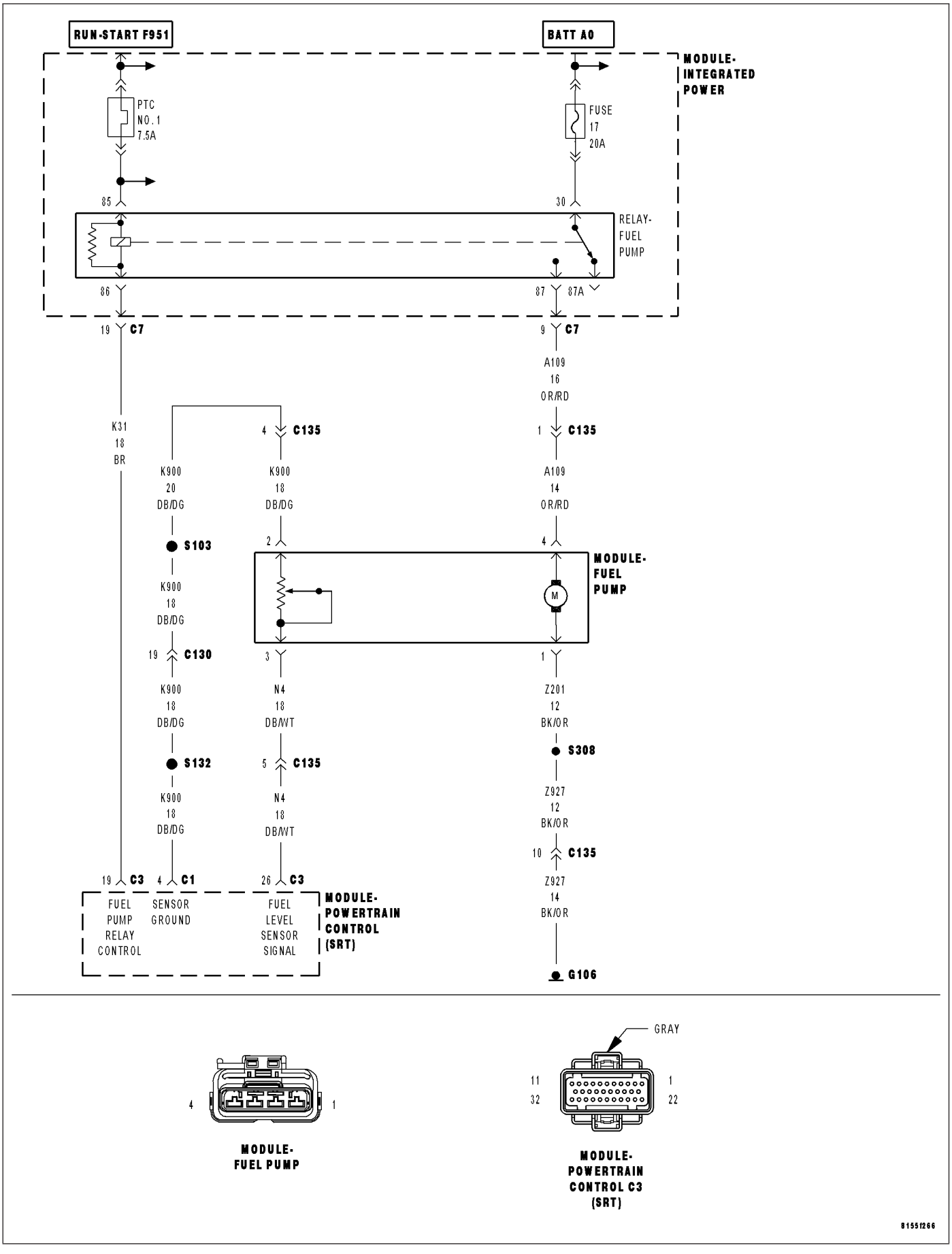

P0462-FUEL LEVEL SENDING UNIT VOLTS TOO LOW (CONTINUED)

For the Engine circuit diagram (Refer to 9 - ENGINE - SCHEMATICS AND DIAGRAMS).

For a complete wiring diagram **Refer to Section 8W**.

- **When Monitored:**
  Ignition on and battery voltage above 10.4 volts.
- **Set Condition:**
  The fuel level sensor signal voltage goes below 0.4 of a volt for more than 90 seconds. One Trip Fault. Three good trips to turn off the MIL.

Possible Causes
(N4) FUEL LEVEL SIGNAL CIRCUIT SHORTED TO GROUND
(N4) FUEL LEVEL SIGNAL CIRCUIT SHORTED TO THE (K900) SENSOR GROUND CIRCUIT
FUEL LEVEL SENSOR
INSTRUMENT CLUSTER

Always perform the Pre-Diagnostic Troubleshooting procedure before proceeding. (Refer to 9 - ENGINE - SCHEMATICS AND DIAGRAMS).

Diagnostic Test

1. FUEL LEVEL SENSOR VOLTAGE BELOW 0.4 OF A VOLT

NOTE: Diagnose any Bus Message failures before continuing.
Ignition on, engine not running.
With the scan tool, read the Fuel Level Sensor voltage.

Is the Fuel Level Sensor voltage below 0.4 of a volt?

Yes >> Go To 2

No >> Refer to the INTERMITTENT CONDITION Diagnostic Procedure.
Perform the POWERTRAIN VERIFICATION TEST. (Refer to 9 - ENGINE - STANDARD PROCEDURE)

---

2. FUEL LEVEL SENSOR

Turn the ignition off.
Disconnect the Fuel Pump Module harness connector.
Ignition on, engine not running.
With the scan tool, read the Fuel Level Sensor voltage.

Did the Fuel Level Sensor voltage change from below 0.4 of a volt to above 4.0 volts?

Yes >> Replace the Fuel Level Sensor.
Perform the POWERTRAIN VERIFICATION TEST. (Refer to 9 - ENGINE - STANDARD PROCEDURE)

No >> Go To 3

P0462-FUEL LEVEL SENDING UNIT VOLTS TOO LOW (CONTINUED)

3. (N4) FUEL LEVEL SIGNAL CIRCUIT SHORTED TO GROUND

Turn the ignition off.

Disconnect the C3 PCM harness connector.

Measure the resistance between ground and the (N4) Fuel Level Signal circuit in the Fuel Pump Module harness connector.

Is the resistance below 100 ohms?

Yes >> Repair the short to ground in the (N4) Fuel Level Signal circuit.
Perform the POWERTRAIN VERIFICATION TEST. (Refer to 9 - ENGINE - STANDARD PROCEDURE)

No >> Go To 4

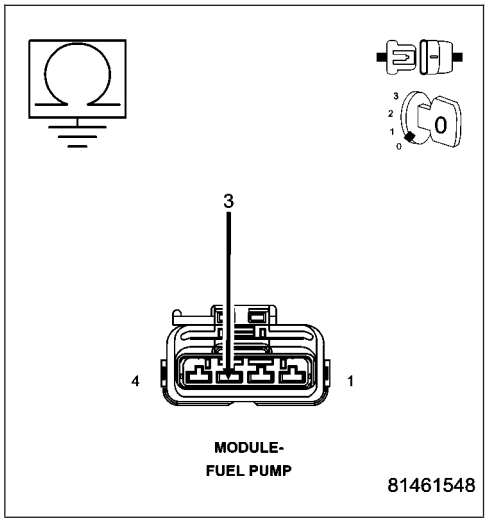

4. (N4) FUEL LEVEL SIGNAL CIRCUIT SHORTED TO THE (K900) SENSOR GROUND CIRCUIT

Measure the resistance between the (N4) Fuel Level Signal circuit and the (K900) Sensor Ground circuit in the Fuel Pump Module harness connector.

Is the resistance below 5.0 ohms?

Yes >> Repair the short between the (K900) Sensor Ground circuit and the (N4) Fuel Level Signal circuit.
Perform the POWERTRAIN VERIFICATION TEST. (Refer to 9 - ENGINE - STANDARD PROCEDURE)

No >> Go To 5

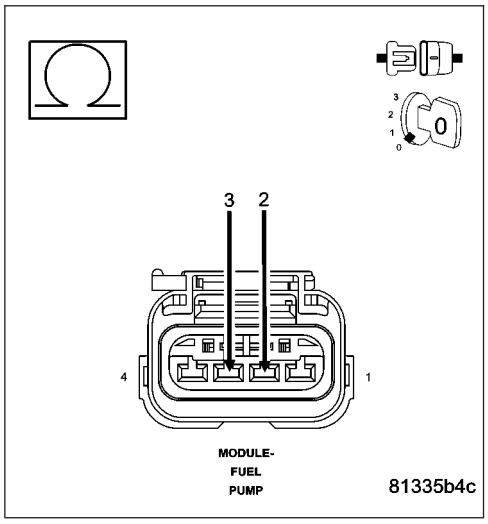

5. PCM

NOTE: Before continuing, check the PCM harness connector terminals for corrosion, damage, or terminal push out. Repair as necessary.

Using the schematics as a guide, inspect the wire harness and connectors. Pay particular attention to all Power and Ground circuits.

Were there any problems found?

Yes >> Repair as necessary.
Perform the POWERTRAIN VERIFICATION TEST. (Refer to 9 - ENGINE - STANDARD PROCEDURE)

No >> Replace and program the Powertrain Control Module per Service Information.
Perform the POWERTRAIN VERIFICATION TEST. (Refer to 9 - ENGINE - STANDARD PROCEDURE)

P0463-FUEL LEVEL SENSOR 1 CIRCUIT HIGH

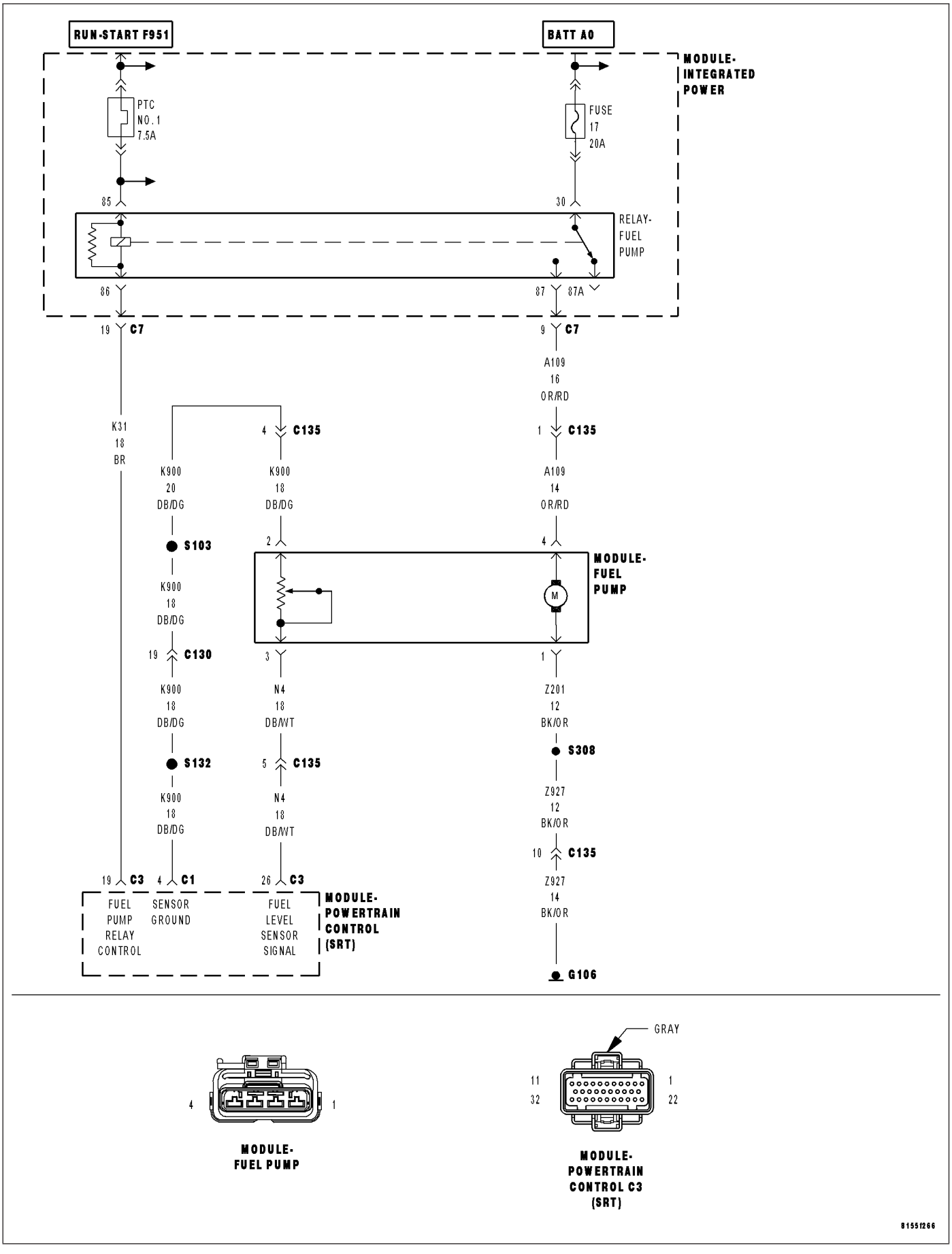

P0463-FUEL LEVEL SENSOR 1 CIRCUIT HIGH (CONTINUED)

For the Engine circuit diagram (Refer to 9 - ENGINE - SCHEMATICS AND DIAGRAMS).

For a complete wiring diagram **Refer to Section 8W**.

- **When Monitored:**
  Ignition on and battery voltage above 10.4 volts.
- **Set Condition:**
  The fuel level sensor signal voltage at the PCM goes above 4.9 volts for more than 90 seconds. One Trip Fault. Three good trips to turn off the MIL.

Possible Causes
(N4) FUEL LEVEL SIGNAL CIRCUIT SHORTED TO BATTERY VOLTAGE
(N4) FUEL LEVEL SIGNAL CIRCUIT OPEN
(K900) SENSOR GROUND CIRCUIT OPEN
FUEL LEVEL SENSOR
PCM

Always perform the Pre-Diagnostic Troubleshooting procedure before proceeding. (Refer to 9 - ENGINE - DIAGNOSIS AND TESTING).

Diagnostic Test

1. FUEL LEVEL SENSOR VOLTS ABOVE 4.9 VOLTS

NOTE: Diagnose any Bus Message failures before continuing.

Ignition on, engine not running.

With a scan tool, read the Fuel Level Sensor voltage.

Is the Fuel Level Sensor voltage above 4.9 volts?

Yes >> Go To 2

No >> Refer to the INTERMITTENT CONDITION Diagnostic Procedure.
Perform the POWERTRAIN VERIFICATION TEST. (Refer to 9 - ENGINE - STANDARD PROCEDURE)

P0463-FUEL LEVEL SENSOR 1 CIRCUIT HIGH (CONTINUED)

2. FUEL LEVEL SENSOR

Turn the ignition off.

Disconnect the Fuel Pump Module electrical harness connector.

Ignition on, engine not running.

Connect a jumper wire between the (N4) Fuel Level Signal circuit and the (K900) Sensor Ground circuit in the Fuel Pump Module harness connector.

With the scan tool, read the Fuel Level Sensor voltage.

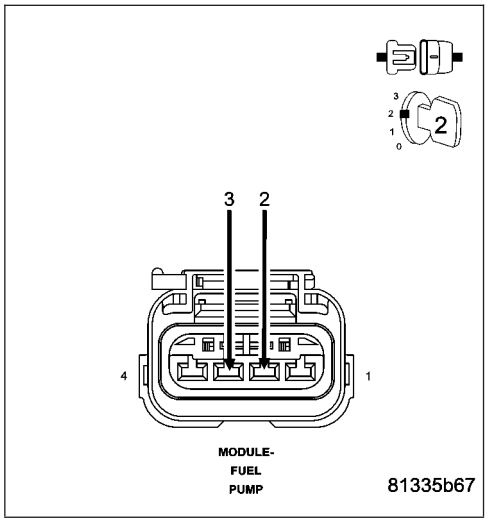

Did the Fuel Level Sensor voltage change from above 4.8 volts to below 0.4 of a volt with the jumper wire installed?

Yes >> Replace the Fuel Level Sensor.
Perform the POWERTRAIN VERIFICATION TEST. (Refer to 9 - ENGINE - STANDARD PROCEDURE)

No >> Go To 3

NOTE: Remove the jumper wire before continuing.

3. (N4) FUEL LEVEL SIGNAL CIRCUIT SHORTED TO BATTERY VOLTAGE

Turn the ignition off.

Disconnect the C3 PCM harness connector.

Ignition on, engine not running.

Measure the voltage on the (N4) Fuel Level Signal circuit in the Fuel Pump Module harness connector.

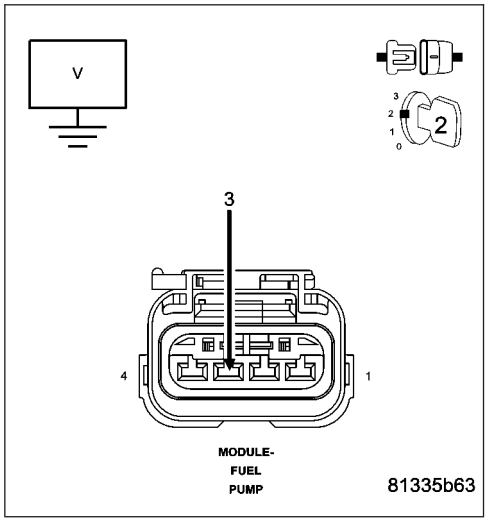

Is the voltage above 0 volts?

Yes >> Repair the short to battery voltage in the (N4) Fuel Level Signal circuit.
Perform the POWERTRAIN VERIFICATION TEST. (Refer to 9 - ENGINE - STANDARD PROCEDURE)

No >> Go To 4

P0463-FUEL LEVEL SENSOR 1 CIRCUIT HIGH (CONTINUED)

4. (N4) FUEL LEVEL SIGNAL CIRCUIT OPEN

Turn the ignition off.

Measure the resistance of the (N4) Fuel Level Signal circuit from the Fuel Pump Module harness connector to the PCM harness connector.

Is the resistance below 5.0 ohms?

Yes >> Go To 5

No >> Repair the open in the (N4) Fuel Level Signal circuit. Perform the POWERTRAIN VERIFICATION TEST. (Refer to 9 - ENGINE - STANDARD PROCEDURE)

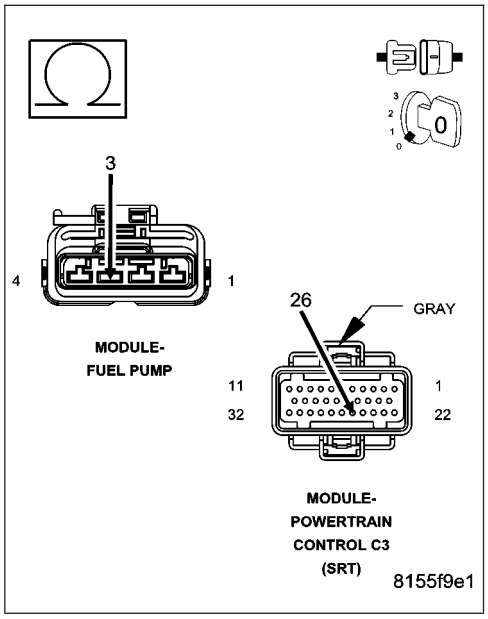

5. (K900) SENSOR GROUND CIRCUIT OPEN

Measure the resistance of the (K900) Sensor Ground circuit from the Fuel Pump Module harness connector to the PCM harness connector.

Is the resistance below 5.0 ohms?

Yes >> Go To 6

No >> Repair the open in the (K900) Sensor Ground circuit. Perform the POWERTRAIN VERIFICATION TEST. (Refer to 9 - ENGINE - STANDARD PROCEDURE)

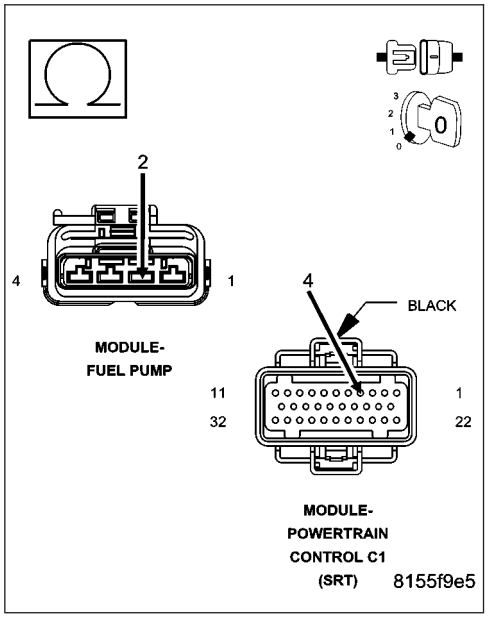

P0463-FUEL LEVEL SENSOR 1 CIRCUIT HIGH (CONTINUED)

6. PCM

NOTE: Before continuing, check the PCM harness connector terminals for corrosion, damage, or terminal push out. Repair as necessary.

Using the schematics as a guide, inspect the wire harness and connectors. Pay particular attention to all Power and Ground circuits.

Were there any problems found?

Yes >> Repair as necessary.
Perform the POWERTRAIN VERIFICATION TEST. (Refer to 9 - ENGINE - STANDARD PROCEDURE)

No >> Replace and program the Powertrain Control Module per Service Information.
Perform the POWERTRAIN VERIFICATION TEST. (Refer to 9 - ENGINE - STANDARD PROCEDURE)

P0500-NO VEHICLE SPEED SIGNAL

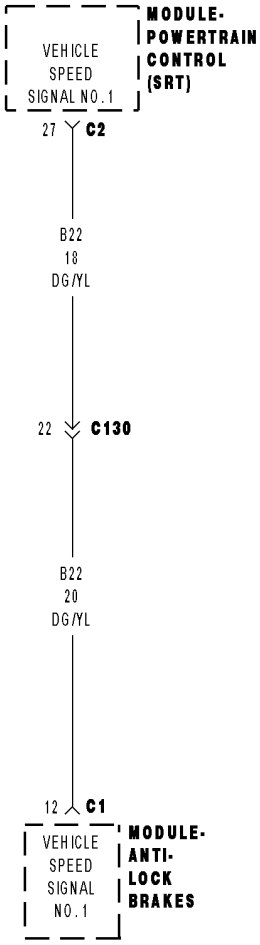

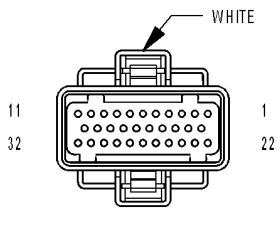

MODULE-
POWERTRAIN
CONTROL C2
(SRT)

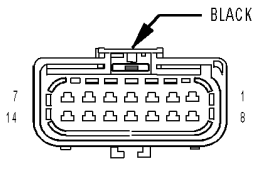

MODULE-
ANTI-
LOCK
BRAKES C1

81551913

P0500-NO VEHICLE SPEED SIGNAL (CONTINUED)

For the Engine circuit diagram (Refer to 8 - ELECTRICAL/ELECTRONIC CONTROL MODULES/ENGINE CONTROL MODULE - SCHEMATIC - ELECTRICAL)

For a complete wiring diagram **Refer to Section 8W**.

- **When Monitored:**
  Engine Temperature greater than 104 Deg F, MAP vacuum approximately 15″ to 16″ inches of mercury and Engine RPM between 1400 and 3000 rpm.
- **Set Condition:**
  No Vehicle Speed Signal for more than 15 seconds on two consecutive trips.

Possible Causes
(B22) VEHICLE SPEED SIGNAL CIRCUIT SHORTED TO VOLTAGE
(B22) VEHICLE SPEED SIGNAL CIRCUIT OPEN BETWEEN CAB AND PCM
(B22) VEHICLE SPEED SIGNAL CIRCUIT SHORTED TO GROUND
PCM

Always perform the Pre-Diagnostic Troubleshooting procedure before proceeding. (Refer to 9 - ENGINE - DIAGNOSIS AND TESTING)

1. GOOD TRIP EQUAL TO ZERO

Ignition on, engine not running.

NOTE: With the scan tool check for any related DTCs that may be present in the ABS/RWAL Module or TCM, diagnose any ABS/RWAL Module DTC's before continuing.

With the scan tool, read DTCs and record the related Freeze Frame data.

Is the Good Trip Counter displayed and equal to zero?

Yes >> Go To 2

No >> Refer to the INTERMITTENT CONDTION Diagnostic Procedure.
Perform POWERTRAIN VERIFICATION TEST. (Refer to 9 - ENGINE - STANDARD PROCEDURE)

---

2. (B22) VEHICLE SPEED SENSOR SIGNAL CIRCUIT SHORT TO VOLTAGE

Turn the ignition off.

Disconnect the PCM harness connectors.

Disconnect the CAB Module harness connector.

Ignition on, engine not running.

Measure the voltage of the (B22) Vehicle Speed Signal circuit in the CAB Module or PCM harness connector.

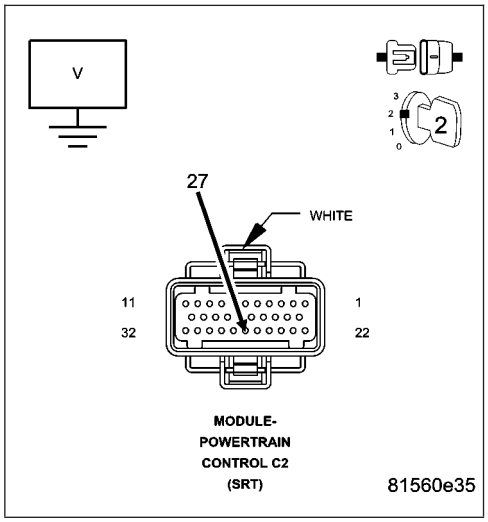

Is the voltage above 4.9 volts?

Yes >> Repair the short to voltage in the (B22) Vehicle Speed Signal circuit between the CAB and PCM.
Perform POWERTRAIN VERIFICATION TEST. (Refer to 9 - ENGINE - STANDARD PROCEDURE)

No >> Go To 3

P0500-NO VEHICLE SPEED SIGNAL (CONTINUED)

3. (B22) VEHICLE SPEED SENSOR SIGNAL CIRCUIT OPEN BETWEEN CAB AND PCM

Turn the ignition off.

Measure the resistance of the (B22) Vehicle Speed Signal circuit between the PCM harness connector and the CAB Module harness connector.

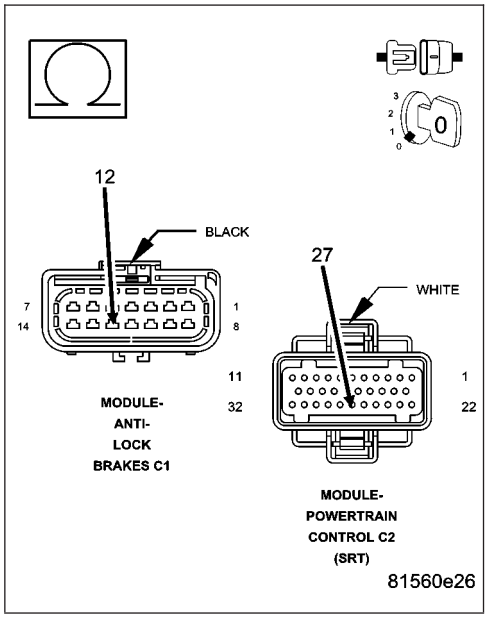

Is the resistance above 5.0 ohms?

Yes >> Repair the open in the (B22) Vehicle Speed Signal circuit between the CAB and PCM.
Perform POWERTRAIN VERIFICATION TEST. (Refer to 9 - ENGINE - STANDARD PROCEDURE)

No >> Go To 4

4. (B22) VEHICLE SPEED SENSOR SIGNAL CIRCUIT SHORT TO GROUND

Measure the resistance between ground and the (B22) Vehicle Speed Signal circuit at the PCM harness connector.

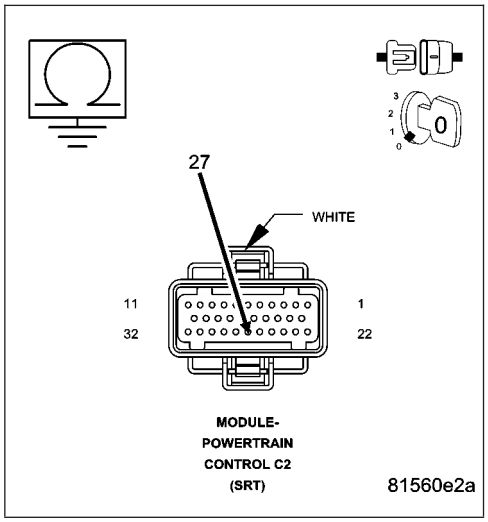

Is the resistance below 100 ohms?

Yes >> Repair the short to ground in the (B22) Vehicle Speed Signal circuit between the CAB and PCM.
Perform POWERTRAIN VERIFICATION TEST. (Refer to 9 - ENGINE - STANDARD PROCEDURE)

No >> Go To 5

5. PCM

NOTE: Before continuing, check the PCM harness connector terminals for corrosion, damage, or terminal push out. Repair as necessary.

Using the schematics as a guide, inspect the wire harness and connectors. Pay particular attention to all Power and Ground circuits.

If there are no possible causes remaining, view repair.

Repair

Replace and program the Powertrain Control Module per Service Information.
Perform POWERTRAIN VERIFICATION TEST. (Refer to 9 - ENGINE - STANDARD PROCEDURE)

P0505-IDLE AIR CONTROL MOTOR CIRCUITS

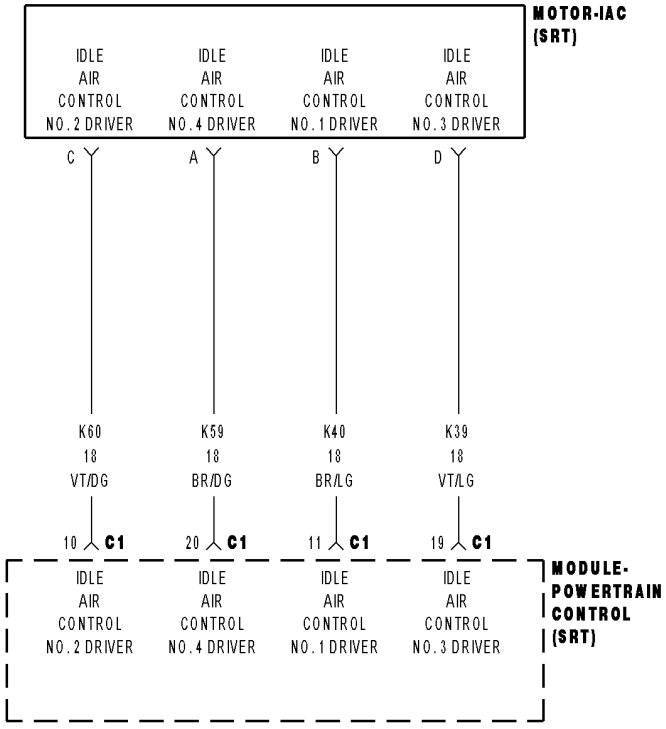

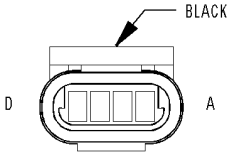

MOTOR-IAC (SRT)

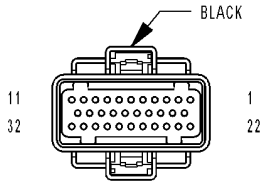

MODULE-POWERTRAIN CONTROL C1 (SRT)

81560150

P0505-IDLE AIR CONTROL MOTOR CIRCUITS (CONTINUED)

For the Engine circuit diagram (Refer to 8 - ELECTRICAL/ELECTRONIC CONTROL MODULES/ENGINE CONTROL MODULE - SCHEMATIC - ELECTRICAL)

For a complete wiring diagram **Refer to Section 8W**.

- **When Monitored:**
  At power-up and battery voltage greater than 11.5 volts.
- **Set Condition:**
  The PCM senses a short to ground or battery voltage on any of the four Idle Air Control (IAC) driver circuits for 100 ms while the IAC motor is active.

Possible Causes
(K40) IAC #1 DRIVER CIRCUIT SHORTED TO (K60) #2, (K39) #3, OR (K59) #4 IAC DRIVER CIRCUITS
(K60) IAC #2 DRIVER CIRCUIT SHORTED TO (K39) IAC #3 OR (K59) IAC #4
(K39) IAC #3 DRIVER CIRCUIT SHORTED TO (K59) IAC #4 DRIVER CIRCUIT
IAC DRIVER CIRCUIT SHORTED TO VOLTAGE
IAC DRIVER CIRCUIT SHORTED TO GROUND
IAC MOTOR
PCM

Always perform the Pre-Diagnostic Troubleshooting procedure before proceeding. (Refer to 9 - ENGINE - DIAGNOSIS AND TESTING)

1. GOOD TRIP EQUAL TO ZERO

Ignition on, engine not running.

With the scan tool, read DTCs and record the related Freeze Frame data.

Is the Good Trip Counter displayed and equal to zero?

Yes >> Go To 2

No >> Refer to the INTERMITTENT CONDITION Symptom (Diagnostic Procedure).
Perform POWERTRAIN VERIFICATION TEST. (Refer to 9 - ENGINE - STANDARD PROCEDURE)

P0505-IDLE AIR CONTROL MOTOR CIRCUITS (CONTINUED)

2. IAC #1 DRIVER CIRCUIT SHORTED TO #2, #3, OR #4

Turn the ignition off.

Disconnect the IAC Motor harness connector.

Disconnect the C1 PCM harness connector.

NOTE: The following steps are checking for a short between the IAC Driver circuits.

Measure the resistance between the (K40) IAC #1 Driver circuit and #2, #3, #4 Driver circuits.

Is the resistance below 100 ohms on any of the Drivers?

Yes >> Repair the short between the IAC Driver circuits.
Perform POWERTRAIN VERIFICATION TEST. (Refer to 9 - ENGINE - STANDARD PROCEDURE)

No >> Go To 3

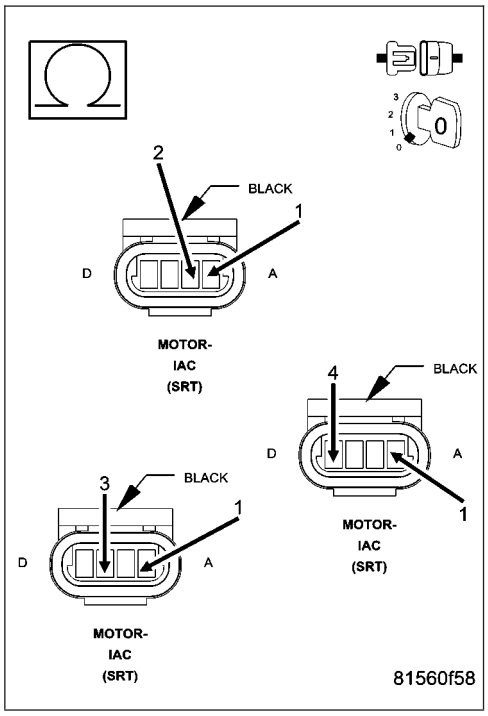

3. (K60) IAC #2 DRIVER CIRCUIT SHORTED TO (K39) IAC #3 OR (K59) IAC #4 DRIVER CIRCUITS

NOTE: The following steps are checking for a short between the IAC Driver circuits.

Measure the resistance between the (K60) IAC #2 Driver circuit and (K39) IAC #3, (K59) IAC #4 Driver circuits.

Is the resistance below 100 ohms on any of the Drivers?

Yes >> Repair the shorted between the IAC Driver circuits.
Perform POWERTRAIN VERIFICATION TEST. (Refer to 9 - ENGINE - STANDARD PROCEDURE)

No >> Go To 4

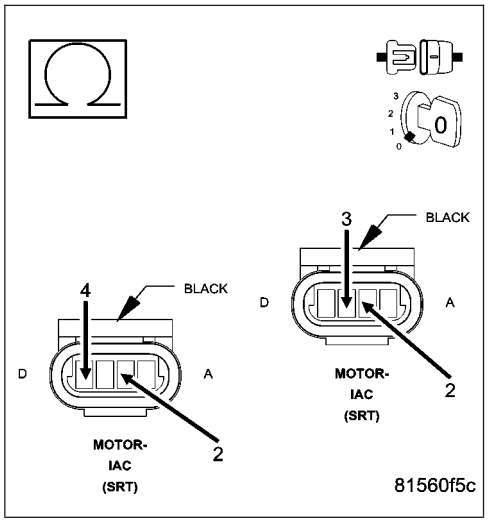

P0505-IDLE AIR CONTROL MOTOR CIRCUITS (CONTINUED)

4. (K39) IAC #3 DRIVER CIRCUIT SHORTED TO THE (K59) IAC #4 DRIVER CIRCUIT

NOTE: The following steps are checking for a short between the Driver Circuits.

Measure the resistance between the (K39) IAC #3 Driver circuit and the (K59) IAC #4 Driver circuit.

Is the resistance below 100 ohms?

Yes >> Repair the short between the IAC Driver circuits.
Perform POWERTRAIN VERIFICATION TEST. (Refer to 9 - ENGINE - STANDARD PROCEDURE)

No >> Go To 5

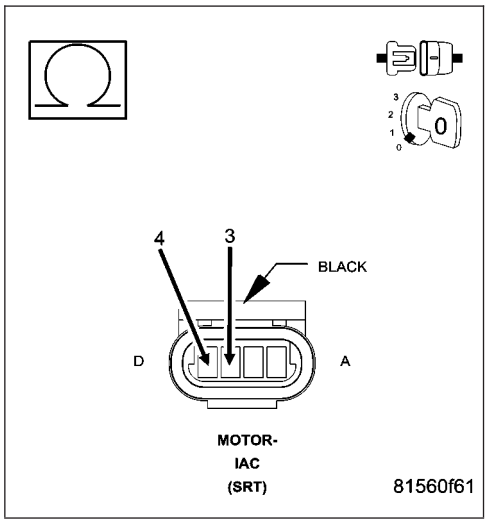

5. IAC DRIVER CIRCUITS SHORTED TO VOLTAGE

Remove the ASD Relay.

Using a jumper wire, jumper between the (A14) Fused B+ circuit and (K342) ASD Relay Output circuit in the PDC.

Ignition on, engine not running with the PCM and IAC harness connectors disconnected.

Measure the voltage on each of the IAC Driver circuits.

Is the voltage above 1.0 volt at any IAC Driver circuit?

Yes >> Repair the short to voltage on the appropriate IAC Driver circuit.
Perform POWERTRAIN VERIFICATION TEST. (Refer to 9 - ENGINE - STANDARD PROCEDURE)

No >> Go To 6

NOTE: Remove the jumper wire and install the ASD Relay before continuing.

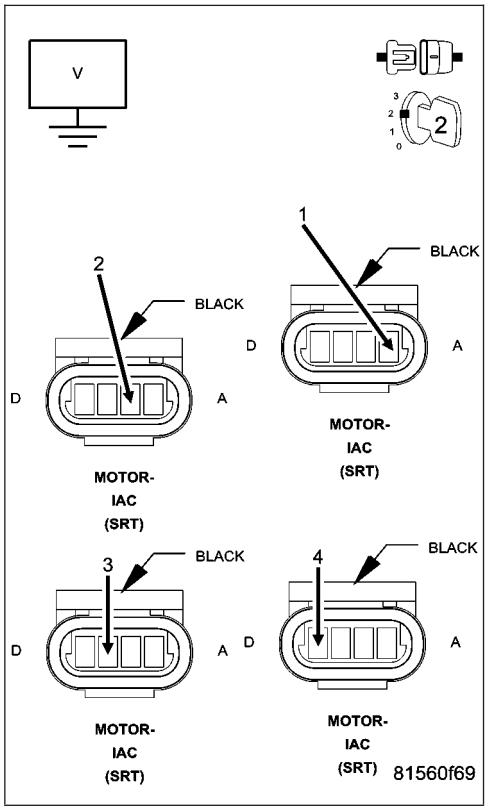

P0505-IDLE AIR CONTROL MOTOR CIRCUITS (CONTINUED)

6. IAC DRIVER CIRCUITS SHORTED TO GROUND

Turn the ignition off.

Repeat each measurement for each IAC Driver circuit.

Measure the resistance between ground and each IAC Driver circuit.

Is the resistance below 100 ohms at any IAC Driver circuit?

Yes >> Repair the short to ground in the appropriate IAC Driver circuit.
Perform POWERTRAIN VERIFICATION TEST. (Refer to 9 - ENGINE - STANDARD PROCEDURE)

No >> Go To 7

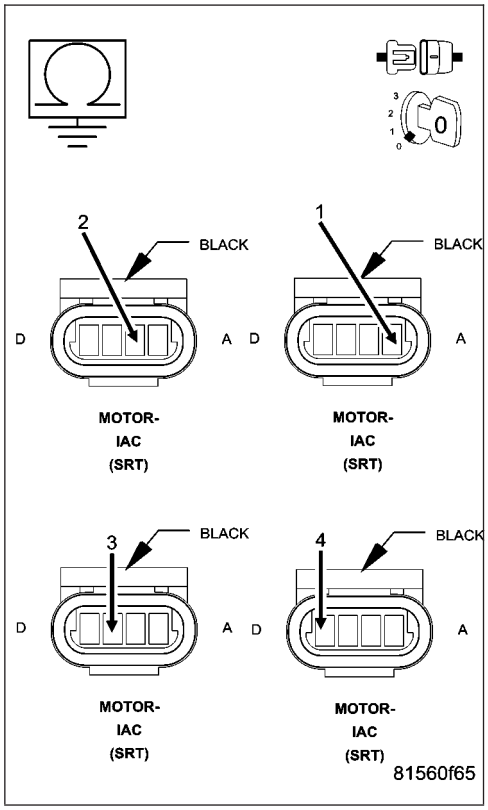

7. IAC MOTOR OPERATION

Turn the ignition off.

Connect the C1 PCM harness connectors.

Start and idle the engine.

Using a test light connected to ground, probe the IAC Driver #1 circuit for 10 seconds.

Repeat the above test for the remaining IAC Motor Driver circuits.

Does the test light turn on and off while probing each IAC Motor Driver circuits?

Yes >> Replace the Idle Air Control Motor.
Perform POWERTRAIN VERIFICATION TEST. (Refer to 9 - ENGINE - STANDARD PROCEDURE)

No >> Replace and program the Powertrain Control Module per Service Information.
Perform POWERTRAIN VERIFICATION TEST. (Refer to 9 - ENGINE - STANDARD PROCEDURE)

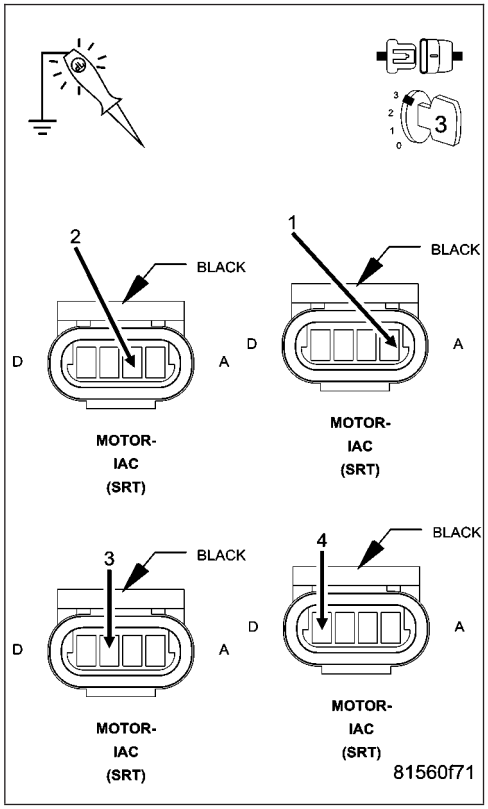

P0522-OIL PRESSURE CIRCUIT LOW

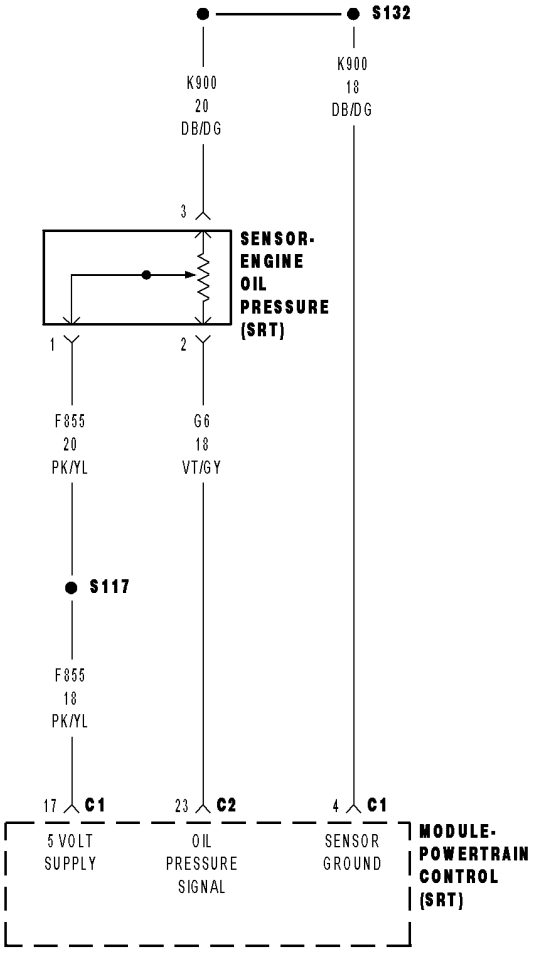

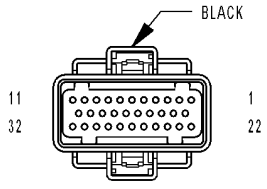

MODULE-
POWERTRAIN
CONTROL C1
(SRT)

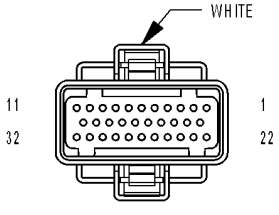

MODULE-
POWERTRAIN
CONTROL C2
(SRT)

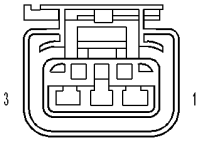

SENSOR-
ENGINE
OIL
PRESSURE
(SRT)

815612aa

P0522-OIL PRESSURE CIRCUIT LOW (CONTINUED)

For the Engine circuit diagram (Refer to 8 - ELECTRICAL/ELECTRONIC CONTROL MODULES/ENGINE CONTROL MODULE - SCHEMATIC - ELECTRICAL)

For a complete wiring diagram **Refer to Section 8W**.

- **When Monitored:**
  Ignition on.
- **Set Condition:**
  When the PCM recognizes the Oil Pressure signal voltage lower than 0.3 of a volt.

Possible Causes
(F855) 5-VOLT SUPPLY CIRCUIT OPEN
(F855) 5-VOLT SUPPLY CIRCUIT SHORTED TO GROUND
OIL PRESSURE SENSOR
(G6) OIL PRESSURE SIGNAL CIRCUIT SHORTED TO GROUND
(G6) OIL PRESSURE SIGNAL CIRCUIT SHORTED TO THE (K900) SENSOR GROUND
PCM

Always perform the Pre-Diagnostic Troubleshooting procedure before proceeding. (Refer to 9 - ENGINE - DIAGNOSIS AND TESTING)

1. OIL PRESSURE SENSOR VOLTAGE BELOW 0.1 VOLT

Start the engine.

With the scan tool in Sensors, read the Oil Pressure Sensor voltage.

Is the Oil Pressure Sensor voltage below 0.1 of a volt?

Yes >> Go To 2

No >> Refer to the INTERMITTENT CONDITION Diagnostic Procedure.
Perform POWERTRAIN VERIFICATION TEST. (Refer to 9 - ENGINE - STANDARD PROCEDURE)

---

2. (F855) 5-VOLT SUPPLY CIRCUIT

Turn the ignition off.

Disconnect the Oil Pressure Sensor harness connector.

Ignition on, engine not running.

Measure the voltage on the (F855) 5-volt Supply circuit in the Oil Pressure Sensor harness connector.

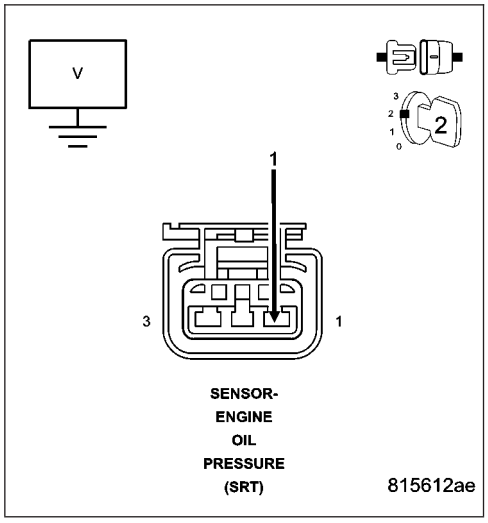

Is the voltage between 4.5 to 5.2 volts?

Yes >> Go To 3

No >> Go To 6

P0522-OIL PRESSURE CIRCUIT LOW (CONTINUED)

3. OIL PRESSURE SENSOR

With the scan tool in Sensors, read the Oil Pressure Sensor voltage with the Sensor harness connector still disconnected.

Is the voltage above 4.6 volts?

Yes >> Replace the Oil Pressure Sensor.
Perform POWERTRAIN VERIFICATION TEST. (Refer to 9 - ENGINE - STANDARD PROCEDURE)

No >> Go To 4

---

4. (G6) OIL PRESSURE SIGNAL CIRCUIT SHORTED TO GROUND

Turn the ignition off.

Disconnect the C2 PCM harness connector.

Measure the resistance between (G6) Oil Pressure Signal circuit and ground at the Sensor connector.

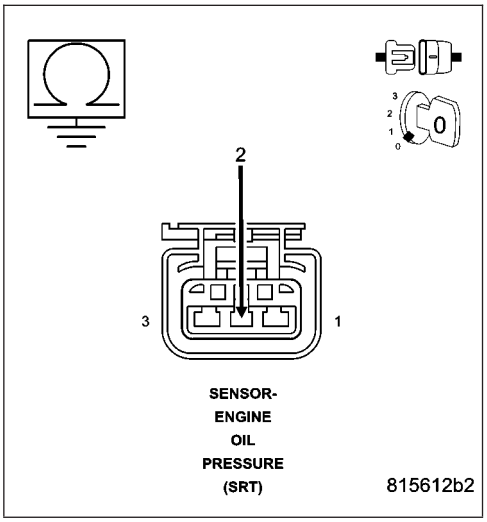

Is the resistance below 100 ohms?

Yes >> Repair the short to ground in the (G6) Oil Pressure Signal circuit.
Perform POWERTRAIN VERIFICATION TEST. (Refer to 9 - ENGINE - STANDARD PROCEDURE)

No >> Go To 5

---

5. (G6) OIL PRESSURE SIGNAL CIRCUIT SHORTED TO THE (K900) SENSOR GROUND CIRCUIT

Measure the resistance between the (G6) Oil Pressure Signal circuit and the (K900) Sensor ground circuit at the Sensor connector.

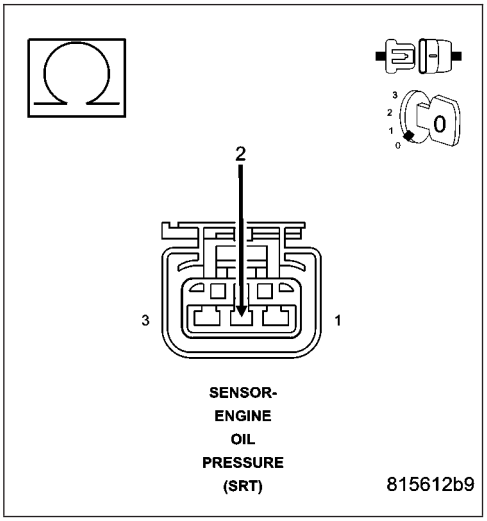

Is the resistance below 5.0 ohms?

Yes >> Repair the short between the (K900) Sensor ground and the (G6) Oil Pressure Signal circuit.
Perform POWERTRAIN VERIFICATION TEST. (Refer to 9 - ENGINE - STANDARD PROCEDURE)

No >> Go To 8

P0522-OIL PRESSURE CIRCUIT LOW (CONTINUED)

6. (F855) 5-VOLT SUPPLY CIRCUIT OPEN

Turn the ignition off.

Disconnect the C1 PCM harness connector.

Measure the resistance of the (F855) 5-volt Supply circuit from the Sensor harness connector to the PCM harness connector.

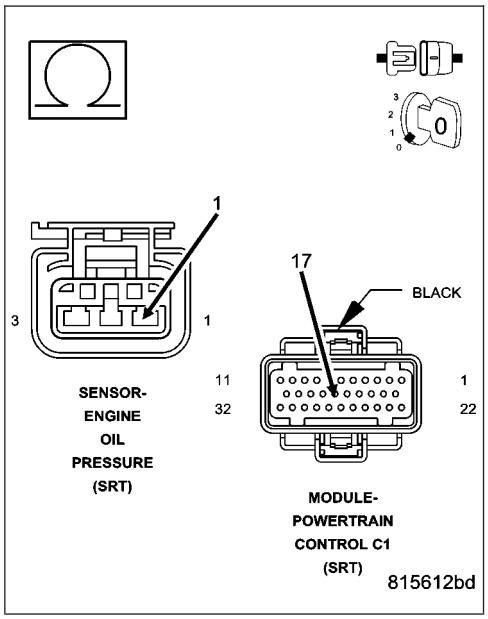

Is the resistance below 5.0 ohms?

Yes >> Go To 7

No >> Repair the open in the (F855) 5-volt Supply circuit.
Perform POWERTRAIN VERIFICATION TEST. (Refer to 9 - ENGINE - STANDARD PROCEDURE)

7. (F855) 5-VOLT SUPPLY CIRCUIT SHORTED TO GROUND

Measure the resistance between ground and the (F855) 5-volt Supply circuit in the Oil Pressure Sensor harness connector.

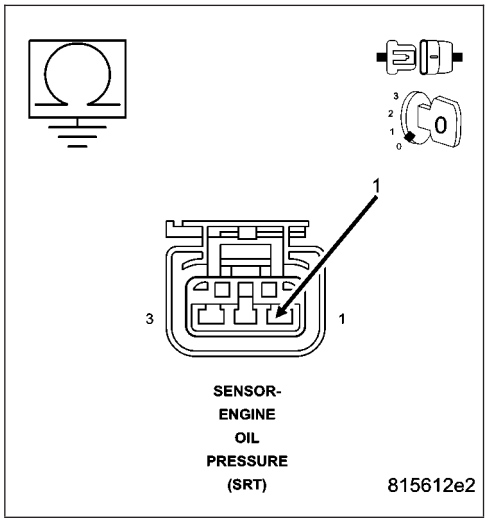

Is the resistance below 100 ohms?

Yes >> Repair the short to ground in the (F855) 5-volt Supply circuit.
Perform POWERTRAIN VERIFICATION TEST. (Refer to 9 - ENGINE - STANDARD PROCEDURE)

No >> Go To 8

8. PCM

NOTE: Before continuing, check the PCM harness connector terminals for corrosion,damage, or terminal push out. Repair as necessary.

Using the schematics as a guide, inspect the wire harness and connectors. Pay particular attention to all Power and Ground circuits.

If there are no possible causes remaining, view repair.

Repair

Replace and program the Powertrain Control Module per Service Information.

Perform POWERTRAIN VERIFICATION TEST. (Refer to 9 - ENGINE - STANDARD PROCEDURE)

P0523-OIL PRESSURE CIRCUIT HIGH

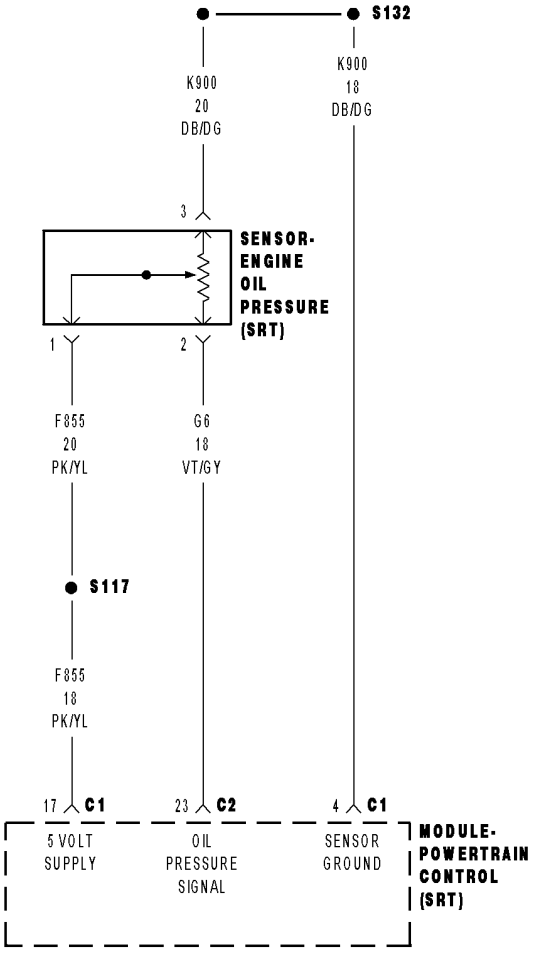

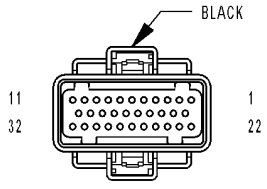

MODULE-
POWERTRAIN
CONTROL C1
(SRT)

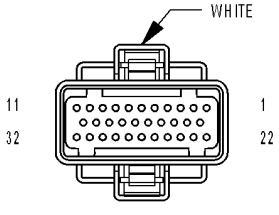

MODULE-
POWERTRAIN
CONTROL C2
(SRT)

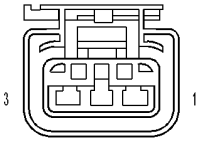

SENSOR-
ENGINE
OIL
PRESSURE
(SRT)

815612aa

P0523-OIL PRESSURE CIRCUIT HIGH (CONTINUED)

For the Engine circuit diagram (Refer to 8 - ELECTRICAL/ELECTRONIC CONTROL MODULES/ENGINE CONTROL MODULE - SCHEMATIC - ELECTRICAL)

For a complete wiring diagram **Refer to Section 8W**.

- **When Monitored:**
  With the ignition on and battery voltage above 10.4 volts.
- **Set Condition:**
  The oil pressure sensor signal at PCM goes above 4.9 volts. One Trip Fault.

Possible Causes
OIL PRESSURE SENSOR
(G6) OIL PRESSURE SIGNAL CIRCUIT SHORTED TO BATTERY VOLTAGE
(G6) OIL PRESSURE SIGNAL CIRCUIT OPEN
(K900) SENSOR GROUND CIRCUIT OPEN
PCM

Always perform the Pre-Diagnostic Troubleshooting procedure before proceeding. (Refer to 9 - ENGINE - DIAGNOSIS AND TESTING)

1. OIL PRESSURE SENSOR VOLTAGE ABOVE 4.8 VOLTS

Ignition on, engine not running.

With the scan tool in Sensors, read the Oil Pressure Sensor voltage.

Is the Oil Pressure Sensor voltage above 4.8 volts?

Yes >> Go To 2

No >> Refer to the INTERMITTENT CONDITION Diagnostic Procedure.
Perform POWERTRAIN VERIFICATION TEST. (Refer to 9 - ENGINE - STANDARD PROCEDURE)

---

2. OIL PRESSURE SENSOR

Turn the ignition off.

Disconnect the Oil Pressure Sensor harness connector.

Ignition on, engine not running.

Connect a jumper wire between the (G60) Oil Pressure Signal circuit and (K900) Sensor ground circuit at the Sensor harness connector.

With the scan tool in Sensors, read the Oil Pressure Sensor voltage.

Is the voltage below 1.0 volt?

Yes >> Replace the Oil Pressure Sensor.
Perform POWERTRAIN VERIFICATION TEST. (Refer to 9 - ENGINE - STANDARD PROCEDURE)

No >> Go To 3

NOTE: Remove the jumper wire before continuing.

P0523-OIL PRESSURE CIRCUIT HIGH (CONTINUED)

3. (G6) OIL PRESSURE SIGNAL CIRCUIT SHORTED TO BATTERY VOLTAGE

Turn the ignition off.

Disconnect the PCM harness connectors.

Ignition on, engine not running.

Using a 12-volt test light connected to ground, probe the (G6) Oil Pressure Signal circuit.

Is the test light brightly illuminated?

Yes >> Repair the short to voltage in the (G6) Oil Pressure Signal circuit.
Perform POWERTRAIN VERIFICATION TEST. (Refer to 9 - ENGINE - STANDARD PROCEDURE)

No >> Go To 4

---

4. (G6) OIL PRESSURE SIGNAL CIRCUIT OPEN

Turn the ignition off.

Measure the resistance of the (G6) Oil Pressure Signal circuit from the Oil Pressure Sensor harness connector to the PCM harness connector.

Is the resistance below 5.0 ohms?

Yes >> Go To 5

No >> Repair the open in the (G6) Oil Pressure Signal circuit.
Perform POWERTRAIN VERIFICATION TEST. (Refer to 9 - ENGINE - STANDARD PROCEDURE) Perform POWERTRAIN VERIFICATION TEST.

---

5. (K900) SENSOR GROUND CIRCUIT OPEN

Measure the resistance of the (K900) Sensor ground circuit from the Oil Pressure Sensor harness connector to the PCM harness connector.

Is the resistance below 5.0 ohms?

Yes >> Go To 6

No >> Repair the open in the (K900) Sensor ground circuit.
Perform POWERTRAIN VERIFICATION TEST. (Refer to 9 - ENGINE - STANDARD PROCEDURE)

---

6. PCM

NOTE: Before continuing, check the PCM harness connector terminals for corrosion, damage, or terminal push out. Repair as necessary.

Using the schematics as a guide, inspect the wire harness and connectors. Pay particular attention to all Power and Ground circuits.

If there are no possible causes remaining, view repair.

Repair

Replace and program the Powertrain Control Module per Service Information.
Perform POWERTRAIN VERIFICATION TEST. (Refer to 9 - ENGINE - STANDARD PROCEDURE)

P0601-PCM INTERNAL CONTROLLER FAILURE

For the Engine circuit diagram (Refer to 9 - ENGINE - SCHEMATICS AND DIAGRAMS).

For a complete wiring diagram **Refer to Section 8W**.

- **When Monitored:**
  With the ignition on.
- **Set Condition:**
  Internal checksum for software failed, does not match calculated value. One Trip Fault, Three Good Trips to clear.

Possible Causes
PCM

Always perform the Pre-Diagnostic Troubleshooting procedure before proceeding. (Refer to 9 - ENGINE - DIAGNOSIS AND TESTING).

Diagnostic Test

1. PCM

NOTE: Diagnose any CMP or CKP Sensor faults before continuing. Check for intermittent loose CMP or CKP connections.

The Powertrain Control Module is reporting internal errors, view repair to continue.

Repair

Replace and program the Powertrain Control Module per Service Information.
Perform the POWERTRAIN VERIFICATION TEST. (Refer to 9 - ENGINE - STANDARD PROCEDURE)

P0622-GENERATOR FIELD NOT SWITCHING PROPERLY

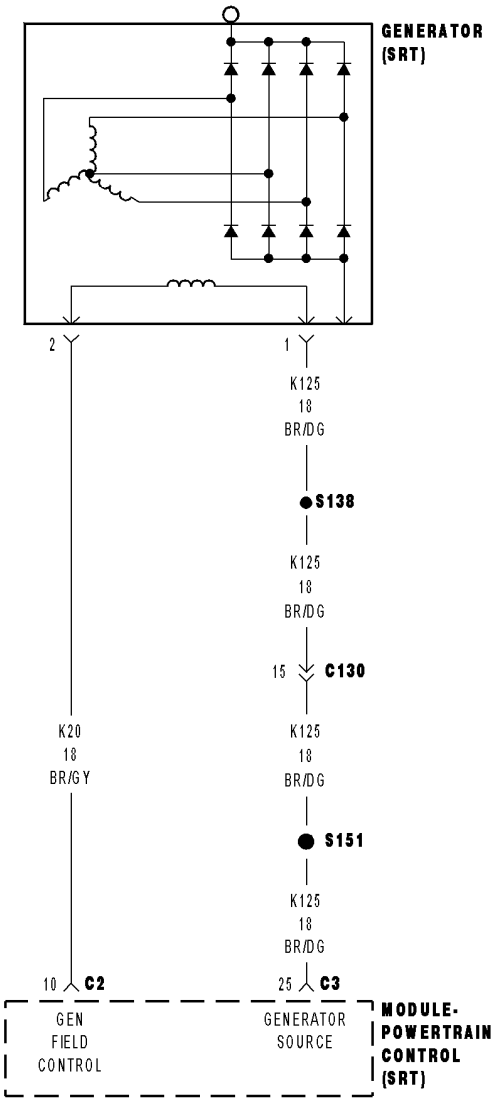

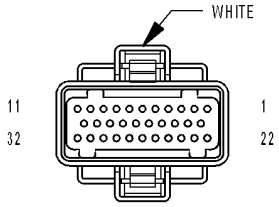

MODULE-
POWERTRAIN
CONTROL C2
(SRT)

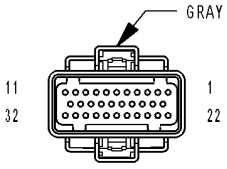

MODULE-
POWERTRAIN
CONTROL C3
(SRT)

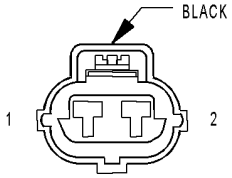

GENERATOR
(SRT)

81562fb8

P0622-GENERATOR FIELD NOT SWITCHING PROPERLY (CONTINUED)

For the Engine circuit diagram (Refer to 8 - ELECTRICAL/ELECTRONIC CONTROL MODULES/ENGINE CONTROL MODULE - SCHEMATIC - ELECTRICAL)

For a complete wiring diagram **Refer to Section 8W**.

- **When Monitored:**
  With the ignition key on and the engine running.
- **Set Condition:**
  When the PCM tries to regulate the generator field with no result during monitoring.

Possible Causes
(K125) GEN FIELD SOURCE CIRCUIT OPEN
(K20) GEN FIELD CONTROL CIRCUIT OPEN
(K20) GEN FIELD CONTROL CIRCUIT SHORTED TO GROUND
GENERATOR
PCM

Always perform the Pre-Diagnostic Troubleshooting procedure before proceeding. (Refer to 9 - ENGINE - DIAGNOSIS AND TESTING)

1. GENERATOR FIELD PERFORMANCE

Ignition on, engine not running.

Record all DTCs and the related Freeze Frame data.

Turn the ignition off.

Disconnect the Generator harness connector.

Ignition on, engine not running.

Using a 12-volt test light connected to 12-volts, probe the (K20) Gen Field Control circuit at the Generator harness connector.

With the scan tool, actuate the Generator Field Driver.

Does the test light blink?

Yes >> Refer to the INTERMITTENT CONDITION Diagnostic Procedure.
Perform POWERTRAIN VERIFICATION TEST. (Refer to 9 - ENGINE - STANDARD PROCEDURE)

No >> Go To 2

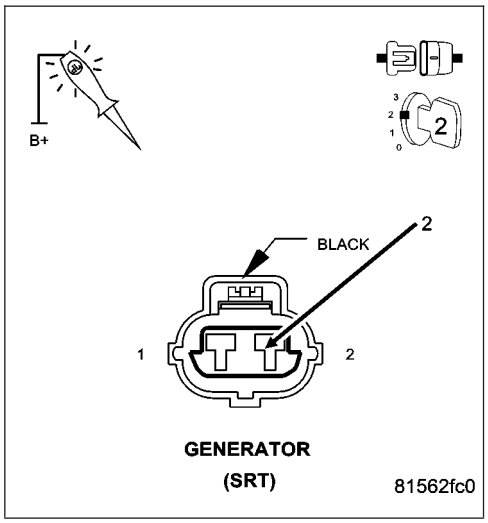

P0622-GENERATOR FIELD NOT SWITCHING PROPERLY (CONTINUED)

2. (K125) GEN FIELD SOURCE CIRCUIT OPEN

Turn the ignition off.

Disconnect the C2 and C3 PCM harness connectors.

Carefully inspect all connectors for corrosion or spread terminals before continuing.

Measure the resistance of the (K125) Generator Field Source circuit from the Generator harness connector to the C3 PCM harness connector.

Is the resistance below 5.0 ohms?

Yes >> Go To 3

No >> Repair the open in the (K125) Gen Field Source circuit. Perform POWERTRAIN VERIFICATION TEST. (Refer to 9 - ENGINE - STANDARD PROCEDURE)

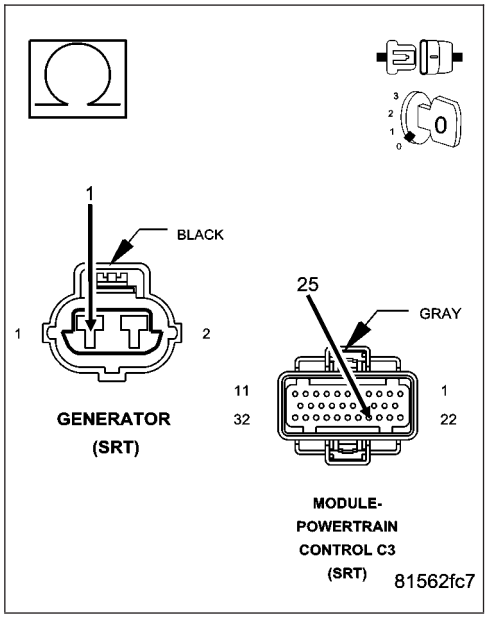

3. (K20) GEN FIELD CONTROL CIRCUIT OPEN

Measure the resistance of the (K20) Generator Field Control circuit from the Generator Field harness connector to the C2 PCM harness connector.

Is the resistance below 5.0 ohms?

Yes >> Go To 4

No >> Repair the open in the (K20) Gen Field Control circuit. Perform POWERTRAIN VERIFICATION TEST. (Refer to 9 - ENGINE - STANDARD PROCEDURE)

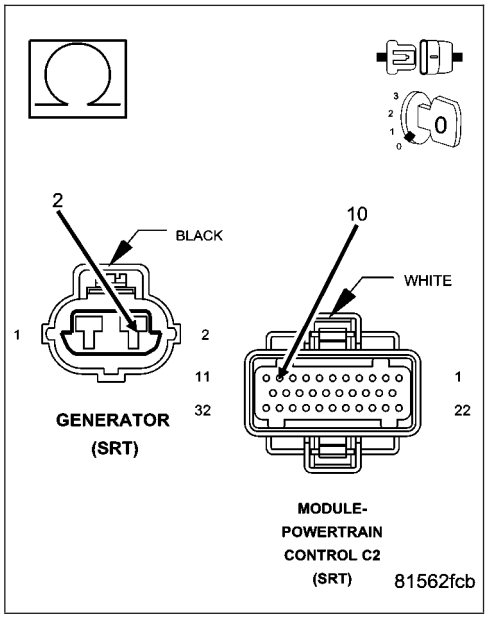

P0622-GENERATOR FIELD NOT SWITCHING PROPERLY (CONTINUED)

4. (K20) GEN FIELD CONTROL CIRCUIT SHORTED TO GROUND

Measure the resistance between ground and the (K20) Generator Field Control circuit in the Generator harness connector.

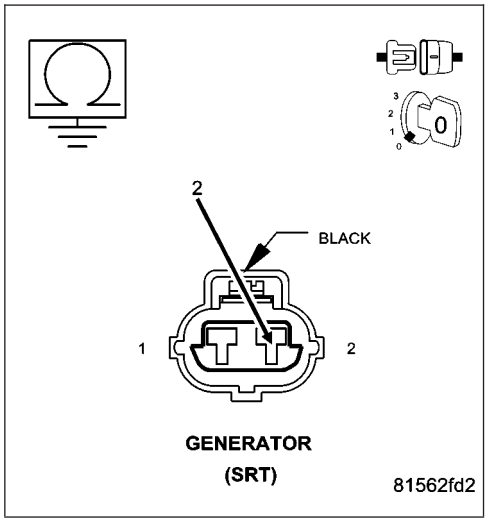

Is the resistance below 100 ohms?

Yes >> Repair the short to ground in the (K20) Gen Field Control circuit.
Perform POWERTRAIN VERIFICATION TEST. (Refer to 9 - ENGINE - STANDARD PROCEDURE)

No >> Go To 5

5. GENERATOR

Measure resistance across the Generator Field Terminals at the Generator.

Is the resistance between 0.5 of and ohm and 15 ohms?

Yes >> Go To 6

No >> Repair the Generator as necessary.
Perform POWERTRAIN VERIFICATION TEST. (Refer to 9 - ENGINE - STANDARD PROCEDURE)

6. PCM

NOTE: Before continuing, check the PCM harness connector terminals for corrosion, damage, or terminal push out. Repair as necessary.

Using the schematics as a guide, inspect the wire harness and connectors. Pay particular attention to all Power and Ground circuits.

If there are no possible causes remaining, view repair.

Repair

Replace and program the Powertrain Control Module per Service Information.
Perform POWERTRAIN VERIFICATION TEST. (Refer to 9 - ENGINE - STANDARD PROCEDURE)

P0645-A/C CLUTCH RELAY CIRCUIT

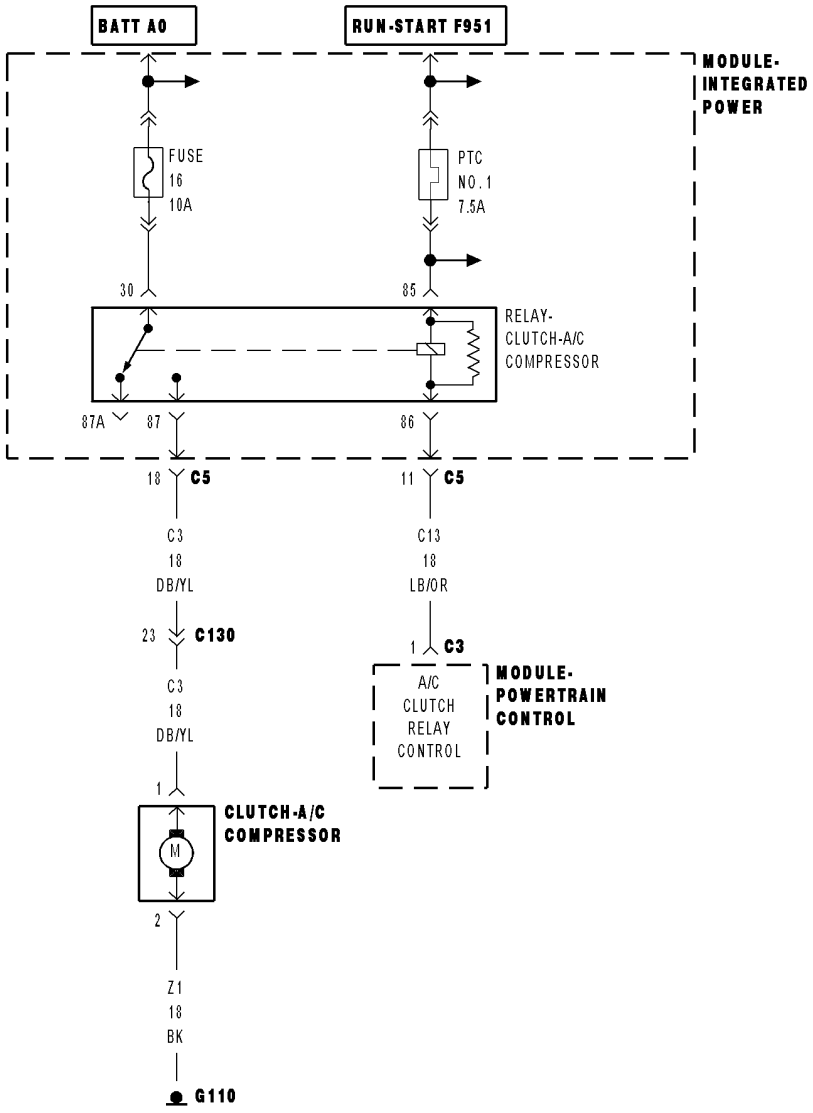

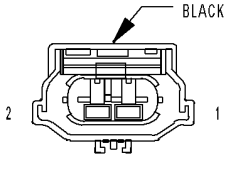

CLUTCH-A/C
COMPRESSOR

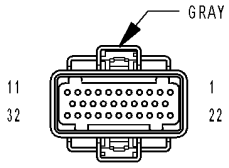

MODULE-
POWERTRAIN
CONTROL C3
(SRT)

81562fe1

P0645-A/C CLUTCH RELAY CIRCUIT (CONTINUED)

For the Engine circuit diagram (Refer to 9 - ENGINE - SCHEMATICS AND DIAGRAMS).

For a complete wiring diagram **Refer to Section 8W**.

- **When Monitored:**
  With the ignition on. Battery voltage greater than 10 volts. A/C Switch on.
- **Set Condition:**
  An open or shorted condition is detected in the A/C clutch relay control circuit. One Trip Fault. Three good trips to turn off the MIL.

Possible Causes
INTERNAL FUSED IGNITION SWITCH OUTPUT CIRCUIT
INTERNAL FUSED B+ CIRCUIT
(C13) A/C CLUTCH RELAY CONTROL CIRCUIT OPEN
(C13) A/C CLUTCH RELAY CONTROL CIRCUIT SHORTED TO GROUND
A/C CLUTCH RELAY
PCM

Always perform the Pre-Diagnostic Troubleshooting procedure before proceeding. (Refer to 9 - ENGINE - DIAGNOSIS AND TESTING).

Diagnostic Test

1. A/C CLUTCH RELAY OPERATION

Ignition on, engine not running.

With a scan tool, actuate the A/C Clutch Relay.

Is the A/C Clutch Relay operating?

Yes >> Refer to the INTERMITTENT CONDITION Diagnostic Procedure.
Perform the POWERTRAIN VERIFICATION TEST. (Refer to 9 - ENGINE - STANDARD PROCEDURE)

No >> Go To 2

---

2. A/C CLUTCH RELAY RESISTANCE

Turn the ignition off.

Remove the A/C Clutch Relay from the IPM.

Measure the resistance of the A/C Clutch Relay Coil.

Is the resistance between 60 to 80 ohms?

Yes >> Go To 3

No >> Replace the A/C Clutch Relay.
Perform the POWERTRAIN VERIFICATION TEST. (Refer to 9 - ENGINE - STANDARD PROCEDURE)

P0645-A/C CLUTCH RELAY CIRCUIT (CONTINUED)

3. INTERNAL FUSED IGNITION SWITCH OUTPUT CIRCUIT AND FUSED B+ CIRCUIT

Ignition on, engine not running.

Using a 12-volt test light connected to ground, probe the Internal Fused Ignition Switch Output circuit and the Fused B+ circuit in the connection.

Does the test light illuminate brightly?

Yes >> Go To 4

No >> Repair the open or short to ground in the Fused Ignition Switch Output circuit or the Fused B+ circuit. Check and replace any open fuses.
Perform the POWERTRAIN VERIFICATION TEST. (Refer to 9 - ENGINE - STANDARD PROCEDURE)

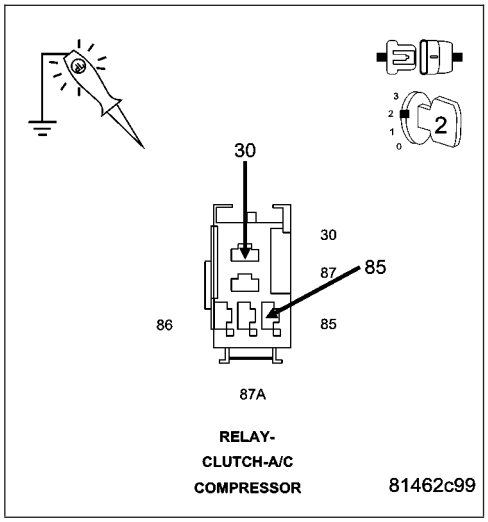

4. (C13) A/C CLUTCH RELAY CONTROL CIRCUIT OPEN

Turn the ignition off.

Disconnect the C3 PCM harness connector.

Measure the resistance of the (C13) A/C Clutch Relay Control circuit from the relay connection to the PCM harness connector.

Is the resistance below 5.0 ohms?

Yes >> Go To 5

No >> Repair the open in the (C13) A/C Clutch Relay Control circuit.
Perform the POWERTRAIN VERIFICATION TEST. (Refer to 9 - ENGINE - STANDARD PROCEDURE)

5. (C13) A/C CLUTCH RELAY CONTROL CIRCUIT SHORTED TO GROUND

Measure the resistance between ground and the (C13) A/C Clutch Relay Control circuit at the IPM.

Is the resistance below 5.0 ohms?

Yes >> Repair the short to ground in the (C13) A/C Relay Clutch Control circuit.
Perform the POWERTRAIN VERIFICATION TEST. (Refer to 9 - ENGINE - STANDARD PROCEDURE)

No >> Go To 6

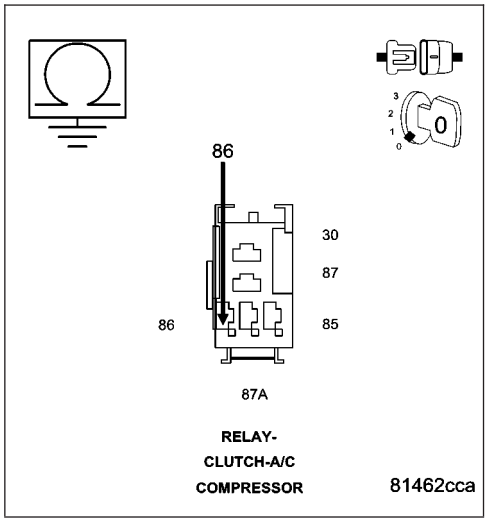

P0645-A/C CLUTCH RELAY CIRCUIT (CONTINUED)

6. PCM

NOTE: Before continuing, check the PCM harness connector terminals for corrosion, damage, or terminal push out. Repair as necessary.

Using the schematics as a guide, inspect the wire harness and connectors. Pay particular attention to all Power and Ground circuits.

Were there any problems found?

Yes >> Repair as necessary.
Perform the POWERTRAIN VERIFICATION TEST. (Refer to 9 - ENGINE - STANDARD PROCEDURE)

No >> Replace and program the Powertrain Control Module per Service Information.
Perform the POWERTRAIN VERIFICATION TEST. (Refer to 9 - ENGINE - STANDARD PROCEDURE)

P0801-REVERSE GEAR LOCKOUT CIRCUIT OPEN OR SHORTED

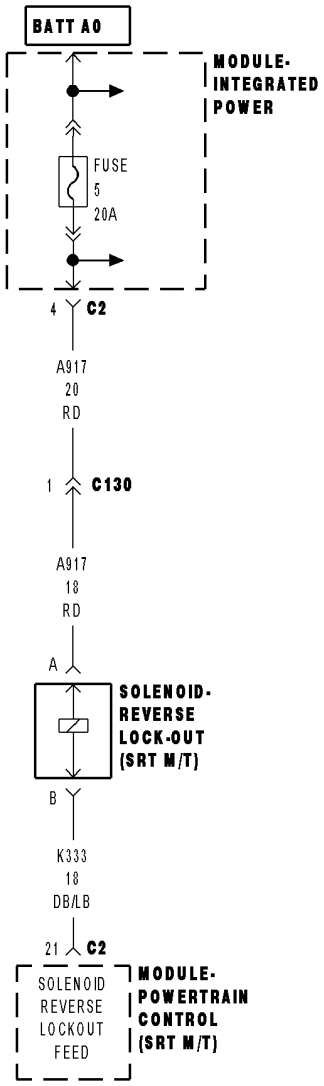

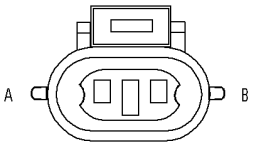

SOLENOID-
REVERSE
LOCK-OUT
(SRT M/T)

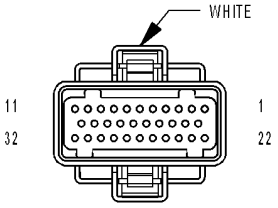

MODULE-
POWERTRAIN
CONTROL C2
(SRT)

81562f15

P0801-REVERSE GEAR LOCKOUT CIRCUIT OPEN OR SHORTED (CONTINUED)

For the Engine circuit diagram (Refer to 8 - ELECTRICAL/ELECTRONIC CONTROL MODULES/ENGINE CONTROL MODULE - SCHEMATIC - ELECTRICAL)

For a complete wiring diagram **Refer to Section 8W**.

- **When Monitored:**
  Engine at operating temperature, Engine RPM above 608 rpm's, and Vehicle Speed above 5 MPH.
- **Set Condition:**
  Reverse Gear Lockout Solenoid Control circuit is not in the expected state when requested to operate by the PCM. Note: When Vehicle Speed is less then 5 MPH the PCM provides a ground for the solenoid which energizes the solenoid. (Allowing Reverse).

Possible Causes
(A917) FUSED IGNITION SWITCH OUTPUT CIRCUIT
(K333) REVERSE LOCKOUT SOLENOID CONTROL CIRCUIT OPEN
(K333) REVERSE LOCKOUT SOLENOID CONTROL CIRCUIT SHORT TO GROUND
REVERSE LOCKOUT SOLENOID
PCM

Always perform the Pre-Diagnostic Troubleshooting procedure before proceeding. (Refer to 9 - ENGINE - DIAGNOSIS AND TESTING)

1. GOOD TRIP EQUAL TO ZERO

With the scan tool, read DTCs and record the related Freeze Frame data.

Is the Good Trip Counter displayed and equal to zero?

Yes >> Go To 2

No >> Refer to the INTERMITTENT CONDITION Diagnostic Procedure.
Perform POWERTRAIN VERIFICATION TEST. (Refer to 9 - ENGINE - STANDARD PROCEDURE)

---

2. (A917) FUSED IGNITION SWITCH OUTPUT CIRCUIT OPEN OR SHORT TO GROUND

Turn the ignition off.

Disconnect the Reverse Lockout Solenoid harness connector.

NOTE: Check connectors - Clean/repair as necessary.
Ignition on, engine not running.

Using a 12-volt test light connected to ground, probe the (A917) Fused Ignition Switch Output circuit.

NOTE: The test light must be brightly lit. If the test light does not light or is Dim repair the circuit for a open or high resistance circuit.

Does the test light illuminate brightly?

Yes >> Go To 3

No >> Repair the open or short to ground in the (A917) Fused Ignition Switch Output circuit.
Perform POWERTRAIN VERIFICATION TEST. (Refer to 9 - ENGINE - STANDARD PROCEDURE)

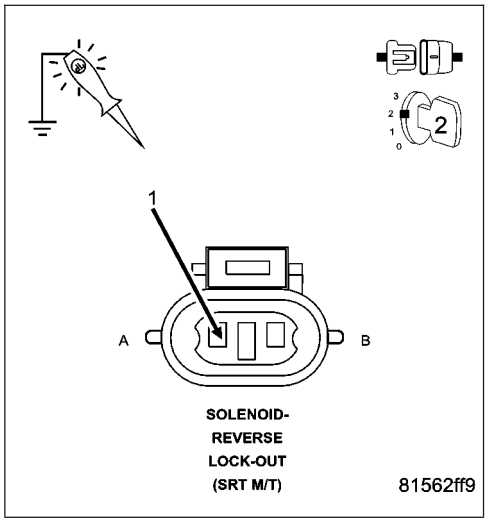

P0801-REVERSE GEAR LOCKOUT CIRCUIT OPEN OR SHORTED (CONTINUED)

3. (K333) REVERSE LOCKOUT SOLENOID CONTROL CIRCUIT OPEN

Turn the ignition off.

Disconnect the C2 PCM harness connector.

Measure the resistance of the (K333) Reverse Lockout Solenoid Control circuit from the PCM connector to the Reverse Lockout Solenoid connector.

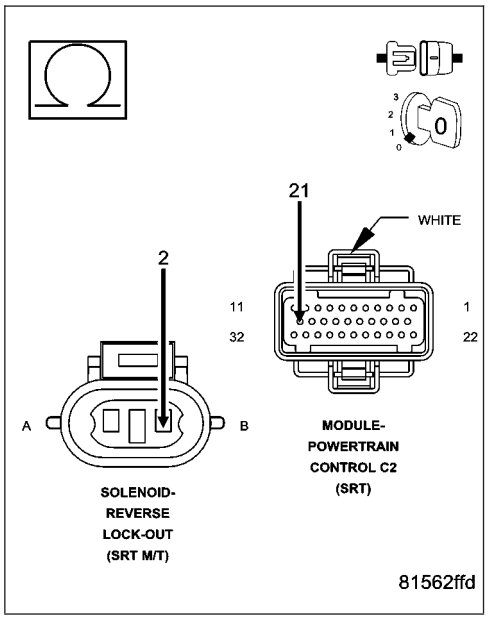

Is the resistance below 5.0 ohms?

Yes >> Go To 4

No >> Repair the open in the (K333) Reverse Lockout Solenoid Control circuit.
Perform POWERTRAIN VERIFICATION TEST. (Refer to 9 - ENGINE - STANDARD PROCEDURE)

4. (K333) REVERSE LOCKOUT SOLENOID CONTROL CIRCUIT SHORT TO GROUND

Measure the resistance between ground and the (K333) Reverse Lockout Solenoid Control circuit in the Solenoid harness connector.

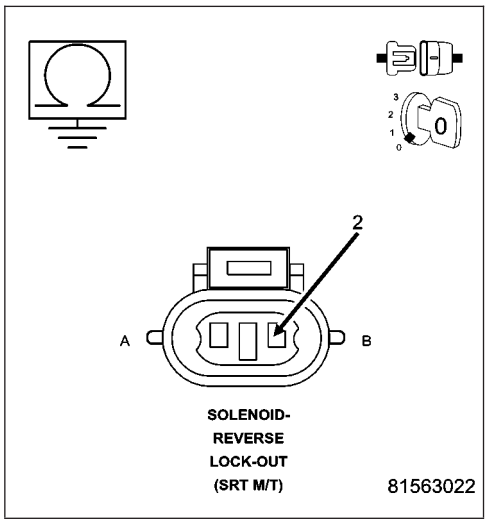

Is the resistance below 5.0 ohms?

Yes >> Repair the short to ground in the (K333) Reverse Lockout Solenoid Control circuit.
Perform POWERTRAIN VERIFICATION TEST. (Refer to 9 - ENGINE - STANDARD PROCEDURE)

No >> Go To 5

P0801-REVERSE GEAR LOCKOUT CIRCUIT OPEN OR SHORTED (CONTINUED)

5. REVERSE LOCKOUT SOLENOID

Measure the resistance across both terminals of the Reverse Lockout solenoid.

NOTE: The resistance should be about 13.5 ohms at 25°C. (77°F).

Is the resistance between 12.0 ohms and 14.0 ohms?

Yes >> Go To 6

No >> Replace the Reverse Lockout Solenoid.
Perform POWERTRAIN VERIFICATION TEST. (Refer to 9 - ENGINE - STANDARD PROCEDURE)

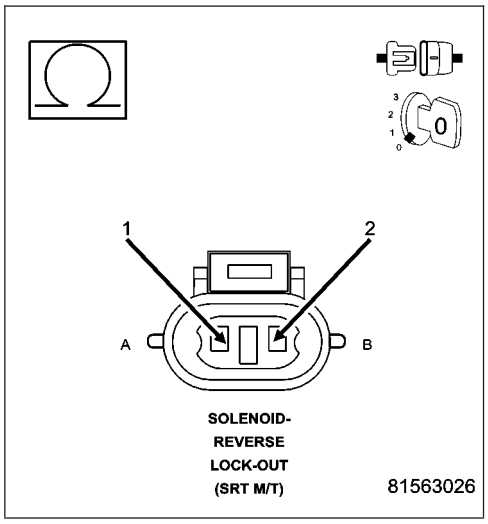

6. PCM

NOTE: Before continuing, check the PCM harness connector terminals for corrosion, damage, or terminal push out. Repair as necessary.
Using the schematics as a guide, inspect the wire harness and connectors. Pay particular attention to all Power and Ground circuits.

If there are no possible causes remaining, view repair..

Repair

Replace and program the Powertrain Control Module per Service Information.
Perform POWERTRAIN VERIFICATION TEST. (Refer to 9 - ENGINE - STANDARD PROCEDURE)

P1195-O2 SENSOR 1/1 SLOW DURING CATALYST MONITOR

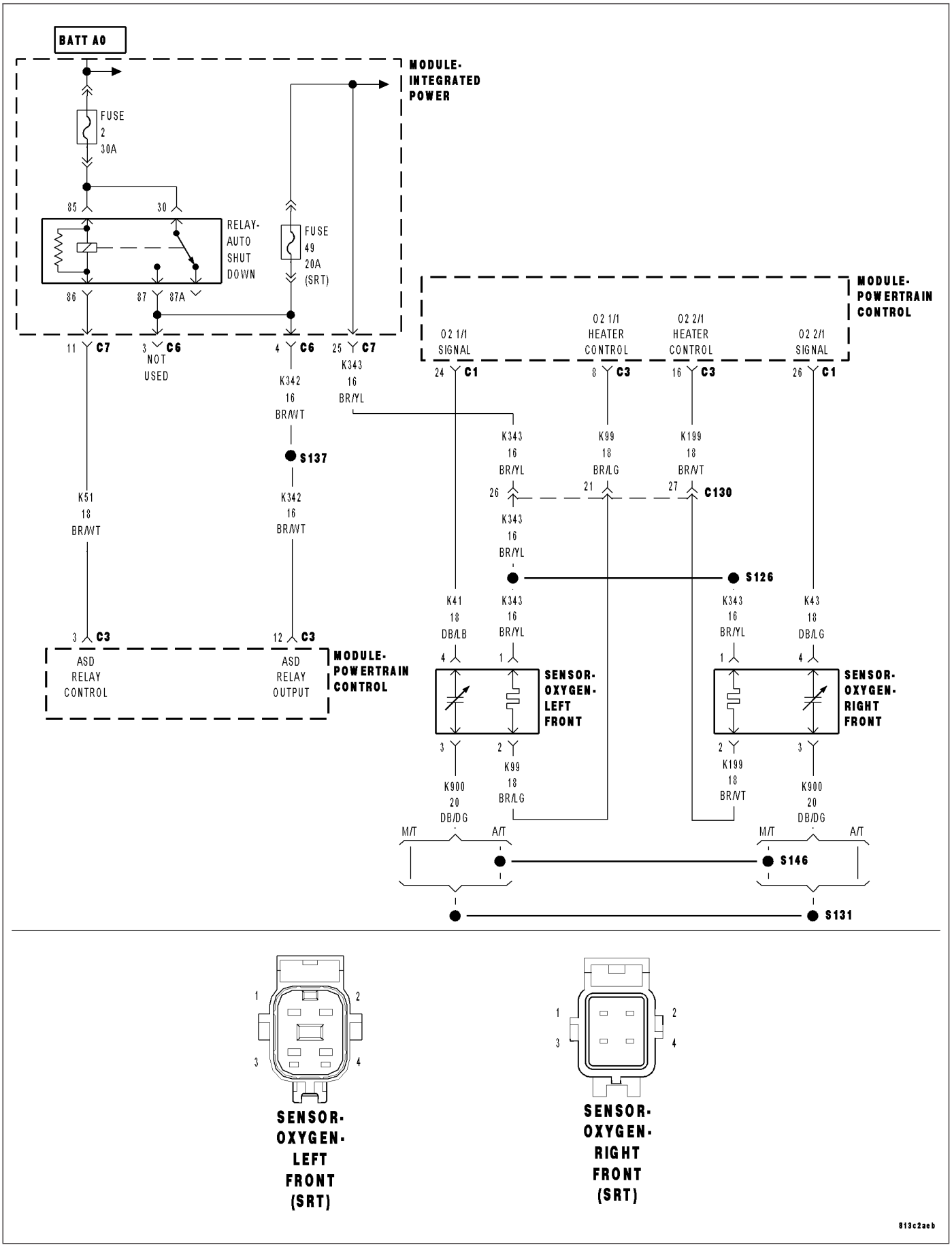

P1195-O2 SENSOR 1/1 SLOW DURING CATALYST MONITOR (CONTINUED)

For the engine circuit diagram. (Refer to 9 - ENGINE - SCHEMATICS AND DIAGRAMS)

For a complete wiring diagram **Refer to Section 8W**.

- **When Monitored:**
  With the engine running, coolant greater than 170°F, open throttle, steady to slightly increasing vehicle speed greater than 18 mph but less than 55 mph, with a light load on the engine, for a period no less than 5 minutes.
- **Set Condition:**
  The oxygen sensor signal voltage is switching from below 0.39 of a volt to above 0.6 of a volt and back fewer times than required.

Possible Causes
EXHAUST LEAK
RESISTANCE IN THE (K41) O2 SENSOR 1/1 SIGNAL CIRCUIT
RESISTANCE IN THE (K900) SENSOR GROUND CIRCUIT
O2 SENSOR

Always perform the Pre-Diagnostic Troubleshooting procedure before proceeding. (Refer to 9 - ENGINE - DIAGNOSIS AND TESTING)

Diagnostic Test

1. GOOD TRIP EQUAL TO ZERO

Ignition on, engine not running.

With the scan tool, read DTCs and record the related Freeze Frame data.

Is the Good Trip Counter displayed and equal to zero?

Yes >> Go To 2

No >> Refer to the INTERMITTENT CONDITION Diagnostic Procedure.
Perform the POWERTRAIN VERIFICATION TEST. (Refer to 9 - ENGINE - STANDARD PROCEDURE)

2. EXHAUST LEAK

Start the engine.

Inspect the exhaust for leaks between the engine and the appropriate O2 Sensor.

Are there any exhaust leaks?

Yes >> Repair or replace the leaking exhaust parts as necessary.
Perform the POWERTRAIN VERIFICATION TEST. (Refer to 9 - ENGINE - STANDARD PROCEDURE)

No >> Go To 3

P1195-O2 SENSOR 1/1 SLOW DURING CATALYST MONITOR (CONTINUED)

3. (K41) O2 SENSOR 1/1 SIGNAL CIRCUIT VOLTAGE DROP

Turn the ignition off.

Backprobe the (K41) O2 Sensor 1/1 Signal circuit at the 1/1 O2 Sensor harness connector and PCM harness connector.

NOTE: Make sure the voltmeter leads are connected for positive polarity, meet the terminals in the connector, and that there is good terminal to wire connection.

NOTE: Make sure the voltmeter leads are connected for positive polarity

Start the engine.

Allow the engine to idle.

Is the voltage below 0.10 of a volt?

Yes >> Go To 4

No >> Repair the excessive resistance on the (K41) O2 Sensor 1/1 Signal circuit.
Perform the POWERTRAIN VERIFICATION TEST. (Refer to 9 - ENGINE - STANDARD PROCEDURE)

4. (K900) SENSOR GROUND CIRCUIT VOLTAGE DROP

Turn the ignition off.

Backprobe the (K900) Sensor ground circuit at the O2 Sensor harness connector and PCM harness connector.

NOTE: Make sure the voltmeter leads are connected for positive polarity, meet the terminals in the connector, and that there is good terminal to wire connection.

NOTE: Make sure the voltmeter leads are connected for positive polarity

Start the engine.

Allow the engine to idle.

Is the voltage below 0.10 of a volt?

Yes >> Go To 5

No >> Repair the excessive resistance in the (K900) Sensor ground circuit.
Perform the POWERTRAIN VERIFICATION TEST. (Refer to 9 - ENGINE - STANDARD PROCEDURE)

5. O2 SENSOR

Turn the ignition off.

If there are no possible causes remaining, view repair.

Repair

Replace the O2 Sensor
Perform the POWERTRAIN VERIFICATION TEST. (Refer to 9 - ENGINE - STANDARD PROCEDURE)

P1196-O2 SENSOR 2/1 SLOW DURING CATALYST MONITOR

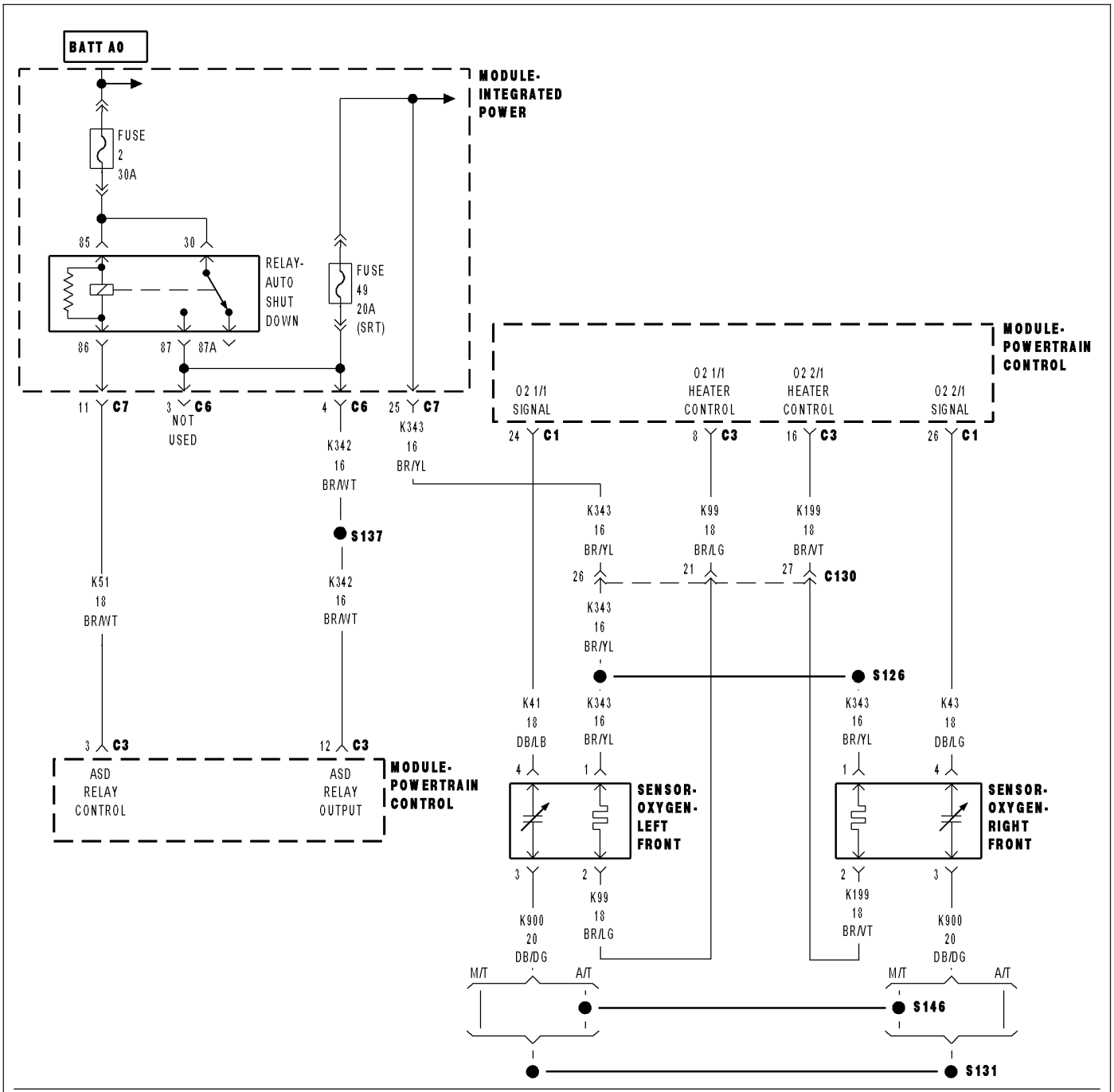

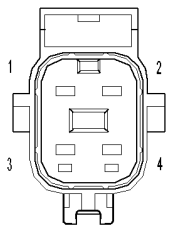

SENSOR-
OXYGEN-
LEFT
FRONT
(SRT)

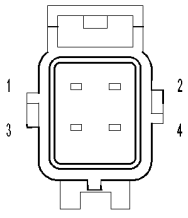

SENSOR-
OXYGEN-
RIGHT
FRONT
(SRT)

813c2aeb

P1196-O2 SENSOR 2/1 SLOW DURING CATALYST MONITOR (CONTINUED)

For the engine circuit diagram. (Refer to 9 - ENGINE - SCHEMATICS AND DIAGRAMS)

For a complete wiring diagram **Refer to Section 8W**.

- **When Monitored:**
  With the engine running, coolant greater than 170°F, open throttle, steady to slightly increasing vehicle speed greater than 18 mph but less than 55 mph, with a light load on the engine, for a period no less than 5 minutes.
- **Set Condition:**
  The oxygen sensor signal voltage is switching from below 0.39 of a volt to above 0.6 of a volt and back fewer times than required.

Possible Causes
EXHAUST LEAK
RESISTANCE IN THE (K43) O2 SENSOR 2/1 SIGNAL CIRCUIT
RESISTANCE IN THE (K900) SENSOR GROUND CIRCUIT
O2 SENSOR

Always perform the Pre-Diagnostic Troubleshooting procedure before proceeding. (Refer to 9 - ENGINE - DIAGNOSIS AND TESTING)

Diagnostic Test

1. GOOD TRIP EQUAL TO ZERO

Ignition on, engine not running.

With the scan tool, read DTCs and record the related Freeze Frame data.

Is the Good Trip Counter displayed and equal to zero?

Yes >> Go To 2

No >> Refer to the INTERMITTENT CONDITION Diagnostic Procedure.
Perform the POWERTRAIN VERIFICATION TEST. (Refer to 9 - ENGINE - STANDARD PROCEDURE)

2. EXHAUST LEAK

Start the engine.

Inspect the exhaust for leaks between the engine and the appropriate O2 Sensor.

Are there any exhaust leaks?

Yes >> Repair or replace the leaking exhaust parts as necessary.
Perform the POWERTRAIN VERIFICATION TEST. (Refer to 9 - ENGINE - STANDARD PROCEDURE)

No >> Go To 3

P1196-O2 SENSOR 2/1 SLOW DURING CATALYST MONITOR (CONTINUED)

3. (K43) O2 SENSOR 2/1 SIGNAL CIRCUIT VOLTAGE DROP

Turn the ignition off.

Backprobe the (K43) O2 Sensor 2/1 Signal circuit at the 2/1 O2 Sensor harness connector and PCM harness connector.

NOTE: Make sure the voltmeter leads are connected for positive polarity, meet the terminals in the connector, and that there is good terminal to wire connection.

NOTE: Make sure the voltmeter leads are connected for positive polarity

Start the engine.

Allow the engine to idle.

Is the voltage below 0.10 of a volt?

Yes >> Go To 4

No >> Repair the excessive resistance on the (K43) O2 Sensor 2/1 Signal circuit.
Perform the POWERTRAIN VERIFICATION TEST. (Refer to 9 - ENGINE - STANDARD PROCEDURE)

4. (K900) SENSOR GROUND CIRCUIT VOLTAGE DROP

Turn the ignition off.

Backprobe the (K900) Sensor ground circuit at the 2/1 O2 Sensor harness connector and PCM harness connector.

NOTE: Make sure the voltmeter leads are connected for positive polarity, meet the terminals in the connector, and that there is good terminal to wire connection.

NOTE: Make sure the voltmeter leads are connected for positive polarity

Start the engine.

Allow the engine to idle.

Is the voltage below 0.10 of a volt?

Yes >> Go To 5

No >> Repair the excessive resistance in the (K900) Sensor ground circuit.
Perform the POWERTRAIN VERIFICATION TEST. (Refer to 9 - ENGINE - STANDARD PROCEDURE)

5. O2 SENSOR

Turn the ignition off.

If there are no possible causes remaining, view repair.

Repair

Replace the O2 Sensor
Perform the POWERTRAIN VERIFICATION TEST. (Refer to 9 - ENGINE - STANDARD PROCEDURE)

P1281-ENGINE IS COLD TOO LONG

For the Engine circuit diagram (Refer to 8 - ELECTRICAL/ELECTRONIC CONTROL MODULES/ENGINE CONTROL MODULE - SCHEMATIC - ELECTRICAL)

For a complete wiring diagram **Refer to Section 8W**.

- **When Monitored:**
  The ignition key on, engine running.
- **Set Condition:**
  The engine does not warm to 176 Deg. F while driving for 20 minutes after start.

Possible Causes
ENGINE COLD TOO LONG
ECT SENSOR OPERATION

Always perform the Pre-Diagnostic Troubleshooting procedure before proceeding. (Refer to 9 - ENGINE - DIAGNOSIS AND TESTING)

1. CHECK COOLING SYSTEM PERFORMANCE

NOTE: The best way to diagnose this DTC is to allow the vehicle to remain outside overnight in order to have a completely cold soaked engine.

NOTE: Extremely cold outside ambient temperatures may cause this DTC to set.

Verify that the coolant level is not low and correct as necessary.

Start the engine.

With the scan tool, set the engine RPM to 1500 and allow the engine to warm up for 10-15 minutes.

With the scan tool, monitor the ENG COOLANT TMP DEG value during the warm up cycle. Make sure the transition of temperature change is smooth.

Did the engine temperature reach a minimum of 80° C (176° F)?

Yes >> Go To 2

No >> Refer to the Service Information for cooling system performance diagnosis. The most probable cause is a Thermostat problem. Also, refer to any related TSBs.
Perform POWERTRAIN VERIFICATION TEST. (Refer to 9 - ENGINE - STANDARD PROCEDURE)

---

2. ECT SENSOR OPERATION

WARNING: WARNING: MAKE SURE THE ENGINE COOLING SYSTEM IS COOL BEFORE REMOVING THE PRESSURE CAP OR ANY HOSE. SEVERE PERSONAL INJURY MAY RESULT FROM ESCAPING HOT COOLANT. THE COOLING SYSTEM IS PRESSURIZED WHEN HOT.

With the scan tool, read and record the ECT Sensor Temperature value.

Using the DRB Temperature Probe #CH7050, measure the engine coolant temperature.

NOTE: The t-stat housing area should be around 192-195 at start to open.

Is the ECT Sensor value with -15°C (5°F) of the temperature probe reading?

Yes >> Test Complete.

No >> Replace the ECT Sensor.
Perform POWERTRAIN VERIFICATION TEST. (Refer to 9 - ENGINE - STANDARD PROCEDURE)

P1282-FUEL PUMP/SYSTEM RELAY CONTROL CIRCUIT

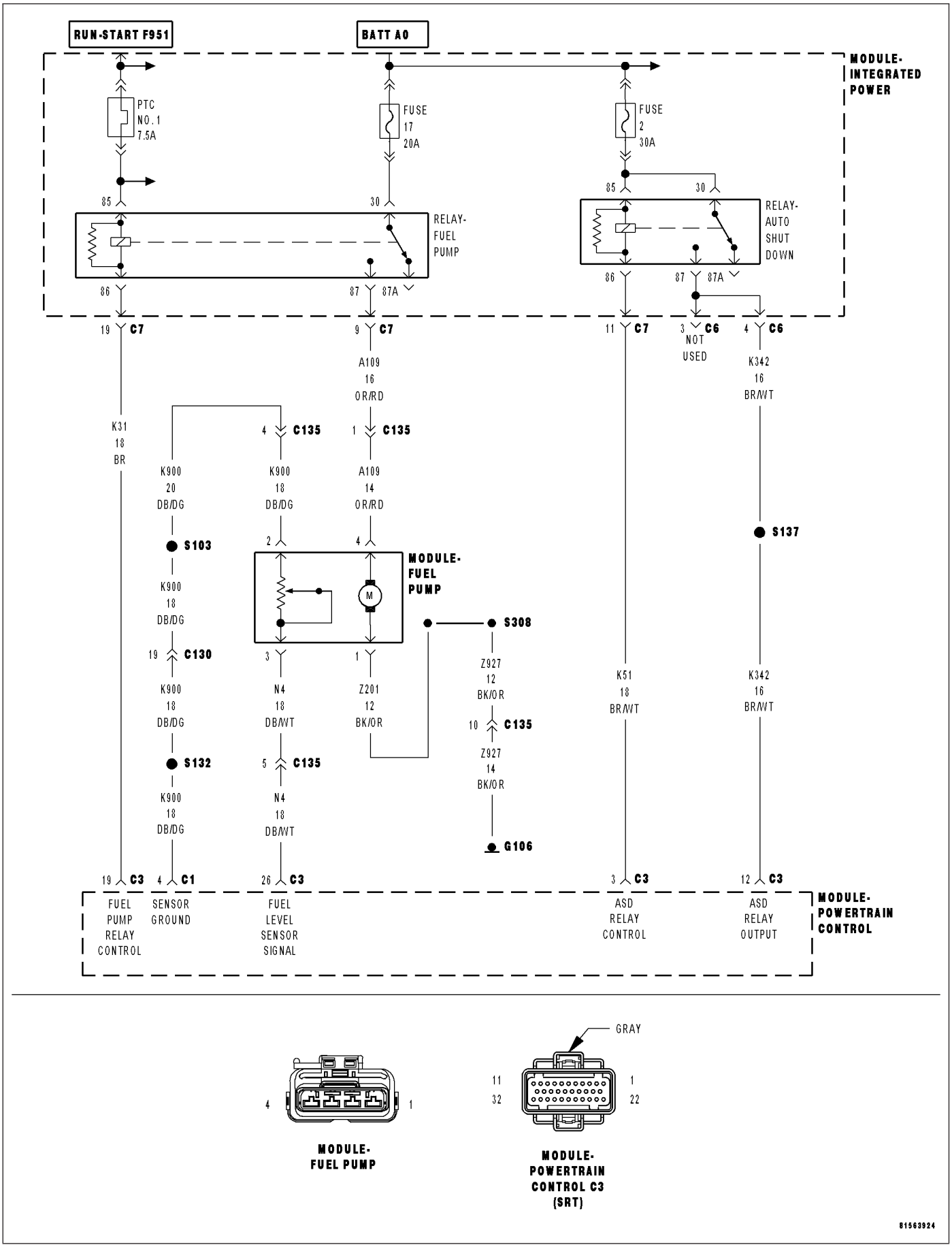

P1282-FUEL PUMP/SYSTEM RELAY CONTROL CIRCUIT (CONTINUED)

For the Engine circuit diagram (Refer to 8 - ELECTRICAL/ELECTRONIC CONTROL MODULES/ENGINE CONTROL MODULE - SCHEMATIC - ELECTRICAL)

For a complete wiring diagram **Refer to Section 8W**.

- **When Monitored:**
  With the ignition on and battery voltage above 10.4 volts.
- **Set Condition:**
  An open or shorted condition is detected in the Fuel Pump Relay Control circuit.

Possible Causes
FUEL PUMP RELAY OPERATION
FUEL PUMP RELAY
FUSED IGNITION SWITCH OUTPUT CIRCUIT
(K31) FUEL PUMP RELAY CONTROL CIRCUIT OPEN
(K31) FUEL PUMP RELAY CONTROL CIRCUIT SHORTED TO GROUND
PCM

Always perform the Pre-Diagnostic Troubleshooting procedure before proceeding. (Refer to 9 - ENGINE - DIAGNOSIS AND TESTING)

1. FUEL PUMP RELAY OPERATION

Ignition on, engine not running.
With the scan tool, read DTCs and record the related Freeze Frame data.
With the scan tool, actuate the Fuel Pump Relay.

Is the Fuel Pump Relay clicking?

Yes >> Refer to the INTERMITTENT CONDITION Symptom (Diagnostic Procedure).
Perform POWERTRAIN VERIFICATION TEST. (Refer to 9 - ENGINE - STANDARD PROCEDURE)

No >> Go To 2

---

2. FUEL PUMP RELAY

Turn the ignition off.
Remove the Fuel Pump Relay.

NOTE: Check connectors - Clean/repair as necessary.
Measure the resistance between the coil terminals of the Fuel Pump Relay.

Is the resistance between 50 and 90 ohms?

Yes >> Go To 3

No >> Replace the Fuel Pump Relay.
Perform POWERTRAIN VERIFICATION TEST. (Refer to 9 - ENGINE - STANDARD PROCEDURE)

P1282-FUEL PUMP/SYSTEM RELAY CONTROL CIRCUIT (CONTINUED)

3. FUSED IGNITION SWITCH CIRCUIT OPEN

Ignition on, engine not running.

Using a 12-volt test light connected to ground, probe the Fused Ignition Switch Output circuit in the Fuel Pump Relay connector.

Does the test light illuminate brightly?

Yes >> Go To 4

No >> Repair the open or short to ground in the Fused Ignition Switch Output circuit. Inspect the related fuse and repair as necessary.
Perform POWERTRAIN VERIFICATION TEST. (Refer to 9 - ENGINE - STANDARD PROCEDURE)

---

4. (K31) FUEL PUMP RELAY CONTROL CIRCUIT OPEN

Turn the ignition off.

Disconnect the PCM harness connectors.

Measure the resistance of the (K31) Fuel Pump Relay Control circuit from the Fuel Pump Relay connector to the PCM harness connector.

Is the resistance below 5.0 ohms?

Yes >> Go To 5

No >> Repair the open in the (K31) Fuel Pump Relay Control circuit.
Perform POWERTRAIN VERIFICATION TEST. (Refer to 9 - ENGINE - STANDARD PROCEDURE)

---

5. (K31) FUEL PUMP RELAY CONTROL CIRCUIT SHORT TO GROUND

Measure the resistance between ground and the (K31) Fuel Pump Relay Control circuit at the PDC.

Is the resistance below 100 ohms?

Yes >> Repair the short to ground in the (K31) Fuel Pump Relay Control circuit.
Perform POWERTRAIN VERIFICATION TEST. (Refer to 9 - ENGINE - STANDARD PROCEDURE)

No >> Go To 6

---

6. PCM

NOTE: Before continuing, check the PCM harness connector terminals for corrosion, damage, or terminal push out. Repair as necessary.

Using the schematics as a guide, inspect the wire harness and connectors. Pay particular attention to all Power and Ground circuits.

If there are no possible causes remaining, view repair.

Repair

Replace and program the Powertrain Control Module per Service Information.
Perform POWERTRAIN VERIFICATION TEST. (Refer to 9 - ENGINE - STANDARD PROCEDURE)

P1294-TARGET IDLE NOT REACHED

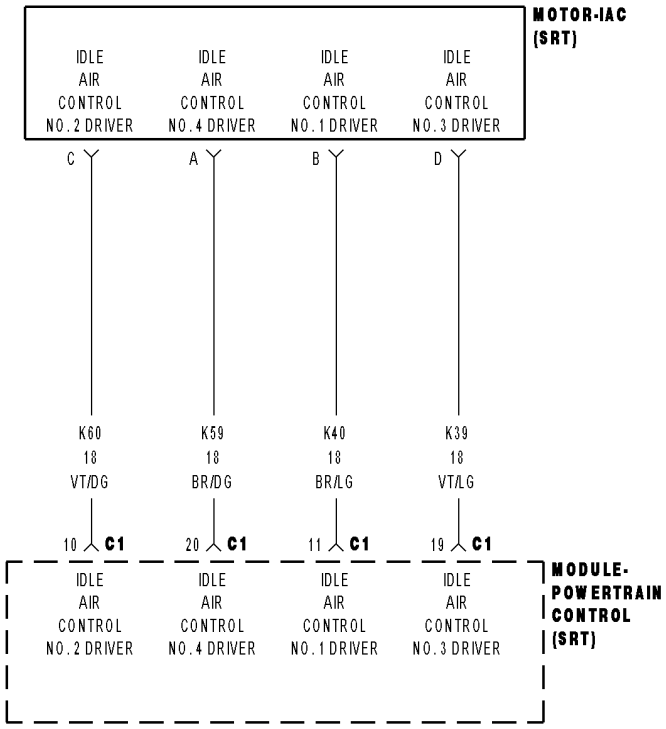

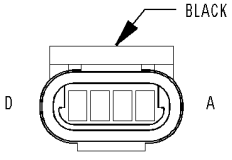

MOTOR-IAC (SRT)

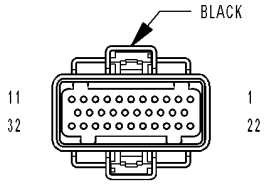

MODULE-POWERTRAIN CONTROL C1 (SRT)

81563980

P1294-TARGET IDLE NOT REACHED (CONTINUED)

For the Engine circuit diagram (Refer to 8 - ELECTRICAL/ELECTRONIC CONTROL MODULES/ENGINE CONTROL MODULE - SCHEMATIC - ELECTRICAL)

For a complete wiring diagram **Refer to Section 8W**.

- **When Monitored:**
  With the engine idling and in drive, if automatic. There must not be a MAP sensor trouble code or a throttle position sensor trouble code.
- **Set Condition:**
  Engine idle is not within 200 rpm above or 100 rpm below target idle for 14 seconds. Three separate failures are required to set a bad trip. Two bad trips are required to set the code.

Possible Causes
GOOD TRIP EQUAL TO ZERO
VACUUM LEAK
AIR INDUCTION SYSTEM
THROTTLE BODY AND THROTTLE LINKAGE
IAC DRIVER CIRCUIT OPEN
PCM

Always perform the Pre-Diagnostic Troubleshooting procedure before proceeding. (Refer to 9 - ENGINE - DIAGNOSIS AND TESTING)

1. GOOD TRIP EQUAL TO ZERO

Ignition on, engine not running.

NOTE: All MAP Sensor, IAC, and/or TPS codes present must be diagnosed first before proceeding.
With the scan tool, read DTCs and record the related Freeze Frame data.

Is the Good Trip Counter displayed and equal to zero?

Yes >> Go To 2

No >> Refer to the INTERMITTENT CONDITION Symptom (Diagnostic Procedure).
Perform POWERTRAIN VERIFICATION TEST. (Refer to 9 - ENGINE - STANDARD PROCEDURE)

---

2. VACUUM LEAK

Inspect the Intake Manifold for vacuum leaks.
Inspect the Power Brake Booster for any vacuum leaks.
Inspect the PCV system for proper operation or any vacuum leaks.

Were any problems found?

Yes >> Repair vacuum leak as necessary.
Perform POWERTRAIN VERIFICATION TEST. (Refer to 9 - ENGINE - STANDARD PROCEDURE)

No >> Go To 3

P1294-TARGET IDLE NOT REACHED (CONTINUED)

3. AIR INDUCTION SYSTEM

Inspect the Air Induction System for the following problems.
Restrictions: Dirty Air Cleaner, Foreign material in the air intake tube, etc.
Leaks: Air Intake tube connection, Air Cleaner housing, etc.

Were any problems found?

Yes >> Repair or replace as necessary.
Perform POWERTRAIN VERIFICATION TEST. (Refer to 9 - ENGINE - STANDARD PROCEDURE)

No >> Go To 4

---

4. THROTTLE BODY AND THROTTLE LINKAGE

Inspect the throttle body plate for carbon build up or other restrictions.
Inspect the throttle linkage for binding and smooth operation.
Ensure the throttle plate is resting on the stop at idle.
Remove IAC, inspect the pintle and its seating surface inside the throttle body.

Were any problems found?

Yes >> Clean and/or replace the throttle body as needed.
Perform POWERTRAIN VERIFICATION TEST. (Refer to 9 - ENGINE - STANDARD PROCEDURE)

No >> Go To 5

---

5. IAC DRIVER CIRCUITS OPEN

Turn the ignition off.
Disconnect IAC Motor harness connector.
Disconnect the PCM harness connectors.
Measure the resistance of each of the IAC Driver circuit from the IAC Motor harness connector to the PCM harness connector.

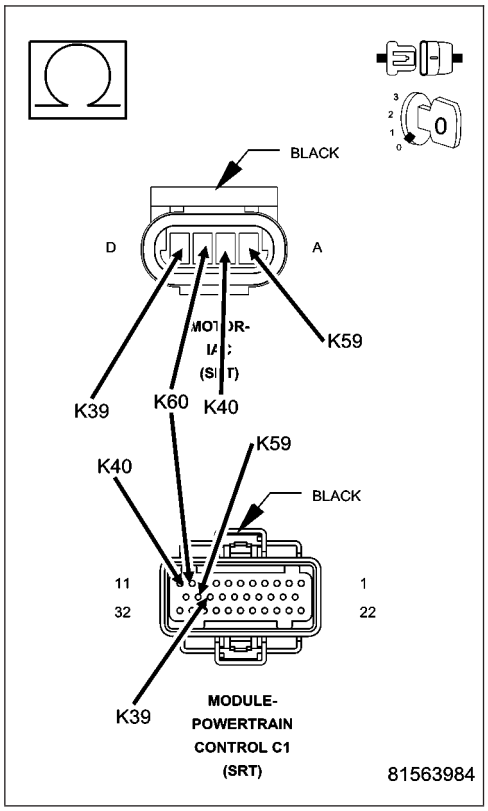

Is the resistance below 5.0 ohms?

Yes >> Go To 6

No >> Repair the open in the appropriate IAC Driver circuit.
Perform POWERTRAIN VERIFICATION TEST. (Refer to 9 - ENGINE - STANDARD PROCEDURE)

P1294-TARGET IDLE NOT REACHED (CONTINUED)

6. **PCM**

NOTE: Before continuing, check the PCM harness connector terminals for corrosion, damage, or terminal push out. Repair as necessary.

Using the schematics as a guide, inspect the wire harness and connectors. Pay particular attention to all Power and Ground circuits.

If there are no possible causes remaining, view repair.

Repair

Replace and program the Powertrain Control Module per Service Information.

Perform POWERTRAIN VERIFICATION TEST. (Refer to 9 - ENGINE - STANDARD PROCEDURE)

P1296-NO 5-VOLTS TO MAP SENSOR

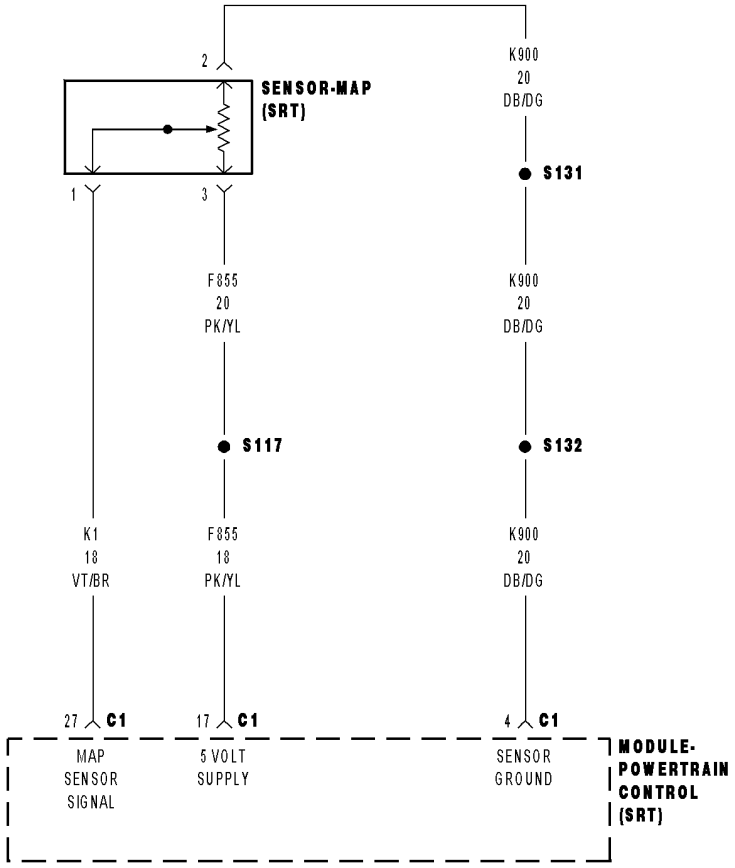

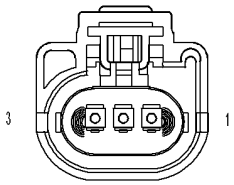

SENSOR-
MAP
(SRT)

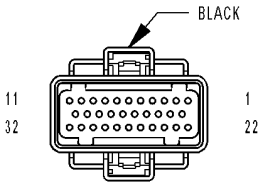

MODULE-
POWERTRAIN
CONTROL C1
(SRT)

81563c46

P1296-NO 5-VOLTS TO MAP SENSOR (CONTINUED)

For the Engine circuit diagram (Refer to 8 - ELECTRICAL/ELECTRONIC CONTROL MODULES/ENGINE CONTROL MODULE - SCHEMATIC - ELECTRICAL)

For a complete wiring diagram **Refer to Section 8W**.

- **When Monitored:**
  During power-down and battery voltage greater than 10.4 volts.
- **Set Condition:**
  The MAP sensor signal voltage goes below 2.35 volts with the key off for 5 seconds.

Possible Causes
MAP SENSOR VOLTS BELOW 2.3 VOLTS
MAP SENSOR
(F855) 5-VOLT SUPPLY CIRCUIT SHORTED TO GROUND
SHORTED SENSOR
(F855) 5-VOLT SUPPLY CIRCUIT OPEN
PCM

Always perform the Pre-Diagnostic Troubleshooting procedure before proceeding. (Refer to 9 - ENGINE - DIAGNOSIS AND TESTING)

1. MAP SENSOR VOLTS BELOW 2.3 VOLTS

NOTE: If the P0107 - MAP Sensor Voltage Too Low is also set, diagnose it first before continuing with P1296 - No 5-volts To MAP Sensor.

Ignition on, engine not running.

With the scan tool, read DTCs and record the related Freeze Frame data.

With the scan tool in Sensors, read the MAP Sensor voltage.

Is the voltage below 2.35 volts?

Yes >> Go To 2

No >> Refer to the INTERMITTENT CONDITION Symptom (Diagnostic Procedure).
Perform POWERTRAIN VERIFICATION TEST. (Refer to 9 - ENGINE - STANDARD PROCEDURE)

2. (F855) 5-VOLT SUPPLY CIRCUIT

Turn the ignition off.

Disconnect the MAP Sensor harness connector.

Ignition on, engine not running.

Measure the voltage on the (F855) 5-volt Supply circuit at the MAP Sensor harness connector.

Is the voltage above 4.5 volts?

Yes >> Go To 3

No >> Go To 4

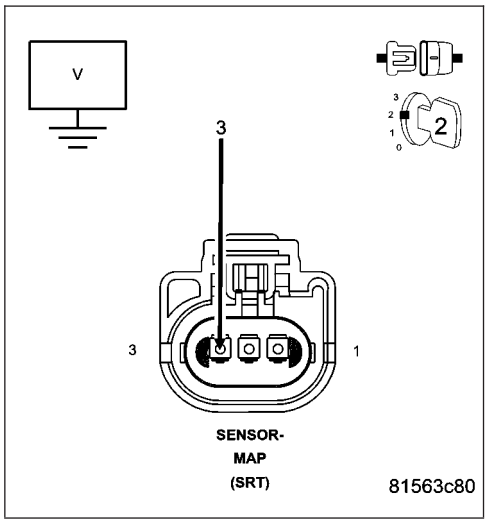

P1296-NO 5-VOLTS TO MAP SENSOR (CONTINUED)

3. MAP SENSOR

With the scan tool in Sensors, read the MAP Sensor voltage with the Sensor harness connector disconnected.

Is the voltage above 4.5 volts?

Yes >> Replace the MAP Sensor.
Perform POWERTRAIN VERIFICATION TEST. (Refer to 9 - ENGINE - STANDARD PROCEDURE)

No >> Go To 7

4. SHORTED SENSOR

Measure the voltage on the (K7) 5-volt Supply circuit in the MAP Sensor harness connector while disconnecting the remaining Sensors that share the (K7) 5-volt Supply circuit.

Does the voltage return to approximately 5.0 volts with any Sensor disconnected?

Yes >> Replace the Sensor that pulled the (K7) 5-volt Supply circuit low.
Perform POWERTRAIN VERIFICATION TEST. (Refer to 9 - ENGINE - STANDARD PROCEDURE)

No >> Go To 5

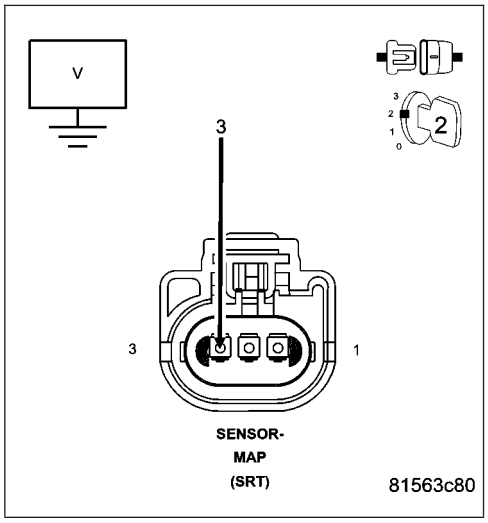

P1296-NO 5-VOLTS TO MAP SENSOR (CONTINUED)

5. (F855) 5-VOLT SUPPLY CIRCUIT OPEN

Turn the ignition off.

Disconnect the PCM harness connectors.

Measure the resistance of the (F855) 5-volt Supply circuit from the MAP Sensor harness connector to the PCM harness connector.

Is the resistance below 5.0 ohms?

Yes >> Go To 6

No >> Repair the excessive resistance in the (F855) 5-volt Supply circuit.

Perform POWERTRAIN VERIFICATION TEST. (Refer to 9 - ENGINE - STANDARD PROCEDURE)

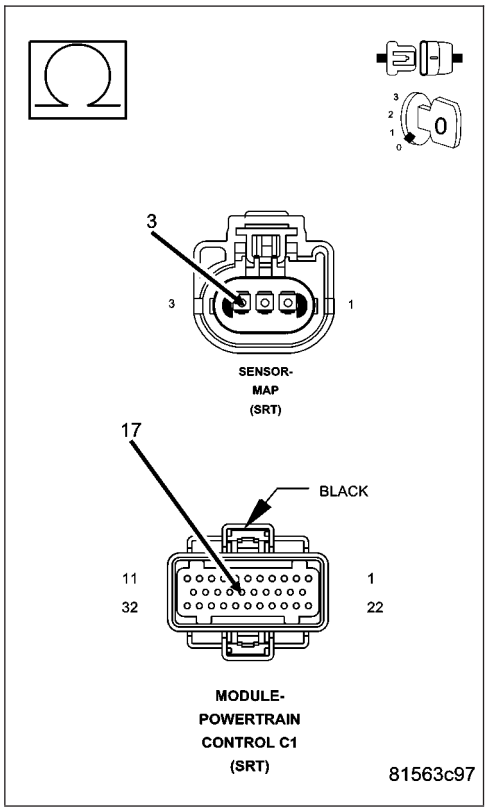

6. (F855) 5-VOLT SUPPLY CIRCUIT SHORTED TO GROUND

Measure the resistance between ground and the (F855) 5-volt Supply circuit in the MAP Sensor harness connector.

Is the resistance below 100 ohms?

Yes >> Repair the short to ground in the (F855) 5-volt Supply circuit.

Perform POWERTRAIN VERIFICATION TEST. (Refer to 9 - ENGINE - STANDARD PROCEDURE)

No >> Go To 7

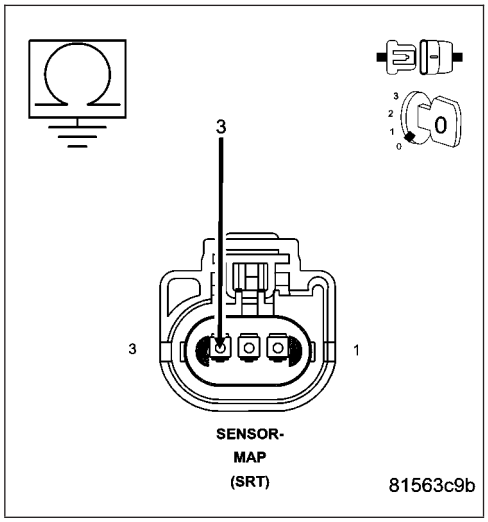

P1296-NO 5-VOLTS TO MAP SENSOR (CONTINUED)

7. **PCM**

NOTE: Before continuing, check the PCM harness connector terminals for corrosion, damage, or terminal push out. Repair as necessary.

Using the schematics as a guide, inspect the wire harness and connectors. Pay particular attention to all Power and Ground circuits.

If there are no possible causes remaining, view repair.

Repair

Replace and program the Powertrain Control Module per Service Information.

Perform POWERTRAIN VERIFICATION TEST. (Refer to 9 - ENGINE - STANDARD PROCEDURE)

P1297-NO CHANGE IN MAP FROM START TO RUN

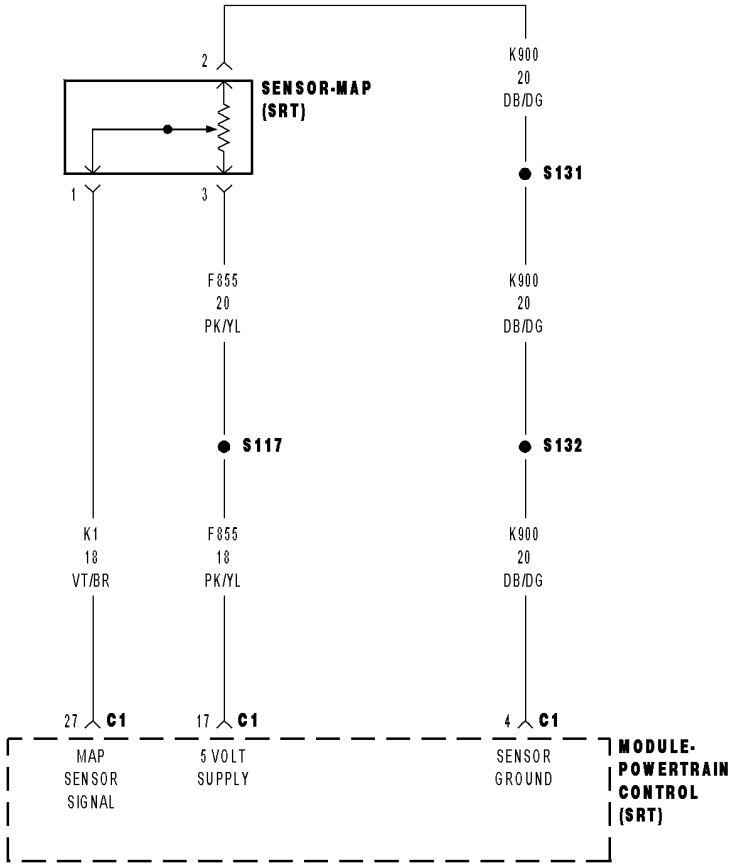

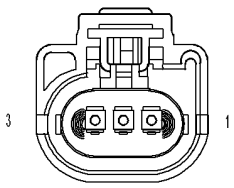

SENSOR-
MAP
(SRT)

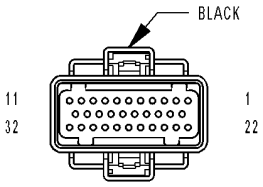

MODULE-
POWERTRAIN
CONTROL C1
(SRT)

81563c46

P1297-NO CHANGE IN MAP FROM START TO RUN (CONTINUED)

For the Engine circuit diagram (Refer to 8 - ELECTRICAL/ELECTRONIC CONTROL MODULES/ENGINE CONTROL MODULE - SCHEMATIC - ELECTRICAL)

For a complete wiring diagram **Refer to Section 8W**.

- **When Monitored:**
  With engine RPM +/- 64 of target idle and the throttle blade at closed throttle.
- **Set Condition:**
  Too small of a difference is seen between barometric pressure with ignition on (engine running) and manifold vacuum for 8.80 seconds.

Possible Causes
GOOD TRIP EQUAL TO ZERO
MAP SENSOR VACUUM PORT
MAP SENSOR VOLTAGE BELOW 3.19 VOLTS
(F855) 5-VOLT SUPPLY CIRCUIT OPEN
(F855) 5-VOLT SUPPLY CIRCUIT SHORTED TO GROUND
MAP SENSOR
(K1) MAP SENSOR SIGNAL CIRCUIT SHORTED TO GROUND
(K1) MAP SENSOR SIGNAL CIRCUIT SHORTED TO (K900) SENSOR GROUND CIRCUIT
PCM

Always perform the Pre-Diagnostic Troubleshooting procedure before proceeding. (Refer to 9 - ENGINE - DIAGNOSIS AND TESTING)

1. GOOD TRIP EQUAL TO ZERO

NOTE: If a MAP high or Low DTC set along with P1297, diagnose the High or Low DTC first before continuing.

Ignition on, engine not running.

With the scan tool, read DTCs and record the related Freeze Frame data.

Is the Good Trip Counter displayed and equal to zero?

Yes >> Go To 2

No >> Refer to the INTERMITTENT CONDITION Symptom (Diagnostic Procedure).
Perform POWERTRAIN VERIFICATION TEST. (Refer to 9 - ENGINE - STANDARD PROCEDURE)

---

2. MAP SENSOR VACUUM PORT

Turn the ignition off.

Remove the MAP Sensor.

Inspect the vacuum port, check for restrictions or any foreign materials.

Were any restriction found?

Yes >> Repair as necessary.
Perform POWERTRAIN VERIFICATION TEST. (Refer to 9 - ENGINE - STANDARD PROCEDURE)

No >> Go To 3

P1297-NO CHANGE IN MAP FROM START TO RUN (CONTINUED)

3. MAP SENSOR VOLTAGE BELOW 3.19 VOLTS

Install the MAP Sensor.

Ignition on, engine not running.

With the scan tool, read the MAP Sensor voltage.

Is the voltage below 3.19 volts?

Yes >> Go To 4

No >> Refer to the INTERMITTENT CONDITION Symptom (Diagnostic Procedure).
Perform POWERTRAIN VERIFICATION TEST. (Refer to 9 - ENGINE - STANDARD PROCEDURE)

---

4. (F855) 5-VOLT SUPPLY CIRCUIT

Turn the ignition off.

Disconnect the MAP Sensor harness connector.

Ignition on, engine not running.

Measure the voltage on the (F855) 5-volt Supply circuit at the MAP Sensor harness connector.

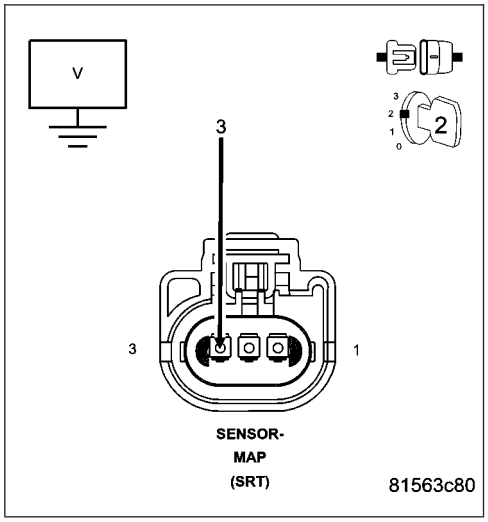

Is the voltage between 4.5 to 5.2 volts?

Yes >> Go To 5

No >> Go To 8

---

5. MAP SENSOR

With the scan tool, monitor the MAP Sensor voltage with Sensor harness connector disconnected.

Is the voltage above 1.2 volts?

Yes >> Replace the MAP Sensor.
Perform POWERTRAIN VERIFICATION TEST. (Refer to 9 - ENGINE - STANDARD PROCEDURE)

No >> Go To 6

P1297-NO CHANGE IN MAP FROM START TO RUN (CONTINUED)

6. (K1) MAP SENSOR SIGNAL CIRCUIT SHORTED TO GROUND

Turn the ignition off.

Disconnect the PCM harness connectors.

Measure the resistance between ground and the (K1) MAP Sensor Signal circuit at the MAP Sensor harness connector.

Is the resistance below 100 ohms?

Yes >> Repair the short to ground in the (K1) MAP Sensor Signal circuit.

Perform POWERTRAIN VERIFICATION TEST. (Refer to 9 - ENGINE - STANDARD PROCEDURE)

No >> Go To 7

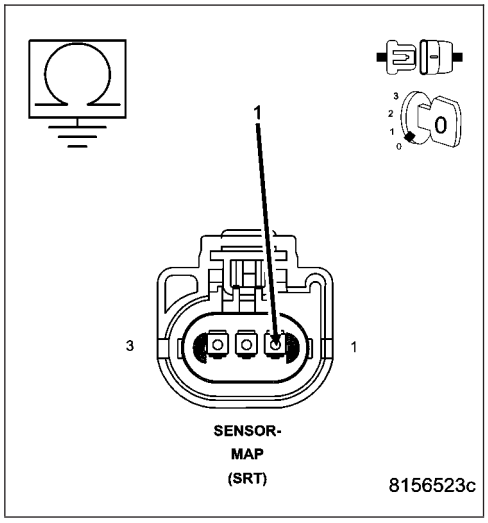

7. (K1) MAP SENSOR SIGNAL CIRCUIT SHORTED TO (K900) SENSOR GROUND CIRCUIT

Measure the resistance between the (K1) MAP Sensor Signal circuit and the (K900) Sensor ground circuit at the MAP Sensor harness connector.

Is the resistance below 100 ohms?

Yes >> Repair the short between the (K900) Sensor ground and the (K1) MAP Sensor Signal circuit.

Perform POWERTRAIN VERIFICATION TEST VER - 5.

No >> Go To 10

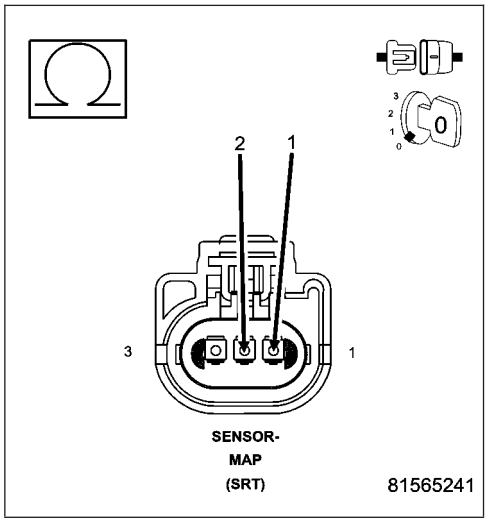

P1297-NO CHANGE IN MAP FROM START TO RUN (CONTINUED)

8. (F855) 5-VOLT SUPPLY CIRCUIT OPEN

Turn the ignition off.

Disconnect the PCM harness connectors.

Measure the resistance of the (F855) 5-volt Supply circuit from the MAP Sensor harness connector to the PCM harness connector.

Is the resistance below 5.0 ohms?

Yes >> Go To 9

No >> Repair the open in the (F855) 5-volt Supply circuit.
Perform POWERTRAIN VERIFICATION TEST. (Refer to 9 - ENGINE - STANDARD PROCEDURE)

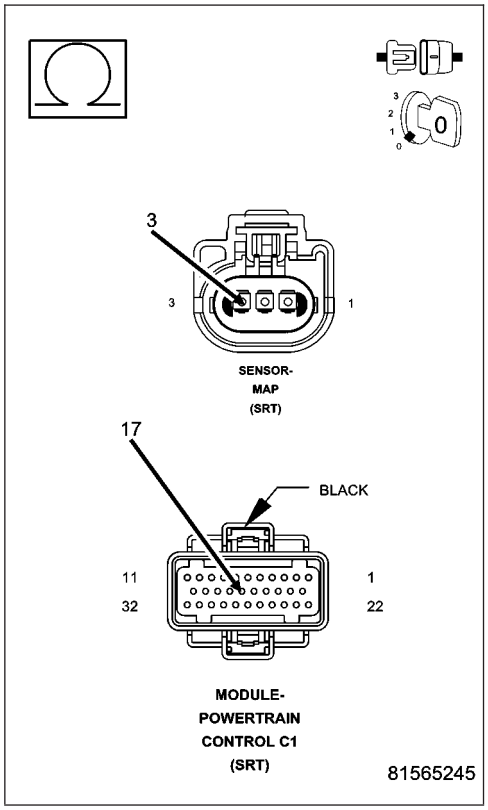

9. (F855) 5-VOLT SUPPLY CIRCUIT SHORTED TO GROUND

Measure the resistance between ground and the (F855) 5-volt Supply circuit at the MAP Sensor harness connector.

Is the resistance below 100 ohms?

Yes >> Repair the short to ground in the (F855) 5-volt Supply circuit.
Perform the POWERTRAIN VERIFICATION TEST. (Refer to 9 - ENGINE - STANDARD PROCEDURE)

No >> Go To 10

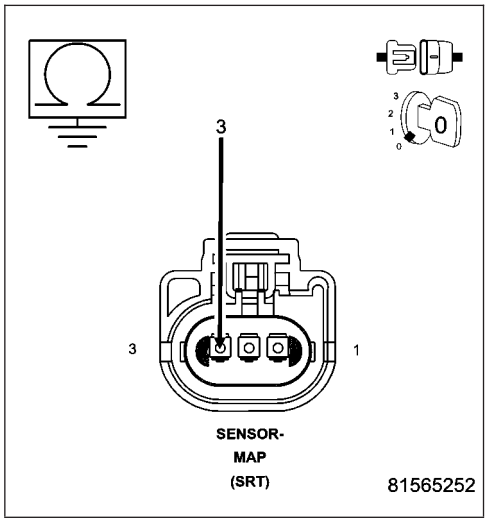

P1297-NO CHANGE IN MAP FROM START TO RUN (CONTINUED)

10. PCM

NOTE: Before continuing, check the PCM harness connector terminals for corrosion, damage, or terminal push out. Repair as necessary.

Using the schematics as a guide, inspect the wire harness and connectors. Pay particular attention to all Power and Ground circuits.

If there are no possible causes remaining, view repair.

Repair

Replace and program the Powertrain Control Module per Service Information.

Perform POWERTRAIN VERIFICATION TEST. (Refer to 9 - ENGINE - STANDARD PROCEDURE)

P1388-AUTO SHUTDOWN RELAY CONTROL CIRCUIT

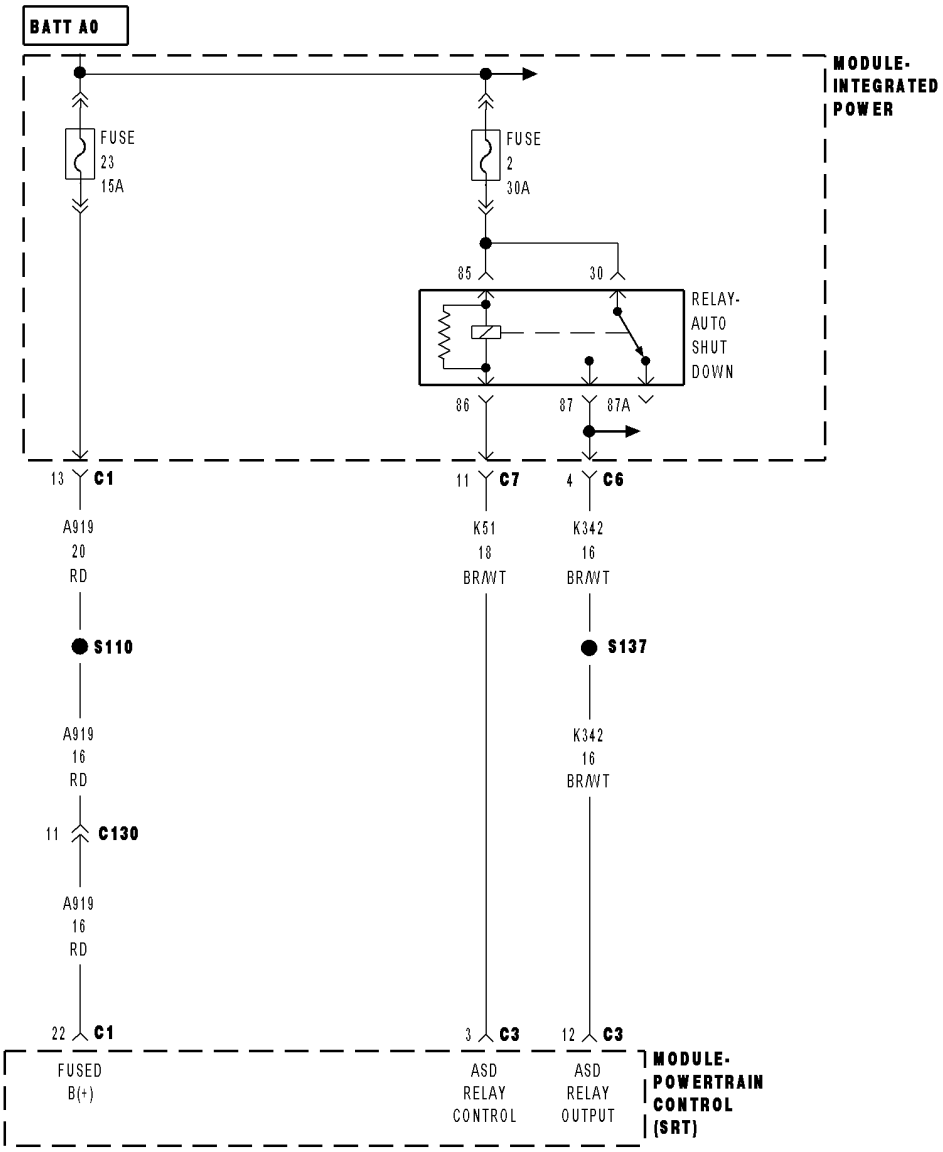

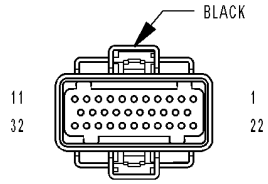

MODULE-
POWERTRAIN
CONTROL C1
(SRT)

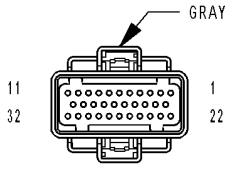

MODULE-
POWERTRAIN
CONTROL C3
(SRT)

8156584c

P1388-AUTO SHUTDOWN RELAY CONTROL CIRCUIT (CONTINUED)

For the Engine circuit diagram (Refer to 8 - ELECTRICAL/ELECTRONIC CONTROL MODULES/ENGINE CONTROL MODULE - SCHEMATIC - ELECTRICAL)

For a complete wiring diagram **Refer to Section 8W**.

- **When Monitored:**
  With ignition key on and battery voltage above 10.4 volts.
- **Set Condition:**
  An open or shorted condition is detected in the ASD Relay control circuit.

Possible Causes
GOOD TRIP EQUAL TO ZERO
ASD RELAY
(A14) FUSED B+ OUTPUT CIRCUITS
(K51) ASD RELAY CONTROL CIRCUIT OPEN
(K51) ASD RELAY CONTROL CIRCUIT SHORTED TO GROUND
PCM

Always perform the Pre-Diagnostic Troubleshooting procedure before proceeding. (Refer to 9 - ENGINE - DIAGNOSIS AND TESTING)

1. GOOD TRIP EQUAL TO ZERO

Ignition on, engine not running.

With the scan tool, read DTCs and record the related Freeze Frame data.

Is the Good Trip Counter displayed and equal to zero?

Yes >> Go To 2

No >> Refer to the INTERMITTENT CONDITION Symptom (Diagnostic Procedure).
Perform POWERTRAIN VERIFICATION TEST. (Refer to 9 - ENGINE - STANDARD PROCEDURE)

---

2. ASD RELAY

Turn the ignition off.

Remove the ASD Relay from the PDC.

Measure the resistance between the coil terminals of the ASD Relay.

Is the resistance between 50 and 80 ohms?

Yes >> Go To 3

No >> Replace the ASD Relay.
Perform POWERTRAIN VERIFICATION TEST. (Refer to 9 - ENGINE - STANDARD PROCEDURE)

P1388-AUTO SHUTDOWN RELAY CONTROL CIRCUIT (CONTINUED)

3. (A14) FUSED B+ OUTPUT CIRCUIT

Using a 12-volt test light connected to ground, probe the (A14) Fused B+ Output circuits in the ASD Relay connector.

Does the test light illuminate brightly?

Yes >> Go To 4

No >> Repair the open or short to ground in the (A14) Fused B+ Output circuits. Inspect the related fuse and repair as necessary.
Perform POWERTRAIN VERIFICATION TEST. (Refer to 9 - ENGINE - STANDARD PROCEDURE)

---

4. (K51) ASD RELAY CONTROL CIRCUIT OPEN

Disconnect the PCM harness connectors.

Measure the resistance of the (K51) ASD Relay Control circuit from the ASD Relay cavity in the PDC to the PCM harness connector.

Is the resistance below 5.0 ohms?

Yes >> Go To 5

No >> Repair the open in the (K51) ASD Relay Control circuit.
Perform POWERTRAIN VERIFICATION TEST. (Refer to 9 - ENGINE - STANDARD PROCEDURE)

---

5. (K51) ASD RELAY CONTROL CIRCUIT SHORT TO GROUND

Measure the resistance between ground and the (K51) ASD Relay Control circuit.

Is the resistance below 100 ohms?

Yes >> Repair the short to ground in the (K51) ASD Relay Control circuit.
Perform POWERTRAIN VERIFICATION TEST. (Refer to 9 - ENGINE - STANDARD PROCEDURE)

No >> Go To 6

---

6. PCM

NOTE: Before continuing, check the PCM harness connector terminals for corrosion, damage, or terminal push out. Repair as necessary.

Using the schematics as a guide, inspect the wire harness and connectors. Pay particular attention to all Power and Ground circuits.

If there are no more possible causes remaining, view repair.

Repair

Replace and program the Powertrain Control Module per Service Information.
Perform POWERTRAIN VERIFICATION TEST. (Refer to 9 - ENGINE - STANDARD PROCEDURE)

P1389-NO ASD RELAY OUTPUT VOLTAGE AT PCM

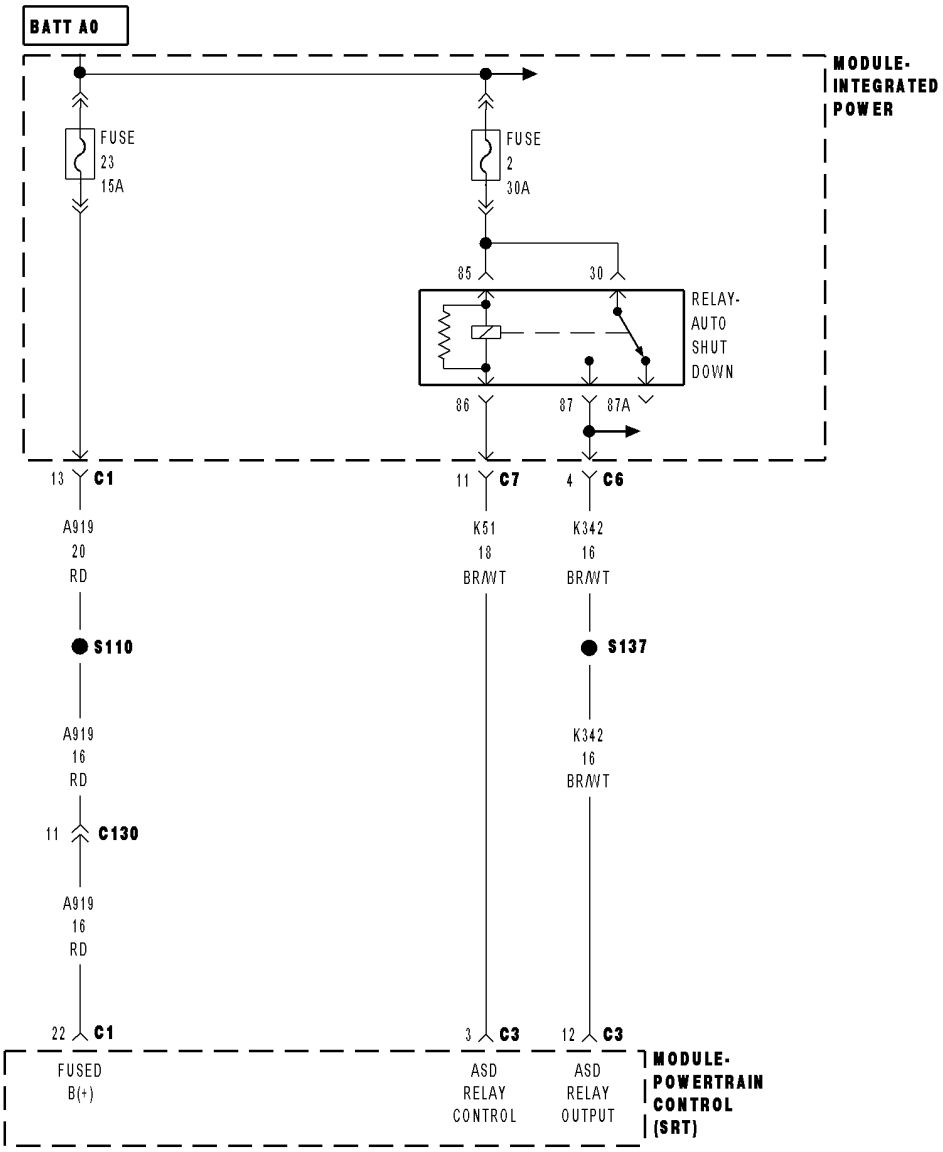

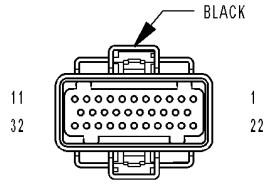

MODULE-
POWERTRAIN
CONTROL C1
(SRT)

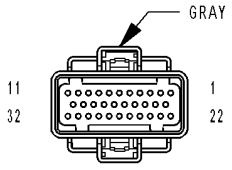

MODULE-
POWERTRAIN
CONTROL C3
(SRT)

8156584c

P1389-NO ASD RELAY OUTPUT VOLTAGE AT PCM (CONTINUED)

For the Engine circuit diagram (Refer to 8 - ELECTRICAL/ELECTRONIC CONTROL MODULES/ENGINE CONTROL MODULE - SCHEMATIC - ELECTRICAL)

For a complete wiring diagram **Refer to Section 8W**.

- **When Monitored:**
  With ignition key on, battery voltage above 10.4 volts, and engine RPM greater than 400.
- **Set Condition:**
  No voltage sensed at the PCM when the ASD Relay is energized.

Possible Causes
GOOD TRIP EQUAL TO ZERO
ASD RELAY
(A14) FUSED B+ CIRCUITS
(K342) ASD RELAY OUTPUT CIRCUIT OPEN
(K342) ASD OUTPUT CIRCUIT OPEN
PCM

Always perform the Pre-Diagnostic Troubleshooting procedure before proceeding. (Refer to 9 - ENGINE - DIAGNOSIS AND TESTING)

1. GOOD TRIP EQUAL TO ZERO

Ignition on, engine not running.

With the scan tool, read DTCs and record the related Freeze Frame data.

Is the Good Trip Counter displayed and equal to zero?

Yes >> Go To 2

No >> Refer to the INTERMITTENT CONDITION Symptom (Diagnostic Procedure).
Perform POWERTRAIN VERIFICATION TEST. (Refer to 9 - ENGINE - STANDARD PROCEDURE)

---

2. ENGINE STARTING STATUS

Attempt to start the engine.

Did the engine start?

Yes >> Go To 3

No >> Go To 4

P1389-NO ASD RELAY OUTPUT VOLTAGE AT PCM (CONTINUED)

3. (K342) ASD OUTPUT CIRCUIT OPEN

Turn the ignition off.

Remove the ASD Relay from the PDC.

Disconnect the PCM harness connectors.

Measure the resistance of the (K342) ASD Relay Output circuit from the ASD Relay cavity in the PDC to the PCM harness connector.

Is the resistance below 5.0 ohms?

Yes >> Go To 7

No >> Repair the open in the (K342) ASD Relay Output circuit.
Perform POWERTRAIN VERIFICATION TEST. (Refer to 9 - ENGINE - STANDARD PROCEDURE)

---

4. ASD RELAY

Install a substitute relay for the ASD Relay.

Attempt to start the vehicle.

Did the engine start?

Yes >> Replace the ASD Relay.
Perform POWERTRAIN VERIFICATION TEST VER - 2.

No >> Go To 5

---

5. (A14) FUSED B+ CIRCUITS

Turn the ignition off.

Remove the ASD Relay from the PDC.

Using a 12-volt test light, probe the (A14) Fused B+ circuits at the ASD Relay connector in the PDC.

Does the test light illuminate brightly?

Yes >> Go To 6

No >> Repair the open or short to ground in the (A14) Fused B+ circuits. Inspect the related fuse and repair as necessary.
Perform POWERTRAIN VERIFICATION TEST. (Refer to 9 - ENGINE - STANDARD PROCEDURE)

---

6. (K342) ASD RELAY OUTPUT CIRCUIT OPEN

Disconnect the PCM harness connectors.

Measure the resistance of the (K342) ASD Relay Output circuit from the ASD Relay cavity in the PDC to the PCM harness connector.

Is the resistance below 5.0 ohms?

Yes >> Go To 7

No >> Repair the open in the (K342) ASD Relay Output circuit.
Perform POWERTRAIN VERIFICATION TEST. (Refer to 9 - ENGINE - STANDARD PROCEDURE)

P1389-NO ASD RELAY OUTPUT VOLTAGE AT PCM (CONTINUED)

7. **PCM**

NOTE: Before continuing, check the PCM harness connector terminals for corrosion, damage, or terminal push out. Repair as necessary.

Using the schematics as a guide, inspect the wire harness and connectors. Pay particular attention to all Power and Ground circuits.

If there are no possible causes remaining, view repair.

Repair

Replace and program the Powertrain Control Module per Service Information.

Perform POWERTRAIN VERIFICATION TEST. (Refer to 9 - ENGINE - STANDARD PROCEDURE)

P1391-INTERMITTENT LOSS OF CMP OR CKP

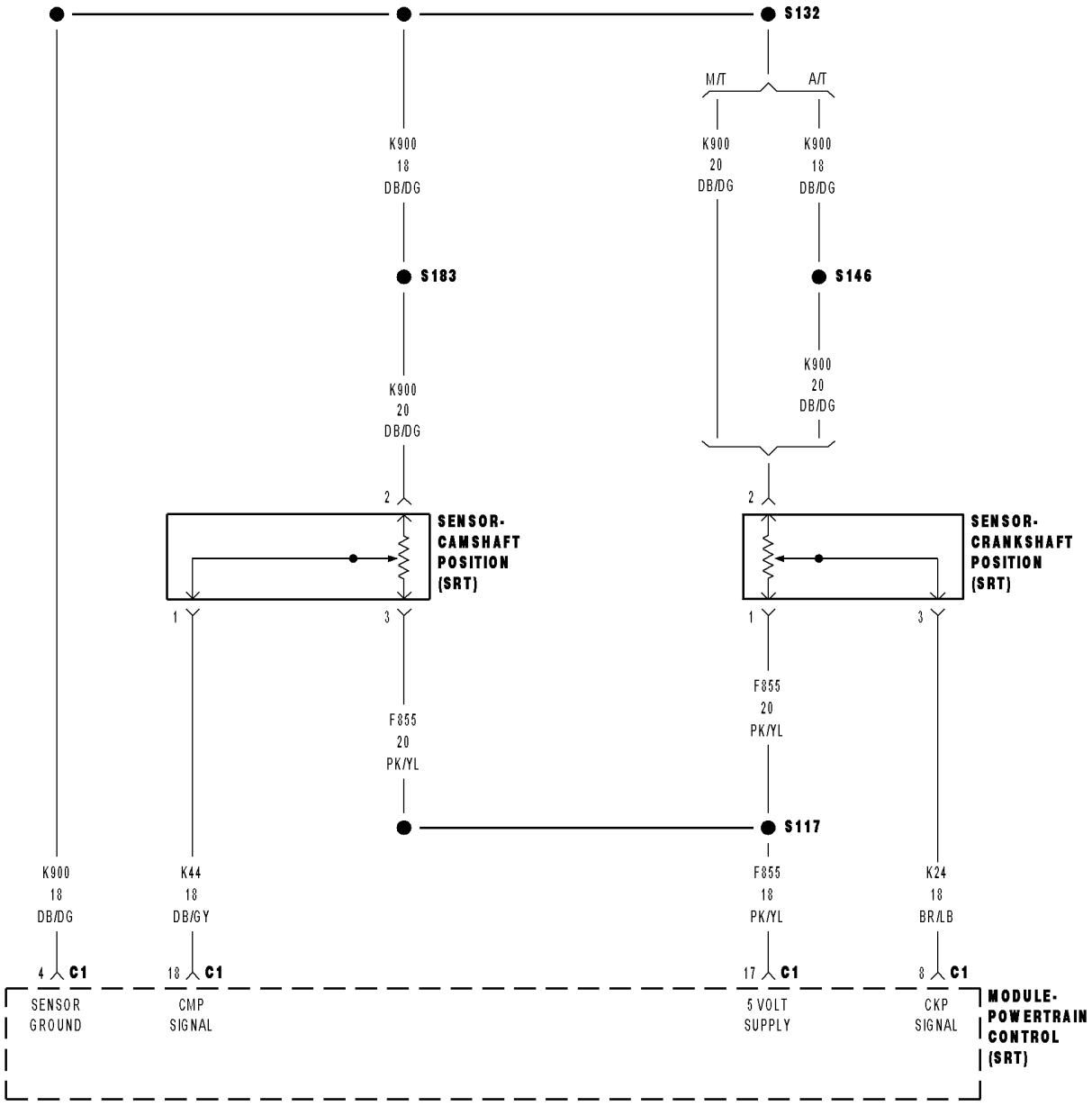

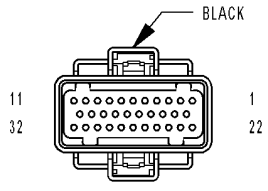

MODULE-
POWERTRAIN
CONTROL C1
(SRT)

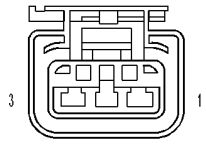

SENSOR-
CRANKSHAFT
POSITION
(5.7L/SRT)

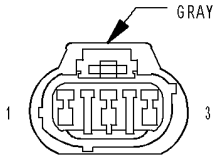

SENSOR-
CAMSHAFT
POSITION
(GAS)

81566736

P1391-INTERMITTENT LOSS OF CMP OR CKP (CONTINUED)

For the Engine circuit diagram (Refer to 8 - ELECTRICAL/ELECTRONIC CONTROL MODULES/ENGINE CONTROL MODULE - SCHEMATIC - ELECTRICAL)

For a complete wiring diagram **Refer to Section 8W**.

- **When Monitored:**
  Engine running or cranking.
- **Set Condition:**
  When the failure counter reaches 20 for 2 consecutive trips.

Possible Causes
GOOD TRIP EQUAL TO ZERO
CMP WIRE HARNESS INSPECTION
TONE WHEEL/PULSE RING INSPECTION
CKP WIRE HARNESS INSPECTION
TONE WHEEL/PULSE RING INSPECTION
CHECKING INTERMITTENT CKP SIGNAL WITH LAB SCOPE
CAMSHAFT POSITION SENSOR
CRANKSHAFT POSITION SENSOR

Always perform the Pre-Diagnostic Troubleshooting procedure before proceeding. (Refer to 9 - ENGINE - DIAGNOSIS AND TESTING)

1. GOOD TRIP EQUAL TO ZERO

Ignition on, engine not running.

WARNING: When the engine is operating, do not stand in a direct line with the fan. Do not put your hand near the pulleys, belts, or fan. Do not wear loose clothing.

With the scan tool, read DTCs and record the related Freeze Frame data.

Start the engine and run until operating temp is reached. (Closed Loop)

If the DTC does not return right away it may be necessary to test drive the vehicle to duplicate the DTC.

Does the P1391 return?

Yes >> Go To 2

No >> Refer to the INTERMITTENT CONDITION Symptom (Diagnostic Procedure).
Perform POWERTRAIN VERIFICATION TEST. (Refer to 9 - ENGINE - STANDARD PROCEDURE)

---

2. INTERMITTENT CAM POSITION SENSOR SIGNAL

Turn the ignition off.

With the scan tool as a Dual Channel Lab Scope and Miller special tool #6801, backprobe the (K44) CMP Signal circuit in the CMP harness connector and PCM harness connector.

WARNING: When the engine is operating, do not stand in a direct line with the fan. Do not put your hand near the pulleys, belts, or fan. Do not wear loose clothing.

Start the engine.

Observe the lab scope screen.

Are there any irregular or missing signals?

Yes >> Go To 3

No >> Go To 6

P1391-INTERMITTENT LOSS OF CMP OR CKP (CONTINUED)

3. CMP WIRE HARNESS INSPECTION

Visually inspect the related wire harness. Look for any chafed, pierced, pinched, or partially broken wires.

Visually inspect the related wire harness connectors. Look for broken, bent, pushed out, or corroded terminals.

Make sure the Crankshaft Position Sensor and the Camshaft Position Sensor are properly installed and the mounting bolt(s) are torqued to specification.

Refer to any TSB that may apply.

Were any of the above conditions present?

Yes >> Repair as necessary
Perform POWERTRAIN VERIFICATION TEST. (Refer to 9 - ENGINE - STANDARD PROCEDURE)

No >> Go To 4

---

4. TONE WHEEL/PULSE RING INSPECTION

Turn the ignition off.

Remove the Camshaft Position Sensor.

Inspect the Tone Wheel/Pulse Ring for damage, foreign material, or excessive movement.

Were any problems found?

Yes >> Repair or replace the Tone Wheel/Pulse Ring as necessary.
Perform POWERTRAIN VERIFICATION TEST. (Refer to 9 - ENGINE - STANDARD PROCEDURE)

No >> Go To 5

---

5. CAMSHAFT POSITION SENSOR

If there are no possible causes remaining, view repair.

Repair

Replace the Camshaft Position Sensor.
Perform POWERTRAIN VERIFICATION TEST. (Refer to 9 - ENGINE - STANDARD PROCEDURE)

---

6. CHECKING CKP SIGNAL WITH THE SCAN TOOL LAB

Turn the ignition off.

With the scan tool as a Dual Channel Lab Scope and the Miller special tool #6801, backprobe the (K24) CKP Signal circuit in the CKP harness connector and PCM harness connector.

WARNING: When the engine is operating, do not stand in a direct line with the fan. Do not put your hand near the pulleys, belts, or fan. Do not wear loose clothing.

Start the engine.

Observe the lab scope screen.

Are there any irregular or missing signals?

Yes >> Go To 7

No >> Go To 10

P1391-INTERMITTENT LOSS OF CMP OR CKP (CONTINUED)

7. CKP WIRE HARNESS INSPECTION

Visually inspect the related wire harness. Look for any chafed, pierced, pinched, or partially broken wires.

Visually inspect the related wire harness connectors. Look for broken, bent, pushed out, or corroded terminals.

Ensure the Crankshaft Position Sensor and the Camshaft Position Sensor are properly installed and the mounting bolt(s) are torqued to specification.

Refer to any TSB that may apply.

Were any of the above conditions present?

Yes >> Repair as necessary
Perform POWERTRAIN VERIFICATION TEST. (Refer to 9 - ENGINE - STANDARD PROCEDURE)

No >> Go To 8

---

8. TONE WHEEL/FLEX PLATE INSPECTION

Remove the Crankshaft Position Sensor.

Inspect the Tone Wheel/Flex Plate slots for damage, foreign material, or excessive movement.

Were any problems found?

Yes >> Repair or replace the Tone Wheel/Flex Plate as necessary.
Perform POWERTRAIN VERIFICATION TEST. (Refer to 9 - ENGINE - STANDARD PROCEDURE)

No >> Go To 9

---

9. CRANKSHAFT POSITION SENSOR

If there are no possible causes remaining, view repair.

Repair

Replace the Crankshaft Position Sensor.
Perform POWERTRAIN VERIFICATION TEST. (Refer to 9 - ENGINE - STANDARD PROCEDURE)

---

10. CHECKING CKP SIGNAL WITH LAB SCOPE

NOTE: The conditions that set this DTC are not present at this time. The following test may help in identifying the intermittent condition.

Turn the ignition off.

With the scan tool as a Dual Channel Lab Scope and the Miller special tool #6801, backprobe the (K24) CKP Signal circuit in the PCM harness connector and CKP harness connector.

WARNING: When the engine is operating, do not stand in a direct line with the fan. Do not put your hand near the pulleys, belts, or fan. Do not wear loose clothing.

Start the engine.

Carefully wiggle the related wire harness and gently tap on the CKP sensor.

Compare the Channel 1 reading to the Channel 2 reading on the lab scope screen.

Both of the readings should be the same.

Were any of the above conditions present?

Yes >> Repair the wiring or connector concern.
Perform POWERTRAIN VERIFICATION TEST. (Refer to 9 - ENGINE - STANDARD PROCEDURE)

No >> Test Complete.

P1398-MIS-FIRE ADAPTIVE NUMERATOR AT LIMIT

For the Engine circuit diagram (Refer to 8 - ELECTRICAL/ELECTRONIC CONTROL MODULES/ENGINE CONTROL MODULE - SCHEMATIC - ELECTRICAL)

For a complete wiring diagram **Refer to Section 8W**.

- **When Monitored:**
  Under closed throttle decel and Fuel Pulse Width equal to zero for 30 seconds.
- **Set Condition:**
  One of the CKP sensor target windows has more than 2.86% variance from the reference window.

Possible Causes
ADAPTIVE NUMERATOR RELEARN
CMP SENSOR CONNECTOR/WIRING
CKP SENSOR CONNECTOR/WIRING
DAMAGED TONE WHEEL/FLEX PLATE (CRANKSHAFT)
CRANKSHAFT POSITION SENSOR
PCM

Always perform the Pre-Diagnostic Troubleshooting procedure before proceeding. (Refer to 9 - ENGINE - DIAGNOSIS AND TESTING)

1. ADAPTIVE NUMERATOR RELEARN

NOTE: Check for any TSB's that may apply to this symptom.
Read and record the Freeze Frame Data. Use this information to help you duplicate the conditions that set the DTC. Pay particular attention to the DTC set conditions, such as, VSS, MAP, ECT, and Load.

Ignition on, engine not running.

With the scan tool in the miscellaneous menu, choose Clear PCM (battery disconnect) to reset the PCM.

With the scan tool, choose the Misfire Pretest screen.

Road test the vehicle and re-learn the adaptive numerator.

The adaptive numerator is learned when the Adaptive Numerator Done Learning line on the Misfire screen changes to Yes.

Did the adaptive numerator re-learn?

Yes >> Refer to the INTERMITTENT CONDITION Symptom (Diagnostic Procedure).
Perform POWERTRAIN VERIFICATION TEST. (Refer to 9 - ENGINE - STANDARD PROCEDURE)

No >> Go To 2

P1398-MIS-FIRE ADAPTIVE NUMERATOR AT LIMIT (CONTINUED)

2. CMP CONNECTOR/HARNESS INSPECTION

Turn ignition off.

NOTE: Visually inspect the related wire harness connectors. Look for broken, bent, pushed out, or corroded terminals.

NOTE: Visually inspect the related wire harness. Look for any chafed, pierced, pinched, or partially broken wires.

NOTE: Make sure the Camshaft Position Sensor is tight.

NOTE: Refer to any technical service bulletins that may apply.

Were any problems found?

Yes >> Repair as necessary.
Perform POWERTRAIN VERIFICATION TEST. (Refer to 9 - ENGINE - STANDARD PROCEDURE)

No >> Go To 3

---

3. CKP CONNECTOR/HARNESS INSPECTION

NOTE: Visually inspect the Crankshaft Position Sensor and related wire harness connectors. Look for broken, bent, pushed out, or corroded terminals.

NOTE: Visually inspect the related wire harness. Look for any chafed, pierced, pinched, or partially broken wires.

NOTE: Verify the Crank Position Sensor is properly installed.

Were any problems found?

Yes >> Repair as necessary.
Perform POWERTRAIN VERIFICATION TEST. (Refer to 9 - ENGINE - STANDARD PROCEDURE)

No >> Go To 4

---

4. TONE WHEEL/FLEX PLATE INSPECTION

Disconnect and remove the Crankshaft Position Sensor.

Inspect the tone wheel/flexplate slots for damage, foreign material, or excessive movement.

Is the tone wheel/flexplate free from defects?

Yes >> Go To 5

No >> Repair/replace tone wheel/flex plate as necessary.
Perform POWERTRAIN VERIFICATION TEST. (Refer to 9 - ENGINE - STANDARD PROCEDURE)

P1398-MIS-FIRE ADAPTIVE NUMERATOR AT LIMIT (CONTINUED)

5. CRANKSHAFT POSITION SENSOR I

With the scan tool lab scope probe and the Miller special tool #6801, back probe the (K24) CKP Signal circuit in the PCM harness connector.

WARNING: WARNING: WHEN THE ENGINE IS OPERATING, DO NOT STAND IN A DIRECT LINE WITH THE FAN. DO NOT PUT YOUR HANDS NEAR THE PULLEYS, BELTS OR FAN. DO NOT WEAR LOOSE CLOTHING..
Start the engine and observe the lab scope screen for any erratic CKP Sensor pulses.

NOTE: Turn the ignition off before continuing.

Were any erratic Crank Position signals detected.

Yes. >> Replace the Crankshaft Position Sensor.
Perform POWERTRAIN VERIFICATION TEST. (Refer to 9 - ENGINE - STANDARD PROCEDURE)

No. >> Go To 6

---

6. PCM

NOTE: Before continuing, check the PCM harness connector terminals for corrosion, damage, or terminal push out. Repair as necessary.
Using the schematics as a guide, inspect the wire harness and connectors. Pay particular attention to all Power and Ground circuits.

If there are no possible causes remaining, view repair.

Repair

Replace and program the Powertrain Control Module per Service Information.
Perform POWERTRAIN VERIFICATION TEST. (Refer to 9 - ENGINE - STANDARD PROCEDURE)

P1486-EVAP LEAK MONITOR PINCHED HOSE FOUND

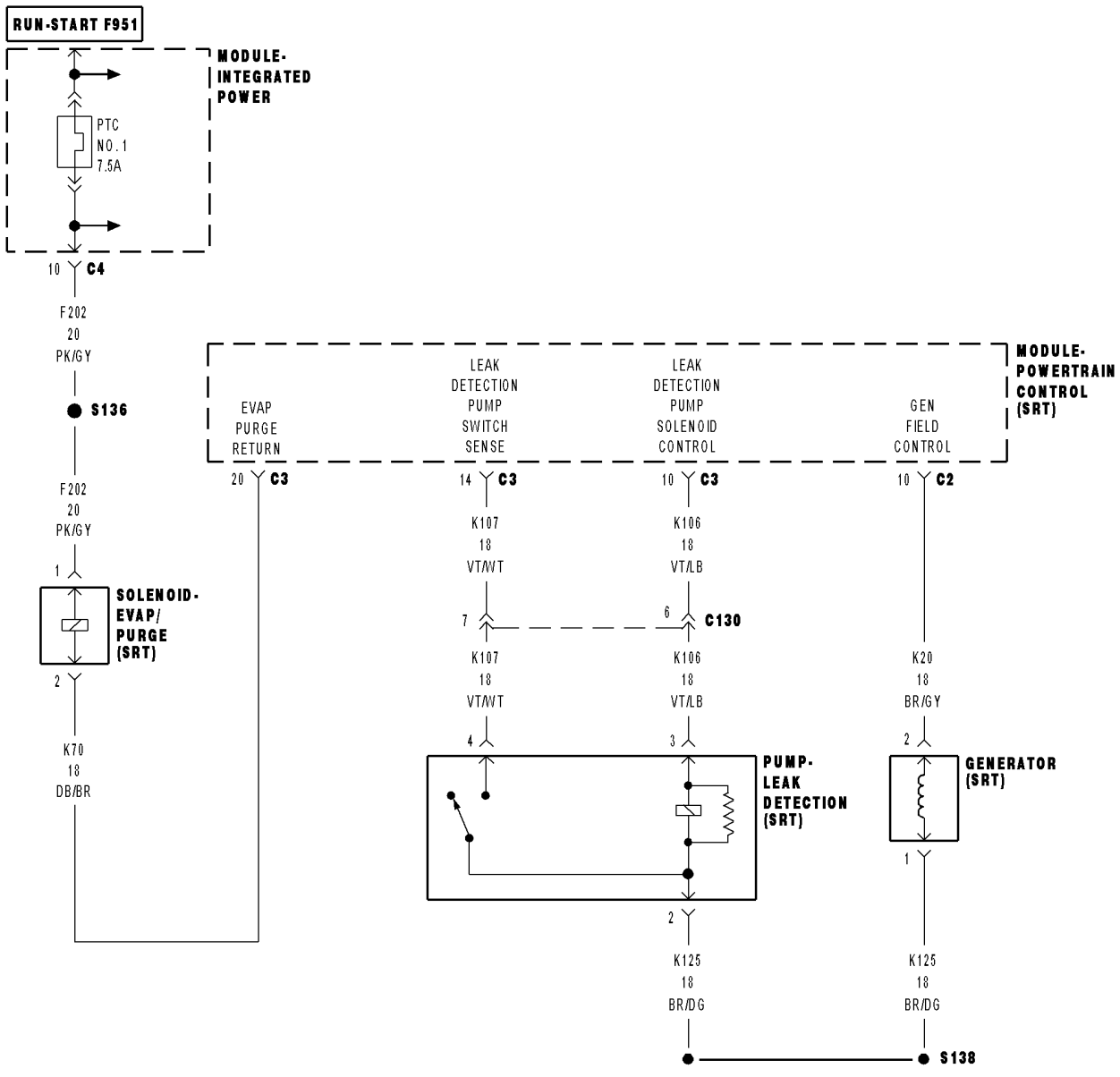

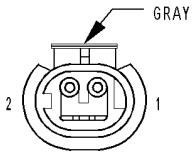

SOLENOID-
EVAP/
PURGE
(SRT)

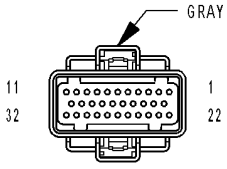

MODULE-
POWERTRAIN
CONTROL C3
(SRT)

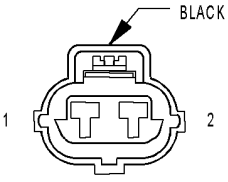

GENERATOR
(SRT)

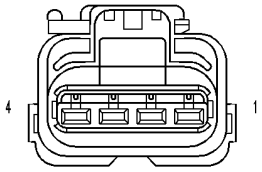

PUMP-
LEAK DETECTION
(SRT)

8155e655

P1486-EVAP LEAK MONITOR PINCHED HOSE FOUND (CONTINUED)

For the Engine circuit diagram (Refer to 8 - ELECTRICAL/ELECTRONIC CONTROL MODULES/ENGINE CONTROL MODULE - SCHEMATIC - ELECTRICAL)

For a complete wiring diagram **Refer to Section 8W**.

- **When Monitored:**
  Immediately after a cold start, with battery/ambient temperature between 40 deg. F and 90 Deg. F and coolant temperature within 10 Deg. F of battery/ambient.
- **Set Condition:**
  LDP test must pass first. If the PCM suspects a pinched hose it will not set a fault until it runs the EVAP purge flow monitor. If the purge monitor does not pass then the pinched hose fault will be set.

Possible Causes
GOOD TRIP EQUAL TO ZERO
EVAP CANISTER OBSTRUCTED
OBSTRUCTION IN HOSE/TUBE BETWEEN EVAP CANISTER AND PURGE SOLENOID
LDP PRESSURE HOSE OBSTRUCTED
LEAK DETECTION PUMP

Always perform the Pre-Diagnostic Troubleshooting procedure before proceeding. (Refer to 9 - ENGINE - DIAGNOSIS AND TESTING)

1. GOOD TRIP EQUAL TO ZERO

Ignition on, engine not running.

With the scan tool, read DTCs and record the related Freeze Frame data.

Check for any related TSB's.

Is the Good Trip Counter displayed and equal to zero?

Yes >> Go To 2

No >> Refer to the INTERMITTENT CONDITION Symptom (Diagnostic Procedure).
Perform POWERTRAIN VERIFICATION TEST. (Refer to 9 - ENGINE - STANDARD PROCEDURE)

---

2. CHECKING FOR OBSTRUCTED EVAP CANISTER

Pressurize the EVAP System. On Miller Tool #8404, hold down the remote smoke/air start button and monitor the gauge.

When the flow meter gauge on the EELD reads 0 LPM, the EVAP system is completely pressurized.

Disconnect the LDP Pressure hose at the EVAP Canister. The LDP Pressure hose is the hose that connects the Evap Canister to the Leak Detection Pump.

Did the pressure drop when the hose was disconnected?

Yes >> Go To 3

No >> Replace the EVAP Canister.
Perform POWERTRAIN VERIFICATION TEST. (Refer to 9 - ENGINE - STANDARD PROCEDURE)

P1486-EVAP LEAK MONITOR PINCHED HOSE FOUND (CONTINUED)

3. CHECKING FOR OBSTRUCTION - EVAP CANISTER TO PURGE SOLENOID

NOTE: Connect all previously disconnected hose(s).

Re-pressurize the EVAP System. On Miller Tool #8404, hold down the smoke/air start button and monitor the gauge. When the flow meter gauge on the EELD reads 0 LPM, the EVAP system is completely pressurized.

Disconnect the EVAP hoses at the Purge Solenoid.

Did the pressure drop when the hose was disconnected?

Yes >> Go To 4

No >> Repair or replace hose/tube as necessary.
Perform POWERTRAIN VERIFICATION TEST. (Refer to 9 - ENGINE - STANDARD PROCEDURE)

---

4. LDP PRESSURE HOSE INSPECTION

Disconnect and remove the LDP pressure hose. The LDP pressure hose is the hose that connects the EVAP Canister to the Leak Detection Pump.

Inspect the LDP pressure hose for any obstructions or physical damage.

Is the LDP pressure hose free from defects?

Yes >> Replace the Leak Detection Pump.
Perform POWERTRAIN VERIFICATION TEST. (Refer to 9 - ENGINE - STANDARD PROCEDURE)

No >> Repair/replace hose as necessary.
Perform POWERTRAIN VERIFICATION TEST. (Refer to 9 - ENGINE - STANDARD PROCEDURE)

P1492-AMBIENT/BATTERY TEMPERATURE SENSOR VOLTAGE TOO HIGH

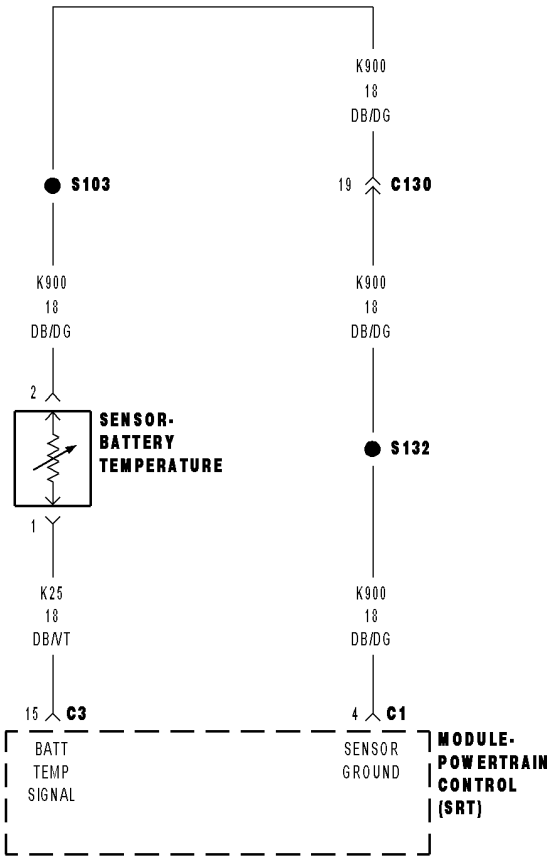

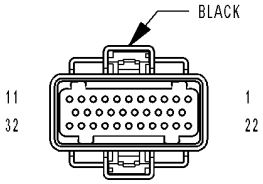

MODULE-
POWERTRAIN
CONTROL C1
(SRT)

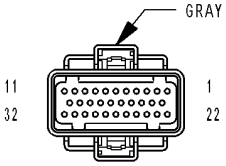

MODULE-
POWERTRAIN
CONTROL C3
(SRT)

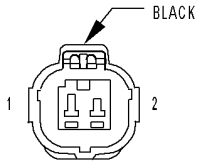

SENSOR-
BATTERY
TEMPERATURE

81566721

P1492-AMBIENT/BATTERY TEMPERATURE SENSOR VOLTAGE TOO HIGH (CONTINUED)

For the Engine circuit diagram (Refer to 8 - ELECTRICAL/ELECTRONIC CONTROL MODULES/ENGINE CONTROL MODULE - SCHEMATIC - ELECTRICAL)

For a complete wiring diagram **Refer to Section 8W**.

- **When Monitored:**
  With the ignition key on.
- **Set Condition:**
  The PCM senses the voltage from the Battery Temperature Sensor above 4.9 volts for 3 seconds.

Possible Causes
BATTERY TEMP SENSOR VOLTAGE ABOVE 4.8 VOLTS
BATTERY TEMPERATURE SENSOR
(K25) BATTERY TEMP SIGNAL CIRCUIT SHORTED TO VOLTAGE
(K25) BATTERY TEMP SIGNAL CIRCUIT OPEN
(K900) SENSOR GROUND CIRCUIT OPEN
PCM

Always perform the Pre-Diagnostic Troubleshooting procedure before proceeding. (Refer to 9 - ENGINE - DIAGNOSIS AND TESTING)

1. BATTERY TEMP SENSOR VOLTAGE ABOVE 4.8 VOLTS

Ignition on, engine not running.

Record all DTCs and the related Freeze Frame data.

With the scan tool, monitor the Battery Temperature Sensor voltage.

Is the voltage above 4.8 volts?

Yes >> Go To 2

No >> Refer to the INTERMITTENT CONDITION Symptom (Diagnostic Procedure).
Perform POWERTRAIN VERIFICATION TEST. (Refer to 9 - ENGINE - STANDARD PROCEDURE)

2. BATTERY TEMPERATURE SENSOR

Turn the ignition off.

Disconnect the Battery Temp Sensor harness connector.

Ignition on, engine not running.

With the scan tool in sensors, read the Batt Temp Sensor voltage value.

Connect a jumper wire between the (K25) Batt Temp Signal circuit and the (K900) Sensor ground circuit at the Battery Temp Sensor connector.

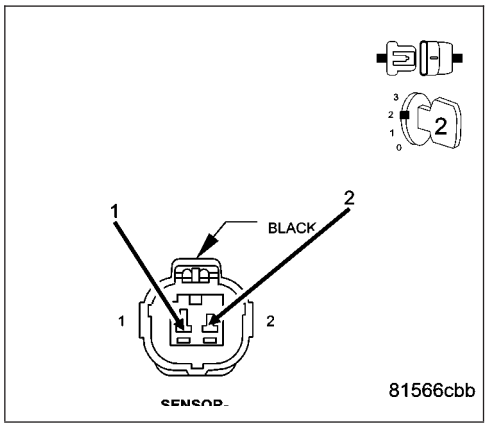

NOTE: Remove the jumper wire before continuing.

Did the Battery Temp Sensor voltage change from greater than 4.5 volts to less than 1.0 volt?

Yes >> Replace the Battery Temperature Sensor.
Perform POWERTRAIN VERIFICATION TEST. (Refer to 9 - ENGINE - STANDARD PROCEDURE)

No >> Go To 3

P1492-AMBIENT/BATTERY TEMPERATURE SENSOR VOLTAGE TOO HIGH (CONTINUED)

3. (K25) BATT TEMP SIGNAL CIRCUIT SHORTED TO VOLTAGE

Turn the ignition off.

Disconnect the PCM harness connectors.

Ignition on, engine not running.

Measure the voltage on the (K25) Battery Temp Signal circuit at the Sensor harness connector.

Is the voltage above 5.2 volts?

Yes >> Repair the short to voltage in the (K25) Batt Temp Signal circuit.
Perform POWERTRAIN VERIFICATION TEST. (Refer to 9 - ENGINE - STANDARD PROCEDURE)

No >> Go To 4

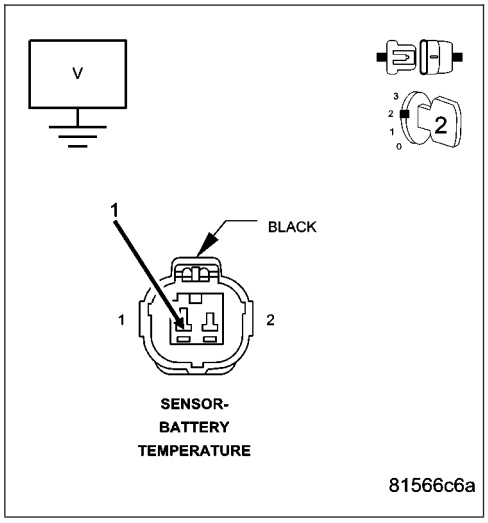

4. (K25) BATT TEMP SIGNAL CIRCUIT OPEN

Turn the ignition off.

Measure the resistance of the (K25) Battery Temp Signal circuit from the Battery Temp Sensor harness connector to the PCM harness connector.

Is the resistance below 5.0 ohms?

Yes >> Go To 5

No >> Repair the open in the (K25) Batt Temp Signal circuit.
Perform POWERTRAIN VERIFICATION TEST. (Refer to 9 - ENGINE - STANDARD PROCEDURE)

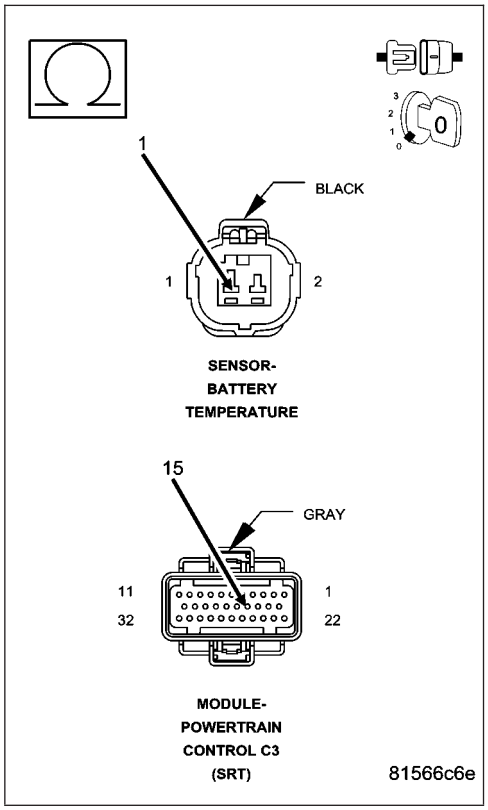

P1492-AMBIENT/BATTERY TEMPERATURE SENSOR VOLTAGE TOO HIGH (CONTINUED)

5. (K900) SENSOR GROUND CIRCUIT OPEN

Measure the resistance in the (K900) Sensor ground circuit from the PCM harness connector to the Sensor connector.

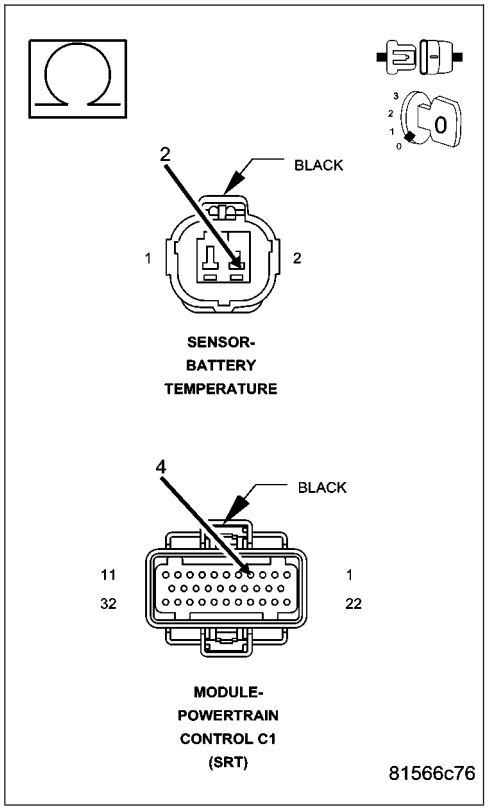

Is the resistance below 5.0 ohms?

Yes >> Go To 6

No >> Repair the open in the (K900) Sensor ground circuit.
Perform POWERTRAIN VERIFICATION TEST. (Refer to 9 - ENGINE - STANDARD PROCEDURE)

---

6. PCM

NOTE: Before continuing, check the PCM harness connector terminals for corrosion, damage, or terminal push out. Repair as necessary.

Using the schematics as a guide, inspect the wire harness and connectors. Pay particular attention to all Power and Ground circuits.

If there are no possible causes remaining, view repair.

Repair

Replace and program the Powertrain Control Module per Service Information.
Perform POWERTRAIN VERIFICATION TEST. (Refer to 9 - ENGINE - STANDARD PROCEDURE)

P1493-AMBIENT/BATTERY TEMPERATURE SENSOR VOLTAGE TOO LOW

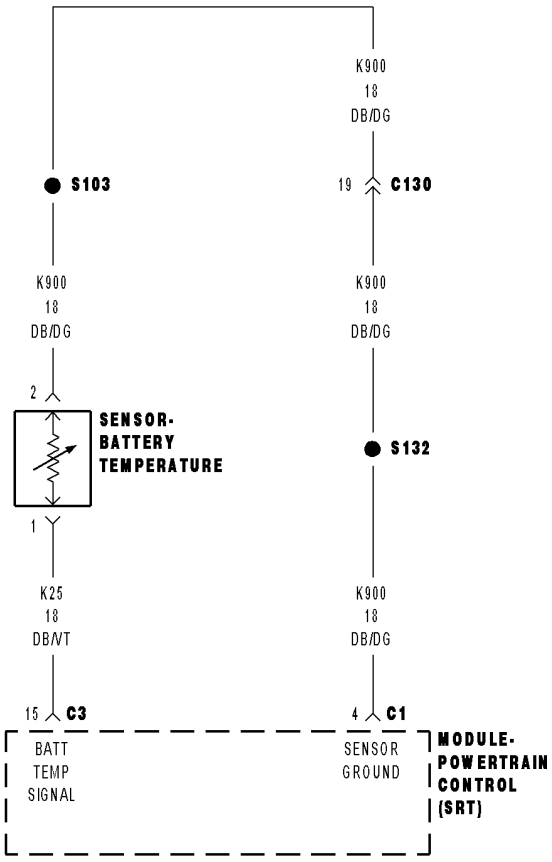

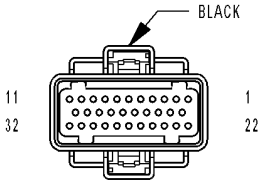

MODULE-
POWERTRAIN
CONTROL C1
(SRT)

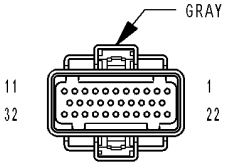

MODULE-
POWERTRAIN
CONTROL C3
(SRT)

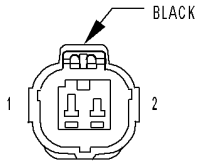

SENSOR-
BATTERY
TEMPERATURE

81566721

P1493-AMBIENT/BATTERY TEMPERATURE SENSOR VOLTAGE TOO LOW (CONTINUED)

For the Engine circuit diagram (Refer to 8 - ELECTRICAL/ELECTRONIC CONTROL MODULES/ENGINE CONTROL MODULE - SCHEMATIC - ELECTRICAL)

For a complete wiring diagram **Refer to Section 8W**.

- **When Monitored:**
  With the ignition on.
- **Set Condition:**
  The PCM senses the voltage from the Battery Temperature Sensor below 0.5 of a volt for 3 seconds.

Possible Causes
BATTERY TEMP SENSOR VOLTAGE BELOW 0.5 OF A VOLT
BATTERY TEMPERATURE SENSOR
(K25) BATTERY TEMP SIGNAL CIRCUIT SHORTED TO GROUND
(K25) BATTERY TEMP SIGNAL CIRCUIT SHORTED TO THE (K900) SENSOR GROUND
PCM

Always perform the Pre-Diagnostic Troubleshooting procedure before proceeding. (Refer to 9 - ENGINE - DIAGNOSIS AND TESTING)

1. BATTERY TEMP SENSOR VOLTAGE BELOW 0.5 OF A VOLT

Ignition on, engine not running.
Record all DTCs and the related Freeze Frame data.
With scan tool, monitor the Ambient/Battery Temperature Sensor voltage.

Is the voltage below 0.5 of a volt?

Yes >> Go To 2

No >> Refer to the INTERMITTENT CONDITION Symptom (Diagnostic Procedure).
Perform POWERTRAIN VERIFICATION TEST. (Refer to 9 - ENGINE - STANDARD PROCEDURE)

---

2. BATTERY TEMPERATURE SENSOR

Ignition on, engine not running.
With the scan tool in sensors, read the Battery Temp Sensor voltage.
Disconnect the Battery Temp Sensor harness connector.

Did the Battery Temperature Sensor voltage change from below 1.0 volt to above 4.5 volts?

Yes >> Replace the Battery Temperature Sensor.
Perform POWERTRAIN VERIFICATION TEST. (Refer to 9 - ENGINE - STANDARD PROCEDURE)

No >> Go To 3

P1493-AMBIENT/BATTERY TEMPERATURE SENSOR VOLTAGE TOO LOW (CONTINUED)

3. (K25) BATTERY TEMP SIGNAL CIRCUIT SHORTED TO GROUND

Turn the ignition off.

Disconnect the PCM harness connectors.

Measure the resistance between ground and the (K25) Battery Temp Signal circuit at the Battery Temp Sensor harness connector.

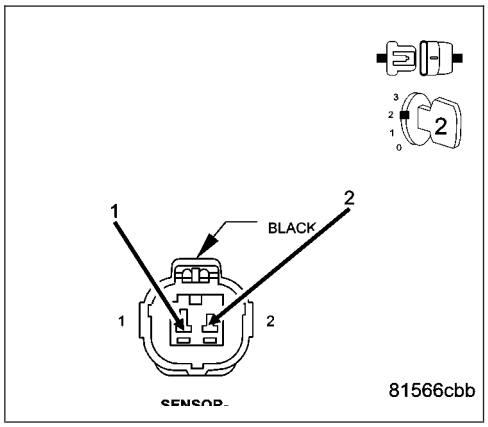

Is the resistance below 100 ohms?

Yes >> Repair the short to ground in the (K25) Batt Temp Signal circuit.

Perform POWERTRAIN VERIFICATION TEST. (Refer to 9 - ENGINE - STANDARD PROCEDURE)

No >> Go To 4

4. (K25) BATTERY TEMP SIGNAL CIRCUIT SHORTED TO THE (K900) SENSOR GROUND

Measure the resistance between the (K25) Battery Temp Signal circuit and the (K900) Sensor ground circuit at the Battery Temp Sensor harness connector.

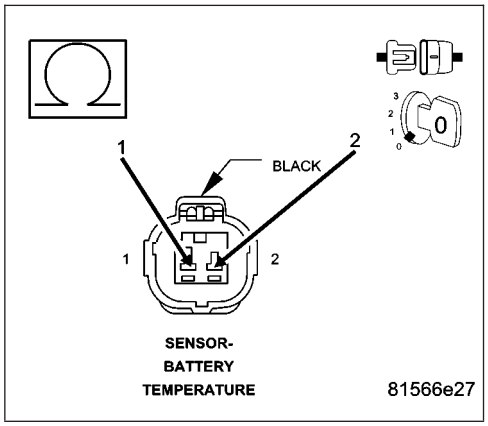

Is the resistance below 100 ohms?

Yes >> Repair the short between the (K900) Sensor ground circuit and the (K25) Batt Temp Signal circuit.

Perform POWERTRAIN VERIFICATION TEST. (Refer to 9 - ENGINE - STANDARD PROCEDURE)

No >> Go To 5

5. PCM

NOTE: Before continuing, check the PCM harness connector terminals for corrosion, damage, or terminal push out. Repair as necessary.

Using the schematics as a guide, inspect the wire harness and connectors. Pay particular attention to all Power and Ground circuits.

If there are no possible causes remaining, view repair.

Repair

Replace and program the Powertrain Control Module per Service Information.

Perform POWERTRAIN VERIFICATION TEST. (Refer to 9 - ENGINE - STANDARD PROCEDURE)

P1494-LEAK DETECTION PUMP SWITCH OR MECHANICAL FAULT

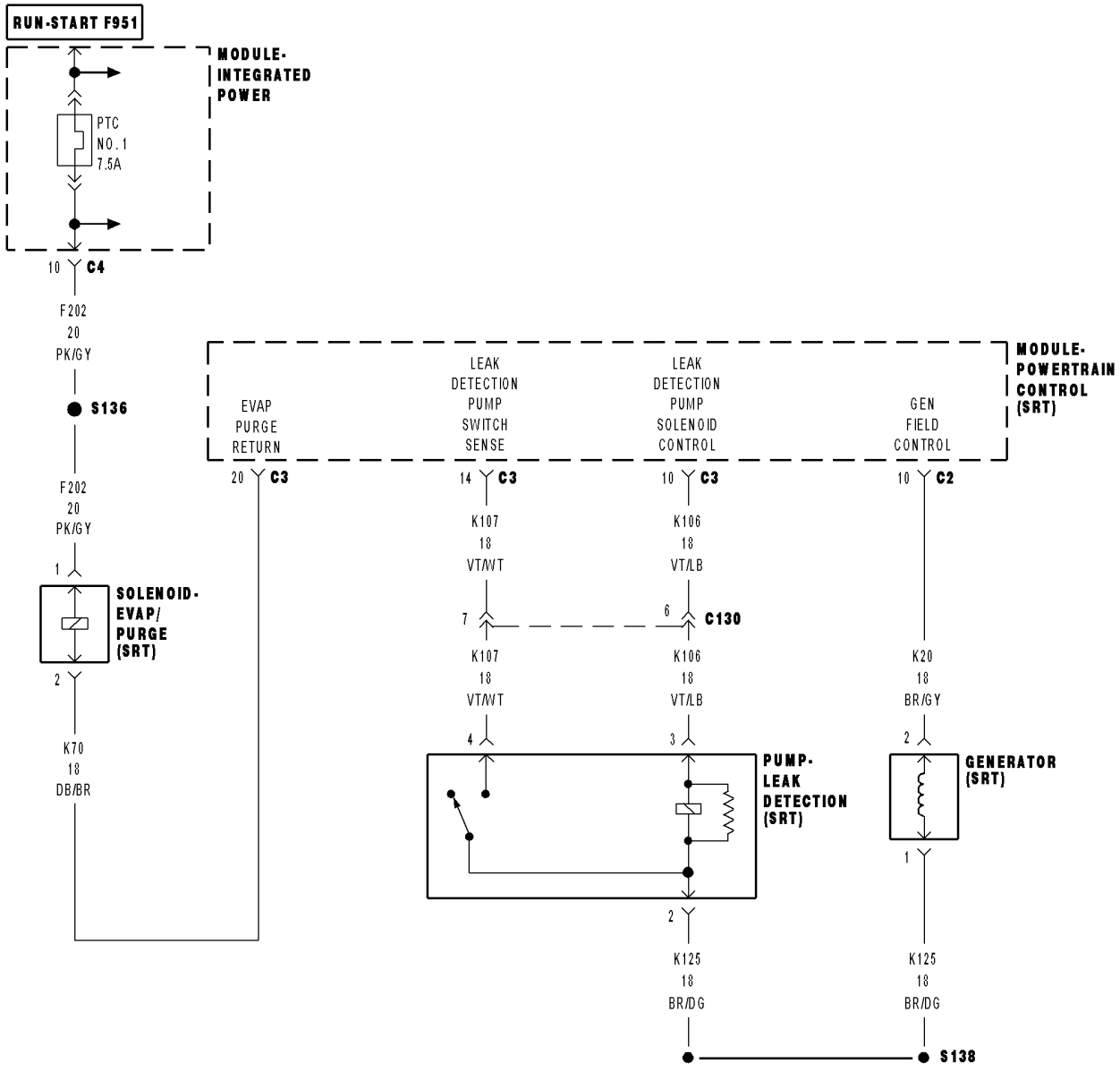

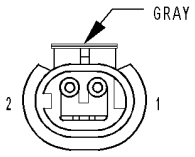

SOLENOID-
EVAP/
PURGE
(SRT)

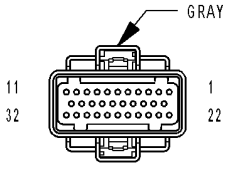

MODULE-
POWERTRAIN
CONTROL C3
(SRT)

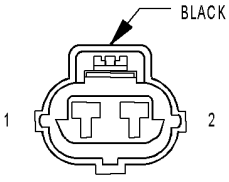

GENERATOR
(SRT)

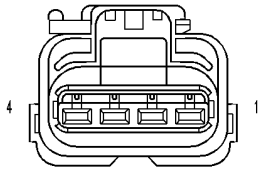

PUMP-
LEAK DETECTION
(SRT)

8155e655

P1494-LEAK DETECTION PUMP SWITCH OR MECHANICAL FAULT (CONTINUED)

For the Engine circuit diagram (Refer to 8 - ELECTRICAL/ELECTRONIC CONTROL MODULES/ENGINE CONTROL MODULE - SCHEMATIC - ELECTRICAL)

For a complete wiring diagram **Refer to Section 8W**.

- **When Monitored:**
  Immediately after a cold start, with battery/ambient temperature between 40 Deg. F and 90 Deg. F and coolant temperature within 10 Deg. F of battery/ambient.
- **Set Condition:**
  The state of the switch does not change when the solenoid is energized.

Possible Causes
GOOD TRIP EQUAL TO ZERO
LDP VACUUM SUPPLY
LEAK DETECTION PUMP
(K107) LDP SWITCH SENSE CIRCUIT OPEN
(K107) LDP SWITCH SENSE CIRCUIT SHORTED TO GROUND
PCM

Always perform the Pre-Diagnostic Troubleshooting procedure before proceeding. (Refer to 9 - ENGINE - DIAGNOSIS AND TESTING)

1. GOOD TRIP EQUAL TO ZERO

Check for any related TSBs.

Ignition on, engine not running.

With the scan tool, read DTCs and record the related Freeze Frame data.

Is the Good Trip Counter displayed and equal to zero?

Yes >> Go To 2

No >> Refer to the INTERMITTENT CONDITION Symptom (Diagnostic Procedure).
Perform POWERTRAIN VERIFICATION TEST. (Refer to 9 - ENGINE - STANDARD PROCEDURE)

---

2. LDP VACUUM SUPPLY

Turn the ignition off.

Disconnect the vacuum supply hose at the Leak Detection Pump.

Connect a vacuum gauge to the disconnected vacuum supply hose at the Leak Detection Pump.

Start the engine and read the vacuum gauge.

Does the vacuum gauge read at least 13″ Hg?

Yes >> Go To 3

No >> Repair leak or obstruction in vacuum hose as necessary.
Perform POWERTRAIN VERIFICATION TEST. (Refer to 9 - ENGINE - STANDARD PROCEDURE)

P1494-LEAK DETECTION PUMP SWITCH OR MECHANICAL FAULT (CONTINUED)

3. LEAK DETECTION PUMP

Turn the ignition off.

Connect the vacuum supply hose at the LDP.

Disconnect the Leak Detection Pump electrical harness connector.

Start the engine.

With the scan tool in Inputs/Outputs, read the Leak Detect Pump Switch state.

Connect a jumper wire between 12-volts and the (K107) LDP Switch Signal circuit.

NOTE: Remove the jumper wire before continuing.

Did the Leak Detect Pump Sw state change when the jumper was connected?

Yes >> Replace the Leak Detection Pump.
Perform POWERTRAIN VERIFICATION TEST VER - 6.

No >> Go To 4

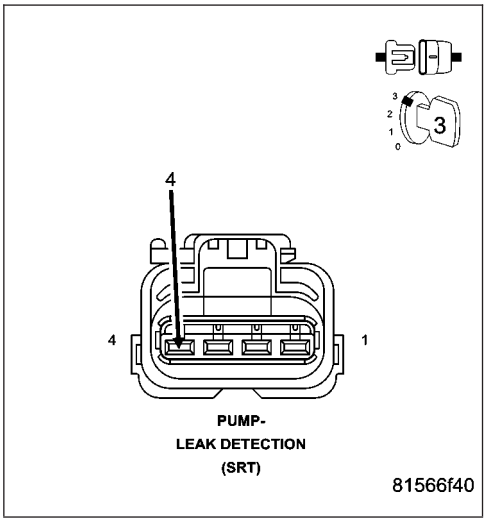

4. (K107) LDP SWITCH SENSE CIRCUIT OPEN

Turn the ignition off.

Disconnect the PCM harness connectors.

Measure the resistance of the (K107) LDP Switch Sense circuit from the PCM harness connector to LDP harness connector.

Is the resistance below 5.0 ohms?

Yes >> Go To 5

No >> Repair the open in the (K107) Leak Detection Pump Switch Sense circuit.
Perform POWERTRAIN VERIFICATION TEST. (Refer to 9 - ENGINE - STANDARD PROCEDURE)

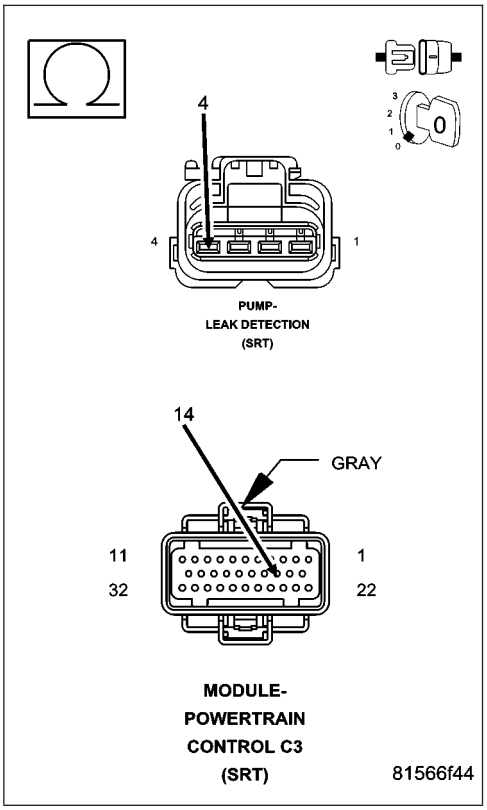

P1494-LEAK DETECTION PUMP SWITCH OR MECHANICAL FAULT (CONTINUED)

5. (K107) LDP SWITCH SENSE CIRCUIT SHORT TO GROUND

Measure the resistance between ground and the (K107) LDP Switch Sense circuit.

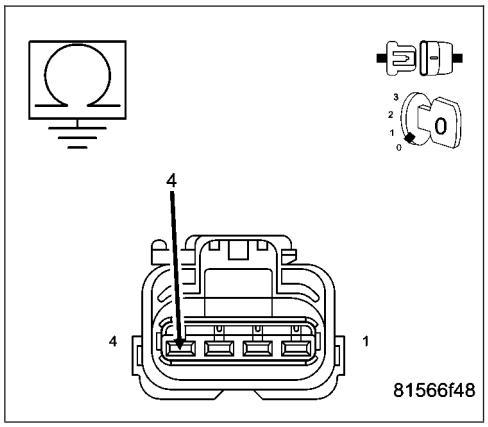

Is the resistance below 100 ohms?

Yes >> Repair the short to ground in the (K107) LDP Switch Sense circuit.
Perform POWERTRAIN VERIFICATION TEST. (Refer to 9 - ENGINE - STANDARD PROCEDURE)

No >> Go To 6

---

6. PCM

NOTE: Before continuing, check the PCM harness connector terminals for corrosion, damage, or terminal push out. Repair as necessary.

Using the schematics as a guide, inspect the wire harness and connectors. Pay particular attention to all Power and Ground circuits.

If there are no possible causes remaining, view repair.

Repair

Replace and program the Powertrain Control Module per Service Information.
Perform POWERTRAIN VERIFICATION TEST. (Refer to 9 - ENGINE - STANDARD PROCEDURE)

P1495-LEAK DETECTION PUMP SOLENOID CIRCUIT

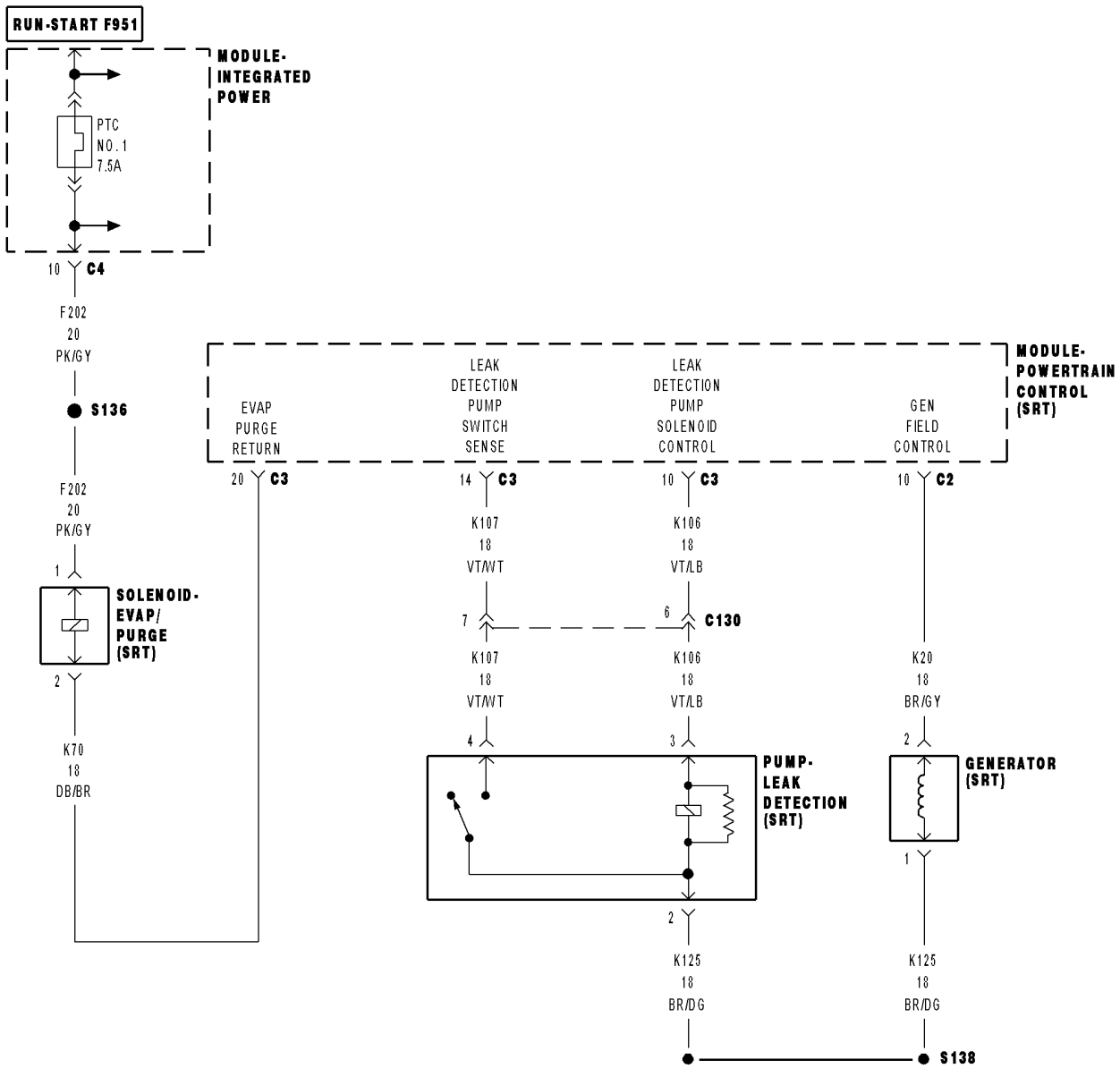

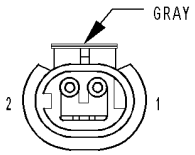

SOLENOID-
EVAP/
PURGE
(SRT)

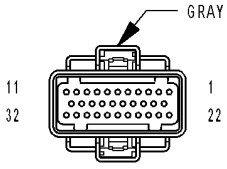

MODULE-
POWERTRAIN
CONTROL C3
(SRT)

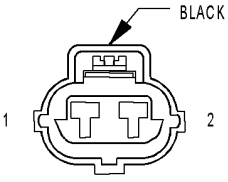

GENERATOR
(SRT)

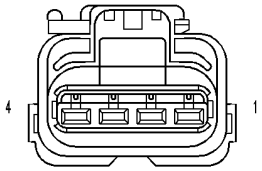

PUMP-
LEAK DETECTION
(SRT)

8155e655

P1495-LEAK DETECTION PUMP SOLENOID CIRCUIT (CONTINUED)

For the Engine circuit diagram (Refer to 8 - ELECTRICAL/ELECTRONIC CONTROL MODULES/ENGINE CONTROL MODULE - SCHEMATIC - ELECTRICAL)

For a complete wiring diagram **Refer to Section 8W**.

- **When Monitored:**
  Continuously when the ignition is on and battery voltage is greater than 10.4 volts.
- **Set Condition:**
  The state of the solenoid circuit does not match the PCM's desired state.

Possible Causes
GOOD TRIP EQUAL TO ZERO
(K125) GENERATOR SOURCE CIRCUIT OPEN
(K107) LDP SWITCH SIGNAL CIRCUIT OPEN
(K107) LDP SWITCH SIGNAL CIRCUIT SHORTED TO GROUND
(K106) LEAK DETECTION PUMP SOLENOID CONTROL CIRCUIT OPEN
(K106) LDP SOLENOID CONTROL CIRCUIT SHORTED TO GROUND
LEAK DETECTION PUMP
PCM

Always perform the Pre-Diagnostic Troubleshooting procedure before proceeding. (Refer to 9 - ENGINE - DIAGNOSIS AND TESTING)

1. GOOD TRIP EQUAL TO ZERO

Check for any related TSBs.
Ignition on, engine not running.
With the scan tool, read DTCs and record the related Freeze Frame data.

Is the Good Trip Counter displayed and equal to zero?

Yes >> Go To 2

No >> Refer to the INTERMITTENT CONDITION Symptom (Diagnostic Procedure).
Perform POWERTRAIN VERIFICATION TEST. (Refer to 9 - ENGINE - STANDARD PROCEDURE)

---

2. (K125) GENERATOR SOURCE CIRCUIT OPEN

Turn the ignition off.
Disconnect the Leak Detection Pump electrical harness connector.
Ignition on, engine not running.
With the scan tool, actuate the Leak Detection Pump.
Using a 12-volt test light connected to ground, check the (K125) Generator Source circuit at the LDP connector.

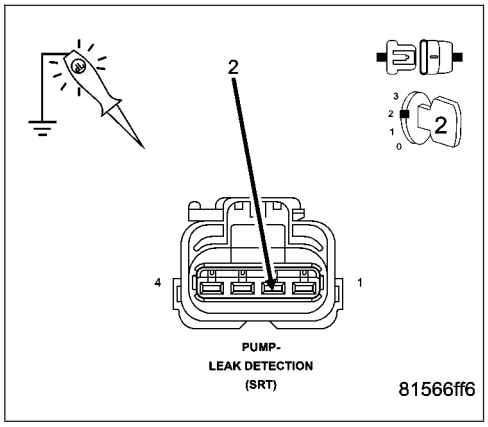

Does the test light illuminate brightly?

Yes >> Go To 3

No >> Repair the open in the (K125) Generator Source circuit.
Perform POWERTRAIN VERIFICATION TEST. (Refer to 9 - ENGINE - STANDARD PROCEDURE)

P1495-LEAK DETECTION PUMP SOLENOID CIRCUIT (CONTINUED)

3. LDP SOLENOID CONTROL OPERATION

Turn the ignition off.

Connect a 12-volt test light to a good 12-volt source.

Ignition on, engine not running.

With the scan tool, actuate the Leak Detection Pump.

Probe the (K106) LDP Solenoid Control circuit with the test light while the Pump is actuating.

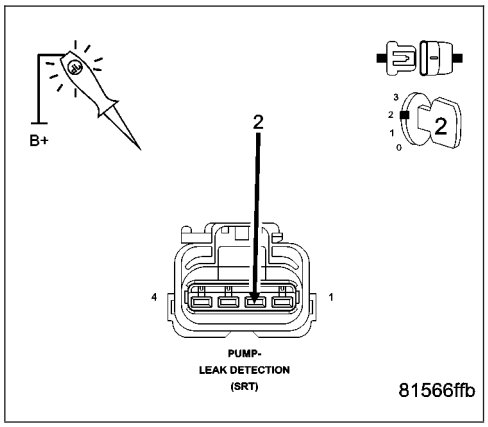

Does the test light blink?

Yes >> Go To 4

No >> Go To 7

---

4. (K107) LDP SWITCH SIGNAL CIRCUIT OPEN

Turn the ignition off.

Disconnect the PCM harness connectors.

Measure the resistance of the (K107) LDP Switch Signal circuit from the PCM harness connector to LDP harness connector.

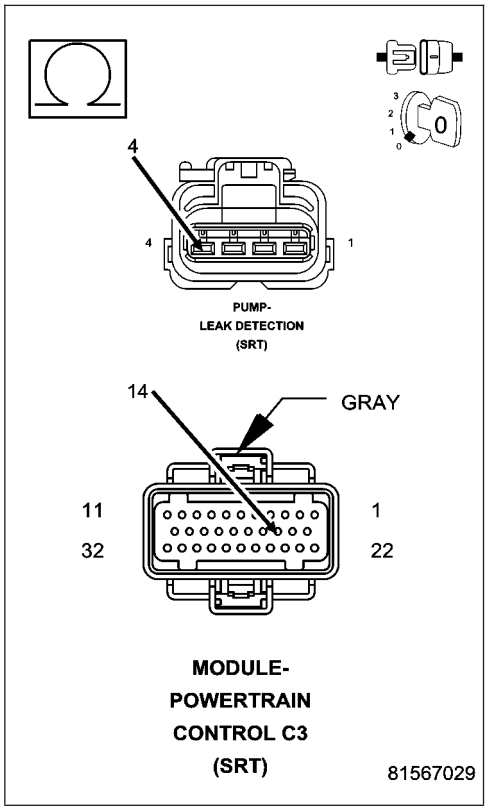

Is the resistance below 5.0 ohms?

Yes >> Go To 5

No >> Repair the open in the (K107) Leak Detection Pump Switch Signal circuit.

Perform POWERTRAIN VERIFICATION TEST. (Refer to 9 - ENGINE - STANDARD PROCEDURE)

P1495-LEAK DETECTION PUMP SOLENOID CIRCUIT (CONTINUED)

5. (K107) LDP SWITCH SIGNAL CIRCUIT SHORT TO GROUND

Measure the resistance between ground and the (K107) LDP Switch Signal circuit at the LDP harness connector.

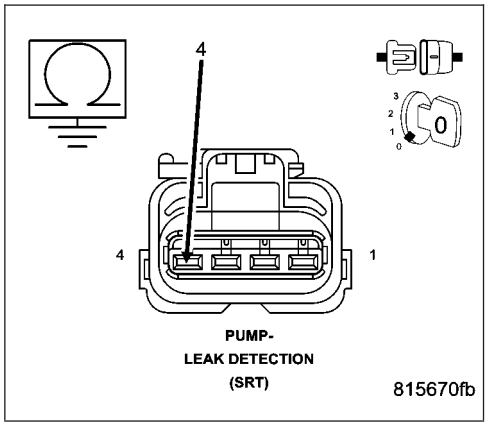

Is the resistance below 100 ohms?

Yes >> Repair the short to ground in the (K107) LDP Switch Signal circuit.
Perform POWERTRAIN VERIFICATION TEST. (Refer to 9 - ENGINE - STANDARD PROCEDURE)

No >> Go To 6

---

6. LEAK DETECTION PUMP

If there are no possible causes remaining, view repair.

Repair

Replace the Leak Detection Pump.
Perform POWERTRAIN VERIFICATION TEST. (Refer to 9 - ENGINE - STANDARD PROCEDURE)

---

7. (K106) LEAK DETECTION PUMP SOLENOID CONTROL CIRCUIT OPEN

Turn the ignition off.

Disconnect the PCM harness connectors.

Measure the resistance of the (K106) LDP Solenoid Control circuit from the PCM harness connector to the LDP harness connector.

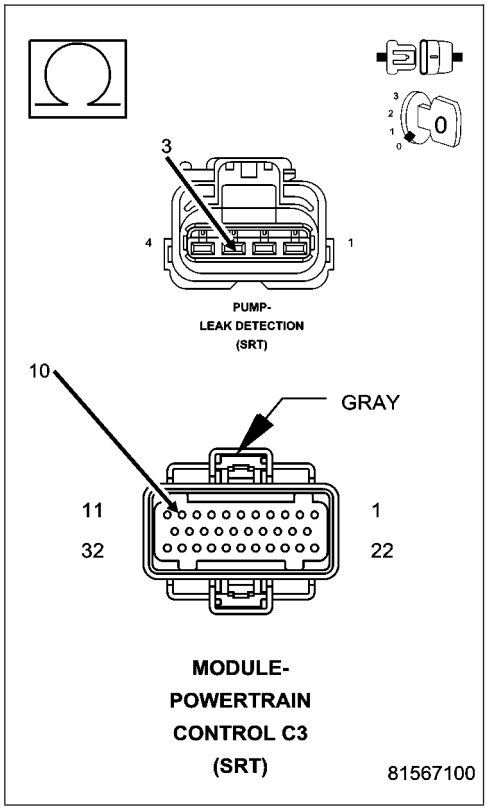

Is the resistance below 5.0 ohms?

Yes >> Go To 8

No >> Repair the open in the (K106) Leak Detection Pump Solenoid Control circuit.
Perform POWERTRAIN VERIFICATION TEST. (Refer to 9 - ENGINE - STANDARD PROCEDURE)

P1495-LEAK DETECTION PUMP SOLENOID CIRCUIT (CONTINUED)

8. (K106) LDP SOLENOID CONTROL CIRCUIT SHORT TO GROUND

Measure the resistance between ground and the (K106) LDP Solenoid Control circuit.

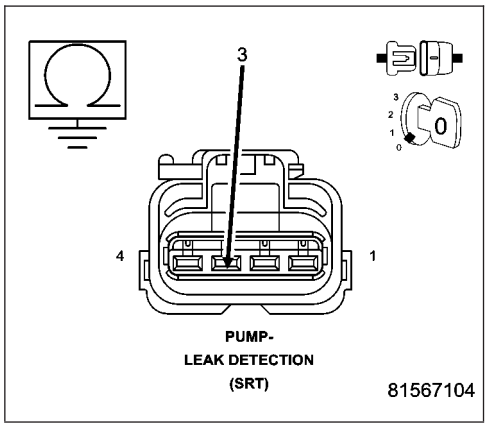

Is the resistance below 100 ohms?

Yes >> Repair the short to ground in the (K106) LDP Solenoid Control circuit.
Perform POWERTRAIN VERIFICATION TEST. (Refer to 9 - ENGINE - STANDARD PROCEDURE)

No >> Go To 9

---

9. PCM

NOTE: Before continuing, check the PCM harness connector terminals for corrosion, damage, or terminal push out. Repair as necessary.

Using the schematics as a guide, inspect the wire harness and connectors. Pay particular attention to all Power and Ground circuits.

If there are no possible causes remaining, view repair.

Repair

Replace and program the Powertrain Control Module per Service Information.
Perform POWERTRAIN VERIFICATION TEST. (Refer to 9 - ENGINE - STANDARD PROCEDURE)

P1499-HYDRAULIC FAN SOLENOID CIRCUIT

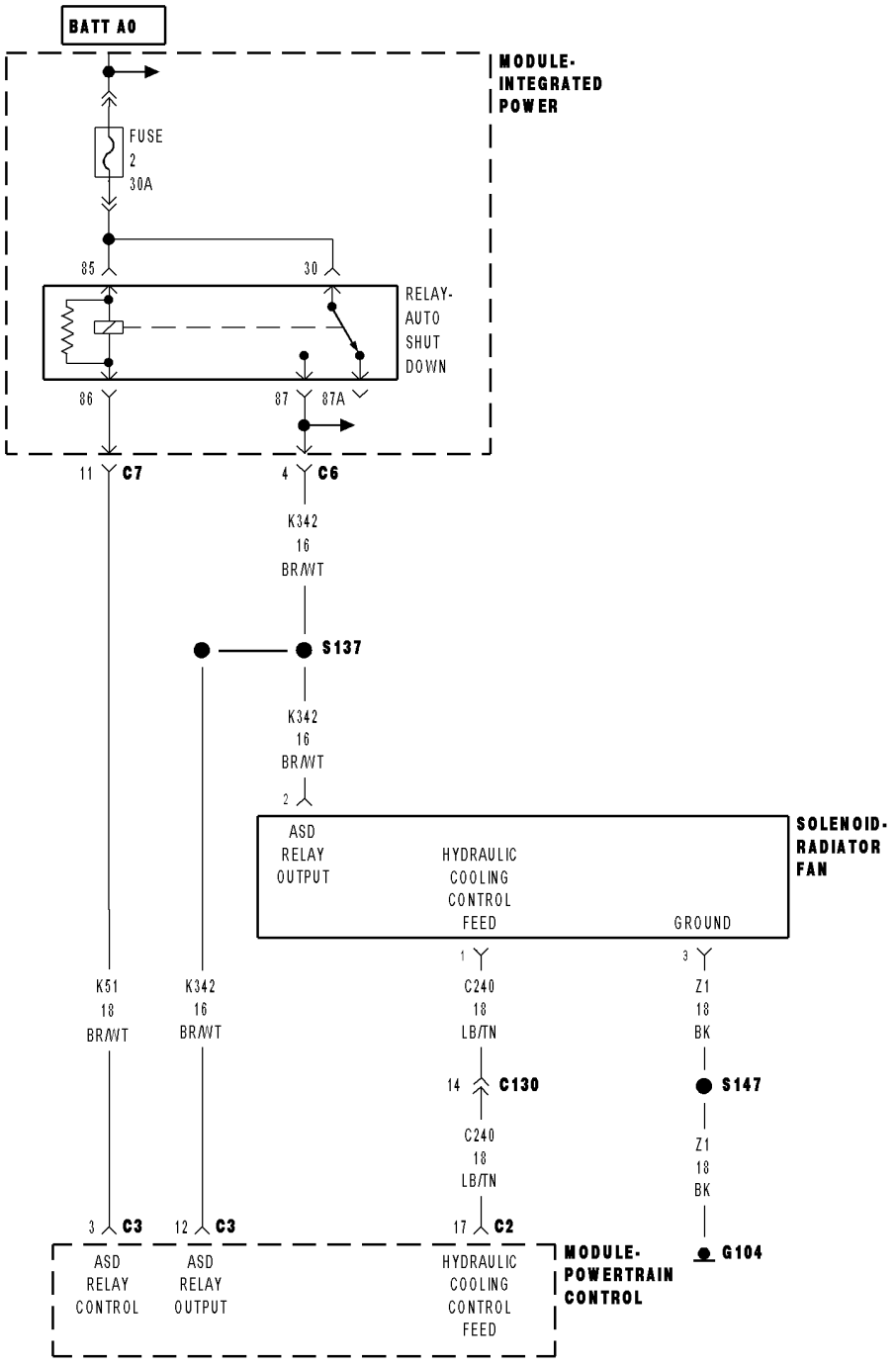

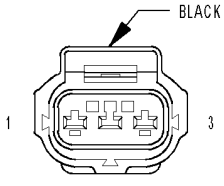

SOLENOID-
RADIATOR FAN
(SRT)

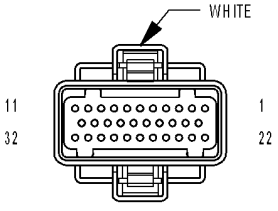

MODULE-
POWERTRAIN
CONTROL C2
(SRT)

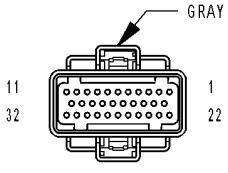

MODULE-
POWERTRAIN
CONTROL C3
(SRT)

8156673d

P1499-HYDRAULIC FAN SOLENOID CIRCUIT (CONTINUED)

For the Engine circuit diagram (Refer to 8 - ELECTRICAL/ELECTRONIC CONTROL MODULES/ENGINE CONTROL MODULE - SCHEMATIC - ELECTRICAL)

For a complete wiring diagram **Refer to Section 8W**.

- **When Monitored:**
  Ignition on and engine running.
- **Set Condition:**
  An open or shorted condition in the Hydraulic Fan Solenoid control circuit is detected by the Powertrain Control Module.

Possible Causes
RADIATOR FAN INOP
(K342) FUSED ASD RELAY OUTPUT CIRCUIT
(C240) COOLING FAN CONTROL CIRCUIT OPEN
(C240) COOLING FAN CONTROL CIRCUIT SHORTED TO GROUND
HYDRAULIC FAN
PCM

Always perform the Pre-Diagnostic Troubleshooting procedure before proceeding. (Refer to 9 - ENGINE - DIAGNOSIS AND TESTING)

1. RADIATOR FAN INOP

Ignition on, engine not running.

With the scan tool, perform the Hydraulic Fan Solenoid Test found under Engine Test and Systems Test.

Does the Radiator Fan operate properly?

Yes >> Refer to the INTERMITTENT CONDITION Symptom (Diagnostic Procedure).
Perform POWERTRAIN VERIFICATION TEST. (Refer to 9 - ENGINE - STANDARD PROCEDURE)

No >> Go To 2

2. (K342) FUSED ASD RELAY OUTPUT CIRCUIT

Turn the ignition off.

Disconnect the Fan Solenoid harness connector.

Ignition on, engine not running.

With the scan tool, actuate the ASD Relay.

Using a 12-volt test light connect to ground, probe the (K342) Fused ASD Relay Output circuit at the fan solenoid.

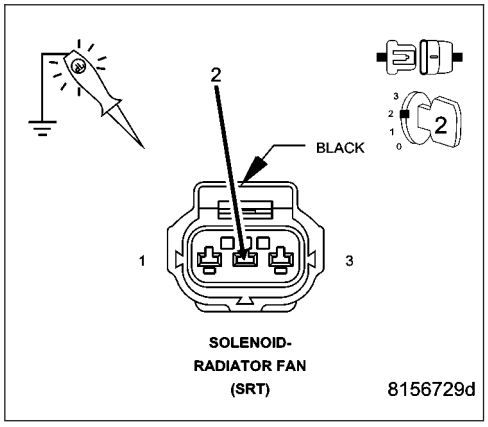

Does the test light illuminate brightly when the ASD Relay is actuated?

Yes >> Go To 3

No >> Repair the open or short to ground in the (K342) Fused ASD Relay Output circuit. Inspect the related fuse and repair as necessary.
Perform POWERTRAIN VERIFICATION TEST. (Refer to 9 - ENGINE - STANDARD PROCEDURE)

P1499-HYDRAULIC FAN SOLENOID CIRCUIT (CONTINUED)

3. (C240) COOLING FAN SOLENOID CIRCUIT OPEN

Turn the ignition off.

Disconnect the PCM harness connectors.

Measure the resistance of the (C240) Cooling Fan Solenoid Control circuit from the fan harness connector to the PCM harness connector.

Is the resistance below 5.0 ohms?

Yes >> Go To 4

No >> Repair the open in the (C240) Cooling Fan Control circuit.
Perform POWERTRAIN VERIFICATION TEST. (Refer to 9 - ENGINE - STANDARD PROCEDURE)

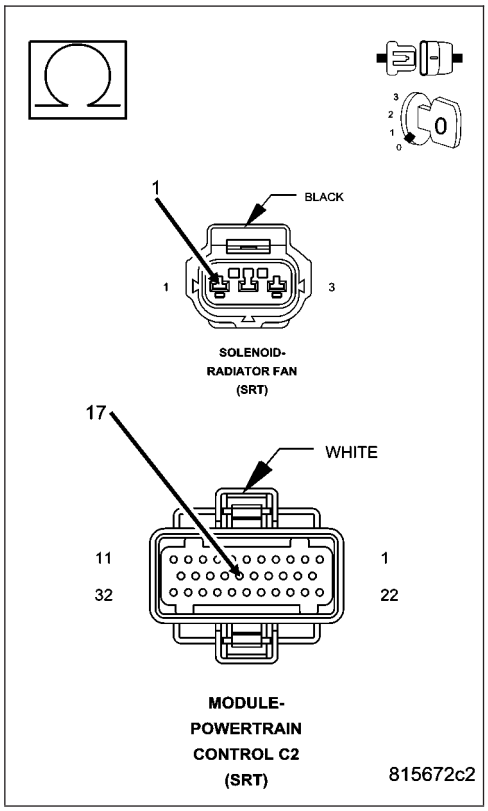

4. (C240) COOLING FAN CONTROL CIRCUIT SHORT TO GROUND

Measure the resistance between ground and the (C240) Cooling Fan Control circuit.

Is the resistance below 100 ohms?

Yes >> Repair the short to ground in the (C240) Cooling Fan Control circuit.
Perform POWERTRAIN VERIFICATION TEST. (Refer to 9 - ENGINE - STANDARD PROCEDURE)

No >> Go To 5

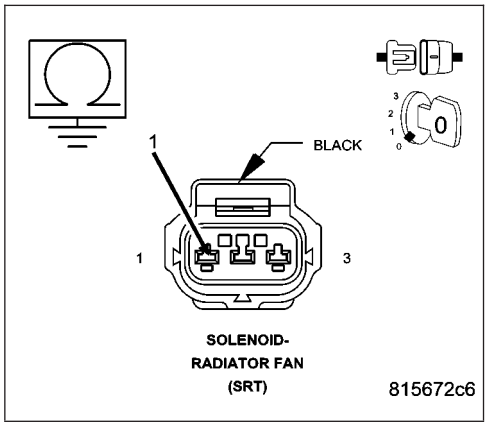

P1499-HYDRAULIC FAN SOLENOID CIRCUIT (CONTINUED)

5. HYDRAULIC FAN SOLENOID

Remove the ASD Relay and connect a jumper wire between the (K342) ASD Relay Output terminal and the (A14) Fused B+ circuit to keep the ASD Output circuit powered up for this step.

Connect another jumper wire to the (C240) Hydraulic Fan Solenoid Control circuit in the PCM harness connector. Momentarily connect the other end of the jumper wire to ground.

NOTE: Remove the jumper wires before continuing.

Did the solenoid actuate?

Yes >> Go To 6

No >> Replace the Hydraulid Radiator Fan.
Perform POWERTRAIN VERIFICATION TEST. (Refer to 9 - ENGINE - STANDARD PROCEDURE)

---

6. PCM

NOTE: Before continuing, check the PCM harness connector terminals for corrosion, damage, or terminal push out. Repair as necessary.

Using the schematics as a guide, inspect the wire harness and connectors. Pay particular attention to all Power and Ground circuits.

If there are no possible causes remaining, view repair.

Repair

Replace and program the Powertrain Control Module per Service Information.
Perform POWERTRAIN VERIFICATION TEST. (Refer to 9 - ENGINE - STANDARD PROCEDURE)

P1594-CHARGING SYSTEM VOLTAGE TOO HIGH

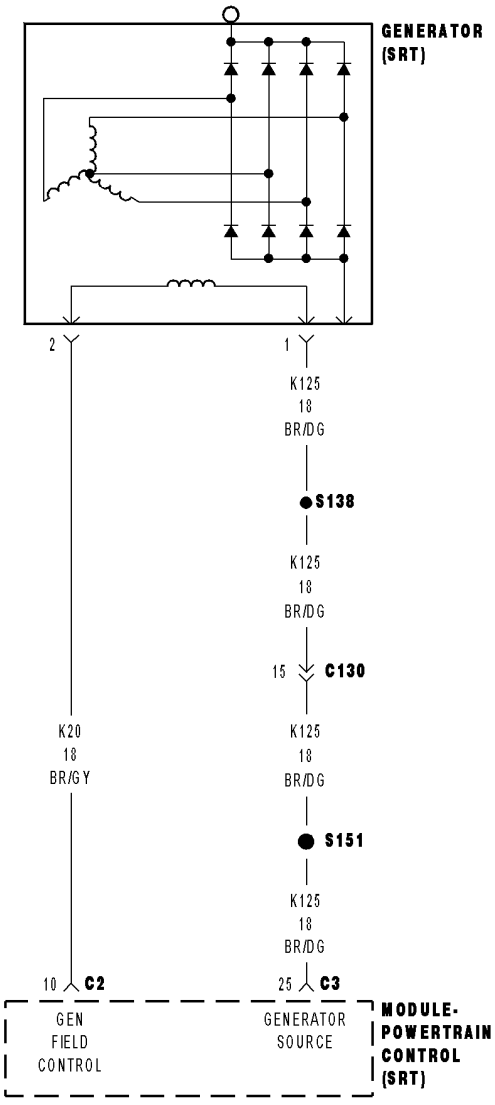

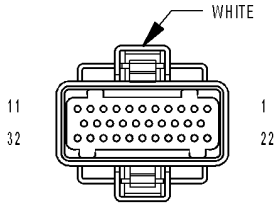

MODULE-
POWERTRAIN
CONTROL C2
(SRT)

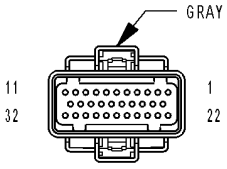

MODULE-
POWERTRAIN
CONTROL C3
(SRT)

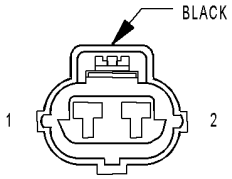

GENERATOR
(SRT)

81562fb8

P1594-CHARGING SYSTEM VOLTAGE TOO HIGH (CONTINUED)

For the Engine circuit diagram (Refer to 9 - ENGINE - SCHEMATICS AND DIAGRAMS).

For a complete wiring diagram **Refer to Section 8W**.

- **When Monitored:**
  With the ignition key on and the engine speed greater than 0 RPM.
- **Set Condition:**
  When the PCM regulates the generator field and there are no detected field problems, but the voltage output does not decrease.

Possible Causes
(K20) GENERATOR FIELD CONTROL CIRCUIT SHORTED TO GROUND
GENERATOR FIELD COIL SHORTED TO GROUND
BATTERY TEMPERATURE SENSOR
PCM

Always perform the Pre-Diagnostic Troubleshooting procedure before proceeding. (Refer to 9 - ENGINE - DIAGNOSIS AND TESTING)

Diagnostic Test

1. CHARGING SYSTEM OPERATION

NOTE: Battery must be fully charged and be capable of passing a load test.

NOTE: Generator Belt tension and condition must be checked before continuing.

Ignition on, engine not running.

With the scan tool, read DTCs and the related Freeze Frame data then clear the DTCs.

With scan tool, actuate the Generator Field Driver.

With a 12-volt test light connected to ground, backprobe the (K20) Gen Field Control circuit in the back of Generator Field harness connector.

Does the test light illuminate brightly and flash?

Yes >> Go To 2

No >> Refer to the INTERMITTENT CONDITION Diagnostic Procedure.
Perform the POWERTRAIN VERIFICATION TEST. (Refer to 9 - ENGINE - STANDARD PROCEDURE)

P1594-CHARGING SYSTEM VOLTAGE TOO HIGH (CONTINUED)

2. (K20) GEN FIELD CONTROL CIRCUIT SHORTED TO GROUND

Turn the ignition off.

Disconnect the C2 PCM harness connector.

Disconnect the Generator Field Harness connector.

Carefully inspect the related connectors for corrosion or spread terminals before continuing.

Measure the resistance between ground and the (K20) Generator Field Driver circuit at the Generator Field harness connector.

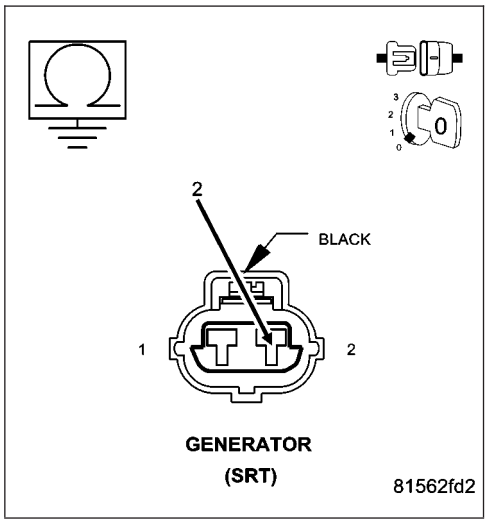

Is the resistance below 100 ohms?

Yes >> Repair the short to ground in the (K20) Generator Field Control circuit.
Perform the POWERTRAIN VERIFICATION TEST. (Refer to 9 - ENGINE - STANDARD PROCEDURE)

No >> Go To 3

---

3. GENERATOR FIELD COIL SHORTED TO GROUND

Measure the resistance between ground and the Generator Field terminals on the Generator.

Is the resistance below 100 ohms?

Yes >> Replace or repair the Generator Field Coil for a short to ground.
Perform the POWERTRAIN VERIFICATION TEST. (Refer to 9 - ENGINE - STANDARD PROCEDURE)

No >> Go To 4

---

4. BATTERY TEMPERATURE SENSOR

Connect the PCM harness connectors and the Generator harness connector.

Ignition on, engine not running.

With the scan tool in Inputs/Outputs, read the Batt Temp Sensor value.

Using a thermometer measure under hood temperature near Battery tray.

Is the temperature within 10 deg of Battery temperature?

Yes >> Go To 5

No >> Replace the Battery Temperature Sensor.
Perform the POWERTRAIN VERIFICATION TEST. (Refer to 9 - ENGINE - STANDARD PROCEDURE)

---

5. PCM

NOTE: Before continuing, check the PCM harness connector terminals for corrosion, damage, or terminal push out. Repair as necessary.

Using the schematics as a guide, inspect the wire harness and connectors. Pay particular attention to all Power and Ground circuits.

If there are no possible causes remaining, view repair.

Repair

Replace and program the Powertrain Control Module per Service Information.
Perform the POWERTRAIN VERIFICATION TEST. (Refer to 9 - ENGINE - STANDARD PROCEDURE)

P1598-A/C PRESSURE SENSOR VOLTAGE TOO HIGH

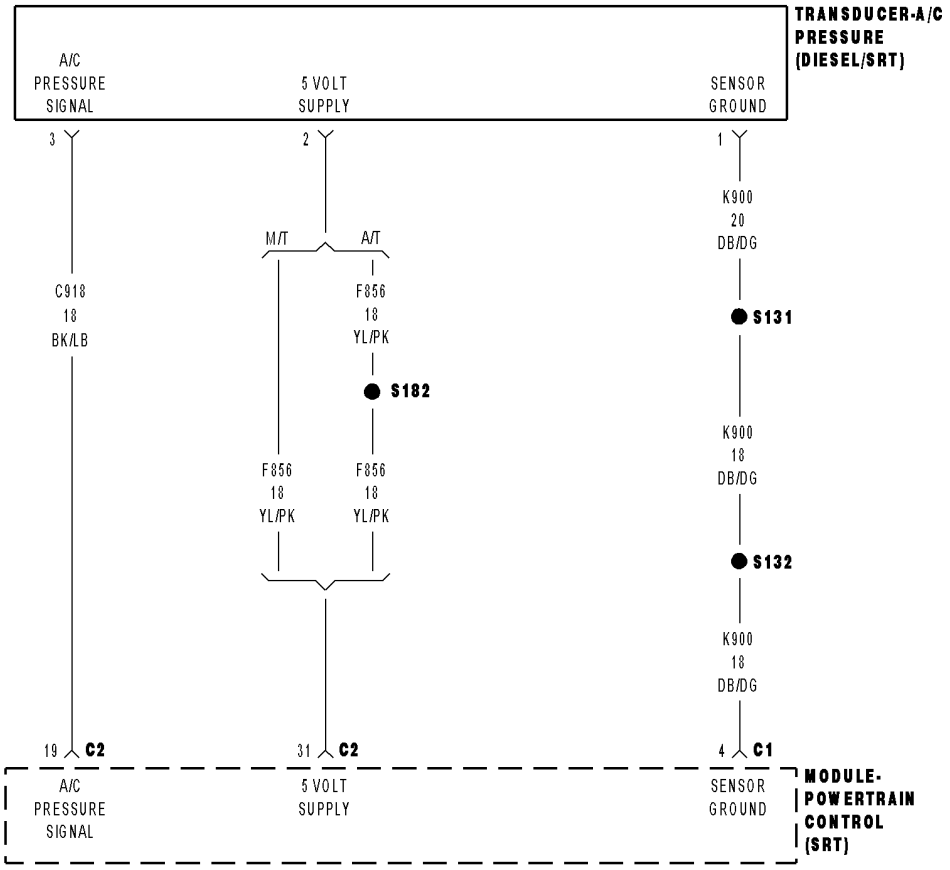

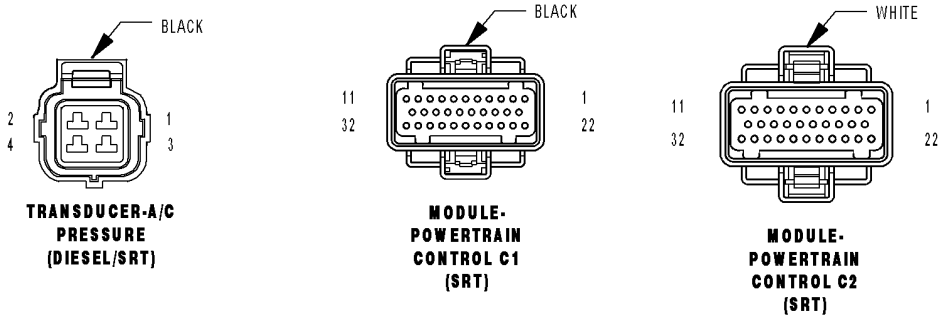

81566742

P1598-A/C PRESSURE SENSOR VOLTAGE TOO HIGH (CONTINUED)

For the Engine circuit diagram (Refer to 9 - ENGINE - SCHEMATICS AND DIAGRAMS).

For a complete wiring diagram **Refer to Section 8W**.

- **When Monitored:**
  With the engine running and the A/C Relay energized.
- **Set Condition:**
  The A/C Pressure Sensor Signal at the PCM goes above 4.92 volts.

Possible Causes
(C18) A/C PRESSURE SIGNAL CIRCUIT SHORTED TO VOLTAGE
(C18) A/C PRESSURE SIGNAL CIRCUIT OPEN
(C18) A/C PRESSURE SIGNAL CIRCUIT SHORTED TO THE (F855) 5-VOLT SUPPLY CIRCUIT
(K900) SENSOR GROUND CIRCUIT OPEN
A/C PRESSURE SENSOR
PCM

Always perform the Pre-Diagnostic Troubleshooting procedure before proceeding. (Refer to 9 - ENGINE - DIAGNOSIS AND TESTING)

Diagnostic Test

1. A/C PRESSURE SENSOR VOLTAGE ABOVE 4.9 VOLTS

NOTE: Make sure the A/C refrigerant System is properly charged per the Service Information.

Ignition on, engine not running.

With the scan tool, read DTCs and record the related Freeze Frame data.

Start the engine.

With the scan tool, read the A/C Pressure Sensor voltage.

Is the voltage above 4.9 volts?

Yes >> Go To 2

No >> Refer to the INTERMITTENT CONDITION Diagnostic Procedure.
Perform the POWERTRAIN VERIFICATION TEST. (Refer to 9 - ENGINE - STANDARD PROCEDURE)

P1598-A/C PRESSURE SENSOR VOLTAGE TOO HIGH (CONTINUED)

2. A/C PRESSURE SENSOR

Turn the ignition off.

Disconnect the A/C Pressure Sensor harness connector.

Connect a jumper wire between the (C918) A/C Pressure Signal circuit and the (K900) Sensor ground circuit in the Sensor harness connector.

With the scan tool, monitor the A/C Pressure Sensor voltage.

Ignition on, engine not running.

Is the voltage below 1.0 volt?

Yes >> Replace the A/C Pressure Sensor.
Perform the POWERTRAIN VERIFICATION TEST. (Refer to 9 - ENGINE - STANDARD PROCEDURE)

No >> Go To 3

NOTE: Remove the jumper wire before continuing.

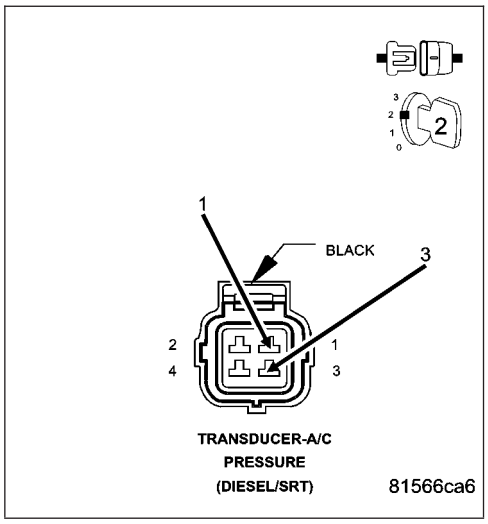

3. (C918) A/C PRESSURE SIGNAL CIRCUIT SHORTED TO BATTERY VOLTAGE

Turn the ignition off.

Disconnect the PCM harness connectors.

Ignition on, engine not running.

Measure the voltage on the (C918) A/C Pressure Signal circuit in the A/C Pressure Sensor harness connector.

Is the voltage above 5.2 volts?

Yes >> Repair the short to voltage in the (C918) A/C Pressure Signal circuit.
Perform the POWERTRAIN VERIFICATION TEST. (Refer to 9 - ENGINE - STANDARD PROCEDURE)

No >> Go To 4

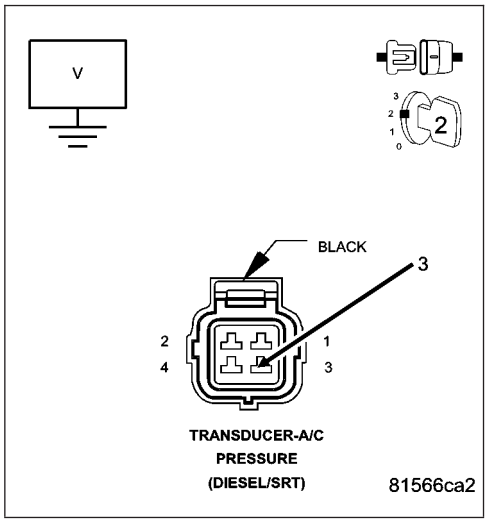

P1598-A/C PRESSURE SENSOR VOLTAGE TOO HIGH (CONTINUED)

4. (C918) A/C PRESSURE SIGNAL CIRCUIT OPEN

Turn the ignition off.

Measure the resistance of the (C918) A/C Pressure Signal circuit between the A/C Pressure Sensor harness connector and the PCM harness connector.

Is the resistance below 5.0 ohms?

Yes >> Go To 5

No >> Repair the open in the (C918) A/C Pressure Signal circuit. Perform the POWERTRAIN VERIFICATION TEST. (Refer to 9 - ENGINE - STANDARD PROCEDURE)

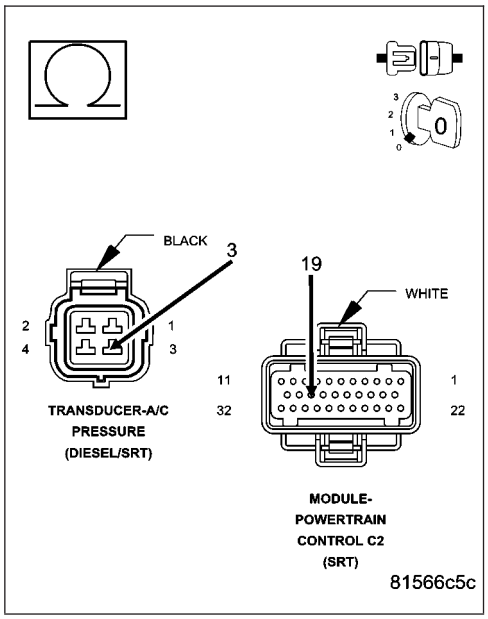

5. (C918) A/C PRESSURE SIGNAL CIRCUIT SHORTED TO THE (F855) 5-VOLT SUPPLY CIRCUIT

Measure the resistance between the (C918) A/C Pressure Signal circuit and the (F855) 5-volt Supply circuit in the A/C Pressure Sensor harness connector.

Is the resistance below 5.0 ohms?

Yes >> Repair the short between the (F855) 5-volt Supply circuit and the (C918) A/C Pressure Signal circuit.
Perform the POWERTRAIN VERIFICATION TEST. (Refer to 9 - ENGINE - STANDARD PROCEDURE)

No >> Go To 6

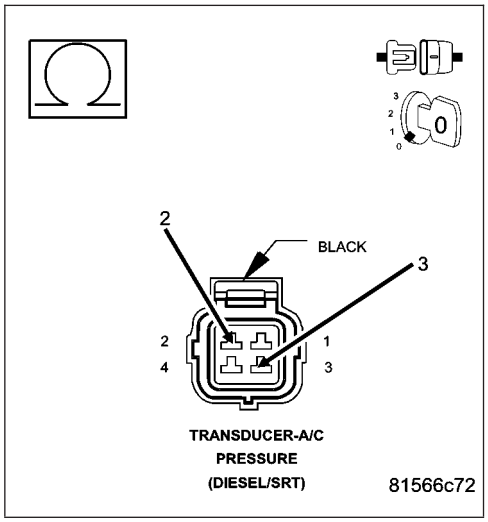

P1598-A/C PRESSURE SENSOR VOLTAGE TOO HIGH (CONTINUED)

6. (K900) SENSOR GROUND CIRCUIT OPEN

Measure the resistance of the (K900) Sensor ground circuit from the A/C Pressure Sensor harness connector to the PCM harness connector.

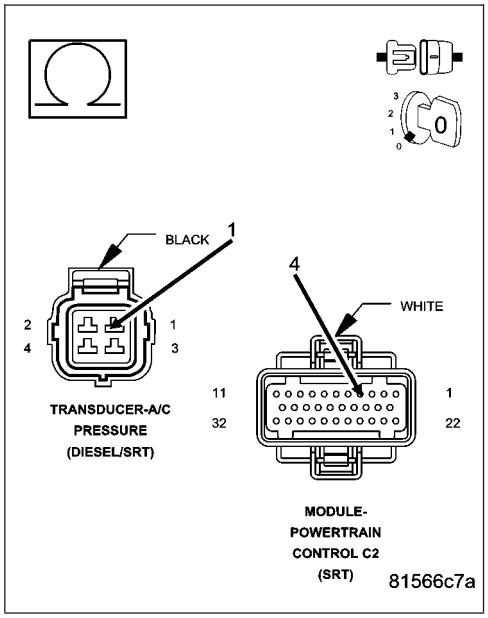

Is the resistance below 5.0 ohms?

Yes >> Go To 7

No >> Repair the open in the (K900) Sensor ground circuit.
Perform the POWERTRAIN VERIFICATION TEST. (Refer to 9 - ENGINE - STANDARD PROCEDURE)

7. PCM

NOTE: Before continuing, check the PCM harness connector terminals for corrosion, damage, or terminal push out. Repair as necessary.
Using the schematics as a guide, inspect the wire harness and connectors. Pay particular attention to all Power and Ground circuits.

If there are no possible causes remaining, view repair.

Repair

Replace and program the Powertrain Control Module per Service Information.
Perform the POWERTRAIN VERIFICATION TEST. (Refer to 9 - ENGINE - STANDARD PROCEDURE)

P1599-A/C PRESSURE SENSOR VOLTAGE TOO LOW

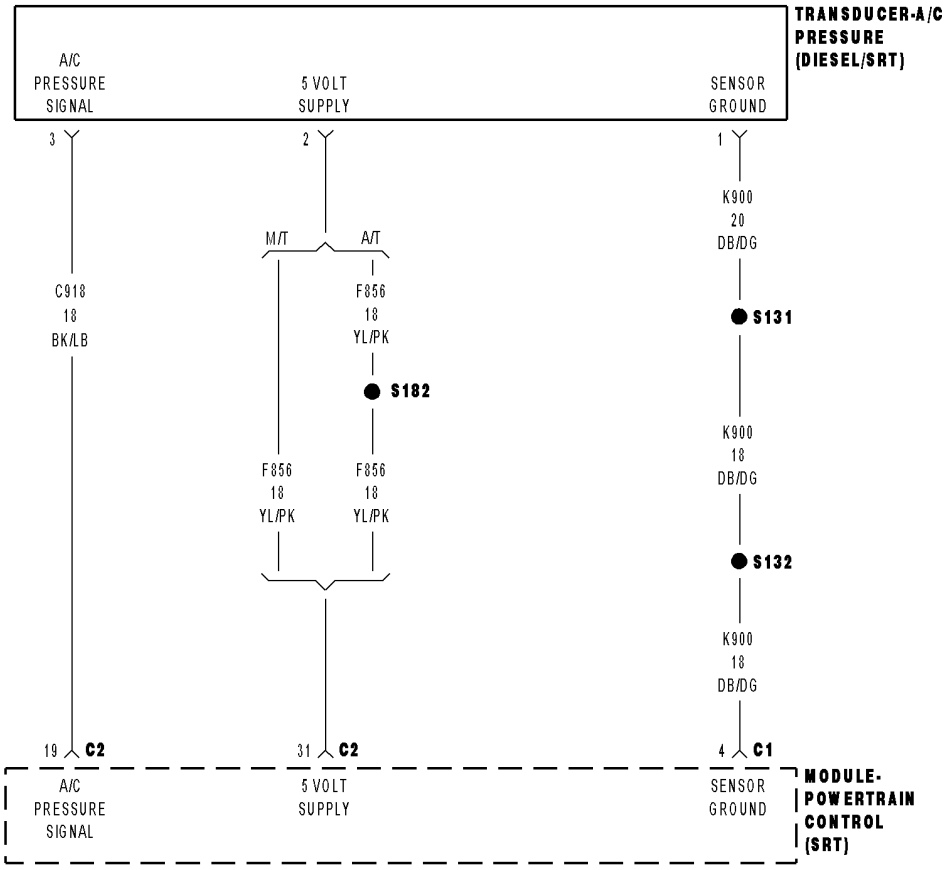

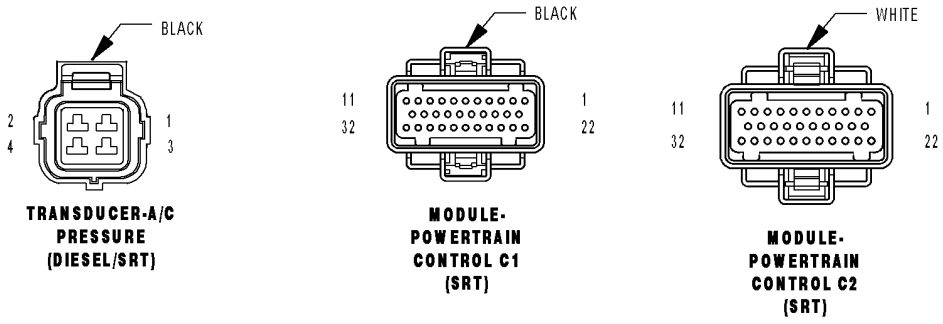

81566742

P1599-A/C PRESSURE SENSOR VOLTAGE TOO LOW (CONTINUED)

For the Engine circuit diagram (Refer to 9 - ENGINE - SCHEMATICS AND DIAGRAMS).

For a complete wiring diagram **Refer to Section 8W**.

- **When Monitored:**
  With the engine running and the A/C Relay energized.
- **Set Condition:**
  The A/C Pressure Transducer Signal voltage at the PCM goes below 0.58 volts for 2.6 seconds.

Possible Causes
(F855) 5-VOLT SUPPLY CIRCUIT OPEN
(F855) 5-VOLT SUPPLY CIRCUIT SHORTED TO GROUND
A/C PRESSURE SENSOR
(C918) A/C PRESSURE SIGNAL CIRCUIT SHORTED TO GROUND
(C918) A/C PRESSURE SIGNAL CIRCUIT SHORTED TO THE (K900) SENSOR GROUND CIRCUIT
PCM

Always perform the Pre-Diagnostic Troubleshooting procedure before proceeding. (Refer to 9 - ENGINE - DIAGNOSIS AND TESTING)

Diagnostic Test

1. A/C PRESSURE SENSORr VOLTAGE BELOW 0.6 VOLTS

NOTE: Make sure the A/C refrigerant System is properly charged per the Service Information.

Ignition on, engine not running.

With the scan tool, read DTCs and record the related Freeze Frame data.

Start the engine.

With the scan tool, read the A/C Pressure Transducer voltage.

Is the voltage below 0.60 of a volt?

Yes >> Go To 2

No >> Refer to the INTERMITTENT CONDITION Diagnostic Procedure.
Perform the POWERTRAIN VERIFICATION TEST. (Refer to 9 - ENGINE - STANDARD PROCEDURE)

P1599-A/C PRESSURE SENSOR VOLTAGE TOO LOW (CONTINUED)

2. (F855) 5-VOLT SUPPLY CIRCUIT

Turn the ignition off.

Disconnect the A/C Pressure Transducer harness connector.

Ignition on, engine not running.

Measure the voltage on the (F855) 5-volt Supply circuit in the A/C Pressure Transducer harness connector.

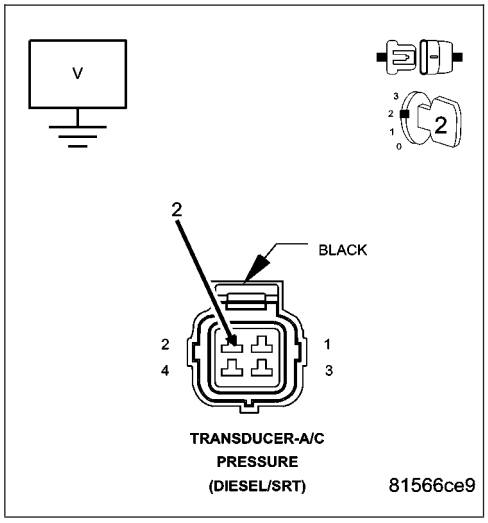

Is the voltage between 4.5 to 5.2 volts?

Yes >> Go To 3

No >> Go To 6

3. A/C PRESSURE TRANSDUCER

With the scan tool, monitor the A/C Pressure Transducer voltage with the Transducer disconnected.

Is the voltage above 0.6 of a volt?

Yes >> Replace the A/C Pressure Transducer.
Perform the POWERTRAIN VERIFICATION TEST. (Refer to 9 - ENGINE - STANDARD PROCEDURE)

No >> Go To 4

4. (C918) A/C PRESSURE SIGNAL CIRCUIT SHORTED TO GROUND

Turn the ignition off.

Disconnect the PCM harness connectors.

Measure the resistance between ground and the (C918) A/C Pressure Signal circuit in the A/C Pressure Transducer harness connector.

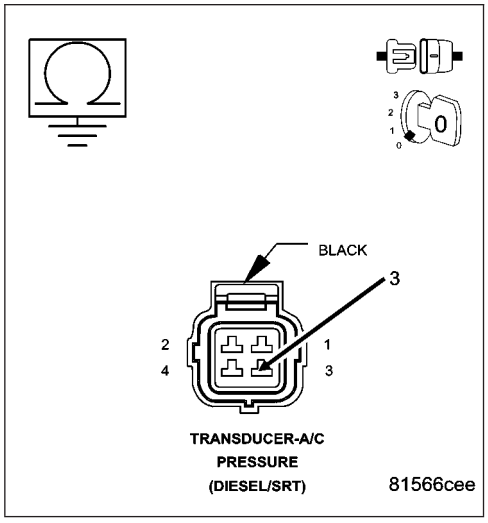

Is the resistance below 100 ohms?

Yes >> Repair the short to ground in the (C918) A/C Pressure Signal circuit.
Perform the POWERTRAIN VERIFICATION TEST. (Refer to 9 - ENGINE - STANDARD PROCEDURE)

No >> Go To 5

P1599-A/C PRESSURE SENSOR VOLTAGE TOO LOW (CONTINUED)

5. (C918) A/C PRESSURE SIGNAL CIRCUIT SHORTED TO THE (K900) SENSOR GROUND CIRCUIT

Measure the resistance between the (C918) A/C Pressure Signal circuit and the (K900) Sensor ground circuit in the A/C Pressure Transducer harness connector.

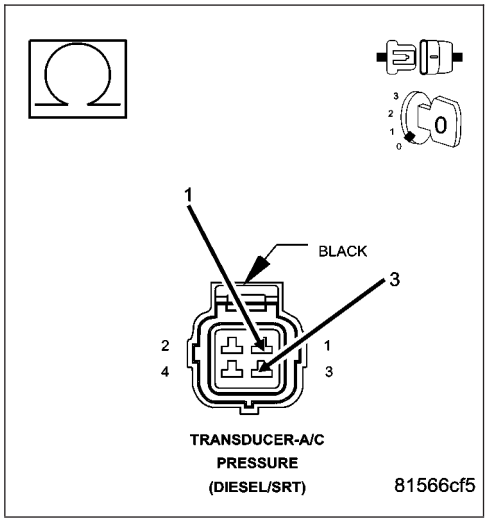

Is the resistance below 100 ohms?

Yes >> Repair the short between the (K900) Sensor ground and the (C918) A/C Pressure Signal circuit.
Perform the POWERTRAIN VERIFICATION TEST. (Refer to 9 - ENGINE - STANDARD PROCEDURE)

No >> Go To 8

6. (F855) 5-VOLT SUPPLY CIRCUIT OPEN

Turn the ignition off.

Disconnect the PCM harness connectors.

Measure the resistance of the (F855) 5-volt Supply circuit between the A/C Pressure Transducer harness connector and the PCM harness connector.

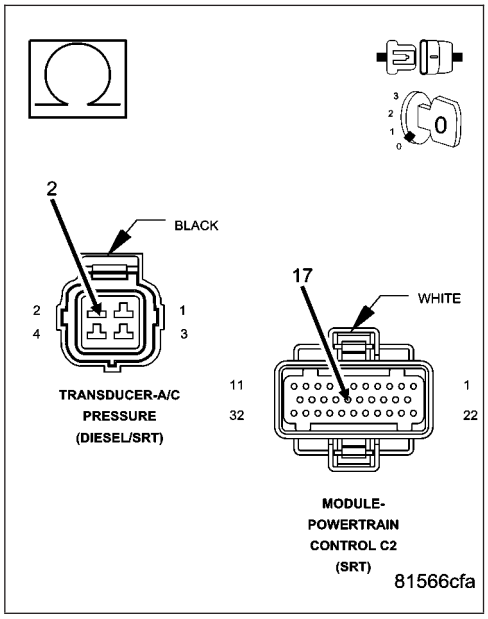

Is the resistance below 5.0 ohms?

Yes >> Go To 7

No >> Repair the open in the (F855) 5-volt Supply circuit.
Perform the POWERTRAIN VERIFICATION TEST. (Refer to 9 - ENGINE - STANDARD PROCEDURE)

P1599-A/C PRESSURE SENSOR VOLTAGE TOO LOW (CONTINUED)

7. (F855) 5-VOLT SUPPLY CIRCUIT SHORTED TO GROUND

Measure the resistance between the (F855) 5-volt Supply circuit and ground in the A/C Pressure Transducer harness connector.

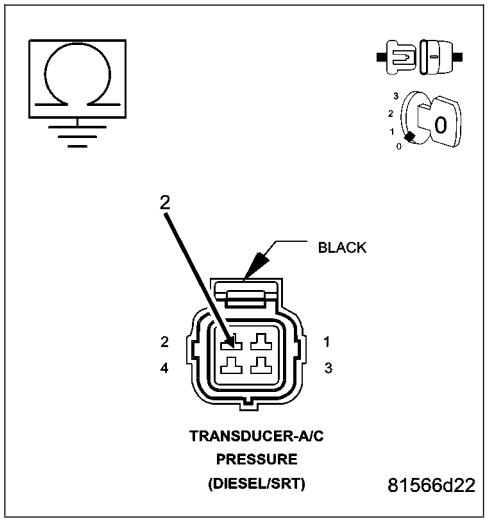

Is the resistance below 100 ohms?

Yes >> Repair the short to ground in the (F855) 5-volt Supply circuit.
Perform the POWERTRAIN VERIFICATION TEST. (Refer to 9 - ENGINE - STANDARD PROCEDURE)

No >> Go To 8

---

8. PCM

NOTE: Before continuing, check the PCM harness connector terminals for corrosion, damage, or terminal push out. Repair as necessary.
Using the schematics as a guide, inspect the wire harness and connectors. Pay particular attention to all Power and Ground circuits.

If there are no possible causes remaining, view repair.

Repair

Replace and program the Powertrain Control Module per Service Information.
Perform the POWERTRAIN VERIFICATION TEST. (Refer to 9 - ENGINE - STANDARD PROCEDURE)

P1682-CHARGING SYSTEM VOLTAGE TOO LOW

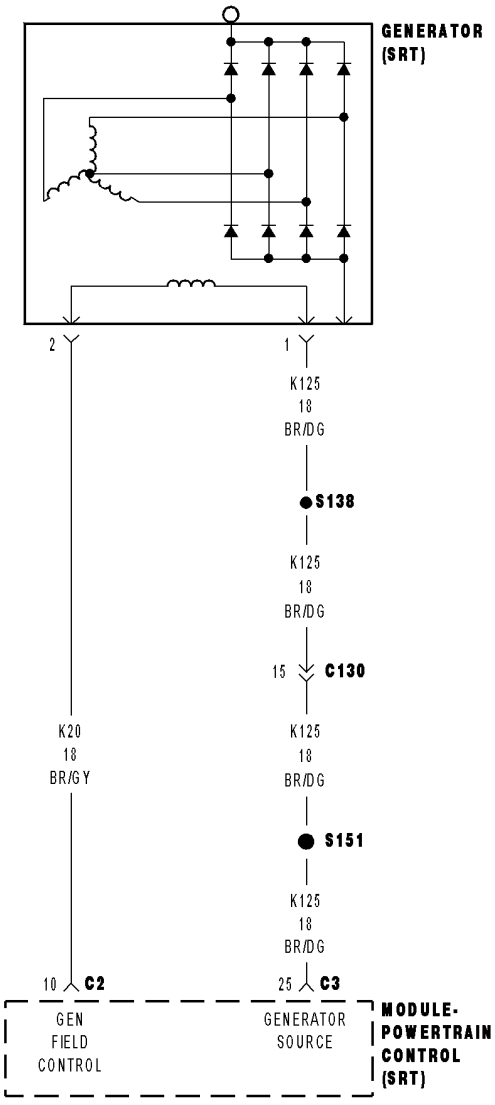

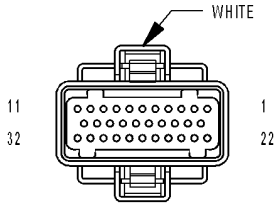

MODULE-
POWERTRAIN
CONTROL C2
(SRT)

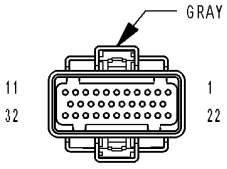

MODULE-
POWERTRAIN
CONTROL C3
(SRT)

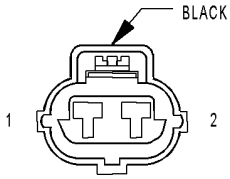

GENERATOR
(SRT)

81562fb8

P1682-CHARGING SYSTEM VOLTAGE TOO LOW (CONTINUED)

For the Engine circuit diagram (Refer to 9 - ENGINE - SCHEMATICS AND DIAGRAMS).

For a complete wiring diagram **Refer to Section 8W**.

- **When Monitored:**
  With the ignition key on and the engine running over 1500 RPM after 25 seconds.
- **Set Condition:**
  When the PCM regulates the generator field and there are no detected field problems, but the voltage output does not increase.

Possible Causes
BATTERY TEMPERATURE SENSOR
RESISTANCE IN THE BATTERY POSITIVE CIRCUIT
(K125) GENERATOR FIELD SOURCE CIRCUIT OPEN
RESISTANCE IN THE GENERATOR GROUND
(K125) GENERATOR FIELD SOURCE CIRCUIT SHORTED TO GROUND
(K20) GENERATOR FIELD CONTROL CIRCUIT OPEN
RESISTANCE IN THE GENERATOR FIELD COIL
PCM

Always perform the Pre-Diagnostic Troubleshooting procedure before proceeding. (Refer to 9 - ENGINE - DIAGNOSIS AND TESTING)

Diagnostic Test

1. CHARGING VOLTAGE BELOW 15.1 VOLTS

Turn the ignition off.

NOTE: Battery must be fully charged and capable of passing a battery load test.

NOTE: Generator Belt tension and condition must be checked before continuing.

NOTE: Inspect the vehicle for any aftermarket accessories that may exceed the maximum Generator output.

WARNING: When the engine is operating, do not stand in direct line of the fan. Do not put your hands near the pulley, belts, or fan. Do no wear loose clothing.

Start the engine.

Record all DTCs and the related Freeze Frame data.

With the scan tool, read the target charging voltage.

Is the target charging voltage above 15.1 volts?

Yes >> Refer to the INTERMITTENT CONDITION Diagnostic Procedure.
Perform the POWERTRAIN VERIFICATION TEST. (Refer to 9 - ENGINE - STANDARD PROCEDURE)

No >> Go To 2

P1682-CHARGING SYSTEM VOLTAGE TOO LOW (CONTINUED)

2. BATTERY TEMPERATURE SENSOR

Turn the ignition off.

NOTE: Generator Belt tension and condition must be checked before continuing.
Start the engine.
Allow the engine to reach normal operating temperature.
With the scan tool in sensors, read the Battery Temp Sensor value.
Using a Thermometer, measure under hood temperature.

Is the temperature within 10° F of Battery temperature?

Yes >> Go To 3

No >> Replace the Battery Temperature Sensor.
Perform the POWERTRAIN VERIFICATION TEST. (Refer to 9 - ENGINE - STANDARD PROCEDURE)

---

3. HIGH RESISTANCE IN THE BATTERY POSITIVE CIRCUIT

Ignition on, engine not running.
Measure the voltage between the Generator B+ Terminal and the Battery Positive Post.

WARNING: When the engine is operating, do not stand in direct line of the fan. Do not put your hands near the pulley, belts, or fan. Do no wear loose clothing.

CAUTION: Make sure all wires are clear of the engine's moving parts.
Start the engine.

Is the voltage above 0.4 of a volt?

Yes >> Repair the excessive resistance in the Battery Positive circuit between the Generator and Battery.
Perform the POWERTRAIN VERIFICATION TEST. (Refer to 9 - ENGINE - STANDARD PROCEDURE)

No >> Go To 4

---

4. RESISTANCE IN THE GENERATOR GROUND

Start the engine.

WARNING: When the engine is operating, do not stand in direct line of the fan. Do not put your hands near the pulley, belts, or fan. Do no wear loose clothing.
Warm the engine to operating temperature.

CAUTION: Make sure all wires are clear of the engine's moving parts.
Measure the voltage between the Generator case and Battery Negative Post.

Is the voltage above 0.1 of a volt?

Yes >> Repair the excessive resistance in the Generator Ground circuit between the Generator Case and Battery Negative side.
Perform the POWERTRAIN VERIFICATION TEST. (Refer to 9 - ENGINE - STANDARD PROCEDURE)

No >> Go To 5

P1682-CHARGING SYSTEM VOLTAGE TOO LOW (CONTINUED)

5. (K125) GEN FIELD SOURCE CIRCUIT OPEN

Ignition on, engine not running.

Carefully inspect all connectors for corrosion or spread terminals before continuing.

With the scan tool actuate the Generator Field Driver.

While backprobing, measure the voltage on the (K125) Generator Field Source circuit at back of Generator.

Is the voltage above 10.0 volts?

Yes >> Go To 6

No >> Repair the open in the (K125) Generator Field Source circuit.
Perform the POWERTRAIN VERIFICATION TEST. (Refer to 9 - ENGINE - STANDARD PROCEDURE)

6. (K125) GEN FIELD SOURCE CIRCUIT SHORTED TO GROUND

Turn the ignition off.

Disconnect the PCM harness connectors.

Disconnect the Generator Field harness connector.

Measure the resistance between ground and the (K125) Generator Field Source circuit in the PCM harness connector.

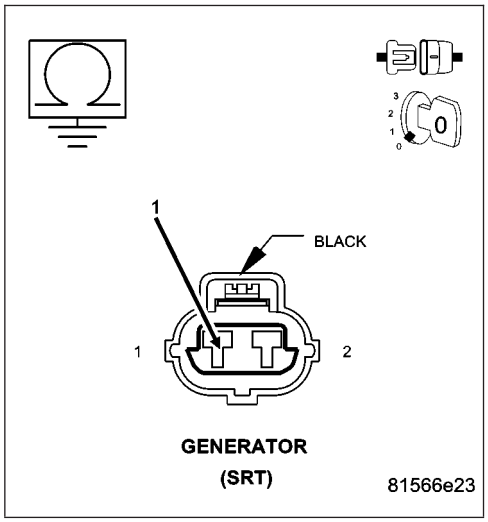

Is the resistance below 100 ohms?

Yes >> Repair the short to ground in the (K125) Generator Field Source circuit and replace the PCM.
Perform the POWERTRAIN VERIFICATION TEST. (Refer to 9 - ENGINE - STANDARD PROCEDURE)

No >> Go To 7

7. (K20) GEN FIELD CONTROL CIRCUIT OPEN

Measure the resistance of the (K20) Generator Field Driver circuit from the Generator harness connector to the PCM harness connector.

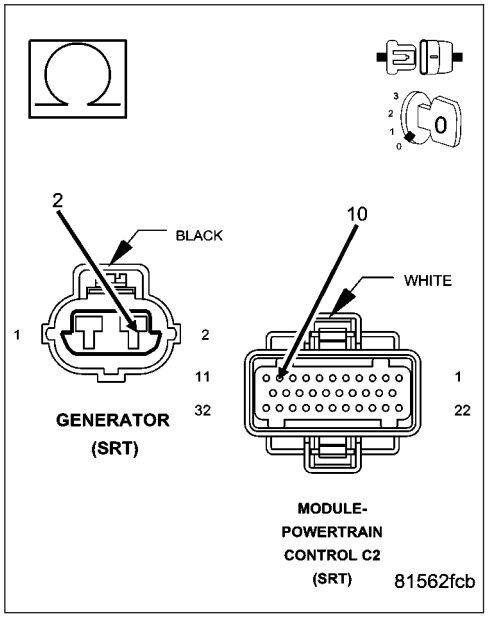

Is the resistance below 5.0 ohms?

Yes >> Go To 8

No >> Repair the open in the (K20) Generator Field Control circuit.
Perform the POWERTRAIN VERIFICATION TEST. (Refer to 9 - ENGINE - STANDARD PROCEDURE)

P1682-CHARGING SYSTEM VOLTAGE TOO LOW (CONTINUED)

8. GENERATOR FIELD COIL HIGH RESISTANCE

Measure resistance across the Generator Field Terminals at the Generator.

Is the resistance above 15 ohms?

Yes >> Replace or repair the Generator as necessary.
Perform the POWERTRAIN VERIFICATION TEST. (Refer to 9 - ENGINE - STANDARD PROCEDURE)

No >> Go To 9

---

9. PCM

NOTE: Before continuing, check the PCM harness connector terminals for corrosion, damage, or terminal push out. Repair as necessary.

Using the schematics as a guide, inspect the wire harness and connectors. Pay particular attention to all Power and Ground circuits.

If there are no possible causes remaining, view repair.

Repair

Replace and program the Powertrain Control Module per Service Information.
Perform the POWERTRAIN VERIFICATION TEST. (Refer to 9 - ENGINE - STANDARD PROCEDURE)

P1687-NO CLUSTER BUS MESSAGE

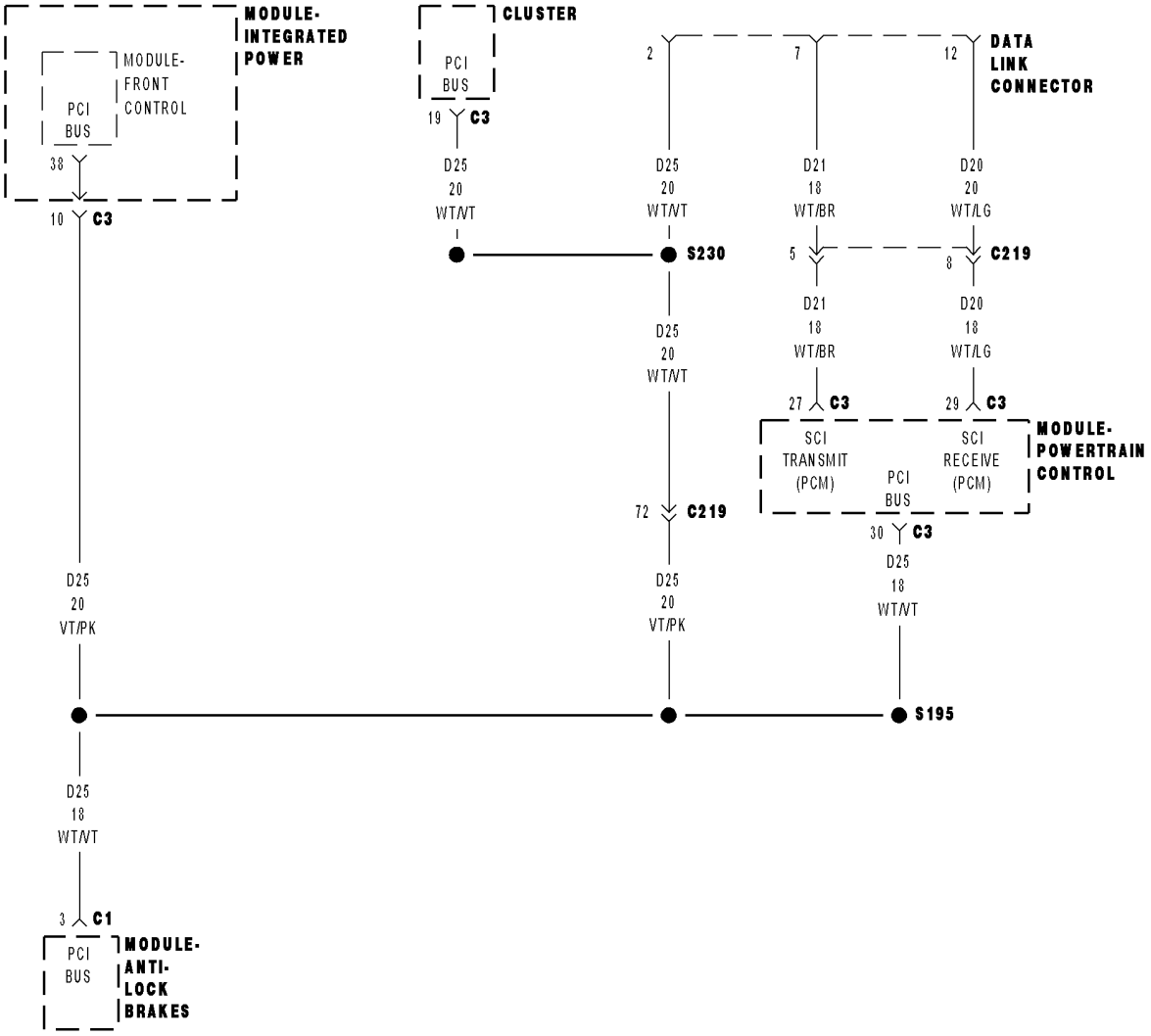

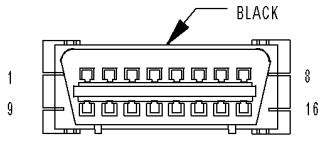

DATA LINK CONNECTOR

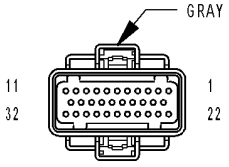

MODULE-
POWERTRAIN
CONTROL C3
(SRT)

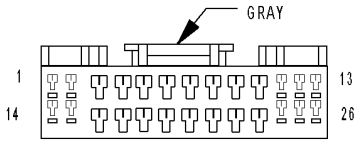

CLUSTER C3

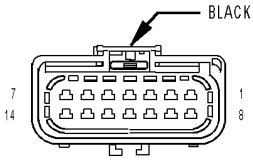

MODULE-
ANTI-
LOCK
BRAKES C1

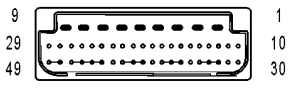

MODULE-
FRONT
CONTROL IPM

8156691B

P1687-NO CLUSTER BUS MESSAGE (CONTINUED)

For the Engine circuit diagram (Refer to 9 - ENGINE - SCHEMATICS AND DIAGRAMS).

For a complete wiring diagram **Refer to Section 8W**.

- **When Monitored:**
  With the ignition on.
- **Set Condition:**
  The PCM has not received an expected Cluster Status Bus message from the instrument cluster within the last 20 seconds.

Possible Causes
(D25) OPEN BETWEEN PCM AND CLUSTER
(D25) SHORTED BETWEEN PCM AND CLUSTER
CLUSTER
PCM

Always perform the Pre-Diagnostic Troubleshooting procedure before proceeding. (Refer to 9 - ENGINE - DIAGNOSIS AND TESTING)

Diagnostic Test

1. NO CLUSTER BUS MESSAGE

Ignition on, engine not running.
With the scan tool, erase DTCs.
Cycle the ignition key on and off several times.
With the scan tool, read DTCs.

Does the DTC reset?

Yes >> Go To 2

No >> Refer to the INTERMITTENT CONDITION Diagnostic Procedure.
Perform the POWERTRAIN VERIFICATION TEST. (Refer to 9 - ENGINE - STANDARD PROCEDURE)

---

2. COMMUNICATE WITH CLUSTER

Ignition on, engine not running.
With the scan tool, attempt to communicate with the Instrument cluster.

Can communication be established with the Instrument Cluster?

Yes >> Go To 3

No >> Refer to the Communication Category of the Body Diagnostic Manual and perform the appropriate symptom related to no communication with cluster.
Perform the POWERTRAIN VERIFICATION TEST. (Refer to 9 - ENGINE - STANDARD PROCEDURE)

P1687-NO CLUSTER BUS MESSAGE (CONTINUED)

3. INSTRUMENT CLUSTER OPERATION

Start the engine
Allow the engine to idle.

Is the correct engine speed display in the instrument cluster (Tach)?

Yes >> Replace and program the Powertrain Control Module per Service Information.
Perform the POWERTRAIN VERIFICATION TEST. (Refer to 9 - ENGINE - STANDARD PROCEDURE)

No >> Refer to the Instrument Category in the Body Diagnostic Manual and perform the appropriate symptom.
Perform the POWERTRAIN VERIFICATION TEST. (Refer to 9 - ENGINE - STANDARD PROCEDURE)

P1695-BUS MESSAGE FROM BODY CONTROL MODULE

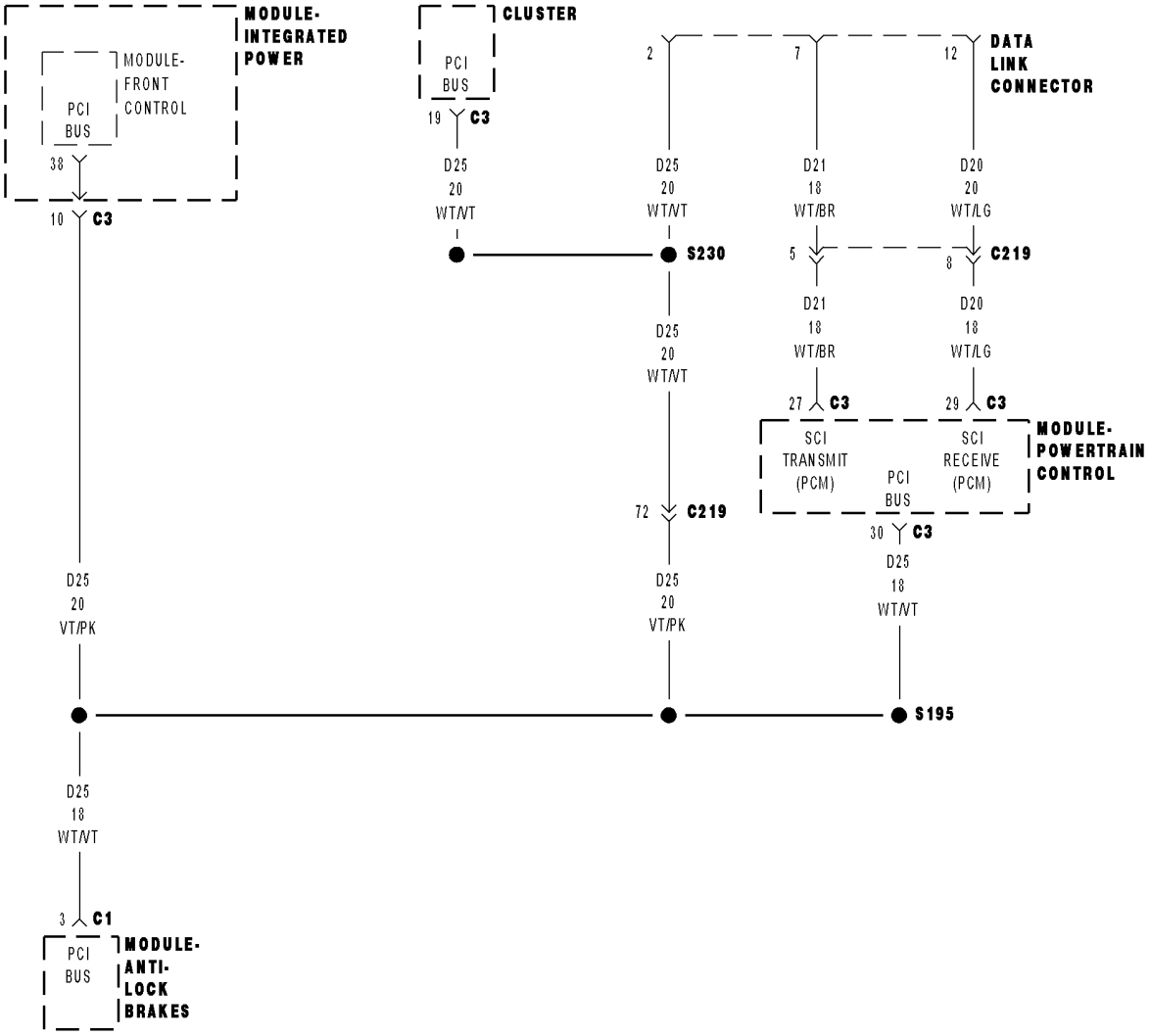

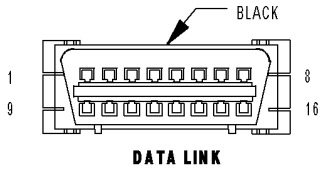

DATA LINK CONNECTOR

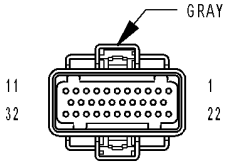

MODULE-
POWERTRAIN
CONTROL C3
(SRT)

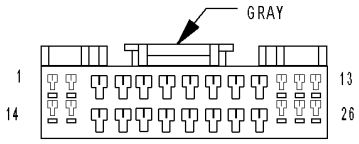

CLUSTER C3

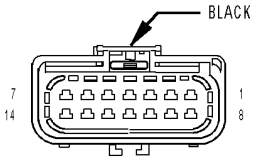

MODULE-
ANTI-
LOCK
BRAKES C1

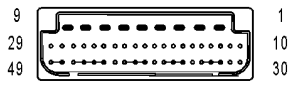

MODULE-
FRONT
CONTROL IPM

8156691B

P1695-BUS MESSAGE FROM BODY CONTROL MODULE (CONTINUED)

For the Engine circuit diagram (Refer to 9 - ENGINE - SCHEMATICS AND DIAGRAMS).

For a complete wiring diagram **Refer to Section 8W**.

- **When Monitored:**
  With the ignition on. Battery voltage greater than 10.4 volts.
- **Set Condition:**
  No BUS messages recieved from the BCM for 20 seconds.

Possible Causes
(D25) PCI BUS CIRCUIT OPEN
PCM

Always perform the Pre-Diagnostic Troubleshooting procedure before proceeding. (Refer to 9 - ENGINE - DIAGNOSIS AND TESTING)

Diagnostic Test

1. DTC RESET

Ignition on, engine not running.

With the scan tool, erase DTCs.

Cycle the ignition key on and off several times. Leaving the ignition on for at least 20 seconds.

With the scan tool, read DTCs.

Does the DTC reset?

Yes >> Go To 2

No >> Refer to the INTERMITTENT CONDITION Diagnostic Procedure.
Perform the POWERTRAIN VERIFICATION TEST. (Refer to 9 - ENGINE - STANDARD PROCEDURE)

---

2. COMMUNICATE WITH FCM

With the scan tool, attempt to communicate with the FCM.

Can communication be established with the BCM?

Yes >> Go To 3

No >> Refer to the Communication Category and perform the appropriate symptom related to no communication with FCM.
Perform the POWERTRAIN VERIFICATION TEST. (Refer to 9 - ENGINE - STANDARD PROCEDURE)

P1695-BUS MESSAGE FROM BODY CONTROL MODULE (CONTINUED)

3. (D25) PCI BUS CIRCUIT OPEN

Turn the ignition off.

Disconnect the C3 PCM harness connector.

Disconnect the FCM harness connector.

NOTE: Inspect the PCI Bus terminal at both the PCM connectors and the FCM connectors. Check for corrosion, damage or terminal push out.

Measure the resistance of the (D25) PCI BUS circuit between the C3 PCM harness connector and the FCM harness connector.

Is the resistance below 5.0 ohms?

Yes >> Replace and program the Powertrain Control Module per Service Information.

Perform the POWERTRAIN VERIFICATION TEST. (Refer to 9 - ENGINE - STANDARD PROCEDURE)

No >> Repair the open in the (D25) PCI BUS circuit.

Perform the POWERTRAIN VERIFICATION TEST. (Refer to 9 - ENGINE - STANDARD PROCEDURE)

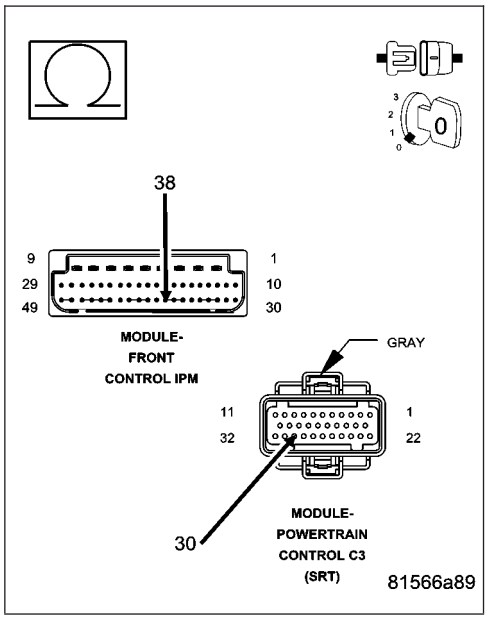

P1696-PCM FAILURE EEPROM WRITE DENIED

For the Engine circuit diagram. (Refer to 9 - ENGINE - SCHEMATICS AND DIAGRAMS).

For a complete wiring diagram **Refer to Section 8W**.

- **When Monitored:**
  Ignition on and battery voltage greater than 10 volts.
- **Set Condition:**
  An attempt to program/write to the internal EEPROM failed, also checks at powerdown.

Possible Causes
SRI MILEAGE INVALID
PCM

Always perform the Pre-Diagnostic Troubleshooting procedure before proceeding. (Refer to 9 - ENGINE - DIAGNOSIS AND TESTING)

Diagnostic Test

1. SCAN TOOL DISPLAYS WRITE FAILURE

Ignition on, engine not running.
With the scan tool, perform the SRI Memory Test.

Does the scan tool display Write Failure?

Yes >> Replace and program the Powertrain Control Module per Service Information.
Perform the POWERTRAIN VERIFICATION TEST. (Refer to 9 - ENGINE - STANDARD PROCEDURE)

No >> Go To 2

---

2. SCAN TOOL DISPLAYS WRITE REFUSED

With the scan tool, perform the SRI Memory Test.

Does the scan tool display Write Refused?

Yes >> Go To 3

No >> Go To 4

---

3. PCM REFUSED 2ND TEST

With the scan tool, perform the SRI Memory Test a second time.

NOTE: Retest the SRI Memory two more times.

Does the scan tool display Write Refused again?

Yes >> Replace and program the Powertrain Control Module per Service Information.
Perform the POWERTRAIN VERIFICATION TEST. (Refer to 9 - ENGINE - STANDARD PROCEDURE)

No >> Test Complete.

P1696-PCM FAILURE EEPROM WRITE DENIED (CONTINUED)

4. SCAN TOOL DISPLAYS SRI MILEAGE INVALID

With the scan tool, perform the SRI Memory Test.

Does the scan tool display SRI Mileage Invalid?

Yes >> Update the mileage and retest the SRI Memory.
Perform the POWERTRAIN VERIFICATION TEST. (Refer to 9 - ENGINE - STANDARD PROCEDURE)

No >> Go To 5

---

5. COMPARE SRI MILEAGE WITH ODOMETER

Compare the SRI Mileage stored with the Instrument Panel Odometer.

Is the mileage within the specified range displayed on the scan tool?

Yes >> Test Complete.

No >> Update the mileage and retest the SRI Memory.
Perform the POWERTRAIN VERIFICATION TEST. (Refer to 9 - ENGINE - STANDARD PROCEDURE)

---

*BRAKE SWITCH SENSE STATUS DOES NOT CHANGE ON THE SCAN TOOL

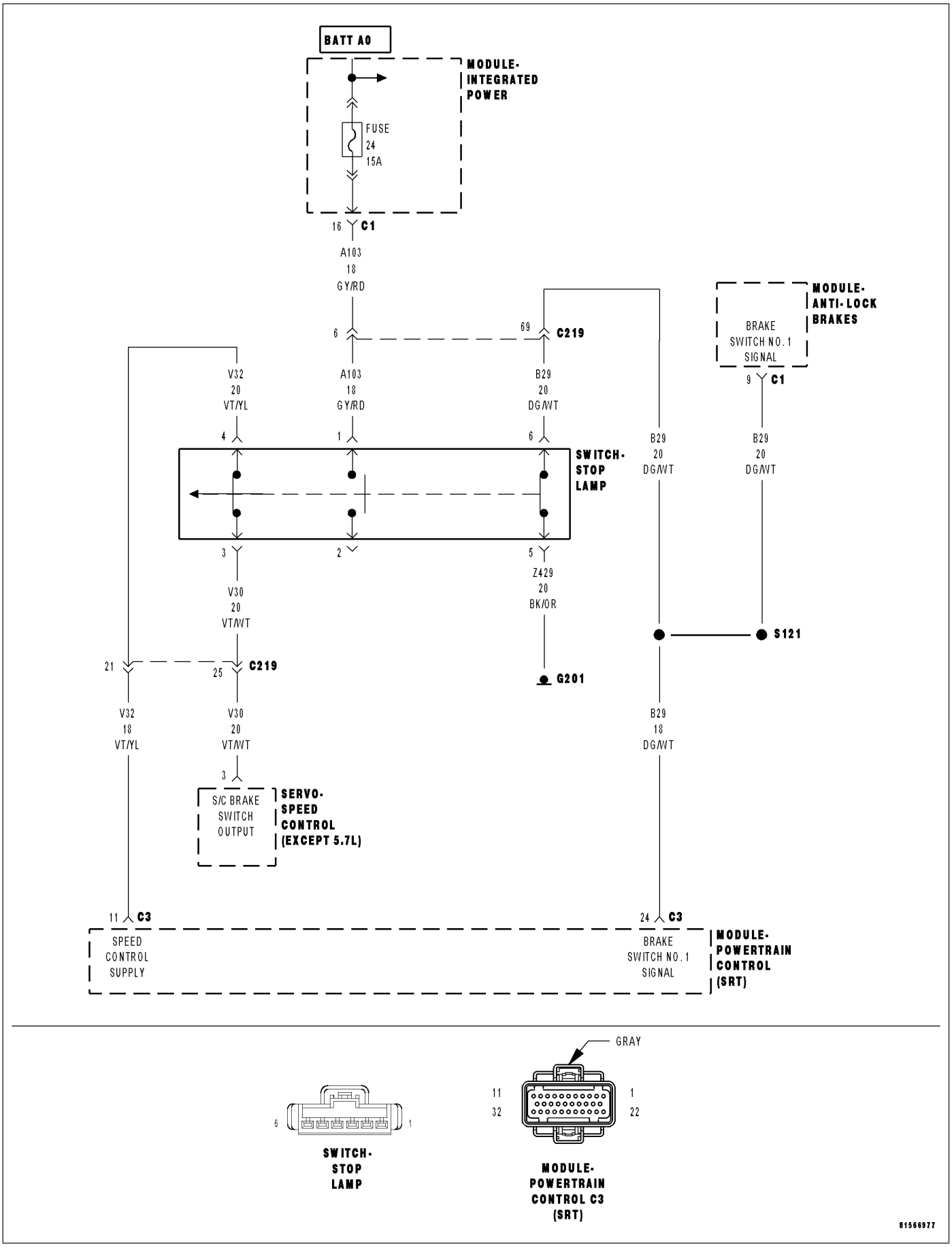

***BRAKE SWITCH SENSE STATUS DOES NOT CHANGE ON THE SCAN TOOL (CONTINUED)**

For the Engine circuit diagram (Refer to 9 - ENGINE - SCHEMATICS AND DIAGRAMS).

For a complete wiring diagram **Refer to Section 8W**.

Possible Causes
(A103) FUSED B+ CIRCUIT
(Z429) BRAKE LAMP SWITCH GROUND CIRCUIT OPEN
BRAKE LAMP SWITCH
(B29) BRAKE SWITCH NO.1 SIGNAL CIRCUIT OPEN
(B29) BRAKE SWITCH NO.1 SIGNAL CIRCUIT SHORT TO GROUND
PCM

Always perform the Pre-Diagnostic Troubleshooting procedure before proceeding. (Refer to 9 - ENGINE - DIAGNOSIS AND TESTING)

Diagnostic Test

1. SCAN TOOL DOES NOT SHOW BRAKE SW PRESSED OR RELEASED

Ignition on, engine not running.

With the scan tool in Inputs/Outputs, read the Brake Switch state.

While observing the scan tool display, press and release the brake pedal several times.

Does the scan tool display Brake Switch PRESSED and RELEASED?

Yes >> The Brake Lamp Switch is operating properly at this time.
Perform the POWERTRAIN VERIFICATION TEST. (Refer to 9 - ENGINE - STANDARD PROCEDURE)

No >> Go To 2

---

2. (A103) FUSED B+ CIRCUIT OPEN

Turn the ignition off.

Disconnect the Brake Lamp Switch harness connector.

Using a 12-volt test light connected to ground, probe the (A103) Fused B+ circuit at the Brake Lamp Switch harness connector.

Does the test light illuminate brightly?

Yes >> Go To 3

No >> Repair the open or short to ground in the (A103) Fused B+ circuit. Check and replace fuses as necessary.
Perform the POWERTRAIN VERIFICATION TEST. (Refer to 9 - ENGINE - STANDARD PROCEDURE)

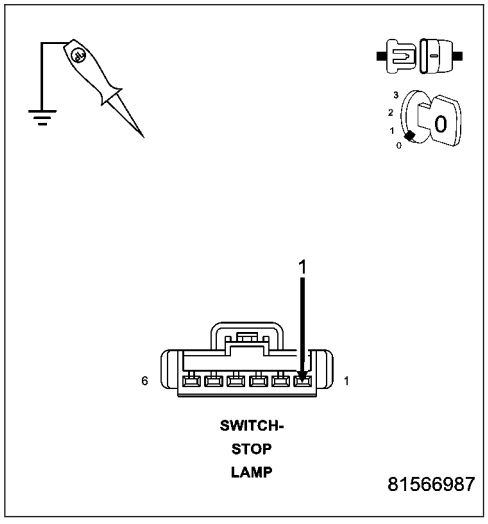

***BRAKE SWITCH SENSE STATUS DOES NOT CHANGE ON THE SCAN TOOL (CONTINUED)**

3. (Z429) BRAKE LAMP SWITCH GROUND CIRCUIT OPEN

Using a 12-volt test light connect to 12-volts, probe the (Z429) Brake Lamp Switch ground circuit.

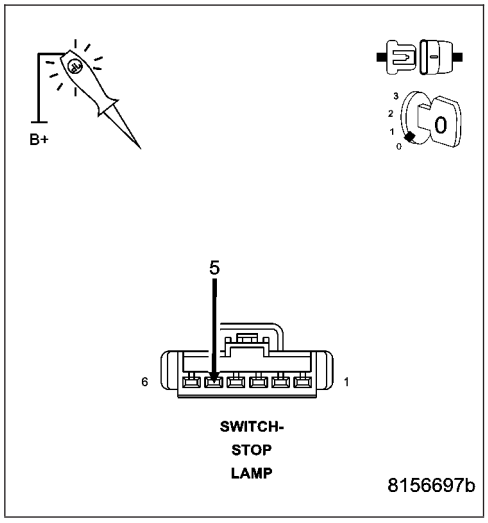

Does the test light illuminate brightly?

Yes >> Go To 4

No >> Repair the open in the (Z429) Brake Lamp Switch Ground circuit.
Perform the POWERTRAIN VERIFICATION TEST. (Refer to 9 - ENGINE - STANDARD PROCEDURE)

4. BRAKE LAMP SWITCH

Measure the resistance across the (B29) Brake Lamp Switch Signal terminal and the (Z429) Ground terminal (measurement taken across the switch).

Apply and release the Brake Pedal while monitoring the ohmmeter.

Does the resistance change from below 5.0 ohms to open circuit?

Yes >> Go To 5

No >> Replace the Brake Lamp Switch.
Perform the POWERTRAIN VERIFICATION TEST. (Refer to 9 - ENGINE - STANDARD PROCEDURE)

5. (B29) BRAKE LAMP SWITCH SIGNAL CIRCUIT OPEN

Disconnect the C3 PCM harness connector.

Measure the resistance of the (B29) Brake Lamp Switch Signal circuit from the Stop Lamp Switch harness connector to the C3 PCM harness connector.

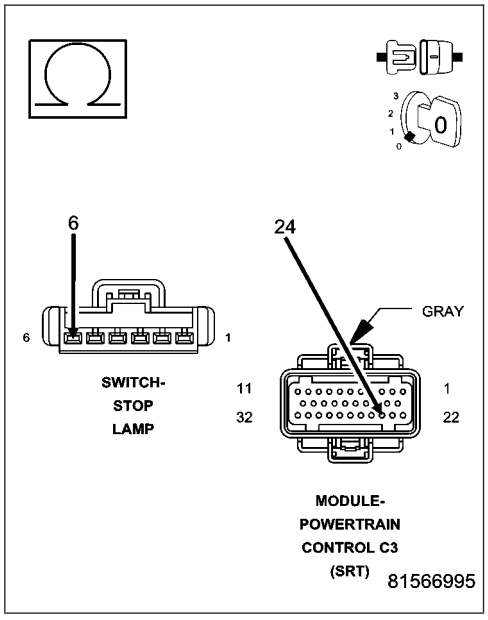

Is the resistance below 5.0 ohms?

Yes >> Go To 6

No >> Repair the open in the (B29) Brake Lamp Switch Signal circuit.
Perform the POWERTRAIN VERIFICATION TEST. (Refer to 9 - ENGINE - STANDARD PROCEDURE)

***BRAKE SWITCH SENSE STATUS DOES NOT CHANGE ON THE SCAN TOOL (CONTINUED)**

6. (B29) BRAKE LAMP SWITCH SIGNAL CIRCUIT SHORTED TO GROUND

Measure the resistance between ground and the (B29) Brake Lamp Switch Signal circuit at the Stop Lamp Switch harness connector.

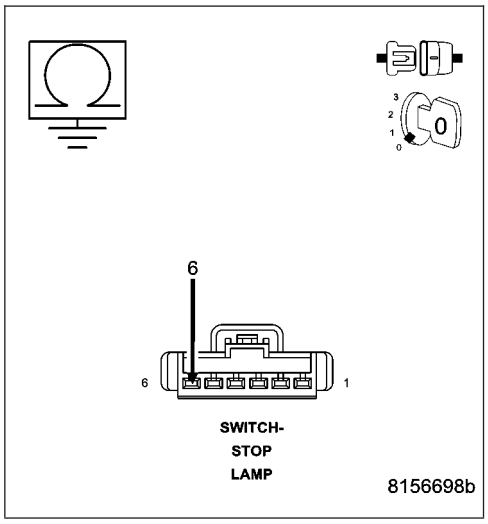

Is the resistance below 100 ohms?

Yes >> Repair the short to ground in the (B29) Brake Lamp Switch Signal circuit.
Perform the POWERTRAIN VERIFICATION TEST. (Refer to 9 - ENGINE - STANDARD PROCEDURE)

No >> Go To 7

---

7. (B29) BRAKE LAMP SWITCH SIGNAL LESS THAN 10.0 VOLTS

Connect the PCM harness connectors.

Connect the Brake Lamp Switch harness connector.

Brake pedal must be depressed in the next step.

Ignition on, engine not running.

Using a 12-volt test light connected to ground, probe the (B29) Brake Lamp Switch Signal circuit at the Brake Lamp Switch harness connector.

Is the test light illuminated and bright?

Yes >> Go To 8

No >> Replace or adjust the brake switch.
Perform the POWERTRAIN VERIFICATION TEST. (Refer to 9 - ENGINE - STANDARD PROCEDURE)

---

8. PCM

NOTE: Before continuing, check the PCM harness connector terminals for corrosion, damage, or terminal push out. Repair as necessary.

Using the schematics as a guide, inspect the wire harness and connectors. Pay particular attention to all Power and Ground circuits.

If there are no possible causes remaining, view repair.

Repair

Replace and program the Powertrain Control Module per Service Information.
Perform the POWERTRAIN VERIFICATION TEST. (Refer to 9 - ENGINE - STANDARD PROCEDURE)

---

*CANNOT SHIFT INTO REVERSE

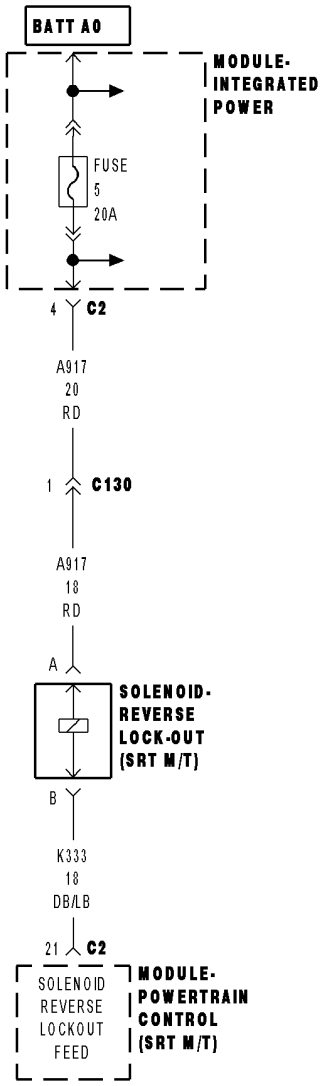

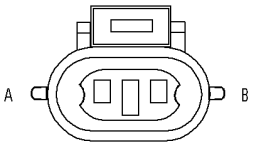

SOLENOID-
REVERSE
LOCK-OUT
(SRT M/T)

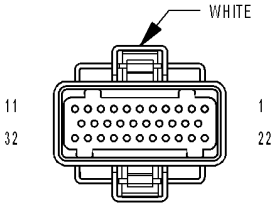

MODULE-
POWERTRAIN
CONTROL C2
(SRT)

81562f15

***CANNOT SHIFT INTO REVERSE (CONTINUED)**

For the Engine circuit diagram (Refer to 9 - ENGINE - SCHEMATICS AND DIAGRAMS).

For a complete wiring diagram **Refer to Section 8W**.

Possible Causes
REVERSE LOCKOUT SOLENOID STUCK

Always perform the Pre-Diagnostic Troubleshooting procedure before proceeding. (Refer to 9 - ENGINE - DIAGNOSIS AND TESTING)

Diagnostic Test

1. REVERSE LOCKOUT SOLENOID STUCK

Check for a mechanically stuck Reverse Lockout Solenoid. This will not set a DTC in the PCM, but will prevent reverse gear engagement.

Is the solenoid stuck?

Yes >> Replace the Reverse Lockout Solenoid.

No >> Test Complete

*CHECKING A/C SYSTEM OPERATION WITH NO DTCS

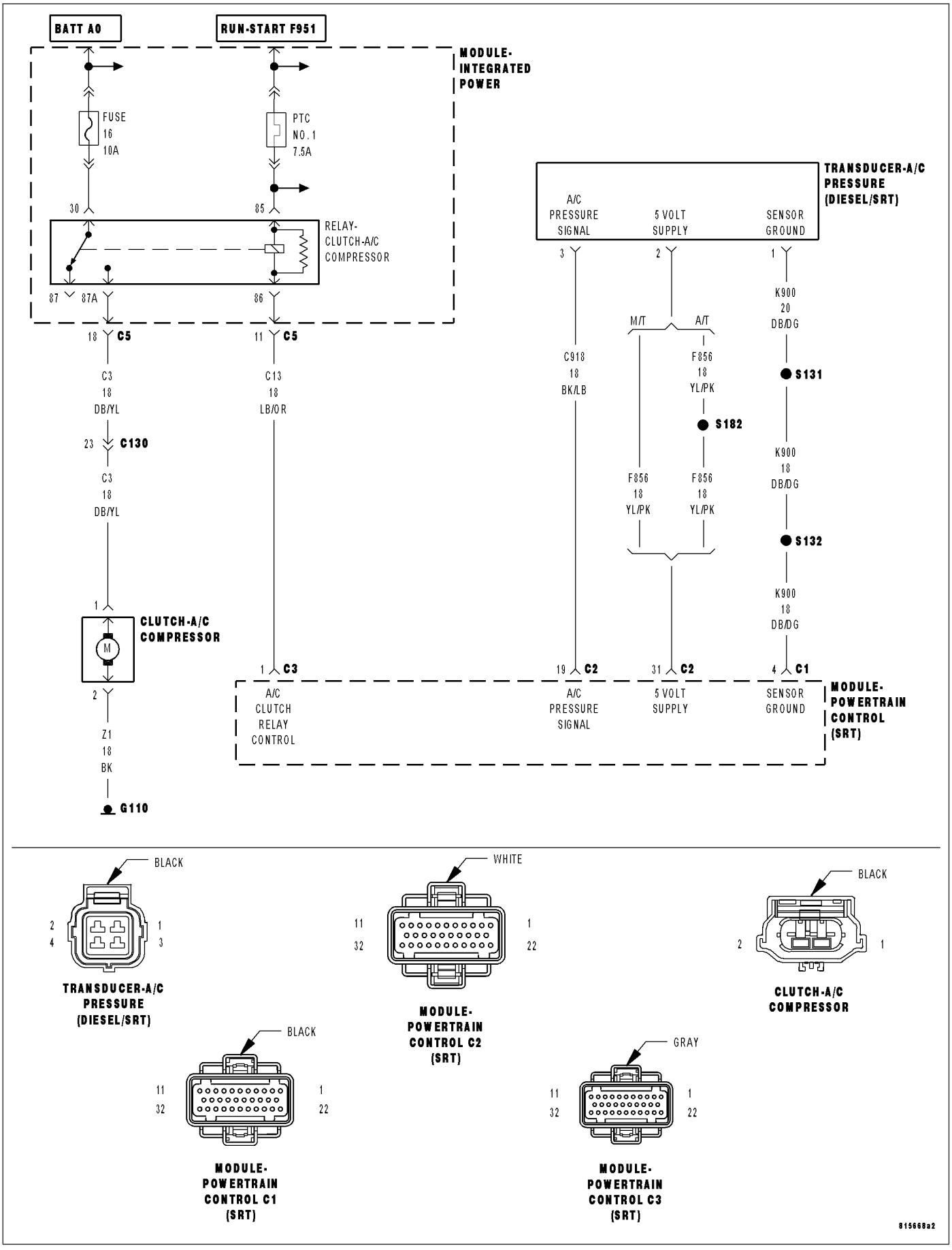

***CHECKING A/C SYSTEM OPERATION WITH NO DTCS (CONTINUED)**

For the XXXX circuit diagram (Refer to 9 - ENGINE - SCHEMATICS AND DIAGRAMS).

For a complete wiring diagram **Refer to Section 8W**.

Possible Causes
A/C SELECT CIRCUIT OPEN
A/C SELECT IN HVAC
PCM
A/C REQUEST CIRCUIT OPEN
REFRIGERATION SYSTEM NOT PROPERLY CHARGED
HIGH PRESS CUT-OFF SWITCH
LOW PRESSURE SWITCH
A/C CLUTCH COIL
A/C COMPRESSOR CLUTCH GROUND CIRCUIT OPEN
(C3) A/C CLUTCH RELAY OUTPUT CIRCUIT OPEN
FUSED B+ CIRCUIT OPEN
A/C CLUTCH RELAY

Always perform the Pre-Diagnostic Troubleshooting procedure before proceeding. (Refer to 9 - ENGINE - DIAGNOSIS AND TESTING)

Diagnostic Test

1. DTC AND COMMUNICATION PRESENT

Ignition on, engine not running.

Verify that communication with the HVAC and PCM is available over the BUS.

With the scan tool, check for DTCs in the PCM and HVAC module.

Are any A/C DTC's or communication failures present?

Yes >> Diagnose the related DTC(s) or BUS failure before continuing. Perform BODY VERIFICATION TEST - VER 1.

No >> Go To 2

---

2. A/C SELECT CIRCUIT OPEN

Engine running.

With the scan tool, read the A/C Select status in the PCM.

Turn the A/C Switch on and off a few times.

Does the A/C Select state change?

Yes >> Go To 3

No >> Go To 12

***CHECKING A/C SYSTEM OPERATION WITH NO DTCS (CONTINUED)**

3. A/C REQUEST CIRCUIT OPEN

Engine Running.
Turn the A/C system on and the fan on high.
With the scan tool in Inputs/Outputs, read the A/C request state.

Does the A/C request state change?

Yes >> Go To 4

No >> Repair the open in the A/C Request circuit.
Perform BODY VERIFICATION TEST - VER 1.

---

4. REFRIGERATION SYSTEM NOT PROPERLY CHARGED

Turn the ignition off.
Verify that the Refrigerant System is properly charged per Service Procedure.

Is the Refrigerant System properly charged?

Yes >> Go To 5

No >> Properly charge the Refrigerant System per Service Information.
Perform BODY VERIFICATION TEST - VER 1.

---

5. HIGH PRESSURE CUT-OFF SWITCH

Turn the ignition off.
Verify the High Pressure Cut-Off Switch operation per Service Information.

Is the High Pressure Cut-Off Switch OK?

Yes >> Go To 6

No >> Replace the High Pressure Cut-Off Switch.
Perform BODY VERIFICATION TEST - VER 1.

---

6. LOW PRESSURE SWITCH

Turn the ignition off.
Verify the Low Pressure Switch operation per Service Information.

Is the Low Pressure Switch OK?

Yes >> Go To 7

No >> Replace the Low Pressure Switch.
Perform BODY VERIFICATION TEST - VER 1.

---

7. A/C CLUTCH COIL

Ignition on, engine not running.
Disconnect the A/C Compressor Clutch harness connector.
Connect a test light between the ground circuit and the A/C Clutch Relay Output circuit.
With the scan tool, actuate the A/C Clutch Relay.

Does the test light illuminate brightly on and off with the relay actuation?

Yes >> Replace the A/C Clutch Coil.
Perform BODY VERIFICATION TEST - VER 1.

No >> Go To 8

***CHECKING A/C SYSTEM OPERATION WITH NO DTCS (CONTINUED)**

8. A/C COMPRESSOR CLUTCH GROUND CIRCUIT OPEN

Turn the ignition off.

Disconnect the A/C Clutch harness connector.

NOTE: Check connectors - Clean/repair as necessary.

Measure the resistance between ground and the A/C Compressor Clutch ground circuit in the A/C Clutch harness connector.

Is the resistance below 5.0 ohms?

Yes >> Go To 9

No >> Repair the open in the A/C Compressor Clutch ground circuit.
Perform BODY VERIFICATION TEST - VER 1.

---

9. (C3) A/C CLUTCH RELAY OUTPUT CIRCUIT OPEN

Turn the ignition off.

Disconnect the A/C Clutch harness connector.

Remove the A/C Clutch Relay.

NOTE: Check connectors - Clean/repair as necessary.

Measure the resistance of the (C3) A/C Clutch Relay Output circuit between the IPM and the A/C Clutch Coil.

Is the resistance below 5.0 ohms?

Yes >> Go To 10

No >> Repair the open in the (C3) A/C Clutch Relay Output circuit.
Perform BODY VERIFICATION TEST - VER 1.

---

10. (A17) FUSED B+ CIRCUIT OPEN

Turn the ignition off.

Remove the A/C Clutch Relay.

NOTE: Check connectors - Clean/repair as necessary.

Measure the voltage of the Fused B+ circuit at the A/C Clutch Relay connector.

Is the voltage above 11.0 volts?

Yes >> Go To 11

No >> Repair the open in the Fused B+ circuit. The open may be in the IMP.
Perform BODY VERIFICATION TEST - VER 1.

---

11. A/C CLUTCH RELAY

If there are no possible causes remaining, view repair.

Repair

Replace the A/C Clutch Relay.
Perform BODY VERIFICATION TEST - VER 1.

***CHECKING A/C SYSTEM OPERATION WITH NO DTCS (CONTINUED)**

12. A/C SELECT SWITCH STATUS IN HVAC

Ignition on, engine not running.

With the scan tool in the HVAC, under the Monitors screen, read the A/C Select Switch state.

While monitoring the scan tool screen, turn the A/C switch on and off a few times.

Does the A/C Select State change on the HVAC Monitors screen.

Yes >> Check for any related TSBs. Replace and program the PCM in accordance with the Service Information as long as no BUS problems exist.
Perform BODY VERIFICATION TEST - VER 1.

No >> Replace the A/C-Heater Control module.
Perform BODY VERIFICATION TEST - VER 1.

*CHECKING CHARGING SYSTEM OPERATION WITH NO DTCS

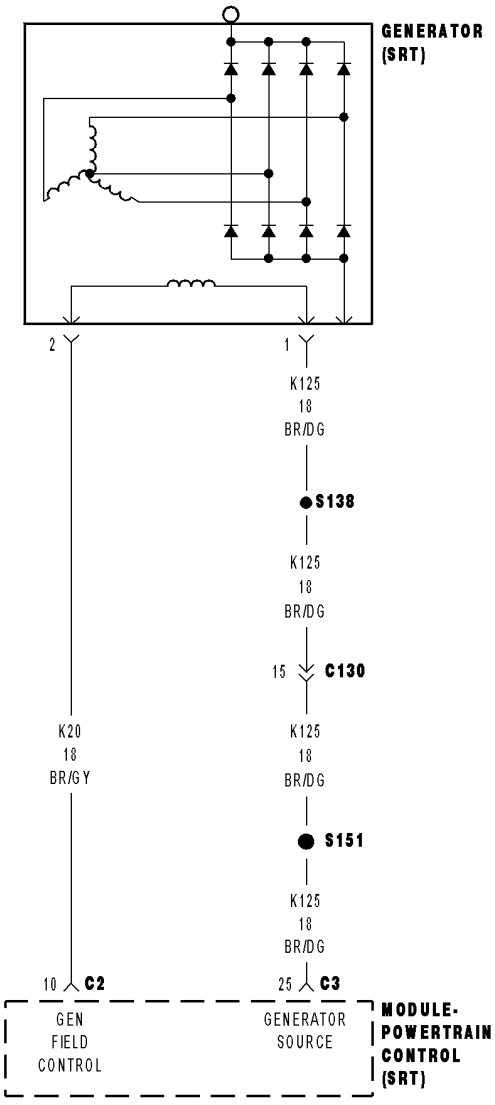

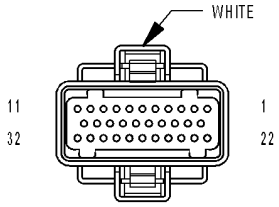

MODULE-
POWERTRAIN
CONTROL C2
(SRT)

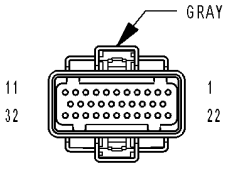

MODULE-
POWERTRAIN
CONTROL C3
(SRT)

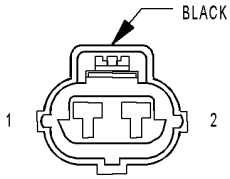

GENERATOR
(SRT)

81562fb8

***CHECKING CHARGING SYSTEM OPERATION WITH NO DTCS (CONTINUED)**

For the Engine circuit diagram (Refer to 9 - ENGINE - SCHEMATICS AND DIAGRAMS).

For a complete wiring diagram **Refer to Section 8W**.

Possible Causes
GENERATOR BELT CONDITION
RESISTANCE IN THE BATTERY POSITIVE CIRCUIT
(K125) GENERATOR FIELD SOURCE CIRCUIT OPEN
GENERATOR FIELD COIL HIGH RESISTANCE
(K20) GEN FIELD CONTROL CIRCUIT OPEN
RESISTANCE IN THE GENERATOR GROUND
PCM

Always perform the Pre-Diagnostic Troubleshooting procedure before proceeding. (Refer to 9 - ENGINE - DIAGNOSIS AND TESTING)

Diagnostic Test

1. TARGET CHARGING DIFFERS FROM ACTUAL CHARGING BY 1 VOLT

NOTE: Verify that the Battery is able to pass a load test before continuing.

Ignition on, engine not running.

With the scan tool, read the Battery voltage and record the results.

Measure Battery voltage between the Battery Positive and Negative Terminals and record the results.

Compare the two voltage readings.

Is the voltage difference less than one volt?

Yes >> Go To 2

No >> Go To 8

---

2. RESISTANCE IN THE BATTERY POSITIVE CIRCUIT

Ignition on, engine not running.

Measure the voltage between the Generator B+ Terminal and the Battery+ Post.

CAUTION: Make sure all wires are clear of the engine's moving parts.

Start the engine.

Is the voltage above 0.4 of a volt?

Yes >> Repair the excessive resistance in the Battery Positive circuit between the Generator and Battery. Perform the POWERTRAIN VERIFICATION TEST. (Refer to 9 - ENGINE - STANDARD PROCEDURE)

No >> Go To 3

***CHECKING CHARGING SYSTEM OPERATION WITH NO DTCS (CONTINUED)**

3. (K125) GEN FIELD SOURCE CIRCUIT OPEN

Ignition on, engine not running.

Record all DTCs and freeze frame data, now erase Codes.

Carefully inspect all connectors for corrosion or spread terminals before continuing.

With the scan tool, actuate the Generator Field Driver.

Measure the voltage of the (K125) Generator Field Source circuit by backprobing the back of Generator Field harness connector.

Is the voltage above 10.0 volts?

Yes >> Go To 4

No >> Repair the (K125) Generator Field Source circuit for an open or short to ground.
Perform the POWERTRAIN VERIFICATION TEST. (Refer to 9 - ENGINE - STANDARD PROCEDURE)

---

4. RESISTANCE IN THE GENERATOR GROUND

Start the engine.

Warm the engine to operating temperature.

CAUTION: Make sure all wires are clear of the engine's moving parts.
Measure the voltage between the Generator case and Battery Negative Post.

Is the voltage above 0.1 of a volt?

Yes >> Repair the excessive resistance in the Generator Ground circuit between the Generator Case and Battery Ground side.
Perform the POWERTRAIN VERIFICATION TEST. (Refer to 9 - ENGINE - STANDARD PROCEDURE)

No >> Go To 5

---

5. GENERATOR FIELD COIL HIGH RESISTANCE

Turn the ignition off.

Disconnect the Generator Field harness connector at back of the Generator.

Measure resistance across the Generator Field Terminals at the Generator.

Is the resistance above 15 ohms?

Yes >> Replace or repair the Generator as necessary.
Perform the POWERTRAIN VERIFICATION TEST. (Refer to 9 - ENGINE - STANDARD PROCEDURE)

No >> Go To 6

***CHECKING CHARGING SYSTEM OPERATION WITH NO DTCS (CONTINUED)**

6. (K20) GEN FIELD CONTROL CIRCUIT OPEN

Disconnect the C3 PCM harness connector.

Measure the resistance of the (K20) Generator Field Driver circuit between the C3 PCM harness connector and the Generator harness connector.

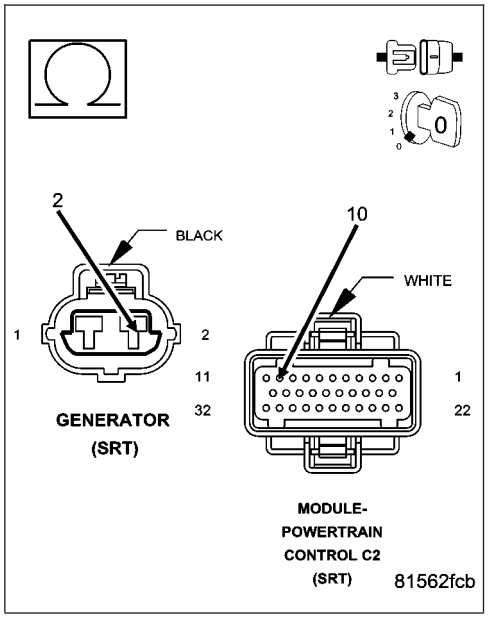

Is the resistance below 5.0 ohms?

Yes >> Go To 7

No >> Repair the open in the (K20) Gen Field Control circuit.
Perform the POWERTRAIN VERIFICATION TEST. (Refer to 9 - ENGINE - STANDARD PROCEDURE)

---

7. PCM

NOTE: Before continuing, check the PCM harness connector terminals for corrosion, damage, or terminal push out. Repair as necessary.
Using the schematics as a guide, inspect the wire harness and connectors. Pay particular attention to all Power and Ground circuits.

If there are no possible causes remaining, view repair.

Repair

Replace and program the Powertrain Control Module per Service Information.
Perform the POWERTRAIN VERIFICATION TEST. (Refer to 9 - ENGINE - STANDARD PROCEDURE)

---

8. GENERATOR BELT CONDITION

Turn the ignition off.

NOTE: Battery condition must be verified prior to this test.
Inspect the Generator Belt tension and condition.

Is the Generator Belt OK?

Yes >> Go To 9

No >> Repair as necessary.
Perform the POWERTRAIN VERIFICATION TEST. (Refer to 9 - ENGINE - STANDARD PROCEDURE)

***CHECKING CHARGING SYSTEM OPERATION WITH NO DTCS (CONTINUED)**

9. ACTIVE DTC SET

Start the engine.
Turn on all accessories.
Raise engine speed to 2000 RPM for 30 seconds then return to idle.
With the scan tool, read DTCs.

Are there any ″Charging System″ Trouble Codes?

Yes >> Refer to DTC list for the related Charging DTCs.
Perform the POWERTRAIN VERIFICATION TEST. (Refer to 9 - ENGINE - STANDARD PROCEDURE)

No >> Go To 10

---

10. WIRE HARNESS INSPECTION

Ignition on, engine not running.
With the scan tool, actuate the Generator Field Driver.
Using a 12-volt test light, backprobe the Generator Field Driver Terminal at the back of the Generator.

NOTE: The test light should blink On and Off every 1.4 seconds.
While monitoring the 12-volt test light, wiggle the Field Terminals back to the PCM and ASD Relay.

Was there any interruption in the normal cycle of the test light?

Yes >> Repair the wire or connector where the wiggling interrupted the voltage cycle.
Perform the POWERTRAIN VERIFICATION TEST. (Refer to 9 - ENGINE - STANDARD PROCEDURE)

No >> Test Complete.

---

*CHECKING RADIATOR FAN OPERATION

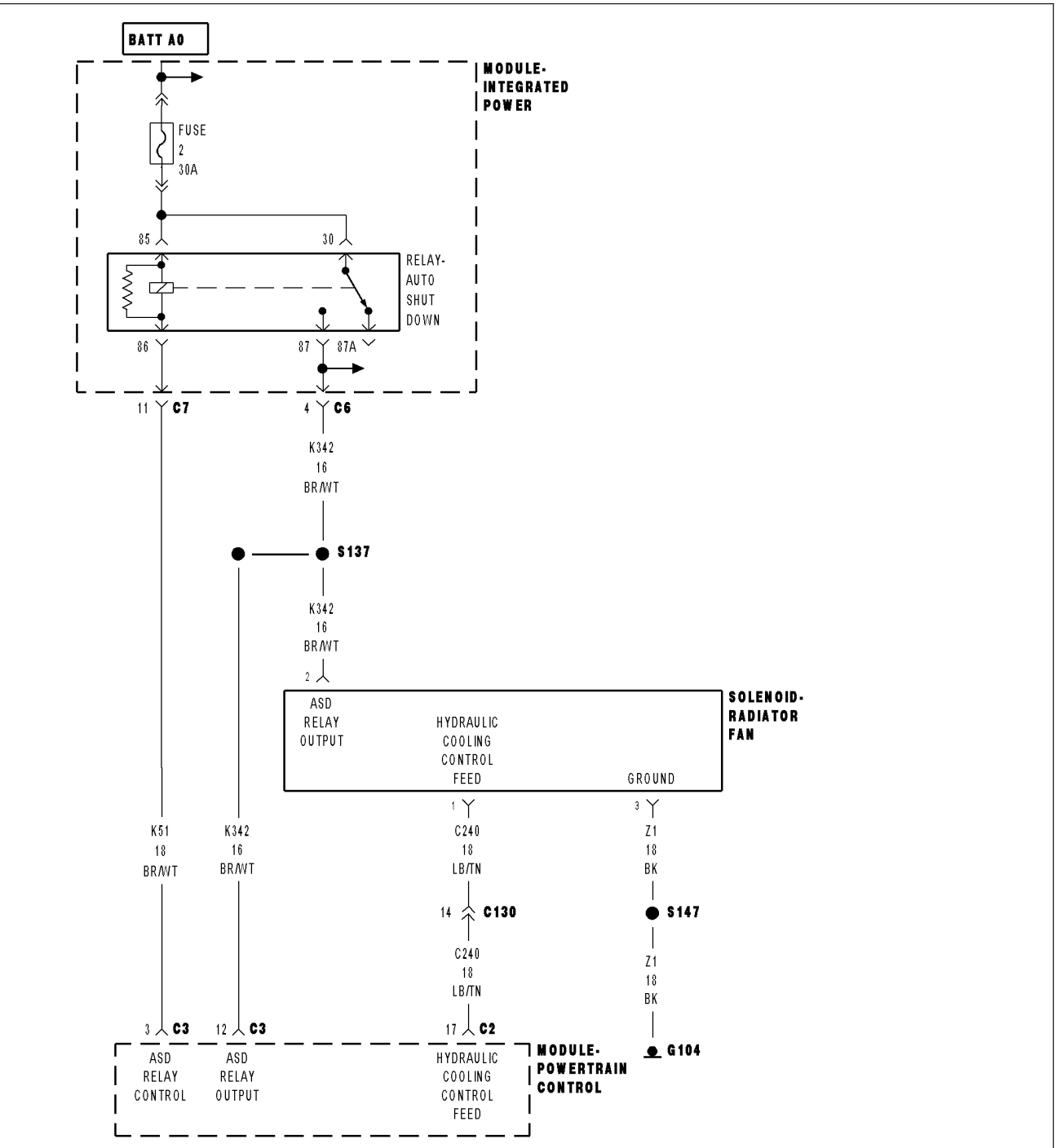

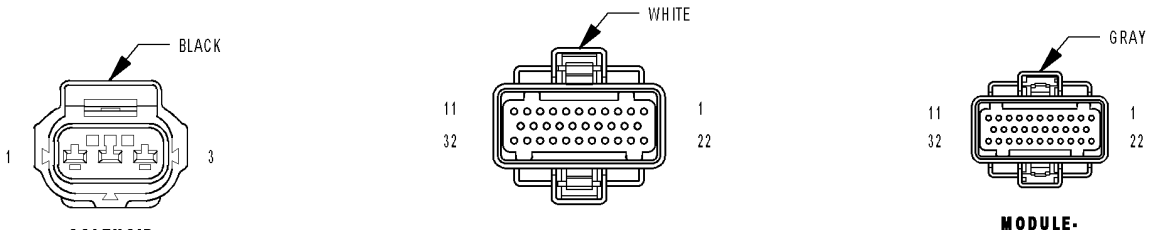

SOLENOID-
RADIATOR FAN
(SRT)

MODULE-
POWERTRAIN
CONTROL C2
(SRT)

MODULE-
POWERTRAIN
CONTROL C3
(SRT)

8156673d

***CHECKING RADIATOR FAN OPERATION (CONTINUED)**

For the Engine circuit diagram (Refer to 9 - ENGINE - SCHEMATICS AND DIAGRAMS).

For a complete wiring diagram **Refer to Section 8W**.

Possible Causes
HARNESS INSPECTION
HYDRAULIC FAN

Always perform the Pre-Diagnostic Troubleshooting procedure before proceeding. (Refer to 9 - ENGINE - DIAGNOSIS AND TESTING)

Diagnostic Test

1. FAN OPERATION

Ignition on, engine not running.

With the scan tool select Engine Test, Systems Test, and Hydraulic Fan Solenoid Test.

Actuate the Hydraulic Fan Solenoid Test.

Does the fan operate properly?

Yes >> Test Complete.

No >> Go To 2

---

2. HARNESS INSPECTION

Turn the ignition off.

Check to see if the fan wire harness is properly connected at the upper right corner of the fan shroud.

Check to see if the fan wire harness is properly connected at the fan solenoid on the fan motor.

Check the harness for continuity from the Hydraulic Fan Relay to the solenoid.

Inspect connector terminals for proper pin fit and corrosion.

Inspect the related fuse and relay.

Were any problems found?

Yes >> Repair any defective wire harness concerns.
Perform the POWERTRAIN VERIFICATION TEST. (Refer to 9 - ENGINE - STANDARD PROCEDURE)

No >> Go To 3

---

3. HYDRAULIC FAN

Turn the ignition off.

Inspect the hydraulic circuit for leaks and repair as necessary.

Were any problems found?

Yes >> Repair the Hydraulic leaks and/or replace the Hydraulic Fan assembly.
Perform the POWERTRAIN VERIFICATION TEST. (Refer to 9 - ENGINE - STANDARD PROCEDURE)

No >> Test Complete.

---

*CHECKING THE PCM POWER AND GROUNDS

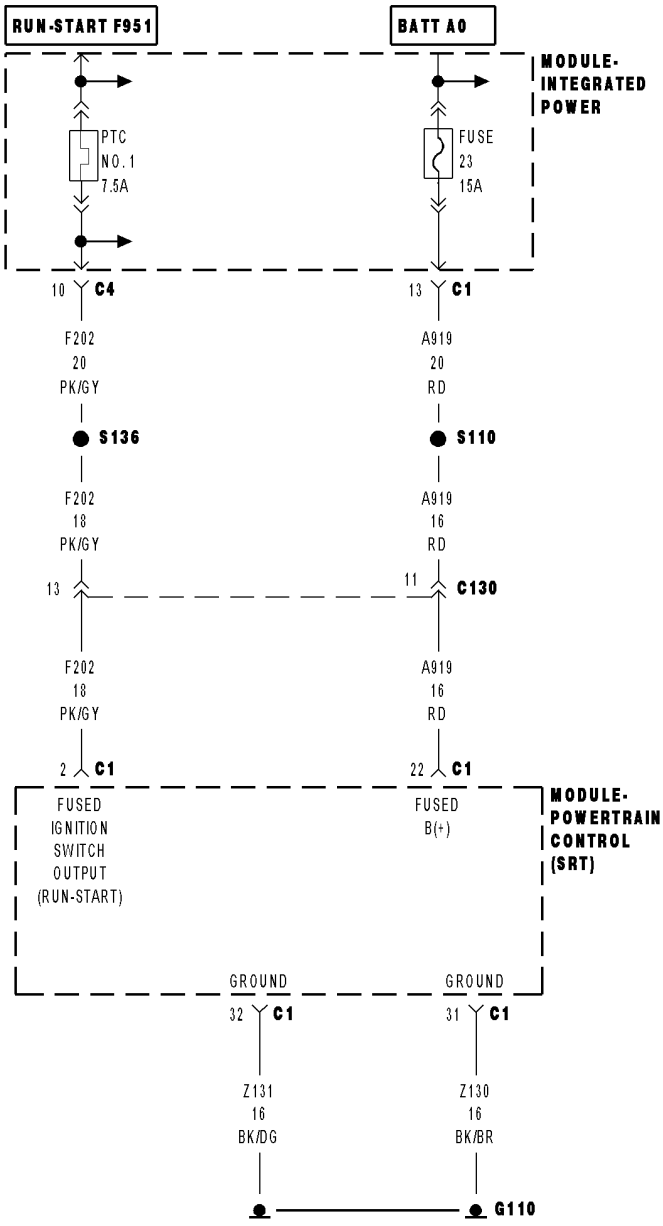

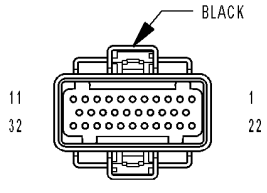

MODULE-
POWERTRAIN
CONTROL C1
(SRT)

8156680f

***CHECKING THE PCM POWER AND GROUNDS (CONTINUED)**

For the Engine circuit diagram (Refer to 9 - ENGINE - SCHEMATICS AND DIAGRAMS).

For a complete wiring diagram **Refer to Section 8W**.

Possible Causes
(A919) PCM FUSED B+ CIRCUIT
(F202) PCM FUSED IGNITION SWITCH OUTPUT CIRCUIT
(Z130) AND (Z131) PCM GROUND CIRCUITS

Always perform the Pre-Diagnostic Troubleshooting procedure before proceeding. (Refer to 9 - ENGINE - DIAGNOSIS AND TESTING)

Diagnostic Test

1. (A919) PCM FUSED B+ CIRCUIT

Turn the ignition off.

Disconnect the PCM harness connectors.

Using a 12-volt test light connected to ground, probe the (A919) PCM Fused B+ circuit in the C1 PCM harness connector.

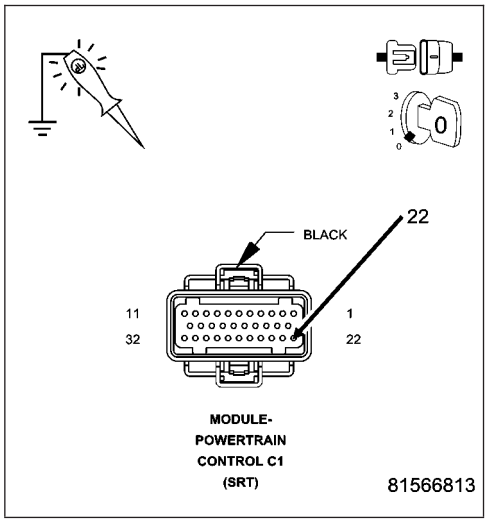

Does the test light illuminate brightly?

Yes >> Go To 2

No >> Repair the open in the (A1919) Fused B+ circuit. Inspect the related fuse and repair as necessary.

Perform the POWERTRAIN VERIFICATION TEST. (Refer to 9 - ENGINE - STANDARD PROCEDURE)

2. (F202) PCM FUSED IGNITION SWITCH OUTPUT CIRCUIT

Ignition on, engine not running.

Using a 12-volt test light connected to ground, probe the (F202) PCM Fused Ignition Switch Output circuit in the C1 PCM harness connector.

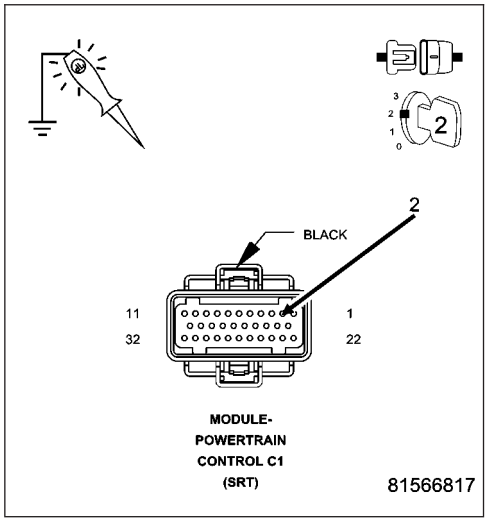

Does the test light illuminate brightly?

Yes >> Go To 3

No >> Repair the open in the (F202) Fused Ignition Switch Output circuit.

Perform the POWERTRAIN VERIFICATION TEST. (Refer to 9 - ENGINE - STANDARD PROCEDURE)

***CHECKING THE PCM POWER AND GROUNDS (CONTINUED)**

3. (Z130) AND (Z131) PCM GROUND CIRCUITS

Turn the ignition off.

Using a 12-volt test light connected to battery voltage, probe the (Z130) and (Z131) PCM ground circuits in the C1 PCM harness connector.

Does the test light illuminate brightly?

Yes >> Test Complete.

No >> Repair the open in the (Z130) and (Z131) PCM ground circuits.

Perform the POWERTRAIN VERIFICATION TEST. (Refer to 9 - ENGINE - STANDARD PROCEDURE)

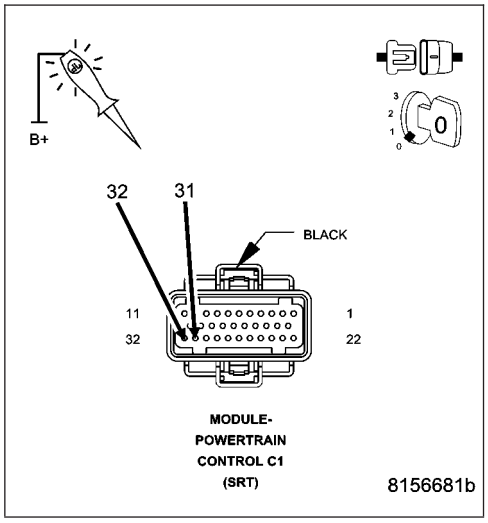

STANDARD PROCEDURE

POWERTRAIN VERIFICATION TEST

For the Engine circuit diagram (Refer to 9 - ENGINE - SCHEMATICS AND DIAGRAMS)

For a complete wiring diagram **Refer to Section 8W**.

Diagnostic Test

1. SELECTING THE PROPER VERIFICATION TEST

The following verification test are for different repairs. Select the appropriate Verification test for the repair that has been completed.

Speed Control repair
Go To 2

Charging System repair
Go To 3

NVLD System repair
Go To 4

All other repairs
Go To 5

POWERTRAIN VERIFICATION TEST (CONTINUED)

2. POWERTRAIN VERIFICATION TEST 1

NOTE: If this vehicle is equipped with an Electronic Throttle Control system, and the APP Sensors, PCM, or Throttle Body Assembly have been replaced, use the scan tool to perform the ETC RELEARN function.

NOTE: 2. After completing the Powertrain Verification Test the Transmission Verification Test must be performed.

NOTE: 3. If the PCM has been replaced and the correct VIN and mileage have not been programmed, a DTC will set in the ABS Module, Airbag Module and the SKIM/SKREEM.

NOTE: 4. If the vehicle is equipped with a Sentry Key Remote Entry, Secret Key data must be updated. Refer to the Service Information for the PCM, SKIM/SKREEM and the Transponder (ignition key) for programming information. Using the scan tool, program the Secret Key information into the PCM using the PCM replaced function under the WCM menu.

5. Inspect the vehicle to make sure that all engine components are properly installed and connected.

6. Connect the scan tool to the data link connector and erase all codes.

7. Turn the speed control ON (if equipped, cruise light will be on).

8. Depress and release the SET Switch when the vehicle speed is greater than 35 MPH. The speed control should engage and hold the selected speed.

9. Press and hold the RESUME/ACCEL Switch. The vehicle speed should increase by at least 2 MPH.

10. Press and hold the COAST switch. The vehicle speed should decrease.

11. Using caution, press and release the brake pedal. The speed control should disengage.

12. Bring the vehicle speed back up to 35 MPH.

13. Press the RESUME/ACCEL switch. The speed control should resume the previously set speed.

14. Hold down the SET switch. The vehicle should decelerate.

15. Make sure vehicle speed is greater than 35 mph and release the SET Switch. The vehicle should adjust and set a new vehicle speed.

16. Press and release the CANCEL switch. The speed control should disengage.

17. Bring the vehicle speed back up above 35 mph and engage speed control.

18. Turn the Speed Control Off. (Cruise light will be off). The speed control should disengage.

NOTE: OVERSHOOT/UNDERSHOOT FOLLOWING SPEED CONTROL SET.

20. If the vehicle operator repeatedly presses and releases the SET button with their foot off of the accelerator (referred to as ″lift foot set″), the vehicle may accelerate and exceed the desired set speed by up to 5 mph (8 km/h).

21. It may also decelerate to less than the desired set speed, before finally achieving the desired set speed.

22. The Speed Control System has an adaptive strategy that compensates for vehicle-to-vehicle variations in speed control cable lengths.

23. When the speed control is set with the vehicles operators foot off of the accelerator pedal, the speed control thinks there is excessive speed control cable slack and adapts accordingly.

24. If the ″lift foot sets″ are continually used, a speed control overshoot/undershoot condition will develop.

25. To ″unlearn″ the overshoot/undershoot condition, the vehicle operator has to press and release the set button while maintaining the desired set speed using the accelerator pedal (not decelerating or accelerating).

26. Then turn the cruise control switch to the OFF position (or press the CANCEL button if equipped) after waiting 10 seconds.

27. This procedure must be performed approximately 10-15 times to completely unlearn the overshoot/undershoot condition.

Did the Speed Control pass the above test?

Yes >> Repair is complete.

No >> Check for any related Technical Service Bulletins and/or refer to the appropriate Diagnostic Procedure.

POWERTRAIN VERIFICATION TEST (CONTINUED)

3. POWERTRAIN VERIFICATION TEST 2

1. If this vehicle is equipped with an Electronic Throttle Control system, and the APP Sensors, PCM, or Throttle Body Assembly has been replaced use a scan tool to perform the ETC RELEARN function.

NOTE: 2. After completing the Powertrain Verification Test the Transmission Verification Test must be performed.

NOTE: 3. If the PCM has been replaced and the correct VIN and mileage have not been programmed, a DTC will set in the ABS Module, Airbag Module and the SKIM/SKREEM.

NOTE: 4. If the vehicle is equipped with a Sentry Key Remote Entry, Secret Key data must be updated. Refer to the Service Information for the PCM, SKIM/SKREEM and the Transponder (ignition key) for programming information. Using the scan tool, program the Secret Key information into the PCM using the PCM replaced function under the WCM menu.

5. Inspect the vehicle to make sure that all components related to the repair are properly installed and connected.
6. With the scan tool, clear DTCs.
7. Perform generator output test. Refer to the appropriate service information as necessary.
8. Start the engine and set engine speed to 2000 RPM for at least thirty seconds.
9. Cycle the ignition key off and on.
10. With the scan tool, read the DTCs.

Are any DTCs or symptoms remaining?

Yes >> Check for any Technical Service Bulletins and/or refer to the appropriate Diagnostic Procedure.

No >> Repair is complete.

---

4. POWERTRAIN VERIFICATION TEST 3

1. Install the Miller Tool #8404 Evaporative Emission Leak Detector (EELD) according to the instructions in the previous DTC table.
2. Set the smoke/air control switch to AIR.
3. Insert the tester's AIR supply tip (clear hose) into the appropriate calibration orifice on the tester's control panel (based on DTC leak size).
4. Press the remote smoke/air start button.
5. Position the red flag on the air flow meter so it is aligned with the indicator ball.
6. When the calibration is complete, release the remote button. The EELD flow meter is now calibrated in liters per minute to the size of leak indicated by the DTC set in the PCM.
7. Install the service port adapter #8404-14 on the vehicle's service port.
8. Connect the Air supply hose from the EELD to the vehicle.
9. Press the remote button to activate AIR flow.

NOTE: 10. Larger volume fuel tanks, lower fuel levels or if the vehicle is equipped with a Flow Management Valve may indicate high flow and will require 4 to 5 minutes to fill.

11. Compare the flow meter indicator ball reading to the red flag.
12. ABOVE the red flag indicates a leak present.
13. BELOW the red flag indicates a sealed system.

NOTE: If this vehicle is equipped with an Electronic Throttle Control system, and the APP Sensors, PCM, or Throttle Body Assembly have been replaced, use the scan tool to perform the ETC RELEARN function.

15. If the indicator ball shows a leak present, perform the smoke test indicated in the previous test and identify the leak and repair. Perform this verification test when the repair is complete.

Did the indicator ball indicate the a leak is present?

Yes >> Repeat the DTC test to identify the leak and repair.

No >> Repair is complete.

POWERTRAIN VERIFICATION TEST (CONTINUED)

5. POWERTRAIN VERIFICATION TEST 4

NOTE: 1. After completing the Powertrain Verification Test the Transmission Verification Test must be performed.

NOTE: 2. If the PCM has been replaced and the correct VIN and mileage have not been programmed, a DTC will set in the ABS Module, Airbag Module and the SKIM/SKREEM.

NOTE: 3. If the vehicle is equipped with a Sentry Key Remote Entry, Secret Key data must be updated. Refer to the Service Information for the PCM, SKIM/SKREEM and the Transponder (ignition key) for programming information. Using the scan tool, program the Secret Key information into the PCM using the PCM replaced function under the WCM menu.

NOTE: 4. If this vehicle is equipped with an Electronic Throttle Control system, and the APP Sensors, PCM, or Throttle Body Assembly have been replaced, use the scan tool to perform the ETC RELEARN function.

NOTE: 5. When replacing an O2 Sensor, the PCM RAM memory must be cleared, either by disconnecting the PCM C1 connector or momentarily disconnecting the Battery negative terminal.

6. The NGC learns the characteristics of each O2 heater element and these old values should be cleared when installing a new O2 sensor. The customer may experience driveability issues if this is not performed.

7. Inspect the vehicle to make sure that all engine components are properly installed and connected. Reassemble and reconnect components as necessary.

8. Connect the scan tool to the data link connector.

9. Make sure the fuel tank has at least a quarter tank of fuel. Turn off all accessories.

10. If the Catalyst was replaced, with the scan tool go to the Miscellaneous Menu Option ″Catalyst Replaced″ and press enter.

11. If a Comprehensive Component DTC was repaired, perform steps 12 - 14. If a Major OBDII Monitor DTC was repaired skip those steps and continue verification.

12. After the ignition has been off for at least 10 seconds, restart the vehicle and run 2 minutes.

13. With the scan tool, monitor the appropriate pre-test enabling conditions until all conditions have been met. Once the conditions have been met, switch screen to the appropriate OBDII monitor, (Audible beeps when the monitor is running).

14. If the repaired OBDII trouble code has reset or was seen in the monitor while on the road test, the repair is not complete. Check for any related technical service bulletins or flash updates and return to Engine Electrical Diagnostic List.

15. If the conditions cannot be duplicated, erase all DTCs with the Scan tool.

16. If another DTC has set, return to the Engine Electrical Diagnostic List and follow the path specified for that DTC.

Did the OBDII Monitor run successfully and has the Good Trip Counter changed to one or more?

Yes >> Repair is complete.

No >> Check for any related Technical Service Bulletins and/or refer to the appropriate Diagnostic Procedure.

ENGINE - 3.7L - SERVICE INFORMATION

TABLE OF CONTENTS

page

ENGINE - 3.7L - SERVICE INFORMATION
DESCRIPTION 2039
DIAGNOSIS AND TESTING
DIAGNOSIS AND TESTING - ENGINE DIAGNOSIS - INTRODUCTION 2040
DIAGNOSIS AND TESTING - ENGINE DIAGNOSIS - PERFORMANCE 2040
DIAGNOSIS AND TESTING - ENGINE DIAGNOSIS - MECHANICAL 2042
DIAGNOSIS AND TESTING - ENGINE DIAGNOSIS - LUBRICATION 2043
DIAGNOSIS AND TESTING - CYLINDER COMPRESSION PRESSURE 2044
DIAGNOSIS AND TESTING - CYLINDER COMBUSTION PRESSURE LEAKAGE 2044
STANDARD PROCEDURE
STANDARD PROCEDURE - REPAIR DAMAGED OR WORN THREADS 2045
STANDARD PROCEDURE - FORM-IN-PLACE GASKETS AND SEALERS 2045
STANDARD PROCEDURE - ENGINE GASKET SURFACE PREPARATION 2046
REMOVAL 2047
INSTALLATION 2051
SPECIFICATIONS
SPECIFICATIONS - 3.7L ENGINE 2055
TORQUE 2060
SPECIAL TOOLS 2061
ELEMENT - AIR CLEANER
REMOVAL 2066
INSTALLATION 2067
CYLINDER HEAD - LEFT
DIAGNOSIS AND TESTING - CYLINDER HEAD GASKET 2067
REMOVAL 2068
INSTALLATION 2070
CAMSHAFT
DESCRIPTION 2072
REMOVAL 2072
INSTALLATION 2074
COVER - CYLINDER HEAD
DESCRIPTION 2075
REMOVAL 2075
INSTALLATION 2076
VALVES & SEATS - INTAKE/EXHAUST
DESCRIPTION 2076
STANDARD PROCEDURE - REFACING 2077
REMOVAL 2077
INSTALLATION 2078
ROCKER ARM - VALVE
DESCRIPTION 2079
REMOVAL 2079
INSTALLATION 2080
SEALS - VALVE GUIDE
DESCRIPTION 2080
SPRINGS VALVE
DESCRIPTION 2080
REMOVAL 2080
INSTALLATION 2081
CYLINDER HEAD - RIGHT
DIAGNOSIS AND TESTING - HYDRAULIC LASH ADJUSTER 2081
REMOVAL 2082
INSTALLATION 2084
CAMSHAFT
DESCRIPTION 2087
REMOVAL 2088
INSTALLATION 2091
COVER - CYLINDER HEAD
REMOVAL 2092
INSTALLATION 2093
ROCKER ARM - VALVE
DESCRIPTION 2093
REMOVAL 2094
SEALS - VALVE GUIDE
DESCRIPTION 2094
SPRINGS - VALVE
DESCRIPTION 2094
REMOVAL 2094
INSTALLATION 2095
ENGINE BLOCK
DESCRIPTION 2095
STANDARD PROCEDURE - CYLINDER BORE HONING 2096
CLEANING 2096
INSPECTION 2097
CRANKSHAFT
DESCRIPTION 2098
REMOVAL 2099
INSPECTION 2100
INSTALLATION 2100
BEARINGS - CRANKSHAFT MAIN
STANDARD PROCEDURE
MAIN BEARING FITTING 2102
SEAL - CRANKSHAFT OIL - FRONT
REMOVAL 2104
INSTALLATION 2105
SEAL - CRANKSHAFT OIL - REAR
DIAGNOSIS AND TESTING - REAR SEAL AREA LEAKS 2105
REMOVAL 2106
INSTALLATION 2106

FLEX PLATE
REMOVAL 2107
INSTALLATION 2108
PISTON & CONNECTING ROD
DESCRIPTION 2108
STANDARD PROCEDURE
CONNECTING ROD BEARING FITTING . . . 2109
STANDARD PROCEDURE - PISTON FITTING 2112
REMOVAL 2112
CLEANING 2113
INSPECTION 2113
INSTALLATION 2114
RINGS - PISTON
STANDARD PROCEDURE - PISTON RING FITTING 2115
DAMPER - CRANKSHAFT
REMOVAL 2118
INSTALLATION 2119
COVER - STRUCTURAL
DESCRIPTION 2119
OPERATION 2119
REMOVAL 2120
INSTALLATION 2120
MOUNT - FRONT
REMOVAL 2120
INSTALLATION 2122
MOUNT - REAR
REMOVAL 2124
INSTALLATION 2124
LUBRICATION
DESCRIPTION 2125
OPERATION 2125
DIAGNOSIS AND TESTING
DIAGNOSIS AND TESTING - ENGINE OIL LEAK 2127
DIAGNOSIS AND TESTING - CHECKING ENGINE OIL PRESSURE 2128
DIAGNOSIS AND TESTING - REAR SEAL AREA LEAKS 2128
PAN -ENGINE OIL
DESCRIPTION 2129
REMOVAL 2130
CLEANING 2131
INSPECTION 2131
INSTALLATION 2131
SWITCH - OIL PRESSURE
DESCRIPTION 2132
OPERATION 2132
REMOVAL 2133
INSTALLATION 2133
PUMP - ENGINE OIL
REMOVAL 2133
DISASSEMBLY 2133
INSPECTION 2134
ASSEMBLY 2136
INSTALLATION 2136
FILTER - ENGINE OIL
REMOVAL 2137
INSTALLATION 2137
OIL
STANDARD PROCEDURE - ENGINE OIL SERVICE 2138
MANIFOLD - INTAKE
DESCRIPTION 2139
DIAGNOSIS AND TESTING - INTAKE MANIFOLD LEAKS 2139
REMOVAL 2140
INSTALLATION 2140
MANIFOLD - EXHAUST
DESCRIPTION 2141
REMOVAL 2142
INSTALLATION 2143
VALVE TIMING
DESCRIPTION 2144
OPERATION 2144
STANDARD PROCEDURE
MEASURING TIMING CHAIN WEAR 2145
SERVICE PROCEDURE - TIMING VERIFICATION 2146
SHAFT - BALANCE
REMOVAL 2149
INSTALLATION 2150
SHAFT - IDLER
REMOVAL 2150
INSTALLATION 2151
COVER - TIMING
REMOVAL 2151
INSTALLATION 2152
TIMING CHAIN & SPROCKETS
REMOVAL 2153
INSPECTION 2156
INSTALLATION 2156

ENGINE - 3.7L - SERVICE INFORMATION

DESCRIPTION

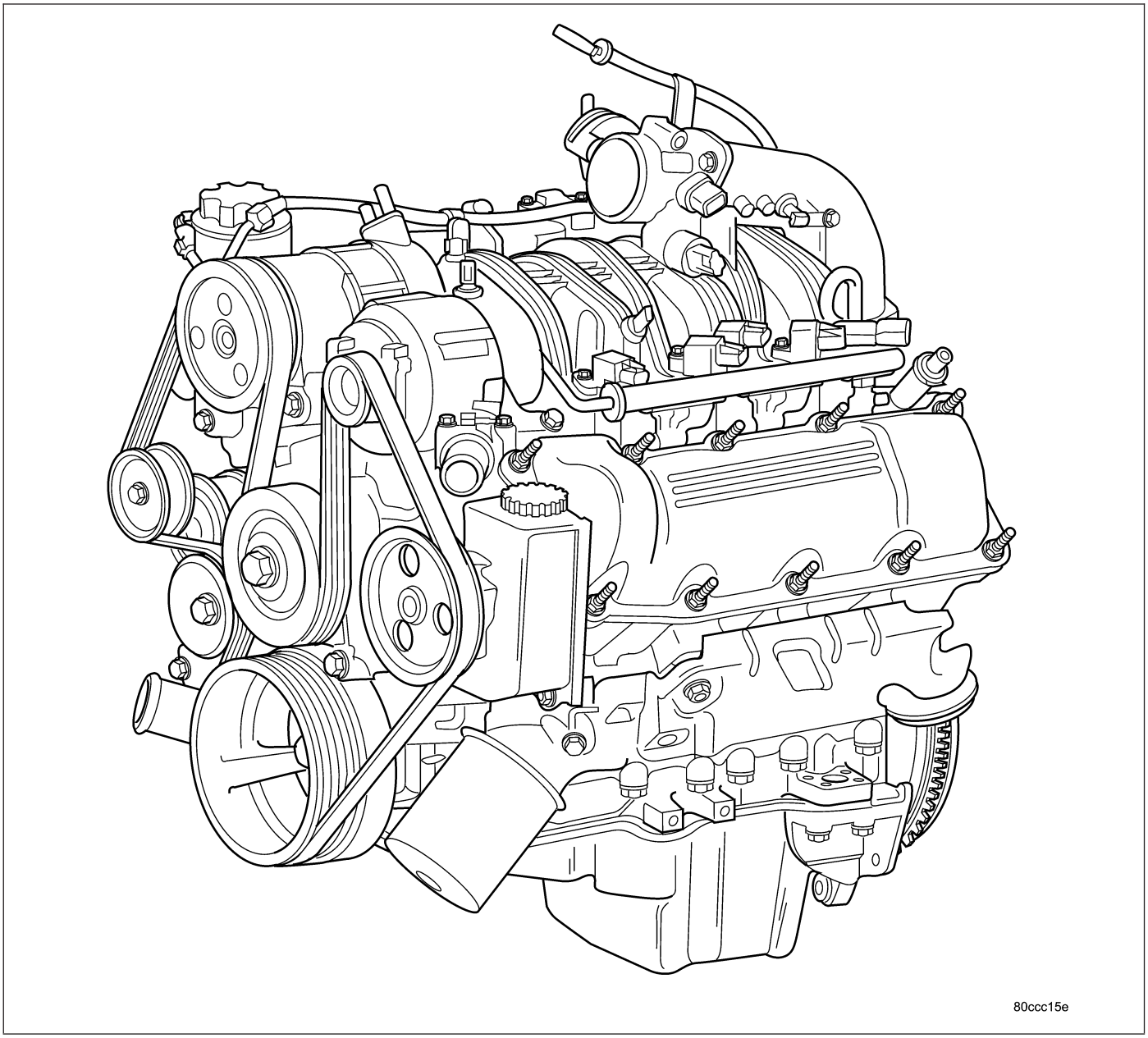

The 3.7 liter (226 CID) six-cylinder engine is an 90° single overhead camshaft engine. The cast iron cylinder block is made up of two different components; the first component is the cylinder bore and upper block, the second component is the bedplate that comprises the lower portion of the cylinder block and houses the lower half of the crankshaft main bearings. The cylinders are numbered from front to rear with the left bank being numbered 1,3, and 5 and the right bank being numbered 2,4, and 6. The firing order is 1–6–5–4–3–2. The engine serial number is located at the right front side of the engine block.

DIAGNOSIS AND TESTING

DIAGNOSIS AND TESTING - ENGINE DIAGNOSIS - INTRODUCTION

Engine diagnosis is helpful in determining the causes of malfunctions not detected and remedied by routine maintenance.

These malfunctions may be classified as either performance (e.g., engine idles rough and stalls) or mechanical (e.g., a strange noise).

(Refer to 9 - ENGINE - DIAGNOSIS AND TESTING) - PERFORMANCE and (Refer to 9 - ENGINE - DIAGNOSIS AND TESTING)—MECHANICAL for possible causes and corrections of malfunctions. (Refer to 14 - FUEL SYSTEM/FUEL DELIVERY - DIAGNOSIS AND TESTING) and (Refer to 14 - FUEL SYSTEM/FUEL INJECTION - DIAGNOSIS AND TESTING) for the fuel system diagnosis.

Additional tests and diagnostic procedures may be necessary for specific engine malfunctions that can not be isolated with the Service Diagnosis charts. Information concerning additional tests and diagnosis is provided within the following diagnosis:

- Cylinder Compression Pressure Test (Refer to 9 - ENGINE - DIAGNOSIS AND TESTING).
- Cylinder Combustion Pressure Leakage Test (Refer to 9 - ENGINE - DIAGNOSIS AND TESTING).
- Engine Cylinder Head Gasket Failure Diagnosis (Refer to 9 - ENGINE/CYLINDER HEAD - DIAGNOSIS AND TESTING).
- Intake Manifold Leakage Diagnosis (Refer to 9 - ENGINE/MANIFOLDS/INTAKE MANIFOLD - DIAGNOSIS AND TESTING).

DIAGNOSIS AND TESTING - ENGINE DIAGNOSIS - PERFORMANCE

CONDITION	POSSIBLE CAUSE	CORRECTION
ENGINE WILL NOT START	1. Weak battery	1. Charge or replace as necessary.
	2. Corroded or loose battery connections.	2. Clean and tighten battery connections. Apply a coat of light mineral grease to the terminals.
	3. Faulty starter.	3. (Refer to 8 - ELECTRICAL/STARTING - DIAGNOSIS AND TESTING).
	4. Faulty coil or control unit.	4. (Refer to 8 - ELECTRICAL/IGNITION CONTROL/IGNITION COIL - REMOVAL).
	5. Incorrect spark plug gap.	5. (Refer to 8 - ELECTRICAL/IGNITION CONTROL/SPARK PLUG - CLEANING).
	6. Incorrect right bank cam timing.	6. Refer to engine timing in this section.
	7. Dirt or water in fuel system.	7. Clean system and replace fuel filter.
	8.Faulty fuel pump, relay or wiring.	8.Repair or replace as necessary.
	9. Faulty cam or crank sensor	9. Refer to Ignition system.
ENGINE STALLS OR ROUGH IDLE	1. Vacuum leak.	1. Inspect intake manifold and vacuum hoses, repair or replace as necessary.
	2. Faulty crank position sensor	2. Replace crank position sensor.
	3. Faulty coil.	3. (Refer to 8 - ELECTRICAL/IGNITION CONTROL/IGNITION COIL - REMOVAL).

CONDITION	POSSIBLE CAUSE	CORRECTION
	4. Incorrect cam timing.	4. (Refer to 9 - ENGINE/VALVE TIMING - STANDARD PROCEDURE).
1. ENGINE LOSS OF POWER	1. Dirty or incorrectly gapped spark plugs.	1. (Refer to 8 - ELECTRICAL/ IGNITION CONTROL/SPARK PLUG - CLEANING).
	2. Dirt or water in fuel system.	2. Clean system and replace fuel filter.
	3. Faulty fuel pump.	3. (Refer to 14 - FUEL SYSTEM/ FUEL DELIVERY/FUEL PUMP - DIAGNOSIS AND TESTING).
	4. Blown cylinder head gasket.	4. Replace cylinder head gasket.
	5. Low compression.	5. (Refer to 9 - ENGINE - DIAGNOSIS AND TESTING), repair as necessary.
	6. Burned, warped or pitted valves.	6. Replace as necessary.
	7. Plugged or restricted exhaust system.	7. Inspect and replace as necessary.
	8. Faulty coil.	8. (Refer to 8 - ELECTRICAL/ IGNITION CONTROL/IGNITION COIL - REMOVAL).
	9. Incorrect cam timing.	9. Refer to Engine TIming in this section.
1. ENGINE MISSES ON ACCELERATION	1. Spark plugs dirty or incorrectly gapped.	1. (Refer to 8 - ELECTRICAL/ IGNITION CONTROL/SPARK PLUG - CLEANING).
	2. Dirt in fuel system.	2. Clean fuel system.
	3. Burned, warped or pitted valves.	3. Replcae as necessary.
	4. Faulty coil.	4. (Refer to 8 - ELECTRICAL/ IGNITION CONTROL/IGNITION COIL - REMOVAL).
1. ENGINE MISSES AT HIGH SPEED	1. Spark plugs dirty or incorrectly gapped.	1. (Refer to 8 - ELECTRICAL/ IGNITION CONTROL/SPARK PLUG - CLEANING).
	2. Faulty coil.	2. (Refer to 8 - ELECTRICAL/ IGNITION CONTROL/IGNITION COIL - REMOVAL).
	3. Dirt or water in fuel system.	3. Clean system and replace fuel filter.

DIAGNOSIS AND TESTING - ENGINE DIAGNOSIS - MECHANICAL

CONDITION	POSSIBLE CAUSES	CORRECTIONS
NOISY VALVES	1. High or low oil level in crankcase.	1. (Refer to LUBRICATION & MAINTENANCE - SPECIFICATIONS)
	2. Thin or diluted oil.	2. Change oil and filter.
	3. Low oil pressure.	3. Check oil pump, if Ok, check rod and main bearings for excessive wear.
	4. Dirt in lash adjusters.	4. Replace as necessary.
	5. Worn rocker arms.	5. Replace as necessary.
	6. Worn lash adjusters	6. Replace as necessary.
	7. Worn valve guides.	7. (Refer to 9 - ENGINE/CYLINDER HEAD/INTAKE/EXHAUST VALVES & SEATS - STANDARD PROCEDURE)
	8. Excessive runout of valve seats on valve faces.	8. (Refer to 9 - ENGINE/CYLINDER HEAD/INTAKE/EXHAUST VALVES & SEATS - STANDARD PROCEDURE)
CONNECTING ROD NOISE	1. Insufficient oil supply.	1. (Refer to LUBRICATION & MAINTENANCE - SPECIFICATIONS)
	2. Low oil pressure.	2. Check oil pump, if Ok, check rod and main bearings for excessive wear.
	3. Thin or diluted oil.	3. Change oil and filter.
	4. Excessive bearing clearance.	4. Replace as necessary.
	5. Connecting rod journal out-of-round.	5. Service or replace crankshaft.
	6. Misaligned connecting rods.	6. Replace bent connecting rods.
MAIN BEARING NOISE	1. Insufficient oil supply.	1. (Refer to LUBRICATION & MAINTENANCE - SPECIFICATIONS)
	2. Low oil pressure.	2. Check oil pump, if Ok, check rod and main bearings for excessive wear.
	3. Thin or diluted oil.	3. Change oil and filter.
	4. Excessive bearing clearance.	4. Replace as necessary.
	5. Excessive end play.	5. Check thrust washers for wear.
	6. Crankshaft journal out-of round.	6. Service or replace crankshaft.
	7. Loose flywheel or torque converter.	7. Tighten to correct torque

DIAGNOSIS AND TESTING - ENGINE DIAGNOSIS - LUBRICATION

CONDITION	POSSIBLE CAUSES	CORRECTION
OIL LEAKS	1. Gaskets and O-Rings.	1.
	(a) Misaligned or damaged.	(a) Replace as necessary.
	(b) Loose fasteners, broken or porous metal parts.	(b) Tighten fasteners, Repair or replace metal parts.
	2. Crankshaft rear seal	2. Replace as necessary (Refer to 9 - ENGINE/ENGINE BLOCK/ CRANKSHAFT OIL SEAL - REAR - REMOVAL).
	3. Crankshaft seal flange. Scratched, nicked or grooved.	3. Polish or replace crankshaft.
	4. Oil pan flange cracked.	4. Replace oil pan (Refer to 9 - ENGINE/LUBRICATION/OIL PAN - REMOVAL).
	5. Timing chain cover seal, damaged or misaligned.	5. Replace seal (Refer to 9 - ENGINE/ENGINE BLOCK/ CRANKSHAFT OIL SEAL - FRONT - REMOVAL).
	6. Scratched or damaged vibration damper hub.	6. Polish or replace damper.
OIL PRESSURE DROP	1. Low oil level.	1. Check and correct oil level.
	2. Faulty oil pressure sending unit.	2. Replace sending unit (Refer to 9 - ENGINE/LUBRICATION/OIL PRESSURE SENSOR/SWITCH - REMOVAL).
	3. Low oil pressure.	3. Check oil pump and bearing clearance.
	4. Clogged oil filter.	4. Replace oil filter (Refer to 9 - ENGINE/LUBRICATION/OIL FILTER - REMOVAL).
	5. Worn oil pump.	5. Replace oil pump (Refer to 9 - ENGINE/LUBRICATION/OIL PUMP - REMOVAL).
	6. Thin or diluted oil.	6. Change oil and filter.
	7. Excessive bearing clearance.	7. Replace as necessary.
	8. Oil pump relief valve stuck.	8. Replace oil pump (Refer to 9 - ENGINE/LUBRICATION/OIL PUMP - REMOVAL).
	9. Oil pick up tube loose, damaged or clogged.	9. Replace as necessary.

CONDITION	POSSIBLE CAUSES	CORRECTION
OIL PUMPING AT RINGS; SPARK PLUGS FOULING	1. Worn or damaged rings.	1. Hone cylinder bores and replace rings.
	2. Carbon in oil ring slots.	2. Replace rings (Refer to 9 - ENGINE/ENGINE BLOCK/PISTON RINGS - STANDARD PROCEDURE).
	3. Incorrect ring size installed.	3. Replace rings (Refer to 9 - ENGINE/ENGINE BLOCK/PISTON RINGS - STANDARD PROCEDURE).
	4. Worn valve guides.	4. Ream guides and replace valves (Refer to 9 - ENGINE/CYLINDER HEAD/INTAKE/EXHAUST VALVES & SEATS - STANDARD PROCEDURE).
	5. Leaking valve guide seals.	5. Replace valve guide seals.

DIAGNOSIS AND TESTING - CYLINDER COMPRESSION PRESSURE

The results of a cylinder compression pressure test can be utilized to diagnose several engine malfunctions.

Ensure the battery is completely charged and the engine starter motor is in good operating condition. Otherwise the indicated compression pressures may not be valid for diagnosis purposes.

1. Clean the spark plug recesses with compressed air.
2. Remove the spark plugs.
3. Disable the fuel system (Refer to 14 - FUEL SYSTEM/FUEL DELIVERY - DESCRIPTION).
4. Remove the ASD relay (Refer to 8 - ELECTRICAL/IGNITION CONTROL/AUTO SHUT DOWN RELAY - REMOVAL).
5. Insert a compression pressure gauge and rotate the engine with the engine starter motor for three revolutions.
6. Record the compression pressure on the 3rd revolution. Continue the test for the remaining cylinders.
7. (Refer to 9 - ENGINE - SPECIFICATIONS) for the correct engine compression pressures.

DIAGNOSIS AND TESTING - CYLINDER COMBUSTION PRESSURE LEAKAGE

The combustion pressure leakage test provides an accurate means for determining engine condition.

Combustion pressure leakage testing will detect:

- Exhaust and intake valve leaks (improper seating).
- Leaks between adjacent cylinders or into water jacket.
- Any causes for combustion/compression pressure loss.

1. Check the coolant level and fill as required. DO NOT install the radiator cap.
2. Start and operate the engine until it attains normal operating temperature, then turn the engine OFF.
3. Remove the spark plugs.
4. Remove the oil filler cap.
5. Remove the air cleaner hose.
6. Calibrate the tester according to the manufacturer's instructions. The shop air source for testing should maintain 483 kPa (70 psi) minimum, 1,379 kPa (200 psi) maximum and 552 kPa (80 psi) recommended.
7. Perform the test procedures on each cylinder according to the tester manufacturer's instructions. Set piston of cylinder to be tested at TDC compression,While testing, listen for pressurized air escaping through the throttle body, tailpipe and oil filler cap opening. Check for bubbles in the radiator coolant.

All gauge pressure indications should be equal, with no more than 25% leakage.

FOR EXAMPLE: At 552 kPa (80 psi) input pressure, a minimum of 414 kPa (60 psi) should be maintained in the cylinder.

Refer to CYLINDER COMBUSTION PRESSURE LEAKAGE DIAGNOSIS CHART .

CYLINDER COMBUSTION PRESSURE LEAKAGE DIAGNOSIS CHART

CONDITION	POSSIBLE CAUSE	CORRECTION
AIR ESCAPES THROUGH THROTTLE BODY	Intake valve bent, burnt, or not seated properly	Inspect valve and valve seat. Reface or replace, as necessary. Inspect valve springs. Replace as necessary.
AIR ESCAPES THROUGH TAILPIPE	Exhaust valve bent, burnt, or not seated properly	Inspect valve and valve seat. Reface or replace, as necessary. Inspect valve springs. Replace as necessary.
AIR ESCAPES THROUGH RADIATOR	Head gasket leaking or cracked cylinder head or block	Remove cylinder head and inspect. Replace defective part
MORE THAN 50% LEAKAGE FROM ADJACENT CYLINDERS	Head gasket leaking or crack in cylinder head or block between adjacent cylinders	Remove cylinder head and inspect. Replace gasket, head, or block as necessary
MORE THAN 25% LEAKAGE AND AIR ESCAPES THROUGH OIL FILLER CAP OPENING ONLY	Stuck or broken piston rings; cracked piston; worn rings and/or cylinder wall	Inspect for broken rings or piston. Measure ring gap and cylinder diameter, taper and out-of-round. Replace defective part as necessary

STANDARD PROCEDURE

STANDARD PROCEDURE - REPAIR DAMAGED OR WORN THREADS

CAUTION: Be sure that the tapped holes maintain the original center line.

Damaged or worn threads can be repaired. Essentially, this repair consists of:

- Drilling out worn or damaged threads.
- Tapping the hole with a special Heli-Coil Tap, or equivalent.
- Installing an insert into the tapped hole to bring the hole back to its original thread size.

STANDARD PROCEDURE - FORM-IN-PLACE GASKETS AND SEALERS

There are numerous places where form-in-place gaskets are used on the engine. Care must be taken when applying form-in-place gaskets to assure obtaining the desired results. **Do not use form-in-place gasket material unless specified.** Bead size, continuity, and location are of great importance. Too thin a bead can result in leakage while too much can result in spill-over which can break off and obstruct fluid feed lines. A continuous bead of the proper width is essential to obtain a leak-free gasket.

There are numerous types of form-in-place gasket materials that are used in the engine area. Mopar® Engine RTV GEN II, Mopar® ATF-RTV, and Mopar® Gasket Maker gasket materials, each have different properties and can not be used in place of the other.

MOPAR® ENGINE RTV GEN II

Mopar® Engine RTV GEN II is used to seal components exposed to engine oil. This material is a specially designed black silicone rubber RTV that retains adhesion and sealing properties when exposed to engine oil. Moisture in the air causes the material to cure. This material is available in three ounce tubes and has a shelf life of one year. After one year this material will not properly cure. Always inspect the package for the expiration date before use.

MOPAR® ATF RTV

Mopar® ATF RTV is a specifically designed black silicone rubber RTV that retains adhesion and sealing properties to seal components exposed to automatic transmission fluid, engine coolants, and moisture. This material is available in three ounce tubes and has a shelf life of one year. After one year this material will not properly cure. Always inspect the package for the expiration date before use.

MOPAR® GASKET MAKER

Mopar® Gasket Maker is an anaerobic type gasket material. The material cures in the absence of air when squeezed between two metallic surfaces. It will not cure if left in the uncovered tube. The anaerobic material is for use between two machined surfaces. Do not use on flexible metal flanges.

MOPAR® GASKET SEALANT

Mopar® Gasket Sealant is a slow drying, permanently soft sealer. This material is recommended for sealing threaded fittings and gaskets against leakage of oil and coolant. Can be used on threaded and machined parts under all temperatures. This material is used on engines with multi-layer steel (MLS) cylinder head gaskets. This material also will prevent corrosion. Mopar® Gasket Sealant is available in a 13 oz. aerosol can or 4oz./16 oz. can w/applicator.

FORM-IN-PLACE GASKET AND SEALER APPLICATION

Assembling parts using a form-in-place gasket requires care but it's easier than using precut gaskets.

Mopar® Gasket Maker material should be applied sparingly 1 mm (0.040 in.) diameter or less of sealant to one gasket surface. Be certain the material surrounds each mounting hole. Excess material can easily be wiped off. Components should be torqued in place within 15 minutes. The use of a locating dowel is recommended during assembly to prevent smearing material off the location.

Mopar® Engine RTV GEN II or ATF RTV gasket material should be applied in a continuous bead approximately 3 mm (0.120 in.) in diameter. All mounting holes must be circled. For corner sealing, a 3.17 or 6.35 mm (1/8 or 1/4 in.) drop is placed in the center of the gasket contact area. Uncured sealant may be removed with a shop towel. Components should be torqued in place while the sealant is still wet to the touch (within 10 minutes). The usage of a locating dowel is recommended during assembly to prevent smearing material off the location.

Mopar® Gasket Sealant in an aerosol can should be applied using a thin, even coat sprayed completely over both surfaces to be joined, and both sides of a gasket. Then proceed with assembly. Material in a can w/applicator can be brushed on evenly over the sealing surfaces. Material in an aerosol can should be used on engines with multi-layer steel gaskets.

STANDARD PROCEDURE - ENGINE GASKET SURFACE PREPARATION

To ensure engine gasket sealing, proper surface preparation must be performed, especially with the use of aluminum engine components and multi-layer steel cylinder head gaskets.

Never use the following to clean gasket surfaces:

- Metal scraper (3).
- Abrasive pad (1) or paper to clean cylinder block and head.
- High speed power tool (1) with an abrasive pad or a wire brush.

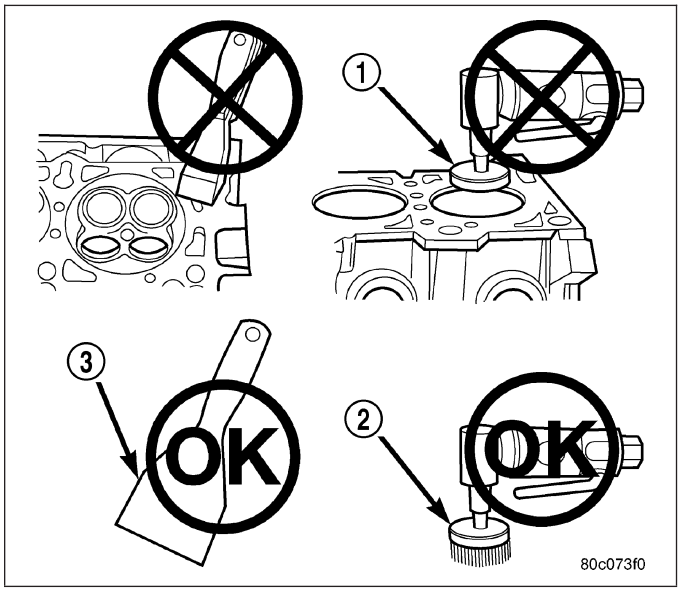

NOTE: Multi-Layer Steel (MLS) head gaskets require a scratch free sealing surface.

Only use the following for cleaning gasket surfaces:

- Solvent or a commercially available gasket remover
- Plastic or wood scraper.
- Drill motor with 3M Roloc™ Bristle Disc (white or yellow).

CAUTION: Excessive pressure or high RPM (beyond the recommended speed), can damage the sealing surfaces. The mild (white, 120 grit) bristle disc is recommended. If necessary, the medium (yellow, 80 grit) bristle disc may be used on cast iron surfaces with care.

REMOVAL

1. Disconnect the battery negative cable.
2. Remove air cleaner assembly.
3. Remove radiator core support bracket.
4. Remove fan shroud with viscous fan assembly.
5. Remove drive belt.
6. Remove A/C compressor (2) and secure away from engine.

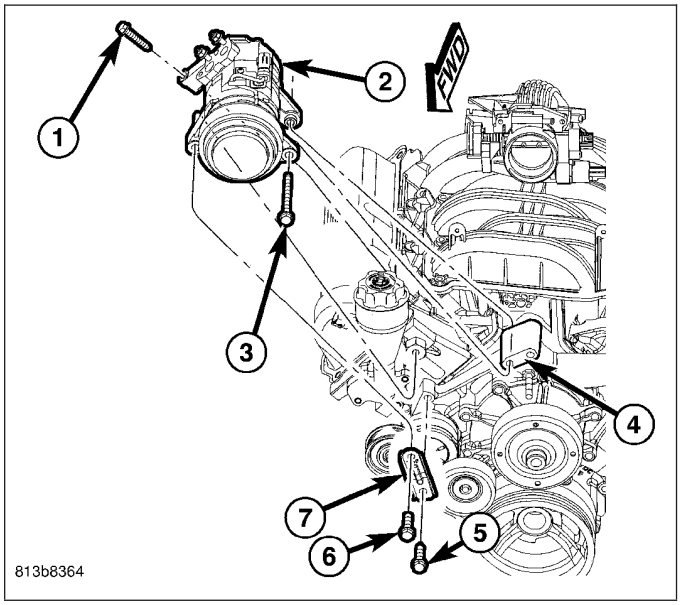

7. Remove generator (3) and secure away from engine.

NOTE: Do NOT remove the phenolic pulley from the P/S pump. It is not required for P/S pump removal.

8. Remove power steering pump with lines attached and secure away from engine.
9. Drain cooling system.
10. Disconnect the heater hoses from the engine.
11. Disconnect heater hoses from heater core and remove hose assembly.
12. Disconnect throttle and speed control cables.
13. Remove upper radiator hose from engine.
14. Remove lower radiator hose from engine.
15. Remove radiator/cooling module assembly.
16. Disconnect the engine to body ground straps at the left side of cowl.

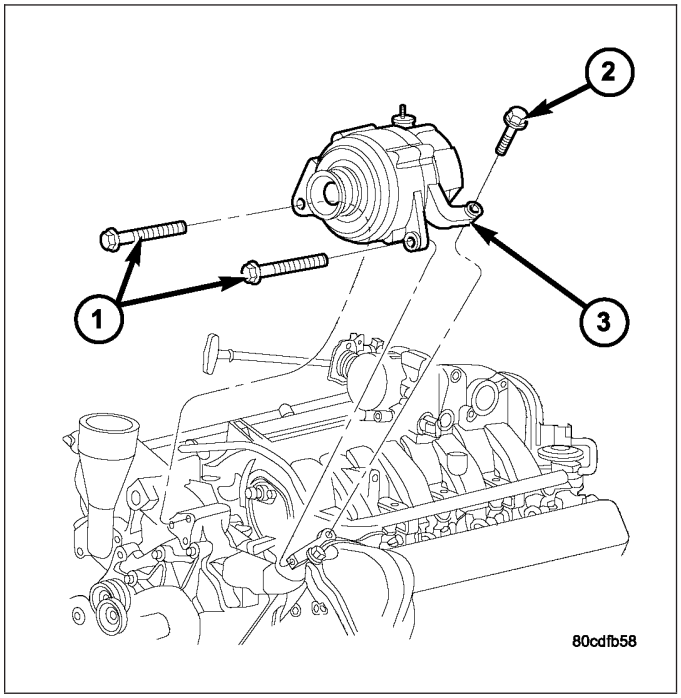

17. Disconnect the engine wiring harness at the following points:
    - Intake air temperature (IAT) sensor (4)
    - Fuel Injectors
    - Throttle Position (TPS) Switch (2)
    - Idle Air Control (IAC) Motor (3)
    - Engine Oil Pressure Switch
    - Engine Coolant Temperature (ECT) Sensor
    - Manifold Absolute Pressure MAP) Sensor
    - Camshaft Position (CMP) Sensor
    - Coil Over Plugs
    - Crankshaft Position Sensor
18. Remove coil over plugs.

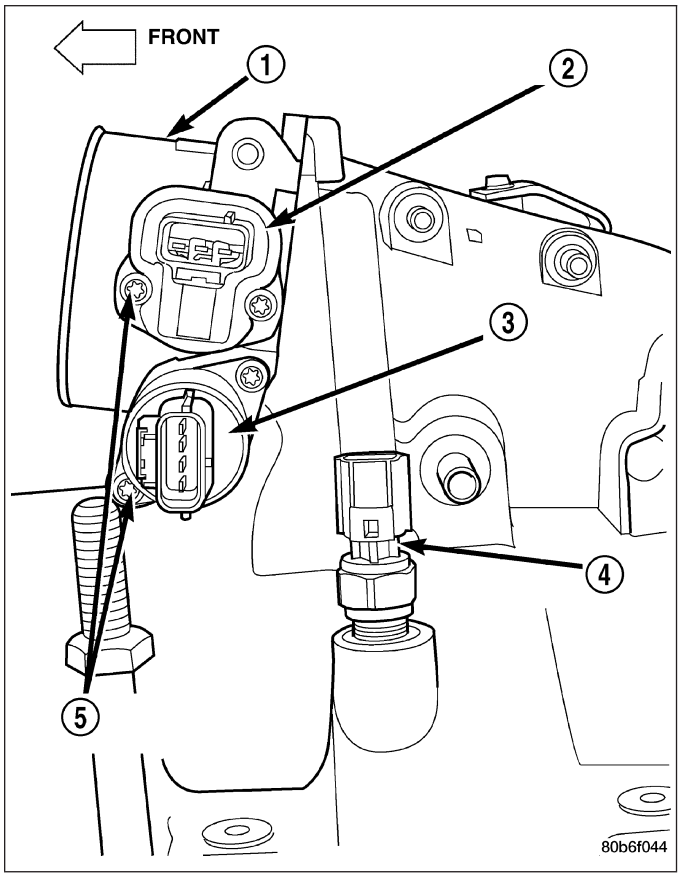

19. Release fuel rail pressure.
20. Remove fuel rail and secure away from engine.

NOTE: It is not necessary to release the quick connect fitting from the fuel supply line for engine removal.

21. Remove the PCV hose.
22. Remove the breather hoses.
23. Remove the vacuum hose for the power brake booster.
24. Disconnect knock sensors.
25. Remove engine oil dipstick tube.
26. Remove intake manifold.

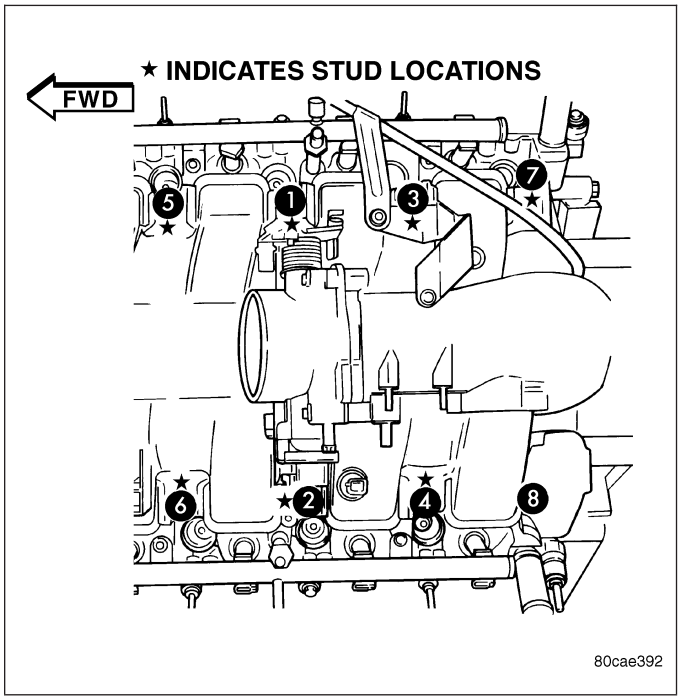

27. Install engine lifting fixture,special tool#8247, using original fasteners from the removed intake manifold, and fuel rail. Torque to factory specifications.

NOTE: Recheck bolt torque for engine lift plate before removing engine.

28. Secure the left and right engine wiring harnesses away from engine.

29. Raise vehicle.
30. Disconnect oxygen sensor wiring.
31. Disconnect crankshaft postion sensor.
32. Disconnect the engine block heater power cable, if equipped.
33. Disconnect the front propshaft at the front differential and secure out of way.

NOTE: It is necessary to disconnect the front propshaft for access to the starter and left side exhaust flange.

34. Remove the starter (4).

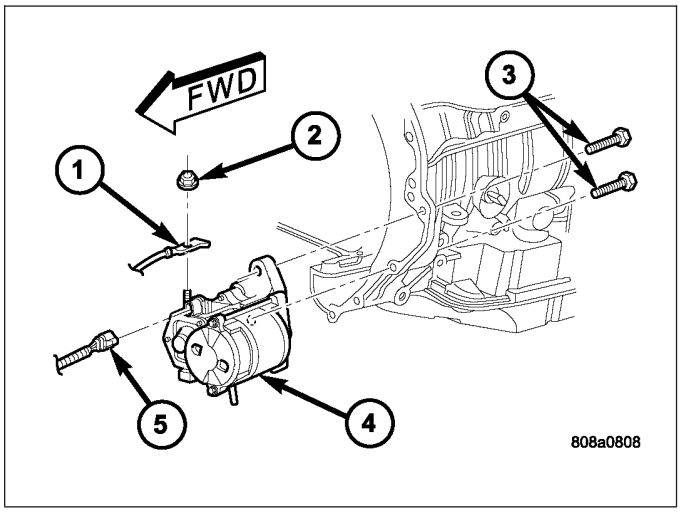

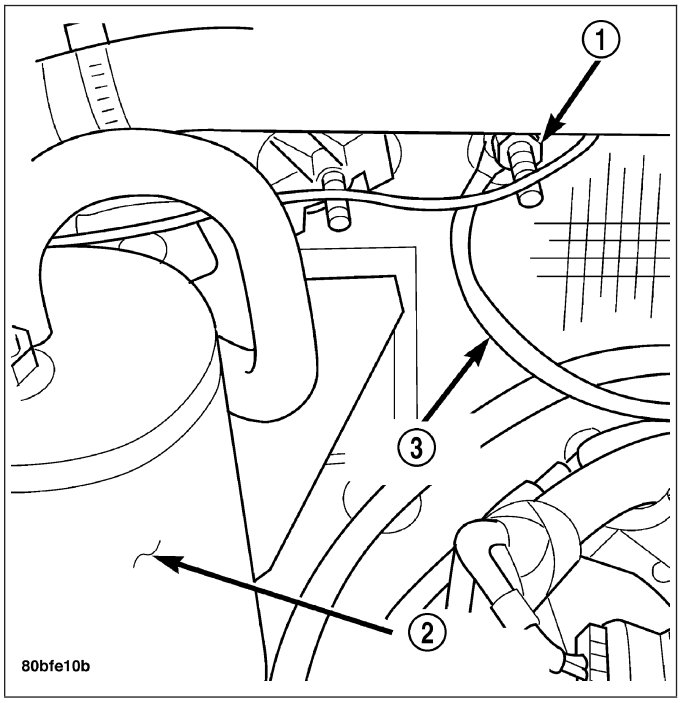

35. Remove the ground straps from the left (2) and right (3) side of the block.
36. Disconnect the right and left exhaust pipes at the manifolds and from the crossover, and remove from the vehicle.

NOTE: The exhaust clamps at the manifolds cannot be reused. New clamps must be used or leaks may occur.

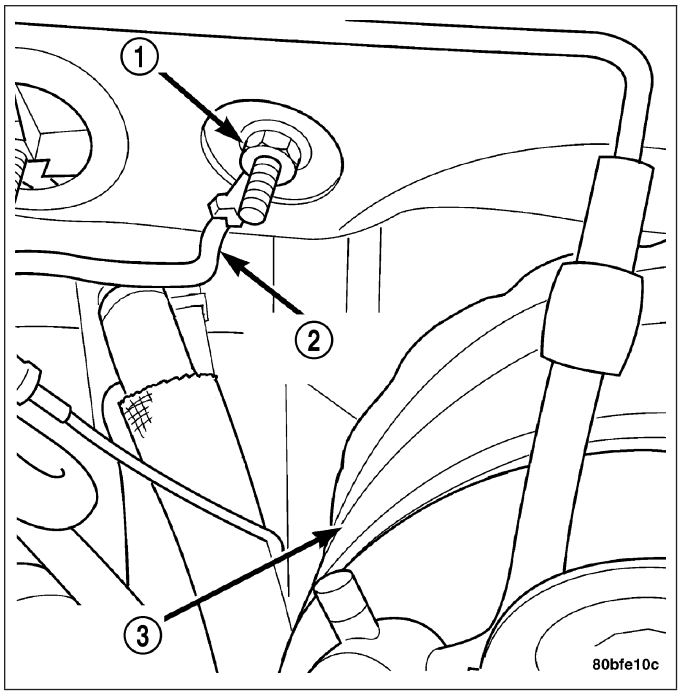

37. Remove the structural cover.
38. Remove torque convertor bolts, and mark location for reassembly.
39. Remove transmission bellhousing to engine bolts.
40. Remove left and right engine mount thru bolts.
41. Lower the vehicle.
42. Support the transmission with a suitable jack.
43. Connect a suitable engine hoist to the engine lift plate.
44. Remove engine from vehicle.

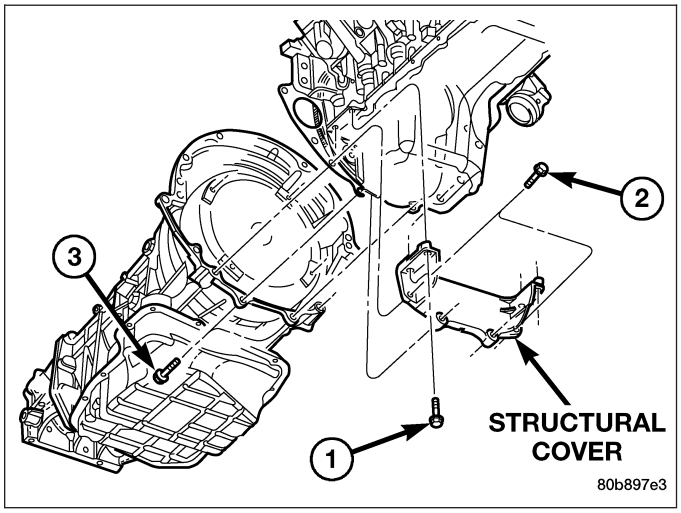

INSTALLATION

1. Position the engine in the vehicle.
2. Install both left and right side engine mounts onto engine.
3. Raise the vehicle.
4. Install the transmission bellhousing to engine mounting bolts. Tighten the bolts to 41 N·m (30ft. lbs.).
5. Tighten the engine mount thru bolts.
6. Install the torque convertor bolts.
7. Connect the ground straps on the left (2) and right (3)side of the engine.

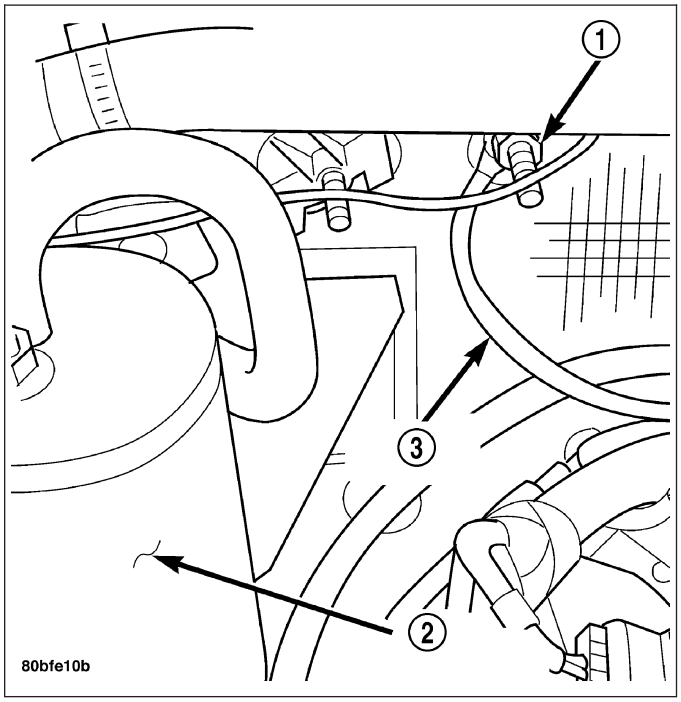

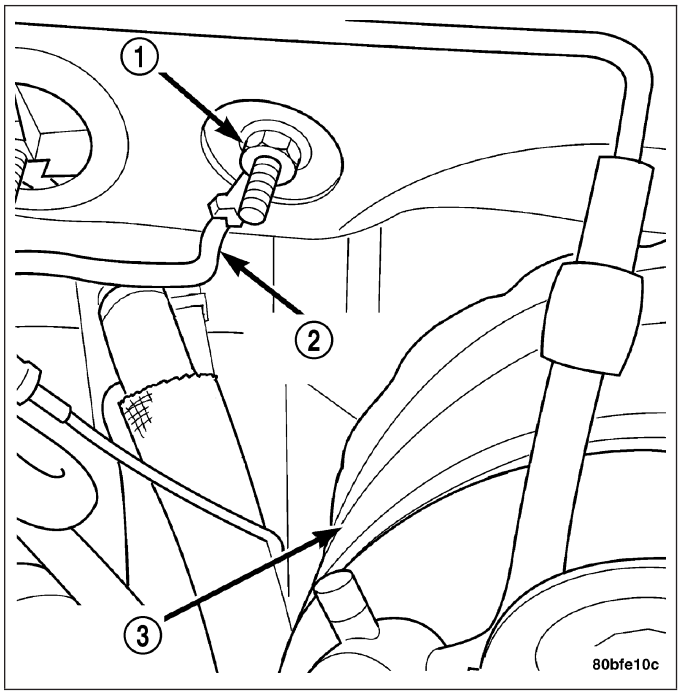

8. Install the starter(4).
9. Connect the crankshaft position sensor.
10. Install the engine block heater power cable, if equipped.

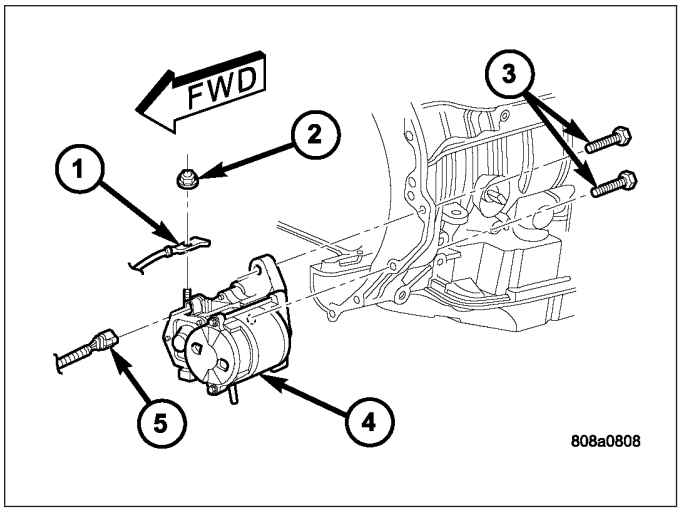

CAUTION: The structural cover requires a specific torque sequence. Failure to follow this sequence may cause severe damage to the cover.

11. Install the structural cover.

NOTE: New clamps must be used on exhaust manifold flanges. Failure to use new clamps may result in exhaust leaks.

12. Install the left and right exhaust pipes.
13. Connect the left and right oxygen sensors.
14. Lower vehicle.
15. Remove the engine lift plate.
16. Connect the knock sensors.
17. Connect the engine to body ground straps at the left side of the cowl.

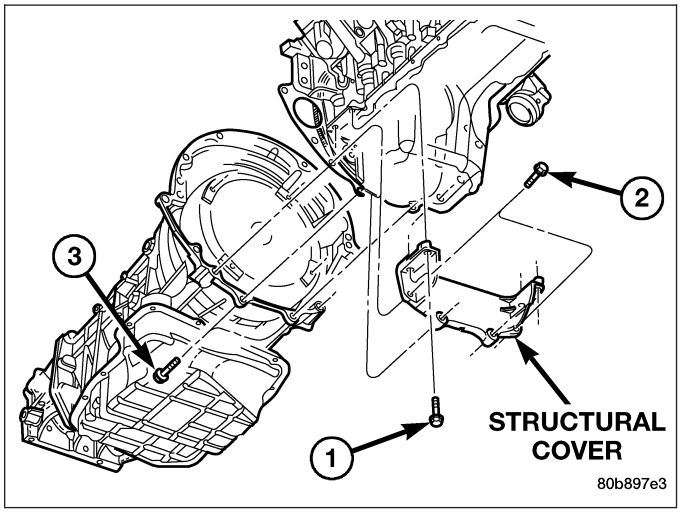

18. Install the intake manifold.
19. Install the engine oil dipstick tube.
20. Install the power brake booster vacuum hose.
21. Install the breather hoses.
22. Install the PCV hose.
23. Install the fuel rail.
24. Install the coil over plugs.

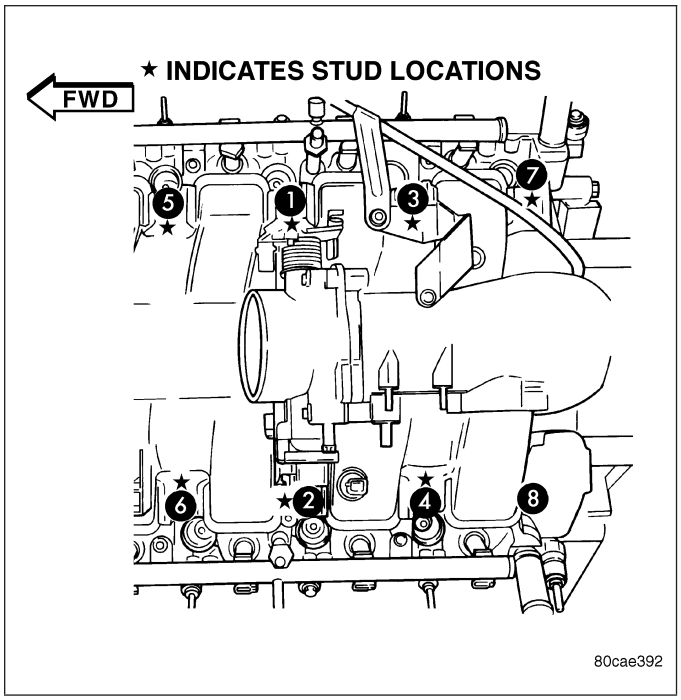

25. Connect the engine wiring harness at the following points:
    - Intake air temperature (IAT) sensor (4)
    - Fuel Injectors
    - Throttle Position (TPS) Switch (2)
    - Idle Air Control (IAC) Motor (3)
    - Engine Oil Pressure Switch
    - Engine Coolant Temperature (ECT) Sensor
    - Manifold Absolute Pressure MAP) Sensor
    - Camshaft Position (CMP) Sensor
    - Coil Over Plugs
    - Crankshaft Position Sensor

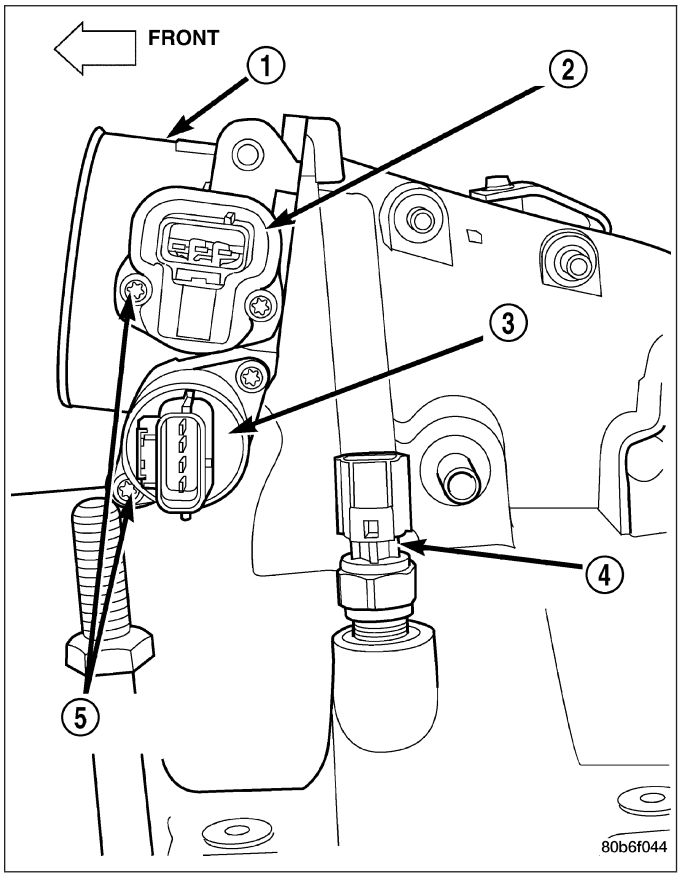

26. Reinstall the radiator/cooling module assembly.
27. Connect lower radiator hose.
28. Connect upper radiator hose.
29. Connect throttle and speed control cables.
30. Install the heater hose assembly.
31. Install coolant recovery bottle.
32. Install the power steering pump.
33. Install the generator (3).

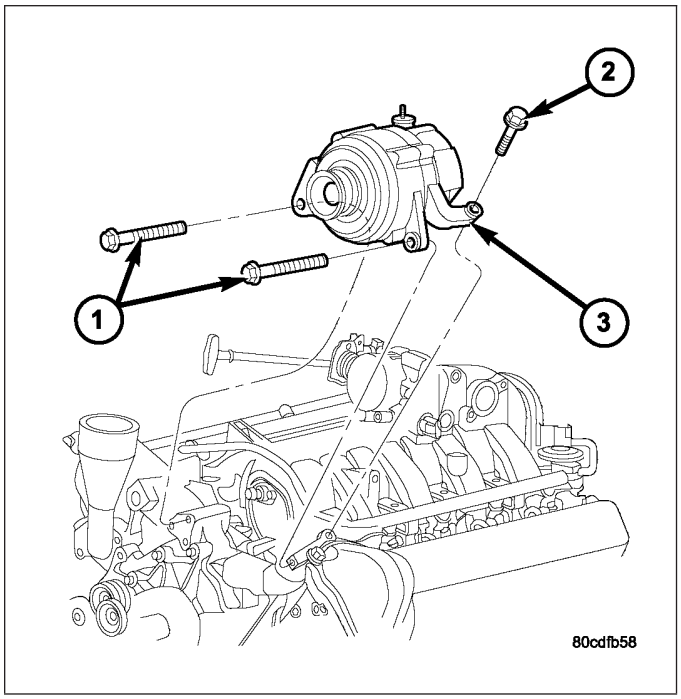

34. Install the A/C compressor (2).
35. Install the drive belt.
36. Install the fan shroud with the viscous fan assembly.
37. Install the radiator core support bracket.
38. Install the air cleaner assembly.
39. Refill the engine cooling system.
40. Recharge the air conditioning.
41. Check and fill engine oil.
42. Connect the battery negative cable.
43. Start the engine and check for leaks.

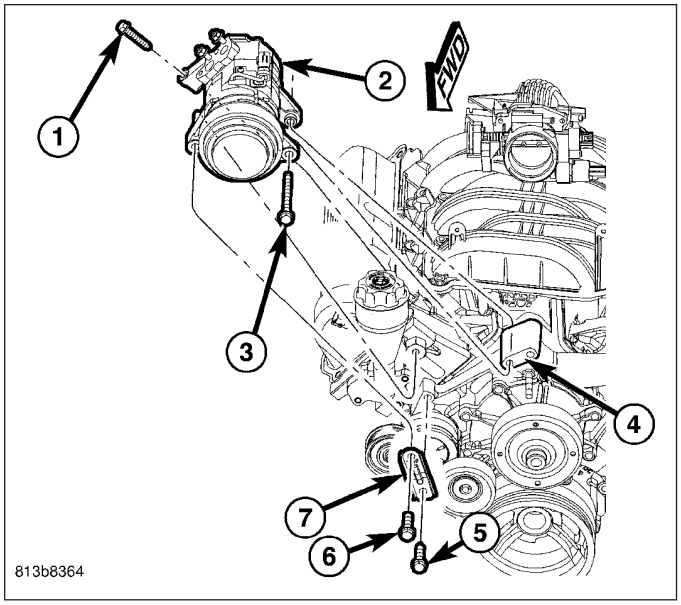

SPECIFICATIONS

SPECIFICATIONS - 3.7L ENGINE

GENERAL SPECIFICATIONS

DESCRIPTION	SPECIFICATION	
Type	90° SOHC V6 12 Valve	
Number of Cylinders	6	
Firing Order	1-6-5-4-3-2	
Lead Cylinder	No. 1 Left Bank	
Compression Ratio	9.6:1	
Max. Variation Between Cylinders	25%	
	Metric	**Standard**
Displacement	3.7 Liters	226 Cubic Inches
Bore	93.0 mm	3.66 in.
Stroke	90.8 mm	3.40 in.
Horsepower	211 @ 5200 RPM	
Torque	236ft. lbs.@4000 PRM	
Compression Pressure	1172-1551 kPa	170-225 psi

CYLINDER BLOCK

DESCRIPTION	SPECIFICATION	
	Metric	**Standard**
Bore Diameter	93.013 ± .0075 mm	3.6619 ± 0.0003 in.
Out of Round (MAX)	0.076 mm	0.003 in.
Taper (MAX)	0.051 mm	0.002 in.

PISTONS

DESCRIPTION	SPECIFICATION	
	Metric	**Standard**
Diameter	92.975 mm	3.6605 in.
Weight	365.0 grams	12.87 oz
Ring Groove Diameter		
No. 1	85.37 - 83.13 mm	3.282 - 3.273 in
No. 2	82.833 - 83.033 mm	3.261 - 3.310 in.
No. 3	83.88 - 84.08 mm	3.302 - 3.310 in.

PISTON PINS

DESCRIPTION	SPECIFICATION	
	Metric	**Standard**
Clearance In Piston	0.006 - 0.015 mm	0.0002 - 0.0005 in.
Diameter	24.017 - 24.020 mm	0.9455 - 0.9456 in.

PISTON RINGS

DESCRIPTION	SPECIFICATION	
	Metric	Standard
Ring Gap		
Top Compression Ring	0.20 - 0.36 mm	0.0079 - 0.0142 in.
Second Compression Ring	0.37 - 0.63 mm	0.0146 - 0.0249 in.
Oil Control (Steel Rails)	0.25 - 0.76 mm	0.0099 - 0.30 in.
Side Clearance		
Top Compression Ring	.051 - .094 mm	0.0020 - 0.0037 in.
Second Compression Ring	0.040 - 0.080 mm	0.0016 - 0.0031 in.
Oil Ring (Steel Ring)	.019 - .229 mm	.0007 - .0091 in.
Ring Width		
Top Compression Ring	1.472 - 1.490 mm	0.057 - 0.058 in.
Second Compression Ring	1.472 - 1.490 mm	0.057 - 0.058 in.
Oil Ring (Steel Rails)	0.445 - 0.470 mm	0.017 - 0.018 in.

CONNECTING RODS

DESCRIPTION	SPECIFICATION	
	Metric	Standard
Bearing Clearance	0.006 - 0.044 mm	0.0002 - 0.0017 in.
Side Clearance	0.10 - 0.35 mm	0.004 - 0.0138 in.
Piston Pin Clearance	.015 - .028 mm	0.0006 - 0.0011 in.
Bearing Bore Out of Round (MAX)	0.004 mm	0.0002 in.
Total Weight (Less Bearing)	612 grams	21.588 ounces

CRANKSHAFT

DESCRIPTION	SPECIFICATION	
	Metric	Standard
Main Bearing Journal Diameter	63.488 - 63.512 mm	2.4996 - 2.5005 in.
Bearing Clearance	0.002 - 0.046 mm	0.00008 - 0.0018 in.
Out of Round (MAX)	0.005 mm	0.0002 in.
Taper (MAX)	0.006 mm	0.0004 in.
End Play	0.052 - 0.282 mm	0.0021 - 0.0112 in.
End Play (MAX)	0.282 mm	0.0112 in.
Connecting Rod Journal Diameter	57.908 - 57.892 mm	2.2798 - 2.2792 in.
Bearing Clearance	0.006 - 0.044	0.0002 - 0.0011 in.
Out of Round (MAX)	0.005 mm	0.0002 in.
Taper (MAX)	0.006 mm	0.0002 in.

CAMSHAFT

DESCRIPTION	SPECIFICATION	
	Metric	Standard
Bore Diameter	26.02 - 26.04 mm	1.0245 - 1.0252 in.
Bearing Journal Diameter	25.975 - 25.995 mm	1.0227 - 1.0235 in.
Bearing Clearance	0.025 - 0.065 mm	0.001 - 0.0026 in.
Bearing Clearance (MAX)	0.065 mm	0.0026 in.
End Play	.075 - .200 mm	0.003 - 0.0079 in.
End Play (MAX)	.200 mm	0.0079 in.

VALVE TIMING

DESCRIPTION	SPECIFICATION
Intake	
Opens (BTDC)	5.6°
Closes (ATDC)	240.1°
Duration	245.7°
Exhaust	
Opens (BTDC)	241.5°
Closes (ATDC)	20.1°
Duration	261.6°
Valve Overlap	25.7°

VALVES

DESCRIPTION	SPECIFICATION	
	Metric	Standard
Face Angle	45° - 45.5°	
Head Diameter		
Intake	48.52 - 48.78 mm	1.9103 - 1.9205 in.
Exhaust	36.87 - 37.13 mm	1.4516 - 1.4618 in.
Length (Overall)		
Intake	113.45 - 114.21 mm	4.4666 - 4.4965 in.
Exhaust	114.92 - 115.68 mm	4.5244 - 4.5543 in.
Stem Diameter		
Intake	6.931 - 6.957 mm	0.2729 - 0.2739 in.
Exhaust	6.902 - 6.928 mm	0.2717 - 0.2728 in.
Stem-to-Guide Clearance		
Intake	0.018 - 0.069 mm	0.0008 - 0.0028 in.
Exhaust	0.047 - 0.098 mm	0.0019 - 0.0039 in.

DESCRIPTION	SPECIFICATION	
	Metric	Standard
Max. Allowable Stem-to-Guide Clearance (Rocking Method)		
Intake	0.069 mm	0.0028 in.
Exhaust	0.098 mm	0.0039 in.
Valve Lift (Zero Lash)		
Intake	12.00 mm	0.472 in.
Exhaust	12.00 mm	0.472 in.

VALVE SPRING

DESCRIPTION	SPECIFICATION	
	Metric	Standard
Free Length (Approx)		
Intake	48.18 mm	1.896 in.
Exhaust - w/damper	48.2 mm	1.897 in.
Spring Force (Valve Closed)		
Intake	332.0 - 368.0 N @ 40.12 mm	74.63 - 82.72 lbs. @ 1.5795 in.
Exhaust - (without damper)	356 - 394 N @ 39.12 mm	80.031 - 88.57 lbs. @ 1.54 in.
Spring Force (Valve Open)		
Intake	948.0 - 1038.0 N @ 28.12 mm	213.2 - 233.8 lbs. @ 1.107 in.
Exhaust - without damper	974 - 956 N @ 27.12 mm	218.8 - 215.1 lbs. @ 1.067 in.
Number of Coils		
Intake	7.30	
Exhaust	7.15	
Wire Diameter		
Intake	4.77 × 3.80mm	0.1878 × 0.1496 in.
Exhaust	4.66 × 3.72mm	0.1843 × .1464 in.
Installed Height (Spring Seat to Bottom of Retainer)		
Nominal		
Intake	40.12 mm	1.579 in.
Exhaust - w/damper	40.12 mm	1.579 in.

CYLINDER HEAD

DESCRIPTION	SPECIFICATION	
	Metric	Standard
Gasket Thickness (Compressed)	0.7 mm	(0.0276 in.)
Valve Seat Angle	44.5° - 45.0°	
Valve Seat Runout (MAX)	0.051 mm	0.002 in.
Valve Seat Width		
Intake	1.75 - 2.36 mm	0.0698 - 0.0928 in.
Exhaust	1.71 - 2.32 mm	0.0673 - 0.0911 in.
Guide Bore Diameter (Std.)	6.975 - 7.00 mm	0.2747 - 0.2756 in.
Cylinder Head Warpage (Flatness)	0.0508 mm	0.002 in.

OIL PUMP

DESCRIPTION	SPECIFICATION	
	Metric	Standard
Clearance Over Rotors/End Face (MAX)	0.095 mm	0.0038 in.
Cover Out - of -Flat (MAX)	0.025 mm	0.001 in.
Inner and Outer Rotor Thickness	12.02 mm	0.4731 in.
Outer Rotor to pocket (Diametral) clearance (MAX)	.235 mm	.0093 in.
Outer Rotor Diameter (MIN)	85.925 mm	0.400 in.
Tip Clearance Between Rotors (MAX)	0.150 mm	0.006 in.

OIL PRESSURE

SPECIFICATION	SPECIFICATION	
	Metric	Standard
At Curb Idle Speed (MIN)*	25 kPa	4 psi
@ 3000 rpm	170 - 758 kPa	25 - 110 psi
*** CAUTION: If pressure is zero at curb idle, DO NOT run engine at 3000 rpm.**		

TORQUE

DESCRIPTION	N·m	Ft. Lbs.	In. Lbs.
Bolt - Camshaft			
Non - Oiled Sprocket Bolt	122	90	-
Bearing Cap Bolts	11	-	100
Bolt - Counterbalance shaft retaining	28	-	250
Bolts - Timing Chain Cover	58	43	-
Bolts - Connecting Rod Cap	27	20	-
	PLUS 90° TURN		
Bolts - Bed Plate	Refer to Procedure		
Bolt - Crankshaft Damper	175	130	-
Bolts - Cylinder Head			
M11 Bolts	Refer To Procedure		
M8 Bolts	Refer To Procedure		
Bolts - Cylinder Head Cover	12	-	105
Bolts - Exhaust Manifold	25	18	-
Nuts - Exhaust Manifold Heat Shield	8	-	72
	Then loosen 45°		
Bolts - Flexplate	95	70	-
Bolts - Engine Mount Bracket to Block	61	45	-
Bolts - Rear Mount to Transmission	46	34	-
Bolts - Generator Mounting			
M10 Bolts	54	40	-
M8 Bolts	28	-	250
Bolts - Intake Manifold	12	-	105
	Refer to Procedure for Tightening Sequence		
Bolts - Oil Pan	15	-	130
Plug - Oil Pan-Drain	34	25	-
Bolts - Oil Pump	28	-	250
Bolts - Oil Pump Cover	12	-	105
Bolt and Nut - Oil Pickup Tube	28	-	250
Bolt - Oil Dipstick Tube to Engine Block	15	-	130
Bolts - Oil Fill Tube	12	-	105
Bolts - Timing Chain Guide	28	-	250
Timing Chain Tensioner Arm	28	-	250
Bolts - Hydraulic Tensioner	28	-	250
Bolts - Timing Chain Primary Tensioner	28	-	250
Bolt - Timing Drive Idler Sprocket	34	25	-
Bolts - Thermostat Housing	12	-	105
Bolts - Water Pump	58	43	-

SPECIAL TOOLS

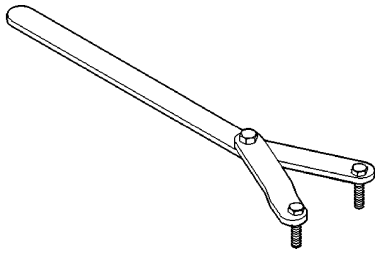

Spanner Wrench 6958

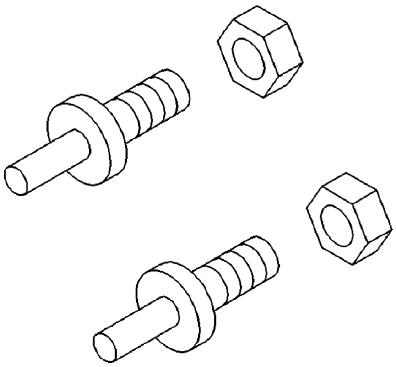

Adapter Pins 8346

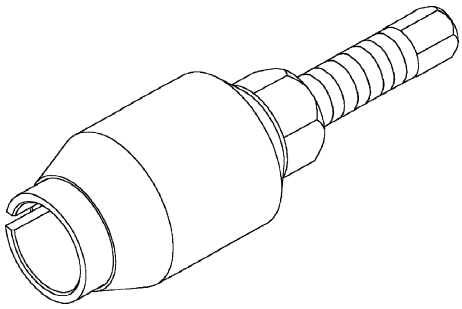

Front Crankshaft Seal Remover 8511

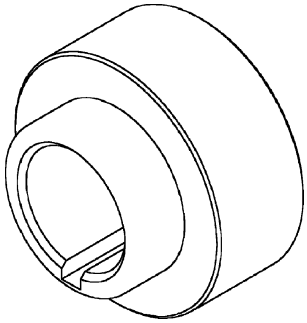

Front Crankshaft Seal Installer 8348

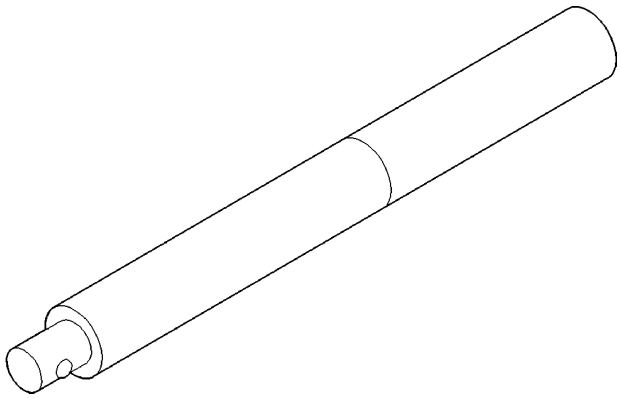

Handle C-4171

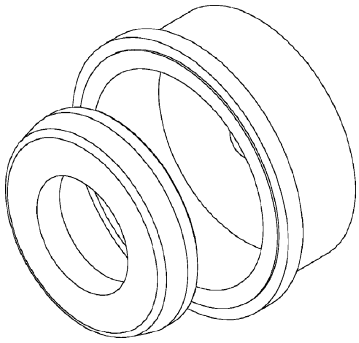

Rear Crankshaft Seal Installer 8349

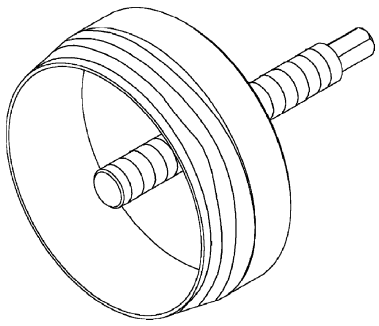

Rear Crankshaft Seal Remover 8506

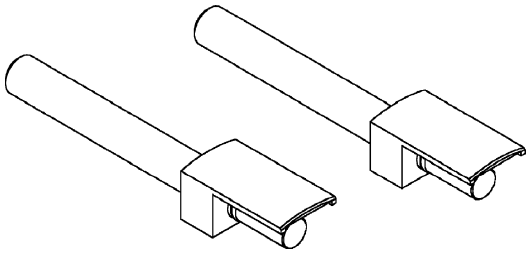

Connecting Rod Guides 8507

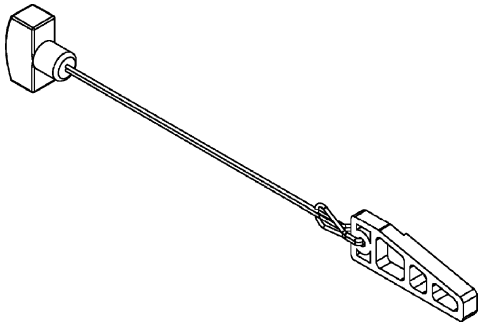

Chain Tensioner Wedge 8379

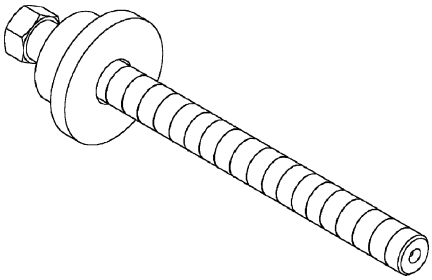

Crankshaft Damper Installer 8512

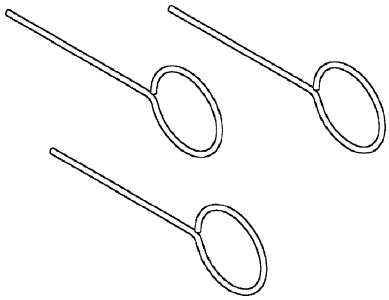

Chain Tensioner Pins 8514

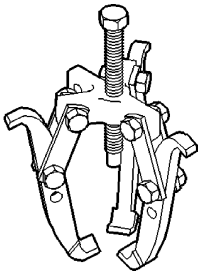

Puller 1026

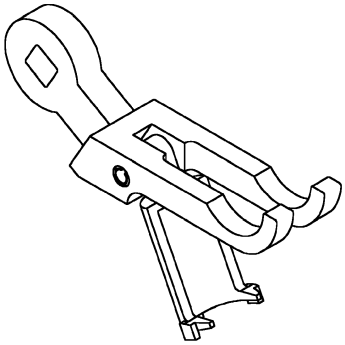

VALVE SPRING COMPRESSOR 8426

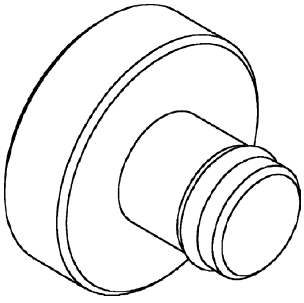

Crankshaft Damper Removal Insert 8513

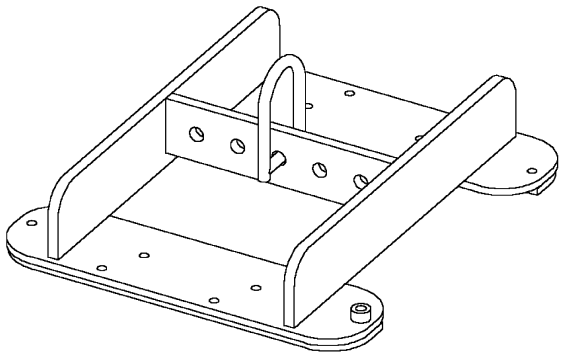

ENGINE LIFTING FIXTURE 8427

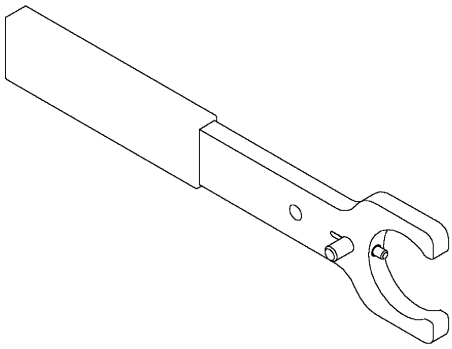

CAMSHAFT HOLDER 8428

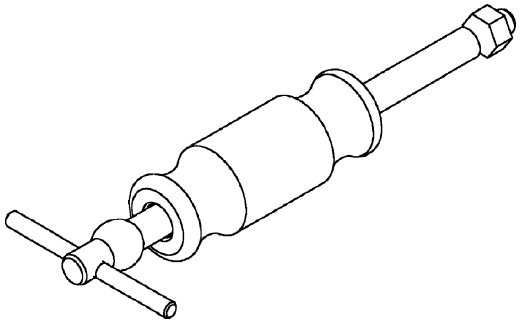

Idler Shaft Remover 8517

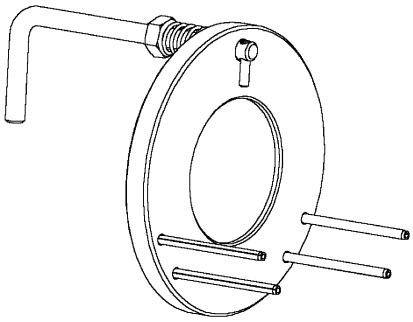

HOLDER SECONDARY CAMSHAFT CHAIN 8429

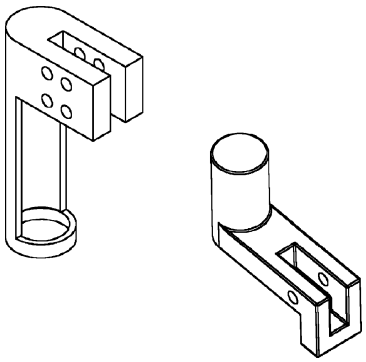

Valve Spring Compressor Adapters 8519

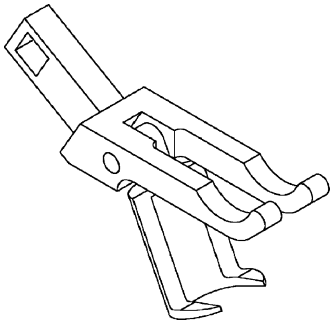

Remover, Rocker Arm 8516

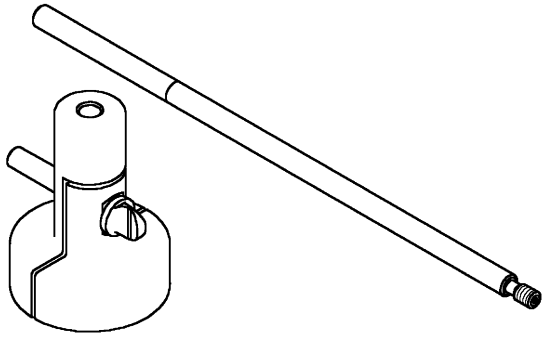

INSTALLER - REMOVER - COUNTER BALANCE SHAFT 8641

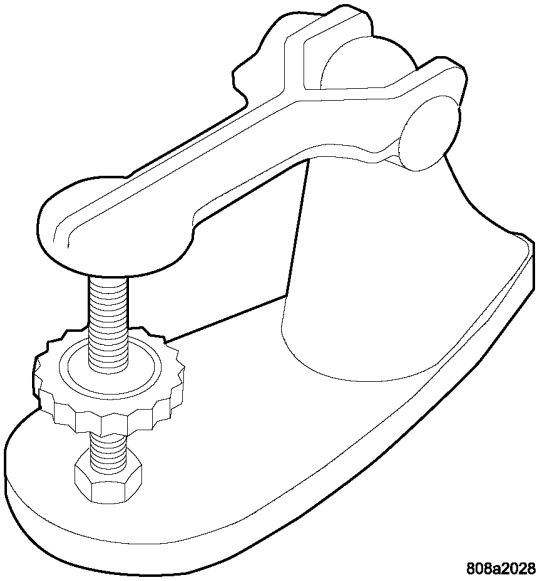

Valve Spring Tester C-647

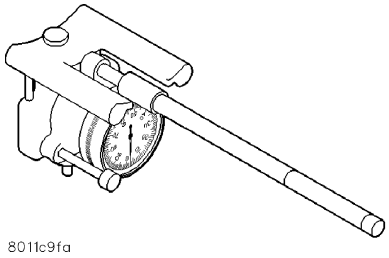

Bore Size Indicator C-119

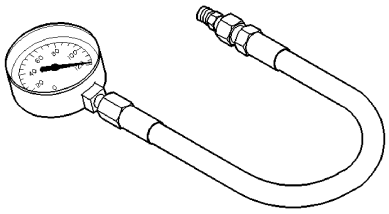

Oil Pressure Gauge C-3292

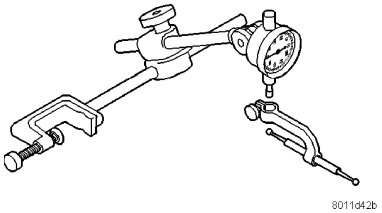

Dial Indicator C-3339

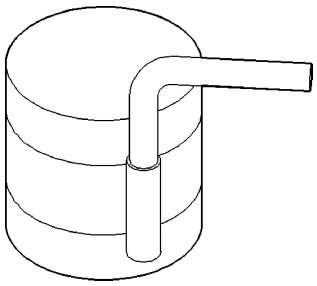

Piston Ring Compressor C-385

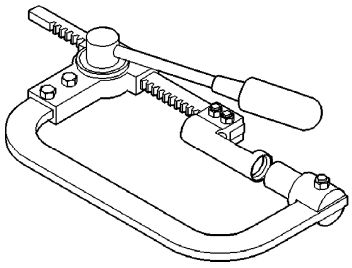

Valve Spring Compressor C-3422-B

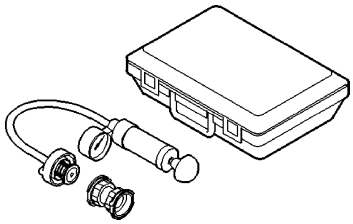

Pressure Tester Kit 7700

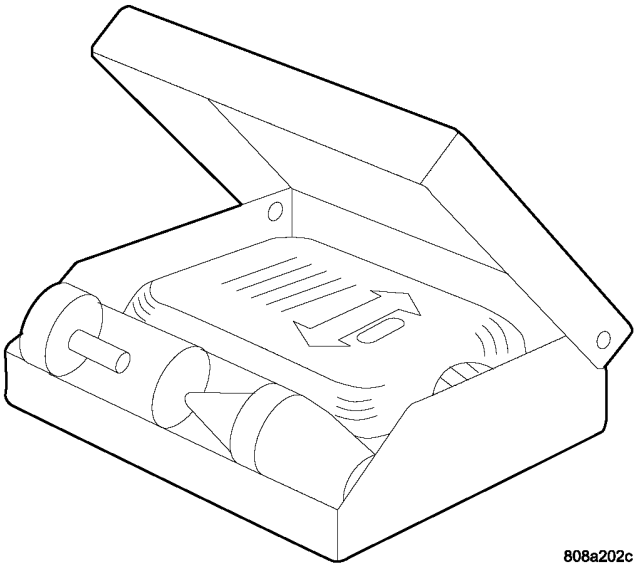

Bloc–Chek–Kit C-3685–A

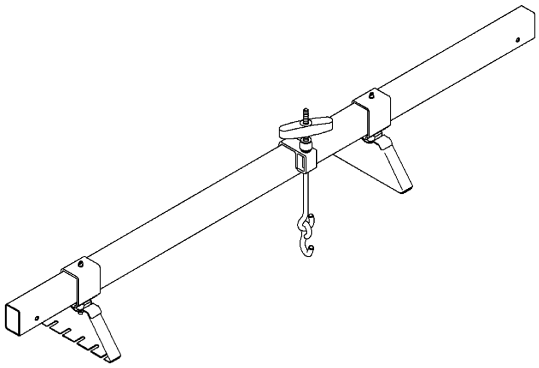

ENGINE SUPPORT FIXTURE 8534

ELEMENT - AIR CLEANER

REMOVAL

Filter Element Only

1. Housing removal is not necessary for element (filter) replacement.
2. Loosen clamp and disconnect air duct at air cleaner cover.
3. Pry over 4 spring clips (5) from housing cover (3) (spring clips retain cover to housing).
4. Release housing cover (3) from locating tabs on housing and remove cover.
5. Remove air cleaner element (filter) from housing.
6. Clean inside of housing before replacing element.

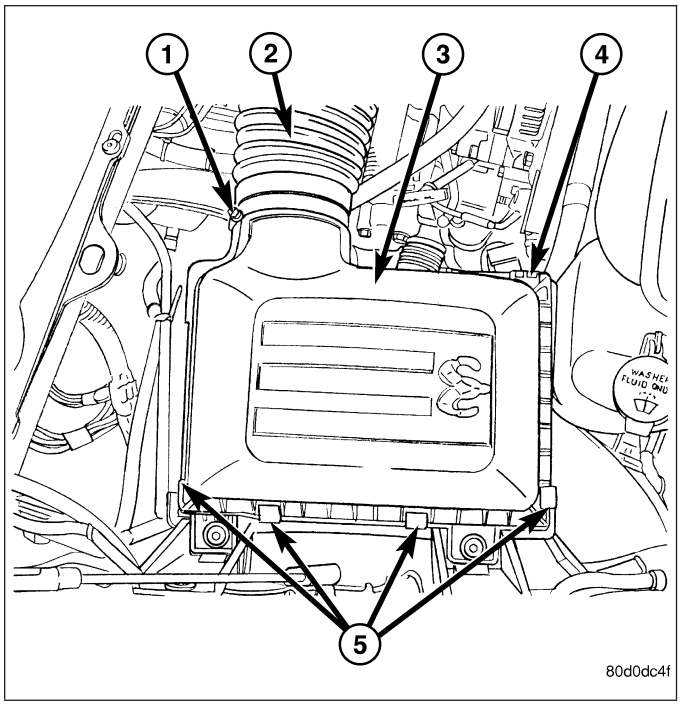

Housing Assembly

1. Loosen clamp and disconnect air duct at air cleaner cover.
2. Lift entire housing (1) assembly from 4 locating pins (2).

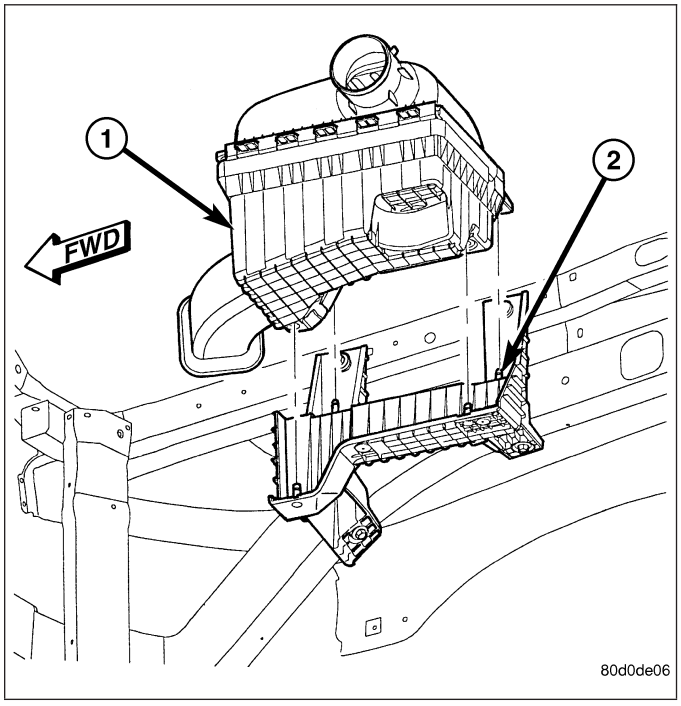

INSTALLATION

1. Install filter element into housing.
2. Position housing cover into housing locating tabs.
3. Pry up 4 spring clips and lock cover to housing.
4. Install air duct to air cleaner cover and tighten hose clamp to 3 N·m (30 in. lbs.) torque.
5. If any other hose clamps were removed from air intake system, tighten them to 3.4 N·m (30 in. lbs.) torque.
6. If any bolts were removed from air resonator housing or air intake tubing, tighten them to 4.5 N·m (40 in. lbs.) torque.

CYLINDER HEAD - LEFT

DIAGNOSIS AND TESTING - CYLINDER HEAD GASKET

A cylinder head gasket leak can be located between adjacent cylinders or between a cylinder and the adjacent water jacket.

Possible indications of the cylinder head gasket leaking between adjacent cylinders are:

- Loss of engine power
- Engine misfiring
- Poor fuel economy

Possible indications of the cylinder head gasket leaking between a cylinder and an adjacent water jacket are:

- Engine overheating
- Loss of coolant
- Excessive steam (white smoke) emitting from exhaust
- Coolant foaming

CYLINDER-TO-CYLINDER LEAKAGE TEST

To determine if an engine cylinder head gasket is leaking between adjacent cylinders, follow the procedures in Cylinder Compression Pressure Test (Refer to 9 - ENGINE - DIAGNOSIS AND TESTING). An engine cylinder head gasket leaking between adjacent cylinders will result in approximately a 50 - 70% reduction in compression pressure.

CYLINDER-TO-WATER JACKET LEAKAGE TEST

WARNING: USE EXTREME CAUTION WHEN THE ENGINE IS OPERATING WITH COOLANT PRESSURE CAP REMOVED.

VISUAL TEST METHOD

With the engine cool, remove the coolant pressure cap. Start the engine and allow it to warm up until thermostat opens.

If a large combustion/compression pressure leak exists, bubbles will be visible in the coolant.

COOLING SYSTEM TESTER METHOD

WARNING: WITH COOLING SYSTEM TESTER IN PLACE, PRESSURE WILL BUILD UP FAST. EXCESSIVE PRESSURE BUILT UP, BY CONTINUOUS ENGINE OPERATION, MUST BE RELEASED TO A SAFE PRESSURE POINT. NEVER PERMIT PRESSURE TO EXCEED 138 kPa (20 psi).

Install Cooling System Tester 7700 or equivalent to pressure cap neck. Start the engine and observe the tester's pressure gauge. If gauge pulsates with every power stroke of a cylinder a combustion pressure leak is evident.

CHEMICAL TEST METHOD

Combustion leaks into the cooling system can also be checked by using Bloc-Chek Kit C-3685-A or equivalent. Perform test following the procedures supplied with the tool kit.

REMOVAL

1. Disconnect the negative cable from the battery.
2. Raise the vehicle on a hoist.
3. Disconnect the exhaust pipe at the left side exhaust manifold.
4. Drain the engine coolant (Refer to 7 - COOLING - STANDARD PROCEDURE).
5. Lower the vehicle.
6. Remove the intake manifold (Refer to 9 - ENGINE/MANIFOLDS/INTAKE MANIFOLD - REMOVAL).
7. Remove the master cylinder and booster assembly (Refer to 5 - BRAKES/HYDRAULIC/MECHANICAL/POWER BRAKE BOOSTER - REMOVAL).
8. Remove the cylinder head cover (Refer to 9 - ENGINE/CYLINDER HEAD/CYLINDER HEAD COVER(S) - REMOVAL).
9. Remove the fan shroud and fan blade assembly (Refer to 7 - COOLING/ENGINE/RADIATOR FAN - REMOVAL).
10. Remove accessory drive belt (Refer to 7 - COOLING/ACCESSORY DRIVE/DRIVE BELTS - REMOVAL).
11. Remove the power steering pump and set aside.
12. Rotate the crankshaft until the damper timing mark is aligned with TDC indicator mark (2).

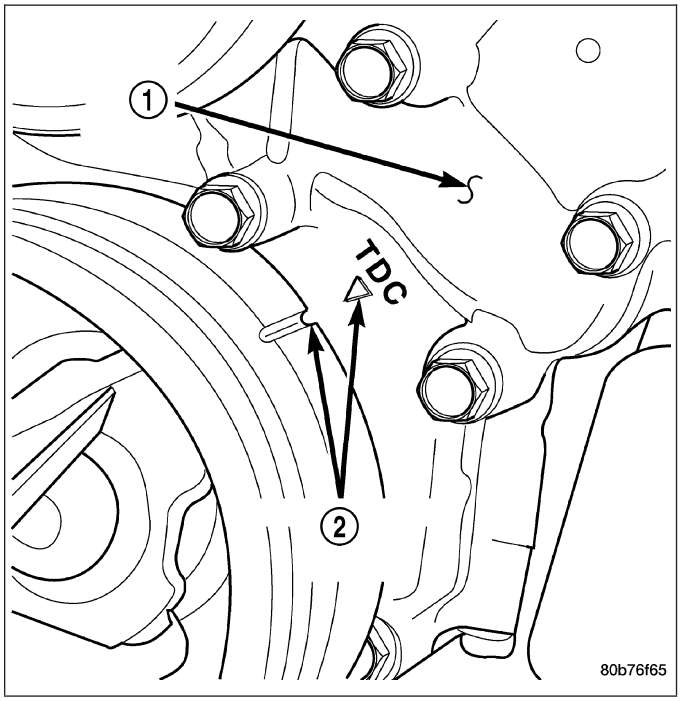

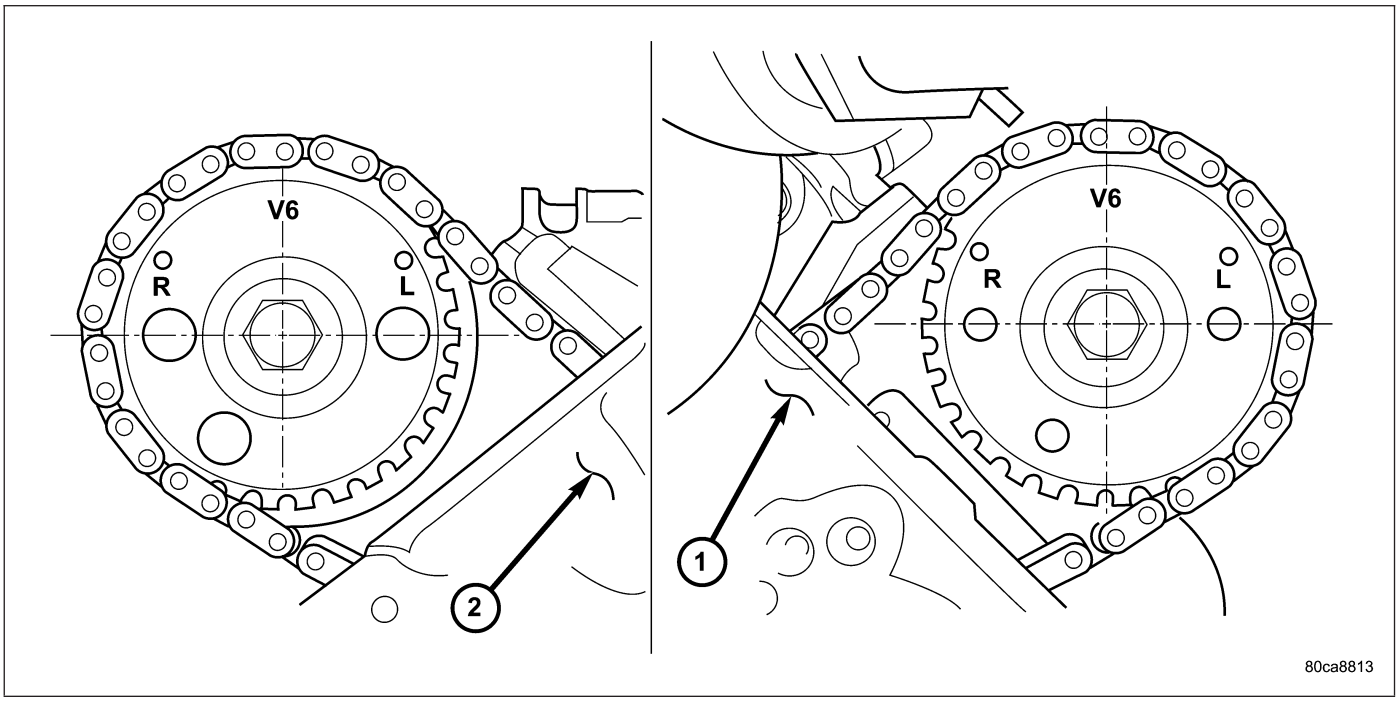

13. Verify the V6 mark on the camshaft sprocket is at the 12 o'clock position. Rotate the crankshaft one turn if necessary.
14. Remove the crankshaft damper (Refer to 9 - ENGINE/ENGINE BLOCK/VIBRATION DAMPER - REMOVAL).
15. Remove the timing chain cover (Refer to 9 - ENGINE/VALVE TIMING/TIMING BELT / CHAIN COVER(S) - REMOVAL).
16. Lock the secondary timing chains to the idler sprocket using Special Tool 8429 Timing Chain Holding Fixture.

NOTE: Mark the secondary timing chain prior to removal to aid in installation.

17. Mark the secondary timing chain, one link on each side of the V6 mark on the camshaft drive gear.
18. Remove the left side secondary chain tensioner. Refer to Timing Chain and Sprockets.

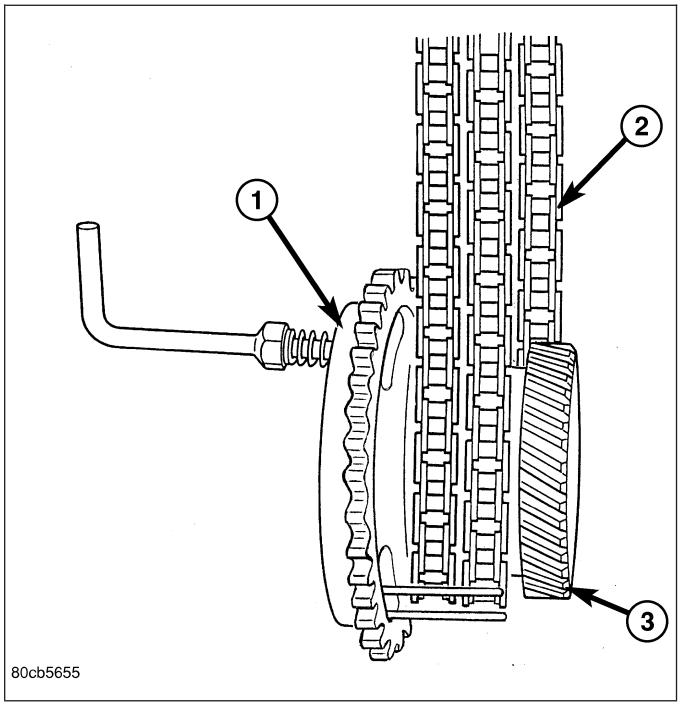

19. Remove the cylinder head access plug.
20. Remove the left side secondary chain guide (Refer to 9 - ENGINE/VALVE TIMING/TIMING BELT/CHAIN AND SPROCKETS - REMOVAL).
21. Remove the retaining bolt and the camshaft drive gear.

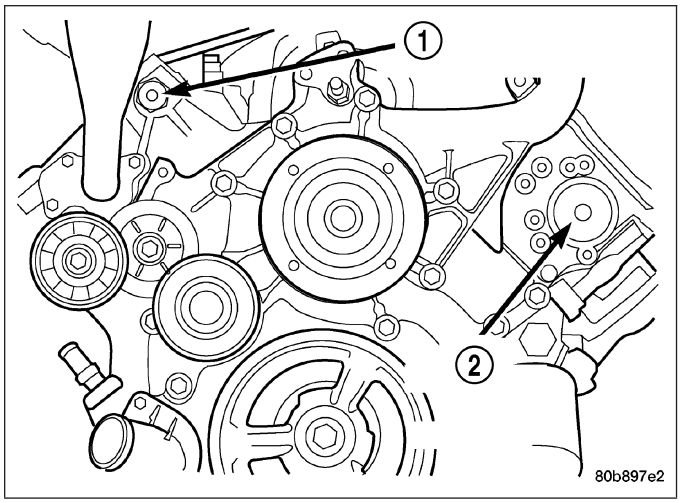

CAUTION: Do not allow the engine to rotate. Severe damage to the valve train can occur.

CAUTION: Do not overlook the four smaller bolts at the front of the cylinder head. Do not attempt to remove the cylinder head without removing these four bolts.

NOTE: The cylinder head is attached to the cylinder block with twelve bolts.

22. Remove the cylinder head retaining bolts.
23. Remove the cylinder head and gasket. Discard the gasket.

CAUTION: Do not lay the cylinder head on its gasket sealing surface, due to the design of the cylinder head gasket any distortion to the cylinder head sealing surface may prevent the gasket from properly sealing resulting in leaks.

INSTALLATION

NOTE: The cylinder head bolts are tightened using a torque plus angle procedure. The bolts must be examined BEFORE reuse. If the threads are necked down (2) the bolts should be replaced.

Necking can be checked by holding a straight edge against the threads. If all the threads do not contact the scale, the bolt should be replaced.

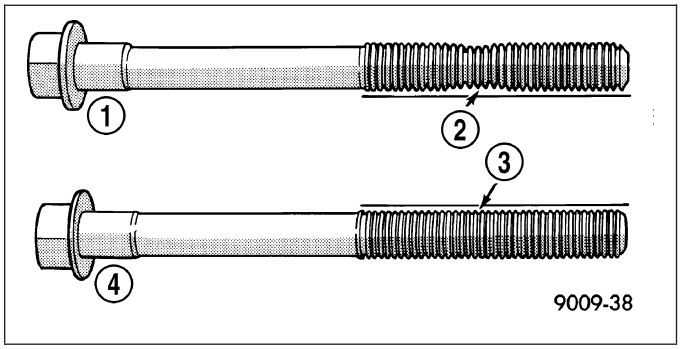

CAUTION: When cleaning cylinder head and cylinder block surfaces, DO NOT use a metal scraper (1) because the surfaces could be cut or ground. Use only a wooden or plastic scraper.

1. Clean the cylinder head and cylinder block mating surfaces.

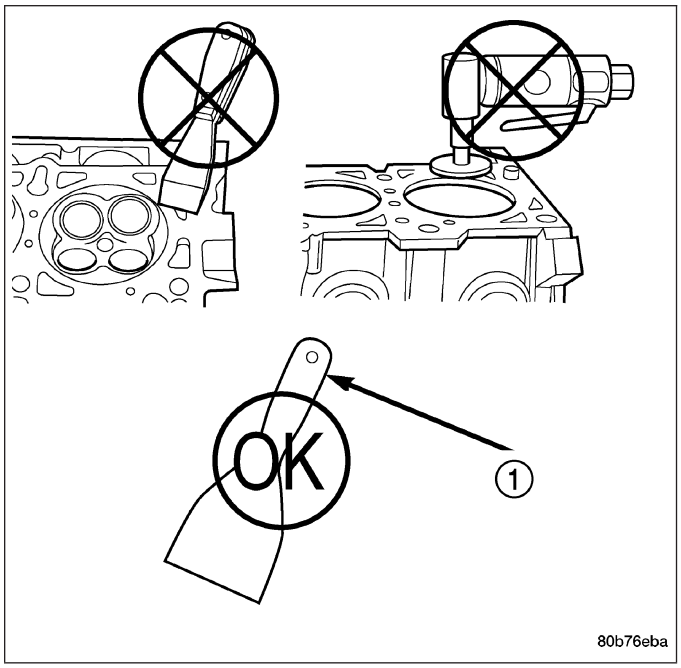

2. Position the new cylinder head gasket on the locating dowels.

CAUTION: When installing cylinder head, use care not damage the tensioner arm or the guide arm.

3. Position the cylinder head onto the cylinder block. Make sure the cylinder head seats fully over the locating dowels.

NOTE: The four smaller cylinder head mounting bolts require sealant to be added to them before installing. Failure to do so may cause leaks.

4. Lubricate the cylinder head bolt threads with clean engine oil and install the eight M11 bolts.
5. Coat the four M8 cylinder head bolts with **Mopar® Lock and Seal Adhesive** then install the bolts.

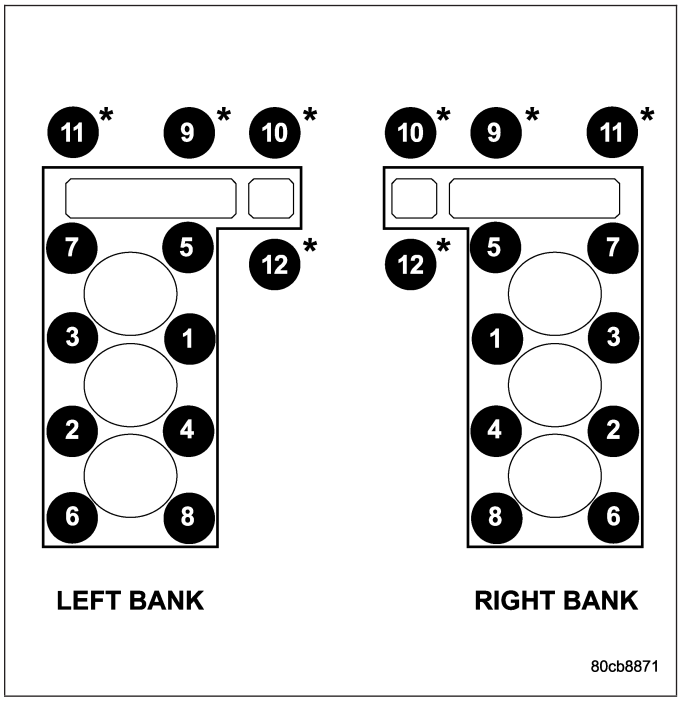

NOTE: The cylinder head bolts are tightened using an angle torque procedure, however, the bolts are not a torque-to-yield design.

6. Tighten the bolts in sequence using the following steps and torque values:
   - Step 1: Tighten bolts 1-8, 27 N·m (20 ft. lbs.).
   - Step 2: Verify that bolts 1-8, all reached 27 N·m (20 ft. lbs.), by repeating step 1 without loosening the bolts.
   - Tighten bolts 9 thru 12 to 14 N·m (10 ft. lbs.).
   - Step 3: Tighten bolts 1-8, 90 degrees.
   - Step 4: Tighten bolts 1-8, 90 degrees, again. Tighten bolts 9-12, 26 N·m (19 ft. lbs.)
7. Position the secondary chain onto the camshaft drive gear, making sure one marked chain link is on either side of the V6 mark on the gear then using Special Tool 8428 Camshaft Wrench, position the gear onto the camshaft.

CAUTION: Remove excess oil from camshaft sprocket retaining bolt before reinstalling bolt. Failure to do so may cause over-torqueing of bolt resulting in bolt failure.

8. Install the camshaft drive gear retaining bolt.
9. Install the left side secondary chain guide (Refer to 9 - ENGINE/VALVE TIMING/TIMING BELT/CHAIN AND SPROCKETS - INSTALLATION).
10. Install the cylinder head access plug.
11. Re-set and install the left side secondary chain tensioner (Refer to 9 - ENGINE/VALVE TIMING/TIMING BELT/CHAIN AND SPROCKETS - INSTALLATION).
12. Remove Special Tool 8429.
13. Install the timing chain cover (Refer to 9 - ENGINE/VALVE TIMING/TIMING BELT / CHAIN COVER(S) - INSTALLATION).
14. Install the crankshaft damper (Refer to 9 - ENGINE/ENGINE BLOCK/VIBRATION DAMPER - INSTALLATION). Tighten damper bolt 175 N·m (130 Ft. Lbs.).
15. Install the power steering pump.
16. Install the fan blade assembly and fan shroud (Refer to 7 - COOLING/ENGINE/RADIATOR FAN - INSTALLATION).
17. Install the cylinder head cover (Refer to 9 - ENGINE/CYLINDER HEAD/CYLINDER HEAD COVER(S) - INSTALLATION).
18. Install the master cylinder and booster assembly (Refer to 5 - BRAKES/HYDRAULIC/MECHANICAL/POWER BRAKE BOOSTER - INSTALLATION).
19. Install the intake manifold (Refer to 9 - ENGINE/MANIFOLDS/INTAKE MANIFOLD - INSTALLATION).
20. Refill the cooling system (Refer to 7 - COOLING - STANDARD PROCEDURE).
21. Raise the vehicle.
22. Install the exhaust pipe onto the left exhaust manifold.
23. Lower the vehicle.
24. Connect the negative cable to the battery.
25. Start the engine and check for leaks.

CAMSHAFT

DESCRIPTION

The camshafts consist of powdered metal steel lobes which are sinter-bonded to a steel tube. Four bearing journals are machined into the camshaft. Camshaft end play is controlled by two thrust walls that border the nose piece journal.

REMOVAL

CAUTION: When the timing chain is removed and the cylinder heads are still installed, DO NOT forcefully rotate the camshafts or crankshaft independently of each other. Severe valve and/or piston damage can occur.

CAUTION: When removing the cam sprocket, timing chains or camshaft, Failure to use Special Tool 8379 will result in hydraulic tensioner ratchet over extension, requiring timing chain cover removal to reset the tensioner ratchet.

1. Remove cylinder head cover (Refer to 9 - ENGINE/CYLINDER HEAD/CYLINDER HEAD COVER(S) - REMOVAL).

2. Set engine to TDC cylinder #1, camshaft sprocket V6 marks at the 12 o'clock position.
3. Mark one link on the secondary timing chain on both sides of the V6 mark on the camshaft sprocket to aid in installation.

CAUTION: Do not hold or pry on the camshaft target wheel (Located on the right side camshaft sprocket) for any reason, Severe damage will occur to the target wheel resulting in a vehicle no start condition.

4. Loosen but **DO NOT** remove the camshaft sprocket retaining bolt. Leave the bolt snug against the sprocket.

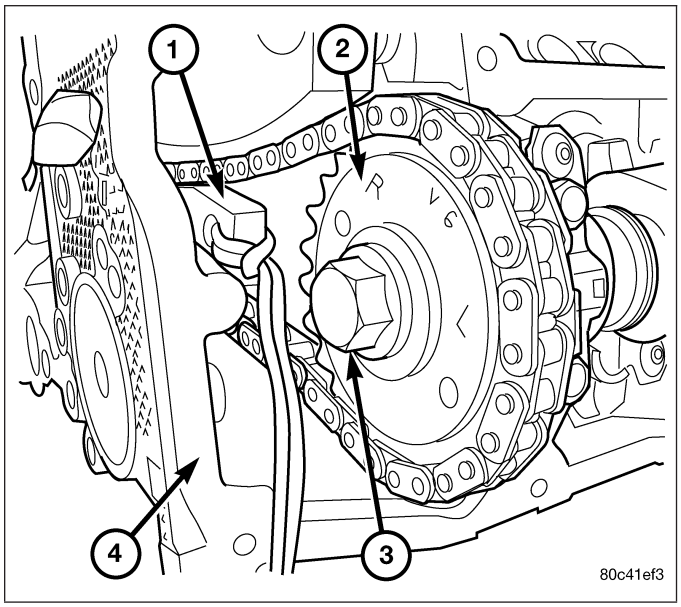

NOTE: The timing chain tensioners must be secured prior to removing the camshaft sprockets. Failure to secure tensioners will allow the tensioners to extend, requiring timing chain cover removal in order to reset tensioners.

CAUTION: Do not force wedge past the narrowest point between the chain strands. Damage to the tensioners may occur.

5. Position Special Tool 8379 timing chain wedge between the timing chain strands, tap the tool to securely wedge the timing chain against the tensioner arm and guide.

6. Hold the camshaft with Special Tool 8428 Camshaft Wrench , while removing the camshaft sprocket bolt and sprocket.
7. Using Special Tool 8428 Camshaft Wrench, gently allow the camshaft to rotate 5° clockwise until the camshaft is in the neutral position (no valve load).
8. Starting at the outside working inward, loosen the camshaft bearing cap retaining bolts 1/2 turn at a time. Repeat until all load is off the bearing caps.

CAUTION: DO NOT STAMP OR STRIKE THE CAMSHAFT BEARING CAPS. SEVERE DAMAGE WILL OCCUR TO THE BEARING CAPS.

NOTE: When the camshaft is removed the rocker arms may slide downward, mark the rocker arms before removing camshaft.

9. Remove the camshaft bearing caps and the camshaft.

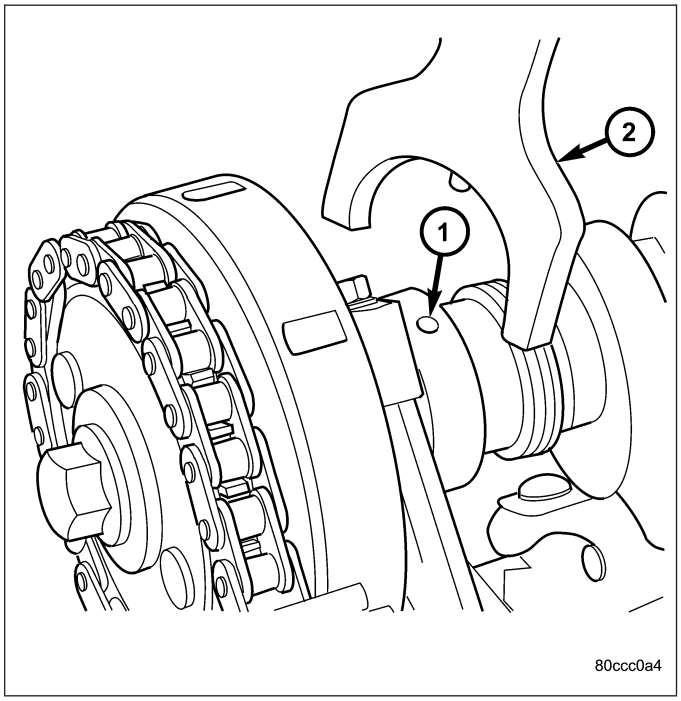

INSTALLATION

1. Lubricate camshaft journals with clean engine oil.

NOTE: Position the left side camshaft so that the camshaft sprocket dowel is near the 1 o'clock position, This will place the camshaft at the neutral position easing the installation of the camshaft bearing caps.

2. Position the camshaft into the cylinder head.
3. Install the camshaft bearing caps, hand tighten the retaining bolts.

NOTE: Caps should be installed so that the stamped numbers on the caps are in numerical order, (1 thru 4) from the front to the rear of the engine. All caps should be installed so that the stamped arrows on the caps point toward the front of the engine.

4. Working in 1/2 turn increments, tighten the bearing cap retaining bolts starting with the middle cap working outward.
5. Torque the camshaft bearing cap retaining bolts to 11 N·m (100 in. lbs.).

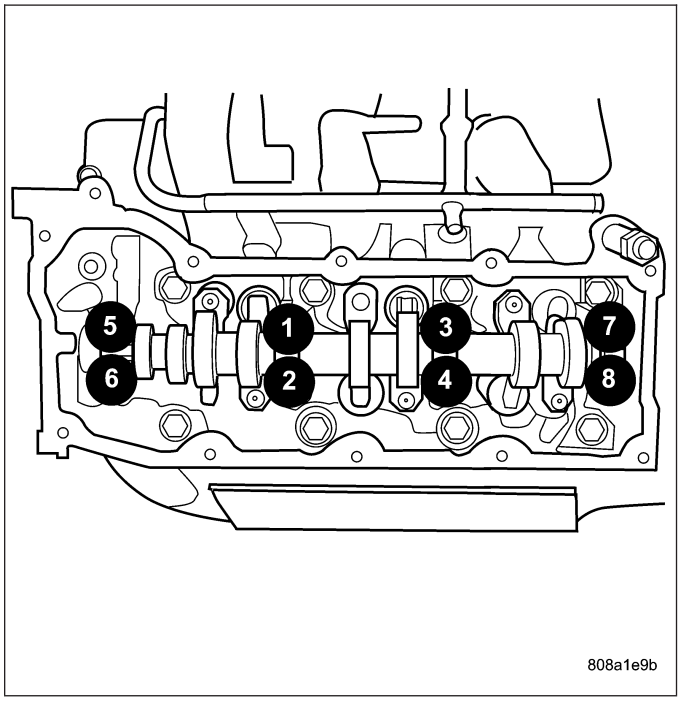

6. Position the camshaft drive gear into the timing chain aligning the V6 mark between the two marked chain links (Two links marked during removal).
7. Using Special Tool 8428 Camshaft Wrench, rotate the camshaft until the camshaft sprocket dowel is aligned with the slot in the camshaft sprocket. Install the sprocket onto the camshaft.

CAUTION: Remove excess oil from camshaft sprocket bolt. Failure to do so can cause bolt over-torque resulting in bolt failure.

8. Remove excess oil from bolt, then install the camshaft sprocket retaining bolt and hand tighten.
9. Remove Special Tool 8379 timing chain wedge.
10. Using Special Tool 6958 spanner wrench with adapter pins 8346, torque the camshaft sprocket retaining bolt to 122 N·m (90 ft. lbs.).
11. Install the cylinder head cover (Refer to 9 - ENGINE/CYLINDER HEAD/CYLINDER HEAD COVER(S) - INSTALLATION).

COVER - CYLINDER HEAD

DESCRIPTION

The cylinder head covers (1,2) are made of glass re-enforced thermoset plastic, and are not interchangable from side-to-side.

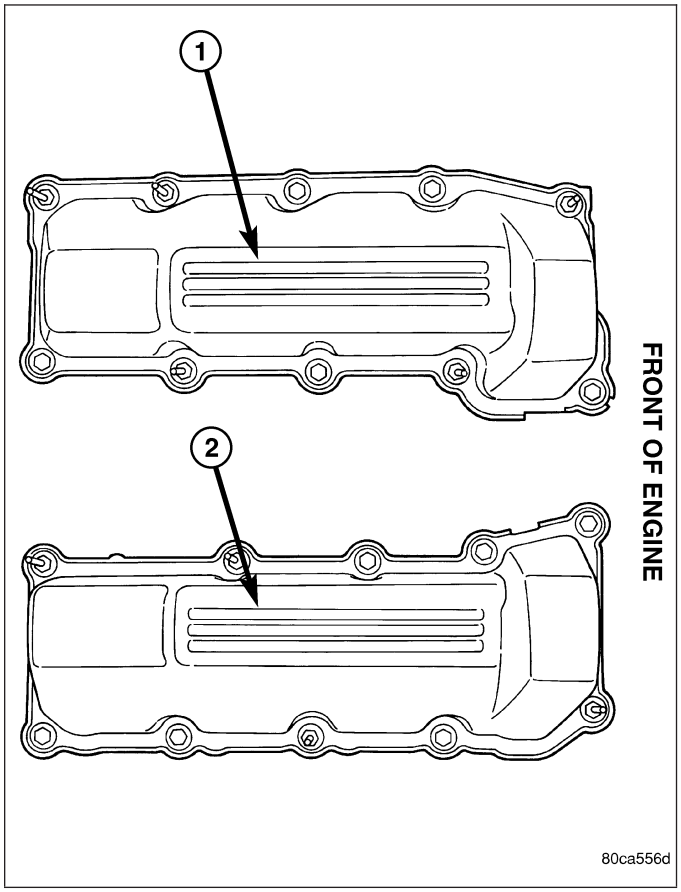

REMOVAL

1. Disconnect negative cable from battery.
2. Remove the resonator assemble and air inlet hose.
3. Disconnect injector connectors and un-clip the injector harness.
4. Route injector harness in front of cylinder head cover.
5. Disconnect the left side breather tube and remove the breather tube.
6. Remove the cylinder head cover mounting bolts (1).
7. Remove cylinder head cover (1) and gasket.

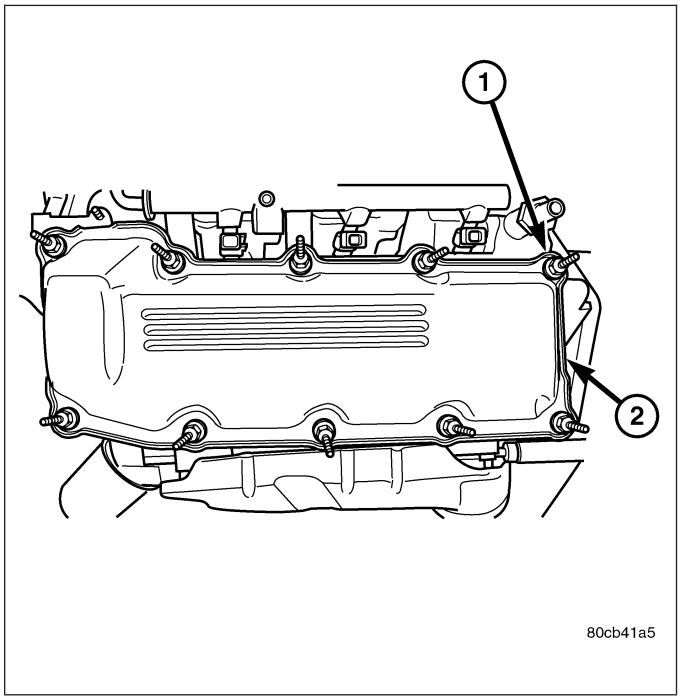

NOTE: The gasket may be used again, providing no cuts, tears, or deformation has occurred.

INSTALLATION

CAUTION: Do not use harsh cleaners to clean the cylinder head covers. Severe damage to covers may occur.

NOTE: The gasket may be used again, provided no cuts, tears, or deformation has occurred.

1. Clean cylinder head cover and both sealing surfaces. Inspect and replace gasket as necessary.
2. Install cylinder head cover (2).
3. Tighten cylinder head cover bolts (1) and double ended studs to 12 N·m (105 in. lbs.).
4. Install left side breather and connect breather tube.
5. Connect injector electrical connectors and injector harness retaining clips.
6. Install the resonator and air inlet hose.
7. Connect negative cable to battery.

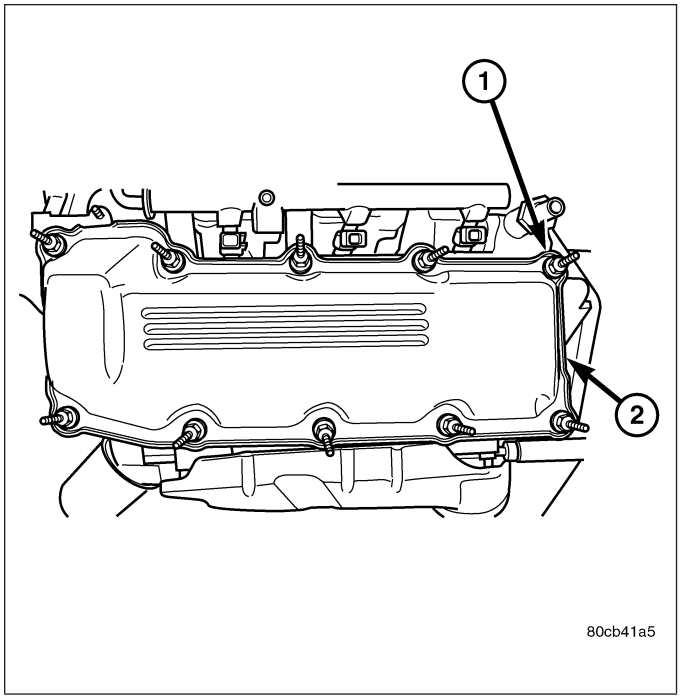

VALVES & SEATS - INTAKE/EXHAUST

DESCRIPTION

The valves are made of heat resistant steel and have chrome plated stems to prevent scuffing. Each valve is actuated by a roller rocker arm which pivots on a stationary lash adjuster. All valves use three bead lock keepers to retain the springs and promote valve rotation.

STANDARD PROCEDURE - REFACING

NOTE: Valve seats that are worn or burned can be reworked, provided that correct angle and seat width are maintained. Otherwise the cylinder head must be replaced.

NOTE: When refacing valves (4) and valve seats, it is important that the correct size valve guide pilot be used for reseating stones. A true and complete surface must be obtained.

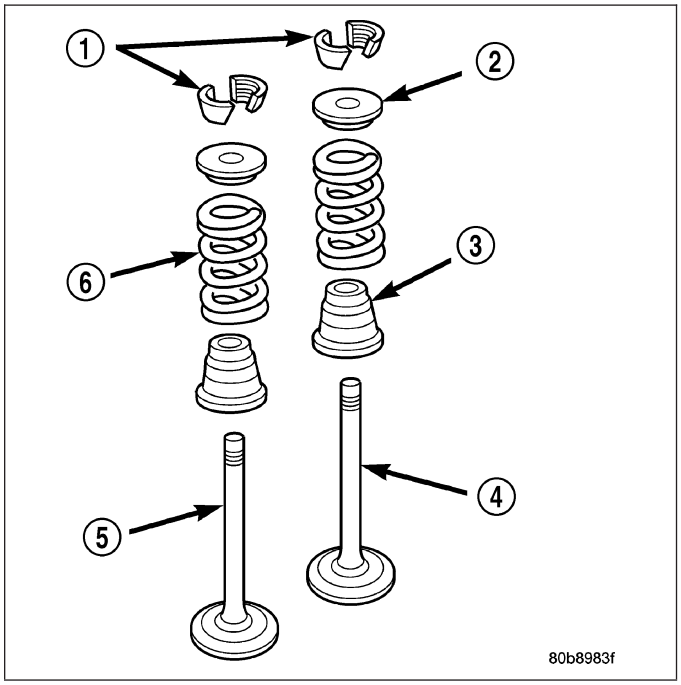

1. Using a suitable dial indicator measure the center of the valve seat Total run out must not exceed 0.051 mm (0.002 in).
2. Apply a small amount of Prussian blue to the valve seat, insert the valve into the cylinder head, while applying light pressure on the valve rotate the valve. Remove the valve and examine the valve face. If the blue is transferred below the top edge of the valve face, lower the valve seat using a 15 degree stone. If the blue is transferred to the bottom edge of the valve face, raise the valve seat using a 65 degree stone.
3. When the seat is properly positioned the width of the intake seat must be 1.75 - 2.36 mm (0.0689 - 0.0928 in.) and the exhaust seat must be 1.71 - 2.32 mm (0.0673 - 0.0911 in.).
4. Check the valve spring (6) installed height after refacing the valve and seat. The installed height for both intake and exhaust valve springs must not exceed 40.74 mm (1.6039 in.).
5. The valve seat and valve face must maintain a face angle of 44.5 - 45 ° angle .

REMOVAL

NOTE: The cylinder heads must be removed in order to perform this procedure.

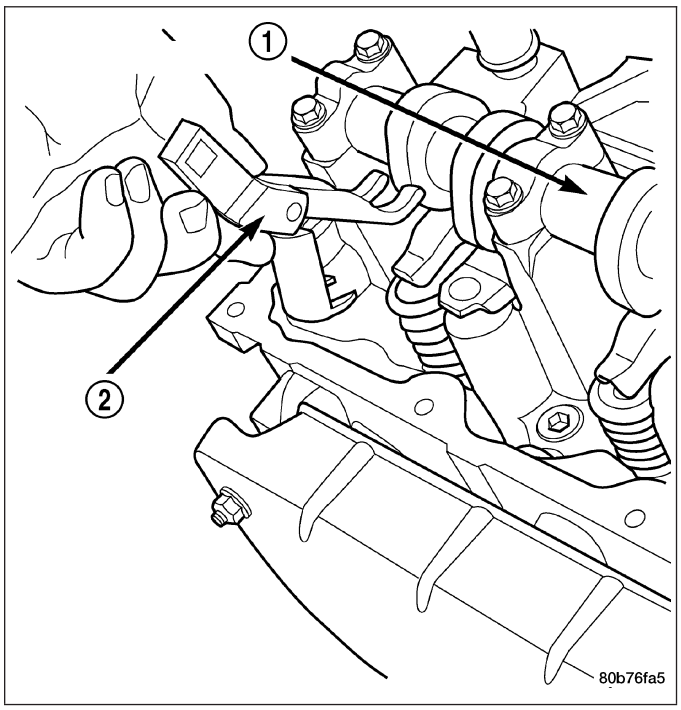

1. Remove rocker arms and lash adjusters (Refer to 9 - ENGINE/CYLINDER HEAD/ROCKER ARM / ADJUSTER ASSY - REMOVAL).
2. Remove the camshaft bearing caps and the camshaft.

NOTE: All six valve springs and valves are removed in the same manner; this procedure only covers one valve and valve spring.

3. Using Special Tool C-3422–B or C-3422–C Valve Spring Compressor and Special tool 8519 Adapter, compress the valve spring.

NOTE: It may be necessary to tap the top of the valve spring to loosen the spring retainers locks enough to be removed.

4. Remove the two spring retainer lock halves.

NOTE: the valve spring is under tension use care when releasing the valve spring compressor.

5. Remove the valve spring compressor.
6. Remove the spring retainer, and the spring.

NOTE: Check for sharp edges on the keeper grooves. Remove any burrs from the valve stem before removing the valve from the cylinder head.

7. Remove the valve from the cylinder head.

NOTE: The valve stem seals are common between intake and exhaust.

8. Remove the valve stem seal. Mark the valve for proper installation.

TESTING VALVE SPRINGS

NOTE: Whenever the valves are removed from the cylinder head it is recommended that the valve springs be inspected and tested for reuse.

Inspect the valve springs for physical signs of wear or damage. Turn table of tool C-647 (1) until surface is in line with the 40.12 mm (1.579 in.) mark on the threaded stud and the zero mark on the front. Place spring over the stud on the table and lift compressing lever to set tone device. Pull on torque wrench until a Ping is heard. Take reading on torque wrench at this instant. Multiply this reading by two. This will give the spring load at test length. Fractional measurements are indicated on the table for finer adjustments. Refer to Specifications Section to obtain specified height and allowable tensions. Replace any springs that do not meet specifications.

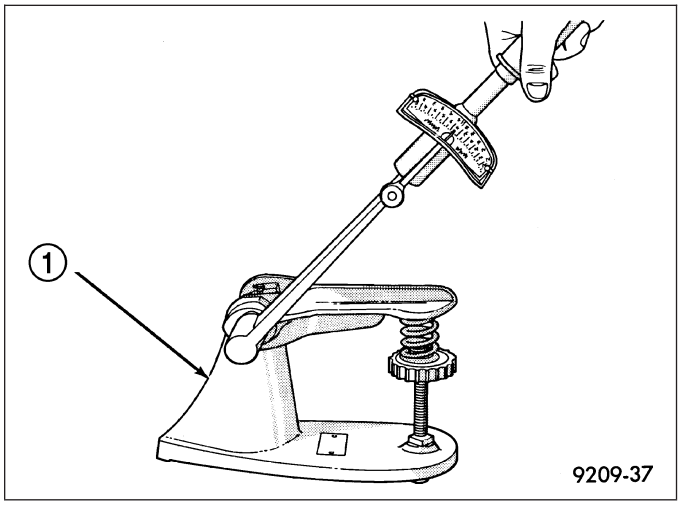

INSTALLATION

1. coat the valve stem with clean engine oil and insert it into the cylinder head.
2. Install the valve stem seal. make sure the seal is fully seated and that the garter spring at the top of the seal is intact.
3. Install the spring and the spring retainer.
4. Using the valve spring compressor, compress the spring and install the two valve spring retainer halves.
5. Release the valve spring compressor and make sure the two spring retainer halves and the spring retainer are fully seated.

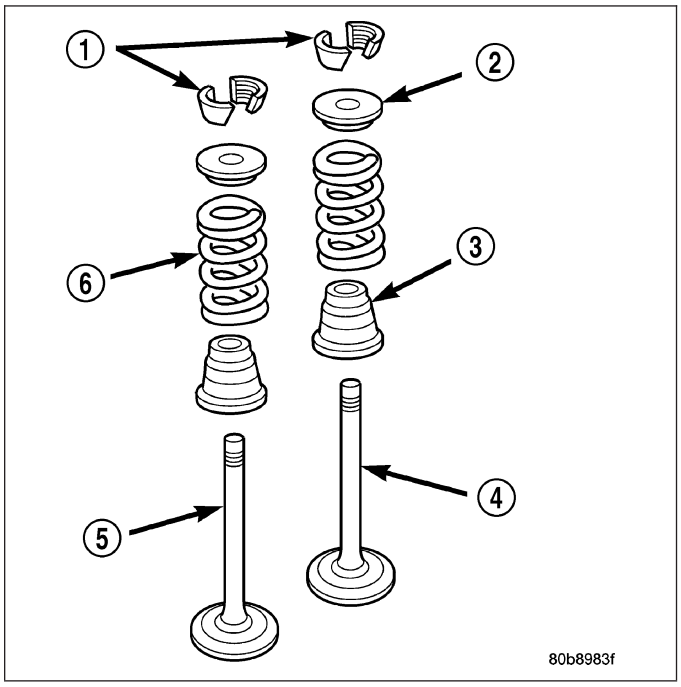

6. lubricate the camshaft journal with clean engine oil then Position the camshaft (with the sprocket dowel on the left camshaft at 11 o'clock and the right camshaft at 12 o'clock), then position the camshaft bearing caps.
7. Install the camshaft bearing cap retaining bolts. Tighten the bolts 9-13 N·m (100 in. lbs.) in 1/2 turn increments in the sequence shown.
8. Position the hydraulic lash adjusters and rocker arms (Refer to 9 - ENGINE/CYLINDER HEAD/ ROCKER ARM / ADJUSTER ASSY - INSTALLATION).

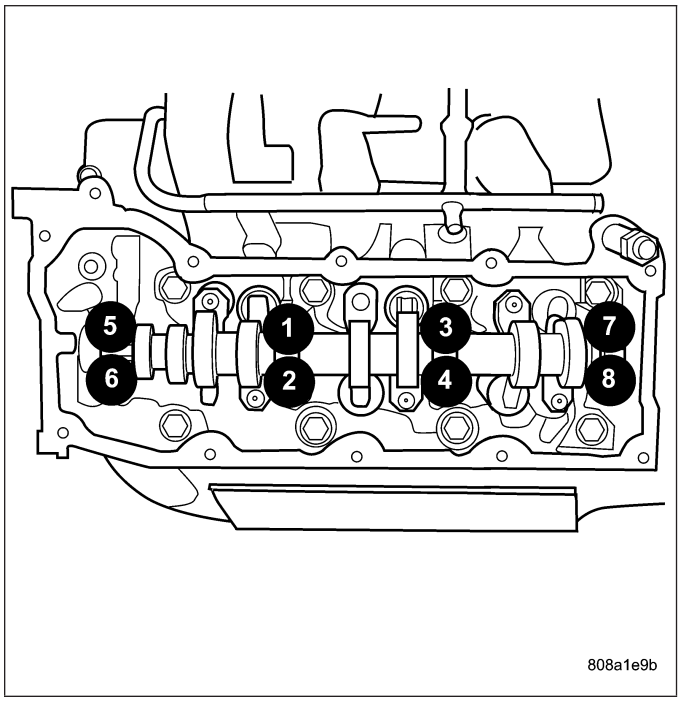

ROCKER ARM - VALVE

DESCRIPTION

The rocker arms are steel stampings with an integral roller bearing. The rocker arms incorporate a 2.8 mm (0.11 inch) oil hole in the lash adjuster socket for roller and camshaft lubrication.

REMOVAL

NOTE: Disconnect the battery negative cable to prevent accidental starter engagement.

1. Remove the cylinder head cover (Refer to 9 - ENGINE/CYLINDER HEAD/CYLINDER HEAD COVER(S) - REMOVAL).
2. For rocker arm removal on cylinder No. 4, Rotate the crankshaft until cylinder No. 1 is at BDC intake stroke.
3. For rocker arm removal on cylinder No. 1, Rotate the crankshaft until cylinder No. 1 is at BDC combustion stroke.
4. For rocker arm removal on cylinders No. 3 and No. 5, Rotate the crankshaft until cylinder No. 1 is at TDC exhaust stroke.
5. For rocker arm removal on cylinders No. 2 and No. 6, Rotate the crankshaft until cylinder No. 1 is at TDC ignition stroke.
6. Using special tool 8516 Rocker Arm Remover (2) , press downward on the valve spring, remove rocker arm.

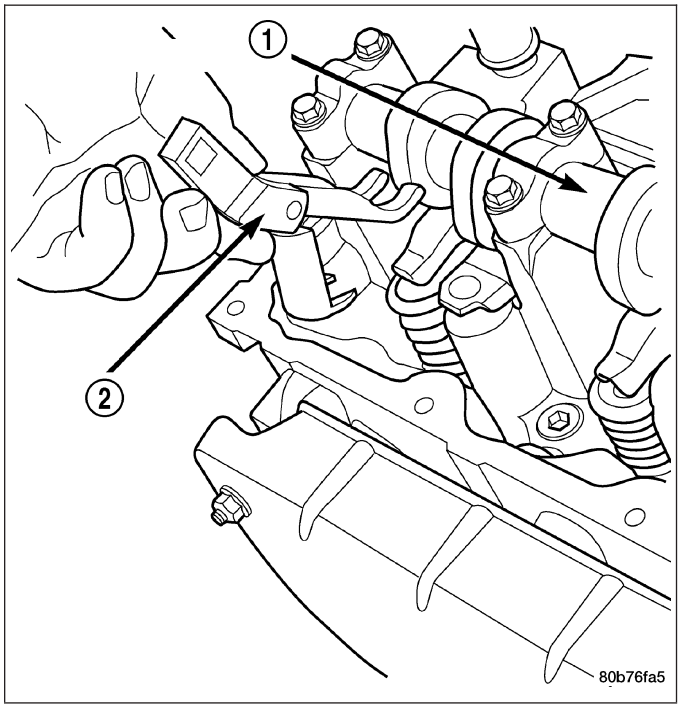

INSTALLATION

CAUTION: Make sure the rocker arms are installed with the concave pocket over the lash adjusters. Failure to do so may cause severe damage to the rocker arms and/or lash adjusters.

NOTE: Coat the rocker arms with clean engine oil prior to installation.

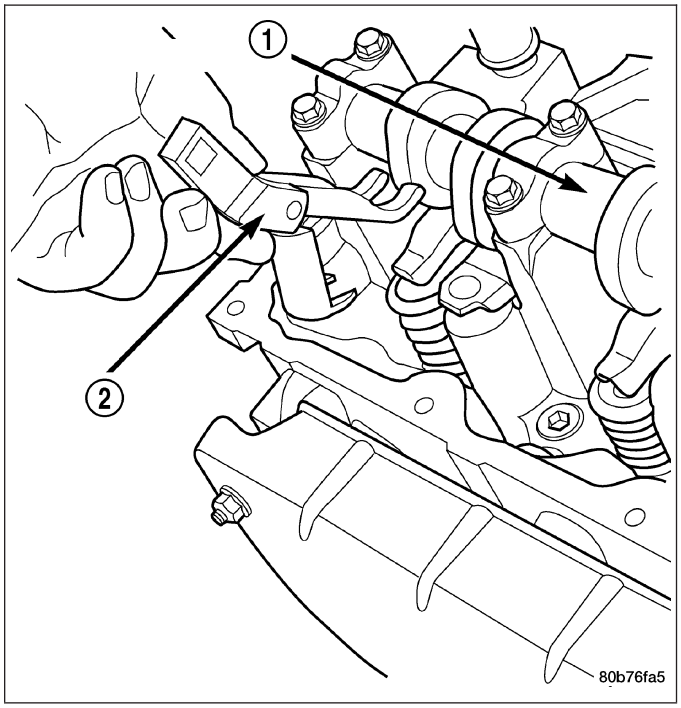

1. For rocker arm installation on cylinders No. 4, Rotate the crankshaft until cylinder No. 1 is at BDC intake stroke.
2. For rocker arm installation on cylinder No. 1, Rotate the crankshaft until cylinder No. 1 is at BDC combustion stroke.
3. For rocker arm installation on cylinders No. 3 and No. 5, Rotate the crankshaft until cylinder No. 1 is at TDC exhaust stroke.
4. For rocker arm installation on cylinders No. 2 and No. 6, Rotate the crankshaft until cylinder No. 1 is at TDC ignition stroke.
5. Using special tool 8516 (2) press downward on the valve spring, install rocker arm.
6. Install the cylinder head cover (Refer to 9 - ENGINE/CYLINDER HEAD/CYLINDER HEAD COVER(S) - INSTALLATION).

SEALS - VALVE GUIDE

DESCRIPTION

The valve guide seals are made of rubber and incorporate an integral steel valve spring seat. The integral garter spring maintains consistent lubrication control to the valve stems.

SPRINGS VALVE

DESCRIPTION

The valve springs are made from high strength chrome silicon steel. The springs are NOT common for intake and exhaust applications. The exhaust spring has an external damper. The valve spring seat is integral with the valve stem seal, which is a positive type seal to control lubrication.

REMOVAL

1. Remove the cylinder head cover (Refer to 9 - ENGINE/CYLINDER HEAD/CYLINDER HEAD COVER(S) - REMOVAL).
2. Using Special Tool 8516 Valve Spring Compressor, remove the rocker arms and the hydraulic lash adjusters.
3. Remove the spark plug for the cylinder the valve spring and seal are to be removed from.
4. Apply shop air to the cylinder to hold the valves in place when the spring is removed.

NOTE: All six valve springs and seals are removed in the same manner; this procedure only covers one valve seal and valve spring.

5. Using Special Tool 8387 Valve Spring Compressor, compress the valve spring.

NOTE: It may be necessary to tap the top of the valve spring to loosen the spring retainers locks enough to be removed.

6. Remove the two spring retainer lock halves.

NOTE: the valve spring is under tension use care when releasing the valve spring compressor.

7. Remove the valve spring compressor.

NOTE: The valve springs are NOT common between intake and exhaust.

8. Remove the spring retainer, and the spring.
9. Remove the valve stem seal.

NOTE: The valve stem seals are common between intake and exhaust.

INSTALLATION

NOTE: All six valve springs and seals are removed in the same manner; this procedure only covers one valve seal and valve spring.

1. Apply shop air to the cylinder to hold the valves in place while the spring is installed.

NOTE: The valve stem seals are common between intake and exhaust.

2. Install the valve stem seal.

NOTE: The valve springs are NOT common between intake and exhaust.

3. Install the spring retainer, and the spring.
4. Using Special Tool 8387 Valve Spring Compressor, compress the valve spring.
5. Install the two spring retainer lock halves.

NOTE: the valve spring is under tension use care when releasing the valve spring compressor.

6. Remove the valve spring compressor.
7. Disconnect the shop air to the cylinder.
8. Install the spark plug for the cylinder the valve spring and seal was installed on.
9. Using Special Tool 8516 Valve Spring Compressor, install the rocker arms and the hydraulic lash adjusters.
10. Install the cylinder head cover (Refer to 9 - ENGINE/CYLINDER HEAD/CYLINDER HEAD COVER(S) - INSTALLATION).

CYLINDER HEAD - RIGHT

DIAGNOSIS AND TESTING - HYDRAULIC LASH ADJUSTER

A tappet-like noise may be produced from several items. Check the following items.

1. Engine oil level too high or too low. This may cause aerated oil to enter the adjusters and cause them to be spongy.
2. Insufficient running time after rebuilding cylinder head. Low speed running up to 1 hour may be required.
3. Turn engine off and let set for a few minutes before restarting. Repeat this several times after engine has reached normal operating temperature.
4. Low oil pressure.
5. The oil restrictor in cylinder head gasket or the oil passage to the cylinder head is plugged with debris.
6. Air ingested into oil due to broken or cracked oil pump pick up.
7. Worn valve guides.

8. Rocker arm ears contacting valve spring retainer.
9. Rocker arm loose, adjuster stuck or at maximum extension and still leaves lash in the system.
10. Oil leak or excessive cam bore wear in cylinder head.
11. Faulty lash adjuster.
    a. Check lash adjusters for sponginess while installed in cylinder head and cam on camshaft at base circle. Depress part of rocker arm over adjuster. Normal adjusters should feel firm when pressed quickly. When pressed very slowly, lash adjusters should collapse.
    b. Remove suspected lash adjusters, and replace.
    c. Before installation, make sure adjusters are full of oil. This can be verified by little plunger travel when lash adjuster is depressed quickly.

REMOVAL

1. Disconnect battery negative cable.
2. Raise the vehicle on a hoist.
3. Disconnect the exhaust pipe at the right side exhaust manifold.
4. Drain the engine coolant (Refer to 7 - COOLING - STANDARD PROCEDURE).
5. Lower the vehicle.
6. Remove the intake manifold (Refer to 9 - ENGINE/ MANIFOLDS/INTAKE MANIFOLD - REMOVAL).
7. Remove the cylinder head cover (Refer to 9 - ENGINE/CYLINDER HEAD - REMOVAL).
8. Remove the fan shroud (Refer to 7 - COOLING/ ENGINE/RADIATOR FAN - REMOVAL).
9. Remove oil fill housing from cylinder head.
10. Remove accessory drive belt (Refer to 7 - COOLING/ACCESSORY DRIVE/DRIVE BELTS - REMOVAL).
11. Rotate the crankshaft until the damper timing mark is aligned with TDC indicator mark (2).

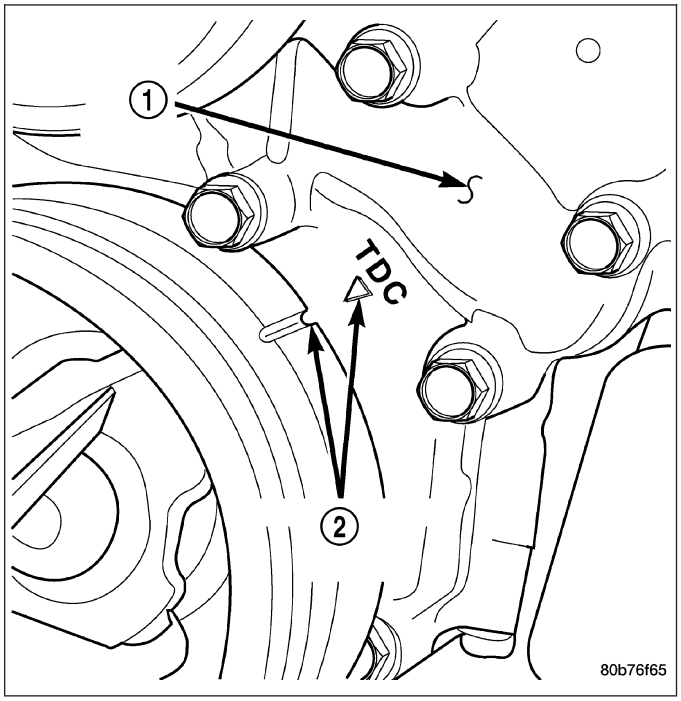

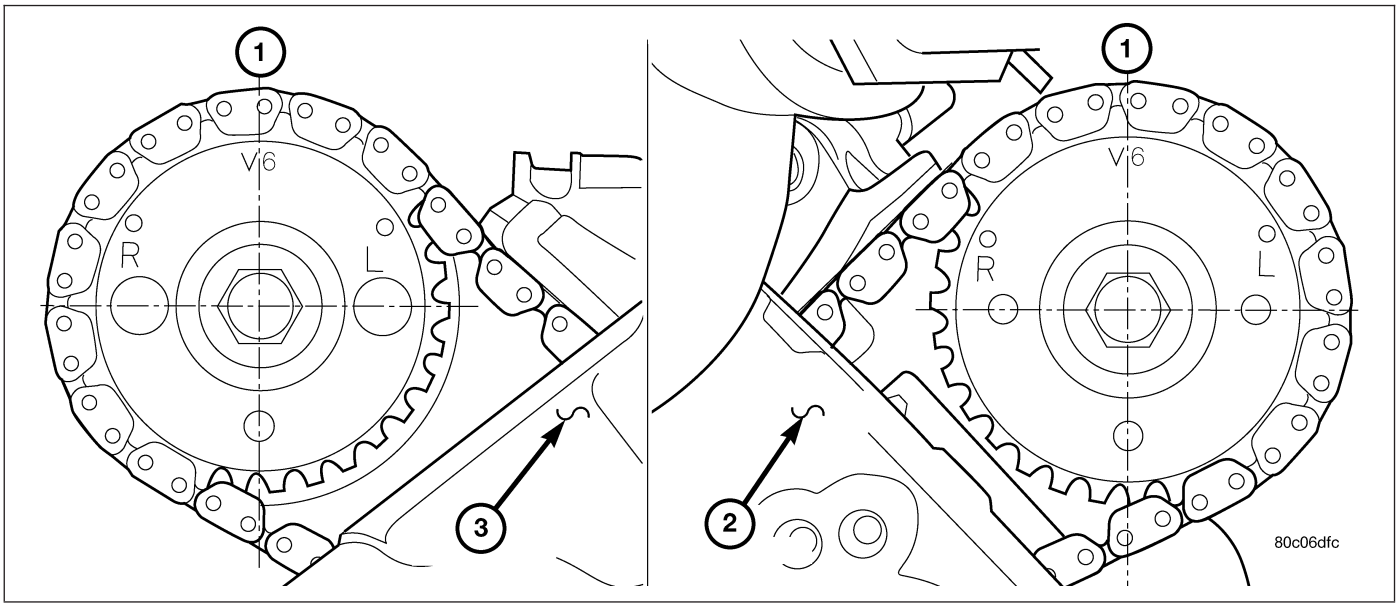

12. Verify the V6 mark on the camshaft sprocket is at the 12 o'clock position. Rotate the crankshaft one turn if necessary.
13. Remove the crankshaft damper (Refer to 9 - ENGINE/ENGINE BLOCK/VIBRATION DAMPER - REMOVAL).
14. Remove the timing chain cover (Refer to 9 - ENGINE/VALVE TIMING/TIMING BELT / CHAIN COVER(S) - REMOVAL).

15. Lock the secondary timing chains to the idler sprocket using Special Tool 8429 Timing Chain Holding Fixture (1).

NOTE: Mark the secondary timing chain prior to removal to aid in installation.

16. Mark the secondary timing chain, one link on each side of the V6 mark on the camshaft drive gear.
17. Remove the right side secondary chain tensioner (Refer to 9 - ENGINE/VALVE TIMING/TIMING BELT/CHAIN AND SPROCKETS - REMOVAL).

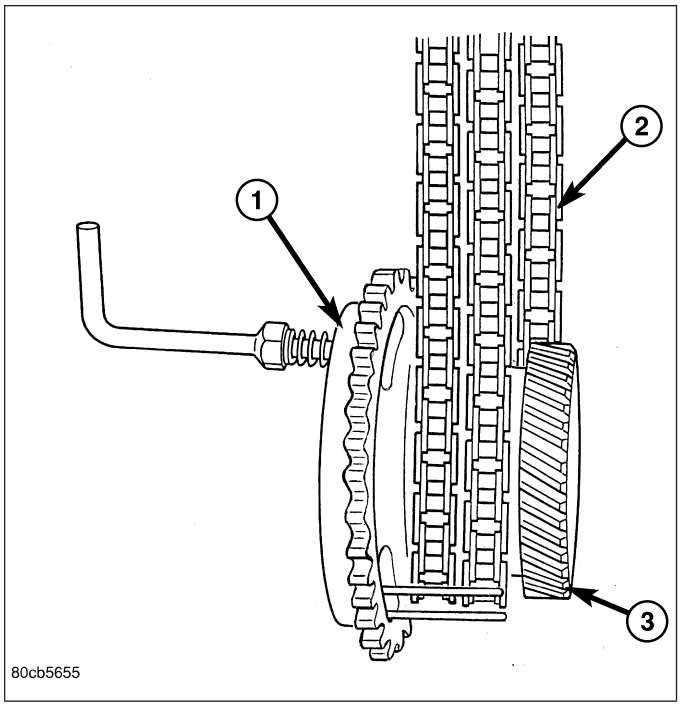

18. Remove the cylinder head access plug (1,2).
19. Remove the right side secondary chain guide (Refer to 9 - ENGINE/VALVE TIMING/TIMING BELT/CHAIN AND SPROCKETS - REMOVAL).

CAUTION: The nut on the right side camshaft sprocket should not be removed for any reason, as the sprocket and camshaft sensor target wheel is serviced as an assembly. If the nut was removed, torque nut to 5 N·m (44 in. lbs.).

20. Remove the retaining bolt and the camshaft drive gear.

CAUTION: Do not allow the engine to rotate. severe damage to the valve train can occur.

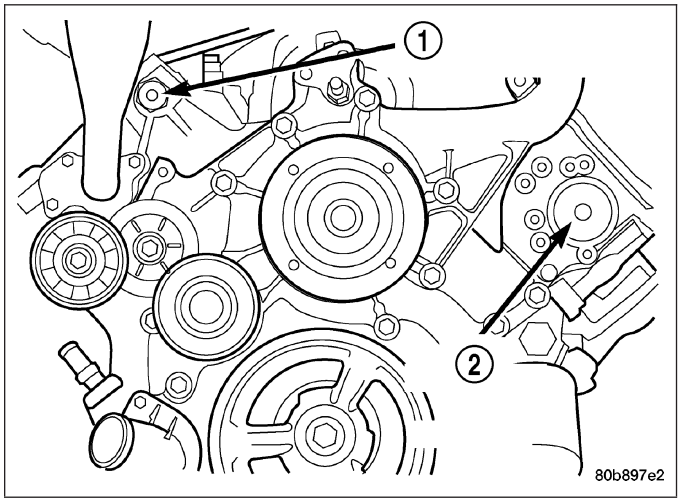

CAUTION: Do not overlook the four smaller bolts at the front of the cylinder head. Do not attempt to remove the cylinder head without removing these four bolts.

CAUTION: Do not hold or pry on the camshaft target wheel for any reason. A damaged target wheel can result in a vehicle no start condition.

NOTE: The cylinder head is attached to the cylinder block with twelve bolts.

21. Remove the cylinder head retaining bolts.
22. Remove the cylinder head and gasket. Discard the gasket.

CAUTION: Do not lay the cylinder head on its gasket sealing surface, do to the design of the cylinder head gasket any distortion to the cylinder head sealing surface may prevent the gasket from properly sealing resulting in leaks.

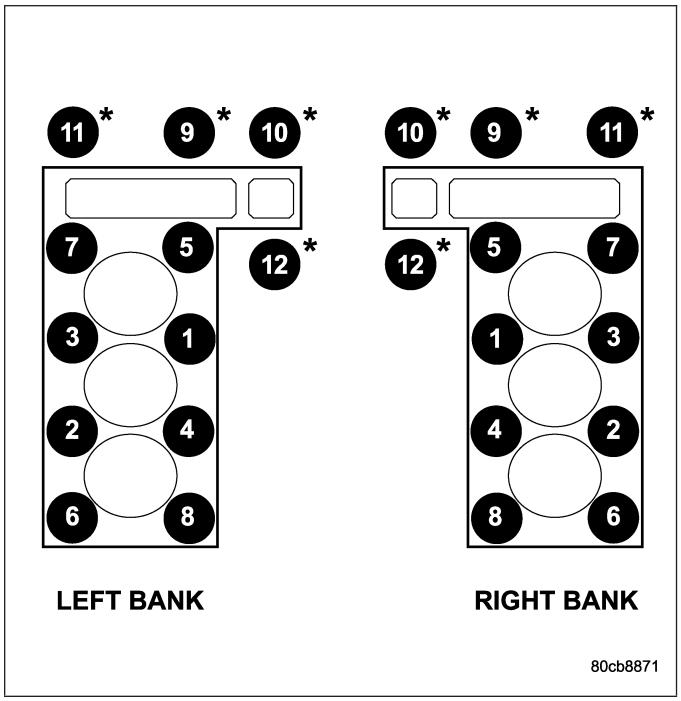

INSTALLATION

NOTE: The cylinder head bolts are tightened using a torque plus angle procedure. The bolts must be examined BEFORE reuse. If the threads are necked down (1) the bolts should be replaced.

Necking can be checked by holding a straight edge against the threads. If all the threads do not contact the scale, the bolt should be replaced.

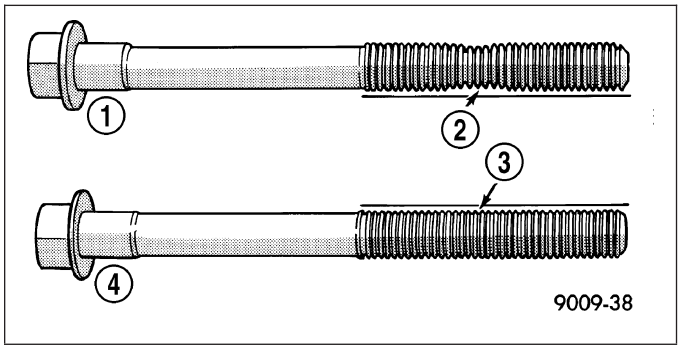

CAUTION: When cleaning cylinder head and cylinder block surfaces, DO NOT use a metal scraper because the surfaces could be cut or ground. Use only a wooden or plastic scraper (1).

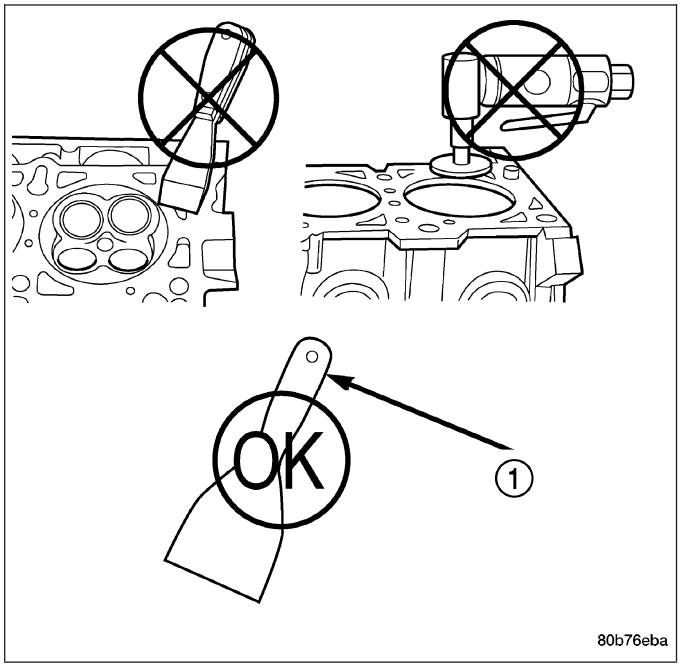

1. Clean the cylinder head and cylinder block mating surfaces.

2. Position the new cylinder head gasket on the locating dowels.

CAUTION: When installing cylinder head, use care not damage the tensioner arm or the guide arm.

3. Position the cylinder head onto the cylinder block. Make sure the cylinder head seats fully over the locating dowels.

NOTE: The four M8 cylinder head mounting bolts (1) require sealant to be added to them before installing. Failure to do so may cause leaks.

4. Lubricate the cylinder head bolt threads with clean engine oil and install the eight M10 bolts.
5. Coat the four M8 cylinder head bolts with **Mopar Lock and Seal Adhesive** then install the bolts.

NOTE: The cylinder head bolts are tightened using an angle torque procedure, however, the bolts are not a torque-to-yield design.

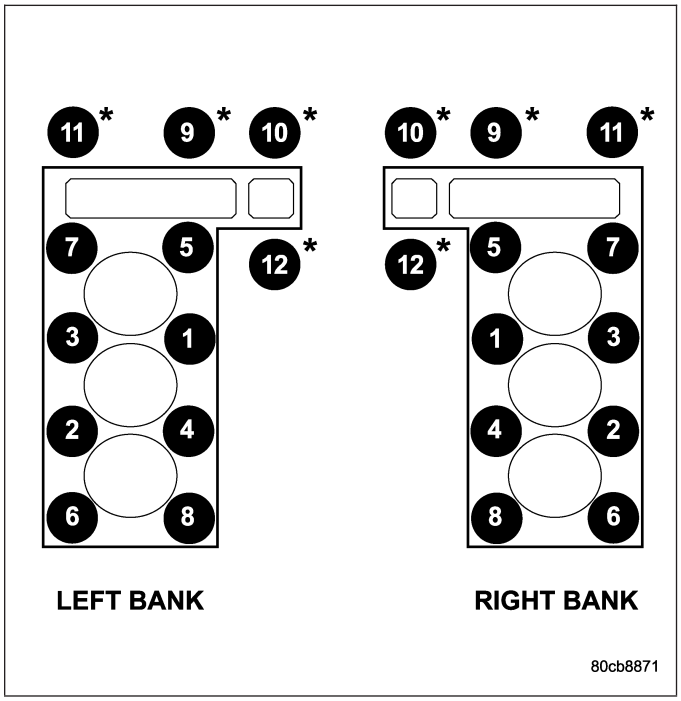

6. Tighten the bolts in sequence using the following steps and torque values:
   - Step 1: Tighten bolts 1-8, 27 N·m (20 ft. lbs.).
   - Step 2: Verify that bolts 1-8, all reached 27 N·m (20 ft. lbs.), by repeating step 1 without loosening the bolts. Tighten bolts 9 thru 12 to 14 N·m (10 ft. lbs.).
   - Step 3: Tighten bolts 1-8, 90 °.
   - Step 4: Tighten bolts 1-8, 90 °, again. Tighten bolts 9-12, 26 N·m (19 ft. lbs.)

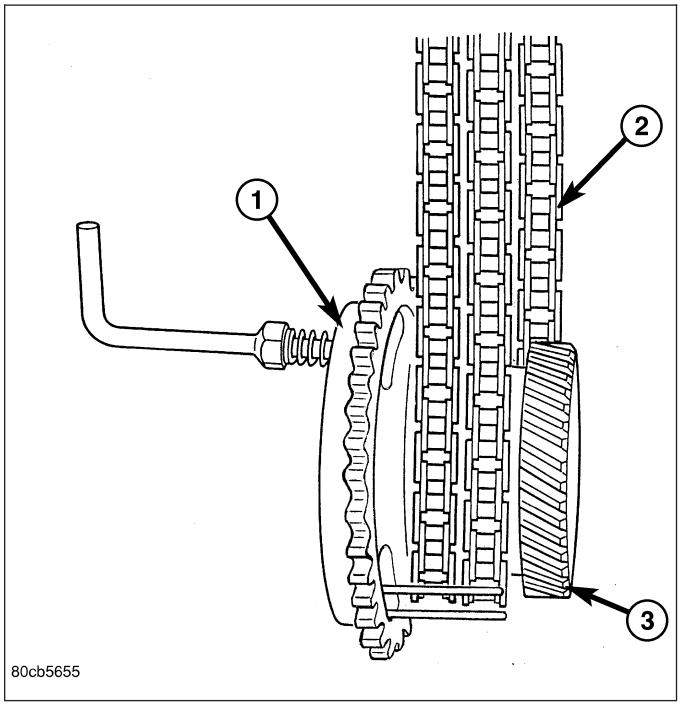

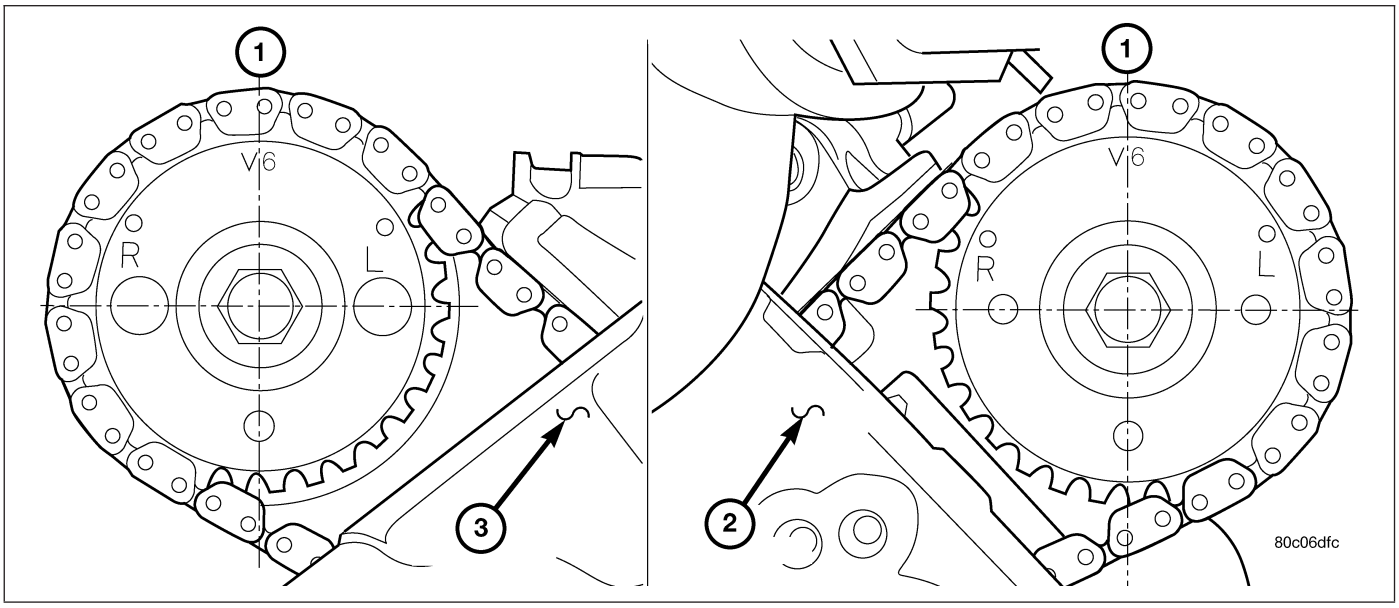

CAUTION: The nut on the right side camshaft sprocket should not be removed for any reason, as the sprocket and camshaft sensor target wheel is serviced as an assembly. If the nut was removed, torque nut to 5 NM (60 in. lbs.).

7. Position the secondary chain (2) onto the camshaft drive gear, making sure one marked chain link is on either side of the V6 mark (1) on the gear then using Special Tool 8428 Camshaft Wrench, position the gear onto the camshaft.

CAUTION: Remove excess oil from camshaft sprocket retaining bolt before reinstalling bolt. Failure to do so may cause over-torquing of bolt resulting in bolt failure.

8. Install the camshaft drive gear retaining bolt.
9. Install the right side secondary chain guide (Refer to 9 - ENGINE/VALVE TIMING/TIMING BELT/CHAIN AND SPROCKETS - INSTALLATION).

10. Install the cylinder head access plug (1,2).
11. Re-set and install the right side secondary chain tensioner (Refer to 9 - ENGINE/VALVE TIMING/ TIMING BELT/CHAIN AND SPROCKETS - INSTALLATION).

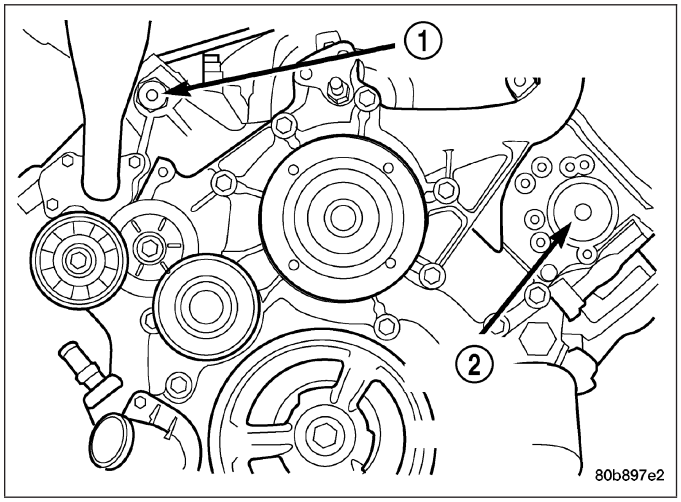

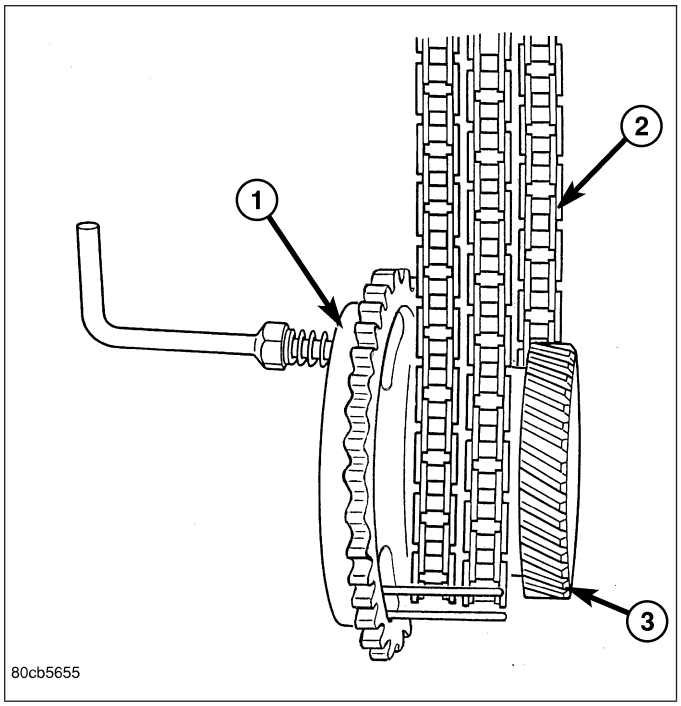

12. Remove Special Tool 8429 (1).
13. Install the timing chain cover (Refer to 9 - ENGINE/VALVE TIMING/TIMING BELT / CHAIN COVER(S) - REMOVAL).
14. Install the crankshaft damper (Refer to 9 - ENGINE/ENGINE BLOCK/VIBRATION DAMPER - INSTALLATION). Tighten damper bolt 175 N·m (130 Ft. Lbs.).
15. Install accessory drive belt (Refer to 7 - COOLING/ACCESSORY DRIVE/DRIVE BELTS - INSTALLATION).
16. Install the fan shroud (Refer to 7 - COOLING/ENGINE/RADIATOR FAN - INSTALLATION).
17. Install the cylinder head cover (Refer to 9 - ENGINE/CYLINDER HEAD/CYLINDER HEAD COVER(S) - INSTALLATION).
18. Install the intake manifold (Refer to 9 - ENGINE/MANIFOLDS/INTAKE MANIFOLD - INSTALLATION).
19. Install oil fill housing onto cylinder head.
20. Refill the cooling system (Refer to 7 - COOLING - STANDARD PROCEDURE).
21. Raise the vehicle.
22. Install the exhaust pipe onto the right exhaust manifold.
23. Lower the vehicle.
24. Reconnect battery negative cable.
25. Start the engine and check for leaks.

CAMSHAFT

DESCRIPTION

The camshafts consist of powdered metal steel lobes which are sinter-bonded to a steel tube. Four bearing journals are machined into the camshaft. Camshaft end play is controlled by two thrust walls that border the nose piece journal.

REMOVAL

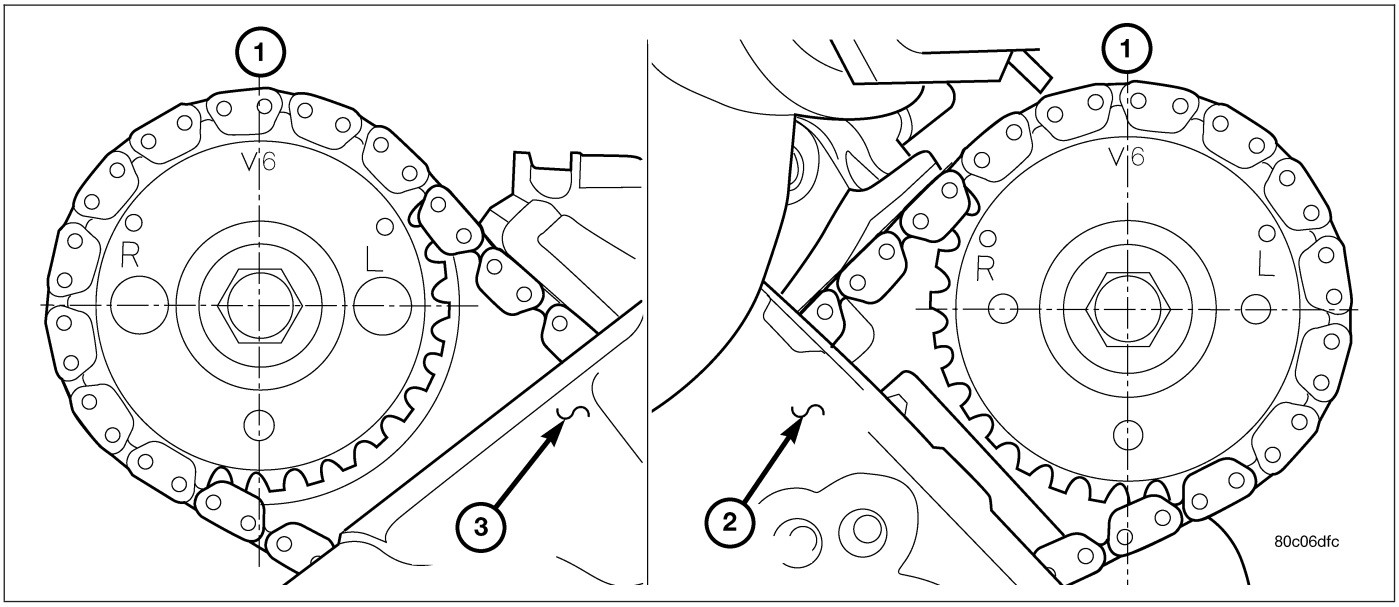

CAUTION: When the timing chain is removed and the cylinder heads are still installed, DO NOT forcefully rotate the camshafts or crankshaft independently of each other. Severe valve and/or piston damage can occur.

CAUTION: When removing the cam sprocket, timing chains or camshaft, Failure to use special tool 8379 will result in hydraulic tensioner ratchet over extension, Requiring timing chain cover removal to re-set the tensioner ratchet.

1. Remove the cylinder head cover (Refer to 9 - ENGINE/CYLINDER HEAD/CYLINDER HEAD COVER(S) - REMOVAL).
2. Set engine to TDC cylinder No. 1, camshaft sprocket V6 marks at the 12 o'clock position (1).
3. Mark one link on the secondary timing chain on both sides of the V6 mark on the camshaft sprocket to aid in installation.

CAUTION: Do not hold or pry on the camshaft target wheel for any reason, Severe damage will occur to the target wheel. A damaged target wheel could cause a vehicle no start condition.

4. Loosen but **DO NOT** remove the camshaft sprocket retaining bolt. Leave bolt snug against sprocket.

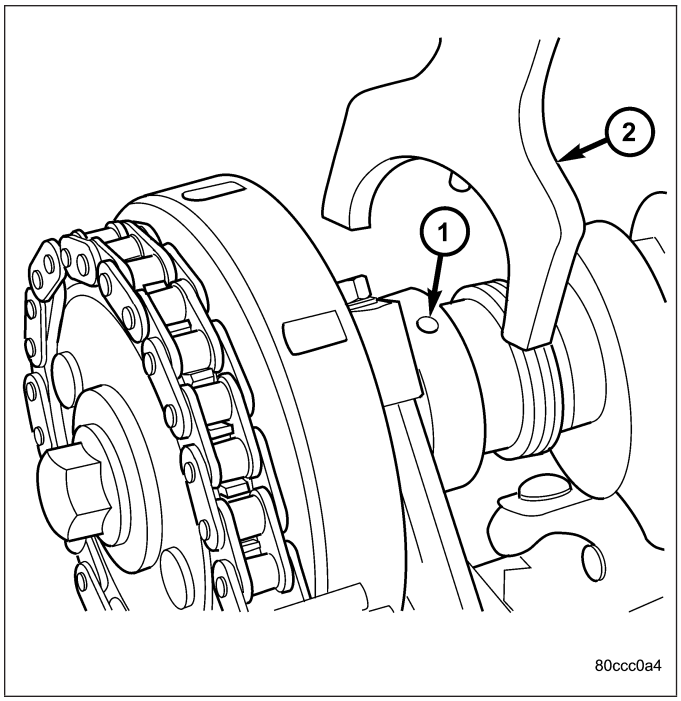

NOTE: The timing chain tensioners must be secured prior to removing the camshaft sprockets. Failure to secure tensioners will allow the tensioners to extend, requiring timing chain cover removal in order to reset tensioners.

CAUTION: Do not force wedge past the narrowest point between the chain strands. Damage to the tensioners may occur.

5. Position Special Tool 8379 timing chain wedge (1) between the timing chain strands. Tap the tool to securely wedge the timing chain against the tensioner arm and guide.

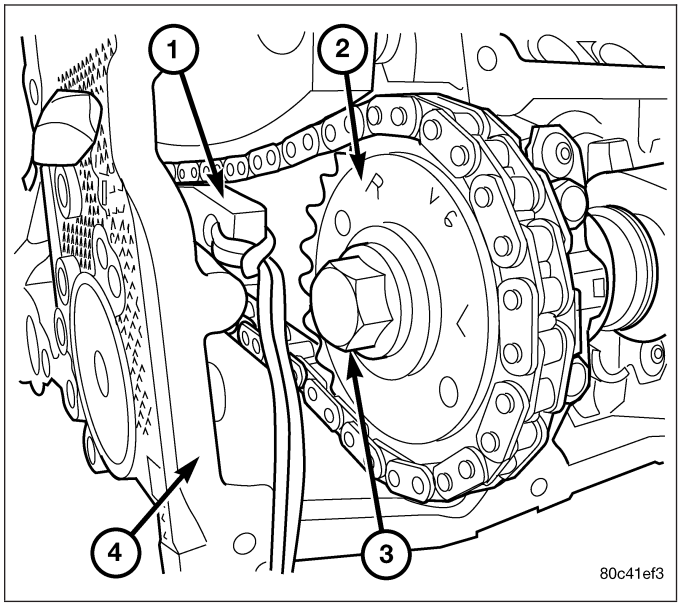

6. Remove the camshaft position sensor.
7. Hold the camshaft with Special Tool 8428 Camshaft Wrench (2), while removing the camshaft sprocket bolt and sprocket.

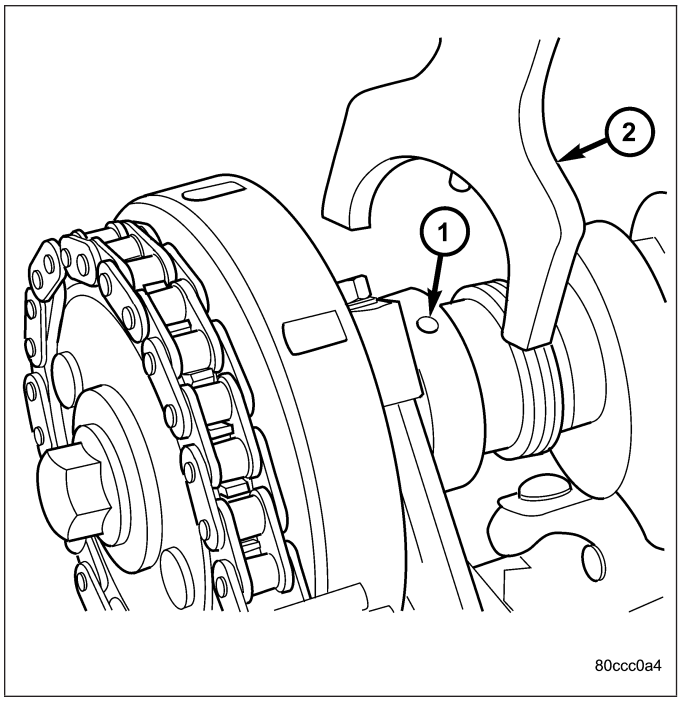

8. Starting at the outside working inward, loosen the camshaft bearing cap retaining bolts 1/2 turn at a time. Repeat until all load is off the bearing caps.

CAUTION: DO NOT STAMP OR STRIKE THE CAMSHAFT BEARING CAPS. SEVERE DAMAGE WILL OCCUR TO THE BEARING CAPS.

NOTE: When the camshaft is removed the rocker arms may slide downward, mark the rocker arms before removing camshaft.

9. Remove the camshaft bearing caps and the camshaft.

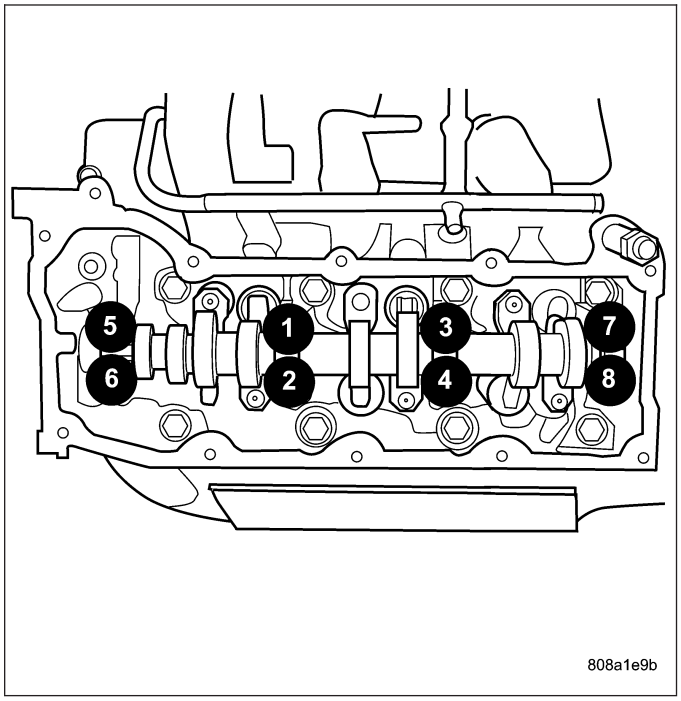

INSTALLATION

1. Lubricate camshaft journals with clean engine oil.

NOTE: Position the right side camshaft so that the camshaft sprocket dowel is near the 10 o'clock position, This will place the camshaft at the neutral position easing the installation of the camshaft bearing caps.

2. Position the camshaft into the cylinder head.
3. Install the camshaft bearing caps, hand tighten the retaining bolts.

NOTE: Caps should be installed so that the stamped numbers on the caps are in numerical order, (1 thru 4) from the front to the rear of the engine. All caps should be installed so that the stamped arrows on the caps point toward the front of the engine.

4. Working in 1/2 turn increments, tighten the bearing cap retaining bolts starting with the middle cap working outward.
5. Torque the camshaft bearing cap retaining bolts to 11 N·m (100 in. lbs.).

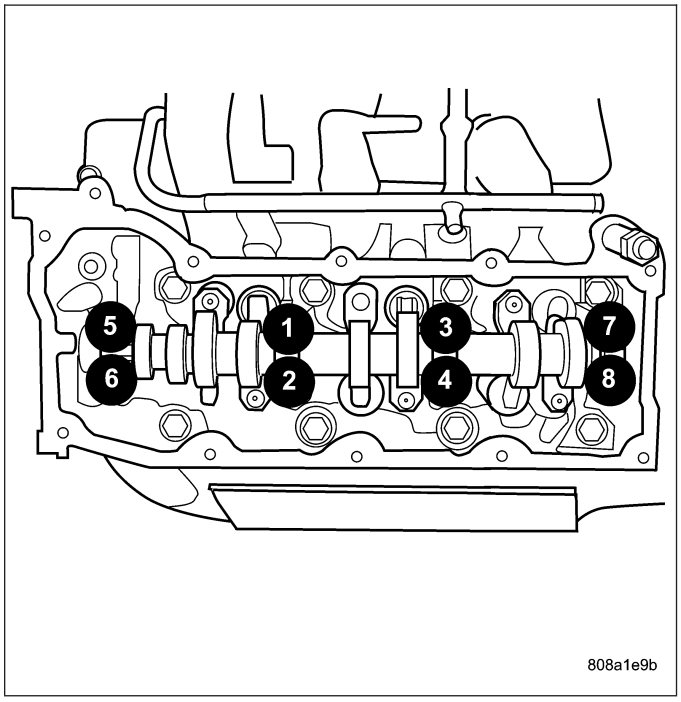

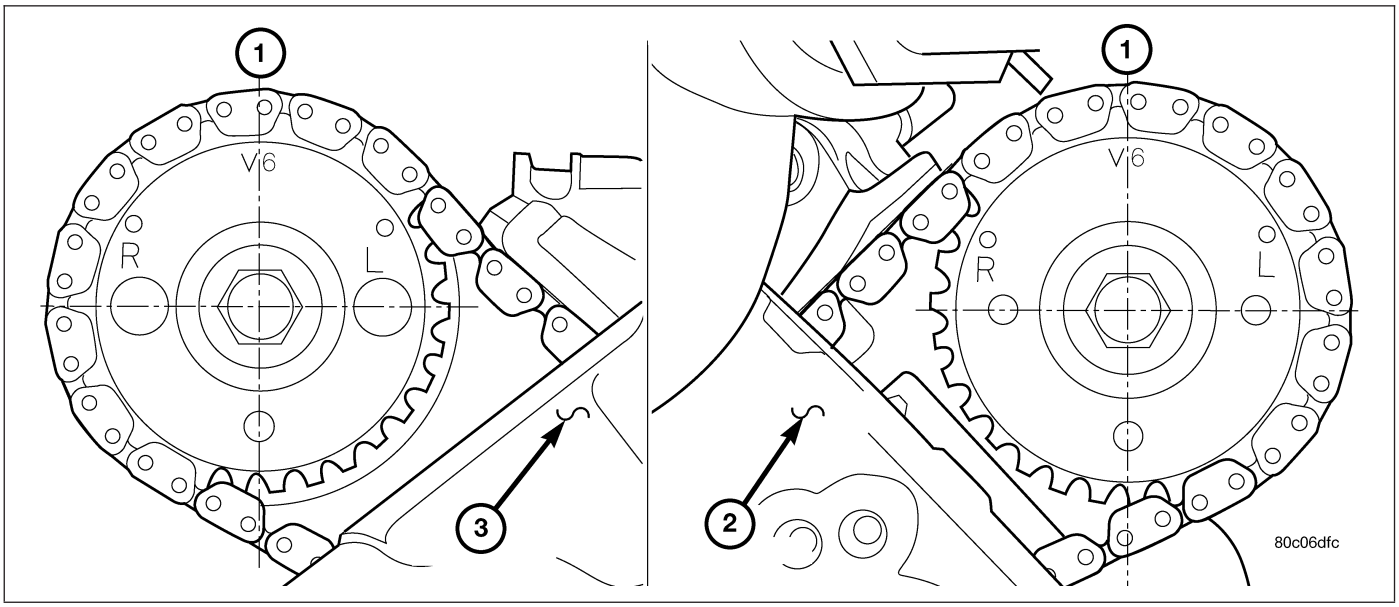

6. Position the camshaft drive gear into the timing chain aligning the V6 mark between the two marked chain links (Two links marked during removal).

7. Using Special Tool 8428 Camshaft Wrench (2), rotate the camshaft until the camshaft sprocket dowel is aligned with the slot in the camshaft sprocket. Install the sprocket onto the camshaft.

CAUTION: Remove excess oil from camshaft sprocket bolt. Failure to do so can cause bolt over-torque resulting in bolt failure.

8. Remove excess oil from camshaft sprocket bolt, then install the camshaft sprocket retaining bolt and hand tighten.

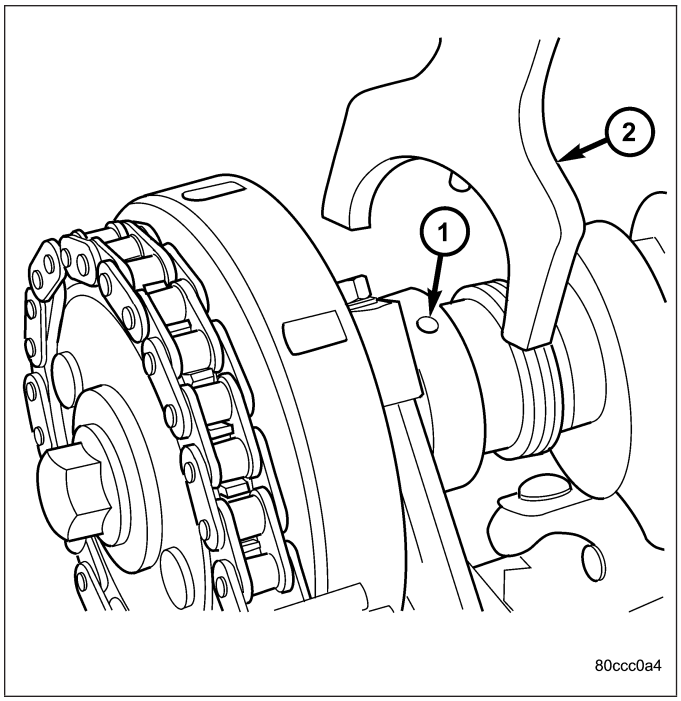

9. Remove timing chain wedge special tool 8379 (1).
10. Using Special Tool 6958 spanner wrench with adapter pins 8346, torque the camshaft sprocket retaining bolt to 122 N·m (90 ft. lbs.).
11. Install the camshaft position sensor.
12. Install the cylinder head cover (Refer to 9 - ENGINE/CYLINDER HEAD/CYLINDER HEAD COVER(S) - INSTALLATION).

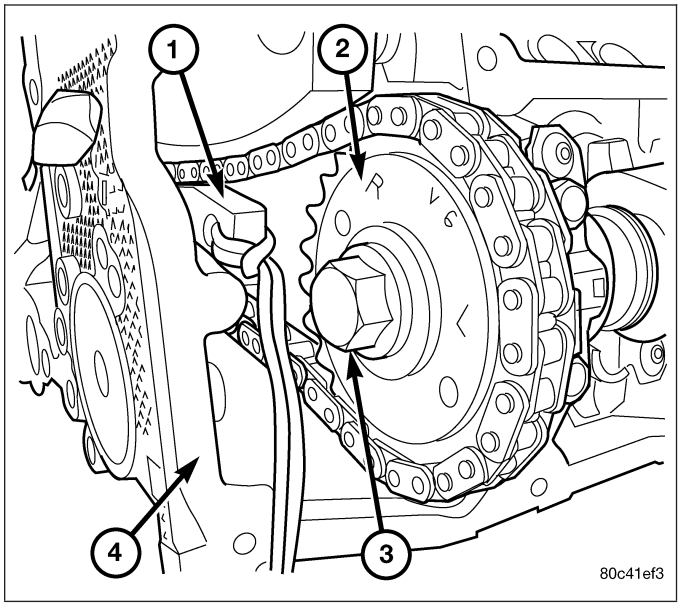

COVER - CYLINDER HEAD

REMOVAL

1. Disconnect battery negative cable.
2. Remove air cleaner assembly, resonator assembly and air inlet hose.
3. Drain cooling system, below the level of the heater hoses (Refer to 7 - COOLING - STANDARD PROCEDURE).
4. Remove accessory drive belt (Refer to 7 - COOLING/ACCESSORY DRIVE/DRIVE BELTS - REMOVAL).
5. Remove air conditioning compressor retaining bolts and move compressor to the left.
6. Remove heater hoses.
7. Disconnect injector and ignition coil connectors.
8. Disconnect and remove positive crankcase ventilation (PCV) hose.

9. Remove oil fill tube.
10. Un-clip injector and ignition coil harness and move away from cylinder head cover.
11. Remove right rear breather tube and filter assembly.
12. Remove cylinder head cover retaining bolts.
13. Remove cylinder head cover.

INSTALLATION

CAUTION: Do not use harsh cleaners to clean the cylinder head covers. Severe damage to covers may occur.

NOTE: The gasket may be used again, provided no cuts, tears, or deformation has occurred.

1. Clean cylinder head cover and both sealing surfaces. Inspect and replace gasket as necessary.
2. Tighten cylinder head cover bolts and double ended studs to 12 N·m (105 in. lbs).
3. Install right rear breather tube and filter assembly.
4. Connect injector, ignition coil electrical connectors and harness retaining clips.
5. Install the oil fill tube.
6. Install PCV hose.
7. Install heater hoses.
8. Install air conditioning compressor retaining bolts.
9. Install accessory drive belt (Refer to 7 - COOLING/ACCESSORY DRIVE/DRIVE BELTS - INSTALLATION).
10. Fill Cooling system (Refer to 7 - COOLING - STANDARD PROCEDURE).
11. Install air cleaner assembly, resonator assembly and air inlet hose.
12. Connect battery negative cable.

ROCKER ARM - VALVE

DESCRIPTION

The rocker arms are steel stampings with an integral roller bearing. The rocker arms incorporate a 0.5 mm oil hole in the lash adjuster socket for roller and camshaft lubrication.

REMOVAL

NOTE: Disconnect the battery negative cable to prevent accidental starter engagement.

1. Remove the cylinder head cover (Refer to 9 - ENGINE/CYLINDER HEAD/CYLINDER HEAD COVER(S) - REMOVAL).
2. For rocker arm removal on cylinder No. 4, Rotate the crankshaft until cylinder No. 1 is at BDC intake stroke.
3. For rocker arm removal on cylinder No. 1, Rotate the crankshaft until cylinder No. 1 is at BDC combustion stroke.
4. For rocker arm removal on cylinders No. 3 and No. 5, Rotate the crankshaft until cylinder No. 1 is at TDC exhaust stroke.
5. For rocker arm removal on cylinders No. 2 and No. 6, Rotate the crankshaft until cylinder No. 1 is at TDC ignition stroke.
6. Using special tool 8516 Rocker Arm Remover (2) , press downward on the valve spring, remove rocker arm.

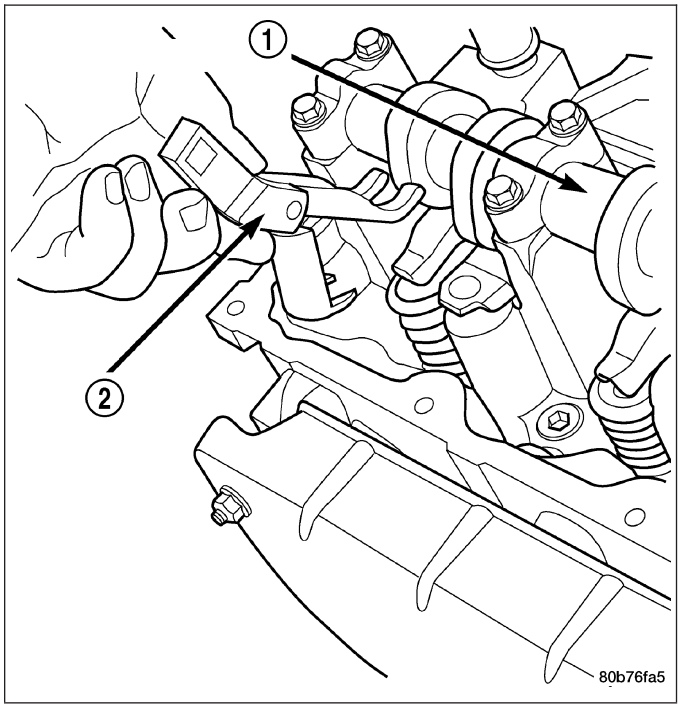

SEALS - VALVE GUIDE

DESCRIPTION

The valve guide seals are made of rubber and incorporate an integral steel valve spring seat. The integral garter spring maintains consistent lubrication control to the valve stems.

SPRINGS - VALVE

DESCRIPTION

The valve springs are made from high strength chrome silicon steel. There are different springs for intake and exhaust applications. The exhaust spring has an external damper. The valve spring seat is integral with the valve stem seal, which is a positive type seal to control lubrication.

REMOVAL

1. Remove the cylinder head cover (Refer to 9 - ENGINE/CYLINDER HEAD/CYLINDER HEAD COVER(S) - REMOVAL).
2. Using Special Tool 8516 Valve Spring Compressor, remove the rocker arms and the hydraulic lash adjusters.
3. Remove the spark plug for the cylinder the valve spring and seal are to be removed from.
4. Apply shop air to the cylinder to hold the valves in place when the spring is removed.

NOTE: All six valve springs and seals are removed in the same manner; this procedure only covers one valve seal and valve spring.

5. Using Special Tool 8387 Valve Spring Compressor, compress the valve spring.

NOTE: It may be necessary to tap the top of the valve spring to loosen the spring retainers locks enough to be removed.

6. Remove the two spring retainer lock halves.

NOTE: the valve spring is under tension use care when releasing the valve spring compressor.

7. Remove the valve spring compressor.

NOTE: The valve springs are NOT common between intake and exhaust.

8. Remove the spring retainer, and the spring.
9. Remove the valve stem seal.

NOTE: The valve stem seals are common between intake and exhaust.

INSTALLATION

NOTE: All six valve springs and seals are removed in the same manner; this procedure only covers one valve seal and valve spring.

1. Apply shop air to the cylinder to hold the valves in place while the spring is installed.

NOTE: The valve stem seals are common between intake and exhaust.

2. Install the valve stem seal.

NOTE: The valve springs are NOT common between intake and exhaust.

3. Install the spring retainer, and the spring.
4. Using Special Tool 8387 Valve Spring Compressor, compress the valve spring.
5. Install the two spring retainer lock halves.

NOTE: the valve spring is under tension use care when releasing the valve spring compressor.

6. Remove the valve spring compressor.
7. Disconnect the shop air to the cylinder.
8. Install the spark plug for the cylinder the valve spring and seal was installed on.
9. Using Special Tool 8516 Valve Spring Compressor, install the rocker arms and the hydraulic lash adjusters.
10. Install the cylinder head cover (Refer to 9 - ENGINE/CYLINDER HEAD/CYLINDER HEAD COVER(S) - INSTALLATION).

ENGINE BLOCK

DESCRIPTION

The cylinder block is made of cast iron. The block is a closed deck design with the left bank forward. To provide high rigidity and improved NVH an enhanced compacted graphite bedplate is bolted to the block. The block design allows coolant flow between the cylinders bores, and an internal coolant bypass to a single poppet inlet thermostat is included in the cast aluminum front cover.

STANDARD PROCEDURE - CYLINDER BORE HONING

Before honing, stuff plenty of clean shop towels under the bores and over the crankshaft to keep abrasive materials from entering the crankshaft area.

1. Used carefully, the Cylinder Bore Sizing Hone C-823, equipped with 220 grit stones, is the best tool for this job. In addition to deglazing, it will reduce taper and out-of-round, as well as removing light scuffing, scoring and scratches. Usually, a few strokes will clean up a bore and maintain the required limits.

CAUTION: DO NOT use rigid type hones to remove cylinder wall glaze.

2. Deglazing of the cylinder walls may be done if the cylinder bore is straight and round. Use a cylinder surfacing hone, Honing Tool C-3501, equipped with 280 grit stones (C-3501-3810). about 20-60 strokes, depending on the bore condition, will be sufficient to provide a satisfactory surface. Using honing oil C-3501-3880, or a light honing oil, available from major oil distributors.

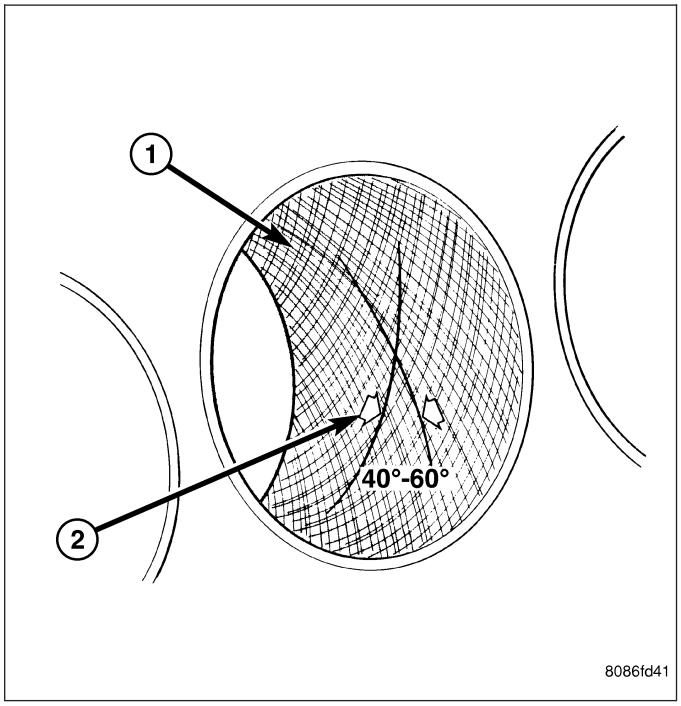

CAUTION: DO NOT use engine or transmission oil, mineral spirits, or kerosene.

3. Honing should be done by moving the hone up and down fast enough to get a crosshatch pattern (1). The hone marks should INTERSECT at 50° to 60° for proper seating of rings (2).
4. A controlled hone motor speed between 200 and 300 RPM is necessary to obtain the proper crosshatch angle. The number of up and down strokes per minute can be regulated to get the desired 50° to 60° angle. Faster up and down strokes increase the crosshatch angle.
5. After honing, it is necessary that the block be cleaned to remove all traces of abrasive. Use a brush to wash parts with a solution of hot water and detergent. Dry parts thoroughly. Use a clean, white, lint-free cloth to check that the bore is clean. Oil the bores after cleaning to prevent rusting.

CLEANING

Thoroughly clean the oil pan and engine block gasket surfaces.

Use compressed air to clean out:

- The galley at the oil filter adaptor hole.
- The front and rear oil galley holes.
- The feed holes for the crankshaft main bearings.

Once the block has been completely cleaned, apply Loctite PST pipe sealant with Teflon 592 to the threads of the front and rear oil galley plugs. Tighten the 1/4 inch NPT plugs to 20 N·m (177 in. lbs.) torque. Tighten the 3/8 inch NPT plugs to 27 N·m (240 in. lbs.) torque.

INSPECTION

1. It is mandatory to use a dial bore gauge to measure each cylinder bore diameter. To correctly select the proper size piston, a cylinder bore gauge, capable of reading in 0.003 mm (.0001 in.) INCREMENTS is required. If a bore gauge is not available, do not use an inside micrometer.
2. Measure the inside diameter of the cylinder bore at three levels below top of bore. Start perpendicular (across or at 90 degrees) to the axis of the crankshaft and then take two additional reading.
3. Measure the cylinder bore diameter crosswise to the cylinder block near the top of the bore. Repeat the measurement near the middle of the bore, then repeat the measurement near the bottom of the bore.
4. Determine taper by subtracting the smaller diameter from the larger diameter.
5. Rotate measuring device 90° and repeat steps above.
6. Determine out-of-roundness by comparing the difference between each measurement.

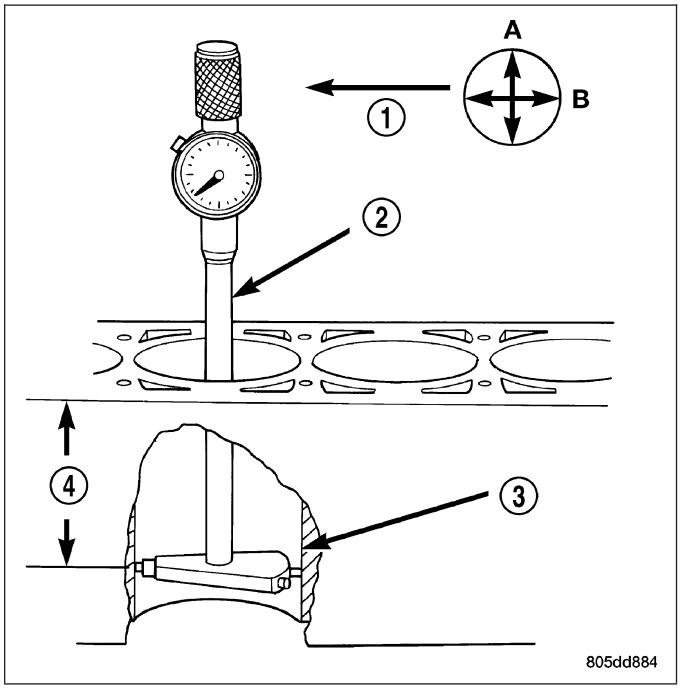

7. If cylinder bore taper does not exceed 0.025 mm (0.001 inch) and out-of-roundness does not exceed 0.025 mm (0.001 inch), the cylinder bore can be honed. If the cylinder bore taper or out- of-round condition exceeds these maximum limits, the cylinder block must be replaced. A slight amount of taper always exists in the cylinder bore after the engine has been in use for a period of time.

CRANKSHAFT

DESCRIPTION

The crankshaft (1) is constructed of nodular cast iron. The crankshaft is a three throw split pin design with six counterweights for balancing purposes. The crankshaft is supported by four select fit main bearings with the No. 2 serving as the thrust washer location. The main journals of the crankshaft are cross drilled to improve rod bearing lubrication. The No. 6 counterweight has provisions for crankshaft position sensor target wheel (2) mounting. The select fit main bearing markings are located on the rear side of the target wheel. The crankshaft oil seals are one piece design. The front oil seal is retained in the timing chain cover, and the rear seal is pressed in to a bore formed by the cylinder block and the bedplate assembly.

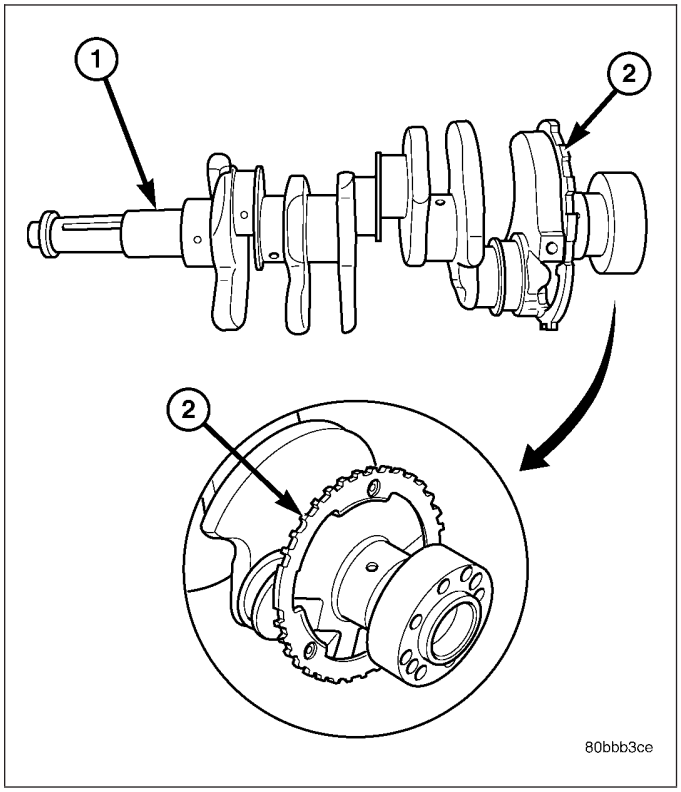

REMOVAL

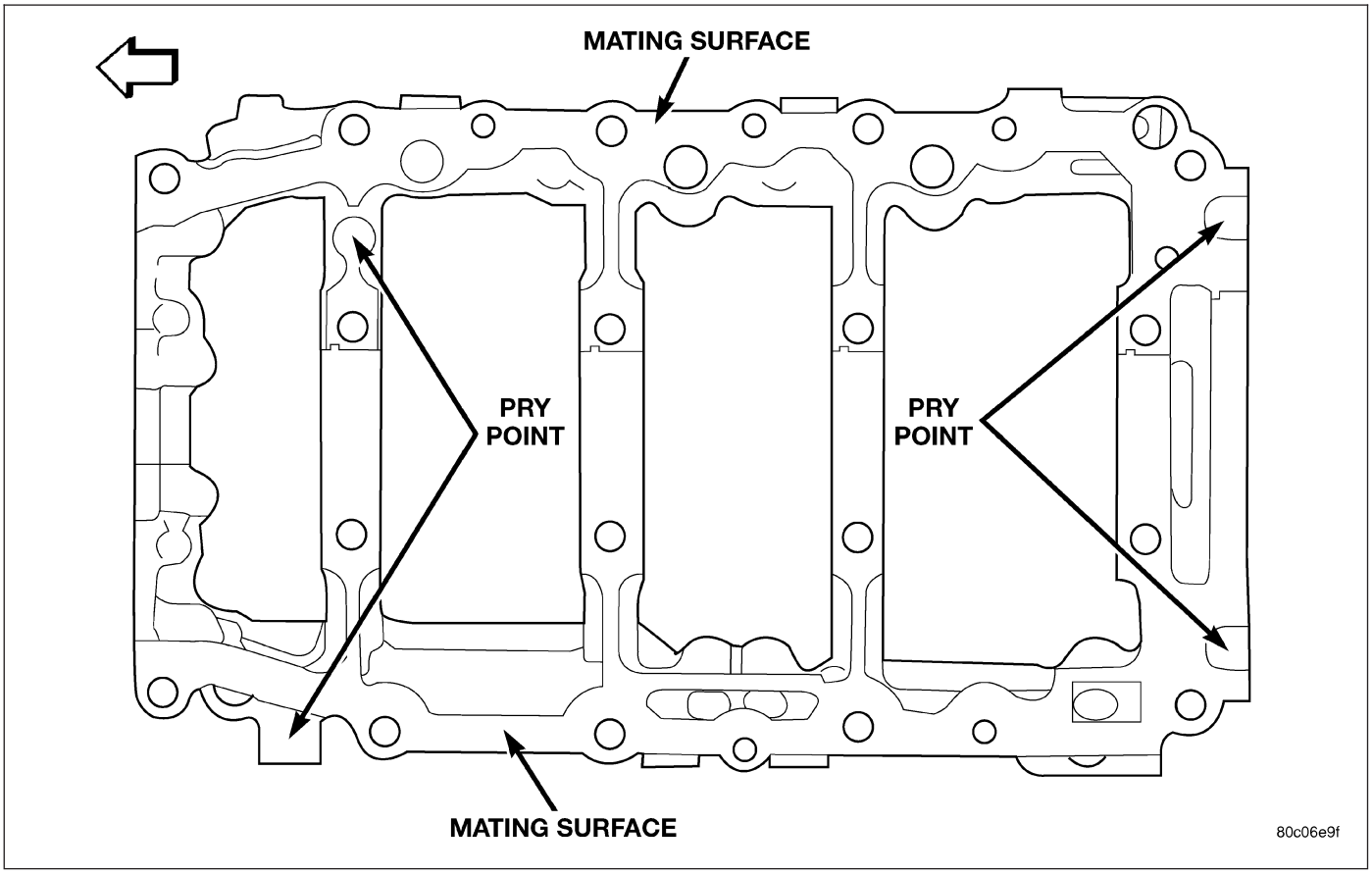

NOTE: To remove the crankshaft from the engine, the engine must be removed from the vehicle.

1. Remove the engine (Refer to 9 - ENGINE - REMOVAL).
2. Remove the engine oil pump (Refer to 9 - ENGINE/LUBRICATION/OIL PUMP - REMOVAL).

CAUTION: DO NOT pry on the oil pan gasket when removing the oil pan, The oil pan gasket is mounted to the cylinder block in three locations and will remain attached to block when removing oil pan. Gasket can not be removed with oil pan.

3. Remove the bedplate mounting bolts. Note the location of the two stud bolts for installation.
4. Remove the connecting rods from the crankshaft.

CAUTION: The bedplate to cylinder block mating surface is a critical sealing surface. Do not pry on or damage this surface in anyway.

NOTE: The bedplate contains the lower main bearing halves. Use care when handling bedplate as not to drop or damage bearing halves. Installing main bearing halves in the wrong position will cause severe damage to the crankshaft.

NOTE: The bedplate has pry points cast into it. Use these points only. The pry points are shown below.

5. Carefully pry on the pry points to loosen the bedplate then remove the bedplate.

CAUTION: When removing the crankshaft, use care not to damage bearing surfaces on the crankshaft.

6. Remove the crankshaft.

7. Remove the crankshaft tone wheel.

INSPECTION

NOTE: Thoroughly inspect the connecting rod bearing bores and main bearing bores for scoring, blueing or severe scratches. Further disassembly may be required.

If connecting rod bearing bores show damage, the cylinder heads must be removed to service the piston and rod assemblies. If the bedplate or the cylinder block main bearing bores show damage the engine must be replaced.

1. If required, remove the main bearing halves from the cylinder block and bedplate.
2. Thoroughly clean the bedplate to cylinder block sealing surfaces and main bearing bores. Remove all oil and sealant residue.
3. Inspect the bedplate main bearing bores for cracks, scoring or severe blueing. If either condition exists the engine must be replaced.
4. Inspect the crankshaft thrust washers for scoring, scratches, wear or blueing. If either condition exist replace the thrust washers.
5. Inspect the oil pan gasket/windage tray for splits, tears or cracks in the gasket sealing surfaces. Replace gasket as necessary.

INSTALLATION

CAUTION: Main bearings are select fit. Refer to Crankshaft Main Bearings in this section for proper bearing selections.

CAUTION: When installing crankshaft, use care not to damage bearing surfaces on the crankshaft.

NOTE: Apply sealant to the tone wheel retaining screws prior to installation.

1. Lubricate upper main bearing halves with clean engine oil.
2. Install the crankshaft tone wheel. Torque the mounting screws to 15 N·m (11 ft. lbs.).
3. Position crankshaft in cylinder block.
4. Install the thrust washers (1).

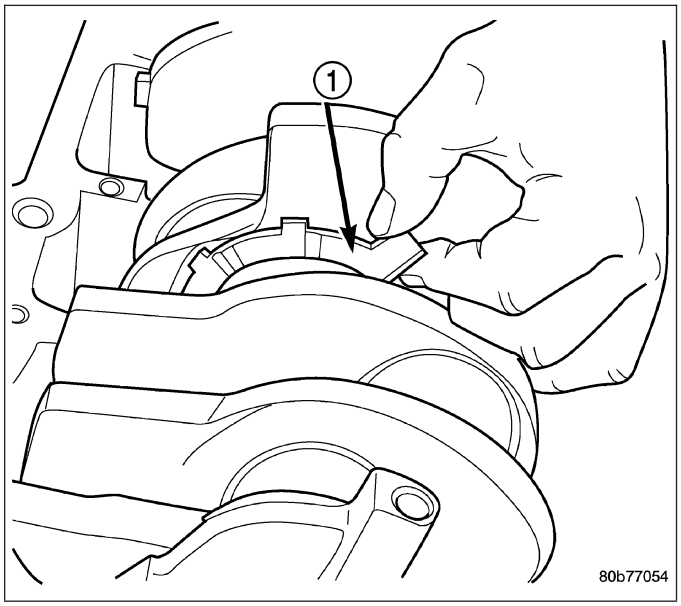

CAUTION: The bedplate to cylinder block mating surface must be coated with Mopar® Engine RTV sealant prior to installation. Failure to do so will cause severe oil leaks.

NOTE: Make sure that the bedplate and cylinder block sealing surfaces are clean and free of oil or other contaminants. Contaminants on the sealing surfaces may cause main bearing distortion and/or oil leaks.

5. Apply a 2.5mm (0.100 inch) bead of Mopar® Engine RTV sealant to the cylinder block-to-bedplate mating surface (2,3) as shown.

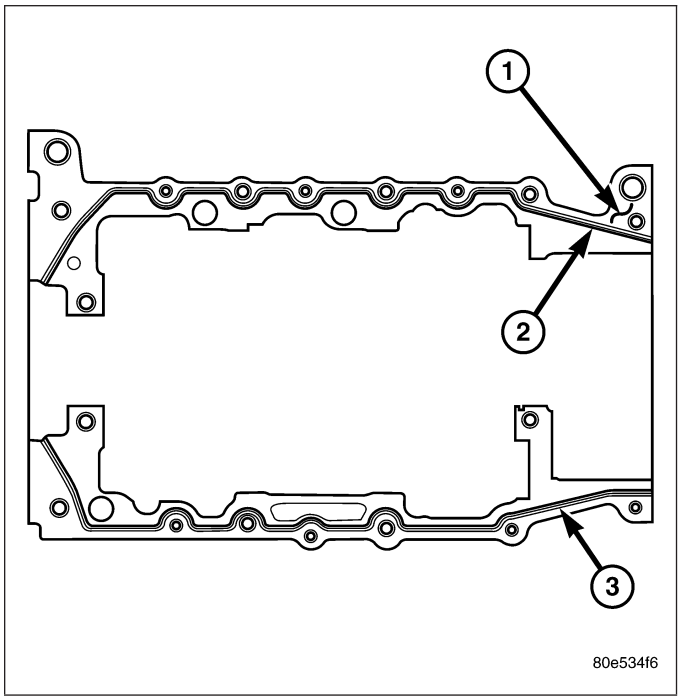

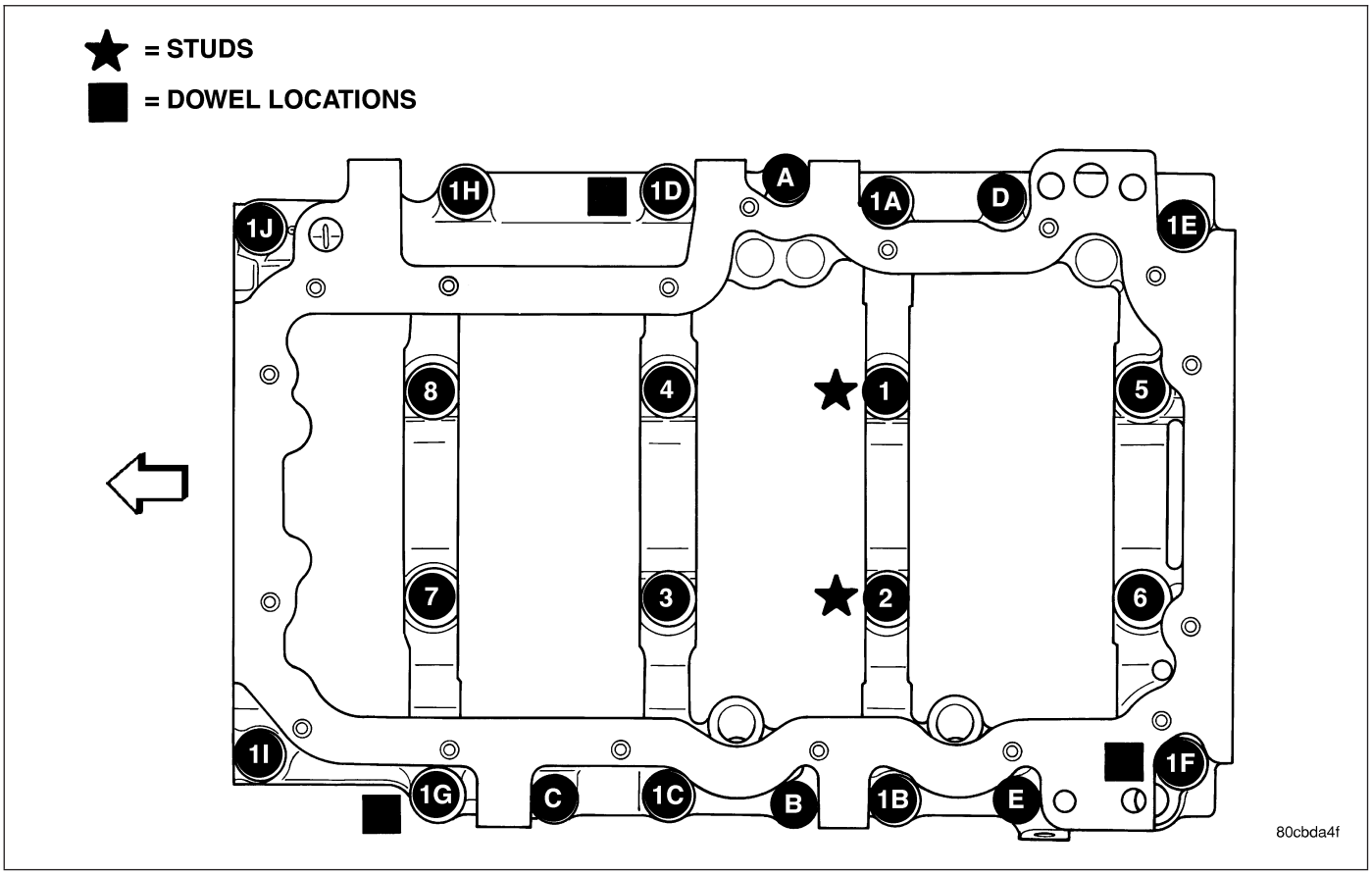

6. Coat the crankshaft main bearing journals with clean engine oil and position the bedplate onto the cylinder block.

NOTE: Lubricate the bedplate retaining bolts with clean engine oil prior to installation.

7. Install the bedplate retaining bolts, making sure to place the stud bolts in the correct location, Torque the bolts in the sequence shown.
   - Hand tighten bolts **1D,1G and 1F** until the bedplate contacts the block.

- Tighten bolts **1A - 1J** to 54 N·m (40 ft. lbs.)
- Tighten bolts **1 - 8** to 7 N·m (5 ft. lbs.)
- Turn bolts **1 - 8** an additional 90°.
- Tighten bolts **A - E** 27 N·m (20 ft. lbs.).

8. Measure crankshaft end play.
9. Install the connecting rods and measure side clearance (Refer to 9 - ENGINE/ENGINE BLOCK/PISTON & CONNECTING ROD - STANDARD PROCEDURE).
10. Install oil pump (Refer to 9 - ENGINE/LUBRICATION/OIL PUMP - INSTALLATION).
11. Install the engine (Refer to 9 - ENGINE - INSTALLATION).

BEARINGS - CRANKSHAFT MAIN

STANDARD PROCEDURE

MAIN BEARING FITTING

SELECT FIT IDENTIFICATION

The main bearings are “select fit” to achieve proper oil clearances. For main bearing selection, the crankshaft position sensor target wheel (2) has grade identification marks stamped into it. These marks are read from left to right, corresponding with journal number 1, 2, 3, 4. The crankshaft position sensor target wheel is mounted to the number 6 counter weight (1) on the crankshaft.

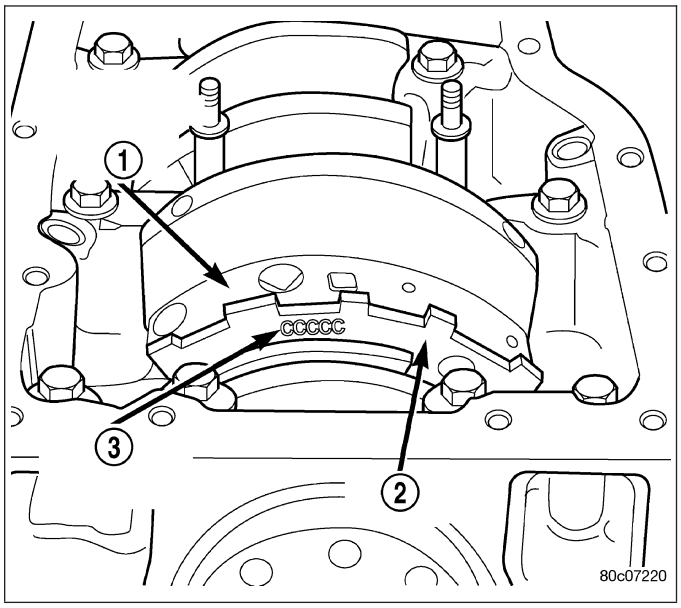

INSPECTION

Wipe the inserts clean and inspect for abnormal wear patterns and for metal or other foreign material imbedded in the lining. Normal main bearing insert wear patterns are illustrated.

Inspect the back of the inserts for fractures, scrapings or irregular wear patterns.

Inspect the upper insert locking tabs for damage.

Replace all damaged or worn bearing inserts.

MAIN BEARING JOURNAL DIAMETER (CRANKSHAFT REMOVED)

Remove the crankshaft from the cylinder block (Refer to 9 - ENGINE/ENGINE BLOCK/CRANKSHAFT - REMOVAL).

Clean the oil off the main bearing journal.

Determine the maximum diameter of the journal with a micrometer. Measure at two locations 90° apart at each end of the journal.

The maximum allowable taper is 0.008mm (0.0004 inch.) and maximum out of round is 0.005mm (0.002 inch). Compare the measured diameter with the journal diameter specification (Main Bearing Fitting Chart). Select inserts required to obtain the specified bearing-to-journal clearance.

Install the crankshaft into the cylinder block (Refer to 9 - ENGINE/ENGINE BLOCK/CRANKSHAFT - INSPECTION).

Check crankshaft end play.

CRANKSHAFT MAIN BEARING SELECTION

Crankshaft Marking	**JOURNAL SIZE SIZE mm (in.)**	
″R″ Size	63.488 - 63.496 mm (2.4995 - 2.4998 in.)	
″S″ Size	63.496 - 63.500 mm (2.4998 - 2.4999 in.)	
″T″ Size	63.500 - 63.504 mm (2.4999 - 2.501 in.)	
″U″ Size	63.504 - 63.512 mm (2.5001 - 2.5004 in.)	
Bearing size		
Bearing Code	Size	Application
Upper Bearing		
A	.2.443 - 2.447 mm (.0961 - .0963 in.)	Use with crankshaft size ″R″
B	2.439 - 2.443 mm (0.960 - .0961 in.)	Use with crankshaft ″S, T″
C	2.435 - 2.439 mm (.0958 - .0960 in.)	Use with crankshaft ″U″
Lower Bearing Main ″1″ and ″4″		
″1″	2.441 - 2.447 mm (.0961 -.0963 in.)	Use with crankshaft ″R, S″
″2″	2.435 - 2.441 mm (.0958 - .0962 in.)	Use with crankshaft ″T, U″
Lower Main Bearing ″2″ and ″3″		
″3″	2.429 - 2.435 mm (.0956 - .0958 in.)	Use with crankshaft ″R, S″
″4″	2.423 - 2.429 mm (.0953 - .0956 in.)	Use with crankshaft ″T, U″
Bearing Clearances		
Main ″1, 4″		
Crankshaft ″R″	.004 - .034 mm (.00015 - .0013 in.)	
Crankshaft ″S″	.004 - .030 mm (.00015 - .0011 in.)	
Crankshaft ″T″	.006 - .032 mm (.0002 - .0012 in.)	
Crankshaft ″U″	.002 - .032 mm (.00007 -. 0012 in.)	
Main ″2, 3″		
Crankshaft ″R″	.016 - .046 mm (.0006 - .0018 in.)	
Crankshaft ″S″	.016 - .042 mm (.00062 - .016 in.)	
Crankshaft ″T″	.018 - .044 mm (.0007 - .0017 in.)	
Crankshaft ″U″	.014 - .044 mm (.0005 - .0017 in.)	

1. Service main bearings are available in four grades. The chart below identifies the four service grades available.

SEAL - CRANKSHAFT OIL - FRONT

REMOVAL

1. Disconnect negative cable from battery.
2. Remove accessory drive belt (Refer to 7 - COOLING/ACCESSORY DRIVE/DRIVE BELTS - REMOVAL).
3. Remove A/C compressor mouning fasteners and set aside.
4. Drain cooling system (Refer to 7 - COOLING - STANDARD PROCEDURE).
5. Remove upper radiator hose.
6. Disconnect electrical connector for fan mounted inside radiator shroud.
7. Remove radiator shroud attaching fasteners.

NOTE: Transmission cooler line snaps into shroud lower right hand corner.

8. Remove radiator cooling fan and shroud (Refer to 7 - COOLING/ENGINE/RADIATOR FAN - REMOVAL).
9. Remove crankshaft damper bolt.
10. Remove damper using Special Tools 8513 Insert and 1026 Three Jaw Puller (2).

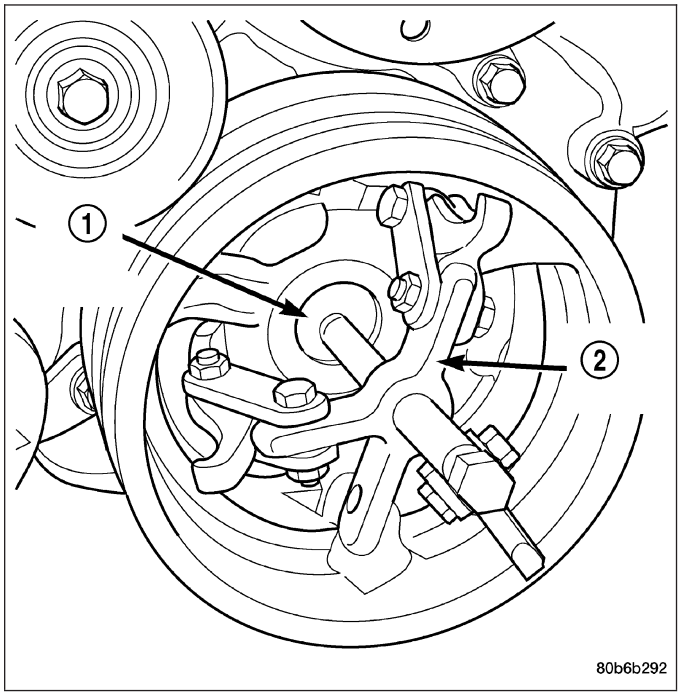

11. Using Special Tool 8511 (1), remove crankshaft front seal.

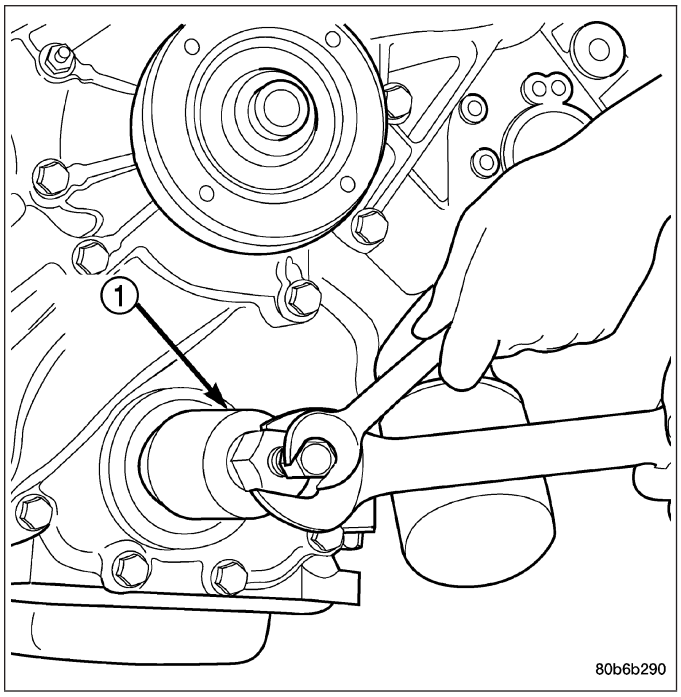

INSTALLATION

CAUTION: To prevent severe damage to the Crankshaft, Damper or Special Tool 8512, thoroughly clean the damper bore and the crankshaft nose before installing Damper.

1. Using Special Tool 8348 and 8512 (2,3), install crankshaft front seal.
2. Install vibration damper (Refer to 9 - ENGINE/ENGINE BLOCK/VIBRATION DAMPER - INSTALLATION).
3. Install radiator cooling fan and shroud (Refer to 7 - COOLING/ENGINE/RADIATOR FAN - INSTALLATION).
4. Install upper radiator hose.
5. Install A/C compressor and tighten fasteners to 54 N·m (40 ft. lbs.).
6. Install accessory drive belt refer (Refer to 7 - COOLING/ACCESSORY DRIVE/DRIVE BELTS - INSTALLATION).
7. Refill cooling system (Refer to 7 - COOLING - STANDARD PROCEDURE).
8. Connect negative cable to battery.

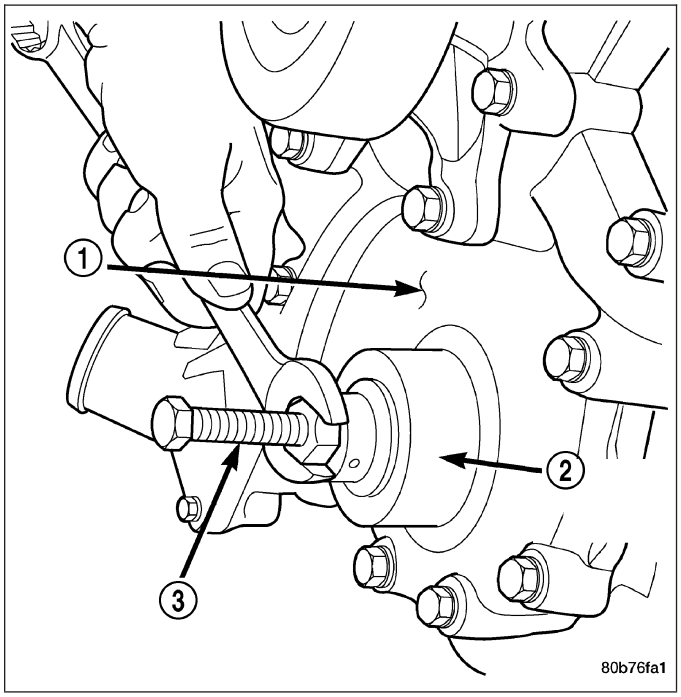

SEAL - CRANKSHAFT OIL - REAR

DIAGNOSIS AND TESTING - REAR SEAL AREA LEAKS

Since it is sometimes difficult to determine the source of an oil leak in the rear seal area of the engine, a more involved inspection is necessary. The following steps should be followed to help pinpoint the source of the leak.

If the leakage occurs at the crankshaft rear oil seal area:

1. Disconnect the battery.
2. Raise the vehicle.
3. Remove torque converter or clutch housing cover and inspect rear of block for evidence of oil. Use a black light to check for the oil leak:
   a. Circular spray pattern generally indicates seal leakage or crankshaft damage.
   b. Where leakage tends to run straight down, possible causes are a porous block, camshaft bore cup plugs, oil galley pipe plugs, oil filter runoff, and main bearing cap to cylinder block mating surfaces. See Engine, for proper repair procedures of these items.
4. If no leaks are detected, pressurized the crankcase as outlined in the section, Inspection (Engine oil Leaks in general)

CAUTION: Do not exceed 20.6 kPa (3 psi).

5. If the leak is not detected, very slowly turn the crankshaft and watch for leakage. If a leak is detected between the crankshaft and seal while slowly turning the crankshaft, it is possible the crankshaft seal surface is damaged. The seal area on the crankshaft could have minor nicks or scratches that can be polished out with emery cloth.

CAUTION: Use extreme caution when crankshaft polishing is necessary to remove minor nicks or scratches. The crankshaft seal flange is specially machined to complement the function of the rear oil seal.

6. For bubbles that remain steady with shaft rotation, no further inspection can be done until disassembled. (Refer to 9 - ENGINE - DIAGNOSIS AND TESTING), under the Oil Leak row, for components inspections on possible causes and corrections.
7. After the oil leak root cause and appropriate corrective action have been identified, (Refer to 9 - ENGINE/ENGINE BLOCK/CRANKSHAFT OIL SEAL - REAR - REMOVAL).

REMOVAL

NOTE: This procedure can be performed in vehicle.

1. If being performed in vehicle, remove the transmission.
2. Remove the flexplate (Refer to 9 - ENGINE/ENGINE BLOCK/FLEX PLATE - REMOVAL).

NOTE: The crankshaft oil seal CAN NOT be reused after removal.

NOTE: The crankshaft rear oil seal remover Special Tool 8506 must be installed deeply into the seal. Continue to tighten the removal tool into the seal until the tool can not be turned farther. Failure to install tool correctly the first time will cause tool to pull free of seal without removing seal from engine.

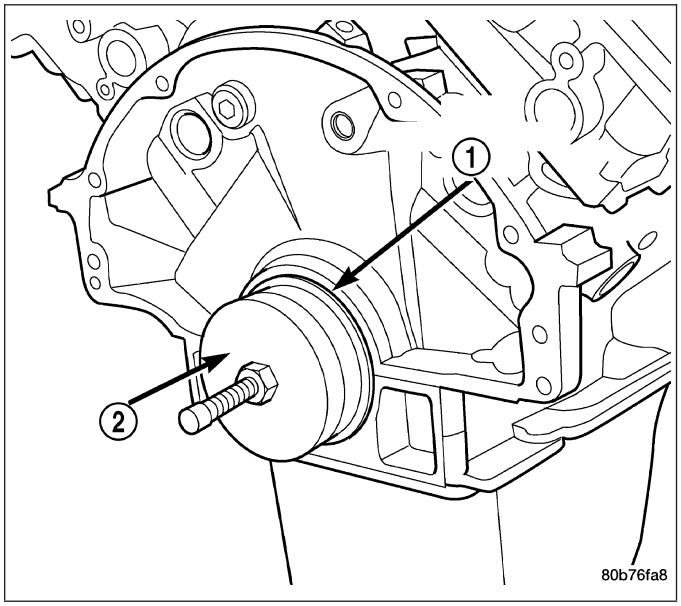

3. Using Special Tool 8506 (2), remove the crankshaft rear oil seal (1)

INSTALLATION

1. Lubricate the crankshaft flange with engine oil.
2. Position the magnetic seal guide Special Tool 8349-2 onto the crankshaft rear face. Then position the crankshaft rear oil seal (1) onto the guide (2).

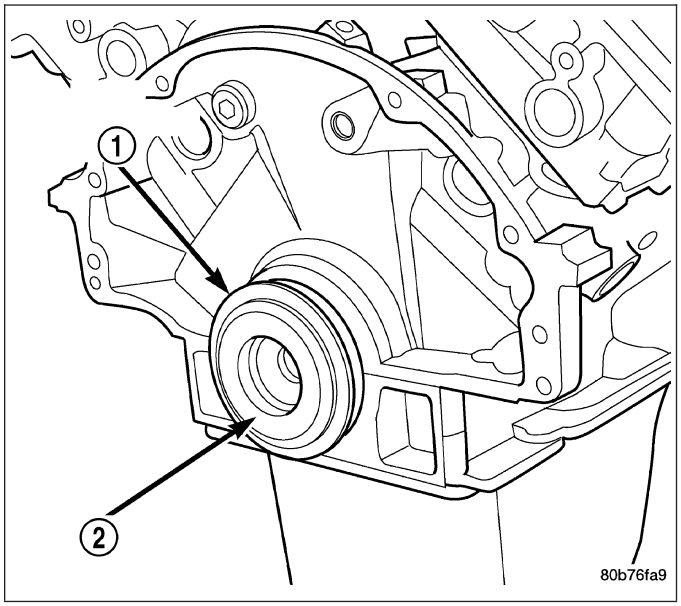

3. Using Special Tools 8349 Crankshaft Rear Oil Seal Installer (2) and C-4171 Driver Handle (3), with a hammer, tap the seal (1) into place. Continue to tap on the driver handle until the seal installer seats against the cylinder block crankshaft bore.
4. Install the flexplate.
5. Install the transmission.

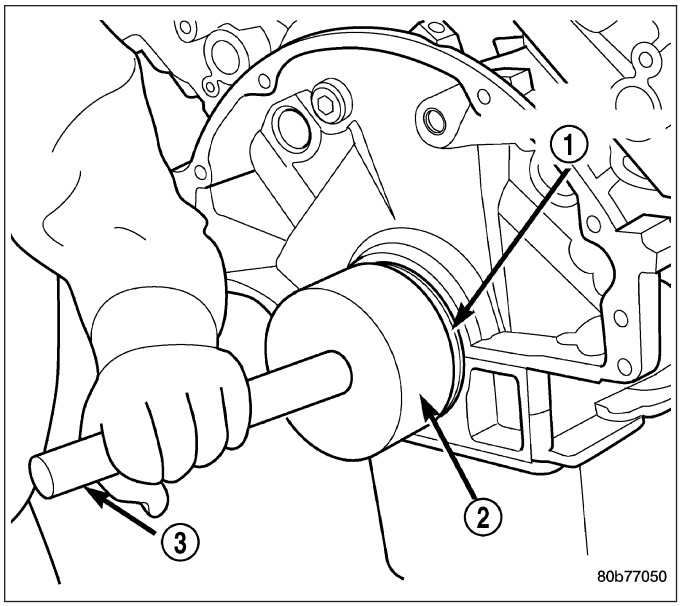

FLEX PLATE

REMOVAL

1. Remove the transmission. (Refer to 21 - TRANSMISSION/TRANSAXLE/AUTOMATIC - 45RFE/545RFE - REMOVAL).
2. Remove the bolts and flexplate (1).

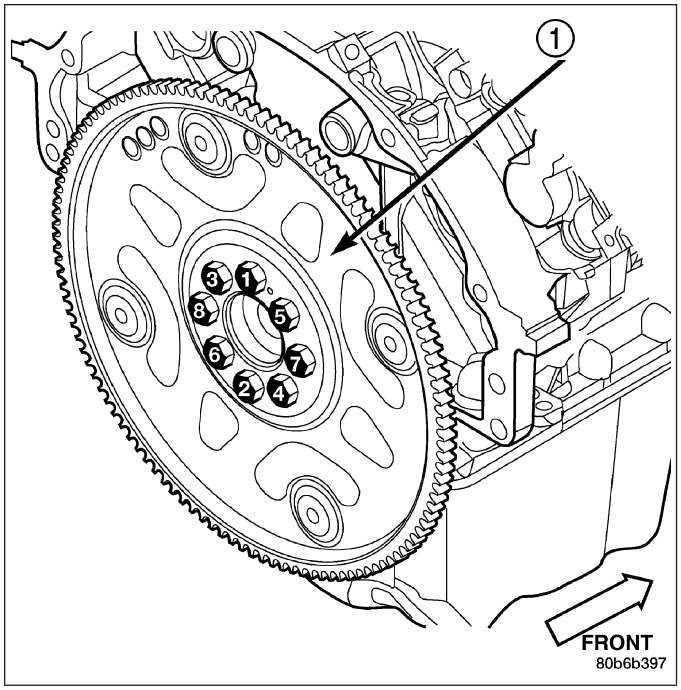

INSTALLATION

1. Position the flexplate onto the crankshaft and install the bolts hand tight.
2. Tighten the flexplate (1) retaining bolts to 95 N·m (70 ft. lbs.) in the sequence shown.
3. Install the transmission.

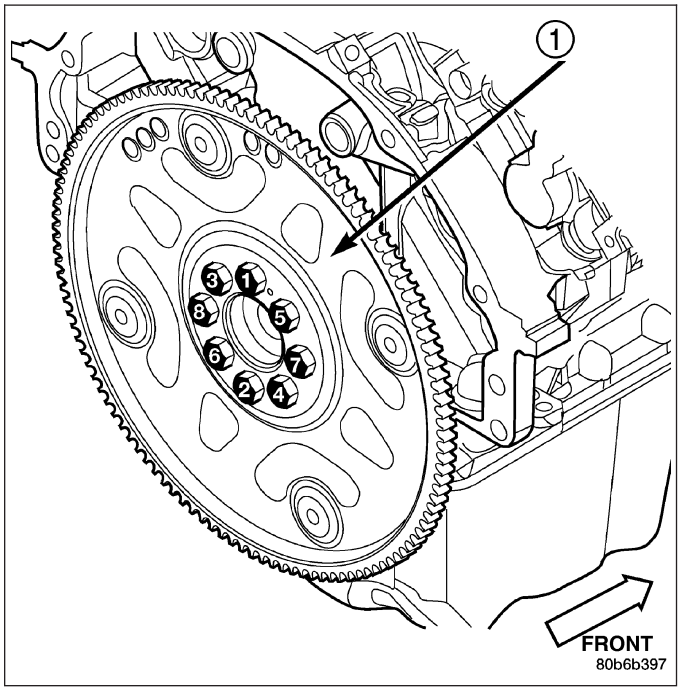

PISTON & CONNECTING ROD

DESCRIPTION

CAUTION: Do not use a metal stamp to mark connecting rods as damage may result, instead use ink or a scratch awl.

The pistons (2) are made of a high strength aluminum alloy. The connecting rods (1) are made of forged powdered metal, with a “fractured cap” design. A full floating piston pin is used to attach the piston to the connecting rod.

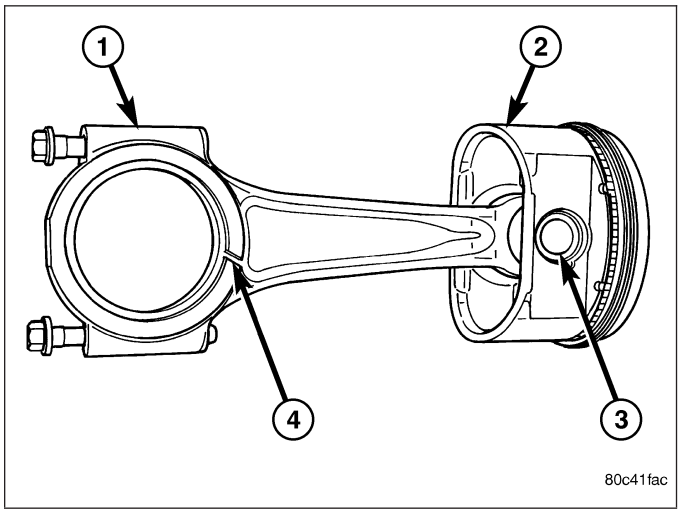

STANDARD PROCEDURE

CONNECTING ROD BEARING FITTING

Inspect the connecting rod bearings for scoring. Check the bearings for normal wear patterns, scoring, grooving, fatigue and pitting. Replace any bearing that shows abnormal wear.

Inspect the connecting rod journals for signs of scoring, nicks and burrs.

Misaligned or bent connecting rods can cause abnormal wear on pistons, piston rings, cylinder walls, connecting rod bearings and crankshaft connecting rod journals. If wear patterns or damage to any of these components indicate the probability of a misaligned connecting rod, inspect it for correct rod alignment. Replace misaligned, bent or twisted connecting rods.

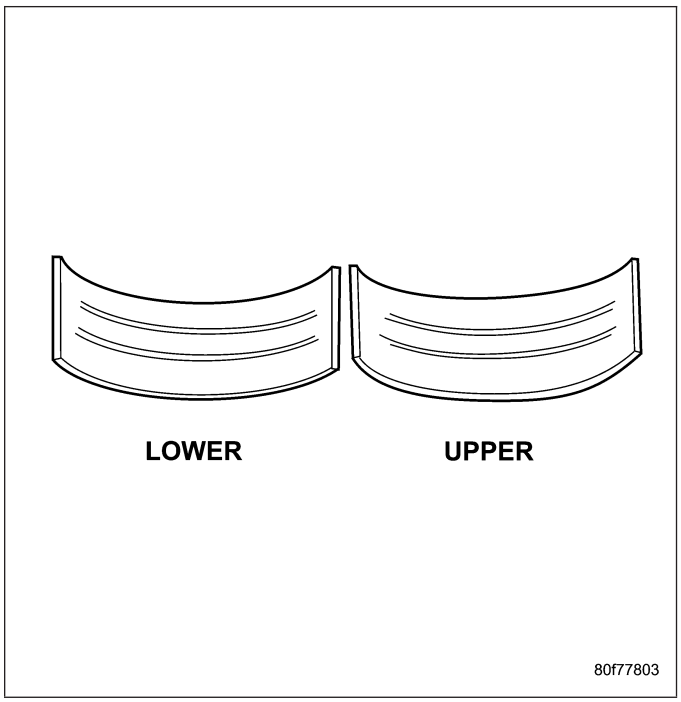

1. Wipe the oil from the connecting rod journal.
2. Lubricate the upper bearing insert and position in connecting rod. **Center bearing insert (2) in connecting rod (1)**

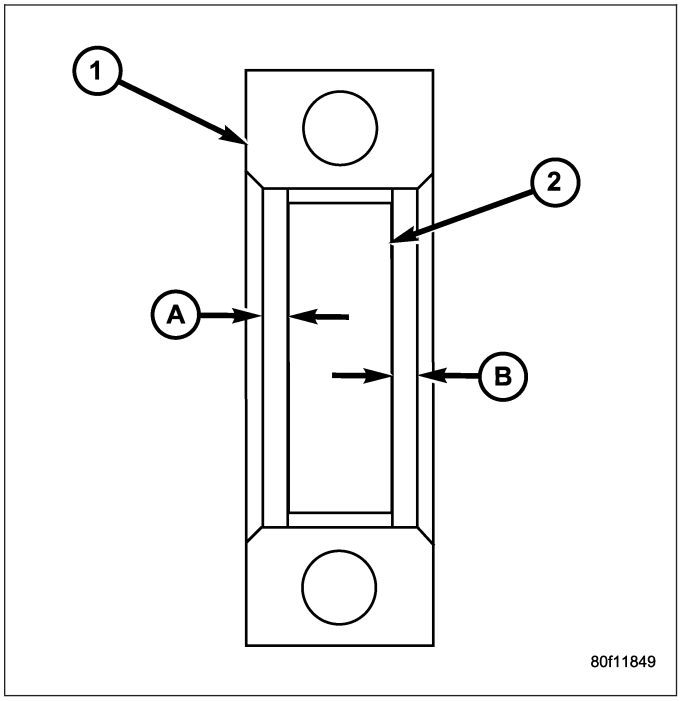

3. Use piston ring compressor (3) and Guide Pins Special Tool 8507 to install the rod and piston assemblies. The oil slinger slots in the rods must face front of the engine. The “F”’s near the piston wrist pin bore (1) should point to the front of the engine.

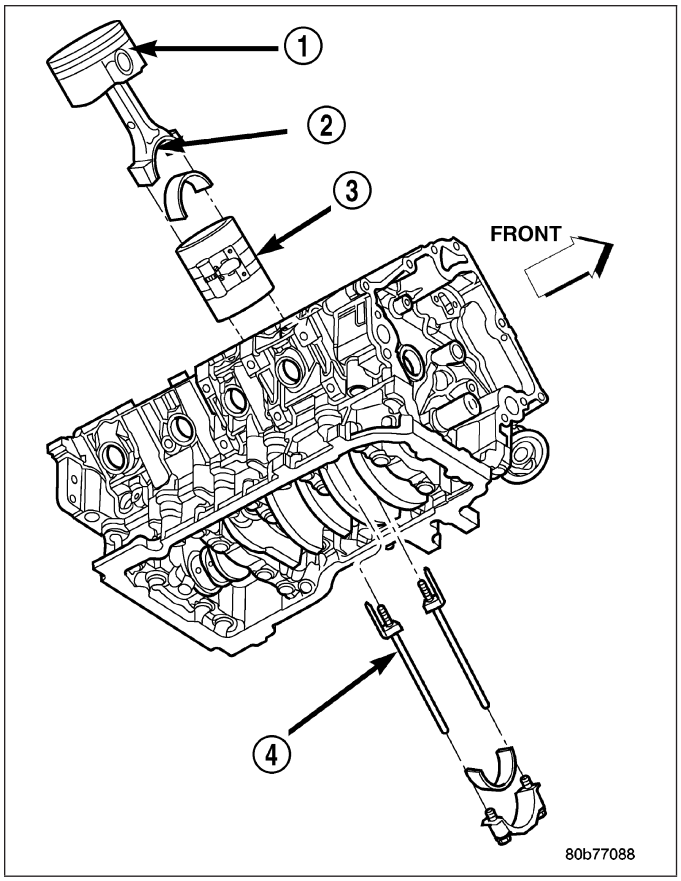

4. Install the lower bearing insert in the bearing cap. **Center bearing insert in connecting rod.**. The lower insert must be dry. Place strip of Plastigage across full width of the lower insert at the center of bearing cap. Plastigage must not crumble in use. If brittle, obtain fresh stock.
5. Install bearing cap and connecting rod on the journal and tighten bolts to 27 N·m (20 ft. lbs.) plus a 90° turn. DO NOT rotate crankshaft. Plastigage will smear, resulting in inaccurate indication.
6. Remove the bearing cap and determine amount of bearing-to-journal clearance by measuring the width of compressed Plastigage (2). Refer to Engine Specifications for the proper clearance. **Plastigage should indicate the same clearance across the entire width of the insert. If the clearance varies, it may be caused by either a tapered journal, bent connecting rod or foreign material trapped between the insert and cap or rod.**
7. If the correct clearance is indicated, replacement of the bearing inserts is not necessary. Remove the Plastigage from crankshaft journal and bearing insert. Proceed with installation.

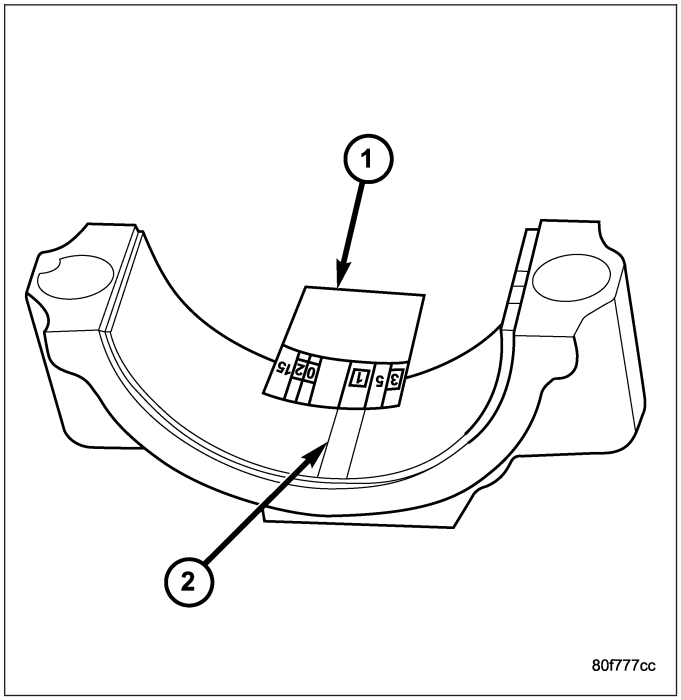

Bearing Mark	SIZE	USED WITH JOURNAL SIZE
.025 US	.025 mm (.001 in.)	57.883-57.867 mm (2.2788-2.2783 in.)
Std.	STANDARD	57.908-57.892 mm (2.2798-2.2792 in.)
.250 US	.250 mm (.010 in.)	57.658-57.646 mm (2.2700-2.2695 in.)

8. If bearing-to-journal clearance exceeds the specification, determin which services bearing set to use the bearing sizes are as follows:

CAUTION: Connecting Rod Bolts are Torque to Yield Bolts and Must Not Be Reused. Always replace the Rod Bolts whenever they are loosened or removed.

9. Repeat the Plastigage measurement to verify your bearing selection prior to final assembly.
10. Once you have selected the proper insert, install the insert and cap. Tighten the connecting rod bolts to 27 N·m (20 ft. lbs.) plus a 90° turn.

Slide snug-fitting feeler gauge between the connecting rod and crankshaft journal flange. Refer to Engine Specifications for the proper clearance. Replace the connecting rod if the side clearance is not within specification.

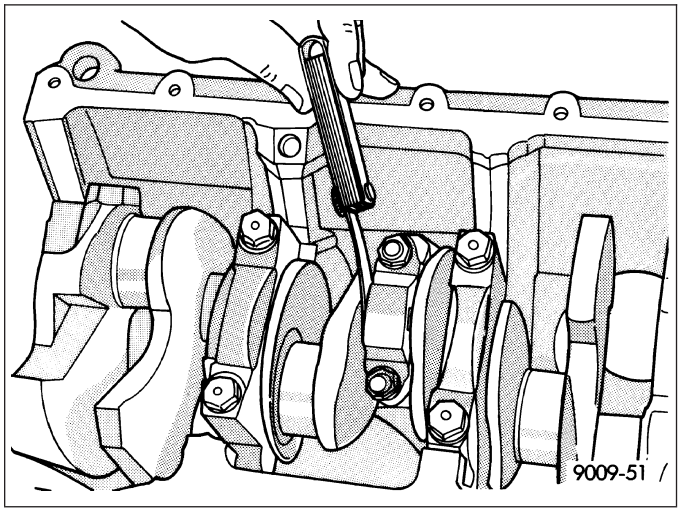

STANDARD PROCEDURE - PISTON FITTING

1. To correctly select the proper size piston, a cylinder bore gauge (2), capable of reading in 0.003 mm (.0001 in.) INCREMENTS is required. If a bore gauge is not available, do not use an inside micrometer.
2. Measure the inside diameter of the cylinder bore (3) at a point 38.0 mm (1.5 inches) below top of bore. Start perpendicular (across or at 90 degrees) to the axis of the crankshaft at point A and then take an additional bore reading 90 degrees to that at point B.

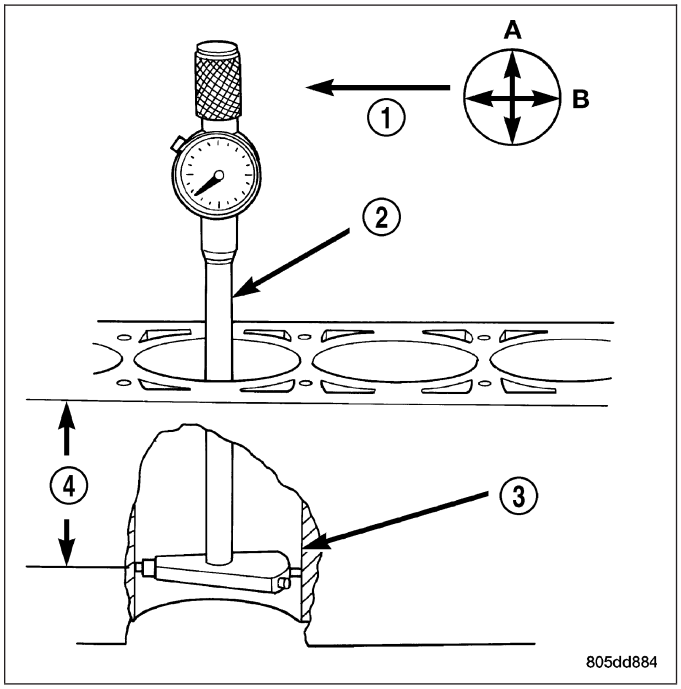

3. The coated pistons (1,2) will be serviced with the piston pin and connecting rod pre-assembled.
4. The coating material is applied to the piston after the final piston machining process. Measuring the outside diameter of a coated piston (1,2) will not provide accurate results. Therefore measuring the inside diameter of the cylinder bore with a dial Bore Gauge is **MANDATORY**. To correctly select the proper size piston, a cylinder bore gauge capable of reading in 0.003 mm (.0001 in.) increments is required.
5. Piston installation into the cylinder bore requires slightly more pressure than that required for non-coated pistons. The bonded coating on the piston will give the appearance of a line-to-line fit with the cylinder bore.

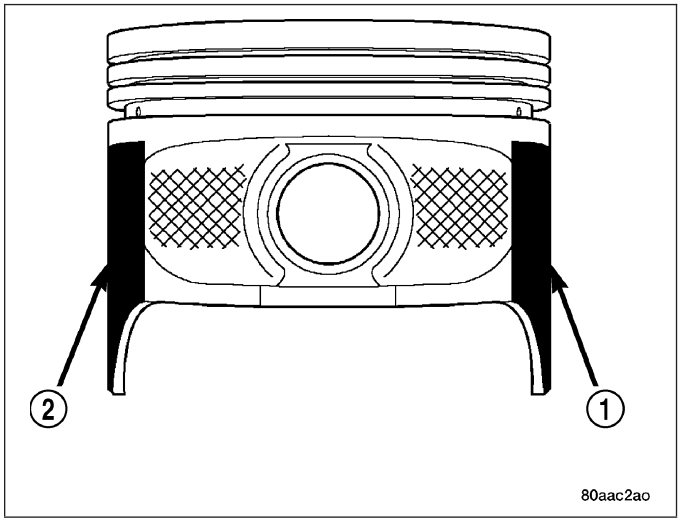

REMOVAL

1. Disconnect negative cable from battery.
2. Remove the following components:
   - Oil pan and gasket/windage tray (Refer to 9 - ENGINE/LUBRICATION/OIL PAN - REMOVAL).
   - Cylinder head covers (Refer to 9 - ENGINE/CYLINDER HEAD/CYLINDER HEAD COVER(S) - REMOVAL) and (Refer to 9 - ENGINE/CYLINDER HEAD/CYLINDER HEAD COVER(S) - REMOVAL).
   - Timing chain cover (Refer to 9 - ENGINE/VALVE TIMING/TIMING BELT / CHAIN COVER(S) - REMOVAL).
   - Cylinder head(s) (Refer to 9 - ENGINE/CYLINDER HEAD - REMOVAL) and (Refer to 9 - ENGINE/CYLINDER HEAD - REMOVAL).
3. If necessary, remove top ridge of cylinder bores with a reliable ridge reamer before removing pistons from cylinder block. **Be sure to keep tops of pistons covered during this operation.** Pistons and connecting rods

must be removed from top of cylinder block. When removing piston and connecting rod assemblies from the engine, rotate crankshaft so the each connecting rod is centered in cylinder bore.

CAUTION: DO NOT use a number stamp or a punch to mark connecting rods or caps, as damage to connecting rods could occur

NOTE: Connecting rods and bearing caps are not interchangeable and should be marked before removing to ensure correct reassembly.

4. Mark connecting rod and bearing cap positions using a permanent ink marker or scribe tool.

CAUTION: Care must be taken not to damage the fractured rod and cap joint face surfaces, as engine damage may occur.

5. Remove connecting rod cap. Install Special Tool 8507 Connecting Rod Guides into the connecting rod being removed. Remove piston from cylinder bore. Repeat this procedure for each piston being removed.

CAUTION: Care must be taken not to nick crankshaft journals, as engine damage may occur

6. Immediately after piston and connecting rod removal, install bearing cap on the mating connecting rod to prevent damage to the fractured cap and rod surfaces.

CLEANING

CAUTION: DO NOT use a wire wheel or other abrasive cleaning devise to clean the pistons or connecting rods. The pistons have a Moly coating, this coating must not be damaged.

1. Using a suitable cleaning solvent clean the pistons in warm water and towel dry.
2. Use a wood or plastic scraper to clean the ring land grooves.

CAUTION: DO NOT remove the piston pin from the piston and connecting rod assembly.

INSPECTION

Check the connecting rod journal for excessive wear, taper and scoring (Refer to 9 - ENGINE/ENGINE BLOCK/ CONNECTING ROD BEARINGS - STANDARD PROCEDURE).

Check the connecting rod for signs of twist or bending.

Check the piston for taper and elliptical shape before it is fitted into the cylinder bore (Refer to 9 - ENGINE/ENGINE BLOCK/PISTON & CONNECTING ROD - STANDARD PROCEDURE).

Check the piston for scoring, or scraping marks in the piston skirts. Check the ring lands for cracks and/or deterioration.

INSTALLATION

1. Before installing piston and connecting rod assemblies into the bore, install the piston rings.
2. Immerse the piston head and rings in clean engine oil. Position a ring compressor (3) over the piston and rings. Tighten ring compressor. **Ensure position of rings do not change during this operation.**
3. Position bearing onto connecting rod. Ensure that hole in bearing shell aligns with hole in connecting rod. Lubricate bearing surface with clean engine oil.
4. Install Special Tool 8507 Connecting Rod Guides (4) into connecting rod bolt threads.

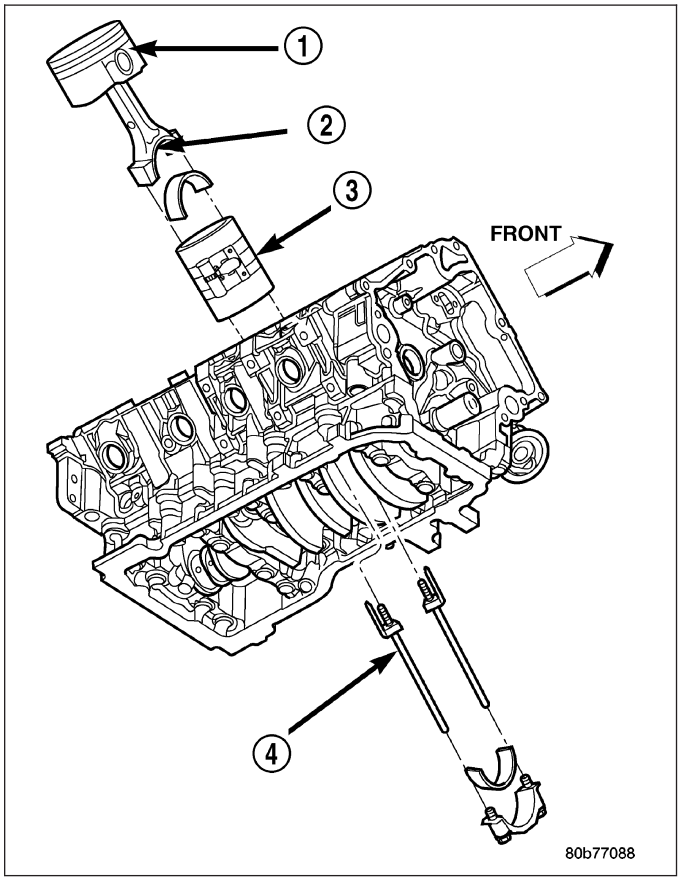

5. The pistons are marked on the piston pin bore surface with an raised “F” indicating installation position (1). This mark must be pointing toward the front of engine on both cylinder banks. The connecting rod oil slinger slot faces the front of the engine.
6. Wipe cylinder bore clean and lubricate with engine oil.
7. Rotate crankshaft until connecting rod journal is on the center of cylinder bore. Insert rod and piston into cylinder bore and carefully position connecting rod guides over crankshaft journal.
8. Tap piston down in cylinder bore using a hammer handle. While at the same time, guide connecting rod into position on rod journal.

CAUTION: Connecting Rod Bolts are Torque to Yield Bolts and Must Not Be Reused. Always replace the Rod Bolts whenever they are loosened or removed.

9. Lubricate rod bolts and bearing surfaces with engine oil. Install connecting rod cap and bearing. Tighten bolts to 27 N·m (20 ft. lbs.) plus 90°.
10. Install the following components:

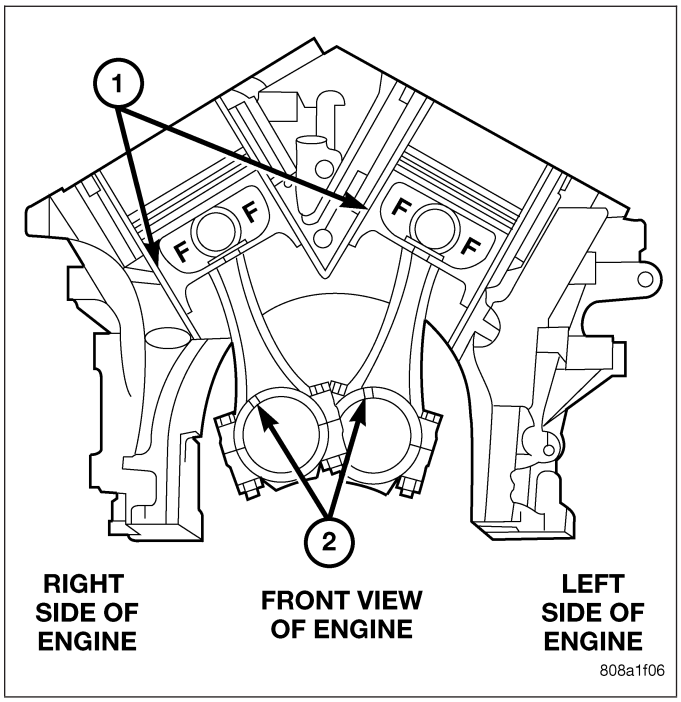

- Cylinder head(s). (Refer to 9 - ENGINE/CYLINDER HEAD - INSTALLATION).
- Timing chain and cover. (Refer to 9 - ENGINE/VALVE TIMING/TIMING BELT / CHAIN COVER(S) - INSTALLATION).
- Cylinder head covers (Refer to 9 - ENGINE/CYLINDER HEAD/CYLINDER HEAD COVER(S) - INSTALLATION).
- Oil pan and gasket/windage tray. (Refer to 9 - ENGINE/LUBRICATION/OIL PAN - INSTALLATION).

11. Fill crankcase with proper engine oil to correct level.
12. Connect negative cable to battery.

RINGS - PISTON

STANDARD PROCEDURE - PISTON RING FITTING

Before reinstalling used rings or installing new rings, the ring clearances must be checked.

1. Wipe the cylinder bore clean.
2. Insert the ring in the cylinder bore.

NOTE: The ring gap measurement must be made with the ring positioned at least 12mm (0.50 inch.) from bottom of cylinder bore.

3. Using a piston, to ensure that the ring is squared in the cylinder bore, slide the ring downward into the cylinder.
4. Using a feeler gauge (1) check the ring end gap. Replace any rings not within specification.

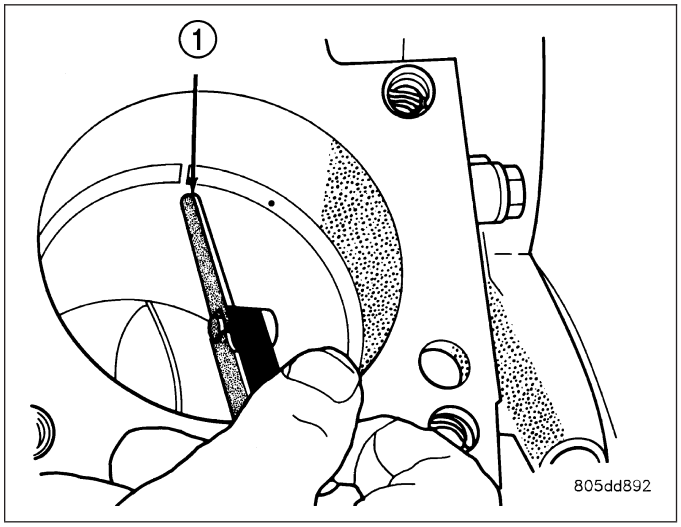

PISTON RING SIDE CLEARANCE

NOTE: Make sure the piston ring grooves are clean and free of nicks and burrs.

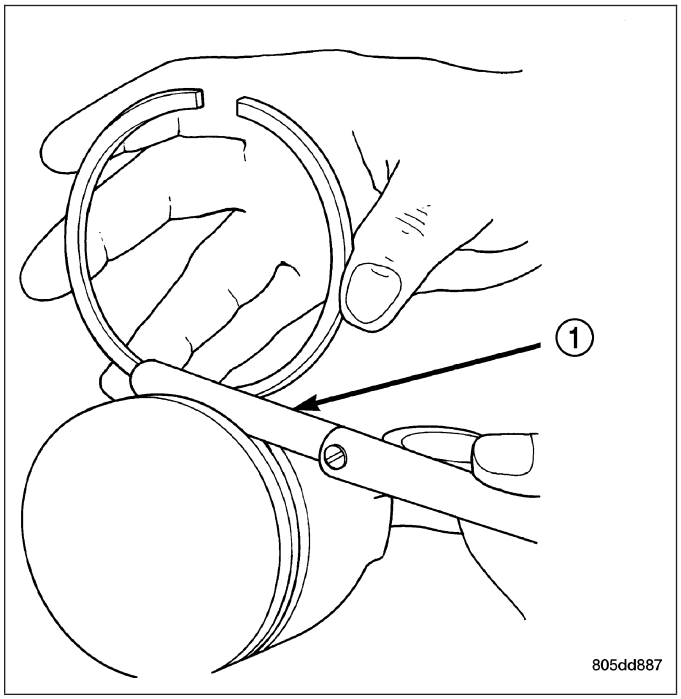

5. Measure the ring side clearance as shown make sure the feeler gauge (1) fits snugly between the ring land and the ring. Replace any ring not within specification.
6. Rotate the ring around the piston, the ring must rotate in the groove with out binding.

PISTON RING SPECIFICATION CHART

Ring Position	Groove Clearance	Maximum Clearance
Upper Ring	.051-.094 mm (0.0020-.0037 in.)	0.11 mm (0.004 in.)
Intermediate Ring	0.04-0.08 mm (0.0016-0.0031 in.)	0.10 mm (0.004 in.)
Oil Control Ring (Steel Rails)	.019-.229 mm (.0007-.0090 in.)	.25 mm (0.010 in.)
Ring Position	**Ring Gap**	**Wear Limit**
Upper Ring	0.20-0.36 mm (0.0079-0.0142 in.)	0.43 mm (0.0017 in.)
Intermediate Ring	0.37-0.63 mm (0.0146-0.0249 in.)	0.74 mm (0.029 in.)
Oil Control Ring (Steel Rail)	0.025-0.76 mm (0.0099- 0.03 in.)	1.55 mm (0.061 in.)

7. The No. 1 and No. 2 piston rings have a different cross section. Ensure No. 2 ring is installed with manufacturers I.D. mark (Dot) facing up, towards top of the piston.

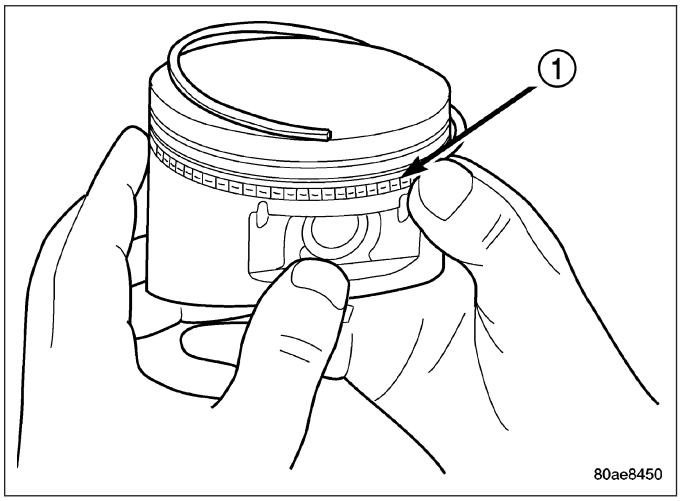

NOTE: Piston rings are installed in the following order:
- **Oil ring expander.**
- **Upper oil ring side rail.**
- **Lower oil ring side rail.**
- **No. 2 Intermediate piston ring.**
- **No. 1 Upper piston ring.**

8. Install the oil ring expander.
9. Install upper side rail (1) by placing one end between the piston ring groove and the expander ring. Hold end firmly and press down the portion to be installed until side rail is in position. Repeat this step for the lower side rail.

10. Install No. 2 intermediate piston ring using a piston ring installer.
11. Install No. 1 upper piston ring using a piston ring installer.

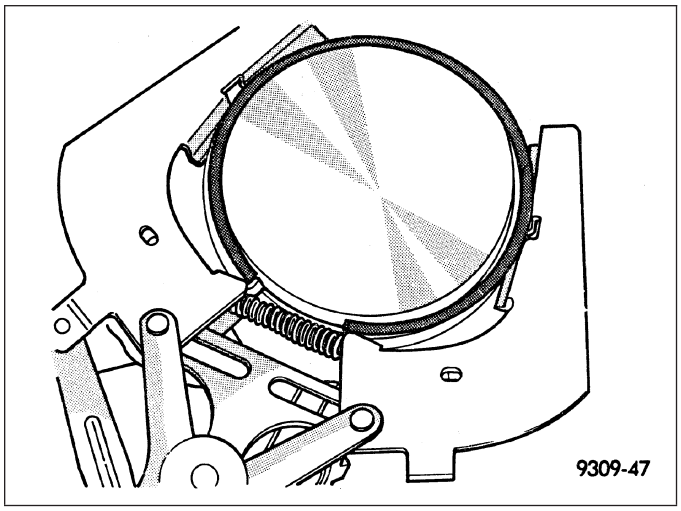

12. Position piston ring end gaps as shown in. It is important that expander ring gap (5) is at least 45° from the side rail gaps, but not on the piston pin center or on the thrust direction.

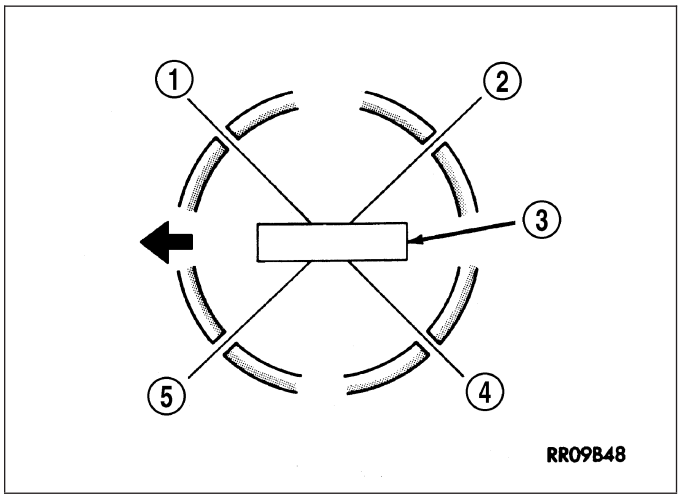

DAMPER - CRANKSHAFT

REMOVAL

1. Disconnect negative cable from battery.
2. Remove accessory drive belt (Refer to 7 - COOLING/ACCESSORY DRIVE/DRIVE BELTS - REMOVAL).
3. Drain cooling system (Refer to 7 - COOLING - STANDARD PROCEDURE).
4. Remove radiator upper hose.
5. Remove upper fan shroud.
6. Using Special Tools 6958 Spanner with Adapter Pins 8346 (1), loosen fan and viscous assembly from water pump.
7. Remove fan and viscous assembly.
8. Disconnect electrical connector for fan mounted inside radiator shroud.

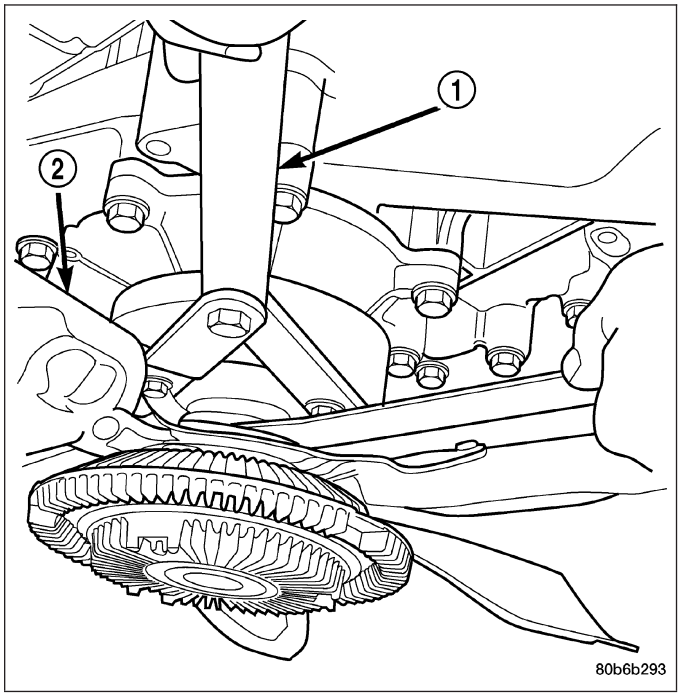

NOTE: Transmission cooler line snaps into shroud lower right hand corner.

9. Remove crankshaft damper bolt.
10. Remove damper using Special Tools 8513 Insert and 1026 Three Jaw Puller (2).

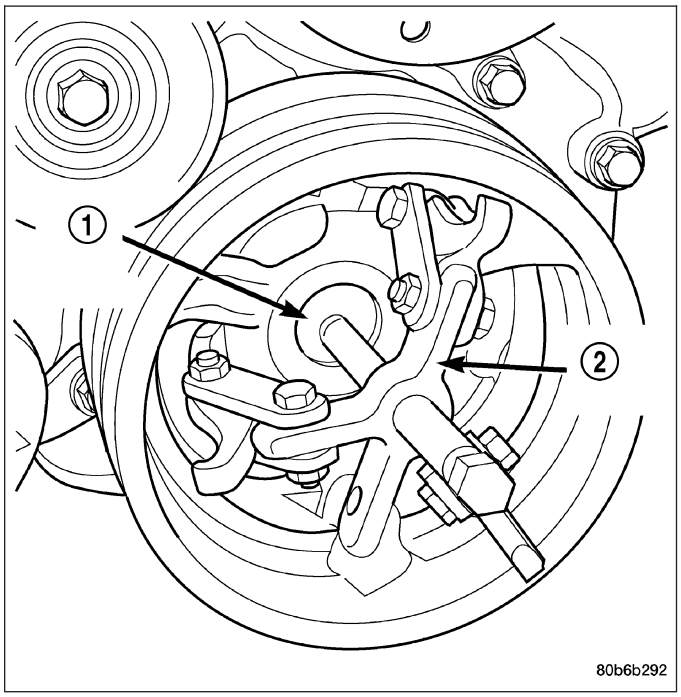

INSTALLATION

CAUTION: To prevent severe damage to the Crankshaft, Damper or Special Tool 8512–A, thoroughly clean the damper bore and the crankshaft nose before installing Damper.

1. Align crankshaft damper slot with key in crankshaft. Slide damper onto crankshaft slightly.

CAUTION: Special Tool 8512–A, is assembled in a specific sequence. Failure to assemble this tool in this sequence can result in tool failure and severe damage to either the tool or the crankshaft.

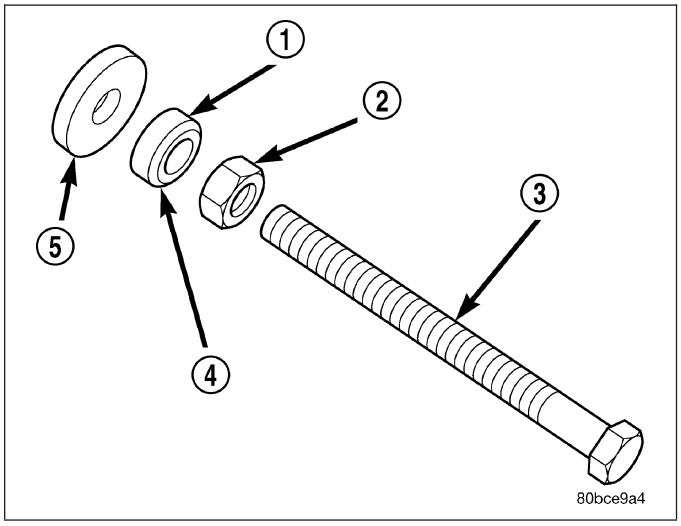

2. Assemble Special Tool 8512–A as follows, The nut (2) is threaded onto the shaft first. Then the roller bearing (1) is placed onto the threaded rod (3) (The hardened bearing surface of the bearing (1) **MUST**face the nut (2). Then the hardened washer (5)slides onto the threaded rod. Once assembled coat the threaded rod's threads with Mopar® Nickel Anti-Seize or equivalent.

3. Using Special Tool 8512–A, press damper onto crankshaft (1).
4. Install then tighten crankshaft damper bolt to 175 N·m (130 ft. lbs.).
5. Install fan blade assembly (Refer to 7 - COOLING/ ENGINE/FAN DRIVE VISCOUS CLUTCH - INSTALLATION).
6. Install radiator upper shroud and tighten fasteners to 11 N·m (95 in. lbs.).
7. Connect electrical connector for shroud fan.
8. Install radiator upper hose.
9. Install accessory drive belt (Refer to 7 - COOLING/ ACCESSORY DRIVE/DRIVE BELTS - INSTALLATION).
10. Refill cooling system (Refer to 7 - COOLING - STANDARD PROCEDURE).
11. Connect negative cable to battery.

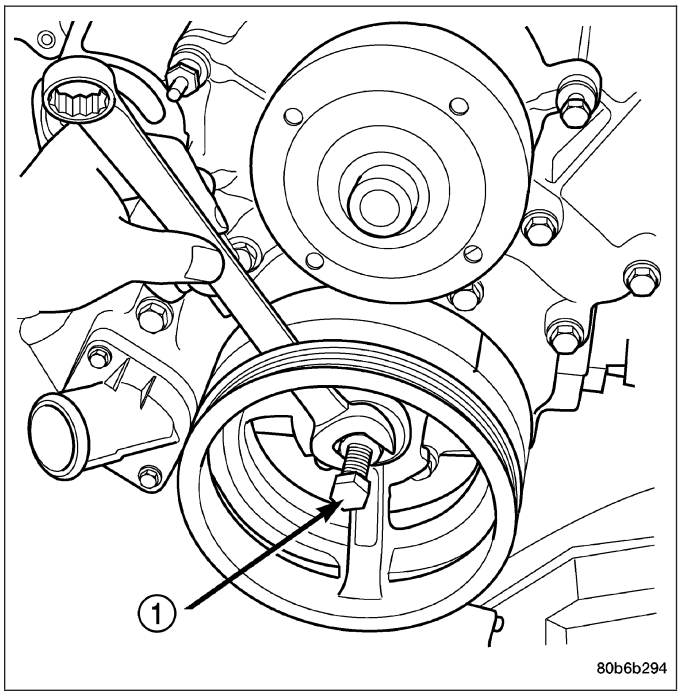

COVER - STRUCTURAL

DESCRIPTION

The structural dust cover is made of die cast aluminum and joins the lower half of the transmission bell housing to the engine bedplate.

OPERATION

The structural cover provides additional powertrain stiffness and reduces noise and vibration.

REMOVAL

1. Raise vehicle on hoist.
2. Remove the left hand exhaust pipe from exhaust manifold.
3. Loosen the right hand exhaust manifold-to-exhaust pipe retaining bolts.
4. Remove the eight bolts (1,2,3) retaining structural cover in the sequence shown.
5. Pivot the exhaust pipe downward and remove the structural cover.

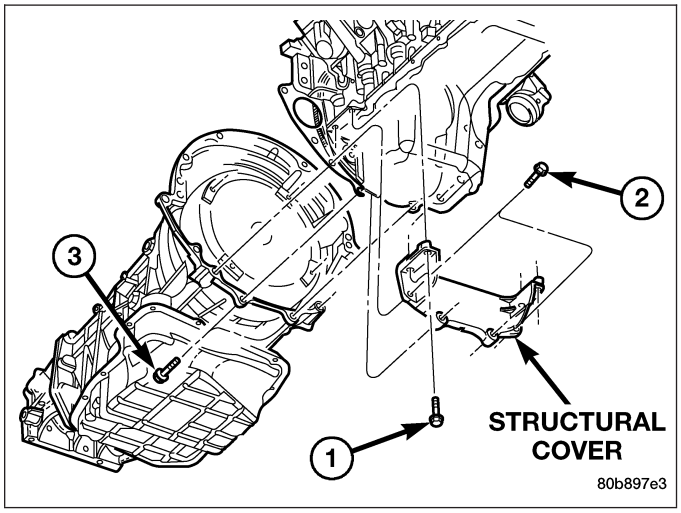

INSTALLATION

CAUTION: The structural cover must be installed as described in the following steps. Failure to do so will cause severe damage to the cover.

1. Position the structural cover in the vehicle.
2. Install all four bolts (1,2,3)retaining the cover-to-engine. DO NOT tighten the bolts at this time.
3. Install the four cover-to-transmission bolts (1,2,3). Do NOT tighten at this time.

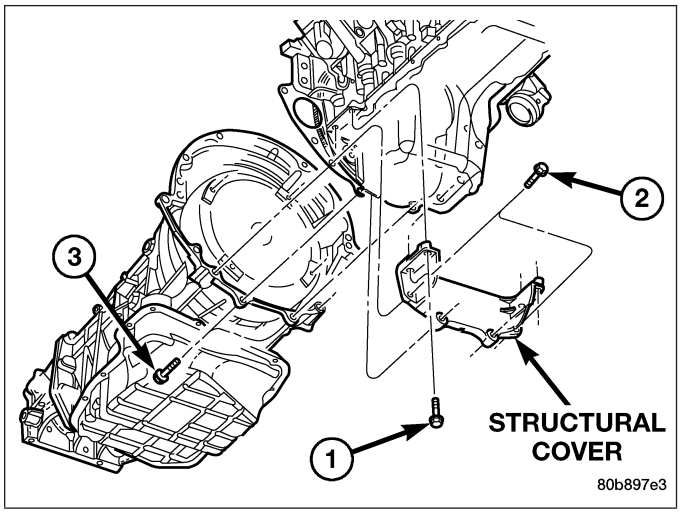

CAUTION: The structural cover must be held tightly against both the engine and the transmission bell housing during tightening sequence. Failure to do so may cause damage to the cover.

4. Starting with the two rear cover-to-engine bolts, tighten bolts (1) to 54 N·m (40 ft. lbs.), then tighten bolts (2) and (3) to 54 N·m (40 ft. lbs.) in the sequence shown.
5. Install the exhaust pipe on left hand exhaust manifold.
6. Tighten exhaust manifold-to-exhaust pipe retaining bolts to 20–26 N·m (15–20 ft. lbs.).

MOUNT - FRONT

REMOVAL

2WD

1. Disconnect the negative cable from the battery.

CAUTION: Remove the viscous fan before raising engine. Failure to do so may cause damage to the fan blade, fan clutch and fan shroud.

2. Remove the viscous fan (Refer to 7 - COOLING/ENGINE/FAN DRIVE VISCOUS CLUTCH - REMOVAL).
3. Raise the vehicle.

4. Remove the engine oil filter.
5. Remove the oil drain trough.
6. Support the engine with a suitable jack and a block of wood across the full width of the engine oil pan.
7. Support the front axle with a suitable jack.
8. Remove the (4) bolts that attach the engine mounts to the front axle.
9. Remove the (3) bolts that attach the front axle to the left engine bracket.
10. Lower the front axle.
11. Remove the through bolts
12. Raise the engine far enough to be able to remove the left and right engine mounts.
13. Remove the (8) mount to engine attaching bolts
14. Remove the engine mounts.

4WD

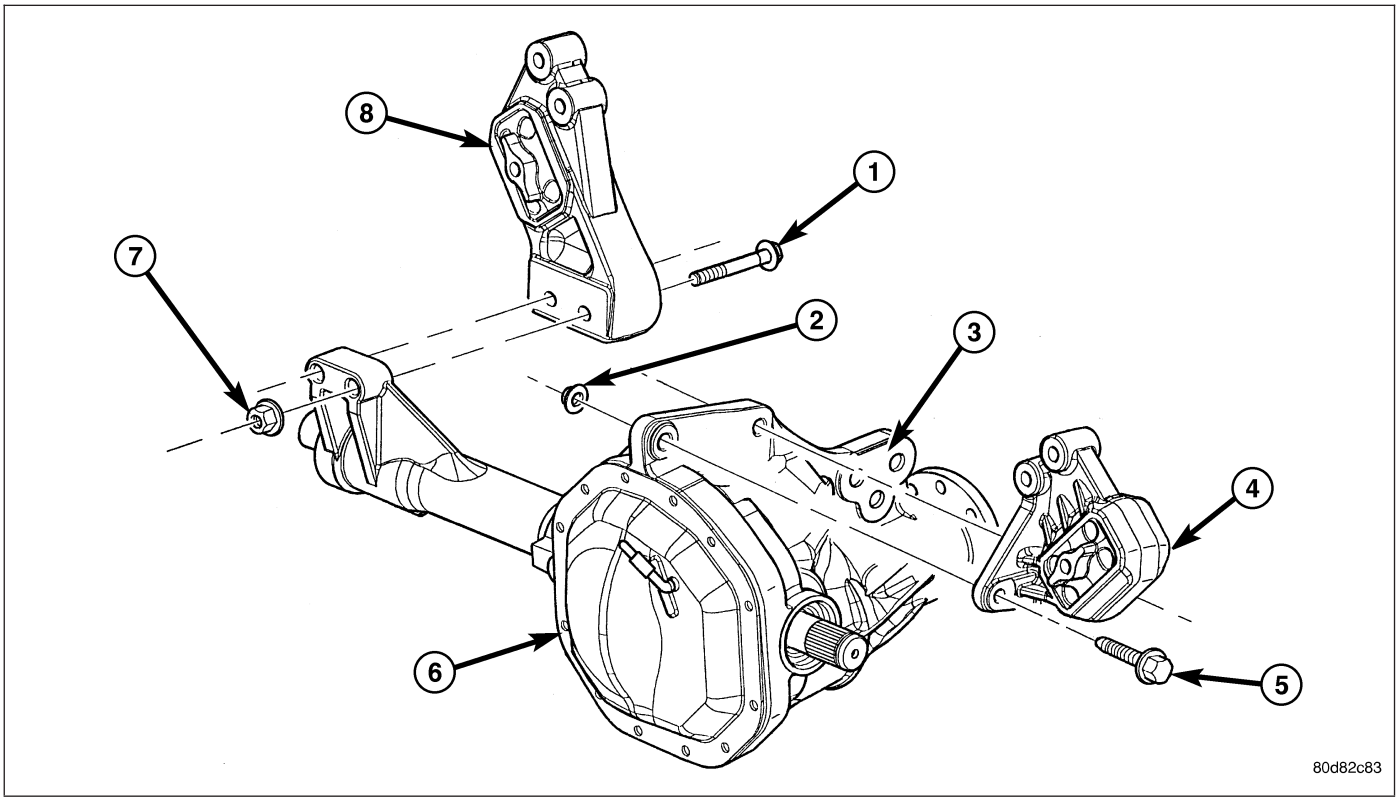

1. Disconnect the negative cable from the battery.

CAUTION: Remove the viscous fan before raising engine. Failure to do so may cause damage to the fan blade, fan clutch and fan shroud.

2. Remove the viscous fan (Refer to 7 - COOLING/ENGINE/FAN DRIVE VISCOUS CLUTCH - REMOVAL).
3. Raise the vehicle.
4. Remove the skid plate.
5. Remove the front crossmember.
6. Remove the engine oil filter.
7. Remove the oil drain trough.
8. Support the engine with a suitable jack and a block of wood across the full width of the engine oil pan.
9. Support the front axle with a suitable jack.
10. Remove the 4 bolts that attach the engine mounts to the front axle.
11. Remove the 3 bolts that attach the front axle to the left engine bracket.

12. Lower the front axle.
13. Remove the 6 through bolts
14. Raise the engine far enough to be able to remove the left (4) and right (8) engine mounts.
15. Remove the mounts.

16. Remove the engine mount brackets (2).

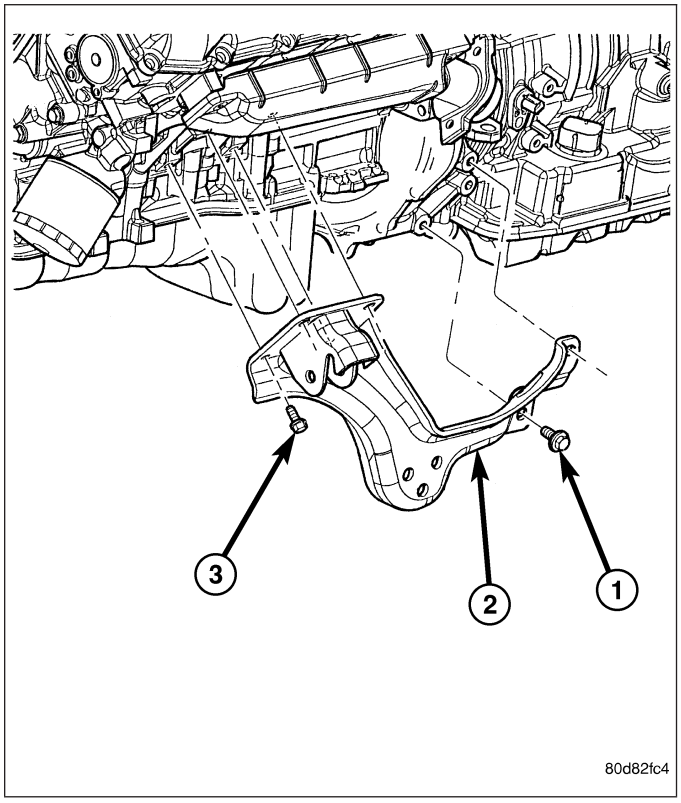

INSTALLATION

2WD

NOTE: For mount to engine block and left engine bracket to front axle bolts, apply Mopar® Lock and Seal Adhesive, Medium Strength Threadlocker.

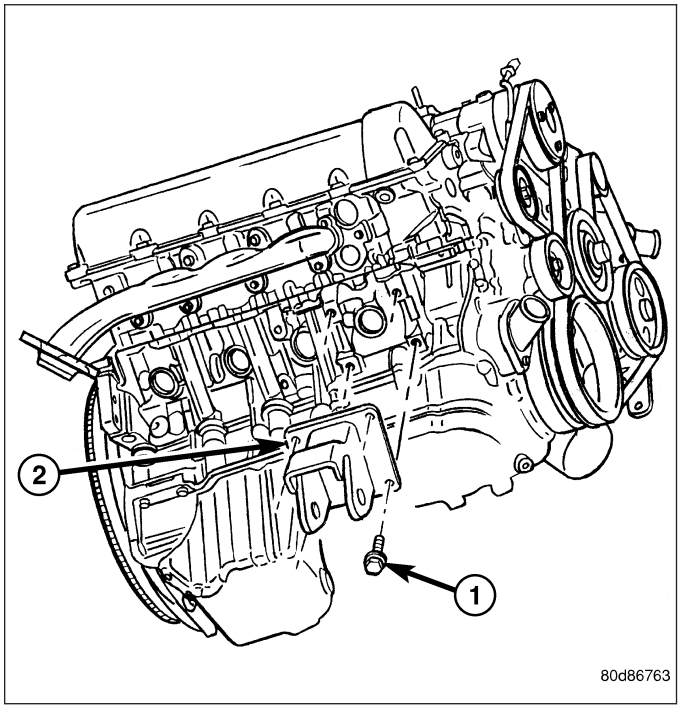

1. Install the right and left side engine mounts to the engine block with (8) bolts. Torque bolts to 54 N·m (40 ft. lbs.).
2. Insert the (2) through bolts into the right and left side engine mounts and loose assemble the two nuts onto the through bolts.
3. Lower the engine until the through bolts rest onto the slots in the frame brackets.
4. Tighten the through bolt nuts to 94 N·m (70 ft. lbs.).
5. Install the oil drain trough.
6. Install the engine oil filter.
7. Lower the vehicle.
8. Install the viscous fan (Refer to 7 - COOLING/ENGINE/FAN DRIVE VISCOUS CLUTCH - REMOVAL).
9. Reconnect the negative battery cable.

4WD

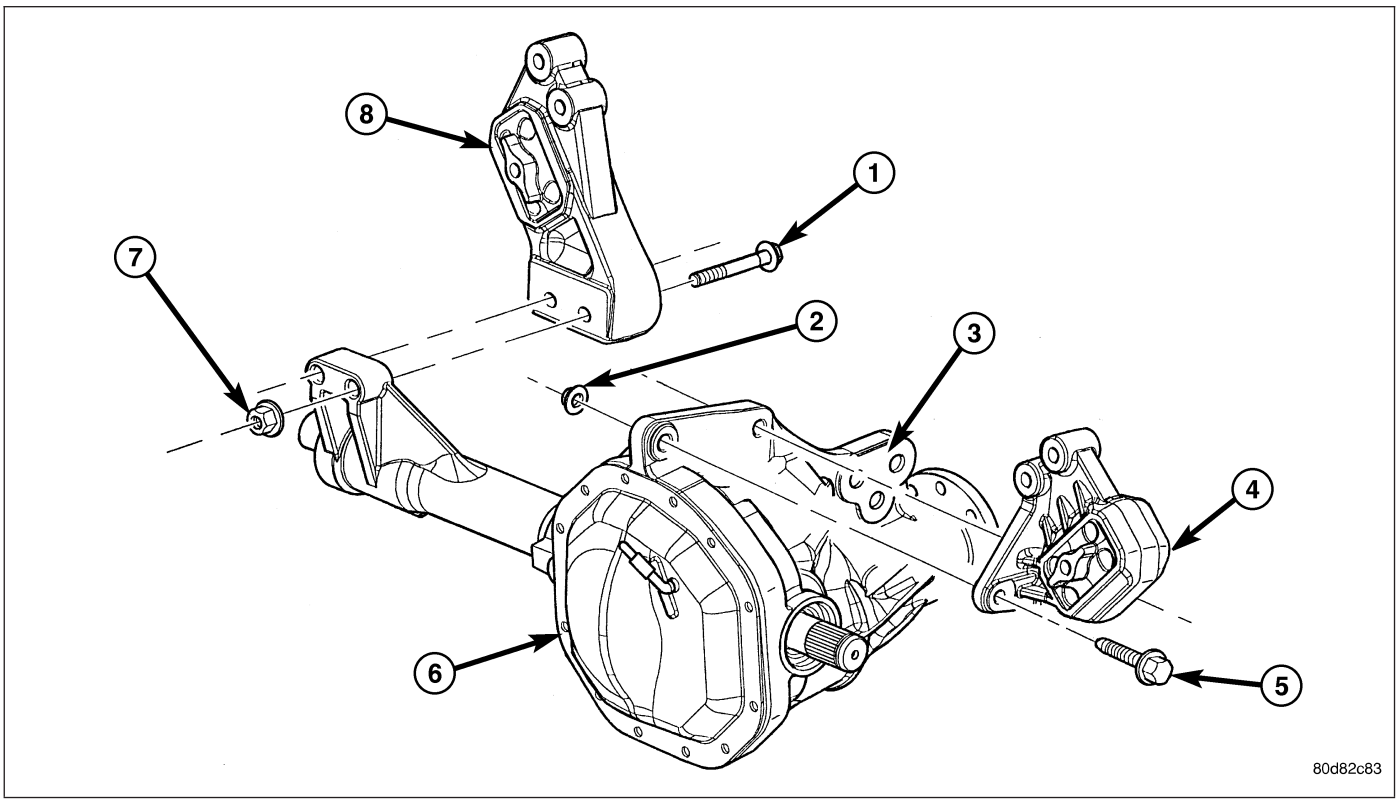

NOTE: For mount to engine block and left engine bracket to front axle bolts, apply Mopar® Lock and Seal Adhesive, Medium Strength Threadlocker.

1. Install the right and left side engine mounts (4,8)to the front axle. Torque nuts to 94 N·m (70 ft. lbs.).
2. Raise the front axle into the frame and install the left and right side through bolts. Torque nuts to 94 N·m (70 ft. lbs.).
3. Insert the two upper through bolts into the right and left side engine mounts and loose assemble the two nuts onto the through bolts.
4. Lower the engine until the left and right side engine brackets rest on the through bolts, and the lower engine bracket through holes align with the engine mounts, and the left engine bracket holes align with the front axle slots.
5. Loose assemble the 3 bolts that attach the front axle to the left engine bracket.
6. Loose assemble the lower through bolts.
7. Torque the nuts for the 4 through bolts to 101 N·m (75 ft. lbs.).
8. Torque the 3 bolts that attach the front axle to the left engine bracket to 101 N·m (75 ft. lbs.).
9. Install the oil drain trough.
10. Install the engine oil filter.
11. Install the front crossmember.
12. Install the skid plate.
13. Lower the vehicle.
14. Install the viscous fan (Refer to 7 - COOLING/ENGINE/FAN DRIVE VISCOUS CLUTCH - REMOVAL).
15. Reconnect the negative battery cable.

MOUNT - REAR

REMOVAL

1. Raise the vehicle on a hoist.
2. Using a suitable jack, support transmission.
3. Remove the nuts from the transmission mount (1).
4. Remove the two bolts that attach the transmission mount to the engine bracket.
5. Raise the transmission enough to remove the mount from the crossmember (2).
6. Remove the mount (1).

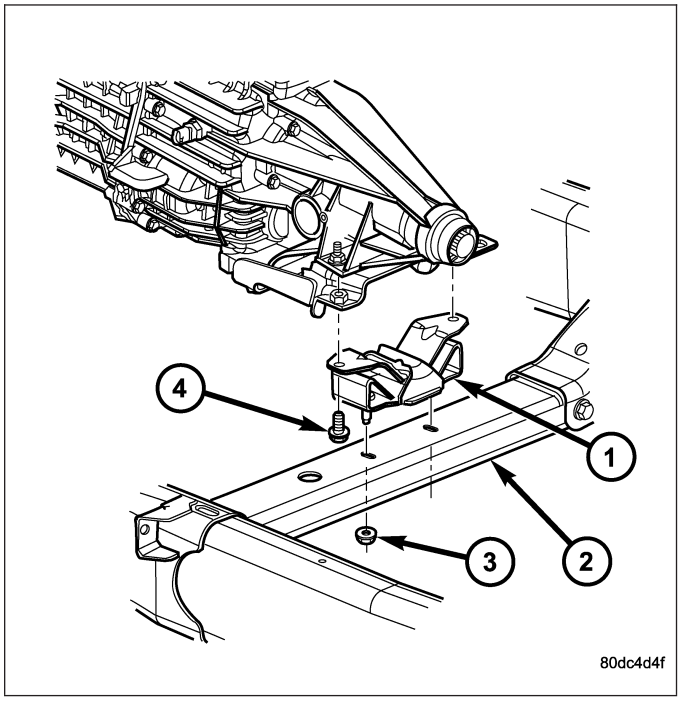

INSTALLATION

NOTE: Threadlocking compound must be applied to the bolts before installation.

1. Install the two bolts that attach the transmission mount to the transmission bracket.
2. Torque the bolts to 61N·m (45 ft.lbs.) torque.
3. Lower the transmission so the transmission mount rests on the crossmember, and the studs of the transmission mount are aligned in the slots in the crossmember.
4. Install the nuts onto the transmission mount studs through the crossmember access slot.
5. Torque the nuts to 54N·m (40 ft. lbs.).

LUBRICATION

DESCRIPTION

The lubrication system is a full flow filtration pressure feed type.

OPERATION

Engine Lubrication Flow Chart - Block: Table 1

FROM	TO
Oil Pickup Tube	Oil Pump
Oil Pump	Oil Filter
Oil Filter	Block Main Oil Gallery
Block Main Oil Gallery	1. Crankshaft Main Journal 2. Left Cylinder Head* 3. Right Cylinder Head* 4. Counterbalance Shaft Rear Journal
Crankshaft Main Journals	Crankshaft Rod Journals
Crankshaft Number One Main Journal	1. Front Timing Chain Idler Shaft 2. Counterbalance Shaft - Front Journal 3. Both Secondary Chain Tensioners
Left Cylinder Head	Refer to Engine Lubrication Flow Chart - Cylinder Heads: Table 2
Right Cylinder Head	Refer to Engine Lubrication Flow Chart - Cylinder Heads: Table 2
* The cylinder head gaskets have an oil restricter to control oil flow to the cylinder heads	

Engine Lubrication Flow Chart - Cylinder Heads: Table 2

FROM	TO
Cylinder Head Oil Port (in bolt hole)	Diagonal Cross Drilling to Main Oil Gallery
Main Oil Gallery (drilled through head from rear to front)	1. Base of Camshaft Towers 2. Lash Adjuster Towers
Base of Camshaft Towers	Vertical Drilling Through Tower to Camshaft Bearings**
Lash Adjuster Towers	Diagonal Drillings to Hydraulic Lash Adjuster Pockets
** The number three camshaft bearing journal feeds oil into the hollow camshaft tubes. Oil is routed to the intake lobes, which have oil passages drilled into them to lubricate the rocker arms.	

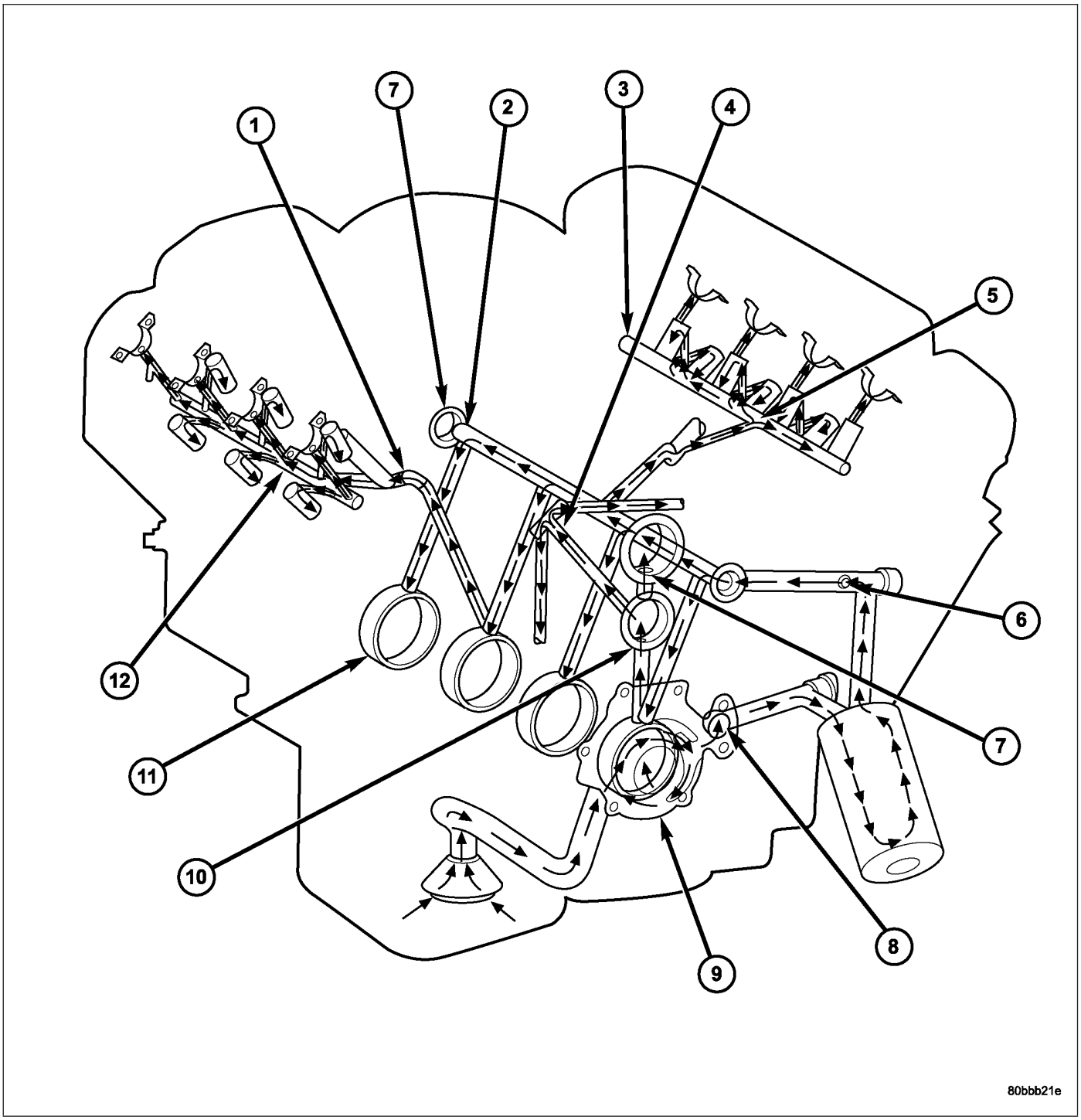

Oil from the oil pan is pumped by a gerotor type oil pump (9) directly mounted to the crankshaft nose. Oil pressure is controlled by a relief valve mounted inside the oil pump housing.

The camshaft exhaust valve lobes and rocker arms are lubricated through a small hole in the rocker arm; oil flows through the lash adjuster then through the rocker arm and onto the camshaft lobe. Due to the orientation of the rocker arm, the camshaft intake lobes are not lubed in the same manner as the exhaust lobes. The intake lobes are lubed through internal passages in the camshaft. Oil flows through a bore in the No. 3 camshaft bearing bore, and as the camshaft turns, a hole in the camshaft aligns with the hole in the camshaft bore allowing engine oil to enter the camshaft tube. The oil then exits through 1.6mm (0.063 in.) holes drilled into the intake lobes, lubricating the lobes and the rocker arms.

DIAGNOSIS AND TESTING

DIAGNOSIS AND TESTING - ENGINE OIL LEAK

Begin with a thorough visual inspection of the engine, particularly at the area of the suspected leak. If an oil leak source is not readily identifiable, the following steps should be followed:

1. Do not clean or degrease the engine at this time because some solvents may cause rubber to swell, temporarily stopping the leak.
2. Add an oil soluble dye (use as recommended by manufacturer). Start the engine and let idle for approximately 15 minutes. Check the oil dipstick to make sure the dye is thoroughly mixed as indicated with a bright yellow color under a black light.
3. Using a black light, inspect the entire engine for fluorescent dye, particularly at the suspected area of oil leak. If the oil leak is found and identified, repair per service manual instructions.
4. If dye is not observed, drive the vehicle at various speeds for approximately 24 km (15 miles), and repeat inspection.If the oil leak source is not positively identified at this time, proceed with the air leak detection test method.

Air Leak Detection Test Method

1. Disconnect the breather cap to air cleaner hose at the breather cap end. Cap or plug breather cap nipple.
2. Remove the PCV valve from the cylinder head cover. Cap or plug the PCV valve grommet.
3. Attach an air hose with pressure gauge and regulator to the dipstick tube.

CAUTION: Do not subject the engine assembly to more than 20.6 kPa (3 PSI) of test pressure.

4. Gradually apply air pressure from 1 psi to 2.5 psi maximum while applying soapy water at the suspected source. Adjust the regulator to the suitable test pressure that provide the best bubbles which will pinpoint the leak source. If the oil leak is detected and identified, repair per service manual procedures.
5. If the leakage occurs at the rear oil seal area, refer to the section, Inspection for Rear Seal Area Leak.
6. If no leaks are detected, turn off the air supply and remove the air hose and all plugs and caps. Install the PCV valve and breather cap hose.
7. Clean the oil off the suspect oil leak area using a suitable solvent. Drive the vehicle at various speeds approximately 24 km (15 miles). Inspect the engine for signs of an oil leak by using a black light.

INSPECTION FOR REAR SEAL AREA LEAKS

Since it is sometimes difficult to determine the source of an oil leak in the rear seal area of the engine, a more involved inspection is necessary. The following steps should be followed to help pinpoint the source of the leak.

If the leakage occurs at the crankshaft rear oil seal area:

1. Disconnect the battery.
2. Raise the vehicle.
3. Remove torque converter or clutch housing cover and inspect rear of block for evidence of oil. Use a black light to check for the oil leak:
   a. Circular spray pattern generally indicates seal leakage or crankshaft damage.
   b. Where leakage tends to run straight down, possible causes are a porous block, distributor seal, camshaft bore cup plugs oil galley pipe plugs, oil filter runoff, and main bearing cap to cylinder block mating surfaces.
4. If no leaks are detected, pressurize the crankcase as outlined in the, Inspection (Engine oil Leaks in general)

CAUTION: Do not exceed 20.6 kPa (3 psi).

5. If the leak is not detected, very slowly turn the crankshaft and watch for leakage. If a leak is detected between the crankshaft and seal while slowly turning the crankshaft, it is possible the crankshaft seal surface is damaged. The seal area on the crankshaft could have minor nicks or scratches that can be polished out with emery cloth.

CAUTION: Use extreme caution when crankshaft polishing is necessary to remove minor nicks and scratches. The crankshaft seal flange is especially machined to complement the function of the rear oil seal.

6. For bubbles that remain steady with shaft rotation, no further inspection can be done until disassembled.

DIAGNOSIS AND TESTING - CHECKING ENGINE OIL PRESSURE

1. Remove oil pressure sending unit (2) and install gauge assembly C-3292.
2. Run engine until thermostat opens.
3. Oil Pressure:
   - Curb Idle - 25 kPa (4 psi) minimum
   - 3000 rpm - 170 - 758 kPa (25 - 110 psi)
4. If oil pressure is 0 at idle, shut off engine. Check for a clogged oil pick-up screen or a pressure relief valve stuck open.

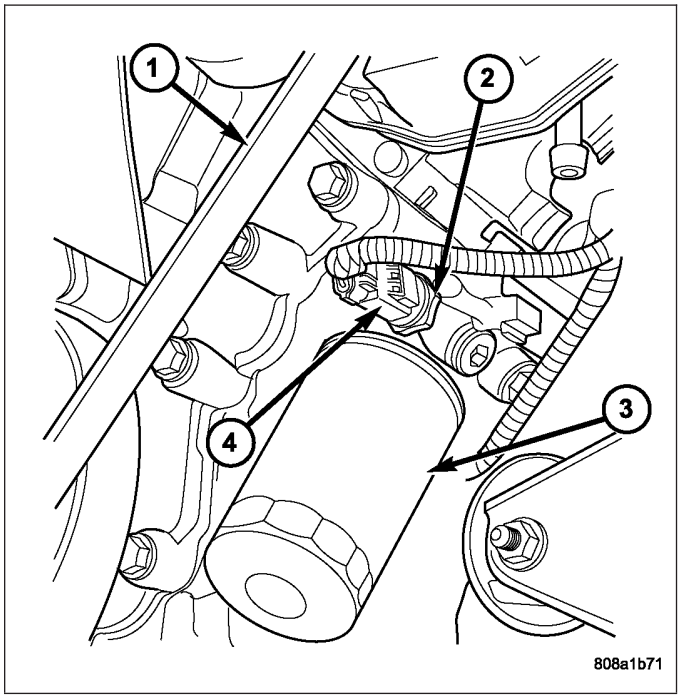

DIAGNOSIS AND TESTING - REAR SEAL AREA LEAKS

Since it is sometimes difficult to determine the source of an oil leak in the rear seal area of the engine, a more involved inspection is necessary. The following steps should be followed to help pinpoint the source of the leak.

If the leakage occurs at the crankshaft rear oil seal area:

1. Disconnect the battery.
2. Raise the vehicle.
3. Remove torque converter or clutch housing cover and inspect rear of block for evidence of oil. Use a black light to check for the oil leak:
   a. Circular spray pattern generally indicates seal leakage or crankshaft damage.
   b. Where leakage tends to run straight down, possible causes are a porous block, camshaft bore cup plugs, oil galley pipe plugs, oil filter runoff, and main bearing cap to cylinder block mating surfaces. See Engine, for proper repair procedures of these items.
4. If no leaks are detected, pressurized the crankcase as outlined in the section, Inspection (Engine oil Leaks in general)

CAUTION: Do not exceed 20.6 kPa (3 psi).

5. If the leak is not detected, very slowly turn the crankshaft and watch for leakage. If a leak is detected between the crankshaft and seal while slowly turning the crankshaft, it is possible the crankshaft seal surface is damaged. The seal area on the crankshaft could have minor nicks or scratches that can be polished out with emery cloth.

CAUTION: Use extreme caution when crankshaft polishing is necessary to remove minor nicks or scratches. The crankshaft seal flange is specially machined to complement the function of the rear oil seal.

6. For bubbles that remain steady with shaft rotation, no further inspection can be done until disassembled. (Refer to 9 - ENGINE - DIAGNOSIS AND TESTING), under the Oil Leak row, for components inspections on possible causes and corrections.
7. After the oil leak root cause and appropriate corrective action have been identified, (Refer to 9 - ENGINE/ENGINE BLOCK/CRANKSHAFT OIL SEAL - REAR - REMOVAL).

PAN -ENGINE OIL

DESCRIPTION

The engine oil pan (1)is made of laminated steel and has a single plane sealing surface. The sandwich style oil pan gasket has an integrated windage tray (2) and steel carrier. The sealing area of the gasket is molded with rubber and is designed to be reused as long as the gasket is not cut, torn or ripped.

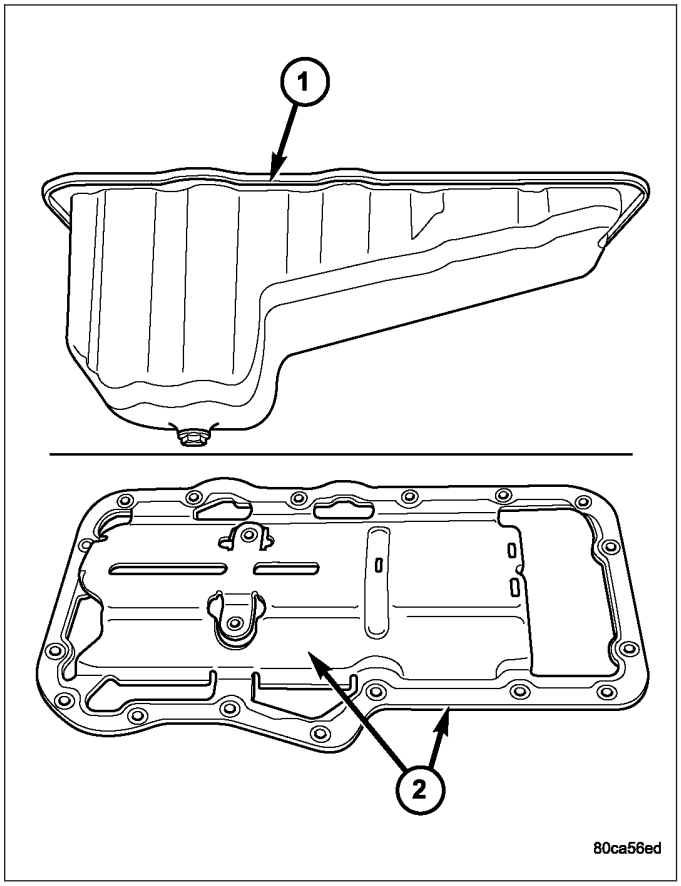

REMOVAL

1. Disconnect the negative battery cable.
2. Install engine support fixture special tool # 8534. **Do not raise engine at this time.**
3. Loosen both left and right side engine mount through bolts. Do not remove bolts.
4. Remove the structural dust cover, if equipped.
5. Drain engine oil.
6. Remove the front crossmember (Refer to 13 - FRAME & BUMPERS/FRAME/FRONT CROSSMEMBER - REMOVAL).

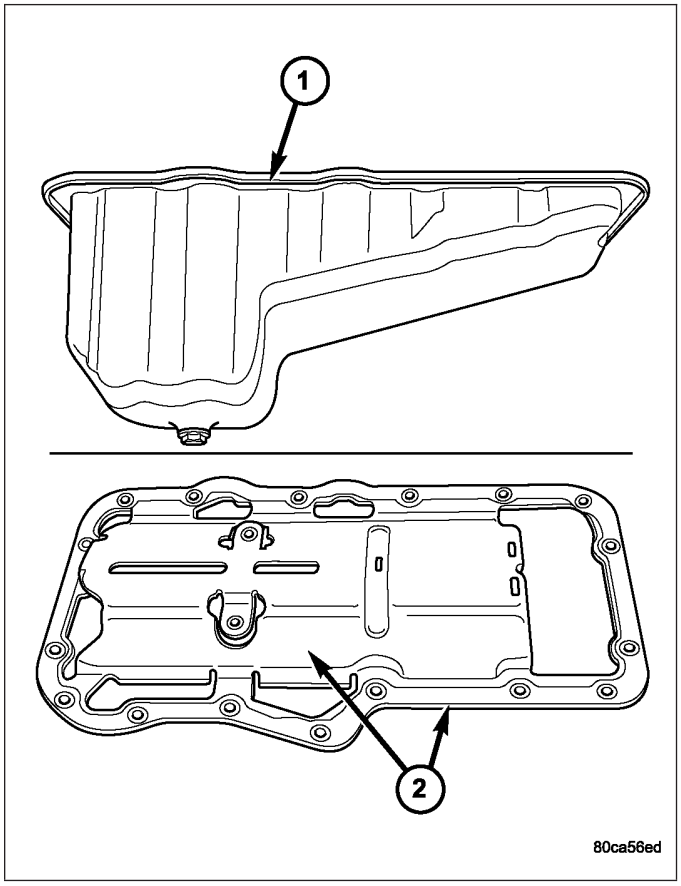

CAUTION: Only raise the engine enough to provide clearance for oil pan removal. Check for proper clearance at fan shroud to fan and cowl to intake manifold.

7. Raise engine using special tool 8534 to provide clearance to remove oil pan.

NOTE: Do not pry on oil pan or oil pan gasket. Gasket is integral to engine windage tray and does not come out with oil pan.

8. Remove the oil pan mounting bolts and oil pan (1).
9. Unbolt oil pump pickup tube and remove tube.
10. Inspect the integral windage tray and gasket (2) and replace as needed.

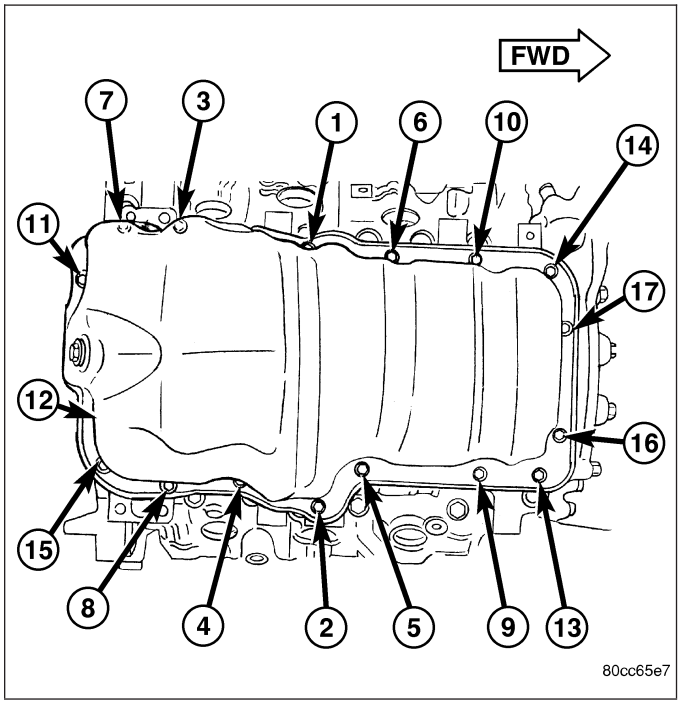

CLEANING

1. Clean oil pan in solvent and wipe dry with a clean cloth.
2. Clean the oil pan gasket surface. **DO NOT** use a grinder wheel or other abrasive tool to clean sealing surface.
3. Clean oil screen and tube thoroughly in clean solvent.

INSPECTION

1. Inspect oil drain plug and plug hole for stripped or damaged threads. Repair as necessary.
2. Inspect the oil pan mounting flange for bends or distortion. Straighten flange, if necessary.

INSTALLATION

1. Clean the oil pan gasket mating surface of the bedplate and oil pan.
2. Inspect integrated oil pan gasket (2), and replace as necessary.
3. Position the integrated oil pan gasket/windage tray assembly (2).
4. Install the oil pickup tube.
5. Install the mounting bolt and nuts. Tighten nuts to 28 N·m (20 ft. lbs.).

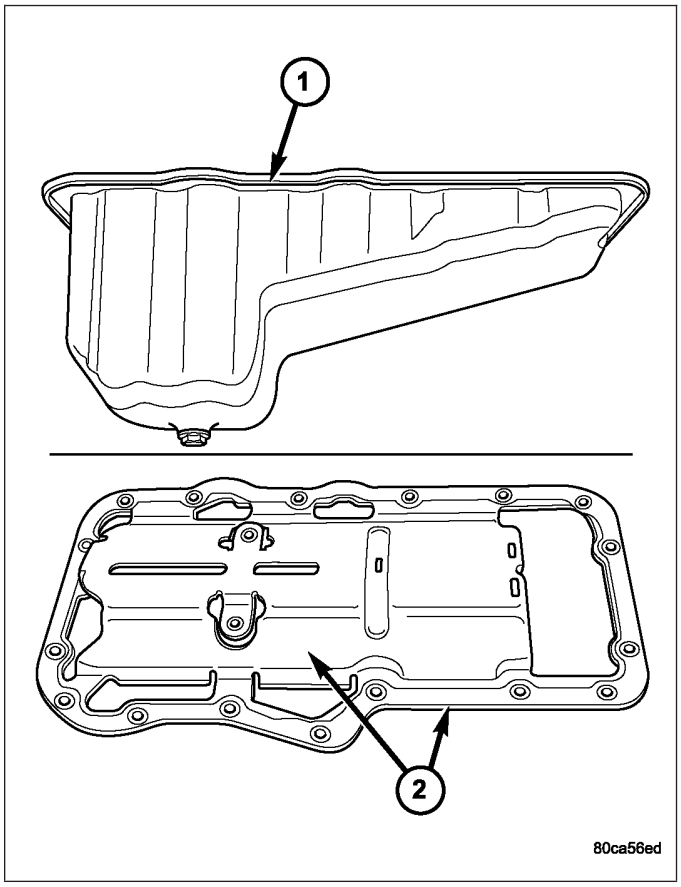

1. If removed, install stud at position No. 9.
2. Position the oil pan and install the mounting bolts and nut. Tighten the mounting bolts and nut to 15 N·m (11 ft. lbs.) in the sequence shown.
3. Lower the engine into mounts using special tool 8534.
4. Install both the left and right side engine mount through bolts. Tighten the nuts to 68 N·m (50 ft. lbs.).
5. Remove special tool 8534.
6. Install structural dust cover, if equipped.
7. Install the front crossmember (Refer to 13 - FRAME & BUMPERS/FRAME/FRONT CROSSMEMBER - INSTALLATION).
8. Fill engine oil.
9. Reconnect the negative battery cable.
10. Start engine and check for leaks.

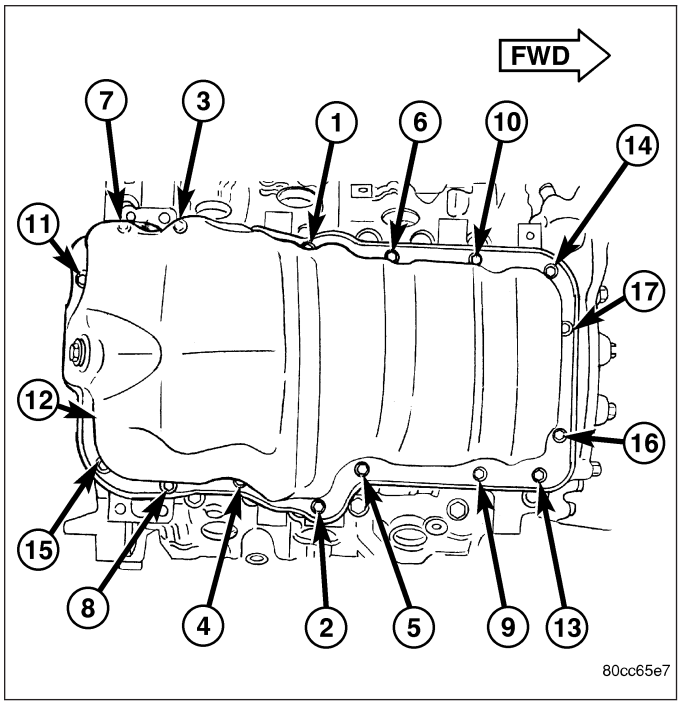

SWITCH - OIL PRESSURE

DESCRIPTION

The 3 wire, solid-state engine oil pressure sensor (sending unit) is located in an engine oil pressure gallery.

OPERATION

The oil pressure sensor uses three circuits. They are:

- A 5 volt power supply from the Powertrain Control Module (PCM)
- A sensor ground through the PCM's sensor return
- A signal to the PCM relating to engine oil pressure

The oil pressure sensor has a 3 wire electrical function very much like the Manifold Absolute Pressure (MAP) sensor. Meaning different pressures relate to different output voltages.

A 5 volt supply is sent to the sensor from the PCM to power up the sensor. The sensor returns a voltage signal back to the PCM relating to engine oil pressure. This signal is then transferred (bussed) to the instrument panel on either a CCD or PCI bus circuit (depending on vehicle line) to operate the oil pressure gauge and the check gauges lamp. Ground for the sensor is provided by the PCM through a low-noise sensor return.

REMOVAL

1. Disconnect the negative cable from the battery.
2. Raise vehicle on hoist.
3. Remove front splash shield.
4. Disconnect oil pressure sender wire (4).
5. Remove the pressure sender (2).

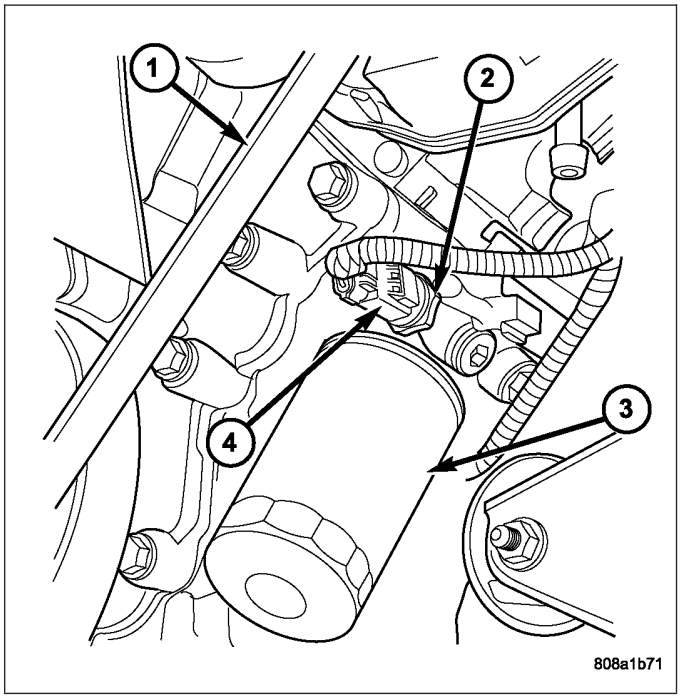

INSTALLATION

1. Install oil pressure sender.
2. Connect oil pressure sender wire.
3. Install front splash shield.
4. Lower vehicle.
5. Connect the negative battery cable.

PUMP - ENGINE OIL

REMOVAL

1. Remove the oil pan and pick-up tube (Refer to 9 - ENGINE/LUBRICATION/OIL PAN - REMOVAL).
2. Remove the timing chain cover (Refer to 9 - ENGINE/VALVE TIMING/TIMING BELT / CHAIN COVER(S) - REMOVAL).
3. Remove the timing chains and tensioners (Refer to 9 - ENGINE/VALVE TIMING/TIMING BELT/CHAIN AND SPROCKETS - REMOVAL).
4. Remove the four bolts, primary timing chain tensioner and the oil pump.

DISASSEMBLY

1. Remove oil pump cover screws and lift off cover plate.
2. Remove pump inner and outer rotors.

NOTE: Once the oil pressure relief valve, cup plug, and pin are removed, the pump assembly must be replaced.

3. If it is necessary to remove the pressure relief valve, drive the roll pin from pump housing and remove cup plug, spring and valve.

INSPECTION

CAUTION: Oil pump pressure relief valve and spring should not be removed from the oil pump. If these components are disassembled and or removed from the pump the entire oil pump assembly must be replaced.

1. Clean all parts thoroughly. Mating surface of the oil pump housing should be smooth. If the pump cover is scratched or grooved the oil pump assembly should be replaced.
2. Lay a straight edge across the pump cover surface (3). If a 0.025 mm (0.001 in.) feeler gauge (2) can be inserted between the cover and the straight edge the oil pump assembly should be replaced.

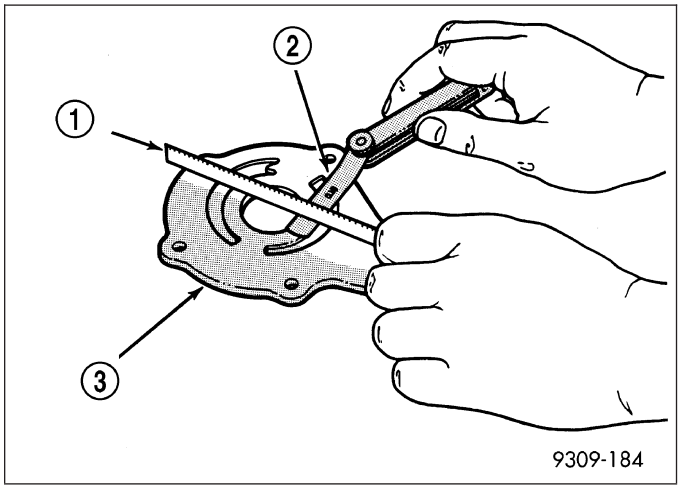

3. Measure the thickness of the outer rotor. If the outer rotor thickness measures at 12.005 mm (0.472 in.) or less the oil pump assembly must be replaced.
4. Measure the diameter of the outer rotor. If the outer rotor diameter measures at 85.925 mm (3.382 in.) or less the oil pump assembly must be replaced.

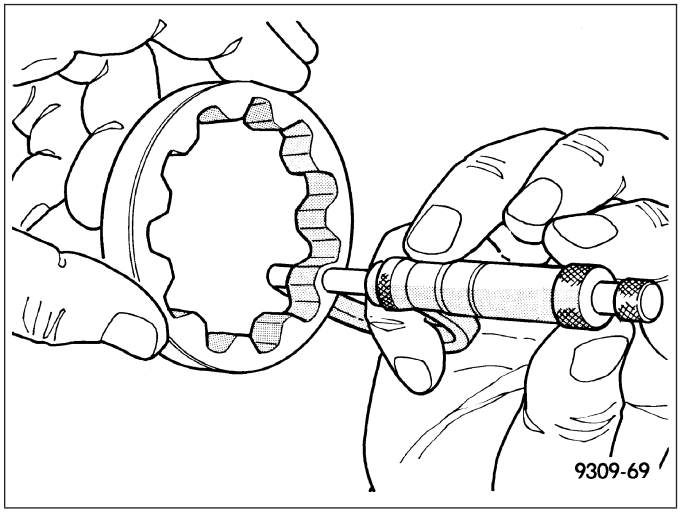

5. Measure the thickness of the inner rotor. If the inner rotor thickness measures at 12.005 mm (0.472 in.) or less then the oil pump assembly must be replaced.

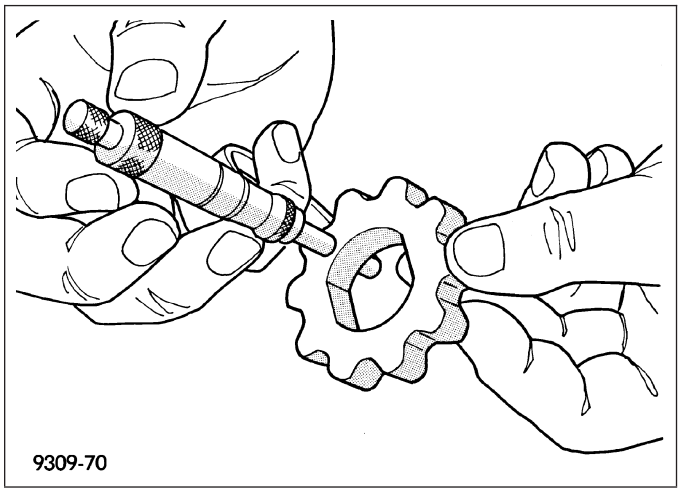

6. Slide outer rotor (2) into the body of the oil pump. Press the outer rotor to one side of the oil pump body and measure clearance between the outer rotor and the body. If the measurement is 0.235mm (0.009 in.) or more the oil pump assembly must be replaced.

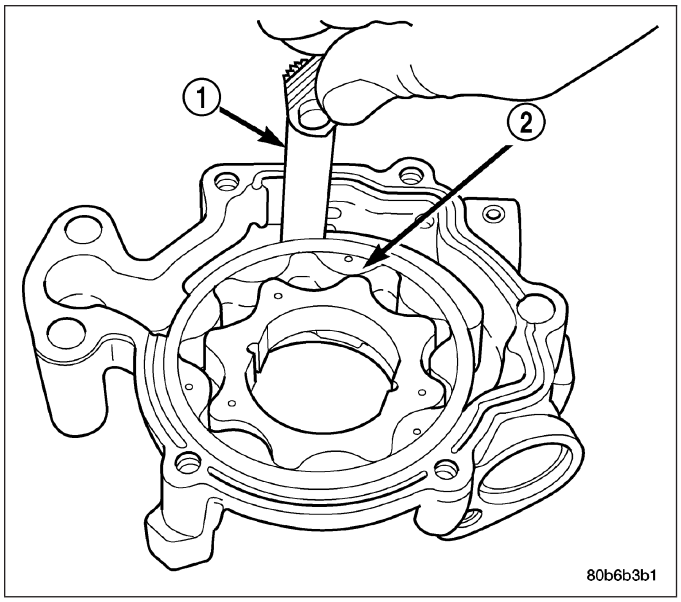

7. Install the inner rotor in the into the oil pump body. Measure the clearance between the inner (3) and outer (1) rotors. If the clearance between the rotors is .150 mm (0.006 in.) or more the oil pump assembly must be replaced.

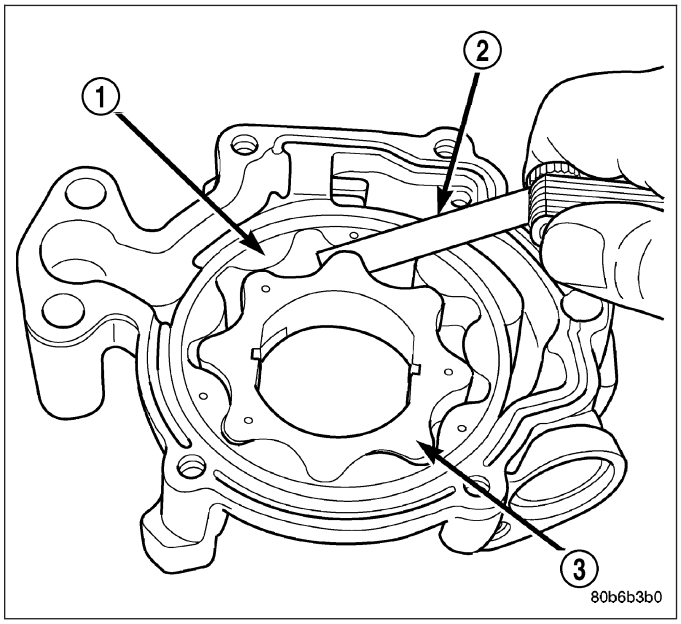

8. Place a straight edge (1) across the body of the oil pump (between the bolt holes), if a feeler gauge (2) of .095 mm (0.0038 in.) or greater can be inserted between the straightedge and the rotors, the pump must be replaced.

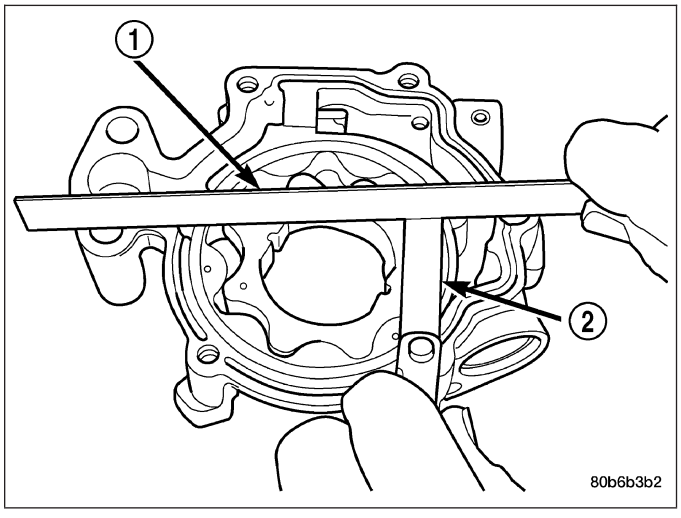

NOTE: The 3.7L/4.7L Oil pump is released as an assembly. There are no DaimlerChrysler part numbers for Sub-Assembly components. In the event the oil pump is not functioning or out of specification it must be replaced as an assembly.

ASSEMBLY

1. Wash all parts in a suitable solvent and inspect carefully for damage or wear.
2. Install inner and outer rotors
3. Install oil pump cover plate and install cover bolts and tighten them to 12 N·m (105 in. lbs.).
4. Prime oil pump before installation by filling rotor cavity with engine oil.
5. If oil pressure is low and pump is within specifications, inspect for worn engine bearings or other causes for oil pressure loss.

INSTALLATION

1. Position the oil pump onto the crankshaft and install one oil pump retaining bolts.
2. Position the primary timing chain tensioner and install three retaining bolts.
3. Tighten the oil pump and primary timing chain tensioner retaining bolts to 28 N·m (250 in. lbs.) in the sequence shown.
4. Install the secondary timing chain tensioners and timing chains (Refer to 9 - ENGINE/VALVE TIMING/TIMING BELT/CHAIN AND SPROCKETS - INSTALLATION).
5. Install the timing chain cover (Refer to 9 - ENGINE/VALVE TIMING/TIMING BELT / CHAIN COVER(S) - INSTALLATION).
6. Install the pick-up tube and oil pan (Refer to 9 - ENGINE/LUBRICATION/OIL PAN - INSTALLATION).

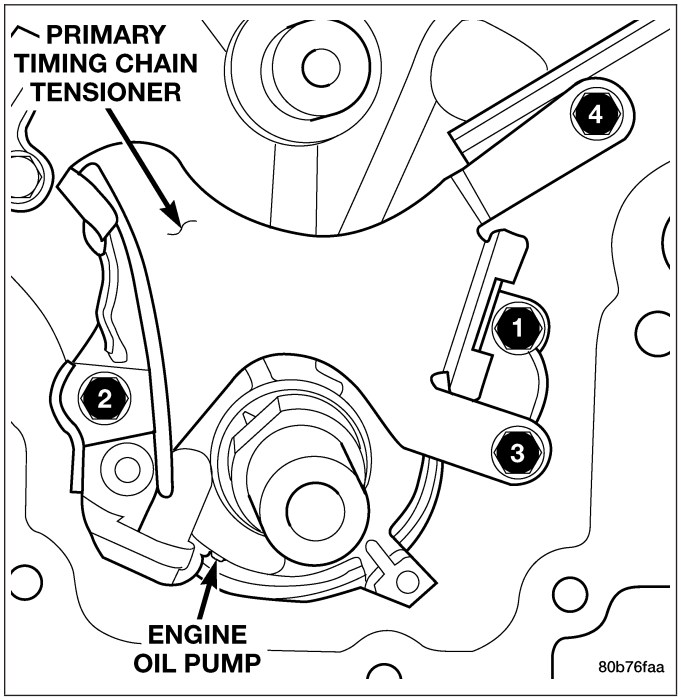

FILTER - ENGINE OIL

REMOVAL

All engines are equipped with a high quality full-flow, disposable type oil filter (1). DaimlerChrysler Corporation recommends a Mopar® or equivalent oil filter be used.

1. Position a drain pan under the oil filter.
2. Using a suitable oil filter wrench loosen filter.
3. Rotate the oil filter counterclockwise to remove it from the cylinder block oil filter boss.
4. When filter separates from cylinder block oil filter boss, tip gasket end upward to minimize oil spill. Remove filter from vehicle.

NOTE: Make sure filter gasket was removed with filter.

5. With a wiping cloth, clean the gasket sealing surface of oil and grime.

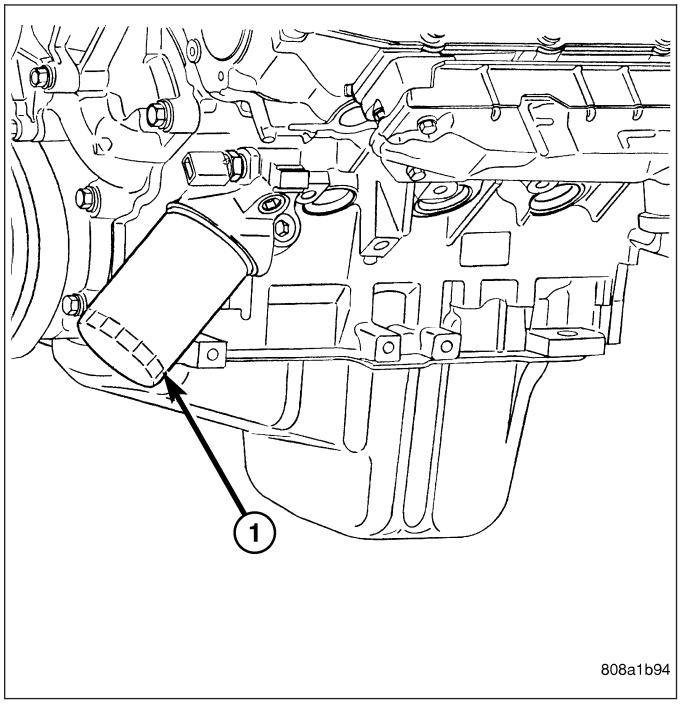

INSTALLATION

1. Lightly lubricate oil filter gasket (2) with engine oil.
2. Thread filter (3) onto adapter nipple. When gasket makes contact with sealing surface, hand tighten filter one full turn, do not over tighten.
3. Add oil, verify crankcase oil level and start engine. Inspect for oil leaks.

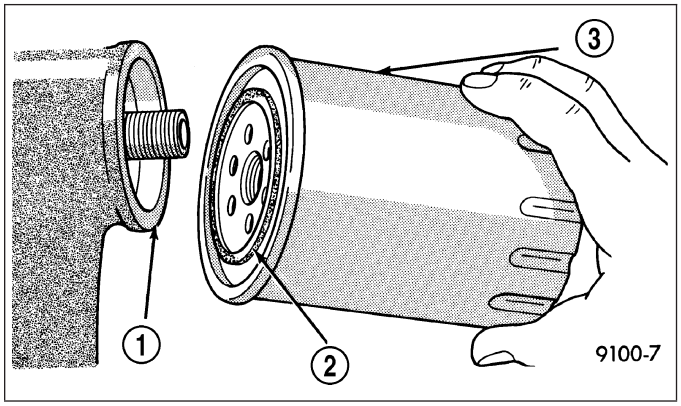

OIL

STANDARD PROCEDURE - ENGINE OIL SERVICE

The engine oil level indicator (1) is located at the right rear of the engine on the 3.7L/4.7L engines.

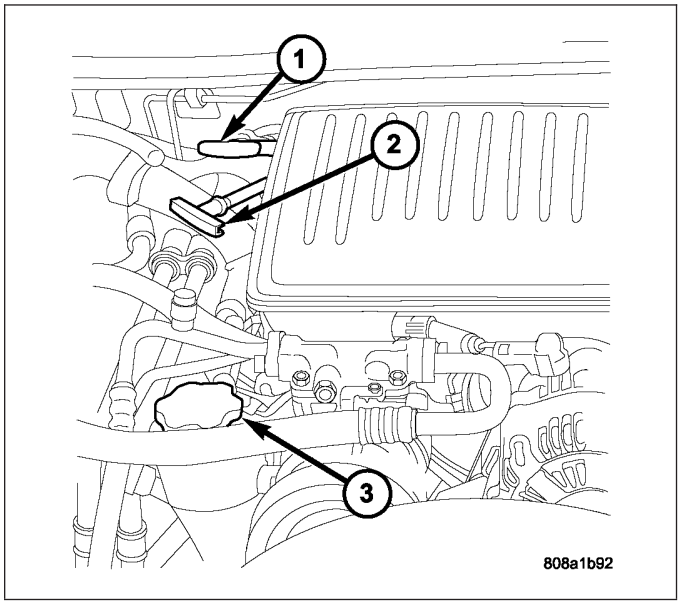

CRANKCASE OIL LEVEL INSPECTION

CAUTION: Do not overfill crankcase with engine oil, pressure loss or oil foaming can result.

Inspect engine oil level approximately every 800 kilometers (500 miles). Unless the engine has exhibited loss of oil pressure, run the engine for about five minutes before checking oil level. Checking engine oil level on a cold engine is not accurate.

To ensure proper lubrication of an engine, the engine oil must be maintained at an acceptable level. The acceptable levels are indicated between the ADD and SAFE marks on the engine oil dipstick.

1. Position vehicle on level surface.
2. With engine OFF, allow approximately ten minutes for oil to settle to bottom of crankcase, remove engine oil dipstick.
3. Wipe dipstick clean.
4. Install dipstick and verify it is seated in the tube.
5. Remove dipstick, with handle held above the tip, take oil level reading.
6. Add oil only if level is below the ADD mark on dipstick.

ENGINE OIL CHANGE

Change engine oil at mileage and time intervals described in Maintenance Schedules.

Run engine until achieving normal operating temperature.

1. Position the vehicle on a level surface and turn engine off.
2. Hoist and support vehicle on safety stands.
3. Remove oil fill cap.
4. Place a suitable drain pan under crankcase drain.
5. Remove drain plug from crankcase and allow oil to drain into pan. Inspect drain plug threads for stretching or other damage. Replace drain plug if damaged.
6. Install drain plug in crankcase.
7. Lower vehicle and fill crankcase with specified type and amount of engine oil described in this section.
8. Install oil fill cap.

9. Start engine and inspect for leaks.
10. Stop engine and inspect oil level.

NOTE:
Care should be exercised when disposing used engine oil after it has been drained from a vehicle engine. Refer to the WARNING at beginning of this section.

MANIFOLD - INTAKE

DESCRIPTION

The intake manifold (2) is made of a composite material and features 300 mm (11.811 in.) long runners which maximizes low end torque. The intake manifold uses single plane sealing which consist of six individual press in place port gaskets to prevent leaks. The throttle body attaches directly to the intake manifold. Eight studs and two bolts are used to fasten the intake to the head.

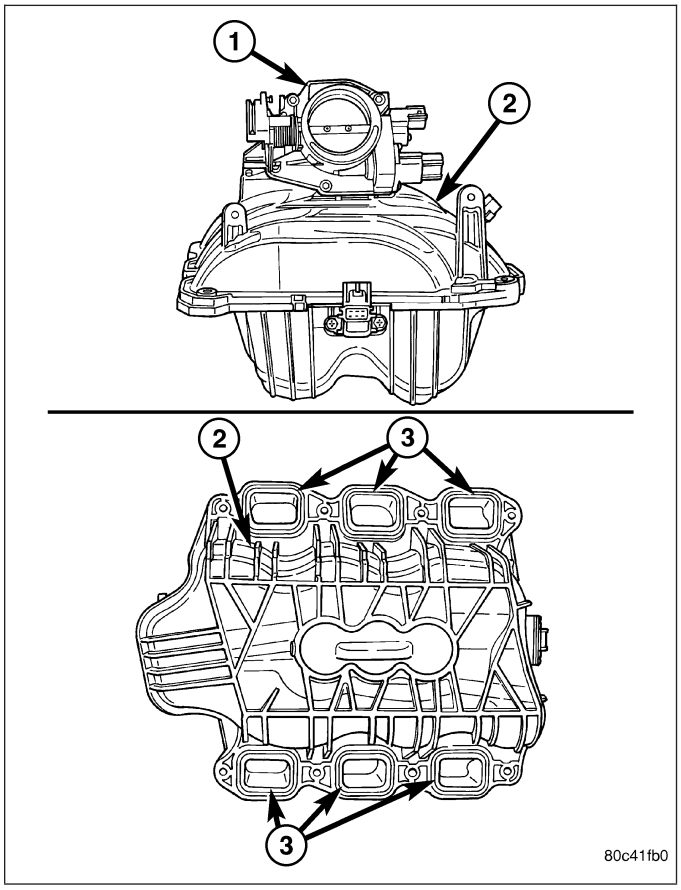

DIAGNOSIS AND TESTING - INTAKE MANIFOLD LEAKS

An intake manifold air leak is characterized by lower than normal manifold vacuum. Also, one or more cylinders may not be functioning.

WARNING: USE EXTREME CAUTION WHEN THE ENGINE IS OPERATING. DO NOT STAND IN A DIRECT LINE WITH THE FAN. DO NOT PUT YOUR HANDS NEAR THE PULLEYS, BELTS OR THE FAN. DO NOT WEAR LOOSE CLOTHING.

1. Start the engine.
2. Spray a small stream of water (spray bottle) at the suspected leak area.
3. If engine RPM'S change, the area of the suspected leak has been found.
4. Repair as required.

REMOVAL

1. Disconnect negative cable from battery.
2. Remove resonator assembly and air inlet hose.
3. Disconnect throttle and speed control cables.
4. Disconnect electrical connectors for the following components: Refer to FUEL SYSTEM for component locations.
   - Manifold Absolute Pressure (MAP) Sensor
   - Intake Air Temperature (IAT) Sensor
   - Throttle Position (TPS) Sensor
   - Coolant Temperature (CTS) Sensor
   - Idle Air Control (IAC) Motor
5. Disconnect vapor purge hose, brake booster hose, speed control servo hose, positive crankcase ventilation (PCV) hose.
6. Disconnect generator electrical connections.
7. Disconnect air conditioning compressor electrical connections.
8. Disconnect left and right radio suppressor straps.
9. Disconnect and remove ignition coil towers.
10. Remove top oil dipstick tube retaining bolt and ground strap.
11. Bleed fuel system (Refer to 14 - FUEL SYSTEM/FUEL DELIVERY - STANDARD PROCEDURE).
12. Remove fuel rail.
13. Remove throttle body assembly and mounting bracket.
14. Drain cooling system below coolant temperature level (Refer to 7 - COOLING - STANDARD PROCEDURE).
15. Remove the heater hoses from the engine front cover and the heater core.
16. Unclip and remove heater hoses and tubes from intake manifold.
17. Remove coolant temperature sensor (Refer to 7 - COOLING/ENGINE/ENGINE COOLANT TEMP SENSOR - REMOVAL).
18. Remove intake manifold retaining fasteners in reverse order of tightening sequence.
19. Remove intake manifold.

INSTALLATION

1. Install intake manifold gaskets.
2. Install intake manifold.
3. Install intake manifold retaining bolts and tighten in sequence shown in to 12 N·m (105 in. lbs.).
4. Install left and right radio suppressor straps.
5. Install throttle body assembly.
6. Connect throttle cable and speed control cable to throttle body.
7. Install fuel rail.

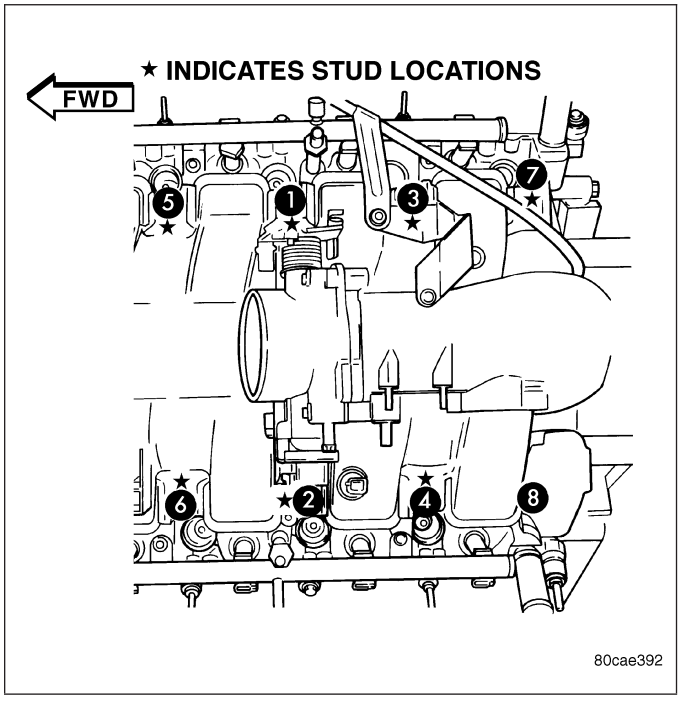

8. Install ignition coil towers.
9. Position and install heater hoses and tubes onto intake manifold.
10. Install the heater hoses to the heater core and engine front cover.
11. Connect electrical connectors for the following components:
    - Manifold Absolute Pressure (MAP) Sensor
    - Intake Air Temperature (IAT) Sensor
    - Throttle Position (TPS) Sensor
    - Coolant Temperature (CTS) Sensor
    - Idle Air Control (IAC) Motor
    - Ignition coil towers
    - Fuel injectors
12. Install top oil dipstick tube retaining bolt and ground strap.
13. Connect generator electrical connections.
14. Connect Vapor purge hose, Brake booster hose, Speed control servo hose, Positive crankcase ventilation (PCV) hose.
15. Fill cooling system (Refer to 7 - COOLING - STANDARD PROCEDURE).
16. Install resonator assembly and air inlet hose.
17. Connect negative cable to battery.

MANIFOLD - EXHAUST

DESCRIPTION

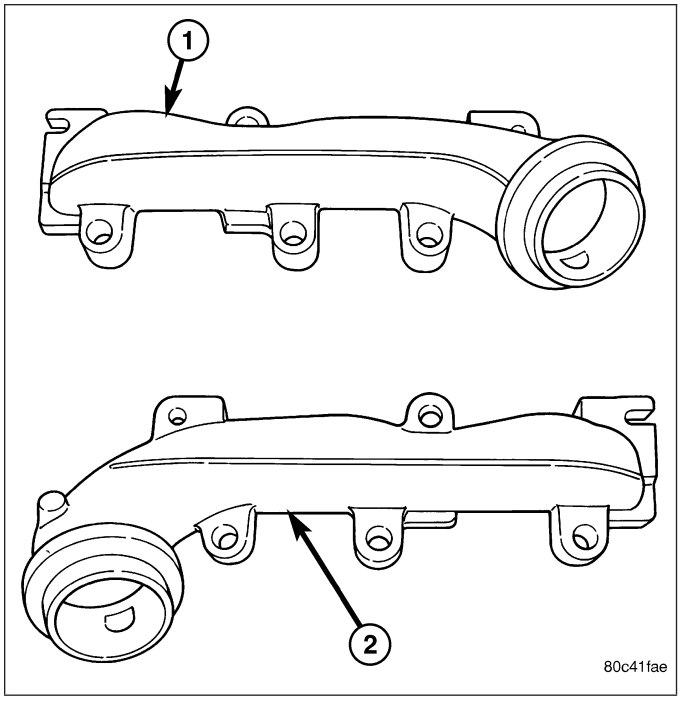

The exhaust manifolds (1,2) are log style with a patented flow enhancing design to maximize performance. The exhaust manifolds are made of high silicon molybdenum cast iron. A perforated core graphite exhaust manifold gasket is used to improve sealing to the cylinder head. The exhaust manifolds are covered by a three layer laminated heat shield (3) for thermal protection and noise reduction. The heat shields are fastened with a torque prevailing nut that is backed off slightly to allow for the thermal expansion of the exhaust manifold.

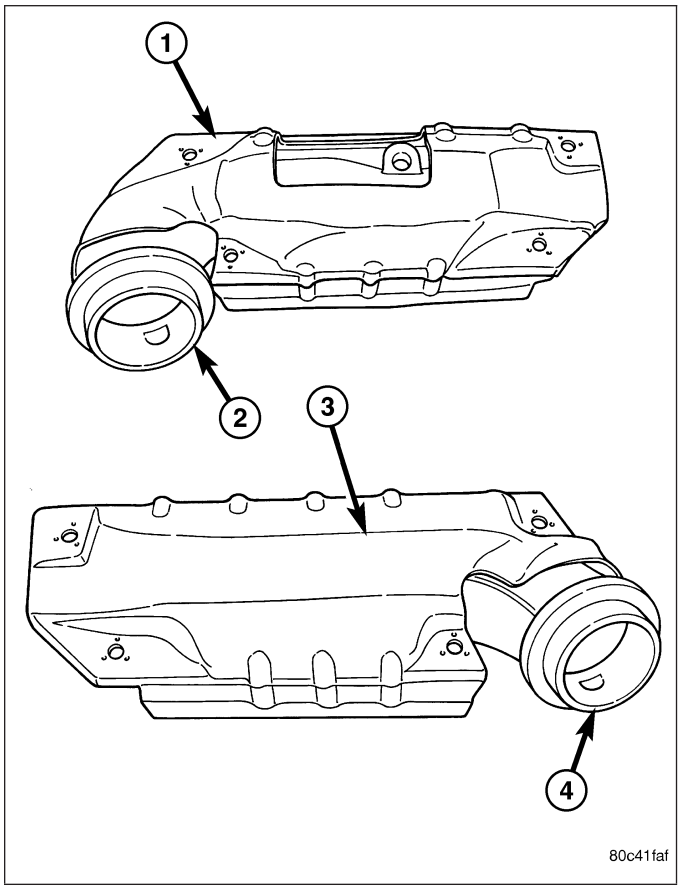

REMOVAL

RIGHT EXHAUST MANIFOLD

1. Disconnect the negative cable from the battery.
2. Raise and support the vehicle.
3. Remove the bolts and nuts attaching the exhaust pipe to the engine exhaust manifold.
4. Lower the vehicle.
5. Remove the exhaust heat shield (1).
6. Remove bolts, nuts and washers attaching manifold to cylinder head.
7. Remove manifold and gasket from the cylinder head.

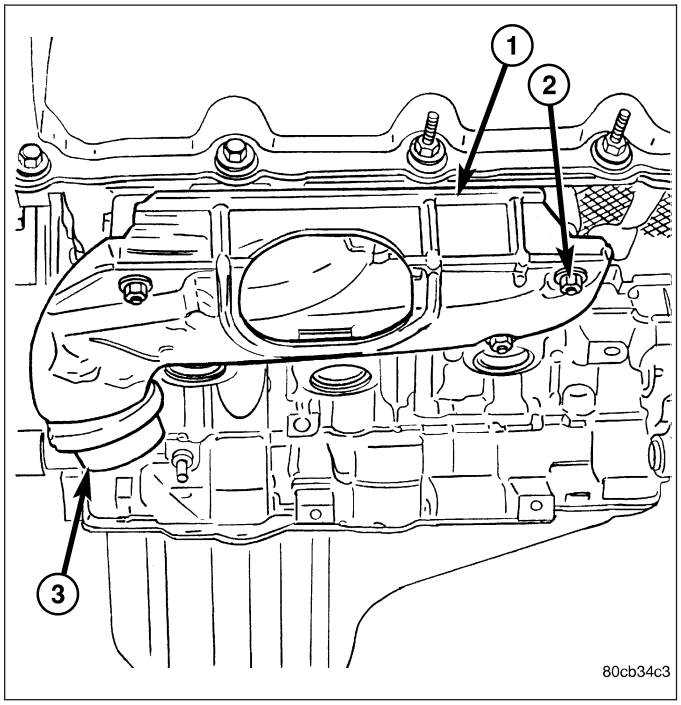

LEFT EXHAUST MANIFOLD

1. Disconnect the negative cable from the battery.
2. Raise and support the vehicle.
3. Remove the bolts and nuts attaching the exhaust pipe to the engine exhaust manifold.
4. Lower the vehicle.
5. Remove the exhaust heat shields (1).
6. Remove bolts, nuts and washers attaching manifold to cylinder head.
7. Remove manifold and gasket from the cylinder head.

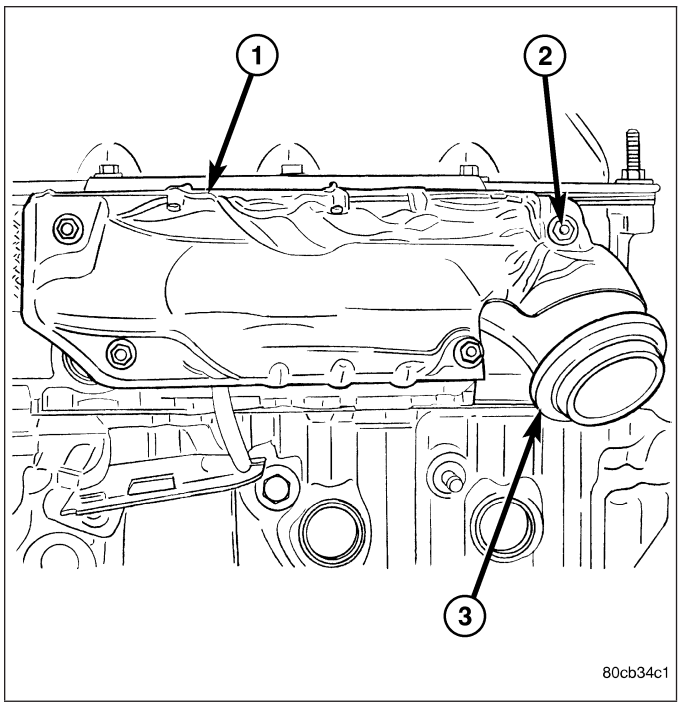

INSTALLATION

RIGHT EXHAUST MANIFOLD

CAUTION: If the studs came out with the nuts when removing the engine exhaust manifold, install new studs. Apply sealer on the coarse thread ends. Water leaks may develop at the studs if this precaution is not taken.

1. Position the engine exhaust manifold and gasket on the two studs located on the cylinder head. Install conical washers and nuts on these studs.
2. Install remaining conical washers. Starting at the center arm and working outward, tighten the bolts and nuts to 25 N·m (18 ft. lbs.) torque.
3. Install the exhaust heat shields.
4. Raise and support the vehicle.

CAUTION: Over tightening heat shield fasteners, may cause shield to distort and/or crack.

5. Assemble exhaust pipe to manifold and secure with bolts, nuts and retainers. Tighten the bolts and nuts to 34 N·m (25 ft. lbs.) torque.

LEFT EXHAUST MANIFOLD

CAUTION: If the studs came out with the nuts when removing the engine exhaust manifold, install new studs. Apply sealer on the coarse thread ends. Water leaks may develop at the studs if this precaution is not taken.

1. Position the engine exhaust manifold and gasket on the two studs located on the cylinder head. Install conical washers and nuts on these studs.
2. Install remaining conical washers. Starting at the center arm and working outward, tighten the bolts and nuts to 25 N·m (18 ft. lbs.) torque.
3. Install the exhaust heat shields.
4. Raise and support the vehicle.

CAUTION: Over tightening heat shield fasteners, may cause shield to distort and/or crack.

5. Assemble exhaust pipe to manifold and secure with bolts, nuts and retainers. Tighten the bolts and nuts to 34 N·m (25 ft. lbs.) torque.

VALVE TIMING

DESCRIPTION

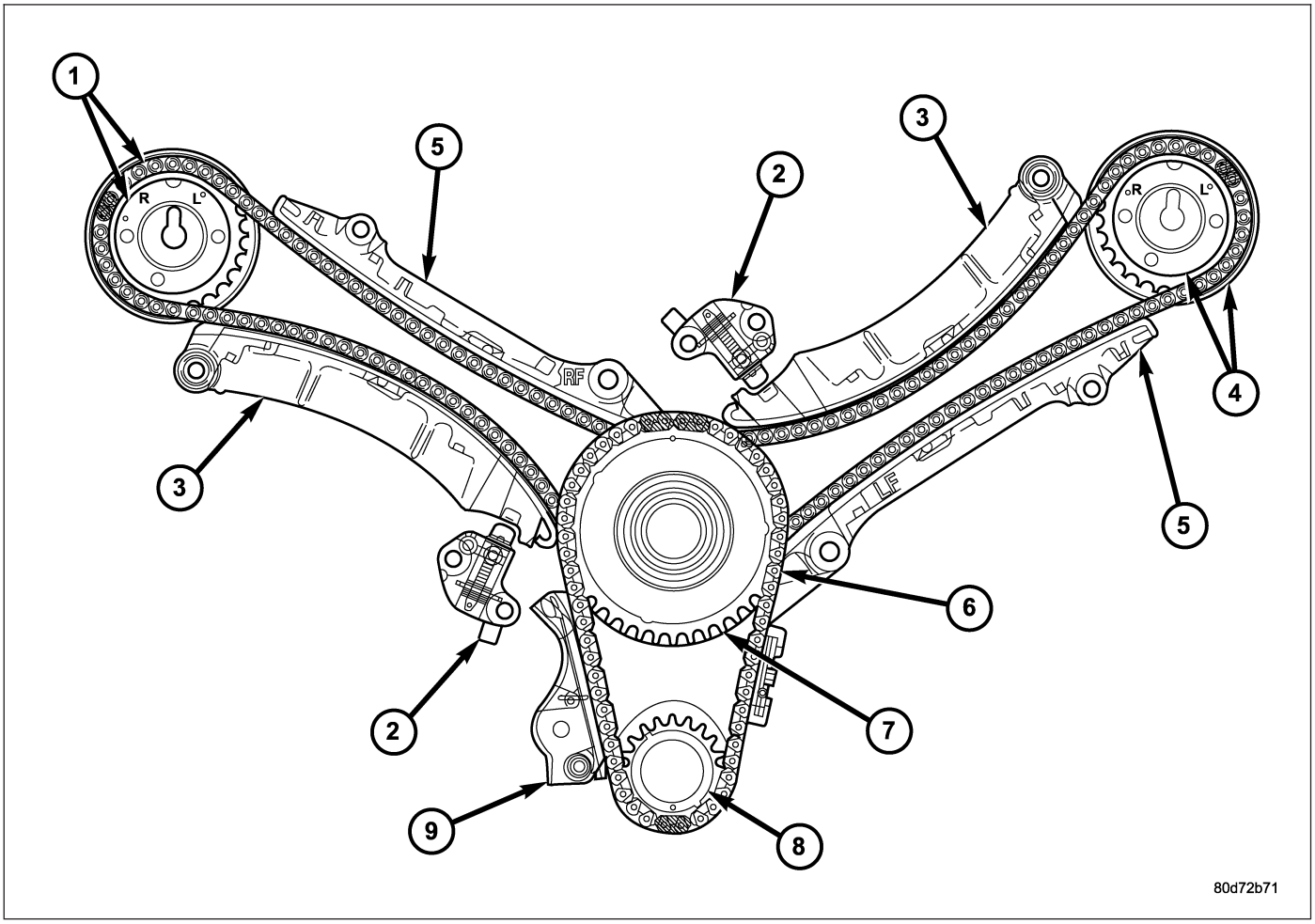

The timing drive system has been designed to provide quiet performance and reliability to support a **non-free wheeling** engine. Specifically the intake valves are non-free wheeling and can be easily damaged with forceful engine rotation if camshaft-to-crankshaft timing is incorrect. The timing drive system consists of a primary chain (6), two secondary timing chain drives (1,4) and a counterbalance shaft drive.

OPERATION

The primary timing chain is a single inverted tooth chain type. The primary chain drives the large 50 tooth idler sprocket directly from a 25 tooth crankshaft sprocket. Primary chain motion is controlled by a pivoting leaf spring tensioner arm and a fixed guide. The arm and the guide both use nylon plastic wear faces for low friction and long wear. The primary chain receives oil splash lubrication from the secondary chain drive and designed oil pump leakage. The idler sprocket assembly connects the primary chain drive, secondary chain drives, and the counterbalance shaft. The idler sprocket assembly consists of two integral 26 tooth sprockets a 50 tooth sprocket and a helical gear that is press-fit to the assembly. The spline joint for the 50 tooth sprocket is a non serviceable press fit anti rattle type. A spiral ring is installed on the outboard side of the 50 tooth sprocket to prevent spline disengagement. The idler sprocket assembly spins on a stationary idler shaft. The idler shaft is a light press-fit into the cylinder block. A large washer on the idler shaft bolt and the rear flange of the idler shaft are used to control sprocket thrust move-

ment. Pressurized oil is routed through the center of the idler shaft to provide lubrication for the two bushings used in the idler sprocket assembly.

There are two secondary drive chains, both are roller type, one to drive the camshaft in each SOHC cylinder head. There are no shaft speed changes in the secondary chain drive system. Each secondary chain drives a 26 tooth cam sprocket directly from the 26 tooth sprocket on the idler sprocket assembly. A fixed chain guide and a hydraulic oil damped tensioner are used to maintain tension in each secondary chain system. The hydraulic tensioners for the secondary chain systems are fed pressurized oil from oil reservoir pockets in the block. Each tensioner incorporates a controlled leak path through a device known as a vent disc located in the nose of the piston to manage chain loads. Each tensioner also has a mechanical ratchet system that limits chain slack if the tensioner piston bleeds down after engine shut down. The tensioner arms and guides also utilize nylon wear faces for low friction and long wear. The secondary timing chains receive lubrication from a small orifice in the tensioners. This orifice is protected from clogging by a fine mesh screen which is located on the back of the hydraulic tensioners.

STANDARD PROCEDURE

MEASURING TIMING CHAIN WEAR

NOTE: This procedure must be performed with the timing chain cover removed.

1. Remove the timing chain cover (Refer to 9 - ENGINE/VALVE TIMING/TIMING BELT/CHAIN AND SPROCKETS - REMOVAL).
2. To determine if the secondary timing chains are worn, rotate the engine clockwise until maximum tensioner piston (2) extension is obtained. Measure the distance between the secondary timing chain tensioner housing and the step ledge on the piston. The measurement at point (A) must be less than 15mm (.5906 inches).
3. If the measurement exceeds the specification the secondary timing chains are worn and require replacement (Refer to 9 - ENGINE/VALVE TIMING/ TIMING BELT/CHAIN AND SPROCKETS - REMOVAL).

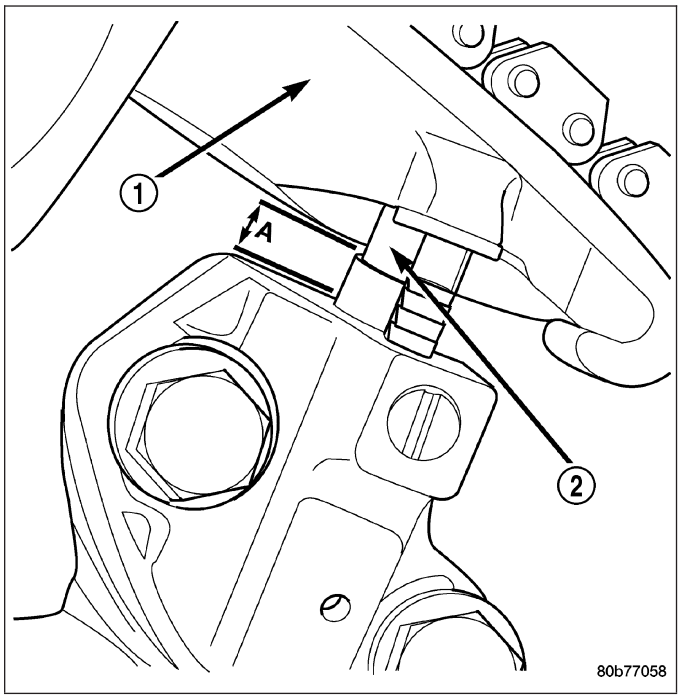

SERVICE PROCEDURE - TIMING VERIFICATION

CAUTION: The 3.7L is a non free-wheeling design engine. Therefore, correct engine timing is critical.

NOTE: Components referred to as left hand or right hand are as viewed from the drivers position inside the vehicle.

NOTE: The blue link plates on the chains and the dots on the camshaft drive sprockets may not line up during the timing verification procedure. The blue link plates are lined up with the sprocket dots only when re-timing the complete timing drive. Once the timing drive is rotated blue link-to-dot alignment is no longer valid.

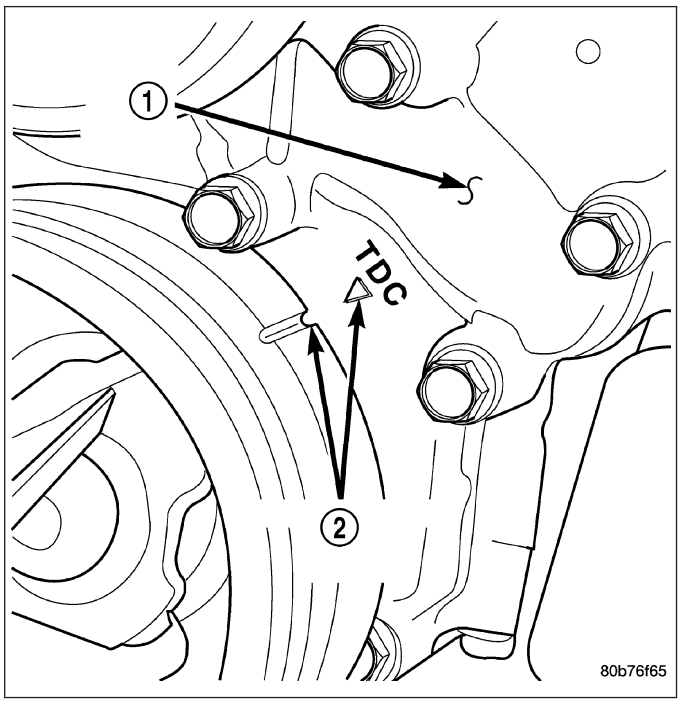

Engine base timing can be verified by the following procedure:

1. Remove the cylinder head covers. Refer to the procedure in this section.
2. Using a mirror, locate the TDC arrow on the front cover. Rotate the crankshaft until the mark on the crankshaft damper (2) is aligned with the TDC arrow on the front cover (2). The engine is now at TDC.

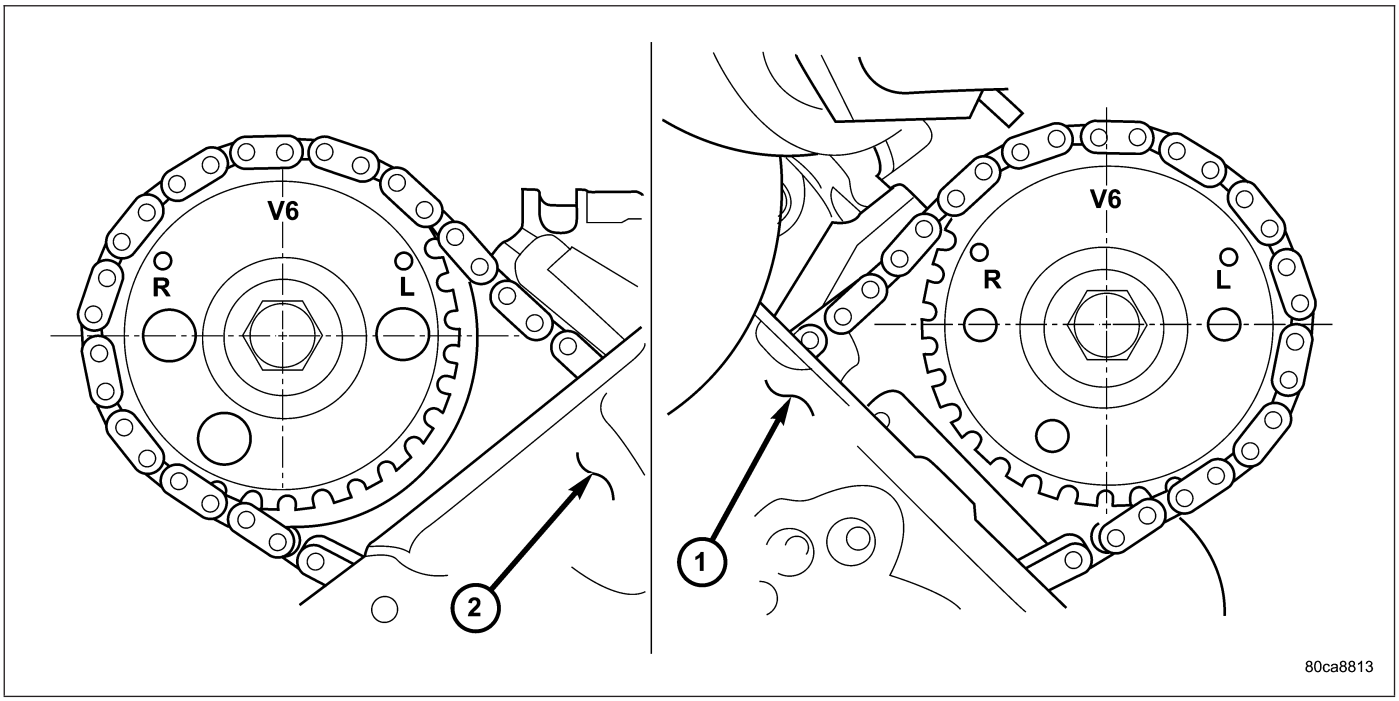

3. Note the location of the V6 mark stamped into the camshaft drive gears (1,2). If the V6 mark on each camshaft drive gear is at the twelve o'clock position, the engine is at TDC on the exhaust stroke. If the V6 mark on each gear is at the six o'clock position, the engine is at TDC on the compression stroke.
4. If both of the camshaft drive gears are off in the same or opposite directions, the primary chain or both secondary chains are at fault. Refer to Timing Chain and Sprockets procedure in this section.

5. If only one of the camshaft drive gears is off and the other is correct, the problem is confined to one secondary chain. Refer to Single camshaft timing, in this procedure.
6. If both camshaft drive gear V6 marks are at the twelve o'clock or the six o'clock position the engine base timing is correct. Reinstall the cylinder head covers.

COUNTER BALANCE SHAFT TIMING

1. Ensure that the engine is at TDC with both camshaft sprocket V6 marks in the 12 o'clock position.
2. Look down the left cylinder head chain cavity. The timing dot (2) on the counter balance shaft drive gear should be in the 6 o'clock position.

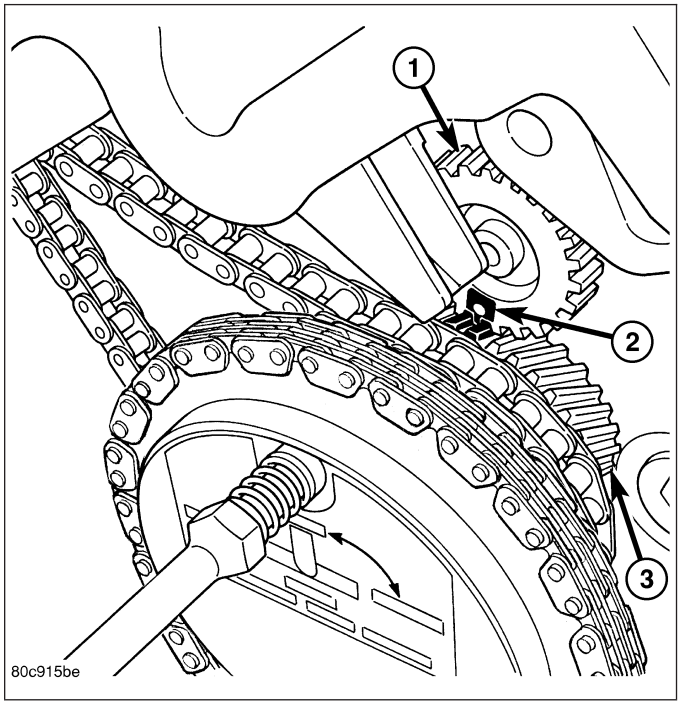

TIMING - SINGLE CAMSHAFT

NOTE: to adjust the timing on one camshaft, preform the following procedure.

1. Using Chain Tensioner Wedge, Special Tool 8379 (2), stabilize the secondary chain drive. For reference purposes, mark the chain-to-sprocket position.

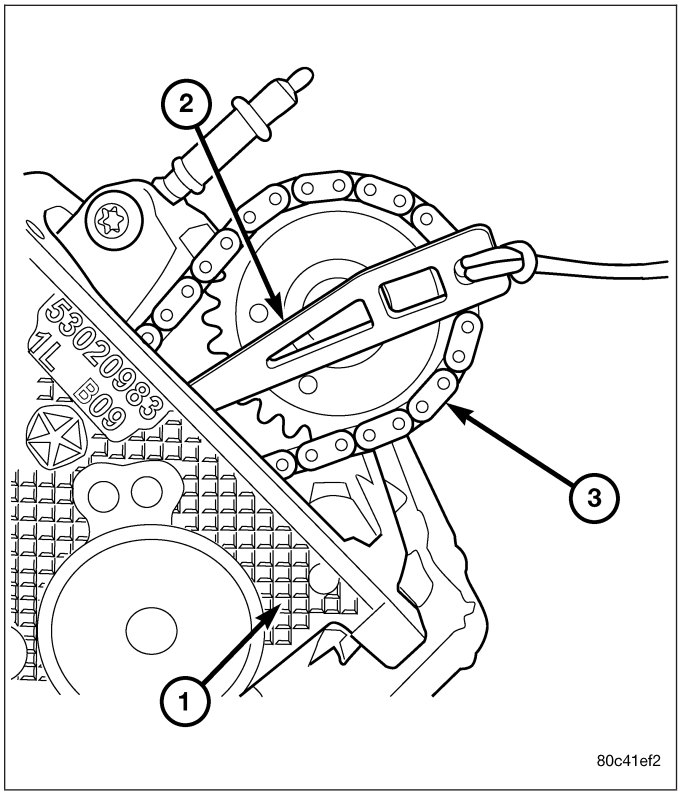

2. Remove the camshaft drive gear retaining bolt (3).
3. Carefully remove the camshaft drive gear from the camshaft.

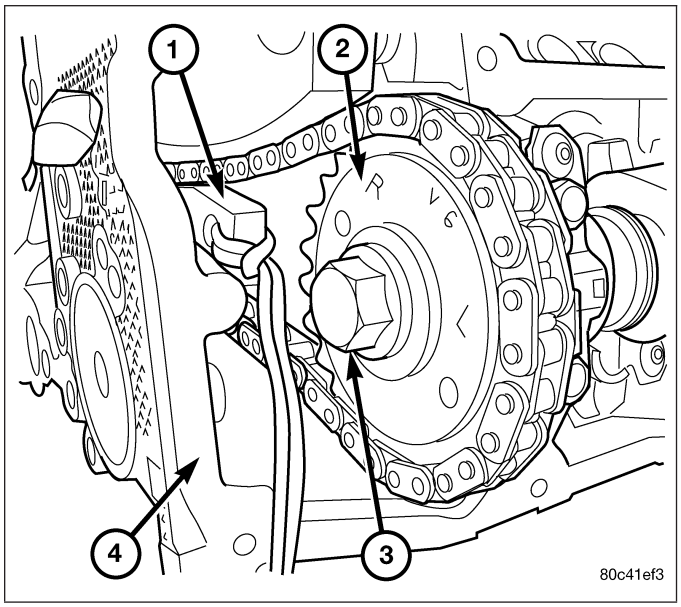

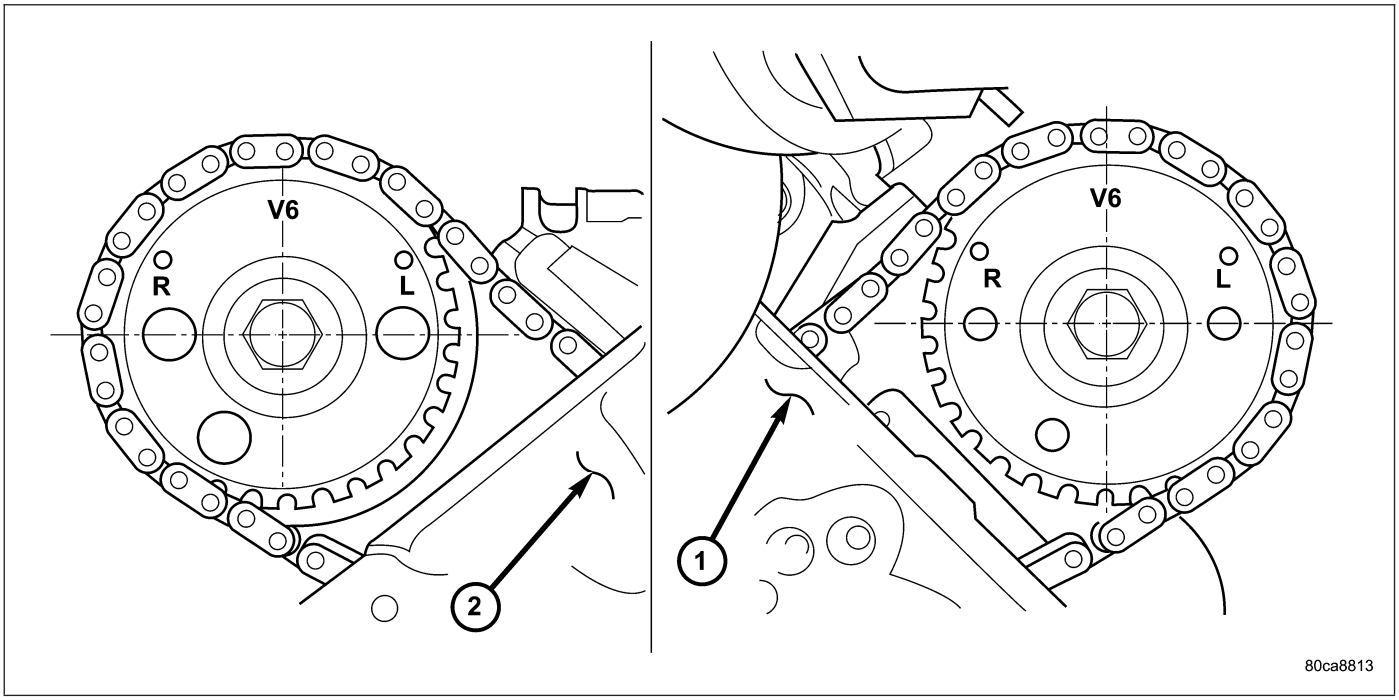

4. Re-index the camshaft drive gear in the chain until the V6 mark is at the same position as the V6 mark on the opposite camshaft drive gear (1,2).
5. Using Special Tool 8428 Camshaft Wrench, rotate the camshaft until the alignment dowel on the camshaft is aligned with the slot in the camshaft drive gear.

CAUTION: Remove excess oil from camshaft sprocket retaining bolt before reinstalling bolt. Failure to do so may cause over-torqueing of bolt resulting in bolt failure.

6. Position the camshaft drive gear onto the camshaft, remove oil from bolt then install the retaining bolt. Using Special Tools, Spanner Wrench 6958 with Adapter Pins 8346 and a suitable torque wrench, Tighten retaining bolt to 122 N·m (90 ft. Lbs.).
7. Remove Special Tool 8379.
8. Rotate the crankshaft two full revolutions, then verify that the camshaft drive gear V6 marks are in fact aligned.
9. Install the cylinder head covers. Refer to Cylinder Head Cover in this section.

SHAFT - BALANCE

REMOVAL

1. Remove the primary and secondary timing chains. Refer to TIMING CHAIN and SPROCKET.

NOTE: The balance shaft and gear are serviced as an assembly. Do not attempt to remove the gear from the balance shaft.Remove the retaining bolt (4) from the counterbalance shaft thrust plate (2).

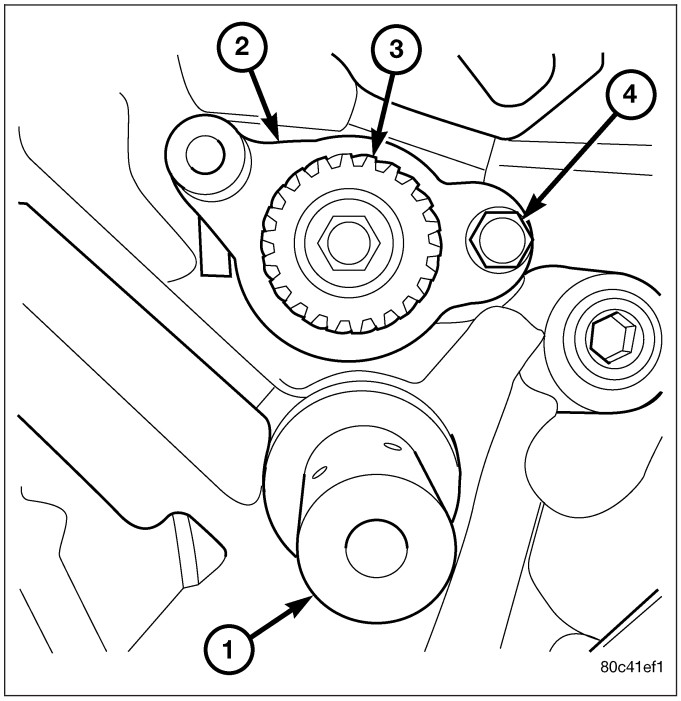

2. Using Special Tool 8641 Counterbalance shaft remover/installer tool (1), remove the counterbalance shaft from the engine .

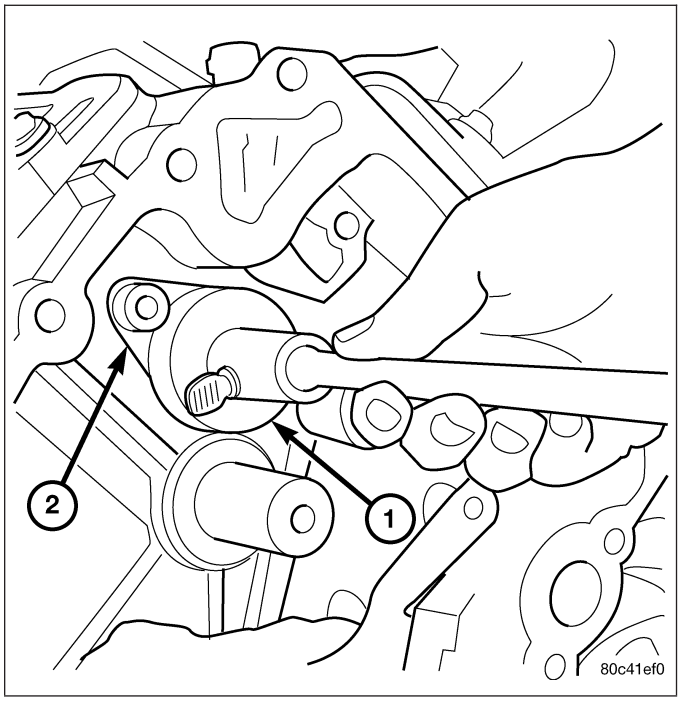

INSTALLATION

NOTE: The balance shaft and gear are serviced as an assembly. Do not attempt to remove the gear from the balance shaft.

1. Coat counterbalance shaft bearing journals with clean engine oil.

NOTE: The balance shaft is heavy, and care should be used when installing shaft, so bearings are not damaged.

2. Using Special Tool 8641 Counterbalance shaft remover/installer tool (1), carefully install counterbalance shaft into engine.

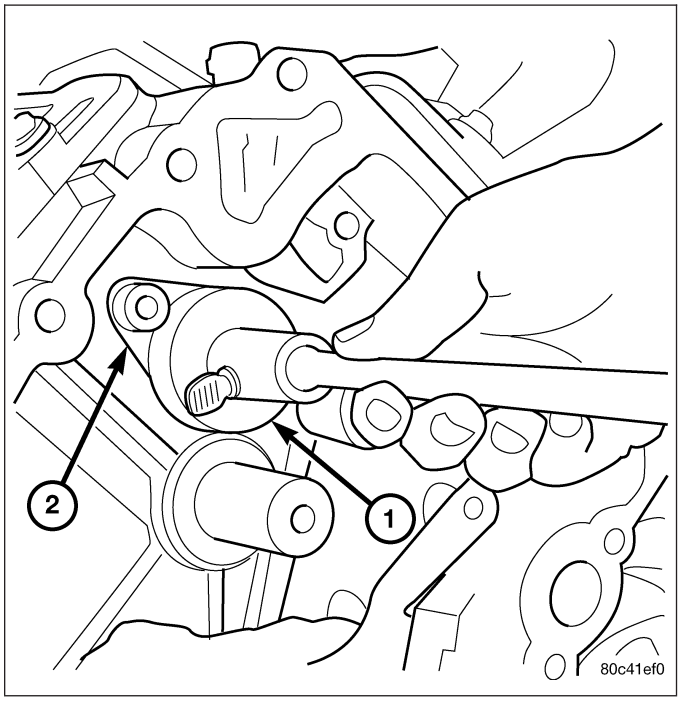

3. Install Counterbalance shaft thrust plate retaining bolt (4) finger tight.Do not tighten bolt at this time.
4. Position the right side of the thrust plate with the right chain guide bolt, install bolt finger tight.
5. Torque the thrust plate retaining bolt (4) to 28 N·m (250 in. lbs.).
6. Remove the chain guide bolt so that guide can be installed.

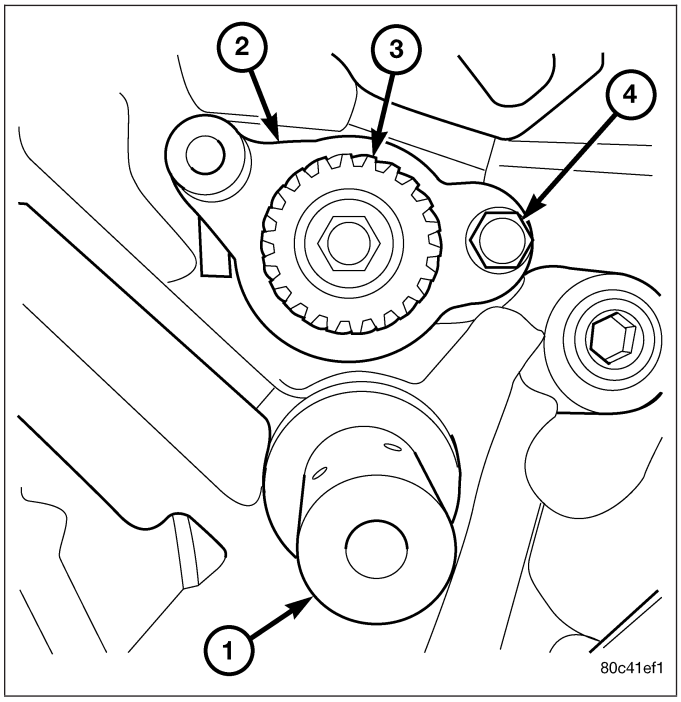

SHAFT - IDLER

REMOVAL

1. Remove the primary and secondary timing chains and sprockets. Refer to procedure in this section.

NOTE: To remove the idler shaft, it is necessary to tap threads into the shaft, to install the removal tool.

2. Using a 12 mm X 1.75 tap, cut threads in the idler shaft center bore.
3. Cover the radiator core with a suitable cover.

CAUTION: Use care when removing the idler shaft, Do not strike the radiator cooling fins with the slide hammer.

4. Using Special Tool 8517 Slide Hammer, remove the idler shaft.

INSTALLATION

1. Thoroughly clean the idler shaft bore.
2. Position the idler shaft in the bore.

NOTE: The two lubrication holes in the idler shaft do not require any special alignment.

NOTE: Before using the retaining bolt to install the idler shaft, coat the threads and the pilot on the idler shaft, with clean engine oil.

3. Using the primary idler sprocket retaining bolt and washer, carefully draw the idler shaft into the bore until fully seated.
4. Coat the idler shaft with clean engine oil.
5. Install the timing chains and sprockets. Refer to procedure in this section.

COVER - TIMING

REMOVAL

1. Disconnect the battery negative cable.
2. Drain cooling system (Refer to 7 - COOLING - STANDARD PROCEDURE).
3. Remove electric cooling fan and fan shroud assembly.
4. Remove fan and fan drive assembly (Refer to 7 - COOLING/ENGINE/FAN DRIVE VISCOUS CLUTCH - REMOVAL).
5. Disconnect both heater hoses at timing cover.
6. Disconnect lower radiator hose at engine.
7. Remove accessory drive belt tensioner assembly (1).

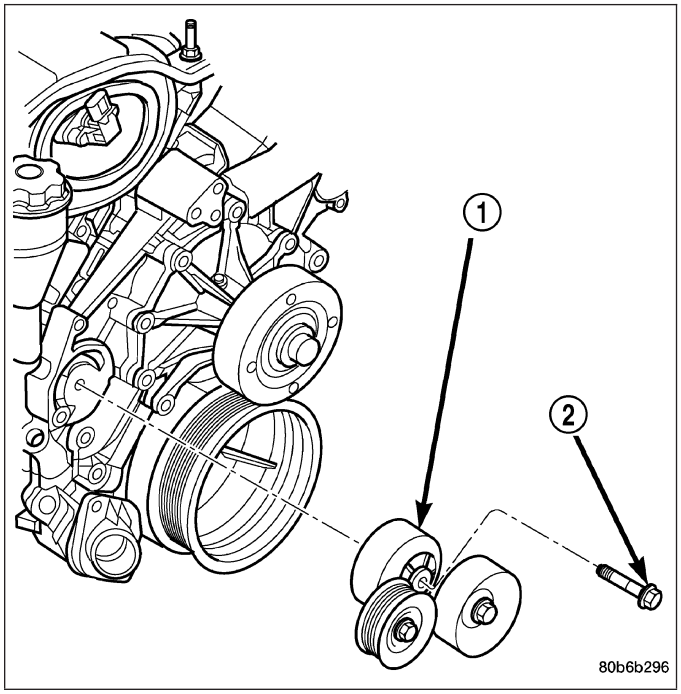

8. Remove crankshaft damper (Refer to 9 - ENGINE/ ENGINE BLOCK/VIBRATION DAMPER - REMOVAL).
9. Remove the generator (Refer to 8 - ELECTRICAL/ CHARGING/GENERATOR - REMOVAL).
10. Remove A/C compressor (Refer to 24 - HEATING & AIR CONDITIONING/PLUMBING/A/C COMPRESSOR - REMOVAL).

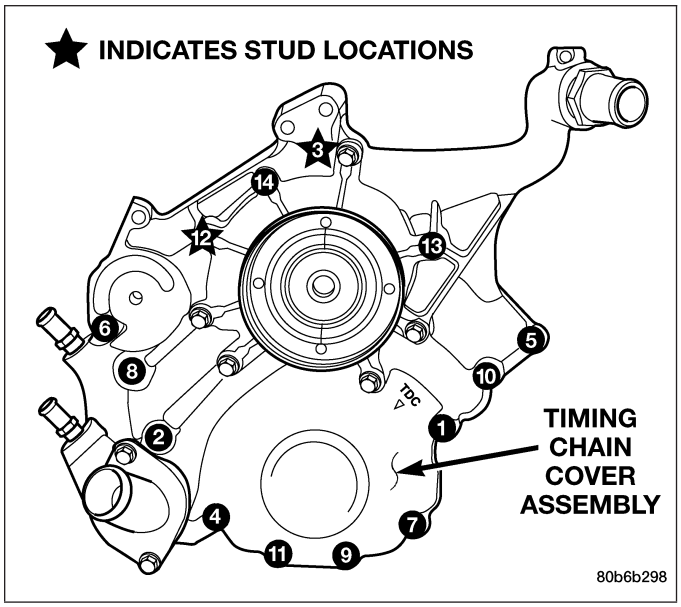

CAUTION: The 3.7L engine uses an anerobic sealer instead of a gasket to seal the front cover to the engine block, from the factory. For service, Mopar® Grey Engine RTV sealant must be substituted.

NOTE: It is not necessary to remove the water pump for timing cover removal.

11. Remove the bolts holding the timing cover to engine block.
12. Remove the timing cover.

INSTALLATION

CAUTION: Do not use oil based liquids to clean timing cover or block surfaces. Use only rubbing alcohol, along with plastic or wooden scrapers. Use no wire brushes or abrasive wheels or metal scrapers, or damage to surfaces could result.

1. Clean timing chain cover and block surface using rubbing alcohol.

CAUTION: The 3.7L uses a special anerobic sealer instead of a gasket to seal the timing cover to the engine block, from the factory. For service repairs, Mopar® Engine Grey RTV must be used as a substitute.

2. Inspect the water passage o-rings for any damage, and replace as necessary.
3. Apply Mopar® Grey Engine RTV sealer (3) to front cover (1) following the path provided using a 3 to 4mm thick bead (3).

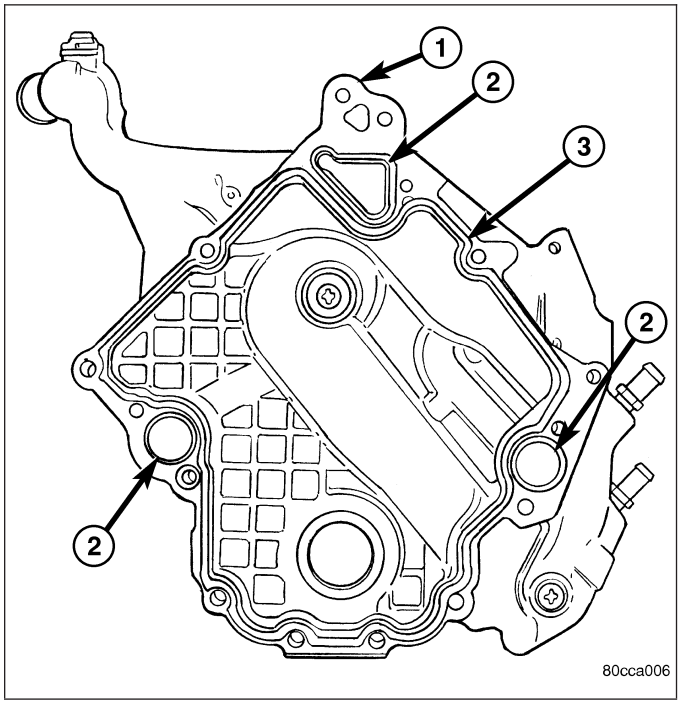

4. Install cover. Tighten fasteners in sequence as shown in to 58 N·m (43 ft. lbs.).
5. Install crankshaft damper (Refer to 9 - ENGINE/ ENGINE BLOCK/VIBRATION DAMPER - INSTALLATION).
6. Install the A/C compressor (Refer to 24 - HEATING & AIR CONDITIONING/PLUMBING/A/C COMPRESSOR - INSTALLATION).
7. Install the generator (Refer to 8 - ELECTRICAL/ CHARGING/GENERATOR - INSTALLATION).
8. Install accessory drive belt tensioner assembly (Refer to 7 - COOLING/ACCESSORY DRIVE/BELT TENSIONERS - INSTALLATION).
9. Install radiator upper and lower hoses.
10. Install both heater hoses.
11. Install electric fan shroud and viscous fan drive assembly (Refer to 7 - COOLING/ENGINE/FAN DRIVE VISCOUS CLUTCH - INSTALLATION).

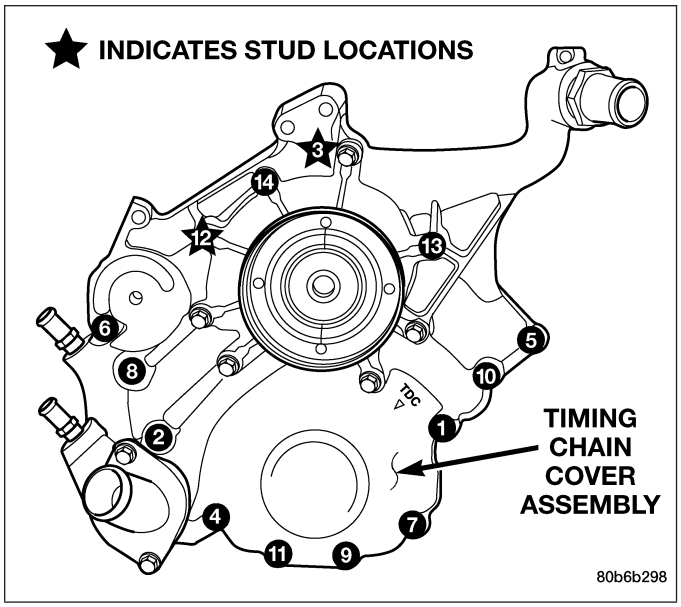

12. Fill cooling system (Refer to 7 - COOLING - STANDARD PROCEDURE).
13. Connect the battery negative cable.

TIMING CHAIN & SPROCKETS

REMOVAL

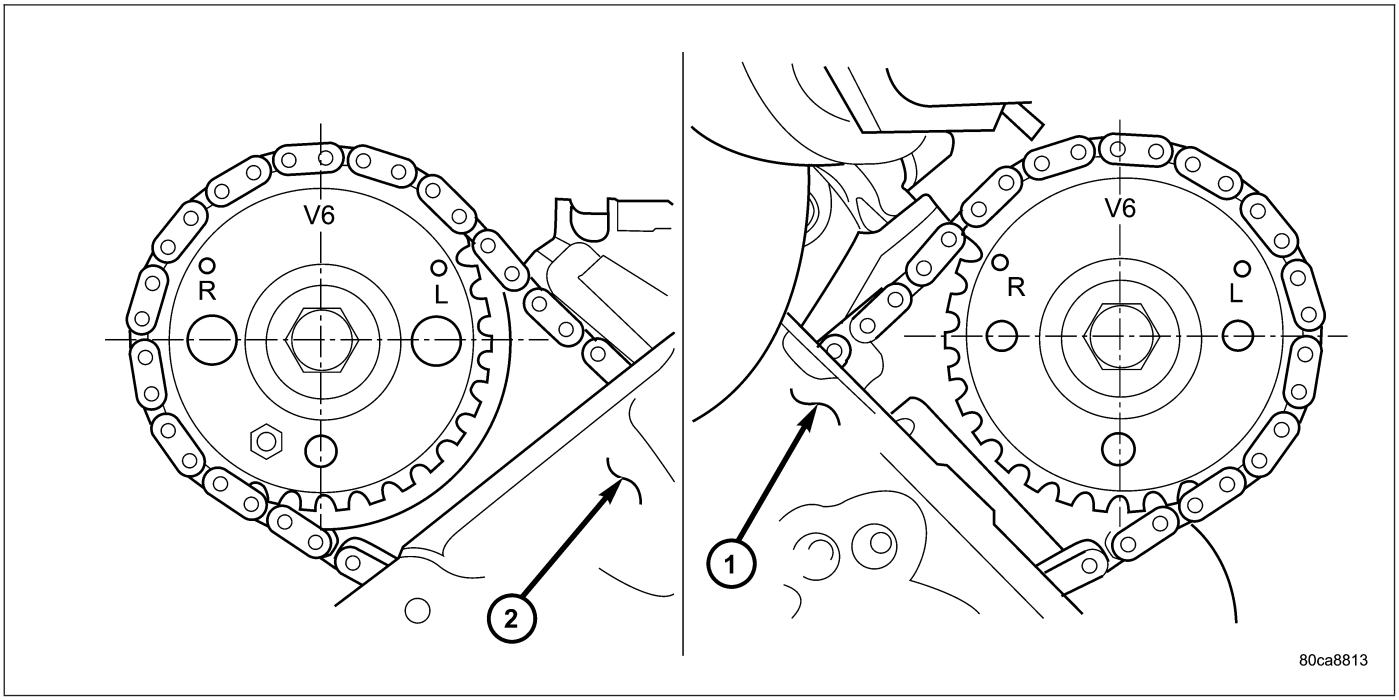

1. Disconnect negative cable from battery.
2. Drain cooling system (Refer to 7 - COOLING - STANDARD PROCEDURE).
3. Remove right and left cylinder head covers (Refer to 9 - ENGINE/CYLINDER HEAD/CYLINDER HEAD COVER(S) - REMOVAL).
4. Remove radiator fan shroud (Refer to 7 - COOLING/ENGINE/RADIATOR FAN - REMOVAL).
5. Rotate engine until timing mark on crankshaft damper (2) aligns with TDC mark on timing chain cover (2) and the camshaft sprocket “V6” marks are at the 12 o’clock position (No. 1 TDC exhaust stroke).

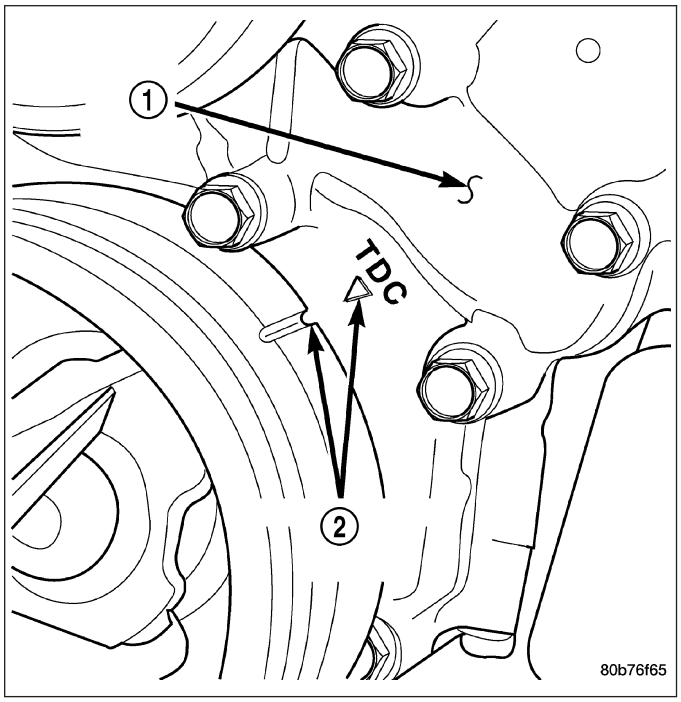

6. Remove power steering pump (Refer to 19 - STEERING/PUMP - REMOVAL).
7. Remove access plug from left and right cylinder heads for access to chain guide fasteners.
8. Remove the oil fill housing to gain access to the right side tensioner arm fastener.
9. Remove crankshaft damper (Refer to 9 - ENGINE/ENGINE BLOCK/VIBRATION DAMPER - REMOVAL) and timing chain cover (Refer to 9 - ENGINE/VALVE TIMING/TIMING BELT / CHAIN COVER(S) - REMOVAL).

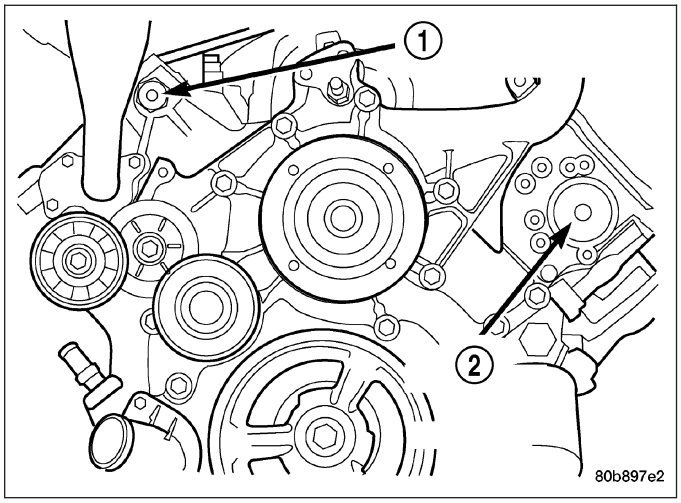

10. Collapse and pin primary chain tensioner.

CAUTION: Plate behind left secondary chain tensioner could fall into oil pan. Therefore, cover pan opening.

11. Remove secondary chain tensioners.
12. Remove camshaft position sensor (2).

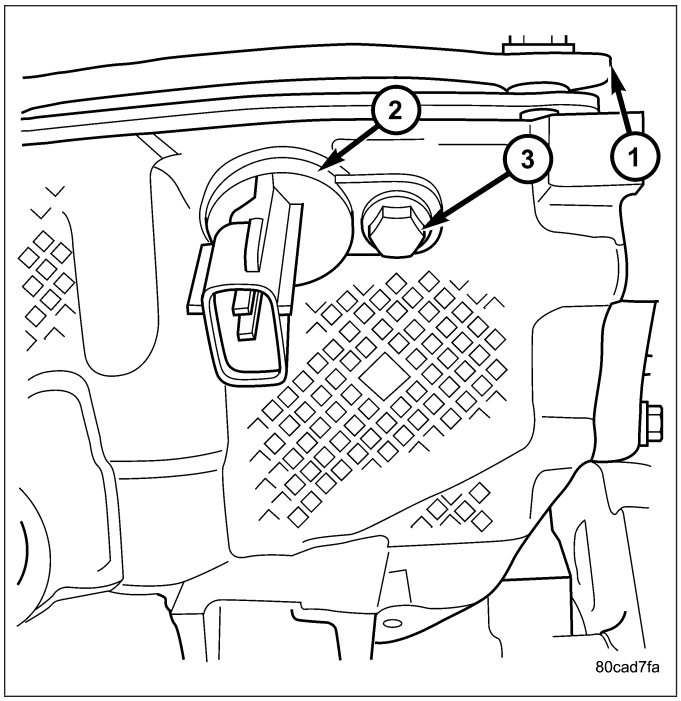

CAUTION: Care should be taken not to damage camshaft target wheel. Do not hold target wheel while loosening or tightening camshaft sprocket. Do not place the target wheel near a magnetic source of any kind. A damaged or magnetized target wheel could cause a vehicle no start condition.

CAUTION: Do not forcefully rotate the camshafts or crankshaft independently of each other. Damaging intake valve to piston contact will occur. Ensure negative battery cable is disconnected to guard against accidental starter engagement.

13. Remove left and right camshaft sprocket bolts.
14. While holding the left camshaft steel tube with Special Tool 8428 Camshaft Wrench (2), remove the left camshaft sprocket. Slowly rotate the camshaft approximately 5 degrees clockwise to a neutral position.
15. While holding the right camshaft steel tube with Special Tool 8428 Camshaft Wrench (2), remove the right camshaft sprocket.

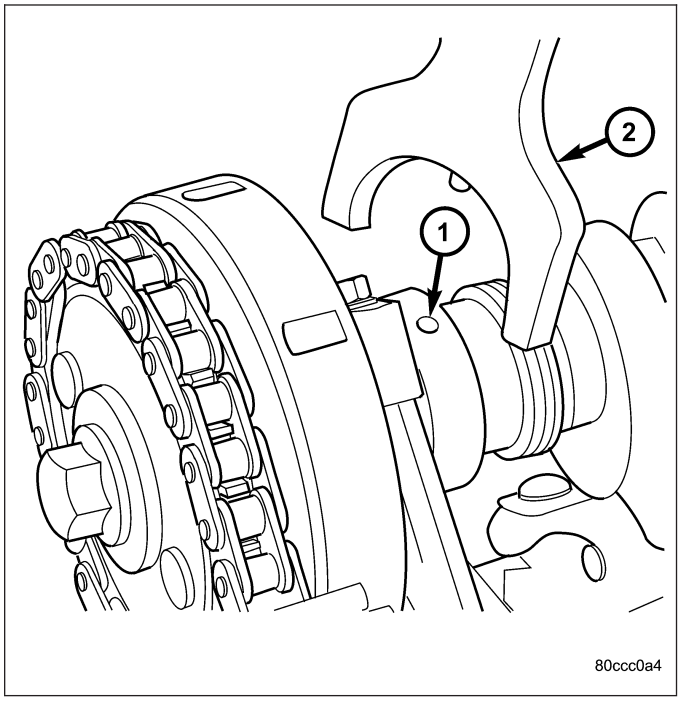

16. Remove idler sprocket assembly bolt.
17. Slide the idler sprocket assembly and crank sprocket forward simultaneously to remove the primary and secondary chains.
18. Remove both pivoting tensioner arms and chain guides.
19. Remove primary chain tensioner.

INSPECTION

Inspect the following components:

- Sprockets for excessive tooth wear. Some tooth markings are normal and not a cause for sprocket replacement.
- Idler sprocket assembly bushing and shaft for excessive wear.
- Idler sprocket assembly spline joint. The joint should be tight with no backlash or axial movement.
- Chain guides and tensioner arms. Replace these parts if grooving in plastic face is more than 1 mm (0.039 in.) deep. If plastic face is severely grooved or melted, the tensioner lube jet may be clogged. The tensioner should be replaced.
- Secondary chain tensioner piston and ratcheting device. Inspect for evidence of heavy contact between tensioner piston and tensioner arm. If this condition exist the tensioner tensioner arm and chain should be replaced.
- Primary chain tensioner plastic faces. Replace as required.

INSTALLATION

1. Using a vise, lightly compress the secondary chain tensioner piston (5) until the piston step is flush with the tensioner body. Using a pin or suitable tool, release ratchet pawl by pulling pawl back against spring force through access hole on side of tensioner. While continuing to hold pawl back, Push ratchet device to approximately 2 mm from the tensioner body. Install Special Tool 8514 lock pin (3) into hole on front of tensioner. Slowly open vise (1) to transfer piston spring force to lock pin.
2. Position primary chain tensioner over oil pump and insert bolts into lower two holes on tensioner bracket. Tighten bolts to 28 N·m (250 in. lbs.).

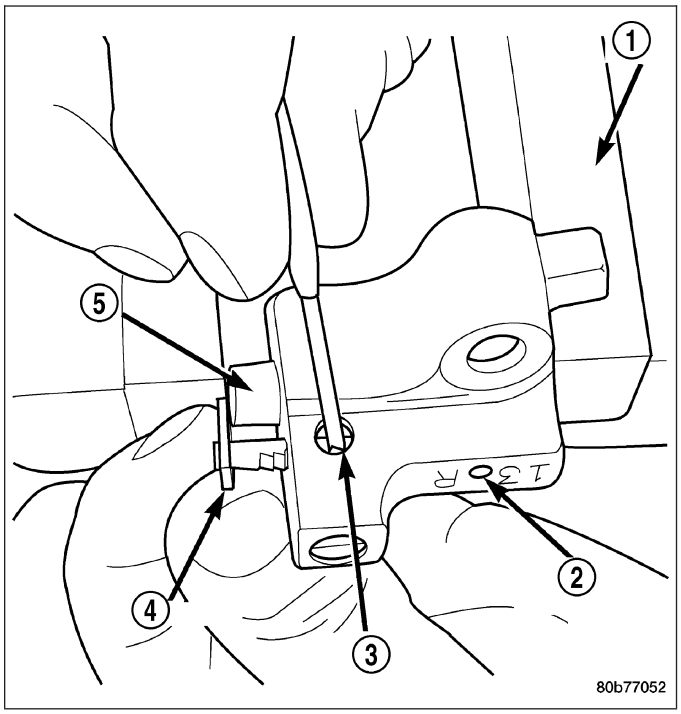

3. Install right side chain tensioner arm. Install Torx® bolt. Tighten Torx® bolt to 28 N·m (250 in. lbs.).

CAUTION: The silver bolts retain the guides to the cylinder heads and the black bolts retain the guides to the engine block.

4. Install the left side chain guide. Tighten the bolts to 28 N·m (250 in. lbs.).
5. Install left side chain tensioner arm, and Torx® bolt. Tighten Torx® bolt to 28 N·m (250 in. lbs.).
6. Install the right side chain guide. Tighten the bolts to 28 N·m (250 in. lbs.).
7. Install both secondary chains onto the idler sprocket. Align two plated links on the secondary chains to be visible through the two lower openings on the idler sprocket (4 o'clock and 8 o'clock). Once the secondary timing chains are installed, position special tool 8429 (1) to hold chains in place for installation.

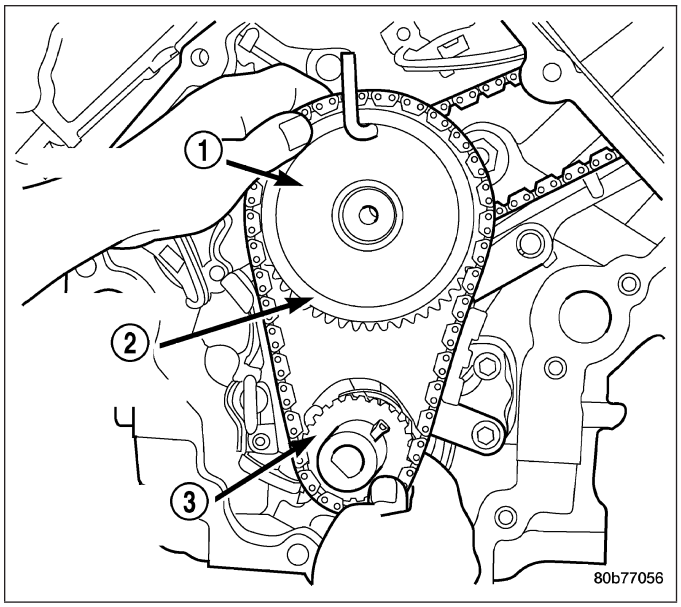

8. Align primary chain double plated links with the timing mark at 12 o'clock on the idler sprocket. Align the primary chain single plated link with the timing mark at 6 o'clock on the crankshaft sprocket.
9. Lubricate idler shaft and bushings with clean engine oil.

NOTE: The idler sprocket must be timed to the counterbalance shaft drive gear before the idler sprocket is fully seated.

10. Install all chains, crankshaft sprocket, and idler sprocket as an assembly. After guiding both secondary chains through the block and cylinder head openings, affix chains with a elastic strap or equivalent. This will maintain tension on chains to aid in installation. Align the timing mark (2) on the idler sprocket gear (3) to the timing mark on the counterbalance shaft drive gear (1), then seat idler sprocket fully. Before installing idler sprocket bolt, lubricate washer with oil, and tighten idler sprocket assembly retaining bolt to 34 N·m (25 ft. lbs.).

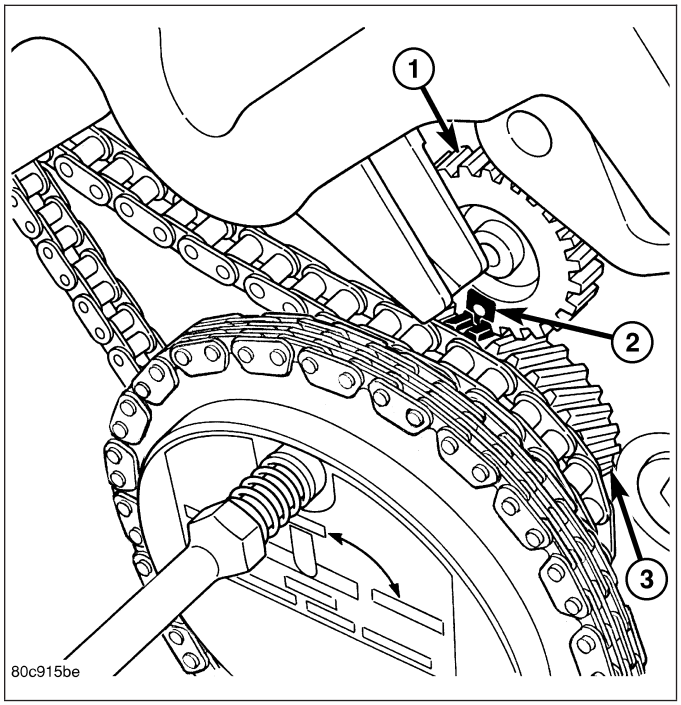

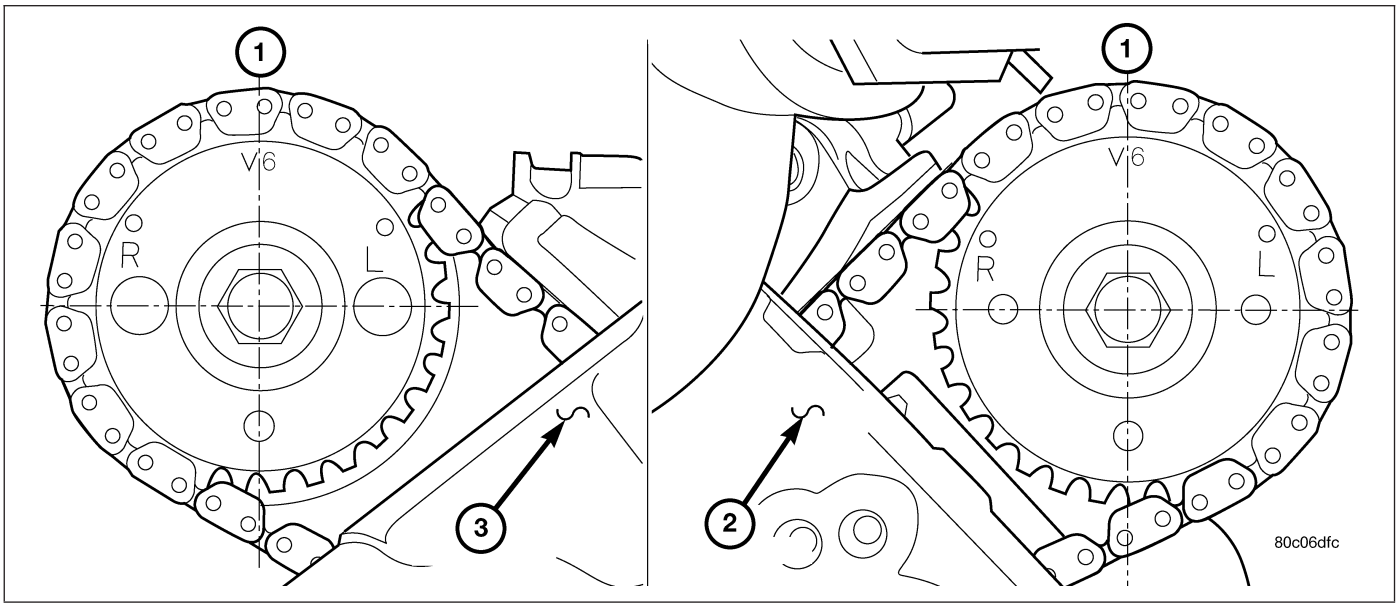

NOTE: It will be necessary to slightly rotate camshafts for sprocket installation.

11. Align left camshaft sprocket “L” dot to plated link on chain.
12. Align right camshaft sprocket “R” dot to plated link on chain.

CAUTION: Remove excess oil from the camshaft sprocket bolt. Failure to do so can result in over-torque of bolt resulting in bolt failure.

13. Remove Special Tool 8429, then attach both sprockets to camshafts. Remove excess oil from bolts, then Install sprocket bolts, but do not tighten at this time.
14. Verify that all plated links are aligned with the marks on all sprockets and the “V6” marks on camshaft sprockets are at the 12 o’clock position.

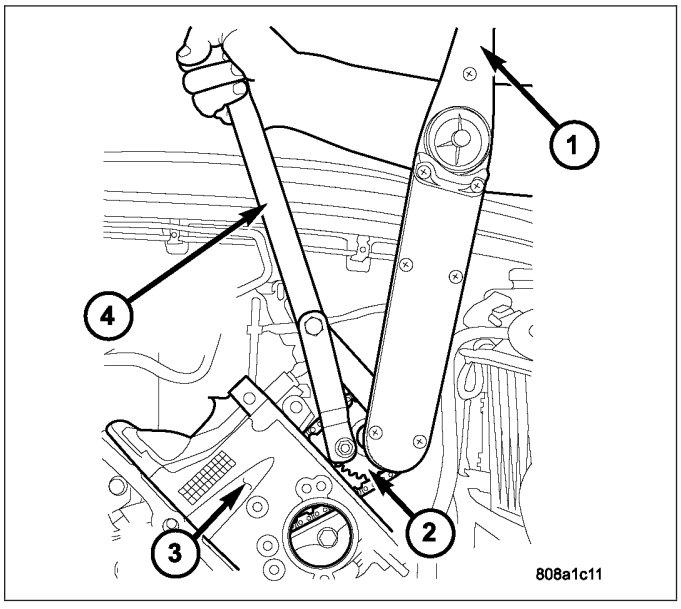

CAUTION: Ensure the plate between the left secondary chain tensioner and block is correctly installed.

15. Install both secondary chain tensioners. Tighten bolts to 28 N·m (250 in. lbs.).

NOTE: Left and right secondary chain tensioners are not common.

16. Remove all 3 locking pins from tensioners.

CAUTION: After pulling locking pins out of each tensioner, DO NOT manually extend the tensioner(s) ratchet. Doing so will over tension the chains, resulting in noise and/or high timing chain loads.

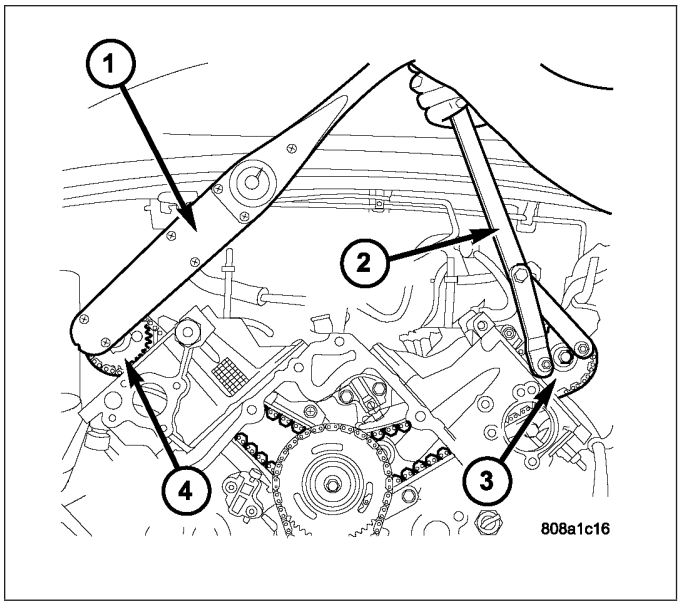

17. Using Special Tool 6958, Spanner with Adaptor Pins 8346, (4) tighten left and right. camshaft sprocket bolts to 122 N·m (90 ft. lbs.).
18. Rotate engine two full revolutions. Verify timing marks are at the follow locations:
    - primary chain idler sprocket dot is at 12 o'clock
    - primary chain crankshaft sprocket dot is at 6 o'clock
    - secondary chain camshaft sprockets "V6" marks are at 12 o'clock
    - counterbalancer shaft drive gear dot is aligned to the idler sprocket gear dot
19. Lubricate all three chains with engine oil.
20. After installing all chains, it is recommended that the idler gear end play be checked. The end play must be within 0.10 -0.25 mm (0.004 - 0.010 in.). If not within specification, the idler gear must be replaced.
21. Install timing chain cover and crankshaft damper. Refer to procedures.
22. Install cylinder head covers (Refer to 9 - ENGINE/ CYLINDER HEAD/CYLINDER HEAD COVER(S) - INSTALLATION).

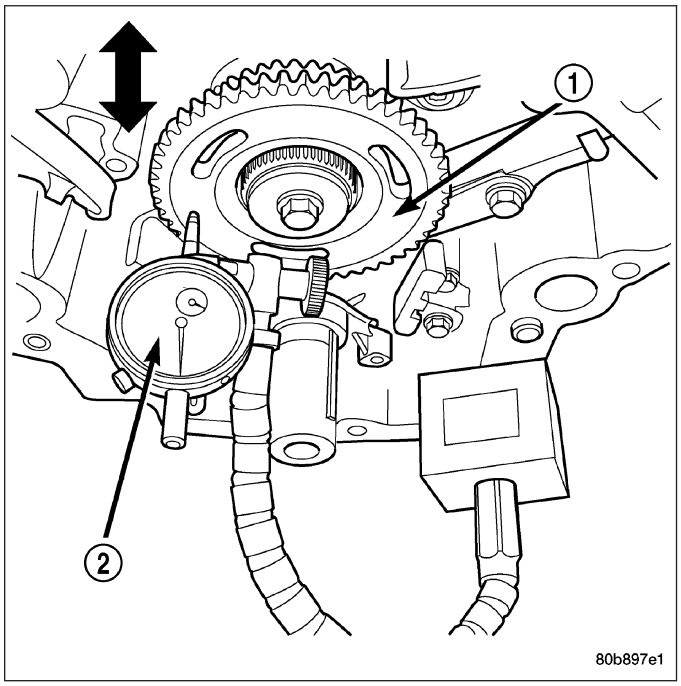

NOTE: Before installing threaded plug in right cylinder head, the plug must be coated with sealant to prevent leaks.

23. Coat the large threaded access plug with **Mopar® Thread Sealant with Teflon**, then install into the right cylinder head (1) and tighten to 81 N·m (60 ft. lbs.).
24. Install the oil fill housing.
25. Install access plug in left cylinder head (2).
26. Install power steering pump (Refer to 19 - STEERING/PUMP - INSTALLATION).
27. Fill cooling system (Refer to 7 - COOLING - STANDARD PROCEDURE).
28. Connect negative cable to battery.

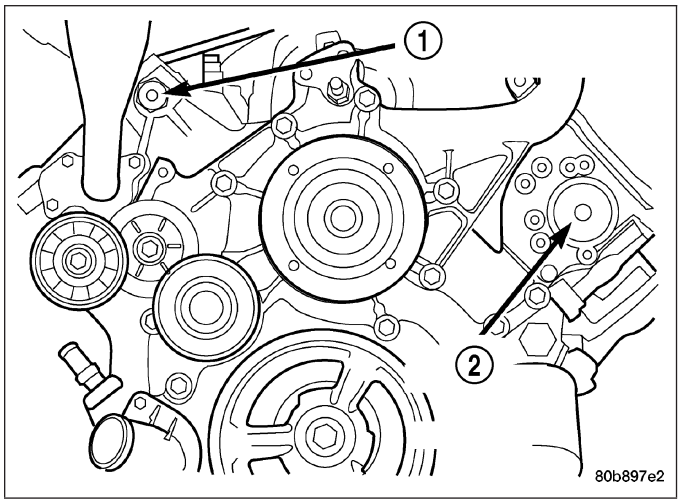

ENGINE - 4.7L - SERVICE INFORMATION

TABLE OF CONTENTS

page

ENGINE - 4.7L - SERVICE INFORMATION
DIAGNOSIS AND TESTING
DIAGNOSIS AND TESTING - ENGINE DIAGNOSIS - PERFORMANCE 2163
DIAGNOSIS AND TESTING - ENGINE DIAGNOSIS - MECHANICAL 2165
DIAGNOSIS AND TESTING - CYLINDER COMPRESSION PRESSURE 2166
DIAGNOSIS AND TESTING - CYLINDER COMBUSTION PRESSURE LEAKAGE 2166
DIAGNOSIS AND TESTING - ENGINE DIAGNOSIS - INTRODUCTION 2167
STANDARD PROCEDURE
STANDARD PROCEDURE - REPAIR DAMAGED OR WORN THREADS 2167
STANDARD PROCEDURE - FORM-IN-PLACE GASKETS AND SEALERS 2167
REMOVAL 2168
INSTALLATION 2174
SPECIFICATIONS
SPECIFICATIONS - 4.7L ENGINE 2179
TORQUE 2184
SPECIAL TOOLS
4.7L ENGINE 2186
ELEMENT - AIR CLEANER
REMOVAL 2190
INSTALLATION 2191
CYLINDER HEAD
DESCRIPTION
DESCRIPTION - CYLINDER HEAD 2191
DESCRIPTION - VALVE GUIDES 2191
DIAGNOSIS AND TESTING
CYLINDER HEAD GASKET 2191
REMOVAL
REMOVAL - LEFT CYLINDER HEAD 2192
REMOVAL - RIGHT CYLINDER HEAD 2195
CLEANING 2198
INSPECTION 2198
INSTALLATION
INSTALLATION - LEFT CYLINDER HEAD . . 2198
INSTALLATION - RIGHT CYLINDER HEAD . 2201
CAMSHAFT - LEFT
DESCRIPTION 2203
REMOVAL 2204
INSTALLATION 2206
CAMSHAFT - RIGHT
DESCRIPTION 2209
REMOVAL 2209
INSTALLATION 2212
COVER - CYLINDER HEAD
DESCRIPTION 2215

page

REMOVAL
REMOVAL - RIGHT SIDE 2215
REMOVAL - LEFT SIDE 2216
CLEANING 2216
INSTALLATION
INSTALLATION - RIGHT SIDE 2216
INSTALLATION - LEFT SIDE 2217
VALVES & SEATS - INTAKE/EXHAUST
DESCRIPTION 2217
REMOVAL 2217
INSTALLATION 2218
ROCKER ARM - VALVE
DESCRIPTION 2219
DIAGNOSIS AND TESTING - HYDRAULIC LASH ADJUSTER 2219
REMOVAL 2220
INSTALLATION 2220
SPRINGS-VALVE
DESCRIPTION 2220
REMOVAL 2221
INSTALLATION 2221
SEALS-VALVE GUIDE
DESCRIPTION 2222
ENGINE BLOCK
DESCRIPTION 2222
STANDARD PROCEDURE - CYLINDER BORE HONING 2222
CLEANING 2222
INSPECTION 2223
BEARINGS - CONNECTING ROD
STANDARD PROCEDURE - CONNECTING ROD BEARING FITTING 2223
PLUGS - CORE
REMOVAL 2226
INSTALLATION 2226
CRANKSHAFT
DESCRIPTION 2227
REMOVAL 2227
INSPECTION 2227
INSTALLATION 2228
BEARINGS - CRANKSHAFT MAIN
STANDARD PROCEDURE - CRANKSHAFT MAIN BEARING - FITTING 2230
INSPECTION 2231
SEAL - CRANKSHAFT OIL - FRONT
REMOVAL 2232
INSTALLATION 2233
SEAL - CRANKSHAFT OIL - REAR
DIAGNOSIS AND TESTING - REAR SEAL AREA LEAKS 2233
REMOVAL 2234

INSTALLATION 2234
FLEX PLATE
REMOVAL 2235
INSTALLATION 2236
ROD - PISTON & CONNECTING
DESCRIPTION 2236
STANDARD PROCEDURE - PISTON FITTING 2237
REMOVAL 2237
CLEANING 2238
INSPECTION 2238
INSTALLATION 2239
RINGS - PISTON
STANDARD PROCEDURE - PISTON RING FITTING 2240
DAMPER - CRANKSHAFT
REMOVAL 2243
INSTALLATION 2244
COVER - STRUCTURAL
DESCRIPTION 2244
OPERATION 2244
REMOVAL 2245
INSTALLATION 2245
MOUNT - FRONT
REMOVAL 2245
INSTALLATION 2247
MOUNT - REAR
REMOVAL 2249
INSTALLATION 2249
LUBRICATION
DESCRIPTION 2250
OPERATION 2250
DIAGNOSIS AND TESTING
DIAGNOSIS AND TESTING - CHECKING ENGINE OIL PRESSURE 2252
DIAGNOSIS AND TESTING - ENGINE OIL LEAK 2252
OIL
STANDARD PROCEDURE - ENGINE OIL SERVICE 2253
FILTER - ENGINE OIL
REMOVAL 2255
INSTALLATION 2255
PAN - ENGINE OIL
REMOVAL 2255
INSTALLATION 2256
SWITCH - OIL PRESSURE
DESCRIPTION
DESCRIPTION 2256
DESCRIPTION 2256
OPERATION
OPERATION 2257
OPERATION 2257
REMOVAL 2257
INSTALLATION 2257
PUMP - ENGINE OIL
REMOVAL 2258
DISASSEMBLY 2258
CLEANING 2258
INSPECTION 2258
ASSEMBLY 2260
INSTALLATION 2261
MANIFOLD - INTAKE
DESCRIPTION 2261
DIAGNOSIS AND TESTING - INTAKE MANIFOLD LEAKAGE 2261
REMOVAL 2261
CLEANING 2263
INSPECTION 2263
INSTALLATION 2263
MANIFOLD - EXHAUST
DESCRIPTION 2264
REMOVAL 2264
CLEANING 2266
INSPECTION 2266
INSTALLATION 2266
VALVE TIMING
DESCRIPTION - TIMING DRIVE SYSTEM . . . 2268
OPERATION - TIMING DRIVE SYSTEM 2268
STANDARD PROCEDURE
STANDARD PROCEDURE - MEASURING TIMING CHAIN WEAR 2269
STANDARD PROCEDURE - ENGINE TIMING - VERIFICATION 2269
COVER - TIMING
REMOVAL 2274
INSTALLATION 2275
TIMING CHAIN & SPROCKETS
REMOVAL 2276
INSPECTION 2280
INSTALLATION 2281
SHAFT - IDLER
REMOVAL 2284
INSTALLATION 2284

ENGINE - 4.7L - SERVICE INFORMATION

DIAGNOSIS AND TESTING

DIAGNOSIS AND TESTING - ENGINE DIAGNOSIS - PERFORMANCE

CONDITION	POSSIBLE CAUSE	CORRECTION
ENGINE WILL NOT START	1. Weak battery	1. Charge or replace as necessary.
	2. Corroded or loose battery connections.	2. Clean and tighten battery connections. Apply a coat of light mineral grease to the terminals.
	3. Faulty starter.	3. (Refer to 8 - ELECTRICAL/ STARTING - DIAGNOSIS AND TESTING).
	4. Faulty coil or control unit.	4. (Refer to 8 - ELECTRICAL/ IGNITION CONTROL/IGNITION COIL - REMOVAL).
	5. Incorrect spark plug gap.	5. (Refer to 8 - ELECTRICAL/ IGNITION CONTROL/SPARK PLUG - CLEANING).
	6. Dirt or water in fuel system.	6. Clean system and replace fuel filter.
	7. Faulty fuel pump, relay or wiring.	7. Repair or replace as necessary.
ENGINE STALLS OR ROUGH IDLE	1. Idle speed set to low.	1. (Refer to 14 - FUEL SYSTEM/ FUEL INJECTION/IDLE AIR CONTROL MOTOR - REMOVAL).
	2. Idle mixture too lean or too rich.	2. Refer to Powertrain Diagnosis Information.
	3. Vacuum leak.	3. Inspect intake manifold and vacuum hoses, repair or replace as necessary.
	4. Faulty coil.	4. (Refer to 8 - ELECTRICAL/ IGNITION CONTROL/IGNITION COIL - REMOVAL).
	5. Incorrect engine timing.	5. (Refer to 9 - ENGINE/VALVE TIMING - STANDARD PROCEDURE).

CONDITION	POSSIBLE CAUSE	CORRECTION
ENGINE LOSS OF POWER	1. Dirty or incorrectly gapped spark plugs.	1. (Refer to 8 - ELECTRICAL/ IGNITION CONTROL/SPARK PLUG - CLEANING).
	2. Dirt or water in fuel system.	2. Clean system and replace fuel filter.
	3. Faulty fuel pump.	3. Refer to the Appropriate Diagnostic Information
	4. Blown cylinder head gasket.	4. Replace cylinder head gasket.
	5. Low compression.	5. (Refer to 9 - ENGINE - DIAGNOSIS AND TESTING).
	6. Burned, warped or pitted valves.	6. Replace as necessary.
	7. Plugged or restricted exhaust system.	7. Inspect and replace as necessary.
	8. Faulty coil.	8. (Refer to 8 - ELECTRICAL/ IGNITION CONTROL/IGNITION COIL - REMOVAL).
ENGINE MISSES ON ACCELERATION	1. Spark plugs dirty or incorrectly gapped.	1. (Refer to 8 - ELECTRICAL/ IGNITION CONTROL/SPARK PLUG - CLEANING).
	2. Dirt in fuel system.	2. Clean fuel system.
	3. Burned, warped or pitted valves.	3. Replcae as necessary.
	4. Faulty coil.	4. (Refer to 8 - ELECTRICAL/ IGNITION CONTROL/IGNITION COIL - REMOVAL).
ENGINE MISSES AT HIGH SPEED	1. Spark plugs dirty or incorrectly gapped.	1. (Refer to 8 - ELECTRICAL/ IGNITION CONTROL/SPARK PLUG - CLEANING).
	2. Faulty coil.	2. (Refer to 8 - ELECTRICAL/ IGNITION CONTROL/IGNITION COIL - REMOVAL).
	3. Dirt or water in fuel system.	3. Clean system and replace fuel filter.

DIAGNOSIS AND TESTING - ENGINE DIAGNOSIS - MECHANICAL

CONDITION	POSSIBLE CAUSES	CORRECTIONS
NOISY VALVES	1. High or low oil level in crankcase.	1. (Refer to LUBRICATION & MAINTENANCE - SPECIFICATIONS)
	2. Thin or diluted oil.	2. Change oil and filter.
	3. Low oil pressure.	3. Check oil pump, if Ok, check rod and main bearings for excessive wear.
	4. Dirt in lash adjusters.	4. Replace as necessary.
	5. Worn rocker arms.	5. Replace as necessary.
	6. Worn lash adjusters	6. Replace as necessary.
	7. Worn valve guides.	7. (Refer to 9 - ENGINE/CYLINDER HEAD/INTAKE/EXHAUST VALVES & SEATS - STANDARD PROCEDURE)
	8. Excessive runout of valve seats on valve faces.	8. (Refer to 9 - ENGINE/CYLINDER HEAD/INTAKE/EXHAUST VALVES & SEATS - STANDARD PROCEDURE)
CONNECTING ROD NOISE	1. Insufficient oil supply.	1. (Refer to LUBRICATION & MAINTENANCE - SPECIFICATIONS)
	2. Low oil pressure.	2. Check oil pump, if Ok, check rod and main bearings for excessive wear.
	3. Thin or diluted oil.	3. Change oil and filter.
	4. Excessive bearing clearance.	4. Replace as necessary.
	5. Connecting rod journal out-of-round.	5. Service or replace crankshaft.
	6. Misaligned connecting rods.	6. Replace bent connecting rods.
MAIN BEARING NOISE	1. Insufficient oil supply.	1. (Refer to LUBRICATION & MAINTENANCE - SPECIFICATIONS)
	2. Low oil pressure.	2. Check oil pump, if Ok, check rod and main bearings for excessive wear.
	3. Thin or diluted oil.	3. Change oil and filter.
	4. Excessive bearing clearance.	4. Replace as necessary.
	5. Excessive end play.	5. Check thrust washers for wear.
	6. Crankshaft journal out-of round.	6. Service or replace crankshaft.
	7. Loose flywheel or torque converter.	7. Tighten to correct torque

DIAGNOSIS AND TESTING - CYLINDER COMPRESSION PRESSURE

The results of a cylinder compression pressure test can be utilized to diagnose several engine malfunctions.

Ensure the battery is completely charged and the engine starter motor is in good operating condition. Otherwise the indicated compression pressures may not be valid for diagnosis purposes.

1. Clean the spark plug recesses with compressed air.
2. Remove the spark plugs.
3. Disable the fuel system (Refer to 14 - FUEL SYSTEM/FUEL DELIVERY - DESCRIPTION).
4. Remove the ASD relay (Refer to 8 - ELECTRICAL/IGNITION CONTROL/AUTO SHUT DOWN RELAY - REMOVAL).
5. Insert a compression pressure gauge and rotate the engine with the engine starter motor for three revolutions.
6. Record the compression pressure on the 3rd revolution. Continue the test for the remaining cylinders.
7. (Refer to 9 - ENGINE - SPECIFICATIONS) for the correct engine compression pressures.

DIAGNOSIS AND TESTING - CYLINDER COMBUSTION PRESSURE LEAKAGE

The combustion pressure leakage test provides an accurate means for determining engine condition.

Combustion pressure leakage testing will detect:

- Exhaust and intake valve leaks (improper seating).
- Leaks between adjacent cylinders or into water jacket.
- Any causes for combustion/compression pressure loss.

1. Check the coolant level and fill as required. DO NOT install the radiator cap.
2. Start and operate the engine until it attains normal operating temperature, then turn the engine OFF.
3. Remove the spark plugs.
4. Remove the oil filler cap.
5. Remove the air cleaner hose.
6. Calibrate the tester according to the manufacturer's instructions. The shop air source for testing should maintain 483 kPa (70 psi) minimum, 1,379 kPa (200 psi) maximum and 552 kPa (80 psi) recommended.
7. Perform the test procedures on each cylinder according to the tester manufacturer's instructions. Set piston of cylinder to be tested at TDC compression,While testing, listen for pressurized air escaping through the throttle body, tailpipe and oil filler cap opening. Check for bubbles in the radiator coolant.

All gauge pressure indications should be equal, with no more than 25% leakage.

FOR EXAMPLE: At 552 kPa (80 psi) input pressure, a minimum of 414 kPa (60 psi) should be maintained in the cylinder.

Refer to CYLINDER COMBUSTION PRESSURE LEAKAGE DIAGNOSIS CHART .

CYLINDER COMBUSTION PRESSURE LEAKAGE DIAGNOSIS CHART

CONDITION	POSSIBLE CAUSE	CORRECTION
AIR ESCAPES THROUGH THROTTLE BODY	Intake valve bent, burnt, or not seated properly	Inspect valve and valve seat. Reface or replace, as necessary. Inspect valve springs. Replace as necessary.
AIR ESCAPES THROUGH TAILPIPE	Exhaust valve bent, burnt, or not seated properly	Inspect valve and valve seat. Reface or replace, as necessary. Inspect valve springs. Replace as necessary.
AIR ESCAPES THROUGH RADIATOR	Head gasket leaking or cracked cylinder head or block	Remove cylinder head and inspect. Replace defective part
MORE THAN 50% LEAKAGE FROM ADJACENT CYLINDERS	Head gasket leaking or crack in cylinder head or block between adjacent cylinders	Remove cylinder head and inspect. Replace gasket, head, or block as necessary
MORE THAN 25% LEAKAGE AND AIR ESCAPES THROUGH OIL FILLER CAP OPENING ONLY	Stuck or broken piston rings; cracked piston; worn rings and/or cylinder wall	Inspect for broken rings or piston. Measure ring gap and cylinder diameter, taper and out-of-round. Replace defective part as necessary

DIAGNOSIS AND TESTING - ENGINE DIAGNOSIS - INTRODUCTION

Engine diagnosis is helpful in determining the causes of malfunctions not detected and remedied by routine maintenance.

These malfunctions may be classified as either performance (e.g., engine idles rough and stalls) or mechanical (e.g., a strange noise).

(Refer to 9 - ENGINE - DIAGNOSIS AND TESTING) - PERFORMANCE and (Refer to 9 - ENGINE - DIAGNOSIS AND TESTING)—MECHANICAL for possible causes and corrections of malfunctions. (Refer to 14 - FUEL SYSTEM/FUEL DELIVERY - DIAGNOSIS AND TESTING) and (Refer to 14 - FUEL SYSTEM/FUEL INJECTION - DIAGNOSIS AND TESTING) for the fuel system diagnosis.

Additional tests and diagnostic procedures may be necessary for specific engine malfunctions that can not be isolated with the Service Diagnosis charts. Information concerning additional tests and diagnosis is provided within the following diagnosis:

- Cylinder Compression Pressure Test (Refer to 9 - ENGINE - DIAGNOSIS AND TESTING).
- Cylinder Combustion Pressure Leakage Test (Refer to 9 - ENGINE - DIAGNOSIS AND TESTING).
- Engine Cylinder Head Gasket Failure Diagnosis (Refer to 9 - ENGINE/CYLINDER HEAD - DIAGNOSIS AND TESTING).
- Intake Manifold Leakage Diagnosis (Refer to 9 - ENGINE/MANIFOLDS/INTAKE MANIFOLD - DIAGNOSIS AND TESTING).

STANDARD PROCEDURE

STANDARD PROCEDURE - REPAIR DAMAGED OR WORN THREADS

CAUTION: Be sure that the tapped holes maintain the original center line.

Damaged or worn threads can be repaired. Essentially, this repair consists of:

- Drilling out worn or damaged threads.
- Tapping the hole with a special Heli-Coil Tap, or equivalent.
- Installing an insert into the tapped hole to bring the hole back to its original thread size.

STANDARD PROCEDURE - FORM-IN-PLACE GASKETS AND SEALERS

There are numerous places where form-in-place gaskets are used on the engine. Care must be taken when applying form-in-place gaskets to assure obtaining the desired results. **Do not use form-in-place gasket material unless specified.** Bead size, continuity, and location are of great importance. Too thin a bead can result in leakage while too much can result in spill-over which can break off and obstruct fluid feed lines. A continuous bead of the proper width is essential to obtain a leak-free gasket.

There are numerous types of form-in-place gasket materials that are used in the engine area. Mopar® Engine RTV GEN II, Mopar® ATF-RTV, and Mopar® Gasket Maker gasket materials, each have different properties and can not be used in place of the other.

MOPAR® ENGINE RTV GEN II

Mopar® Engine RTV GEN II is used to seal components exposed to engine oil. This material is a specially designed black silicone rubber RTV that retains adhesion and sealing properties when exposed to engine oil. Moisture in the air causes the material to cure. This material is available in three ounce tubes and has a shelf life of one year. After one year this material will not properly cure. Always inspect the package for the expiration date before use.

MOPAR® ATF RTV

Mopar® ATF RTV is a specifically designed black silicone rubber RTV that retains adhesion and sealing properties to seal components exposed to automatic transmission fluid, engine coolants, and moisture. This material is available in three ounce tubes and has a shelf life of one year. After one year this material will not properly cure. Always inspect the package for the expiration date before use.

MOPAR® GASKET MAKER

Mopar® Gasket Maker is an anaerobic type gasket material. The material cures in the absence of air when squeezed between two metallic surfaces. It will not cure if left in the uncovered tube. The anaerobic material is for use between two machined surfaces. Do not use on flexible metal flanges.

MOPAR® GASKET SEALANT

Mopar® Gasket Sealant is a slow drying, permanently soft sealer. This material is recommended for sealing threaded fittings and gaskets against leakage of oil and coolant. Can be used on threaded and machined parts under all temperatures. This material is used on engines with multi-layer steel (MLS) cylinder head gaskets. This material also will prevent corrosion. Mopar® Gasket Sealant is available in a 13 oz. aerosol can or 4oz./16 oz. can w/applicator.

FORM-IN-PLACE GASKET AND SEALER APPLICATION

Assembling parts using a form-in-place gasket requires care but it's easier than using precut gaskets.

Mopar® Gasket Maker material should be applied sparingly 1 mm (0.040 in.) diameter or less of sealant to one gasket surface. Be certain the material surrounds each mounting hole. Excess material can easily be wiped off. Components should be torqued in place within 15 minutes. The use of a locating dowel is recommended during assembly to prevent smearing material off the location.

Mopar® Engine RTV GEN II or ATF RTV gasket material should be applied in a continuous bead approximately 3 mm (0.120 in.) in diameter. All mounting holes must be circled. For corner sealing, a 3.17 or 6.35 mm (1/8 or 1/4 in.) drop is placed in the center of the gasket contact area. Uncured sealant may be removed with a shop towel. Components should be torqued in place while the sealant is still wet to the touch (within 10 minutes). The usage of a locating dowel is recommended during assembly to prevent smearing material off the location.

Mopar® Gasket Sealant in an aerosol can should be applied using a thin, even coat sprayed completely over both surfaces to be joined, and both sides of a gasket. Then proceed with assembly. Material in a can w/applicator can be brushed on evenly over the sealing surfaces. Material in an aerosol can should be used on engines with multi-layer steel gaskets.

REMOVAL

NOTE: This procedure applies to both the 4X2 and 4X4 vehicles, steps that apply to the 4X4 vehicle only, are identified.

1. Release fuel rail pressure (Refer to 14 - FUEL SYSTEM/FUEL DELIVERY - STANDARD PROCEDURE) then disconnect the fuel supply quick connect fitting at the fuel rail (Refer to 14 - FUEL SYSTEM/FUEL DELIVERY/ QUICK CONNECT FITTING - STANDARD PROCEDURE).
2. Disconnect the battery negative and positive cables.
3. Raise vehicle on hoist.
4. Remove exhaust crossover pipe from exhaust manifolds.
5. **4X4 vehicles** Disconnect axle vent tube from left side engine mount.
6. Remove the through bolt retaining nut and bolt from both the left and right side engine mounts.
7. **4X4 vehicles** Remove locknut from left and right side engine mount brackets.
8. Disconnect two ground straps from the lower left hand side and one ground strap from the lower right hand side of the engine.

9. Disconnect crankshaft position sensor (1).

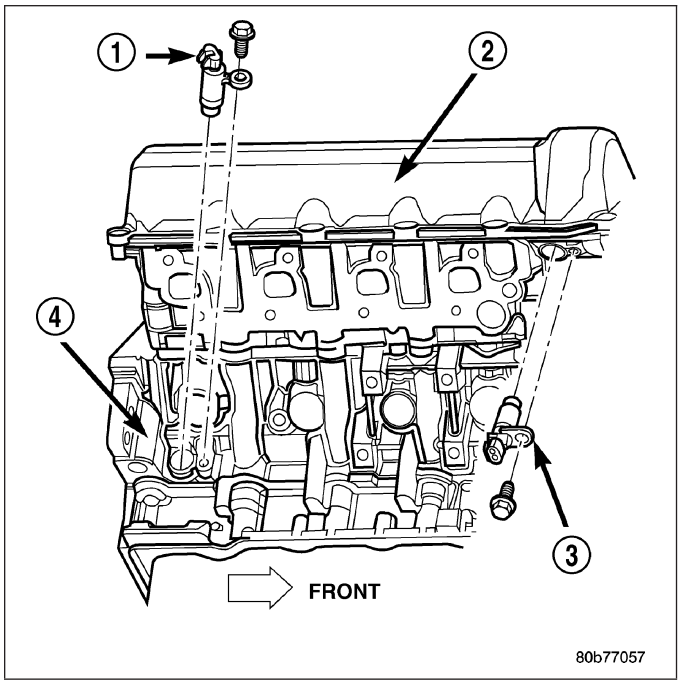

NOTE: The following step applies to 4X4 vehicles equipped with automatic transmission only.

10. **4X4 vehicles** Remove the axle isolator bracket from the engine, transmission and the axle.

11. Remove structural cover (Refer to 9 - ENGINE/ ENGINE BLOCK/STRUCTURAL COVER - REMOVAL).

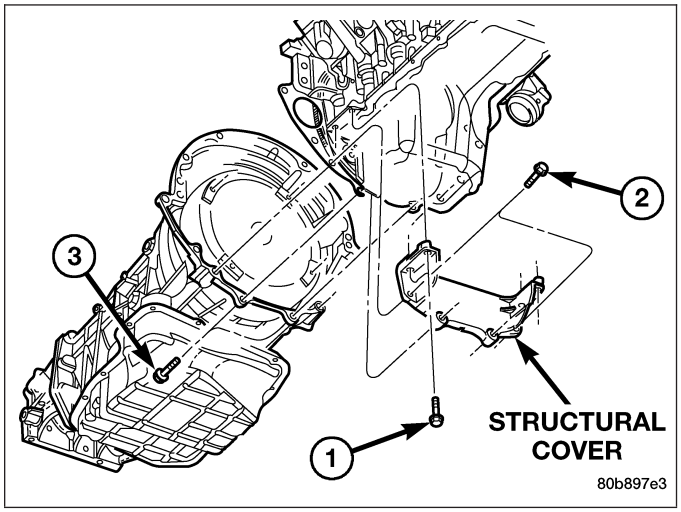

12. Remove starter (4) (Refer to 8 - ELECTRICAL/ STARTING/STARTER MOTOR - REMOVAL).

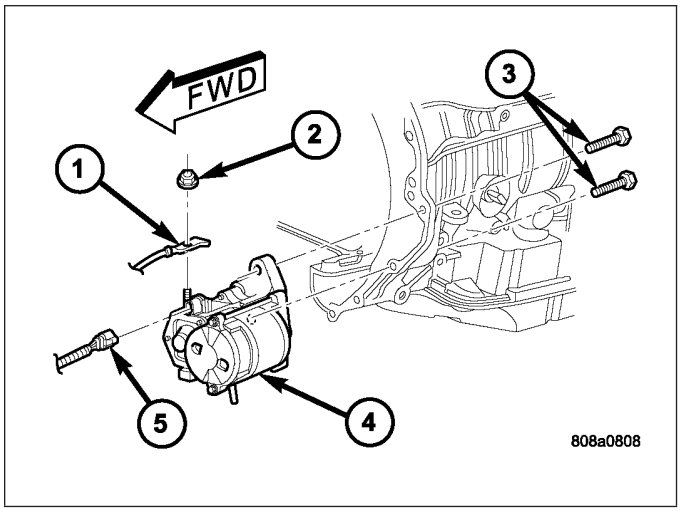

13. Drain cooling system (Refer to 7 - COOLING - STANDARD PROCEDURE).
14. Remove torque converter bolts (Automatic Transmission Only).
15. Remove transmission to engine mounting bolts.
16. Disconnect the engine block heater power cable from the block heater, if equipped.
17. Lower vehicle.
18. Remove throttle body resonator assembly and air inlet hose.
19. Disconnect throttle and speed control cables.
20. Disconnect tube from both the left and right side crankcase breathers (1). Remove breathers
21. Discharge A/C system (Refer to 24 - HEATING & AIR CONDITIONING/PLUMBING/REFRIGERANT - STANDARD PROCEDURE).
22. Remove A/C compressor (2) (Refer to 24 - HEATING & AIR CONDITIONING/PLUMBING/A/C COMPRESSOR - REMOVAL).

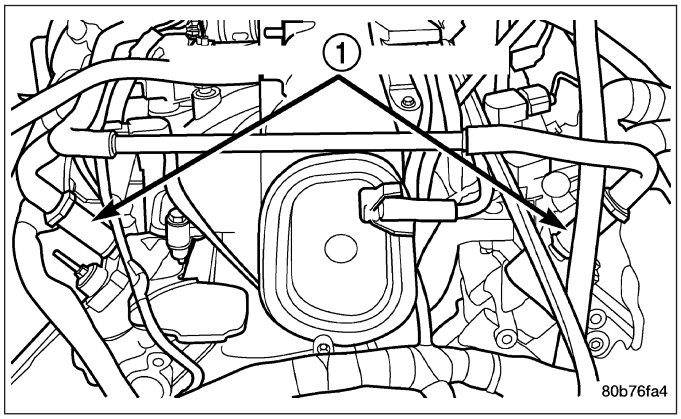

23. Remove shroud, fan assembly (Refer to 7 - COOLING/ENGINE/FAN DRIVE VISCOUS CLUTCH - REMOVAL) and accessory drive belt (Refer to 7 - COOLING/ACCESSORY DRIVE/ DRIVE BELTS - REMOVAL).
24. Disconnect transmission oil cooler lines at the radiator.
25. Disconnect radiator upper and lower hoses.
26. Remove radiator (Refer to 7 - COOLING/ENGINE/ RADIATOR - REMOVAL), A/C condenser (Refer to 24 - HEATING & AIR CONDITIONING/PLUMBING/A/C CONDENSER - REMOVAL) and transmission oil cooler.

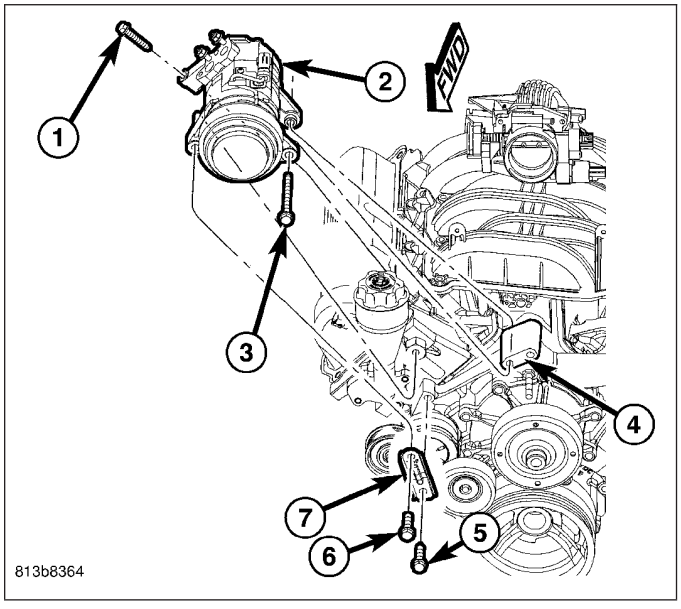

27. Remove generator (3) (Refer to 8 - ELECTRICAL/ CHARGING/GENERATOR - REMOVAL).

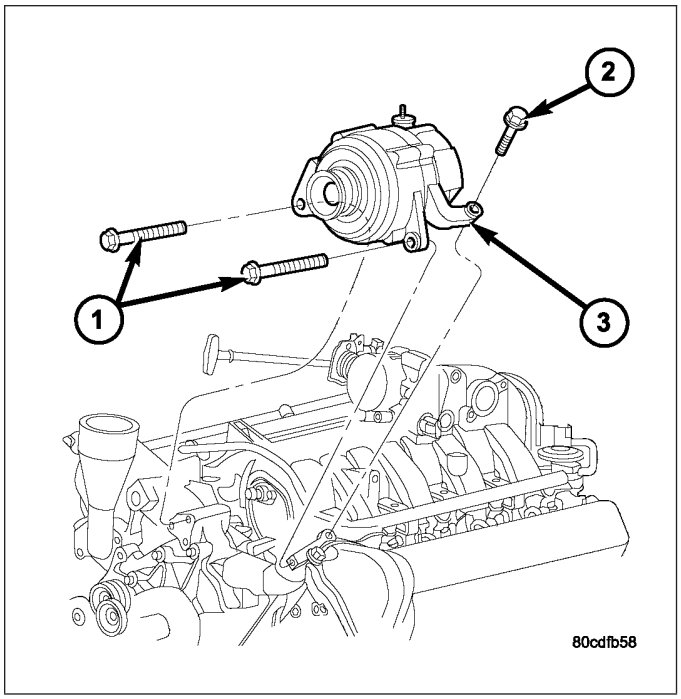

28. Disconnect the two heater hoses from the timing chain cover and heater core.
29. Unclip (2) and remove heater hoses (1) and tubes from the intake manifold.

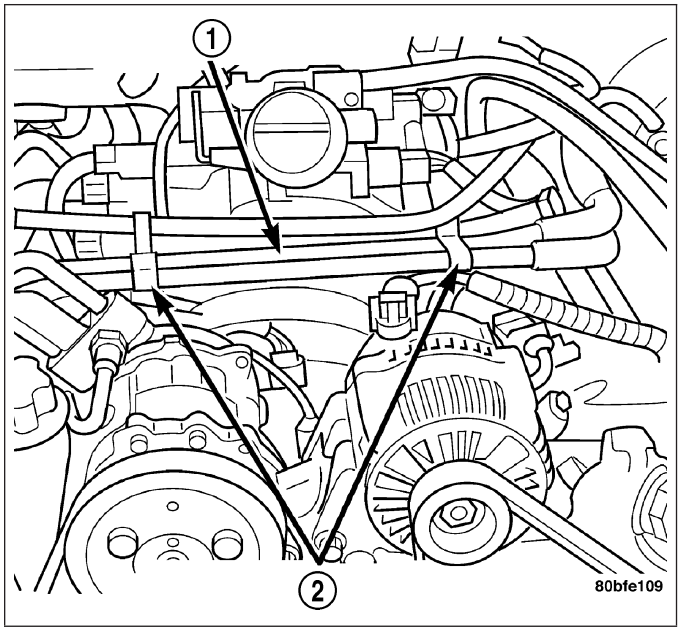

30. Disconnect engine harness at the following points :
    - Intake air temperature (IAT) sensor (4)
    - Fuel Injectors
    - Throttle Position (TPS) Switch (2)
    - Idle Air Control (IAC) Motor (3)
    - Engine Oil Pressure Switch
    - Engine Coolant Temperature (ECT) Sensor
    - Manifold absolute pressure (MAP) Sensor
    - Camshaft Position (CMP) Sensor
    - Coil Over Plugs
31. Disconnect the vacuum lines at the throttle body and intake manifold.
32. Remove power steering pump and position out of the way.

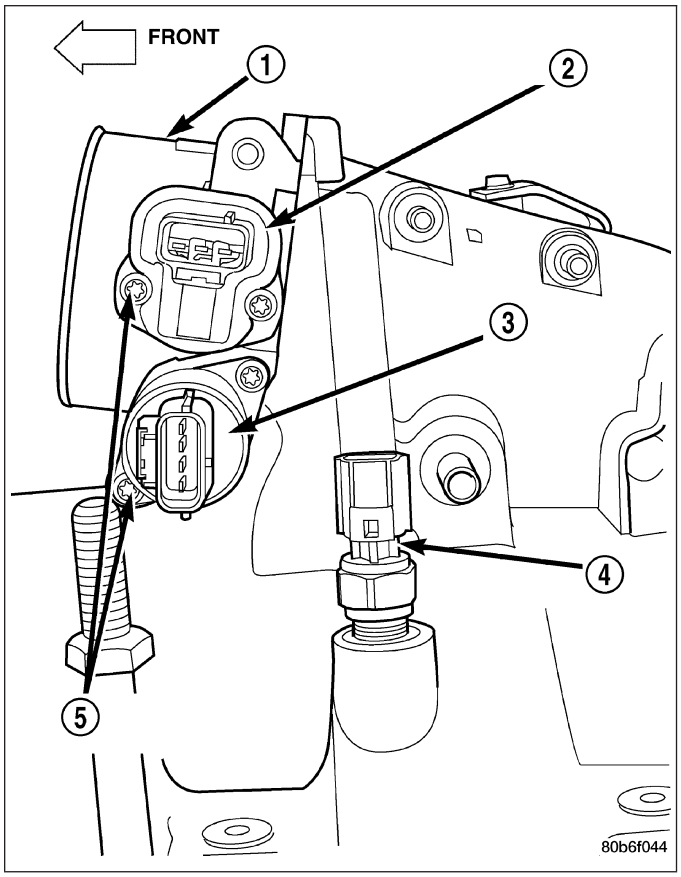

33. Install Special Tools 8400 Lifting Studs, into the cylinder heads.
34. Install Engine Lifting Fixture Special Tool 8347 (3) following these steps.
    - Holding the lifting fixture at a slight angle, slide the large bore in the front plate over the hex portion of the lifting stud.
    - Position the two remaining fixture arms onto the two Special Tools 8400 Lifting Studs, in the cylinder heads.
    - Pull foward and upward on the lifting fixture so that the lifting stud rest in the slotted area below the large bore.
    - Secure the lifting fixture to the three studs using three 7/16 – 14 N/C locknuts.
    - Make sure the lifting loop in the lifting fixture is in the last hole (closest to the throttle body) to minimize the angle of engine during removal.

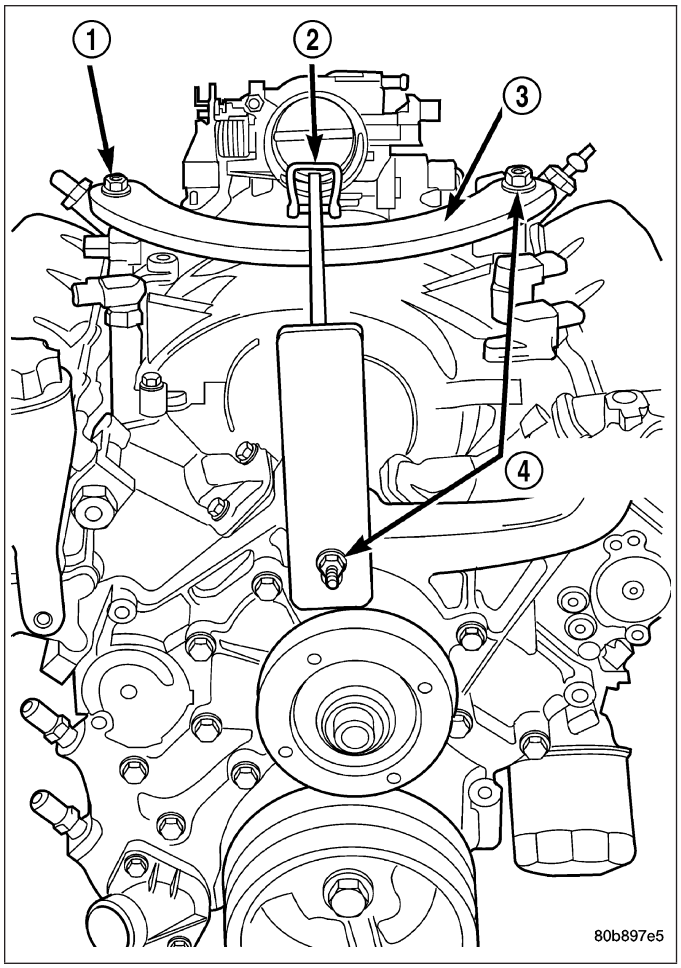

35. Disconnect body ground strap (3) at the right side cowl.

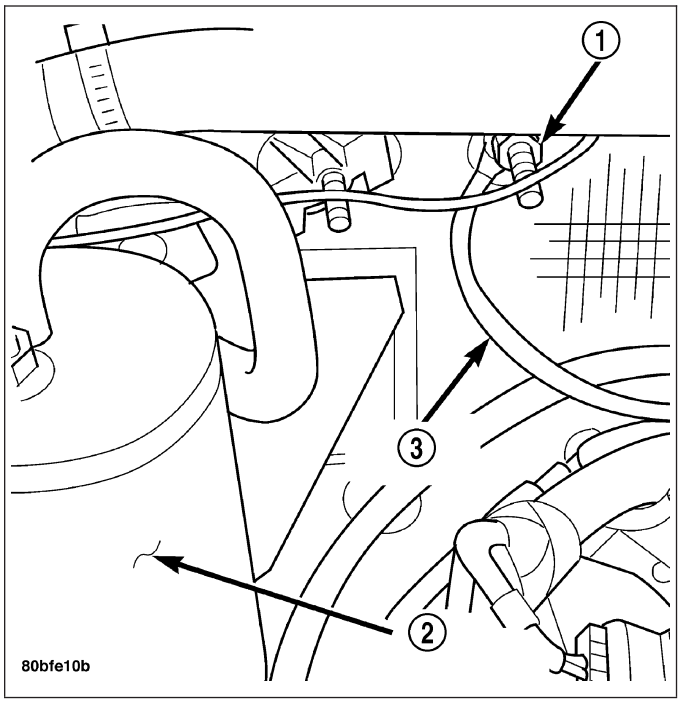

36. Disconnect body ground strap (2) at the left side cowl.

NOTE: It will be necessary to support the transmission in order to remove the engine.

37. Position a suitable jack under the transmission.
38. Remove engine from the vehicle.

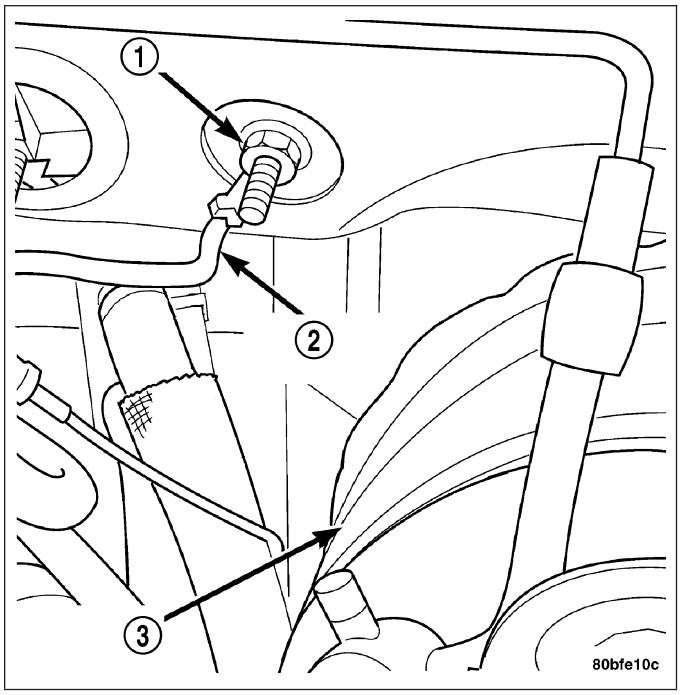

INSTALLATION

1. Position engine in the vehicle.

Position both the left and right side engine mount brackets and install the through bolts and nuts. Tighten nuts to **4X2 vehicles**95 N·m (70 ft. lbs.).**4X4 vehicles**102 N·m (75 ft. lbs.).

2. **4X4 vehicles**Install locknuts onto the engine mount brackets. Tighten locknuts to 41 N·m (30 ft. lbs.).
3. Remove jack from under the transmission.
4. Remove Engine Lifting Fixture Special Tool 8347 (3).
5. Remove Special Tools 8400 Lifting Studs.

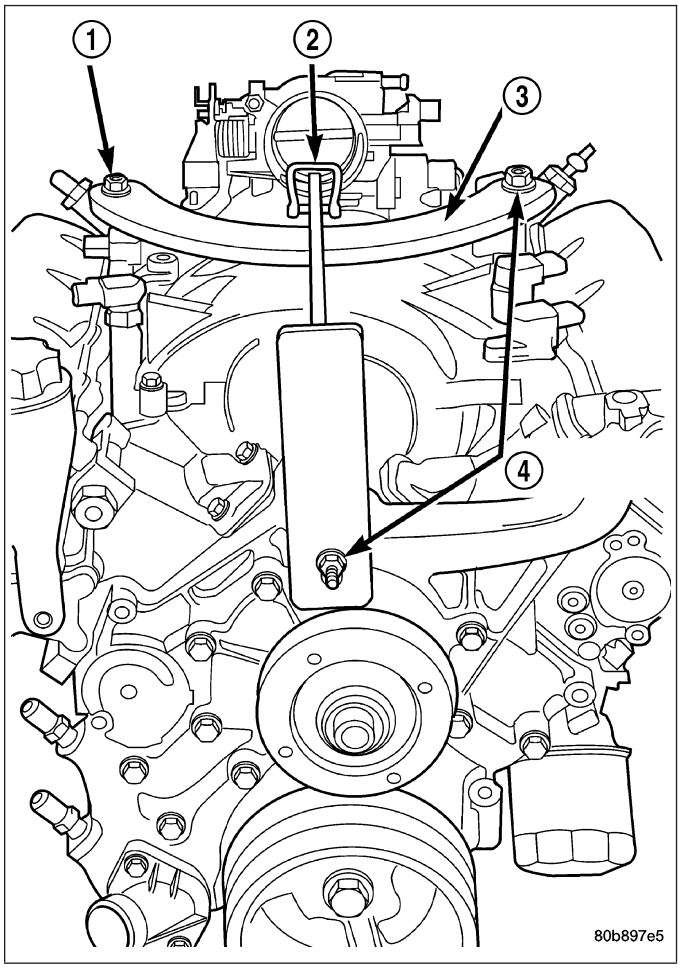

6. Position generator wiring behind the oil dipstick tube, then install the oil dipstick tube upper mounting bolt.
7. Connect both left (2) and right (3) side body ground straps.
8. Install power steering pump.
9. Connect fuel supply line quick connect fitting (Refer to 14 - FUEL SYSTEM/FUEL DELIVERY/QUICK CONNECT FITTING - STANDARD PROCEDURE).
10. Connect the vacuum lines at the throttle body and intake manifold.

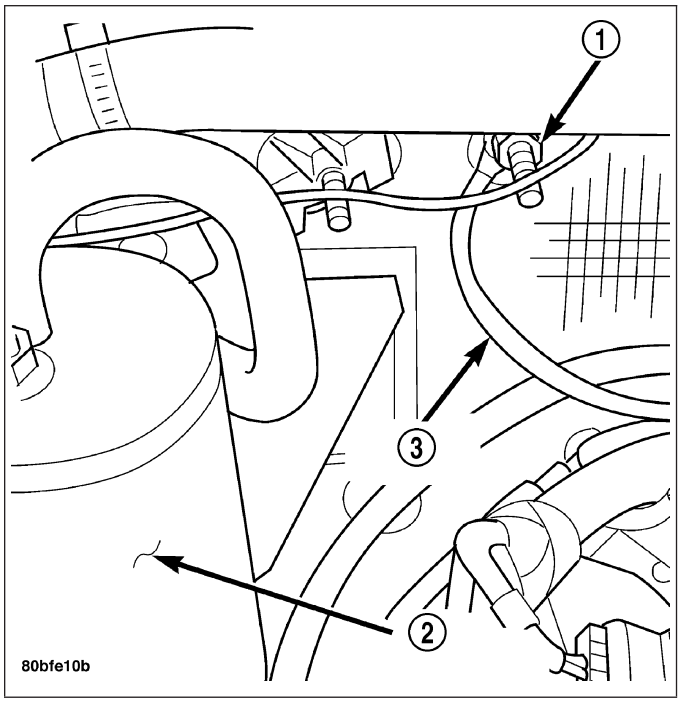

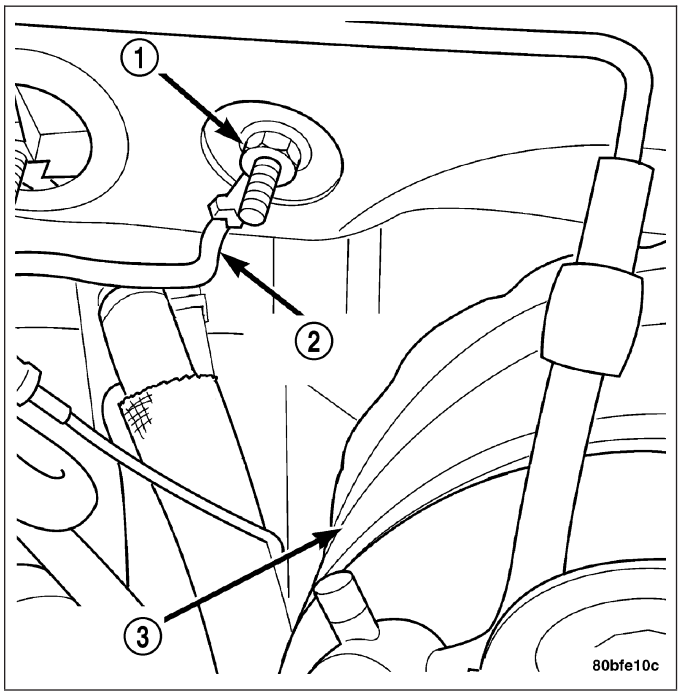

11. Connect engine harness at the following points:
    - Intake Air Temperature (IAT) Sensor (4)
    - Idle Air Control (IAC) Motor (3)
    - Fuel Injectors
    - Throttle Position (TPS) Switch (2)
    - Engine Oil Pressure Switch
    - Engine Coolant Temperature (ECT) Sensor
    - Manifold Absolute Pressure (MAP) Sensor
    - Camshaft Position (CMP) Sensor
    - Coil Over Plugs

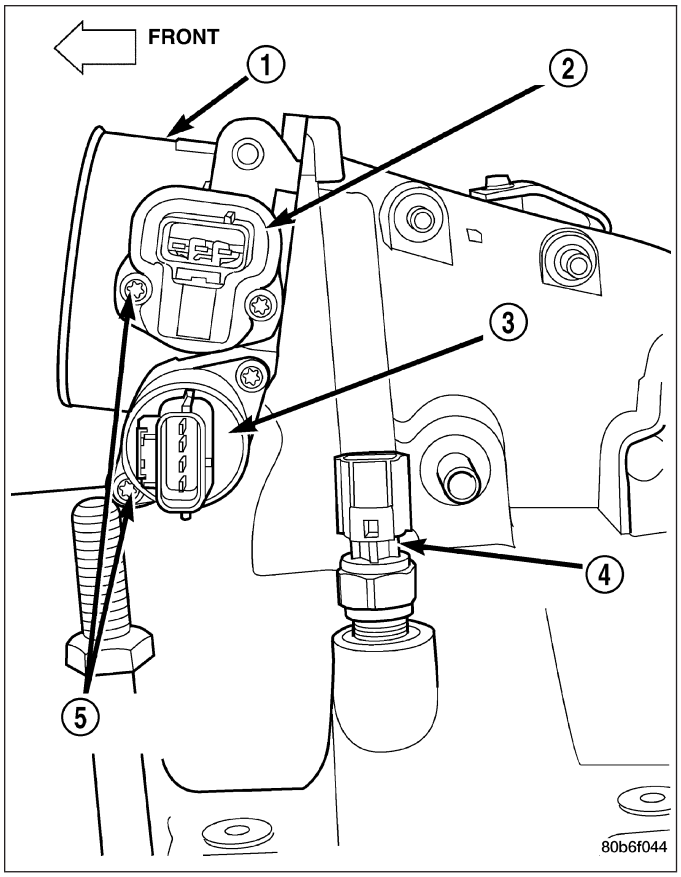

12. Position and install heater hoses (1) and tubes onto intake manifold.
13. Install the heater hoses onto the heater core and the engine front cover, and install clips (2).

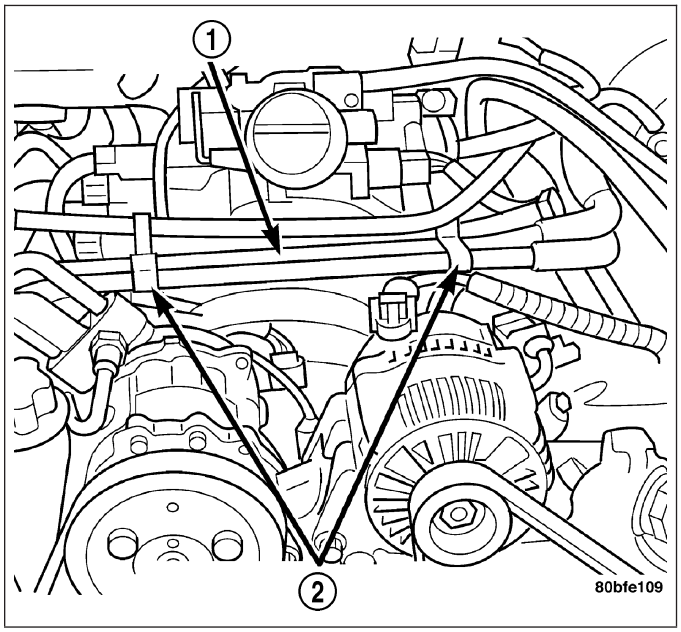

14. Install generator (3) (Refer to 8 - ELECTRICAL/ CHARGING/GENERATOR - INSTALLATION).

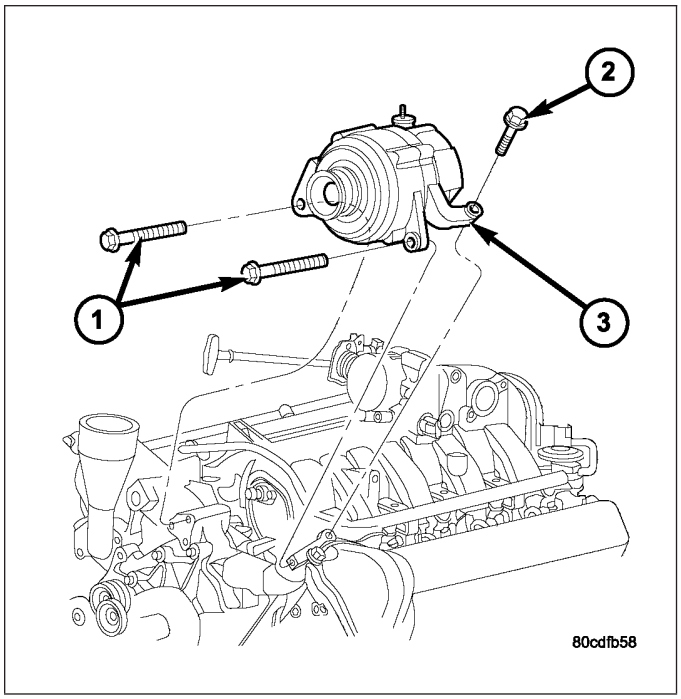

15. Install A/C condenser (Refer to 24 - HEATING & AIR CONDITIONING/PLUMBING/A/C CONDENSER - INSTALLATION), radiator (Refer to 7 - COOLING/ENGINE/RADIATOR - INSTALLATION) and transmission oil cooler.
16. Connect radiator upper and lower hoses.
17. Connect the transmission oil cooler lines to the radiator.
18. Install accessory drive belt (Refer to 7 - COOLING/ACCESSORY DRIVE/DRIVE BELTS - INSTALLATION), fan assembly and shroud (Refer to 7 - COOLING/ENGINE/FAN DRIVE VISCOUS CLUTCH - INSTALLATION).

19. Install A/C compressor (2) (Refer to 24 - HEATING & AIR CONDITIONING/PLUMBING/A/C COMPRESSOR - INSTALLATION).

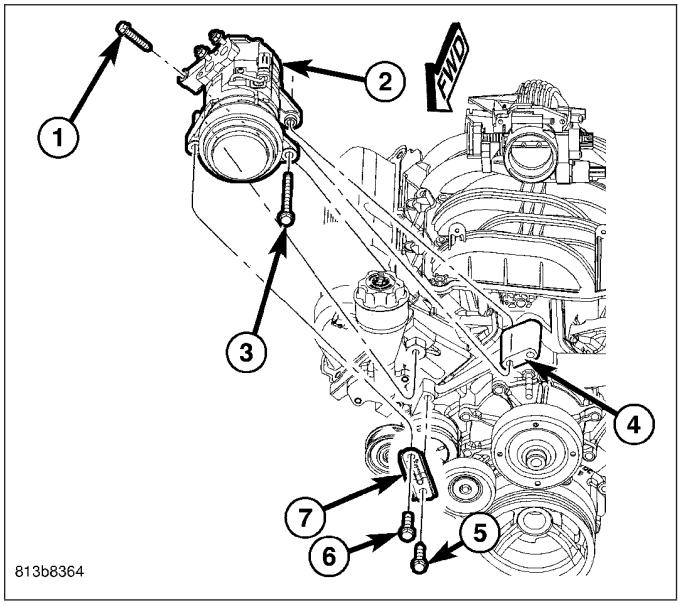

20. Install both breathers (1). Connect tube to both crankcase breathers.
21. Connect throttle and speed control cables.
22. Install throttle body resonator assembly and air inlet hose. Tighten clamps 4 N·m (35 in. lbs.).
23. Raise vehicle.

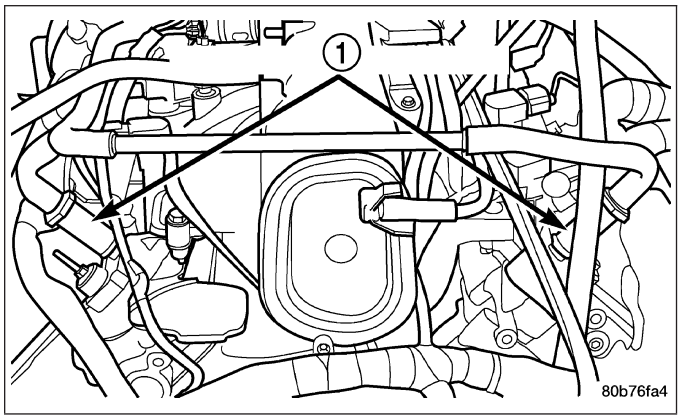

24. Install transmission to engine mounting bolts. Tighten the bolts to 41 N·m (30 ft. lbs.).
25. Install torque converter bolts (Automatic Transmission Only).
26. Connect crankshaft position sensor (1).
27. **4X4 vehicles**Position and install the axle isolator bracket onto the axle, transmission and engine block. Tighten bolts to specification (Refer to 9 - ENGINE - SPECIFICATIONS).

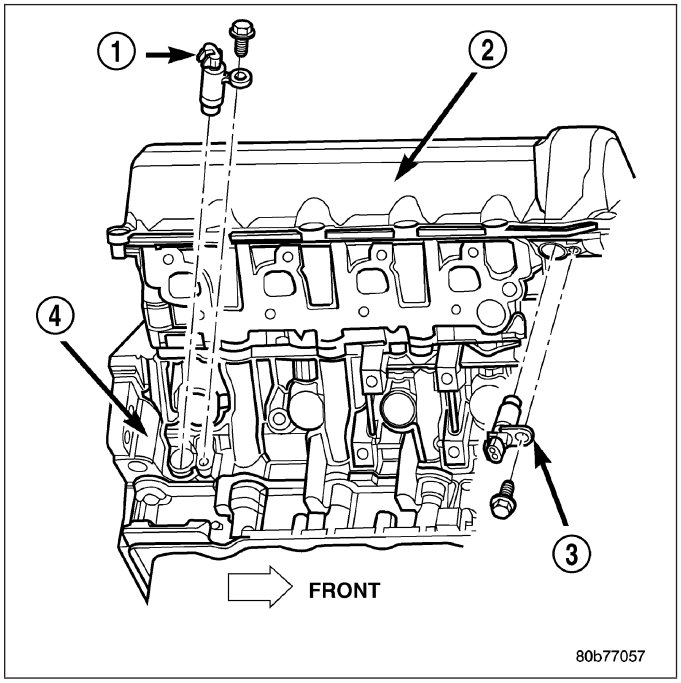

28. Install starter (4) (Refer to 8 - ELECTRICAL/ STARTING/STARTER MOTOR - INSTALLATION).

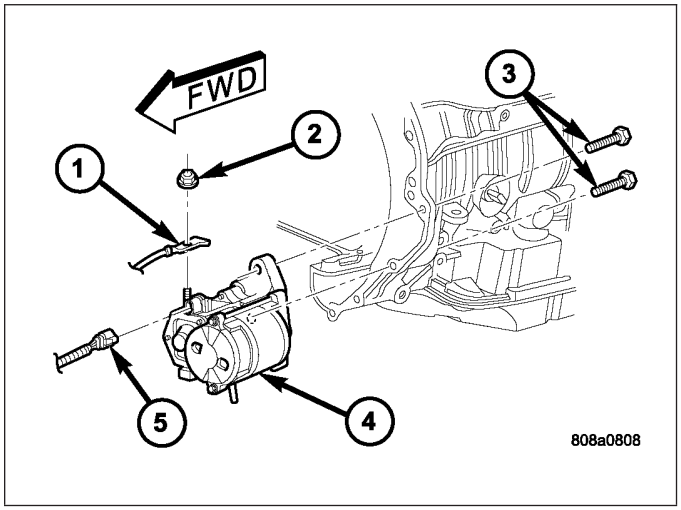

CAUTION: The structural cover requires a specific torque sequence. Failure to follow this sequence may cause severe damage to the cover.

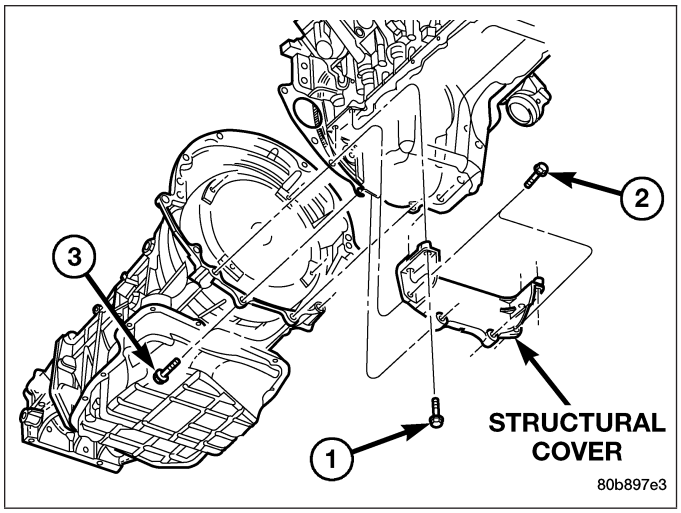

29. Install structural cover (Refer to 9 - ENGINE/ENGINE BLOCK/STRUCTURAL COVER - INSTALLATION).
30. Install exhaust crossover pipe.
31. Install engine block heater power cable, If equipped.
32. **4X4 vehicles**Connect axle vent tube to left side engine mount.
33. Lower vehicle.
34. Check and fill engine oil.
35. Recharge the A/C system (Refer to 24 - HEATING & AIR CONDITIONING/PLUMBING/REFRIGERANT - STANDARD PROCEDURE).
36. Refill the engine cooling system (Refer to 7 - COOLING - STANDARD PROCEDURE).
37. Connect the battery positive and negative cables.
38. Start the engine and check for leaks.

SPECIFICATIONS

SPECIFICATIONS - 4.7L ENGINE

GENERAL DESCRIPTION

DESCRIPTION	SPECIFICATION
Engine Type	90° SOHC V-8 16-Valve
Displacement	4.7 Liters / 4701 cc 287 (Cubic Inches)
Bore	93.0 mm (3.66 in.)
Stroke	86.5 mm (3.40 in.)
Compression Ratio	9.0:1
Horsepower	235 BHP @ 4800 RPM
Torque	295 LB-FT @ 3200 RPM
Lead Cylinder	#1 Left Bank
Firing Order	1-8-4-3-6-5-7-2

CYLINDER BLOCK

DESCRIPTION	SPECIFICATION	
	Metric	Standard
Bore Diameter	93.010 ± .0075 mm	3.6619 ± 0.0003 in.
Out of Round (MAX)	0.076 mm	0.003 in.
Taper (MAX)	0.051 mm	0.002 in.

PISTONS

DESCRIPTION	SPECIFICATION	
	Metric	Standard
Diameter	92.975 mm	3.6605 in.
Weight	366 grams	12.9 oz
Ring Groove Diameter		
No. 1	83.37 - 83.13 mm	3.282 - 3.273 in
No. 2	82.833 - 83.033 mm	3.261 - 3.310 in.
No. 3	83.88 - 84.08 mm	3.302 - 3.310 in.

PISTON PINS

DESCRIPTION	SPECIFICATION	
	Metric	Standard
Clearance In Piston	0.010 - 0.019 mm	0.0004 - 0.0008 in.
Diameter	24.013 - 24.016 mm	0.9454 - 0.9455 in.

PISTON RINGS

DESCRIPTION	SPECIFICATION	
	Metric	Standard
Ring Gap		
Top Compression Ring	0.20 - 0.36 mm	0.0079 - 0.0142 in.
Second Compression Ring	0.37 - 0.63 mm	0.0146 - 0.0249 in.
Oil Control (Steel Rails)	0.25 - 0.76 mm	0.0099 - 0.30 in.
Side Clearance		
Top Compression Ring	.051 - .094 mm	0.0020 - 0.0037 in.
Second Compression Ring	0.040 - 0.080 mm	0.0016 - 0.0031 in.
Oil Ring (Steel Ring)	.019 - .229 mm	.0007 - .0091 in.
Ring Width		
Top Compression Ring	1.472 - 1.490 mm	0.057 - 0.058 in.
Second Compression Ring	1.472 - 1.490 mm	0.057 - 0.058 in.
Oil Ring (Steel Rails)	0.445 - 0.470 mm	0.017 - 0.018 in.

CONNECTING RODS

DESCRIPTION	SPECIFICATION	
	Metric	Standard
Bearing Clearance	0.015 - 0.055 mm	0.0006 - 0.0022 in.
Side Clearance	0.10 - 0.35 mm	0.004 - 0.0138 in.
Piston Pin Bore Diameter (Interference Fit)	.025 - .048 mm	0.001 - 0.0019 in.
Bearing Bore Out of Round (MAX)	0.004 mm	0.0002 in.
Total Weight (Less Bearing)	555 grams	19.5771 ounces

CRANKSHAFT

DESCRIPTION	SPECIFICATION	
	Metric	Standard
Main Bearing Journal Diameter	63.488 - 63.512 mm	2.4996 - 2.5005 in.
Bearing Clearance	0.004 - 0.034 mm	0.0002 - 0.0013 in.
Out of Round (MAX)	0.005 mm	0.0004 in.
Taper (MAX)	0.008 mm	0.0004 in.
End Play	0.052 - 0.282 mm	0.0021 - 0.0112 in.
End Play (MAX)	0.282 mm	0.0112 in.
Connecting Rod Journal Diameter	50.992 - 51.008 mm	2.0076 - 2.0082 in.
Bearing Clearance	0.010 - 0.048	0.0004 - 0.0019 in.
Out of Round (MAX)	0.005 mm	0.0002 in.
Taper (MAX)	0.008 mm	0.0004 in.

CAMSHAFT

DESCRIPTION	SPECIFICATION	
	Metric	Standard
Bore Diameter	26.02 - 26.04 mm	1.0245 - 1.0252 in.
Bearing Journal Diameter	25.975 - 25.995 mm	1.0227 - 1.0235 in.
Bearing Clearance	0.025 - 0.065 mm	0.001 - 0.0026 in.
Bearing Clearance (MAX)	0.065 mm	0.0026 in.
End Play	.075 - .200 mm	0.003 - 0.0079 in.
End Play (MAX)	.200 mm	0.0079 in.

VALVE TIMING

DESCRIPTION	SPECIFICATION
Intake	
Opens (BTDC)	4.4°
Closes (ATDC)	239.1°
Duration	243.5°
Exhaust	
Opens (BTDC)	240.5°
Closes (ATDC)	13.2°
Duration	253.70°
Valve Overlap	17.6°

VALVES

DESCRIPTION	SPECIFICATION
Face Angle	45° - 45.5°
Head Diameter	
Intake	48.52 - 48.78 mm (1.9103 - 1.9205 in.)
Exhaust	36.87 - 37.13 mm (1.4516 - 1.4618 in.)
Length (Overall)	
Intake	113.45 - 114.21 mm (4.4666 - 4.4965)
Exhaust	114.92 - 115.68 mm (4.5244 - 4.5543 in.)
Stem Diameter	
Intake	6.931 - 6.957 mm (0.2729 - 0.2739 in.)
Exhaust	6.902 - 6.928 mm (0.2717 - 0.2728 in.)
Stem - to - Guide Clearance	
Intake	0.018 - 0.069 mm (0.0008 - 0.0028 in.)
Exhaust	0.047 - 0.098 mm (0.0019 - 0.0039 in.)
Max. Allowable Stem - to - Guide Clearance (Rocking Method)	
Intake	0.069 mm (0.0028 in.)
Exhaust	0.098 mm (0.0039 in.)
Valve Lift (Zero Lash)	
Intake	11.25 mm (0.443 in.)
Exhaust	10.90 mm (0.4292 in.)

VALVE SPRING

DESCRIPTION	SPECIFICATION
Free Length (Approx)	
Intake	49.0 mm (1.9291 in.)
Exhaust	49.0 mm (1.9291 in.)
Spring Force (Valve Closed)	
Intake and Exhaust	313.0 - 354.0 N @ 40.12 mm (70.365 - 79.582 lbs. @ 1.5795 in.)
Spring Force (Valve Open)	
Intake and Exhaust	776.0 - 870.0 N @ 28.88 mm (174.451 - 195.583 lbs. @ 1.137 in.)
Number of Coils	
Intake	7.3
Exhaust	7.3
Wire Diameter	
Intake and Exhaust	4.6 × 3.67mm (0.1811 - 0.1445 in.)
Installed Height (Spring Seat to Bottom of Retainer) Nominal	
Intake	40.12 mm (1.579 in.)
Exhaust	40.12 mm (1.579 in.)

CYLINDER HEAD

DESCRIPTION	SPECIFICATION
Gasket Thickness (Compressed)	0.7 mm (0.0276 in.)
Valve Seat Angle	44.5° - 45.0°
Valve Seat Runout (MAX)	0.051 mm (0.002 in.)
Valve Seat Width	
Intake	1.75 - 2.36 mm (0.0698 - 0.0928 in.)
Exhaust	1.71 - 2.32 mm (0.0673 - 0.0911 in.)
Guide Bore Diameter (Std.)	6.975 - 7.00 mm (0.2747 - 0.2756 in.)
Cylinder Head Warpage (Flatness)	0.0508 mm (0.002 in.)

OIL PUMP

DESCRIPTION	SPECIFICATION
Clearance Over Rotors/End Face (MAX)	0.095 mm (0.0038 in.)
Cover Out - of -Flat (MAX)	0.025 mm (0.001 in.)
Inner and Outer Rotor Thickness	12.02 mm (0.4731 in.)
Outer Rotor to pocket (Diametral) clearance (MAX)	.235 mm (.0093 in.)
Outer Rotor Diameter (MIN)	85.925 mm (0.400 in.)
Tip Clearance Between Rotors (MAX)	0.150 mm (0.006 in.)

OIL PRESSURE

SPECIFICATION	SPECIFICATION
At Curb Idle Speed (MIN)*	48 kPa (7 psi)
@ 3000 rpm	240 - 725 kPa (35 - 105 psi)
*** CAUTION: If pressure is zero at curb idle, DO NOT run engine at 3000 rpm.**	

TORQUE

DESCRIPTION	N·m	Ft. Lbs.	In. Lbs.
Camshaft			
Non - Oiled Sprocket Bolt	122	90	—
Bearing Cap Bolts	11	—	100
Timing Chain Cover—Bolts	58	43	—
Connecting Rod Cap—Bolts	27	20	—
	PLUS 90° TURN		
Bed Plate—Bolts	Refer to Procedure		
Cylinder Head—Bolts	Refer to Procedure		
Crankshaft Damper—Bolt	175	130	—
Cylinder Head Cover—Bolts	12	—	105
Exhaust Manifold—Bolts	25	18	—
Exhaust Manifold Heat Shield—Nuts	8	—	72
	Then loosen 45°		
Flexplate—Bolts	60	45	—
Engine Mount Bracket to Block—Bolts	61	45	—
Rear Mount to Transmission—Bolts	46	34	—
Generator Mounting—Bolts			
M10 Bolts	54	40	—
M8 Bolts	28	—	250
Intake Manifold—Bolts	12	—	105
	Refer to Procedure for Tightening Sequence		
Oil Pan—Bolts	15	—	130
Oil Pan—Drain Plug	34	25	—
Oil Pump—Bolts	28	—	250

DESCRIPTION	N·m	Ft. Lbs.	In. Lbs.
Oil Pump Cover—Bolts	12	—	105
Oil Pickup Tube—Bolt and Nut	28	—	250
Oil Dipstick Tube to Engine Block—Bolt	15	—	130
Oil Fill Tube—Bolts	12	—	105
Timing Chain Guide—Bolts	28	—	250
Timing Chain Tensioner Arm—Special Pin Bolt	17	—	150
Hydraulic Tensioner—Bolts	28	—	250
Timing Chain Primary Tensioner—Bolts	28	—	250
Timing Drive Idler Sprocket—Bolt	34	25	—
Thermostat Housing—Bolts	13	—	115
Water Pump—Bolts	58	43	—

SPECIAL TOOLS

4.7L ENGINE

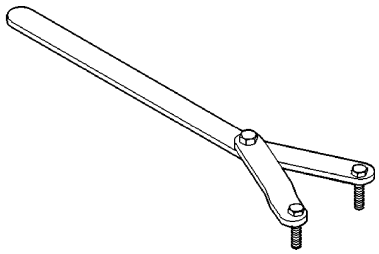

Spanner Wrench 6958

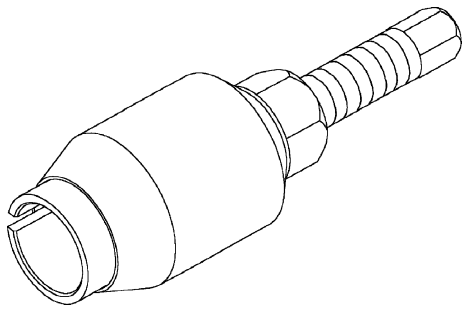

Front Crankshaft Seal Remover 8511

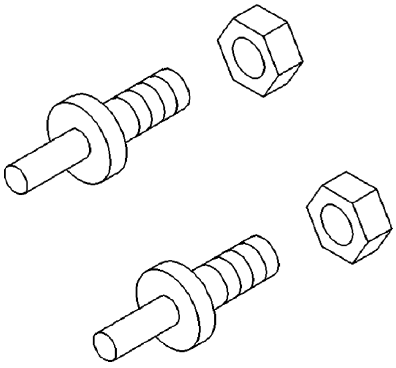

Adapter Pins 8346

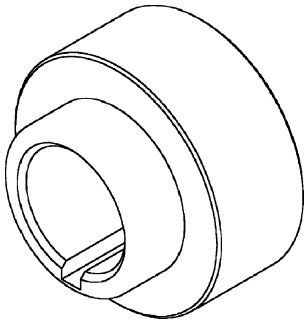

Front Crankshaft Seal Installer 8348

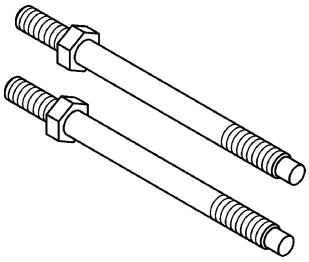

Engine Lifting Studs 8400

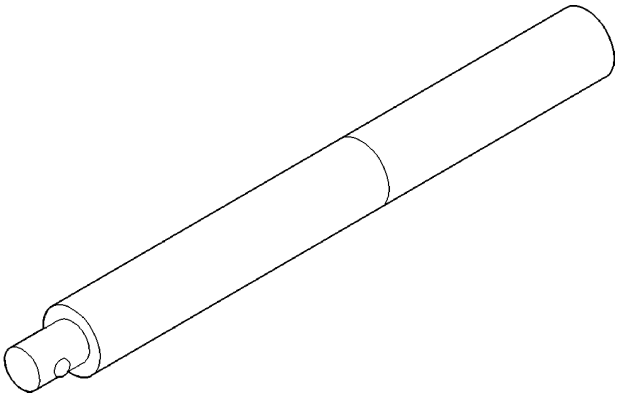

Handle C-4171

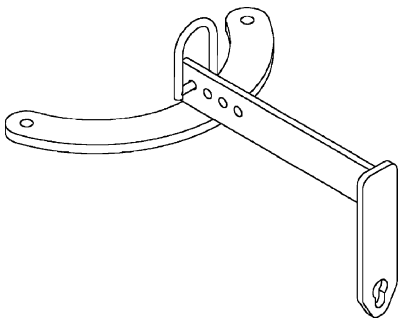

Engine Lift Fixture 8347

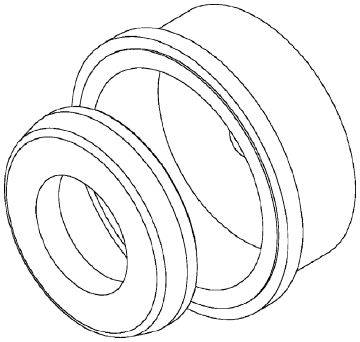

Rear Crankshaft Seal Installer 8349

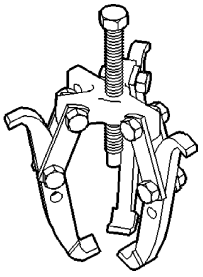

Puller 1026

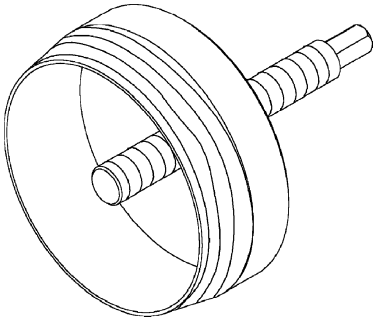

Rear Crankshaft Seal Remover 8506

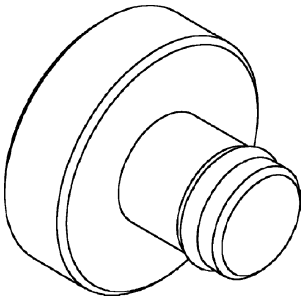

Crankshaft Damper Removal Insert 8513

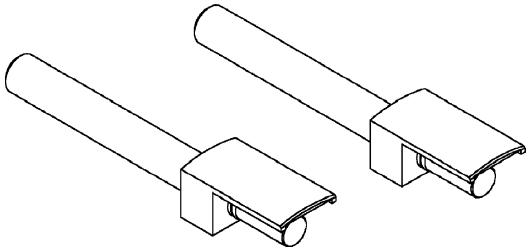

Connecting Rod Guides 8507

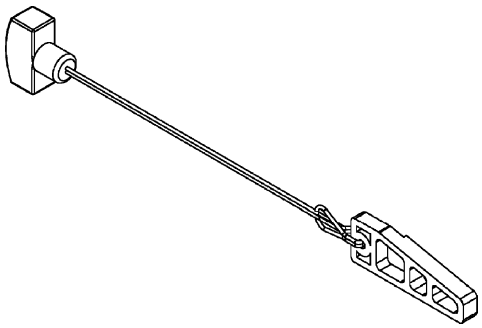

Chain Tensioner Wedge 8379

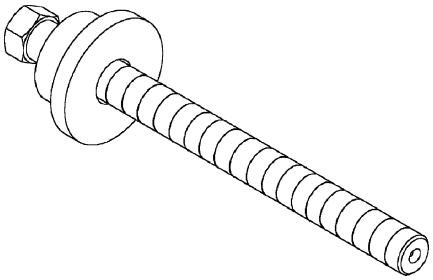

Crankshaft Damper Installer 8512

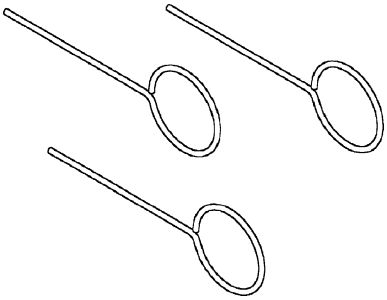

Chain Tensioner Pins 8514

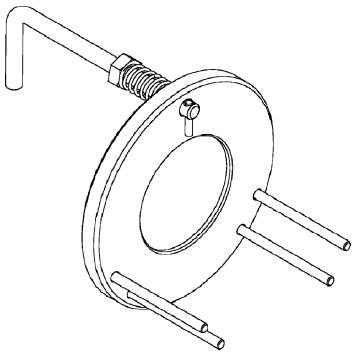

Secondary Chain Holder 8515

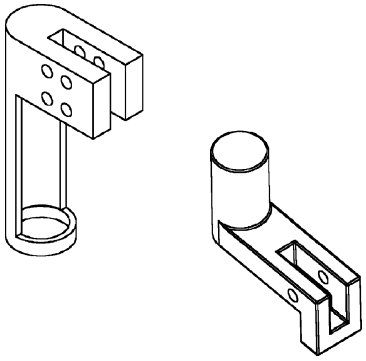

Valve Spring Compressor Adapters 8519

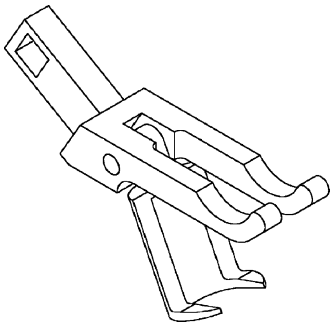

Remover, Rocker Arm 8516

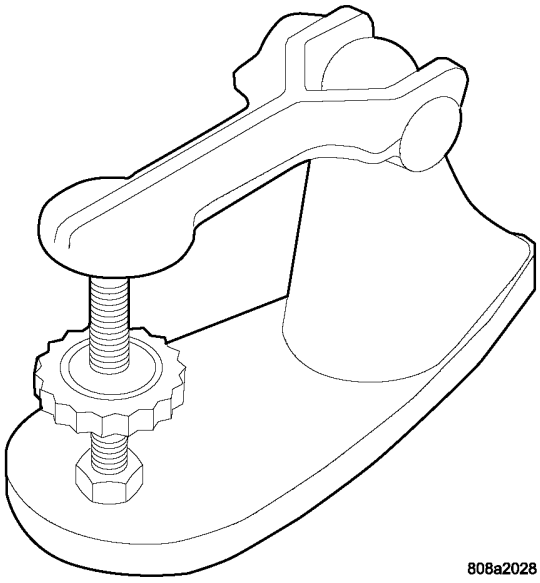

Valve Spring Tester C-647

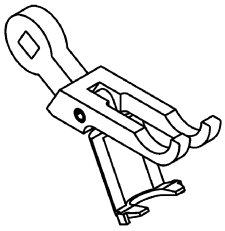

Valve Spring Compressor 8387

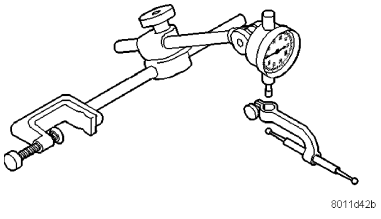

Dial Indicator C-3339

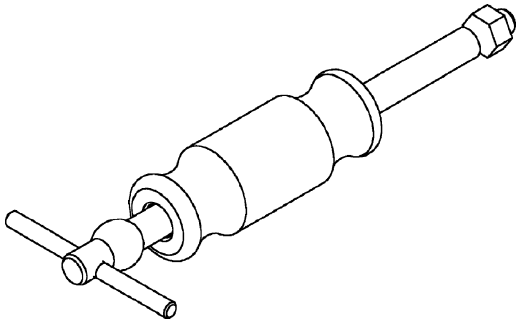

Idler Shaft Remover 8517

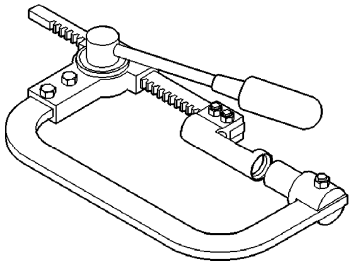

COMPRESSOR VALVE SPRING C-3422-C

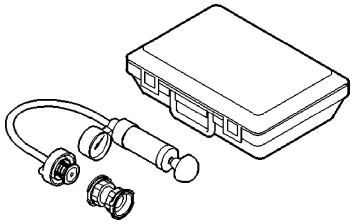

Pressure Tester Kit 7700

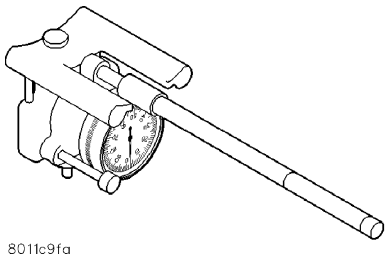

INDICATOR CYLINDER BORE C-119

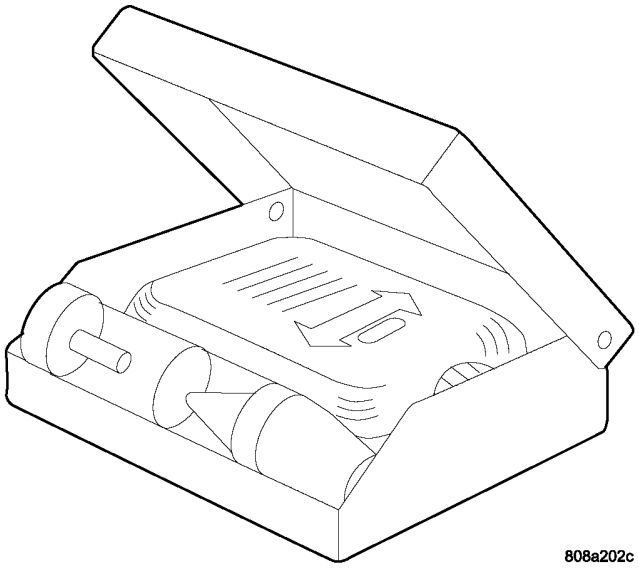

BLOC-CHEK KIT C-3685

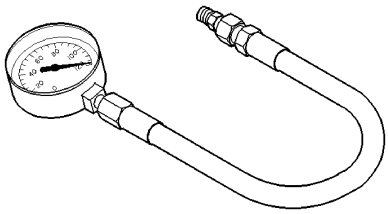

GAUGE OIL PRESSURE - C-3292

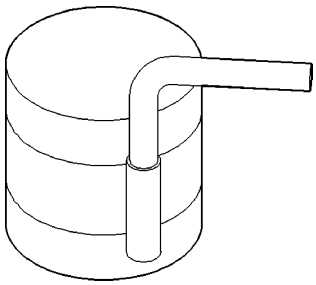

Piston Ring Compressor C-385

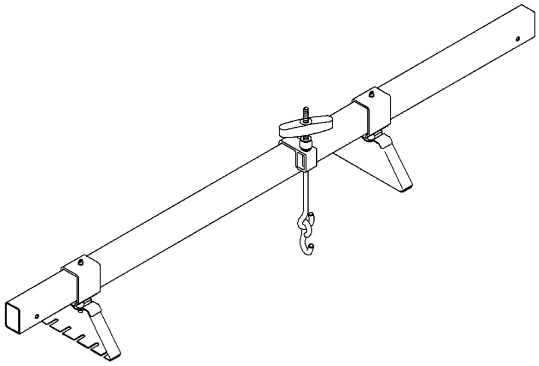

ENGINE SUPPORT FIXTURE 8534

ELEMENT - AIR CLEANER

REMOVAL

Filter Element Only

1. Housing removal is not necessary for element (filter) replacement.
2. Loosen clamp and disconnect air duct at air cleaner cover.
3. Pry over 4 spring clips (5) from housing cover (3) (spring clips retain cover to housing).
4. Release housing cover (3) from locating tabs on housing and remove cover.
5. Remove air cleaner element (filter) from housing.
6. Clean inside of housing before replacing element.

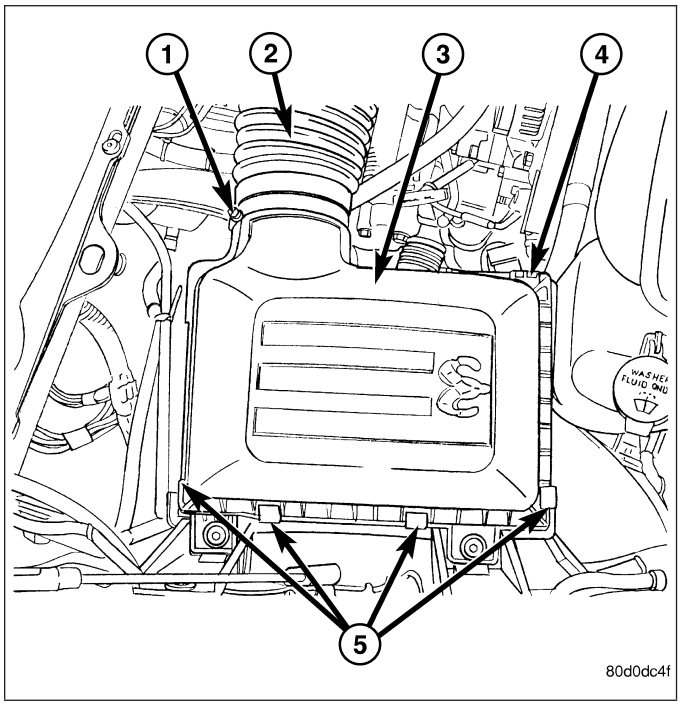

Housing Assembly

1. Loosen clamp and disconnect air duct at air cleaner cover.
2. Lift entire housing (1) assembly from 4 locating pins (2).

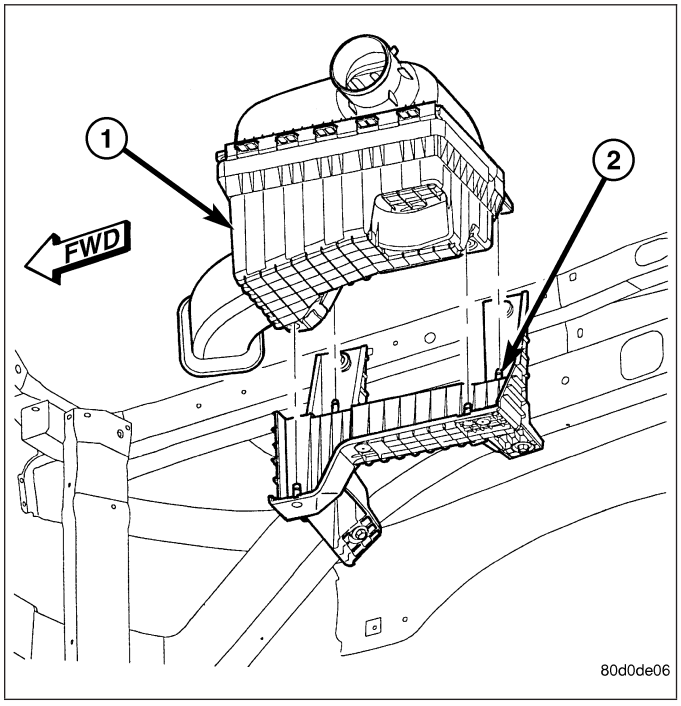

INSTALLATION

1. Install filter element into housing.
2. Position housing cover into housing locating tabs.
3. Pry up 4 spring clips and lock cover to housing.
4. Install air duct to air cleaner cover and tighten hose clamp to 3 N·m (30 in. lbs.) torque.
5. If any other hose clamps were removed from air intake system, tighten them to 3.4 N·m (30 in. lbs.) torque.
6. If any bolts were removed from air resonator housing or air intake tubing, tighten them to 4.5 N·m (40 in. lbs.) torque.

CYLINDER HEAD

DESCRIPTION

DESCRIPTION - CYLINDER HEAD

The cylinder heads are made of an aluminum alloy. The cylinder head features two valves per cylinder with pressed in powdered metal valve guides. The cylinder heads also provide enclosures for the timing chain drain, necessitating unique left and right cylinder heads.

DESCRIPTION - VALVE GUIDES

The valve guides are made of powered metal and are pressed into the cylinder head. The guides are not replaceable or serviceable, and valve guide reaming is not recommended. If the guides are worn beyond acceptable limits, replace the cylinder heads.

DIAGNOSIS AND TESTING

CYLINDER HEAD GASKET

A cylinder head gasket leak can be located between adjacent cylinders or between a cylinder and the adjacent water jacket.

Possible indications of the cylinder head gasket leaking between adjacent cylinders are:

- Loss of engine power
- Engine misfiring
- Poor fuel economy

Possible indications of the cylinder head gasket leaking between a cylinder and an adjacent water jacket are:

- Engine overheating
- Loss of coolant
- Excessive steam (white smoke) emitting from exhaust
- Coolant foaming

CYLINDER-TO-CYLINDER LEAKAGE TEST

To determine if an engine cylinder head gasket is leaking between adjacent cylinders, follow the procedures in Cylinder Compression Pressure Test (Refer to 9 - ENGINE - DIAGNOSIS AND TESTING). An engine cylinder head gasket leaking between adjacent cylinders will result in approximately a 50 - 70% reduction in compression pressure.

CYLINDER-TO-WATER JACKET LEAKAGE TEST

WARNING: USE EXTREME CAUTION WHEN THE ENGINE IS OPERATING WITH COOLANT PRESSURE CAP REMOVED.

VISUAL TEST METHOD

With the engine cool, remove the coolant pressure cap. Start the engine and allow it to warm up until thermostat opens.

If a large combustion/compression pressure leak exists, bubbles will be visible in the coolant.

COOLING SYSTEM TESTER METHOD

WARNING: WITH COOLING SYSTEM TESTER IN PLACE, PRESSURE WILL BUILD UP FAST. EXCESSIVE PRESSURE BUILT UP, BY CONTINUOUS ENGINE OPERATION, MUST BE RELEASED TO A SAFE PRESSURE POINT. NEVER PERMIT PRESSURE TO EXCEED 138 kPa (20 psi).

Install Cooling System Tester 7700 or equivalent to pressure cap neck. Start the engine and observe the tester's pressure gauge. If gauge pulsates with every power stroke of a cylinder a combustion pressure leak is evident.

CHEMICAL TEST METHOD

Combustion leaks into the cooling system can also be checked by using Bloc-Chek Kit C-3685-A or equivalent. Perform test following the procedures supplied with the tool kit.

REMOVAL

REMOVAL - LEFT CYLINDER HEAD

1. Disconnect the negative cable from the battery.
2. Raise the vehicle on a hoist.
3. Disconnect the exhaust pipe at the left side exhaust manifold.
4. Drain the engine coolant. Refer to COOLING SYSTEM.
5. Lower the vehicle.
6. Remove the intake manifold (Refer to 9 - ENGINE/MANIFOLDS/INTAKE MANIFOLD - REMOVAL).
7. Remove the master cylinder and booster assembly. Refer to section 5 brakes.
8. Remove the cylinder head cover (Refer to 9 - ENGINE/CYLINDER HEAD/CYLINDER HEAD COVER(S) - REMOVAL).

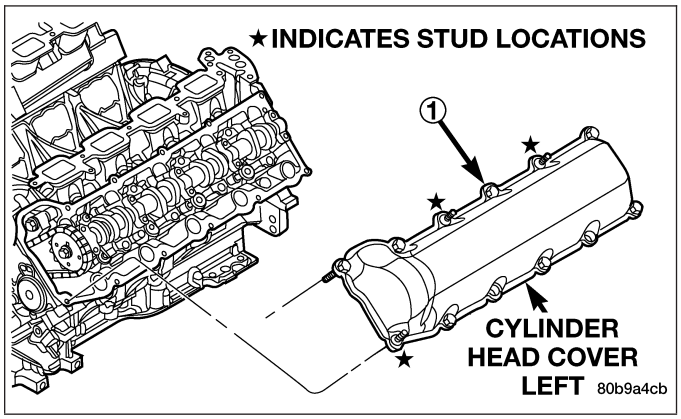

9. Remove the fan shroud and fan blade assembly (Refer to 7 - COOLING/ENGINE/FAN DRIVE VISCOUS CLUTCH - REMOVAL).
10. Remove accessory drive belt (Refer to 7 - COOLING/ACCESSORY DRIVE/DRIVE BELTS - REMOVAL).
11. Remove the power steering pump and set aside.
12. Rotate the crankshaft until the damper timing mark is aligned with TDC indicator mark.

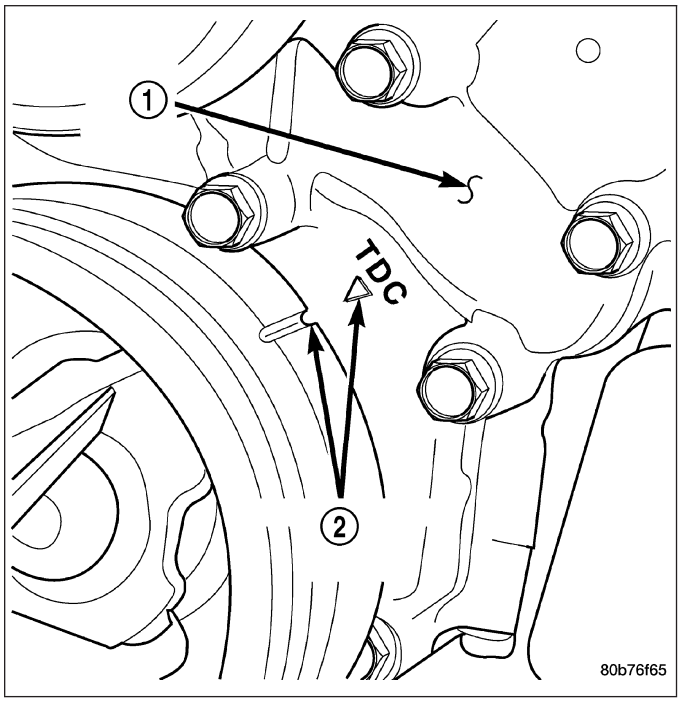

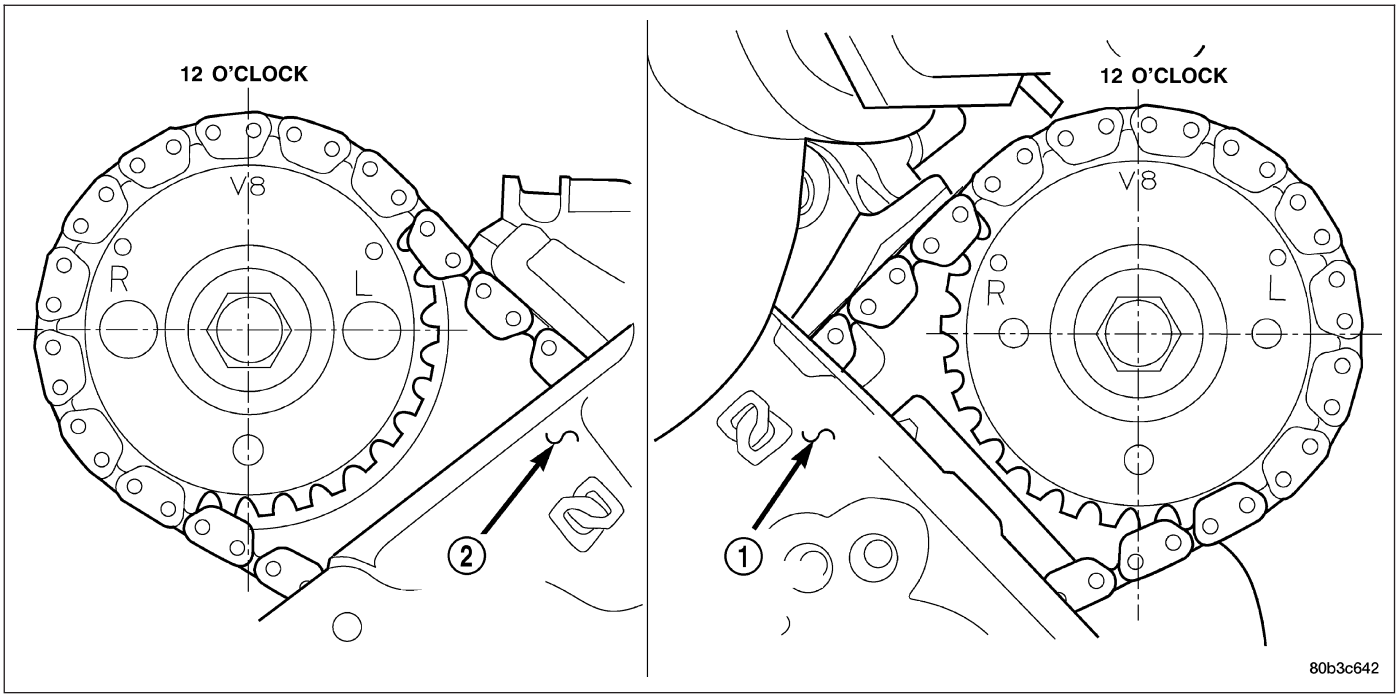

13. Verify the V8 mark on the camshaft sprocket is at the 12 o'clock position. Rotate the crankshaft one turn if necessary.
14. Remove the crankshaft damper (Refer to 9 - ENGINE/ENGINE BLOCK/VIBRATION DAMPER - REMOVAL).
15. Remove the timing chain cover (Refer to 9 - ENGINE/VALVE TIMING/TIMING BELT / CHAIN COVER(S) - REMOVAL).

16. Lock the secondary timing chains to the idler sprocket using Special Tool 8515.

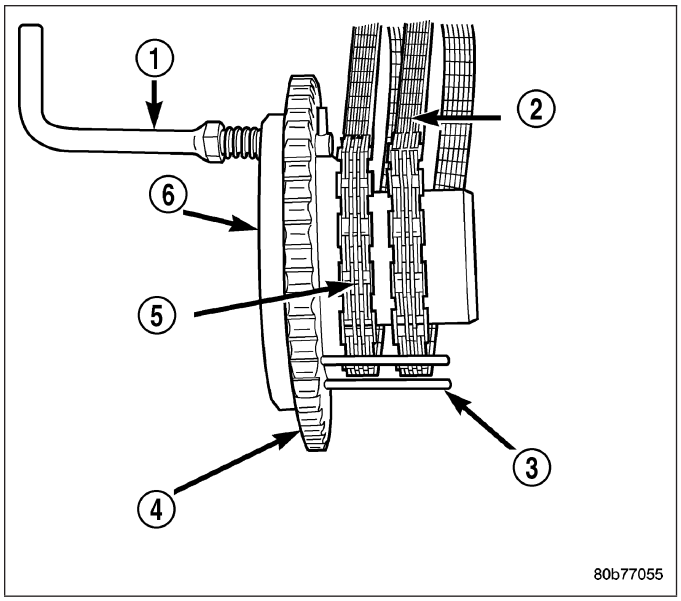

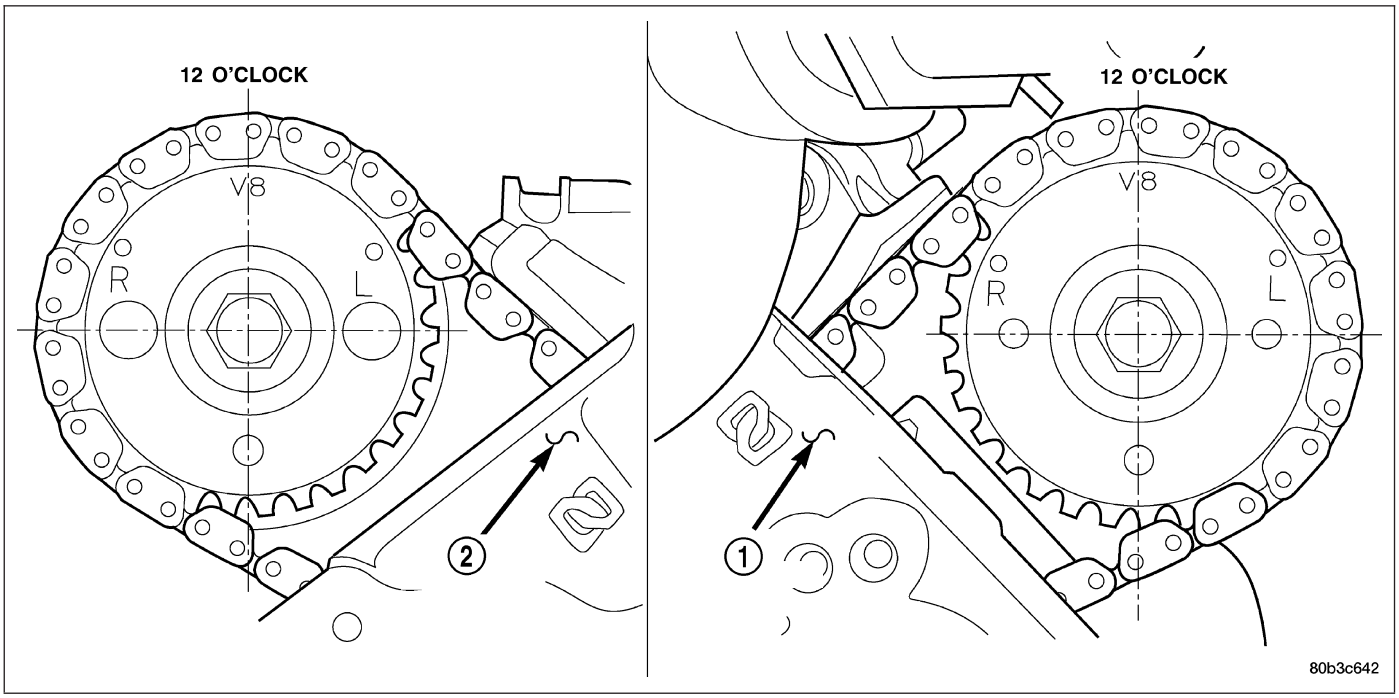

NOTE: Mark the secondary timing chain prior to removal to aid in installation.

17. Mark the secondary timing chain, one link on each side of the V8 mark on the camshaft drive gear.
18. Remove the left side secondary chain tensioner (Refer to 9 - ENGINE/VALVE TIMING/TIMING BELT/CHAIN AND SPROCKETS - REMOVAL).

19. Remove the cylinder head access plug (2).
20. Remove the left side secondary chain guide (Refer to 9 - ENGINE/VALVE TIMING/TIMING BELT/CHAIN AND SPROCKETS - REMOVAL).
21. Remove the retaining bolt and the camshaft drive gear.

CAUTION: Do not allow the engine to rotate. Severe damage to the valve train can occur.

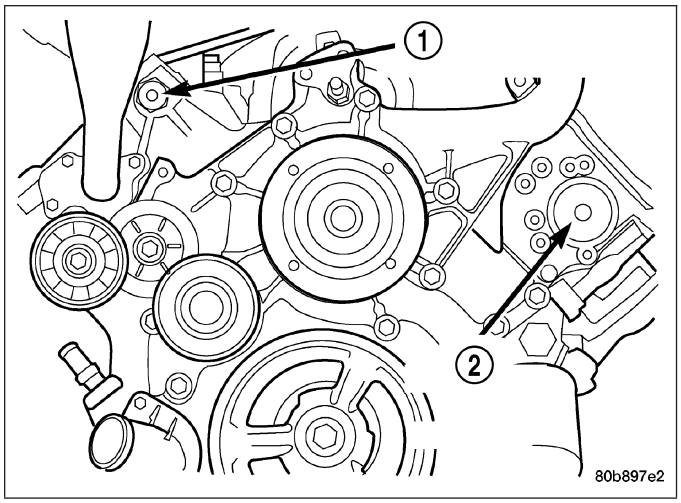

CAUTION: Do not overlook the four smaller bolts at the front of the cylinder head. Do not attempt to remove the cylinder head without removing these four bolts.

NOTE: The cylinder head is attached to the cylinder block with fourteen bolts.

22. Remove the cylinder head retaining bolts using the sequence provided.
23. Remove the cylinder head and gasket. Discard the gasket.

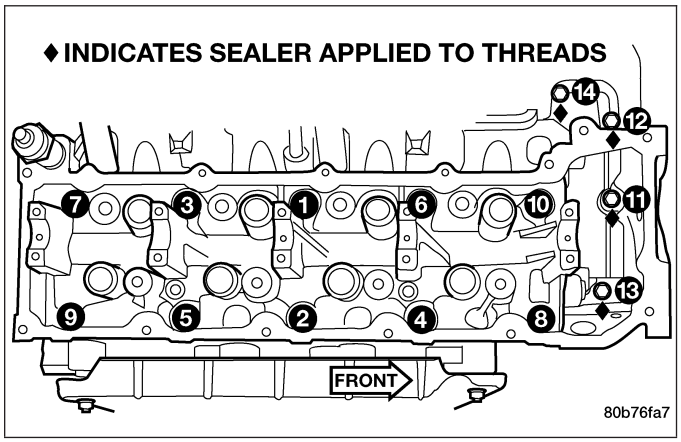

CAUTION: Do not lay the cylinder head on its gasket sealing surface, due to the design of the cylinder head gasket any distortion to the cylinder head sealing surface may prevent the gasket from properly sealing resulting in leaks.

REMOVAL - RIGHT CYLINDER HEAD

1. Disconnect battery negitive cable.
2. Raise the vehicle on a hoist.
3. Disconnect the exhaust pipe at the right side exhaust manifold.
4. Drain the engine coolant (Refer to 7 - COOLING - STANDARD PROCEDURE).
5. Lower the vehicle.
6. Remove the intake manifold (Refer to 9 - ENGINE/MANIFOLDS/INTAKE MANIFOLD - REMOVAL).
7. Remove the cylinder head cover (1) (Refer to 9 - ENGINE/CYLINDER HEAD/CYLINDER HEAD COVER(S) - REMOVAL).

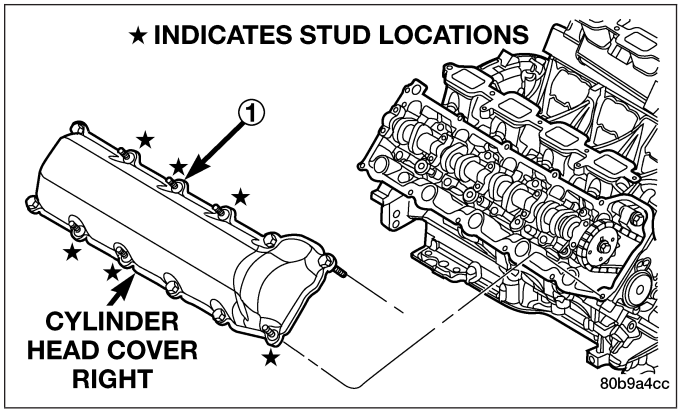

8. Remove the fan shroud (Refer to 7 - COOLING/ ENGINE/FAN DRIVE VISCOUS CLUTCH - REMOVAL).
9. Remove oil fill housing from cylinder head.
10. Remove accessory drive belt (Refer to 7 - COOLING/ACCESSORY DRIVE/DRIVE BELTS - REMOVAL).
11. Rotate the crankshaft until the damper timing mark is aligned with TDC indicator mark (2).

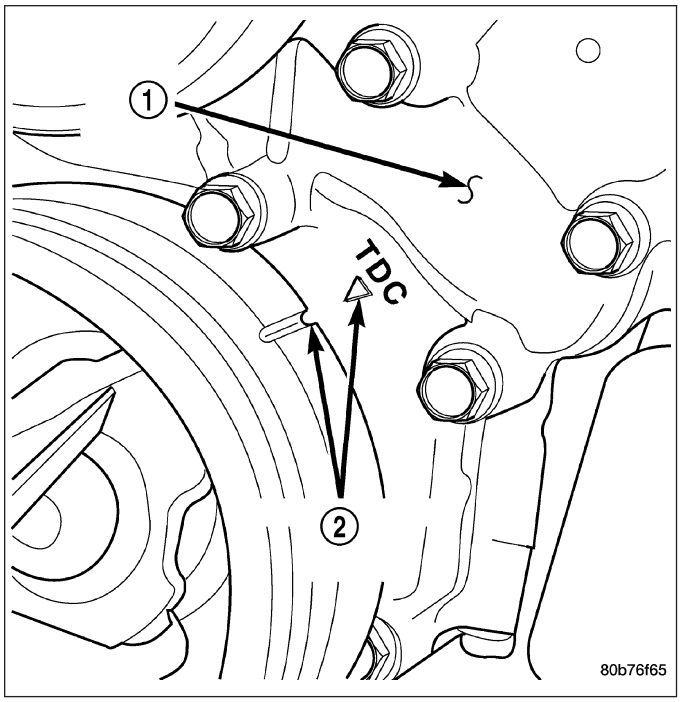

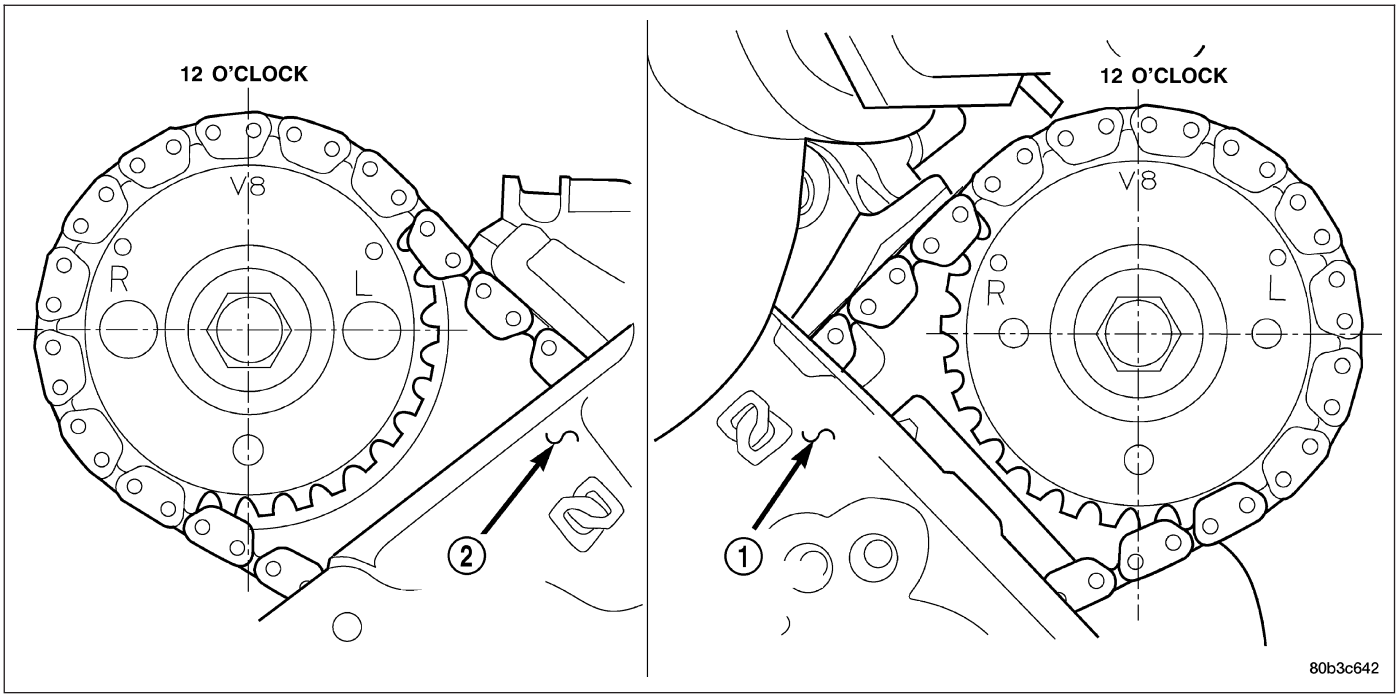

12. Verify the V8 mark on the camshaft sprocket is at the 12 o'clock position (2). Rotate the crankshaft one turn if necessary.
13. Remove the crankshaft damper (Refer to 9 - ENGINE/ENGINE BLOCK/VIBRATION DAMPER - REMOVAL).
14. Remove the timing chain cover (Refer to 9 - ENGINE/VALVE TIMING/TIMING BELT / CHAIN COVER(S) - REMOVAL).

15. Lock the secondary timing chains to the idler sprocket using Special Tool 8515 (6).

NOTE: Mark the secondary timing chain prior to removal to aid in installation.

16. Mark the secondary timing chain, one link on each side of the V8 mark on the camshaft drive gear.
17. Remove the right side secondary chain tensioner (Refer to 9 - ENGINE/VALVE TIMING/TIMING BELT/CHAIN AND SPROCKETS - REMOVAL).

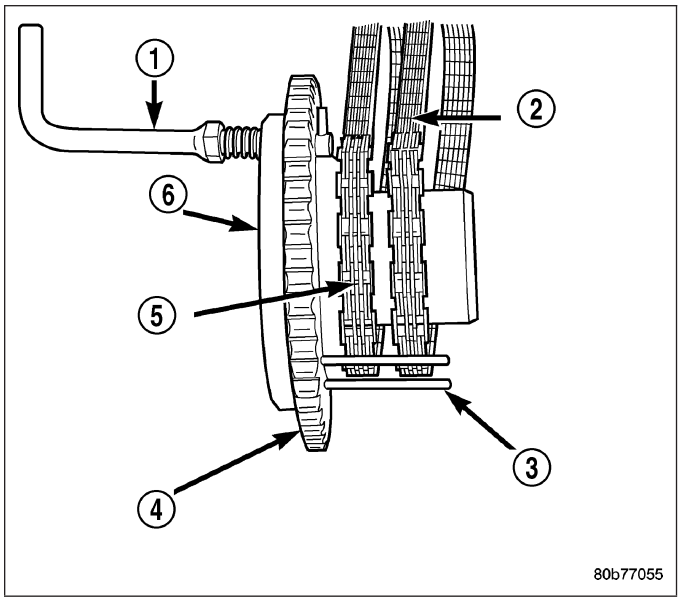

18. Remove the cylinder head access plug (1).
19. Remove the right side secondary chain guide (Refer to 9 - ENGINE/VALVE TIMING/TIMING BELT/CHAIN AND SPROCKETS - REMOVAL).
20. Remove the retaining bolt and the camshaft drive gear.

CAUTION: Do not allow the engine to rotate. severe damage to the valve train can occur.

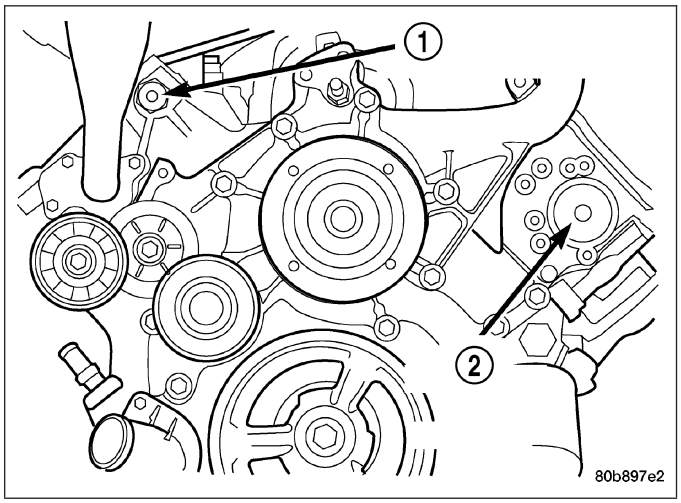

CAUTION: Do not overlook the four smaller bolts at the front of the cylinder head. Do not attempt to remove the cylinder head without removing these four bolts.

CAUTION: Do not hold or pry on the camshaft target wheel for any reason. A damaged target wheel can result in a vehicle no start condition.

NOTE: The cylinder head is attached to the cylinder block with fourteen bolts.

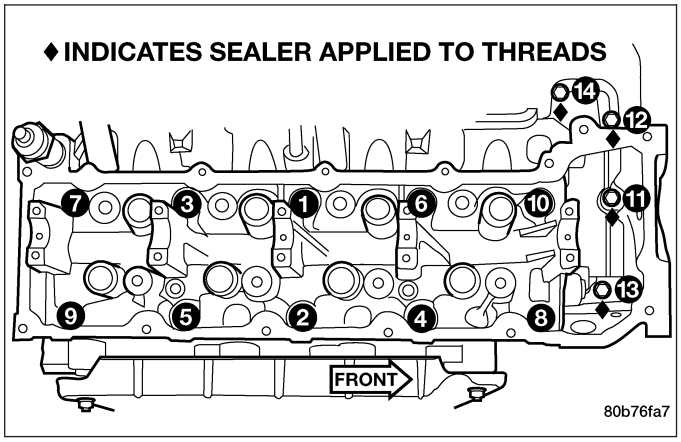

21. Remove the cylinder head retaining bolts using the sequence provided.
22. Remove the cylinder head and gasket. Discard the gasket.

CAUTION: Do not lay the cylinder head on its gasket sealing surface, do to the design of the cylinder head gasket any distortion to the cylinder head sealing surface may prevent the gasket from properly sealing resulting in leaks.

CLEANING

To ensure engine gasket sealing, proper surface preparation must be performed, especially with the use of aluminum engine components. (Refer to 9 - ENGINE - STANDARD PROCEDURE)

INSPECTION

1. Inspect the cylinder head for out-of-flatness, using a straightedge and a feeler gauge. If tolerances exceed 0.0508 mm (0.002 in.) replace the cylinder head.
2. Inspect the valve seats for damage. Service the valve seats as necessary.
3. Inspect the valve guides for wear, cracks or looseness. If either condition exist, replace the cylinder head.

INSTALLATION

INSTALLATION - LEFT CYLINDER HEAD

NOTE: The cylinder head bolts are tightened using a torque plus angle procedure. The bolts must be examined BEFORE reuse. If the threads are necked down (2) the bolts should be replaced.

Necking can be checked by holding a straight edge against the threads. If all the threads do not contact the scale, the bolt should be replaced.

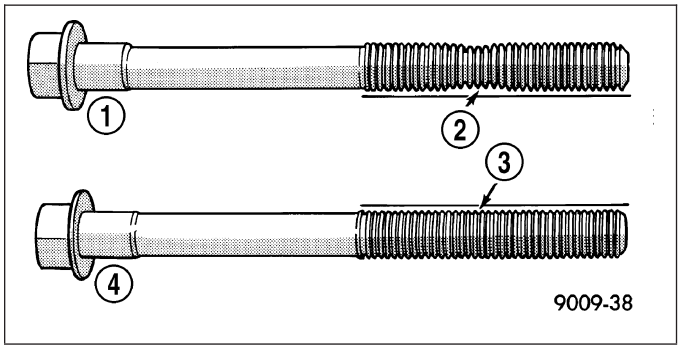

CAUTION: When cleaning cylinder head and cylinder block surfaces, DO NOT use a metal scraper because the surfaces could be cut or ground. Use only a wooden or plastic scraper (1).

1. Clean the cylinder head and cylinder block mating surfaces.

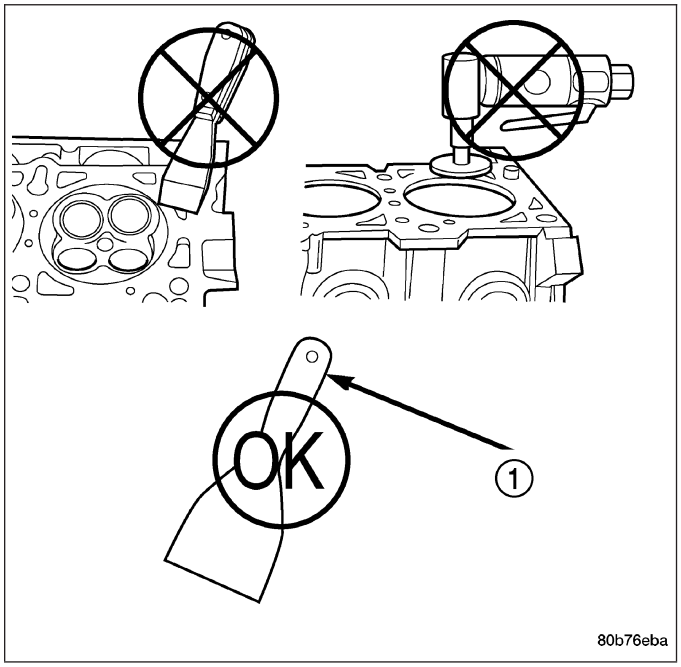

2. Position the new cylinder head gasket on the locating dowels.

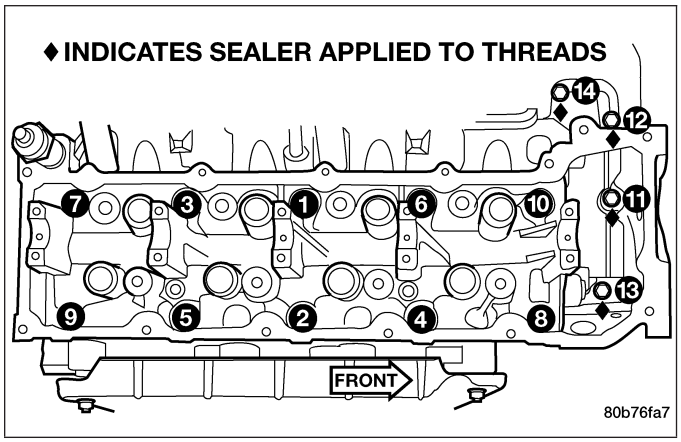

CAUTION: When installing cylinder head, use care not damage the tensioner arm or the guide arm.

3. Position the cylinder head onto the cylinder block. Make sure the cylinder head seats fully over the locating dowels.

NOTE: The four smaller cylinder head mounting bolts require sealant to be added to them before installing. Failure to do so may cause leaks.

4. Lubricate the cylinder head bolt threads with clean engine oil and install the ten M11 bolts.
5. Coat the four M8 cylinder head bolts with **Mopar® Lock and Seal Adhesive** then install the bolts.

NOTE: The cylinder head bolts are tightened using an angle torque procedure, however, the bolts are not a torque-to-yield design.

6. Tighten the bolts in sequence using the following steps and torque values:
   - Step 1: Tighten bolts 1–10, 20 N·m (15 ft. lbs.).
   - Step 2: Tighten bolts 1–10, 47 N·m (35 ft. lbs.). Tighten bolts 11–14, 25 N·m (18 ft. lbs.).
   - Step 3: Tighten bolts 1–10, 90 degrees. Tighten bolts 11–14, 30 N·m (22 ft. lbs.).

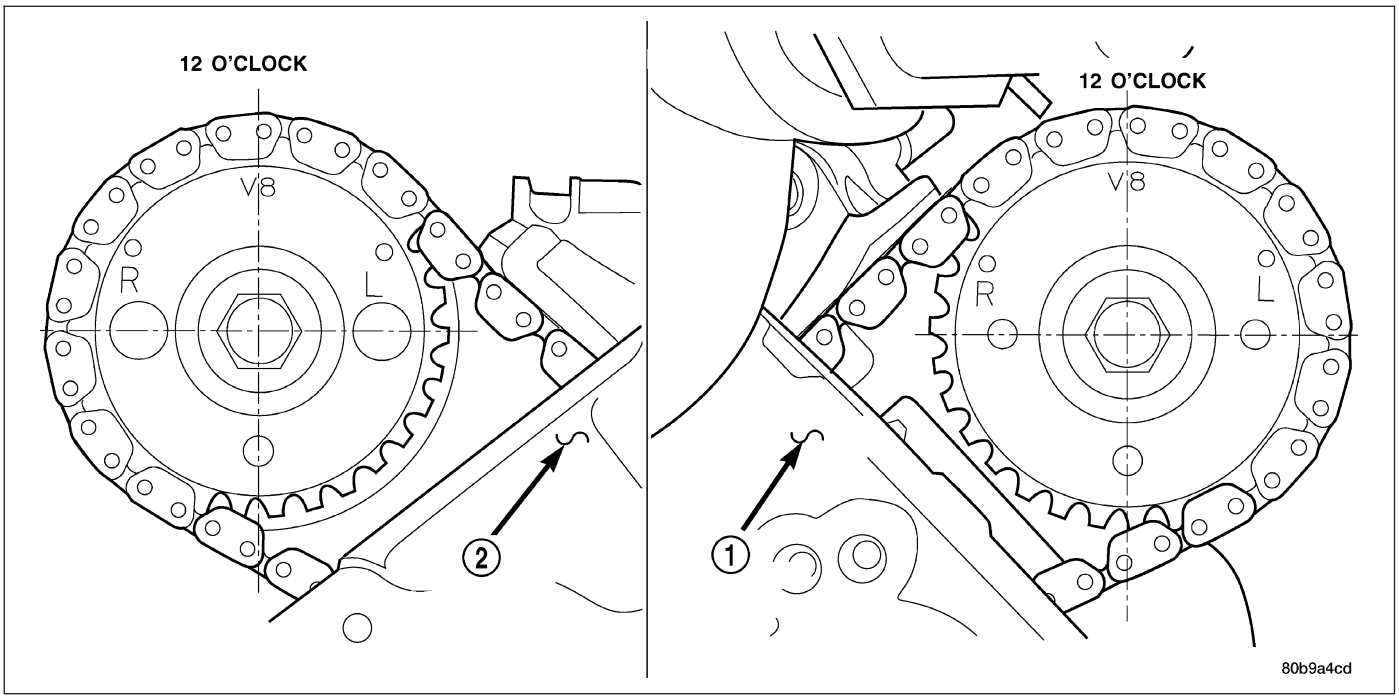

7. Position the secondary chain onto the camshaft drive gear, making sure one marked chain link is on either side of the V8 mark on the gear and position the gear onto the camshaft.
8. Install the camshaft drive gear retaining bolt.
9. Install the left side secondary chain guide (Refer to 9 - ENGINE/VALVE TIMING/TIMING BELT/CHAIN AND SPROCKETS - INSTALLATION).

10. Install the cylinder head access plug (2).
11. Re-set and Install the left side secondary chain tensioner (Refer to 9 - ENGINE/VALVE TIMING/ TIMING BELT/CHAIN AND SPROCKETS - INSTALLATION).

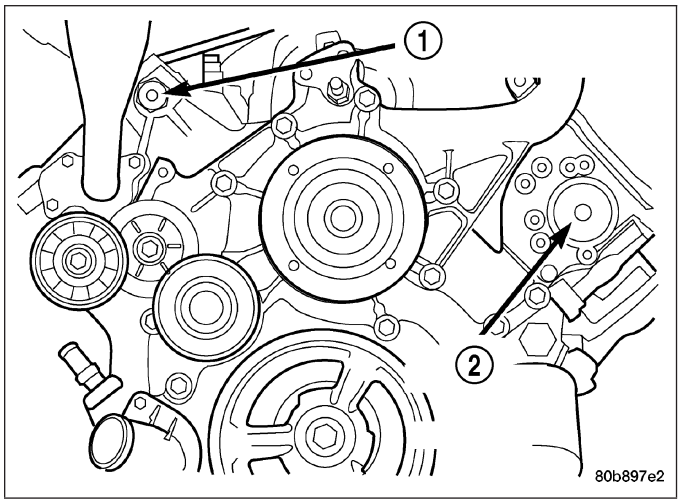

12. Remove Special Tool 8515 (6).
13. Install the timing chain cover (Refer to 9 - ENGINE/VALVE TIMING/TIMING BELT / CHAIN COVER(S) - INSTALLATION).
14. Install the crankshaft damper (Refer to 9 - ENGINE/ENGINE BLOCK/VIBRATION DAMPER - INSTALLATION).
15. Install the power steering pump.
16. Install the fan blade assembly and fan shroud (Refer to 7 - COOLING/ENGINE/FAN DRIVE VISCOUS CLUTCH - INSTALLATION).

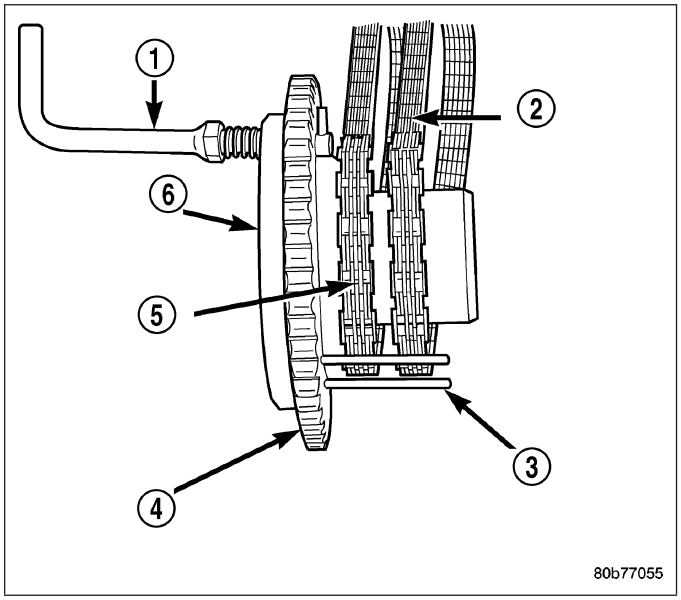

17. Install the cylinder head cover (Refer to 9 - ENGINE/CYLINDER HEAD/CYLINDER HEAD COVER(S) - INSTALLATION).
18. Reinstall the master cylinder and booster assembly. Refer to section 5 brakes.
19. Install the intake manifold (Refer to 9 - ENGINE/ MANIFOLDS/INTAKE MANIFOLD - INSTALLATION).
20. Refill the cooling system (Refer to 7 - COOLING - STANDARD PROCEDURE).
21. Raise the vehicle.
22. Install the exhaust pipe onto the left exhaust manifold.
23. Lower the vehicle.
24. Connect the negative cable to the battery.
25. Start the engine and check for leaks.

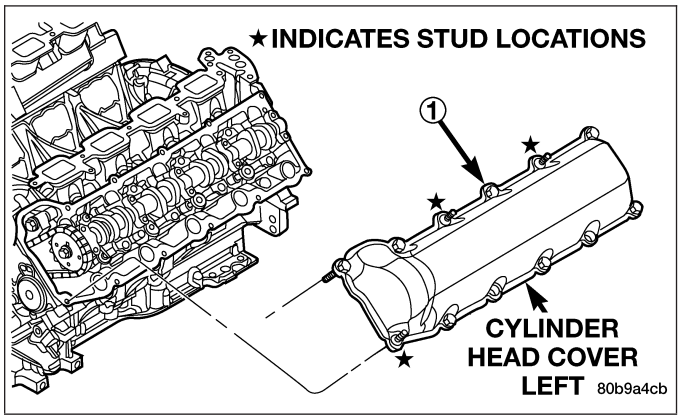

INSTALLATION - RIGHT CYLINDER HEAD

NOTE: The cylinder head bolts are tightened using a torque plus angle procedure. The bolts must be examined BEFORE reuse. If the threads are necked down (2) the bolts should be replaced.

Necking (2) can be checked by holding a straight edge against the threads. If all the threads do not contact the scale (2), the bolt should be replaced.

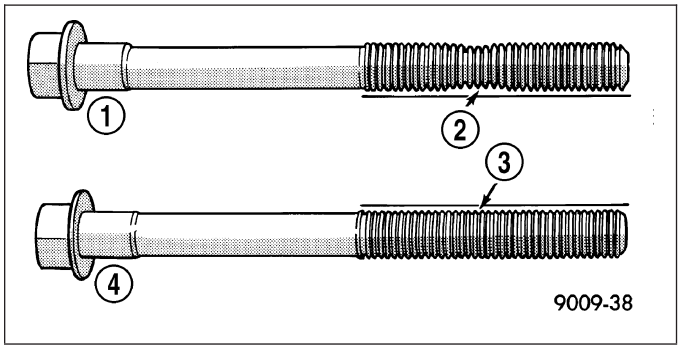

CAUTION: When cleaning cylinder head and cylinder block surfaces, DO NOT use a metal scraper because the surfaces could be cut or ground. Use only a wooden or plastic scraper (1).

1. Clean the cylinder head and cylinder block mating surfaces.

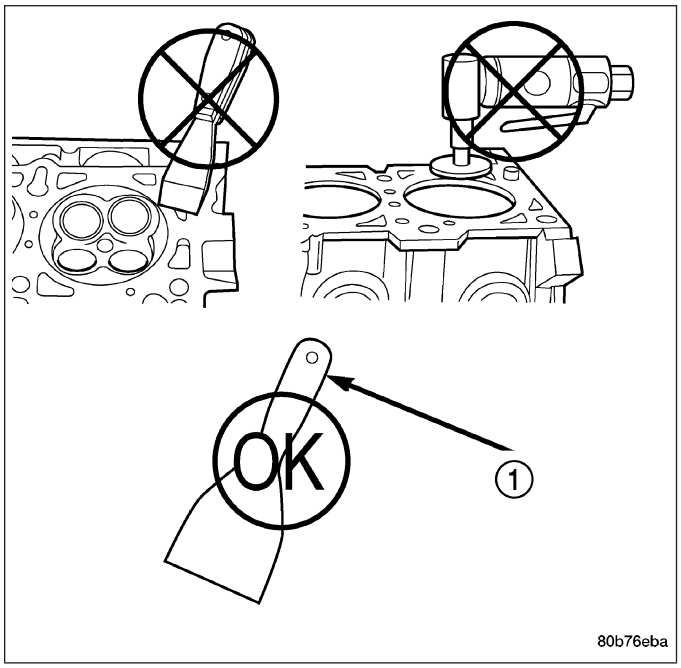

2. Position the new cylinder head gasket on the locating dowels.

CAUTION: When installing cylinder head, use care not damage the tensioner arm or the guide arm.

3. Position the cylinder head onto the cylinder block. Make sure the cylinder head seats fully over the locating dowels.

NOTE: The four smaller cylinder head mounting bolts require sealant to be added to them before installing. Failure to do so may cause leaks.

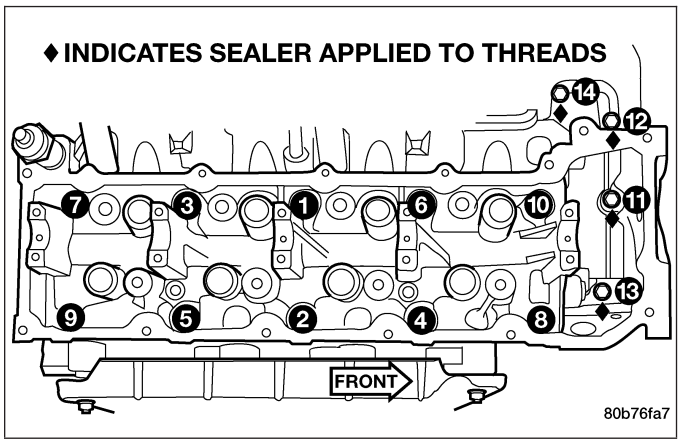

4. Lubricate the cylinder head bolt threads with clean engine oil and install the ten M10 bolts.
5. Coat the four M8 cylinder head bolts with **Mopar® Lock and Seal Adhesive** then install the bolts.

NOTE: The cylinder head bolts are tightened using an angle torque procedure, however, the bolts are not a torque-to-yield design.

6. Tighten the bolts in sequence using the following steps and torque values:
   - Step 1: Tighten bolts 1–10, 20 N·m (15 ft. lbs.).
   - Step 2: Tighten bolts 1–10, 47 N·m (35 ft. lbs.). Tighten bolts 11–14, 25 N·m (18 ft. lbs.).
   - Step 3: Tighten bolts 1–10, 90 degrees. Tighten bolts 11–14, 30 N·m (22 ft. lbs.).

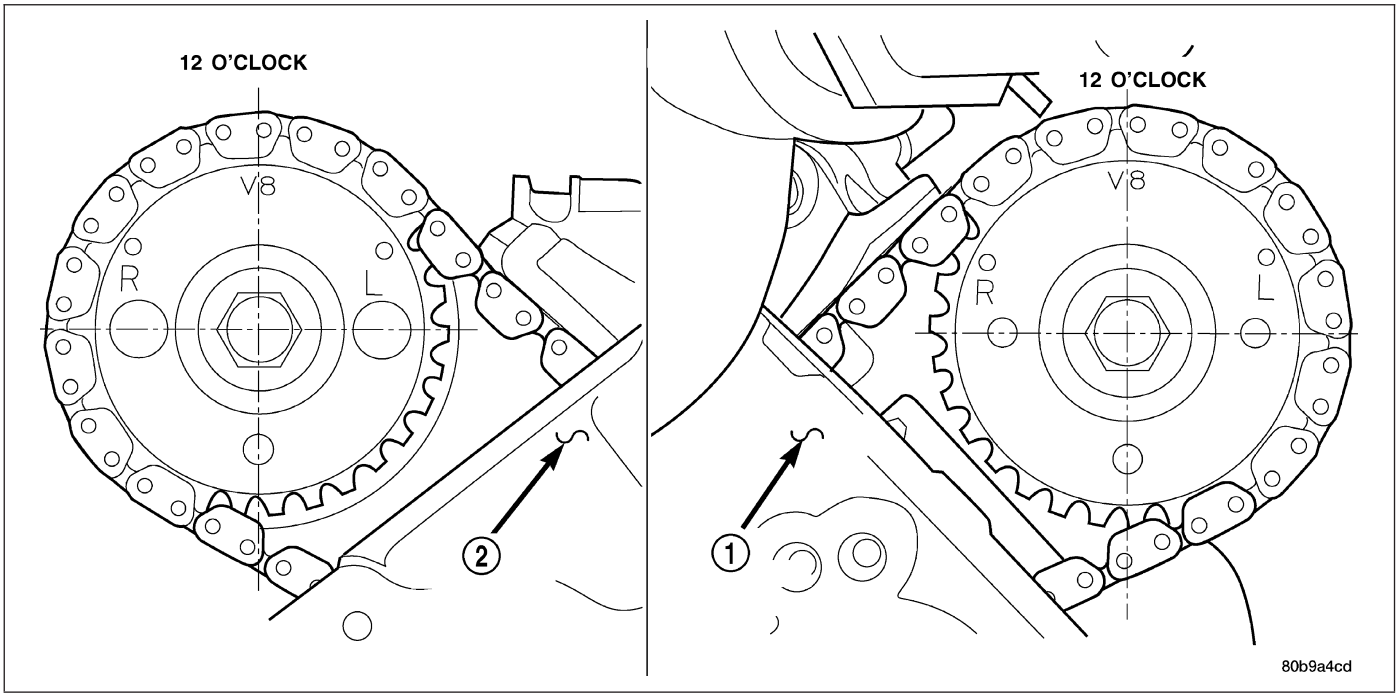

7. Position the secondary chain onto the camshaft drive gear, making sure one marked chain link is on either side of the V8 mark on the gear (2) and position the gear onto the camshaft.
8. Install the camshaft drive gear retaining bolt.
9. Install the right side secondary chain guide (Refer to 9 - ENGINE/VALVE TIMING/TIMING BELT / CHAIN COVER(S) - INSTALLATION).

10. Install the right side cylinder head access plug (1).
11. Re-set and install the right side secondary chain tensioner.

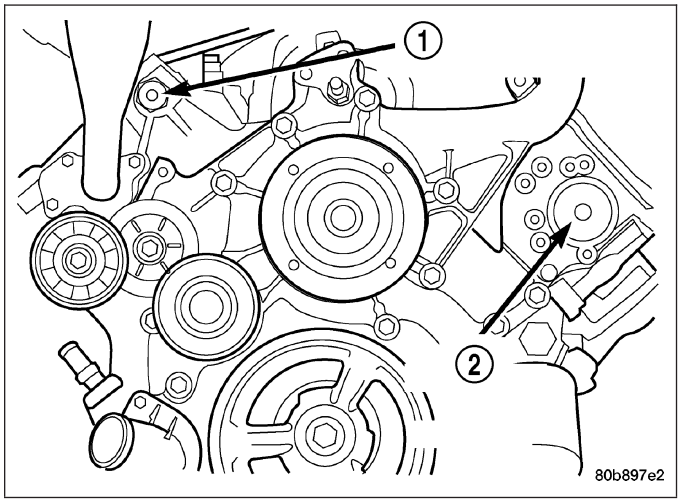

12. Remove Special Tool 8515 (6).
13. Install the timing chain cover (Refer to 9 - ENGINE/VALVE TIMING/TIMING BELT / CHAIN COVER(S) - INSTALLATION).
14. Install the crankshaft damper (Refer to 9 - ENGINE/ENGINE BLOCK/VIBRATION DAMPER - INSTALLATION).
15. Install accessory drive belt (Refer to 7 - COOLING/ACCESSORY DRIVE/DRIVE BELTS - INSTALLATION).
16. Install the fan shroud.

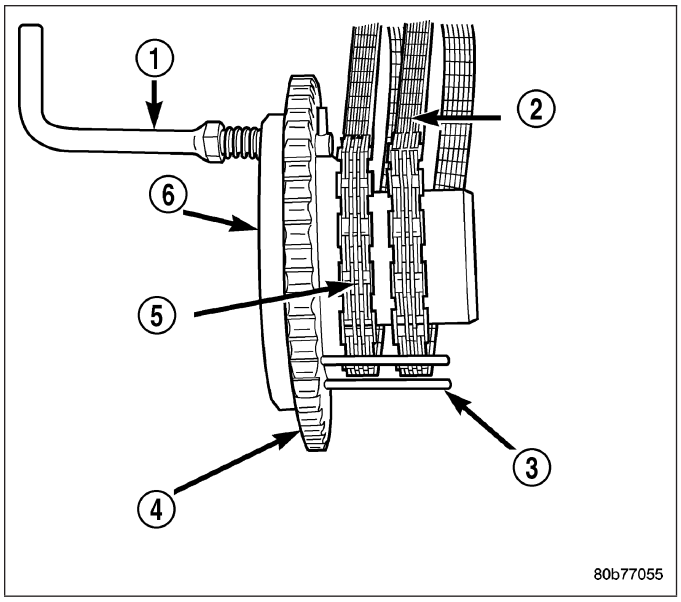

17. Install the cylinder head cover (1) (Refer to 9 - ENGINE/CYLINDER HEAD/CYLINDER HEAD COVER(S) - INSTALLATION).
18. Install the intake manifold (Refer to 9 - ENGINE/MANIFOLDS/INTAKE MANIFOLD - INSTALLATION).
19. Install oil fill housing onto cylinder head.
20. Refill the cooling system (Refer to 7 - COOLING - STANDARD PROCEDURE).
21. Raise the vehicle.
22. Install the exhaust pipe onto the right exhaust manifold.
23. Lower the vehicle.
24. Reconnect battery negitive cable.
25. Start the engine and check for leaks.

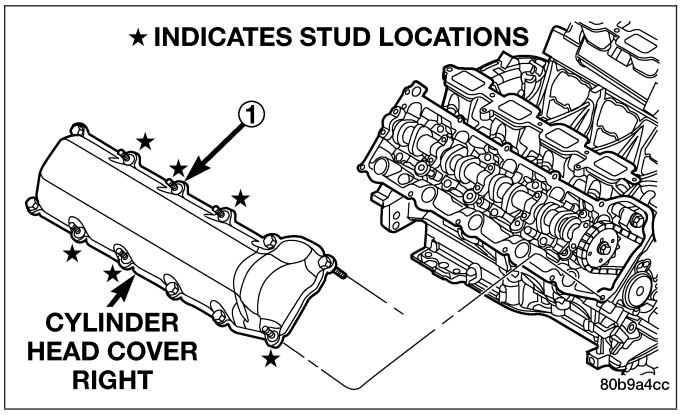

CAMSHAFT - LEFT

DESCRIPTION

The camshafts consist of powdered metal steel lobes which are sinter-bonded to a steel tube. A steel post or nose piece is friction-welded to the steel camshaft tube. Five bearing journals are machined into the camshaft, four on the steel tube and one on the steel nose piece. Camshaft end play is controlled by two thrust walls that border the nose piece journal. Engine oil enters the hollow camshafts at the third journal and lubricates every intake lobe rocker through a drilled passage in the intake lobe.

REMOVAL

1. Remove cylinder head cover (1) (Refer to 9 - ENGINE/CYLINDER HEAD/CYLINDER HEAD COVER(S) - REMOVAL).

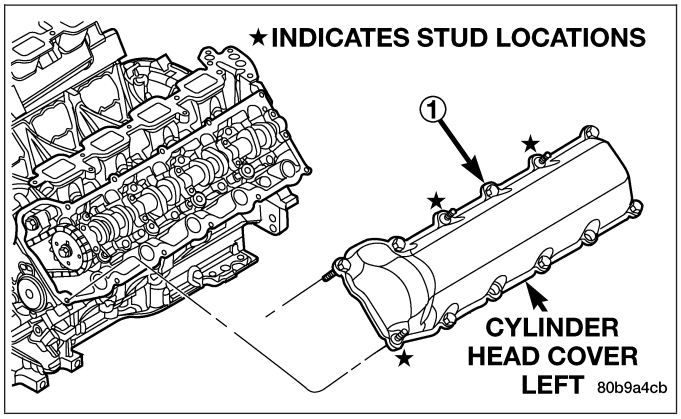

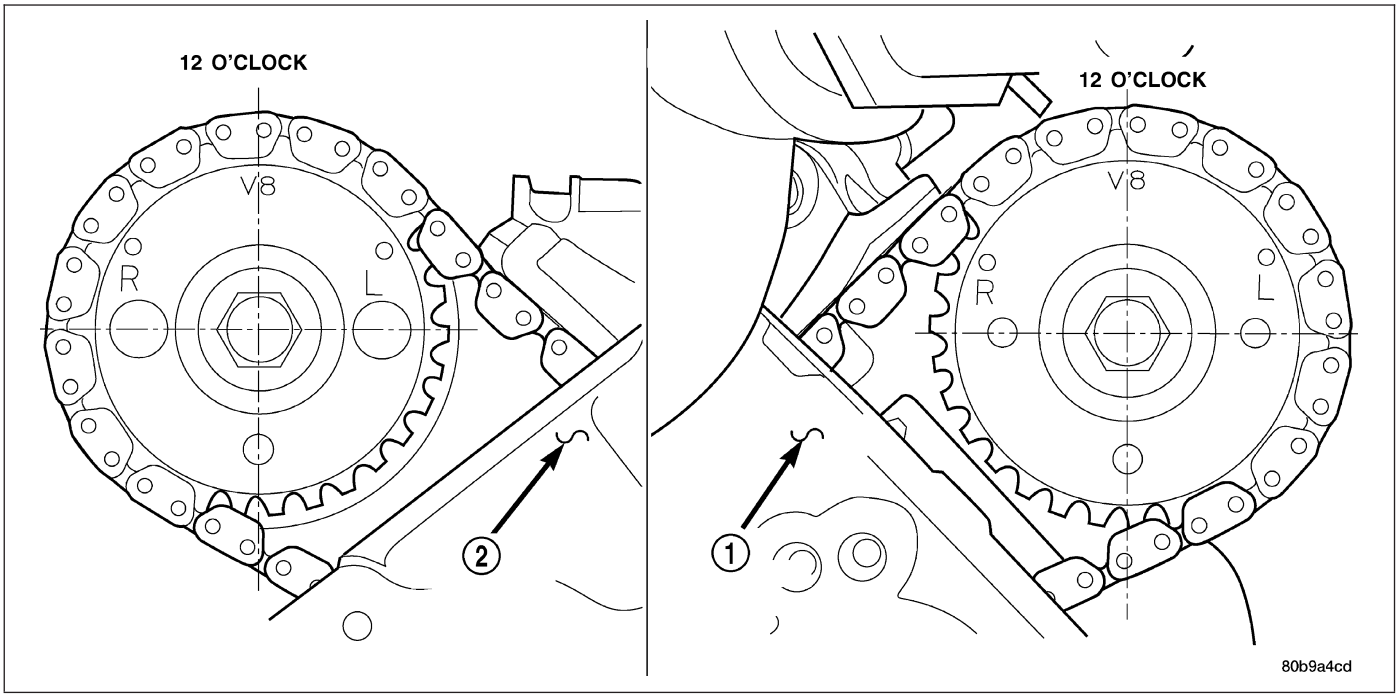

CAUTION: When the timing chain is removed and the cylinder heads are still installed, DO NOT forcefully rotate the camshafts or crankshaft independently of each other. Severe valve and/or piston damage can occur.

CAUTION: When removing the cam sprocket, timing chains or camshaft, Failure to use Special Tool 8350 will result in hydraulic tensioner ratchet over extension, requiring timing chain cover removal to reset the tensioner ratchet.

2. Set engine to TDC cylinder #1, camshaft sprocket V8 marks at the 12 o'clock position (1).
3. Mark one link on the secondary timing chain on both sides of the V8 mark on the camshaft sprocket to aid in installation.

CAUTION: Do not hold or pry on the camshaft target wheel (Located on the right side camshaft sprocket) for any reason, Severe damage will occur to the target wheel resulting in a vehicle no start condition.

4. Loosen but **DO NOT** remove the camshaft sprocket retaining bolt. Leave the bolt snug against the sprocket.

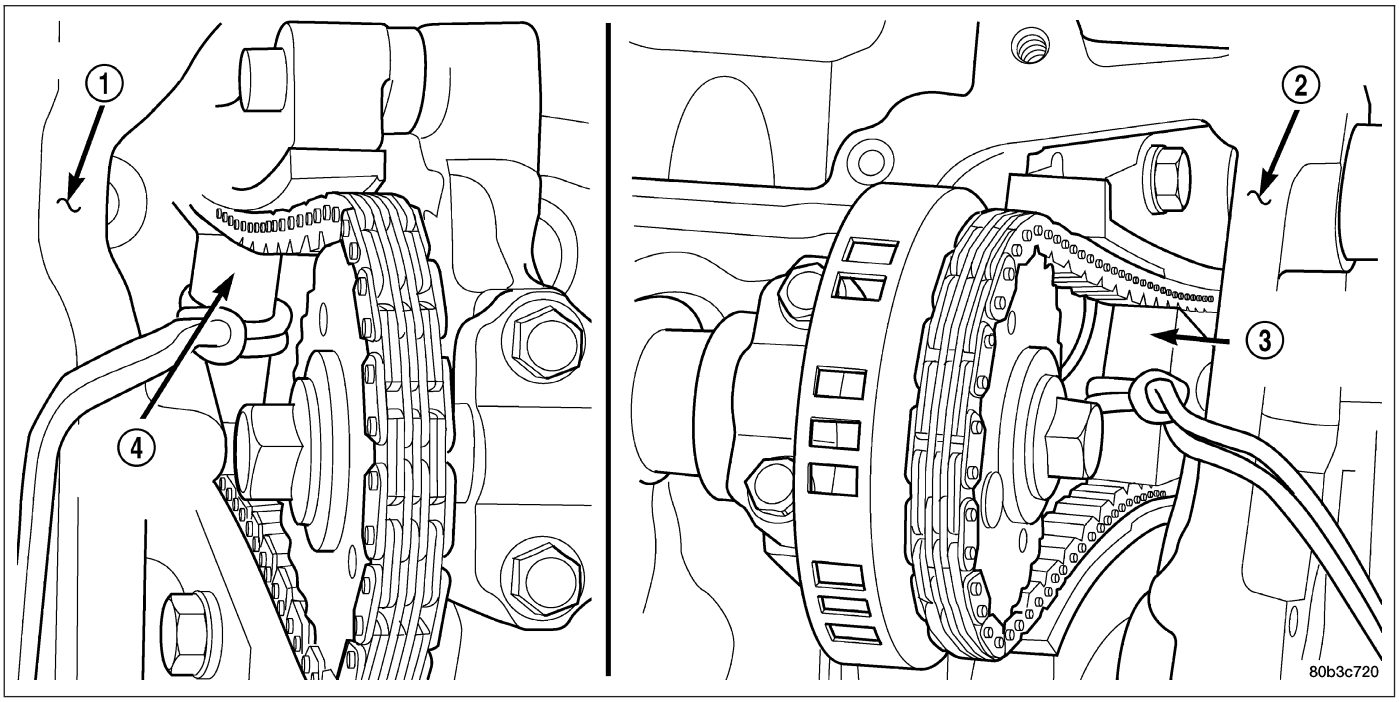

NOTE: The timing chain tensioners must be secured prior to removing the camshaft sprockets. Failure to secure tensioners will allow the tensioners to extend, requiring timing chain cover removal in order to reset tensioners.

CAUTION: Do not force wedge past the narrowest point between the chain strands. Damage to the tensioners may occur.

5. Position Special Tool 8350 (4) timing chain wedge between the timing chain strands, tap the tool to securely wedge the timing chain against the tensioner arm and guide.

NOTE: When gripping the camshaft, place the pliers on the tube portion of the camshaft only. Do not grip the lobes or the sprocket areas.

6. Hold the camshaft (3) with adjustable pliers (2) while removing the camshaft sprocket bolt and sprocket (1).
7. Using the pliers, gently allow the camshaft to rotate 15° clockwise until the camshaft is in the neutral position (no valve load).

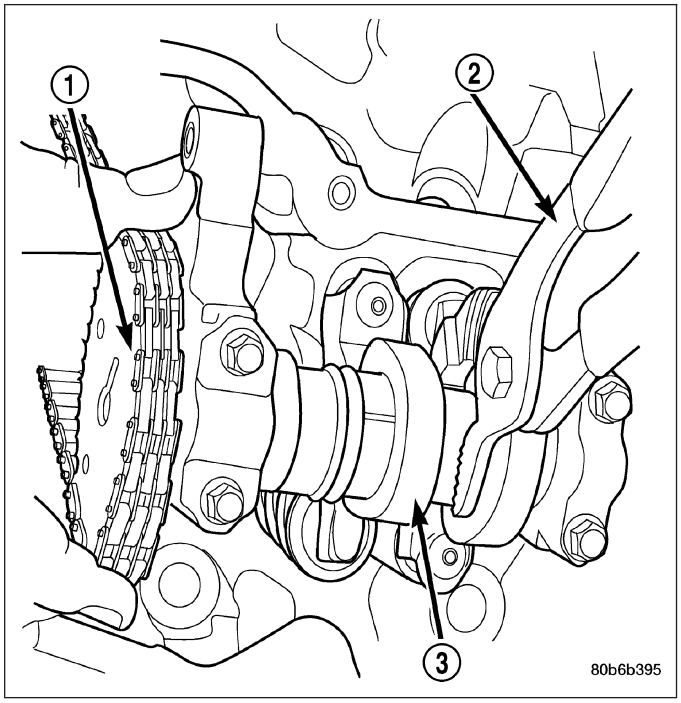

8. Starting at the outside working inward, loosen the camshaft bearing cap retaining bolts 1/2 turn at a time. Repeat until all load is off the bearing caps.

CAUTION: DO NOT STAMP OR STRIKE THE CAMSHAFT BEARING CAPS. SEVERE DAMAGE WILL OCCUR TO THE BEARING CAPS.

NOTE: When the camshaft is removed the rocker arms may slide downward, mark the rocker arms before removing camshaft.

9. Remove the camshaft bearing caps and the camshaft.

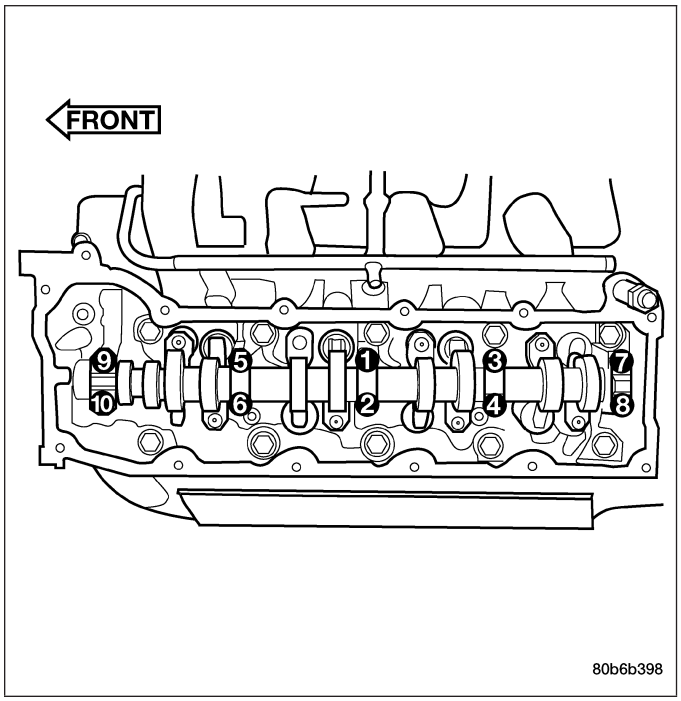

INSTALLATION

1. Lubricate camshaft journals with clean engine oil.

NOTE: Position the left side camshaft so that the camshaft sprocket dowel is near the 1 o'clock position, This will place the camshaft at the neutral position easing the installation of the camshaft bearing caps.

2. Position the camshaft into the cylinder head.
3. Install the camshaft bearing caps, hand tighten the retaining bolts.
4. Working in ½ turn increments, tighten the bearing cap retaining bolts starting with the middle cap working outward.
5. Torque the camshaft bearing cap retaining bolts to 11 N·m (100 in. lbs.).

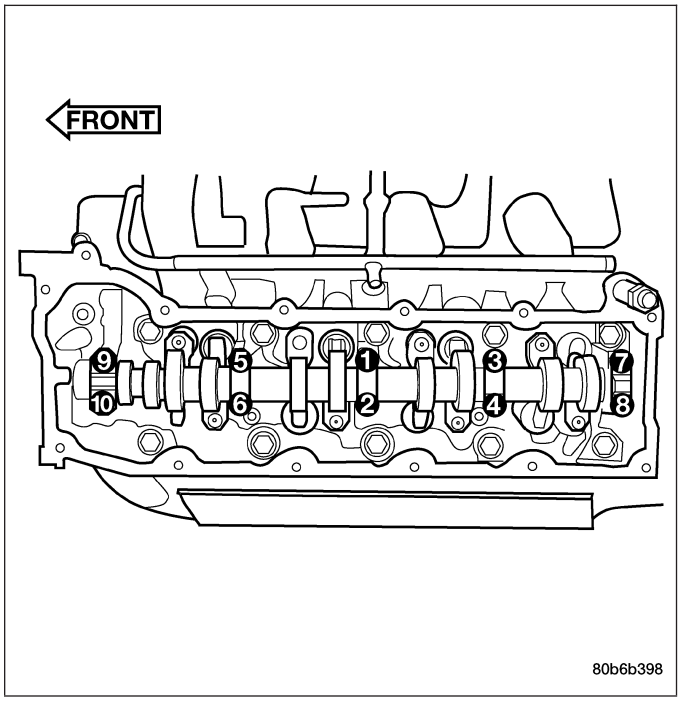

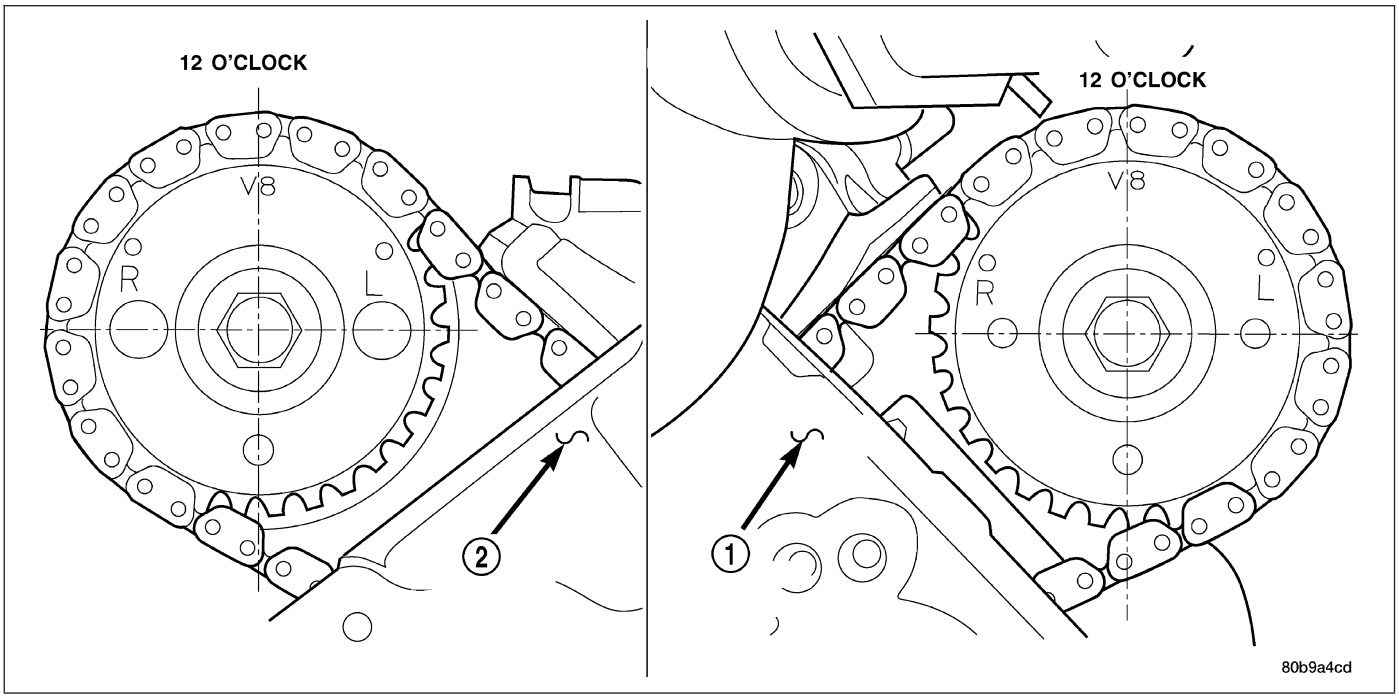

6. Position the camshaft drive gear into the timing chain aligning the V8 mark between the two marked chain links (Two links marked during removal) (1).

NOTE: When gripping the camshaft, place the pliers on the tube portion of the camshaft only. Do not grip the lobes or the sprocket areas.

7. Using the adjustable pliers (1), rotate the camshaft until the camshaft sprocket dowel (2) is aligned with the slot in the camshaft sprocket. Install the sprocket onto the camshaft.

CAUTION: Remove excess oil from camshaft sprocket bolt. Failure to do so can cause bolt over-torque resulting in bolt failure.

8. Remove excess oil from bolt, then install the camshaft sprocket retaining bolt and hand tighten.

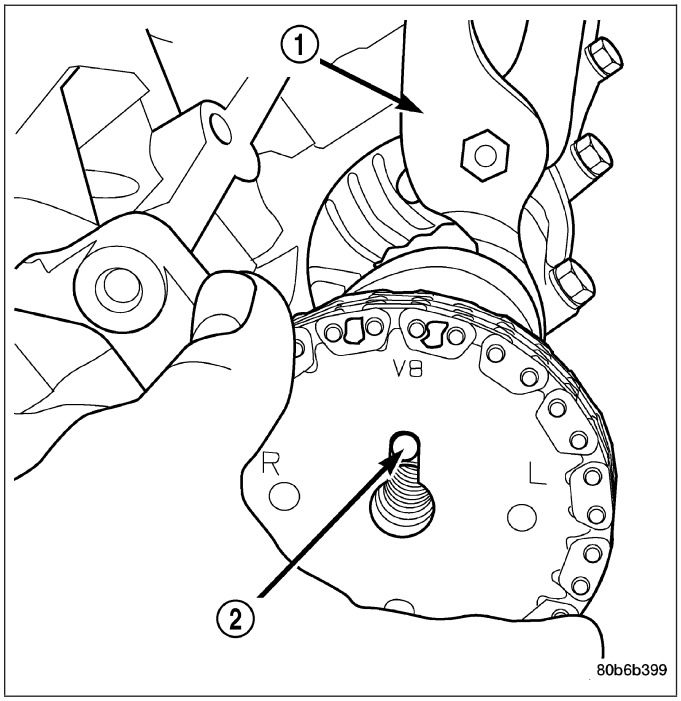

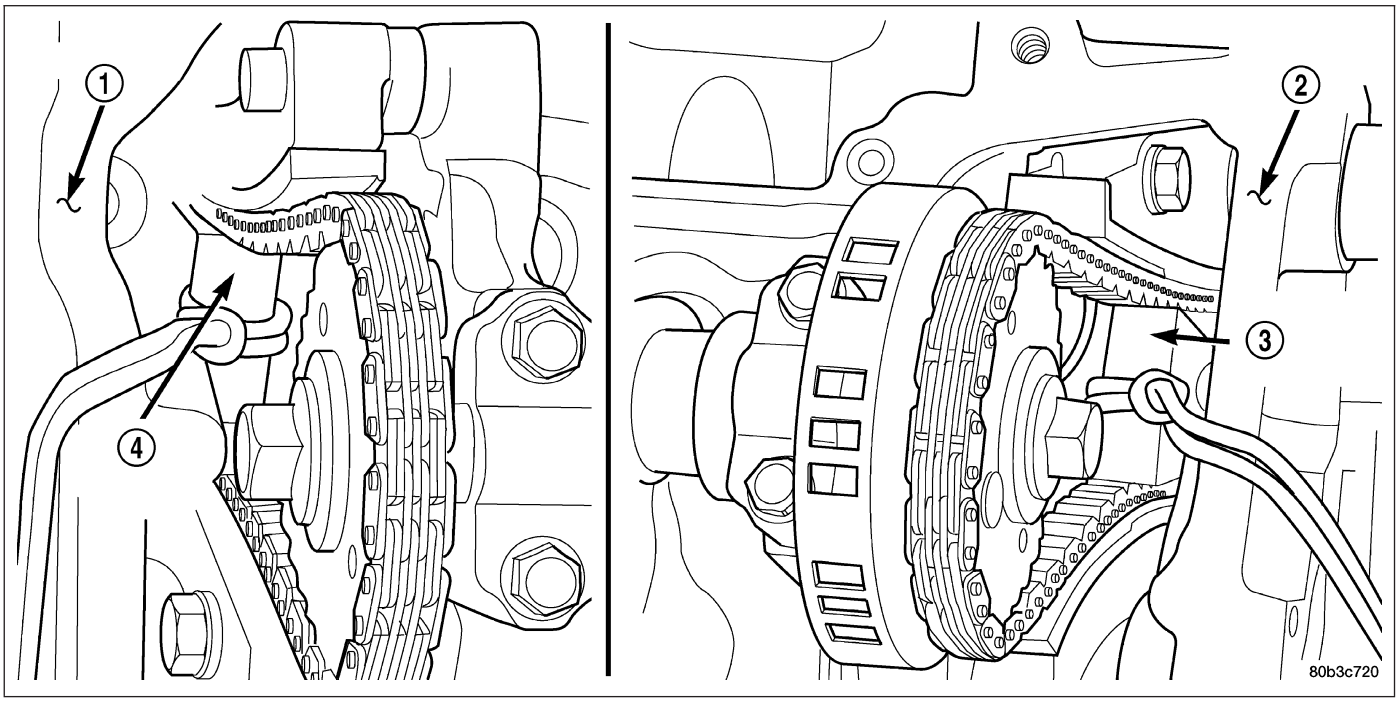

9. Remove Special Tool 8350 timing chain wedge (4).

10. Using Special Tool 6958 spanner wrench (4)with adapter pins 8346, torque the camshaft sprocket retaining bolt (2) to 122 N·m (90 ft. lbs.).

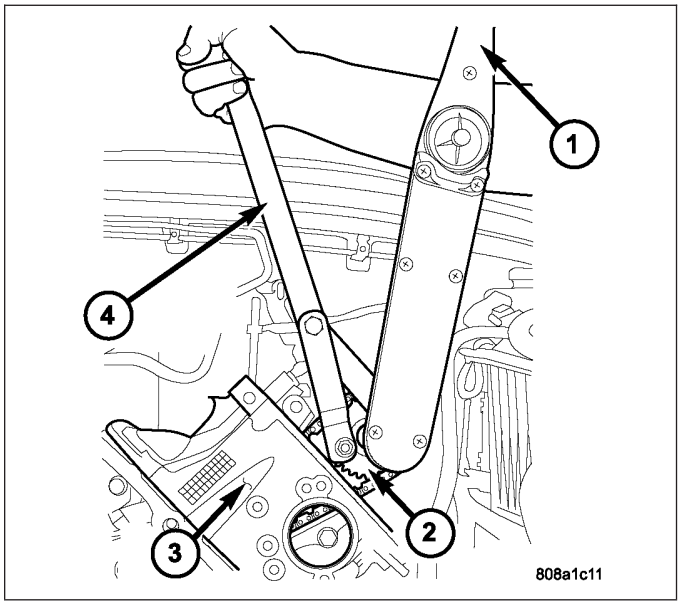

11. Install the cylinder head cover (1).

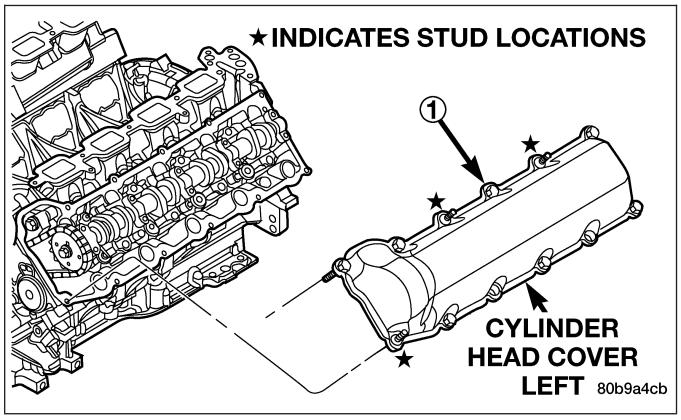

CAMSHAFT - RIGHT

DESCRIPTION

The camshafts consist of powdered metal steel lobes which are sinter-bonded to a steel tube. A steel post or nose piece is friction-welded to the steel camshaft tube. Five bearing journals are machined into the camshaft, four on the steel tube and one on the steel nose piece. Camshaft end play is controlled by two thrust walls that border the nose piece journal. Engine oil enters the hollow camshafts at the third journal and lubricates every intake lobe rocker through a drilled passage in the intake lobe.

REMOVAL

1. Remove the cylinder head covers (1) (Refer to 9 - ENGINE/CYLINDER HEAD/CYLINDER HEAD COVER(S) - REMOVAL).

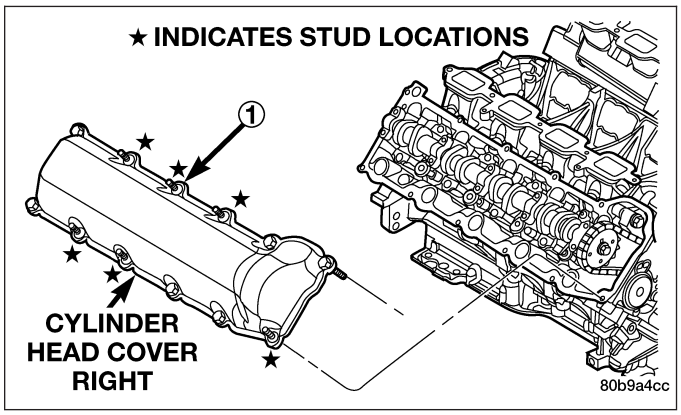

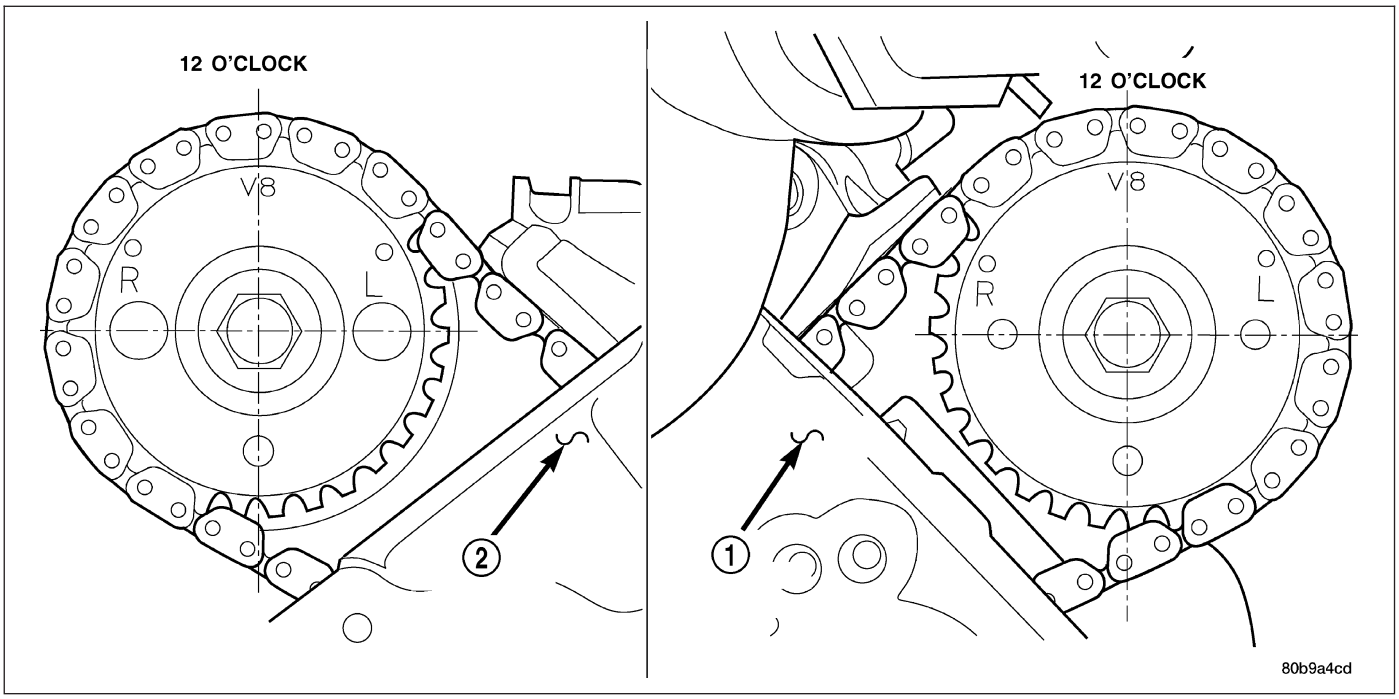

CAUTION: When the timing chain is removed and the cylinder heads are still installed, DO NOT forcefully rotate the camshafts or crankshaft independently of each other. Severe valve and/or piston damage can occur.

CAUTION: When removing the cam sprocket, timing chains or camshaft, Failure to use special tool 8350 will result in hydraulic tensioner ratchet over extension, Requiring timing chain cover removal to re-set the tensioner ratchet.

2. Set engine to TDC cylinder #1, camshaft sprocket V8 marks at the 12 o'clock position.
3. Mark one link on the secondary timing chain on both sides of the V8 mark on the camshaft sprocket (2) to aid in installation.

CAUTION: Do not hold or pry on the camshaft target wheel for any reason, Severe damage will occur to the target wheel. A damaged target wheel could cause a vehicle no start condition.

4. Loosen but **DO NOT** remove the camshaft sprocket retaining bolt (2). Leave bolt snug against sprocket (3).

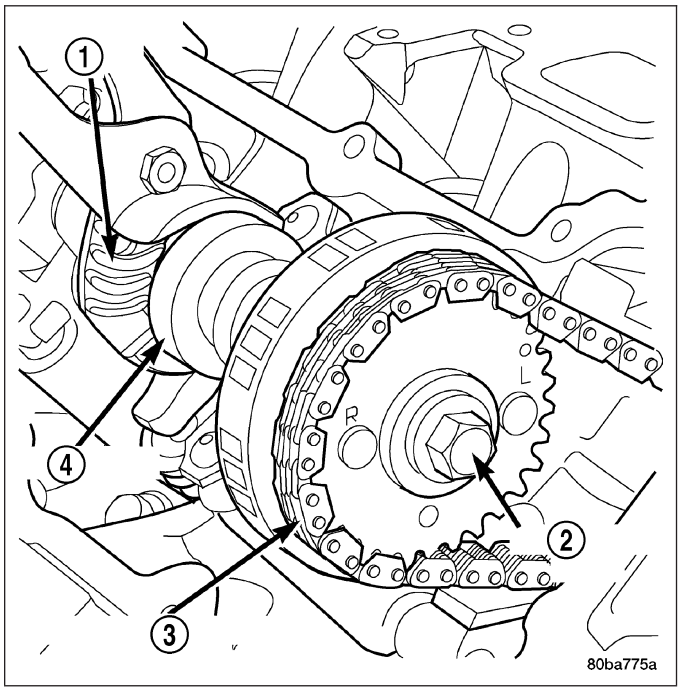

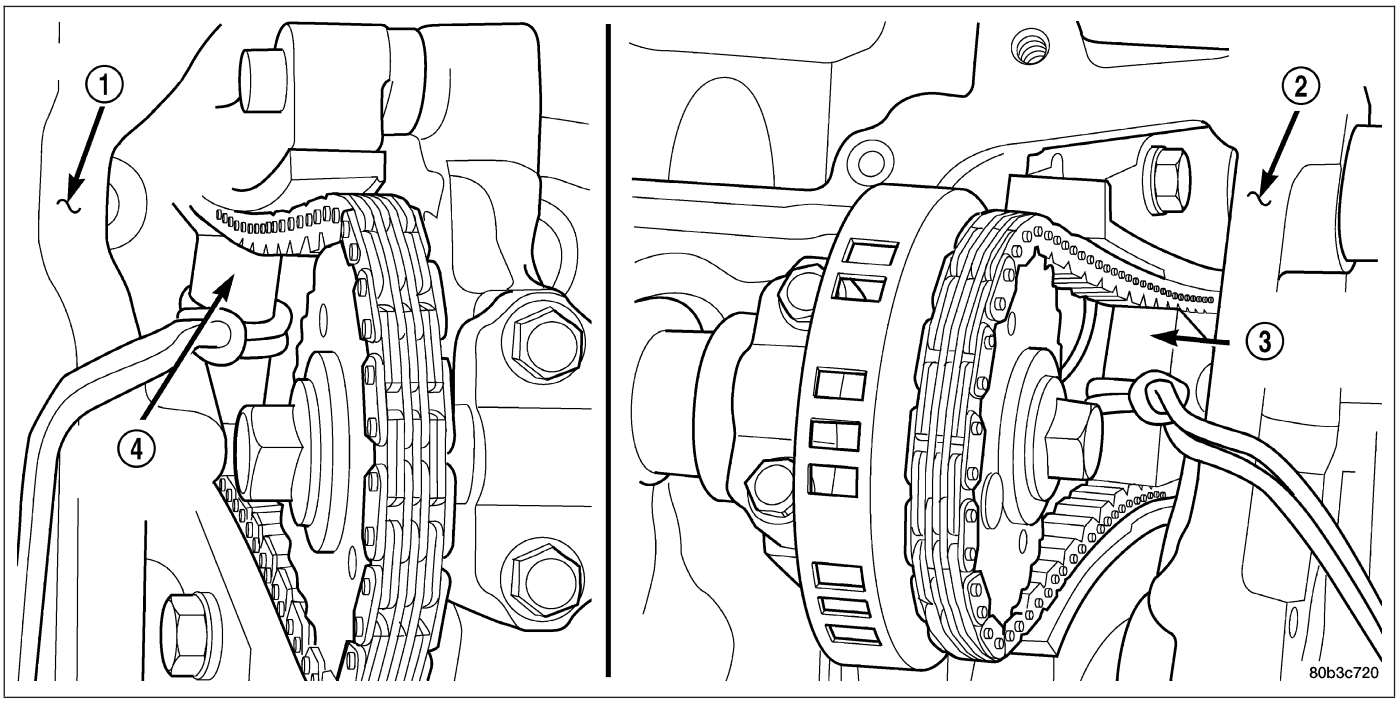

NOTE: The timing chain tensioners must be secured prior to removing the camshaft sprockets. Failure to secure tensioners will allow the tensioners to extend, requiring timing chain cover removal in order to reset tensioners.

CAUTION: Do not force wedge (3) past the narrowest point between the chain strands. Damage to the tensioners may occur.

5. Position Special Tool 8350 timing chain wedge (3) between the timing chain strands. Tap the tool to securely wedge the timing chain against the tensioner arm and guide.

6. Remove the camshaft position sensor (1).

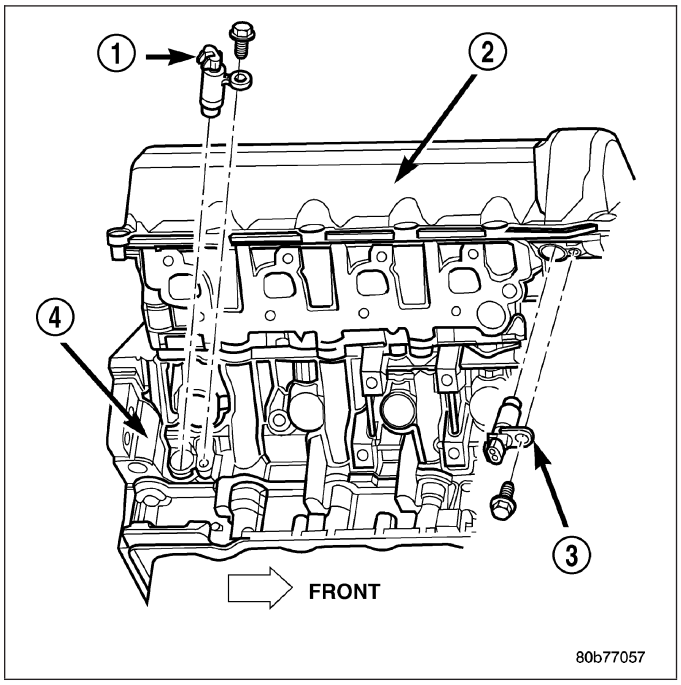

NOTE: When gripping the camshaft, place the pliers (1) on the tube portion of the camshaft only. Do not grip the lobes or the sprocket areas.

7. Hold the camshaft with adjustable pliers (1) while removing the camshaft sprocket bolt (2)and sprocket (3).
8. Using the pliers (1), gently allow the camshaft to rotate 45° counter-clockwise until the camshaft is in the neutral position (no valve load).

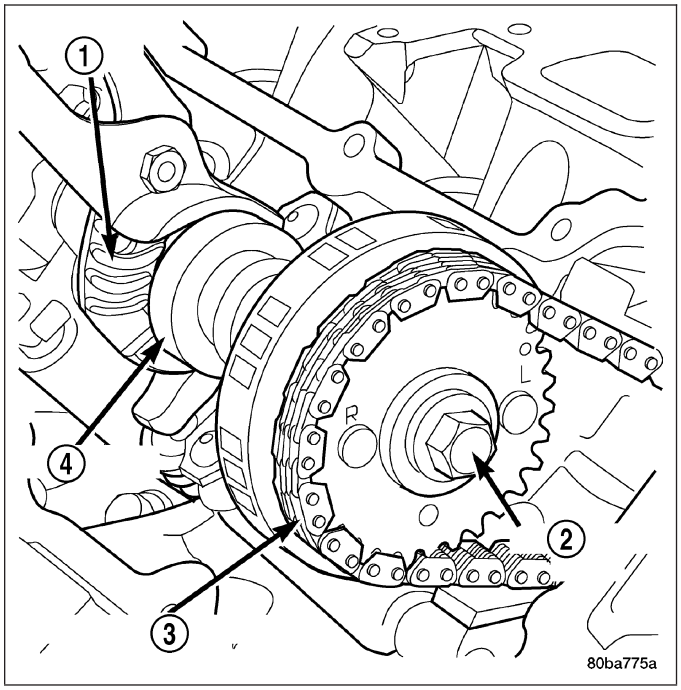

9. Starting at the outside working inward, loosen the camshaft bearing cap retaining bolts 1/2 turn at a time. Repeat until all load is off the bearing caps.

CAUTION: DO NOT STAMP OR STRIKE THE CAMSHAFT BEARING CAPS. SEVERE DAMAGE WILL OCCUR TO THE BEARING CAPS.

NOTE: When the camshaft is removed the rocker arms may slide downward, mark the rocker arms before removing camshaft.

10. Remove the camshaft bearing caps and the camshaft.

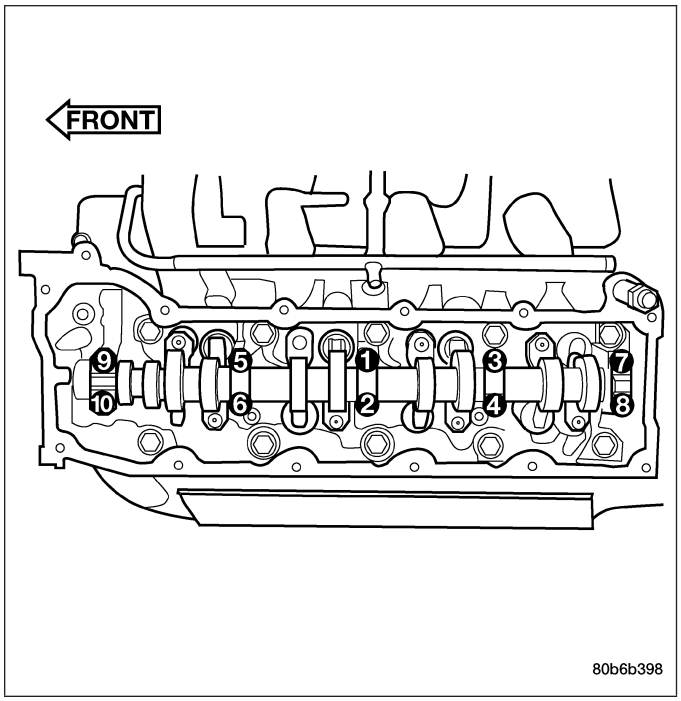

INSTALLATION

1. Lubricate camshaft journals with clean engine oil.

NOTE: Position the right side camshaft so that the camshaft sprocket dowel is near the 10 o'clock position, This will place the camshaft at the neutral position easing the installation of the camshaft bearing caps.

2. Position the camshaft into the cylinder head.
3. Install the camshaft bearing caps, hand tighten the retaining bolts.
4. Working in 1/2 turn increments, tighten the bearing cap retaining bolts starting with the middle cap working outward.
5. Torque the camshaft bearing cap retaining bolts to 11 N·m (100 in. lbs.).

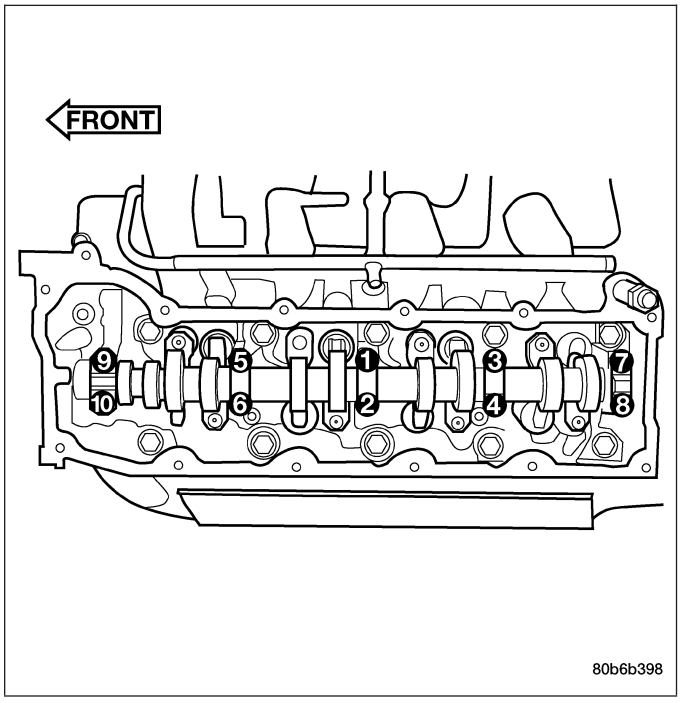

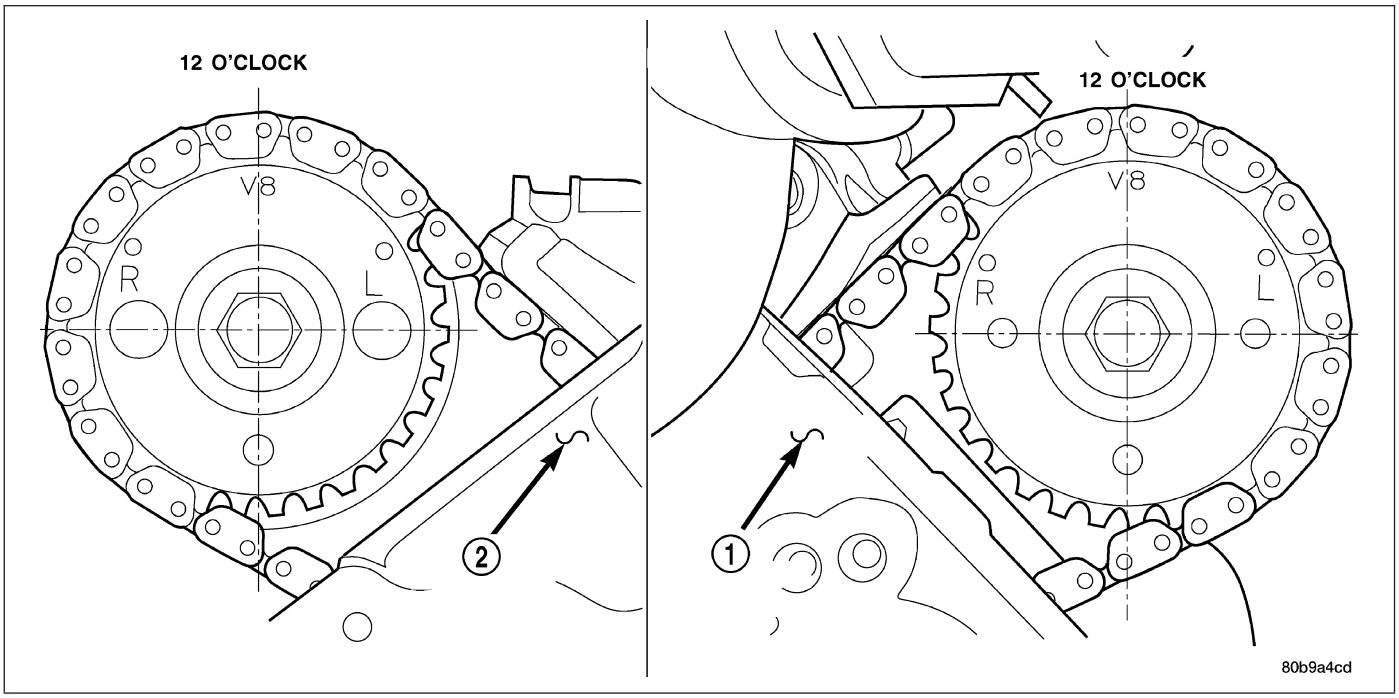

6. Position the camshaft drive gear into the timing chain aligning the V8 mark (2) between the two marked chain links (Two links marked during removal).

NOTE: When gripping the camshaft, place the pliers on the tube portion of the camshaft only. Do not grip the lobes or the sprocket areas.

7. Using the adjustable pliers (1), rotate the camshaft until the camshaft sprocket dowel (2) is aligned with the slot in the camshaft sprocket (2). Install the sprocket onto the camshaft.

CAUTION: Remove excess oil from camshaft sprocket bolt. Failure to do so can cause bolt over-torque resulting in bolt failure.

8. Remove excess oil from camshaft sprocket bolt, then install the camshaft sprocket retaining bolt and hand tighten.

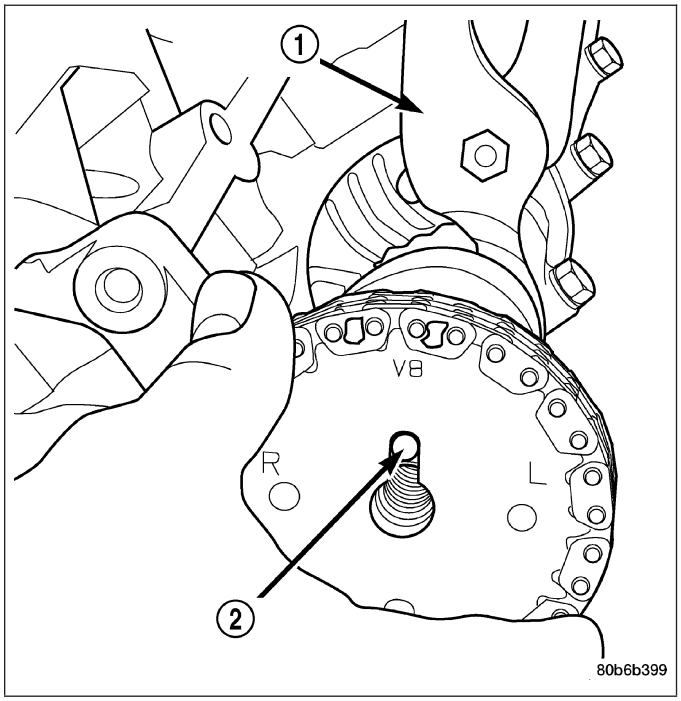

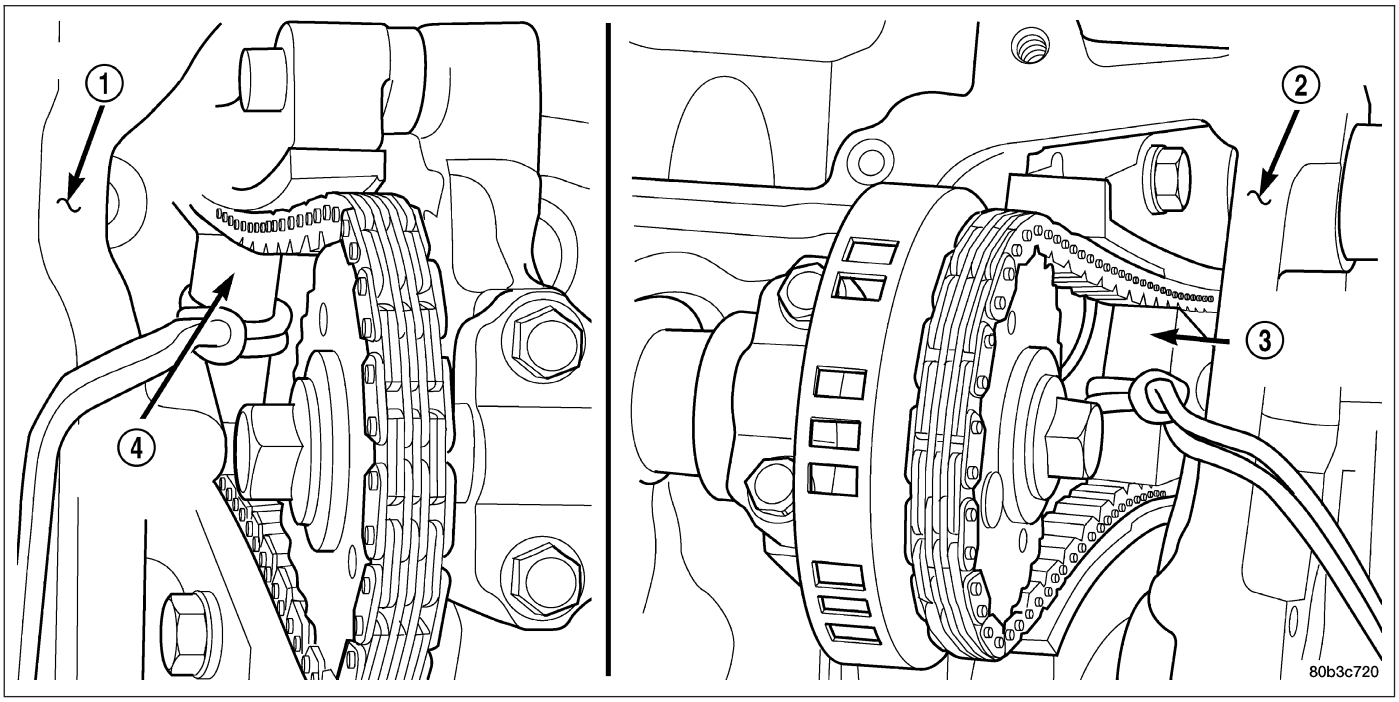

9. Remove timing chain wedge special tool 8350 (3).

10. Using Special Tool 6958 spanner wrench with adapter pins 8346 (2), torque the camshaft sprocket retaining bolt (4) to 122 N·m (90 ft. lbs.).

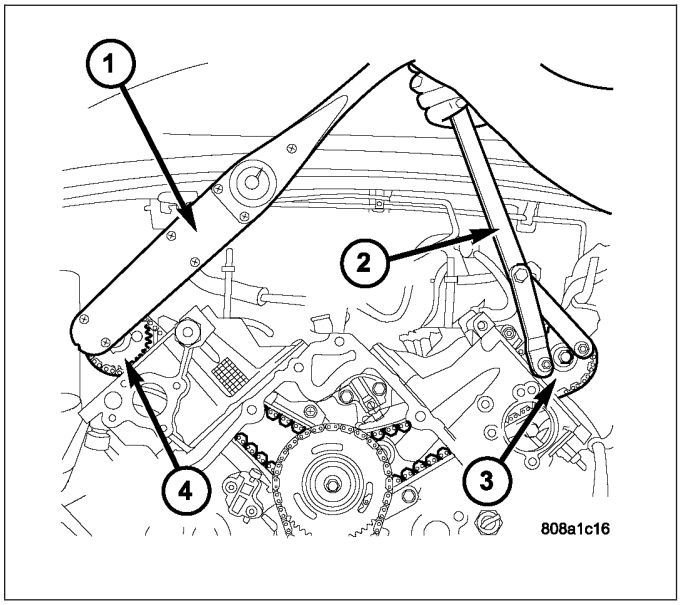

11. Install the camshaft position sensor.

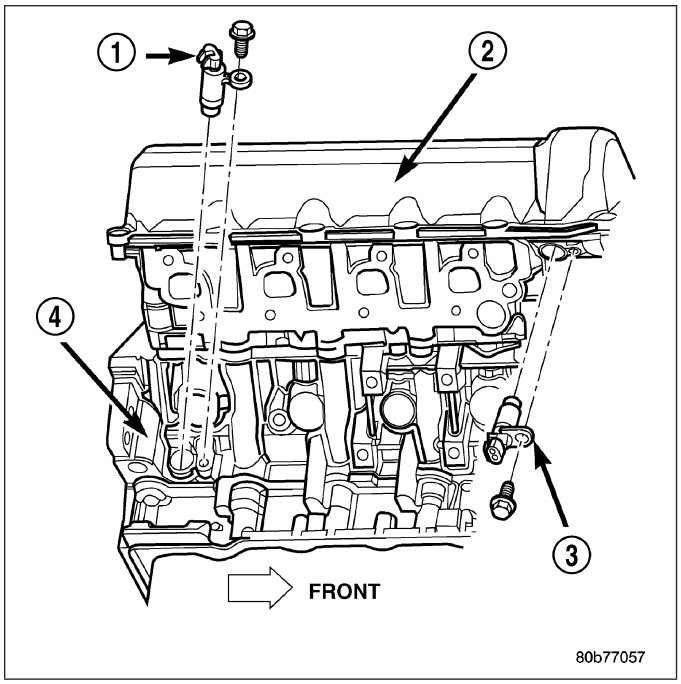

12. Install the cylinder head cover (1) (Refer to 9 - ENGINE/CYLINDER HEAD/CYLINDER HEAD COVER(S) - INSTALLATION).

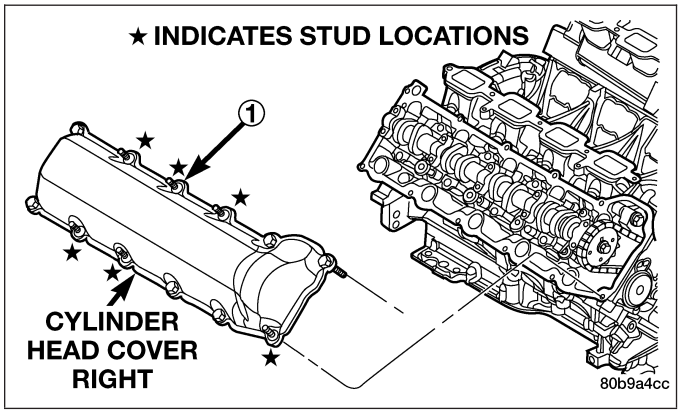

COVER - CYLINDER HEAD

DESCRIPTION

The cylinder head covers are made of injection molded thermo-set plastic, and are not interchangeable from side-to-side. It is imperative that nothing rest on the cylinder head covers. Prolonged contact with other items may wear a hole in the cylinder head cover.

REMOVAL

REMOVAL - RIGHT SIDE

1. Disconnect battery negative cable.
2. Remove air cleaner assembly, resonator assembly and air inlet hose.
3. Drain cooling system (Refer to 7 - COOLING - STANDARD PROCEDURE).
4. Remove accessory drive belt (Refer to 7 - COOLING/ACCESSORY DRIVE/DRIVE BELTS - REMOVAL).
5. Remove air conditioning compressor retaining bolts and move compressor to the left.
6. Remove heater hoses.
7. Disconnect injector and ignition coil connectors.
8. Disconnect and remove positive crankcase ventilation (PCV) hose.

9. Remove oil fill tube.
10. Un-clip injector and ignition coil harness and move away from cylinder head cover.
11. Remove right rear breather tube and filter assembly.
12. Remove cylinder head cover retaining bolts.
13. Remove cylinder head cover.

NOTE: The gasket may be used again, provided no cuts, tears, or deformation has occurred.

REMOVAL - LEFT SIDE

1. Disconnect negative cable from battery.
2. Remove the resonator assemble and air inlet hose.
3. Disconnect injector connectors and un-clip the injector harness.
4. Route injector harness in front of cylinder head cover.
5. Disconnect the left side breather tube and remove the breather tube.
6. Remove the cylinder head cover mounting bolts.
7. Remove cylinder head cover and gasket.

NOTE: The gasket may be used again, provided no cuts, tears, or deformation has occurred.

CLEANING

Clean cylinder head cover gasket surface.

Clean head rail, if necessary.

INSTALLATION

INSTALLATION - RIGHT SIDE

CAUTION: Do not use harsh cleaners to clean the cylinder head covers. Severe damage to covers may occur.

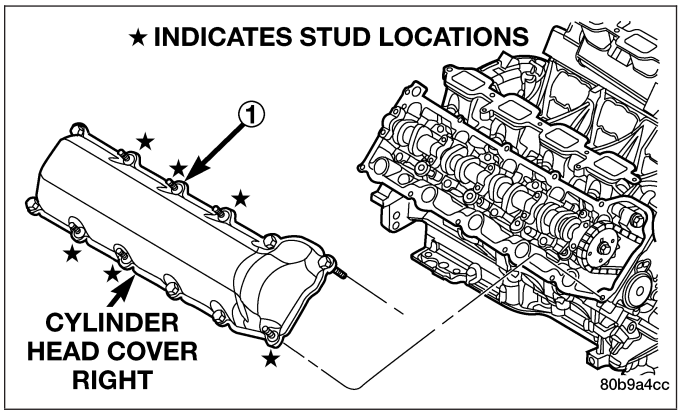

1. Clean cylinder head cover and both sealing surfaces. Inspect and replace gasket as necessary.
2. Install cylinder head cover and hand start all fasteners (1). Verify that all double ended studs are in the correct location shown in.
3. Tighten cylinder head cover bolts and double ended studs to 12 N·m (105 in. lbs).
4. Install right rear breather tube and filter assembly.
5. Connect injector, ignition coil electrical connectors and harness retaining clips.
6. Install the oil fill tube.
7. Install PCV hose.
8. Install heater hoses.
9. Install air conditioning compressor retaining bolts.
10. Install accessory drive belt (Refer to 7 - COOLING/ACCESSORY DRIVE/DRIVE BELTS - INSTALLATION).
11. Fill Cooling system (Refer to 7 - COOLING - STANDARD PROCEDURE).
12. Install air cleaner assembly, resonator assembly and air inlet hose.
13. Connect battery negative cable.

INSTALLATION - LEFT SIDE

CAUTION: Do not use harsh cleaners to clean the cylinder head covers. Severe damage to covers may occur.

1. Clean cylinder head cover and both sealing surfaces. Inspect and replace gasket as necessary.
2. Install cylinder head cover and hand start all fasteners. Verify that all studs are in the correct location shown in.
3. Tighten cylinder head cover bolts (1) and double ended studs to 12 N·m (105 in. lbs.).
4. Install left side breather and connect breather tube.
5. Connect injector electrical connectors and injector harness retaining clips.
6. Install the resonator and air inlet hose.
7. Connect negative cable to battery.

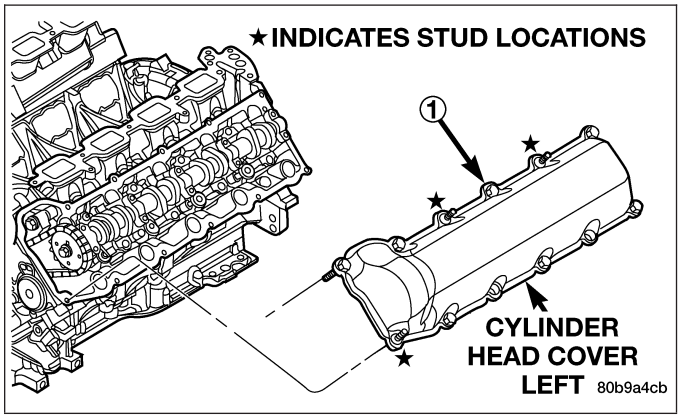

VALVES & SEATS - INTAKE/EXHAUST

DESCRIPTION

The valves are made of heat resistant steel and have chrome plated stems to prevent scuffing. Each valve is actuated by a roller rocker arm which pivots on a stationary lash adjuster. All valves use three bead lock keepers to retain the springs and promote valve rotation.

REMOVAL

NOTE: The cylinder heads must be removed in order to perform this procedure.

1. Remove rocker arms and lash adjusters (Refer to 9 - ENGINE/CYLINDER HEAD/ROCKER ARM / ADJUSTER ASSY - REMOVAL).
2. Remove the camshaft bearing caps and the camshaft.

NOTE: All six valve springs and valves are removed in the same manner; this procedure only covers one valve and valve spring.

3. Using Special Tool C-3422–B or C-3422–C Valve Spring Compressor and Special tool 8519 Adapter, compress the valve spring.

NOTE: It may be necessary to tap the top of the valve spring to loosen the spring retainers locks enough to be removed.

4. Remove the two spring retainer lock halves.

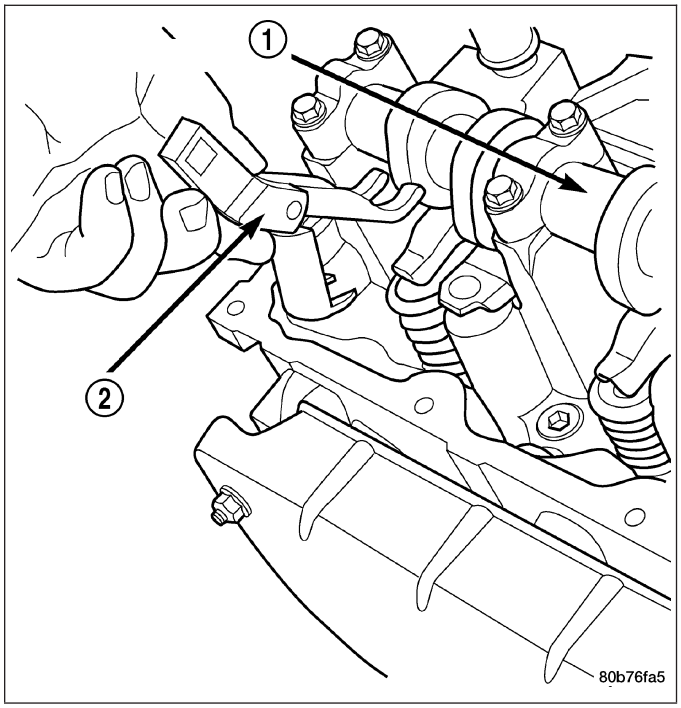

NOTE: the valve spring is under tension use care when releasing the valve spring compressor.

5. Remove the valve spring compressor.

6. Remove the spring retainer, and the spring.

NOTE: Check for sharp edges on the keeper grooves. Remove any burrs from the valve stem before removing the valve from the cylinder head.

7. Remove the valve from the cylinder head.

NOTE: The valve stem seals are common between intake and exhaust.

8. Remove the valve stem seal. Mark the valve for proper installation.

TESTING VALVE SPRINGS

NOTE: Whenever the valves are removed from the cylinder head it is recommended that the valve springs be inspected and tested for reuse.

Inspect the valve springs for physical signs of wear or damage. Turn table of tool C-647 (1) until surface is in line with the 40.12 mm (1.579 in.) mark on the threaded stud and the zero mark on the front. Place spring over the stud on the table and lift compressing lever to set tone device. Pull on torque wrench until a Ping is heard. Take reading on torque wrench at this instant. Multiply this reading by two. This will give the spring load at test length. Fractional measurements are indicated on the table for finer adjustments. Refer to Specifications Section to obtain specified height and allowable tensions. Replace any springs that do not meet specifications.

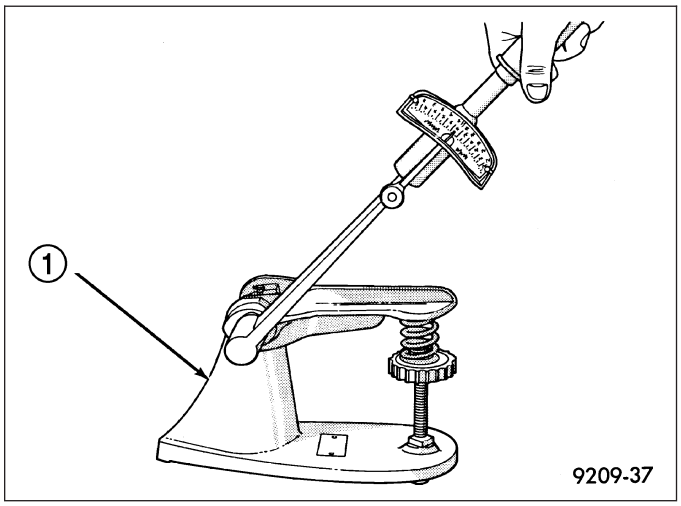

INSTALLATION

1. Coat the valve stem with clean engine oil and insert it into the cylinder head.
2. Install the valve stem seal (3). make sure the seal is fully seated and that the garter spring at the top of the seal is intact.
3. Install the spring (6) and the spring retainer (2).
4. Using the valve spring compressor, compress the spring (6) and install the two valve locks (1).
5. Release the valve spring compressor and make sure the two valve locks and the spring retainer are fully seated.

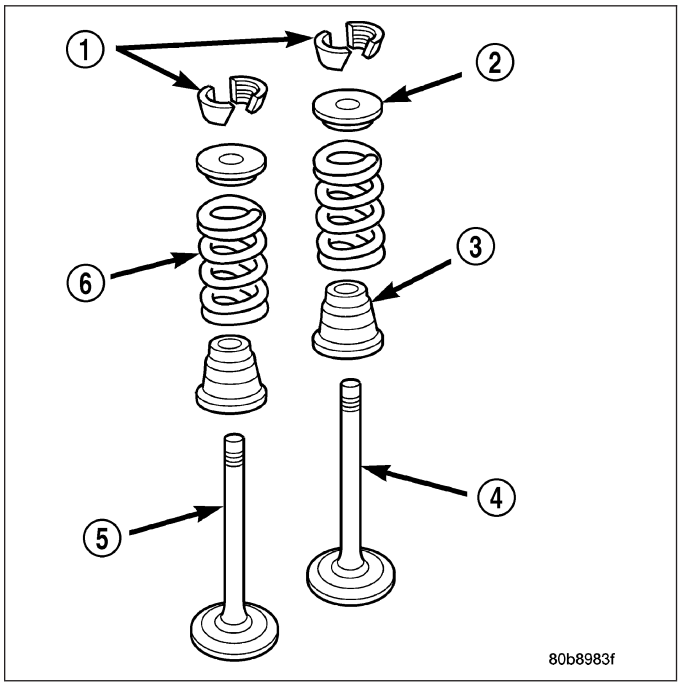

6. lubricate the camshaft journal with clean engine oil then Position the camshaft (with the sprocket dowel on the left camshaft at 11 o'clock and the right camshaft at 12 o'clock), then position the camshaft bearing caps.
7. Install the camshaft bearing cap retaining bolts. Tighten the bolts 9–13 N·m (100 in. lbs.) in ½ turn increments in the sequence shown.
8. Position the hydraulic lash adjusters and rocker arms.

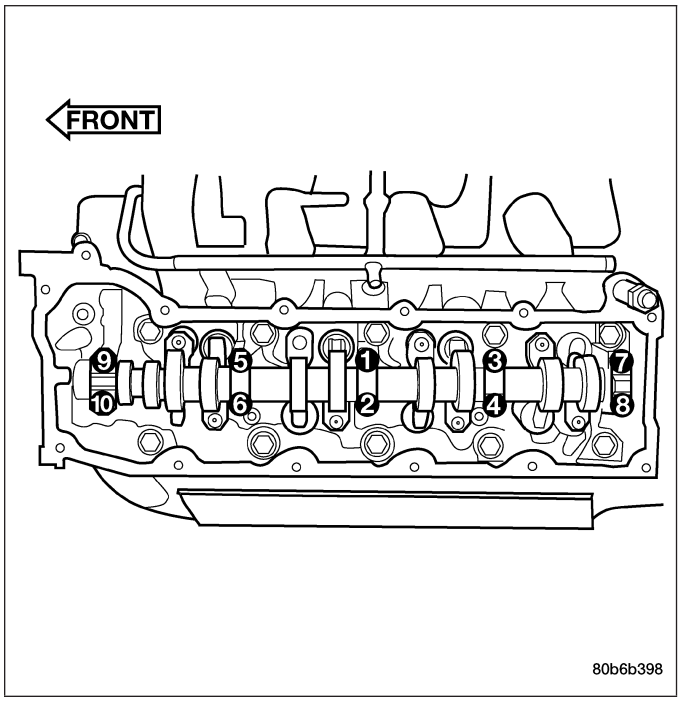

ROCKER ARM - VALVE

DESCRIPTION

The rocker arms are steel stampings with an integral roller bearing. The rocker arms incorporate a 2.8 mm (0.11 inch) oil hole in the lash adjuster socket for roller and camshaft lubrication.

DIAGNOSIS AND TESTING - HYDRAULIC LASH ADJUSTER

A tappet-like noise may be produced from several items. Check the following items.

1. Engine oil level too high or too low. This may cause aerated oil to enter the adjusters and cause them to be spongy.
2. Insufficient running time after rebuilding cylinder head. Low speed running up to 1 hour may be required.
3. Turn engine off and let set for a few minutes before restarting. Repeat this several times after engine has reached normal operating temperature.
4. Low oil pressure.
5. The oil restrictor in cylinder head gasket or the oil passage to the cylinder head is plugged with debris.
6. Air ingested into oil due to broken or cracked oil pump pick up.
7. Worn valve guides.
8. Rocker arm ears contacting valve spring retainer.
9. Rocker arm loose, adjuster stuck or at maximum extension and still leaves lash in the system.
10. Oil leak or excessive cam bore wear in cylinder head.
11. Faulty lash adjuster.

    a. Check lash adjusters for sponginess while installed in cylinder head and cam on camshaft at base circle. Depress part of rocker arm over adjuster. Normal adjusters should feel very firm. Spongy adjusters can be bottomed out easily.

    b. Remove suspected lash adjusters, and replace.

    c. Before installation, make sure adjusters are at least partially full of oil. This can be verified by little or no plunger travel when lash adjuster is depressed.

REMOVAL

NOTE: Disconnect the battery negative cable to prevent accidental starter engagement.

1. Remove the cylinder head cover (Refer to 9 - ENGINE/CYLINDER HEAD/CYLINDER HEAD COVER(S) - REMOVAL).
2. For rocker arm removal on cylinders 3 and 5 Rotate the crankshaft until cylinder #1 is at TDC exhaust stroke.
3. For rocker arm removal on cylinders 2 and 8 Rotate the crankshaft until cylinder #1 is at TDC compression stroke.
4. For rocker arm removal on cylinders 4 and 6 Rotate the crankshaft until cylinder #3 is at TDC compression stroke.
5. For rocker arm removal on cylinders 1 and 7 Rotate the crankshaft until cylinder #2 is at TDC compression stroke.
6. Using special tool 8516 Rocker Arm Remover (2), press downward on the valve spring, remove rocker arm.

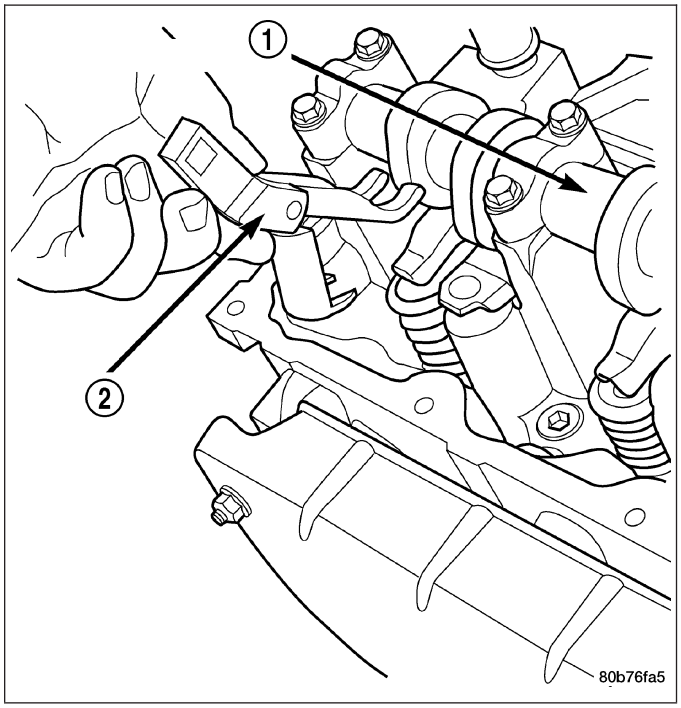

INSTALLATION

CAUTION: Make sure the rocker arms are installed with the concave pocket over the lash adjusters. Failure to do so may cause severe damage to the rocker arms and/or lash adjusters.

NOTE: Coat the rocker arms with clean engine oil prior to installation.

1. For rocker arm installation on cylinders 3 and 5 Rotate the crankshaft until cylinder #1 is at TDC exhaust stroke.
2. For rocker arm installation on cylinders 2 and 8 Rotate the crankshaft until cylinder #1 is at TDC compression stroke.
3. For rocker arm installation on cylinders 4 and 6 Rotate the crankshaft until cylinder #3 is at TDC compression stroke.
4. For rocker arm installation on cylinders 1 and 7 Rotate the crankshaft until cylinder #2 is at TDC compression stroke.
5. Using special tool 8516 press downward on the valve spring, install rocker arm.
6. Install the cylinder head cover (Refer to 9 - ENGINE/CYLINDER HEAD/CYLINDER HEAD COVER(S) - INSTALLATION).

SPRINGS-VALVE

DESCRIPTION

The valve springs are made from high strength chrome silicon steel. The springs are common for intake and exhaust applications. The valve spring seat is integral with the valve stem seal, which is a positive type seal to control lubrication.

REMOVAL

1. Remove the cylinder head cover (Refer to 9 - ENGINE/CYLINDER HEAD/CYLINDER HEAD COVER(S) - REMOVAL).
2. Using Special Tool 8516 Rocker Arm Remover (2), remove the rocker arms and the hydraulic lash adjusters.
3. Remove the spark plug for the cylinder the valve spring and seal are to be removed from.
4. Apply shop air to the cylinder to hold the valves in place when the spring is removed

NOTE: All eight valve springs and seals are removed in the same manner; this procedure only covers one valve seal and valve spring.

5. Using Special Tool 8387 Valve Spring Compressor, compress the valve spring.

NOTE: It may be necessary to tap the top of the valve spring to loosen the spring retainers locks enough to be removed.

6. Remove the two spring retainer lock halves.

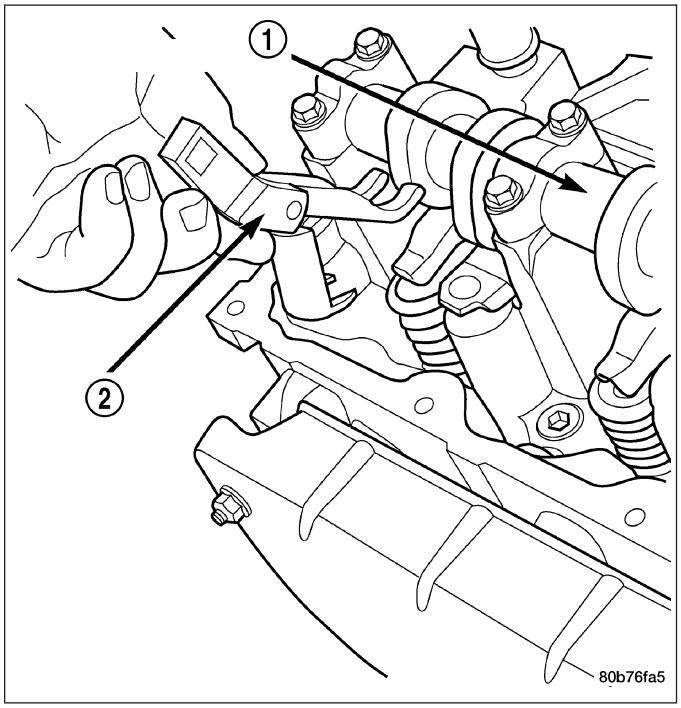

NOTE: the valve spring is under tension use care when releasing the valve spring compressor.

7. Remove the valve spring compressor.
8. Remove the spring retainer, and the spring.
9. Remove the valve stem seal.

NOTE: The valve stem seals are common between intake and exhaust.

INSTALLATION

1. Coat the valve stem with clean engine oil and install the valve stem seal. Make sure the seal is fully seated and that the garter spring at the top of the seal is intact.
2. Install the spring (6) and the spring retainer (2).
3. Using Special Tool 8387 Valve Spring Compressor, compress the spring and install the two valve spring retainer halves.
4. Release the valve spring compressor and make sure the two spring retainer halves and the spring retainer are fully seated.
5. Position the hydraulic lash adjusters and rocker arms.
6. Install the cylinder head cover (Refer to 9 - ENGINE/CYLINDER HEAD/CYLINDER HEAD COVER(S) - INSTALLATION).

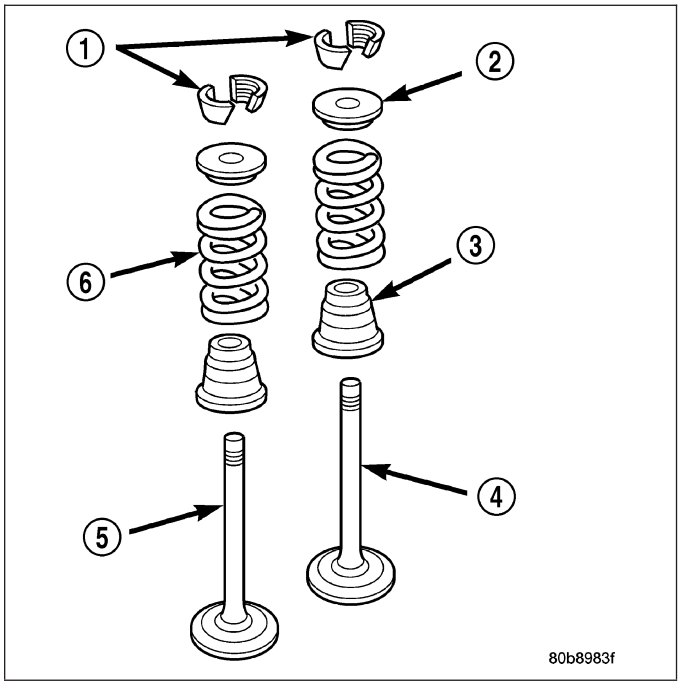

SEALS-VALVE GUIDE

DESCRIPTION

The valve stem seals are made of rubber and incorporate an integral steel valve spring seat. The integral garter spring maintains consistent lubrication control to the valve stems.

ENGINE BLOCK

DESCRIPTION

The cylinder block is made of cast iron. The block is a closed deck design with the left bank forward. To provide high rigidity and improved NVH an enhanced compacted graphite bedplate is bolted to the block. The block design allows coolant flow between the cylinders bores, and an internal coolant bypass to a single poppet inlet thermostat is included in the cast aluminum front cover.

STANDARD PROCEDURE - CYLINDER BORE HONING

Before honing, stuff plenty of clean shop towels under the bores and over the crankshaft to keep abrasive materials from entering the crankshaft area.

1. Used carefully, the Cylinder Bore Sizing Hone C-823, equipped with 220 grit stones, is the best tool for this job. In addition to deglazing, it will reduce taper and out-of-round, as well as removing light scuffing, scoring and scratches. Usually, a few strokes will clean up a bore and maintain the required limits.

CAUTION: DO NOT use rigid type hones to remove cylinder wall glaze.

2. Deglazing of the cylinder walls may be done if the cylinder bore is straight and round. Use a cylinder surfacing hone, Honing Tool C-3501, equipped with 280 grit stones (C-3501-3810). about 20-60 strokes, depending on the bore condition, will be sufficient to provide a satisfactory surface. Using honing oil C-3501-3880, or a light honing oil, available from major oil distributors.

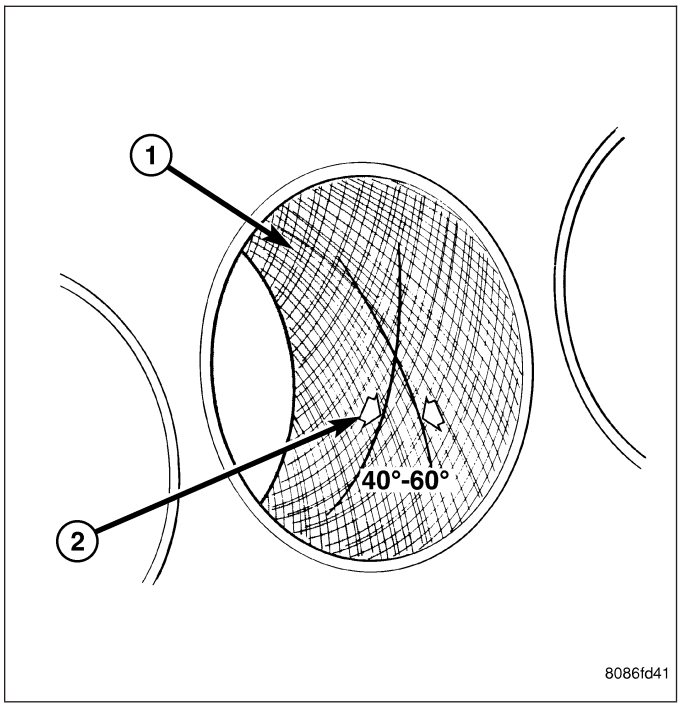

CAUTION: DO NOT use engine or transmission oil, mineral spirits, or kerosene.

3. Honing should be done by moving the hone up and down fast enough to get a crosshatch pattern (1). The hone marks should INTERSECT at 50° to 60° for proper seating of rings (2).
4. A controlled hone motor speed between 200 and 300 RPM is necessary to obtain the proper crosshatch angle. The number of up and down strokes per minute can be regulated to get the desired 50° to 60° angle. Faster up and down strokes increase the crosshatch angle.
5. After honing, it is necessary that the block be cleaned to remove all traces of abrasive. Use a brush to wash parts with a solution of hot water and detergent. Dry parts thoroughly. Use a clean, white, lint-free cloth to check that the bore is clean. Oil the bores after cleaning to prevent rusting.

CLEANING

Thoroughly clean the oil pan and engine block gasket surfaces.

Use compressed air to clean out:

- The galley at the oil filter adaptor hole.

- The front and rear oil galley holes.
- The feed holes for the crankshaft main bearings.

Once the block has been completely cleaned, apply Loctite PST pipe sealant with Teflon 592 to the threads of the front and rear oil galley plugs. Tighten the 1/4 inch NPT plugs to 20 N·m (177 in. lbs.) torque. Tighten the 3/8 inch NPT plugs to 27 N·m (240 in. lbs.) torque.

INSPECTION

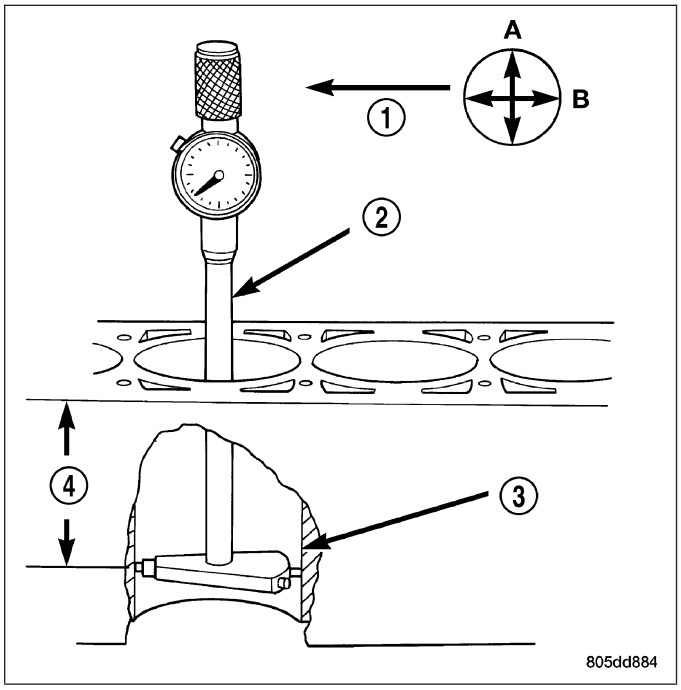

1. It is mandatory to use a dial bore gauge to measure each cylinder bore diameter. To correctly select the proper size piston, a cylinder bore gauge, capable of reading in 0.003 mm (.0001 in.) INCREMENTS is required. If a bore gauge is not available, do not use an inside micrometer.
2. Measure the inside diameter of the cylinder bore at three levels below top of bore. Start perpendicular (across or at 90 degrees) to the axis of the crankshaft and then take two additional reading.
3. Measure the cylinder bore diameter crosswise to the cylinder block near the top of the bore. Repeat the measurement near the middle of the bore, then repeat the measurement near the bottom of the bore.
4. Determine taper by subtracting the smaller diameter from the larger diameter.
5. Rotate measuring device 90° and repeat steps above.
6. Determine out-of-roundness by comparing the difference between each measurement.
7. If cylinder bore taper does not exceed 0.025 mm (0.001 inch) and out-of-roundness does not exceed 0.025 mm (0.001 inch), the cylinder bore can be honed. If the cylinder bore taper or out- of-round condition exceeds these maximum limits, the cylinder block must be replaced. A slight amount of taper always exists in the cylinder bore after the engine has been in use for a period of time.

BEARINGS - CONNECTING ROD

STANDARD PROCEDURE - CONNECTING ROD BEARING FITTING

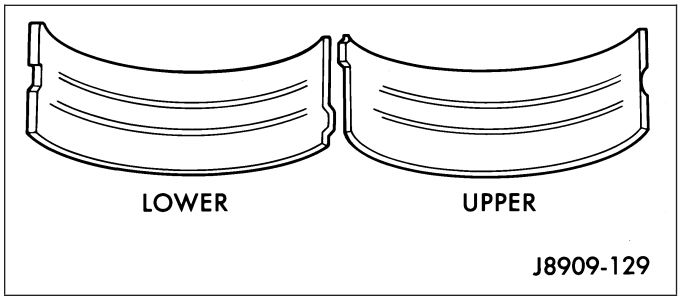

Inspect the connecting rod bearings for scoring. Check the bearings for normal wear patterns, scoring, grooving, fatigue and pitting. Replace any bearing that shows abnormal wear.

Inspect the connecting rod journals for signs of scoring, nicks and burrs.

Misaligned or bent connecting rods can cause abnormal wear on pistons, piston rings, cylinder walls, connecting rod bearings and crankshaft connecting rod journals. If wear patterns or damage to any of these components indicate the probability of a misaligned connecting rod, inspect it for correct rod alignment. Replace misaligned, bent or twisted connecting rods.

1. Wipe the oil from the connecting rod journal.

2. Lubricate the upper bearing insert (2) and install in connecting rod (1). **Center bearing insert (2) in connecting rod.**

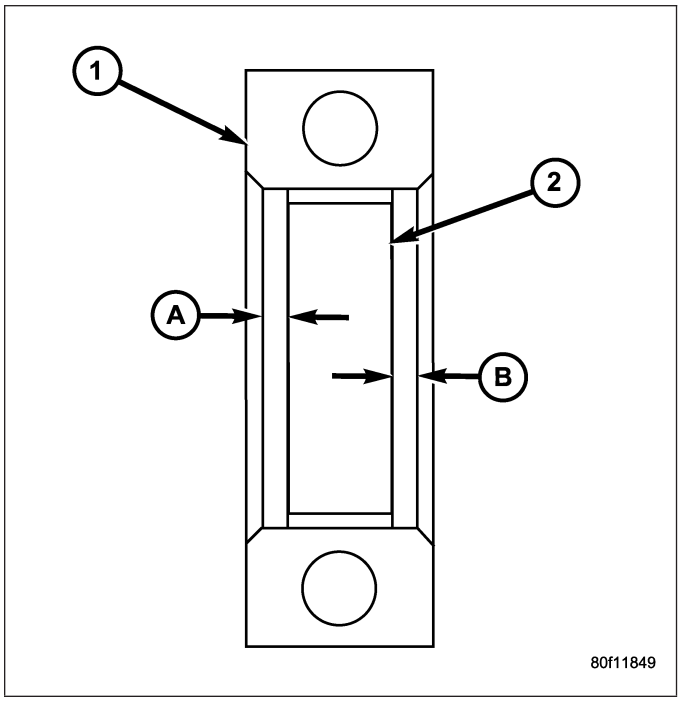

3. Use piston ring compressor (3) and Guide Pins Special Tool 8507 (4) to install the rod and piston assemblies. The oil slinger slots in the rods must face front of the engine. The “F”’s near the piston wrist pin bore should point to the front of the engine.

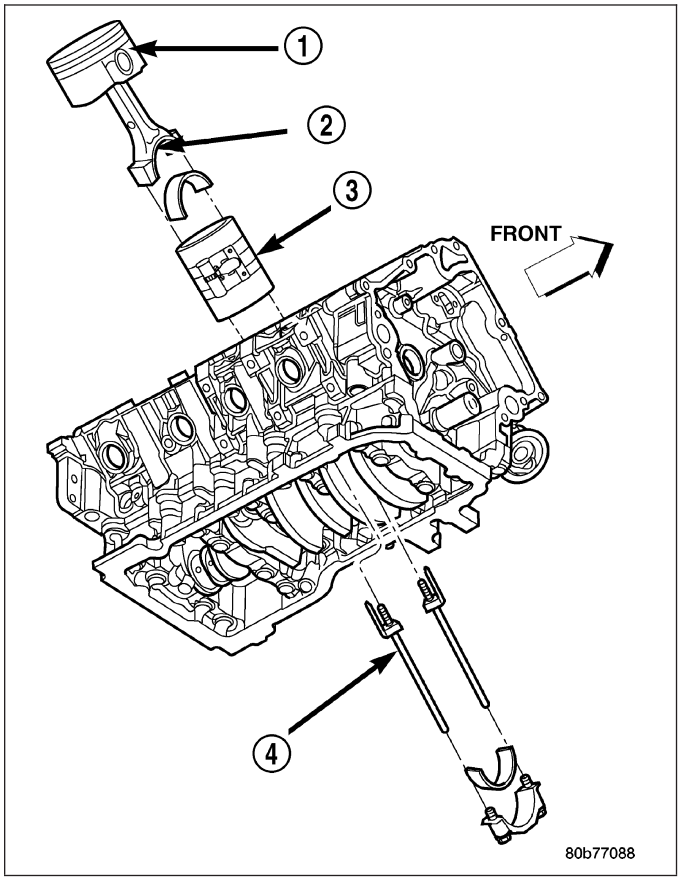

4. Install the lower bearing insert in the bearing cap **Center bearing insert (2) in connecting rod (1).**. The lower insert must be dry. Place strip of Plastigage across full width of the lower insert at the center of bearing cap. Plastigage must not crumble in use. If brittle, obtain fresh stock.

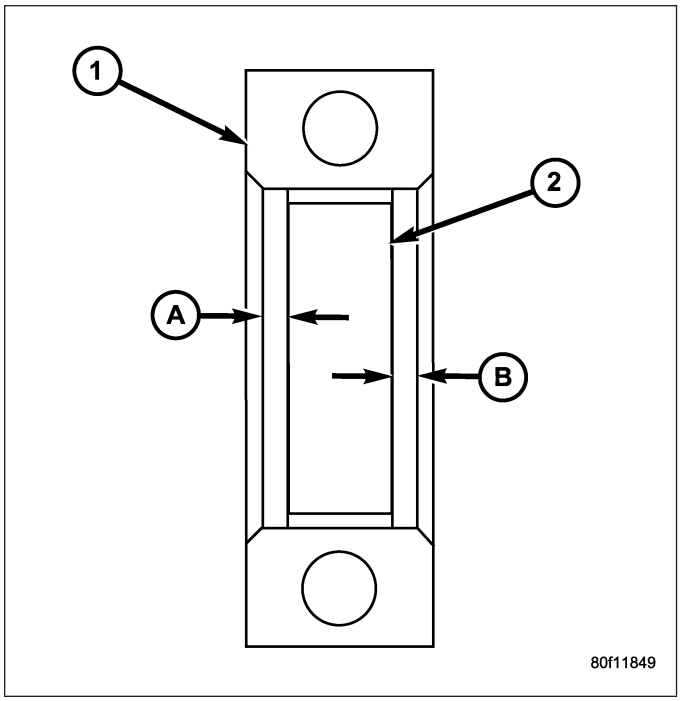

5. Install bearing cap and connecting rod on the journal and tighten bolts to 27 N·m (20 ft. lbs.) plus a 90° turn. DO NOT rotate crankshaft. Plastigage will smear, resulting in inaccurate indication.
6. Remove the bearing cap and determine amount of bearing-to-journal clearance by measuring the width of compressed Plastigage (2). Refer to Engine Specifications for the proper clearance. **Plastigage should indicate the same clearance across the entire width of the insert. If the clearance varies, it may be caused by either a tapered journal, bent connecting rod or foreign material trapped between the insert and cap or rod.**
7. If the correct clearance is indicated, replacement of the bearing inserts is not necessary. Remove the Plastigage (2) from crankshaft journal and bearing insert. Proceed with installation.

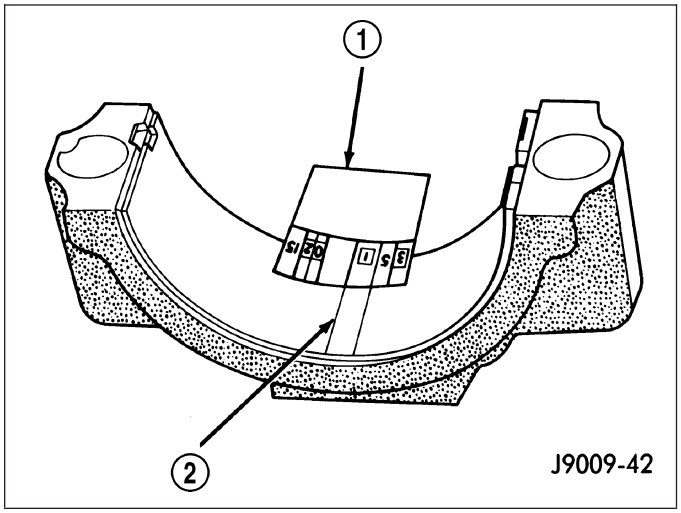

Bearing Mark	SIZE	USED WITH JOURNAL SIZE
.025 US	.025 mm (.001 in.)	50.983-50.967 mm (2.0073-2.0066 in.)
Std.	STANDARD	50.992-51.008 mm (2.0076-2.0082 in.)
.250 US	.250 mm (.010 in.)	50.758-50.742 mm (1.9984-1.9978 in.)

8. If bearing-to-journal clearance exceeds the specification, determine which service bearing set to use, using the following bearing sizes:

CAUTION: Connecting Rod Bolts are Torque to Yield Bolts and Must Not Be Reused. Always replace the Rod Bolts whenever they are loosened or removed.

9. Repeat the Plastigage measurement to verify your bearing selection prior to final assembly.
10. Once you have selected the proper insert, install the insert and cap. Tighten the connecting rod bolts to 27 N·m (20 ft. lbs.) plus a 90° turn.

Slide snug-fitting feeler gauge between the connecting rod and crankshaft journal flange. Refer to Engine Specifications for the proper clearance. Replace the connecting rod if the side clearance is not within specification.

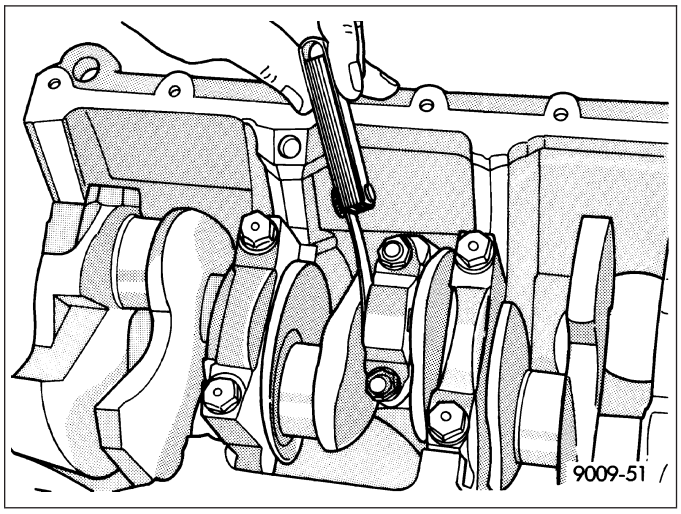

PLUGS - CORE

REMOVAL

1. Drain the cooling system (Refer to 7 - COOLING - STANDARD PROCEDURE).
2. Using a blunt tool such as a drift or a screw driver and a hammer, strike the bottom edge of the cup plug (5).
3. Using a suitable pair of pliers, grasp the core plug (2) and remove.

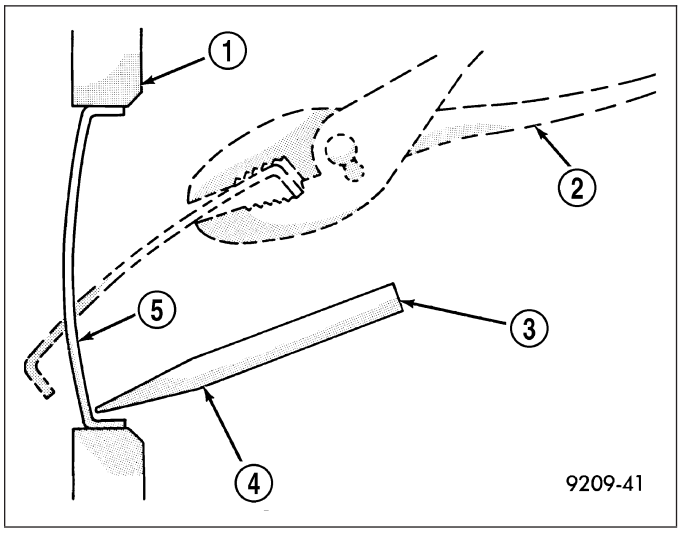

INSTALLATION

NOTE: Thoroughly clean core plug bore, remove all of the old sealer.

1. Coat the edges of the engine core plug and the core plug bore with Mopar Gasket Maker, or equivalent.

NOTE: It is not necessary to wait for the sealant to cure on the core plugs. The cooling system can be filled and the vehicle returned to service immediately.

2. Using proper plug driver, drive core plug into the core plug bore. The sharp edge of the core plug should be at least 0.50 mm (0.020 in.) inside the lead in chamfer.
3. Refill the cooling system (Refer to 7 - COOLING - STANDARD PROCEDURE).

CRANKSHAFT

DESCRIPTION

The crankshaft is constructed of nodular cast iron. The crankshaft is a crosshaped four throw design with eight counterweights for balancing purposes. The crankshaft is supported by five select fit main bearings with the number three serving as the thrust washer location. The main journals of the crankshaft are cross drilled to improve rod bearing lubrication. The number eight counterweight has provisions for crankshaft position sensor target wheel mounting. The select fit main bearing markings are located on the rear side of the target wheel. The crankshaft oil seals are one piece design. The front oil seal is retained in the timing chain cover, and the rear seal is pressed in to a bore formed by the cylinder block and the bedplate assembly.

REMOVAL

NOTE: To remove the crankshaft from the engine, the engine must be removed from the vehicle.

1. Remove the engine. (Refer to 9 - ENGINE - REMOVAL).
2. Remove the engine oil pump. (Refer to 9 - ENGINE/LUBRICATION/OIL PUMP - REMOVAL).

CAUTION: DO NOT pry on the oil pan gasket when removing the oil pan, The oil pan gasket is mounted to the cylinder block in three locations and will remain attached to block when removing oil pan. Gasket can not be removed with oil pan.

3. Remove oil pan. (Refer to 9 - ENGINE/LUBRICATION/OIL PAN - REMOVAL).
4. Remove the oil pump pickup tube and oil pan gasket /windage tray.
5. Remove the bedplate mounting bolts. Note the location of the three stud bolts for installation.
6. Remove the connecting rods from the crankshaft.

CAUTION: The bedplate to cylinder block mating surface is a critical sealing surface. Do not pry on or damage this surface in anyway.

NOTE: The bedplate contains the lower main bearing halves. Use care when handling bedplate as not to drop or damage bearing halves. Installing main bearing halves in the wrong position will cause sever damage to the crankshaft.

NOTE: The bedplate has pry points cast into it. Use these points only. The pry points are on both the left and right sides, only the left side is shown.

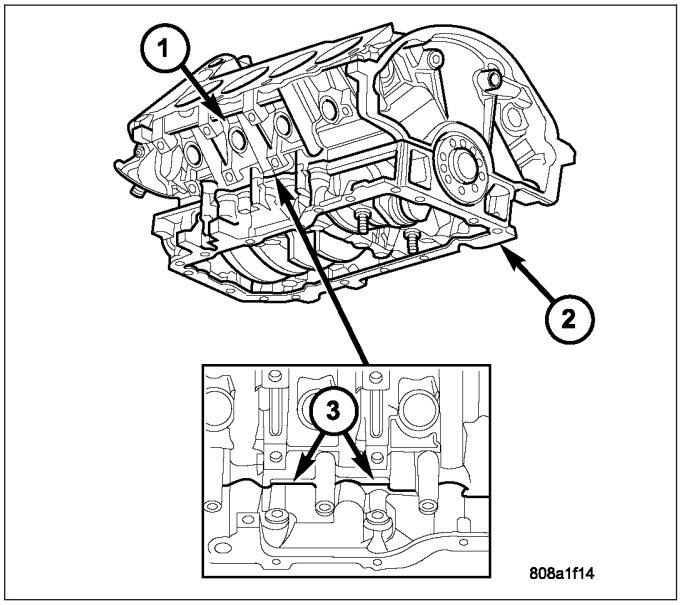

7. Carefully pry on the pry points to loosen the bedplate then remove the bedplate.

CAUTION: When removing the crankshaft, use care not to damage bearing surfaces on the crankshaft.

8. Remove the crankshaft.
9. Remove the crankshaft target wheel.

INSPECTION

NOTE: Thoroughly inspect the connecting rod bearing bores and main bearing bores for scoring, blueing or severe scratches. Further disassembly may be required.

If connecting rod bearing bores show damage, the cylinder heads must be removed to service the piston and rod assemblies. If the bedplate or the cylinder block main bearing bores show damage the engine must be replaced.

1. If required, remove the main bearing halves from the cylinder block and bedplate.
2. Thoroughly clean the bedplate to cylinder block sealing surfaces and main bearing bores. Remove all oil and sealant residue.
3. Inspect the bedplate main bearing bores for cracks, scoring or severe blueing. If either condition exists the engine must be replaced.
4. Inspect the crankshaft thrust washers for scoring, scratches, wear or blueing. If either condition exist replace the thrust washer.
5. Inspect the oil pan gasket/windage tray for splits, tears or cracks in the gasket sealing surfaces. Replace gasket as necessary.

INSTALLATION

CAUTION: Main bearings are select fit. (Refer to 9 - ENGINE/ENGINE BLOCK/CRANKSHAFT MAIN BEARINGS - STANDARD PROCEDURE) for proper bearing selections.

1. Lubricate upper main bearing halves with clean engine oil.

CAUTION: When installing crankshaft, use care not to damage bearing surfaces on the crankshaft.

NOTE: Apply sealant to the target wheel retaining screws prior to installation.

2. Install the crankshaft target wheel. Torque the mounting screws to 15 N·m (12 ft. lbs.).
3. Position crankshaft in cylinder block.
4. Install the thrust washers (1).

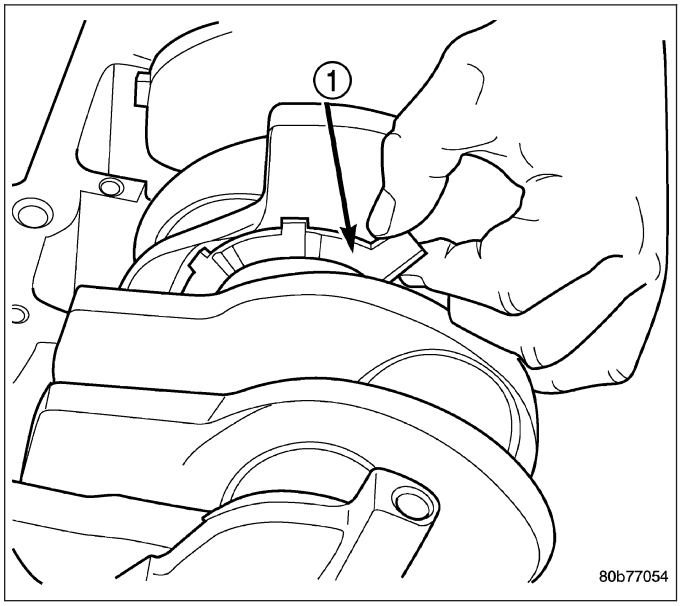

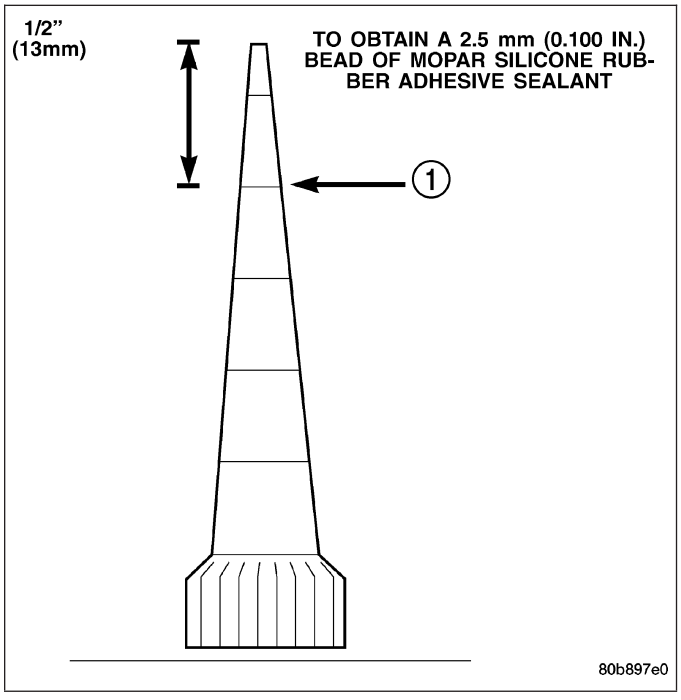

CAUTION: The bedplate to cylinder block mateing surface must be coated with sealant prior to installation. Failure to do so will cause severe oil leaks.

NOTE: The installation time to install the bedplate after the sealant has been applied is critical.

NOTE: Make sure that the bedplate and cylinder block sealing surfaces are clean and free of oil or other contaminants. Contaminants on the sealing surfaces may cause main bearing distortion and/or oil leaks.

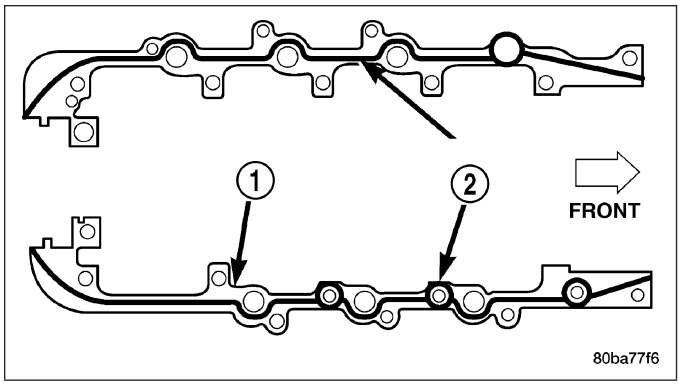

5. Apply a 2.5mm (0.100 inch) bead of Mopar® Gen II Silicone Rubber Adhesive sealant (2) to the cylinder block-to-bedplate mating surface (1) as shown.
6. Coat the crankshaft main bearing journals with clean engine oil and position the bedplate onto the cylinder block.

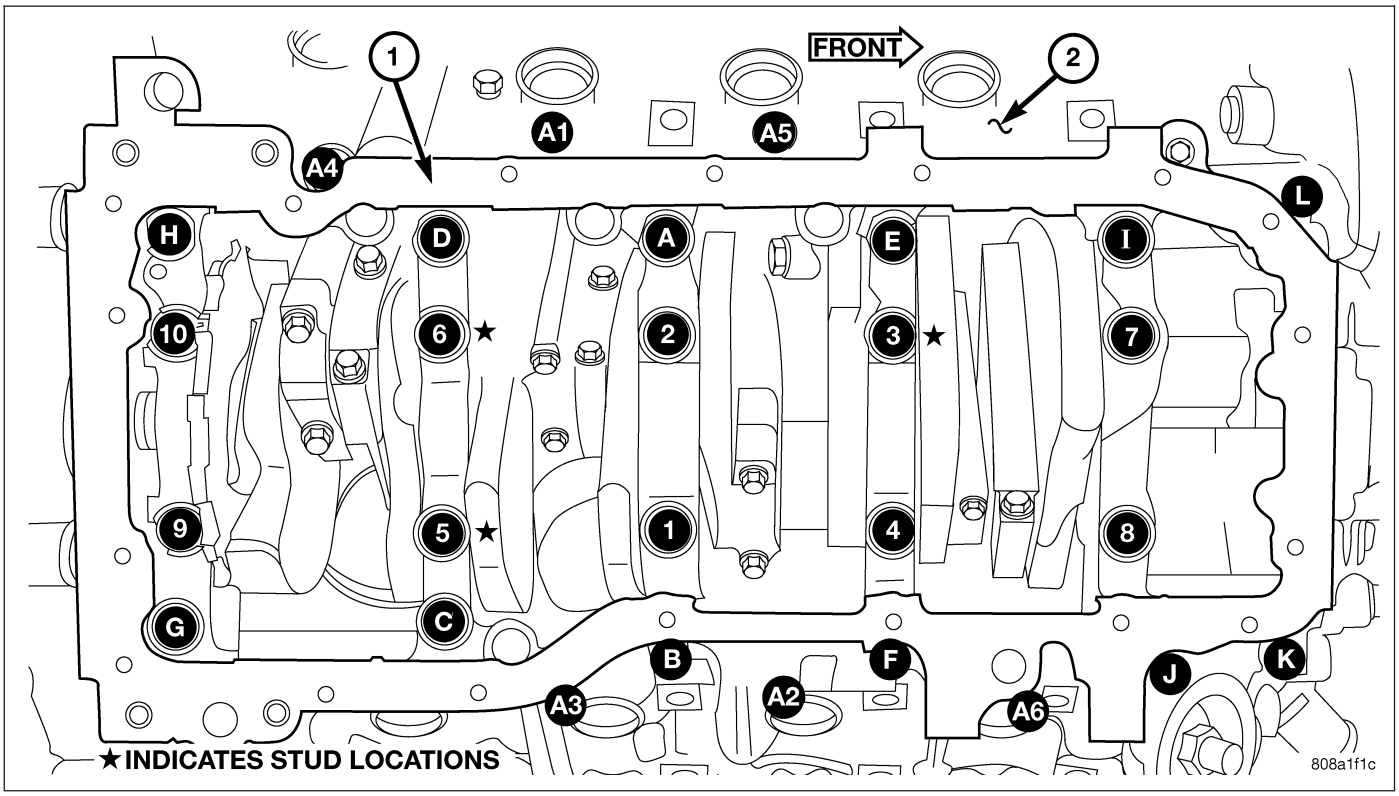

NOTE: Lubricate the bedplate retaining bolts with clean engine oil prior to installation.

7. Install the bedplate retaining bolts, making sure to place the stud bolts in the correct location, Torque the bolts in the sequence shown.
   - Tighten bolts **A – L** to 54 N·m (40 ft. lbs.)
   - Tighten bolts **1–10** to 2.8 N·m (25 in. lbs.)
   - Turn bolts **1–10** an additional 90°.
   - Tighten bolts **A1– A6** to 27 N·m (20 ft. lbs.)
8. Measure crankshaft end play. (Refer to 9 - ENGINE/ENGINE BLOCK/CRANKSHAFT - STANDARD PROCEDURE).

9. Install the connecting rods and measure side clearance. (Refer to 9 - ENGINE/ENGINE BLOCK/CONNECTING ROD BEARINGS - STANDARD PROCEDURE).

10. Position the oil pan gasket/windage tray, using a new o-ring, install the oil pickup tube. Torque the bolt to 28N·n (20 ft. lbs.) torque the nuts to 28N·m (20 ft. lbs.).
11. Install the oil pan. Torque the retaining bolts to 15 N·m (11 ft. lbs.) in the sequence shown.
12. Install the engine (Refer to 9 - ENGINE - INSTALLATION).

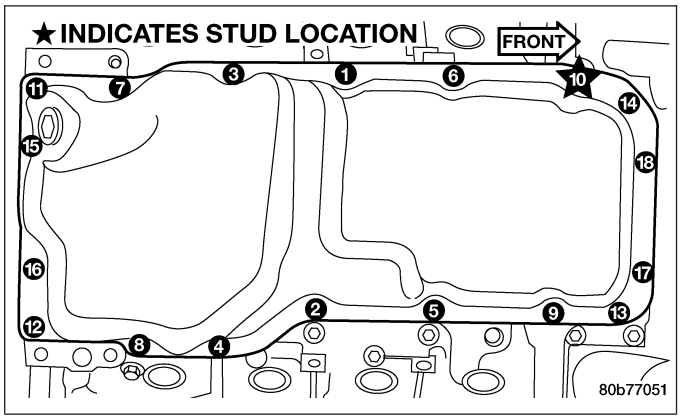

BEARINGS - CRANKSHAFT MAIN

STANDARD PROCEDURE - CRANKSHAFT MAIN BEARING - FITTING

MAIN BEARING JOURNAL DIAMETER (CRANKSHAFT REMOVED)

Crankshaft removed from the cylinder block.

Clean the oil off the main bearing journal.

Determine the maximum diameter of the journal with a micrometer. Measure at two locations 90° apart at each end of the journal.

The maximum allowable taper is 0.008mm (0.0004 inch.) and maximum out of round is 0.005mm (0.002 inch). Compare the measured diameter with the journal diameter specification (Main Bearing Fitting Chart). Select inserts required to obtain the specified bearing-to-journal clearance.

CRANKSHAFT MAIN BEARING SELECTION

The main bearings are “select fit” to achieve proper oil clearances. For main bearing selection, the crankshaft position sensor target wheel has grade identification marks stamped into it (2). These marks are read from left to right, corresponding with journal number 1, 2, 3, 4 and 5. The crankshaft position sensor target wheel (2) is mounted to the number 8 counter weight (1) on the crankshaft.

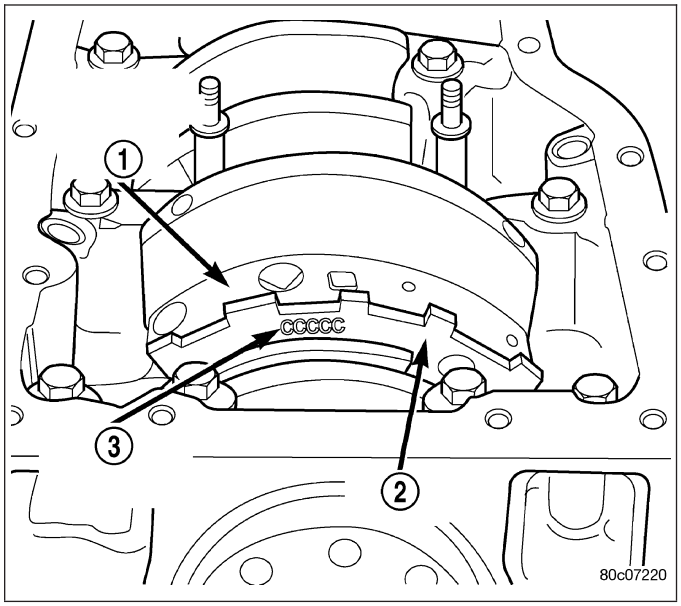

NOTE: Service main bearings are coded. These codes identify what size (grade) the bearing is.

MAIN BEARING SELECTION CHART - 4.7L

GRADE MARKING	SIZE mm (in.)	FOR USE WITH JOURNAL SIZE
A	0.008 mm U/S (0.0004 in.) U/S	63.488–63.496 mm (2.4996–2.4999 in.)
B	NOMINAL	63.496–63.504 mm (2.4999–2.5002 in.)
C	0.008 mm O/S (0.0004 in.) O/S	63.504–63.512 mm (2.5002–2.5005 in.)

INSPECTION

Wipe the inserts clean and inspect for abnormal wear patterns and for metal or other foreign material imbedded in the lining. Normal main bearing insert wear patterns are illustrated.

NOTE: If any of the crankshaft journals are scored, the crankshaft must be repaired or replaced.

Inspect the back of the inserts for fractures, scrapings or irregular wear patterns.

Inspect the upper insert locking tabs for damage.

Replace all damaged or worn bearing inserts.

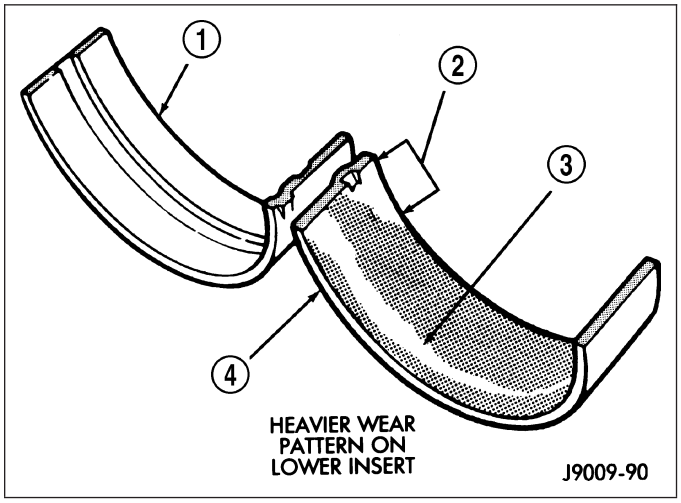

SEAL - CRANKSHAFT OIL - FRONT

REMOVAL

1. Disconnect negative cable from battery.
2. Remove accessory drive belt (Refer to 7 - COOLING/ACCESSORY DRIVE/DRIVE BELTS - REMOVAL).
3. Remove A/C compressor mouning fasteners and set aside.
4. Drain cooling system (Refer to 7 - COOLING - STANDARD PROCEDURE).
5. Remove upper radiator hose.
6. Disconnect electrical connector for fan mounted inside radiator shroud.
7. Remove radiator shroud attaching fasteners.

NOTE: Transmission cooler line snaps into shroud lower right hand corner.

8. Remove radiator cooling fan and shroud (Refer to 7 - COOLING/ENGINE/RADIATOR FAN - REMOVAL).
9. Remove crankshaft damper bolt.
10. Remove damper using Special Tools 8513 Insert and 1026 Three Jaw Puller (2).

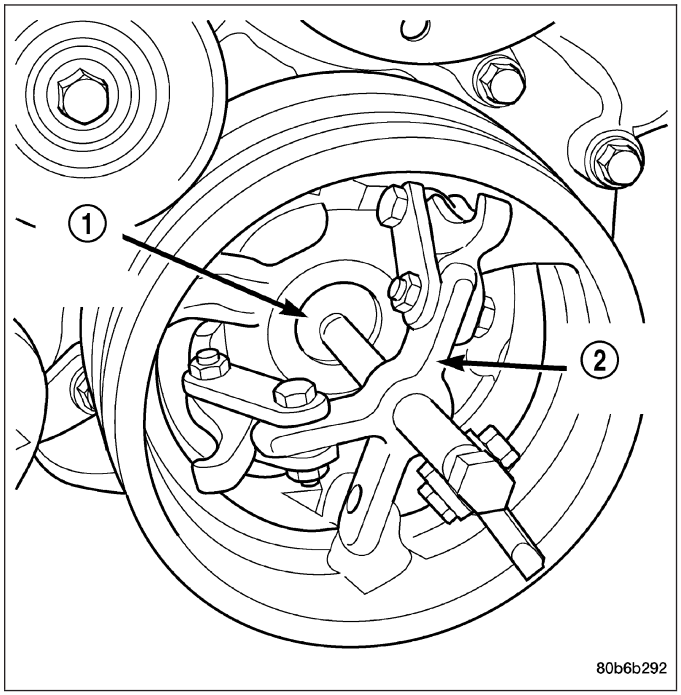

11. Using Special Tool 8511 (1), remove crankshaft front seal.

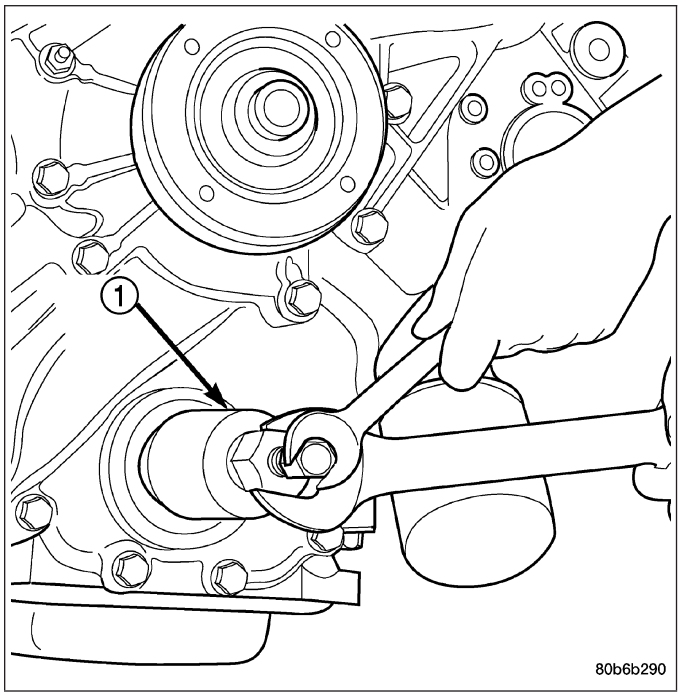

INSTALLATION

CAUTION: To prevent severe damage to the Crankshaft, Damper or Special Tool 8512, thoroughly clean the damper bore and the crankshaft nose before installing Damper.

1. Using Special Tool 8348 and 8512 (2,3), install crankshaft front seal.
2. Install vibration damper (Refer to 9 - ENGINE/ENGINE BLOCK/VIBRATION DAMPER - INSTALLATION).
3. Install radiator cooling fan and shroud (Refer to 7 - COOLING/ENGINE/RADIATOR FAN - INSTALLATION).
4. Install upper radiator hose.
5. Install A/C compressor and tighten fasteners to 54 N·m (40 ft. lbs.).
6. Install accessory drive belt refer (Refer to 7 - COOLING/ACCESSORY DRIVE/DRIVE BELTS - INSTALLATION).
7. Refill cooling system (Refer to 7 - COOLING - STANDARD PROCEDURE).
8. Connect negative cable to battery.

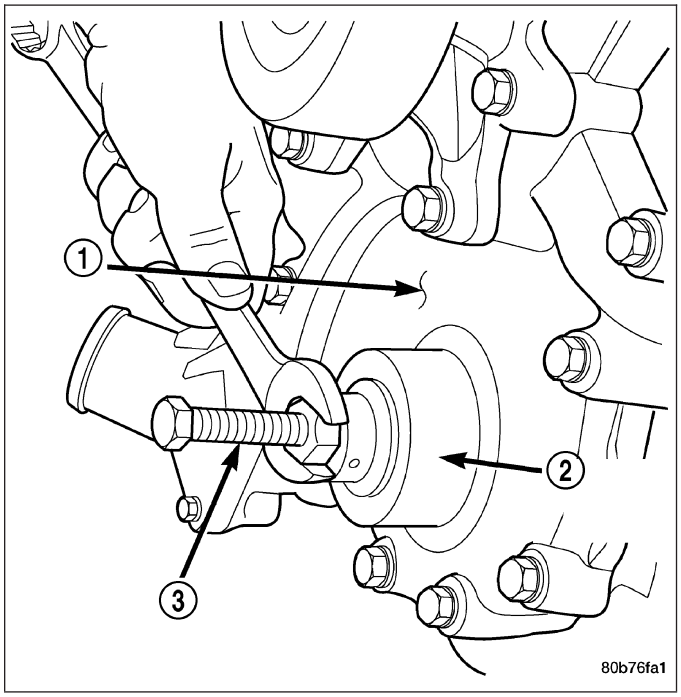

SEAL - CRANKSHAFT OIL - REAR

DIAGNOSIS AND TESTING - REAR SEAL AREA LEAKS

Since it is sometimes difficult to determine the source of an oil leak in the rear seal area of the engine, a more involved inspection is necessary. The following steps should be followed to help pinpoint the source of the leak.

If the leakage occurs at the crankshaft rear oil seal area:

1. Disconnect the battery.
2. Raise the vehicle.
3. Remove torque converter or clutch housing cover and inspect rear of block for evidence of oil. Use a black light to check for the oil leak:
   a. Circular spray pattern generally indicates seal leakage or crankshaft damage.
   b. Where leakage tends to run straight down, possible causes are a porous block, camshaft bore cup plugs, oil galley pipe plugs, oil filter runoff, and main bearing cap to cylinder block mating surfaces. See Engine, for proper repair procedures of these items.
4. If no leaks are detected, pressurized the crankcase as outlined in the section, Inspection (Engine oil Leaks in general)

CAUTION: Do not exceed 20.6 kPa (3 psi).

5. If the leak is not detected, very slowly turn the crankshaft and watch for leakage. If a leak is detected between the crankshaft and seal while slowly turning the crankshaft, it is possible the crankshaft seal surface is damaged. The seal area on the crankshaft could have minor nicks or scratches that can be polished out with emery cloth.

CAUTION: Use extreme caution when crankshaft polishing is necessary to remove minor nicks or scratches. The crankshaft seal flange is specially machined to complement the function of the rear oil seal.

6. For bubbles that remain steady with shaft rotation, no further inspection can be done until disassembled. (Refer to 9 - ENGINE - DIAGNOSIS AND TESTING), under the Oil Leak row, for components inspections on possible causes and corrections.
7. After the oil leak root cause and appropriate corrective action have been identified, (Refer to 9 - ENGINE/ENGINE BLOCK/CRANKSHAFT OIL SEAL - REAR - REMOVAL).

REMOVAL

NOTE: This procedure can be performed in vehicle.

1. If being performed in vehicle, remove the transmission.
2. Remove the flexplate (Refer to 9 - ENGINE/ENGINE BLOCK/FLEX PLATE - REMOVAL).

NOTE: The crankshaft oil seal CAN NOT be reused after removal.

NOTE: The crankshaft rear oil seal remover Special Tool 8506 must be installed deeply into the seal. Continue to tighten the removal tool into the seal until the tool can not be turned farther. Failure to install tool correctly the first time will cause tool to pull free of seal without removing seal from engine.

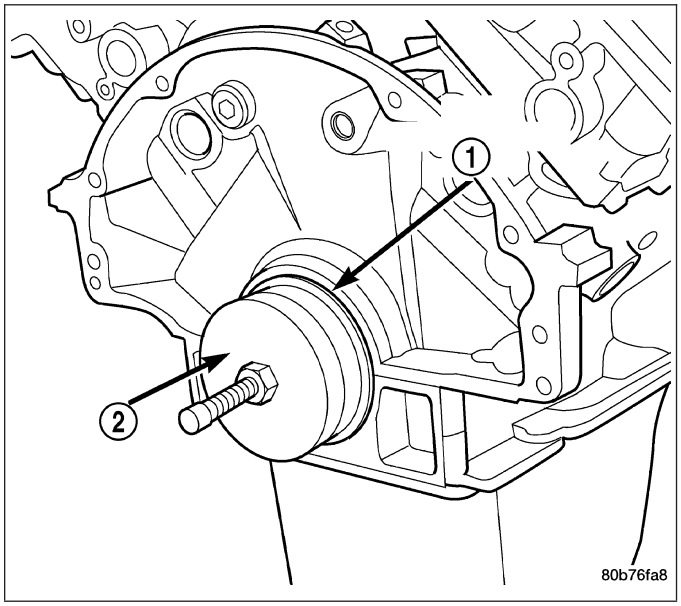

3. Using Special Tool 8506 (2), remove the crankshaft rear oil seal (1)

INSTALLATION

1. Lubricate the crankshaft flange with engine oil.
2. Position the magnetic seal guide Special Tool 8349-2 onto the crankshaft rear face. Then position the crankshaft rear oil seal (1) onto the guide (2).

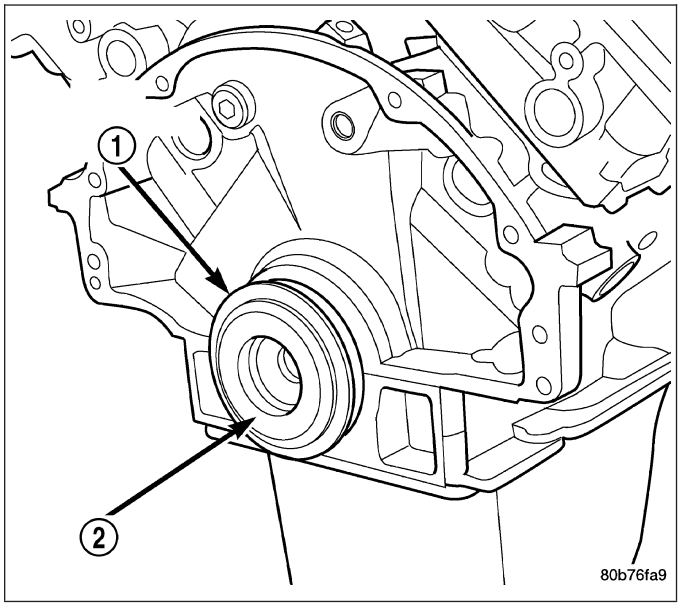

3. Using Special Tools 8349 Crankshaft Rear Oil Seal Installer (2) and C-4171 Driver Handle (3), with a hammer, tap the seal (1) into place. Continue to tap on the driver handle until the seal installer seats against the cylinder block crankshaft bore.
4. Install the flexplate.
5. Install the transmission.

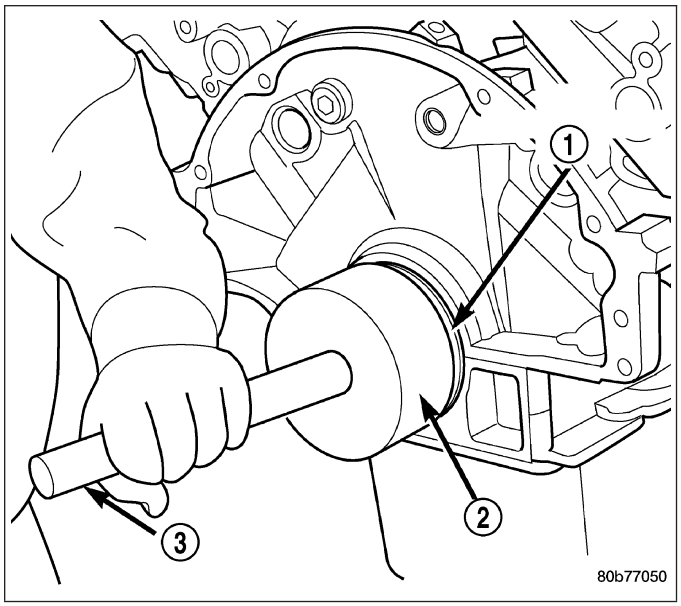

FLEX PLATE

REMOVAL

1. Remove the transmission. (Refer to 21 - TRANSMISSION/TRANSAXLE/AUTOMATIC - 45RFE/545RFE - REMOVAL).
2. Remove the bolts and flexplate (1).

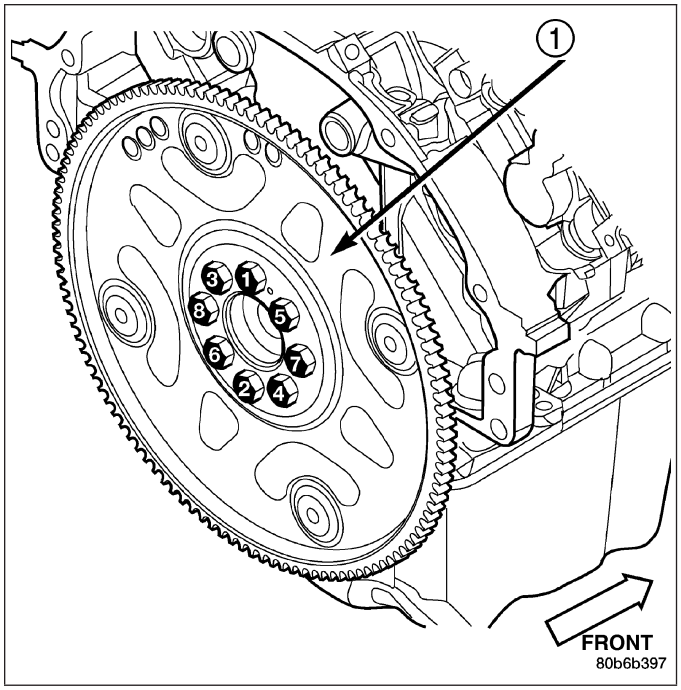

INSTALLATION

1. Position the flexplate onto the crankshaft and install the bolts hand tight.
2. Tighten the flexplate retaining bolts to 60 N·m (45 ft. lbs.) in the sequence shown.
3. Install the transmission. (Refer to 21 - TRANSMISSION/TRANSAXLE/AUTOMATIC - 45RFE/545RFE - INSTALLATION).

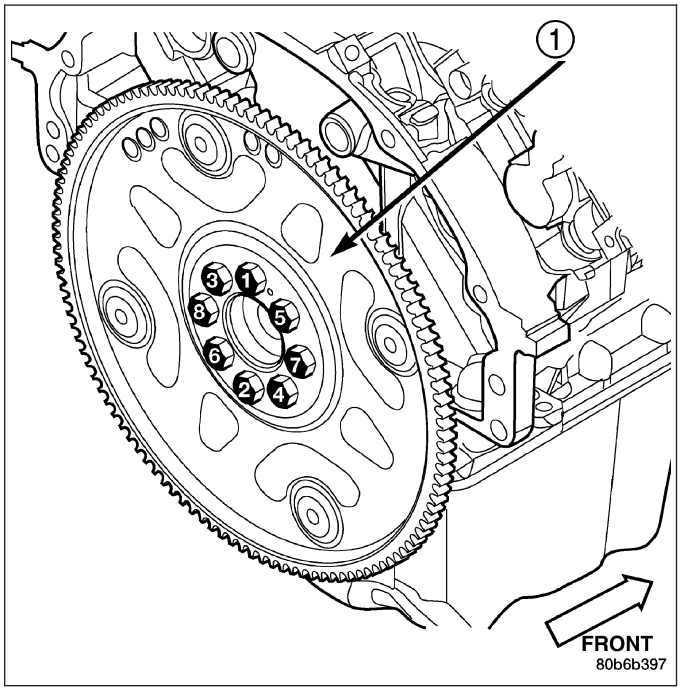

ROD - PISTON & CONNECTING

DESCRIPTION

CAUTION: Do not use a metal stamp to mark connecting rods as damage may result, instead use ink or a scratch awl.

The pistons are made of a high strength aluminum alloy. The anodized top ring groove and crown has been replaced with a coated top ring that is blue in color on the bottom surface. Piston skirts are coated with a solid lubricant (Molykote) to reduce friction and provide scuff resistance. The connecting rods are made of forged powdered metal, with a “fractured cap” design. A pressed fit piston pin is used to attach the piston and connecting rod.

STANDARD PROCEDURE - PISTON FITTING

1. To correctly select the proper size piston, a cylinder bore gauge (2), capable of reading in 0.003 mm (.0001 in.) INCREMENTS is required. If a bore gauge is not available, do not use an inside micrometer.
2. Measure the inside diameter of the cylinder bore (3) at a point 38.0 mm (1.5 inches) below top of bore. Start perpendicular (across or at 90 degrees) to the axis of the crankshaft at point A and then take an additional bore reading 90 degrees to that at point B.

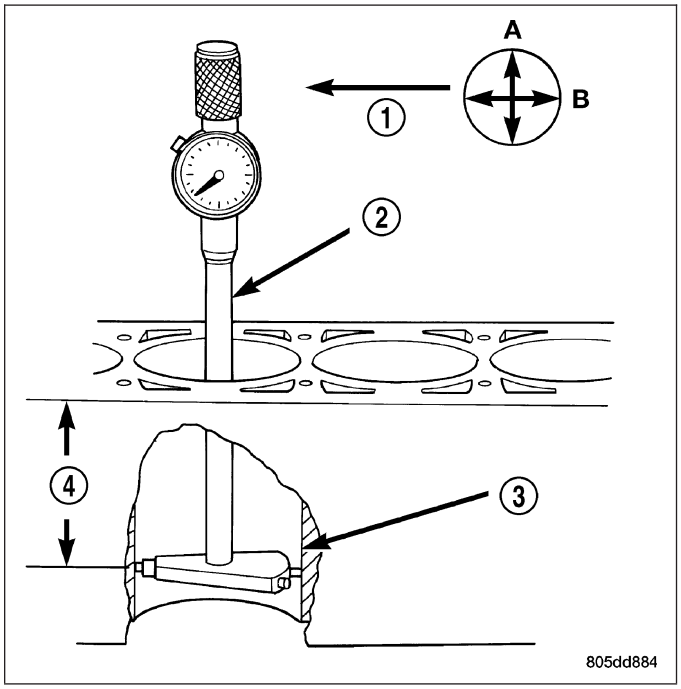

3. The coated pistons (1,2) will be serviced with the piston pin and connecting rod pre-assembled.
4. The coating material is applied to the piston after the final piston machining process. Measuring the outside diameter of a coated piston (1,2) will not provide accurate results. Therefore measuring the inside diameter of the cylinder bore with a dial Bore Gauge is **MANDATORY**. To correctly select the proper size piston, a cylinder bore gauge capable of reading in 0.003 mm (.0001 in.) increments is required.
5. Piston installation into the cylinder bore requires slightly more pressure than that required for non-coated pistons. The bonded coating on the piston will give the appearance of a line-to-line fit with the cylinder bore.

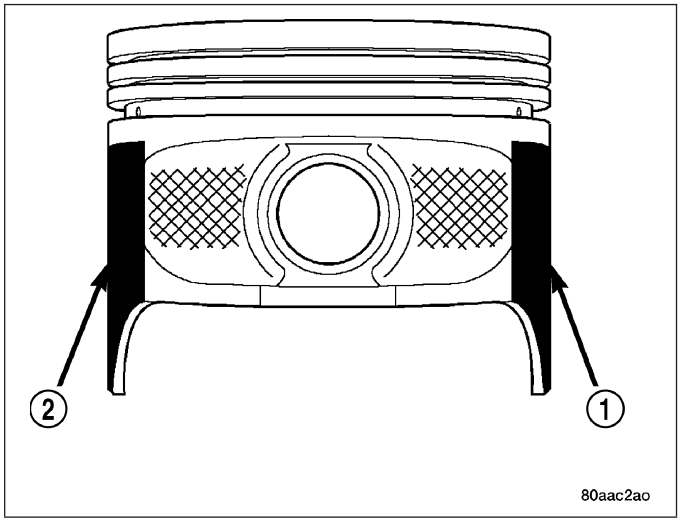

REMOVAL

1. Disconnect negative cable from battery.
2. Remove the following components:
   - Oil pan and gasket/windage tray (Refer to 9 - ENGINE/LUBRICATION/OIL PAN - REMOVAL).
   - Cylinder head covers (Refer to 9 - ENGINE/CYLINDER HEAD/CYLINDER HEAD COVER(S) - REMOVAL) and (Refer to 9 - ENGINE/CYLINDER HEAD/CYLINDER HEAD COVER(S) - REMOVAL).
   - Timing chain cover (Refer to 9 - ENGINE/VALVE TIMING/TIMING BELT / CHAIN COVER(S) - REMOVAL).
   - Cylinder head(s) (Refer to 9 - ENGINE/CYLINDER HEAD - REMOVAL) and (Refer to 9 - ENGINE/CYLINDER HEAD - REMOVAL).
3. If necessary, remove top ridge of cylinder bores with a reliable ridge reamer before removing pistons from cylinder block. **Be sure to keep tops of pistons covered during this operation.** Pistons and connecting rods

must be removed from top of cylinder block. When removing piston and connecting rod assemblies from the engine, rotate crankshaft so the each connecting rod is centered in cylinder bore.

CAUTION: DO NOT use a number stamp or a punch to mark connecting rods or caps, as damage to connecting rods could occur

NOTE: Connecting rods and bearing caps are not interchangeable and should be marked before removing to ensure correct reassembly.

4. Mark connecting rod and bearing cap positions using a permanent ink marker or scribe tool.

CAUTION: Care must be taken not to damage the fractured rod and cap joint face surfaces, as engine damage may occur.

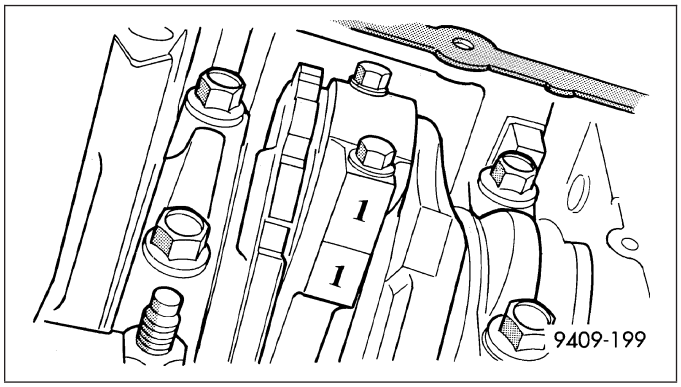

5. Remove connecting rod cap. Install Special Tool 8507 Connecting Rod Guides into the connecting rod being removed. Remove piston from cylinder bore. Repeat this procedure for each piston being removed.

CAUTION: Care must be taken not to nick crankshaft journals, as engine damage may occur

6. Immediately after piston and connecting rod removal, install bearing cap on the mating connecting rod to prevent damage to the fractured cap and rod surfaces.
7. Carefully remove piston rings from piston(s), starting from the top ring down.

CLEANING

CAUTION: DO NOT use a wire wheel or other abrasive cleaning devise to clean the pistons or connecting rods. The pistons have a Moly coating, this coating must not be damaged.

1. Using a suitable cleaning solvent clean the pistons in warm water and towel dry.
2. Use a wood or plastic scraper to clean the ring land grooves.

CAUTION: DO NOT remove the piston pin from the piston and connecting rod assembly.

INSPECTION

Check the connecting rod journal for excessive wear, taper and scoring (Refer to 9 - ENGINE/ENGINE BLOCK/ CONNECTING ROD BEARINGS - STANDARD PROCEDURE).

Check the connecting rod for signs of twist or bending.

Check the piston for taper and elliptical shape before it is fitted into the cylinder bore (Refer to 9 - ENGINE/ENGINE BLOCK/PISTON & CONNECTING ROD - STANDARD PROCEDURE).

Check the piston for scoring, or scraping marks in the piston skirts. Check the ring lands for cracks and/or deterioration.

INSTALLATION

1. Before installing piston and connecting rod assemblies into the bore, install the piston rings.
2. Immerse the piston head and rings in clean engine oil. Position a ring compressor (3) over the piston and rings. Tighten ring compressor. **Ensure position of rings do not change during this operation.**
3. Position bearing onto connecting rod. Ensure that hole in bearing shell aligns with hole in connecting rod. Lubricate bearing surface with clean engine oil.
4. Install Special Tool 8507 Connecting Rod Guides (4) into connecting rod bolt threads.

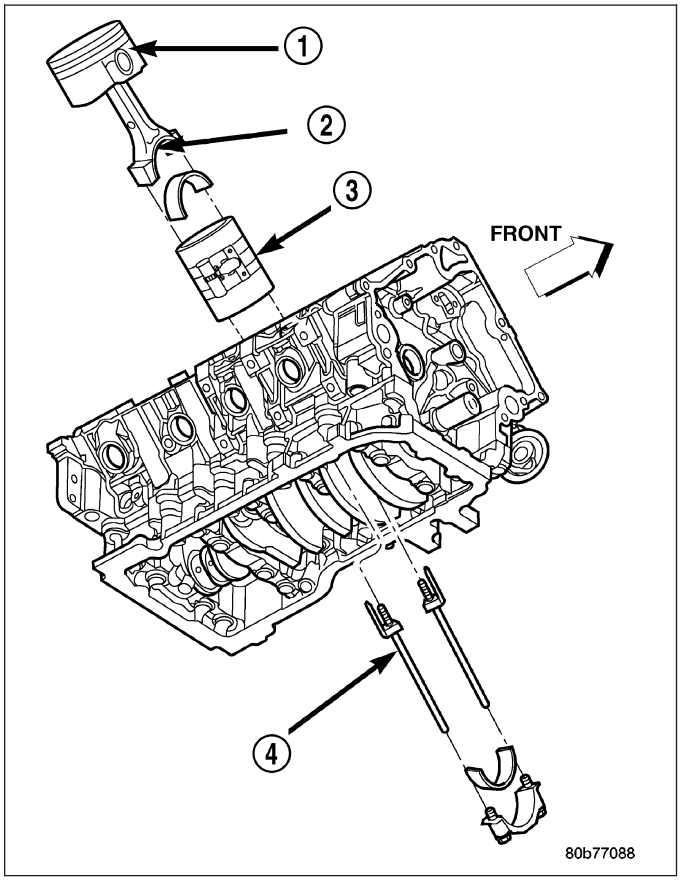

5. The pistons are marked on the piston pin bore surface with an raised “F” indicating installation position (1). This mark must be pointing toward the front of engine on both cylinder banks. The connecting rod oil slinger slot faces the front of the engine.
6. Wipe cylinder bore clean and lubricate with engine oil.
7. Rotate crankshaft until connecting rod journal is on the center of cylinder bore. Insert rod and piston into cylinder bore and carefully position connecting rod guides over crankshaft journal.
8. Tap piston down in cylinder bore using a hammer handle. While at the same time, guide connecting rod into position on rod journal.

CAUTION: Connecting Rod Bolts are Torque to Yield Bolts and Must Not Be Reused. Always replace the Rod Bolts whenever they are loosened or removed.

9. Lubricate rod bolts and bearing surfaces with engine oil. Install connecting rod cap and bearing. Tighten bolts to 27 N·m (20 ft. lbs.) plus 90°.
10. Install the following components:

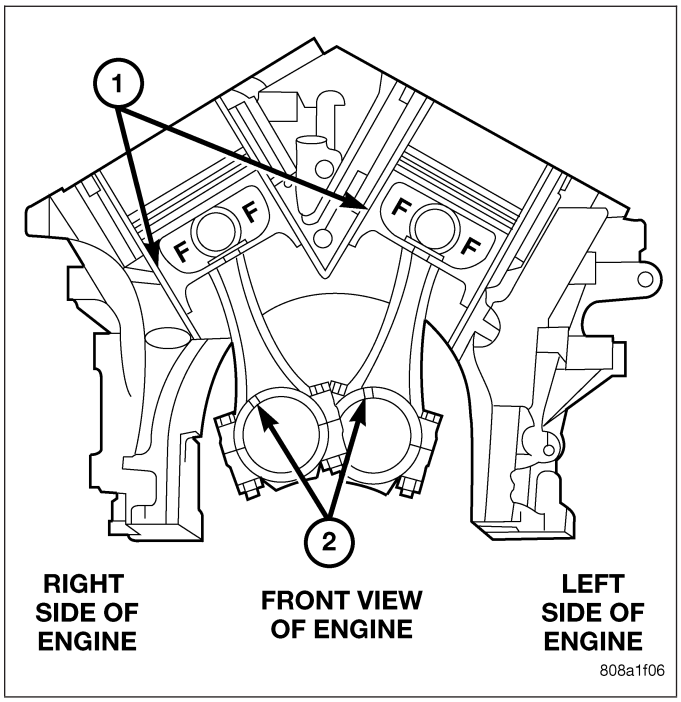

- Cylinder head(s). (Refer to 9 - ENGINE/CYLINDER HEAD - INSTALLATION).
- Timing chain and cover. (Refer to 9 - ENGINE/VALVE TIMING/TIMING BELT / CHAIN COVER(S) - INSTALLATION).
- Cylinder head covers (Refer to 9 - ENGINE/CYLINDER HEAD/CYLINDER HEAD COVER(S) - INSTALLATION).
- Oil pan and gasket/windage tray. (Refer to 9 - ENGINE/LUBRICATION/OIL PAN - INSTALLATION).

11. Fill crankcase with proper engine oil to correct level.
12. Connect negative cable to battery.

RINGS - PISTON

STANDARD PROCEDURE - PISTON RING FITTING

Before reinstalling used rings or installing new rings, the ring clearances must be checked.

1. Wipe the cylinder bore clean.
2. Insert the ring in the cylinder bore.

NOTE: The ring gap measurement must be made with the ring positioned at least 12mm (0.50 inch.) from bottom of cylinder bore.

3. Using a piston, to ensure that the ring is squared in the cylinder bore, slide the ring downward into the cylinder.
4. Using a feeler gauge (1) check the ring end gap. Replace any rings not within specification.

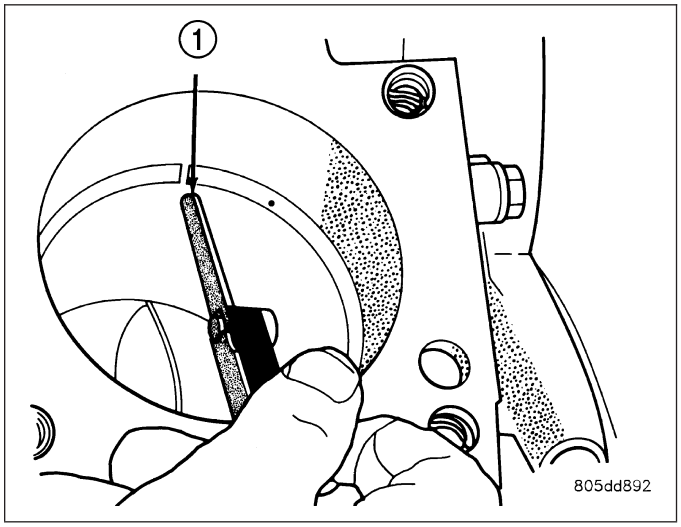

PISTON RING SIDE CLEARANCE

NOTE: Make sure the piston ring grooves are clean and free of nicks and burrs.

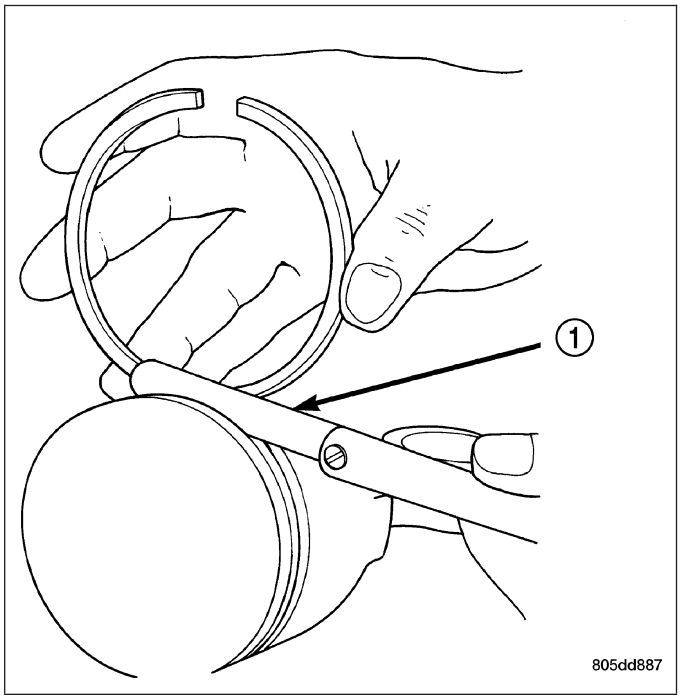

5. Measure the ring side clearance as shown make sure the feeler gauge (1) fits snugly between the ring land and the ring. Replace any ring not within specification.
6. Rotate the ring around the piston, the ring must rotate in the groove with out binding.

PISTON RING SPECIFICATION CHART

Ring Position	Groove Clearance	Maximum Clearance
Upper Ring	.051-.094 mm (0.0020-.0037 in.)	0.11 mm (0.004 in.)
Intermediate Ring	0.04-0.08 mm (0.0016-0.0031 in.)	0.10 mm (0.004 in.)
Oil Control Ring (Steel Rails)	.019-.229 mm (.0007-.0090 in.)	.25 mm (0.010 in.)
Ring Position	**Ring Gap**	**Wear Limit**
Upper Ring	0.20-0.36 mm (0.0079-0.0142 in.)	0.43 mm (0.0017 in.)
Intermediate Ring	0.37-0.63 mm (0.0146-0.0249 in.)	0.74 mm (0.029 in.)
Oil Control Ring (Steel Rail)	0.025-0.76 mm (0.0099- 0.03 in.)	1.55 mm (0.061 in.)

7. The No. 1 and No. 2 piston rings have a different cross section. Ensure No. 2 ring is installed with manufacturers I.D. mark (Dot) facing up, towards top of the piston.

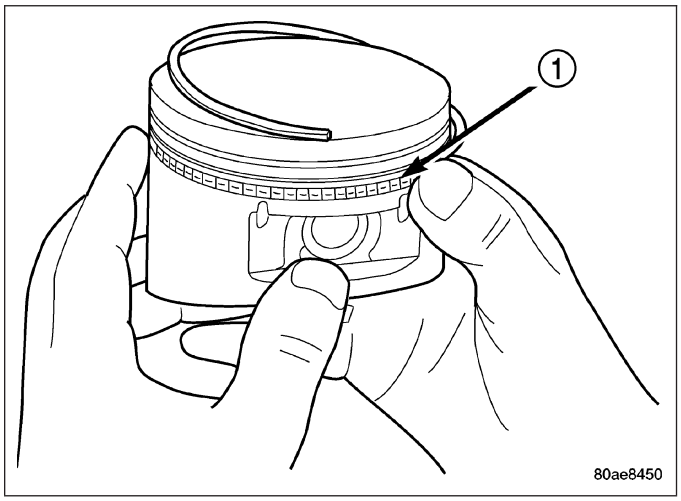

NOTE: Piston rings are installed in the following order:
- **Oil ring expander.**
- **Upper oil ring side rail.**
- **Lower oil ring side rail.**
- **No. 2 Intermediate piston ring.**
- **No. 1 Upper piston ring.**

8. Install the oil ring expander.
9. Install upper side rail (1) by placing one end between the piston ring groove and the expander ring. Hold end firmly and press down the portion to be installed until side rail is in position. Repeat this step for the lower side rail.

10. Install No. 2 intermediate piston ring using a piston ring installer.
11. Install No. 1 upper piston ring using a piston ring installer.

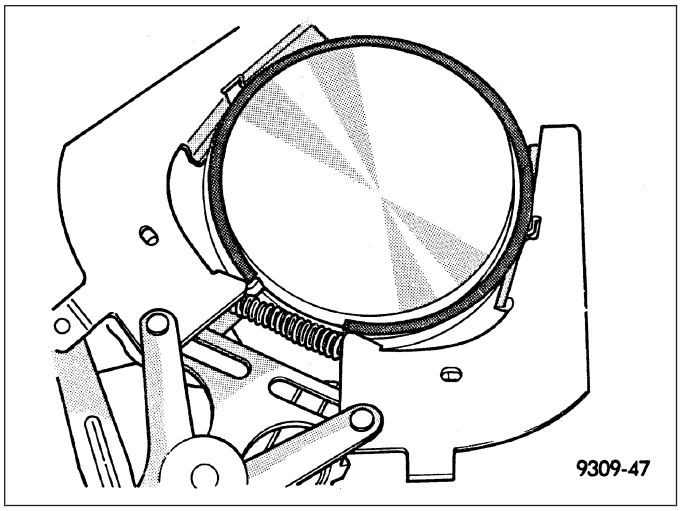

12. Position piston ring end gaps as shown in. It is important that expander ring gap (5) is at least 45° from the side rail gaps, but not on the piston pin center or on the thrust direction.

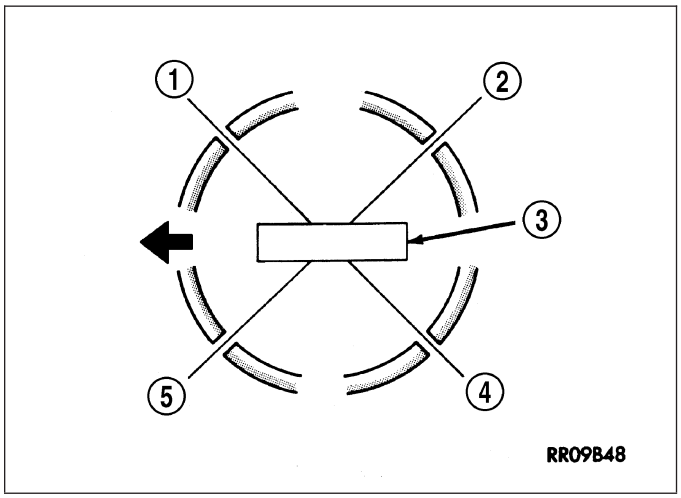

DAMPER - CRANKSHAFT

REMOVAL

1. Disconnect negative cable from battery.
2. Remove accessory drive belt (Refer to 7 - COOLING/ACCESSORY DRIVE/DRIVE BELTS - REMOVAL).
3. Drain cooling system (Refer to 7 - COOLING - STANDARD PROCEDURE).
4. Remove radiator upper hose.
5. Remove upper fan shroud.
6. Using Special Tools 6958 Spanner with Adapter Pins 8346 (1), loosen fan and viscous assembly from water pump.
7. Remove fan and viscous assembly.
8. Disconnect electrical connector for fan mounted inside radiator shroud.

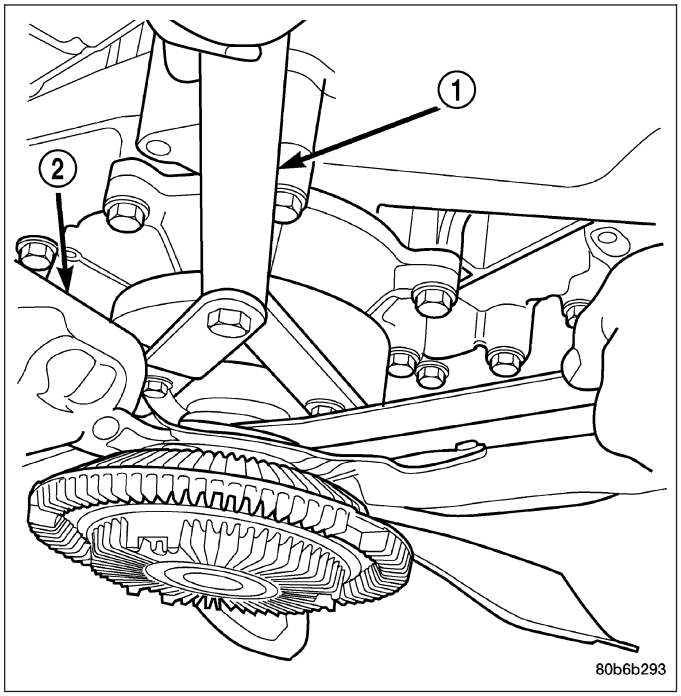

NOTE: Transmission cooler line snaps into shroud lower right hand corner.

9. Remove crankshaft damper bolt.
10. Remove damper using Special Tools 8513 Insert and 1026 Three Jaw Puller (2).

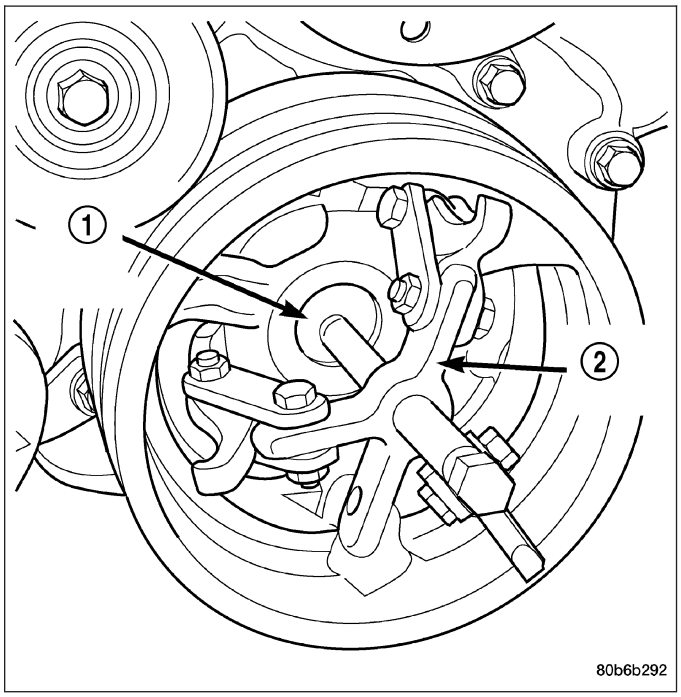

INSTALLATION

CAUTION: To prevent severe damage to the Crankshaft, Damper or Special Tool 8512–A, thoroughly clean the damper bore and the crankshaft nose before installing Damper.

1. Align crankshaft damper slot with key in crankshaft. Slide damper onto crankshaft slightly.

CAUTION: Special Tool 8512–A, is assembled in a specific sequence. Failure to assemble this tool in this sequence can result in tool failure and severe damage to either the tool or the crankshaft.

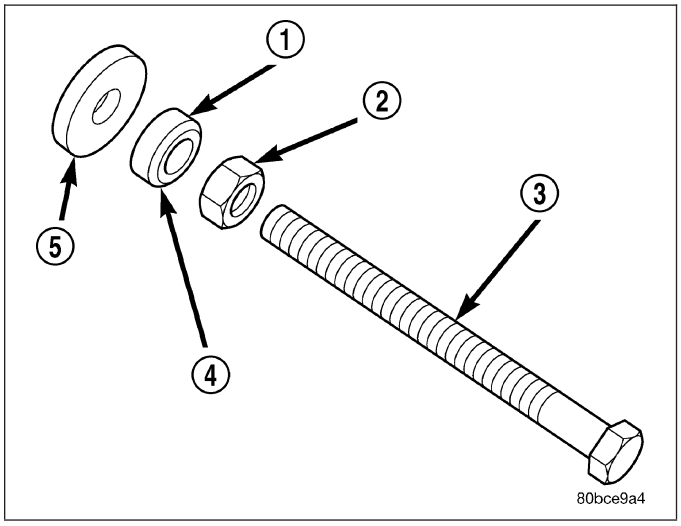

2. Assemble Special Tool 8512–A as follows, The nut (2) is threaded onto the shaft first. Then the roller bearing (1) is placed onto the threaded rod (3) (The hardened bearing surface of the bearing (1) **MUST**face the nut (2). Then the hardened washer (5)slides onto the threaded rod. Once assembled coat the threaded rod's threads with Mopar® Nickel Anti-Seize or equivalent.

3. Using Special Tool 8512–A, press damper onto crankshaft (1).
4. Install then tighten crankshaft damper bolt to 175 N·m (130 ft. lbs.).
5. Install fan blade assembly (Refer to 7 - COOLING/ ENGINE/FAN DRIVE VISCOUS CLUTCH - INSTALLATION).
6. Install radiator upper shroud and tighten fasteners to 11 N·m (95 in. lbs.).
7. Connect electrical connector for shroud fan.
8. Install radiator upper hose.
9. Install accessory drive belt (Refer to 7 - COOLING/ ACCESSORY DRIVE/DRIVE BELTS - INSTALLATION).
10. Refill cooling system (Refer to 7 - COOLING - STANDARD PROCEDURE).
11. Connect negative cable to battery.

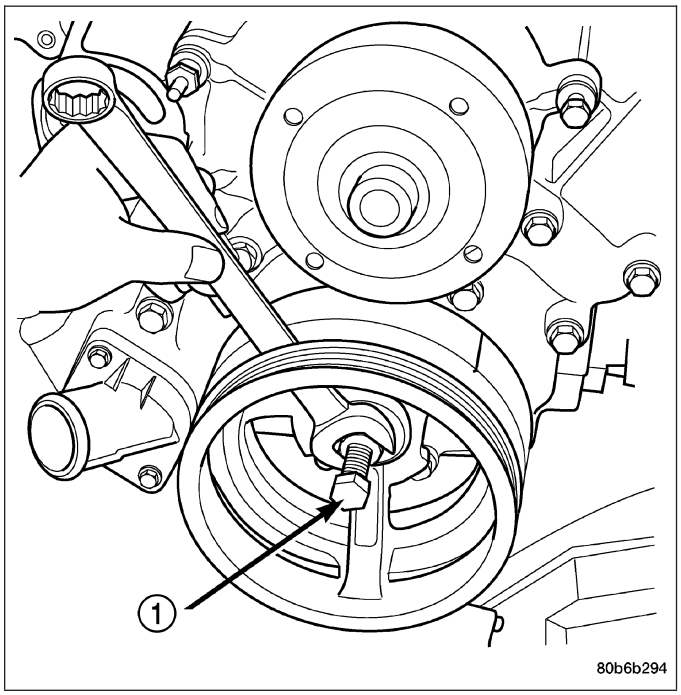

COVER - STRUCTURAL

DESCRIPTION

The structural dust cover is made of die cast aluminum and joins the lower half of the transmission bell housing to the engine bedplate.

OPERATION

The structural cover provides additional powertrain stiffness and reduces noise and vibration.

REMOVAL

1. Raise vehicle on hoist.
2. Remove the left hand exhaust pipe from exhaust manifold.
3. Loosen the right hand exhaust manifold-to-exhaust pipe retaining bolts.
4. Remove the eight bolts (1,2,3) retaining structural cover in the sequence shown.
5. Pivot the exhaust pipe downward and remove the structural cover.

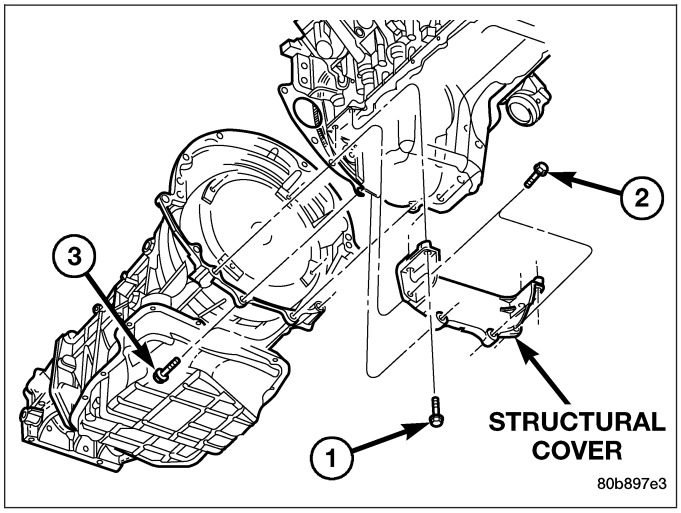

INSTALLATION

CAUTION: The structural cover must be installed as described in the following steps. Failure to do so will cause severe damage to the cover.

1. Position the structural cover in the vehicle.
2. Install all four bolts (1,2,3)retaining the cover-to-engine. DO NOT tighten the bolts at this time.
3. Install the four cover-to-transmission bolts (1,2,3). Do NOT tighten at this time.

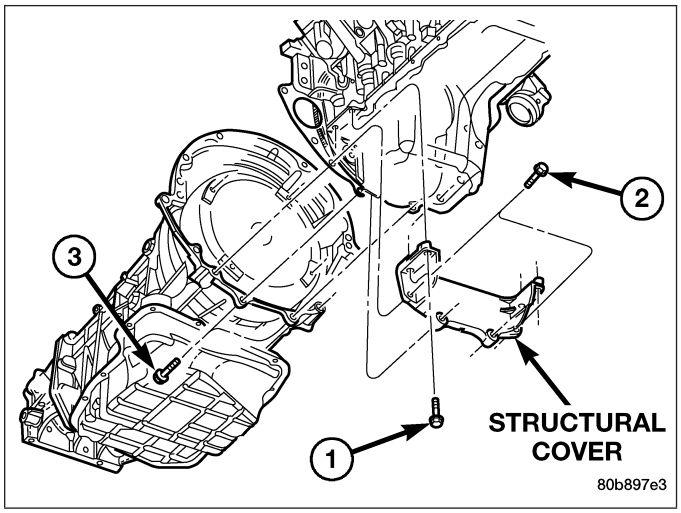

CAUTION: The structural cover must be held tightly against both the engine and the transmission bell housing during tightening sequence. Failure to do so may cause damage to the cover.

4. Starting with the two rear cover-to-engine bolts, tighten bolts (1) to 54 N·m (40 ft. lbs.), then tighten bolts (2) and (3) to 54 N·m (40 ft. lbs.) in the sequence shown.
5. Install the exhaust pipe on left hand exhaust manifold.
6. Tighten exhaust manifold-to-exhaust pipe retaining bolts to 20–26 N·m (15–20 ft. lbs.).

MOUNT - FRONT

REMOVAL

2WD

1. Disconnect the negative cable from the battery.

CAUTION: Remove the viscous fan before raising engine. Failure to do so may cause damage to the fan blade, fan clutch and fan shroud.

2. Remove the viscous fan (Refer to 7 - COOLING/ENGINE/FAN DRIVE VISCOUS CLUTCH - REMOVAL).
3. Raise the vehicle.

4. Remove the engine oil filter.
5. Remove the oil drain trough.
6. Support the engine with a suitable jack and a block of wood across the full width of the engine oil pan.
7. Support the front axle with a suitable jack.
8. Remove the (4) bolts that attach the engine mounts to the front axle.
9. Remove the (3) bolts that attach the front axle to the left engine bracket.
10. Lower the front axle.
11. Remove the through bolts
12. Raise the engine far enough to be able to remove the left and right engine mounts.
13. Remove the (8) mount to engine attaching bolts
14. Remove the engine mounts.

4WD

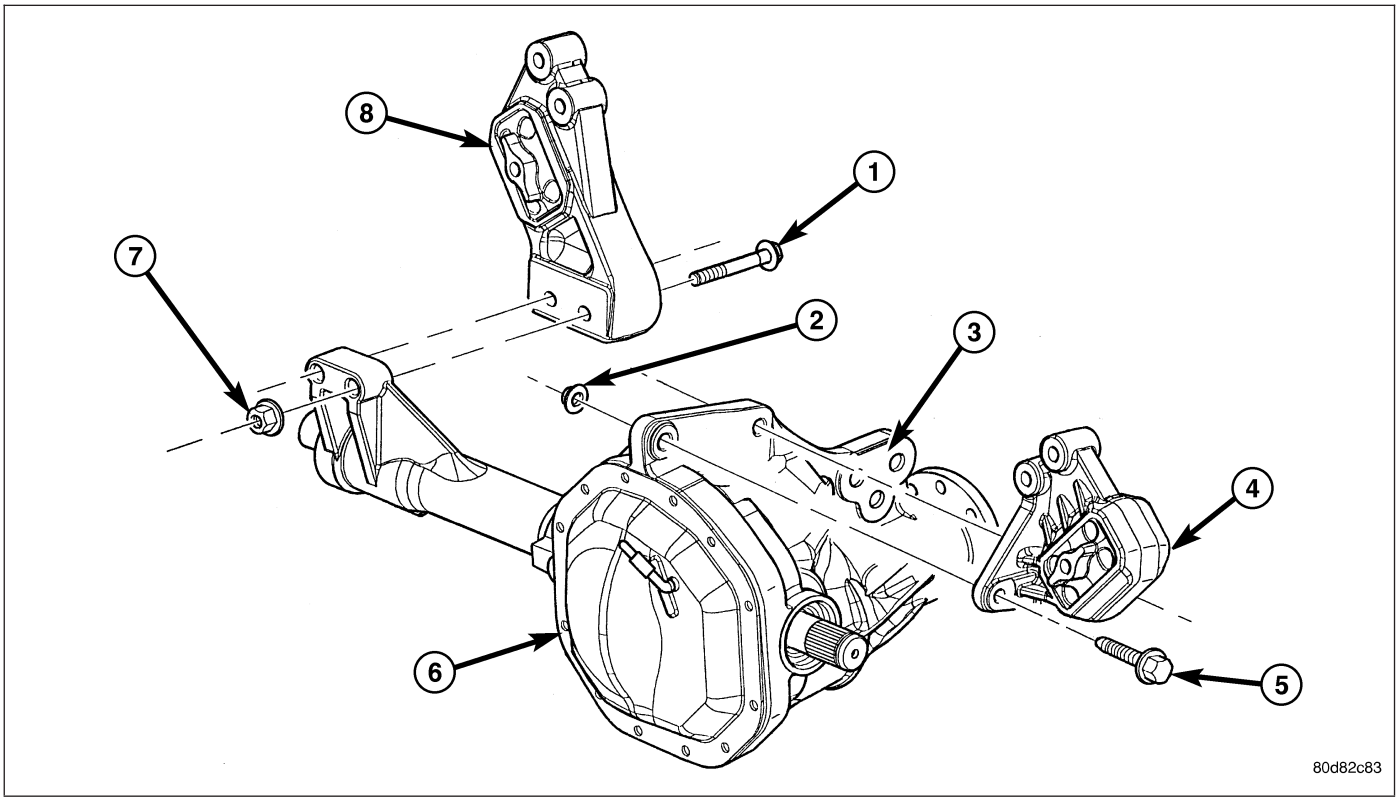

1. Disconnect the negative cable from the battery.
2. Remove the viscous fan.
3. Raise the vehicle.
4. Remove the skid plate.
5. Remove the front crossmember.
6. Remove the engine oil filter.
7. Remove the oil drain trough.
8. Support the engine with a suitable jack and a block of wood across the full width of the engine oil pan.
9. Support the front axle with a suitable jack.
10. Remove the 4 bolts that attach the engine mounts to the front axle (6).
11. Remove the 3 bolts (3) that attach the front axle to the left engine bracket.
12. Lower the front axle.
13. Remove the through bolts
14. Raise the engine far enough to be able to remove the left and right engine mounts.

15. Remove the engine mounts (4,8).

16. Remove the engine mount brackets (2).

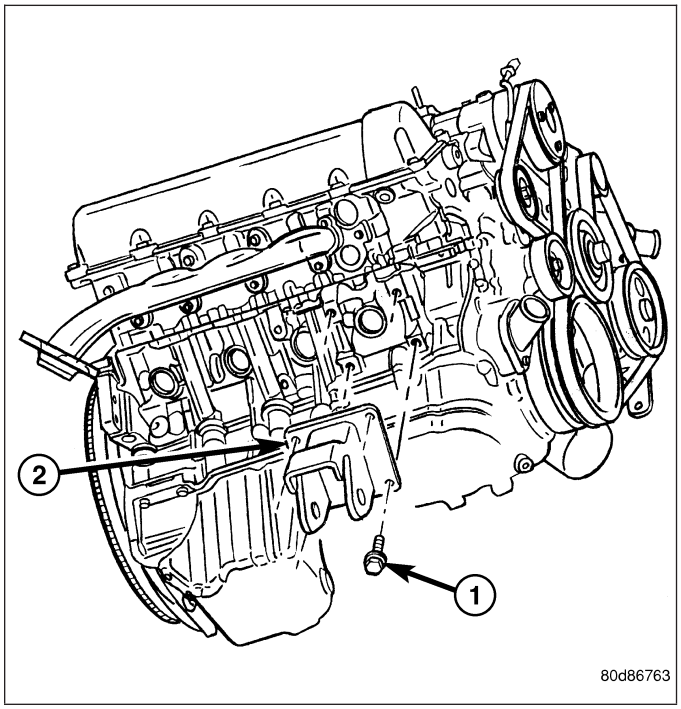

INSTALLATION

2WD

NOTE: For mount to engine block and left engine bracket to front axle bolts, apply Mopar® Lock and Seal Adhesive, Medium Strength Threadlocker.

1. Install the right and left side engine mounts to the engine block with (8) bolts. Torque bolts to 54 N·m (40 ft. lbs.).
2. Insert the (2) through bolts into the right and left side engine mounts and loose assemble the two nuts onto the through bolts.
3. Lower the engine until the through bolts rest onto the slots in the frame brackets.
4. Tighten the through bolt nuts to 94 N·m (70 ft. lbs.).
5. Install the oil drain trough.
6. Install the engine oil filter.
7. Lower the vehicle.
8. Install the viscous fan (Refer to 7 - COOLING/ENGINE/FAN DRIVE VISCOUS CLUTCH - REMOVAL).
9. Reconnect the negative battery cable.

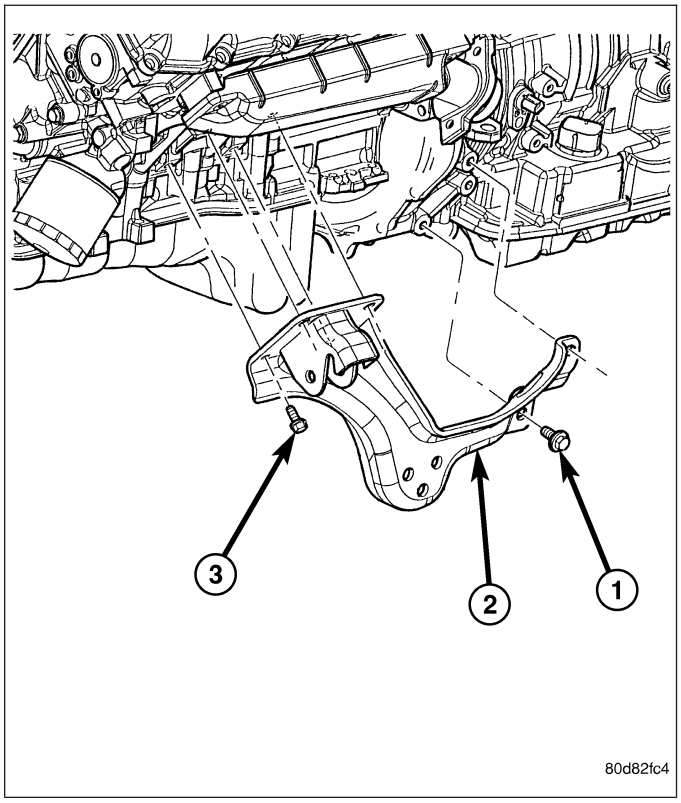

4WD

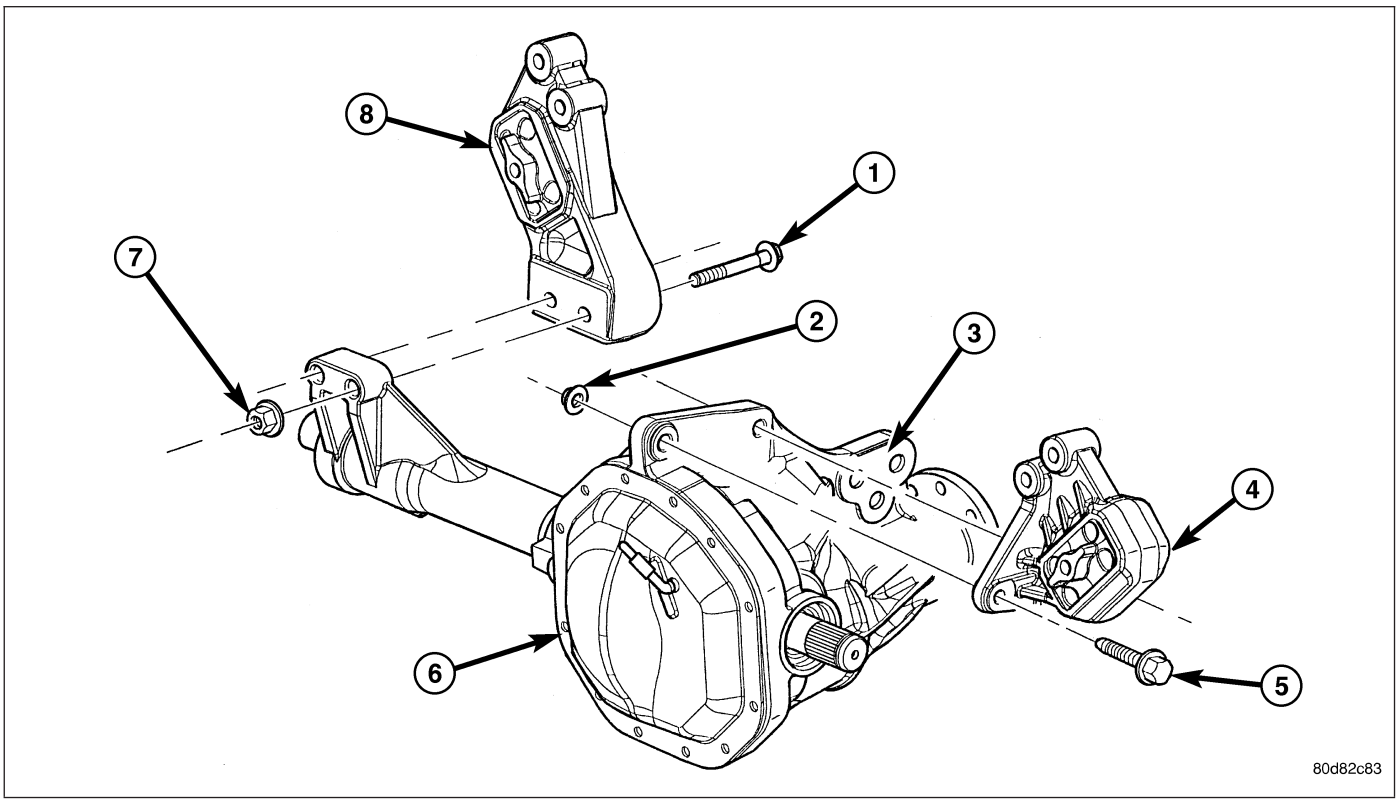

NOTE: For mount to engine block and left engine bracket to front axle bolts, apply Mopar® Lock and Seal Adhesive, Medium Strength Threadlocker.

1. Install the right and left side engine mounts (4,8) to the front axle (6). Torque nuts to 94 N·m (70 ft. lbs.).
2. Raise the front axle into the frame and install the left and right side through bolts. Torque nuts to 94 N·m (70 ft. lbs.).
3. Insert the two upper through bolts into the right and left side engine mounts and loose assemble the two nuts onto the through bolts.
4. Lower the engine until the left and right side engine brackets rest on the through bolts, and the lower engine bracket through holes align with the engine mounts, and the left engine bracket holes align with the front axle slots.
5. Loose assemble the (3) bolts that attach the front axle to the left engine bracket.
6. Loose assemble the lower through bolts.
7. Torque the nuts for the (4) through bolts to 101 N·m (75 ft. lbs.).
8. Torque the (3) bolts that attach the front axle to the left engine bracket to 101 N·m (75 ft. lbs.).
9. Install the oil drain trough.
10. Install the engine oil filter.
11. Install the front crossmember.
12. Install the skid plate.
13. Lower the vehicle.
14. Install the viscous fan (Refer to 7 - COOLING/ENGINE/FAN DRIVE VISCOUS CLUTCH - REMOVAL).
15. Reconnect the negative battery cable.

MOUNT - REAR

REMOVAL

1. Raise the vehicle on a hoist.
2. Using a suitable jack, support transmission.
3. Remove the nuts from the transmission mount (1).
4. Remove the two bolts that attach the transmission mount to the engine bracket.
5. Raise the transmission enough to remove the mount from the crossmember (2).
6. Remove the mount (1).

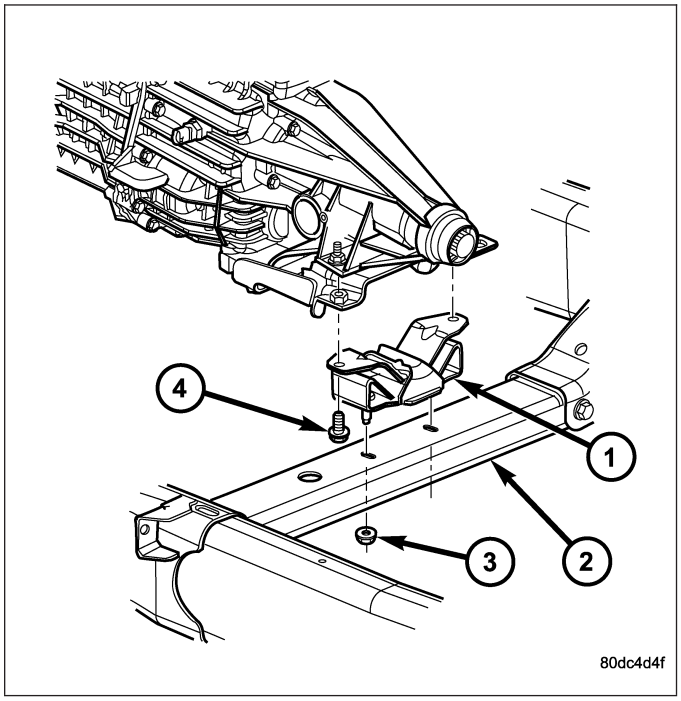

INSTALLATION

NOTE: Threadlocking compound must be applied to the bolts before installation.

1. Install the two bolts that attach the transmission mount to the transmission bracket.
2. Torque the bolts to 61N·m (45 ft.lbs.) torque.
3. Lower the transmission so the transmission mount rests on the crossmember, and the studs of the transmission mount are aligned in the slots in the crossmember.
4. Install the nuts onto the transmission mount studs through the crossmember access slot.
5. Torque the nuts to 54N·m (40 ft. lbs.).

LUBRICATION

DESCRIPTION

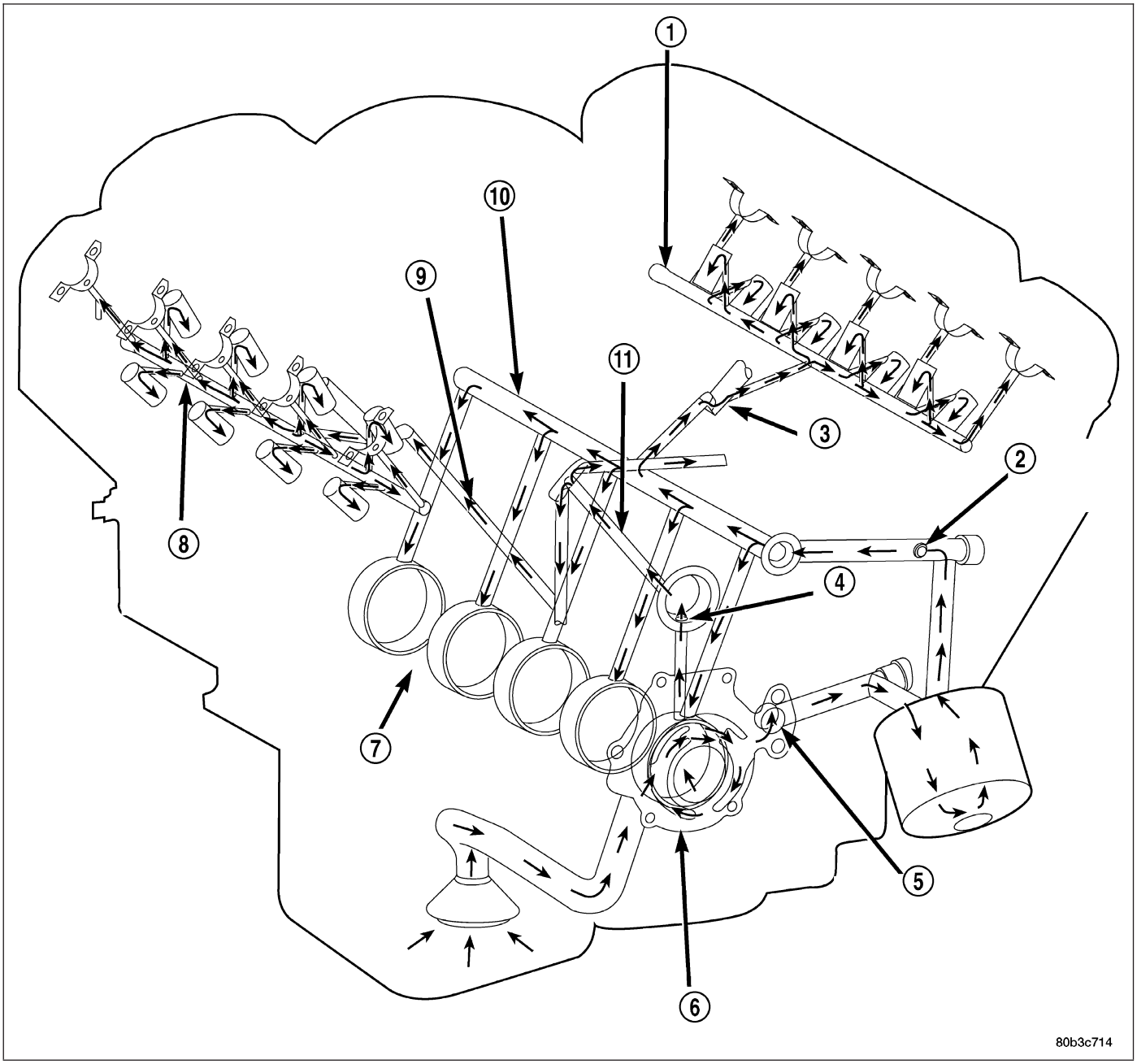

The lubrication system is a full flow filtration pressure feed type.

OPERATION

Oil from the oil pan is pumped by a gerotor type oil pump directly mounted to the crankshaft nose. Oil pressure is controlled by a relief valve mounted inside the oil pump housing.

The camshaft exhaust valve lobes and rocker arms are lubricated through a small hole in the rocker arm; oil flows through the lash adjuster then through the rocker arm and onto the camshaft lobe. Due to the orentation of the rocker arm, the camshaft intake lobes are not lubed in the same manner as the exhaust lobes. The intake lobes are lubed through internal passages in the camshaft. Oil flows through a bore in the number 3 camshaft bearing bore, and as the camshaft turns, a hole in the camshaft aligns with the hole in the camshaft bore allowing engine oil to

enter the camshaft tube. The oil then exits through 1.6mm (0.063 in.) holes drilled into the intake lobes, lubricating the lobes and the rocker arms.

Engine Lubrication Flow Chart—Block: Table 1

FROM	TO
Oil Pickup Tube	Oil Pump
Oil Pump	Oil Filter
Oil Filter	Block Main Oil Gallery
Block Main Oil Gallery	1. Crankshaft Main Journal 2. Left Cylinder Head* 3. Right Cylinder Head*
Crankshaft Main Journals	Crankshaft Rod Journals
Crankshaft Number One Main Journal	1.Front Timing Chain Idler Shaft 2.Both Secondary Chain Tensioners
Left Cylinder Head	See Table 2
Right Cylinder Head	See Table 2
* The cylinder head gaskets have an oil restricter to control oil flow to the cylinder heads.	

Engine Lubrication Flow Chart—Cylinder Heads: Table 2

FROM	TO
Cylinder Head Oil Port (in bolt hole)	Diagonal Cross Drilling to Main Oil Gallery
Main Oil Gallery (drilled through head from rear to front)	1. Base of Camshaft Towers 2. Lash Adjuster Towers
Base of Camshaft Towers	Vertical Drilling Through Tower to Camshaft Bearings**
Lash Adjuster Towers	Diagonal Drillings to Hydraulic Lash Adjuster Pockets
** The number three camshaft bearing journal feeds oil into the hollow camshaft tubes. Oil is routed to the intake lobes, which have oil passages drilled into them to lubricate the rocker arms.	

DIAGNOSIS AND TESTING

DIAGNOSIS AND TESTING - CHECKING ENGINE OIL PRESSURE

1. Remove oil pressure sending unit (2) and install gauge assembly C-3292.
2. Run engine until thermostat opens.
3. Oil Pressure:
   - Curb Idle - 25 kPa (4 psi) minimum
   - 3000 rpm - 170 - 758 kPa (25 - 110 psi)
4. If oil pressure is 0 at idle, shut off engine. Check for a clogged oil pick-up screen or a pressure relief valve stuck open.

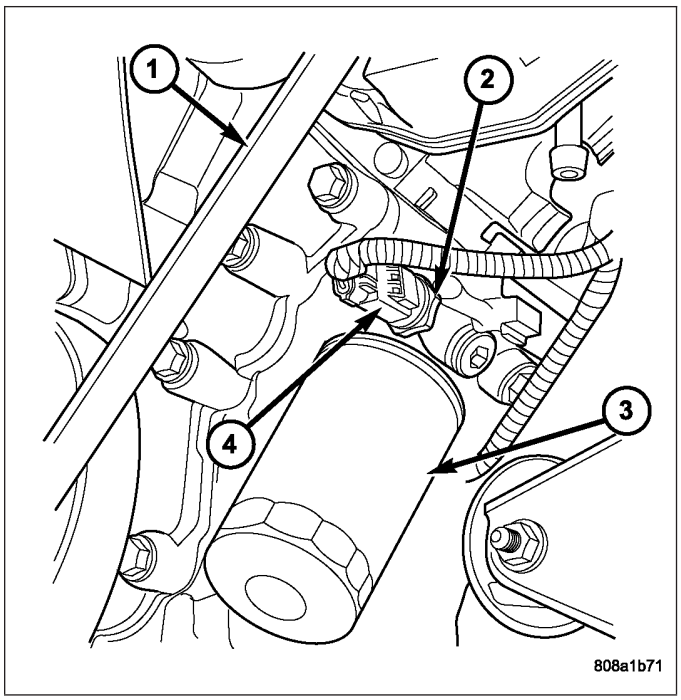

DIAGNOSIS AND TESTING - ENGINE OIL LEAK

Begin with a thorough visual inspection of the engine, particularly at the area of the suspected leak. If an oil leak source is not readily identifiable, the following steps should be followed:

1. Do not clean or degrease the engine at this time because some solvents may cause rubber to swell, temporarily stopping the leak.
2. Add an oil soluble dye (use as recommended by manufacturer). Start the engine and let idle for approximately 15 minutes. Check the oil dipstick to make sure the dye is thoroughly mixed as indicated with a bright yellow color under a black light.
3. Using a black light, inspect the entire engine for fluorescent dye, particularly at the suspected area of oil leak. If the oil leak is found and identified, repair per service manual instructions.
4. If dye is not observed, drive the vehicle at various speeds for approximately 24 km (15 miles), and repeat inspection.If the oil leak source is not positively identified at this time, proceed with the air leak detection test method.

Air Leak Detection Test Method

1. Disconnect the breather cap to air cleaner hose at the breather cap end. Cap or plug breather cap nipple.
2. Remove the PCV valve from the cylinder head cover. Cap or plug the PCV valve grommet.
3. Attach an air hose with pressure gauge and regulator to the dipstick tube.

CAUTION: Do not subject the engine assembly to more than 20.6 kPa (3 PSI) of test pressure.

4. Gradually apply air pressure from 1 psi to 2.5 psi maximum while applying soapy water at the suspected source. Adjust the regulator to the suitable test pressure that provide the best bubbles which will pinpoint the leak source. If the oil leak is detected and identified, repair per service manual procedures.
5. If the leakage occurs at the rear oil seal area, refer to the section, Inspection for Rear Seal Area Leak.
6. If no leaks are detected, turn off the air supply and remove the air hose and all plugs and caps. Install the PCV valve and breather cap hose.

7. Clean the oil off the suspect oil leak area using a suitable solvent. Drive the vehicle at various speeds approximately 24 km (15 miles). Inspect the engine for signs of an oil leak by using a black light.

INSPECTION FOR REAR SEAL AREA LEAKS

Since it is sometimes difficult to determine the source of an oil leak in the rear seal area of the engine, a more involved inspection is necessary. The following steps should be followed to help pinpoint the source of the leak.

If the leakage occurs at the crankshaft rear oil seal area:

1. Disconnect the battery.
2. Raise the vehicle.
3. Remove torque converter or clutch housing cover and inspect rear of block for evidence of oil. Use a black light to check for the oil leak:
   a. Circular spray pattern generally indicates seal leakage or crankshaft damage.
   b. Where leakage tends to run straight down, possible causes are a porous block, distributor seal, camshaft bore cup plugs oil galley pipe plugs, oil filter runoff, and main bearing cap to cylinder block mating surfaces.
4. If no leaks are detected, pressurize the crankcase as outlined in the, Inspection (Engine oil Leaks in general)

CAUTION: Do not exceed 20.6 kPa (3 psi).

5. If the leak is not detected, very slowly turn the crankshaft and watch for leakage. If a leak is detected between the crankshaft and seal while slowly turning the crankshaft, it is possible the crankshaft seal surface is damaged. The seal area on the crankshaft could have minor nicks or scratches that can be polished out with emery cloth.

CAUTION: Use extreme caution when crankshaft polishing is necessary to remove minor nicks and scratches. The crankshaft seal flange is especially machined to complement the function of the rear oil seal.

6. For bubbles that remain steady with shaft rotation, no further inspection can be done until disassembled.

OIL

STANDARD PROCEDURE - ENGINE OIL SERVICE

The engine oil level indicator (2) is located at the right rear of the engine on the 4.7L engines.

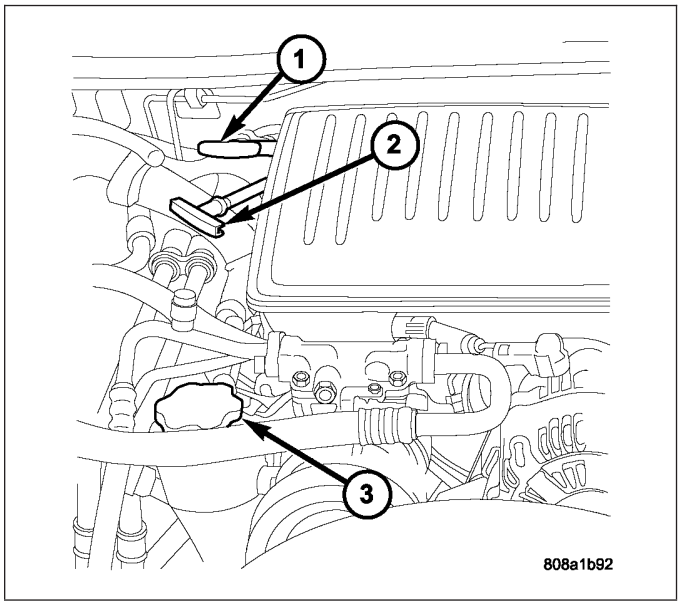

CRANKCASE OIL LEVEL INSPECTION

CAUTION: Do not overfill crankcase with engine oil, pressure loss or oil foaming can result.

Inspect engine oil level approximately every 800 kilometers (500 miles). Unless the engine has exhibited loss of oil pressure, run the engine for about five minutes before checking oil level. Checking engine oil level on a cold engine is not accurate.

To ensure proper lubrication of an engine, the engine oil must be maintained at an acceptable level. The acceptable levels are indicated between the ADD and SAFE marks on the engine oil dipstick.

1. Position vehicle on level surface.
2. With engine OFF, allow approximately ten minutes for oil to settle to bottom of crankcase, remove engine oil dipstick.
3. Wipe dipstick clean.
4. Install dipstick and verify it is seated in the tube.
5. Remove dipstick, with handle held above the tip, take oil level reading.
6. Add oil only if level is below the ADD mark on dipstick.

ENGINE OIL CHANGE

Change engine oil at mileage and time intervals described in Maintenance Schedules.

Run engine until achieving normal operating temperature.

1. Position the vehicle on a level surface and turn engine off.
2. Hoist and support vehicle on safety stands.
3. Remove oil fill cap.
4. Place a suitable drain pan under crankcase drain.
5. Remove drain plug from crankcase and allow oil to drain into pan. Inspect drain plug threads for stretching or other damage. Replace drain plug if damaged.
6. Install drain plug in crankcase.
7. Lower vehicle and fill crankcase with specified type and amount of engine oil described in this section.
8. Install oil fill cap.
9. Start engine and inspect for leaks.
10. Stop engine and inspect oil level.

NOTE: Care should be exercised when disposing used engine oil after it has been drained from a vehicle engine. Refer to the WARNING at beginning of this section.

FILTER - ENGINE OIL

REMOVAL

All engines are equipped with a high quality full-flow, disposable type oil filter. DaimlerChrysler Corporation recommends a Mopar® or equivalent oil filter be used.

1. Position a drain pan under the oil filter.
2. Using a suitable oil filter wrench loosen filter.
3. Rotate the oil filter counterclockwise to remove it from the cylinder block oil filter boss.
4. When filter separates from cylinder block oil filter boss, tip gasket end upward to minimize oil spill. Remove filter from vehicle.

NOTE: Make sure filter gasket was removed with filter.

5. With a wiping cloth, clean the gasket sealing surface of oil and grime.

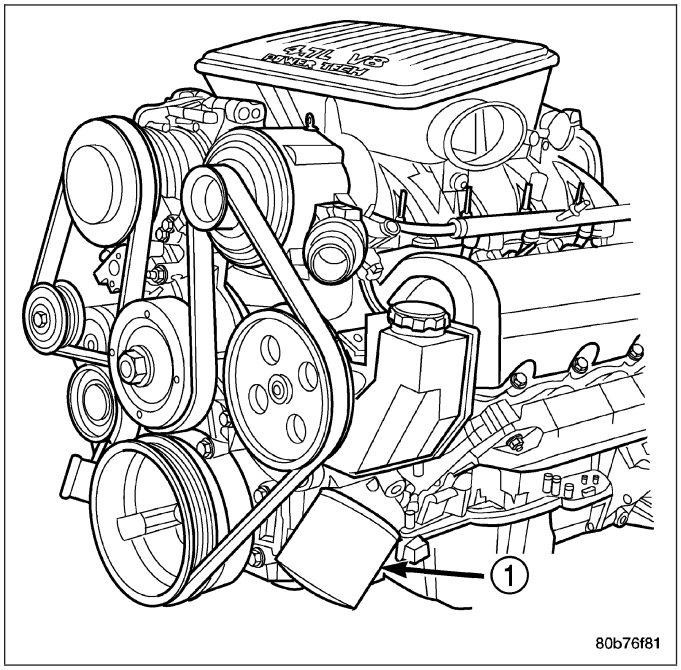

INSTALLATION

1. Lightly lubricate oil filter gasket (2) with engine oil.
2. Thread filter (3) onto adapter nipple. When gasket makes contact with sealing surface, hand tighten filter one full turn, do not over tighten.
3. Add oil, verify crankcase oil level and start engine. Inspect for oil leaks.

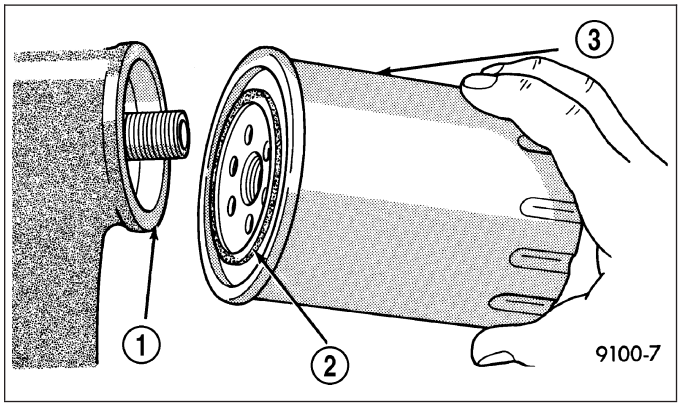

PAN - ENGINE OIL

REMOVAL

1. Disconnect the negative battery cable.
2. Install engine support fixture special tool # 8534. **Do not raise engine at this time.**
3. Loosen both left and right side engine mount through bolts. Do not remove bolts.
4. Remove the structural dust cover, if equipped.
5. Drain engine oil.
6. Remove the front crossmember (Refer to 13 - FRAME & BUMPERS/FRAME/FRONT CROSSMEMBER - REMOVAL).

CAUTION: Only raise the engine enough to provide clearance for oil pan removal. Check for proper clearance at fan shroud to fan and cowl to intake manifold.

7. Raise engine using special tool # 8534 to provide clearance to remove oil pan.

NOTE: Do not pry on oil pan or oil pan gasket. Gasket is integral to engine windage tray and does not come out with oil pan.

8. Remove the oil pan mounting bolts and oil pan.
9. Unbolt oil pump pickup tube and remove tube.
10. Inspect the integral windage tray and gasket and replace as needed.

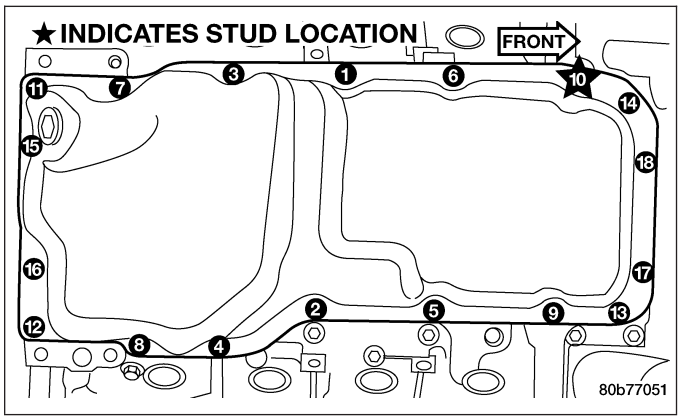

INSTALLATION

1. Clean the oil pan gasket mating surface of the bedplate and oil pan.
2. Position the oil pan gasket and pickup tube with new o-ring. Install the mounting bolt and nuts. Tighten bolt and nuts to 28 N·m (20 ft. lbs.).
3. Position the oil pan and install the mounting bolts. Tighten the mounting bolts to 15 N·m (11 ft. lbs.) in the sequence shown.

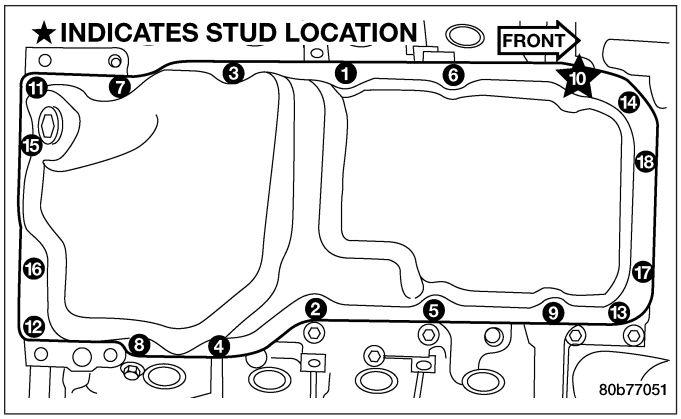

4. Lower the engine into mounts using special tool # 8534.
5. Install both the left and right side engine mount through bolts. Tighten the nuts to 68 N·m (50 ft. lbs.).
6. Remove special tool # 8534.
7. Install structural dust cover, if equipped.
8. Install the front crossmember (Refer to 13 - FRAME & BUMPERS/FRAME/FRONT CROSSMEMBER - INSTALLATION).
9. Fill engine oil.
10. Reconnect the negative battery cable.
11. Start engine and check for leaks.

SWITCH - OIL PRESSURE

DESCRIPTION

DESCRIPTION

The 3 wire, solid-state engine oil pressure sensor (sending unit) is located in an engine oil pressure gallery.

DESCRIPTION

The 3–wire, electrical/mechanical engine oil pressure sensor (sending unit) is located in an engine oil pressure gallery.

OPERATION

OPERATION

The oil pressure sensor uses three circuits. They are:

- A 5 volt power supply from the Powertrain Control Module (PCM)
- A sensor ground through the PCM's sensor return
- A signal to the PCM relating to engine oil pressure

The oil pressure sensor has a 3 wire electrical function very much like the Manifold Absolute Pressure (MAP) sensor. Meaning different pressures relate to different output voltages.

A 5 volt supply is sent to the sensor from the PCM to power up the sensor. The sensor returns a voltage signal back to the PCM relating to engine oil pressure. This signal is then transferred (bussed) to the instrument panel on either a CCD or PCI bus circuit (depending on vehicle line) to operate the oil pressure gauge and the check gauges lamp. Ground for the sensor is provided by the PCM through a low-noise sensor return.

OPERATION

The oil pressure sensor uses two circuits. They are:

- A signal to the PCM relating to engine oil pressure
- A sensor ground through the PCM's sensor return

The oil pressure sensor returns a voltage signal back to the PCM relating to engine oil pressure. This signal is then transferred (bussed) to the instrument panel on a CCD bus circuit to operate the oil pressure gauge and the check gauges lamp. Ground for the sensor is provided by the PCM through a low-noise sensor return.

REMOVAL

1. Disconnect the negative cable from the battery.
2. Raise vehicle on hoist.
3. Remove front splash shield.
4. Disconnect oil pressure sender wire (4).
5. Remove the pressure sender (2).

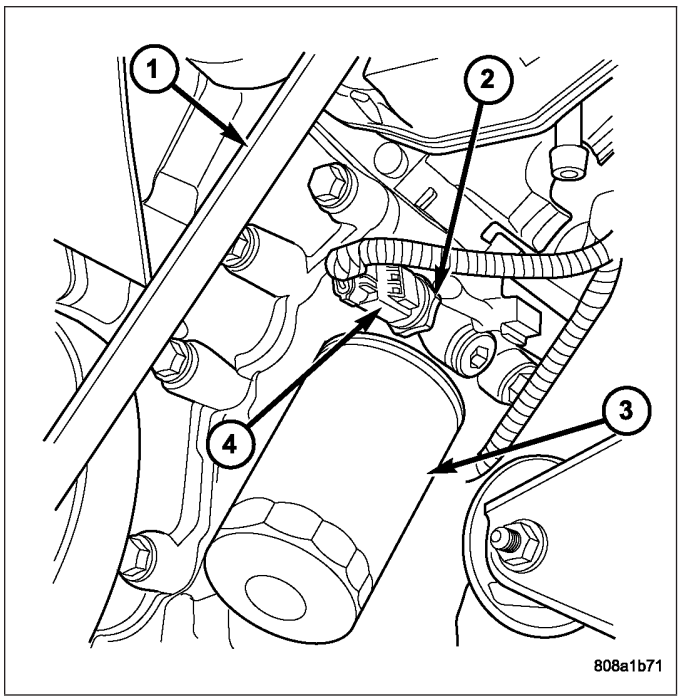

INSTALLATION

1. Install oil pressure sender.
2. Connect oil pressure sender wire.
3. Install front splash shield.
4. Lower vehicle.
5. Connect the negative battery cable.

PUMP - ENGINE OIL

REMOVAL

1. Remove the oil pan and pick-up tube (Refer to 9 - ENGINE/LUBRICATION/OIL PAN - REMOVAL).
2. Remove the timing chain cover (Refer to 9 - ENGINE/VALVE TIMING/TIMING BELT / CHAIN COVER(S) - REMOVAL).
3. Remove the timing chains and tensioners (Refer to 9 - ENGINE/VALVE TIMING/TIMING BELT/CHAIN AND SPROCKETS - REMOVAL).
4. Remove the four bolts, primary timing chain tensioner and the oil pump.

DISASSEMBLY

1. Remove oil pump cover screws and lift off cover plate.
2. Remove pump inner and outer rotors.

NOTE: Once the oil pressure relief valve, cup plug, and pin are removed, the pump assembly must be replaced.

3. If it is necessary to remove the pressure relief valve, drive the roll pin from pump housing and remove cup plug, spring and valve.

CLEANING

1. Wash all parts in a suitable solvent.

INSPECTION

CAUTION: Oil pump pressure relief valve and spring should not be removed from the oil pump. If these components are disassembled and or removed from the pump the entire oil pump assembly must be replaced.

1. Clean all parts thoroughly. Mating surface of the oil pump housing should be smooth. If the pump cover is scratched or grooved the oil pump assembly should be replaced.
2. Lay a straight edge across the pump cover surface (3). If a 0.025 mm (0.001 in.) feeler gauge (2) can be inserted between the cover and the straight edge the oil pump assembly should be replaced.

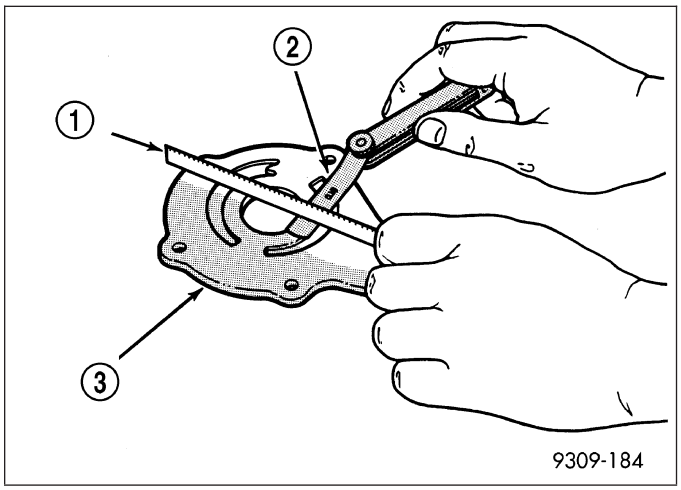

3. Measure the thickness of the outer rotor. If the outer rotor thickness measures at 12.005 mm (0.472 in.) or less the oil pump assembly must be replaced.
4. Measure the diameter of the outer rotor. If the outer rotor diameter measures at 85.925 mm (3.382 in.) or less the oil pump assembly must be replaced.

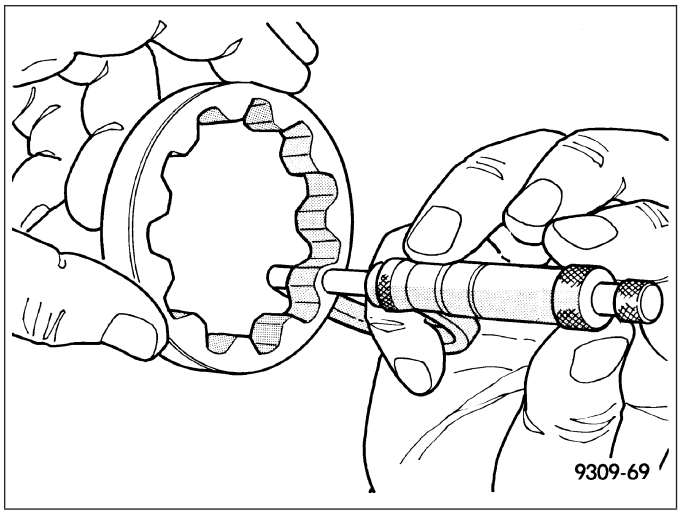

5. Measure the thickness of the inner rotor. If the inner rotor thickness measures at 12.005 mm (0.472 in.) or less then the oil pump assembly must be replaced.

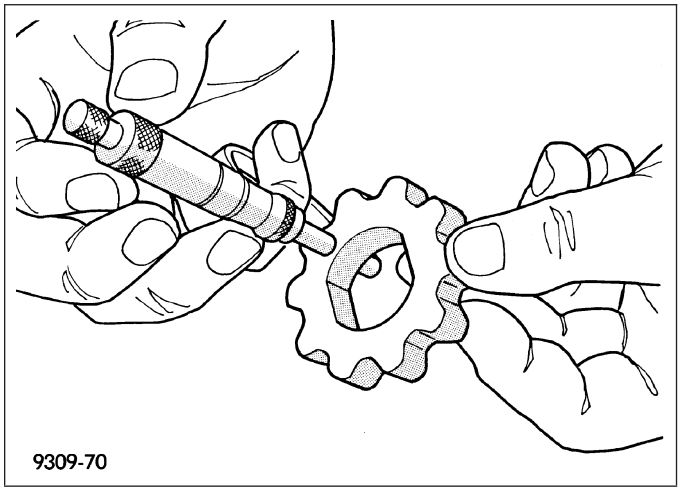

6. Slide outer rotor (2) into the body of the oil pump. Press the outer rotor to one side of the oil pump body and measure clearance between the outer rotor and the body. If the measurement is 0.235mm (0.009 in.) or more the oil pump assembly must be replaced.

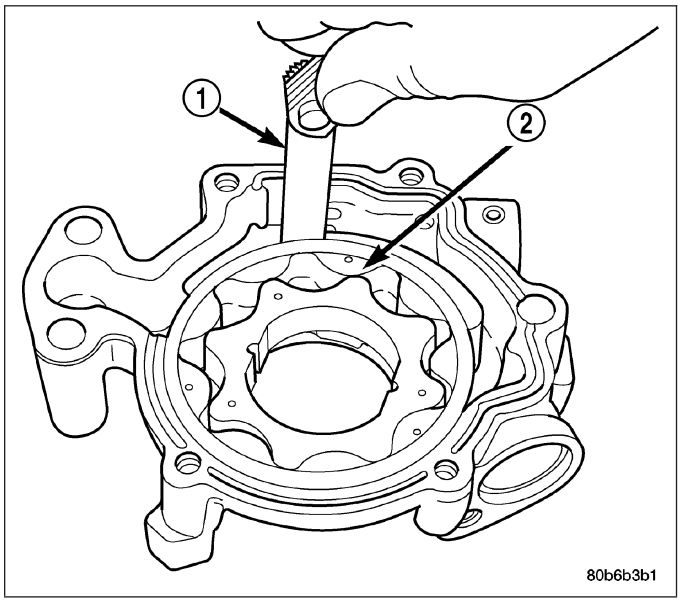

7. Install the inner rotor in the into the oil pump body. Measure the clearance between the inner (3) and outer (1) rotors. If the clearance between the rotors is .150 mm (0.006 in.) or more the oil pump assembly must be replaced.

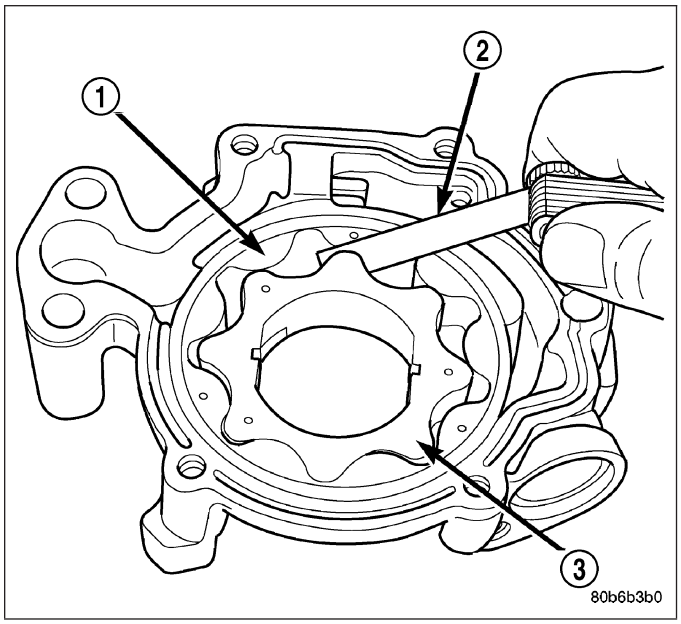

8. Place a straight edge (1) across the body of the oil pump (between the bolt holes), if a feeler gauge (2) of .095 mm (0.0038 in.) or greater can be inserted between the straightedge and the rotors, the pump must be replaced.

NOTE: The 3.7L/4.7L Oil pump is released as an assembly. There are no DaimlerChrysler part numbers for Sub-Assembly components. In the event the oil pump is not functioning or out of specification it must be replaced as an assembly.

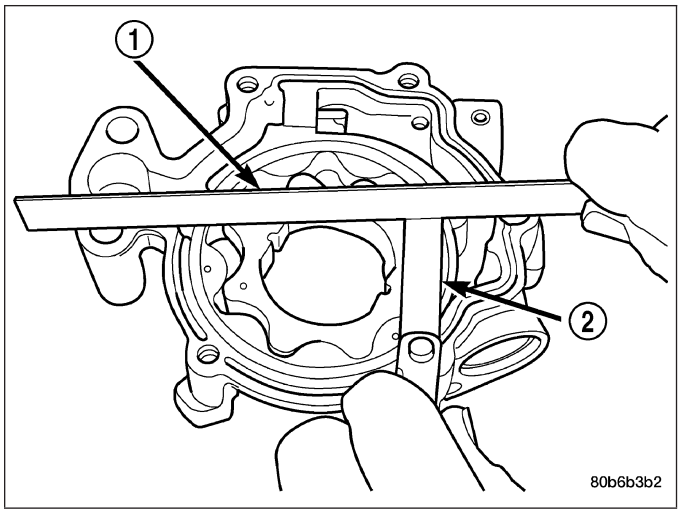

ASSEMBLY

1. Wash all parts in a suitable solvent and inspect carefully for damage or wear.
2. Install inner and outer rotors
3. Install oil pump cover plate and install cover bolts and tighten them to 12 N·m (105 in. lbs.).
4. Prime oil pump before installation by filling rotor cavity with engine oil.
5. If oil pressure is low and pump is within specifications, inspect for worn engine bearings or other causes for oil pressure loss.

INSTALLATION

1. Position the oil pump onto the crankshaft and install one oil pump retaining bolts.
2. Position the primary timing chain tensioner and install three retaining bolts.
3. Tighten the oil pump and primary timing chain tensioner retaining bolts to 28 N·m (250 in. lbs.) in the sequence shown.
4. Install the secondary timing chain tensioners and timing chains (Refer to 9 - ENGINE/VALVE TIMING/TIMING BELT/CHAIN AND SPROCKETS - INSTALLATION).
5. Install the timing chain cover (Refer to 9 - ENGINE/VALVE TIMING/TIMING BELT / CHAIN COVER(S) - INSTALLATION).
6. Install the pick-up tube and oil pan (Refer to 9 - ENGINE/LUBRICATION/OIL PAN - INSTALLATION).

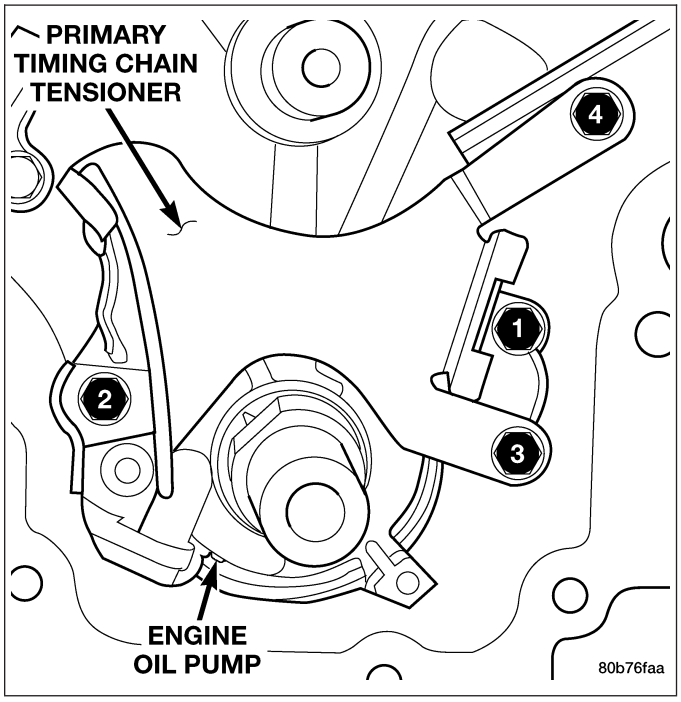

MANIFOLD - INTAKE

DESCRIPTION

The intake manifold is made of a composite material and features long runners which maximizes low end torque. The intake manifold uses single plane sealing which consist of eight individual press in place port gaskets to prevent leaks. Eight studs and two bolts are used to fasten the intake to the head.

DIAGNOSIS AND TESTING - INTAKE MANIFOLD LEAKAGE

An intake manifold air leak is characterized by lower than normal manifold vacuum. Also, one or more cylinders may not be functioning.

WARNING: USE EXTREME CAUTION WHEN THE ENGINE IS OPERATING. DO NOT STAND IN A DIRECT LINE WITH THE FAN. DO NOT PUT YOUR HANDS NEAR THE PULLEYS, BELTS OR THE FAN. DO NOT WEAR LOOSE CLOTHING.

1. Start the engine.
2. Spray a small stream of water at the suspected leak area.
3. If a change in RPM is observed the area of the suspected leak has been found.
4. Repair as required.

REMOVAL

1. Disconnect negative cable from battery.
2. Remove resonator assembly and air inlet hose.
3. Disconnect throttle and speed control cables.
4. Disconnect electrical connectors for the following components:
   - Manifold Absolute Pressure (MAP) Sensor
   - Intake Air Temperature (IAT) Sensor
   - Throttle Position (TPS) Sensor
   - Coolant Temperature (CTS) Sensor
   - Idle Air Control (IAC) Motor

5. Disconnect brake booster hose and positive crankcase ventilation (PCV) hose.
6. Disconnect generator electrical connections.
7. Disconnect air conditioning compressor electrical connections.
8. Disconnect left and right radio suppressor straps.
9. Disconnect and remove ignition coil towers (Refer to 8 - ELECTRICAL/IGNITION CONTROL/IGNITION COIL - REMOVAL).
10. Remove top oil dipstick tube retaining bolt and ground strap.
11. Bleed fuel system (Refer to 14 - FUEL SYSTEM/FUEL DELIVERY - STANDARD PROCEDURE).
12. Remove fuel rail (Refer to 14 - FUEL SYSTEM/FUEL DELIVERY/FUEL RAIL - REMOVAL).
13. Remove throttle body assembly and mounting bracket.
14. Drain cooling system below coolant temperature level (Refer to 7 - COOLING - STANDARD PROCEDURE).

15. Remove the heater hoses (1) from the engine front cover and the heater core.
16. Unclip (2) and remove heater hoses and tubes from intake manifold.
17. Remove coolant temperature sensor (Refer to 7 - COOLING/ENGINE/ENGINE COOLANT TEMPERATURE SENSO - REMOVAL).

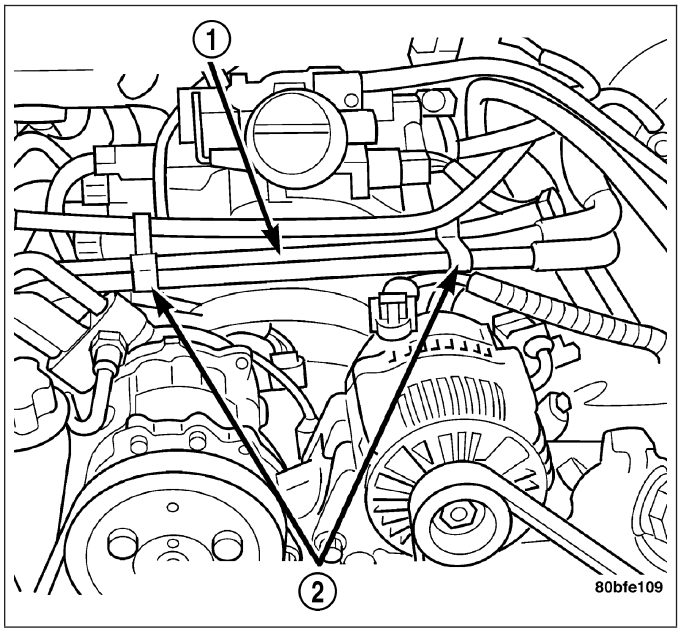

18. Remove intake manifold retaining fasteners in reverse order of tightening sequence.
19. Remove intake manifold.

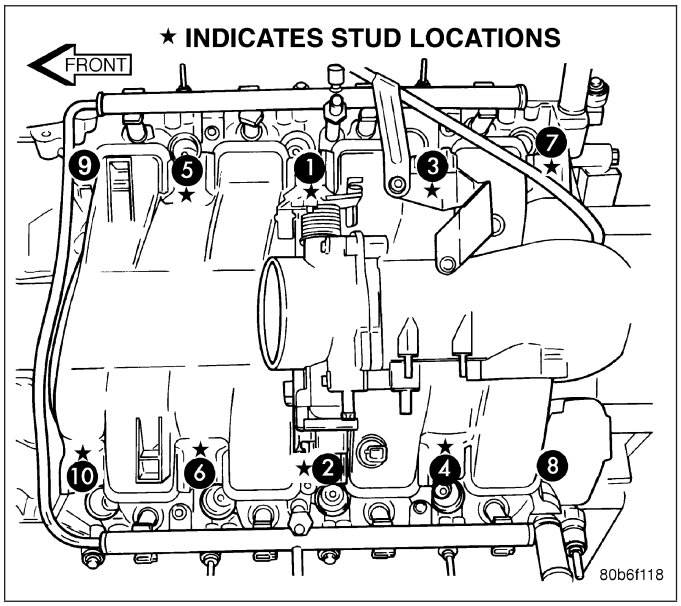

CLEANING

NOTE: There is NO approved repair procedure for the intake manifold. If severe damage is found during inspection, the intake manifold must be replaced.

Before installing the intake manifold thoroughly clean the mating surfaces. Use a suitable cleaning solvent, then air dry.

INSPECTION

1. Inspect the intake sealing surface for cracks, nicks and distortion.
2. Inspect the intake manifold vacuum hose fittings for looseness or blockage.
3. Inspect the manifold to throttle body mating surface for cracks, nicks and distortion.

INSTALLATION

1. Install intake manifold gaskets.
2. Position intake manifold.
3. Install intake manifold retaining bolts and tighten in sequence shown in to 12 N·m (105 in. lbs.).
4. Install left and right radio suppressor straps.
5. Install throttle body assembly.
6. Install throttle cable bracket.
7. Connect throttle cable and speed control cable to throttle body.
8. Install fuel rail (Refer to 14 - FUEL SYSTEM/FUEL DELIVERY/FUEL RAIL - INSTALLATION).
9. Install ignition coil towers (Refer to 8 - ELECTRICAL/IGNITION CONTROL/IGNITION COIL - INSTALLATION).

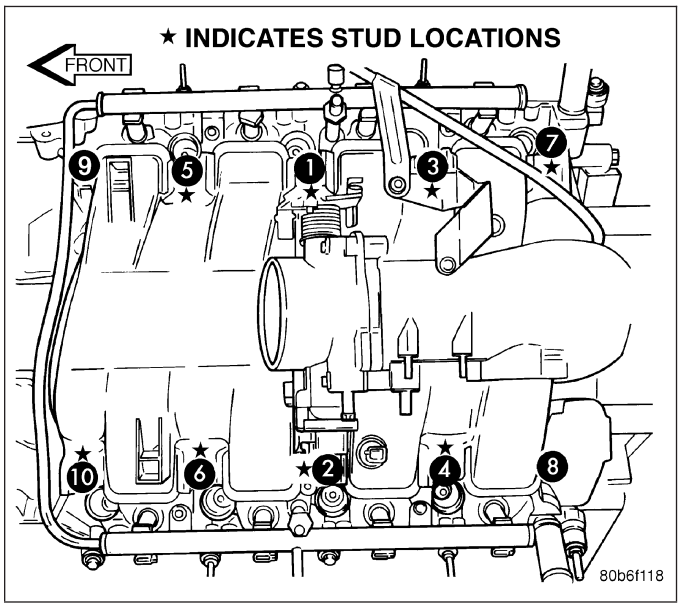

10. Position and install heater hoses and tubes onto intake manifold.
11. Install the heater hoses to the heater core and engine front cover.
12. Connect electrical connectors for the following components:
    - Manifold Absolute Pressure (MAP) Sensor
    - Intake Air Temperature (IAT) Sensor
    - Throttle Position (TPS) Sensor
    - Coolant Temperature (CTS) Sensor
    - Idle Air Control (IAC) Motor
    - Ignition coil towers
    - Fuel injectors
13. Install top oil dipstick tube retaining bolt and ground strap.
14. Connect generator electrical connections.
15. Connect Brake booster hose and Positive crankcase ventilation (PCV) hose.
16. Fill cooling system (Refer to 7 - COOLING - STANDARD PROCEDURE).
17. Install resonator assembly and air inlet hose.
18. Connect negative cable to battery.

MANIFOLD - EXHAUST

DESCRIPTION

The exhaust manifolds are log style with a patented flow enhancing design to maximize performance. The exhaust manifolds are made of high silicon molybdenum cast iron. A perforated core graphite exhaust manifold gasket is used to improve sealing to the cylinder head. The exhaust manifolds are covered by a three layer laminated heat shield for thermal protection and noise reduction. The heat shields are fastened with a torque prevailing nut that is backed off slightly to allow for the thermal expansion of the exhaust manifold.

REMOVAL

RIGHT EXHAUST MANIFOLD

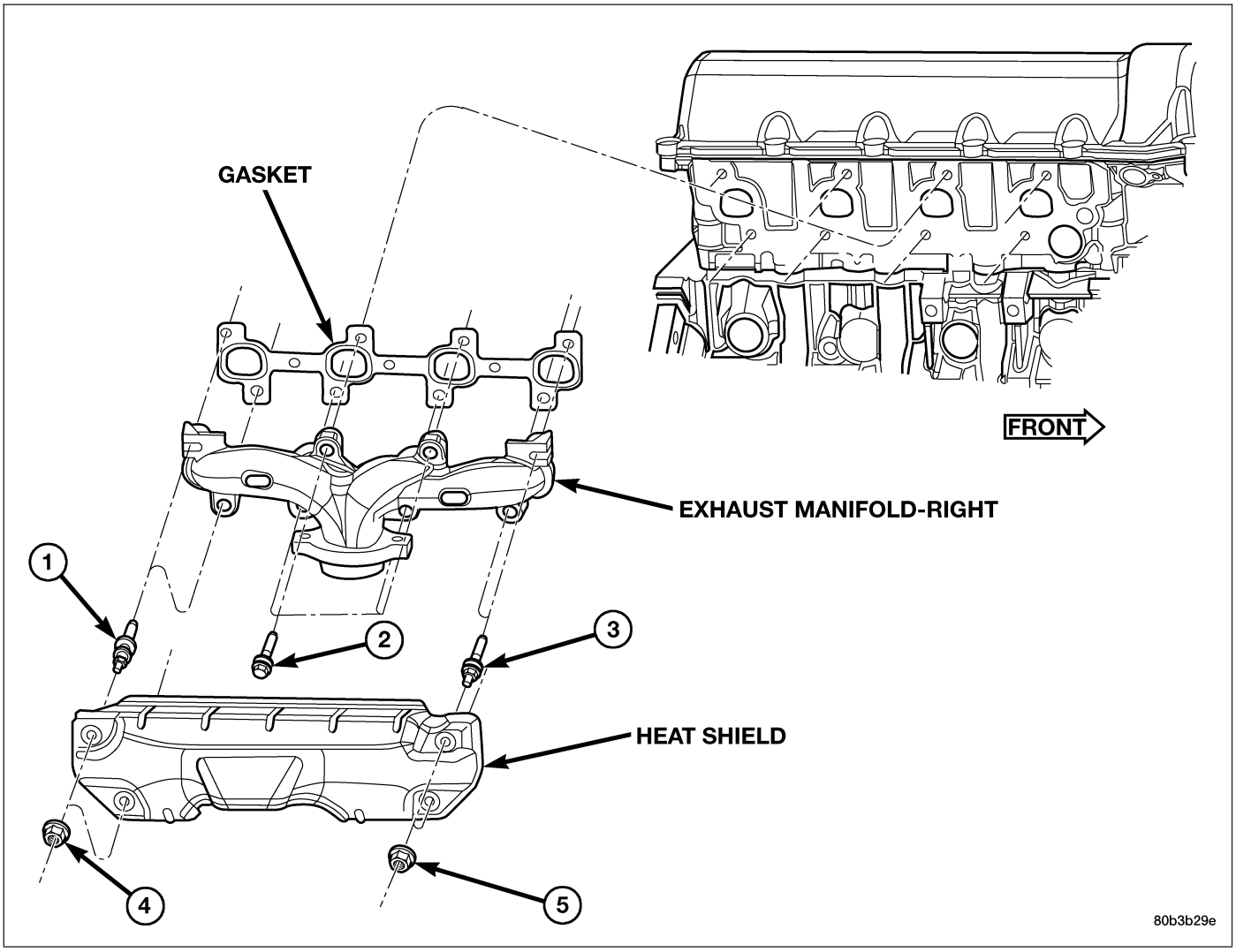

1. Disconnect negative cable for battery.
2. Remove air cleaner assembly, resonator assembly and air inlet hose.
3. Remove accessory drive belt (Refer to 7 - COOLING/ACCESSORY DRIVE/DRIVE BELTS - REMOVAL).
4. Remove A/C compressor (Refer to 24 - HEATING & AIR CONDITIONING/PLUMBING/A/C COMPRESSOR - REMOVAL).
5. Remove A/C accumulator support bracket fastener.
6. Drain coolant below heater hose level (Refer to 7 - COOLING - STANDARD PROCEDURE).
7. Remove heater hoses at engine.
8. Remove fasteners(4,5) attaching exhaust manifold heat shield.

9. Remove heat shield.
10. Remove upper exhaust manifold attaching fasteners (1,3).
11. Raise vehicle on hoist.
12. Disconnect exhaust pipe from manifold.
13. Remove fasteners attaching starter. Move starter aside.
14. Remove lower exhaust manifold attaching fasteners.
15. Remove exhaust manifold and gasket. Manifold is removed from below the engine compartment.

LEFT EXHAUST MANIFOLD

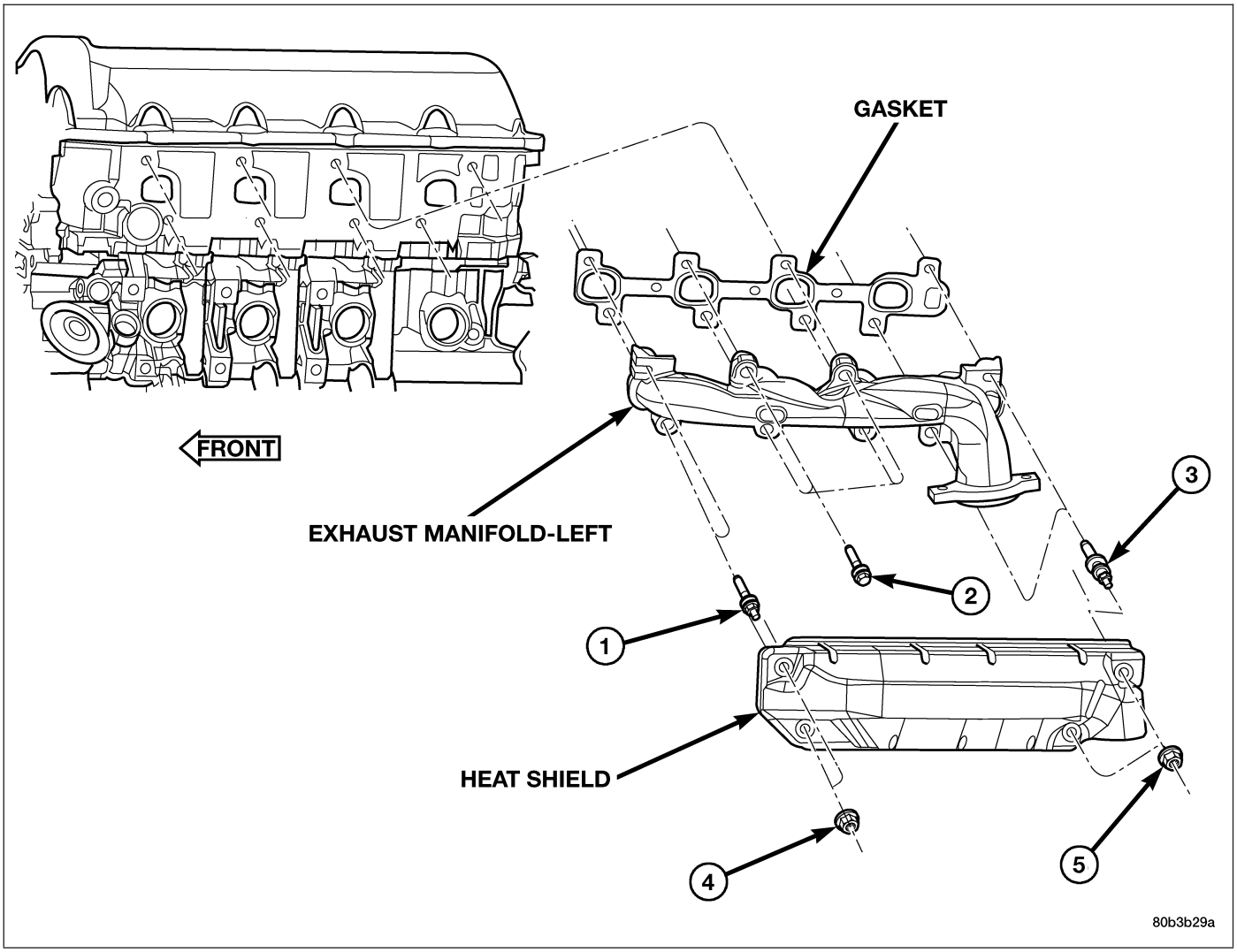

1. Disconnect negative cable for battery.
2. Hoist vehicle.
3. Disconnect exhaust pipe at manifold.
4. Lower vehicle.
5. Remove the front two exhaust heat shield retaining fasteners (4,5). Raise vehicle and remove the fasteners at rear of heat shield.
6. Remove heat shield.
7. Lower vehicle and remove the upper exhaust manifold retaining bolts (2).
8. Raise vehicle and remove the lower exhaust manifold retaining bolts (3).
9. Remove exhaust manifold and gasket. Manifold is removed from below the engine compartment.

CLEANING

1. Clean the exhaust manifold using a suitable cleaning solvent, then allow to air dry.
2. Clean all gasket residue from the manifold mating surface.

INSPECTION

1. Inspect the exhaust manifold for cracks in the mating surface and at every mounting bolt hole.
2. Using a straight edge and a feeler gauge, check the mating surface for warp and twist.
3. Inspect the manifold to exhaust pipe mating surface for cracks, gouges, or other damage that would prevent sealing.

INSTALLATION

RIGHT EXHAUST MANIFOLD

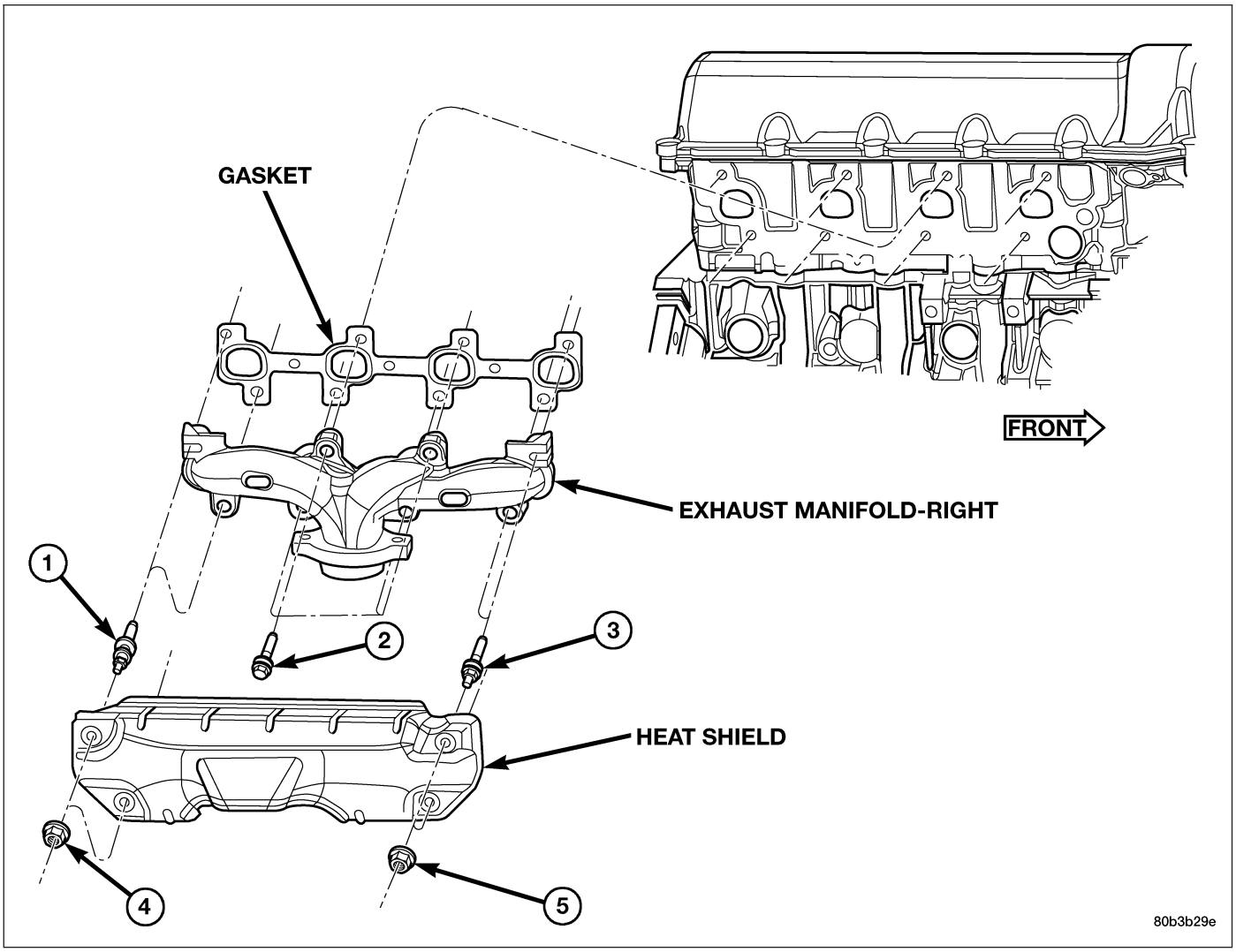

1. Install exhaust manifold and gasket from below engine compartment.
2. Install lower exhaust manifold fasteners. DO NOT tighten until all fasteners are in place.
3. Lower vehicle and install upper exhaust manifold fasteners. Tighten all manifold bolts 91,2,3) starting at center and working outward to 25 N·m (18 ft. lbs.).

CAUTION: Over tightening heat shield fasteners, may cause shield to distort and/or crack.

4. Install exhaust manifold heat shield. Tighten fasteners (4,5) to 8 N·m (72 in. lbs.), then loosen 45 degrees.

5. Install starter and fasteners.
6. Connect exhaust pipe to manifold.
7. Connect heater hoses at engine.
8. Install fastener attaching A/C accumulator.
9. Install A/C compressor and fasteners.
10. Install accessory drive belt (Refer to 7 - COOLING/ACCESSORY DRIVE/DRIVE BELTS - INSTALLATION).
11. Install air cleaner assembly, resonator assembly and air inlet hose.
12. Install battery and connect cables.
13. Fill cooling system (Refer to 7 - COOLING - STANDARD PROCEDURE).

LEFT EXHAUST MANIFOLD

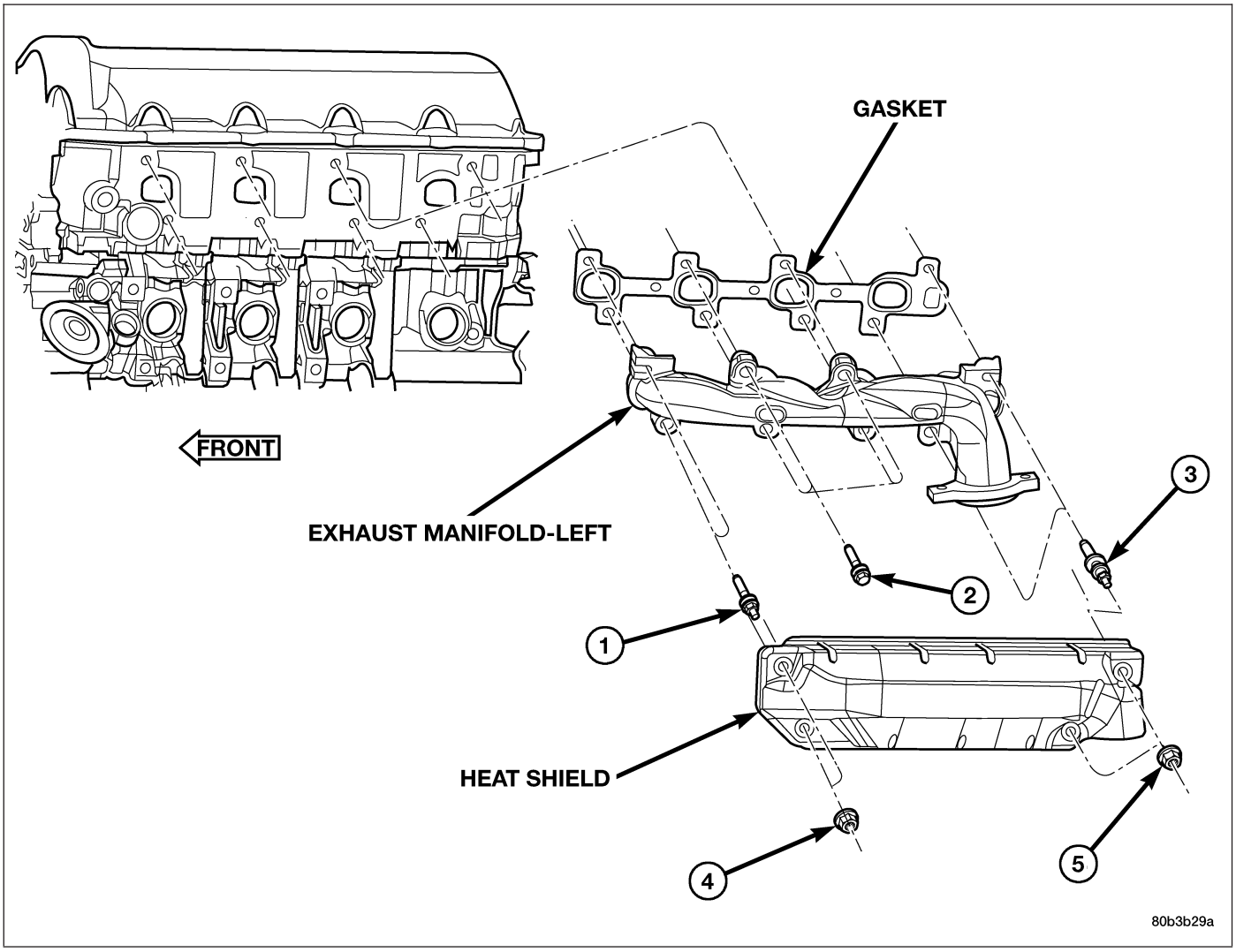

1. Install exhaust manifold and gasket from below engine compartment.
2. Install lower exhaust manifold fasteners. DO NOT tighten until all fasteners are in place.
3. Lower vehicle and install upper exhaust manifold fasteners. Tighten all manifold bolts (2,3) starting at center and working outward to 25 N·m (18 ft. lbs.).

CAUTION: Over tightening heat shield fasteners, may cause shield to distort and/or crack.

4. Install exhaust manifold heat shield. Tighten fasteners (4,5) to 8 N·m (72 in. lbs.), then loosen 45 degrees.
5. Connect exhaust pipe to manifold.

6. Connect negative cable to battery.

VALVE TIMING

DESCRIPTION - TIMING DRIVE SYSTEM

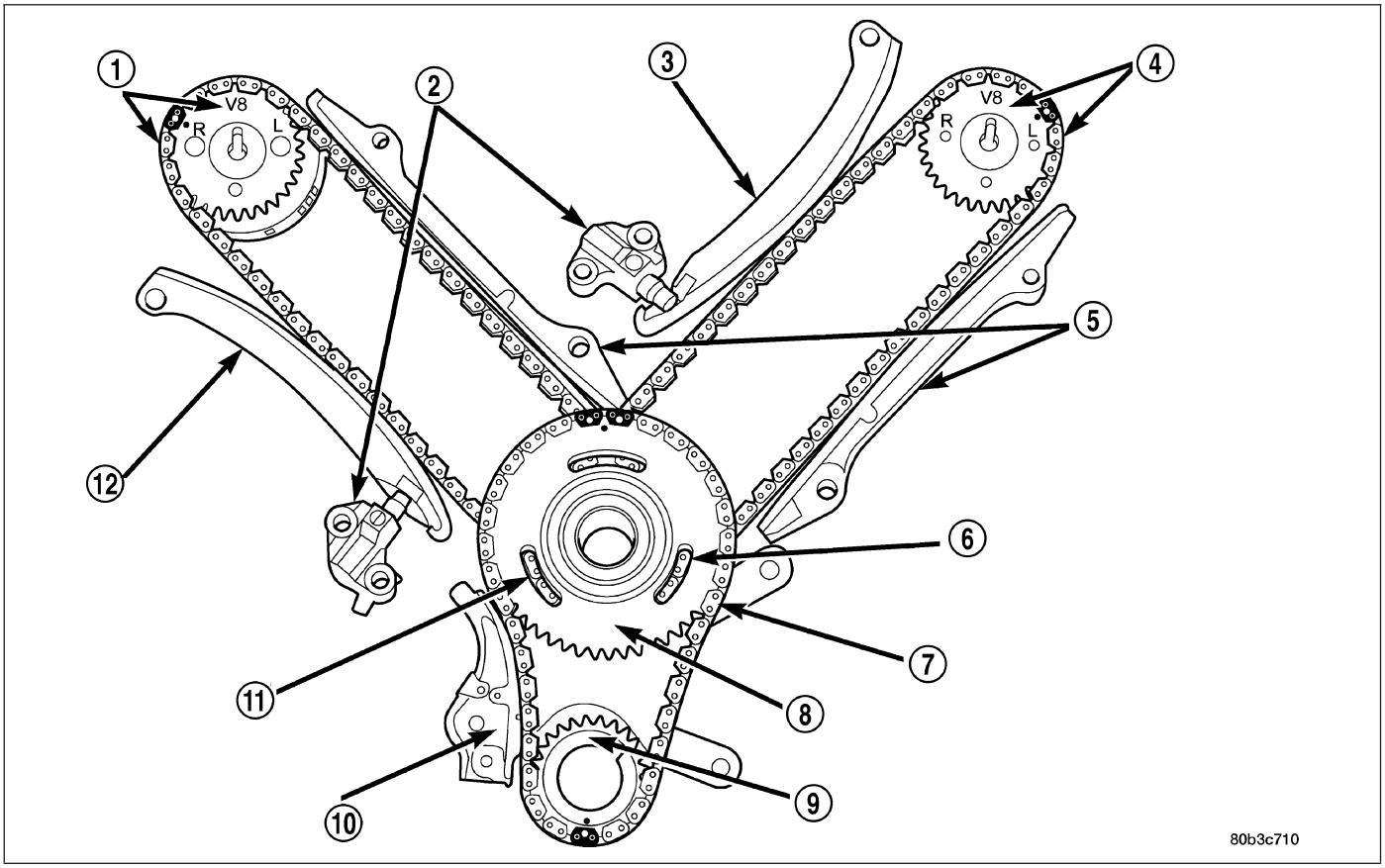

The timing drive system has been designed to provide quiet performance and reliability to support a **non-free wheeling** engine. Specifically the intake valves are non-free wheeling and can be easily damaged with forceful engine rotation if camshaft-to-crankshaft timing is incorrect. The timing drive system consists of a primary chain and two secondary timing chain drives.

OPERATION - TIMING DRIVE SYSTEM

The primary timing chain is a single inverted tooth type. The primary chain drives the large fifty tooth idler sprocket directly from a 25 tooth crankshaft sprocket. Primary chain motion is controlled by a pivoting leaf spring tensioner arm and a fixed guide. The arm and the guide both use nylon plastic wear faces for low friction and long wear. The primary chain receives oil splash lubrication from the secondary chain drive and oil pump leakage. The idler sprocket assembly connects the primary and secondary chain drives. The idler sprocket assembly consists of two integral thirty tooth sprockets and a fifty tooth sprocket that is splined to the assembly. The spline joint is a non – serviceable press fit anti rattle type. The idler sprocket assembly spins on a stationary idler shaft. The idler shaft is press-fit into the cylinder block. A large washer on the idler shaft bolt and the rear flange of the idler shaft are used to control sprocket thrust movement. Pressurized oil is routed through the center of the idler shaft to provide lubrication for the two bushings used in the idler sprocket assembly.

There are two secondary drive chains, both are inverted tooth type, one to drive the camshaft in each SOHC cylinder head. There are no shaft speed changes in the secondary chain drive system. Each secondary chain drives a thirty tooth cam sprocket directly from the thirty tooth sprocket on the idler sprocket assembly. A fixed chain guide and a hydraulic oil damped tensioner are used to maintain tension in each secondary chain system. The hydraulic tensioners for the secondary chain systems are fed pressurized oil from oil reservoir pockets in the block. Each tensioner also has a mechanical ratchet system that limits chain slack if the tensioner piston bleeds down after

engine shut down. The tensioner arms and guides also utilize nylon wear faces for low friction and long wear. The secondary timing chains receive lubrication from a small orifice in the tensioners. This orifice is protected from clogging by a fine mesh screen which is located on the back of the hydraulic tensioners.

STANDARD PROCEDURE

STANDARD PROCEDURE - MEASURING TIMING CHAIN WEAR

NOTE: This procedure must be performed with the timing chain cover removed.

1. Remove the timing chain cover. (Refer to 9 - ENGINE/VALVE TIMING/TIMING BELT / CHAIN COVER(S) - REMOVAL).
2. To determine if the secondary timing chains are worn, rotate the engine clockwise until maximum tensioner piston (2) extension is obtained. Measure the distance between the secondary timing chain tensioner housing and the step ledge on the piston. The measurement at point (A) must be less than 15mm (0.5906 inches).
3. If the measurement exceeds the specification the secondary timing chains are worn and require replacement. (Refer to 9 - ENGINE/VALVE TIMING/TIMING BELT/CHAIN AND SPROCKETS - REMOVAL).

NOTE: If the secondary chains are to be replaced the primary chain must also be replaced.

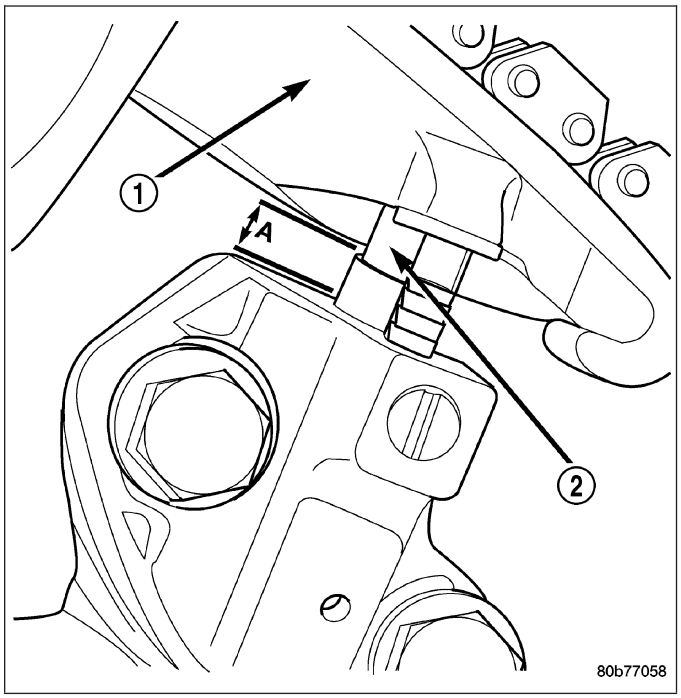

STANDARD PROCEDURE - ENGINE TIMING - VERIFICATION

CAUTION: The 4.7L is a non free-wheeling design engine. Therefore, correct engine timing is critical.

NOTE: Components referred to as left hand or right hand are as viewed from the drivers position inside the vehicle.

NOTE: The blue link plates on the chains and the dots on the camshaft drive sprockets may not line up during the timing verification procedure. The blue link plates are lined up with the sprocket dots only when re-timing the complete timing drive. Once the timing drive is rotated blue link-to-dot alignment is no longer valid.

Engine base timing can be verified by the following procedure:

1. Remove the cylinder head covers (Refer to 9 - ENGINE/CYLINDER HEAD/CYLINDER HEAD COVER(S) - REMOVAL).

2. Using a mirror, locate the TDC arrow on the front cover. Rotate the crankshaft until the mark on the crankshaft damper is aligned with the TDC arrow on the front cover. The engine is now at TDC.

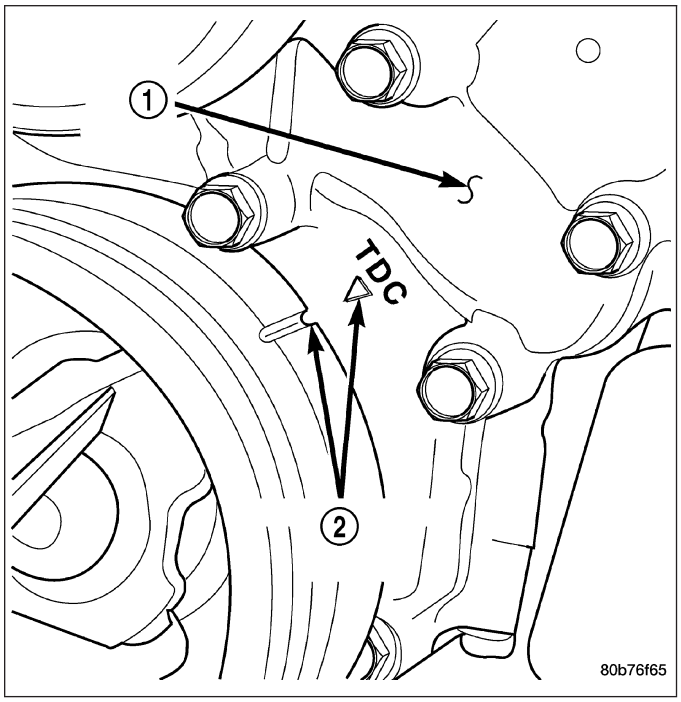

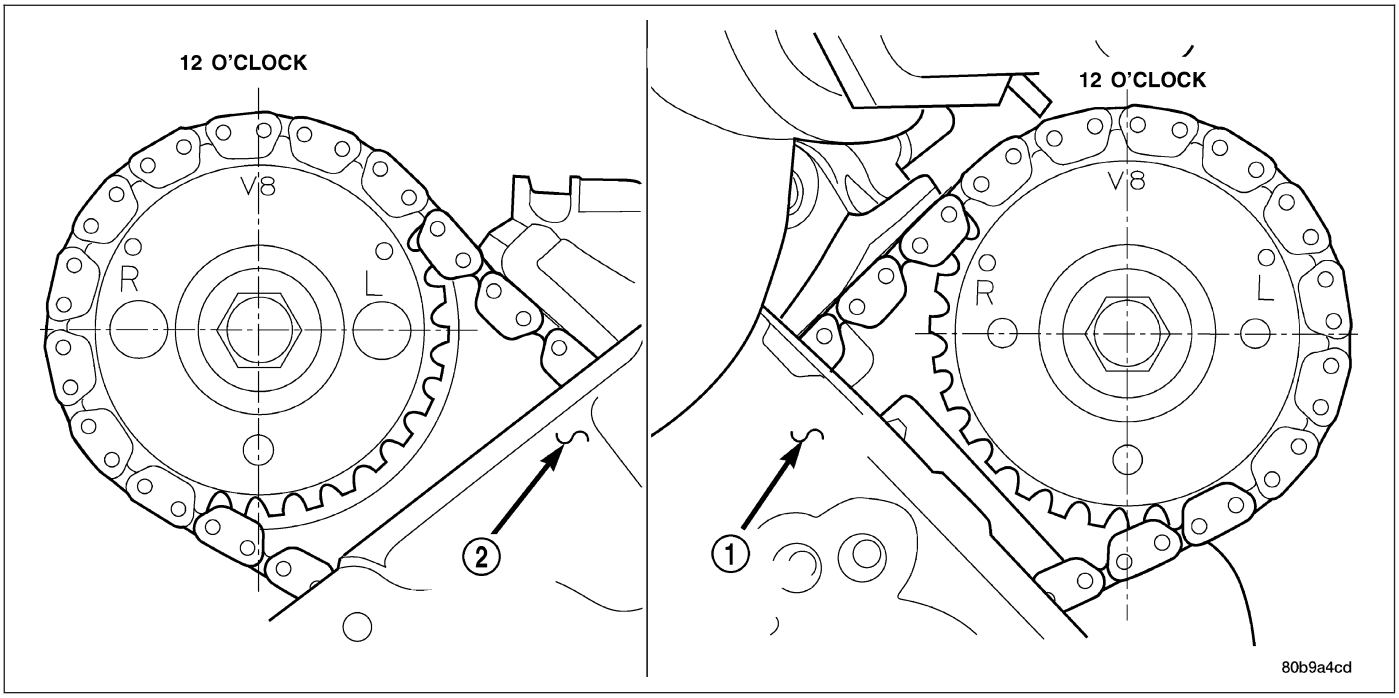

3. Note the location of the V8 mark stamped into the camshaft drive gears. If the V8 mark on each camshaft drive gear is at the twelve o'clock position, the engine is at TDC (cylinder #1) on the exhaust stroke. If the V8 mark on each gear is at the six o'clock position, the engine is at TDC (cylinder #1) on the compression stroke.
4. If both of the camshaft drive gears are off in the same or opposite directions, the primary chain or both secondary chains are at fault. Refer to Timing Chain and Sprockets procedure in this section.
5. If only one of the camshaft drive gears is off and the other is correct, the problem is confined to one secondary chain. Refer to Single camshaft timing, in this procedure.
6. If both camshaft drive gear V8 marks are at the twelve o'clock or the six o' clock position the engine base timing is correct. Reinstall the cylinder head covers.

SINGLE CAMSHAFT TIMING

NOTE: to adjust the timing on one camshaft, peform the following procedure.

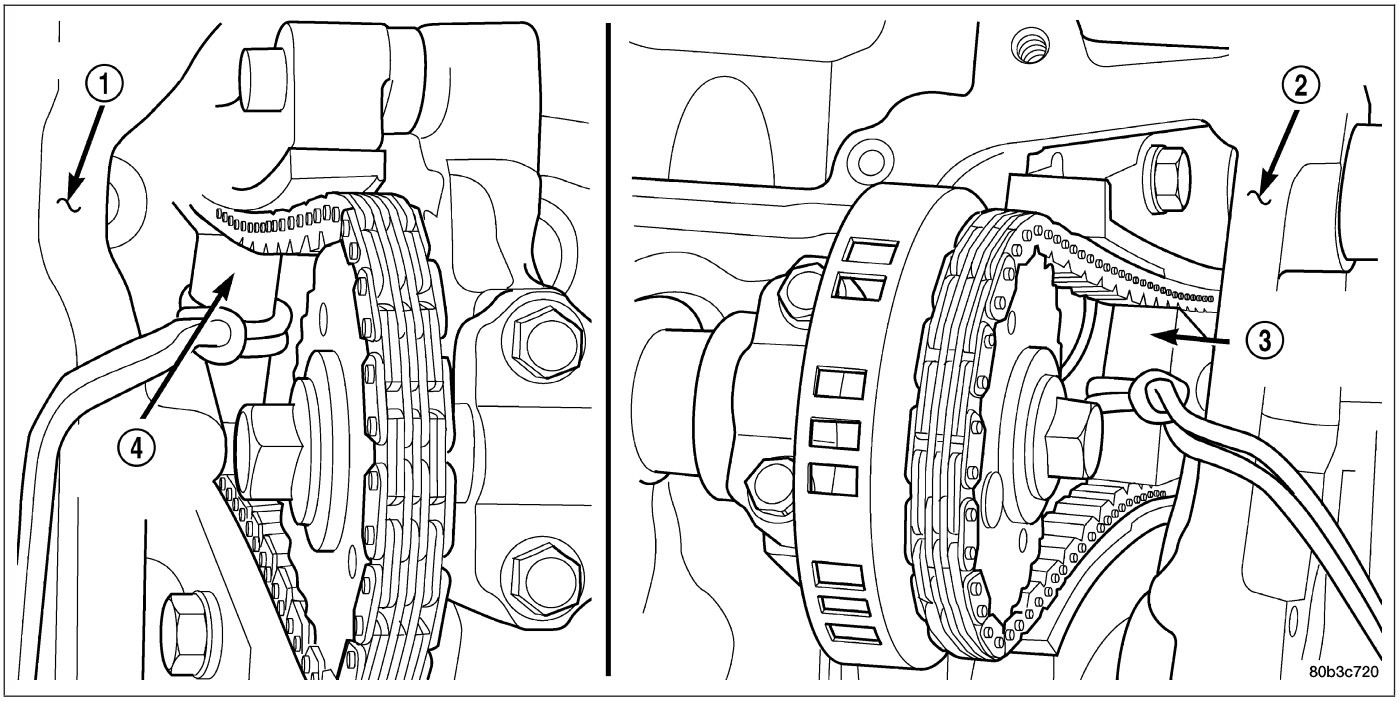

1. Using Chain Tensioner Wedge, special tool 8350 (3), stabilize the secondary chain drive. For reference purposes, mark the chain-to-sprocket position.
2. Remove the camshaft drive gear retaining bolt.
3. Carefully remove the camshaft drive gear from the camshaft.
4. Re-index the camshaft drive gear in the chain until the V8 mark is at the same position as the V8 mark on the opposite camshaft drive gear.

NOTE: When gripping the camshaft, place the pliers on the tube portion of the camshaft only. Do not grip the lobes or the sprocket areas.

5. Using a suitable pair of adjustable pliers (1), rotate the camshaft until the alignment dowel (2) on the camshaft is aligned with the slot in the camshaft drive gear.

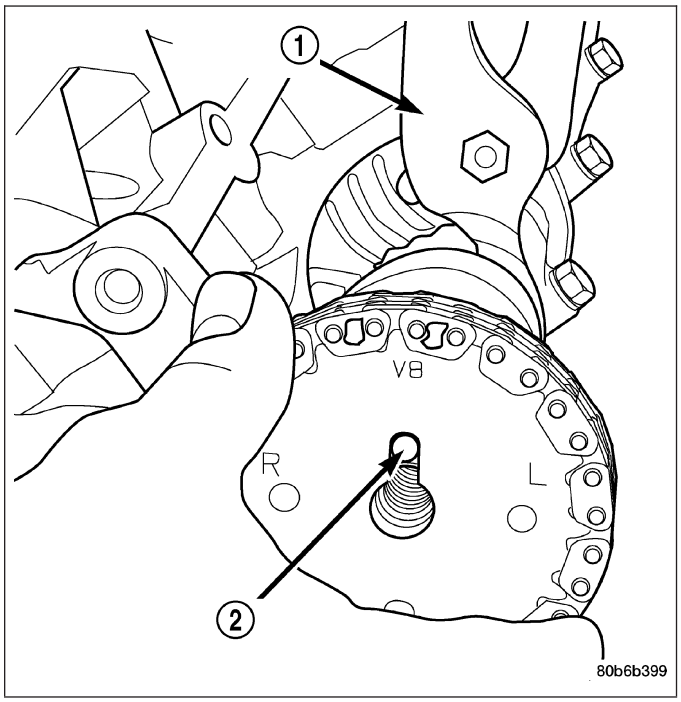

CAUTION: Remove excess oil from camshaft sprocket retaining bolt before reinstalling bolt. Failure to do so may cause over-torqueing of bolt resulting in bolt failure.

6. Position the camshaft drive gear onto the camshaft, remove oil from bolt then install the retaining bolt. Using Special Tools, Spanner Wrench 6958 with Adapter Pins 8346 and a suitable torque wrench (1), Tighten retaining bolt to 122N·m (90 ft. Lbs.).

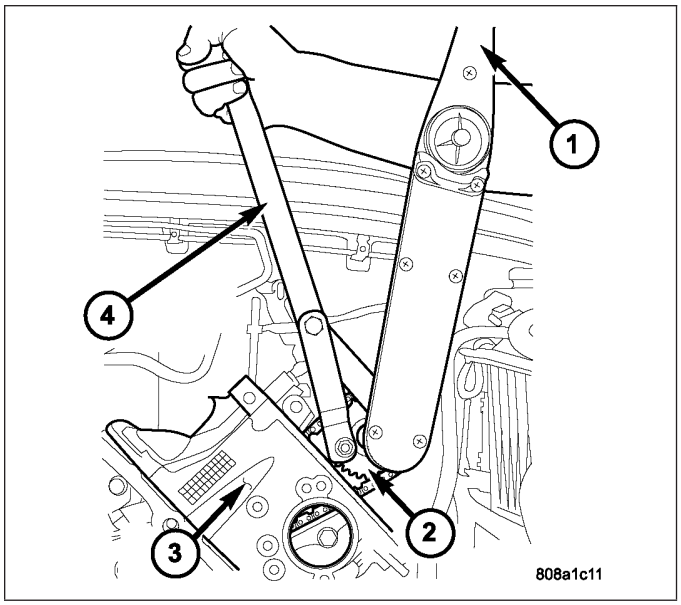

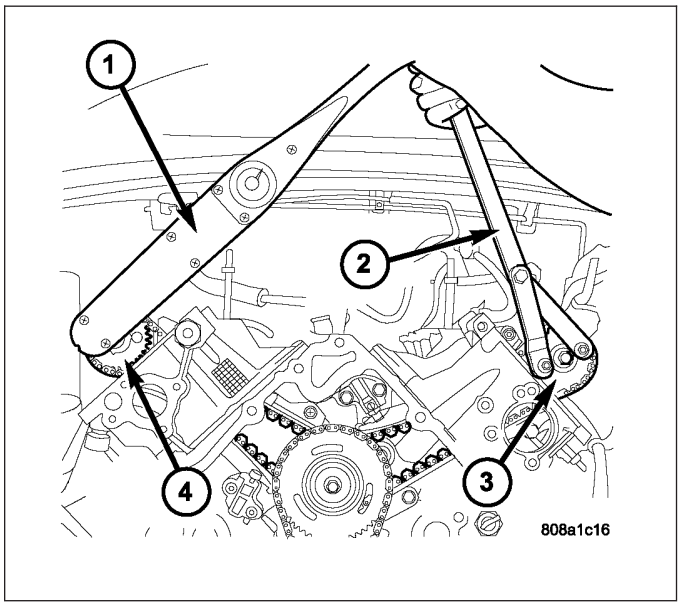

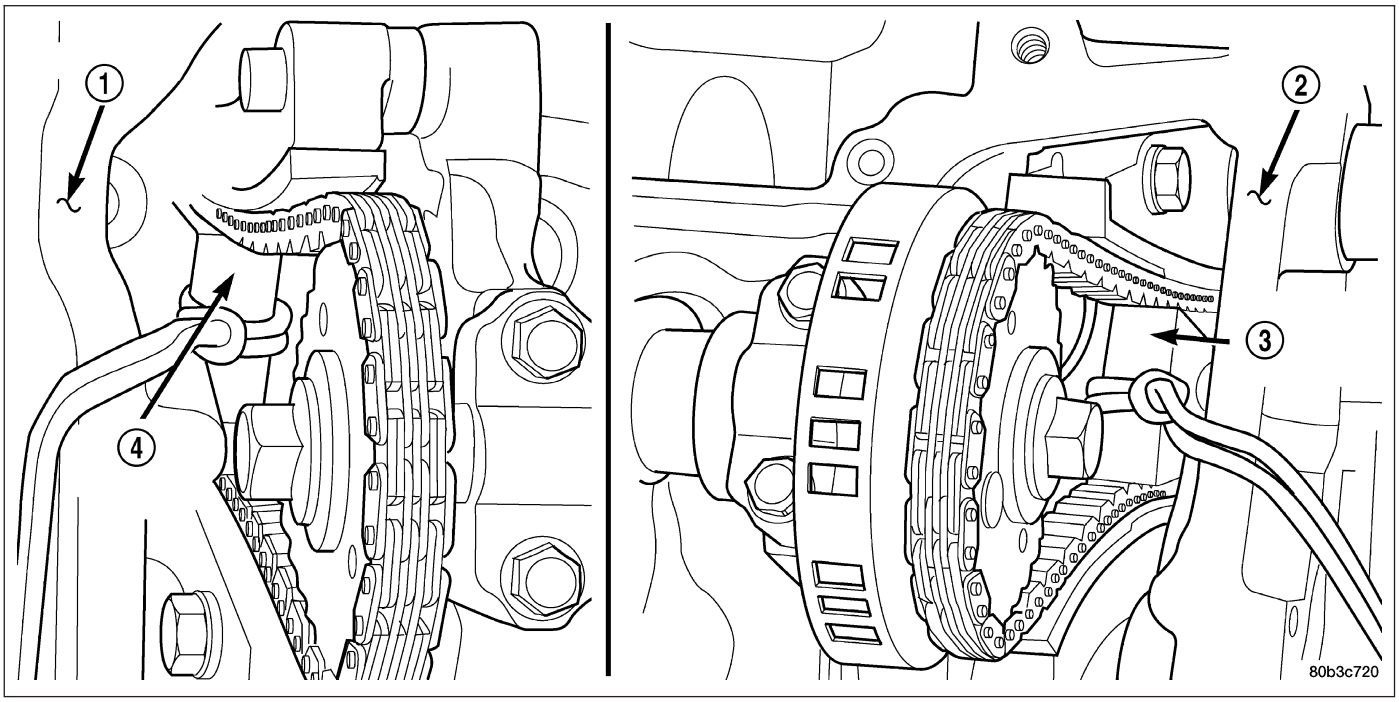

7. Remove special tool 8350 (3,4).

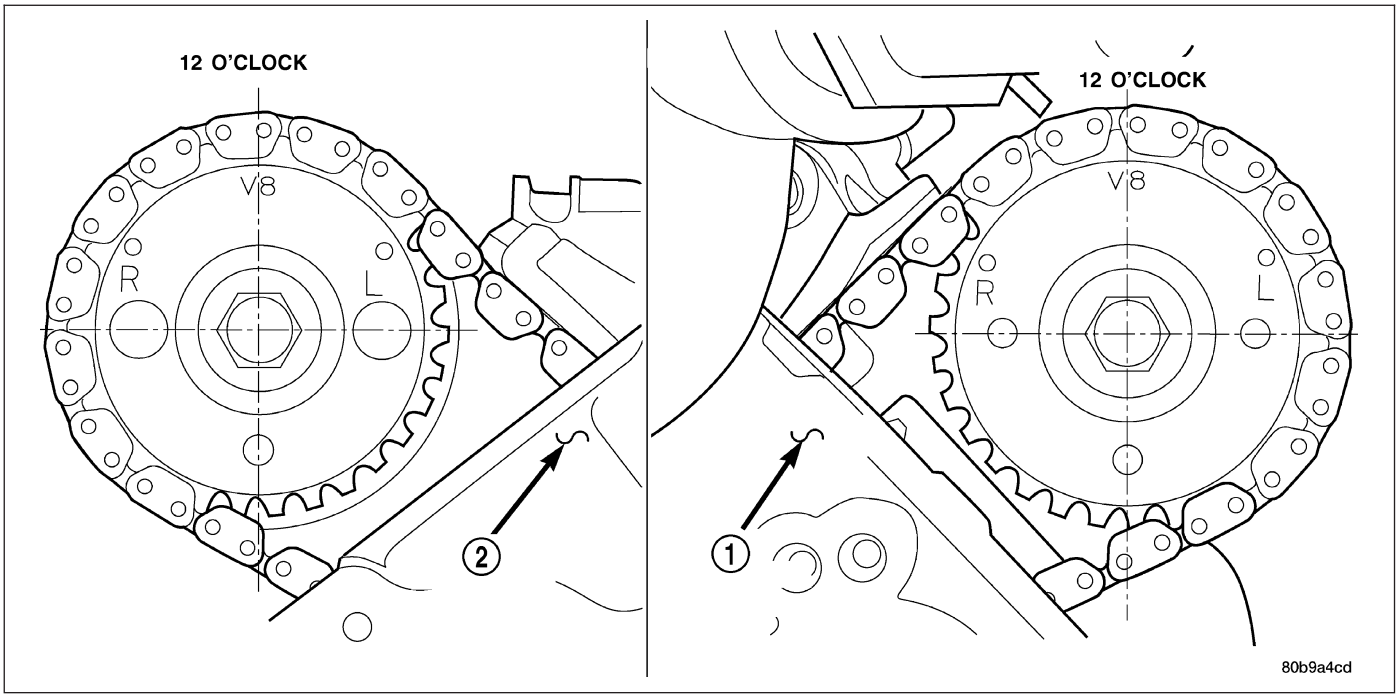

8. Rotate the crankshaft two full revolutions, then reverify that the camshaft drive gear V8 marks are in fact aligned.
9. Install the cylinder head covers (Refer to 9 - ENGINE/CYLINDER HEAD/CYLINDER HEAD COVER(S) - INSTALLATION).

COVER - TIMING

REMOVAL

1. Disconnect the battery negative cable.
2. Drain cooling system (Refer to 7 - COOLING - STANDARD PROCEDURE).
3. Disconnect both heater hoses at timing cover.
4. Disconnect lower radiator hose at engine.
5. Remove crankshaft damper (Refer to 9 - ENGINE/ ENGINE BLOCK/VIBRATION DAMPER - REMOVAL).
6. Remove accessory drive belt tensioner assembly (1).
7. Remove the generator and A/C compressor.

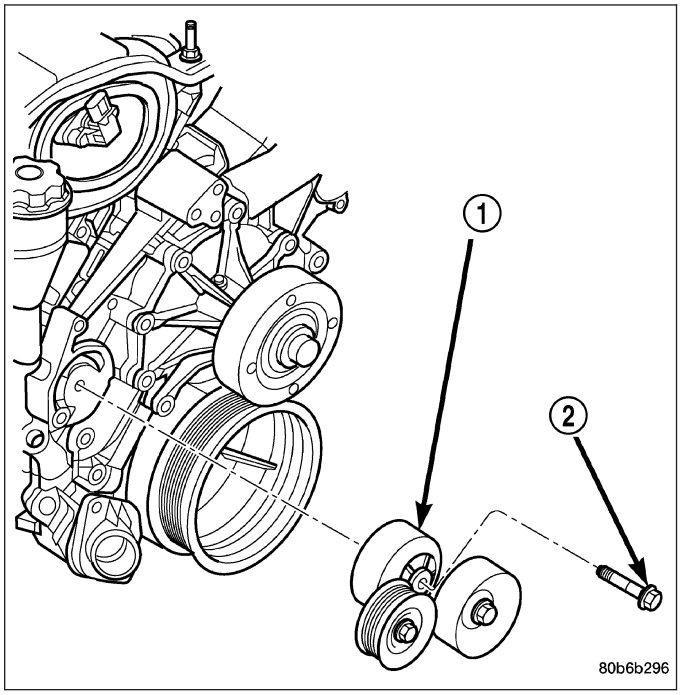

CAUTION: The 4.7L engine uses an RTV sealer instead of a gasket to seal the front cover to the engine block, from the factory. For service, Mopar® Grey Engine RTV sealant must be substituted.

NOTE: It is not necessary to remove the water pump for timing cover removal.

8. Remove the bolts holding the timing cover to engine block.
9. Remove cover.

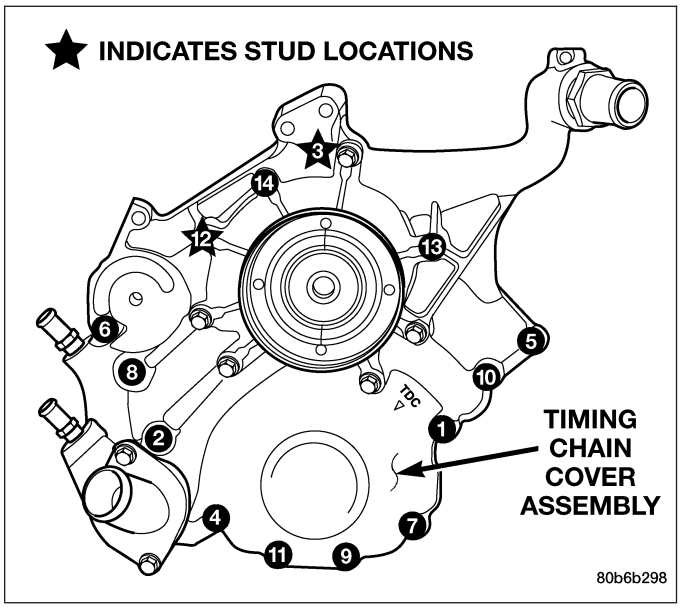

INSTALLATION

CAUTION: Do not use oil based liquids to clean timing cover or block surfaces. Use only rubbing alcohol, along with plastic or wooden scrapers. Use no wire brushes or abrasive wheels or metal scrapers, or damage to surfaces could result.

1. Clean timing chain cover and block surface using rubbing alcohol.

CAUTION: The 4.7L can use a special RTV sealer instead of a carrier gasket to seal the timing cover to the engine block, from the factory. For service repairs, Mopar® Grey Engine RTV must be used as a substitute, if RTV is present. If the front cover being used has no provisions for the water passage o-rings, then Mopar® Grey Engine RTV must be applied around the water passages.

2. Inspect the water passage o-rings, if equipped for any damage, and replace as necessary.
3. Apply Mopar® Grey Engine RTV sealer to the front cover following the path above, using a 3 to 4mm thick bead.

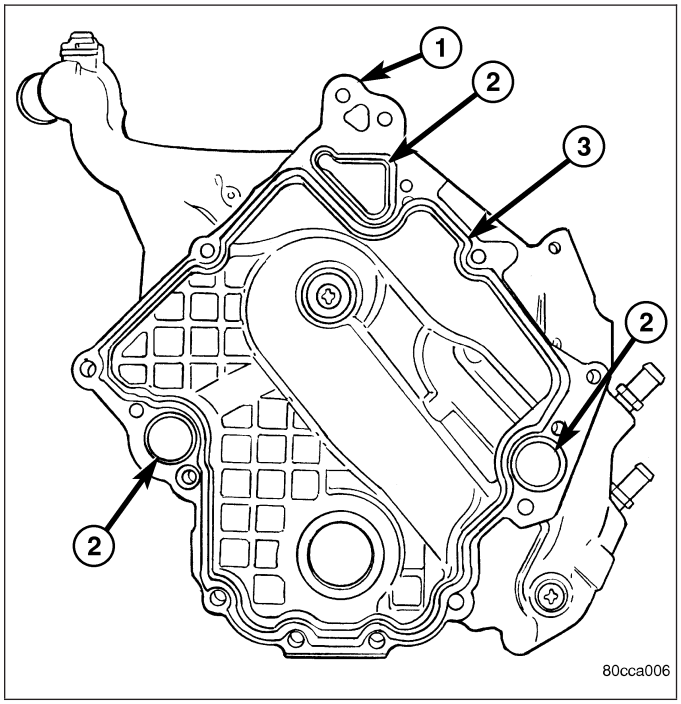

4. Install cover. Tighten flange head fasteners in sequence as shown in to 58 N·m (43 ft. lbs.).
5. Install the A/C compressor and generator.
6. Install crankshaft damper (Refer to 9 - ENGINE/ ENGINE BLOCK/VIBRATION DAMPER - INSTALLATION).
7. Install accessory drive belt tensioner assembly. Tighten fastener to 54 N·m (40 ft. lbs.).
8. Install lower radiator hose.
9. Install both heater hoses.
10. Fill cooling system (Refer to 7 - COOLING - STANDARD PROCEDURE).
11. Connect the battery negative cable.

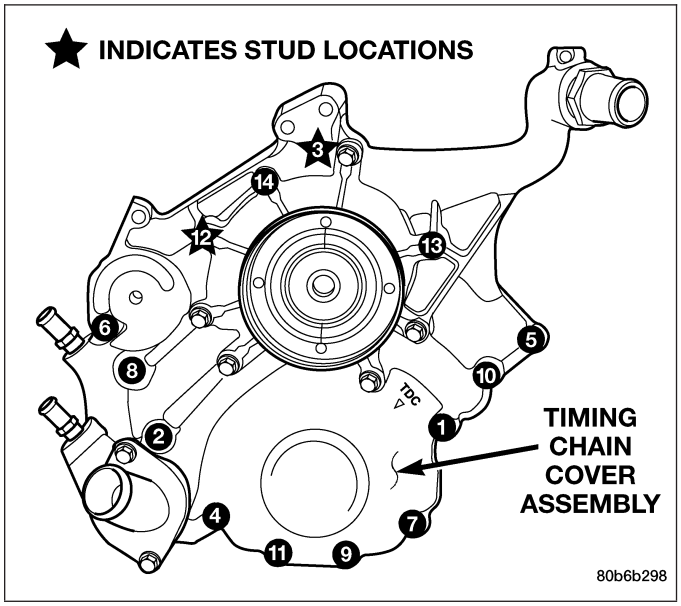

TIMING CHAIN & SPROCKETS

REMOVAL

1. Disconnect negative cable from battery.
2. Drain cooling system (Refer to 7 - COOLING - STANDARD PROCEDURE).
3. Remove right and left cylinder head covers (Refer to 9 - ENGINE/CYLINDER HEAD/CYLINDER HEAD COVER(S) - REMOVAL).
4. Remove radiator fan shroud.
5. Rotate engine until timing mark (2) on crankshaft damper aligns with TDC mark on timing chain cover (2) (#1 cylinder exhaust stroke) and the camshaft sprocket “V8” marks are at the 12 o’clock position (1,2).

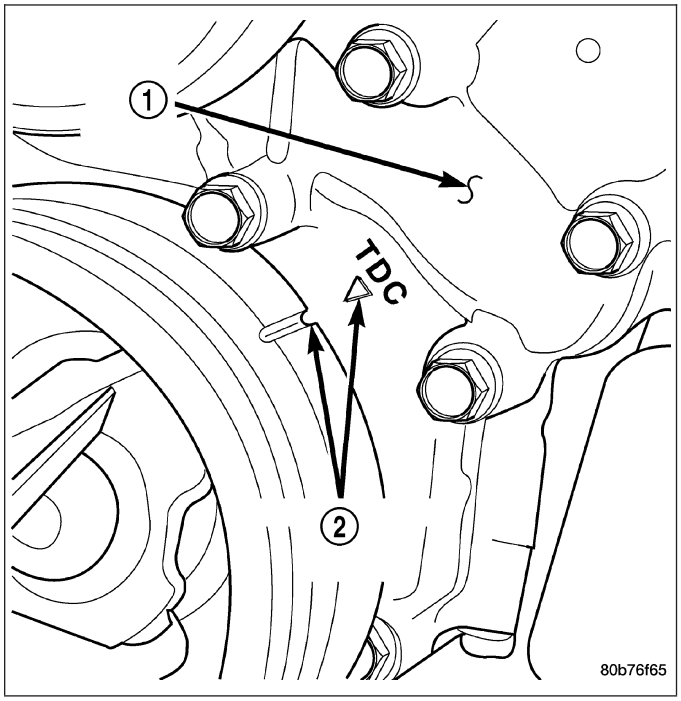

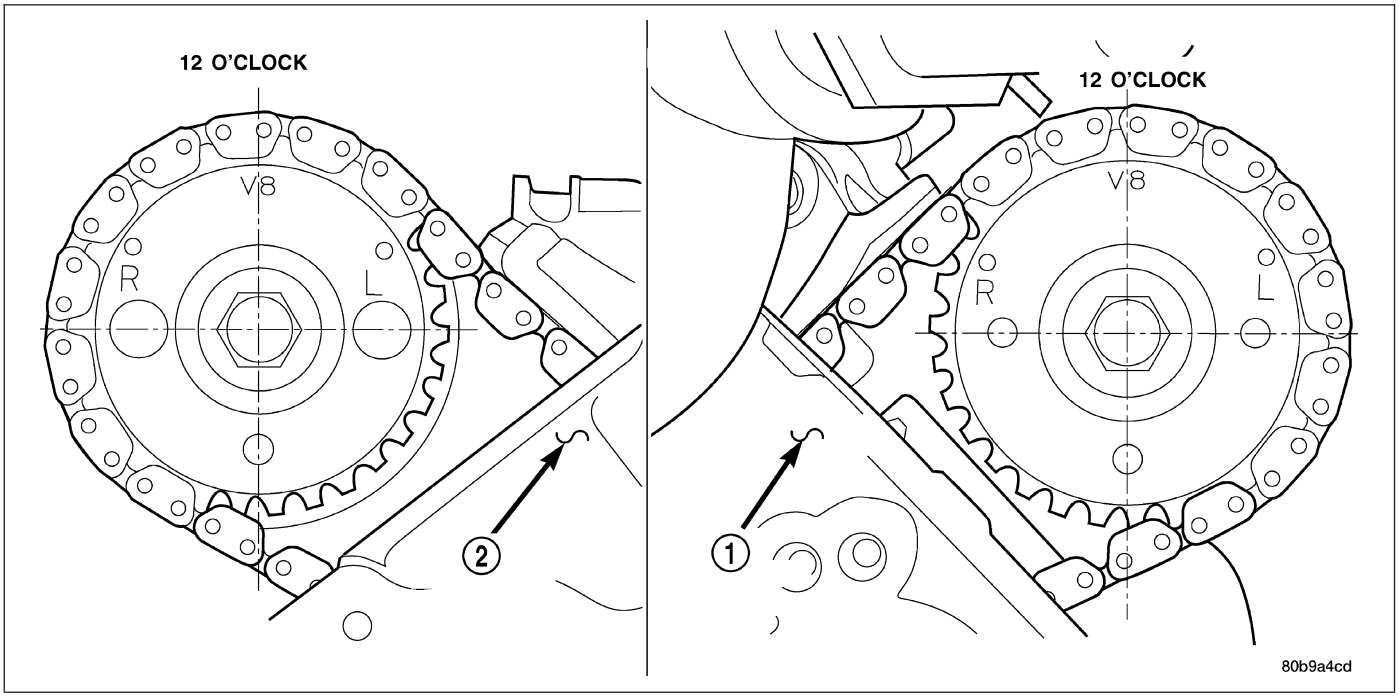

6. Remove power steering pump (Refer to 19 - STEERING/PUMP - REMOVAL).
7. Remove access plugs (1,2) from left and right cylinder heads for access to chain guide fasteners.
8. Remove the oil fill housing to gain access to the right side tensioner arm fastener.
9. Remove crankshaft damper (Refer to 9 - ENGINE/ENGINE BLOCK/VIBRATION DAMPER - REMOVAL) and timing chain cover (Refer to 9 - ENGINE/VALVE TIMING/TIMING BELT / CHAIN COVER(S) - REMOVAL).

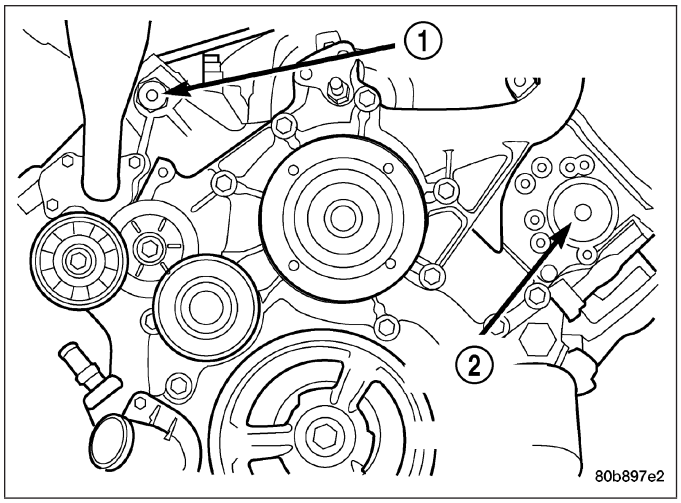

10. Collapse and pin primary chain tensioner (1).

CAUTION: Plate behind left secondary chain tensioner could fall into oil pan. Therefore, cover pan opening.

11. Remove secondary chain tensioners.

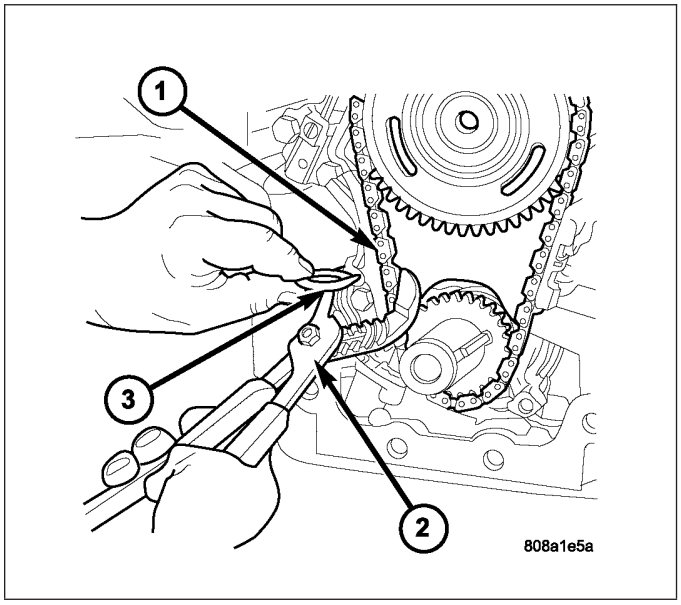

12. Remove camshaft position sensor (1) from right cylinder head.

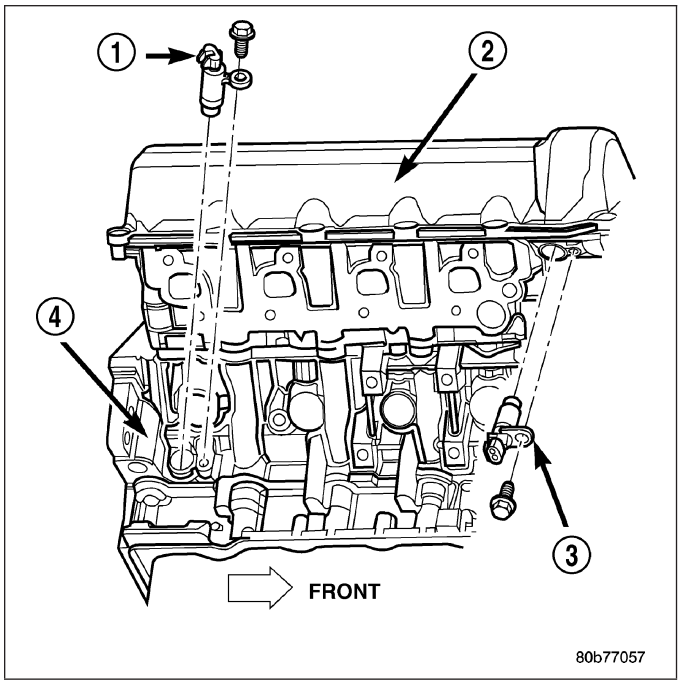

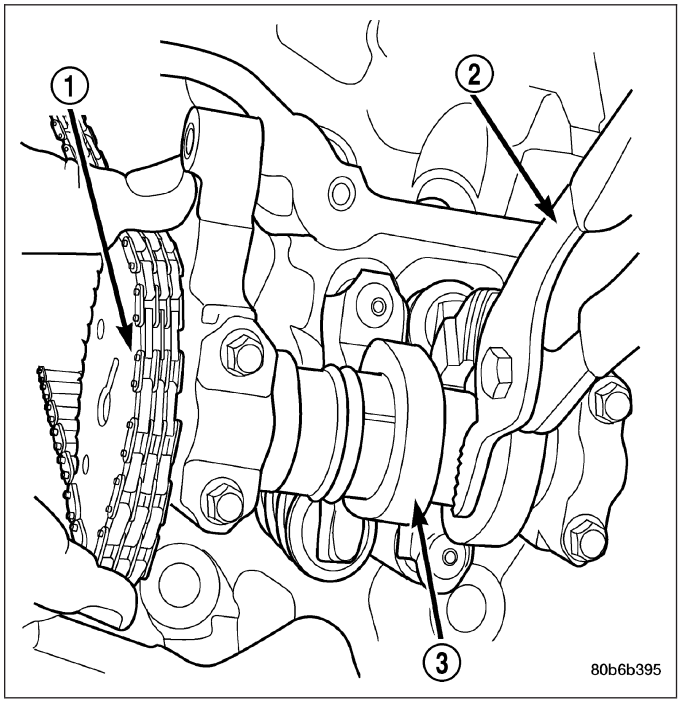

CAUTION: Care should be taken not to damage camshaft target wheel. Do not hold target wheel while loosening or tightening camshaft sprocket. Do not place the target wheel near a magnetic source of any kind. A damaged or magnetized target wheel could cause a vehicle no start condition.

CAUTION: Do not forcefully rotate the camshafts or crankshaft independently of each other. Damaging intake valve to piston contact will occur. Ensure negative battery cable is disconnected to guard against accidental starter engagement.

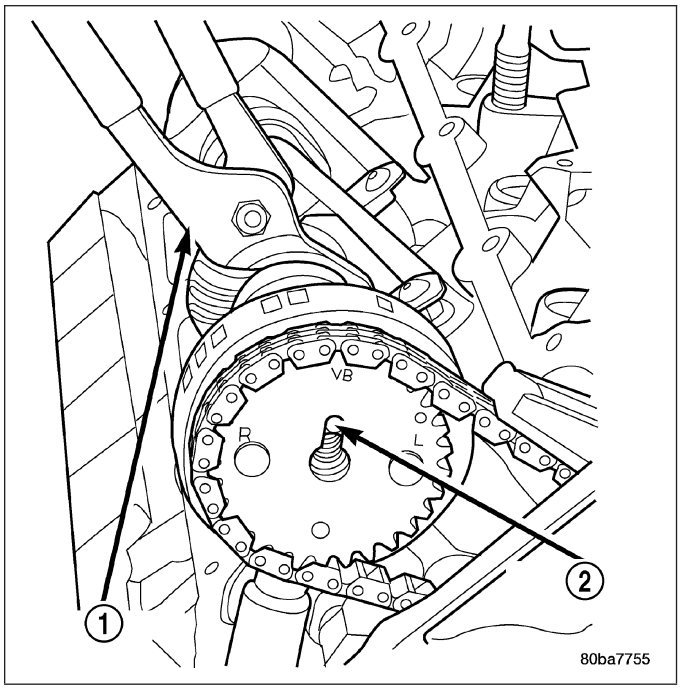

13. Remove left and right camshaft sprocket bolts.
14. While holding the left camshaft steel tube with adjustable pliers (1), remove the left camshaft sprocket. Slowly rotate the camshaft approximately 15 degrees clockwise to a neutral position.
15. While holding the right camshaft steel tube with adjustable pliers (1), remove the right camshaft sprocket. Slowly rotate the camshaft approximately 45 degrees counterclockwise to a neutral position.
16. Remove idler sprocket assembly bolt.
17. Slide the idler sprocket assembly and crank sprocket forward simultaneously to remove the primary and secondary chains.
18. Remove both pivoting tensioner arms and chain guides.
19. Remove chain tensioner.

INSPECTION

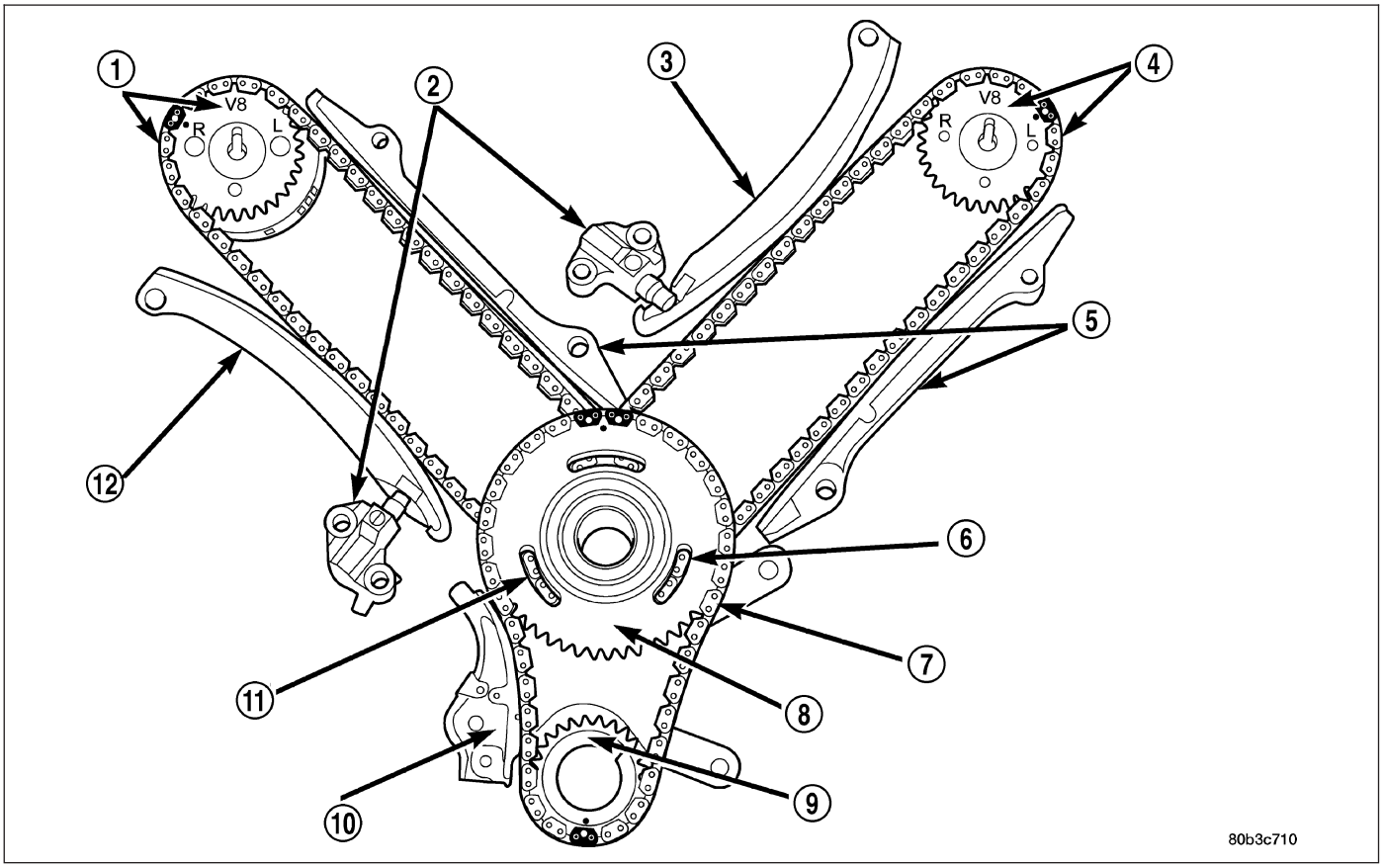

Inspect the following components:

- Sprockets for excessive tooth wear. Some tooth markings are normal and not a cause for sprocket replacement.
- Idler sprocket assembly bushing and shaft for excessive wear.
- Idler sprocket assembly spline joint. The joint should be tight with no backlash or axial movement.
- Chain guides and tensioner arms. Replace these parts if grooving in plastic face is more than 1 mm (0.039 in.) deep. If plastic face is severely grooved or melted, the tensioner lube jet may be clogged. The tensioner should be replaced.
- Secondary chain tensioner piston and ratcheting device. Inspect for evidence of heavy contact between tensioner piston and tensioner arm. If this condition exist the tensioner and tensioner arm should be replaced.
- Primary chain tensioner plastic faces. Replace as required.

INSTALLATION

1. Using a vise, lightly compress the secondary chain tensioner piston until the piston step is flush with the tensioner body. Using a pin or suitable tool, release ratchet pawl by pulling pawl back against spring force through access hole on side of tensioner. While continuing to hold pawl back, Push ratchet device to approximately 2 mm from the tensioner body. Install Special Tool 8514 lock pin (3) into hole on front of tensioner (2). Slowly open vise to transfer piston spring force to lock pin.

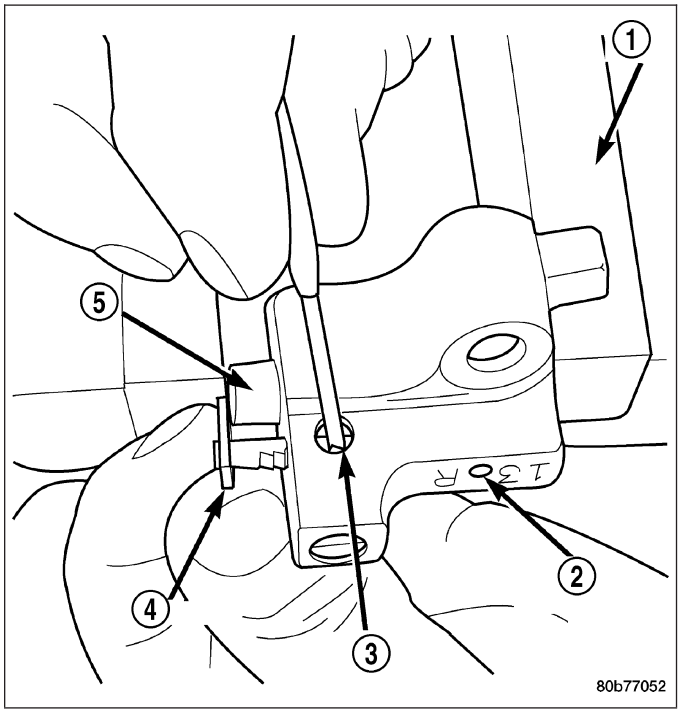

2. Position primary chain tensioner over oil pump and insert bolts into lower two holes on tensioner bracket. Tighten bolts to 28 N·m (250 in. lbs.).

CAUTION: Overtightening the tensioner arm torx® bolt can cause severe damage to the cylinder head. Tighten torx® bolt to specified torque only.

3. Install right side chain tensioner arm. Apply Mopar® Lock N, Seal to torx® bolt, tighten bolt to 17 N·m (150 in. lbs.).

NOTE: The silver bolts retain the guides to the cylinder heads and the black bolts retain the guides to the engine block.

4. Install the left side chain guide. Tighten the bolts to 28 N·m (250 in. lbs.).

CAUTION: Overtightening the tensioner arm torx® bolt can cause severe damage to the cylinder head. Tighten torx® bolt to specified torque only.

5. Install left side chain tensioner arm. Apply Mopar® Lock N, Seal to torx® bolt, tighten bolt to 17 N·m (150 in. lbs.).
6. Install the right side chain guide. Tighten the bolts to 28 N·m (250 in. lbs.).

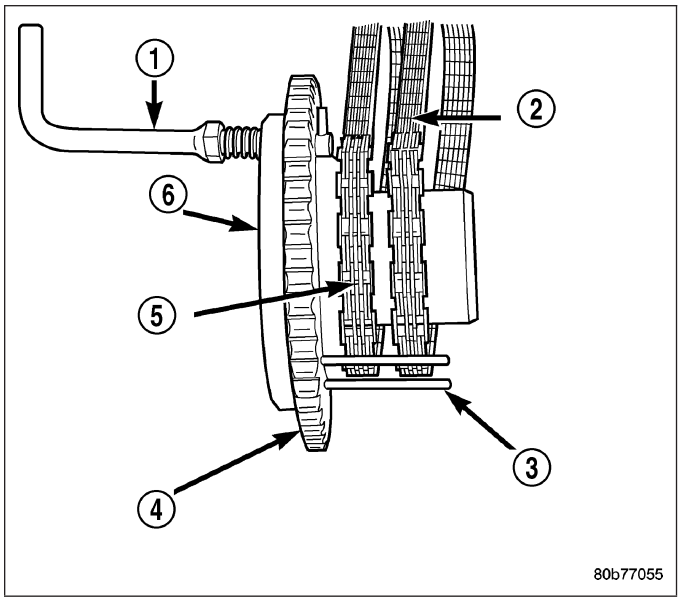

7. Install both secondary chains onto the idler sprocket. Align two plated links on the secondary chains to be visible through the two lower openings on the idler sprocket (4 o'clock and 8 o'clock). Once the secondary timing chains are installed, position special tool 8515 (6) to hold chains in place for installation.
8. Align primary chain double plated links with the timing mark at 12 o'clock (1) on the idler sprocket. Align the primary chain single plated link with the timing mark at 6 o'clock on the crankshaft sprocket (3).

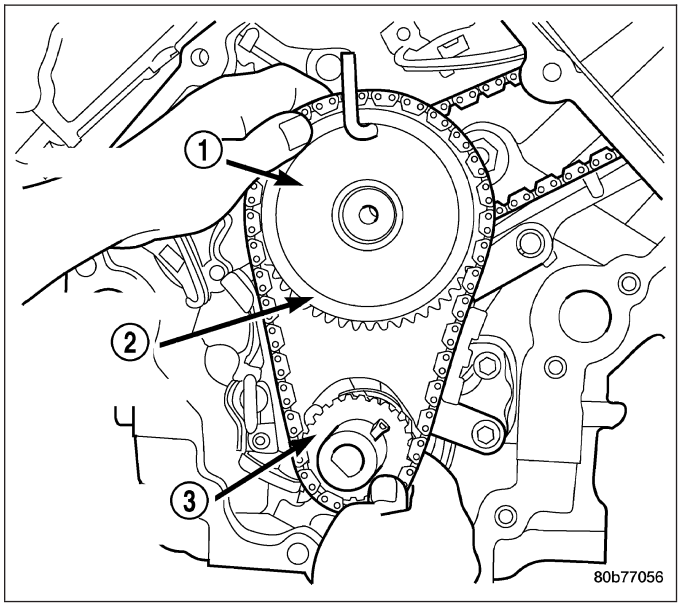

9. Lubricate idler shaft and bushings with clean engine oil.
10. Install all chains, crankshaft sprocket, and idler sprocket as an assembly. After guiding both secondary chains through the block and cylinder head openings, affix chains with a elastic strap or the equivalent, This will maintain tension on chains to aid in installation.

NOTE: It will be necessary to slightly rotate camshafts for sprocket installation.

11. Align left camshaft sprocket "L" dot to plated link on chain.
12. Align right camshaft sprocket "R" dot to plated link on chain.

CAUTION: Remove excess oil from the camshaft sprocket bolt. Failure to do so can result in over-torque of bolt resulting in bolt failure.

13. Remove Special Tool 8515, then attach both sprockets to camshafts. Remove excess oil from bolts, then Install sprocket bolts, but do not tighten at this time.
14. Verify that all plated links are aligned with the marks on all sprockets and the "V8" marks on camshaft sprockets are at the 12 o'clock position.

CAUTION: Ensure the plate between the left secondary chain tensioner and block is correctly installed.

15. Install both secondary chain tensioners. Tighten bolts to 28 N·m (250 in. lbs.).

NOTE: Left and right secondary chain tensioners are not common.

16. Before installing idler sprocket bolt, lubricate washer with oil, and tighten idler sprocket assembly retaining bolt to 34 N·m (25 ft. lbs.).
17. Remove all locking pins (3) from tensioners.

CAUTION: After pulling locking pins out of each tensioner, DO NOT manually extend the tensioner(s) ratchet. Doing so will over tension the chains, resulting in noise and/or high timing chain loads.

18. Using Special Tool 6958, Spanner with Adaptor Pins 8346, tighten left (3) and right (4), camshaft sprocket bolts to 122 N·m (90 ft. lbs.).
19. Rotate engine two full revolutions. Verify timing marks are at the follow locations:
    - primary chain idler sprocket dot is at 12 o'clock
    - primary chain crankshaft sprocket dot is at 6 o'clock
    - secondary chain camshaft sprockets "V8" marks are at 12 o'clock
20. Lubricate all three chains with engine oil.

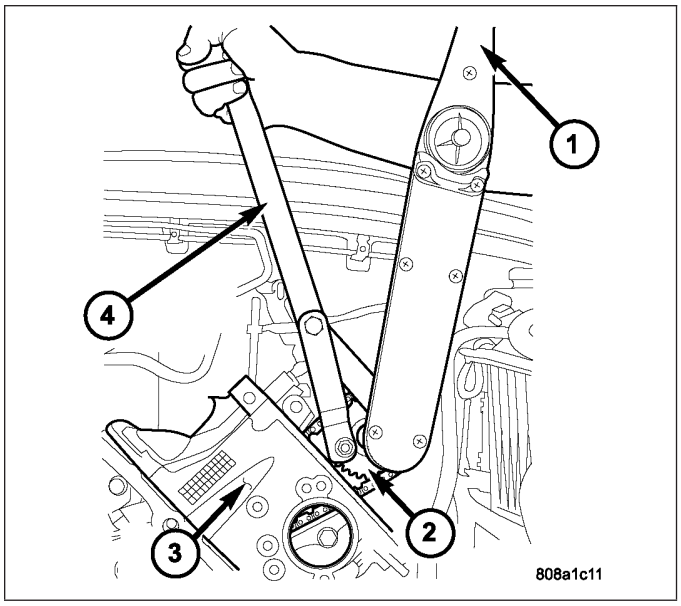

21. After installing all chains, it is recommended that the idler gear (1) end play be checked. The end play must be within 0.10–0.25 mm (0.004–0.010 in.). If not within specification, the idler gear must be replaced.

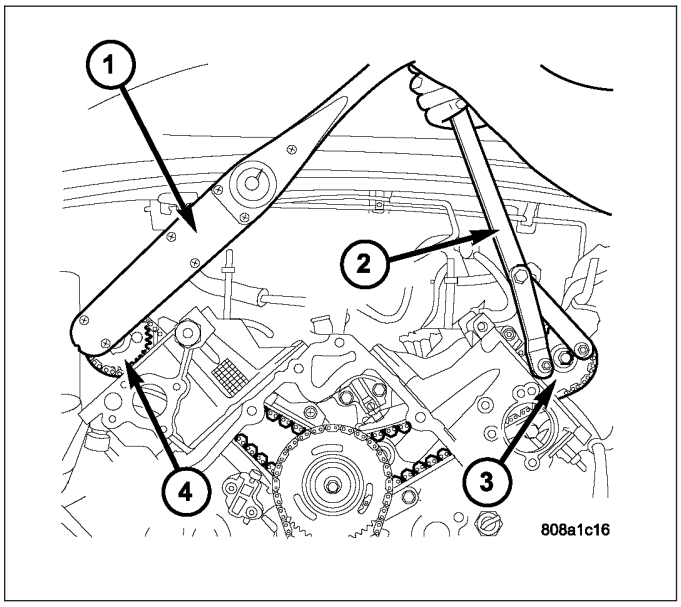

22. Install timing chain cover (Refer to 9 - ENGINE/ VALVE TIMING/TIMING BELT / CHAIN COVER(S) - INSTALLATION) and crankshaft damper (Refer to 9 - ENGINE/ENGINE BLOCK/VIBRATION DAMPER - INSTALLATION).
23. Install cylinder head covers (Refer to 9 - ENGINE/ CYLINDER HEAD/CYLINDER HEAD COVER(S) - INSTALLATION).

NOTE: Before installing threaded plug in right cylinder head, the plug must be coated with sealant to prevent leaks.

24. Coat the large threaded access plug with **Mopar® Thread Sealant with Teflon**, then install into the right cylinder head and tighten to 81 N·m (60 ft. lbs.).
25. Install the oil fill housing.
26. Install access plug in left cylinder head.

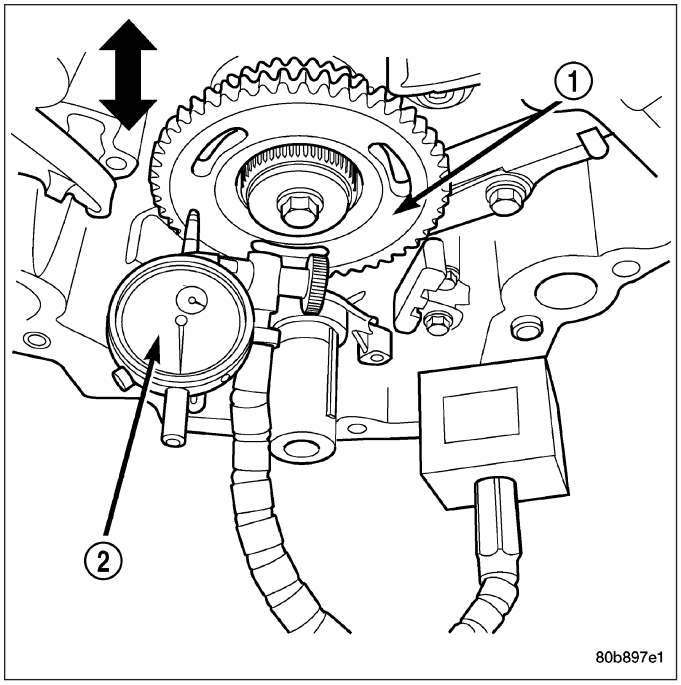

27. Install power steering pump (Refer to 19 - STEERING/PUMP - INSTALLATION).
28. Install radiator fan shroud.
29. Fill cooling system (Refer to 7 - COOLING - STANDARD PROCEDURE).
30. Connect negative cable to battery.

SHAFT - IDLER

REMOVAL

1. Remove the primary and secondary timing chains and sprockets (Refer to 9 - ENGINE/VALVE TIMING/TIMING BELT/CHAIN AND SPROCKETS - REMOVAL) .

NOTE: To remove the idler shaft, it is necessary to tap threads into the shaft, to install the removal tool.

2. Using a 12 mm X 1.75 tap, cut threads in the idler shaft center bore.
3. Cover the radiator core with a suitable cover.

CAUTION: Use care when removing the idler shaft, Do not strike the radiator cooling fins with the slide hammer.

4. Using Special Tool 8517 Slide Hammer, remove the idler shaft.

INSTALLATION

1. Thoroughly clean the idler shaft bore.
2. Position the idler shaft in the bore.

NOTE: The two lubrication holes in the idler shaft do not require any special alignment.

NOTE: Before using the retaining bolt to install the idler shaft, coat the threads and the pilot on the idler shaft, with clean engine oil.

3. Using the primary idler sprocket retaining bolt and washer, carefully draw the idler shaft into the bore until fully seated.
4. Coat the idler shaft with clean engine oil.
5. Install the timing chains and sprockets (Refer to 9 - ENGINE/VALVE TIMING/TIMING BELT/CHAIN AND SPROCKETS - INSTALLATION) .

ENGINE - 5.7L - SERVICE INFORMATION

TABLE OF CONTENTS

page

ENGINE - 5.7L - SERVICE INFORMATION
DESCRIPTION 2287
DIAGNOSIS AND TESTING
DIAGNOSIS AND TESTING - ENGINE DIAGNOSIS - INTRODUCTION 2288
DIAGNOSIS AND TESTING - ENGINE DIAGNOSIS - PERFORMANCE 2288
DIAGNOSIS AND TESTING - ENGINE DIAGNOSIS - MECHANICAL 2290
DIAGNOSIS AND TESTING - CYLINDER COMPRESSION PRESSURE 2290
DIAGNOSIS AND TESTING - CYLINDER COMBUSTION PRESSURE LEAKAGE 2291
DIAGNOSIS AND TESTING - ENGINE DIAGNOSIS - LUBRICATION 2292
DIAGNOSIS AND TESTING - ENGINE DIAGNOSIS - MECHANICAL 2293
STANDARD PROCEDURE
STANDARD PROCEDURE - REPAIR DAMAGED OR WORN THREADS 2295
STANDARD PROCEDURE—HYDROSTATIC LOCK 2295
REMOVAL 2296
INSTALLATION 2301
SPECIFICATIONS
5.7L ENGINE 2306
TORQUE 2312
SPECIAL TOOLS
5.7L ENGINE 2314
ELEMENT - AIR CLEANER
REMOVAL 2318
INSTALLATION 2319
CYLINDER HEAD
OPERATION—CYLINDER HEAD 2320
DIAGNOSIS AND TESTING—CYLINDER HEAD GASKET FAILURE 2320
REMOVAL 2321
CLEANING 2323
INSPECTION 2323
INSTALLATION 2324
COVER - CYLINDER HEAD
REMOVAL 2328
INSTALLATION 2331
VALVES & SEATS - INTAKE/EXHAUST
DESCRIPTION
DESCRIPTION - VALVE GUIDES 2333
DESCRIPTION 2333
STANDARD PROCEDURE - REFACING 2333
REMOVAL 2334
INSTALLATION 2334

page

ROCKER ARM
REMOVAL 2335
INSTALLATION 2337
SEALS - VALVE GUIDE
DESCRIPTION 2339
SPRINGS - VALVE
REMOVAL 2339
INSTALLATION 2345
ENGINE BLOCK
CLEANING 2349
INSPECTION 2350
CAMSHAFT
REMOVAL
REMOVAL - CAMSHAFT CORE HOLE PLUG 2350
REMOVAL - CAMSHAFT 2351
INSPECTION 2355
INSTALLATION
INSTALLATION - CAMSHAFT CORE HOLE PLUG 2356
INSTALLATION - CAMSHAFT 2356
CRANKSHAFT
REMOVAL 2363
INSTALLATION 2367
BEARINGS - CRANKSHAFT MAIN
STANDARD PROCEDURE - CRANKSHAFT MAIN BEARING - FITTING 2372
INSPECTION 2372
SEAL - CRANKSHAFT OIL - FRONT
REMOVAL 2373
INSTALLATION 2374
SEAL - CRANKSHAFT OIL - REAR
DIAGNOSIS AND TESTING - REAR SEAL AREA LEAKS 2374
REMOVAL 2375
INSTALLATION 2376
RETAINER - CRANK REAR OIL - SEAL
REMOVAL 2376
INSTALLATION 2377
FLEX PLATE
REMOVAL 2377
INSTALLATION 2378
TAPPETS - HYDRAULIC ROLLER
DIAGNOSIS AND TESTING - HYDRAULIC TAPPETS 2378
REMOVAL 2379
INSTALLATION 2380
PISTON & CONNECTING ROD
DESCRIPTION 2380
STANDARD PROCEDURE - PISTON FITTING 2381

REMOVAL 2381
CLEANING 2383
INSPECTION 2383
INSTALLATION 2383
RINGS - PISTON
STANDARD PROCEDURE - PISTON RING FITTING 2384
DAMPER - CRANKSHAFT
REMOVAL 2387
INSTALLATION 2388
COVER - STRUCTURAL
DESCRIPTION 2389
OPERATION 2389
REMOVAL 2389
INSTALLATION 2389
MOUNT - FRONT
REMOVAL 2391
INSTALLATION 2393
MOUNT - REAR
REMOVAL 2394
INSTALLATION 2395
LUBRICATION
DIAGNOSIS AND TESTING
DIAGNOSIS AND TESTING - CHECKING ENGINE OIL PRESSURE 2395
DIAGNOSIS AND TESTING - ENGINE OIL LEAK 2395
OIL
STANDARD PROCEDURE - ENGINE OIL SERVICE 2396
FILTER - ENGINE OIL
REMOVAL 2397
INSTALLATION 2397
PAN - ENGINE OIL
REMOVAL 2398
INSTALLATION 2399
PUMP - ENGINE OIL
DESCRIPTION 2402
REMOVAL 2403
CLEANING 2403
INSPECTION 2404
INSTALLATION 2405
MANIFOLD - INTAKE
DESCRIPTION 2406
DIAGNOSIS AND TESTING - INTAKE MANIFOLD LEAKAGE 2406
REMOVAL 2406
CLEANING 2406
INSPECTION 2406
INSTALLATION 2407
MANIFOLD - EXHAUST
DESCRIPTION 2407
OPERATION 2407
REMOVAL 2408
CLEANING 2408
INSPECTION 2408
INSTALLATION 2409
COVER - TIMING
REMOVAL 2410
INSTALLATION 2412
TIMING CHAIN & SPROCKETS
REMOVAL 2413
INSTALLATION 2416
TENSIONER - TIMING CHAIN
DESCRIPTION 2419
OPERATION 2419

ENGINE - 5.7L - SERVICE INFORMATION

DESCRIPTION

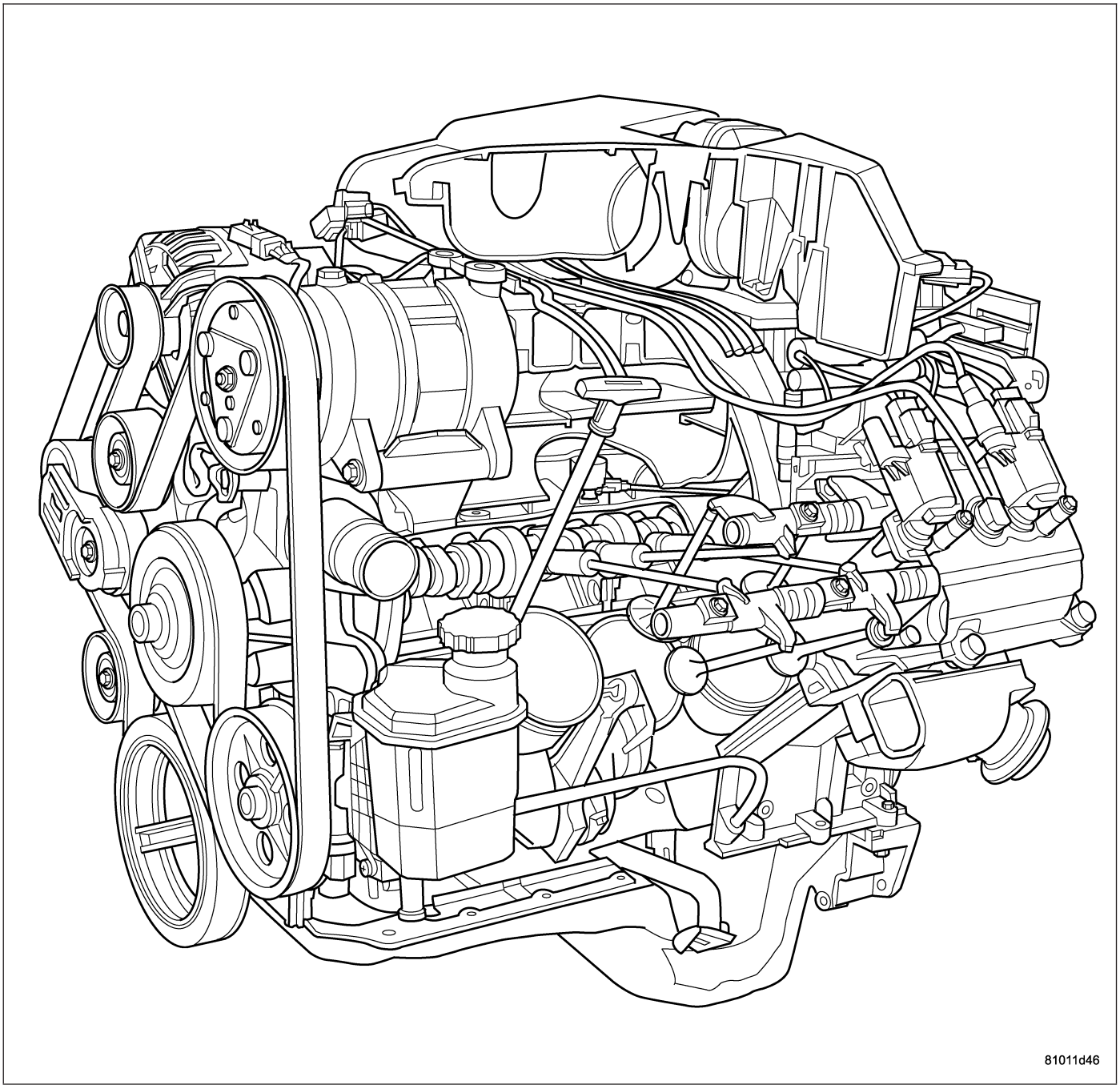

The 5.7L engine (345 CID) eight-cylinder engine is a 90° V-Type lightweight, deep skirt cast iron block, aluminum heads, single cam, overhead valve engine with hydraulic roller tappets. The heads incorporate splayed valves with a hemispherical style combustion chamber and dual spark plugs. The cylinders are numbered from front to rear; 1, 3, 5, 7 on the left bank and 2, 4, 6, 8 on the right bank. The firing order is 1-8-4-3-6-5-7-2.

DIAGNOSIS AND TESTING

DIAGNOSIS AND TESTING - ENGINE DIAGNOSIS - INTRODUCTION

Engine diagnosis is helpful in determining the causes of malfunctions not detected and remedied by routine maintenance.

These malfunctions may be classified as either performance (e.g., engine idles rough and stalls) or mechanical (e.g., a strange noise).

(Refer to 9 - ENGINE - DIAGNOSIS AND TESTING) - PERFORMANCE and (Refer to 9 - ENGINE - DIAGNOSIS AND TESTING)—MECHANICAL for possible causes and corrections of malfunctions. (Refer to 14 - FUEL SYSTEM/FUEL DELIVERY - DIAGNOSIS AND TESTING) and (Refer to 14 - FUEL SYSTEM/FUEL INJECTION - DIAGNOSIS AND TESTING) for the fuel system diagnosis.

Additional tests and diagnostic procedures may be necessary for specific engine malfunctions that can not be isolated with the Service Diagnosis charts. Information concerning additional tests and diagnosis is provided within the following diagnosis:

- Cylinder Compression Pressure Test (Refer to 9 - ENGINE - DIAGNOSIS AND TESTING).
- Cylinder Combustion Pressure Leakage Test (Refer to 9 - ENGINE - DIAGNOSIS AND TESTING).
- Engine Cylinder Head Gasket Failure Diagnosis (Refer to 9 - ENGINE/CYLINDER HEAD - DIAGNOSIS AND TESTING).
- Intake Manifold Leakage Diagnosis (Refer to 9 - ENGINE/MANIFOLDS/INTAKE MANIFOLD - DIAGNOSIS AND TESTING).

DIAGNOSIS AND TESTING - ENGINE DIAGNOSIS - PERFORMANCE

CONDITION	POSSIBLE CAUSE	CORRECTION
ENGINE WILL NOT START	1. Weak battery	1. Charge or replace as necessary.
	2. Corroded or loose battery connections.	2. Clean and tighten battery connections. Apply a coat of light mineral grease to the terminals.
	3. Faulty starter.	3. (Refer to 8 - ELECTRICAL/STARTING - DIAGNOSIS AND TESTING).
	4. Faulty coil or control unit.	4. (Refer to 8 - ELECTRICAL/IGNITION CONTROL/IGNITION COIL - REMOVAL).
	5. Incorrect spark plug gap.	5. (Refer to 8 - ELECTRICAL/IGNITION CONTROL/SPARK PLUG - CLEANING).
	6. Dirt or water in fuel system.	6. Clean system and replace fuel filter.
	7. Faulty fuel pump, relay or wiring.	7. Repair or replace as necessary.

CONDITION	POSSIBLE CAUSE	CORRECTION
ENGINE STALLS OR ROUGH IDLE	1. Idle speed set to low.	1. (Refer to 14 - FUEL SYSTEM/ FUEL INJECTION/IDLE AIR CONTROL MOTOR - REMOVAL).
	2. Idle mixture too lean or too rich.	2. Refer to Powertrain Diagnosis Information.
	3. Vacuum leak.	3. Inspect intake manifold and vacuum hoses, repair or replace as necessary.
	4. Faulty coil.	4. (Refer to 8 - ELECTRICAL/ IGNITION CONTROL/IGNITION COIL - REMOVAL).
	5. Incorrect engine timing.	5. (Refer to 9 - ENGINE/VALVE TIMING - STANDARD PROCEDURE).
ENGINE LOSS OF POWER	1. Dirty or incorrectly gapped spark plugs.	1. (Refer to 8 - ELECTRICAL/ IGNITION CONTROL/SPARK PLUG - CLEANING).
	2. Dirt or water in fuel system.	2. Clean system and replace fuel filter.
	3. Faulty fuel pump.	3. Refer to the Appropriate Diagnostic Information
	4. Blown cylinder head gasket.	4. Replace cylinder head gasket.
	5. Low compression.	5. (Refer to 9 - ENGINE - DIAGNOSIS AND TESTING).
	6. Burned, warped or pitted valves.	6. Replace as necessary.
	7. Plugged or restricted exhaust system.	7. Inspect and replace as necessary.
	8. Faulty coil.	8. (Refer to 8 - ELECTRICAL/ IGNITION CONTROL/IGNITION COIL - REMOVAL).
ENGINE MISSES ON ACCELERATION	1. Spark plugs dirty or incorrectly gapped.	1. (Refer to 8 - ELECTRICAL/ IGNITION CONTROL/SPARK PLUG - CLEANING).
	2. Dirt in fuel system.	2. Clean fuel system.
	3. Burned, warped or pitted valves.	3. Replcae as necessary.
	4. Faulty coil.	4. (Refer to 8 - ELECTRICAL/ IGNITION CONTROL/IGNITION COIL - REMOVAL).
ENGINE MISSES AT HIGH SPEED	1. Spark plugs dirty or incorrectly gapped.	1. (Refer to 8 - ELECTRICAL/ IGNITION CONTROL/SPARK PLUG - CLEANING).
	2. Faulty coil.	2. (Refer to 8 - ELECTRICAL/ IGNITION CONTROL/IGNITION COIL - REMOVAL).
	3. Dirt or water in fuel system.	3. Clean system and replace fuel filter.

DIAGNOSIS AND TESTING - ENGINE DIAGNOSIS - MECHANICAL

CONDITION	POSSIBLE CAUSES	CORRECTIONS
NOISY VALVES	1. High or low oil level in crankcase.	1. (Refer to LUBRICATION & MAINTENANCE - SPECIFICATIONS)
	2. Thin or diluted oil.	2. Change oil and filter.
	3. Low oil pressure.	3. Check oil pump, if Ok, check rod and main bearings for excessive wear.
	4. Dirt in lash adjusters.	4. Replace as necessary.
	5. Worn rocker arms.	5. Replace as necessary.
	6. Worn lash adjusters	6. Replace as necessary.
	7. Worn valve guides.	7. (Refer to 9 - ENGINE/CYLINDER HEAD/INTAKE/EXHAUST VALVES & SEATS - STANDARD PROCEDURE)
	8. Excessive runout of valve seats on valve faces.	8. (Refer to 9 - ENGINE/CYLINDER HEAD/INTAKE/EXHAUST VALVES & SEATS - STANDARD PROCEDURE)
CONNECTING ROD NOISE	1. Insufficient oil supply.	1. (Refer to LUBRICATION & MAINTENANCE - SPECIFICATIONS)
	2. Low oil pressure.	2. Check oil pump, if Ok, check rod and main bearings for excessive wear.
	3. Thin or diluted oil.	3. Change oil and filter.
	4. Excessive bearing clearance.	4. Replace as necessary.
	5. Connecting rod journal out-of-round.	5. Service or replace crankshaft.
	6. Misaligned connecting rods.	6. Replace bent connecting rods.
MAIN BEARING NOISE	1. Insufficient oil supply.	1. (Refer to LUBRICATION & MAINTENANCE - SPECIFICATIONS)
	2. Low oil pressure.	2. Check oil pump, if Ok, check rod and main bearings for excessive wear.
	3. Thin or diluted oil.	3. Change oil and filter.
	4. Excessive bearing clearance.	4. Replace as necessary.
	5. Excessive end play.	5. Check thrust washers for wear.
	6. Crankshaft journal out-of round.	6. Service or replace crankshaft.
	7. Loose flywheel or torque converter.	7. Tighten to correct torque

DIAGNOSIS AND TESTING - CYLINDER COMPRESSION PRESSURE

The results of a cylinder compression pressure test can be utilized to diagnose several engine malfunctions.

Ensure the battery is completely charged and the engine starter motor is in good operating condition. Otherwise the indicated compression pressures may not be valid for diagnosis purposes.

1. Clean the spark plug recesses with compressed air.
2. Remove the spark plugs.
3. Disable the fuel system (Refer to 14 - FUEL SYSTEM/FUEL DELIVERY - DESCRIPTION).
4. Remove the ASD relay (Refer to 8 - ELECTRICAL/IGNITION CONTROL/AUTO SHUT DOWN RELAY - REMOVAL).
5. Insert a compression pressure gauge and rotate the engine with the engine starter motor for three revolutions.
6. Record the compression pressure on the 3rd revolution. Continue the test for the remaining cylinders.
7. (Refer to 9 - ENGINE - SPECIFICATIONS) for the correct engine compression pressures.

DIAGNOSIS AND TESTING - CYLINDER COMBUSTION PRESSURE LEAKAGE

The combustion pressure leakage test provides an accurate means for determining engine condition.

Combustion pressure leakage testing will detect:

- Exhaust and intake valve leaks (improper seating).
- Leaks between adjacent cylinders or into water jacket.
- Any causes for combustion/compression pressure loss.

1. Check the coolant level and fill as required. DO NOT install the radiator cap.
2. Start and operate the engine until it attains normal operating temperature, then turn the engine OFF.
3. Remove the spark plugs.
4. Remove the oil filler cap.
5. Remove the air cleaner hose.
6. Calibrate the tester according to the manufacturer's instructions. The shop air source for testing should maintain 483 kPa (70 psi) minimum, 1,379 kPa (200 psi) maximum and 552 kPa (80 psi) recommended.
7. Perform the test procedures on each cylinder according to the tester manufacturer's instructions. Set piston of cylinder to be tested at TDC compression,While testing, listen for pressurized air escaping through the throttle body, tailpipe and oil filler cap opening. Check for bubbles in the radiator coolant.

All gauge pressure indications should be equal, with no more than 25% leakage.

FOR EXAMPLE: At 552 kPa (80 psi) input pressure, a minimum of 414 kPa (60 psi) should be maintained in the cylinder.

Refer to CYLINDER COMBUSTION PRESSURE LEAKAGE DIAGNOSIS CHART .

CYLINDER COMBUSTION PRESSURE LEAKAGE DIAGNOSIS CHART

CONDITION	POSSIBLE CAUSE	CORRECTION
AIR ESCAPES THROUGH THROTTLE BODY	Intake valve bent, burnt, or not seated properly	Inspect valve and valve seat. Reface or replace, as necessary. Inspect valve springs. Replace as necessary.
AIR ESCAPES THROUGH TAILPIPE	Exhaust valve bent, burnt, or not seated properly	Inspect valve and valve seat. Reface or replace, as necessary. Inspect valve springs. Replace as necessary.
AIR ESCAPES THROUGH RADIATOR	Head gasket leaking or cracked cylinder head or block	Remove cylinder head and inspect. Replace defective part
MORE THAN 50% LEAKAGE FROM ADJACENT CYLINDERS	Head gasket leaking or crack in cylinder head or block between adjacent cylinders	Remove cylinder head and inspect. Replace gasket, head, or block as necessary
MORE THAN 25% LEAKAGE AND AIR ESCAPES THROUGH OIL FILLER CAP OPENING ONLY	Stuck or broken piston rings; cracked piston; worn rings and/or cylinder wall	Inspect for broken rings or piston. Measure ring gap and cylinder diameter, taper and out-of-round. Replace defective part as necessary

DIAGNOSIS AND TESTING - ENGINE DIAGNOSIS - LUBRICATION

CONDITION	POSSIBLE CAUSES	CORRECTION
OIL LEAKS	1. Gaskets and O-Rings. (a) Misaligned or damaged. (b) Loose fasteners, broken or porous metal parts. 2. Crankshaft rear seal 3. Crankshaft seal flange. Scratched, nicked or grooved. 4. Oil pan flange cracked. 5.Front cover seal, damaged or misaligned. 6. Scratched or damaged vibration damper hub. 7. Crankshaft Rear Flange Microporosity	1. (a) Replace as necessary. (b) Tighten fasteners, Repair or replace metal parts. 2. Replace as necessary. 3. Polish or replace crankshaft. 4. Replace oil pan. 5. Replace seal. 6. Polish or replace damper. 7. Replace Crankshaft
OIL PRESSURE DROP	1. Low oil level. 2. Faulty oil pressure sending unit. 3. Low oil pressure. 4. Clogged oil filter. 5. Worn oil pump. 6. Thin or diluted oil. 7. Excessive bearing clearance. 8. Oil pump relief valve stuck. 9. Oil pickup tube loose or damaged.	1. Check and correct oil level. 2. Replace sending unit. 3. Check pump and bearing clearance. 4. Replace oil filter. 5. Replace as necessary. 6. Change oil and filter. 7. Replace as necessary. 8. Replace oil pump. 9. Replace as necessary.
OIL PUMPING AT RINGS; SPARK PLUGS FOULING	1. Worn or damaged rings. 2. Carbon in oil ring slots. 3. Incorrect ring size installed. 4. Worn valve guides. 5. Leaking intake gasket. 6. Leaking valve guide seals.	1. Hone cylinder bores and replace rings. 2. Replace rings. 3. Replace rings. 4. Ream guides and replace valves. 5. Replace intake gaskets. 6. Replace valve guide seals.

DIAGNOSIS AND TESTING - ENGINE DIAGNOSIS - MECHANICAL

ENGINE MECHANICAL DIAGNOSIS CHART

CONDITION	POSSIBLE CAUSES	CORRECTION
NOISY VALVES/LIFTERS	1. High or low oil level in crankcase	1. Check for correct oil level. Adjust oil level by draining or adding as needed
	2. Thin or diluted oil	2. Change oil. (Refer to 9 - ENGINE/LUBRICATION/OIL - STANDARD PROCEDURE)
	3. Low oil pressure	3. Check engine oil level. If ok, Perform oil pressure test. (Refer to 9 - ENGINE/LUBRICATION - DIAGNOSIS AND TESTING) for engine oil pressure test/ specifications
	4. Dirt in tappets/lash adjusters	4. Clean/replace hydraulic tappets/lash adjusters
	5. Bent push rod(s)	5. Install new push rods
	6. Worn rocker arms	6. Inspect oil supply to rocker arms and replace worn arms as needed
	7. Worn tappets/lash adjusters	7. Install new hydraulic tappets/lash adjusters
	8. Worn valve guides	8. Inspect all valve guides and replace as necessary
	9. Excessive runout of valve seats or valve faces	9. Grind valves and seats
CONNECTING ROD NOISE	1. Insufficient oil supply	1. Check engine oil level.
	2. Low oil pressure	2. Check engine oil level. If ok, Perform oil pressure test. (Refer to 9 - ENGINE/LUBRICATION - DIAGNOSIS AND TESTING) engine oil pressure test/specifications
	3. Thin or diluted oil	3. Change oil to correct viscosity. (Refer to 9 - ENGINE/ LUBRICATION/OIL - STANDARD PROCEDURE) for correct procedure/engine oil specifications
	4. Excessive connecting rod bearing clearance	4. Measure bearings for correct clearance with plasti-gage. Repair as necessary
	5. Connecting rod journal out of round	5. Replace crankshaft or grind journals
	6. Misaligned connecting rods	6. Replace bent connecting rods

CONDITION	POSSIBLE CAUSES	CORRECTION
MAIN BEARING NOISE	1. Insufficient oil supply	1. Check engine oil level.
	2. Low oil pressure	2. Check engine oil level. If ok, Perform oil pressure test. (Refer to 9 - ENGINE/LUBRICATION - DIAGNOSIS AND TESTING)
	3. Thin or diluted oil	3. Change oil to correct viscosity.
	4. Excessive main bearing clearance	4. Measure bearings for correct clearance. Repair as necessary
	5. Excessive end play	5. Check crankshaft thrust bearing for excessive wear on flanges
	6. Crankshaft main journal out of round or worn	6. Grind journals or replace crankshaft
	7. Loose flywheel or torque converter	7. Inspect crankshaft, flexplate/ flywheel and bolts for damage. Tighten to correct torque
LOW OIL PRESSURE	1. Low oil level	1. Check oil level and fill if necessary
	2. Faulty oil pressure sending unit	2. Install new sending unit
	3. Clogged oil filter	3. Install new oil filter
	4. Worn oil pump	4. Replace oil pump assembly.
	5. Thin or diluted oil	5. Change oil to correct viscosity.
	6. Excessive bearing clearance	6. Measure bearings for correct clearance
	7. Oil pump relief valve stuck	7. Remove valve to inspect, clean and reinstall
	8. Oil pickup tube loose, broken, bent or clogged	8. Inspect oil pickup tube and pump, and clean or replace if necessary
	9. Oil pump cover warped or cracked	9. Install new oil pump
OIL LEAKS	1. Misaligned or deteriorated gaskets	1. Replace gasket
	2. Loose fastener, broken or porous metal part	2. Tighten, repair or replace the part
	3. Front or rear crankshaft oil seal leaking	3. Replace seal
	4. Leaking oil gallery plug or cup plug	4. Remove and reseal threaded plug. Replace cup style plug

CONDITION	POSSIBLE CAUSES	CORRECTION
EXCESSIVE OIL CONSUMPTION OR SPARK PLUGS OIL FOULED	1. CCV System malfunction	1. (Refer to 25 - EMISSIONS CONTROL/EVAPORATIVE EMISSIONS - DESCRIPTION) for correct operation
	2. Defective valve stem seal(s)	2. Repair or replace seal(s)
	3. Worn or broken piston rings	3. Hone cylinder bores. Install new rings
	4. Scuffed pistons/cylinder walls	4. Hone cylinder bores and replace pistons as required
	5. Carbon in oil control ring groove	5. Remove rings and de-carbon piston
	6. Worn valve guides	6. Inspect/replace valve guides as necessary
	7. Piston rings fitted too tightly in grooves	7. Remove rings and check ring end gap and side clearance. Replace if necessary

STANDARD PROCEDURE

STANDARD PROCEDURE - REPAIR DAMAGED OR WORN THREADS

CAUTION: Be sure that the tapped holes maintain the original center line.

Damaged or worn threads can be repaired. Essentially, this repair consists of:

- Drilling out worn or damaged threads.
- Tapping the hole with a special Heli-Coil Tap, or equivalent.
- Installing an insert into the tapped hole to bring the hole back to its original thread size.

STANDARD PROCEDURE—HYDROSTATIC LOCK

CAUTION: DO NOT use the starter motor to rotate the crankshaft. Severe damage could occur.

When an engine is suspected of hydrostatic lock (regardless of what caused the problem), follow the steps below.

1. Perform the Fuel Pressure Release Procedure (Refer to 14 - FUEL SYSTEM/FUEL DELIVERY - STANDARD PROCEDURE).
2. Disconnect the negative cable(s) from the battery.
3. Inspect air cleaner, induction system, and intake manifold to ensure system is dry and clear of foreign material.
4. Place a shop towel around the spark plugs to catch any fluid that may possibly be under pressure in the cylinder head. Remove the spark plugs.
5. With all spark plugs removed, rotate the crankshaft using a breaker bar and socket.
6. Identify the fluid in the cylinders (coolant, fuel, oil, etc.).
7. Be sure all fluid has been removed from the cylinders.
8. Repair engine or components as necessary to prevent this problem from occurring again.
9. Squirt a small amount of engine oil into the cylinders to lubricate the walls. This will prevent damage on restart.
10. Install new spark plugs. Tighten the spark plugs to 41 N·m (30 ft. lbs.) torque.
11. Drain engine oil. Remove and discard the oil filter.
12. Install the drain plug. Tighten the plug to 34 N·m (25 ft. lbs.) torque.
13. Install a new oil filter.
14. Fill engine crankcase with the specified amount and grade of oil. (Refer to LUBRICATION & MAINTENANCE - SPECIFICATIONS).

15. Connect the negative cable(s) to the battery.
16. Start the engine and check for any leaks.

REMOVAL

1. Perform the Fuel System Pressure Release procedure (Refer to 14 - FUEL SYSTEM/FUEL DELIVERY - STANDARD PROCEDURE).
2. Disconnect the battery negative cable.
3. Remove the air cleaner resonator and duct work as an assembly.
4. Drain cooling system (Refer to 7 - COOLING - STANDARD PROCEDURE).
5. Remove the viscous fan/drive (Refer to 7 - COOLING/ENGINE/RADIATOR FAN - REMOVAL).
6. Remove the accessory drive belt (Refer to 7 - COOLING/ACCESSORY DRIVE/DRIVE BELTS - REMOVAL).

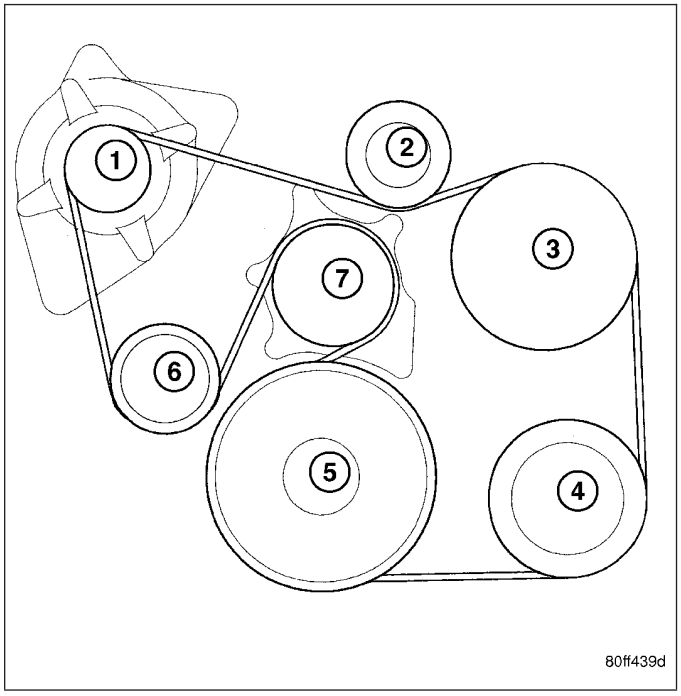

7. Remove the fan shroud (3).

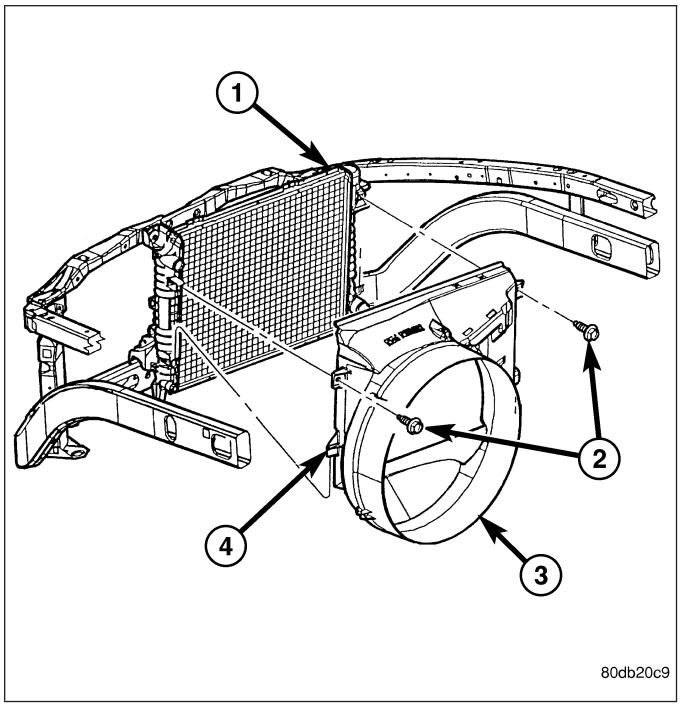

8. Remove radiator (1) (Refer to 7 - COOLING/ENGINE/RADIATOR - REMOVAL).
9. Remove the upper crossmember and top core support.

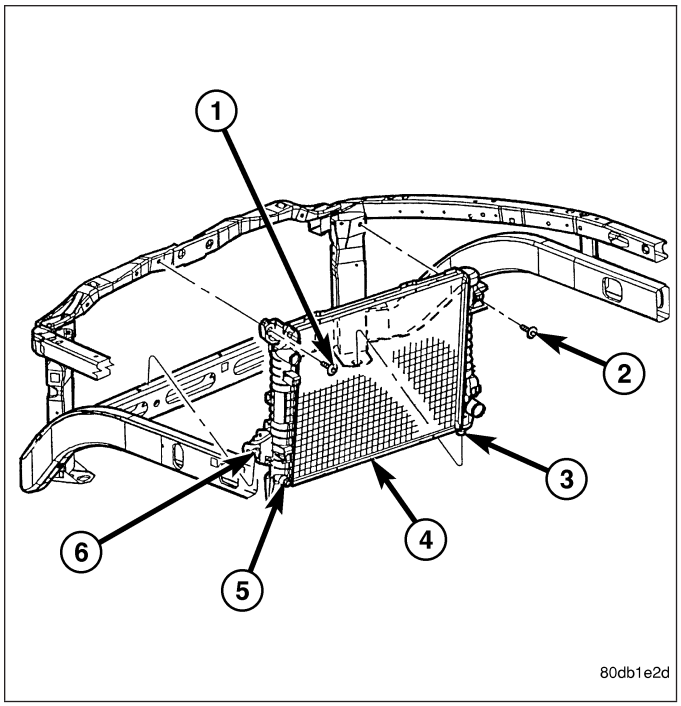

NOTE: It is not necessary to drain A/C system for engine removal.

10. Remove the A/C compressor (2) with the lines attached. Secure compressor out of the way.

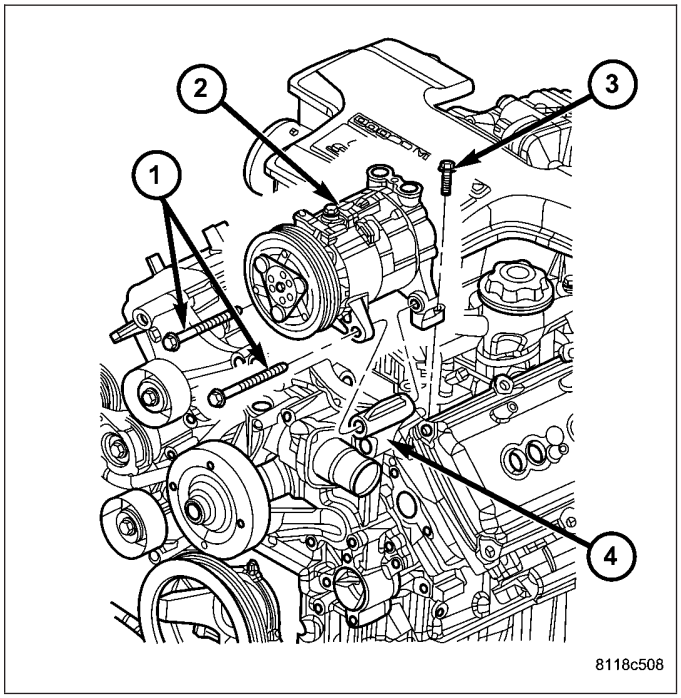

11. Remove generator assembly (2) (Refer to 8 - ELECTRICAL/CHARGING/GENERATOR - REMOVAL).
12. Remove the intake manifold and IAFM as an assembly (Refer to 9 - ENGINE/MANIFOLDS/INTAKE MANIFOLD - REMOVAL).
13. Disconnect the heater hoses.

NOTE: It is not necessary to disconnect P/S hoses from pump, for P/S pump removal.

14. Remove the power steering pump and set aside.
15. Disconnect the fuel supply line (Refer to 14 - FUEL SYSTEM/FUEL DELIVERY/QUICK CONNECT FITTING - STANDARD PROCEDURE).
16. Raise and support the vehicle on a hoist and drain the engine oil.

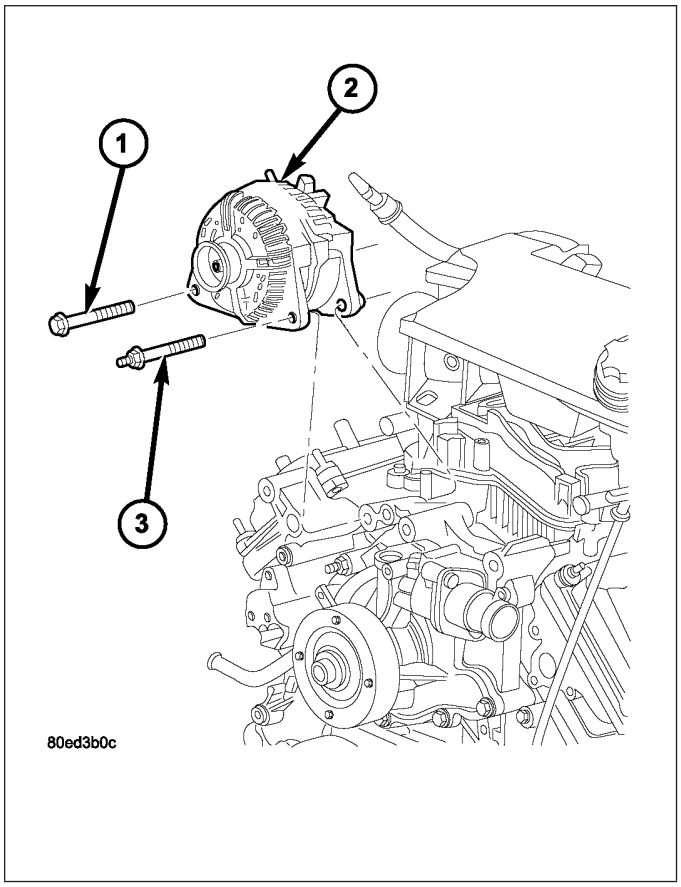

17. Remove engine front mount thru-bolt nuts.
18. Remove right side axle retaining bolts.
19. Disconnect the transmission oil cooler lines from their retainers at the oil pan bolts.
20. Disconnect exhaust pipe at manifolds (2).

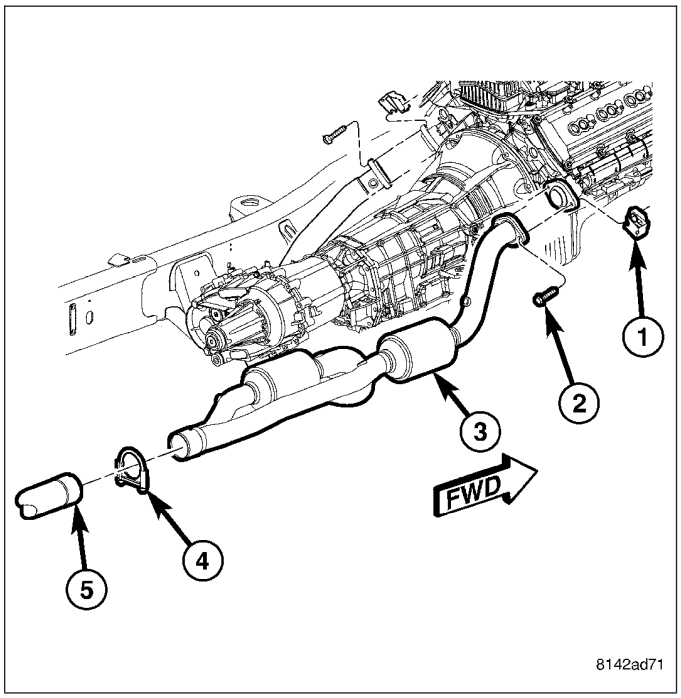

21. Disconnect the starter wires. Remove starter motor (1) (Refer to 8 - ELECTRICAL/STARTING/ STARTER MOTOR - REMOVAL).

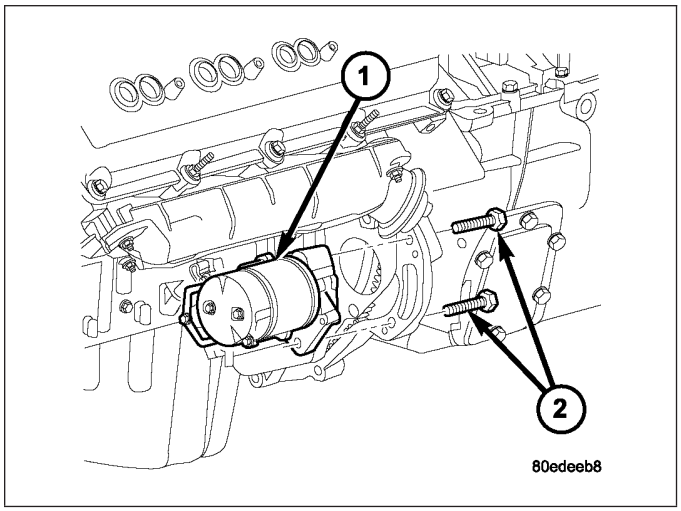

22. Remove the structural dust cover (1) and transmission inspection cover, (Refer to 9 - ENGINE/ ENGINE BLOCK/STRUCTURAL COVER - REMOVAL) .
23. Remove drive plate to converter bolts (Automatic transmission equipped vehicles).

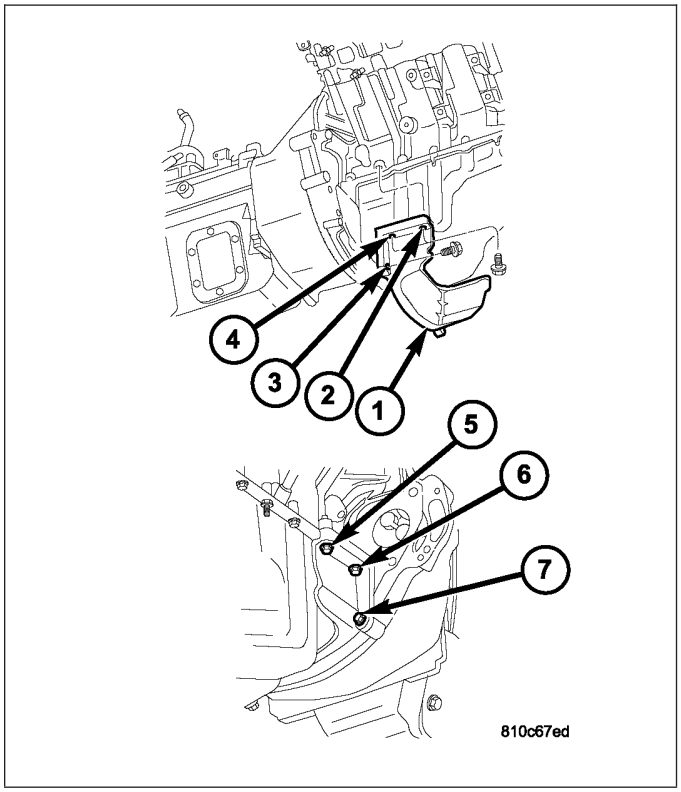

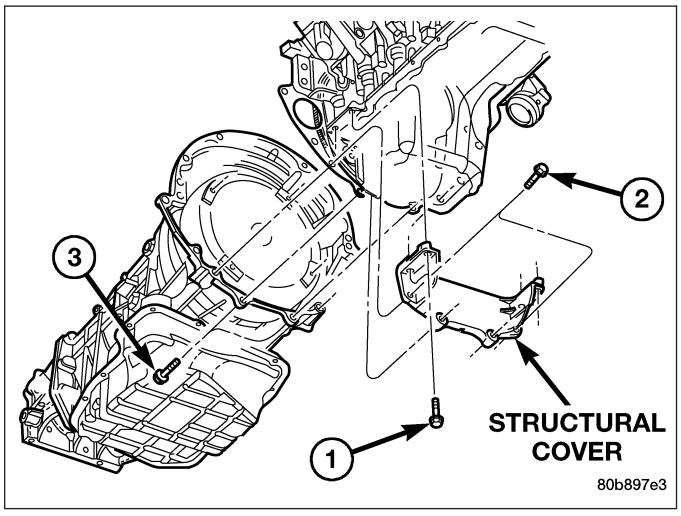

24. Remove transmission bell housing to engine block bolts (2).
25. Lower the vehicle.

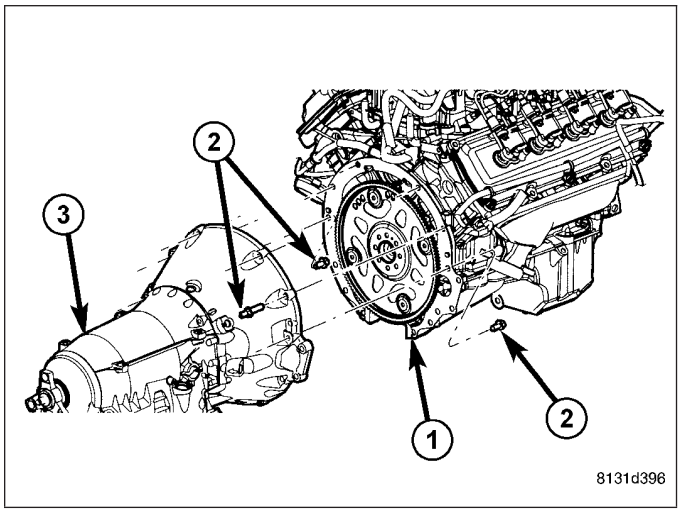

NOTE: Do not use air tools to install engine lift fixture (2) special tool # 8984.

26. Install engine lift fixture (2), special tool # 8984. **Do not use adapter (4)**
27. Separate engine from transmission, remove engine from vehicle, and install engine assembly on a repair stand.

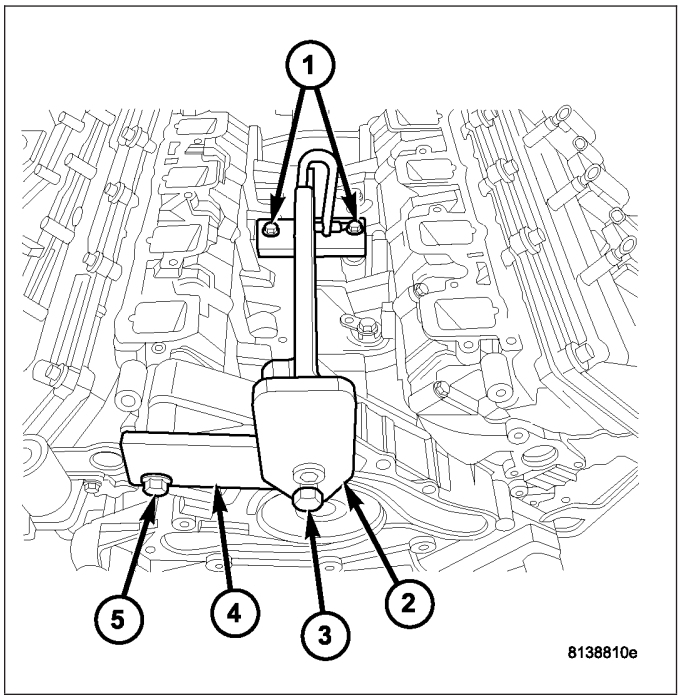

INSTALLATION

NOTE: Do not use air tools to install engine lift fixture (2) special tool # 8984.

1. Install engine lift fixture (2), special tool # 8984. **Do not use adapter (4).**
2. Position the engine in the engine compartment.
3. Lower engine into compartment and align engine with transmission:
   - Manual Transmission: Align clutch disc assembly (if disturbed). Install transmission input shaft into clutch disc while mating engine and transmission surfaces. Install two transmission to engine block mounting bolts finger tight.
   - Automatic Transmission: Mate engine and transmission and install two transmission to engine block mounting bolts finger tight.

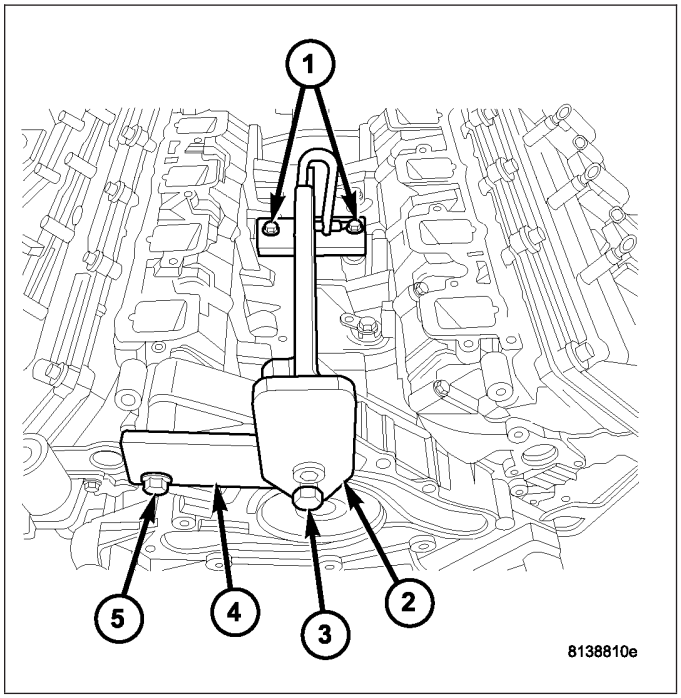

4. Position the thru-bolt into the support cushion brackets.
5. Lower engine assembly until engine mount through bolts rest in mount perches.
6. Install remaining transmission to engine block mounting bolts (2) and tighten.

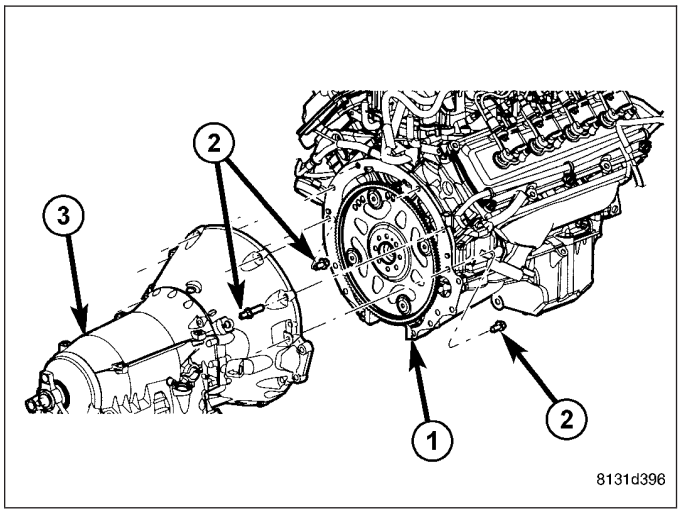

7. Tighten engine mount through bolts.
8. Install drive plate to torque converter bolts. (Automatic transmission models)
9. Install the structural dust cover (1) and transmission dust cover, (Refer to 9 - ENGINE/ENGINE BLOCK/STRUCTURAL COVER - INSTALLATION) .

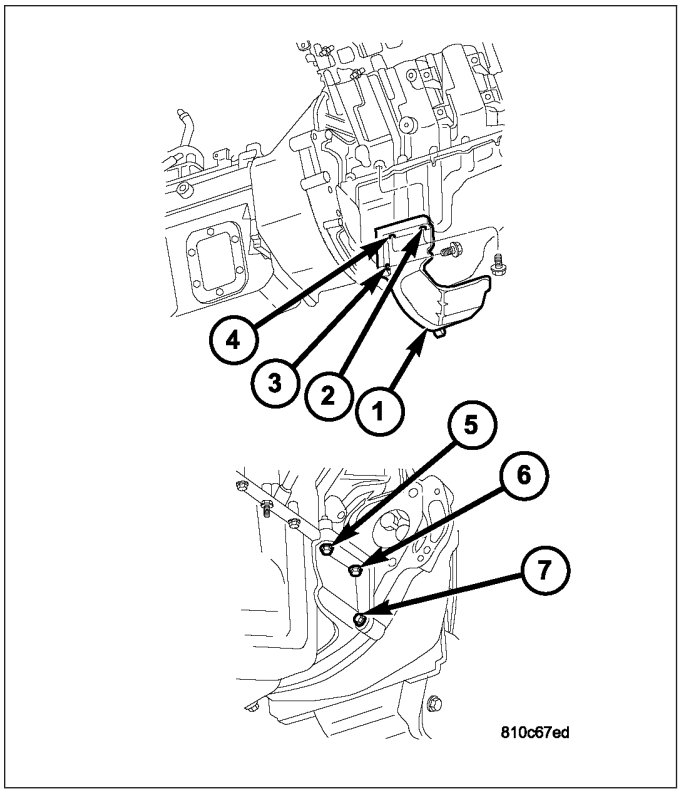

10. Install the starter (1) and connect the starter wires (Refer to 8 - ELECTRICAL/STARTING/STARTER MOTOR - INSTALLATION).

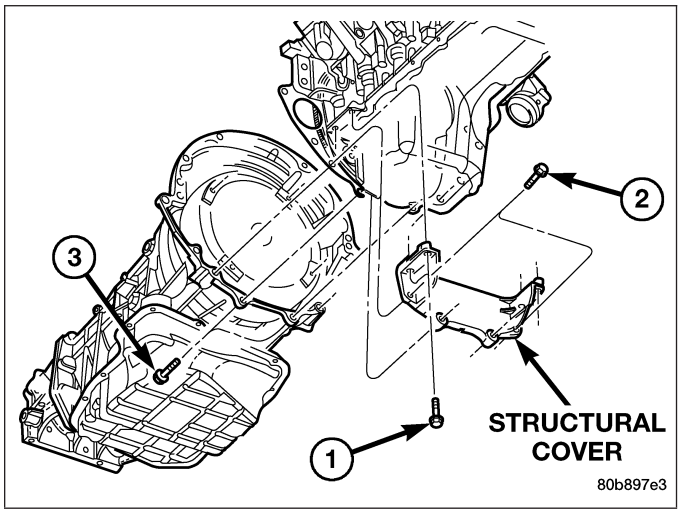

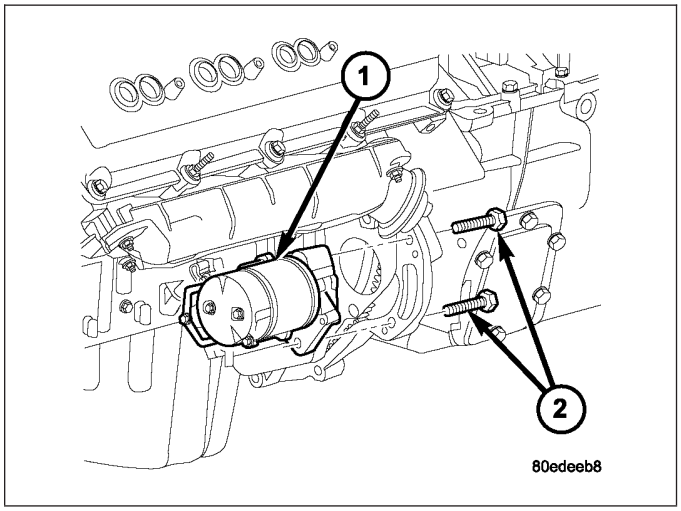

11. Install exhaust pipe to exhaust manifold bolts (2).
12. Lower the vehicle.

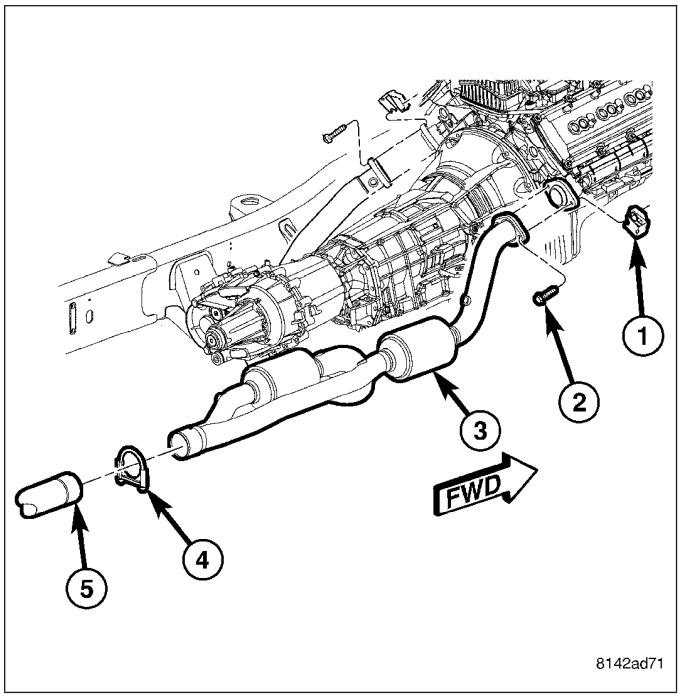

NOTE: Do not use air tools on engine lift fixture (2) special tool # 8984.

13. Remove engine lift fixture (2), special tool # 8984.
14. Connect the fuel supply line (Refer to 14 - FUEL SYSTEM/FUEL DELIVERY/QUICK CONNECT FITTING - STANDARD PROCEDURE).
15. Reinstall the power steering pump.
16. Connect the heater hoses.

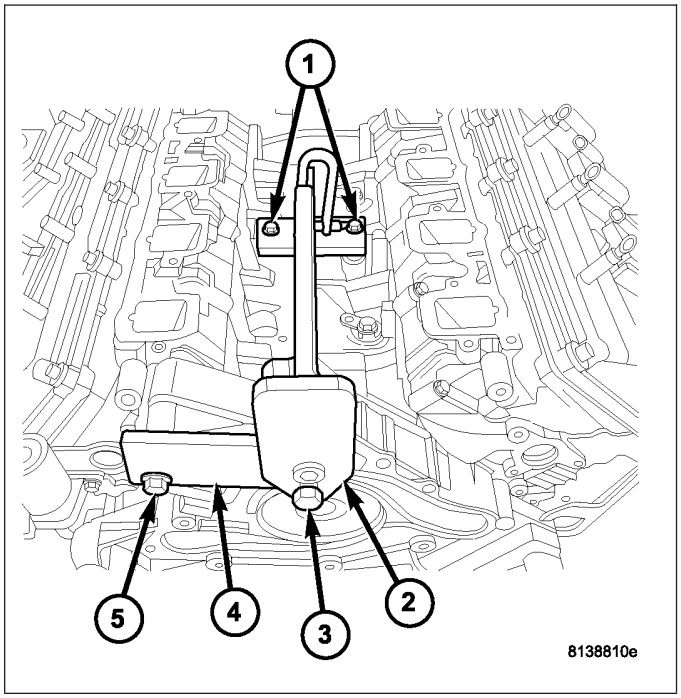

17. Install the intake manifold.
18. Using a new gasket, install throttle body (Refer to 14 - FUEL SYSTEM/FUEL INJECTION/THROTTLE BODY - INSTALLATION).
19. Install the generator (2) and wire connections (Refer to 8 - ELECTRICAL/CHARGING/GENERATOR - INSTALLATION).

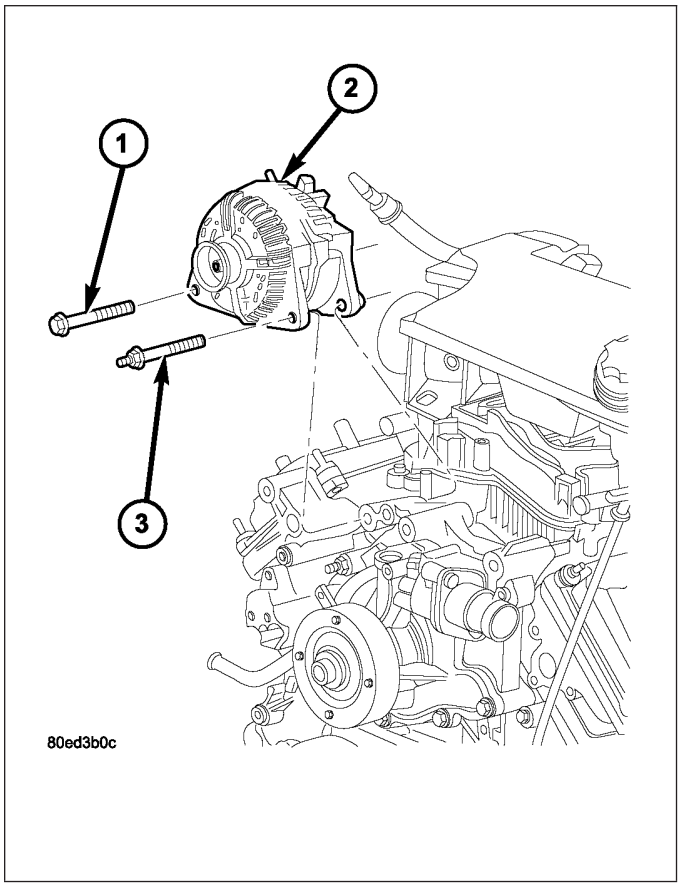

20. Install a/c compressor (2) (Refer to 24 - HEATING & AIR CONDITIONING/PLUMBING/A/C COMPRESSOR - INSTALLATION).

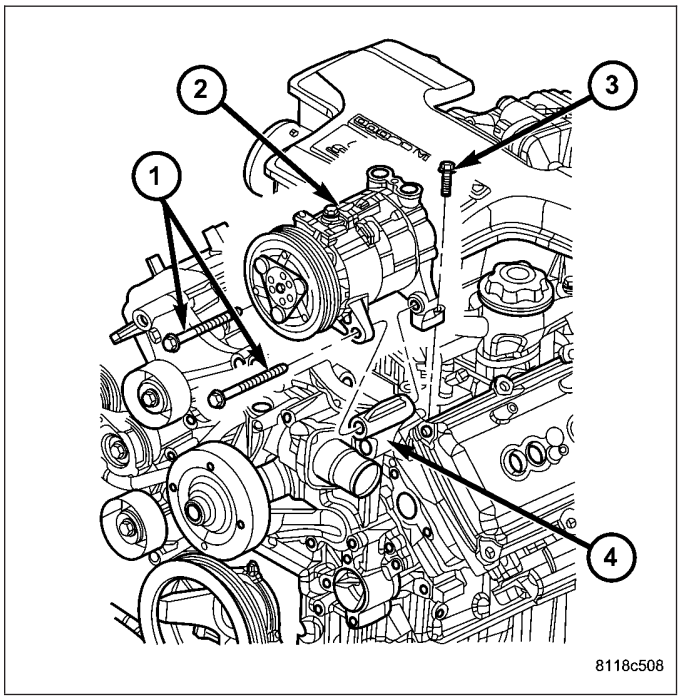

21. Install the accessory drive belt (Refer to 7 - COOLING/ACCESSORY DRIVE/DRIVE BELTS - INSTALLATION).
22. Install upper radiator support crossmember.

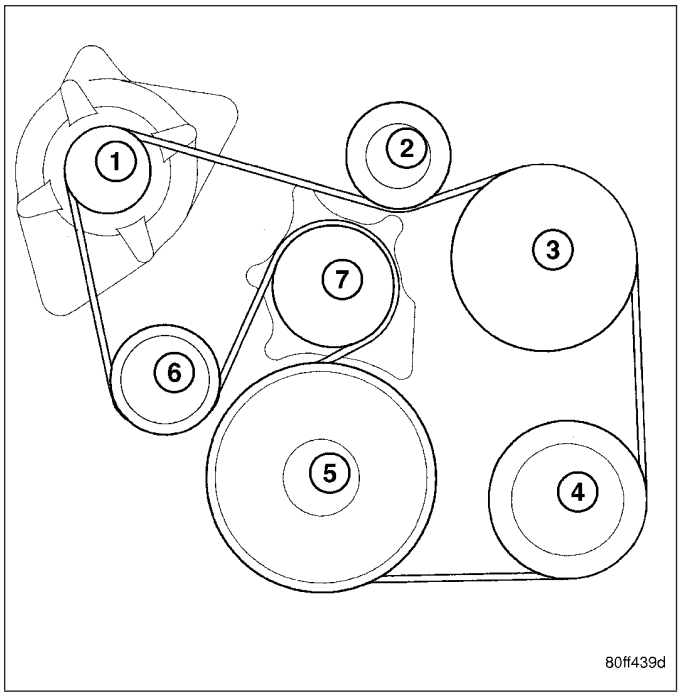

23. Install radiator (1) (Refer to 7 - COOLING/ENGINE/RADIATOR - INSTALLATION).
24. Connect the radiator lower hose.
25. Connect the transmission oil cooler lines to the radiator.

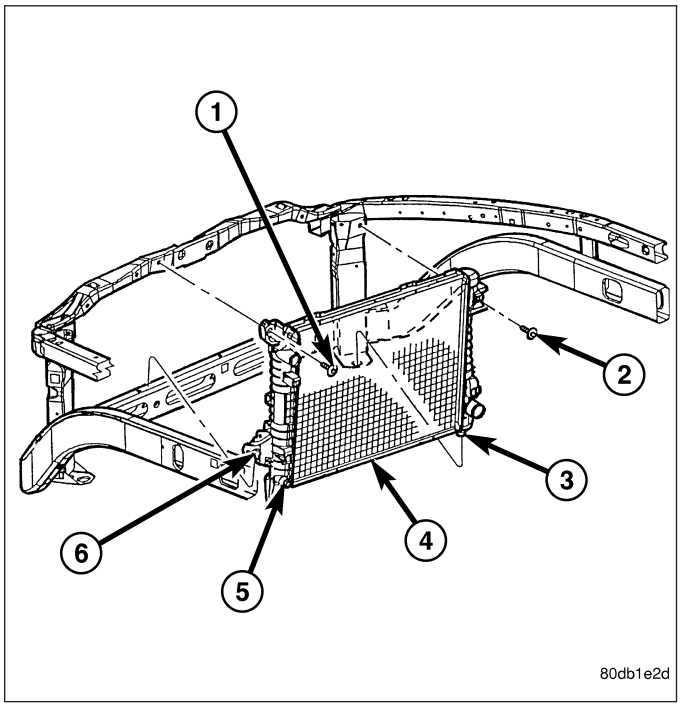

26. Install the fan shroud (3).
27. Install the fan (Refer to 7 - COOLING/ENGINE/ RADIATOR FAN - INSTALLATION).
28. Connect the radiator upper hose.
29. Install the washer bottle.
30. Connect the transmission cooler lines.
31. Install the air cleaner resonator and duct work..
32. Add engine oil to crankcase (Refer to LUBRICATION & MAINTENANCE/FLUID TYPES - SPECIFICATIONS).
33. Fill cooling system (Refer to 7 - COOLING - STANDARD PROCEDURE).
34. Connect battery negative cable.
35. Start engine and inspect for leaks.
36. Road test vehicle.

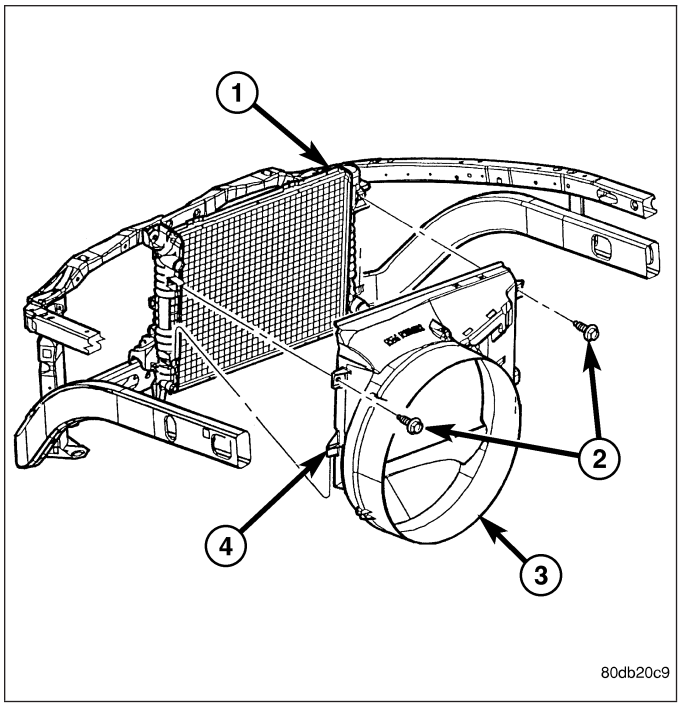

SPECIFICATIONS

5.7L ENGINE

GENERAL DESCRIPTION

DESCRIPTION	SPECIFICATION
Engine Type	90° V-8 OHV
Displacement	5.7 Liters 345 (Cubic Inches)
Bore	99.5 mm (3.91 in.)
Stroke	90.9 mm (3.58 in.)
Compression Ratio	9.6:1
Firing Order	1-8-4-3-6-5-7-2
Lubrication	Pressure Feed - Full Flow Filtration
Cooling System	Liquid Cooled - Forced Circulation
Cylinder Block	Cast Iron
Cylinder Head	Aluminum
Crankshaft	Nodular Iron
Camshaft	Hollow Assembled Camshaft
Pistons	Aluminum Alloy
Connecting Rods	Powdered Metal

CYLINDER BLOCK

DESCRIPTION	SPECIFICATION	
	Metric	Standard
Cylinder Bore Diameter	99.50 mm	3.917 in.
Out of Round (MAX)	0.0076 mm	0003 in.
Taper (MAX)	0.0127 mm	0.0005 in.
Lifter Bore Diameter	21.45 - 21.425 mm	0.8444 - 0.8435 in.

PISTONS

DESCRIPTION	SPECIFICATION	
	Metric	Standard
Clearance Measured at 38.0 mm (1.5 in.) Below Deck	0.0215 - 0.0485 mm	0.0008 - 0.0019 in.
Ring Groove Diameter		
Groove #1	89.6 - 89.8 mm	3.527 - 3.535 in.
Groove #2	88.1 - 88.3 mm	3.468 - 3.476 in.
Weight	413 grams	14.56 oz
Piston Length	54.70 - 55.30	2.153 - 2.177 in.
Ring Groove Width		
No. 1	1.51 - 1.54 mm	0.0594 - 0.0606 in
No. 2	1.51 - 1.53 mm	0.0594 - 0.0602 in.
No. 3	3.030 - 3.055 mm	0.1192 - 0.1202 in.

PISTON PINS

DESCRIPTION	SPECIFICATION	
	Metric	Standard
Clearance In Piston	0.009 - 0.018 mm	0.00035 - 0.0007 in.
Diameter	24.0 - 24.003 mm	0.9448 - 0.9449 in.
Length	70.53 - 71.03 mm	2.78 - 2.80 in.

PISTON RINGS

DESCRIPTION	SPECIFICATION	
	Metric	Standard
Ring Gap		
Top Compression Ring	0.23 - 0.38 mm	0.0090 - 0.0149 in.
Second Compression Ring	0.35 - 0.60 mm	0.0137 - 0.0236 in.
Oil Control (Steel Rails)	0.15 - 0.66 mm	0.0059 - 0.0259 in.
Side Clearance		
Top Compression Ring	.02 - .068 mm	0.0007 - 0.0026 in.
Second Compression Ring	0.02 - 0.058 mm	0.0007 - 0.0022 in.
Oil Ring (Steel Ring)	.019 - .229 mm	.0007 - .0091 in.
Ring Width		
Top Compression Ring	1.472 - 1.490 mm	0.0579 - 0.0586 in.
Second Compression Ring	1.472 - 1.490 mm	0.0579 - 0.0586 in.
Oil Ring (Steel Rails)	0.447 - 0.473 mm	0.0175 - 0.0186 in.

CONNECTING RODS

DESCRIPTION	SPECIFICATION	
	Metric	Standard
Piston Pin Bore Diameter	23.955 - 23.975 mm	0.9431 - 0.9438 in.
Side Clearance	0.10 - 0.35 mm	0.003 - 0.0137 in.

CRANKSHAFT

DESCRIPTION	SPECIFICATION	
	Metric	Standard
Main Bearing Journal Diameter	64.988 - 65.012 mm	2.5585 - 2.5595 in.
Bearing Clearance	0.023 - 0.051 mm	0.0009 - 0.002 in.
Out of Round (MAX)	0.005 mm	0.0002 in.
Taper (MAX)	0.003 mm	0.0001 in.
End Play	0.052 - 0.282 mm	0.002 - 0.011 in.
End Play (MAX)	0.282 mm	0.011 in.
Connecting Rod Journal Diameter	53.992 - 54.008 mm	2.125 - 2.126 in.
Bearing Clearance	0.020 - 0.060 mm	0.0007 - 0.0023 in.
Out of Round (MAX)	0.005 mm	0.0002 in.
Taper (MAX)	0.003 mm	0.0001 in.

CAMSHAFT

DESCRIPTION	SPECIFICATION	
	Metric	Standard
Bearing Journal Diameter		
No. 1	58.2 mm	2.29 in.
No. 2	57.8 mm	2.27 in.
No. 3	57.4 mm	2.26 in.
No. 4	57.0 mm	2.24 in.
No. 5	43.633 mm	1.72 in.
Bearing To Journal Clearance Standard		
No. 1	0.040 - 0.080 mm	.0015 - .003 in.
No. 2	0.050 -0.090 mm	0.0019 - .0035 in.
No. 3	0.040 - 0.080 mm	.0015 - .003 in.
No. 4	0.050 - 0.090 mm	0.0019 - .0035 in.
No. 5	0.040 - 0.080 mm	.0015 - .003 in.
Camshaft End Play	.080 - 0.290mm	0.0031 - 0.0114 in.

VALVE TIMING

DESCRIPTION	SPECIFICATION
Intake	
Opens (BTDC)	7.0°
Closes (ATDC)	253.0°
Exhaust	
Opens (BTDC)	233°
Closes (ATDC)	27°
Duration	253.70°
Valve Overlap	34°

CYLINDER HEAD

DESCRIPTION	SPECIFICATION
Valve Seat Angle	44.5° - 45.0°
Valve Seat Runout (MAX)	0.05 mm (0.0019 in.)
Valve Seat Width (Finish)	
Intake	1.018 - 1.62 mm (0.0464 - 0.0637 in.)
Exhaust	1.48 - 1.92 mm (0.0582 - 0.0755 in.)
Guide Bore Diameter (Std.)	7.975 - 8.00 mm (0.313 - 0.314 in.)

HYDRAULIC TAPPETS

DESCRIPTION	SPECIFICATION	
	Metric	Standard
Body Diameter	21.387 - 21.405 mm	0.8420 - 0.8427 in.
Clearance (To Bore)	0.020 - 0.063 mm	0.0007 - 0.0024 in.
Dry Lash	3.0 mm (at the valve)	0.1181 in.

VALVES

DESCRIPTION	SPECIFICATION
Face Angle	45.0° - 45.5°
Head Diameter	
Intake	50.67 - 50.93 mm (1.99 - 2.00 in.)
Exhaust	39.27 - 39.53 mm (1.54 - 1.55 in.)
Length (Overall)	
Intake	123.38 - 123.76 mm (4.857 - 4.872 in.)
Exhaust	120.475 - 120.855 mm (4.743 - 4.758 in.)
Stem Diameter	
Intake	7.935 - 7.953 mm (0.312 - 0.313 in.)
Exhaust	7.905 - 7.925 mm (0.311 - 0.312 in.)
Stem - to - Guide Clearance	
Intake	0.022 - 0.065 mm (0.0008 - 0.0025 in.)
Exhaust	0.050 - 0.095 mm (0.0019 - 0.0037 in.)
Valve Lift (@ Zero Lash)	
Intake	12.0 mm (0.472 in.)
Exhaust	11.70 mm (0.460 in.)

VALVE SPRING

DESCRIPTION	SPECIFICATION
Spring Force (Valve Closed) Intake and Exhaust	418.0 N +/- 30.0 N @ 46 mm (93.0 lbs +/- 7.0 lbs. @ 1.811 in.)
Spring Force (Valve Open) Intake and Exhaust	1077.0 N +/- 47.0 N @ 33.6 mm. (242.0 lbs. +/- 11 lbs. @ 1.322 in.)
Free Length (approx)	57.3 mm (2.256 in.)
Number of Coils Intake and Exhaust	7.4
Wire Diameter Intake and Exhaust	5.39 × 4.52 mm (0.212 - 0.177 in.)
Installed Height (Spring Seat to Bottom of Retainer) Intake and Exhaust	46.0 mm (1.81 in.)

OIL PUMP

DESCRIPTION	SPECIFICATION
Clearance Over Rotors (MAX)	0.095 mm (0.0038 in.)
Outer Rotor to Pump Body Clearance (MAX)	.235 mm (.009 in.)
Tip Clearance Between Rotors (MAX)	0.150 mm (0.006 in.)

OIL PRESSURE

SPECIFICATION	SPECIFICATION
At Curb Idle Speed (MIN)*	25 kPa (4 psi)
@ 3000 rpm	170 - 758 kPa (25 - 110 psi)
*** CAUTION: If pressure is zero at curb idle, DO NOT run engine**	

TORQUE

TORQUE CHART 5.7L ENGINE

DESCRIPTION	N·m	Ft. Lbs.	In. Lbs.
Block Pipe Plugs (1/4 NPT)	20	—	177
(3/8 NPT)	27	—	240
Camshaft Sprocket—Bolt	122	90	—
Camshaft Tensioner Plate—Bolts	28	—	250
Timing Chain Case Cover—Bolts	28	—	250
Lifting Stud	55	40	—
Connecting Rod Cap—Bolts	21 plus 90° Turn	15 plus 90° Turn	—
Main Bearing Cap—Bolts M-12	27 plus 90° Turn	—	—
Crossbolts M-8	28	—	—
Cylinder Head—Bolts M-12 Bolts			
Step 1	34	25	—
Step 2	54	40	—
Step 3	Turn 90°	Turn 90°	—
M-8 Bolts			—
Step 1	20	15	—
Step 2	34	25	—
Cylinder Head Cover—Bolts	8	—	70
Exhaust Manifold to Cylinder Head	25	—	220
Flexplate to crankshaft—Bolts	95	70	—
Flywheel to crankshaft—Bolts	75	55	—
Front Insulator—Through bolt/nut	95	70	—
Front Insulator to Support Bracket			
—Stud Nut (4WD)	41	30	—
—Through Bolt/Nut (4WD)	102	75	—
Front Insulator to Block—Bolts (2WD)	95	70	—
Generator—Mounting Bolt	55	40	—
Intake Manifold—Bolts	Refer to Procedure		
Lifter Guide Holder	12	—	106
Oil Pan Bolts	12	-	105
Oil Dipstick Tube	12	—	105
Oil Pan—Drain Plug	34	25	—
Oil Pump—Attaching Bolts	28	—	250
Oil Pump Pickup Tube – Bolt and Nut	28	—	250
Rear Seal Retainer Attaching Bolts	15	—	132
Rear Insulator to Bracket— Through-Bolt (2WD)	68	50	—

DESCRIPTION	N·m	Ft. Lbs.	In. Lbs.
Rear Insulator to Crossmember Support Bracket—Nut (2WD)	41	30	—
Rear Insulator to Crossmember—Nuts (4WD)	68	50	—
Rear Insulator to Transmission—Bolts (4WD)	68	50	—
Rear Insulator Bracket—Bolts (4WD Automatic)	68	50	—
Rear Support Bracket to Crossmember Flange—Nuts	41	30	—
Rear Support Plate to Transfer Case—Bolts	41	30	—
Rocker Arm—Bolts	22	—	195
Spark Plugs	—	—	—
Thermostat Housing—Bolts	28	—	250
Throttle Body—Bolts	12	—	105
Transfer Case to Insulator Mounting Plate—Nuts	204	105	—
Transmission Support Bracket—Bolts (2WD)	68	50	—
Vibration Damper—Bolt	176	129	—
Water Pump to Timing Chain Case Cover—Bolts	28	—	250

SPECIAL TOOLS

5.7L ENGINE

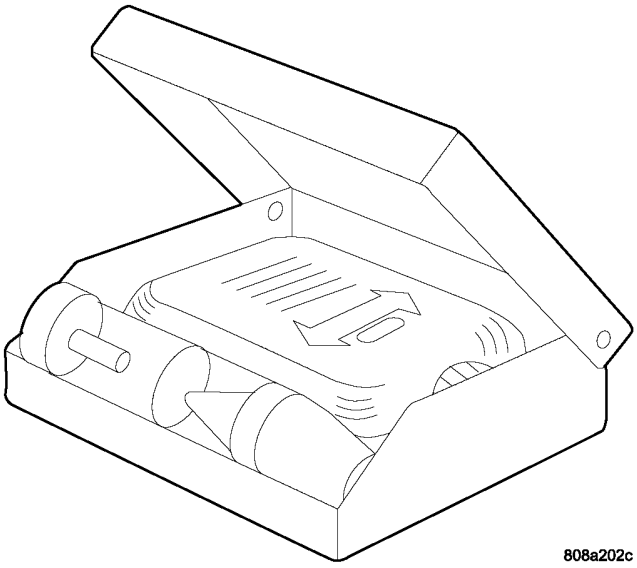

BLOC-CHEK KIT C-3685

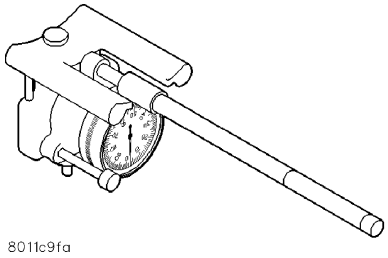

Bore Size Indicator C-119

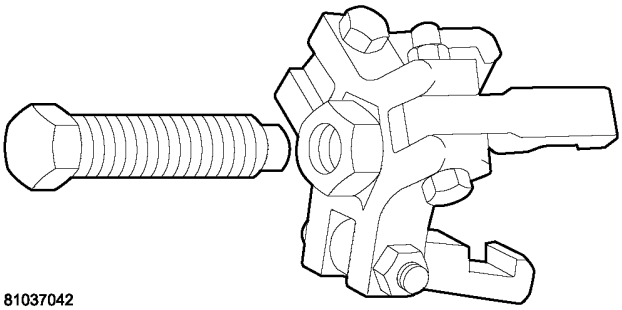

Puller 8454

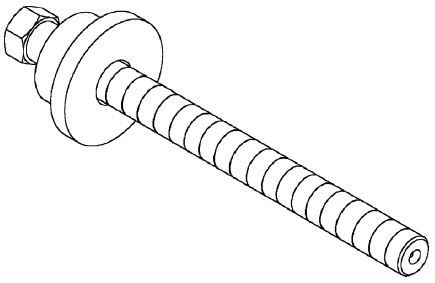

Crankshaft Damper Installer 8512

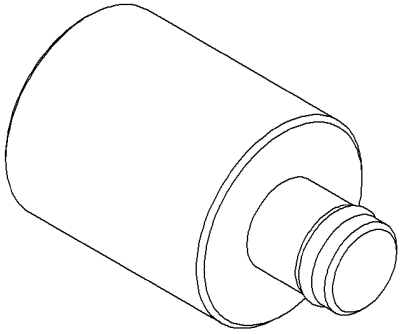

CRANKSHAFT DAMPER REMOVER INSERT - 8513-A

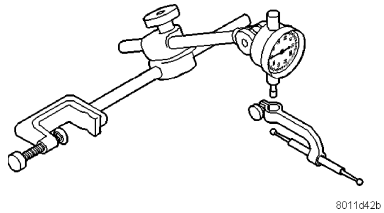

Dial Indicator C-3339

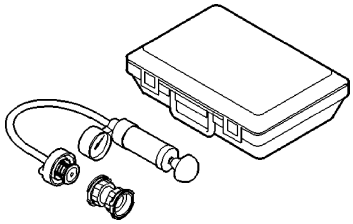

Pressure Tester Kit 7700

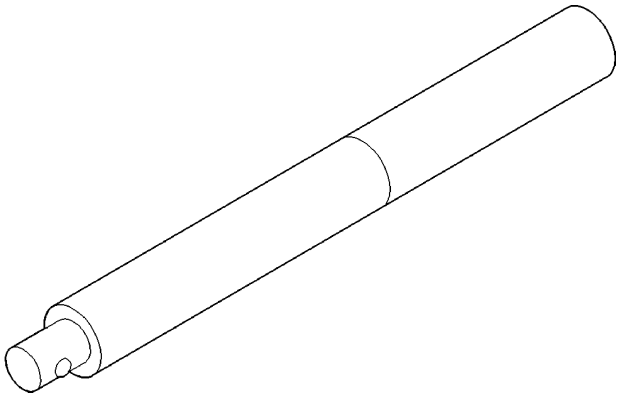

Handle C-4171

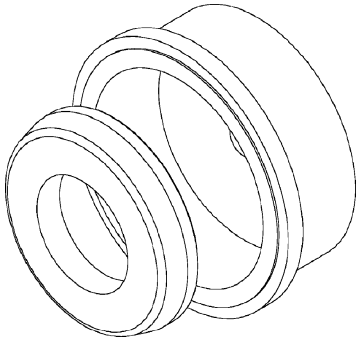

Rear Crankshaft Seal Installer 8349

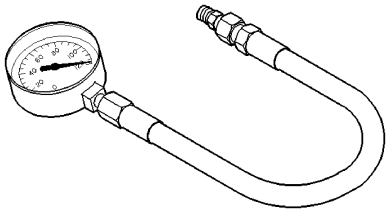

Oil Pressure Gauge C-3292

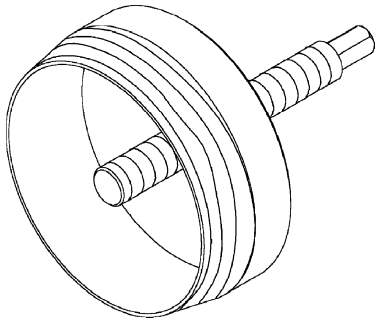

Rear Crankshaft Seal Remover 8506

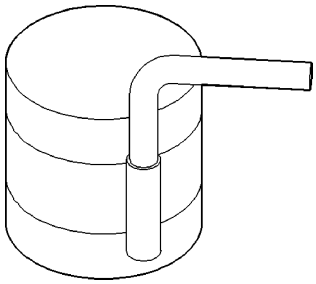

Piston Ring Compressor C-385

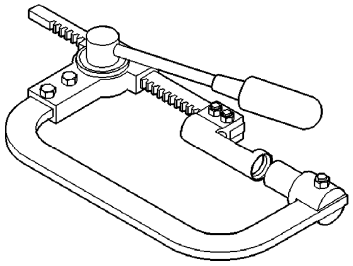

Valve Spring Compressor C-3422-B

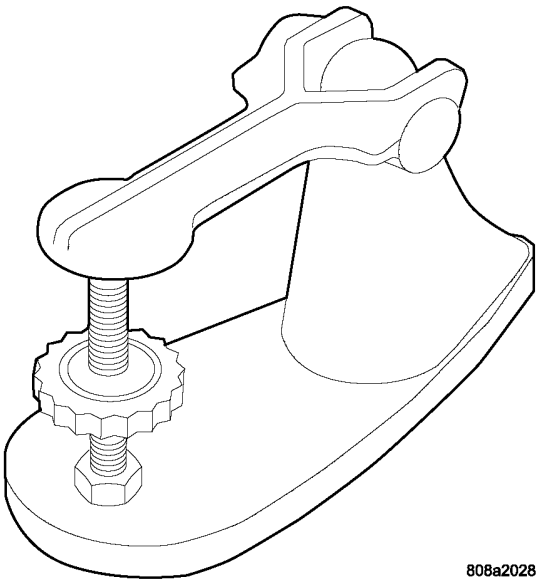

Valve Spring Tester C-647

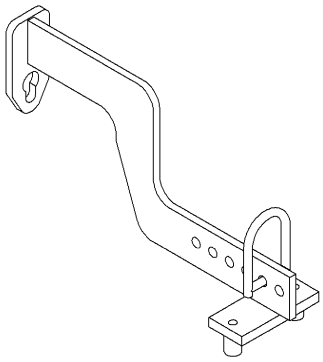

ENGINE LIFT FIXTURE 8984

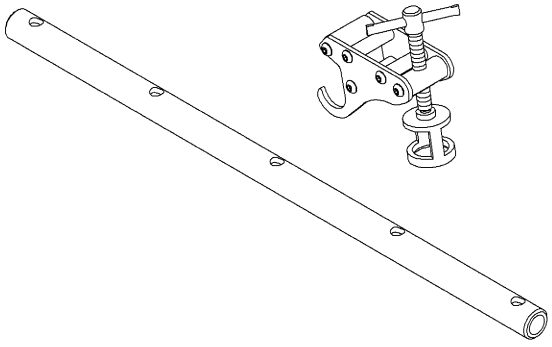

VALVE SPRING COMPRESSOR - 9065

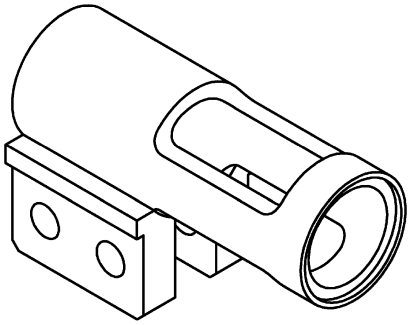

Adapter, Valve Spring Compressor Off-vehicle 8464

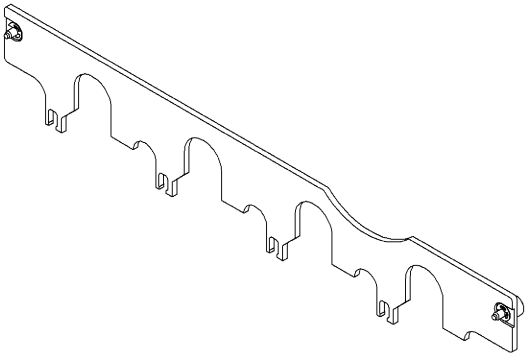

PUSHROD RETAINING PLATE - 9070

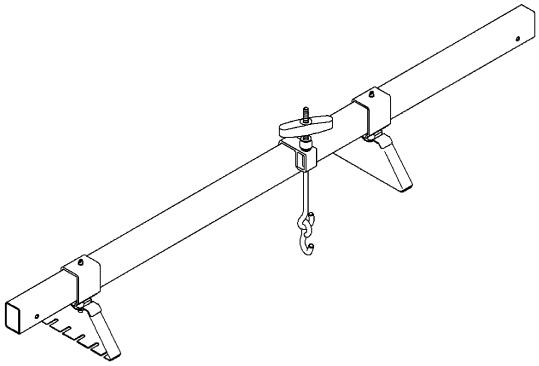

ENGINE SUPPORT FIXTURE 8534

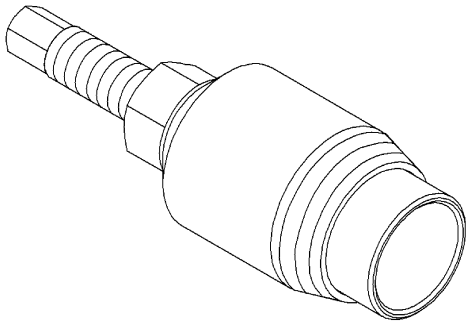

FRONT CRANK SEAL REMOVER - 9071

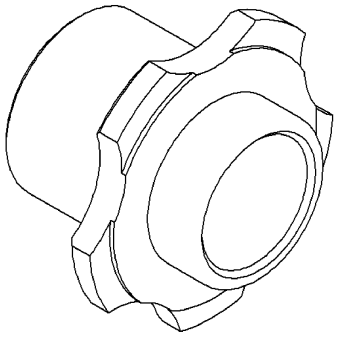

FRONT CRANK SEAL INSTALLER 9072

ELEMENT - AIR CLEANER

REMOVAL

Filter Element Only

Housing removal is not necessary for element (filter) replacement.

1. Loosen clamp and disconnect air duct at air cleaner cover.
2. Pry over 4 spring clips (5) from housing cover (3) (spring clips retain cover to housing).
3. Release housing cover (3) from locating tabs (4) on housing and remove cover (3).
4. Remove air cleaner element (filter) from housing.
5. Clean inside of housing before replacing element.

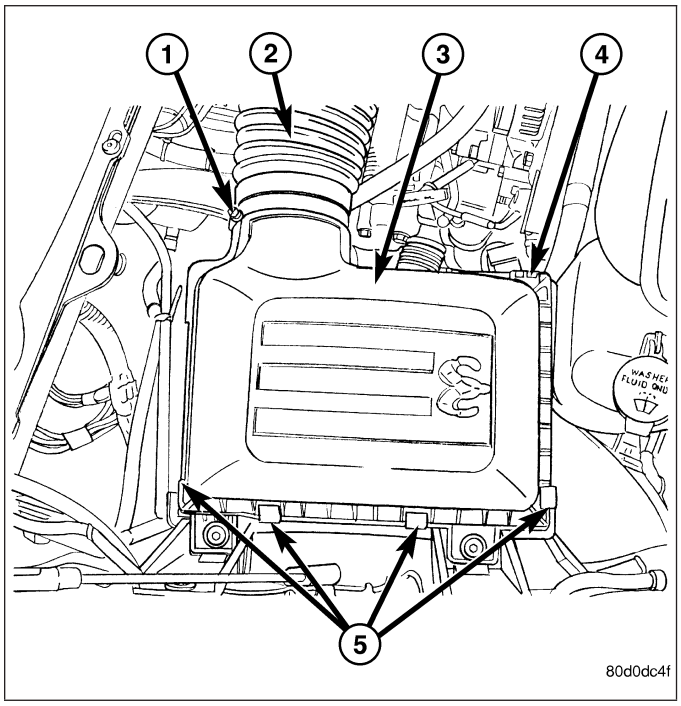

Fig. 1 AIR CLEANER COVER

1 - CLAMP
2 - AIR DUCT
3 - AIR CLEANER COVER
4 - LOCATING TABS
5 - CLIPS (4)

Housing Assembly

1. Loosen clamp and disconnect air duct at air cleaner cover.
2. Lift entire housing (1) assembly from 4 locating pins (2).

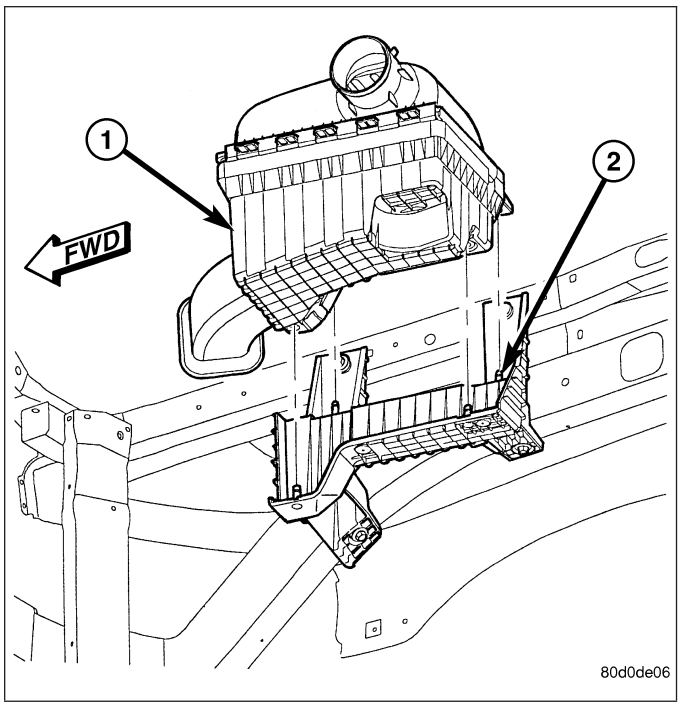

Fig. 2 AIR CLEANER HOUSING

1 - AIR CLEANER HOUSING ASSEMBLY
2 - LOCATING PINS (4)

INSTALLATION

1. Install filter element into housing.
2. Position housing cover into housing locating tabs (4).
3. Pry up 4 spring clips(5) and lock cover to housing.
4. Install air duct to air cleaner cover and tighten hose clamp to 3 N·m (30 in. lbs.) torque.
5. If any other hose clamps were removed from air intake system, tighten them to 3.4 N·m (30 in. lbs.) torque.
6. If any bolts were removed from air resonator housing or air intake tubing, tighten them to 4.5 N·m (40 in. lbs.) torque.

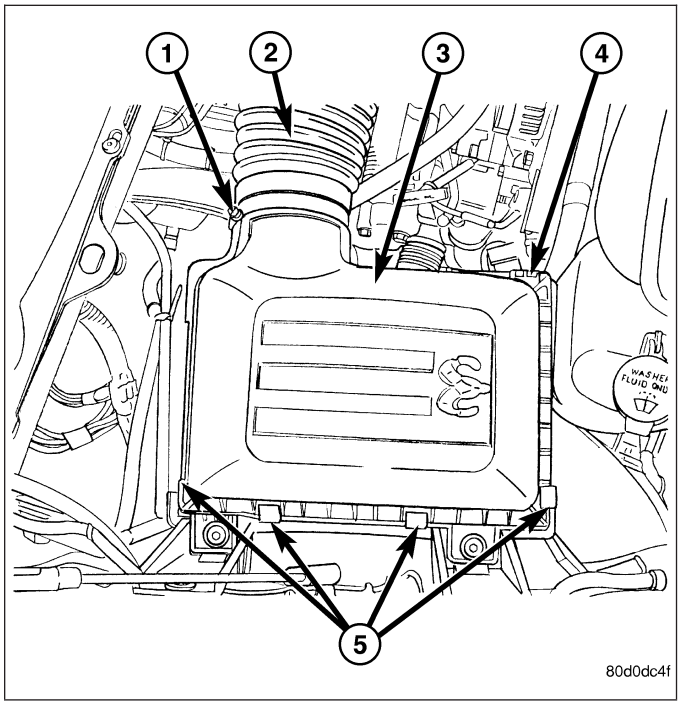

7. Install filter housing (1) into locating pins (2).

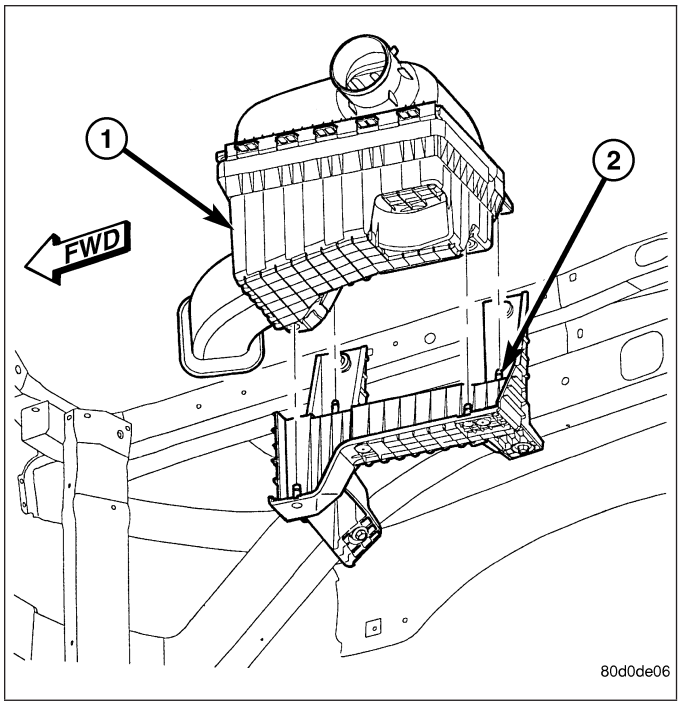

CYLINDER HEAD

OPERATION—CYLINDER HEAD

The cylinder head closes the combustion chamber allowing the pistons to compress the air fuel mixture to the correct ratio for ignition. The valves located in the cylinder head open and close to either allow clean air into the combustion chamber or to allow the exhaust gases out, depending on the stroke of the engine.

DIAGNOSIS AND TESTING—CYLINDER HEAD GASKET FAILURE

A cylinder head gasket leak can be located between adjacent cylinders or between a cylinder and the adjacent water jacket.

- Possible indications of the cylinder head gasket leaking between adjacent cylinders are:
  - Loss of engine power
  - Engine misfiring
  - Poor fuel economy
- Possible indications of the cylinder head gasket leaking between a cylinder and an adjacent water jacket are:
  - Engine overheating
  - Loss of coolant
  - Excessive steam (white smoke) emitting from exhaust
  - Coolant foaming

CYLINDER-TO-CYLINDER LEAKAGE TEST

To determine if an engine cylinder head gasket is leaking between adjacent cylinders, follow the procedures in Cylinder Compression Pressure Test in this section. An engine cylinder head gasket leaking between adjacent cylinders will result in approximately a 50–70% reduction in compression pressure.

CYLINDER-TO-WATER JACKET LEAKAGE TEST

WARNING: USE EXTREME CAUTION WHEN THE ENGINE IS OPERATING WITH COOLANT PRESSURE CAP REMOVED.

VISUAL TEST METHOD

With the engine cool, remove the coolant pressure cap. Start the engine and allow it to warm up until thermostat opens.

If a large combustion/compression pressure leak exists, bubbles will be visible in the coolant.

COOLING SYSTEM TESTER METHOD

WARNING: WITH COOLING SYSTEM TESTER IN PLACE, PRESSURE WILL BUILD UP FAST. EXCESSIVE PRESSURE BUILT UP, BY CONTINUOUS ENGINE OPERATION, MUST BE RELEASED TO A SAFE PRESSURE POINT. NEVER PERMIT PRESSURE TO EXCEED 138 kPa (20 psi).

Install Cooling System Tester 7700 or equivalent to pressure cap neck. Start the engine and observe the tester's pressure gauge. If gauge pulsates with every power stroke of a cylinder a combustion pressure leak is evident.

CHEMICAL TEST METHOD

Combustion leaks into the cooling system can also be checked by using Bloc-Chek Kit C-3685-A or equivalent. Perform test following the procedures supplied with the tool kit.

REMOVAL

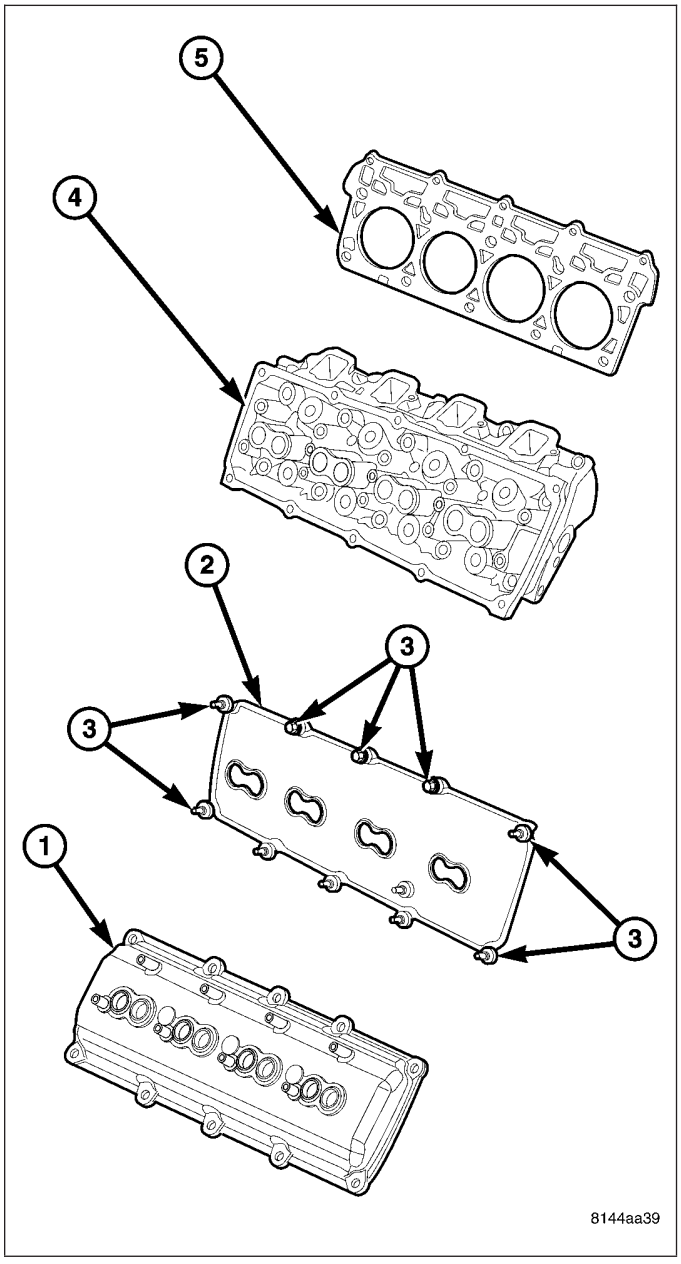

1. Perform the Fuel System Pressure Release procedure (Refer to 14 - FUEL SYSTEM/FUEL DELIVERY - STANDARD PROCEDURE). Disconnect the fuel supply line (Refer to 14 - FUEL SYSTEM/ FUEL DELIVERY/QUICK CONNECT FITTING - STANDARD PROCEDURE).
2. Disconnect the battery negative cable.
3. Drain cooling system (Refer to 7 - COOLING - STANDARD PROCEDURE).
4. Remove the air cleaner resonator and duct work (Refer to 9 - ENGINE/AIR INTAKE SYSTEM - REMOVAL).
5. Remove closed crankcase ventilation system.
6. Disconnect the exhaust at the exhaust manifolds.
7. Disconnect the evaporation control system.
8. Disconnect heater hoses.
9. Remove the power steering pump.
10. Remove cylinder head covers (1), using the sequence provided, and gaskets (2). (Refer to 9 - ENGINE/CYLINDER HEAD/CYLINDER HEAD COVER(S) - REMOVAL)
    .
11. Remove intake manifold and throttle body as an assembly. (Refer to 9 - ENGINE/MANIFOLDS/INTAKE MANIFOLD - REMOVAL).
12. Remove rocker arm assemblies and push rods. Identify to ensure installation in original locations. (Refer to 9 - ENGINE/CYLINDER HEAD/ ROCKER ARM / ADJUSTER ASSY - REMOVAL).

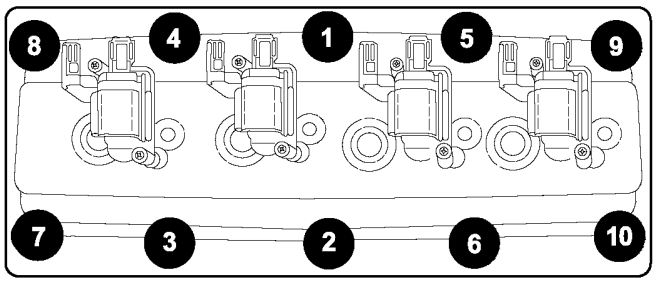

8142eaa1

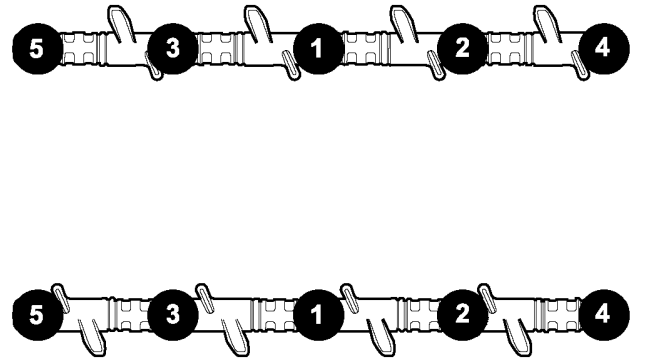

8142ed0a

13. Remove the head bolts from each cylinder head, using the sequence provided, and remove cylinder heads. Discard the cylinder head gasket.

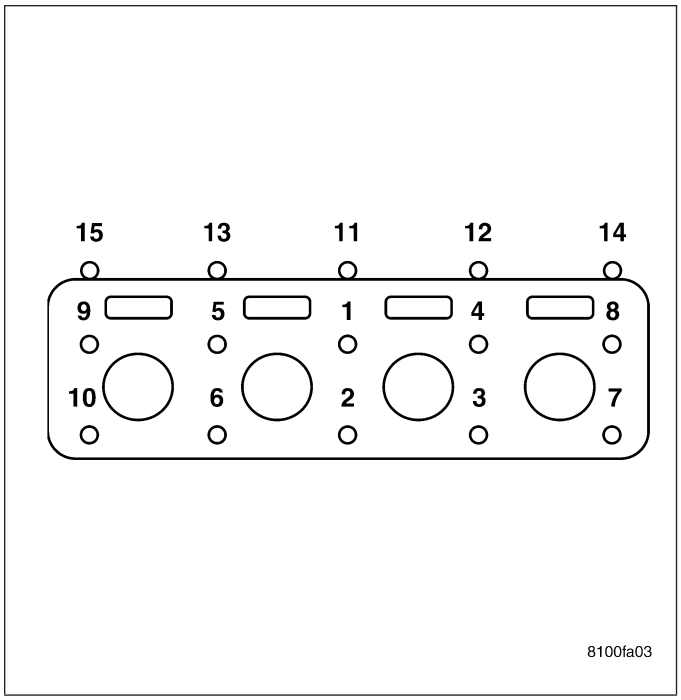

CLEANING

Clean all surfaces of cylinder block and cylinder heads.

Clean cylinder block front and rear gasket surfaces using a suitable solvent.

INSPECTION

1. Inspect the cylinder head for out-of-flatness, using a straightedge and a feeler gauge. If tolerances exceed 0.0508 mm (0.002 in.) replace the cylinder head.
2. Inspect the valve seats for damage. Service the valve seats as necessary.
3. Inspect the valve guides for wear, cracks or looseness. If either condition exist, replace the cylinder head.
4. Inspect pushrods. Replace worn or bent pushrods.

INSTALLATION

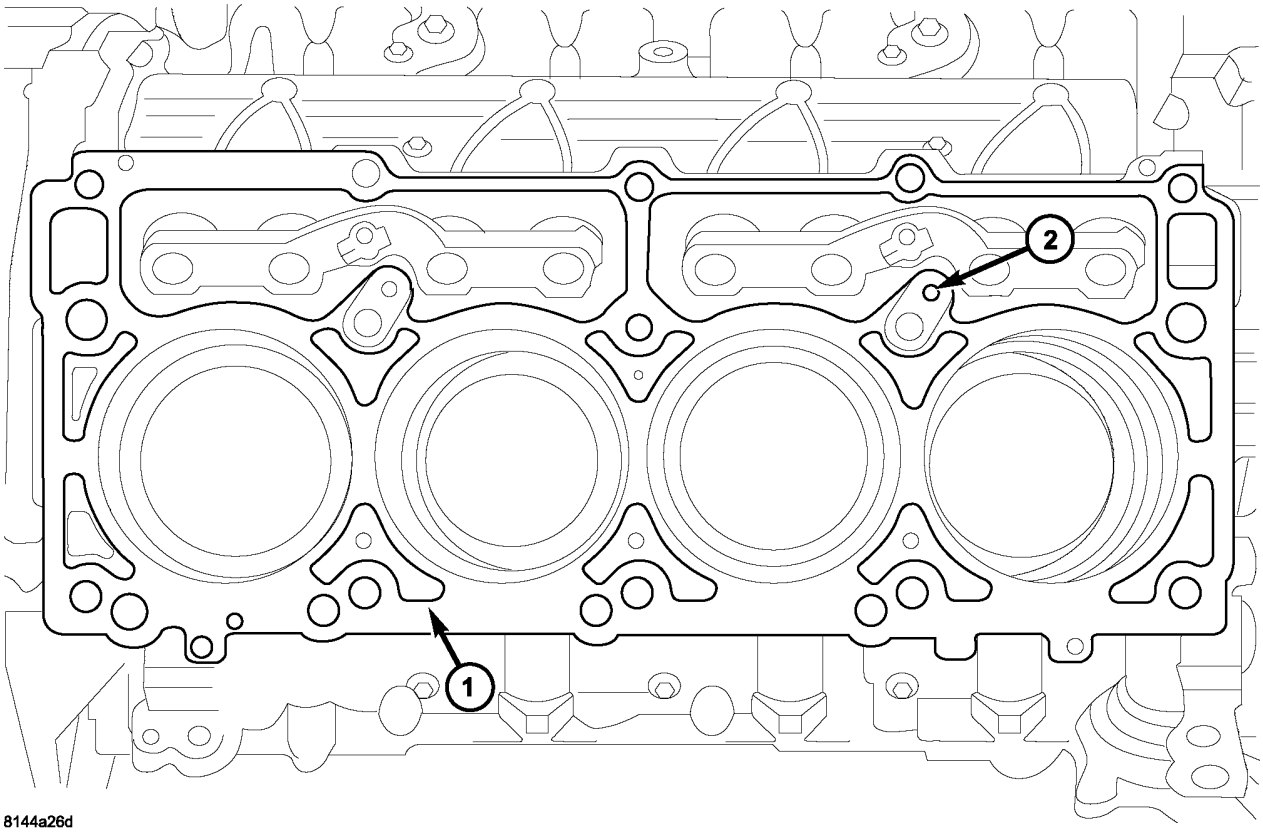

1. Clean all surfaces of cylinder block and cylinder heads.
2. Clean cylinder block front and rear gasket surfaces using a suitable solvent.

CAUTION: The head gaskets (1) are not interchangeable between left and right sides. They are marked “L” and “R” to indicate left and right sides.

CAUTION: The head gaskets (1) are marked “TOP” to indicate which side goes up.

3. Position new cylinder head gaskets (5) onto the cylinder block.
4. Position cylinder heads (4) onto head gaskets (5) and cylinder block.

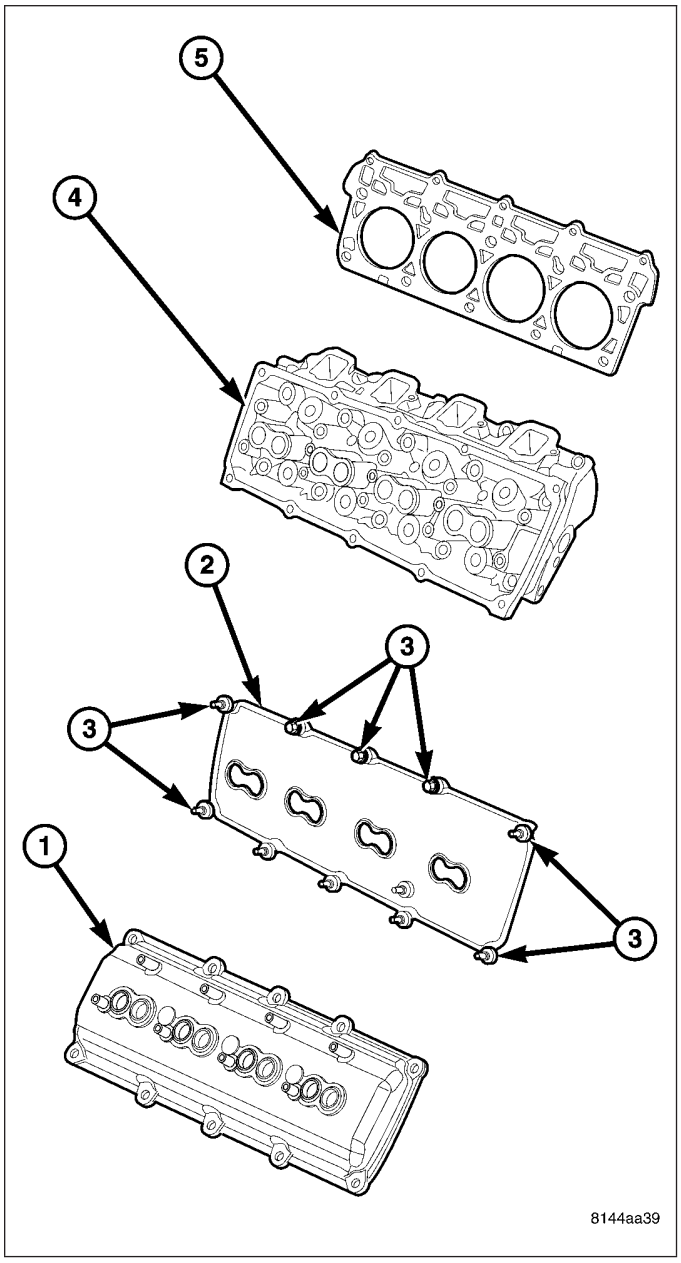

5. Tighten the cylinder head bolts in three steps using the sequence provided :
   - Step 1— Snug tighten M12 cylinder head bolts, in sequence, to 34 N·m (25 ft. lbs.) and M8 bolts to 20 N·m (15 ft. lbs.) torque.
   - Step 2— Tighten M12 cylinder head bolts, in sequence, to 54 N·m (40 ft. lbs.) and verify M8 bolts to 20 N·m (15 ft. lbs.) torque..
   - Step 3— Turn M12 cylinder head bolts, in sequence, 90 degrees and tighten M8 bolts to 34 N·m (25 ft. lbs.) torque.

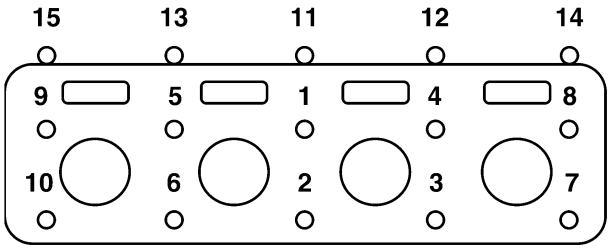

8100fa03

6. Install push rods and rocker arm assemblies in their original position, using pushrod retaining plate (1) special tool# 9070. (Refer to 9 - ENGINE/CYLINDER HEAD/ROCKER ARM / ADJUSTER ASSY - INSTALLATION).
7. Install the intake manifold and throttle body assembly (Refer to 9 - ENGINE/MANIFOLDS/INTAKE MANIFOLD - INSTALLATION).
8. If required, adjust spark plugs to specifications. Install the plugs.
9. Connect the heater hoses.
10. Install the fuel supply line.
11. Install the power steering pump.
12. Install the drive belt (Refer to 7 - COOLING/ACCESSORY DRIVE/DRIVE BELTS - INSTALLATION).

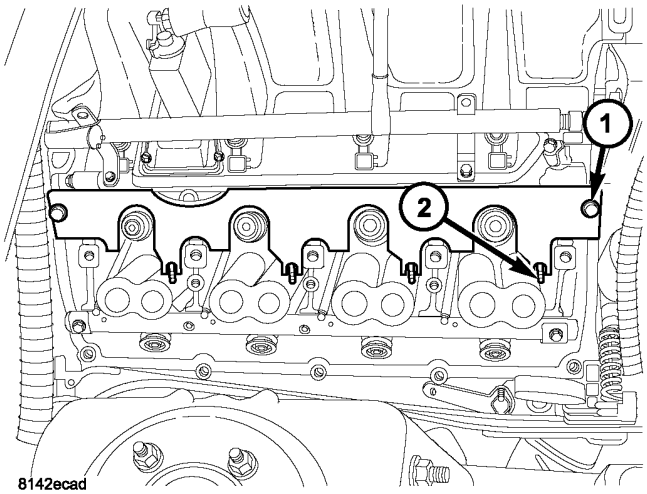

8142ecad

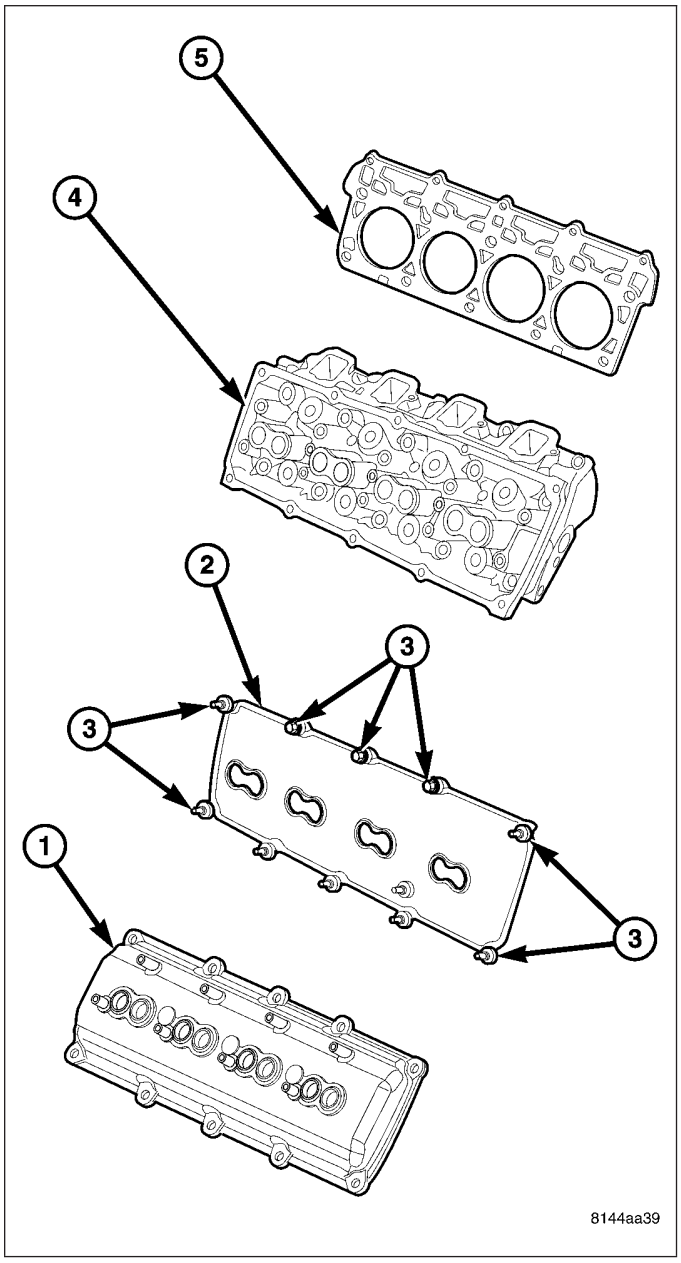
5
4
2
3
3
1
3
8144aa39

13. Install cylinder head covers (1) (Refer to 9 - ENGINE/CYLINDER HEAD/CYLINDER HEAD COVER(S) - INSTALLATION).
14. Connect the evaporation control system.
15. Install the air cleaner (Refer to 9 - ENGINE/AIR INTAKE SYSTEM - INSTALLATION).
16. Fill cooling system (Refer to 7 - COOLING - STANDARD PROCEDURE).
17. Connect the negative cable to the battery.
18. Start engine check for leaks.

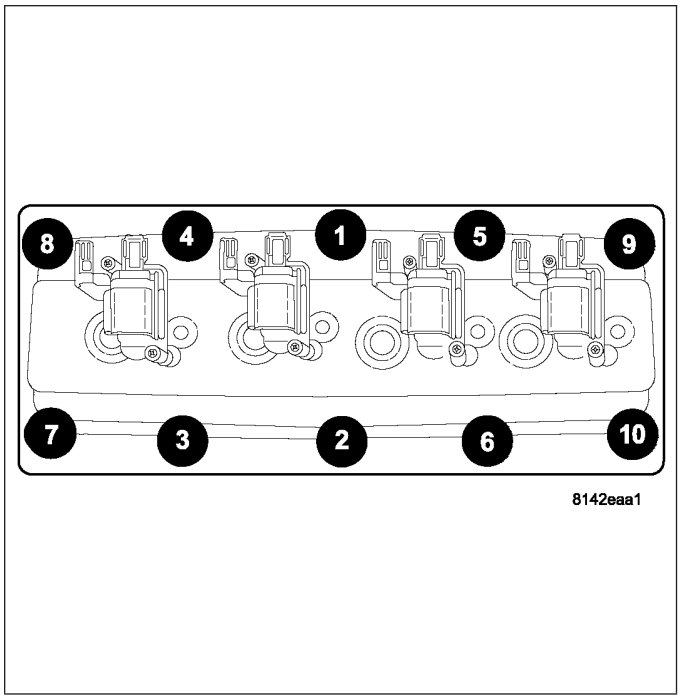

COVER - CYLINDER HEAD

REMOVAL

1. Disconnect battery negative cable.

2. Disconnect coil on plug connectors (4).

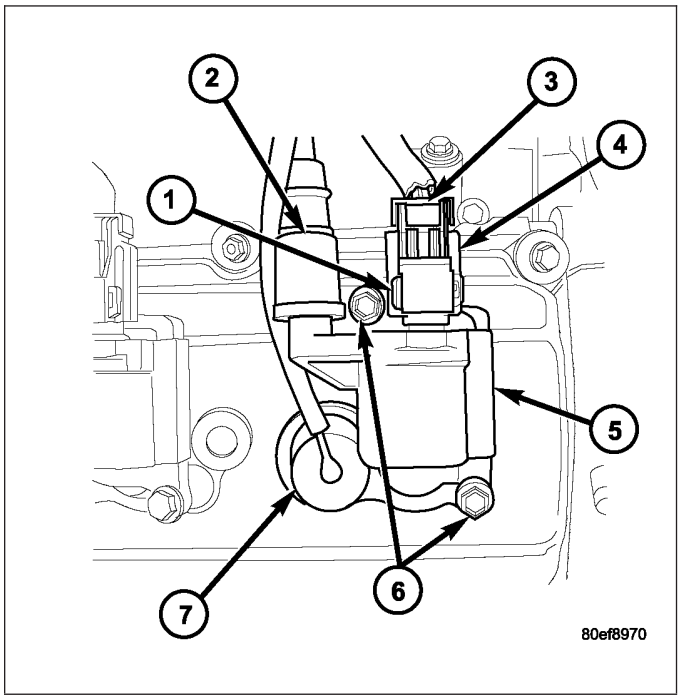

CAUTION: The ground straps must be installed in the same location as removed. The covers are machined to accept the ground straps in those locations only.

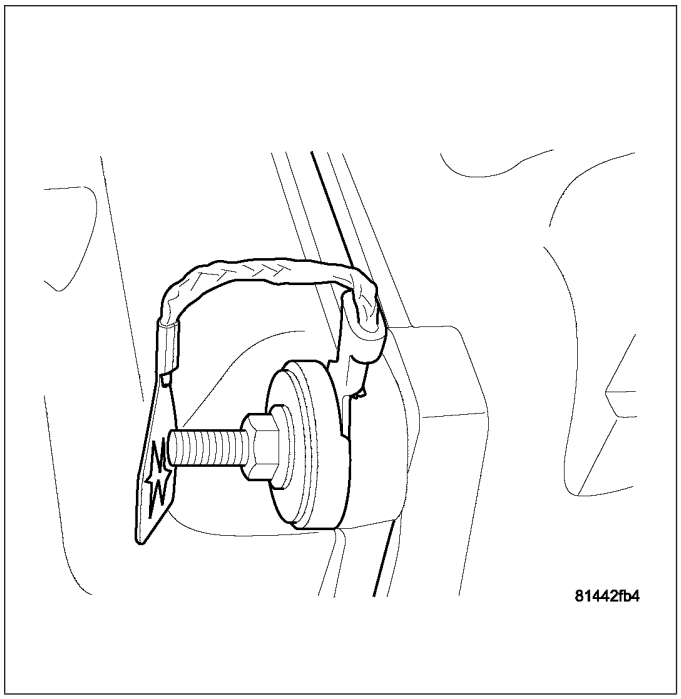

3. Remove cylinder head cover retaining bolts, and ground straps.

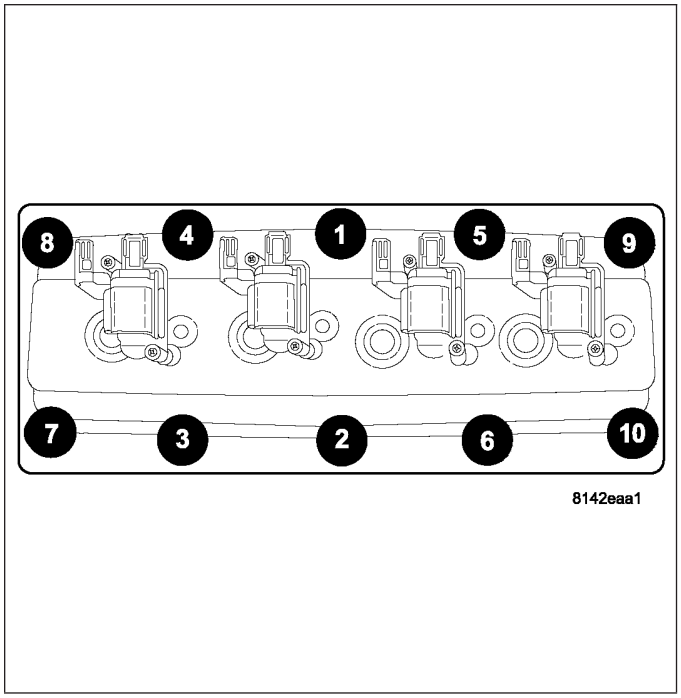

4. Remove cylinder head cover (1).

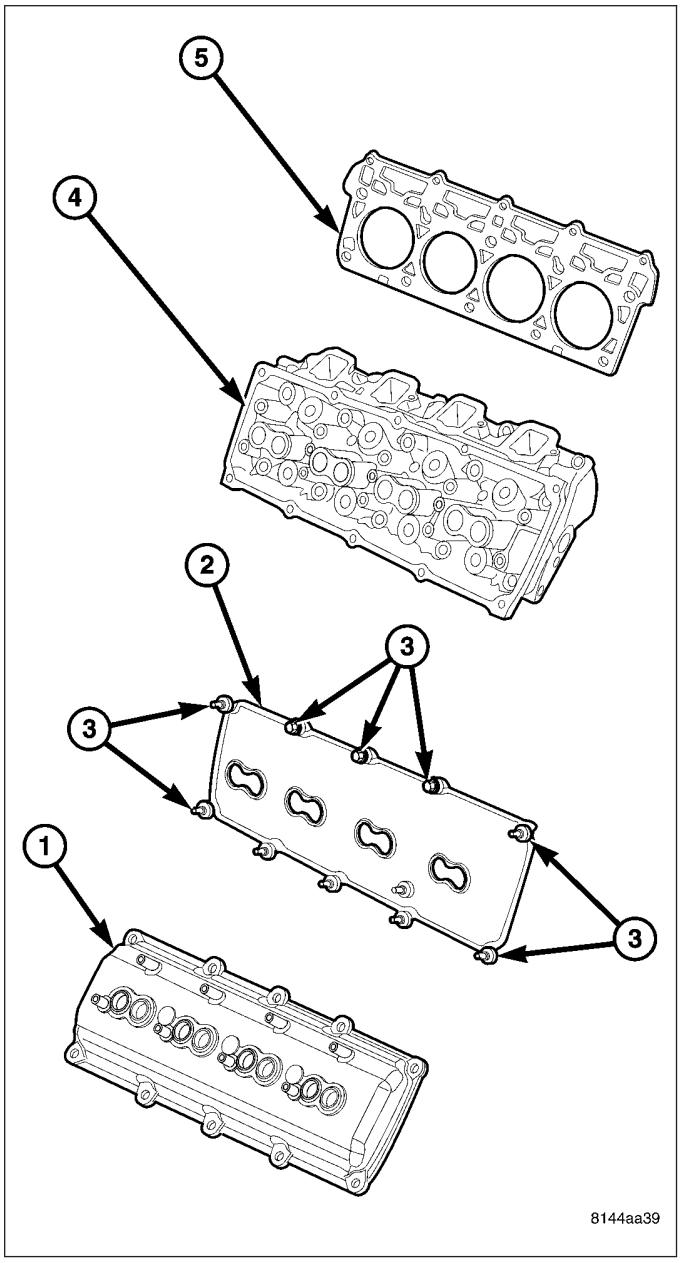

NOTE: The gasket (2) may be used again, provided no cuts, tears, or deformation has occurred.

INSTALLATION

CAUTION: Do not use harsh cleaners to clean the cylinder head covers. Severe damage to covers may occur.

CAUTION: DO NOT allow other components including the wire harness to rest on or against the engine cylinder head cover. Prolonged contact with other objects may wear a hole in the cylinder head cover.

1. Clean cylinder head cover (1) and both sealing surfaces (1,4,). Inspect and replace gasket (2) as necessary.

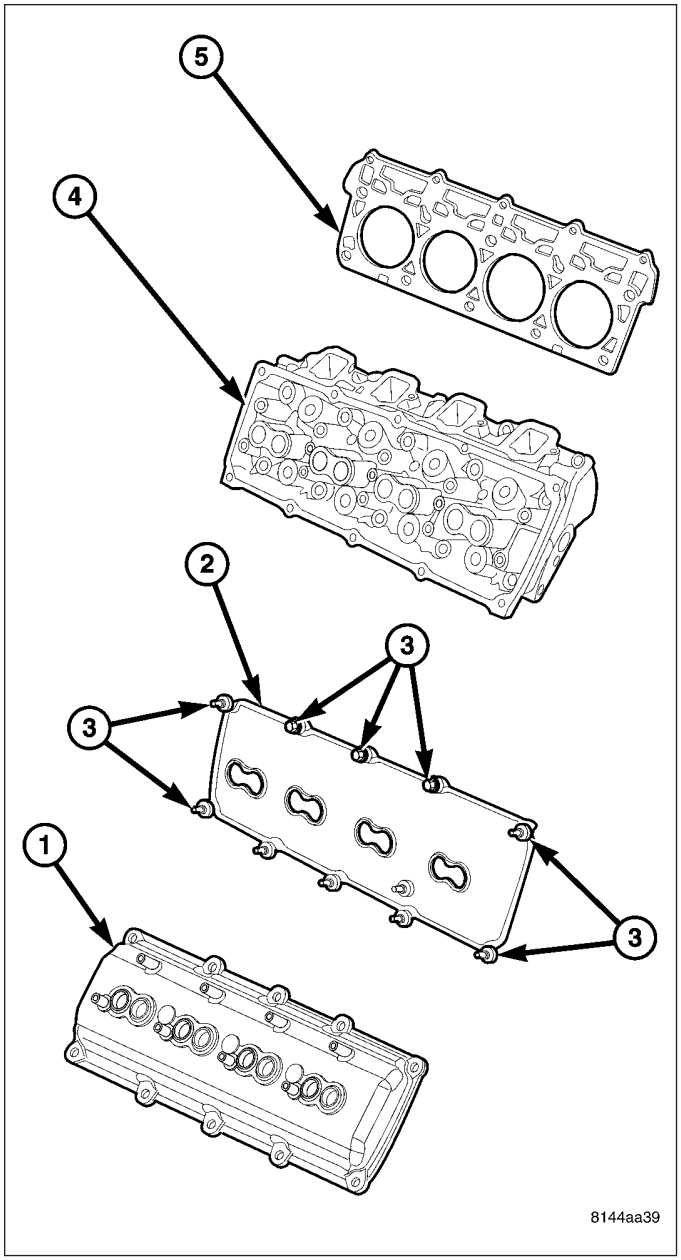

2. Install cylinder head cover and hand start all fasteners. Verify that all double ended studs are in the correct location and install left and right ground straps.

CAUTION: The ground straps must be installed in the same location as removed. The covers are machined to accept the ground straps in those locations only.

NOTE: The right hand ground strap is located on the front inboard stud. The left hand ground strap is located on the rear inboard stud.

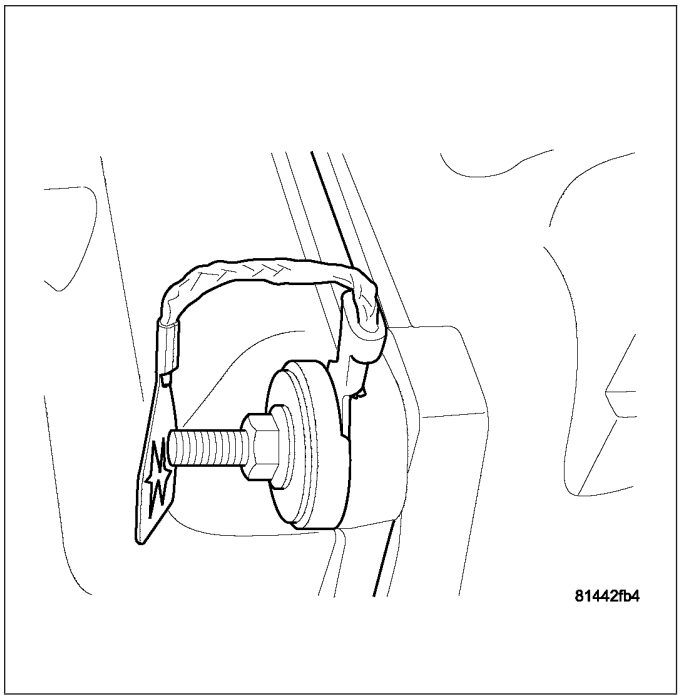

3. Tighten cylinder head cover bolts and double ended studs to 8 N·m (70 in. lbs). Begin torque sequence in the middle of head cover and torque bolts moving outward in a crisscross pattern from top to bottom.

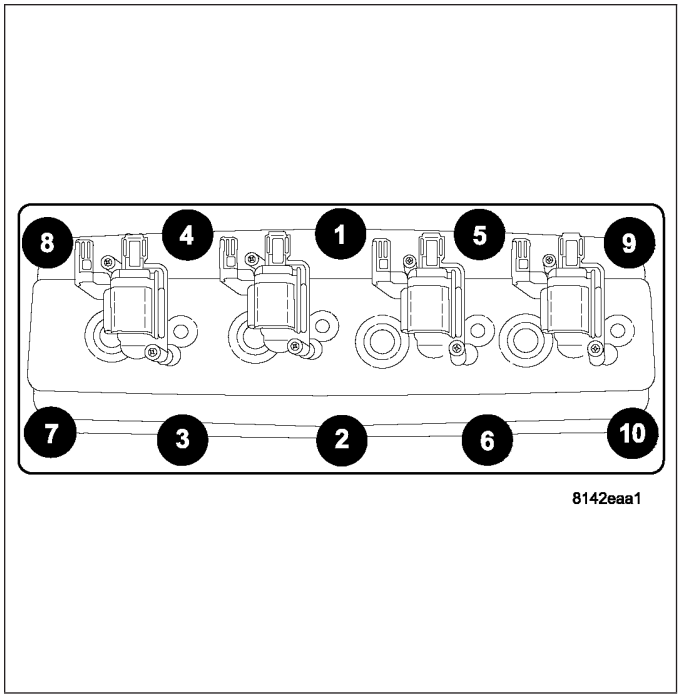

4. Install ignition coil on plug (5) , and torque fasteners (6) to 12 N·m (105 in. lbs)
5. Connect, ignition coil electrical connectors (4).
6. Install PCV hose.
7. Connect battery negative cable.

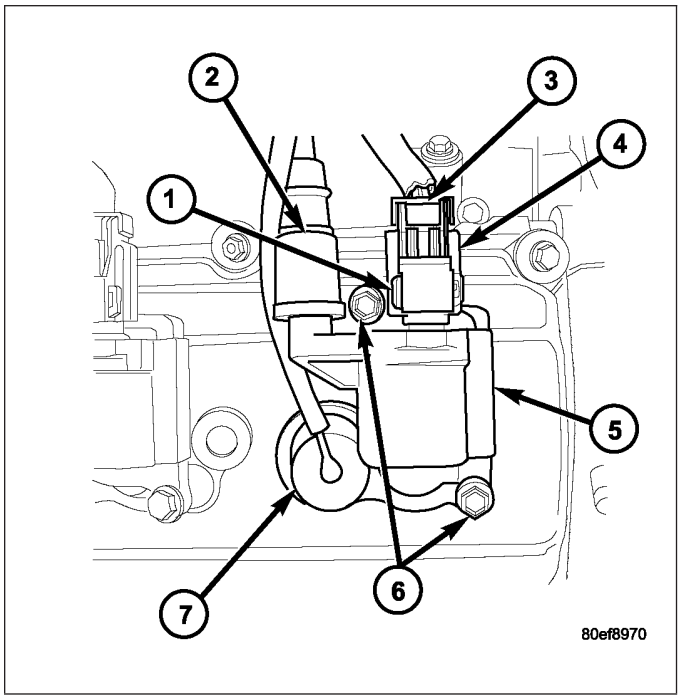

VALVES & SEATS - INTAKE/EXHAUST

DESCRIPTION

DESCRIPTION - VALVE GUIDES

The valve guides are made of powered metal and are pressed into the cylinder head. The guides are not replaceable or serviceable, and valve guide reaming is not recommended. If the guides are worn beyond acceptable limits, replace the cylinder heads.

DESCRIPTION

Both the intake and exhaust valves are made of steel. The intake valve is 50.93 mm (2.00 inches) in diameter and the exhaust valve is 39.53 mm (1.55 inches) in diameter. All valves use three bead lock keepers to retain the springs and promote valve rotation.

STANDARD PROCEDURE - REFACING

NOTE: Valve seats that are worn or burned can be reworked, provided that correct angle and seat width are maintained. Otherwise the cylinder head must be replaced.

NOTE: When refacing valves and valve seats, it is important that the correct size valve guide pilot be used for reseating stones. A true and complete surface must be obtained.

1. Using a suitable dial indicator measure the center of the valve seat Total run out must not exceed 0.051 mm (0.002 in).
2. Apply a small amount of Prussian blue to the valve seat, insert the valve into the cylinder head, while applying light pressure on the valve rotate the valve. Remove the valve and examine the valve face. If the blue is transferred below the top edge of the valve face, lower the valve seat using a 15 degree stone. If the blue is transferred to the bottom edge of the valve face, raise the valve seat using a 65 degree stone.
3. When the seat is properly positioned the width of the intake seat must be 1.018 - 1.62 mm (0.0464 - 0.0637 in.) and the exhaust seat must be 1.48 - 1.92 mm (0.058 - 0.075 in.).
4. Check the valve spring installed height after refacing the valve and seat. The installed height for both intake and exhaust valve springs must not exceed 46.0 mm (1.81 in.).

VALVE FACE AND VALVE SEAT ANGLE CHART

DESCRIPTION	SPECIFICATION
SEAT WIDTH	
INTAKE	1.018 - 1.62 mm (0.0464 - 0.0637 in.)
EXHAUST	1.48 - 1.92 mm (0.058 - 0.075 in.)
FACE ANGLE (INT. AND EXT.)	45° - 45½°
SEAT ANGLE (INT. AND EXT.)	44½° - 45°

5. The valve seat must maintain an angle of 44.5 – 45.0 degrees angle.
6. The valve face must maintain a face angle of 45.0 – 45.5 degrees angle.

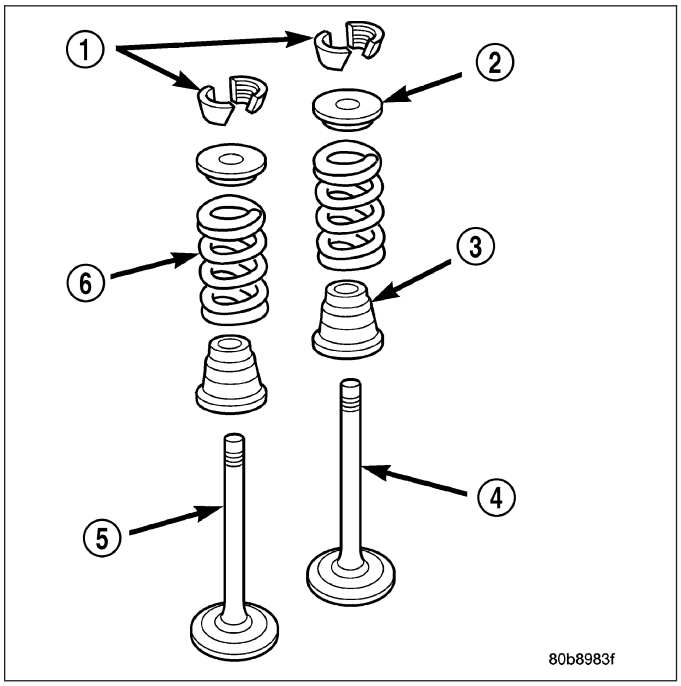

REMOVAL

1. Remove the cylinder head (Refer to 9 - ENGINE/CYLINDER HEAD - REMOVAL).
2. Compress valve springs using Valve Spring Compressor Tool special tool # C-3422and adapter 8464.
3. Remove valve retaining locks, valve spring retainers, valve stem seals and valve springs.
4. Before removing valves, remove any burrs from valve stem lock grooves to prevent damage to the valve guides. Identify valves to ensure installation in original location.

INSTALLATION

1. Clean valves thoroughly. Discard burned, warped and cracked valves.
2. Remove carbon and varnish deposits from inside of valve guides with a reliable guide cleaner.
3. Measure valve stems for wear. If wear exceeds 0.051 mm (0.002 inch), replace the valve.
4. Coat valve stems with lubrication oil and insert them in cylinder head.
5. If valves or seats are reground, check valve stem height. If valve is too long, replace cylinder head.
6. Install new seals on all valve guides. Install valve springs and valve retainers.

7. Compress valve springs with Valve Spring Compressor Tool special tool # C- 3422and adapter 8464, install locks and release tool. If valves and/or seats are ground, measure the installed height of springs. Make sure the measurement is taken from bottom of spring seat in cylinder head to the bottom surface of spring retainer.
8. Install cylinder head (Refer to 9 - ENGINE/CYLINDER HEAD - INSTALLATION).

ROCKER ARM

REMOVAL

1. Remove cylinder head cover. (Refer to 9 - ENGINE/CYLINDER HEAD/CYLINDER HEAD COVER(S) - REMOVAL).

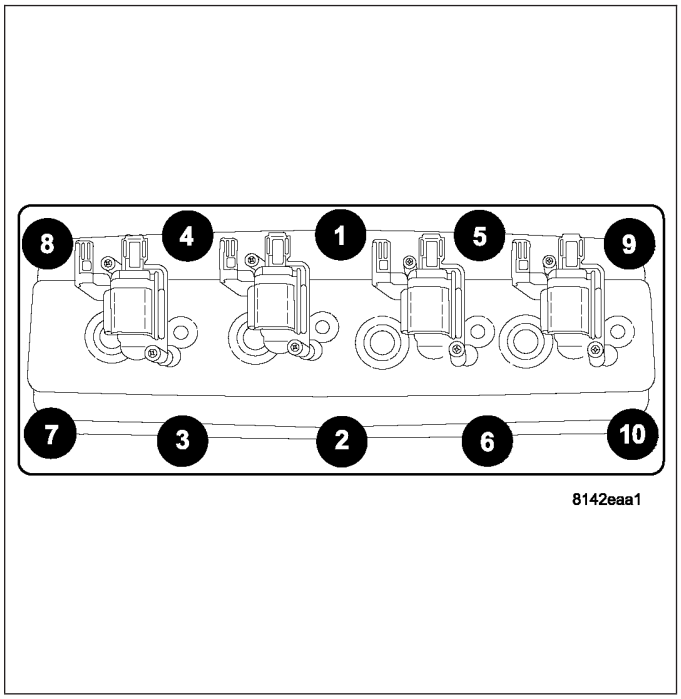

2. Install pushrod retaining plate (1)special tool 9070.

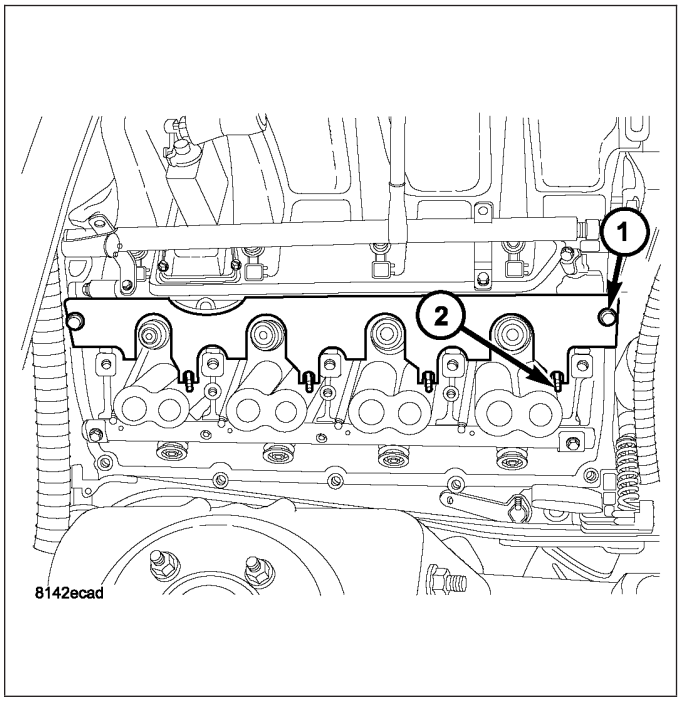

3. Loosen the rocker shafts using the sequence provided.

CAUTION: The rocker shaft assemblies are not interchangeable between intake and exhaust. The intake rocker arms are marked with an "I".

4. Remove the rocker shafts. Note location for reassembly.

CAUTION: The longer push rods are for the exhaust side, and the shorter push rods are for intake side.

5. Remove the pushrods. Note pushrod location for reassembly.

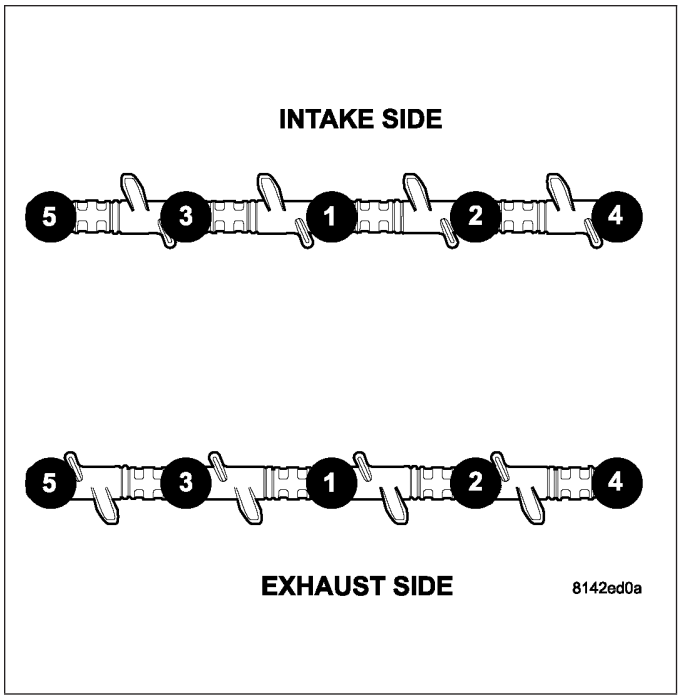

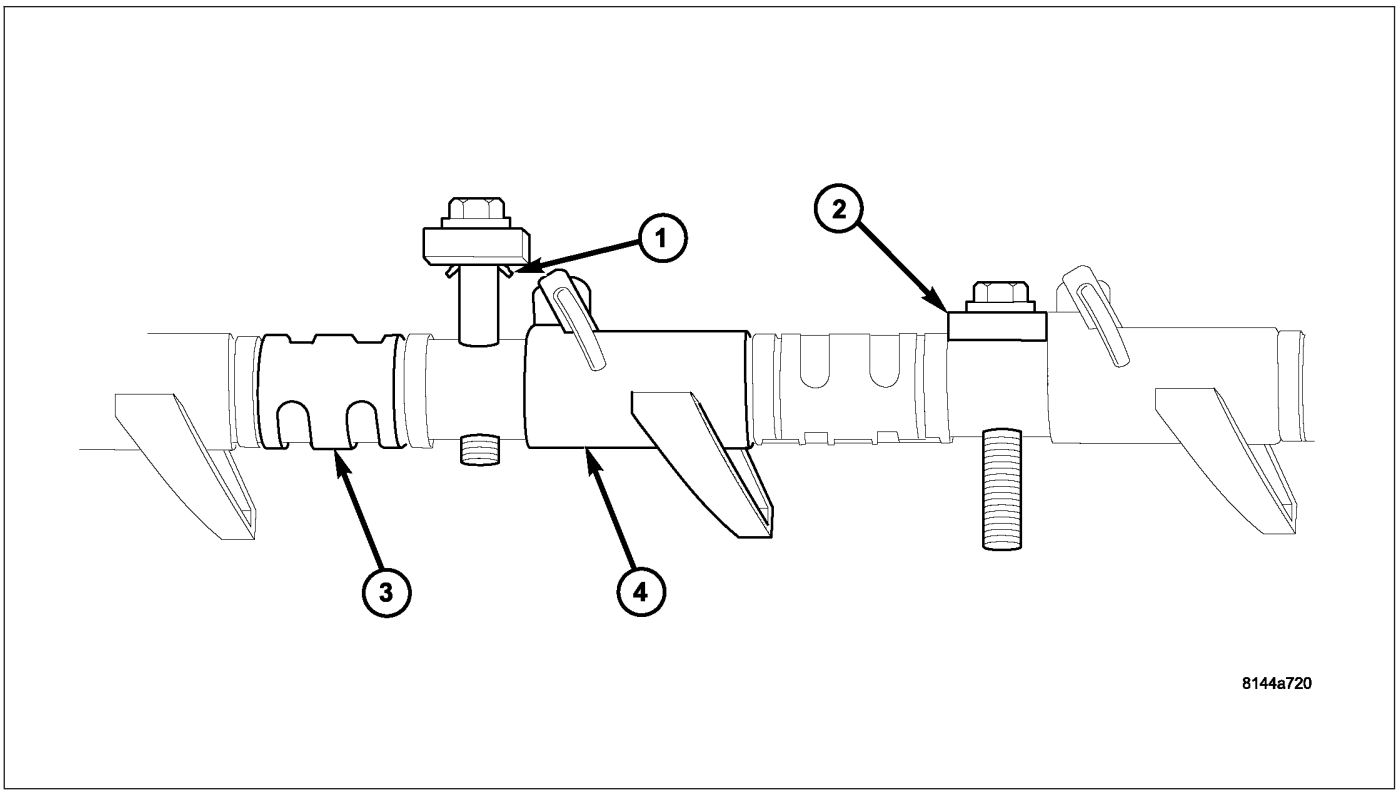

CAUTION: Do not remove the retainers from the rocker shaft. The assembly tangs (1) at the bottom of the retainers (2) can be damaged, causing the assembly tangs to break off, and get into the engine.

INSTALLATION

CAUTION: The longer push rods are for the exhaust side, and the shorter push rods are for intake side.

1. Install the push rods in the same order as removed.
2. Install the pushrod retaining plate (1) special tool 9070.

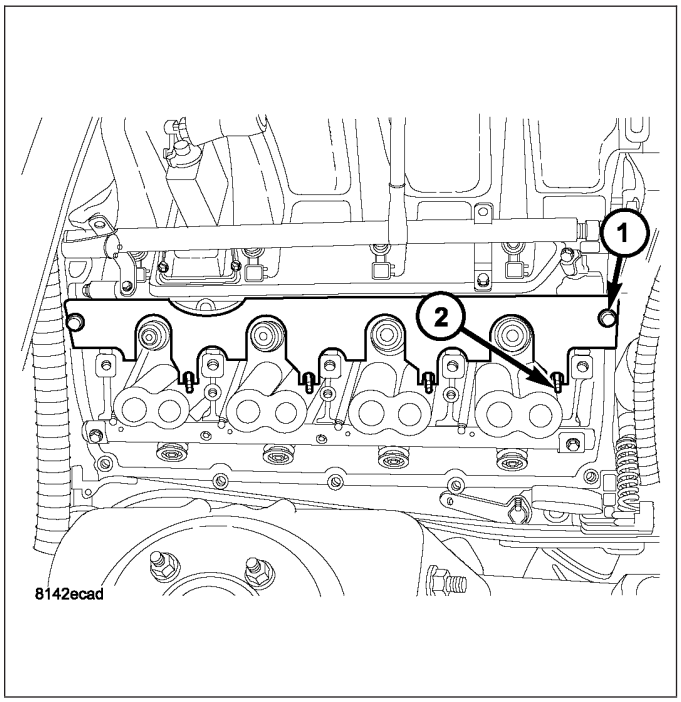

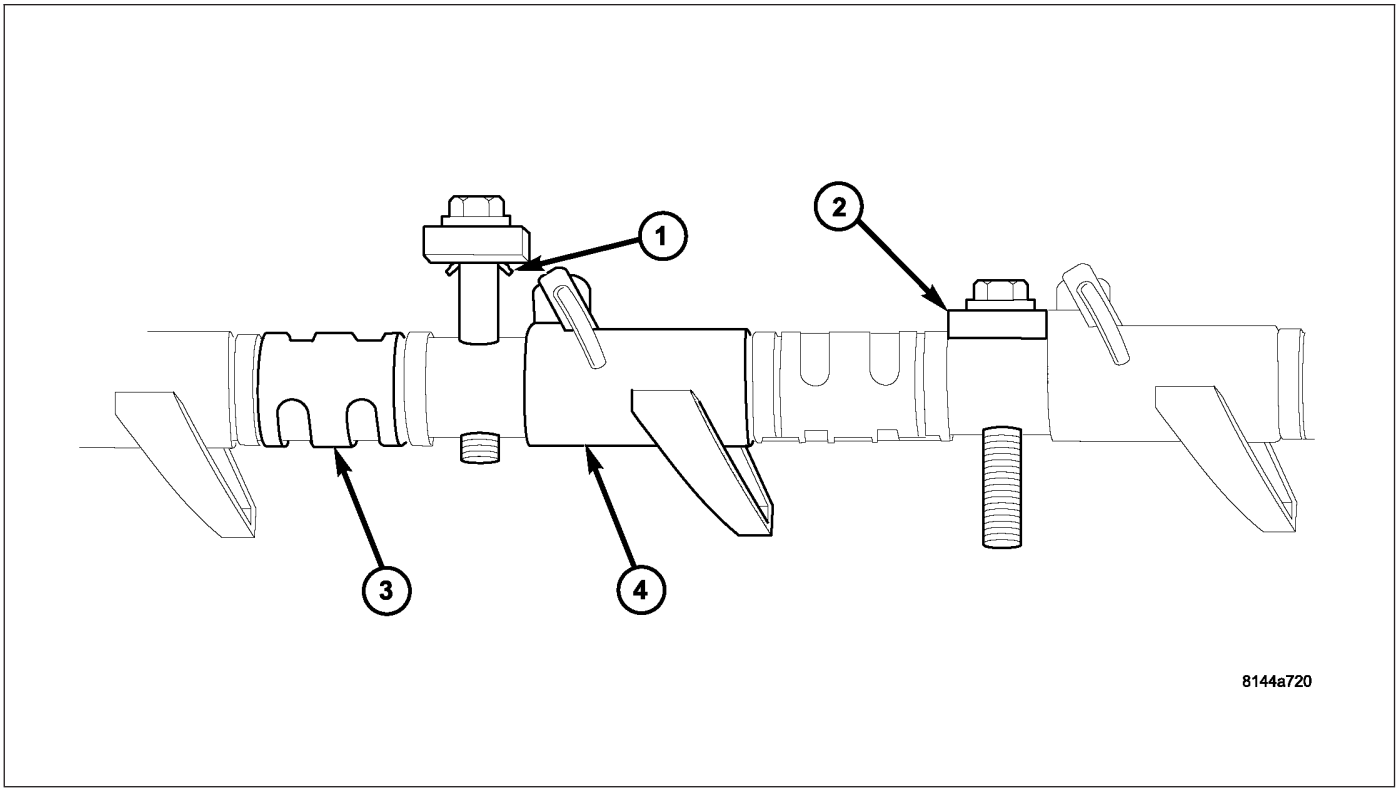

CAUTION: Ensure that retainers (2) and rocker arms (4) are not overlapped when torquing bolts.

CAUTION: Verify that pushrod is installed into rocker arm (4) and tappet correctly while installing rocker shaft assembly. Recheck after rocker shaft has been torqued to specification.

CAUTION: The rocker shaft assemblies are not interchangeable between intake and exhaust. The intake rocker arms are marked with the letter "I".

3. Install rocker shaft assemblies in the same order as removed.
4. Tighten the rocker shaft bolts to 22 N·m (195 in. lbs.) torque,using the sequence provided.

CAUTION: DO NOT rotate or crank the engine during or immediately after rocker arm installation. Allow the hydraulic roller tappets adequate time to bleed down (about 5 minutes).

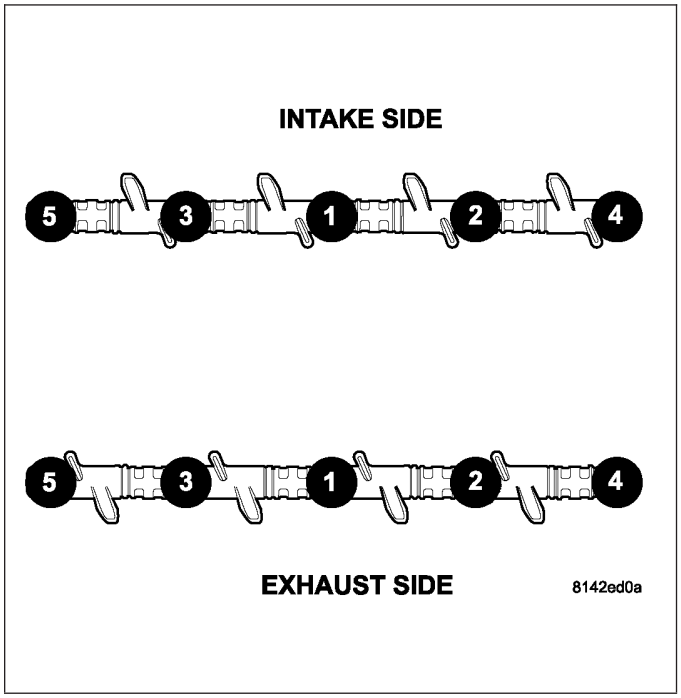

5. Remove pushrod retaining plate (1) special tool 9070.

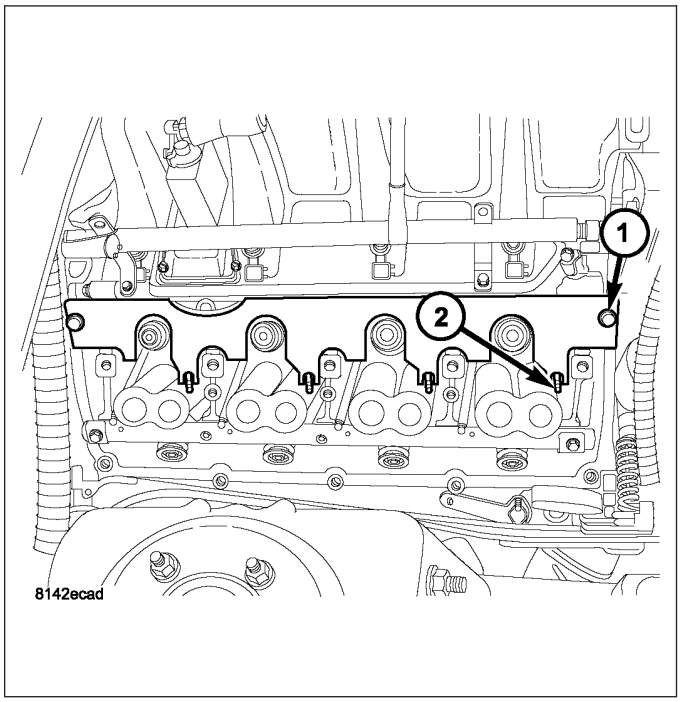

6. Install cylinder head cover (Refer to 9 - ENGINE/ CYLINDER HEAD/CYLINDER HEAD COVER(S) - INSTALLATION).

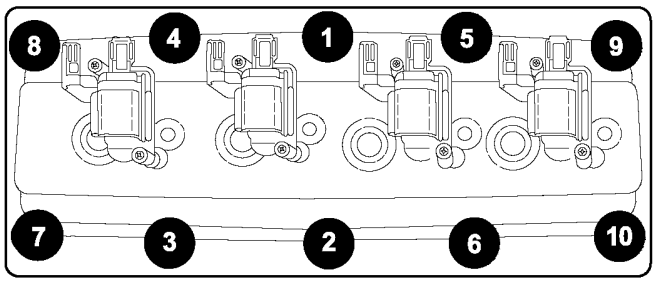

8142eaa1

SEALS - VALVE GUIDE

DESCRIPTION

The valve guide seals are made of rubber and incorporate an integral steel valve spring seat. The integral garter spring maintains consistent lubrication control to the valve stems.

SPRINGS - VALVE

REMOVAL

1. Disconnect negative battery cable.
2. Remove air cleaner assembly.
3. Remove air intake resonator.
4. Remove spark plug cables.
5. Remove ignition coil connectors (4).
6. Remove ignition coils (5).
7. Remove one spark plug.

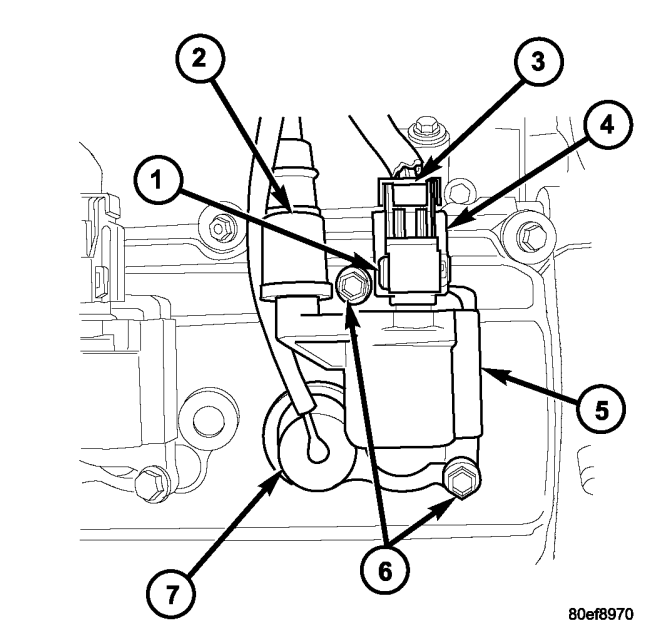

80ef8970

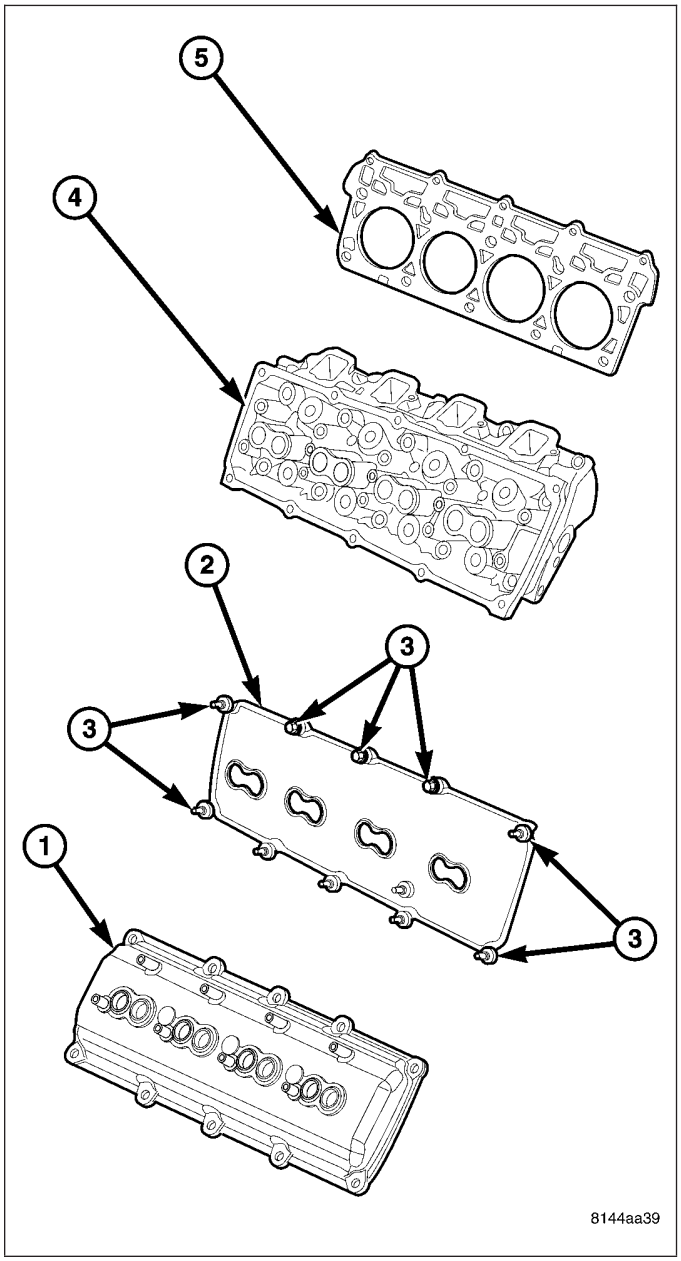
5
4
2
3
3
1
3
8144aa39

8. Remove cylinder head cover (1) using the sequence shown (Refer to 9 - ENGINE/CYLINDER HEAD/CYLINDER HEAD COVER(S) - REMOVAL).

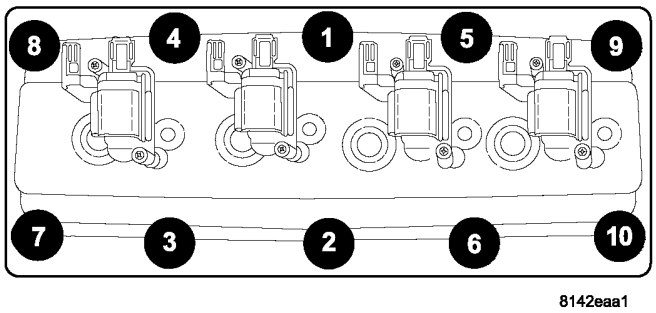

CAUTION: The piston must be at TDC, and both valves closed on the cylinder to be serviced.

NOTE: If removing intake valve spring, install special tool# 9070, pushrod retaining plate (1), to retain the intake pushrods (2).

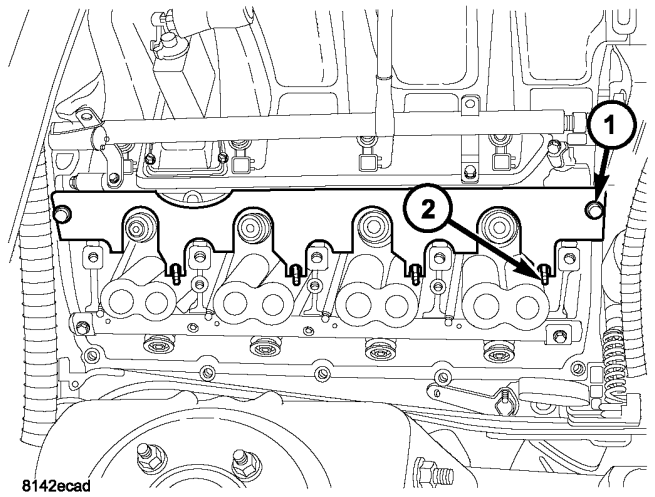

9. Remove exhaust/intake rocker arm shafts using the sequence shown.

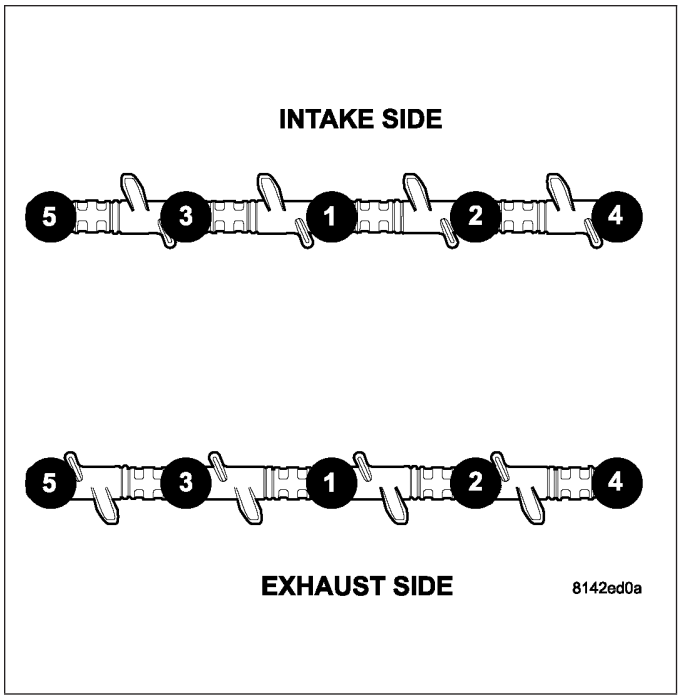

10. Install rocker arm shaft (1) special tool# 9065.

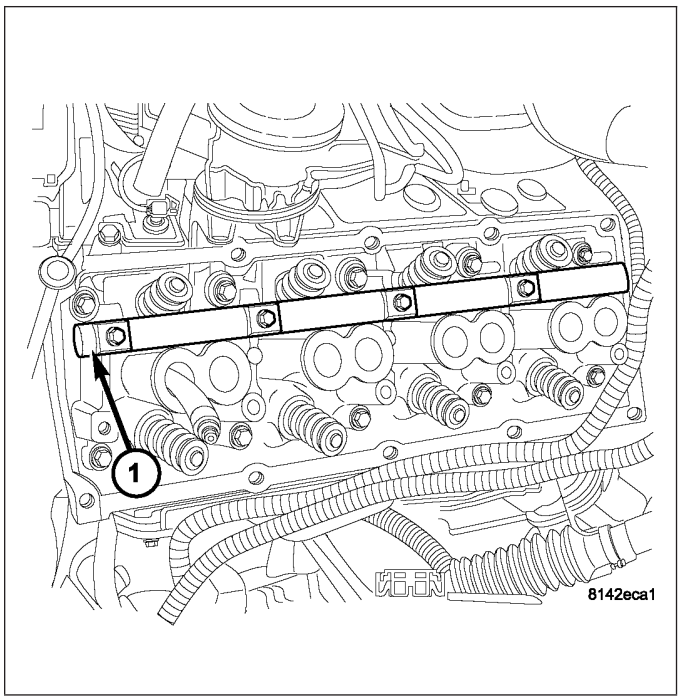

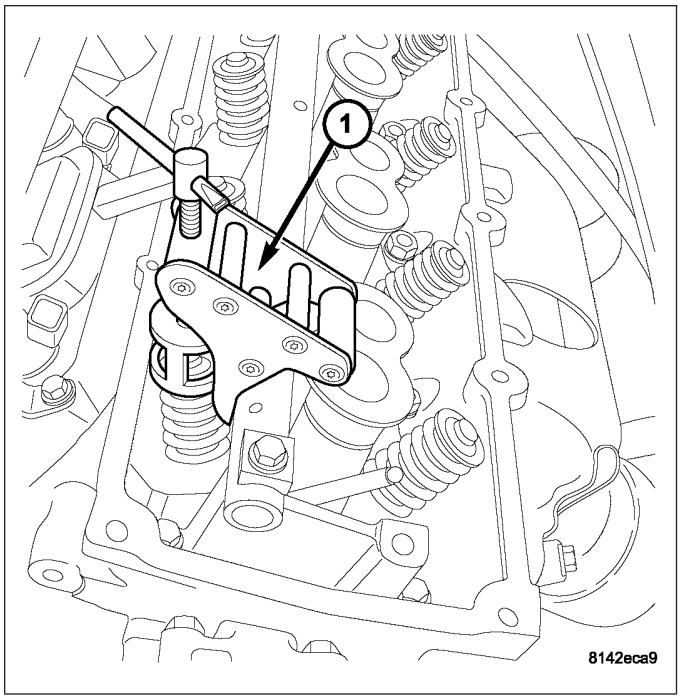
1
8142eca9

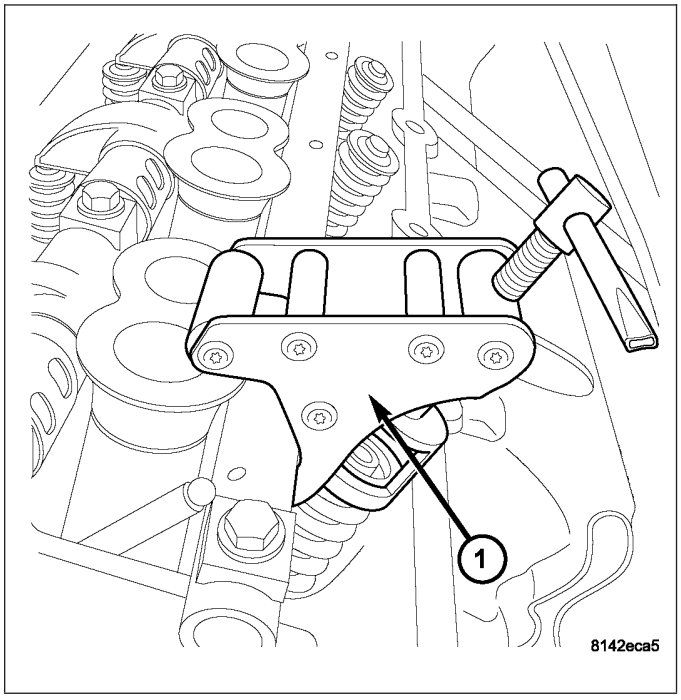
1
8142eca5

11. Install spring compressor (1,3,), special tool# 9065, and exhaust adapter arm (1) tool # 9065if needed.

NOTE: All valve springs and seals are removed in the same manner.

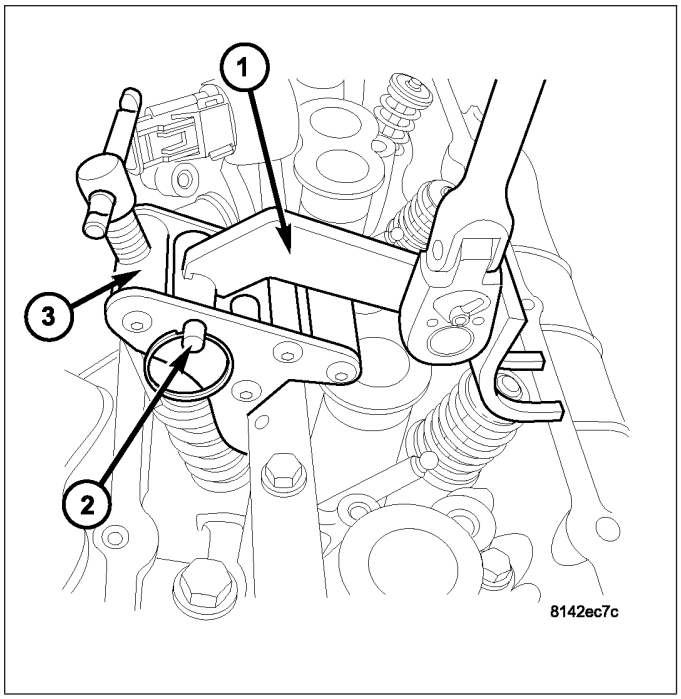

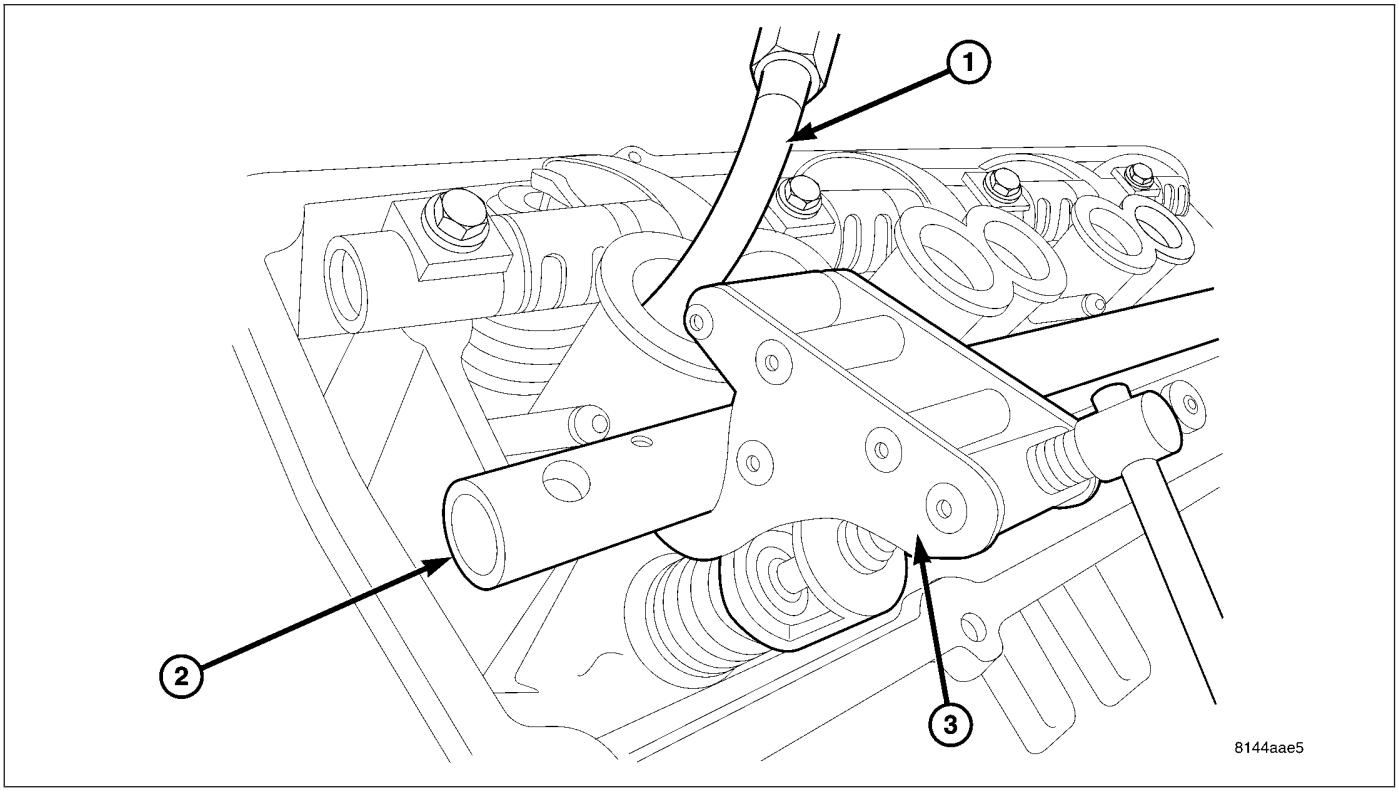

12. Insert air hose (1) into spark plug hole and charge cylinder with air.

NOTE: Tap the top of the valve spring retainer to loosen the spring retainers locks.

13. Compress valve spring with valve spring compessor (3) tool # 9065and remove valve retainer locks.
14. Release spring compressor (3) and remove valve spring.

NOTE: The valve springs are interchangeable between intake and exhaust.

15. Remove valve seal.

INSTALLATION

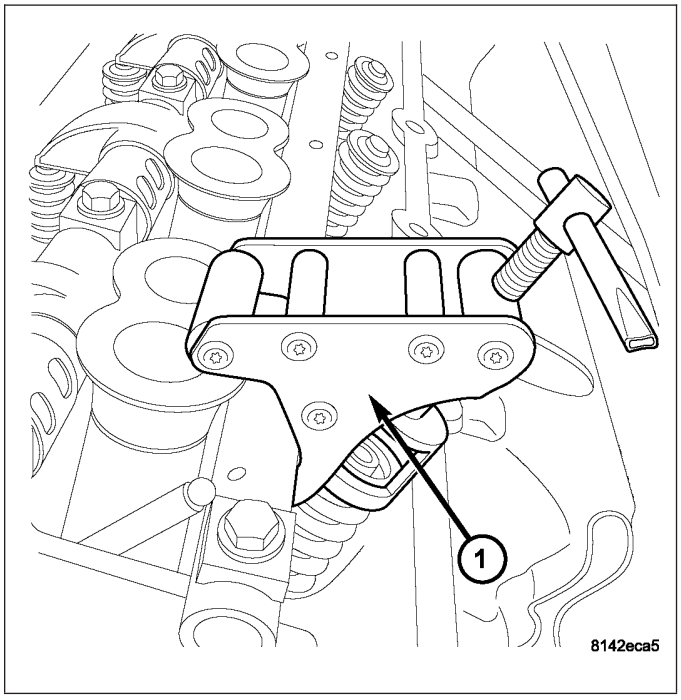

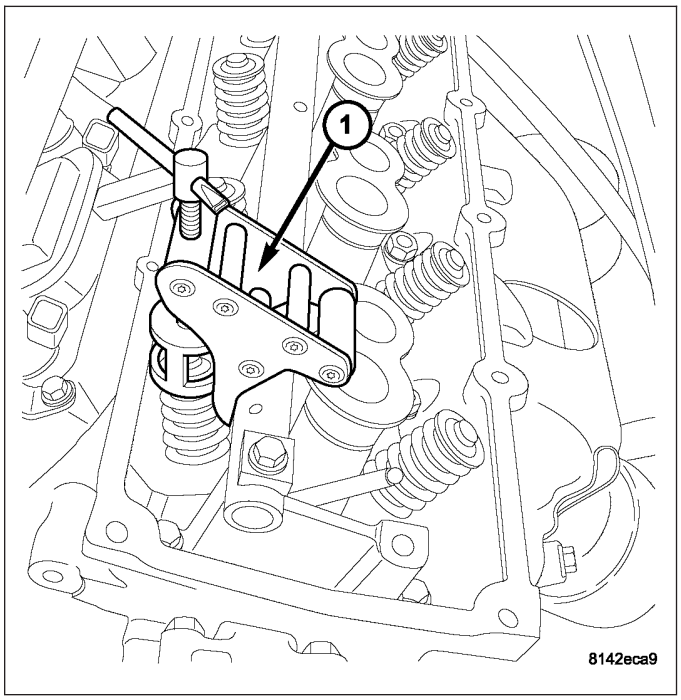

1. Install valve seal.
2. Install valve spring.
3. Using special tool# 9065 (1,3,), compress valve spring and install valve spring retainer and locks.

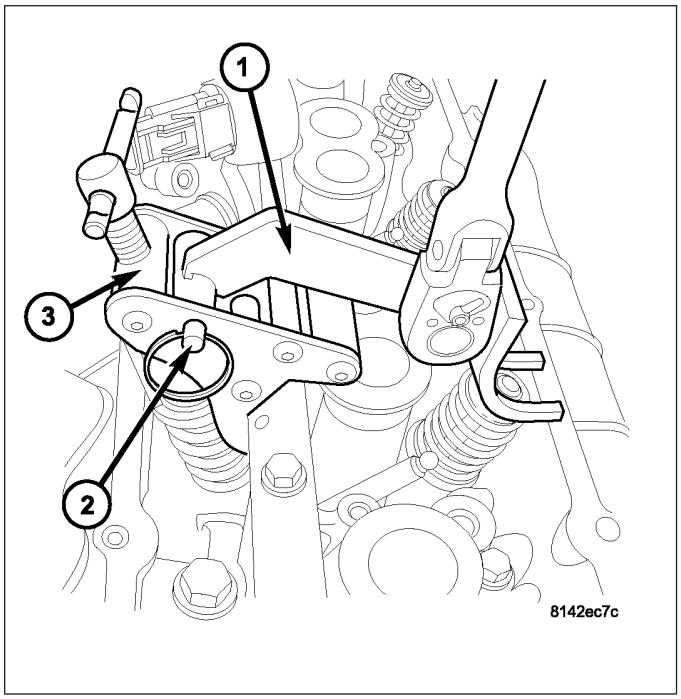

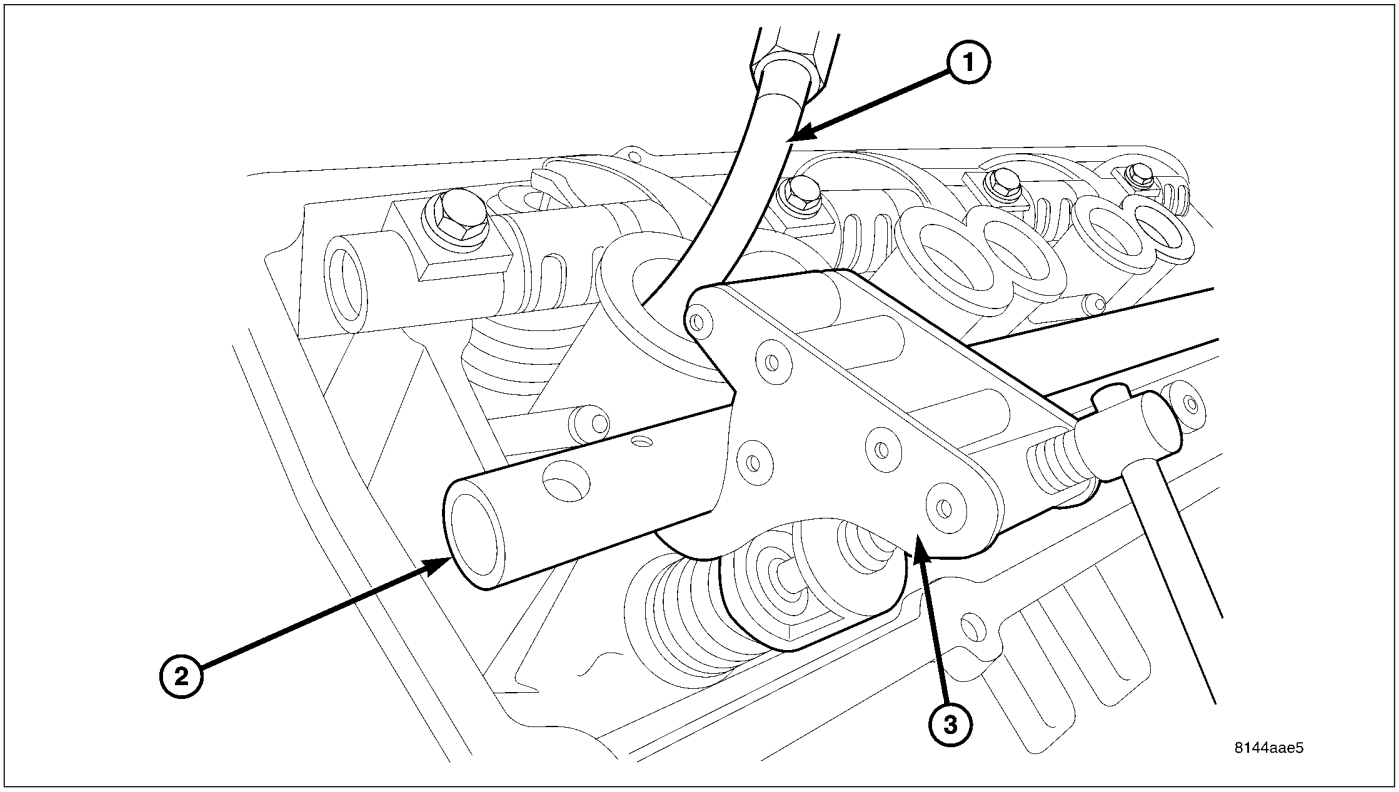

4. Release air charge in cylinder (1).
5. Remove spring compressor tool # 9065 (3).

CAUTION: Verify that the pushrods are fully seated into lifter and rocker arm. Recheck after rocker arm shaft has been torqued to specification.

6. Install rocker arm shaft and pushrods (Refer to 9 - ENGINE/CYLINDER HEAD/ROCKER ARM / ADJUSTER ASSY - INSTALLATION).
7. Tighten the rocker shaft bolts to 22 N·m (195 in. lbs.) torque, using the rocker shaft torque sequence.

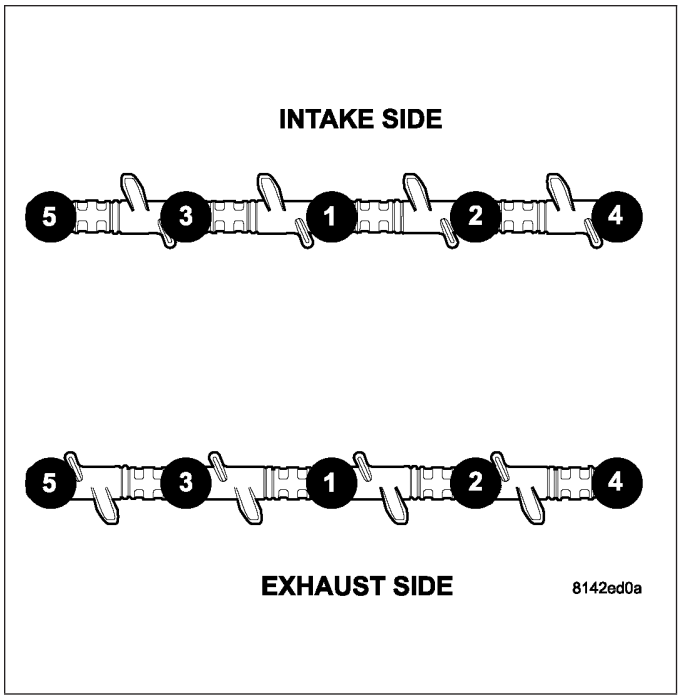

8. Remove special tool# 9070, pushrod retaining plate (1), if used.

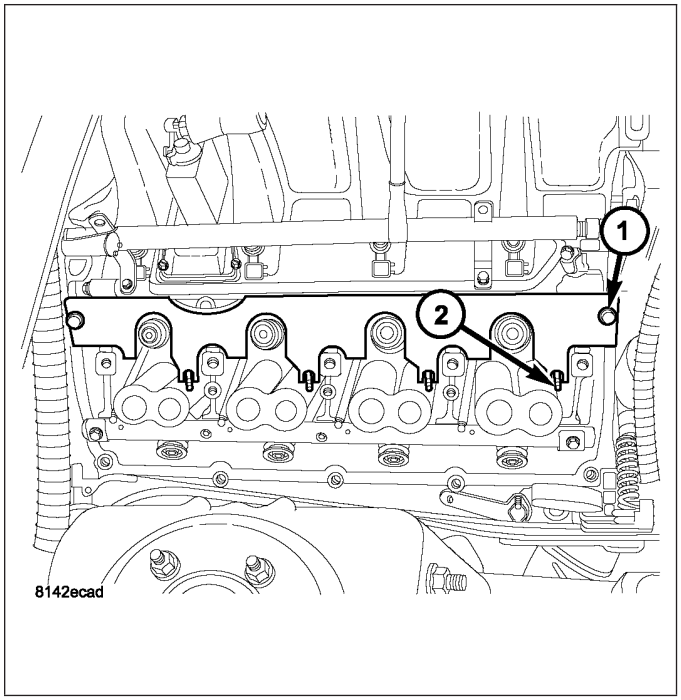

9. Install cylinder head cover (1).

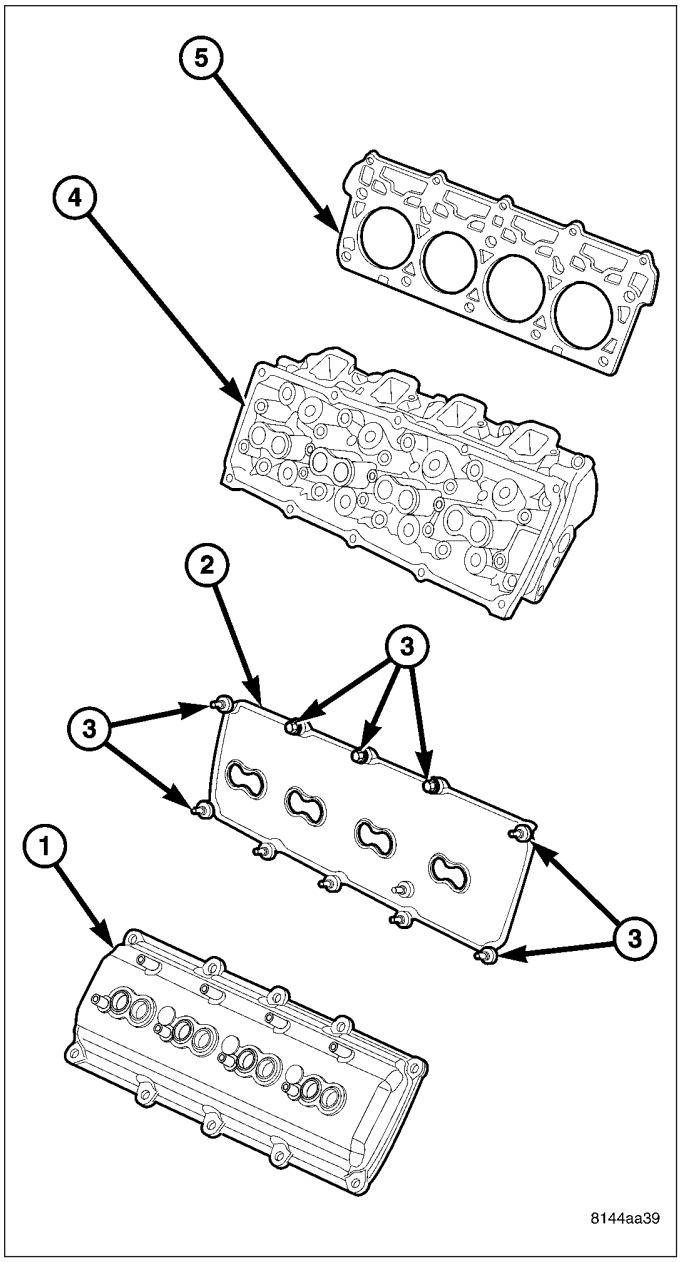

10. Tighten cylinder head cover bolts and double ended studs (Refer to 9 - ENGINE/CYLINDER HEAD/CYLINDER HEAD COVER(S) - INSTALLATION) .
11. Install spark plugs.

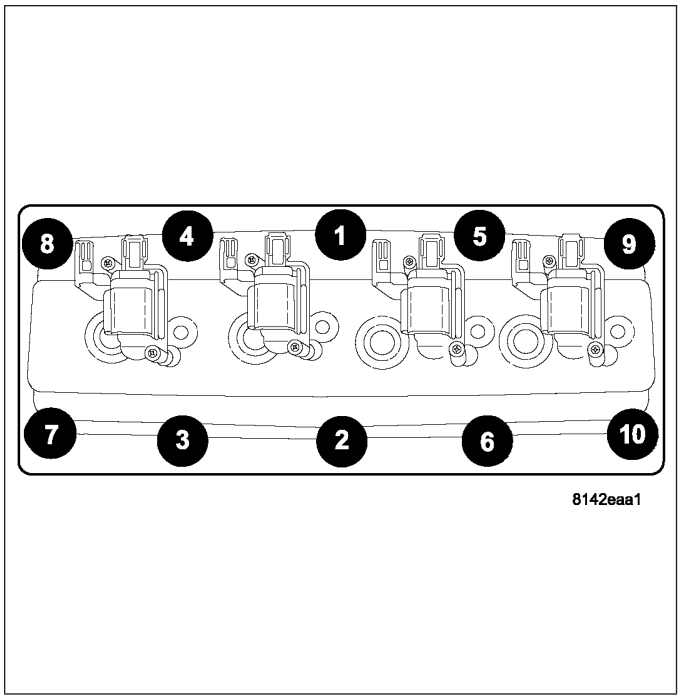

12. Install ignition coil on plug (5), and torque fasteners (6) to 12 N·m (105 in. lbs)
13. Install ignition coil connectors (4).
14. Install spark plug cables.
15. Install air intake resonator.
16. Install air cleaner assembly.
17. Connect negative battery cable.

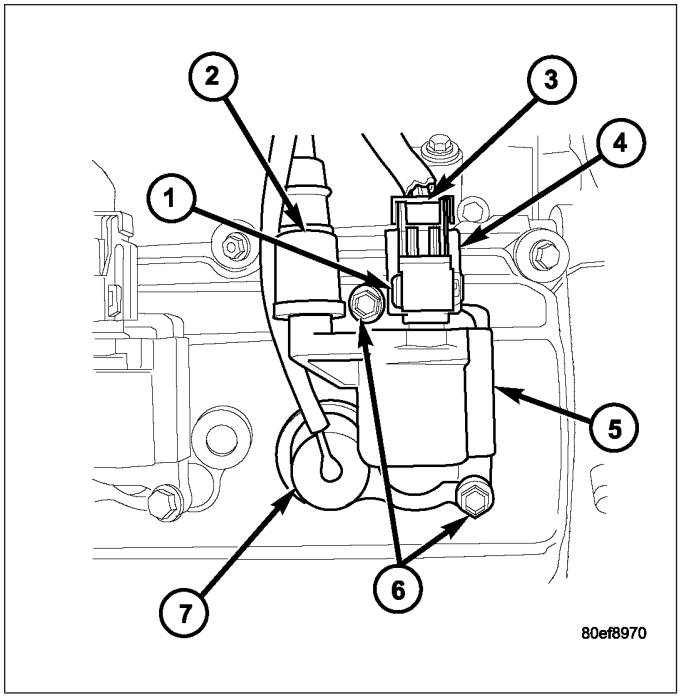

ENGINE BLOCK

CLEANING

Thoroughly clean the oil pan and engine block gasket surfaces.

Use compressed air to clean out:

- The galley at the oil filter adaptor hole.
- The front and rear oil galley holes.
- The feed holes for the crankshaft main bearings.

Once the block has been completely cleaned, apply Loctite PST pipe sealant with Teflon 592 to the threads of the front and rear oil galley plugs. Tighten the 1/4 inch NPT plugs to 20 N·m (177 in. lbs.) torque. Tighten the 3/8 inch NPT plugs to 27 N·m (240 in. lbs.) torque.

INSPECTION

1. It is mandatory to use a dial bore gauge to measure each cylinder bore diameter. To correctly select the proper size piston, a cylinder bore gauge, capable of reading in 0.003 mm (.0001 in.) INCREMENTS is required. If a bore gauge is not available, do not use an inside micrometer.
2. Measure the inside diameter of the cylinder bore at three levels below top of bore. Start perpendicular (across or at 90 degrees) to the axis of the crankshaft and then take two additional reading.
3. Measure the cylinder bore diameter crosswise to the cylinder block near the top of the bore. Repeat the measurement near the middle of the bore, then repeat the measurement near the bottom of the bore.
4. Determine taper by subtracting the smaller diameter from the larger diameter.
5. Rotate measuring device 90° and repeat steps above.
6. Determine out-of-roundness by comparing the difference between each measurement.

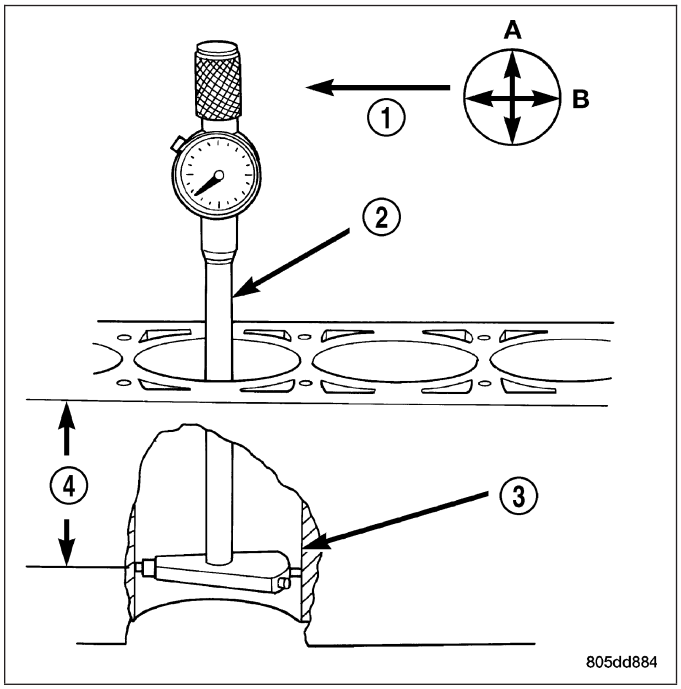

7. If cylinder bore taper does not exceed 0.025 mm (0.001 inch) and out-of-roundness does not exceed 0.025 mm (0.001 inch), the cylinder bore can be honed. If the cylinder bore taper or out- of-round condition exceeds these maximum limits, the cylinder block must be replaced. A slight amount of taper always exists in the cylinder bore after the engine has been in use for a period of time.

CAMSHAFT

REMOVAL

REMOVAL - CAMSHAFT CORE HOLE PLUG

CAUTION: Do not damage the rear surface of the camshaft or the core plug sealing surface, when removing the core plug.

1. Remove the rear cam bearing core plug.

REMOVAL - CAMSHAFT

1. Remove the battery negative cable.
2. Remove the air cleaner assembly. (Refer to 9 - ENGINE/AIR INTAKE SYSTEM - REMOVAL)
3. Drain coolant. (Refer to 7 - COOLING - STANDARD PROCEDURE)
4. Remove the accessory drive belt. (Refer to 7 - COOLING/ACCESSORY DRIVE/DRIVE BELTS - REMOVAL)
5. Remove the generator.
6. Remove the A/C compressor, and set aside.
7. Remove the radiator (Refer to 7 - COOLING/ENGINE/RADIATOR - REMOVAL).
8. Remove intake manifold (Refer to 9 - ENGINE/MANIFOLDS/INTAKE MANIFOLD - REMOVAL).
9. Remove cylinder head covers (Refer to 9 - ENGINE/CYLINDER HEAD/CYLINDER HEAD COVER(S) - REMOVAL).

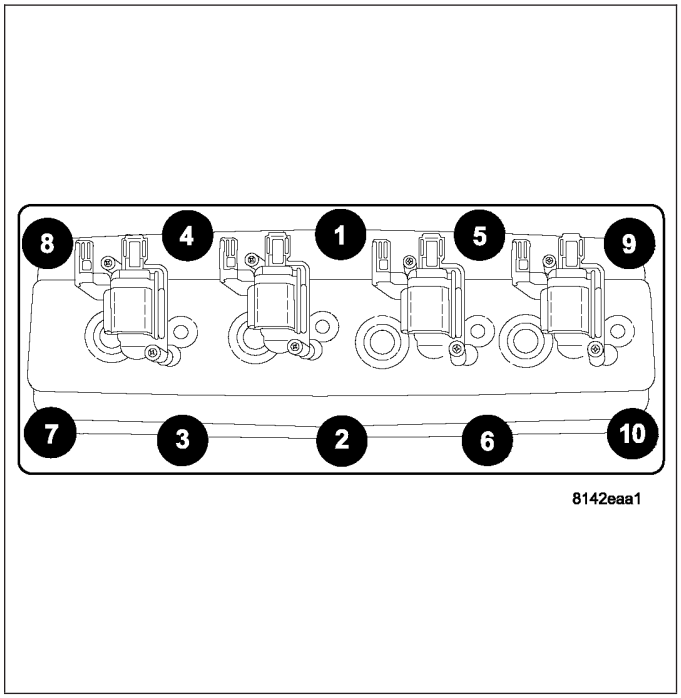

10. Remove both left and right cylinder heads (4) (Refer to 9 - ENGINE/CYLINDER HEAD - REMOVAL).
11. Remove the oil pan (Refer to 9 - ENGINE/LUBRICATION/OIL PAN - REMOVAL).

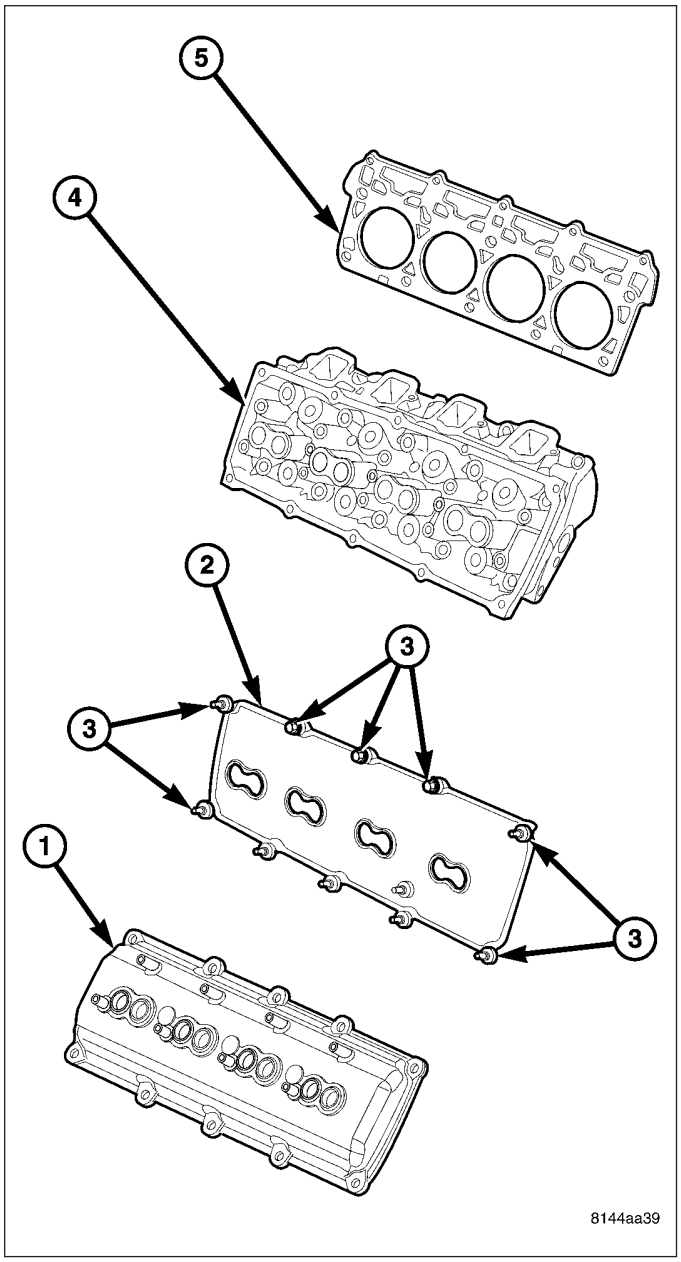

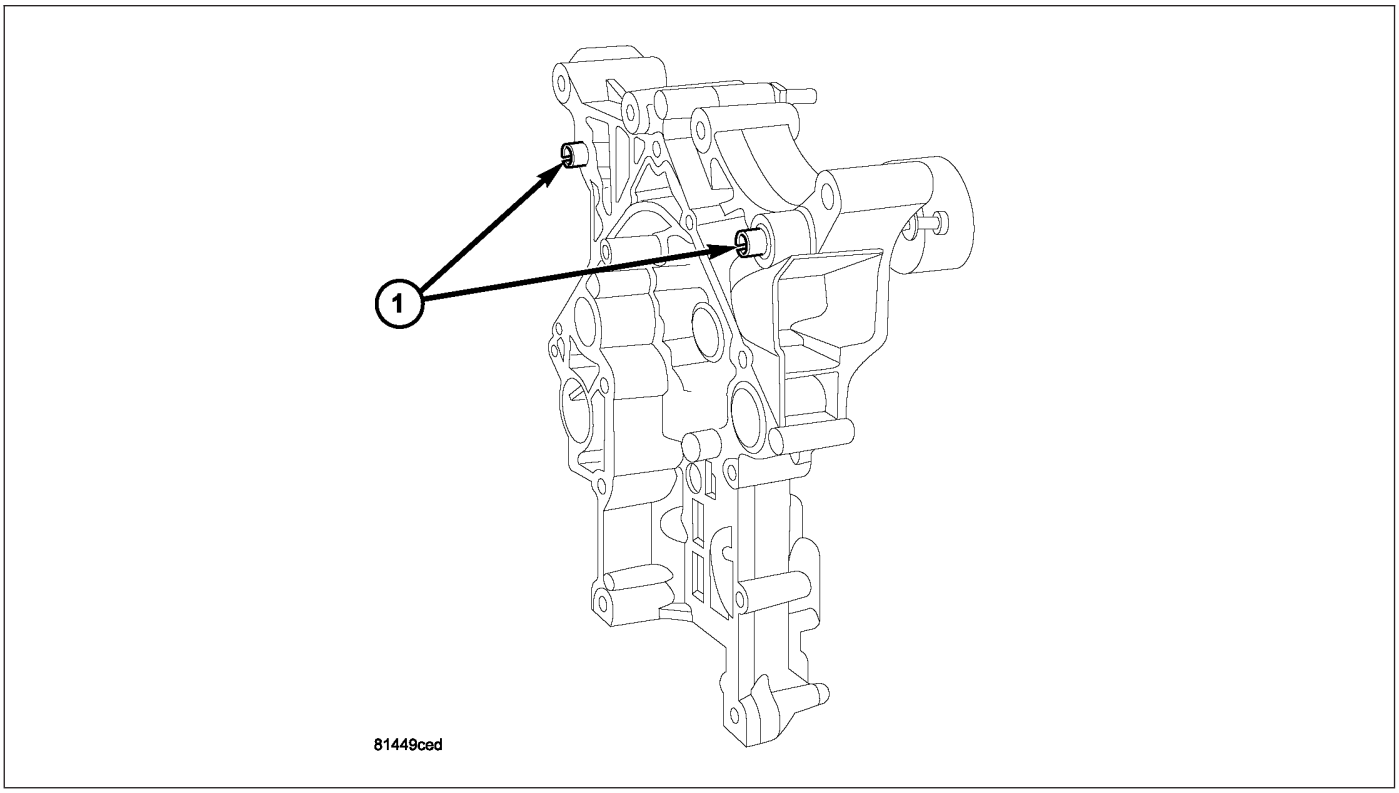

12. Remove timing case cover (1) (Refer to 9 - ENGINE/VALVE TIMING/TIMING BELT / CHAIN COVER(S) - REMOVAL).

13. Remove the oil pick up tube.

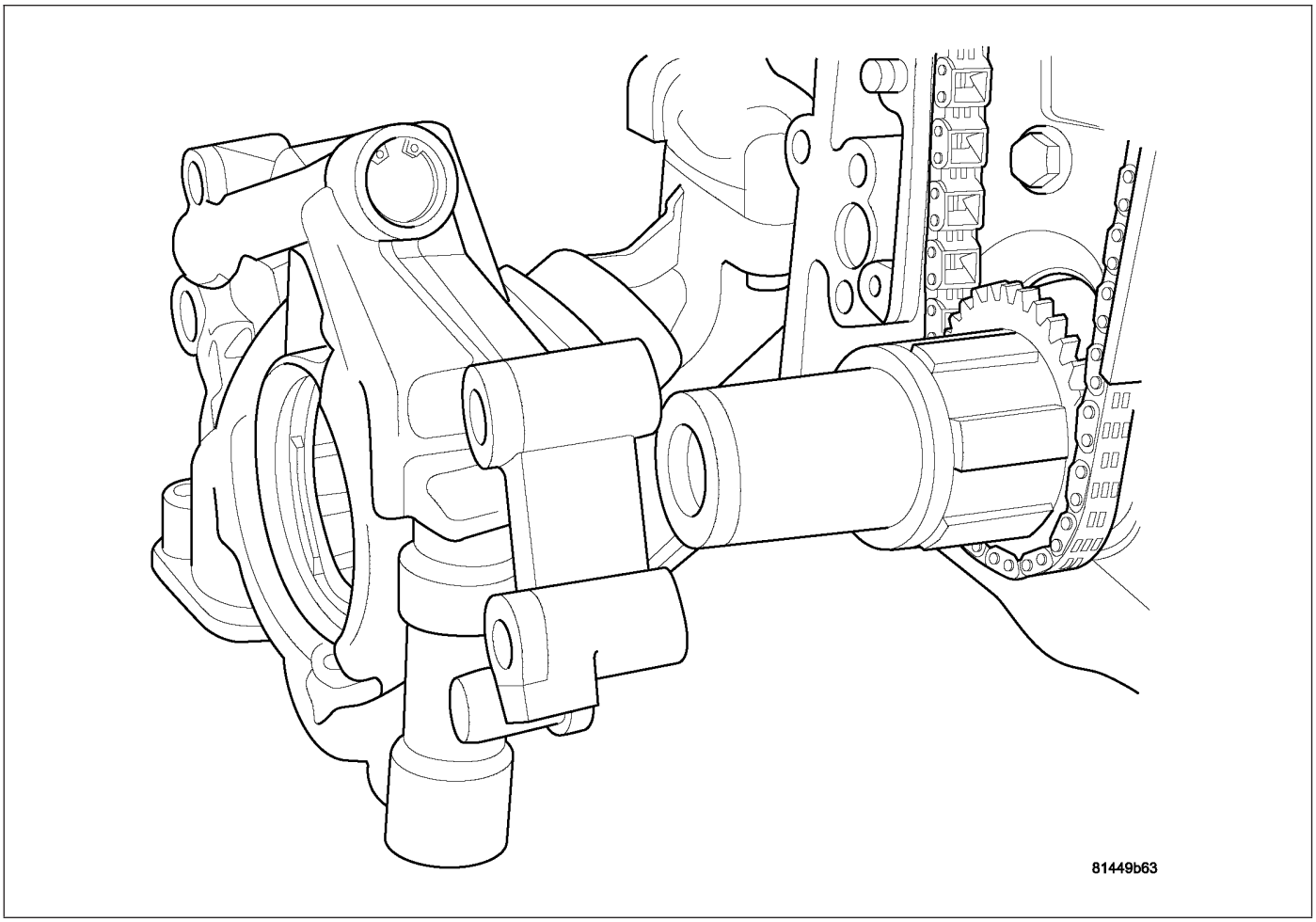

14. Remove the oil pump (figure 2) (Refer to 9 - ENGINE/LUBRICATION/OIL PUMP - REMOVAL).

15. Remove timing chain (2) (Refer to 9 - ENGINE/VALVE TIMING/TIMING BELT/CHAIN AND SPROCKETS - REMOVAL).
16. Remove camshaft tensioner/thrust plate assembly.

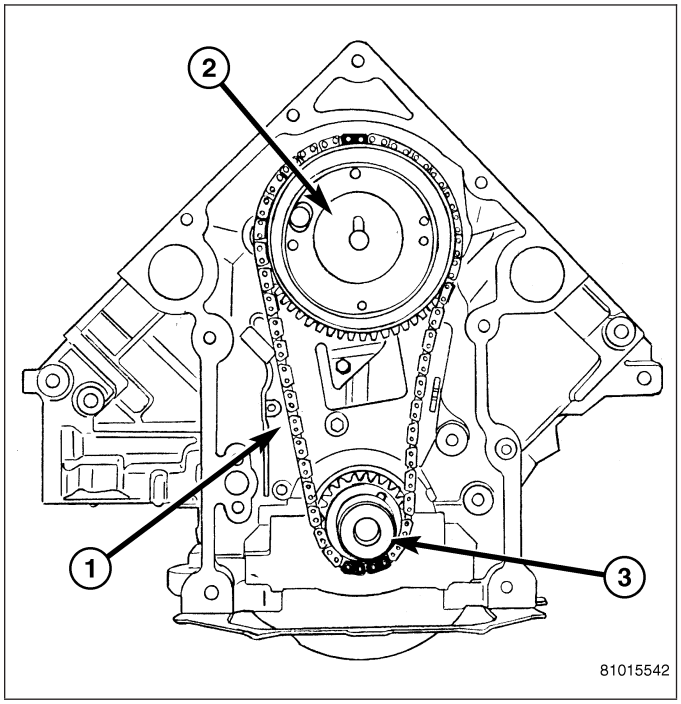

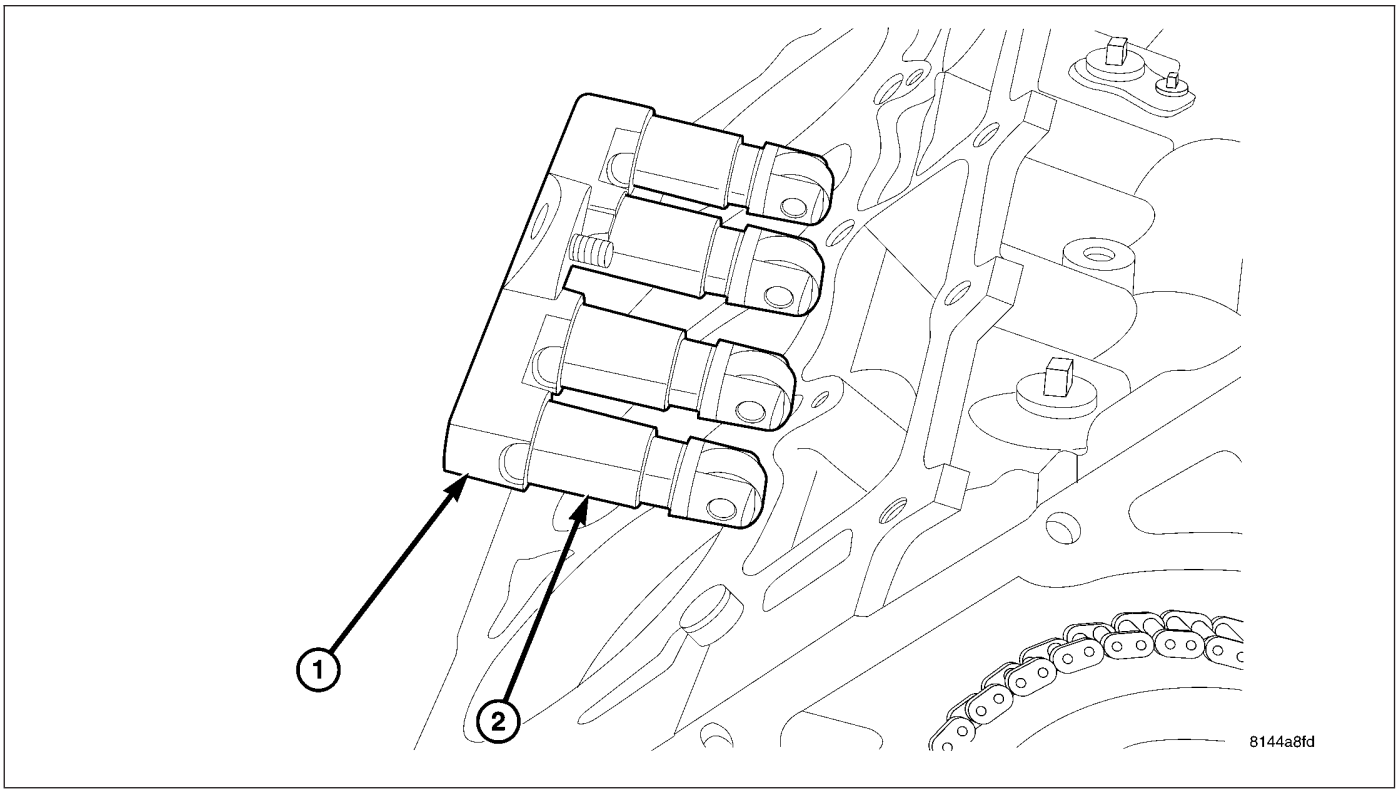

NOTE: Identify lifters to ensure installation in original location.

17. Remove the tappets (2) and retainer (1) assembly.

18. Install a long bolt into front of camshaft to aid in removal of the camshaft. Remove camshaft, being careful not to damage cam bearings with the cam lobes (figure 5).

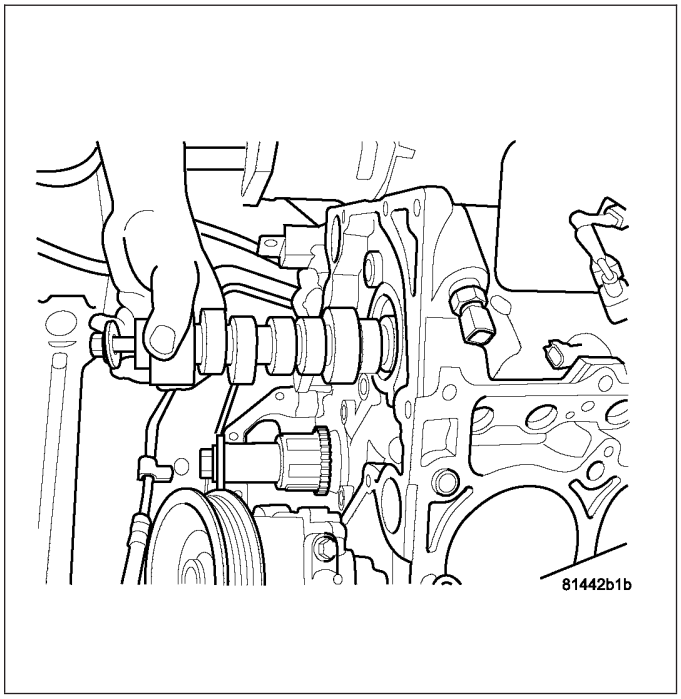

INSPECTION

1. The cam bearings are not serviceable. Do not attempt to replace cam bearings for any reason.

INSTALLATION

INSTALLATION - CAMSHAFT CORE HOLE PLUG

1. Clean core hole in block.

NOTE: Do not apply adhesive to the new core hole plug. A new plug will have adhesive pre-applied.

2. Install a new core hole plug at the rear of camshaft, using suitable flat faced tool. The plug must be fully seated on the cylinder block shoulder.

INSTALLATION - CAMSHAFT

1. Lubricate camshaft lobes and camshaft bearing journals and insert the camshaft (figure1).

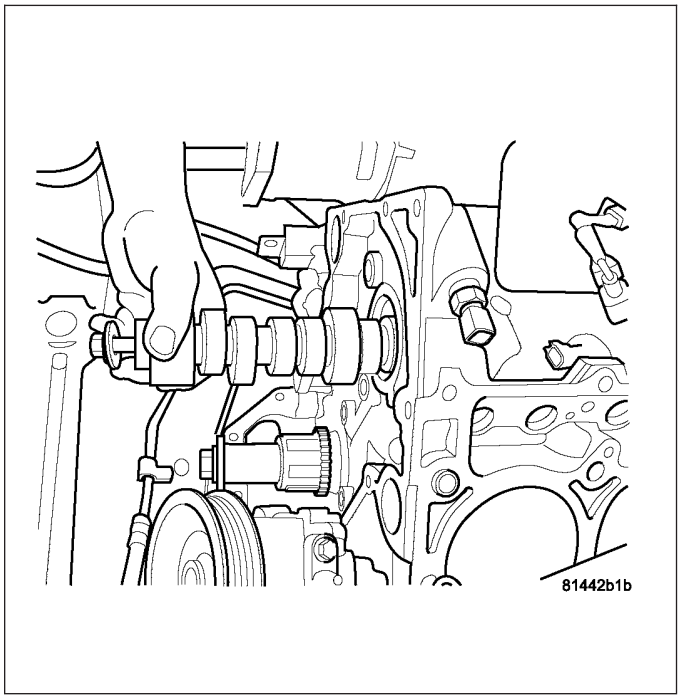

2. Install camshaft Tensioner plate assembly. Tighten bolts to 28 N·m (250 in. lbs.) torque.
3. Install timing chain and sprockets (Refer to 9 - ENGINE/VALVE TIMING/TIMING BELT/CHAIN AND SPROCKETS - INSTALLATION).
4. Measure camshaft end play (Refer to 9 - ENGINE - SPECIFICATIONS). If not within limits install a new thrust plate.

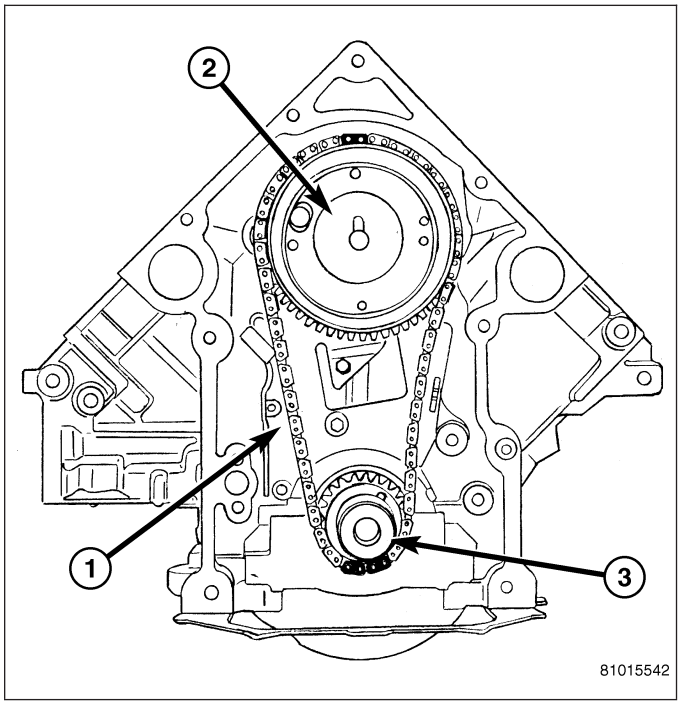

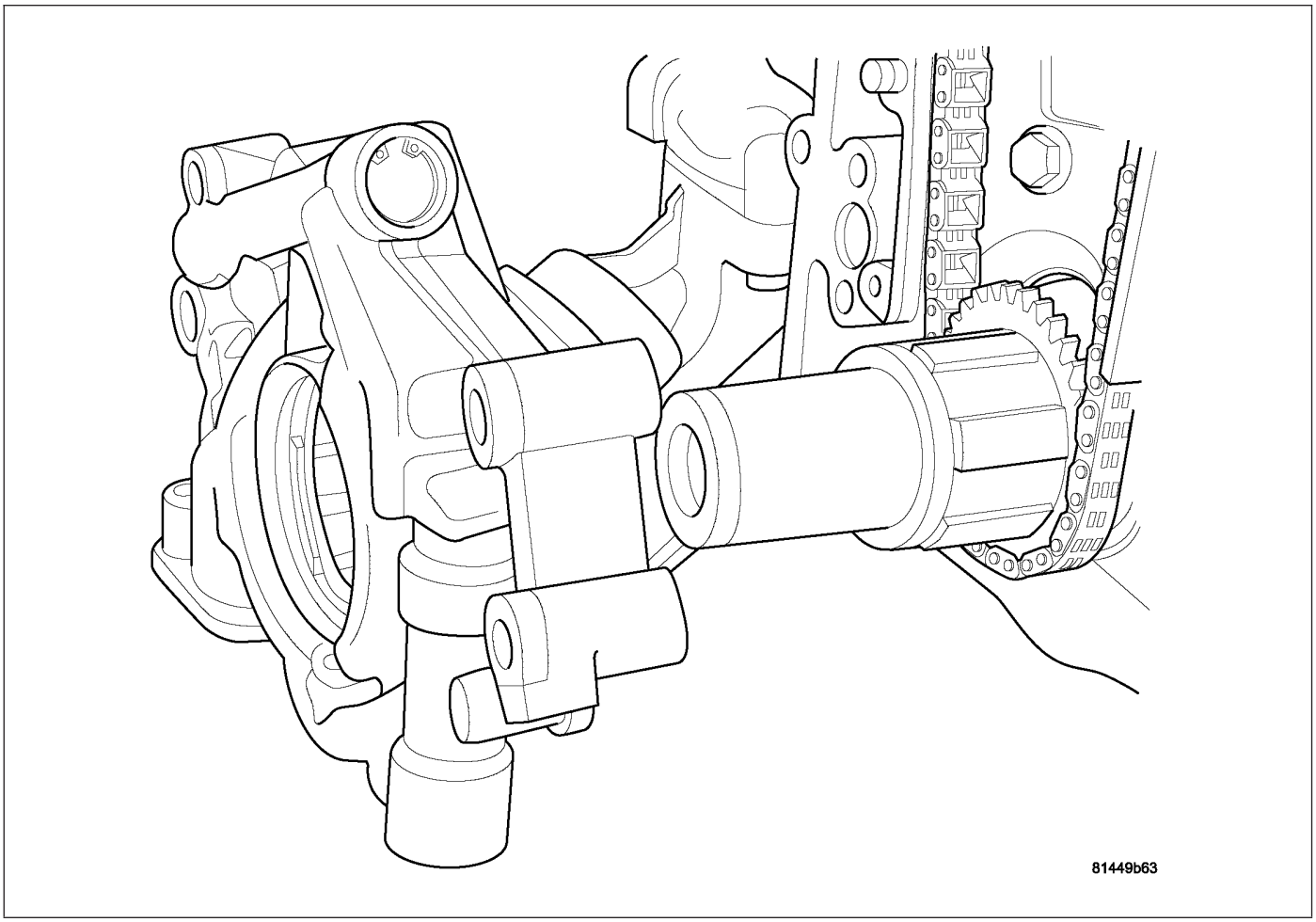

5. Install the oil pump (figure2) (Refer to 9 - ENGINE/LUBRICATION/OIL PUMP - INSTALLATION).
6. Install the oil pick up tube.

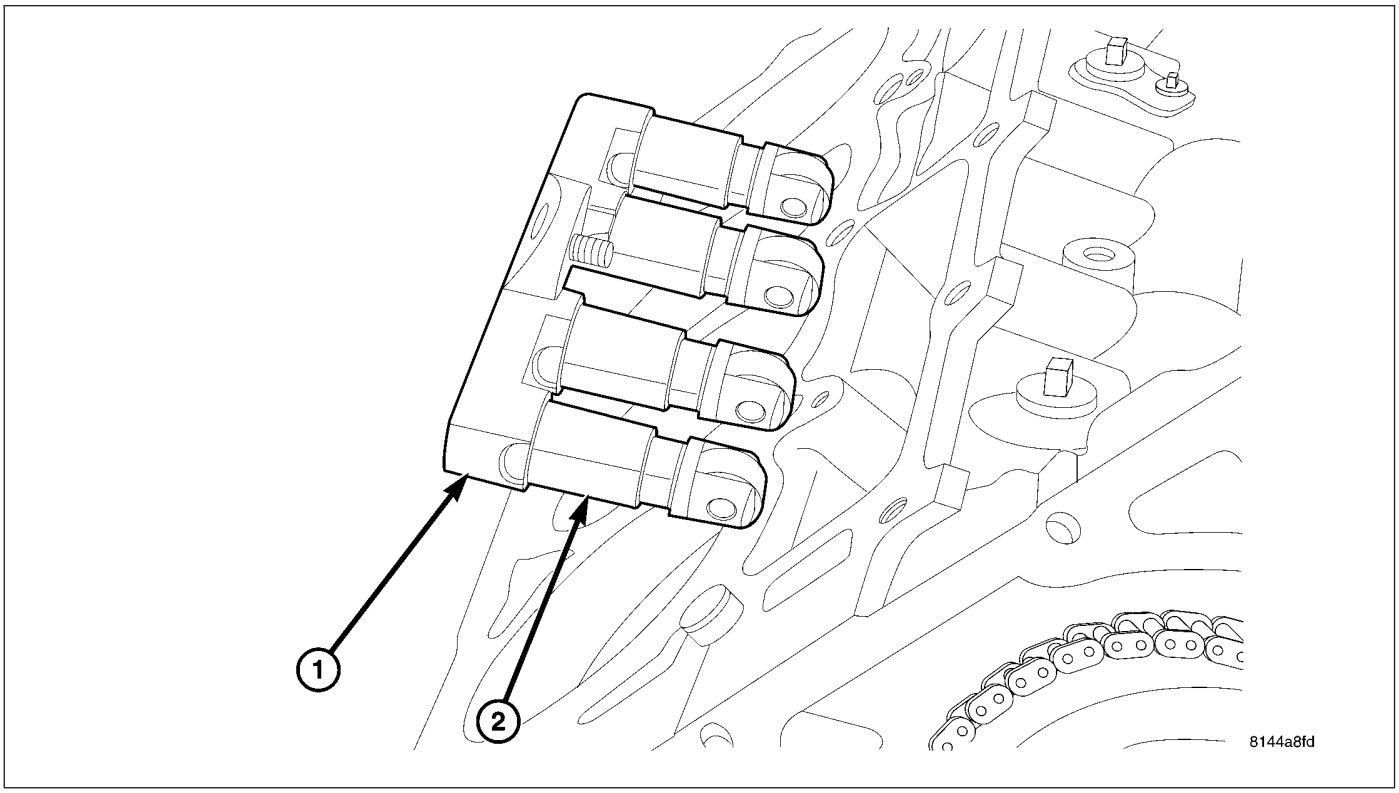

7. Each tappet reused must be installed in the same position from which it was removed. **When camshaft is replaced, all of the tappets must be replaced.**
8. Install tappets (2) and retaining yoke assembly (1). (Refer to 9 - ENGINE/ENGINE BLOCK/HYDRAULIC LIFTERS (CAM IN BLOCK) - INSTALLATION).

9. Install both left and right cylinder heads (4) (Refer to 9 - ENGINE/CYLINDER HEAD - INSTALLATION).
10. Install pushrods.

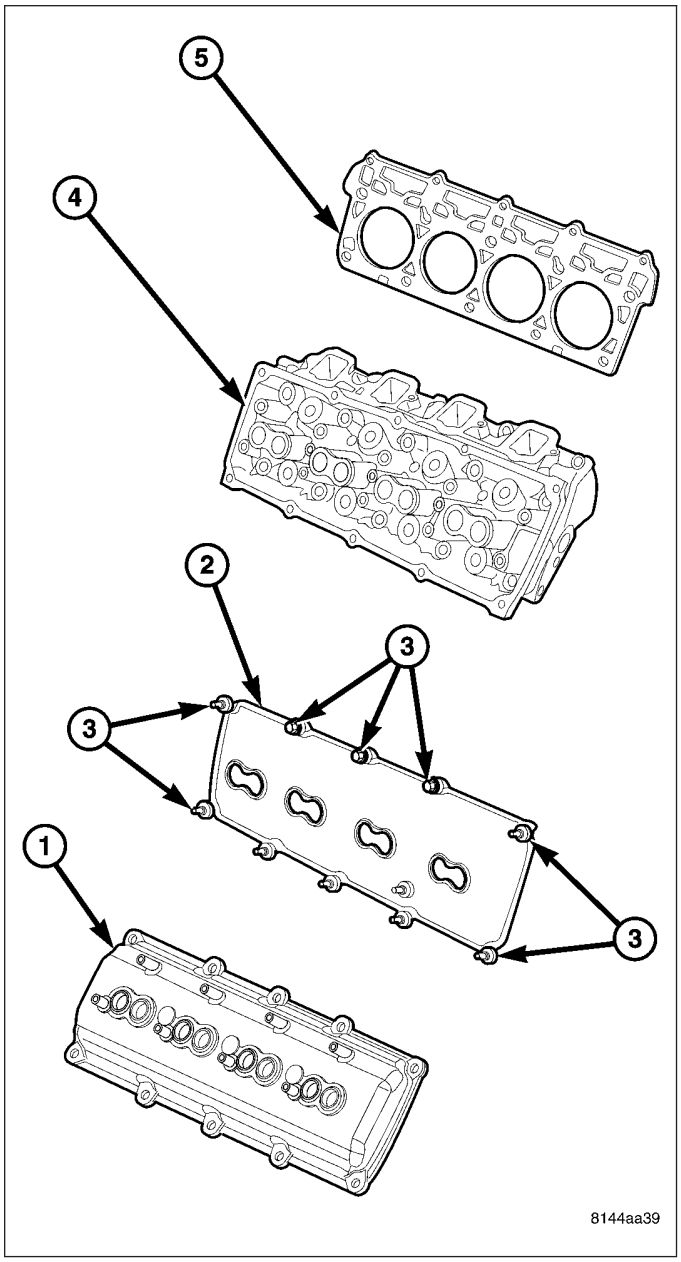

11. Install rocker arms (Refer to 9 - ENGINE/CYLINDER HEAD/ROCKER ARM / ADJUSTER ASSY - INSTALLATION).

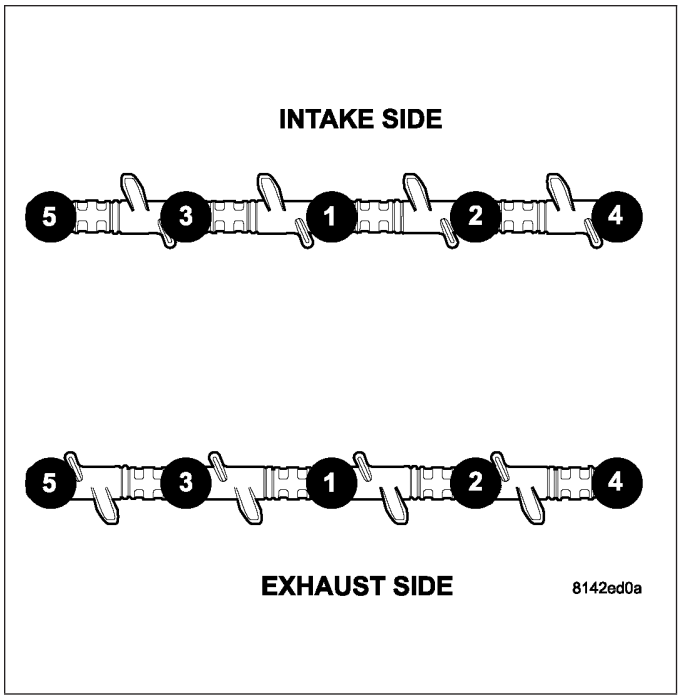

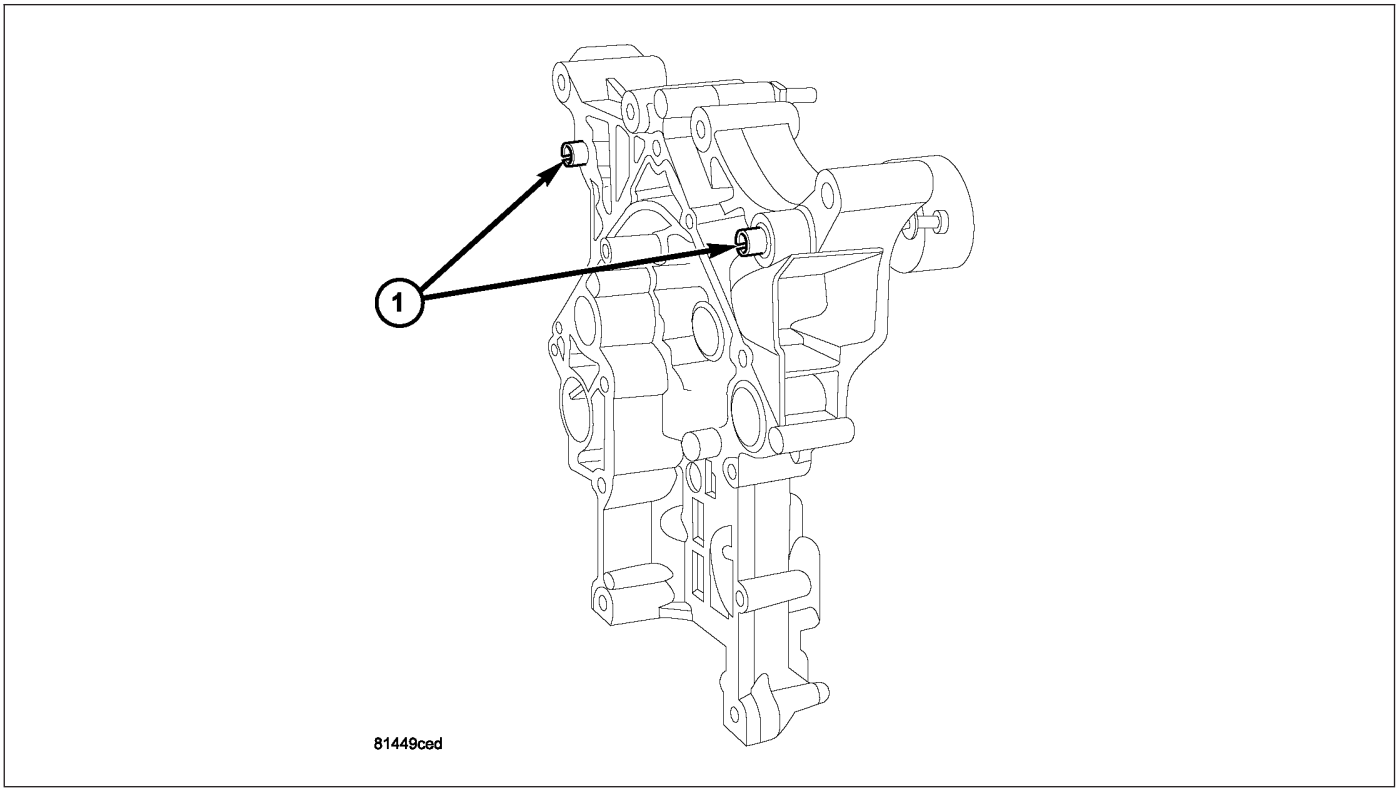

12. Install timing case cover (figure4) (Refer to 9 - ENGINE/VALVE TIMING/TIMING BELT / CHAIN COVER(S) - INSTALLATION).
13. Install the oil pan (Refer to 9 - ENGINE/LUBRICATION/OIL PAN - INSTALLATION).

14. Install cylinder head covers (Refer to 9 - ENGINE/CYLINDER HEAD/CYLINDER HEAD COVER(S) - INSTALLATION).

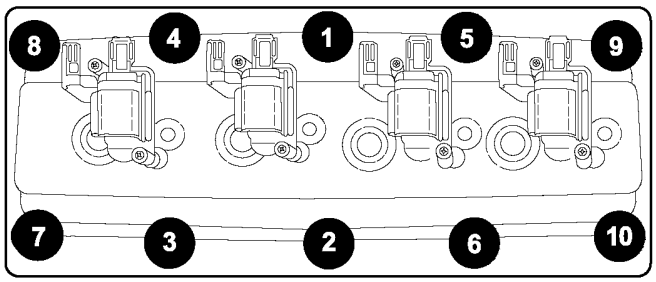

8142eaa1

15. Install intake manifold (Refer to 9 - ENGINE/MANIFOLDS/INTAKE MANIFOLD - INSTALLATION).
16. Install the A/C compressor (2).

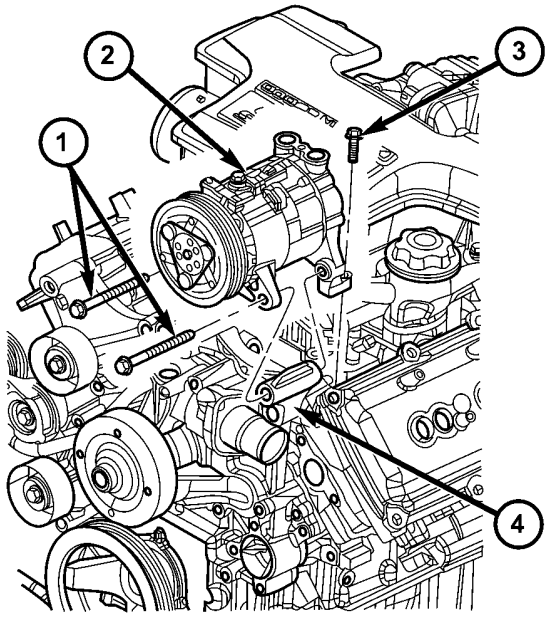

8118c508

17. Install the generator (2).

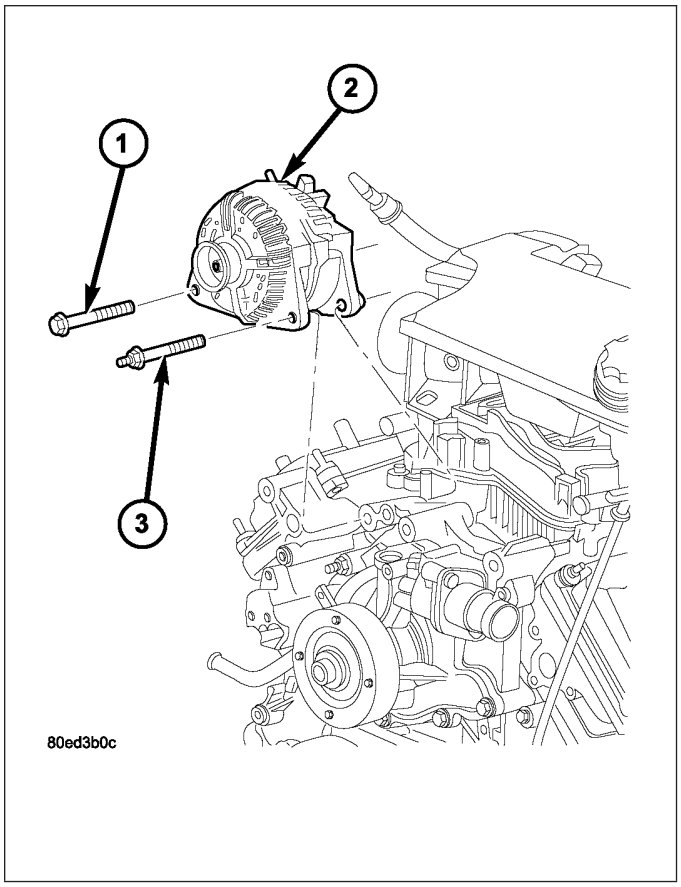

18. Install the accessory drive belt. (Refer to 7 - COOLING/ACCESSORY DRIVE/DRIVE BELTS - INSTALLATION).
19. Install the radiator (Refer to 7 - COOLING/ENGINE/RADIATOR - INSTALLATION).
20. Install the air cleaner assembly. (Refer to 9 - ENGINE/AIR INTAKE SYSTEM - INSTALLATION)
21. Install the battery negative cable.
22. Refill coolant. (Refer to 7 - COOLING - STANDARD PROCEDURE)
23. Refill engine oil.
24. Start engine and check for leaks.

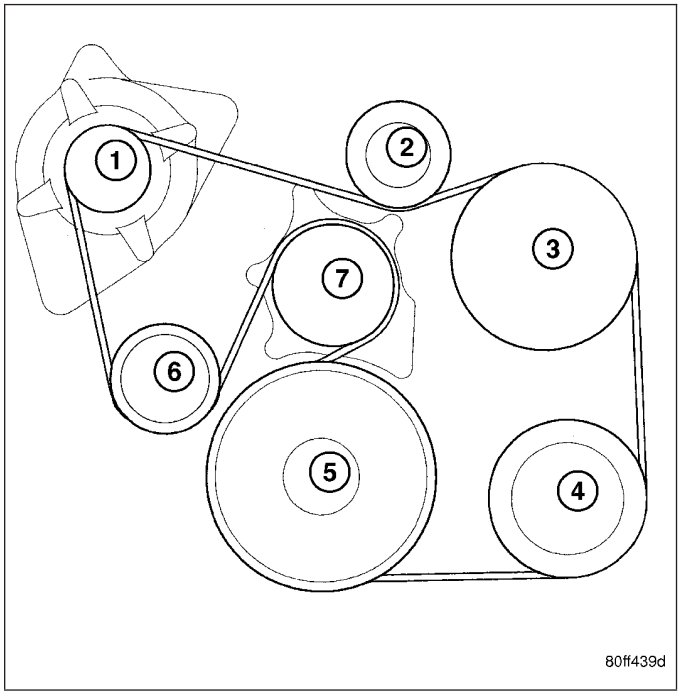

CRANKSHAFT

REMOVAL

1. Remove the vibration damper (1) (Refer to 9 - ENGINE/ENGINE BLOCK/VIBRATION DAMPER - REMOVAL).

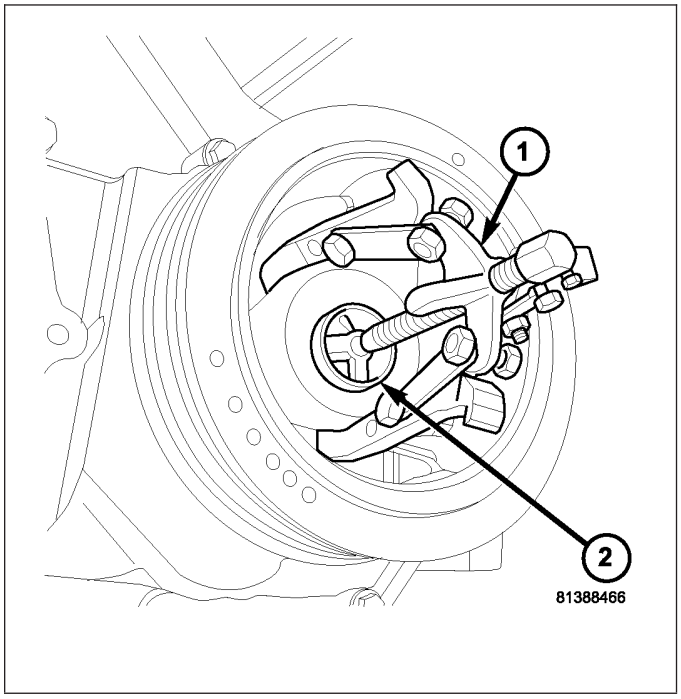

2. Remove the rear oil seal retainer (Refer to 9 - ENGINE/ENGINE BLOCK/CRANKSHAFT REAR OIL SEAL RETAINE - REMOVAL).
3. Remove the oil pan (Refer to 9 - ENGINE/LUBRICATION/OIL PAN - REMOVAL).
4. Remove the oil pump pickup.
5. Remove the windage tray/oil pan gasket.

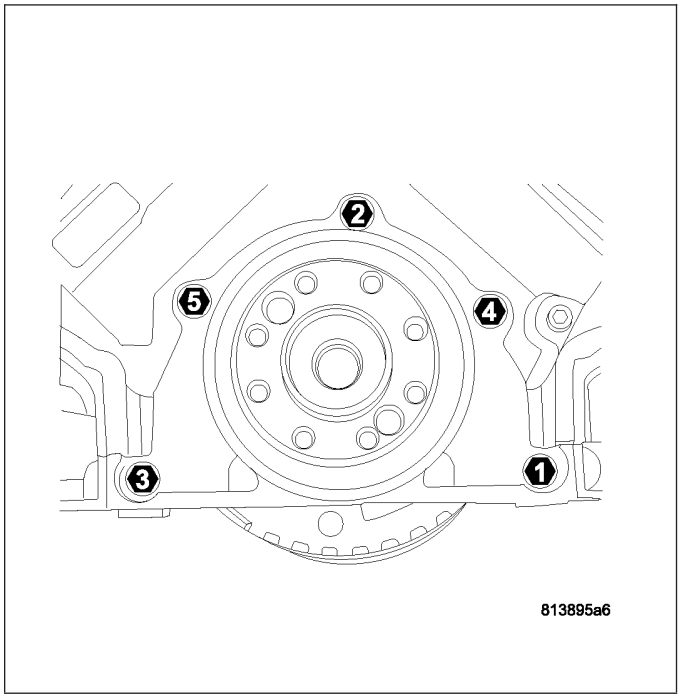

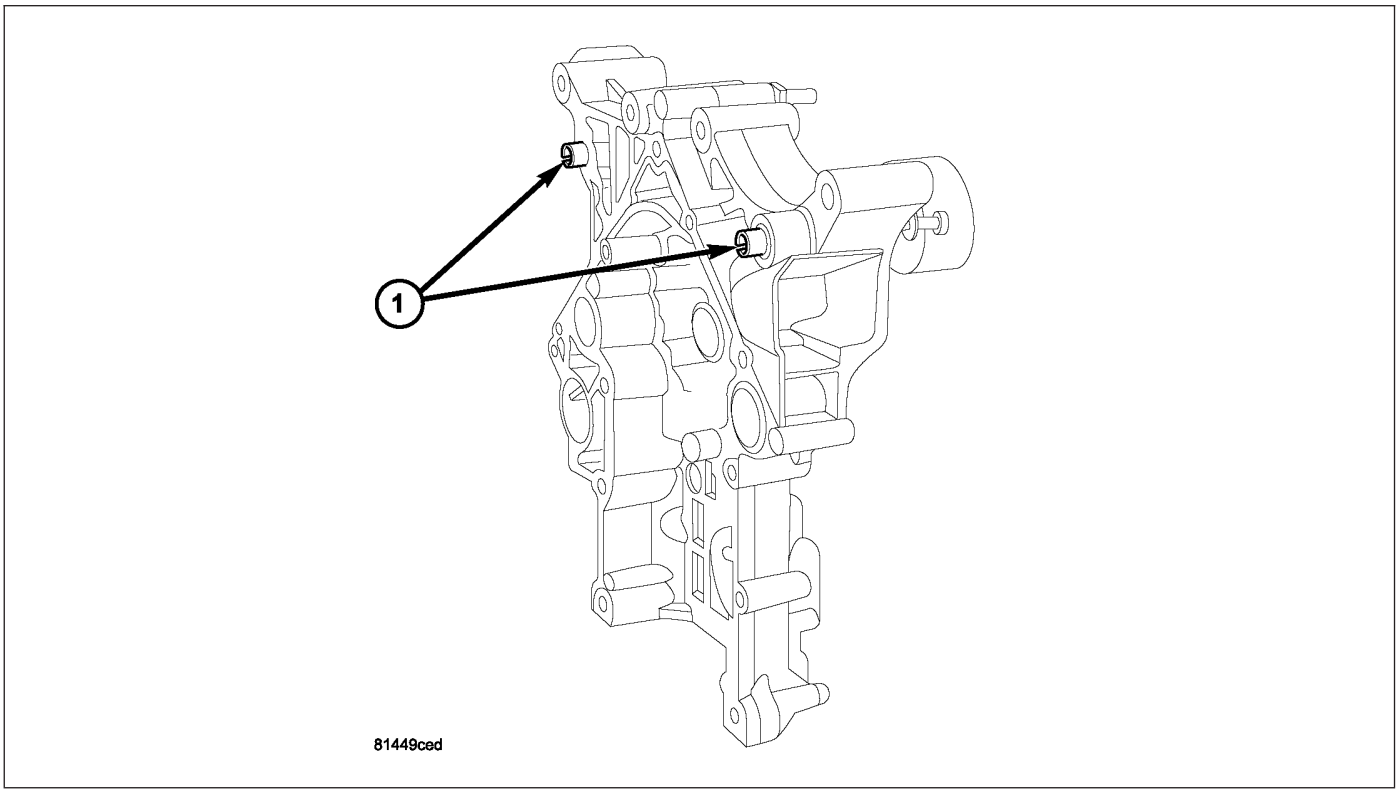

6. Remove the timing chain cover (Refer to 9 - ENGINE/VALVE TIMING/TIMING BELT / CHAIN COVER(S) - REMOVAL).

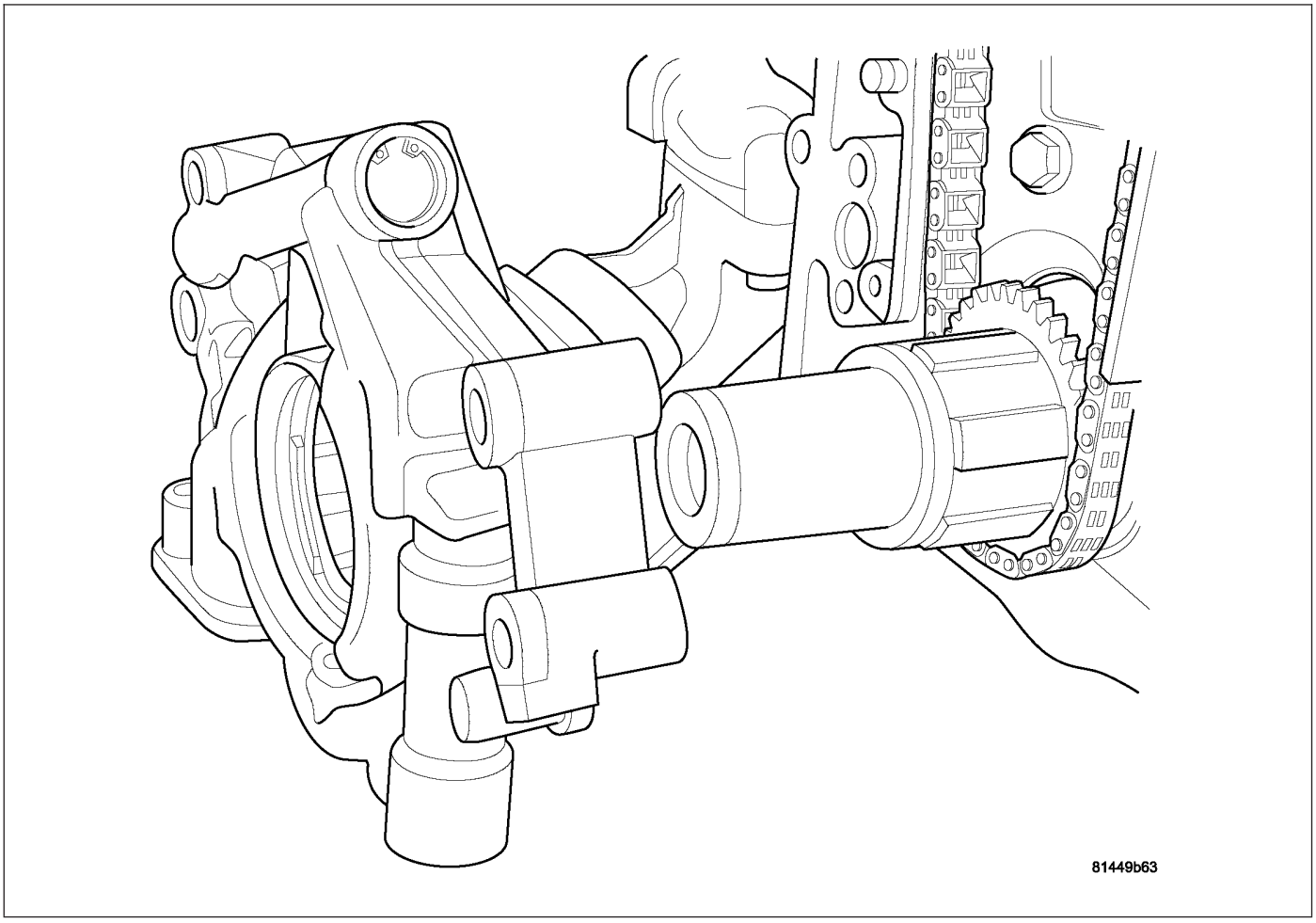

7. Remove the oil pump (Refer to 9 - ENGINE/LUBRICATION/OIL PUMP - REMOVAL).

8. Remove the timing drive (2) (Refer to 9 - ENGINE/VALVE TIMING/TIMING BELT/CHAIN AND SPROCKETS - REMOVAL).

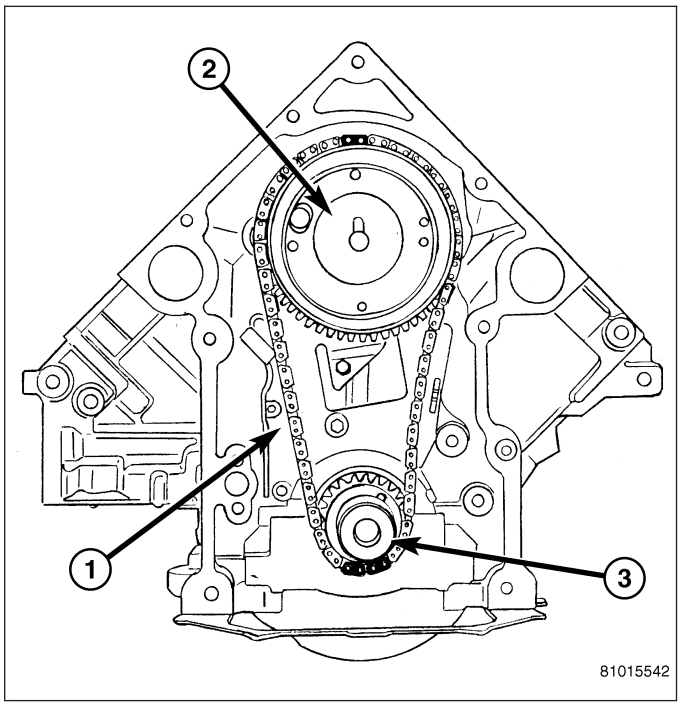

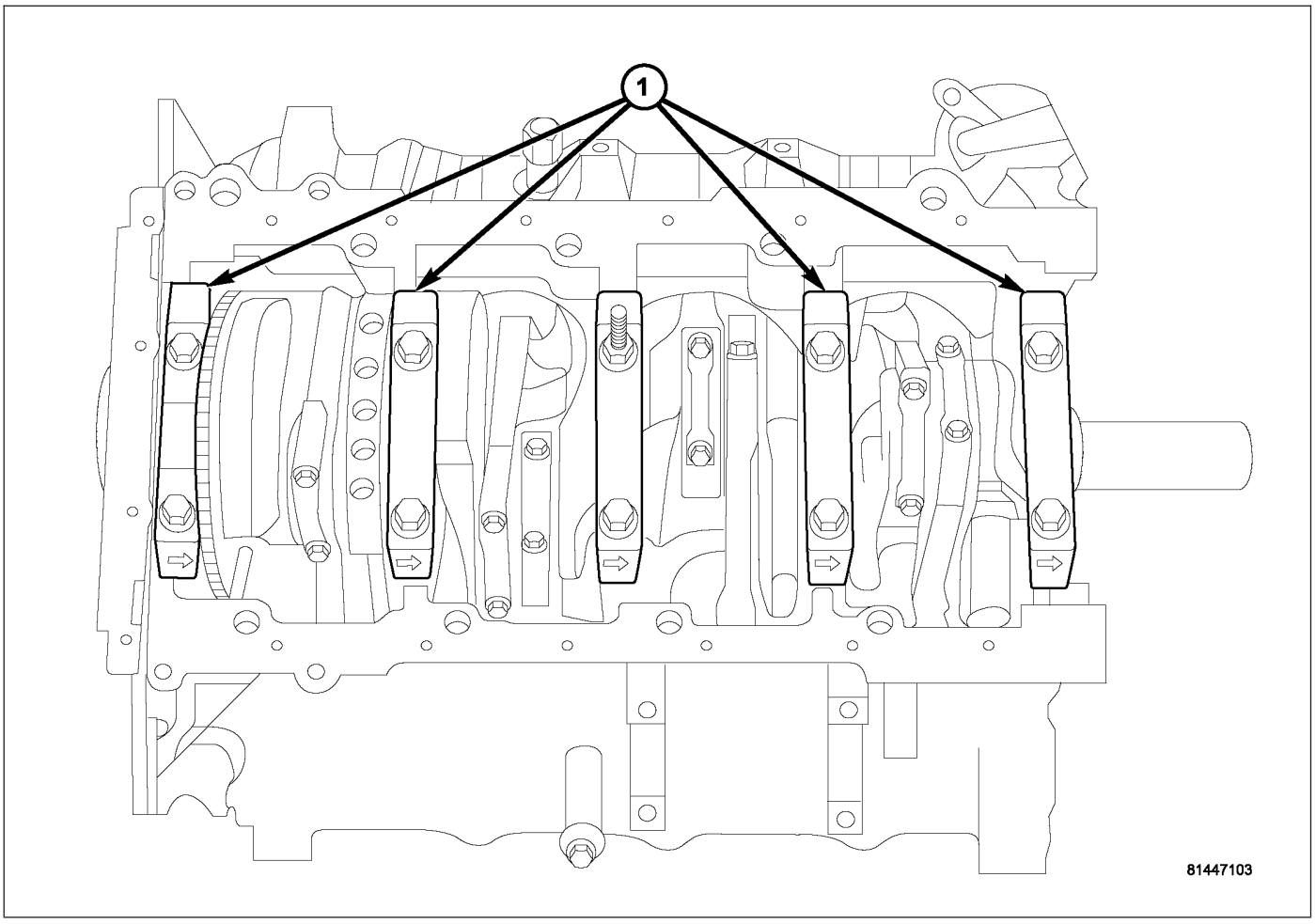

9. Identify rod bearing caps before removal. Remove rod bearing caps with bearings.

10. Identify main bearing caps (1) before removal.

11. Remove main bearing caps (1) and bearings one at a time.

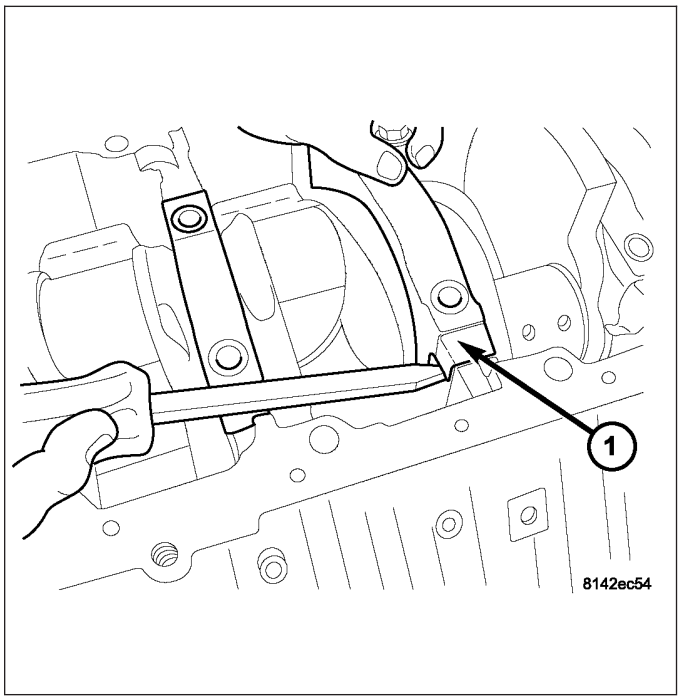

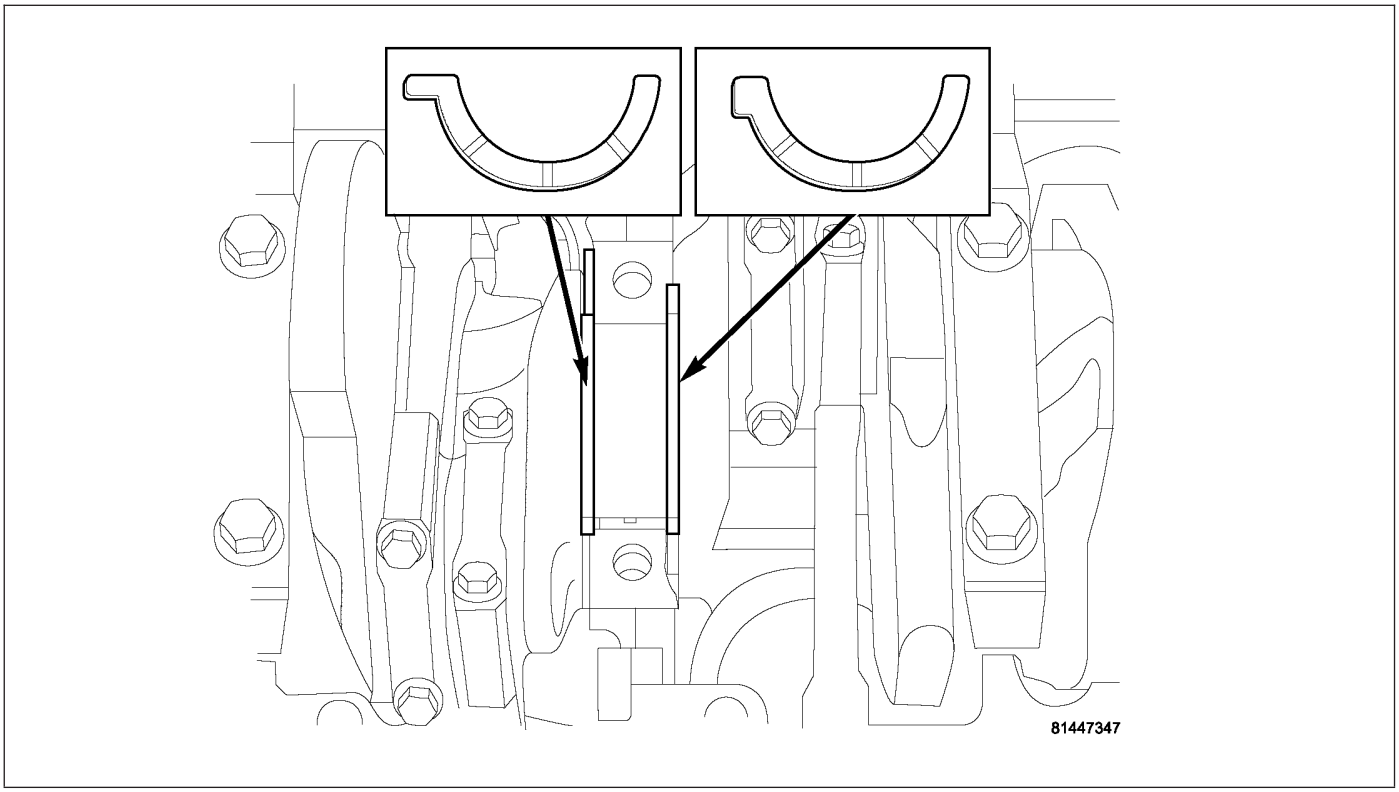

12. Remove the thrust washers.
13. Remove the crankshaft out of the block.

INSTALLATION

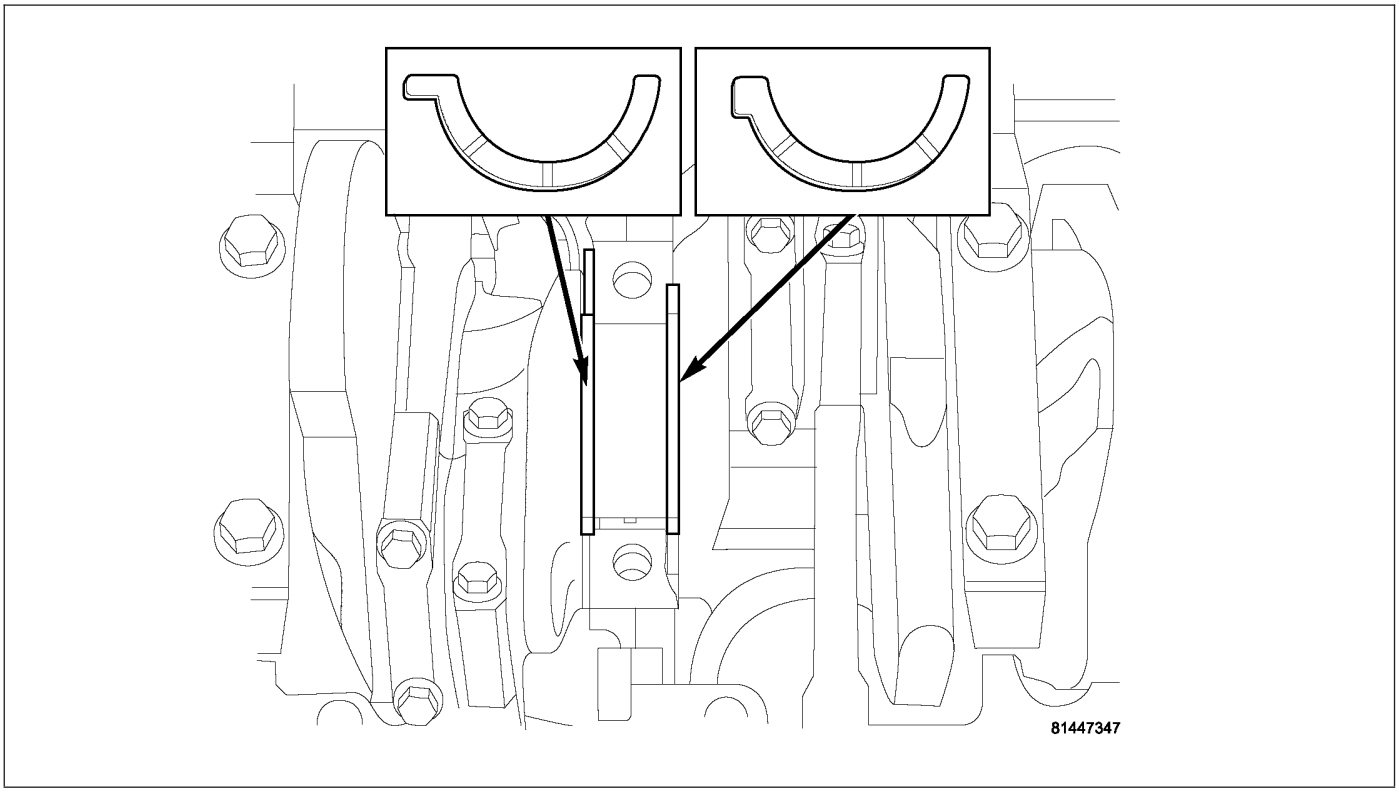

1. Select the proper main bearings (Refer to 9 - ENGINE/ENGINE BLOCK/CRANKSHAFT MAIN BEARINGS - STANDARD PROCEDURE).
2. Install main bearings in block and caps, and lubricate bearings.
3. Position the crankshaft into the cylinder block.
4. Install the thrust washers (1).

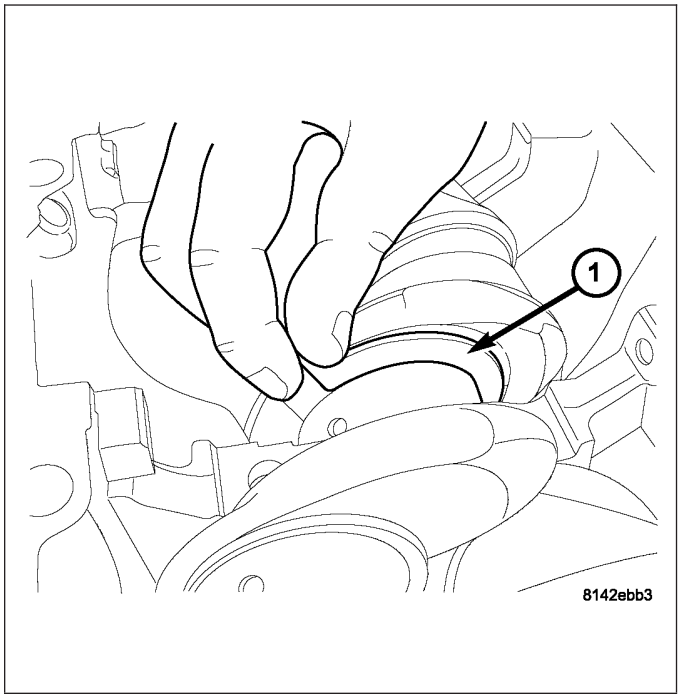

NOTE: The main cap crossbolts are torqued after final torque of the main cap bolts. Always use a new washer/seal on crossbolts.

5. Clean and oil all cap bolts. Install all main bearing caps (1). Install all cap bolts and alternately tighten in two steps using the following sequence.

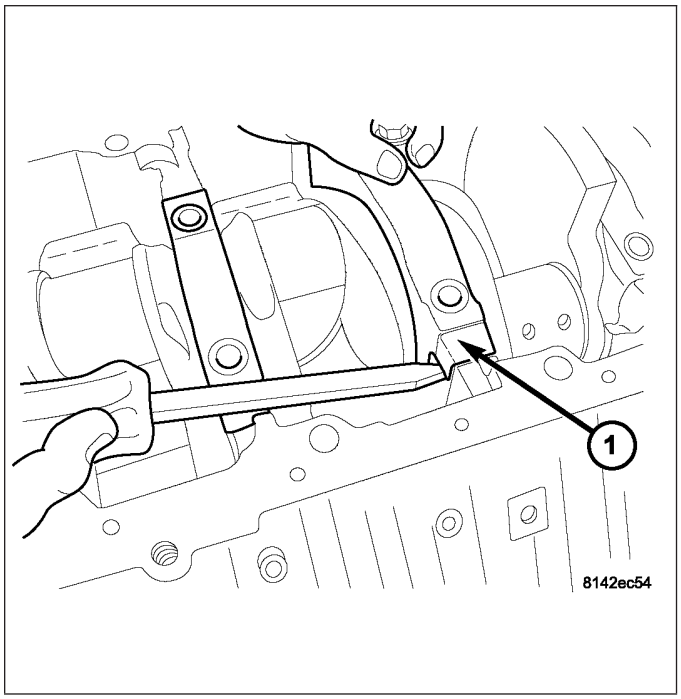

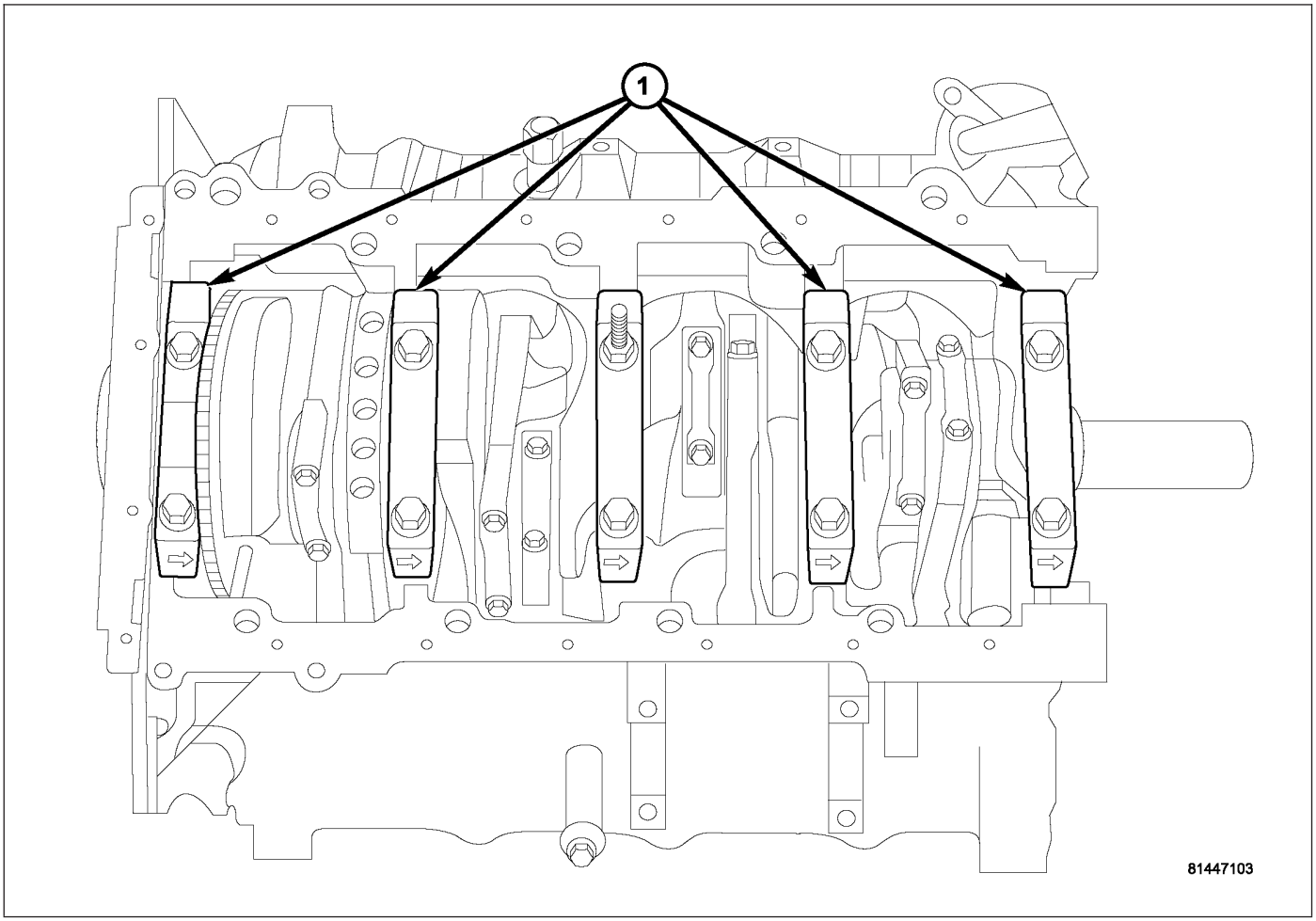

6. • Step 1 – 27 N·m (20ft. lbs.) torque.
7. • Step 2 – Turn main cap bolts an additional 90°.
8. Install the crossbolts with new washer/gasket. Starting with crossbolt A torque each crossbolt to 28 N·m (21ft. lbs.)torque.
9. Repeat crossbolt torque procedure.
10. Measure crankshaft end play (Refer to 9 - ENGINE/ENGINE BLOCK/CRANKSHAFT MAIN BEARINGS - STANDARD PROCEDURE).

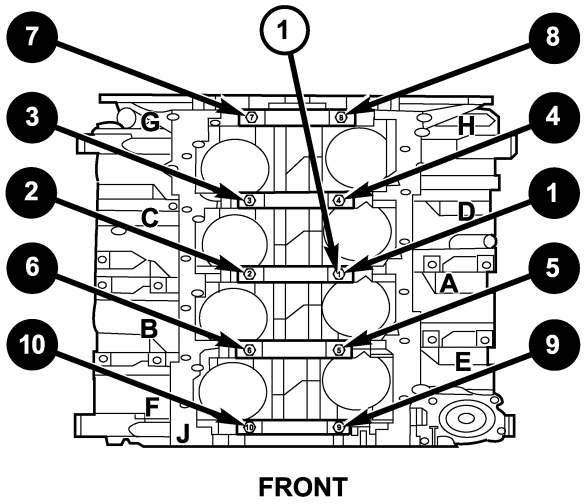

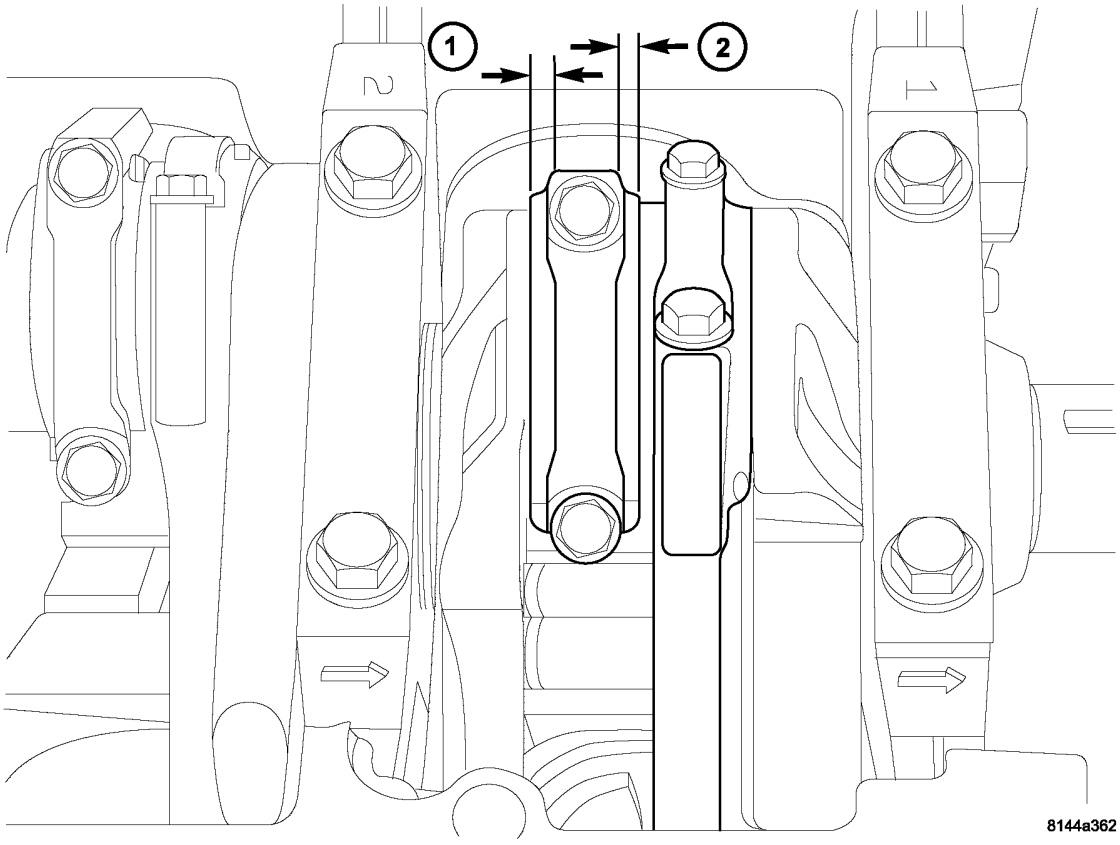

11. Position the connecting rods onto the crankshaft and install the rod bearing caps (Refer to 9 - ENGINE/ENGINE BLOCK/PISTON & CONNECTING ROD - INSTALLATION).

12. Install timing drive (2) (Refer to 9 - ENGINE/ VALVE TIMING/TIMING BELT/CHAIN AND SPROCKETS - INSTALLATION).

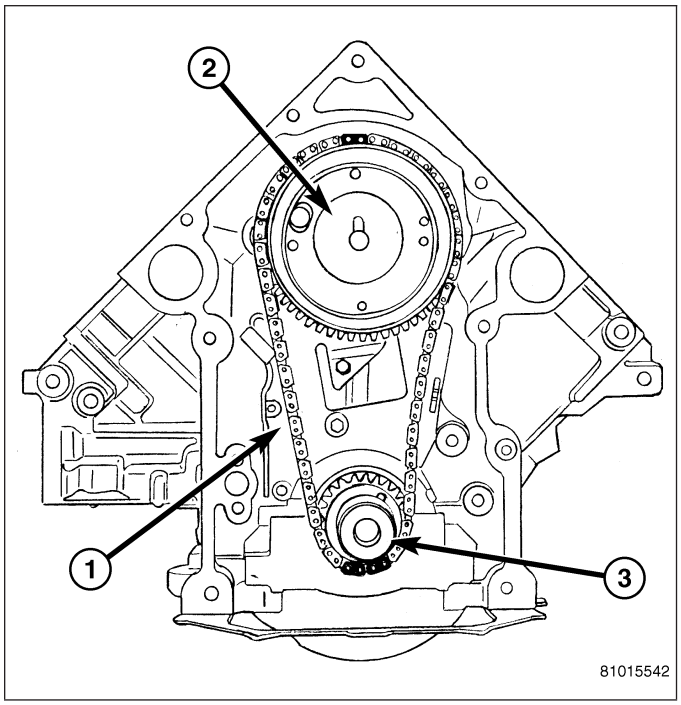

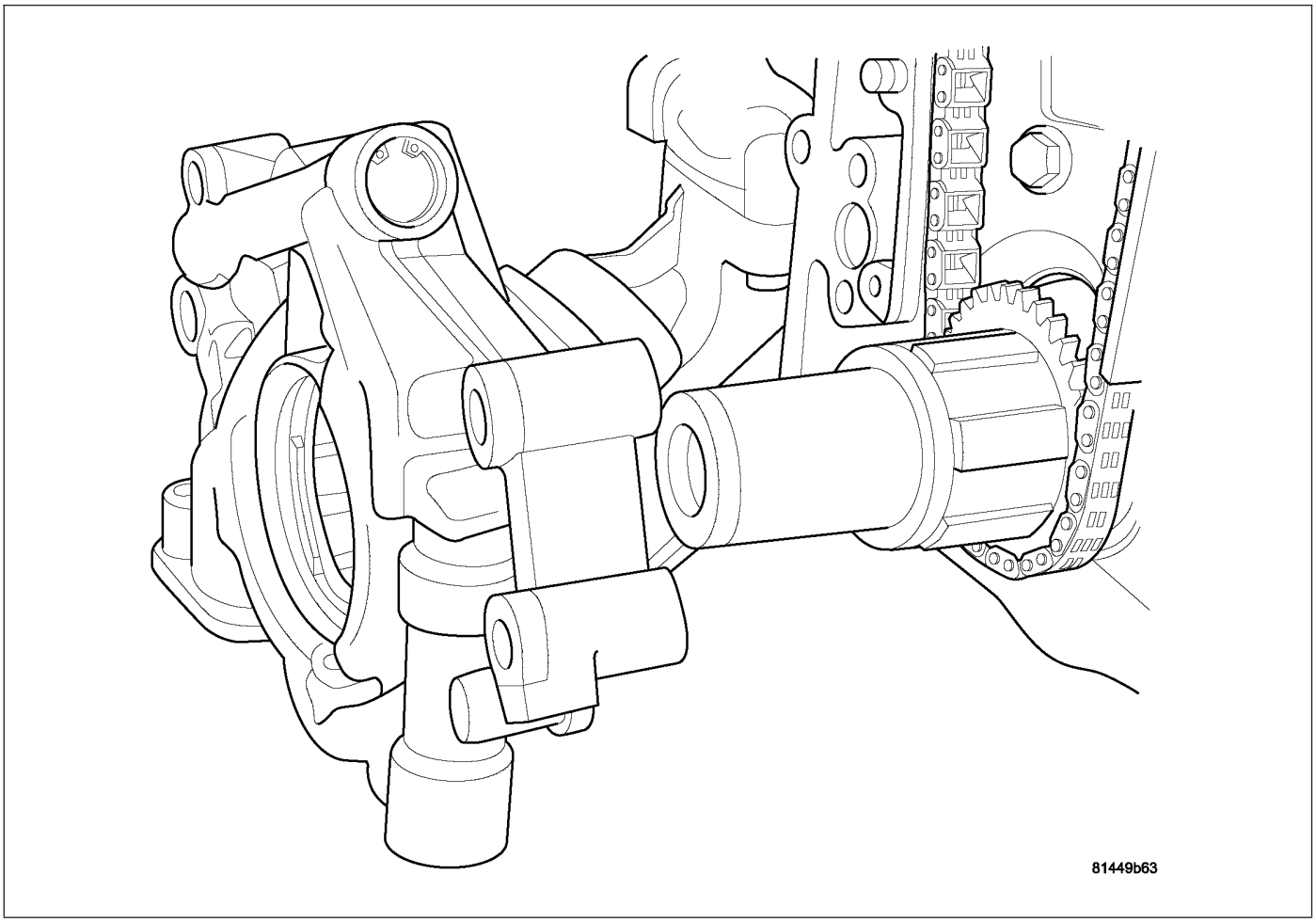

13. Install oil pump (Refer to 9 - ENGINE/LUBRICATION/OIL PUMP - INSTALLATION).

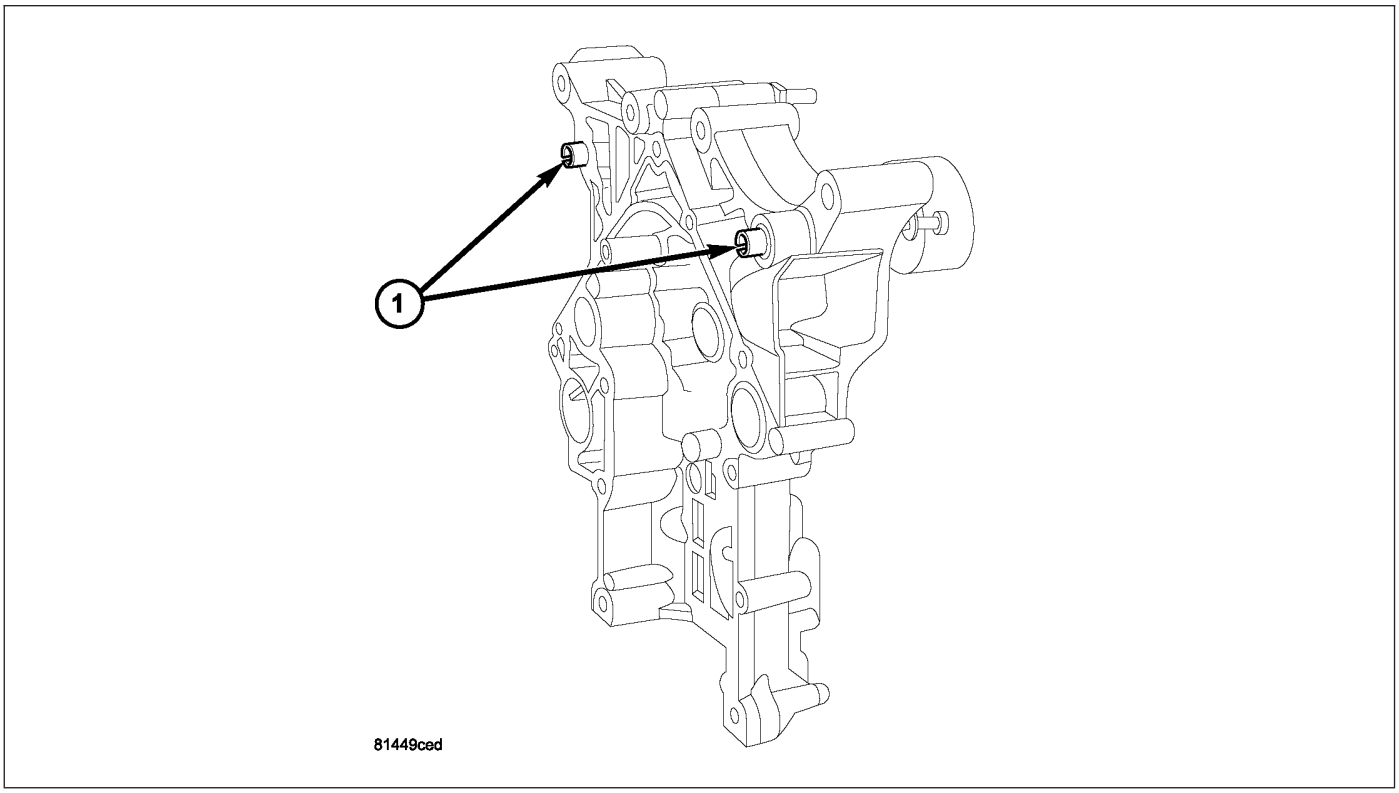

14. Install the timing chain cover (1) (Refer to 9 - ENGINE/VALVE TIMING/TIMING BELT / CHAIN COVER(S) - INSTALLATION).

15. Install the rear main seal and retainer (Refer to 9 - ENGINE/ENGINE BLOCK/CRANKSHAFT REAR OIL SEAL RETAINE - INSTALLATION).
16. Install the windage tray/oil pan gasket.
17. Install the oil pick up tube.
18. Install the oil pan (Refer to 9 - ENGINE/LUBRICATION/OIL PAN - INSTALLATION).
19. Install the vibration damper (Refer to 9 - ENGINE/ENGINE BLOCK/VIBRATION DAMPER - INSTALLATION).
20. Install the engine (Refer to 9 - ENGINE - INSTALLATION).

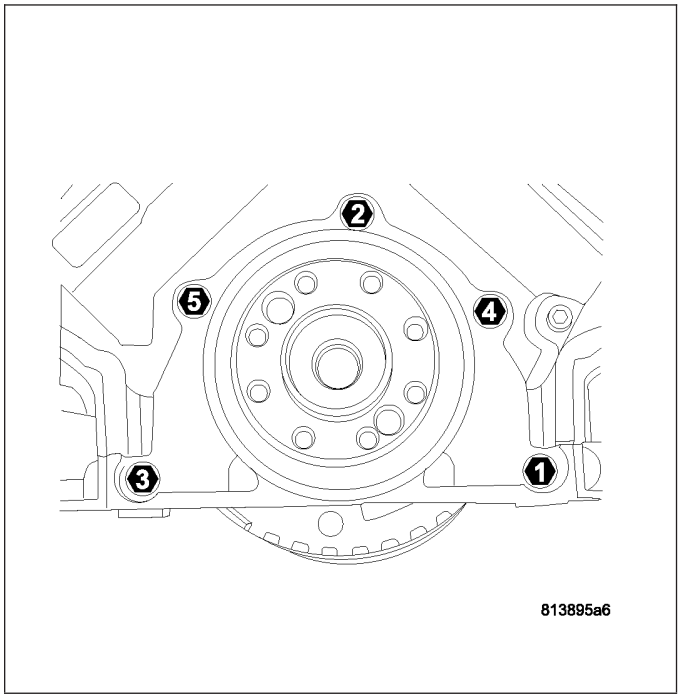

BEARINGS - CRANKSHAFT MAIN

STANDARD PROCEDURE - CRANKSHAFT MAIN BEARING - FITTING

MAIN BEARING JOURNAL DIAMETER (CRANKSHAFT REMOVED)

Crankshaft removed from the cylinder block.

Clean the oil off the main bearing journal.

Determine the maximum diameter of the journal with a micrometer. Measure at two locations 90° apart at each end of the journal.

The maximum allowable taper is 0.008mm (0.0004 inch.) and maximum out of round is 0.005mm (0.0002 inch). Compare the measured diameter with the journal diameter specification (Main Bearing Fitting Chart). Select inserts required to obtain the specified bearing-to-journal clearance.

CRANKSHAFT MAIN BEARING SELECTION

The main bearings are “select fit” to achieve proper oil clearances. For main bearing selection, the crankshaft counterweight has grade identification marks stamped into it. These marks are read from left to right, corresponding with journal number 1, 2, 3, 4 and 5.

NOTE: Service main bearings are coded. These codes identify what size (grade) the bearing is.

MAIN BEARING SELECTION CHART - 5.7L

GRADE MARKING	SIZE mm (in.)	FOR USE WITH JOURNAL SIZE
A	0.008 mm U/S (0.0004 in.) U/S	64.988–64.995 mm (2.5585– 2.5588in.)
B	NOMINAL	64.996–65.004 mm (2.5588–2.5592 in.)
C	0.008 mm O/S (0.0004 in.) O/S	65.005–65.012 mm (2.5592–2.5595 in.)

INSPECTION

Wipe the inserts clean and inspect for abnormal wear patterns and for metal or other foreign material imbedded in the lining. Normal main bearing insert wear patterns are illustrated.

NOTE: If any of the crankshaft journals are scored, the crankshaft must be repaired or replaced.

Inspect the back of the inserts for fractures, scrapings or irregular wear patterns.

Inspect the upper insert locking tabs for damage.

Replace all damaged or worn bearing inserts.

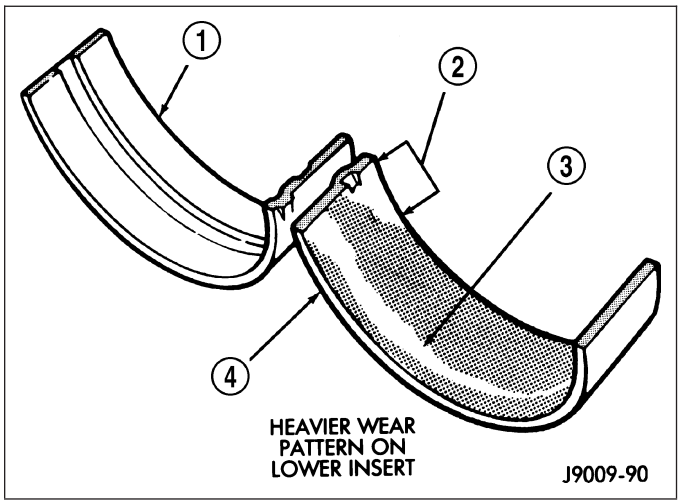

SEAL - CRANKSHAFT OIL - FRONT

REMOVAL

1. Disconnect negative cable from battery.
2. Remove accessory drive belt (Refer to 7 - COOLING/ACCESSORY DRIVE/DRIVE BELTS - REMOVAL).
3. Drain cooling system (Refer to 7 - COOLING - STANDARD PROCEDURE).
4. Remove upper radiator hose.
5. Remove radiator shroud attaching fasteners.
6. Remove radiator cooling fan and shroud (Refer to 7 - COOLING/ENGINE/RADIATOR FAN - REMOVAL).
7. Remove crankshaft damper bolt.
8. Remove damper using Special Tools 8513A Insert (2) and 1023 Three Jaw Puller (1) (Refer to 9 - ENGINE/ENGINE BLOCK/VIBRATION DAMPER - REMOVAL).

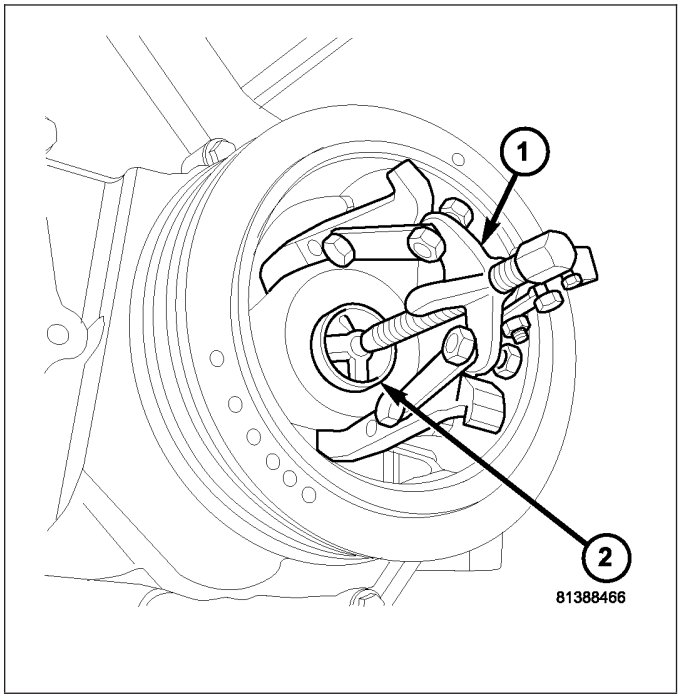

9. Using Special Tool 9071 (1), remove crankshaft front seal (2).

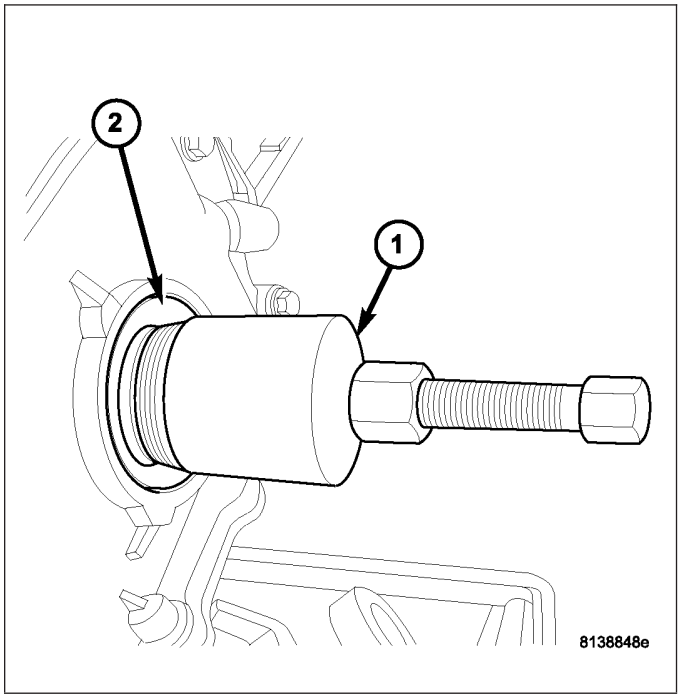

INSTALLATION

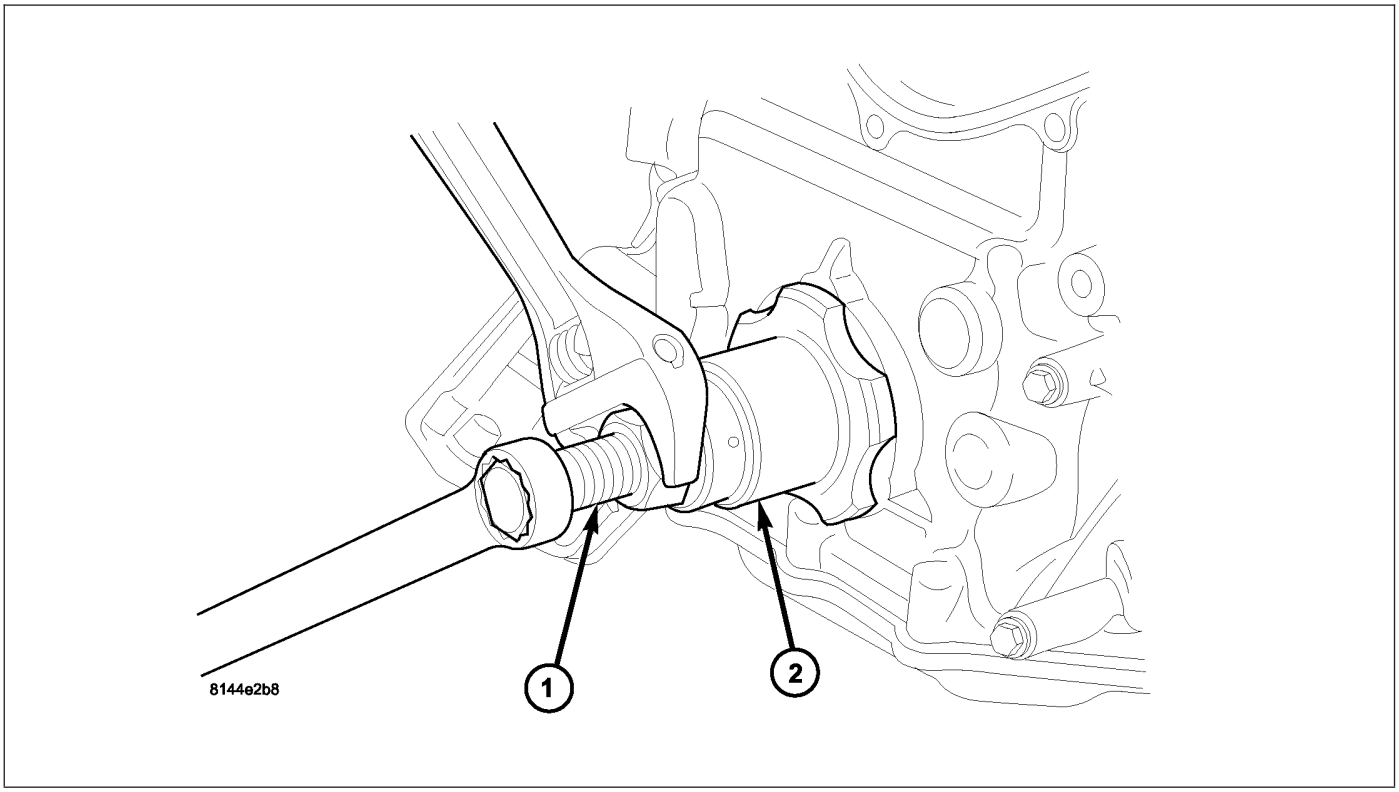

CAUTION: The front crankshaft seal must be installed dry. Do not apply lubricant to sealing lip or to outer edge.

1. Using Special Tool 8348 and 8512A, install crankshaft front seal.

CAUTION: To prevent severe damage to the Crankshaft or Damper, thoroughly clean the damper bore and the crankshaft nose before installing Damper.

2. Install vibration damper (Refer to 9 - ENGINE/ENGINE BLOCK/VIBRATION DAMPER - INSTALLATION).
3. Install radiator cooling fan and shroud (Refer to 7 - COOLING/ENGINE/RADIATOR FAN - INSTALLATION).
4. Install upper radiator hose.
5. Install accessory drive belt refer (Refer to 7 - COOLING/ACCESSORY DRIVE/DRIVE BELTS - INSTALLATION).
6. Refill cooling system (Refer to 7 - COOLING - STANDARD PROCEDURE).
7. Connect negative cable to battery.

SEAL - CRANKSHAFT OIL - REAR

DIAGNOSIS AND TESTING - REAR SEAL AREA LEAKS

Since it is sometimes difficult to determine the source of an oil leak in the rear seal area of the engine, a more involved inspection is necessary. The following steps should be followed to help pinpoint the source of the leak.

If the leakage occurs at the crankshaft rear oil seal area:

1. Disconnect the battery.
2. Raise the vehicle.
3. Remove torque converter or clutch housing cover and inspect rear of block for evidence of oil. Use a black light to check for the oil leak:
   a. Circular spray pattern generally indicates seal leakage or crankshaft damage.

b. Where leakage tends to run straight down, possible causes are a porous block, camshaft bore cup plugs, oil galley pipe plugs, oil filter runoff, and main bearing cap to cylinder block mating surfaces. See Engine, for proper repair procedures of these items.

4. If no leaks are detected, pressurized the crankcase as outlined in the section, Inspection (Engine oil Leaks in general)

CAUTION: Do not exceed 20.6 kPa (3 psi).

5. If the leak is not detected, very slowly turn the crankshaft and watch for leakage. If a leak is detected between the crankshaft and seal while slowly turning the crankshaft, it is possible the crankshaft seal surface is damaged. The seal area on the crankshaft could have minor nicks or scratches that can be polished out with emery cloth.

CAUTION: Use extreme caution when crankshaft polishing is necessary to remove minor nicks or scratches. The crankshaft seal flange is specially machined to complement the function of the rear oil seal.

6. For bubbles that remain steady with shaft rotation, no further inspection can be done until disassembled. (Refer to 9 - ENGINE - DIAGNOSIS AND TESTING), under the Oil Leak row, for components inspections on possible causes and corrections.
7. After the oil leak root cause and appropriate corrective action have been identified, (Refer to 9 - ENGINE/ENGINE BLOCK/CRANKSHAFT OIL SEAL - REAR - REMOVAL).

REMOVAL

NOTE: This procedure can be performed in vehicle.

1. If being performed in vehicle, remove the transmission.
2. Remove the flexplate (Refer to 9 - ENGINE/ENGINE BLOCK/FLEX PLATE - REMOVAL).

NOTE: The crankshaft oil seal CAN NOT be reused after removal.

NOTE: The crankshaft rear oil seal remover Special Tool 8506 must be installed deeply into the seal. Continue to tighten the removal tool into the seal until the tool can not be turned farther. Failure to install tool correctly the first time will cause tool to pull free of seal without removing seal from engine.

3. Using Special Tool 8506 (1), remove the crankshaft rear oil seal (2).

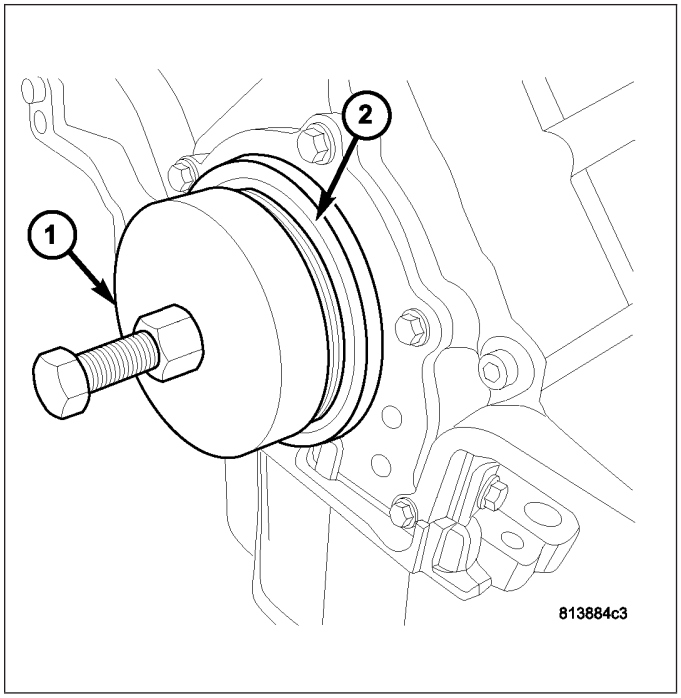

INSTALLATION

CAUTION: The rear seal must be installed dry for proper operation. Do not lubricate the seal lip or outer edge.

1. Position the plastic seal guide (2) onto the crankshaft rear face. Then position the crankshaft rear oil seal (3) onto the guide.
2. Using Special Tools 8349 Crankshaft Rear Oil Seal Installer (1) and C-4171 Driver Handle, with a hammer, tap the seal (3) into place. Continue to tap on the driver handle until the seal installer seats against the cylinder block crankshaft bore.
3. Install the flexplate. (Refer to 9 - ENGINE/ENGINE BLOCK/FLEX PLATE - INSTALLATION).
4. Install the transmission.

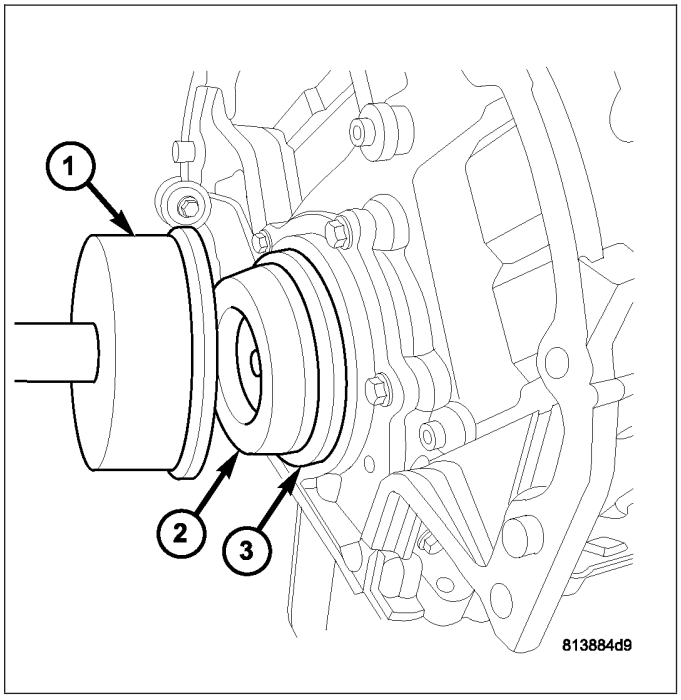

RETAINER - CRANK REAR OIL - SEAL

REMOVAL

1. Disconnect negative cable from battery.
2. Remove the transmission. (Refer to 21 - TRANSMISSION/TRANSAXLE/AUTOMATIC - NAG1 - REMOVAL).
3. Remove the flexplate. (Refer to 9 - ENGINE/ENGINE BLOCK/FLEX PLATE - REMOVAL).
4. Remove the oil pan. (Refer to 9 - ENGINE/LUBRICATION/OIL PAN - REMOVAL)
5. Remove the rear oil seal retainer mounting bolts.
6. Carefully remove the retainer from the engine block.

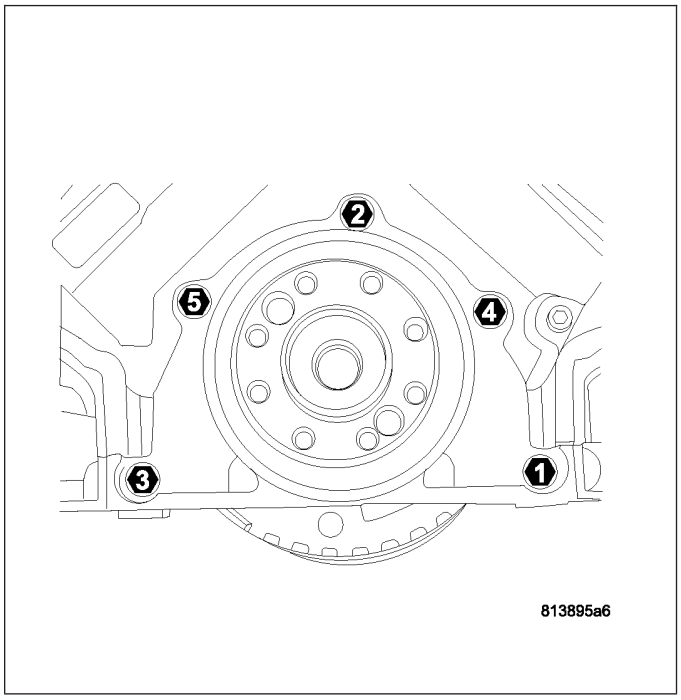

INSTALLATION

1. Throughly clean all gasket resdue from the engine block.
2. Use extream care and clean all gasket resdue from the retainer.
3. Position the gasket onto the retainer.
4. Position the retainer onto the engine block.
5. Install the retainer mounting bolts. Tighten the bolts to 15 N·m (132 in. lbs.) using the procedure shown.
6. Install the oil pan (Refer to 9 - ENGINE/LUBRICATION/OIL PAN - INSTALLATION).
7. Install the flexplate (Refer to 9 - ENGINE/ENGINE BLOCK/FLEX PLATE - INSTALLATION).
8. Install the transmission (Refer to 21 - TRANSMISSION/TRANSAXLE/AUTOMATIC - NAG1 - INSTALLATION).
9. Check and verify engine oil level.
10. Start engine and check for leaks.

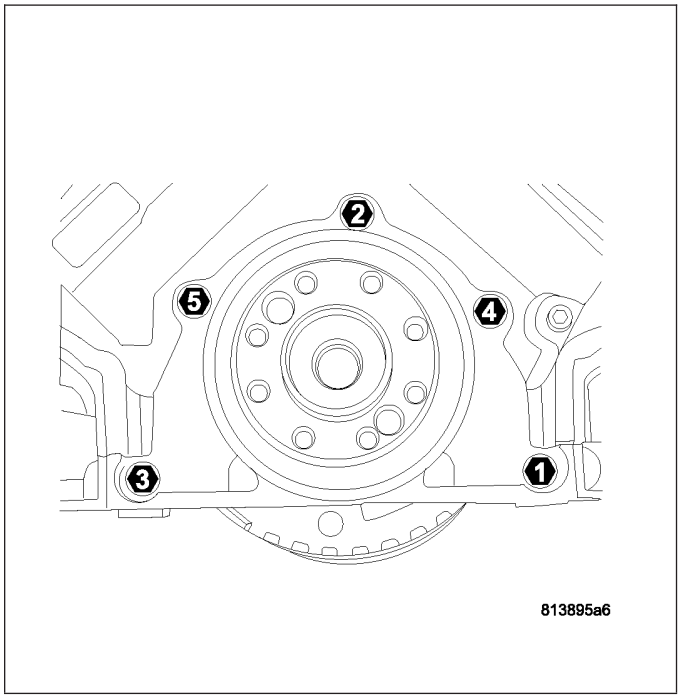

FLEX PLATE

REMOVAL

1. Remove the transmission. (Refer to 21 - TRANSMISSION/TRANSAXLE/AUTOMATIC - NAG1 - REMOVAL).
2. Remove the bolts and flexplate (1).

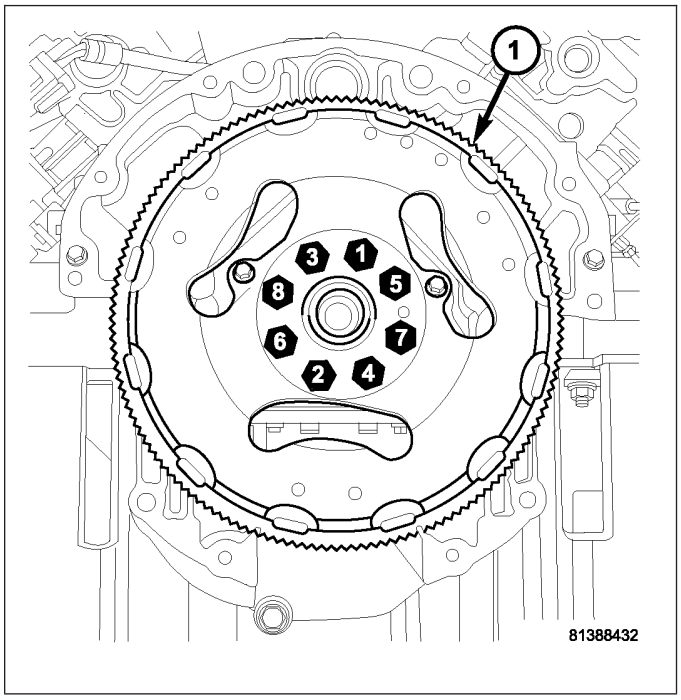

INSTALLATION

1. Position the flexplate or flywheel onto the crankshaft and install the bolts hand tight.
2. **For automatic transmissions:** Tighten the flexplate retaining bolts to 95 N·m (70 ft. lbs.).

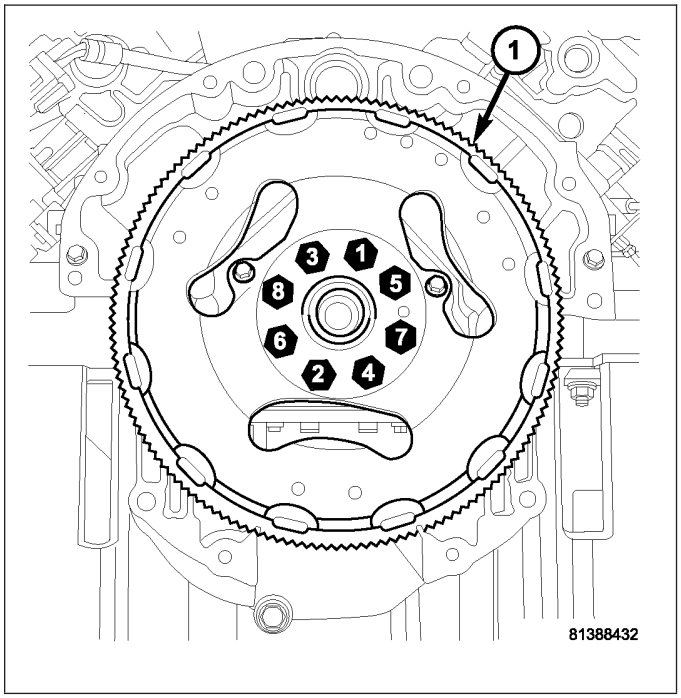

3. Install the transmission. (Refer to 21 - TRANSMISSION/TRANSAXLE/AUTOMATIC - NAG1 - INSTALLATION).

TAPPETS - HYDRAULIC ROLLER

DIAGNOSIS AND TESTING - HYDRAULIC TAPPETS

Before disassembling any part of the engine to correct tappet noise, check the oil pressure. If vehicle has no oil pressure gauge, install a reliable gauge at the pressure sending-unit. The pressure should be between 207-552 kPa (30-70 psi) at 3,000 RPM.

Check the oil level after the engine reaches normal operating temperature. Allow 5 minutes to stabilize oil level, check dipstick. The oil level in the pan should never be above the FULL mark or below the ADD OIL mark on dipstick. Either of these two conditions could be responsible for noisy tappets.

OIL LEVEL

HIGH

If oil level is above the FULL mark, it is possible for the connecting rods to dip into the oil. With the engine running, this condition could create foam in the oil pan. Foam in oil pan would be fed to the hydraulic tappets by the oil pump causing them to lose length and allow valves to seat noisily.

LOW

Low oil level may allow oil pump to take in air. When air is fed to the tappets, they lose length, which allows valves to seat noisily. Any leaks on intake side of oil pump through which air can be drawn will create the same tappet action. Check the lubrication system from the intake strainer to the pump cover, including the relief valve retainer cap. When tappet noise is due to aeration, it may be intermittent or constant, and usually more than one tappet will be noisy. When oil level and leaks have been corrected, operate the engine at fast idle. Run engine for a sufficient time to allow all of the air inside the tappets to be bled out.

TAPPET NOISE DIAGNOSIS

1. To determine source of tappet noise, crank over engine with cylinder head covers removed.

2. Feel each valve spring or rocker arm to detect noisy tappet. The noisy tappet will cause the affected spring and/or rocker arm to vibrate or feel rough in operation.

NOTE: Worn valve guides or cocked springs are sometimes mistaken for noisy tappets. If such is the case, noise may be dampened by applying side thrust on the valve spring. If noise is not appreciably reduced, it can be assumed the noise is in the tappet. Inspect the rocker arm push rod sockets and push rod ends for wear.

3. Valve tappet noise ranges from light noise to a heavy click. A light noise is usually caused by excessive leak-down around the unit plunger, or by the plunger partially sticking in the tappet body cylinder. The tappet should be replaced. A heavy click is caused by a tappet check valve not seating, or by foreign particles wedged between the plunger and the tappet body. This will cause the plunger to stick in the down position. This heavy click will be accompanied by excessive clearance between the valve stem and rocker arm as valve closes. In either case, tappet assembly should be removed for inspection and cleaning.
4. The valve train generates a noise very much like a light tappet noise during normal operation. Care must be taken to ensure that tappets are making the noise. If more than one tappet seems to be noisy, it's probably not the tappets.

REMOVAL

1. Disconnect the negative cable from the battery.
2. Remove the air cleaner (Refer to 9 - ENGINE/AIR INTAKE SYSTEM - REMOVAL).
3. Remove intake manifold (Refer to 9 - ENGINE/MANIFOLDS/INTAKE MANIFOLD - REMOVAL).
4. Remove cylinder head cover (Refer to 9 - ENGINE/CYLINDER HEAD/CYLINDER HEAD COVER(S) - REMOVAL).
5. Remove rocker arm assembly and push rods (Refer to 9 - ENGINE/CYLINDER HEAD/ROCKER ARM / ADJUSTER ASSY - REMOVAL). Identify push rods to ensure installation in original location.
6. Remove the cylinder head (Refer to 9 - ENGINE/CYLINDER HEAD - REMOVAL).

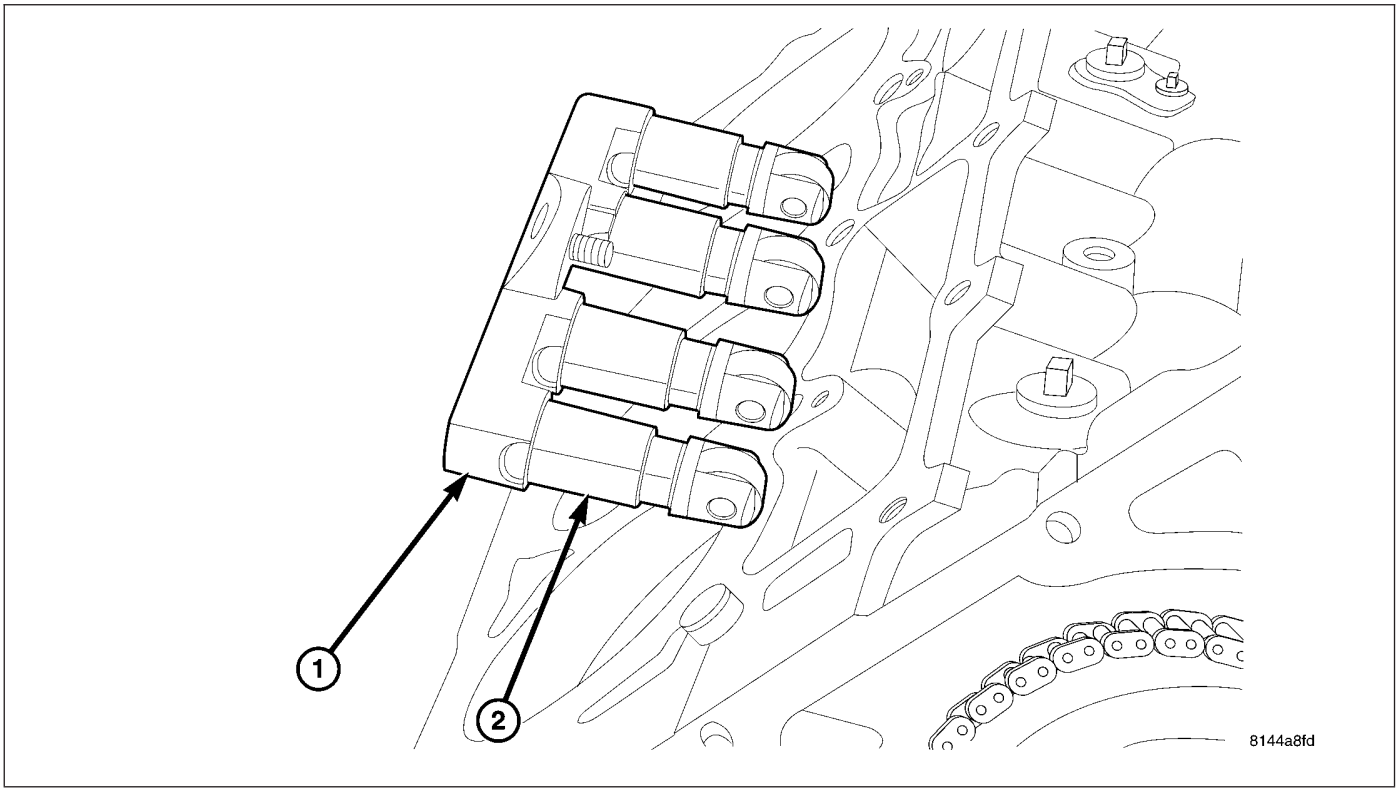

7. Remove bolt from tappet retainer (1).
8. Remove tappet retainer (1).

9. Pull tappet out of bore with a twisting motion. If all tappets are to be removed and reused, identify tappets to ensure installation in original location.
10. Check camshaft lobes for abnormal wear.

INSTALLATION

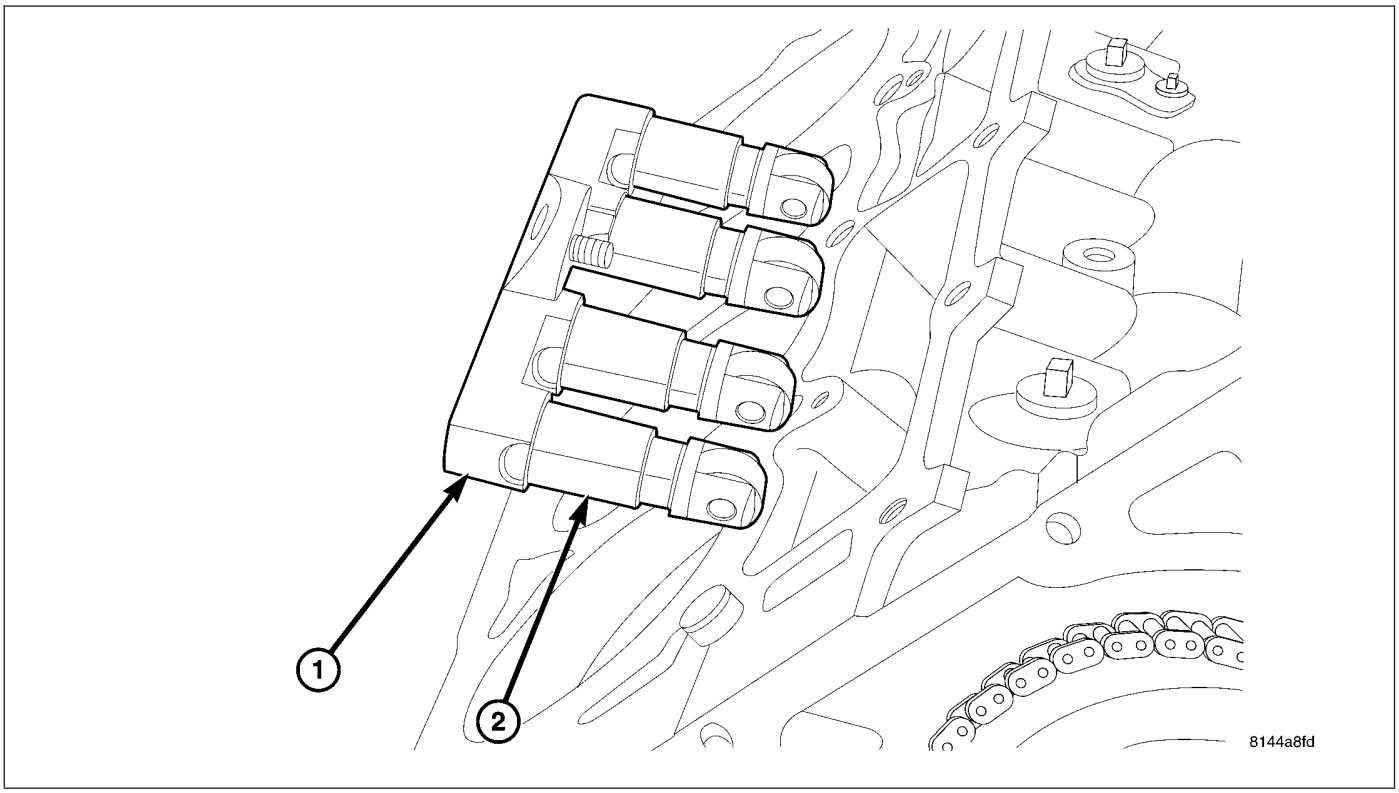

1. Lubricate tappets.
2. Install tappets in their original positions.
3. Install tappet retainer (1). Install the tappet retainer bolt and tighten to 12 N·m (106 in. lbs.) torque.
4. Install cylinder head (Refer to 9 - ENGINE/CYLINDER HEAD - INSTALLATION).
5. Install pushrods and rocker arm assembly (Refer to 9 - ENGINE/CYLINDER HEAD/ROCKER ARM / ADJUSTER ASSY - INSTALLATION).
6. Install cylinder head cover (Refer to 9 - ENGINE/CYLINDER HEAD/CYLINDER HEAD COVER(S) - INSTALLATION).
7. Install intake manifold (Refer to 9 - ENGINE/MANIFOLDS/INTAKE MANIFOLD - INSTALLATION).
8. Install the air cleaner (Refer to 9 - ENGINE/AIR INTAKE SYSTEM - INSTALLATION).
9. Connect the negative cable to the battery.

CAUTION: To prevent damage to valve mechanism, engine must not be run above fast idle until all hydraulic tappets have filled with oil and have become quiet.

10. Road test vehicle and check for leaks.

PISTON & CONNECTING ROD

DESCRIPTION

CAUTION: Do not use a metal stamp to mark connecting rods as damage may result, instead use ink or a scratch awl.

The pistons are made of a high strength aluminum alloy. Piston skirts are coated with a solid lubricant (Molykote) to reduce friction and provide scuff resistance. The piston top ring groove and land is anodized. The connecting rods are made of forged powdered metal, with a “fractured cap” design. A pressed fit piston pin is used to attach the piston and connecting rod.

STANDARD PROCEDURE - PISTON FITTING

1. To correctly select the proper size piston, a cylinder bore gauge, capable of reading in 0.003 mm (.0001 in.) INCREMENTS is required. If a bore gauge is not available, do not use an inside micrometer.
2. Measure the inside diameter of the cylinder bore at a point 38.0 mm (1.5 inches) below top of bore. Start perpendicular (across or at 90 degrees) to the axis of the crankshaft at point A and then take an additional bore reading 90 degrees to that at point B.
3. The coated pistons will be serviced with the piston pin and connecting rod pre-assembled. The piston-rod assembly is specific for the left cylinder bank (odd numbered) and the right cylinder bank (even numbered) and must not be interchanged.
4. The coating material is applied to the piston after the final piston machining process. Measuring the outside diameter of a coated piston will not provide accurate results. Therefore measuring the inside diameter of the cylinder bore with a dial Bore Gauge is **MANDATORY**. To correctly select the proper size piston, a cylinder bore gauge capable of reading in 0.003 mm (.0001 in.) increments is required.
5. Piston installation into the cylinder bore requires slightly more pressure than that required for non-coated pistons. The bonded coating on the piston will give the appearance of a line-to-line fit with the cylinder bore.

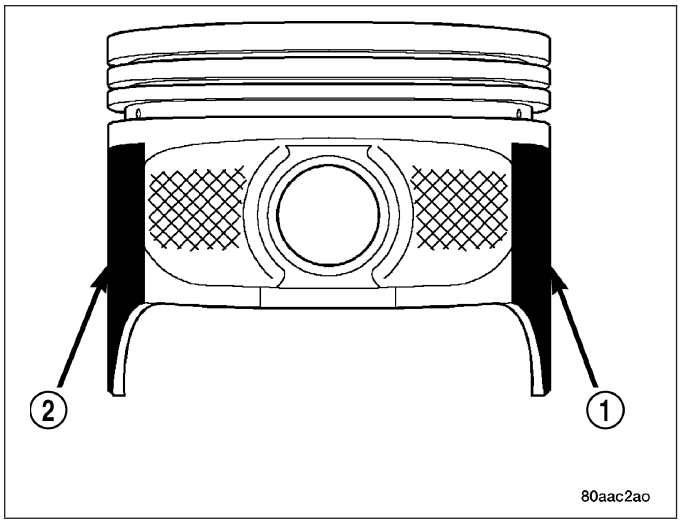

REMOVAL

1. Disconnect negative cable from battery.
2. Remove the following components:
   - Oil pan and gasket/windage tray (Refer to 9 - ENGINE/LUBRICATION/OIL PAN - REMOVAL).
   - Cylinder head covers (Refer to 9 - ENGINE/CYLINDER HEAD/CYLINDER HEAD COVER(S) - REMOVAL) and (Refer to 9 - ENGINE/CYLINDER HEAD/CYLINDER HEAD COVER(S) - REMOVAL).
   - Timing chain cover (Refer to 9 - ENGINE/VALVE TIMING/TIMING BELT / CHAIN COVER(S) - REMOVAL).
   - Cylinder head(s) (Refer to 9 - ENGINE/CYLINDER HEAD - REMOVAL) and (Refer to 9 - ENGINE/CYLINDER HEAD - REMOVAL).
3. If necessary, remove top ridge of cylinder bores with a reliable ridge reamer before removing pistons from cylinder block. **Be sure to keep tops of pistons covered during this operation.** Pistons and connecting rods must be removed from top of cylinder block. When removing piston and connecting rod assemblies from the engine, rotate crankshaft so the each connecting rod is centered in cylinder bore.

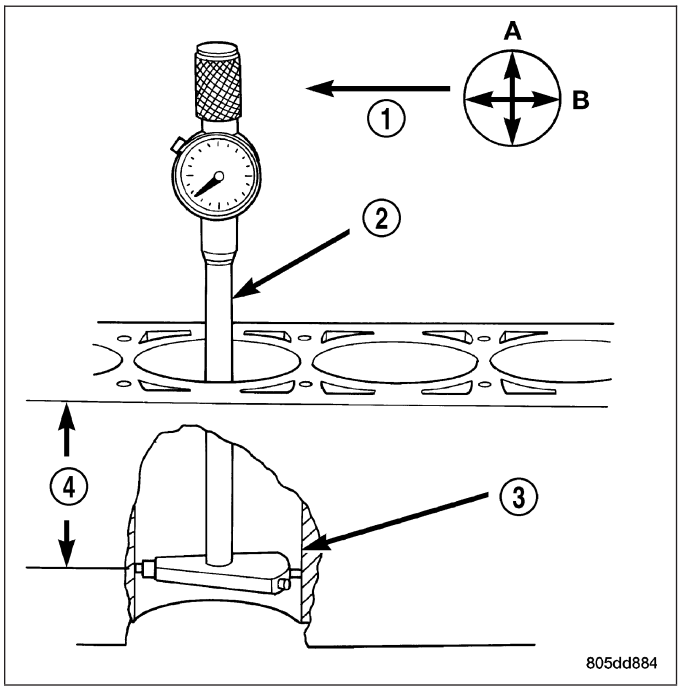

CAUTION: DO NOT use a number stamp or a punch to mark connecting rods or caps, as damage to connecting rods could occur

NOTE: Connecting rods and bearing caps are not interchangeable and should be marked before removing to ensure correct reassembly.

4. Mark connecting rod and bearing cap positions using a permanent ink marker or scribe tool.

CAUTION: Care must be taken not to damage the fractured rod and cap joint face surfaces, as engine damage may occur.

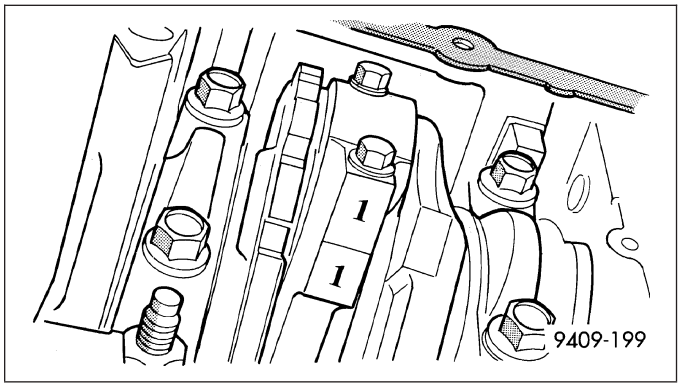

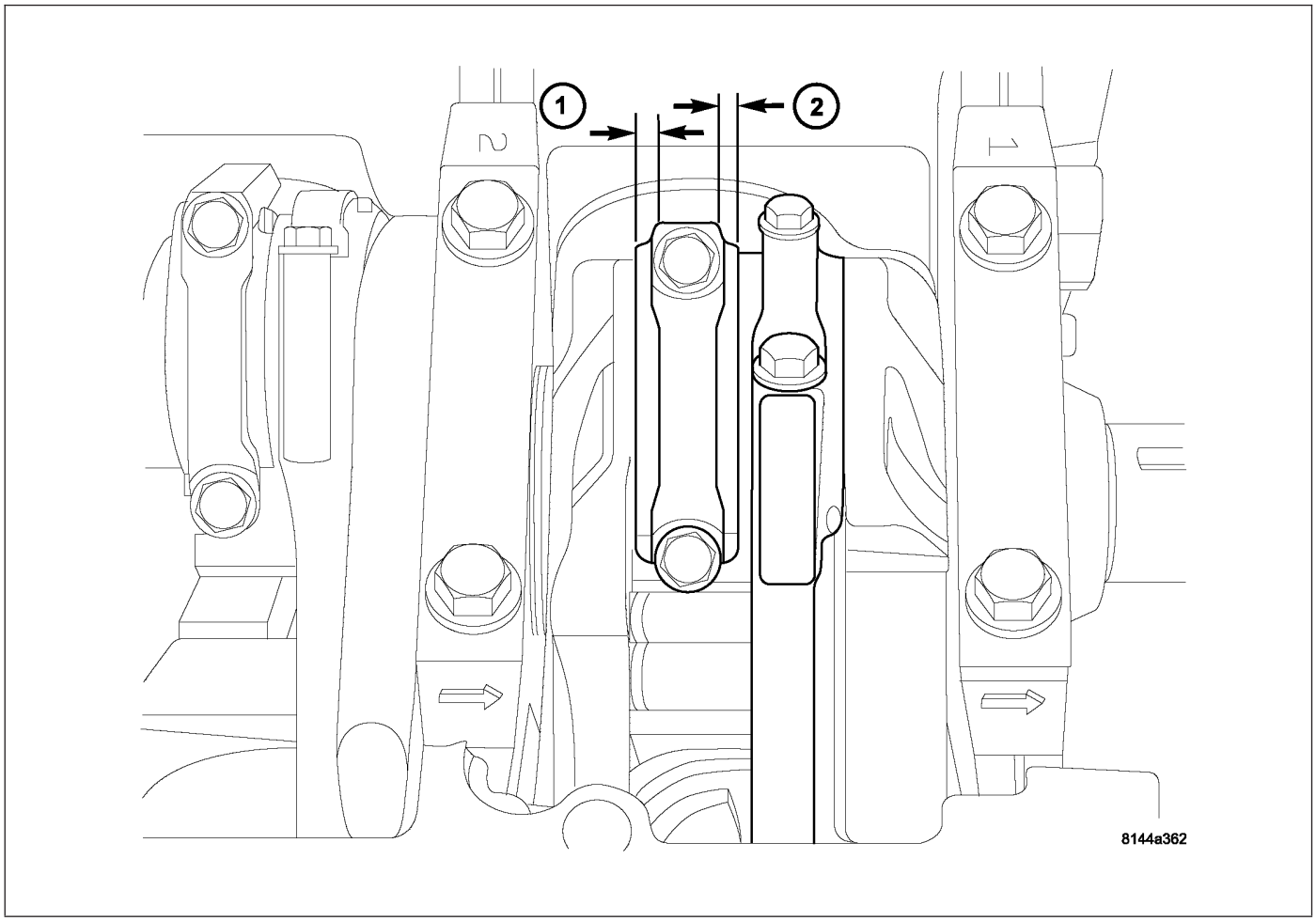

5. Remove connecting rod cap. Install Special Tool 8507 Connecting Rod Guides into the connecting rod being removed. Remove piston from cylinder bore. Repeat this procedure for each piston being removed.

CAUTION: Care must be taken not to nick crankshaft journals, as engine damage may occur

6. Immediately after piston and connecting rod removal, install bearing cap on the mating connecting rod to prevent damage to the fractured cap and rod surfaces.

7. Carefully remove piston rings from piston(s), starting from the top ring down.

CLEANING

CAUTION: DO NOT use a wire wheel or other abrasive cleaning devise to clean the pistons or connecting rods. The pistons have a Moly coating, this coating must not be damaged.

1. Using a suitable cleaning solvent clean the pistons in warm water and towel dry.
2. Use a wood or plastic scraper to clean the ring land grooves.

CAUTION: DO NOT remove the piston pin from the piston and connecting rod assembly.

INSPECTION

Check the connecting rod journal for excessive wear, taper and scoring (Refer to 9 - ENGINE/ENGINE BLOCK/ CONNECTING ROD BEARINGS - STANDARD PROCEDURE).

Check the connecting rod for signs of twist or bending.

Check the piston for taper and elliptical shape before it is fitted into the cylinder bore (Refer to 9 - ENGINE/ENGINE BLOCK/PISTON & CONNECTING ROD - STANDARD PROCEDURE).

Check the piston for scoring, or scraping marks in the piston skirts. Check the ring lands for cracks and/or deterioration.

INSTALLATION

1. Before installing piston and connecting rod assemblies into the bore, install the piston rings (Refer to 9 - ENGINE/ENGINE BLOCK/PISTON RINGS - STANDARD PROCEDURE).
2. Immerse the piston head and rings in clean engine oil. Position a ring compressor over the piston and rings. Tighten ring compressor. **Ensure position of rings do not change during this operation.**
3. Position bearing onto connecting rod. Lubricate bearing surface with clean engine oil.
4. Install Special Tool 8507 Connecting Rod Guides into connecting rod bolt threads.
5. The pistons are marked on the piston pin bore surface with an raised “F” or arrow on top of piston indicating installation position. This mark must be pointing toward the front of engine on both cylinder banks.
6. Wipe cylinder bore clean and lubricate with engine oil.

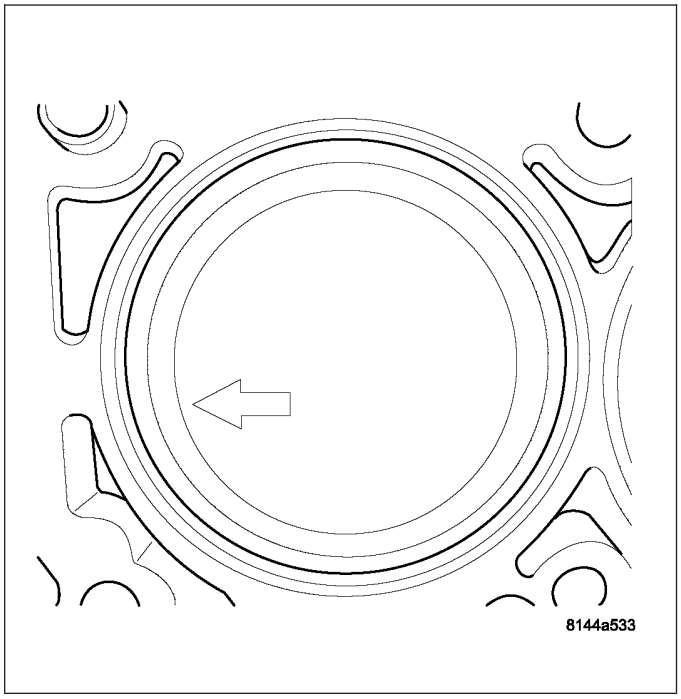

7. Rotate crankshaft until connecting rod journal is on the center of cylinder bore. Insert rod and piston into cylinder bore and carefully position connecting rod guides over crankshaft journal.
8. Tap piston down in cylinder bore using a hammer handle. While at the same time, guide connecting rod into position on rod journal.

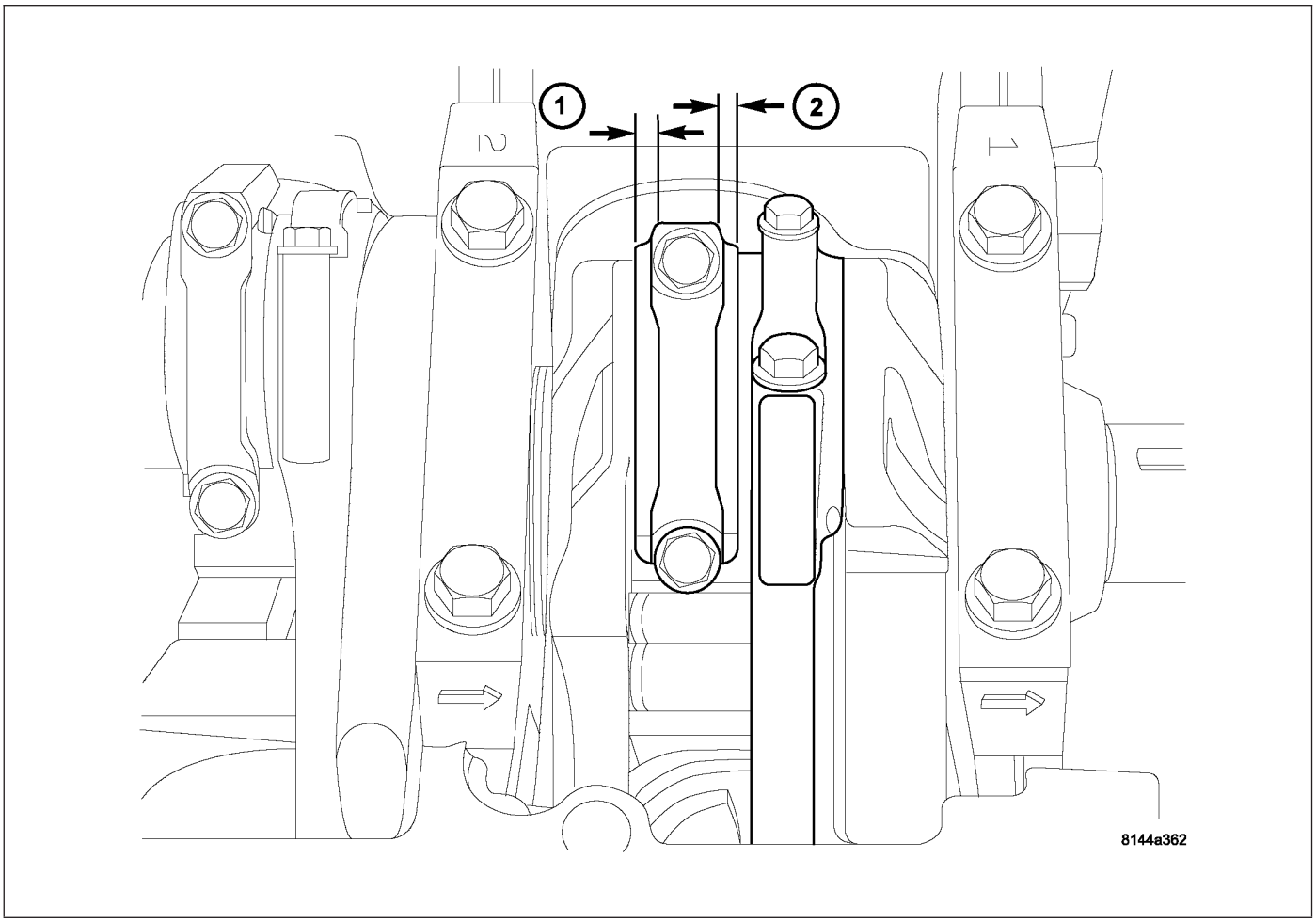

CAUTION: Connecting Rod Bolts are Torque to Yield Bolts and Must Not Be Reused. Always replace the Rod Bolts whenever they are loosened or removed.

9. Lubricate rod bolts and bearing surfaces with engine oil. Install connecting rod cap and bearing. Tighten bolts to 21 N·m (15 ft. lbs.) plus a 90° turn.

10. Install the following components:
    - Cylinder head(s). (Refer to 9 - ENGINE/CYLINDER HEAD - INSTALLATION).
    - Cylinder head covers (Refer to 9 - ENGINE/CYLINDER HEAD/CYLINDER HEAD COVER(S) - INSTALLATION).
    - Install the intake manifold.
    - Oil pan and gasket/windage tray. (Refer to 9 - ENGINE/LUBRICATION/OIL PAN - INSTALLATION).
11. Fill crankcase with proper engine oil to correct level.
12. Connect negative cable to battery.

RINGS - PISTON

STANDARD PROCEDURE - PISTON RING FITTING

Before reinstalling used rings or installing new rings, the ring clearances must be checked.

1. Wipe the cylinder bore clean.
2. Insert the ring in the cylinder bore.

NOTE: The ring gap measurement must be made with the ring positioned at least 12mm (0.50 inch.) from bottom of cylinder bore.

3. Using a piston, to ensure that the ring is squared in the cylinder bore, slide the ring downward into the cylinder.
4. Using a feeler gauge check the ring end gap. Replace any rings not within specification.

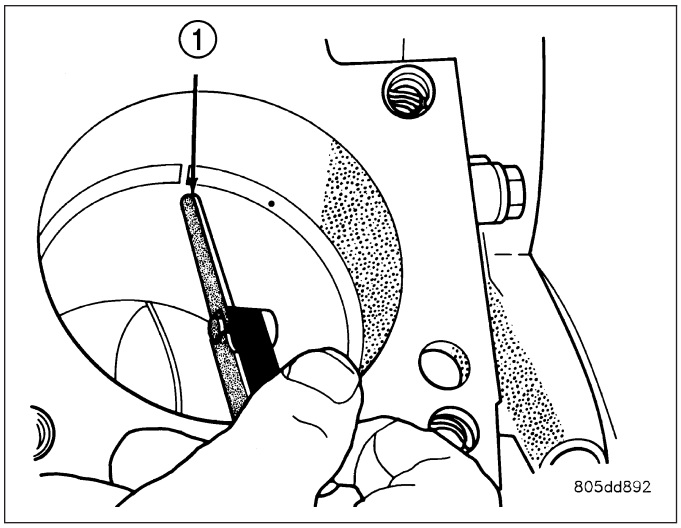

PISTON RING SIDE CLEARANCE

NOTE: Make sure the piston ring grooves are clean and free of nicks and burrs.

5. Measure the ring side clearance as shown make sure the feeler gauge fits snugly between the ring land and the ring. Replace any ring not within specification.
6. Rotate the ring around the piston, the ring must rotate in the groove with out binding.

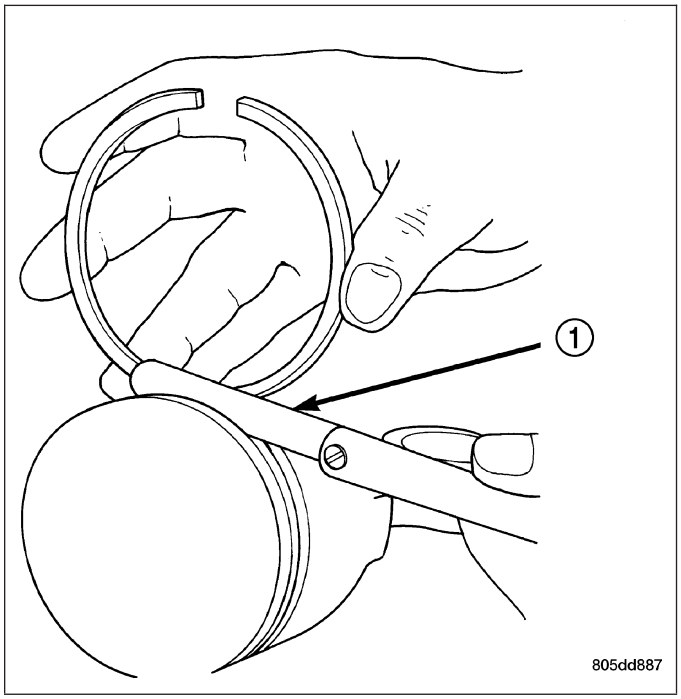

PISTON RING SPECIFICATION CHART

Ring Position	Ring/Groove Side Clearance	Maximum Clearance
Upper Ring	0.02-0.07mm (0.0008- 0.0028 in.)	0.11mm (0.004 in.)
Intermediate Ring	0.02-0.06 mm (0.0008-0.0023 in.)	0.10mm (0.004 in.)
Ring Position	**Ring Gap**	**Wear Limit**
Upper Ring	0.23-0.38mm (0.0090-0.0149 in.)	0.43mm (0.017 in.)
Intermediate Ring	0.35-0.60mm (0.0137-0.0236 in.)	0.74mm (0.029 in.)
Oil Control Ring (Steel Rail)	0.015-0.66mm (0.0059- 0.0259 in.)	0.76mm (0.030 in.)

7. The No. 1 and No. 2 piston rings have a different cross section. Ensure No. 2 ring is installed with manufacturers I.D. mark (Dot) facing up, towards top of the piston.

NOTE: Piston rings are installed in the following order:
- **Oil ring expander.**
- **Lower oil ring side rail.**
- **Upper oil ring side rail.**
- **No. 2 Intermediate piston ring.**
- **No. 1 Upper piston ring.**

8. Install the oil ring expander.
9. Install upper side rail by placing one end between the piston ring groove and the expander ring. Hold end firmly and press down the portion to be installed until side rail is in position. Repeat this step for the lower side rail.

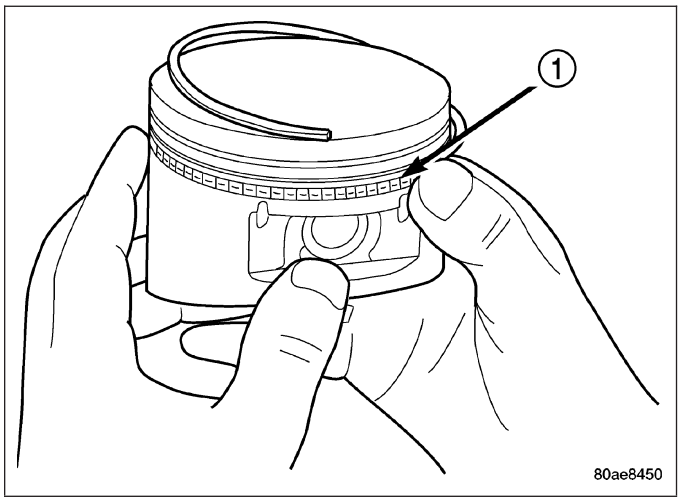

10. Install No. 2 intermediate piston ring using a piston ring installer.
11. Install No. 1 upper piston ring using a piston ring installer.

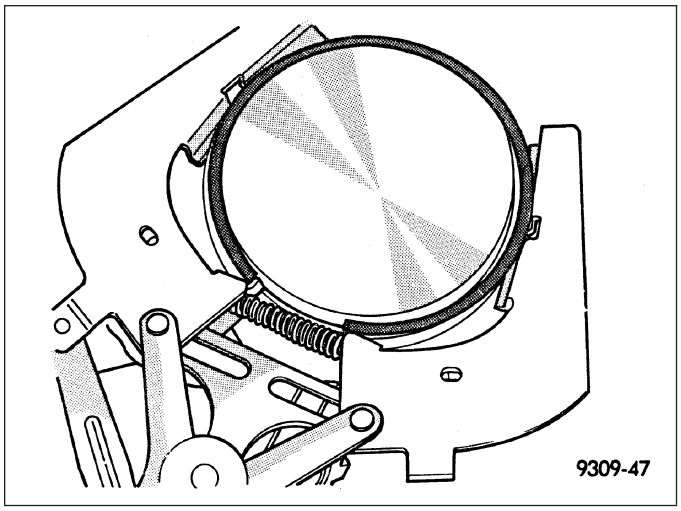

12. Position piston ring end gaps as shown in. It is important that expander ring gap is at least 45° from the side rail gaps, but not on the piston pin center or on the thrust direction.

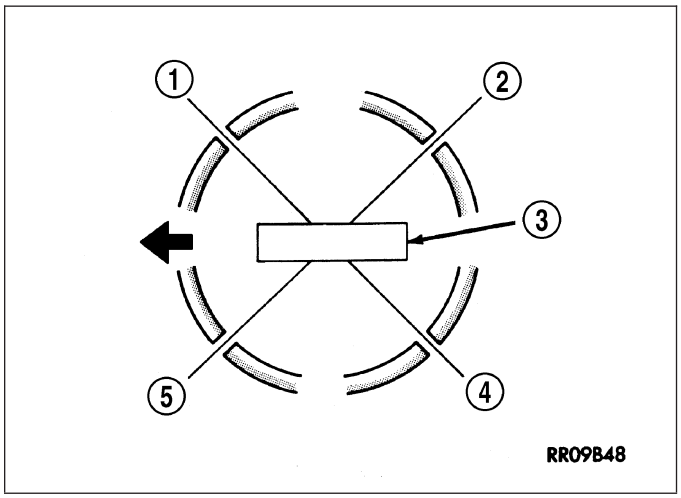

DAMPER - CRANKSHAFT

REMOVAL

1. Disconnect negative cable from battery.
2. Remove accessory drive belt (Refer to 7 - COOLING/ACCESSORY DRIVE/DRIVE BELTS - REMOVAL).
3. Drain cooling system (Refer to 7 - COOLING - STANDARD PROCEDURE).
4. Remove radiator upper hose.
5. Remove fan shroud (Refer to 7 - COOLING/ENGINE/RADIATOR FAN - REMOVAL).
6. Remove crankshaft damper bolt.

7. Remove damper using Special Tools 8513A Insert and 1023 Three Jaw Puller.

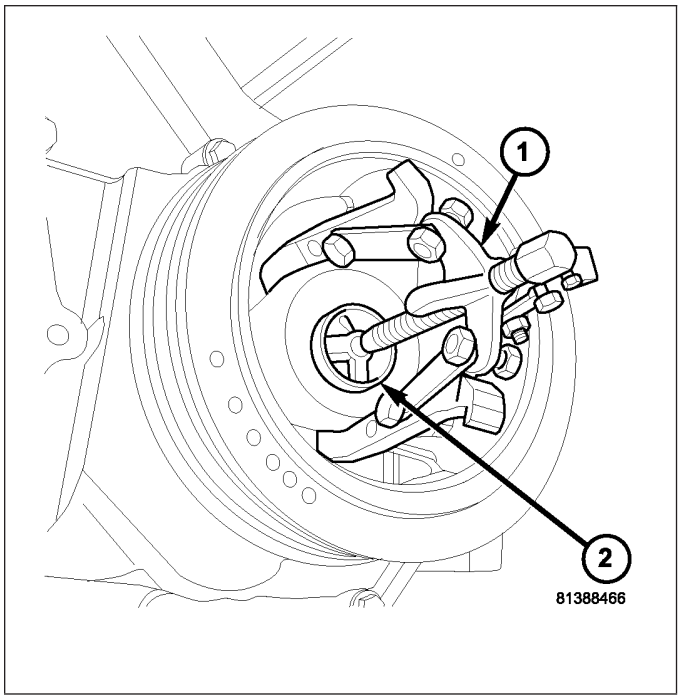

INSTALLATION

CAUTION: To prevent severe damage to the Crankshaft, Damper or Special Tool 8512–A, thoroughly clean the damper bore and the crankshaft nose before installing Damper.

1. Slide damper onto crankshaft slightly.

CAUTION: Special Tool 8512–A, is assembled in a specific sequence. Failure to assemble this tool in this sequence can result in tool failure and severe damage to either the tool or the crankshaft.

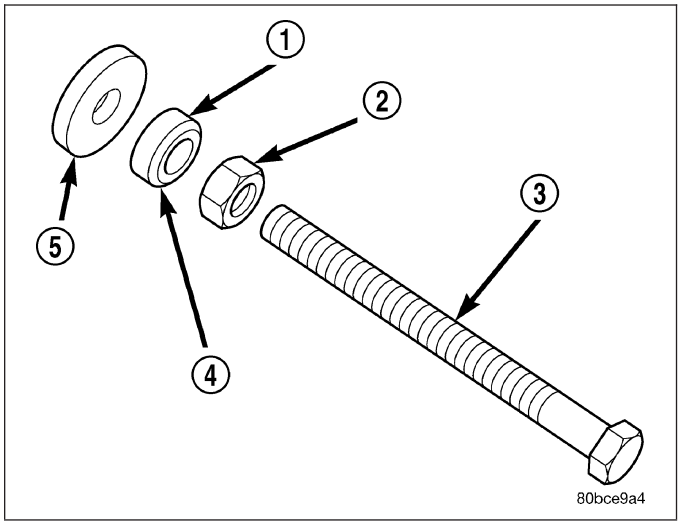

2. Assemble Special Tool 8512–A as follows, The nut is threaded onto the shaft first (2). Then the roller bearing (1) is placed onto the threaded rod (3) The hardened bearing surface of the bearing (1) **MUST** face the nut (2). Then the hardened washer (5) slides onto the threaded rod (3). Once assembled coat the threaded rod's threads with Mopar® Nickel Anti-Seize or (Loctite No. 771).
3. Using Special Tool 8512–A, press damper onto crankshaft.
4. Install then tighten crankshaft damper bolt to 176 N·m (129 ft. lbs.).
5. Install radiator upper hose.
6. Install accessory drive belt (Refer to 7 - COOLING/ACCESSORY DRIVE/DRIVE BELTS - INSTALLATION).
7. Refill cooling system (Refer to 7 - COOLING - STANDARD PROCEDURE).
8. Connect negative cable to battery.

COVER - STRUCTURAL

DESCRIPTION

The structural dust cover is made of die cast aluminum and joins the lower half of the transmission bell housing to the engine.

OPERATION

The structural cover provides additional powertrain stiffness and reduces noise and vibration.

REMOVAL

1. Raise vehicle on hoist.

CAUTION: On manual transmission vehicles, the 7/16 inch engine block to clutch housing bolts must be loosened before removal of the structural dust cover (1). Clutch housing distortion will occur if this procedure is not followed.

2. Remove the bolts retaining structural cover (1,2).
3. Remove the structural cover.

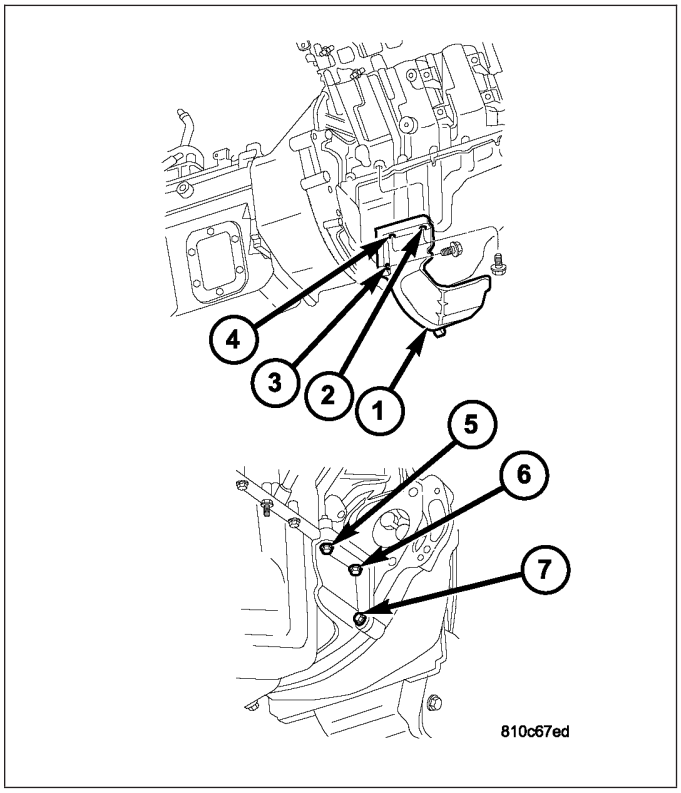

INSTALLATION

AUTOMATIC TRANSMISSION

CAUTION: The structural cover must be installed as described in the following steps. Failure to do so will cause severe damage to the cover.

1. Position the structural cover in the vehicle.
2. Install all four bolts retaining the cover-to-engine. DO NOT tighten the bolts at this time.
3. Install the four cover-to-transmission bolts. Do NOT tighten at this time.

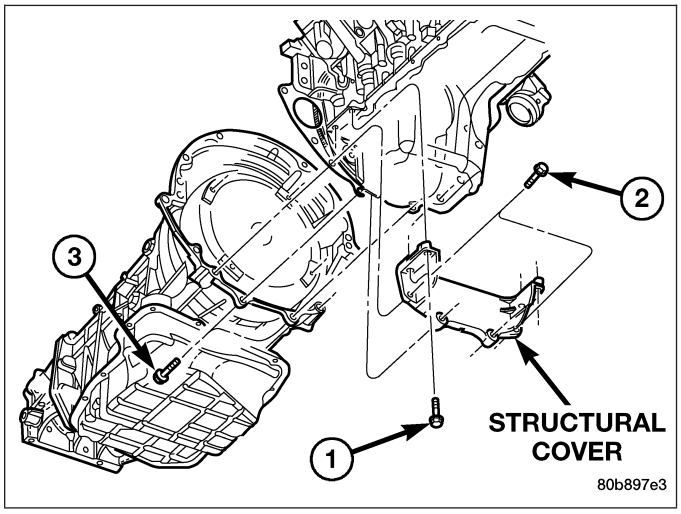

CAUTION: The structural cover must be held tightly against both the engine and the transmission bell housing during tightening sequence. Failure to do so may cause damage to the cover.

4. Torque the (4)structural dust cover bolts that go into the transmission to 6-11 N·m (50-100 in.lbs.).
5. Torque the (4) structural dust cover bolts that go into the engine block to 6-11 N·m (50-100 in.lbs.).
6. Starting with the two rear cover-to-engine bolts, tighten bolts (1) to 54 N·m (40 ft. lbs.), then tighten bolts (2) and (3) to 54 N·m (40 ft. lbs.) in the sequence shown.

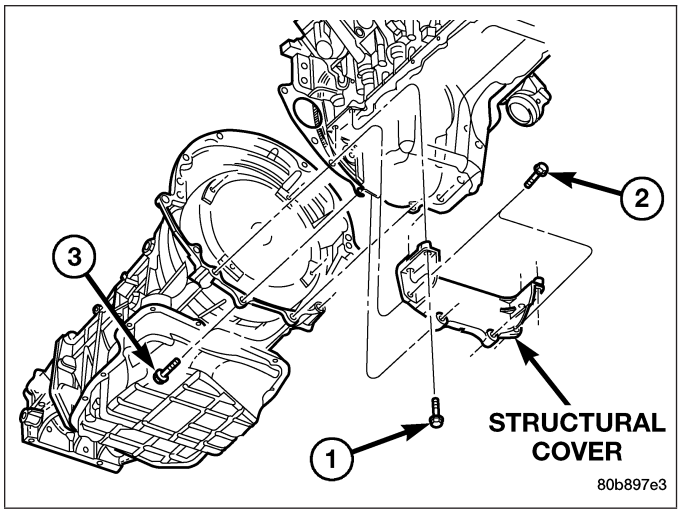

7. Install the exhaust pipe on left hand exhaust manifold.
8. Tighten exhaust manifold-to-exhaust pipe retaining bolts to 20–26 N·m (15–20 ft. lbs.).

MANUAL TRANSMISSION

CAUTION: The 7/16 inch engine block to clutch housing bolts must be loosened before removal/installation of the structural dust cover. Clutch housing distortion will occur if this procedure is not followed.

1. Position the structural cover in the vehicle.

CAUTION: The structural cover must be installed as described in the following steps. Failure to do so will cause severe damage to the cover, and engine noise.

2. Install all bolts retaining the cover-to-engine. DO NOT tighten the bolts at this time.
3. Install the cover-to-transmission bolts. Do NOT tighten at this time.

CAUTION: The structural cover must be held tightly against the corner formed by the engine and the transmission clutch housing during tightening sequence. Failure to do so may cause damage to the cover and engine noise.

4. Torque the (2)structural dust cover bolts that go into the clutch housing to 6-11 N·m (50-100 in.lbs.).
5. Torque the (4) structural dust cover bolts that go into the engine block to 6-11 N·m (50-100 in.lbs.).
6. Torque the structural cover bolt that is closest to the rear face of block on the passenger side of block to 54 N·m (40 ft. lbs.).
7. Torque the structural cover bolt that is closest to the front face of block on the drivers side to 54 N·m (40 ft. lbs.).
8. Torque the remaining (2) structural cover bolts that go into the **block** in an “X” pattern to 54 N·m (40 ft. lbs.).

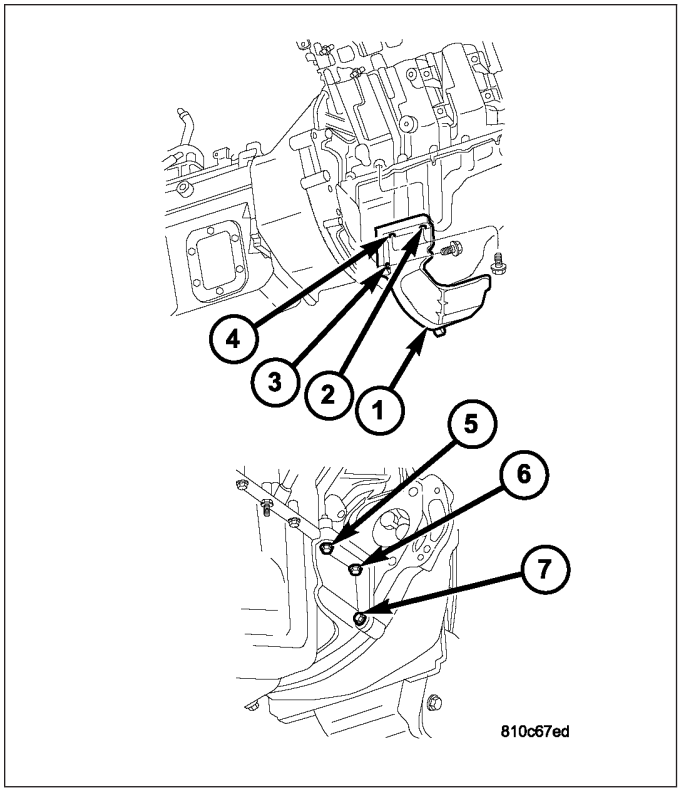

9. Torque the structural cover bolts that go into the **clutch housing** to 54 N·m (40 ft. lbs.).
10. Torque the 7/16 inch engine block to clutch housing bolts to 68 N·m (50 ft. lbs.).

MOUNT - FRONT

REMOVAL

2WD

1. Disconnect negative battery cable.
2. Raise vehicle.
3. Remove engine mount through bolts.
4. Raise engine using engine support fixture special tool # 8534.
5. Remove engine mount to insulator bolts (1).
6. Remove insulator (2) from engine.

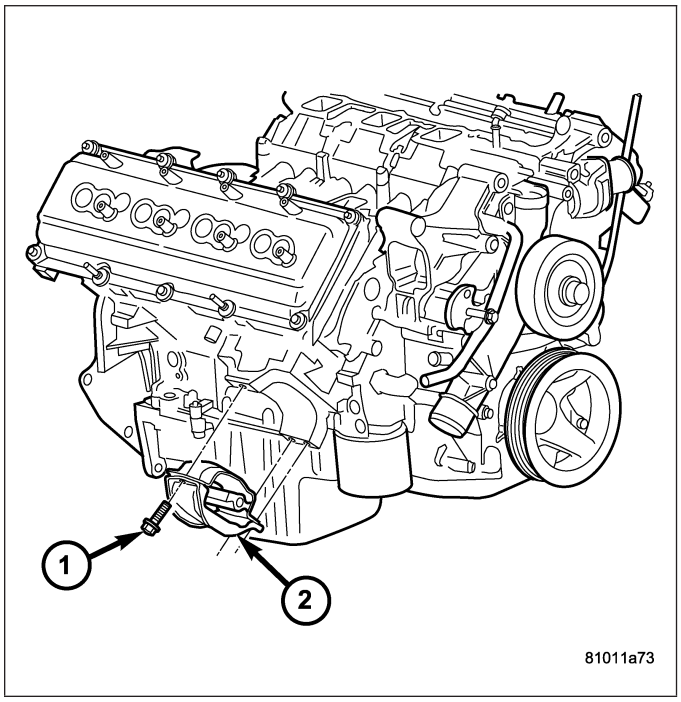

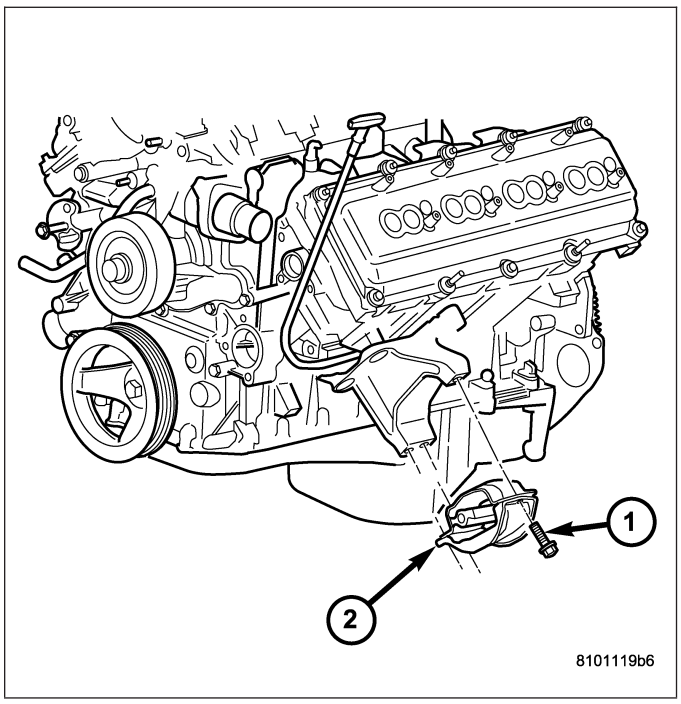

4WD

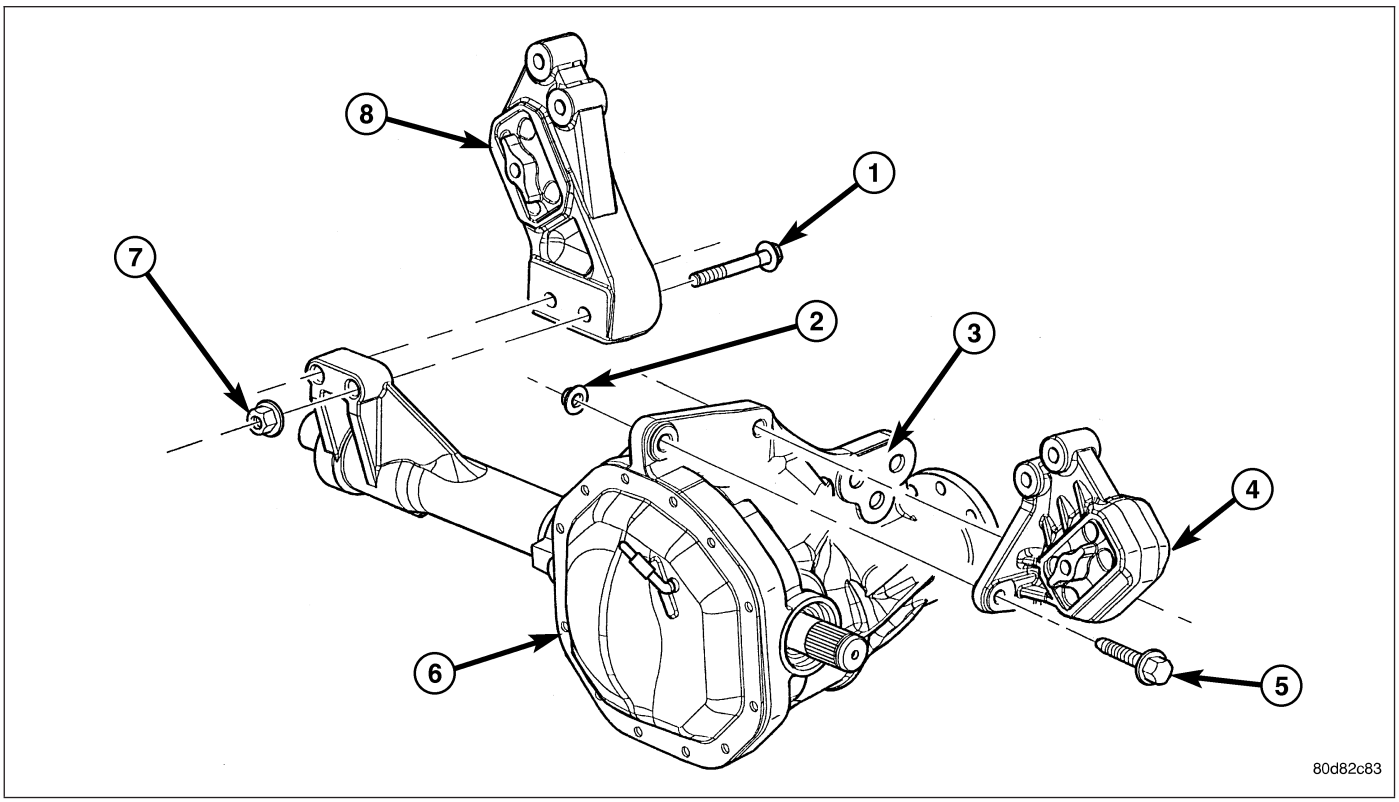

1. Disconnect the negative cable from the battery.
2. Raise the vehicle.
3. Remove the skid plate.
4. Remove the front crossmember (Refer to 13 - FRAME & BUMPERS/FRAME/FRONT CROSSMEMBER - REMOVAL).
5. Remove the engine oil filter.
6. Support the engine using engine support fixture, special tool # 8534.
7. Support the front axle with a suitable jack.
8. Remove the (4) bolts that attach the engine mounts to the front axle.
9. Remove the (3) bolts that attach the front axle to the left engine bracket.
10. Lower the front axle.
11. Remove the (6) through bolts
12. Raise the engine far enough to be able to remove the left (4) and right (8) engine mounts.
13. Remove the engine mounts (4,8).

INSTALLATION

2WD

1. Install insulator (2) on the engine.

NOTE: For mount to engine block and left engine bracket to front axle bolts, apply Mopar® Lock and Seal Adhesive, Medium Strength Threadlocker.

2. Install upper and lower mount mounting bolts. Tighten bolts to 61 N·m (45 ft. lbs.).
3. Lower the engine using engine support fixture special tool # 8534.
4. Install mount through bolts.
5. Tighten through bolts on both sides to 61 N·m (45 ft. lbs.).
6. Lower vehicle.
7. Connect negative battery cable.

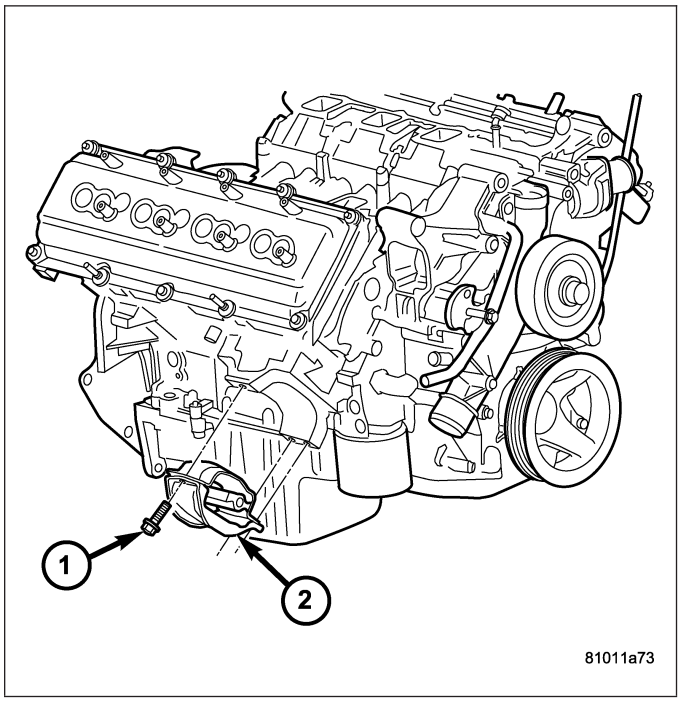

4WD

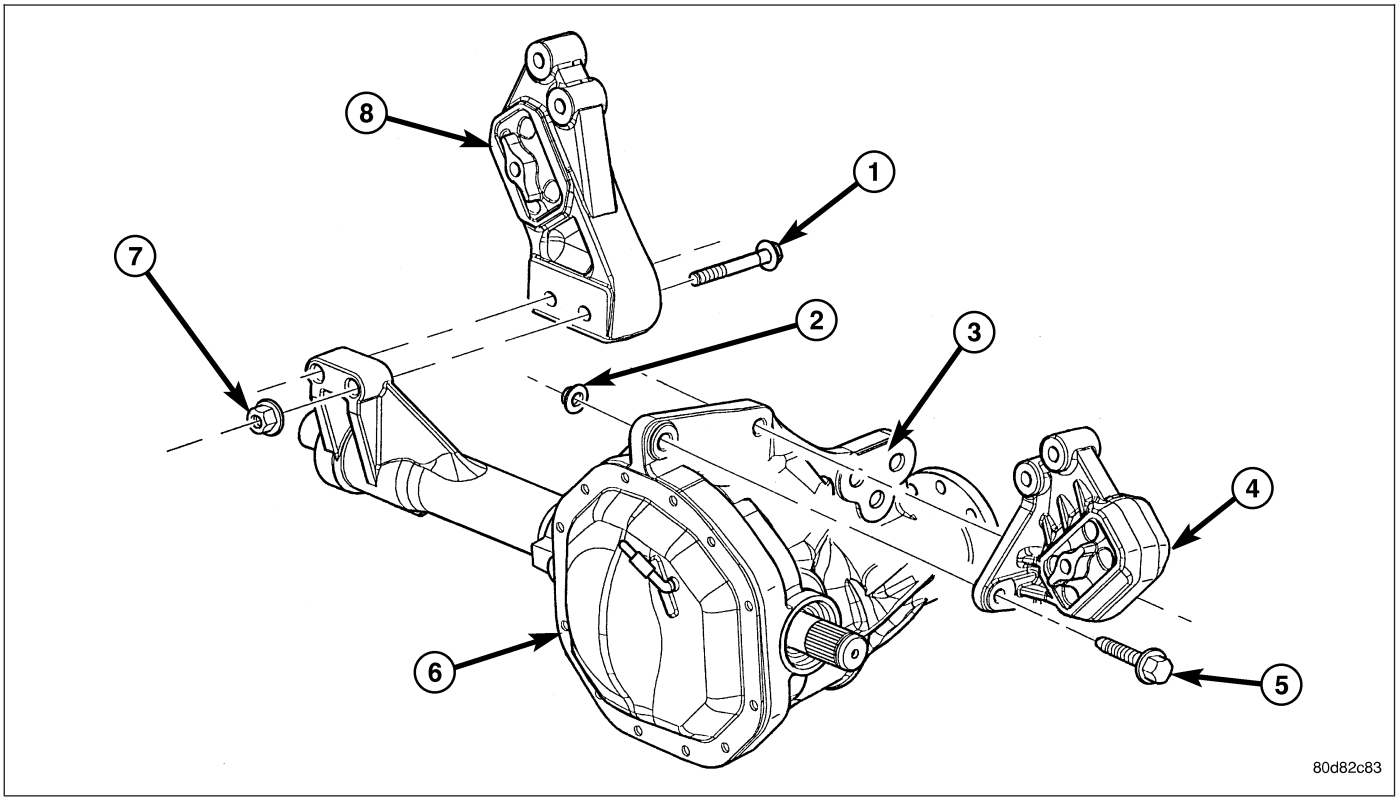

NOTE: For mount to engine block and left engine bracket to front axle bolts, apply Mopar® Lock and Seal Adhesive, Medium Strength Threadlocker.

1. Install the right (8) and left (4) side engine mounts to the front axle. Torque nuts to 94 N·m (70 ft. lbs.).
2. Raise the front axle into the frame and install the left and right side through bolts. Torque nuts to 94 N·m (70 ft. lbs.).
3. Insert the two upper through bolts into the right and left side engine mounts and loose assemble the two nuts onto the through bolts.
4. Lower the engine using engine support fixture special tool # 8534, until the left and right side engine brackets rest on the through bolts, and the lower engine bracket through holes align with the engine mounts, and the left engine bracket holes align with the front axle slots.
5. Loose assemble the 3 bolts that attach the front axle to the left engine bracket.
6. Loose assemble the lower through bolts.
7. Torque the nuts for the 4 through bolts to 101 N·m (75 ft. lbs.).
8. Torque the 3 bolts that attach the front axle to the left engine bracket to 101 N·m (75 ft. lbs.).
9. Install the engine oil filter, if removed.
10. Install the front crossmember (Refer to 13 - FRAME & BUMPERS/FRAME/FRONT CROSSMEMBER - INSTALLATION).
11. Install the skid plate.
12. Lower the vehicle.
13. Reconnect the negative battery cable.

MOUNT - REAR

REMOVAL

1. Raise the vehicle on a hoist.
2. Using a suitable jack, support transmission.
3. Remove the nuts from the transmission mount.
4. Remove the two bolts that attach the transmission mount to the engine bracket.
5. Raise the transmission enough to remove the mount from the crossmember.
6. Remove the mount.

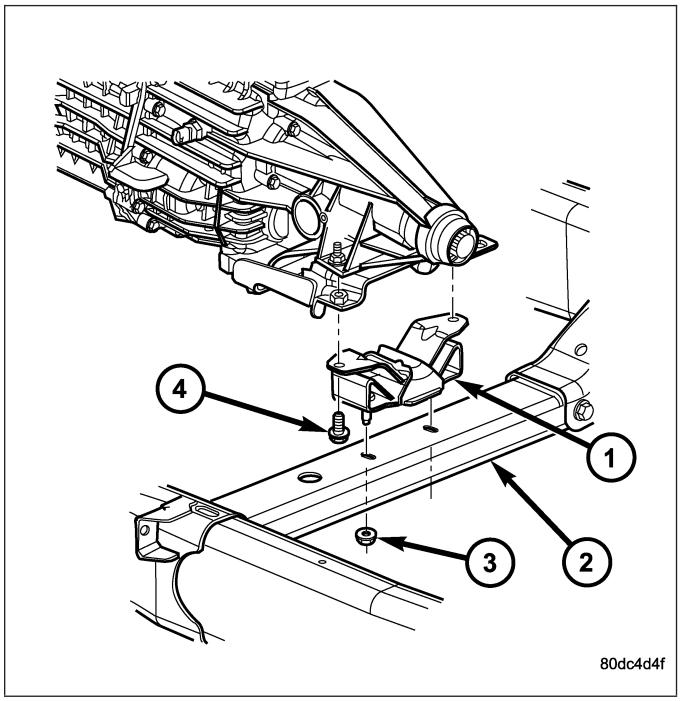

INSTALLATION

NOTE: Threadlocking compound must be applied to the bolts before installation.

1. Install the two bolts that attach the transmission mount to the transmission bracket.
2. Torque the bolts to 61N·m (45 ft.lbs.) torque.
3. Lower the transmission so the transmission mount rests on the crossmember, and the studs of the transmission mount are aligned in the slots in the crossmember.
4. Install the nuts onto the transmission mount studs through the crossmember access slot.
5. Torque the nuts to 54N·m (40 ft. lbs.).

LUBRICATION

DIAGNOSIS AND TESTING

DIAGNOSIS AND TESTING - CHECKING ENGINE OIL PRESSURE

1. Remove oil pressure sending unit and install gauge assembly C-3292.
2. Run engine until thermostat opens.
3. Oil Pressure:
   - Curb Idle–25 kPa (4 psi) minimum
   - 3000 rpm–170 - 758 kPa (25 - 110 psi)
4. If oil pressure is 0 at idle, shut off engine. Check for a clogged oil pick-up screen or a pressure relief valve stuck open.

DIAGNOSIS AND TESTING - ENGINE OIL LEAK

Begin with a thorough visual inspection of the engine, particularly at the area of the suspected leak. If an oil leak source is not readily identifiable, the following steps should be followed:

1. Do not clean or degrease the engine at this time because some solvents may cause rubber to swell, temporarily stopping the leak.
2. Add an oil soluble dye (use as recommended by manufacturer). Start the engine and let idle for approximately 15 minutes. Check the oil dipstick to make sure the dye is thoroughly mixed as indicated with a bright yellow color under a black light.
3. Using a black light, inspect the entire engine for fluorescent dye, particularly at the suspected area of oil leak. If the oil leak is found and identified, repair per service manual instructions.
4. If dye is not observed, drive the vehicle at various speeds for approximately 24 km (15 miles), and repeat inspection.**If the oil leak source is not positively identified at this time**, proceed with the air leak detection test method.

Air Leak Detection Test Method

1. Remove the PCV valve from the IAFM. Cap or plug the PCV valve grommet.
2. Attach an air hose with pressure gauge and regulator to the dipstick tube.

CAUTION: Do not subject the engine assembly to more than 20.6 kPa (3 PSI) of test pressure.

3. Gradually apply air pressure from 1 psi to 2.5 psi maximum while applying soapy water at the suspected source. Adjust the regulator to the suitable test pressure that provide the best bubbles which will pinpoint the leak source. If the oil leak is detected and identified, repair per service manual procedures.
4. If the leakage occurs at the rear oil seal area, refer to the section, Inspection for Rear Seal Area Leak.
5. If no leaks are detected, turn off the air supply and remove the air hose and all plugs and caps. Install the PCV valve.
6. Clean the oil off the suspect oil leak area using a suitable solvent. Drive the vehicle at various speeds approximately 24 km (15 miles). Inspect the engine for signs of an oil leak by using a black light.

INSPECTION FOR REAR SEAL AREA LEAKS

Since it is sometimes difficult to determine the source of an oil leak in the rear seal area of the engine, a more involved inspection is necessary. The following steps should be followed to help pinpoint the source of the leak.

If the leakage occurs at the crankshaft rear oil seal area:

1. Disconnect the battery.
2. Raise the vehicle.
3. Remove torque converter or clutch housing cover and inspect rear of block for evidence of oil. Use a black light to check for the oil leak:
   a. Circular spray pattern generally indicates seal leakage or crankshaft damage.
   b. Where leakage tends to run straight down, possible causes are a porous block, distributor seal, camshaft bore cup plugs oil galley pipe plugs, oil filter runoff, and main bearing cap to cylinder block mating surfaces.
4. If no leaks are detected, pressurize the crankcase as outlined in the, Inspection (Engine oil Leaks in general)

CAUTION: Do not exceed 20.6 kPa (3 psi).

5. If the leak is not detected, very slowly turn the crankshaft and watch for leakage. If a leak is detected between the crankshaft and seal while slowly turning the crankshaft, it is possible the crankshaft seal surface is damaged. The seal area on the crankshaft could have minor nicks or scratches that can be polished out with emery cloth.

CAUTION: Use extreme caution when crankshaft polishing is necessary to remove minor nicks and scratches. The crankshaft seal flange is especially machined to complement the function of the rear oil seal.

6. For bubbles that remain steady with shaft rotation, no further inspection can be done until disassembled.

OIL

STANDARD PROCEDURE - ENGINE OIL SERVICE

The engine oil level indicator is located at the left hand of the engine on the 5.7L engines.

CRANKCASE OIL LEVEL INSPECTION

CAUTION: Do not overfill crankcase with engine oil, pressure loss or oil foaming can result.

Inspect engine oil level approximately every 800 kilometers (500 miles). Unless the engine has exhibited loss of oil pressure, run the engine for about ten minutes before checking oil level. Checking engine oil level on a cold engine is not accurate.

To ensure proper lubrication of an engine, the engine oil must be maintained at an acceptable level. The acceptable levels are indicated between the ADD and SAFE marks on the engine oil dipstick.

1. Position vehicle on level surface.
2. With engine OFF, allow approximately five minutes for oil to settle to bottom of crankcase, remove engine oil dipstick.
3. Wipe dipstick clean.
4. Install dipstick and verify it is seated in the tube.
5. Remove dipstick, with handle held above the tip, take oil level reading.
6. Add oil only if level is below the ADD mark on dipstick.

ENGINE OIL CHANGE

Change engine oil at mileage and time intervals described in Maintenance Schedules (Refer to LUBRICATION & MAINTENANCE/MAINTENANCE SCHEDULES - DESCRIPTION).

Run engine until achieving normal operating temperature.

1. Position the vehicle on a level surface and turn engine off.
2. Hoist and support vehicle on safety stands.

3. Remove oil fill cap.
4. Place a suitable drain pan under crankcase drain.
5. Remove drain plug from crankcase and allow oil to drain into pan. Inspect drain plug threads for stretching or other damage. Replace drain plug if damaged.
6. Install drain plug in crankcase. Torque to 34 N·m (25 ft. lbs.).
7. Lower vehicle and fill crankcase with specified type and amount of engine oil described in this section.
8. Install oil fill cap.
9. Start engine and inspect for leaks.
10. Stop engine and inspect oil level.

USED ENGINE OIL DISPOSAL

Care should be exercised when disposing used engine oil after it has been drained from a vehicle engine. Refer to the WARNING at beginning of this section.

FILTER - ENGINE OIL

REMOVAL

All engines are equipped with a high quality full-flow, disposable type oil filter. DaimlerChrysler Corporation recommends a Mopar® or equivalent oil filter be used.

1. Position a drain pan under the oil filter.
2. Using a suitable oil filter wrench loosen filter (3).
3. Rotate the oil filter counterclockwise to remove it from the cylinder block oil filter boss.
4. When filter separates from cylinder block oil filter boss, tip gasket end upward to minimize oil spill. Remove filter from vehicle.

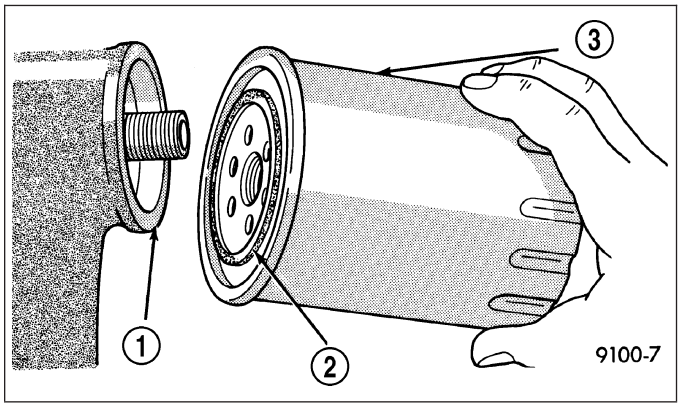

NOTE: Make sure filter gasket was removed with filter.

5. With a wiping cloth, clean the gasket sealing surface of oil and grime.

INSTALLATION

1. Lightly lubricate oil filter gasket (2) with engine oil.
2. Thread filter (3) onto adapter nipple. When gasket makes contact with sealing surface, hand tighten filter one half turn, or 180°,do not over tighten.
3. Add oil, verify crankcase oil level and start engine. Inspect for oil leaks.

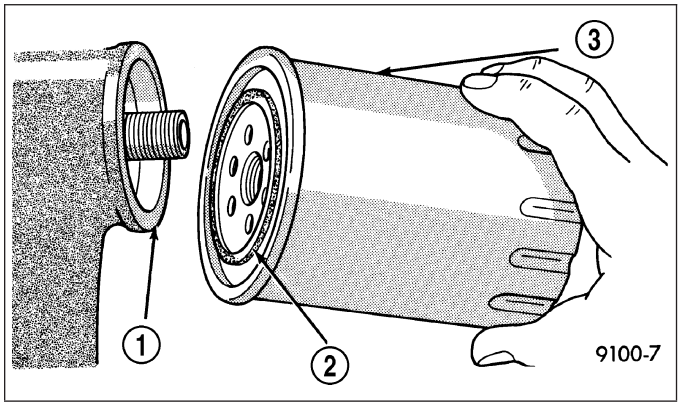

PAN - ENGINE OIL

REMOVAL

1. Disconnect the negative battery cable.
2. Install engine support fixture special tool # 8534. **Do not raise engine at this time.**
3. **For 2WD vehicles,** Remove both engine mount to frame through bolts.
4. **For 4WD vehicles,** Loosen both left and right side engine mount bracket to mount bolts, and remove the lower bolt on each side. The upper hole in the engine bracket is slotted.
5. Remove the structural dust cover (1). (Refer to 9 - ENGINE/ENGINE BLOCK/STRUCTURAL COVER - REMOVAL)
6. Drain engine oil.
7. Remove the front crossmember (Refer to 13 - FRAME & BUMPERS/FRAME/FRONT CROSSMEMBER - REMOVAL).

CAUTION: Only raise the engine enough to provide clearance for oil pan removal. Check for proper clearance at fan shroud to fan and cowl to intake manifold.

8. Raise engine using special tool # 8534 to provide clearance to remove oil pan.
9. Remove the nuts from the transmission mount to crossmember.
10. Using suitable transmission jack, raise the transmission approximately 3 inches off of the crossmember.

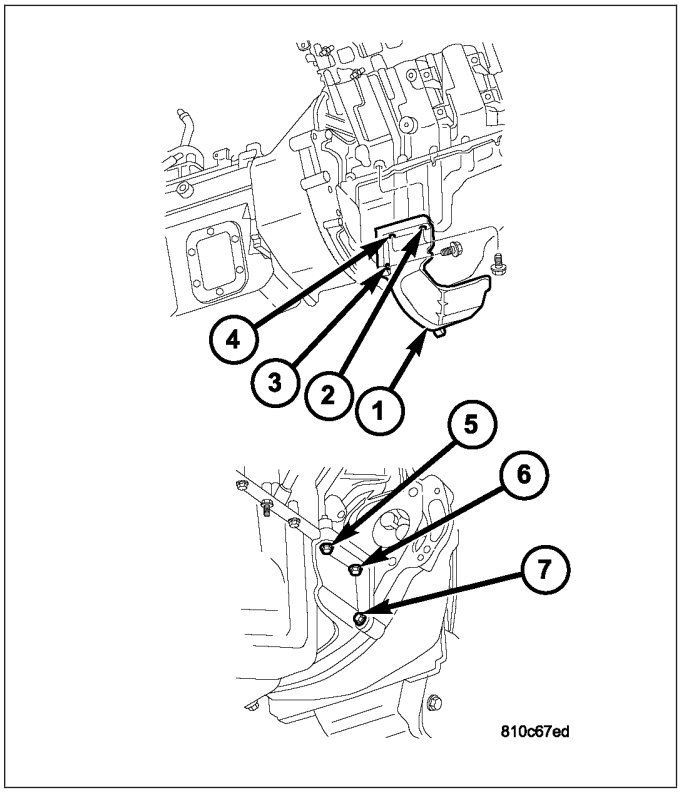

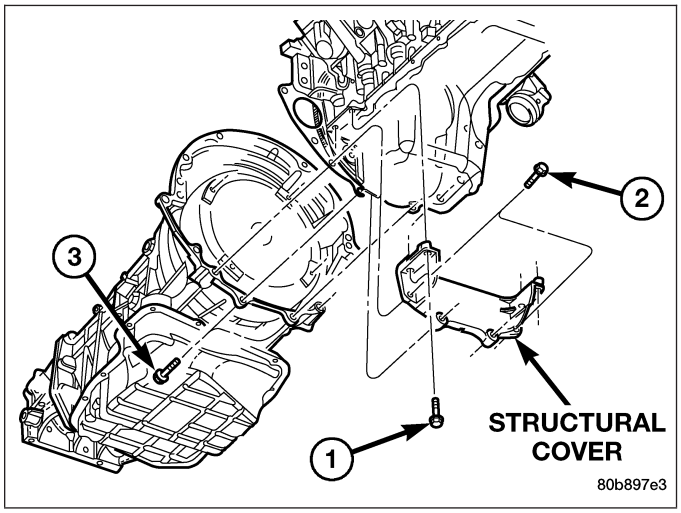

NOTE: Do not pry on oil pan or oil pan gasket. Gasket is integral to engine windage tray and does not come out with oil pan.

11. Remove the oil pan mounting bolts using the sequence above, and remove oil pan.

NOTE: The double ended oil pan studs must be installed in the same location that they were removed from.

12. Unbolt oil pump pickup tube and remove tube.

NOTE: When the oil pan is removed, a new oil pan gasket/windage tray assembly must be installed. The old gasket cannot be reused.

13. Discard the integral windage tray and gasket and replace.

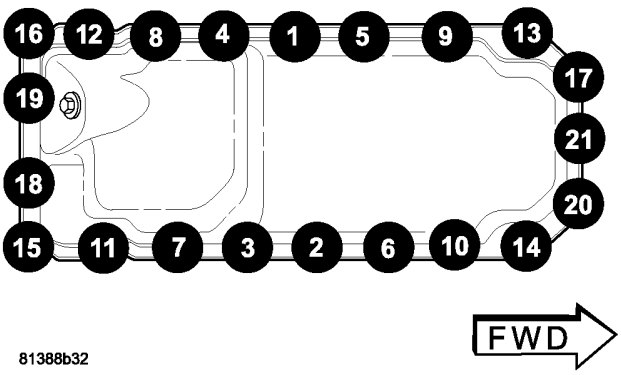

INSTALLATION

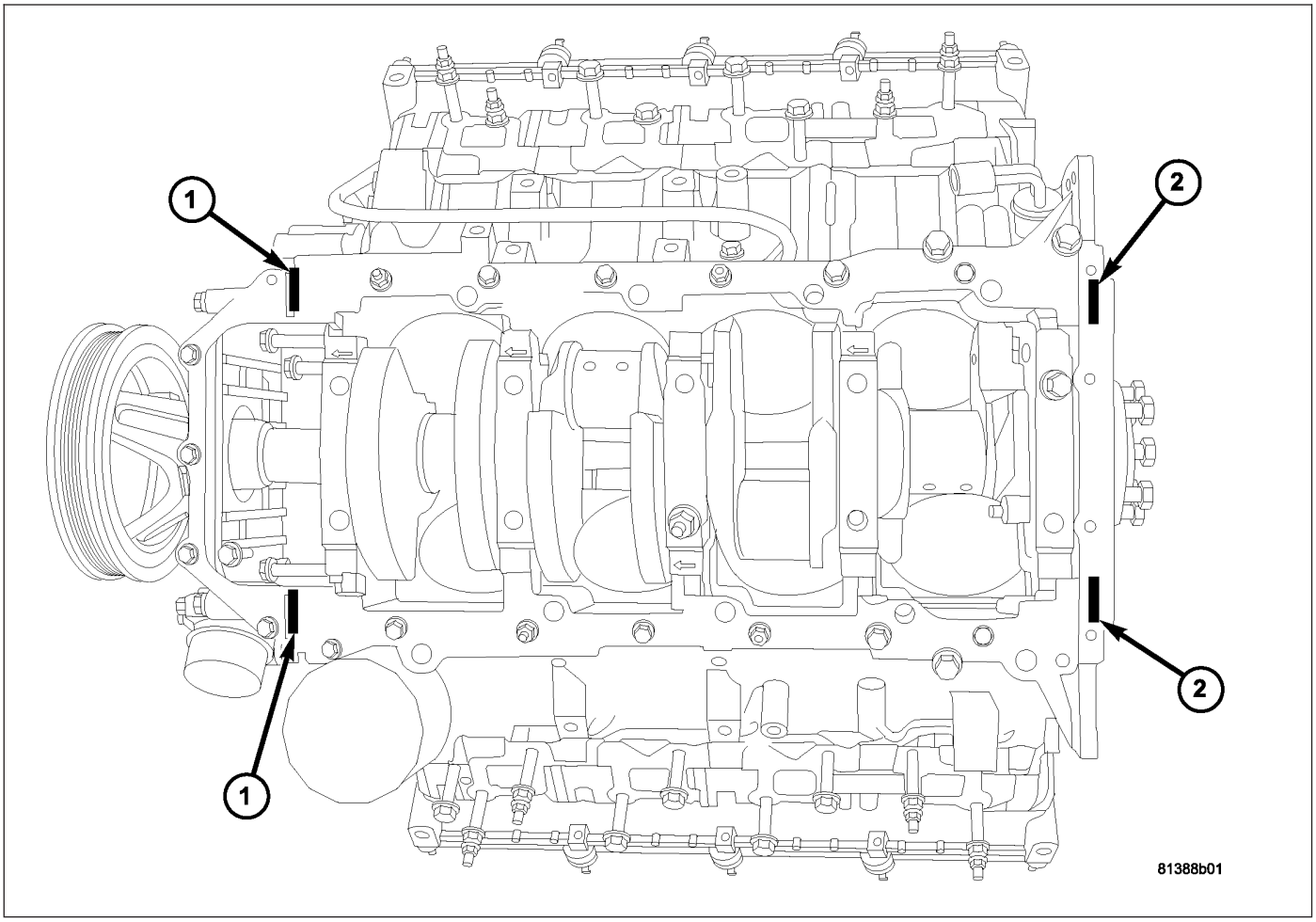

1. Clean the oil pan gasket mating surface of the block and oil pan.

NOTE: Mopar® Engine RTV must be applied to the 4 T-joints, (area where front cover, rear retainer, block, and oil pan gasket meet). The bead of RTV should cover the bottom of the gasket. This area is approximately 4.5 mm x 25 mm in each of the 4 T-joint locations.

2. Apply Mopar® Engine RTV at the 4 T- joints.

NOTE: When the oil pan is removed, a new integral windage tray and gasket assembly must be installed. The old gasket cannot be reused.

3. Install a new integral windage tray and gasket.
4. Reinstall the oil pump pickup tube with new o-ring. Tighten tube to pump fasteners to 28 N·m (250 in. lbs.).

NOTE: The double ended oil pan studs must be installed in the same location that they were removed from.

5. Position the oil pan and install the mounting bolts and studs. Tighten the mounting bolts to 12 N·m (105 in.lbs.), using the sequence above.
6. Lower the transmission onto the crossmember. Install nuts, and tighten.
7. Lower the engine into mounts using special tool # 8534.
8. **For 2WD vehicles,** Install both the left and right side engine mount through bolts. Tighten the nuts to 68 N·m (50 ft. lbs.).

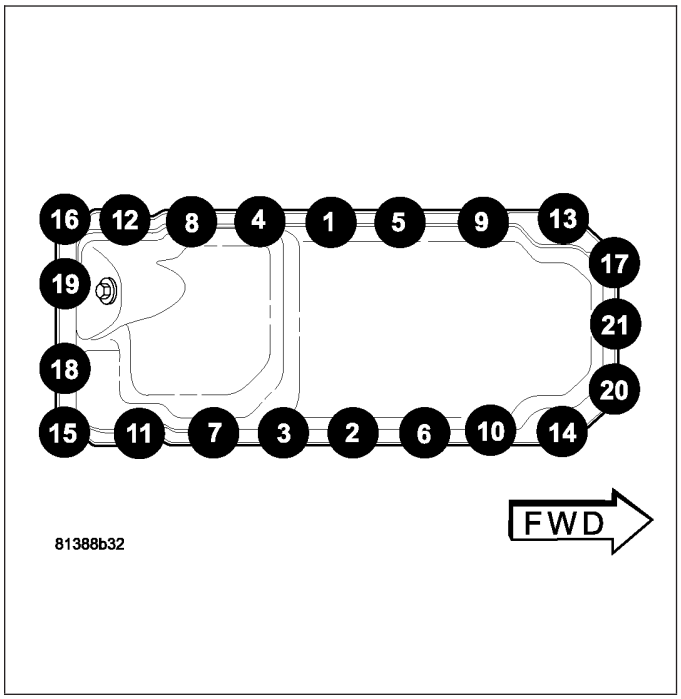

9. **For 4WD vehicles,** Install both the left and right side engine mount bracket to mount bolts. Tighten the nuts to 68 N·m (50 ft. lbs.).
10. Remove special tool # 8534.

11. Install the structural dust cover (1). (Refer to 9 - ENGINE/ENGINE BLOCK/STRUCTURAL COVER - INSTALLATION).
12. Install the front crossmember (Refer to 13 - FRAME & BUMPERS/FRAME/FRONT CROSSMEMBER - INSTALLATION).
13. Fill engine oil.
14. Reconnect the negative battery cable.
15. Start engine and check for leaks.

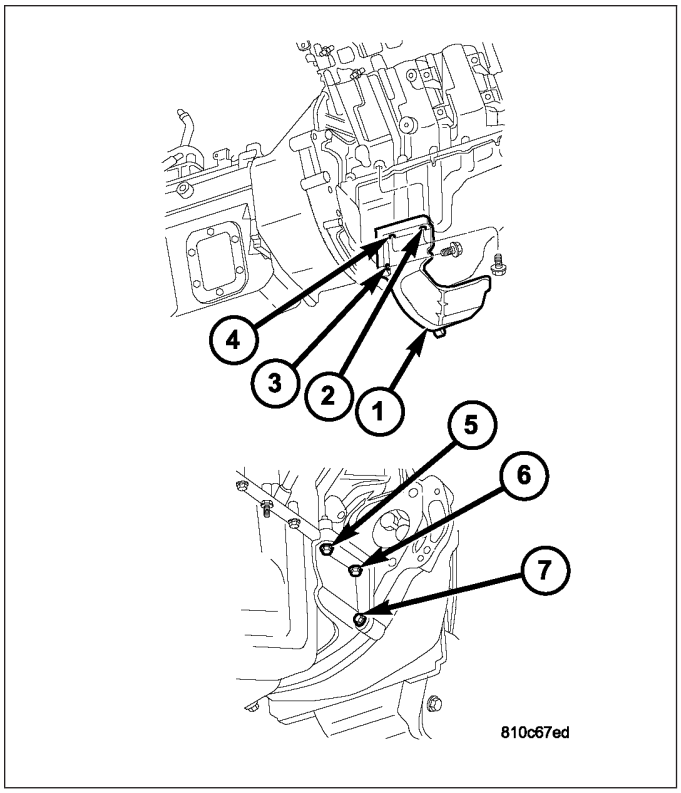

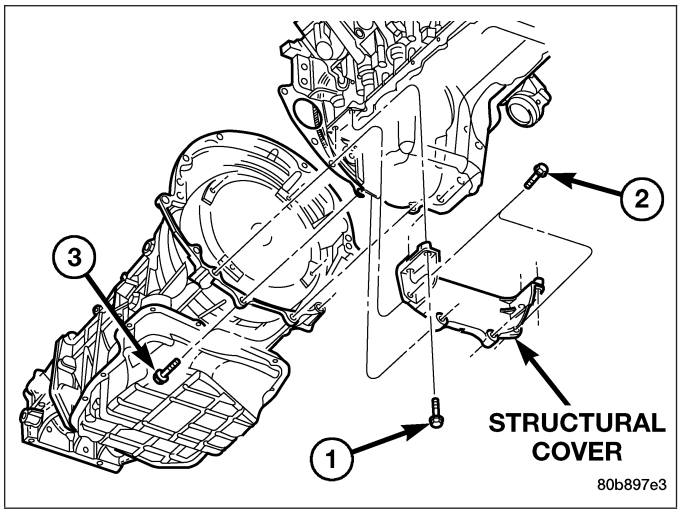

PUMP - ENGINE OIL

DESCRIPTION

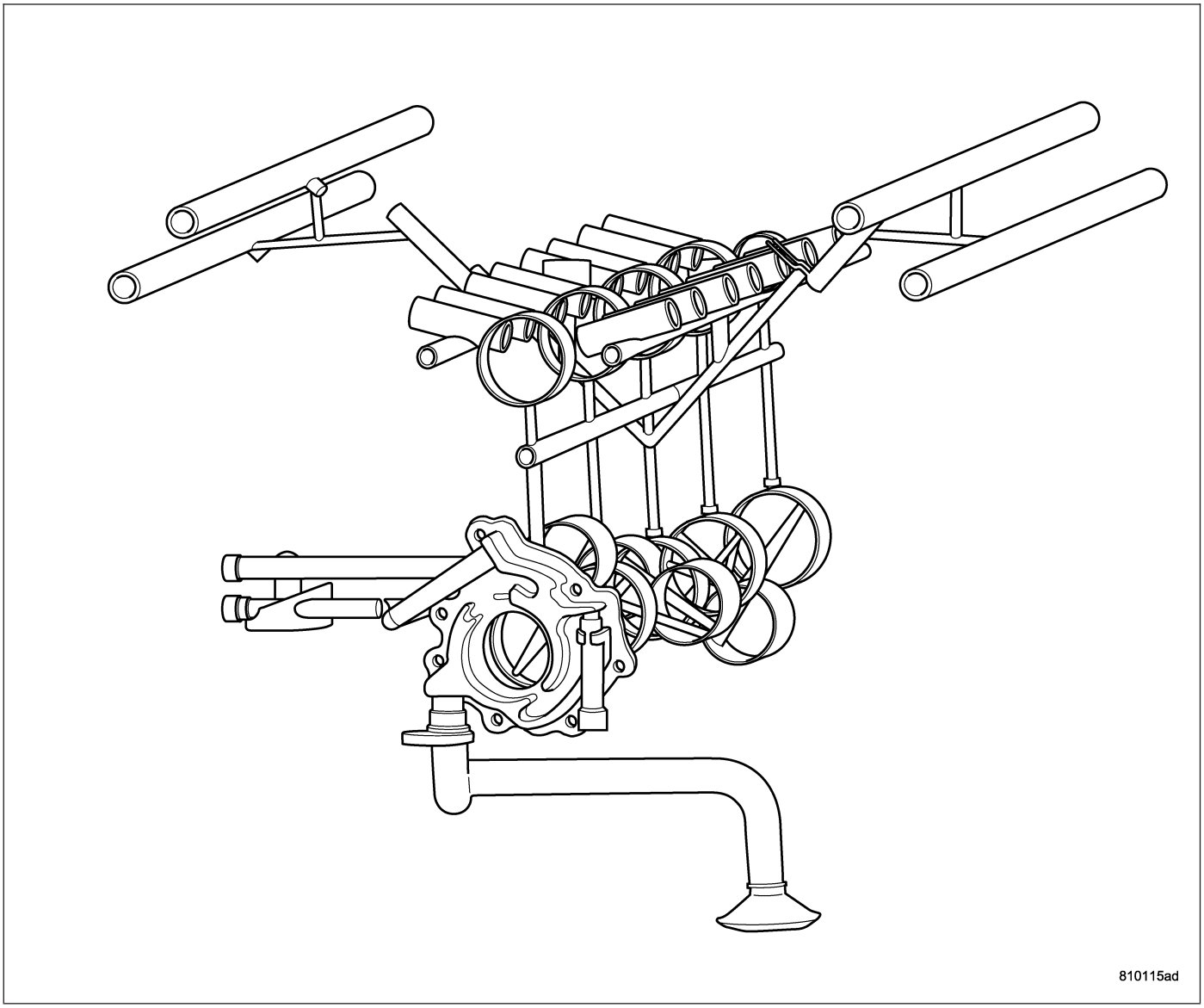

The lubrication system is a full flow filtration pressure feed type.

REMOVAL

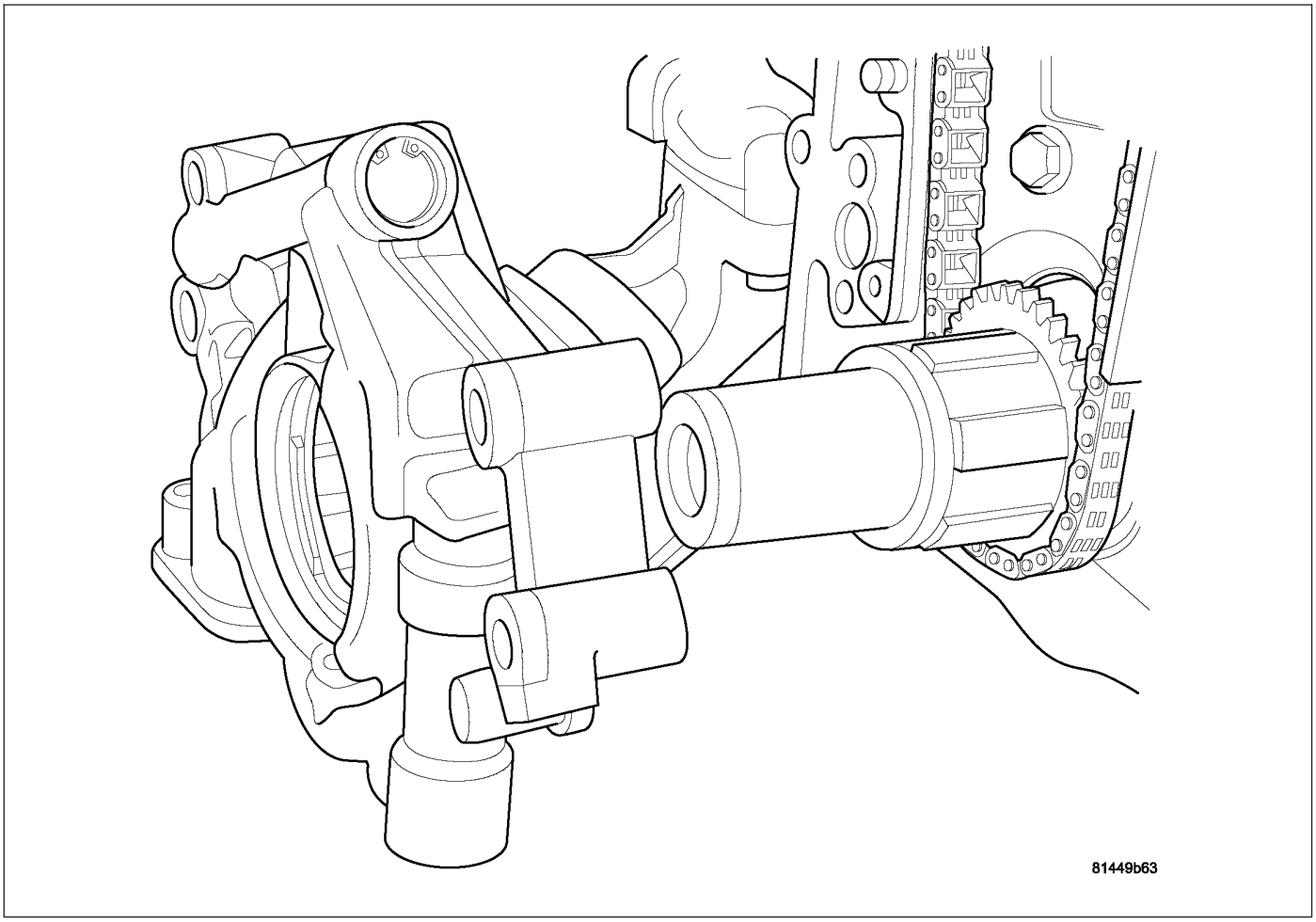

1. Remove the oil pan and pick-up tube (Refer to 9 - ENGINE/LUBRICATION/OIL PAN - REMOVAL).
2. Remove the timing chain cover (Refer to 9 - ENGINE/VALVE TIMING/TIMING BELT / CHAIN COVER(S) - REMOVAL).
3. Remove the four bolts, and the oil pump.

CLEANING

1. Wash all parts in a suitable solvent.

INSPECTION

CAUTION: Oil pump pressure relief valve and spring should not be removed from the oil pump. If these components are disassembled and or removed from the pump the entire oil pump assembly must be replaced.

1. Remove the pump cover.
2. Clean all parts thoroughly. Mating surface of the oil pump housing should be smooth. If the pump cover is scratched or grooved the oil pump assembly should be replaced.
3. Slide outer rotor into the body of the oil pump. Press the outer rotor to one side of the oil pump body and measure clearance between the outer rotor (2) and the body. If the measurement is 0.235mm (0.009 in.) or more the oil pump assembly must be replaced.

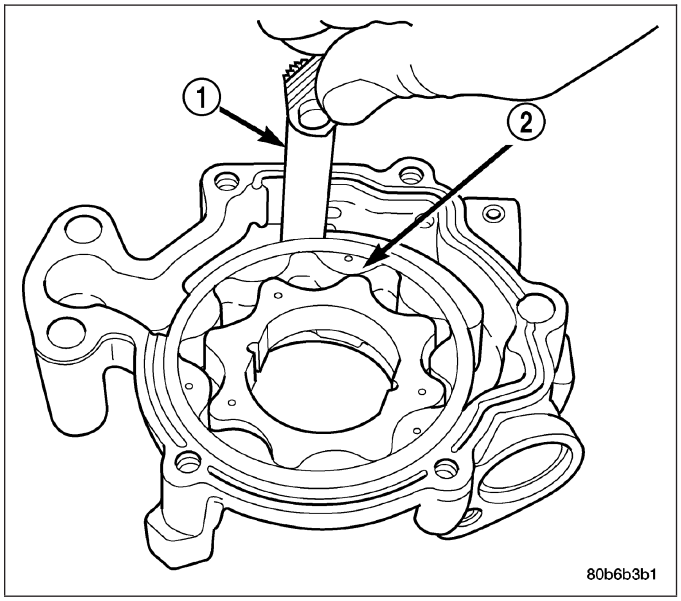

4. Install the inner rotor in the into the oil pump body. Measure the clearance between the inner (3) and outer rotors (1). If the clearance between the rotors is .150 mm (0.006 in.) or more the oil pump assembly must be replaced.

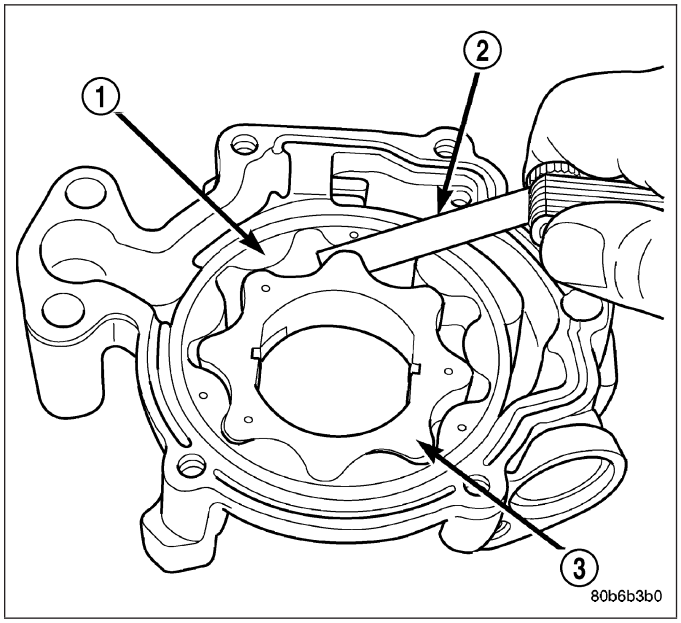

5. Place a straight edge (1) across the body of the oil pump (between the bolt holes), if a feeler gauge (2) of .095 mm (0.0038 in.) or greater can be inserted between the straightedge and the rotors, the pump must be replaced.
6. Reinstall the pump cover. Torque fasteners to 15 N·m (132 in. lbs.).

NOTE: The 5.7 Oil pump is released as an assembly. There are no DaimlerChrysler part numbers for Sub-Assembly components. In the event the oil pump is not functioning or out of specification it must be replaced as an assembly.

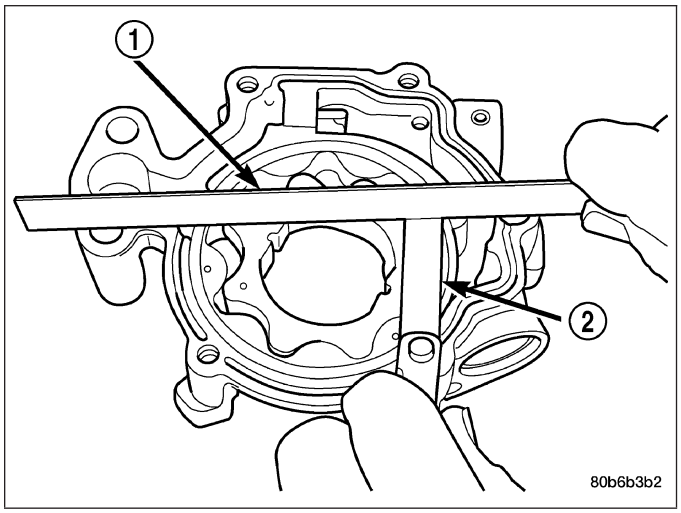

INSTALLATION

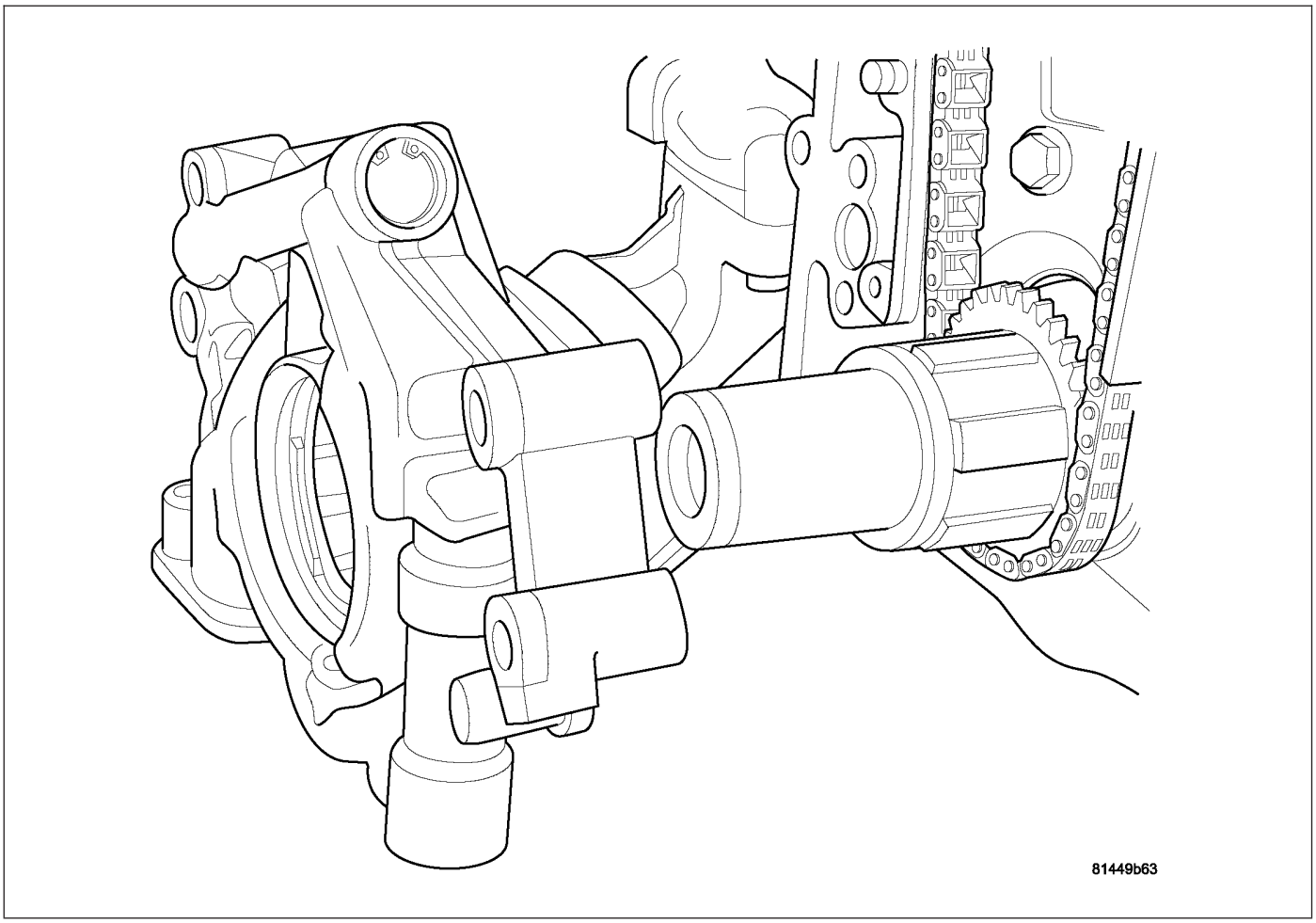

1. Position the oil pump onto the crankshaft and install the 4 oil pump retaining bolts.
2. Tighten the oil pump retaining bolts to 28 N·m (250 in. lbs.).
3. Install the timing chain cover (Refer to 9 - ENGINE/VALVE TIMING/TIMING BELT / CHAIN COVER(S) - INSTALLATION).
4. Install the pick-up tube and oil pan (Refer to 9 - ENGINE/LUBRICATION/OIL PAN - INSTALLATION).

MANIFOLD - INTAKE

DESCRIPTION

The intake manifold is made of a composite material and features long runners which maximizes low end torque. The intake manifold uses single plane sealing which consist of eight individual press in place port gaskets to prevent leaks.

DIAGNOSIS AND TESTING - INTAKE MANIFOLD LEAKAGE

An intake manifold air leak is characterized by lower than normal manifold vacuum. Also, one or more cylinders may not be functioning.

WARNING: USE EXTREME CAUTION WHEN THE ENGINE IS OPERATING. DO NOT STAND IN A DIRECT LINE WITH THE FAN. DO NOT PUT YOUR HANDS NEAR THE PULLEYS, BELTS OR THE FAN. DO NOT WEAR LOOSE CLOTHING.

1. Start the engine.
2. Spray a small stream of water at the suspected leak area.
3. If a change in RPM is observed the area of the suspected leak has been found.
4. Repair as required.

REMOVAL

1. Disconnect negative cable from battery.
2. Remove resonator assembly and air inlet hose.
3. Disconnect electrical connectors for the following components:
   - Manifold Absolute Pressure (MAP) Sensor
   - Intake Air Temperature (IAT) Sensor
   - Throttle Position (TPS) Sensor
   - Coolant Temperature (CTS) Sensor
4. Disconnect brake booster hose and positive crankcase ventilation (PCV) hose.
5. Remove generator and set aside.

NOTE: It is not necessary to remove lines or remove freon from A/C compressor.

6. Remove air conditioning compressor and set aside..
7. Bleed fuel system (Refer to 14 - FUEL SYSTEM/FUEL DELIVERY - STANDARD PROCEDURE).
8. Remove intake manifold retaining fasteners in a crisscross pattern starting from the outside bolts and ending at the middle bolts.
9. Remove intake manifold and IAFM as an assembly.

CLEANING

NOTE: There is NO approved repair procedure for the intake manifold. If severe damage is found during inspection, the intake manifold must be replaced.

Before installing the intake manifold thoroughly clean the mating surfaces. Use a suitable cleaning solvent, then air dry.

INSPECTION

1. Inspect the intake sealing surface for cracks, nicks and distortion.
2. Inspect the intake manifold vacuum hose fittings for looseness or blockage.
3. Inspect the manifold to throttle body mating surface for cracks, nicks and distortion.

INSTALLATION

1. Install intake manifold seals.
2. Position intake manifold and IAFM.
3. Install intake manifold retaining bolts, and tighten in sequence from the middle bolts towards the outside in a crisscross pattern. Torque fasteners to 12 N·m (105 in. lbs.).
4. Connect electrical connectors for the following components:
   - Manifold Absolute Pressure (MAP) Sensor
   - Intake Air Temperature (IAT) Sensor
   - Throttle Position (TPS) Sensor
   - Coolant Temperature (CTS) Sensor
   - Idle Air Control (IAC) Motor
5. Install generator.
6. Install A/C compressor.
7. Connect Brake booster hose and Positive crankcase ventilation (PCV) hose.
8. Install resonator assembly and air inlet hose.
9. Connect negative cable to battery.

MANIFOLD - EXHAUST

DESCRIPTION

The exhaust manifolds are log style with a patented flow enhancing design to maximize performance. The exhaust manifolds are made of high silicon molybdenum cast iron. A perforated core graphite exhaust manifold gasket is used to improve sealing to the cylinder head. The exhaust manifolds are covered by a three layer laminated heat shield for thermal protection and noise reduction. The heat shields are fastened with a torque prevailing nut that is backed off slightly to allow for the thermal expansion of the exhaust manifold.

OPERATION

The exhaust manifolds collect the engine exhaust exiting the combustion chambers, then channels the exhaust gases to the exhaust pipes attached to the manifolds.

REMOVAL

EXHAUST MANIFOLD

1. Disconnect negative battery cable.
2. Raise vehicle.
3. Remove exhaust pipe to manifold bolts.
4. Lower vehicle.
5. Install engine support fixture special tool #8534.
6. Raise engine enough to remove manifolds.

CAUTION: Do not damage engine harness while raising the engine.

7. Remove heat shield.
8. Remove manifold bolts using sequence provided.
9. Remove manifold and gasket.

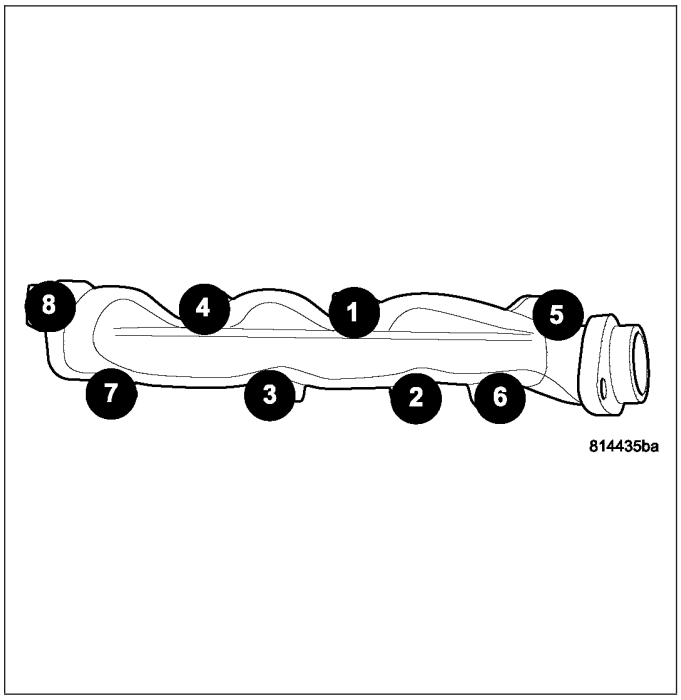

CLEANING

Clean mating surfaces on cylinder head and manifold. Wash with solvent and blow dry with compressed air.

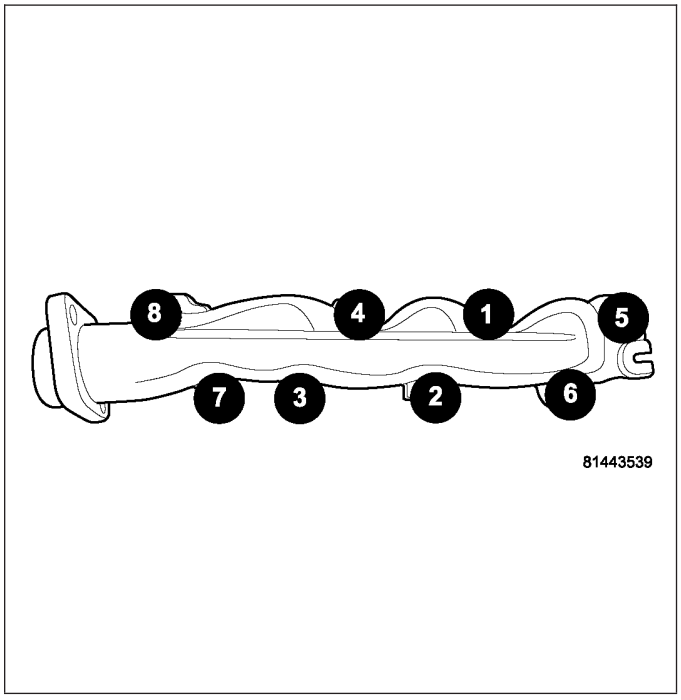

INSPECTION

Inspect manifold for cracks.

Inspect mating surfaces of manifold for flatness with a straight edge. Gasket surfaces must be flat within 0.2 mm per 300 mm (0.008 inch per foot).

INSTALLATION

EXHAUST MANIFOLD

1. Install manifold gasket and manifold.
2. Install manifold bolts and tighten using sequence provided to 25 N·m (18 ft. lbs.).
3. Install heat shield and tighten nuts to 15 N·m (11 ft. lbs.).
4. Lower engine.

CAUTION: Do not damage engine harness while lowering the engine.

5. Remove engine support fixture from engine.
6. Raise vehicle.
7. Tighten right and left side engine mount through bolts.
8. Install exhaust flange to pipe bolts.
9. Lower vehicle.
10. Connect negative battery cable.

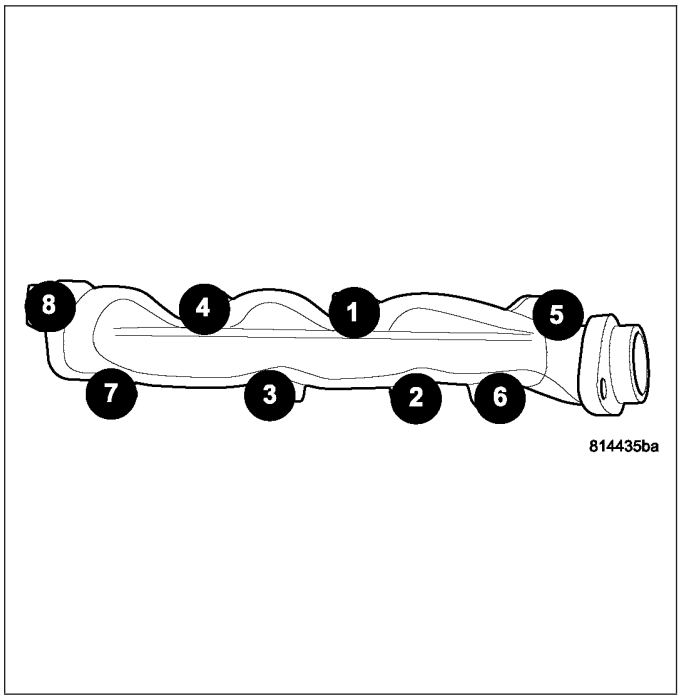

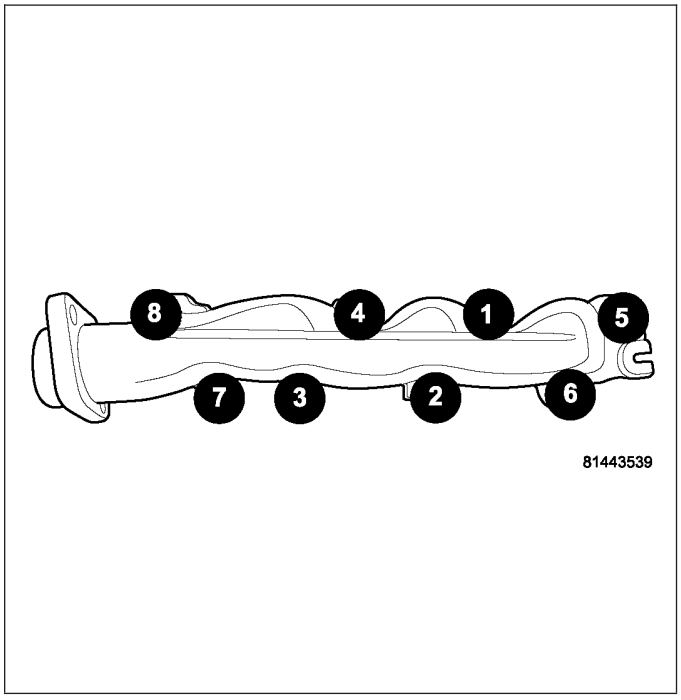

COVER - TIMING

REMOVAL

1. Disconnect the battery negative cable.
2. Remove the engine cover (1).
3. Remove air cleaner assembly.
4. Drain cooling system.
5. Remove accessory drive belt.
6. Remove fan and fan drive assembly (Refer to 7 - COOLING/ENGINE/FAN DRIVE VISCOUS CLUTCH - REMOVAL).
7. Remove coolant bottle and washer bottle.
8. Remove fan shroud.

NOTE: It is not necessary to disconnect A/C lines or discharge freon.

9. Remove A/C compressor and set aside.

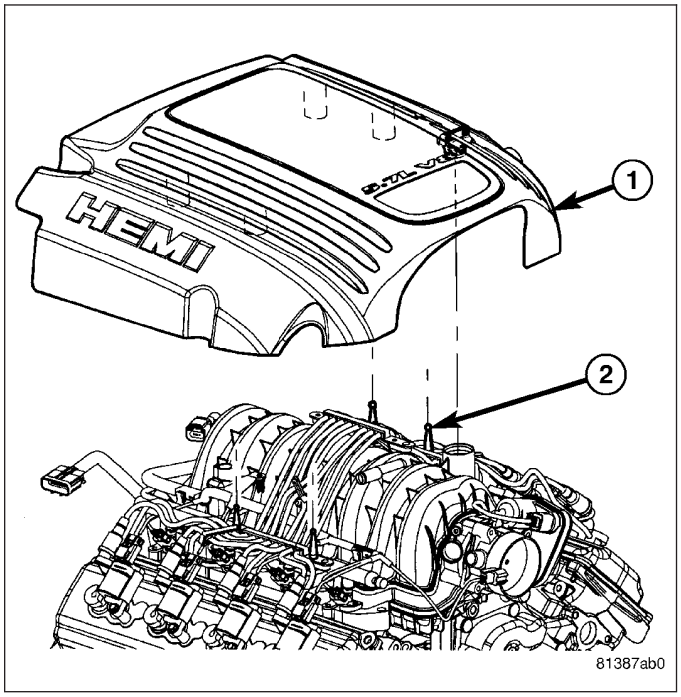

10. Remove the generator.
11. Remove upper radiator hose.
12. Disconnect both heater hoses at timing cover.
13. Disconnect lower radiator hose at engine.
14. Remove accessory drive belt tensioner and both idler pulleys.
15. Remove crankshaft damper (2) (Refer to 9 - ENGINE/ENGINE BLOCK/VIBRATION DAMPER - REMOVAL).

NOTE: Do not remove the hoses from the power steering pump.

16. Remove power steering pump and set aside.

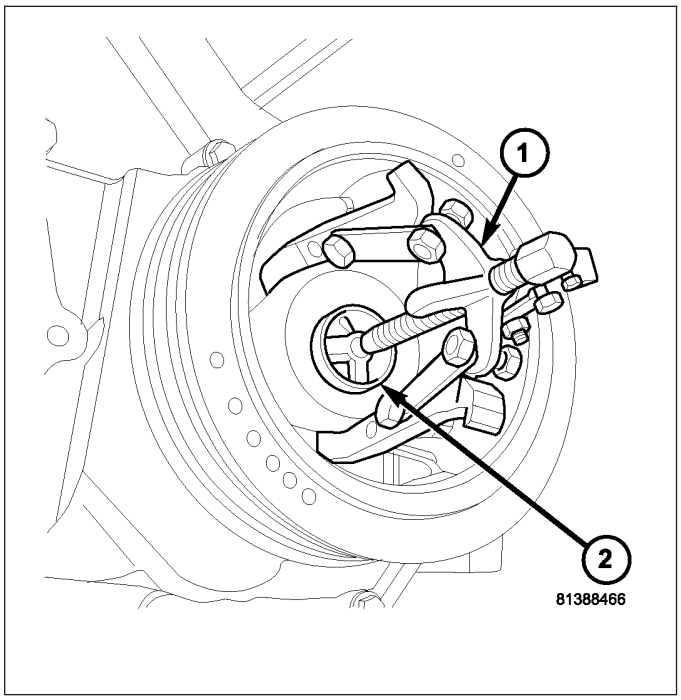

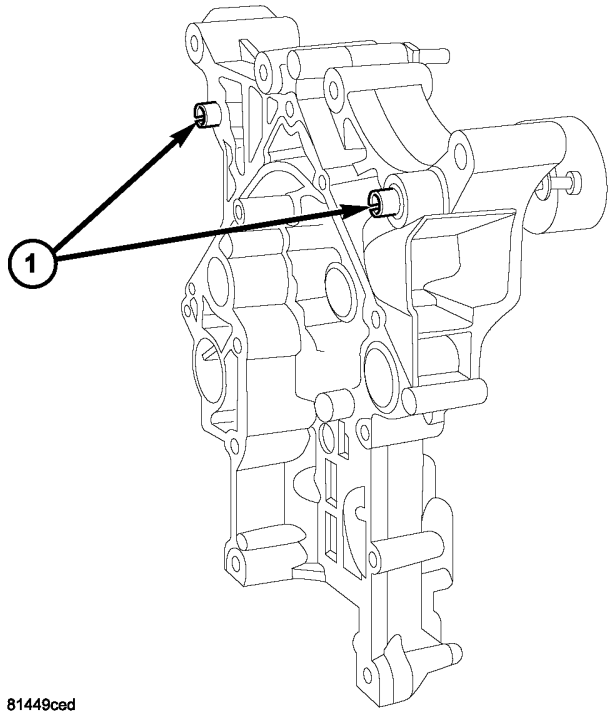

17. Remove the dipstick support bolt.
18. Drain the engine oil.
19. Remove the oil pan and pick up tube (Refer to 9 - ENGINE/LUBRICATION/OIL PAN - REMOVAL).

NOTE: It is not necessary to remove water pump for timing cover removal.

20. Remove timing cover bolts and remove cover.
21. Verify that timing cover slide bushings (1) are located in timing cover.

INSTALLATION

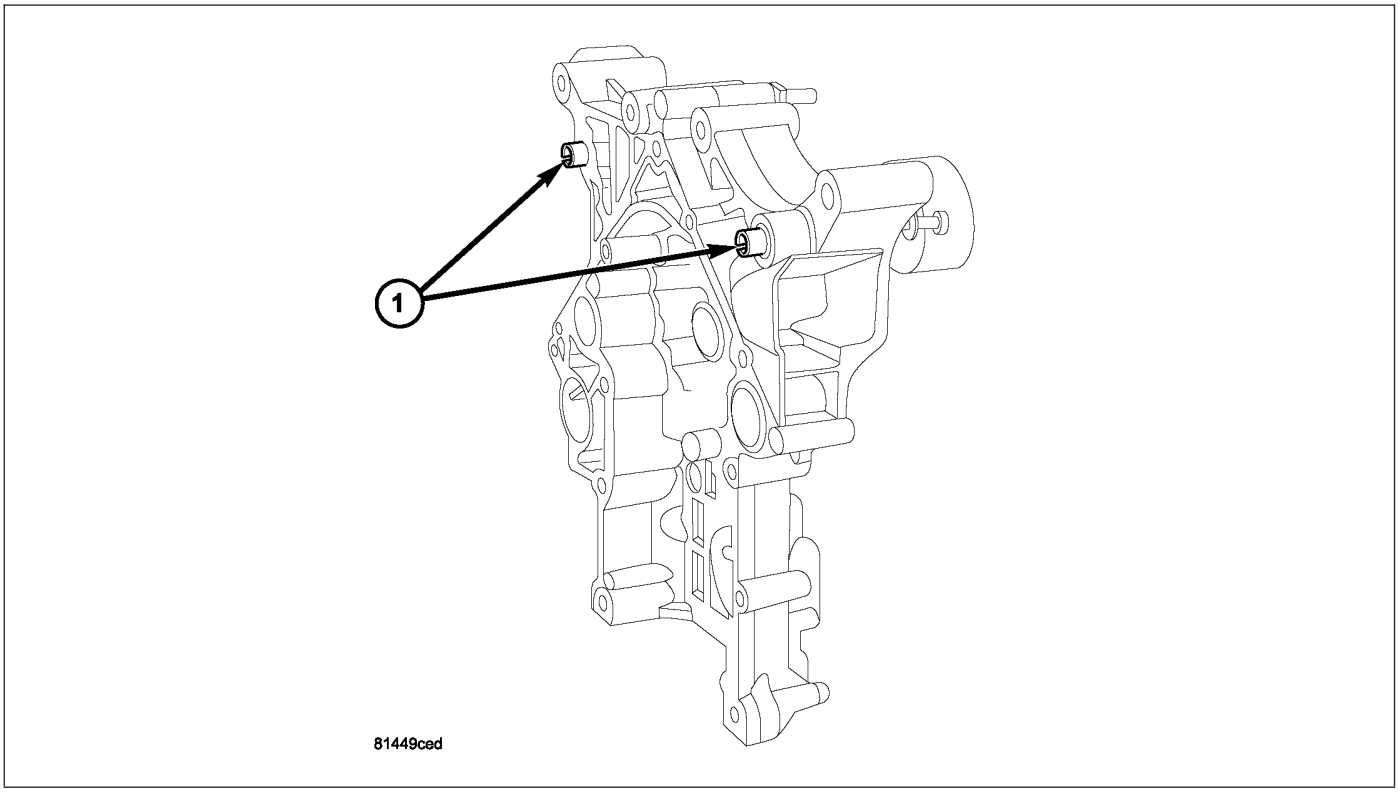

1. Clean timing chain cover and block surface.

NOTE: Always install a new gasket on timing cover.

2. Verify that the slide bushings (1) are installed in timing cover.
3. Install cover and new gasket. Tighten fasteners to 28 N·m (250 in. lbs.).

NOTE: The large lifting stud is torqued to 55 N·m (40 ft. lbs.).

4. Install the oil pan and pick up tube (Refer to 9 - ENGINE/LUBRICATION/OIL PAN - INSTALLATION).
5. Install the A/C compressor.
6. Install the generator.
7. Install power steering pump.
8. Install the dipstick support bolt.
9. Install the thermostat housing.
10. Install crankshaft damper (Refer to 9 - ENGINE/ENGINE BLOCK/VIBRATION DAMPER - INSTALLATION).

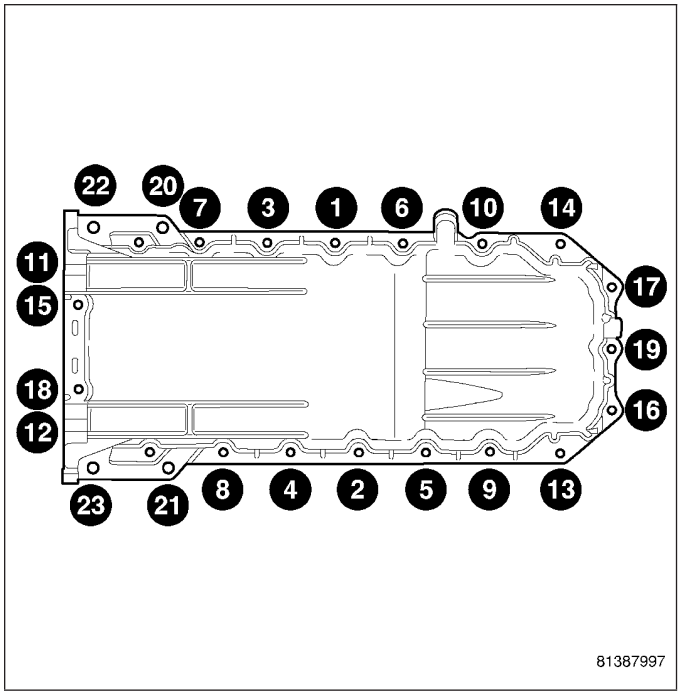

11. Install accessory drive belt tensioner assembly and both idler pulleys.

12. Install radiator lower hose.
13. Install both heater hoses.
14. Install radiator fan shroud.
15. Install the fan and fan drive assembly
16. Install the accessory drive belt.
17. Install the coolant bottle and washer bottle.
18. Install the upper radiator hose.
19. Install the air cleaner assembly.
20. Fill cooling system.
21. Refill engine oil.
22. Connect the battery negative cable.
23. Install the engine cover (1).

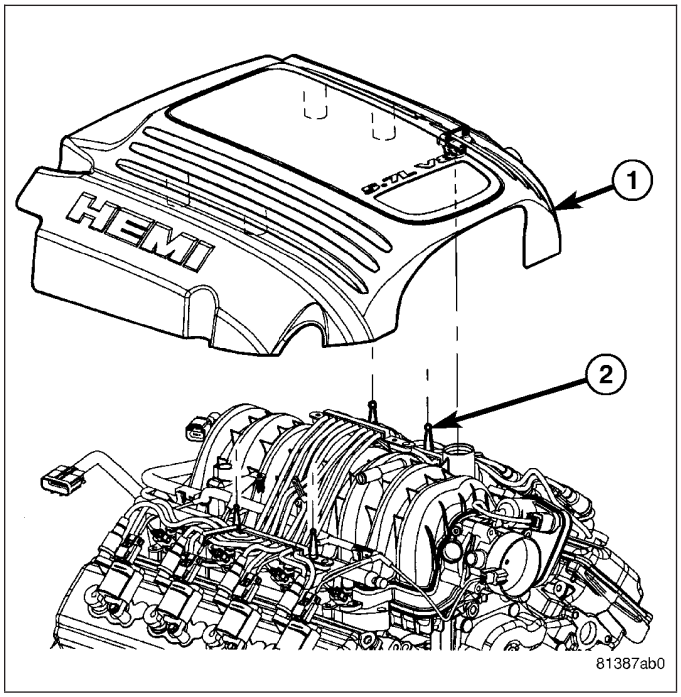

TIMING CHAIN & SPROCKETS

REMOVAL

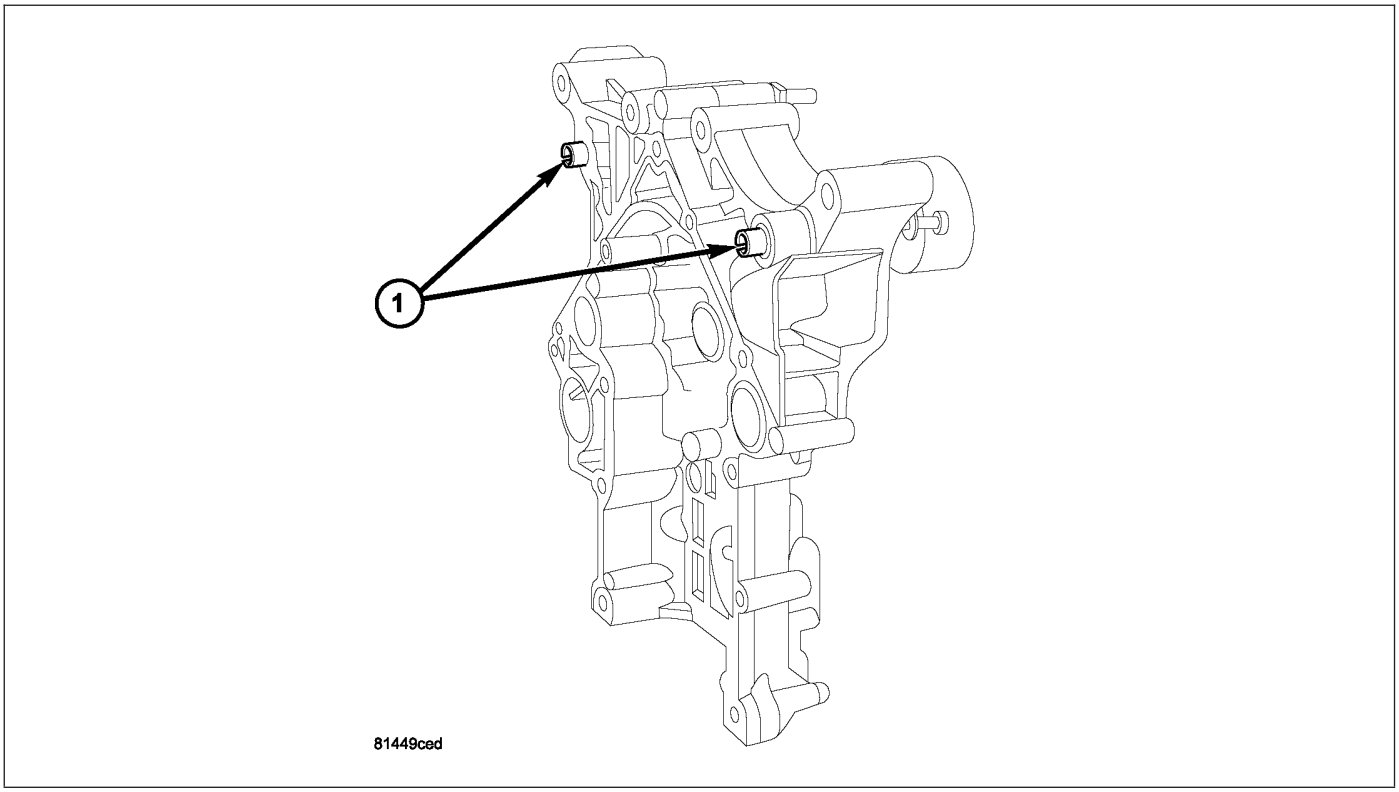

1. Disconnect battery negative cable.
2. Drain cooling system.

3. Remove Timing Chain Cover (1).

4. Re-install the vibration damper bolt finger tight. Using a suitable socket and breaker bar, rotate the crankshaft to align timing chain sprockets and keyways as shown.

CAUTION: The camshaft pin and the slot in the cam sprocket must be clocked at 12:00 (2). The crankshaft keyway must be clocked at 2:00 (3). The crankshaft sprocket must be installed so that the dots and or paint marking is at 6:00.

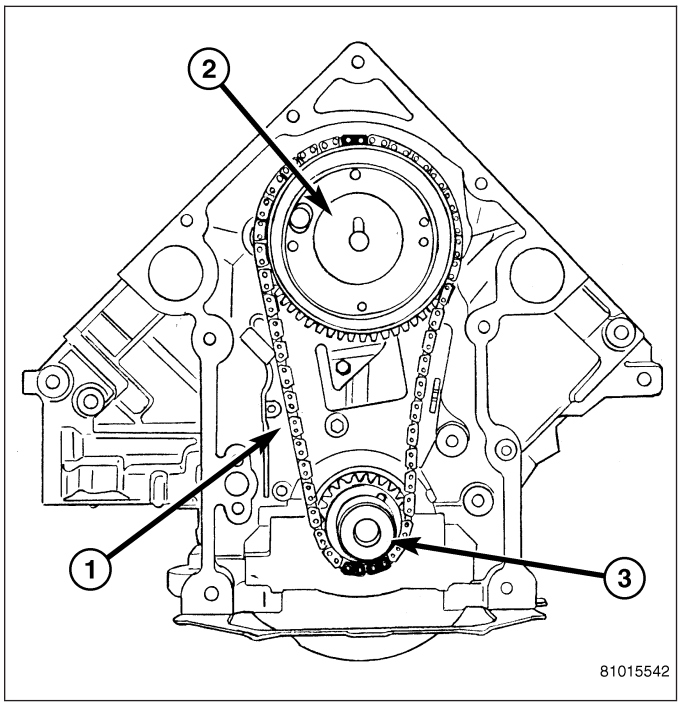

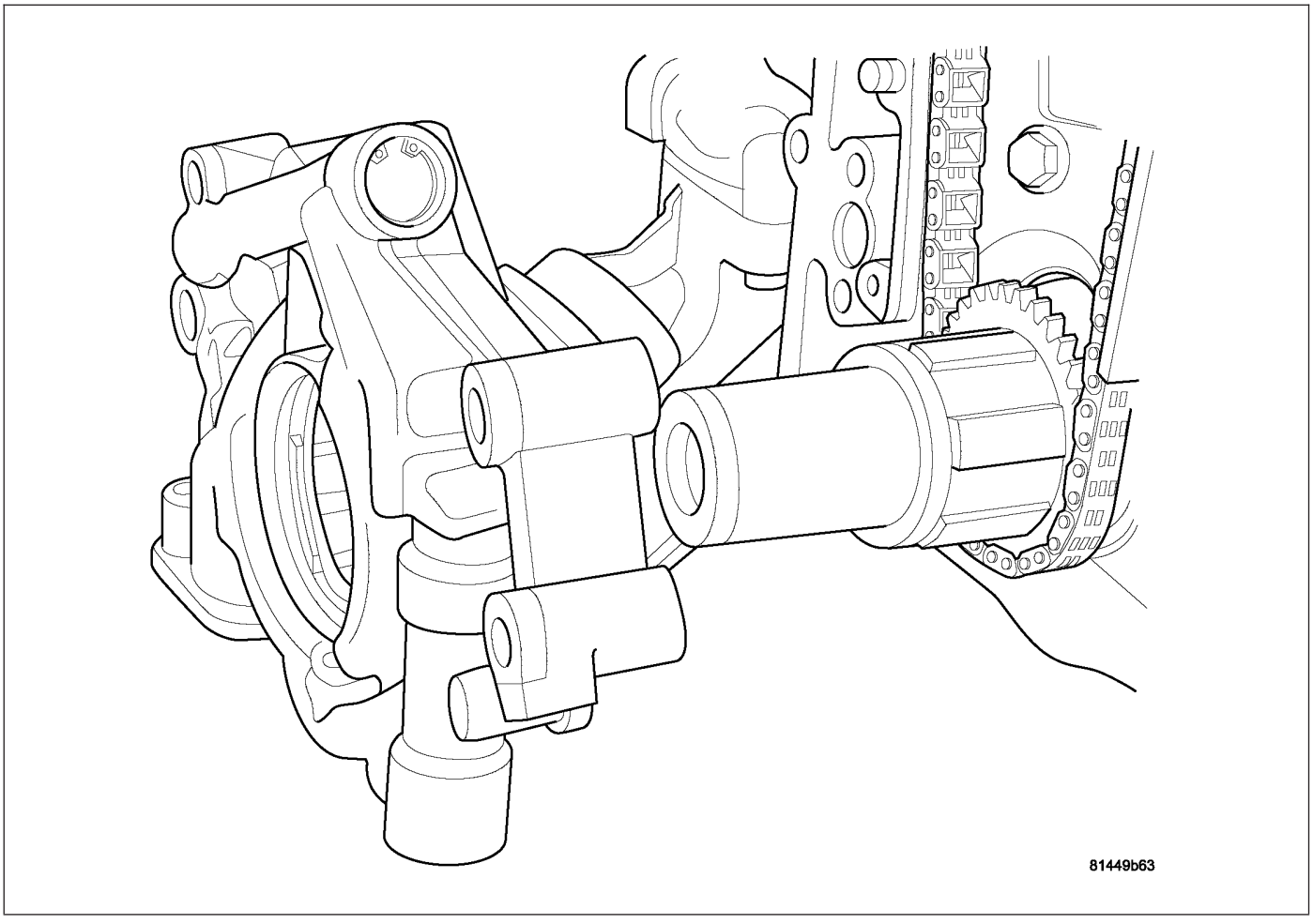

5. Remove oil pump.

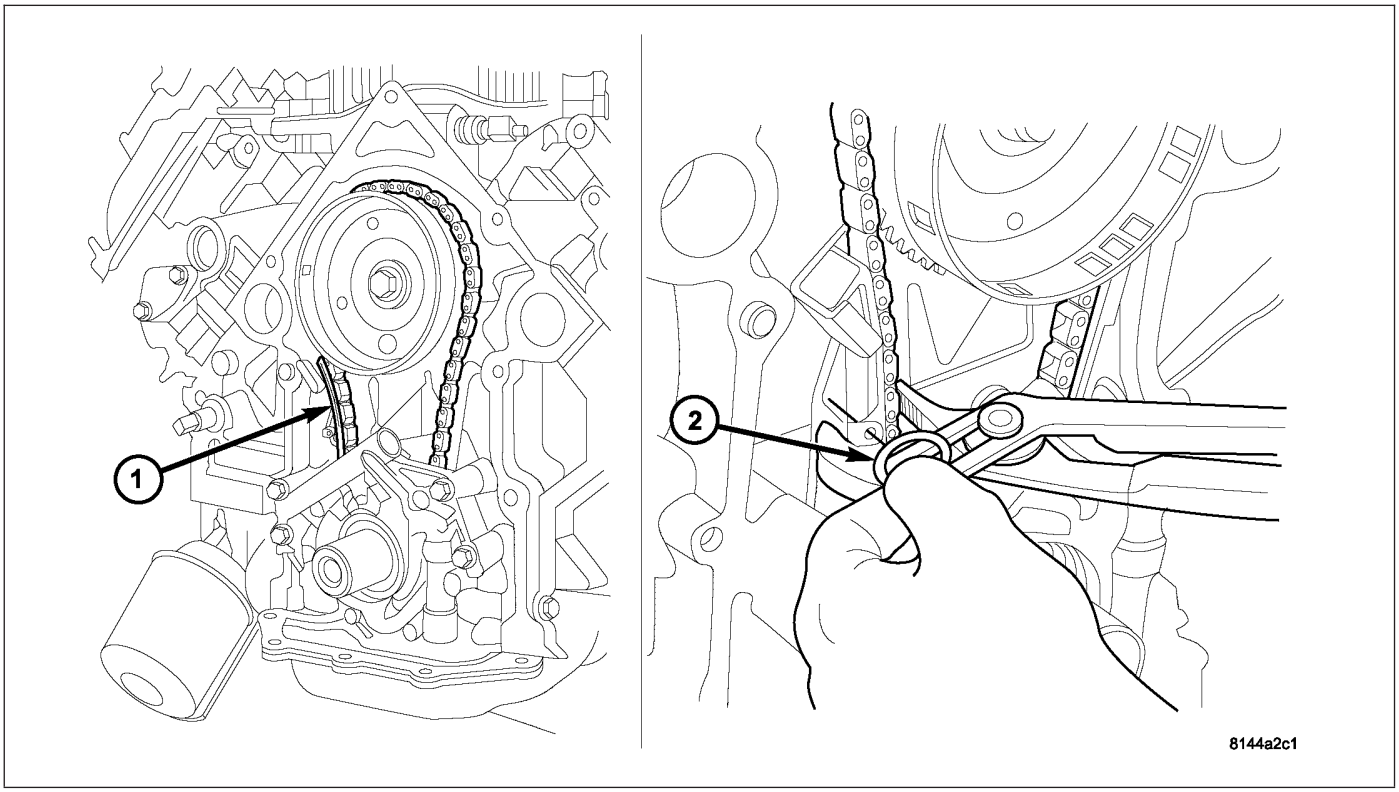

6. Retract tensioner shoe (1) until hole in shoe lines up with hole in bracket..

7. Slide a suitable pin (2) into the holes.

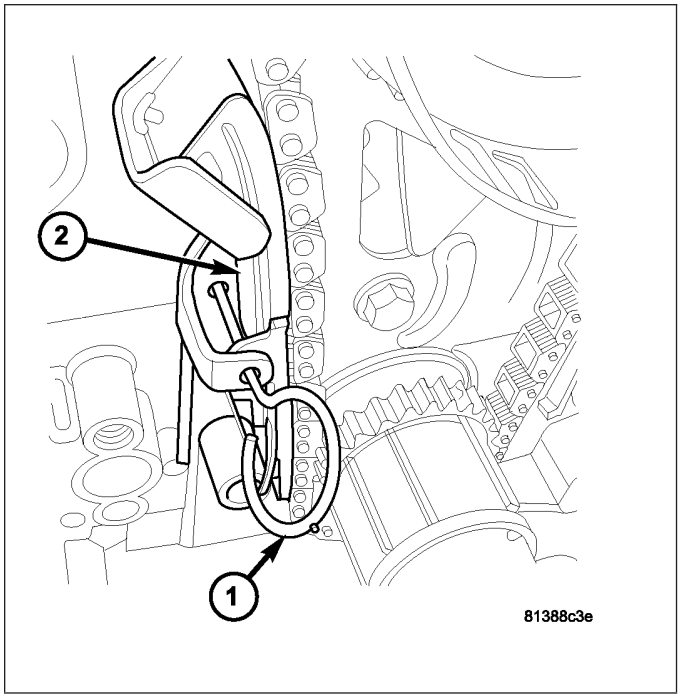

8. Remove camshaft sprocket attaching bolt and remove timing chain with crankshaft and camshaft sprockets (2).
9. If tensioner assembly is to be replaced, remove the tensioner to block bolts and remove tensioner assembly.

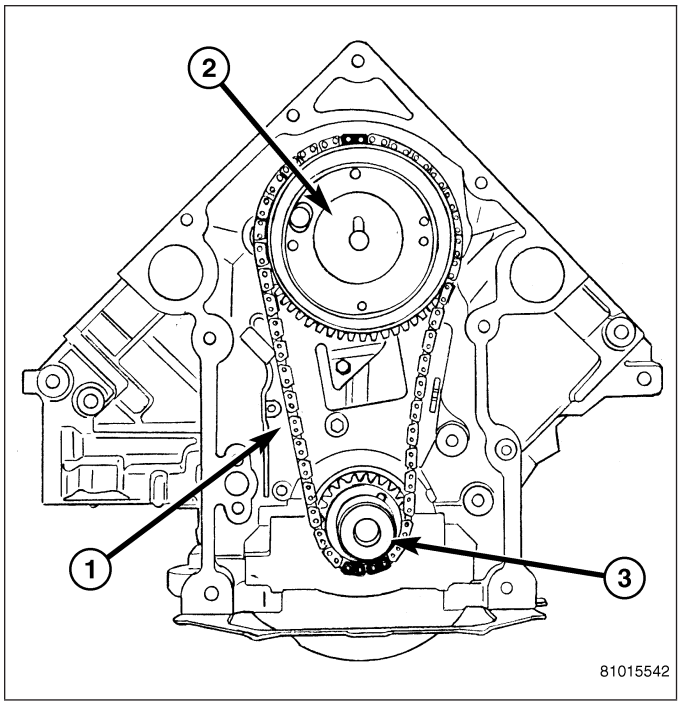

INSTALLATION

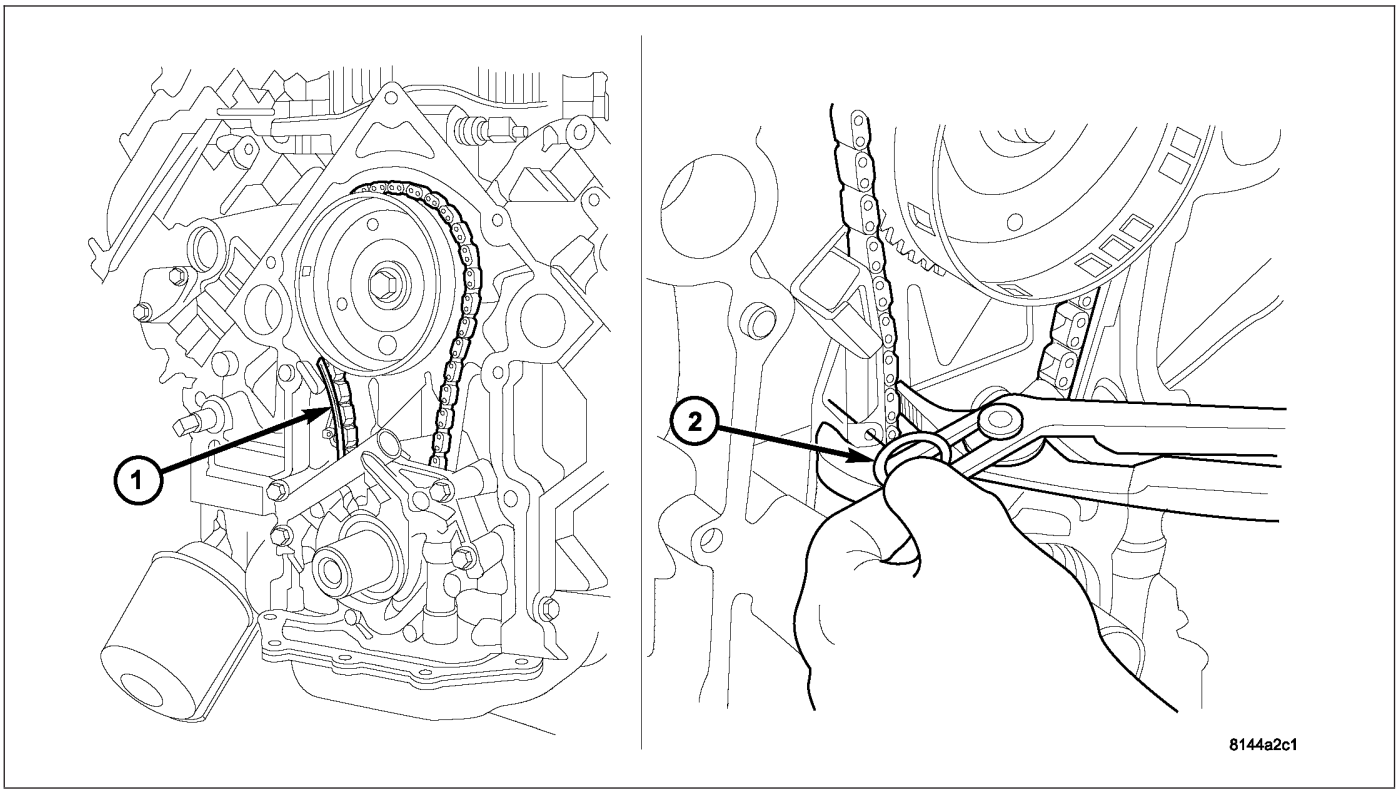

1. If tensioner (1) assembly is being replaced, install tensioner and mounting bolts. Torque bolts to 28 N·m (250 in. lbs.).
2. Retract tensioner (2) if required.

CAUTION: The timing chain must be installed with the single plated link aligned with the dot and or paint marking on the camshaft sprocket. The crankshaft sprocket is aligned with the dot and or paint marking on the sprocket between two plated timing chain links.

CAUTION: The camshaft pin and the slot in the cam sprocket must be clocked at 12:00. The crankshaft keyway must be clocked at 2:00. The crankshaft sprocket must be installed so that the dots and or paint marking is at 6:00.

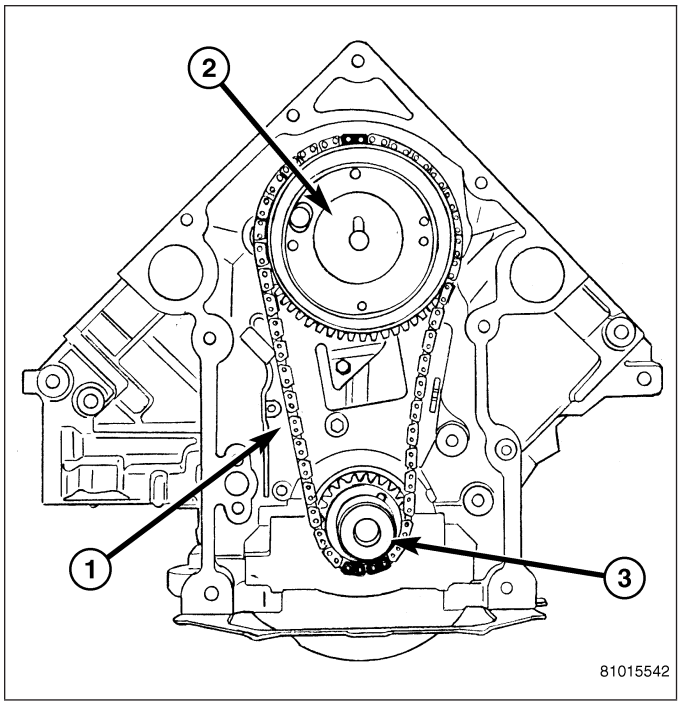

3. Place both camshaft sprocket and crankshaft sprocket on the bench with timing marks on exact imaginary center line through both camshaft and crankshaft bores.
4. Place timing chain around both sprockets.
5. Lift sprockets and chain (keep sprockets tight against the chain in position as shown).
6. Slide both sprockets (2,3) evenly over their respective shafts and check alignment of timing marks.
7. Install the camshaft bolt. Tighten the bolt to 122 N·m (90 ft. lbs.) torque.
8. **Remove tensioner pin. (1)** Again, verify alignment of timing marks.

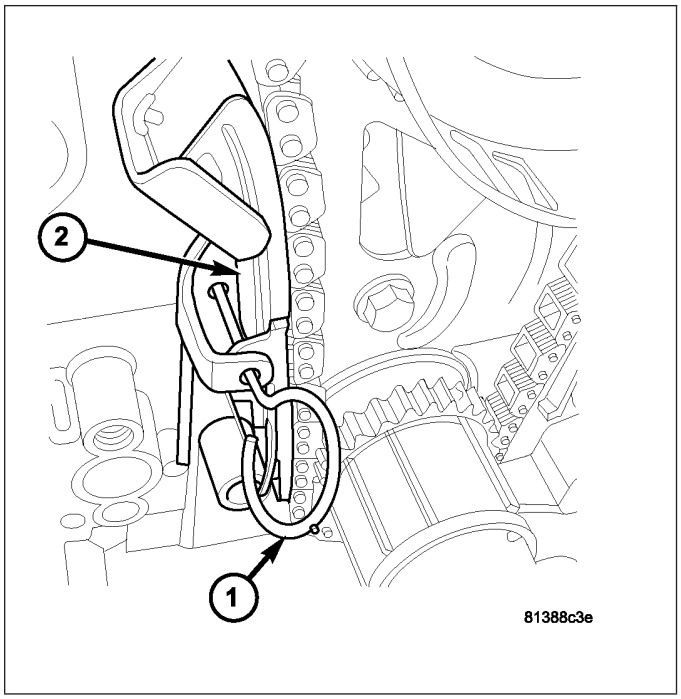

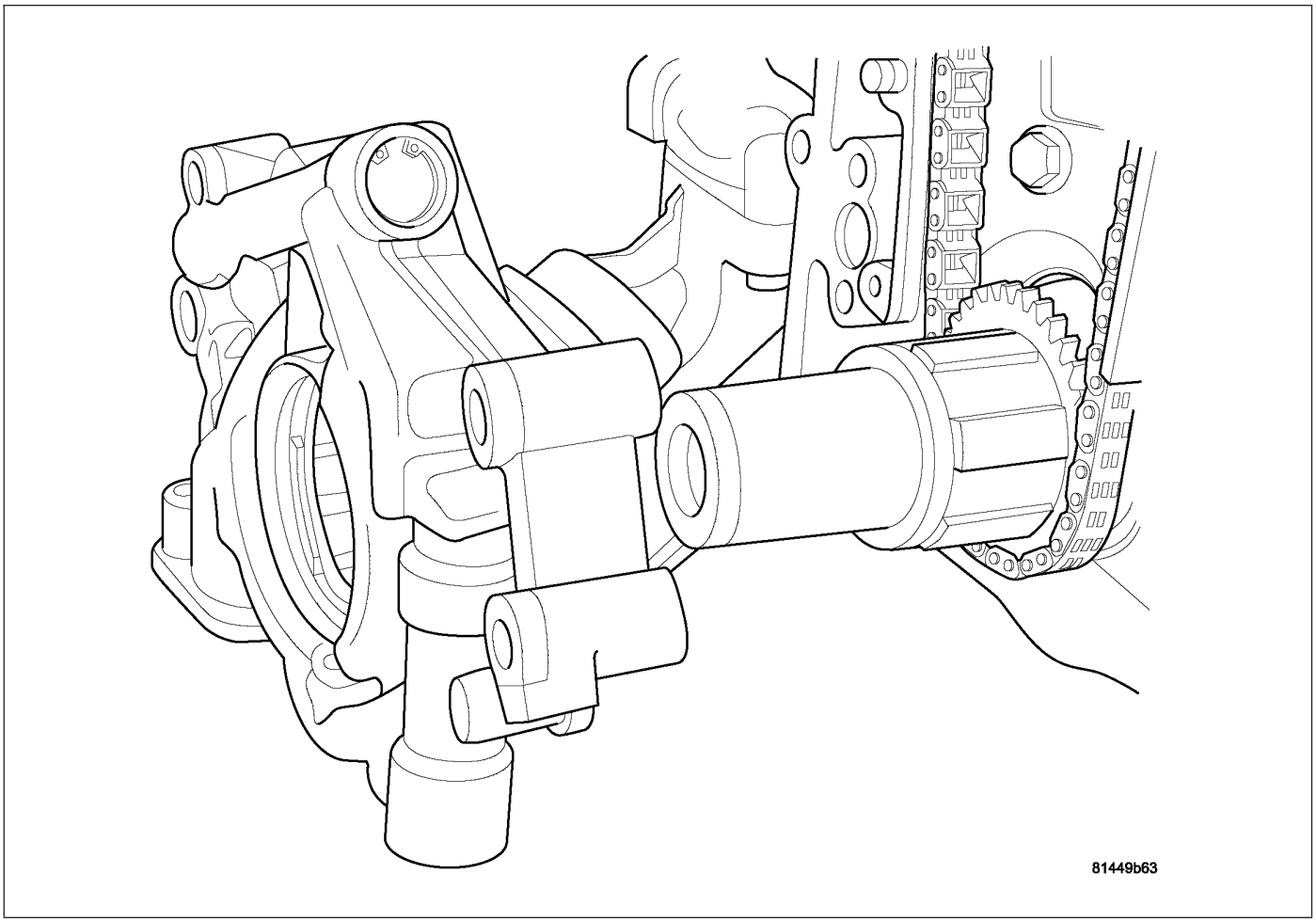

9. Install the oil pump (Refer to 9 - ENGINE/LUBRICATION/OIL PUMP - INSTALLATION).
10. Install the oil pan and pick up (Refer to 9 - ENGINE/LUBRICATION/OIL PAN - INSTALLATION).

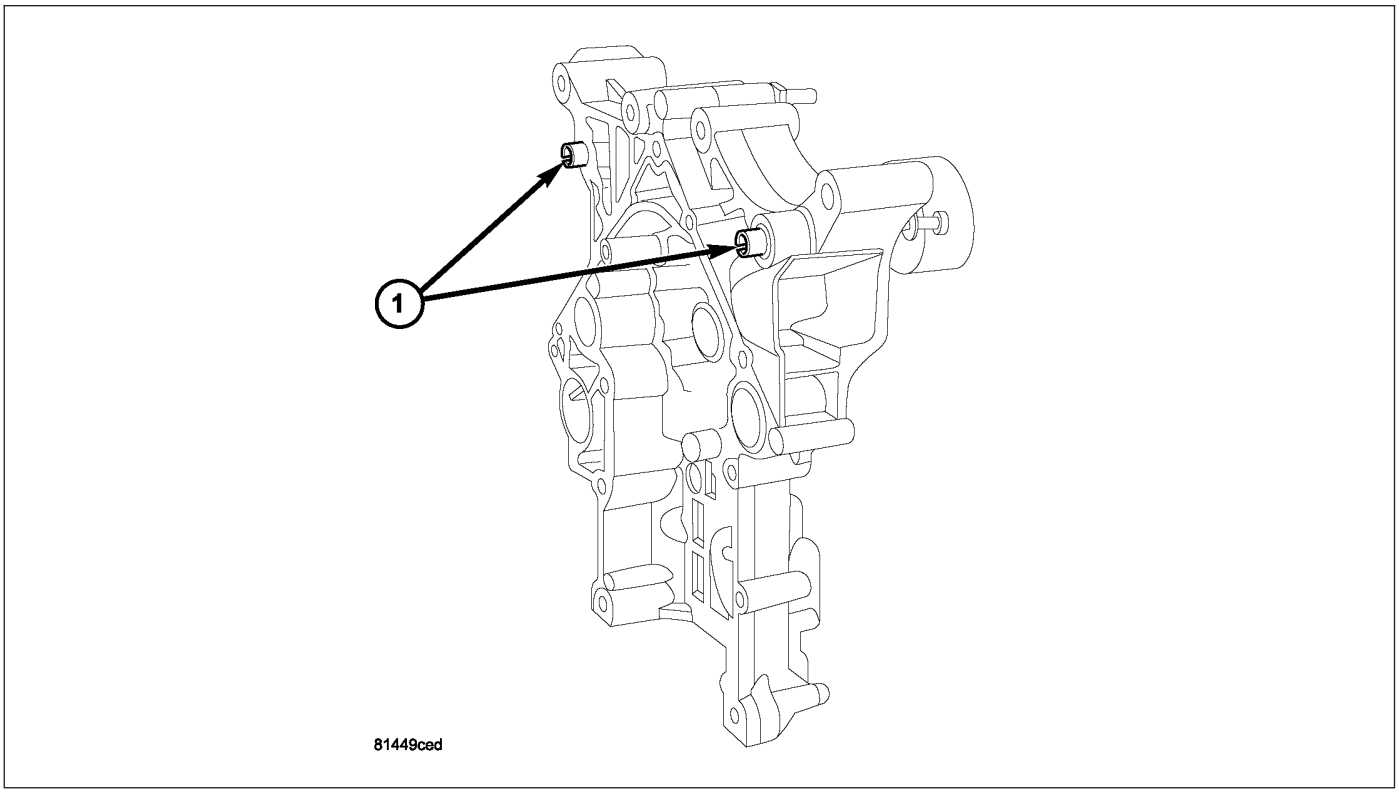

11. Install the timing chain cover (Refer to 9 - ENGINE/VALVE TIMING/TIMING BELT / CHAIN COVER(S) - INSTALLATION).
12. Refill engine oil.
13. Fill cooling system (Refer to 7 - COOLING - STANDARD PROCEDURE).
14. Connect battery negative cable.
15. Start engine and check for oil and coolant leaks.

TENSIONER - TIMING CHAIN

DESCRIPTION

The timing chain tensioner is a stamped steel constant tension mechanical design. It is mounted to the front of the engine, behind the timing chain drive.

OPERATION

The timing chain tension is maintained by routing the timing chain through the tensioner assembly. A nylon covered spring steel arm presses on the timing chain maintaining the correct chain tension.

ENGINE - 8.3L - SERVICE INFORMATION

TABLE OF CONTENTS

page

ENGINE - 8.3L - SERVICE INFORMATION
DESCRIPTION 2422
DIAGNOSIS AND TESTING
INTRODUCTION 2423
ENGINE DIAGNOSIS - PERFORMANCE . . 2424
ENGINE DIAGNOSIS - MECHANICAL 2425
CYLINDER COMPRESSION PRESSURE TEST 2427
CYLINDER COMBUSTION PRESSURE LEAKAGE TEST 2427
CYLINDER HEAD GASKET FAILURE DIAGNOSIS 2428
HYDRAULIC TAPPET NOISE DIAGNOSIS . 2429
ENGINE OIL LEAK INSPECTION 2429
STANDARD PROCEDURE
ENGINE CORE AND OIL GALLERY PLUGS 2431
FORM-IN-PLACE GASKETS AND SEALERS 2431
ENGINE GASKET SURFACE PREPARATION 2432
HYDROSTATIC LOCKED ENGINE 2432
REMOVAL - ENGINE ASSEMBLY 2433
INSTALLATION - ENGINE ASSEMBLY 2437
SPECIFICATIONS
ENGINE 2440
TORQUE 2445
SPECIAL TOOLS
ENGINE 2447
SYSTEM-AIR INTAKE
DESCRIPTION 2450
ELEMENT-AIR CLEANER
REMOVAL 2450
INSTALLATION 2451
HOUSING-AIR CLEANER
REMOVAL 2452
INSTALLATION 2453
MOUNTS-ENGINE
REMOVAL 2454
INSTALLATION 2455
MANIFOLD-INTAKE
DIAGNOSIS AND TESTING
INTAKE MANIFOLD LEAKS 2456
REMOVAL 2457
INSPECTION 2459
INSTALLATION 2459
MANIFOLD-EXHAUST
REMOVAL 2462
INSPECTION 2463
INSTALLATION 2463

page

HEAD(S)-CYLINDER
REMOVAL - CYLINDER HEAD(S) 2464
CLEANING
CLEANING / INSPECTION 2465
INSTALLATION - CYLINDER HEAD(S) 2465
COVER(S)-CYLINDER HEAD
REMOVAL 2467
INSTALLATION 2468
ARMS-ROCKER
REMOVAL 2469
INSTALLATION 2469
SPRINGS/SEALS-VALVE
DIAGNOSIS AND TESTING
VALVE SPRING TESTING 2470
STANDARD PROCEDURE - VALVE SPRING/ SEAL SERVICE IN-CAR 2470
REMOVAL 2471
INSTALLATION 2472
INTAKE/EXHAUST - VALVES/SEATS/GUIDES
STANDARD PROCEDURE - VALVE AND VALVE SEAT - REFACING 2473
INSPECTION 2474
COVER-TIMING CHAIN
REMOVAL 2476
INSTALLATION 2478
TIMING CHAIN AND SPROCKETS
REMOVAL 2480
INSTALLATION 2482
LUBRICATION
DESCRIPTION 2483
OPERATION 2483
DIAGNOSIS AND TESTING
CHECKING ENGINE OIL PRESSURE 2483
ENGINE OIL LEAK 2483
OIL
STANDARD PROCEDURE
CHECKING ENGINE OIL LEVEL 2484
ENGINE OIL AND FILTER CHANGE 2485
COOLER & LINES-OIL
DESCRIPTION 2485
OPERATION 2485
STANDARD PROCEDURE - OIL COOLER LINE QUICK CONNECT FITTING DISASSEMBLY/ ASSEMBLY 2486
REMOVAL 2487
INSTALLATION 2488
PAN-OIL
REMOVAL 2488
INSTALLATION 2490
PUMP-OIL
REMOVAL 2492

DISASSEMBLY 2492
CLEANING 2493
INSPECTION 2493
ASSEMBLY 2495
INSTALLATION 2496
SENSOR-OIL PRESSURE
REMOVAL 2497
INSTALLATION 2497
SENSOR-OIL TEMPERATURE
REMOVAL 2498
INSTALLATION 2498
BLOCK-ENGINE
DESCRIPTION 2499
STANDARD PROCEDURE - CYLINDER BORE HONING 2499
CLEANING 2499
INSPECTION 2500
HYDRAULIC TAPPETS
DESCRIPTION 2500
REMOVAL 2501
INSTALLATION 2501
CAMSHAFT
REMOVAL 2502
INSTALLATION 2503
ROD-PISTON & CONNECTING
DESCRIPTION 2504
STANDARD PROCEDURE
PISTON FITTING 2504
MEASURING CONNECTING ROD SIDE CLEARANCE 2505
REMOVAL 2505
INSPECTION 2506
INSTALLATION 2507
RINGS-PISTON
STANDARD PROCEDURE - MEASURING PISTON RING CLEARANCES 2509
REMOVAL 2509
INSTALLATION 2510
BEARINGS-CONNECTING ROD
DESCRIPTION 2511
STANDARD PROCEDURE
CONNECTING ROD BEARING - FITTING . . 2511
MEASURING CONNECTING ROD BEARING CLEARANCE 2512
DAMPER-CRANKSHAFT
REMOVAL 2513
INSTALLATION 2514
SEAL-CRANKSHAFT OIL- FRONT
REMOVAL 2514
INSTALLATION 2515
SEAL-OIL-REAR-CRANK AND RETAINER
REMOVAL 2515
INSTALLATION 2516
BEARINGS-CRANKSHAFT MAIN
DESCRIPTION 2517
STANDARD PROCEDURE
MEASURING CRANKSHAFT MAIN BEARING CLEARANCE IN-CAR 2517
CRANKSHAFT
STANDARD PROCEDURE
MEASURING CRANKSHAFT END PLAY . . 2518
CRANKSHAFT JOURNAL MEASUREMENT 2519
REMOVAL 2519
INSPECTION 2521
INSTALLATION 2522
BEARING-CRANKSHAFT PILOT
REMOVAL 2525
INSTALLATION 2525

ENGINE - 8.3L - SERVICE INFORMATION

DESCRIPTION

The engine is an 8.3 Liter (505 CID), 10-cylinder, 90° V-type, lightweight, single-cam, overhead valve engine. This engine is designed for premium unleaded fuel.

The crankshaft is forged steel. The cylinder block and cylinder heads are aluminum. The firing order is 1-10-9-4-3-6-5-8-7-2. The cylinders are numbered from front to rear as follows:

- on the left bank - 1, 3, 5, 7, 9
- on the right bank - 2, 4, 6, 8, 10

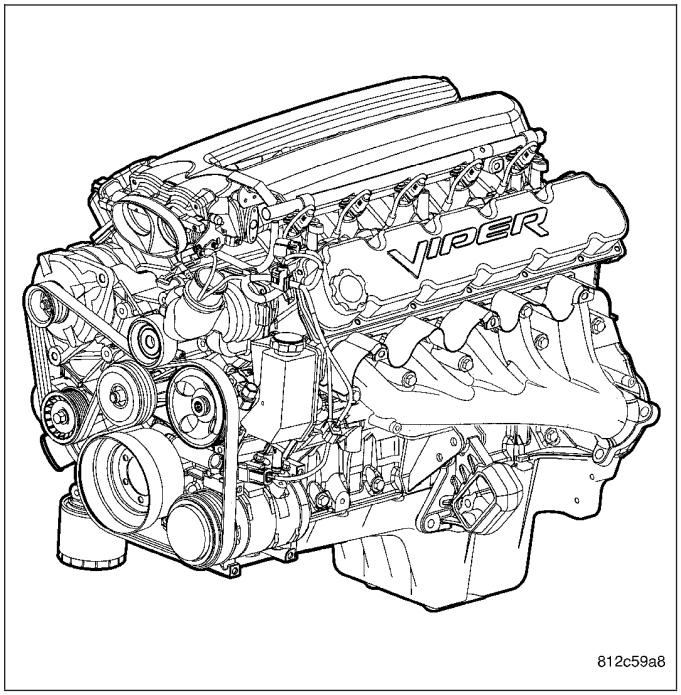

Vehicle Identification Number

This number (1) is located on the rear of the cylinder block just below the right cylinder head.

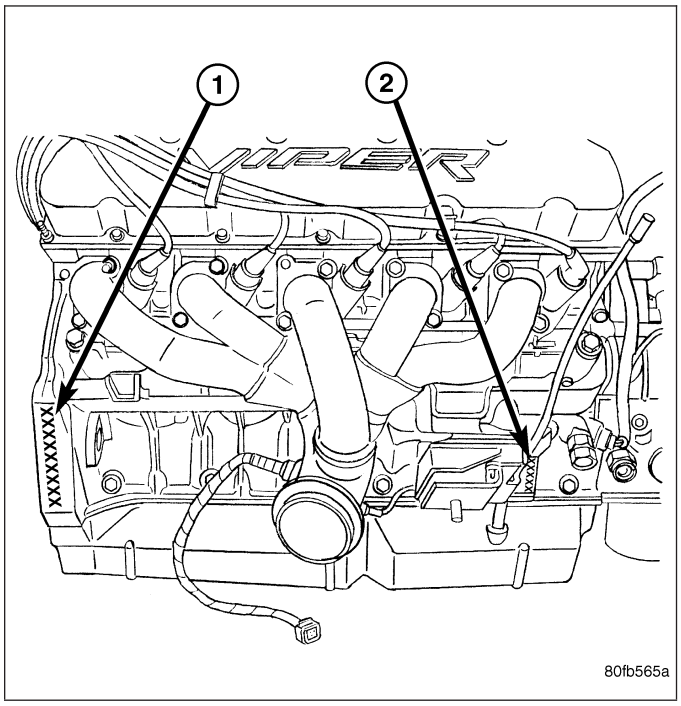

Engine Serial Number

This number (2) is located on the lower right front of the cylinder block near the oil pressure sensor.

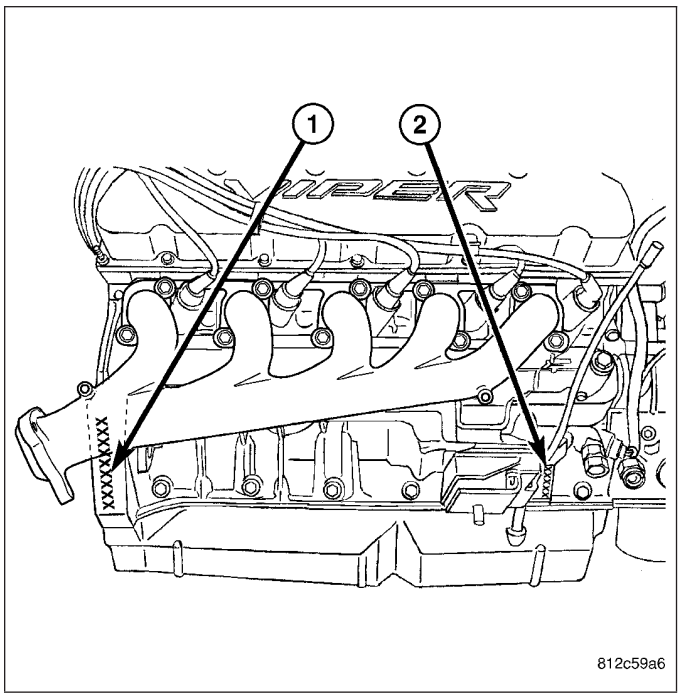

DIAGNOSIS AND TESTING

INTRODUCTION

Engine diagnosis is helpful in determining the causes of malfunctions not detected and remedied by routine maintenance.

These malfunctions may be classified as either mechanical (e.g., a strange noise), or performance (e.g., engine idles rough and stalls).

(Refer to 9 - ENGINE - DIAGNOSIS AND TESTING) - MECHANICAL and (Refer to 9 - ENGINE - DIAGNOSIS AND TESTING) - PERFORMANCE for possible causes and corrections of malfunctions. Refer to the appropriate Diagnostic Information for fuel system diagnosis.

Additional tests and diagnostic procedures may be necessary for specific engine malfunctions that cannot be isolated with the Engine Diagnosis charts. Information concerning additional tests and diagnosis is provided within the following:

- Cylinder Compression Pressure Test
- Cylinder Combustion Pressure Leakage Test
- Cylinder Head Gasket Failure Diagnosis
- Intake Manifold Leakage Diagnosis
- Hydraulic Tappet Noise Diagnosis
- Engine Oil Leak Inspection

ENGINE DIAGNOSIS - PERFORMANCE

CONDITION	POSSIBLE CAUSES	CORRECTION
ENGINE WILL NOT CRANK	1. Weak or discharged battery.	1. Charge or replace battery as necessary. (Refer to 8 - ELECTRICAL/BATTERY SYSTEM - DIAGNOSIS AND TESTING). Check charging system. Refer to the appropriate Diagnostic Information for charging system diagnosis.
	2. Corroded or loose battery connections.	2. Clean/tighten battery/starter connections.
	3. Faulty starter or related circuits.	3. Check starting system. (Refer to 8 - ELECTRICAL/STARTING - DIAGNOSIS AND TESTING).
	4. Seized accessory drive component.	4. Remove accessory drive belt and attempt to start engine. If engine cranks, repair/replace seized component.
	5. Engine internal mechanical failure or hydrostatic lock.	5. (Refer to 9 - ENGINE - STANDARD PROCEDURE - HYDROSTATIC LOCKED ENGINE).
ENGINE CRANKS BUT WILL NOT START	1. No spark.	1. Check for spark. Refer to the appropriate Diagnostic Information for ignition system diagnosis.
	2. No fuel.	2. Perform fuel pressure test. Refer to the appropriate Diagnostic Information for fuel system diagnosis.
	3. Low or no engine compression.	3. Perform cylinder compression test. (Refer to 9 - ENGINE - DIAGNOSIS AND TESTING - CYLINDER COMPRESSION PRESSURE TEST).
ENGINE LOSS OF POWER	1. Worn or incorrect gapped spark plugs.	1. Replace spark plugs or set gap.
	2. Dirt or water in fuel system.	2. Clean system and replace fuel filter.
	3. Faulty fuel pump.	3. Replace fuel pump.
	4. Incorrect valve timing.	4. Correct valve timing.
	5. Blown cylinder head gasket(s).	5. Replace cylinder head gasket(s).
	6. Low compression.	6. Test cylinder compression. (Refer to 9 - ENGINE - DIAGNOSIS AND TESTING - CYLINDER COMPRESSION PRESSURE TEST)
	7. Burned, warped, or pitted valves.	7. Install new or reface valves as necessary.
	8. Plugged or restricted exhaust.	8. Replace parts as necessary.
	9. Faulty ignition cables.	9. Replace ignition cables as necessary.
	10. Faulty coil(s).	10. Test and replace as necessary.

CONDITION	POSSIBLE CAUSES	CORRECTION
ENGINE STALLS OR ROUGH IDLE	1. Carbon buildup on throttle plate.	1. Remove throttle body and de-carbon.
	2. Engine idle speed too low.	2. Check Idle Air Control circuit. Refer to the appropriate Diagnostic Information for IAC motor testing.
	3. Worn or incorrectly gapped spark plugs.	3. Replace spark plugs or set gap.
	4. Faulty or crossed ignition cables.	4. Check for correct firing order or replace ignition cables as necessary.
	5. Faulty coil(s).	5. Test and replace as necessary.
	6. Intake manifold vacuum leak.	6. Inspect intake manifold gasket and vacuum hoses. Replace as necessary.
ENGINE MISSES ON ACCELERATION	1. Worn or incorrectly gapped spark plugs.	1. Replace spark plugs or set gap.
	2. Faulty ignition cables.	2. Replace ignition cables as necessary.
	3. Dirt or water in fuel system.	3. Clean system and replace fuel filter.
	4. Burned, warped, or pitted valves.	4. Install new or reface valves as necessary.
	5. Faulty coil(s).	5. Test and replace as necessary.

ENGINE DIAGNOSIS - MECHANICAL

CONDITION	POSSIBLE CAUSES	CORRECTION
NOISY VALVES	1. High or low oil level in crankcase.	1. Check for correct oil level. Adjust oil level by draining or adding as needed.
	2. Thin or diluted oil.	2. Change oil and filter.
	3. Low oil pressure.	3. Check engine oil level. If OK, perform oil pressure test. (Refer to 9 - ENGINE/ LUBRICATION - DIAGNOSIS AND TESTING).
	4. Dirt in tappets/lash adjusters.	4. Clean/replace hydraulic tappets/lash adjusters.
	5. Bent push rod(s).	5. Replace push rod(s) as necessary.
	6. Worn rocker arms.	6. Replace worn rocker arms and inspect oil supply to rocker arms.
	7. Worn tappets/lash adjusters.	7. Replace hydraulic tappets/hydraulic lash adjusters.
	8. Worn valve guides.	8. Ream and install new valves with oversize stems.
	9. Excessive runout of valve seats on valve faces.	9. Grind valve seats and valves.

CONDITION	POSSIBLE CAUSES	CORRECTION
CONNECTING ROD NOISE	1. Insufficient oil supply.	1. Check engine oil level.
	2. Low oil pressure.	2. Check engine oil level. If OK, perform oil pressure test. Inspect oil pump relief valve and spring. (Refer to 9 - ENGINE/ LUBRICATION - DIAGNOSIS AND TESTING).
	3. Thin or diluted oil.	3. Change oil and filter.
	4. Excessive bearing clearance.	4. Measure bearings for correct clearance. Repair as necessary.
	5. Connecting rod journal out-of-round.	5. Replace crankshaft or grind journals.
	6. Misaligned connecting rods.	6. Replace bent connecting rods.
MAIN BEARING NOISE	1. Insufficient oil supply.	1. Check engine oil level.
	2. Low oil pressure.	2. Check engine oil level. If OK, perform oil pressure test. Inspect oil pump relief valve and spring. (Refer to 9 - ENGINE/ LUBRICATION - DIAGNOSIS AND TESTING).
	3. Thin or diluted oil.	3. Change oil and filter.
	4. Excessive bearing clearance.	4. Measure bearings for correct clearance. Repair as necessary.
	5. Excessive end play.	5. Check No. 3 bearing for wear on flanges.
	6. Crankshaft journal out-of-round and/or worn.	6. Grind journals or replace crankshaft.
	7. Loose flywheel.	7. Inspect crankshaft, flywheel, and bolts for damage. Tighten bolts to correct torque.
OIL PRESSURE DROP	1. Low oil level.	1. Check oil level and fill if necessary.
	2. Faulty oil pressure sending unit.	2. Replace sending unit.
	3. Clogged oil filter.	3. Install new oil filter.
	4. Worn oil pump.	4. Replace worn gears or oil pump assembly.
	5. Thin or diluted oil.	5. Change oil to correct viscosity.
	6. Excessive bearing clearance.	6. Measure bearings for correct clearance.
	7. Oil pump relief valve stuck.	7. Remove relief valve. Inspect valve and spring. Replace as necessary.
	8. Oil pump pick up tube restricted, cracked, or damaged.	8. Remove oil pan and inspect oil pump pick up tube. Clean or replace as necessary.
	9. Oil pump cover loose, warped, or cracked.	9. Inspect/tighten cover screws or install new oil pump, if necessary.
OIL LEAKS	1. Misaligned or deteriorated gaskets.	1. Replace gaskets.
	2. Loose fastener, broken or porous component.	2. Tighten, repair or replace component.

CONDITION	POSSIBLE CAUSES	CORRECTION
EXCESSIVE OIL CONSUMPTION OR SPARK PLUGS OIL FOULED	1. PCV system malfunction.	1. Check and repair PCV system as necessary.
	2. Defective valve stem seal(s).	2. Repair or replace seal(s).
	3. Worn or broken piston rings.	3. Hone cylinder bores. Install new rings.
	4. Scuffed pistons/cylinder walls.	4. Hone cylinder bores and replace pistons as necessary.
	5. Carbon in oil control ring groove.	5. Remove rings and de-carbon piston.
	6. Worn valve guides.	6. Ream and install new valves with oversize stems.
	7. Piston rings fitted too tightly in grooves.	7. Remove piston rings. Check ring end gap and side clearance. Replace as necessary.

CYLINDER COMPRESSION PRESSURE TEST

The results of a cylinder compression pressure test can be utilized to diagnose several engine malfunctions.

Ensure the battery is completely charged and the engine starter motor is in good operating condition. Otherwise the indicated compression pressures may not be valid for diagnosis purposes.

1. Check engine oil level and add oil if necessary.
2. Drive the vehicle until engine reaches normal operating temperature. Select a route free from traffic and other forms of congestion, observe all traffic laws, and accelerate through the gears several times briskly.
3. Remove the Auto Shut Down (ASD) relay from the Power Distribution Center (PDC).
4. Disconnect ignition cables from spark plugs.
5. Remove all spark plugs from engine. As spark plugs are being removed, check electrodes for abnormal firing indicators fouled, hot, oily, etc. Record cylinder number of spark plug for future reference.
6. Be sure throttle blade is fully open during the compression check.
7. Insert compression gauge adaptor Special Tool 8116 or the equivalent, into the No. 1 spark plug hole in cylinder head. Connect the 0-500 psi (Blue) pressure transducer (Special Tool CH7059) with cable adaptors to the scan tool. For Special Tool identification, (Refer to 9 - ENGINE - SPECIAL TOOLS).
8. Crank engine until maximum pressure is reached on gauge. Record this pressure as No. 1 cylinder pressure.
9. Repeat the previous step for all remaining cylinders.
10. Compression should not be less than 689 kPa (100 psi) and not vary more than 25 percent from cylinder to cylinder.
11. If one or more cylinders have abnormally low compression pressures, repeat the compression test.
12. If the same cylinder or cylinders repeat an abnormally low reading on the second compression test, it could indicate the existence of a problem in the cylinder in question. **The recommended compression pressures are to be used only as a guide to diagnosing engine problems. An engine should not be disassembled to determine the cause of low compression unless some malfunction is present.**

CYLINDER COMBUSTION PRESSURE LEAKAGE TEST

The combustion pressure leakage test provides an accurate means for determining engine condition.

Combustion pressure leakage testing will detect:

- Exhaust and intake valve leaks (improper seating).
- Leaks between adjacent cylinders or into water jacket.
- Any causes for combustion/compression pressure loss.

WARNING: DO NOT REMOVE THE COOLING SYSTEM PRESSURE CAP WITH THE SYSTEM HOT AND UNDER PRESSURE BECAUSE SERIOUS BURNS FROM COOLANT CAN OCCUR.

1. Check the coolant level and fill as required. DO NOT install the pressure cap.
2. Start and operate the engine until it attains normal operating temperature, then turn the engine OFF.

3. Clean spark plug recesses with compressed air.
4. Remove the spark plugs.
5. Remove the oil fill cap.
6. Remove the air cleaner.
7. Calibrate the tester according to the manufacturer's instructions. The shop air source for testing should maintain 483 kPa (70 psi) minimum, 1,379 kPa (200 psi) maximum, with 552 kPa (80 psi) recommended.
8. Perform the test procedures on each cylinder according to the tester manufacturer's instructions. While testing, listen for pressurized air escaping through the throttle body, tailpipe and oil filler cap opening. Check for bubbles in the coolant pressure bottle.

All gauge pressure indications should be equal, with no more than 25 percent leakage per cylinder.

FOR EXAMPLE: At 552 kPa (80 psi) input pressure, a minimum of 414 kPa (60 psi) should be maintained in the cylinder.

CYLINDER HEAD GASKET FAILURE DIAGNOSIS

A cylinder head gasket leak can be located between adjacent cylinders, between a cylinder and the adjacent water jacket, or an external coolant leak may be present.

Possible indications of the cylinder head gasket leaking between adjacent cylinders are:

- Loss of engine power
- Engine misfiring
- Poor fuel economy

Possible indications of the cylinder head gasket leaking between a cylinder and an adjacent water jacket are:

- Engine overheating
- Loss of coolant
- Excessive steam (white smoke) emitting from exhaust
- Coolant foaming

CYLINDER-TO-CYLINDER LEAKAGE TEST

To determine if an engine cylinder head gasket is leaking between adjacent cylinders, follow the procedures in Cylinder Compression Pressure Test in this section. An engine cylinder head gasket leaking between adjacent cylinders will result in approximately a 50-70% reduction in compression pressure. Cylinders adjacent to each other will both have low compression.

CYLINDER-TO-WATER JACKET LEAKAGE TEST

WARNING: USE EXTREME CAUTION WHEN THE ENGINE IS OPERATING WITH COOLANT PRESSURE CAP REMOVED.

VISUAL TEST METHOD

With the engine cool, remove the coolant pressure cap. Start the engine and allow it to warm up until thermostat opens.

If a large combustion/compression pressure leak exists, bubbles will be visible in the coolant.

COOLING SYSTEM TESTER METHOD

WARNING: WITH COOLING SYSTEM TESTER IN PLACE, PRESSURE WILL BUILD UP FAST. EXCESSIVE PRESSURE BUILT UP, BY CONTINUOUS ENGINE OPERATION, MUST BE RELEASED TO A SAFE PRESSURE POINT. NEVER PERMIT PRESSURE TO EXCEED 138 kPa (20 psi).

Install Cooling System Tester 7700 or equivalent to pressure cap neck. Start the engine and observe the tester's pressure gauge. If gauge pulsates with every power stroke of a cylinder a combustion pressure leak is evident.

CHEMICAL TEST METHOD

Combustion leaks into the cooling system can also be checked by using Bloc-Chek Kit C-3685-A or equivalent. Perform test following the procedures supplied with the tool kit.

HYDRAULIC TAPPET NOISE DIAGNOSIS

PRELIMINARY STEP TO CHECKING THE HYDRAULIC TAPPETS

Before disassembling any part of the engine to correct tappet noise, check engine oil level and oil pressure.

1. Check the engine oil level.
   - **Oil Level Check: stop engine after reaching normal operating temperature**
   - The oil level should never be above the FULL mark on dipstick, or below the ADD mark. Either of these two conditions could be responsible for noisy tappets. Allow 5 minutes to stabilize oil level, check dipstick.
2. Remove oil pressure sensor.
3. Install a reliable oil pressure gauge at oil pressure sensor location.

The oil pressure should be 206.8 - 551.6 kPa (30 - 80 psi) at 2000 rpm.

OIL LEVEL TOO HIGH

If oil level is above the FULL mark on dipstick, it is possible for the connecting rods to dip into the oil while engine is running and create foam. Foam in oil pan would be fed to the hydraulic tappets by the oil pump causing them to become soft and allow valves to seat noisily.

OIL LEVEL TOO LOW

Low oil level may allow pump to take in air which when fed to the tappets, causes them to become soft and allows valves to seat noisily. Any leaks on intake side of pump through which air can be drawn will create the same tappet action. Check the lubrication system from the intake strainer to the pump cover, including the relief valve retainer cap. When tappet noise is due to aeration, it may be intermittent or constant, and usually more than one tappet will be noisy. When oil level and leaks have been corrected, engine should be operated at fast idle to allow all of the air inside of the tappets to be bled out.

VALVE TRAIN NOISE DIAGNOSIS

To determine source of valve train noise, operate engine at idle with cylinder head covers removed and listen for source of the noise.

NOTE: Worn valve guides or cocked springs are sometimes mistaken for noisy tappets. If such is the case, noise may be dampened by applying side thrust on the valve spring. If noise is not appreciably reduced, it can be assumed the noise is in the tappet. Inspect the rocker arm push rod sockets and push rod ends for wear.

Valve tappet noise ranges from light noise to a heavy click. A light noise is usually caused by excessive leak-down around the unit plunger which will necessitate replacing the tappet, or by the plunger partially sticking in the tappet body cylinder. A heavy click is caused either by a tappet check valve not seating, or by foreign particles becoming wedged between the plunger and the tappet body causing the plunger to stick in the down position. This heavy click will be accompanied by excessive clearance between the valve stem and rocker arm as valve closes. In either case, tappet assembly should be removed and replaced.

ENGINE OIL LEAK INSPECTION

Begin with a thorough visual inspection of the engine, particularly at the area of the suspected leak. If an oil leak source is not readily identifiable, the following steps should be followed:

1. Do not clean or degrease the engine at this time because some solvents may cause rubber to swell, temporarily stopping the leak.
2. Add an oil soluble dye (use as recommended by manufacturer). Start the engine and let idle for approximately 15 minutes. Check the oil dipstick to make sure the dye is thoroughly mixed as indicated with a bright yellow color under a black light.

3. Using a black light, inspect the entire engine for fluorescent dye, particularly at the suspected area of oil leak. If the oil leak is found and identified, repair as necessary.
4. If dye is not observed, drive the vehicle at various speeds for approximately 24 km (15 miles), and repeat inspection.
5. **If the oil leak source is not positively identified at this time**, proceed with the air leak detection test method as follows:
   1. Disconnect the PCV hoses at the cylinder head covers and plug or cap the outlet on the covers.
   2. Attach an air hose with pressure gauge and regulator to the dipstick tube.

CAUTION: Do not subject the engine assembly to more than 20.6 kpa (3 PSI) of test pressure.

   3. Gradually apply air pressure from 6.89 kPa (1 psi) to 17.23 kPa (2.5 psi) maximum while applying soapy water at the suspected source. Adjust the regulator to the suitable test pressure that provides the best bubbles which will pinpoint the leak source. If the oil leak is detected and identified, repair per service manual procedures.
   4. If the leakage occurs at the crankshaft rear oil seal area, refer to the section, Inspection for Rear Seal Area Leak.
6. If no leaks are detected, turn off the air supply. Remove the air hose, all plugs, and caps. Connect the PCV hoses. Proceed to next step.
7. Clean the oil off the suspect oil leak area using a suitable solvent. Drive the vehicle at various speeds approximately 24 km (15 miles). Inspect the engine for signs of an oil leak by using a black light.

NOTE: If oil leakage is observed at the dipstick tube to oil pan location; remove the tube, clean and reseal using Mopar® Stud & Bearing Mount (press fit tube applications only), and for O-ring style tubes, remove tube and replace the O-ring seal.

INSPECTION FOR REAR SEAL AREA LEAKS

Since it is sometimes difficult to determine the source of an oil leak in the rear seal area of the engine, a more involved inspection is necessary. The following steps should be followed to help pinpoint the source of the leak.

If the leakage occurs at the crankshaft rear oil seal area:

1. Disconnect the battery.
2. Raise the vehicle.
3. Remove clutch housing inspection cover and inspect rear of block for evidence of oil. Use a black light to check for the oil leak. If a leak is present in this area, remove transmission for further inspection.
   a. Circular spray pattern generally indicates seal leakage or crankshaft damage.
   b. Where leakage tends to run straight down, possible causes are a porous block, oil gallery cup plug or rear crankshaft seal retainer gasket leak. See proper repair procedures for these items.
4. If no leaks are detected, pressurize the crankcase as previously described.

CAUTION: Do not exceed 20.6 kPa (3 psi).

5. If the leak is not detected, very slowly turn the crankshaft and watch for leakage. If a leak is detected between the crankshaft and seal while slowly turning the crankshaft, it is possible the crankshaft seal surface is damaged. The seal area on the crankshaft could have minor nicks or scratches that can be polished out with emery cloth.

CAUTION: Use extreme caution when crankshaft polishing is necessary to remove minor nicks and scratches. The crankshaft seal flange is especially machined to complement the function of the rear oil seal.

6. For bubbles that remain steady with shaft rotation, no further inspection can be done until disassembled.
7. After the oil leak root cause and appropriate corrective action have been identified, replace component(s) as necessary.

STANDARD PROCEDURE

ENGINE CORE AND OIL GALLERY PLUGS

Using a blunt tool such as a drift (4) and a hammer, strike the bottom edge of the cup plug. With the cup plug rotated, grasp firmly with pliers (2) or other suitable tool and remove plug (5).

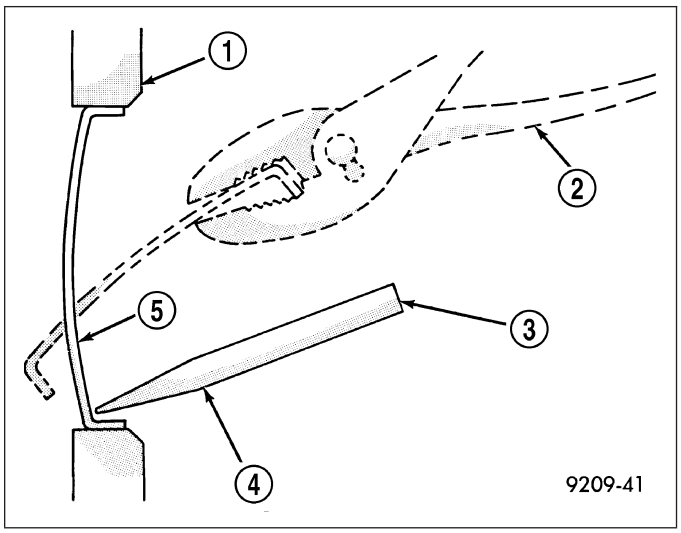

CAUTION: Do not drive cup plug into the casting as restricted cooling can result and cause serious engine problems.

Thoroughly clean inside of cup plug hole in cylinder block or head. Be sure to remove old sealer. Lightly coat inside of cup plug hole with Mopar® Stud and Bearing Mount. Make certain the new plug is cleaned of all oil or grease. Using proper drive plug, drive plug into hole so that the sharp edge of the plug is at least 0.5 mm (0.020 in.) inside the lead-in chamfer.

It is not necessary to wait for curing of the sealant. The cooling system can be refilled and the vehicle placed in service immediately.

FORM-IN-PLACE GASKETS AND SEALERS

There are numerous places where form-in-place gaskets are used on the engine. Care must be taken when applying form-in-place gaskets to assure obtaining the desired results. **Do not use form-in-place gasket material unless specified.** Bead size, continuity, and location are of great importance. Too thin a bead can result in leakage while too much can result in spill-over which can break off and obstruct fluid feed lines. A continuous bead of the proper width is essential to obtain a leak-free gasket.

There are numerous types of form-in-place gasket materials that are used in the engine area. Mopar® Engine RTV GEN II, Mopar® ATF-RTV, and Mopar® Gasket Maker gasket materials, each have different properties and can not be used in place of the other.

MOPAR® ENGINE RTV GEN II

Mopar® Engine RTV GEN II is used to seal components exposed to engine oil. This material is a specially designed black silicone rubber RTV that retains adhesion and sealing properties when exposed to engine oil. Moisture in the air causes the material to cure. This material is available in three ounce tubes and has a shelf life of one year. After one year this material will not properly cure. Always inspect the package for the expiration date before use.

MOPAR® ATF RTV

Mopar® ATF RTV is a specifically designed black silicone rubber RTV that retains adhesion and sealing properties to seal components exposed to automatic transmission fluid, engine coolants, and moisture. This material is available in three ounce tubes and has a shelf life of one year. After one year this material will not properly cure. Always inspect the package for the expiration date before use.

MOPAR® GASKET MAKER

Mopar® Gasket Maker is an anaerobic type gasket material. The material cures in the absence of air when squeezed between two metallic surfaces. It will not cure if left in the uncovered tube. The anaerobic material is for use between two machined surfaces. Do not use on flexible metal flanges.

MOPAR® BED PLATE SEALANT

Mopar® Bed Plate Sealant is a unique (green-in-color) anaerobic type gasket material that is specially made to seal the area between the bedplate and cylinder block without disturbing the bearing clearance or alignment of these components. The material cures slowly in the absence of air when torqued between two metallic surfaces, and will rapidly cure when heat is applied.

MOPAR® GASKET SEALANT

Mopar® Gasket Sealant is a slow drying, permanently soft sealer. This material is recommended for sealing threaded fittings and gaskets against leakage of oil and coolant. Can be used on threaded and machined parts under all temperatures. This material is used on engines with multi-layer steel (MLS) cylinder head gaskets. This material also will prevent corrosion. Mopar® Gasket Sealant is available in a 13 oz. aerosol can or 4 oz./16 oz. can w/applicator.

FORM-IN-PLACE GASKET AND SEALER APPLICATION

Mopar® Gasket Maker material should be applied sparingly 1 mm (0.040 in.) diameter or less of sealant to one gasket surface. Be certain the material surrounds each mounting hole. Excess material can easily be wiped off. Components should be torqued in place within 15 minutes. The use of a locating dowel is recommended during assembly to prevent smearing material off the location.

Mopar® Engine RTV GEN II or ATF RTV gasket material should be applied in a continuous bead approximately 3 mm (0.120 in.) in diameter. All mounting holes must be circled. For corner sealing, a 3.17 mm or 6.35 mm (1/8 in. or 1/4 in.) drop is placed in the center of the gasket contact area. Uncured sealant may be removed with a shop towel. Components should be torqued in place while the sealant is still wet to the touch (within 10 minutes). The usage of a locating dowel is recommended during assembly to prevent smearing material off the location.

Mopar® Gasket Sealant in an aerosol can should be applied using a thin, even coat sprayed completely over both surfaces to be joined, and both sides of a gasket. Then proceed with assembly. Material in a can w/applicator can be brushed on evenly over the sealing surfaces. Material in an aerosol can should be used on engines with multi-layer steel gaskets.

ENGINE GASKET SURFACE PREPARATION

To ensure engine gasket sealing, proper surface preparation must be performed, especially with the use of aluminum engine components and multi-layer steel cylinder head gaskets.

Never use the following to clean gasket surfaces:

- Metal scraper
- Abrasive pad or paper to clean cylinder block and head
- High speed power tool with an abrasive pad or a wire brush (1)

NOTE: Multi-Layer Steel (MLS) head gaskets require a scratch free sealing surface.

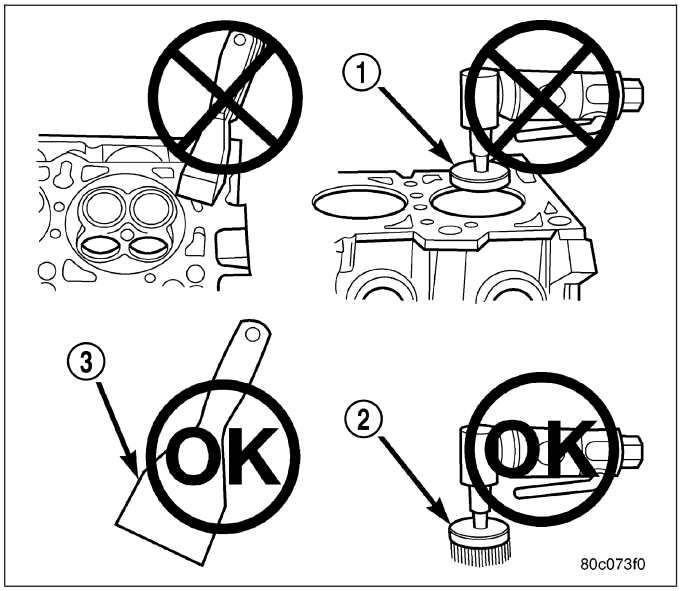

Only use the following for cleaning gasket surfaces:

- Solvent or a commercially available gasket remover
- Plastic or wood scraper (3)
- Drill motor with 3M Roloc™ Bristle Disc (white or yellow) (2)

CAUTION: Excessive pressure or high RPM (beyond the recommended speed), can damage the sealing surfaces. The mild (white, 120 grit) bristle disc is recommended. If necessary, the medium (yellow, 80 grit) bristle disc may be used on cast iron surfaces with care.

HYDROSTATIC LOCKED ENGINE

When an engine is suspected to be hydrostatically locked, regardless of what caused the problem, the following steps should be used.

CAUTION: DO NOT use starter motor to rotate the engine, severe damage may occur.

1. Inspect air cleaner, induction system and intake manifold to ensure system is dry and clear of foreign material.
2. Remove negative battery cable.

3. Place a shop towel around the spark plugs when removing them from the engine. This will catch any fluid that may possibly be in the cylinder under pressure.
4. With all spark plugs removed, rotate engine crankshaft using a breaker bar and socket.
5. Identify the fluid in the cylinder(s) (i.e., coolant, fuel, oil or other).
6. Make sure all fluid has been removed from the cylinders. Inspect engine for damage (i.e., connecting rods, pistons, valves, etc.)
7. Repair engine or components as necessary to prevent this problem from re-occurring.

CAUTION: Squirt approximately one teaspoon of oil into the cylinders, rotate engine to lubricate the cylinder walls to prevent damage on restart.

8. Install new spark plugs.
9. Drain engine oil and remove oil filter.
10. Fill engine with specified amount of approved oil and install new oil filter.
11. Connect negative battery cable.
12. Start engine and check for any leaks.

REMOVAL - ENGINE ASSEMBLY

1. Perform fuel pressure release procedure (Refer to 14 - FUEL SYSTEM/FUEL DELIVERY - STANDARD PROCEDURE).
2. Disconnect negative battery cable.
3. Disconnect throttle body air inlet duct, remove air cleaner cover (Refer to 9 - ENGINE/AIR INTAKE SYSTEM/AIR CLEANER ELEMENT - REMOVAL).
4. Raise and support the vehicle.
5. Remove the lower engine shield.
6. Drain cooling system (Refer to 7 - COOLING/ENGINE - STANDARD PROCEDURE - DRAINING COOLING SYSTEM).
7. Paint mark and remove the driveshaft (Refer to 3 - DIFFERENTIAL & DRIVELINE/PROPELLER SHAFT/PROPELLER SHAFT - REMOVAL).
8. Remove the transmission (Refer to 21 - TRANSMISSION/TRANSAXLE/MANUAL - REMOVAL).
9. Remove the starter (Refer to 8 - ELECTRICAL/STARTING/STARTER MOTOR - REMOVAL).
10. Disconnect the front exhaust pipe flange to exhaust manifold fasteners (1 and 2).

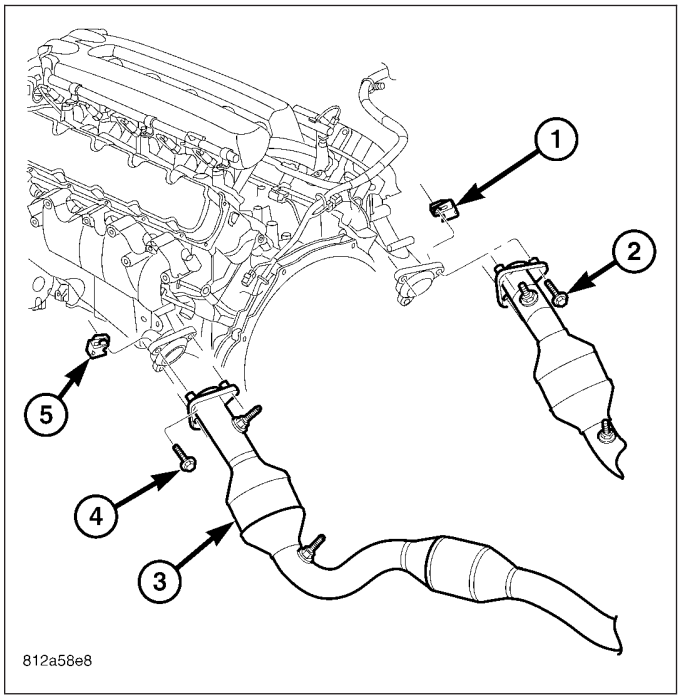

11. Disconnect the hydraulic cooling fan lines and capture any spillage (Refer to 7 - COOLING/ENGINE/RADIATOR FAN - REMOVAL).
12. Drain engine oil and remove the oil filter.
13. Separate the air conditioning hose from the fan shroud.
14. Disconnect the lower radiator hose.
15. Disconnect the power steering line support bracket at the lower left of the radiator.
16. Loosen both engine mount through bolts.

17. Separate the ground strap (1) from the floor board, above the right exhaust flange.
18. Lower the vehicle.
19. Discharge air conditioning system (Refer to 24 - HEATING & AIR CONDITIONING/PLUMBING/REFRIGERANT - STANDARD PROCEDURE).
20. Remove the upper radiator hose.
21. Disconnect windshield washer hose at the splice.
22. Remove radiator core support.
23. Disconnect the cooling fan harness connector (Refer to 7 - COOLING/ENGINE/RADIATOR FAN - REMOVAL).
24. Remove the radiator and radiator fan assembly (Refer to 7 - COOLING/ENGINE/RADIATOR - REMOVAL).
25. Remove the A/C condenser, cap and position the hoses aside.
26. Disconnect the heater hoses at the top front cover and at the lower coolant housing and position aside.

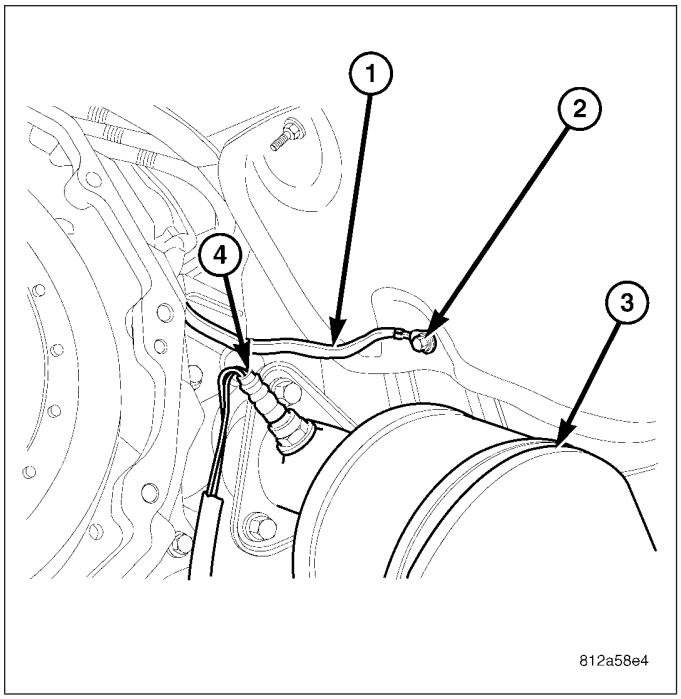

27. Disconnect the oil cooler hoses from the engine and position aside (Refer to 9 - ENGINE/LUBRICATION/OIL COOLER & LINES - STANDARD PROCEDURE).
28. Remove accessory drive belt (1).
29. Disconnect and remove generator.
30. Remove power steering pump mounting bolts and set pump aside.

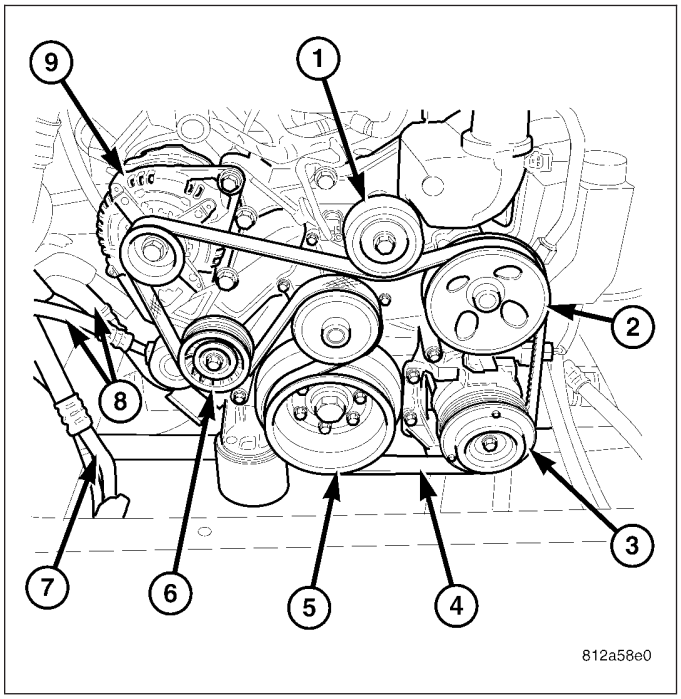

31. Disconnect A/C lines and electrical connector from A/C compressor. Plug holes in A/C compressor to prevent debris from entering A/C compressor.
32. Disconnect brake booster vacuum hose and fuel line to fuel rail.

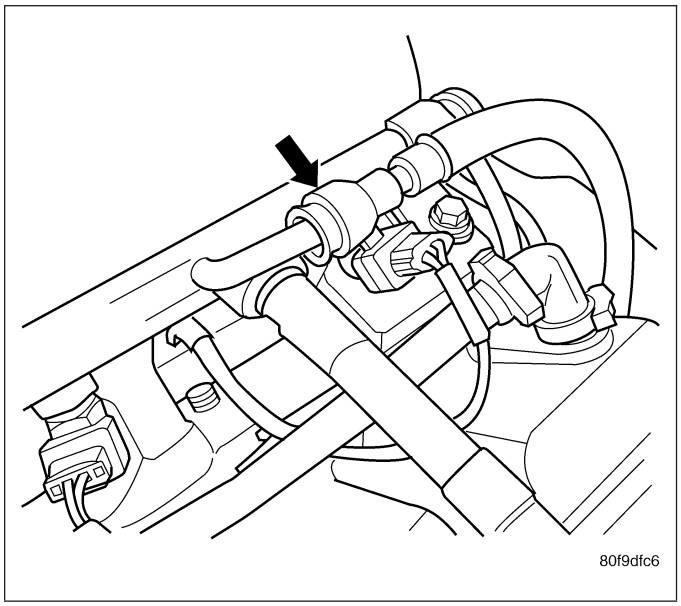

33. Disconnect the cruise control, accelerator cable and fuel vapor purge harness (2) , then set aside.
34. Disconnect the engine harness connectors on top of the intake manifold.
35. Disconnect the spark plug wires from the spark plugs and set the plug wires on top of the engine.
36. Disconnect the ground strap at the thermostat housing and pull the electrical harness underneath the intake manifold and set aside.

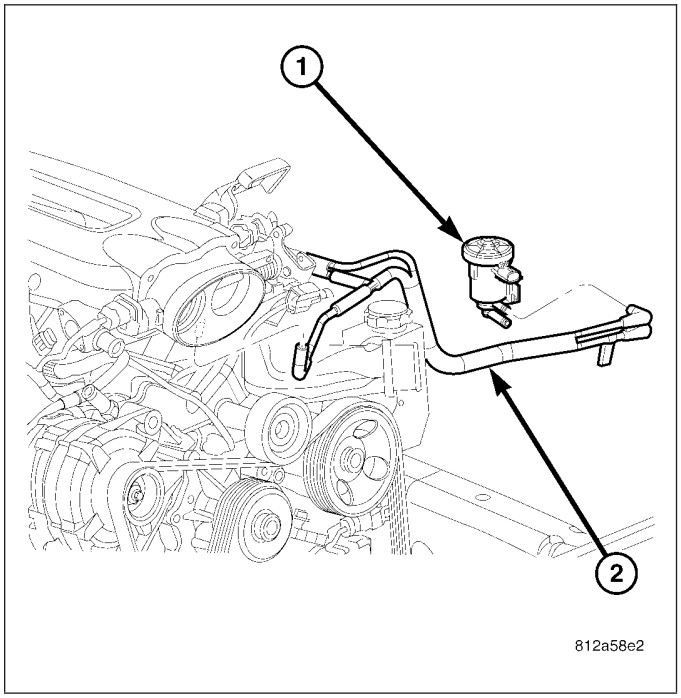

37. Install Special Tool 9363 - Engine Lifting Brackets (1) and to the exhaust manifold heat shield studs where indicated.

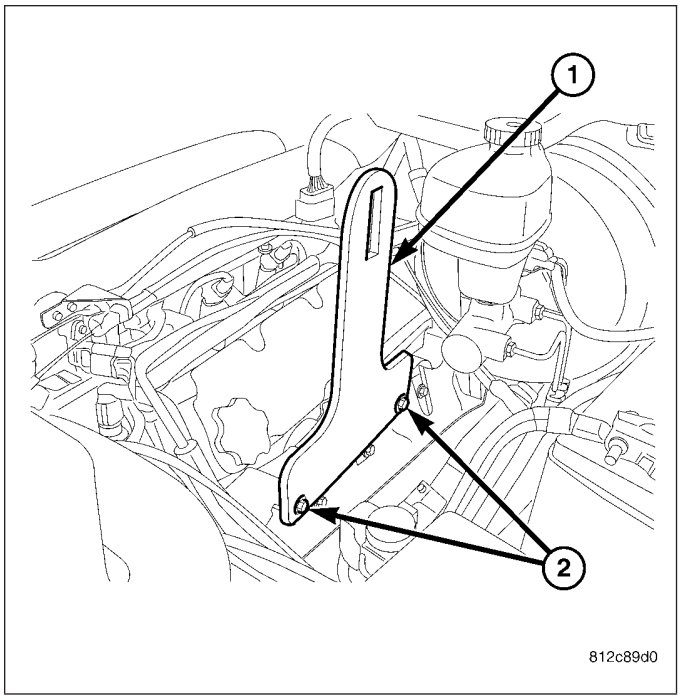

38. Insert engine lifting bar (1) through the access holes in the engine lifting brackets (2) and secure with the bar retaining pins (3).

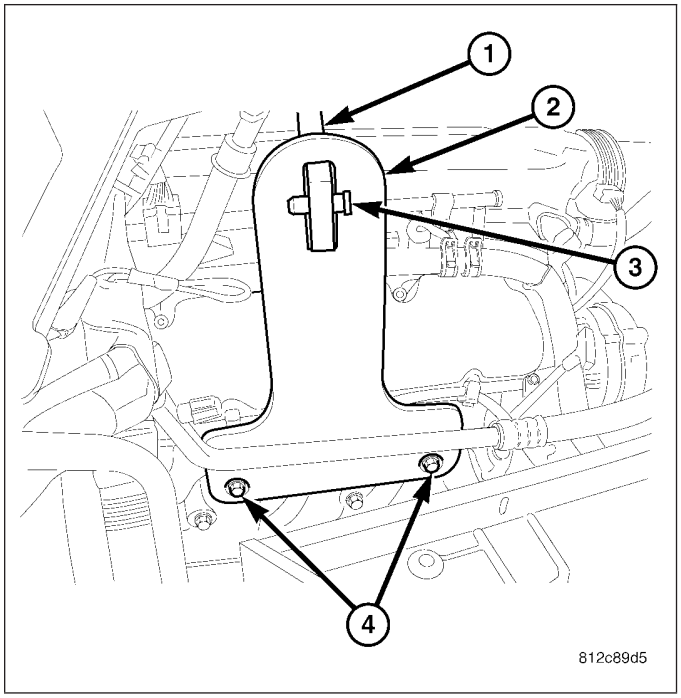

39. Remove engine with an engine hoist (1).

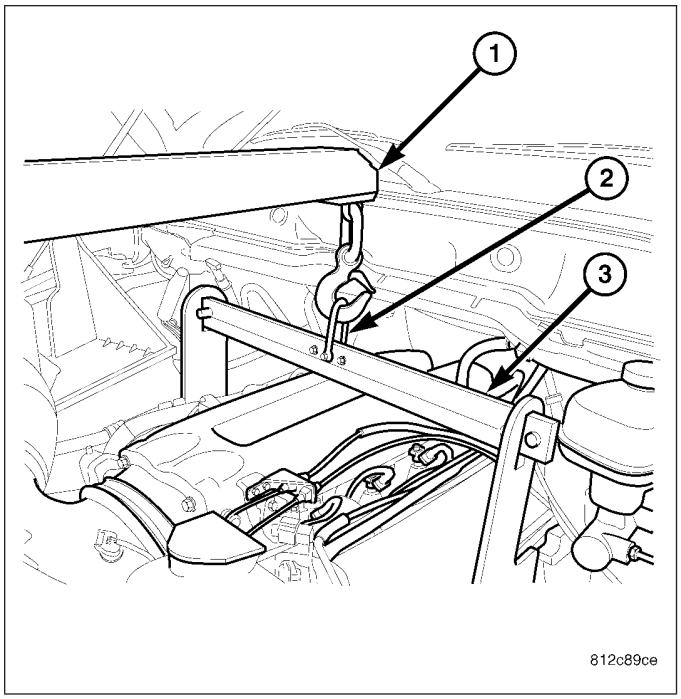

INSTALLATION - ENGINE ASSEMBLY

1. Attach engine hoist (1) and lower the engine into engine compartment, aligning the left and right engine mounts
2. Install left and right engine mount insulator bolts and nuts. Tighten nuts to 102 N·m (75 ft. lbs.).
3. Remove engine hoist and engine lifting bar (2) and brackets (3).

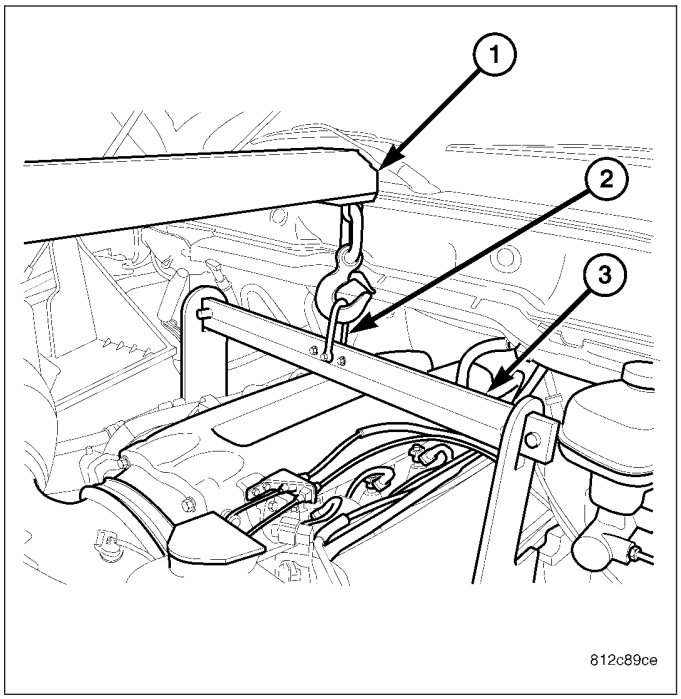

4. Install the exhaust manifold heat shield nuts (2) and tighten to 6 N·m (50 in. lbs.).
5. Connect the ground strap to the thermostat housing and route the electrical and purge harness underneath the throttle body and attach the connectors.
6. Connect the fuel vapor purge lines.
7. Properly route and connect the spark plug wires.
8. Connect the engine electrical harnesses.
9. Connect the brake booster vacuum hose, fuel line, cruise control and accelerator cables.
10. Install the A/C lines at the A/C compressor (Refer to 24 - HEATING & AIR CONDITIONING/PLUMBING/A/C COMPRESSOR - REMOVAL).
11. Connect A/C clutch electrical connector (Refer to 24 - HEATING & AIR CONDITIONING/PLUMBING/A/C COMPRESSOR - REMOVAL).
12. Install the power steering pump.
13. Install the generator.
14. Install the accessory drive belt.
15. Connect the heater hoses to the engine.
16. Install the radiator and cooling fan assembly.
17. Install the A/C condenser.

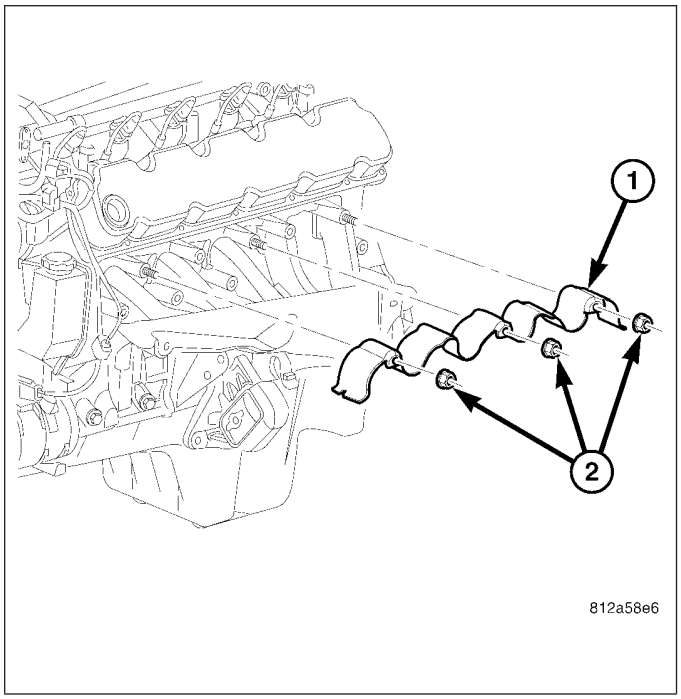

18. Connect the A/C lines to the condenser.
19. Connect the cooling fan electrical connector.
20. Connect the windshield washer hose at the splice.
21. Install the coolant recovery container.
22. Install the upper radiator hose.
23. Install the throttle body air inlet duct and the air cleaner element cover.
24. Raise and support the vehicle.
25. Install transmission.
26. Install transmission bolts and tighten bolts to:
    - 7/16 Transmission bolts and washers (2) - 68 N·m (50 ft. lbs.)
    - Transmission to top of engine - 41 N·m (30 ft. lbs.)
    - Transmission to oil pan (3) - 30 N·m (22 ft. lbs.)
27. Install drive shaft.

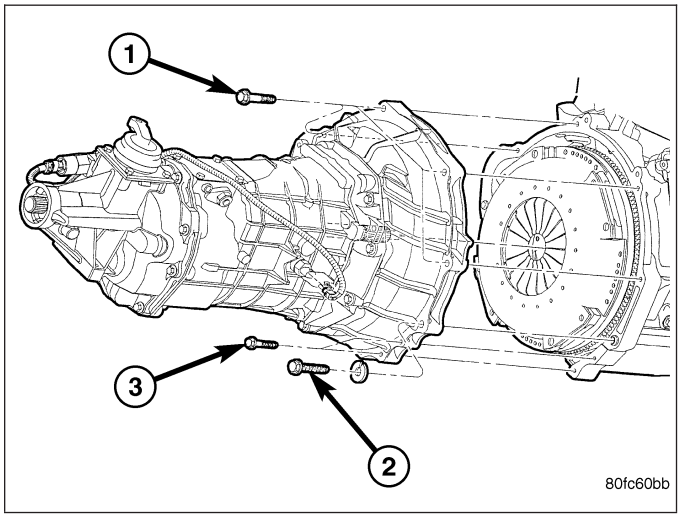

28. Install the ground strap (1) to the floor pan above the right exhaust manifold flange.

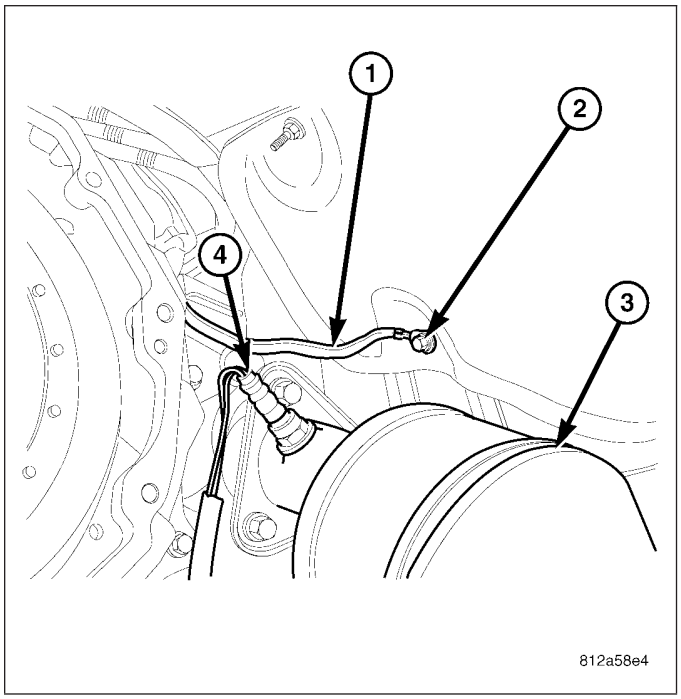

29. Connect the front exhaust pipes to the exhaust manifolds and tighten the fasteners (1 and 2) to 34 N·m (25 ft. lbs.).

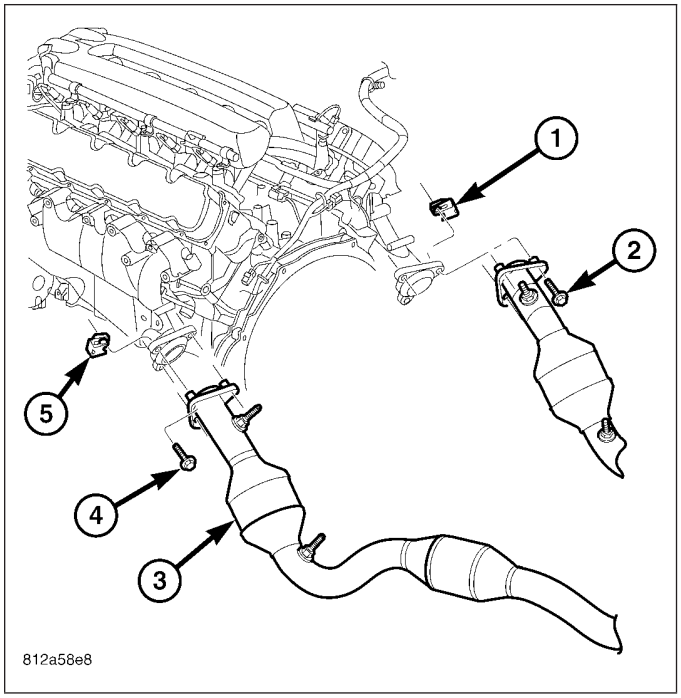

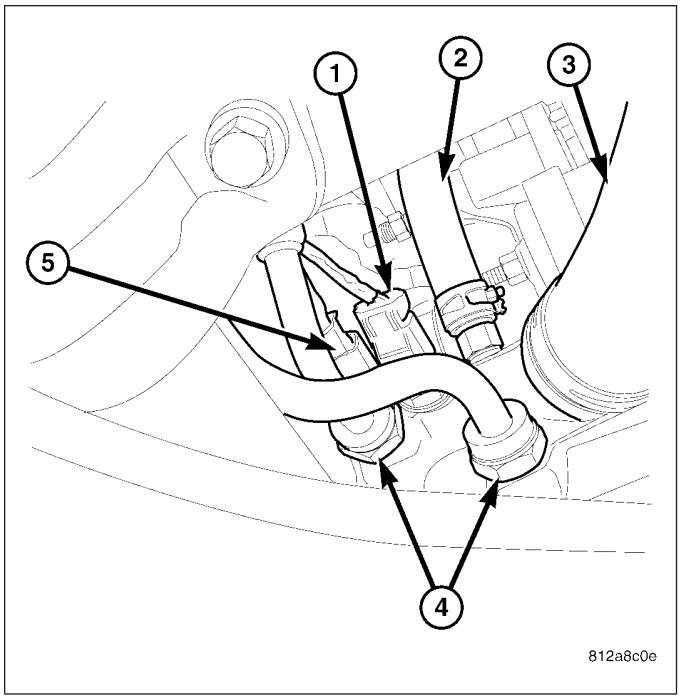

30. Connect oil cooler lines (4) and connect the oil pressure sensor (1) and oil temperature sensor (5).
31. Install the power steering line support bracket at the radiator.
32. Install lower radiator hose.
33. Connect the cooling fan hydraulic lines (Refer to 7 - COOLING/ENGINE/RADIATOR FAN - INSTALLATION).
34. Connect the A/C line to the fan shroud.
35. Install under body shield.
36. Lower vehicle.
37. Fill engine crankcase with the proper oil to the correct level (Refer to LUBRICATION & MAINTENANCE/FLUID TYPES - SPECIFICATIONS).
38. Evacuate and recharge the air conditioning (Refer to 24 - HEATING & AIR CONDITIONING/PLUMBING - STANDARD PROCEDURE).
39. Fill the cooling system (Refer to 7 - COOLING - STANDARD PROCEDURE).
40. Fill power steering to proper level and purge the system (Refer to 19 - STEERING/PUMP - STANDARD PROCEDURE).
41. Connect the negative battery cable.
42. Start the engine and run until operating temperature is obtained.
43. Turn engine off and inspect for leaks.
44. Recheck all fluid levels, fill as required.

SPECIFICATIONS

ENGINE

GENERAL SPECIFICATIONS

DESCRIPTION	SPECIFICATION	
Type	90° V-10	
Number of Cylinders	10	
Firing Order	1-10-9-4-3-6-5-8-7-2	
Compression Ratio	9.6:1	
Brake Horsepower	501@5600 RPM	
Torque	525 ft. lbs. @4100 RPM	
Crankshaft	Forged Steel	
Cylinder Block	Aluminum Alloy with Interference Fit Cast Iron Liners	
Connecting Rods	Cracked Cap Powdered Metal	
Pistons	Cast Aluminum Alloy	
	Metric	**Standard**
Displacement	8.3L	505 cu. in.
Bore	102.4 mm	4.03 in.
Stroke	100.6 mm	3.96 in.
Compression Pressure	1069-1172 kPa	155-170 psi
Engine Weight (Approx.)	284 Kilograms	625 Lbs.

CYLINDER BLOCK

DESCRIPTION	SPECIFICATION	
	Metric	Standard
Cylinder Bore Diameter	102.356-102.368 mm	4.02975-4.03025 in.
Out of Round (Max.)	0.051 mm	0.002 in.
Taper (Max.)	0.038 mm	0.0015 in.
Tappet Bore Diameter	22.974-22.992 mm	0.9045-0.9052 in.
Block Length	693.7 mm	27.310 in.
Block Height	240.8 mm	9.48 in.

CRANKSHAFT

DESCRIPTION	SPECIFICATION	
	Metric	Standard
Connecting Rod Journal Diameter	53.990-54.008 mm	2.1256-2.1263 in.
Out-of-Round (Max.)	0.013 mm	0.0005 in.
Taper (Max.)	0.013 mm	0.0005 in
End Play	0.051-0.178 mm	0.002-0.007 in.
Desired	0.13 mm	0.005 in.
Wear Limit	0.254 mm	0.010 in.
Main Bearing Clearance 1-6	0.025-0.051 mm	0.001-0.002 in.
Wear Limit	0.076 mm	0.003 in.

MAIN BEARING JOURNALS

DESCRIPTION	SPECIFICATION	
	Metric	Standard
Diameter-High	76.233-76.246 mm	3.0013-3.0018 in.
Diameter-Low	76.220-76.223 mm	3.0008-3.0013 in.
Out of Round (Max.)	0.013 mm	0.0005 in

CONNECTING RODS

DESCRIPTION	SPECIFICATION	
	Metric	Standard
Bearing Clearance	0.005-0.074 mm.	0.0002-0.0029 in.
Desired	0.0381 mm	0.0015 in.
Wear Limit	0.0889 mm	0.0035 in.
Piston Pin Boar Diameter	23.940-23.978 mm	0.9425-0.9440 in.
Side Clearance (Two Rods)	0.25-0.46 mm	0.010-0.018 in.
Wear Limit	0.51 mm	0.020 in.
Total Weight (Less Bearing)	598.4 grams	21.11 oz.

PISTONS

DESCRIPTION	SPECIFICATION	
	Metric	Standard
Piston Size	102.314-102.332 mm.	4.0281-4.0288 in.
Clearance at Top of Skirt (12 mm from bottom)	0.025-0.055 mm.	0.0010-0.0022 in.
Land Clearance (Diametrical)	0.771-0.808 mm	-0.036–0.042 in.
Weight	429-439 grams	15.13-15.49 oz.
Piston Length	57.0 mm	2.24 in.
Piston Pin Boar Diameter	23.940-23.978 mm	0.9425-0.9440 in.
Piston Pin Boar Offset	0.800 mm	0.031 in.
Piston Ring Groove Depth No.1	91.55-91.88 mm	3.604-3.614 in.
Piston Ring Groove Depth No.2	90.75-91.00 mm	3.573-3.583 in.
Piston Ring Groove Depth No.3	92.53-92.79 mm	3.643-3.653 in.

PISTON PINS

DESCRIPTION	SPECIFICATION	
	Metric	Standard
Clearance in Piston	0.009-0.022 mm	0.0004-0.0009 in.
Clearance in Connecting Rod	0.017-0.061 mm	0.0007-0.0024 in.
Diameter	23.995-24.000 mm	0.9447-0.9449 in.
Length	73.35 mm	2.888 in.
End Play	None	

PISTON RING

DESCRIPTION	SPECIFICATION	
	Metric	Standard
Piston Ring End Gap		
Top Compression Ring	0.20-0.36 mm	0.008-0.014 in.
Second Compression Ring	0.56-0.79 mm	0.022-0.031 in.
Oil Control (Steel Rails)	0.25-0.76 mm	0.010-0.030 in.
Wear Limit-Top Compression Ring	0.63 mm	0.025 in.
Wear Limit-2nd Compression Ring	1.40 mm	0.055 in.
Wear Limit-Oil Control Steel Rails	1.64 mm	0.065 in.
Piston Ring Side Clearance		
Top and 2nd Compression Ring	0.040-0.085 mm	0.0016-0.0033 in.
Oil Ring (Steel Ring)	0.046-0.201 mm	0.0018-0.0079 in.
Wear Limit- Top and 2nd Ring	0.10 mm	0.004 in.
Wear Limit Oil Ring Pack	0.216 mm	0.0085 in.
Piston Ring Width		
Compression Rings	1.407-1.490 mm	0.0579-0.0586 in.
Oil Ring (Steel Rails)	0.447-0.473 mm	0.0176-0.0186 in.

CAMSHAFT

DESCRIPTION	SPECIFICATION	
	Metric	Standard
Lift	8.13 mm	0.320 in.
Journal Diameter 1-6	53.09-53.11 mm	2.090-2.091 in.
Boar Diameter No.1-6	53.16-53.19 mm	2.093-2.094 in.
Diametrical Clearance	0.051-0.102 mm	0.002-0.004 in.
Max. Allowable	0.127 mm	0.005 in.
End Play	0.127-0.381 mm	0.005-0.015 in.
Valve Timing-Exhaust Valve		
Closes (ATC)	36.5°	
Opens (BBC)	88.5°	
Duration	305.0°	
Valve Timing-Intake Valve		
Closes (BTDC)	86.5°	
Opens	23.5°	
Duration	297.0°	
Valve Overlap	60.0°	

HYDRAULIC TAPPETS

DESCRIPTION	SPECIFICATION	
	Metric	Standard
Body Diameter	22.949-22.962 mm	0.9035-0.9040 in.
Clearance in Block	0.013-0.043 mm	0.0005-0.0017 in.
Plunger Travel (Dry)	4.24 mm	0.167 in.
Push Rod Length (Overall)	193.22-193.73 mm	7.607-7.627 in.

CYLINDER HEAD

DESCRIPTION	SPECIFICATION	
	Metric	Standard
Gasket Thickness (Compressed)	1.35 mm	0.053 in.

CYLINDER HEAD VALVE SEAT

DESCRIPTION	SPECIFICATION	
	Metric	Standard
Seat Angle	44°-44.5°	
Runout (Max.)	0.038 mm	0.002 in.
Width (Finish) Intake and Exhaust	1.02-1.52 mm	0.040-0.060 in.
Guide Bore Diameter (Std.)	7.95-7.98 mm	0.313-0.314 in.

VALVES

DESCRIPTION	SPECIFICATION	
	Metric	Standard
Face Angle	45-45.5°	
Back Cut Angle	25°-29°	
Stem Diameter-Intake and Exhaust	7.90-7.92 mm	0.331-0.312 in.
Head Diameter-Intake	50.67-50.93 mm	1.995-2.005 in.
Head Diameter-Exhaust	40.01-40.26 mm	1.575-1.585 in.
Length-Intake (Over All)	145.69-146.33 mm	5.736-5.761 in.
Length-Exhaust (Over All)	146.23-146.86 mm	5.757-5.782 in.
Valve Margin-Intake	1.30 mm	0.051 in.
Valve Margin-Exhaust	2.03 mm	0.080 in.
Lift-Intake (Zero Lash	14.06 mm	0.554 in.
Lift-Exhaust (Zero Lash)	14.06 mm	0.554 in.
Valve Stem Tip Height	52.96 mm	2.085 in.
Stem-to-Guide Clearance-Intake and Exhaust	0.025-0.076 mm	0.001-0.003 in.
Max. Allowable-Intake (Rocking Method)	0.50 mm	0.020 in.
Max. Allowable-Exhaust (Rocking Method)	0.70 mm	0.027 in.

VALVE SPRING

DESCRIPTION	SPECIFICATION	
	Metric	Standard
Free Length - Spring	55.0 mm	2.165 in.
Free Length - Spring Damper	47 mm	1.850 in.
Spring Tension (Valve Closed)	534 ± 20 N @ 44.5 mm	120 ± 4.5 lbs. @ 1.750 in.
Spring Tension (Valve Open)	1245 ± 40 N @ 30.6 mm	280 ± 9.0 lbs. @ 1.207 in.
Number of Coils - Spring	7.25 Right Hand Twist	
Number of Coils - Spring Damper	3.6 to 4.0 Left Hand Twist	
Wire Diameter (Ovate)	4.2 x 5.3 mm	0.166 x 0.208 in.
Installed Height (Spring Seat to Bottom of Retainer)	44.5 mm	1.750 in.

LUBRICATION

DESCRIPTION	SPECIFICATION	
	Metric	Standard
At Curb Idle Speed* (Minimum with engine at operating temperature)	68.9 kPa	10 psi
At 3000 RPM	310-517 kPa	45-75 psi
CAUTION: *If pressure is ZERO at curb idle, DO NOT run engine at 3000 rpm.		

OIL PUMP

DESCRIPTION	SPECIFICATION	
	Metric	Standard
Clearance Over Rotors (Max.)	0.077 mm	0.003 in.
Cover Out-Of-Flat (Max.)	0.076 mm	0.003 in.
Inner Rotor Thickness (Min.)	18.92 mm	0.744 in.
Clearance (Max.)	0.19 mm	0.007 in.
Diameter (Min.)	82.45 mm	3.246 in.
Thickness (Min.)	18.92 mm	0.744 in.
Tip Clearance Between Rotors (Max)	0.150 mm	0.0068 in.

TORQUE

DESCRIPTION	N·m	Ft. Lbs.	In. Lbs.
Bolts-A/C Compressor Mounting	23	-	200
Bolts-A/C Compressor Bracket	23	-	200
Bolt-Camshaft Position Sensor	11	-	95
Bolts-Camshaft Sprocket	23	-	200
Bolts-Camshaft Thrust Plate	24	-	210
Bolts-Connecting Rod Cap	68	50	-
Bolts-Crankshaft Main Bearing Cap	(Refer to CRANKSHAFT - INSTALLATION)		
Nuts-Crankshaft Oil Scraper	23	-	200
Bolts-Crankshaft Pulley	23	-	200
Bolt-Crankshaft Vibration Damper	176	130	-
Bolts-Cylinder Head	(Refer to CYLINDER HEAD - INSTALLATION)		
Bolts/Studs-Cylinder Head Cover	11	-	95
Exhaust Manifold	23	-	200
Exhaust Pipe to Exhaust Manifold	34	25	-
Bolts-Engine Mount Bracket-to-Block	41	30	-
Nuts-Engine Mount Insulator	102	75	-
Bolts-Flywheel to Crankshaft	75	55	-
Bolts-Generator Mounting	41	30	-
Bolts-Intake Manifold	11	-	95
Bolts-Oil Cooler	5	-	40
Oil Cooler Line Fitting	68	50	-
Bolts-Oil Pan			
1/4–20	11	-	95
5/16–18	23	-	200
Plug-Oil Pan Drain	34	25	-
Plug-Oil Pressure Relief Valve	34	25	-
Bolts-Oil Pump Cover	23	-	200
Oil Pump Pick-up Tube			
Bolt 1/4–20	11	-	95

DESCRIPTION	N·m	Ft. Lbs.	In. Lbs.
Nut 5/16–18	23	-	200
Oil Filter	18	-	160
Oil Pressure Sensor	8.5	-	75
Oil Temperature Sensor	8.5	-	75
Bolts-Power Steering Pump Mounting	23	-	200
Bolts-Rear Crankshaft Seal Retainer	11	-	95
Bolts-Rocker Arm	35	26	-
Spark Plugs	27	20	-
Bolts-Starter Mounting	41	30	-
Bolts-Throttle Body	11	-	95
Bolts-Timing Chain Cover	23	-	200
Bolts-Water Pump Mounting	11	-	95

SPECIAL TOOLS

ENGINE

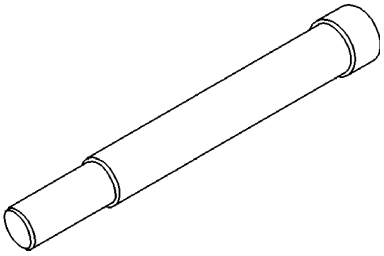

Crankshaft Insert 8194

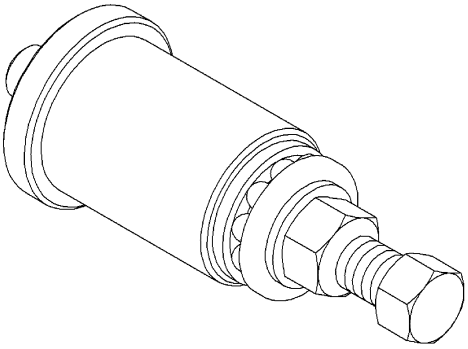

Crankshaft Damper/Sprocket Installer 9055

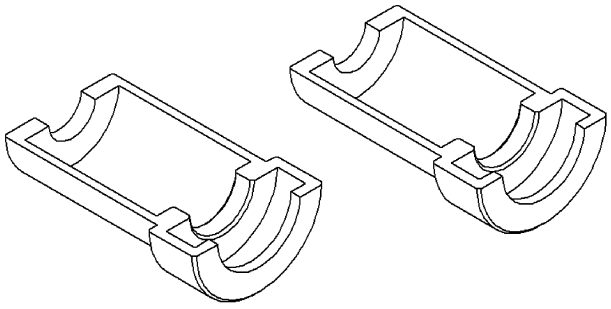

Crankshaft Sprocket Remover 9056

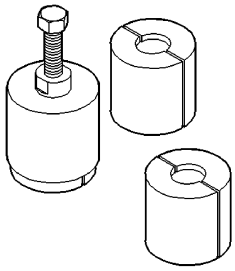

Puller 5048

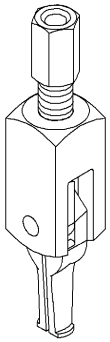

Bearing/Seal Remover Adapter - 8990

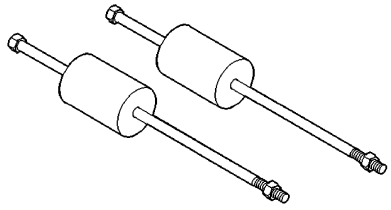

Puller, Slide Hammer C-3752

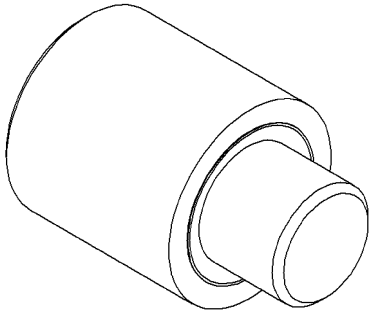

Crankshaft Pilot Bearing Installer 9058

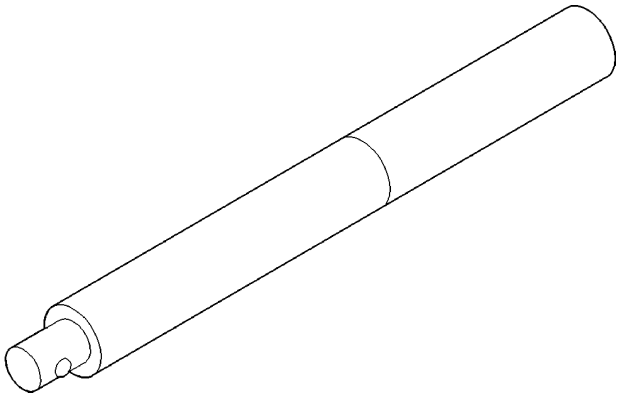

Driver Handle C-4171

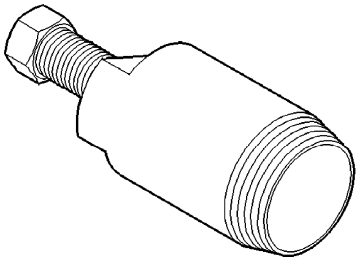

Front Crankshaft Seal Remover C-4679A

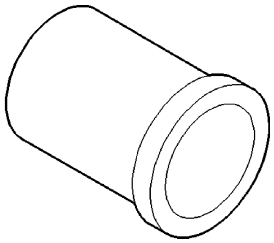

Front Crankshaft Seal Installer MD-998306

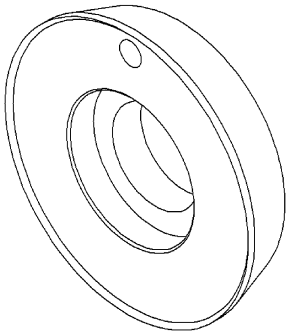

Rear Crankshaft Seal Installation Guide 9060

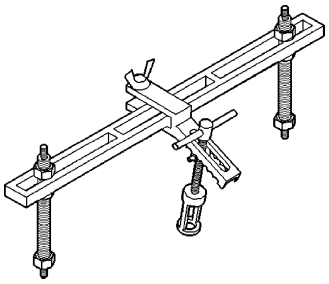

Valve Spring Compressor MD998772A

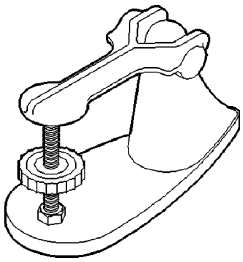

Valve Spring Tester C-647

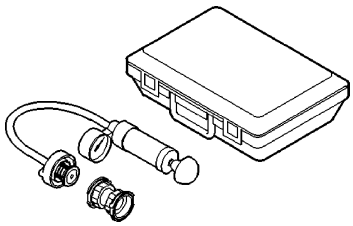

Pressure Tester Kit 7700

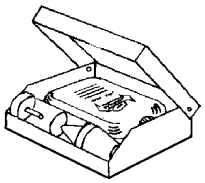

Bloc–Chek–Kit C-3685–A

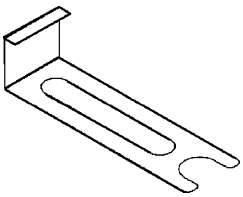

Clutch Hydraulic Line Disconnect Tool 6638A

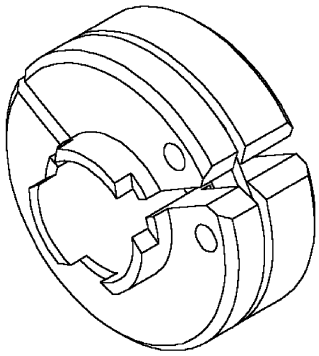

Disconnect Tool 9005

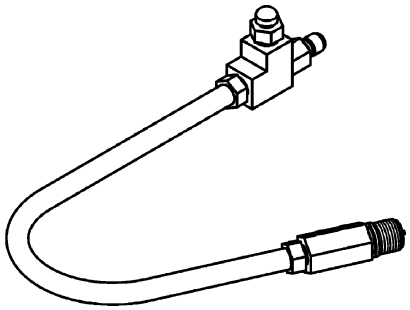

Adaptor 8116

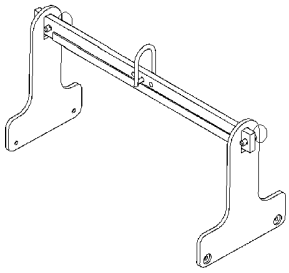

ENGINE LIFTING FIXTURE 9363



DRB III® with PEP Module – OT-CH6010A

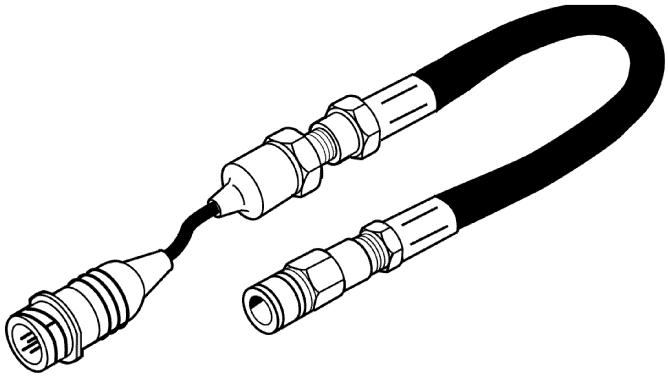

Pressure Transducer OT-CH7059

SYSTEM-AIR INTAKE

DESCRIPTION

Air deflectors mounted to the hood and front grill route the cool incoming air into the right inner fender (3) where the inlet for the air cleaner housing (4) resides. Air passes through a filter element inside the housing, through a air inlet duct (1), and into the throttle body.

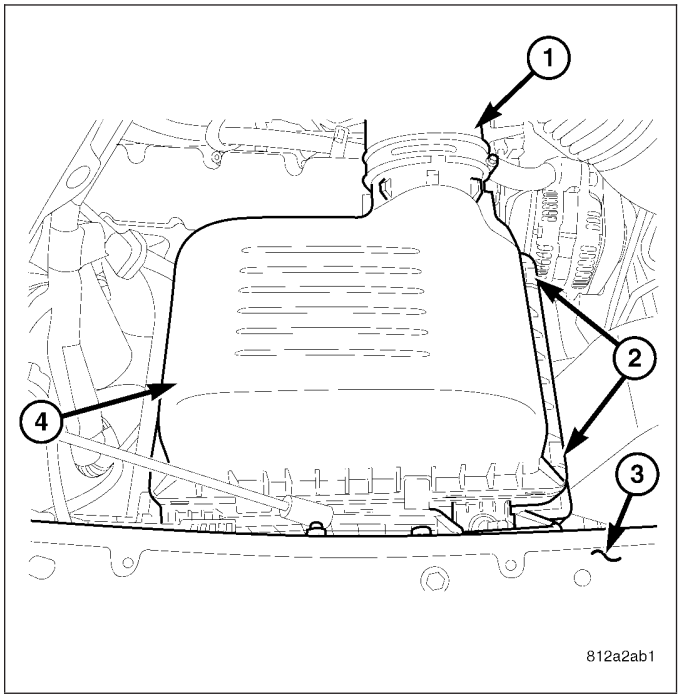

ELEMENT-AIR CLEANER

REMOVAL

1. Unclip the air cleaner cove (1) and release the top of the air cleaner housing assembly.

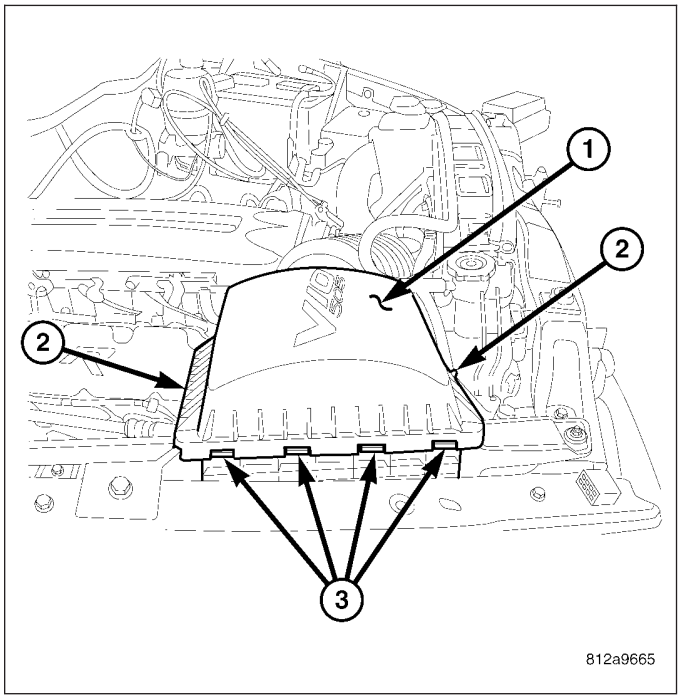

2. Pull the air filter element up and out of the air cleaner housing assembly.

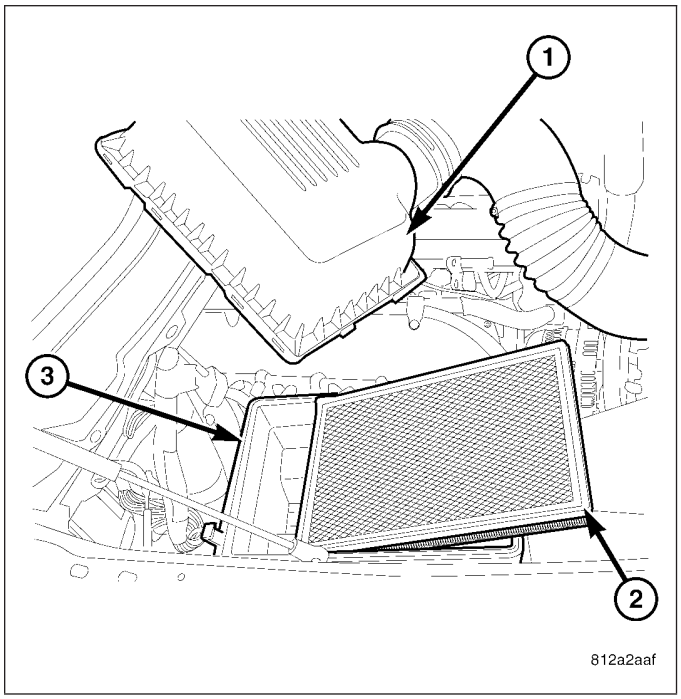

INSTALLATION

1. Install the air filter element (2) into the housing assembly (3).

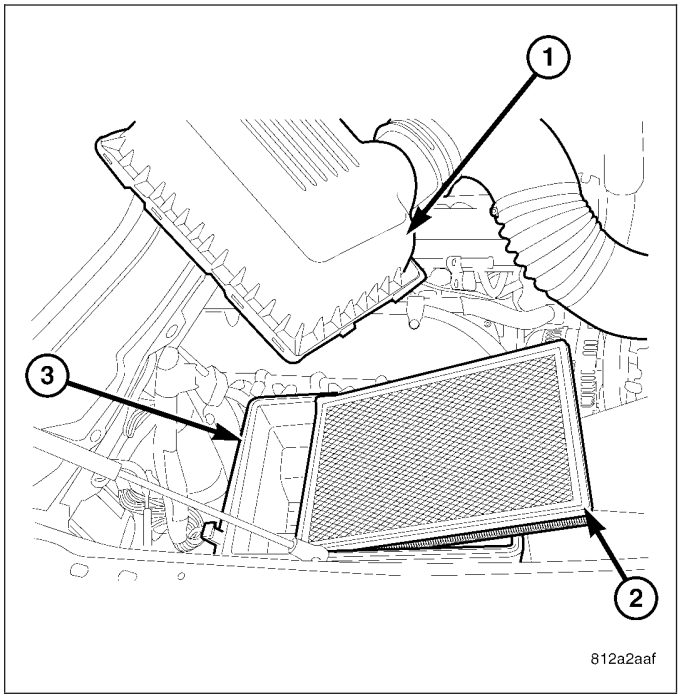

2. Position the alignment tabs (3) of the housing cover (1) into the lower housing assuring the position of the interlocking tabs.
3. Clip and snap the air cleaner housing cover retainers (2).

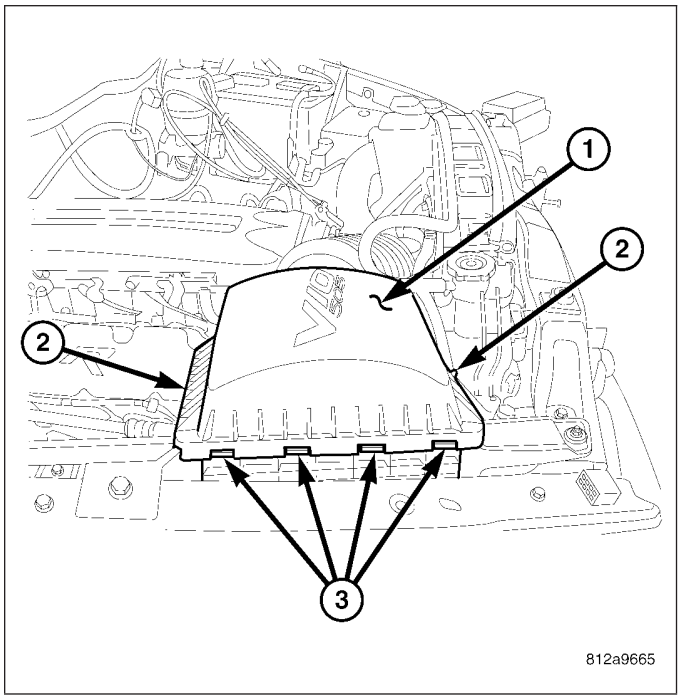

HOUSING-AIR CLEANER

REMOVAL

1. Disconnect the air inlet duct (1) and crankcase ventilation hose from the air cleaner housing (2).

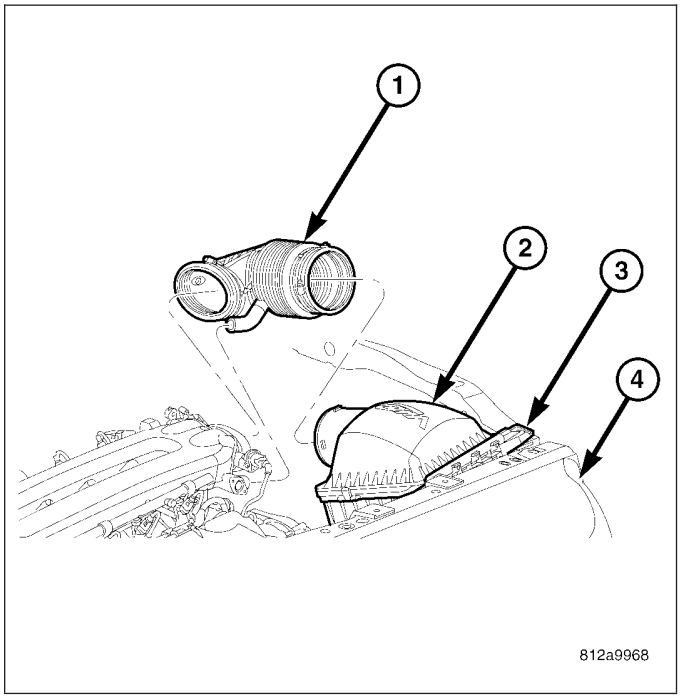

2. Remove the air cleaner housing fastener (6) on the front core support.
3. Lift up and remove the housing off of the guide pins (2) and grommets.

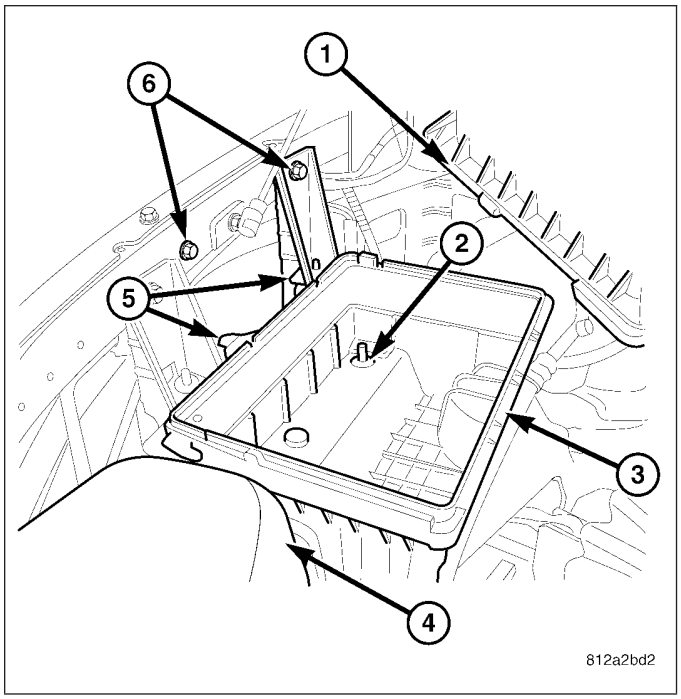

INSTALLATION

1. Position the housing (3) over the guide pins (2) and push down to seat.
2. Install and tighten the housing fasteners (6).

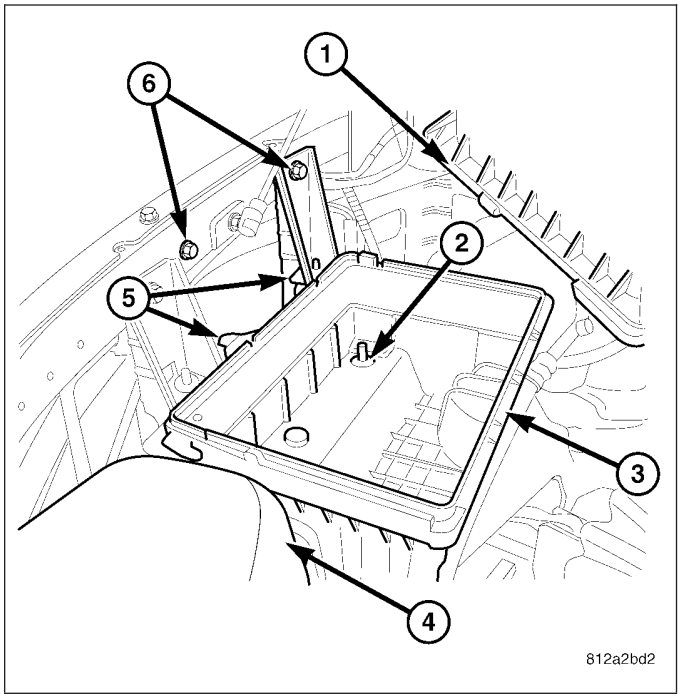

3. Connect the throttle body air inlet duct (1) and crank case ventilation hose to the air cleaner housing cover (2).

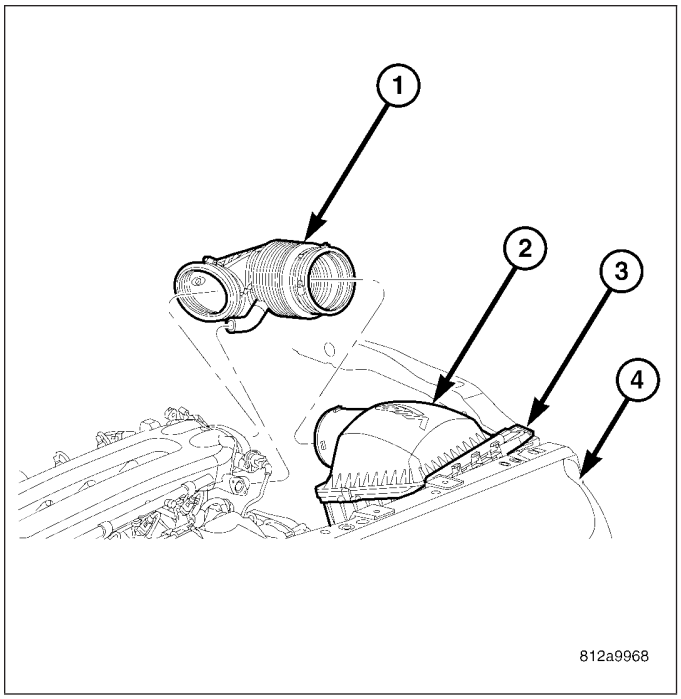

MOUNTS-ENGINE

REMOVAL

NOTE: This procedure covers either the left or right engine mount.

1. Raise vehicle on hoist.
2. Support oil pan with suitable jack.
3. Loosen engine mount (1) to block bolts or.

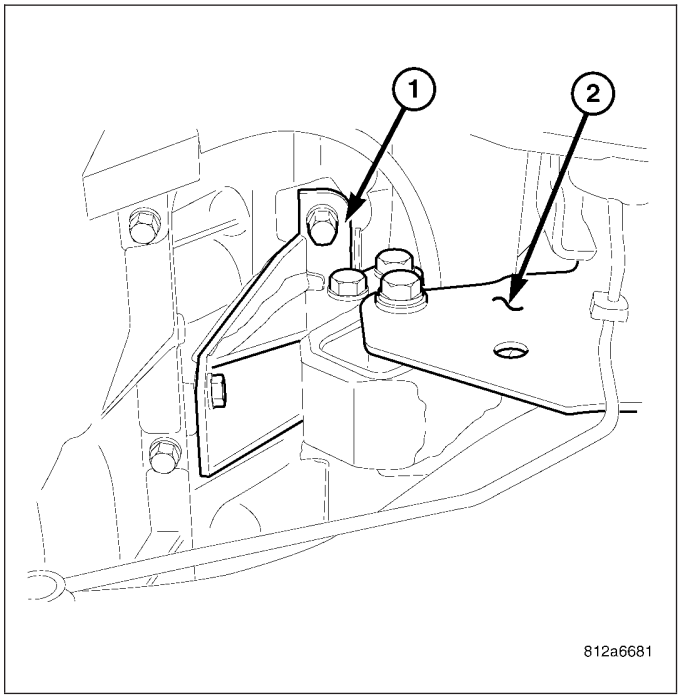

4. Loosen engine mount (2) to frame nut
5. Raise engine with jack. Remove engine mount to block bolts.
6. Remove engine mount or.

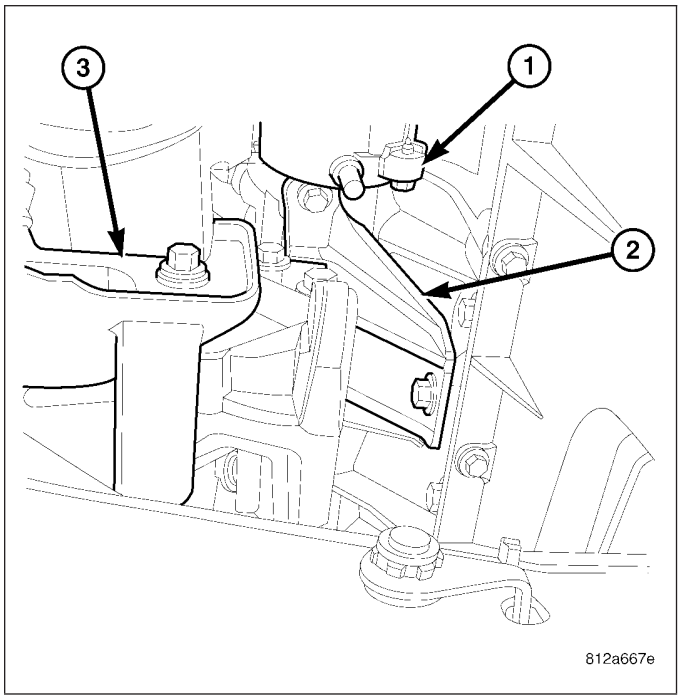

INSTALLATION

NOTE: This procedure covers either the left or right engine mount.

1. With engine raised, position engine mount (2) onto engine and install bolts. Tighten bolts to 41 N·m (30 ft. lbs.) or.

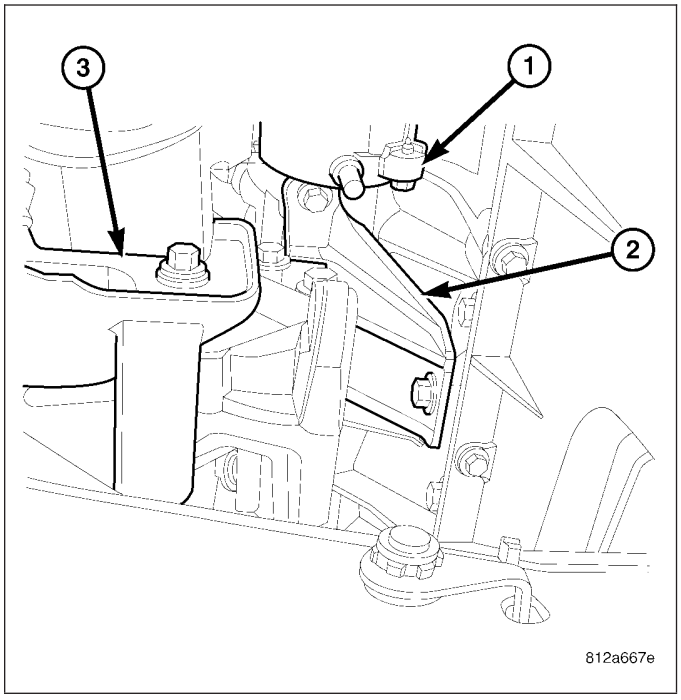

2. Lower engine with jack while guiding engine mount (1) studs into frame slots.
3. Install engine mount to frame nut. Tighten nut to 102 N·m (75 ft. lbs.) or.
4. Remove jack.
5. Lower vehicle.

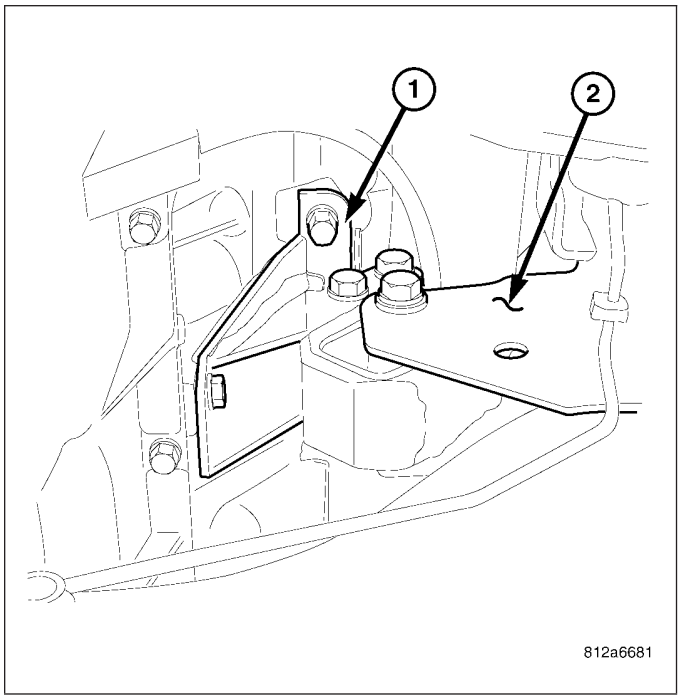

MANIFOLD-INTAKE

DIAGNOSIS AND TESTING

INTAKE MANIFOLD LEAKS

An intake manifold air leak is characterized by lower than normal manifold vacuum, rough idle, or engine misfire.

WARNING: USE EXTREME CAUTION WHEN THE ENGINE IS OPERATING. DO NOT STAND IN A DIRECT LINE WITH THE FAN. DO NOT PUT YOUR HANDS NEAR THE PULLEYS, BELT OR THE FAN. DO NOT WEAR LOOSE CLOTHING.

1. Start the engine.
2. Spray a small stream of water (Spray Bottle) at the suspected leak area.
3. If engine RPM'S change, the area of the suspected leak has been found.
4. Repair as required.

REMOVAL

NOTE: Care must be taken to protect the intake manifold powder coating from scrapes and abrasions.

1. Perform the fuel system pressure release procedure, **before attempting any repairs.** (Refer to 14 - FUEL SYSTEM/FUEL DELIVERY - STANDARD PROCEDURE - FUEL SYSTEM PRESSURE RELEASE PROCEDURE).
2. Disconnect negative battery cable.
3. Disconnect throttle body air inlet duct, IAT sensor, CCV hose and remove air cleaner cover (Refer to 9 - ENGINE/AIR INTAKE SYSTEM - REMOVAL).
4. Disconnect throttle cable (2) from throttle cam. Remove throttle cable from bracket and set aside.
5. Disconnect speed control cable from throttle cam and set aside.

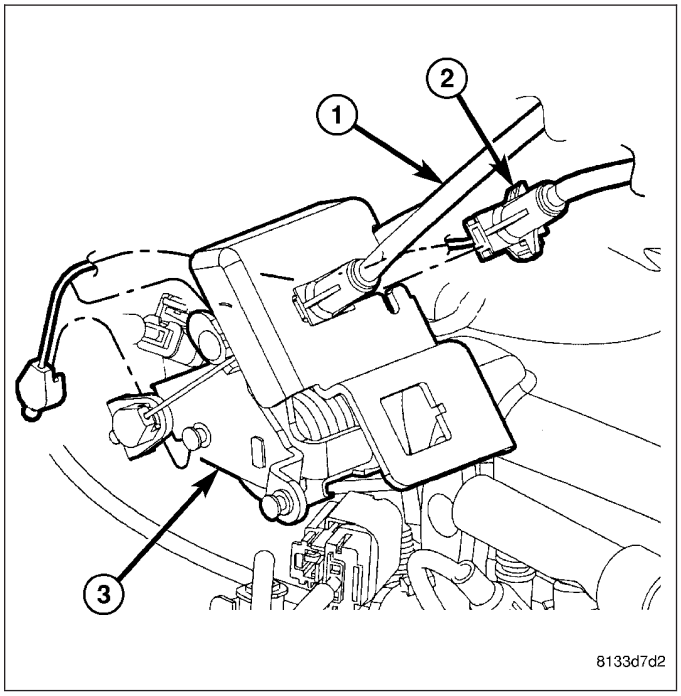

6. Disconnect brake booster vacuum hose from the intake manifold and set aside.

WARNING: WRAP A SHOP TOWEL AROUND FUEL LINE TO CATCH ANY GASOLINE SPILLAGE.

7. Disconnect fuel line quick connect fitting from fuel rail (Refer to 14 - FUEL SYSTEM/FUEL DELIVERY/QUICK CONNECT FITTING - STANDARD PROCEDURE).

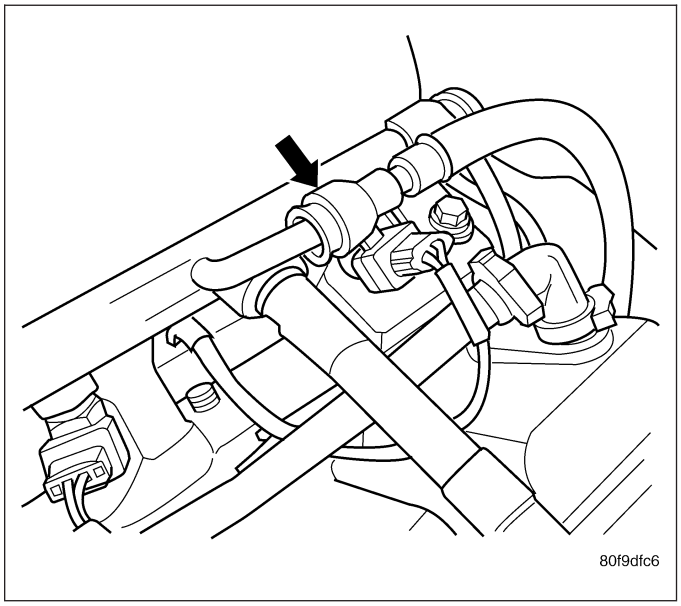

8. Disconnect the following electrical connectors:
   - Left cylinder head fuel injectors
   - MAP sensor
   - Engine Coolant Temperature (ECT) Sensor
   - Idle Speed Control Sensor (ISC)
   - Throttle Position Sensor (TPS) (1)
   - Right cylinder head fuel injectors
9. Carefully separate the fuel injector harness push pins from the intake manifold.

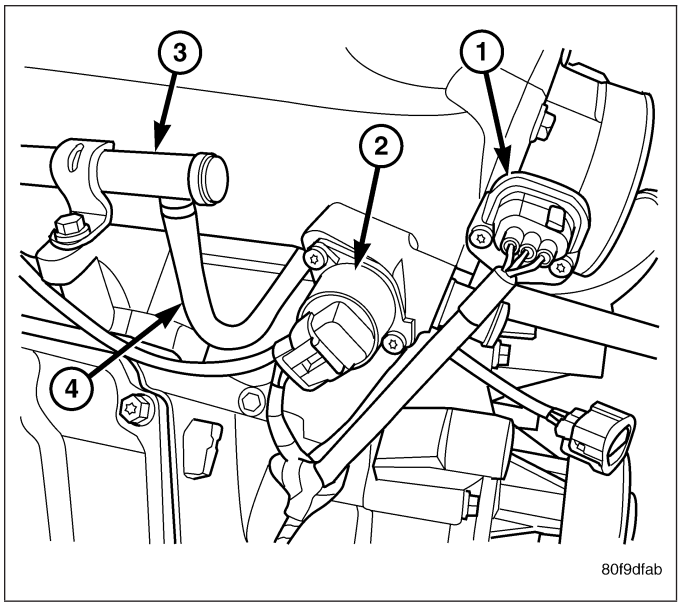

10. Disconnect the purge solenoid hose from beneath the throttle body.
11. Disconnect CCV hoses from left and right cylinder head covers.

CAUTION: Care must be taken when removing the No. nine cylinder inside intake manifold bolt. Failure to do so may result in personal injury or possible damage.

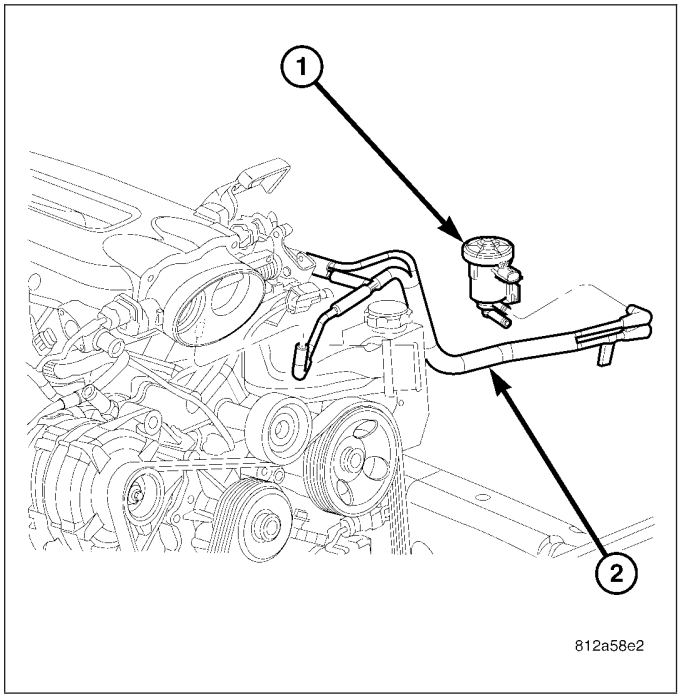

12. Remove the intake manifold bolts and intake manifold (2).
13. Cover the intake manifold openings with a suitable cover when servicing to prevent any debris from entering cylinder heads.

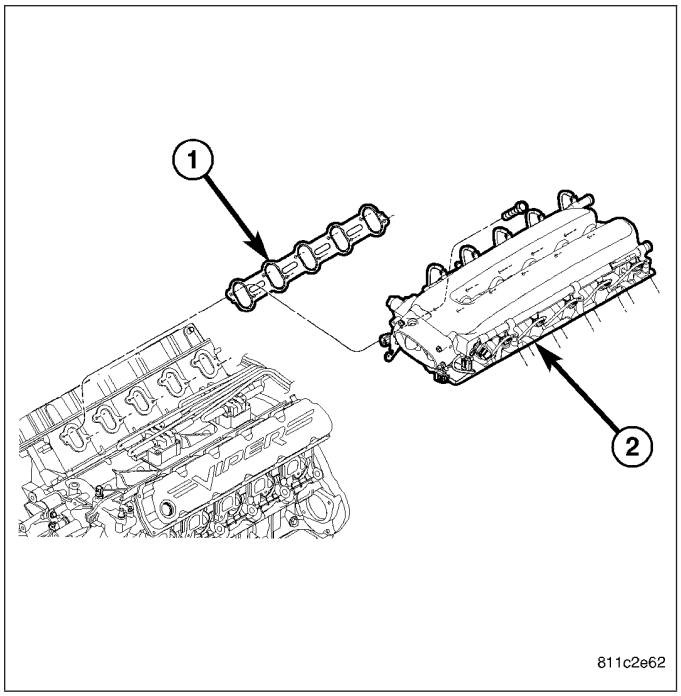

INSPECTION

1. Inspect manifold for cracks or other damage.
2. Inspect manifold sealing surfaces for damage.

INSTALLATION

CAUTION: When cleaning the intake manifold and cylinder head mating surfaces, do not use a metal scraper because the surfaces could be cut or ground. Instead, use a wooden or plastic scraper.

NOTE: Care must be taken to protect the intake manifold powder coat from possible scrapes and abrasions.

1. Clean gasket surfaces and remove covering from intake manifold openings.
2. Carefully install the intake manifold gaskets (2) and alignment pins (1).

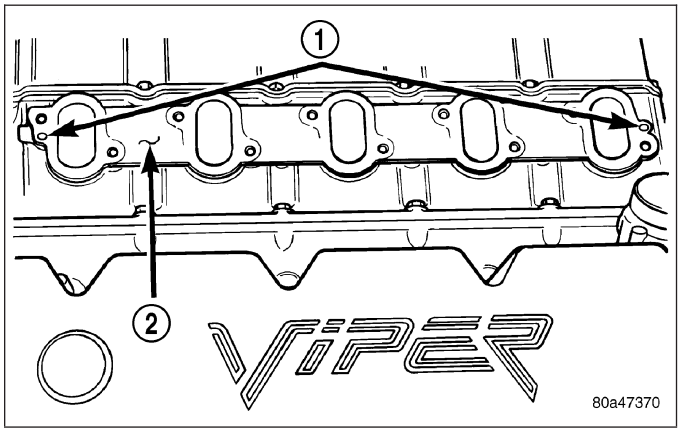

3. Set the intake manifold in position on the engine. Install intake manifold bolts and tighten initially to 1 N·m (10 in. lbs.). Tighten bolts starting at the center and working outward to 11 N·m (95 in. lbs.).
4. Connect CCV hoses to left and right cylinder head covers.
5. Connect fuel line to fuel rail. Pull backward on the quick connect fitting to ensure complete insertion.
6. Connect the brake booster vacuum hose.

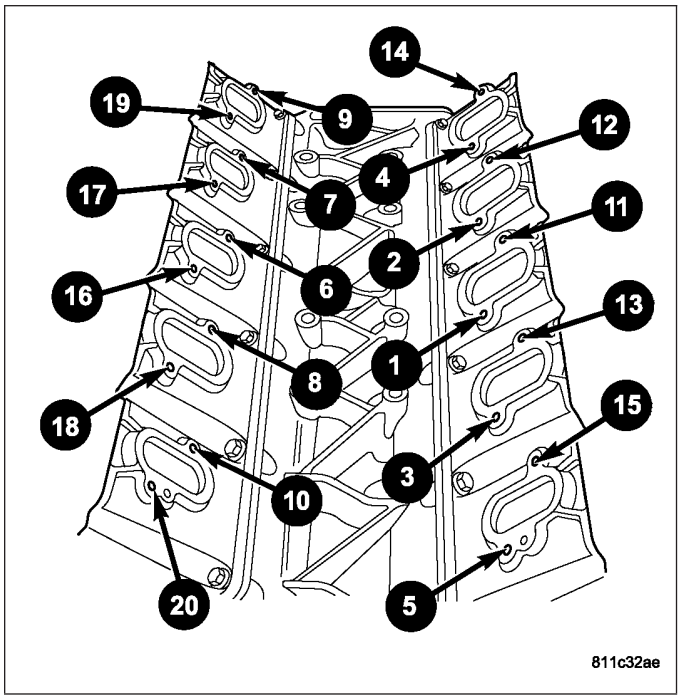

7. Connect speed control cable to throttle linkage.
8. Connect the throttle cable housing to the bracket and then attach the cable to the throttle linkage

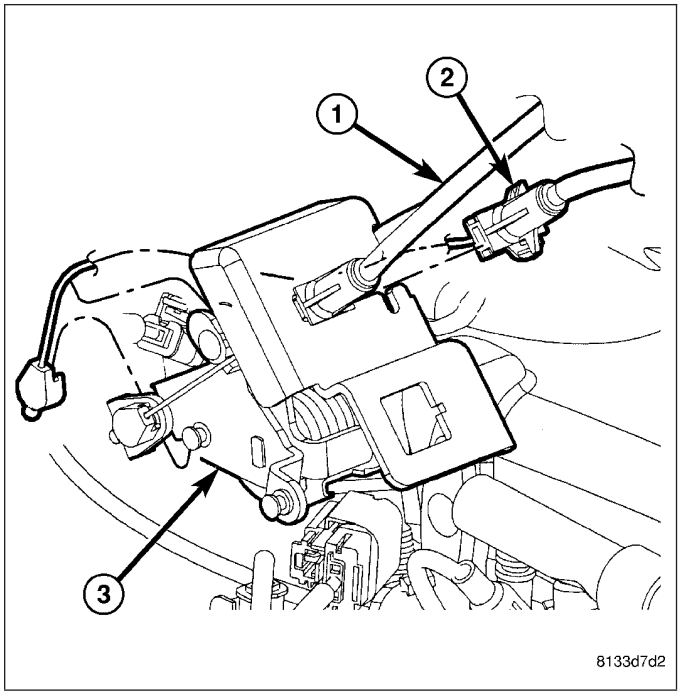

9. Attach the purge solenoid hose to the underside of the throttle body housing.

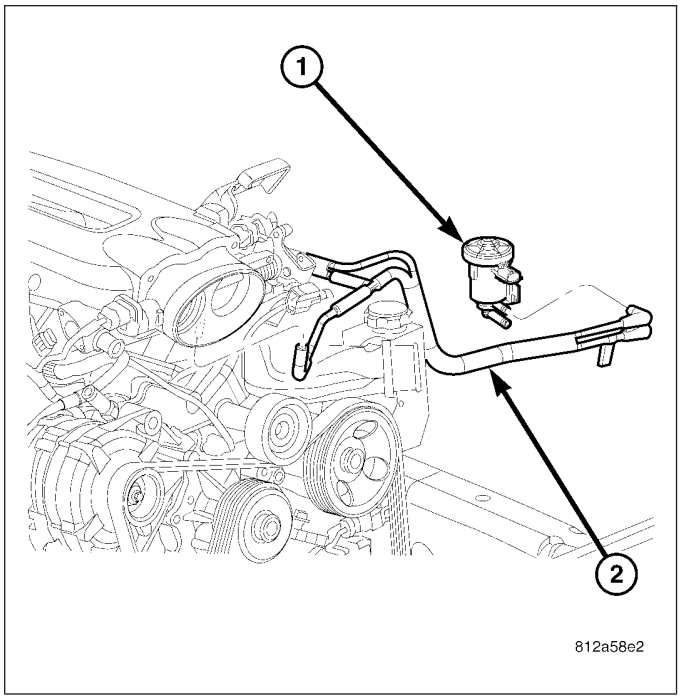

10. Reconnect the following electrical connectors:
    - Left cylinder head fuel injectors
    - Engine Coolant Temperature (ECT) Sensor
    - MAP sensor
    - Idle Speed Control
    - Throttle Position Sensor
    - Right cylinder head fuel injectors
11. Install air cleaner cover assembly, connect throttle body air inlet hose, CCV hose and connect the Intake Air Temperature Sensor (Refer to 9 - ENGINE/AIR INTAKE SYSTEM - INSTALLATION).
12. Connect negative battery cable.
13. With the Scan Tool, use the ASD Fuel System Test to pressurize fuel system to check for leaks.

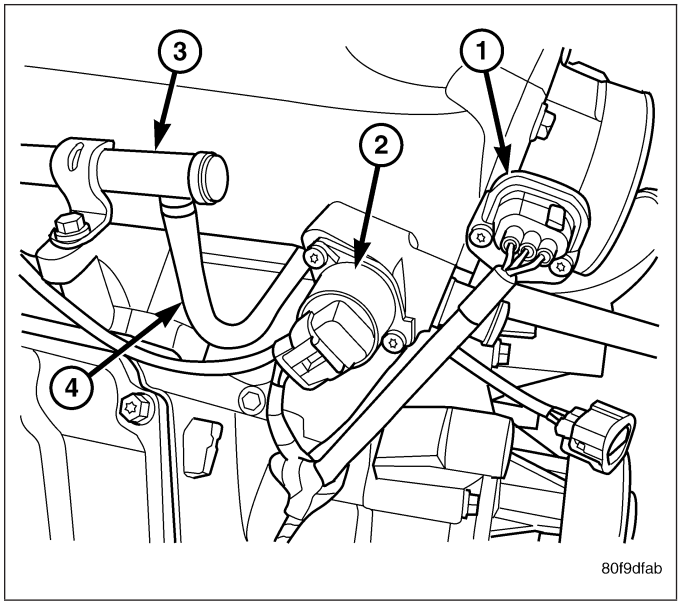

CAUTION: When using the ASD Fuel System Test, the Auto Shutdown (ASD) relay will remain energized for 7 minutes or until the ignition switch is turned to the OFF position, or Stop All Test is selected.

MANIFOLD-EXHAUST

REMOVAL

NOTE: Care must be taken to protect the cylinder head covers powder coating from scrapes and abrasions. This procedure covers either the left or right exhaust manifold.

1. Disconnect negative battery cable.

NOTE: When servicing the right exhaust manifold it is necessary to remove the upper oil dip stick tube fastener and position the tube aside.

2. Raise vehicle on hoist.

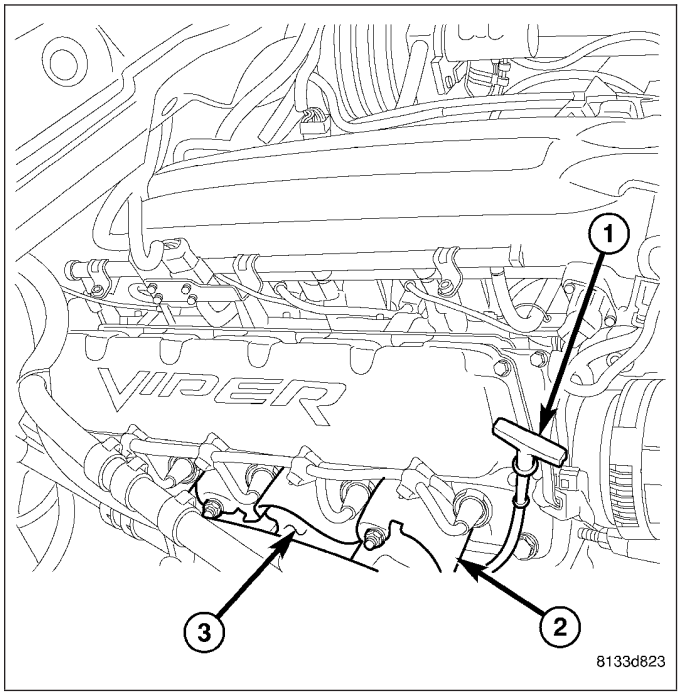

3. Loosen and remove the fasteners from the exhaust pipe to exhaust manifold.
4. Separate exhaust pipe from the exhaust manifold.
5. Lower the vehicle.
6. Disconnect the spark plug wires from the spark plugs and set aside.
7. Remove manifold heat shield from exhaust manifold ,.

NOTE: Note the location of exhaust manifold studs and bolts for proper installation.

8. Remove studs and bolts attaching manifold to cylinder head and remove manifold ,.

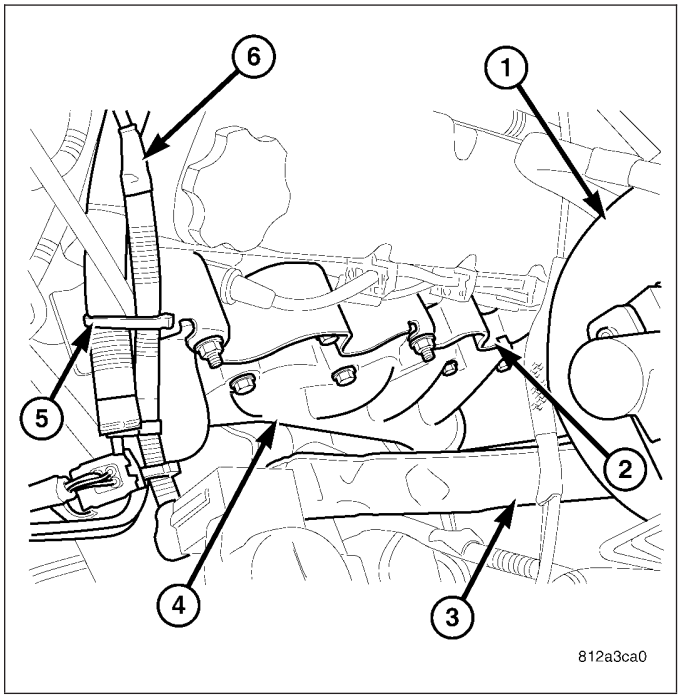

INSPECTION

Inspect exhaust manifolds for damage or cracks. Check for distortion of the cylinder head mounting surfaces with a straightedge and feeler gauge.

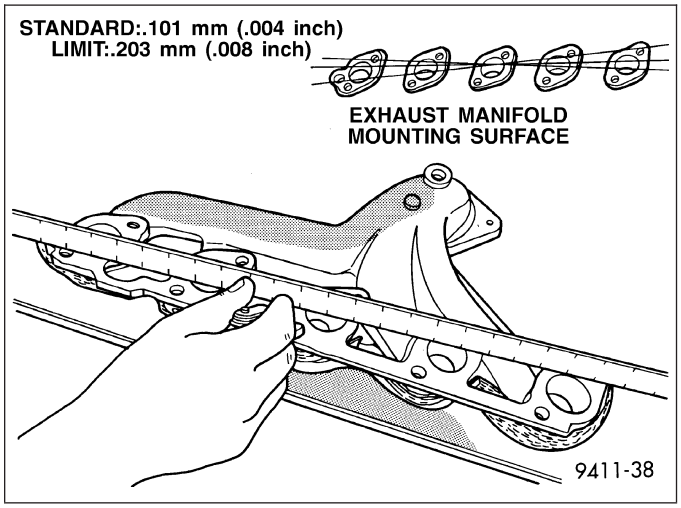

INSTALLATION

NOTE: Care must be taken to protect the cylinder head covers powder coating from scrapes and abrasions. This procedure covers either the left or right exhaust manifold.

1. Install new gasket and install exhaust manifold Tighten attaching fasteners to 23 N·m (200 in. lbs.) ,.

NOTE: When installing right exhaust manifold, properly position the oil level indicator tube, install fastener and tighten to the cylinder head cover specification.

2. Install manifold heat shield and tighten attaching fasteners to 6 N·m (50 in. lbs.) ,.

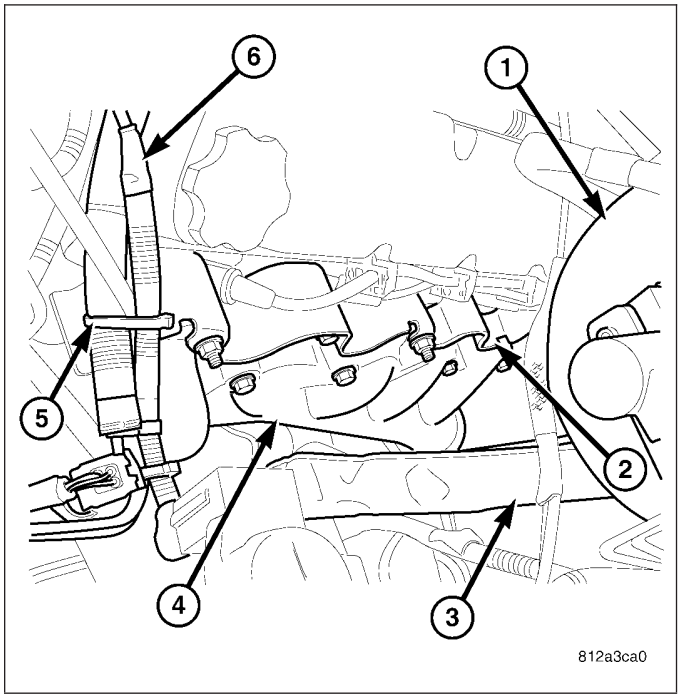

3. Install the spark plug wires.
4. Raise vehicle on hoist.
5. Connect exhaust pipe to exhaust manifold. Tighten fasteners to 34 N·m (25 ft.lbs.).
6. Lower vehicle.
7. Connect negative battery cable.

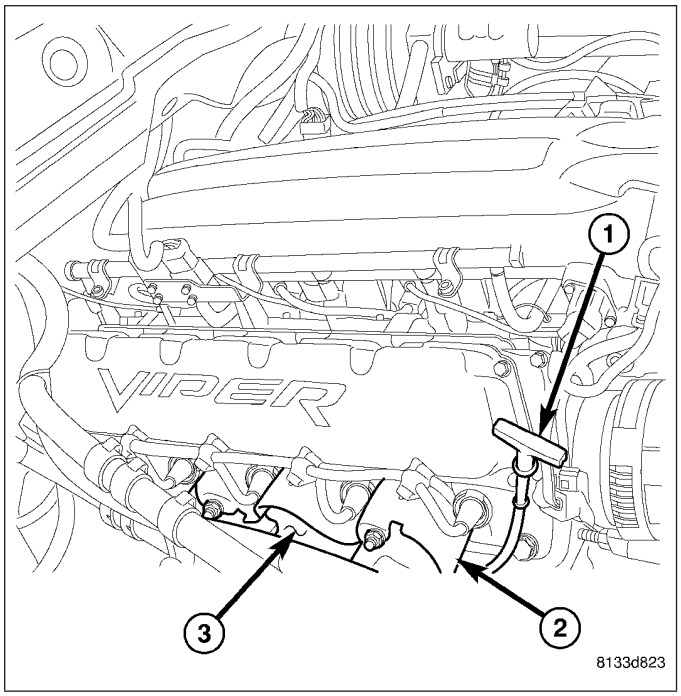

HEAD(S)-CYLINDER

REMOVAL - CYLINDER HEAD(S)

NOTE: Care must be taken to protect the intake manifold and cylinder head covers powder coating from scrapes and abrasions. This procedure covers either the left or right cylinder head.

The aluminum alloy cylinder head shown in is held in place by 12, ½ inch bolts (5) and 8, ¼ inch bolts (4).

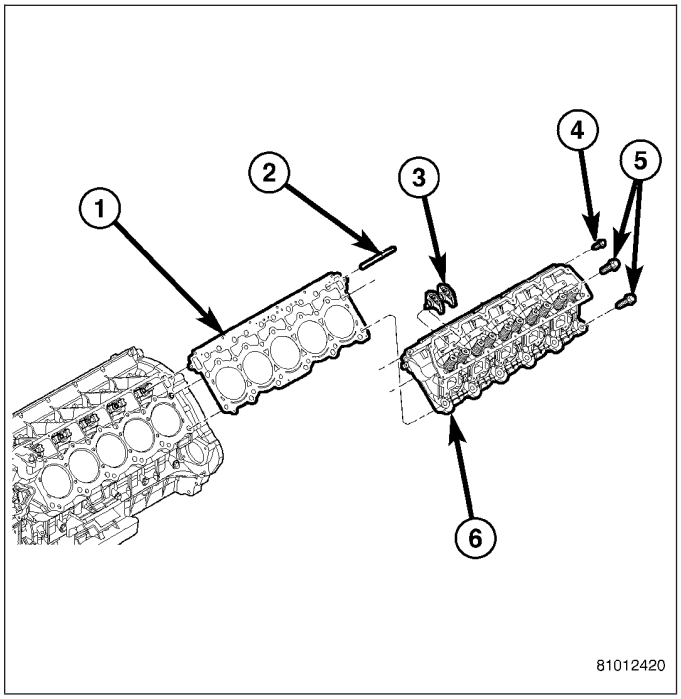

1. Release the fuel pressure (Refer to 14 - FUEL SYSTEM/FUEL DELIVERY - STANDARD PROCEDURE).
2. Disconnect negative battery cable.
3. Disconnect the throttle body air inlet duct, IAT sensor, CCV hose and remove the air cleaner cover (Refer to 9 - ENGINE/AIR INTAKE SYSTEM/AIR CLEANER HOUSING - REMOVAL).
4. Drain the cooling system (Refer to 7 - COOLING/ ENGINE - STANDARD PROCEDURE - DRAINING COOLING SYSTEM).
5. Raise and support the vehicle.
6. Disconnect the front exhaust pipe to exhaust manifold connection.
7. Lower the vehicle.
8. Remove intake manifold (Refer to 9 - ENGINE/MANIFOLDS/INTAKE MANIFOLD - REMOVAL).
9. Disconnect the spark plug wires by pulling on the boot straight out in line with the spark plug. Dislodge spark plug retainers from the cylinder head cover studs and position the spark plug wires aside.
10. Disconnect the oil level indicator tube and set aside.
11. Disconnect CCV hoses from cylinder head covers.
12. Remove the cylinder head covers (Refer to 9 - ENGINE/CYLINDER HEAD/ROCKER ARMS - REMOVAL).

13. Remove exhaust manifold heat shields.
14. Remove exhaust manifold(s) and gasket(s) (Refer to 9 - ENGINE/MANIFOLDS/EXHAUST MANIFOLD - REMOVAL).

NOTE: If rocker arms and push rods are to be reused, identify each component to ensure installation in original locations.

15. Remove the rocker arm and pedestal assemblies (Refer to 9 - ENGINE/CYLINDER HEAD/ROCKER ARMS - REMOVAL).
16. Remove push rods.
17. Remove the 12 head bolts and 8 cylinder head tappet gallery bolts from cylinder head(s).
18. Remove cylinder head(s) and gasket(s).

CLEANING

CLEANING / INSPECTION

1. Before cleaning, check for leaks, damage and cracks.
2. Clean cylinder head and oil passages.
3. Check cylinder head for flatness.
4. Inspect all surfaces with a straightedge (2) if there is any reason to suspect leakage. If out-of-flatness exceeds 0.019 mm (0.00075 in.) times the span length in inches in any direction, either replace head or lightly machine the head surface. As an example, if a 12.0 inch span is 1.0 mm (0.004 in.) out-of-flat, allowable is 12 x 0.019 mm (0.00075 in.) equals 0.22 mm (0.009 in.). This amount of out-of-flat is acceptable. *Maximum of 0.2 mm (0.008 in.) for grinding is permitted.

CAUTION: This is a combined total dimension of stock removal from cylinder head surface.

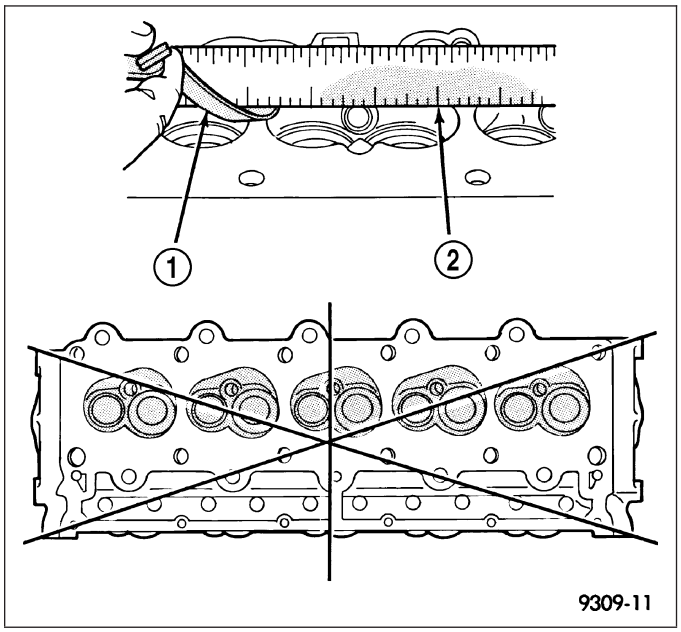

INSTALLATION - CYLINDER HEAD(S)

NOTE: This procedure covers either the left or right cylinder head.

1. Clean all surfaces of engine block and cylinder heads (Refer to 9 - ENGINE - STANDARD PROCEDURE - ENGINE GASKET SURFACE PREPARATION).

CAUTION: Remove all gasket material from cylinder head and block using a plastic scraper only. DO NOT use a metal scraper, as damage to sealing surface may occur.

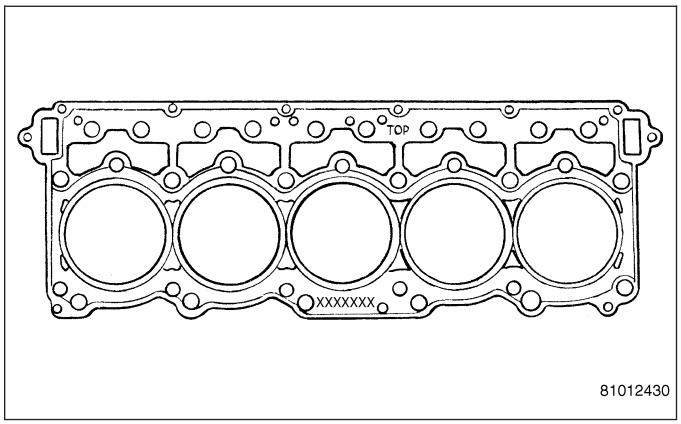

NOTE: A multi-layer steel head gasket is used.

2. Install new gasket(s) on the engine block. Assure all coolant passages and bolt holes align properly..

CAUTION: Cylinder head bolts are coated, DO NOT oil.

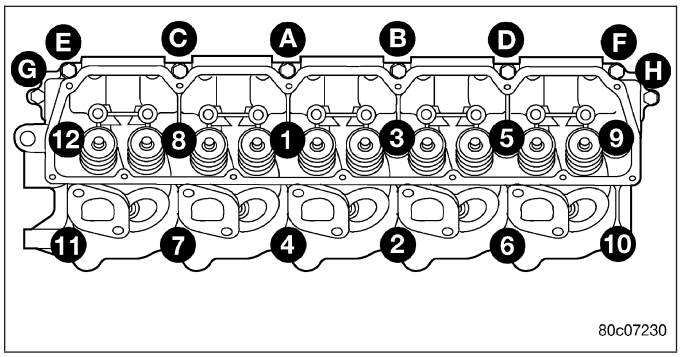

3. Install cylinder head(s) over dowel pins. Install cylinder head bolts 1–12. Tighten cylinder head bolts 1–12 in the sequence shown in using a two step torque sequence:
   a. First to 47 N·m (35 ft. lbs.).
   b. Second to 122 N·m (90 ft. lbs.).
4. After cylinder head bolts 1-12 have been tightened to specifications, install and tighten cylinder head tappet gallery bolts A-H in sequence shown to 11 N·m (95 in. lbs.).

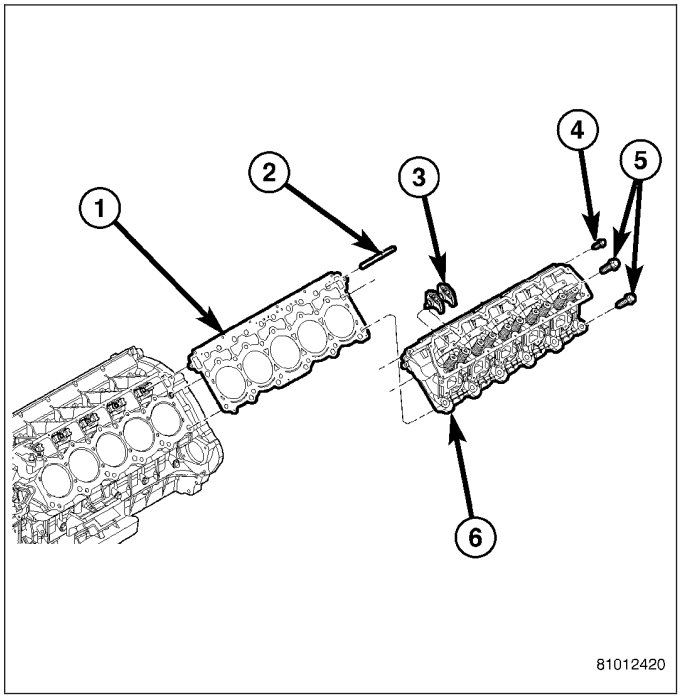

5. Inspect the push rods. Replace worn or bent push rods as necessary.
6. Install push rods. Install rocker arms and pedestal assemblies into their original positions. Ensure push rods are seated properly under each rocker arm. Tighten rocker arm bolts to 35 N·m (26 ft. lbs.).
7. Install exhaust manifold(s) and gasket(s) (Refer to 9 - ENGINE/MANIFOLDS/EXHAUST MANIFOLD - INSTALLATION).
8. Install exhaust manifold heat shields.
9. Install cylinder head covers (Refer to 9 - ENGINE/CYLINDER HEAD/CYLINDER HEAD COVER(S) - INSTALLATION).
10. Position and install the oil level indicator tube. Tighten fastener to 11 N·m (95 in. lbs.).
11. Connect CCV hoses to cylinder head covers.
12. Install the spark plug wires and plug wire retainers.
13. Install intake manifold (Refer to 9 - ENGINE/MANIFOLDS/INTAKE MANIFOLD - INSTALLATION).
14. Raise and support the vehicle.
15. Connect the exhaust system to the exhaust manifolds.
16. Drain the engine oil (Refer to 9 - ENGINE/LUBRICATION/OIL - STANDARD PROCEDURE).
17. Lower the vehicle.
18. Fill engine oil to the proper level (Refer to LUBRICATION & MAINTENANCE/FLUID TYPES - DESCRIPTION), (Refer to LUBRICATION & MAINTENANCE/FLUID TYPES - SPECIFICATIONS).
19. Fill the cooling system (Refer to 7 - COOLING/ENGINE - STANDARD PROCEDURE - FILLING COOLING SYSTEM).
20. Connect negative battery cable.
21. Install the air cleaner cover, throttle inlet duct and connect the IAT sensor and CCV hose.
22. Start engine and inspect for leaks.

COVER(S)-CYLINDER HEAD

REMOVAL

LEFT CYLINDER HEAD COVER

NOTE: Care must be taken to protect the cylinder head cover powder coating from scrapes and abrasions.

1. Disconnect CCV hose from cylinder head cover.
2. Disconnect left side spark plug wires by pulling on the boot straight out in line with plug. Dislodge spark plug wire retainers from cylinder head cover studs. Reposition spark plug wires aside.
3. Disconnect the power brake booster vacuum hose at the intake manifold and set aside.

NOTE: For reassembly purposes, identify location of cylinder head cover attaching studs and bolts.

4. Remove cylinder head cover fasteners. Remove cylinder head cover (2) from engine.

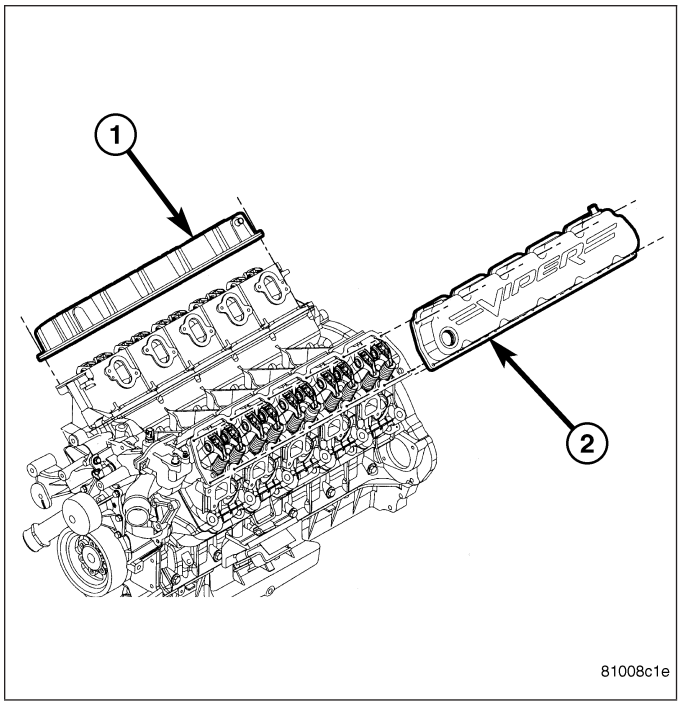

RIGHT CYLINDER HEAD COVER

NOTE: Care must be taken to protect the cylinder head cover powder coating from scrapes and abrasions.

1. Disconnect CCV hose from cylinder head cover.
2. Disconnect right side spark plug wires by pulling on the boot straight out in line with plug. Dislodge spark plug wire retainers from cylinder head cover studs. Reposition spark plug wires aside.
3. Remove the oil level indicator tube fastener and position tube aside.

NOTE: For reassembly purposes, identify location of cylinder head cover attaching studs and bolts.

4. Remove cylinder head cover fasteners.
5. Remove cylinder head cover (1) from engine.

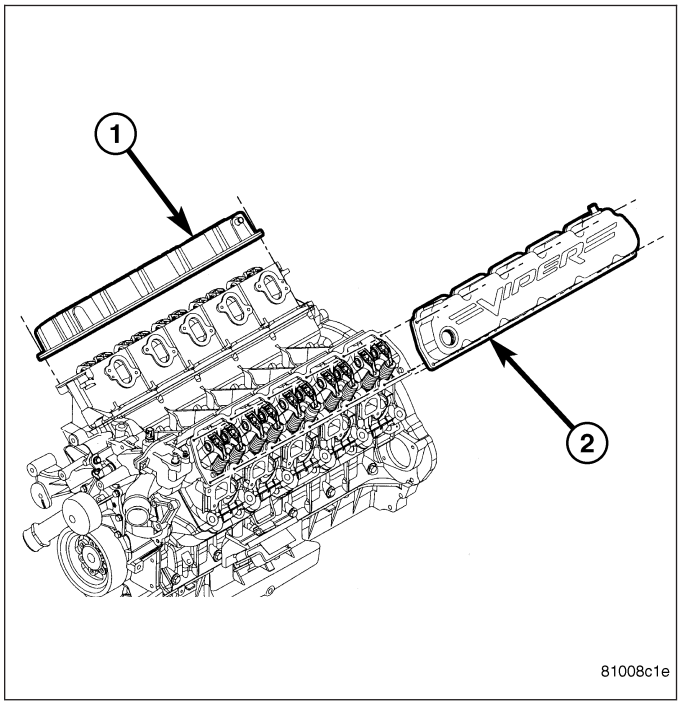

INSTALLATION

LEFT CYLINDER HEAD COVER

NOTE: Care must be taken to protect the cylinder head covers powder coating from scrapes and abrasions.

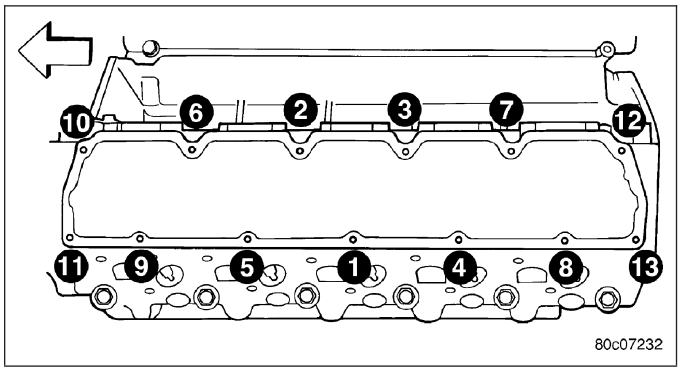

1. Inspect cylinder head cover gasket. Replace as necessary.
2. Place cylinder head cover onto cylinder head. Install and tighten cylinder head cover fasteners to 11 N·m (95 in. lbs.) in sequence shown in.
3. Connect spark plug wires. Position spark plug wire retainers onto cylinder head cover studs.
4. Connect CCV hose to cylinder head cover.
5. Connect the power brake booster vacuum hose to the intake manifold port.

RIGHT CYLINDER HEAD COVER

1. Inspect cylinder head cover gasket. Replace as necessary.
2. Place cylinder head cover onto cylinder head. Install and tighten cylinder head cover fasteners to 11 N·m (95 in. lbs.) in sequence shown in.
3. Position the oil level indicator tube into position. Tighten fastener to 11 N·m (95 in. lbs.).
4. Connect spark plug wires. Position spark plug wire retainers onto cylinder head cover studs.
5. Connect CCV hose to cylinder head cover.

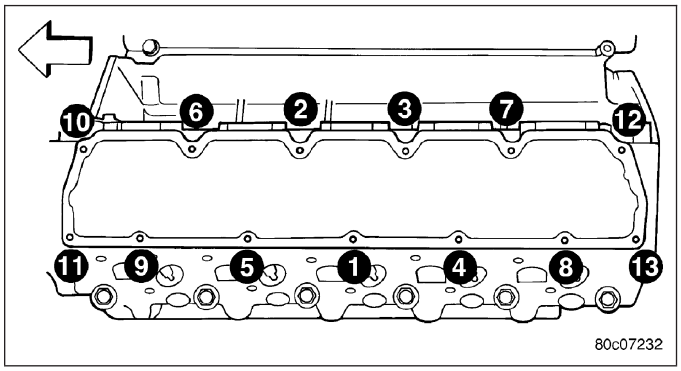

ARMS-ROCKER

REMOVAL

NOTE: Before replacing parts, inspect all related valvetrain components for damage to prevent engine misfire.

1. Remove cylinder head cover(s) (Refer to 9 - ENGINE/CYLINDER HEAD/CYLINDER HEAD COVER(S) - REMOVAL).
2. Remove two rocker pedestal bolts per each cylinder.
3. Remove rocker arm assemblies as a pair.
4. If rocker arm assemblies are disassembled for cleaning or replacement, reassemble rocker arms in their original position.

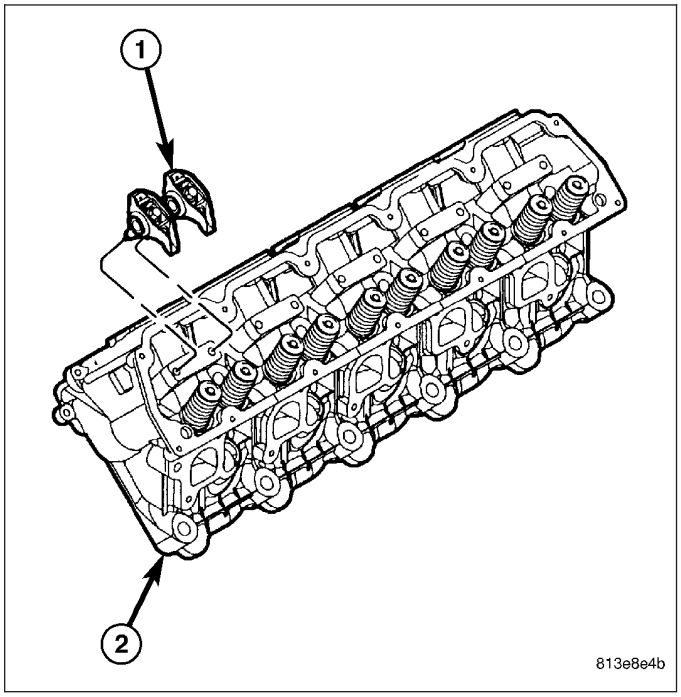

INSTALLATION

NOTE: Before replacing parts, inspect all related valvetrain components for damage to prevent engine misfire.

1. Install rocker arm and pedestal assemblies into position. Ensure push rods are seated properly under each rocker arm. Tighten rocker arm bolts to 35 N·m (26 ft. lbs.).

CAUTION: THE ROCKER ARM PEDESTAL BOLTS SHOULD BE TORQUED DOWN SLOWLY. ALLOW 20 MINUTES TAPPET BLEED DOWN TIME AFTER INSTALLATION OF THE ROCKER BOLTS BEFORE ENGINE OPERATION.

2. Install cylinder head cover(s) (Refer to 9 - ENGINE/CYLINDER HEAD/CYLINDER HEAD COVER(S) - INSTALLATION).

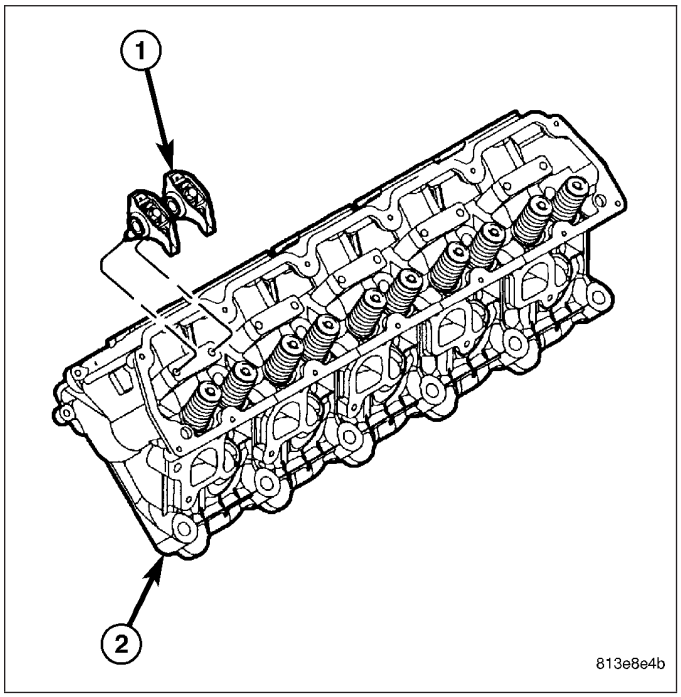

SPRINGS/SEALS-VALVE

DIAGNOSIS AND TESTING

VALVE SPRING TESTING

The valve springs should be tested whenever removed for inspection, reconditioning, or replacement.

1. Obtain specifications for spring tension at specified spring length (Refer to 9 - ENGINE - SPECIFICATIONS).
2. Turn table of Special Tool C-647 (2) until the surface is in line with the spring length specification mark on the threaded stud and the zero mark is on the front.
3. Place spring over stud on the table and lift compressing lever to set tone device.
4. Pull on torque wrench (beam or dial type) until ping is heard. Take reading on torque wrench at this instant. Multiply this reading by two. This will give the spring load at test length.

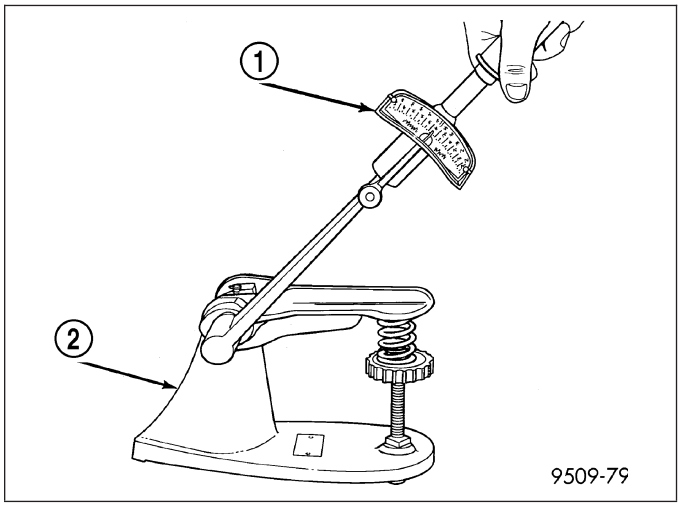

5. Compare reading to the specification. Discard the springs that do not meet specifications.

STANDARD PROCEDURE - VALVE SPRING/SEAL SERVICE IN-CAR

1. Disconnect negative battery cable.
2. Disconnect secondary ignition wires and remove spark plugs.
3. Remove cylinder head cover(s) (Refer to 9 - ENGINE/CYLINDER HEAD/CYLINDER HEAD COVER(S) - REMOVAL).
4. Rotate crankshaft until No. 1 piston is at TDC on compression stroke.
5. Remove rocker arms with pivots. The rocker arms should not be disturbed and remain on pivot block.
6. With air hose attached to spark plug adapter installed in No. 1 spark plug hole, apply 620.5 - 689 kPa (90 - 100 psi) air pressure. This is to hold valves into place while servicing components.

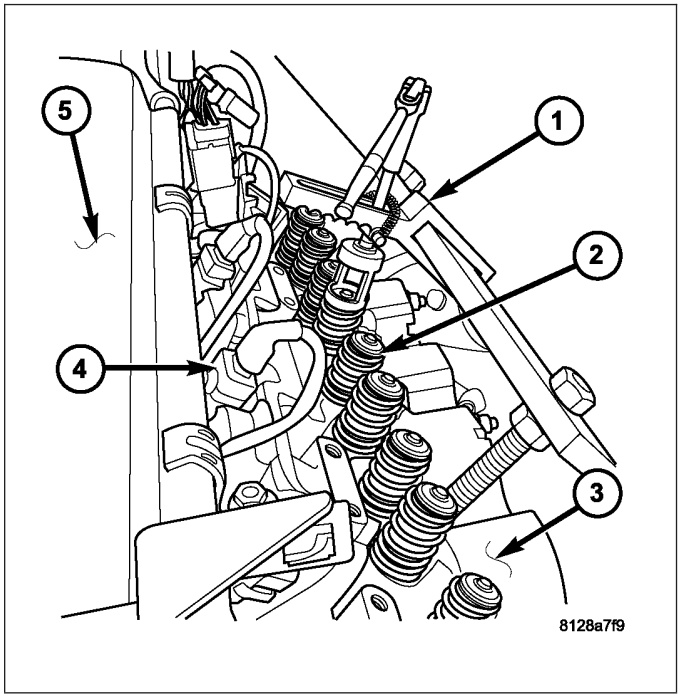

CAUTION: Place a suitable shop towel around the valve spring being serviced to prevent the valve retaining locks from entering the engine once the valve spring is compressed.

7. Using valve spring compressor MD998772-A with insert 6716-A (1), compress valve spring (2) and remove valve retaining locks.
8. Release valve spring compressor (1).
9. Remove valve spring and retainer.
10. Remove valve seal.

NOTE: Black valve seals are intake. Brown valve seals are exhaust.

11. The intake and exhaust valve stem seals should be pushed firmly and squarely over the valve guide using the valve stem as guide. Push seal against top of guide. When installing the valve retainer locks, compress the spring **only enough** to install the locks.

CAUTION: Do not pinch seal between retainer and top of valve guide.

12. Follow the same procedure on the remaining 9 cylinders. **Make sure piston is at TDC on the cylinder the valve spring is being removed.**
13. Remove spark plug adapter tool.
14. Install rocker arm and pedestal assemblies. Ensure push rods are seated properly under each rocker arm. Tighten rocker arm bolts to 35 N·m (26 ft. lbs.).
15. Install cylinder head covers (Refer to 9 - ENGINE/CYLINDER HEAD/CYLINDER HEAD COVER(S) - INSTALLATION).
16. Install spark plugs and connect secondary ignition wires.
17. Connect negative battery cable.

REMOVAL

NOTE: Before replacing parts, inspect all related valvetrain components for damage to prevent engine misfire.

1. With the cylinder head removed, compress valve springs using a valve spring compressor (1).

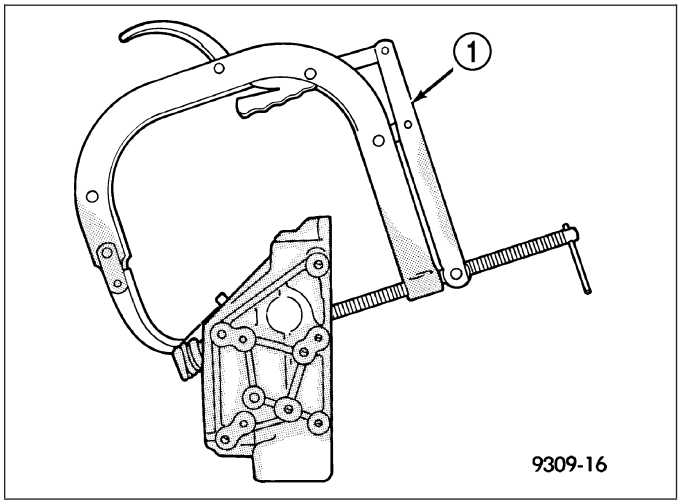

2. Remove valve retaining locks.
3. Slowly release valve spring compressor.
4. Remove valve spring retainer and valve spring.
5. Before removing the valves, **remove any burrs from valve stem lock grooves to prevent damage to the valve guides.** Identify the valves to ensure installation in original location.
6. Remove valve seal.
7. Repeat procedure for remaining valves.

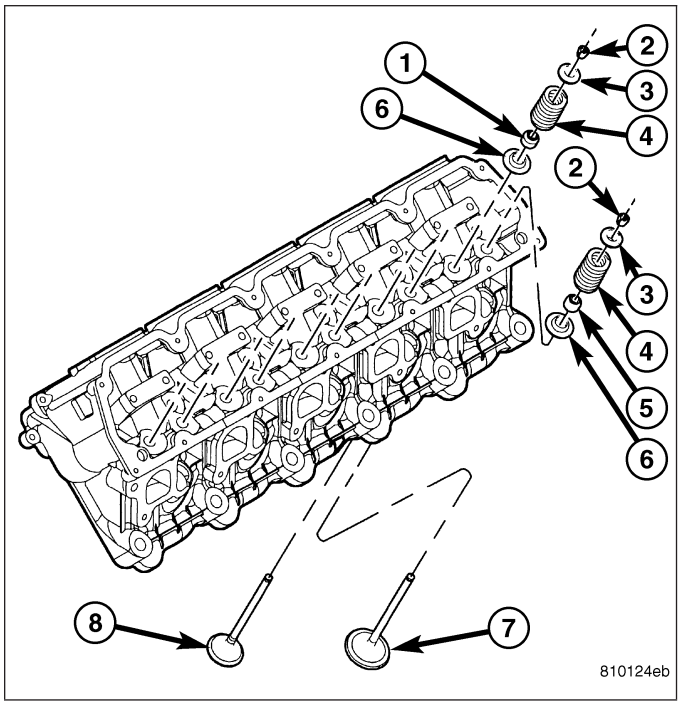

INSTALLATION

NOTE: Before replacing parts, inspect all related valvetrain components for damage to prevent engine misfire.

NOTE: Black valve seals are intake. Brown valve seals are exhaust.

1. Install valve seals (1).
2. Coat the valve stems with clean engine oil and insert them in the cylinder head.
3. Install valve spring seats (6).
4. Install valve springs and valve retainers (2).

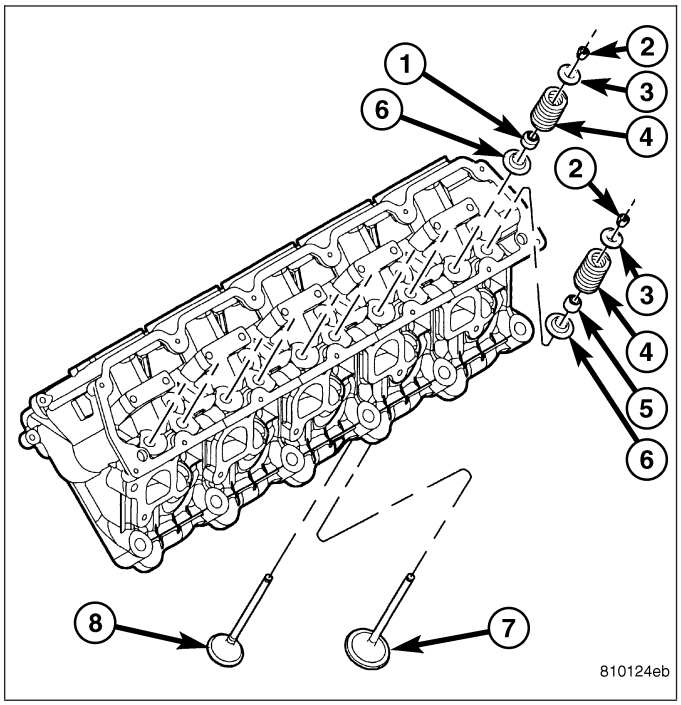

5. Compress valve springs with a valve spring compressor. Install retaining locks and release tool.
6. **If valves and/or seats have been reground, measure valve tip height (A). Make sure measurements are taken from cylinder head surface to the top of valve stem.** If valve tip height is greater than 52.96 mm (2.085 in.), grind the valve tip until within specifications.
7. **If valves and/or seats have been reground, measure installed height of springs (B). Make sure measurements are taken from top of spring seat to the bottom surface of valve spring retainer.** If height is greater than 44.45 mm (1.75 in.), install a 0.794 mm (.031 in.) spacer in head counter-bore under the valve spring seat to bring spring height back to 43.69 - 44.45 mm (1.72 - 1.75 in.).

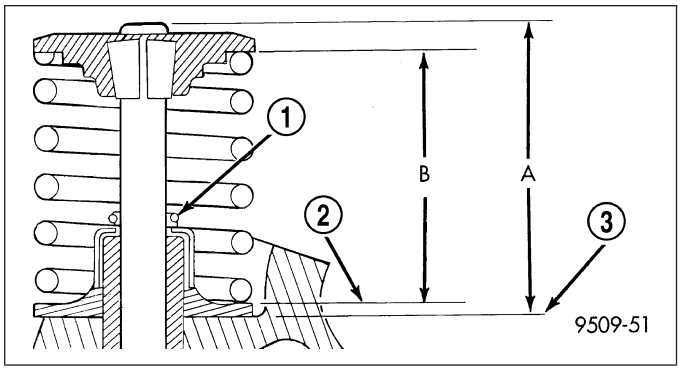

INTAKE/EXHAUST - VALVES/SEATS/GUIDES

STANDARD PROCEDURE - VALVE AND VALVE SEAT - REFACING

The intake and exhaust valves have a 44.5° - 45° face angle (1). The valve seats (2) have a 44.5° - 45° face angle.

Inspect the remaining margin after the valves are refaced. (Refer to 9 - ENGINE - SPECIFICATIONS).

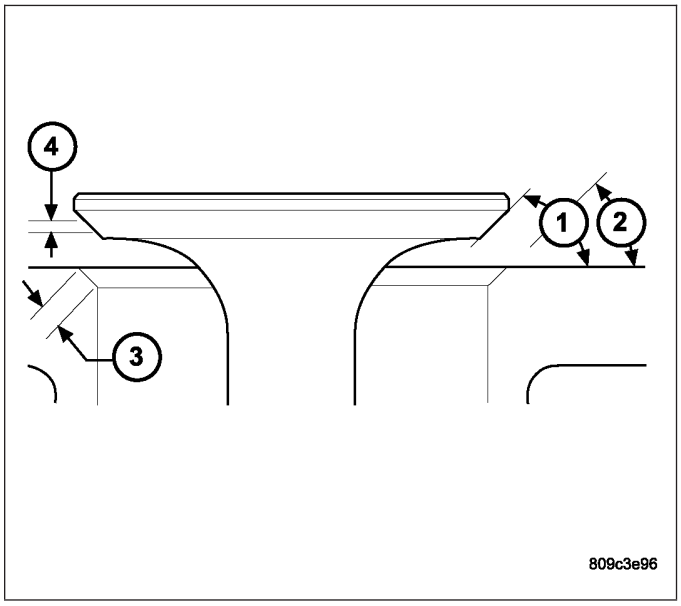

VALVE SEATS

CAUTION: Do not un-shroud valves during valve seat refacing.

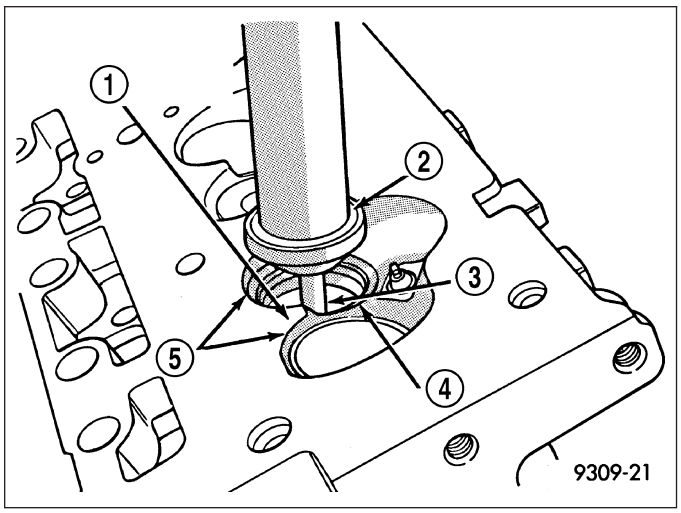

1. When refacing valve seats, it is important that the correct size valve guide pilot be used for reseating stones. A true and complete surface must be obtained.
2. Measure the concentricity of valve seat using a dial indicator. Total runout should not exceed 0.051 mm (0.002 in.) total indicator reading.
3. Inspect the valve seat with Prussian blue to determine where the valve contacts the seat. To do this, coat valve seat **LIGHTLY**with Prussian blue then set valve in place. Rotate the valve with light pressure. If the blue is transferred to the center of valve face, contact is satisfactory. If the blue is transferred to top edge of valve face, lower valve seat with a 30° stone. If the blue is transferred to the bottom edge of valve face raise valve seat with a 75° stone.

NOTE: Valve seats which are worn or burned can be reworked, provided that correct angle and seat width are maintained. Otherwise cylinder head must be replaced.

4. When seat is properly positioned the width of both seats should be 1.02 - 1.52 mm (0.040 - 0.060 in.).

INSPECTION

Valve

1. Clean valves thoroughly and discard any burned, bent, warped, and cracked valves.
2. Measure valve stems for wear (Refer to 9 - ENGINE - SPECIFICATIONS).

NOTE: Valve stems are chrome plated and should not be polished.

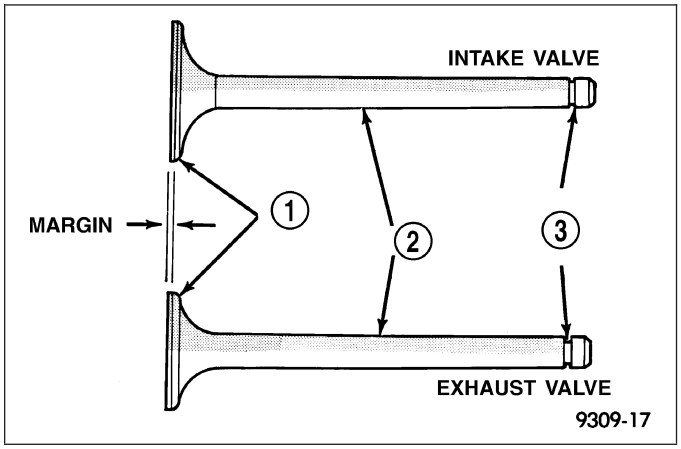

Valve Guide

1. Remove carbon and varnish deposits from inside of valve guides with a reliable guide cleaner.
2. Measure valve stem guide clearance as follows:
   1. Install valve into cylinder head so it is 14 mm (0.551 in.) off the valve seat. A small piece of hose may be used to hold valve in place.
   2. Attach Special Tool C-3339, dial indicator to cylinder head and set it at right angle of valve stem being measured.
   3. Move valve to and from the indicator. (Refer to 9 - ENGINE - SPECIFICATIONS) for valve guide specifications. If guides are out of specifications, ream to next oversize.
3. Ream the guides for valves with oversized stems if dial indicator reading is excessive or if the stems are scuffed or scored.

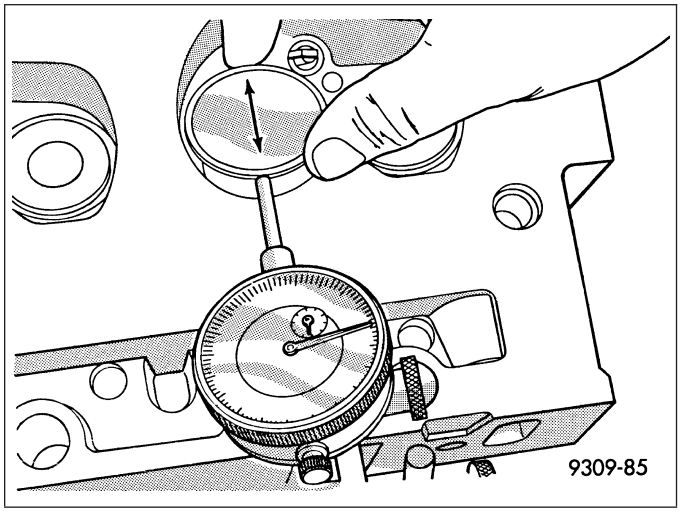

4. Service valves with oversize stems and over size seals are available in 0.15 mm (0.005 in.) and 0.40 mm (0.015 in.) oversize.

NOTE: Oversize seals must be used with oversize valves.

5. Select the correct size reamer to accommodate the oversize valve stem. Refer to Valve Guide Oversize Chart.
6. Slowly turn reamer by hand and clean guide thoroughly before installing new valve. **Do not attempt to ream the valve guides from standard directly to 0.40 mm (0.015 in.). Use a step procedure of 0.15 mm (0.005 in.) to 0.40 mm (0.015 in.), so the valve guides may be reamed true in relation to the valve seat. After reaming guides, the seat runout should be measured and resurfaced if necessary. See Refacing Valves and Valve Seats (Refer to 9 - ENGINE/CYLINDER HEAD/INTAKE/EXHAUST VALVES & SEATS - STANDARD PROCEDURE).**

NOTE: Replace cylinder head if guide does not clean up with 0.40 mm (0.015 inch) oversize reamer, or if guide is loose in cylinder head.

VALVE GUIDE OVERSIZE CHART

Valve Guide Reamer Oversize	Valve Guide Size
0.15 mm (0.005 in.)	8.077 - 8.103 mm (0.318 - 0.319 in.)
0.40 mm (0.015 in.)	8.331 - 8.357 mm (0.328 - 0.329 in.)

COVER-TIMING CHAIN

REMOVAL

1. Disconnect negative battery cable.
2. Disconnect throttle body air inlet duct at the throttle body, CCV hose, disconnect the IAT sensor and remove air cleaner housing cover (Refer to 9 - ENGINE/AIR INTAKE SYSTEM - REMOVAL).
3. Remove the oil indicator tube (1) fastener at the right cylinder head cover.
4. Raise and support the vehicle.
5. Remove the lower engine shield.
6. Drain cooling system (Refer to 7 - COOLING/ENGINE - STANDARD PROCEDURE - DRAINING COOLING SYSTEM).
7. Drain engine oil and remove oil filter (Refer to 9 - ENGINE/LUBRICATION/OIL - STANDARD PROCEDURE).
8. Drain power steering.
9. Disconnect the cooling fan return hose at radiator fan.
10. Disconnect the radiator fan pressure hose to power steering rack.

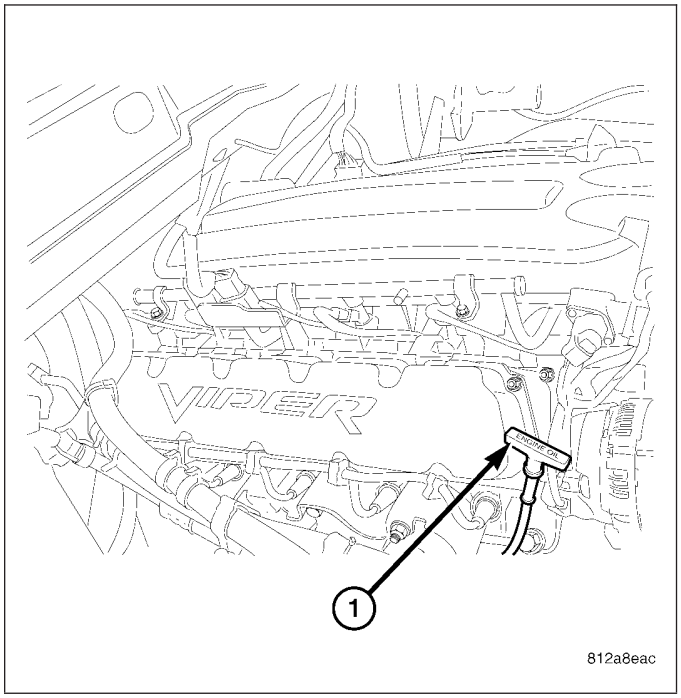

11. Disconnect the power steering hose to power steering pump.
12. Separate the A/C hose from the radiator fan module.
13. Remove the lower radiator hoses.
14. Remove the front frame cross member (Refer to 13 - FRAME & BUMPERS/FRAME/FRONT CROSSMEMBER - REMOVAL).
15. Remove the flywheel inspection cover.

NOTE: Capture and properly dispose of any fuel spillage.

16. Disconnect oil cooler line at the timing cover using Special Tool 9005 (Refer to 9 - ENGINE/LUBRICATION/OIL COOLER & LINES - STANDARD PROCEDURE).
17. Separate the oil cooler coolant hose from the timing cover.

18. Wiggle oil indicator tube free of oil pan.
19. Loosen engine mounts (3 and 5).

NOTE: Care must be taken not to damage the A/C compressor when placing the jack stand and raising the engine

20. Raise and support the engine with a jack stand at the A/C bracket.
21. Remove the engine oil pan.
22. Lower the engine and remove the jack stand.

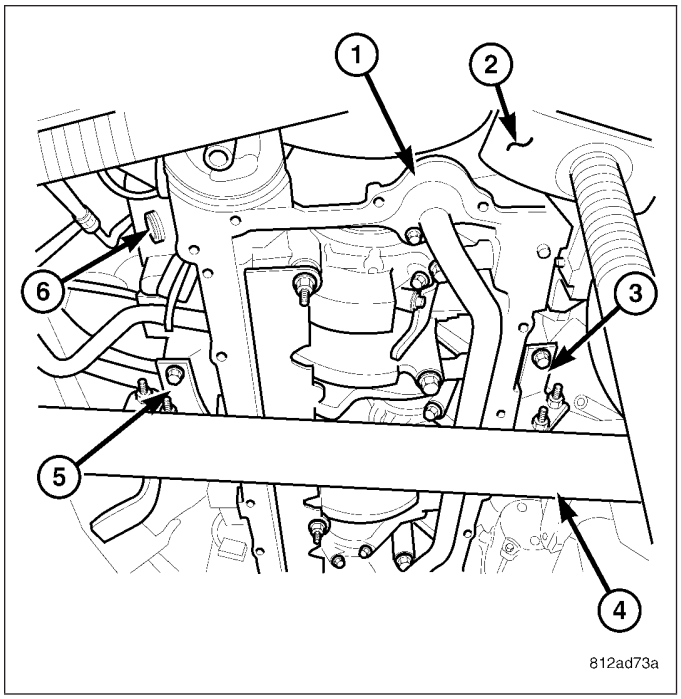

23. Remove the oil pump pick up tube (2).
24. Remove accessory drive belt (Refer to 7 - COOLING/ACCESSORY DRIVE/DRIVE BELTS - REMOVAL).

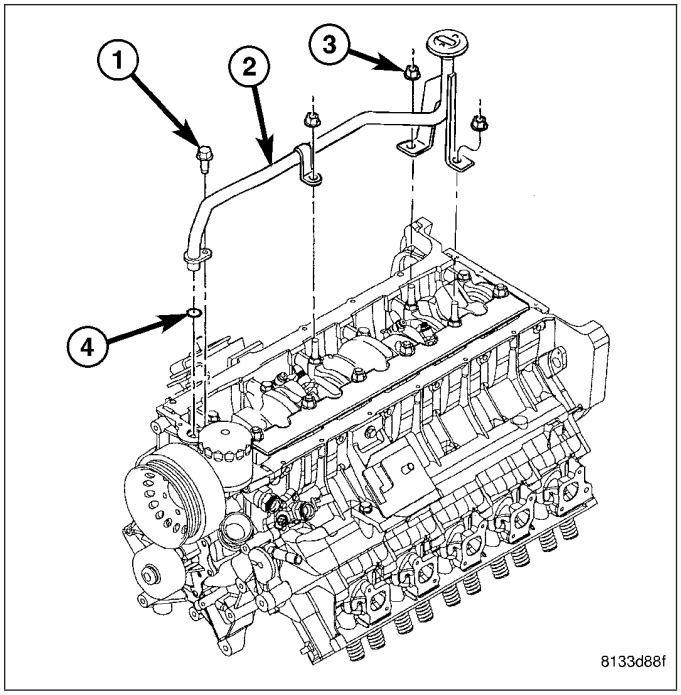

25. Remove A/C compressor mounting bolts. Reposition A/C compressor. **Do not** disconnect A/C lines.
26. Disconnect the power steering line support bracket at the radiator.
27. Lower the vehicle.
28. Remove the upper radiator hose and coolant recovery container.
29. Remove the cooling fan module (Refer to 7 - COOLING/ENGINE/RADIATOR FAN - REMOVAL).
30. Remove the upper idler pulley.
31. Remove power steering pump mounting bolts. Reposition power steering pump aside. **Do not** disconnect power steering lines.
32. Remove the generator (Refer to 8 - ELECTRICAL/CHARGING/GENERATOR - REMOVAL).
33. Disconnect the heater hose at the timing cover.
34. Disconnect the ground wire at the thermostat housing.

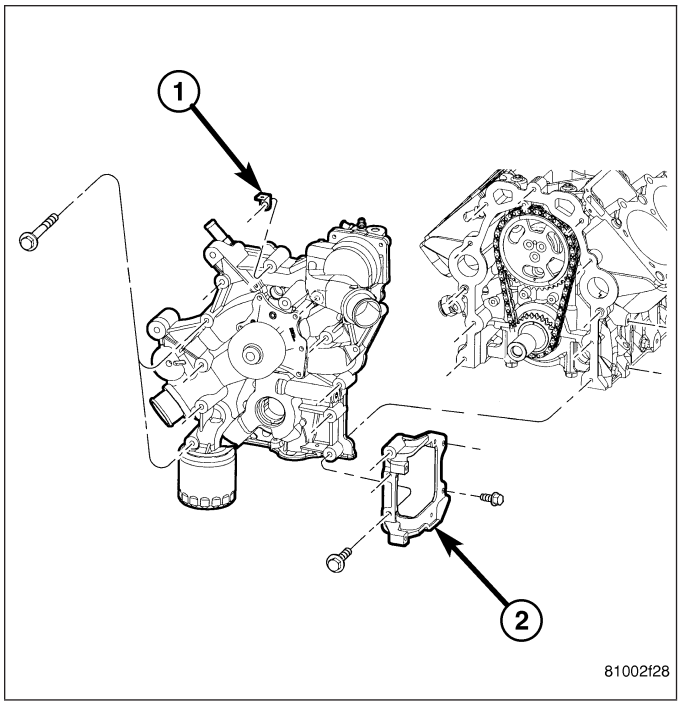

NOTE: Do Not remove the camshaft position sensor from the timing cover.

35. Disconnect the camshaft sensor wiring harness connector.
36. Disconnect engine coolant temperature (ECT) sensor connector.
37. Remove crankshaft pulley and damper (Refer to 9 - ENGINE/ENGINE BLOCK/VIBRATION DAMPER - REMOVAL).
38. Remove the timing cover.

INSTALLATION

CAUTION: Do not use a metal scraper to clean aluminum sealing surfaces, as damage to surfaces may occur. Use only a plastic scraper and Mopar® Brake Parts Cleaner or the equivalent.

1. Be sure mating surfaces of chain case cover and cylinder block are clean and free from burrs. Crankshaft oil seal must be removed to insure correct oil pump engagement.
2. Install the timing chain cover gasket.
3. Position the oil pump inner rotor mating flats in the same position as the crankshaft drive flats.
4. Install the timing chain cover onto crankshaft. Ensure the oil pump is engaged on the crankshaft correctly or severe damage may result (Refer to 9 - ENGINE/LUBRICATION/OIL PUMP - INSTALLATION).

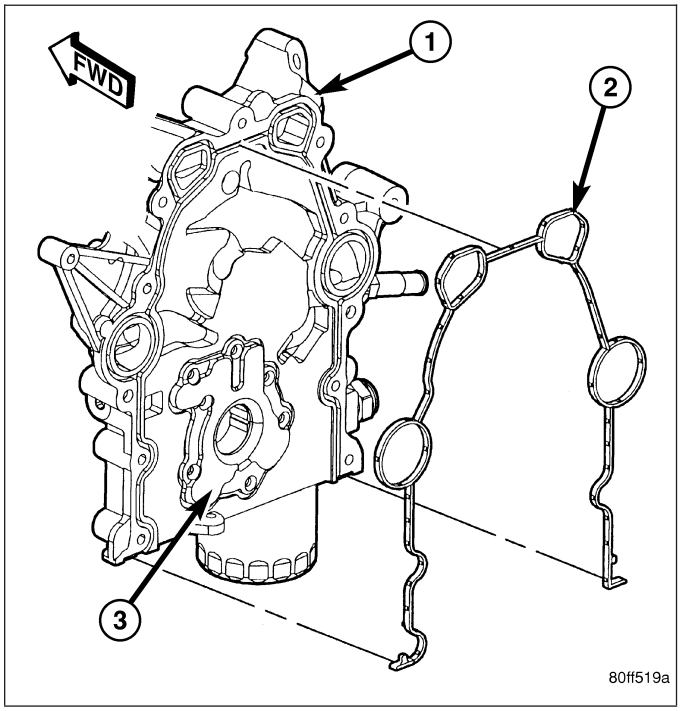

5. Hand start bolts No.1 and No.2.
6. Loosely install A/C compressor mounting bracket.
7. Hand start remaining timing chain cover bolts.
8. Torque timing chain cover bolts in the sequence shown in to 23 N·m (200 in. lbs.).
9. Torque A/C compressor mounting bracket bolts to 23 N·m (200 in. lbs.).
10. Install crankshaft oil seal (Refer to 9 - ENGINE/ ENGINE BLOCK/CRANKSHAFT OIL SEAL - FRONT - INSTALLATION).
11. Raise vehicle on hoist.

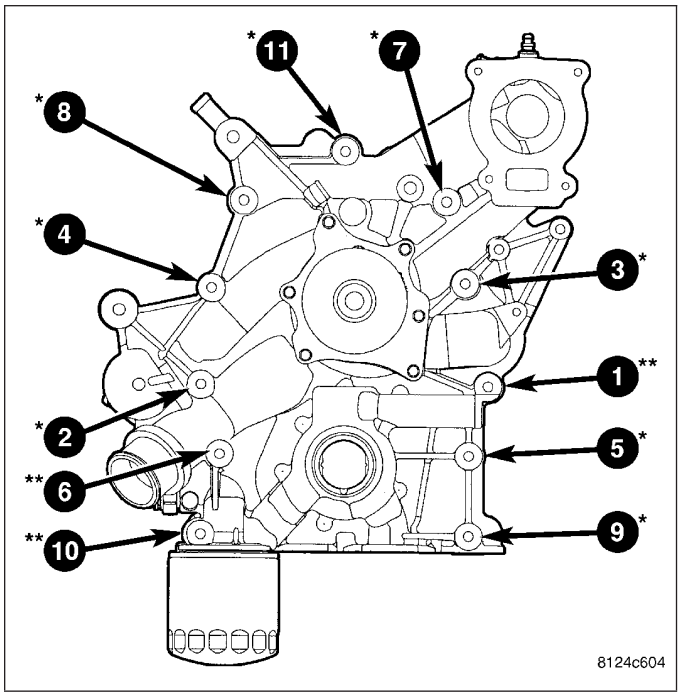

12. Install oil pump pick up tube using a **new** o-ring. Torque 1/4–20 bolt to 11 N·m (95 in. lbs.). Torque 5/16–18 nuts to 23 N·m (200 in. lbs.).
13. Support the engine with a jack stand.
14. Install oil pan and drain plug (Refer to 9 - ENGINE/LUBRICATION/OIL PAN - INSTALLATION).
15. Remove the jackstand.
16. Tighten the engine mount to frame nuts to 102 N·m (75 ft.lbs.).
17. Connect the oil cooler coolant hose to the timing cover.
18. Connect the oil cooler line (Refer to 9 - ENGINE/ LUBRICATION/OIL COOLER & LINES - STANDARD PROCEDURE).
19. Install the lower radiator hose.
20. Install the flywheel inspection cover.
21. Install the front frame cross member (Refer to 13 - FRAME & BUMPERS/FRAME/FRONT CROSSMEMBER - INSTALLATION).

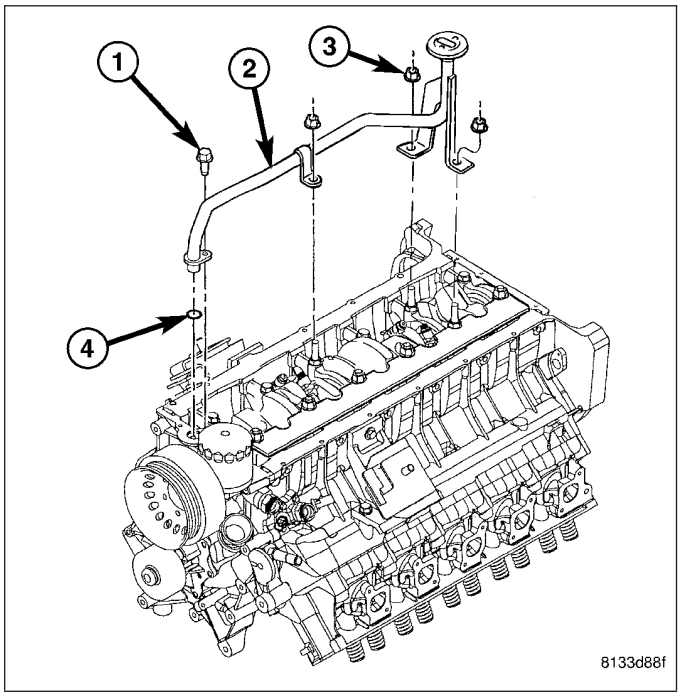

22. Lower vehicle.
23. Position the compressor and install A/C compressor mounting bolts. Torque bolts to 23 N·m (200 in. lbs.).
24. Connect heater hose at timing cover.
25. Install crankshaft damper and pulley (Refer to 9 - ENGINE/ENGINE BLOCK/VIBRATION DAMPER - INSTALLATION).
26. Install generator. Connect electrical connectors.
27. Install the idler pulley.
28. Connect the camshaft position sensor wiring harness connector.
29. Connect engine coolant temperature (ECT) sensor wiring harness connector.
30. Install power steering pump mounting bolts.

31. Install accessory drive belt (Refer to 7 - COOLING/ACCESSORY DRIVE/DRIVE BELTS - INSTALLATION).
32. Install the radiator fan assembly (Refer to 7 - COOLING/ENGINE/RADIATOR FAN - INSTALLATION).
33. Raise and support the vehicle.
34. Connect the hydraulic lines to the fan assembly and steering rack then connect the A/C hose to the fan shroud.
35. Install a **New** oil filter.
36. Lower the vehicle.
37. Install upper radiator hose and connect the ground wire at the thermostat housing.
38. Install air cleaner housing cover assembly, connect throttle body air inlet duct, IAT sensor and CCV hose. (Refer to 9 - ENGINE/AIR INTAKE SYSTEM - INSTALLATION).
39. Fill and purge air from the power steering system.
40. Fill engine crankcase with proper oil to correct level.
41. Fill and purge air from the cooling system (Refer to 7 - COOLING/ENGINE - STANDARD PROCEDURE - FILLING COOLING SYSTEM).
42. Connect negative battery cable.
43. Start the vehicle and inspect for leaks.
44. Install the lower engine shield.

TIMING CHAIN AND SPROCKETS

REMOVAL

TIMING CHAIN AND CAMSHAFT SPROCKET REMOVAL

1. Remove timing chain cover (Refer to 9 - ENGINE/VALVE TIMING/TIMING CHAIN COVER - REMOVAL).
2. Rotate crankshaft until timing marks are aligned.
3. Remove the camshaft sprocket attaching bolts (2).
4. Remove the timing chain (1) with camshaft sprocket (2).

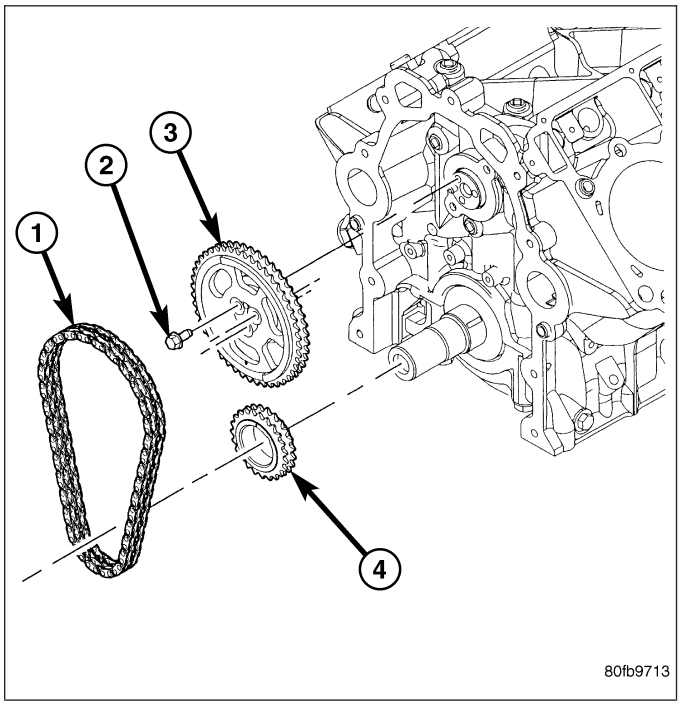

CRANKSHAFT SPROCKET REMOVAL

1. Install Special Tool 8194 into end of crankshaft. Lubricate the end of Special Tool 8194 with wheel bearing grease or equivalent.

NOTE: Lubricate the threads of Special Tool 5048 using Mopar® Nickel Anti-seize Compound or equivalent, before beginning crankshaft sprocket removal.

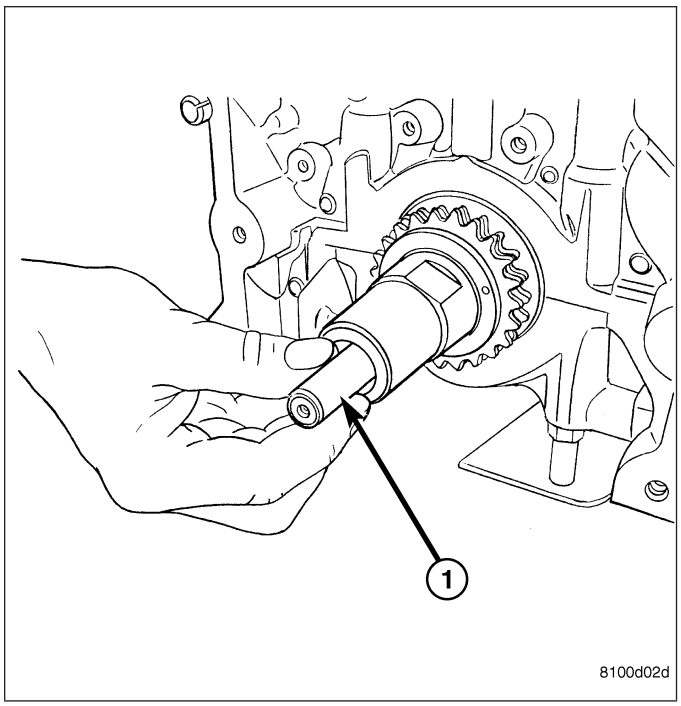

2. Using Special Tools 9056 (1) and 5048 (2 and 3), remove crankshaft sprocket.

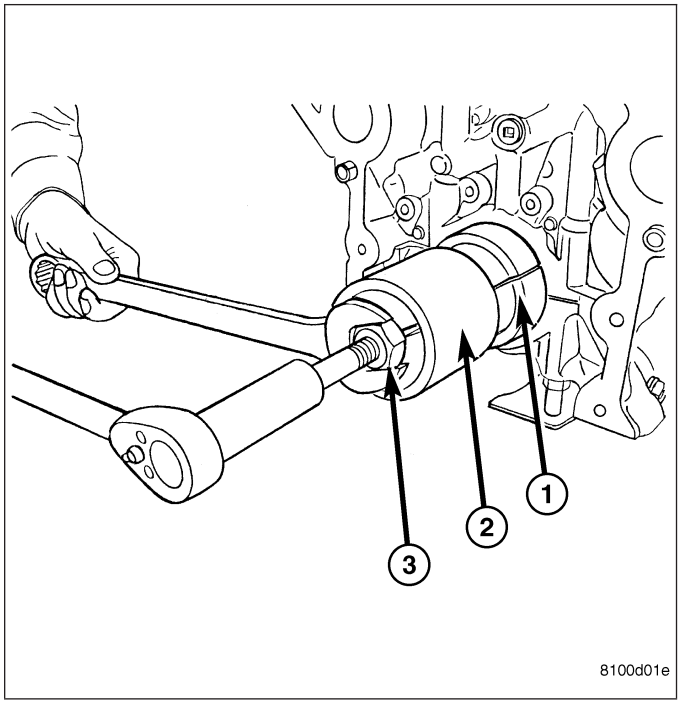

INSTALLATION

CRANKSHAFT SPROCKET INSTALLATION

1. Position a new crankshaft sprocket on the crankshaft with timing mark facing out. Align crankshaft keyway with slot in crankshaft sprocket.

NOTE: Lubricate the threads of Special Tool 9055 (1) using Mopar® Nickel Anti-seize Compound or equivalent, before beginning crankshaft sprocket installation.

2. Install the crankshaft sprocket using Special Tool 9055 (1).

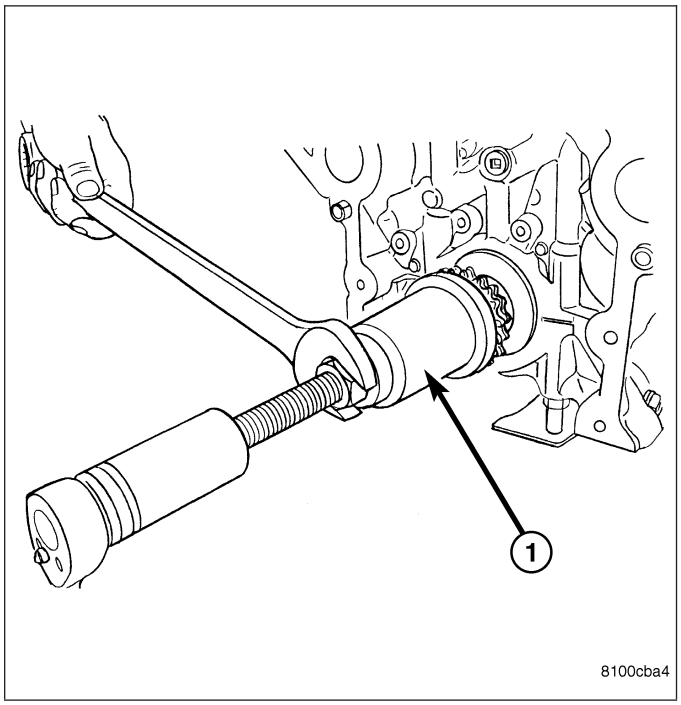

TIMING CHAIN AND CAMSHAFT SPROCKET INSTALLATION

1. Rotate the crankshaft sprocket so the timing mark is at the 12 O'clock position.
2. Place the timing chain around the camshaft sprocket and place the timing mark to the 6 O'clock position.
3. Place the timing chain around crankshaft sprocket and install the camshaft sprocket into position.
4. Using straight edge, check alignment of timing marks.
5. Install the camshaft sprocket bolts. Tighten the bolts to 23 N·m (200 in. lbs.).
6. Rotate crankshaft 2 revolutions. Timing marks should line up. If timing marks do not line up, remove cam sprocket and realign.
7. Measure camshaft end play. (Refer to 9 - ENGINE - SPECIFICATIONS). If not within specifications, install new thrust plate.
8. Install timing chain cover (Refer to 9 - ENGINE/ VALVE TIMING/TIMING CHAIN COVER - INSTALLATION).

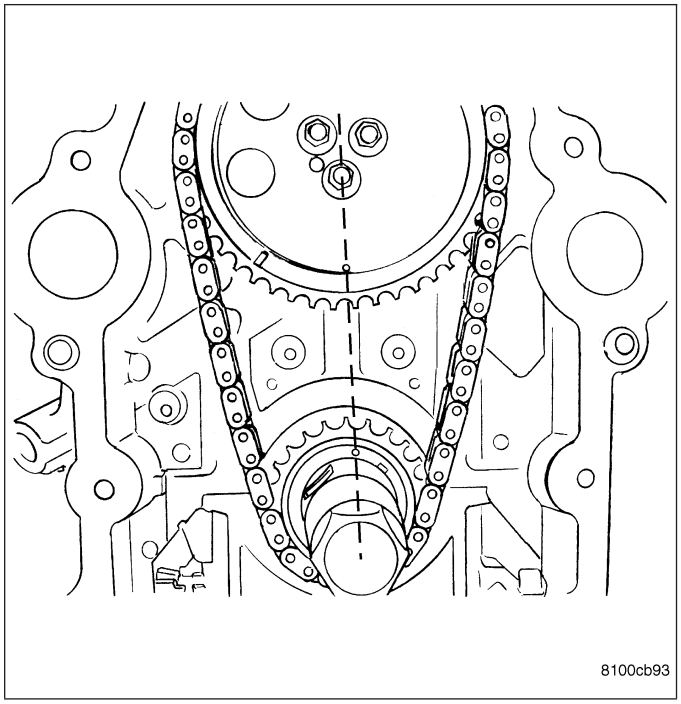

LUBRICATION

DESCRIPTION

The engine lubrication system is a full-flow filtration pressure feed type.

OPERATION

Engine oil stored in the oil pan is taken in and discharged by an internal gear type oil pump, which is driven by the crankshaft. A pressure relief valve is located in the timing chain case cover; it regulates oil pressure. The oil is pumped through an oil filter and feeds a main oil gallery. Also, oil is routed to an external oil cooler. The main oil gallery feeds oil under pressure to the main bearings, connecting rod bearings, and camshaft bearings. Passages in the cylinder block feed oil to the hydraulic lifters. The oil then flows through hollow pushrods, which feed the rocker arm pivots.

DIAGNOSIS AND TESTING

CHECKING ENGINE OIL PRESSURE

1. Remove oil pressure sensor (Refer to 9 - ENGINE/LUBRICATION/OIL PRESSURE SENSOR - REMOVAL).
2. Install oil pressure gauge.
3. Warm engine at high idle until thermostat opens.

CAUTION: If oil pressure is 0 at idle, Do Not Run engine at 3000 RPM.

4. Oil pressure should be 68.9 kPa (10 psi) at idle or 310 - 517 kPa (45 - 75 psi) at 3000 RPM.
5. If oil pressure is 0 at idle, shut off engine. Check for a clogged oil pick-up screen or a pressure relief valve stuck open.

ENGINE OIL LEAK

Begin with a thorough visual inspection of the engine, particularly at the area of the suspected leak. If an oil leak source is not readily identifiable, the following steps should be followed:

1. Do not clean or degrease the engine at this time because some solvents may cause rubber to swell, temporarily stopping the leak.
2. Add an oil soluble dye (use as recommended by manufacturer). Start the engine and let idle for approximately 15 minutes. Check the oil dipstick to make sure the dye is thoroughly mixed as indicated with a bright yellow color under a black light.
3. Using a black light, inspect the entire engine for fluorescent dye, particularly at the suspected area of oil leak. If the oil leak is found and identified, repair per service manual instructions.
4. If dye is not observed, drive the vehicle at various speeds for approximately 24 km (15 miles), and repeat inspection.**If the oil leak source is not positively identified at this time**, proceed with the air leak detection test method.

Air Leak Detection Test Method

1. Remove the PCV valve from the IAFM. Cap or plug the PCV valve grommet.
2. Attach an air hose with pressure gauge and regulator to the dipstick tube.

CAUTION: Do not subject the engine assembly to more than 20.6 kPa (3 PSI) of test pressure.

3. Gradually apply air pressure from 6.89 - 17.23 kPa (1 - 2.5 psi) maximum while applying soapy water at the suspected source. Adjust the regulator to the suitable test pressure that provide the best bubbles which will pinpoint the leak source. If the oil leak is detected and identified, repair per service manual procedures.
4. If the leakage occurs at the rear oil seal area, refer to the section, Inspection for Rear Seal Area Leak.
5. If no leaks are detected, turn off the air supply and remove the air hose and all plugs and caps. Install the PCV valve.
6. Clean the oil off the suspect oil leak area using a suitable solvent. Drive the vehicle at various speeds approximately 24 km (15 miles). Inspect the engine for signs of an oil leak by using a black light.

INSPECTION FOR REAR SEAL AREA LEAKS

Since it is sometimes difficult to determine the source of an oil leak in the rear seal area of the engine, a more involved inspection is necessary. The following steps should be followed to help pinpoint the source of the leak.

If the leakage occurs at the crankshaft rear oil seal area:

1. Disconnect the battery.
2. Raise the vehicle.
3. Remove torque converter or clutch housing cover and inspect rear of block for evidence of oil. Use a black light to check for the oil leak:
   a. Circular spray pattern generally indicates seal leakage or crankshaft damage.
   b. Where leakage tends to run straight down, possible causes are a porous block, distributor seal, camshaft bore cup plugs oil galley pipe plugs, oil filter runoff, and main bearing cap to cylinder block mating surfaces.
4. If no leaks are detected, pressurize the crankcase as outlined in the, Inspection (Engine oil Leaks in general)

CAUTION: Do not exceed 20.6 kPa (3 psi).

5. If the leak is not detected, very slowly turn the crankshaft and watch for leakage. If a leak is detected between the crankshaft and seal while slowly turning the crankshaft, it is possible the crankshaft seal surface is damaged. The seal area on the crankshaft could have minor nicks or scratches that can be polished out with emery cloth.

CAUTION: Use extreme caution when crankshaft polishing is necessary to remove minor nicks and scratches. The crankshaft seal flange is especially machined to complement the function of the rear oil seal.

6. For bubbles that remain steady with shaft rotation, no further inspection can be done until disassembled.

OIL

STANDARD PROCEDURE

CHECKING ENGINE OIL LEVEL

The best time to check engine oil level is after the vehicle has sat overnight. If the engine has been running, allow the engine to be shut off for at least 5 minutes before checking oil level.

Checking the oil while the vehicle is on level ground will improve the accuracy of the oil level reading. Remove the engine oil indicator. The indicator is calibrated for 1 quart within the SAFE zone.

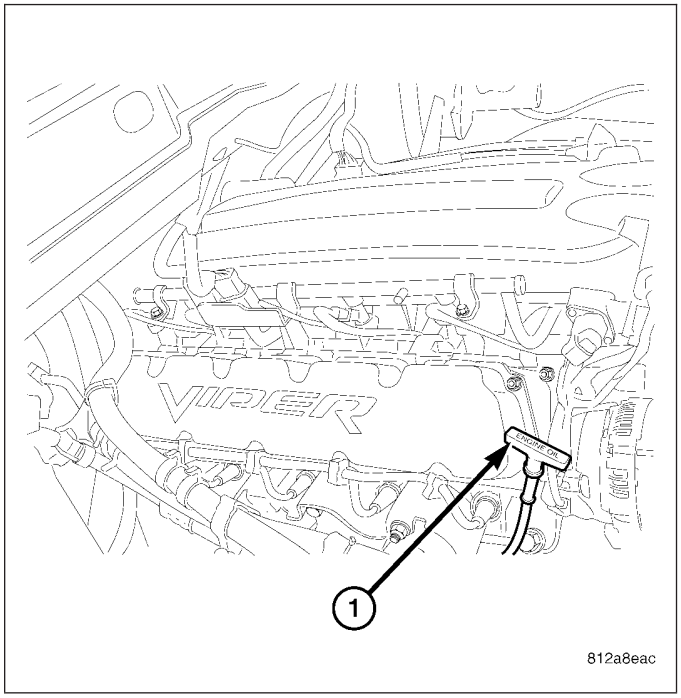

ENGINE OIL AND FILTER CHANGE

WARNING: NEW OR USED ENGINE OIL CAN BE IRRITATING TO THE SKIN. AVOID PROLONGED OR REPEATED SKIN CONTACT WITH ENGINE OIL. CONTAMINANTS IN USED ENGINE OIL, CAUSED BY INTERNAL COMBUSTION, CAN BE HAZARDOUS TO YOUR HEALTH. THOROUGHLY WASH EXPOSED SKIN WITH SOAP AND WATER. DO NOT WASH SKIN WITH GASOLINE, DIESEL FUEL, THINNER, OR SOLVENTS, HEALTH PROBLEMS CAN RESULT. DO NOT POLLUTE, DISPOSE OF USED ENGINE OIL PROPERLY. CONTACT YOUR DEALER OR GOVERNMENT AGENCY FOR LOCATION OF COLLECTION CENTER IN YOUR AREA.

Change engine oil and filter at mileage and time intervals described in LUBRICATION AND MAINTENANCE (Refer to LUBRICATION & MAINTENANCE/MAINTENANCE SCHEDULES - DESCRIPTION).

ENGINE OIL AND FILTER CHANGE

1. Run engine until achieving normal operating temperature.
2. Position the vehicle on a level surface and turn engine off.
3. Open hood, remove oil fill cap.
4. Raise vehicle on hoist.
5. Remove underbody front shield
6. Place a suitable drain pan under oil pan drain plug.
7. Remove drain plug from oil pan and allow oil to drain into pan. Inspect drain plug threads for stretching or other damage. Replace drain plug and gasket if damaged.
8. Install drain plug in crankcase.
9. Remove oil filter and replace with new.
10. Install under body shield.
11. Lower vehicle and fill crankcase with specified type (Refer to LUBRICATION & MAINTENANCE/FLUID TYPES - DESCRIPTION) and amount of engine oil (Refer to LUBRICATION & MAINTENANCE - SPECIFICATIONS).
12. Install oil fill cap.
13. Start engine and inspect for leaks.
14. Stop engine and inspect oil level. Adjust oil level as necessary.

OIL SPECIFICATION

DaimlerChrysler Corporation recommends a fully synthetic API certified engine oil of the proper viscosity grade for refill. Viper engine factory fill is Mobil 1® 10W-30 Synthetic.

OIL FILTER SPECIFICATION

All DaimlerChrysler Corporation engines are equipped with a high quality full-flow, disposable type oil filter. DaimlerChrysler Corporation recommends a Mopar® or equivalent oil filter be used.

USED ENGINE OIL DISPOSAL

Care should be exercised when disposing used engine oil after it has been drained from a vehicle engine.

COOLER & LINES-OIL

DESCRIPTION

An engine oil cooler is used on all models. The cooler is a coolant-to-oil type and mounted on the right front inner fender.

OPERATION

Engine oil travels from the oil pump and filter to the oil cooler via an oil supply line. The oil is cooled and returned to the engine via an oil return line. Engine oil is then pumped into the main oil gallery. Engine coolant flows into the cooler from the heater return hose and exits into the water pump inlet nipple.

STANDARD PROCEDURE - OIL COOLER LINE QUICK CONNECT FITTING DISASSEMBLY/ASSEMBLY

DISASSEMBLY

1. Remove dust cap by pulling it straight back off of quick connect fitting (1).
2. Place disconnect tool (4) onto oil cooler line with the fingers of the tool facing the quick connect fitting (1).
3. Slide disconnect tool down the line and engage the fingers of the tool into the retaining clip. When properly engaged in the clip, the tool will fit flush against the quick connect fitting.
4. Rotate the disconnect tool 60° to expand the retaining clip.
5. While holding the disconnect tool against the quick connect fitting, pull back on the oil cooler line to remove.

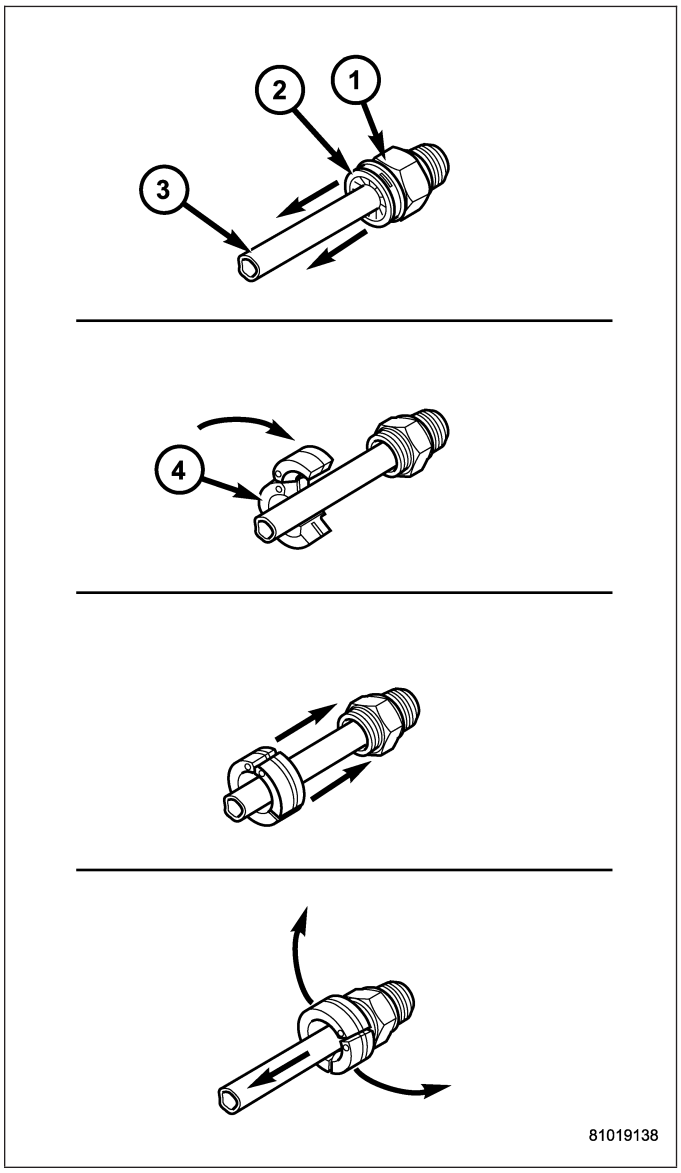

ASSEMBLY

1. Align oil cooler line (3) with quick connect fitting (1) while pushing straight into the fitting.
2. Push in on oil cooler line (3) until a “click” is heard or felt.
3. Slide dust cap (4) down the oil cooler line (3) and snap it over the quick connect fitting (1) until it is fully seated and rotates freely. Dust cap (4) will only snap over quick connect fitting (1) when the cooler line (3) is properly installed.

NOTE: If dust cap will not snap into place, repeat assembly step #2.

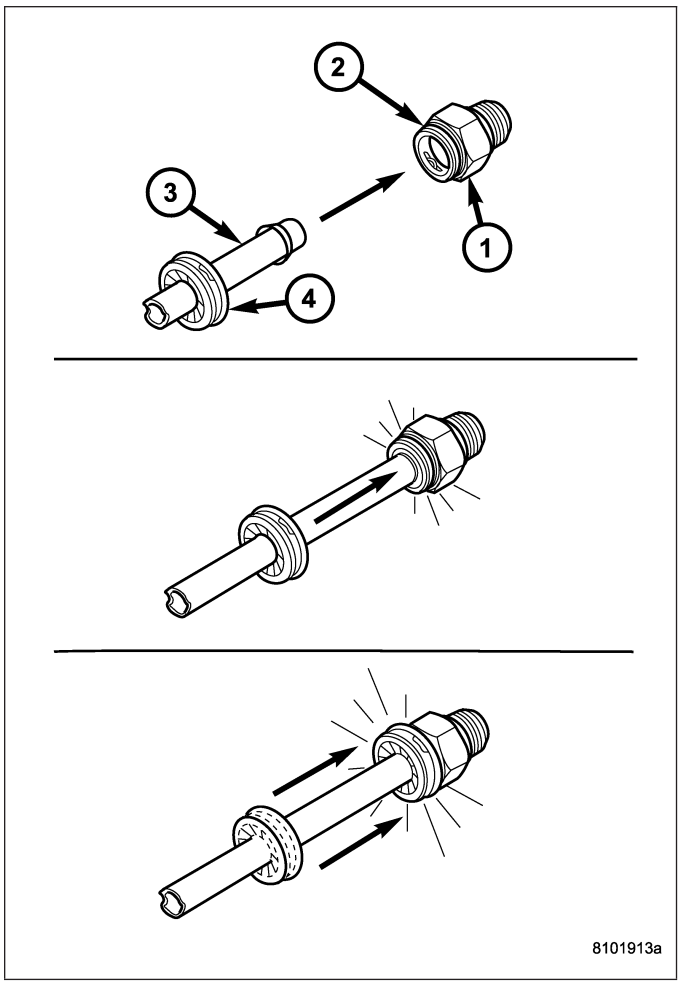

REMOVAL

1. Disconnect oil cooler coolant hoses (3).
2. Disconnect throttle body air inlet hose, remove air cleaner housing assembly (Refer to 9 - ENGINE/ AIR INTAKE SYSTEM/AIR CLEANER HOUSING - REMOVAL).
3. Drain cooling system (Refer to 7 - COOLING/ENGINE - STANDARD PROCEDURE).
4. Using Special Tool 9005, disconnect oil supply (1) and return lines (2) at oil cooler (Refer to 9 - ENGINE/LUBRICATION/OIL COOLER & LINES - STANDARD PROCEDURE).
5. Remove fasteners securing oil cooler to inner fender and remove oil cooler.

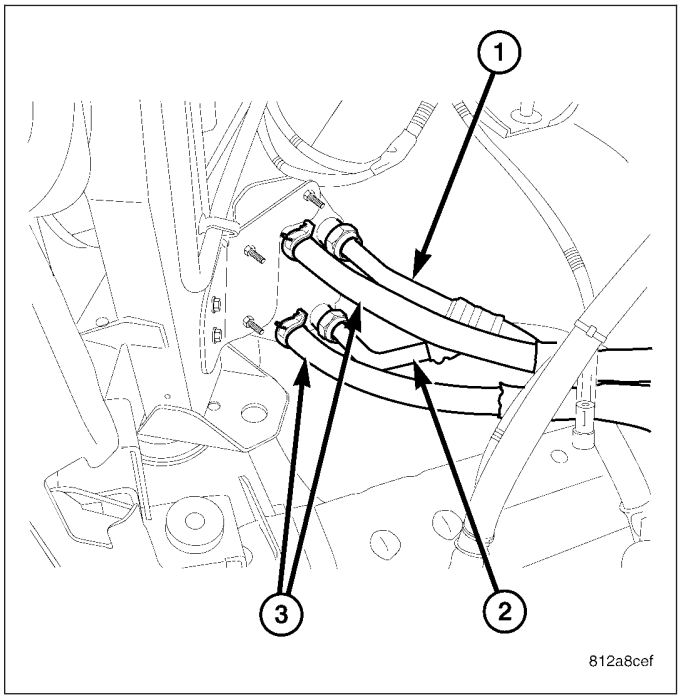

INSTALLATION

1. Position oil cooler to mounting position.
2. Install oil cooler fasteners. Tighten to 12 N·m (105 in. lbs.).
3. Connect oil supply (1) and return lines (2) to oil cooler and.
4. Connect oil cooler coolant hoses (3).
5. Install air cleaner housing assembly, connect throttle body air inlet hose (Refer to 9 - ENGINE/AIR INTAKE SYSTEM/AIR CLEANER HOUSING - INSTALLATION).
6. Fill cooling system (Refer to 7 - COOLING/ENGINE - STANDARD PROCEDURE).
7. Start the engine to circulate and fill the oil cooler. Shut off the engine and check the oil level. Add oil as needed.
8. Inspect the oil cooler connections for leaks.

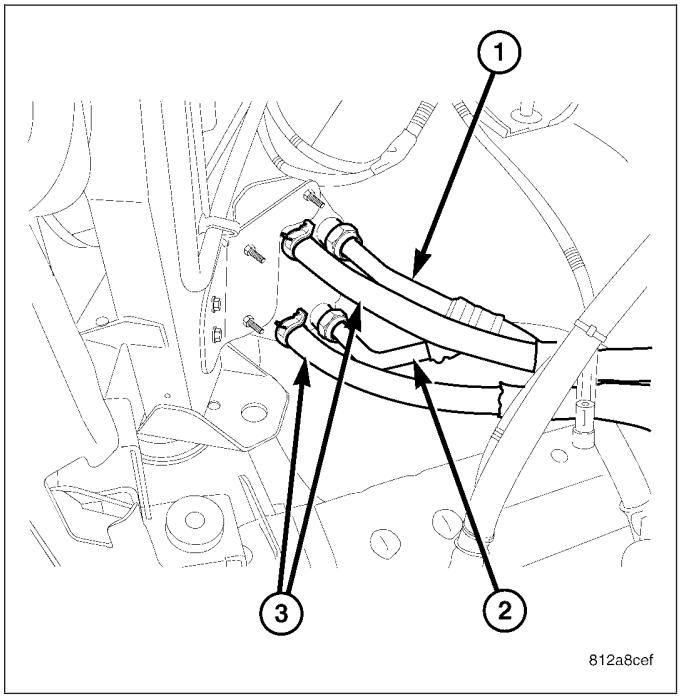

PAN-OIL

REMOVAL

1. Disconnect the negative battery cable.
2. Disconnect engine oil indicator tube fastener from the right cylinder head cover.
3. Install engine lifting fixture TOOL 9363 and support TOOL.
4. Raise vehicle on hoist.
5. Remove the lower engine shield.
6. Drain engine oil.
7. Remove the front cross member (Refer to 13 - FRAME & BUMPERS/FRAME/FRONT CROSSMEMBER - REMOVAL)
8. Remove flywheel inspection cover.
9. Loosen engine mount through bolts.
10. Wiggle and separate the oil level indicator tube from the oil pan.

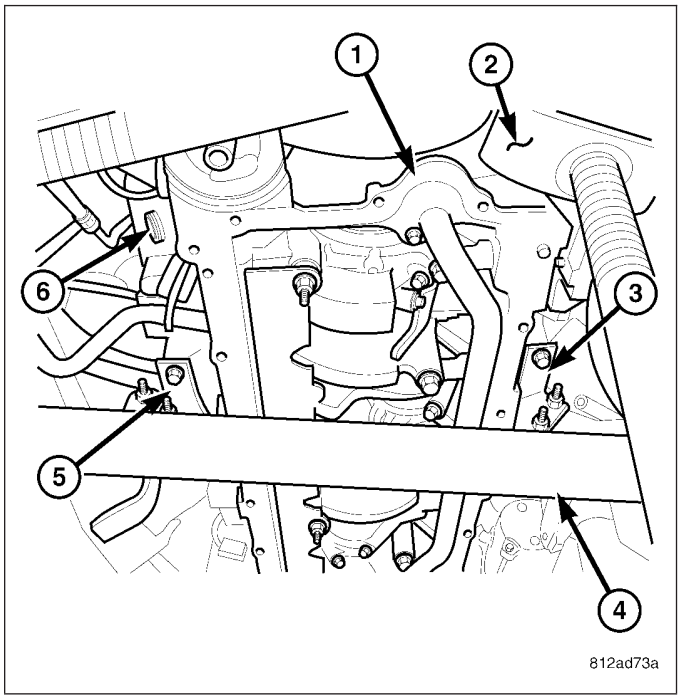

NOTE: Careful positioning of the jack stand is necessary to prevent damage to other components

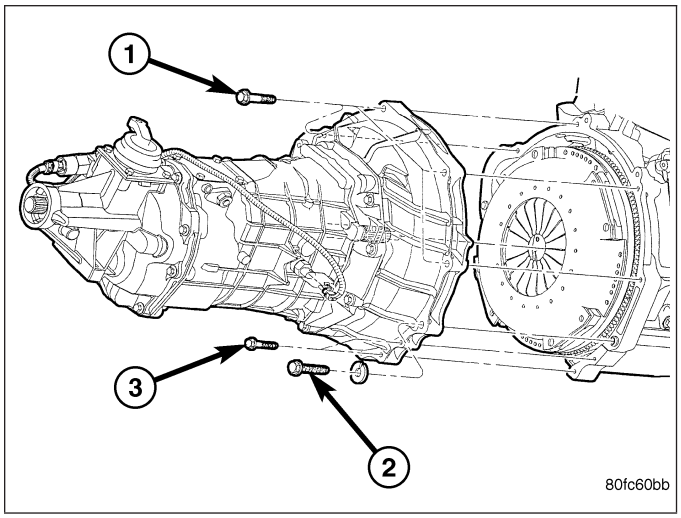

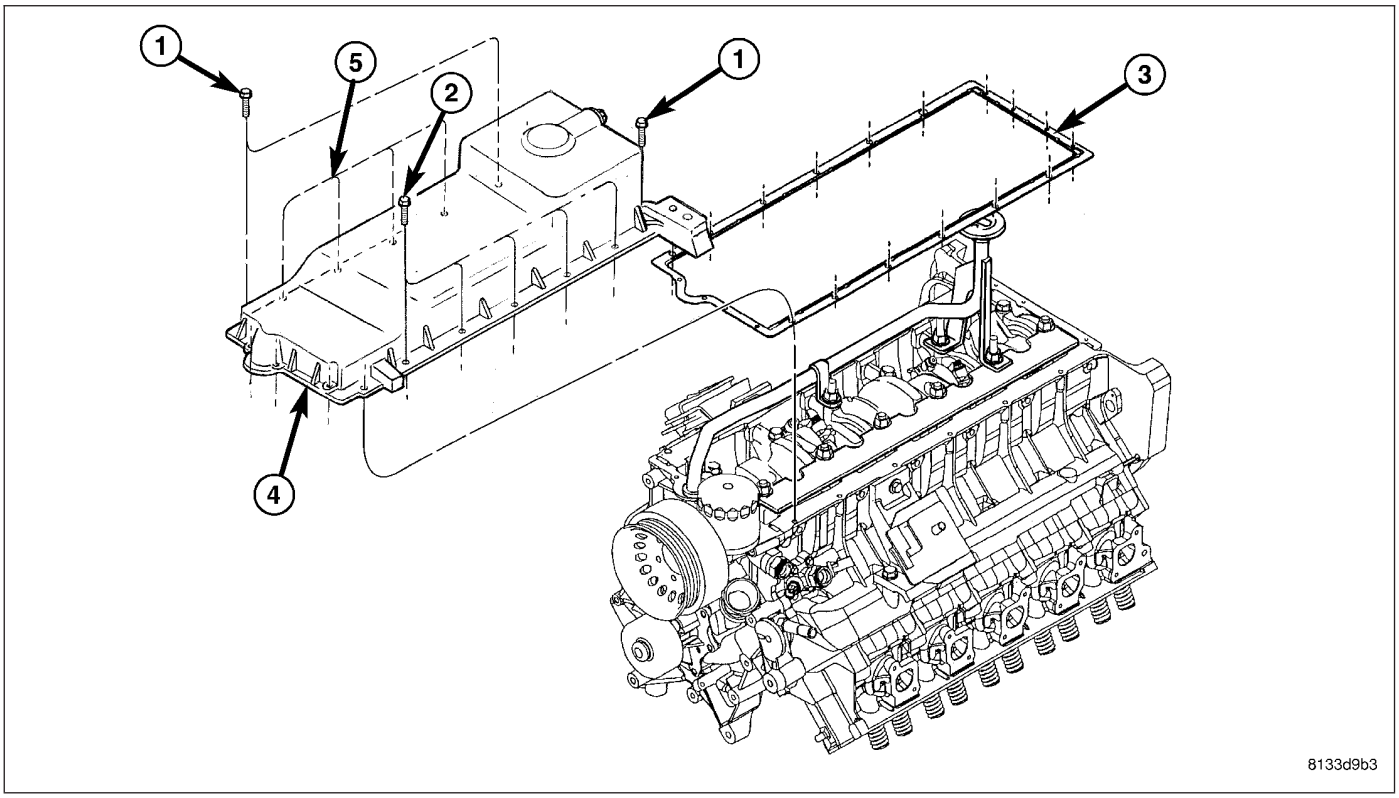

11. Using lifting fixture TOOL 9363 and support TOOL , raise the front of the engine
12. Remove transmission to oil pan fasteners.
13. Remove oil pan bolts and remove oil pan.

NOTE: Clean and inspect oil pan gasket. The pan gasket can be used again if in good condition.

INSTALLATION

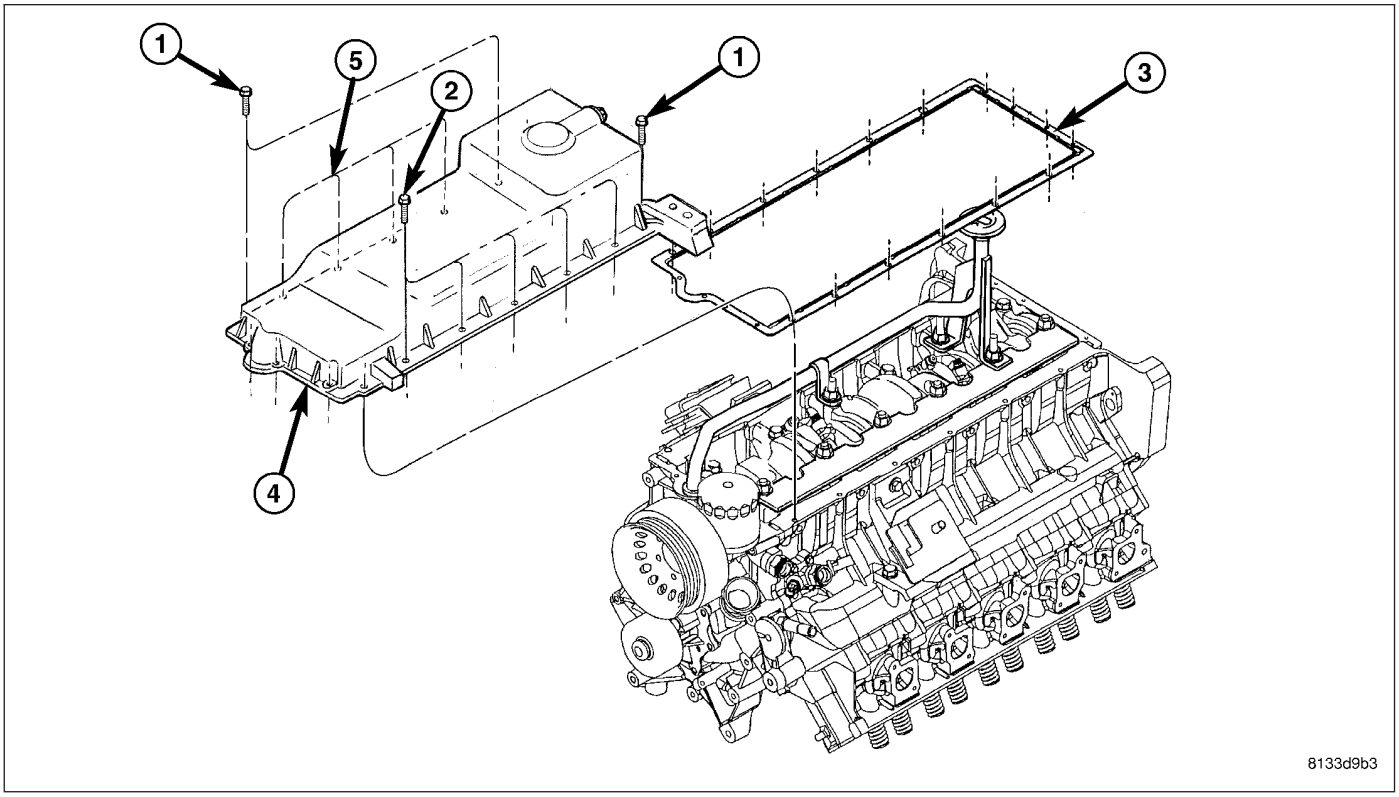

1. Clean gasket surfaces. Inspect oil pan gasket. Replace as necessary.
2. Apply an 1/8 in. bead of Mopar Engine RTV at the two joints between the cylinder block to timing chain case cover and the two joints between the rear main seal retainer and engine block.
3. Position oil pan and gasket to engine block, seat the oil level indicator tube in the oil pan and hand start all fasteners.
4. Tighten the transmission to oil pan bolts in finger tight.
5. Torque 5/16-18 oil pan bolts to 23 N·m (200 in. lbs.). Torque 1/4-20 oil pan bolts to 11 N·m (95 in lbs.).
6. Torque transmission to oil pan bolts to 23 N·m (200 in. lbs.).

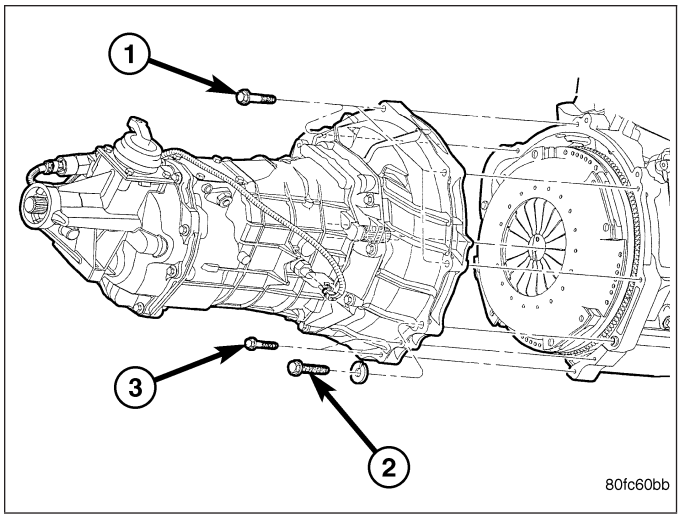

7. Lower the engine.
8. Install and tighten engine mount through bolts to 102 N·m (75 ft. lbs.).
9. Install flywheel inspection cover.

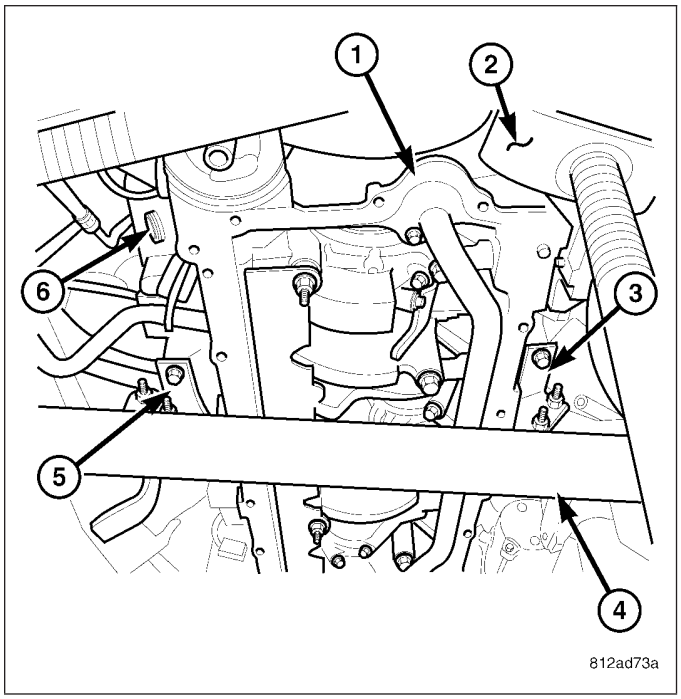

10. Install frame front cross member (Refer to 13 - FRAME & BUMPERS/FRAME/FRONT CROSS-MEMBER - INSTALLATION).
11. Lower vehicle.
12. Install the oil level indicator tube fastener.
13. Fill the crankcase with the correct oil to proper level.
14. Start the engine and inspect for leaks.

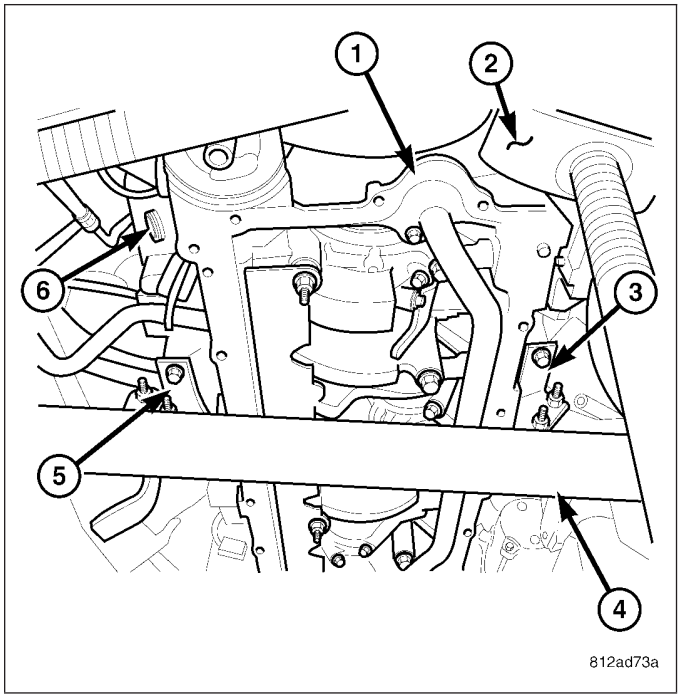

PUMP-OIL

REMOVAL

NOTE: The oil pump is serviced with the timing chain cover.

1. Remove timing chain cover (1) (Refer to 9 - ENGINE/VALVE TIMING/TIMING CHAIN COVER - REMOVAL).
2. Disassemble oil pump (3) (Refer to 9 - ENGINE/ LUBRICATION/OIL PUMP - DISASSEMBLY).
3. Inspect oil pump parts (Refer to 9 - ENGINE/LUBRICATION/OIL PUMP - INSPECTION).

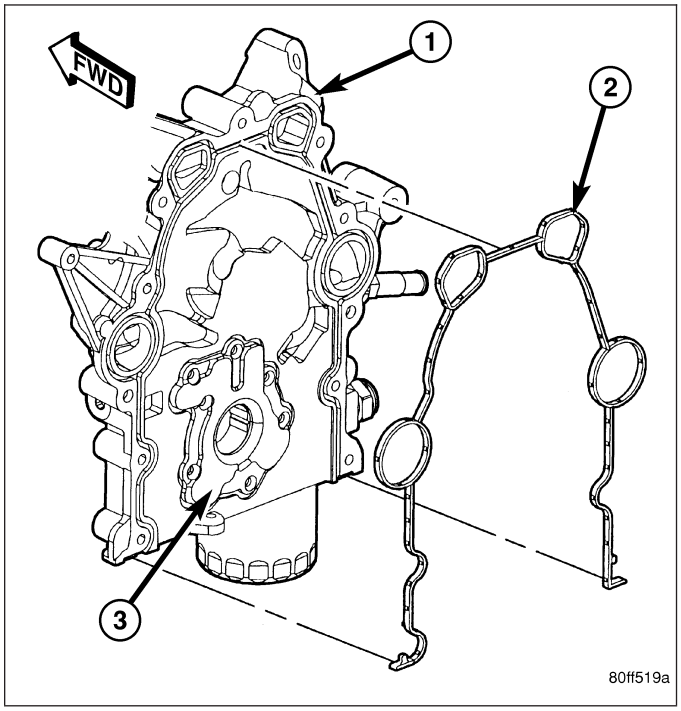

DISASSEMBLY

1. Remove oil pump cover screws (1) and lift off cover.
2. Remove pump rotors.

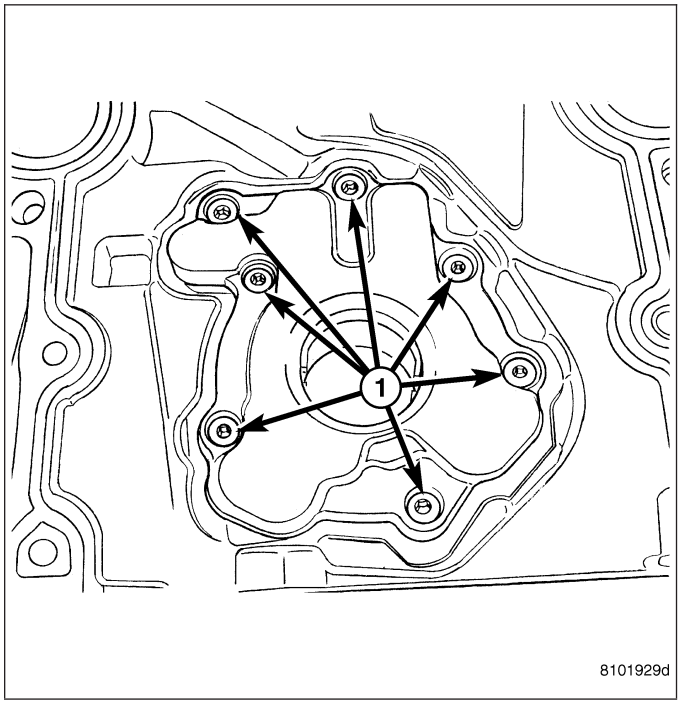

3. Remove oil pressure relief valve (1) and spring (2).
4. Wash all parts in a suitable solvent and inspect carefully for damage or wear.

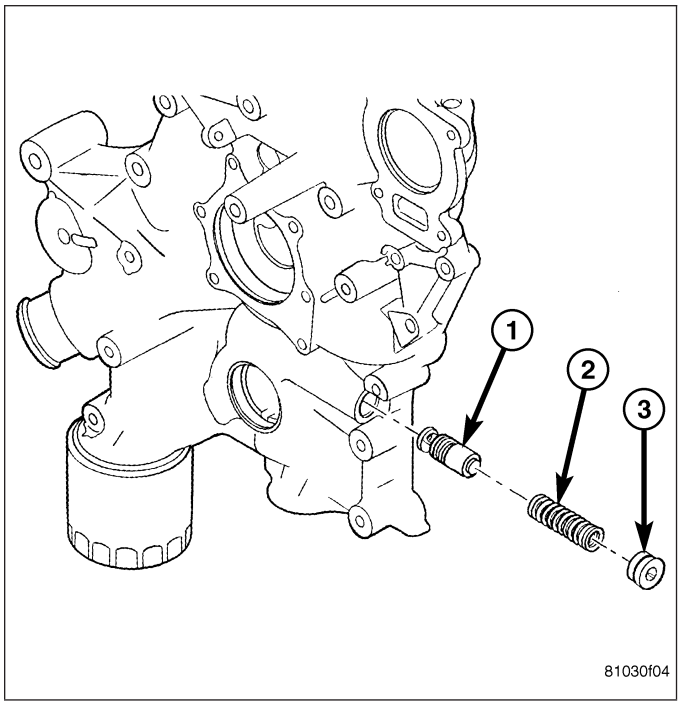

CLEANING

Clean all parts thoroughly. Mating surface of the chain case cover should be smooth. Replace pump cover if scratched or grooved.

INSPECTION

1. Lay a straightedge (1) across the pump cover surface. If a 0.076 mm (0.003 in.) feeler gauge (2) can be inserted between cover and straight edge, cover should be replaced.

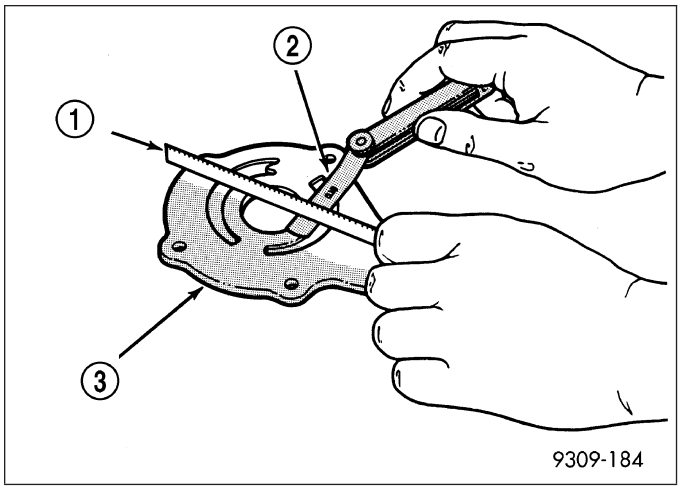

2. Measure thickness and diameter of rotors. if the outer rotor diameter is 82.45 mm (3.246 in.) or less, replace rotor set and.

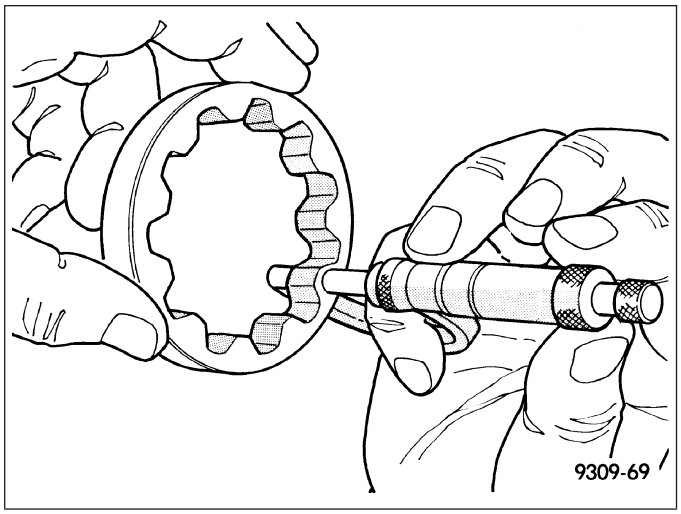

3. If either rotor thickness measures 18.92 mm (0.744 in.) or less, replace rotor set

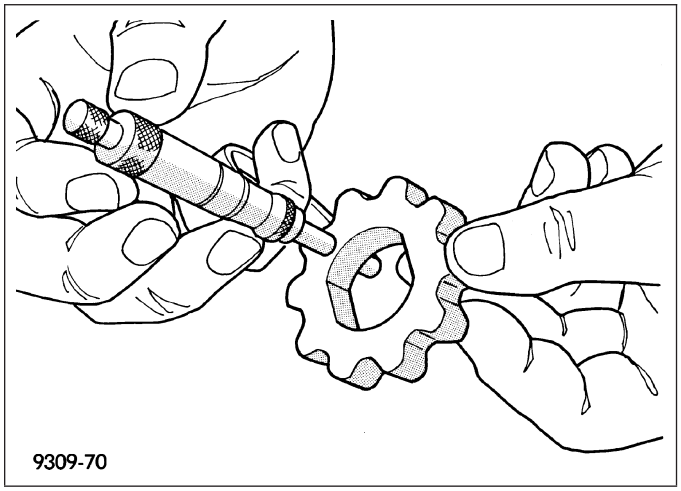

4. Measure clearance between outer rotor (2) and case. If measurement is 0.19 mm (0.007 in.) or more, and outer rotor (2) is within specification, replace chain case cover.

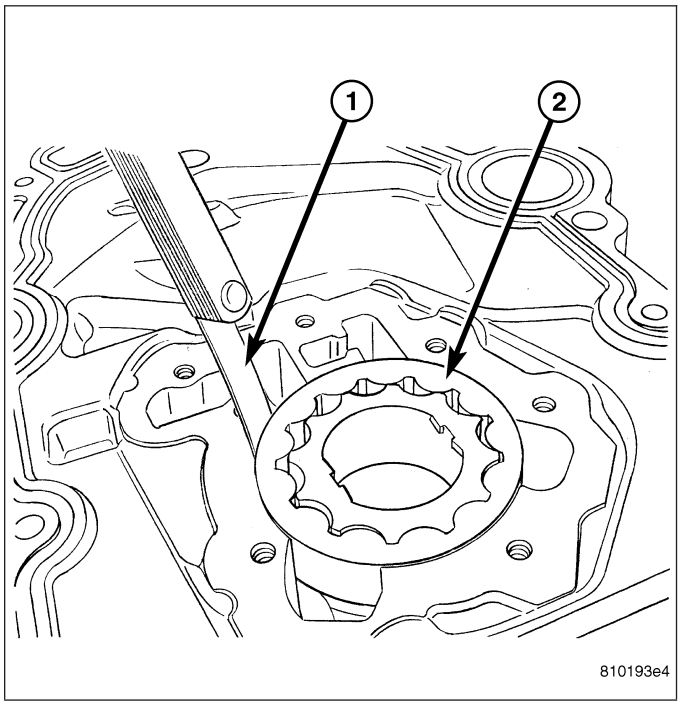

5. Measure clearance between the outer rotor (2) and inner rotor (3). If clearance between inner (3) and outer rotors (2) is 0.150 mm (0.006 in.) or more, replace rotor set.
6. Place a straightedge across the face of the chain case cover, in between the bolt holes. If a feeler gauge of 0.077 mm (0.003 in.) or more can be inserted between rotors and the straightedge, and the rotors are within specification, replace the case cover.
7. Inspect oil pressure relief valve for scoring and free operation in its bore. Small marks may be removed with 400 grit wet or dry sandpaper.
8. The relief valve spring has a free length of approximately 68.7 mm (2.70 in.) and should test between 10.2 kg and 12.4 kg (22.5 and 27.5 lbs.) when compressed to 57 mm (2.24 in.). Replace spring that fails to meet specifications.
9. If oil pressure is low and pump is within specifications, inspect for worn engine bearings or other reasons for oil pressure loss.

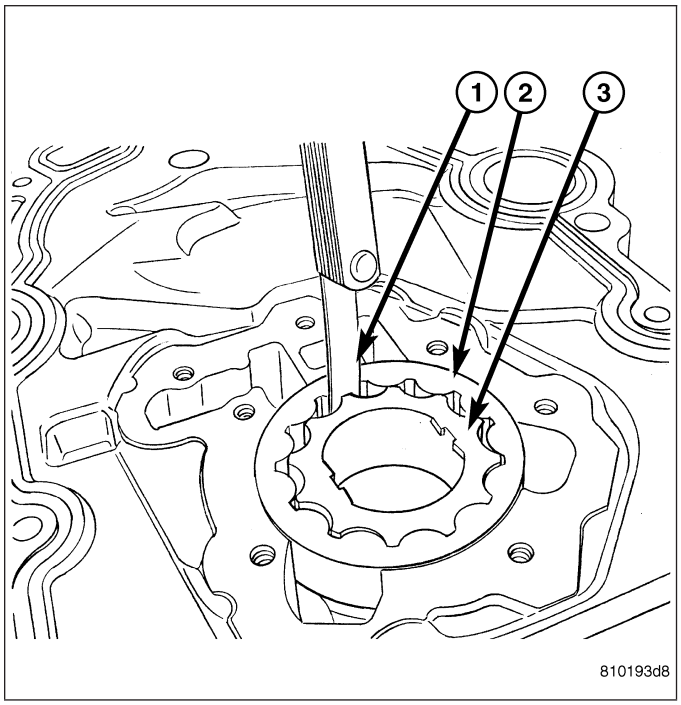

ASSEMBLY

1. Assemble pump using new parts as required.
2. Install spring (2) onto oil pressure relief valve (1).
3. Lubricate oil pressure relief valve and spring with clean engine oil.
4. Install oil pressure relief valve (1) and spring (2).
5. Inspect relief valve plug o-ring (3). Replace as necessary. Torque plug to 34 N·m (25 ft. lbs.)

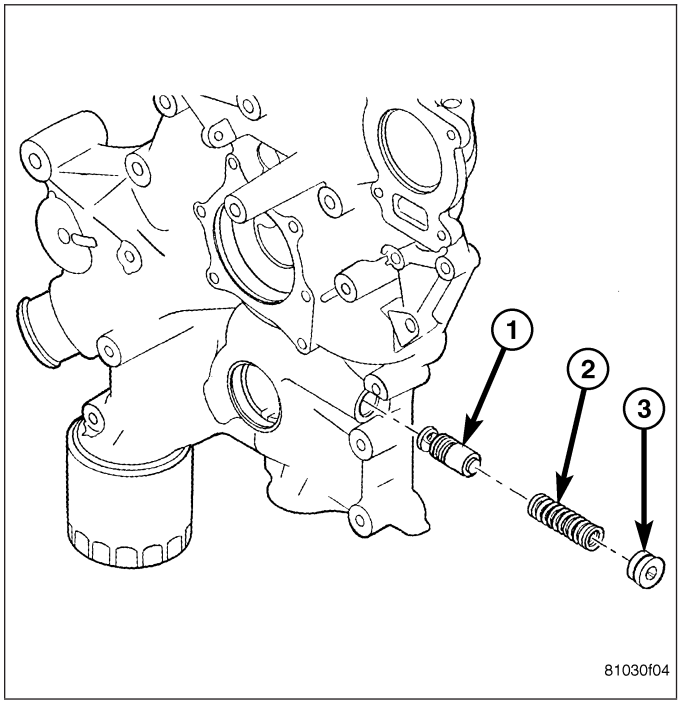

6. Install pump rotors with chamfer side to the inside of chain case cover.
7. Install oil pump cover and screws (1). Tighten cover screws to 23 N·m (200 in. lbs.).
8. Prime oil pump before installation by filling rotor cavity with engine oil.

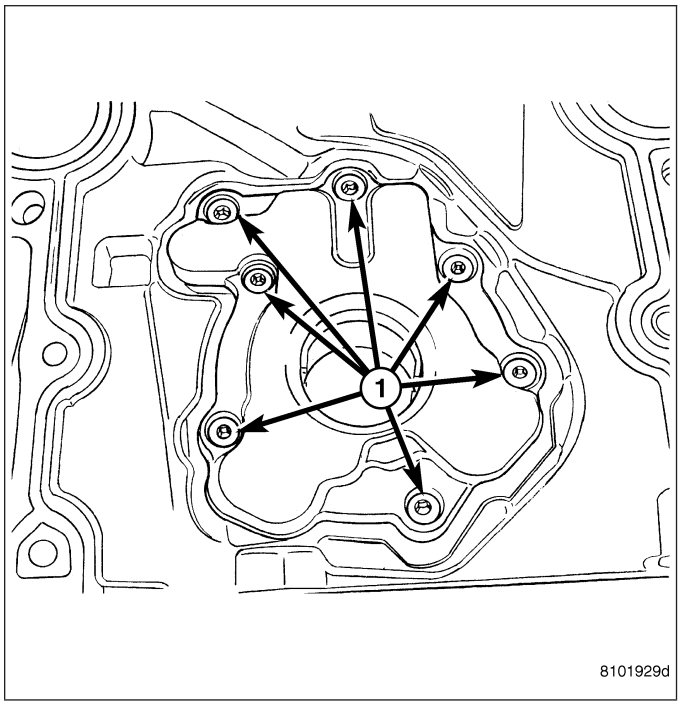

INSTALLATION

1. Assemble oil pump (3) (Refer to 9 - ENGINE/LUBRICATION/OIL PUMP - ASSEMBLY).
2. Prime oil pump before installation by filling rotor cavity with the correct engine oil.
3. Install timing chain cover (Refer to 9 - ENGINE/VALVE TIMING/TIMING CHAIN COVER - INSTALLATION).
4. Install **NEW** oil filter.
5. Fill the crankcase with the correct engine oil to the proper level.

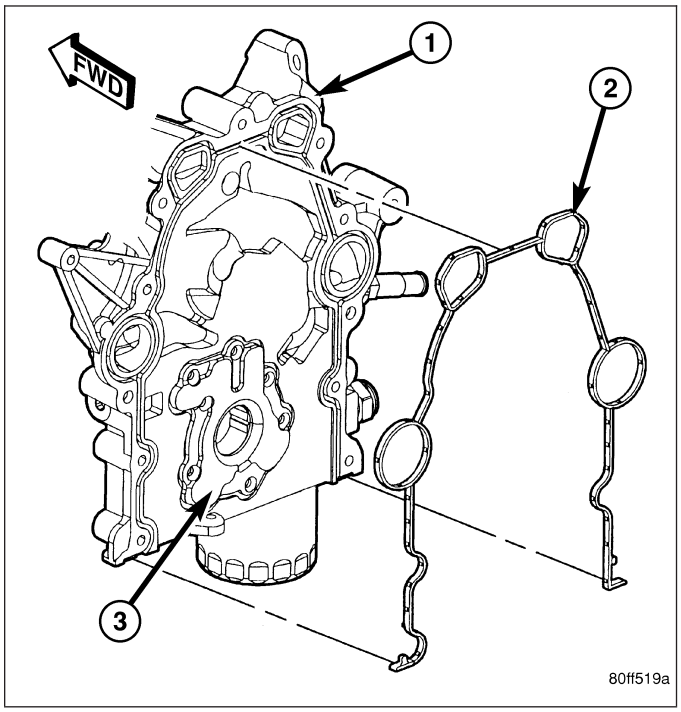

SENSOR-OIL PRESSURE

REMOVAL

1. Disconnect oil pressure sensor electrical connector.
2. Remove oil pressure sensor (1).

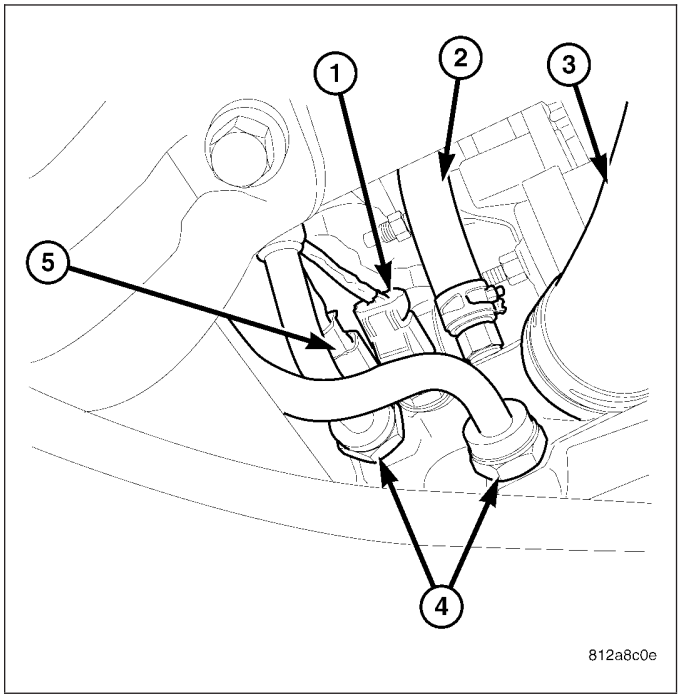

INSTALLATION

1. Apply thread sealer to oil pressure sensor threads.
2. Install oil pressure sensor (1).
3. Connect electrical connector.

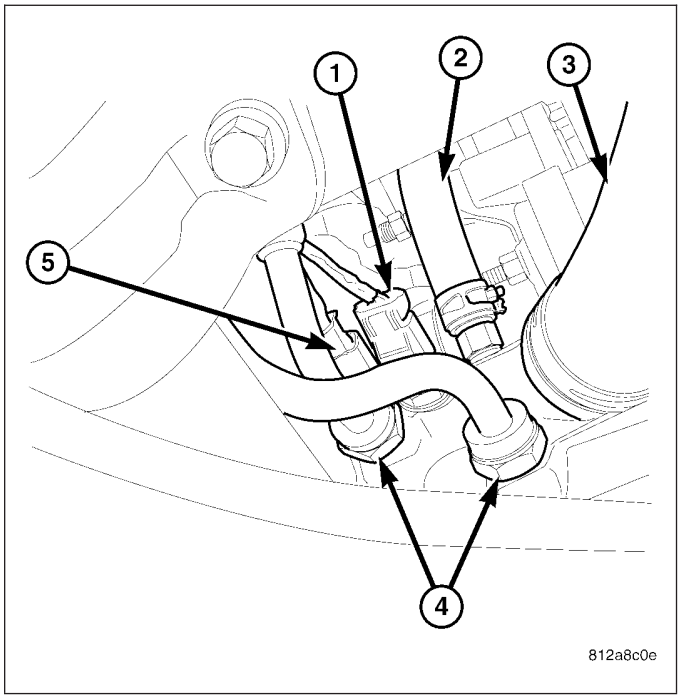

SENSOR-OIL TEMPERATURE

REMOVAL

1. Disconnect oil temperature sensor electrical connector.
2. Remove oil temperature sensor (5).

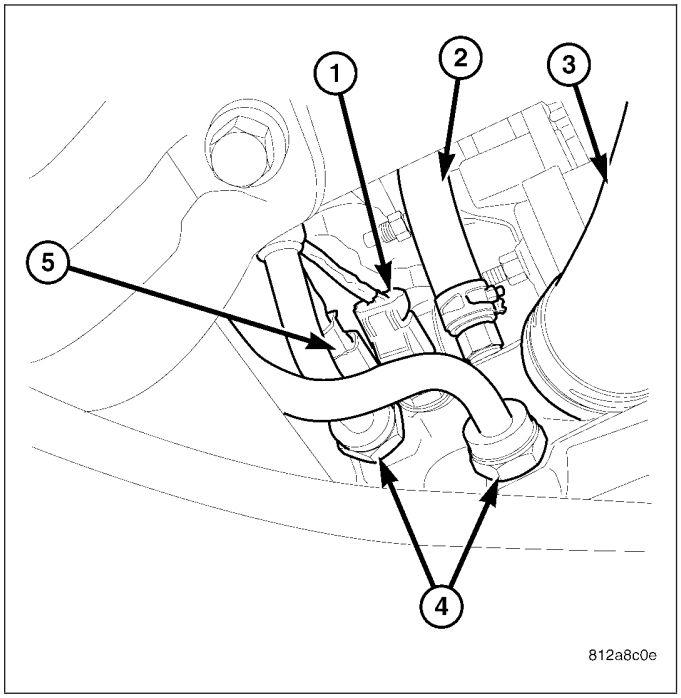

INSTALLATION

1. Apply thread sealer to oil temperature sensor threads.
2. Install oil temperature sensor (5).
3. Connect electrical connector.

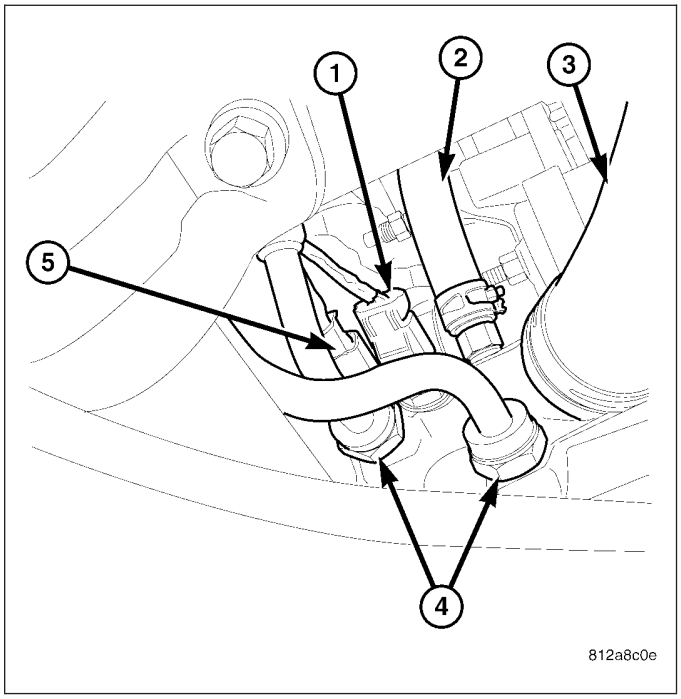

BLOCK-ENGINE

DESCRIPTION

The cylinder block is made of a sand-cast aluminum alloy. The cylinder block has interference-fit cast iron cylinder liners. The cylinder liners are thermally installed during block manufacturing; they are not serviceable items.

Six iron main bearing caps use four bolts per cap; two vertical and two horizontal. A crankshaft oil scraper is attached to the main bearing caps via extended main bearing cap bolts and nuts.

STANDARD PROCEDURE - CYLINDER BORE HONING

Before honing, stuff plenty of clean shop towels under the bores and over the crankshaft to keep abrasive materials from entering the crankshaft area.

1. Used carefully, the Cylinder Bore Sizing Hone C-823, equipped with 220 grit stones, is the best tool for this job. In addition to deglazing, it will reduce taper and out-of-round, as well as removing light scuffing, scoring and scratches. Usually, a few strokes will clean up a bore and maintain the required limits.

CAUTION: DO NOT use rigid type hones to remove cylinder wall glaze.

2. Deglazing of the cylinder walls may be done if the cylinder bore is straight and round. Use a cylinder surfacing hone, Honing Tool C-3501, equipped with 280 grit stones (C-3501-3810). about 20-60 strokes, depending on the bore condition, will be sufficient to provide a satisfactory surface. Using honing oil C-3501-3880, or a light honing oil, available from major oil distributors.

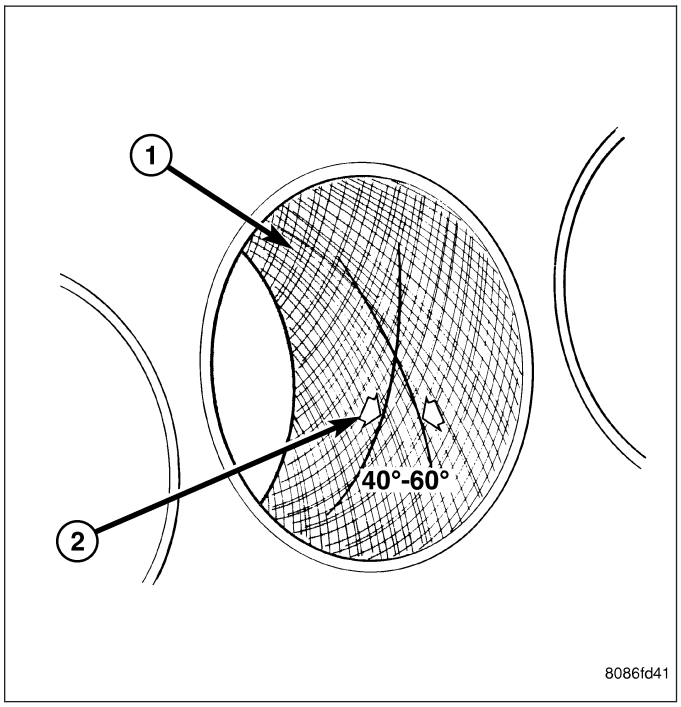

CAUTION: DO NOT use engine or transmission oil, mineral spirits, or kerosene.

3. Honing should be done by moving the hone up and down fast enough to get a crosshatch pattern. The hone marks should INTERSECT at 50° to 60° for proper seating of rings.
4. A controlled hone motor speed between 200 and 300 RPM is necessary to obtain the proper crosshatch angle. The number of up and down strokes per minute can be regulated to get the desired 50° to 60° angle. Faster up and down strokes increase the crosshatch angle.
5. After honing, it is necessary that the block be cleaned to remove all traces of abrasive. Use a brush to wash parts with a solution of hot water and detergent. Dry parts thoroughly. Use a clean, white, lint-free cloth to check that the bore is clean. Oil the bores after cleaning to prevent rusting.

CLEANING

CAUTION: Remove all gasket material from cylinder block using a plastic gasket scraper and Mopar® Brake Parts Cleaner or the equivalent, this will prevent damage to the cylinder block.

1. When cleaning the cylinder block, remove the oil gallery plugs at the front and rear of the block.
2. Spray compressed air into all oil gallery passages to ensure they are clear of blockage.
3. Use a wooden or plastic scraper and Mopar® Brake Parts Cleaner or the equivalent to remove the old gasket.
4. Clean the oil passages in the crankshaft with a brush.

INSPECTION

The cylinder walls should be checked for out-of-round and taper with Special Tool C-119 (1). If the cylinder walls are badly scuffed or scored, the cylinder bore can be machined oversize. Oversize piston and rings are available.

Measure the cylinder bore at three levels in directions A and B. Top measurement should be 12 mm (0.50 in.) down and bottom measurement should be 12 mm (0.50 in.) up from bottom of bore. (Refer to 9 - ENGINE - SPECIFICATIONS) for cylinder bore and piston specifications.

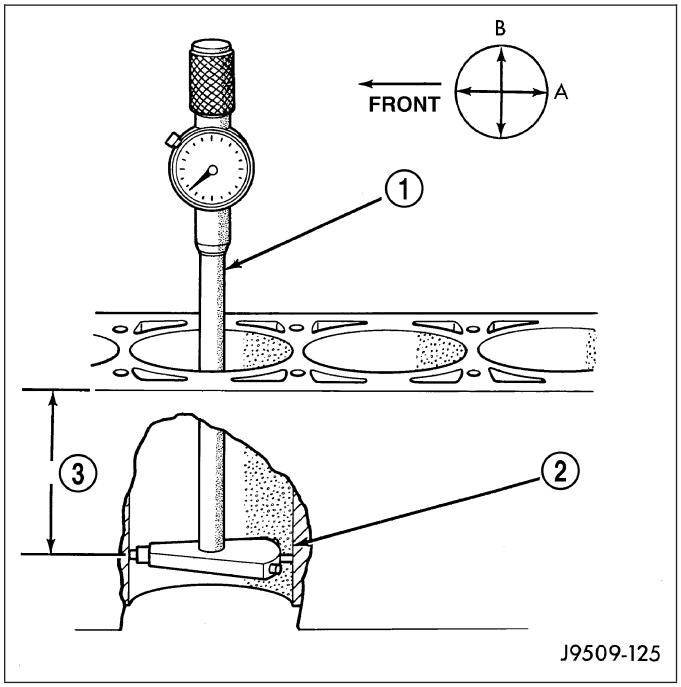

HYDRAULIC TAPPETS

DESCRIPTION

The roller type design hydraulic tappets (3) are positioned in the cylinder block. Roller tappet alignment is maintained by machined flats on tappet body being fitted in pairs into ten aligning yokes (2).

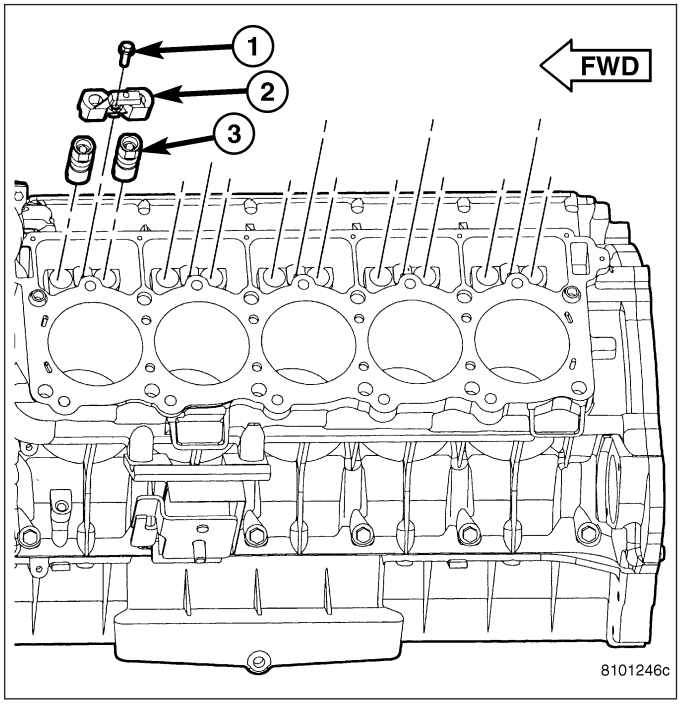

REMOVAL

1. Remove cylinder head(s) (Refer to 9 - ENGINE/ CYLINDER HEAD - REMOVAL).

NOTE: If tappets (3) are to be reused, identify tappet location to ensure installation in original location.

2. Remove tappet aligning yoke bolt (1).
3. Remove tappets (3) from bores.

CAUTION: Do not disassemble tappets.

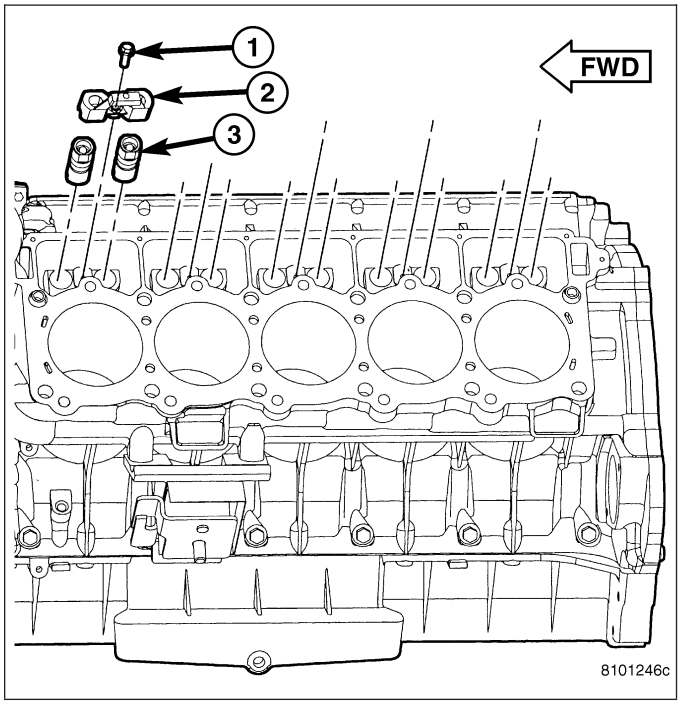

INSTALLATION

1. Lubricate tappets.
2. Install tappets in their original positions with oil holes (1) facing up.

CAUTION: The "handle" on the tappet aligning yoke must be installed in the outboard position; i.e. toward the cylinders.

3. With roller tappets in proper position, install aligning yoke assemblies. Apply Mopar® Lock & Seal Adhesive (Medium Strength Threadlocker) to the screws and tighten to 11 N·m (95 in. lbs.).
4. Install cylinder heads (Refer to 9 - ENGINE/CYLINDER HEAD - INSTALLATION).
5. Start and operate engine. Warm up to normal operating temperature.

CAUTION: To prevent damage to valve mechanism, engine must not be run above fast idle until all hydraulic tappets have filled with oil and have become quiet.

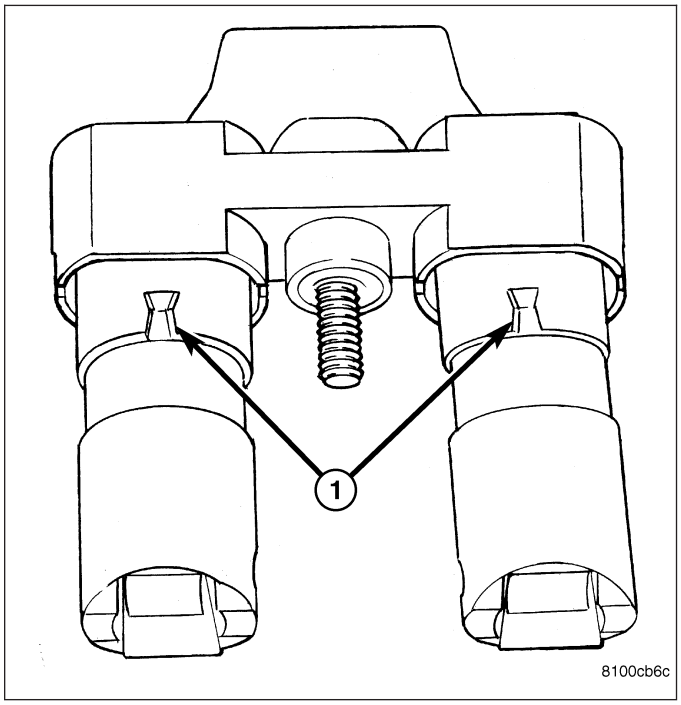

CAMSHAFT

REMOVAL

1. Perform the fuel pressure relief procedure (Refer to 14 - FUEL SYSTEM/FUEL DELIVERY - STANDARD PROCEDURE).
2. Disconnect the negative battery cable.
3. Raise and support the vehicle.
4. Remove the front engine shield.
5. Drain the cooling system
6. Drain the power steering fluid.
7. Remove the oil pan (Refer to 9 - ENGINE/LUBRICATION/OIL PAN - REMOVAL).
8. Lower the vehicle.
9. Remove the radiator and radiator fan assembly (Refer to 7 - COOLING/ENGINE/RADIATOR - REMOVAL).
10. Remove intake manifold (Refer to 9 - ENGINE/MANIFOLDS/INTAKE MANIFOLD - REMOVAL).
11. Remove cylinder head covers (Refer to 9 - ENGINE/CYLINDER HEAD/CYLINDER HEAD COVER(S) - REMOVAL).
12. Remove timing chain cover (Refer to 9 - ENGINE/VALVE TIMING/TIMING CHAIN COVER - REMOVAL).
13. Remove rocker arm assemblies.

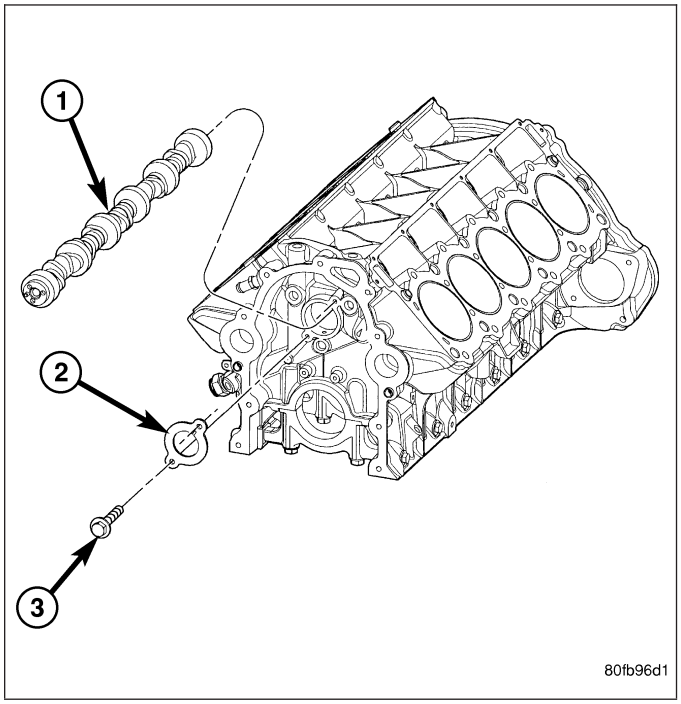

NOTE: Identify each push rod to be replaced in its original location.

14. Remove push rods.
15. Remove cylinder heads (Refer to 9 - ENGINE/CYLINDER HEAD - REMOVAL).
16. Remove hydraulic tappets (Refer to 9 - ENGINE/ENGINE BLOCK/HYDRAULIC TAPPETS - REMOVAL).
17. Remove timing chain and camshaft sprocket (Refer to 9 - ENGINE/VALVE TIMING/TIMING CHAIN AND SPROCKETS - REMOVAL).
18. Remove camshaft thrust plate (2).
19. Slowly remove camshaft (1). Use care not to damage camshaft bearing surfaces with the cam lobes.

INSTALLATION

1. Lubricate camshaft lobes and camshaft bearing journals.
2. Slowly install camshaft (1). Use care not to damage camshaft bearing surfaces with the cam lobes.
3. Install camshaft thrust plate bolts (3).. Tighten to 24 N·m (210 in. lbs.).

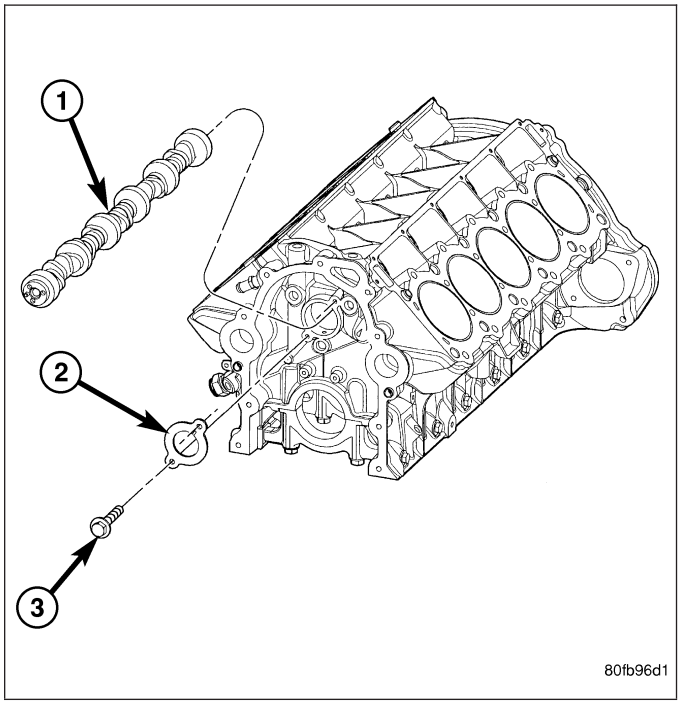

4. Install timing chain and camshaft sprocket (Refer to 9 - ENGINE/VALVE TIMING/TIMING CHAIN AND SPROCKETS - INSTALLATION).
5. Measure camshaft end play. End Play should measure 0.0127 - 0.381 mm (0.005 - 0.015 in.) 0.381 mm (0.015 in. Max.). If not within limits, install a new thrust plate.
6. **When camshaft is replaced, all of the tappets must be replaced.** Each hydraulic tappet must be installed with oil hole facing up (Refer to 9 - ENGINE/ENGINE BLOCK/HYDRAULIC TAPPETS - INSTALLATION).
7. Install timing chain cover (Refer to 9 - ENGINE/VALVE TIMING/TIMING CHAIN COVER - INSTALLATION).
8. Install cylinder heads (Refer to 9 - ENGINE/CYLINDER HEAD - INSTALLATION).
9. Install push rods in their original location.
10. Install rocker arms (Refer to 9 - ENGINE/CYLINDER HEAD/ROCKER ARMS - INSTALLATION).
11. Install intake manifold (Refer to 9 - ENGINE/MANIFOLDS/INTAKE MANIFOLD - INSTALLATION).

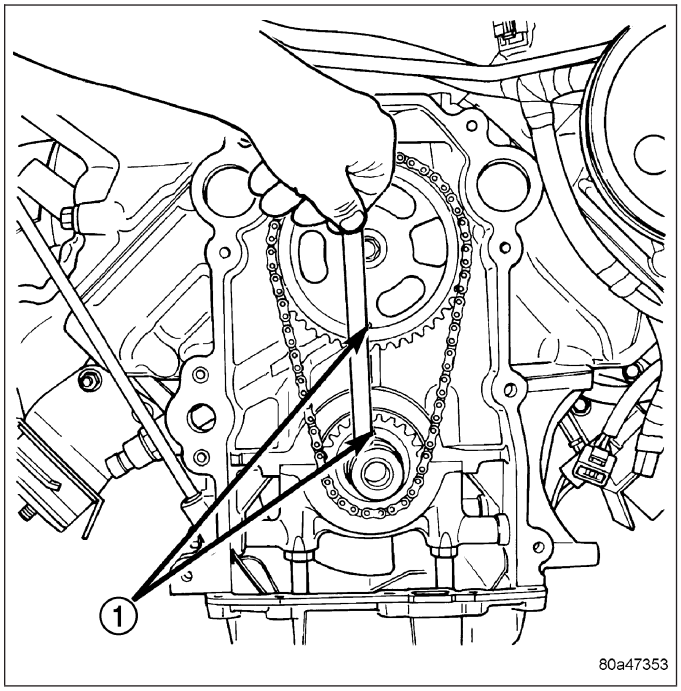

12. Install cylinder head covers (Refer to 9 - ENGINE/CYLINDER HEAD/CYLINDER HEAD COVER(S) - INSTALLATION).
13. Install the radiator and fan assembly (Refer to 7 - COOLING/ENGINE/RADIATOR - INSTALLATION).
14. Raise and support the vehicle.
15. Install the oil pan (Refer to 9 - ENGINE/LUBRICATION/OIL PAN - INSTALLATION).
16. Install the front engine shield.

17. Lower the vehicle.
18. Fill and purge air from the power steering (Refer to 19 - STEERING/PUMP - STANDARD PROCEDURE).
19. Fill and purge air from the cooling system (Refer to 7 - COOLING - STANDARD PROCEDURE).
20. Fill engine crankcase with the proper oil to the correct level (Refer to 9 - ENGINE/LUBRICATION/OIL - STANDARD PROCEDURE).
21. Connect the negative battery cable.
22. Start the vehicle and inspect for leaks.

ROD-PISTON & CONNECTING

DESCRIPTION

The pistons are made of cast aluminum with an added anodized coating on both sides of the skirt and the top piston ring groove for reduced wear and it's low friction properties. Three piston rings are used; two compression and one three-piece oil control ring. The piston pin (press-fit into the rods) joins the piston to a forged steel, fractured cap, designed connecting rod, with a custom twelve point nine millimeter threaded bolt. The piston and connecting rod is serviced as an assembly and is not interchangeable with previous model years.

STANDARD PROCEDURE

PISTON FITTING

All pistons are machined to the same weight in grams, to maintain piston balance.

Piston and cylinder wall must be clean and dry. Piston diameter should be measured 90 degrees to piston pin axis at size location shown in. Cylinder bores should be measured halfway down the cylinder bore and transverse to the engine crankshaft center line shown in. (Refer to 9 - ENGINE - SPECIFICATIONS) for cylinder bore and piston specifications.

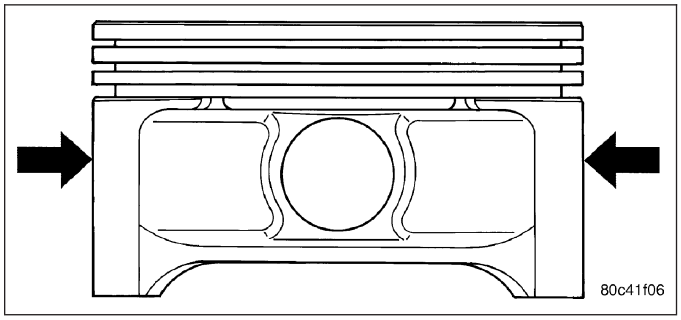

NOTE: Pistons and cylinder bores should be measured at normal room temperature, 70°F (21°C).

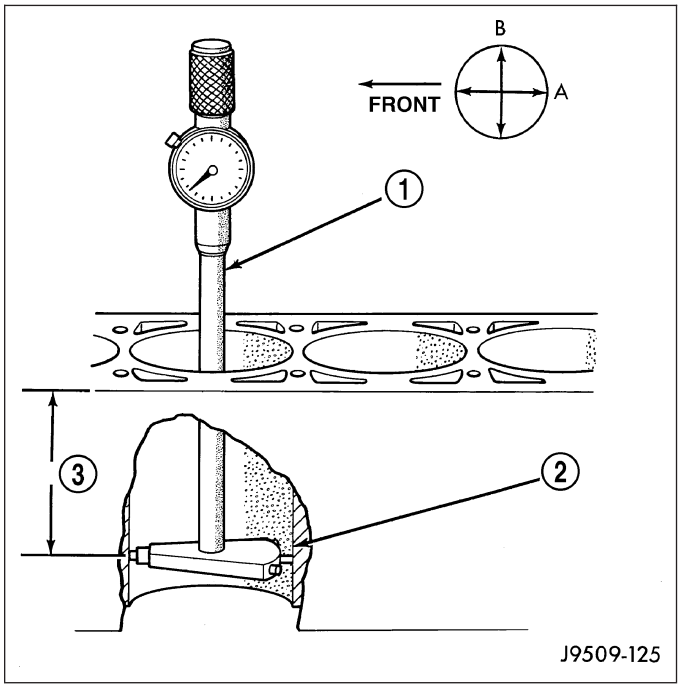

MEASURING CONNECTING ROD SIDE CLEARANCE

1. Using a feeler gauge, check connecting rod side clearance. (Refer to 9 - ENGINE - SPECIFICATIONS) for connecting rod side clearance specifications.

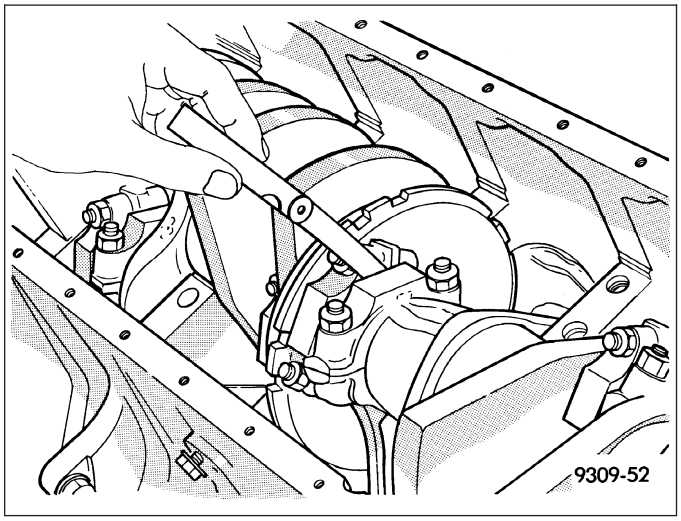

REMOVAL

NOTE: Pistons and connecting rods are to be removed as an assembly from top of cylinder block.

1. Remove engine (Refer to 9 - ENGINE - REMOVAL) and place in a suitable engine stand.
2. Remove cylinder heads (Refer to 9 - ENGINE/CYLINDER HEAD - REMOVAL).
3. Remove oil pan (Refer to 9 - ENGINE/LUBRICATION/OIL PAN - REMOVAL).
4. Remove the oil pump pick up tube (2)

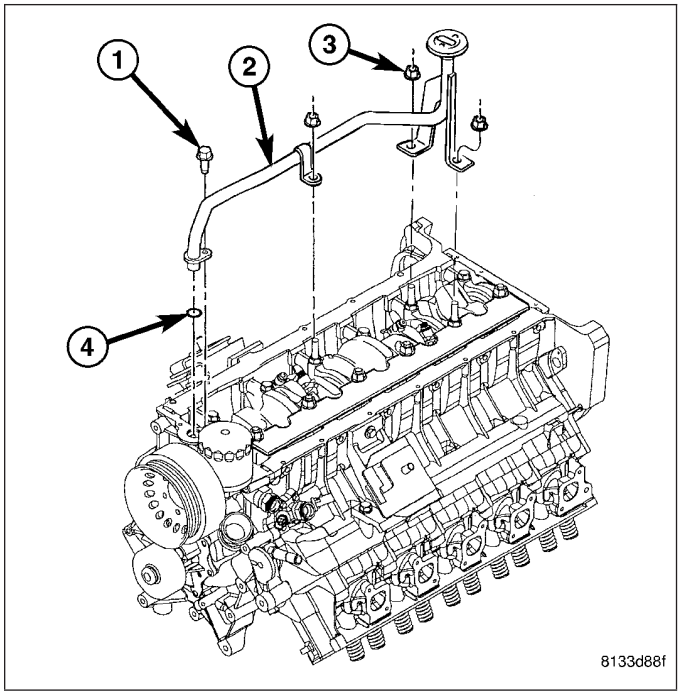

5. Remove the crankshaft oil scraper nuts (1) and oil scraper (2).

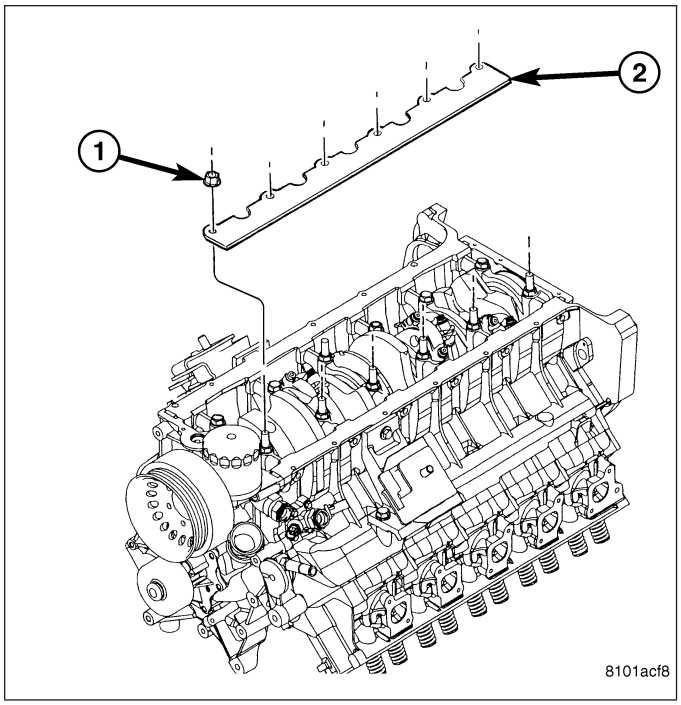

CAUTION: DO NOT use a number stamp or a punch to mark connecting rods. Damage to connecting rod could occur.

6. Inspect connecting rods and connecting rod caps for cylinder identification (1). Identify them if necessary using a permanent ink or paint marker.

CAUTION: Care must be taken not to damage the fractured rod and cap joint surfaces, as engine damage may occur.

NOTE: Do not reuse connecting rod bolts.

7. Remove connecting rod bolts and cap. Push each piston and rod assembly out the block.

NOTE: Be careful not to nick crankshaft journals.

8. After removal, install bearing cap on the mating rod.

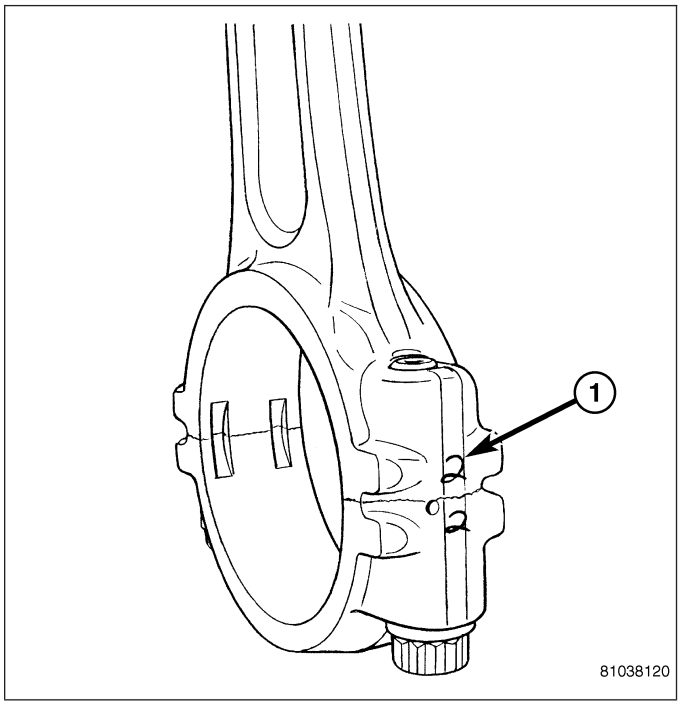

INSPECTION

CONNECTING ROD

1. Check the connecting rods for twist or bend.
2. Check the condition of the large end. Use an oil stone to remove any nicks and burrs.
3. Check the condition of the pin bore in the small end of the connecting rod. Use an oil stone to remove all nicks and burrs.

PISTON PIN

1. Inspect for free rotation of the piston pin in the piston.

PISTON

1. Inspect all piston surfaces for nicks and scuffs.
2. Inspect piston and ring grooves for wear.

INSTALLATION

NOTE: Pistons and connecting rods are serviced as an assembly. Left bank pistons are labeled "ODD". Right bank pistons are labeled "EVEN".

1. Install piston rings (Refer to 9 - ENGINE/ENGINE BLOCK/PISTON RINGS - INSTALLATION).

NOTE: Before installing pistons, and connecting rod assemblies into the bore, be sure that compression ring gaps are staggered so that neither is in line with oil ring rail gap. Before installing the ring compressor, make sure the oil ring expander ends are butted and the rail gaps located as shown in.

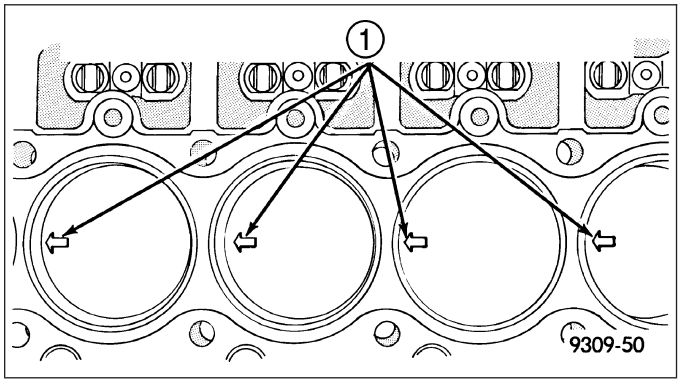

2. Immerse the piston head and rings in clean engine oil, slide the ring compressor, over the piston. **Be sure position of rings does not change during this operation.**
3. Rotate crankshaft so that the connecting rod journal is at the bottom of it's stroke and in the center of the cylinder bore.
4. The arrow on top of piston (1) must be pointing toward front of engine.
5. Install new connecting rod bearing in connecting rod and rod cap.
6. Install piston assembly from the top of the block. Tap the piston down in cylinder bore, using a hammer handle. Guide the rod over the crankshaft journal.
7. Install rod cap. Install **NEW** connecting rod bolts. Bolt threads should be oiled with engine oil. Torque connecting rod bolts to 68 N·m (50 ft. lbs.).

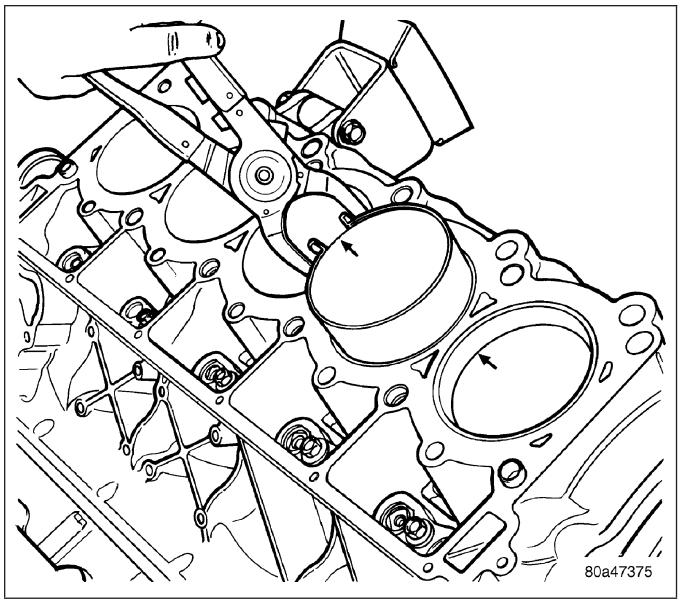

8. Install the crankshaft oil scraper (2) and nuts (1). Torque nuts (1) to 23 N·m (200 in. lbs.).

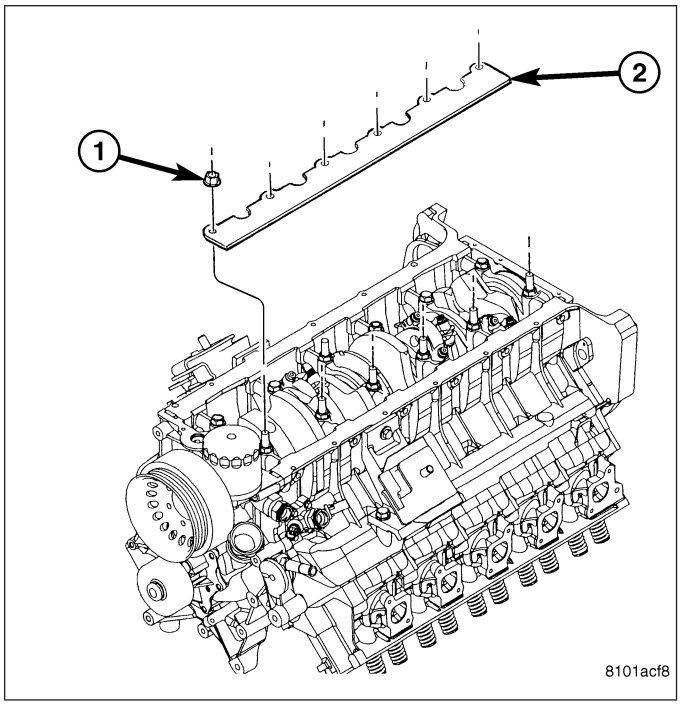

9. Install oil pump pick up tube (2) using a **new** o-ring (4). Torque 1/4-20 bolt to 11 N·m (95 in. lbs.). Torque 5/16-18 nuts to 23 N·m (200 in. lbs.).
10. Install oil pan (Refer to 9 - ENGINE/LUBRICATION/OIL PAN - INSTALLATION).
11. Install cylinder heads (Refer to 9 - ENGINE/CYLINDER HEAD - INSTALLATION).
12. Install engine, (Refer to 9 - ENGINE - INSTALLATION).

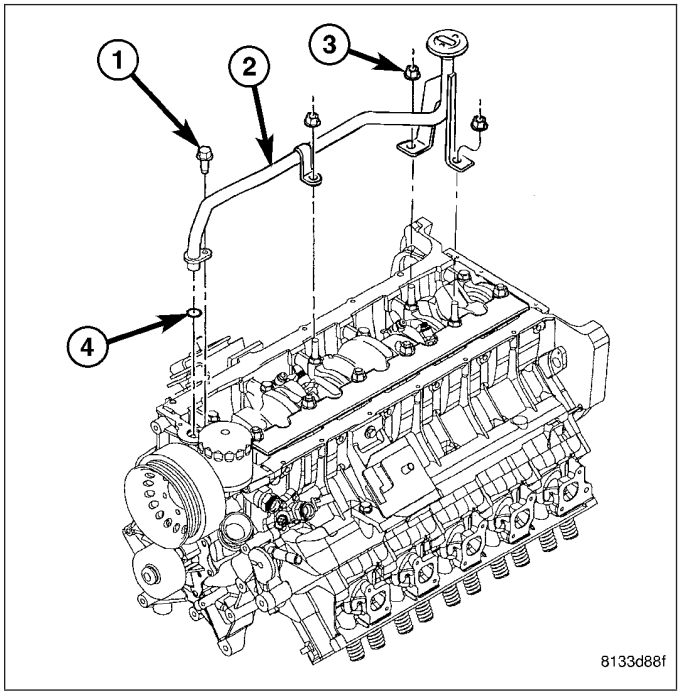

RINGS-PISTON

STANDARD PROCEDURE - MEASURING PISTON RING CLEARANCES

1. Wipe cylinder bore clean. Insert ring and push down with piston to ensure it is square in bore. The ring gap measurement must be made with the ring positioning at least 12 mm (0.50 in.) from bottom of cylinder bore. Check gap with feeler gauge (1). (Refer to 9 - ENGINE - SPECIFICATIONS) for piston ring specifications.

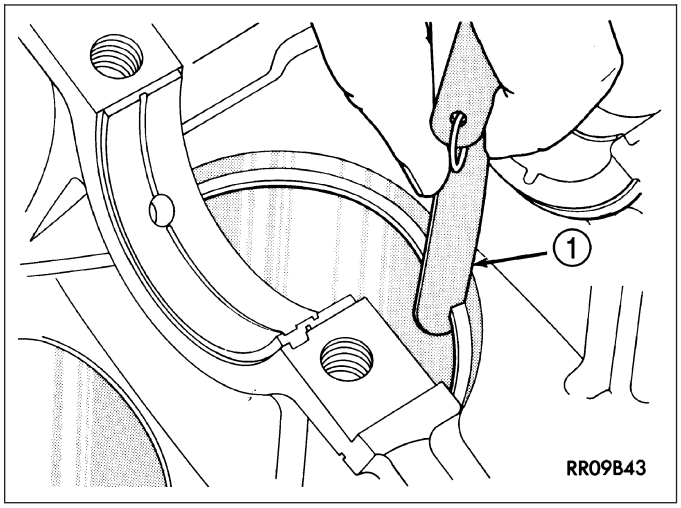

2. Check piston ring side clearance. (Refer to 9 - ENGINE - SPECIFICATIONS) for piston ring specifications.

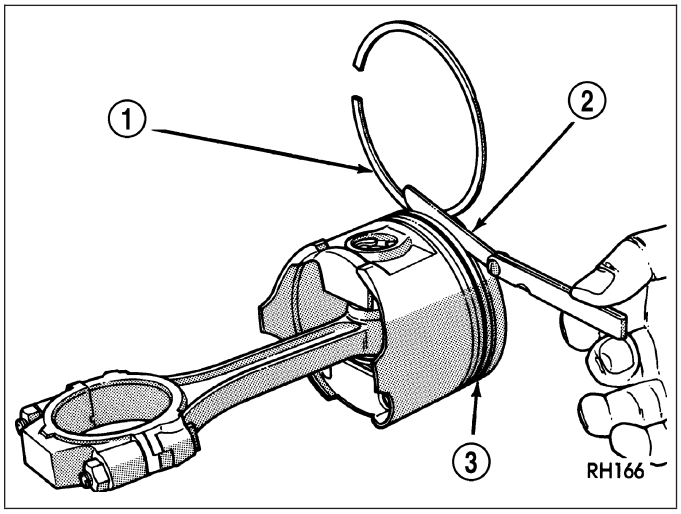

REMOVAL

1. Using a suitable ring expander, remove upper and intermediate piston rings.
2. Remove the upper oil ring side rail, lower oil ring side rail and then oil ring expander from piston.
3. Clean ring grooves of any carbon deposits.

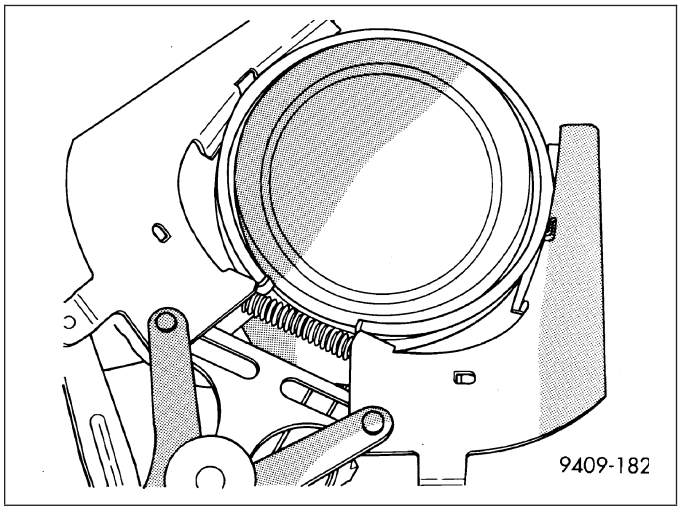

INSTALLATION

The No. 1 (1) and No. 2 (2) piston rings have a different cross section. Install rings with manufacturers I.D. mark facing up, to the top of the piston.

CAUTION: Install piston rings in the following order:

- Oil ring expander
- Lower oil ring side rail
- Upper oil ring side rail
- No. 2 intermediate piston ring
- No. 1 upper piston ring

1. Install oil ring expander.

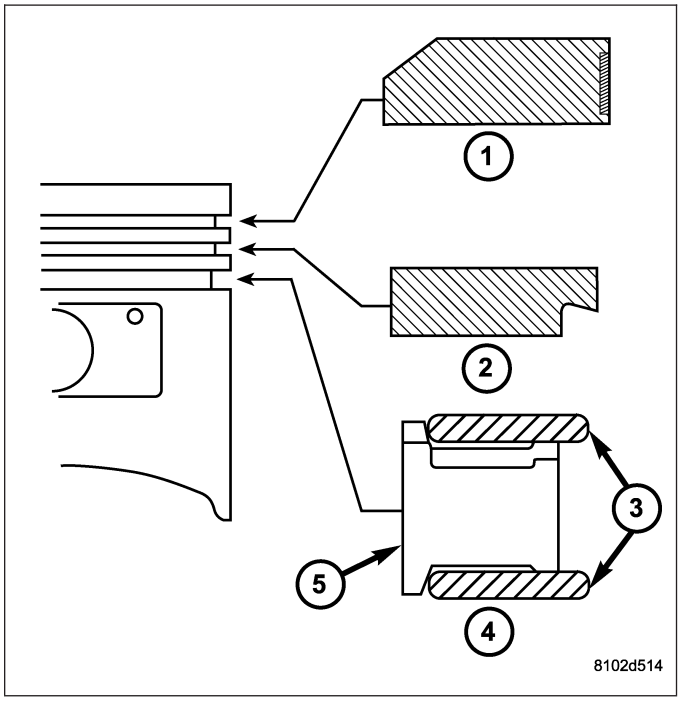

2. Install the lower oil ring side rail by placing one end between the piston ring groove and the expander. Hold end firmly and press down the portion to be installed until side rail (1) is in position. **Do not use a piston ring expander.**.

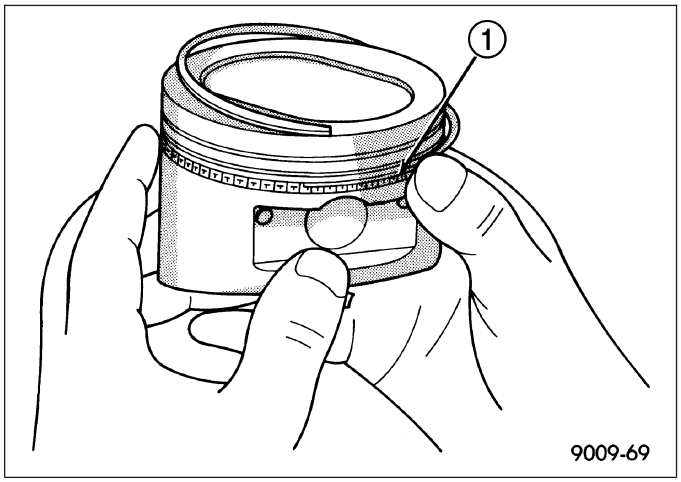

3. Install upper oil ring side rail.
4. Install No. 2 piston ring and then No. 1 piston ring.

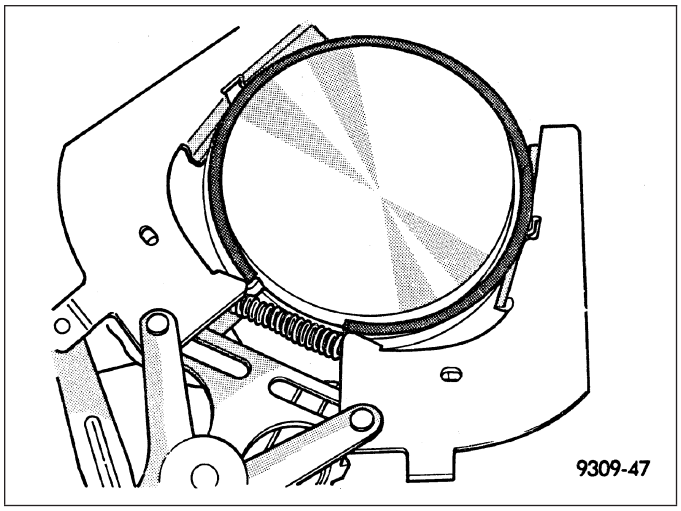

5. Position piston ring end gaps as shown.
6. Position oil ring expander gap at least 45° from the side rail gaps but **not** on the piston pin center or on the thrust direction. Staggering ring gap is important for oil control.

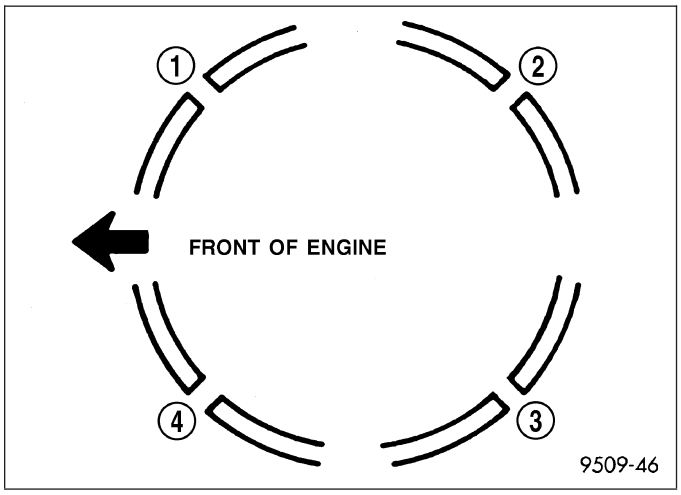

BEARINGS-CONNECTING ROD

DESCRIPTION

The bearing caps are not interchangeable and should be paint marked or scribed at removal to insure correct assembly.

The bearing shells must be installed so that the tangs are in the machined grooves in the rods and caps.

Limits of taper or out-of-round on any crankshaft journals should be held to 0.013 mm (0.0005 in.). Bearings are available in 0.025 mm (0.001 in.), 0.051 mm (0.002 in.), 0.076 mm (0.003 in.), 0.254 mm (0.010 in.) and 0.305 mm (0.012 in.) undersize. **Install the bearings in pairs. Do not use a new bearing half with an old bearing half. Do not file the rods or bearing caps.**

STANDARD PROCEDURE

CONNECTING ROD BEARING - FITTING

Fit all rods on one bank until complete. Do not alternate from one bank to another, because when the rods are assembled to pistons correctly, they are not interchangeable from one bank to another.

The bearing caps are not interchangeable and should be marked at removal to insure correct assembly.

The bearing shells must be installed so that the tangs are in the machined grooves in the rods and caps.

Limits of taper or out-of-round on any crankshaft journals should be held to 0.013 mm (0.0005 in.). Bearings are available in 0.025 mm (0.001 in.), 0.051 mm (0.002 in.), 0.076 mm (0.003 in.), 0.254 mm (0.010 in.) and 0.305 mm

(0.012 in.) undersize. **Install the bearings in pairs. Do not use a new bearing half with an old bearing half. Do not file the rods or bearing caps.**

1. (Refer to 9 - ENGINE/ENGINE BLOCK/CONNECTING ROD BEARINGS - STANDARD PROCEDURE) - Measuring Connecting Rod Bearing Clearance to determine bearing clearance.
2. Before installing the connecting rod cap bolts, the bolt threads should be oiled with engine oil.
3. Install bolts finger tight, then alternately torque each bolt to assemble the cap properly.
4. Tighten the connecting rod bolts to 68 N·m (50 ft. lbs.).

MEASURING CONNECTING ROD BEARING CLEARANCE

Engine crankshaft bearing clearances can be determined by use of Plastigage (1) or equivalent. The following is the recommended procedure for the use of Plastigage:

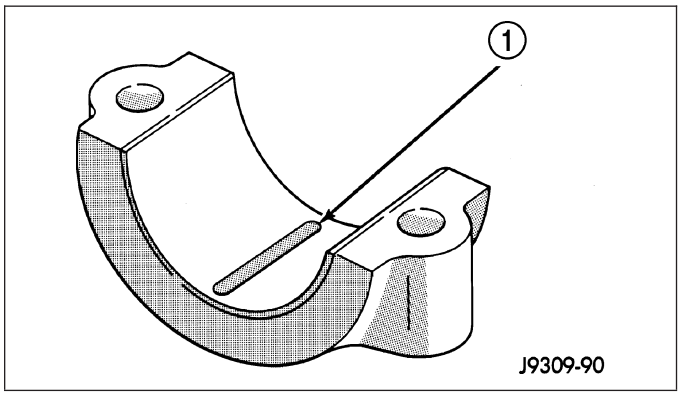

1. Rotate the crankshaft until the connecting rod to be checked is at the bottom of its stroke.
2. Remove oil film from surface to be checked. Plastigage is soluble in oil.
3. Place a piece of Plastigage (1) across the entire width of the bearing shell in the bearing cap approximately 6.35 mm (1/4 inch.) off center and away from the oil hole. In addition, suspect areas can be checked by placing plastigage in the suspect area.
4. Before assembling the rod cap with Plastigage in place, the crankshaft must be rotated until the connecting rod being checked starts moving toward the top of the engine. Only then should the cap be assembled and torqued to specifications. **Do not rotate the crankshaft while assembling the cap or the Plastigage may be smeared, giving inaccurate results.**

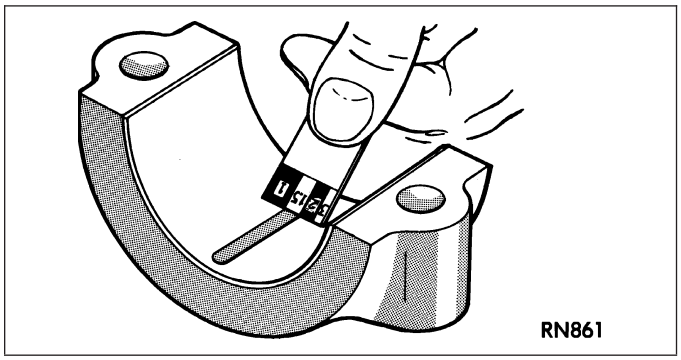

5. Remove the bearing cap and compare the width of the flattened Plastigage with the metric scale provided on the package. Locate the band closest to the same width. This band shows the amount of clearance in thousandths of a millimeter. Differences in readings between the ends indicate the amount of taper present. Record all readings taken. (Refer to 9 - ENGINE - SPECIFICATIONS). **Plastigage generally is accompanied by two scales. One scale is in inches, the other is a metric scale.**
6. Plastigage is available in a variety of clearance ranges. The 0.025-0.076 mm (.001-.003 inch) is usually the most appropriate for checking engine bearing proper specifications.

DAMPER-CRANKSHAFT

REMOVAL

1. Raise and support the vehicle.
2. Remove the engine front shield.
3. Disconnect the radiator fan hydraulic lines (Refer to 7 - COOLING/ENGINE/RADIATOR FAN - REMOVAL).
4. Lower vehicle.
5. Disconnect the air inlet duct, IAT sensor, CCV hose at the throttle body, and remove the air cleaner housing cover.
6. Remove accessory drive belt (Refer to 7 - COOLING/ACCESSORY DRIVE/DRIVE BELTS - REMOVAL).
7. Remove the radiator fan (Refer to 7 - COOLING/ENGINE/RADIATOR FAN - REMOVAL).
8. Raise and support the vehicle.
9. Remove crankshaft pulley.
10. Remove crankshaft damper bolt.
11. Install crankshaft insert, Special Tool 8194 (1). Lubricate the end of Special Tool 8194 (1) with wheel bearing grease or equivalent.

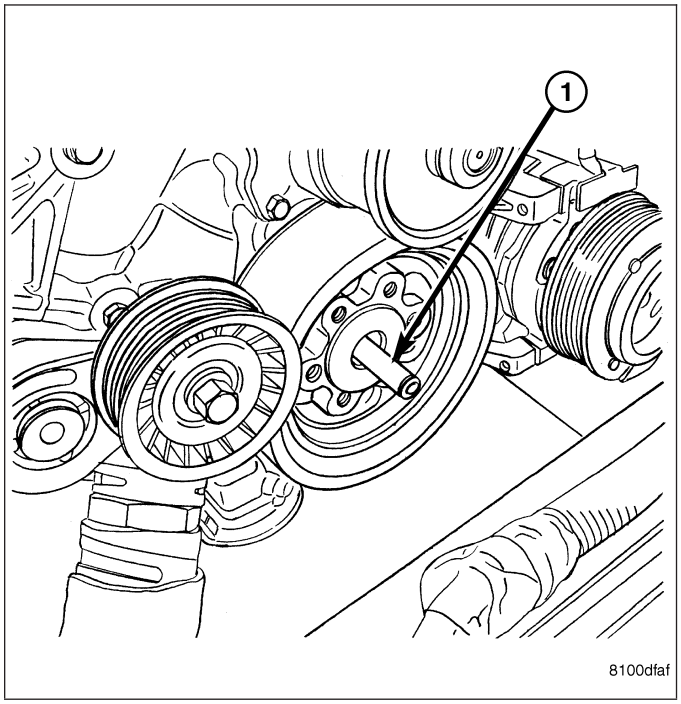

NOTE: Lubricate the threads of the puller using Mopar® Nickel Anti-seize Compound or equivalent, before beginning crankshaft damper removal.

12. Using a bolt-grip type universal puller (1), remove the crankshaft damper.

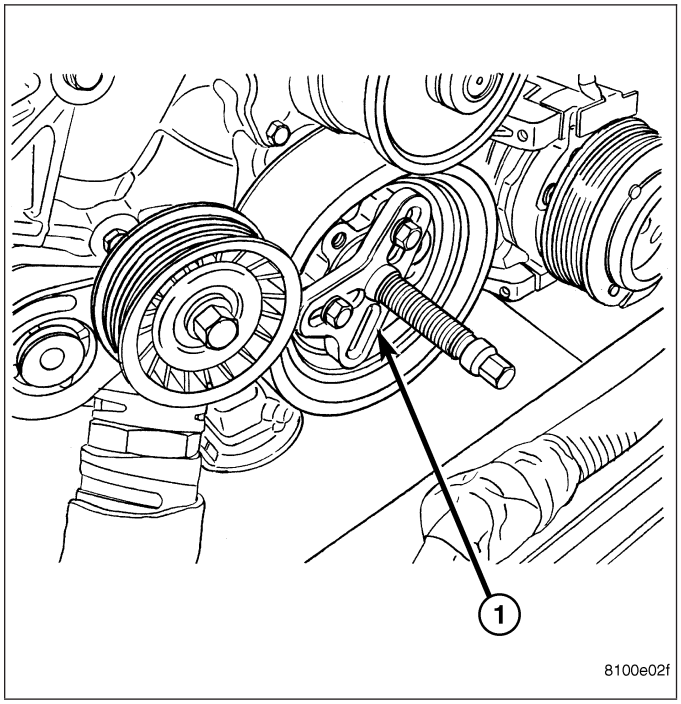

INSTALLATION

NOTE: Lubricate the threads of Special Tool 9055 (1) using Mopar® Nickel Anti-seize Compound or equivalent, before beginning crankshaft damper installation.

1. Raise and support the vehicle.
2. Install crankshaft damper using Special Tool 9055 (1).
3. Install and tighten damper bolt to 176 N·m (130 ft. lbs.).
4. Install the crankshaft pulley. Tighten crankshaft pulley bolts to 23 N·m (200 in. lbs.).
5. Install the front engine shield.
6. Lower the vehicle.
7. Install accessory drive belt (Refer to 7 - COOLING/ ACCESSORY DRIVE/DRIVE BELTS - INSTALLATION).
8. Install the radiator fan (Refer to 7 - COOLING/ENGINE/RADIATOR FAN - INSTALLATION).
9. Install air cleaner cover connecting the CVV hose, IAT, and air duct to the throttle body housing.
10. Lower vehicle.

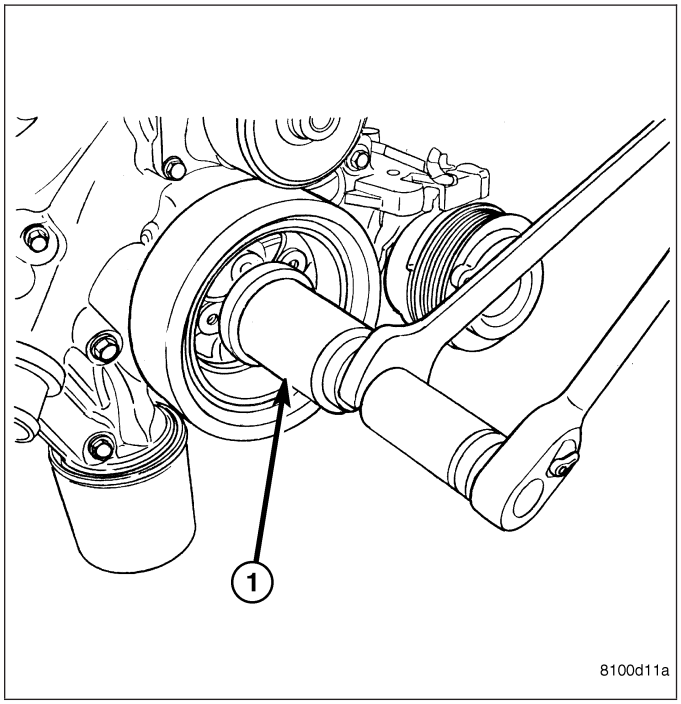

SEAL-CRANKSHAFT OIL- FRONT

REMOVAL

1. Disconnect the air inlet duct, IAT sensor, CCV hose at the throttle body, and remove the air cleaner housing cover.
2. Remove accessory drive belt (Refer to 7 - COOLING/ACCESSORY DRIVE/DRIVE BELTS - REMOVAL).
3. Remove crankshaft damper (Refer to 9 - ENGINE/ ENGINE BLOCK/CRANKSHAFT DAMPER - REMOVAL).
4. Use Special Tool C-4679A (1) to remove crankshaft oil seal. Be careful not to damage the crankshaft seal surface of cover.

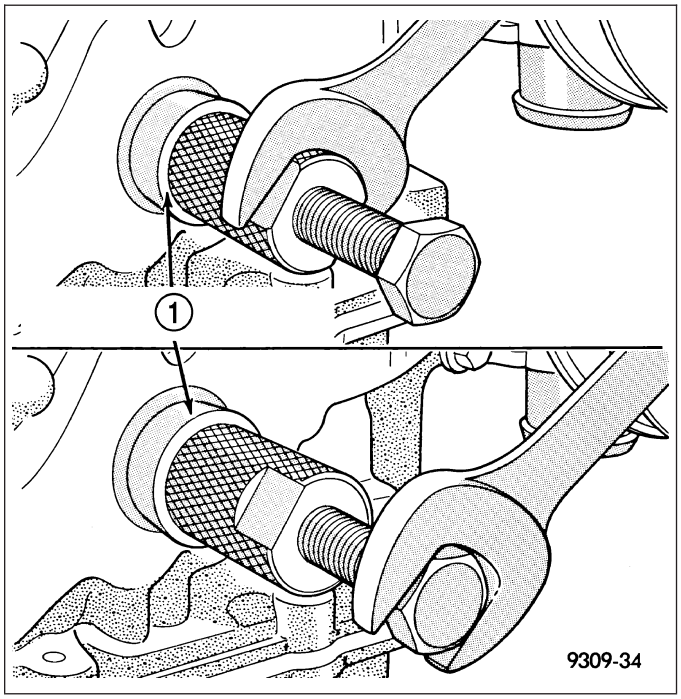

INSTALLATION

1. Install the new seal by using Special Tool MD 998306 (2).
2. Place seal into opening with seal spring towards the inside of engine. Install seal until it bottoms out in timing chain cover.
3. Install crankshaft damper (Refer to 9 - ENGINE/ ENGINE BLOCK/VIBRATION DAMPER - INSTALLATION).
4. Install accessory drive belt (Refer to 7 - COOLING/ ACCESSORY DRIVE/DRIVE BELTS - INSTALLATION).
5. Install air cleaner cover connecting the CVV hose, IAT sensor, and air duct to the throttle body housing.

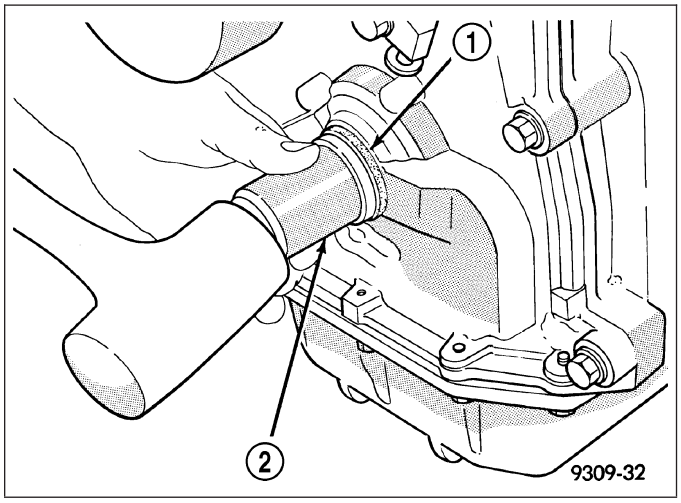

SEAL-OIL-REAR-CRANK AND RETAINER

REMOVAL

1. Remove transmission (Refer to 21 - TRANSMISSION/TRANSAXLE/MANUAL - REMOVAL).
2. Remove clutch and flywheel (Refer to 6 - CLUTCH/ CLUTCH DISC - REMOVAL).

NOTE: The oil seal and retainer are serviced as an assembly.

3. Remove the seal retainer bolts from cylinder block and oil pan.
4. Remove the oil seal and retainer (1) assembly.

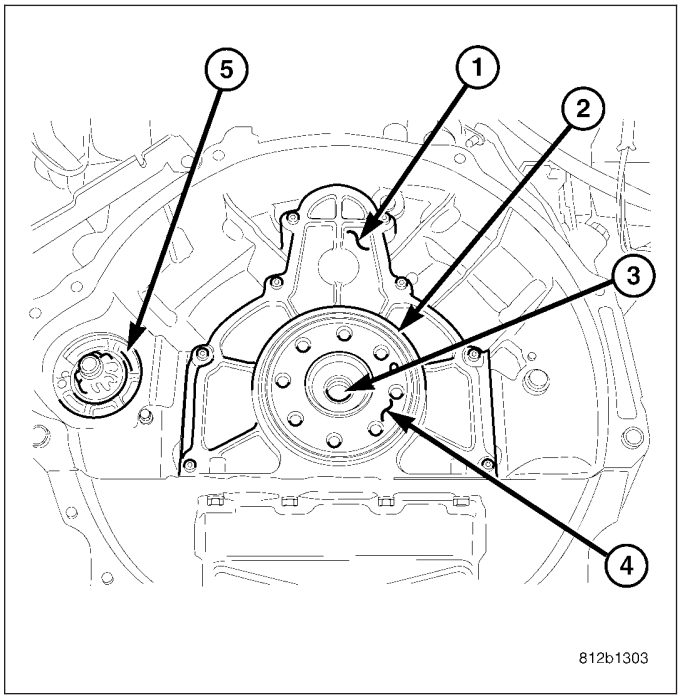

INSTALLATION

1. Clean the engine block and retainer. Make sure surfaces are clean and free of oil.
2. Install Special Tool 9060 (1) (seal guide) onto end of crankshaft. Align hole in tool with dowel pin on crankshaft.

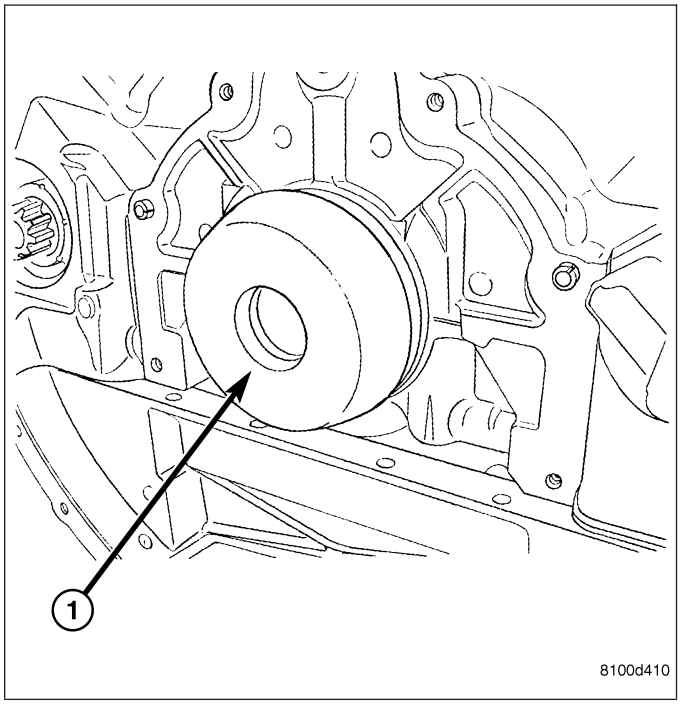

3. Carefully position retainer/oil seal (1) to block. Tighten the retainer bolts to 11 N·m (95 in. lbs.).
4. Install flywheel and clutch (Refer to 6 - CLUTCH/ CLUTCH DISC - INSTALLATION).
5. Install transmission (Refer to 21 - TRANSMISSION/ TRANSAXLE/MANUAL - INSTALLATION).

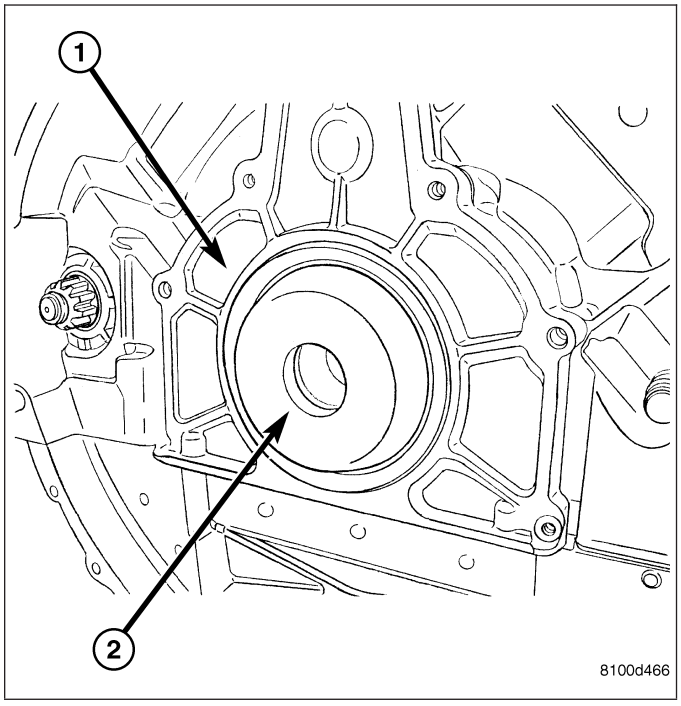

BEARINGS-CRANKSHAFT MAIN

DESCRIPTION

The main bearing caps are not interchangeable and should be marked at removal to insure correct assembly. Upper and lower main bearing halves are NOT interchangeable. Lower main bearing halves of No. 1, No. 2, No. 4, No. 5 and No. 6 are interchangeable. Upper main bearing halves of No. 1, No. 2, No. 4, No. 5 and No. 6 are interchangeable.

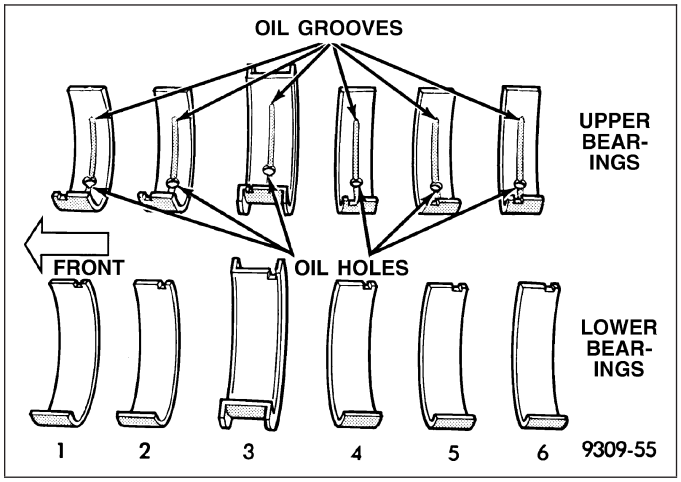

Upper and lower No. 3 bearing halves are flanged to carry the crankshaft thrust loads and are NOT interchangeable with any other bearing halves in the engine. All bearing cap bolts removed during service procedures are to be cleaned and oiled before installation. Bearing shells are available in standard and the following undersizes: 0.025 mm (0.001 in.), 0.051 mm (0.002 in.), 0.076 mm (0.003 in.), 0.254 mm (0.010 in.), 0.305 mm (0.012 in.) and 0.508 mm (0.020 in.). Never install an undersize bearing that will reduce clearance below specifications.

STANDARD PROCEDURE

MEASURING CRANKSHAFT MAIN BEARING CLEARANCE IN-CAR

PLASTIGAGE METHOD

Engine crankshaft bearing clearances can be determined by use of Plastigage or equivalent. The following is the recommended procedure for the use of Plastigage:

1. Remove oil film from surface to be checked. Plastigage is soluble in oil.
2. The total clearance of the **main bearings** can only be determined by removing the weight of the crankshaft. This can be accomplished by either of two methods:

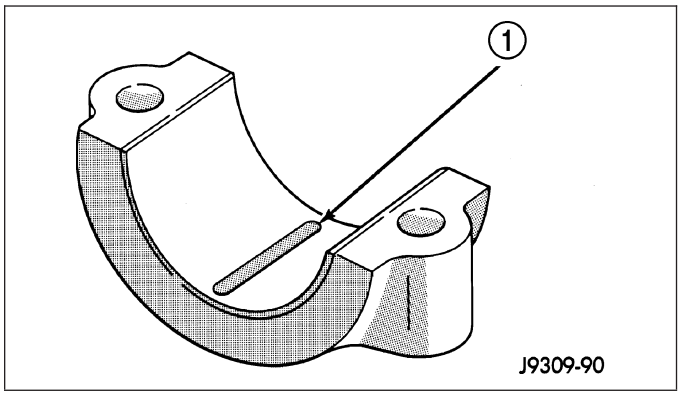

PREFERRED METHOD

1. Shimming the bearings adjacent to the bearing to be checked in order to remove the clearance between upper bearing shell and the crankshaft. This can be accomplished by placing a minimum of 0.254 mm (.010 inch) shim (e. g. cardboard, matchbook cover, etc.) between the bearing shell and the bearing cap on the adjacent bearings and tighten bolts to 14-20 N·m (10-15 ft.lb.)
   - When checking No. 1 main bearing. Shim No. 2 main bearing.
   - When checking No. 2 main bearing. Shim No.1 and No. 3 main bearing.
   - When checking No.3 main bearing. Shim No. 2 and No. 4 main bearing.
   - When checking No. 4 main bearing. Shim No. 3 and No. 5 main bearing.
   - When checking No. 5 main bearing. Shim No. 4 and No. 6 main bearing.
   - When checking No. 6 main bearing. Shim No. 5 main bearing.

NOTE: REMOVE ALL SHIMS BEFORE REASSEMBLING ENGINE

ALTERNATIVE METHOD

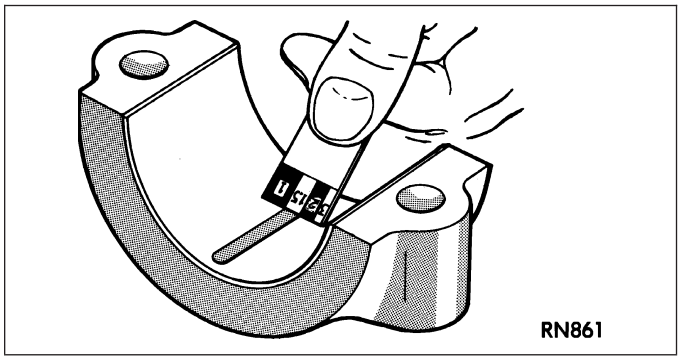

1. With the weight of the crankshaft being supported by a jack under the counterweight adjacent to the bearing being checked.
2. Place a piece of Plastigage across the entire width of the bearing shell in the cap approximately 6.35 mm (1/4 inch) off center and away from the oil holes. (In addition, suspect areas can be checked by placing the Plastigage in the suspect area). Torque the bearing cap bolts of the bearing being checked to the proper specifications.
3. Remove the bearing cap and compare the width of the flattened Plastigage with the metric scale provided on the package. Locate the band closest to the same width. This band shows the amount of clearance in thousandths of a millimeter. Differences in readings between the ends indicate the amount of taper present. Record all readings taken. Refer to Engine Specifications. **Plastigage generally is accompanied by two scales. One scale is in inches, the other is a metric scale.**
4. Plastigage is available in a variety of clearance ranges. The 0.025-0.076 mm (.001-.003 inch) is usually the most appropriate for checking engine bearing proper specifications.

CRANKSHAFT

STANDARD PROCEDURE

MEASURING CRANKSHAFT END PLAY

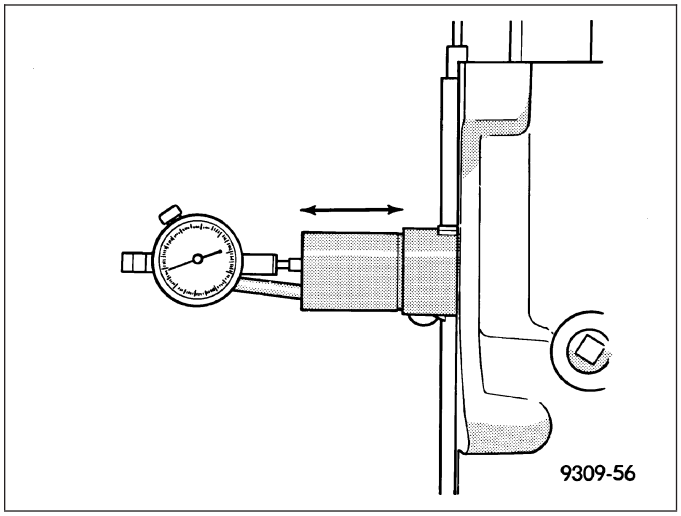

1. Mount a dial indicator to front of engine, locating probe on nose of crankshaft.
2. Move crankshaft all the way to the rear of its travel.
3. Zero the dial indicator.
4. Move crankshaft all the way to the front and read the dial indicator. (Refer to 9 - ENGINE - SPECIFICATIONS) for crankshaft end-play specifications.

CRANKSHAFT END PLAY CHECK - OPTIONAL

1. Move crankshaft all the way to the rear of its travel using a lever inserted between a main bearing cap and a crankshaft cheek using care not to damage any bearing surface. **Do not** loosen main bearing cap.
2. Use a feeler gauge between number 3 thrust bearing and machined crankshaft surface to determine end play. (Refer to 9 - ENGINE - SPECIFICATIONS) for crankshaft end-play specifications.

CRANKSHAFT JOURNAL MEASUREMENT

The crankshaft journals should be checked for excessive wear, taper and scoring. Limits of taper or out-of-round on any crankshaft journals should be held to 0.013 mm (0.0005 in.). Journal grinding should not exceed 0.508 mm (0.020 in.) under the standard journal diameter. DO NOT grind thrust faces of No. 3 main bearing. DO NOT nick crank pin or bearing fillets. After grinding, remove rough edges from crankshaft oil holes and clean out all passages.

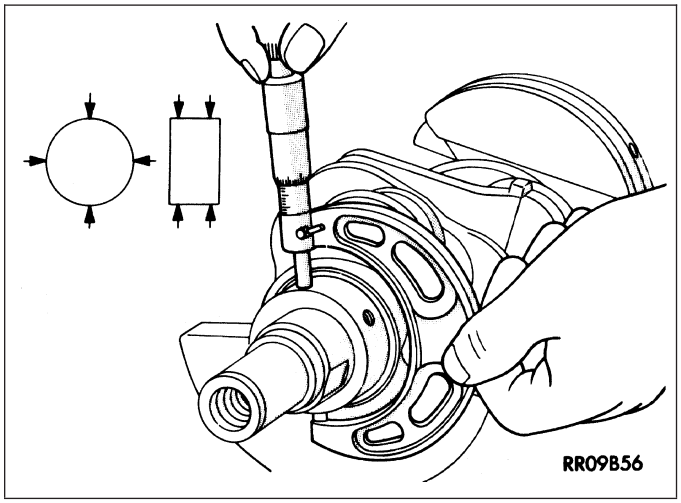

CAUTION: With the forged crankshafts it is important that the final paper or cloth polish after any journal regrind be in the same direction as normal rotation in the engine.

1. Measure the journal outside diameter as illustrated. (Refer to 9 - ENGINE - SPECIFICATIONS) for crankshaft specifications.

REMOVAL

1. Remove engine assembly from vehicle (Refer to 9 - ENGINE - REMOVAL).
2. Mount engine on a suitable repair stand.
3. Remove oil pan (Refer to 9 - ENGINE/LUBRICATION/OIL PAN - REMOVAL).
4. Remove crankshaft rear oil seal retainer (Refer to 9 - ENGINE/ENGINE BLOCK/CRANKSHAFT REAR OIL SEAL RETAINER - REMOVAL).
5. Remove crankshaft pulley and damper (Refer to 9 - ENGINE/ENGINE BLOCK/VIBRATION DAMPER - REMOVAL).
6. Remove timing chain cover (Refer to 9 - ENGINE/VALVE TIMING/TIMING CHAIN COVER - REMOVAL).
7. Remove timing chain and crankshaft sprocket. (Refer to 9 - ENGINE/VALVE TIMING/TIMING CHAIN AND SPROCKETS - REMOVAL).
8. Remove oil pump pick up tube (2).

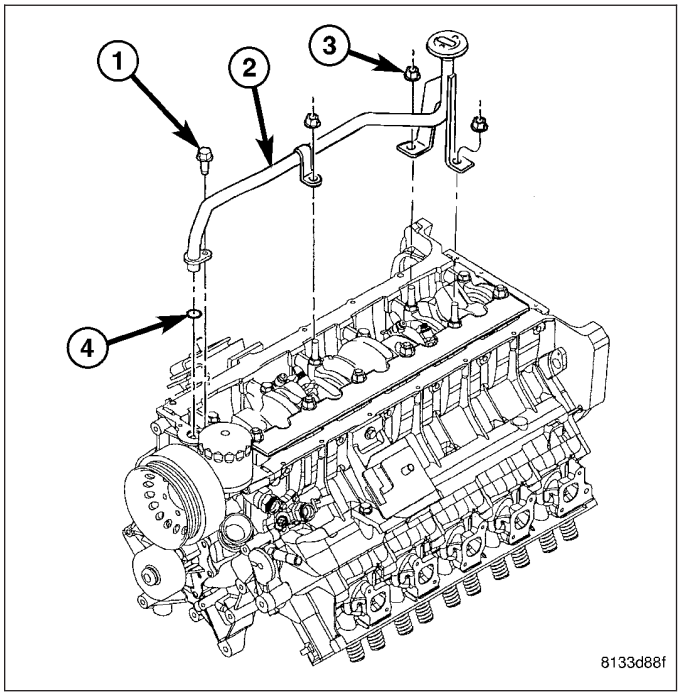

9. Remove crankshaft oil scraper (2).

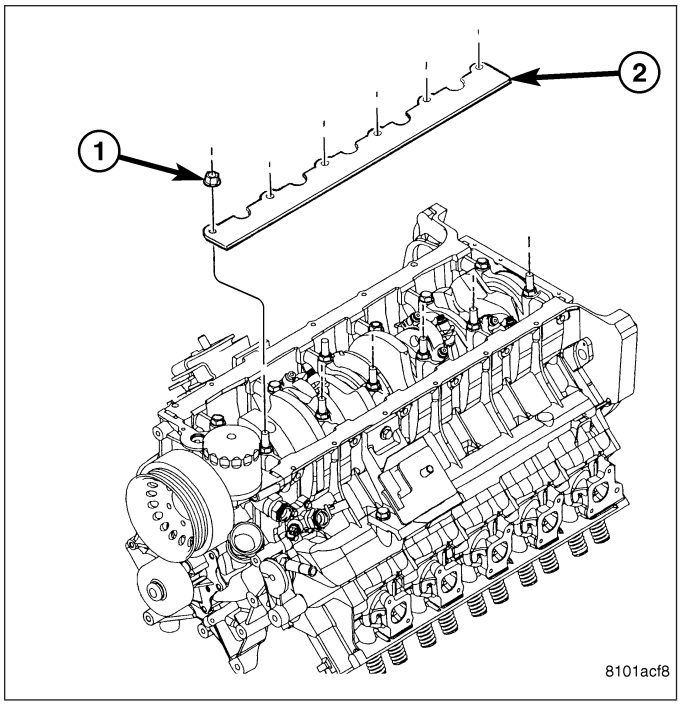

CAUTION: DO NOT use a number stamp or a punch to mark connecting rods. Damage to connecting rod could occur.

10. Inspect connecting rods and connecting rod caps for cylinder identification (1). Identify them if necessary using a permanent ink or paint marker.

CAUTION: Care must be taken not to damage the fractured rod and cap joint surfaces, as engine damage many occur.

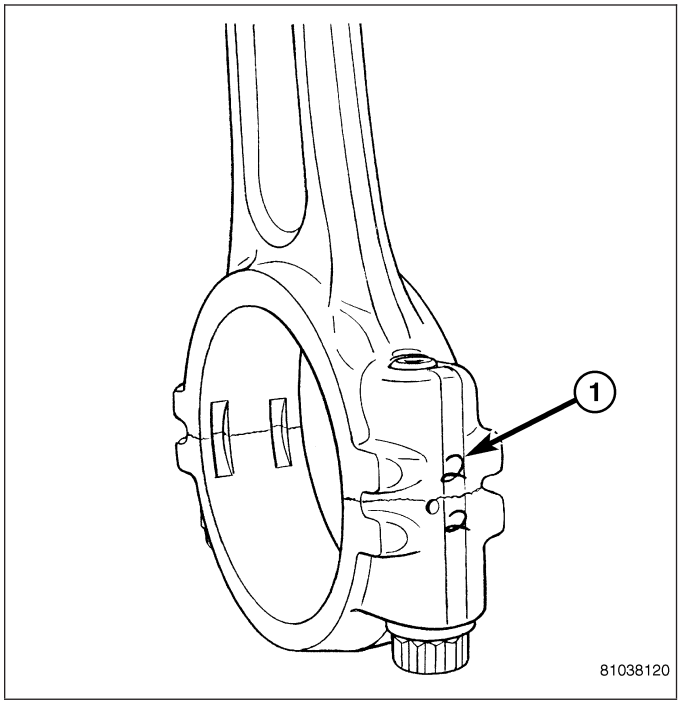

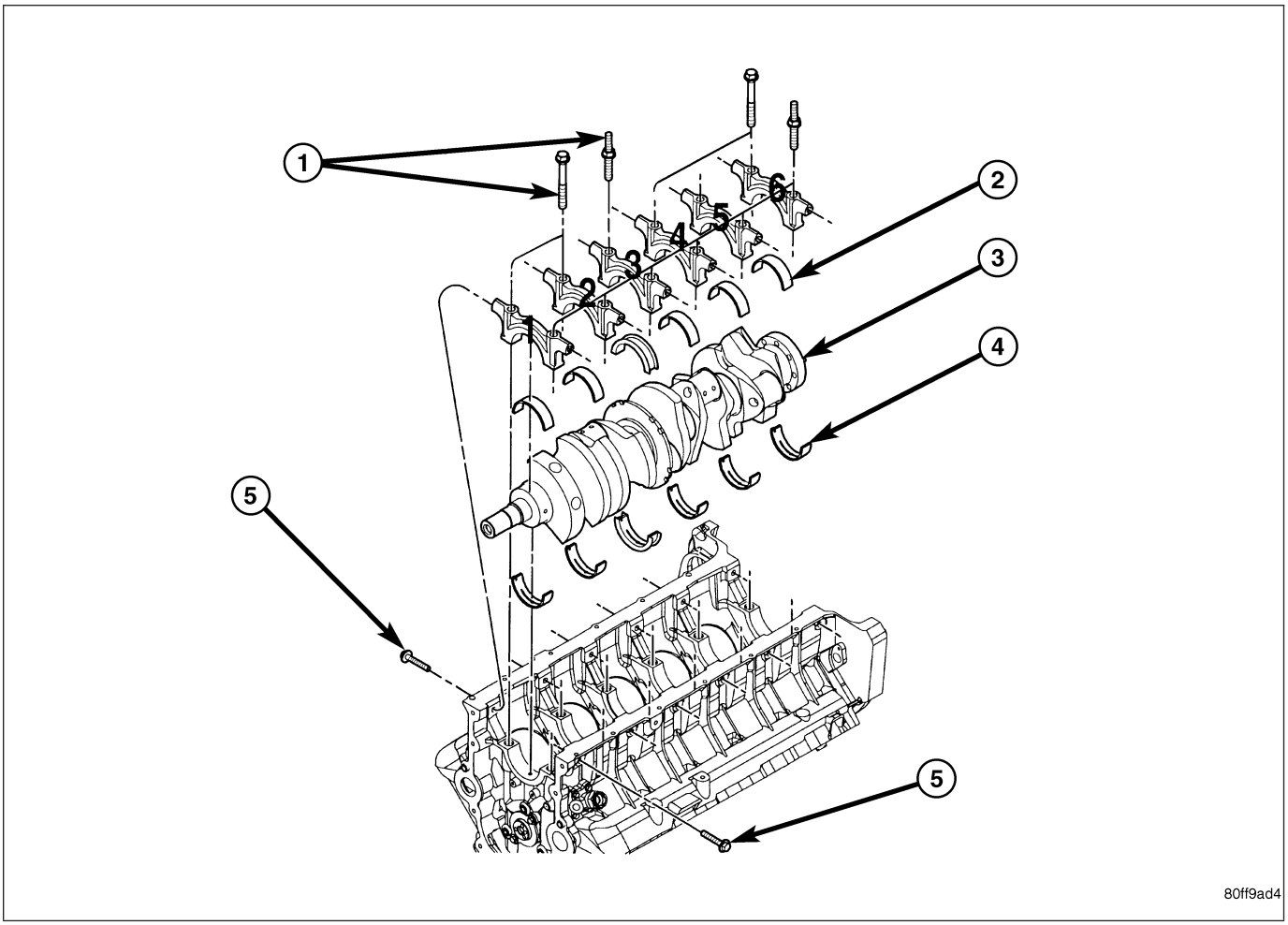

NOTE: Do not reuse connecting rod bolts.

11. Remove connecting rod bolts (1) and caps.
12. Main bearing caps are not interchangeable and should be marked before removal to ensure correct reassembly.
13. Remove the side main bearing cap bolts and main bearing cap bolts.
14. Remove the main bearing caps.
15. When removing the crankshaft, it should be lifted straight out of the engine block. This will prevent any damage to the engine and crankshaft.

INSPECTION

1. The crankshaft journals should be checked for excessive wear, taper and scoring. Limits of taper or out-of-round on any crankshaft journals should be held to 0.025 mm (0.001 in.). Journal grinding should not exceed 0.508 mm (0.020 inch) under the standard journal diameter. DO NOT grind thrust faces of No. 3 main bearing. DO NOT nick crank pin or bearing fillets. After grinding, remove rough edges from crankshaft oil holes and clean out all passages.

CAUTION: With the forged crankshafts it is important that the final paper or cloth polish after any journal regrind be in the same direction as normal rotation in the engine.

2. Check and clean all oil holes for blockage and debris.

INSTALLATION

1. Install upper main bearing shells into engine block.
2. Lubricate upper main bearing shells with clean engine oil.
3. Install the crankshaft.
4. Install lower main bearing shells into main bearing caps.

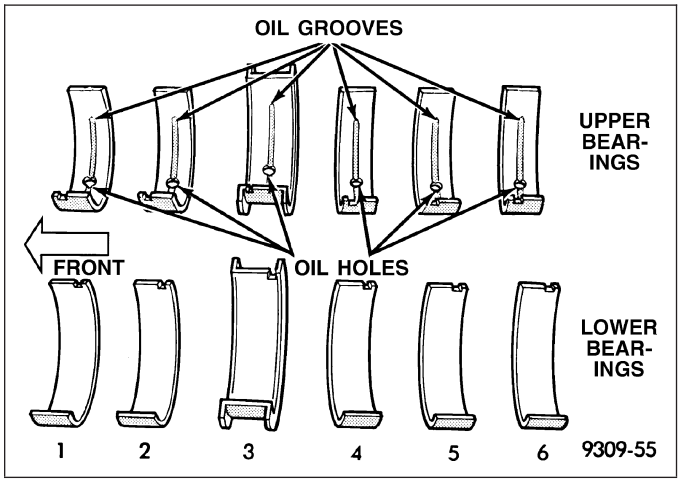

5. Install each main bearing cap in proper sequence and direction (1). Tighten all bolts finger tight.

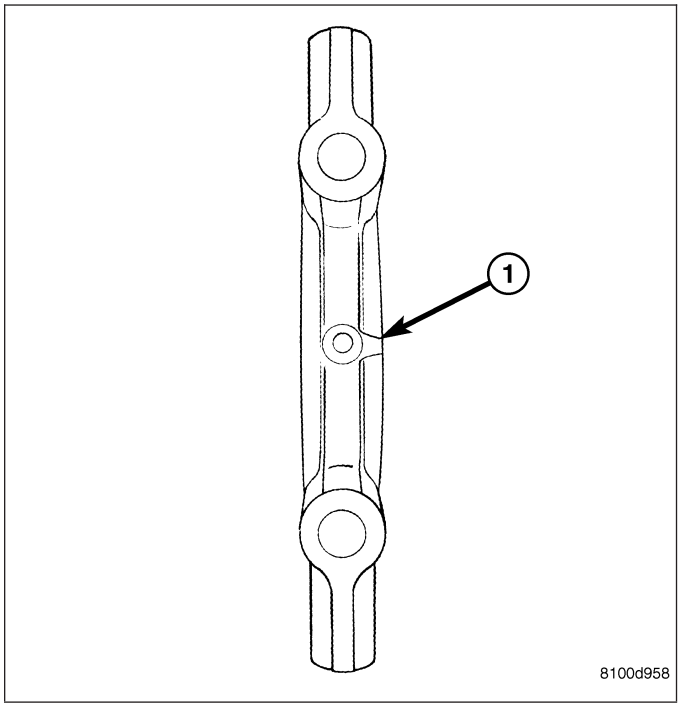

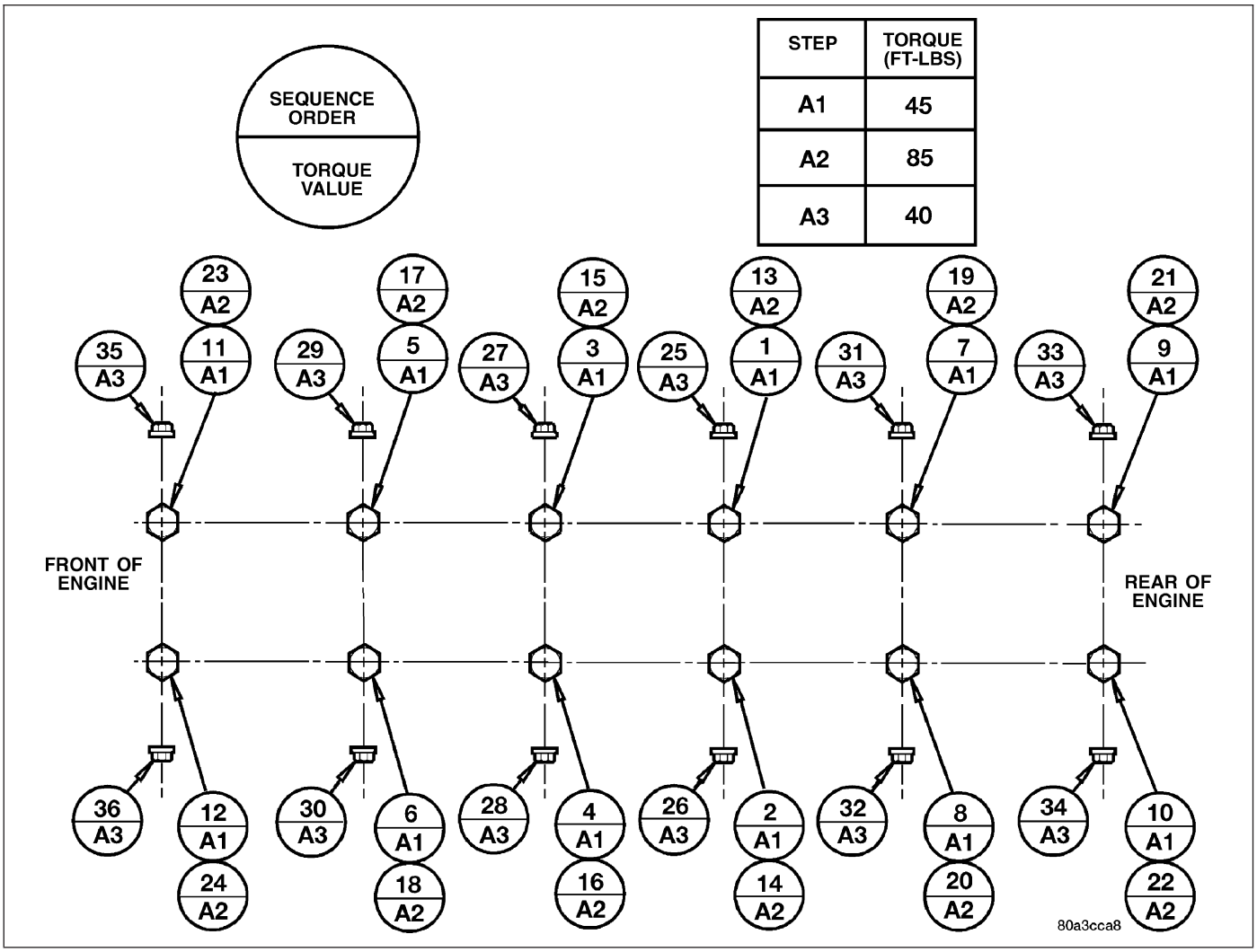

6. Tighten the main cap bolts following the illustrated tightening sequence:
   - **Step 1** Tighten main bearing cap bolts 1-12 in the illustrated sequence to 20 N·m (15 ft. lbs.). This will seat the bearing caps onto the engine block.
   - **Step 2** To ensure correct thrust bearing alignment the following procedure must be follwed:
     a. Move crankshaft all the way to the rear of its travel.
     b. Then, move crankshaft all the way to the front of its travel.
     c. Wedge an appropriate tool between the rear of the cylinder block and rear crankshaft counterweight. This will hold the crankshaft in it's most forward position.
   - **Step A1**–tighten the A1 bolts to 61 N·m (45 ft. lbs.) in the illustrated sequence.
   - **Step A2**–tighten the A2 bolts to 115 N·m (85 ft. lbs.) in the illustrated sequence.
   - **Step A3**–tighten the A3 Bolts to 54 N·m (40 ft. lbs.) in the illustrated sequence.
7. Remove the holding tool.
8. Install new connecting rod bearings.
9. Install rod caps. Install **NEW** connecting rod bolts. Bolt threads should be oiled with engine oil. Torque connecting rod bolts to 68 N·m (50 ft. lbs.).

10. Install the crankshaft oil scraper and tighten nuts to 23 N·m (200 in. lbs.).

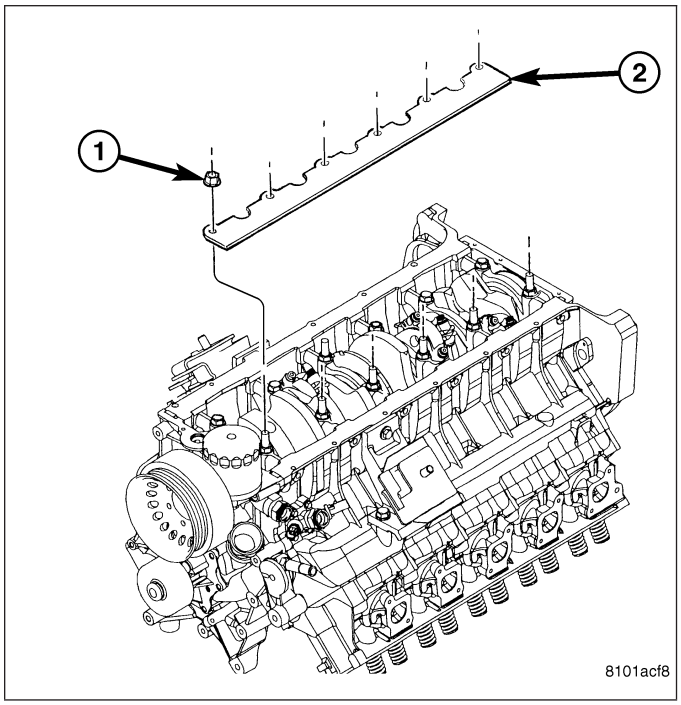

11. Install oil pump pick up tube (2) using a **new** o-ring (4). Torque 1/4-20 bolt to 11 N·m (95 in. lbs.). Torque 5/16-18 nuts to 23 N·m (200 in. lbs.).
12. Install the crankshaft rear oil seal and retainer (Refer to 9 - ENGINE/ENGINE BLOCK/CRANKSHAFT REAR OIL SEAL RETAINER - INSTALLATION).
13. Install lower crankshaft gear along with the timing chain (Refer to 9 - ENGINE/VALVE TIMING/TIMING CHAIN AND SPROCKETS - INSTALLATION).
14. Install timing chain cover (Refer to 9 - ENGINE/VALVE TIMING/TIMING CHAIN COVER(S) - INSTALLATION).
15. Install oil pan (Refer to 9 - ENGINE/LUBRICATION/OIL PAN - INSTALLATION).
16. Install crankshaft damper and pulley (Refer to 9 - ENGINE/ENGINE BLOCK/VIBRATION DAMPER - INSTALLATION).
17. Install engine assembly (Refer to 9 - ENGINE - INSTALLATION).

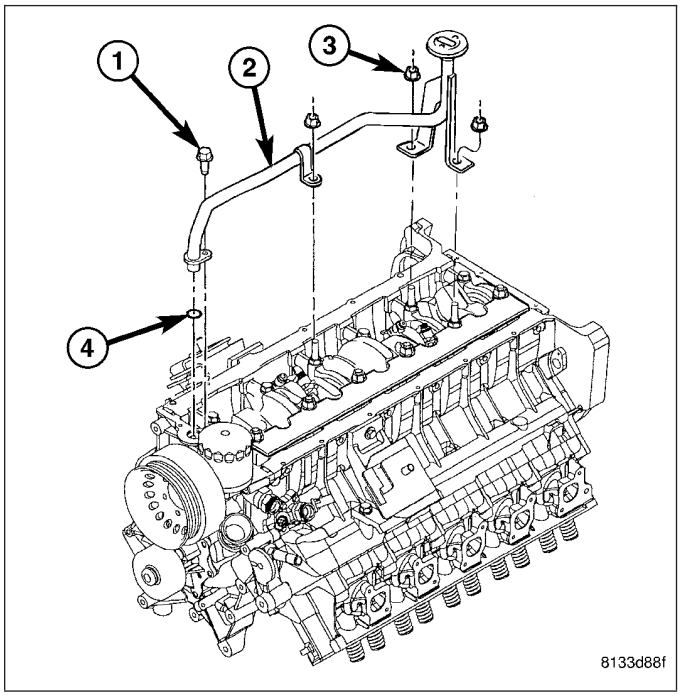

BEARING-CRANKSHAFT PILOT

REMOVAL

1. Remove transmission (Refer to 21 - TRANSMISSION/TRANSAXLE/MANUAL - REMOVAL).
2. Remove clutch and flywheel (Refer to 6 - CLUTCH/CLUTCH DISC - REMOVAL).
3. Using Special Tools 8990 (1) and C-3752 (2), remove pilot bearing from crankshaft.

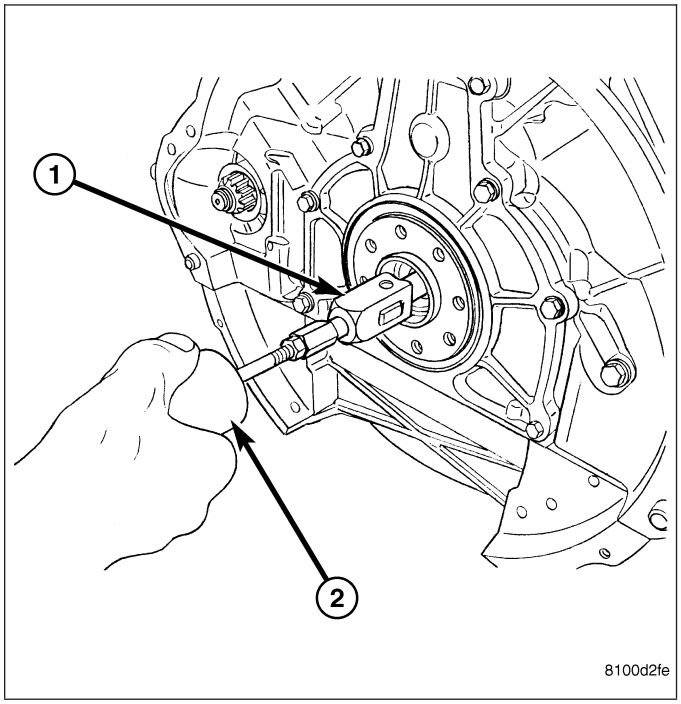

INSTALLATION

NOTE: New pilot bearing has special grease packed into bearing. Do not wash grease from bearing. Install bearing with part number markings (1) facing out.

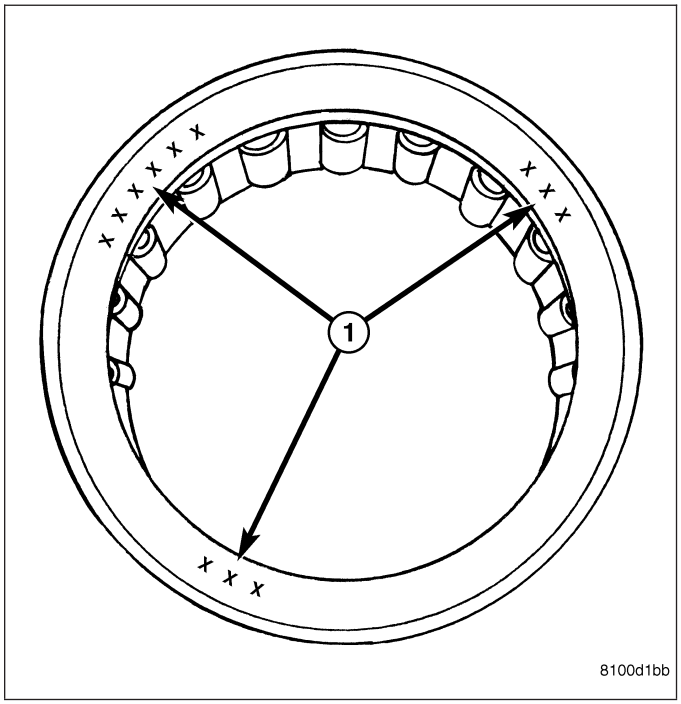

1. Install pilot bearing with Special Tools 9058 (1) and C-4171 (2).
2. Install flywheel and clutch (Refer to 6 - CLUTCH/ CLUTCH DISC - INSTALLATION).
3. Install transmission (Refer to 21 - TRANSMISSION/ TRANSAXLE/MANUAL - INSTALLATION).

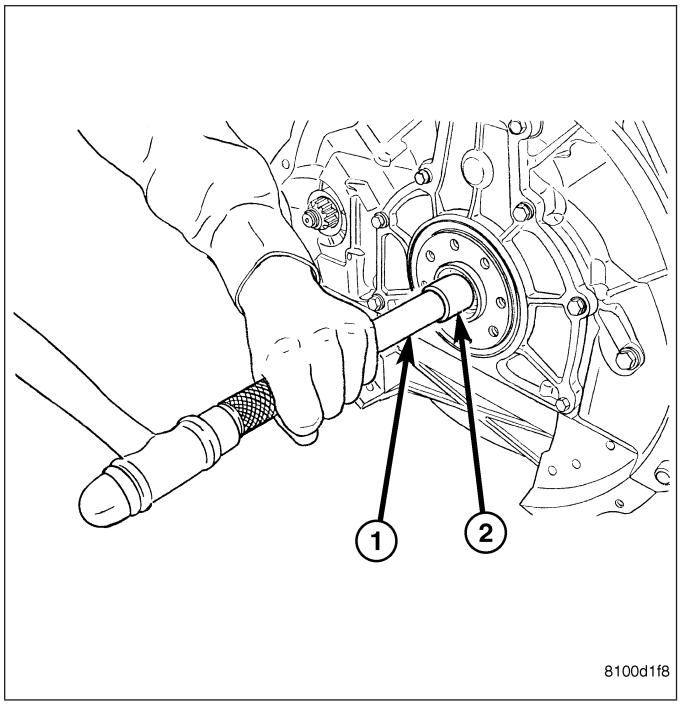

ENGINE - 5.9L DIESEL - SERVICE INFORMATION

TABLE OF CONTENTS

page

ENGINE - 5.9L DIESEL - SERVICE INFORMATION
DESCRIPTION
DESCRIPTION 2529
DESCRIPTION - CRANKCASE BREATHER - LATE BUILDS 2530
DIAGNOSIS AND TESTING
DIAGNOSIS AND TESTING - ENGINE DIAGNOSIS - MECHANICAL 2531
DIAGNOSIS AND TESTING - SMOKE DIAGNOSIS CHARTS 2533
DIAGNOSIS AND TESTING - CYLINDER COMPRESSION/LEAKAGE TESTS 2535
STANDARD PROCEDURE
STANDARD PROCEDURE - FORM-IN-PLACE GASKETS AND SEALERS 2537
STANDARD PROCEDURE - REPAIR DAMAGED OR WORN THREADS 2538
STANDARD PROCEDURE—HYDROSTATIC LOCK 2538
REMOVAL
REMOVAL - ENGINE 2539
REMOVAL - CRANKCASE BREATHER - EARLY BUILD 2544
INSTALLATION
INSTALLATION - ENGINE 2544
INSTALLATION - CRANKCASE BREATHER - EARLY BUILD 2550
SPECIFICATIONS
SPECIFICATIONS - 5.9L DIESEL 2551
TORQUE 2553
SPECIAL TOOLS
5.9L DIESEL ENGINE 2554
ENGINE DATA PLATE
DESCRIPTION 2557
AIR CLEANER ELEMENT
REMOVAL 2557
INSTALLATION 2558
CYLINDER HEAD
DESCRIPTION 2559
REMOVAL 2559
CLEANING
CLEANING—CYLINDER HEAD 2561
CLEANING—CROSSHEADS 2561
CLEANING—PUSHRODS 2561
INSPECTION
INSPECTION - CYLINDER HEAD 2562
INSPECTION - CROSSHEADS 2563
INSPECTION—PUSHRODS 2563
INSTALLATION 2564

page

COVER - CYLINDER HEAD
REMOVAL
REMOVAL - CYL HEAD COVER - EARLY . . 2567
REMOVAL - ROCKER HOUSING 2567
REMOVAL - CYL HEAD COVER - LATE . . . 2568
REMOVAL - CYL HEAD COVER GASKET . 2569
CLEANING 2569
INSPECTION 2569
INSTALLATION
INSTALLATION - CYL HEAD COVER - EARLY 2570
INSTALLATION - ROCKER HOUSING 2570
INSTALLATION - CYL HEAD COVER - LATE 2571
INSTALLATION 2572
VALVES & SEATS - INTAKE/EXHAUST
DESCRIPTION 2573
STANDARD PROCEDURE
STANDARD PROCEDURE - VALVES, GUIDES AND SPRINGS 2573
STANDARD PROCEDURE - VALVE LASH ADJUSTMENT AND VERIFICATION 2578
REMOVAL - VALVE SPRINGS AND SEALS . . 2579
INSTALLATION 2581
ROCKER ARM
DESCRIPTION 2581
REMOVAL 2582
CLEANING 2582
INSPECTION 2583
INSTALLATION 2584
ENGINE BLOCK
STANDARD PROCEDURE
STANDARD PROCEDURE - CYLINDER BLOCK REFACING 2585
STANDARD PROCEDURE - CYLINDER BORE - DE-GLAZE 2585
STANDARD PROCEDURE—CYLINDER BORE REPAIR 2586
STANDARD PROCEDURE - CAM BORE REPAIR 2589
INSPECTION 2589
CAMSHAFT & BEARINGS (IN BLOCK)
REMOVAL
CAMSHAFT BEARINGS 2590
CAMSHAFT 2591
INSPECTION 2593
INSTALLATION
CAMSHAFT BEARINGS 2595
CAMSHAFT 2595

BEARINGS - CONNECTING ROD
STANDARD PROCEDURE - CONNECTING ROD BEARING AND CRANKSHAFT JOURNAL CLEARANCE . . . 2596
CRANKSHAFT & GEAR
DESCRIPTION . . . 2597
REMOVAL - GEAR . . . 2597
INSTALLATION - GEAR . . . 2598
BEARINGS - CRANKSHAFT MAIN
STANDARD PROCEDURE - MAIN BEARING CLEARANCE . . . 2598
SEAL - CRANKSHAFT OIL - FRONT
REMOVAL . . . 2599
INSTALLATION . . . 2600
SEAL - CRANKSHAFT OIL - REAR
REMOVAL . . . 2601
INSTALLATION . . . 2601
RETAINER - CRANK REAR OIL SEAL
REMOVAL . . . 2602
INSTALLATION . . . 2602
TAPPETS - VALVE
REMOVAL . . . 2604
CLEANING . . . 2605
INSPECTION . . . 2605
INSTALLATION . . . 2606
PISTON & CONNECTING ROD
DESCRIPTION . . . 2608
STANDARD PROCEDURE - HEAD GASKET SELECTION . . . 2608
REMOVAL . . . 2609
CLEANING—PISTON AND CONNECTING ROD . . . 2609
INSPECTION
INSPECTION - PISTONS . . . 2609
INSPECTION - CONNECTING ROD . . . 2611
INSTALLATION . . . 2611
RINGS - PISTON
STANDARD PROCEDURE - PISTON RING FITTING . . . 2612
DAMPER - CRANKSHAFT
REMOVAL . . . 2614
INSPECTION . . . 2614
INSTALLATION . . . 2614
MOUNT - FRONT
REMOVAL . . . 2615
INSTALLATION . . . 2616
MOUNT - REAR
REMOVAL . . . 2617
INSTALLATION . . . 2617
LUBRICATION
DESCRIPTION . . . 2618
OPERATION . . . 2618
DIAGNOSIS AND TESTING—ENGINE OIL PRESSURE . . . 2622
OIL
STANDARD PROCEDURE
STANDARD PROCEDURE - ENGINE OIL LEVEL . . . 2622
STANDARD PROCEDURE - ENGINE OIL SERVICE . . . 2622
COOLER - ENGINE OIL & LINES
CLEANING
CLEANING AND INSPECTION . . . 2623
FILTER - ENGINE OIL
REMOVAL . . . 2623
INSTALLATION . . . 2623
PAN - ENGINE OIL
REMOVAL . . . 2623
CLEANING . . . 2624
INSPECTION . . . 2624
INSTALLATION . . . 2624
VALVE - OIL PRESSURE RELIEF
REMOVAL . . . 2625
CLEANING . . . 2625
INSPECTION . . . 2625
INSTALLATION . . . 2625
SWITCH - OIL PRESSURE
REMOVAL . . . 2625
INSTALLATION . . . 2626
PUMP - ENGINE OIL
REMOVAL . . . 2626
CLEANING . . . 2626
INSPECTION . . . 2626
INSTALLATION . . . 2628
MANIFOLD - INTAKE
REMOVAL . . . 2629
CLEANING . . . 2630
INSPECTION . . . 2630
INSTALLATION . . . 2630
MANIFOLD - EXHAUST
REMOVAL . . . 2631
CLEANING . . . 2631
INSPECTION . . . 2631
INSTALLATION . . . 2631
VALVE TIMING
STANDARD PROCEDURE - TIMING VERIFICATION . . . 2632
CASE - FRONT
REMOVAL . . . 2632
INSTALLATION . . . 2633
COVER - TIMING
REMOVAL . . . 2635
INSTALLATION . . . 2635

ENGINE - 5.9L DIESEL - SERVICE INFORMATION

DESCRIPTION

DESCRIPTION

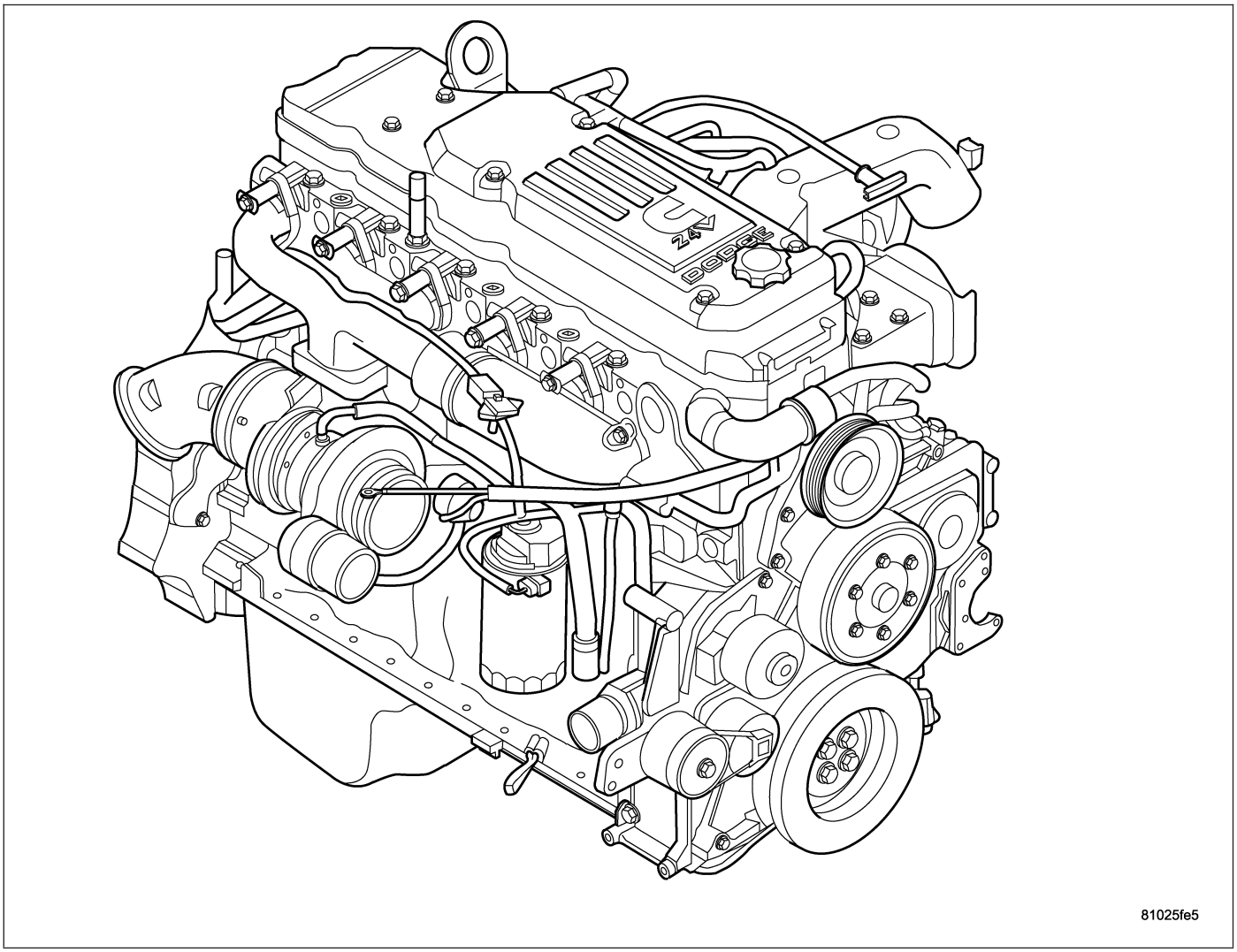

The cylinder block is constructed of cast iron. The casting is a skirted design which incorporates longitudal ribs for superior strength and noise reduction. The block incorporates metric straight thread o-ring fittings at lubrication oil access points. The engine is manufactured with the cylinders being a non-sleeved type cylinder. However, one approved service method is to bore out the cylinders and add cylinder sleeves to the cylinder block.

The cylinders are numbered front to rear ; 1 to 6. The firing order is 1–5–3–6–2–4.

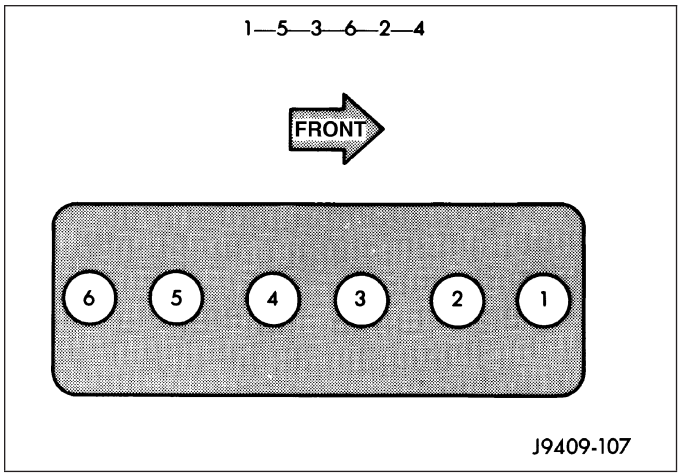

DESCRIPTION - CRANKCASE BREATHER - LATE BUILDS

The crankcase breather assembly is integrated into the cylinder head cover (3) and is not serviced seperately. The external fittings (2) to the breather tube and breather drain tube are serviceable.

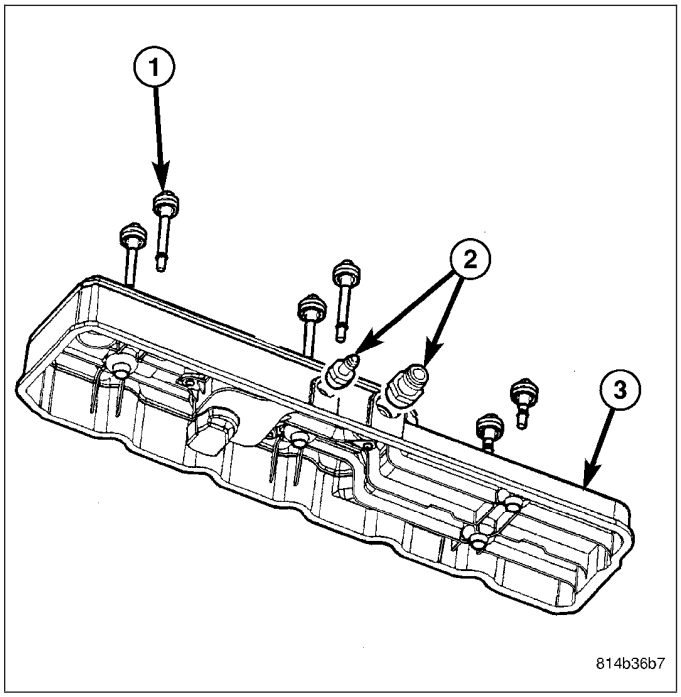

DIAGNOSIS AND TESTING

DIAGNOSIS AND TESTING - ENGINE DIAGNOSIS - MECHANICAL

CONDITION	POSSIBLE CAUSES	CORRECTION
LUBRICATING OIL PRESSURE LOW	1. Low oil level.	1. (a) Check and fill with clean engine oil. (b) Check for a severe external oil leak that could reduce the pressure.
	2. Oil viscosity thin, diluted or wrong specification.	2. (a) Verify the correct engine oil is being used. (Refer to LUBRICATION & MAINTENANCE/FLUID TYPES - DESCRIPTION). (b) Look for reduced viscosity from fuel dilution.
	3. Improperly operating pressure switch/gauge.	3. Verify the pressure switch is functioning correctly. If not, replace switch/gauge.
	4. Relief valve stuck open.	4. Check/replace valve.
	6. If cooler was replaced, shipping plugs may have been left in cooler	6. Check/remove shipping plugs.
	7. Worn oil pump.	7. Check and replace oil pump.
	8. Suction tube loose or seal leaking.	8. Check and replace seal.
	9. Loose main bearing cap.	9. Check and install new bearing. Tighten cap to proper torque.
	10. Worn bearings or wrong bearings installed.	10. Inspect and replace connecting rod or main bearings. Check and replace directed piston cooling nozzles.
	11. Directed piston cooling nozzles under piston, bad fit into main carrier.	11. Check directed piston cooling nozzles position.
	12. Loose oil rifle plug with saddle-jet style nozzles	12.Tighten oil rifle plug.
	13. Loose directed piston cooling nozzle.	13. Tighten directed piston cooling nozzle.
	14. Both J-jet and saddle jet style cooling nozzle installed.	14. Install correct style jet.
LUBRICATING OIL PRESSURE TOO HIGH ENGINE BREATHER RESTRICTED	1. Pressure switch/gauge not operating properly.	1. Verify pressure switch is functioning correctly. If not, replace switch/gauge.
	2. Engine running too cold.	2. Refer to Coolant Temperature Below Normal (Refer to 7 - COOLING - DIAGNOSIS AND TESTING).
	3. Oil viscosity too thick.	3. Make sure the correct oil is being used. (Refer to LUBRICATION & MAINTENANCE/FLUID TYPES - DESCRIPTION).
	4. Oil pressure relief valve stuck closed or binding	4. Check and replace valve.
LUBRICATING OIL LOSS	1. External leaks.	1. Visually inspect for oil leaks. Repair as required.
	2. Crankcase being overfilled.	2. Verify that the correct dipstick is being used.
	3. Incorrect oil specification or viscosity.	3. (a) Make sure the correct oil is being used (Refer to LUBRICATION & MAINTENANCE/FLUID TYPES - DESCRIPTION).

CONDITION	POSSIBLE CAUSES	CORRECTION
		(b) Look for reduced viscosity from dilution with fuel. (c) Review/reduce oil change intervals.
	4. Oil cooler leak	4. Check and replace the oil cooler.
	5. High blow-by forcing oil out the breather.	5. Check the breather tube area for signs of oil loss. Perform the required repairs.
	6. Turbocharger leaking oil to the air intake.	6. Inspect the air ducts for evidence of oil transfer. Repair as required.
COMPRESSION KNOCKS	1. Air in the fuel system.	1. Identify location of air leak and repair. Do not bleed high pressure fuel system.
	2. Poor quality fuel or water/gasoline contaminated fuel.	2. Verify by operating from a temporary tank with good fuel. Clean and flush the fuel tank. Replace fuel/water separator filter.
	3. Engine overloaded.	3. Verify the engine load rating is not being exceeded.
	4. Improperly operating injectors.	5. Check and replace misfiring/inoperative injectors.
EXCESSIVE VIBRATION	1. Loose or broken engine mounts.	1. Replace engine mounts.
	2. Damaged fan or improperly operating accessories.	2. Check and replace the vibrating components.
	3. Improperly operating vibration damper	3. Inspect/replace vibration damper.
	4. Improperly operating electronically controlled viscous fan drive.	4. Inspect/replace fan drive.
	5. Worn or damaged generator bearing.	5. Check/replace generator.
	6. Flywheel housing misaligned.	6. Check/correct flywheel alignment.
	7. Loose or broken power component.	7. Inspect the crankshaft and rods for damage that causes an unbalance condition. Repair/replace as required.
	8. Worn or unbalanced driveline components.	8. Check/repair driveline components.
EXCESSIVE ENGINE NOISES	1. Drive belt squeal, insufficient tension or abnormally high loading.	1. Check the automatic tensioner and inspect the drive belt. Make sure water pump, tensioner pulley, fan hub, generator and power steering pump turn freely.
	2. Intake air or exhaust leaks.	2. Refer to Excessive Exhaust Smoke (Refer to 9 - ENGINE - DIAGNOSIS AND TESTING).
	3. Excessive valve lash.	3. Adjust valves. Make sure the push rods are not bent and rocker arms, adjusting screws, crossheads, are not severely worn. Replace bent or severely worn components.
	4. Turbocharger noise.	4. Check turbocharger impeller and turbine wheel for housing contact. Repair/replace as required.
	5. Gear train noise.	5. Visually inspect and measure gear backlash. Replace gears as required.
	6. Power function knock.	6. Check/replace rod and main bearings.

DIAGNOSIS AND TESTING - SMOKE DIAGNOSIS CHARTS

The following charts include possible causes and corrections for **excess or abnormal** exhaust smoke. Small amounts of exhaust smoke (at certain times) are to be considered normal for a diesel powered engine.

EXCESSIVE BLACK SMOKE	
POSSIBLE CAUSE	**CORRECTION**
Air filter dirty or plugged.	Check Filter Minder® at air filter (Refer to 9 - ENGINE/ AIR INTAKE SYSTEM/AIR CLEANER ELEMENT - REMOVAL).
Air intake system restricted.	Check entire air intake system including all hoses and tubes for restrictions, collapsed parts or damage. Repair/replace as necessary.
Air Leak in Intake System.	Check entire air intake system (Refer to 11 - EXHAUST SYSTEM/TURBOCHARGER SYSTEM/CHARGE AIR COOLER AND PLUMBING - DIAGNOSIS AND TESTING) including all hoses and tubes for cracks, loose clamps and/or holes in rubber ducts. Also check intake manifold for loose mounting hardware.
Diagnostic Trouble Codes (DTC's) active or multiple, intermittent DTC's.	Refer to Powertrain Diagnostic Procedures Information.
Engine Control Module (ECM) not calibrated or ECM has incorrect calibration.	Refer to Powertrain Diagnostic Procedures Information.
Exhaust system restriction is above specifications.	Check exhaust pipes for damage/restrictions. Repair as necessary.
Fuel grade is not correct or fuel quality is poor.	Temporarily change fuel brands and note condition. Change brand if necessary.
Fuel injection pump malfunctioning.	A DTC may have been set. If so, refer to Powertrain Diagnostic Procedures Information.
Fuel injector malfunctioning.	A DTC may have been set. Perform "Cylinder Performance Test" or "Cylinder Cutout Test" using DRB scan tool to isolate individual cylinders. Also refer to Powertrain Diagnostic Procedures Information and, to (Refer to 14 - FUEL SYSTEM/FUEL INJECTION/FUEL INJECTOR - DIAGNOSIS AND TESTING).
Fuel return system restricted.	Check fuel return lines for restriction (Refer to 14 - FUEL SYSTEM/FUEL DELIVERY - DIAGNOSIS AND TESTING).
Intake manifold restricted.	Remove restriction.
Manifold Air Pressure (Boost) Sensor or sensor circuit malfunctioning.	A DTC should have been set. Refer to Powertrain Diagnostic Procedures Information.
Raw fuel in intake manifold.	Fuel injectors leaking on engine shutdown. Do Fuel Injector Test (Refer to 14 - FUEL SYSTEM/FUEL INJECTION/FUEL INJECTOR - DIAGNOSIS AND TESTING).
Turbocharger air intake restriction.	Remove restriction.
Turbocharger damaged.	(Refer to 11 - EXHAUST SYSTEM/TURBOCHARGER SYSTEM/TURBOCHARGER - INSPECTION).
Turbocharger has excess build up on compressor wheel and/or diffuser vanes.	(Refer to 11 - EXHAUST SYSTEM/TURBOCHARGER SYSTEM/TURBOCHARGER - CLEANING).
Turbocharger wheel clearance out of specification.	(Refer to 11 - EXHAUST SYSTEM/TURBOCHARGER SYSTEM/TURBOCHARGER - INSPECTION).

EXCESSIVE WHITE SMOKE	
POSSIBLE CAUSE	**CORRECTION**
Air in fuel supply: Possible leak in fuel supply side.	(Refer to 14 - FUEL SYSTEM/FUEL DELIVERY/FUEL TRANSFER PUMP - DIAGNOSIS AND TESTING).
Coolant leaking into combustion chamber.	Do pressure test of cooling system (Refer to 7 - COOLING - DIAGNOSIS AND TESTING).
Diagnostic Trouble Codes (DTC's) active or multiple, intermittent DTC's.	Refer to Powertrain Diagnostic Procedures Information.
In very cold ambient temperatures, engine block heater is malfunctioning (if equipped).	(Refer to 7 - COOLING/ENGINE/ENGINE BLOCK HEATER - REMOVAL).
Engine coolant temperature sensor malfunctioning.	A DTC should have been set. Refer to Powertrain Diagnostic Procedures Information. Also check thermostat operation (Refer to 7 - COOLING/ENGINE/ ENGINE COOLANT THERMOSTAT - DIAGNOSIS AND TESTING).
Engine Control Module (ECM) not calibrated or has incorrect calibration.	A DTC should have been set. Refer to Powertrain Diagnostic Procedures Information.
Fuel filter plugged.	Refer to Powertrain Diagnostic Manual for fuel system testing.
Fuel grade not correct or fuel quality is poor.	Temporarily change fuel brands and note condition. Change brand if necessary.
Fuel heater element or fuel heater temperature sensor malfunctioning. This will cause wax type build-up in fuel filter.	Refer to Fuel Heater Testing (Refer to 14 - FUEL SYSTEM/FUEL DELIVERY/FUEL HEATER - DIAGNOSIS AND TESTING).
Fuel injector malfunctioning.	A DTC should have been set. Perform "Cylinder Performance Test" or "Cylinder cutout Test" using DRB scan tool to isolate individual cylinders. Also refer to Powertrain Diagnostic Procedures Information and, (Refer to 14 - FUEL SYSTEM/FUEL INJECTION/FUEL INJECTOR - DIAGNOSIS AND TESTING).
Fuel injector hold-downs loose.	Torque to specifications.
Fuel injector protrusion not correct.	Check washer (shim) at bottom of fuel injector for correct thickness. (Refer to 14 - FUEL SYSTEM/FUEL INJECTION/FUEL INJECTOR - INSTALLATION)
Fuel injection pump malfunctioning.	A DTC should have been set. Refer to Powertrain Diagnostic Procedures Information.
Fuel supply side restriction.	Refer to Powertrain Diagnostic Manual for fuel system testing.
Fuel transfer (lift) pump malfunctioning.	A DTC may have been set. Refer to Powertrain Diagnostic Procedures Information.
Intake/Exhaust valve adjustments not correct (too tight).	(Refer to 9 - ENGINE/CYLINDER HEAD/INTAKE/ EXHAUST VALVES & SEATS - STANDARD PROCEDURE).
Intake manifold air temperature sensor malfunctioning.	A DTC should have been set. Refer to Powertrain Diagnostic Procedures Information.
Intake manifold heater circuit not functioning correctly in cold weather.	A DTC should have been set. Refer to Powertrain Diagnostic Procedures Information. Also check heater elements for correct operation.
Intake manifold heater elements not functioning correctly in cold weather.	A DTC should have been set if heater elements are malfunctioning. Refer to Powertrain Diagnostic Procedures Information.

EXCESSIVE WHITE SMOKE	
POSSIBLE CAUSE	**CORRECTION**
Internal engine damage (scuffed cylinder).	Analyze engine oil and inspect oil filter to locate area of probable damage.
Restriction in fuel supply side of fuel system.	Refer to Powertrain Diagnostic Manual for fuel system testing.

EXCESSIVE BLUE SMOKE	
POSSIBLE CAUSE	**CORRECTION**
Dirty air cleaner or restricted turbocharger intake duct.	Check Filter Minder® at air filter housing. (Refer to 9 - ENGINE/AIR INTAKE SYSTEM/AIR CLEANER ELEMENT - REMOVAL).
Air leak in boost system between turbocharger compressor outlet and intake manifold.	Service air charge system..
Obstruction in exhaust manifold.	Remove exhaust manifold and inspect for blockage (Refer to 9 - ENGINE/MANIFOLDS/EXHAUST MANIFOLD - REMOVAL).
Restricted turbocharger drain tube.	Remove turbocharger drain tube and remove obstruction.
Crankcase ventilation system plugged.	Inspect crankcase ventilation system for function
Valve seals are worn, brittle, or improperly installed.	Replace valve stem oil seals (Refer to 9 - ENGINE/ CYLINDER HEAD/INTAKE/EXHAUST VALVES & SEATS - REMOVAL).
Valve stems and/or guides are worn.	Remove valves and inspect valves and guides. (Refer to 9 - ENGINE/CYLINDER HEAD/INTAKE/EXHAUST VALVES & SEATS - STANDARD PROCEDURE).
Broken or Improperly installed piston rings.	Tear down engine and inspect piston rings.
Excessive piston ring end gap.	Remove pistons and measure piston ring end gap (Refer to 9 - ENGINE/ENGINE BLOCK/PISTON RINGS - STANDARD PROCEDURE).
Excessive cylinder bore wear and taper.	Remove pistons and measure cylinder bore wear and taper (Refer to 9 - ENGINE/ENGINE BLOCK - STANDARD PROCEDURE).
Cylinder damage.	Remove pistons and inspect cylinder bore for cracks or porosity. Repair with cylinder liner if necessary. (Refer to 9 - ENGINE/ENGINE BLOCK - STANDARD PROCEDURE).
Piston damage.	Remove pistons and inspect for cracks, holes. Measure piston for out-of-round and taper (Refer to 9 - ENGINE/ENGINE BLOCK/PISTON & CONNECTING ROD - INSPECTION).
Turbocharger failure.	(Refer to 11 - EXHAUST SYSTEM/TURBOCHARGER SYSTEM/TURBOCHARGER - INSPECTION).

DIAGNOSIS AND TESTING - CYLINDER COMPRESSION/LEAKAGE TESTS

CYLINDER COMPRESSION PRESSURE

The results of a cylinder compression pressure test can be utilized to diagnose several engine malfunctions.

Ensure batteries are completely charged and the engine starter motor is in good operating condition. Otherwise, the indicated compression pressures may not be valid for diagnostic purposes.

1. Disconnect the fuel inlet line to the fuel filter housing. Plug the fuel line from the fuel tank.

NOTE: Failure to plug fuel line will result in fuel leak.

2. Remove fuel transfer pump relay from PDC.
3. Start the engine and idle until the engine stalls (runs out of fuel).
4. **FOR EARLY BUILDS** Disconnect all three injector wire harness connectors at the rocker housing.**FOR LATE BUILDS** Remove the cylinder head cover.
5. **FOR LATE BUILDS** Remove the cylinder head cover carrier gasket.
6. **FOR EARLY BUILDS** Remove the breather cover and cylinder head cover.
7. Remove the high pressure fuel line between the cylinder head and fuel rail for the cylinder to be tested. Use tool# 9011 to cap this fuel rail on the cylinder being tested.
8. Remove the fuel connector tube nut and fuel connector tube.
9. Remove the exhaust rocker lever.
10. Use Tool 9010 to remove the injector and copper sealing washer.
11. Install the exhaust rocker lever and torque to 36 N·m (27 ft. lbs.).
12. Cover the remaining rocker levers with clean shop towels to prevent any oil splatter under the hood.
13. Place a rag over the compression test tool fitting. Crank the engine for 2–3 seconds to purge any fuel that may have drained into the cylinder when the injector was removed.
14. Connect the compression test gauge.
15. Crank the engine for 5 seconds and record the pressure reading. Repeat this step three times and calculate the average of the three readings.

NOTE: The minimum cylinder pressure is 350 psi. Cylinder pressure should be within 20% from cylinder to cylinder.

16. Combustion pressure leakage can be checked if cylinder pressure is below the specification. Perform the leakage test procedure on each cylinder according to the tester manufacturer instructions.
17. Upon completion of the test check and erase any engine related fault codes.

CYLINDER COMBUSTION PRESSURE LEAKAGE

The combustion pressure leakage test provides an accurate means for determining engine condition.

Combustion pressure leakage testing will detect:

- Exhaust and intake valve leaks (improper seating).
- Leaks between adjacent cylinders or into water jacket.
- Any causes for combustion/compression pressure loss

1. Start and operate the engine until it attains normal operating temperature.
2. **FOR EARLY BUILDS** Remove the breather cover and cylinder head cover.
3. **FOR EARLY BUILDS** Disconnect all three injector wire harness connectors at the rocker housing.
4. **FOR LATE BUILDS** Disconnect injector harness connectors.
5. **FOR LATE BUILDS** Disconnect breather tube and breather drain tube from valve cover.
6. **FOR LATE BUILDS** Remove the cylinder head cover.
7. **FOR LATE BUILDS** Disconnect harness from injectors.
8. **FOR LATE BUILDS** Remove the cylinder head cover carrier gasket.
9. Bring the cylinder to be tested to TDC.
10. Remove the high pressure fuel line between the cylinder head and the fuel rail for the cylinder to be tested.
11. Install capping Tool 9011 onto the rail.
12. Remove the high pressure connector nut and high pressure connector with Tool 9015.
13. Remove the exhaust and intake rocker lever.
14. Use Tool 9010 to remove the injector and copper sealing washer.
15. Install compression test Tool 9007 into the injector bore.
16. Connect the leakage tester and perform the leakage test procedure on each cylinder according to the tester manufacturer's instructions.

17. Upon completion of the test check and erase any engine related fault codes.

STANDARD PROCEDURE

STANDARD PROCEDURE - FORM-IN-PLACE GASKETS AND SEALERS

There are numerous places where form-in-place gaskets are used on the engine. Care must be taken when applying form-in-place gaskets to assure obtaining the desired results. **Do not use form-in-place gasket material unless specified.** Bead size, continuity, and location are of great importance. Too thin a bead can result in leakage while too much can result in spill-over which can break off and obstruct fluid feed lines. A continuous bead of the proper width is essential to obtain a leak-free gasket.

There are numerous types of form-in-place gasket materials that are used in the engine area. Mopar® Engine RTV GEN II, Mopar® ATF-RTV, and Mopar® Gasket Maker gasket materials, each have different properties and can not be used in place of the other.

MOPAR® ENGINE RTV GEN II

Mopar® Engine RTV GEN II is used to seal components exposed to engine oil. This material is a specially designed black silicone rubber RTV that retains adhesion and sealing properties when exposed to engine oil. Moisture in the air causes the material to cure. This material is available in three ounce tubes and has a shelf life of one year. After one year this material will not properly cure. Always inspect the package for the expiration date before use.

MOPAR® ATF RTV

Mopar® ATF RTV is a specifically designed black silicone rubber RTV that retains adhesion and sealing properties to seal components exposed to automatic transmission fluid, engine coolants, and moisture. This material is available in three ounce tubes and has a shelf life of one year. After one year this material will not properly cure. Always inspect the package for the expiration date before use.

MOPAR® GASKET MAKER

Mopar® Gasket Maker is an anaerobic type gasket material. The material cures in the absence of air when squeezed between two metallic surfaces. It will not cure if left in the uncovered tube. The anaerobic material is for use between two machined surfaces. Do not use on flexible metal flanges.

MOPAR® GASKET SEALANT

Mopar® Gasket Sealant is a slow drying, permanently soft sealer. This material is recommended for sealing threaded fittings and gaskets against leakage of oil and coolant. Can be used on threaded and machined parts under all temperatures. This material is used on engines with multi-layer steel (MLS) cylinder head gaskets. This material also will prevent corrosion. Mopar® Gasket Sealant is available in a 13 oz. aerosol can or 4oz./16 oz. can w/applicator.

FORM-IN-PLACE GASKET AND SEALER APPLICATION

Assembling parts using a form-in-place gasket requires care but it's easier than using precut gaskets.

Mopar® Gasket Maker material should be applied sparingly 1 mm (0.040 in.) diameter or less of sealant to one gasket surface. Be certain the material surrounds each mounting hole. Excess material can easily be wiped off. Components should be torqued in place within 15 minutes. The use of a locating dowel is recommended during assembly to prevent smearing material off the location.

Mopar® Engine RTV GEN II or ATF RTV gasket material should be applied in a continuous bead approximately 3 mm (0.120 in.) in diameter. All mounting holes must be circled. For corner sealing, a 3.17 or 6.35 mm (1/8 or 1/4 in.) drop is placed in the center of the gasket contact area. Uncured sealant may be removed with a shop towel. Components should be torqued in place while the sealant is still wet to the touch (within 10 minutes). The usage of a locating dowel is recommended during assembly to prevent smearing material off the location.

Mopar® Gasket Sealant in an aerosol can should be applied using a thin, even coat sprayed completely over both surfaces to be joined, and both sides of a gasket. Then proceed with assembly. Material in a can w/applicator can be brushed on evenly over the sealing surfaces. Material in an aerosol can should be used on engines with multi-layer steel gaskets.

STANDARD PROCEDURE - REPAIR DAMAGED OR WORN THREADS

CAUTION: Be sure that the tapped holes maintain the original center line.

Damaged or worn threads can be repaired. Essentially, this repair consists of:

- Drilling out worn or damaged threads.
- Tapping the hole with a special Heli-Coil Tap, or equivalent.
- Installing an insert into the tapped hole to bring the hole back to its original thread size.

STANDARD PROCEDURE—HYDROSTATIC LOCK

CAUTION: DO NOT use the starter motor to rotate the crankshaft. Severe damage could occur.

When an engine is suspected of hydrostatic lock (regardless of what caused the problem), follow the steps below.

1. Disconnect the negative cable(s) from the battery.
2. Inspect air cleaner, induction system, and intake manifold to ensure system is dry and clear of foreign material.
3. Place a shop towel around the fuel injectors to catch any fluid that may possibly be under pressure in the cylinder head. Remove the fuel injectors (Refer to 14 - FUEL SYSTEM/FUEL INJECTION/FUEL INJECTOR - REMOVAL).
4. With all injectors removed, rotate the crankshaft using the crankshaft barring tool (PN 7471–B).
5. Identify the fluid in the cylinders (coolant, fuel, oil, etc.).
6. Be sure all fluid has been removed from the cylinders.
7. Repair engine or components as necessary to prevent this problem from occurring again.
8. Squirt a small amount of engine oil into the cylinders to lubricate the walls. This will prevent damage on restart.
9. Install fuel injectors (Refer to 14 - FUEL SYSTEM/FUEL INJECTION/FUEL INJECTOR - INSTALLATION).
10. Drain engine oil. Remove and discard the oil filter (Refer to 9 - ENGINE/LUBRICATION/OIL FILTER - REMOVAL).
11. Install the drain plug. Tighten the plug to 50 N·m (37 ft. lbs.) torque.
12. Install a new oil filter (Refer to 9 - ENGINE/LUBRICATION/OIL FILTER - INSTALLATION).
13. Fill engine crankcase with the specified amount and grade of oil (Refer to LUBRICATION & MAINTENANCE/FLUID TYPES - SPECIFICATIONS).
14. Connect the negative cable(s) to the battery.
15. Start the engine and check for any leaks.

REMOVAL

REMOVAL - ENGINE

1. Disconnect both battery negative cables.
2. Disconnect engine grid heater harness at grid heater relays.
3. Disconnect electrical connections from rear of alternator.
4. Recover A/C refrigerant. (Refer to 24 - HEATING & AIR CONDITIONING/PLUMBING - STANDARD PROCEDURE).
5. Raise vehicle on a hoist.
6. Drain engine coolant (Refer to 7 - COOLING - STANDARD PROCEDURE).
7. Remove engine oil drain plug and drain engine oil.
8. Reinstall drain plug. Tighten to 50N·m (37 ft. lbs.) torque.
9. Lower the vehicle.
10. Remove fan (3) and fan drive (2). Refer to (Refer to 7 - COOLING/ENGINE/RADIATOR FAN - REMOVAL).

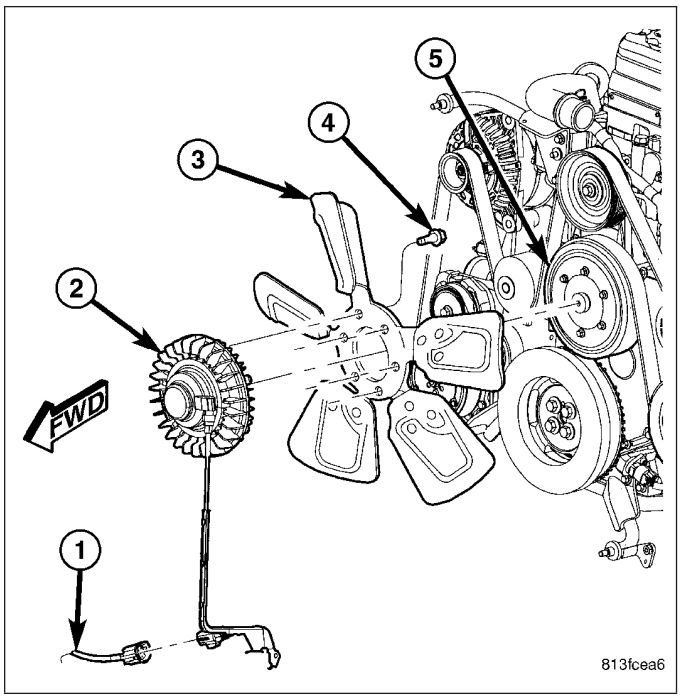

11. Remove fan shroud mounting bracket (3) and shroud. Refer to (Refer to 7 - COOLING/ENGINE/RADIATOR FAN - REMOVAL).
12. Remove radiator upper hose.
13. Disconnect the coolant recovery bottle hose from the radiator fill neck.
14. Disconnect heater core supply and return hoses from the cylinder head fitting and coolant pipe.
15. Raise vehicle on a hoist.
16. Remove transmission and transfer case (if equipped).
17. Disconnect exhaust pipe from turbocharger extension pipe.
18. Disconnect engine harness to vehicle harness connectors.

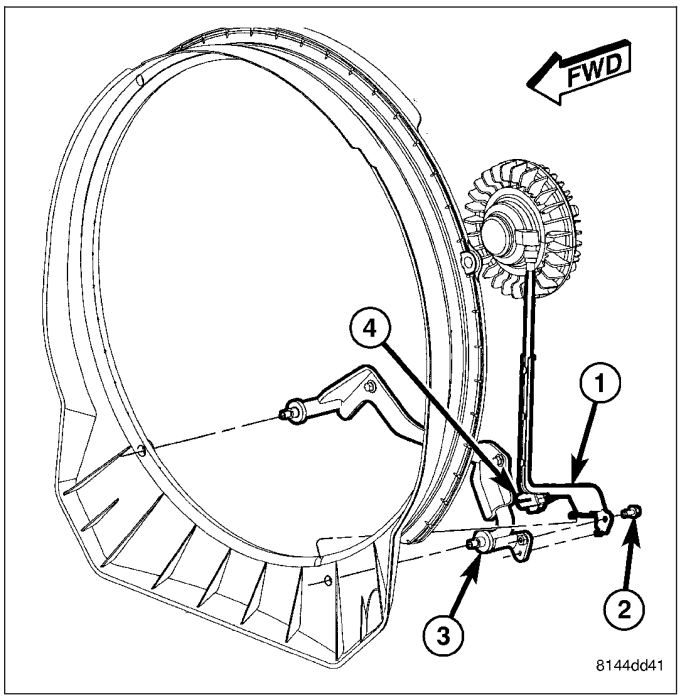

19. Remove starter motor (2) (Refer to 8 - ELECTRICAL/STARTING/STARTER MOTOR - REMOVAL).
20. Remove flywheel/flexplate.
21. Remove transmission adapter.

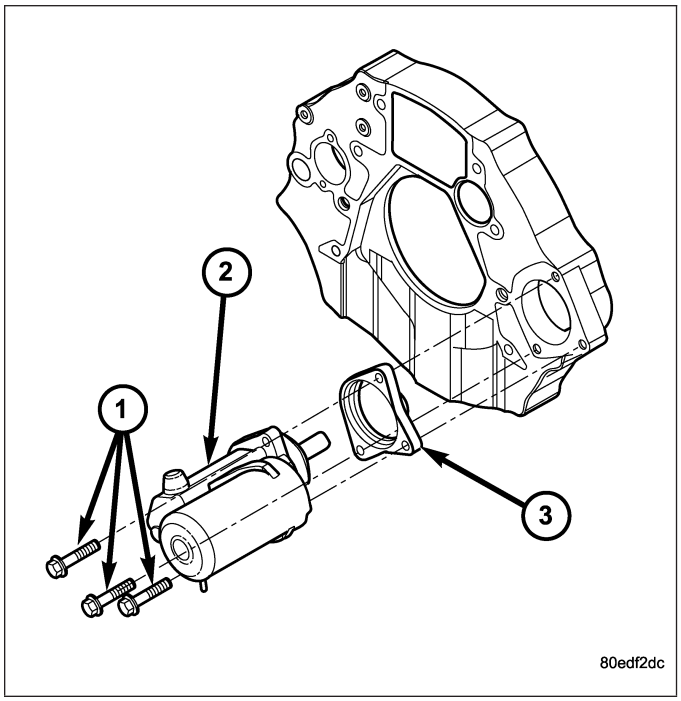

22. Disconnect A/C suction/discharge hose from the rear of the A/C compressor.
23. Lower vehicle.
24. Disconnect lower radiator hose from radiator outlet.
25. **Automatic transmission models:**
26. Disconnect transmission oil cooler lines from in front of radiator using special tool #6931
27. Remove radiator. (Refer to 7 - COOLING/ENGINE/RADIATOR - REMOVAL).
28. If A/C equipped, disconnect A/C condenser refrigerant lines.

29. Disconnect charge air cooler piping.
30. Remove charge air cooler mounting bolts (1).
31. Remove charge air cooler (2) from vehicle.

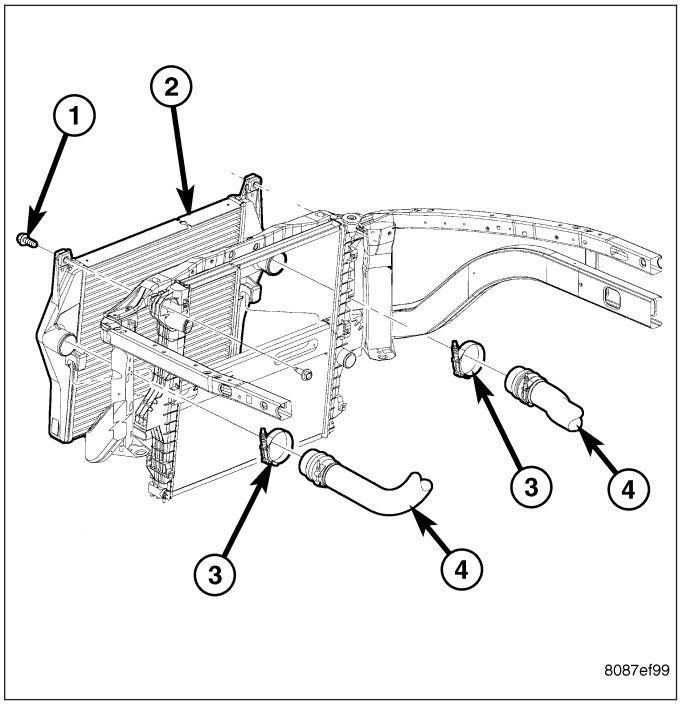

32. Remove the A/C condenser (1).
33. Remove damper and speed indicator ring from front of engine.

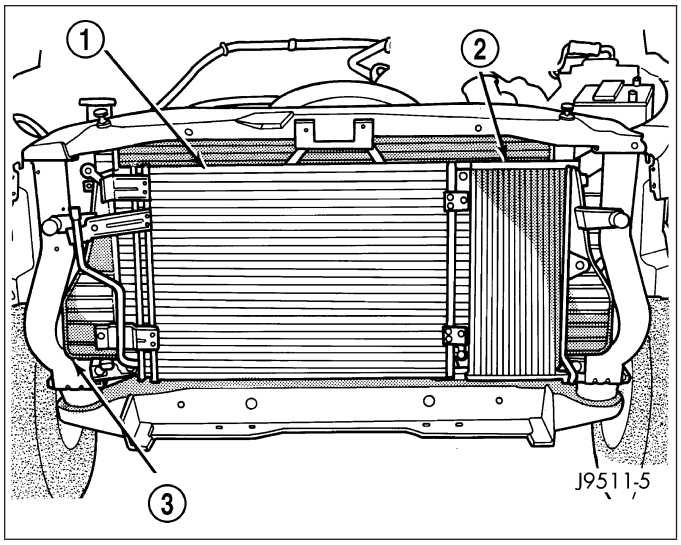

34. Remove lower fan shroud bracket (3) from engine.
35. Remove upper fan shroud brackets from engine.
36. Disconnect engine block heater connector.
37. Disconnect A/C compressor and pressure sensor electrical connectors.
38. Remove the passenger battery ground cable from the engine block. Remove the driver side battery ground cable from the engine block.
39. Remove power steering pump from engine by removing 3 bolts.
40. Disconnect the ECM power connector.
41. Disconnect the ECM ground wire from the hydro-form screw.
42. Disconnect the fuel supply and return hoses.

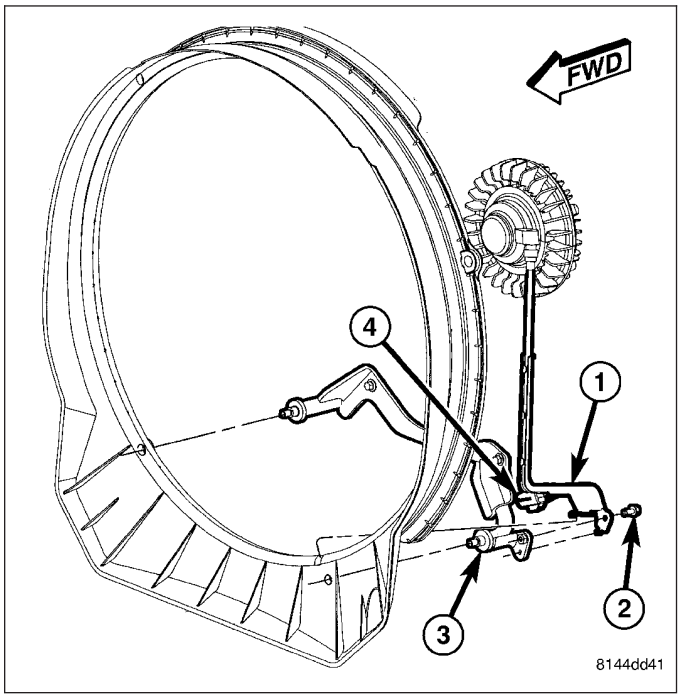

NOTE: For early builds, Ensure that grounding spring (3) remains intact with cylinder head cover (2).

43. **FOR EARLY BUILDS** Remove the cylinder head cover (2)and grounding spring (3). (Refer to 9 - ENGINE/CYLINDER HEAD/CYLINDER HEAD COVER(S) - REMOVAL).
44. **FOR EARLY BUILDS** Disconnect the 3 injector harness connectors at the rocker housing. Disconnect the wire harnesses from the injectors.

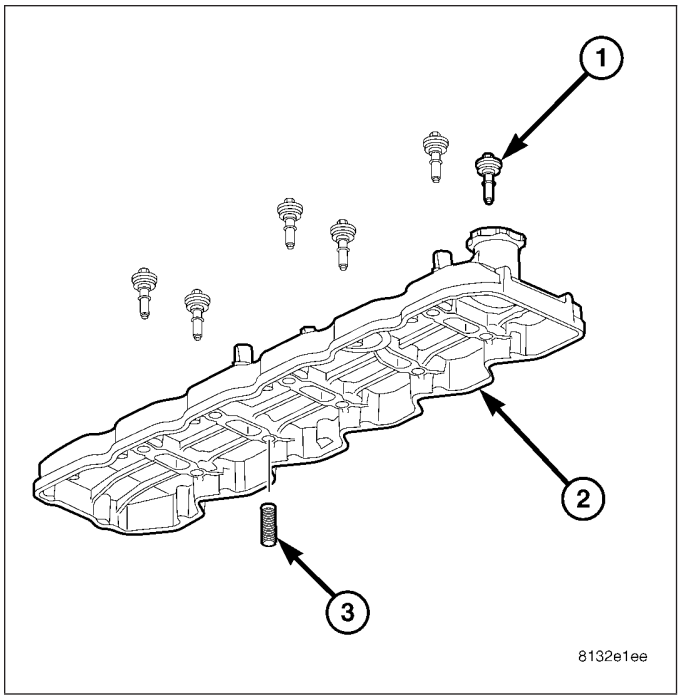

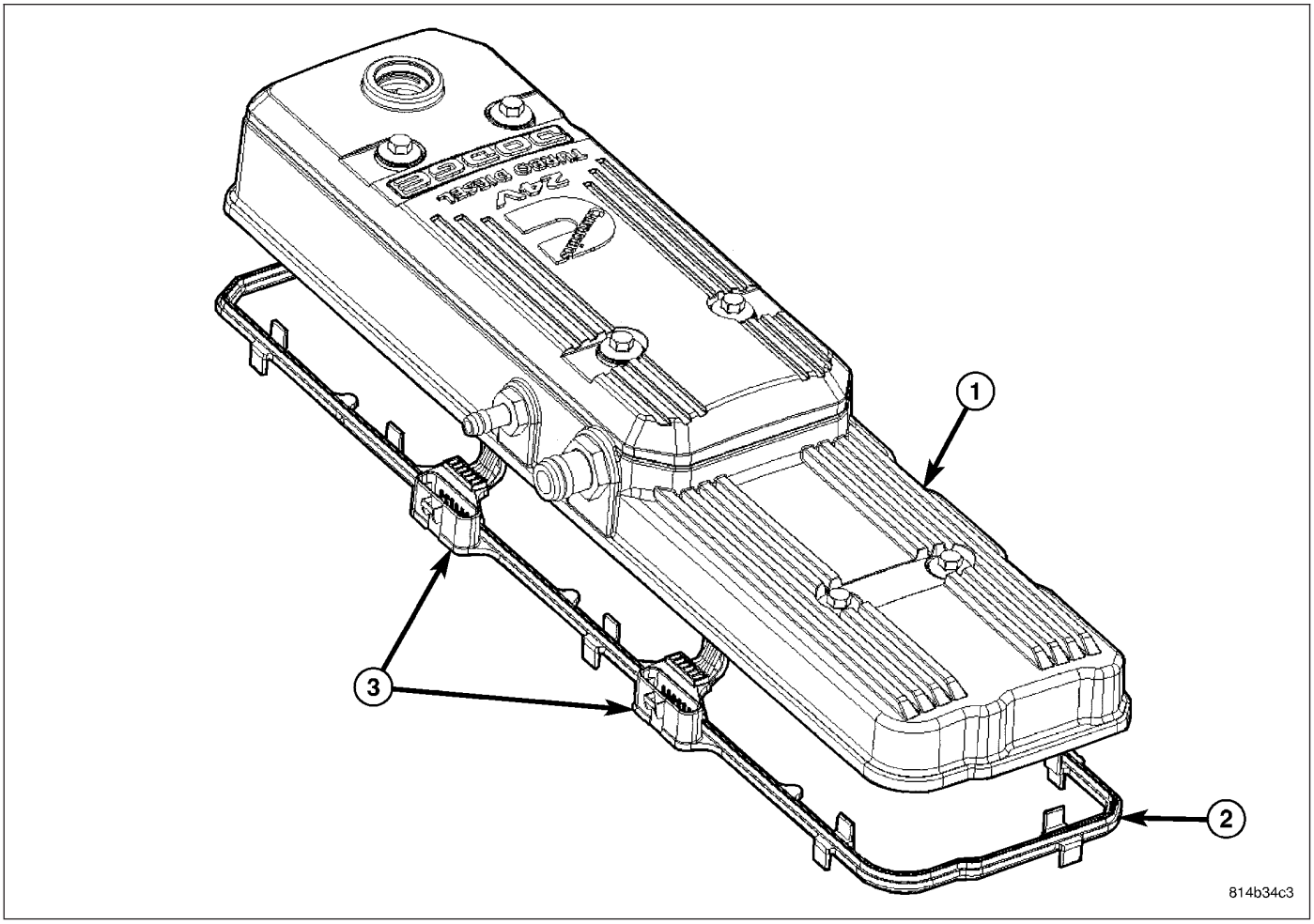

45. **FOR LATE BUILDS** Remove the cylinder head cover (1). (Refer to 9 - ENGINE/CYLINDER HEAD/CYLINDER HEAD COVER(S) - REMOVAL).
46. **FOR LATE BUILDS** Disconnect the wire harnesses from the injectors (3).

47. **FOR LATE BUILDS** Remove the cylinder head cover carrier gasket (2).
48. Loosen #6 fuel line shield bolts and rotate shield out of the way.
49. Remove cylinder #5 and #6 high pressure fuel lines.
50. Remove the rear engine lift bracket.

51. Remove cylinder #4, #5, and #6 intake and exhaust rocker arms (1), pedestals (2), and push tubes. Note the original location for re-assembly.
52. Remove the fuel connector tube nut and fuel connector tube. Remove cylinder #5 and #6 fuel injector.
53. Remove rocker housing.

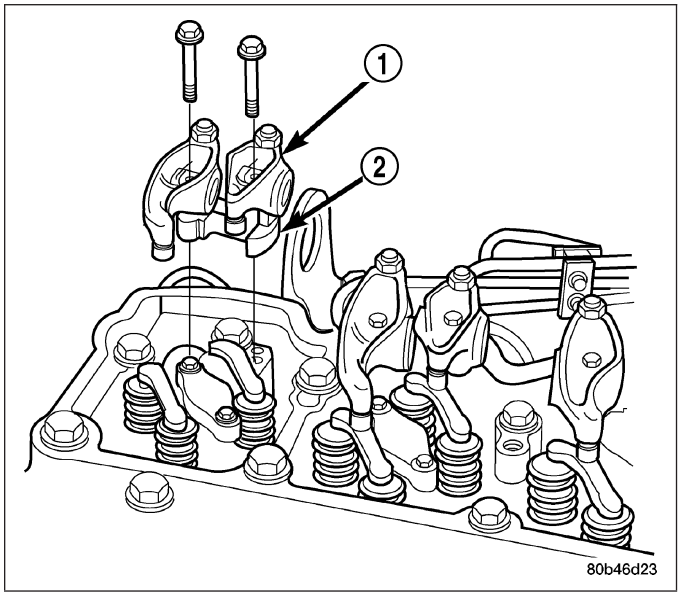

54. Remove two cylinder head bolts (1) according to the diagram and install Tool # 9009 (2). Torque bolts to 105N·m (77ft. lbs.).
55. Loosen but do not remove engine mount through bolts and nuts.
56. Disconnect hood support struts and position hood out of the way.
57. Attach a chain with two hooks to the engine lift brackets.
58. While keeping engine level, lift straight up out of the mounts.
59. Rotate nose of engine upward and pull out of chassis.

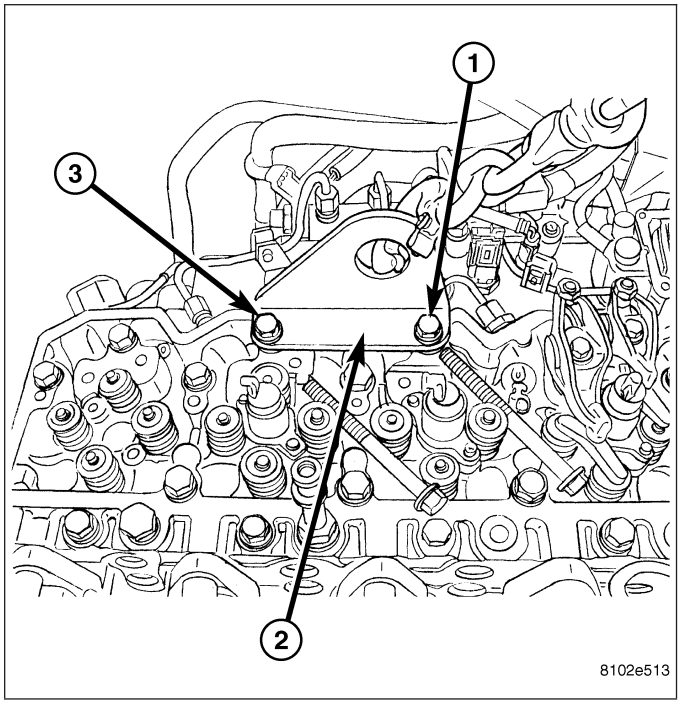

REMOVAL - CRANKCASE BREATHER - EARLY BUILD

1. Remove the oil fill cap.
2. Remove the breather cover bolts (1).
3. Remove breather cover (2).
4. Disconnect breather tube and lube oil drain tube from breather.
5. Remove breather mounting bolts (9).
6. Remove breather from cylinder head cover.

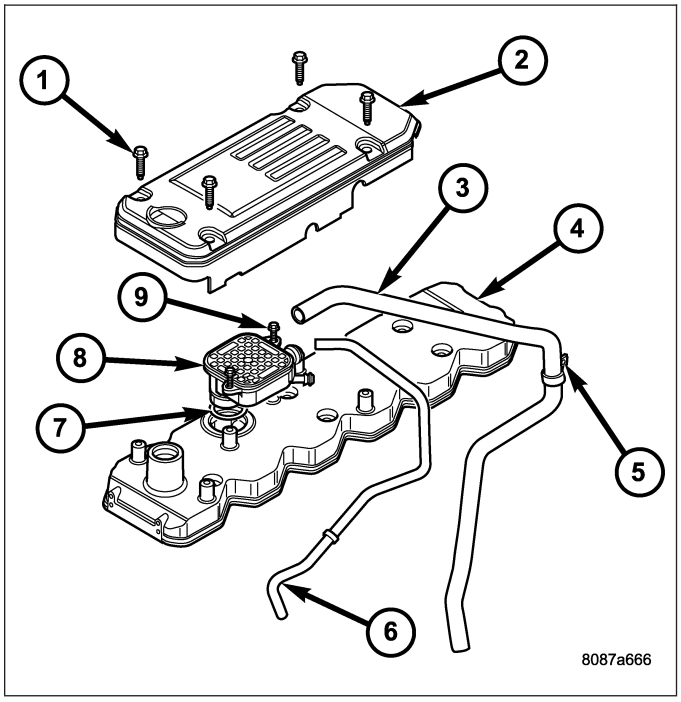

INSTALLATION

INSTALLATION - ENGINE

1. Remove cylinder head bolts (1,3) according to the diagram. Install special Tool 9009 (2). Torque bolts to 105N·m (77ft. lbs.)
2. Lower engine into the engine compartment and install the engine mount through bolts and nuts.
3. Tighten the mount through bolts and nuts to 88 N-m (65 ft-lbs) torque.
4. Remove the engine lifting device (Tool 9009).
5. Check cylinder head capscrew length and install into cylinder head.
6. Torque in 4 steps to:
   - Step 1—Tighten to 70 N·m (52 ft. lbs.) torque.
   - Step 2—Back off 360°.
   - Step 3—Tighten to 105 N·m (77 ft. lbs.) torque.
   - Step 4—Rotate 90°.

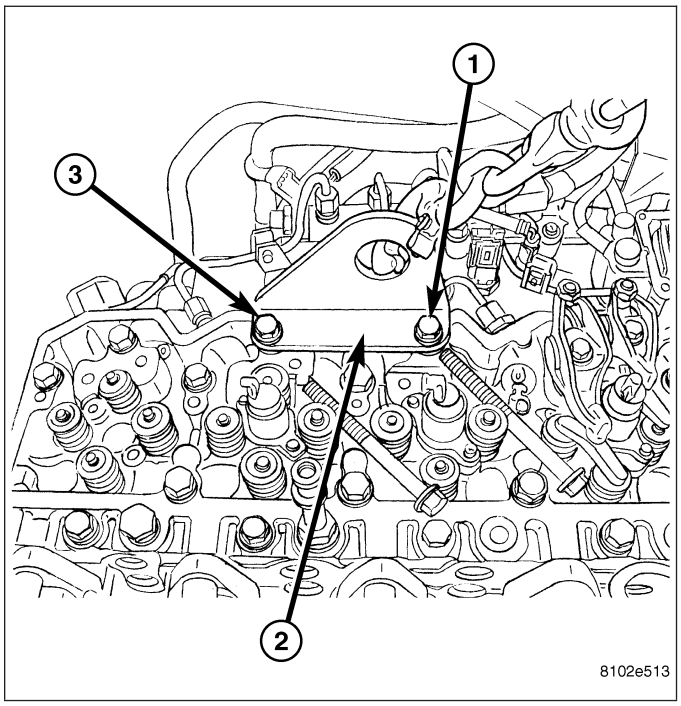

7. Install rocker housing. Torque to 24 N-m (18 ft-lbs). Refer to (Refer to 9 - ENGINE/CYLINDER HEAD/CYLINDER HEAD COVER(S) - INSTALLATION).
8. Replace injector o-ring and sealing washer on injectors #5 and #6. Install injectors and torque using the following steps:

- Step 1—Install injector hold-down capscrews and torque to 5 N·m (44 in. lbs.) torque.
- Step 2—Loosen injector hold-down capscrews.
- Step 3—Install HPC connector tube and nut. Torque nut to 15 N·m (11 ft. lbs.) torque.
- Step 4—Torque injector hold-down capscrews to 10 N·m (89 in. lbs.) torque.
- Step 5—Torque HPC connector tube nut to 50 N·m (37 ft. lbs.) torque.

9. Install rear engine lift bracket. Torque to 77 N-m (57 ft-lb).
10. Install #5 and #6 high pressure fuel lines. Follow correct torque sequence per section 14. Torque fuel line fittings to 30 N-m (22 ft-lb). Torque brace capscrew and nut to 24 N-m (18 ft-lb).
11. Install push tubes, rocker arms (1), and pedestals (2) for cylinders #4, #5, and #6. Torque the mounting bolts to 36 N-m (27 ft-lbs).
12. Reset valve lash on cylinders #4, #5, and #6. Torque adjusting nuts to 24 N-m (18 ft-lbs).

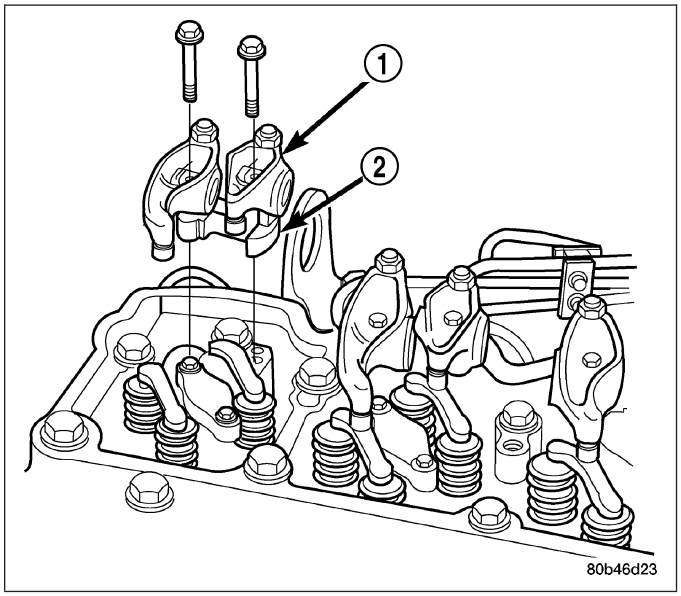

NOTE: For early builds, Verify proper installation of cylinder head cover ground spring (3) into cylinder head cover (2).

13. Install cylinder head cover (2). Torque to 24 N-m (18 ft-lbs). (Refer to 9 - ENGINE/CYLINDER HEAD - INSTALLATION).
14. **FOR EARLY BUILDS** Connect breather tube and lube oil drain tube to breather housing cover. Install breather cover. Torque capscrews to 24 N-m (18 ft-lbs)

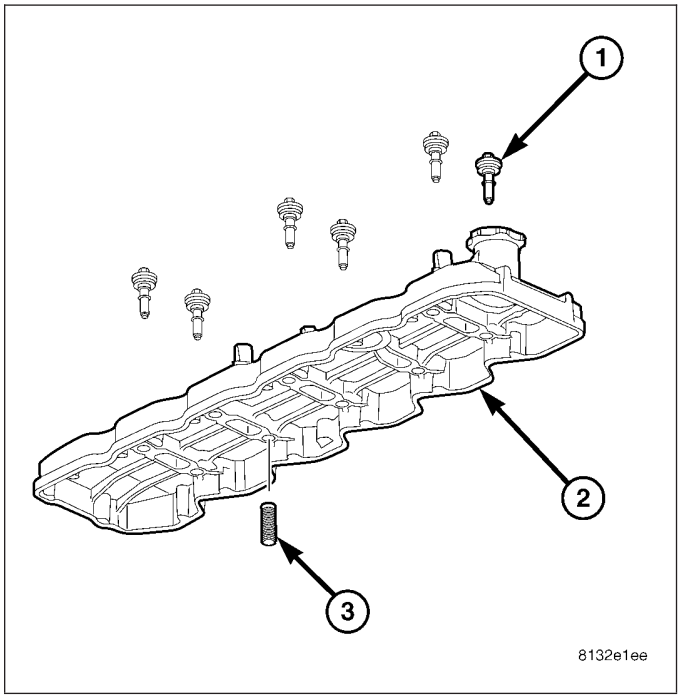

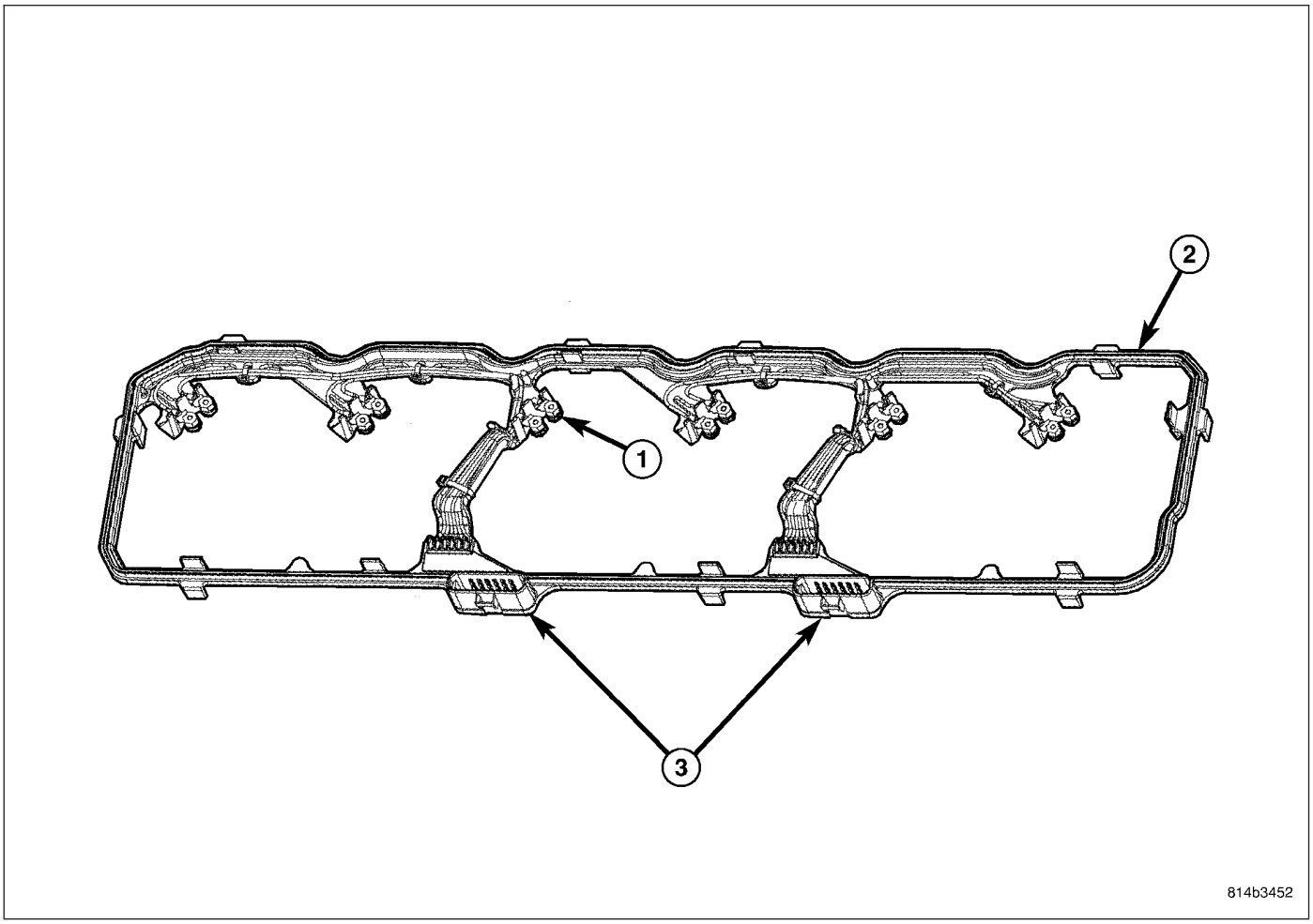

15. **FOR LATE BUILDS** Install cylinder head cover carrier gasket (2).
16. **FOR LATE BUILDS** Connect injector harness nuts to injectors (1). Torque to 1.25 N.m (11 in. lbs.)
17. **FOR LATE BUILDS** Connect injector wiring harness connectors to injector connections on cylinder head cover carrier gasket (3).

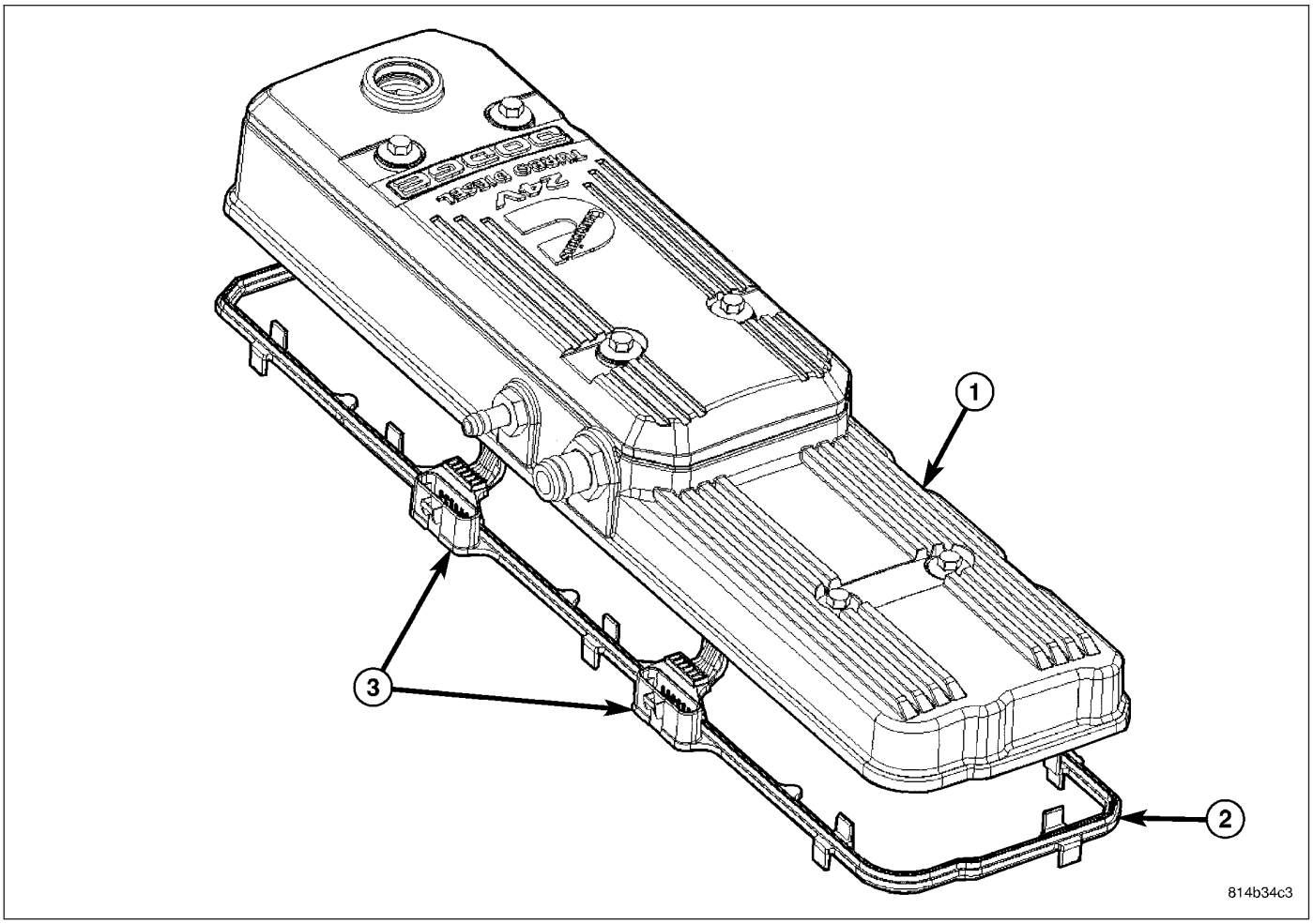

18. **FOR LATE BUILDS** Install cylinder head cover (1).

19. **FOR LATE BUILDS** Connect breather tube (3) and lube oil drain tube (4) to cylinder head cover (2).

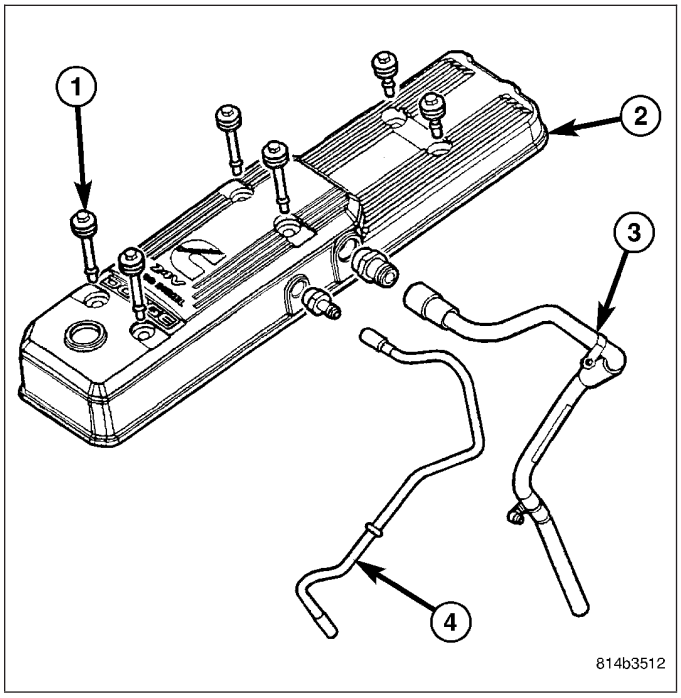

20. Connect fuel supply and return hoses.
21. Connect ECM ground to hydroform screw. Connect ECM power connector.
22. Install the power steering pump.
23. Install the damper and speed indicator ring. Torque to 40 N-m (30 ft-lb) plus 60 degrees.
24. Install lower fan shroud bracket (3). Torque to 24 N-m (18 ft·lb).

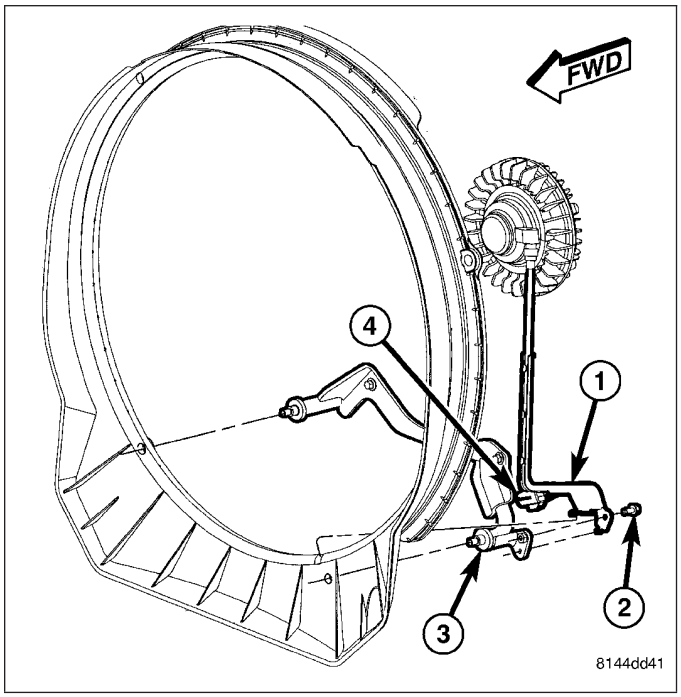

25. Install upper fan shroud brackets, but do not tighten fasteners at this time.
26. Connect the engine block heater connection.
27. Connect the A/C compressor and pressure sensor connectors
28. Install the charge air cooler (2). Install and tighten the charge air cooler mounting bolts(1) to 2 N-m (17 in-lbs).
29. Connect the charge air cooler tubes(4). Torque all clamps to 8 N-m (72 in-lbs).

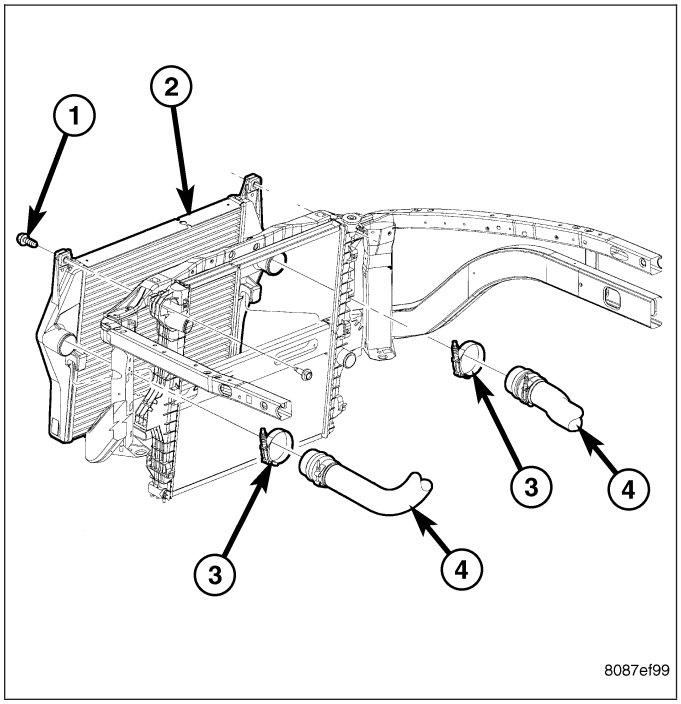

30. Install the a/c condenser (1).
31. Connect the a/c refrigerant lines to the a/c condenser.
32. Install the radiator upper support panel.
33. Install radiator.
34. Connect the transmission quick-connect oil cooler lines.
35. Raise vehicle.
36. Connect a/c compressor suction/discharge hose (if equipped).
37. Install the radiator lower hose and clamps.
38. Install the battery negative cables to the engine block on the driver and passenger side.

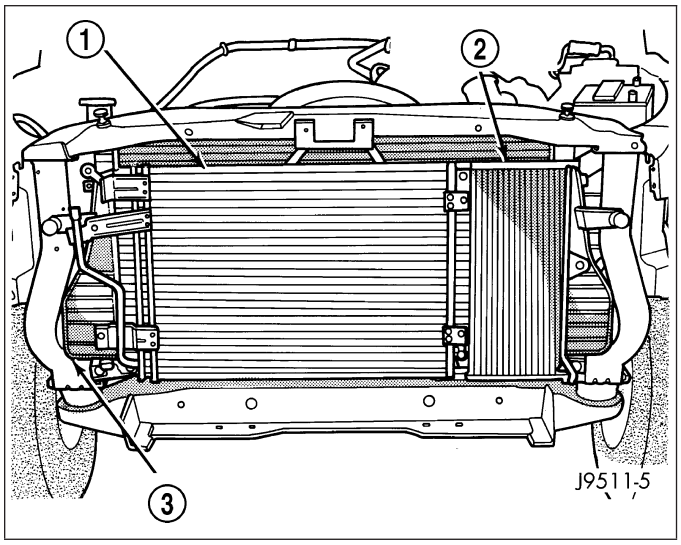

39. Install the transmission adapter with a new camshaft rectangular ring seal. Torque to 77 N-m (57 ft-lb).
40. **FOR EARLY BUILDS** Install the flywheel/flexplate. Torque to 137 N-m (101 ft-lb).
41. **FOR LATE BUILDS** Install the flywheel and adapter or flexplate. Torque to 137 N-m (101 ft-lb).
42. Install the starter motor (2). Torque to 43 N-m (32 ft-lb). (Refer to 8 - ELECTRICAL/STARTING/ STARTER MOTOR - INSTALLATION).
43. Connect engine to vehicle harness connectors.
44. Install transmission and transfer case (if equipped).
45. Connect the exhaust pipe to the turbocharger elbow.
46. Connect the transmission auxiliary oil cooler lines (if equipped).
47. Lower the vehicle.
48. Connect the heater core supply and return hoses.

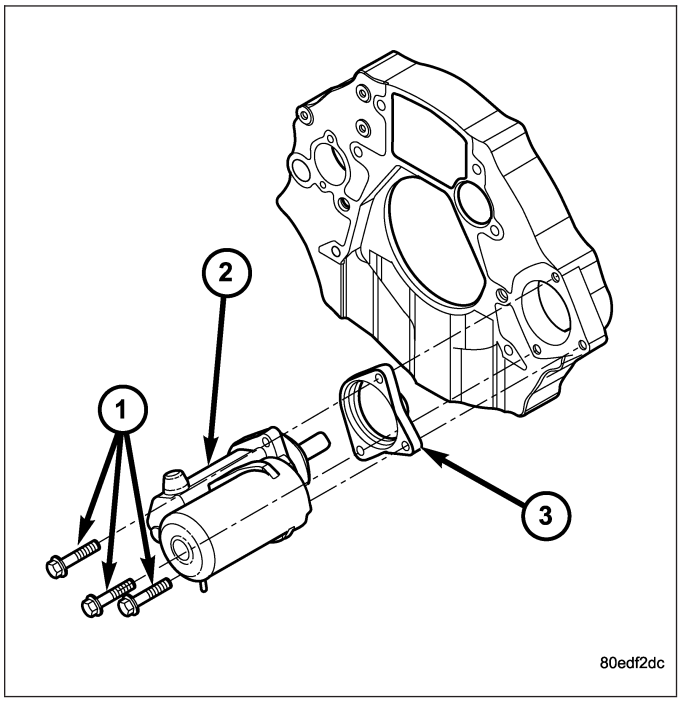

49. Install the cooling fan (3) and fan drive (2). (Refer to 7 - COOLING/ENGINE/RADIATOR FAN - INSTALLATION).

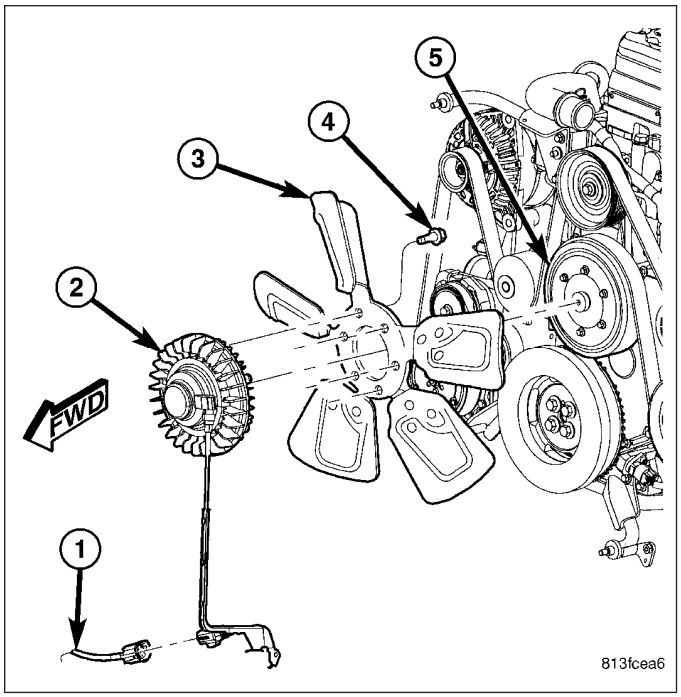

50. Install the fan shroud mounting bracket (3) and shroud. (Refer to 7 - COOLING/ENGINE/RADIATOR FAN - INSTALLATION).
51. Install the windshield washer bottle.
52. Install the upper radiator hose and clamps.
53. Raise vehicle.
54. Change oil filter and install new engine oil.
55. Fill the cooling system with coolant. (Refer to 7 - COOLING - STANDARD PROCEDURE).
56. Connect grid heater harness at grid heater relays.
57. Connect electrical connections to rear of alternator.
58. Start the engine and inspect for engine oil, coolant, and fuel leaks.

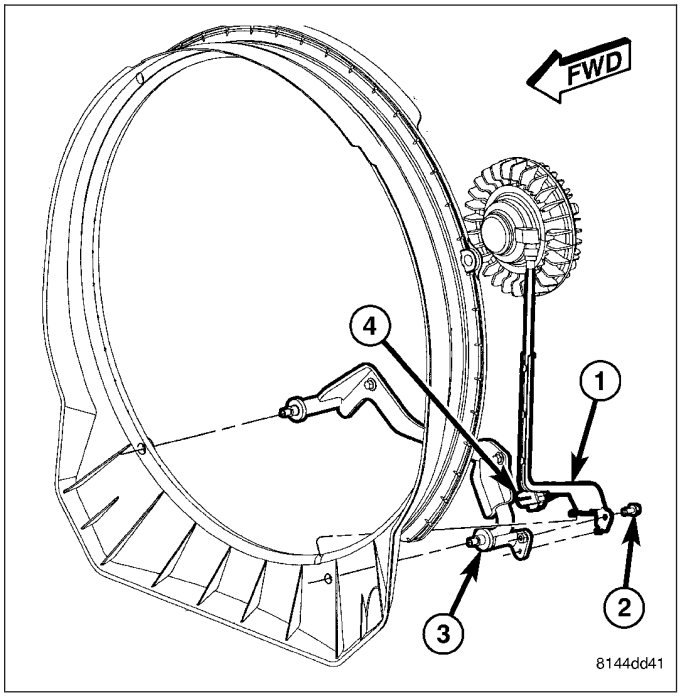

INSTALLATION - CRANKCASE BREATHER - EARLY BUILD

1. Install a new o-ring onto the breather element.
2. Lubricate o-ring and install into cylinder head cover. Torque capscrews to 10 N·m (89 in. lbs.).
3. Connect breather tube and lube oil drain tube.
4. Install breather cover. Torque to 24 N·m (18 ft. lbs.)
5. Install oil fill cap.

SPECIFICATIONS

SPECIFICATIONS - 5.9L DIESEL

GENERAL DESCRIPTION

DESCRIPTION	SPECIFICATION
Engine Type	In-Line 6 Cyl. Turbo Diesel
Displacement	5.9 Liters 359 (Cubic Inches)
Bore	102.0 mm (4.02 in.)
Stroke	120.0 mm (4.72 in.)
Compression Ratio 325 H.P	17.2:1
Cylinder Pressure (Minimum)	350 psi.
Horsepower High Output 48 RE A/T and NV 5600 or G 56 M/T	325 HP @ 2900 RPM
Torque Rating High Output (48RE A/T and NV 5600 or G 56 M/T)	600 LB-FT @ 1400 RPM
Lubrication System	Pressure Feed-Full Flow With Bypass Valve
Firing Order	1-5-3-6-2-4
Cylinder Block	Cast Iron
Crankshaft	Induction Hardened Forged Steel
Cylinder Head	Cast Iron With Valve Seat Inserts
Combustion Chambers	High Swirl Bowl
Camshaft	Chilled Ductile Iron
Pistons	Cast Aluminum
Connnecting Rods	Cross Rolled Micro Alloy

PISTONS

DESCRIPTION	SPECIFICATION	
	Metric	Standard
Skirt Diameter	101.775 - 101.793 mm	4.007 - 4.008 in.
Ring Groove Clearance		
Intermediate (Min)	0.045 mm	.0018 in
(Max)	0.095 mm	0.0037 in.
Oil Control (Min)	0.040 mm	.0016 in.
(Max)	0.085 mm	.0033 in.

PISTON PINS

DESCRIPTION	SPECIFICATION	
	Metric	Standard
Pin Diameter (Min)	39.990 mm	1.5744 in.
(Max)	40.003 mm	1.5749 in.
Bore Diameter (Min)	40.006 mm	1.5750 in.
(Max)	40.012	1.5753 in.

PISTON RINGS

DESCRIPTION	SPECIFICATION	
	Metric	Standard
Ring Gap		
Top Ring	0.26 - 0.36mm	0.010 - 0.014 in.
Intermediate	0.85 - 1.15 mm	0.033 - 0.045in.
Oil Control	0.25 - 0.55 mm	0.010 - 0.21 in.

CONNECTING RODS

DESCRIPTION	SPECIFICATION	
	Metric	Standard
Pin Bore Diameter (Min. w/ bushing installed)	40.019 mm	1.5764 in.
Pin Bore Diameter (Max. w/ bushing installed)	40.042 mm	1.5765 in.
Side Clearance (Min)	0.100 mm	0.004 in.
Side Clearance (Max)	0.330 mm	0.013 in.

CYLINDER HEAD

DESCRIPTION	SPECIFICATION
Overall Flatness End To End (max)	0.305 mm (0.012 in.)
Overall Flatness Side To Side (Max)	0.076 mm (0.003 in.)
Intake Valve Seat Angle	30°
Exhaust Valve Seat Angle	45°
Valve Stem Diameter	
(Min)	6.96 mm (0.2740 in.)
(Max)	7.01 mm (0.2760 in.)
Valve Rim Thickness (Min.)	0.79 mm (0.031 in.)

OIL PRESSURE

SPECIFICATION	SPECIFICATION
At Idle	69 kPa (10 psi)
@ 2500 rpm	207 kPa (30 psi)
Regulating Valve Opening Pressure	517 kPa (75 psi)
Oil Filter Bypass Pressure Setting	344.75 kPa (50 psi)

TORQUE

TORQUE CHART 5.9L DIESEL ENGINE

DESCRIPTION	N·m	In. Lbs.	Ft. Lbs.
Connecting Rod—Bolts			
Step 1	30	—	22
Step 2	60	—	44
Step 3	Rotate 60 degrees		
Crankshaft Main Cap—Bolts			
Step 1	50		37
Step 2	80		59
Step 3	Rotate 90°		
Cylinder Head—Bolts			
Step 1	70	—	52
Step 2	Back off 360 degrees		
Step 3	105	—	77
Step 4 Verify	105	—	77
Step 5	Rotate All Bolts 1/4 Turn		
Cylinder Head Cover Bolts	24	—	18
Breather Cover Bolts	24	—	18
HPC Nut	50	—	37
Flexplate to Engine	137	—	101
Flywheel to Engine (NV 5600)	137	—	101
Flywheel/Crankshaft Adapter G 56 Dual Mass Flywheel	137	—	101
Fuel Delivery Lines—Banjo	24	—	18
Fuel Drain Line—Banjo	24	—	18
Fuel line—rail to cylinder head	30	—	22
Fuel line—pump to fuel rail	37	—	27
Injector fuel line brace	24	—	18
#6 Fuel Line Brace Nut at Lift Bracket Stud	24	—	18
Fuel rail holddown bolt	24	—	18
Oil Pan—Bolts	28	—	21
Oil Pan—Drain Plug	50	—	37
Oil Pressure Regulator—Plug	80	—	59
Oil Pressure Switch	18	—	13
Oil Pump—Bolts			
Step1	8	—	6
Step2	24	—	18
Oil Suction Tube (Flange)—Bolts	24	—	18
Oil Suction Tube (Brace)—Bolt	43	—	32
Rocker Arm/Pedestal—Bolts	36	—	27

SPECIAL TOOLS

5.9L DIESEL ENGINE

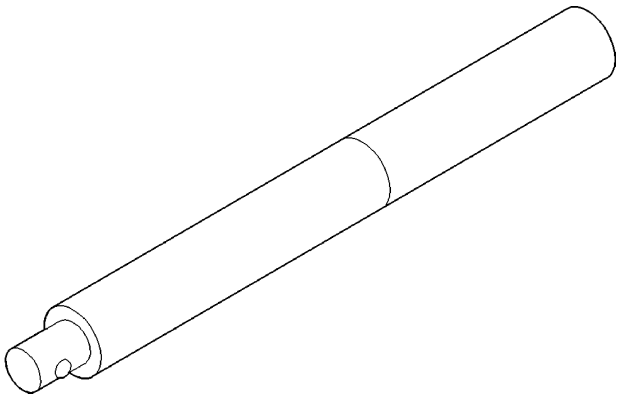

Universal Driver Handle - C4171

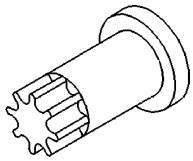

Crankshaft Barring Tool - 7471 - B

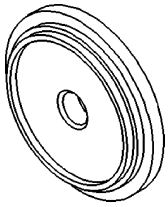

Crankshaft Front Oil Seal Installer - 8281

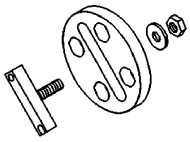

Valve Spring Compressor - 8319A

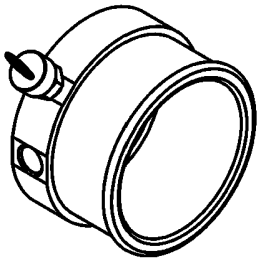

Test Plug - 8442

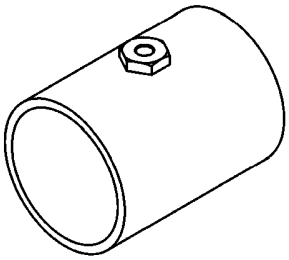

Adapter - 8462

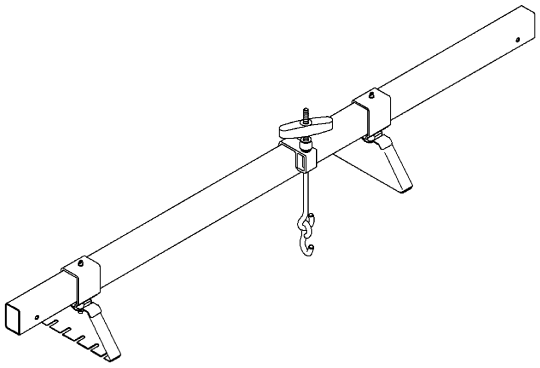

Engine Support Fixture - 8534

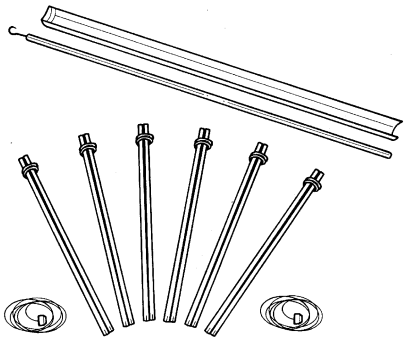

TAPPET INSTALLATION TOOL - 8502

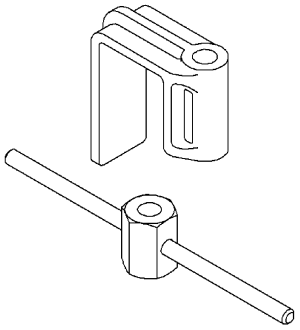

STEEL BRACKET - 8534-A

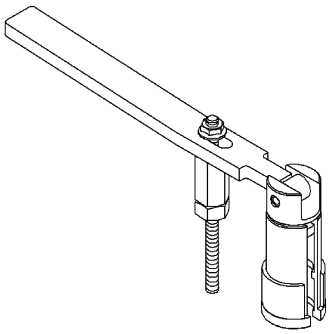

Fuel Injector Remover - 9010

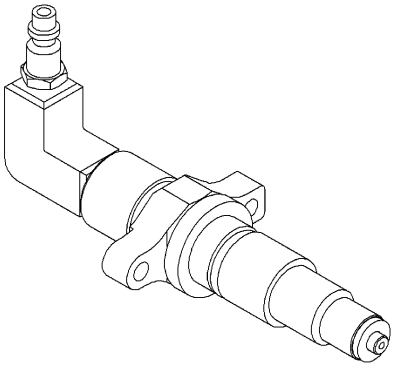

Compression Test Adapter - 9007

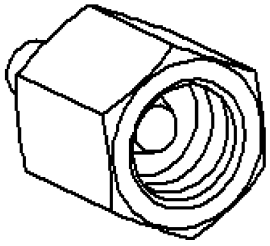

FUEL BLOCKOFF PLUG - 9011

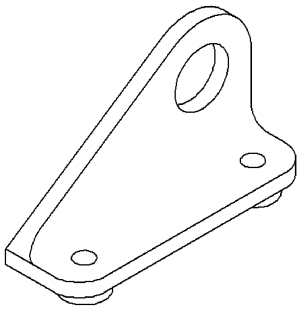

Engine Lift Bracket - 9009

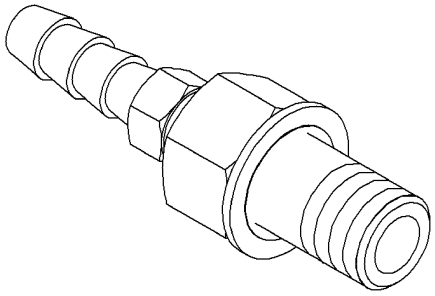

FUEL TEST FITTING - 9013

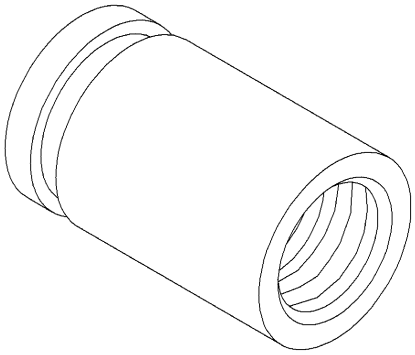

Fuel Injector Tube (Connector) Remover - 9015

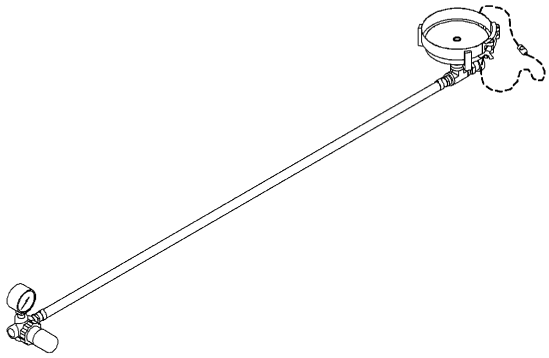

TURBO TEST ADAPTER - 9022

ENGINE DATA PLATE

DESCRIPTION

The engine data plate contains specific information that is helpful to servicing and obtaining parts for the engine. For early model year builds, the data plate can be found affixed to the breather cover on the left side of the engine. For late model year builds, the data plate is on the cylinder head cover. Information that can be found on the data plate includes:

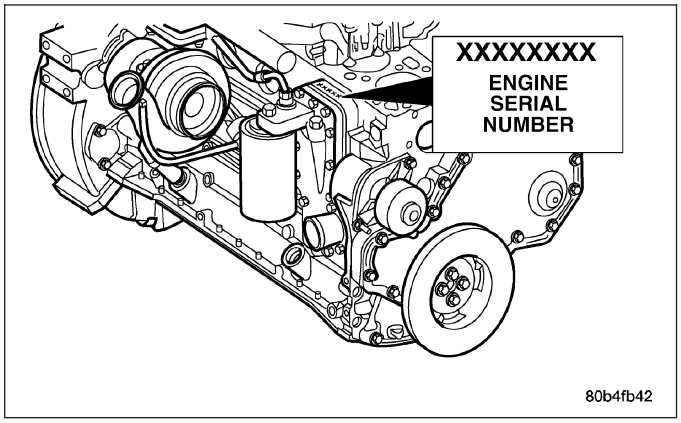

- Engine Part Number
- Date of Engine Manufacture
- Engine Serial Number
- Control Parts List (CPL)
- Engine Rated Horsepower
- Engine Firing Order
- Engine Displacement
- Valve Lash Reset Specifications

If the engine data plate is missing or not legible, the engine serial number is used for engine identification. The engine serial number is stamped on the right side of the block, on top of the oil cooler cavity.

AIR CLEANER ELEMENT

REMOVAL

Testing Air Cleaner Element using Filter Minder™

Do not attempt to unnecessarily remove top of air cleaner housing for air cleaner element inspection on diesel engines.

The air cleaner (filter) housing (5) is equipped with an air Filter Minder™ gauge (3). This air flow restriction gauge will determine when air cleaner element is restricted and should be replaced.

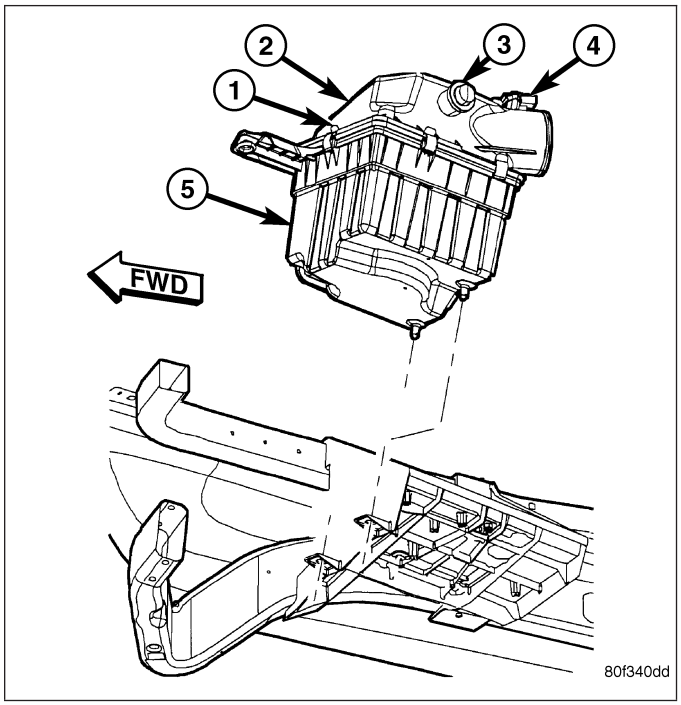

The Filter Minder™ (5) consists of a diaphragm and calibrated spring sealed inside of a plastic housing. A yellow colored disc (2) attached to diaphragm moves along a graduated scale on side of Filter Minder. After the engine has been shut off, a ratcheting device located within Filter Minder will hold yellow disc at highest restriction that air cleaner element has experienced. A drop in air pressure due to an air cleaner element restriction moves diaphragm and yellow disc will indicate size of air drop.

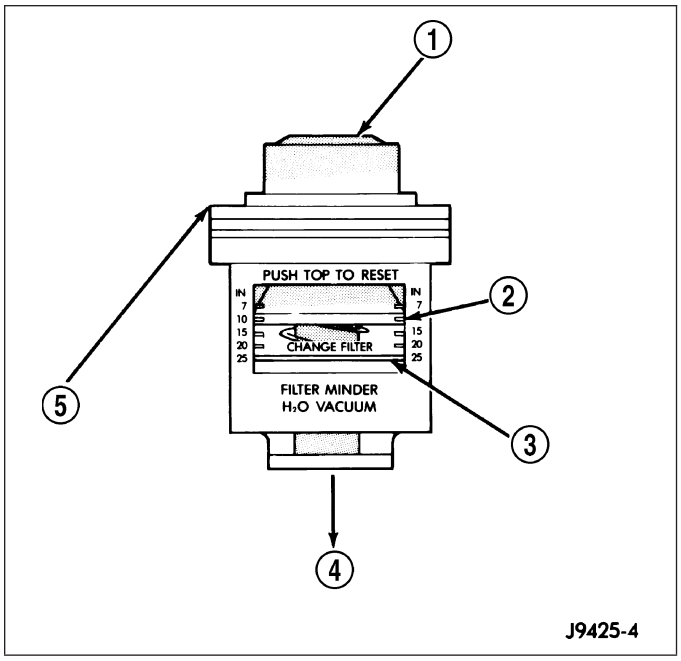

CAUTION: Certain engine degreasers or cleaners may discolor or damage plastic housing of Filter Minder. Cover and tape Filter Minder if any engine degreasers or cleaners are to be used.

To test, turn engine off. If yellow disc (2) has reached red colored zone (3) on graduated scale, air cleaner element should be replaced. Refer to Removal / Installation.

Resetting Filter Minder: After air cleaner (filter) element has been replaced, press rubber button on top of Filter Minder. This will allow yellow colored disc to reset. After button has been pressed, yellow disc should spring back to UP position.

If Filter Minder gauge has reached red colored zone, and after an examination of air cleaner (filter) element, element appears to be clean, high reading may be due to a temporary condition such as snow build-up at air intake. Temporary high restrictions may also occur if air cleaner (filter) element has gotten wet such as during a heavy rain or snow. If this occurs, allow element to dry out during normal engine operation. Reset rubber button on top of Filter Minder and retest after element has dried.

Filter Removal

1. The housing cover is equipped with spring clips and is hinged with plastic tabs. Unlatch clips from top of air cleaner housing and tilt housing cover up for cover removal.
2. Remove air cleaner element from air cleaner housing (5).

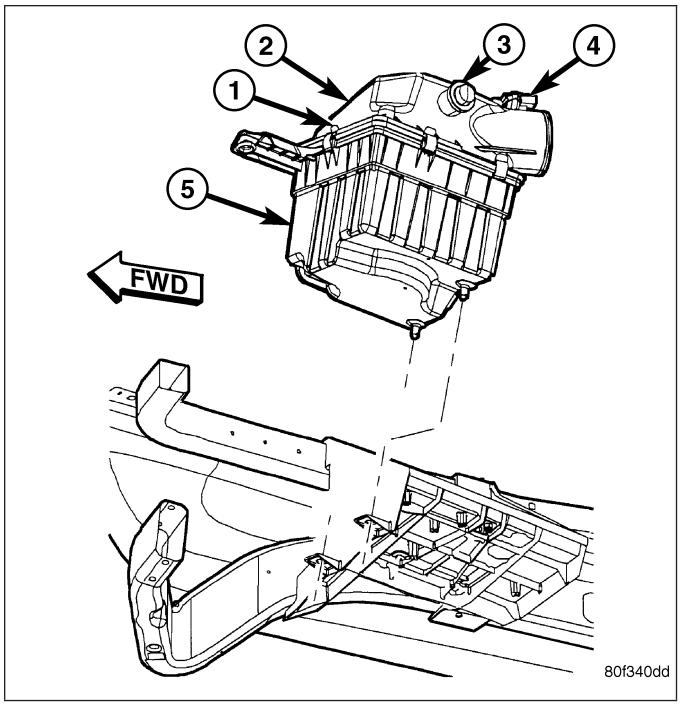

INSTALLATION

1. Before installing new air cleaner element (filter), clean inside of air cleaner housing.
2. Position air cleaner cover to tabs on front of air cleaner housing. Latch spring clips to seal cover to housing.

CYLINDER HEAD

DESCRIPTION

The cylinder head is constructed of cast iron and is a one piece cross flow design with four valves per cylinder. The arrangement of two intake and two exhaust valves per cylinder allows for a centrally located injector. The cylinder head also includes an integral intake manifold, an integral thermostat housing, and a longitudal fuel return rifle, which exits at the rear of the head. The 24 valve design also includes integrally cast valve guides and hardened intake and exhaust valve seat inserts.

REMOVAL

1. Disconnect battery negative cables.
2. Raise vehicle on hoist.
3. Drain engine coolant.
4. Disconnect exhaust pipe from turbocharger elbow.
5. Remove turbocharger drain tube bolts at turbocharger. Cap off ports to prevent dirt or foreign material from entering.
6. Lower vehicle.
7. Disconnect air inlet temperature/pressure sensor.
8. Remove air cleaner housing and snorkel from the vehicle. Cap off turbocharger air inlet to prevent intrusion of dirt or foreign material.
9. Disconnect cab heater core supply and return hoses from the cylinder head and heater pipe.
10. Disconnect turbocharger oil supply line at the turbocharger end. Cap off open ports to prevent intrusion of dirt or foreign material.
11. Remove exhaust manifold-to-cylinder head bolts, spacers, heat shield, retention straps, and cab heater plumbing. Remove exhaust manifold and turbocharger from the vehicle as an assembly.
12. Remove cooling fan/drive/shroud assembly. (Refer to 7 - COOLING/ENGINE/RADIATOR FAN - REMOVAL)
13. Remove accessory drive belt (Refer to 7 - COOLING/ACCESSORY DRIVE/DRIVE BELTS - REMOVAL).
14. Remove cooling fan support from cylinder block.
15. Remove upper generator bolt, loosen lower generator bolt, and rotate generator away from cylinder head.
16. Disconnect radiator upper hose from the thermostat housing.
17. Disconnect the Intake Air Temperature/Manifold Air Pressure, and Coolant Temperature sensor connectors.
18. Remove the engine harness to cylinder head attaching bolts and P-clips at front of head.
19. Remove the throttle linkage cover.
20. Remove the intake air grid heater wires from the grid heater.
21. Remove engine oil level indicator tube attaching bolt at fuel filter housing bracket and inlet air connection..
22. Remove the charge air cooler-to-air inlet housing pipe.
23. Remove the engine wire harness attaching bolt and wire harness push-in fastener from air inlet housing.
24. Remove the air inlet housing and intake grid heater from the intake manifold cover.
25. Remove the two grid heater harness-to-cylinder head attaching bolts at front of cylinder head.
26. **Remove the high pressure pump to fuel rail fuel line as follows:**
    a. Loosen fuel line nuts at fuel pump and at fuel rail.
    b. Use a back-up wrench on the fitting at the fuel pump to keep it from loosening.
27. Remove the fuel rail to cylinder head fuel lines as follows:
    a. Loosen No. 6 high pressure fuel line shield and position out of way.
    b. Loosen the fuel line nuts at the fuel rail and at the cylinder head. Use a back-up wrench on HPC nut.
    c. Remove the fuel line bracket bolts at the intake manifold cover.
28. Remove the engine lift bracket from the rear of the cylinder head.
29. Remove the fuel rail as follows:

a. Remove fuel rail pressure sensor connector.

b. Remove banjo fitting at pressure limiting valve.

c. Remove fuel rail bolts and fuel rail.

30. Remove the low pressure lines as follows:

a. Remove the fuel drain banjo fitting on the front side of fuel filter housing.

b. Remove the fuel drain banjo fitting on rear side of fuel filter housing.

c. Remove the fuel drain line support bracket on rear side of filter housing.

d. Disconnect fuel drain hose.

e. Remove banjo fitting at bottom of fuel filter housing.

f. Disconnect fuel supply hose at fuel filter.

31. Disconnect fuel heater, and water in fuel sensor.
32. Remove the fuel filter assembly-to-cylinder head bolts and remove filter assembly from vehicle.
33. Remove wire harness P-clip from cylinder head (located behind filter housing).

NOTE: Verify that the cylinder head cover ground spring is retained in the cylinder head cover.

34. Remove the cylinder head cover (Refer to 9 - ENGINE/CYLINDER HEAD/CYLINDER HEAD COVER(S) - REMOVAL).
35. Disconnect rocker housing injector harness connectors.
36. Remove injector harness nuts from injectors.

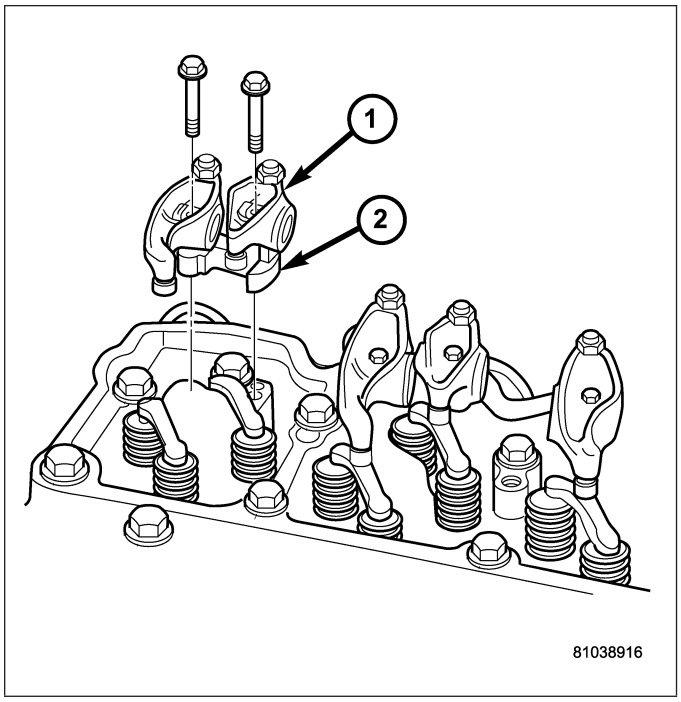

37. Remove the rocker levers (1), cross heads and push rods. Mark each component so they can be installed in their original positions.

NOTE: The #5 cylinder exhaust and the #6 cylinder intake and exhaust push rods are removed by lifting them up and through the provided cowl panel access holes. Remove the rubber plugs to expose these relief holes.

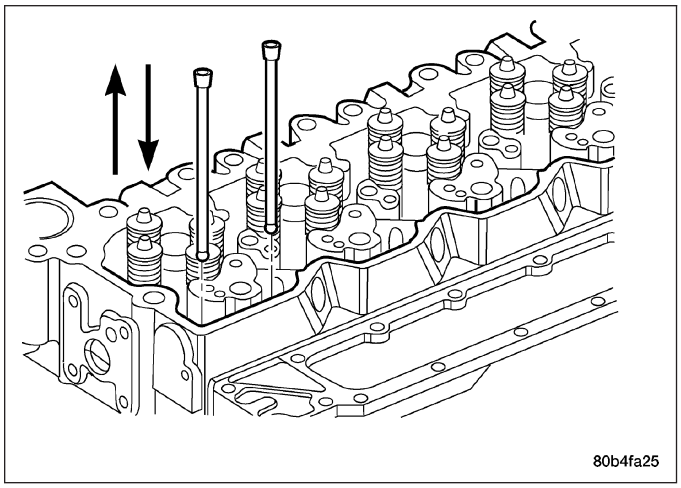

38. Remove the fuel return line and banjo bolt at the rear of the cylinder head. Be careful not to drop the two (2) sealing washers.
39. Remove the fuel injectors (Refer to 14 - FUEL SYSTEM/FUEL INJECTION/FUEL INJECTOR - REMOVAL).
40. Remove rocker housing bolts and rocker housing and gasket.
41. Reinstall the engine lift bracket at the rear of cylinder head. Torque to 77 N·m (57 ft. lbs.).
42. Remove twenty six (26) cylinder head-to-block bolts.
43. Attach an engine lift crane to engine lift brackets and lift cylinder head off engine and out of vehicle.
44. Remove the head gasket and inspect for failure.

CLEANING

CLEANING—CYLINDER HEAD

CAUTION: Do not wire brush head surface while fuel injectors are still installed. Fuel injector damage can result.

Remove fuel injectors before cleaning (if not already removed during cylinder head removal).

Clean the carbon from the injector nozzle seat with a nylon or brass brush.

Scrape the gasket residue from all gasket surfaces.

Wash the cylinder head in hot soapy water solution (88°C or 140°F).

After rinsing, use compressed air to dry the cylinder head.

Polish the gasket surface with 400 grit paper. Use an orbital sander or sanding block to maintain a flat surface.

CLEANING—CROSSHEADS

Clean all crossheads in a suitable solvent. If necessary, use a wire brush or wheel to remove stubborn deposits. Rinse in hot water and blow dry with compressed air.

CLEANING—PUSHRODS

Clean the pushrods in a suitable solvent. Rinse in hot water and blow dry with compressed air. If necessary, use a wire brush or wheel to remove stubborn deposits.

INSPECTION

INSPECTION - CYLINDER HEAD

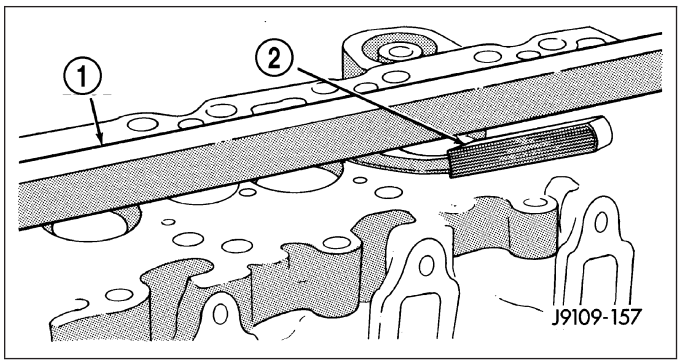

Inspect the cylinder head for cracks in the combustion surface. Pressure test any cylinder head that is visibly cracked. A cylinder head that is cracked between the injector bore and valve seat can be pressure tested and reused if OK; however, if the crack extends **into** the valve seat insert bore, the cylinder head **must** be replaced.

Visually inspect the cylinder block and head combustion surfaces for localized dips or imperfections. Check the cylinder head and block combustion surfaces for overall out-of-flatness. If either the visual or manual inspection exceeds the limits, then the head or block must be surfaced.

Check the top surface for damage caused by the cylinder head gasket leaking between cylinders.

Inspect the block and head surface for nicks, erosion, etc.

Check the head distortion. Maximum overall variation end to end is 0.305 mm (0.012 inch), and maximum overall variation side to side 0.076 mm (.003 in.).

DO NOT proceed with the in-chassis overhaul if the cylinder head or block surface is damaged or not flat (within specifications).

Check block surface for distortion. Maximum variation end-to-end is 0.076 mm (.003 in.), side-to-side 0.051 mm (.002).

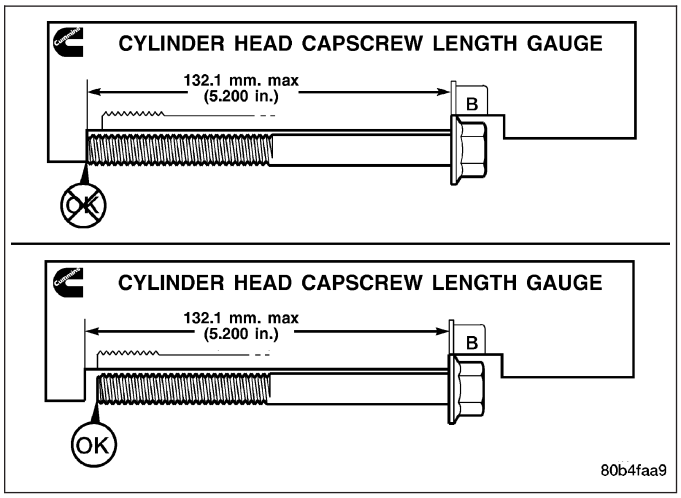

Visually inspect the cylinder head bolts for damaged threads, corroded/pitted surfaces, or a reduced diameter due to bolt stretching.

If the bolts are not damaged, their “free length” should be measured using the cap screw stretch gauge provided with the replacement head gasket. Place the head of the bolt against the base of the slot and align the bolt with the straight edge of gauge . If the end of the bolt touches the foot of the gauge, the bolt **must** be discarded. **The maximum bolt free length is 132.1 mm (5.200 in.).**

INSPECTION - CROSSHEADS

Inspect the crossheads for cracks and/or excessive wear on rocker lever and valve tip mating surfaces. Replace any crossheads that exhibit abnormal wear or cracks.

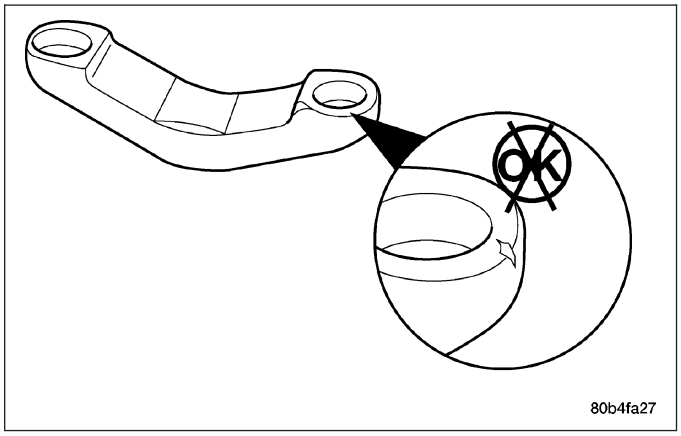

INSPECTION—PUSHRODS

Inspect the push rod ball and socket for signs of scoring. Check for cracks where the ball and the socket are pressed into the tube
.

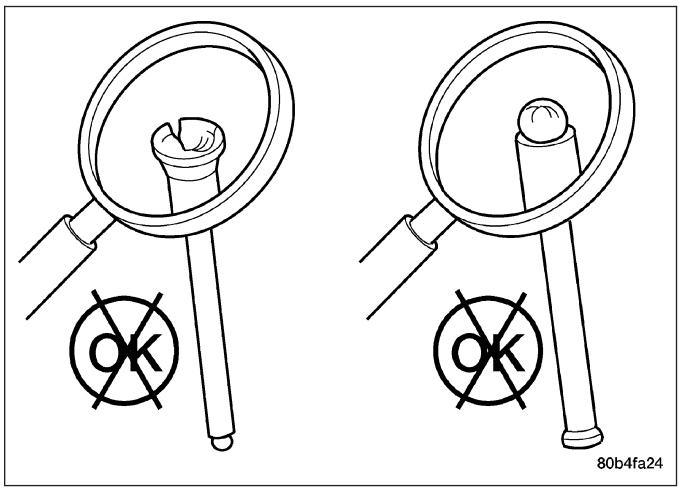

Roll the push rod on a flat work surface with the socket end hanging off the edge. Replace any push rod that appears to be bent.

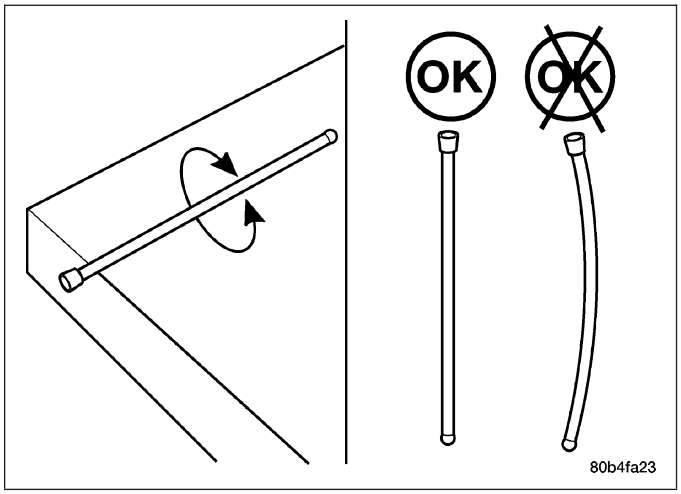

INSTALLATION

WARNING: THE OUTSIDE EDGE OF THE HEAD GASKET IS VERY SHARP. WHEN HANDLING THE NEW HEAD GASKET, USE CARE NOT TO INJURE YOURSELF.

1. Install a new gasket with the part number side up, and locate the gasket over the dowel sleeves.
2. Using an engine lifting crane, lower the cylinder head onto the engine.
3. Lightly lubricate head bolts with engine oil and install. Using the sequence shown in , tighten bolts in the following steps:
   a. Torque bolts to 70 N·m (52 ft. lbs.)
   b. Back off 360 degrees in sequence
   c. Torque bolts to 105 N·m (77 ft. lbs.)
   d. Re-check all bolts to 105 N·m (77 ft. lbs.)
   e. Tighten all bolts an additional ¼ turn (90°)

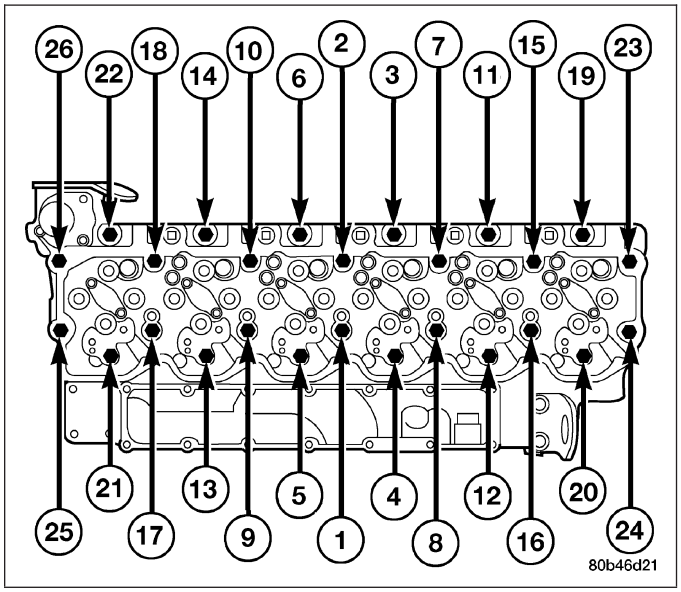

4. Install push rods into their original locations. **Verify that they are seated in the tappets**.

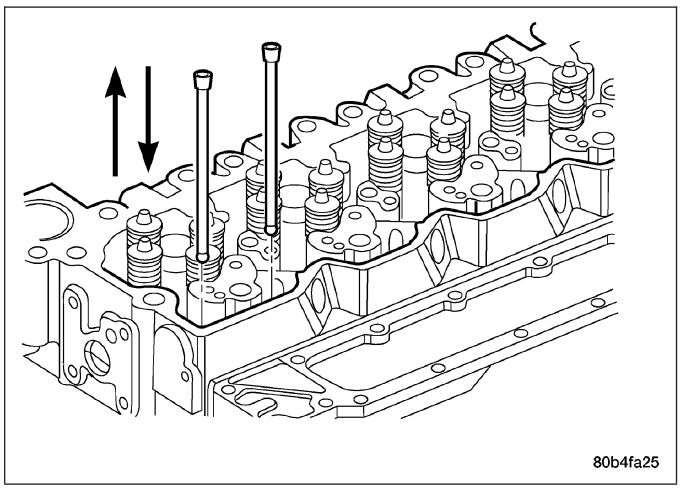

5. Inspect rocker housing gasket for cuts and proper installation into groove. Replace if damaged.
6. Install rocker housing and bolts. Tighten to 24 Nm (18 lb. ft.).
7. Install fuel injector (Refer to 14 - FUEL SYSTEM/FUEL INJECTION/FUEL INJECTOR - INSTALLATION).
8. **FOR EARLY BUILDS** Install injector harness nuts. Tighten to 1.25 Nm (11 lb. in.).
9. **FOR EARLY BUILDS** Reconnect injector harness connectors at rocker housing.

10. Lubricate valve stem tips and install the cross-heads in their original locations.
11. Lubricate the rocker arms (1) and pedestals (2) and install them in their original locations. Install the bolts and torque them to 36 N·m (27 ft. lbs.).
12. Verify that the valve lash settings are maintained (Refer to 9 - ENGINE/CYLINDER HEAD/INTAKE/ EXHAUST VALVES & SEATS - STANDARD PROCEDURE).

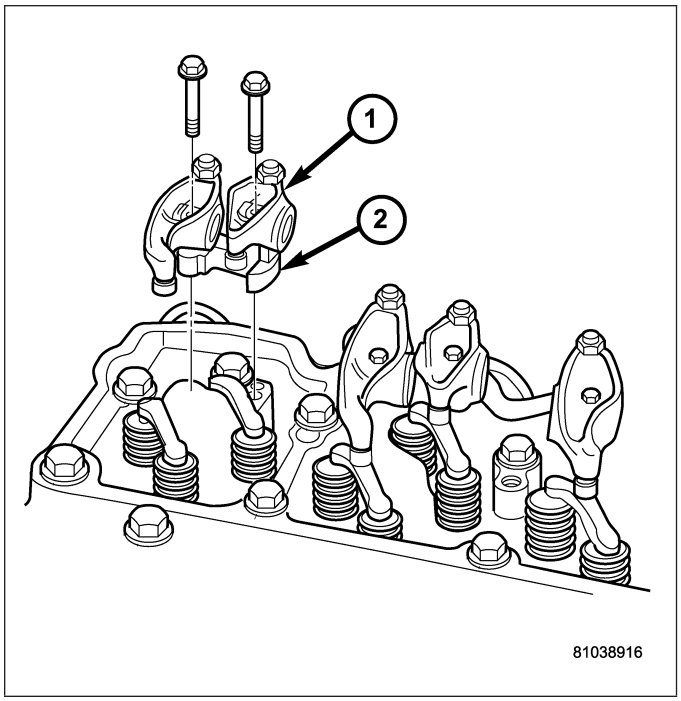

NOTE: For early builds, Verify that cylinder head ground spring is properly installed and retained in the cylinder head cover, before installation.

13. **FOR EARLY BUILDS** Install cylinder head cover and ground spring (Refer to 9 - ENGINE/CYLINDER HEAD/ CYLINDER HEAD COVER(S) - INSTALLATION).
14. **FOR LATE BUILDS** Install cylinder head cover gasket onto rocker housing.
15. **FOR LATE BUILDS** Install injector harness nuts. Tighten to 1.25 Nm (11 lb. in.).
16. **FOR LATE BUILDS** Connect injector harness connectors at cylinder head cover gasket.
17. Install wire harness P-clip to cylinder head behind filter housing 24 N·m (18 ft. lbs.).
18. Connect the IAT/MAP sensor connector.
19. Install the fuel filter housing assembly and torque mounting bolts to 24 N·m (18 ft. lbs.).
20. Connect WIF sensor, and fuel heater.

CAUTION: Failure to follow procedure will result in fuel leaks and/or fuel system failure.

21. **Install the fuel rail and high pressure fuel lines as follows:**
    a. Hand tighten fuel rail bolts.
    b. Hand tighten fuel drain line to pressure limiting valve. Hand tighten banjo bolt at fuel filter housing.
    c. Hand tighten fuel rail-to-cylinder head high pressure fuel lines.
    d. Install fuel line brace bolts-to-intake manifold finger tight for fuel lines #2 thru #5.
    e. Install fuel line brace nut to rear lift bracket stud, finger tight, for fuel line #6.
    f. Hand tighten fuel pump to fuel rail line.
    g. Torque fuel line nuts at cylinder head to 30 Nm (22 ft. lbs.).
    h. Torque fuel line nuts at fuel rail to 30 Nm (22 ft. lbs.)
    i. Using a back up wrench, torque fuel pump to fuel rail line to 37 Nm (27 ft. lbs.). At injection pump.
    j. Torque fuel pump to fuel rail line to 37 Nm (27 ft. lbs.) at fuel rail.
    k. Torque fuel drain banjo bolt at pressure limiting valve and front of fuel filter housing to 24 Nm (18 ft. lbs.).
    l. Torque fuel line brace bolts to 24 N·m (18 ft. lbs.).

m. Torque fuel line brace nut to 24 N·m (18 ft. lbs.).

n. Torque rail bolts to 24 Nm (18 ft. lbs.).

o. Connect fuel pressure sensor.

22. Reposition number 6 fuel line shield and torque to 43 N·m (32 ft. lbs.).
23. Install the fuel filter to injection pump low pressure line. Inspect and replace sealing washers if necessary. Torque banjo bolts to 24 N·m (18 ft. lbs.).
24. Connect fuel return line at back of cylinder head hand tight.
25. Connect fuel return line at filter housing hand tight.
26. Torque banjo connections at cylinder head and fuel filter housing to 24 Nm (18 ft. lbs.)
27. Install bracket to rear of filter housing. Torque to 24 Nm (18 ft. lbs.).
28. Using new gaskets, install the intake grid heater and air inlet housing. Torque bolts to 24 N·m (18 ft. lbs.).
29. Install wire harness P-clip and push on clip to air inlet housing.
30. Connect engine oil level indicator tube at fuel filter housing and at air inlet housing.
31. Install the charge air cooler-to-air inlet housing duct assembly. Torque all clamps to 11 N·m (100 in. lbs.).
32. Connect intake grid heater wires.
33. Secure engine harness to front of cylinder head with bolt at four locations.
34. Connect engine coolant temperature sensor connector.
35. Connect radiator upper hose to thermostat housing.
36. Rotate generator into position. Install upper bolt and torque upper and lower bolts.
37. Install wire harness push-on clip below bracket.
38. Install wire harness P-clip to top of bracket.
39. Install fan support and torque to 32 N·m (24 ft. lbs.).
40. Install cooling fan/drive refer to (Refer to 7 - COOLING/ENGINE/RADIATOR FAN - INSTALLATION).
41. Install accessory drive belt (Refer to 7 - COOLING/ACCESSORY DRIVE/DRIVE BELTS - INSTALLATION).
42. Install exhaust manifold/turbocharger assembly, using new gaskets. Start all bolts/spacers by hand. Torque bolts to 43 N·m (32 ft. lbs.).
43. Install exhaust manifold heat shield to exhaust manifold studs. Install retaining nuts.Torque to 24 N·m (18 ft. lbs.).
44. Install exhaust bolt retention straps across cylinders 5 & 6.
45. Using a new gasket, connect the turbocharger oil drain tube. Torque to 24 N·m (18 ft. lbs.).
46. Perform the turbocharger pre-lube procedure. Refer to Group 11, Exhaust System and Turbocharger for the correct procedure.
47. Connect the turbocharger oil supply line. Torque to 24 N·m (18 ft. lbs.).
48. Install air cleaner housing and duct.
49. Connect air inlet temperature/pressure sensor.
50. Raise vehicle on hoist.
51. Install exhaust pipe to turbocharger elbow. Torque bolts to 11 N·m (100 in. lbs.).
52. Lower vehicle.
53. Fill engine coolant (Refer to 7 - COOLING - STANDARD PROCEDURE).
54. Start engine and check for leaks.

COVER - CYLINDER HEAD

REMOVAL

REMOVAL - CYL HEAD COVER - EARLY

1. Disconnect both battery negative cables.
2. Remove oil fill cap.
3. Remove the breather cover.
4. Disconnect the breather hose and breather drain tube from the breather housing.
5. Remove cylinder head cover bolts (1).
6. Remove the cylinder head cover (2).

NOTE: Verify cylinder head ground spring is still properly retained in cylinder head cover.

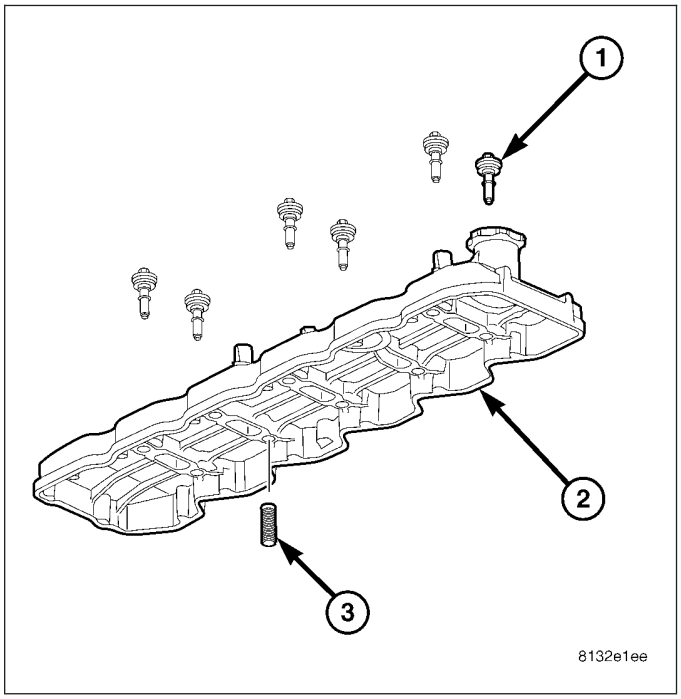

REMOVAL - ROCKER HOUSING

1. Remove cylinder head cover as outlined in this section.
2. **FOR EARLY BUILDS** Disconnect rocker housing injector harness connectors.
3. **FOR EARLY BUILDS** Remove injector harness nuts from injectors.
4. **FOR LATE BUILDS** Remove cylinder head cover gasket.
5. Remove rocker housing bolts.
6. Remove rocker housing and gasket.

REMOVAL - CYL HEAD COVER - LATE

1. Disconnect both negative battery cables.
2. Disconnect the breather tube (3) and breather drain tube (4) from the cylinder head cover.
3. Remove the cylinder head cover bolts.

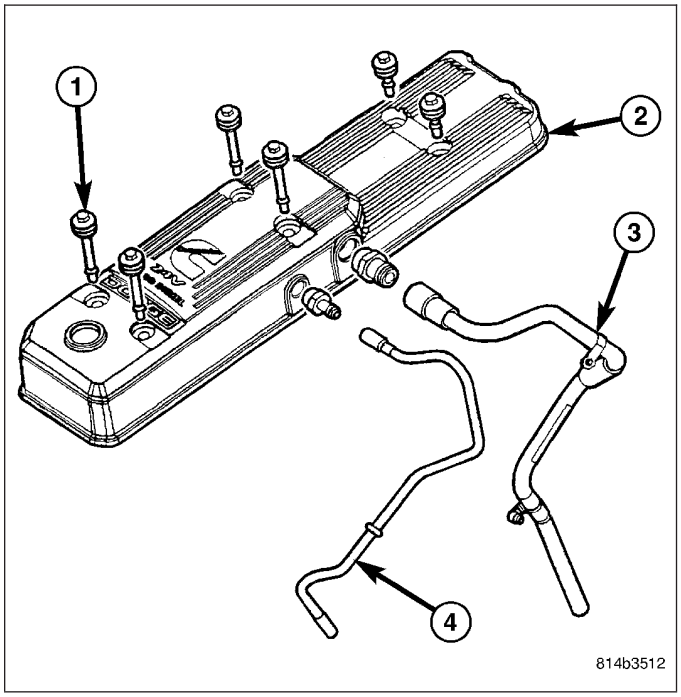

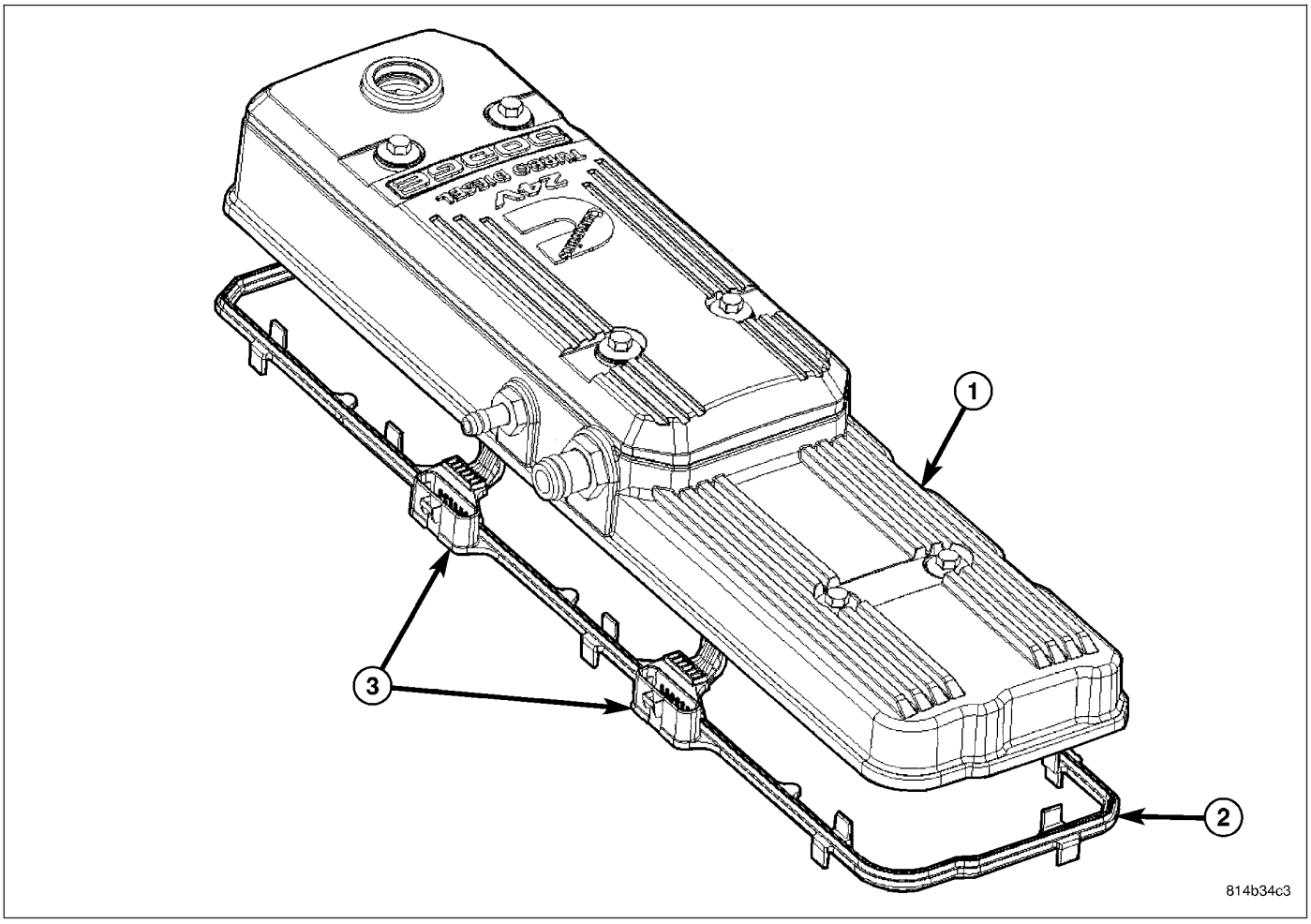

4. Remove the cylinder head cover (1).

REMOVAL - CYL HEAD COVER GASKET

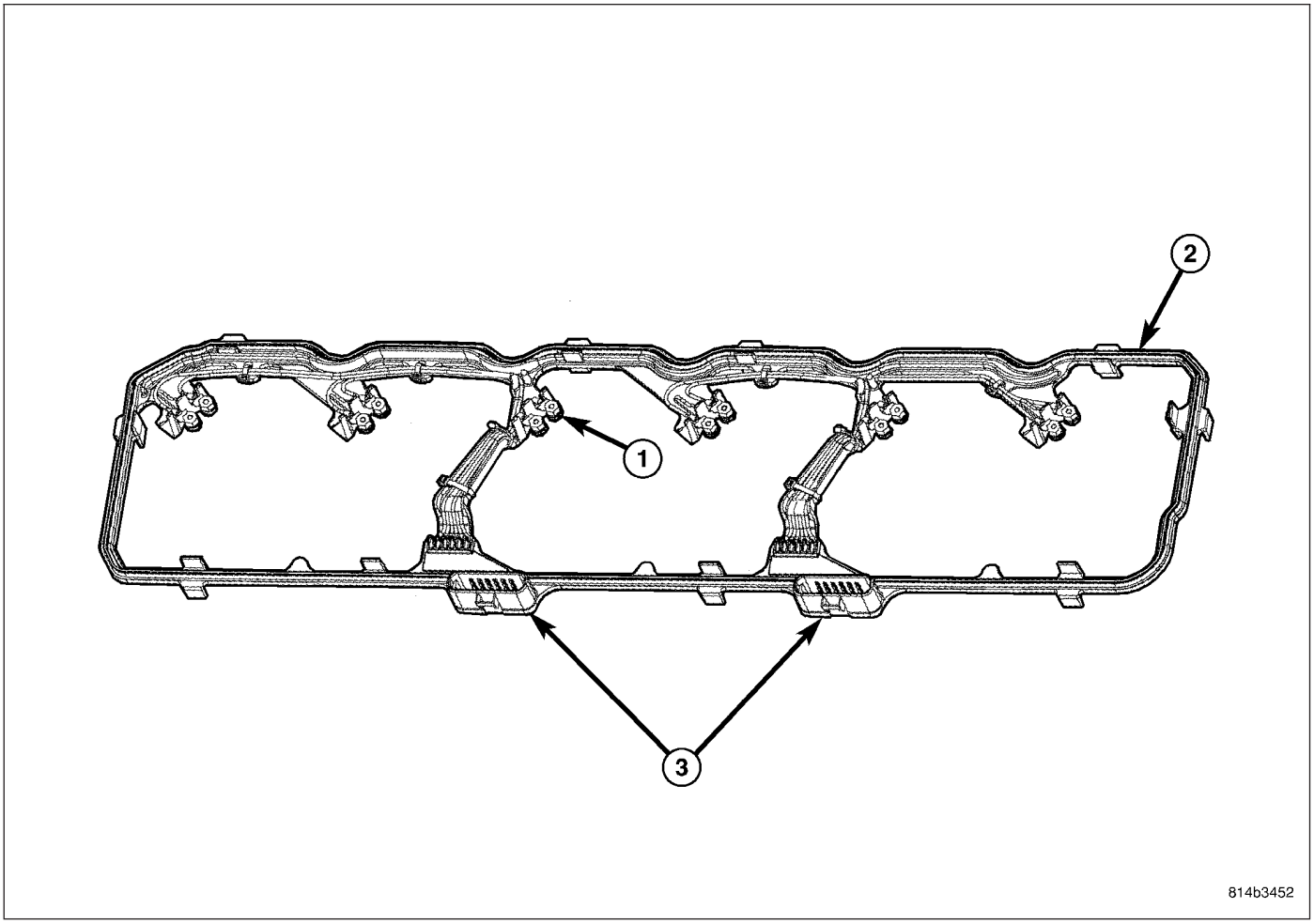

1. Remove cylinder head cover.
2. Disconnect injector harness connectors (3) at cylinder head cover gasket.
3. Remove injector solenoid nuts (1) at injectors.
4. Remove cylinder head cover gasket (2).

CLEANING

Using a suitable solvent, Clean and dry gasket mating surfaces on cylinder head and rocker housing. Wipe gasket dry and inspect for re-use.

INSPECTION

The cylinder head cover gasket and rocker housing gasket, are reusable. However, should cracks, nicks, or tears be present in the rubber/silicone construction, the defective components should be replaced. Also replace gasket if it is no longer flexible. Inspect cylinder head cover rubber isolated capscrews for cracks, nicks, or tears.**Do not reuse gasket if it has been removed from the groove in the rocker housing or cylinder head cover.**

INSTALLATION

INSTALLATION - CYL HEAD COVER - EARLY

1. Inspect cylinder head cover gasket for cuts and proper installation in groove. Replace if damaged.
2. Position cylinder cover on top of rocker housing.

NOTE: Inspect rubber isolators and replace if damaged.

3. Install bolts (1).
4. Starting with the center bolt, torque to 24 N·m (18 ft. lbs.).
5. Install breather hose to breather.
6. Install breather drain hose to breather.
7. Install breather cover and wire harness clip. Torque to 24 N·m (18 ft. lbs.).

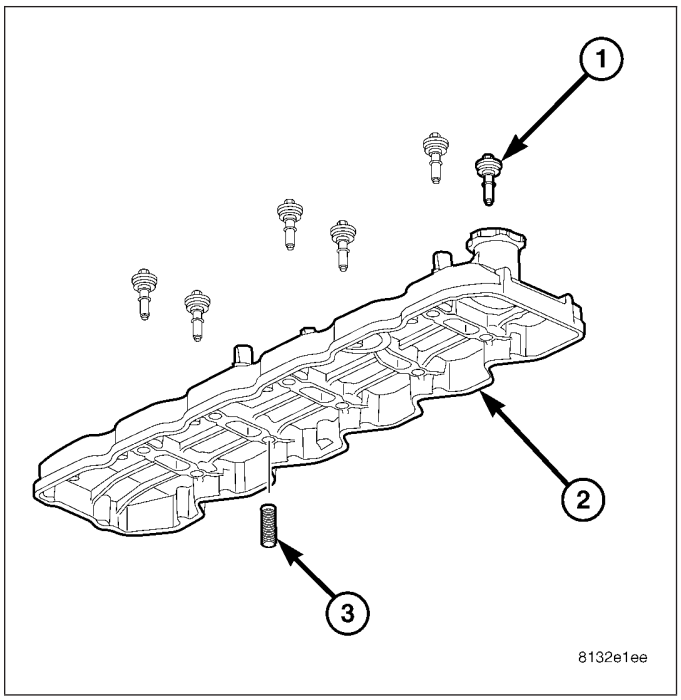

INSTALLATION - ROCKER HOUSING

1. Inspect rocker housing gasket for cuts, nicks, or tears. Replace if damaged or if gasket has come out of groove.
2. Inspect rocker housing gasket for proper installation in groove. Gasket bead must be centered in groove. A gasket bead that is tilted to the side will cause an oil leak.

CAUTION: When installing rocker housing onto cylinder head, do not slide housing from side to side, The gasket could fall out or be damaged.

3. Install the rocker housing. Carefully guide the rocker housing evenly down onto the cylinder head.
4. Install rocker housing bolts and tighten finger tight.
5. Torque bolts, working from center out, to 24 Nm (18ft. lbs.).
6. **FOR EARLY BUILDS** Install injector harness nuts to injector solenoid. Torque to 1.25 Nm (11 in. lbs.).
7. **FOR EARLY BUILDS** Connect rocker housing injector harness connections.

INSTALLATION - CYL HEAD COVER - LATE

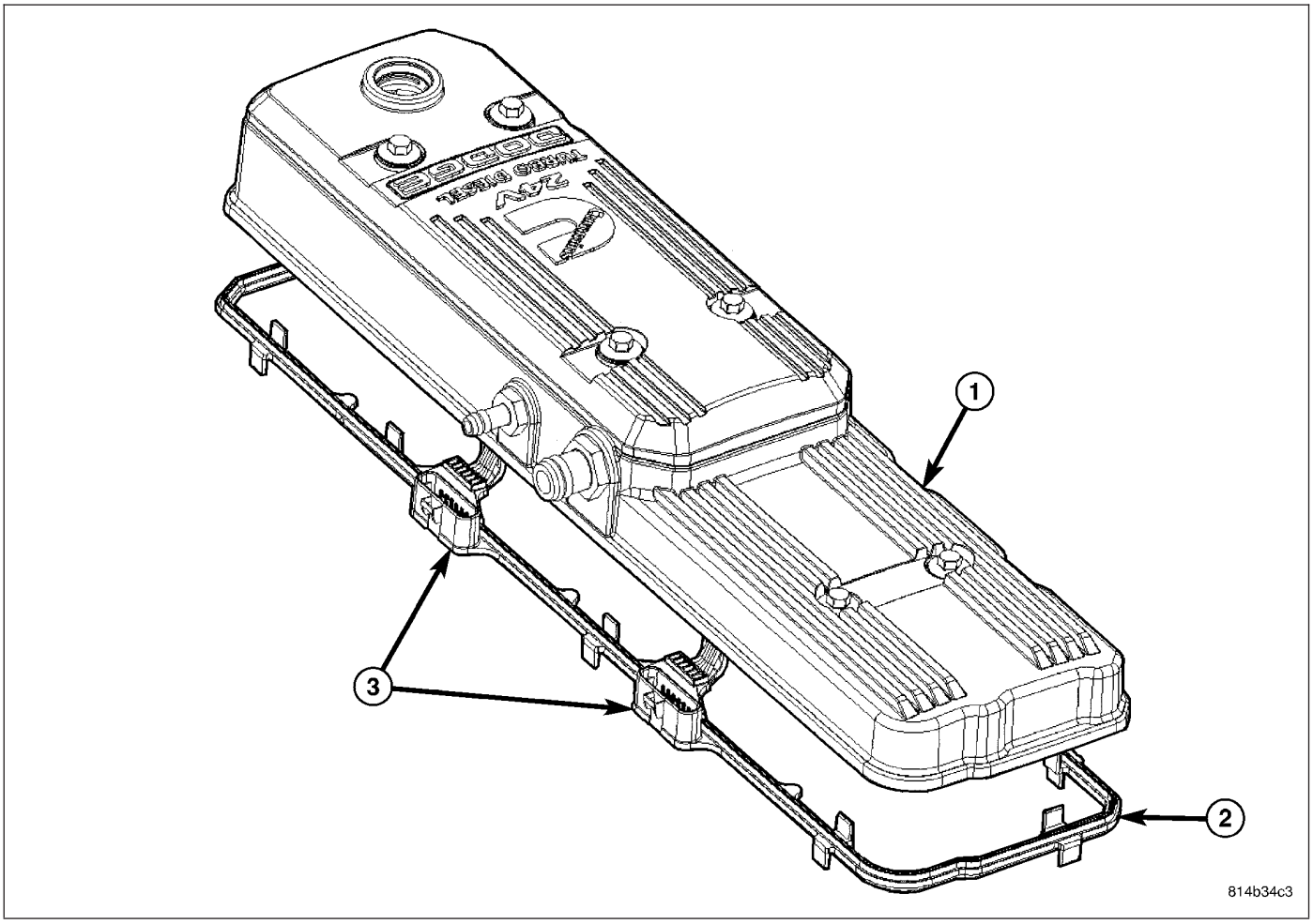

1. Position cylinder head cover (1) on top of cylinder head cover gasket (2).
2. Install bolts finger tight.

3. Starting with the center bolt, torque bolts (1) to 24 N·m (18 ft. lbs.).
4. Install breather tube (3) to cylinder head cover (2).
5. Install breather drain tube (4) to cylinder head cover (2).

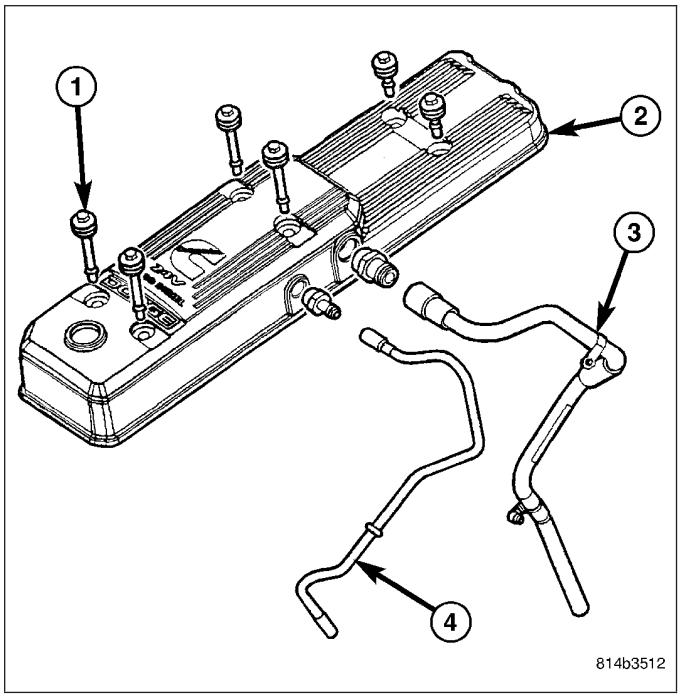

INSTALLATION

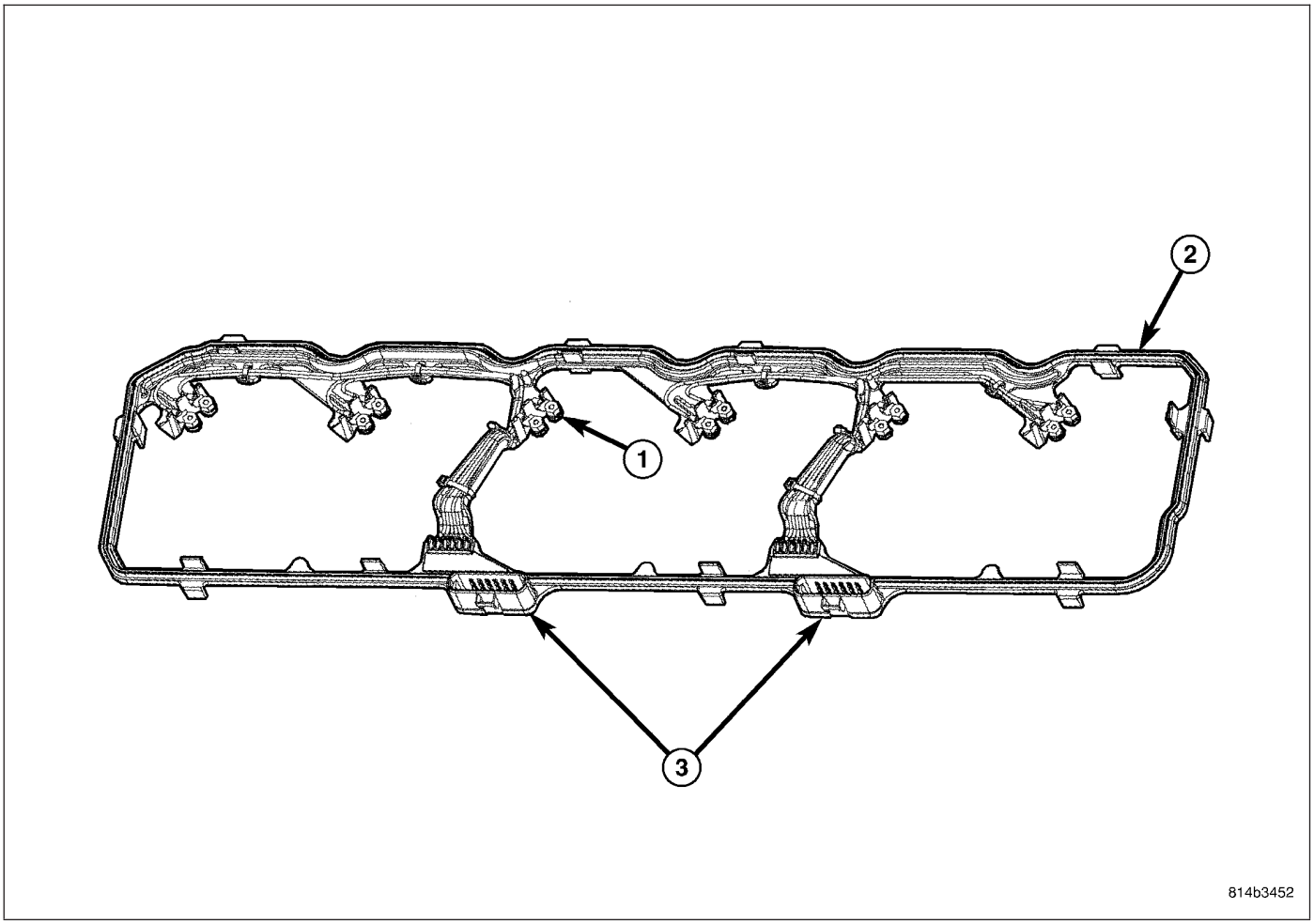

1. Clean oil from cylinder head cover gasket
2. Inspect cylinder head cover gasket for cuts or damage. Replace if damaged.

3. Place cylinder head cover gasket on top of rocker housing (2).
4. Install injector solenoid nuts (1) at injectors. Torque to 1.25 N·m (11 in. lbs.).
5. Connect injector harness connectors (3) at cylinder head cover gasket.

VALVES & SEATS - INTAKE/EXHAUST

DESCRIPTION

The valves (1,2) are made of heat resistant steel, and have chrome plated stems to prevent scuffing. The intake and exhaust valves are both similar in head diameter and overall length, but they have unique face angles which makes them non-interchangeable. The valves are distinguished by unique dimples on the exhaust valve head (2).

The exhaust valve springs are made from high strength, chrome silicon steel. The exhaust valve springs are also exhaust brake compatible.

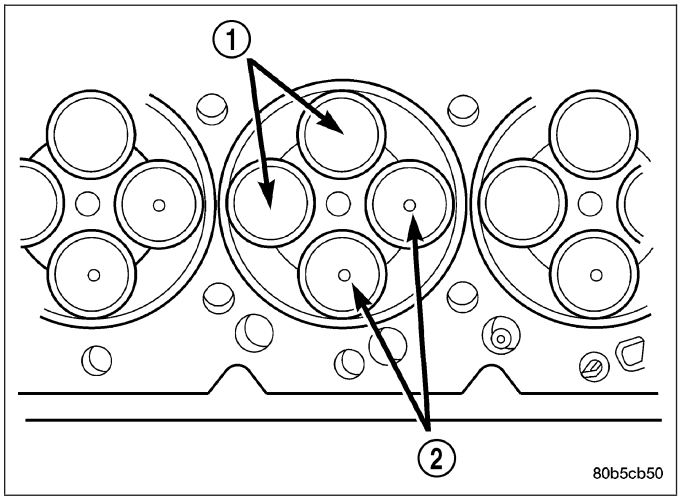

STANDARD PROCEDURE

STANDARD PROCEDURE - VALVES, GUIDES AND SPRINGS

REMOVAL

1. Remove cylinder head (Refer to 9 - ENGINE/CYLINDER HEAD - REMOVAL).
2. Support cylinder head on stands, or install head bolts upside down (through combustion surface side) to protect injector tips from damage from work bench.
3. Install the valve spring compressor mounting base (1) as shown.

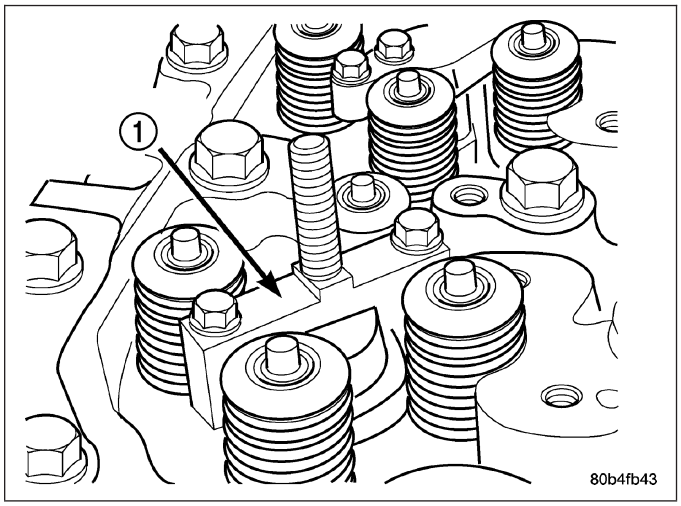

4. Install the compressor top plate, washer, and nut. Using a suitable wrench, tighten the nut (clockwise) to compress the valve springs and remove the locks.
5. Rotate the compressor nut counter-clockwise to relieve tension on the springs. Remove the spring compressor (1).

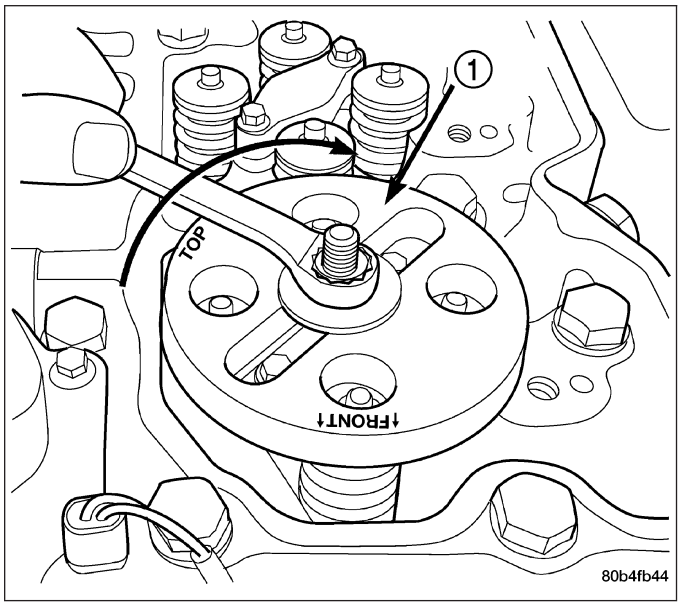

6. Remove the retainers (5), springs (4), valve seals (3) (if necessary), and valves (2). Arrange or number all components so they can be installed in their original locations.
7. Repeat the procedure on all cylinders to be serviced.

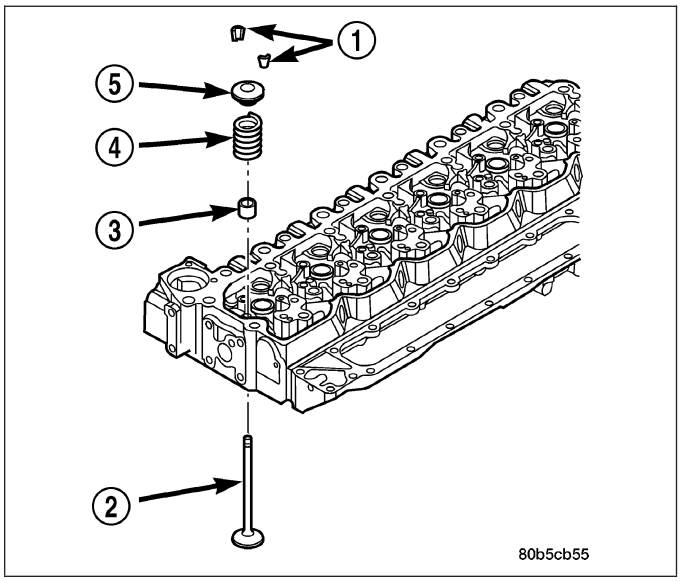

CLEANING

Clean the valve stems with crocus cloth or a Scotch-Brite™ pad. Remove carbon with a soft wire brush. Clean valves, springs, retainers, and valve retaining locks in a suitable solvent. Rinse in hot water and blow dry with compressed air.

INSPECTION

Visually inspect the valves for abnormal wear on the heads, stems, and tips. Replace any valve that is worn out or bent.

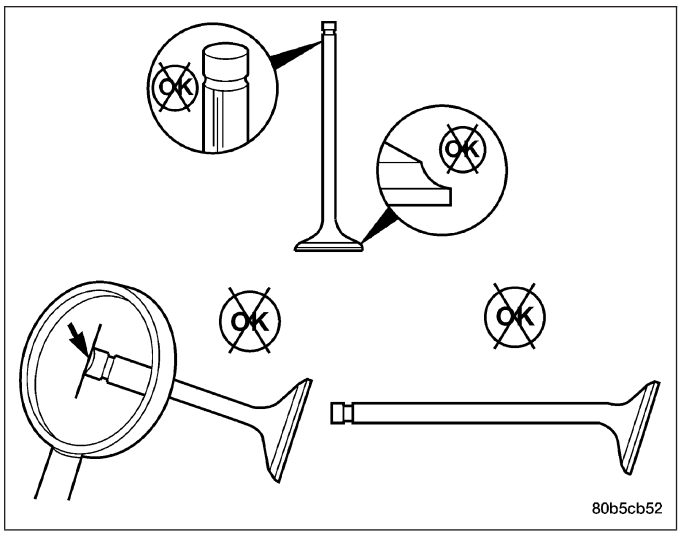

Measure the valve stem diameter in three places as shown.

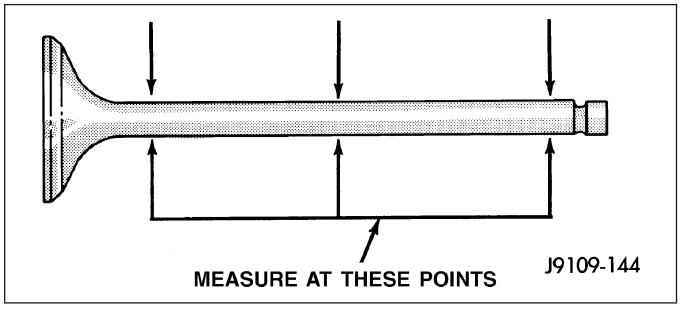

VALVE GUIDE BORE SPECIFICATIONS

VALVE GUIDE BORE SPECIFICATIONS	
Valve guide bore diameter	
Min.	7.027 mm (0.2767 in.)
Max.	7.077 mm (0.2786 in.)
Installed valve guide depth	
Intake	
Min.	0.584 mm (0.023 in.)
Max.	1.092 mm (0.043 in.)
Exhaust	
Min.	0.965 mm (0.028 in.)
Max.	1.473 mm (0.058 in.)

Measure the cylinder head valve guide bore.

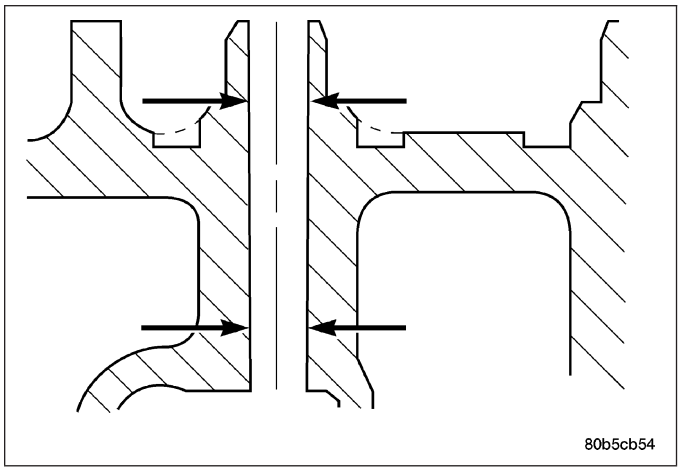

Measure valve margin (rim thickness).

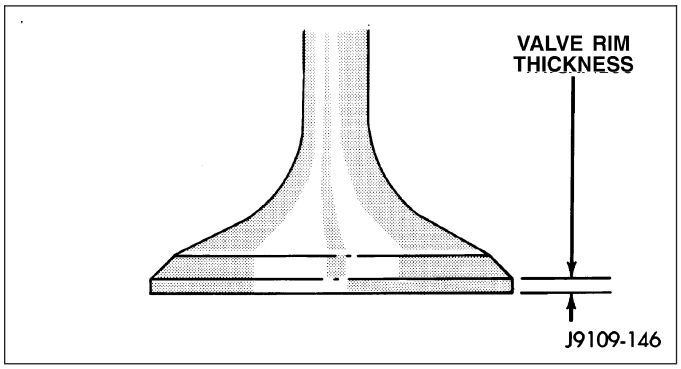

Measure the valve spring free length and maximum inclination.

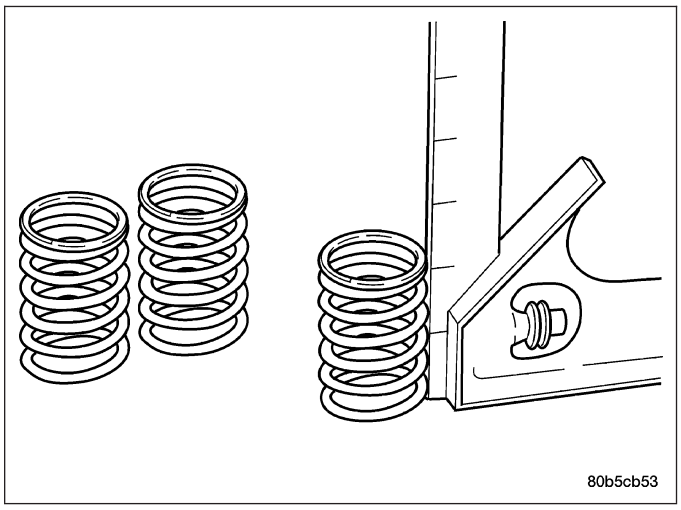

Test valve spring force with tool C-647 (1). Specification 72.0 — 80.7 lbs. when compressed to 35.33 mm (1.39 in.).

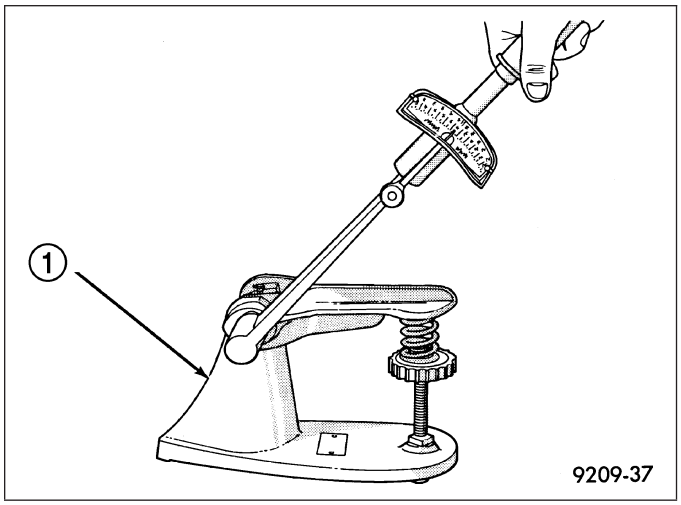

INSTALLATION

1. Install new valve seals. The yellow seals are for the intake valves and the green seals are for the exhaust valves.
2. Install the valves in their original postion. The exhaust valves are identified by a dimple on the valve head.

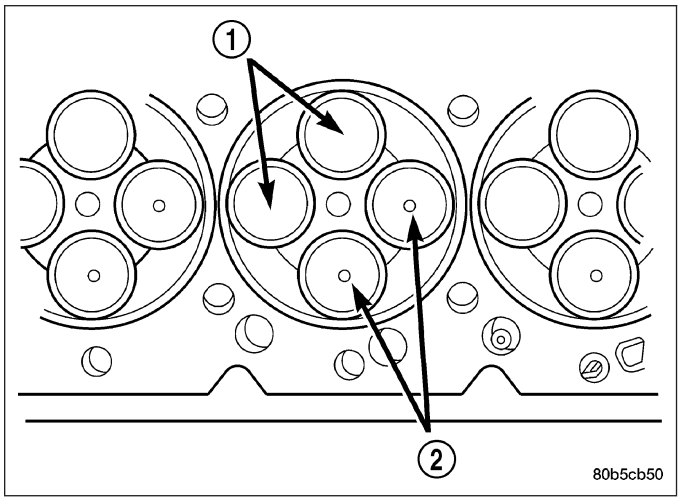

3. Install the valve (2), springs (4), and retainer (5).

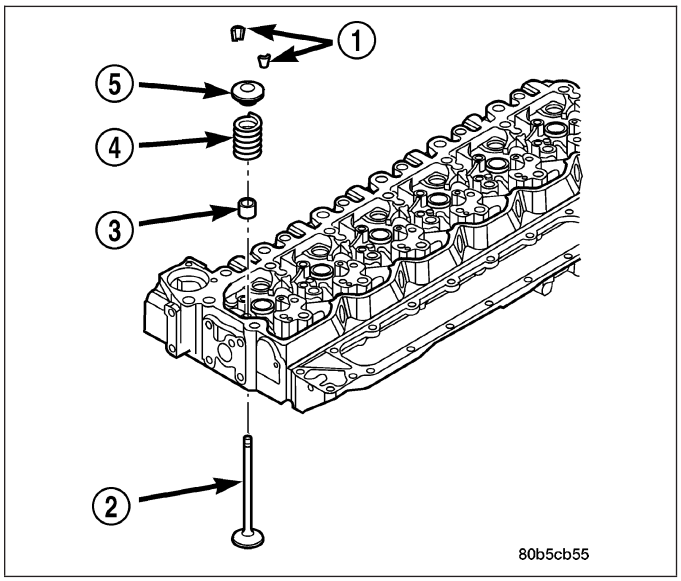

4. Install the valve spring compressor tool 8319–A (1)as shown.
5. Compress the valve springs and install the valve retaining locks.
6. Remove the compressor and repeat the procedure on the remaining cylinders.
7. Install new o-ring and sealing washer on injector.
8. Lubricate o-ring and injector bore.
9. Verify sealing washer (shim) was removed with old injector.
10. Install injector Refer to (Refer to 14 - FUEL SYSTEM/FUEL INJECTION/FUEL INJECTOR - INSTALLATION).
11. Install the cylinder head (Refer to 9 - ENGINE/ CYLINDER HEAD - INSTALLATION).

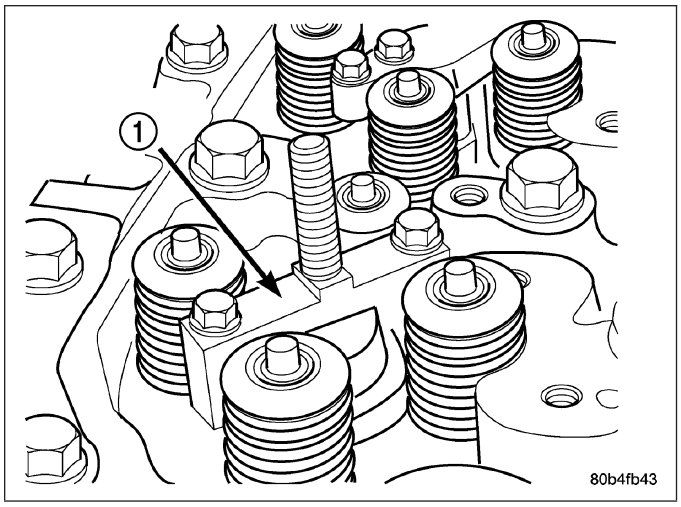

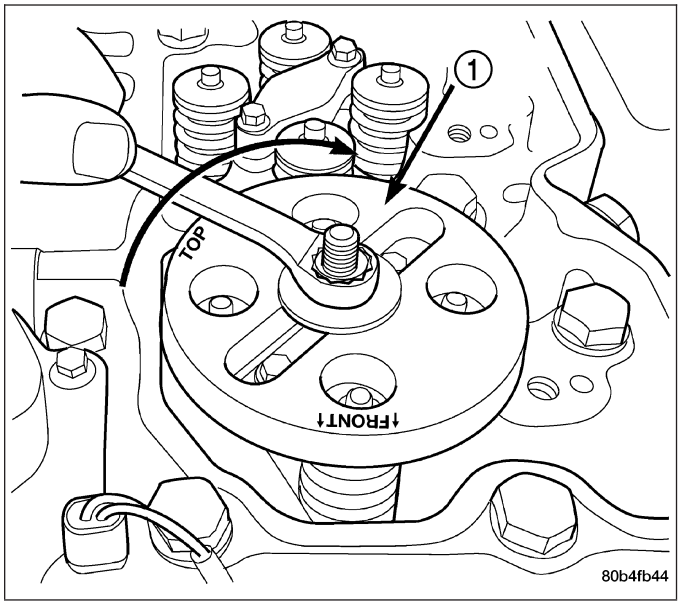

STANDARD PROCEDURE - VALVE LASH ADJUSTMENT AND VERIFICATION

NOTE: To obtain accurate readings, valve lash measurements AND adjustments should only be performed when the engine coolant temperature is less than 60° C (140° F).

The 24–valve overhead system is a “low-maintenance” design. Routine adjustments are no longer necessary, however, measurement should still take place when trouble-shooting performance problems, or upon completion of a repair that includes removal and installation of the valve train components or injectors.

1. Disconnect battery negative cables.
2. Remove cylinder head cover (Refer to 9 - ENGINE/ CYLINDER HEAD/CYLINDER HEAD COVER(S) - REMOVAL).

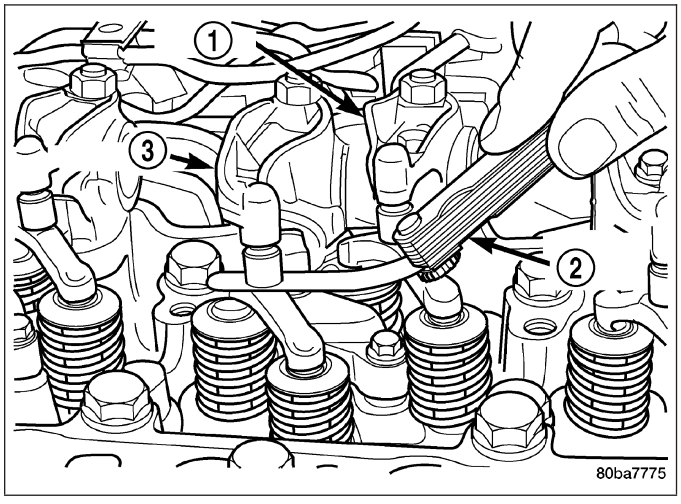

3. Using the crankshaft barring tool #7471–B, rotate crankshaft to align damper TDC mark to 12:00 o’clock position.
   a. If both number one cylinder rocker levers are loose, continue to next step.
   b. If both number one clylinder rocker levers are not loose, rotate crankshaft 360 degrees.

4. With the engine in this position, valve lash can be measured at the following rocker arms: **INTAKE 1–2–4 / EXHAUST 1–3–5**. Measure the valve lash by inserting a feeler gauge between the rocker arm socket and crosshead. Refer to VALVE LASH LIMIT CHART for the correct specifications. If the measurement falls **within** the limits, adjustment/resetting **is not** necessary. If measurement finds the lash **outside** of the limits, adjustment/resetting **is** required.

VALVE LASH LIMIT CHART

INTAKE	EXHAUST
0.152 mm (0.006 in.) MIN.	0.381 mm (0.015 in.) MIN.
0.381 mm (0.015 in.) MAX.	0.762 mm (0.030 in.) MAX.

NOTE:
If measured valve lash falls within these specifications, no adjustment/reset is necessary. Engine operation within these ranges has no adverse affect on performance, emissions, fuel economy or level of engine noise.

5. If adjustment/resetting is required, loosen the lock nut on rocker arms and turn the adjusting screw until the desired lash is obtained:
   - **INTAKE** 0.254 mm (0.010 in.)
   - **EXHAUST** 0.508 mm (0.020 in.) Tighten the lock nut to 24 Nm (18 ft. lbs.) and re-check the valve lash.
6. Using the crankshaft barring tool, rotate the **crankshaft** one revolution (360°) to align the damper TDC mark to the 12 o'clock position.
7. With the engine in this position, valve lash can be measured at the remaining rocker arms: **INTAKE 3–5–6 / EXHAUST 2–4–6**. Use the same method as above for determining whether adjustment is necessary, and adjust those that are found to be outside of the limits.

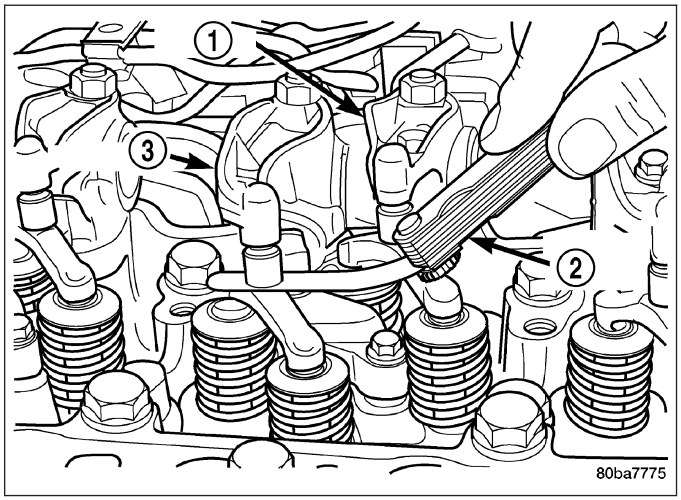

8. Install the cylinder head cover (Refer to 9 - ENGINE/CYLINDER HEAD/CYLINDER HEAD COVER(S) - INSTALLATION).
9. Connect the battery negative cables.

REMOVAL - VALVE SPRINGS AND SEALS

1. Disconnect the battery negative cables.
2. Remove the cylinder head cover (Refer to 9 - ENGINE/CYLINDER HEAD/CYLINDER HEAD COVER(S) - REMOVAL).
3. **FOR EARLY BUILD ENGINES** Disconnect rocker housing injector harness connector. Remove all injector harness solenoid nuts.
4. **FOR LATE BUILD ENGINES** Disconnect the injector harness connectors at cylinder head cover gasket. Remove all injector solenoid nuts. Remove cylinder head cover gasket.
5. Remove injector(s) for cylinder(s) to be serviced. (Refer to 14 - FUEL SYSTEM/FUEL INJECTION/FUEL INJECTOR - REMOVAL) or (Refer to 14 - FUEL SYSTEM/FUEL INJECTION/FUEL INJECTOR - REMOVAL).
6. Remove the rocker housing.

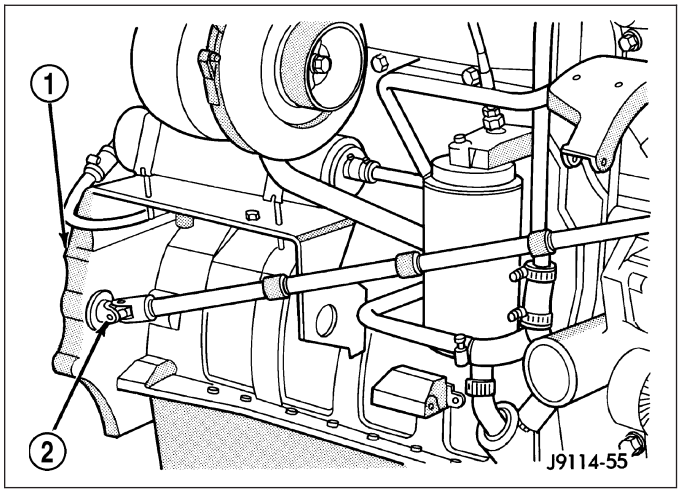

7. Remove the rocker arms and crossheads from the cylinder(s) to be serviced. Mark each component so they can be installed in their original position.
8. Using the crankshaft barring tool #7471–B (2), rotate the engine to position the damper mark in the 12 o'clock position. **At this engine position, cylinders #1 and #6 can be serviced.**
9. Remove the accessory drive belt (Refer to 7 - COOLING/ACCESSORY DRIVE/DRIVE BELTS - REMOVAL).
10. With the damper TDC mark in the 12 o'clock position, add a paint mark anywhere on the gear housing cover next to the crankshaft damper. Place another mark on the vibration damper in alignment with the mark you just made on the cover.
11. Divide the crankshaft damper into three equally sized segments as follows:
    a. Using a tape measure, measure the circumference of the crankshaft damper and divide the measurement by three (3).
    b. Measure that distance in a counter-clockwise direction from the first balancer mark and place another mark on the balancer.
    c. From the second damper mark, again measure in a counter-clockwise direction and place a mark on the damper at the same distance you measured when placing the second damper mark. The damper should now be marked in three equally spaced locations and the damper TDC mark should be in the 12 o'clock position.
    d. Remove injectors, fuel lines, and high pressure connectors for every cylinder that requires repair.
12. Compress the valve springs at cyls. #1 and #6 as follows:
    a. Install the valve spring compressor mounting base as shown in.
    b. Install the top plate, washer, and nut. Using a suitable wrench tighten the nut (clock-wise) to compress the valve springs and remove the collets.
    c. Rotate the compressor nut counter-clockwise to relieve tension on springs. Remove spring compressor.
    d. Remove and replace retainers, springs, and seals as necessary.
    e. **Do not rotate the engine until the springs and retainers are re-installed.**
    f. Install seals, springs and retainers. Install spring compressor, compress valve springs and install the collets.
    g. Release the spring tension and remove the compressor. Verify that the collets are seated by tapping on the valve stem with a plastic hammer.

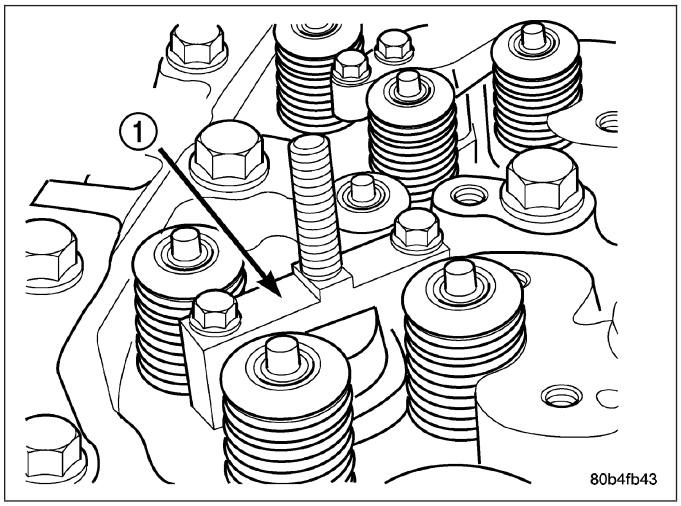

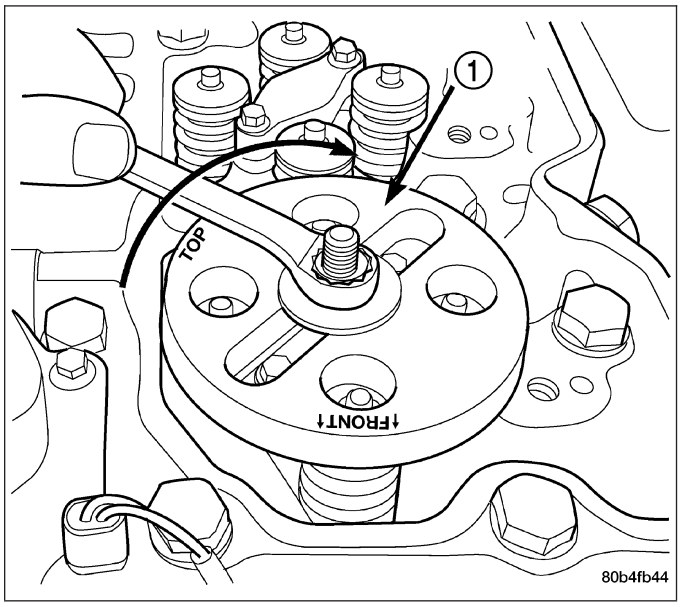

13. Using the crankshaft barring tool (2), rotate the engine until the next crankshaft damper paint mark aligns with the mark you placed on the cover. **In this position, cylinders #2 and #5 can be serviced.**
14. Repeat the valve spring compressing procedure previously performed and service the retainers, springs, and seals as necessary.
15. Using the crankshaft barring tool, rotate the engine until the next crankshaft damper paint mark aligns with the mark you placed on the cover. **In this position, cylinders #3 and #4 can be serviced.**
16. Repeat the spring compressing procedure previously performed and service the retainers, springs, and seals as necessary.

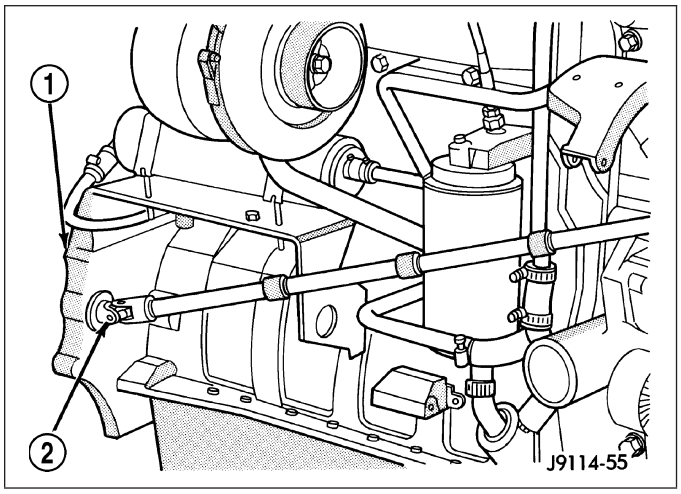

INSTALLATION

1. Install rocker housing.
2. Install fuel injectors and high pressure fuel lines.
3. Lubricate the valve tips and install the crossheads in their original locations.
4. Lubricate the crossheads and push rod sockets and install the rocker arms and pedestals in their original locations. Tighten bolts to 36 N·m (27 ft. lbs.) torque.
5. **Verify valve lash adjustment (Refer to 9 - ENGINE/CYLINDER HEAD/INTAKE/EXHAUST VALVES & SEATS - STANDARD PROCEDURE).**
6. **FOR EARLY BUILDS** Install cylinder head cover and reusable gasket (Refer to 9 - ENGINE/CYLINDER HEAD/CYLINDER HEAD COVER(S) - INSTALLATION).
7. **FOR LATE BUILDS** Install cylinder head cover gasket onto rocker housing.
8. Install injector solenoid nuts.
9. Connect injector harness connectors.
10. Install cylinder head cover.
11. Connect battery negative cables.

ROCKER ARM

DESCRIPTION

The unique intake and exhaust rocker arms have their own rocker shafts and are lubricated by passages intersecting the cylinder block main oil rifle. Crossheads are used, which allow each rocker arm to operate two valves.

The solid push rods are hardened at the rocker arm and tappet contact areas for superior strength and durability.

REMOVAL

1. Disconnect the battery negative cables.
2. Remove cylinder head cover (Refer to 9 - ENGINE/ CYLINDER HEAD/CYLINDER HEAD COVER(S) - REMOVAL).
3. Remove the rocker arm/pedestal fasteners and remove rocker arm (1) and pedestal (2) from cylinder head. Mark the arms and pedestals so they can be installed in their original position.

CAUTION: When removing the rocker arms, the sockets may come loose and fall into the engine. Make sure they stay with the arm upon removal/installation.

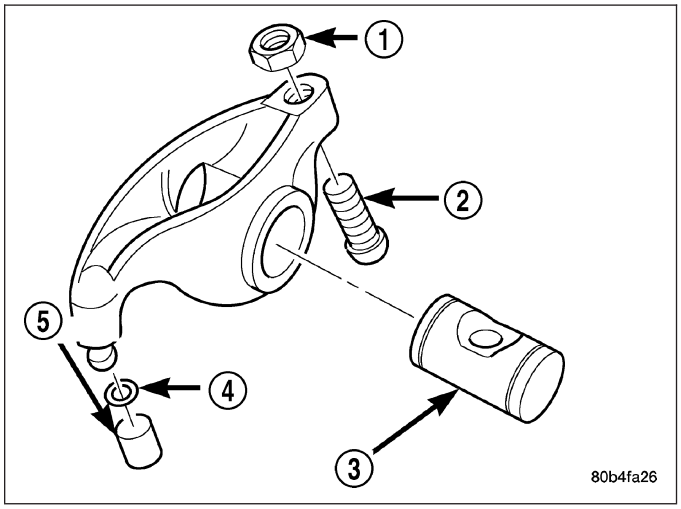

4. Lift the push rod(s) up and out of the engine. Mark them so they can be installed in their original position.

NOTE: The #5 cyl. intake and exhaust and #6 cyl. intake and exhaust push rods must be raised through the provided cowl panel access holes.

5. Lift the crosshead(s) off of the valve stems. Mark them so they can be installed in their original position.

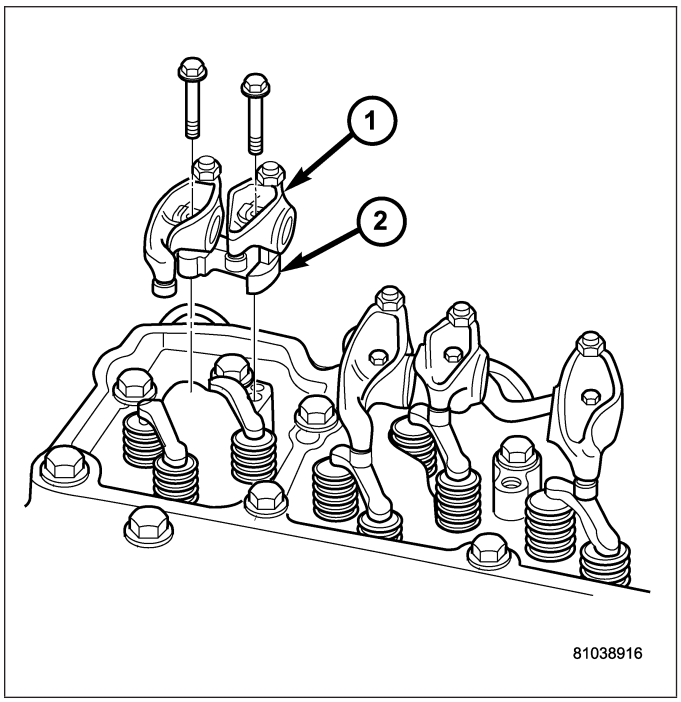

CLEANING

Clean all components in a suitable solvent. If necessary, use a wire brush or wheel to remove stubborn deposits. Rinse in hot water and blow dry with compressed air. Inspect oil passages in rocker arms and pedestals. Apply compressed air to lubrication orifices to purge contaminants.

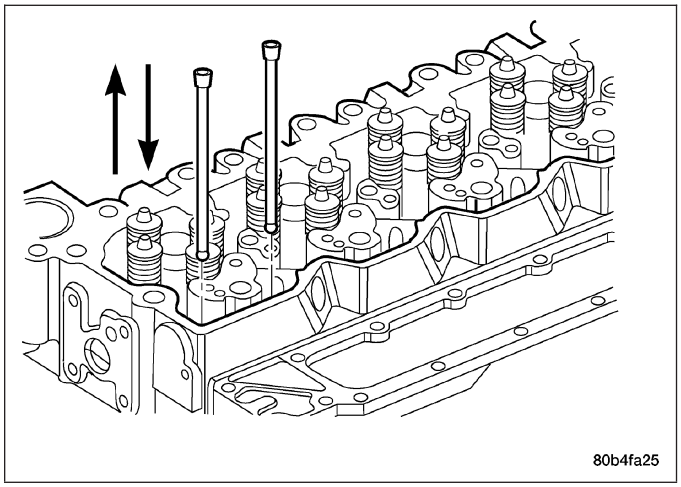

INSPECTION

Rocker Arms

1. Remove rocker shaft and inspect for cracks and excessive wear in the bore or shaft. Remove socket and inspect ball insert and socket for signs of wear. Replace retainer if necessary.

Measure the rocker arm bore and shaft.

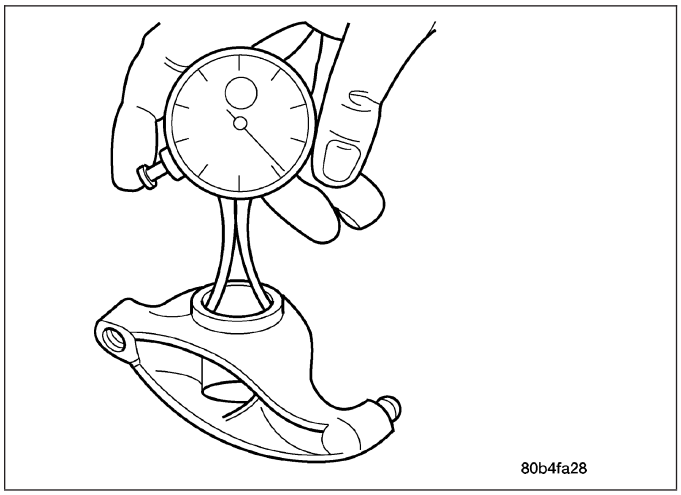

Push Rods

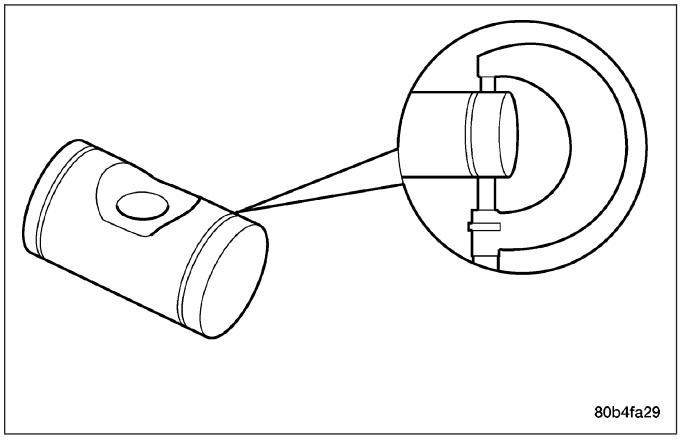

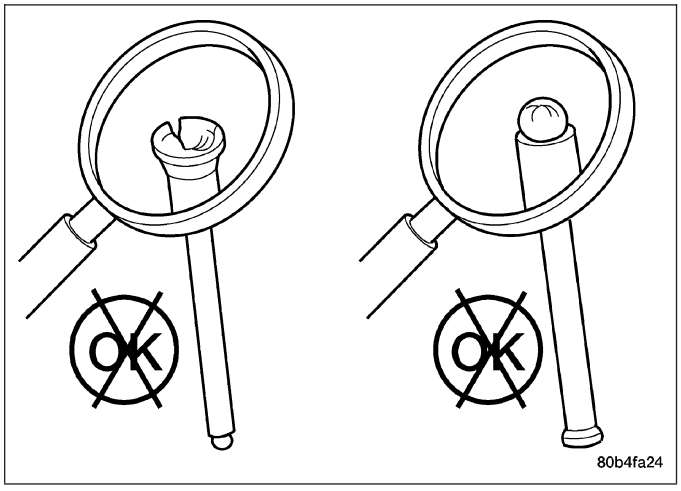

Inspect the push rod ball and socket for signs of scoring. Check for cracks where the ball and the socket are pressed into the tube.

Roll the push rod on a flat work surface with the socket end hanging off the edge. Replace any push rod that appears to be bent.

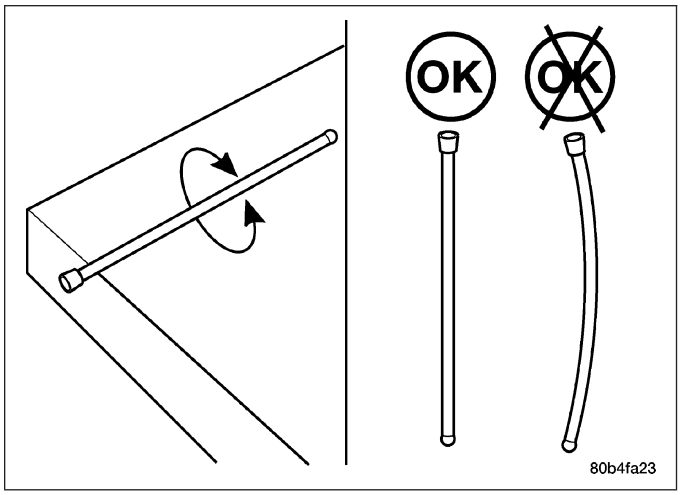

Crossheads

Inspect the crossheads for cracks and/or excessive wear on rocker lever and valve tip mating surfaces.

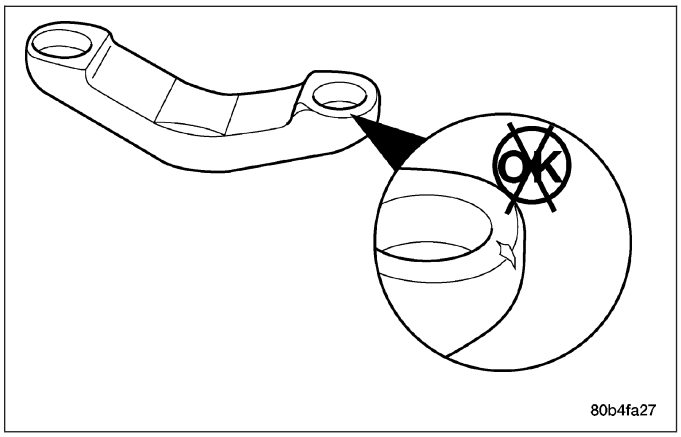

INSTALLATION

1. If previously removed, install the push rods in their original location. **Verify that they are seated in the tappets.**
2. Lubricate the valve tips and install the crossheads in their original locations.
3. Lubricate the crossheads and push rod sockets and install the rocker arms and pedestals in their original locations. Tighten bolts to 36 N·m (27 ft. lbs.) torque.
4. **Verify valve lash adjustment (Refer to 9 - ENGINE/CYLINDER HEAD/INTAKE/EXHAUST VALVES & SEATS - STANDARD PROCEDURE).**
5. **FOR EARLY BUILDS** Install cylinder head cover and reusable gasket (Refer to 9 - ENGINE/CYLINDER HEAD/ CYLINDER HEAD COVER(S) - INSTALLATION).
6. **FOR LATE BUILDS** Install cylinder head cover.
7. Connect battery negative cables.

ENGINE BLOCK

STANDARD PROCEDURE

STANDARD PROCEDURE - CYLINDER BLOCK REFACING

1. The combustion deck can be refaced twice. The first reface should be 0.25 mm (0.0098 inch). If additional refacing is required, an additional 0.25 mm (0.0098 inch) can be removed. Total allowed refacing is 0.50 mm (0.0197 inch).

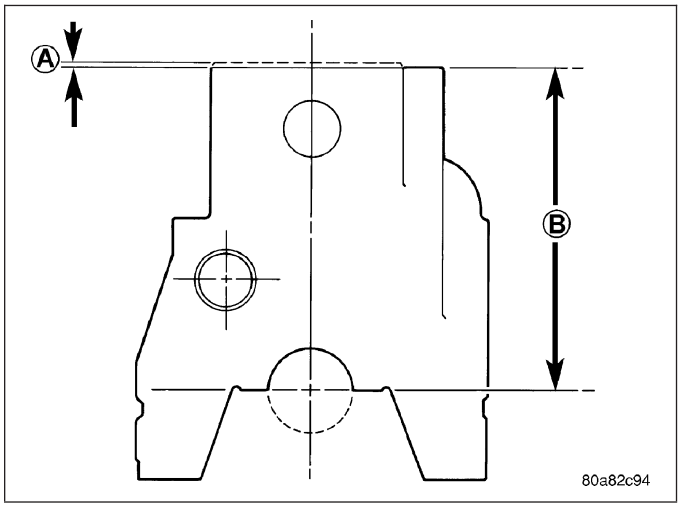

2. The upper right corner of the rear face of the block must be stamped with a X when the block is refaced to 0.25 mm (0.0098 inch). A second X must be stamped beside the first when the block is refaced to 0.50 mm (0.0197 inch).
3. Consult the parts catalog for the proper head gaskets which must be used with refaced blocks to ensure proper piston-to-valve clearance.

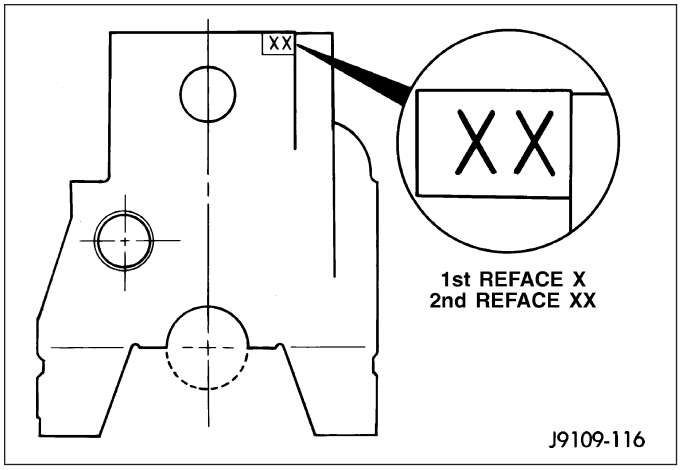

STANDARD PROCEDURE - CYLINDER BORE - DE-GLAZE

1. New piston rings may not seat in glazed cylinder bores.
2. De-glazing gives the bore the correct surface finish required to seat the rings. The size of the bore is not changed by proper de-glazing.
3. Cover the lube and tappet holes in the top of the block with waterproof tape.
4. It crankshaft is installed, wrap connecting rod journals with clean cloth. Cover cloth with waterproof tape.

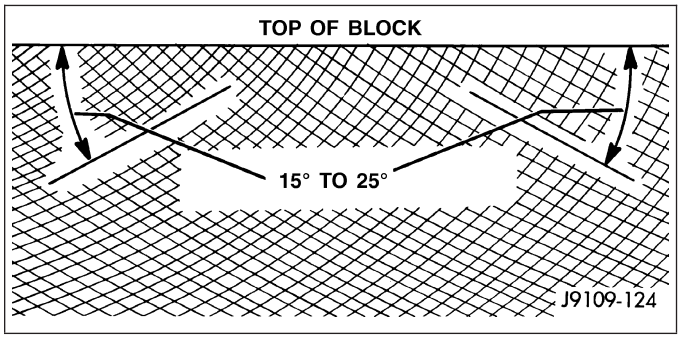

5. A correctly honed surface will have a crosshatch appearance with the lines at 15° to 25° angles. For the rough hone, use 80 grit honing stones. To finish hone, use 280 grit honing stones.

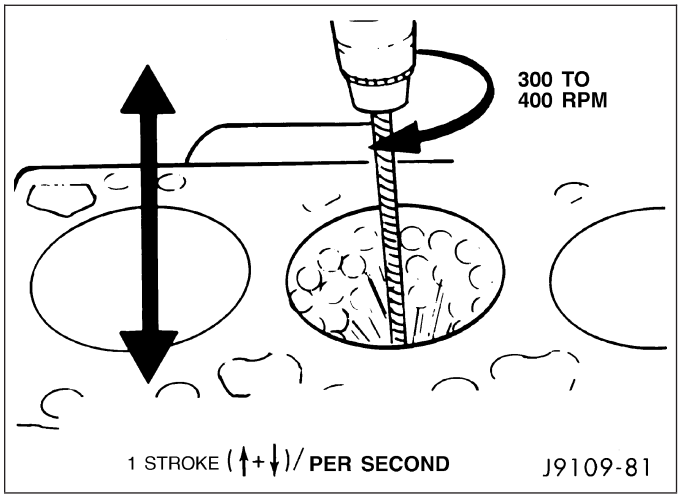

6. Use a drill, a fine grit Flex-hone and a mixture of equal parts of mineral spirits and SAE 30W engine oil to de-glaze the bores.
7. The crosshatch angle is a function of drill speed and how fast the hone is moved vertically.
8. Vertical strokes MUST be smooth continuous passes along the full length of the bore.
9. Inspect the bore after 10 strokes.
10. Use a strong solution of hot water and laundry detergent to clean the bores. Clean the cylinder bores immediately after de-glazing.
11. Rinse the bores until the detergent is removed and blow the block dry with compressed air.
12. Check the bore cleanliness by wiping with a white, lint free, lightly oiled cloth. If grit residue is still present, repeat the cleaning process until all residue is removed. Wash the bores and the complete block assembly with solvent and dry with compressed air. Place a clean shop towel around the top main bearing saddle to deflect water and residue from piston cooling nozzels. Remove directed piston cooling nozzles if installed.
13. Be sure to remove the tape covering the lube holes, rod journals, and piston cooling nozzles after the cleaning process is complete.

STANDARD PROCEDURE—CYLINDER BORE REPAIR

Cylinder bore(s) can be repaired by one of two methods:

- Method 1:—Over boring and using oversize pistons and rings.
- Method 2:—Boring and installing a repair sleeve to return the bore to standard dimensions.

METHOD 1—OVERSIZE BORE

Cylinder bore(s) can be repaired by one of two methods:

Oversize pistons and rings are available in two sizes - 0.50 mm (0.0197 inch) and 1.00 mm (0.0393 inch).

Any combination of standard, 0.50 mm (0.0197 inch) or 1.00 mm (0.0393 inch) overbore may be used in the same engine.

If more than 1.00 mm (0.0393 inch) overbore is needed, a repair sleeve can be installed (refer to Method 2—Repair Sleeve).

Cylinder block bores may be bored twice before use of a repair sleeve is required. The first bore is 0.50 mm (0.0197 inch) oversize. The second bore is 1.00 mm (0.0393 inch) oversize.

After boring to size, use a honing stone to chamfer the edge of the bore.

CYLINDER BORE DIMENSION CHART

DESCRIPTION	MEASUREMENT
BORING DIAMETER DIMENSION	1st. REBORE - 102.469 mm (4.0342 in.)
	2nd. REBORE - 102.969 mm (4.0539 in.)
HONING DIAMETER DIMENSIONS	STANDARD - 102.020 ± 0.020 mm (4.0165 ± 0.0008 in.)
	1st. REBORE - 102.520 ± 0.020 mm (4.0362 ± 0.0008 in.)
	2nd. REBORE - 103.020 ± 0.020 mm 4.0559 ± 0.0008 in.)
CHAMFER DIMENSIONS	Approx. 1.25 mm (0.049 in.) by 30°

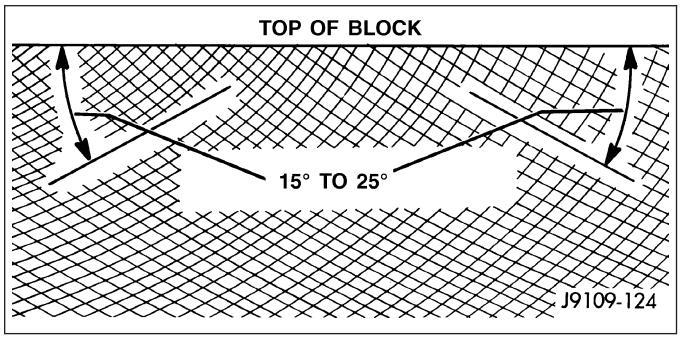

A correctly honed surface will have a crosshatch appearance with the lines at 15° to 25° angles with the top of the cylinder block. For the rough hone, use 80 grit honing stones. To finish hone, use 280 grit honing stones.

A maximum of 1.2 micrometer (48 microinch) surface finish must be obtained.

After finish honing is complete, immediately clean the cylinder bores with a strong solution of laundry detergent and hot water.

After rinsing, blow the block dry.

Check the bore cleanliness by wiping with a white, lint-free, lightly- oiled cloth. There should be no grit residue present.

If the block is not to be used right away, coat it with a rust- preventing compound.

METHOD 2—REPAIR SLEEVE

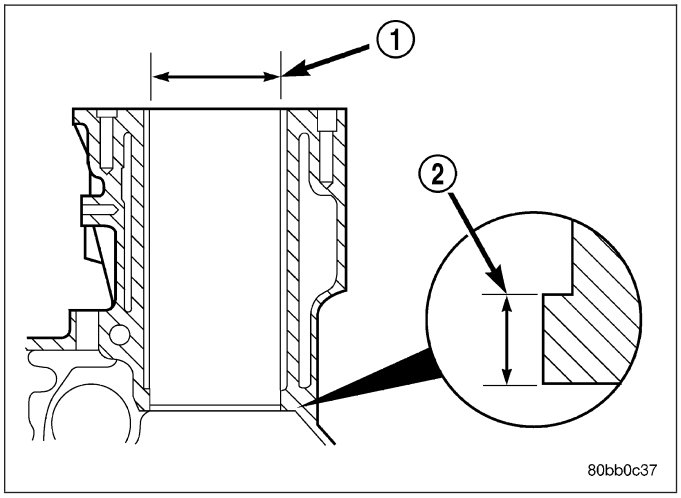

REPAIR SLEEVE BLOCK REBORE DIMENSIONS CHART

BORE DIAMETER	STEP DIMENSION
104.500 + 0.015 mm (4.1142 + 0.0006 in.)	6.35 mm (0.25 in.)

If more than a 1.00 mm (0.03937 inch) diameter oversize bore is required, the block must be bored and a repair sleeve installed.

Bore the block cylinder bore to 104.500-104.515 mm (4.1142-4.1148 inch).

Repair sleeves can be replaced by using a boring bar to bore out the old sleeve. DO NOT cut the cylinder bore beyond the oversize limit.

After machining the block for the new repair sleeve, thoroughly clean the bore of all metal chips, debris and oil residue before installing the sleeve.

Cool the repair sleeve(s) to a temperature of -12°C (10°F) or below for a minimum of one hour. Be ready to install the sleeve immediately after removing it from the freezer.

Apply a coat of Loctite 620, or equivalent to the bore that is to be sleeved.

Wear protective gloves to push the cold sleeve into the bore as far as possible.

Using a sleeve driver (1), drive the sleeve (2) downward until it contacts the step at the bottom of the bore.

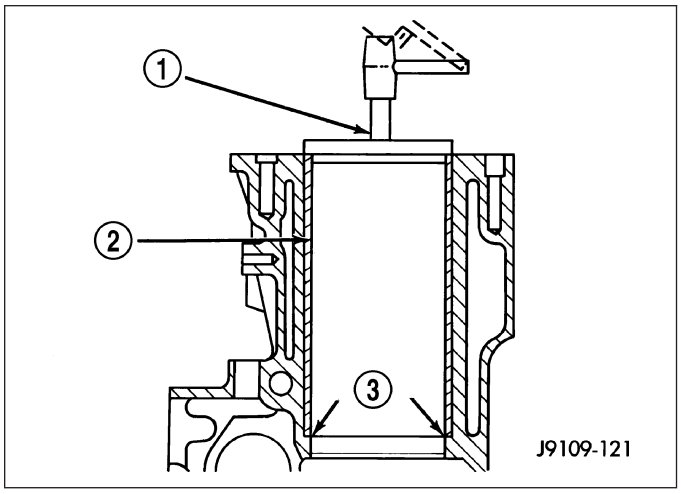

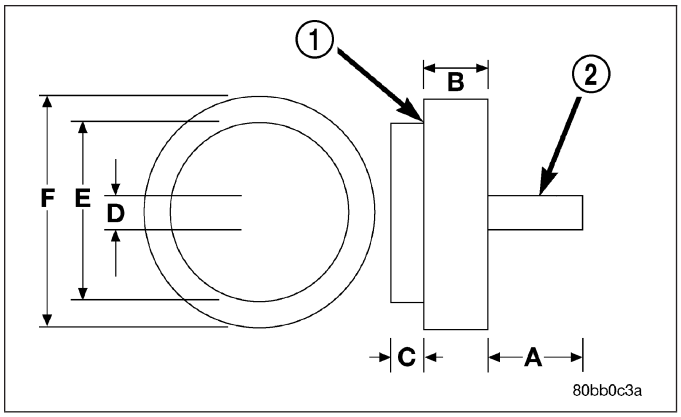

SLEEVE DRIVER CONSTRUCTION SPECIFICATION CHART

ITEM	MEASUREMENT
A	127 mm (5 in.)
B	38 mm (1.5 in.)
C	6.35 mm (0.25 in.)
D	25.4 mm (1 in.)
E	101 mm (3.976 in.)
F	107.343 mm (4.226 in.)

A sleeve driver can be constructed as shown.

SLEEVE MACHINING DIMENSIONS CHART

ITEM	MEASUREMENT
SLEEVE PROTRUSION	MIN. - FLUSH WITH BLOCK
	MAX. - 0.050 mm (0.0019 in.)
SLEEVE DIAMETER	101.956 mm (4.014 in.)
SLEEVE CHAMFER	APPROX. 1.25 mm (0.049 in.) by 15°

Set up a boring bar and machine the sleeve to 101.956 mm (4.014 inch).

After removing the boring bar, use a honing stone to chamfer the corner of the repair sleeve(s).

A correctly honed surface will have a crosshatch appearance with the lines at 15° to 25° angles with the top of the cylinder block. For the rough hone, use 80 grit honing stones. To finish hone, use 280 grit honing stones.

Finished bore inside dimension is 102.020 ±0.020 mm (4.0165 ±0.0008 inch).

A maximum of 1.2 micrometer (48 microinch) surface finish must be obtained.

After finish honing is complete, immediately clean the cylinder bores with a strong solution of laundry detergent and hot water.

After rinsing, blow the block dry with compressed air.

Wipe the bore with a white, lint-free, lightly oiled cloth. Make sure there is no grit residue present.

Apply a rust-preventing compound if the block will not be used immediately.

A standard diameter piston and a piston ring set must be used with a sleeved cylinder bore.

STANDARD PROCEDURE - CAM BORE REPAIR

For standard bushings, not oversized, maximum front cam bushing bore diameter is 59.248 mm. (2.3326 in.). DO NOT bore the intermediate cam bore to the front cam bore oversize dimensions. Maximum front camshaft bushing installed diameter is 54.147 mm. (2.1318 in.). Minimum installed diameter is 54.083 mm. (2.1293 in.). Maximum intermediate camshaft bore diameter is 54.164 mm. (2.1324 in.).

A surface finish of 2.3 micrometers (92 microinch) must be maintained. Not more than 20% of an area of any one bore may be 3.2 micrometers (126 microinch).

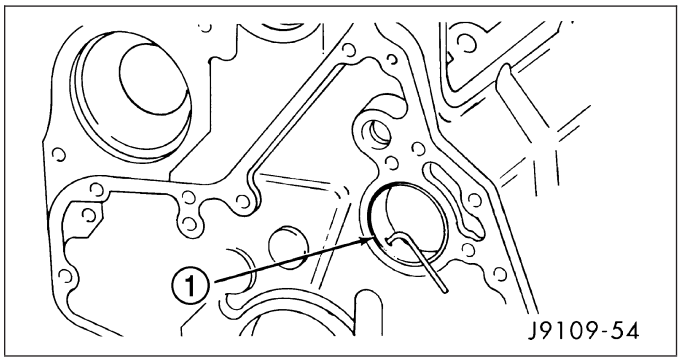

Camshaft bores can be repaired individually. It is not necessary to repair undamaged cam bores in order to repair individually damaged cam bores. The standard front bushing (1) cannot be used to repair intermediate bores.

Install all cam bushings flush or below the front and rear cam bore surface. The front camshaft bushing should be installed flush with front face of block. The oil hole must align to allow a 3.2 mm (0.125 inch) rod to pass through freely.

INSPECTION

Measure the combustion deck face using a straight edge (1) and a feeler gauge (2). Cylinder block flatness: End-to-end 0.076 mm (.003 in.). Maximum variation side-to-side 0.051 mm (.002 in.).

Inspect for any localized dips or imperfections.

If the surface exceeds the limit, (Refer to 9 - ENGINE/ ENGINE BLOCK - STANDARD PROCEDURE).

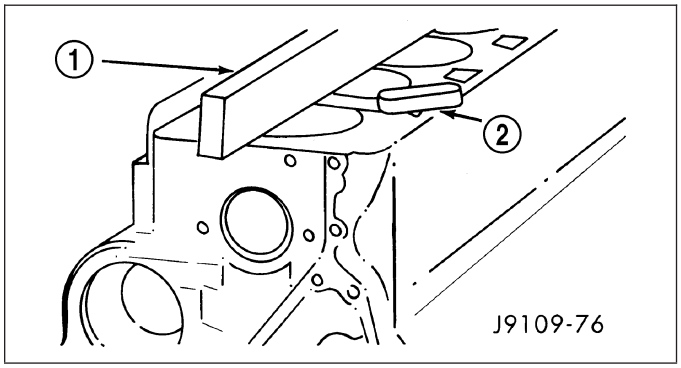

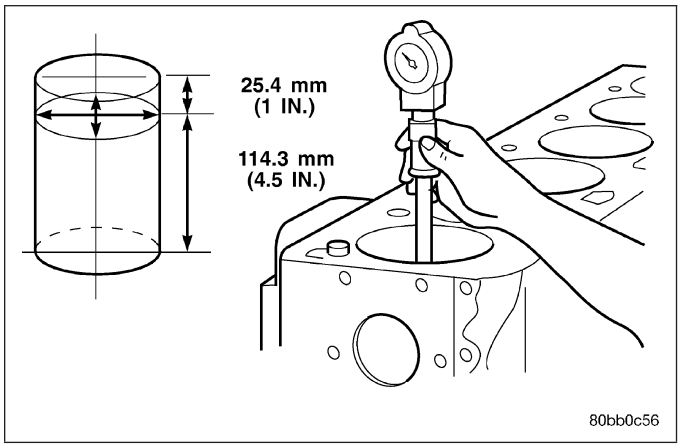

BORE SPECIFICATIONS

BORE DIAMETER		
	Min.	102.000 mm (4.0157 in.)
	Max.	102.116 mm (4.0203 in.)
OUT OF ROUNDNESS		
	Max.	0.038 mm (0.0015 in.)
TAPER		
	Max.	0.076 mm (.003 in.)

Inspect the cylinder bores for damage or excessive wear.

Measure the cylinder bores. If the cylinder bores exceed the limit, (Refer to 9 - ENGINE/ENGINE BLOCK - STANDARD PROCEDURE).

Inspect the camshaft bores for scoring or excessive wear.

Measure the camshaft bores (Refer to 9 - ENGINE - SPECIFICATIONS).

If a bore exceeds the limit, (Refer to 9 - ENGINE/ENGINE BLOCK/CAMSHAFT & BEARINGS (IN BLOCK) - STANDARD PROCEDURE).

Inspect the tappet bores for scoring or excessive wear.

Measure tappet bore from bottom of block. Minimum tappet bore diameter 16.000 mm (0.0630 in.). Maximum tappet bore 16.055 mm. (0.632 in.).

If out of limits, replace the cylinder block.

CAMSHAFT & BEARINGS (IN BLOCK)

REMOVAL

CAMSHAFT BEARINGS

NOTE: Measure the diameter of each bore. If the camshaft bore for the first or rear cam bushing is worn beyond the limit, install a new service bushing. Inspect the rest of the camshaft bores for damage or excessive wear.If the bores without a bushing are worn beyond the limit, the engine must be removed for machining and installation of service bushings. If badly worn, replace the cylinder block.

1. Remove the camshaft (Refer to 9 - ENGINE/ENGINE BLOCK/CAMSHAFT & BEARINGS (IN BLOCK) - REMOVAL).
2. Remove the bushing from the No.1 bore.

3. Mark the cylinder block so you can align the oil hole in the cylinder block with the oil hole in the bushing.

CAMSHAFT

1. Disconnect both battery negative cables.
2. Recover A/C refrigerant (if A/C equipped) (Refer to 24 - HEATING & AIR CONDITIONING/PLUMBING - STANDARD PROCEDURE).
3. Raise vehicle on hoist.
4. Drain engine coolant into container suitable for re-use (Refer to 7 - COOLING - STANDARD PROCEDURE).
5. Lower vehicle.
6. Remove radiator upper hose.
7. Remove viscous fan/drive/shroud assembly (Refer to 7 - COOLING/ENGINE/RADIATOR FAN - REMOVAL).
8. Disconnect the coolant recovery bottle hose from the radiator filler neck.
9. Disconnect lower radiator hose from radiator outlet.
10. **Automatic Transmission models:** Disconnect transmission oil cooler lines from front of radiator using Special Tool 6931 (unless equipped with finger-release disconnect).
11. Remove radiator mounting screws and lift radiator out of engine compartment.
12. Remove upper radiator support panel.
13. If A/C equipped, disconnect A/C condenser refrigerant lines.
14. Disconnect charge air cooler piping from the cooler inlet and outlet.
15. Remove the two charge air cooler mounting bolts.
16. Remove charge air cooler (and A/C condenser if equipped) from vehicle.
17. Remove accessory drive belt (Refer to 7 - COOLING/ACCESSORY DRIVE/DRIVE BELTS - REMOVAL).
18. Remove accessory drive belt tensioner.
19. Remove the fan support/hub assembly.
20. Remove crankshaft damper and speed indicator ring (Refer to 9 - ENGINE/ENGINE BLOCK/VIBRATION DAMPER - REMOVAL).
21. Remove the gear cover-to-housing bolts and gently pry the cover away from the housing, taking care not to mar the sealing surfaces. Remove dust seal with cover.
22. Using Special Tool 7471–B Crankshaft Barring Tool, rotate the crankshaft to align the timing marks on the crankshaft and the camshaft gears.
23. Remove the cylinder head cover (Refer to 9 - ENGINE/CYLINDER HEAD/CYLINDER HEAD COVER(S) - REMOVAL).
24. Remove the rocker arms, cross heads, and push rods. Mark each component so they can be installed in their original positions.

NOTE: The #5 cylinder intake and the #6 cylinder intake and exhaust pushrods are removed by lifting them up and through the provided cowl panel access holes. Remove the rubber plugs to expose these relief holes.

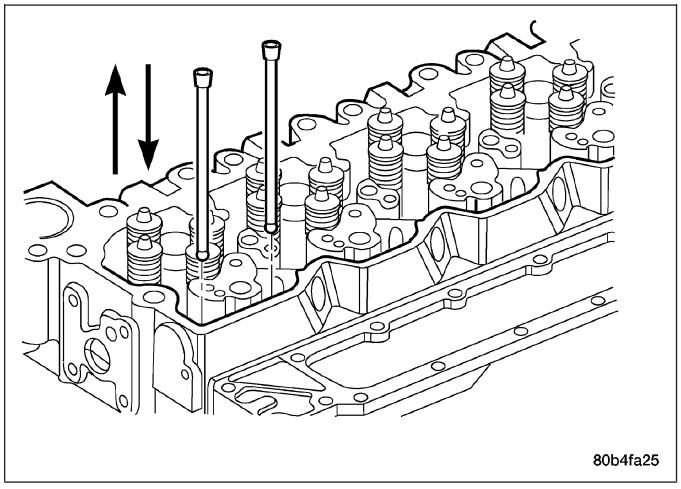

25. Raise the tappets as follows, using the wooden dowel rodsprovided with the Miller Tool Kit 8502.
    a. Insert the slotted end of the dowel rod into the tappet. **The dowel rods for the rear two cylinders will have to be cut for cowl panel clearance.** Press firmly to ensure that it is seated in the tappet.
    b. Raise the dowel rod to bring the tappet to the top of its travel, and wrap a rubber band around the dowel rods to prevent the tappets from dropping into the crankcase.
    c. Repeat this procedure for the remaining cylinders.

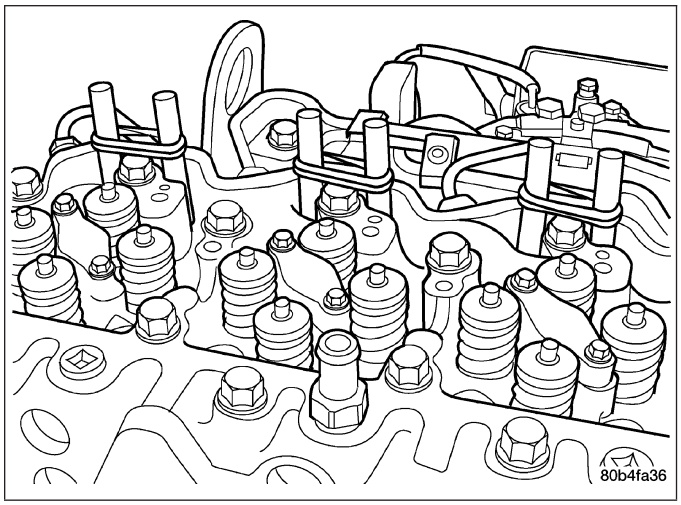

26. Verify that the camshaft timing marks are aligned with the crankshaft mark.
27. Remove the bolts from the thrust plate.
28. Remove engine mount through bolts.
29. Install engine support fixture special tool # 8534, **and steel bracket/wing nut special tool # 8534A**.
30. Raise engine enough to allow camshaft removal.
31. Remove the camshaft, gear and thrust plate.

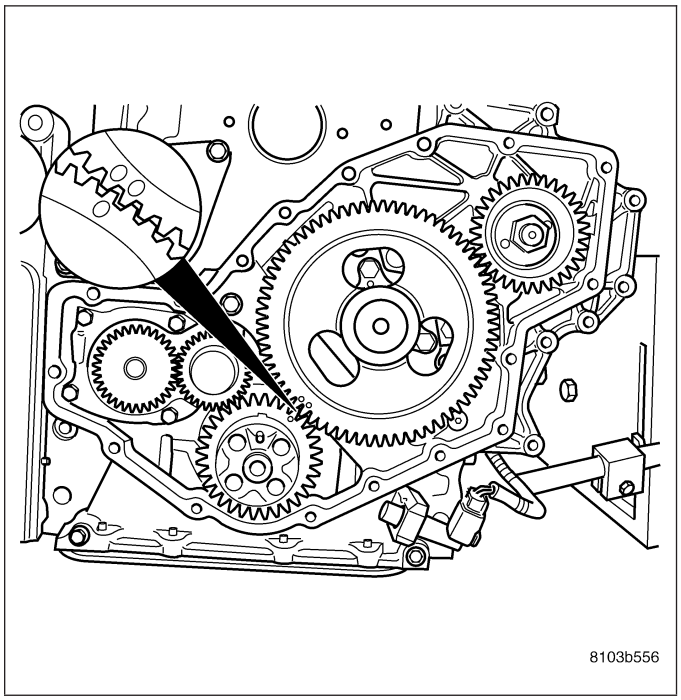

INSPECTION

Camshaft

CAMSHAFT DIMENSIONS

CAMSHAFT DIMENSIONS	
Journal diameter (No.1 and No.7)	
Min.	54.028 mm. (2.127 in.)
Max.	54.048 mm. (2.128 in.)
Journal diameter (No.2 through No.6)	
Min.	53.962 mm. (2.1245 in.)
Max.	54.013 mm. (2.1265 in.)
Diameter of peak of lobe	
Intake	
Min.	47.175 mm (1.857 in.)
Max	47.855 mm.
Exhaust	
Min.	45.632 mm. (1.797 in.)
Max.	46.312 mm. (1.823 in.)

1. Inspect the valve lobes (1) and bearing journals (2) for cracks, pitting, scoring, or generally excessive wear. Replace any camshaft that exceeds the allowable limits.
2. Measure the bearing journals and lobes.

CAUTION: If Camshaft lobes are worn, requiring camshaft replacement, it is necessary to replace the tappets also. (Refer to 9 - ENGINE/ENGINE BLOCK/SOLID LIFTERS - REMOVAL).

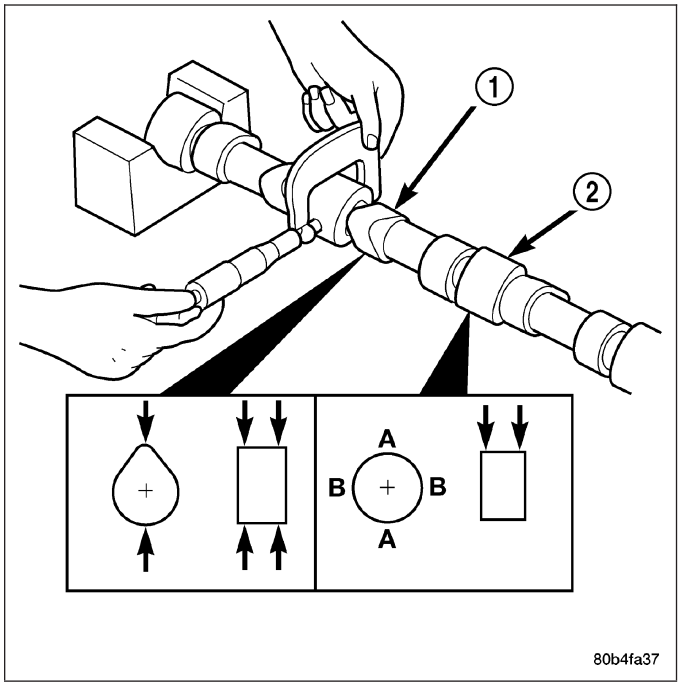

Camshaft Bushing/Bores

Camshaft bores No. 2–7 **do not** use a bushing.

1. Inspect the camshaft bushing and bores for signs of excessive wear.
2. Measure the camshaft bushing and bores with a telescoping bore gauge and micrometer. If out of specification, (Refer to 9 - ENGINE/ENGINE BLOCK/CAMSHAFT & BEARINGS (IN BLOCK) - REMOVAL).

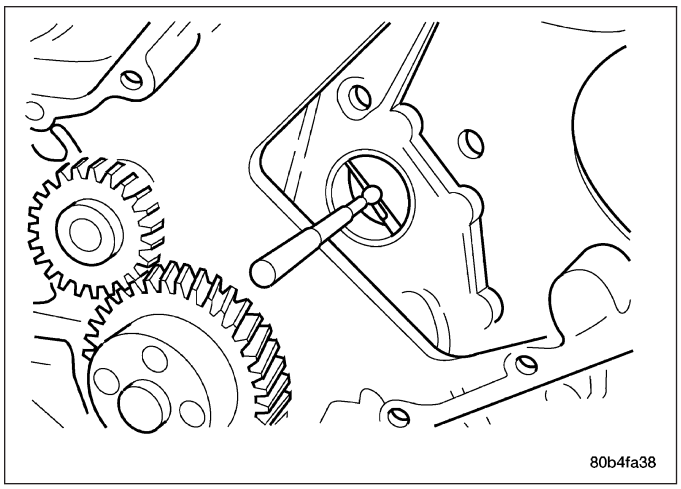

3. Inspect the camshaft bushing (1) oil holes for alignment with cylinder block.

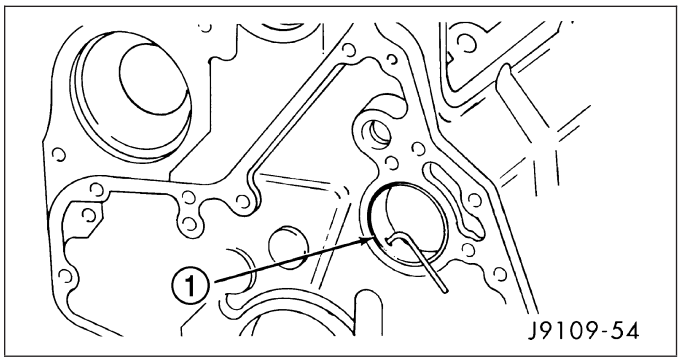

Camshaft Gear

Inspect the camshaft gear for cracks (gear and hub), and chipped/broken/fretted teeth. If replacement is necessary, camshaft and gear are replaced as an assembly. (Refer to 9 - ENGINE/ENGINE BLOCK/CAMSHAFT & BEARINGS (IN BLOCK) - REMOVAL).

Thrust Plate

CAMSHAFT THRUST PLATE THICKNESS CHART

MIN. 9.34 mm (0.368 in.)
MAX. 9.60 mm (0.378 in.)

Inspect the camshaft thrust plate for excessive wear in the camshaft contact area. Measure thrust plate thickness using the CAMSHAFT THRUST PLATE THICKNESS CHART . Replace any thrust plate that falls outside of these specifications:

INSTALLATION

CAMSHAFT BEARINGS

1. Apply a coating of Loctite® 640 Adhesive to the backside of the new bushing. Avoid getting adhesive in the oil hole.
2. Use a universal cam bushing installation tool and install the front bushing (1) so that it is even with the front face of the cylinder block. The oil hole must be aligned. A 3.2 mm (0.128 inch) diameter rod must be able to pass through the hole.
3. Measure the installed bushings at the front bore. The minimum inside diameter is 54.083 mm (2.1293 inch), and the maximum inside diameter is is 54.147 mm. (2.1318 in.).

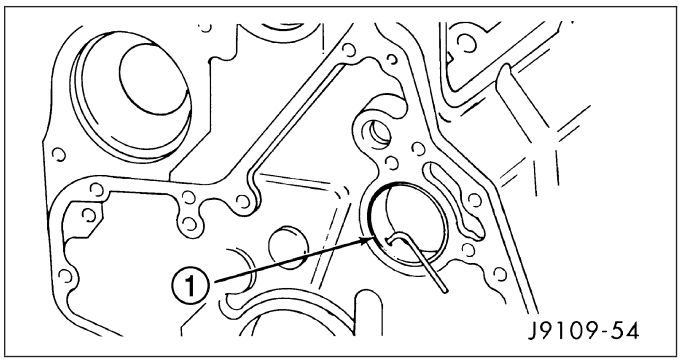

CAMSHAFT

1. Lubricate the camshaft bushing and bores with fresh engine oil or suitable equivalent.
2. Liberally coat the camshaft lobes, journals, and thrust washer with fresh engine oil or suitable equivalent.

CAUTION: When installing the camshaft, DO NOT push it in farther than it will go with the thrust washer in place.

3. Install the camshaft and thrust plate. Align the timing marks as shown.

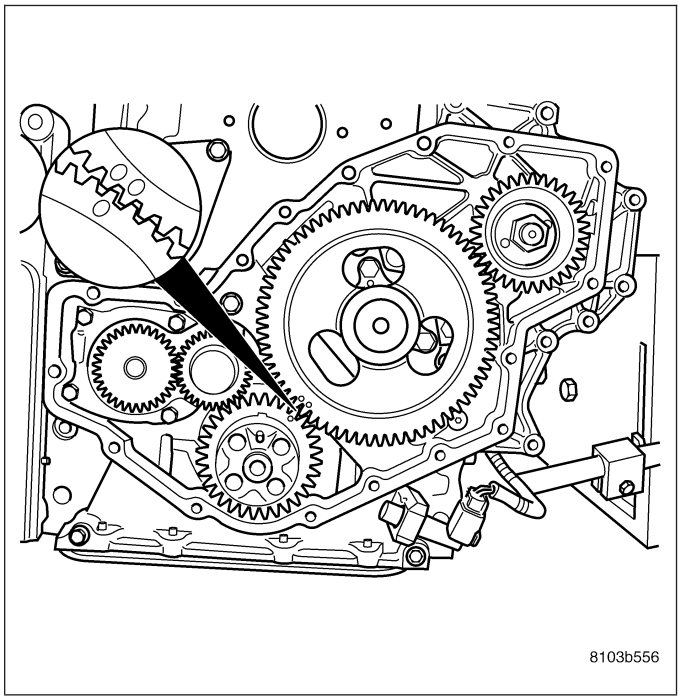

BACKLASH - 0.075 - 0.250 mm (0.003 - 0.010 inch)
CLEARANCE - 0.025 - 0.500 mm (0.001 - 0.020 inch)

4. Install the thrust plate bolts and tighten to 24 N·m (18 ft. lbs.) torque.
5. Measure camshaft back lash and end clearance.
6. Remove the wooden dowel rods and rubber bands from the tappets.
7. Lubricate the push rods with engine oil and install in their original location. **Verify that they are seated in the tappets.**
8. Lubricate the valve tips with engine oil and install the crossheads in their original locations.
9. Lubricate the crossheads and push rod sockets with engine oil and install the rocker arms and pedestals in their original locations. Tighten bolts to 36 N·m (27 ft. lbs.) torque.

10. **Verify valve lash adjustment (Refer to 9 - ENGINE/CYLINDER HEAD/INTAKE/EXHAUST VALVES & SEATS - STANDARD PROCEDURE).**
11. **FOR EARLY BUILDS** Install the cylinder head cover and reusable gasket (Refer to 9 - ENGINE/CYLINDER HEAD/CYLINDER HEAD COVER(S) - INSTALLATION).
12. **FOR LATE BUILDS** Install the cylinder head cover.
13. Install gear housing cover (Refer to 9 - ENGINE/VALVE TIMING/GEAR HOUSING COVER - INSTALLATION). Install front crankshaft dust seal.
14. Install the crankshaft damper with the speed indicator ring (Refer to 9 - ENGINE/ENGINE BLOCK/VIBRATION DAMPER - INSTALLATION).
15. Install the fan support/hub assembly Refer to (Refer to 7 - COOLING/ENGINE/RADIATOR FAN - INSTALLATION).
16. Install the power steering pump.
17. Install accessory drive belt tensioner. Torque bolt to 43 Nm (32 ft. lbs.).
18. Install the accessory drive belt (Refer to 7 - COOLING/ACCESSORY DRIVE/DRIVE BELTS - INSTALLATION).
19. Install the charge air cooler (with a/c condenser and auxiliary transmission oil cooler, if equipped) and tighten the mounting bolts to 2 N·m (17 in. lbs.) torque.
20. Connect charge air cooler inlet and outlet pipes. Tighten clamps to 11 N·m (95 in. lbs.) torque.
21. Install the radiator upper support panel.
22. Close radiator petcock and lower the radiator into the engine compartment. Tighten the mounting bolts to 11 N·m (95 in. lbs.) torque.
23. Raise vehicle on hoist.
24. Connect radiator lower hose and install clamp.
25. Connect transmission auxiliary oil cooler lines (if equipped).
26. Lower vehicle.
27. Install the fan /drive/shroud assembly. (Refer to 7 - COOLING/ENGINE/RADIATOR FAN - INSTALLATION)
28. Install the coolant recovery and windshield washer fluid reservoirs to the fan shroud.
29. Connect the coolant recovery hose to the radiator filler neck.
30. Add engine coolant (Refer to 7 - COOLING - STANDARD PROCEDURE).
31. Charge A/C system with refrigerant (if A/C equipped) (Refer to 24 - HEATING & AIR CONDITIONING/PLUMBING - STANDARD PROCEDURE).
32. Connect the battery negative cables.
33. Start engine and check for engine oil and coolant leaks.

BEARINGS - CONNECTING ROD

STANDARD PROCEDURE - CONNECTING ROD BEARING AND CRANKSHAFT JOURNAL CLEARANCE

DESCRIPTION	MEASUREMENT
CONNECTING ROD BORE, BEARINGS REMOVED	MIN. 72.99 mm (2.874 in.) MAX. 73.01 mm (2.875 in.)
CONNECTING ROD BORE, BEARINGS INSTALLED	MIN. 69.05 mm (2.719 in.) MAX. 69.10 mm (2.720 in.)

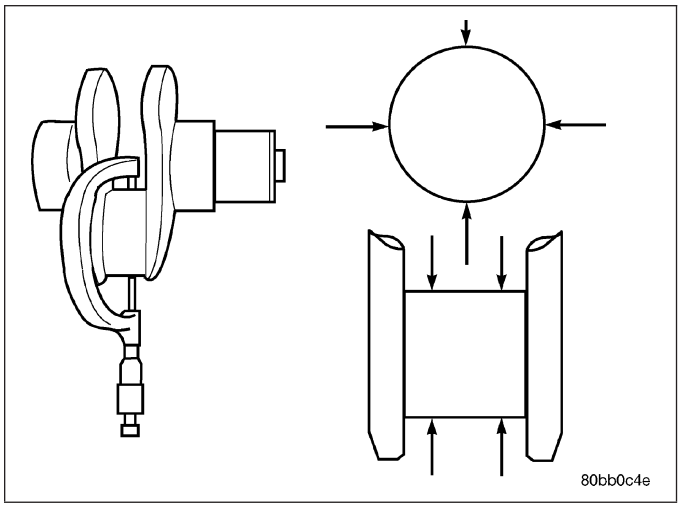

1. Measure the connecting rod bore with bearings **removed** and the bolts tightened to 100 N·m (73 ft. lbs.) torque..
2. Measure the connecting rod bore with the bearings **installed** and the bolts tightened to 100 N·m (73 ft. lbs.) torque.

Measure within 20° arc from each side of the parting line. Also measure 90° from parting line.

Record the smallest and largest diameter.

Measure the diameter of the rod journal at the location shown. Calculate the average diameter for each side of the journal.

Determine minimum bearing clearance by calculating the differance between the smallest connecting rod bore diameter with the bearing installed and the average diameter for each side of the crankshaft journal.

Determine the maximum bearing clearance by calculating the difference between the largest connecting rod bore diameter and the average diameter with the bearing installed for each side of the crankshaft journal.

If the crankshaft is within limits, replace the bearing. If the crankshaft is out of limits, grind the crankshaft to the next smaller size and use oversize rod bearings.

CRANKSHAFT & GEAR

DESCRIPTION

The crankshaft is a forged steel, integrally balanced unit. It is supported by seven main bearings, with position number six designated as the thrust journal. The crankshaft is held in place by main caps and 12 mm capscrews. The crankshaft also has internal cross drillings to supply the connecting rods with engine oil.

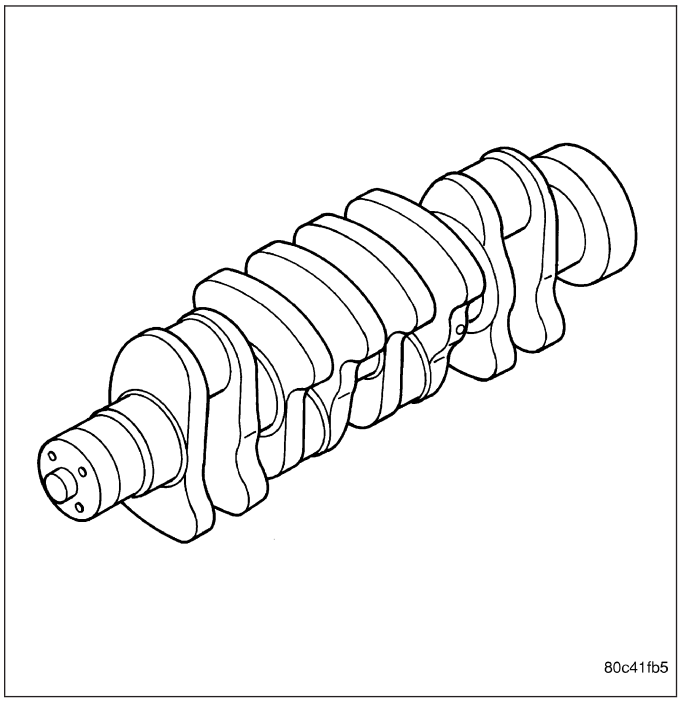

REMOVAL - GEAR

1. Remove the gear housing cover. (Refer to 9 - ENGINE/VALVE TIMING/GEAR HOUSING COVER - REMOVAL)
2. Split the gear and remove it from the crankshaft.

INSTALLATION - GEAR

1. Remove all burrs and make sure the gear surface on the end of the crankshaft is smooth.
2. If removed, install a new alignment pin. Drive the pin in using a ball- peen hammer, leaving it protruding 1.0 mm (0.039 inch) to 1.5 mm (0.059 inch) above the crankshaft.

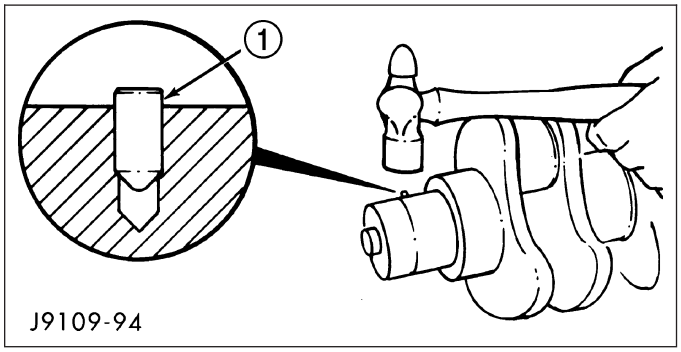

WARNING: WEAR PROTECTIVE GLOVES TO PREVENT INJURY.

CAUTION: DO NOT heat the gear longer than 45 minutes.

3. Heat the crankshaft gear for 45 minutes at a temperature of 149°C (300°F). **Do not use torch, gear failure will occur.**
4. Apply a thin coat of lubricant to the nose of the crankshaft.
5. Position the gear with the timing mark out and install it on the crankshaft using the alignment pin. Make sure the gear contacts the shoulder.

BEARINGS - CRANKSHAFT MAIN

STANDARD PROCEDURE - MAIN BEARING CLEARANCE

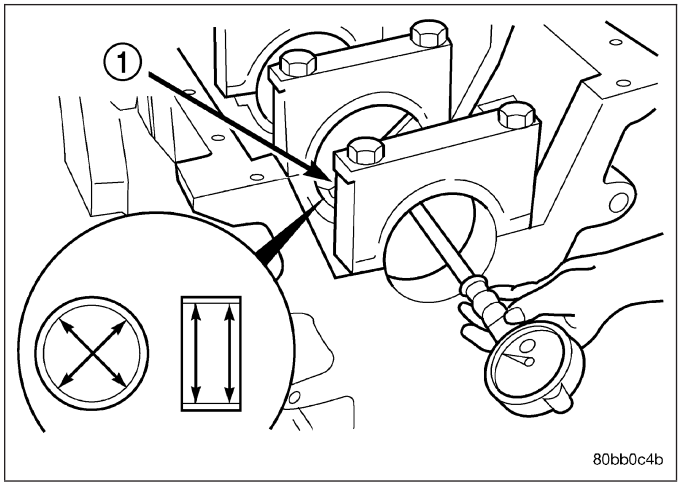

MAIN BEARING BORE DIAMETER CHART

ITEM	MAIN BEARING BORE DIAMETER (MAXIMUM)
BEARINGS INSTALLED	83.106 mm (3.2719 in.)
BEARINGS REMOVED	Min 87.983 mm (3.4639 in.) Max. 88.019 mm (3.4653 in.)

Inspect the main bearing bores for damage or abnormal wear.

1. Remove bearings and measure main bearing bore diameter after torquing main bearing cap bolts to 176 Nm (130 ft. lbs.).
2. Install the crankshaft main bearings and measure main bearing bore diameter with the main bolts tightened to 176 N·m (130 ft. lbs.) torque.

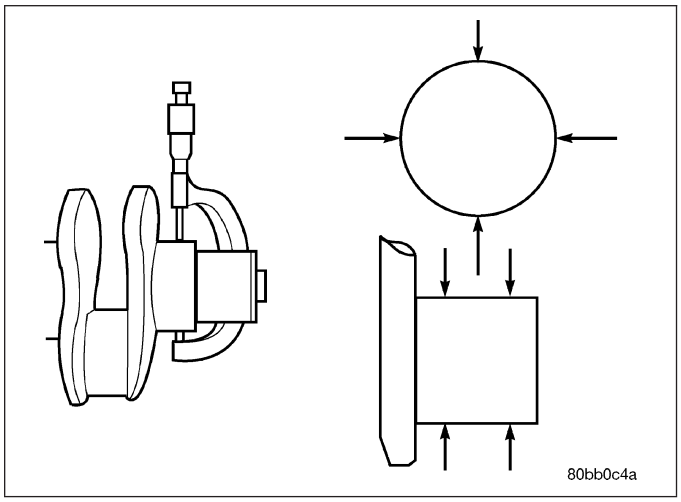

CRANKSHAFT MAIN JOURNAL DIAMETER CHART

ITEM	SPECIFICATION
Minimum diameter	82.962 mm (3.2662 in.)
Maximum diameter	83.013 mm (3.2682 in.)
Maximum out of roundness	0.050 mm (.002 in.)
Maximum taper	0.013 mm (.0005 in.)
Thrust distance (at No.6 position)	Min. 0.065 mm (.003 in.) Max. 0.432 mm (.017 in.)

3. Measure the diameter of the main journal at the locations shown. Calculate the average diameter for each side of the journal.
4. Calculate the main bearing journal to bearing clearance. Maximum clearance is 0.119 mm (0.00475 inch). If the crankshaft journal is within limits, replace the main bearings. If not within specifications, grind the crankshaft to next size and use oversize bearings.
5. Measure thrust distance at the No.6 position.

SEAL - CRANKSHAFT OIL - FRONT

REMOVAL

1. Disconnect both battery negative cables.
2. Raise vehicle on hoist.
3. Partially drain engine coolant into container suitable for re-use (Refer to 7 - COOLING - STANDARD PROCEDURE).
4. Lower vehicle.
5. Remove radiator upper hose.
6. Disconnect coolant recovery bottle hose from radiator filler neck.
7. Disconnect windshield washer pump supply hose and electrical connections and lift washer bottle off of fan shroud.
8. Remove viscous fan/drive assembly. (Refer to 7 - COOLING/ENGINE/RADIATOR FAN - REMOVAL).
9. Remove cooling fan shroud and fan assembly from the vehicle.
10. Remove the accessory drive belt (Refer to 7 - COOLING/ACCESSORY DRIVE/DRIVE BELTS - REMOVAL).
11. Remove the cooling fan support/hub from the front of the engine.
12. Raise the vehicle on hoist.
13. Remove the crankshaft damper and speed indicator ring.

14. Remove power steering pump.
15. Remove accessory drive belt tensioner.
16. Remove the gear cover-to-housing bolts and gently pry the cover away from the housing, taking care not to mar the gasket surfaces. Remove crank seal dust shield with cover.
17. Support the cover on a flat work surface with wooden blocks, and using a suitable punch (1) and hammer, drive the old seal out of the cover from the back side of the cover to the front side.

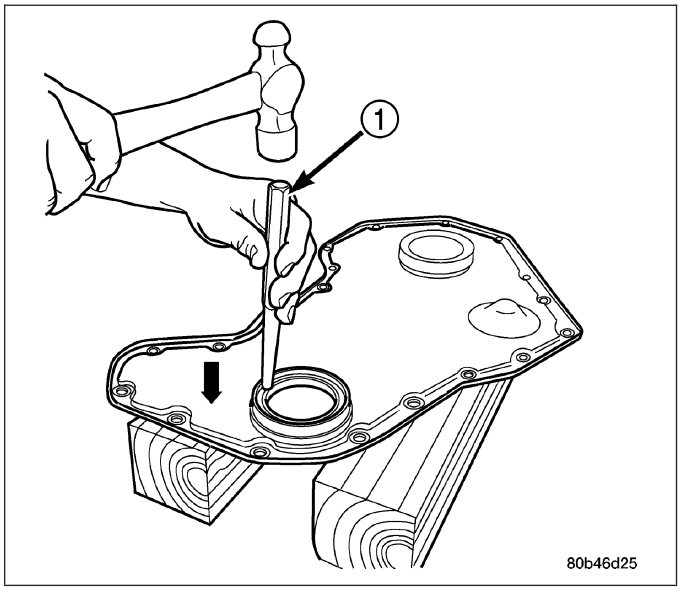

INSTALLATION

CAUTION: The seal lip and the sealing surface on te crankshaft must be be from all oil residue, to prevent leaks. The crankshaft and seal surface must be completely dry when the seal is installed.

1. Clean cover and housing gasket mating surfaces. Use a suitable scraper and be careful not to damage the gear housing surface. Remove any old sealer from the oil seal bore. Thoroughly clean the front seal area of the crankshaft. The seal lip and the sealing surface on the crankshaft must be free from all oil residue to prevent seal leaks.
2. Inspect the gear housing and cover for cracks and replace if necessary. Carefully straighten any bends or imperfections in the gear cover with a ball-peen hammer on a flat surface. Inspect the crankshaft front journal for any grooves or nicks that would affect the integrity of the new seal.
3. Apply a bead of Mopar® Stud & Bearing Mount to the outside diameter of the seal. Do not lubricate the inside diameter of the new seal.

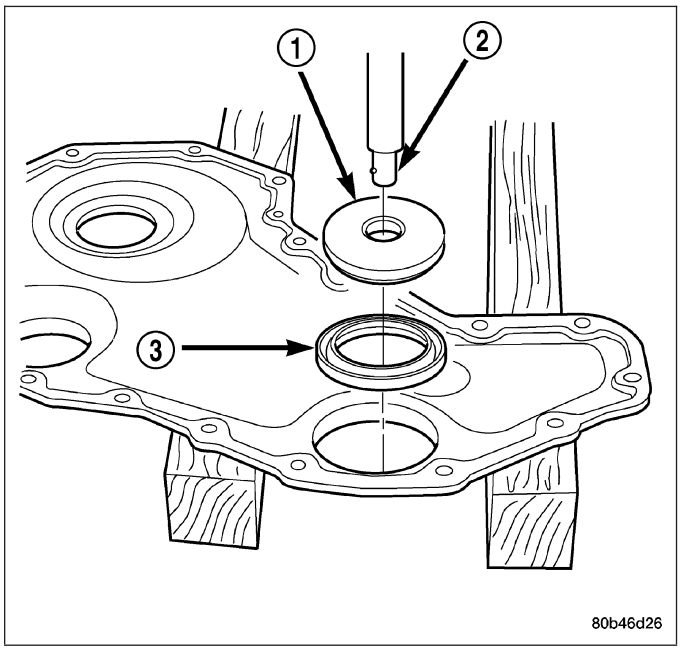

4. With the cover supported by wood blocks, install the seal into the rear of the cover using crankshaft seal installer Special Tool 8281 and driver handle C-4171. Strike the driver handle until the installation tool bottoms out on the inside of the cover.

CAUTION: Do not distort or damage seal.

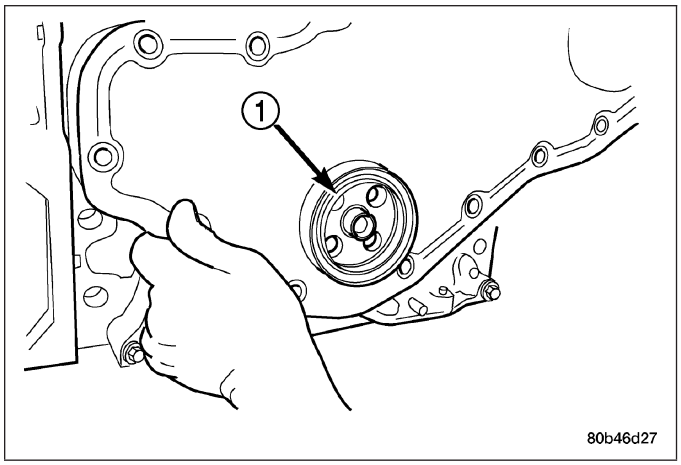

5. Install the plastic seal pilot (provided with seal kit) into the crankshaft seal.
6. Apply a bead of Mopar® Silicone Rubber Adhesive Sealant or equivalent to the gear housing cover sealing surface.
7. Install the cover to the gear housing, aligning the seal pilot with the nose of the crankshaft.
8. Install the cover bolts and tighten to 24 N·m (18 ft. lbs.) torque. Remove pilot tool.
9. Install dust shield over nose of crankshaft.
10. Install the crankshaft damper and speed indicator ring. Torque the bolts to 40 N·m (30 ft. lbs.). Then rotate an additional 60°. Use the engine barring tool to keep the engine from rotating during tightening operation.
11. Install the fan support/hub assembly and torque bolts to 32 N·m (24 ft. lbs.).
12. Install power steering pump.
13. Install accessory drive belt tensioner. Torque bolt to 43 Nm (32 ft.lbs.).
14. Install cooling fan (Refer to 7 - COOLING/ENGINE/RADIATOR FAN - INSTALLATION).
15. Install the accessory drive belt (Refer to 7 - COOLING/ACCESSORY DRIVE/DRIVE BELTS - INSTALLATION).
16. Refill cooling system (Refer to 7 - COOLING - STANDARD PROCEDURE).
17. Connect battery negative cables.
18. Start engine and check for oil leaks.

SEAL - CRANKSHAFT OIL - REAR

REMOVAL

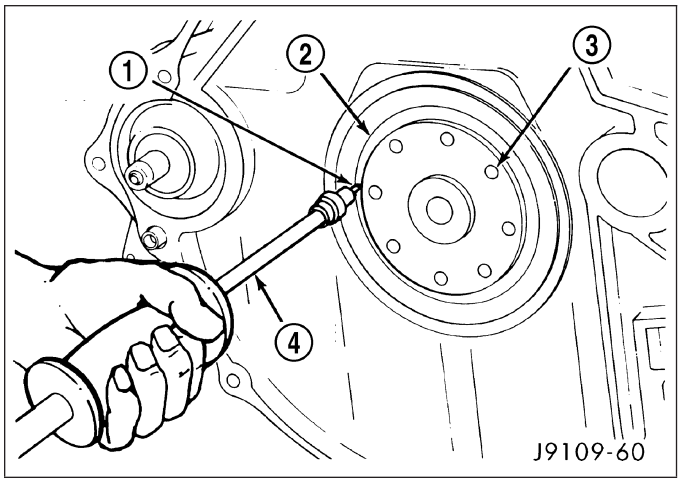

1. Disconnect the battery negative cables.
2. Remove the transmission and transfer case (if equipped).
3. Remove the clutch cover and disc (if manual transmission equipped) (Refer to 6 - CLUTCH/CLUTCH DISC - REMOVAL).
4. Remove the flywheel or converter drive plate.
5. **FOR LATE BUILDS** Remove the flywheel adapter plate.
6. Drill holes 180° apart into the seal. Be careful not to contact the drill against the crankshaft.
7. Install #10 sheet metal screws (1) in the drilled holes and remove the rear seal with a slide hammer (4).

INSTALLATION

CAUTION: The seal lip and the sealing surface on the crankshaft must be free from all oil residue to prevent seal leaks. The crankshaft and seal surfaces must be completely dry when the seal is installed. Use a soap and water solution on outside diameter of seal to ease assembly.

1. Clean the crankshaft journal with a suitable solvent and dry with a clean shop towel or compressed air. Wipe the inside bore of the crankshaft seal retainer with a clean shop towel.

2. Inspect the crankshaft journal for gouges, nicks, or other imperfections. If the seal groove in the crankshaft is excessively deep, install the new seal 1/8” deeper into the retainer bore, or obtain a crankshaft wear sleeve that is available in the aftermarket.
3. Install the seal pilot and new seal, provided in the replacement kit, onto the crankshaft.
4. Remove the seal pilot.
5. Install the installation tool over crankshaft.
6. Using a ball peen hammer, strike the tool (2) at the 12, 3, 6, and 9 o’clock positions until the alignment tool bottoms out on the retainer.
7. Install the flywheel or converter drive plate. Tighten the bolts to 137 N·m (101 ft. lbs.) torque.
8. Install the clutch cover and disc (if equipped) (Refer to 6 - CLUTCH/CLUTCH DISC - INSTALLATION).
9. Install the transmission and transfer case (if equipped).
10. Lower vehicle.
11. Connect battery negative cables.
12. Check engine oil level and adjust, if necessary.
13. Start engine and check for oil leaks.

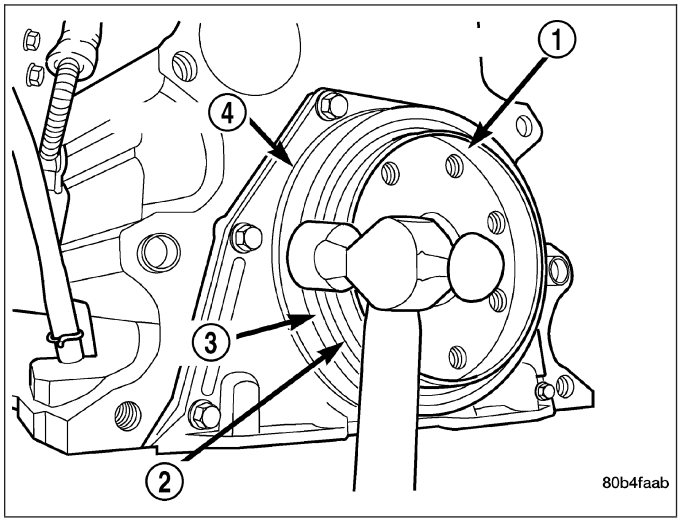

RETAINER - CRANK REAR OIL SEAL

REMOVAL

1. Disconnect the battery negative cables.
2. Raise vehicle on hoist.
3. Remove the oil pan drain plug and drain the engine oil. Re-install plug and torque to 50 N·m (44 ft. lbs.) torque.
4. Remove transmission and transfer case (if equipped) from vehicle.
5. Remove flywheel or torque converter drive plate.
6. **FOR LATE BUILDS** Remove flywheel adapter plate.
7. Disconnect starter cables from starter motor.
8. Remove starter motor (Refer to 8 - ELECTRICAL/ STARTING/STARTER MOTOR - REMOVAL) and transmission adapter plate assembly.
9. Remove four 4 oil pan rear bolts. Slide a feeler gauge between the seal retainer and oil pan gasket to break the seal.
10. Remove the six 6 retainer-to-block bolts (3).
11. Remove the rear seal retainer and gasket (3).
12. Support the seal retainer and drive out the crankshaft seal with a hammer and suitable punch.

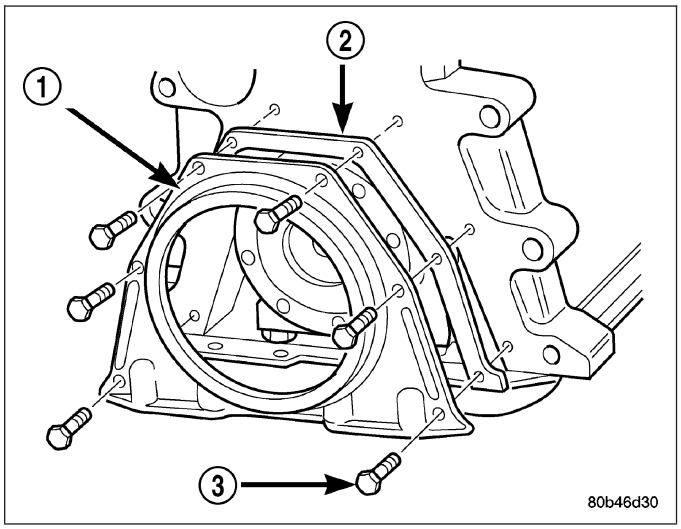

INSTALLATION

NOTE: Late and Early build engines use different retainers, they are not interchangeable.

1. If using the old seal retainer, the crankshaft seal must be replaced.
2. Inspect oil pan gasket for nicks or cuts. If gasket is damaged, the oil pan must be removed and gasket must be replaced. Wipe oil pan gasket dry and apply light coating of RTV.
3. Using the retainer alignment/seal installation tool provided in the seal service kit, install the alignment tool into the retainer and install to the cylinder block, using a new gasket. Tighten the six (6) mounting bolts by hand.
4. The seal alignment tool is used to align rear cover properly. Starting with the center two bolts, tighten the retainer in a circular pattern to 10 N·m (89 in. lbs.). Remove the alignment tool.

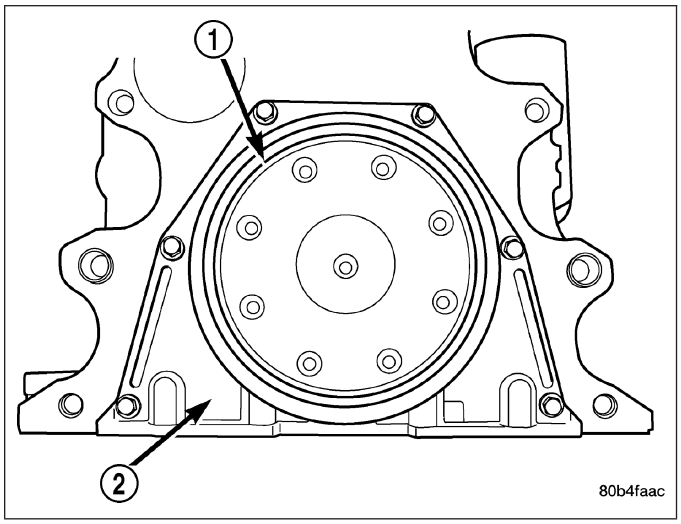

CAUTION: The seal lip and the sealing surface on the crankshaft must be free from all oil residue to prevent seal leaks. The crankshaft and seal surfaces must be completely dry when the seal is installed. Use a soap and water solution on outside diameter of seal to ease assembly.

NOTE: Later build engines are equipped with a dual mass flywheel, which uses a crankshaft adapter. The rear seal retainer will not interchange with a non dual mass flywheel. The rear seal retainer for a dual mass flywheel is shorter and will not fit on earlier engines which have a standard flywheel.

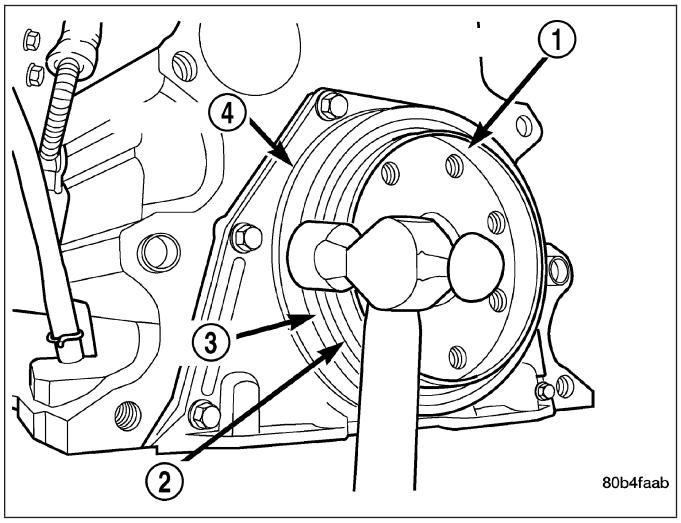

5. Make sure the provided seal pilot (1) is installed into the new crankshaft seal (3). Use the alignment/installation tool and press the seal onto the crankshaft. Alternately drive the seal at the 12, 3, 6 and 9 o'clock positions.

6. Remove the alignment tool and trim the retainer gasket (1) even with the oil pan mounting surface.
7. Remove the seal pilot.
8. Apply a small amount of Mopar® Silicone Rubber Adhesive Sealant to the oil pan rail T-joints.
9. Install the four (4) oil pan rear mounting bolts and torque to 28 N·m (21 ft. lbs.).
10. Install new rectangular ring seal for cam bore.
11. Install the flywheel housing and bolts. Torque bolts to 77 N·m (57 ft. lbs.).
12. Install the flywheel housing and bolts. Torque bolts to 77 N·m (57 ft. lbs.).
13. **FOR EARLY BUILDS** Install the flywheel or converter drive plate. Tighten bolts to 137 N·m (101 ft. lbs.).

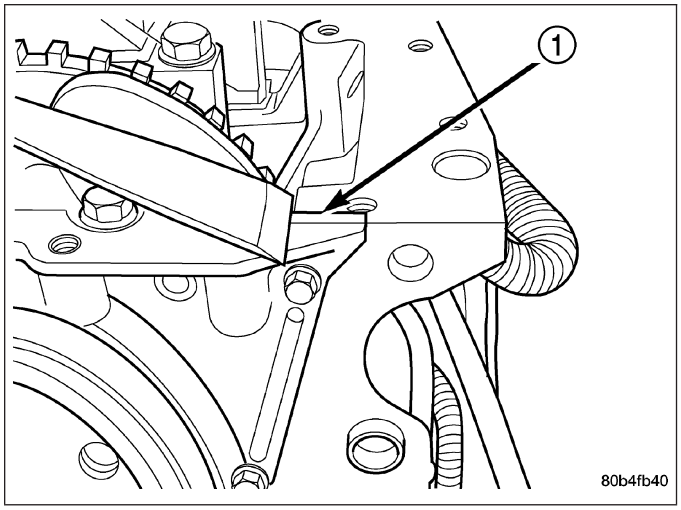

14. **FOR LATE BUILDS** Install the dual mass flywheel with crankshaft adapter. Tighten bolts to 137 N·m (101 ft. lbs.).

15. Install the starter motor Refer to (Refer to 8 - ELECTRICAL/STARTING/STARTER MOTOR - INSTALLATION).
16. Install the transmission and transfer case (if equipped).
17. Lower vehicle.
18. Fill the crankcase with new engine oil.
19. Connect the battery negative cables.
20. Start engine and check for oil leaks.

TAPPETS - VALVE

REMOVAL

NOTE: This procedure requires use of Miller Tool 8502 Tappet Replacement Kit.

1. Remove camshaft (Refer to 9 - ENGINE/ENGINE BLOCK/CAMSHAFT & BEARINGS (IN BLOCK) - REMOVAL).
2. Insert the trough (1) (provided with tool kit) the full length of the camshaft bore. Make sure the cap end goes in first and the open side faces up (towards tappets).

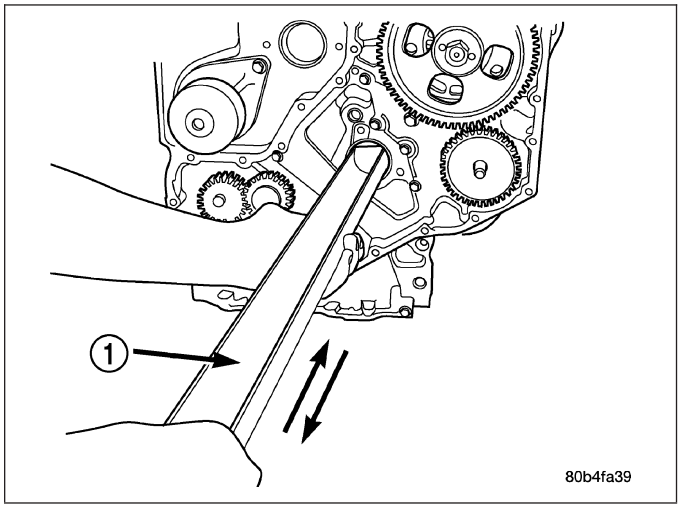

3. **Remove only one tappet at a time.** Remove rubber band from one cylinder pair and attach tappet dowel not being removed to the next cylinder pair.

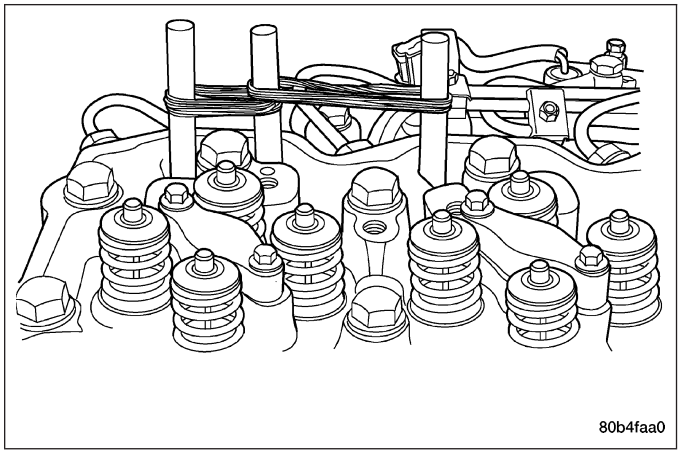

4. Raise dowel rod (disengage from tappet) and allow tappet to fall into trough.
5. Carefully remove trough **(do not rotate)** and tappet. If the tappet is not being replaced, mark it so it can be installed in its original location.

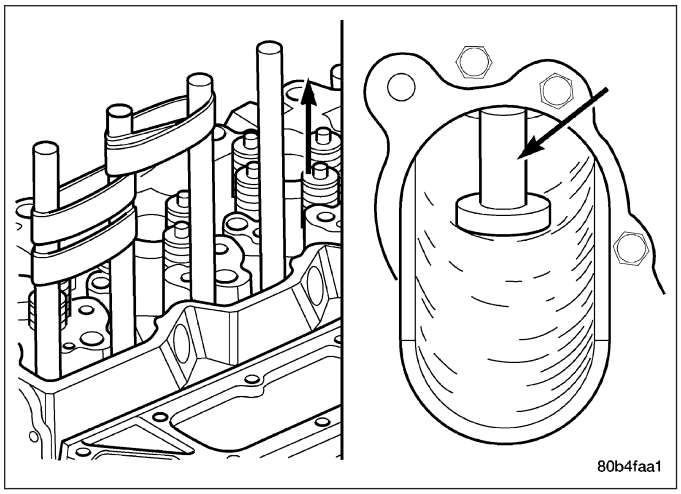

6. Re-install trough (1) and repeat procedure on remaining tappets.

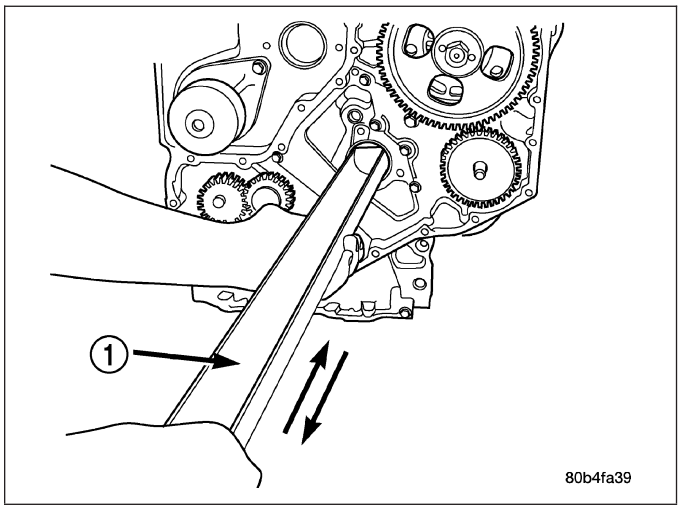

CLEANING

Clean tappet with a suitable solvent. Rinse in hot water and blow dry with a clean shop rag or compressed air.

INSPECTION

1. Visually inspect the tappet the tappet socket, stem, and face for excessive wear, cracks, or obvious damage.
2. Measure the tappet stem diameter. Replace the tappet if it falls below the minimum size.

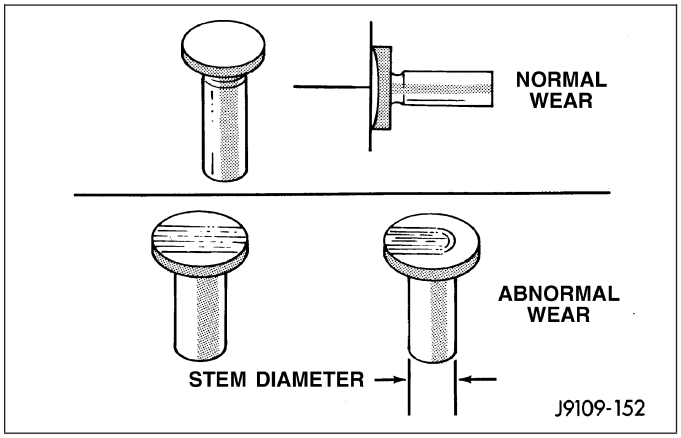

INSTALLATION

1. Insert the trough (1) the full length of the camshaft bore. Again, make sure the cap end goes in first and the open side faces up (towards tappets).

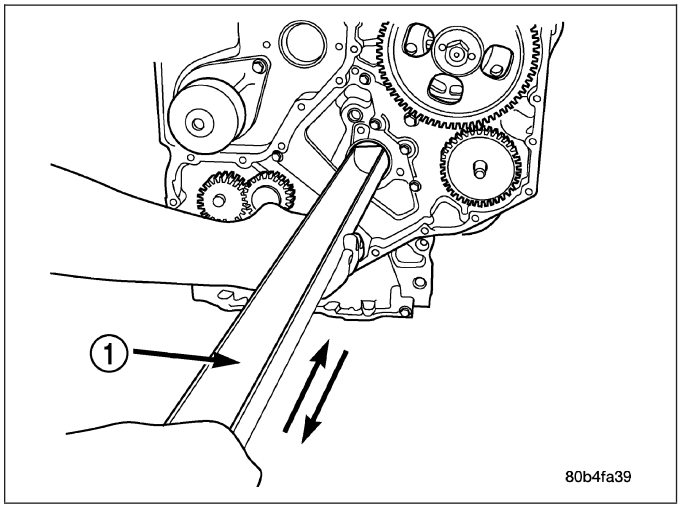

2. Lower the tappet installation tool through the push rod hole and into the trough.

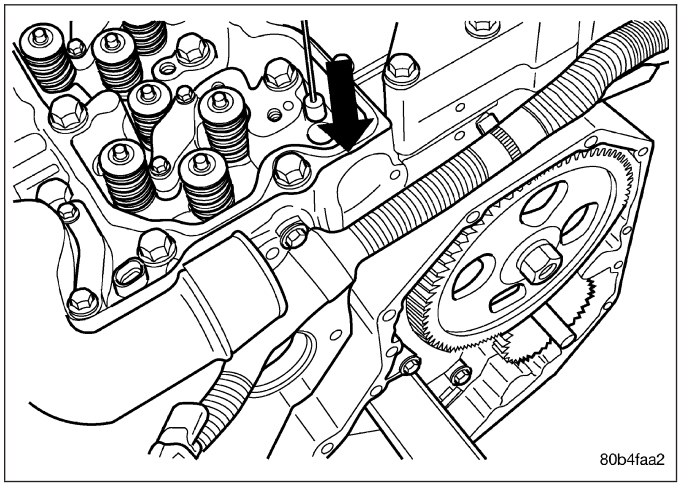

3. Retrieve the tappet installation tool using the hooked rod provided with the tool kit
.

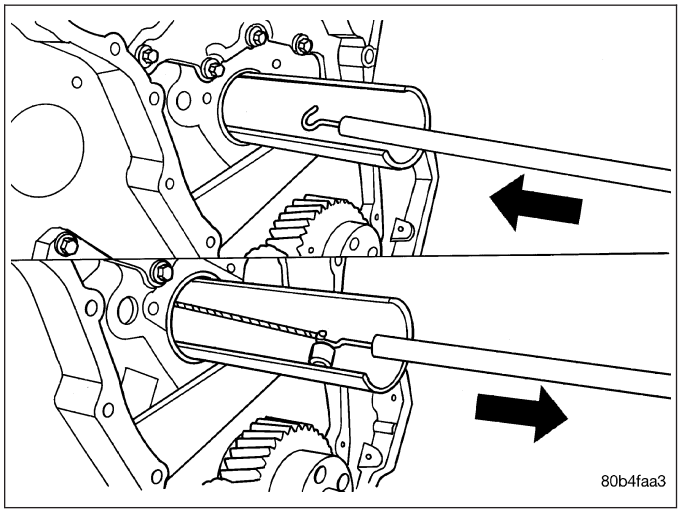

4. Lubricate the tappet with clean engine oil or suitable equivalent and install the tappet to the installation tool.
5. Pull the tappet up and into position. If difficulty is experienced getting the tappet to make the turn into the tappet bore, wiggle the trough while **gently** pulling up on the tappet.

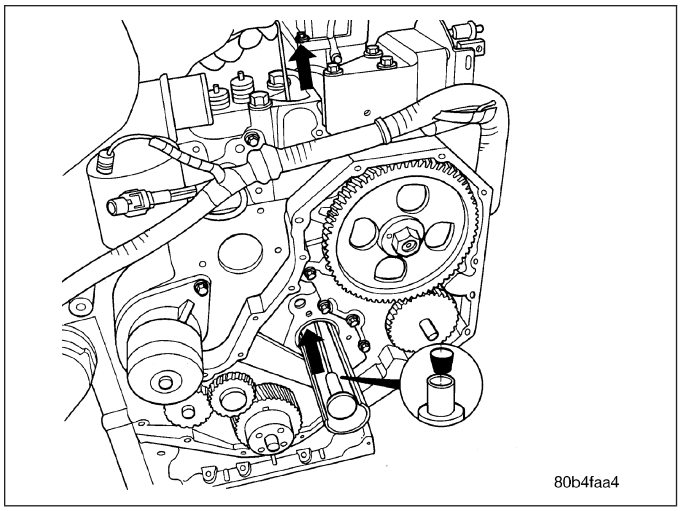

6. With the tappet in place, rotate the trough one half turn so the open side is down (toward crankshaft).
7. Remove the tappet installation tool from the tappet.
8. Re-install a dowel rod and secure the rod with a rubber band.

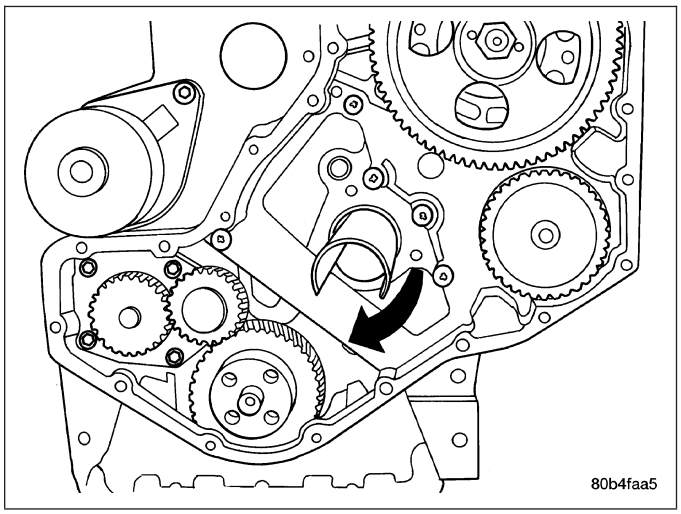

9. Rotate the trough one half turn and repeat the procedure for the remaining tappets.
10. Install the camshaft (Refer to 9 - ENGINE/ENGINE BLOCK/CAMSHAFT & BEARINGS (IN BLOCK) - INSTALLATION).

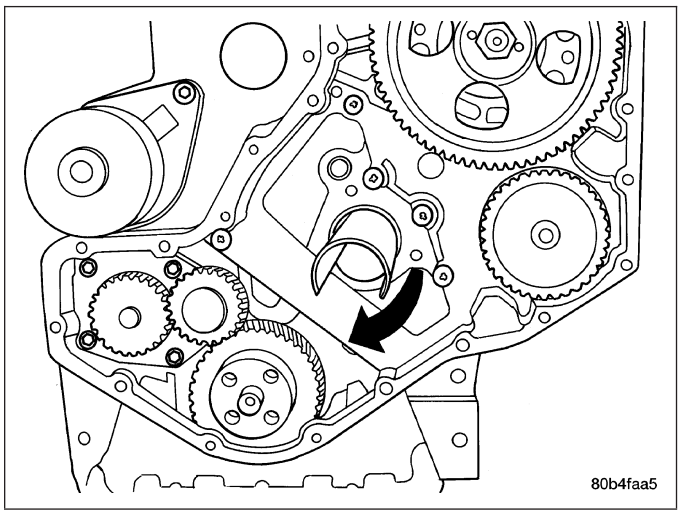

PISTON & CONNECTING ROD

DESCRIPTION

PISTONS

The piston is constructed of aluminum and is gravity cast, free floating design. The piston incorporates a centrally located high swirl combustion bowl, and utilizes a “keystone” style top compression ring, and a “Tapered Face” intermediate ring, for superior cylinder wall scraping. Piston cooling nozzles cool the piston and pin with engine oil supplied by the crankshaft main journals. High horsepower pistons are gallery cooled and utilize J-jet piston cooling nozzles. Pistons are directional in order to provide clearance to piston cooling nozzles.

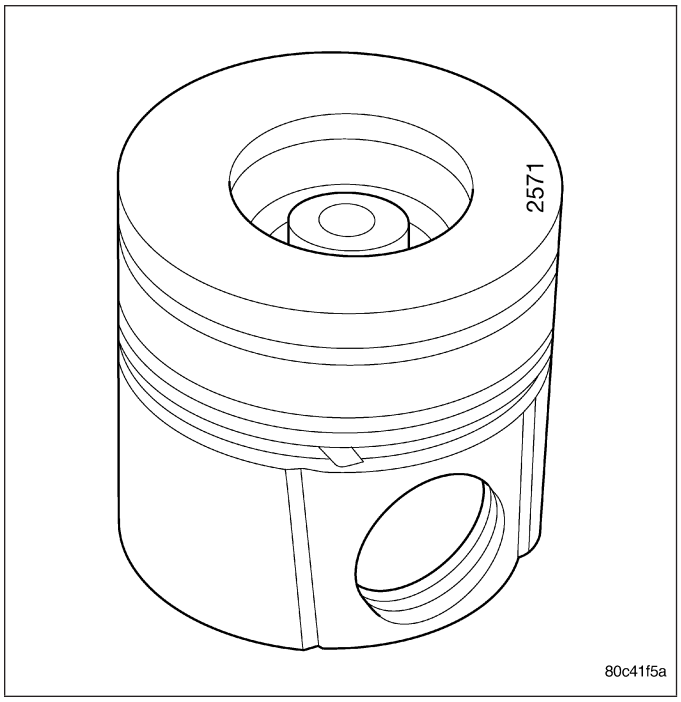

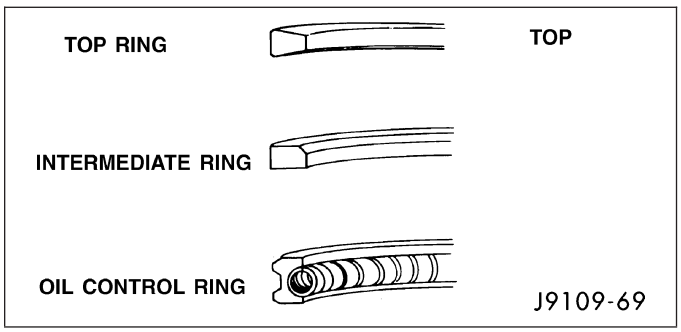

CONNECTING RODS

The connecting rods are a split angle design. They have a pressed-in-place wrist pin bushing that is lubricated by piston cooling nozzle oil spray.

Machined connecting rods are no longer used in the diesel engine. Do not install machined connecting rods into an engine that has fractured split connecting rods.

Fractured split connecting rods are first manufactured as a single piece and then fractured into two pieces. Fractured split connecting rods can be identified by a rough and irregular surface at the connecting rod split face. To properly assemble the rod cap to the connecting rod, the bearing tangs on the connecting rod and cap must be located on the same side of the rod. The long end of the connecting rod must be assembled on the intake or camshaft side of the engine.

Each matched fractured split connecting rod and cap is an assembly and are not interchangeable. If a connecting rod or cap is damaged, the entire assembly must be replaced.

STANDARD PROCEDURE - HEAD GASKET SELECTION

1. Measure piston protrusion for all six pistons.
2. Calculate the average piston protrusion. Maximum allowable protrusion is 0.516 mm (0.020 inch).

NOTE: There are two different head gaskets available. One gasket is for Average piston protrusion less than 0.30 mm (0.011 inch). The other gasket is for Average piston protrusion greater than 0.30 mm (0.011 inch)

REMOVAL

1. Disconnect the battery cables.
2. Remove the cylinder head (Refer to 9 - ENGINE/CYLINDER HEAD - REMOVAL).
3. Remove the oil pan and suction tube (Refer to 9 - ENGINE/LUBRICATION/OIL PAN - REMOVAL).
4. Remove bolts and the block stiffener.
5. Using Miller Tool 7471-B crankshaft barring tool, rotate the crankshaft so all of the pistons are below TDC.
6. Before removing the piston(s) from the bore(s):
   a. Remove any carbon ridge formations or deposits at the top of the bore with a dull scraper or soft wire brush.
   b. If cylinder bore wear ridges are found, use a ridge reamer to cut the ridge from the bore. DO NOT remove more metal than necessary to remove the ridge.
7. Remove the J-jet cooling nozzles, if equipped.

NOTE: If cylinders have ridges, the cylinders are oversize and will more than likely need boring.

8. Using a hammer and steel stamp, stamp the cylinder number in the top of each piston. The front of the piston is identified by a stamping on the top of the piston. DO NOT stamp in the outside 5 mm (.197 in.) of the piston diameter. DO NOT stamp over the piston pin.
9. Mark the connecting rod and cap with the corresponding cylinder numbers.
10. Remove the connecting rod bolts and rod caps. Use care so the cylinder bores and connecting rods are not damaged.
11. Use a hammer handle or similar object to push the piston and connecting rod through the cylinder bore.
12. Store the piston/rod assemblies in a rack.

CLEANING—PISTON AND CONNECTING ROD

CAUTION: DO NOT use bead blast to clean the pistons. DO NOT clean the pistons and rods in an acid tank.

PISTON

Clean the pistons and pins in a suitable solvent, rinse in hot water and blow dry with compressed air. Soaking the pistons over night will loosen most of the carbon build up. De-carbon the ring grooves with a broken piston ring and again clean the pistons in solvent. Rinse in hot water and blow dry with compressed air.

CONNECTING ROD

Clean the connecting rods in a suitable solvent, rinse in hot water and blow dry with compressed air.

INSPECTION

INSPECTION - PISTONS

PISTON SKIRT DIAMETER (MIN.)
101.775 mm (4.006 in.)

Inspect the pistons for damage and excessive wear. Check top of the piston, ring grooves, skirt and pin bore. Measure the piston skirt diameter. If the piston is out of limits, replace the piston.

The upper groove only needs to be inspected for damage. Use a new piston ring (2) to measure the clearance in the intermediate ring groove. Minimum clearance is 0.045 mm (0.0018 inch), maximum clearance is 0.095 mm (.0037 inch). If the clearance of the intermediate ring exceeds specifications, replace the piston (3).

Use a new oil ring to measure the clearance in the oil groove. Minimum clearance is 0.040 mm (0.0016 inch), maximum clearance is 0.085 mm (.0033 inch). If the clearance exceeds specifications, replace the piston.

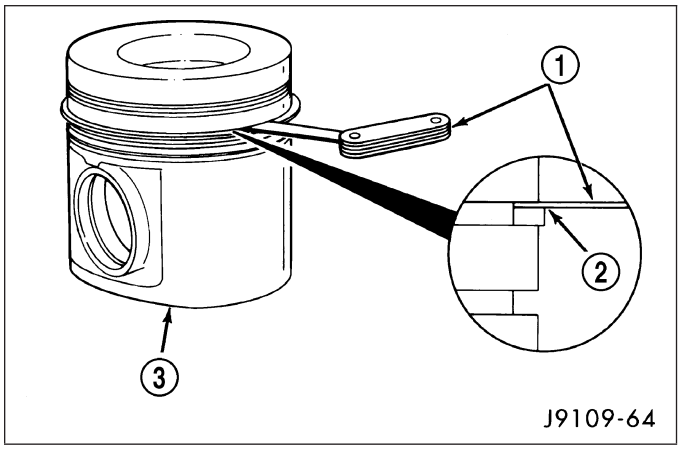

Measure the pin bore (2). The maximum diameter is 40.012 mm (1.5753 inch), Minimum is 40.006 mm (1.575 inch). If the bore is over limits, replace the piston (1).

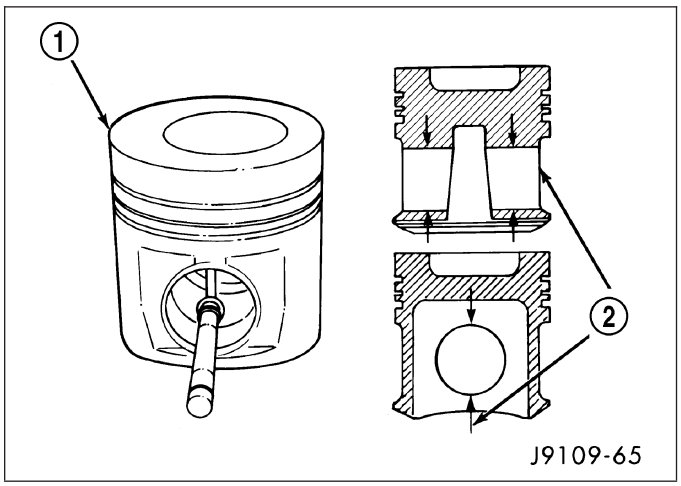

Inspect the piston pin for nicks, gouges and excessive wear. Measure the pin diameter (1). The minimum diameter is 39.990 mm (1.5744 inch), maximum 40.003 mm (1.5749 inch). If the diameter is out of limits, replace the pin (1).

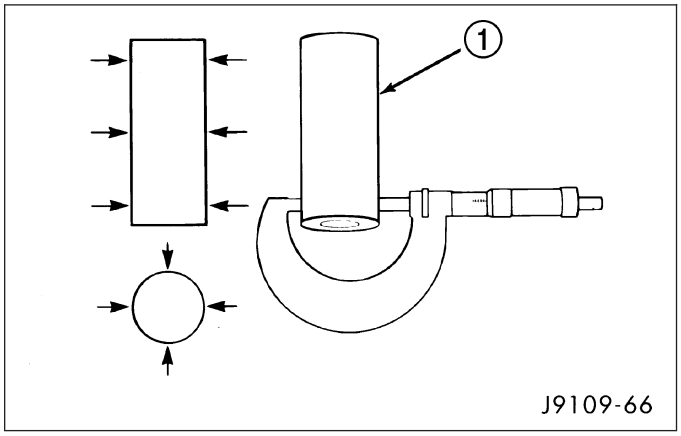

INSPECTION - CONNECTING ROD

Inspect the connecting rod for damage and wear. The I-Beam section of the connecting rod cannot have dents or other damage. Damage to this part can cause stress risers which will progress to breakage.

Measure the connecting rod pin bore (1). The maximum diameter is 40.042 mm (1.5765 inch), minimum diameter is 40.019 mm (1.5756 inch). If out of limits, replace the connecting rod.

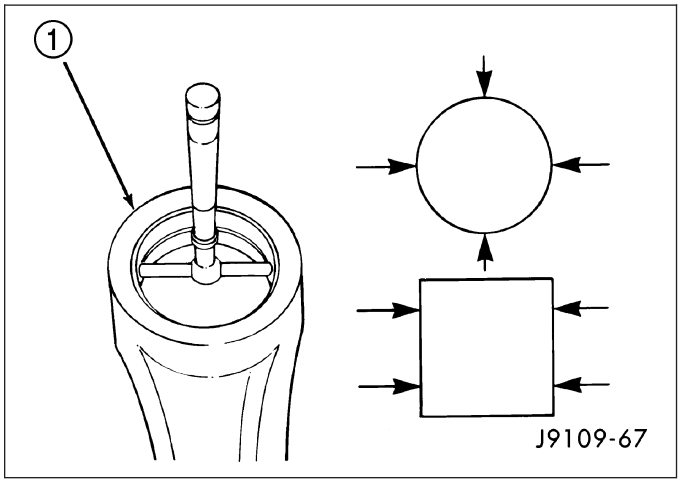

INSTALLATION

1. Lubricate the cylinder bores with clean engine oil.
2. Generously lubricate the rings and piston skirts with clean engine oil.
3. Orientate the rings on the piston (Refer to 9 - ENGINE/ENGINE BLOCK/PISTON RINGS - STANDARD PROCEDURE).
4. Compress the rings using a piston ring compressor tool (1). If using a strap-type ring compressor, make sure the inside end of the strap does not hook on a ring gap and break the ring.

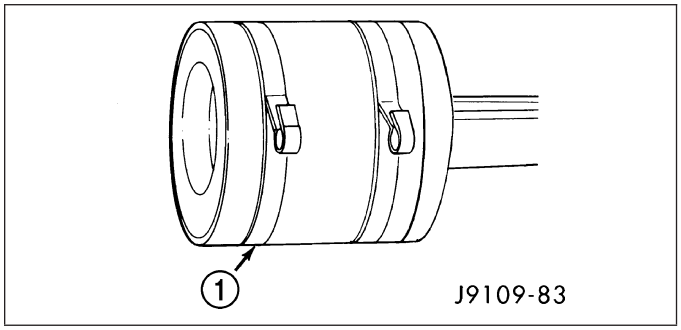

5. Bar the crankshaft so the rod journal for the piston to be installed is at BDC (Bottom Dead Center).
6. Make sure the front of the piston is oriented properly according to the marking on the top of the piston and the connecting rod is oriented properly.

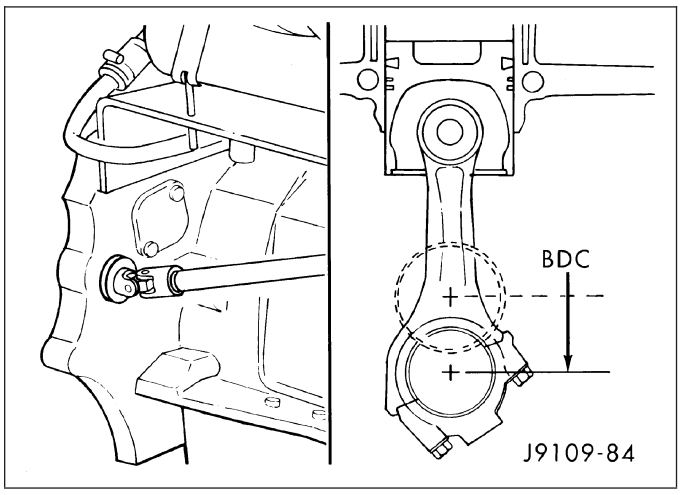

7. Position the piston and rod assembly into the cylinder bore with the front of the piston oriented properly according to the stamping in the top of the piston. Use care when you install the piston and connecting rod so the cylinder bore is not damaged. The long side of the connecting rod must be installed on the intake side of the engine.
8. Push the piston into the bore until the top of the piston is approximately 50 mm (2 inch) below the top of the block. Carefully pull the connecting rod onto the crankshaft journal.
9. Use clean engine oil to lubricate the threads and under the heads of the connecting rod bolts.

10. **For fractured/split type connecting rods,** the long end of the rod must be installed towards the intake side of the engine.
    a. The connecting rod split/face must face toward the same side as the piston notch feature on the skirt. The split face will face toward the exhaust side of the engine if properly installed.
11. Install the rod cap and bolts to the connecting rod. Tighten the connecting rod bolts evenly in 3 steps.
    - Tighten the bolts to 30 N·m (22 ft. lbs.) torque.
    - Tighten the bolts to 60 N·m (44 ft. lbs.) torque.
    - Rotate 60° clockwise.
12. The crankshaft must rotate freely. Check for freedom of rotation as the caps are installed. If the crankshaft does not rotate freely, check the installation of the rod bearing and the bearing size.
13. Measure the side clearance between the connecting rod and the crankshaft. DO NOT measure the clearance between the cap and crankshaft.
14. Install J-jet piston cooling nozzles if equipped.
15. Install block stiffener. Torque to 43 N·m (32 ft. lbs.).
16. Install the suction tube and oil pan (Refer to 9 - ENGINE/LUBRICATION/OIL PAN - INSTALLATION).
17. Install the cylinder head onto the engine (Refer to 9 - ENGINE/CYLINDER HEAD - INSTALLATION).
18. Install a new filter and fill the crankcase with new engine oil.**Prefill the filter with clean oil.**
19. Connect the battery negative cables and start engine.

RINGS - PISTON

STANDARD PROCEDURE - PISTON RING FITTING

1. Determine the piston diameter and obtain the appropriate ring set. The piston rings can be identified as shown.

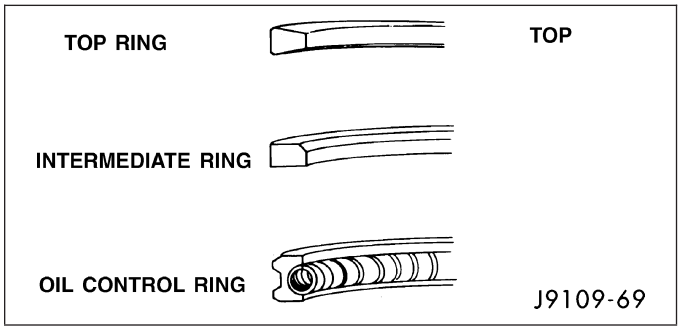

2. Position each ring in the cylinder and use a piston (1) to square it with the bore at a depth (3) of 89.0 mm (3.5 inch).

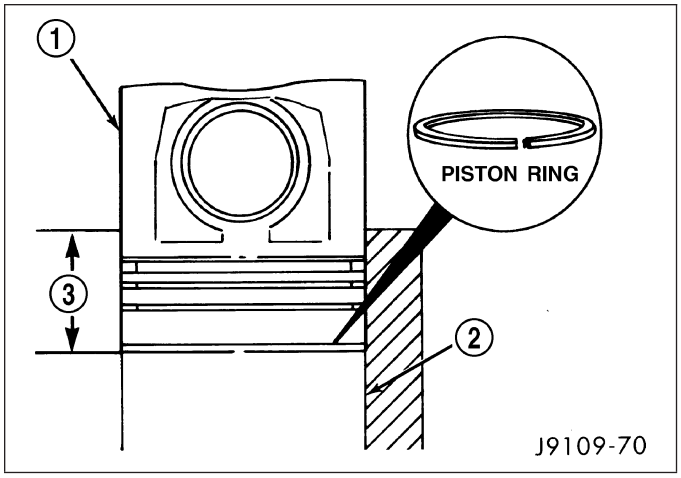

PISTON RING GAP CHART		
TOP RING	0.26 - 0.36 mm	(0.010 - 0.014 in.)
INTERMEDIATE RING	0.85-1.15 mm	(0.033 - 0.045 in.)
OIL CONTROL RING	0.25-0.55 mm	(0.010 - 0.022 in.)

3. Use a feeler gauge to measure the piston ring gap.

4. The top surface of all of the rings are identified with the word TOP or the supplier's MARK. Assemble the rings with the word TOP or the supplier's MARK up.
5. Position the oil ring expander (2) in the oil control ring (1) groove (bottom groove).
6. Install the oil control ring (1) with the end gap OPPOSITE the ends on the expander.

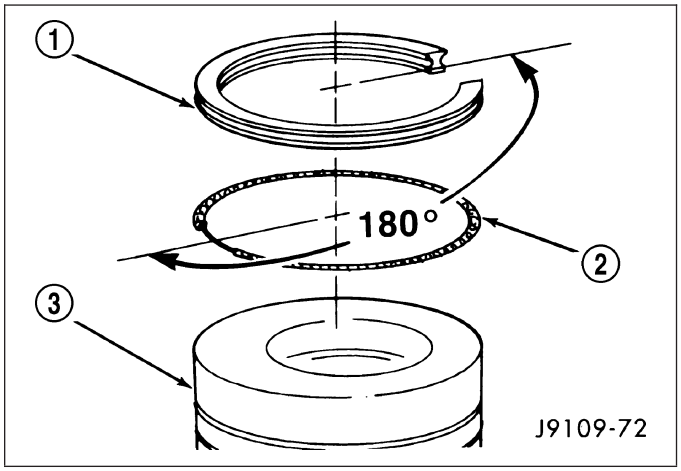

7. Install the intermediate piston ring in the second groove.
8. Install the top piston ring in the top groove.

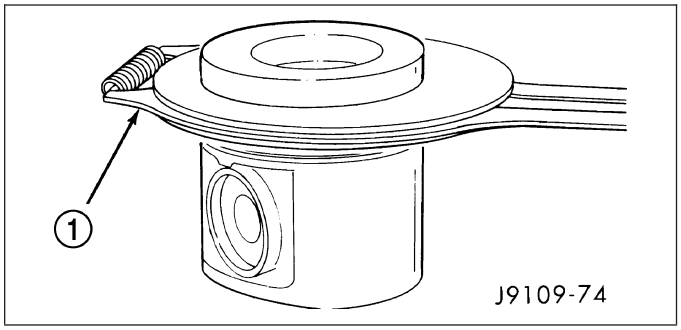

9. Position the rings as shown.

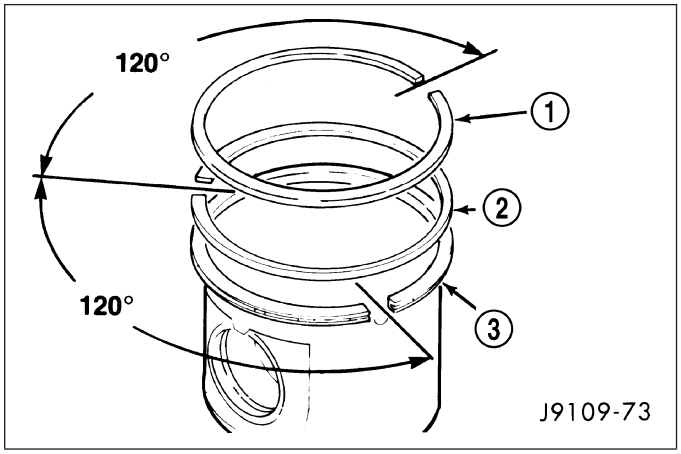

DAMPER - CRANKSHAFT

REMOVAL

1. Remove the accessory drive belt (Refer to 7 - COOLING/ACCESSORY DRIVE/DRIVE BELTS - REMOVAL).
2. Remove the four (4) damper to crankshaft bolts and remove damper and speed indicator ring.

INSPECTION

1. Inspect the damper hub for cracks and replace if any are found.
2. Inspect the rubber member for deterioration or missing segments.

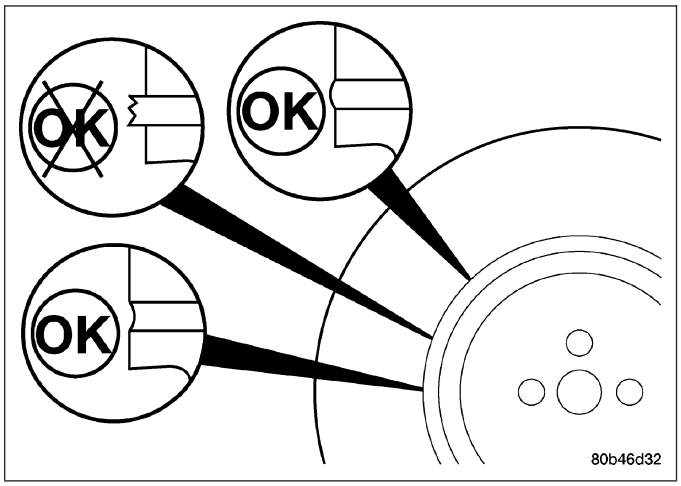

3. Inspect the index lines (1) on the damper hub (2) and the inertia member (3). If the lines are more than 1.59 mm (1/16 in.) out of alignment, replace the damper.

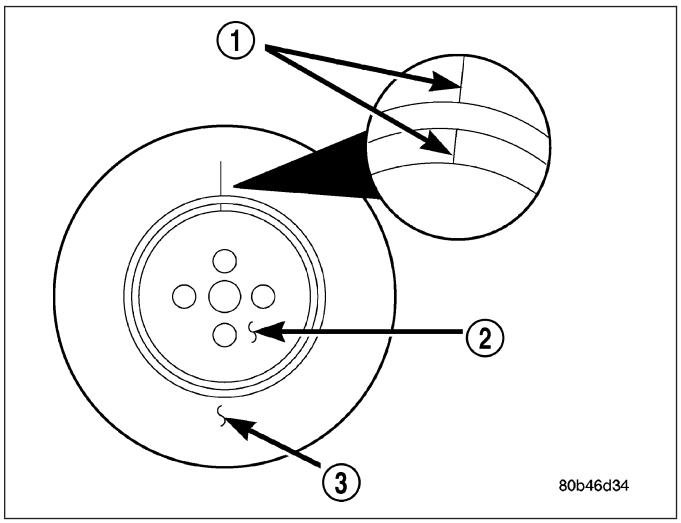

INSTALLATION

1. Install speed indicator ring.

NOTE: The speed indicator ring is located over a dowel pin.

2. Install the crankshaft damper and bolts. Tighten bolts to 40 N·m (30 ft. lbs.) torque, plus an additional 60°.

NOTE: The damper must be installed so the hole is located over the dowel pin.

3. Install the accessory drive belt (Refer to 7 - COOLING/ACCESSORY DRIVE/DRIVE BELTS - INSTALLATION).

MOUNT - FRONT

REMOVAL

1. Disconnect the battery negative cables.
2. Remove the viscous fan/drive assembly (Refer to 7 - COOLING/ENGINE/RADIATOR FAN - REMOVAL).
3. Raise vehicle on hoist.
4. Install engine support fixture tool# 8534 and steel bracket tool # 8534A
5. Loosen the thru-bolt and nut.
6. Lift the engine SLIGHTLY and remove the insulator to block bolts.
7. Remove the RH insulator (2) from the vehicle.

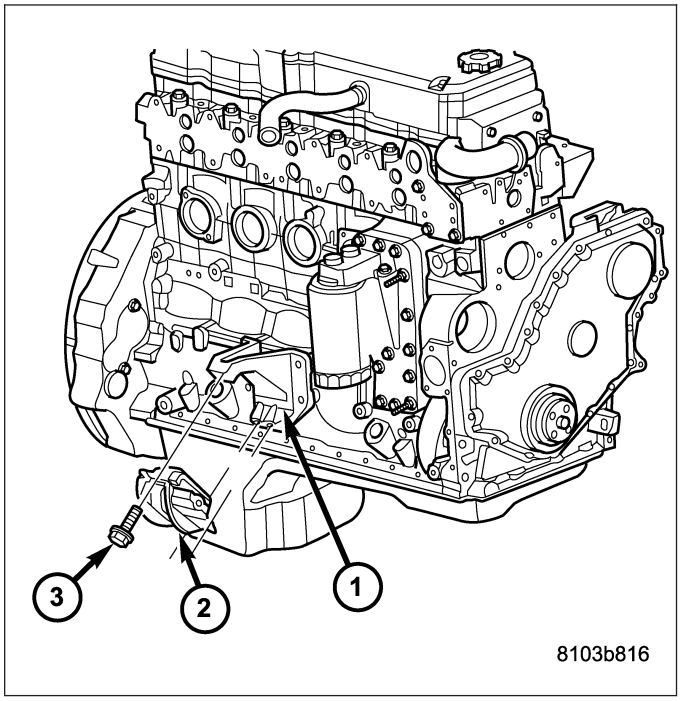

8. Remove the LH insulator (2) from the vehicle.

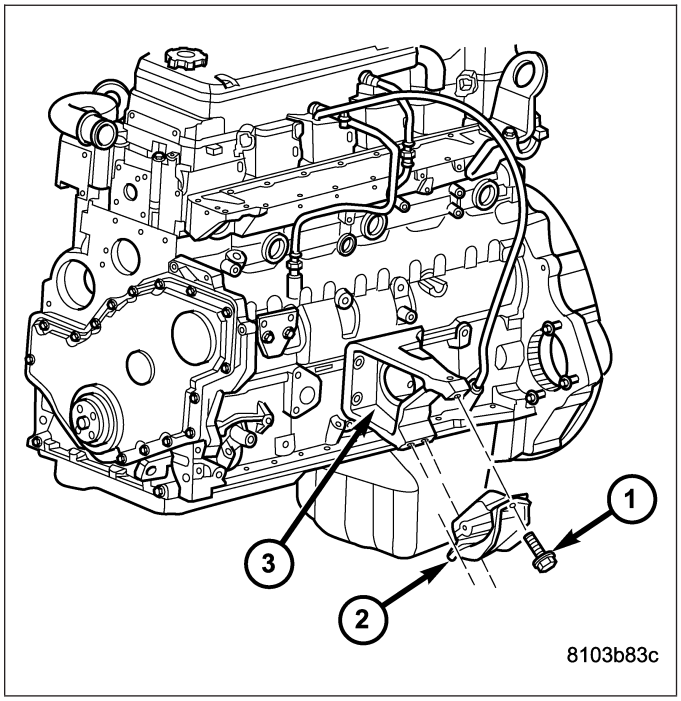

INSTALLATION

1. With engine raised SLIGHTLY, position the LH insulator (2) to the mount. Install the bolts and torque to specification.
2. With engine raised SLIGHTLY, position the RH insulator (2) to the mount. Install the bolts and torque to specification.
3. Lower the engine using tool # 8534, while guiding the mount and thru-bolt into the frame mounted support cushion brackets.
4. Install the thru-bolt nut and tighten the nut to 95 N·m (70 ft. lbs.) torque.
5. Remove the engine support fixture tool #8534.
6. Lower the vehicle.
7. Install the viscous fan/drive assembly (Refer to 7 - COOLING/ENGINE/RADIATOR FAN - INSTALLATION).
8. Connect the battery negative cables.

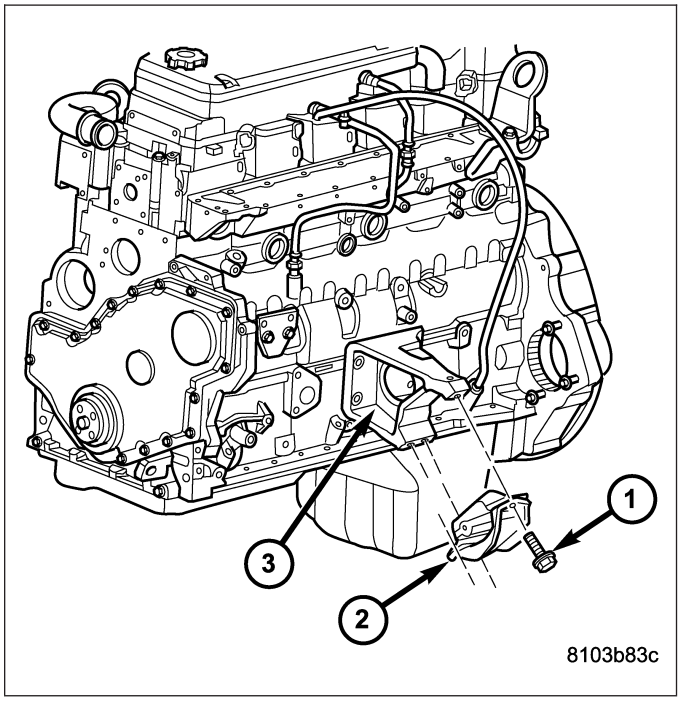

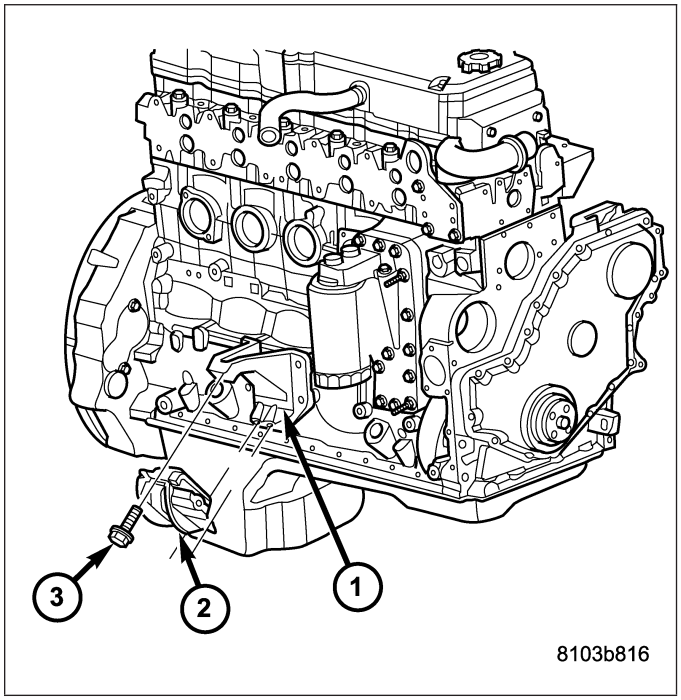

MOUNT - REAR

REMOVAL

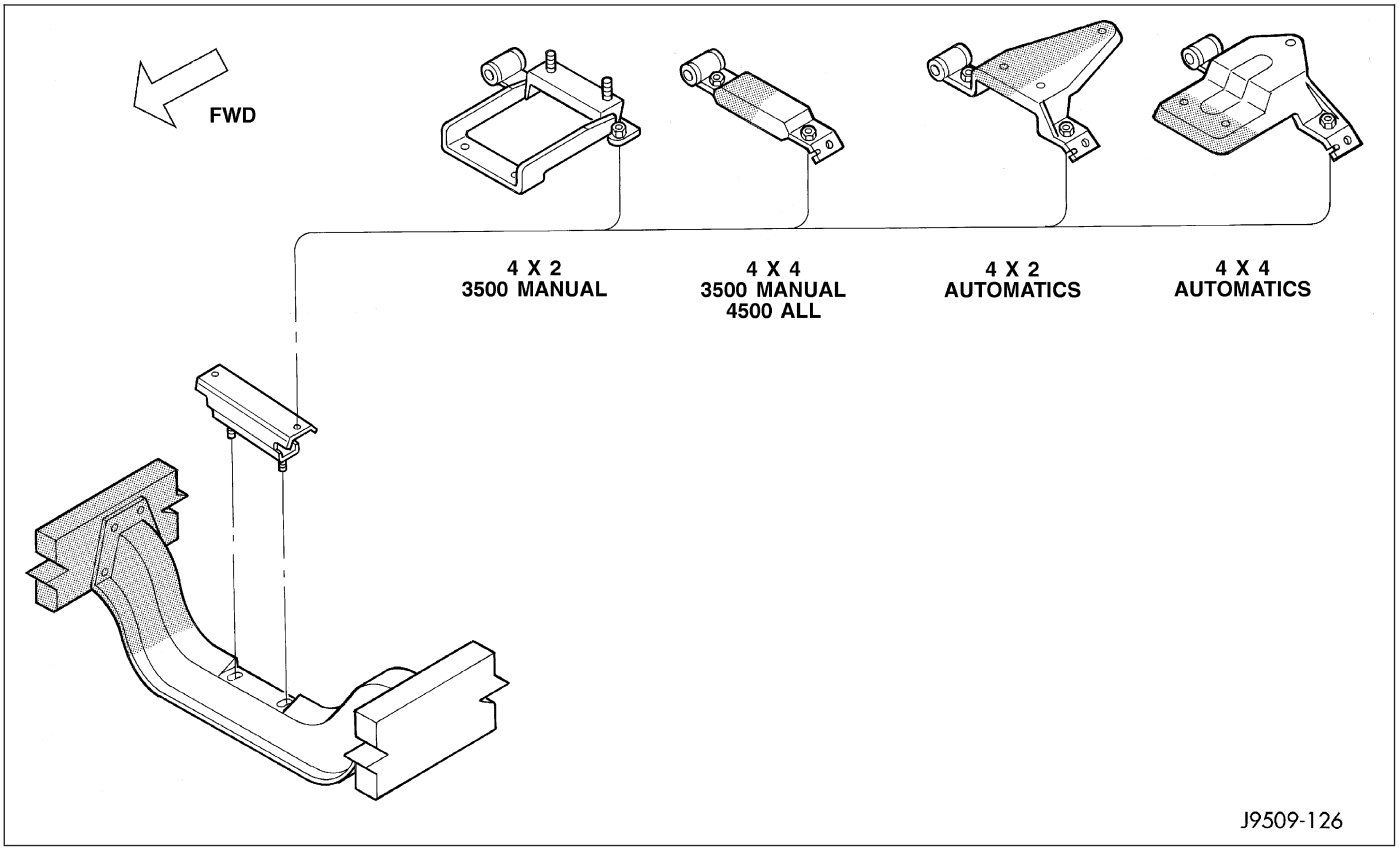

1. Raise the vehicle on a hoist.
2. Position a transmission jack in place.
3. Remove support cushion stud nuts.
4. Raise rear of transmission and engine SLIGHTLY.
5. Remove the bolts holding the support cushion to the transmission support bracket. Remove the support cushion.
6. If necessary, remove the bolts holding the transmission support bracket to the transmission.

INSTALLATION

1. If removed, position the transmission support bracket to the transmission. Install new attaching bolts and tighten to 102 N·m (75 ft. lbs.) torque.
2. Position support cushion to transmission support bracket. Install stud nuts and tighten to 47 N·m (35 ft. lbs.) torque.
3. Using the transmission jack, lower the transmission and support cushion onto the crossmember .
4. Install the support cushion bolts and tighten to 47 N·m (35 ft. lbs.) torque.
5. Remove the transmission jack.
6. Lower the vehicle.

LUBRICATION

DESCRIPTION

NOTE: Refer to and for circuit illustrations.

A gear driven gerotor type oil pump is mounted behind the front gear cover in the lower right portion on the engine.

OPERATION

A gerotor style oil pump draws oil from the crankcase through the suction tube and delivers it through the block where it enters the oil cooler cover and pressure regulator valve. When oil pressure exceeds 517 kPa (75 PSI), the valve opens exposing the dump port, which routes excess oil back to the oil pump.

At the same time, oil is directed to a cast in passage in the oil cooler cover, leading to the oil cooler element. As the oil travels through the element plates, it is cooled by engine coolant traveling past the outside of the plates. It is then routed to the oil filter head and through a full flow oil filter. If a plugged filter is encountered, the filter by-pass valve opens, allowing unfiltered oil to lubricate the engine. This condition can be avoided by frequent oil and filter changes, per the maintenance schedules found in the owners manual. The by-pass valve is calibrated to open when it sees a pressure drop of more than 345 kPa (50 psi) across the oil filter.

The oil filter head then divides the oil between the engine and the turbocharger. The turbocharger receives filtered, cooled and pressurized oil through a supply line from the filter head. The oil lubricates the turbocharger and returns to the pan by way of a drain tube connecting the bottom of the turbocharger to a pressed in tube in the cylinder block.

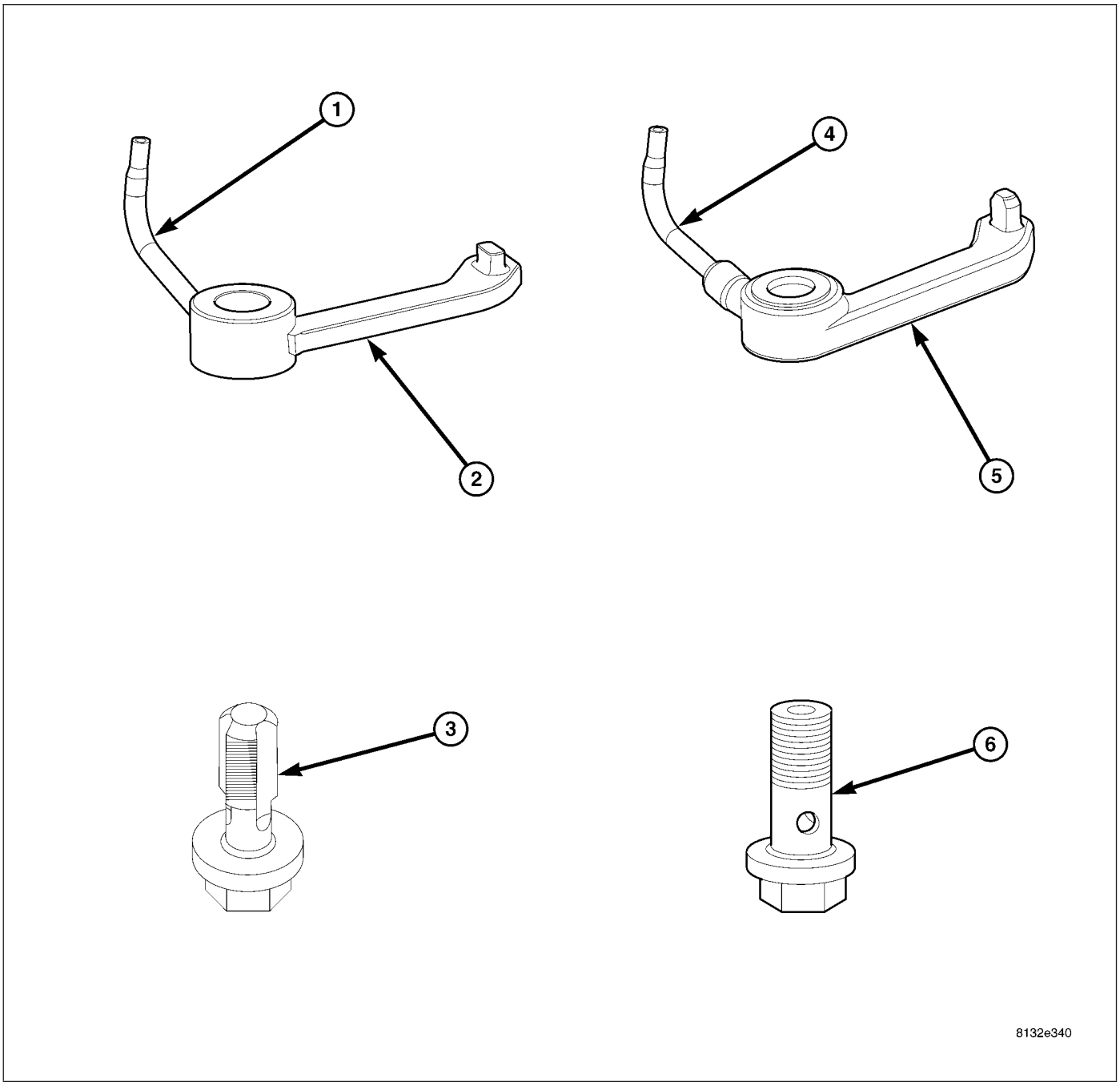

CAUTION:
Two different styles of J-jet piston cooling nozzles and nozzle mounting fasteners are used, depending on engine build date. The two designs are NOT interchangeable. One design uses an all metal piston cooling nozzle (1) with a fluted mounting capscrew (3). The second design uses a plastic nozzle/body/locating arm (5) , and a metal nozzle tip (4). The second design nozzle must be used with a banjo bolt (6). When replacing piston cooling nozzles, it is important to replace the cooling nozzle mounting fastener with the same type that was removed. Do not intermix both designs in the same engine. Severe engine damage can result if the two designs are intermixed.

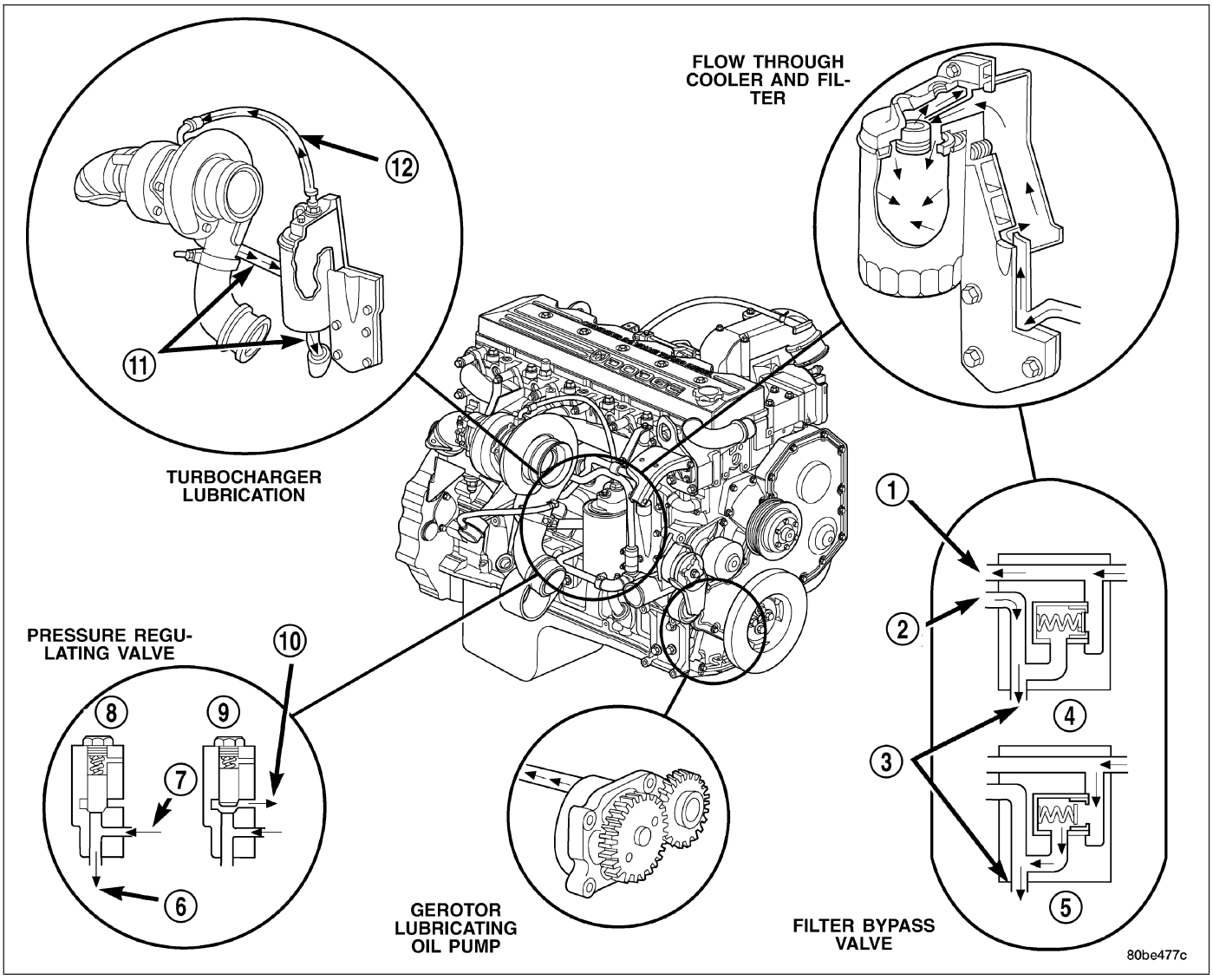

Oil is then carried across the block to an angle drilling which intersects the main oil rifle (3). The main oil rifle (3) runs the length of the block and delivers oil to the crankshaft main journals and valve train. Oil travels to the crankshaft through a series of transfer drillings (one for each main bearing) and lubricates a groove in the main bearing upper shell. From there another drilling feeds the camshaft main journals. J-jet piston cooling nozzles (1,4) are supplied by a separate oil rifle. Plugs are used in place of saddle jets when J-jets are used. Crankshaft internal cross-drillings supply oil to the connecting rod journals.

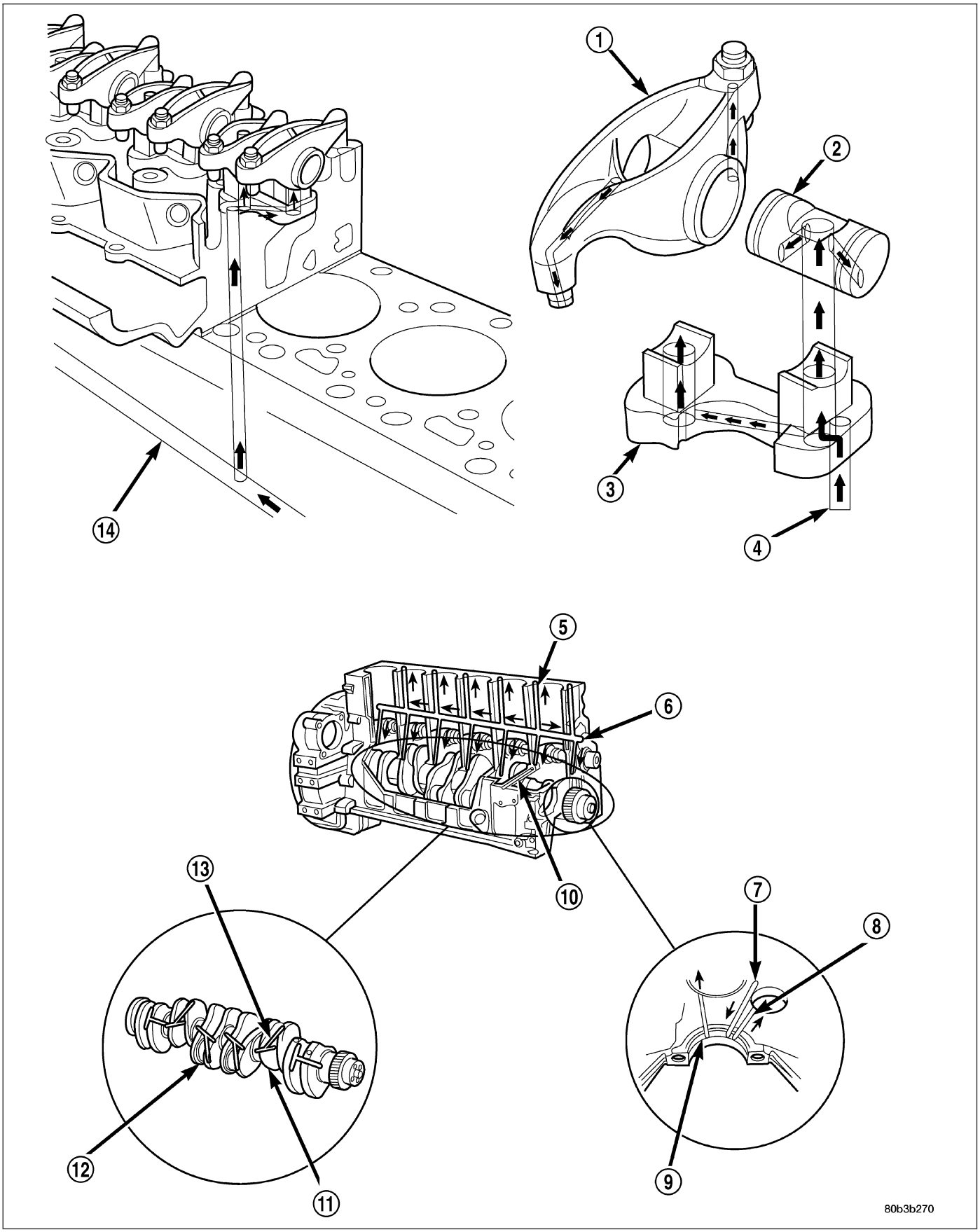

Another series of transfer drillings intersecting the main oil rifle supply (14) the valve train components. Oil travels up the drilling, through a hole in the head gasket, and through a drilling in the cylinder head (one per cylinder), where it enters the rocker arm pedestal (3) and is divided between the intake and exhaust rocker arm (1). Oil travels up and around the rocker arm mounting bolt, and lubricates the rocker shaft (2) by cross drillings that intersect the

mounting bolt hole. Grooves at both ends of the rocker shaft supply oil through the rocker arm where the oil travels to the push rod and socket balls and.

DIAGNOSIS AND TESTING—ENGINE OIL PRESSURE

1. Remove the 1/8 npt plug from the top of the oil filter housing.
2. Install Oil Pressure Line and Gauge Tool C-3292 with a suitable adapter.
3. Start engine and warm to operating temperature.
4. Record engine oil pressure and compare with engine oil pressure chart.

CAUTION: If engine oil pressure is zero at idle, DO NOT RUN THE ENGINE.

Engine Oil Pressure (MIN)	
At Idle	68.9 kPa (10 psi)
At 2500 rpm	206.9 kPa (30 psi)

If minimum engine oil pressure is below these ranges, (Refer to 9 - ENGINE - DIAGNOSIS AND TESTING).

5. Remove oil pressure gauge and install the 1/8 npt plug.

OIL

STANDARD PROCEDURE

STANDARD PROCEDURE - ENGINE OIL LEVEL

CAUTION: Do not overfill crankcase with engine oil, oil foaming and oil pressure loss can result.

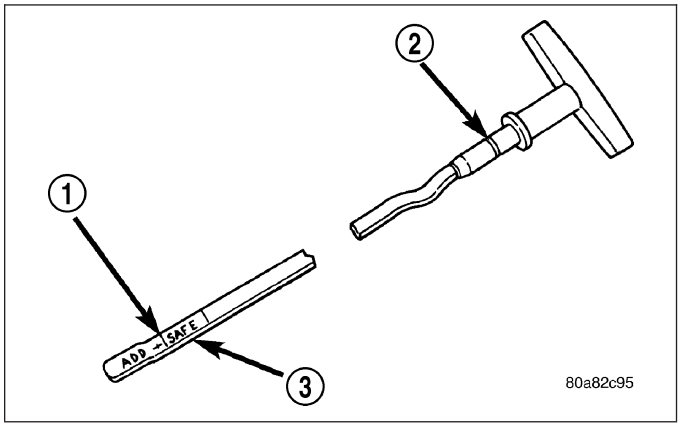

To ensure proper lubrication of an engine, the engine oil must be maintained at an acceptable level. The acceptable oil level is in the SAFE RANGE (3) on the engine oil dipstick.

1. Position vehicle on level surface.
2. With engine OFF, allow approximately 15 minutes for oil to settle to bottom of crankcase, remove engine oil dipstick.
3. Wipe dipstick clean.
4. Replace dipstick and verify it is seated in the tube.
5. Remove dipstick, with handle held above the tip, take oil level reading.
6. Add oil only if level is below the SAFE RANGE area on the dipstick.
7. Replace dipstick.

STANDARD PROCEDURE - ENGINE OIL SERVICE

WARNING: HOT OIL CAN CAUSE PERSONAL INJURY.

NOTE: Change engine oil and filter at intervals specified in the owner's manual.

1. Operate the engine until the water temperature reaches 60°C (140°F). Shut the engine off.
2. Use a container that can hold at least 14 liters (15 quarts) to hold the used oil. Remove the oil drain plug and drain the used engine oil into the container.

3. Always check the condition of the used oil. This can give you an indication of engine problems that might exist.
   - Thin, black oil indicates fuel dilution.
   - Milky discoloration indicates coolant dilution.
4. Clean the area around the oil filter head. Remove the filter (Refer to 9 - ENGINE/LUBRICATION/OIL FILTER - REMOVAL).
5. Install new oil filter (Refer to 9 - ENGINE/LUBRICATION/OIL FILTER - INSTALLATION).
6. Clean the drain plug and the sealing surface of the pan. Check the condition of the threads and sealing surface on the oil pan and drain plug.
7. Install the drain plug. Tighten the plug to 50 N·m (37 ft. lbs.) torque.
8. Use only High-Quality Multi-Viscosity lubricating oil in the Cummins Turbo Diesel engine. Choose the correct oil for the operating conditions (Refer to LUBRICATION & MAINTENANCE/FLUID TYPES - DESCRIPTION).
9. Fill the engine with the correct grade of new oil (Refer to LUBRICATION & MAINTENANCE/FLUID CAPACITIES - SPECIFICATIONS).
10. Start the engine and operate it at idle for several minutes. Check for leaks at the filter and drain plug.
11. Stop engine. Wait 15 minutes to allow the oil to drain back to the pan and check the level again.

USED ENGINE OIL DISPOSAL

Care should be exercised when disposing of used engine oil after it has been drained from a vehicle's engine.

COOLER - ENGINE OIL & LINES

CLEANING

CLEANING AND INSPECTION

Clean the sealing surfaces.

Apply 483 kPa (70 psi) air pressure to the element to check for leaks. If the element leaks, replace the element.

FILTER - ENGINE OIL

REMOVAL

1. Clean the area around the oil filter head. Remove the filter from below using a cap-style filter wrench.
2. Clean the gasket surface of the filter head. The filter canister O-Ring seal can stick on the filter head. Make sure it is removed.

INSTALLATION

1. Fill the oil filter element with clean oil before installation. Use the same type oil that will be used in the engine.
2. Apply a light film of lubricating oil to the sealing surface before installing the filter.

CAUTION: Mechanical over-tightening may distort the threads or damage the filter element seal.

3. Install the filter until it contacts the sealing surface of the oil filter adapter. Tighten filter an additional ½ turn.

PAN - ENGINE OIL

REMOVAL

1. Disconnect the battery negative cables.
2. Install engine support fixture # 8534.
3. Raise vehicle on hoist.
4. Disconnect starter cables from starter motor.
5. Remove transmission and transfer case (if equipped).

6. Remove flywheel or flexplate.
7. Remove starter motor (Refer to 8 - ELECTRICAL/STARTING/STARTER MOTOR - REMOVAL) and transmission adapter plate assembly.

WARNING: HOT OIL CAN CAUSE PERSONAL INJURY.

8. Drain the engine oil (Refer to 9 - ENGINE/LUBRICATION/OIL - STANDARD PROCEDURE).
9. Install the oil pan drain plug if sealing surface is not damaged and tighten to 50 N·m (37 ft. lbs.) torque.
10. Remove oil pan bolts, break the pan to block seal, and lower pan slightly and remove oil suction tube fasteners.
11. Remove oil pan and suction tube.

CLEANING

Remove all gasket material from the oil pan and cylinder block sealing surfaces. Extra effort may be required around T-joint areas. Clean oil pan and flush suction tube with a suitable solvent.

INSPECTION

Inspect the oil pan, suction tube, and tube braces for cracks and damage. Replace any defective component. Inspect the oil drain plug and drain hole threads. Inspect the oil pan sealing surface for straightness. Repair any minor imperfections with a ball-peen hammer. Do not attempt to repair an oil pan by welding.

INSTALLATION

1. Fill the T-joint between the pan rail/gear housing and pan rail/rear seal retainer with sealant. Use Mopar® Silicone Rubber Adhesive Sealant or equivalent.
2. Place suction tube in oil pan and guide them into place. Slide oil pan gasket into postion.Using a new tube to block gasket, install and tighten the suction tube bolts by hand. Starting with the oil pump inlet bolts, tighten the bolts to 24 N·m (18 ft. lbs.) torque. Tighten the remaining tube brace bolts to 43 N·m (32 ft. lbs.) torque.
3. Starting in the center and working outward, tighten the oil pan bolts to 28 N·m (21 ft. lbs.) torque.
4. Install the flywheel housing assembly with the starter motor attached and tighten bolts to 77 N·m (57 ft. lbs.) torque.
5. Connect starter motor cables.

NOTE: Early build engines are equipped with a standard flywheel with an NV 5600 transmission. Later builds use a G 56 transmission, and a dual mass flywheel, which uses a crankshaft to flywheel adapter.

6. **FOR EARLY BUILDS** Install the flywheel or flexplate. Torque to 137 N·m (101 ft. lbs.).
7. **FOR LATE BUILDS** Install the flywheel to crankshaft adapter. Torque to 137 N·m (101 ft. lbs.).
8. Install transmission and transfer case (if equipped).
9. Lower vehicle.
10. Remove the engine support fixture # 8534.
11. Install battery negative cables.
12. Fill the crankcase with new engine oil.
13. Start engine and check for leaks. Stop engine, check oil level, and adjust, if necessary.

VALVE - OIL PRESSURE RELIEF

REMOVAL

1. Disconnect the battery negative cables.
2. Remove the threaded plug (2), spring (4) and valve (5). Insert a finger or a seal pick to lift the plunger from the bore.

NOTE: If the plunger is stuck in the bore, it will be necessary to remove the filter head.

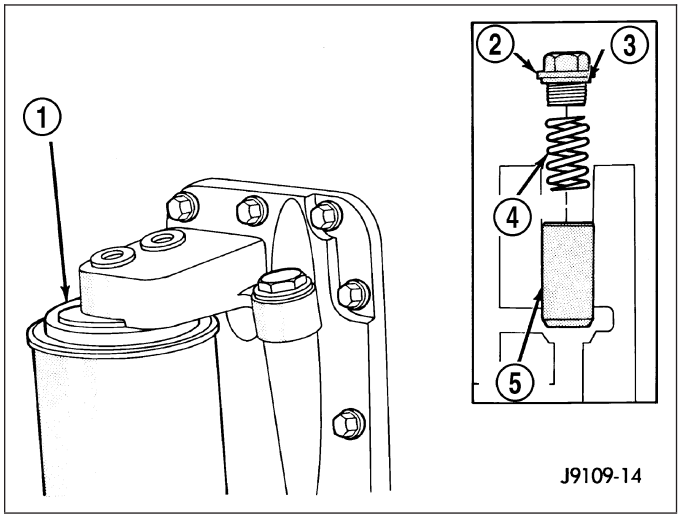

CLEANING

1. Clean the regulator spring and plunger with a suitable solvent and blow dry with compressed air. If the plunger bore requires cleaning, it is necessary to remove the oil filter head to avoid getting debris into the engine.

INSPECTION

Inspect the plunger and plunger bore for cracks and excessive wear. Polished surfaces are acceptable. Verify that the plunger moves freely in the bore.

Check the spring for height and load limitations. Replace the spring if out of limits shown in the figure.

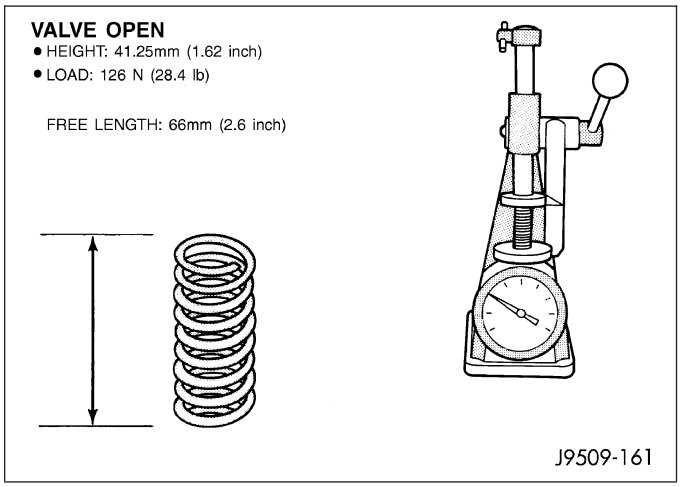

INSTALLATION

1. Install the plunger, spring, and plug as shown in. Tighten the plug to 80 N·m (59 ft. lbs.) torque.
2. Connect the battery negative cables.
3. Start the engine and verify that it has oil pressure.

SWITCH - OIL PRESSURE

REMOVAL

1. Disconnect the battery negative cables.
2. Disconnect the oil pressure switch connector.
3. Using a suitable socket, remove the oil pressure switch from the block (counter-clockwise).

INSTALLATION

1. If the switch is not being replaced, replace and lubricate the o-ring.
2. Install the oil pressure switch and tighten to 18 N·m (159 in. lbs.) torque.
3. Connect oil pressure switch connector.
4. Connect the battery negative cables.
5. Start engine and check for oil leaks at the switch.

PUMP - ENGINE OIL

REMOVAL

1. Disconnect the battery negative cables.
2. Remove fan/drive assembly (Refer to 7 - COOLING/ENGINE/RADIATOR FAN - REMOVAL).
3. Remove the accessory drive belt (Refer to 7 - COOLING/ACCESSORY DRIVE/DRIVE BELTS - REMOVAL).
4. Remove the fan support/hub assembly.
5. Remove crankshaft damper (Refer to 9 - ENGINE/ENGINE BLOCK/VIBRATION DAMPER - REMOVAL) and speed indicator ring.
6. Remove power steering pump.
7. Remove accessory drive belt tensioner.
8. Remove the gear housing cover (Refer to 9 - ENGINE/VALVE TIMING/GEAR HOUSING COVER - REMOVAL).
9. Remove the four mounting bolts (2) and pull the oil pump (1) from the bore in the cylinder block.

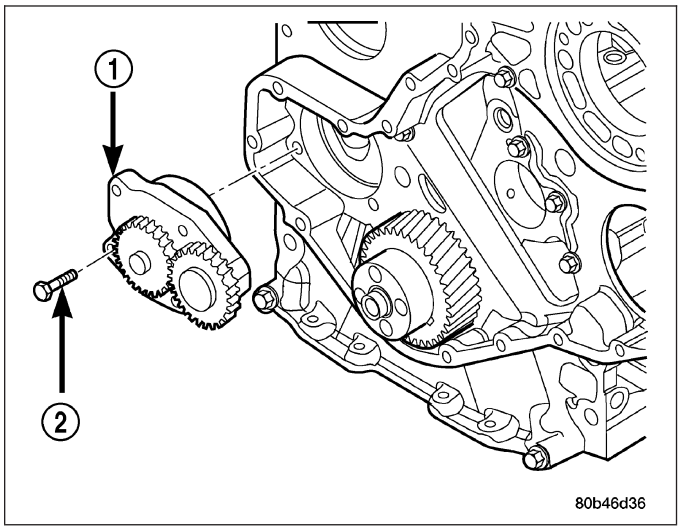

CLEANING

Clean all parts in solvent and dry with compressed air. Clean the old sealer residue from the back of the gear housing cover and front of the gear housing.

INSPECTION

Disassemble and inspect the oil pump as follows:

1. Visually inspect the lube pump gears for chips, cracks or excessive wear.
2. Remove the back plate (1).
3. Mark TOP on the gerotor planetary (3) using a felt tip pen.
4. Remove the gerotor planetary (3) inspect for excessive wear or damage. Inspect the pump housing and gerotor drive (2) for damaged and excessive wear.

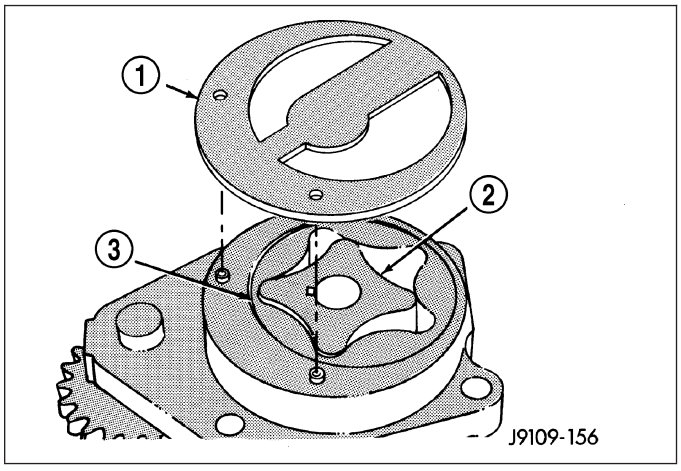

5. Install the gerotor planetary in the original position.
6. Measure the tip clearance (1). Maximum clearance is 0.1778 mm (0.007 inch). If the oil pump is out of limits, replace the pump.

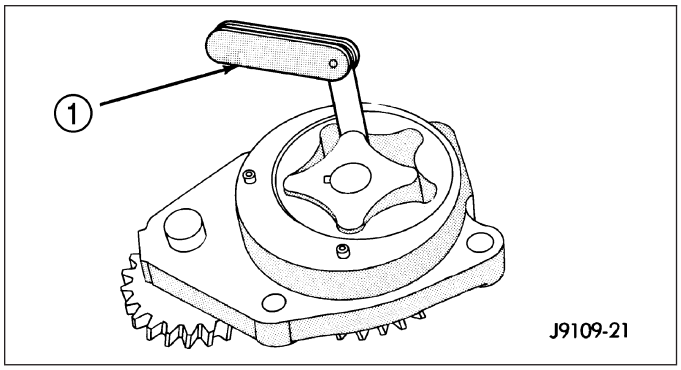

7. Measure the clearance of the gerotor drive/gerotor planetary (2)to port plate (1). Maximum clearance is 0.127 mm (0.005 inch). If the oil pump is out of limits, replace the pump.

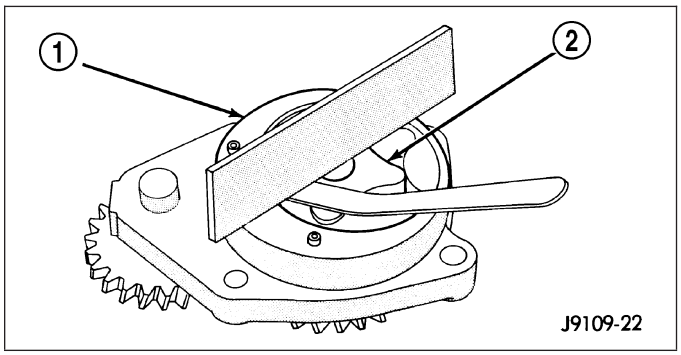

8. Measure the clearance of the gerotor planetary to the body bore (1). Maximum clearance is 0.381 mm (0.015 inch). If the oil pump is out of limits, replace the pump.

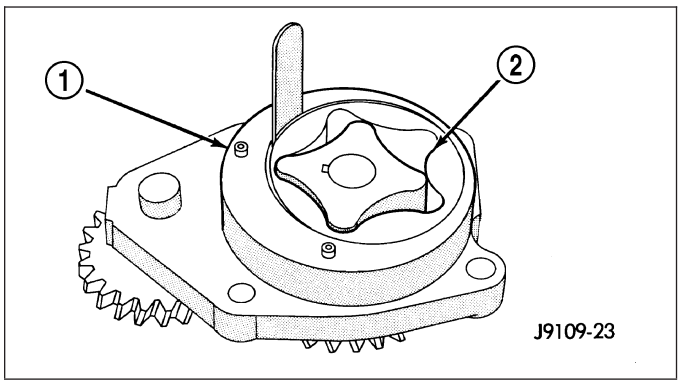

9. Measure the gears backlash (3,4). The limits of a used pump is 0.15- 0.25 mm (0.006-0.010 inch). If the backlash is out of limits, replace the oil pump.
10. Install the back plate.

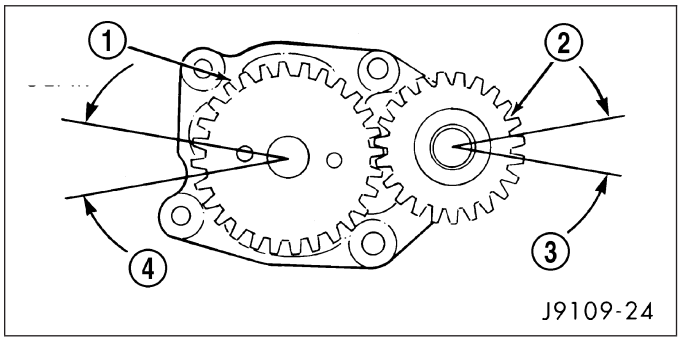

INSTALLATION

1. Lubricate the pump with clean engine oil. Filling the pump with clean engine oil during installation will help to prime the pump at engine start up.
2. Install the pump. Verify the idler gear pin is installed in the locating bore in the cylinder block. Tighten the oil pump mounting bolts in two steps, in the sequence shown in.
   - Step 1—Tighten to 8 N·m (71 in. lbs.) torque.
   - Step 2—Tighten to 24 N·m (18 ft. lbs.) torque.

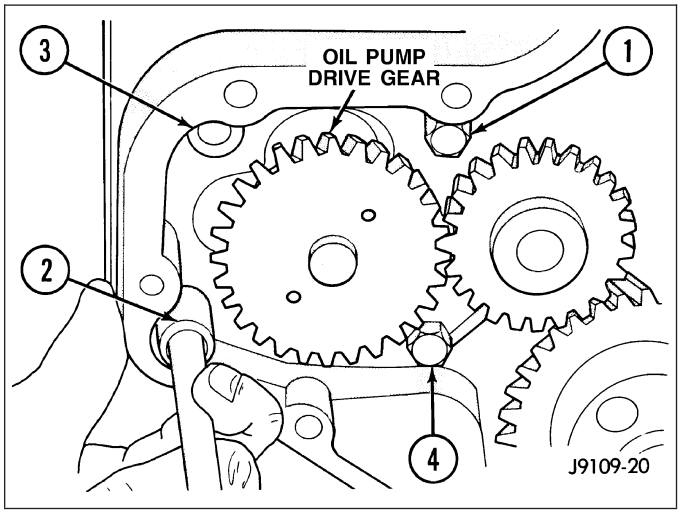

3. The back plate on the pump seats against the bottom of the bore in the cylinder block. When the pump is correctly installed, the flange on the pump will not touch the cylinder block.
4. Measure the idler gear to pump drive gear backlash and the idler gear to crankshaft gear backlash. The backlash should be 0.15- 0.25 mm (0.006-0.010 inch). If the backlash is out of limits, replace the oil pump.
5. If the adjoining gear moves when you measure the backlash, the reading will be incorrect.

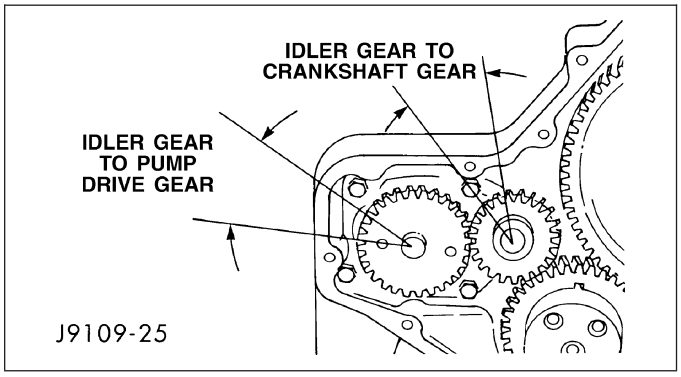

6. Apply a bead of Mopar® Silicone Rubber Adhesive Sealant or equivalent to the gear housing cover sealing surface.
7. Install the gear housing cover (Refer to 9 - ENGINE/VALVE TIMING/GEAR HOUSING COVER - INSTALLATION).
8. Install the vibration damper (Refer to 9 - ENGINE/ENGINE BLOCK/VIBRATION DAMPER - INSTALLATION) and speed indicator ring.
9. Install the fan support/hub assembly Refer to (Refer to 7 - COOLING/ENGINE/RADIATOR FAN - INSTALLATION)
10. Install power steering pump.
11. Install accessory drive belt tensioner. Torque bolt to 43 N·m (32 ft. lbs.).
12. Install the accessory drive belt (Refer to 7 - COOLING/ACCESSORY DRIVE/DRIVE BELTS - INSTALLATION).
13. Install the cooling fan (Refer to 7 - COOLING/ENGINE/RADIATOR FAN - INSTALLATION).
14. Connect battery negative cables.
15. Start engine and check for oil leaks.

MANIFOLD - INTAKE

REMOVAL

1. Disconnect the battery negative cables.
2. Remove the charge air cooler outlet tube (6) from the air inlet housing (8).

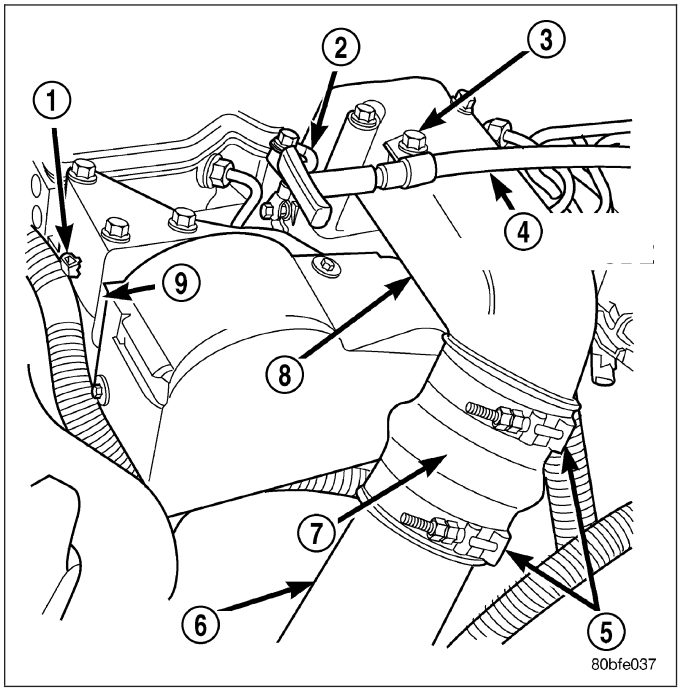

3. Remove the engine oil dipstick tube mounting bolt.
4. Remove dipstick support at fuel filter housing. Position dipstick tube to the side.
5. Disconnect the air grid heater power cables at the cable mounting studs.
6. Remove the engine wiring harness connections at the air inlet housing elbow.
7. Remove the four (4) air inlet housing mounting bolts and remove the housing from top of the heater elements.
8. Remove the intake air grid heater (1)from the manifold.

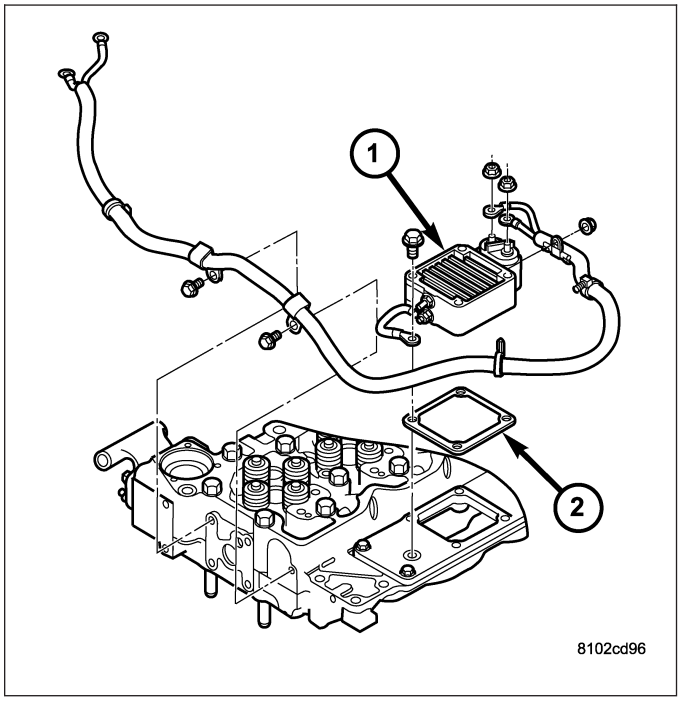

9. Remove the high pressure fuel lines and fuel rail (Refer to 14 - FUEL SYSTEM/FUEL DELIVERY/FUEL LINES - REMOVAL).
10. Disconnect manifold air temperature/pressure sensor connector.
11. Remove the remaining intake manifold cover-to-cylinder head bolts.

12. Remove the intake manifold cover and gasket. Keep the gasket material and any other material out of the air intake.
13. Clean the intake manifold cover and cylinder head sealing surface.

CLEANING

Clean manifold in solvent and blow dry with compressed air.

Clean cylinder block gasket surfaces using a suitable solvent.

The plenum pan rail must be clean and dry (free of all foreign material).

INSPECTION

Inspect manifold for cracks.

Inspect mating surfaces of manifold for flatness with a straightedge.

INSTALLATION

1. Using a new gasket, install the intake manifold cover.
2. Install the cover-to-cylinder head bolts that do not hold down the fuel rail. Tighten the bolts to 24 N·m (18 ft. lbs.) torque.
3. Install the high pressure rail and fuel lines (Refer to 14 - FUEL SYSTEM/FUEL DELIVERY/FUEL LINES - INSTALLATION).
4. Using two (2) new gaskets, install the intake air grid heater and air inlet housing.
5. Connect the manifold air temperature/pressure sensor connector.
6. Install and tighten the air intake heater power supply nuts to 14 N·m (120 in. lbs.) torque.
7. Install oil dipstick tube support at fuel filter housing.
8. Install the engine oil dipstick tube and mounting bolt.
9. Position the charge air cooler outlet tube onto the air inlet housing. Tighten the clamps to 11 N·m (100 in. lbs.) torque.
10. Attach the engine wire harness to the air inlet housing at two locations.
11. Prime the fuel system. Refer to the fuel priming procedure in Group 14, Fuel System.
12. Connect the battery negative cables.

MANIFOLD - EXHAUST

REMOVAL

1. Disconnect the battery negative cables.
2. Raise vehicle on hoist.
3. Disconnect the exhaust pipe from the turbocharger elbow.
4. Disconnect oil drain tube from turbocharger.
5. Lower vehicle.
6. Disconnect the electronic wastegate command valve from harness.
7. Disconnect the turbocharger air inlet hose.
8. Remove air cleaner assembly.
9. Disconnect the turbocharger oil supply line.
10. Disconnect the charge air cooler inlet pipe from the turbocharger.
11. Remove the turbocharger and gasket from the exhaust manifold.
12. Remove the cab heater return pipe nuts from the exhaust manifold stud. Position the tube out of the way.
13. Remove heat shield.
14. Remove exhaust manifold bolt lockplates (1).
15. Remove the exhaust manifold-to-cylinder head bolts(2,6) and spacers (3).
16. Remove the exhaust manifold and gaskets.

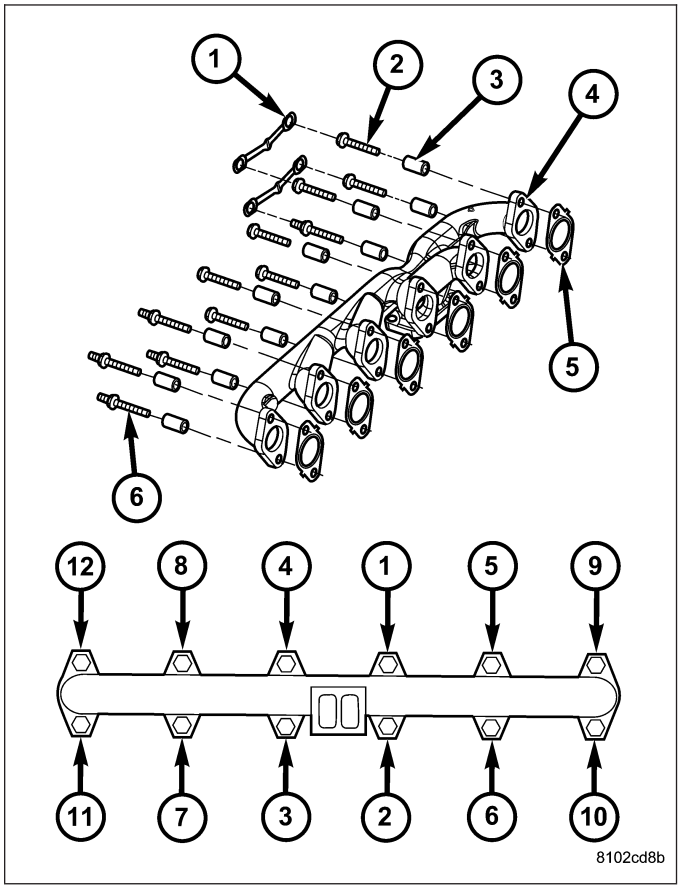

CLEANING

Clean the cylinder head and exhaust manifold sealing surfaces with a suitable scraper. Use a Scotch-Brite™ pad or equivalent.

INSPECTION

Inspect the exhaust manifold for cracks. Measure the exhaust manifold for flatness. Place a ruler over all of the exhaust ports and insert a feeler gauge between the port flange and the ruler. Maximum deviation from flat is 0.20 mm (.008 inch).

INSTALLATION

1. Using new gaskets, install the exhaust manifold and gaskets. Install the bolts and spacers and tighten the bolts in the sequence shown in to 43 N·m (32 ft. lbs.) torque.
2. Retorque the four center bolts.
3. Install heat shield and torque nuts to 24 Nm (18 ft. lbs.).
4. Install cab heater tube.
5. Install exhaust manifold bolt retention straps.
6. Install the cab heater return hose to the manifold bolt stud. Tighten the nut to 24 N·m (18 ft. lbs.) torque.
7. Install the turbocharger and a new gasket. Tighten the turbocharger mounting nuts to 43 N·m (32 ft. lbs.) torque.
8. Raise vehicle on hoist.
9. Install the oil drain tube and a new gasket to the turbocharger. Tighten the drain tube bolts to 24 N·m (18 ft. lbs.) torque.

10. Connect the exhaust pipe to the turbocharger and tighten the bolts to 11 N·m (100 ft. lbs.) torque.
11. Connect the wastegate command valve connector.
12. Lower the vehicle.
13. **Pre-lube the turbocharger.** Pour 50 to 60 cc (2 to 3 oz.) clean engine oil in the oil supply line fitting on the turbo. Rotate the turbocharger impeller by hand to distrubute the oil thoroughly.
14. Install and tighten the oil supply line fitting nut to 24 N·m (18 ft. lbs.) torque.
15. Position the charge air cooler inlet pipe to the turbocharger. With the clamp in position, tighten the clamp nut to 11 N·m (95 in. lbs.) torque.
16. Position the air inlet hose to the turbocharger. Tighten the clamp to 4 N·m (35 in. lbs.) torque.
17. Connect the battery negative cables.
18. Start the engine to check for leaks.

VALVE TIMING

STANDARD PROCEDURE - TIMING VERIFICATION

1. Remove the cylinder head cover (Refer to 9 - ENGINE/CYLINDER HEAD/CYLINDER HEAD COVER(S) - REMOVAL).
2. Remove fuel injector from cylinder number 1 (Refer to 14 - FUEL SYSTEM/FUEL INJECTION/FUEL INJECTOR - REMOVAL).
3. Using Special Tool 7471B rotate the engine until the TDC mark on the damper is at 12 o'clock.
4. Using a 8 in.x 1/4 in. dowel rod inserted into cylinder number 1, rock the crankshaft back and forth to verify piston number 1 is at TDC.
5. With cylinder number still at TDC, inspect the keyway on the crankshaft gear for proper alignment (12 o'clock position).
6. If the keyway is not at 12 o'clock position replace the crankshaft gear assembly.
7. If the keyway is at 12 o'clock position, remove front gear cover and verify timing mark alignment between the camshaft gear and crankshaft gear, if not aligned inspect keyway on camshaft gear.
8. Inspect keyway on camshaft gear for proper alignment with the key in the camshaft, if alignment is off replace the camshaft/gear assembly.
9. If timing marks alignment is off and no damage is found at either the crankshaft or camshaft gear keyways, realign timing marks as necessary.

CASE - FRONT

REMOVAL

1. Disconnect the battery negative cables.
2. Raise vehicle on hoist.
3. Partially drain engine coolant into container suitable for re-use (Refer to 7 - COOLING - STANDARD PROCEDURE).
4. Lower vehicle.
5. Remove radiator upper hose.
6. Disconnect coolant recovery bottle hose from radiator filler neck.
7. Remove viscous fan/drive/shroud assembly (Refer to 7 - COOLING/ENGINE/RADIATOR FAN - REMOVAL).
8. Remove the accessory drive belt (Refer to 7 - COOLING/ACCESSORY DRIVE/DRIVE BELTS - REMOVAL).
9. Remove the cooling fan support/hub from the front of the engine.
10. Raise the vehicle on hoist.
11. Remove the crankshaft damper (Refer to 9 - ENGINE/ENGINE BLOCK/VIBRATION DAMPER - REMOVAL) and speed indicator ring.
12. Remove the lower fan shroud bracket.

13. Remove the upper fan shroud bracket that is mounted to the gear housing.
14. Lower the vehicle.
15. Remove the power steering pump.
16. Remove the accessory drive belt tensioner.
17. Remove the gear cover-to-housing bolts and gently pry the cover away from the housing, taking care not to mar the gasket surfaces.
18. Remove the fuel injection pump (Refer to 14 - FUEL SYSTEM/FUEL DELIVERY/FUEL INJECTION PUMP - REMOVAL).
19. Disconnect the camshaft position sensor connector.
20. Disconnect and remove engine speed sensor.
21. Remove the camshaft (Refer to 9 - ENGINE/ENGINE BLOCK/CAMSHAFT & BEARINGS (IN BLOCK) - REMOVAL).
22. Remove the six front oil pan fasteners.
23. Remove the gear housing fasteners.

NOTE: Use care when removing the gear housing, to avoid damage to the oil pan gasket, as the gasket will be reused if it is not damaged.

24. Slide a feeler gauge between the gear housing and oil pan gasket, to break the gasket seal.
25. Remove the gear housing and gasket.
26. Clean the gasket material from the cylinder block and gear housing.

INSTALLATION

1. Inspect oil pan gasket. If torn, gasket must be replaced.
2. Install a new gear housing gasket onto cylinder block and trim any excesss gasket material flush to oil pan rail.
3. Install the gear housing. Torque bolts to 24 N·m (18 ft. lbs.).

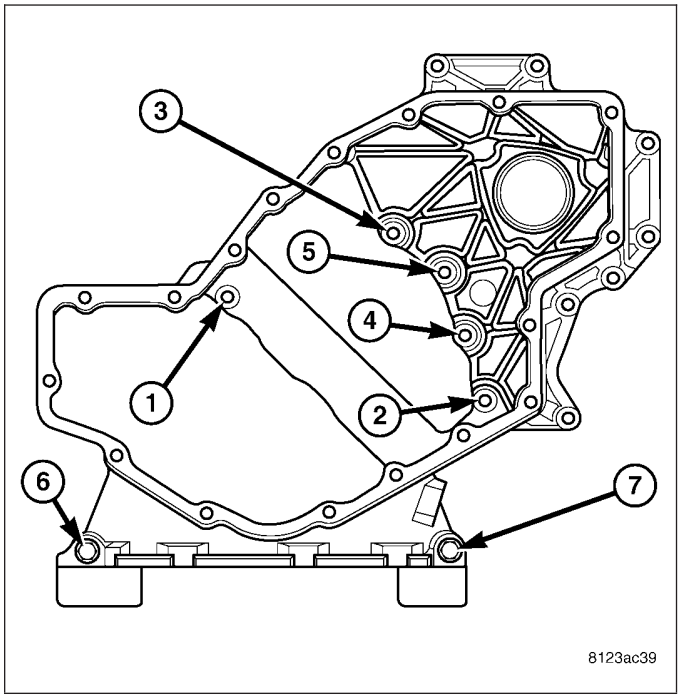

4. If a new housing is installed, the camshaft position sensor, and engine speed sensor must be transferred to the new housing.
5. Connect the camshaft position sensor connector.
6. Install and connect engine speed sensor.
7. Install the injection pump (Refer to 14 - FUEL SYSTEM/FUEL DELIVERY/FUEL INJECTION PUMP - INSTALLATION).

8. Install the camshaft (Refer to 9 - ENGINE/ENGINE BLOCK/CAMSHAFT & BEARINGS (IN BLOCK) - INSTALLATION). Align the crankshaft and camshaft gear marks as shown.

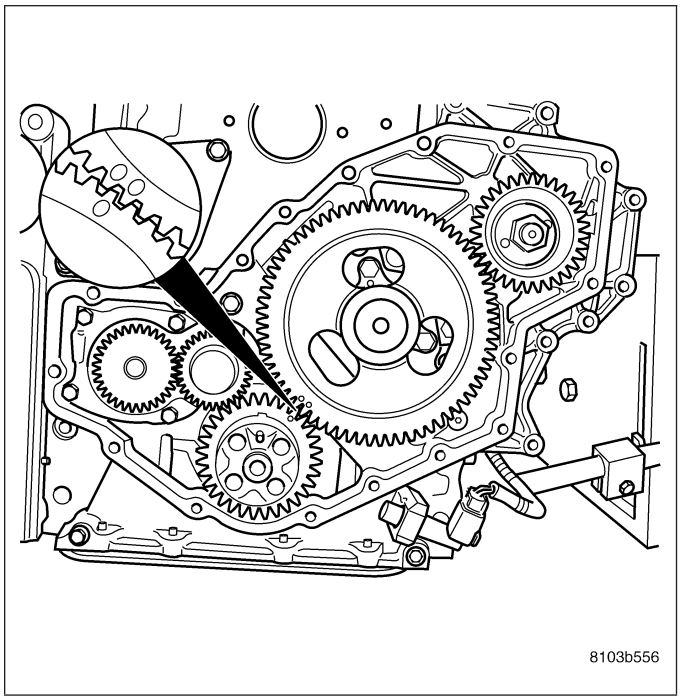

9. Install a new front crankshaft seal into the gear cover.
10. Apply a bead of Mopar® Silicone Rubber Adhesive Sealant or equivalent to the gear housing cover. Be sure to surround all through holes.
11. Using the seal pilot to align the cover, install the cover to the housing and install the bolts. Tighten the bolts to 24 N·m (18 ft. lbs.) torque.
12. Remove the seal pilot. Install front seal dust shield.
13. Raise the vehicle.
14. Trim any excess gear housing gasket to make it flush with the oil pan rail.
15. Install the crankshaft damper and speed indicator ring (Refer to 9 - ENGINE/ENGINE BLOCK/VIBRATION DAMPER - INSTALLATION). Torque bolts to 40 Nm (30 ft. lbs.), plus an additional 60°.
16. Install the lower fan shroud bracket. Torque bolts to 24 N·m (18 ft. lbs.) torque.
17. Install the upper fan shroud brackets.
18. Lower vehicle.
19. Install the fan support/hub assembly and tighten bolts to 32 N·m (24 ft. lbs.) torque.
20. Install the power steering pump.
21. Install the accessory drive belt tensioner. Torque bolt to 43 N·m (32 ft. lbs.) torque.
22. Install the accessory drive belt (Refer to 7 - COOLING/ACCESSORY DRIVE/DRIVE BELTS - INSTALLATION).
23. Install the upper cooling fan/drive/shroud assembly (Refer to 7 - COOLING/ENGINE/RADIATOR FAN - INSTALLATION).
24. Connect the coolant recovery bottle hose to the radiator filler neck.
25. Install the radiator upper hose and clamps.
26. Add engine oil.
27. Add coolant (Refer to 7 - COOLING - STANDARD PROCEDURE).
28. Connect the battery cables.
29. Start engine and inspect for leaks.

COVER - TIMING

REMOVAL

1. Disconnect both battery negative cables.
2. Raise vehicle on hoist.
3. Partially drain engine coolant into container suitable for re-use (Refer to 7 - COOLING - STANDARD PROCEDURE).
4. Lower vehicle.
5. Remove radiator upper hose.
6. Remove viscous fan/drive/shroud assembly (Refer to 7 - COOLING/ENGINE/RADIATOR FAN - REMOVAL).
7. Remove the accessory drive belt (Refer to 7 - COOLING/ACCESSORY DRIVE/DRIVE BELTS - REMOVAL).
8. Remove the cooling fan support/hub from the front of the engine.
9. Raise the vehicle on hoist.
10. Remove power steering pump.
11. Remove accessory drive belt tensioner.
12. Remove the crankshaft damper and speed indicator ring (Refer to 9 - ENGINE/ENGINE BLOCK/VIBRATION DAMPER - REMOVAL).
13. Lower the vehicle.
14. Remove the gear cover-to-housing bolts and gently pry the cover away from the housing, taking care not to mar the gasket surfaces.

INSTALLATION

1. Install a new front crankshaft oil seal.
2. Obtain a seal pilot (1) installation tool from a crankshaft front seal service kit and install the pilot into the seal.
3. Apply a bead of Mopar® Silicone Rubber Adhesive Sealant or equivalent to the gear housing cover. Be sure to surround all through holes.
4. Using the seal pilot to (1) align the cover , install the cover to the housing and install the bolts. Tighten the bolts to 24 N·m (18 ft. lbs.) torque.
5. Remove the seal pilot. Install front seal dust shield.

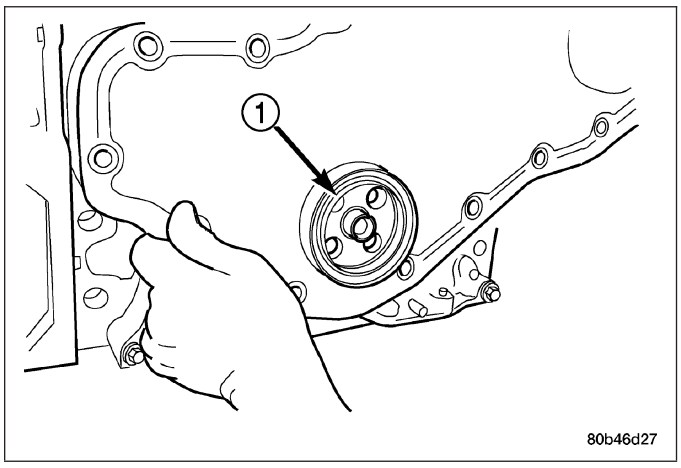

6. Raise the vehicle.
7. Install the speed indicator ring and the crankshaft damper (Refer to 9 - ENGINE/ENGINE BLOCK/VIBRATION DAMPER - INSTALLATION).
8. Lower vehicle.
9. Install the fan support/hub assy, and tighten bolts to 32 N·m (24 ft. lbs.) torque.
10. Install power steering pump.
11. Install accessory drive belt tensioner. Torque bolt to 43 N·m (32 ft. lbs.) torque.
12. Install the accessory drive belt (Refer to 7 - COOLING/ACCESSORY DRIVE/DRIVE BELTS - INSTALLATION).
13. Install the cooling fan/drive/shroud assembly (Refer to 7 - COOLING/ENGINE/RADIATOR FAN - INSTALLATION).
14. Install the radiator upper hose and clamps.
15. Add coolant (Refer to 7 - COOLING - STANDARD PROCEDURE).
16. Connect the battery cables.
17. Start engine and inspect for leaks.

EXHAUST SYSTEM

TABLE OF CONTENTS

page

EXHAUST SYSTEM
DESCRIPTION
GAS ENGINES 2
5.9L DIESEL 3
DIAGNOSIS AND TESTING
GAS ENGINE 4
DIESEL ENGINE 4
SPECIFICATIONS
TORQUE 5
SPECIAL TOOLS 6
CONVERTER-CATALYTIC
DESCRIPTION 7
OPERATION 7
REMOVAL
3.7L/4.7L ENGINE 7
5.7L ENGINE 8
5.9L DIESEL ENGINE 8
8.3L ENGINE 9
INSPECTION 9
INSTALLATION
3.7L/4.7L ENGINE 9
5.7L ENGINE 10
5.9L ENGINE DIESEL 10
8.3L ENGINE 11
PIPE EXHAUST
REMOVAL
3.7L/4.7L/5.7L ENGINE 11
5.9L DIESEL 12
8.3L ENGINE 12
INSPECTION 12
INSTALLATION
3.7L/4.7L/5.7L ENGINE 13
5.9L DIESEL 13
8.3L ENGINE 14
HEAT SHIELDS
DESCRIPTION 14
REMOVAL 14
INSTALLATION 16
MUFFLER
REMOVAL
3.7L/4.7L/5.7L ENGINE 17
8.3L ENGINE 18
5.9L DIESEL ENGINE 18
INSTALLATION
3.7L/4.7L/5.7L ENGINE 19
8.3L ENGINE 19
5.9L DIESEL ENGINE 20
TAILPIPE
REMOVAL
3.7L/4.7L/5.7L ENGINE 20
5.9L DIESEL 21
8.3L ENGINE 21
INSPECTION 21
INSTALLATION
3.7L/4.7L/5.7L ENGINE 22
5.9L DIESEL 22
8.3L ENGINE 23
TURBOCHARGER SYSTEM
DIAGNOSIS AND TESTING
TURBOCHARGER BOOST PRESSURE 23
TURBOCHARGER
DESCRIPTION 24
OPERATION 25
REMOVAL
TURBOCHARGER 27
TURBOCHARGER OIL DRAIN TUBE 28
CLEANING 28
INSPECTION 28
INSTALLATION
TURBOCHARGER 30
TURBOCHARGER OIL DRAIN TUBE 31
WASTEGATE - ELECTRONIC ACTUATOR
REMOVAL 31
INSTALLATION 32
CHARGE AIR COOLER AND PLUMBING
DESCRIPTION 32
OPERATION 33
DIAGNOSIS AND TESTING
CHARGE AIR COOLER SYSTEM - LEAKS . . . 33
REMOVAL 34
CLEANING 34
INSPECTION 34
INSTALLATION 35

EXHAUST SYSTEM

DESCRIPTION

GAS ENGINES

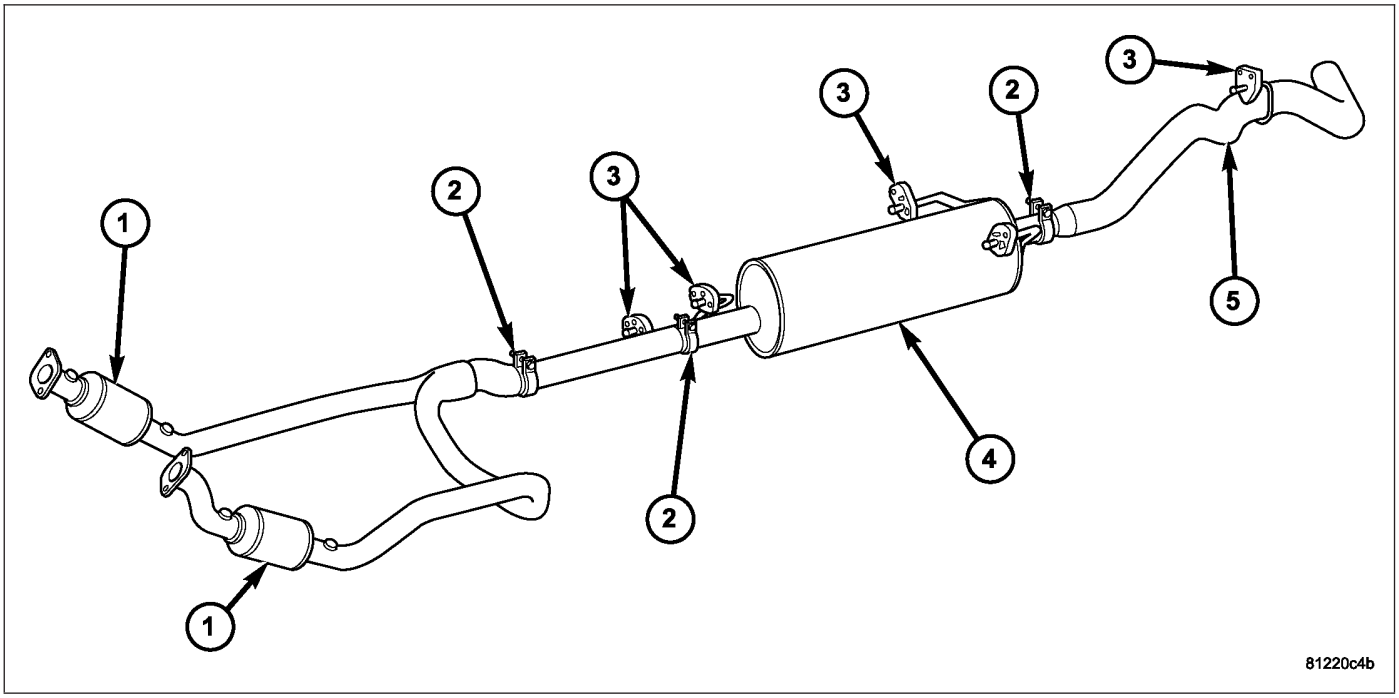

Exhaust System - 3.7L Engine - Typical

CAUTION: Avoid application of rust prevention compounds or undercoating materials to exhaust system floor pan exhaust heat shields. Light overspray near the edges is permitted. Application of coating will result in excessive floor pan temperatures and objectionable fumes.

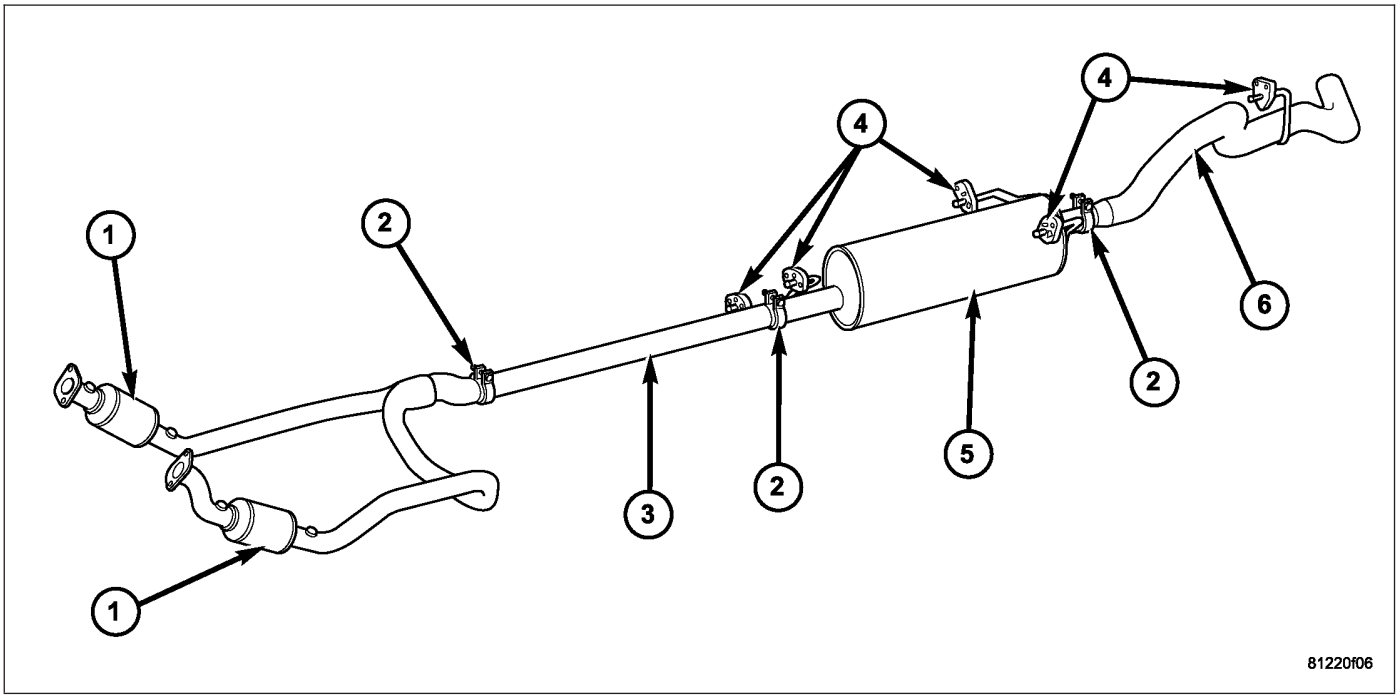

Exhaust System 4.7L Engine - Typical

The federal gasoline engine exhaust system consists of engine exhaust manifolds, exhaust pipes, catalytic converter(s), extension pipe (if needed), exhaust heat shields, muffler and exhaust tailpipe , ,

The California emission vehicles exhaust system also contains the above components as well as mini catalytic converters added to the exhaust pipe.

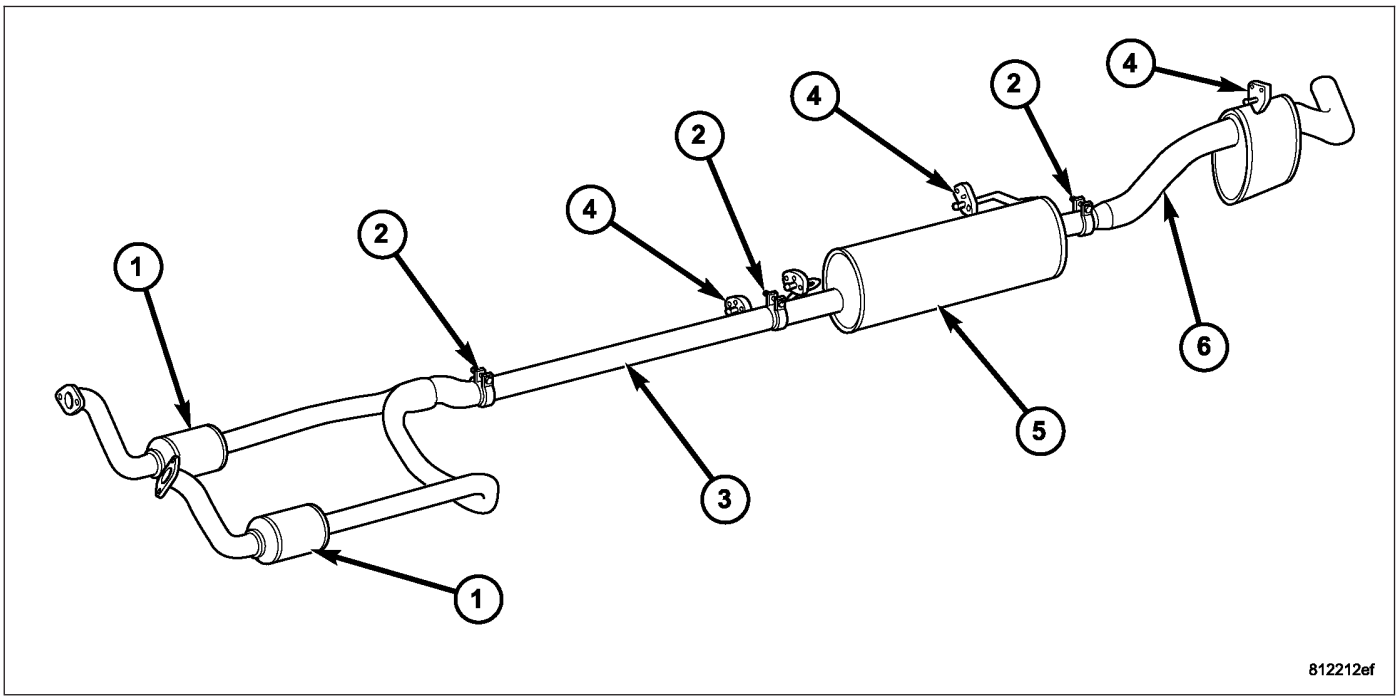

Exhaust System 5.7L Engine - Typical

The exhaust system must be properly aligned to prevent stress, leakage and body contact. Minimum clearance between any exhaust component and the body or frame is 25.4 mm (1.0 in.). If the system contacts any body panel, it may amplify objectionable noises from the engine or body.

5.9L DIESEL

CAUTION: Avoid application of rust prevention compounds or undercoating materials to exhaust system floor pan exhaust heat shields. Light overspray near the edges is permitted. Application of coating will result in excessive floor pan temperatures and objectionable fumes.

The diesel engine exhaust system consists of an engine exhaust manifold, turbocharger, exhaust pipe, resonator, extension pipe, catalytic converter, muffler and exhaust tailpipe.

The exhaust system must be properly aligned to prevent stress, leakage and body contact. The exhaust components should be kept a minimum of 25.4 mm (1.0 in.) away from the body and frame. If the system contacts any body panel, it may amplify objectionable noises from the engine or body.

DIAGNOSIS AND TESTING

GAS ENGINE

EXHAUST SYSTEM DIAGNOSIS CHART

CONDITION	POSSIBLE CAUSE	CORRECTION
EXCESSIVE EXHAUST NOISE OR LEAKING EXHAUST GASES	1. Leaks at pipe joints.	1. Tighten clamps/bolts at leaking joints.
	2. Rusted or blown out muffler.	2. Replace muffler. Inspect exhaust system.
	3. Broken or rusted out exhaust pipe.	3. Replace exhaust pipe.
	4. Exhaust pipe leaking at manifold flange.	4. Tighten/replace flange attaching nuts/bolts.
	5. Exhaust manifold cracked or broken.	5. Replace exhaust manifold.
	6. Leak between exhaust manifold and cylinder head.	6. Tighten exhaust manifold to cylinder head bolts.
	7. Catalytic converter rusted or blown out.	7. Replace catalytic converter assy.
	8. Restriction in exhaust system.	8. Remove restriction, if possible. Replace restricted part if necessary.
CAUTION: When servicing and replacing exhaust system components, disconnect the oxygen sensor connector(s). Allowing the exhaust to hang by the oxygen sensor wires will damage the harness and/or sensor.		

DIESEL ENGINE

EXHAUST SYSTEM DIAGNOSIS CHART

CONDITION	POSSIBLE CAUSE	CORRECTION
EXCESSIVE EXHAUST NOISE OR LEAKING EXHAUST GASES	1. Leaks at pipe joints.	1. Tighten clamps/bolts at leaking joints.
	2. Rusted or blown out muffler.	2. Replace muffler. Inspect exhaust system.
	3. Broken or rusted out exhaust pipe.	3. Replace exhaust pipe.
	4. Exhaust pipe leaking at manifold flange.	4. Tighten/replace flange attaching nuts/bolts.
	5. Exhaust manifold cracked or broken.	5. Replace exhaust manifold.
	6. Leak between exhaust manifold and cylinder head.	6. Tighten exhaust manifold to cylinder head bolts. Replace gasket if necessary.
	7. Turbocharger mounting flange cracked.	7. Remove turbocharger and inspect. (Refer to 11 - EXHAUST SYSTEM/TURBOCHARGER SYSTEM/TURBOCHARGER - REMOVAL).
	8. Restriction in exhaust system.	8. Remove restriction, if possible. Replace restricted part if necessary.

SPECIFICATIONS

TORQUE

DESCRIPTION	N·m	Ft. Lbs.	In. Lbs.
Bolt-Adjusting Strap	23	-	200
Nuts-Air Heater Power Supply	14	-	124
Bolts-Air Inlet Housing	24	18	-
Nuts-Cab Heater Supply/Return Line	24	18	-
Nuts-Exhaust Clamp	54.3	40	-
Bolts-Exhaust Manifold to Cylinder Head-(Diesel Engine)	43	32	-
Bolts-Exhaust Manifold to Cylinder Head-(5.9L)	31	23	-
Bolts-Exhaust Manifold to Cylinder Head-(8.3L)	22	-	195
Bolts-Exhaust Pipe to Manifold	31	23	-
Bolts-Generator Mounting	41	30	-
Bolts-Charge Air Cooler Mounting	10	-	90
Nuts-Charge Air Cooler Duct	11	-	95
Bolt-Generator to Block-Diesel	24	18	-
Nuts and Bolts-Heat Shield	11	-	95
Nuts-Heat Shield-Diesel	24	18	-
Electronically Controlled Wastegate Command Valve	34	25	-
Turbocharger flange studs	24	18	-
Nuts-Turbocharger Mounting	43	32	-
Bolts-Turbocharger Oil Drain Tube	24	18	-
Fitting-Turbocharger Oil Supply Line	24	18	-
Nut-Turbocharger V-Band Clamp	5.6	-	70
Turbocharger Oil Supply fitting (at Turbocharger)	36	27	-
Turbocharger Oil Supply fitting (at lube filter head)	24	18	-

SPECIAL TOOLS

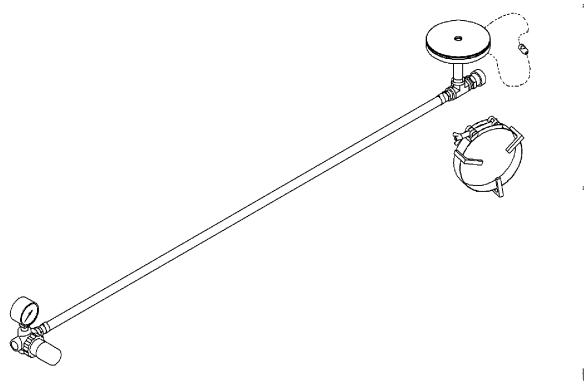

TURBOCHARGER TESTER 9022

CONVERTER-CATALYTIC

DESCRIPTION

WARNING: THE NORMAL OPERATING TEMPERATURE OF THE EXHAUST SYSTEM IS VERY HIGH. THEREFORE, NEVER WORK AROUND OR ATTEMPT TO SERVICE ANY PART OF THE EXHAUST SYSTEM UNTIL IT IS COOLED. SPECIAL CARE SHOULD BE TAKEN WHEN WORKING NEAR THE CATALYTIC CONVERTER. THE TEMPERATURE OF THE CONVERTER RISES TO A HIGH LEVEL AFTER A SHORT PERIOD OF ENGINE OPERATION TIME.

CAUTION: DO NOT remove spark plug wires from plugs or by any other means short out cylinders. Failure of the catalytic converter can occur due to a temperature increase caused by unburned fuel passing through the converter.

The stainless steel catalytic converter body is designed to last the life of the vehicle. Excessive heat can result in bulging or other distortion, but excessive heat will not be the fault of the converter. If unburned fuel enters the converter, overheating may occur. If a converter is heat-damaged, correct the cause of the damage at the same time the converter is replaced. Also, inspect all other components of the exhaust system for heat damage.

Unleaded gasoline must be used to avoid contaminating the catalyst core.

50 State emission vehicles incorporate two mini catalytic converters located after the exhaust manifolds and before the inline catalytic converter.

OPERATION

The catalytic converter captures and burns any unburned fuel mixture exiting the combustion chambers during the exhaust stroke of the engine. This process aids in reducing emissions output.

REMOVAL

3.7L/4.7L ENGINE

1. Raise and support vehicle.
2. Saturate the bolts and nuts with heat valve lubricant. Allow 5 minutes for penetration.
3. Disconnect oxygen sensor electrical connectors.
4. Remove clamps (3 and 5) and nuts.
5. Remove LH catalytic converter (7) to exhaust manifold bolts (2).
6. Remove LH catalytic converter (7).
7. Remove RH catalytic converter (3) to exhaust manifold bolts (2).
8. Remove RH catalytic converter (3).

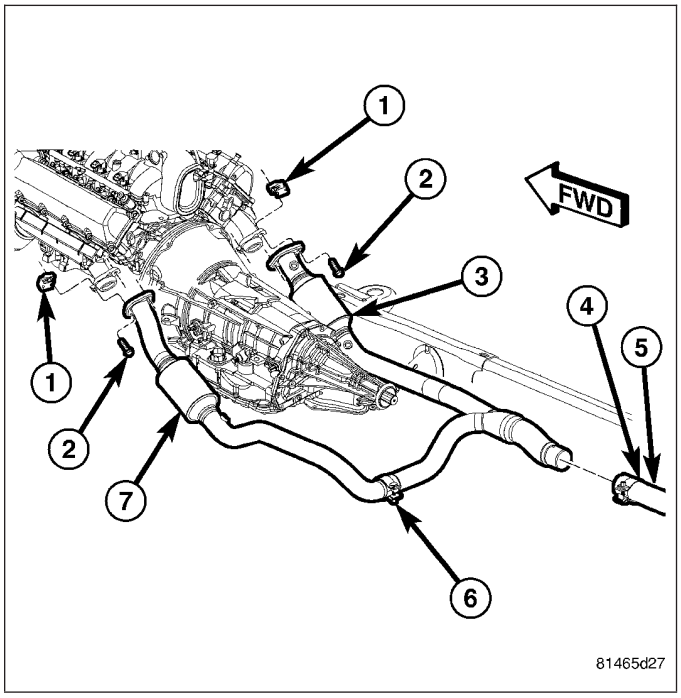

5.7L ENGINE

1. Raise and support vehicle.
2. Saturate the bolts and nuts with heat valve lubricant. Allow 5 minutes for penetration.
3. Disconnect oxygen sensor electrical connectors.
4. Remove clamps and nuts (4).
5. Remove catalytic converter to exhaust manifold bolts (2) and nuts (1).
6. Remove catalytic converter assembly (3).

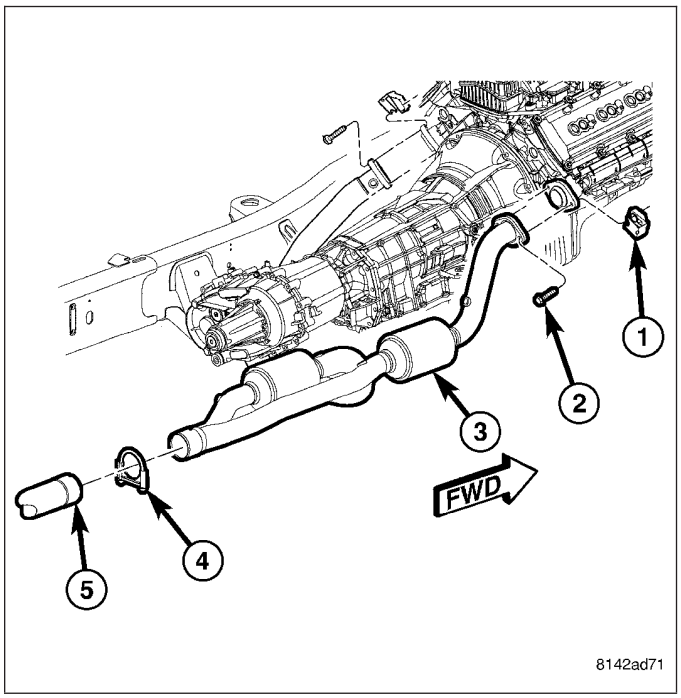

5.9L DIESEL ENGINE

WARNING: IF TORCHES ARE USED WHEN WORKING ON THE EXHAUST SYSTEM, DO NOT ALLOW THE FLAME NEAR THE FUEL LINES.

1. Raise and support the vehicle.
2. Saturate the bolts and nuts with heat valve lubricant. Allow 5 minutes for penetration.
3. Remove clamp bolts from exhaust pipe to catalytic converter clamp (5).

NOTE: Do not remove nut from T-Bolt. Only remove nut far enough, so that the T end can be removed from the clamp.

NOTE: The catalytic converter to exhaust manifold clamp is not reusable. Always use a new clamp when reinstalling the catalytic converter.

4. Loosen the nut from clamp (1) at turbocharger.
5. Remove the T bolt end of the fastener, from the clamp (1).

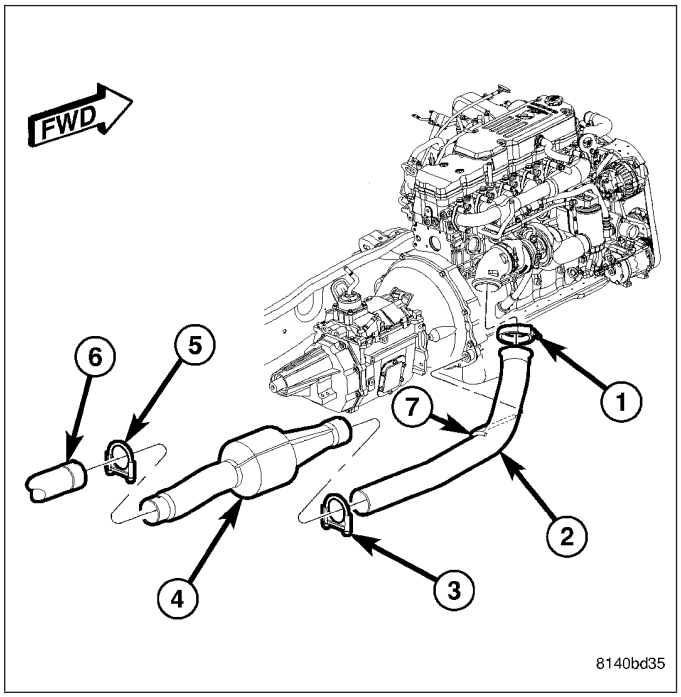

6. Spread the clamp, and remove the catalytic converter (4) and front exhaust pipe (2) from the vehicle.
7. Discard the clamp.
8. Remove front exhaust pipe to catalytic converter clamp (3).
9. Separate front exhaust pipe (2) from catalytic converter (4).

8.3L ENGINE

1. Raise and support vehicle.
2. Saturate the bolts and nuts with heat valve lubricant. Allow 5 minutes for penetration.
3. Disconnect oxygen sensor electrical connectors.
4. Remove LH exhaust pipe to manifold bolts (2), retainers and nuts (1).
5. Remove LH catalytic converter to muffler clamp nuts (4).
6. Rotate LH catalytic converters (6) from the muffler (5).
7. Remove RH exhaust pipe to manifold bolts (2), retainers and nuts (1).
8. Remove RH catalytic converter to muffler clamp nuts (4).
9. Rotate RH catalytic converter (3) from the muffler (5).
10. Remove clamps and nuts (4).

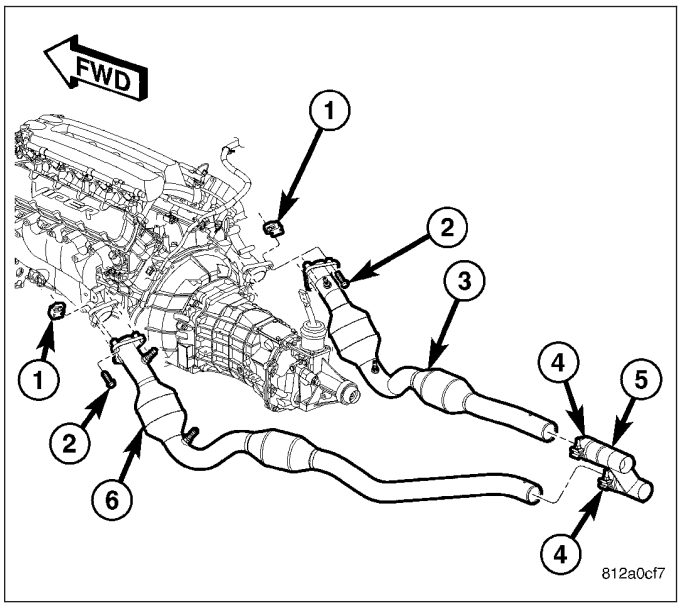

INSPECTION

Look at the stainless steel body of the converter, inspect for bulging or other distortion that could be a result of overheating. If the converter has a heat shield attached make sure it is not bent or loose.

If you suspect internal damage to the catalyst, tapping the bottom of the catalyst with a rubber mallet may indicate a damaged core.

INSTALLATION

3.7L/4.7L ENGINE

1. Install RH catalytic converter to exhaust clamp (4) on RH catalytic converter (3) and position into exhaust pipe (5).
2. Install and hand tighten RH catalytic converter to exhaust manifold bolts (1).
3. Install LH catalytic converter to RH catalytic converter clamp (6) on RH catalytic converter (3).
4. Position LH catalytic converter (7) into RH catalytic converter (3).
5. Install and hand tighten LH catalytic converter to exhaust manifold bolts (1).
6. Tighten catalytic converter to exhaust manifold bolts (1) to 31 N·m (23 ft. lbs.).
7. Tighten all clamp nuts (4 and 6) to 52.2 N·m (40 ft. lbs.) torque.
8. Check the exhaust system for contact with the body panels. A minimum of 25.4 mm (1.0 in.) is required between the exhaust system components and body/frame parts. Make the necessary adjustments, if needed.
9. Lower the vehicle.
10. Start the engine and inspect for exhaust leaks. Repair exhaust leaks as necessary.

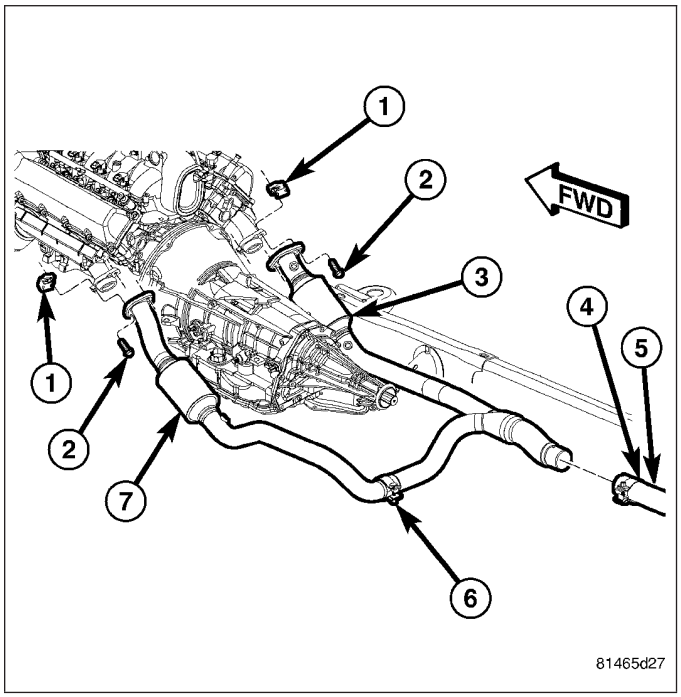

5.7L ENGINE

1. Install catalytic converter to exhaust clamp (4) on catalytic converter (3) and position into exhaust pipe (5).
2. Make sure the alignment tang on catalytic converter (3) is fully seated in the notch on the exhaust pipe (5).
3. Install catalytic converter to exhaust manifold bolts (2) and nuts (1).
4. Tighten catalytic converter to exhaust manifold bolts (2) to 31 N·m (23 ft. lbs.).
5. Tighten catalytic converter to exhaust pipe clamp nuts (4) to 52.2 N·m (40 ft. lbs.) torque.
6. Check the exhaust system for contact with the body panels. A minimum of 25.4 mm (1.0 in.) is required between the exhaust system components and body/frame parts. Make the necessary adjustments, if needed.
7. Lower the vehicle.
8. Start the engine and inspect for exhaust leaks. Repair exhaust leaks as necessary.

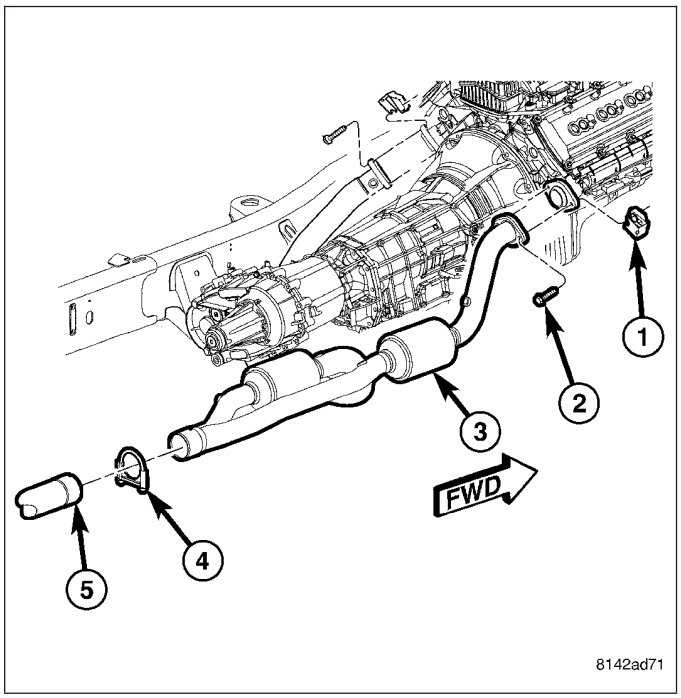

5.9L ENGINE DIESEL

NOTE: The catalytic converter to exhaust manifold clamp is not reusable. Always use a new clamp when reinstalling the catalytic converter.

1. Position the catalytic converter (4) onto the front exhaust pipe (2) until the alignment tab is seated into the alignment slot of the catalytic converter (4).
2. Install catalytic converter (4) into the exhaust pipe (6) onto the until the alignment tab is seated into the alignment slot of exhaust pipe (6).
3. Position front exhaust pipe (2) onto turbocharger and install new clamp (1). Tighten the nuts to 11 N·m (100 in. lbs.) torque.
4. Install the exhaust clamp (5) at the exhaust pipe (6) and catalytic converter (5) connection. Tighten the clamp nuts to 54.2 N·m (40 ft. lbs.) torque.
5. Check the exhaust system for contact with the body panels. A minimum of 25.4 mm (1.0 in.) is required between the exhaust system components and body/frame parts. Make the necessary adjustments, if needed.
6. Lower the vehicle.
7. Start the engine and inspect for exhaust leaks. Repair exhaust leaks as necessary.

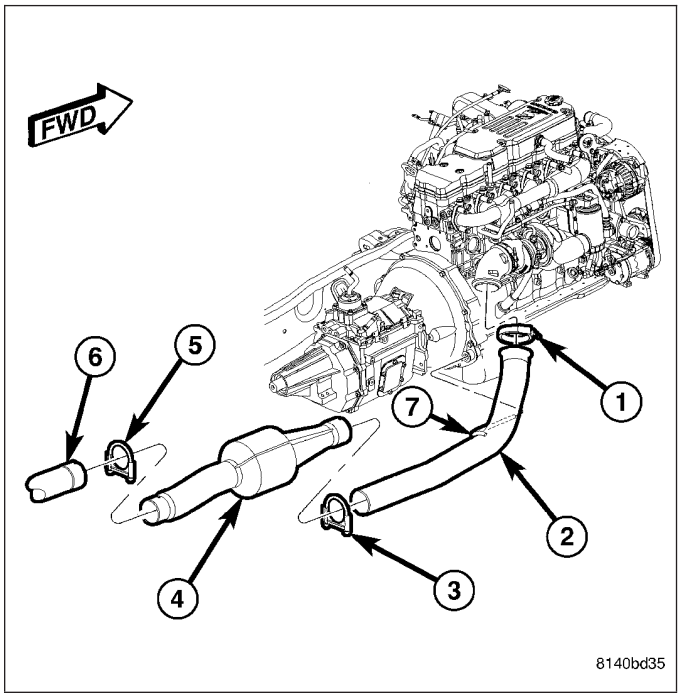

8.3L ENGINE

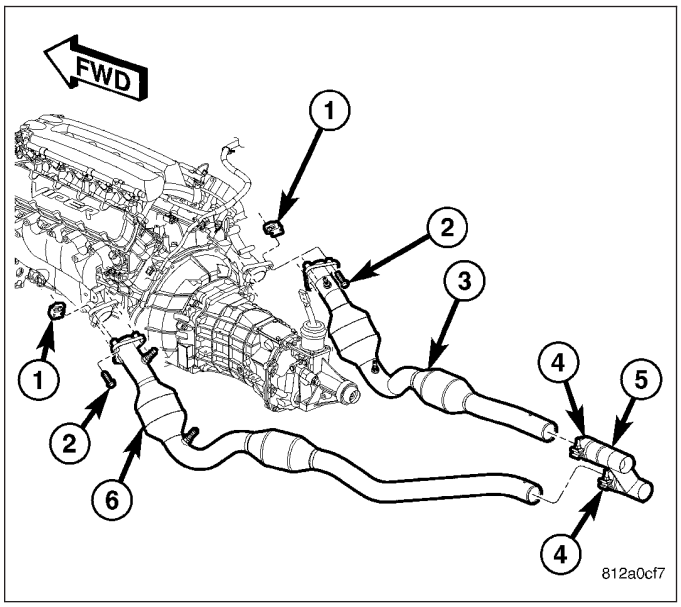

1. Make sure catalytic converters (3, 6) and mufflers (5) are free of burrs.
2. Insert RH catalytic converter (3) into muffler (5).
3. Make sure the alignment tang on the catalytic converter (3) seats in the alignment slot on the muffler (5).
4. Position the catalytic converter (3) to the exhaust manifold. Install and hand tighten bolts (2) , retainers and nuts (1).
5. Insert LH catalytic converter (6) into muffler (5).
6. Make sure the alignment tang on the catalytic converter (6) seats in the alignment slot on the muffler (5).
7. Position the catalytic converter (6) to the exhaust manifold. Install and hand tighten bolts (2), retainers and nuts (1).
8. Check the exhaust system for contact with the body panels. A minimum of 25.4 mm (1.0 in.) is required between the exhaust system components and body/frame parts. Clearance between catalytic converter and frame is 15 mm (.59 inch). Make the necessary adjustments, if needed.
9. Tighten catalytic converter to exhaust manifold bolts (2) to 20.3 N·m (15 ft. lbs.) torque.
10. Tighten the clamp nuts to 54.2 N·m (40 ft. lbs.) torque.
11. Lower the vehicle.
12. Start the engine and inspect for exhaust leaks. and exhaust system. Repair exhaust leaks as necessary.

PIPE EXHAUST

REMOVAL

3.7L/4.7L/5.7L ENGINE

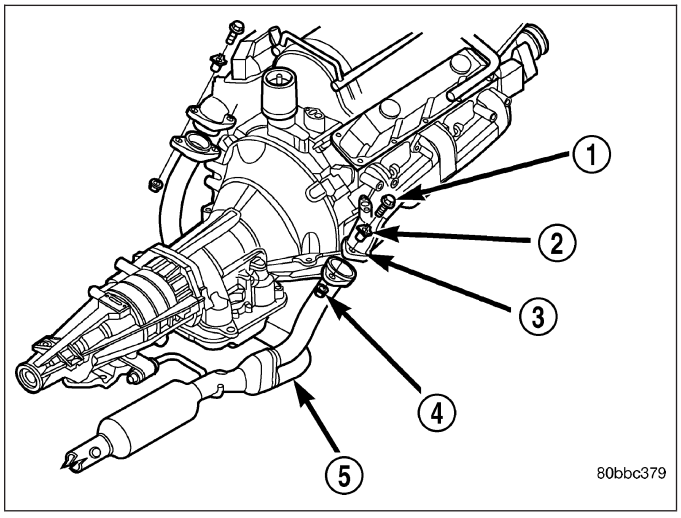

1. Raise and support the vehicle.
2. Saturate the bolts and nuts with heat valve lubricant. Allow 5 minutes for penetration.
3. Remove exhaust pipe to manifold bolts, retainers and nuts.
4. Remove the clamp nuts.
5. Remove the exhaust pipe.

5.9L DIESEL

1. Disconnect the battery negative cables.
2. Raise and support the vehicle on a hoist.
3. Saturate the bolts and nuts with heat valve lubricant. Allow 5 minutes for penetration.
4. Remove the exhaust pipe-to-extension pipe clamp. Separate the exhaust pipe and extension pipe.
5. Remove the exhaust pipe-to-turbocharger elbow clamp.
6. Remove the exhaust pipe from the transmission support.

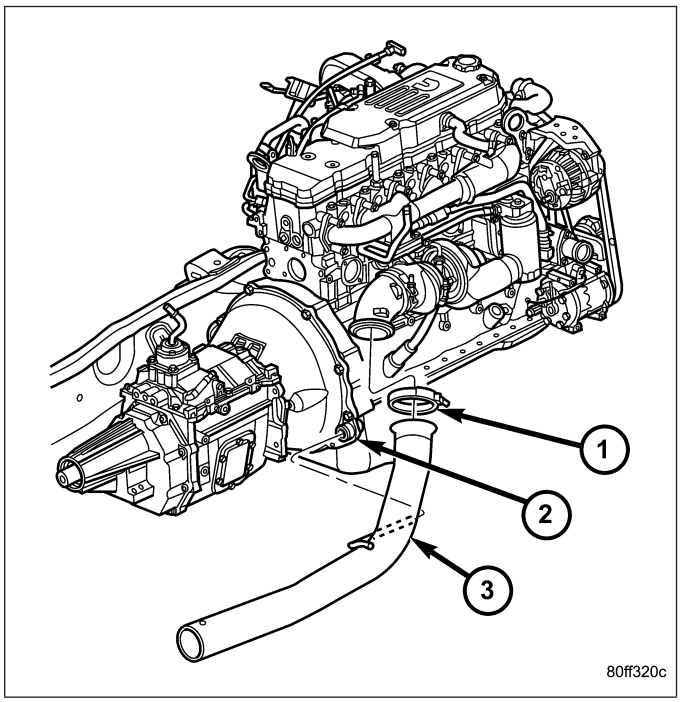

8.3L ENGINE

1. Raise and support the vehicle.
2. Saturate the bolts and nuts with heat valve lubricant. Allow 5 minutes for penetration.
3. Remove clamp nuts.
4. Remove exhaust pipe isolators.
5. Rotate the exhaust pipes to remove from the muffle.

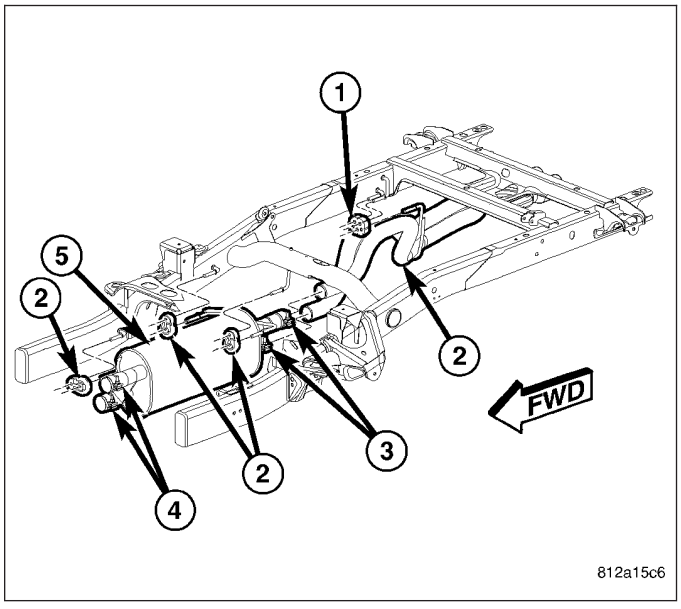

INSPECTION

Discard rusted clamps, broken or worn supports and attaching parts. Replace a component with original equipment parts, or equivalent. This will assure proper alignment with other parts in the system and provide acceptable exhaust noise levels.

INSTALLATION

3.7L/4.7L/5.7L ENGINE

1. Position the exhaust pipe for proper clearance with the frame and underbody parts. A minimum clearance of 25.4 mm (1.0 in.) is required.
2. Position the exhaust pipe to manifold. Install the bolts, retainers and nuts. Tighten the nuts to 31 N·m (23 ft. lbs.) torque.
3. Tighten the clamp nuts to 54.2 N·m (40 ft. lbs.) torque.
4. Lower the vehicle.
5. Start the engine and inspect for exhaust leaks and exhaust system contact with the body panels. Adjust the alignment, if needed.

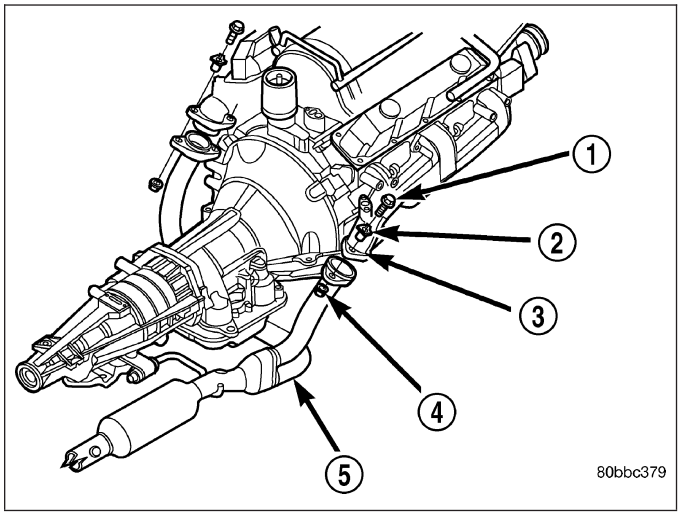

5.9L DIESEL

1. Install the exhaust pipe into the transmission support and onto the turbocharger flange.
2. Install the exhaust pipe-to-turbocharger elbow clamp and tighten to 11 N·m (100 in. lbs.) torque.
3. Install the extension pipe and clamp to the exhaust pipe using a new clamp and tighten the clamp nuts to 54.2 N·m (40 ft. lbs.) torque.
4. Check the exhaust system for contact with the body panels. A minimum of 25.4 mm (1.0 in.) is required between the exhaust system components and body/frame parts. Make the necessary adjustments, if needed.
5. Lower the vehicle.
6. Connect the battery negative cables.
7. Start the engine and inspect for exhaust leaks. Repair exhaust leaks as necessary.

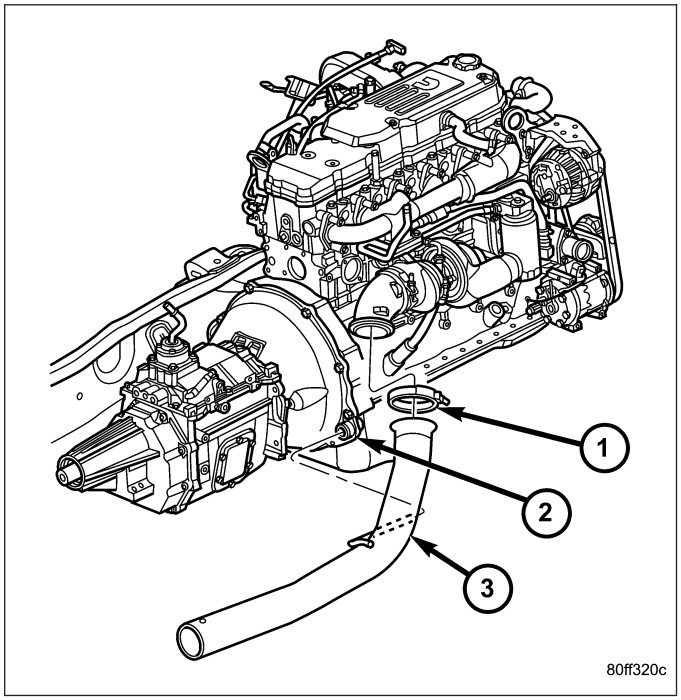

8.3L ENGINE

1. Make sure exhaust pipe is free of any burrs.
2. Insert exhaust pipes into muffler.
3. Make sure alignment tang on exhaust pipes seat into alignment slot on muffler.
4. Install exhaust pipe insulators.
5. Position the exhaust pipe for proper clearance with the frame and underbody parts. A minimum clearance of 25.4 mm (1.0 in.) is required.
6. Tighten the clamp nuts to 54.2 N·m (40 ft. lbs.) torque.
7. Lower the vehicle.
8. Start the engine and inspect for exhaust leaks and inspect for exhaust leaks. Repair exhaust leaks as necessary.

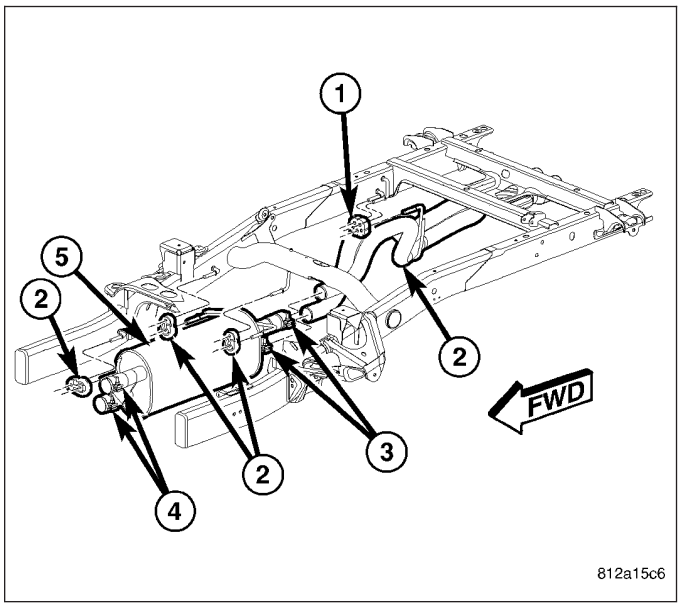

HEAT SHIELDS

DESCRIPTION

There are two types of heat shields used. One is stamped steel the other is molded foil sheets. The shields attach to the vehicle around the exhaust system to prevent heat from the exhaust system from entering the passenger area and other areas where the heat can cause damage to other components.

REMOVAL

1. Raise and support the vehicle.

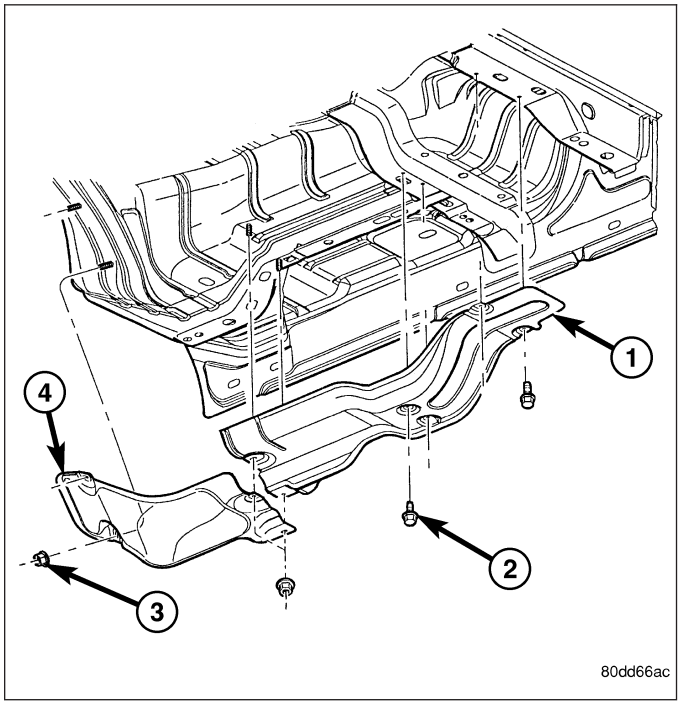

2. Remove the nuts or bolts holding the exhaust heat shield to the floor pan, crossmember or bracket.

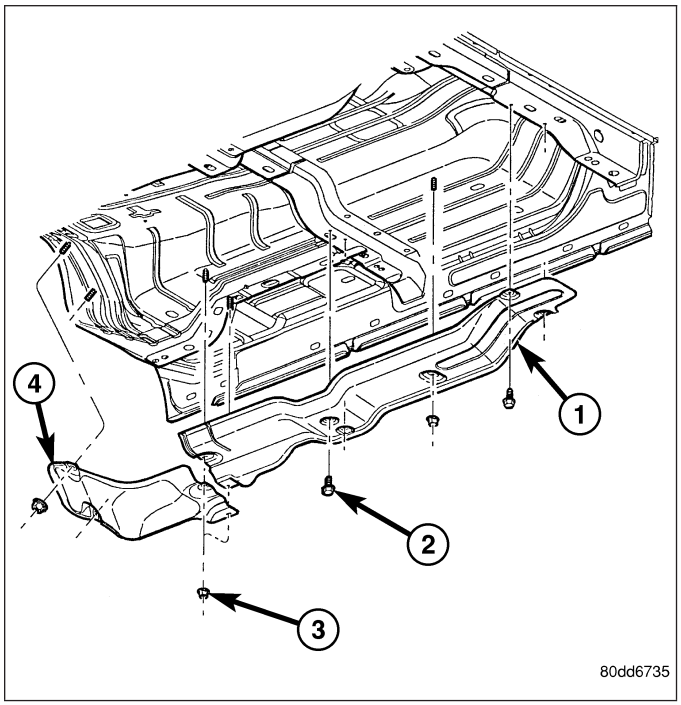

3. Slide the shield out around the exhaust system.

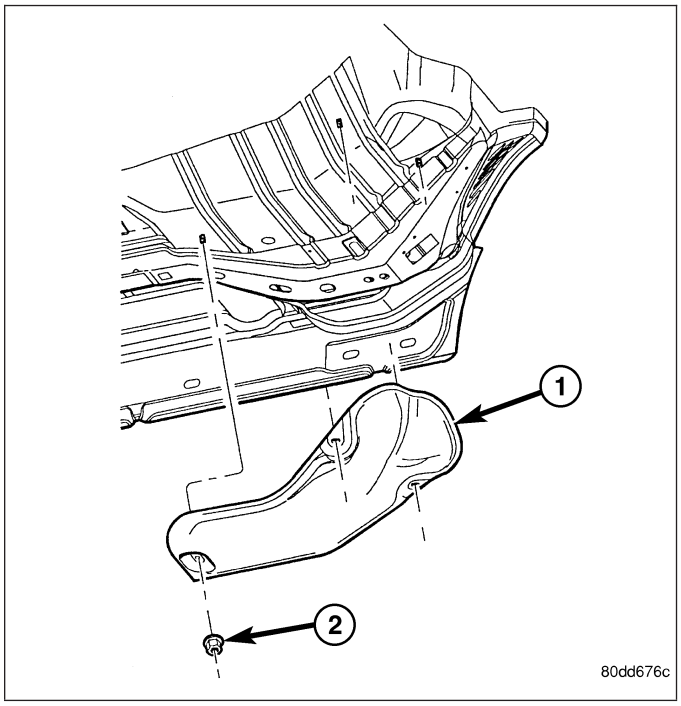

INSTALLATION

1. Position the exhaust heat shield to the floor pan, crossmember or bracket and install the nuts or bolts.

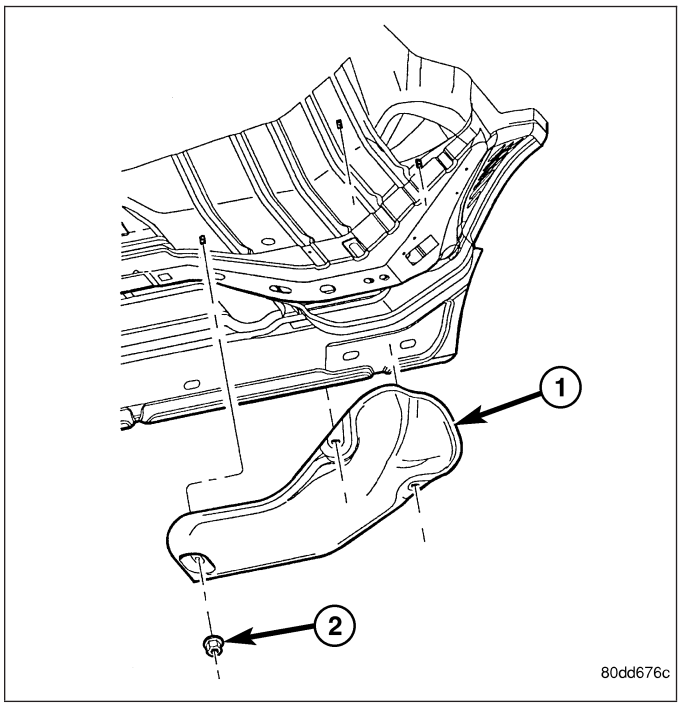

2. Tighten the nuts and bolts 11 N·m (100 in. lbs.).

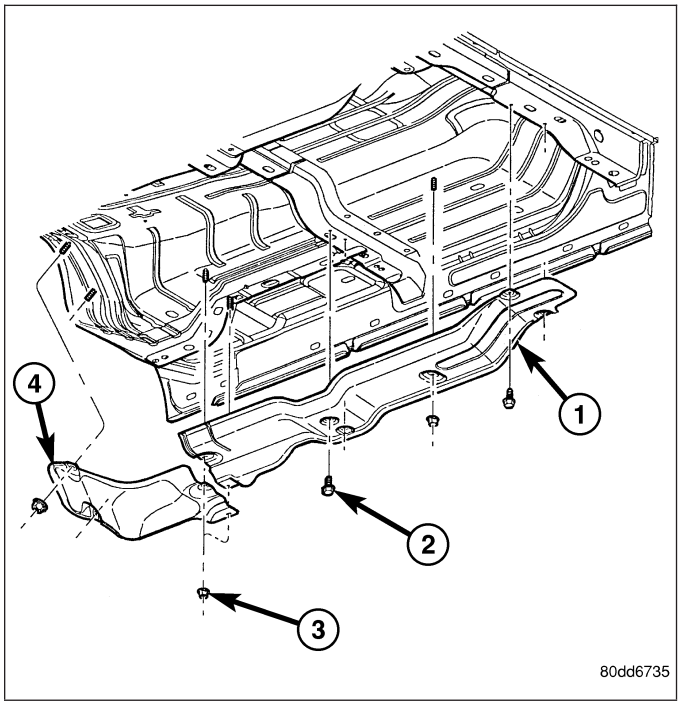

3. Lower the vehicle.

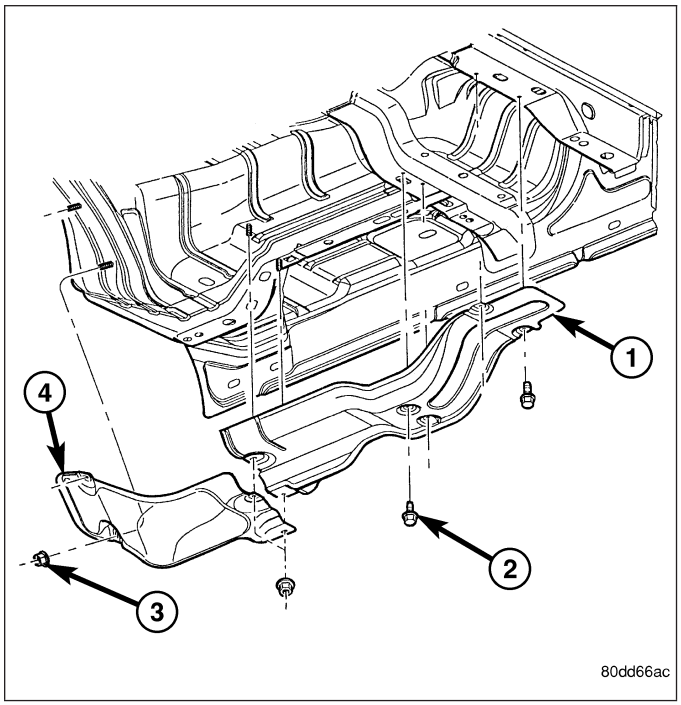

MUFFLER

REMOVAL

3.7L/4.7L/5.7L ENGINE

1. Raise and support the vehicle.
2. Saturate the clamp nuts with heat valve lubricant. Allow 5 minutes for penetration.
3. Disconnect the muffler hangers.
4. Remove clamps and nuts.
5. Remove the muffler.

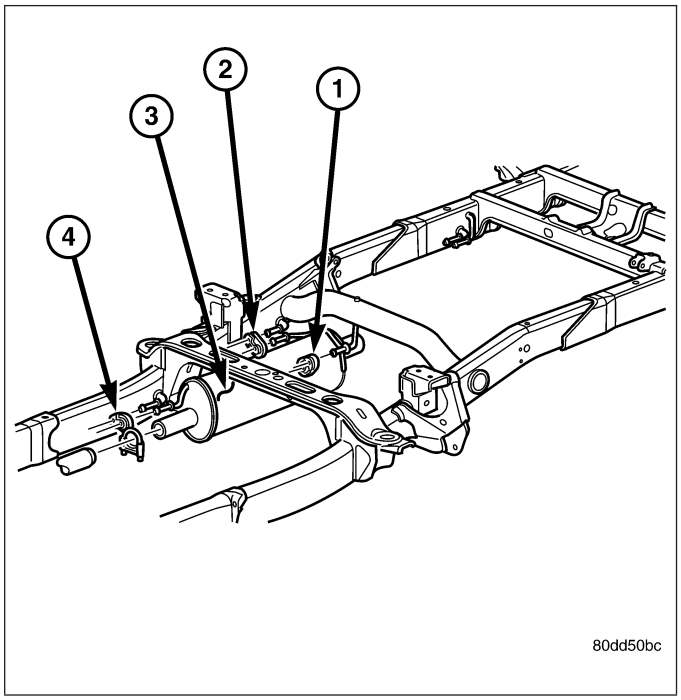

8.3L ENGINE

1. Raise and support the vehicle.
2. Saturate the clamp nuts with heat valve lubricant. Allow 5 minutes for penetration.
3. Remove exhaust pipes (Refer to 11 - EXHAUST SYSTEM/EXHAUST PIPE - REMOVAL).
4. Saturate the clamp nuts with heat valve lubricant. Allow 5 minutes for penetration.
5. Disconnect the muffler hangers.
6. Remove muffler-to-catalytic converter clamp nuts.
7. Remove the muffler.

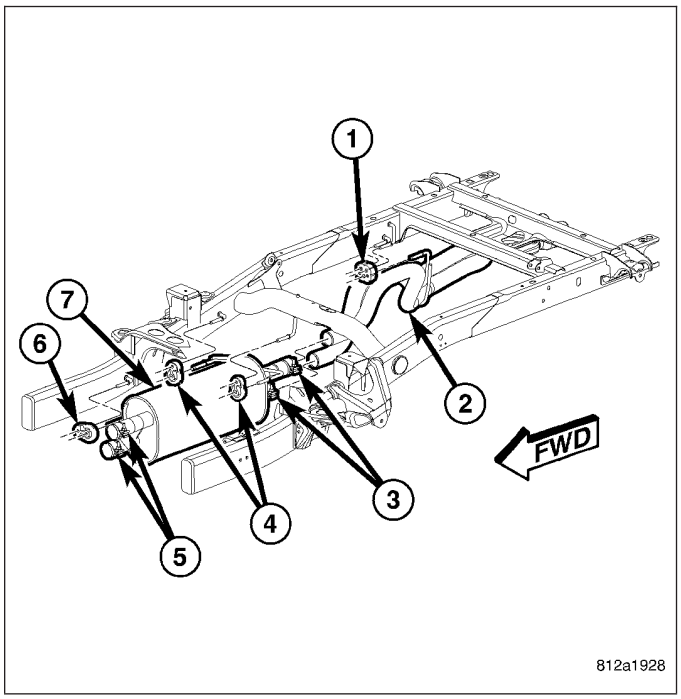

5.9L DIESEL ENGINE

1. Disconnect the battery negative cables.
2. Raise and support the vehicle.
3. Remove the muffler to tail pipe and extension pipe clamps.
4. Disconnect the muffler from the hanger isolators.
5. Disconnect the muffler from the tailpipe.
6. Disconnect the muffler from the extension pipe and remove from the vehicle.

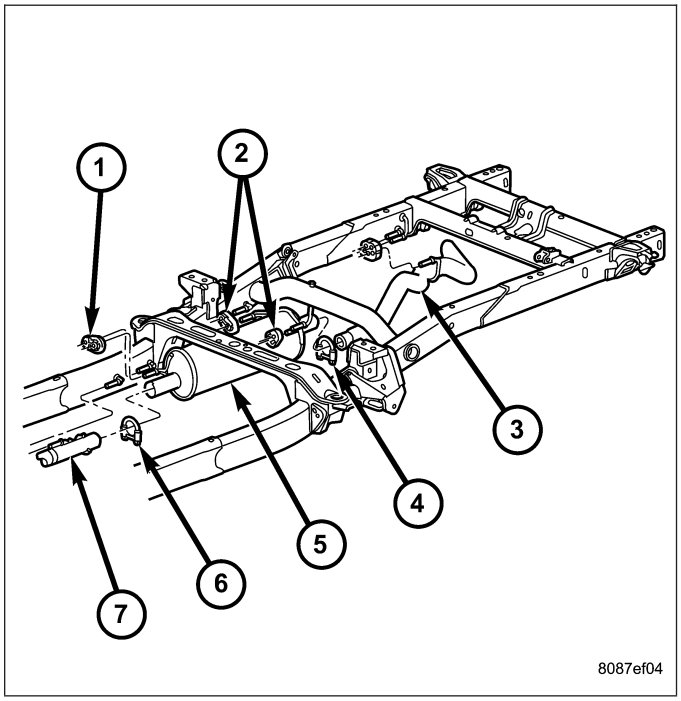

INSTALLATION

3.7L/4.7L/5.7L ENGINE

1. Assemble muffler and clamps loosely to permit proper alignment of all parts.
2. Connect the muffler hangers.
3. Tighten the clamp nuts to 54.2 N·m (40 ft. lbs.) torque.
4. Check the exhaust system for contact with the body panels. A minimum of 25.4 mm (1.0 in.) is required between the exhaust system components and body/frame parts. Make the necessary adjustments, if needed.
5. Lower the vehicle.
6. Start the engine and inspect for exhaust leaks. Repair exhaust leaks as necessary.

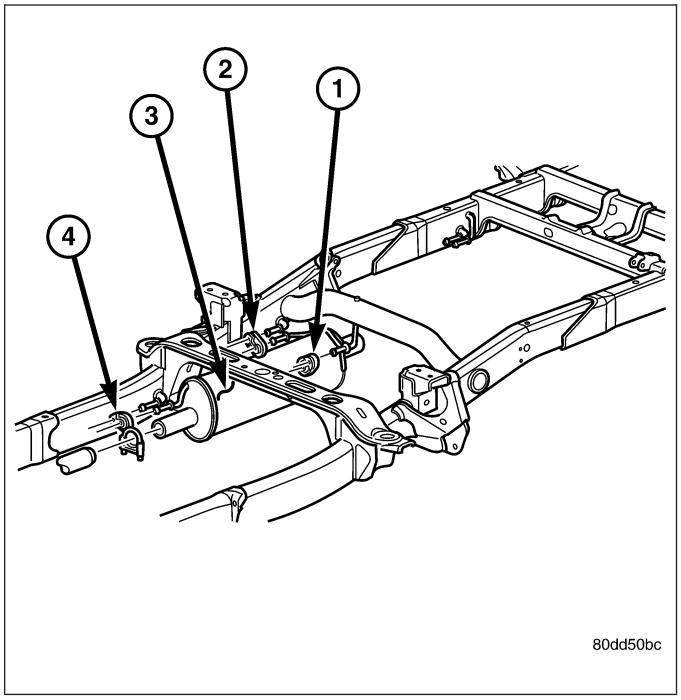

8.3L ENGINE

1. Make sure catalytic converters are free of burrs.
2. Assemble muffler and clamps loosely to permit proper alignment of all parts.
3. Make sure alignment tangs on catalytic converters seat into alignment slots on mufflers.
4. Connect the muffler hangers.
5. Install exhaust pipes (Refer to 11 - EXHAUST SYSTEM/EXHAUST PIPE - INSTALLATION).
6. Check the exhaust system for contact with the body panels. A minimum of 25.4 mm (1.0 in.) is required between the exhaust system components and body/frame parts. Make the necessary adjustments, if needed..
7. Tighten the clamp nuts to 54.2 N·m (40 ft. lbs.) torque.
8. Lower the vehicle.
9. Start the engine and inspect for exhaust leaks. Repair exhaust leaks as necessary.

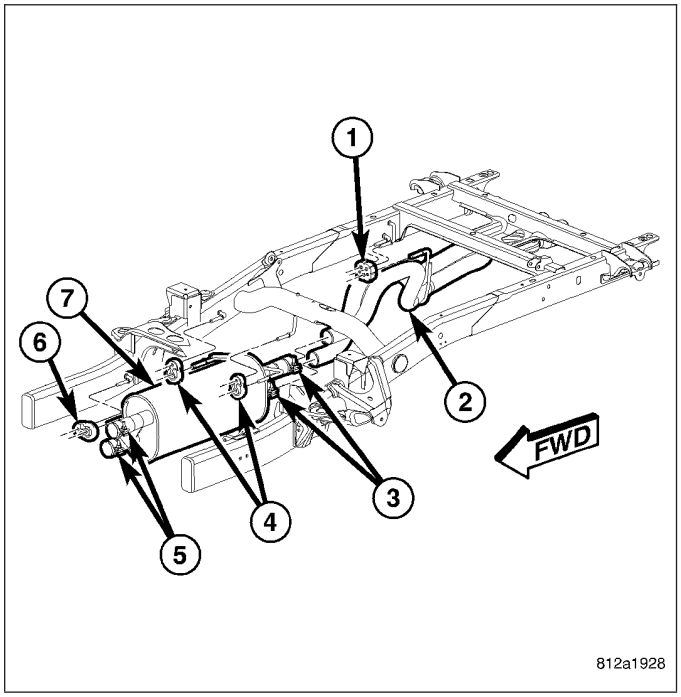

5.9L DIESEL ENGINE

1. Install the muffler hanger rods into the isolators.
2. Install the muffler into the extension pipe.
3. Install the muffler into the tail pipe.
4. Install the exhaust clamps, align the exhaust system, and tighten the exhaust clamps to 54.2 N·m (40 ft. lbs.) torque.
5. Check the exhaust system for contact with the body panels. A minimum of 25.4 mm (1.0 in.) is required between the exhaust system components and body/frame parts. Make the necessary adjustments, if needed.
6. Lower the vehicle.
7. Connect the battery negative cables.
8. Start the engine and inspect for exhaust leaks. Repair exhaust leaks as necessary.

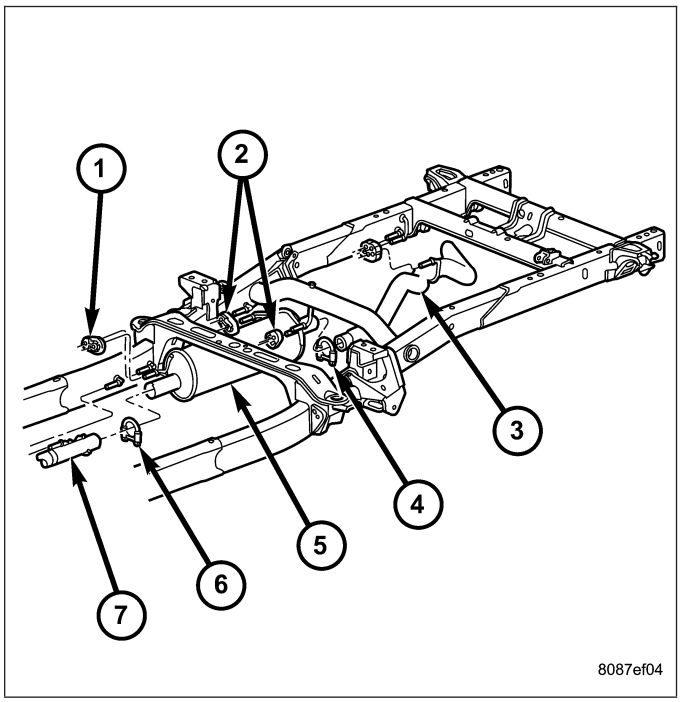

TAILPIPE

REMOVAL

3.7L/4.7L/5.7L ENGINE

1. Raise and support the vehicle.
2. Saturate the clamp nuts with heat valve lubricant. Allow 5 minutes for penetration.
3. Disconnect the exhaust tailpipe support hanger.
4. Remove clamps and nuts.
5. Remove the exhaust tailpipe.

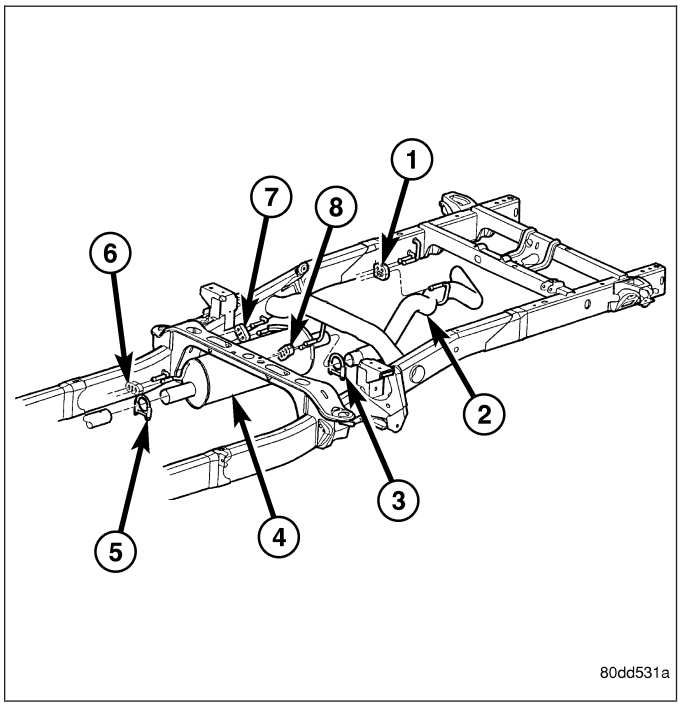

5.9L DIESEL

1. Disconnect the battery negative cables.
2. Raise and support the vehicle.
3. Saturate the clamp nuts with heat valve lubricant. Allow 5 minutes for penetration.
4. Disconnect the exhaust tailpipe support hanger isolators.
5. Remove the muffler-to-tailpipe clamps.
6. Remove the tailpipe from the vehicle.

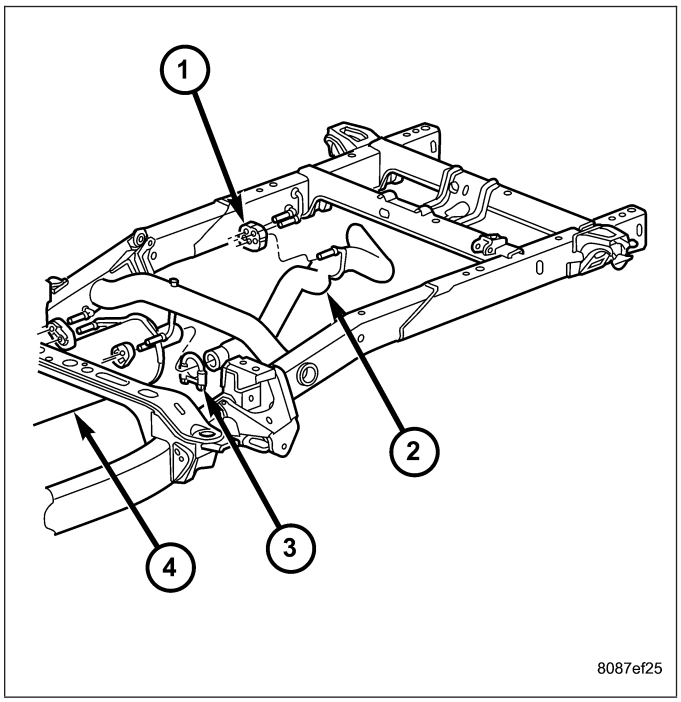

8.3L ENGINE

1. Raise and support the vehicle.
2. Saturate the clamp nuts with heat valve lubricant. Allow 5 minutes for penetration.
3. Disconnect the exhaust tailpipe support insulators (3 and 5).
4. Remove clamps (4) and nuts.
5. Remove the exhaust tailpipes (6).

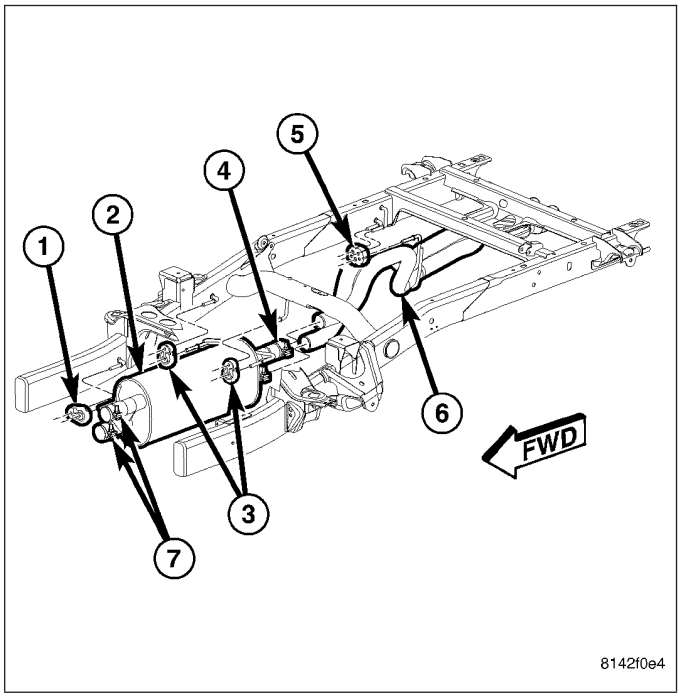

INSPECTION

Discard rusted clamps, broken or worn supports and attaching parts. Replace a component with original equipment parts, or equivalent. This will assure proper alignment with other parts in the system and provide acceptable exhaust noise levels.

INSTALLATION

3.7L/4.7L/5.7L ENGINE

1. Loosely assemble exhaust tailpipe to permit proper alignment of all parts.
2. Connect the support hangers.
3. Position the exhaust tailpipe for proper clearance with the underbody parts.
4. Tighten all clamp nuts to 54.2 N·m (40 ft. lbs.) torque.
5. Check the exhaust system for contact with the body panels. A minimum of 25.4 mm (1.0 in.) is required between the exhaust system components and body/frame parts. Make the necessary adjustments, if needed.
6. Lower the vehicle.
7. Start the engine and inspect for exhaust leaks. Repair exhaust leaks as necessary.

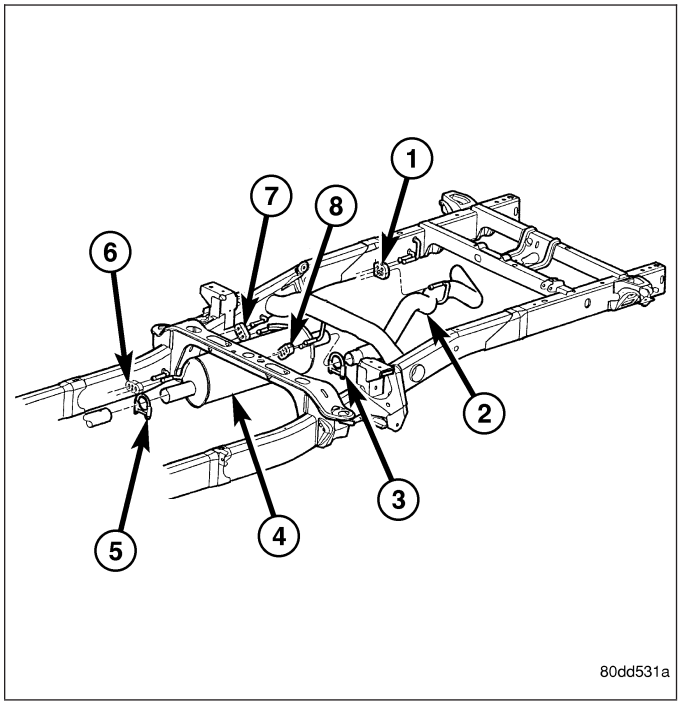

5.9L DIESEL

1. Install the tailpipe into the muffler.
2. Install the tailpipe hanger rods into the isolators
3. Install the exhaust clamp, align the exhaust system, and tighten the clamp 48 N·m (35 ft. lbs.) torque.
4. Check the exhaust system for contact with the body panels. A minimum of 25.4 mm (1.0 in.) is required between the exhaust system components and body/frame parts. Make the necessary adjustments, if needed.
5. Lower the vehicle.
6. Connect the battery negative cables.
7. Start the engine and inspect for exhaust leaks. Repair exhaust leaks as necessary.

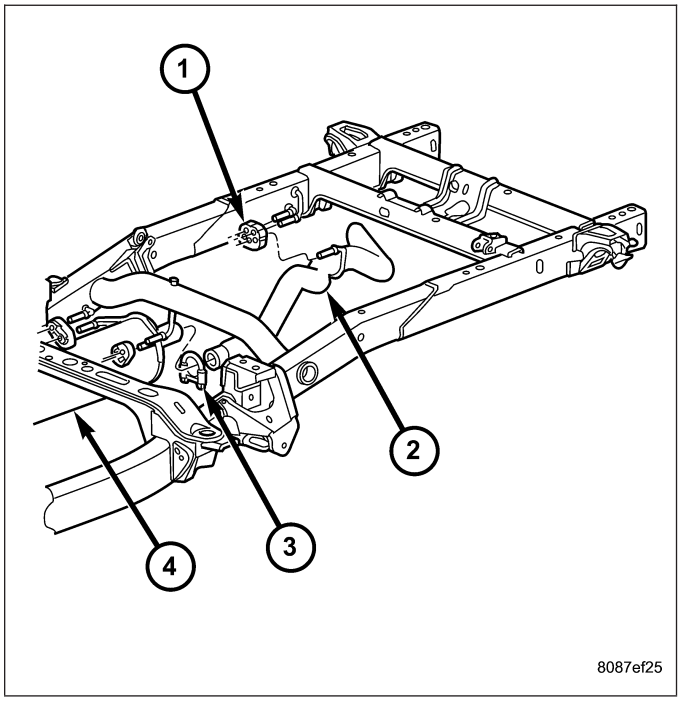

8.3L ENGINE

1. Position tailpipes (6) into muffler (2).
2. Make sure alignment tang on tailpipes (6) fully seat into alignment slots on muffler (2).
3. Install insulators (5).
4. Check the exhaust system for contact with the body panels. A minimum of 25.4 mm (1.0 in.) is required between the exhaust system components and body/frame parts. Make the necessary adjustments, if needed.
5. Tighten all clamp (4) nuts to 54.2 N·m (40 ft. lbs.) torque.
6. Lower the vehicle.
7. Start the engine and inspect for exhaust leaks. Repair exhaust leaks as necessary.

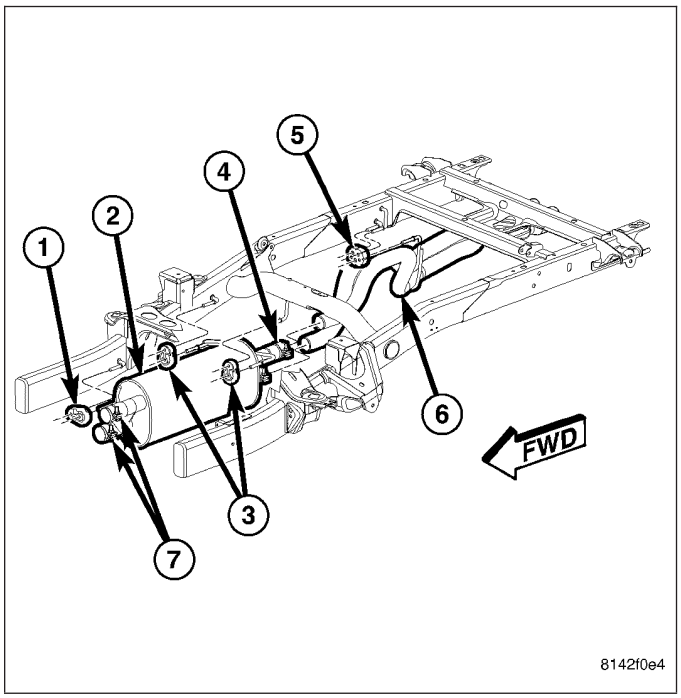

TURBOCHARGER SYSTEM

DIAGNOSIS AND TESTING

TURBOCHARGER BOOST PRESSURE

Low turbocharger boost pressure can cause poor engine performance and driveability concerns. The following procedure will test the turbocharger boost pressure.

Causes of low boost pressure include the following:

- Restricted air inlet system
- Leak in charge air cooler system
- Restricted/high pressure drop across charge air cooler
- Damaged turbocharger compressor wheel housing
- Turbocharger wastegate stuck open
- Excessive exhaust restriction

Causes of excessively high boost pressure include:

- Turbocharger wastegate stuck closed
- Turbocharger wastegate signal line leaking or damaged
- Damaged wastegate command valve O-rings
- Wastegate command valve mechanically stuck in actuated position

Several Diagnostic Trouble Codes (DTCs) can be set that will indicate high or low system boost levels. There is a DTC for circuit faults relating to the electronically controlled wastegate command valve.

(Refer to 11 - EXHAUST SYSTEM/TURBOCHARGER SYSTEM/CHARGE AIR COOLER AND PLUMBING - DIAGNOSIS AND TESTING) for diagnosing of low or high boost pressure due to leaks.

TURBOCHARGER

DESCRIPTION

The turbocharger is an exhaust-driven supercharger which increases the pressure and density of the air entering the engine. With the increase of air entering the engine, more fuel can be injected into the cylinders, which creates more power during combustion.

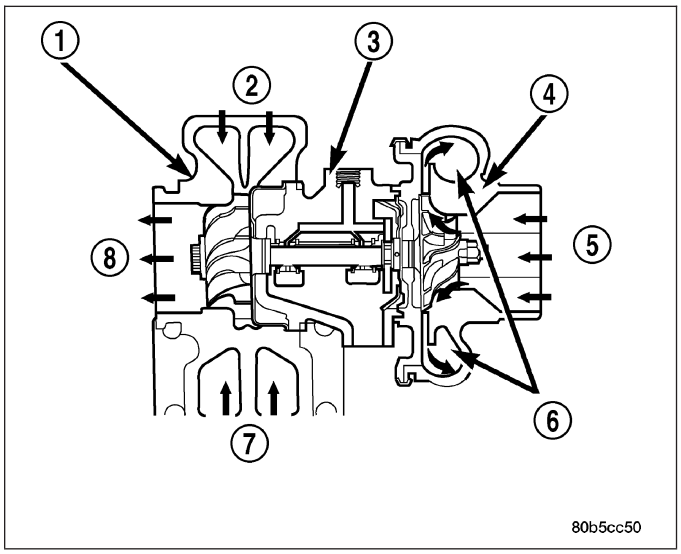

The turbocharger assembly consists of five (5) major component systems :

- Turbine section (1)
- Compressor section (4)
- Bearing housing (4)
- Wastegate
- Electronically controlled wastegate command valve

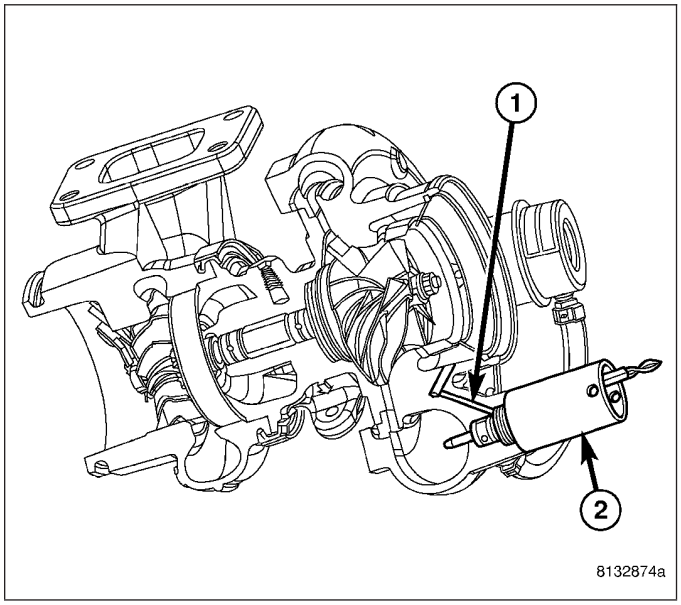

OPERATION

Exhaust gas pressure and energy drive the turbine, which in turn drives a centrifugal compressor that compresses the inlet air, and forces the air into the engine through the charge air cooler and plumbing. Since heat is a by-product of this compression, the air must pass through a charge air cooler to cool the incoming air and maintain power and efficiency.

Increasing air flow to the engine provides:

- Improved engine performance
- Lower exhaust smoke density
- Improved operating economy
- Altitude compensation
- Noise reduction.

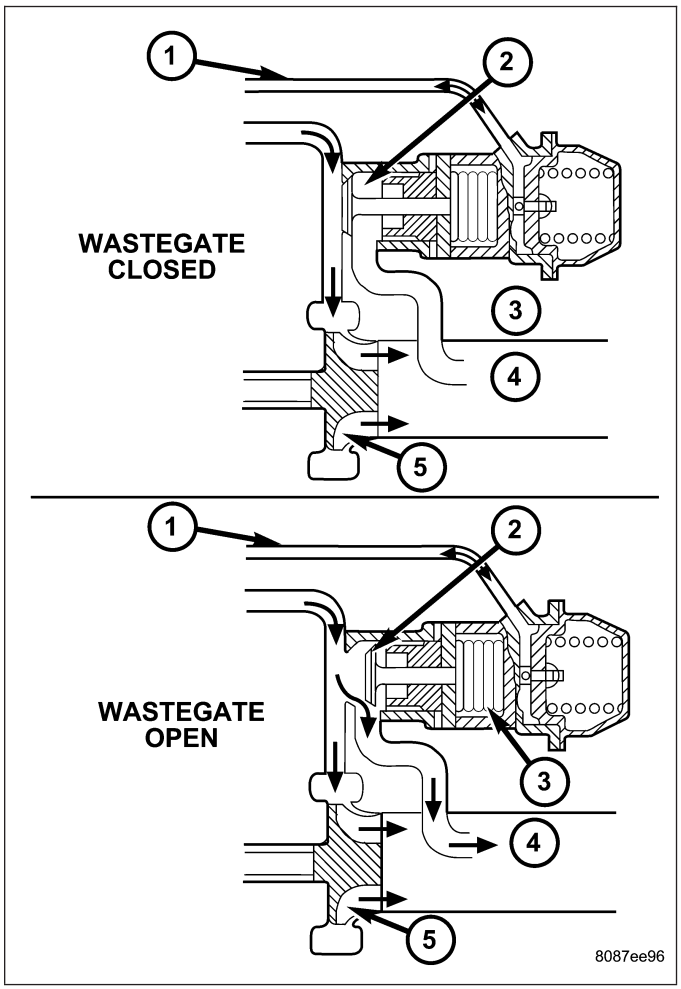

The turbocharger also uses a wastegate , which regulates intake manifold air pressure and prevents over boosting at high engine speeds and loads. When the wastegate valve is closed, all of the exhaust gases flow through the turbine wheel. As the boost pressure (compressor outlet) increases, the boost pressure is fed to the wastegate actuator via a wastegate signal line. When sufficient boost pressure is achieved, the boost pressure applied to the wastegate diaphragm overcomes spring pressure and moves an actuator rod to open an exhaust bypass valve. When exhaust gas is diverted from the turbine wheel, turbine shaft speed is limited which reduces compressor wheel speed, thereby limiting boost pressure.

The turbocharger also includes an additional component, an Electronically Controlled Wastegate Command Valve, to control boost pressure. The command valve is located on the turbocharger compressor housing.

When the command valve is not actuated (no current supplied to the valve), a passage in the valve allows the wastegate signal line to be supplied with boost pressure. This allows boost pressure to be mechanically regulated by the wastegate as in a conventional wastegated system.

When the engine control module (ECM) provides a pulse width modulated (PWM) signal to the command valve, boost pressure is bypassed away from the wastegate signal line through a drilling in the turbocharger compressor housing. The internal drilling bleeds boost pressure back to the turbocharger compressor inlet (low pressure). Actuating the command valve and bypassing the boost pressure signal to the wastegate allows the engine to operate at a higher boost than would be achieved if the wastegate were allowed to operate normally.

Actuating the command valve does not increase boost pressure if the boost pressure is below the wastegate actuator setting. With the command valve actuated, maximum boost pressure at a given operating condition will vary based on ambient air pressure and temperature.

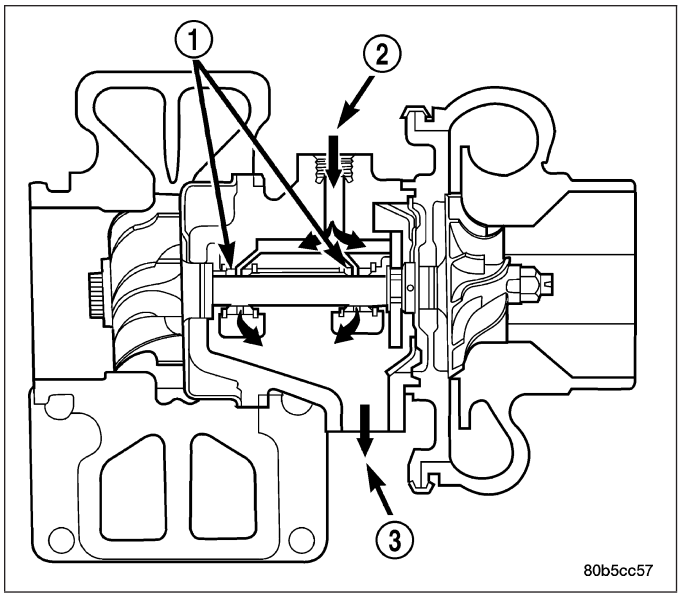

The turbocharger is lubricated by engine oil that is pressurized, cooled, and filtered. The oil is delivered to the turbocharger by a supply line that is tapped into the oil filter head. The oil travels into the bearing housing, where it lubricates the shaft and bearings. A return pipe at the bottom of the bearing housing, routes the engine oil back to the crankcase.

The most common turbocharger failure is bearing failure related to repeated hot shutdowns with inadequate “cool-down” periods. A sudden engine shut down after prolonged operation will result in the transfer of heat from the turbine section of the turbocharger to the bearing housing. This causes the oil to overheat and break down, which causes bearing and shaft damage the next time the vehicle is started.

Letting the engine idle after extended operation allows the turbine housing to cool to normal operating temperature. The following chart should be used as a guide in determining the amount of engine idle time required to sufficiently cool down the turbocharger before shut down, depending upon the type of driving and the amount of cargo.

TURBOCHARGER “COOL DOWN” CHART

Driving Condition	Load	Turbocharger Temperature	Idle Time (in minutes) Before Shut Down
Stop & Go	Empty	Cool	Less than 1
Stop & Go	Medium	Warm	1
Highway Speeds	Medium	Warm	2
City Traffic	Max. GCWR	Warm	3
Highway Speeds	Max. GCWR	Warm	4
Uphill Grade	Max. GCWR	Hot	5

REMOVAL

TURBOCHARGER

1. Disconnect the battery negative cables.
2. Raise vehicle on hoist.
3. Disconnect the exhaust pipe from the turbocharger elbow (Refer to 11 - EXHAUST SYSTEM/EXHAUST PIPE - REMOVAL).
4. Remove the bolts from the turbocharger oil drain tube.
5. Disconnect wastegate command valve connector.
6. Remove two lower turbocharger mounting nuts.
7. Lower vehicle.
8. Disconnect the turbocharger air inlet hose.
9. Disconnect the turbocharger oil supply line from the turbocharger.
10. Disconnect the charge air cooler inlet pipe from the turbocharger compressor outlet.

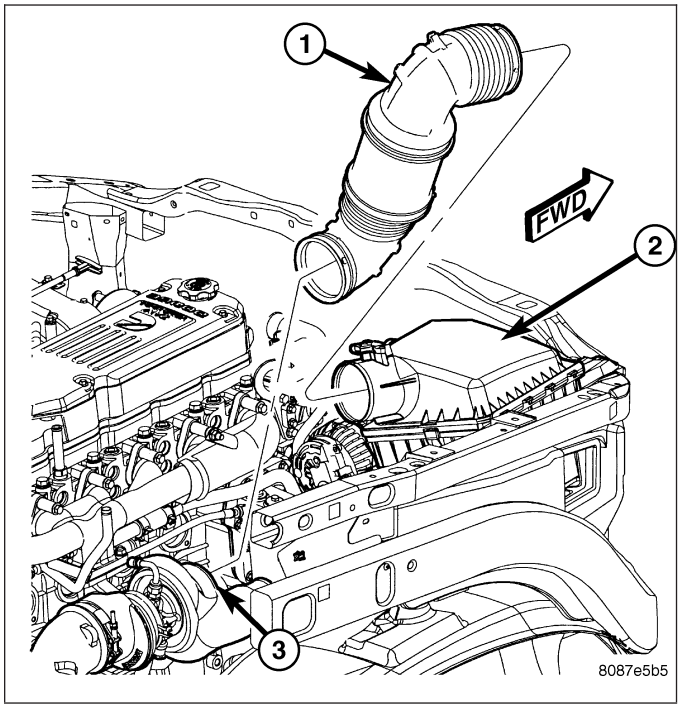

11. Remove two upper turbocharger mounting nuts.
12. Remove the turbocharger and gasket from the exhaust manifold.
13. If the turbocharger is not to be installed immediately, cover the opening to prevent material from entering into the manifold.
14. If replacing the turbocharger, transfer the turbocharger oil supply fitting to the new assembly. Tighten fitting to 36 N·m (27 ft. lbs.).
15. Clean and inspect the sealing surface.

CAUTION: The Wastegate Command Valve, and Command Valve O-ringd are the only serviceable components on the turbocharger. The turbocharger itself is serviced as a component. Do not attempt to repair the turbocharger as turbocharger and/or engine damage can result.

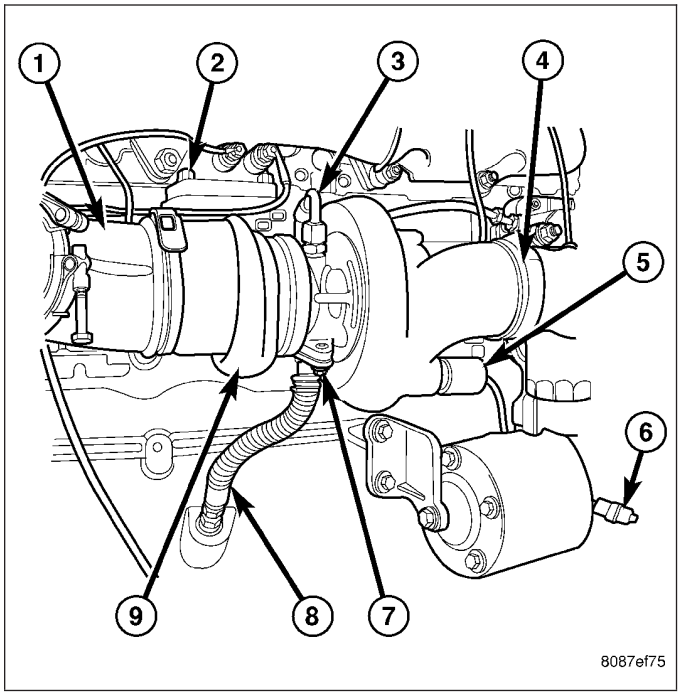

TURBOCHARGER OIL DRAIN TUBE

1. Disconnect negative battery cables.
2. Raise vehicle on hoist.
3. Remove two turbocharger oil tube mounting bolts
4. Pulling upward, remove the turbocharger drain tube from the engine block.

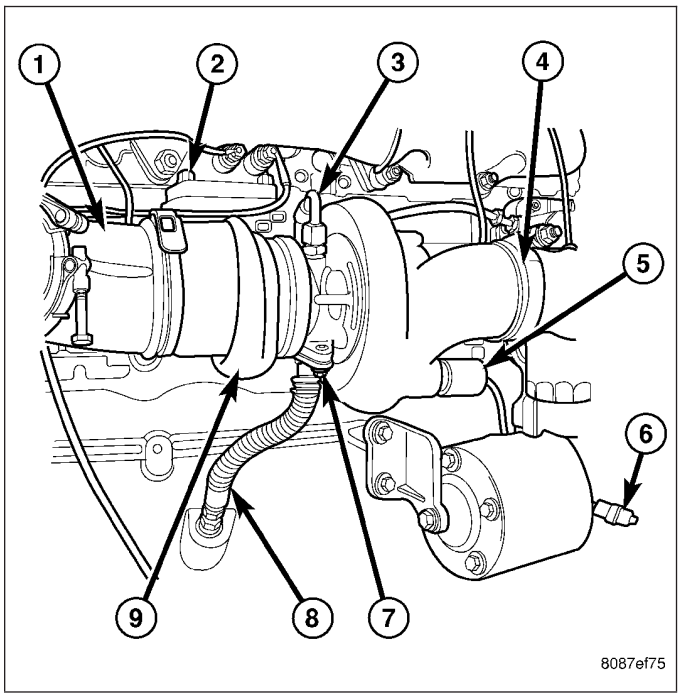

CLEANING

WARNING: To prevent damage or personal injury, do not use a combustible cleaner to clean the turbocharger.

Clean the turbocharger, turbocharger oil drain tube flange, and exhaust manifold mounting surfaces with a suitable scraper.

INSPECTION

Visually inspect the turbocharger and exhaust manifold gasket surfaces. Replace stripped or eroded mounting studs.

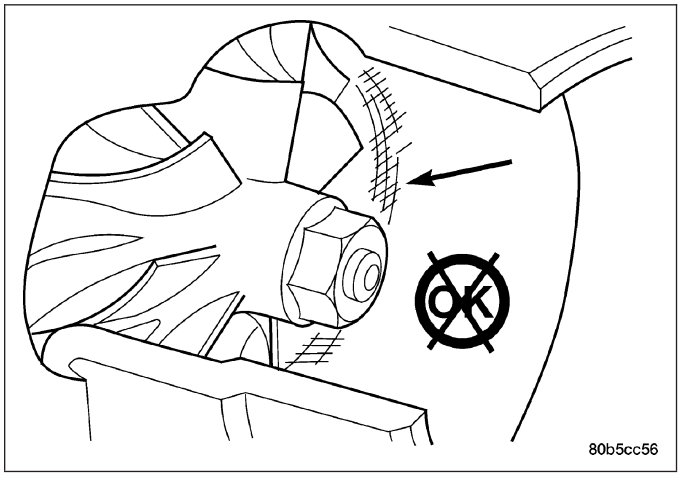

1. Visually inspect the turbocharger for cracks. The following cracks are NOT acceptable:
   - Cracks in the turbine and compressor housing that go completely through.
   - Cracks in the mounting flange that are longer than 15 mm (0.6 in.).
   - Cracks in the mounting flange that intersect bolt through-holes.
   - Two (2) Cracks in the mounting flange that are closer than 6.4 mm (0.25 in.) together.
2. Visually inspect the impeller and compressor wheel fins for nicks, cracks, or chips. Note: Some impellers may have a factory placed paint mark which, after normal operation, appears to be a crack. Remove this mark with a suitable solvent to verify that it is not a crack.
3. Visually inspect the turbocharger compressor housing for an impeller rubbing condition. Replace the turbocharger if the condition exists.

4. Measure the turbocharger axial end play:
   a. Install a dial indicator as shown in. Zero the indicator at one end of travel.
   b. Move the impeller shaft fore and aft and record the measurement. Allowable end play is 0.026 mm (0.0001 in.) MIN. and 0.127 mm (0.005 in.) MAX. If the recorded measurement falls outside these parameters, replace the turbocharger assembly.

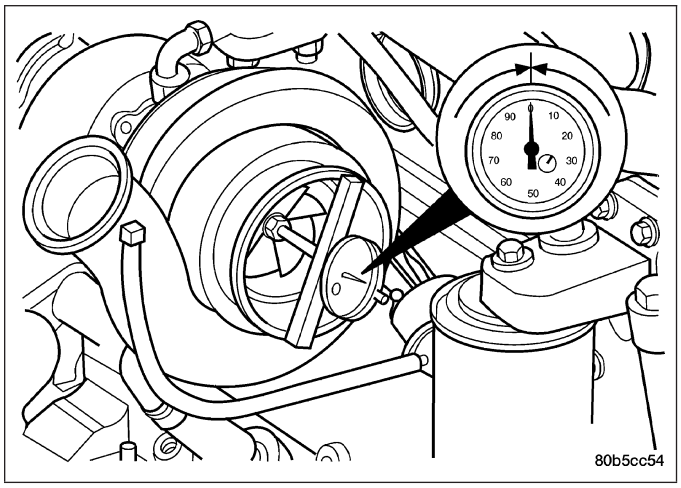

5. Measure the turbocharger bearing radial clearance:
   a. Insert a narrow blade or wire style feeler gauge between the compressor wheel and the housing.
   b. Gently push the compressor wheel toward the housing and record the clearance.
   c. With the feeler gauge in the same location, gently push the compressor wheel away from the housing and again record the clearance.
   d. Subtract the smaller clearance from the larger clearance. This is the radial bearing clearance.
   e. Allowable radial bearing clearance is 0.33 mm (0.013 in.) MIN. and 0.50 mm (0.020 in.) MAX. If the recorded measurement falls outside these specifications, replace the turbocharger assembly.

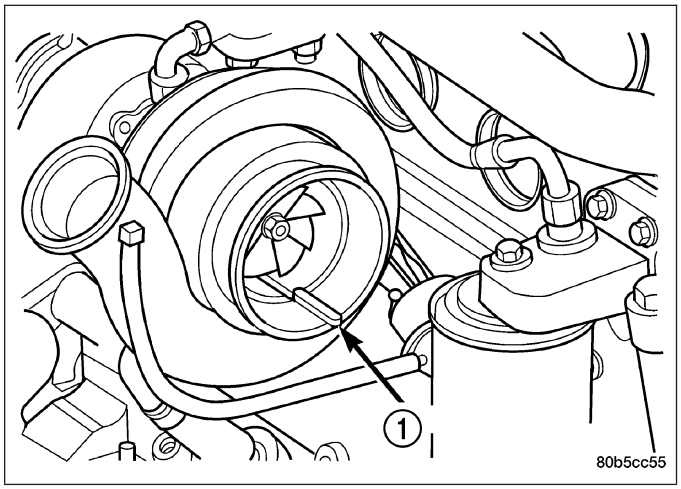

INSTALLATION

TURBOCHARGER

1. Using a new gasket, install the turbocharger. Tighten the turbocharger mounting nuts to 43 N·m (32 ft. lbs.) torque.
2. Raise vehicle on hoist.
3. Using a new gasket, install the oil drain tube to the turbocharger. Tighten the drain tube bolts to 24 N·m (18 ft. lbs.) torque.

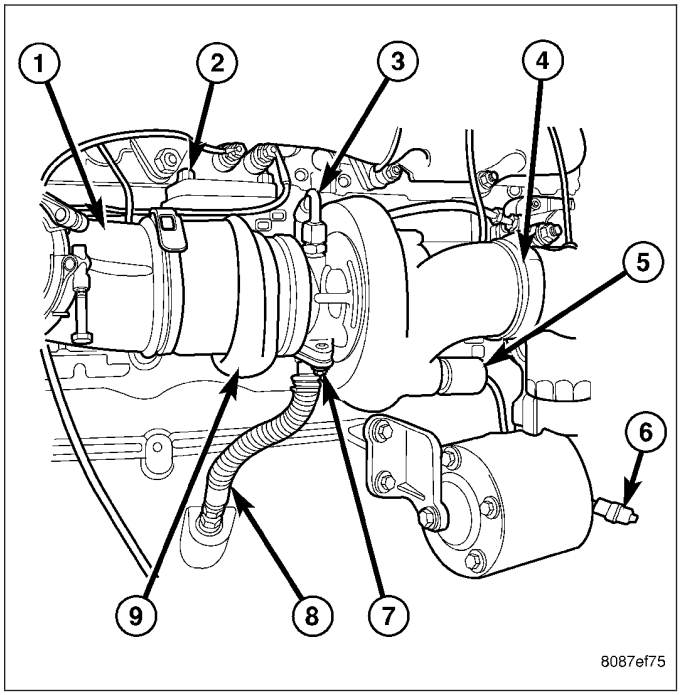

4. Connect the exhaust pipe to the turbocharger and tighten the bolts to 11.3 N·m (100 in. lbs.) torque.
5. Connect wastegate command valve connector.
6. Lower the vehicle.
7. **Pre-lube the turbocharger.** Pour 50 to 60 cc (2 to 3 oz.) clean engine oil in the oil supply line fitting. Carefully rotate the turbocharger impeller by hand to distribute the oil thoroughly.
8. Install and tighten the oil supply line to 24 N·m (18 ft. lbs.) torque.
9. Position the charge air cooler inlet pipe to the turbocharger. With the clamp in position, tighten the clamp nut to 11 N·m (95 in. lbs.) torque.
10. Position the air inlet hose to the turbocharger. Tighten the clamp to 4 N·m (35 in. lbs.) torque.
11. Connect the battery negative cables.
12. Start the engine to check for leaks.

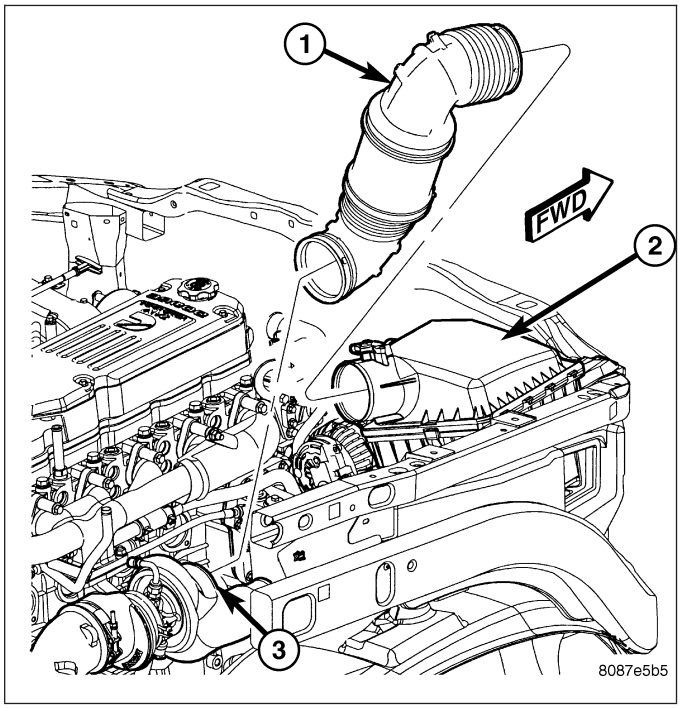

TURBOCHARGER OIL DRAIN TUBE

1. Raise vehicle on hoist.
2. Install new turbocharger oil drain tube O-rings. Lubricate O-rings with engine oil.
3. Install turbocharger oil drain tube into engine block.
4. Using a new gasket, install two oil drain tube mounting bolts. Tighten to 24 N·m (18 ft. lbs.).
5. Lower vehicle.
6. Connect negative battery cable.

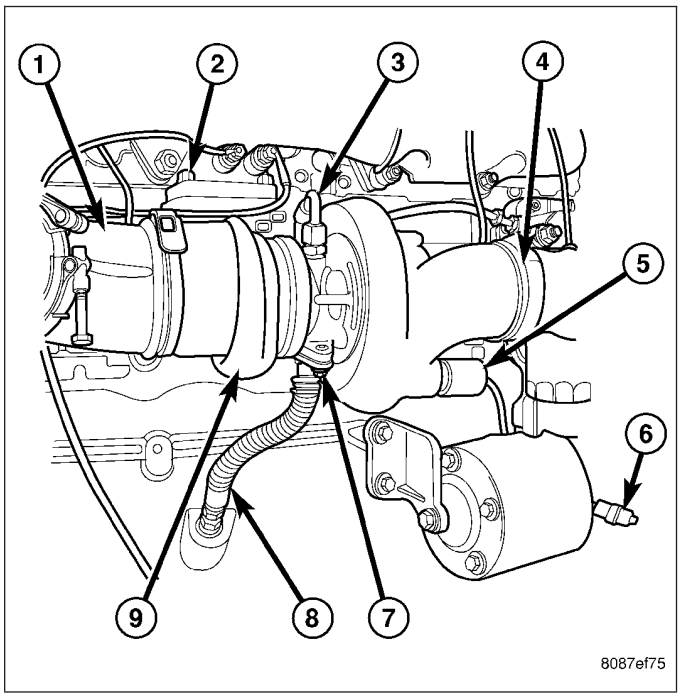

WASTEGATE - ELECTRONIC ACTUATOR

REMOVAL

1. Disconnect battery negative cable.
2. Remove air inlet tube.
3. Disconnect wastegate command valve connector.
4. Remove wastegate command valve.
5. Inspect wastegate command valve O-rings for cuts, nicks, or damage.
6. Inspect valve tip and body for damage or debris.
7. Inspect threads in turbocharger housing for damage.

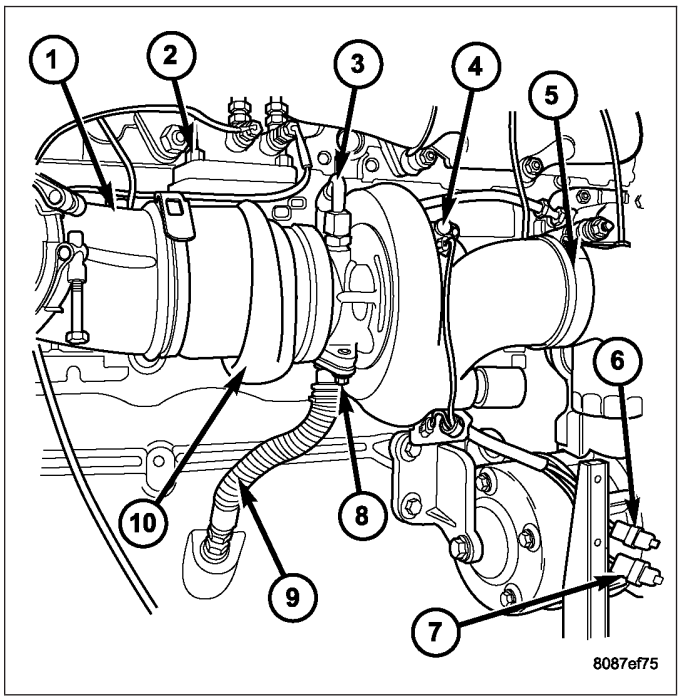

INSTALLATION

1. Install new wastegate command valve O-rings. Do not lubricate O-rings.
2. Install wastegate command valve. Tighten to 34 N·m (25 ft. lbs.) or hand tight plus 15°.
3. Connect wastegate command valve connector.
4. Install air inlet tube.
5. Install negative battery cables.

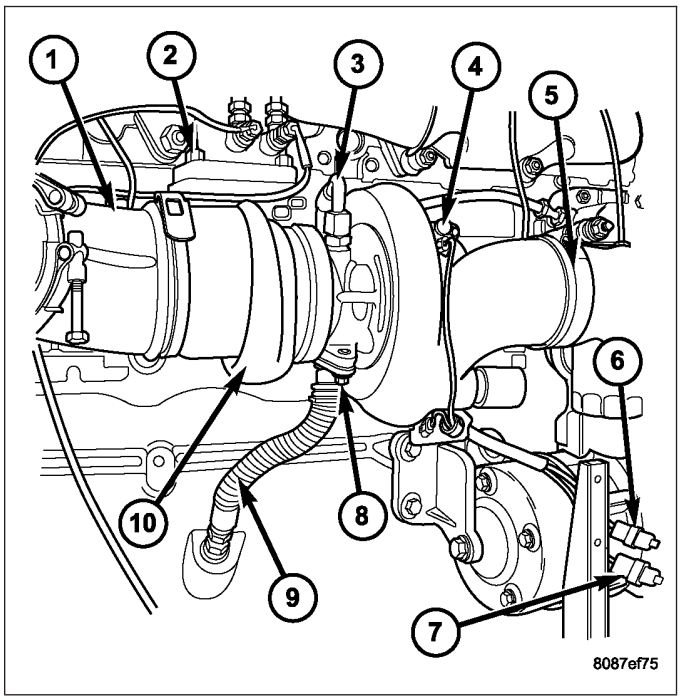

CHARGE AIR COOLER AND PLUMBING

DESCRIPTION

The charge air system consists of the charge air cooler piping, charge air cooler and intake air grid heater.

The charge air cooler is a heat exchanger that uses air flow from vehicle motion to dissipate heat from the intake air. As the turbocharger increases air pressure, the air temperature increases. Lowering the intake air temperature increases engine efficiency and power.

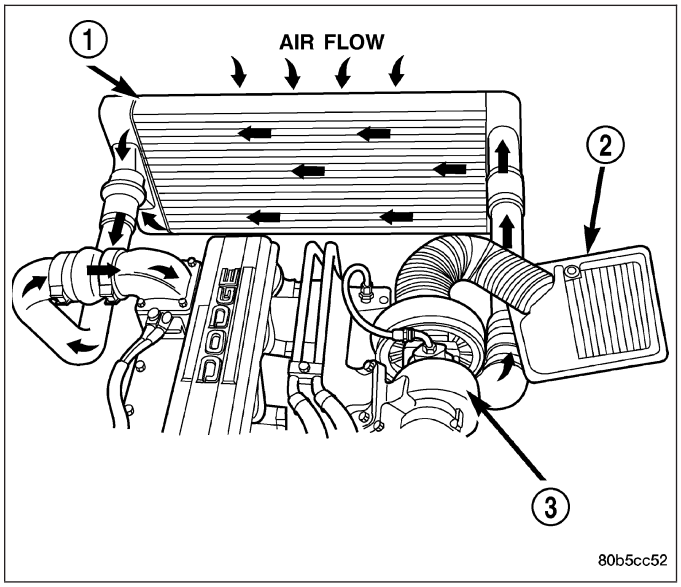

OPERATION

Intake air is drawn through the air cleaner and into the turbocharger compressor housing. Pressurized air from the turbocharger then flows forward through the charge air cooler located in front of the radiator. From the charge air cooler the air flows back into the intake manifold.

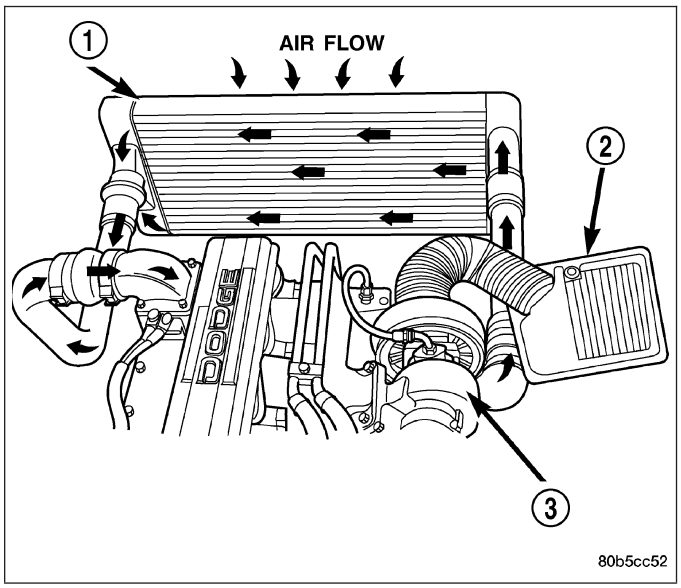

DIAGNOSIS AND TESTING

CHARGE AIR COOLER SYSTEM - LEAKS

Low turbocharger boost pressure and low engine performance can be caused by leaks in the charge air cooler or plumbing. Fuel staining on the exhaust manifold can also be an indication that there are leaks in the air system. The following procedure outlines how to check for leaks in the charge air cooler system.

This procedure can also be used to check for leaks in the wastegate signal line or the wastegate canister.

1. Loosen clamp and remove air inlet hose from turbocharger.
2. Insert Special Tool 9022 Adapter into the turbocharger inlet. Tighten tool clamp to 8 N·m (72 in. lbs.).

CAUTION: Do not apply more than 138 kPa (20 psi) air pressure to the charge air cooler system, severe damage to the charge air cooler system may occur.

3. Connect a regulated air supply to air fitting on Tool 9022 Adapter. Set air pressure to a Maximum of 138 kPa (20 psi).

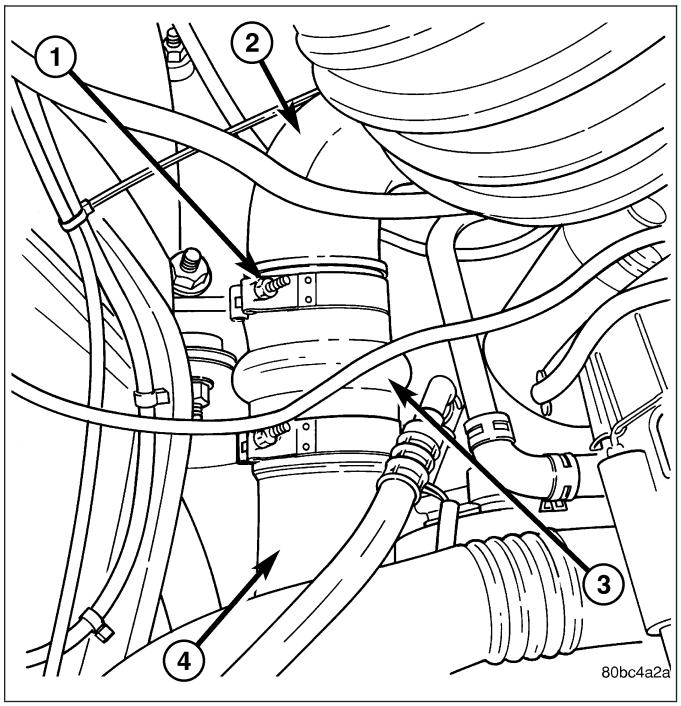

4. Using soapy water check the rubber sleeves, charge air cooler and intake manifold for leaks.
5. Using soapy water check for leaks at the wastegate signal line, wastegate canister and wastegate command valve.

REMOVAL

WARNING: IF THE ENGINE WAS JUST TURNED OFF, THE AIR INTAKE SYSTEM TUBES MAY BE HOT.

1. Disconnect the battery negative cables.
2. Discharge the A/C system (Refer to 24 - HEATING & AIR CONDITIONING/PLUMBING - STANDARD PROCEDURE) and remove the A/C condenser (Refer to 24 - HEATING & AIR CONDITIONING/ PLUMBING/A/C CONDENSER - REMOVAL) (if A/C equipped).
3. Remove the transmission auxiliary cooler (Refer to 7 - COOLING/TRANSMISSION/TRANS COOLER - REMOVAL).
4. Remove intake air tubing from the charge air cooler.
5. Remove the charge air cooler bolts. Pivot the charge air cooler forward and up to remove.

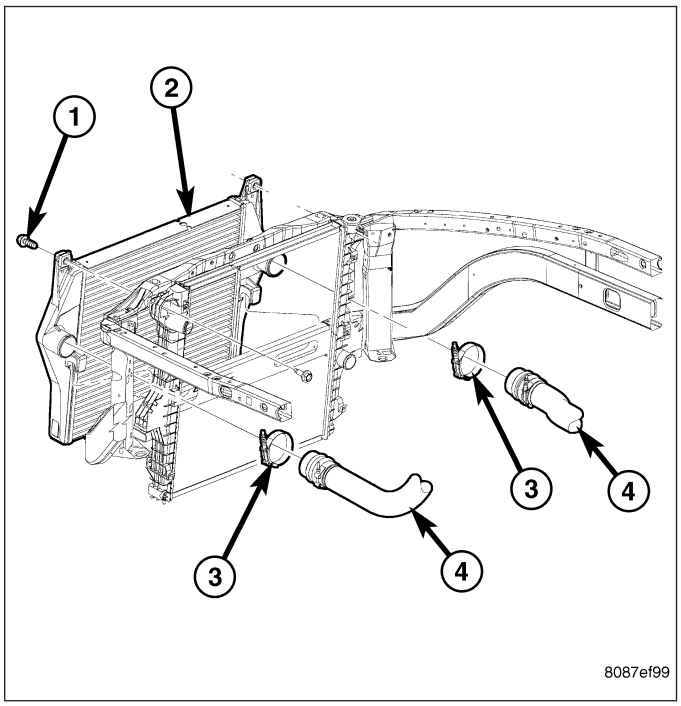

CLEANING

CAUTION: Do not use caustic cleaners to clean the charge air cooler. Damage to the charge air cooler will result.

NOTE: If internal debris cannot be removed from the cooler, the charge air cooler MUST be replaced.

1. If the engine experiences a turbocharger failure or any other situation where oil or debris get into the charge air cooler, the charge air cooler must be cleaned internally.
2. Position the charge air cooler so the inlet and outlet tubes are vertical.
3. Flush the cooler internally with solvent in the direction opposite of normal air flow.
4. Shake the cooler and lightly tap on the end tanks with a rubber mallet to dislodge trapped debris.
5. Continue flushing until all debris or oil are removed.
6. Rinse the cooler with hot soapy water to remove any remaining solvent.
7. Rinse thoroughly with clean water and blow dry with compressed air.

INSPECTION

Visually inspect the charge air cooler for cracks, holes, or damage. Inspect the tubes, fins, and welds for tears, breaks, or other damage. Replace the charge air cooler if damage is found.

Pressure test the charge air cooler, using Charge Air Cooler Tester Kit No. 3824556. This kit is available through Cummins® Service Products. Instructions are provided with the kit.

INSTALLATION

1. Position the charge air cooler. Install the bolts and tighten to 2 N·m (17 in. lbs.) torque.

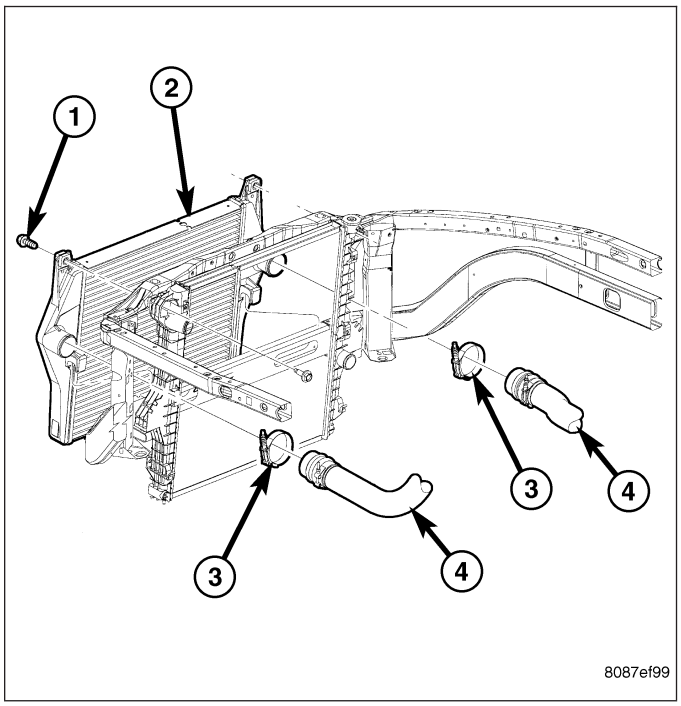

2. Install the air intake system tubes to the charge air cooler. With the clamps in position, tighten the clamps to 11 N·m (95 in. lbs.) torque.
3. Install the transmission auxiliary cooler (if equipped) (Refer to 7 - COOLING/TRANSMISSION/TRANS COOLER - INSTALLATION).
4. Install the A/C condenser (if A/C equipped) (Refer to 24 - HEATING & AIR CONDITIONING/PLUMBING/A/C CONDENSER - INSTALLATION). Recharge A/C system (Refer to 24 - HEATING & AIR CONDITIONING/PLUMBING - STANDARD PROCEDURE).
5. Connect the battery negative cables.
6. Start engine and check for boost system leaks.

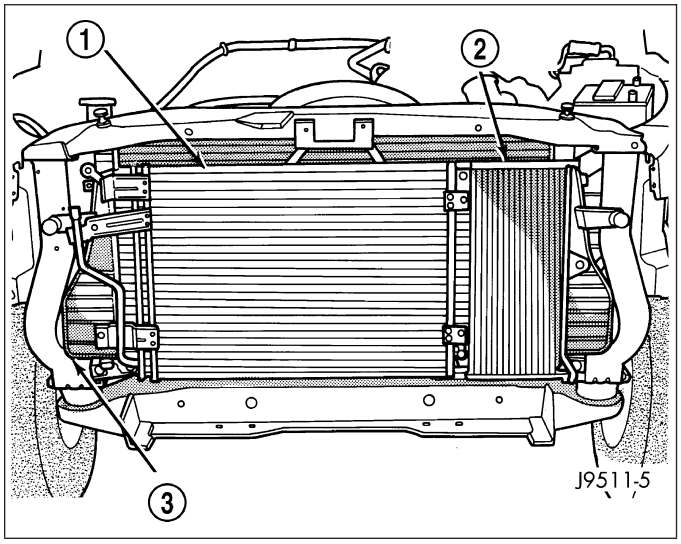

FRAME & BUMPERS

TABLE OF CONTENTS

page

FRAMES & BUMPERS
SPECIFICATIONS
TORQUE 1
FRONT AIR DAM
REMOVAL 2
INSTALLATION 2
FRONT BUMPER
REMOVAL 2
INSTALLATION 2
FRONT FASCIA
REMOVAL 3
INSTALLATION 4
REAR BUMPER
REMOVAL 5
INSTALLATION 6
FASCIA-FRONT SRT-10
REMOVAL 6
INSTALLATION 8
FASCIA-REAR SRT-10
REMOVAL 11
INSTALLATION 13
FRAME
WARNING
WARNINGS 14
STANDARD PROCEDURE
LIGHT DUTY FRONT FRAME RAIL TIP REPLACEMENT 15

page

HYDROFORM FENDER RAIL REPAIR 23
REAR FRAME H-SECTION REPLACEMENT . 32
SPECIFICATIONS
WELD PROCESS 38
FRAME DIMENSIONS 39
TORQUE 45
FRONT CROSSMEMBER
REMOVAL 46
INSTALLATION 48
FRONT SKID PLATE
REMOVAL 49
INSTALLATION 50
FRONT TOW HOOK ASSEMBLY
REMOVAL 51
INSTALLATION 52
TRANSMISSION CROSSMEMBER
REMOVAL 53
INSTALLATION 55
TRAILER HITCH
REMOVAL 56
INSTALLATION 58
TRANSFER CASE SKID PLATE
REMOVAL 60
INSTALLATION 61

FRAMES & BUMPERS

SPECIFICATIONS

TORQUE

TORQUE SPECIFICATIONS

DESCRIPTION	N·m	Ft. Lbs.
Front bumper center bracket nuts	95	70
Front bumper stud plate nuts	95	70
License plate hitch reinforcement bolts	54	40
Rear bumper support bracket stud plate nuts	54	40
Rear bumper support bracket to hitch bolts	54	40
Rear bumper to hitch bolts	54	40

FRONT AIR DAM

REMOVAL

1. Remove the two outboard screws.
2. Remove the three middle screws and remove the air dam.

INSTALLATION

1. Position the air dam onto the bumper and seat the carrot type fasteners fully.
2. Starting at the center screw install the three middle screws.
3. Install the two outboard screws.

FRONT BUMPER

REMOVAL

1. Using a grease pencil or equivalent, mark the position of the bumper (5) on the frame rail tip (7) to aid installation.
2. Disconnect the fog lamp electrical connector at the left frame rail.
3. Support the bumper with a suitable lifting device.
4. Remove the center bracket (5) nuts and bolts (8 and 9) and remove bumper.

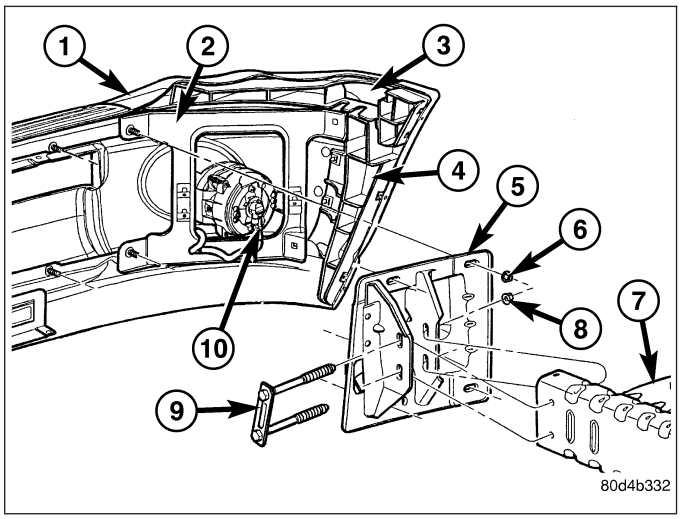

INSTALLATION

1. Install the bumper onto the frame rails (7) and position the wheelhouse splash shield into the support brackets (4).
2. Install the bolts and nuts (8 and 9).
3. Line up the bumper with the marks made previously and tighten the bolts and nuts to 95 N·m (70 ft. lbs.).
4. Check and adjust the bumper alignment as necessary (Refer to 23 - BODY/BODY STRUCTURE/ GAP AND FLUSH - SPECIFICATIONS).

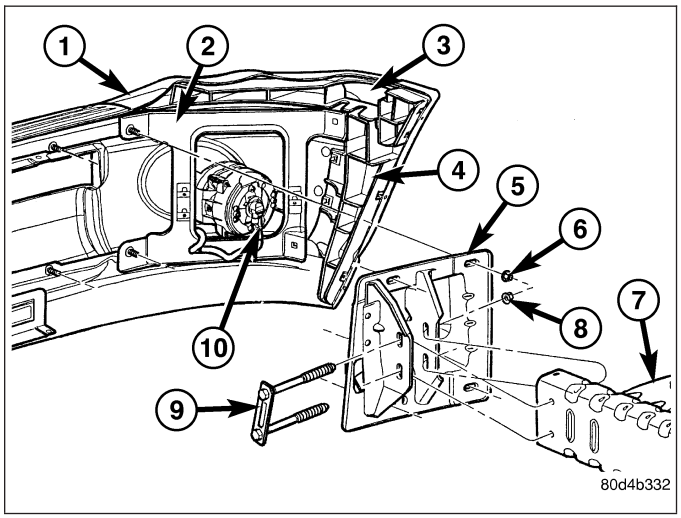

FRONT FASCIA

REMOVAL

ST/SLT/SLT+

1. Remove the two screws (4) at each trailing edge of the fascia.
2. Remove the four push pin fasteners (5) from the upper edge of the close out panel.
3. Using a trim stick (special tool #C-4755) or equivalent, carefully release the six lower clips and remove the close out panel.
4. Using a trim stick or equivalent, carefully remove the step pad (1).
5. Remove and discard the four push pin fasteners (5) and remove the fascia.

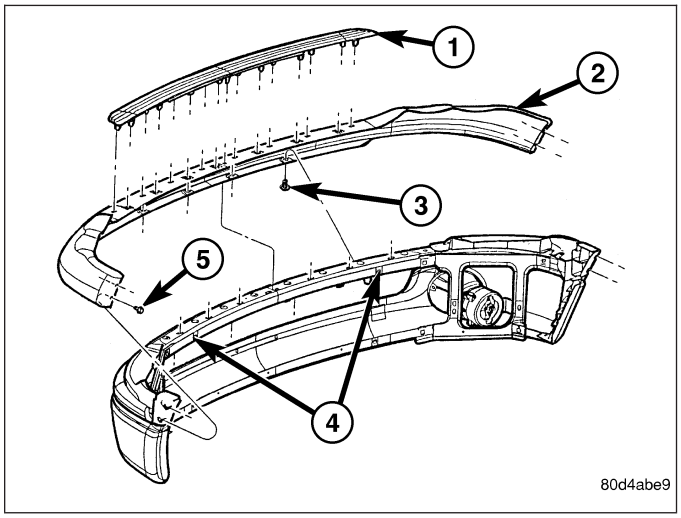

SPORT

1. Raise and support the vehicle (Refer to LUBRICATION & MAINTENANCE/HOISTING - STANDARD PROCEDURE).

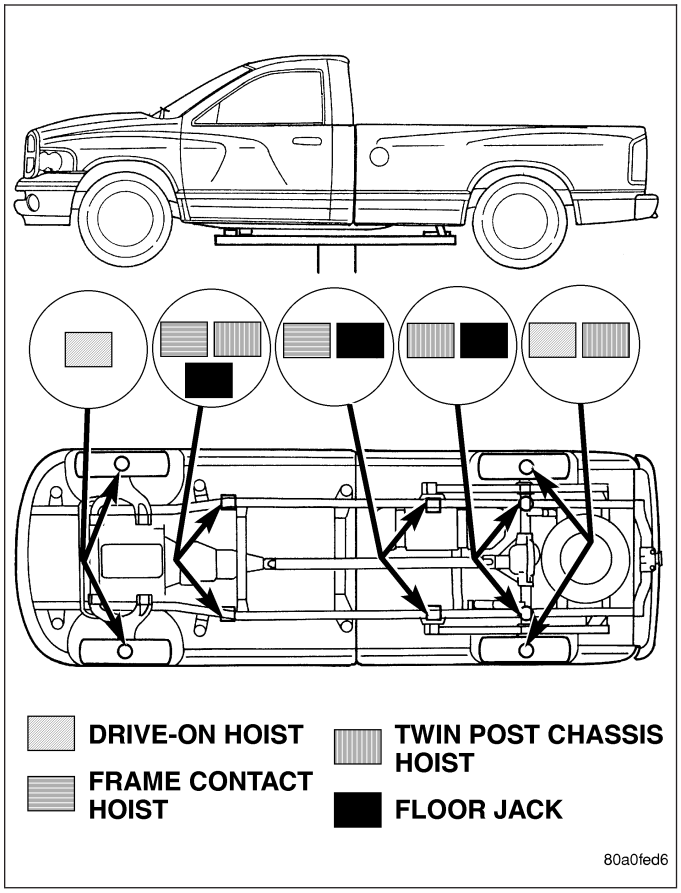

2. Remove the three screws (3) at each trailing edge of the fascia.
3. Remove the five lower screws (8).
4. Remove and discard the four upper push pins (7).
5. Using a trim stick (special tool #C-4755) or equivalent, carefully release the six lower clips and remove the close out panel.
6. Using a trim stick or equivalent, carefully remove the step pad (1).
7. Spread the fascia (2) out at the wheels and remove from the vehicle.

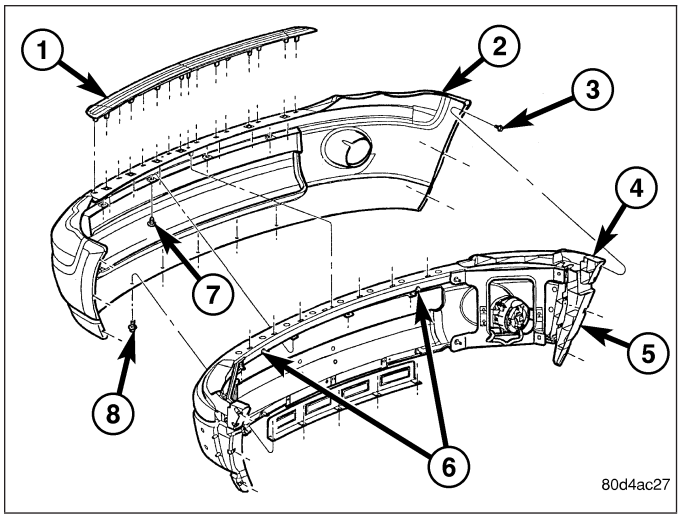

INSTALLATION

ST/SLT/SLT+

NOTE: The left and right inboard bumper to bracket attachments must be secured before installing the fascia and step pad.

1. Install the fascia.
2. Position the close out panel and seat the 6 lower clips fully.
3. Install four new upper push pin fasteners (5).
4. Position the step pad (1) onto the fascia (2) and fully seat the attachment clips.
5. Align the fascia to the fender with a 19 mm (0.75 inch) gap and install the two screws at each trailing edge of the fascia.

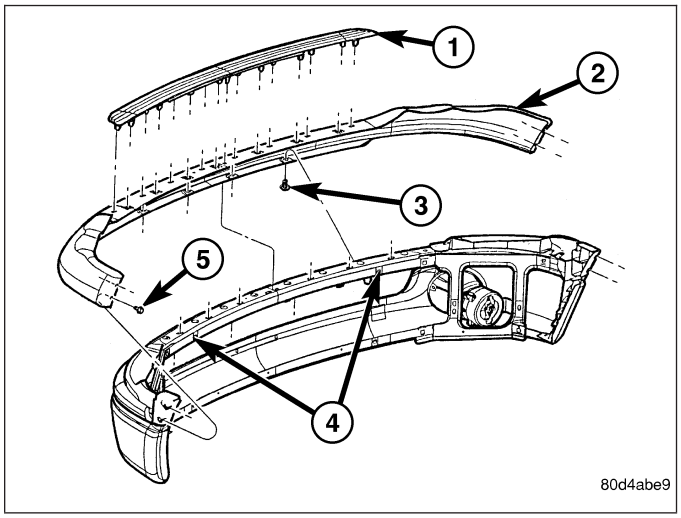

SPORT

NOTE: The left and right inboard bumper to bracket attachments must be secured before installing the fascia and step pad.

1. Position the fascia (2) onto the bumper.
2. Position the step pad (1) onto the fascia (2) and fully seat the attachment clips.
3. Install four new upper push pin fasteners (7).
4. Install the five lower screws (8).
5. Install the three screws (3) at each trailing edge of the fascia.

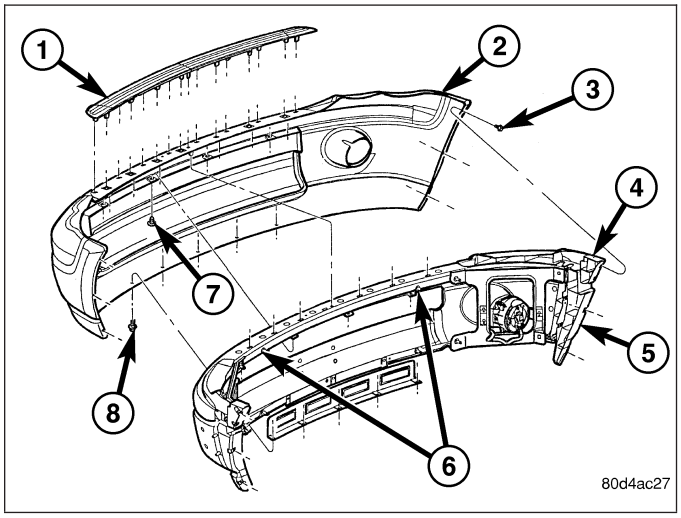

REAR BUMPER

REMOVAL

1. Raise and support the vehicle (Refer to LUBRICATION & MAINTENANCE/HOISTING - STANDARD PROCEDURE).

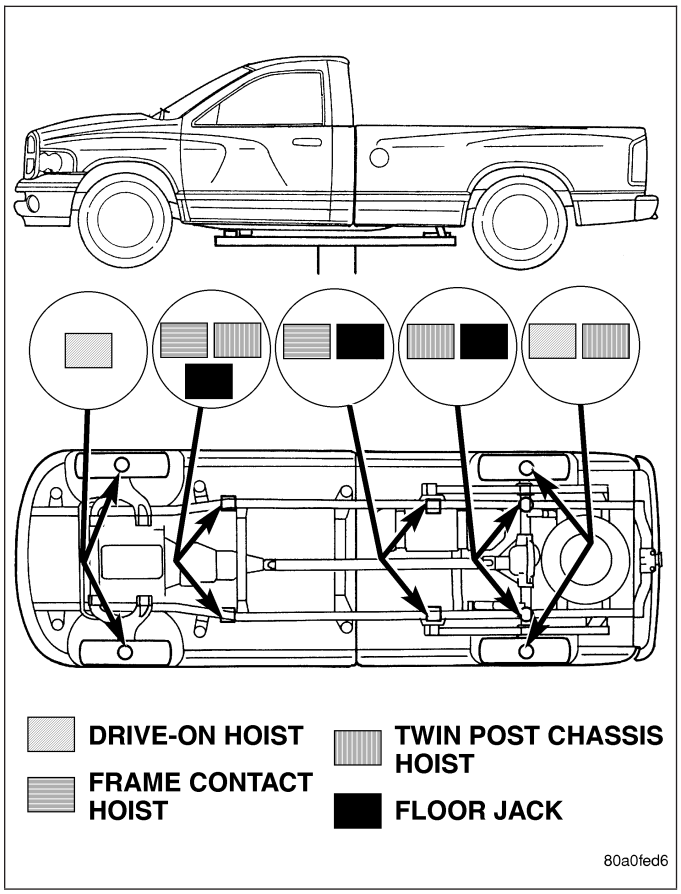

2. Remove the license plate.
3. Remove the bolts behind the plate.
4. Disconnect the license plate light electrical connectors.
5. Disconnect the trailer light connector electrical connection (if equipped).
6. Remove the two bolts along the front upper edge of the bumper near the frame tips.
7. Support the bumper with a suitable lifting device.
8. Remove the bolts attaching the bumper support brackets (4) to the trailer hitch (1).

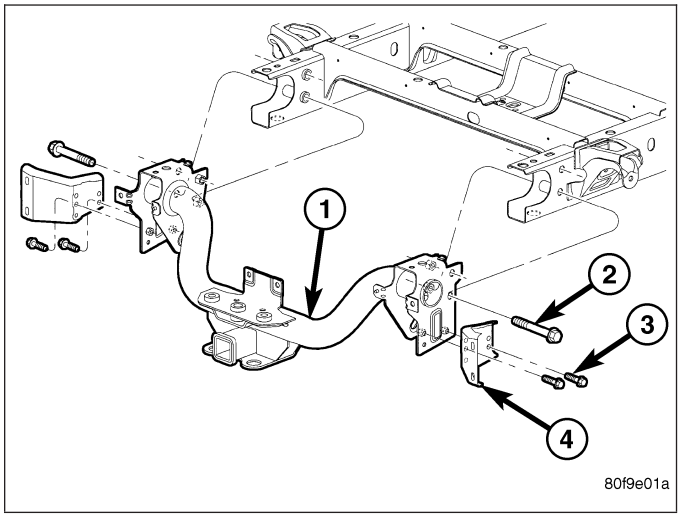

INSTALLATION

1. Align the holes in the bumpers to the trailer hitch pins and install the bumper.
2. Loosely install the hitch bolts (2) in the support bracket (4).
3. Install the front upper edge to the trailer hitch bolts (2) and tighten to 54 N·m (40 ft. lbs.).
4. Install the license plate reinforcement to hitch bolts (2) and tighten to 54 N·m (40 ft. lbs.).
5. Tighten the left bumper bracket bolts (3) to 54 N·m (40 ft. lbs.).
6. Tighten the right bumper bracket bolts (3) to 54 N·m (40 ft. lbs.).
7. Connect the trailer light connector electrical connection (if equipped).
8. Connect the license plate light electrical connectors.
9. Install the license plate.

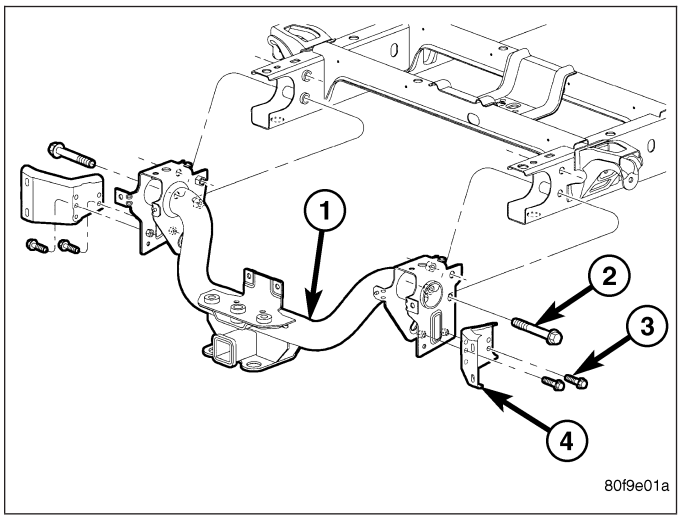

FASCIA-FRONT SRT-10

REMOVAL

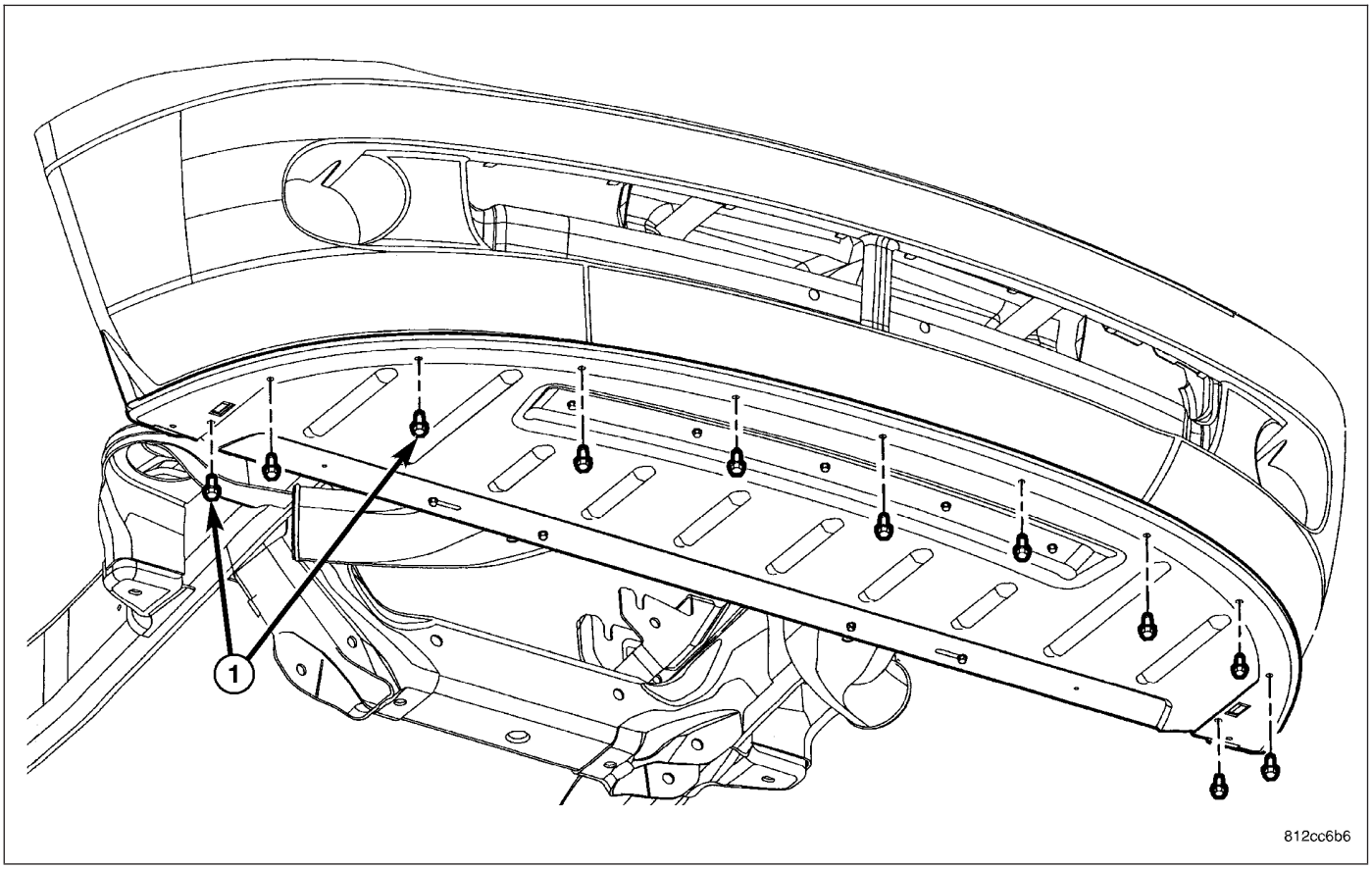

1. Remove the belly pan screws (1).

2. Remove the screws (1 & 2) from the wheel well.

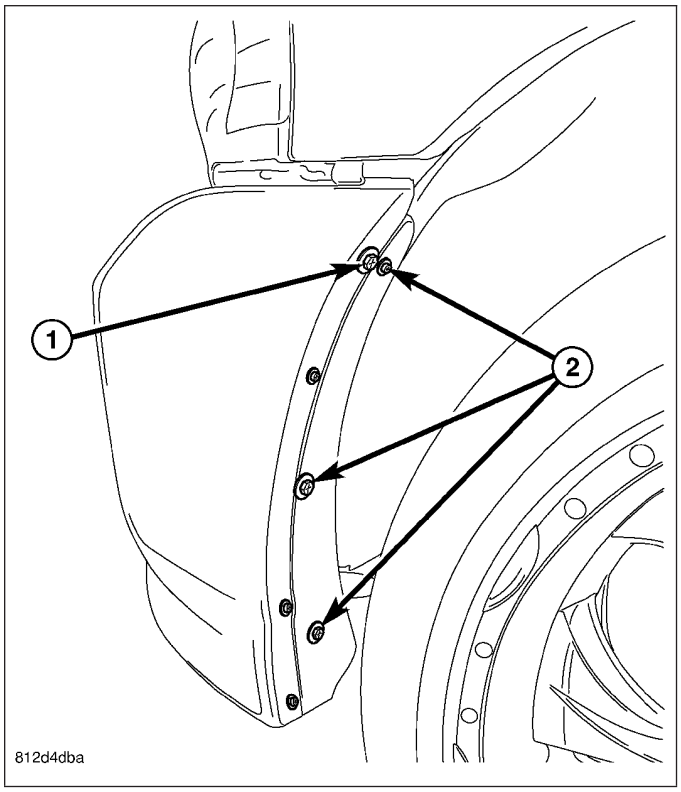

3. Remove the push pin fasteners attaching the upper fascia to the fascia retainer (1).

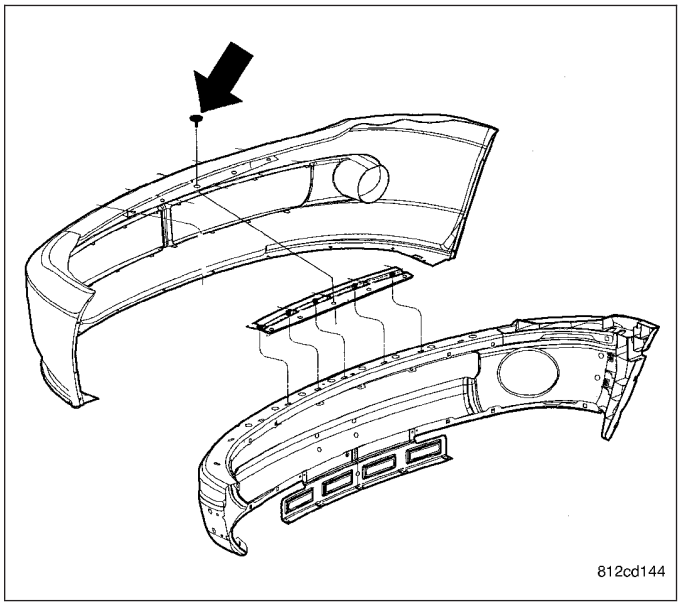

4. Lift the fascia off of the support brackets (1 & 2) and remove the fascia.

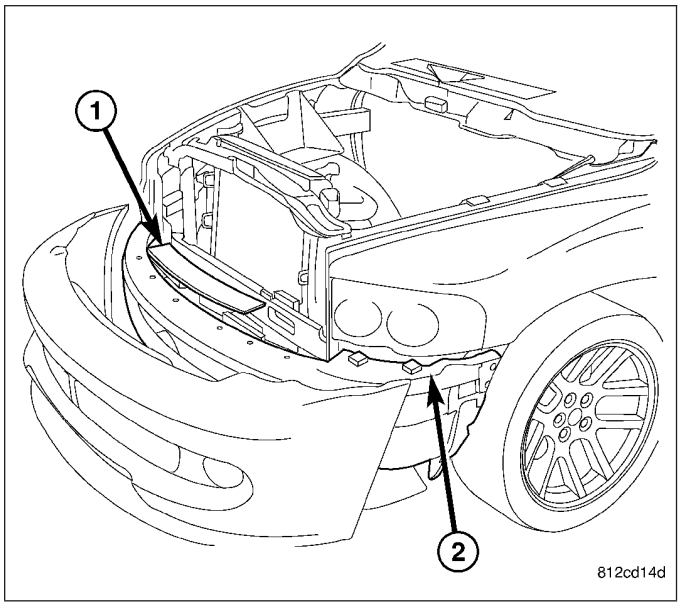

INSTALLATION

1. Position the fascia onto the vehicle.

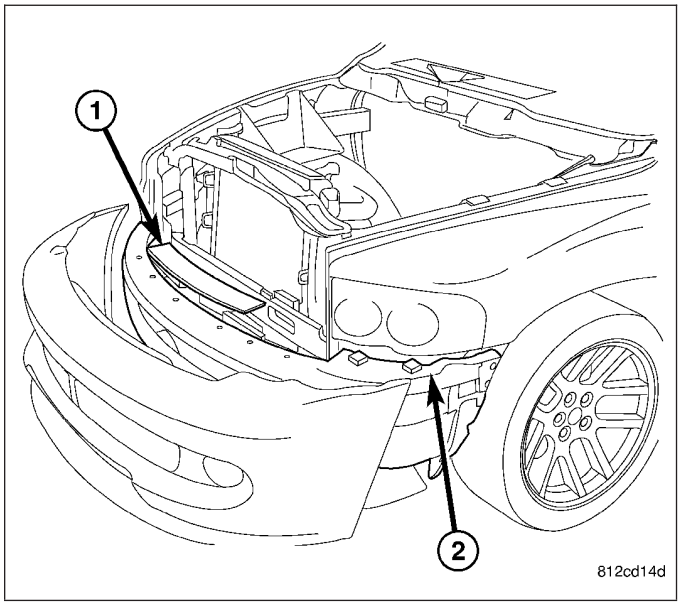

2. Position the fascia (2) over the side support bracket (1) on one side then around and over the other side support bracket (1).

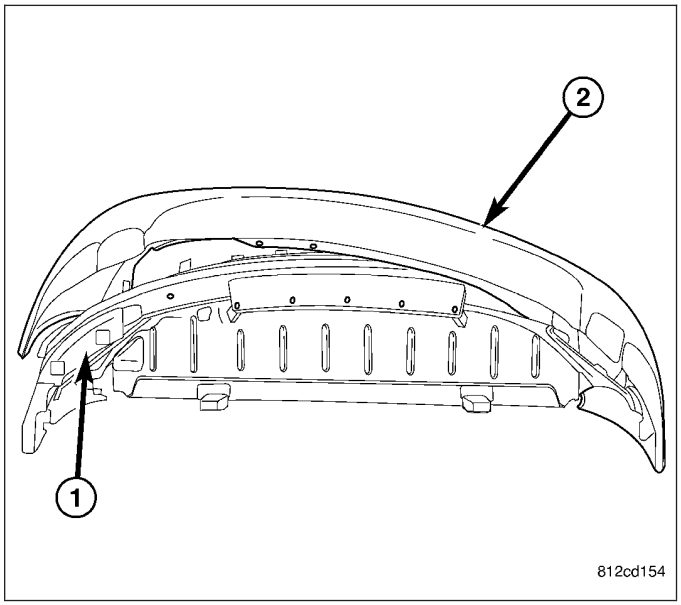

3. Position the belly pan (2) over the lip of the fascia (1).

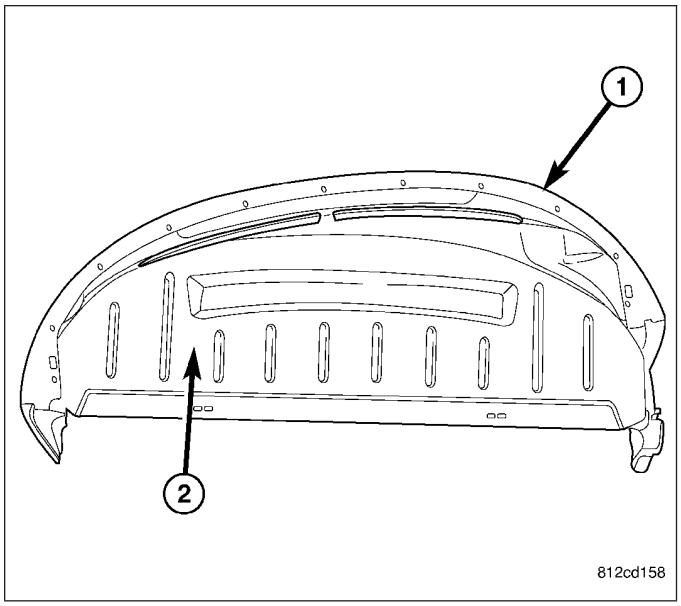

4. Install the push pin fasteners into the fascia retainer.

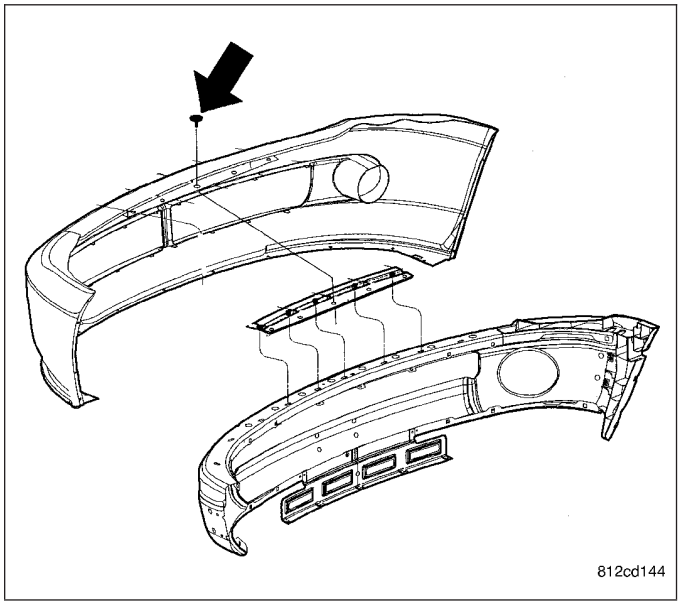

5. Install the screws (1 & 2) into the wheel well.

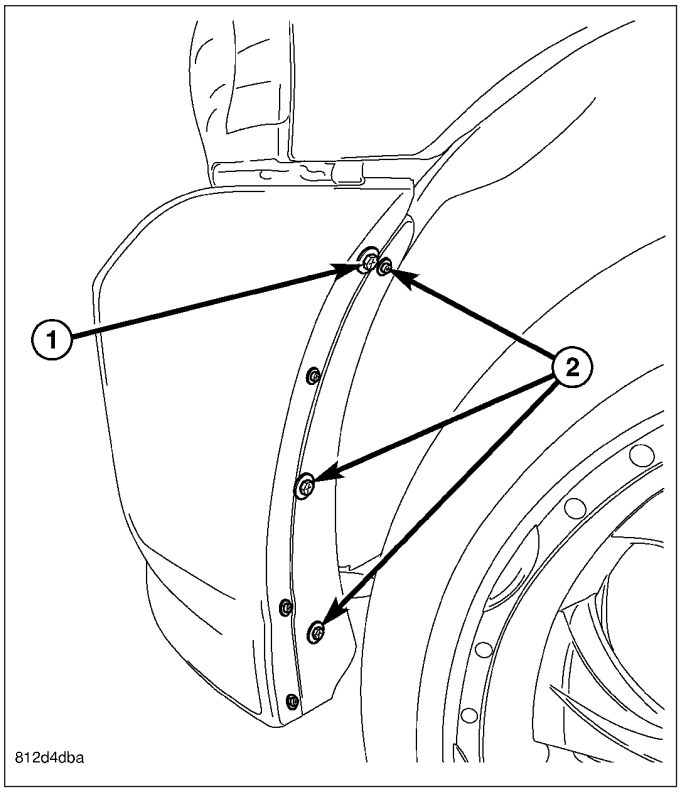

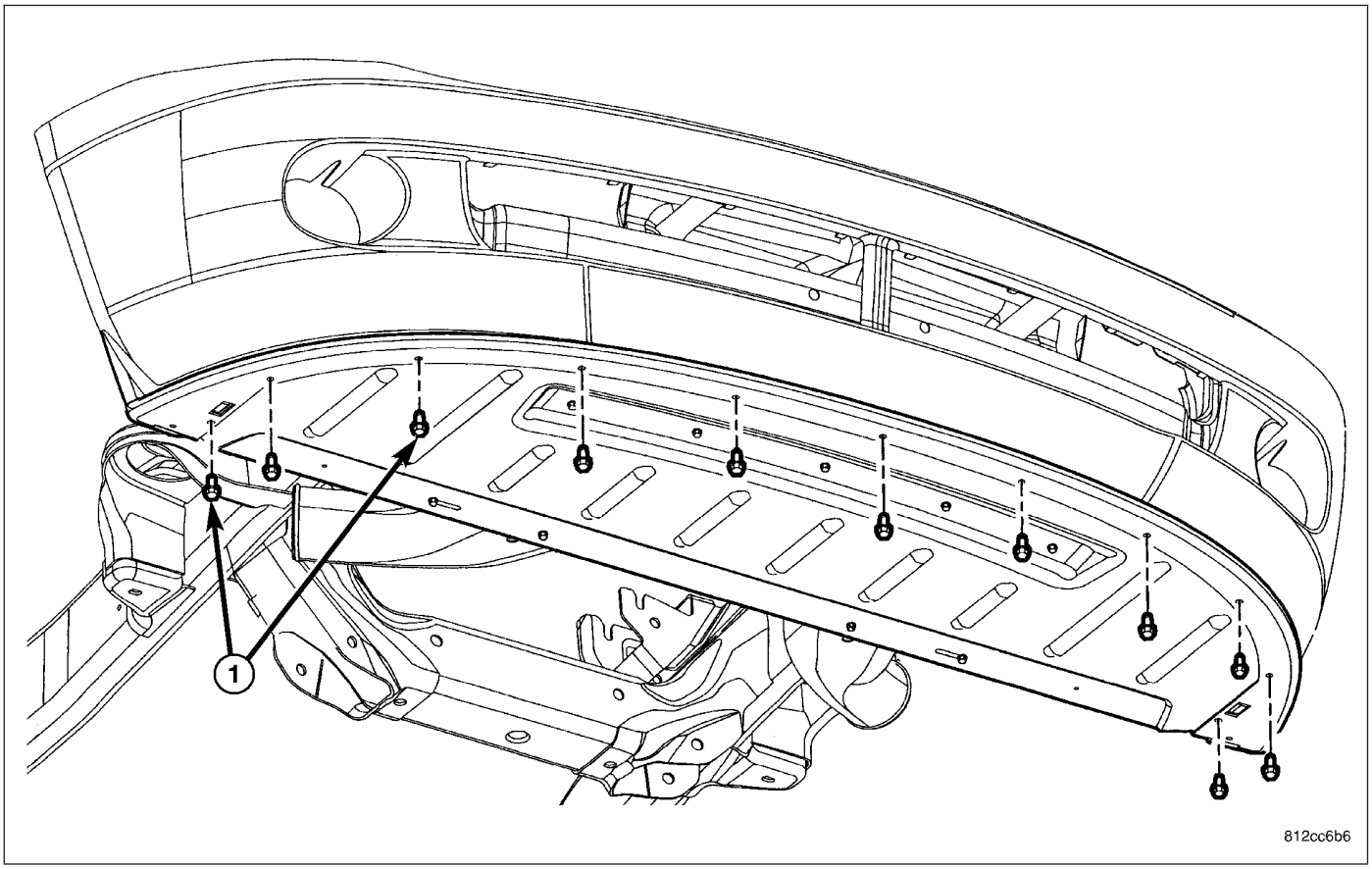

6. Install the screws (1) into the belly pan.

FASCIA-REAR SRT-10

REMOVAL

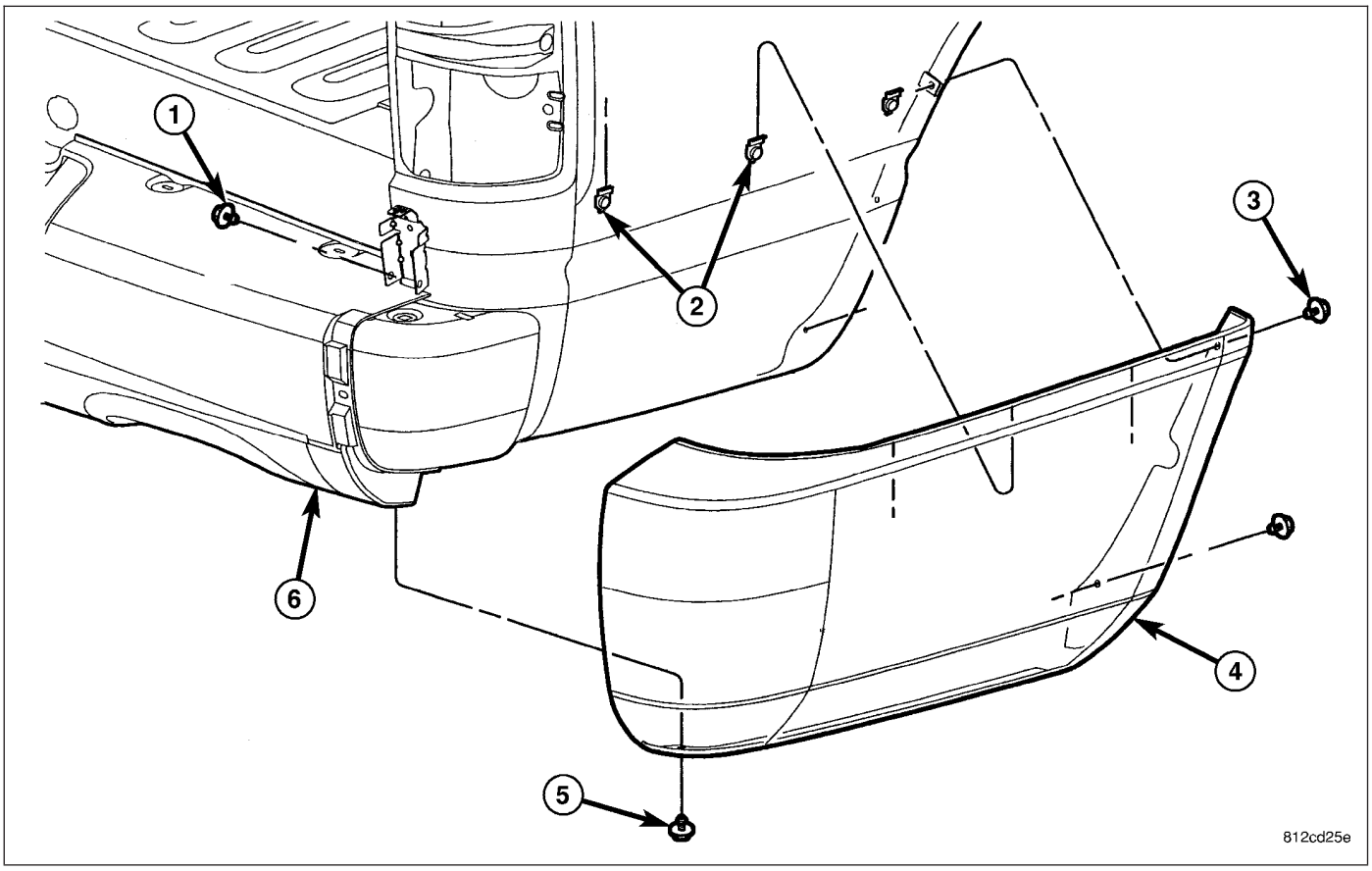

1. Remove the screws (2 and 4).
2. Separate end cap (3) and lift off of the support brackets (1).

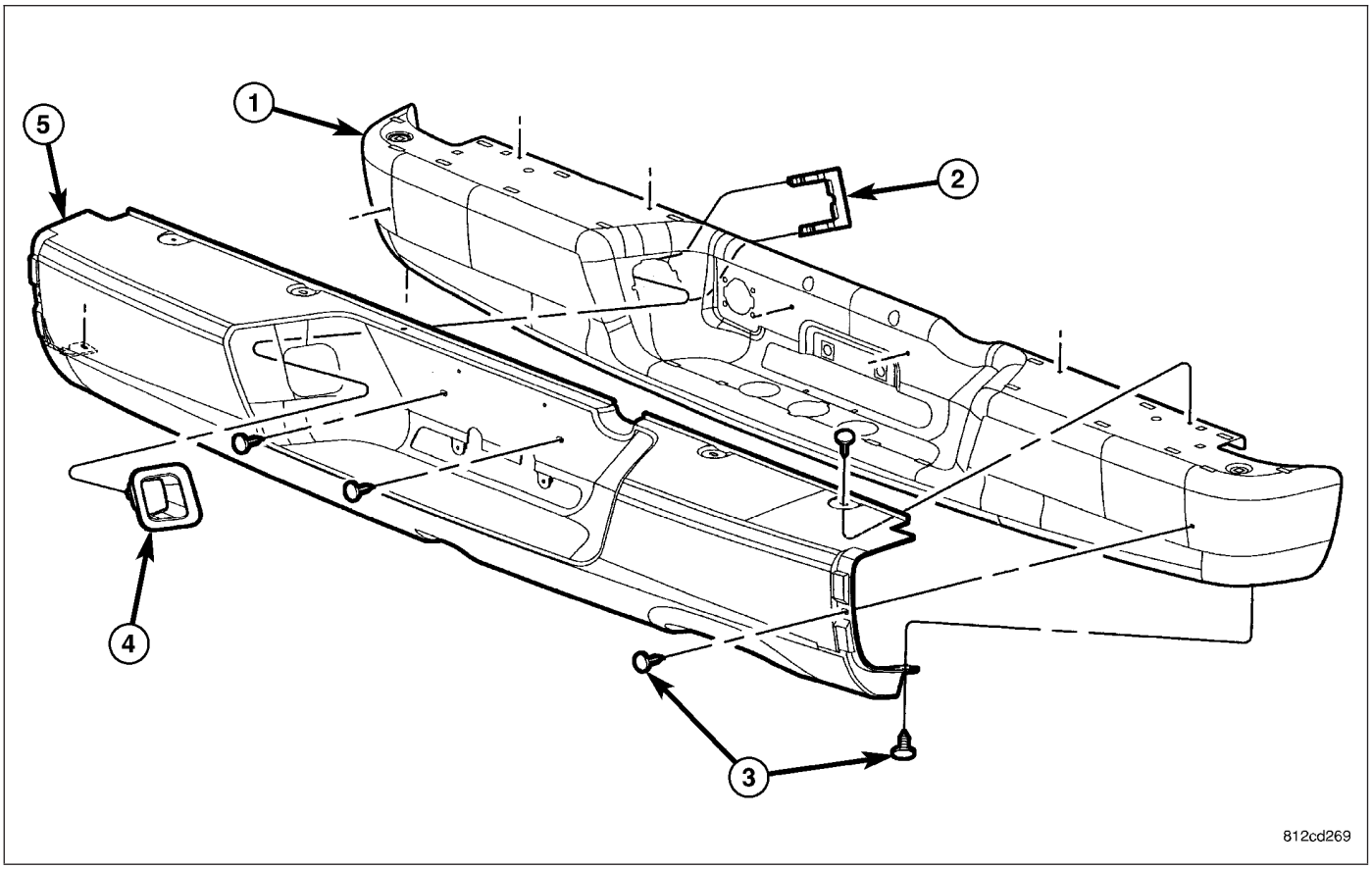

3. Remove the license plate lamp clips (2).
4. Remove the license plate lamps (4) and disconnect the electrical connectors.
5. Remove the push pin fasteners (3) and remove the fascia.

INSTALLATION

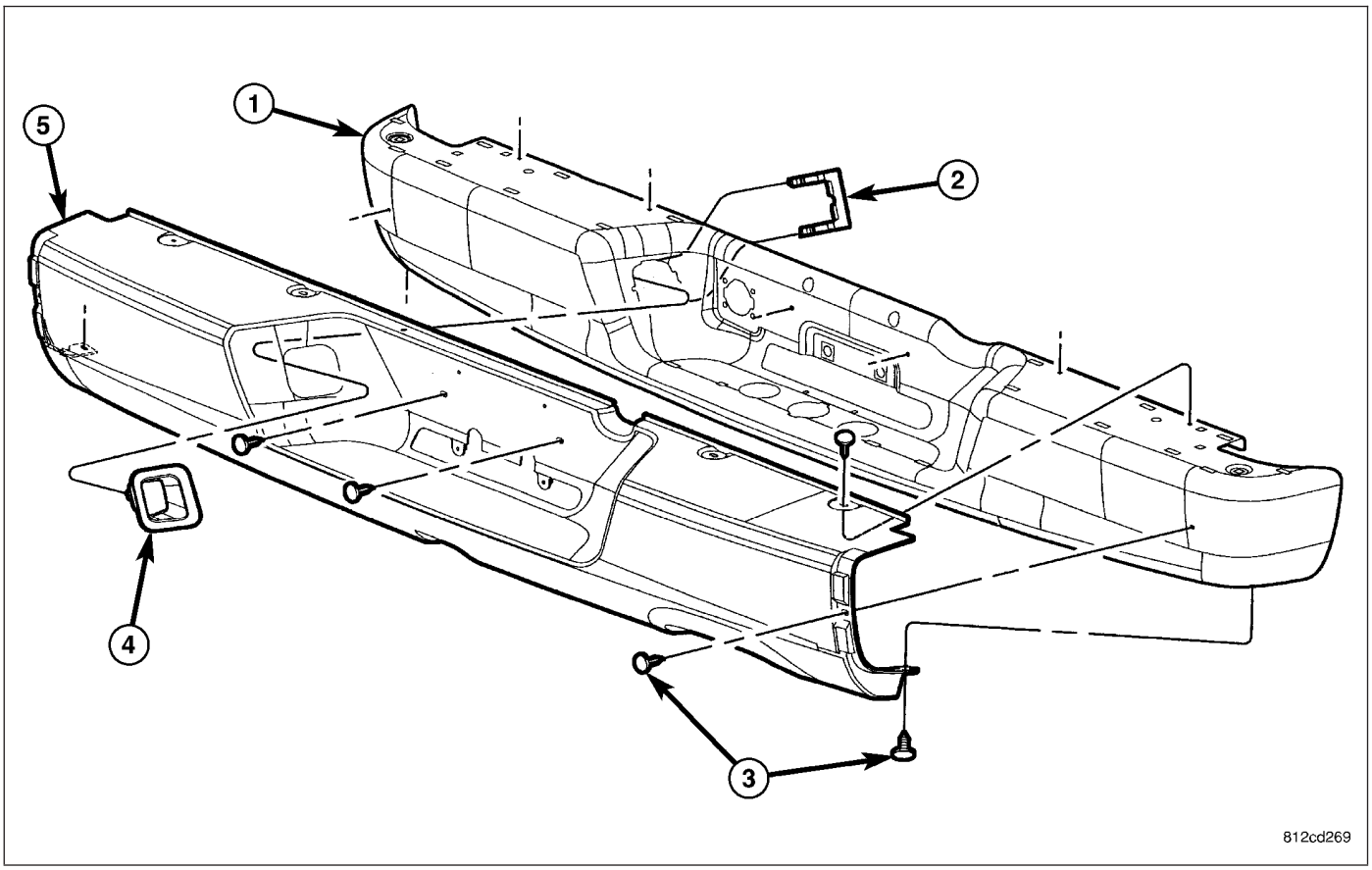

1. Install the fascia (5) and install the push pin fasteners (3).
2. Connect the electrical connectors and install the license plate lamps (4).
3. Install the lamp clips (2).

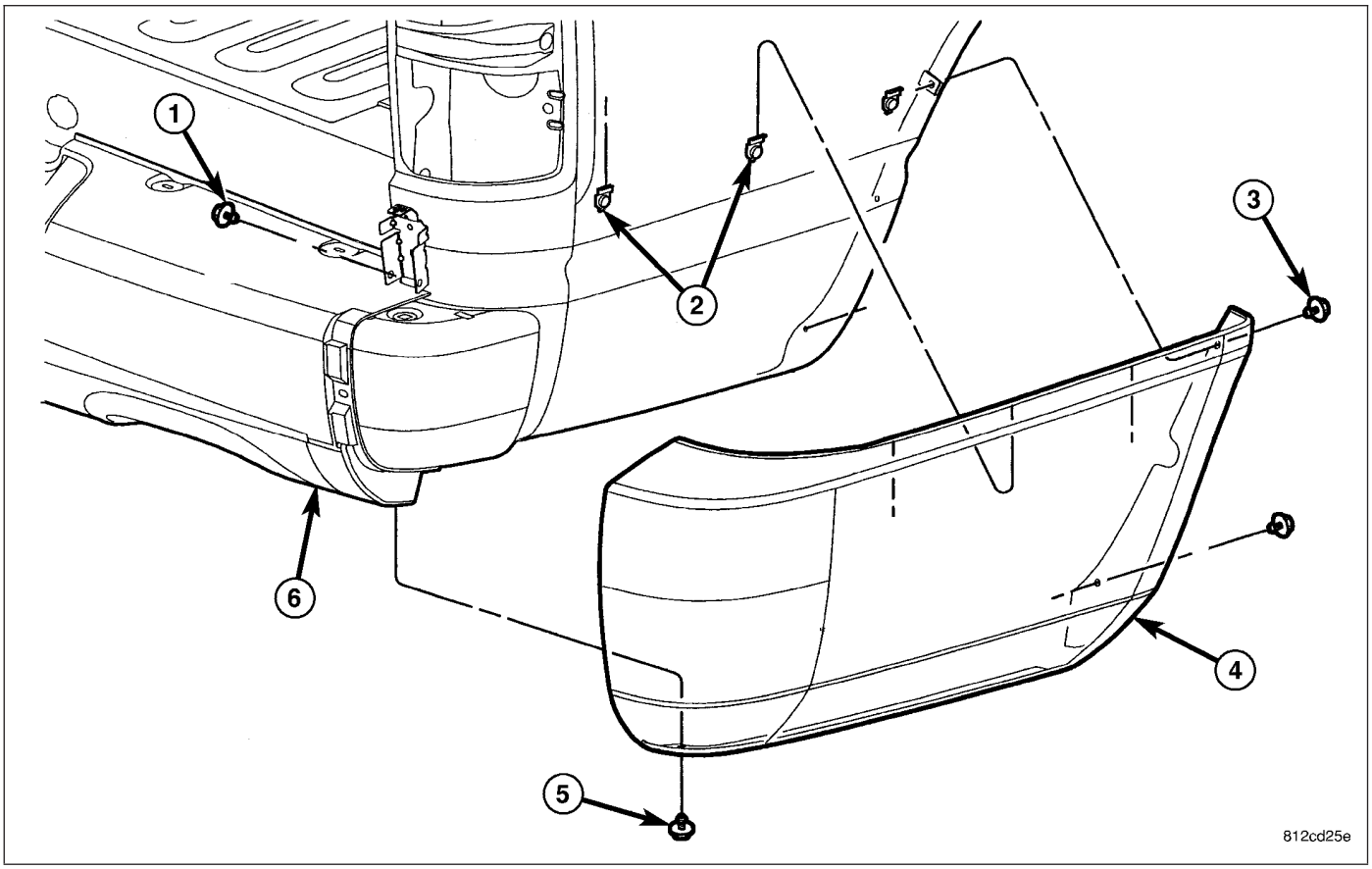

4. Position the end caps (3) over the support brackets (1) and install.
5. Install the screws (2 and 4).

FRAME

WARNING

WARNINGS

Use eye protection when grinding or welding metal. Failure to do this could result in serious personal injury or death.

Before proceeding with frame repair involving grinding or welding, verify that the vehicle fuel system is not leaking or in contact with the repair area. Failure to do this could result in serious personal injury or death.

Do not allow an open flame or heat and metal spatter from arc welding to contact plastic body panels. Fire, explosion can result causing serious personal injury or death.

When welded frame components are replaced, ensure that a complete penetration weld is achieved during installation. If not, dangerous operating conditions can result.

Stand clear of cables or chains on pulling equipment during frame straightening operations. Failure to do this can result in serious personal injury or death.

Do not venture under a hoisted vehicle that is not supported on safety stands. Walking under an unsupported vehicle can result in serious personal injury or death.

1500 series Dodge Ram Trucks (2002 and later) are not designed for snow plow equipment. The front collision repair tips must not be installed on any truck equipped with a snow plow, or even intended to be equipped with a snow plow.

Do not reuse damaged fasteners. The quality of repair would be suspect. Failure to use only production fasteners or fasteners of equivalent hardness can result in loosening or failure of the part. Do not drill any holes in the frame that are not specifically outlined in this, or in other DaimlerChrysler procedures as frame rail failure can result causing serious personal injury or death. When using heat to straighten frame components, do not exceed 566°C (1050°F). If temperature is exceeded, metal fatigue can happen and result in serious personal injury or death.

STANDARD PROCEDURE

LIGHT DUTY FRONT FRAME RAIL TIP REPLACEMENT

CAUTION: This procedure is designed to replace the front frame rail tips that have been damaged in the crush initiator zones. Prior to any cutting, the vehicle must be mounted on the appropriate frame repair equipment ("frame rack"), checked with three dimensional measuring equipment, and the necessary pull corrections made. If damage remains in the frame beyond the area covered by this service part after the pull, the frame must be replaced in its entirety.

CAUTION: Inspect the tire winch assembly for damage. If any one or more of the following are evident, replace the winch assembly.
- **Indications of cracked or bulging plastic.**
- **Housing flanges are bent or cracked.**
- **If winch was loose before repair.**
- **If the rivet heads are separated from the housing in any way.**

NOTE: Procedures for 4X2 and 4X4 are common except as noted in this procedure.

1. Before proceeding with this repair procedure review the required service warnings and precautions. (Refer to 13 - FRAME & BUMPERS/FRAME - WARNING)
2. Disconnect and isolate the battery negative cable.
3. Remove the front wheelhouse splash shield. (Refer to 23 - BODY/EXTERIOR/FRONT WHEELHOUSE SPLASH SHIELD - REMOVAL)
4. Remove the bolts and position aside the wire harness and grounds, if required.
5. Remove the front bumper. (Refer to 13 - FRAME & BUMPERS/BUMPERS/FRONT BUMPER - REMOVAL)
6. Loosen and lower the stabilizer bar mount and bar. (Refer to 2 - SUSPENSION/FRONT/STABILIZER BAR - REMOVAL)

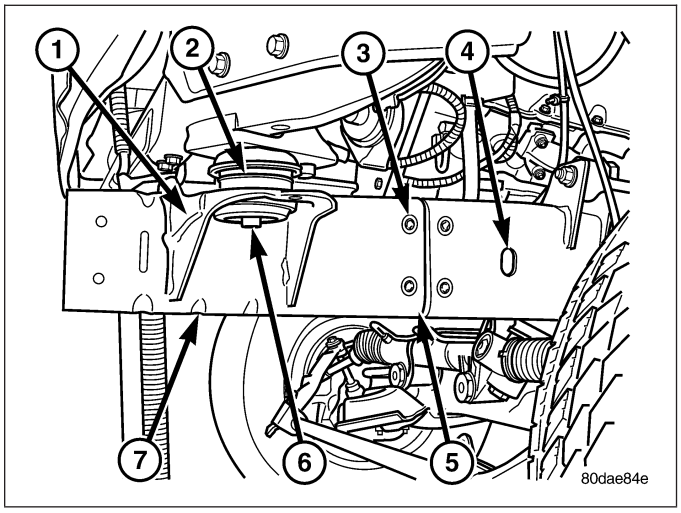

7. Remove the front cab mount bolt (6) to the Front End Sheet Metal (FESM) bracket.

8. Make a vertical mark (6) on the inside and outside face of the frame rail 112 mm (4.5 in.) from the forward edge of the PLP hole (3) in the sides of the rail.
9. Using a straightedge, connect the two lines on the top and bottom of the rail.
10. Using the service tip as a guide, recheck your cut lines to ensure the service tip will fit when the cut is made.

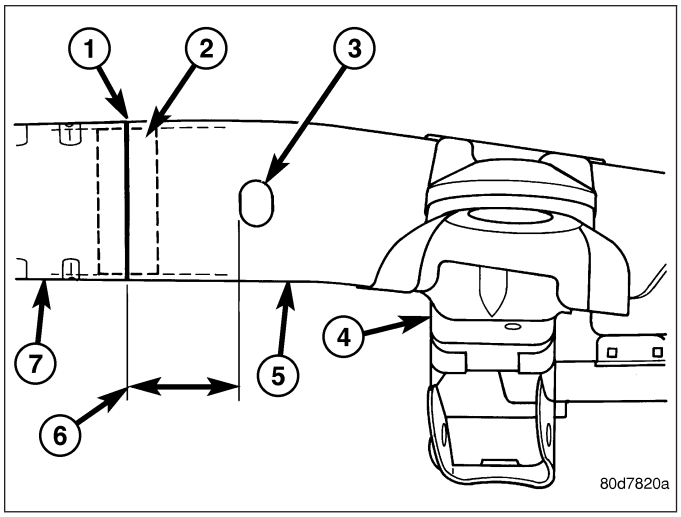

CAUTION: Do not use any flame or plasma cutting equipment to cut the frame in this procedure. This is due to the inaccurate nature of the cut-line and the fact that the high temperatures achieved during flame or plasma cutting will change the metal characteristics and may weaken the frame and/or repair location.

11. Using a reciprocating saw or equivalent, carefully cut and remove the damaged frame rail tip (7).
12. Assemble the service sleeve. Refer to SERVICE SLEEVE ASSEMBLY at the end of this procedure.

NOTE: Any burned surface coatings will need to be removed from the sleeve prior to installation and application of corrosion preventative coatings.

13. Smooth and square the cut edges of the original frame.
14. Dress the cut edge of the existing frame in preparation for the new rail tip.
15. Drill four 13 mm (0.5 in.) diameter holes (9) in the new tip (1) and four more in the existing frame (2) to accommodate ring-fillet welds. Center these holes (8) 19 mm (0.75 in.) from the cut face of the rail and (6) 38 mm (1.5 in.) from the top and bottom of the rail.

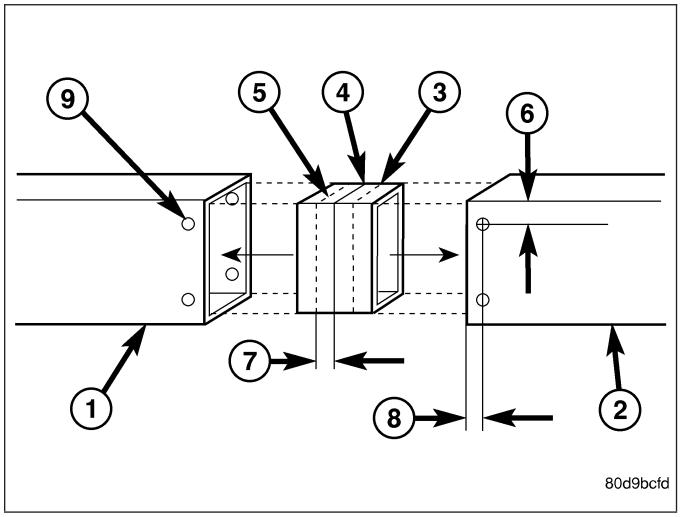

16. Bevel the edges of the new tip, existing frame, and ring-fillet holes 25° - 30° (3). Scribing a line 2 mm from the cut edge and then grinding back to the mark will simplify the bevel creation process and accuracy.
17. Remove any burrs at the holes and beveled edges.
18. Dry fit the new rail to ensure alignment and fit and make any adjustments as necessary.
19. Remove all internal and external OEM e-coat within 51 mm (2.0 in.) of the weld joint on the replacement tip and the existing frame rail.

NOTE: Any burned surface coatings will need to be removed prior to application of corrosion preventative coatings.

CAUTION: Shield the surrounding area and components from exposure to the welding spatter and heat.

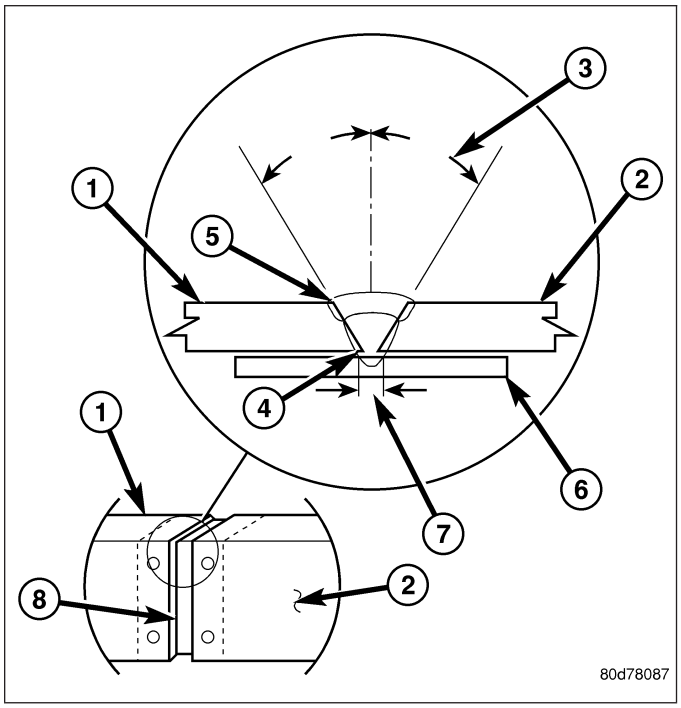

20. On 4X4 models use the service sleeve (3) as a template to drill a hole in the frame tip (1) to accommodate the sway bar mounting bolt (6).

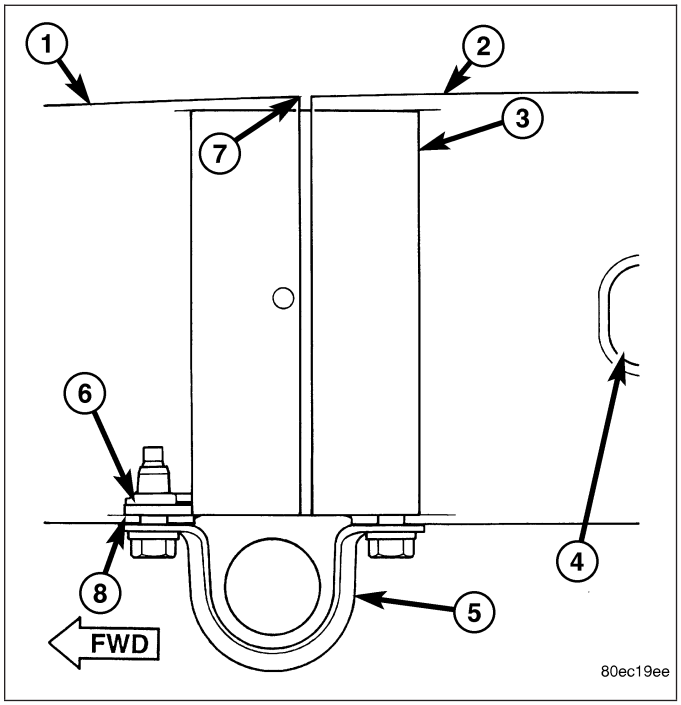

21. Slide the service sleeve (3) into the replacement frame tip (1) and align to the 2 mm (0.08 in.) off center line made previously during the sleeve assembly and tack the ring fillet welds to hold them in place.

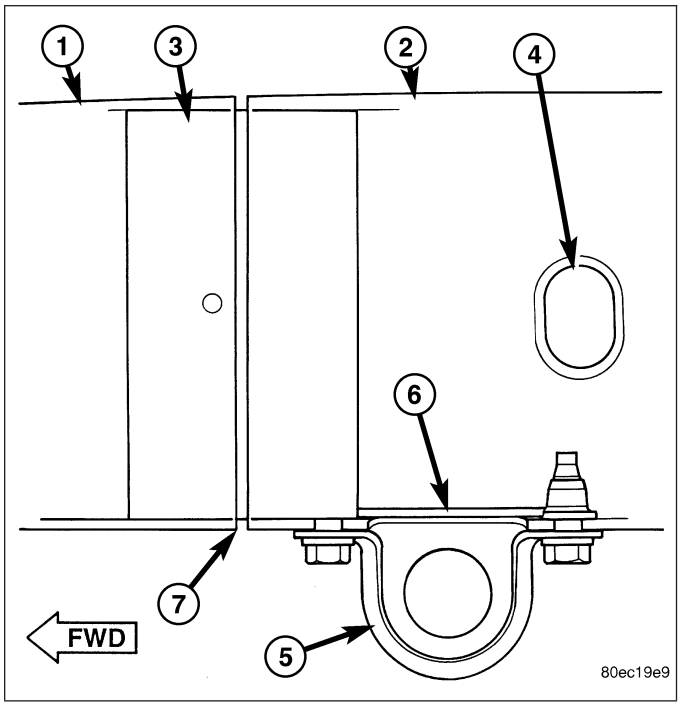

22. On 4X4 models, install the sway bar tapping plate (5) and secure with tack welds.

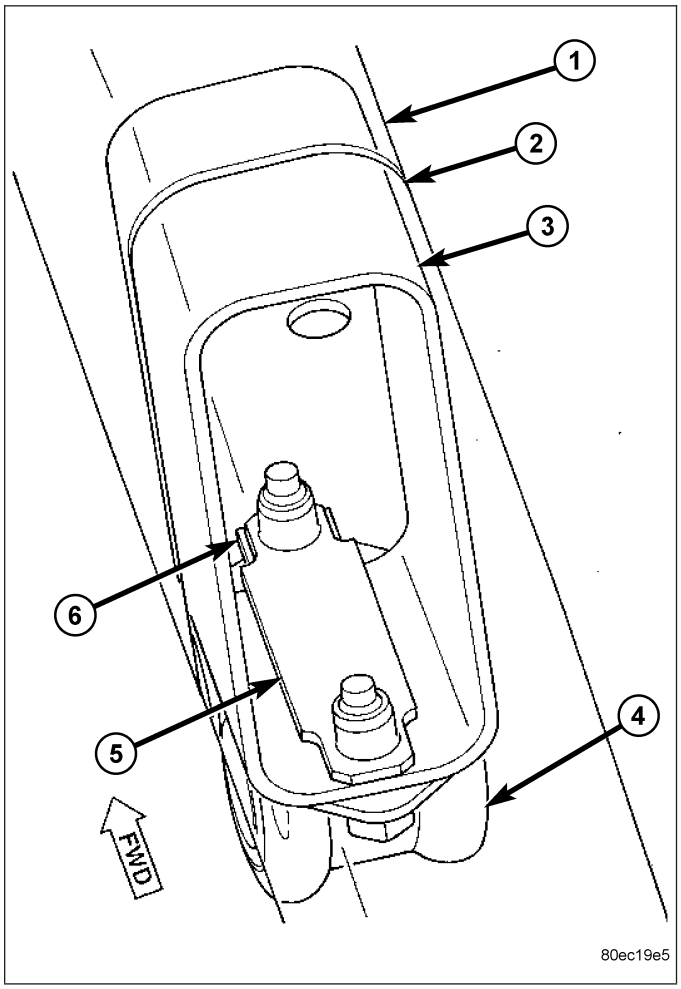

23. Apply ring-fillet welds (3) into the ring-fillet weld holes on the replacement frame tip. (Refer to 13 - FRAME & BUMPERS/FRAME - SPECIFICATIONS - WELDING)
24. Start the ring-fillet welds at location (1) and follow around the circumference of the ring-fillet weld hole and end weld overlapping start point (2).

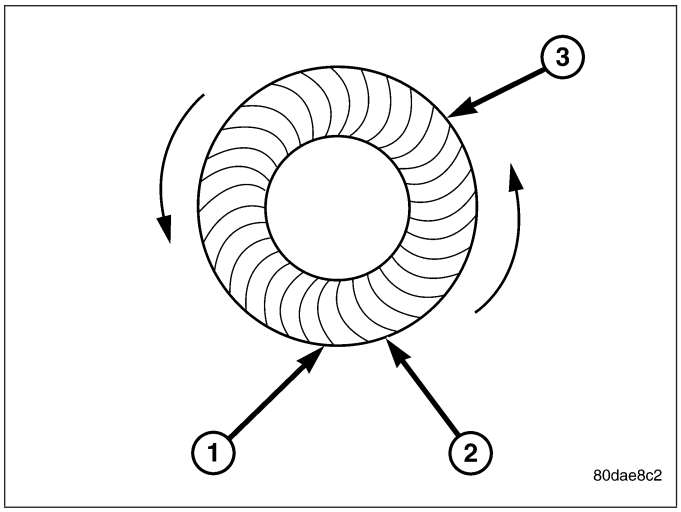

25. Install the upper FESM insulator onto the replacement tip and position the service sleeve/replacement tip into the existing frame rail.
26. Loosely install the lower FESM insulator and cab mounting bolt.
27. Using the appropriate measuring equipment, verify the front end sheet metal bracket's location in all three (X,Y, and Z) planes of space, and adjust if required.

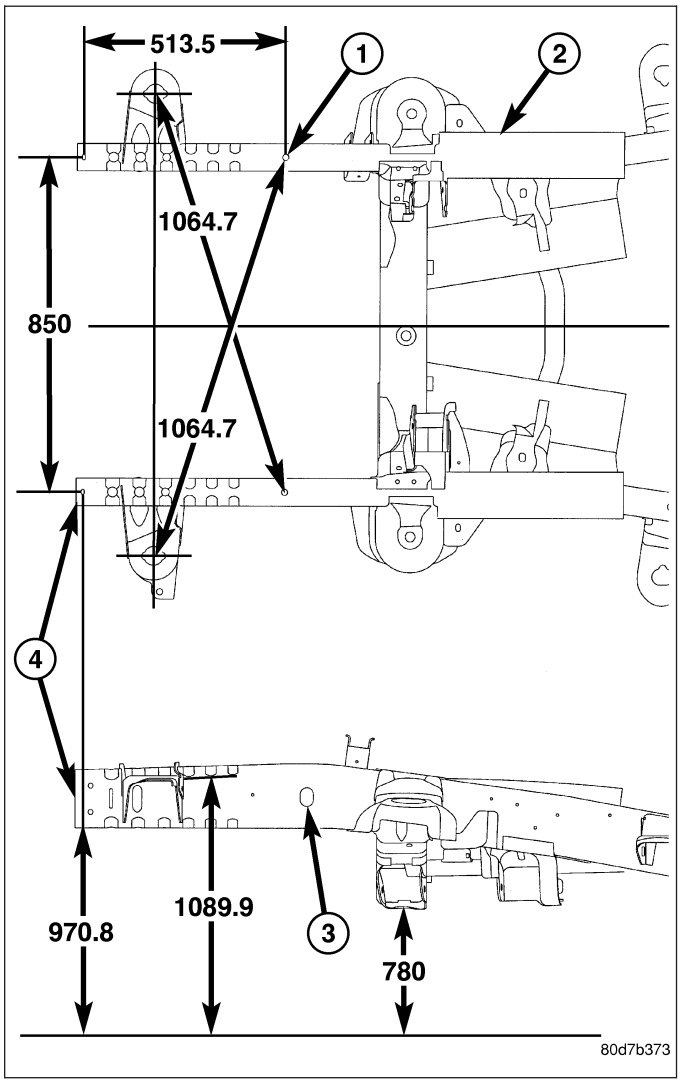

CAUTION: Shield the surrounding area and components from exposure to the welding spatter and heat.

28. When correctly fitted and a weld root gap of 4 mm minimum to 6 mm maximum (0.16 in - 0.24 in) is established, tack the ring fillet welds to hold the tip in position, then complete the ring fillet welds (3).

NOTE: Ring-fillet welds may be filled in with weld material if an improved cosmetic appearance is desired.

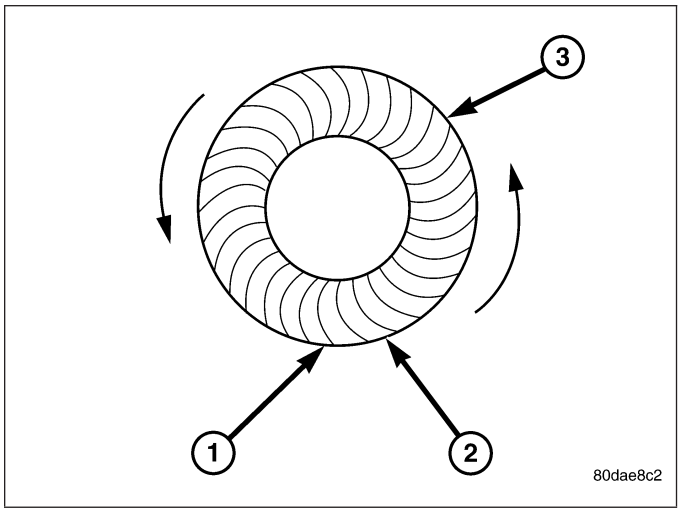

29. Confirm alignment of the replacement frame rail tip (4).

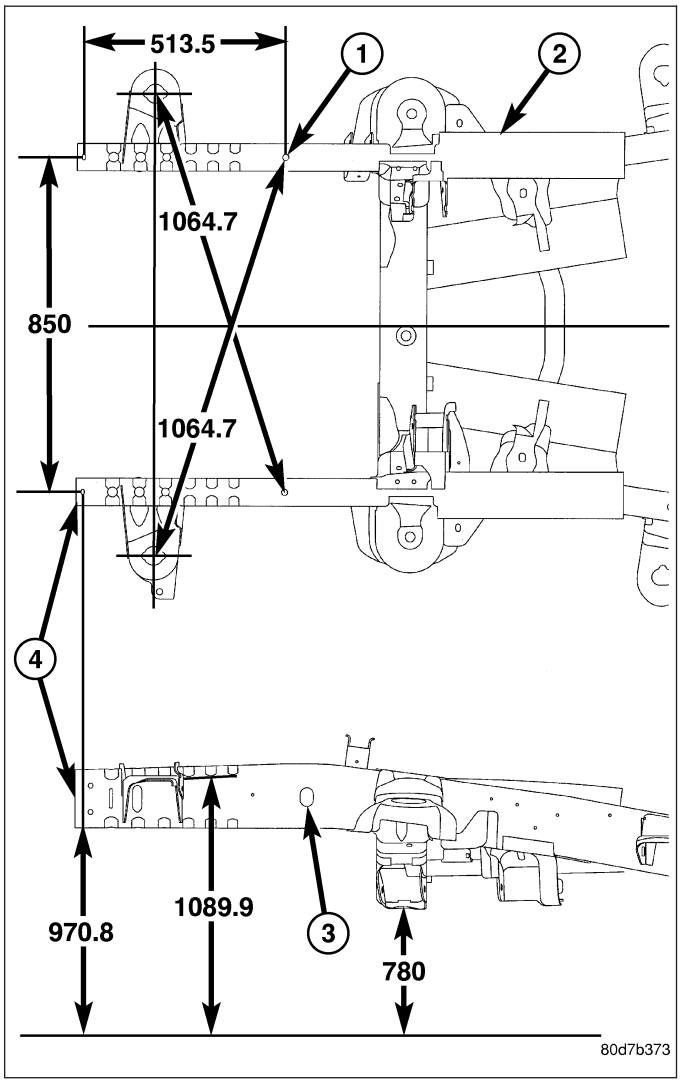

30. Final welding should be performed in a skip (stitch) type method to minimize the heat buildup and frame distortion, utilizing the Weld Process Specifications at the end of this section. The preferred method is GMAW (MIG). (Refer to 13 - FRAME & BUMPERS/FRAME - SPECIFICATIONS - WELDING)
    a. Apply root pass welds (4) to the root joint one quadrant at a time, switching to the opposite side of the frame for each quadrant.
    b. Clean the welds of any flux and other impurities before proceeding with the cover pass welds (5).
    c. Apply the cover pass welds (5) in the same manner as described above.

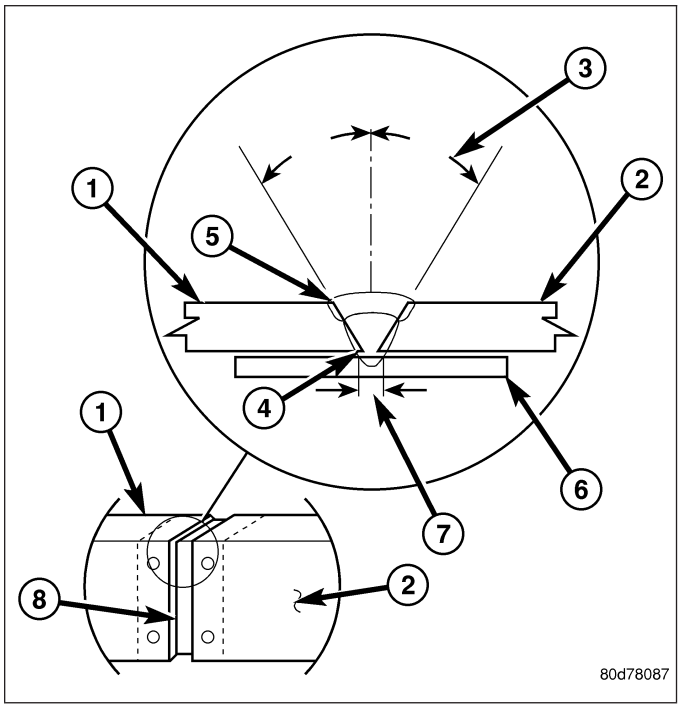

31. Confirm alignment of the replacement frame rail tip (4).

NOTE: Any burned surface coatings will need to be removed prior to application of corrosion preventative coatings.

32. Dress the welded area and apply corrosion resistant coatings inside and out.
    a. Apply etch-primer to the inside of the frame rail repair area.
    b. Inside the rail, inject a creeping wax based rust inhibitor compound through the existing holes in the frame ensuring 100% coverage including the space between the original frame rail and the reinforcing sleeve.
    c. Apply a durable top coat to the outside of the repair area.
33. Tighten the front cab mounting bolt to the FESM bracket to 81 N·m (60 ft. lbs.).
34. Install the stabilizer bar. (Refer to 2 - SUSPENSION/FRONT/STABILIZER BAR - INSTALLATION)
35. Install the front bumper. (Refer to 13 - FRAME & BUMPERS/BUMPERS/FRONT BUMPER - INSTALLATION)
36. Install the wire harness and ground strap if previously removed and install the bolt.
    a. If necessary, re-drill and tap the ground strap mounting hole

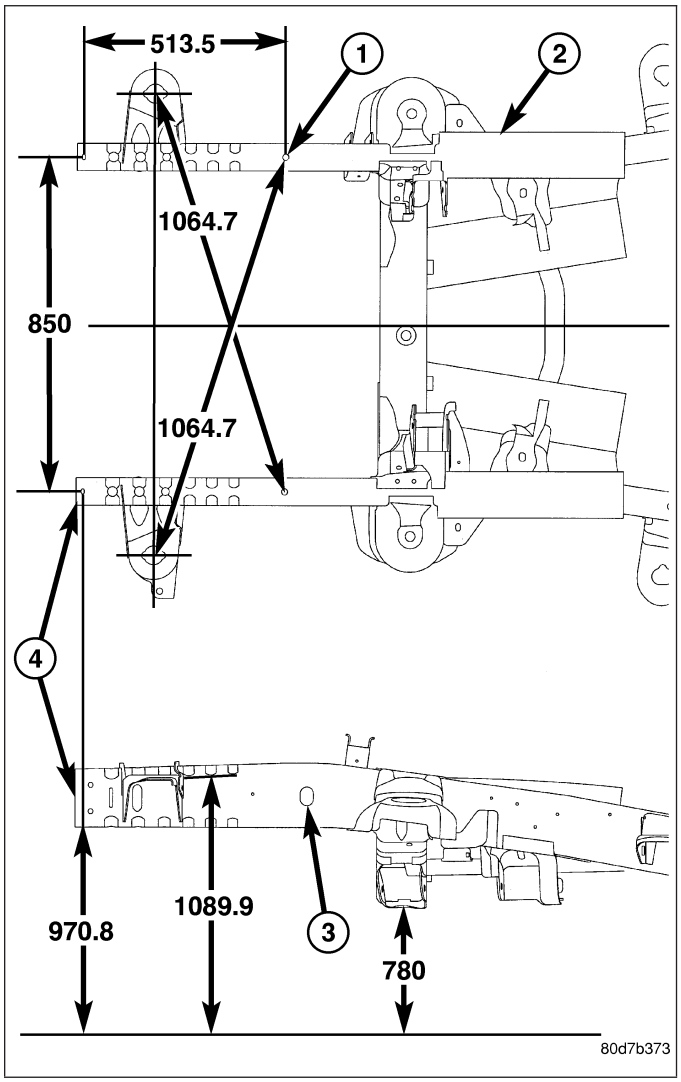

37. Install the front wheelhouse splash shield. (Refer to 23 - BODY/EXTERIOR/FRONT WHEELHOUSE SPLASH SHIELD - INSTALLATION)

SERVICE SLEEVE ASSEMBLY

NOTE: Two sleeve halves are included with each kit. Modifications as follow, are necessary to create the correct sleeve assembly for each application.

1. On 4X2 models, the ″lower″ sleeve (1) is made by cutting off the tab (5) and cutting out a notch (4) in the bottom sleeve portion. Round the corners of the cut out to keep stress cracks from forming. On 4X4 models the ″lower″ sleeve is used as provided.

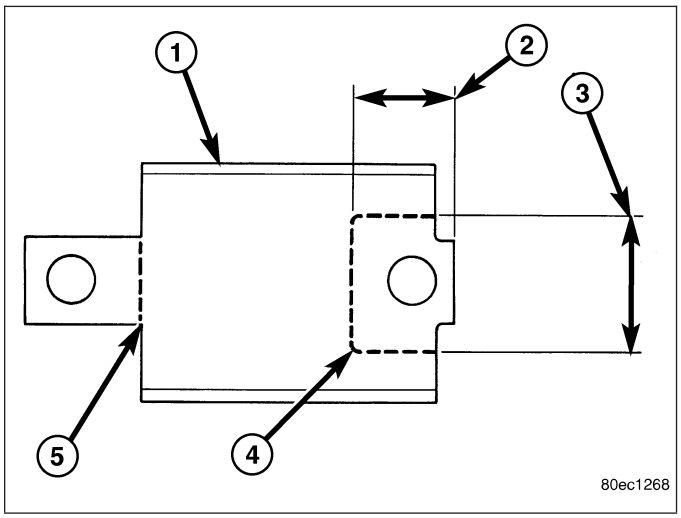

2. On both 4X2 and 4X4 models cut off the front tab (2) on the upper sleeve portion (1).
3. The sleeve halves are shipped slightly oversized to allow custom fitting to each replacement frame rail tip. It is necessary to grind the mating surfaces to achieve the desired snug fit into the replacement tip (rail tube has increasing height rearward of the cut line). Once the two sleeve halves are fitted, bevel the edges 25° - 30°.

NOTE: Scribing a line 2 mm from the cut edge and then grinding back to the mark will simplify the bevel creation process and accuracy.

4. Remove any burrs at the beveled edges.

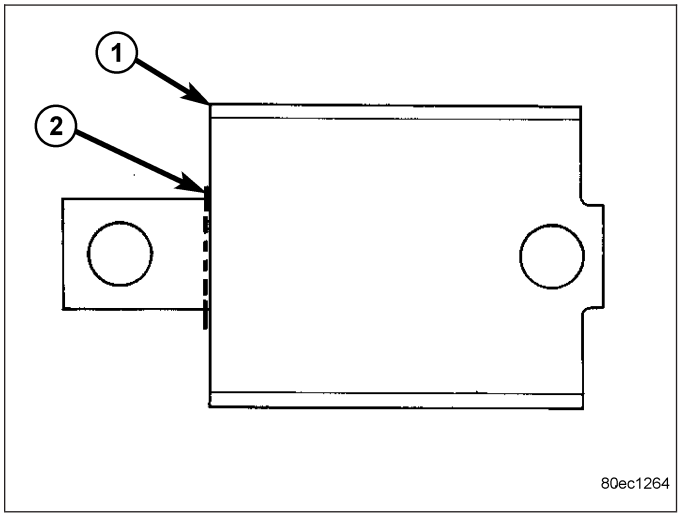

5. Using the Weld Process Specifications table (Refer to 13 - FRAME & BUMPERS/FRAME - SPECIFICATIONS - WELDING), weld the two halves of the repair sleeve together.
6. Clean the welds of any flux and other impurities and grind smooth before proceeding with the installation of the sleeve.
7. Find the centerline of the sleeve and scribe a centerline mark (1). Mark two additional lines (4) 2 mm (0.08 in.) on either side of the centerline mark to help ensure the required 4 mm - 6 mm (0.16 in. - 0.24 in.) weld root gap.

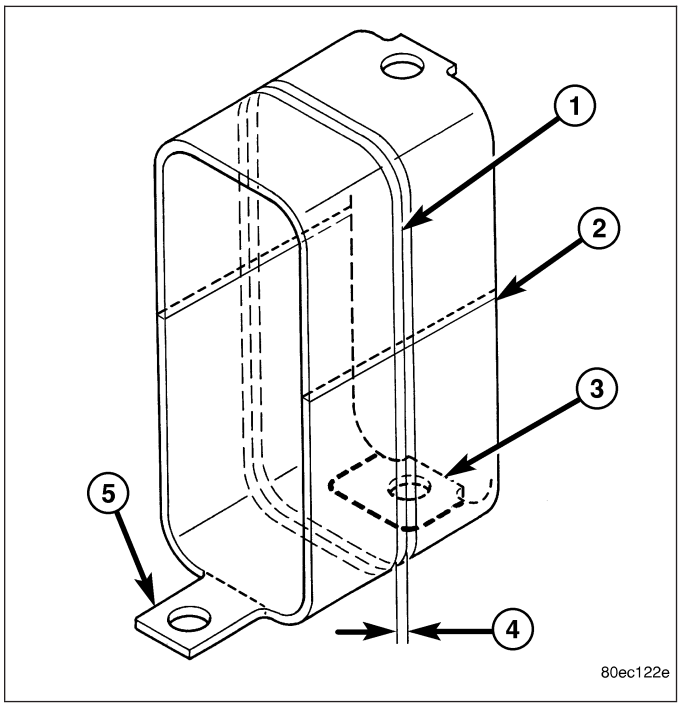

HYDROFORM FENDER RAIL REPAIR

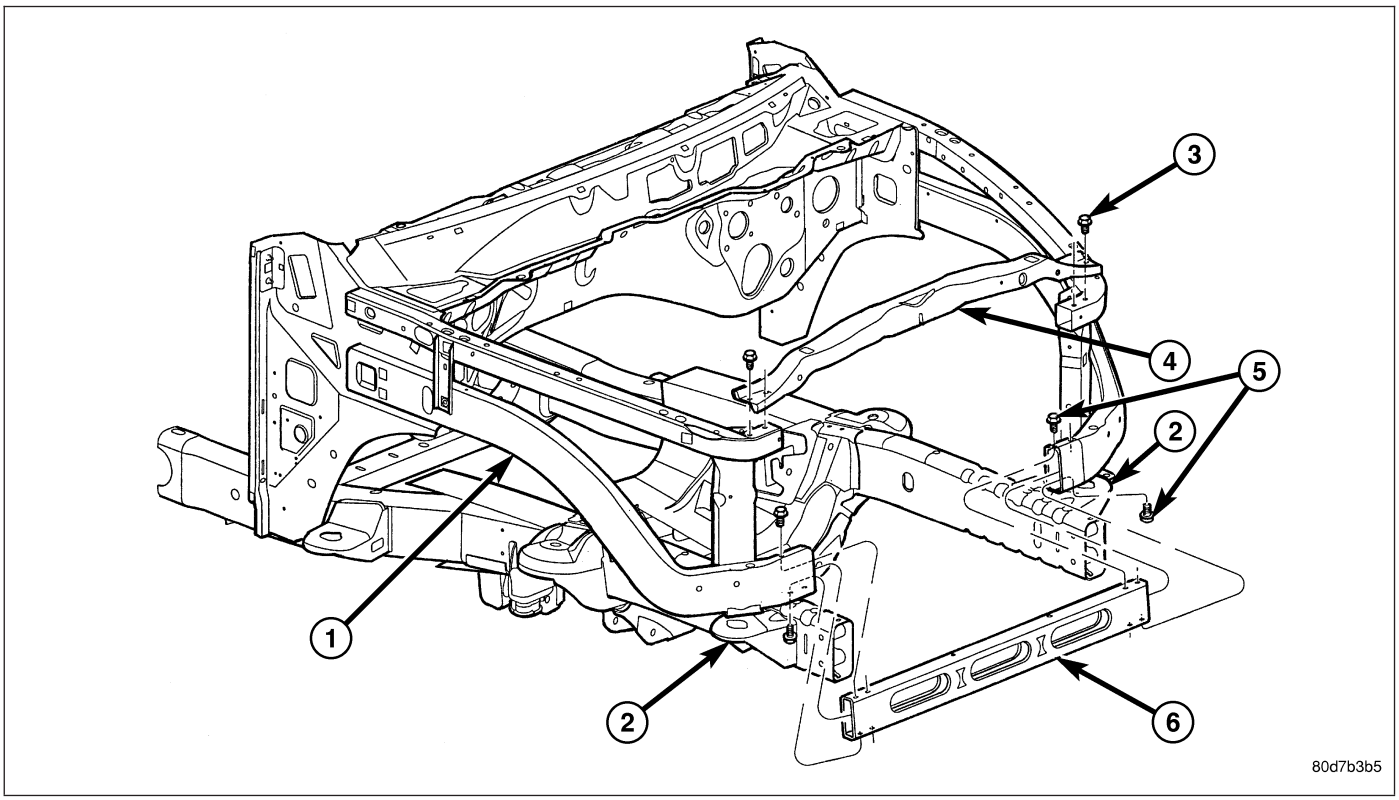

CAUTION: This repair procedure assumes damage to the right or left hydroform fender rail (1). Prior to any repairs, the vehicle must be mounted on the appropriate frame repair equipment (“frame rack”), checked with three dimensional measuring equipment, and necessary pull corrections made. If damage exists in the hydroform fender rail, or cab beyond the area covered by this service procedure after dimensional corrections are made, the hydroform must be replaced in its entirety. Refer to 23 - BODY/BODY STRUCTURE/ WELD LOCATIONS - SPECIFICATIONS, when replacing the entire hydroform.

CAUTION: Inspect the tire winch assembly for damage. If any one or more of the following are evident, replace the winch assembly.

- **Indications of cracked or bulging plastic.**
- **Housing flanges are bent or cracked.**
- **If winch was loose before repair.**
- **If the rivet heads are separated from the housing in any way.**

1. Before proceeding with this repair procedure review the required service warnings and precautions (Refer to 13 - FRAME & BUMPERS/FRAME - WARNING).

2. Disconnect and isolate the battery negative cable.
3. Remove the front wheelhouse splash shield (Refer to 23 - BODY/EXTERIOR/FRONT WHEELHOUSE SPLASH SHIELD - REMOVAL).
4. Remove the fender (Refer to 23 - BODY/EXTERIOR/FRONT FENDER - REMOVAL).

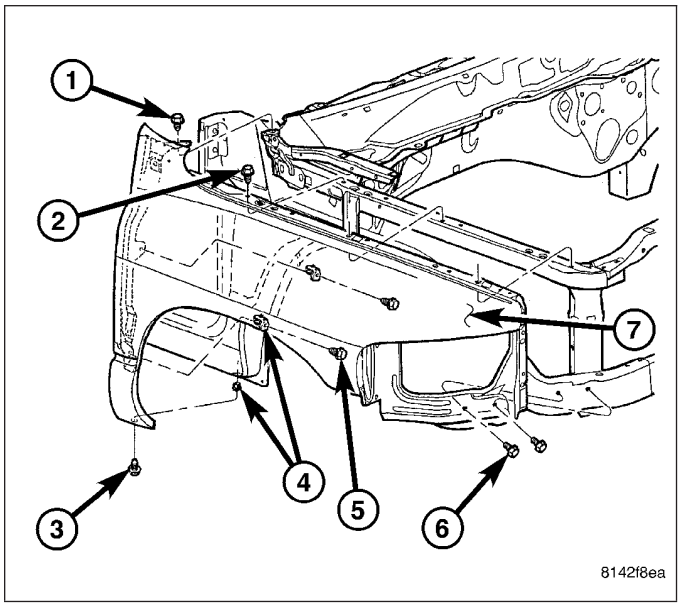

5. Remove the A/C condenser, if required (Refer to 24 - HEATING & AIR CONDITIONING/PLUMBING/A/C CONDENSER - REMOVAL).
6. Remove the A/C lines, if required. Refer to the Heating and Air Conditioning section of the manual for recommended procedures.

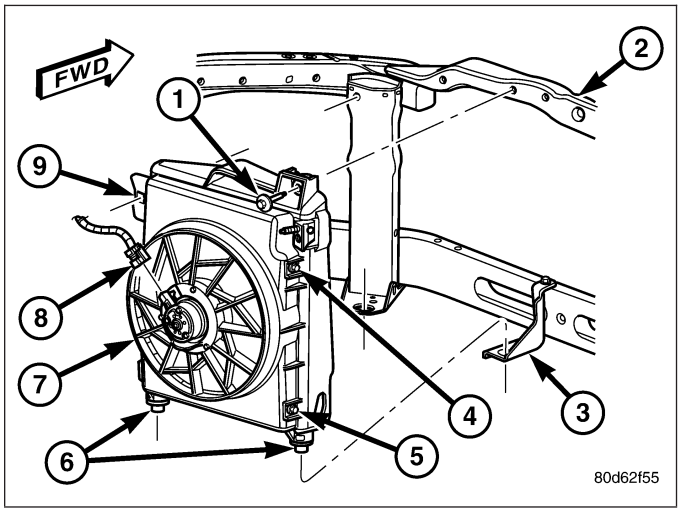

7. Remove the radiator assembly (4) (Refer to 7 - COOLING/ENGINE/RADIATOR - REMOVAL).

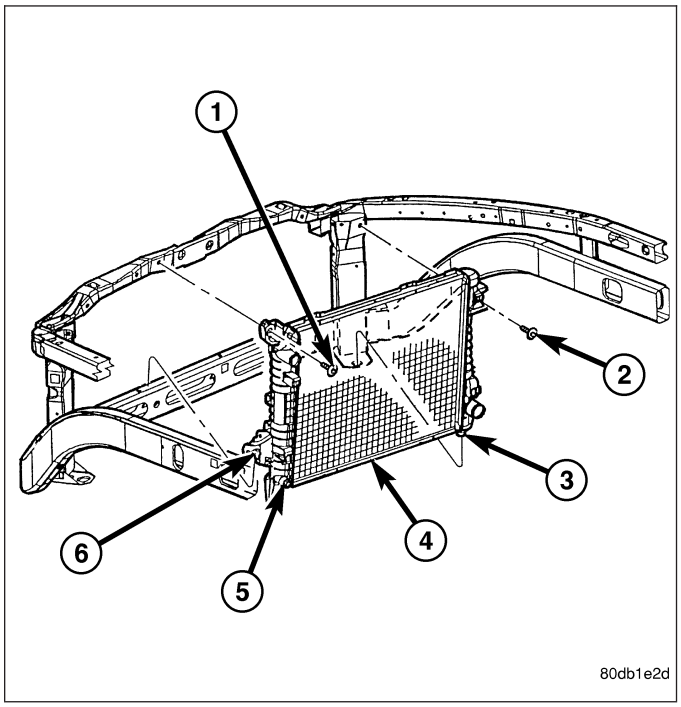

8. Remove the air cleaner and support bracket (1 - if required) (Refer to 9 - ENGINE/AIR INTAKE SYSTEM/AIR CLEANER ELEMENT - REMOVAL).

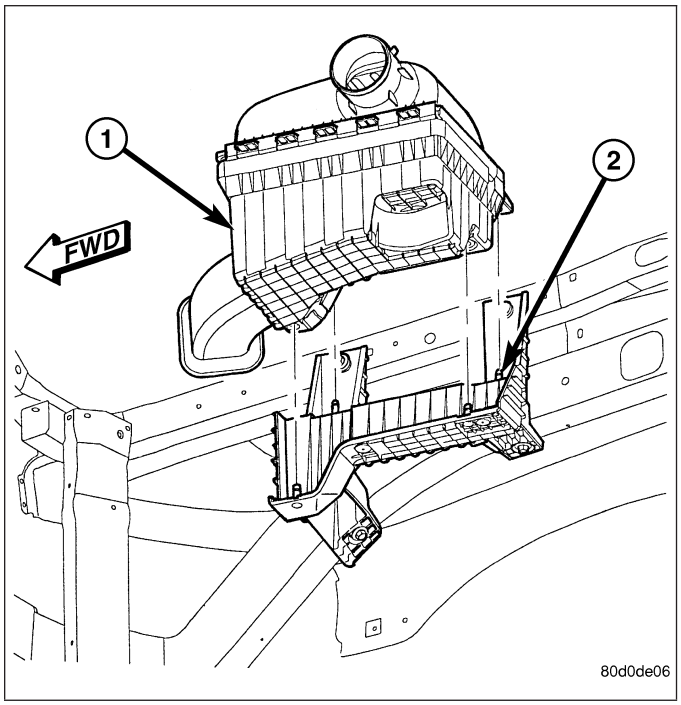

9. Remove the integrated power module (Refer to 8 - ELECTRICAL/POWER DISTRIBUTION/INTEGRATED POWER MODULE - REMOVAL).
10. Remove the bolts and position aside the wire harness and grounds, if required.

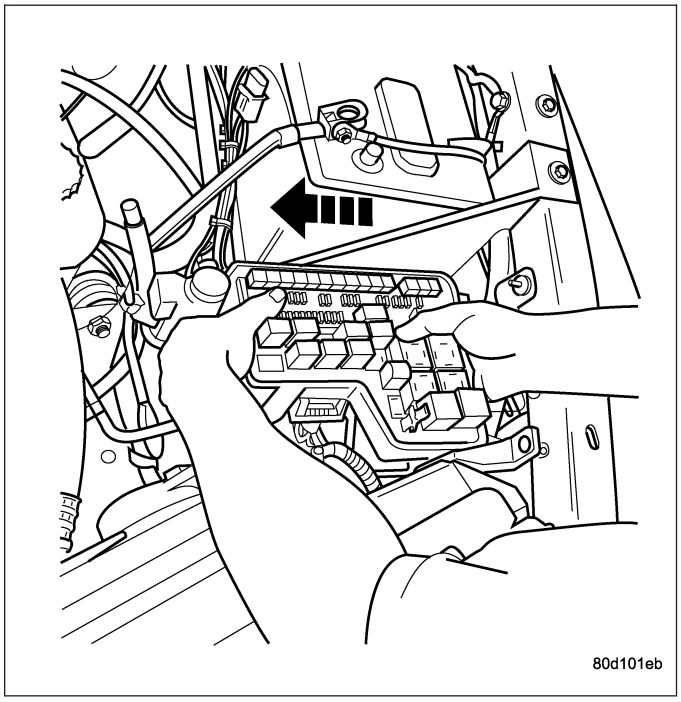

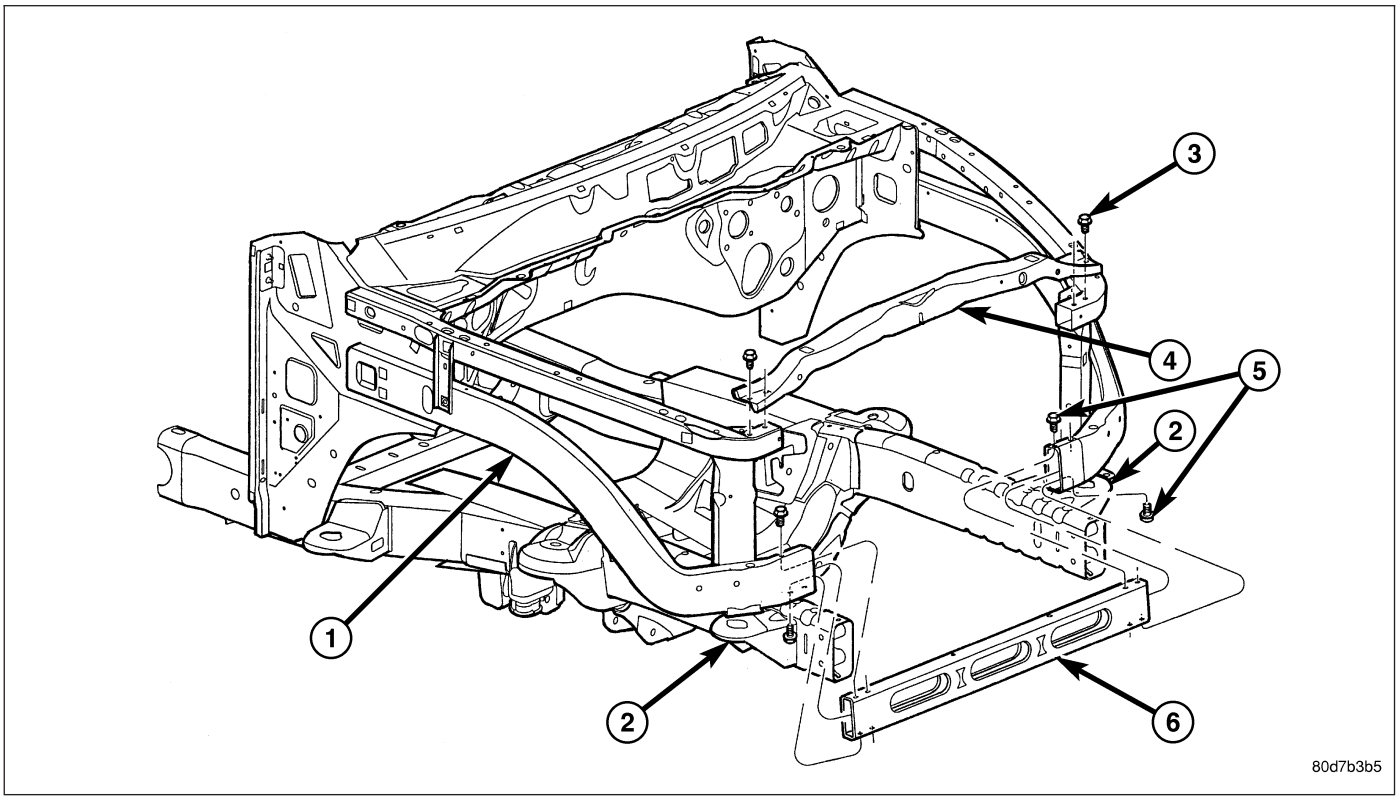

11. Remove the upper radiator crossmember (4). (Refer to 23 - BODY/EXTERIOR/UPPER RADIATOR CROSSMEMBER - REMOVAL).

12. Remove the headlamp unit (5) (Refer to 8 - ELECTRICAL/LAMPS/LIGHTING - EXTERIOR/ HEADLAMP UNIT - REMOVAL).

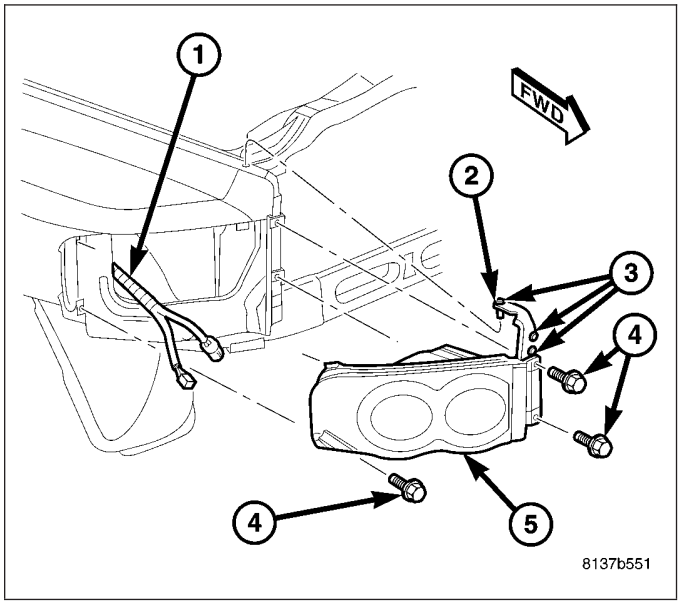

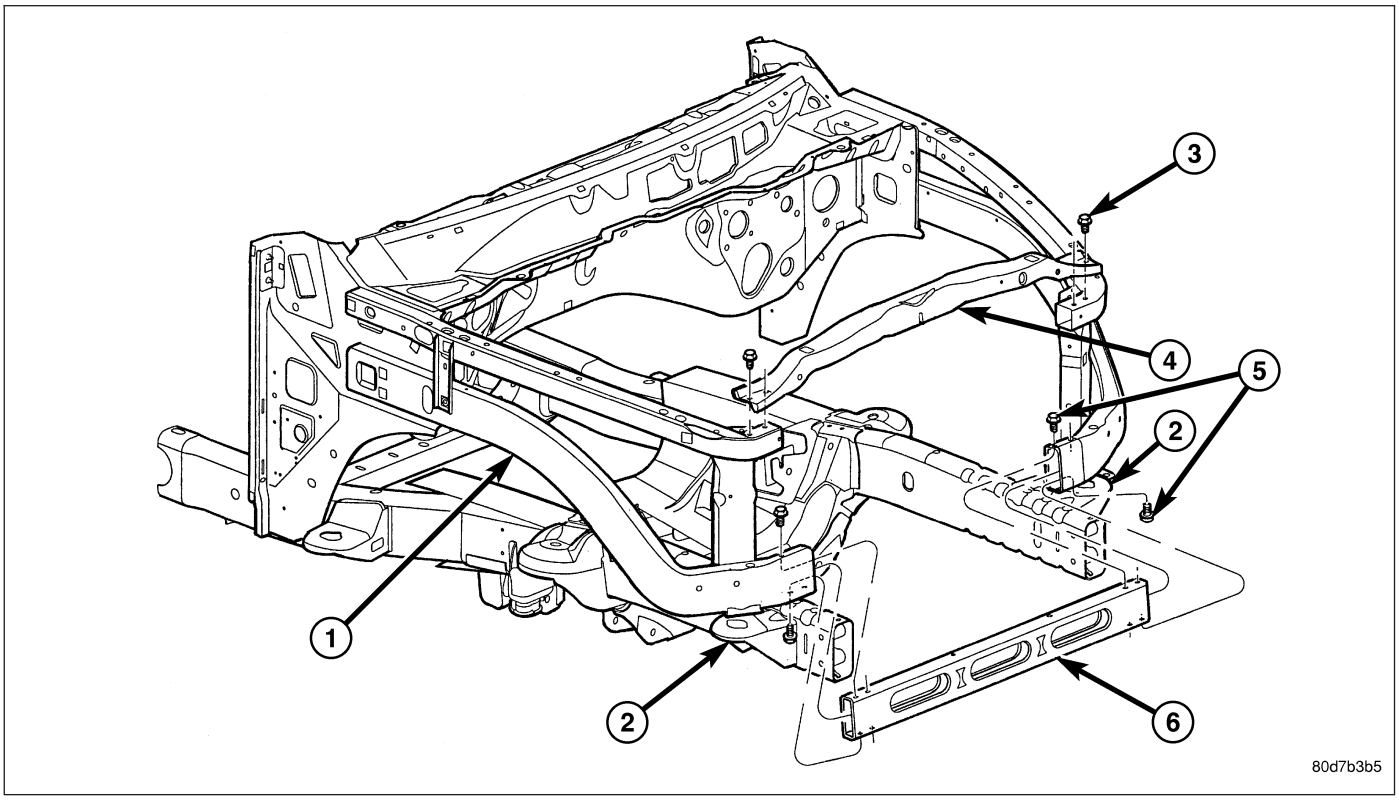

13. Remove the front cab mount to the Front End Sheet Metal bracket (FESM) bolt (2).
14. Remove the bolts (5) attaching the lower radiator crossmember (6) to the hydroform fender rail (1).

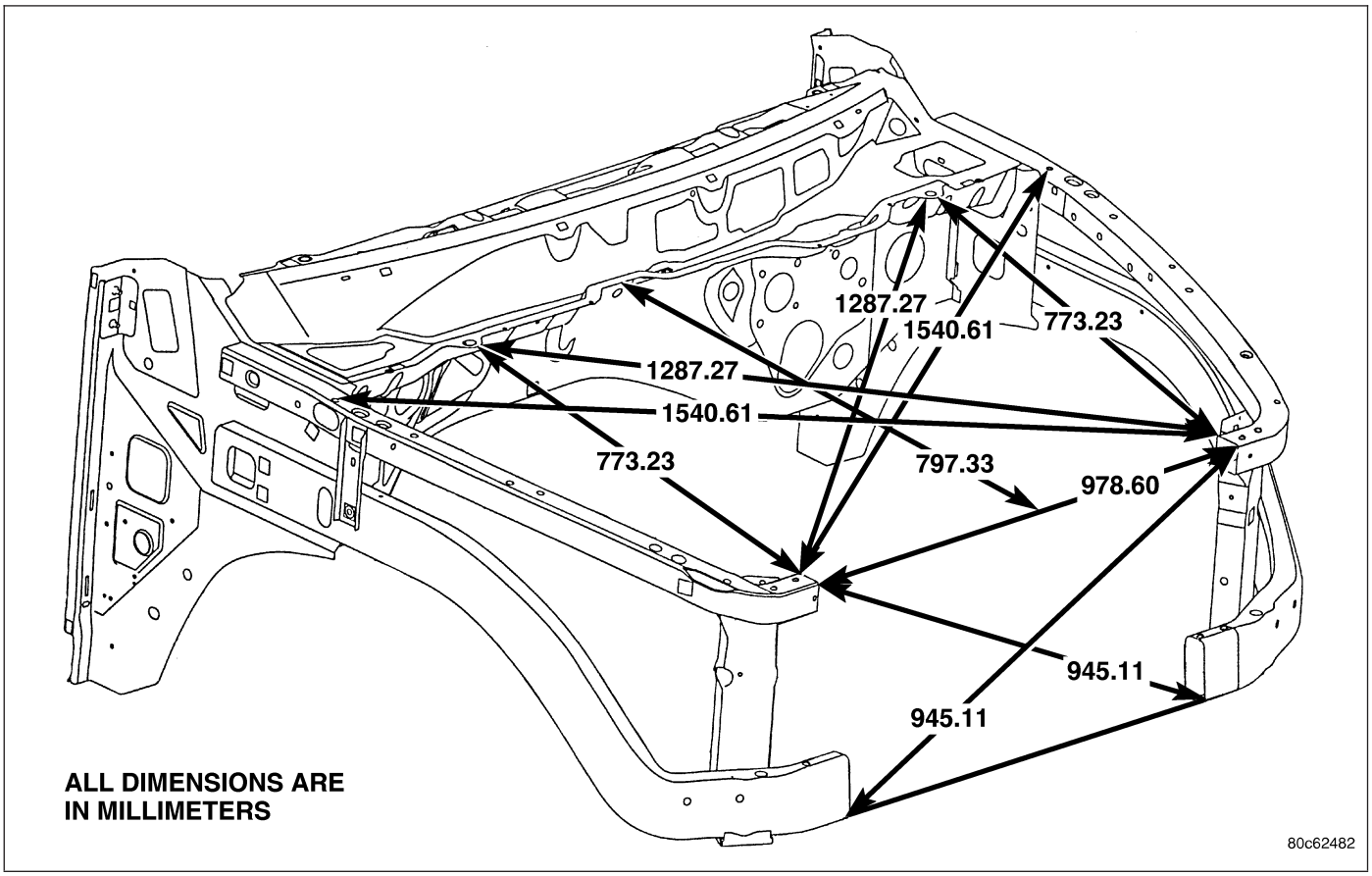

CAUTION: Do not use any flame or plasma cutting equipment to cut the frame in this procedure. The inaccurate and high temperatures achieved during flame or plasma cutting will change the metal characteristics and may weaken the frame and/or repair location.

15. Using a reciprocating saw or equivalent, cut the fender rail and shotgun at a straight and square section of the hydroform and remove.
16. Smooth and square the cut edges.
17. Using the damaged structure as a reference cut the service part at the same location as the first cut. Smooth and square the cut edges.

NOTE: The repair structure should butt up to the remaining structure and provide the same overall vehicle geometry.

18. Fabricate 51 mm (2.0 in.) long repair inserts using scrap from the old structure or the replacement part. It will be necessary to split the inserts on each of their four sides to fit into the hydroform.
19. Remove any paint or e-coat from the inserts and also to the interior and exterior of the hydroforms.
20. Cut plug weld holes as described below.
    - On the upper rail, cut one 13 mm (0.5 in.) hole on each side of the rail, 25 mm (1.0 in.) from the butt joint of the tubes.
    - On the lower rail, cut one 13 mm (0.5 in.) hole on the top and bottom sides of the rail 25 mm (1.0 in.) from the butt joint of the tube.
    - On the lower rail, cut two 13 mm (0.5 in.) holes on the inner and outer sides of the rail 25 mm (1.0 in.) from the butt joint of the tube.

CAUTION: Shield the surrounding area and components from exposure to the welding spatter and heat.

21. Install the insert 1” into the replacement part and tack into place with a weld. (Refer to 13 - FRAME & BUMPERS/FRAME - SPECIFICATIONS - WELDING)
22. Insert the service part into place and using the appropriate measuring equipment, verify the front end sheet metal bracket’s location in all three (X,Y, and Z) planes of space.
23. Complete all 360° plug welds.

NOTE: Before the final welding, use three dimensional measuring equipment to ensure the part is in the correct location. Verify that tap plate extrusion at the bottom of the vertical post lines up with the isolator and hole in the frame perch mount. Also ensure the lower radiator closure tube is bolted into the forward shotgun ends.

24. Complete welding by making a 360° butt weld around the fender rails.
25. Metal finish the exposed welds on the hydroforms.
26. Dress the welded area and apply corrosion resistant coatings inside and out.
    a. Inside the rail, inject a creeping wax based rust inhibitor compound to the inside of the hydroforms ensuring 100% coverage including the mating face between the fender rail sections and insert such that corrosion protection is restored in the internal cavity.
    b. Apply a durable top coat to the outside of the repair area.

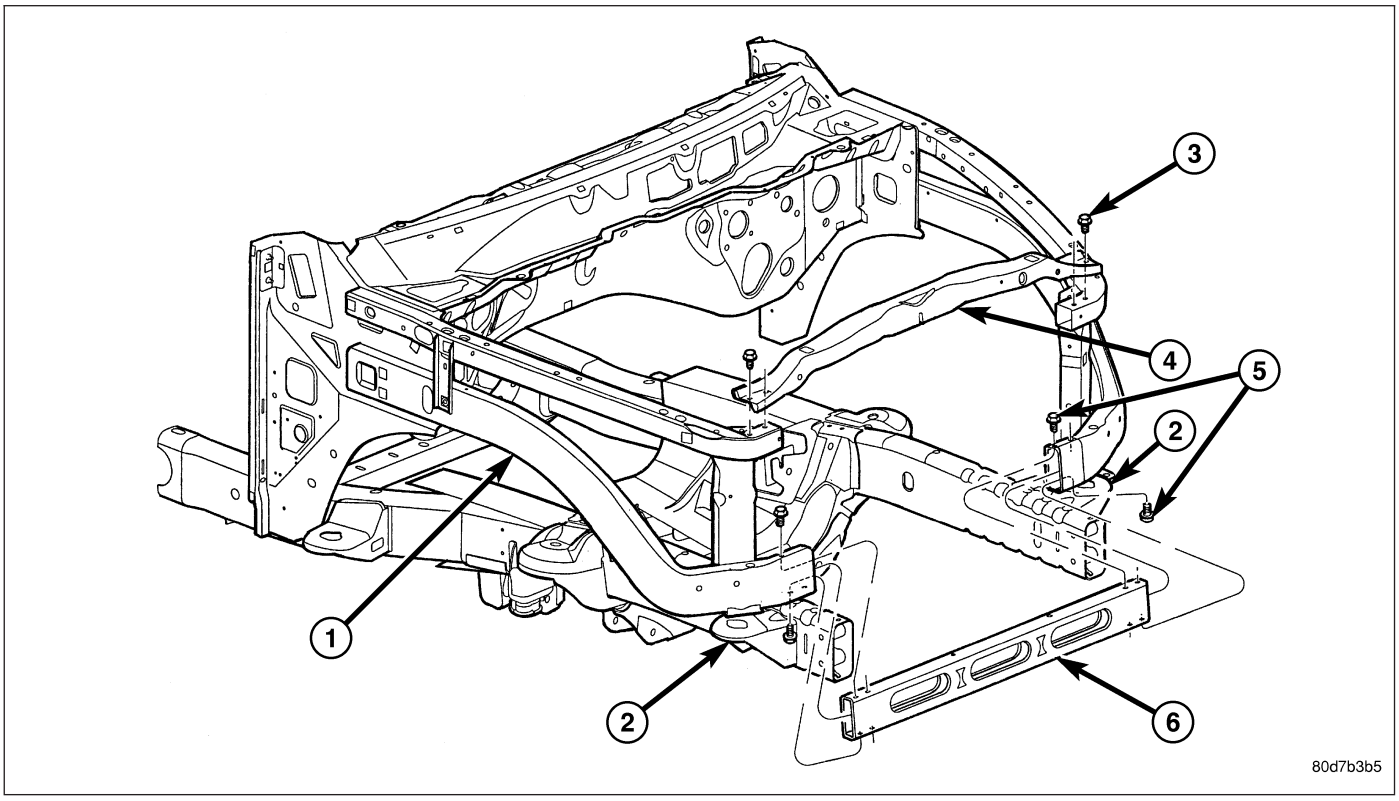

27. Install the front cab mount bolt (2) if previously removed and tighten to 81 N·m (60 ft. lbs.).
28. Install the lower radiator crossmember (6) bolts (5) and tighten to 28 N·m (21 ft. lbs.).

29. Install the headlamp unit (Refer to 8 - ELECTRICAL/LAMPS/LIGHTING - EXTERIOR/HEADLAMP UNIT - INSTALLATION).

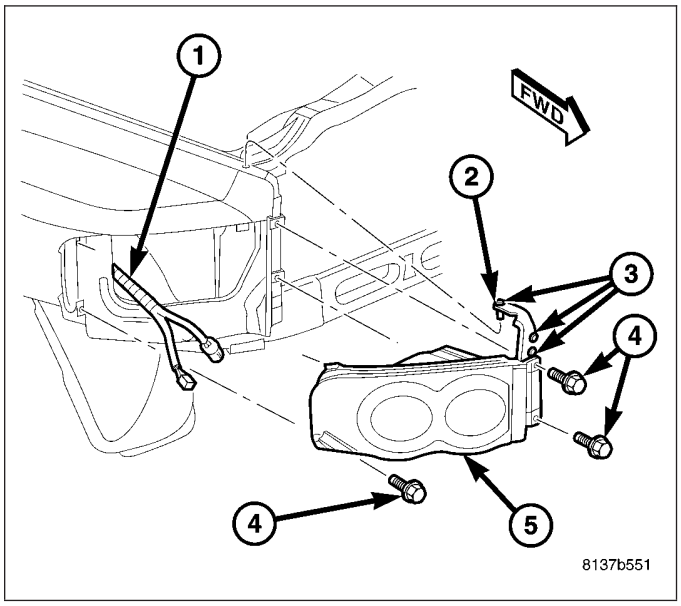

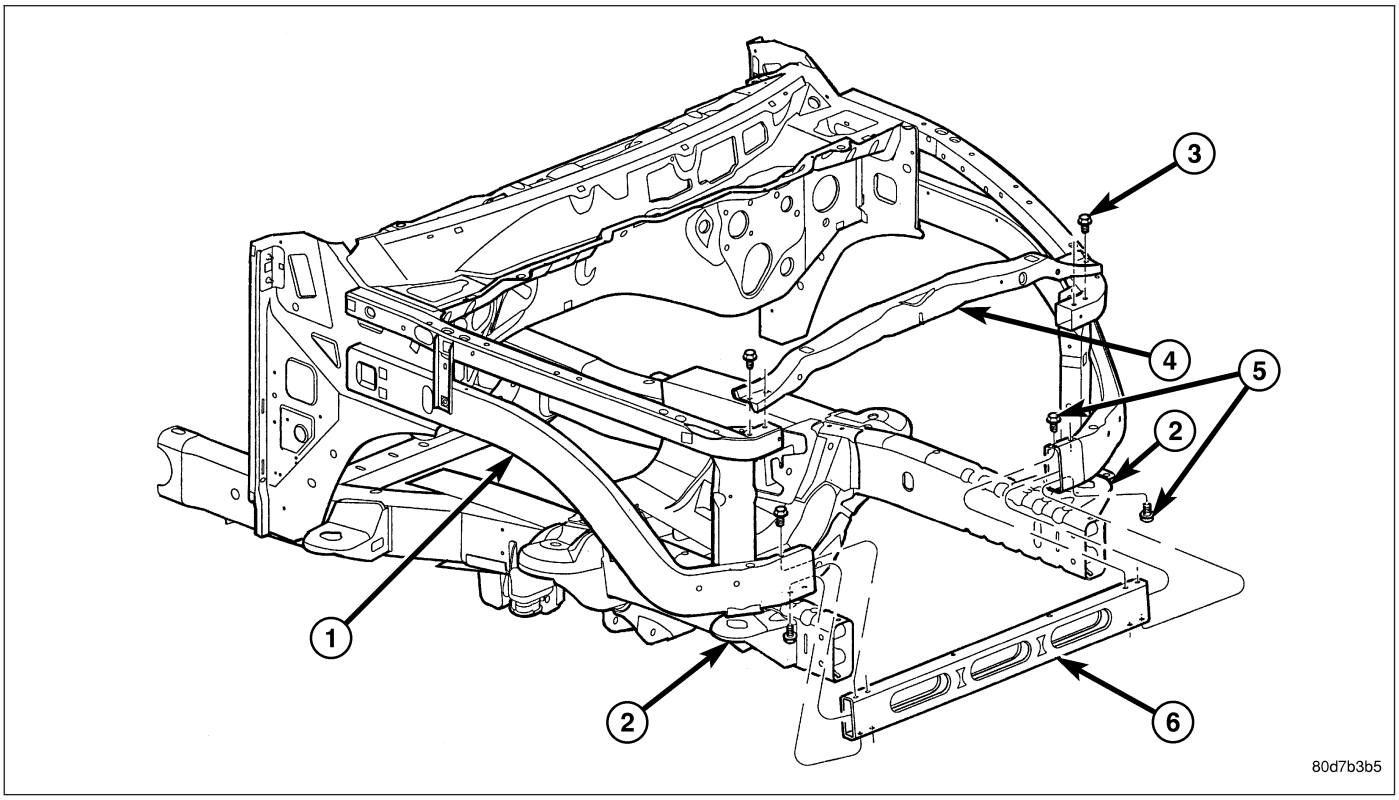

30. Install the upper radiator crossmember (4) (Refer to 23 - BODY/EXTERIOR/UPPER RADIATOR CROSSMEMBER - INSTALLATION).
31. Install the wire harness and ground if previously removed and install the bolts.
32. Install the integrated power module, if previously removed (Refer to 8 - ELECTRICAL/POWER DISTRIBUTION/INTEGRATED POWER MODULE - INSTALLATION)

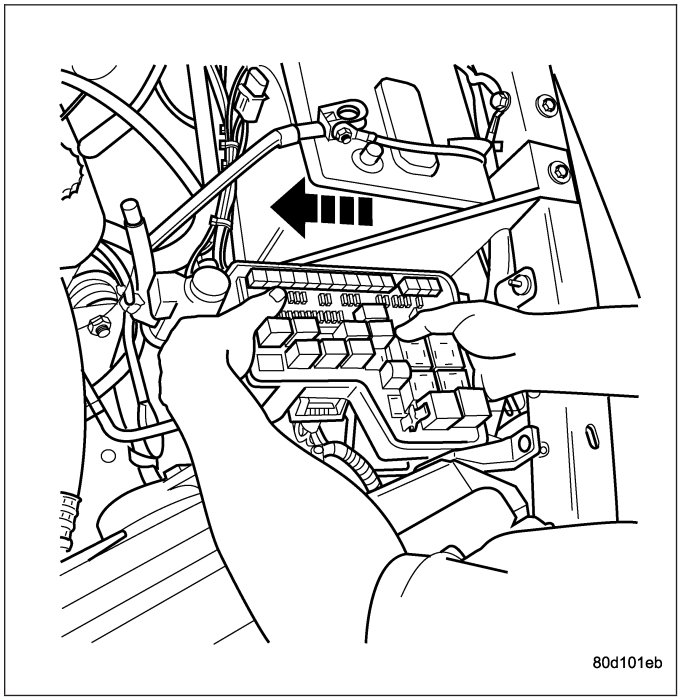

33. Install the air cleaner bracket and air cleaner (1), if previously removed (Refer to 9 - ENGINE/AIR INTAKE SYSTEM/AIR CLEANER ELEMENT - INSTALLATION).

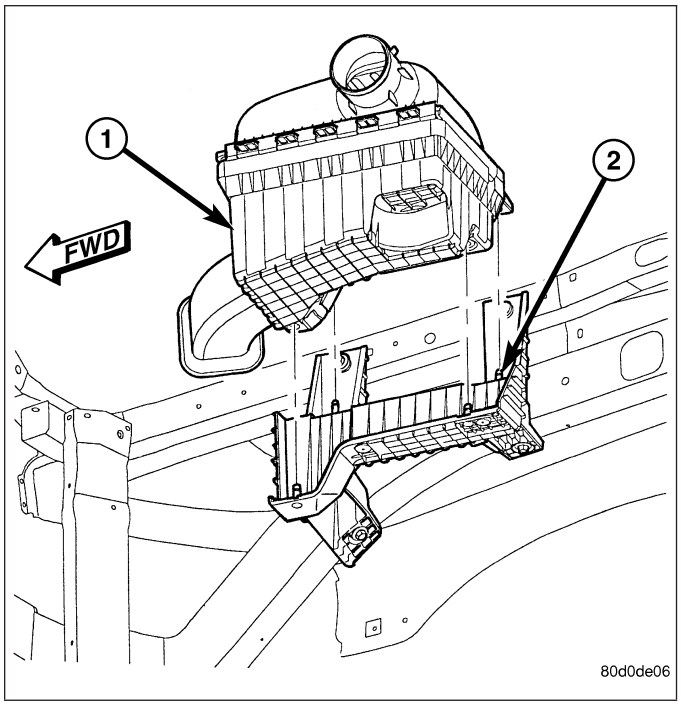

34. Install the radiator assembly (4) (Refer to 7 - COOLING/ENGINE/RADIATOR - INSTALLATION).

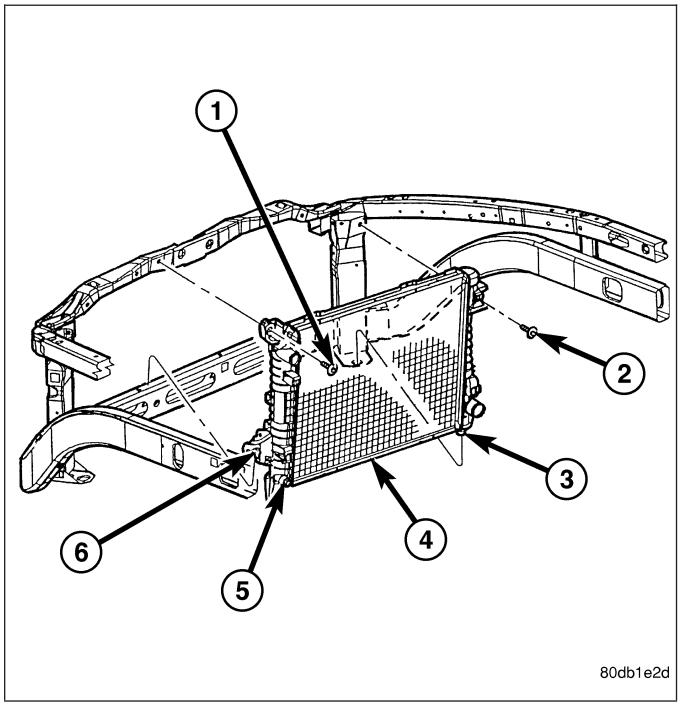

35. Install the A/C lines, if previously removed. Refer to the Heating and Air Conditioning section of the manual for the recommended procedures.
36. Install the A/C condenser, if previously removed (Refer to 24 - HEATING & AIR CONDITIONING/ PLUMBING/A/C CONDENSER - INSTALLATION).

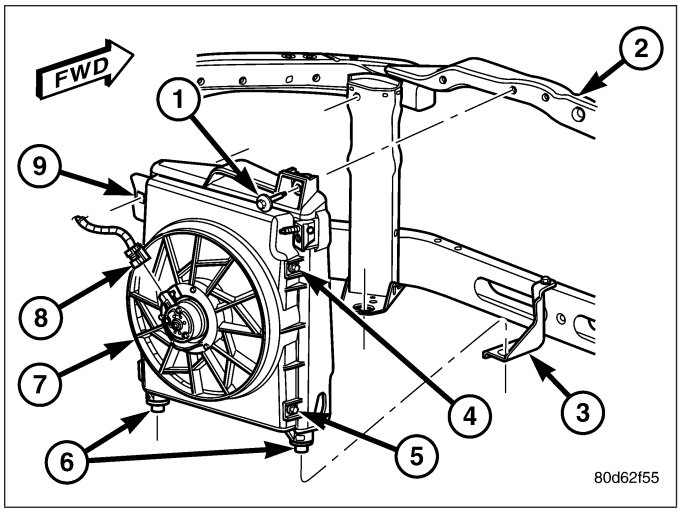

37. Install the fender (Refer to 23 - BODY/EXTERIOR/FRONT FENDER - INSTALLATION).
38. Install the front wheelhouse splash shield. (Refer to 23 - BODY/EXTERIOR/FRONT WHEELHOUSE SPLASH SHIELD - INSTALLATION)
39. Reconnect the battery negative cable.

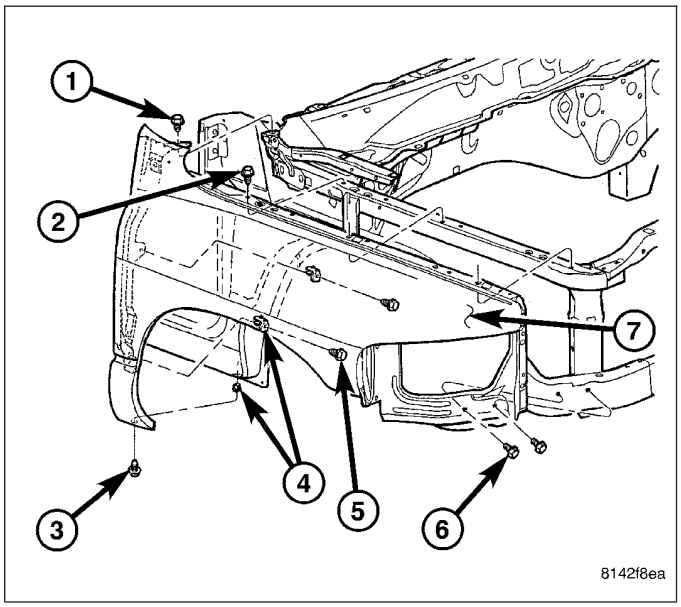

REAR FRAME H-SECTION REPLACEMENT

CAUTION: This procedure is designed to replace the H-section/spare tire support located at the rear of the frame assembly. Prior to any cutting, the vehicle must be mounted on the appropriate frame repair equipment (“frame rack”), checked with three dimensional measuring equipment, and the necessary pull corrections made. If damage remains in the frame beyond the area covered by this service part after the pull, the frame must be replaced in its entirety.

1. Before proceeding with this repair procedure review the required service warnings and precautions. (Refer to 13 - FRAME & BUMPERS/FRAME - WARNING)

2. Disconnect and isolate the battery negative cable.
3. Remove the cargo box (1) (Refer to 23 - BODY/ EXTERIOR/CARGO BOX - REMOVAL).

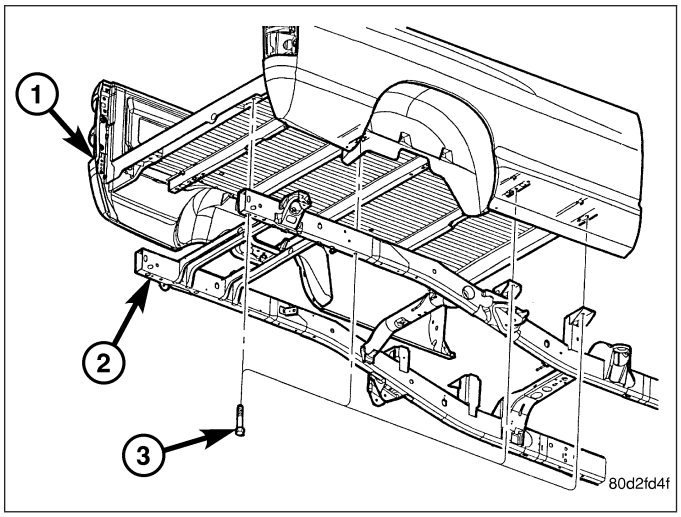

4. Remove the trailer hitch (1) (Refer to 13 - FRAME & BUMPERS/FRAME/TRAILER HITCH - REMOVAL).

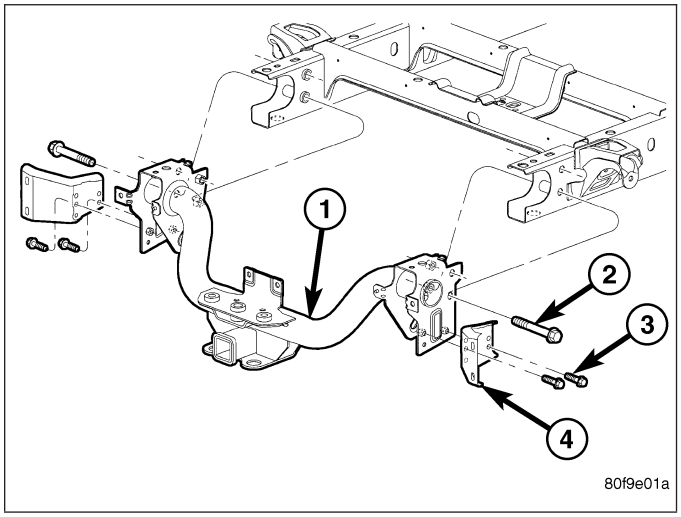

5. Raise and support the frame so the tires are off floor.

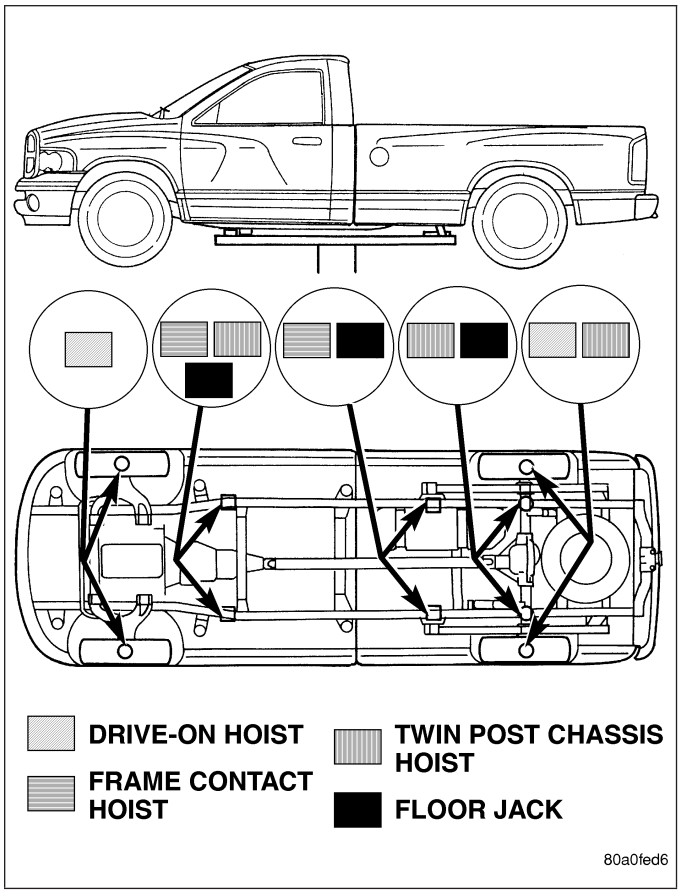

6. Remove the shock absorbers (3) (Refer to 2 - SUSPENSION/REAR/SHOCK - REMOVAL).

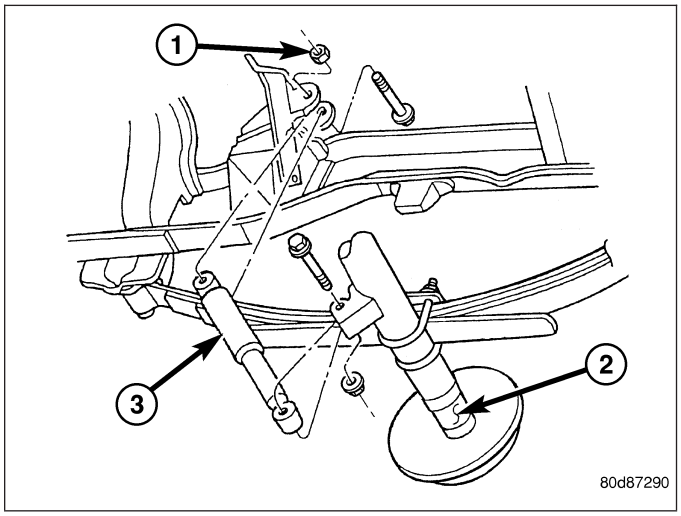

7. Remove the rear leaf spring shackle bolts (6) and let the axle rest on the ground.

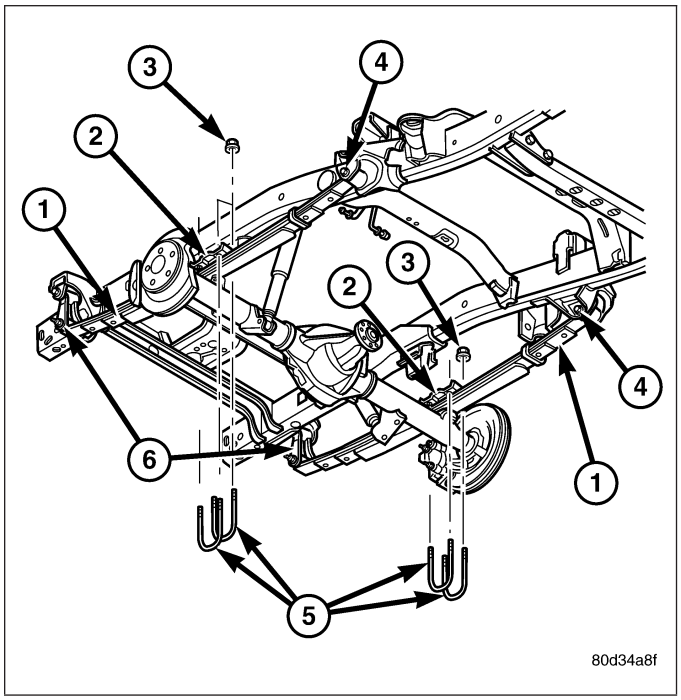

8. Remove the spare wheel.
9. Remove the clip (2) and remove the spare tire winch tube (3).

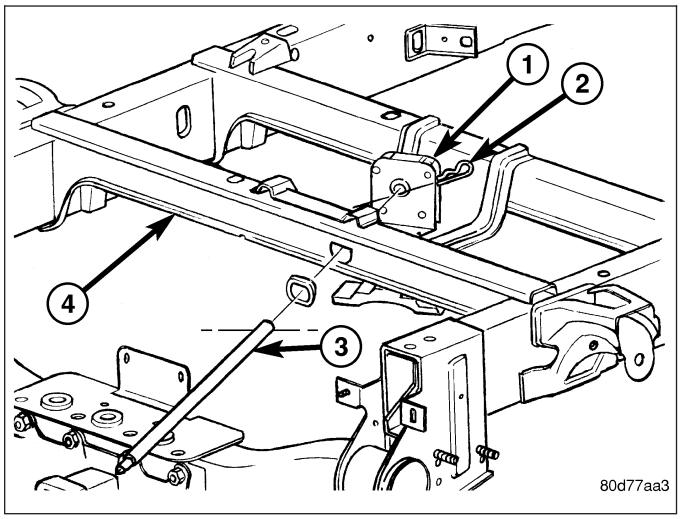

10. Remove the bolts (2) and remove the spare tire winch (1).
11. Position the wire harness forward of the work area.

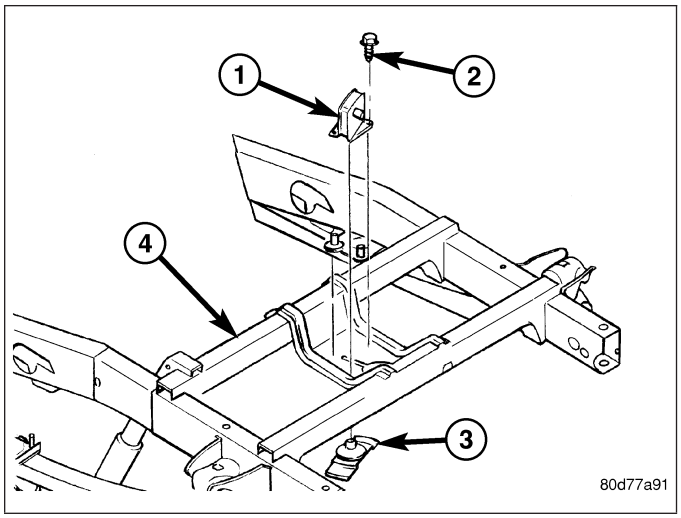

CAUTION: Do not use any flame or plasma cutting equipment to cut the frame in this procedure. The inaccurate and high temperatures achieved during flame or plasma cutting will change the metal characteristics and may weaken the frame and/or repair location.

12. Carefully remove the H-section welds using a grinder or equivalent tool.
13. Remove the H-section and clean any remaining welds from the frame.
14. Trial fit the replacement part.
15. Remove all e-coat from within 25 mm (1.0 in.) of the weld area.
16. Using the appropriate measuring equipment, position the replacement part and verify correct positioning in all three (X,Y, and Z) planes of space. (Refer to 13 - FRAME & BUMPERS/FRAME - SPECIFICATIONS - FRAME DIMENSIONS)

CAUTION: Shield the surrounding area and components from exposure to the welding spatter and heat.

17. Weld the replacement H-section into position. The welding should be performed in a skip (stitch) type method to minimize the heat buildup following I-CAR or the American Welding Society welding procedures and utilizing the process specifications at the end of this section. (Refer to 13 - FRAME & BUMPERS/FRAME - SPECIFICATIONS - WELDING)
18. Dress the welded area and apply corrosion resistant coatings inside and out.
    a. Inside the rail, inject a creeping wax based rust inhibitor compound through the existing holes in the frame ensuring 100% coverage including the mating face between the frame and replacement H-section.
    b. Apply a durable top coat to the outside of the repair area.
19. Position the wiring harness back.

CAUTION: Inspect the tire winch assembly (1) for damage. If any one or more of the following are evident, replace the winch assembly.
- **Indications of cracked or bulging plastic.**
- **Housing flanges are bent or cracked.**
- **If winch was loose before repair.**
- **If the rivet heads are separated from the housing in any way.**

20. Install the spare tire winch (1) and install the bolts (2).
21. Tighten the bolts to 41 N·m (30 ft. lbs.).

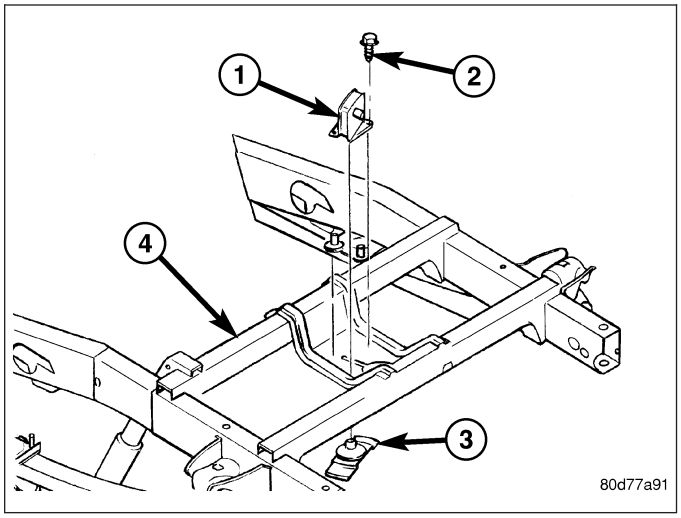

22. Install the spare tire winch tube (3) and install the clip (2).
23. Install the spare tire.

CAUTION: Check operation of the spare tire winch by manipulating it up and down. If the winch binds or jambs, replace the winch assembly.

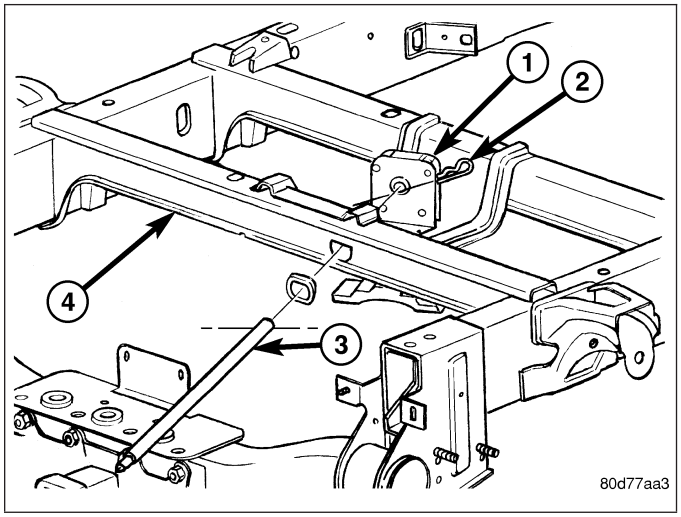

24. Lift the axle into position and install the rear shackle bolts ((6).
25. Tighten the bolts to 163 N·m (120 ft. lbs.).

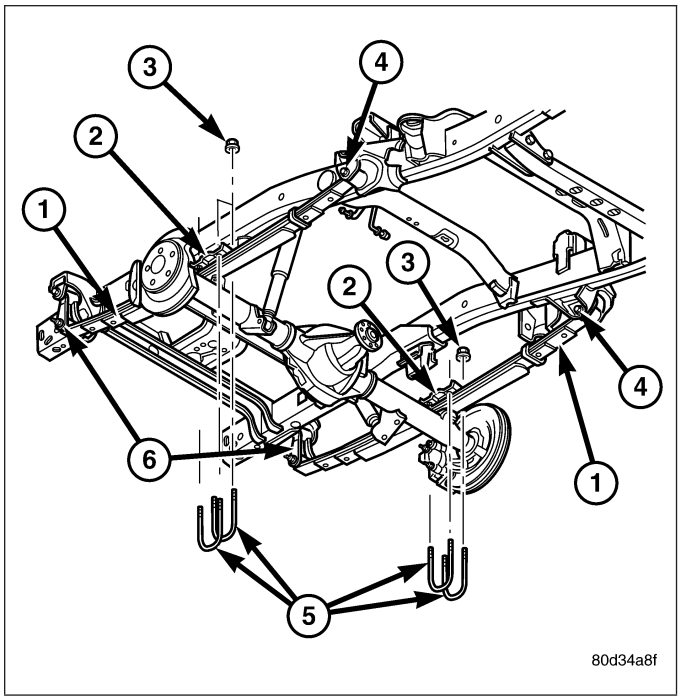

26. Install the lower shock absorber bolts (Refer to 2 - SUSPENSION/REAR/SHOCK - INSTALLATION).

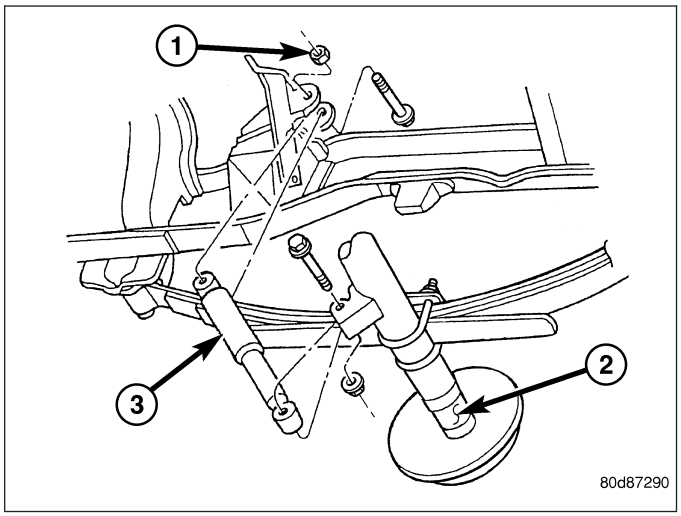

27. Install the trailer hitch (1) (Refer to 13 - FRAME & BUMPERS/FRAME/TRAILER HITCH - INSTALLATION).

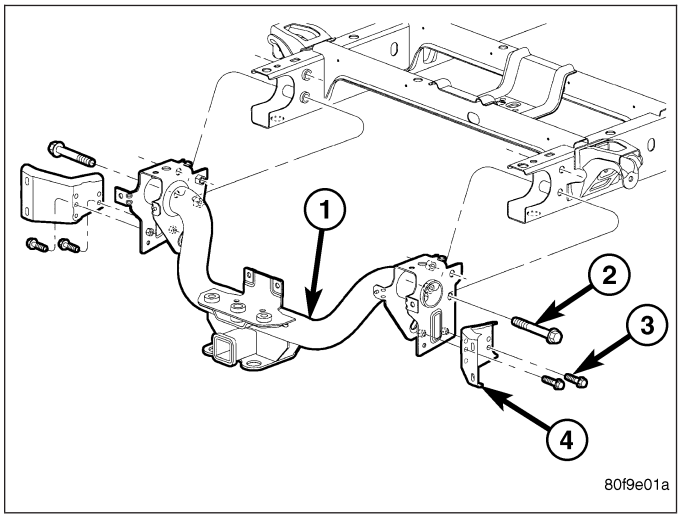

28. Install the cargo box (1) (Refer to 23 - BODY/EXTERIOR/CARGO BOX - INSTALLATION).
29. Reconnect the battery negative cable.

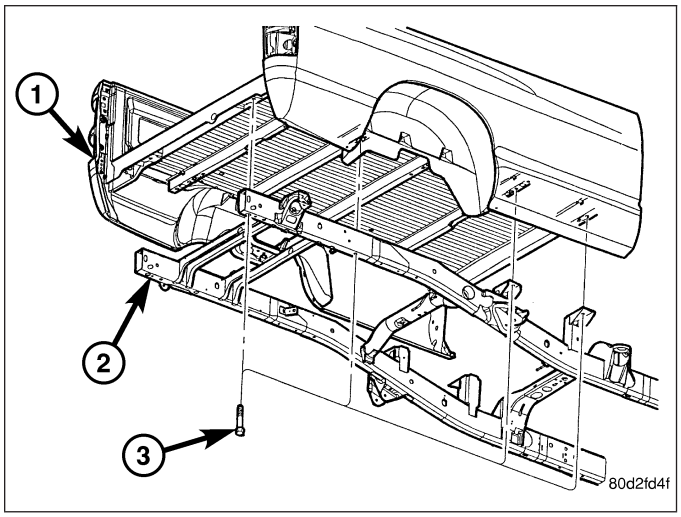

SPECIFICATIONS

WELD PROCESS

CAUTION: All welds should conform to DaimlerChrysler vehicle engineering process standard “ps 9472”.

WELDING PARAMETERS

WELDING PROCESS	FLUX CORED ARC	GAS METAL ARC (MIG)*	SHIELDED METAL ARC (STICK)
Material Thickness	3.7 mm to 4.2 mm	3.7 mm to 4.2 mm	3.7 mm to 4.2 mm
Electrode Type	Lincoln Electrical Co. Product #: NR-211 MP **(Do Not Substitute)**	AWS ER70S-3 **(Do Not Substitute)**	** AWS E 7018
Electrodes Size Inches	.045 Tubular	.035 Solid	3/32″
Electrode Stick Out	3/8″ - 1/2″	1/2″ - 5/8″	N/A
Polarity	Electrode ″-″ Work Piece ″+″	Electrode ″+″ Work Piece ″-″	Electrode ″+″ Work Piece ″-″
Shielding Gas	Self Shielded	75% Ar 25% CO2	Self Shielded
Gas Flow Rate	N/A	25 - 35 CFM	N/A
Wire Feed Speed (inches per minute)	110 - 130 Vertical Down 70 - 90 Flat & Overhead	245 - 250 Vertical Down 210 - 225 Flat & Overhead	N/A
Approximate Amperage			
Vertical	110 - 130	175	85 (3/32″ Diameter)
Flat & Overhead	70 - 90	155	90 (3/32″ Diameter)
Voltage	15 - 18	19 - 20	N/A
Direction of Welding			
Vertical	Vertical Down Hill (only)	Vertical Down Hill (only)	Vertical - Up Hill (only)
Flat & Overhead	Flat - Push or Drag	Flat - Push or Drag	Flat - Drag

***First choice - Gas Metal Arc Welding Process:** Butt joints - apply two layers (passes) of weld metal. First pass should only fill approximately ½ the thickness. Vertical position welds - maintain electrode wire at leading edge of weld puddle while traveling down hill to produce maximum penetration into the sleeve. These techniques work for FCAW as well.

****E7018** new electrodes may be exposed to the atmosphere for up to ten hours with no harmful effect. Reconditioning schedules should come from the manufacturer.

FRAME DIMENSIONS

NOTE: Frame dimensions are listed in metric scale. All dimensions are from center to center of Principal Locating Point (PLP), or from center to center of PLP and fastener location.

VEHICLE PREPARATION

Position the vehicle on a level work surface. Using screw or bottle jacks, adjust the vehicle PLP heights to the specified dimension above a level work surface. Vertical dimensions can be taken from the work surface to the locations indicated were applicable.

INDEX

DESCRIPTION	FIGURE
Frame Dimensional Graphics, Side And Top View	1
140.5 In Wheelbase - Heavy Duty - 2 Wheel Drive	2
140.5 In Wheelbase - Heavy Duty - 4 Wheel Drive	3
160.5 In Wheelbase - Heavy Duty - 2 Wheel Drive	4
160.5 In Wheelbase - Heavy Duty - 4 Wheel Drive	5

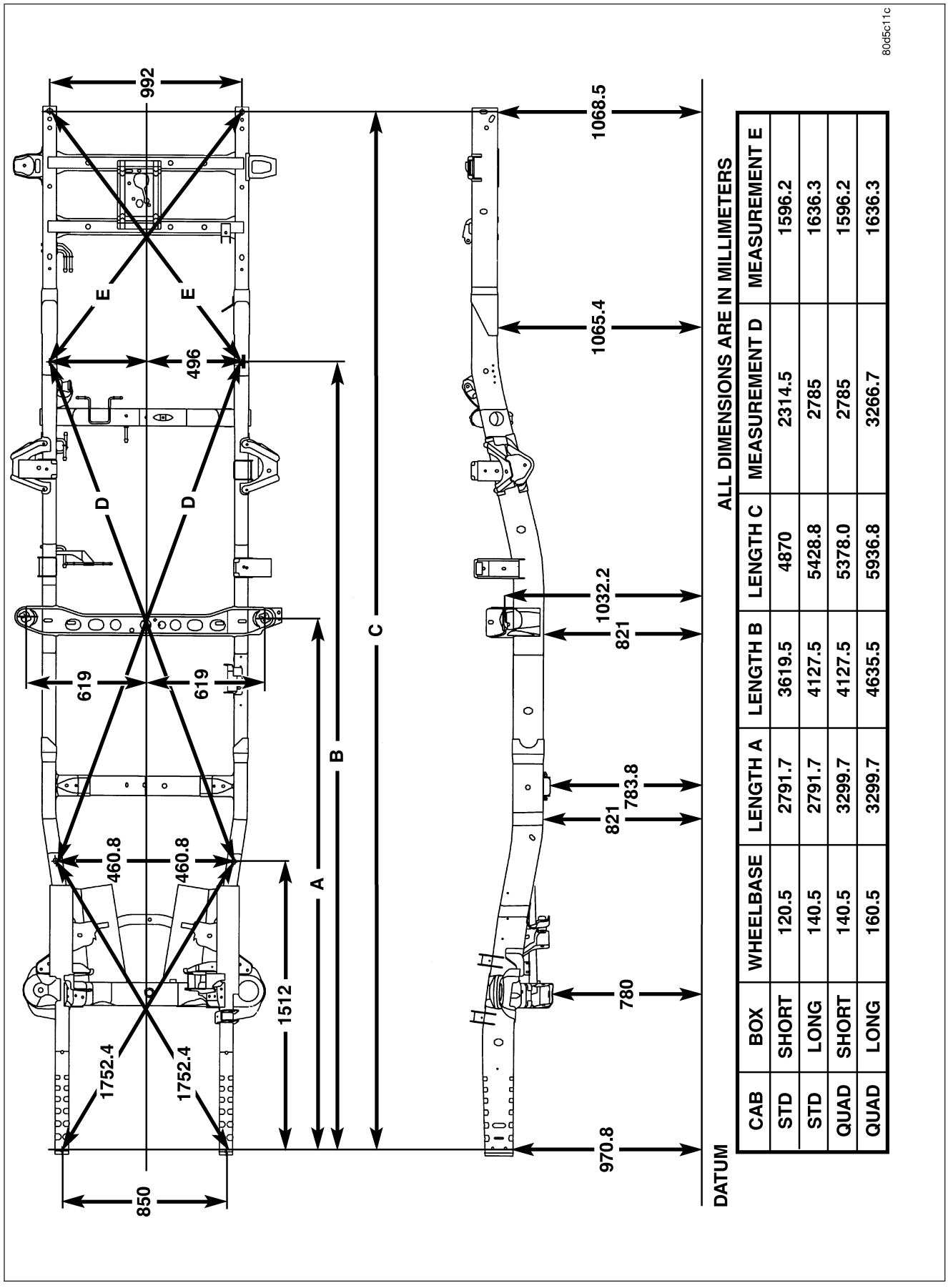

CAB	BOX	WHEELBASE	LENGTH A	LENGTH B	LENGTH C	MEASUREMENT D	MEASUREMENT E
STD	SHORT	120.5	2791.7	3619.5	4870	2314.5	1596.2
STD	LONG	140.5	2791.7	4127.5	5428.8	2785	1636.3
QUAD	SHORT	140.5	3299.7	4127.5	5378.0	2785	1596.2
QUAD	LONG	160.5	3299.7	4635.5	5936.8	3266.7	1636.3

Fig. 1 FRAME DIMENSIONS

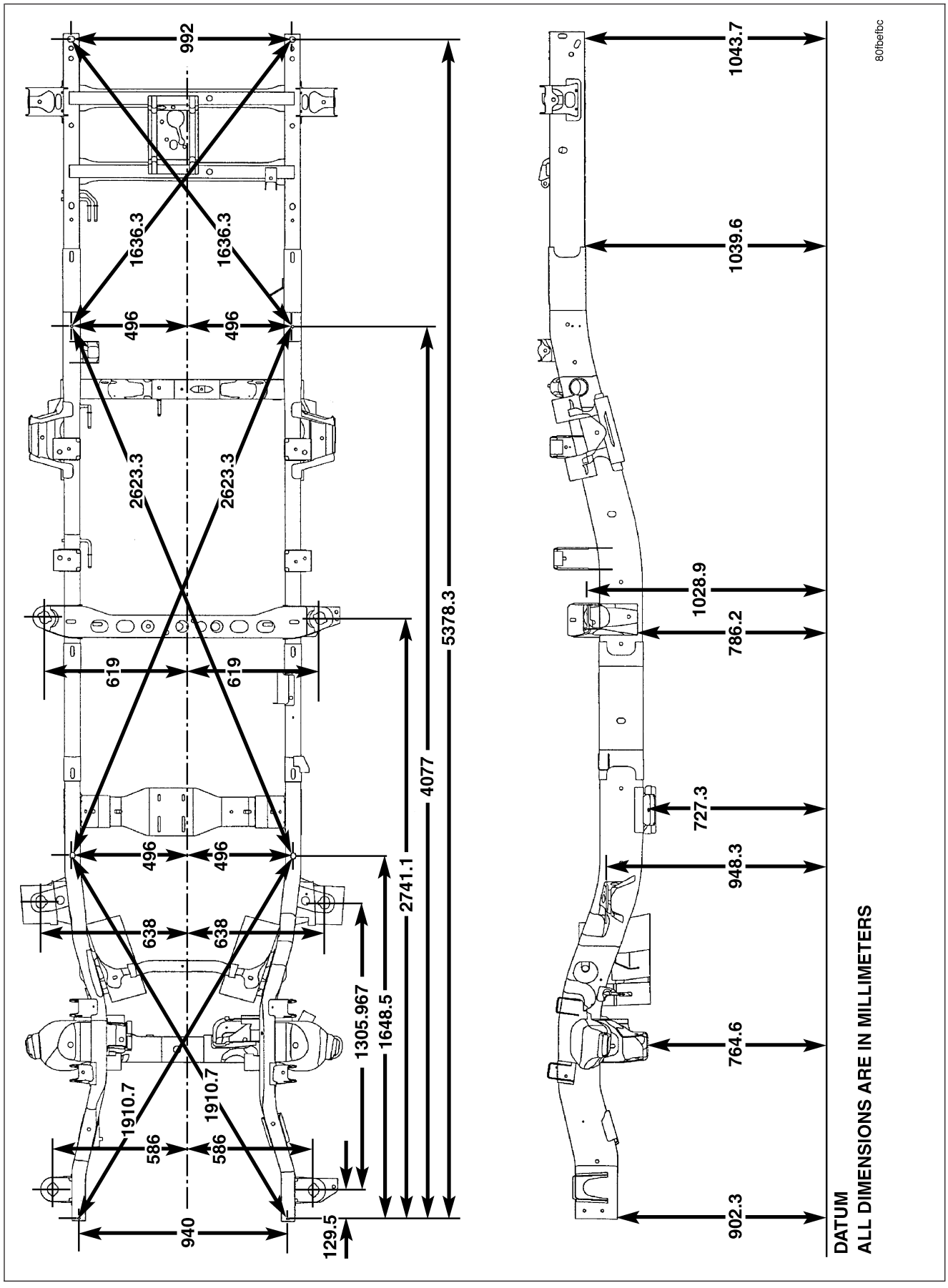

Fig. 2 140.5 IN WHEELBASE - HEAVY DUTY - 2 WHEEL DRIVE

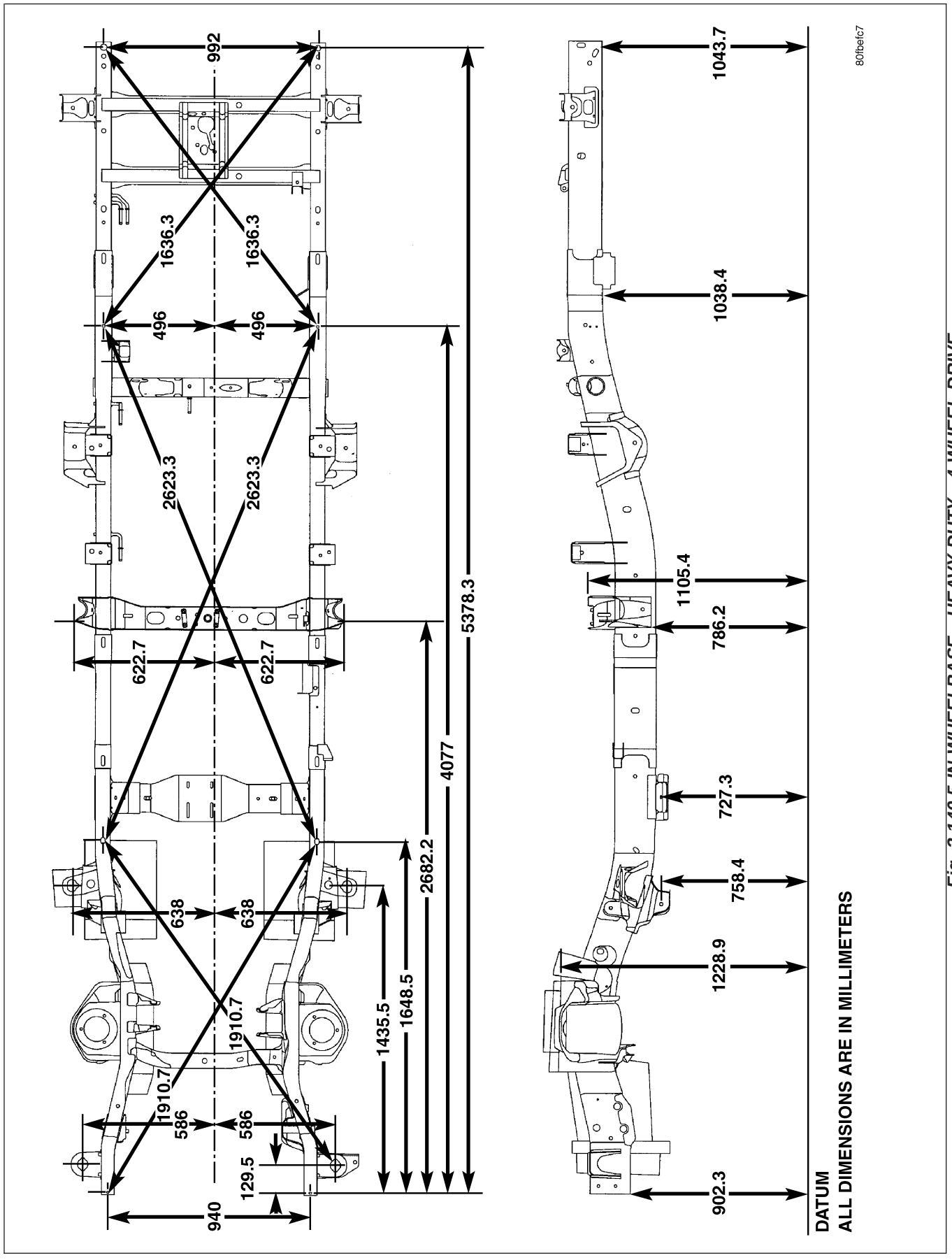

Fig. 3 140.5 IN WHEELBASE - HEAVY DUTY - 4 WHEEL DRIVE

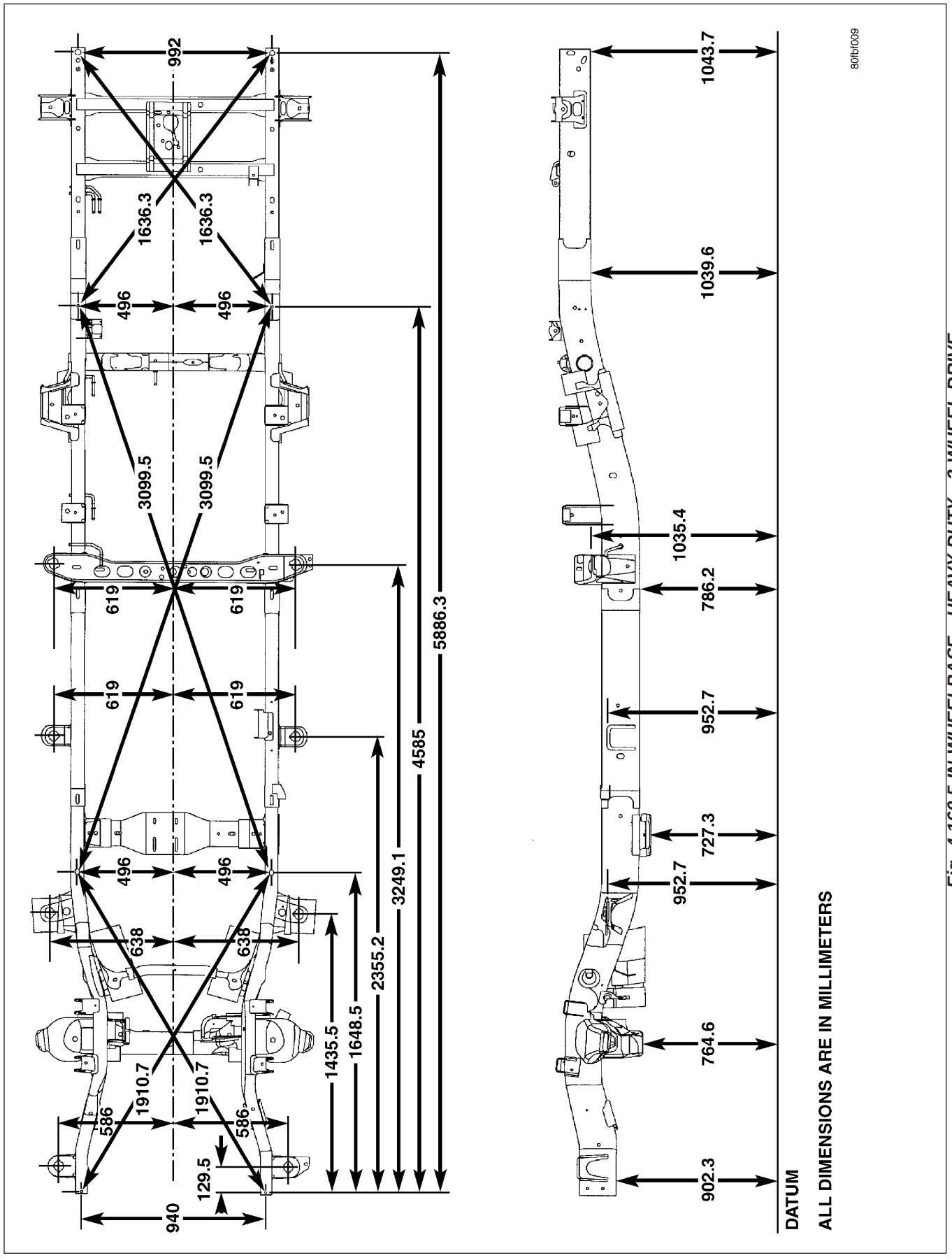

Fig. 4 160.5 IN WHEELBASE - HEAVY DUTY - 2 WHEEL DRIVE

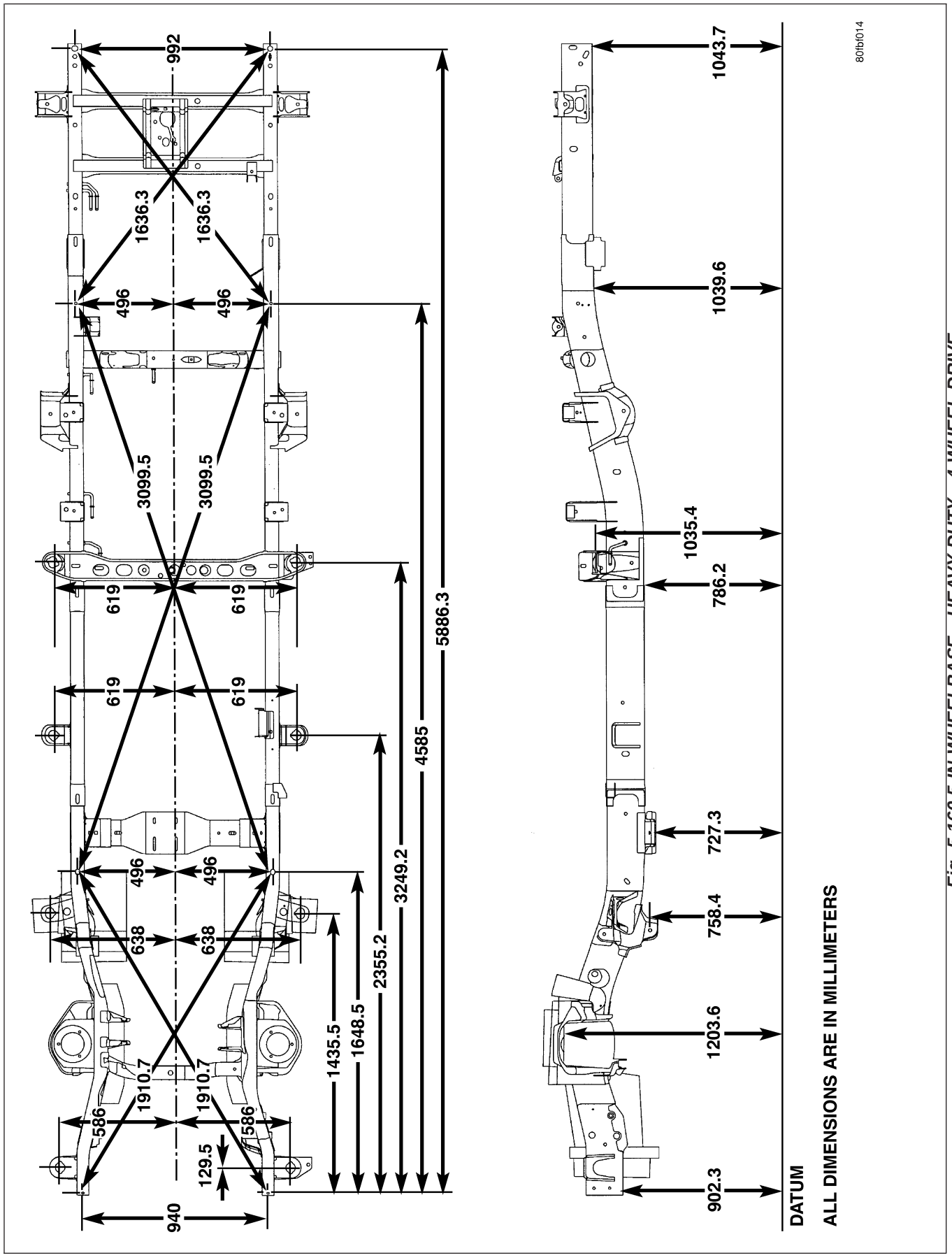

Fig. 5 160.5 IN WHEELBASE - HEAVY DUTY - 4 WHEEL DRIVE

TORQUE

TORQUE SPECIFICATIONS

DESCRIPTION	N·m	Ft. Lbs.
Cab mount bolts	81	60
Cargo box bolts	108	80
Front crossmember bolts - 2WD (light duty only)	61	45
Front crossmember bolts - 2WD (heavy duty only)	75	55
Front crossmember bolts - 4WD (light duty only)	102	75
Front skid plate bolts	34	25
Lower bumper support bracket bolt	54	40
Radiator crossmember bolts - lower	28	21
Radiator crossmember bolts - upper	28	21
Rear crossmember (light duty only)	102	75
Rear crossmember (heavy duty only)	115	85
Rear spring shackle bolts	163	120
Spare tire winch bolts	41	30
Trailer hitch reinforcement bracket bolt	170	125
Transfercase skid plate bolts	34	25
Transercase skid plate crossmember bolts	34	25
Transmission mount to crossmember nuts	54	40

FRONT CROSSMEMBER

REMOVAL

1. Raise and support the vehicle (Refer to LUBRICATION & MAINTENANCE/HOISTING - STANDARD PROCEDURE).

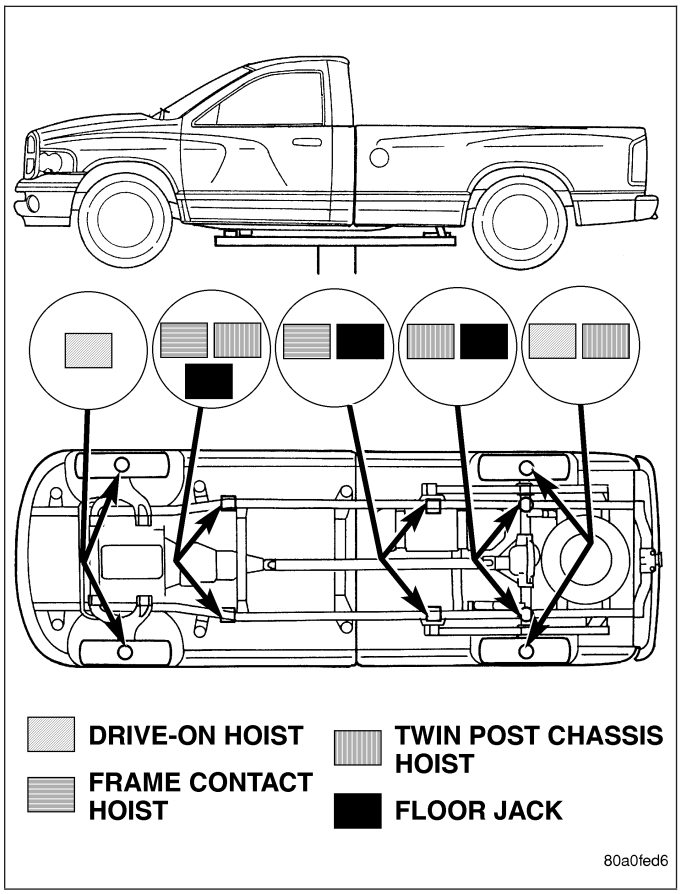

2. Remove the front skid plate (2 - if equipped) (Refer to 13 - FRAME & BUMPERS/FRAME/FRONT SKID PLATE - REMOVAL).

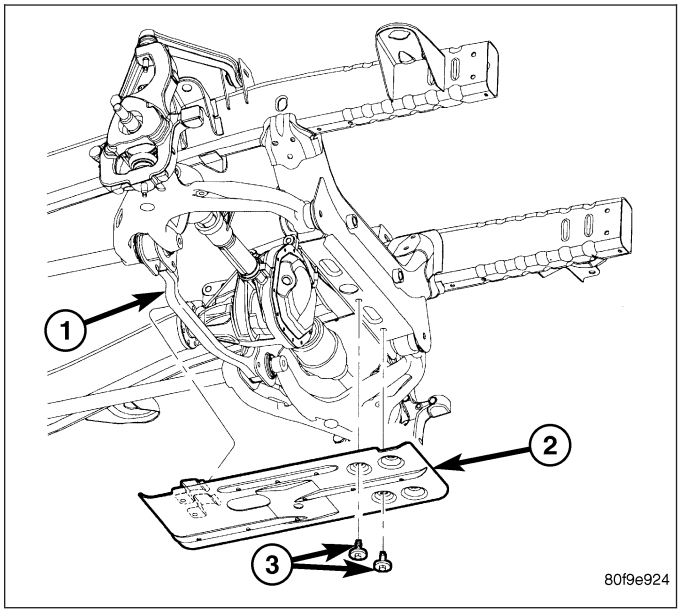

3. On the 2WD models, remove the bolts (2) and remove the crossmember (1).

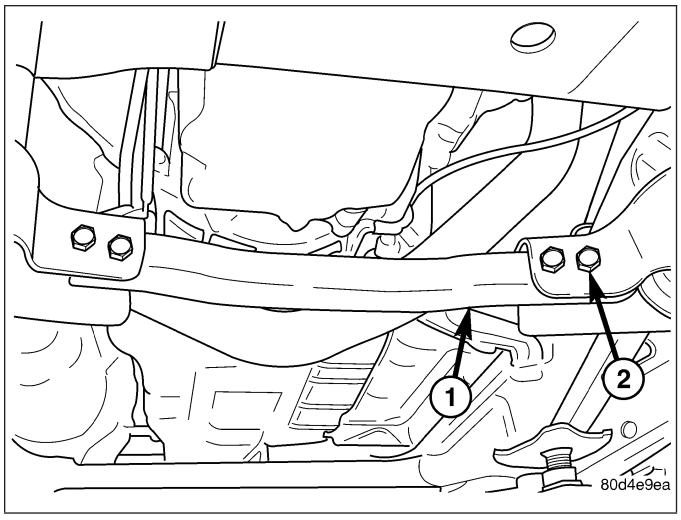

CAUTION: Do not use any flame or plasma cutting equipment to cut the frame in this procedure. This is due to the inaccurate nature of the cut-line and the fact that the high temperatures achieved during flame or plasma cutting will change the metal characteristics and may weaken the frame and/or repair location.

4. On SRT-10 vehicles, remove the welds using a grinder or equivalent.

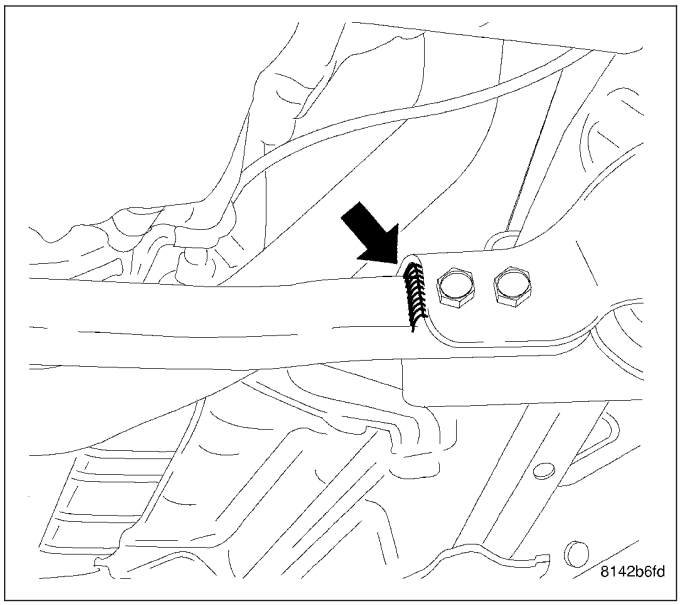

5. On the 4WD models, remove the bolts (1) and remove the crossmember (2).

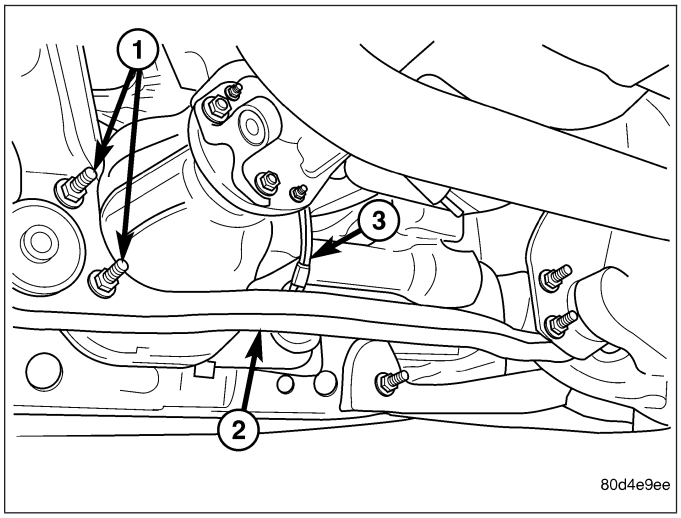

INSTALLATION

1. Install the crossmember (1).
2. Install the bolts (2);
   - On light duty 2WD vehicles, tighten the bolts to 61 N·m (45 ft. lbs.).
   - On heavy duty 2WD vehicles, tighten the bolts to 75 N·m (55 ft. lbs.).

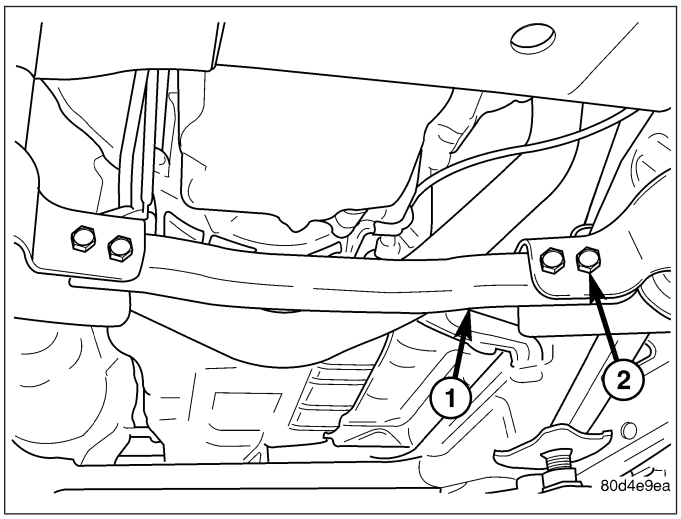

3. On 4WD models, install the crossmember (2).
4. Install the bolts (1) and tighten to 102 N·m (75 ft. lbs.).

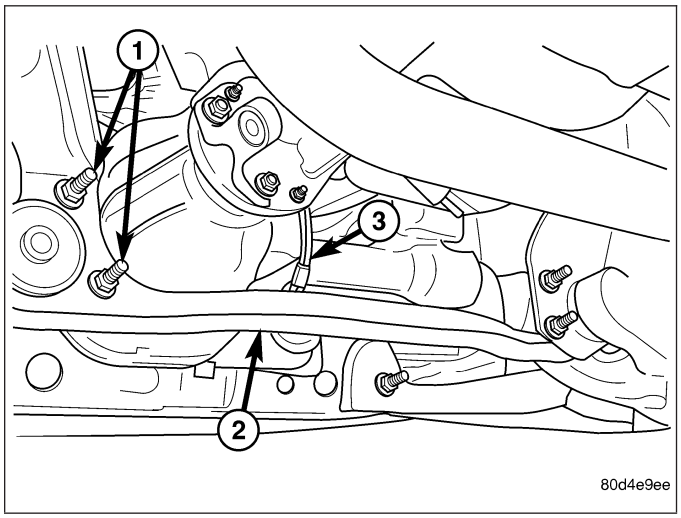

5. Remove all OEM e-coat within 51 mm (2.0 in.) of the weld on both the crossmember and the frame.

CAUTION: Shield the surrounding area and components from exposure to the welding spatter and heat.

6. Using the Weld Process Specifications table (Refer to 13 - FRAME & BUMPERS/FRAME - SPECIFICATIONS - WELDING), apply new welds to the SRT-10 crossmember.

NOTE: Any burned surface coatings will need to be removed prior to application of corrosion preventative coatings.

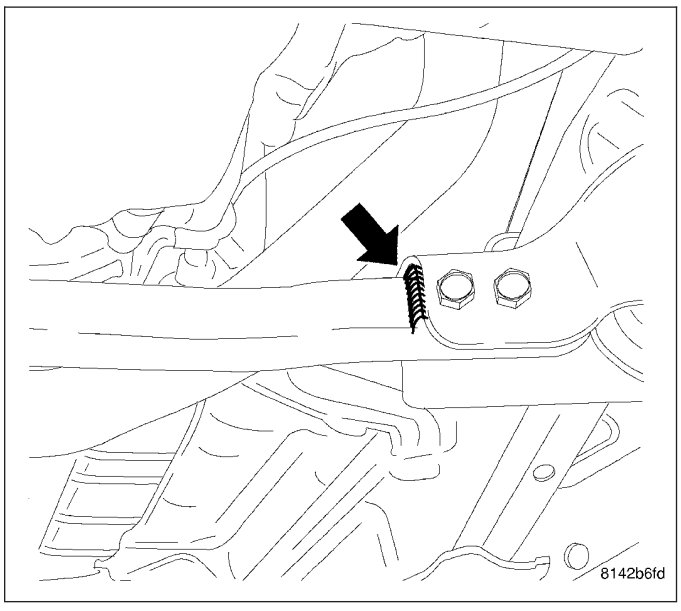

7. Dress the welded area and apply corrosion resistant coatings.
   a. Apply etch-primer to the repair area.
   b. Apply a durable top coat to the outside of the repair area.

8. Install the front skid plate, if equipped (2) (Refer to 13 - FRAME & BUMPERS/FRAME/FRONT SKID PLATE - INSTALLATION)

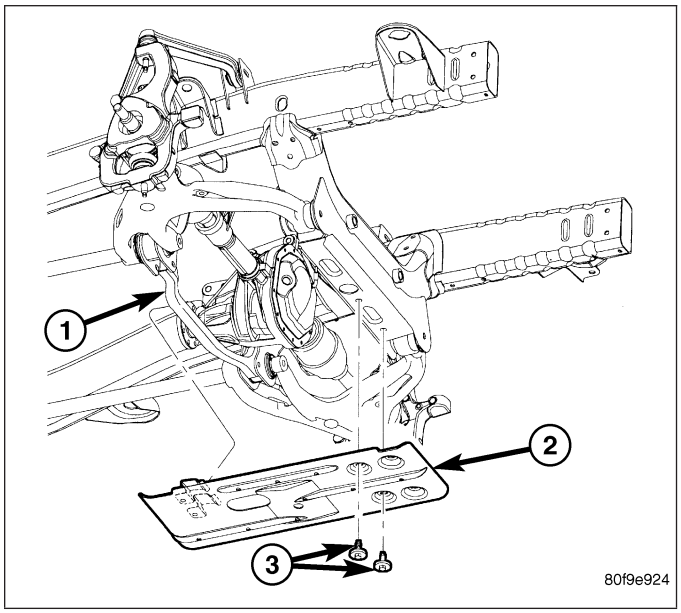

FRONT SKID PLATE

REMOVAL

1. Raise and support the vehicle (Refer to LUBRICATION & MAINTENANCE/HOISTING - STANDARD PROCEDURE).

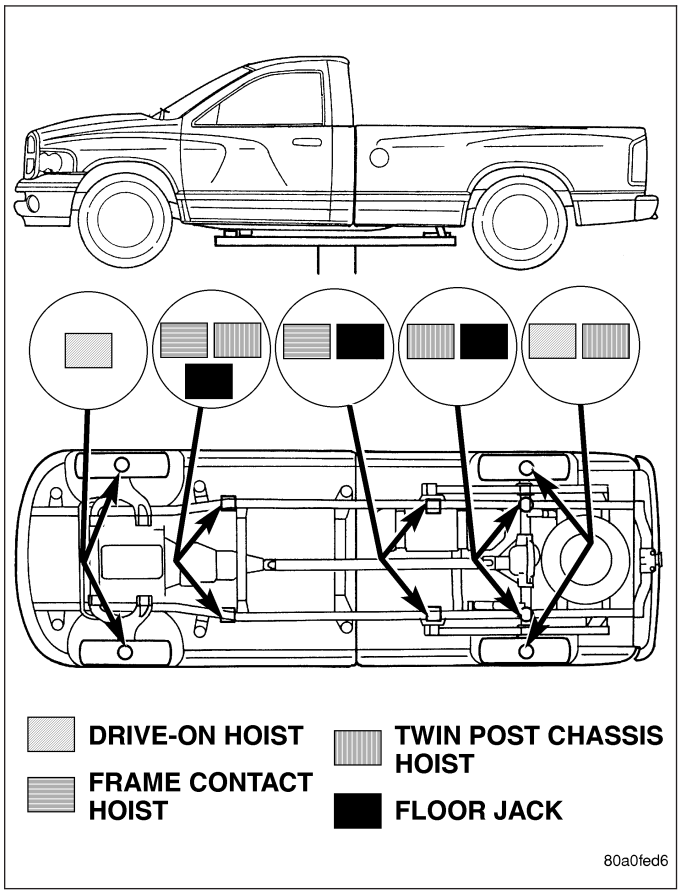

2. Remove the bolts (3).
3. Slide skid plate (2) back off of the crossmember (1) and remove.

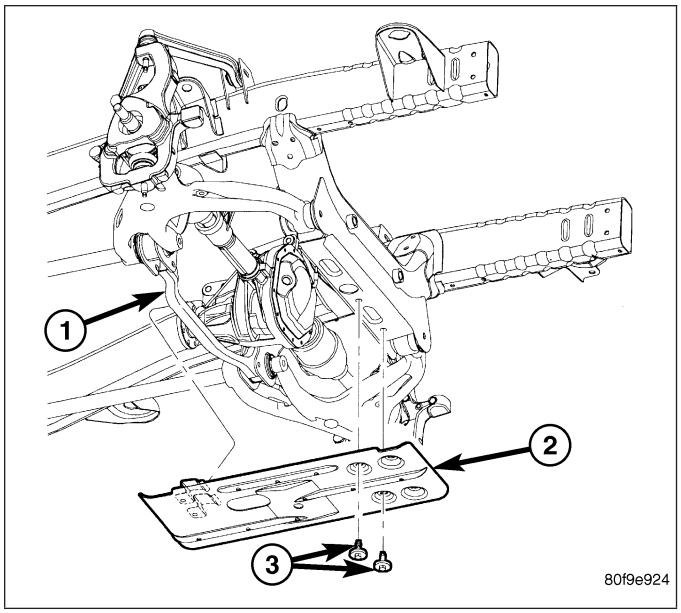

INSTALLATION

1. Snap the rear tabs over the front crossmember (1) and install the skid plate (2).
2. Install the bolts (3) and tighten to 34 N·m (25 ft. lbs.).

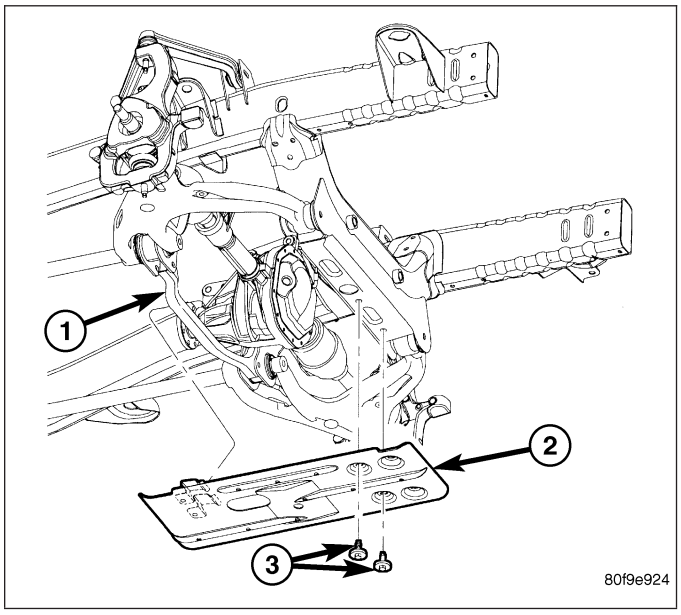

FRONT TOW HOOK ASSEMBLY

REMOVAL

1. Remove front bumper (Refer to 13 - FRAME & BUMPERS/BUMPERS/FRONT BUMPER - REMOVAL).

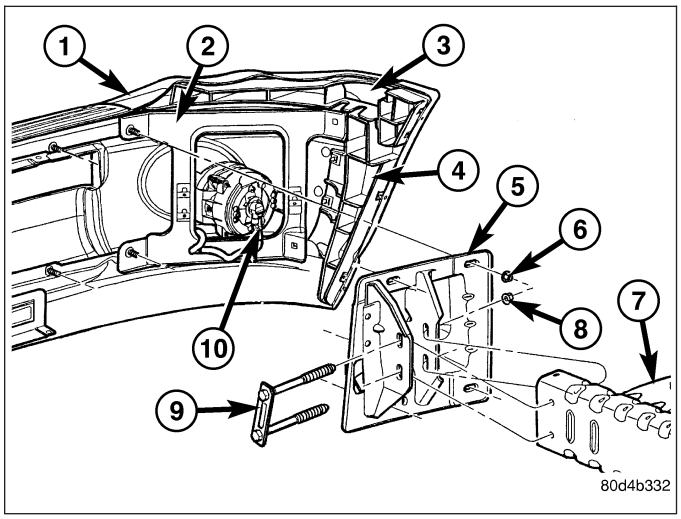

2. Remove the bolts (2) and remove the tow hook assembly (3).

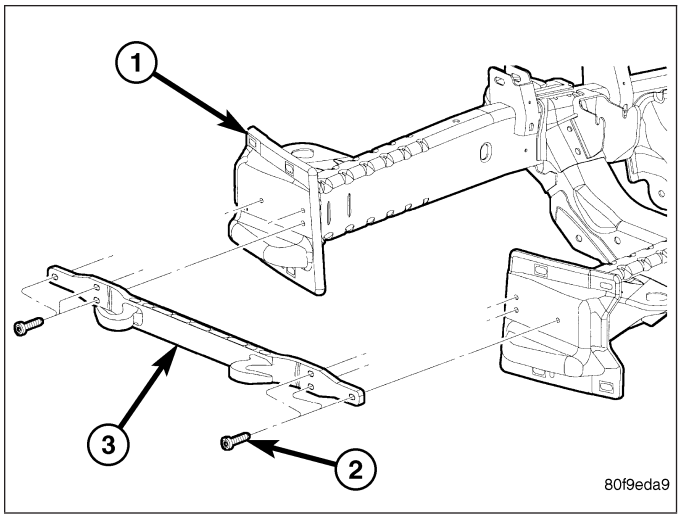

3. If the vehicle is a **Heavy Duty**, then remove the bolts (1) and remove the tow hook (2).

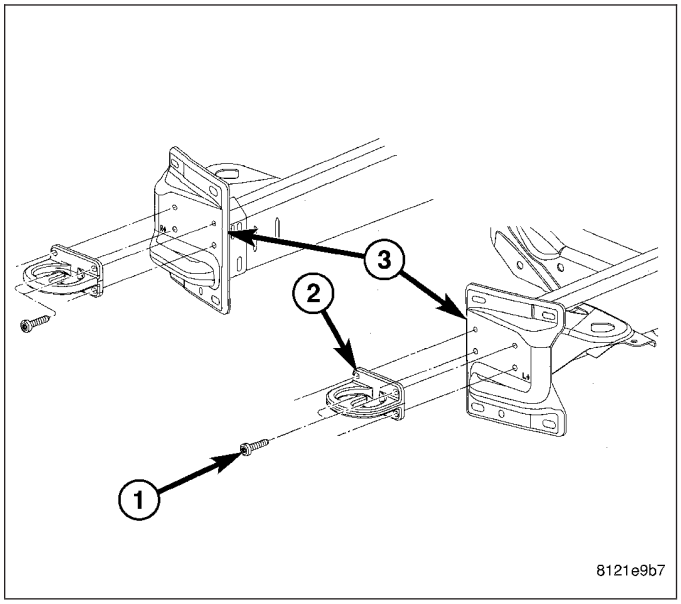

INSTALLATION

1. Install the tow hook assembly (3) and bolts (2) hand tight.

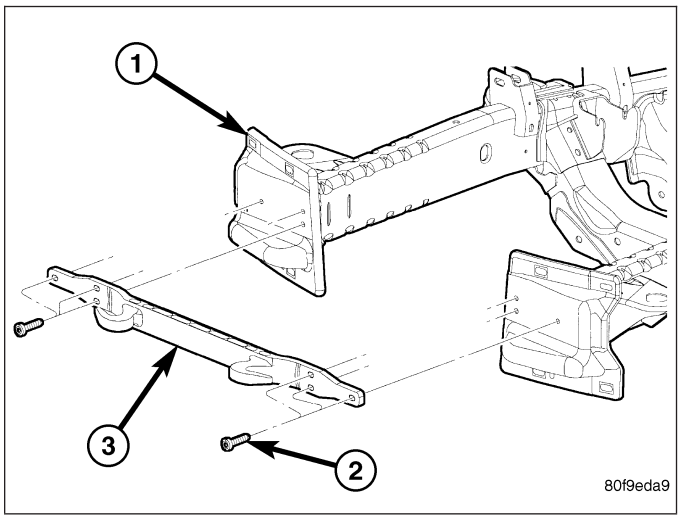

2. If vehicle is a **Heavy Duty**, install the tow hook (2) and bolts (1) hand tight.

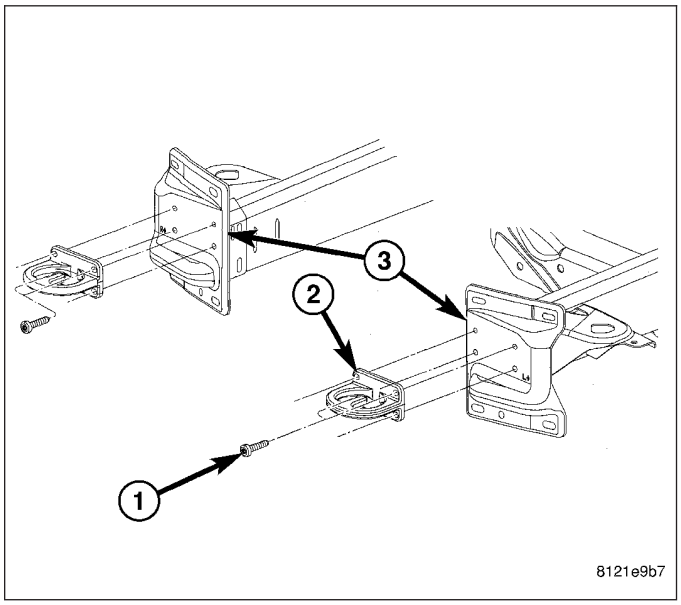

3. Install the front bumper (Refer to 13 - FRAME & BUMPERS/BUMPERS/FRONT BUMPER - INSTALLATION).
4. Line up the tow hooks/tow hook assembly and tighten the bolts to 68 N·m (50 ft. lbs.).

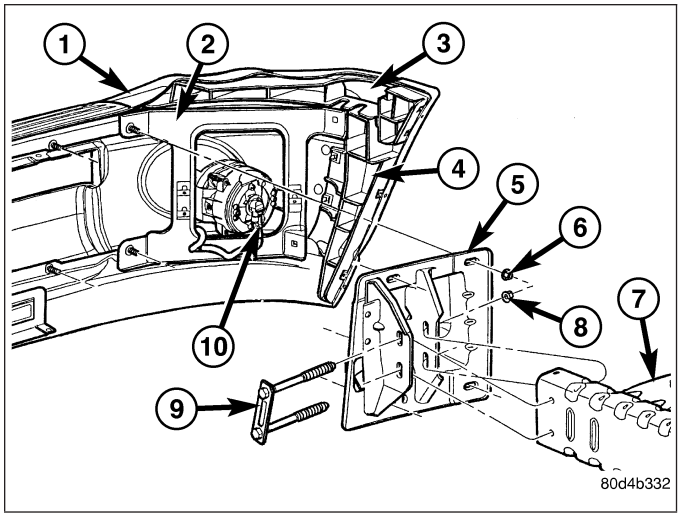

TRANSMISSION CROSSMEMBER

REMOVAL

1. Raise and support the vehicle (Refer to LUBRICATION & MAINTENANCE/HOISTING - STANDARD PROCEDURE).

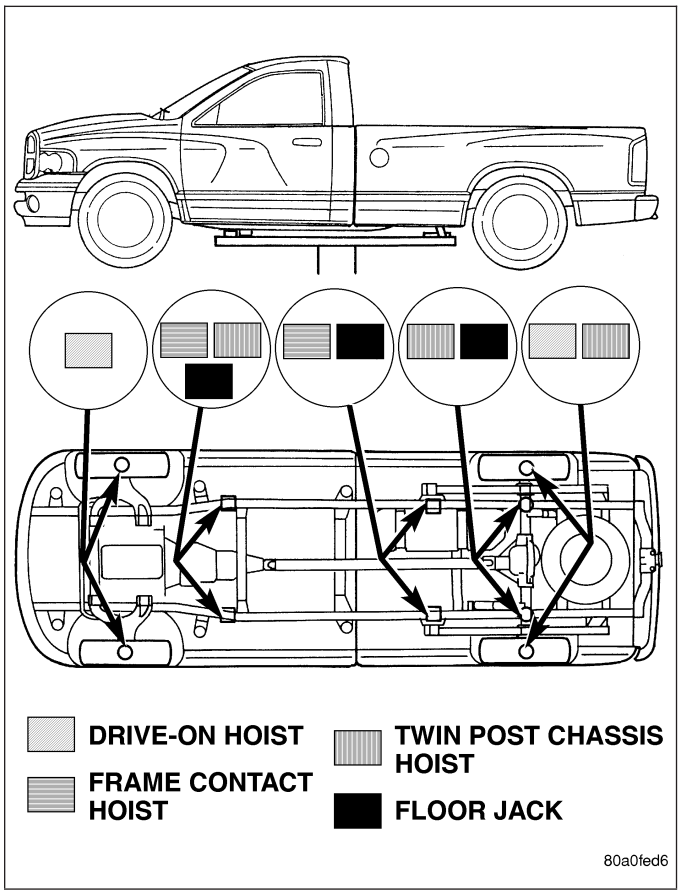

2. Remove the transfer case skid plate (3 - if equipped) (Refer to 13 - FRAME & BUMPERS/FRAME/TRANSFER CASE SKID PLATE - REMOVAL).

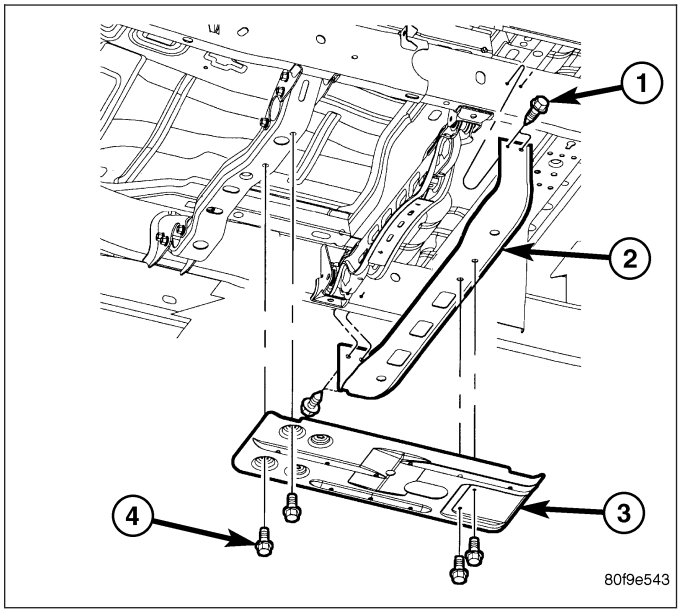

3. Support the transmission (1) with a transmission jack (2) or suitable lifting device.

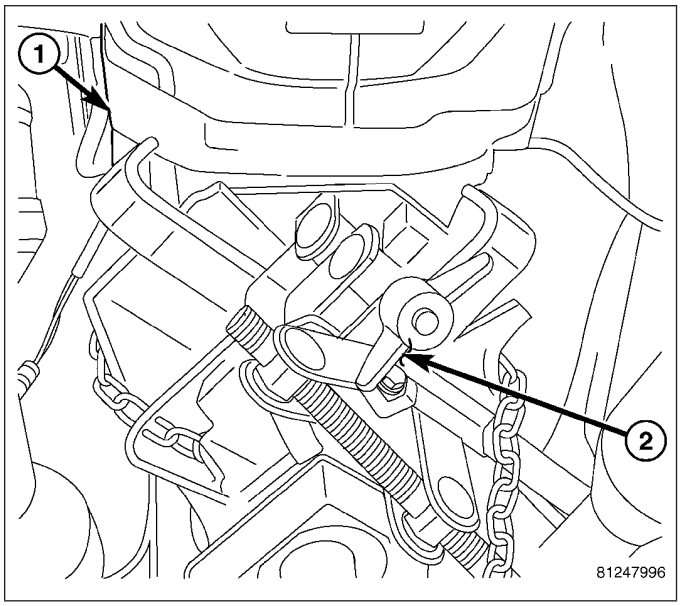

4. **2WD Vehicles** - Remove the transmission mount nuts (3).
5. Remove the bolts and remove the crossmember (2).

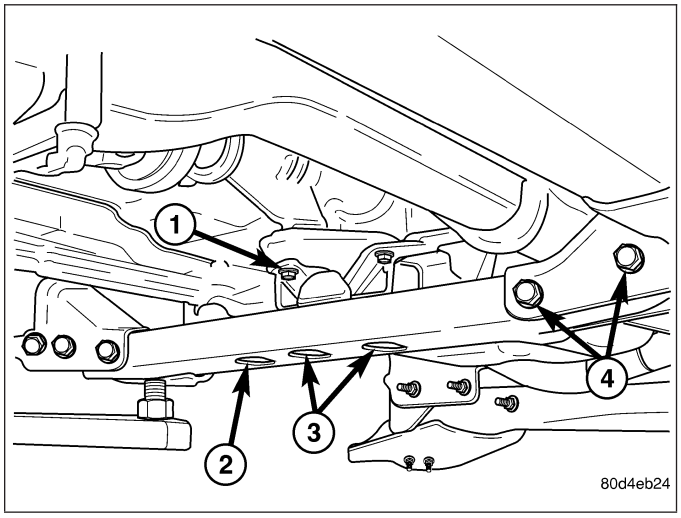

6. **4WD Vehicles** - Remove the transmission mount nuts (5).
7. Remove the bolts and remove the crossmember (3).

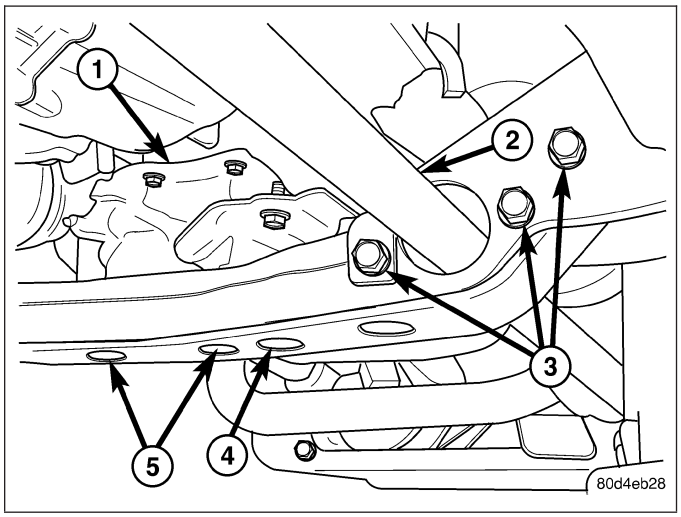

INSTALLATION

1. On **Light Duty Vehicles**, install the crossmember (2) and the bolts (4). Tighten the bolts to 102 N·m (75 ft. lbs.).
2. Install the transmission mount nuts and tighten to 54 N·m (40 ft. lbs.).

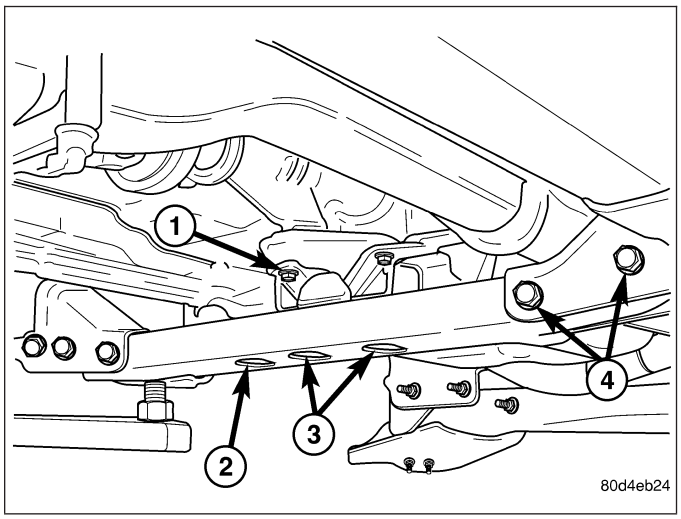

3. On **Heavy Duty Vehicles**, install the crossmember (4) and the bolts (3). Tighten the bolts to 115 N·m (85 ft. lbs.).
4. Install the transmission mount nuts and tighten to 54 N·m (40 ft. lbs.).

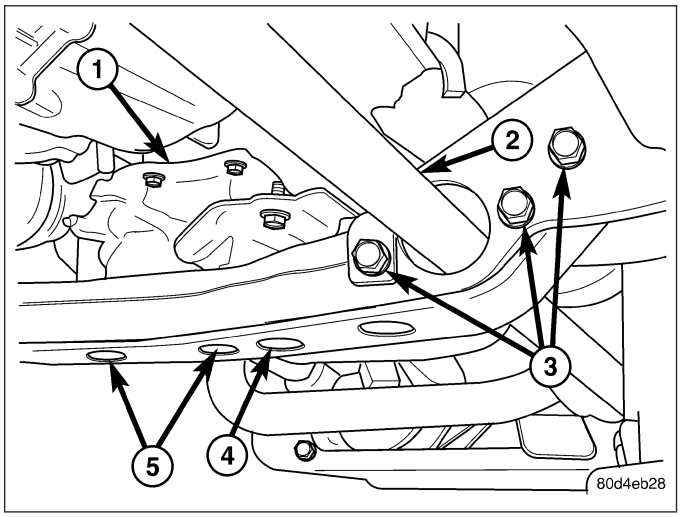

5. Remove the transmission support (2).

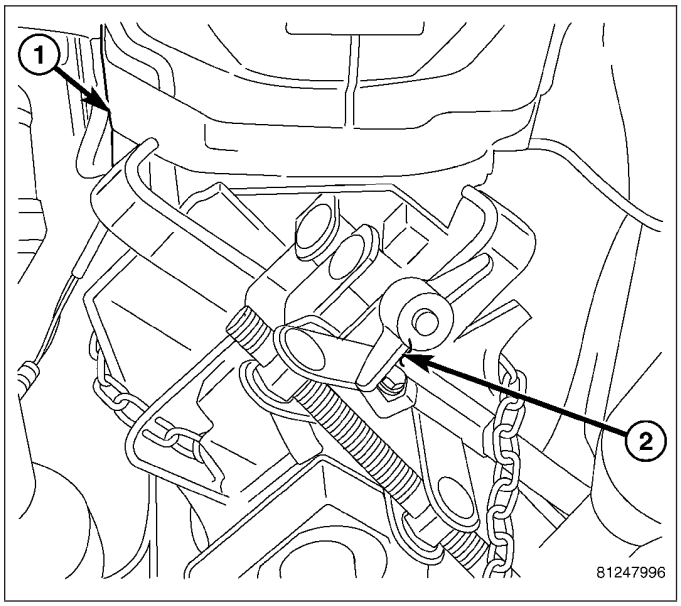

6. Install the transfer case skid plate (3 - if equipped) (Refer to 13 - FRAME & BUMPERS/FRAME/ TRANSFER CASE SKID PLATE - INSTALLATION).

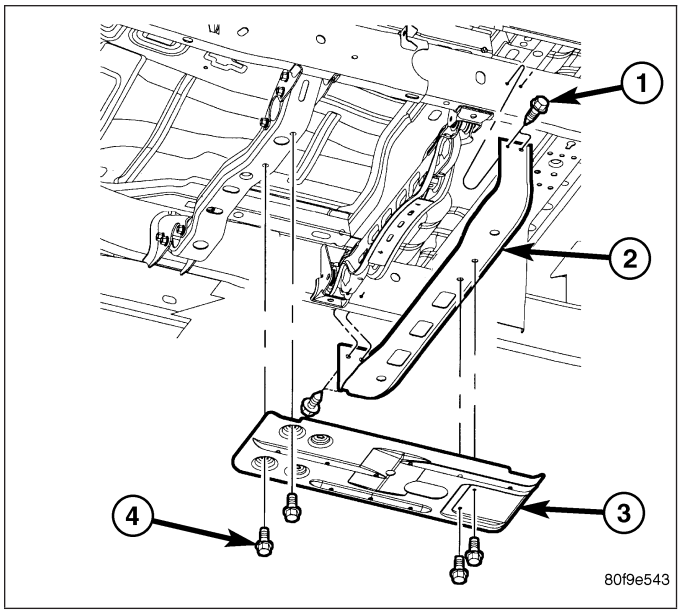

TRAILER HITCH

REMOVAL

1. Remove the rear bumper (Refer to 13 - FRAME & BUMPERS/BUMPERS/REAR BUMPER - REMOVAL).

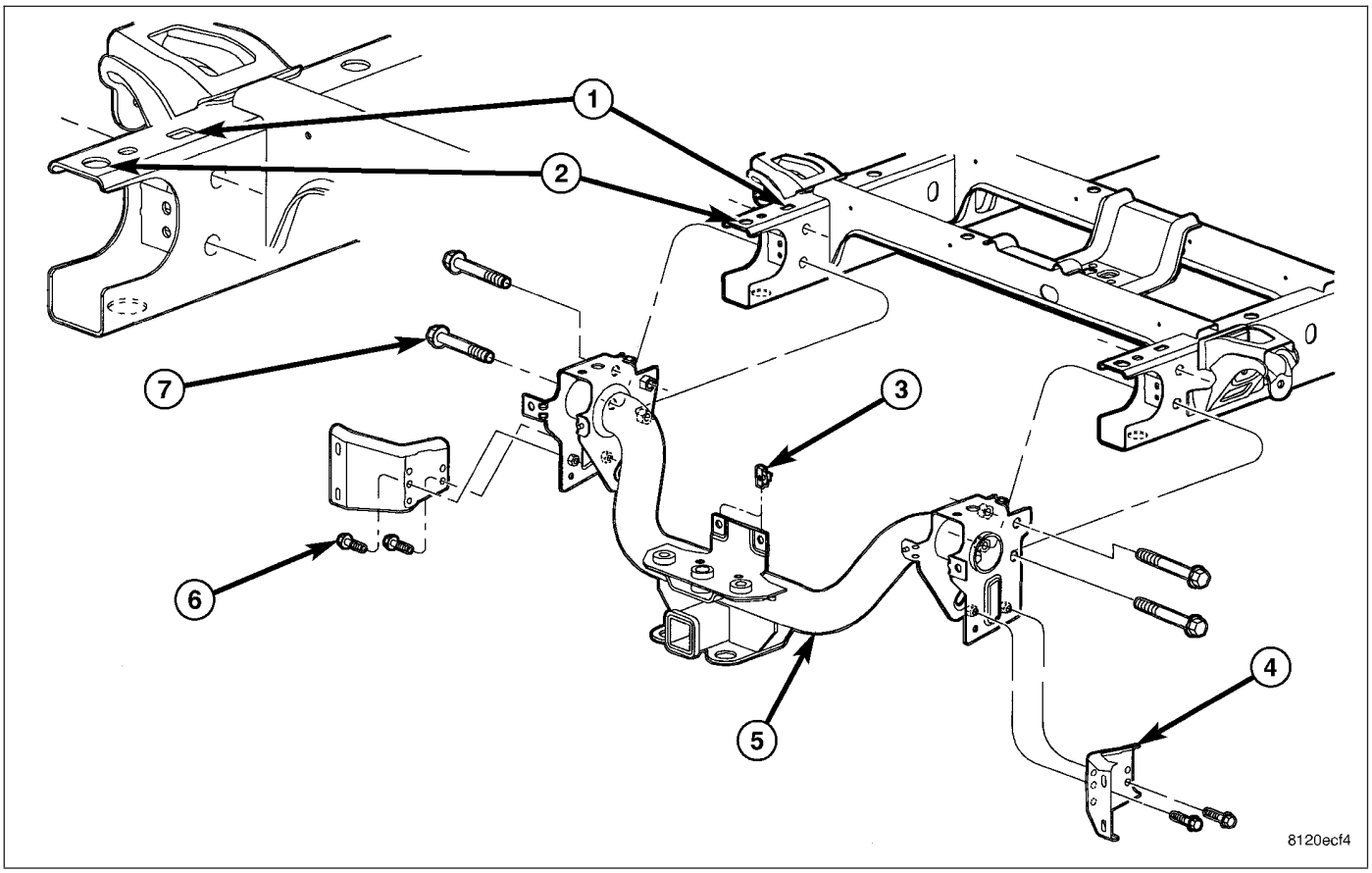

2. On **Light Duty Vehicles**, remove the hitch bolts (7)

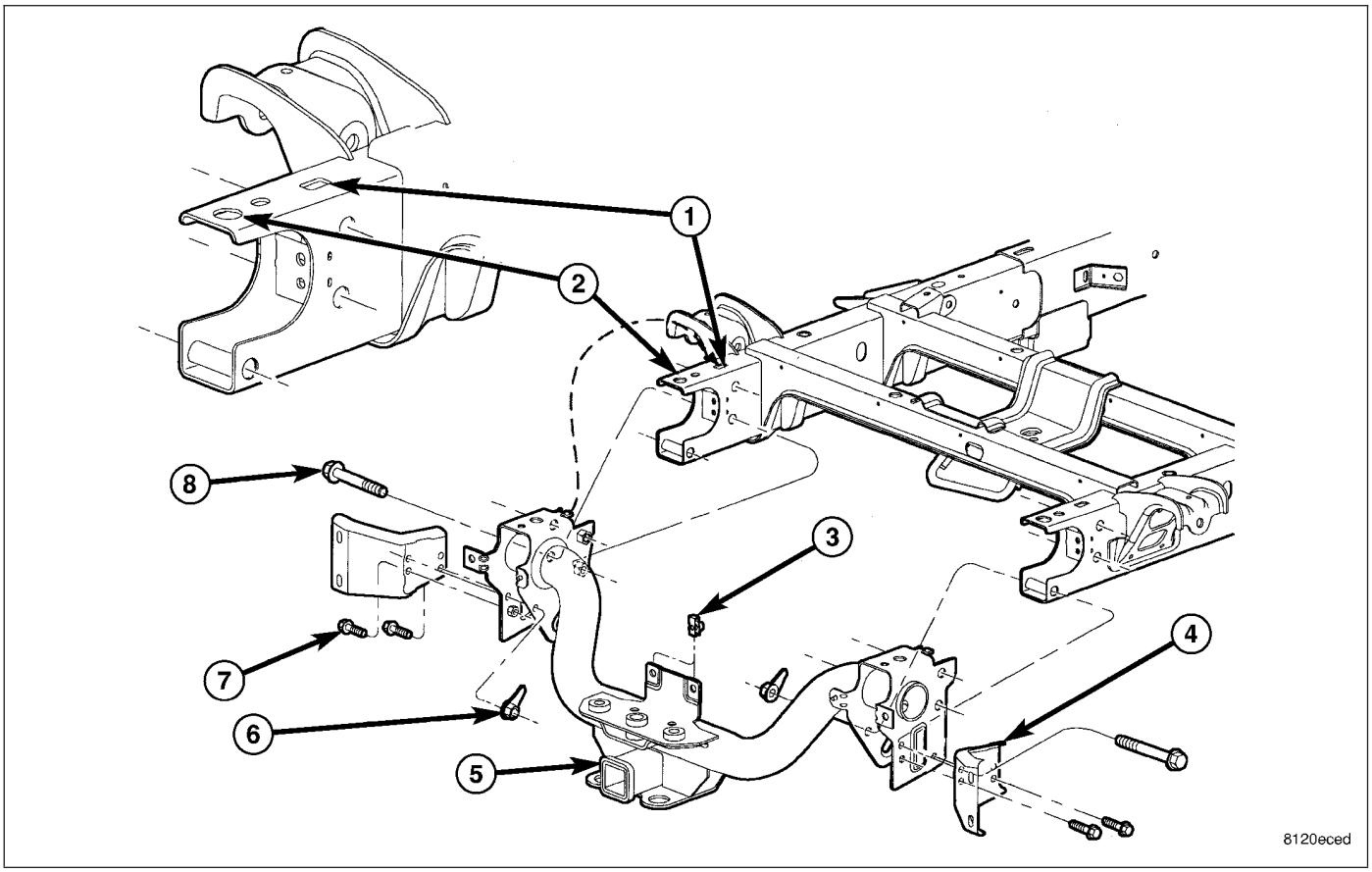

3. On **Heavy Duty Vehicles**, remove the hitch bolts (8)
4. Disconnect all wire harness support push pins.
5. Remove the rear two cargo box bolts (3) and loosen the remaining bolts (Refer to 23 - BODY/ EXTERIOR/CARGO BOX - REMOVAL).
6. Using a suitable lifting device, lift and support the rear of the cargo box and remove the hitch.

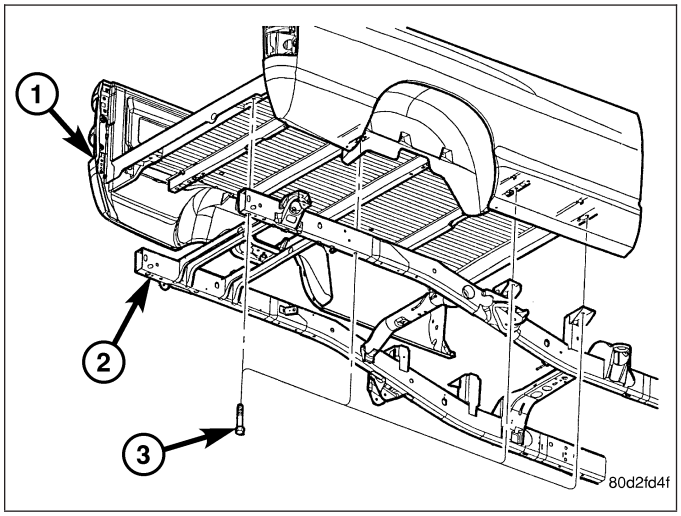

INSTALLATION

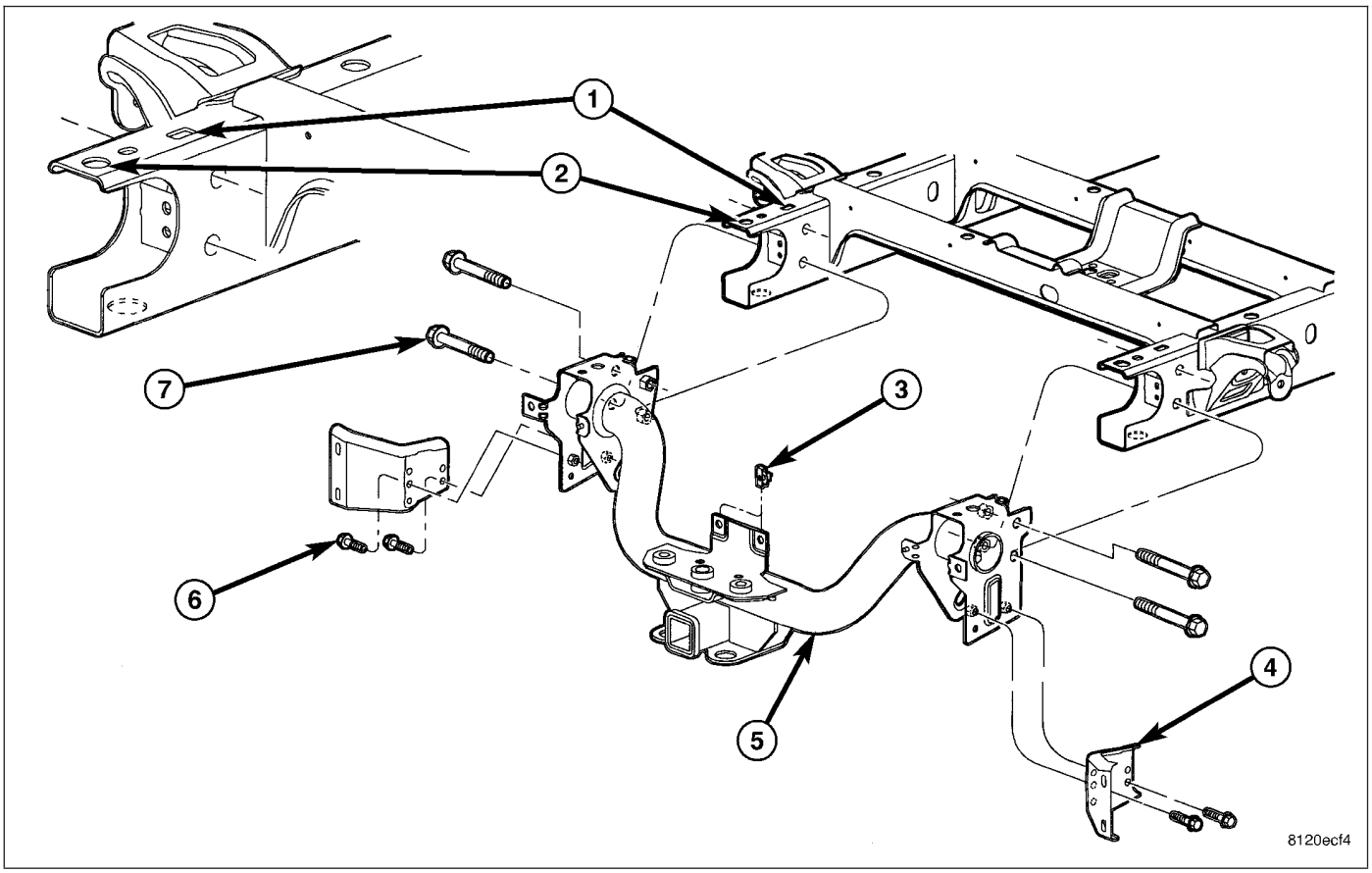

1. On **Light Duty Vehicles**, install the hitch (5) onto the frame rails and make sure the locators (1 and 2) on the inside of the hitch brackets are engaged with the holes in the top of the frame rails properly.
2. Install the hitch bolts (7) and tighten to 170 N·m (125 ft. lbs.).
3. Connect all wire harness support push pins.

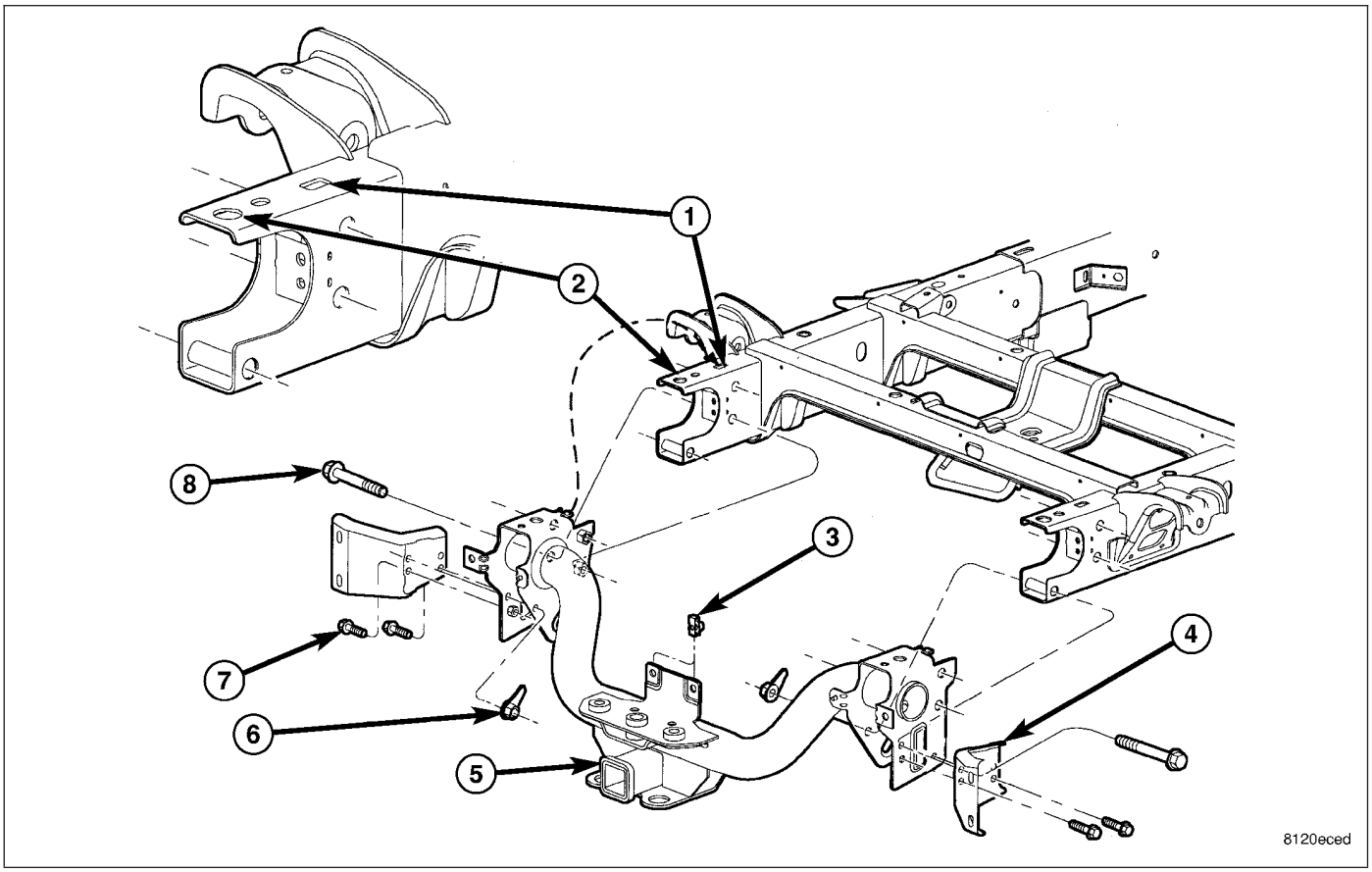

4. On **Heavy Duty Vehicles**, install the hitch (5) onto the frame rails and make sure the locators (1 and 2) on the inside of the hitch brackets are engaged with the holes in the top of the frame rails properly.
5. Install the hitch bolts (8) and tighten to 170 N·m (125 ft. lbs.).
6. Connect all wire harness support push pins.
7. Lower the cargo box and install the rear bolts (3) (Refer to 23 - BODY/EXTERIOR/CARGO BOX - INSTALLATION).
8. Install the rear bumper (Refer to 13 - FRAME & BUMPERS/BUMPERS/REAR BUMPER - INSTALLATION).

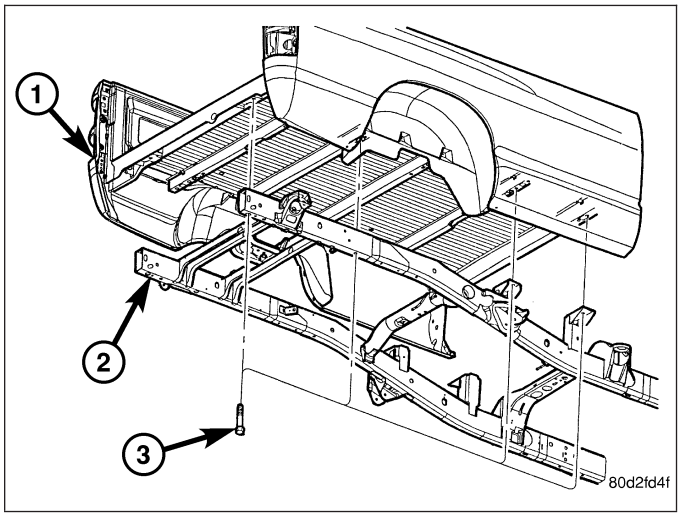

TRANSFER CASE SKID PLATE

REMOVAL

1. Raise and support the vehicle (Refer to LUBRICATION & MAINTENANCE/HOISTING - STANDARD PROCEDURE).

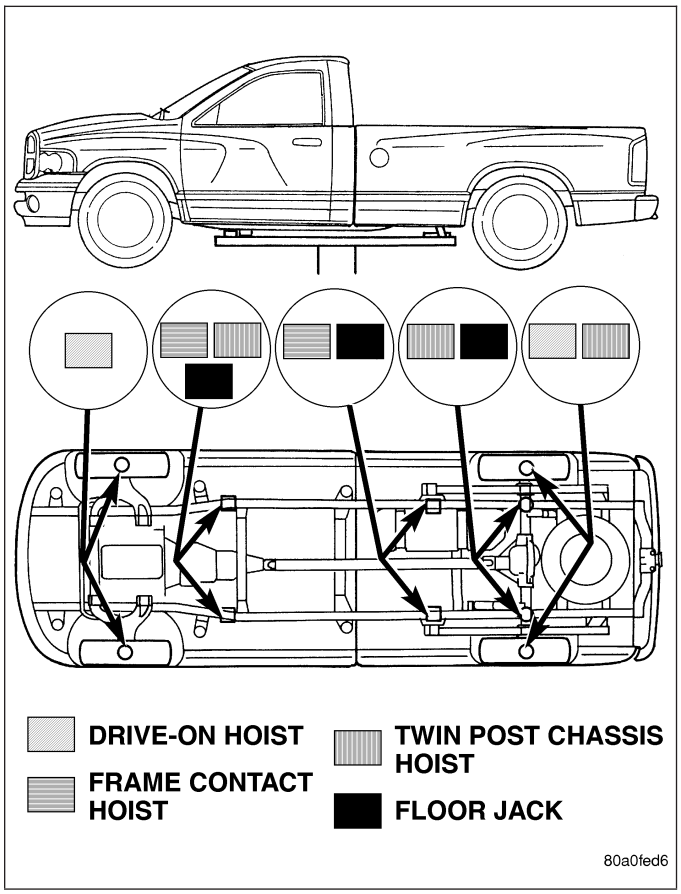

2. Support the skid plate (3) and remove the bolts (4).
3. Remove the skid plate (3).
4. Support the skid plate crossmember (2) and remove the bolts (1).
5. Remove the skid plate crossmember (2).

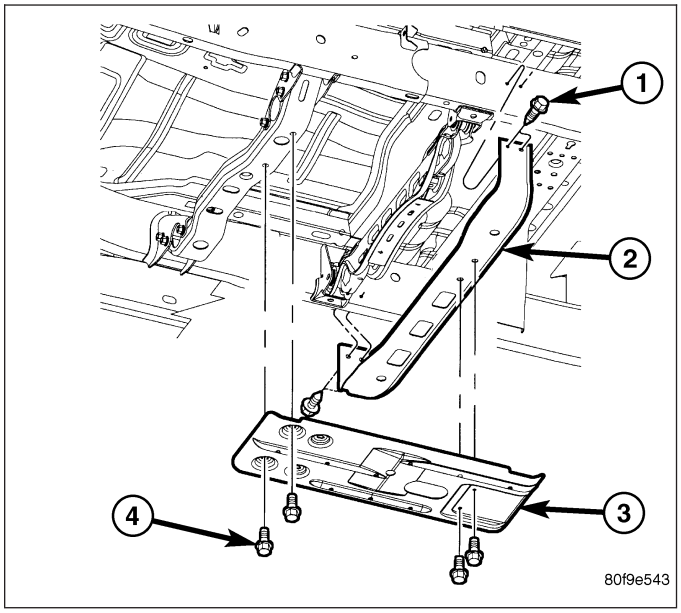

INSTALLATION

1. Install the skid plate crossmember (2) and bolts (1).
2. Tighten the bolts (1) to 34 N·m (25 ft. lbs.).
3. Install the skid plate (3) and bolts (4).
4. Tighten the bolts (4) to 34 N·m (25 ft. lbs.).

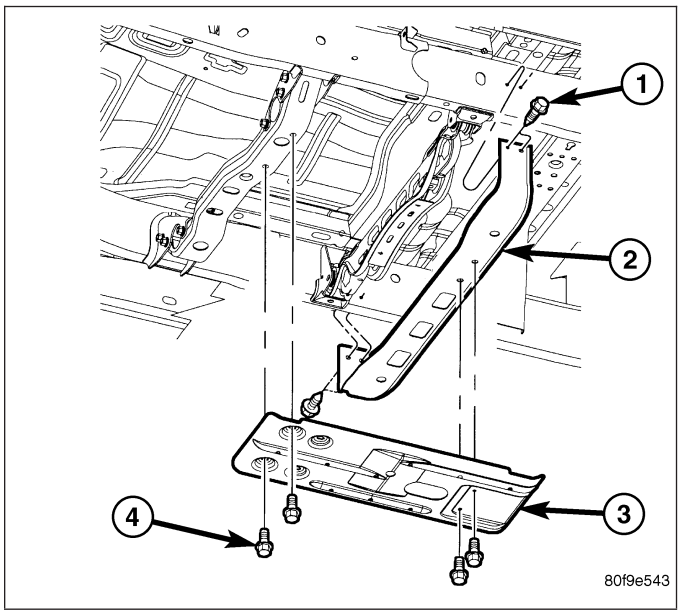

FUEL SYSTEM

TABLE OF CONTENTS

	page		page
FUEL DELIVERY - GAS	1	**FUEL DELIVERY - DIESEL**	98
FUEL INJECTION - GAS	42	**FUEL INJECTION - DIESEL**	126

FUEL DELIVERY - GAS

TABLE OF CONTENTS

	page		page
FUEL DELIVERY - GAS		OPERATION	15
DESCRIPTION	1	**MODULE - FUEL PUMP**	
OPERATION	4	DESCRIPTION	16
STANDARD PROCEDURE - FUEL SYSTEM PRESSURE RELEASE	4	OPERATION	16
SPECIFICATIONS		REMOVAL	16
FUEL SYSTEM PRESSURE	5	INSTALLATION	17
TORQUE - FUEL SYSTEM - EXCEPT DIESEL	5	**RAIL - FUEL**	
SPECIAL TOOLS		DESCRIPTION	17
FUEL SYSTEM	7	OPERATION	17
FUEL FILTER/PRESSURE REGULATOR		REMOVAL	
DESCRIPTION	8	3.7L V-6	17
OPERATION	8	4.7L V-8	18
SENSOR - FUEL LEVEL SENDING UNIT		5.7L V-8	20
DESCRIPTION	8	8.3L - SRT-10	23
OPERATION	8	INSTALLATION	
REMOVAL	9	3.7L V-6	27
INSTALLATION	10	5.7L V-8	28
LINES, FUEL		4.7L V-8	29
DESCRIPTION	10	8.3L - SRT-10	29
FITTING, QUICK CONNECT		**TANK - FUEL**	
DESCRIPTION	10	DESCRIPTION	30
STANDARD PROCEDURE - QUICK-CONNECT FITTINGS	10	OPERATION	30
MODULE-FUEL PUMP		REMOVAL- EXCEPT DIESEL	30
DESCRIPTION	15	INSTALLATION - EXCEPT DIESEL	36
		FILTER - INLET	
		REMOVAL	40
		INSTALLATION	41

FUEL DELIVERY - GAS

DESCRIPTION

The fuel delivery system consists of:

- a fuel pump module containing the electric fuel pump, fuel filter/fuel pressure regulator, fuel gauge sending unit (fuel level sensor) and a secondary fuel filter located at the bottom of the pump module
- fuel tubes/lines/hoses

- a combination fuel filter/fuel pressure regulator
- quick-connect fittings
- fuel injector rail
- fuel tank
- fuel tank filler/vent tube assembly
- fuel tank filler tube cap
- accelerator pedal
- throttle cable

Certain fuel delivery components can be found in the following graphics:

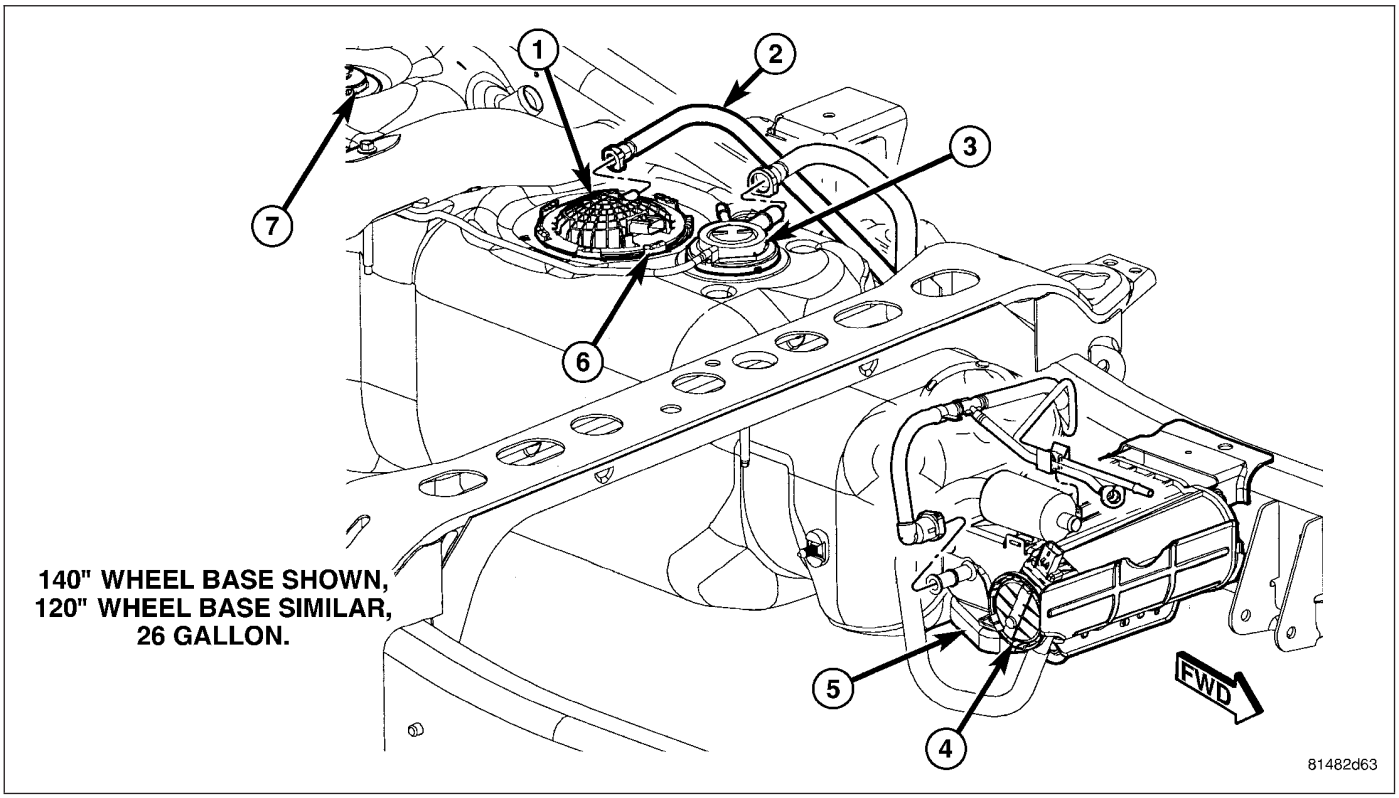

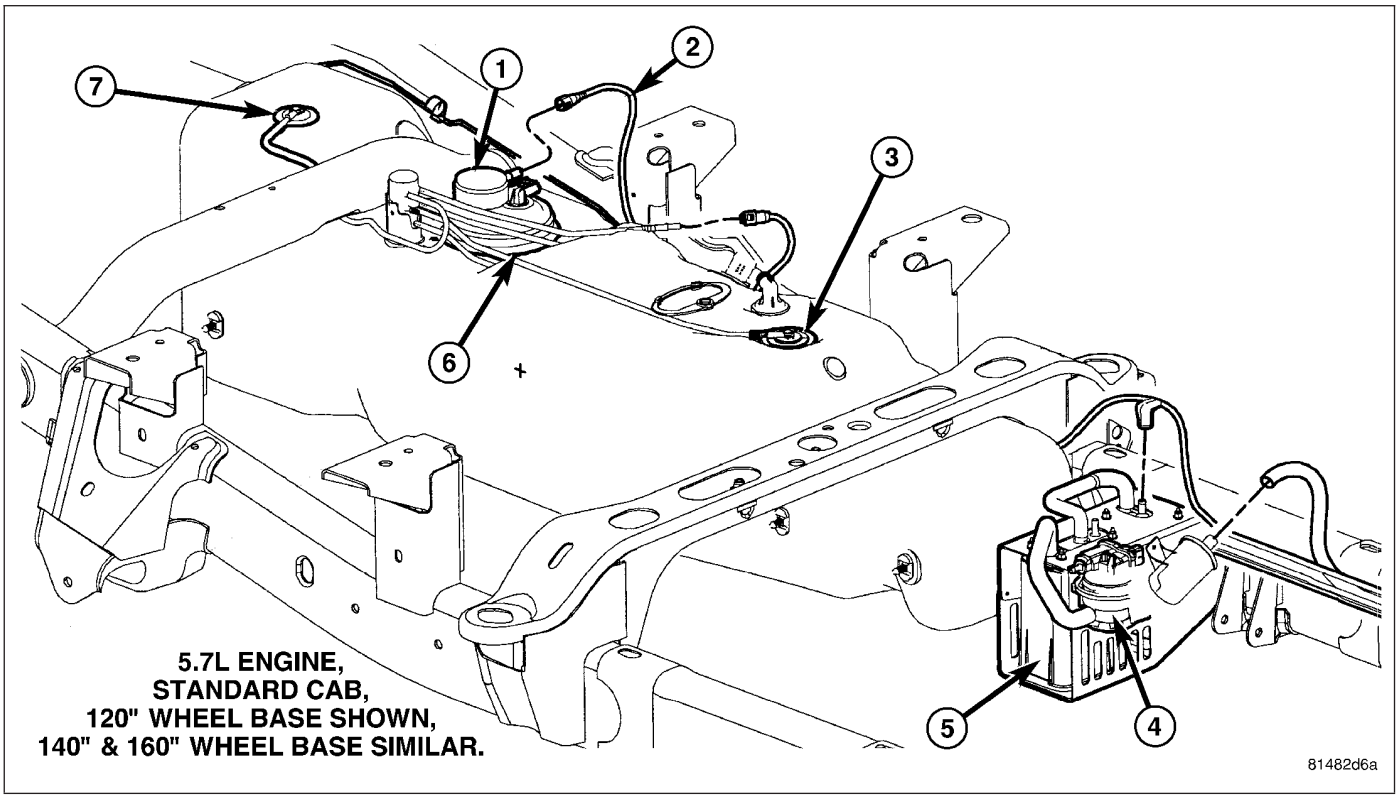

**5.7L ENGINE,
STANDARD CAB,
120" WHEEL BASE SHOWN,
140" & 160" WHEEL BASE SIMILAR.**

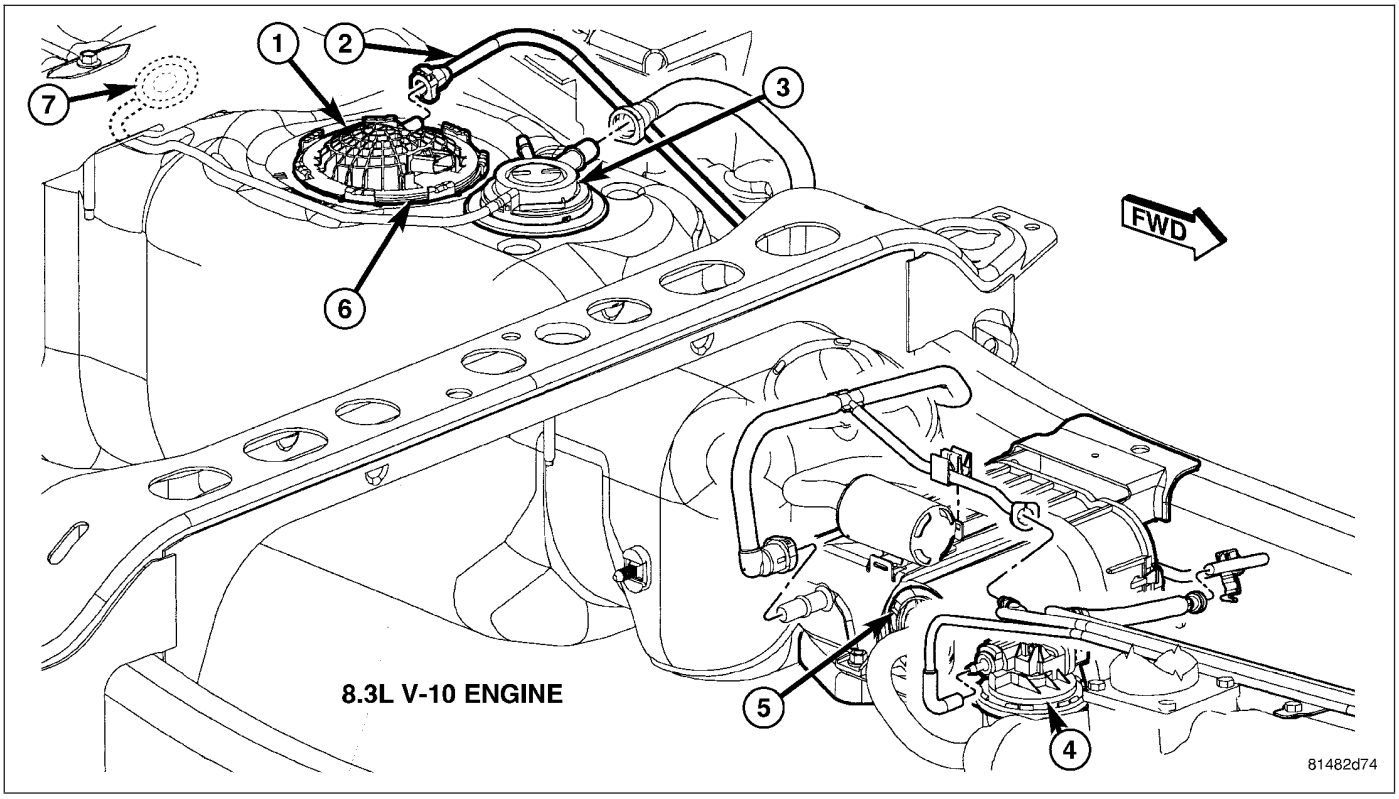

8.3L V-10 ENGINE

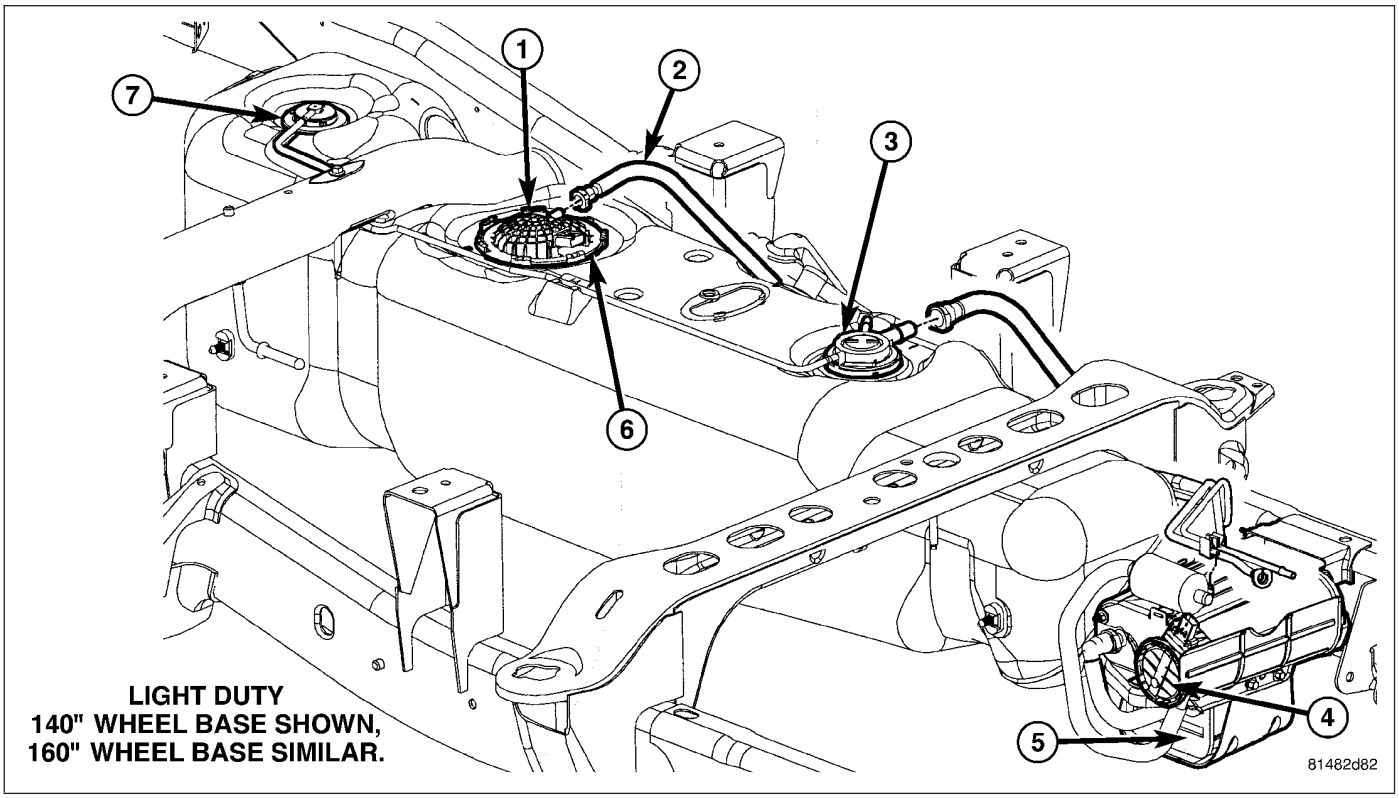

OPERATION

Fuel is returned through the fuel pump module and back into the fuel tank through the fuel filter/fuel pressure regulator. A separate fuel return line from the engine to the tank is not used.

The fuel tank assembly consists of: the fuel tank, fuel pump module assembly, fuel pump module locknut/gasket, and fuel tank check valve (refer to Fuel Tank Check Valve for information).

A fuel filler/vent tube assembly using a pressure/vacuum, 1/4 turn fuel filler cap is used. The fuel filler tube contains a flap door located below the fuel fill cap.

Also to be considered part of the fuel system is the evaporation control system. This is designed to reduce the emission of fuel vapors into the atmosphere. The description and function of the Evaporative Control System is found in Emission Control Systems.

Both fuel filters (at bottom of fuel pump module and within fuel pressure regulator) are designed for extended service. They do not require normal scheduled maintenance. Filters should only be replaced if a diagnostic procedure indicates to do so.

STANDARD PROCEDURE - FUEL SYSTEM PRESSURE RELEASE

Use following procedure if the fuel injector rail is, or is not equipped with a fuel pressure test port.

1. Remove fuel fill cap.
2. Remove fuel pump relay from Power Distribution Center (PDC). For location of relay, refer to label on underside of PDC cover.
3. Start and run engine until it stalls.
4. Attempt restarting engine until it will no longer run.
5. Turn ignition key to OFF position.

CAUTION: Steps 1, 2, 3 and 4 must be performed to relieve high pressure fuel from within fuel rail. Do not attempt to use following steps to relieve this pressure as excessive fuel will be forced into a cylinder chamber.

6. Unplug connector from any fuel injector.
7. Attach one end of a jumper wire with alligator clips (18 gauge or smaller) to either injector terminal.
8. Connect other end of jumper wire to positive side of battery.

9. Connect one end of a second jumper wire to remaining injector terminal.

CAUTION: Powering an injector for more than a few seconds will permanently damage the injector.

10. Momentarily touch other end of jumper wire to negative terminal of battery for no more than a few seconds.
11. Place a rag or towel below fuel line quick-connect fitting at fuel rail.
12. Disconnect quick-connect fitting at fuel rail. Refer to Quick-Connect Fittings.
13. Return fuel pump relay to PDC.
14. One or more Diagnostic Trouble Codes (DTC's) may have been stored in PCM memory due to fuel pump relay removal. The DRB® scan tool must be used to erase a DTC.

SPECIFICATIONS

FUEL SYSTEM PRESSURE

58 psi +/- 2 psi

TORQUE - FUEL SYSTEM - EXCEPT DIESEL

DESCRIPTION	N-m	Ft. Lbs.	In. Lbs.
Accelerator Pedal Bracket Mounting	12	-	105
Accelerator Pedal Position Sensor Bracket-to-Battery Tray Bolts	3	-	30
Crankshaft Position Sensor - 3.7L	28	21	-
Crankshaft Position Sensor - 4.7L	28	21	-
Crankshaft Position Sensor - 5.7L	12	-	105 (+/-20)
Camshaft Position Sensor - 3.7L	12	-	106
Camshaft Position Sensor - 4.7L	12	-	106
Camshaft Position Sensor - 5.7L	12	9	105 (+/-) 20
Engine Coolant Temperature Sensor - 3.7L	11	-	96
Engine Coolant Temperature Sensor - 4.7L	11	-	96
Engine Coolant Temperature Sensor - 5.7L	11	-	96
EVAP Canister- to-Bracket Nuts	8.5	-	75
EVAP Canister-to-frame bolts	34	25	
Fuel Filler Hose Clamp at Tank	3	-	30
Fuel Filler Housing-to-Body Screws	2	-	17
Fuel Pump Module Lock Ring	54	40	-
Fuel Rail Mounting Bolts - 3.7L	11	-	100
Fuel Rail Mounting Bolts - 4.7L	11	-	100
Fuel Rail Mounting Bolts - 5.7L	11	-	100
Fuel Rail Mounting Bolts - 8.3L	12	-	105
Fuel Tank Mounting Straps	41	30	-
IAC Motor Mounting Screws - 3.7L	7	-	60
IAC Motor Mounting Screws - 4.7L	7	-	60
Leak Detection Pump Mounting Bolt	8.5	-	75
Map Sensor Mounting Screws - 3.7L	3	-	25
Map Sensor Mounting Screws - 4.7L	3	-	25
PCM-to-Mounting Bracket Mounting Screws	4	-	35
Power Steering Pressure Switch - 3.7L	14-22	-	124-195

DESCRIPTION	N-m	Ft. Lbs.	In. Lbs.
Power Steering Pressure Switch - 4.7L	14-22	-	124-195
TPS Mounting Screws - 3.7L	7	-	60
TPS Mounting Screws - 4.7L	7	-	60
Throttle Body Mounting Bolts - 3.7L	11	-	100
Throttle Body Mounting Bolts - 4.7L	12	-	105
Throttle Body Mounting Bolts - 5.7L	12	-	105
Oxygen Sensors	30	22	-
Ignition Coil Mounting Bolts	11	-	100

SPECIAL TOOLS

FUEL SYSTEM

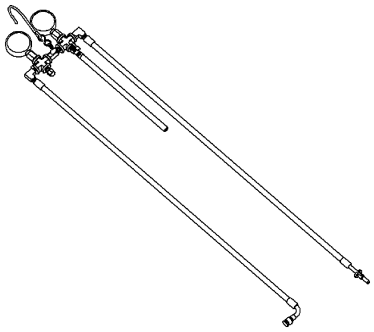

FUEL PRESSURE TESTER - #8978

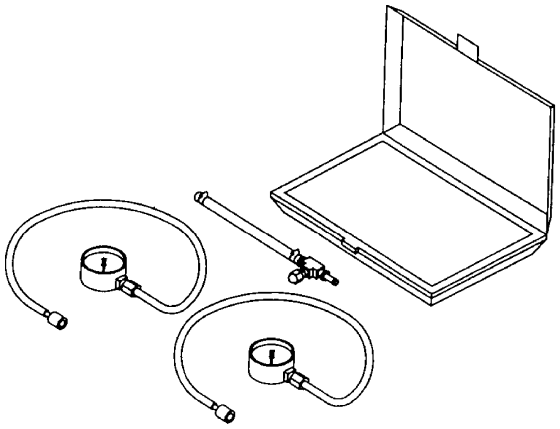

TEST KIT, FUEL PRESSURE #5069

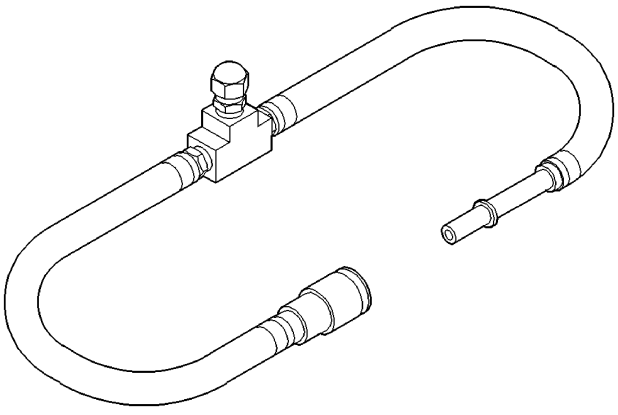

ADAPTERS, FUEL PRESSURE TEST - #6539 AND/OR #6631

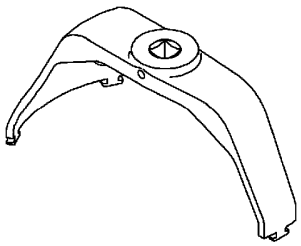

LOCKRING REMOVER/INSTALLER #9340

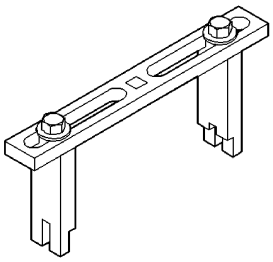

SPANNER WRENCH - #6856

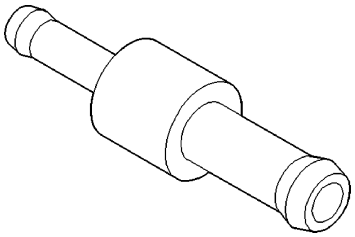

FITTING, AIR METERING - #6714



O2S (OXYGEN SENSOR) REMOVER/INSTALLER - #C-4907

FUEL FILTER/PRESSURE REGULATOR

DESCRIPTION

A combination fuel filter and fuel pressure regulator (3) is used on all engines. It is located on the top of the fuel pump module. A separate frame mounted fuel filter is not used with any engine.

Both fuel filters (at bottom of fuel pump module and within fuel pressure regulator) are designed for extended service. They do not require normal scheduled maintenance. Filters should only be replaced if a diagnostic procedure indicates to do so.

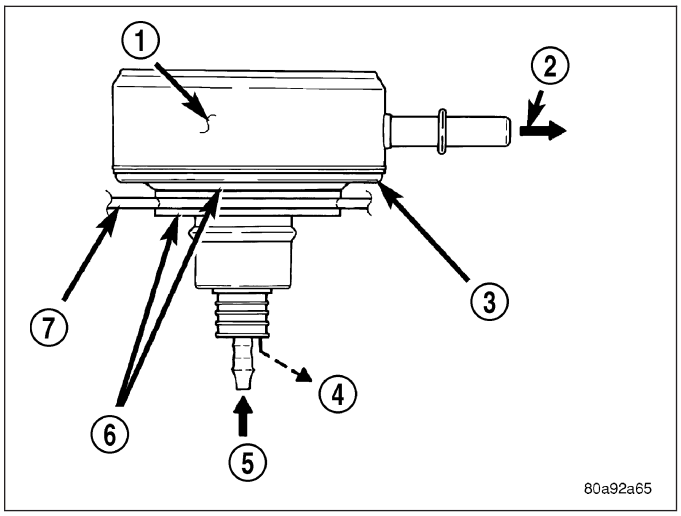

OPERATION

Fuel Pressure Regulator Operation: The pressure regulator is a mechanical device that is not controlled by engine vacuum or the Powertrain Control Module (PCM).

The regulator is calibrated to maintain fuel system operating pressure of approximately 58 ± 2 psi at the fuel injectors. It contains a diaphragm, calibrated springs and a fuel return valve. The internal fuel filter is also part of the assembly.

Fuel is supplied to the filter/regulator by the electric fuel pump through an opening tube at the bottom of filter/regulator.

The regulator acts as a check valve to maintain some fuel pressure when the engine is not operating. This will help to start the engine. A second check valve is located at the outlet end of the electric fuel pump. **Refer to Fuel Pump - Description and Operation for more information.**

If fuel pressure at the pressure regulator exceeds approximately 60 psi, an internal diaphragm opens and excess fuel pressure is routed back into the tank through the bottom of pressure regulator.

Both fuel filters (at bottom of fuel pump module and within fuel pressure regulator) are designed for extended service. They do not require normal scheduled maintenance. Filters should only be replaced if a diagnostic procedure indicates to do so.

SENSOR - FUEL LEVEL SENDING UNIT

DESCRIPTION

The fuel gauge sending unit (fuel level sensor) is attached to the side of the fuel pump module. The sending unit consists of a float, an arm, and a variable resistor track (card).

OPERATION

The fuel pump module has 4 different circuits (wires). Two of these circuits are used for the fuel gauge sending unit for fuel gauge operation, and for certain OBD II emission requirements. The other 2 wires are used for electric fuel pump operation.

For Fuel Gauge Operation: A constant current source is supplied to the resistor track on the fuel gauge sending unit. This is fed directly from the Powertrain Control Module (PCM). **NOTE: For diagnostic purposes, this 12V power source can only be verified with the circuit opened (fuel pump module electrical connector unplugged). With the connectors plugged, output voltages will vary from about 0.6 volts at FULL, to about 8.6 volts at EMPTY (about 8.6 volts at EMPTY for Jeep models, and about 7.0 volts at EMPTY for Dodge Truck models).** The resistor track is used to vary the voltage (resistance) depending on fuel tank float level. As fuel

level increases, the float and arm move up, which decreases voltage. As fuel level decreases, the float and arm move down, which increases voltage. The varied voltage signal is returned back to the PCM through the sensor return circuit.

Both of the electrical circuits between the fuel gauge sending unit and the PCM are hard-wired (not multi-plexed). After the voltage signal is sent from the resistor track, and back to the PCM, the PCM will interpret the resistance (voltage) data and send a message across the multi-plex bus circuits to the instrument panel cluster. Here it is translated into the appropriate fuel gauge level reading. Refer to Instrument Panel for additional information.

For OBD II Emission Monitor Requirements: The PCM will monitor the voltage output sent from the resistor track on the sending unit to indicate fuel level. The purpose of this feature is to prevent the OBD II system from recording/ setting false misfire and fuel system monitor diagnostic trouble codes. The feature is activated if the fuel level in the tank is less than approximately 15 percent of its rated capacity. If equipped with a Leak Detection Pump (EVAP system monitor), this feature will also be activated if the fuel level in the tank is more than approximately 85 percent of its rated capacity.

REMOVAL

The fuel level sending unit (fuel level sensor) and float assembly (7) is located on the side of the fuel pump module.

1. Remove fuel pump module from fuel tank. Refer to Fuel Pump Module Removal/Installation.
2. Disconnect 4–wire electrical connector (3) from fuel pump module. Separate necessary sending unit wiring from connector using terminal pick / removal tool. Refer to Special Tools in 8W Wiring for tool part numbers.

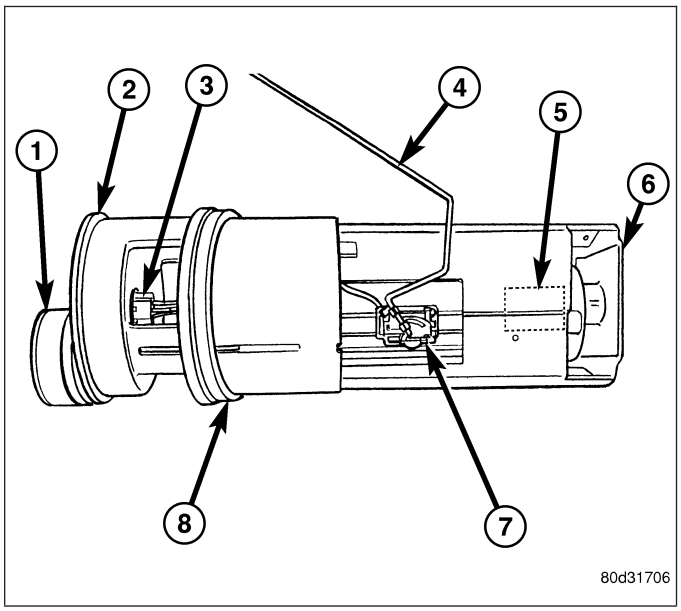

3. To remove sending unit from pump module, lift on plastic locking tab while sliding sending unit tracks.

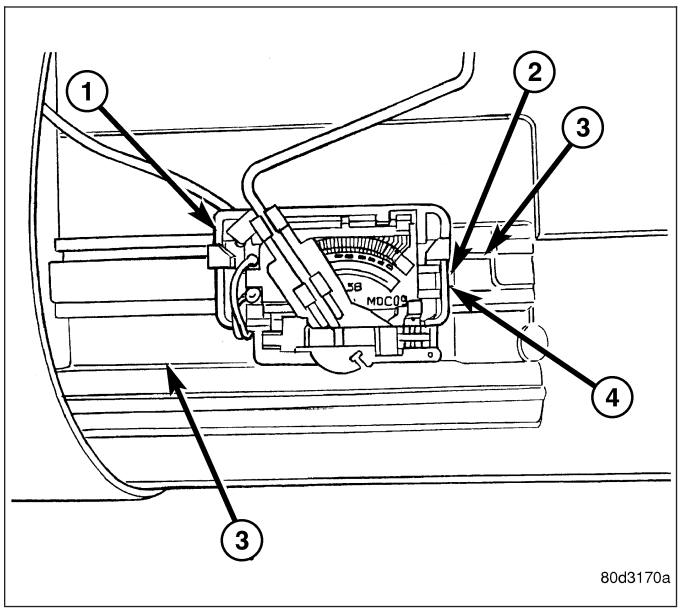

INSTALLATION

1. Connect necessary wiring into electrical connectors. Connect 4–wire electrical connector to pump module.
2. Position sending unit to pump module. Slide and snap into place.
3. Install fuel pump module. Refer to Fuel Pump Module Removal/Installation.

LINES, FUEL

DESCRIPTION

Also refer to Quick-Connect Fittings.

WARNING: THE FUEL SYSTEM MAY BE UNDER A CONSTANT PRESSURE (EVEN WITH THE ENGINE OFF). BEFORE SERVICING ANY FUEL SYSTEM HOSES, FITTINGS, LINES, OR MOST COMPONENTS, FUEL SYSTEM PRESSURE MUST BE RELEASED. REFER TO THE FUEL SYSTEM PRESSURE RELEASE PROCEDURE.

The lines/tubes/hoses used on fuel injected vehicles are of a special construction. This is due to the higher fuel pressures and the possibility of contaminated fuel in this system. If it is necessary to replace these lines/tubes/hoses, only those marked EFM/EFI may be used.

If equipped: The hose clamps used to secure rubber hoses on fuel injected vehicles are of a special rolled edge construction. This construction is used to prevent the edge of the clamp from cutting into the hose. Only these rolled edge type clamps may be used in this system. All other types of clamps may cut into the hoses and cause high-pressure fuel leaks.

Use new original equipment type hose clamps.

FITTING, QUICK CONNECT

DESCRIPTION

Different types of quick-connect fittings are used to attach the various fuel system components, lines and tubes. These are: a single-button type, a two-button type, a pinch type, a single-tab type, a two-tab type or a plastic retainer ring type. Some are equipped with safety latch clips. Some may require the use of a special tool for disconnection and removal. Refer to Quick-Connect Fittings Removal/Installation for more information.

CAUTION: Before separating a quick-connect fitting, pay attention to what type of fitting is being used by referring to Quick-Connect Fitting Removal. This will prevent unnecessary fitting or fitting latch breakage.

CAUTION: The interior components (o-rings, clips) of quick-connect fittings are not serviced separately, but new plastic spacers and latches are available for some types. If service parts are not available, do not attempt to repair the damaged fitting or fuel line (tube). If repair is necessary, replace the complete fuel line (tube) assembly.

STANDARD PROCEDURE - QUICK-CONNECT FITTINGS

Different types of quick-connect fittings are used to attach the various fuel system components, lines and tubes. These are: a single-button type, a two-button type, a pinch type, a single-tab type, a two-tab type or a plastic retainer ring type. Some are equipped with safety latch clips. Some may require the use of a special tool for disconnection and removal.

DISCONNECTING

WARNING: THE FUEL SYSTEM IS UNDER A CONSTANT PRESSURE (EVEN WITH ENGINE OFF). BEFORE SERVICING ANY FUEL SYSTEM HOSE, FITTING OR LINE, FUEL SYSTEM PRESSURE MUST BE RELEASED. REFER TO FUEL SYSTEM PRESSURE RELEASE PROCEDURE.

CAUTION: Before separating a quick-connect fitting, pay attention to what type of fitting is being used by referring to Quick-Connect Fitting Removal. This will prevent unnecessary fitting or fitting latch breakage.

CAUTION: The interior components (o-rings, clips) of quick-connect fittings are not serviced separately, but new plastic spacers and latches are available for some types. If service parts are not available, do not attempt to repair the damaged fitting or fuel line (tube). If repair is necessary, replace the complete fuel line (tube) assembly.

1. Perform fuel pressure release procedure. Refer to Fuel Pressure Release Procedure.
2. Disconnect negative battery cable from battery.
3. Clean fitting of any foreign material before disassembly.
4. **Single–Button Type Fitting:** This type of fitting is equipped with a single push-button (2) located on the quick-connect fitting.

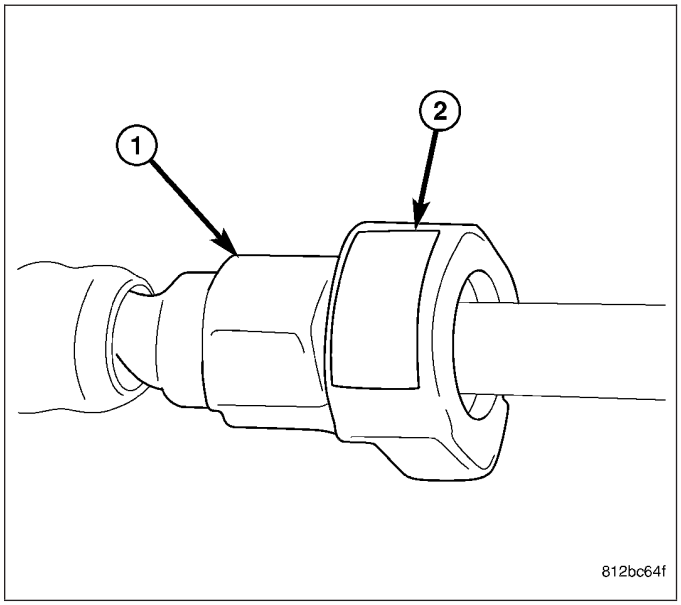

5. The push-button is attached to two internal latches (1). To disconnect, press on push-button with your thumb and unlatch fitting from fuel line. Special tools are not required for disconnection. **DO NOT ATTEMPT TO PRY OR PULL UP ON PUSH-BUTTON. LATCHES WILL BE BROKEN.**

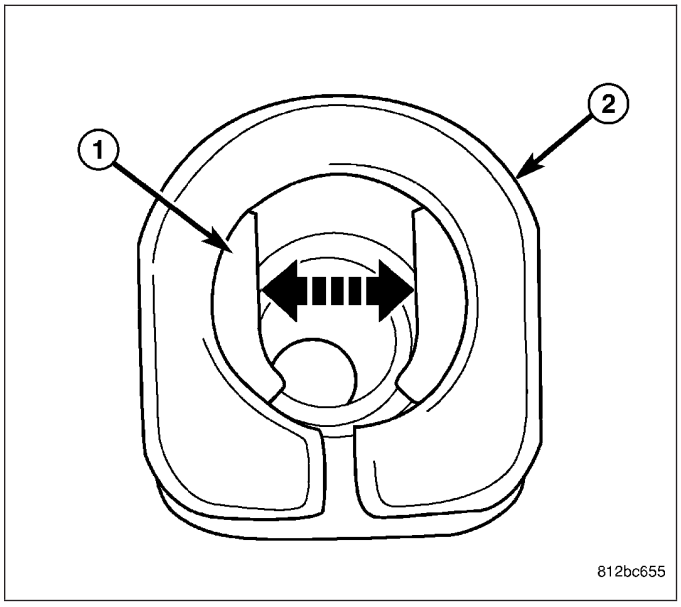

6. Perform fuel pressure release procedure. Refer to Fuel Pressure Release Procedure.
7. Disconnect negative battery cable from battery.
8. Clean fitting of any foreign material before disassembly.
9. **2–Button Type Fitting:** This type of fitting (1) is equipped with a push-button located on each side of quick-connect fitting (2). Press on both buttons simultaneously for removal. Special tools are not required for disconnection.

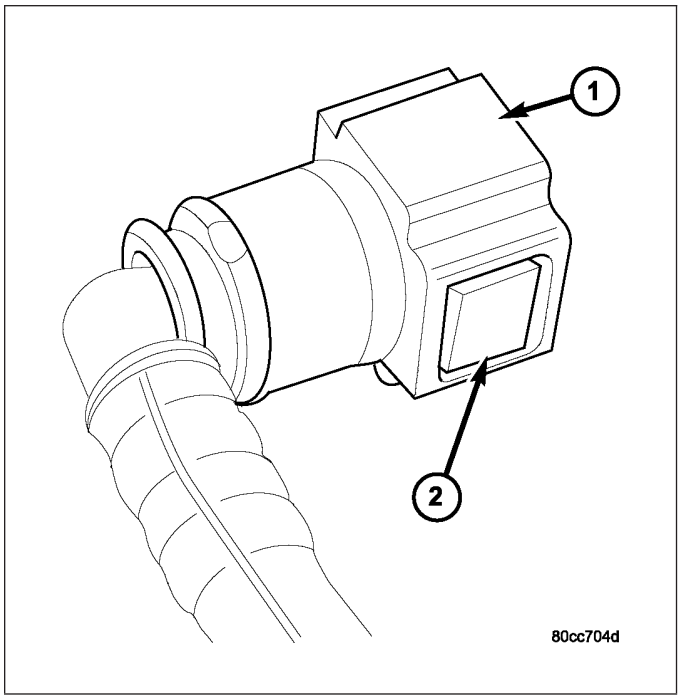

10. **Pinch-Type Fitting:** This fitting (1) is equipped with two finger tabs (2). Pinch both tabs together while removing fitting. Special tools are not required for disconnection.

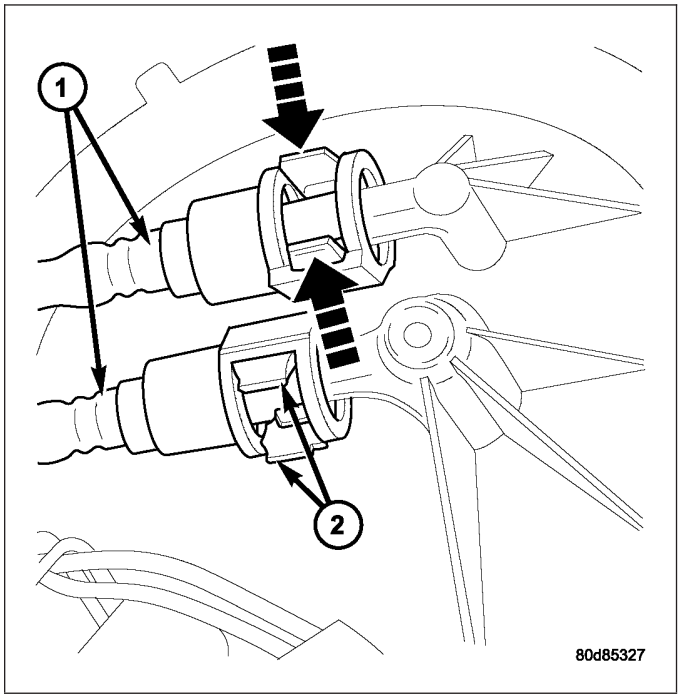

11. **Single-Tab Type Fitting:** This type of fitting (3) is equipped with a single pull tab (1). The tab is removable. After tab is removed, quick-connect fitting can be separated from fuel system component. Special tools are not required for disconnection.

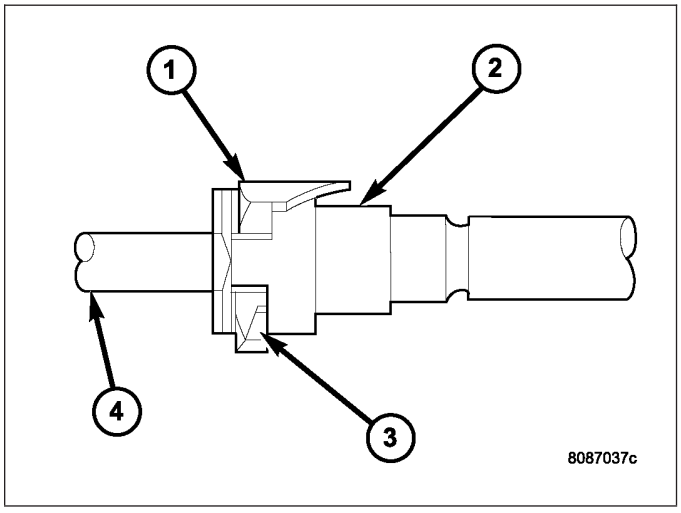

12. Press release tab on side of fitting to release pull tab (1). **If release tab is not pressed prior to releasing pull tab, pull tab will be damaged.**
13. While pressing release tab on side of fitting, use screwdriver (2) to pry up pull tab.
14. Raise pull tab until it separates from quick-connect fitting.

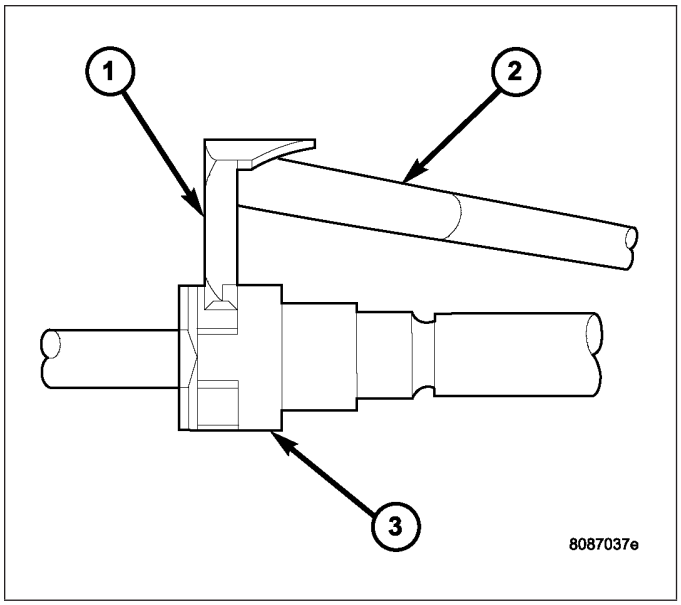

15. **Two-Tab Type Fitting:** This type of fitting (2) is equipped with tabs located on both sides of fitting (1). The tabs are supplied for disconnecting quick-connect fitting from component being serviced.
    a. To disconnect quick-connect fitting, squeeze plastic retainer tabs (1) against sides of quick-connect fitting with your fingers. Tool use is not required for removal and may damage plastic retainer.
    b. Pull fitting from fuel system component being serviced.
    c. The plastic retainer will remain on component being serviced after fitting is disconnected. The o-rings and spacer will remain in quick-connect fitting connector body.

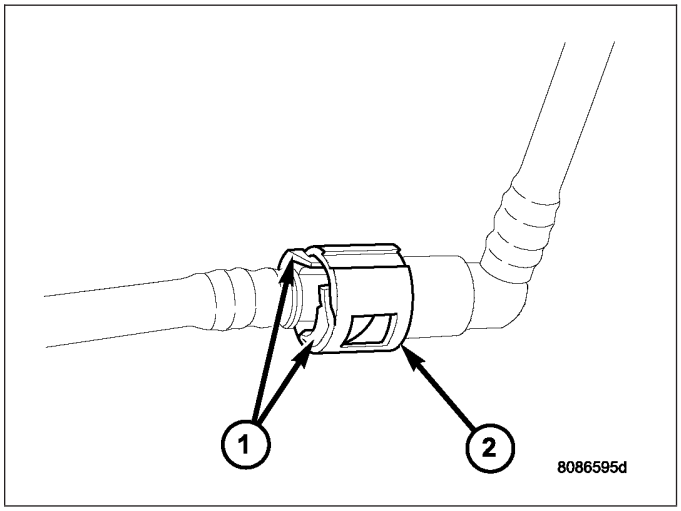

16. **Plastic Retainer Ring Type Fitting:** This type of fitting can be identified by the use of a full-round plastic retainer ring (4) usually black in color.
    a. To release fuel system component from quick-connect fitting, firmly push fitting towards component being serviced while firmly pushing plastic retainer ring into fitting (6). With plastic ring depressed, pull fitting from component. **The plastic retainer ring must be pressed squarely into fitting body. If this retainer is cocked during removal, it may be difficult to disconnect fitting. Use an open-end wrench on shoulder of plastic retainer ring to aid in disconnection.**
    b. After disconnection, plastic retainer ring will remain with quick-connect fitting connector body.
    c. Inspect fitting connector body, plastic retainer ring and fuel system component for damage. Replace as necessary.

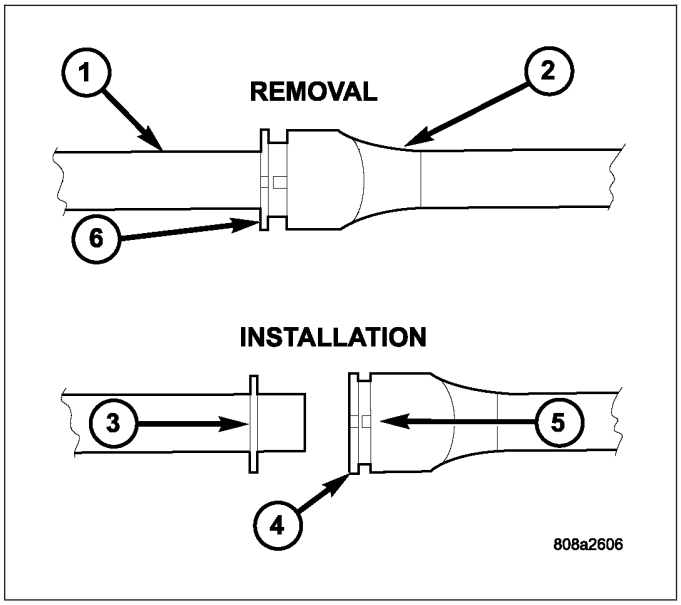

17. **Latch Clips — Type 1:** Depending on vehicle model and engine, 2 different types of safety latch clips are used. Type-1 (4) is tethered to fuel line and type-2 is not. A special tool will be necessary to disconnect fuel line after latch clip is removed. The latch clip may be used on certain fuel line/ fuel rail connection, or to join fuel lines together.
18. Pry up on latch clip with a screwdriver (3).
19. Slide latch clip toward fuel rail while lifting with screwdriver.

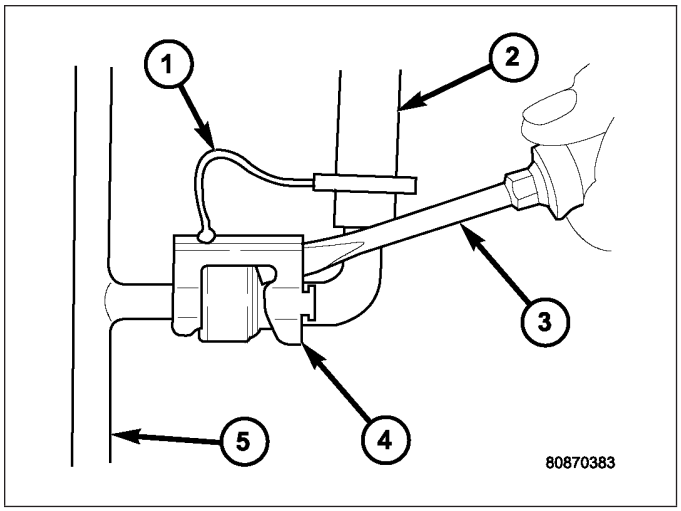

20. Insert special fuel line removal tool (Snap-On number FIH 9055-1 or equivalent) into fuel line (1). Use tool to release locking fingers in end of line.
21. With special tool still inserted, pull fuel line from fuel rail.
22. After disconnection, locking fingers will remain within quick-connect fitting at end of fuel line.
23. Disconnect quick-connect fitting from fuel system component being serviced.

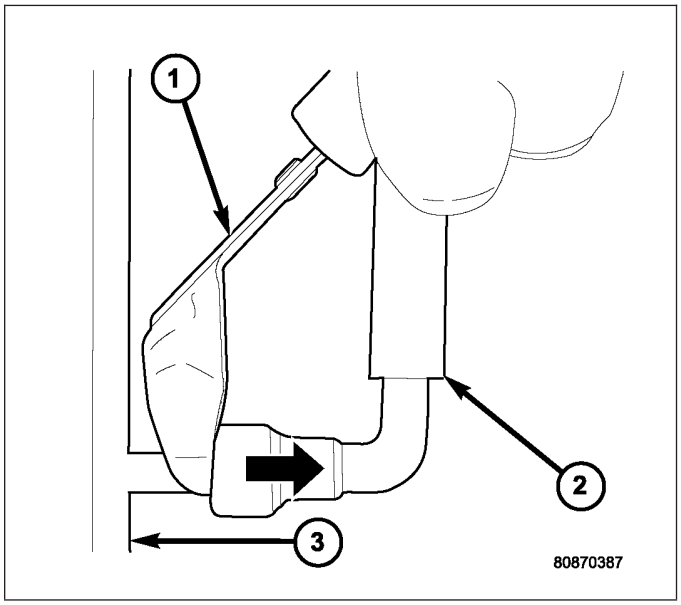

24. **Latch Clips — Type 2:** Depending on vehicle model and engine, 2 different types of safety latch clips are used. Type-1 is tethered to fuel line and type-2 is not. A special tool will be necessary to disconnect fuel line after latch clip is removed. The latch clip may be used on certain fuel line/ fuel rail connection, or to join fuel lines together.
25. Type 2: Separate and unlatch 2 small arms (1) on end of clip and swing away from fuel line.
26. Slide latch clip toward fuel rail while lifting with screwdriver.

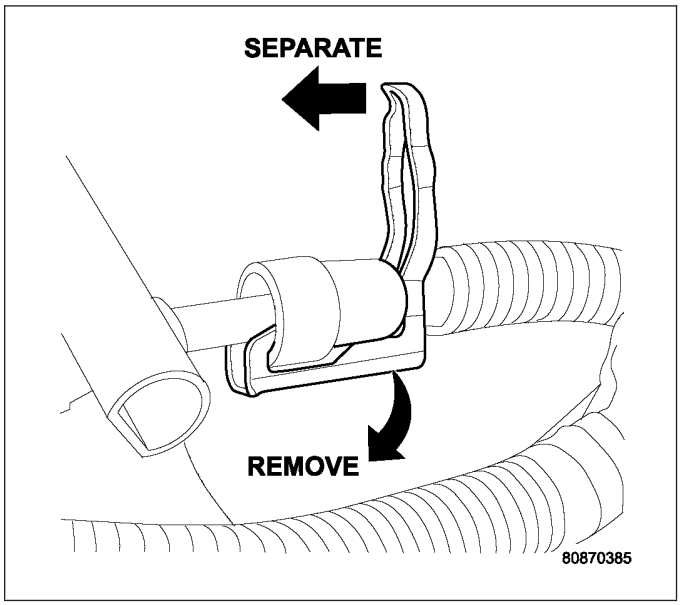

27. Insert special fuel line removal tool (Snap-On number FIH 9055-1 or equivalent) into fuel line (1). Use tool to release locking fingers in end of line.
28. With special tool still inserted, pull fuel line from fuel rail.
29. After disconnection, locking fingers will remain within quick-connect fitting at end of fuel line.
30. Disconnect quick-connect fitting from fuel system component being serviced.

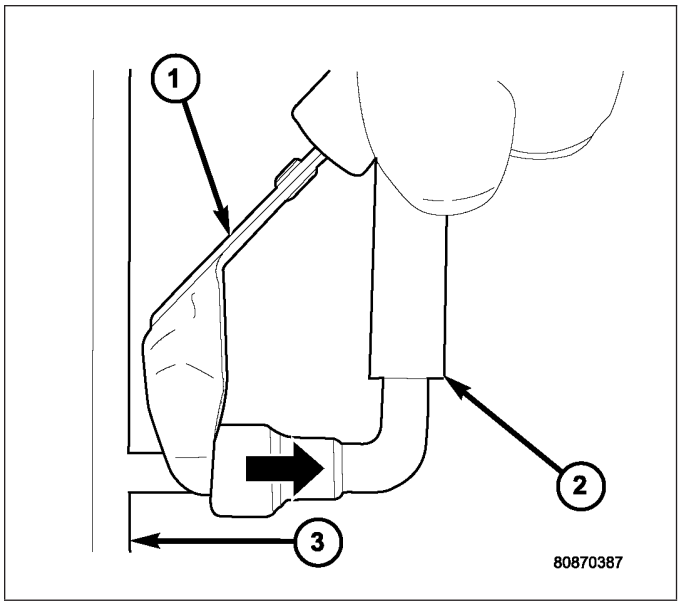

CONNECTING

1. Inspect quick-connect fitting body and fuel system component for damage. Replace as necessary.
2. Prior to connecting quick-connect fitting to component being serviced, check condition of fitting and component. Clean parts with a lint-free cloth. Lubricate with clean engine oil.
3. Insert quick-connect fitting into fuel tube or fuel system component until built-on stop on fuel tube or component rests against back of fitting.
4. Continue pushing until a click is felt.
5. Single-tab type fitting: Push new tab down until it locks into place in quick-connect fitting.
6. Verify a locked condition by firmly pulling on fuel tube and fitting (15-30 lbs.).
7. Latch Clip Equipped: Install latch clip (snaps into position). **If latch clip will not fit, this indicates fuel line is not properly installed to fuel rail (or other fuel line). Recheck fuel line connection.**
8. Connect negative cable to battery.
9. Start engine and check for leaks.

MODULE-FUEL PUMP

DESCRIPTION

The electric fuel pump is located inside of the fuel pump module. A 12 volt, permanent magnet, electric motor powers the fuel pump. The electric fuel pump is not a separate, serviceable component.

OPERATION

Voltage to operate the electric pump is supplied through the fuel pump relay.

Fuel is drawn in through a filter at the bottom of the module and pushed through the electric motor gearset to the pump outlet.

Check Valve Operation: The bottom section of the fuel pump module contains a one-way check valve to prevent fuel flow back into the tank and to maintain fuel supply line pressure (engine warm) when pump is not operational. It is also used to keep the fuel supply line full of gasoline when pump is not operational. After the vehicle has cooled down, fuel pressure may drop to 0 psi (cold fluid contracts), but liquid gasoline will remain in fuel supply line between the check valve and fuel injectors. **Fuel pressure that has dropped to 0 psi on a cooled down vehicle (engine off) is a normal condition.**

The electric fuel pump is not a separate, serviceable component.

MODULE - FUEL PUMP

DESCRIPTION

The fuel pump module assembly is located on the top of the fuel tank. The complete assembly contains the following components:

- A combination fuel filter/fuel pressure regulator
- A separate fuel pick-up, or inlet filter
- An electric fuel pump
- A lockring to retain pump module to tank
- A soft gasket between tank flange and module
- A fuel gauge sending unit (fuel level sensor)
- Fuel line connection

The fuel gauge sending unit may be serviced separately. If the electrical fuel pump, primary inlet filter, fuel filter or fuel pressure regulator require service, the fuel pump module must be replaced.

OPERATION

Refer to Fuel Pump, Inlet Filter, Fuel Filter / Fuel Pressure Regulator and Fuel Gauge Sending Unit.

REMOVAL

WARNING: THE FUEL SYSTEM MAY BE UNDER A CONSTANT PRESSURE (EVEN WITH THE ENGINE OFF). BEFORE SERVICING THE FUEL PUMP MODULE, THE FUEL SYSTEM PRESSURE MUST BE RELEASED.

1. Drain and remove fuel tank. Refer to Fuel Tank Removal/Installation.
2. Note rotational position of module before attempting removal. An indexing arrow is located on top of module for this purpose.
3. Position Special Tool 9340 (3) into notches on outside edge of lockring (5).
4. Install 1/2 inch drive breaker bar (1) to tool 9340 (3).
5. Rotate breaker bar counter-clockwise to remove lockring (5).
6. Remove lockring. The module will spring up slightly when lockring is removed.
7. Remove module from fuel tank. Be careful not to bend float arm while removing.

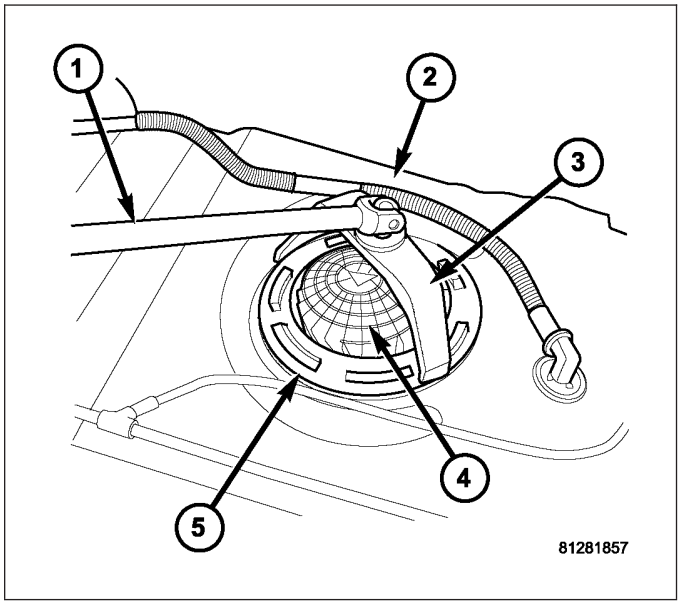

INSTALLATION

1. Using a new seal (gasket), position fuel pump module into opening in fuel tank.
2. Position lockring (5) over top of fuel pump module.
3. Rotate module until embossed alignment arrow points to center alignment mark. This step must be performed to prevent float from contacting side of fuel tank. Also be sure fuel fitting on top of pump module is pointed to drivers side of vehicle.
4. Install Special Tool 9340 (3) to lockring.
5. Install 1/2 inch drive breaker (1) into Special Tool 9340 (3).
6. Tighten lockring (clockwise) until all seven notches have engaged.
7. Install fuel tank. Refer to Fuel Tank Removal/Installation.

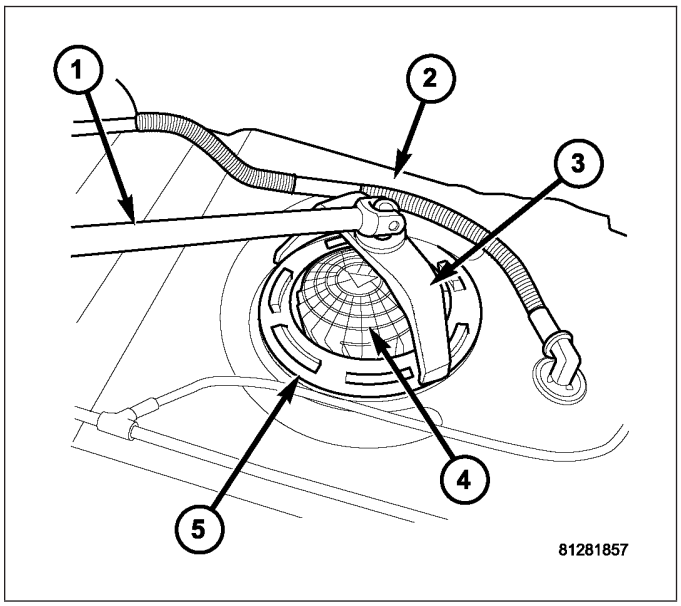

RAIL - FUEL

DESCRIPTION

The fuel injector rail is used to mount the fuel injectors to the engine.

OPERATION

High pressure from the fuel pump is routed to the fuel rail. The fuel rail then supplies the necessary fuel to each individual fuel injector.

A quick-connect fitting with a safety latch clip is used to attach the fuel line to the fuel rail.

The fuel rail is not repairable.

CAUTION: The left and right sections of the fuel rail are connected with either a flexible connecting hose, or joints. Do not attempt to separate the rail halves at these connecting hose or joints. Due to the design of the connecting hose or joint, it does not use any clamps. Never attempt to install a clamping device of any kind to the hose or joint. When removing the fuel rail assembly for any reason, be careful not to bend or kink the connecting hose or joint.

REMOVAL

3.7L V-6

WARNING: THE FUEL SYSTEM IS UNDER CONSTANT PRESSURE EVEN WITH ENGINE OFF. BEFORE SERVICING FUEL RAIL, FUEL SYSTEM PRESSURE MUST BE RELEASED.

CAUTION: The left and right fuel rails are replaced as an assembly. Do not attempt to separate rail halves at connector tubes. Due to design of tubes, it does not use any clamps. Never attempt to install a clamping device of any kind to tubes. When removing fuel rail assembly for any reason, be careful not to bend or kink tubes.

1. Remove fuel tank filler tube cap.
2. Perform Fuel System Pressure Release Procedure. (Refer to 14 - FUEL SYSTEM/FUEL DELIVERY - STANDARD PROCEDURE)
3. Remove negative battery cable at battery.
4. Remove air duct at throttle body air box.
5. Remove air box at throttle body.
6. Remove air resonator mounting bracket at front of throttle body (2 bolts).
7. Disconnect fuel line latch clip and fuel line at fuel rail. A special tool will be necessary for fuel line disconnection. (Refer to 14 - FUEL SYSTEM/FUEL DELIVERY/QUICK CONNECT FITTING - STANDARD PROCEDURE)
8. Remove necessary vacuum lines at throttle body.
9. Disconnect electrical connectors at all 6 fuel injectors. To remove connector refer to. Push red colored slider away from injector (1). While pushing slider, depress tab (2) and remove connector (3) from injector. The factory fuel injection wiring harness is numerically tagged (INJ 1, INJ 2, etc.) for injector position identification. If harness is not tagged, note wiring location before removal.

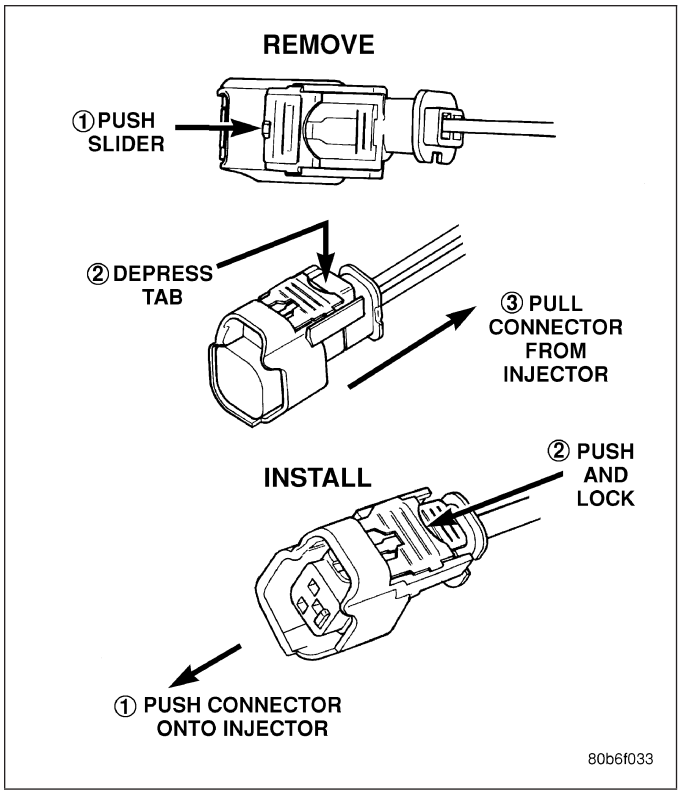

10. Disconnect electrical connectors at all throttle body sensors.
11. Remove 6 ignition coils. (Refer to 8 - ELECTRICAL/IGNITION CONTROL/IGNITION COIL - REMOVAL)
12. Remove 4 fuel rail mounting bolts (1).
13. Gently rock and pull **left** side of fuel rail until fuel injectors just start to clear machined holes in cylinder head. Gently rock and pull **right** side of rail until injectors just start to clear cylinder head holes. Repeat this procedure (left/right) until all injectors have cleared cylinder head holes.
14. Remove fuel rail (with injectors attached) from engine.
15. If fuel injectors are to be removed, (Refer to 14 - FUEL SYSTEM/FUEL INJECTION/FUEL INJECTOR - REMOVAL).

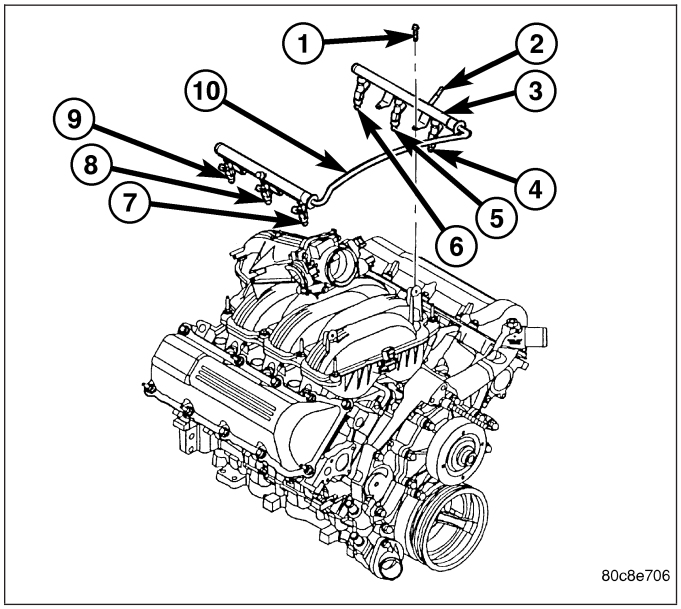

4.7L V-8

WARNING: THE FUEL SYSTEM IS UNDER CONSTANT PRESSURE EVEN WITH ENGINE OFF. BEFORE SERVICING FUEL RAIL, FUEL SYSTEM PRESSURE MUST BE RELEASED.

CAUTION: The left and right fuel rails are replaced as an assembly. Do not attempt to separate rail halves at connector tubes. Due to design of tubes, it does not use any clamps. Never attempt to install a clamping device of any kind to tubes. When removing fuel rail assembly for any reason, be careful not to bend or kink tubes.

1. Remove fuel tank filler tube cap.
2. Perform Fuel System Pressure Release Procedure. (Refer to 14 - FUEL SYSTEM/FUEL DELIVERY - STANDARD PROCEDURE)
3. Remove negative battery cable at battery.
4. Remove air duct at throttle body air box.
5. Remove air box at throttle body.
6. Remove air resonator mounting bracket at front of throttle body (2 bolts).
7. Disconnect fuel line latch clip and fuel line at fuel rail. A special tool will be necessary for fuel line disconnection. (Refer to 14 - FUEL SYSTEM/FUEL DELIVERY/QUICK CONNECT FITTING - STANDARD PROCEDURE)
8. Remove necessary vacuum lines at throttle body.
9. Disconnect electrical connectors at all 8 fuel injectors. To remove connector refer to. Push red colored slider away from injector (1). While pushing slider, depress tab (2) and remove connector (3) from injector. The factory fuel injection wiring harness is numerically tagged (INJ 1, INJ 2, etc.) for injector position identification. If harness is not tagged, note wiring location before removal.

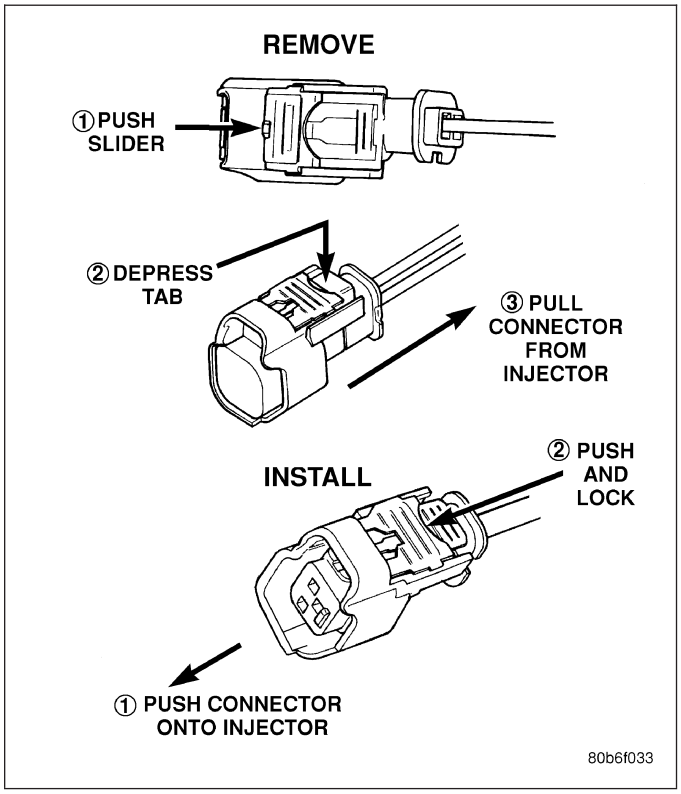

10. Disconnect electrical connectors at all throttle body sensors.
11. Remove 8 ignition coils. (Refer to 8 - ELECTRICAL/IGNITION CONTROL/IGNITION COIL - REMOVAL)

12. Remove 4 fuel rail mounting bolts (1).
13. Gently rock and pull **left** side of fuel rail until fuel injectors just start to clear machined holes in cylinder head. Gently rock and pull **right** side of rail until injectors just start to clear cylinder head holes. Repeat this procedure (left/right) until all injectors have cleared cylinder head holes.
14. Remove fuel rail (with injectors attached) from engine.
15. If fuel injectors are to be removed, (Refer to 14 - FUEL SYSTEM/FUEL INJECTION/FUEL INJECTOR - REMOVAL).

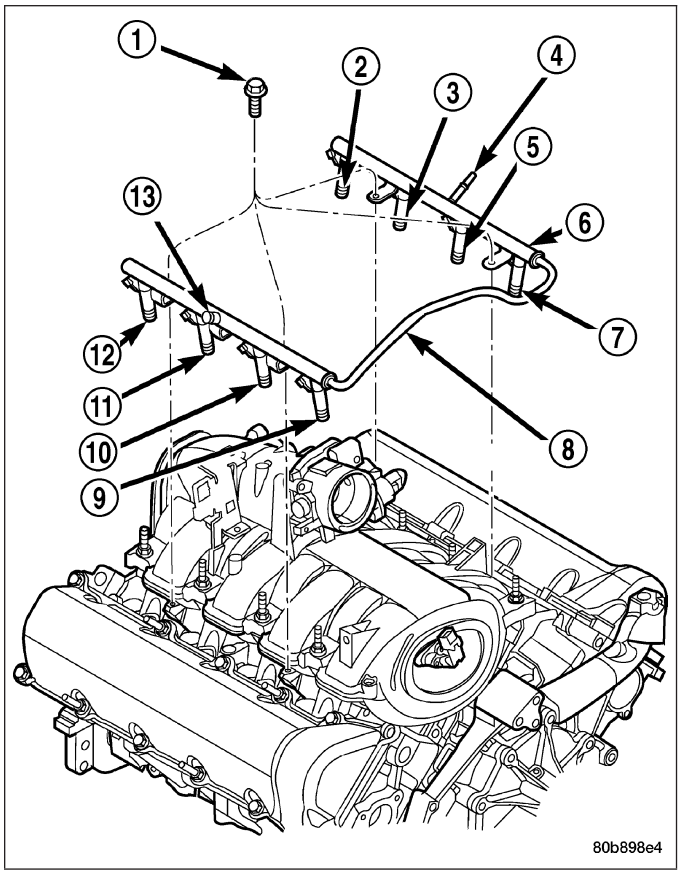

5.7L V-8

WARNING: THE FUEL SYSTEM IS UNDER CONSTANT PRESSURE EVEN WITH ENGINE OFF. BEFORE SERVICING FUEL RAIL, FUEL SYSTEM PRESSURE MUST BE RELEASED.

CAUTION: The left and right fuel rails are replaced as an assembly. Do not attempt to separate rail halves at connector tube. Due to design of tube, it does not use any clamps. Never attempt to install a clamping device of any kind to tube. When removing fuel rail assembly for any reason, be careful not to bend or kink tube.

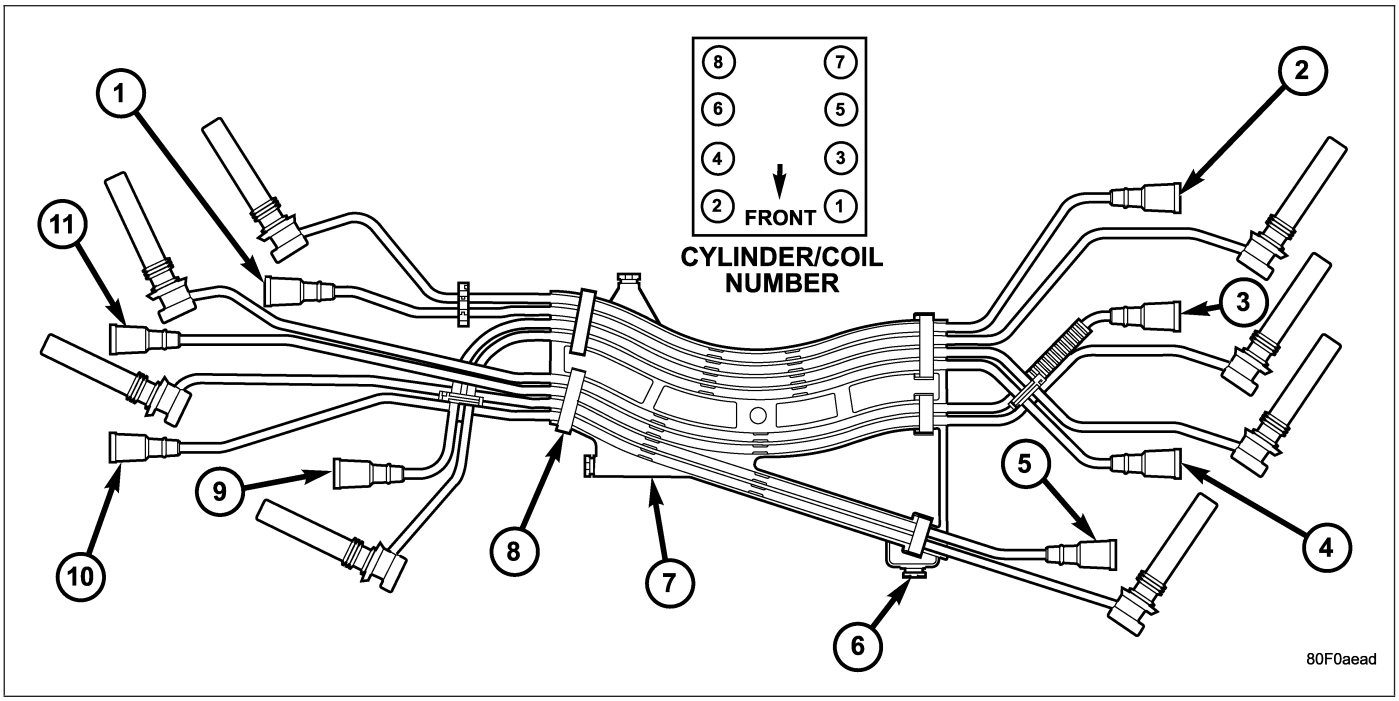

1 - #8 COIL-TO- #5 SPARK PLUG (MARKED 5/8)
2 - #5 COIL-TO- #8 SPARK PLUG (MARKED 5/8)
3 - #7 COIL-TO- #4 SPARK PLUG (MARKED 4/7)
4 - #3 COIL-TO- #2 SPARK PLUG (MARKED 2/3)
5 - #1 COIL-TO- #6 SPARK PLUG (MARKED 1/6)
6 - CLIPS (TRAY-TO-MANIFOLD RETENTION)
7 - CABLE TRAY
8 - CLIPS (SPARK PLUG CABLE-TO-TRAY- RETENTION)
9 - #2 COIL-TO- #3 SPARK PLUG (MARKED 2/3)
10 - #6 COIL-TO- #1 SPARK PLUG (MARKED 1/6)
11 - #4 COIL-TO- #7 SPARK PLUG (MARKED 4/7)

1. Remove fuel tank filler tube cap.
2. Perform Fuel System Pressure Release Procedure. (Refer to 14 - FUEL SYSTEM/FUEL DELIVERY - STANDARD PROCEDURE)
3. Remove negative battery cable at battery.
4. Remove flex tube (air cleaner housing to engine).
5. Remove air resonator box at throttle body.
6. Disconnect all spark plug cables from all spark plugs and ignition coils. Do not remove cables from cable routing tray. Note original cable positions while removing.

7. Remove spark plug cable tray from engine by releasing 4 retaining clips. Remove tray and cables from engine as an assembly.
8. Disconnect electrical connectors at all 8 ignition coils. Refer to Ignition Coil Removal/Installation.
9. Disconnect fuel line latch clip and fuel line at fuel rail. A special tool will be necessary for fuel line disconnection. (Refer to 14 - FUEL SYSTEM/FUEL DELIVERY/QUICK CONNECT FITTING - STANDARD PROCEDURE)

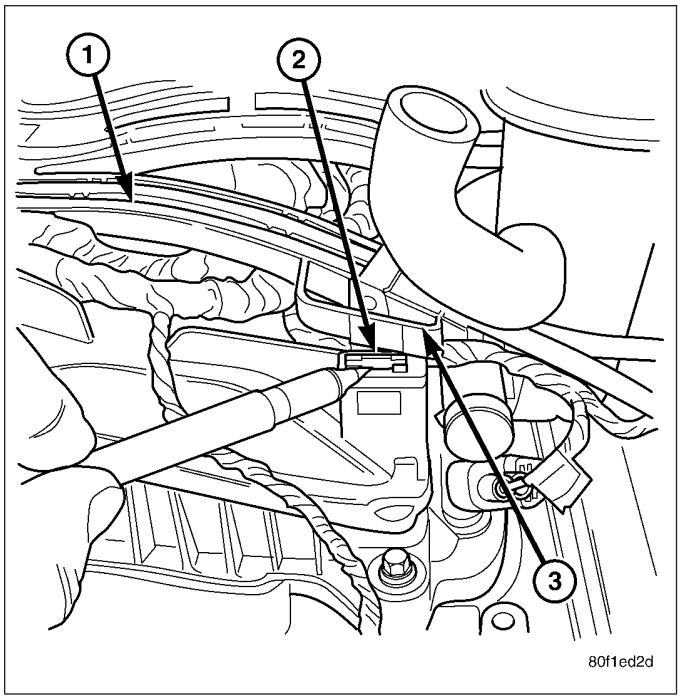

10. Disconnect electrical connectors at all 8 fuel injectors. To remove connector refer to. Push red colored slider away from injector (1). While pushing slider, depress tab (2) and remove connector (3) from injector. The factory fuel injection wiring harness is numerically tagged (INJ 1, INJ 2, etc.) for injector position identification. If harness is not tagged, note wiring location before removal.
11. Disconnect electrical connectors at all throttle body sensors.

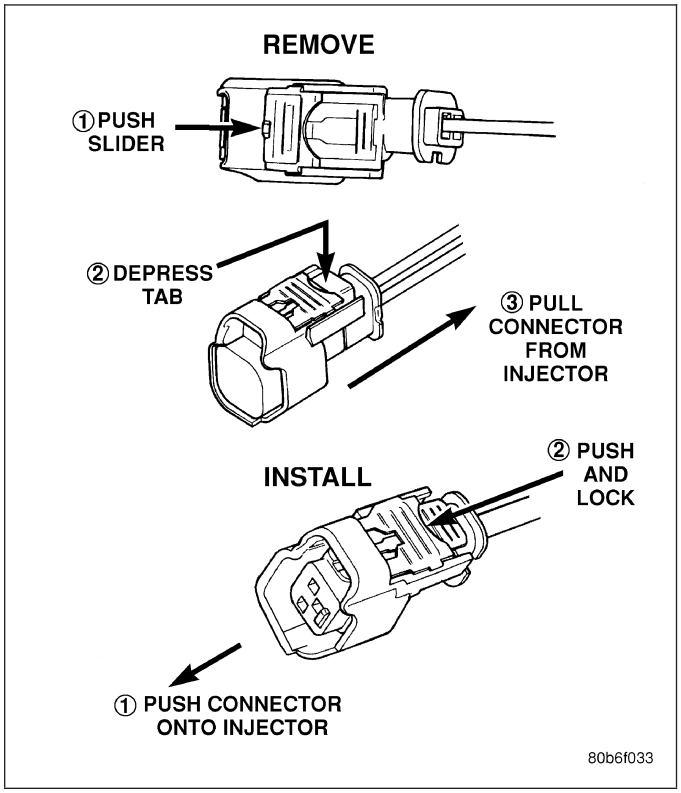

12. Remove 4 fuel rail mounting bolts (2) and hold-own clamps (3).
13. Gently rock and pull **left** side of fuel rail until fuel injectors just start to clear machined holes in intake manifold. Gently rock and pull **right** side of rail until injectors just start to clear intake manifold head holes. Repeat this procedure (left/right) until all injectors have cleared machined holes.
14. Remove fuel rail (with injectors attached) from engine.
15. If fuel injectors are to be removed, (Refer to 14 - FUEL SYSTEM/FUEL INJECTION/FUEL INJECTOR - REMOVAL).

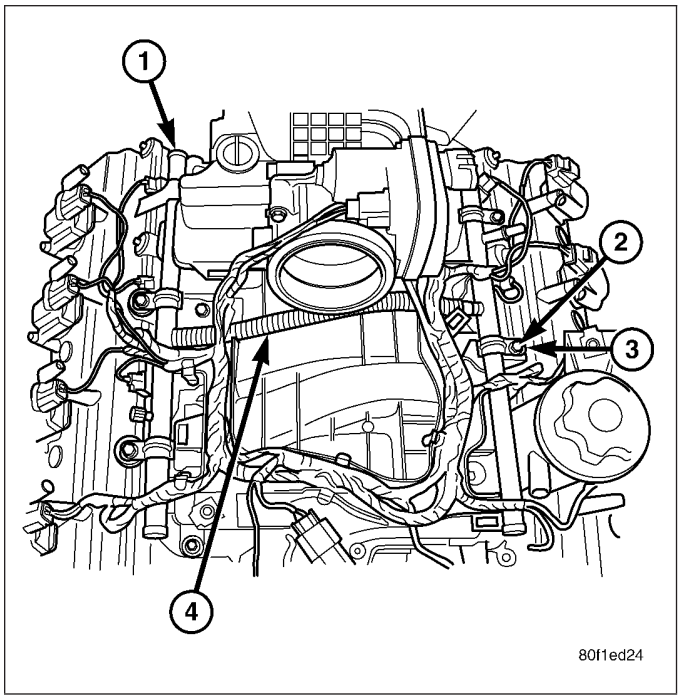

8.3L - SRT-10

1. Disconnect the electrical connector to the MAP sensor (2) and Coolant Temperature sensor (3).
2. Release fuel system pressure. Refer to Fuel Pressure Release Procedure in this section.
3. Disconnect negative battery cable.
4. Remove the air cleaner assembly, refer to the Engine/Air Intake System/Air Cleaner Housing for more information.

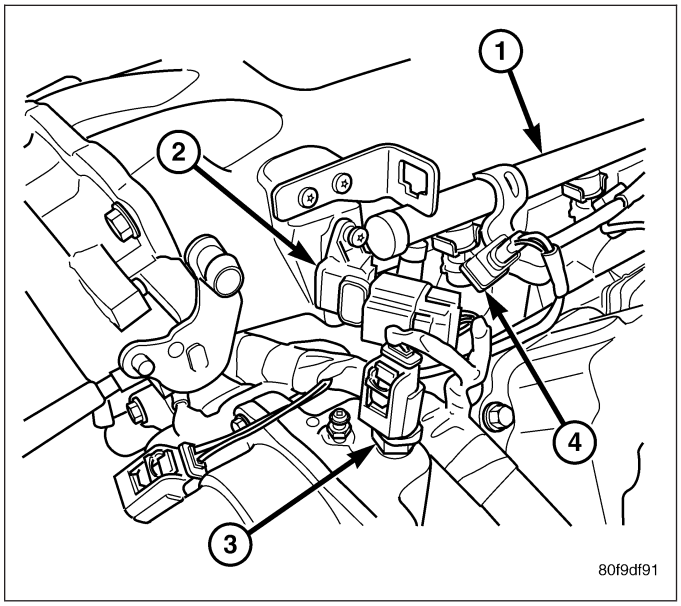

5. Disconnect the electrical connector to the TPS (1) and Idle Air Control.

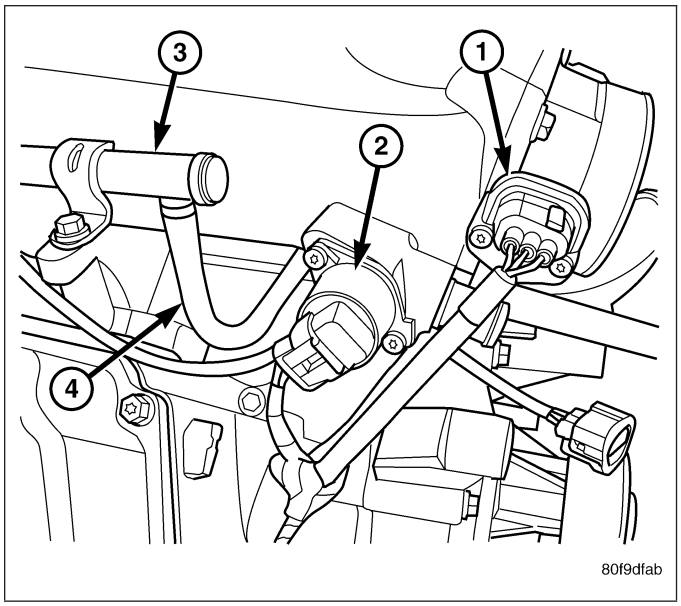

6. Remove the wiring harness from the wiring clips under the throttle body.

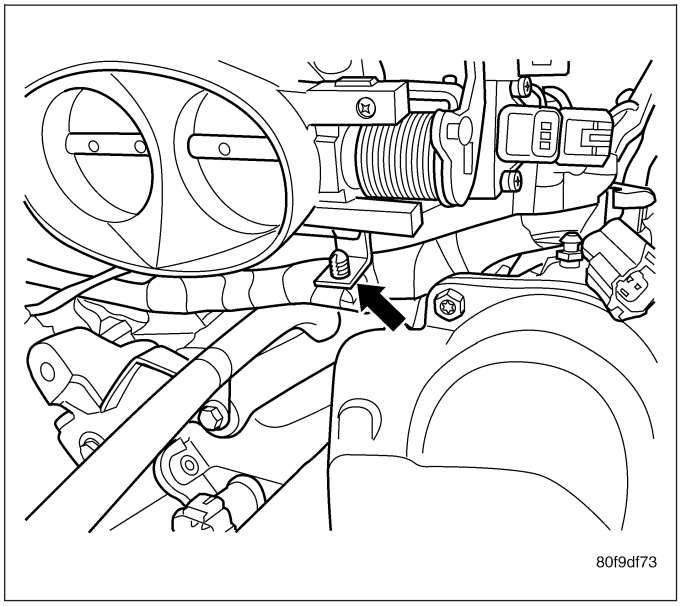

7. Disconnect the electrical connector from the fuel injectors.

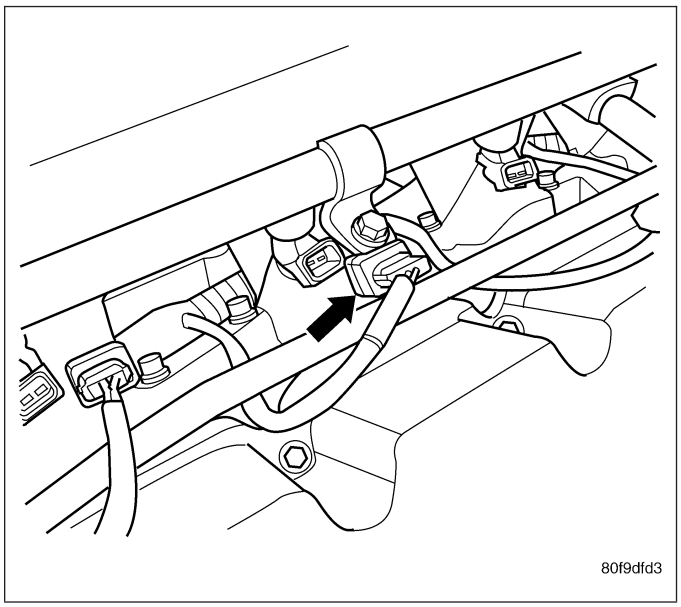

8. Disconnect the fuel line quick connector.

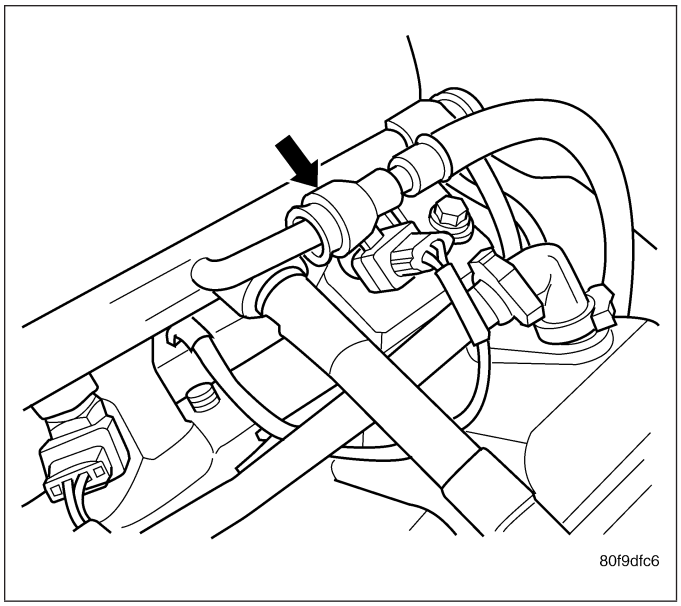

9. Remove the bolts for the fuel rail.

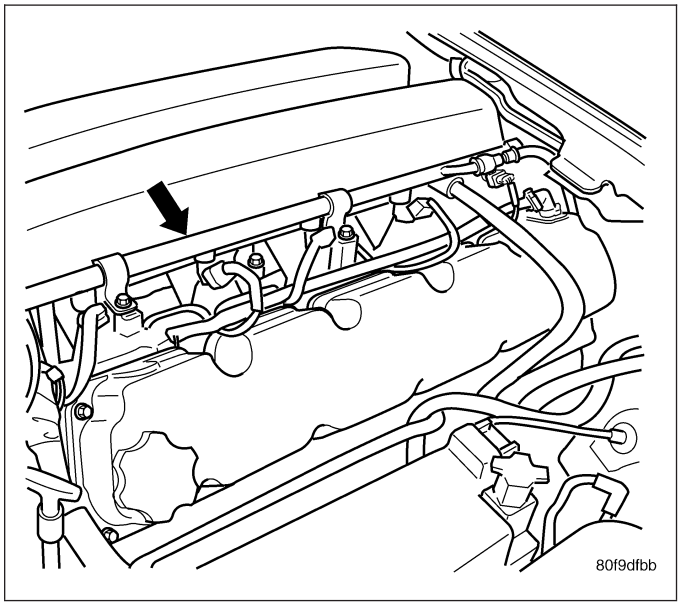

10. Pull fuel rail and injectors straight up and out of the intake manifold.

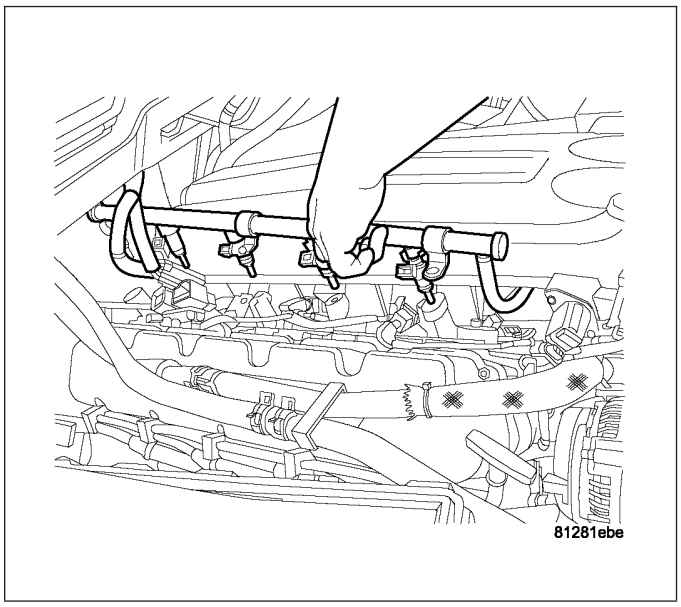

11. Move the fuel rail forward and out from under the intake manifold and throttle body.

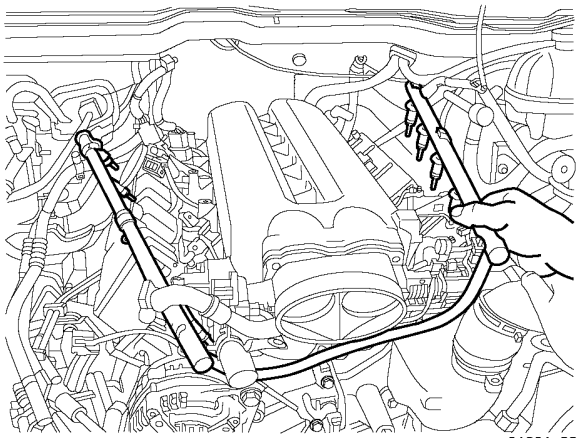

12. Remove the fuel injector from the fuel rail.

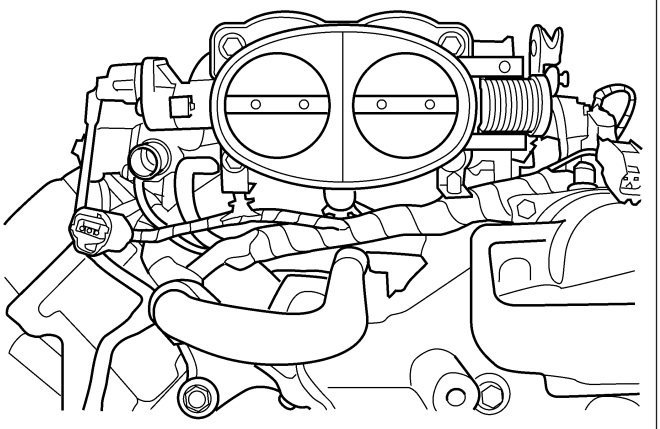

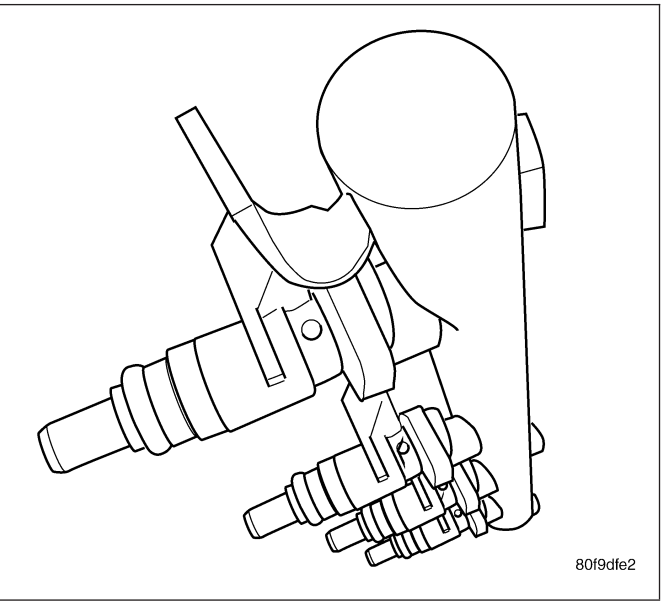

INSTALLATION

3.7L V-6

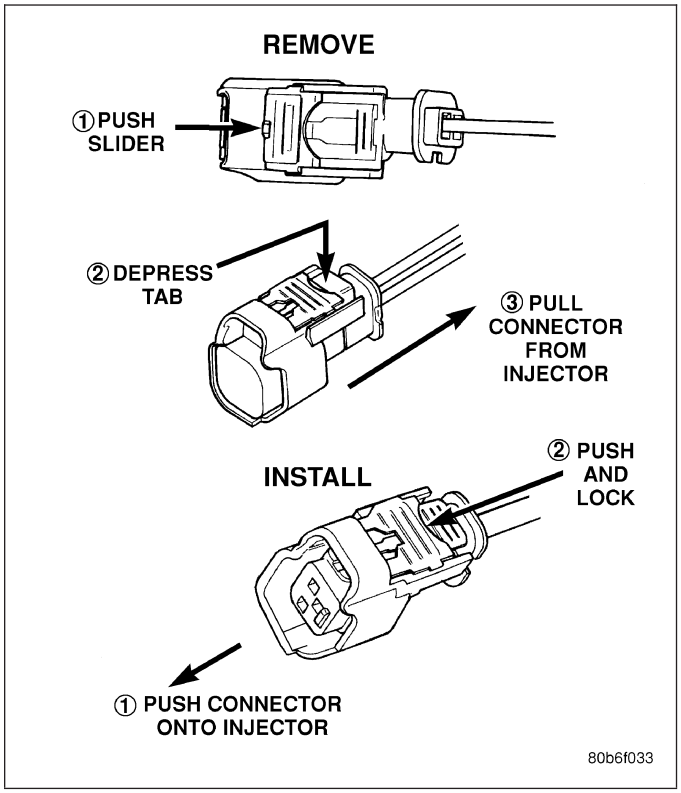

1. If fuel injectors are to be installed, (Refer to 14 - FUEL SYSTEM/FUEL INJECTION/FUEL INJECTOR - INSTALLATION).
2. Clean out fuel injector machined bores in intake manifold.
3. Apply a small amount of engine oil to each fuel injector o-ring. This will help in fuel rail installation.
4. Position fuel rail/fuel injector assembly to machined injector openings in cylinder head.
5. Guide each injector into cylinder head. Be careful not to tear injector o-rings.
6. Push **right** side of fuel rail down until fuel injectors have bottomed on cylinder head shoulder. Push **left** fuel rail down until injectors have bottomed on cylinder head shoulder.
7. Install 4 fuel rail mounting bolts and tighten. (Refer to 14 - FUEL SYSTEM/FUEL DELIVERY - SPECIFICATIONS)
8. Install 6 ignition coils. (Refer to 8 - ELECTRICAL/IGNITION CONTROL/IGNITION COIL - INSTALLATION)
9. Connect electrical connectors to throttle body.
10. Connect electrical connectors at all fuel injectors. To install connector, refer to. Push connector onto injector (1) and then push and lock red colored slider (2). Verify connector is locked to injector by lightly tugging on connector.
11. Connect necessary vacuum lines to throttle body.
12. Install air resonator mounting bracket near front of throttle body (2 bolts).
13. Connect fuel line latch clip and fuel line to fuel rail. (Refer to 14 - FUEL SYSTEM/FUEL DELIVERY/QUICK CONNECT FITTING - STANDARD PROCEDURE)
14. Install air box to throttle body.
15. Install air duct to air box.
16. Connect battery cable to battery.
17. Start engine and check for leaks.

5.7L V-8

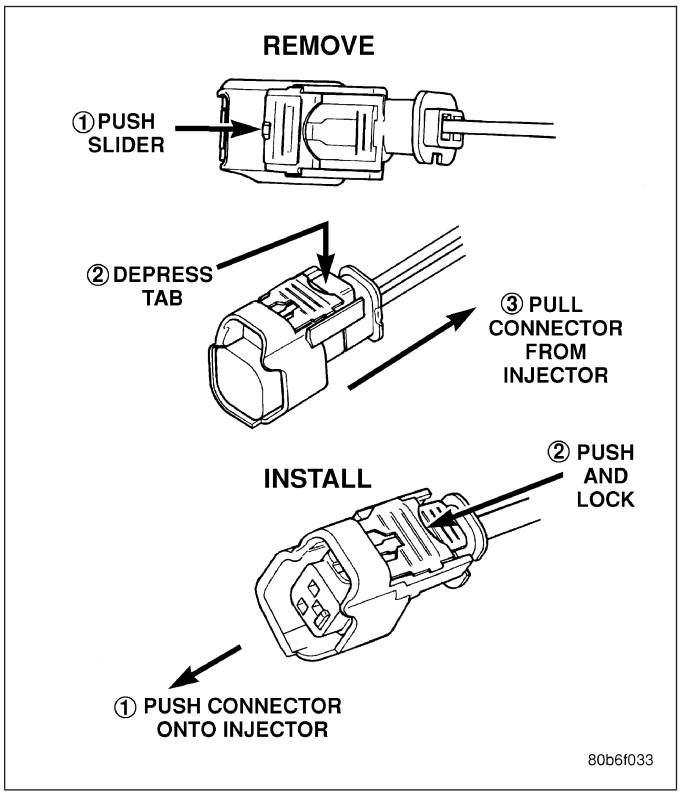

1. If fuel injectors are to be installed, (Refer to 14 - FUEL SYSTEM/FUEL INJECTION/FUEL INJECTOR - INSTALLATION).
2. Clean out fuel injector machined bores in intake manifold.
3. Apply a small amount of engine oil to each fuel injector o-ring. This will help in fuel rail installation.
4. Position fuel rail/fuel injector assembly to machined injector openings in intake manifold.
5. Guide each injector into intake manifold. Be careful not to tear injector o-rings.
6. Push **right** side of fuel rail down until fuel injectors have bottomed on shoulders. Push **left** fuel rail down until injectors have bottomed on shoulders.
7. Install 4 fuel rail holdown clamps and 4 mounting bolts. (Refer to 14 - FUEL SYSTEM/FUEL DELIVERY - SPECIFICATIONS)
8. Position spark plug cable tray and cable assembly to intake manifold. Snap 4 cable tray retaining clips into intake manifold.
9. Install all cables to spark plugs and ignition coils.
10. Connect electrical connector to throttle body.
11. Install electrical connectors to all 8 ignition coils. (Refer to 8 - ELECTRICAL/IGNITION CONTROL/IGNITION COIL - INSTALLATION)
12. Connect electrical connector to throttle body.
13. Connect electrical connectors at all fuel injectors. To install connector, refer to. Push connector onto injector (1) and then push and lock red colored slider (2). Verify connector is locked to injector by lightly tugging on connector.
14. Connect fuel line latch clip and fuel line to fuel rail. (Refer to 14 - FUEL SYSTEM/FUEL DELIVERY/QUICK CONNECT FITTING - STANDARD PROCEDURE)
15. Install air resonator to throttle body (2 bolts).
16. Install flexible air duct to air box.
17. Connect battery cable to battery.
18. Start engine and check for leaks.

4.7L V-8

1. If fuel injectors are to be installed, (Refer to 14 - FUEL SYSTEM/FUEL INJECTION/FUEL INJECTOR - INSTALLATION).
2. Clean out fuel injector machined bores in intake manifold.
3. Apply a small amount of engine oil to each fuel injector o-ring. This will help in fuel rail installation.
4. Position fuel rail/fuel injector assembly to machined injector openings in cylinder head.
5. Guide each injector into cylinder head. Be careful not to tear injector o-rings.
6. Push **right** side of fuel rail down until fuel injectors have bottomed on cylinder head shoulder. Push **left** fuel rail down until injectors have bottomed on cylinder head shoulder.
7. Install 4 fuel rail mounting bolts and tighten. (Refer to 14 - FUEL SYSTEM/FUEL DELIVERY - SPECIFICATIONS)
8. Install 8 ignition coils. (Refer to 8 - ELECTRICAL/IGNITION CONTROL/IGNITION COIL - INSTALLATION)
9. Connect electrical connectors to throttle body.
10. Connect electrical connectors at all fuel injectors. To install connector, refer to. Push connector onto injector (1) and then push and lock red colored slider (2). Verify connector is locked to injector by lightly tugging on connector.

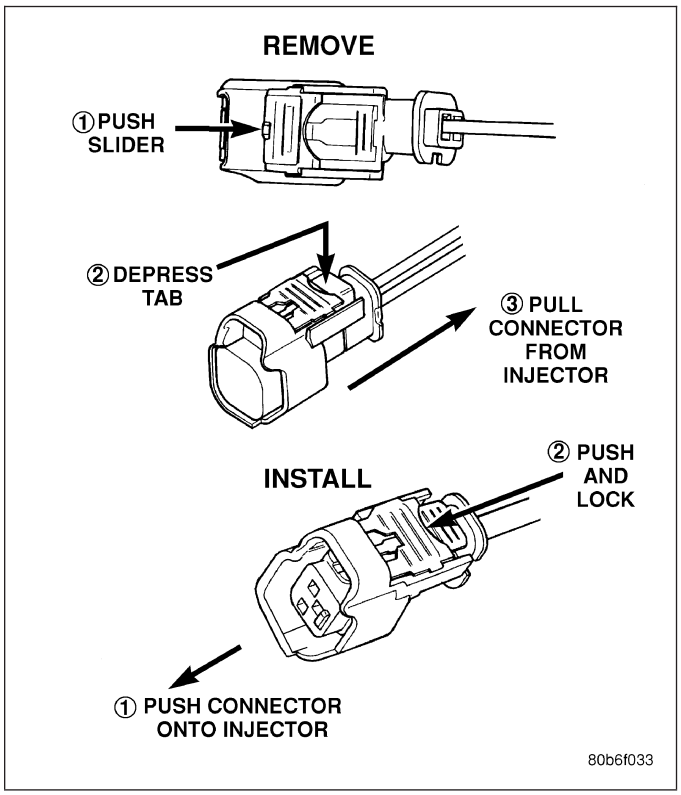

11. Connect necessary vacuum lines to throttle body.
12. Install air resonator mounting bracket near front of throttle body (2 bolts).
13. Connect fuel line latch clip and fuel line to fuel rail. (Refer to 14 - FUEL SYSTEM/FUEL DELIVERY/QUICK CONNECT FITTING - STANDARD PROCEDURE)
14. Install air box to throttle body.
15. Install air duct to air box.
16. Connect battery cable to battery.
17. Start engine and check for leaks.

8.3L - SRT-10

1. Install the fuel injectors to the fuel rail.
2. Install fuel rail under throttle body.
3. Apply a light coating of clean engine oil to the O-ring on the nozzle end of each injector.
4. Insert fuel injector nozzles into openings in intake manifold. Seat the injectors in place. Tighten fuel rail bolts to 12 N·m (105 in. lbs.).
5. Attach electrical connectors to fuel injectors.
6. Connect the electrical connector to the MAP sensor and Coolant Temperature sensor.
7. Connect the electrical connector to the TPS and Idle Air Control.
8. Install the wiring harness to the wiring clips under the throttle body.
9. Connect fuel supply tube to fuel rail. Refer to Quick Connect Fittings in the Fuel Delivery section
10. Install the negative battery cable.
11. Install the air cleaner assembly, refer to the Engine/Air Intake System/Air Cleaner Housing for more information.
12. Use the DRBIII® scan tool ASD Fuel System Test to pressurize the fuel system. Check for leaks.

TANK - FUEL

DESCRIPTION

The fuel tank is constructed of a plastic material. Its main functions are for fuel storage and for placement of the fuel pump module, and (if equipped) certain ORVR components.

OPERATION

All models pass a full 360 degree rollover test without fuel leakage. To accomplish this, fuel and vapor flow controls are required for all fuel tank connections.

Two check (control) valves are mounted into the top of the fuel tank. Refer to Fuel Tank Check Valve for additional information.

An evaporation control system is connected to the fuel tank to reduce emissions of fuel vapors into the atmosphere. When fuel evaporates from the fuel tank, vapors pass through vent hoses or tubes to a charcoal canister where they are temporarily held. When the engine is running, the vapors are drawn into the intake manifold. Certain models are also equipped with a self-diagnosing system using a Leak Detection Pump (LDP) or NVLD Pump, and/or an On-Board Refueling Vapor Recovery (ORVR) system. Refer to Emission Control System for additional information.

REMOVAL- EXCEPT DIESEL

Fuel Tank Draining

WARNING: THE FUEL SYSTEM MAY BE UNDER CONSTANT FUEL PRESSURE EVEN WITH THE ENGINE OFF. THIS PRESSURE MUST BE RELEASED BEFORE SERVICING FUEL TANK.

Two different procedures may be used to drain fuel tank: through the fuel fill fitting on tank, or using a diagnostic scan tool to activate the fuel pump relay. Due to a one-way check valve installed into the fuel fill opening fitting at the tank, the tank cannot be drained conventionally at the fill cap.

The quickest draining procedure involves removing the rubber fuel fill hose.

As an alternative procedure, the electric fuel pump may be activated allowing tank to be drained at fuel rail connection. Refer to diagnostic scan tool for fuel pump activation procedures. Before disconnecting fuel line at fuel rail, release fuel pressure. Refer to the Fuel System Pressure Release Procedure for procedures. Attach end of special test hose tool number 6541, 6539, 6631 or 6923 at fuel rail disconnection (tool number will depend on model and/or engine application). Position opposite end of this hose tool to an approved gasoline draining station. Activate fuel pump and drain tank until empty.

If electric fuel pump is not operating, fuel must be drained through fuel fill fitting at tank. Refer to following procedures.

1. Release fuel system pressure.
2. Raise vehicle.
3. Thoroughly clean area around fuel fill fitting and rubber fuel fill hose at tank.
4. If vehicle is equipped with 4 doors and a 6 foot (short) box, remove left-rear tire/wheel.
5. Loosen clamp and disconnect rubber fuel fill hose at tank fitting. Using an approved gas holding tank, drain fuel tank through this fitting.

Tank Removal

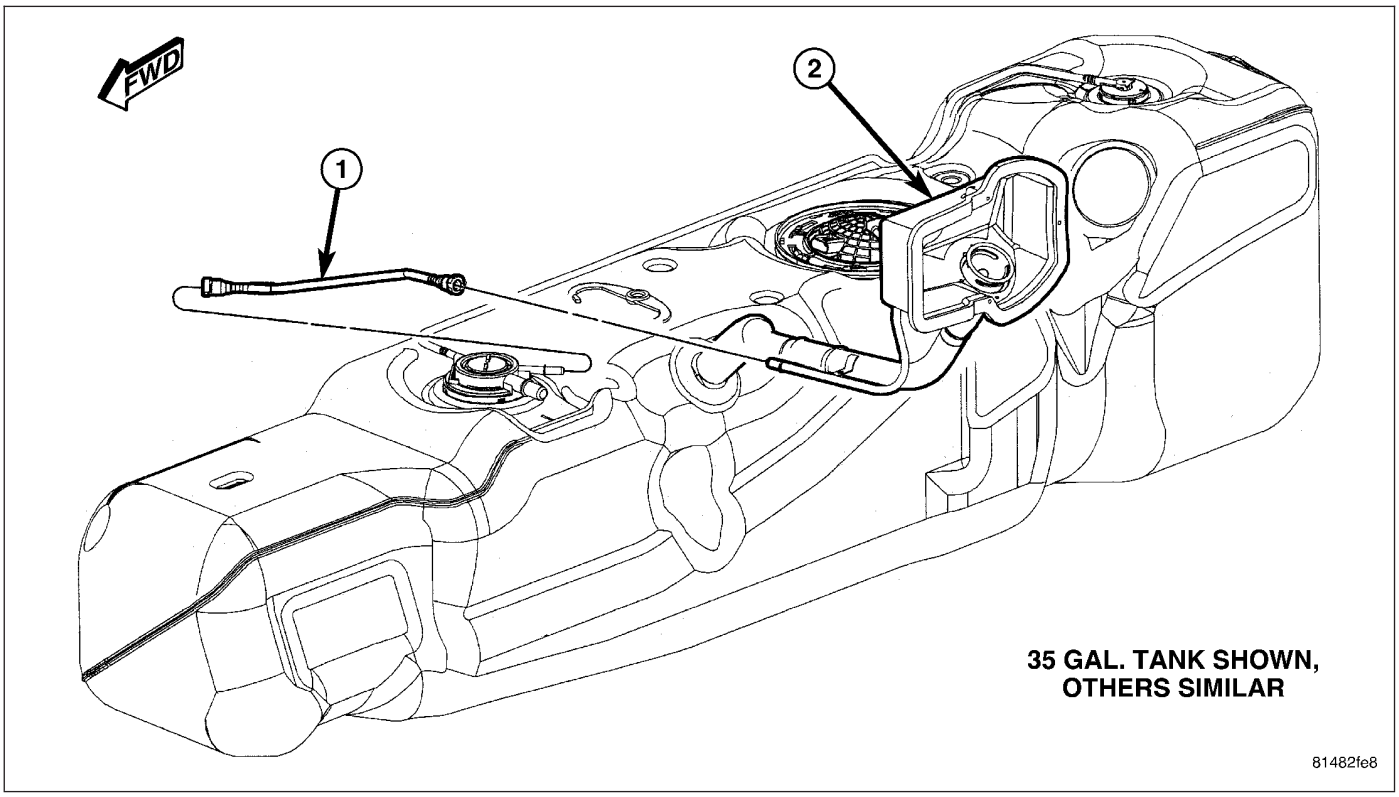

1. Disconnect and separate fuel vent line (1) from fuel fill bezel (2).

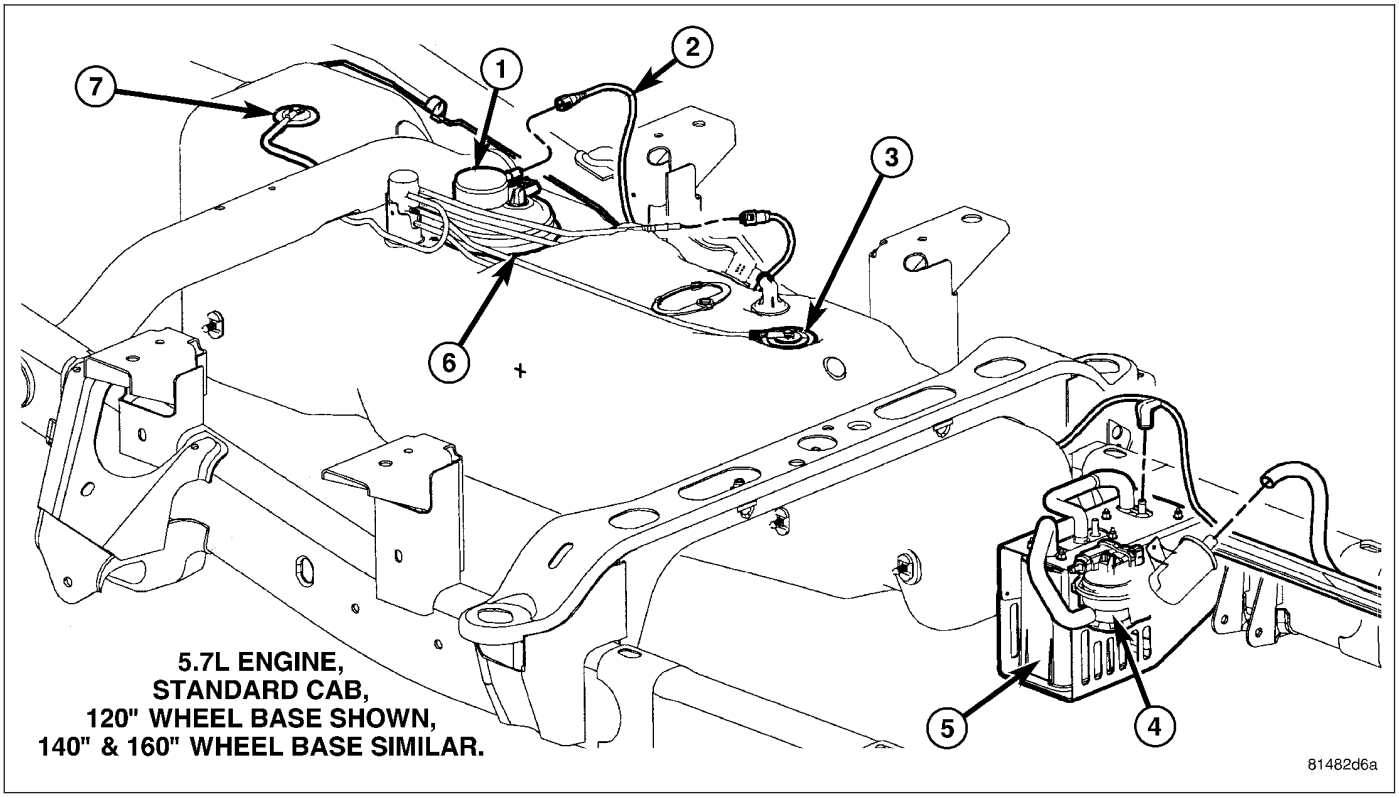

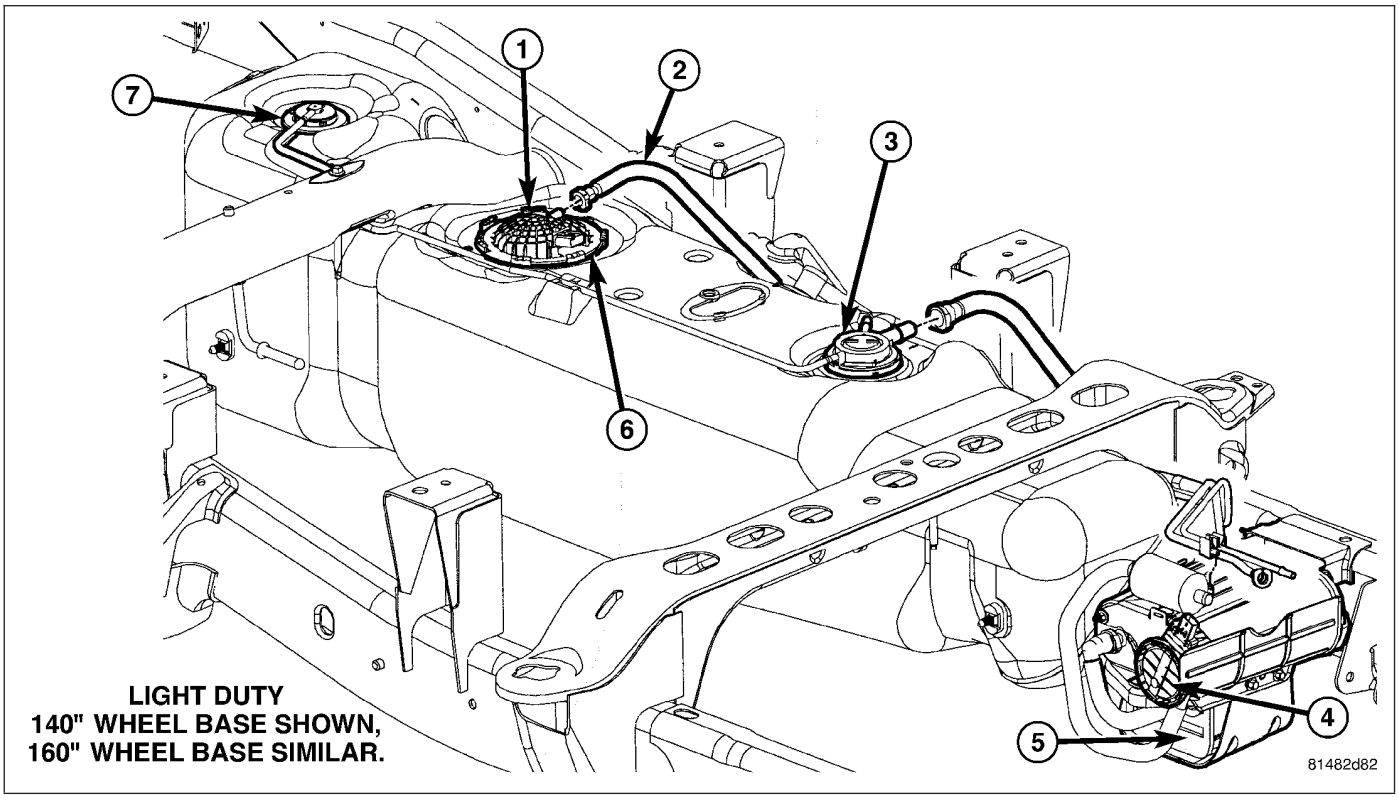
1
2
3
4
5
6
7
LIGHT DUTY
140" WHEEL BASE SHOWN,
160" WHEEL BASE SIMILAR.
81482d82

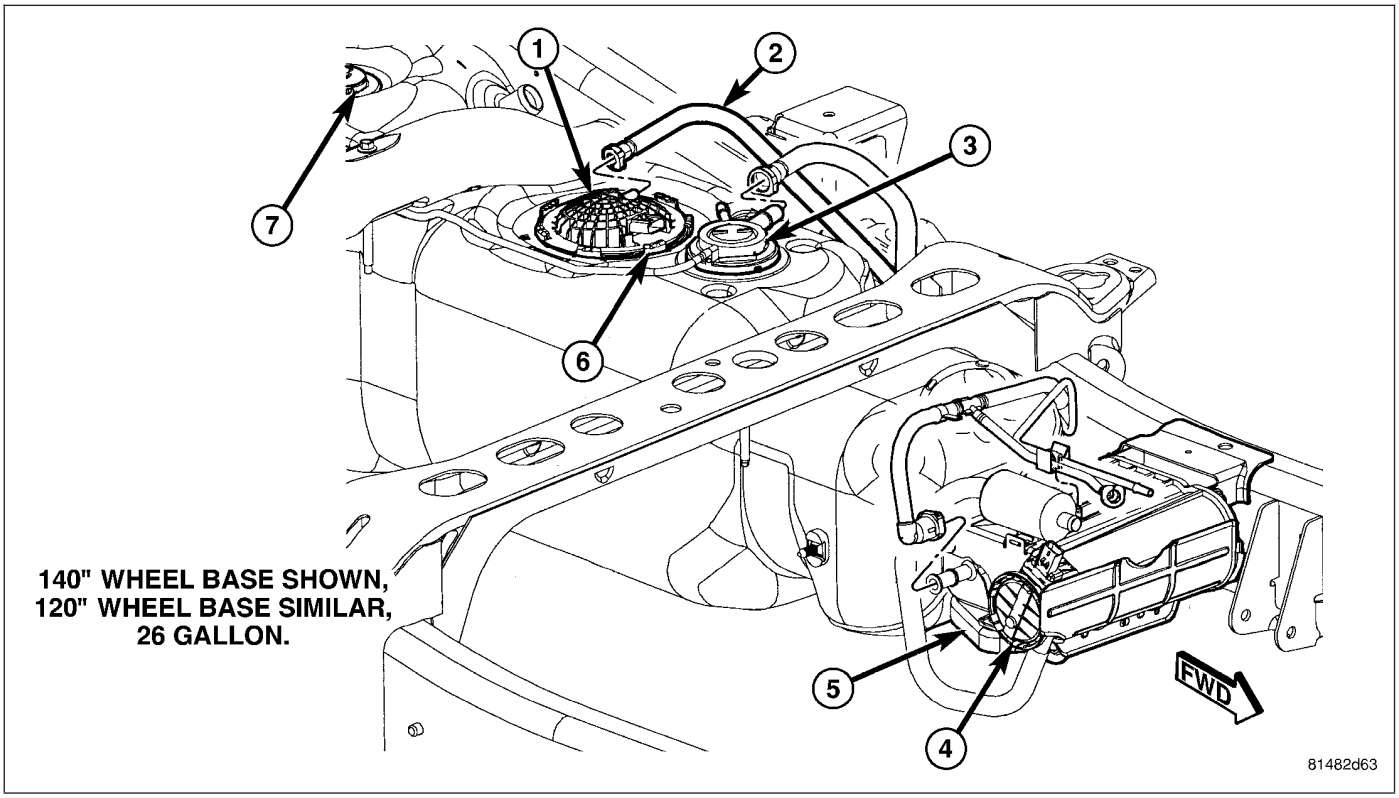
1
2
3
4
5
6
7
FWD
140" WHEEL BASE SHOWN,
120" WHEEL BASE SIMILAR,
26 GALLON.
81482d63

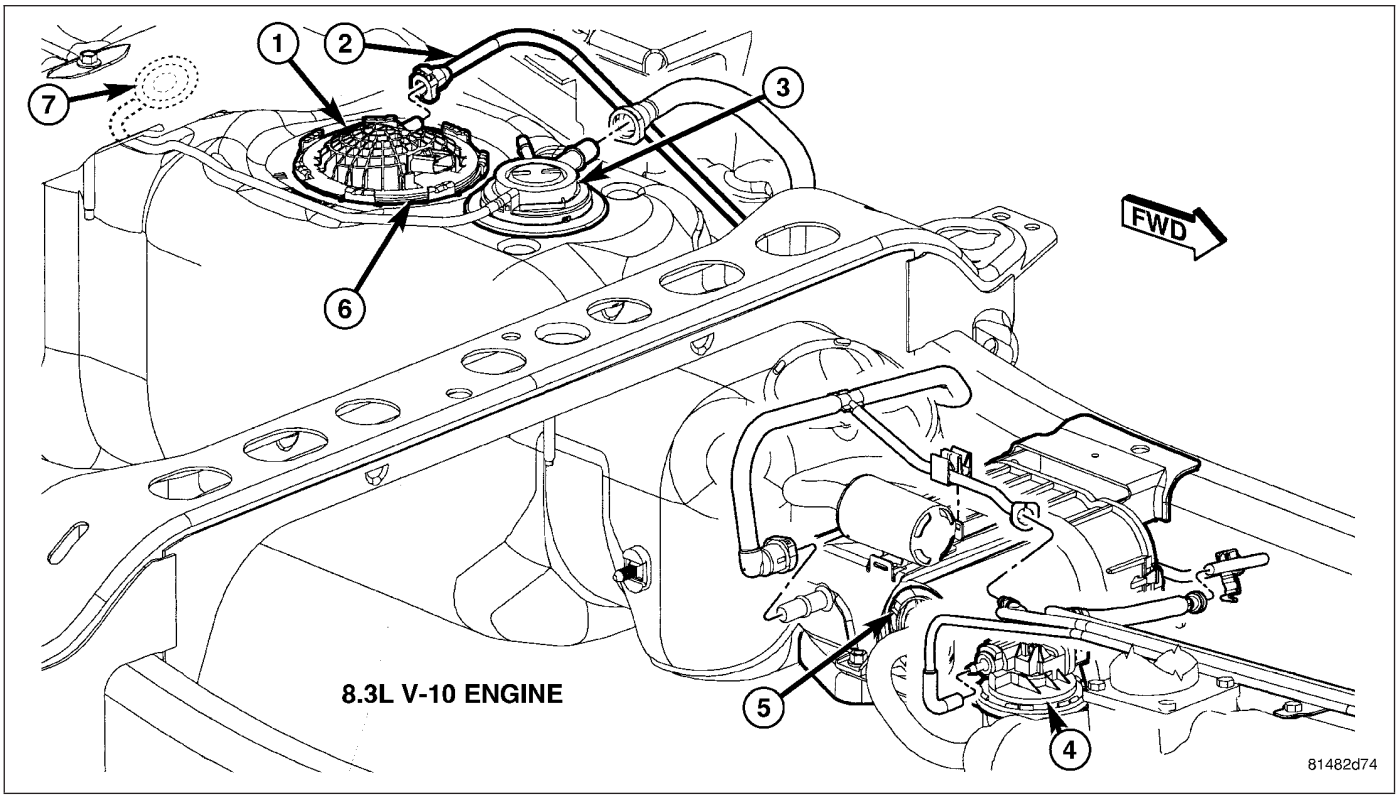

2. Disconnect electrical connector at top of fuel pump module. To disconnect electrical connector: Push upward on red colored tab to unlock. Push on black colored tab while removing connector.
3. Disconnect necessary emission vent lines from leak pump and EVAP canister (4) and/or (5).
4. Disconnect fuel supply line (2) from fuel pump module (1).
5. Disconnect necessary emission vent lines from check valves (3) and/or (7) at top of tank.

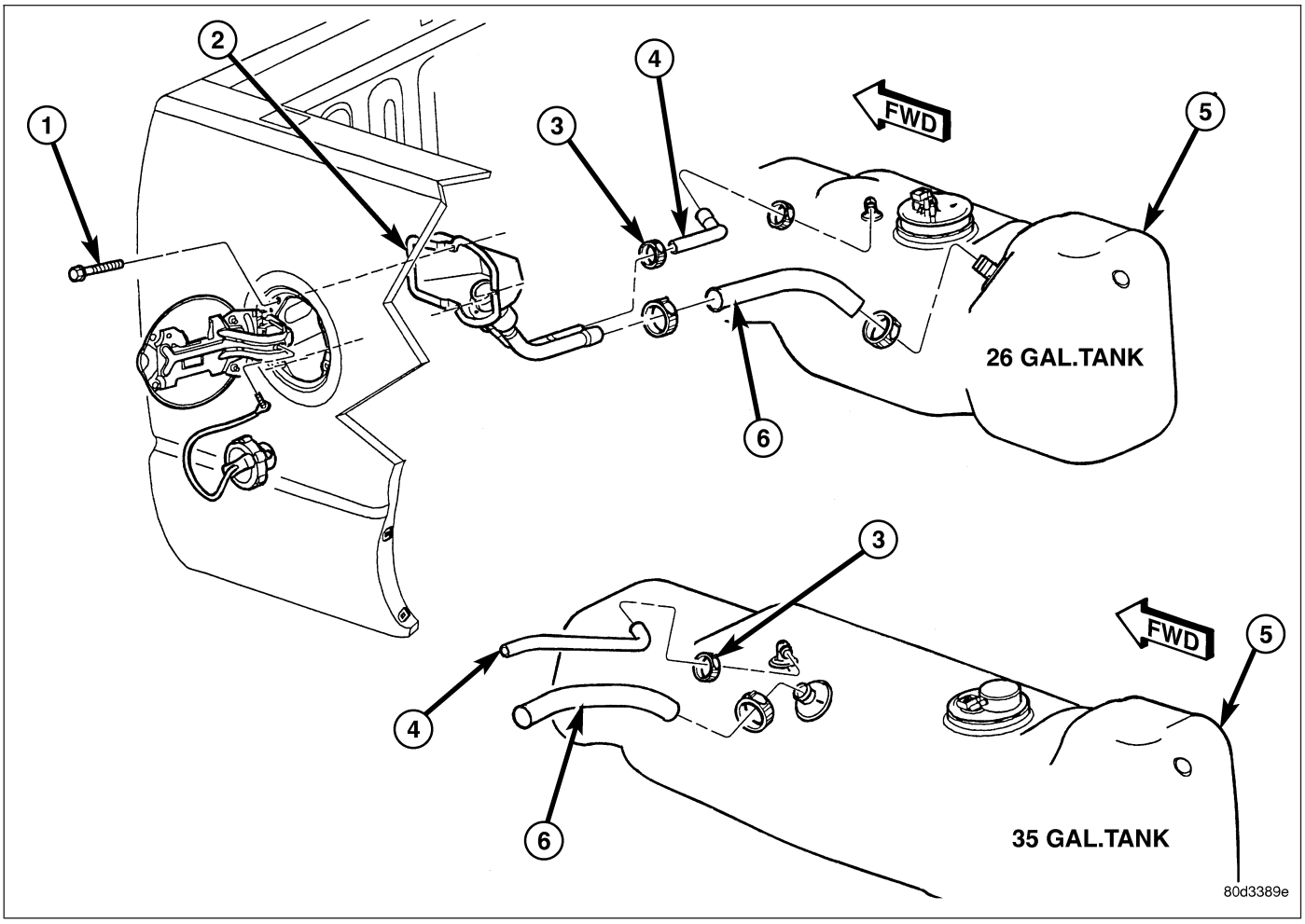

6. Loosen clamps (3) and disconnect rubber fuel hoses at tank fittings.
7. Support tank with a hydraulic jack.

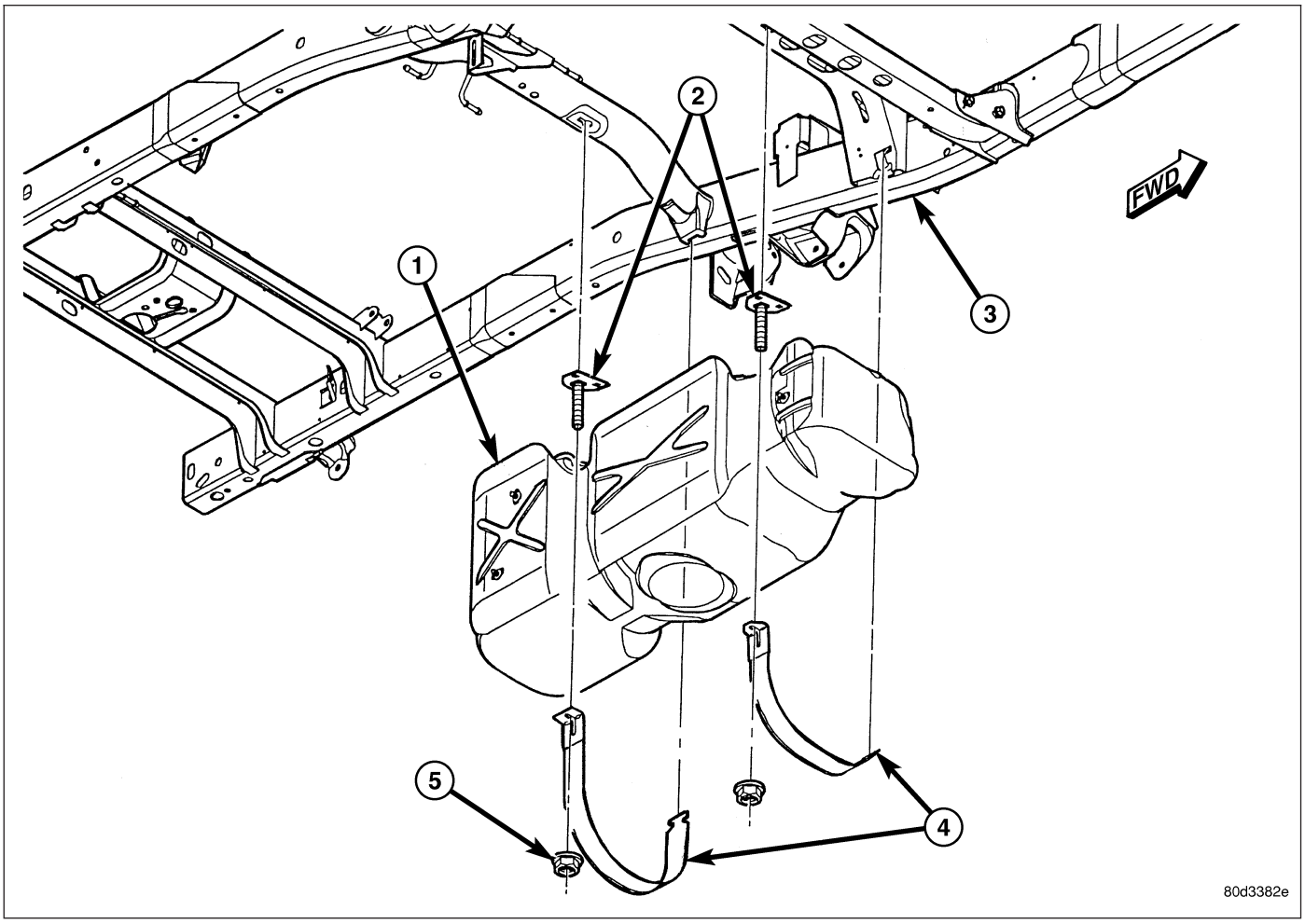

8. Remove two fuel tank strap nuts (5) and remove both tank support straps (4).
9. Continue to lower tank for removal.
10. If fuel tank is to be replaced, remove fuel pump module from tank. Refer to Fuel Pump Module Removal/Installation procedures.

INSTALLATION - EXCEPT DIESEL

1. If fuel tank is to be replaced, install fuel pump module into tank. Refer to Fuel Pump Module Removal/ Installation procedures.
2. Disconnect clamps and remove rubber fuel fill hose and fuel vent hose at fuel fill tube. Install these two hoses to two fuel tank fittings. Rotate hoses until paint marks (2) on hoses line up with alignment marks (1). Tighten both clamps.

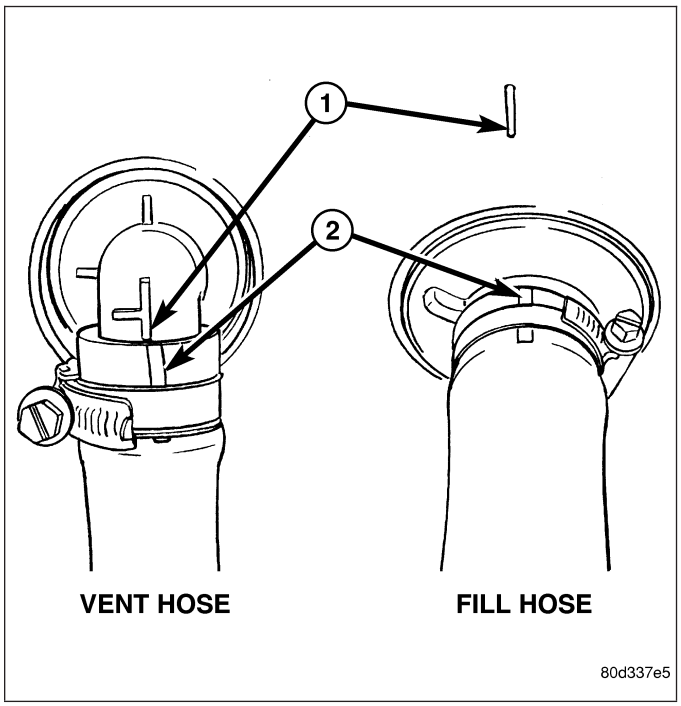

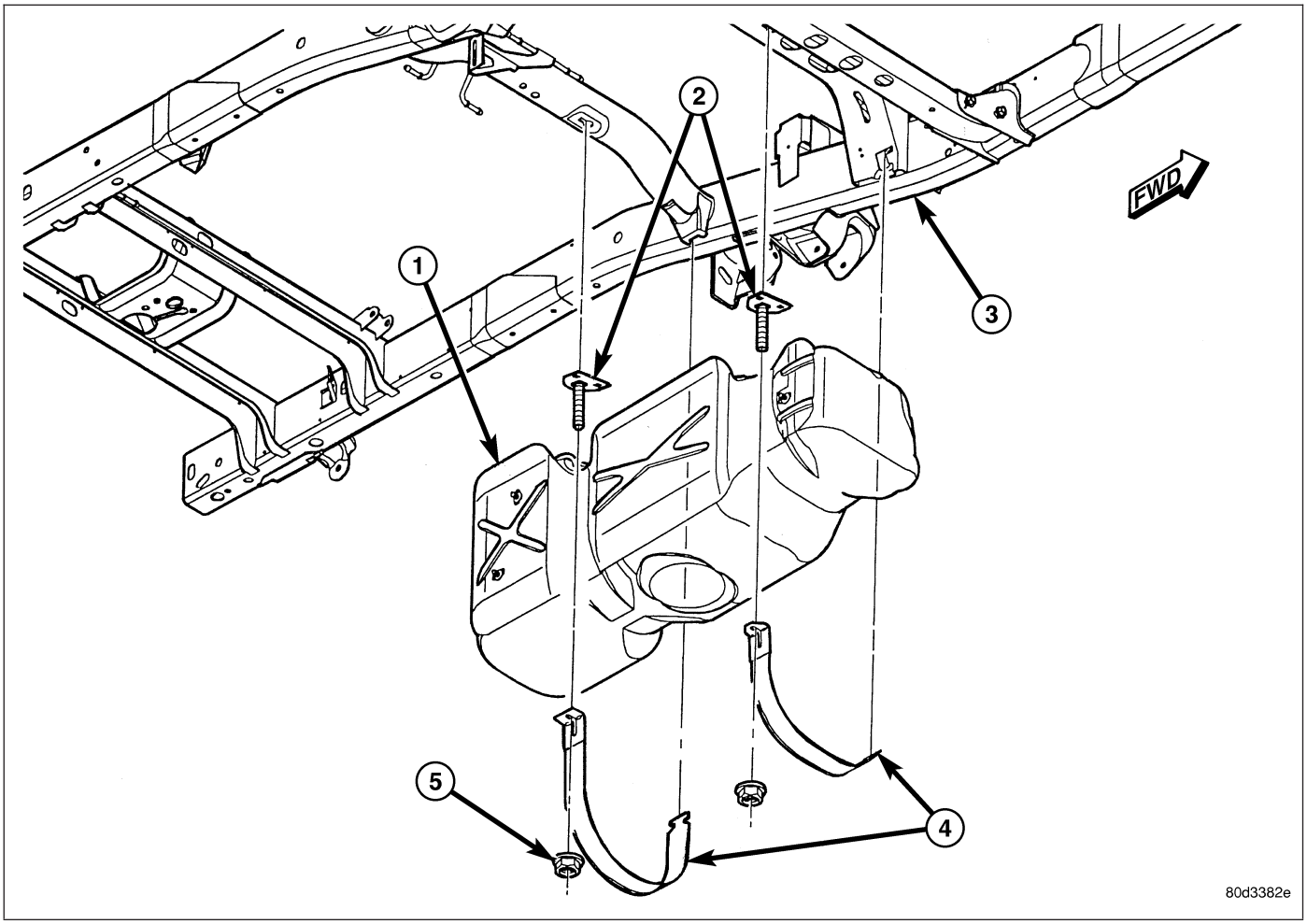

3. Position fuel tank (1) to hydraulic jack.
4. Raise tank (1) until positioned near body.
5. Continue raising tank until positioned snug to body.

6. Install and position both tank support straps (4). Install two fuel tank strap nuts (5) and tighten. **Tighten rear strap nut first.** Refer to Torque Specifications.

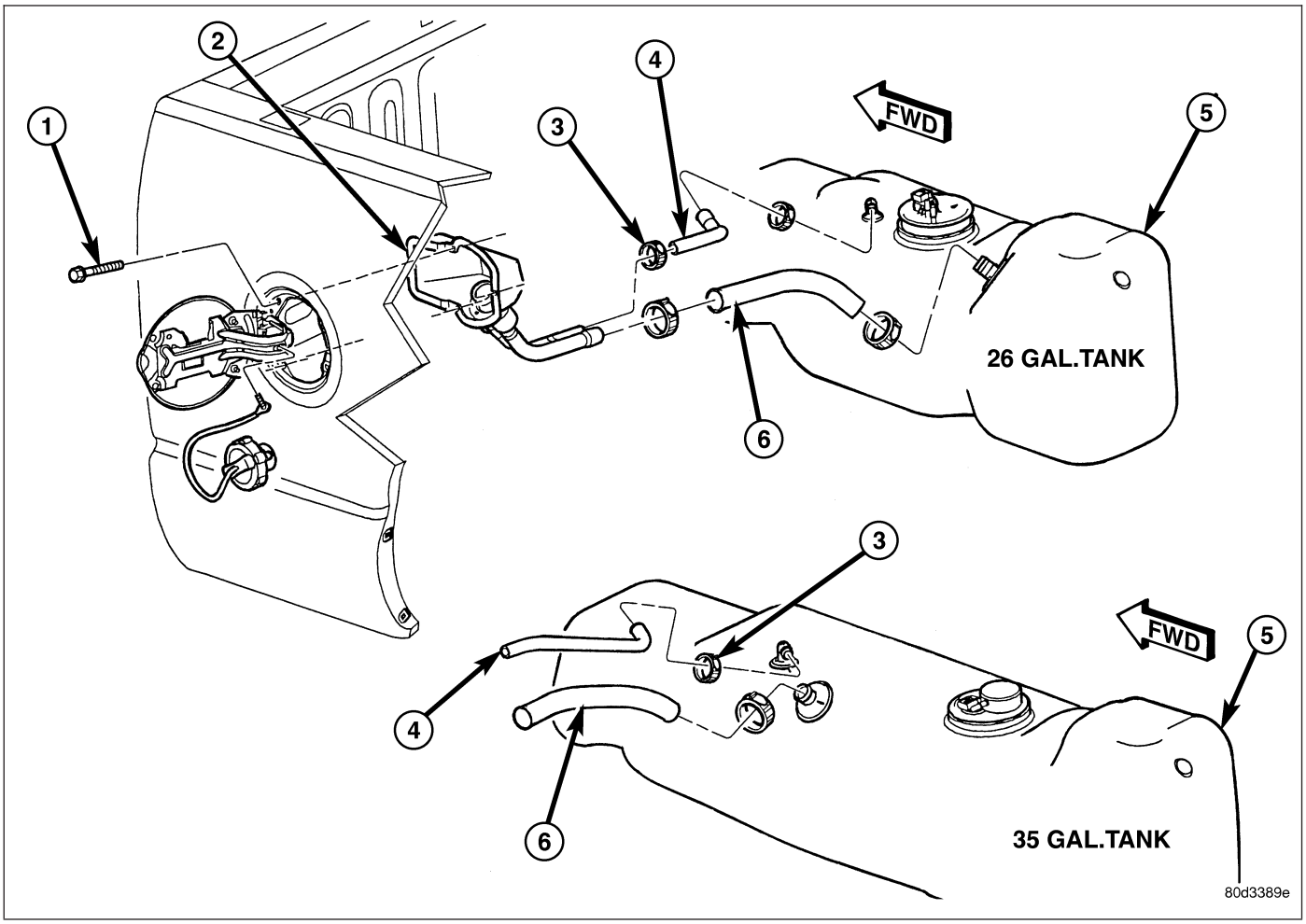

7. Connect rubber fill and vent hoses to fuel fill tube and tighten clamps (3).

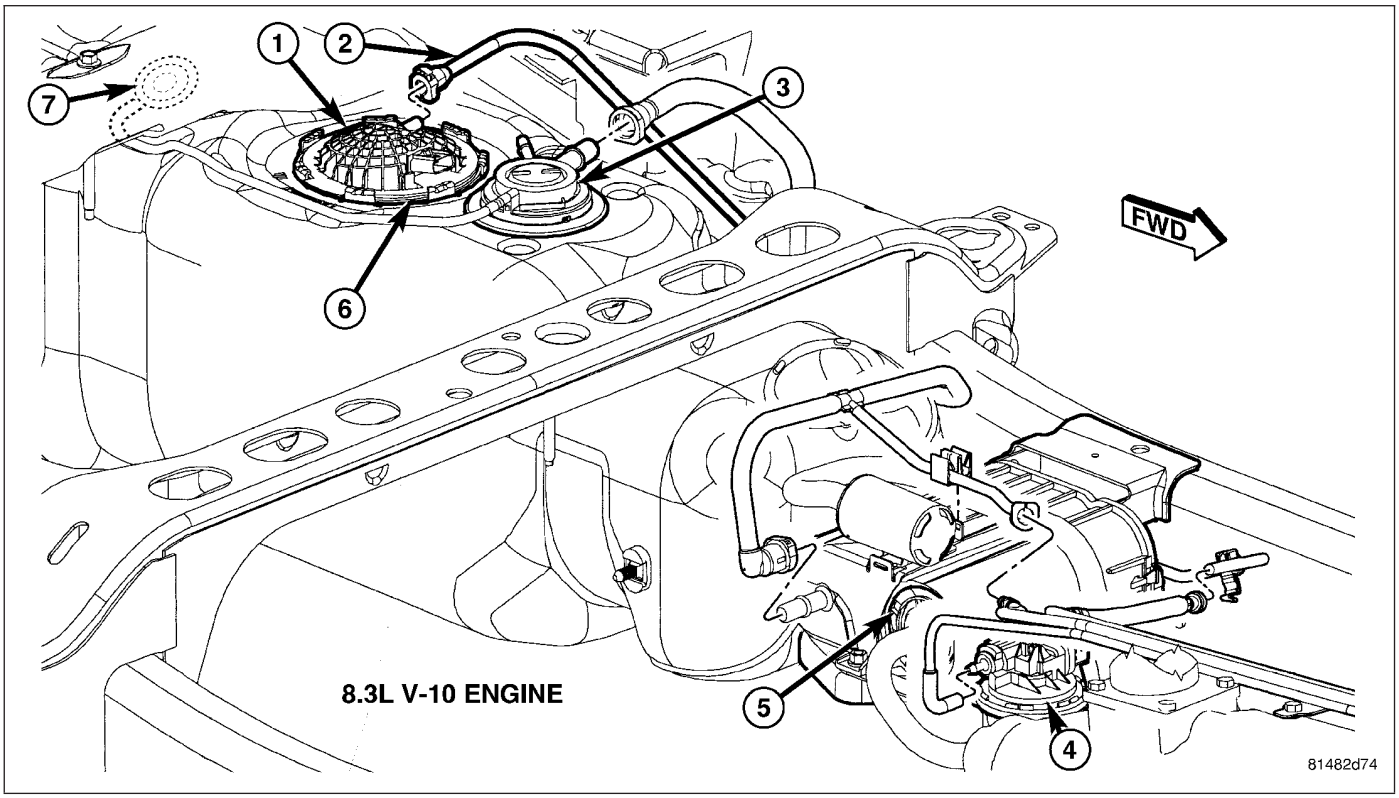
1
2
3
4
5
6
7
FWD
8.3L V-10 ENGINE
81482d74

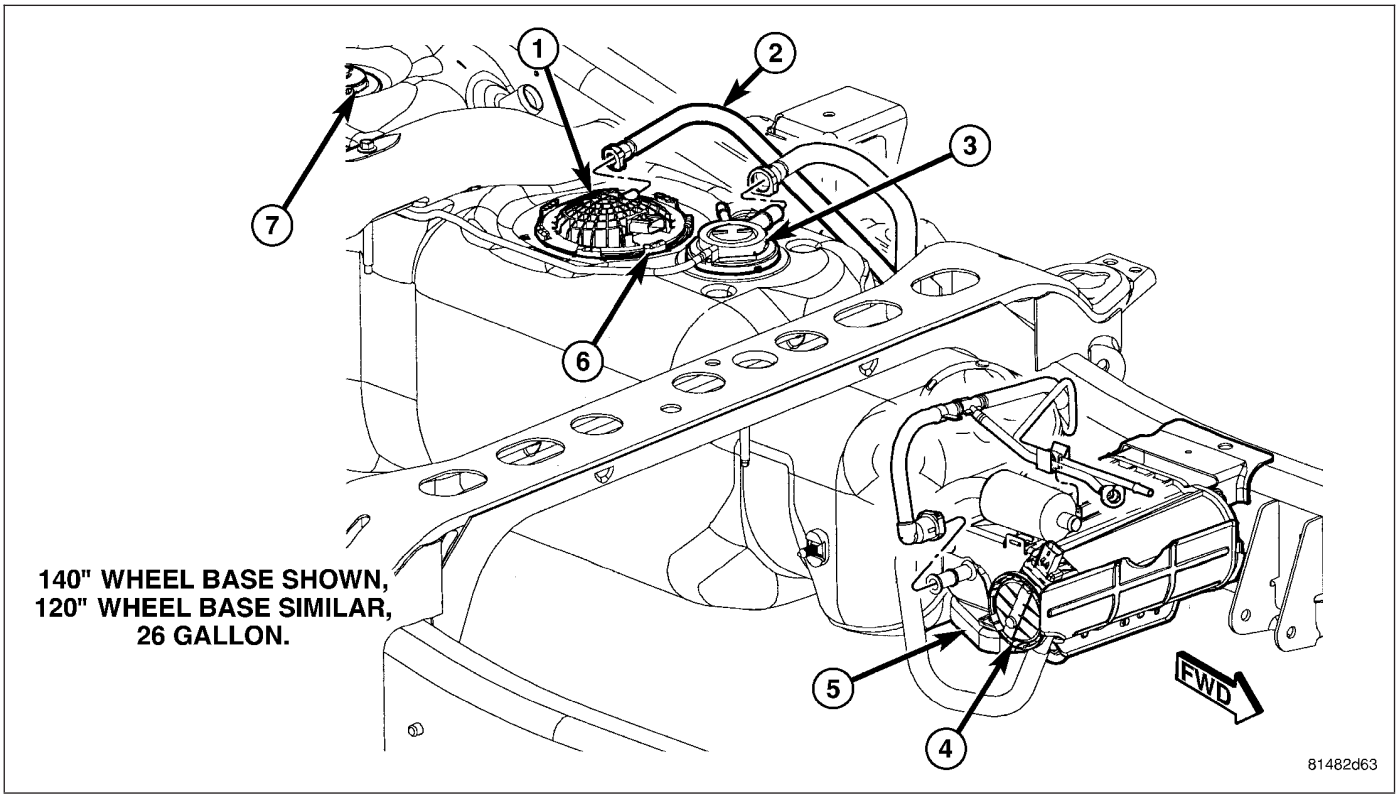
1
2
3
4
5
6
7
FWD
140" WHEEL BASE SHOWN,
120" WHEEL BASE SIMILAR,
26 GALLON.
81482d63

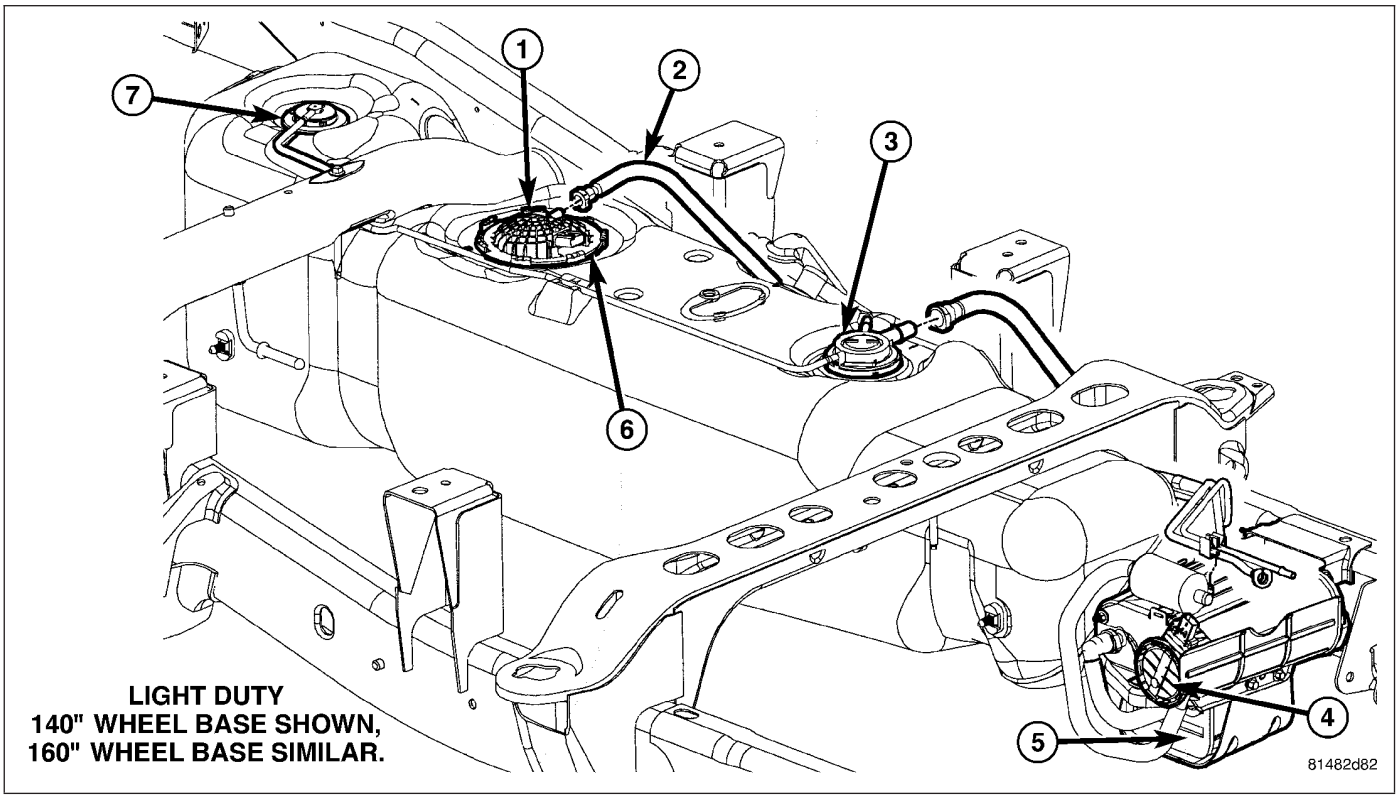

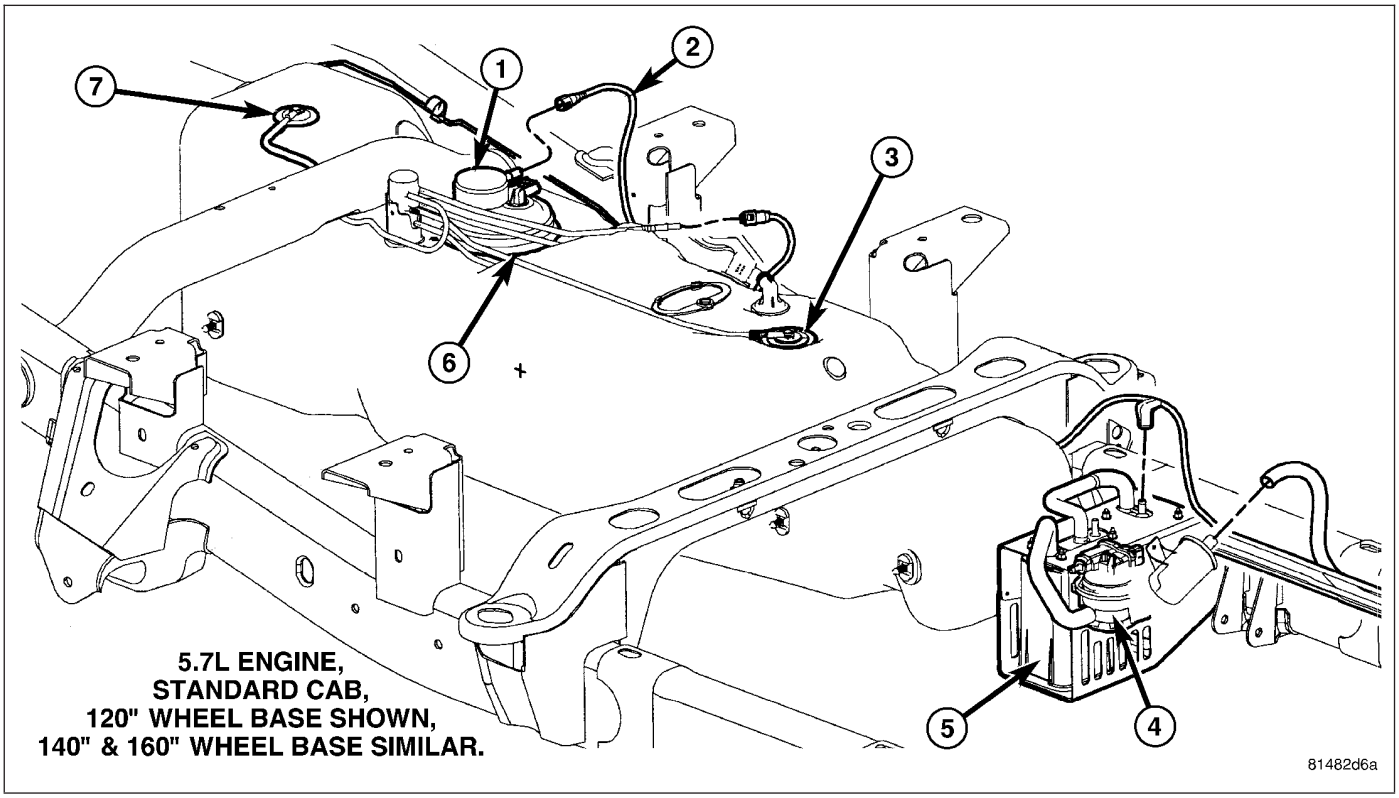

8. Connect electrical connector to top of fuel pump module.
9. Connect necessary emission vent lines to leak pump and EVAP canister (4) and/or (5).
10. Connect fuel supply line (2) to fuel pump module (1).
11. Connect necessary emission vent lines from check valves (3) and/or (7) at top of tank.

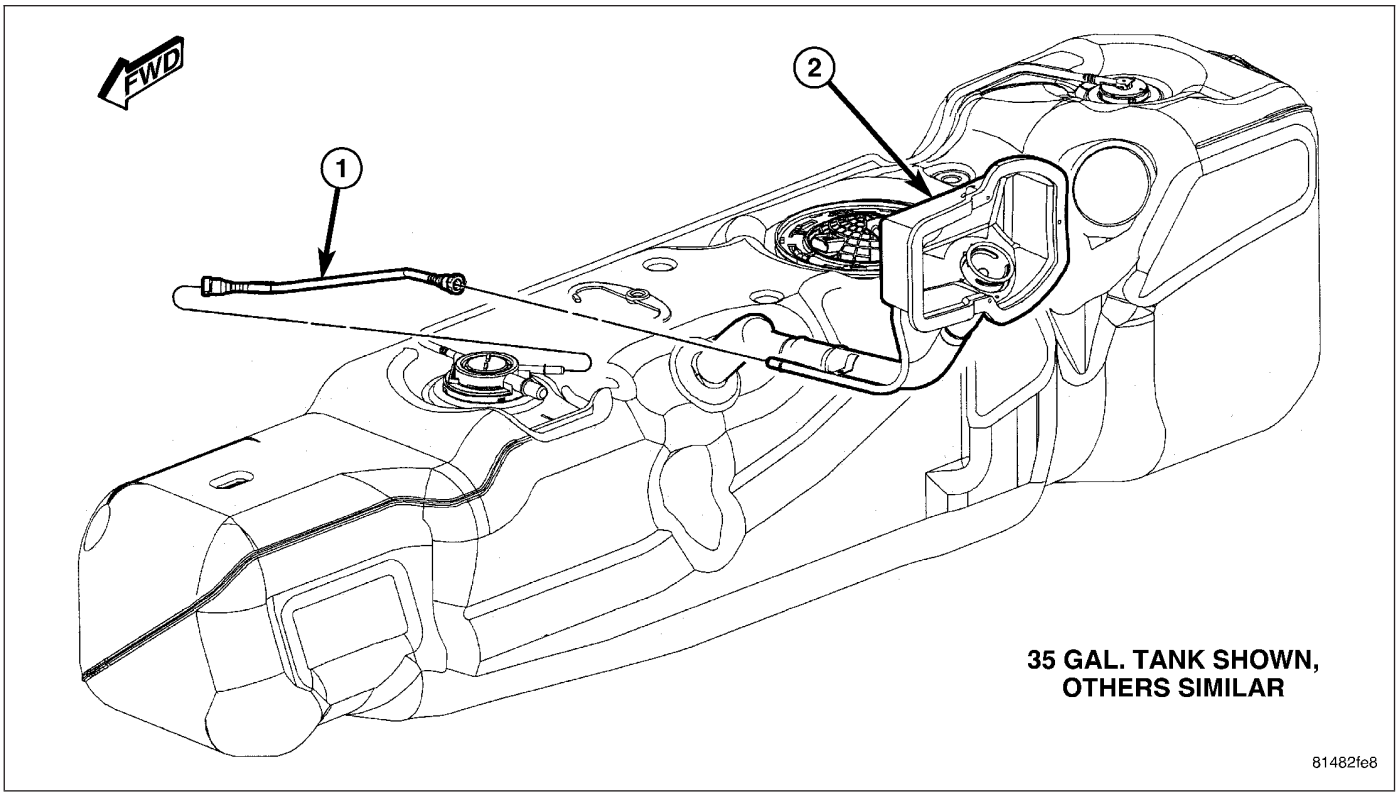

12. Connect fuel vent line (1) to fuel fill bezel (2).
13. Fill fuel tank with fuel.
14. Start engine and check for fuel leaks near top of module.

FILTER - INLET

REMOVAL

The fuel pump inlet filter (strainer) is located on the bottom of the fuel pump module (1). The fuel pump module is located inside of fuel tank.

1. Remove fuel tank. Refer to Fuel Tank Removal/Installation.
2. Remove fuel pump module. Refer to Fuel Pump Module Removal/Installation.
3. Remove filter by carefully prying 2 lock tabs (2) at bottom of module with 2 screwdrivers. Filter is snapped to module.
4. Clean bottom of pump module.

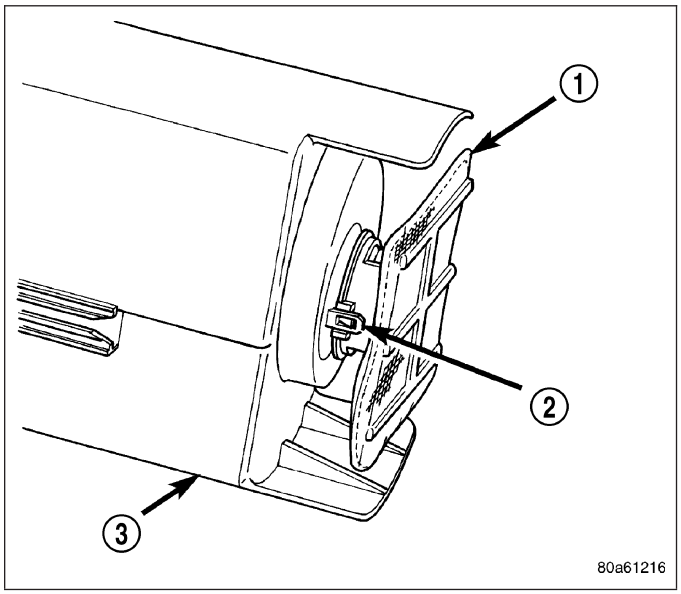

INSTALLATION

The fuel pump inlet filter (strainer) is located on the bottom of the fuel pump module. The fuel pump module is located inside of fuel tank.

1. Snap new filter to bottom of module. Be sure o-ring is in correct position.
2. Install fuel pump module. Refer to Fuel Pump Module Removal/Installation.
3. Install fuel tank. Refer to Fuel Tank Removal/Installation.

FUEL INJECTION - GAS

TABLE OF CONTENTS

page

PEDAL - ACCELERATOR
REMOVAL . . . 43
INSTALLATION . . . 43
SENSOR-ACCELERATOR PEDAL POSITION
DESCRIPTION . . . 44
OPERATION . . . 44
REMOVAL . . . 44
INSTALLATION . . . 45
SENSOR-CRANKSHAFT POSITION
DESCRIPTION
3.7L V-6 . . . 45
4.7L V-8 . . . 46
5.7L V-8 . . . 46
OPERATION
3.7L V-6 . . . 47
4.7L V-8 . . . 47
5.7L V-8 . . . 48
REMOVAL
3.7L V-6 . . . 48
4.7L V-8 . . . 49
5.7L V-8 . . . 49
8.3L - SRT-10 . . . 50
INSTALLATION
3.7L V-6 . . . 51
4.7L V-8 . . . 51
5.7L V-8 . . . 52
8.3L - SRT-10 . . . 52
INJECTOR - FUEL
DESCRIPTION . . . 52
OPERATION
FUEL INJECTOR . . . 53
PCM OUTPUT . . . 53
REMOVAL
3.7L— 4.7L— 5.7L . . . 54
8.3L - SRT-10 . . . 54
INSTALLATION
3.7L, 4.7L, 5.7L . . . 57
8.3L - SRT-10 . . . 57
RELAY - FUEL PUMP
DESCRIPTION . . . 57
OPERATION . . . 58
REMOVAL . . . 58
INSTALLATION . . . 58
MOTOR-IAC
DESCRIPTION
3.7L, 4.7L, 5.7L . . . 59
8.3L - SRT-10 . . . 60
OPERATION
3.7L V-6/4.7L V-8 . . . 60
REMOVAL
3.7L V-6 . . . 61
4.7L V-8 . . . 62
5.7L V-8 . . . 62
8.3L - SRT-10 . . . 62
INSTALLATION
3.7L V-6 . . . 63
4.7L V-8 . . . 63
5.7L V-8 . . . 63
8.3L - SRT-10 . . . 64
SENSOR - INLET AIR TEMPERATURE
REMOVAL — 8.3L . . . 64
INSTALLATION . . . 64
SENSOR-INTAKE AIR TEMPERATURE
DESCRIPTION
3.7L V-6 . . . 65
4.7L V-8 . . . 65
5.7L V-8 . . . 66
OPERATION . . . 66
REMOVAL
3.7L V-6 . . . 67
4.7L V-8 . . . 68
5.7L V-8 . . . 69
INSTALLATION
3.7L V-6 . . . 70
4.7L V-8 . . . 71
5.7L V-8 . . . 71
SENSOR-MAP
DESCRIPTION
3.7L V-6 . . . 72
4.7L V-8 . . . 72
5.7L V-8 . . . 73
8.3L - SRT-10 . . . 73
OPERATION . . . 73
REMOVAL
3.7L V-6 . . . 75
4.7L V-8 . . . 76
5.7L V-8 . . . 76
8.3 L - SRT-10 . . . 77
INSTALLATION
3.7L V-6 . . . 77
4.7L V-8 . . . 78
5.7L V-8 . . . 79
8.3L - SRT-10 . . . 79
SENSOR - OXYGEN
DESCRIPTION . . . 80
REMOVAL . . . 80
INSTALLATION . . . 80
SWITCH - PTO
DESCRIPTION . . . 81
OPERATION . . . 81
THROTTLE BODY
DESCRIPTION . . . 81

OPERATION 81
REMOVAL
3.7L V-6 82
4.7L V-8 83
5.7L V-8 83
8.3L - SRT-10 84
INSTALLATION
3.7L V-6 86
4.7L V-8 87
5.7L V-8 87
8.3L - SRT-10 88
CABLE - THROTTLE CONTROL
REMOVAL 88
INSTALLATION 91
SENSOR-THROTTLE POSITION
DESCRIPTION
3.7L, 4.7L, 5.7L 92
8.3L - SRT-10 92
OPERATION 93
REMOVAL
3.7L V6 93
4.7L V-8 94
5.7L V-8 94
8.3L - SRT-10 94
INSTALLATION
3.7L V-6 95
4.7L V-8 96
8.3L - SRT-10 97

PEDAL - ACCELERATOR

REMOVAL

The following procedure applies only to vehicles without the Adjustable Pedal Package (code XAP).

The accelerator pedal is serviced as a complete assembly including the bracket.

The accelerator cable is connected to the upper part of the accelerator pedal arm by a plastic retainer (clip) (2). This plastic retainer snaps into the top of the accelerator pedal arm.

1. From inside the vehicle, hold up accelerator pedal. Remove plastic cable retainer (clip) and throttle cable core wire from upper end of accelerator pedal arm. Plastic cable retainer (clip) snaps into pedal arm.
2. Remove 2 accelerator pedal mounting bracket nuts. Remove accelerator pedal assembly.

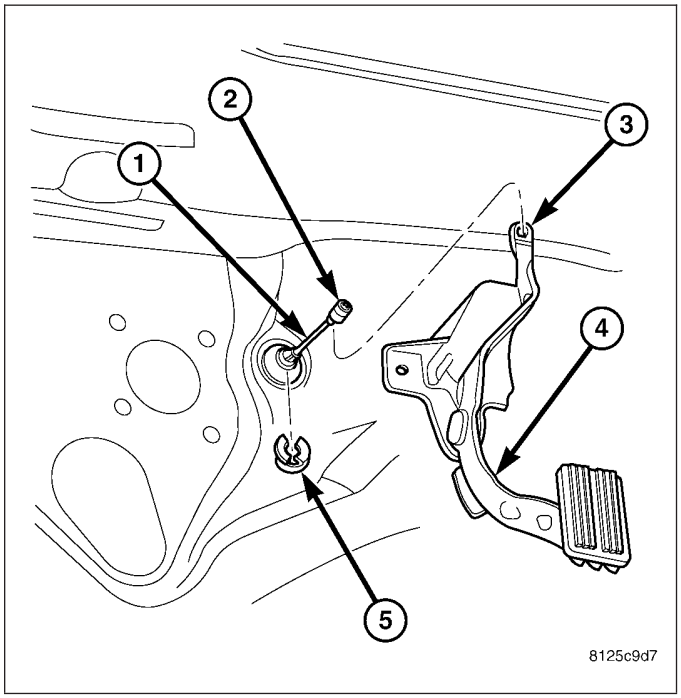

INSTALLATION

1. Place accelerator pedal assembly over 2 studs.
2. Install and tighten 2 mounting nuts. Refer to Torque Specifications.
3. Slide throttle cable into opening slot in top of pedal arm.
4. Push plastic cable retainer (clip) into accelerator pedal arm opening until it snaps into place.
5. Before starting engine, operate accelerator pedal to check for any binding.

SENSOR-ACCELERATOR PEDAL POSITION

DESCRIPTION

The Accelerator Pedal Position Sensor (APPS) (1) is located inside the vehicle. It is attached to the accelerator pedal assembly (3). It is used only on 5.7L V-8 gas engines and diesel engines.

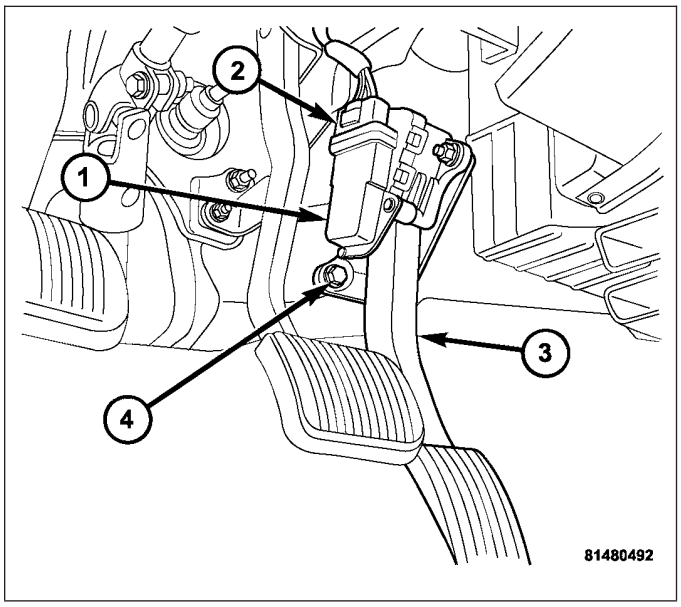

OPERATION

The Accelerator Pedal Position Sensor (APPS) provides the Powertrain Control Module (PCM) with two DC voltage signals which change as the position of the accelerator pedal changes. One of the DC voltage signals will be half the voltage of the other signal.

REMOVAL

CAUTION: Do not attempt to separate or remove the Accelerator Pedal Position Sensor (APPS) from the accelerator pedal assembly. The APPS is replaced as an assembly along with the pedal. If sensor is removed from pedal, its electronic calibration may be destroyed.

1. Disconnect 6–way electrical connector at top of APPS (2).
2. Remove APPS lower mounting bolt (4) and two mounting nuts.
3. Remove pedal and APPS assembly from vehicle.

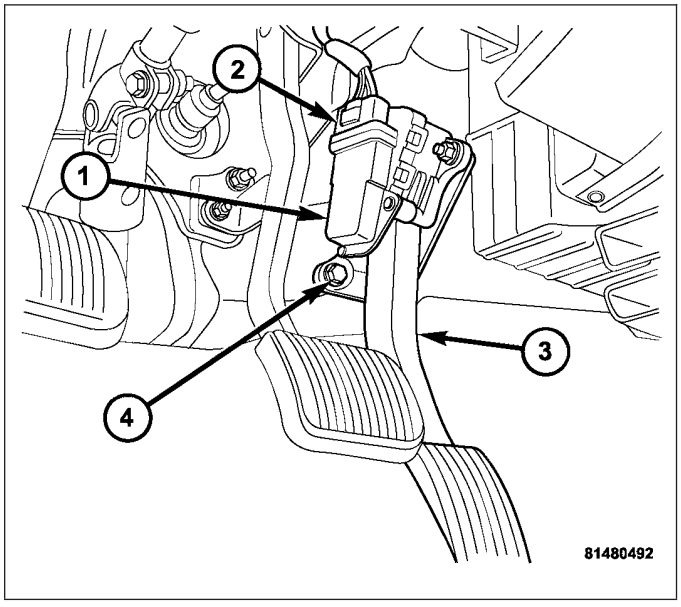

INSTALLATION

CAUTION: Do not attempt to separate or remove the Accelerator Pedal Position Sensor (APPS) from the accelerator pedal assembly. The APPS is replaced as an assembly along with the pedal. If sensor is removed from pedal, its electronic calibration may be destroyed.

1. Position pedal and APPS assembly to its mounting bracket.
2. Connect 6–way electrical connector to top of APPS (2).
3. Install APPS lower mounting bolt (4) and two mounting nuts.
4. If necessary, use a Scan Tool to erase any Diagnostic Trouble Codes (DTC's).

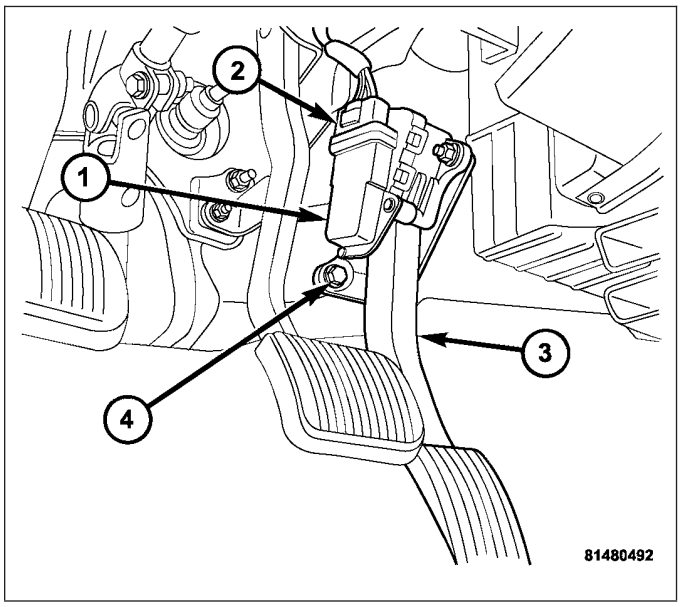

SENSOR-CRANKSHAFT POSITION

DESCRIPTION

3.7L V-6

The Crankshaft Position (CKP) (2) sensor is mounted into the right rear side of the cylinder block. It is positioned and bolted into a machined hole.

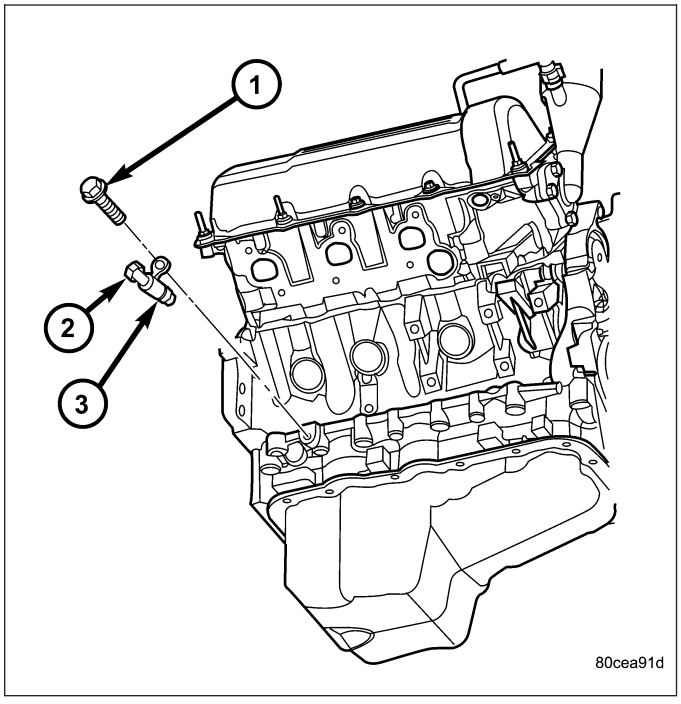

4.7L V-8

The Crankshaft Position (CKP) (1) sensor is mounted into the right rear side of the cylinder block. It is positioned and bolted into a machined hole.

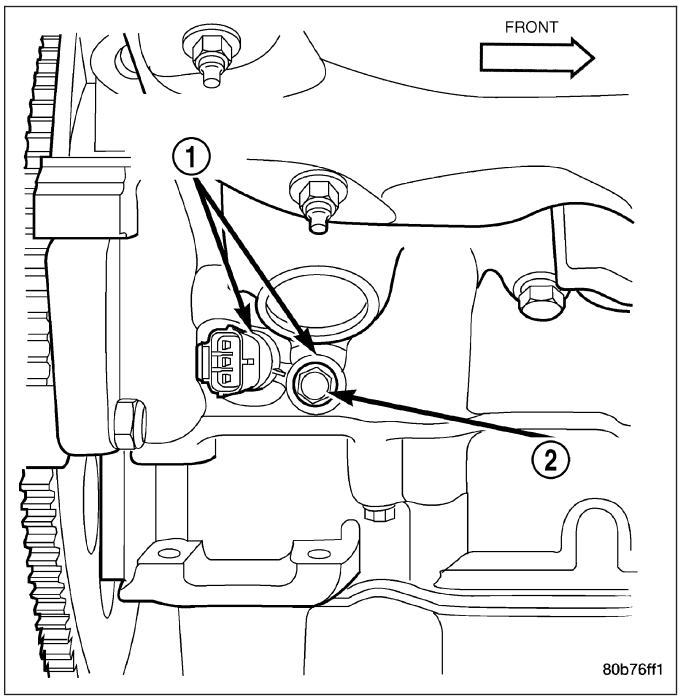

5.7L V-8

The Crankshaft Position (CKP) (4) sensor is mounted into the right rear side of the cylinder block. It is positioned and bolted into a machined hole.

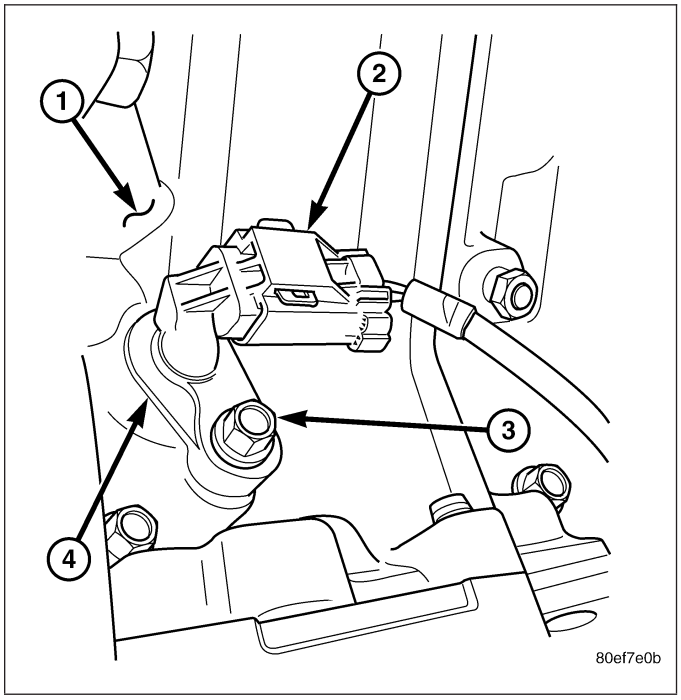

OPERATION

3.7L V-6

Engine speed and crankshaft position are provided through the CKP (Crankshaft Position) sensor. The sensor generates pulses that are the input sent to the Powertrain Control Module (PCM). The PCM interprets the sensor input to determine the crankshaft position. The PCM then uses this position, along with other inputs, to determine injector sequence and ignition timing.

The sensor is a hall effect device combined with an internal magnet. It is also sensitive to steel within a certain distance from it.

A tonewheel (targetwheel) (1) is bolted to the engine crankshaft. This tonewheel has sets of notches (2) at its outer edge.

The notches cause a pulse to be generated when they pass under the sensor. The pulses are the input to the PCM.

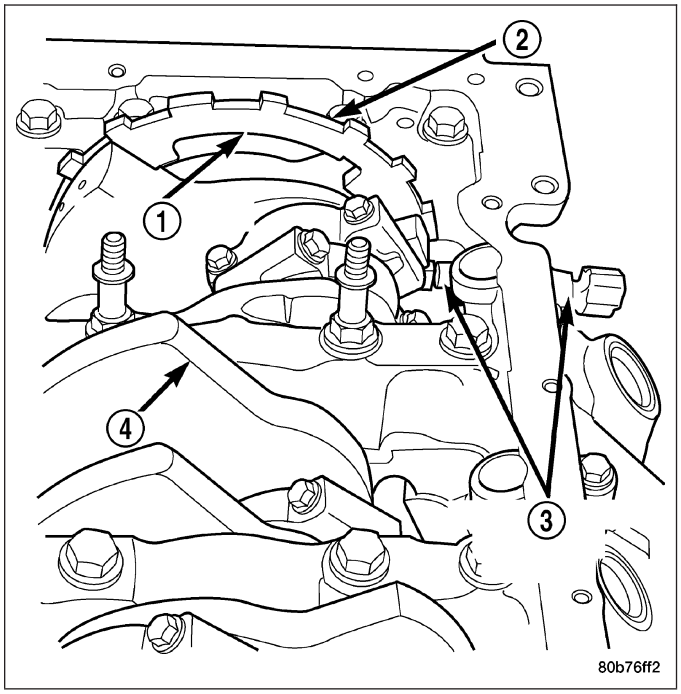

4.7L V-8

Engine speed and crankshaft position are provided through the CKP (Crankshaft Position) sensor. The sensor generates pulses that are the input sent to the Powertrain Control Module (PCM). The PCM interprets the sensor input to determine the crankshaft position. The PCM then uses this position, along with other inputs, to determine injector sequence and ignition timing.

The sensor is a hall effect device combined with an internal magnet. It is also sensitive to steel within a certain distance from it.

A tonewheel (1) is bolted to the engine crankshaft. This tonewheel has sets of notches (2) at its outer edge.

The notches cause a pulse to be generated when they pass under the sensor. The pulses are the input to the PCM.

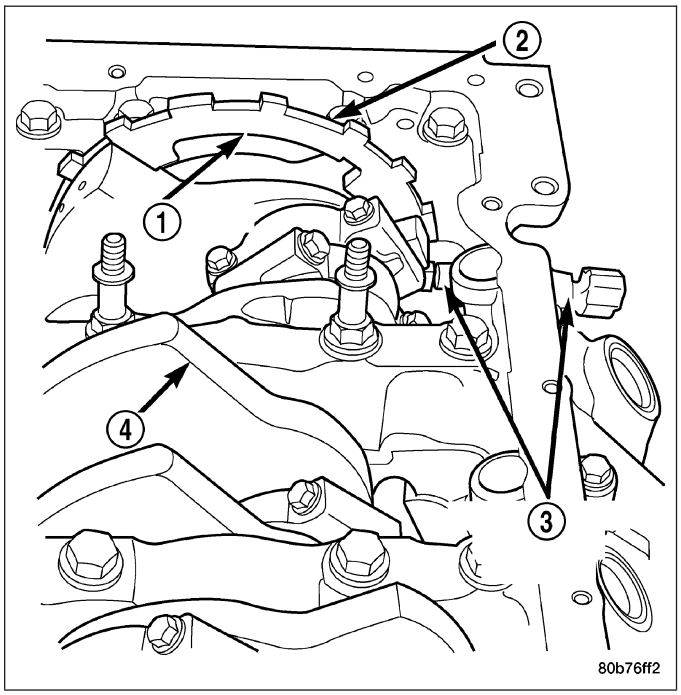

5.7L V-8

Engine speed and crankshaft position are provided through the CKP (Crankshaft Position) sensor. The sensor generates pulses that are the input sent to the Powertrain Control Module (PCM). The PCM interprets the sensor input to determine the crankshaft position. The PCM then uses this position, along with other inputs, to determine injector sequence and ignition timing.

The sensor is a hall effect device combined with an internal magnet. It is also sensitive to steel within a certain distance from it.

A tonewheel is bolted to the engine crankshaft. This tonewheel has sets of notches (3) at its outer edge.

The notches cause a pulse to be generated when they pass under the sensor. The pulses are the input to the PCM.

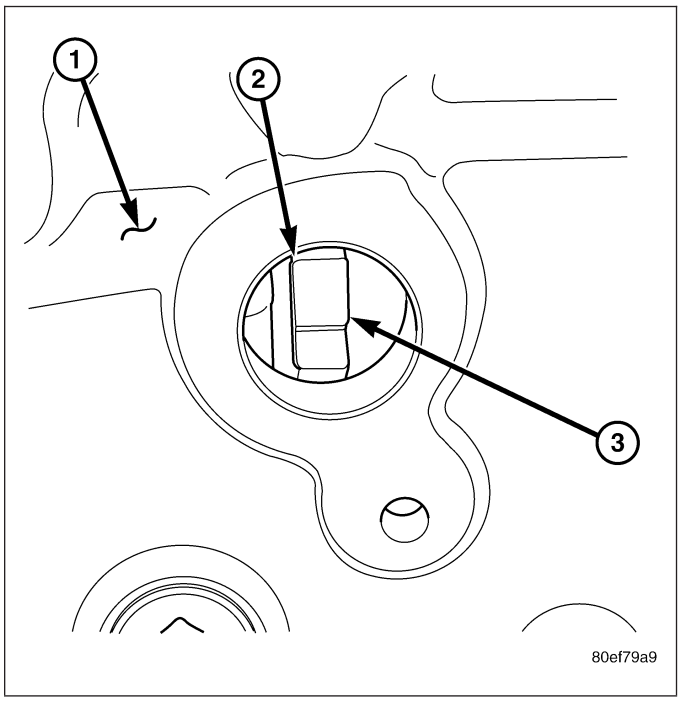

REMOVAL

3.7L V-6

The Crankshaft Position (CKP) sensor is mounted into the right rear side of the cylinder block. It is positioned and bolted into a machined hole.

1. Raise vehicle.
2. Disconnect sensor electrical connector.
3. Remove sensor mounting bolt (1).
4. Carefully twist sensor (2) from cylinder block.
5. Check condition of sensor o-ring (3).

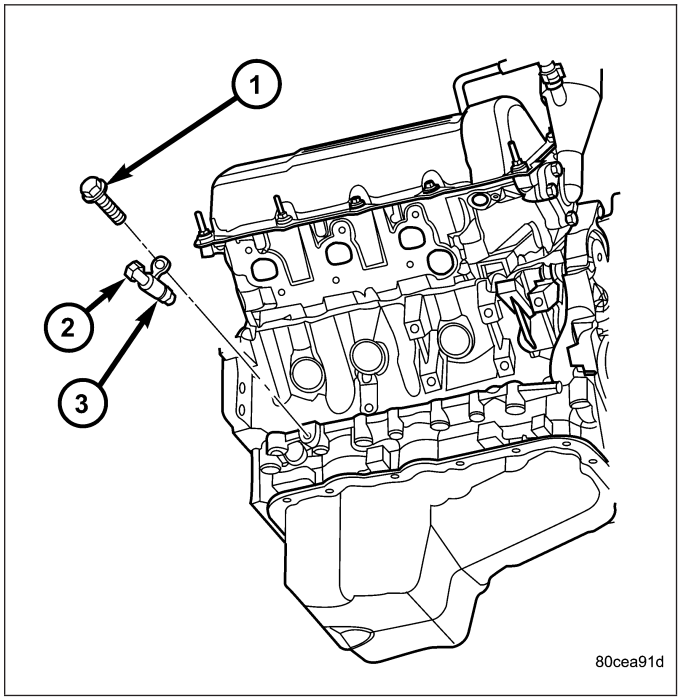

4.7L V-8

The Crankshaft Position (CKP) sensor is located at the right-rear side of the engine cylinder block. It is positioned and bolted into a machined hole in the engine block.

1. Raise vehicle.
2. Disconnect CKP electrical connector at sensor.
3. Remove CKP mounting bolt (2).
4. Carefully twist sensor (1) from cylinder block.
5. Remove sensor from vehicle.
6. Check condition of sensor o-ring.

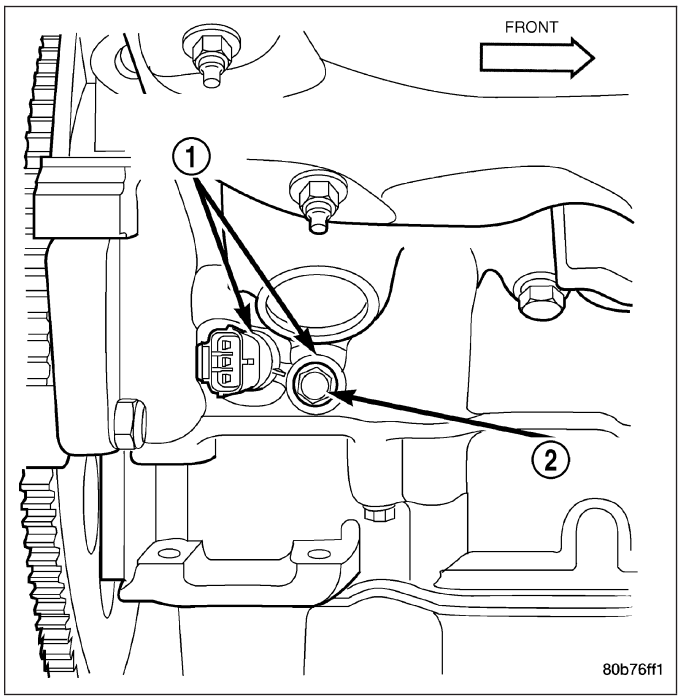

5.7L V-8

The Crankshaft Position (CKP) sensor (4) is located at the right-rear side of the engine cylinder block. It is positioned and bolted into a machined hole in the engine block.

1. Raise vehicle.
2. Disconnect CKP electrical connector at sensor.
3. Remove CKP mounting bolt (3).
4. Carefully twist sensor (4) from cylinder block.
5. Remove sensor from vehicle.
6. Check condition of sensor o-ring.

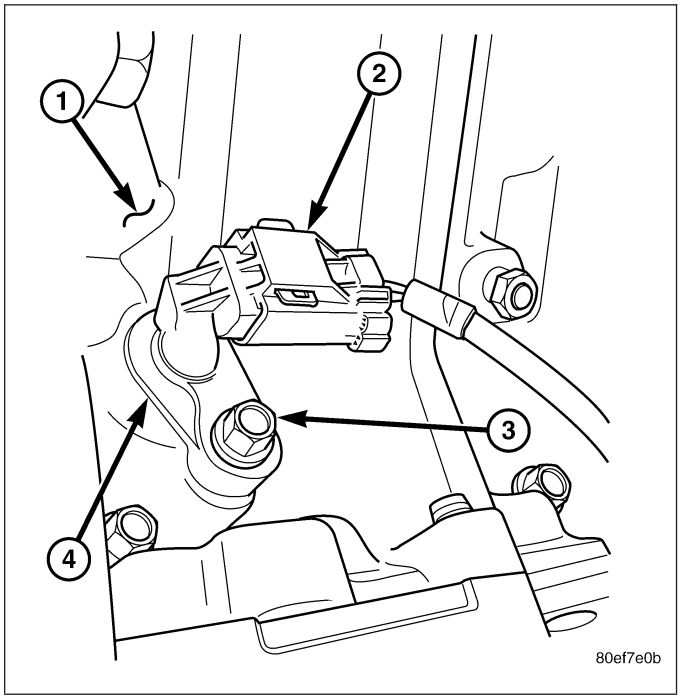

8.3L - SRT-10

The sensor is located at the rear lower passenger side of motor.

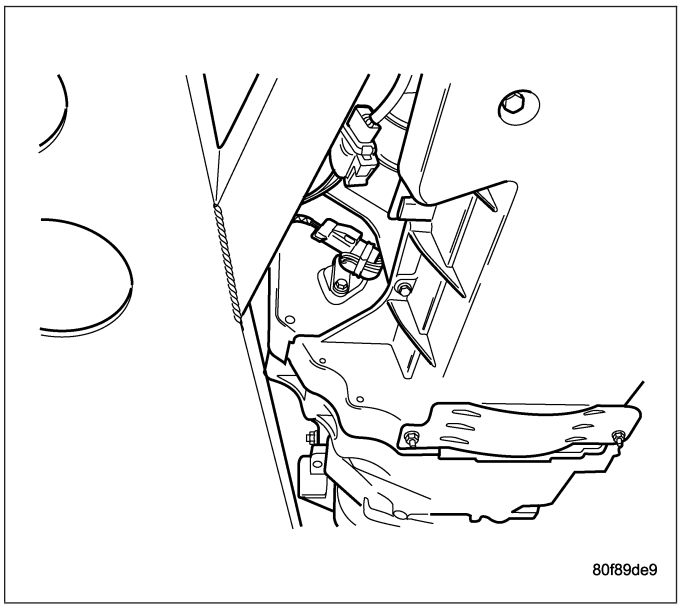

1. Disconnect electrical connector from crankshaft position sensor.
2. Remove sensor mounting bolt.
3. Pull sensor out. A light tap to top of sensor may ease removal.

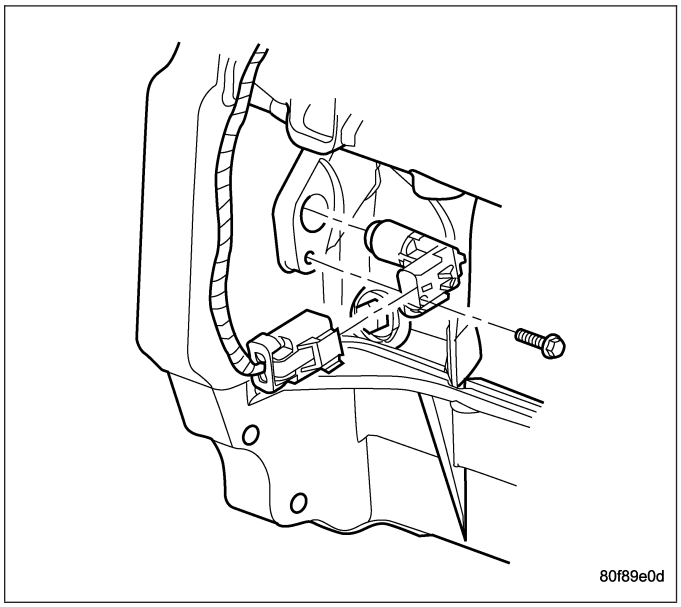

INSTALLATION

3.7L V-6

1. Clean out machined hole in engine block.
2. Apply a small amount of engine oil to sensor o-ring (3).
3. Install sensor into engine block with a slight rocking and twisting action.

CAUTION: Before tightening sensor mounting bolt, be sure sensor is completely flush to cylinder block. If sensor is not flush, damage to sensor mounting tang may result.

4. Install mounting bolt and tighten to 28 N·m (21 ft. lbs.) torque.
5. Connect electrical connector to sensor.
6. Lower vehicle.

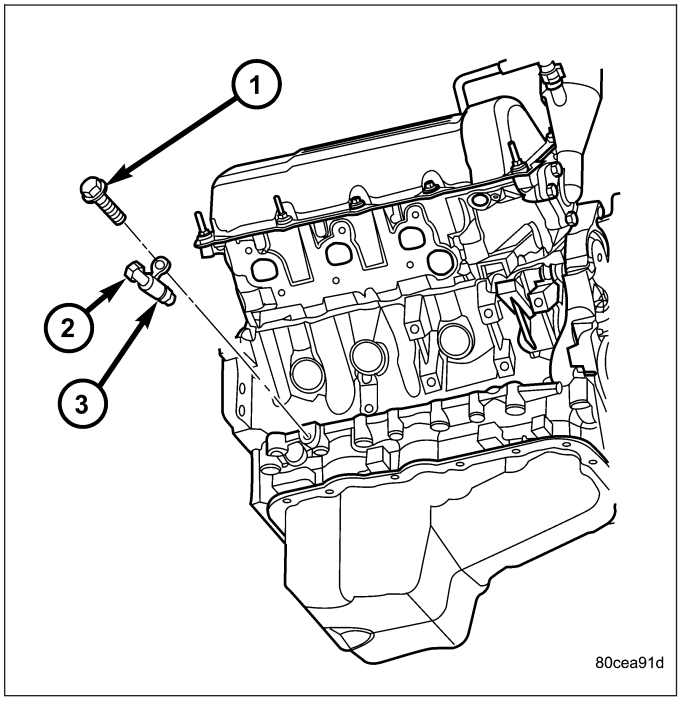

4.7L V-8

1. Clean out machined hole in engine block.
2. Apply a small amount of engine oil to sensor o-ring.
3. Install sensor (1) into engine block with a slight rocking and twisting action.

CAUTION: Before tightening sensor mounting bolt, be sure sensor is completely flush to cylinder block. If sensor is not flush, damage to sensor mounting tang may result.

4. Install mounting bolt and tighten to 28 N·m (21 ft. lbs.) torque.
5. Connect electrical connector to sensor.
6. Lower vehicle.

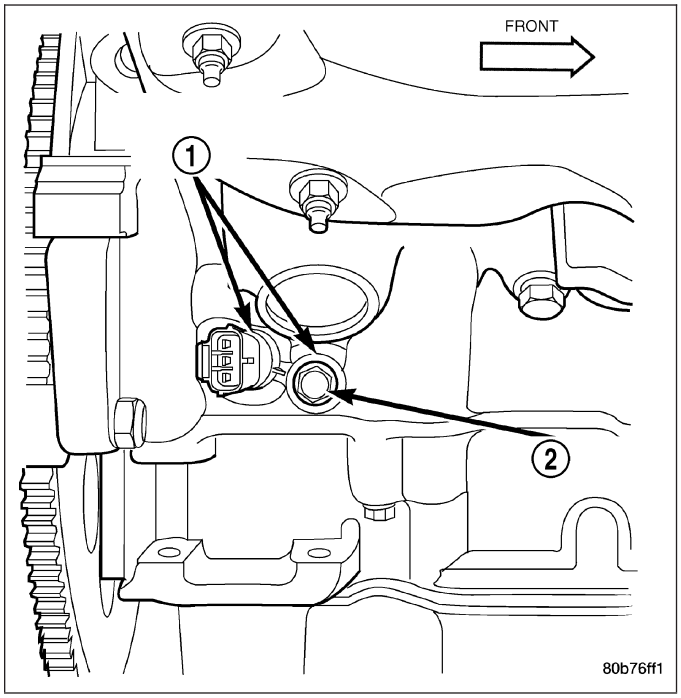

5.7L V-8

1. Clean out machined hole in engine block.
2. Apply a small amount of engine oil to sensor o-ring.
3. Install sensor (4) into engine block with a slight rocking and twisting action.

CAUTION: Before tightening sensor mounting bolt, be sure sensor is completely flush to cylinder block. If sensor is not flush, damage to sensor mounting tang may result.

4. Install mounting bolt (3) and tighten to 28 N·m (21 ft. lbs.) torque.
5. Connect electrical connector to sensor.
6. Lower vehicle.

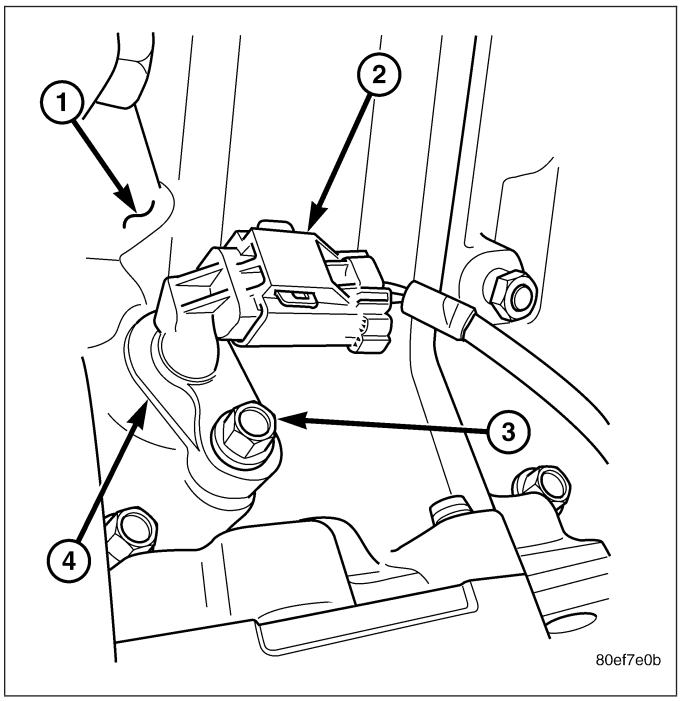

8.3L - SRT-10

1. Slide the sensor into the hole.
2. Install and tighten the mounting bolt to 11 N·m (95 in. lbs.) torque.
3. Connect the electrical connector to the sensor and lock.

INJECTOR - FUEL

DESCRIPTION

An individual fuel injector (1) is used for each individual cylinder.

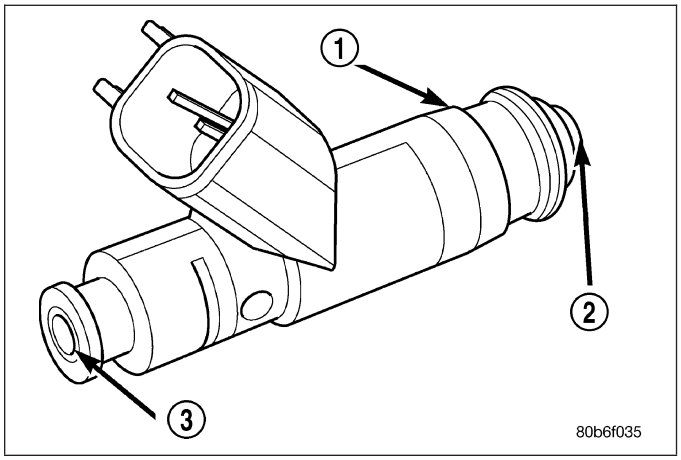

OPERATION

FUEL INJECTOR

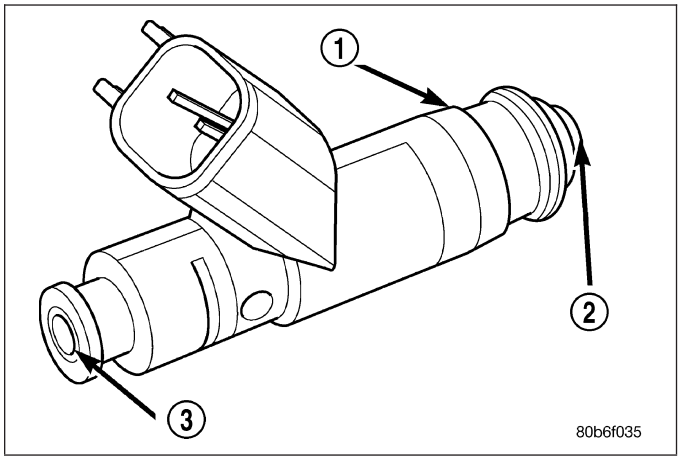

The top (fuel entry) end of the injector (1) is attached into an opening on the fuel rail.

The fuel injectors are electrical solenoids. The injector contains a pintle that closes off an orifice at the nozzle end. When electric current is supplied to the injector, the armature and needle move a short distance against a spring, allowing fuel to flow out the orifice. Because the fuel is under high pressure, a fine spray is developed in the shape of a pencil stream. The spraying action atomizes the fuel, adding it to the air entering the combustion chamber.

The nozzle (outlet) ends of the injectors are positioned into openings in the intake manifold just above the intake valve ports of the cylinder head. The engine wiring harness connector for each fuel injector is equipped with an attached numerical tag (INJ 1, INJ 2 etc.). This is used to identify each fuel injector.

The injectors are energized individually in a sequential order by the Powertrain Control Module (PCM). The PCM will adjust injector pulse width by switching the ground path to each individual injector on and off. Injector pulse width is the period of time that the injector is energized. The PCM will adjust injector pulse width based on various inputs it receives.

Battery voltage is supplied to the injectors through the ASD relay.

The PCM determines injector pulse width based on various inputs.

PCM OUTPUT

The nozzle ends of the injectors are positioned into openings in the intake manifold just above the intake valve ports of the cylinder head. The engine wiring harness connector for each fuel injector is equipped with an attached numerical tag (INJ 1, INJ 2 etc.). This is used to identify each fuel injector with its respective cylinder number.

The injectors are energized individually in a sequential order by the Powertrain Control Module (PCM). The PCM will adjust injector pulse width by switching the ground path to each individual injector on and off. Injector pulse width is the period of time that the injector is energized. The PCM will adjust injector pulse width based on various inputs it receives.

Battery voltage (12 volts +) is supplied to the injectors through the ASD relay. The ASD relay will shut-down the 12 volt power source to the fuel injectors if the PCM senses the ignition is on, but the engine is not running. This occurs after the engine has not been running for approximately 1.8 seconds.

The PCM determines injector on-time (pulse width) based on various inputs.

REMOVAL

3.7L— 4.7L— 5.7L

1. Remove fuel rail. (Refer to 14 - FUEL SYSTEM/ FUEL DELIVERY/FUEL RAIL - REMOVAL)
2. Disconnect clip(s) that retain fuel injector(s) to fuel rail (2).

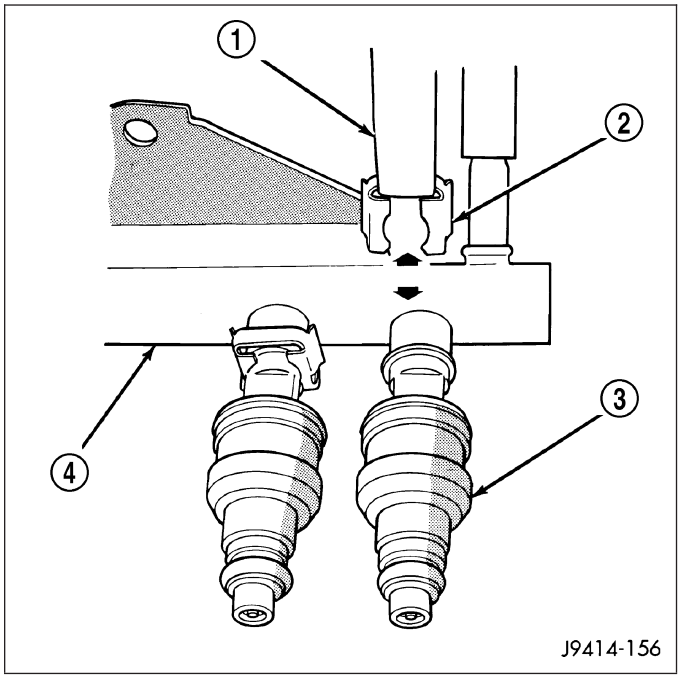

8.3L - SRT-10

1. Release fuel system pressure. Refer to Fuel Pressure Release Procedure in this section.
2. Remove the battery cover and disconnect negative battery cable.
3. Remove the air cleaner assembly, refer to the Engine/Air Intake System/Air Cleaner Housing for more information.
4. Disconnect the electrical connector to the MAP sensor and Coolant Temperature sensor.

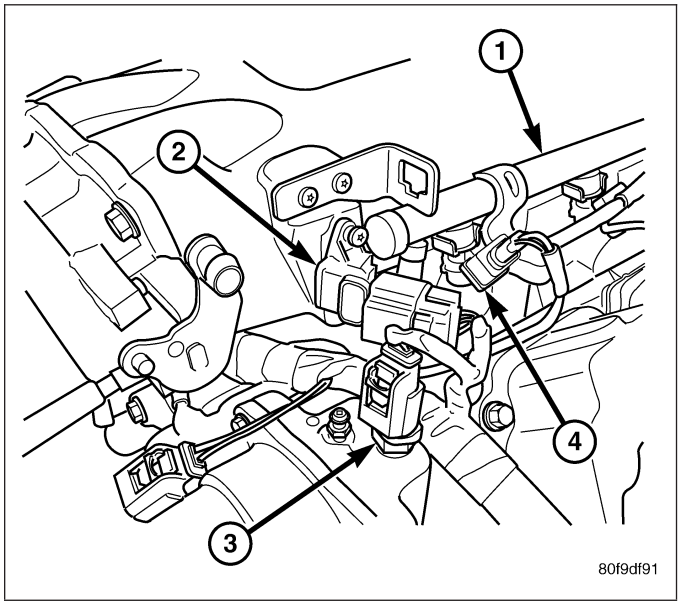

5. Disconnect the electrical connector to the TPS and Idle Air Control.

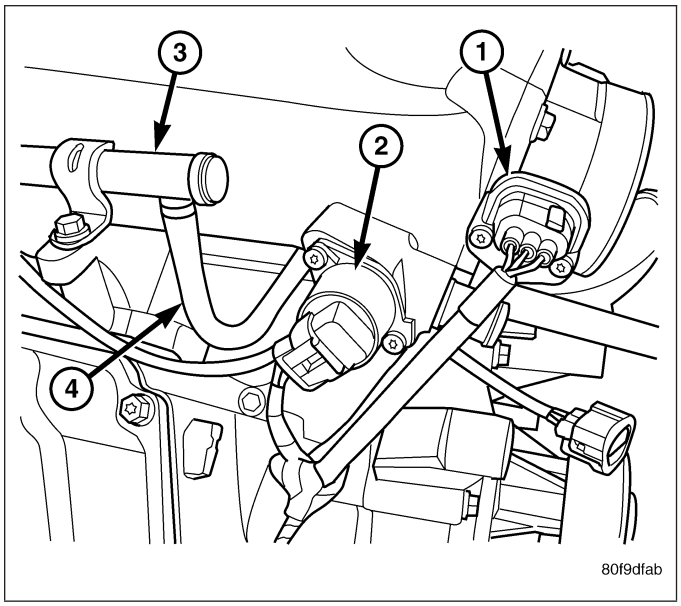

6. Remove the wiring harness from the wiring clips under thew throttle body.

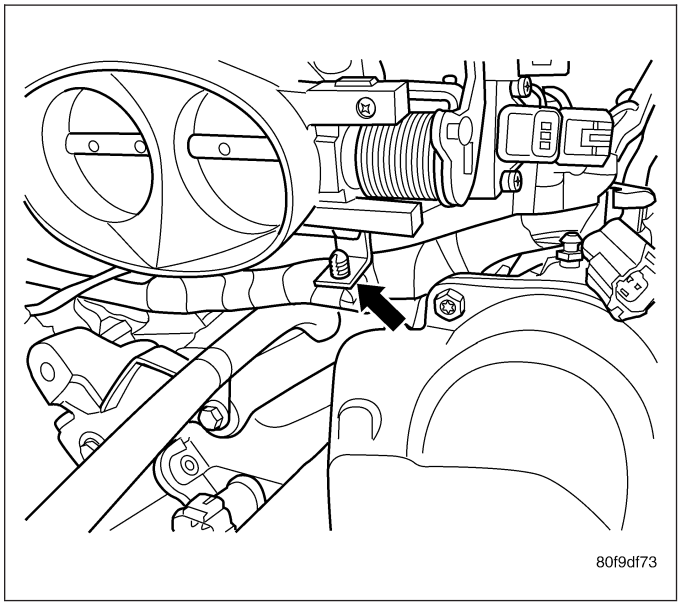

7. Disconnect the electrical connector from the fuel injectors.

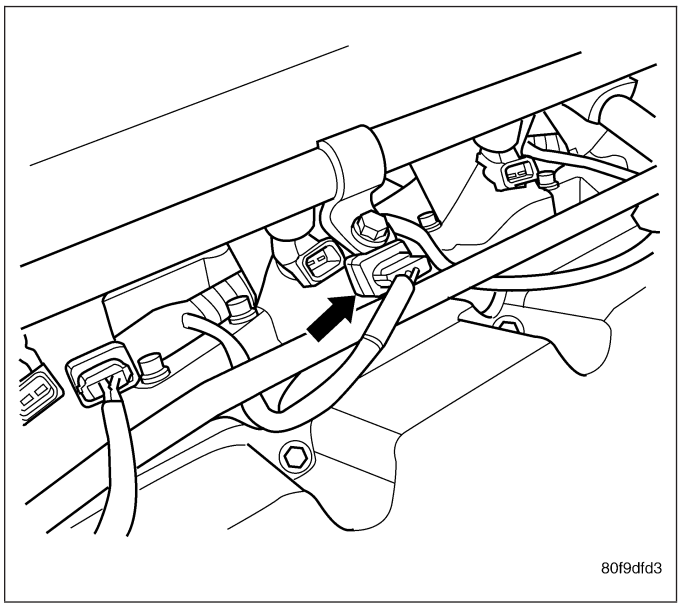

8. Disconnect the fuel line quick connector.

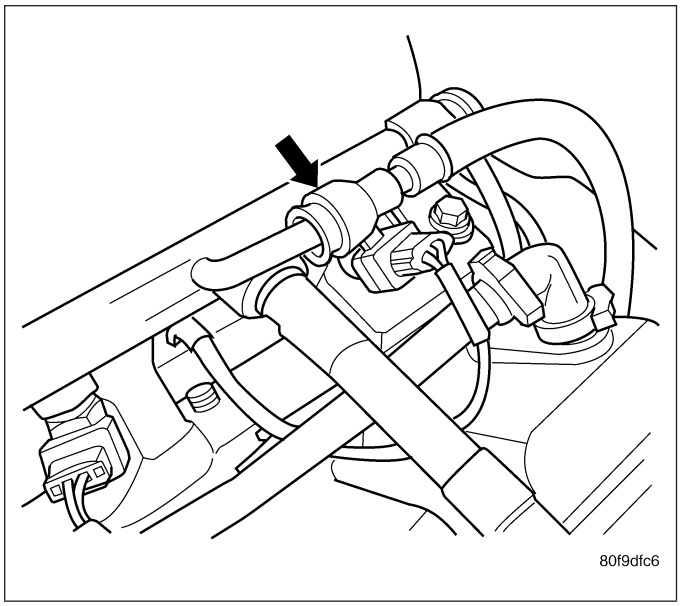

9. Remove the bolts for the fuel rail.

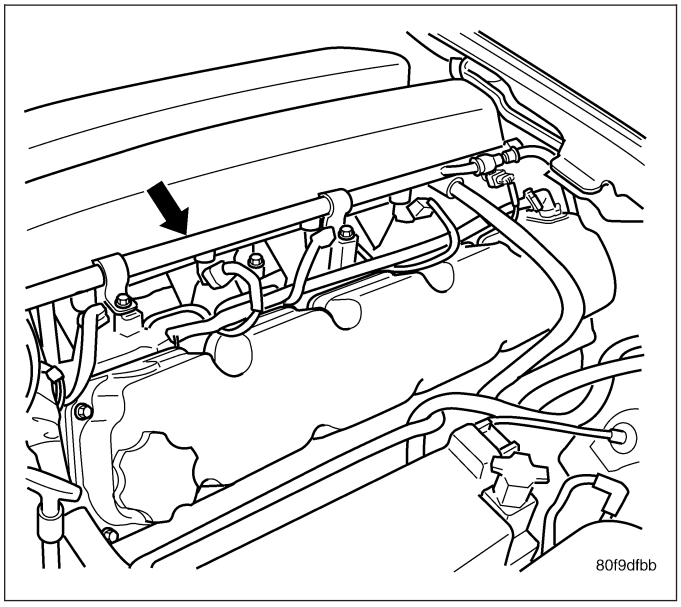

10. Pull fuel rail and injectors straight up and out of the intake manifold.
11. Move the fuel rail forward and out from under the intake manifold and throttle body.

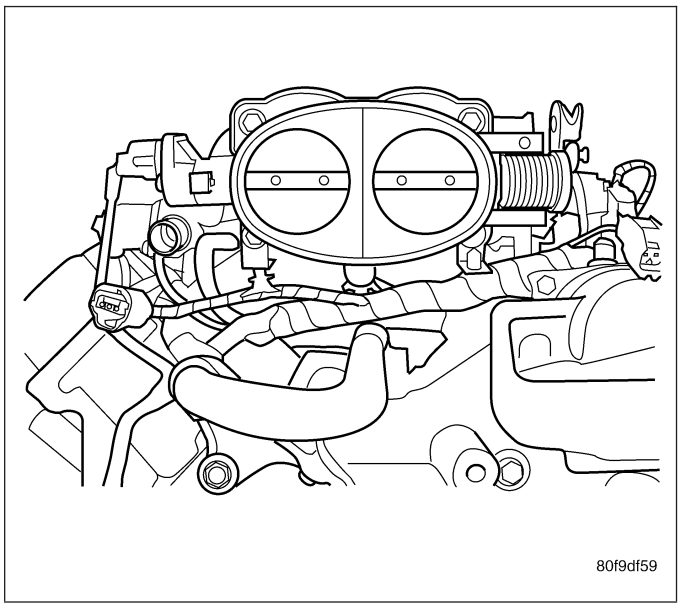

12. Remove the fuel injector from the fuel rail.

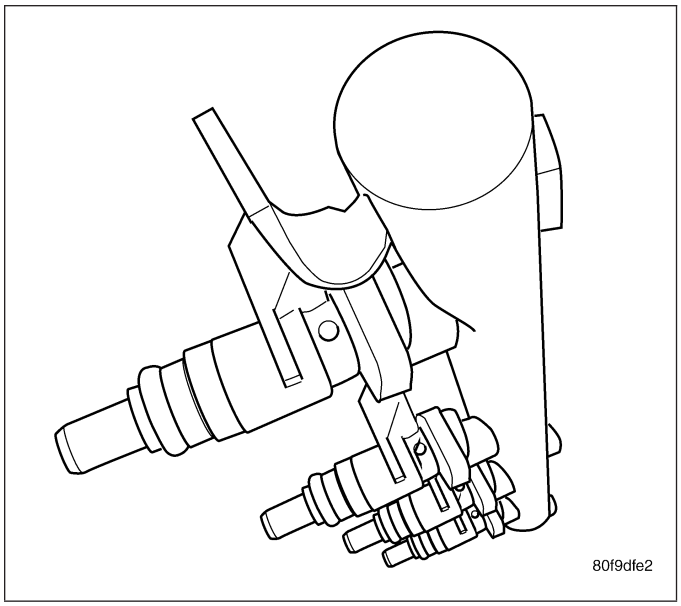

INSTALLATION

3.7L, 4.7L, 5.7L

1. Install fuel injector(s) into fuel rail assembly and install retaining clip(s).
2. If same injector(s) is being reinstalled, install new o-ring(s).
3. Apply a small amount of clean engine oil to each injector o-ring. This will aid in installation.
4. Install fuel rail. (Refer to 14 - FUEL SYSTEM/FUEL DELIVERY/FUEL RAIL - INSTALLATION)
5. Start engine and check for fuel leaks.

8.3L - SRT-10

1. Install the fuel injectors to the fuel rail.
2. Install fuel rail under throttle body.
3. Apply a light coating of clean engine oil to the O-ring on the nozzle end of each injector.
4. Insert fuel injector nozzles into openings in intake manifold. Seat the injectors in place. Tighten fuel rail bolts to 12 N·m (105 in. lbs.).
5. Attach electrical connectors to fuel injectors.
6. Connect the electrical connector to the MAP sensor and Coolant Temperature sensor.
7. Connect the electrical connector to the TPS and Idle Air Control.
8. Install the wiring harness to the wiring clips under the throttle body.
9. Connect fuel supply tube to fuel rail. Refer to Quick Connect Fittings in the Fuel Delivery section
10. Install the negative battery cable and install the battery cover.
11. Install the air cleaner assembly, refer to the Engine/Air Intake System/Air Cleaner Housing for more information.
12. Use the DRBIII® scan tool ASD Fuel System Test to pressurize the fuel system. Check for leaks.

RELAY - FUEL PUMP

DESCRIPTION

The 5–pin, 12–volt, fuel pump relay is located in the Power Distribution Center (PDC). Refer to the label on the PDC cover for relay location.

OPERATION

The Powertrain Control Module (PCM) energizes the electric fuel pump through the fuel pump relay. The fuel pump relay is energized by first applying battery voltage to it when the ignition key is turned ON, and then applying a ground signal to the relay from the PCM.

Whenever the ignition key is turned ON, the electric fuel pump will operate. But, the PCM will shut-down the ground circuit to the fuel pump relay in approximately 1–3 seconds unless the engine is operating or the starter motor is engaged.

REMOVAL

The fuel pump relay is located in the Power Distribution Center (PDC) (2). Refer to label on PDC cover for relay location.

1. Remove PDC cover.
2. Remove relay from PDC.
3. Check condition of relay terminals and PDC connector terminals for damage or corrosion. Repair if necessary before installing relay.
4. Check for pin height (pin height should be the same for all terminals within the PDC connector). Repair if necessary before installing relay.

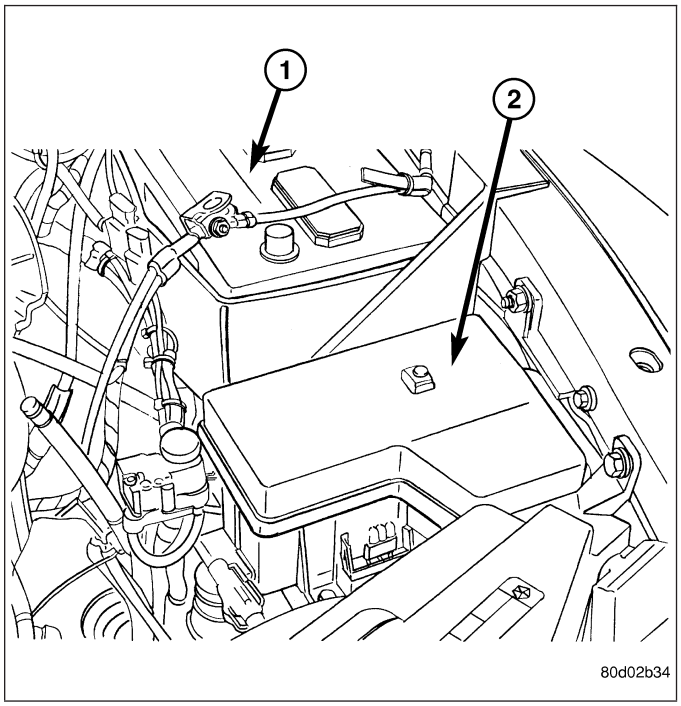

INSTALLATION

The fuel pump relay is located in the Power Distribution Center (PDC). Refer to label on PDC cover for relay location.

1. Install relay to PDC.
2. Install cover to PDC.

MOTOR-IAC

DESCRIPTION

3.7L, 4.7L, 5.7L

3.7L: The IAC stepper motor (3) is mounted to the throttle body. It regulates the amount of air bypassing the control of the throttle plate. As engine loads and ambient temperatures change, engine rpm changes. A pintle on the IAC stepper motor protrudes into a passage in the throttle body, controlling air flow through the passage. The IAC is controlled by the Powertrain Control Module (PCM) to maintain the target engine idle speed.

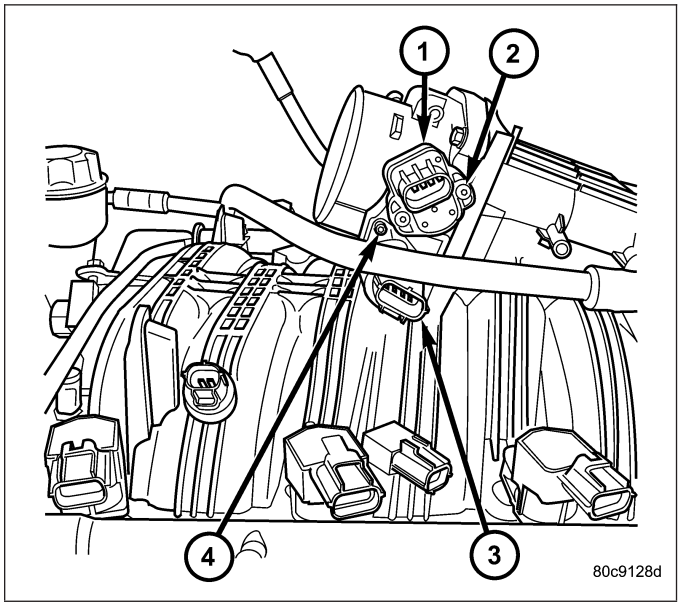

4.7L: The IAC stepper motor (3) is mounted to the throttle body. It regulates the amount of air bypassing the control of the throttle plate. As engine loads and ambient temperatures change, engine rpm changes. A pintle on the IAC stepper motor protrudes into a passage in the throttle body, controlling air flow through the passage. The IAC is controlled by the Powertrain Control Module (PCM) to maintain the target engine idle speed.

5.7L: A separate IAC motor is not used with the 5.7L V-8 engine.

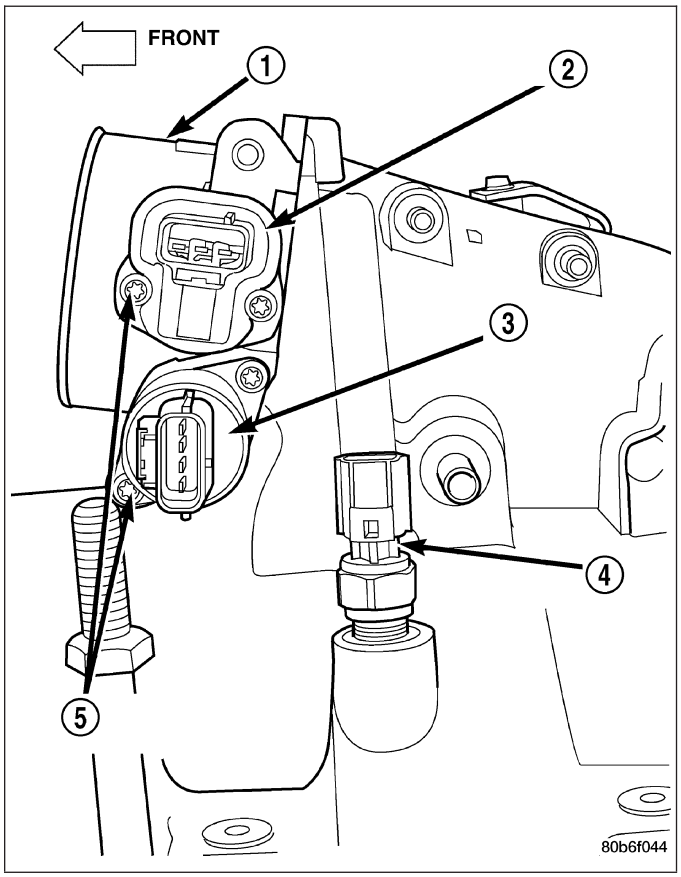

8.3L - SRT-10

The idle air control motor is mounted at the front right of the intake manifold.

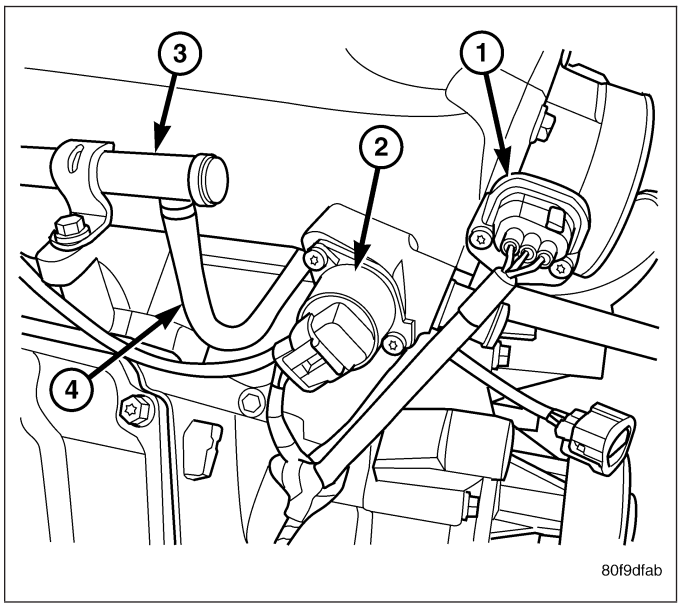

OPERATION

3.7L V-6/4.7L V-8

A separate IAC motor is not used with the 5.7L V-8 engine.

At idle, engine speed can be increased by retracting the IAC motor pintle and allowing more air to pass through the port, or it can be decreased by restricting the passage with the pintle and diminishing the amount of air bypassing the throttle plate.

The IAC is called a stepper motor because it is moved (rotated) in steps, or increments. Opening the IAC opens an air passage around the throttle blade which increases RPM.

The PCM uses the IAC motor to control idle speed (along with timing) and to reach a desired MAP during decel (keep engine from stalling).

The IAC motor has 4 wires with 4 circuits. Two of the wires are for 12 volts and ground to supply electrical current to the motor windings to operate the stepper motor in one direction. The other 2 wires are also for 12 volts and ground to supply electrical current to operate the stepper motor in the opposite direction.

To make the IAC go in the opposite direction, the PCM just reverses polarity on both windings. If only 1 wire is open, the IAC can only be moved 1 step (increment) in either direction. To keep the IAC motor in position when no movement is needed, the PCM will energize both windings at the same time. This locks the IAC motor in place.

In the IAC motor system, the PCM will count every step that the motor is moved. This allows the PCM to determine the motor pintle position. If the memory is cleared, the PCM no longer knows the position of the pintle. So at the first key ON, the PCM drives the IAC motor closed, regardless of where it was before. This zeros the counter. From this point the PCM will back out the IAC motor and keep track of its position again.

When engine rpm is above idle speed, the IAC is used for the following:

- Off-idle dashpot (throttle blade will close quickly but idle speed will not stop quickly)
- Deceleration air flow control
- A/C compressor load control (also opens the passage slightly before the compressor is engaged so that the engine rpm does not dip down when the compressor engages)
- Power steering load control

The PCM can control polarity of the circuit to control direction of the stepper motor.

IAC Stepper Motor Program: The PCM is also equipped with a memory program that records the number of steps the IAC stepper motor most recently advanced to during a certain set of parameters. For example: The PCM was attempting to maintain a 1000 rpm target during a cold start-up cycle. The last recorded number of steps for that may have been 125. That value would be recorded in the memory cell so that the next time the PCM recognizes the

identical conditions, the PCM recalls that 125 steps were required to maintain the target. This program allows for greater customer satisfaction due to greater control of engine idle.

Another function of the memory program, which occurs when the power steering switch (if equipped), or the A/C request circuit, requires that the IAC stepper motor control engine rpm, is the recording of the last targeted steps into the memory cell. The PCM can anticipate A/C compressor loads. This is accomplished by delaying compressor operation for approximately 0.5 seconds until the PCM moves the IAC stepper motor to the recorded steps that were loaded into the memory cell. Using this program helps eliminate idle-quality changes as loads change. Finally, the PCM incorporates a ″No-Load″ engine speed limiter of approximately 1800 - 2000 rpm, when it recognizes that the TPS is indicating an idle signal and IAC motor cannot maintain engine idle.

A (factory adjusted) set screw is used to mechanically limit the position of the throttle body throttle plate. **Never attempt to adjust the engine idle speed using this screw.** All idle speed functions are controlled by the IAC motor through the PCM.

REMOVAL

3.7L V-6

The Idle Air Control (IAC) motor (3) is located on the side of the throttle body.

1. Remove air resonator box at throttle body.
2. Disconnect electrical connector from IAC motor.
3. Remove two mounting bolts (screws) (4).
4. Remove IAC motor from throttle body.

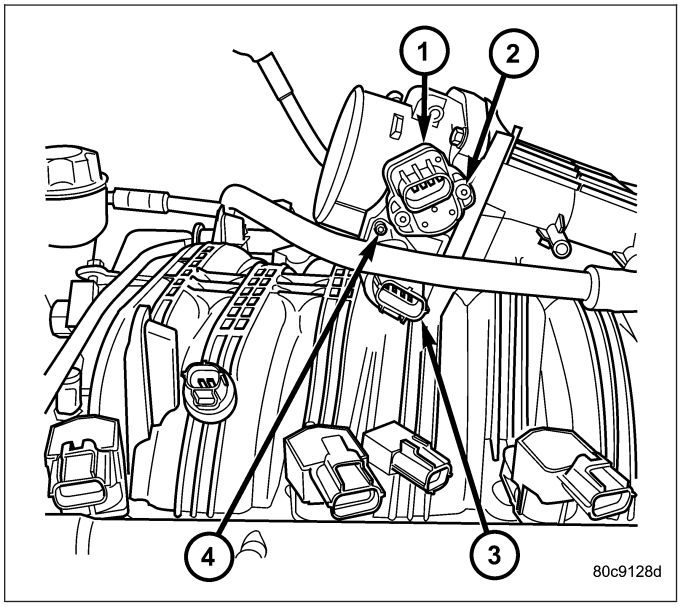

4.7L V-8

The Idle Air Control (IAC) motor (3) is located on the side of the throttle body.

1. Remove air resonator box at throttle body.
2. Disconnect electrical connector from IAC motor.
3. Remove two mounting bolts (screws).
4. Remove IAC motor from throttle body.

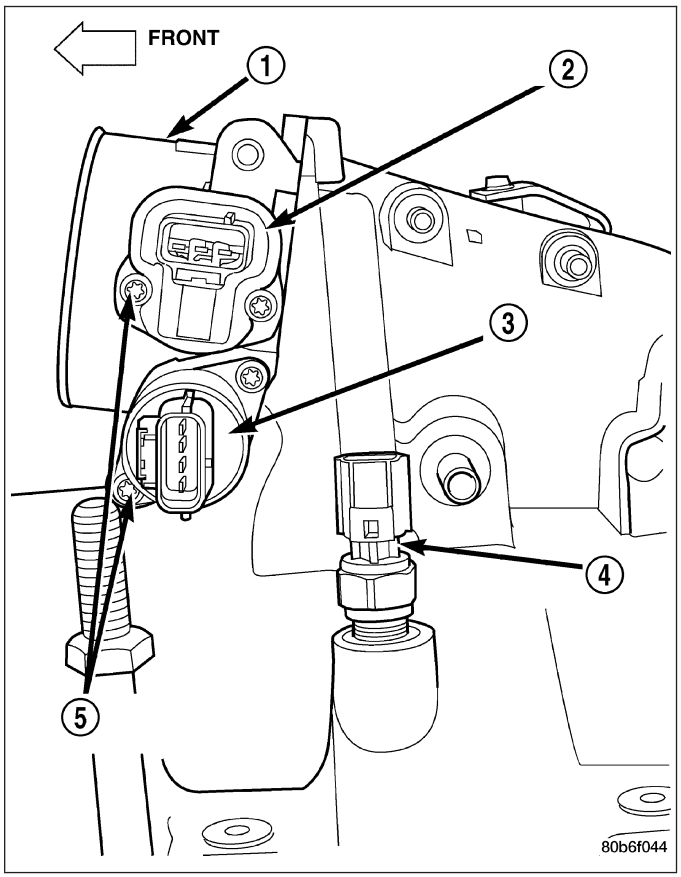

5.7L V-8

The IAC motor is not serviceable on the 5.7L V-8 engine.

8.3L - SRT-10

The IAC motor is inserted into a housing at the front of the intake manifold. The IAC motor and housing are serviced together.

1. Remove housing to manifold screws. Remove IAC motor and housing.
2. Disconnect the electrical connector from IAC motor.

INSTALLATION

3.7L V-6

The Idle Air Control (IAC) motor (3) is located on the side of the throttle body.

1. Install IAC motor to throttle body.
2. Install and tighten two mounting bolts (screws) to 7 N·m (60 in. lbs.) torque.
3. Install electrical connector.
4. Install air resonator to throttle body.

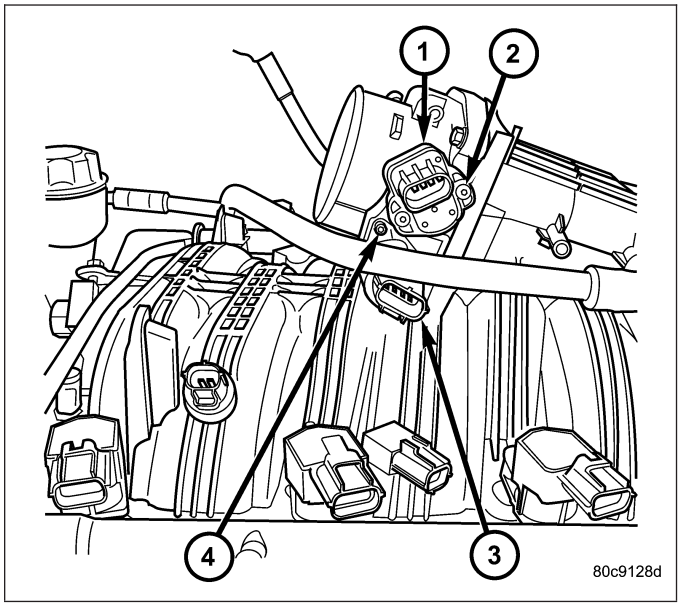

4.7L V-8

The Idle Air Control (IAC) motor (3) is located on the side of the throttle body.

1. Install IAC motor to throttle body.
2. Install and tighten two mounting bolts (screws) to 7 N·m (60 in. lbs.) torque.
3. Install electrical connector.
4. Install air resonator to throttle body.

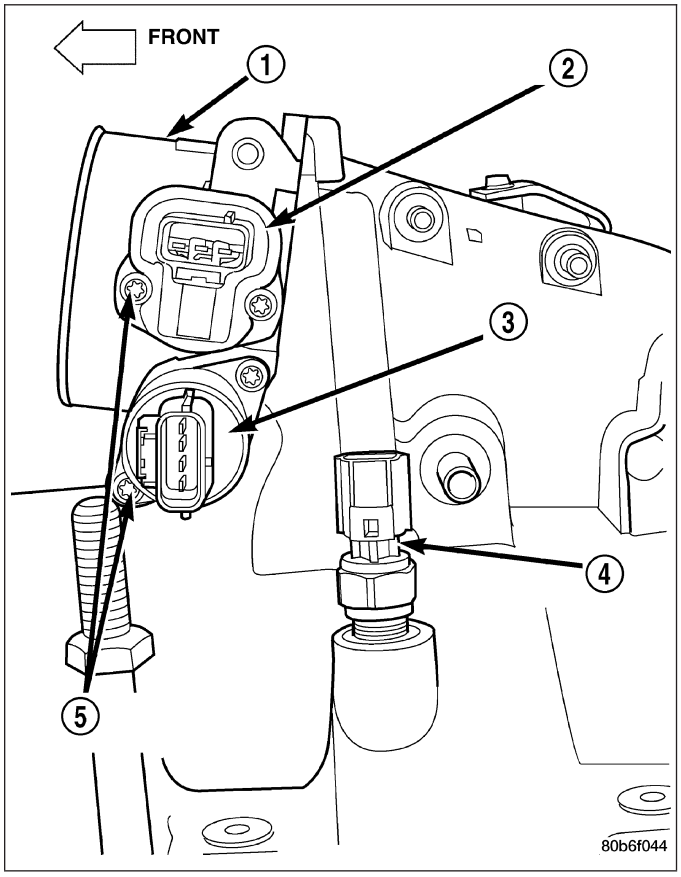

5.7L V-8

The IAC motor is not serviceable on the 5.7L V-8 engine.

8.3L - SRT-10

The IAC motor is inserted into a housing at the front of the intake manifold. The IAC motor and housing are serviced together.

1. Attach electrical connector to IAC motor.
2. Install IAC motor into and housing on manifold. Tighten mounting screws to 4 N·m (35 in. lbs.) torque.

SENSOR - INLET AIR TEMPERATURE

REMOVAL — 8.3L

NOTE: Take care not to damage the thermister pill when removing the sensor.

1. Remove the battery cover and disconnect the negative battery cable.
2. Disconnect the electrical connector from the inlet temperature sensor.
3. Remove sensor from inlet hose.

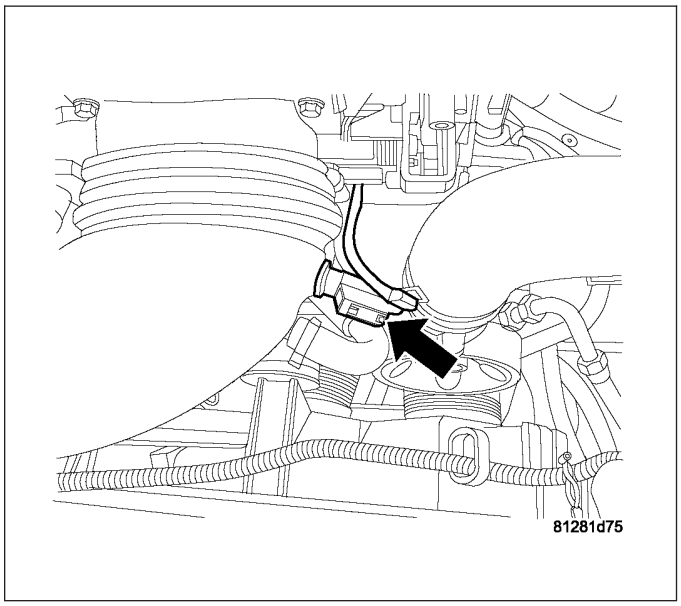

INSTALLATION

NOTE: Take care not to damage the open thermister pill when installing the sensor.

1. Install sensor , use a little water to aid in insertion of sensor.
2. Make sure that the rib on the sensor matches up with the rib on the inlet hose. The thermister pill should be in direct contact with the inlet air stream.
3. Connect the electrical connector.
4. Connect the negative battery cable and install battery cover.

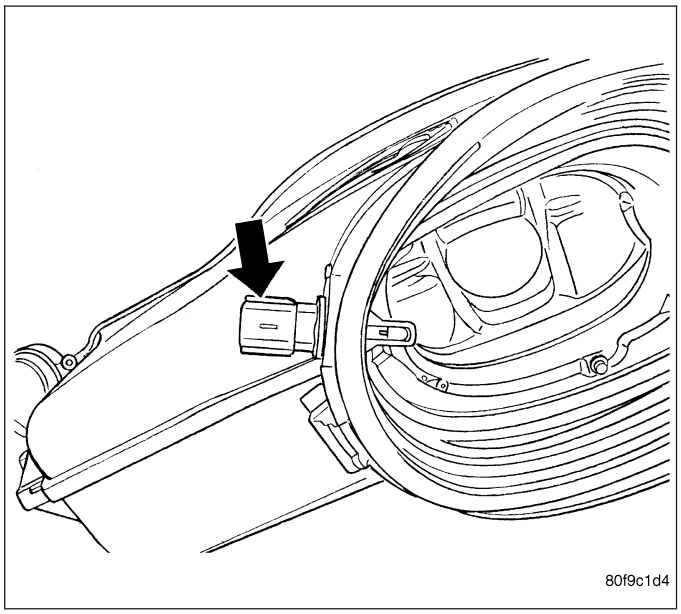

SENSOR-INTAKE AIR TEMPERATURE

DESCRIPTION

3.7L V-6

The 2-wire Intake Manifold Air Temperature (IAT) sensor (1) is installed in the intake manifold with the sensor element extending into the air stream.

The IAT sensor is a two-wire Negative Thermal Coefficient (NTC) sensor. Meaning, as intake manifold temperature increases, resistance (voltage) in the sensor decreases. As temperature decreases, resistance (voltage) in the sensor increases.

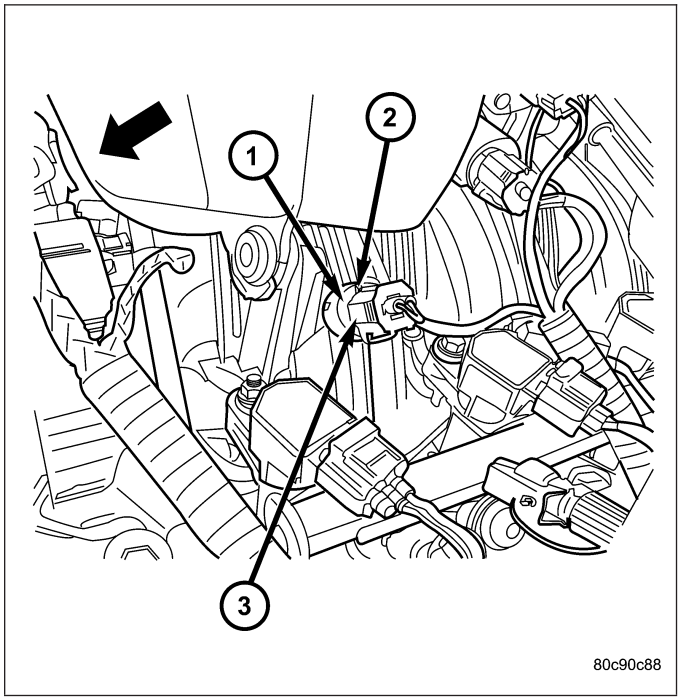

4.7L V-8

The 2-wire Intake Manifold Air Temperature (IAT) sensor (3) is installed in the intake manifold with the sensor element extending into the air stream.

The IAT sensor is a two-wire Negative Thermal Coefficient (NTC) sensor. Meaning, as intake manifold temperature increases, resistance (voltage) in the sensor decreases. As temperature decreases, resistance (voltage) in the sensor increases.

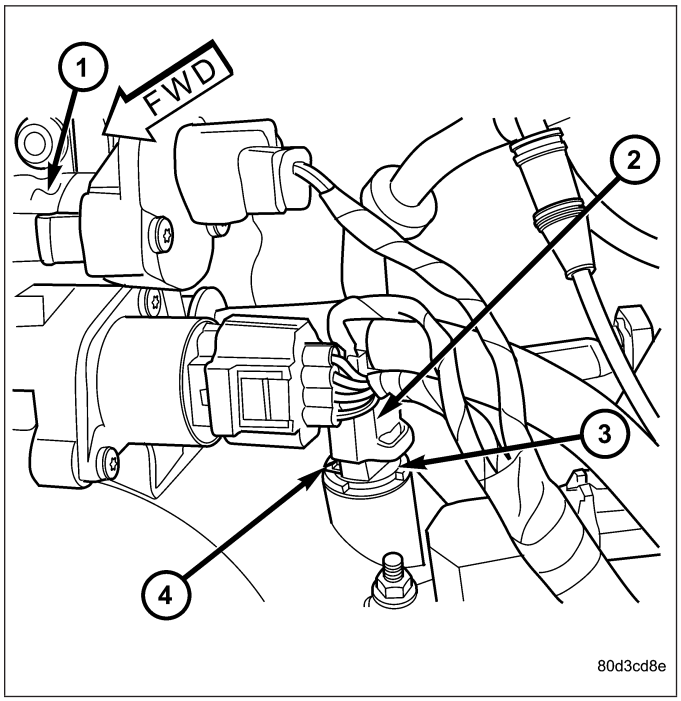

5.7L V-8

The 2-wire Intake Manifold Air Temperature (IAT) sensor is installed in the intake manifold (2) with the sensor element extending into the air stream.

The IAT sensor is a two-wire Negative Thermal Coefficient (NTC) sensor. Meaning, as intake manifold temperature increases, resistance (voltage) in the sensor decreases. As temperature decreases, resistance (voltage) in the sensor increases.

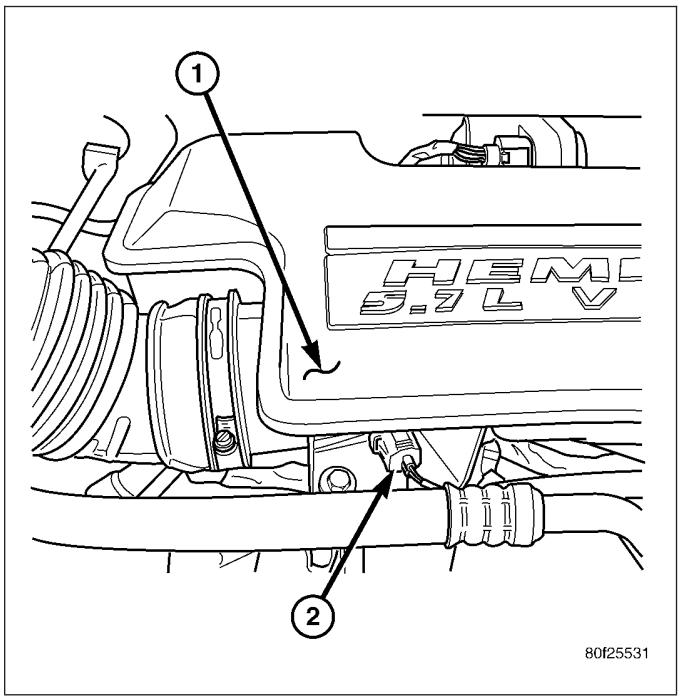

OPERATION

The IAT sensor provides an input voltage to the Powertrain Control Module (PCM) indicating the density of the air entering the intake manifold based upon intake manifold temperature. At key-on, a 5–volt power circuit is supplied to the sensor from the PCM. The sensor is grounded at the PCM through a low-noise, sensor-return circuit.

The PCM uses this input to calculate the following:

- Injector pulse-width
- Adjustment of spark timing (to help prevent spark knock with high intake manifold air-charge temperatures)

The resistance values of the IAT sensor is the same as for the Engine Coolant Temperature (ECT) sensor.

REMOVAL

3.7L V-6

The intake manifold air temperature (IAT) sensor is installed into the left side of intake manifold plenum.

1. Disconnect electrical connector from IAT sensor.
2. Clean dirt from intake manifold at sensor base.

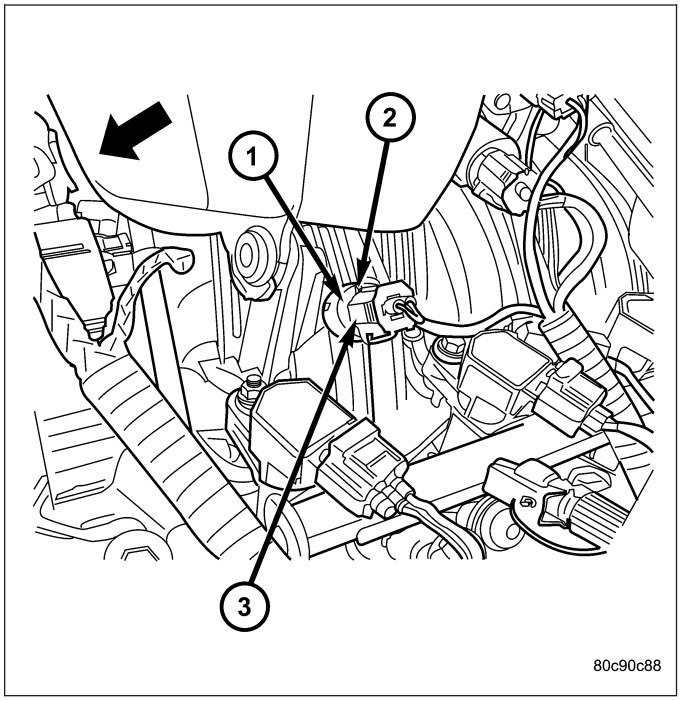

3. Gently lift on small plastic release tab (3) and rotate sensor about 1/4 turn counter-clockwise for removal.
4. Check condition of sensor o-ring.

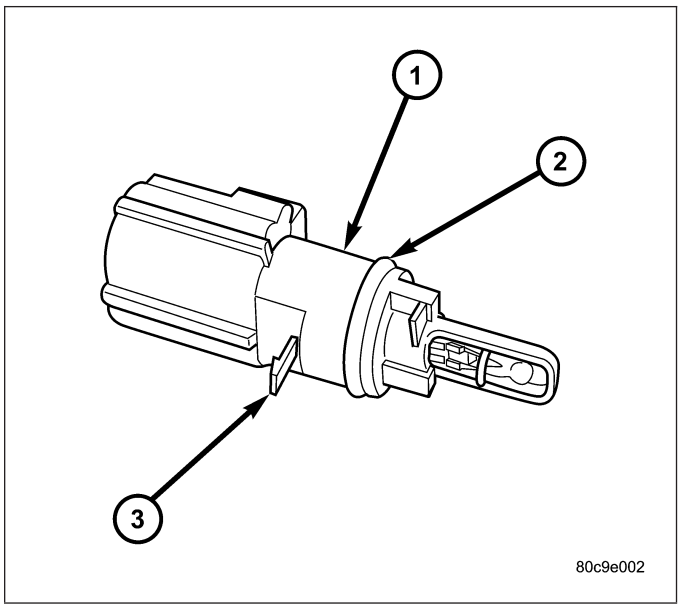

4.7L V-8

The intake manifold air temperature (IAT) sensor (3) is installed into the left side of intake manifold plenum.

1. Disconnect electrical connector from IAT sensor.
2. Clean dirt from intake manifold at sensor base.

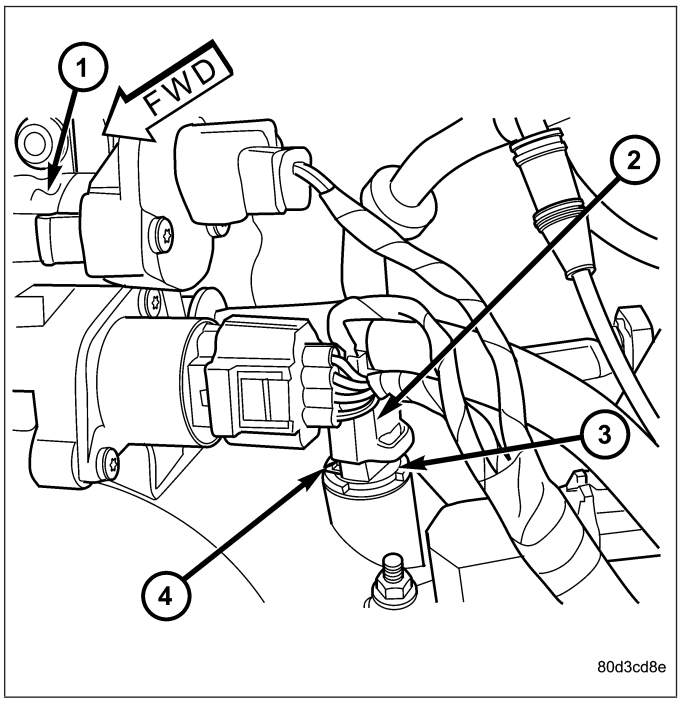

3. Gently lift on small plastic release tab (3) and rotate sensor about 1/4 turn counter-clockwise for removal.
4. Check condition of sensor o-ring.

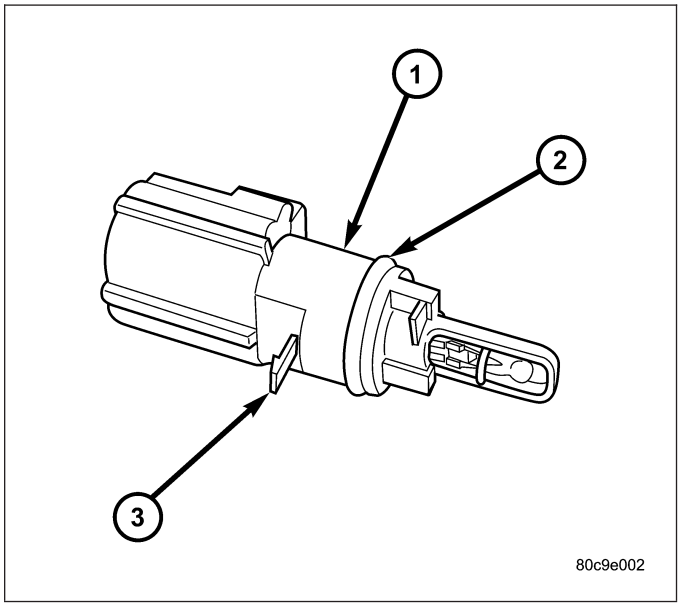

5.7L V-8

The intake manifold air temperature (IAT) sensor (2) is installed into the front of the intake manifold air box plenum.

1. Disconnect electrical connector (2) from IAT sensor.
2. Clean dirt from intake manifold at sensor base.

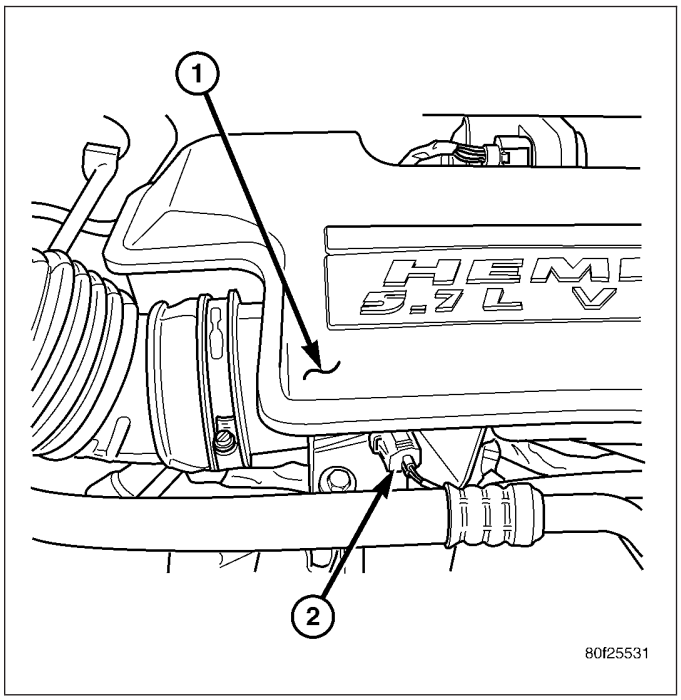

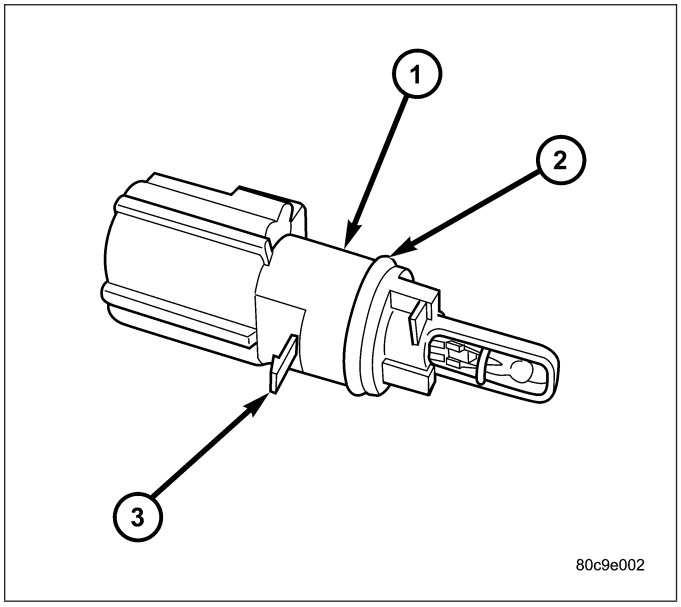

3. Gently lift on small plastic release tab (3) and rotate sensor about 1/4 turn counter-clockwise for removal.
4. Check condition of sensor o-ring.

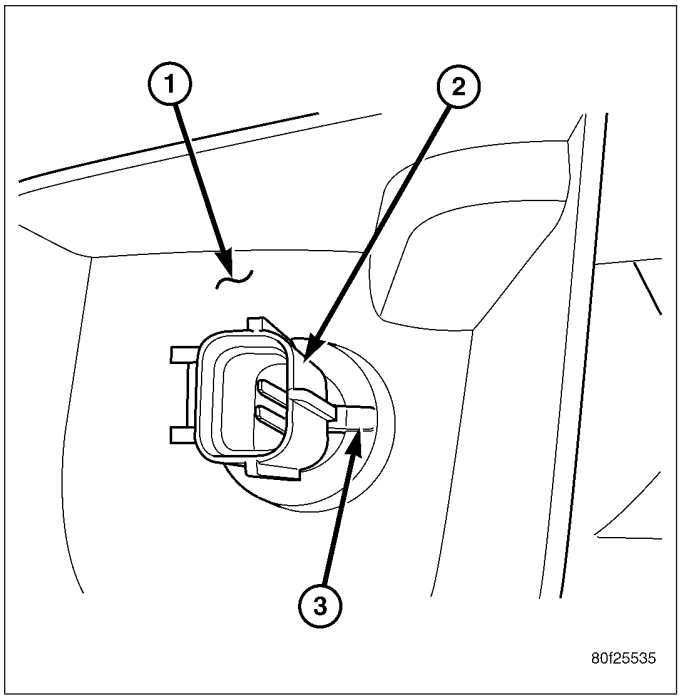

INSTALLATION

3.7L V-6

The intake manifold air temperature (IAT) sensor (1) is installed into the left side of intake manifold plenum.

1. Check condition of sensor o-ring.
2. Clean sensor mounting hole in intake manifold.
3. Position sensor into intake manifold and rotate clockwise until past release tab (2).
4. Install electrical connector.

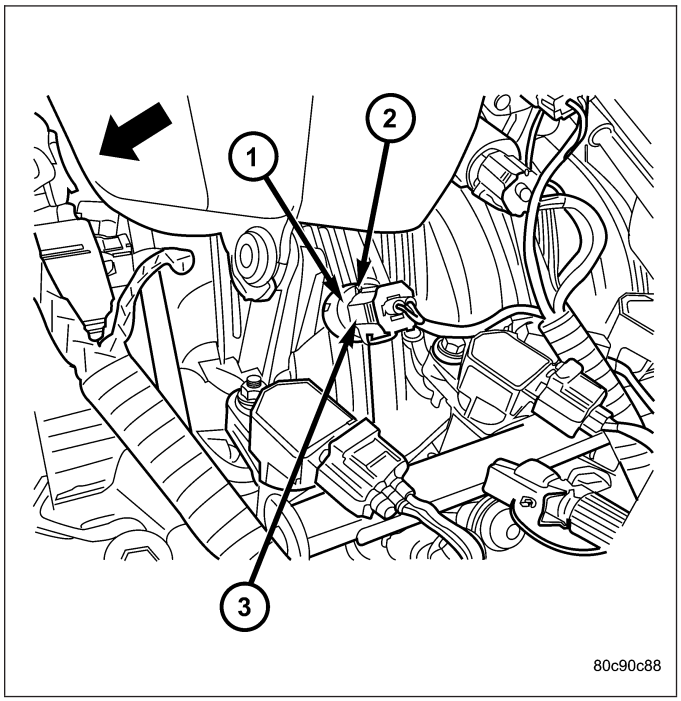

4.7L V-8

The intake manifold air temperature (IAT) sensor (3) is installed into the left side of intake manifold plenum.

1. Check condition of sensor o-ring.
2. Clean sensor mounting hole in intake manifold.
3. Position sensor into intake manifold and rotate clockwise until past release tab.
4. Install electrical connector.

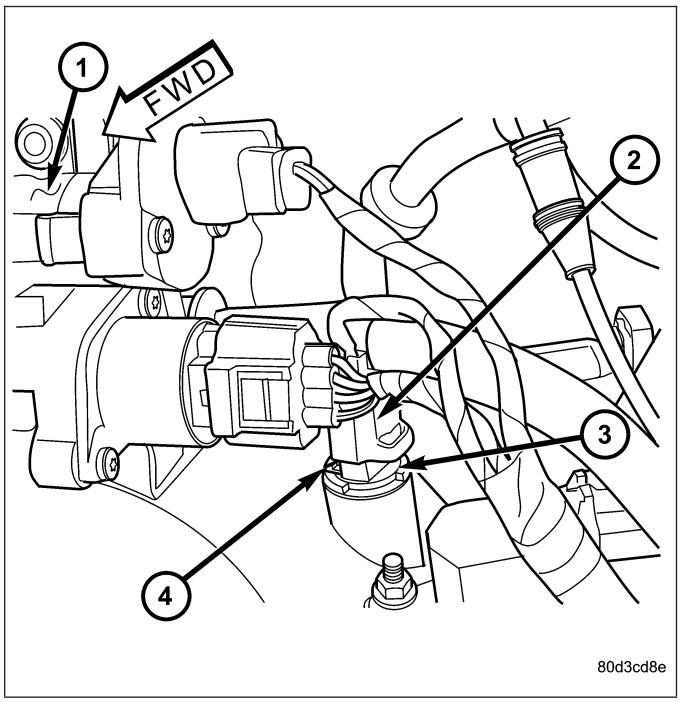

5.7L V-8

The intake manifold air temperature (IAT) sensor (2) is installed into the front of the intake manifold air box plenum.

1. Check condition of sensor o-ring.
2. Clean sensor mounting hole in intake manifold.
3. Position sensor into intake manifold and rotate clockwise until past release tab.
4. Install electrical connector.

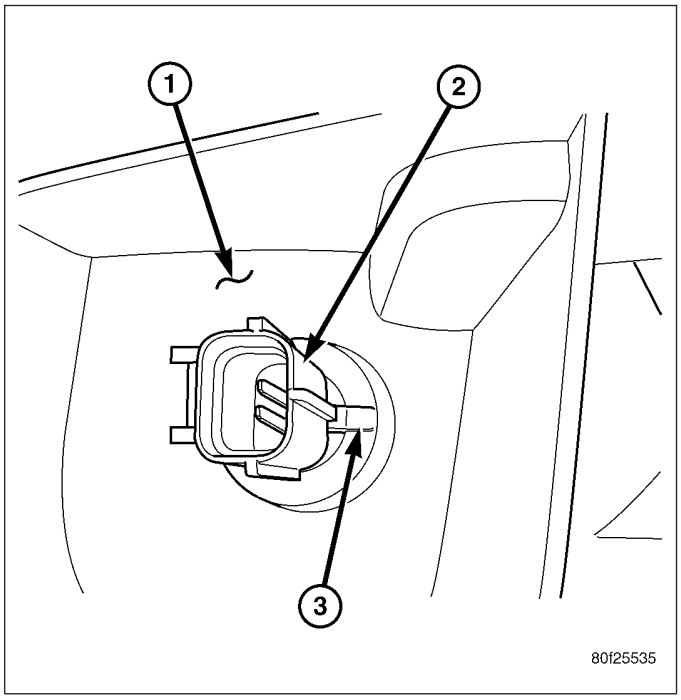

SENSOR-MAP

DESCRIPTION

3.7L V-6

The Manifold Absolute Pressure (MAP) sensor (2) is mounted into the front of the intake manifold with 2 screws.

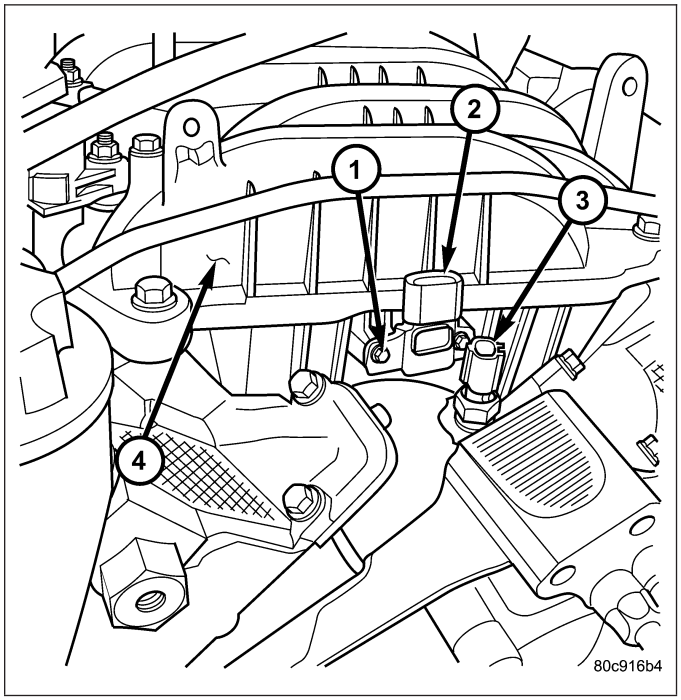

4.7L V-8

The Manifold Absolute Pressure (MAP) sensor (1) is mounted into the front of the intake manifold with 2 screws.

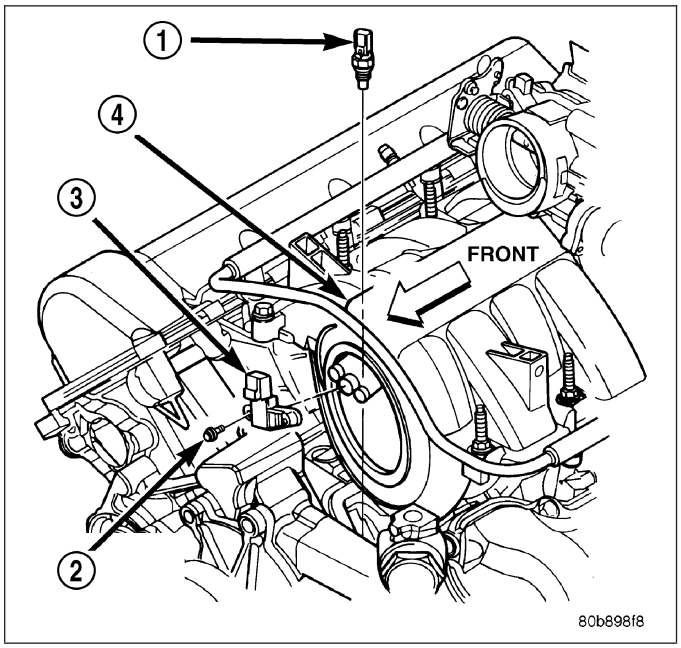

5.7L V-8

The Manifold Absolute Pressure (MAP) sensor is mounted to the front of the intake manifold air plenum box.

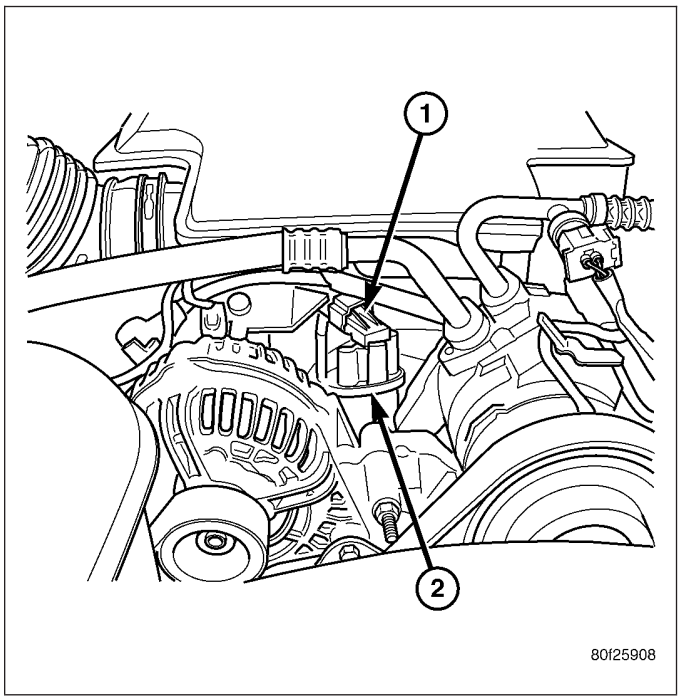

8.3L - SRT-10

The MAP sensor (2) mounts to the drivers side intake manifold plenum.

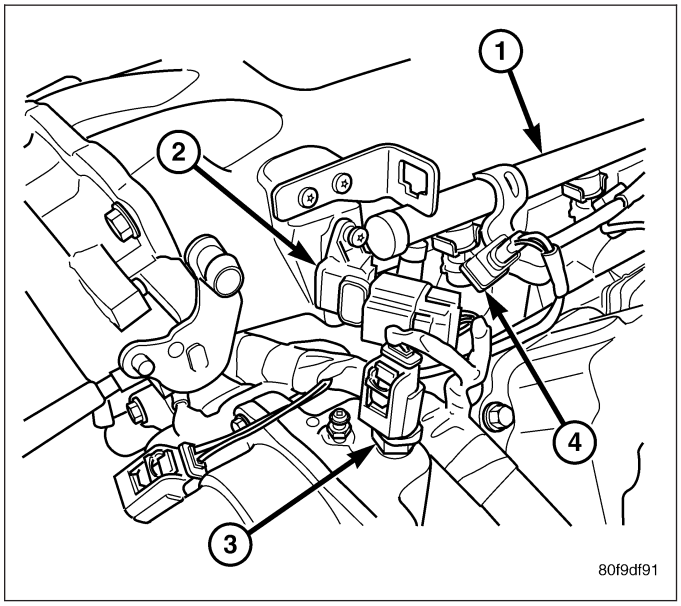

OPERATION

The MAP sensor is used as an input to the Powertrain Control Module (PCM). It contains a silicon based sensing unit to provide data on the manifold vacuum that draws the air/fuel mixture into the combustion chamber. The PCM requires this information to determine injector pulse width and spark advance. When manifold absolute pressure (MAP) equals Barometric pressure, the pulse width will be at maximum.

A 5 volt reference is supplied from the PCM and returns a voltage signal to the PCM that reflects manifold pressure. The zero pressure reading is 0.5V and full scale is 4.5V. For a pressure swing of 0–15 psi, the voltage changes 4.0V. To operate the sensor, it is supplied a regulated 4.8 to 5.1 volts. Ground is provided through the low-noise, sensor return circuit at the PCM.

The MAP sensor input is the number one contributor to fuel injector pulse width. The most important function of the MAP sensor is to determine barometric pressure. The PCM needs to know if the vehicle is at sea level or at a higher altitude, because the air density changes with altitude. It will also help to correct for varying barometric pressure. Barometric pressure and altitude have a direct inverse correlation; as altitude goes up, barometric goes down. At key-on, the PCM powers up and looks at MAP voltage, and based upon the voltage it sees, it knows the current barometric pressure (relative to altitude). Once the engine starts, the PCM looks at the voltage again, continuously every 12 milliseconds, and compares the current voltage to what it was at key-on. The difference between current voltage and what it was at key-on, is manifold vacuum.

During key-on (engine not running) the sensor reads (updates) barometric pressure. A normal range can be obtained by monitoring a known good sensor.

As the altitude increases, the air becomes thinner (less oxygen). If a vehicle is started and driven to a very different altitude than where it was at key-on, the barometric pressure needs to be updated. Any time the PCM sees Wide Open Throttle (WOT), based upon Throttle Position Sensor (TPS) angle and RPM, it will update barometric pressure in the MAP memory cell. With periodic updates, the PCM can make its calculations more effectively.

The PCM uses the MAP sensor input to aid in calculating the following:

- Manifold pressure
- Barometric pressure
- Engine load
- Injector pulse-width
- Spark-advance programs
- Shift-point strategies (certain automatic transmissions only)
- Idle speed
- Decel fuel shutoff

The MAP sensor signal is provided from a single piezoresistive element located in the center of a diaphragm. The element and diaphragm are both made of silicone. As manifold pressure changes, the diaphragm moves causing the element to deflect, which stresses the silicone. When silicone is exposed to stress, its resistance changes. As manifold vacuum increases, the MAP sensor input voltage decreases proportionally. The sensor also contains electronics that condition the signal and provide temperature compensation.

The PCM recognizes a decrease in manifold pressure by monitoring a decrease in voltage from the reading stored in the barometric pressure memory cell. The MAP sensor is a linear sensor; meaning as pressure changes, voltage changes proportionately. The range of voltage output from the sensor is usually between 4.6 volts at sea level to as low as 0.3 volts at 26 in. of Hg. Barometric pressure is the pressure exerted by the atmosphere upon an object. At sea level on a standard day, no storm, barometric pressure is approximately 29.92 in Hg. For every 100 feet of altitude, barometric pressure drops 0.10 in. Hg. If a storm goes through, it can change barometric pressure from what should be present for that altitude. You should know what the average pressure and corresponding barometric pressure is for your area.

REMOVAL

3.7L V-6

The Manifold Absolute Pressure (MAP) sensor is mounted into the front of the intake manifold

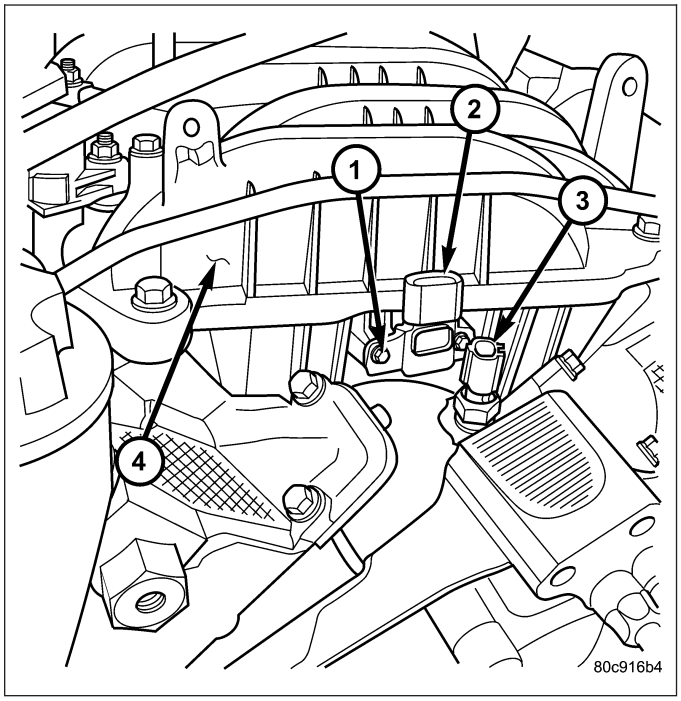

An o-ring (2) is used to seal the sensor to the intake manifold.

1. Disconnect electrical connector at sensor.
2. Clean area around MAP sensor.
3. Remove 2 sensor mounting screws.
4. Remove MAP sensor from intake manifold.
5. Check condition of sensor o-ring.

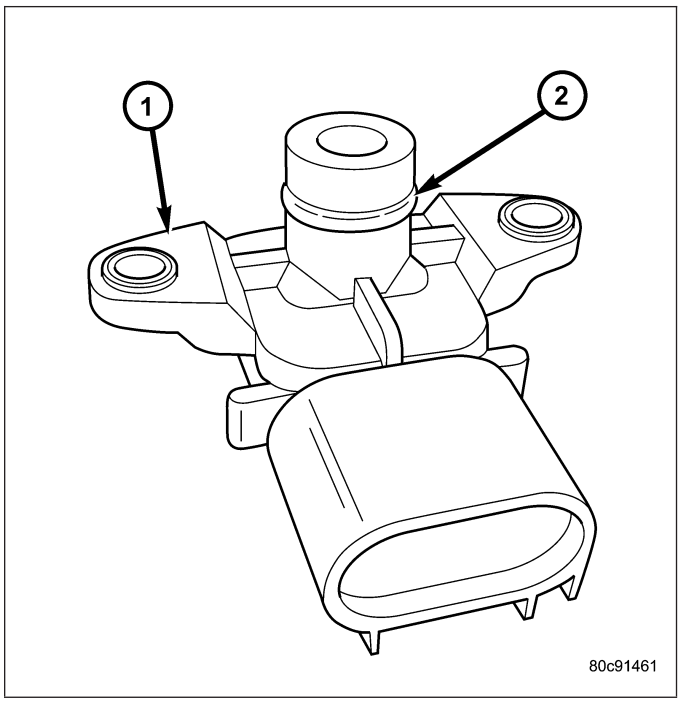

4.7L V-8

The MAP sensor (3) is located on the front of the intake manifold. An o-ring seals the sensor to the intake manifold.

1. Disconnect electrical connector at sensor.
2. Clean area around MAP sensor.
3. Remove 2 sensor mounting bolts.
4. Remove MAP sensor from intake manifold.
5. Check condition of sensor o-ring.

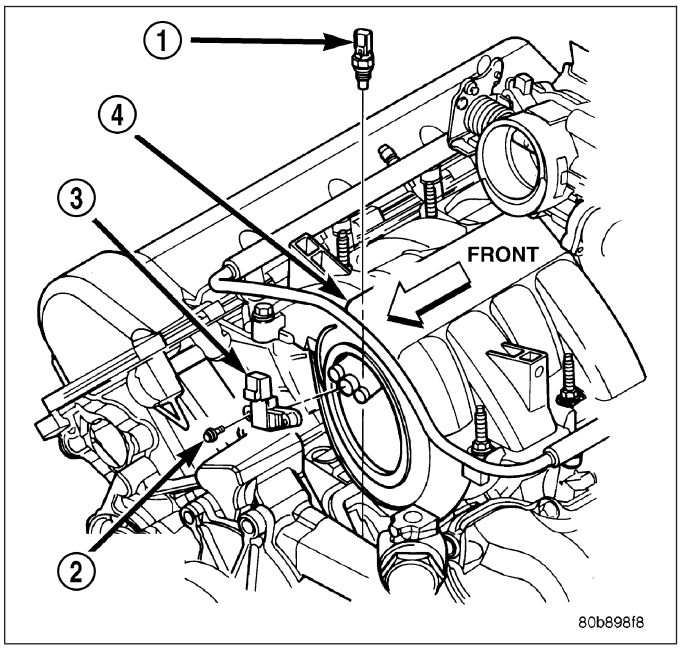

5.7L V-8

The Manifold Absolute Pressure (MAP) sensor is mounted to the front of the intake manifold air plenum box.

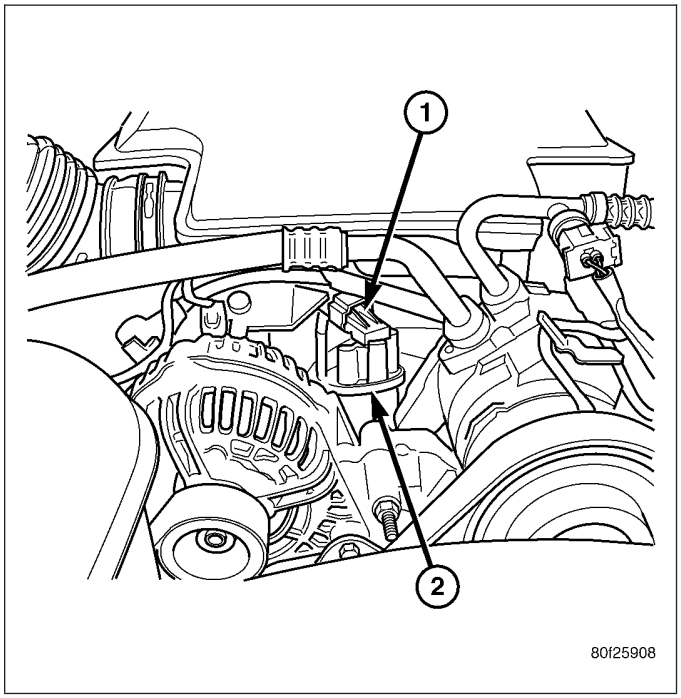

1. Disconnect electrical connector at sensor by sliding release lock out. Press down on lock tab for removal.
2. Rotate sensor (3) 1/4 turn counter-clockwise for removal.
3. Check condition of sensor o-ring.

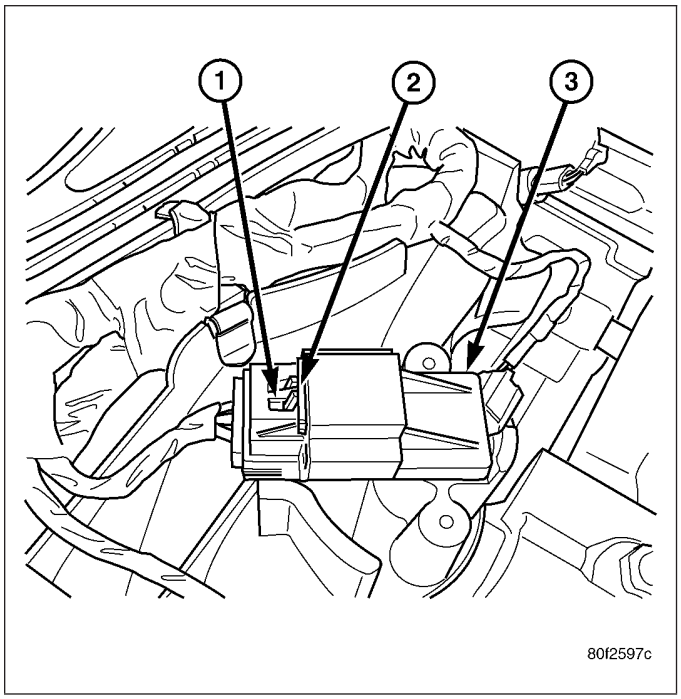

8.3 L - SRT-10

The manifold absolute pressure sensor is mounted on the drivers side of the intake manifold.

1. Disconnect the electrical connector from the MAP sensor.
2. Remove MAP sensor mounting screws.

INSTALLATION

3.7L V-6

The Manifold Absolute Pressure (MAP) sensor is mounted into the front of the intake manifold.

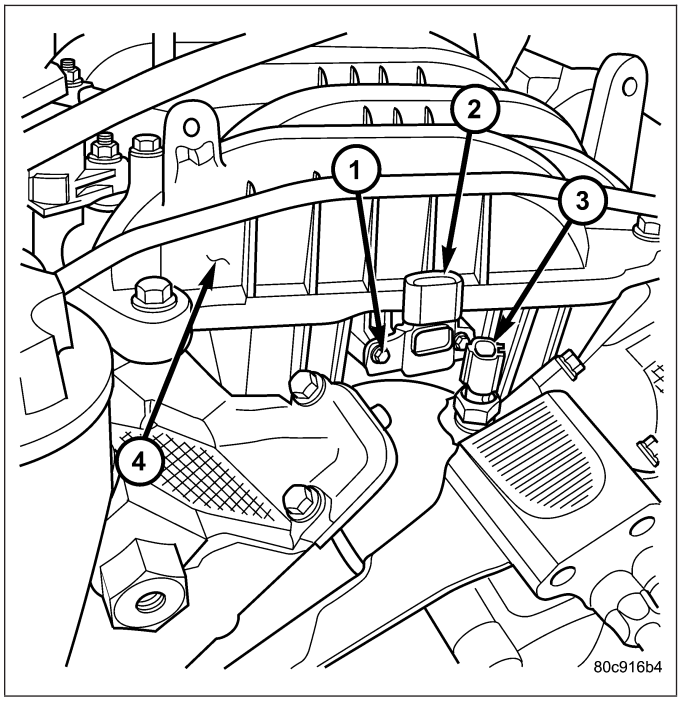

An o-ring (2) is used to seal the sensor to the intake manifold.

1. Clean MAP sensor mounting hole at intake manifold.
2. Check MAP sensor o-ring seal for cuts or tears.
3. Position sensor into manifold.
4. Install MAP sensor mounting bolts (screws). (Refer to 14 - FUEL SYSTEM/FUEL DELIVERY - SPECIFICATIONS)
5. Connect electrical connector.

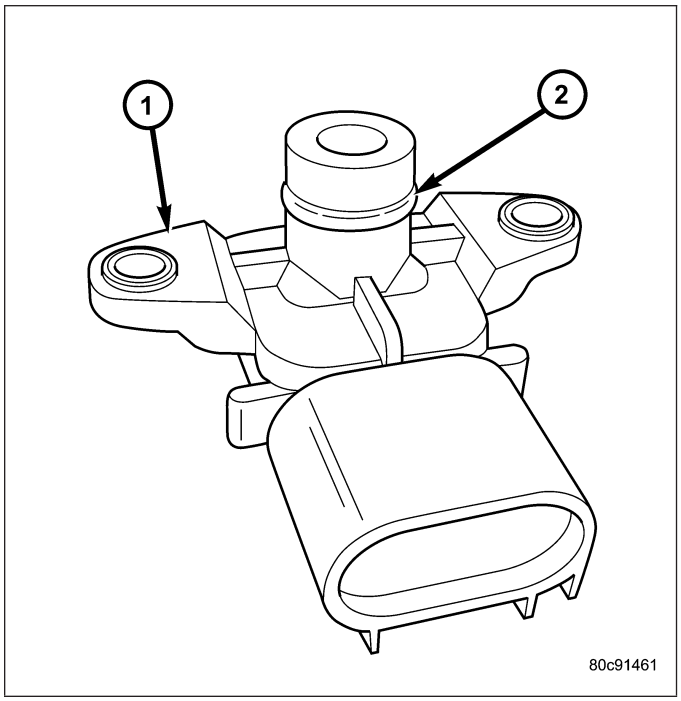

4.7L V-8

The MAP sensor is located on the front of the intake manifold.

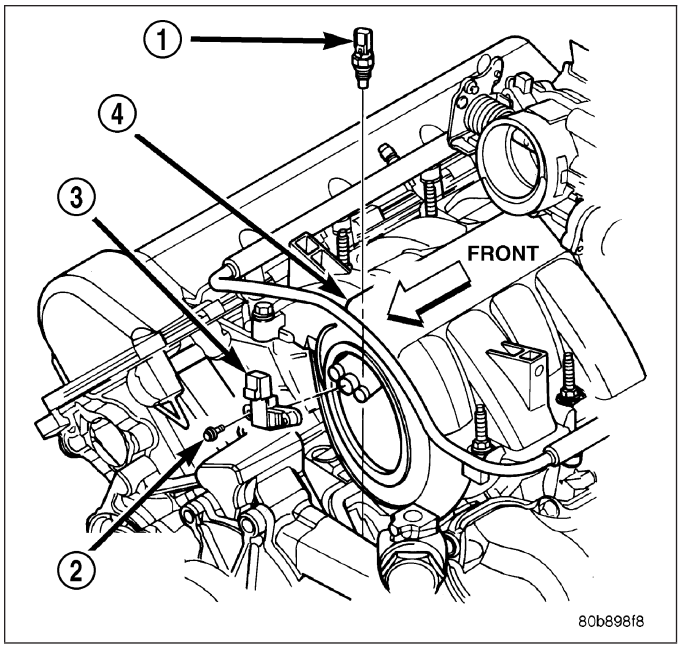

An o-ring (2) seals the sensor to the intake manifold.

1. Clean MAP sensor mounting hole at intake manifold.
2. Check MAP sensor o-ring seal for cuts or tears.
3. Position sensor into manifold.
4. Install MAP sensor mounting bolts (screws). (Refer to 14 - FUEL SYSTEM/FUEL DELIVERY - SPECIFICATIONS)
5. Connect electrical connector.

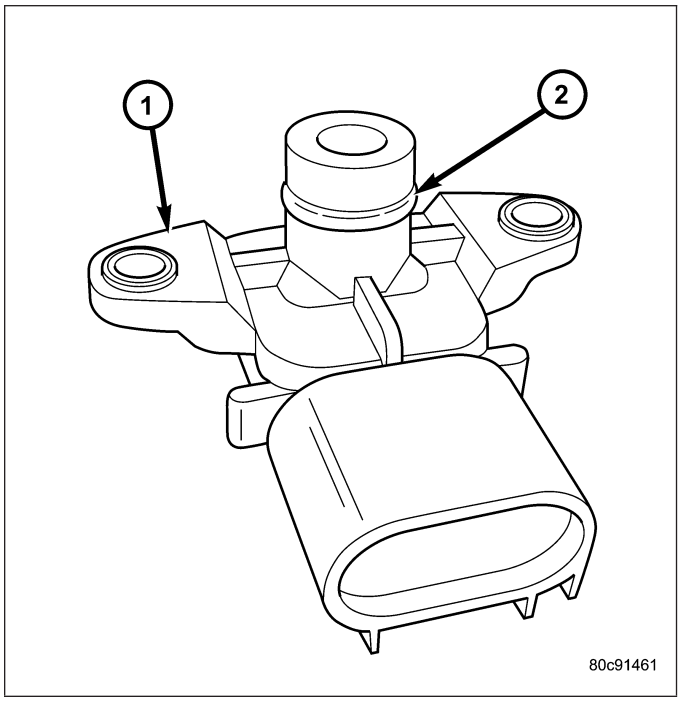

5.7L V-8

The Manifold Absolute Pressure (MAP) sensor (1) is mounted to the front of the intake manifold air plenum box.

1. Clean MAP sensor mounting hole at intake manifold.
2. Check MAP sensor o-ring seal for cuts or tears.
3. Position sensor into manifold.
4. Rotate sensor 1/4 turn clockwise for installation.
5. Connect electrical connector.

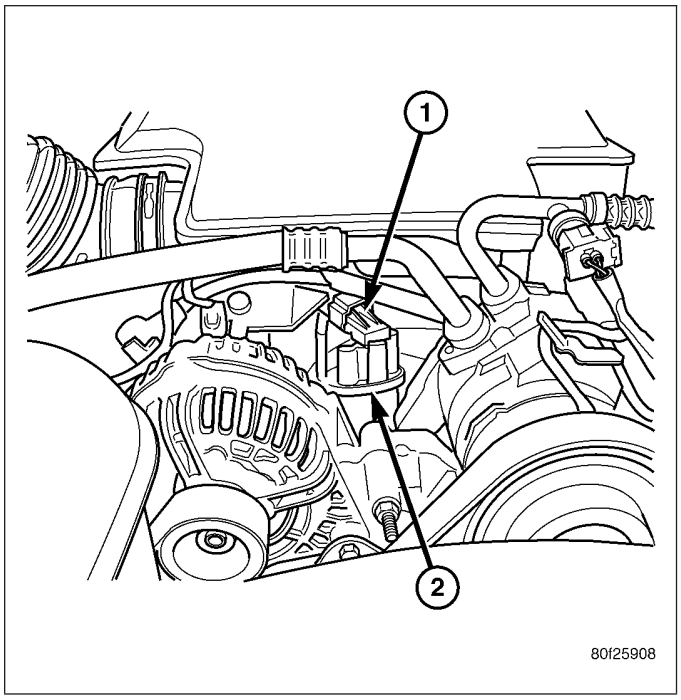

8.3L - SRT-10

1. Install the MAP sensor to the intake manifold.
2. Install MAP sensor mounting screws and tighten mounting screws to 4 N·m (35 in. lbs.).
3. Connect the electrical connector to the MAP sensor.

SENSOR - OXYGEN

DESCRIPTION

The Oxygen Sensors (O2S) are attached to, and protrude into the vehicle exhaust system. Depending on the engine or emission package, the vehicle may use a total of either 2 or 4 sensors.

Federal Emission Packages : Two sensors are used: upstream (referred to as 1/1) and downstream (referred to as 1/2). With this emission package, the upstream sensor (1/1) is located just before the main catalytic convertor. The downstream sensor (1/2) is located just after the main catalytic convertor.

California Emission Packages: On this emissions package, 4 sensors are used: 2 upstream (referred to as 1/1 and 2/1) and 2 downstream (referred to as 1/2 and 2/2). With this emission package, the right upstream sensor (2/1) is located in the right exhaust downpipe just before the mini-catalytic convertor. The left upstream sensor (1/1) is located in the left exhaust downpipe just before the mini-catalytic convertor. The right downstream sensor (2/2) is located in the right exhaust downpipe just after the mini-catalytic convertor, and before the main catalytic convertor. The left downstream sensor (1/2) is located in the left exhaust downpipe just after the mini-catalytic convertor, and before the main catalytic convertor.

REMOVAL

CAUTION: Never apply any type of grease to the oxygen sensor electrical connector, or attempt any soldering of the sensor wiring harness.

WARNING: THE EXHAUST MANIFOLD, EXHAUST PIPES AND CATALYTIC CONVERTER BECOME VERY HOT DURING ENGINE OPERATION. ALLOW ENGINE TO COOL BEFORE REMOVING OXYGEN SENSOR.

1. Raise and support vehicle.
2. Disconnect wire connector from O2S sensor.

CAUTION: When disconnecting sensor electrical connector, do not pull directly on wire going into sensor.

3. Remove O2S sensor with an oxygen sensor removal and installation tool.
4. Clean threads in exhaust pipe using appropriate tap.

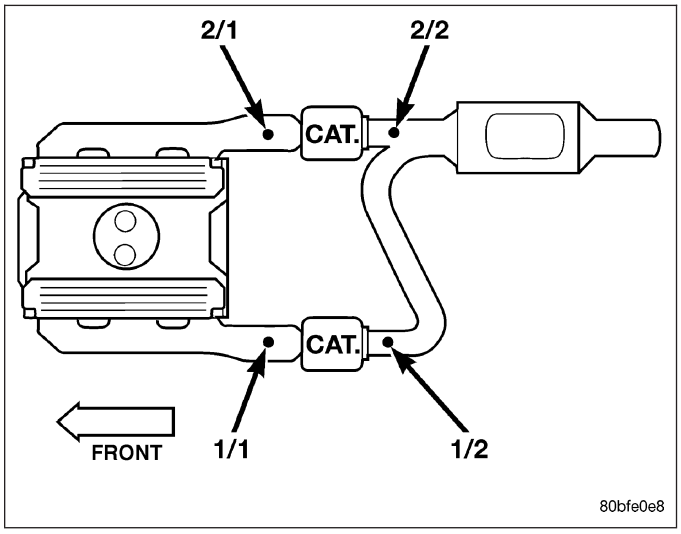

INSTALLATION

Threads of new oxygen sensors are factory coated with anti-seize compound to aid in removal. **DO NOT add any additional anti-seize compound to threads of a new oxygen sensor.**

1. Install O2S sensor. Tighten to 30 N·m (22 ft. lbs.) torque.
2. Connect O2S sensor wire connector.
3. Lower vehicle.

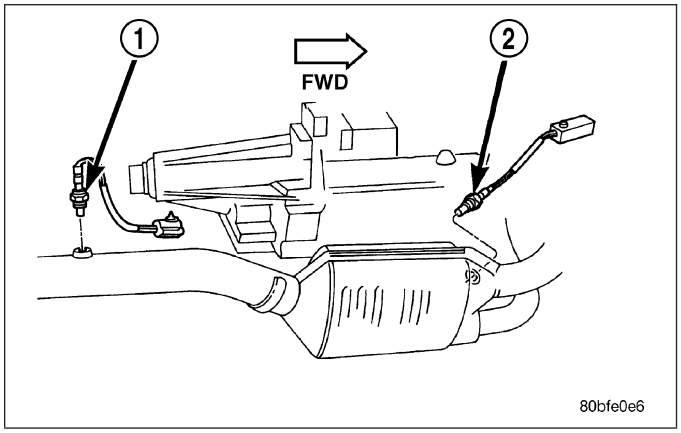

SWITCH - PTO

DESCRIPTION

This Powertrain Control Module (PCM) input is used only on models equipped with aftermarket Power Take Off (PTO) units.

OPERATION

The input is used only to tell the PCM (or ECM-Diesel) that the PTO has been engaged. The PCM (or ECM) will disable (temporarily shut down) certain OBD II diagnostic trouble codes when the PTO is engaged.

JTEC and NGC Engine Controllers: When the aftermarket PTO switch has been engaged, a 12V + signal is sent through circuit G113 to PCM pin A13. The PCM will then sense and determine that the PTO has been activated.

CM 845 or CM 848 Diesel Engine Controllers: When the aftermarket PTO switch has been engaged, a 12V + signal is sent through circuit G113 to ECM pin B38. The ECM will then sense and determine that the PTO has been activated.

THROTTLE BODY

DESCRIPTION

The throttle body is located on the intake manifold. Fuel does not enter the intake manifold through the throttle body. Fuel is sprayed into the manifold by the fuel injectors.

OPERATION

Filtered air from the air cleaner enters the intake manifold through the throttle body. The throttle body contains an air control passage controlled by an Idle Air Control (IAC) motor. The air control passage is used to supply air for idle conditions. A throttle valve (plate) is used to supply air for above idle conditions.

5.7L V-8 Engine:

The throttle body on the 5.7L engine is an electrically controlled unit. A mechanical cable is not used to connect the throttle body to the accelerator pedal. The Accelerator Pedal Position Sensor (APPS) along with inputs from other sensors sets the throttle blade to pre-determined positions.

Except 5.7L V-8 Engine:

Certain sensors are attached to the throttle body. The accelerator pedal cable, speed control cable and transmission control cable (when equipped) are connected to the throttle body linkage arm.

A (factory adjusted) set screw is used to mechanically limit the position of the throttle body throttle plate. **Never attempt to adjust the engine idle speed using this screw.** All idle speed functions are controlled by the PCM.

REMOVAL

3.7L V-6

A (factory adjusted) set screw is used to mechanically limit the position of the throttle body throttle plate. **Never attempt to adjust the engine idle speed using this screw.** All idle speed functions are controlled by the Powertrain Control Module (PCM).

1. Remove air cleaner tube at throttle body.
2. Disconnect throttle body electrical connectors at IAC motor and TPS.
3. Remove all control cables from throttle body (lever) arm. Refer to the Accelerator Pedal and Throttle Cable section for removal/installation procedures.
4. Disconnect necessary vacuum lines at throttle body.
5. Remove 3 throttle body mounting bolts (2).
6. Remove throttle body from intake manifold.

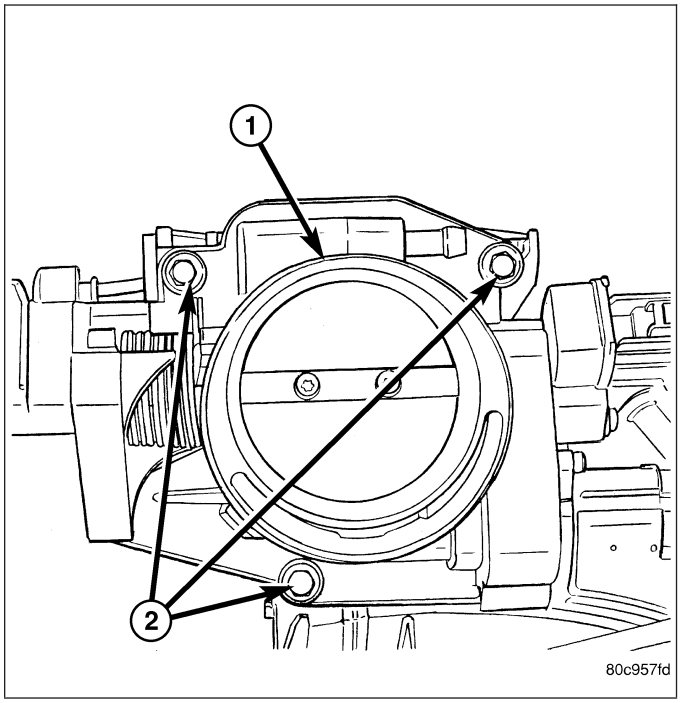

7. Check condition of old throttle body-to-intake manifold o-ring.

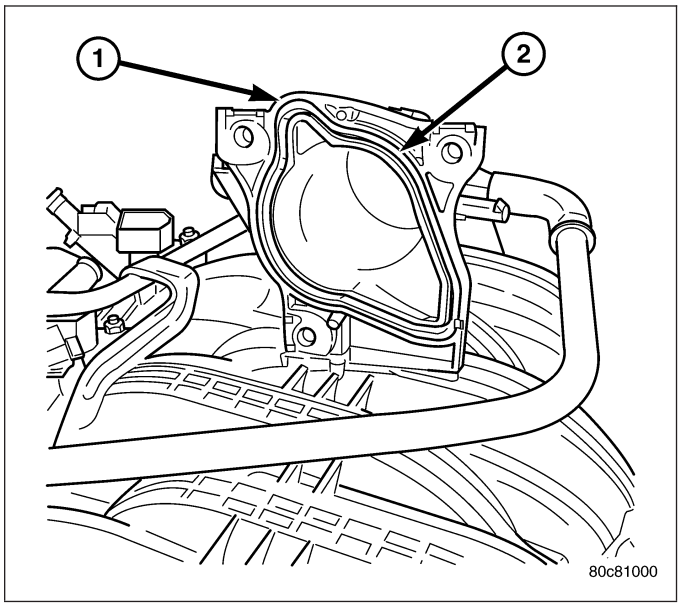

4.7L V-8

1. Remove air duct and air resonator box at throttle body.
2. Disconnect throttle body electrical connectors at IAC motor and TPS.
3. Remove vacuum line at throttle body.
4. Remove all control cables from throttle body (lever) arm. Refer to Accelerator Pedal and Throttle Cable.
5. Remove three throttle body mounting bolts (1).
6. Remove throttle body from intake manifold.

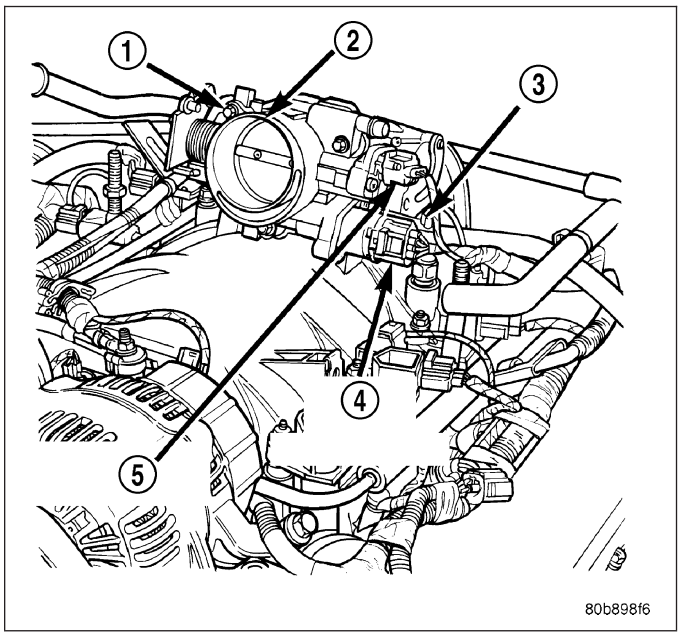

5.7L V-8

CAUTION: Do not use spray (carb) cleaners on any part of the throttle body. Do not apply silicone lubricants to any part of the throttle body.

1. Remove air duct and air resonator box at throttle body.
2. Disconnect electrical connector (2) at throttle body.
3. Remove 4 throttle body mounting bolts (4).
4. Remove throttle body from intake manifold.

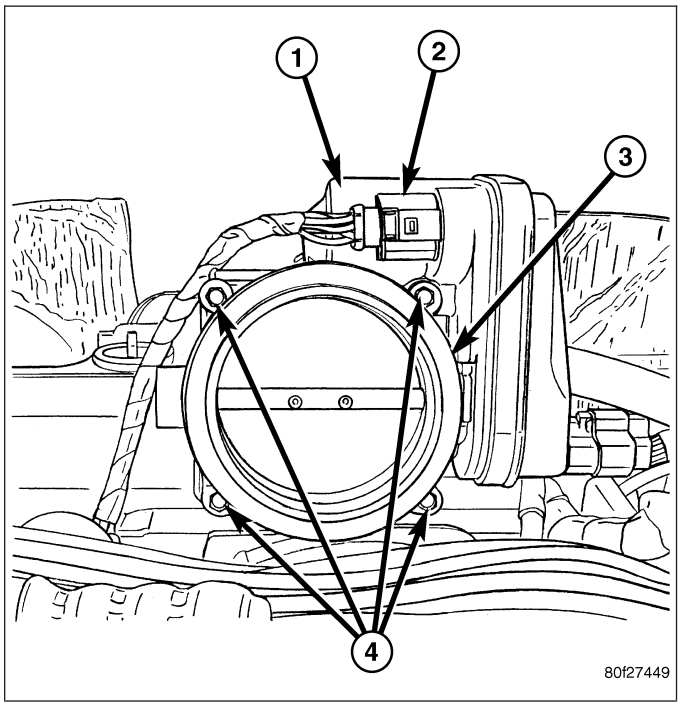

5. Check condition of throttle body o-ring (2).
6. If the throttle body has been changed, the following procedure must be performed:
   a. Disconnect negative battery cable from battery. Leave cable disconnected for approximately 90 seconds.
   b. Reconnect cable to battery.
   c. Turn ignition switch ON, but do not crank engine.
   d. Leave ignition switch ON for a minimum of 10 seconds. This will allow PCM to learn throttle body electrical parameters.

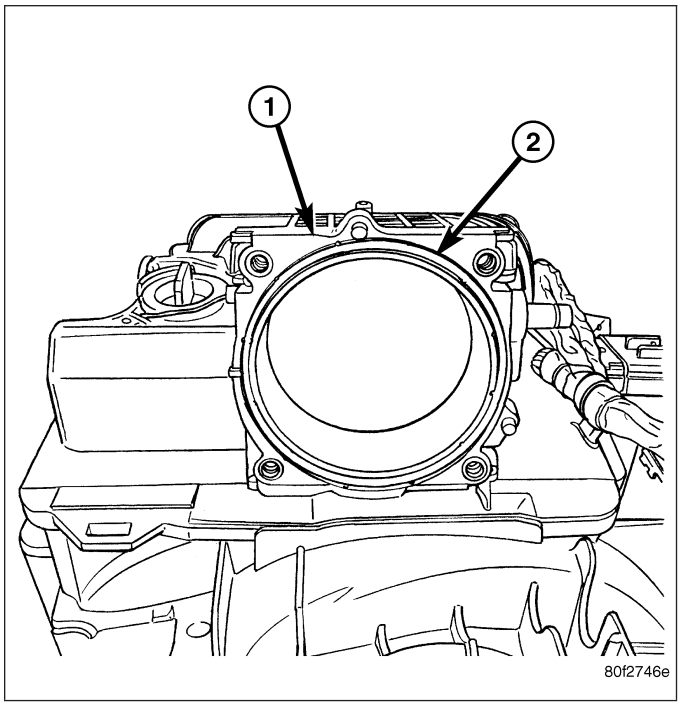

8.3L - SRT-10

1. Remove the throttle cable.

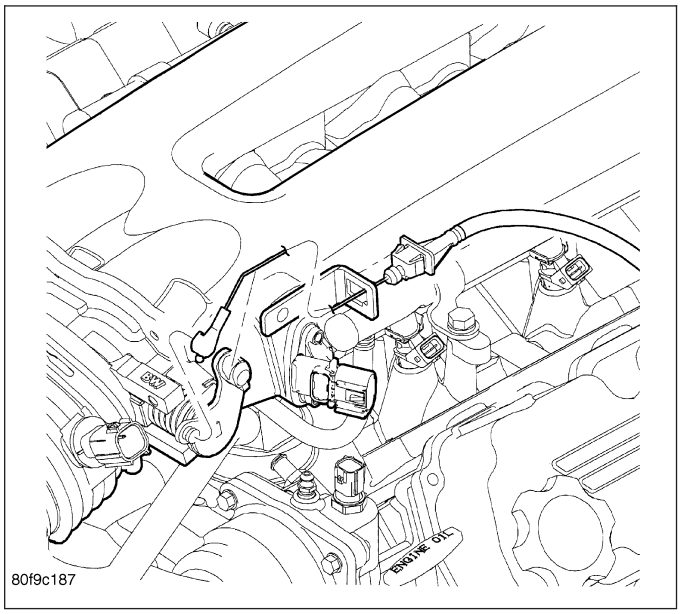

2. Remove the battery cover and disconnect the negative battery cable.
3. Remove the air cleaner assembly, refer to the Engine/Air Intake System/Air Cleaner Housing for more information.
4. Disconnect the TPS electrical connector.

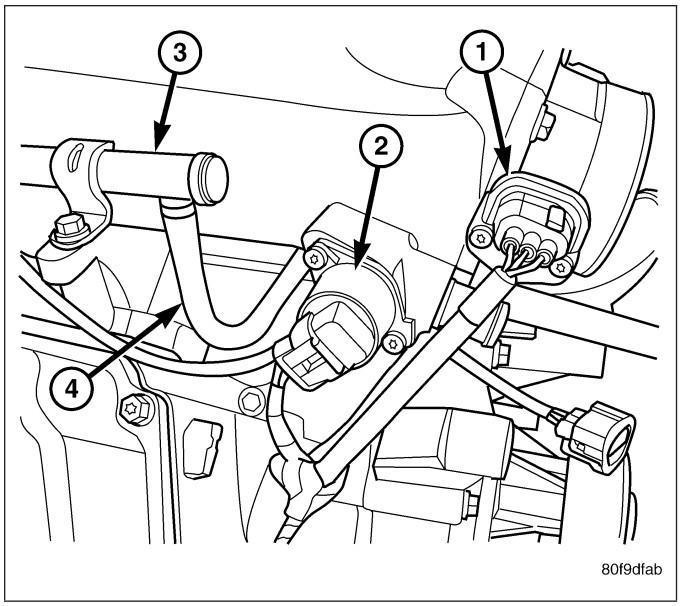

5. Remove the throttle body bolts.

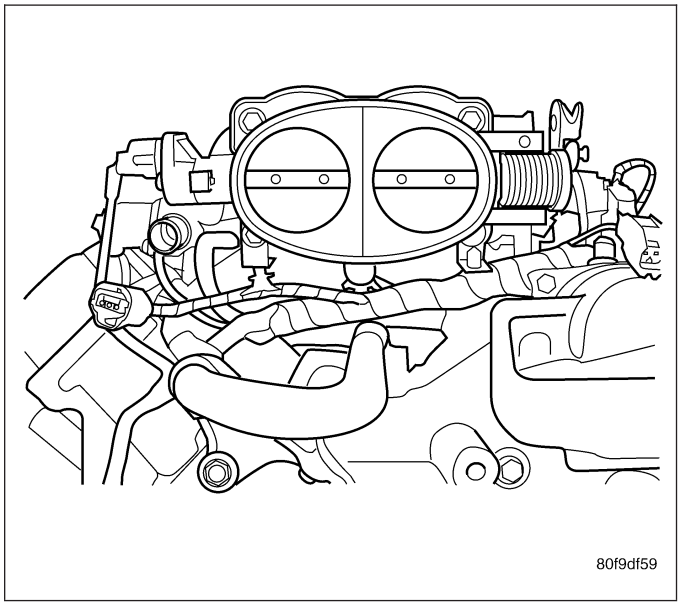

6. Remove the throttle body wiring clips.
7. Remove the throttle body.

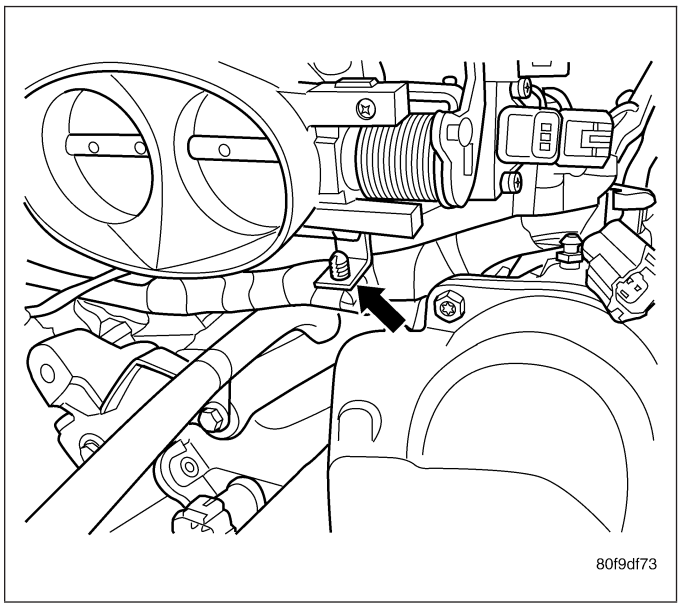

INSTALLATION

3.7L V-6

1. Check condition of throttle body-to-intake manifold o-ring (2). Replace as necessary.
2. Clean mating surfaces of throttle body and intake manifold.
3. Install throttle body-to-intake manifold o-ring.
4. Install throttle body to intake manifold.

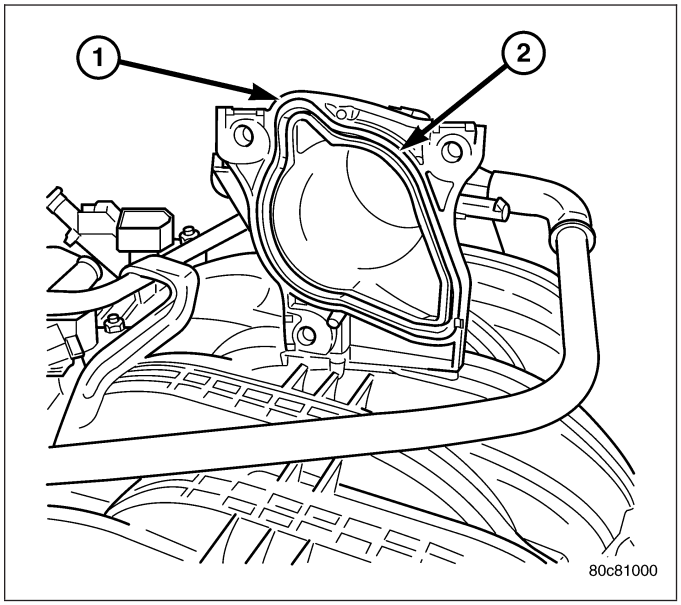

5. Install three mounting bolts (2). Tighten bolts to 12 N·m (105 in. lbs.) torque.
6. Install control cables.
7. Install electrical connectors.
8. Install necessary vacuum lines.
9. Install air plenum.

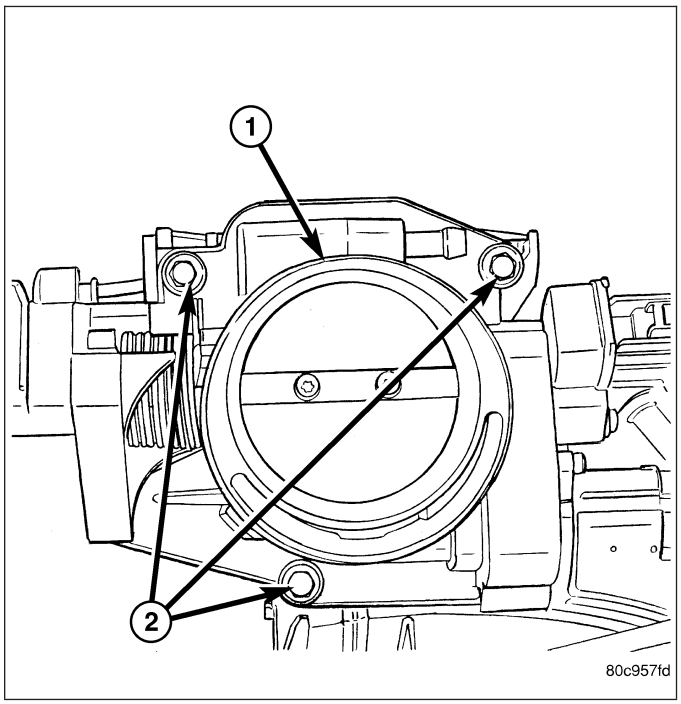

4.7L V-8

1. Clean throttle body-to-intake manifold o-ring.
2. Clean mating surfaces of throttle body and intake manifold.
3. Install throttle body to intake manifold by positioning throttle body to manifold alignment pins.
4. Install three mounting bolts (1). Tighten bolts to 12 N·m (105 in. lbs.) torque.
5. Install control cables.
6. Install vacuum line to throttle body.
7. Install electrical connectors.
8. Install air plenum.

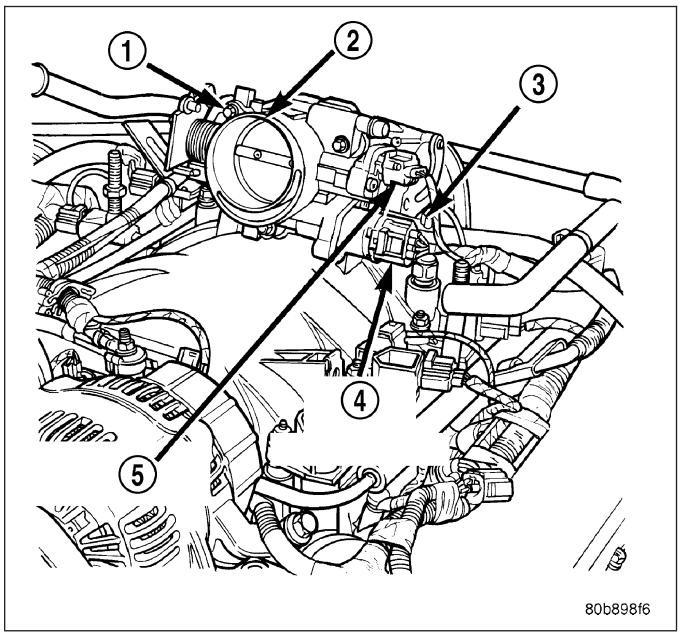

5.7L V-8

CAUTION: Do not use spray (carb) cleaners on any part of the throttle body. Do not apply silicone lubricants to any part of the throttle body.

1. Clean and check condition of throttle body-to-intake manifold o-ring (2).
2. Clean mating surfaces of throttle body and intake manifold.
3. Install throttle body to intake manifold by positioning throttle body to manifold alignment pins.

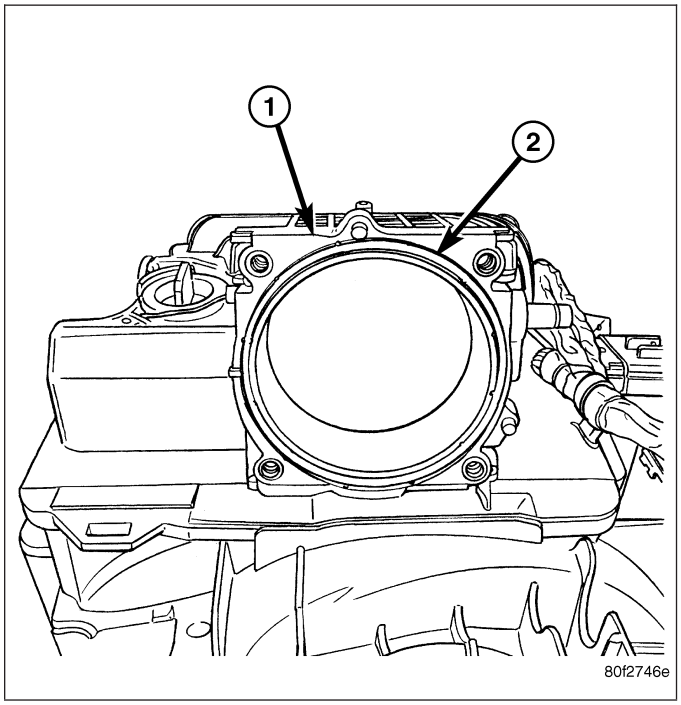

4. Install 4 mounting bolts. (Refer to 14 - FUEL SYSTEM/FUEL DELIVERY - SPECIFICATIONS)
5. Install electrical connector.
6. Install air plenum.
7. **If the throttle body has been changed, the following procedure must be performed:**
   a. Disconnect negative battery cable from battery. Leave cable disconnected for approximately 90 seconds.
   b. Reconnect cable to battery.
   c. Turn ignition switch ON, but do not crank engine.
   d. Leave ignition switch ON for a minimum of 10 seconds. This will allow PCM to learn throttle body electrical parameters.

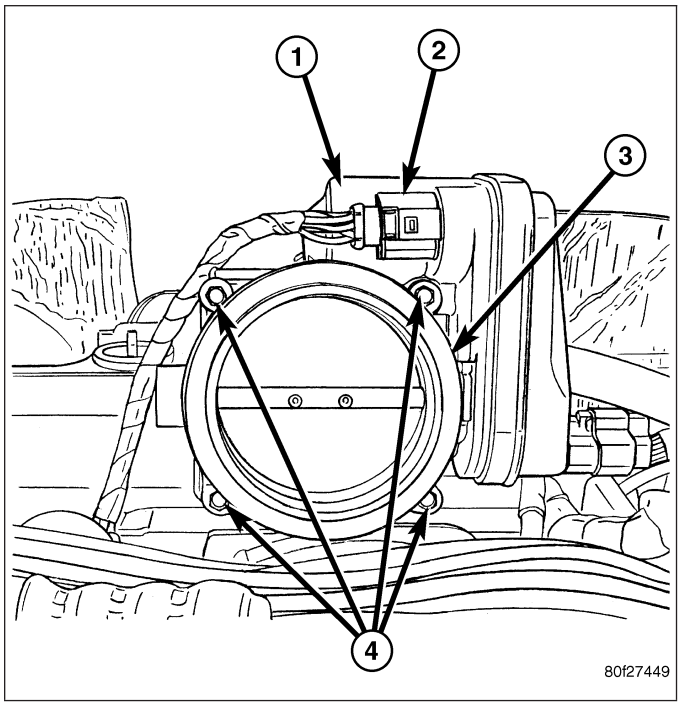

8.3L - SRT-10

1. Mount throttle body and wiring clips , tighten bolts to 12 N.m (105 in. lbs.).
2. Connect electrical connector to throttle position sensor.
3. Install the throttle cable.
4. Install the air cleaner housing, refer to Engine/Air Intake System/Air Cleaner Housing.
5. Connect the negative battery cable and install the battery cover.

CABLE - THROTTLE CONTROL

REMOVAL

3.7L V-6

CAUTION: Be careful not to damage or kink cable core wire (within cable sheathing) while servicing accelerator pedal or throttle cable.

1. From inside vehicle, hold up accelerator pedal. Remove plastic cable retainer (clip) and throttle cable core wire from upper end of pedal arm. Plastic cable retainer snaps into top of pedal arm.
2. Remove cable core wire at pedal arm.
3. From inside vehicle, remove metal clip holding cable to dashpanel.
4. Remove air resonator box at throttle body.
5. Unsnap cable from dashpanel routing clip.
6. Remove cable housing from dash panel and pull into engine compartment.
7. Hold throttle in wide open position. While held in this position, slide throttle cable pin (1) from throttle body bellcrank.

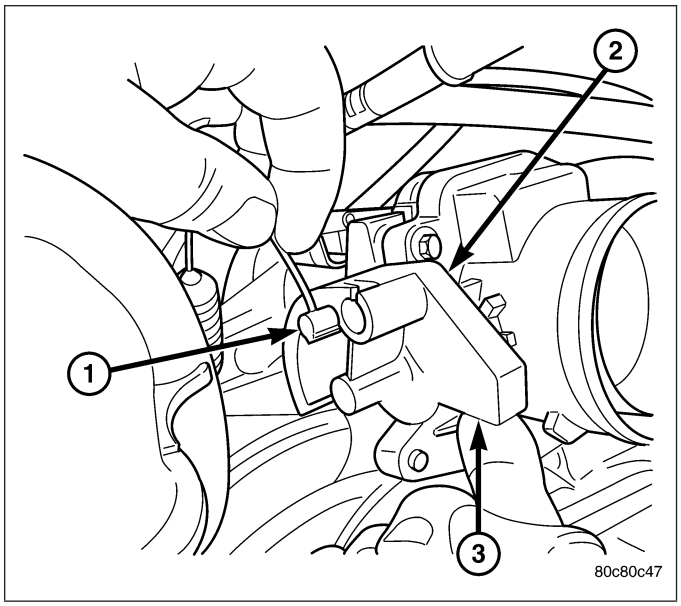

8. Using a pick or small screwdriver (3), press release tab (2) to release plastic (4) cable mount from bracket. **Press on tab only enough to release cable from bracket. If tab is pressed too much, it will be broken.** Slide plastic mount towards right side of vehicle to remove throttle cable from throttle body bracket.
9. Remove throttle cable from vehicle.

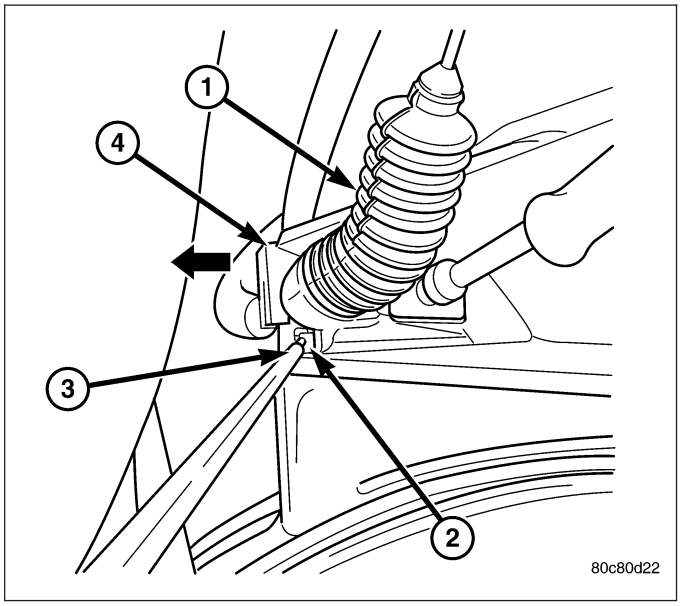

4.7L V-8

CAUTION: Be careful not to damage or kink cable core wire (within cable sheathing) while servicing accelerator pedal or throttle cable.

1. From inside vehicle, hold up accelerator pedal. Remove plastic cable retainer (clip) and throttle cable core wire from upper end of pedal arm. Plastic cable retainer (clip) snaps into pedal arm.
2. Remove cable core wire at pedal arm.
3. From inside vehicle, remove cable clip holding cable to dashpanel.
4. Remove air box at throttle body.
5. Unsnap cable from dashpanel routing clip.
6. Remove cable housing from dash panel and pull into engine compartment.
7. Using finger pressure only, disconnect accelerator cable connector at throttle body bellcrank pin by pushing connector off bellcrank pin towards front of vehicle. **DO NOT try to pull connector off perpendicular to bellcrank pin. Connector will be broken.**
8. Lift accelerator cable from top of cable cam.

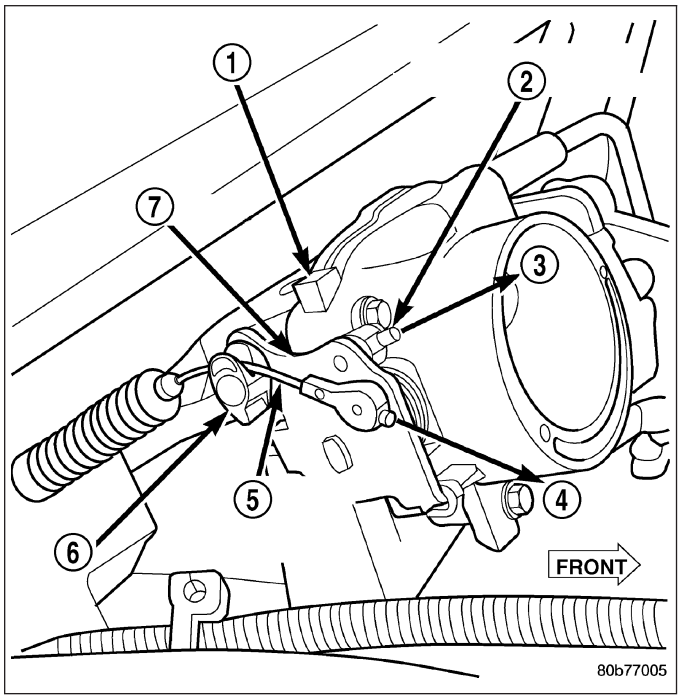

9. Press tab (3) to release plastic cable mount from bracket. **Press on tab only enough to release cable from bracket. If tab is pressed too much, it will be broken.** Slide plastic mount towards passenger side of vehicle to remove cable from bracket.
10. Remove throttle cable from vehicle.

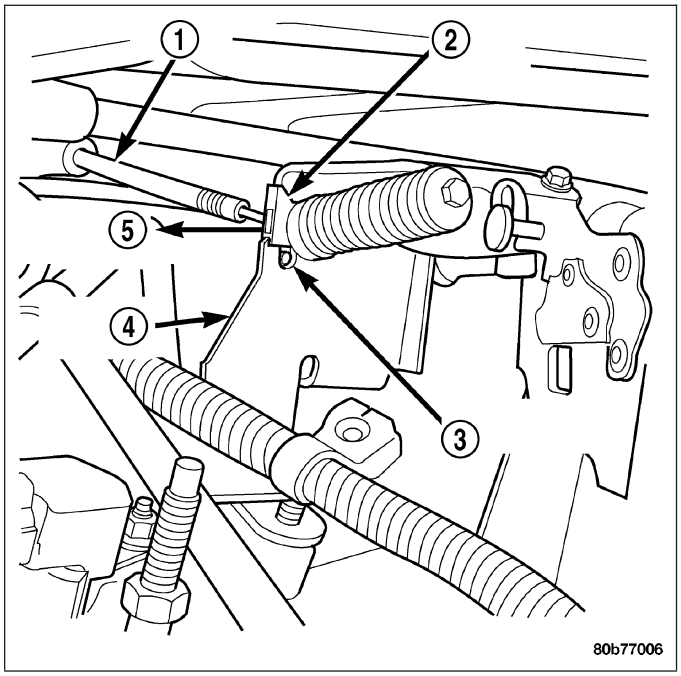

5.7L V-8

The Throttle Control Cable on the 5.7L V-8 engine connects the accelerator pedal to the Accelerator Pedal Position Sensor (APPS). A separate mechanical cable is not routed to the throttle body.

CAUTION: Be careful not to damage or kink cable core wire (within cable sheathing) while servicing accelerator pedal, cables or APPS.

1. From inside vehicle, hold up accelerator pedal. Remove plastic cable retainer and throttle cable core wire from upper end of pedal arm. The plastic cable retainer snaps into pedal arm.
2. Remove cable core wire at pedal arm.
3. Remove APPS. Refer to Accelerator Pedal Position Sensor (APPS) Removal / Installation.

4. From inside vehicle, remove cable clip.
5. Remove cable housing from dash panel and pull cable into engine compartment.
6. Remove cable housing at APPS bracket by pressing on release tab with a small screwdriver. **To prevent cable housing breakage, press on tab only enough to release cable from APPS bracket.**

INSTALLATION

3.7L V-6

1. Slide accelerator cable plastic mount into throttle body mounting bracket. Continue sliding until release tab is aligned to hole in mounting bracket.
2. Hold throttle in wide open position. While held in this position, slide throttle cable pin into throttle body bellcrank.
3. Push cable housing into rubber grommet and through opening in dash panel.
4. From inside vehicle, install metal clip holding cable to dashpanel.
5. From inside vehicle, slide throttle cable core wire into opening (slot) in top of pedal arm.
6. Push plastic cable retainer (clip) into pedal arm opening until it snaps in place.
7. Install air resonator tube to throttle body.
8. Before starting engine, operate accelerator pedal to check for any binding.

4.7L V-8

1. Slide accelerator cable plastic mount into bracket. Continue sliding until tab is aligned to hole in mounting bracket.
2. Route accelerator cable over top of cable cam.
3. Connect cable end to throttle body bellcrank pin (snaps on rearward).
4. Slide rubber grommet away from plastic cable housing.
5. Install rubber grommet into dash panel until seated.
6. Push cable housing into rubber grommet and through opening in dash panel.
7. From inside vehicle, install clip holding cable to dashpanel.
8. From inside vehicle, slide throttle cable core wire into opening in top of pedal arm.
9. Push cable retainer (clip) into pedal arm opening until it snaps in place.
10. Snap cable into dashpanel routing clip.
11. Install air resonator tube to throttle body.
12. Before starting engine, operate accelerator pedal to check for any binding.

5.7L V-8

1. Attach cable to Accelerator Pedal Position Sensor (APPS). Refer to APPS Removal / Installation.
2. Push cable housing into rubber grommet and through opening in dash panel.
3. From inside vehicle, install clip holding cable to dashpanel.
4. From inside vehicle, slide throttle cable core wire into opening in top of pedal arm.
5. Push cable retainer (clip) into pedal arm opening until it snaps in place.
6. Before starting engine, operate accelerator pedal to check for any binding.
7. If necessary, use DRB III® Scan Tool to erase any APPS Diagnostic Trouble Codes (DTC's) from PCM.

SENSOR-THROTTLE POSITION

DESCRIPTION

3.7L, 4.7L, 5.7L

The 3-wire Throttle Position Sensor (TPS) (2) is mounted on the throttle body and is connected to the throttle blade shaft.

The 5.7L V-8 engine does not use a separate TPS on the throttle body.

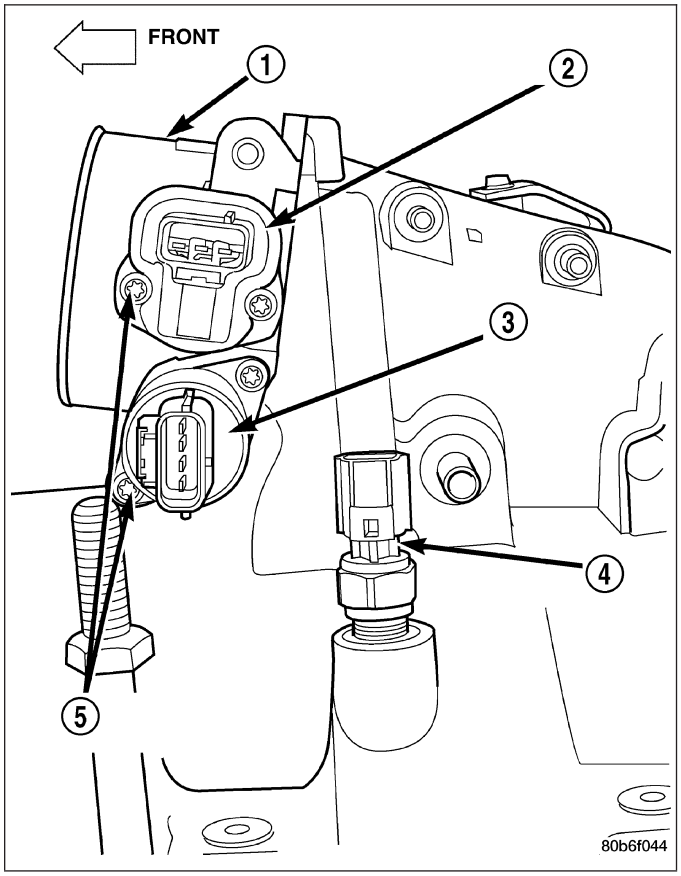

8.3L - SRT-10

The TPS (1) is mounted on the passenger side of the throttle body. The sensor connects to the throttle blade shaft. The TPS is a variable resistor that provides the Powertrain Control Module (PCM) with an input signal (voltage).

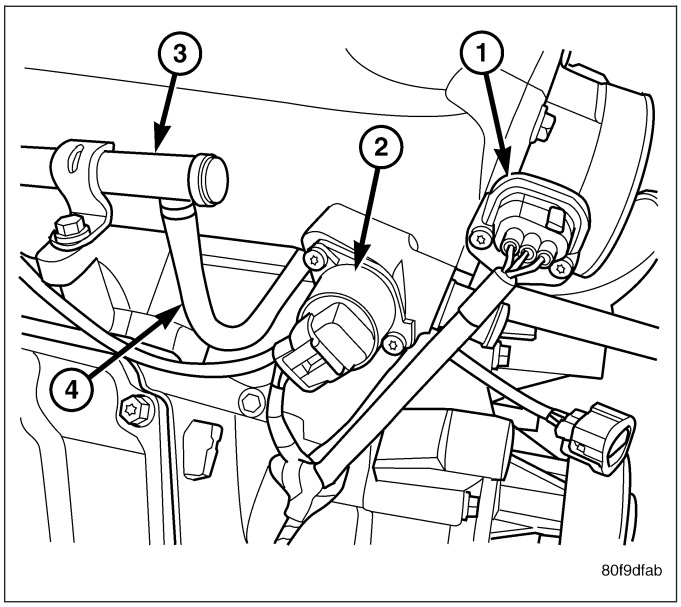

OPERATION

The 5.7L V-8 engine does not use a separate Throttle Position Sensor (TPS) on the throttle body.

The 3-wire TPS provides the Powertrain Control Module (PCM) with an input signal (voltage) that represents the throttle blade position of the throttle body. The sensor is connected to the throttle blade shaft. As the position of the throttle blade changes, the output voltage of the TPS changes.

The PCM supplies approximately 5 volts to the TPS. The TPS output voltage (input signal to the PCM) represents the throttle blade position. The PCM receives an input signal voltage from the TPS. This will vary in an approximate range of from .26 volts at minimum throttle opening (idle), to 4.49 volts at wide open throttle. Along with inputs from other sensors, the PCM uses the TPS input to determine current engine operating conditions. In response to engine operating conditions, the PCM will adjust fuel injector pulse width and ignition timing.

The PCM needs to identify the actions and position of the throttle blade at all times. This information is needed to assist in performing the following calculations:

- Ignition timing advance
- Fuel injection pulse-width
- Idle (learned value or minimum TPS)
- Off-idle (0.06 volt)
- Wide Open Throttle (WOT) open loop (2.608 volts above learned idle voltage)
- Deceleration fuel lean out
- Fuel cutoff during cranking at WOT (2.608 volts above learned idle voltage)
- A/C WOT cutoff (certain automatic transmissions only)

REMOVAL

3.7L V6

The Throttle Position Sensor (TPS) (1) is mounted to the throttle body.

1. Remove air resonator tube at throttle body.
2. Disconnect TPS electrical connector.
3. Remove 2 TPS mounting screws.
4. Remove TPS.

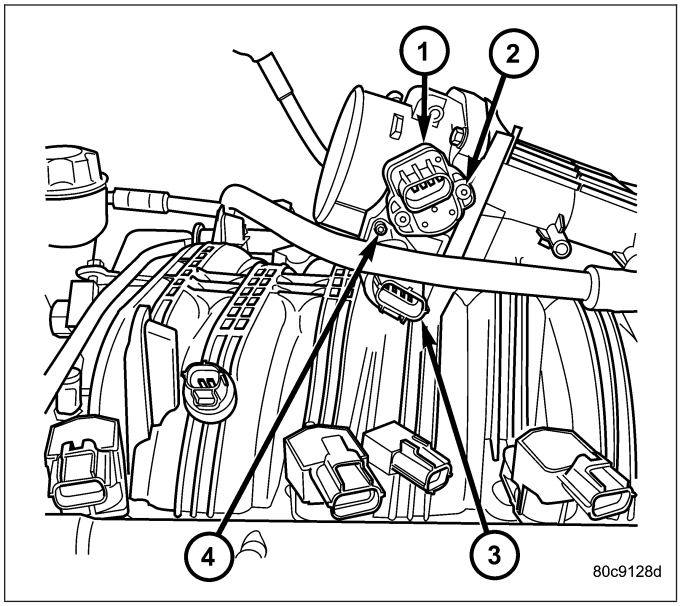

4.7L V-8

The TPS (2) is located on the throttle body.

1. Remove air duct and tube at throttle body.
2. Disconnect TPS electrical connector.
3. Remove two TPS mounting bolts (screws).
4. Remove TPS from throttle body.

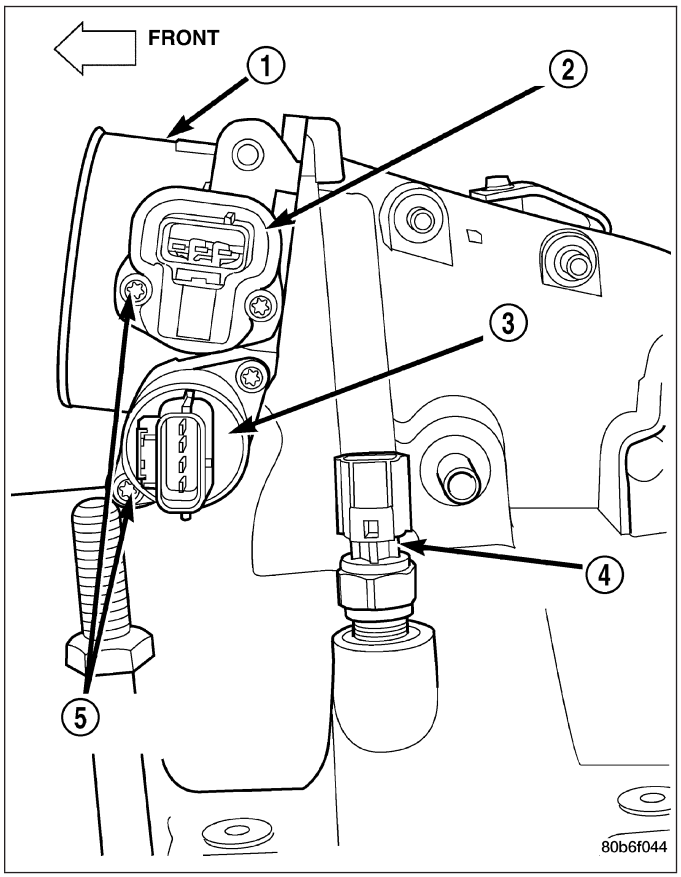

5.7L V-8

The 5.7L V-8 engine does not use a separate Throttle Position Sensor (TPS) on the throttle body.

8.3L - SRT-10

The TPS is attached to the throttle body.

1. Disconnect the TPS electrical connector.
2. Remove the TPS mounting screws.
3. Remove the TPS.

INSTALLATION

3.7L V-6

The Throttle Position Sensor (TPS) (1) is mounted to the throttle body.

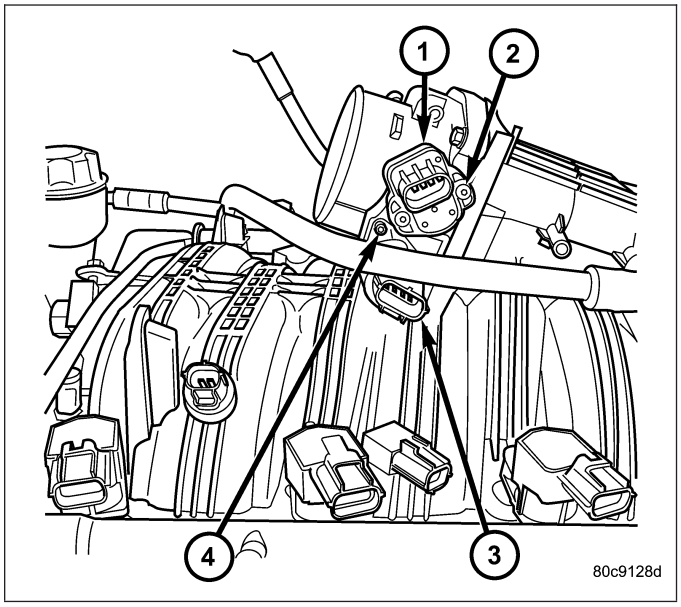

The throttle shaft end of throttle body slides into a socket in TPS. The TPS must be installed so that it can be rotated a few degrees. (If sensor will not rotate, install sensor with throttle shaft on other side of socket tangs). The TPS will be under slight tension when rotated.

1. Install TPS and retaining screws.
2. Tighten screws to 7 N·m (60 in. lbs.) torque.
3. Connect TPS electrical connector to TPS.
4. Manually operate throttle (by hand) to check for any TPS binding before starting engine.
5. Install air cleaner tube to throttle body.

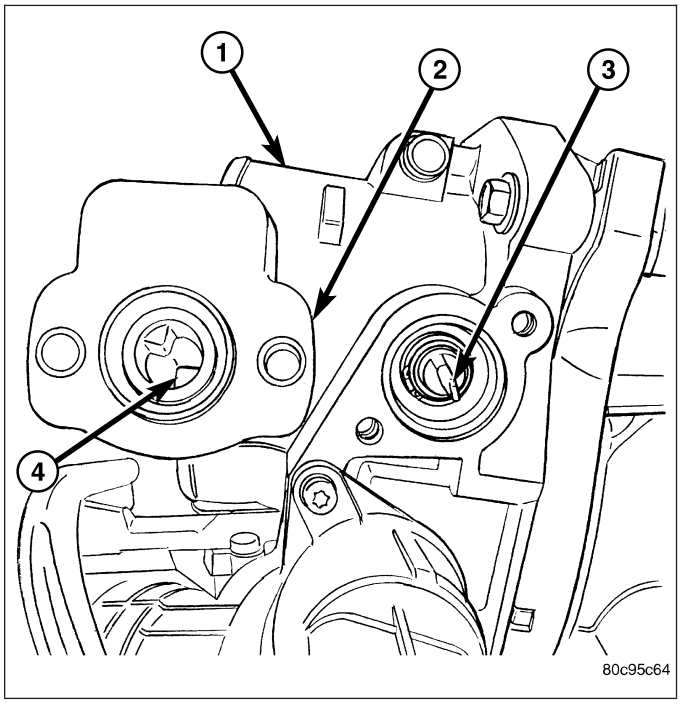

4.7L V-8

The throttle shaft end of throttle body (5) slides into a socket in TPS. The TPS must be installed so that it can be rotated a few degrees. If sensor will not rotate, install sensor with throttle shaft on other side of socket tangs. The TPS will be under slight tension when rotated.

1. Install TPS and two retaining bolts.
2. Tighten bolts to 7 N·m (60 in. lbs.) torque.
3. Manually operate throttle control lever by hand to check for any binding of TPS.
4. Connect TPS electrical connector to TPS.
5. Install air duct/air box to throttle body.

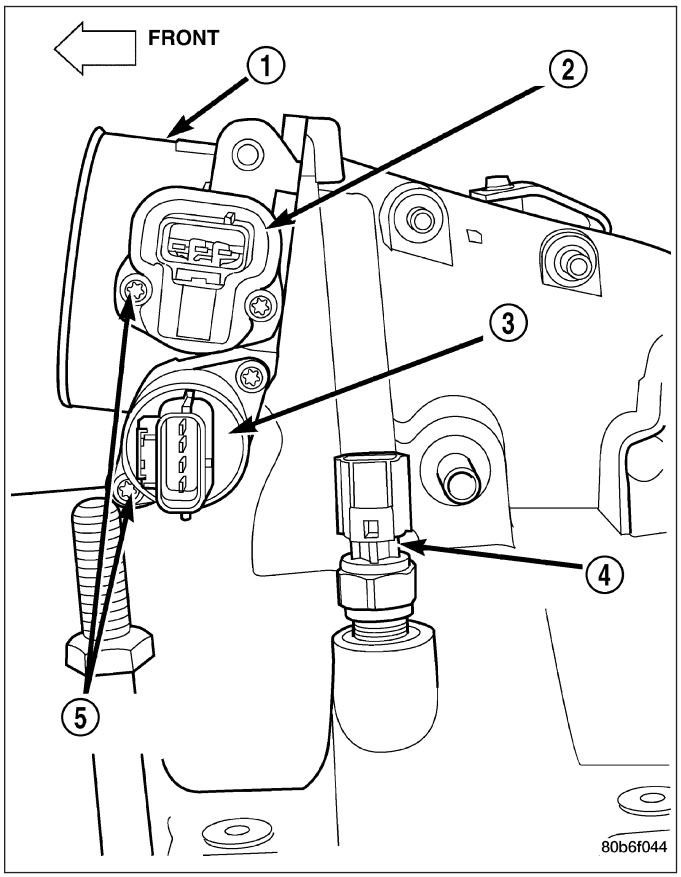

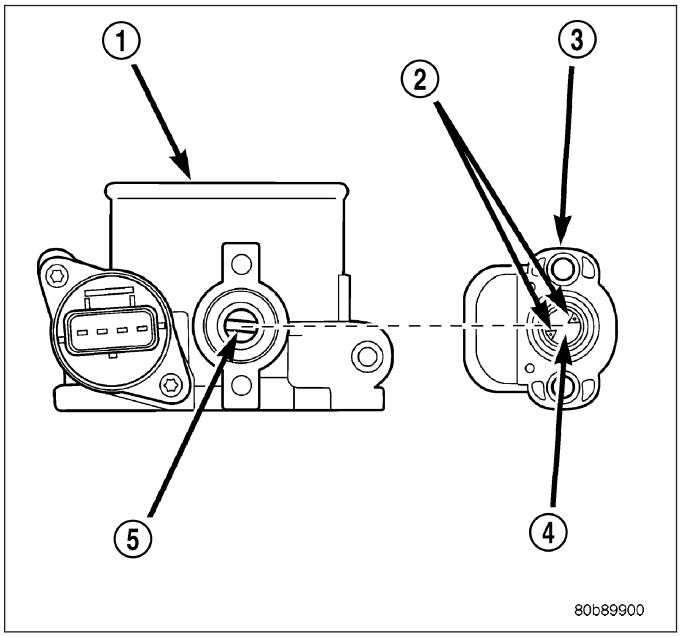

8.3L - SRT-10

The TPS is attached to the throttle body.

The throttle shaft end of the throttle body slides into a socket in the TPS. When indexed correctly, the TPS can rotate a few degrees to line up the mounting screw holes with the screw holes in the throttle body. If the sensor will not rotate into place, install the sensor with the throttle shaft on the other side of the socket tangs. The TPS has slight tension when rotated to align the mounting holes.

1. Install TPS and mounting screws.
2. Attach electrical connector to the TPS.

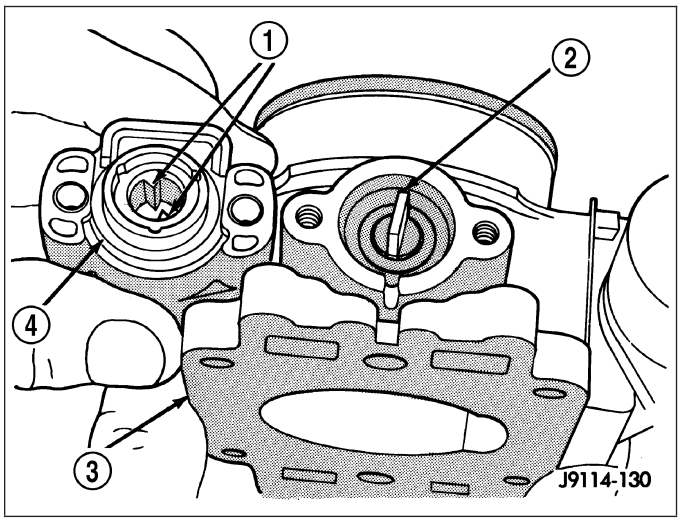

FUEL DELIVERY - DIESEL

TABLE OF CONTENTS

page

FUEL DELIVERY - DIESEL
- DESCRIPTION - DIESEL FUEL SYSTEM 99
- STANDARD PROCEDURE
  - STANDARD PROCEDURES - WATER DRAINING AT FUEL FILTER 101
  - STANDARD PROCEDURES - CLEANING FUEL SYSTEM PARTS 101
  - STANDARD PROCEDURE - FUEL SYSTEM PRIMING 101
- SPECIFICATIONS
  - FUEL INJECTOR FIRING ORDER - DIESEL . 101
  - TORQUE - FUEL SYSTEM - DIESEL ENGINE . 102
- SPECIAL TOOLS
  - DIESEL FUEL SYSTEM 103

FILTER - FUEL / WATER SEPARATOR
- DESCRIPTION 105
- OPERATION 105
- REMOVAL 105
- INSTALLATION 107

HEATER-FUEL
- DESCRIPTION 108
- OPERATION 108
- DIAGNOSIS AND TESTING - FUEL HEATER . . 108
- REMOVAL
  - REMOVAL/INSTALLATION 109

RELAY - FUEL HEATER
- DESCRIPTION 109
- OPERATION 109
- REMOVAL 110
- INSTALLATION 110

PUMP - FUEL INJECTION
- DESCRIPTION 110
- OPERATION 110
- DIAGNOSIS AND TESTING - FUEL INJECTION PUMP TIMING 110
- REMOVAL 111
- INSTALLATION 113

SENSOR - FUEL LEVEL SENDING UNIT
- DESCRIPTION 114
- OPERATION 114
- REMOVAL
  - REMOVAL/INSTALLATION 115

page

LINES - FUEL
- DESCRIPTION 115
- OPERATION 115
- DIAGNOSIS AND TESTING - HIGH-PRESSURE FUEL LINE LEAKS 115
- REMOVAL 116
- INSTALLATION 117

SENSOR - FUEL PRESSURE
- DESCRIPTION 118
- OPERATION 118
- REMOVAL 118
- INSTALLATION 119

VALVE - FUEL PRESSURE LIMITING
- DESCRIPTION 119
- OPERATION 119
- REMOVAL 119
- INSTALLATION 119

TANK - FUEL
- DESCRIPTION - DIESEL 120
- REMOVAL - DIESEL 120
- INSTALLATION - DIESEL 121

MODULE - FUEL TANK
- DESCRIPTION 121
- OPERATION 121
- REMOVAL 122
- INSTALLATION 122

PUMP - FUEL TRANSFER
- DESCRIPTION 122
- OPERATION 122
- REMOVAL 123
- INSTALLATION 123

VALVE - CASCADE OVERFLOW
- DESCRIPTION 123
- OPERATION 123
- REMOVAL
  - REMOVAL/INSTALLATION 124

SENSOR-WATER IN FUEL
- DESCRIPTION 124
- OPERATION 124
- REMOVAL 124

CIRCUIT - FUEL DRAIN
- OPERATION 124

FUEL DELIVERY - DIESEL

DESCRIPTION - DIESEL FUEL SYSTEM

The fuel system used on the Cummins engine is an electronically controlled, Bosch HPCR (High-Pressure Common Rail) system. The HPCR system consists of five main components:

- Electric Fuel Transfer (lift) Pump Located in the Fuel Tank
- Fuel Pump/Gear Pump (attached to fuel injection pump)
- High-Pressure Fuel Injection Pump
- Fuel Injection Rail
- Fuel Injectors

Also to be considered as part of the overall fuel system are:

- Accelerator Pedal
- Air Cleaner Housing/Element
- Check Valve Banjo Fitting at Rear of Cylinder Head
- Fuel Connector Tubes
- Fuel Drain Manifold (passage)
- Fuel Drain Valve (at filter)
- Fuel Filter/Water Separator
- Fuel Heater
- Fuel Heater Relay
- Fuel Transfer Pump Relay
- Fuel Level (gauge) Sending Unit
- Fuel Pressure Limiting Valve
- Fuel Tank
- Fuel Tank Module (containing a fuel gauge sending unit, separate fuel filter located at bottom of tank module, and fuel transfer pump)
- Fuel Tank Filler/Vent Tube Assembly
- Fuel Tank Filler Tube Cap
- Fuel Tubes/Lines/Hoses
- High-Pressure Fuel Injector Lines
- In-Tank Fuel Filter (at bottom of fuel tank module)
- Low-Pressure Fuel Supply Lines
- Low-Pressure Fuel Return Line
- Overflow Valve
- Quick-Connect Fuel Line Fittings
- Accelerator Pedal Position Sensor (APPS) Located in Cab
- Water Draining (maintenance)
- Water-In-Fuel (WIF) Sensor

The fuel injection pump supplies high pressure to the fuel rail independent of engine speed. This high pressure fuel is then accumulated in the fuel rail. High pressure fuel is constantly supplied to the injectors by the fuel rail. The Engine Control Module (ECM) controls the fueling and timing of the engine by actuating the injectors.

Fuel enters the system from the electric fuel transfer (lift) pump, which is located inside of the fuel tank and attached to the fuel tank module (the fuel transfer pump is no longer attached to the engine). Fuel is forced through the fuel filter element and then enters the Fuel Pump/Gear Pump, which is attached to the rear of the fuel injection pump. The Fuel Pump/Gear Pump is a low-pressure pump and produce pressures ranging from 551.5 kpa (80 psi) to 1241 kpa (180) psi. Fuel then enters the fuel injection pump. Low pressure fuel is then supplied to the FCA (Fuel Control Actuator).

The FCA is an electronically controlled solenoid valve. The ECM controls the amount of fuel that enters the high-pressure pumping chambers by opening and closing the FCA based on a demanded fuel pressure. The FPS (Fuel Pressure Sensor) on the fuel rail monitors the actual fuel pressure and provides it as an input to the ECM. When the actuator is opened, the maximum amount of fuel is being supplied to the fuel injection pump. Any fuel that does

not enter the injection pump is directed to the overflow valve. The overflow valve regulates how much excess fuel is used for lubrication of the pump and how much is returned to the tank through the drain manifold.

Fuel entering the injection pump is pressurized to between 300-1600 bar (4351-23,206 psi) by three radial pumping chambers. The pressurized fuel is then supplied to the fuel rail.

WARNING: HIGH-PRESSURE FUEL LINES DELIVER DIESEL FUEL UNDER EXTREME PRESSURE FROM THE INJECTION PUMP TO THE FUEL INJECTORS. THIS MAY BE AS HIGH AS 160,000 KPA (23,206 PSI). USE EXTREME CAUTION WHEN INSPECTING FOR HIGH-PRESSURE FUEL LEAKS. INSPECT FOR HIGH-PRESSURE FUEL LEAKS WITH A SHEET OF CARDBOARD. HIGH FUEL INJECTION PRESSURE CAN CAUSE PERSONAL INJURY IF CONTACT IS MADE WITH THE SKIN.

Certain fuel system components can be found in.

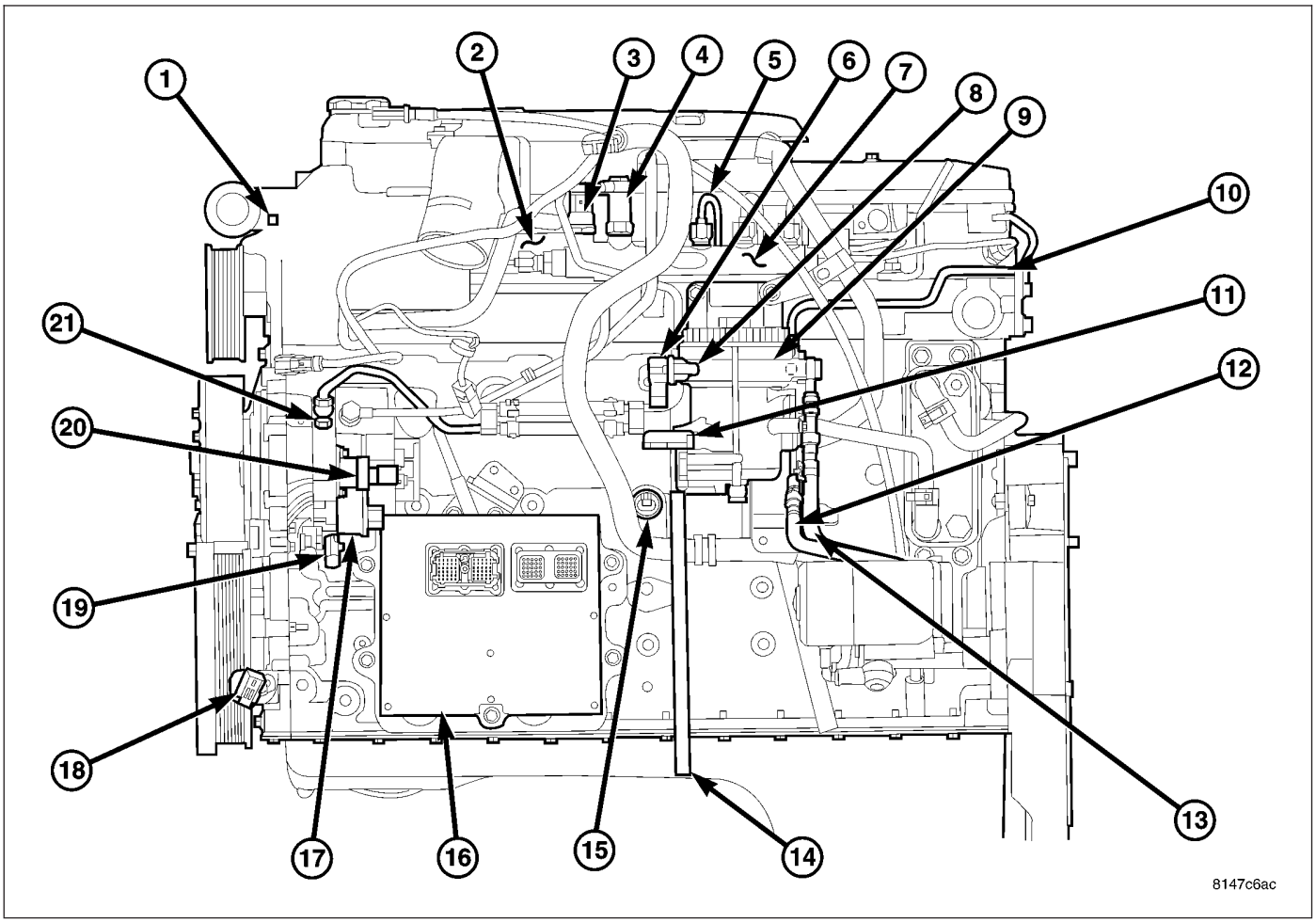

CUMMINS FUEL SYSTEM COMPONENTS

1 - ENGINE COOLANT TEMPERATURE (ECT) SENSOR
2 - INTAKE MANIFOLD AIR HEATER/ELEMENTS
3 - FUEL PRESSURE SENSOR
4 - FUEL PRESSURE LIMITING VALVE
5 - HIGH-PRESSURE FUEL LINES
6 - FUEL HEATER
7 - HIGH-PRESSURE FUEL RAIL
8 - FUEL HEATER TEMPERATURE SENSOR (THERMOSTAT)
9 - FUEL FILTER/WATER SEPARATOR
10 - FUEL DRAIN MANIFOLD (CYLINDER HEAD FUEL RETURN LINE)
11 - DRAIN VALVE
12 - FUEL RETURN LINE CONNECTION (TO FUEL TANK)
13 - FUEL SUPPLY LINE (LOW-PRESSURE, TO ENGINE)
14 - FUEL DRAIN TUBE
15 - OIL PRESSURE SWITCH
16 - ENGINE CONTROL MODULE (ECM)
17 - FUEL INJECTION PUMP
18 - CRANKSHAFT POSITION (ENGINE SPEED) SENSOR
19 - CAMSHAFT POSITION SENSOR (CMP)
20 - FUEL CONTROL ACTUATOR (FCA)
21 - CASCADE OVERFLOW VALVE

STANDARD PROCEDURE

STANDARD PROCEDURES - WATER DRAINING AT FUEL FILTER

Refer to Fuel Filter/Water Separator removal/installation for procedures.

STANDARD PROCEDURES - CLEANING FUEL SYSTEM PARTS

CAUTION: Cleanliness cannot be overemphasized when handling or replacing diesel fuel system components. This especially includes the fuel injectors, high-pressure fuel lines and fuel injection pump. Very tight tolerances are used with these parts. Dirt contamination could cause rapid part wear and possible plugging of fuel injector nozzle tip holes. This in turn could lead to possible engine misfire. Always wash/clean any fuel system component thoroughly before disassembly and then air dry. Cap or cover any open part after disassembly. Before assembly, examine each part for dirt, grease or other contaminants and clean if necessary. When installing new parts, lubricate them with clean engine oil or clean diesel fuel only.

STANDARD PROCEDURE - FUEL SYSTEM PRIMING

A certain amount of air becomes trapped in the fuel system when fuel system components on the supply and/or high-pressure side are serviced or replaced. Fuel system priming is accomplished using the electric fuel transfer (lift) pump.

Servicing or replacing fuel system components will not require fuel system priming.

The fuel transfer (lift) pump is self-priming: When the key is first turned on (without cranking engine), the pump operates for approximately 1 to 2 second and then shuts off (Note: When ambient temperatures are cold enough to cause the intake air heaters to operate, the fuel lift pump will operate during the entire intake air pre-heat cycle). The pump will also operate for up to 25 seconds after the starter is quickly engaged, and then disengaged without allowing the engine to start. The pump shuts off immediately if the key is on and the engine stops running.

1. Turn key to CRANK position and quickly release key to ON position before engine starts. This will operate fuel transfer pump for approximately 25 seconds.
2. Crank engine. If the engine does not start after 25 seconds, turn key to OFF position, and leave it off for at least 5 seconds. Repeat previous step until engine starts.
3. Fuel system priming is now completed.
4. Attempt to start engine. If engine will not start, proceed to following steps. **When engine does start, it may run erratically and be noisy for a few minutes. This is a normal condition.**

CAUTION: Do not engage the starter motor for more than 30 seconds at a time. Allow two minutes between cranking intervals.

5. Perform previous fuel priming procedure steps using fuel transfer pump. Be sure fuel is present at fuel tank.
6. Crank the engine for 30 seconds at a time to allow fuel system to prime.

WARNING: THE FUEL INJECTION PUMP SUPPLIES EXTREMELY HIGH FUEL PRESSURE TO EACH INDIVIDUAL INJECTOR THROUGH THE HIGH-PRESSURE LINES. FUEL UNDER THIS AMOUNT OF PRESSURE CAN PENETRATE THE SKIN AND CAUSE PERSONAL INJURY. WEAR SAFETY GOGGLES AND ADEQUATE PROTECTIVE CLOTHING. DO NOT LOOSEN FUEL FITTINGS WHILE ENGINE IS RUNNING.

WARNING: ENGINE MAY START WHILE CRANKING STARTER MOTOR.

SPECIFICATIONS

FUEL INJECTOR FIRING ORDER - DIESEL

1–5–3–6–2–4

TORQUE - FUEL SYSTEM - DIESEL ENGINE

DESCRIPTION	N-m	Ft. Lbs.	In. Lbs.
Crankshaft Position Sensor	9		80
Camshaft Position Sensor	9	-	80
Engine Coolant Temperature Sensor	18	13	160
Rear Engine Lift Bracket Bolts	77	56	-
Fuel Connector Nut at Cylinder Head	50	37	-
Fuel Filler Hose Clamp at Tank	3	-	27
Fuel Filler Housing-to-Body Screws	2	-	17
Fuel Filter Lid	34	25	-
Fuel Filter Drain Valve Screws	1.5	-	14
Fuel Heater Element Screws	1.5	-	14
Fuel Line Banjo Fitting Bolts	24	18	-
Fuel Line Banjo Fitting Bolts at Fuel Filter Housing	24	18	-
Fuel Line Fittings (High-Pressure - Pump to Rail)	37	27	-
Fuel Line Fittings (High-Pressure - Cylinder head to Rail)	30	22	-
#6 Fuel Line Shield Bolts	43	32	-
Fuel Injector Solenoid Nuts	1.25	-	11
Fuel Injection Pump-to-Gear Shaft Nut	105	77	-
Fuel Injection Pump Mounting Nuts	24	18	-
Fuel Line Brace-to-Intake manifold cover bolt (High-Pressure)	24	18	-
Fuel Pressure Sensor	70	52	-
Fuel Pressure Limiting Valve (Banjo Bolt)	24	18	-
Fuel Pressure Limiting Valve (In Fuel Rail)	70	52	-
Fuel Rail Mounting Bolts	24	18	212
Fuel Tank Mounting Straps	41	30	-
Map Sensor Mounting Screws	1	-	9
ECM-to-Engine Bracket Mounting Bolts	24	18	-
ECM Electrical Harness Connector	3	-	27
Water-In-Fuel Sensor	4.5	-	39

SPECIAL TOOLS

DIESEL FUEL SYSTEM

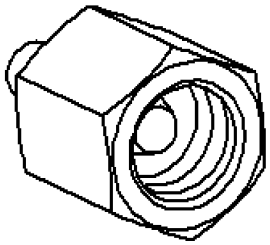

PRESSURE CAP - #9011

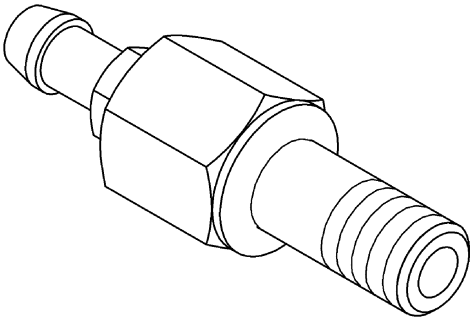

FUEL PRESSURE TEST ADAPTER - # 9012

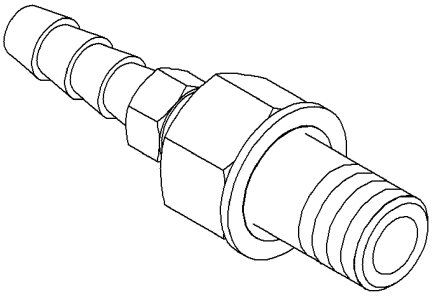

FUEL PRESSURE TEST ADAPTER - #9013

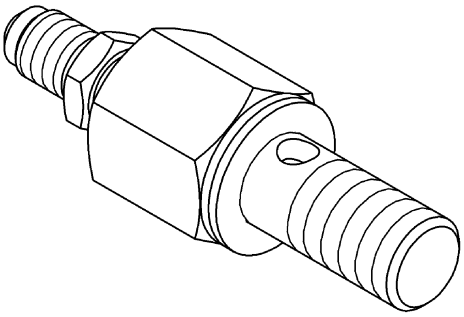

FUEL PRESSURE TEST ADAPTER - #9014

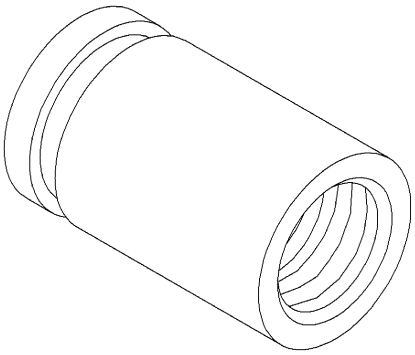

FUEL INJECTOR TUBE (CONNECTOR) REMOVER - #9015

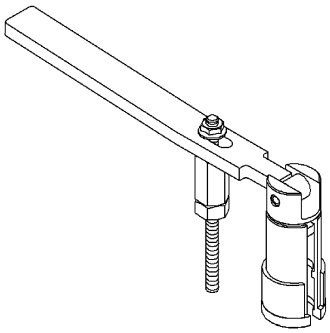

FUEL INJECTOR REMOVER - #9010

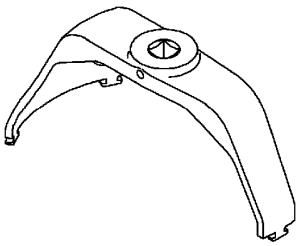

LOCKRING REMOVER/INSTALLER #9340

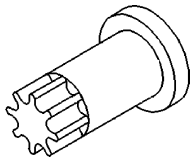

ENGINE ROTATING (BARRING) TOOL - #7471B
(ALSO PART OF KIT #6860)

FILTER - FUEL / WATER SEPARATOR

DESCRIPTION

The fuel filter/water separator assembly is located on left side of engine above the starter motor. The assembly also includes the fuel heater and Water-In-Fuel (WIF) sensor.

OPERATION

The fuel filter/water separator protects the fuel injection pump by removing water and contaminants from the fuel. The construction of the filter/separator allows fuel to pass through it, but helps prevent moisture (water) from doing so. Moisture collects at the bottom of the canister.

Refer to the maintenance schedules in the owners manual for the recommended fuel filter replacement intervals.

For draining of water from canister, refer to Fuel Filter/Water Separator Removal/Installation section.

A Water-In-Fuel (WIF) sensor is attached to the side of fuel filter housing. Refer to Water-In-Fuel Sensor Description/Operation.

The fuel heater is installed into the top of the filter/separator housing. Refer to Fuel Heater Description/Operation.

REMOVAL

Refer to maintenance schedules in this manual, or the owners manual for recommended fuel filter replacement intervals.

Draining water from fuel filter/water separator housing:

The housing drain valve (9) serves two purposes. One is to **partially** drain the filter housing of excess water. The other is to **completely** drain the housing for fuel filter, drain valve, heater element or water-in-fuel sensor replacement.

The filter housing should be partially drained whenever the water-in-fuel warning lamp remains illuminated. (Note that lamp will be illuminated for approximately two seconds when ignition key is initially placed in ON position for a bulb check).

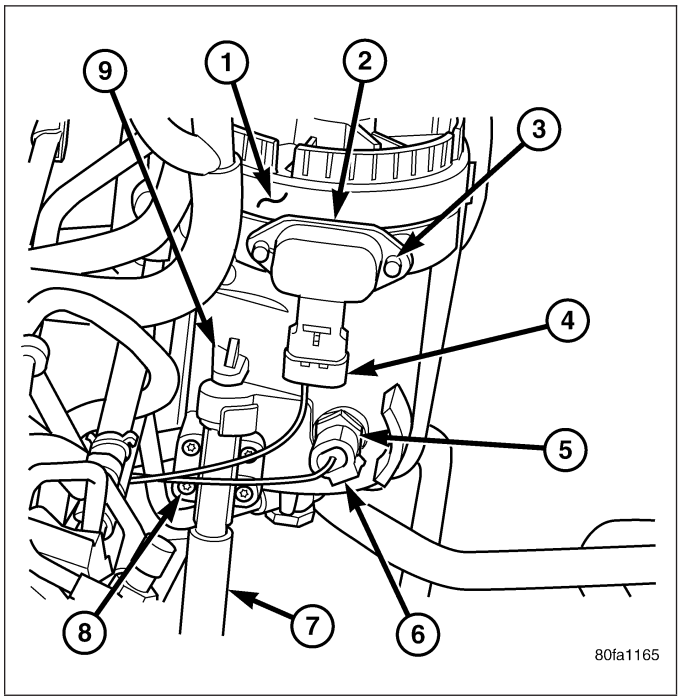

1. A drain hose (7) is located at the bottom of drain valve. Place drain pan under drain hose.
2. **With engine not running,** rotate drain valve handle counter-clockwise (rearward) to OPEN (DRAIN) position. Hold drain valve open until all water and contaminants have been removed and clean fuel exits.
3. If drain valve, fuel heater element or Water-In-Fuel (WIF) sensor is being replaced, drain housing completely. Dispose of mixture in drain pan according to applicable regulations.
4. After draining operation, rotate valve handle clockwise (forward) to the CLOSE position.

5. **Fuel Filter Replacement:** The fuel filter is located inside of the fuel filter housing.
   a. Clean all debris from around canister.
   b. Remove filter lid (1) using a socket. Attach socket to large hex (2) on top of lid. Rotate counter-clockwise for removal. Remove o-ring. Discard o-ring.
   c. Remove filter element by twisting element sideways from filter lid.

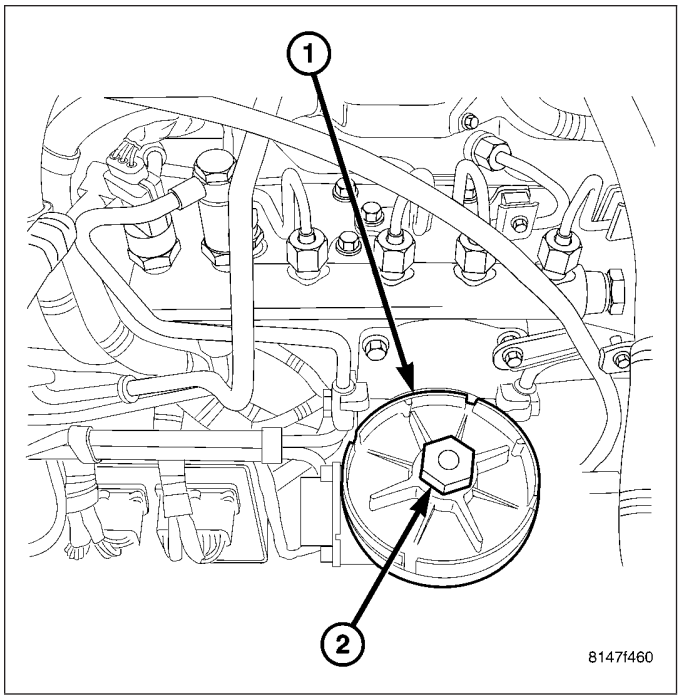

6. **Water-In-Fuel (WIF) Sensor Replacement:** The WIF sensor (5) is located on the side of the fuel filter housing.
   a. Disconnect electrical connector at sensor.
   b. Clean area around sensor.
   c. Remove sensor by rotating counter-clockwise.
   d. Check condition of sensor o-ring. Replace if damaged.

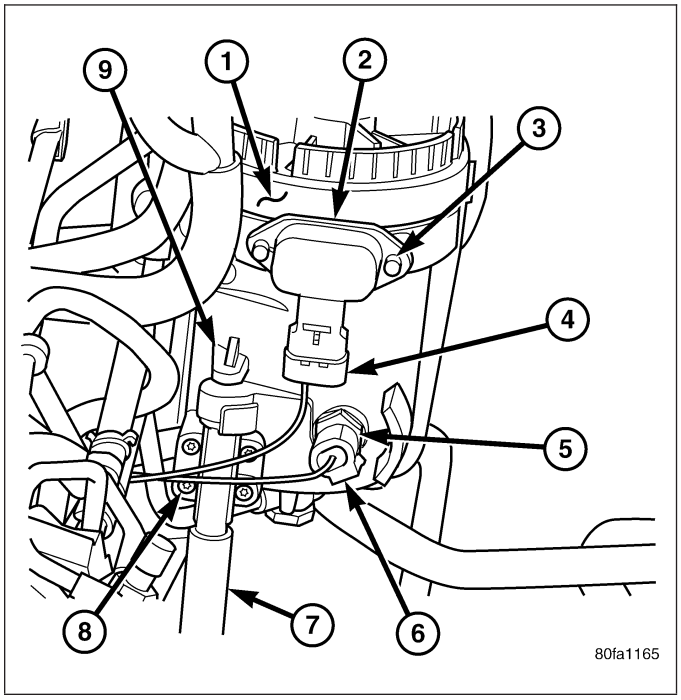

7. **Fuel Heater Element Replacement:** The heater element (2) is located in the fuel filter housing.
   a. Remove fuel filter. See previous steps.
   b. Disconnect electrical connector.
   c. Remove two T-15 Torx head mounting screws (3) from fuel heater element.
   d. Remove fuel heater.

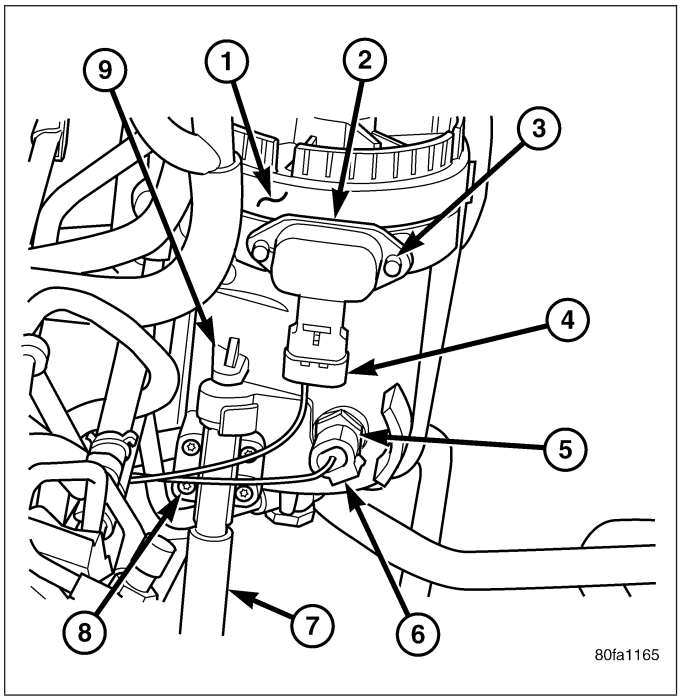

8. **Drain Valve Replacement:** The drain valve assembly (9) is located on the side of the fuel filter housing.
   a. Disconnect drain hose (7) from the fuel drain valve.
   b. Remove 4 drain valve mounting screws (T-15 Torx head) (8).
   c. Remove drain valve from filter housing.

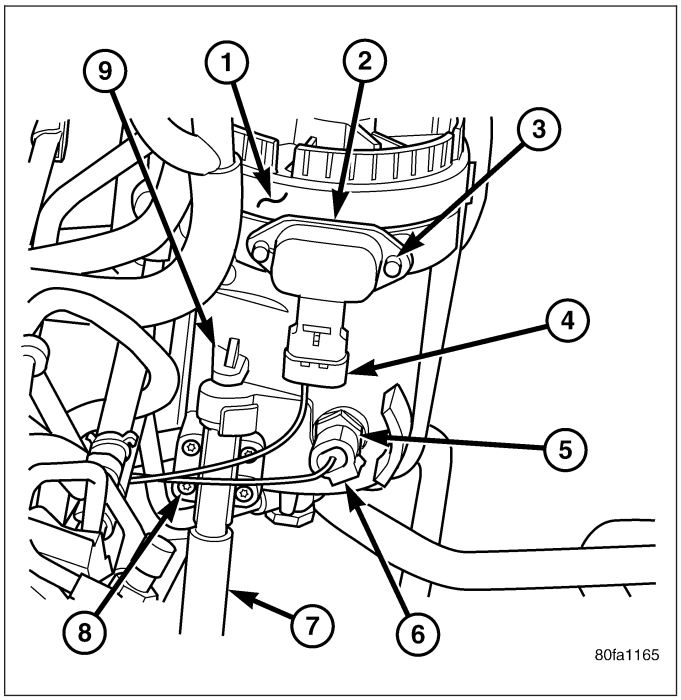

INSTALLATION

Refer to maintenance schedules for recommended fuel filter replacement intervals.

1. Thoroughly clean inside of filter housing, filter cap and all related components.
2. **Fuel Filter:**
   a. **The engine has a self-priming low-pressure fuel system. Refer to Standard Procedures-Fuel System Priming.**
   b. Install new o-ring to canister lid and lubricate o-ring with clean engine oil.
   c. Position new element to canister lid. Place this assembly into canister by rotating clockwise.
   d. Tighten cap to 34 N·m (25 ft. lbs.) torque. Do not overtighten cap.
3. **Water-In-Fuel (WIF) Sensor:**

a. Install new o-ring seal to WIF sensor.

b. Apply a light film of clean oil to o-ring seal.

c. Install sensor into housing.

d. Tighten sensor to 2.5 N·m (25 in. lbs.) torque.

e. Connect electrical connector to WIF sensor.

4. **Fuel Heater Element:**

a. Install fuel heater into fuel filter housing.

b. Install fuel heater thermostat into fuel filter housing.

c. Install fuel heater mounting screws and tighten to 1-1.5 N·m (13 in. lbs.) torque.

d. Connect electrical connector to fuel heater thermostat.

e. Install new filter cover O-ring onto fuel filter housing cover and lubricate with clean engine oil.

f. Tighten fuel filter housing cover (lid) to 34 N·m (25 ft. lbs.).

5. **Drain Valve:**

a. Install 2 new o-rings to valve.

b. Lubricate with silicon grease.

c. Install fuel drain valve.

d. Install 4 mounting screws and tighten to 1–1.5 N·m (8–13 in. lbs.) torque.

e. Connect drain hose to drain valve.

6. Start engine and check for leaks.

HEATER-FUEL

DESCRIPTION

The fuel heater assembly is located on the side of the fuel filter housing and internal to the fuel filter housing .

The heater/element assembly is equipped with a temperature sensor (thermostat) that senses fuel temperature. This sensor is attached to the fuel heater/element assembly.

OPERATION

The fuel heater is used to prevent diesel fuel from waxing during cold weather operation.

When the temperature is below 45 ±8 degrees F, the temperature sensor allows current to flow to the heater element warming the fuel. When the temperature is above 75 ±8 degrees F, the sensor stops current flow to the heater element.

Battery voltage to operate the fuel heater element is supplied from the ignition switch and through the fuel heater relay. Also refer to Fuel Heater Relay. **The fuel heater element and fuel heater relay are not computer controlled.**

The heater element operates on 12 volts, 300 watts at 0 degrees F.

DIAGNOSIS AND TESTING - FUEL HEATER

The fuel heater is used to prevent diesel fuel from waxing during cold weather operation.

NOTE: The fuel heater element, fuel heater relay and fuel heater temperature sensor are not controlled by the Engine Control Module (ECM).

A malfunctioning fuel heater can cause a wax build-up in the fuel filter/water separator. Wax build-up in the filter/separator can cause engine starting problems and prevent the engine from revving up. It can also cause blue or white fog-like exhaust. If the heater is not operating in cold temperatures, the engine may not operate due to fuel waxing.

The fuel heater assembly is located on the side of fuel filter housing.

The heater assembly is equipped with a built-in fuel temperature sensor (thermostat) that senses fuel temperature. When fuel temperature drops below 45 degrees ± 8 degrees F, the sensor allows current to flow to built-in heater element to warm fuel. When fuel temperature rises above 75 degrees ± 8 degrees F, the sensor stops current flow to heater element (circuit is open).

Voltage to operate fuel heater element is supplied from ignition switch, through fuel heater relay (also refer to Fuel Heater Relay), to fuel temperature sensor and on to fuel heater element.

The heater element operates on 12 volts, 300 watts at 0 degrees F. As temperature increases, power requirements decrease.

A minimum of 7 volts is required to operate the fuel heater. The resistance value of the heater element is less than 1 ohm (cold) and up to 1000 ohms warm.

TESTING

1. Disconnect electrical connector from thermostat.

Ambient temperature must be below the circuit close temperature. If necessary, induce this ambient temperature by placing ice packs on thermostat to produce an effective ambient temperature below circuit close temperature.

Measure resistance across two pins. Operating range is 0.3 — 0.45 Ohms.

2. If resistance is out of range, remove thermostat and check resistance across terminal connections of heater. The heater can be checked at room temperature. Operating range is 0.3 - 0.45 Ohms.
3. Replace heater if resistance is not within operating range.
4. If heater is within operating range, replace heater thermostat.

REMOVAL

REMOVAL/INSTALLATION

The fuel heater/element/sensor assembly is located inside of the fuel filter housing. Refer to Fuel Filter/Water Separator Removal/Installation for procedures.

RELAY - FUEL HEATER

DESCRIPTION

The fuel heater relay is located in Power Distribution Center (PDC) (8). Refer to label on inside of PDC cover for relay location.

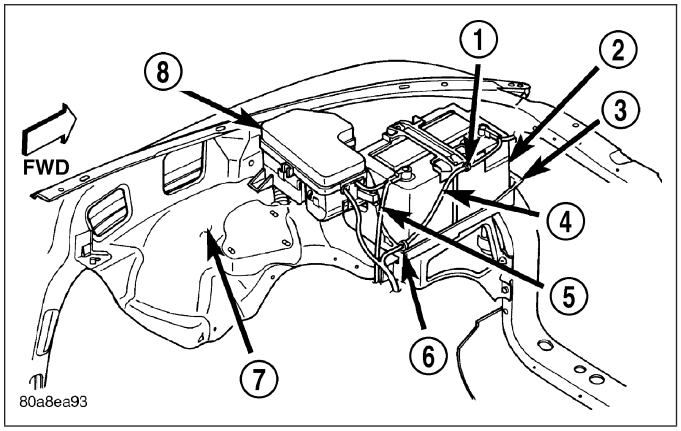

OPERATION

Battery voltage to operate the fuel heater element is supplied from the ignition switch through the fuel heater relay. **The fuel heater element and fuel heater relay are not computer controlled.**

REMOVAL

The fuel heater relay is located in the Power Distribution Center (PDC) (8). Refer to label under PDC cover for relay location.

1. Remove PDC cover.
2. Remove relay from PDC.
3. Check condition of relay terminals and PDC connector terminals for damage or corrosion. Repair if necessary before installing relay.
4. Check for pin height (pin height should be the same for all terminals within the PDC connector). Repair if necessary before installing relay.

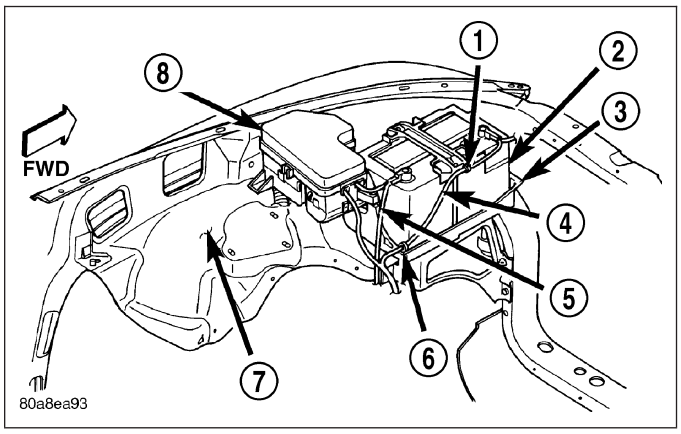

INSTALLATION

The fuel heater relay is located in the Power Distribution Center (PDC). Refer to label under PDC cover for relay location.

1. Install relay to PDC.
2. Install cover to PDC.

PUMP - FUEL INJECTION

DESCRIPTION

A Robert Bosch high-pressure fuel injection pump is used. The pump is attached to the back of the timing gear cover at the left / rear side of the engine.

OPERATION

The fuel injection pump supplies high pressure to the fuel rail independent of engine speed. This high pressure is then accumulated in the fuel rail. High pressure fuel is constantly supplied to the injectors by the fuel rail. The Engine Control Module (ECM) controls the fueling and timing of the engine by actuating the injectors.

Fuel enters the system from the electric fuel transfer (lift) pump, which is located in the fuel tank. Fuel is forced through the fuel filter element and then enters the Fuel Pump/Gear Pump, which is attached to the rear of the fuel injection pump. The Fuel Pump/Gear Pump is a low-pressure pump and produce pressures ranging from 551.5 kpa (80 psi) to 1241 kpa (180) psi. Fuel then enters the fuel injection pump. Low pressure fuel is then supplied to the FCA (Fuel Control Actuator).

The FCA is an electronically controlled solenoid valve. The ECM controls the amount of fuel that enters the high-pressure pumping chambers by opening and closing the FCA based on a demanded fuel pressure. The FPS (Fuel Pressure Sensor) on the fuel rail provides the actual fuel pressure. When the actuator is opened, the maximum amount of fuel is being supplied to the fuel injection pump. Any fuel that does not enter the injection pump is directed to the cascade overflow valve. The cascade overflow valve regulates how much excess fuel is used for lubrication of the pump and how much is returned to the tank through the drain manifold.

Fuel entering the injection pump is pressurized to between 300-1600 bar (4351-23206 psi) by three radial pumping chambers. The pressurized fuel is then supplied to the fuel rail.

DIAGNOSIS AND TESTING - FUEL INJECTION PUMP TIMING

With the Bosch injection pump, there are no mechanical adjustments needed or necessary to accomplish fuel injection timing. All timing and fuel adjustments are electrically made by the engine mounted Engine Control Module (ECM).

REMOVAL

CAUTION: Cleanliness cannot be overemphasized when handling or replacing diesel fuel system components. This especially includes the fuel injectors, high-pressure fuel lines and fuel injection pump. Very tight tolerances are used with these parts. Dirt contamination could cause rapid part wear and possible plugging of fuel injector nozzle tip holes. This in turn could lead to possible engine misfire. Always wash/clean any fuel system component thoroughly before disassembly and then air dry. Cap or cover any open part after disassembly. Before assembly, examine each part for dirt, grease or other contaminants and clean if necessary. When installing new parts, lubricate them with clean engine oil or clean diesel fuel only.

1. Disconnect both negative battery cables at both batteries. Cover and isolate ends of both cables.
2. Remove intake manifold air intake tube (above injection pump) and its rubber connector hose (2).
3. Remove fan shroud.
4. Remove fan assembly.
5. Remove accessory drive belt.

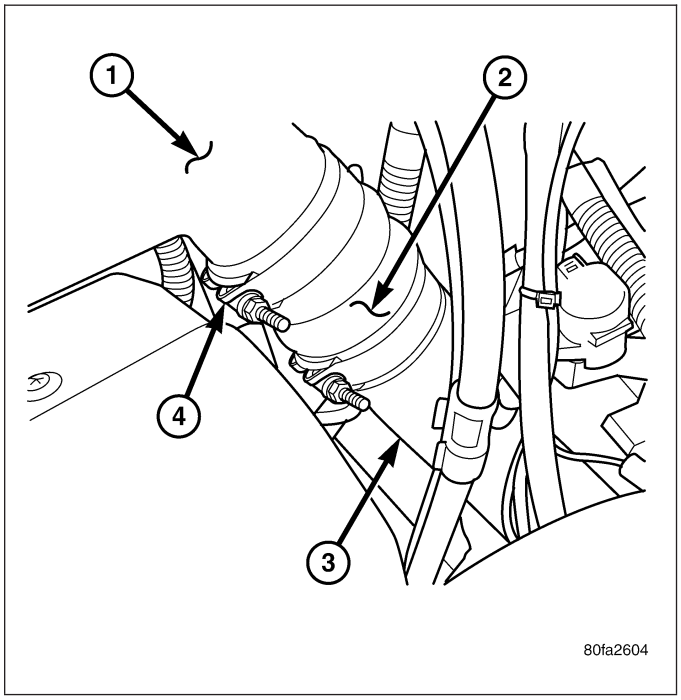

6. Thoroughly clean the rear of injection pump, and attachment points for its 3 fuel lines. Also clean the opposite ends of these same 3 lines at their attachment points.

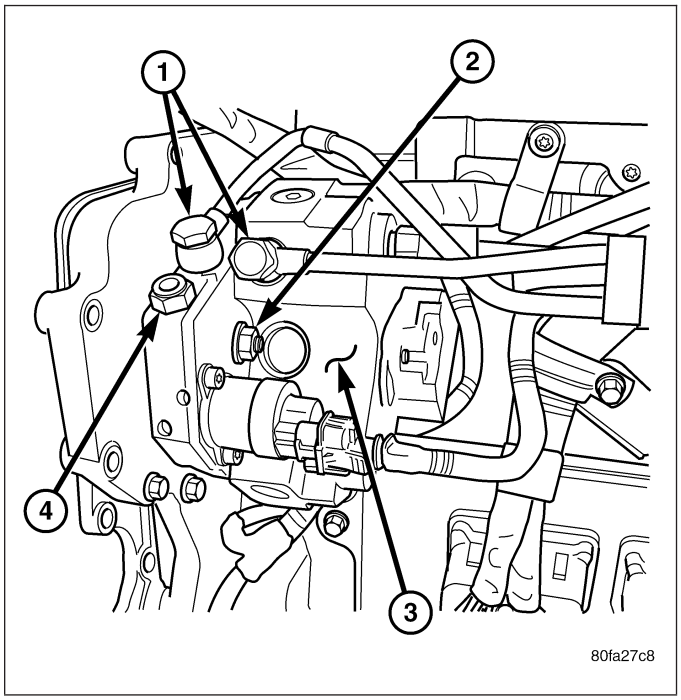

7. Disconnect Fuel Control Actuator (FCA) electrical connector (3) at rear of injection pump.

CAUTION: Whenever a fuel line fitting is connected to a secondary fitting, always use a back-up wrench on the secondary fitting. Do not allow the secondary fitting to rotate.

8. Remove fuel line (injection pump-to-fuel pressure limiting valve).
9. Remove fuel line (injection pump-to-fuel rail). Use back-up wrench on fitting at fuel pump.
10. Remove fuel line (injection pump-to-fuel filter housing).

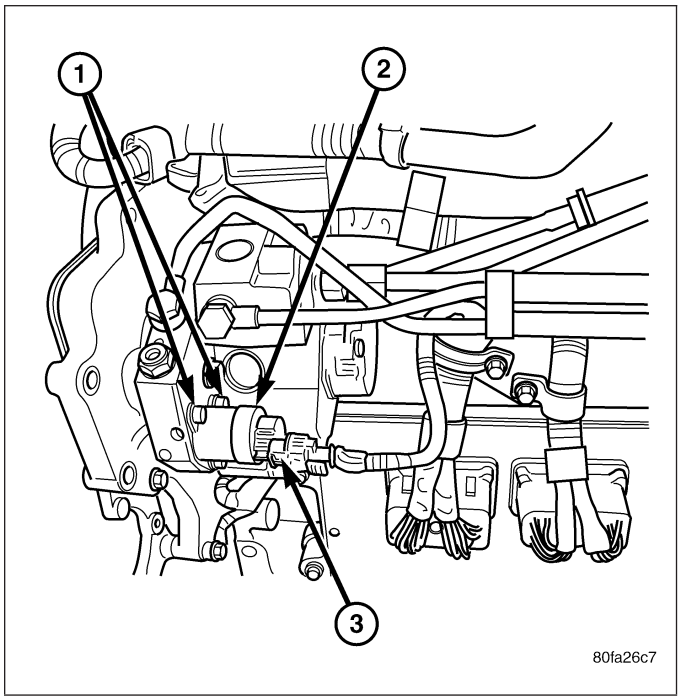

11. Remove fuel pump drive gear access cover (plate) with a 3/8” drive ratchet. Plate (2) is threaded to timing gear cover.
12. Remove fuel pump drive gear mounting nut and washer.

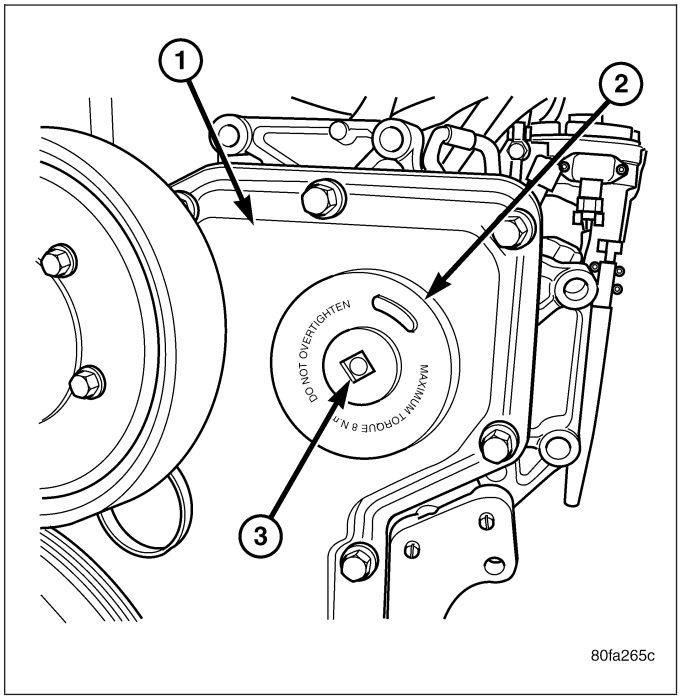

13. Attach C3428B, or L4407A (or equivalent) gear puller (2) to pump drive gear with 2 bolts, and separate gear from pump (a keyway is not used on this particular injection pump). Leave drive gear hanging loose within timing gear cover.

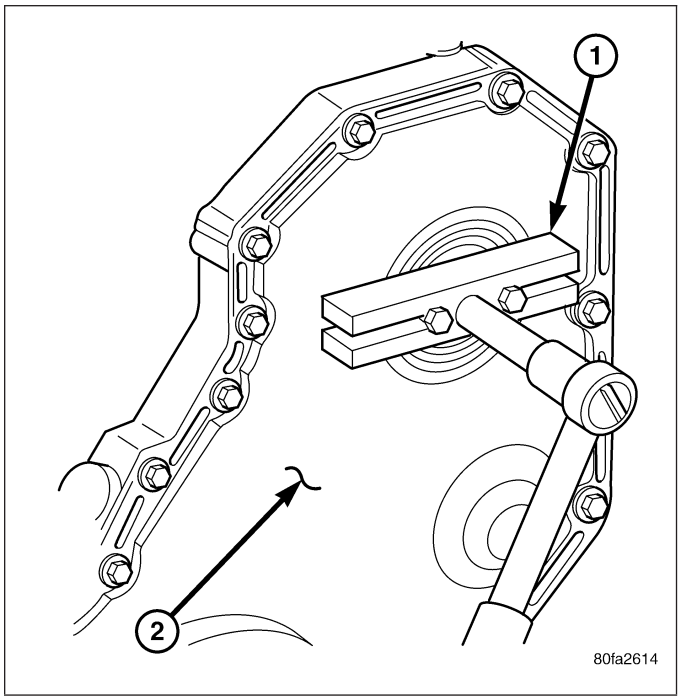

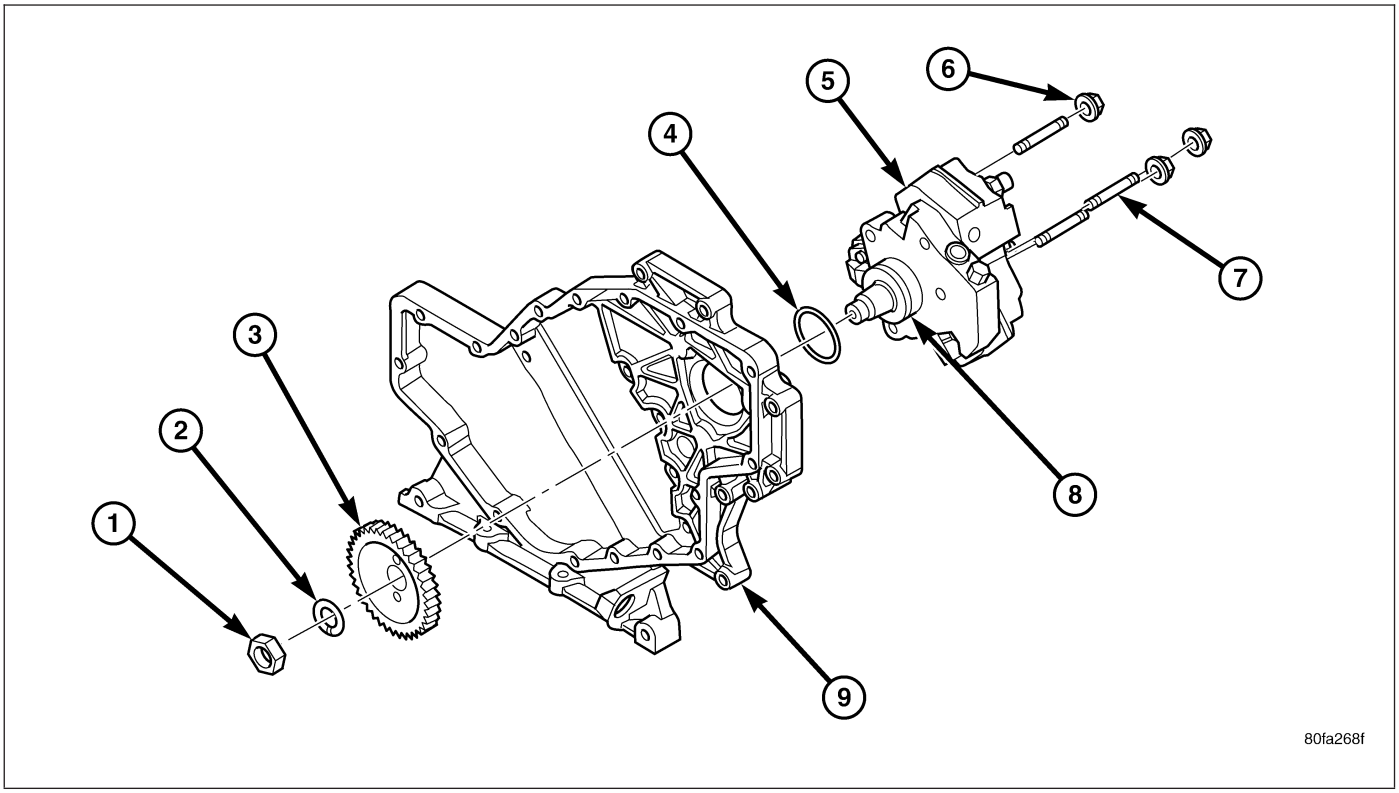

14. Remove 3 injection pump mounting nuts (6) , and remove pump from engine.

INSTALLATION

CAUTION: Cleanliness cannot be overemphasized when handling or replacing diesel fuel system components. This especially includes the fuel injectors, high-pressure fuel lines and fuel injection pump. Very tight tolerances are used with these parts. Dirt contamination could cause rapid part wear and possible plugging of fuel injector nozzle tip holes. This in turn could lead to possible engine misfire. Always wash/clean any fuel system component thoroughly before disassembly and then air dry. Cap or cover any open part after disassembly. Before assembly, examine each part for dirt, grease or other contaminants and clean if necessary. When installing new parts, lubricate them with clean engine oil or clean diesel fuel only.

1. Inspect pump mounting surfaces at pump and mounting flange for nicks, cuts or damage. Inspect o-ring surfaces for nicks, cuts or damage.
2. Clean injection pump mounting flange at gear housing. Also clean front of injection pump.
3. Install new rubber o-ring into machined groove at pump mounting area.
4. Apply clean engine oil **to injection pump o-ring only.**

The machined tapers on both injection pump shaft and injection pump gear must be absolutely dry, clean and free of any dirt or oil film. This will ensure proper gear-to-shaft tightening.

5. Clean pump gear and pump shaft at machined tapers with an evaporative type cleaner such as brake cleaner.
6. Position injection pump to mounting flange on gear housing while aligning injection pump shaft through back of injection pump gear.
7. After pump is positioned flat to mounting flange, install 3 pump mounting nuts and tighten **finger tight only.** Do not attempt a final tightening at this time. **Do not attempt to tighten (pull) pump to gear housing using mounting nuts. Damage to pump or gear cover may occur. The pump must be positioned flat to its mounting flange before attempting to tighten 3 mounting nuts.**
8. To prevent damage or cracking of components, install and tighten nuts in the following sequence:
   a. Install injection pump shaft washer and nut to pump shaft. Tighten nut **finger tight only.**
   b. Do preliminary (light) tightening of injection pump shaft nut.
   c. Tighten 3 injection pump mounting nuts to 24 N·m (18 ft. lbs.).
   d. Do a final tightening of pump shaft nut to 105 N·m (77 ft. lbs.).
9. Install drive gear access cover (plate) using a 3/8” drive ratchet. Plate is threaded to timing gear cover. Tighten to 8 N·m (71 in. lbs.) torque.
10. Install fuel line (injection pump-to-pressure limiting valve). Tighten bolts to 24 N·m (18 ft. lbs.) torque.
11. Install fuel line (injection pump-to-fuel rail).
    a. Tighten fitting at fuel pump to 37 N·m (27 ft. lbs.) torque. Use a back-up wrench.
    b. Tighten fitting at fuel rail to 37 N·m (27 ft. lbs.) torque.
12. Install fuel line (injection pump-to-fuel filter housing). Tighten to 24 N·m (18 ft. lbs.) torque.
13. Connect Fuel Control Actuator (FCA) electrical connector to rear of injection pump.
14. Install intake manifold air intake tube (above injection pump). Tighten clamps.
15. Install accessory drive belt.
16. Install cooling fan shroud.
17. Install cooling fan assembly.
18. Connect both negative battery cables to both batteries.
19. Check system for fuel or engine oil leaks.

SENSOR - FUEL LEVEL SENDING UNIT

DESCRIPTION

The fuel gauge sending unit (fuel level sensor) is attached to the side of the fuel pump module. The sending unit consists of a float, an arm, and a variable resistor track (card). The fuel transfer (lift) pump is also attached to the fuel pump module.

OPERATION

For Fuel Gauge Operation: A constant input voltage source of about 12 volts (battery voltage) is supplied to the resistor track on the fuel gauge sending unit. This is fed directly from the Engine Control Module (ECM). **NOTE: For diagnostic purposes, this 12V power source can only be verified with the circuit opened (fuel tank module electrical connector unplugged). With the connectors plugged, output voltages will vary from about .6 volts at FULL, to about 7.0 volts at EMPTY.** The resistor track is used to vary the voltage (resistance) depending on fuel tank float level. As fuel level increases, the float and arm move up, which decreases voltage. As fuel level

decreases, the float and arm move down, which increases voltage. The varied voltage signal is returned back to the ECM through the sensor return circuit.

Both of the electrical circuits between the fuel gauge sending unit and the ECM are hard-wired (not multi-plexed). After the voltage signal is sent from the resistor track, and back to the ECM, the ECM will interpret the resistance (voltage) data and send a message across the multi-plex bus circuits to the instrument panel cluster. Here it is translated into the appropriate fuel gauge level reading. Refer to Instrument Panel for additional information.

REMOVAL

REMOVAL/INSTALLATION

For diesel removal and installation procedures, refer to the gas section of Fuel System/Fuel Delivery. See Fuel Level Sending Unit/Sensor Removal/Installation.

LINES - FUEL

DESCRIPTION

Low-Pressure Lines Are:

- the fuel supply line from fuel tank to fuel filter housing.
- the fuel return line back to fuel tank.
- the fuel drain (manifold) line at rear of cylinder head.
- the fuel supply line from fuel filter to fuel injection pump.
- the fuel injection pump return line.

High-Pressure Lines Are:

- the fuel line from fuel injection pump to fuel rail.
- the 6 fuel lines from fuel rail up to injector connector tubes

WARNING: HIGH-PRESSURE FUEL LINES DELIVER DIESEL FUEL UNDER EXTREME PRESSURE FROM THE INJECTION PUMP TO THE FUEL INJECTORS. THIS MAY BE AS HIGH AS 160,000 KPA (23,206 PSI). USE EXTREME CAUTION WHEN INSPECTING FOR HIGH-PRESSURE FUEL LEAKS. INSPECT FOR HIGH-PRESSURE FUEL LEAKS WITH A SHEET OF CARDBOARD. HIGH FUEL INJECTION PRESSURE CAN CAUSE PERSONAL INJURY IF CONTACT IS MADE WITH THE SKIN.

OPERATION

High-Pressure Lines

CAUTION: The high-pressure fuel lines must be held securely in place in their holders. The lines cannot contact each other or other components. Do not attempt to weld high-pressure fuel lines or to repair lines that are damaged. If lines are ever kinked or bent, they must be replaced. Use only the recommended lines when replacement of high-pressure fuel line is necessary.

High-pressure fuel lines deliver fuel (under pressure) of up to approximately 160,000 kPa (23,206 PSI) from the injection pump to the fuel injectors. The lines expand and contract from the high-pressure fuel pulses generated during the injection process. All high-pressure fuel lines are of the same length and inside diameter. Correct high-pressure fuel line usage and installation is critical to smooth engine operation.

WARNING: USE EXTREME CAUTION WHEN INSPECTING FOR HIGH-PRESSURE FUEL LEAKS. INSPECT FOR HIGH-PRESSURE FUEL LEAKS WITH A SHEET OF CARDBOARD. HIGH FUEL INJECTION PRESSURE CAN CAUSE PERSONAL INJURY IF CONTACT IS MADE WITH THE SKIN.

DIAGNOSIS AND TESTING - HIGH-PRESSURE FUEL LINE LEAKS

High-pressure fuel line leaks can cause starting problems and poor engine performance.

WARNING: DUE TO EXTREME FUEL PRESSURES OF UP TO 160,000 kPa (23,206 PSI), USE EXTREME CAUTION WHEN INSPECTING FOR HIGH-PRESSURE FUEL LEAKS. DO NOT GET YOUR HAND OR A FINGER NEAR A SUSPECTED LEAK. INSPECT FOR HIGH-PRESSURE FUEL LEAKS WITH A SHEET OF CARDBOARD. HIGH FUEL INJECTION PRESSURE CAN CAUSE PERSONAL INJURY IF CONTACT IS MADE WITH THE SKIN.

Start the engine. Move the cardboard over the suspected high-pressure fuel line leak, and check for fuel spray onto the cardboard. If line is leaking, retorque line. Replace damaged, restricted or leaking high-pressure fuel lines with the correct replacement line.

CAUTION: The high-pressure fuel lines must be clamped securely in place in the holders. The lines cannot contact each other or other components. Do not attempt to weld high-pressure fuel lines or to repair lines that are damaged. Only use the recommended lines when replacement of high-pressure fuel line is necessary.

REMOVAL

CAUTION: Cleanliness cannot be overemphasized when handling or replacing diesel fuel system components. This especially includes the fuel injectors, high-pressure fuel lines and fuel injection pump. Very tight tolerances are used with these parts. Dirt contamination could cause rapid part wear and possible plugging of fuel injector nozzle tip holes. This in turn could lead to possible engine misfire. Always wash/clean any fuel system component thoroughly before disassembly and then air dry. Cap or cover any open part after disassembly. Before assembly, examine each part for dirt, grease or other contaminants and clean if necessary. When installing new parts, lubricate them with clean engine oil or clean diesel fuel only.

1. Disconnect both negative battery cables from both batteries. Cover and isolate ends of cables.
2. Thoroughly clean fuel lines at both ends.
3. If removing fuel line at either #1 or #2 cylinder, the intake manifold air heater elements must first be removed from top of intake manifold. Refer to Intake Air Heater Removal / Installation for procedures.
4. If removing fuel line at #6 cylinder, a bracket (1) is located above fuel line connection at cylinder head. Two bolts secure this bracket to rear of cylinder head. The upper bolt hole is slotted. Loosen (but do not remove) these 2 bracket bolts. Tilt bracket down to gain access to #6 fuel line connection.
5. Remove engine lift bracket (if necessary).

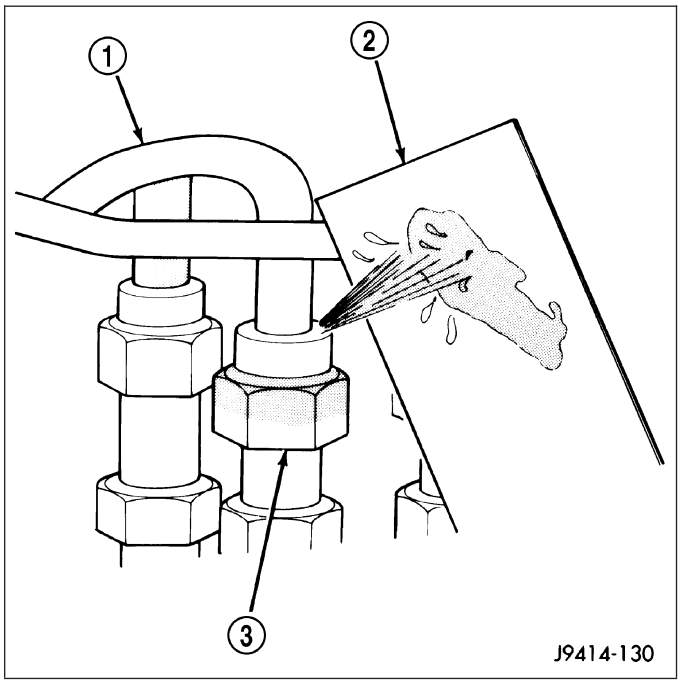

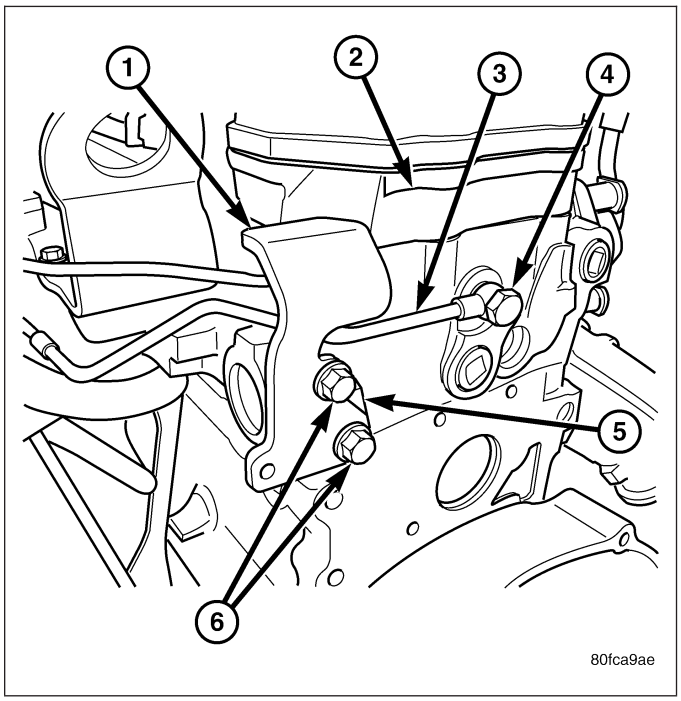

6. Remove necessary insulated fuel line support clamps (2) at intake manifold. DO NOT remove insulators from fuel lines.
7. Place shop towels around fuel lines at fuel rail and injectors. If possible, do not allow fuel to drip down side of engine.

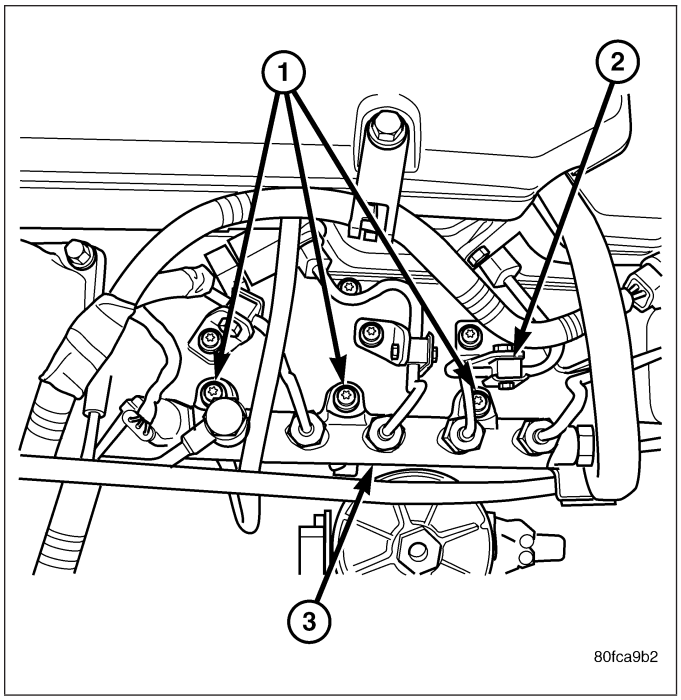

CAUTION: WHEN LOOSENING OR TIGHTENING HIGH-PRESSURE LINES ATTACHED TO A SEPARATE FITTING , USE A BACK-UP WRENCH ON FITTING. DO NOT ALLOW FITTING TO ROTATE. DAMAGE TO BOTH FUEL LINE AND FITTING WILL RESULT.

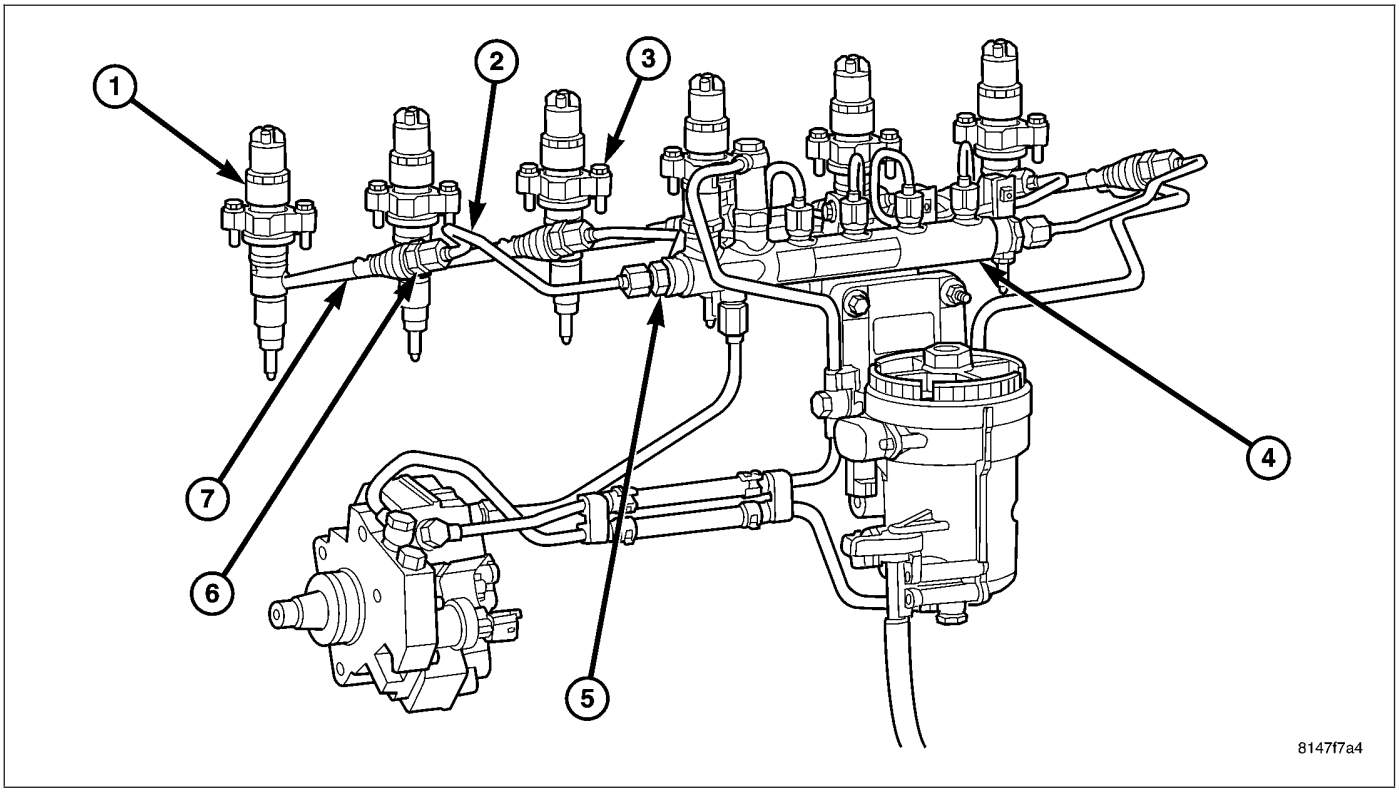

8. Carefully remove each fuel line from engine. Note position of each while removing. **Do not bend lines while removing.**

INSTALLATION

All high-pressure fuel lines are of the same length and inside diameter. Correct high-pressure fuel line usage and installation is critical to smooth engine operation.

CAUTION: Anytime a high-pressure line is removed from the engine, its fuel connector nut at the cylinder head must first be retorqued. Refer to Torque Specifications.

1. Tighten nuts at high pressure injector connector. Refer to Torque Specifications.
2. Position and install fuel line support clamp bolts or nut. Tighten finger tight.
3. Tighten fuel line at cylinder head. Refer to Torque Specifications.
4. Install engine lifting bracket and bolt. Refer to Torque Specifications.
5. Position proper fuel line to proper injector on engine. Tighten fittings hand tight at both ends of line.
6. Tighten fuel lines at fuel rail. Refer to Torque Specifications.
7. Tighten clamp/support nuts and bolts. Refer to Torque Specifications.
8. If fuel line at either #1 or #2 cylinder has been replaced, install intake manifold air heater elements to top of intake manifold. Refer to Intake Air Heater Removal / Installation for procedures.
9. If fuel line at #6 cylinder has been replaced, tilt metal bracket (shield) upward and tighten 2 bolts at rear of cylinder head. Refer to Torque Specifications.
10. Connect both negative battery cables to both batteries.
11. Prime fuel system. Refer to Fuel System Priming.
12. Check lines/fittings for leaks.

SENSOR - FUEL PRESSURE

DESCRIPTION

The fuel pressure sensor is mounted vertically near the top/center of the fuel rail.

OPERATION

The fuel pressure sensor monitors actual high-pressure within the fuel rail. An output signal from this sensor (relating to fuel pressure) is sent to the Engine Control Module (ECM).

REMOVAL

The fuel pressure sensor (4) is mounted vertically near the top/center of the fuel rail.

1. Disconnect electrical connector (1) at sensor.
2. Remove sensor from fuel rail.
3. Inspect sensor sealing surface.

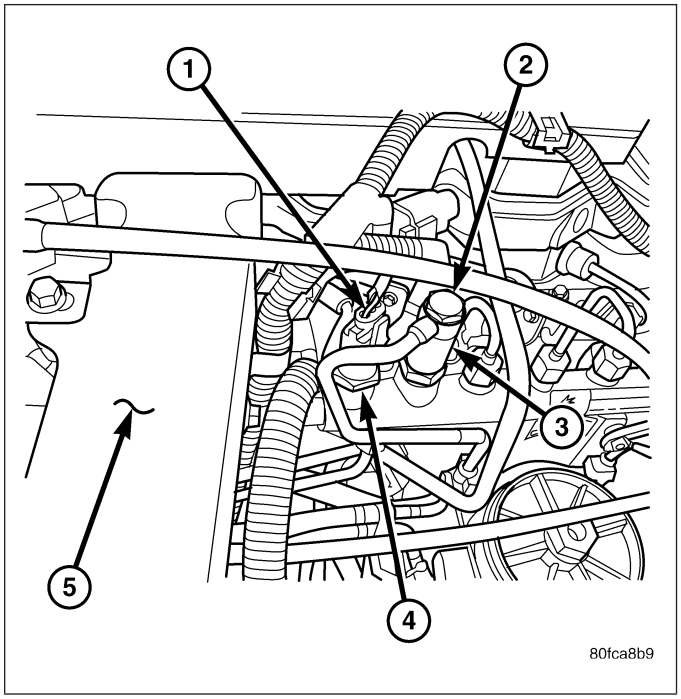

INSTALLATION

1. Inspect fuel pressure sensor sealing surface.
2. Lubricate sensor threads with clean diesel fuel.
3. Install sensor into fuel rail.
4. To prevent leaks, sensor **must** be tightened to prescribed torque. Refer to Torque Specifications.
5. Connect electrical connector to sensor.
6. Start engine and check for fuel leaks.

VALVE - FUEL PRESSURE LIMITING

DESCRIPTION

The fuel pressure limiting valve is located on the top of the fuel rail.

OPERATION

Fuel pressure at the fuel rail is monitored by the fuel rail pressure sensor. If fuel pressure becomes excessive, the pressure limiting valve opens and vents excess pressure into the fuel drain circuit.

REMOVAL

CAUTION: Cleanliness cannot be overemphasized when handling or replacing diesel fuel system components. This especially includes the fuel injectors, high-pressure fuel lines and fuel injection pump. Very tight tolerances are used with these parts. Dirt contamination could cause rapid part wear and possible plugging of fuel injector nozzle tip holes. This in turn could lead to possible engine misfire. Always wash/clean any fuel system component thoroughly before disassembly and then air dry. Cap or cover any open part after disassembly. Before assembly, examine each part for dirt, grease or other contaminants and clean if necessary. When installing new parts, lubricate them with clean engine oil or clean diesel fuel only.

The fuel pressure limiting valve (3) is located on the top of the fuel rail.

1. Thoroughly clean area at pressure limiting valve.
2. Remove banjo bolt (2) at banjo fitting.
3. Remove pressure limiting valve from fuel rail.

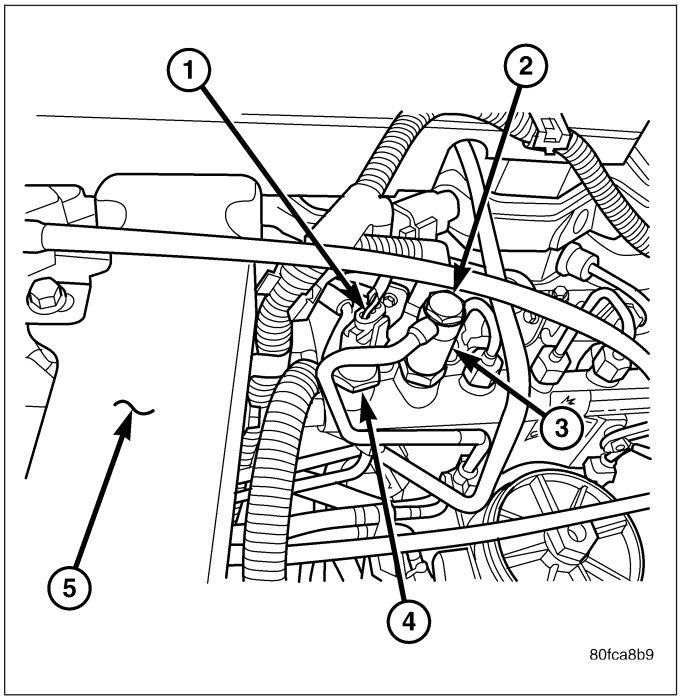

INSTALLATION

1. Be sure both top of manifold and limiting valve are clean.
2. Install valve. Refer to Torque Specifications.
3. Assemble banjo bolt and new sealing washers to limiting valve.
4. Tighten banjo bolt. Refer to Torque Specifications.

TANK - FUEL

DESCRIPTION - DIESEL

The fuel tank is similar to the tank used with gasoline powered models. The tank is equipped with a separate fuel return line and a different fuel tank module for diesel powered models. The electric fuel transfer pump (lift pump) is attached to the fuel pump module. Refer to Fuel Tank Module for additional information.

REMOVAL - DIESEL

Fuel Tank Draining

Due to a one-way check valve installed into the fuel fill opening fitting at the tank, the tank cannot be drained conventionally at the fill cap.

1. Raise vehicle.
2. If vehicle is equipped with 4 doors and a 6 foot (short) box, remove left-rear tire/wheel.
3. Thoroughly clean area at top of fuel tank around fuel tank module.
4. Loosen clamp and disconnect rubber fuel fill hose at tank.
5. Drain fuel tank by attaching drain hose from an approved draining station to fuel fill fitting of tank.

Tank Removal

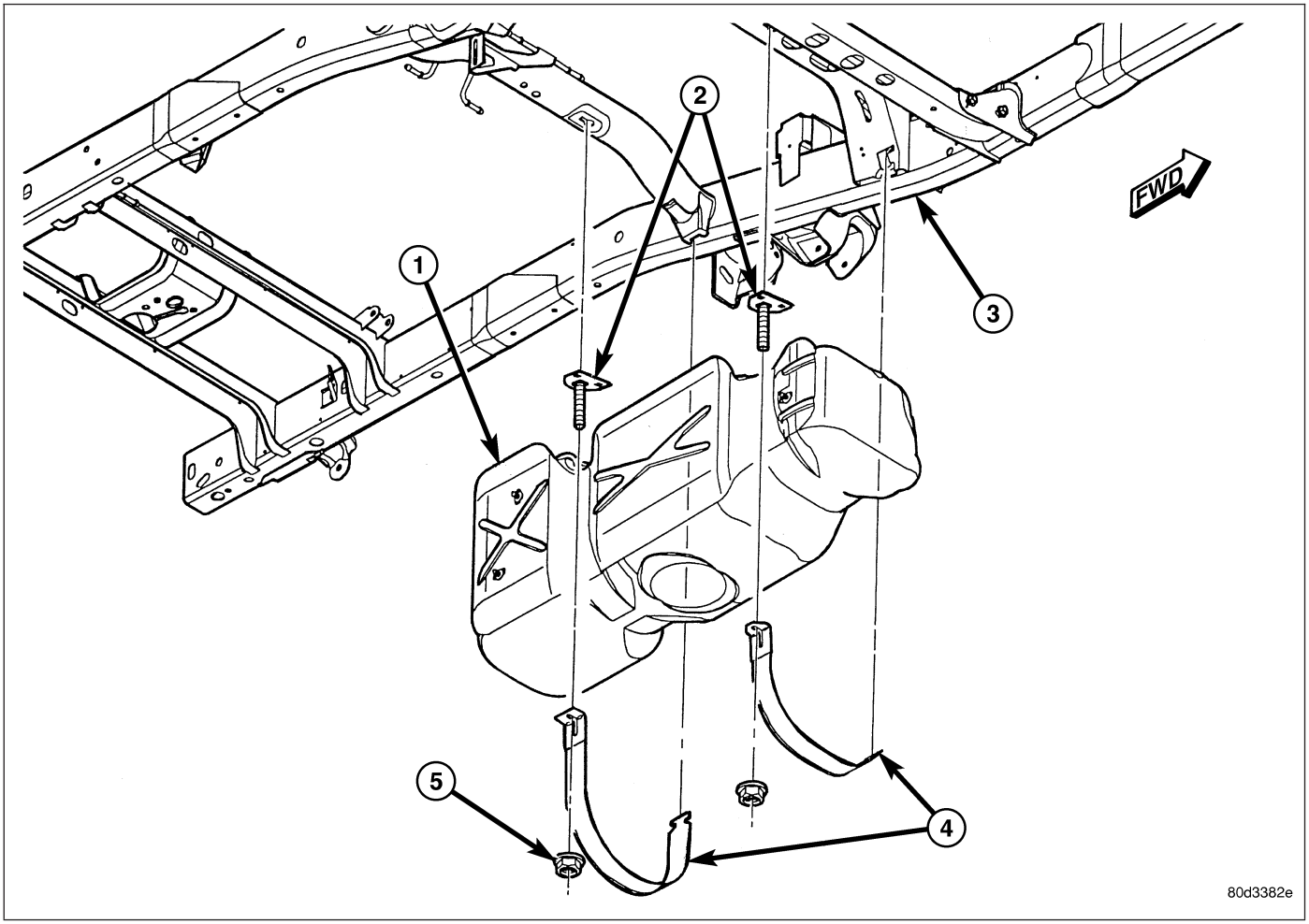

1. Support tank with a hydraulic jack.
2. Remove 2 fuel tank strap nuts (5) and remove both tank support straps.

3. Carefully lower tank a few inches and disconnect fuel pump module electrical connector at top of tank. To disconnect electrical connector: Push upward on red colored tab to unlock. Push on black colored tab while removing connector.
4. Disconnect fuel supply and return lines at fuel tank module. Refer to Quick-Connect Fittings for procedures.
5. Continue to lower tank for removal.
6. If fuel tank is to be replaced, remove fuel tank module from tank. Refer to Fuel Tank Module Removal/Installation procedures.

INSTALLATION - DIESEL

1. If fuel tank is to be replaced, install fuel tank module into tank. Refer to Fuel Tank Module Removal/Installation procedures.
2. Position fuel tank to hydraulic jack.
3. Raise tank until positioned near body.
4. Connect fuel tank module electrical connector at top of tank.
5. Connect fuel supply and return lines to tank module.
6. Continue raising tank until positioned snug to body.
7. Install and position both tank support straps. Install 2 fuel tank strap nuts and tighten. **Tighten rear strap nut first.** Refer to Torque Specifications.
8. Remove hydraulic jack.
9. Connect rubber fill hose to fuel fill tube and tighten clamp.
10. Install tire / wheel (if necessary).
11. Lower vehicle.
12. Fill fuel tank with fuel.
13. Start engine and check for fuel leaks near top of module.

MODULE - FUEL TANK

DESCRIPTION

.

The fuel tank module is installed in the top of the fuel tank. The fuel tank module contains the following components:

- An electric fuel transfer (lift) pump
- Fuel reservoir
- A separate in-tank fuel filter
- Fuel gauge sending unit (fuel level sensor)
- Fuel supply line connection
- A special lockring to retain module to fuel tank
- Fuel return line connection

OPERATION

Refer to Fuel Gauge Sending Unit.

REMOVAL

1. Drain and remove fuel tank. Refer to Fuel Tank Removal/Installation.
2. Note rotational position of module before attempting removal. An indexing arrow is located on top of module for this purpose.
3. Position Special Tool 9340 (3) into notches on outside edge of lockring (5).
4. Install 1/2 inch drive breaker bar (1) to tool 9340 (3).
5. Rotate breaker bar counter-clockwise to remove lockring.
6. Remove lockring. The module will spring up slightly when lockring is removed.
7. Remove module from fuel tank. Be careful not to bend float arm while removing.

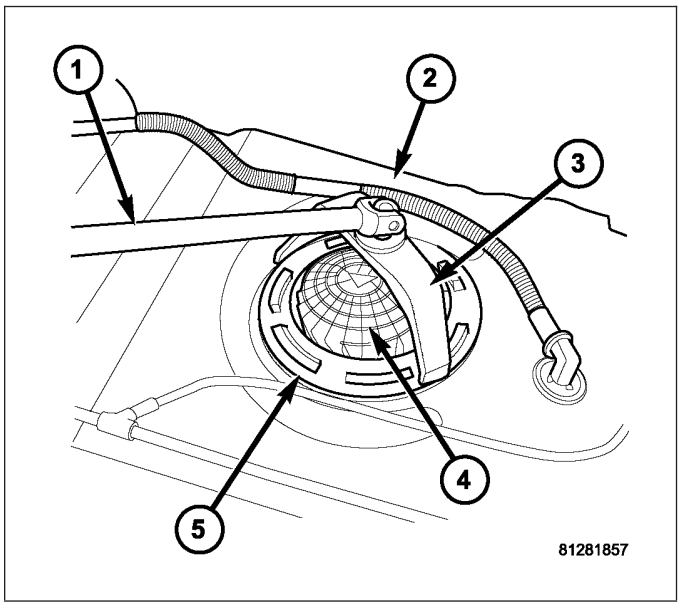

INSTALLATION

CAUTION: Whenever the fuel pump module is serviced, the rubber seal (gasket) must be replaced.

1. Using a new seal (gasket), position fuel pump module into opening in fuel tank.
2. Position lockring (5) over top of fuel pump module.
3. Rotate module until embossed alignment arrow points to center alignment mark. This step must be performed to prevent float from contacting side of fuel tank. Also be sure fuel fitting on top of pump module is pointed to drivers side of vehicle.
4. Install Special Tool 9340 (3) to lockring.
5. Install 1/2 inch drive breaker (1) into Special Tool 9340 (3).
6. Tighten lockring (clockwise) until all seven notches have engaged.
7. Install fuel tank. Refer to Fuel Tank Removal/Installation.

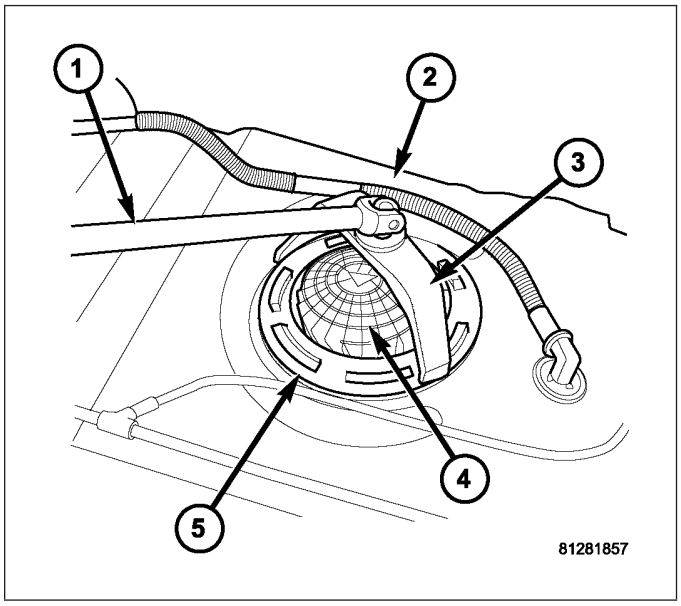

PUMP - FUEL TRANSFER

DESCRIPTION

The fuel transfer pump (fuel lift pump) is part of the fuel pump module. The fuel pump module is located in the fuel tank. The 12–volt electric pump is operated and controlled by the Engine Control Module (ECM). The ECM controls a relay in the Power Distribution Center (PDC) for transfer pump operation.

OPERATION

The purpose of the fuel transfer pump is to supply (transfer) a low-pressure fuel source: **from** the fuel tank, **through** the fuel filter/water separator and **to** the fuel injection pump. Here, the low-pressure is raised to a high-pressure by

the fuel injection pump for operation of the high-pressure fuel injectors. Check valves within the pump, control direction of fuel flow and prevent fuel bleed-back during engine shut down.

Maximum current flow to the pump is 5 amperes.

With the engine running, the pump has a 100 percent duty-cycle.

The transfer pump is self-priming: When the key is first turned on (without cranking engine), the pump will operate for approximately 2 seconds and then shut off (Note: When ambient temperatures are cold enough to cause the intake air heaters to operate, the fuel lift pump will operate during the entire intake air pre-heat cycle). The pump will also operate for up to 25 seconds after the starter is engaged, and then disengaged and the engine is not running. The pump shuts off immediately if the key is on and the engine stops running.

The fuel volume of the transfer pump will always provide more fuel than the fuel injection pump requires. Excess fuel is returned from the injection pump through an overflow valve, and then back to the fuel tank.

REMOVAL

The fuel transfer pump (fuel lift pump) is a part of the fuel tank module. It is not serviced separately. Refer to Fuel Tank Module Removal or Installation for procedures.

INSTALLATION

The fuel transfer pump (fuel lift pump) is a part of the fuel tank module. It is not serviced separately. Refer to Fuel Tank Module Removal or Installation for procedures.

VALVE - CASCADE OVERFLOW

DESCRIPTION

The cascade overflow valve (4) is located on the top/rear side of the fuel injection pump.

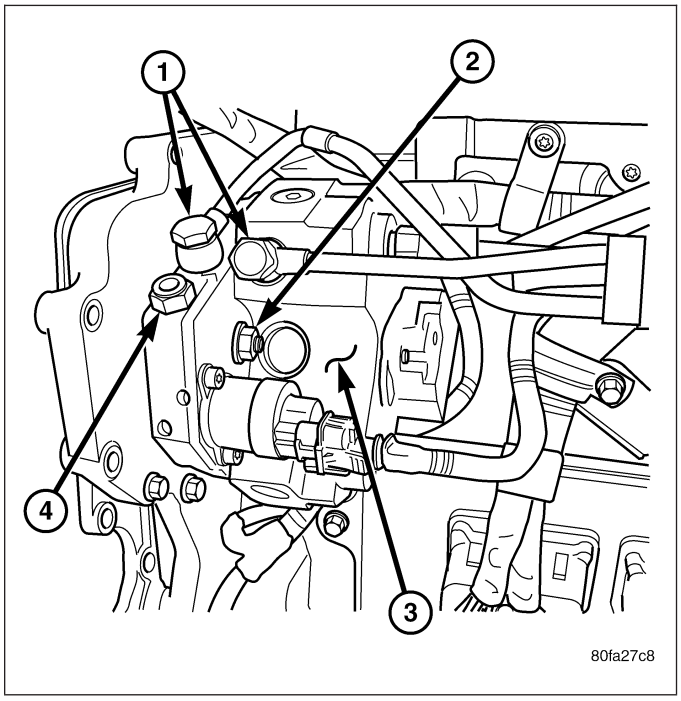

OPERATION

When the fuel control actuator (FCA) is opened, the maximum amount of fuel is being delivered to the fuel injection pump. The cascade valve regulates how much excess fuel is used for lubrication of the injection pump, and is also used to route excess fuel through the drain circuit and back into the fuel tank.

REMOVAL

REMOVAL/INSTALLATION

The cascade overflow valve is not serviced separately.

SENSOR-WATER IN FUEL

DESCRIPTION

The Water-In-Fuel (WIF) sensor (5) is located on the side of the fuel filter/water separator canister.

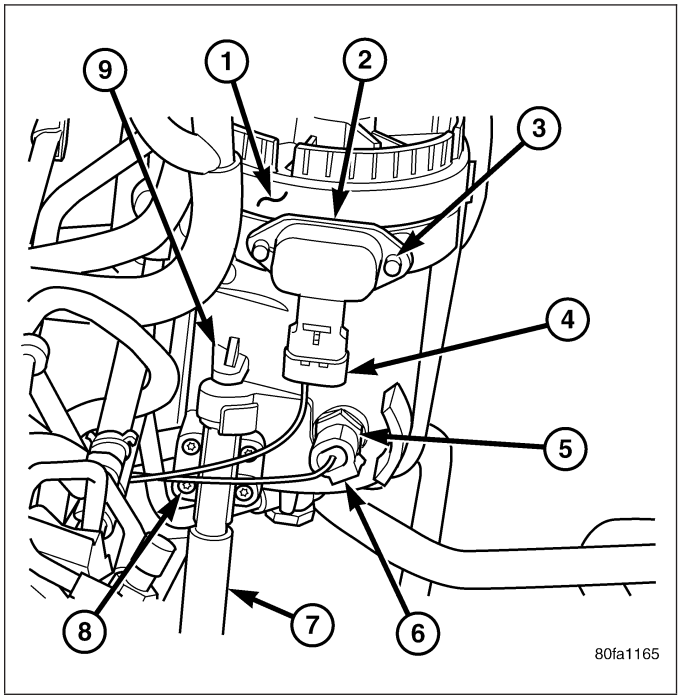

OPERATION

The sensor sends an input to the Engine Control Module (ECM) when it senses water in the fuel filter/water separator. As the water level in the filter/separator increases, the resistance across the WIF sensor decreases. This decrease in resistance is sent as a signal to the ECM and compared to a high water standard value. Once the value reaches 30 to 40 kilohms, the ECM will activate the water-in-fuel warning lamp through CCD bus circuits. This all takes place when the ignition key is initially put in the ON position. The ECM continues to monitor the input while the engine is running.

REMOVAL

The Water-In-Fuel (WIF) sensor is located at the side of fuel filter/water separator canister. Refer to Fuel Filter/ Water Separator Removal/Installation for WIF sensor removal/installation procedures.

CIRCUIT - FUEL DRAIN

OPERATION

The Fuel Drain Circuit incorporates several sources of fuel return. Fuel travels from the fuel tank (via the fuel transfer pump) and is forced through the fuel filter. This fuel then travels into the fuel injection pump. It then goes to a fuel drain line and returns back to the fuel tank.

The fuel that flows to the fuel pump is pressurized by a gear pump and internally transferred to the fuel injection pump. At this point the fuel is channeled into two passages. One passage sends fuel to the FCA (Fuel Control Actuator). The other passage sends fuel to the cascade overflow valve. The overflow valve sends some fuel to a lubrication passage. The rest of the fuel is sent to a drain passage which connects to an external fuel line.

Fuel that travels through the FCA is pressurized by the fuel injection pump and sent through an external high pressure fuel line to the fuel rail. At the fuel rail, fuel is sent to the fuel injectors. If fuel pressure in the fuel rail becomes excessive, the pressure limiting valve opens and sends fuel through an external fuel line.

At the fuel injector, fuel that is not injected is used for lubrication of the fuel injectors. This fuel then travels through an internal passage that is connected to the rear of the cylinder head, an then into an external fuel line. This line is connected to the vehicles fuel return line, and returns excess fuel back into the fuel tank.

FUEL INJECTION - DIESEL

TABLE OF CONTENTS

page

SENSOR-ACCELERATOR PEDAL POSITION
DESCRIPTION . . . 127
OPERATION . . . 127
REMOVAL . . . 127
INSTALLATION . . . 128
SENSOR-CAMSHAFT POSITION
DESCRIPTION . . . 128
OPERATION . . . 128
REMOVAL . . . 129
INSTALLATION . . . 129
SENSOR-CRANKSHAFT POSITION
DESCRIPTION . . . 129
OPERATION . . . 130
REMOVAL . . . 131
INSTALLATION . . . 131
ACTUATOR - FUEL CONTROL
DESCRIPTION . . . 131
OPERATION . . . 132
REMOVAL . . . 132
INJECTOR - FUEL (EARLY)
DESCRIPTION . . . 132
OPERATION . . . 133
REMOVAL . . . 134
INSTALLATION . . . 137
INJECTOR - FUEL (LATE)
DESCRIPTION . . . 138
OPERATION . . . 139
REMOVAL . . . 139
INSTALLATION . . . 143
RAIL - FUEL INJECTOR
DESCRIPTION . . . 144

page

OPERATION . . . 144
REMOVAL . . . 144
INSTALLATION . . . 145
SENSOR-TEMPERATURE/PRESSURE-INTAKE
DESCRIPTION . . . 146
OPERATION . . . 146
REMOVAL . . . 146
INSTALLATION . . . 147
HEATER - INTAKE AIR
DESCRIPTION . . . 148
OPERATION . . . 148
REMOVAL . . . 148
INSTALLATION . . . 150
RELAY - INTAKE AIR HEATER
DESCRIPTION . . . 150
OPERATION . . . 151
REMOVAL . . . 151
INSTALLATION . . . 151
SENSOR-TEMPERATURE/PRESSURE-MAP
DESCRIPTION . . . 152
OPERATION . . . 152
REMOVAL . . . 152
INSTALLATION . . . 153
SENSOR-MAP
DESCRIPTION . . . 153
SWITCH - PTO
DESCRIPTION . . . 153
OPERATION . . . 153

SENSOR-ACCELERATOR PEDAL POSITION

DESCRIPTION

The Accelerator Pedal Position Sensor (APPS) (1) is located inside the vehicle. It is attached to the accelerator pedal assembly (3).

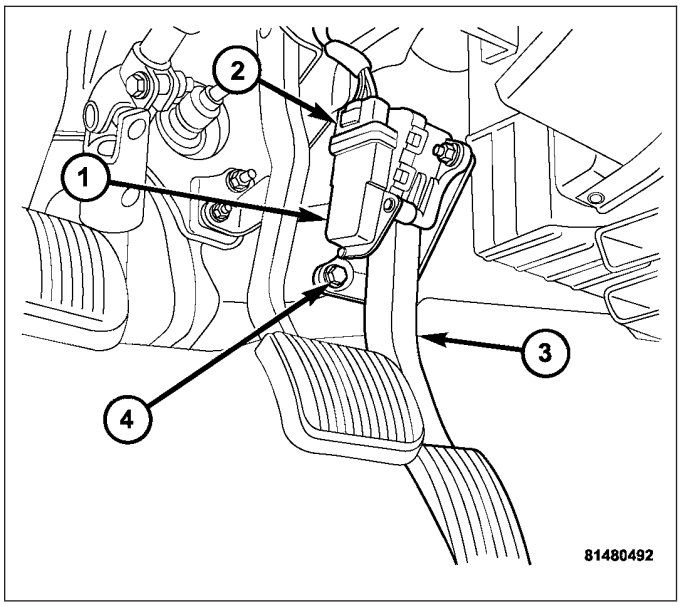

OPERATION

The Accelerator Pedal Position Sensor (APPS) provides the Engine Control Module (ECM) with two DC voltage signals which change as the position of the accelerator pedal changes. One of the DC voltage signals will be half the voltage of the other signal.

REMOVAL

CAUTION: Do not attempt to separate or remove the Accelerator Pedal Position Sensor (APPS) from the accelerator pedal assembly. The APPS is replaced as an assembly along with the pedal. If sensor is removed from pedal, its electronic calibration may be destroyed.

1. Disconnect 6–way electrical connector at top of APPS (2).
2. Remove APPS lower mounting bolt (4) and two mounting nuts.
3. Remove pedal and APPS assembly from vehicle.

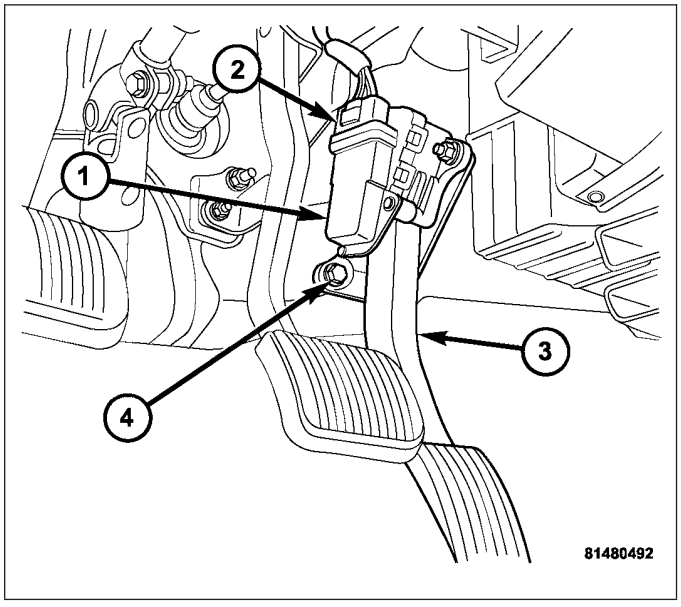

INSTALLATION

CAUTION: Do not attempt to separate or remove the Accelerator Pedal Position Sensor (APPS) from the accelerator pedal assembly. The APPS is replaced as an assembly along with the pedal. If sensor is removed from pedal, its electronic calibration may be destroyed.

1. Position pedal and APPS assembly to its mounting bracket.
2. Connect 6–way electrical connector to top of APPS (2).
3. Install APPS lower mounting bolt (4) and two mounting nuts.
4. If necessary, use a Scan Tool to erase any Diagnostic Trouble Codes (DTC's).

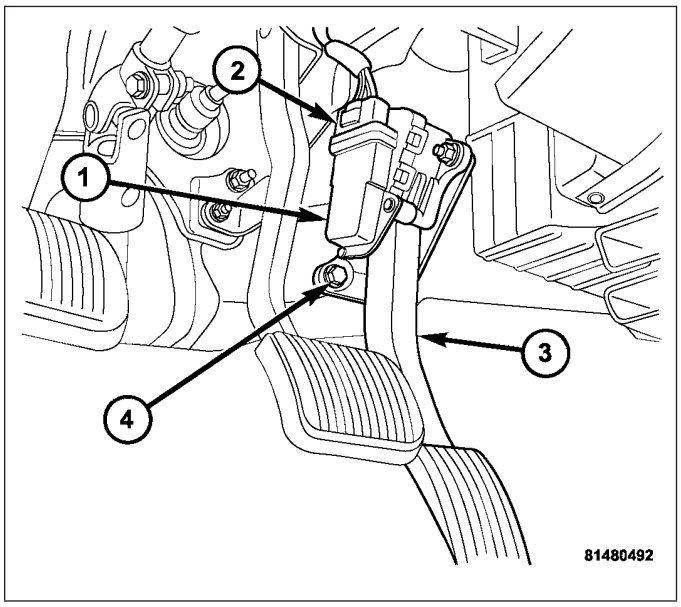

SENSOR-CAMSHAFT POSITION

DESCRIPTION

The Camshaft Position Sensor (CMP) on the 5.9L diesel engine is located below the fuel injection pump. It is bolted to the back of the timing gear housing.

OPERATION

The diesel Camshaft Position Sensor (CMP) contains a hall effect device. A rotating target wheel (tone-wheel) for the CMP is located on the camshaft gear. This hall effect device detects notches located on the back side of the camshaft gear. As the camshaft gear rotates, the notches pass the tip of the CMP.

When the leading edge of the notch passes the tip of the CMP, the following occurs: The interruption of magnetic field causes the voltage to switch high resulting in a signal of approximately 5 volts.

When the trailing edge of the notch passes the tip of the CMP, the following occurs: The change of the magnetic field causes the signal voltage to switch low to 0 volts.

The CMP (1) provides a signal to the Engine Control Module (ECM) at all times when the engine is running. The ECM uses the CMP information primarily on engine start-up. Once the engine is running, the ECM uses the CMP as a backup sensor for engine speed. The Crankshaft Position Sensor (CKP) is the primary engine speed indicator for the engine after the engine is running.

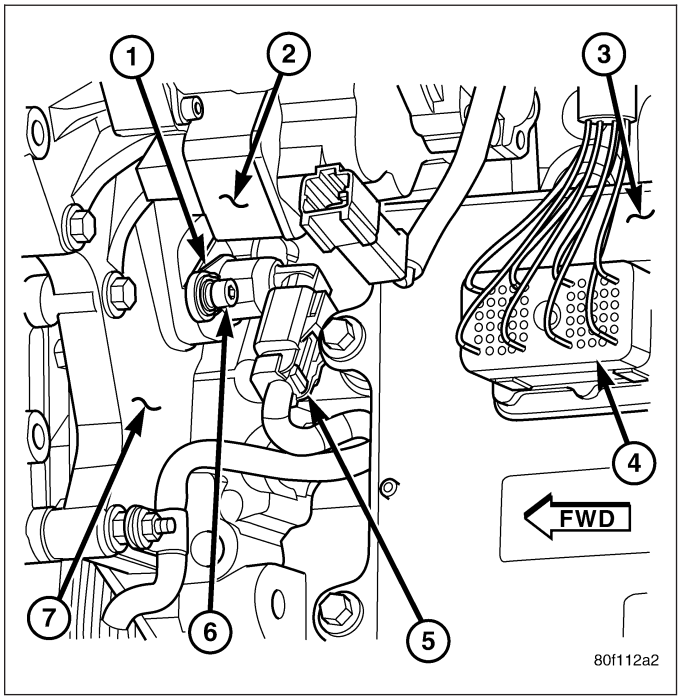

REMOVAL

The Camshaft Position Sensor (CMP) on the 5.9L diesel engine is located (1) below the fuel injection pump. It is bolted to the back of the timing gear housing (7).

1. Disconnect electrical connector at CMP sensor.
2. Remove sensor mounting bolt (6).
3. Carefully twist sensor from timing gear housing.
4. Check condition of sensor o-ring.

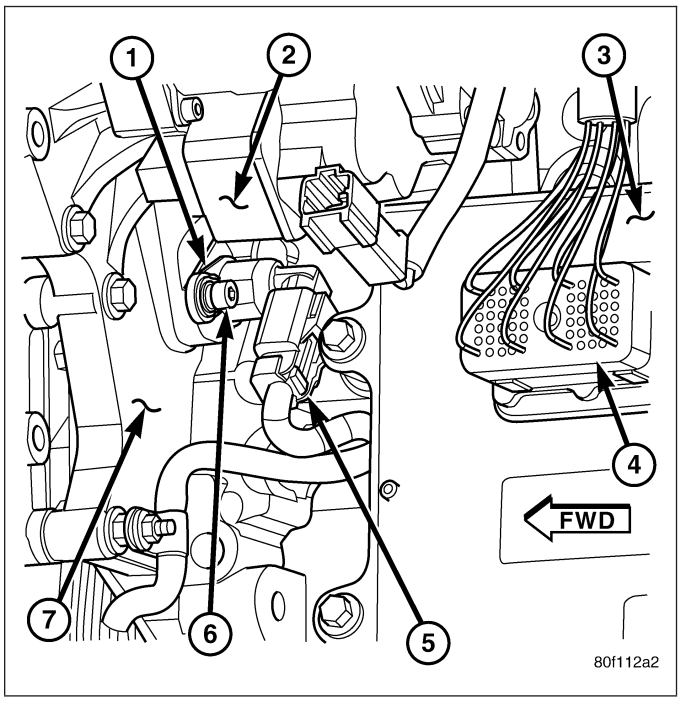

INSTALLATION

1. Clean out machined hole in back of timing gear housing (cover).
2. Apply a small amount of engine oil to sensor o-ring.
3. Install sensor into timing gear housing (cover) with a slight rocking action. Do not twist sensor into position as damage to o-ring may result.

CAUTION: Before tightening sensor mounting bolt, be sure sensor is completely flush to back of timing gear housing (cover). If sensor is not flush, damage to sensor mounting tang may result.

4. Install mounting bolt and tighten. Refer to Torque Specifications.
5. Connect electrical connector to sensor.

SENSOR-CRANKSHAFT POSITION

DESCRIPTION

The Crankshaft Position Sensor (CKP) on the diesel engine is attached at the front / left side of the engine next to the engine harmonic balancer (crankshaft damper).

OPERATION

The Crankshaft Position Sensor (CKP) (5) is the primary engine speed indicator for the engine after the engine is running.

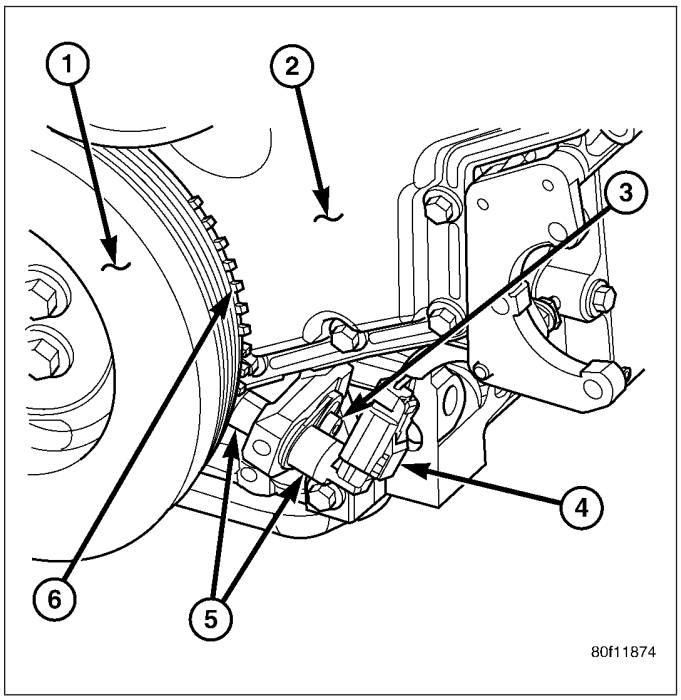

The CKP contains a hall effect device. A rotating, notched target wheel (tonewheel) for the CKP is located on the engine harmonic balancer (2). This hall effect device detects notches located on the tonewheel. As the tonewheel rotates, the notches pass the tip of the CKP.

When the leading edge of the tonewheel notch passes the tip of the CKP, the following occurs: The interruption of magnetic field causes the voltage to switch high resulting in a signal of approximately 5 volts.

When the trailing edge of the tonewheel notch passes the tip of the CKP, the following occurs: The change of the magnetic field causes the signal voltage to switch low to 0 volts.

The Camshaft Position Sensor (CMP) also provides a signal to the Engine Control Module (ECM) at all times when the engine is running. The ECM uses this CMP information primarily on engine start-up. Once the engine is running, the ECM uses the CMP as a backup sensor for engine speed.

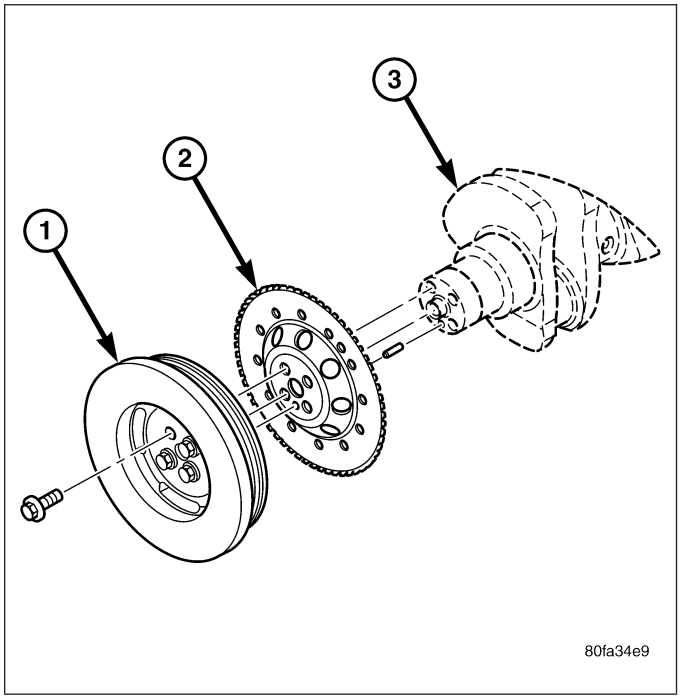

REMOVAL

1. Raise and support vehicle
2. Disconnect electrical connector (4) at CKP sensor.
3. Remove 1 sensor mounting bolt (3).
4. Remove CKP sensor.

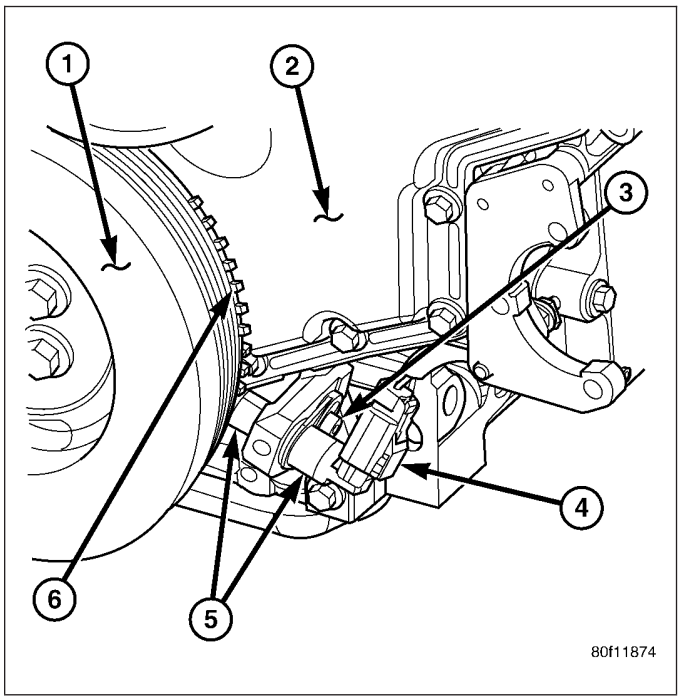

INSTALLATION

1. Position and install CKP sensor to engine.
2. Install 1 sensor mounting bolt and tighten to 9 N·m (80 in. lbs.) torque.
3. Install electrical connector to CKP sensor.

ACTUATOR - FUEL CONTROL

DESCRIPTION

The Fuel Control Actuator (FCA) is located at the rear of the high-pressure, fuel injection pump (2).

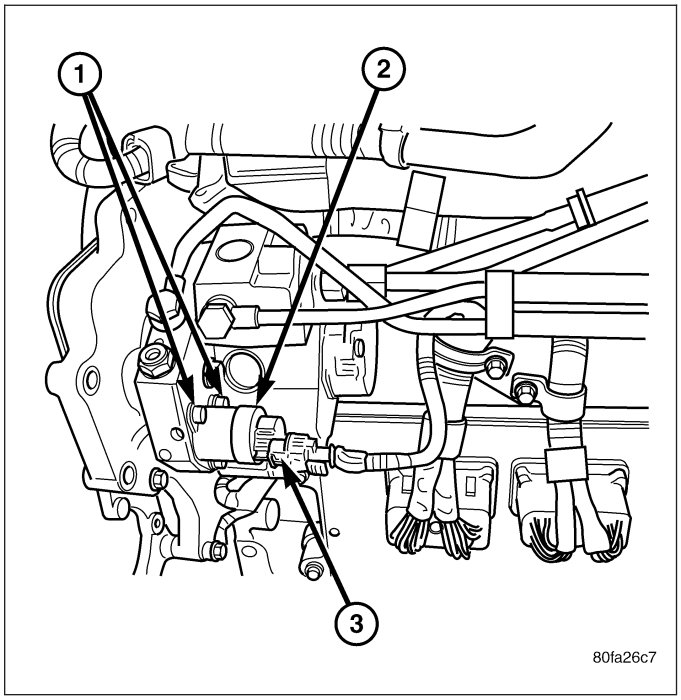

OPERATION

The Fuel Control Actuator (FCA) is an electronically controlled solenoid valve. The ECM controls the amount of fuel that enters the high-pressure pumping chambers by opening and closing the FCA based on a demanded fuel pressure. When the FCA is opened, the maximum amount of fuel is being supplied to the fuel injection pump. Any fuel that does not enter the injection pump is directed to the cascade overflow valve. The cascade overflow valve regulates how much excess fuel is used for lubrication of the pump and how much is returned to the fuel tank through the drain manifold.

An audible click from the FCA is normal when operating the key from the ON to the OFF position.

REMOVAL

The Fuel Control Actuator (FCA) is a non-servicable part.

INJECTOR - FUEL (EARLY)

DESCRIPTION

Six individual, solenoid actuated high-pressure fuel injectors are used. The injectors are vertically mounted into a bored hole in the top of the cylinder head. This bored hole is located between the intake/exhaust valves. High-pressure connectors , mounted into the side of the cylinder head, connect each fuel injector to each high-pressure fuel line.

CAUTION: Two different fuel injectors are used (early and late). Although they physically look the same, they are NOT interchangeable. Be sure to reference the injector part number when replacing a fuel injector. This part number is laser-burned onto the injector. Failure to replace with the proper injector will cause severe engine damage.

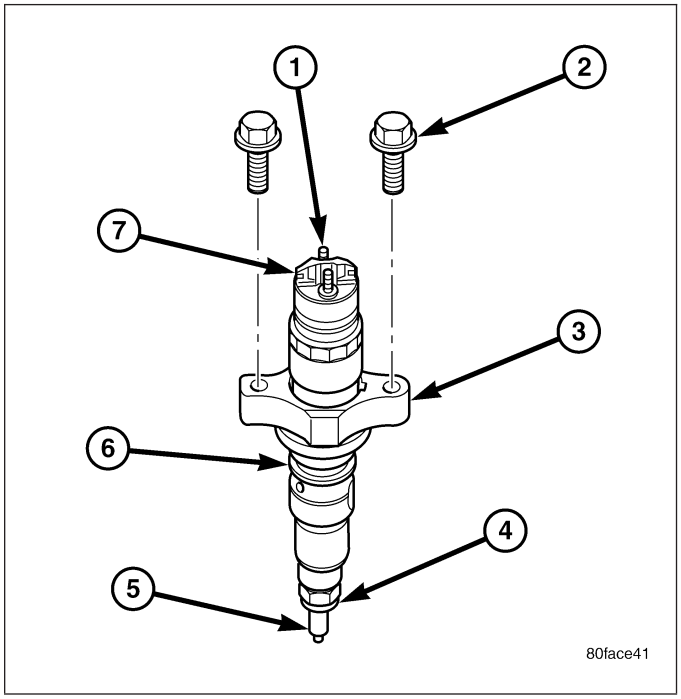

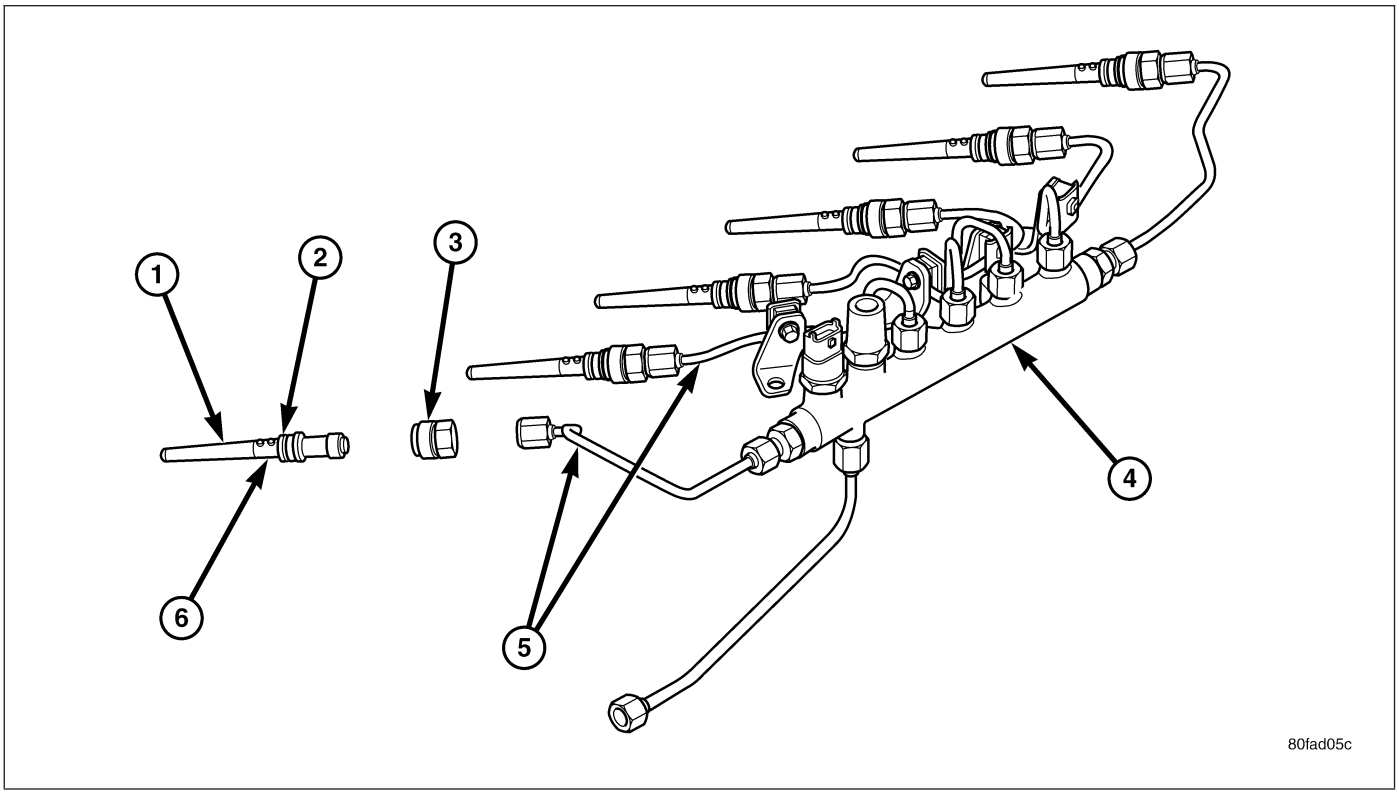

OPERATION

High-pressure fuel is supplied from the injection pump, through a high-pressure fuel line, into a fuel rail, through high-pressure lines, through steel connectors and into the solenoid actuated fuel injector. The ECM actuates the solenoid causing the needle valve to rise and fuel flows through the spray holes in the nozzle tip into the combustion chamber.

Each fuel injector is connected to the fuel rail by a high-pressure fuel line and a steel connector. This steel connector is positioned into the cylinder head and sealed with an o-ring. The connector is retained in the cylinder head by a nut (fitting) that is threaded into the cylinder head.

The torquing force of this threaded nut (fitting) provides a sealing pressure between the fuel line connector and the fuel injector. **Retaining nut torque is very critical.** If the nut (fitting) is under torqued, the mating surfaces will not seal and a high-pressure fuel leak will result. If the fitting is over torqued, the connector and injector will deform and also cause a high-pressure fuel leak. This leak will be inside the cylinder head and will not be visible. The result will be a possible fuel injector miss-fire and low power, or a no-start condition.

The fuel injectors use hole type nozzles. High-pressure flows into the side of the injector, the ECM activates the solenoid causing the injector needle to lift and fuel to be injected. The clearances in the nozzle bore are extremely small and any dirt or contaminants will cause the injector to stick. Because of this, it is very important to do a thorough cleaning of any lines before opening up any fuel system component. Always cover or cap any open fuel connections before a fuel system repair is performed.

Each fuel injector connector tube contains an edge filter that is designed to break up small contaminants before entering the fuel injector. **The edge filters are not a substitute for proper cleaning and covering of all fuel system components during repair.**

The bottom of each fuel injector is sealed to the cylinder head with a **1.5mm** thick copper shim (gasket). The correct thickness shim must always be re-installed after removing an injector.

Fuel pressure in the injector circuit decreases after injection. The injector needle valve is immediately closed and fuel flow into the combustion chamber is stopped. Exhaust gases are prevented from entering the injector nozzle by the needle valve.

REMOVAL

CAUTION: Two different fuel injectors are used (early and late). Although they physically look the same, they are NOT interchangeable. Be sure to reference the injector part number when replacing a fuel injector. This part number is laser-burned onto the injector. Failure to replace with the proper injector will cause severe engine damage.

CAUTION: Refer to Cleaning Fuel System Parts.

Six individual, solenoid actuated high-pressure fuel injectors are used. The injectors are vertically mounted into a bored hole in the top of the cylinder head. This bored hole is located between the intake/exhaust valves. High-pressure connectors , mounted into the side of the cylinder head, connect each fuel injector to each high-pressure fuel line.

1. Disconnect both negative battery cables from both batteries. Cover and isolate ends of cables.
2. Remove breather assembly.
3. Remove valve cover. Refer to Engines for procedures.
4. Remove necessary high pressure fuel line connecting necessary fuel injector rail to high pressure connector. Refer to Fuel Line Removal for procedures.
5. A connector retainer (nut) is used on each connector tube. Remove this nut(s) by unthreading from cylinder head.
6. Using special high-pressure connector removal tool #9015 , or remove necessary high-pressure connector(s) from cylinder head. Tool #9015 threads onto connector tube. Use tool to pry connector tube(s) from cylinder head.
7. Remove necessary exhaust rocker arm assembly(s).
8. Disconnect injector solenoid wire nuts at top of injectors.
9. Remove 2 fuel injector hold-down clamp bolts at each injector being removed.
10. **USING TOOL #9010:**
    a. Special Tool #9010 is equipped with 2 clamshell clamps, a sliding retainer sleeve to retain the clamshell clamps, a 2–piece mounting stud, and a pivoting handle. **Do not attempt to remove the fuel injector with any other device. Damage to injector will occur.**
    b. The rocker housing is bolted to the top of cylinder head. The mounting stud from tool #9010 was meant to temporarily replace a rocker housing mounting bolt. Remove the necessary rocker housing mounting bolt. These mounting bolts are located at the center of each of the 3 rocker housing support bridges.
    c. Install and tighten 2–piece mounting stud to rocker housing. If removing the #6 fuel injector, separate the 2–piece mounting stud. Install lower half of mounting stud to center of rocker housing bridge. Install upper half of mounting stud to lower half.
    d. Position tool handle to mounting stud and install handle nut. Leave handle nut loose to allow a pivoting action.
    e. Position lower part of clamshell halves to sides of fuel injector (wider shoulder to bottom). The upper part of clamshell halves should also be positioned into machined shoulder on the handles pivoting head.
    f. Slide the retainer sleeve over pivoting handle head to lock clamshell halves together.
    g. Be sure handle pivot nut is loose.
    h. Depress handle downward to remove fuel injector straight up from cylinder head bore.
11. Remove and discard injector sealing washer. This should be located on tip of injector or.

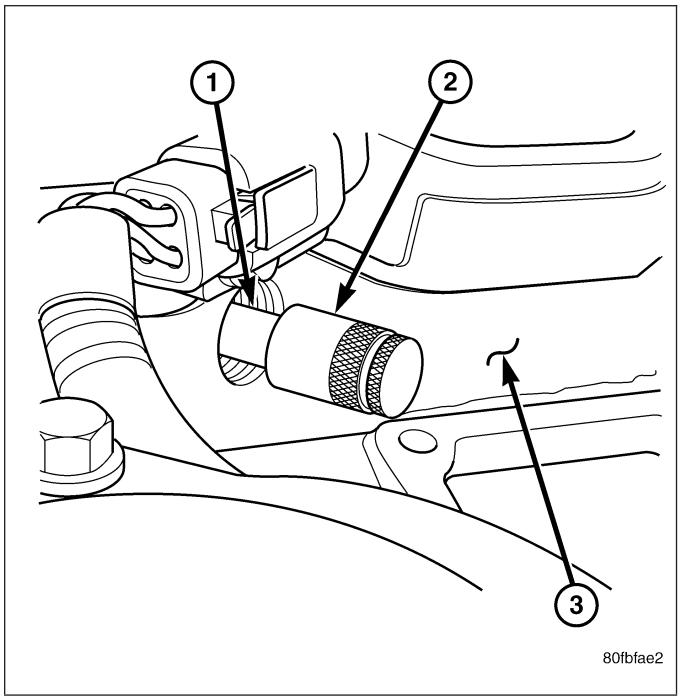
1
2
3
80fbfae2

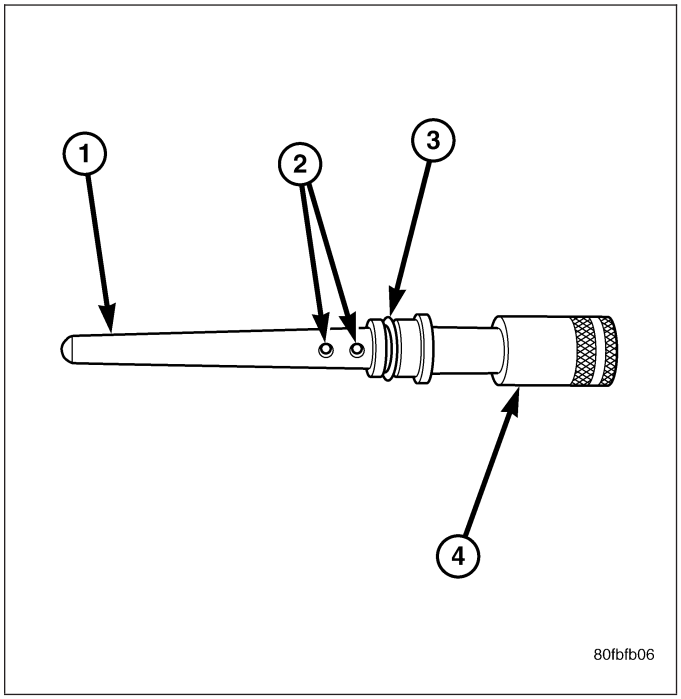
1
2
3
4
80fbfb06

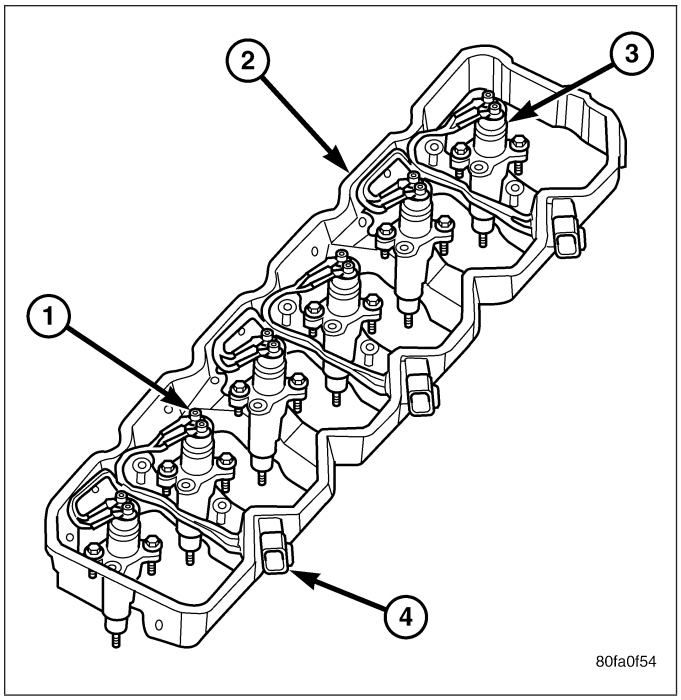
2
3
1
4
80fa0f54

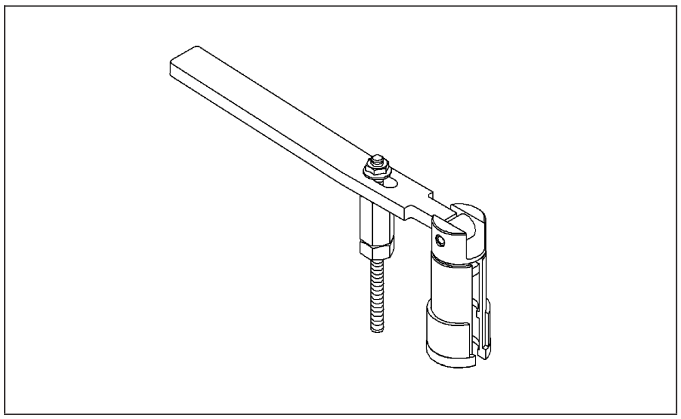

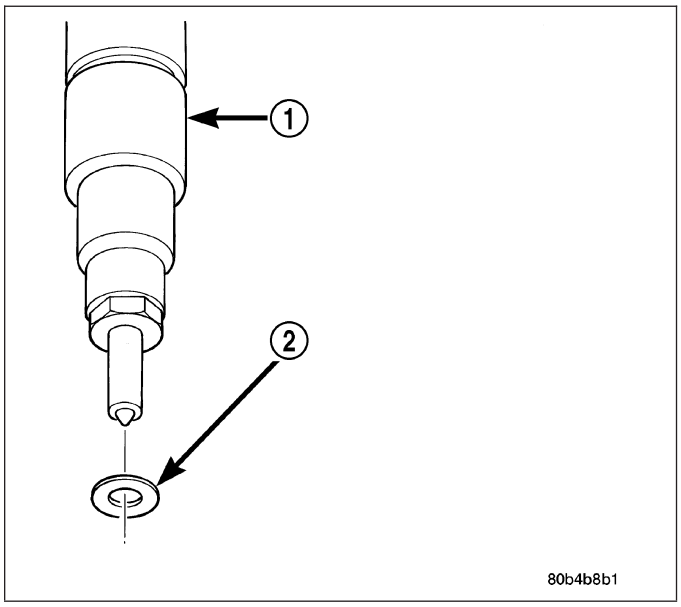
1
2
80b4b8b1

INSTALLATION

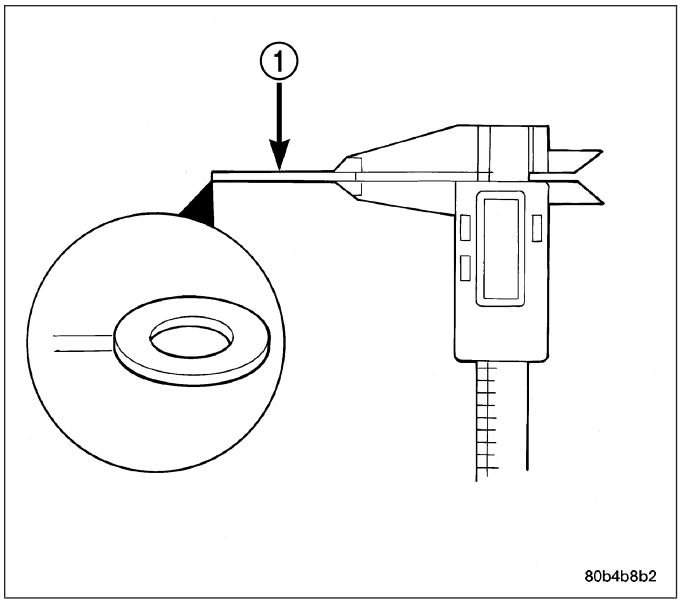

CAUTION: Two different fuel injectors are used (early and late). Although they physically look the same, they are NOT interchangeable. Be sure to reference the injector part number when replacing a fuel injector. This part number is laser-burned onto the injector. Failure to replace with the proper injector will cause severe engine damage.

1. **Inspect fuel injector:**
   a. Look for burrs on injector inlet.
   b. Check nozzle holes for hole erosion or plugging.
   c. Inspect end of nozzle for burrs or rough machine marks.
   d. Look for cracks at nozzle end.
   e. If any of these conditions occur, replace injector.
2. Thoroughly clean fuel injector cylinder head bore. Blow out bore hole with compressed air.
3. The bottom of fuel injector is sealed to cylinder head bore with a copper sealing washer (shim) of a certain thickness. A new shim with correct thickness must always be re-installed after removing injector. Measure thickness of injector shim. **Shim Thickness: 1.5 mm (.060")**
4. Install new shim (washer) to bottom of injector. Apply light coating of clean engine oil to washer. This will keep washer in place during installation.
5. Install new o-ring to fuel injector. Apply small amount of clean engine oil to o-ring.
6. Install injector into cylinder head with male (high-pressure) connector port facing the intake manifold. Push down on fuel injector mounting flange to engage o-ring and seat injector.
7. Tightening Sequence:
   a. Install fuel injector holdown clamp (mounting flange) bolts. **Do a preliminary tightening of these bolts to 5 N·m (44 in. lbs.) torque. This preliminary tightening insures the fuel injector is seated and centered.**
   b. After tightening, relieve bolt torque, but leave both bolts threaded in place.
   c. Install high-pressure connector and retaining nut. Do a preliminary tightening to 15 N·m (11 ft. lbs.) torque.
   d. Alternately tighten injector holdown bolts to 10 N·m (89 in. lbs.) torque.
   e. Do a final tightening of the high-pressure connector and retaining nut. Tighten to 50 N·m (37 ft. lbs.) torque.
8. Connect injector solenoid wires and nuts to top of injectors. Tighten connector nuts to 1.25 N·m (11 in. lbs.) torque. **Be very careful not to overtighten these nuts as damage to fuel injector will occur.**
9. Install exhaust rocker arm assembly. Refer to the Diesel Engine section.
10. Set exhaust valve lash. Refer to the Diesel Engine section.
11. Install high pressure fuel line. Refer to Torque Specifications. **Be sure to use a secondary back-up wrench on the connector nut (fitting) while torquing fuel line fitting.** Refer to Fuel Line Installation for additional information.
12. Install valve cover. Refer to the Diesel Engine section.
13. Install breather assembly.
14. Connect negative battery cables to both batteries.

INJECTOR - FUEL (LATE)

DESCRIPTION

Six individual, solenoid actuated high-pressure fuel injectors are used. The injectors are vertically mounted into a bored hole in the top of the cylinder head. This bored hole is located between the intake/exhaust valves.

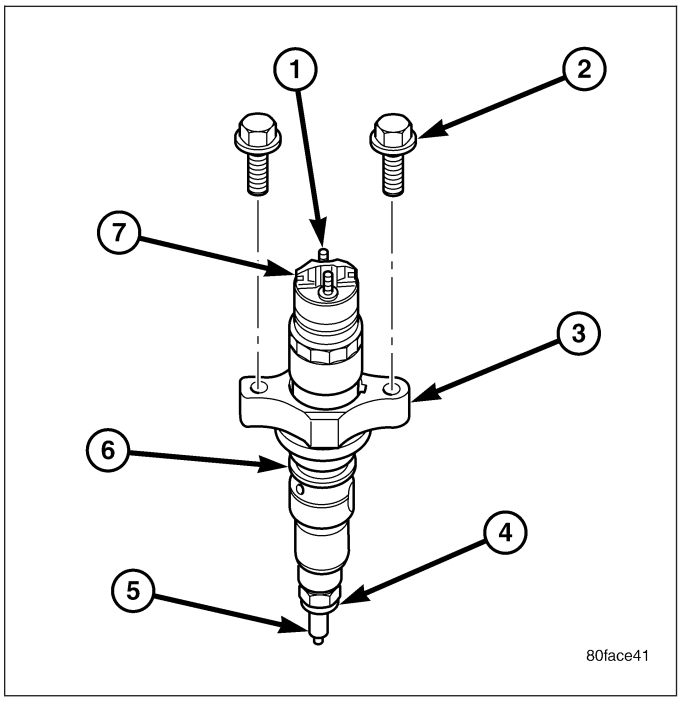

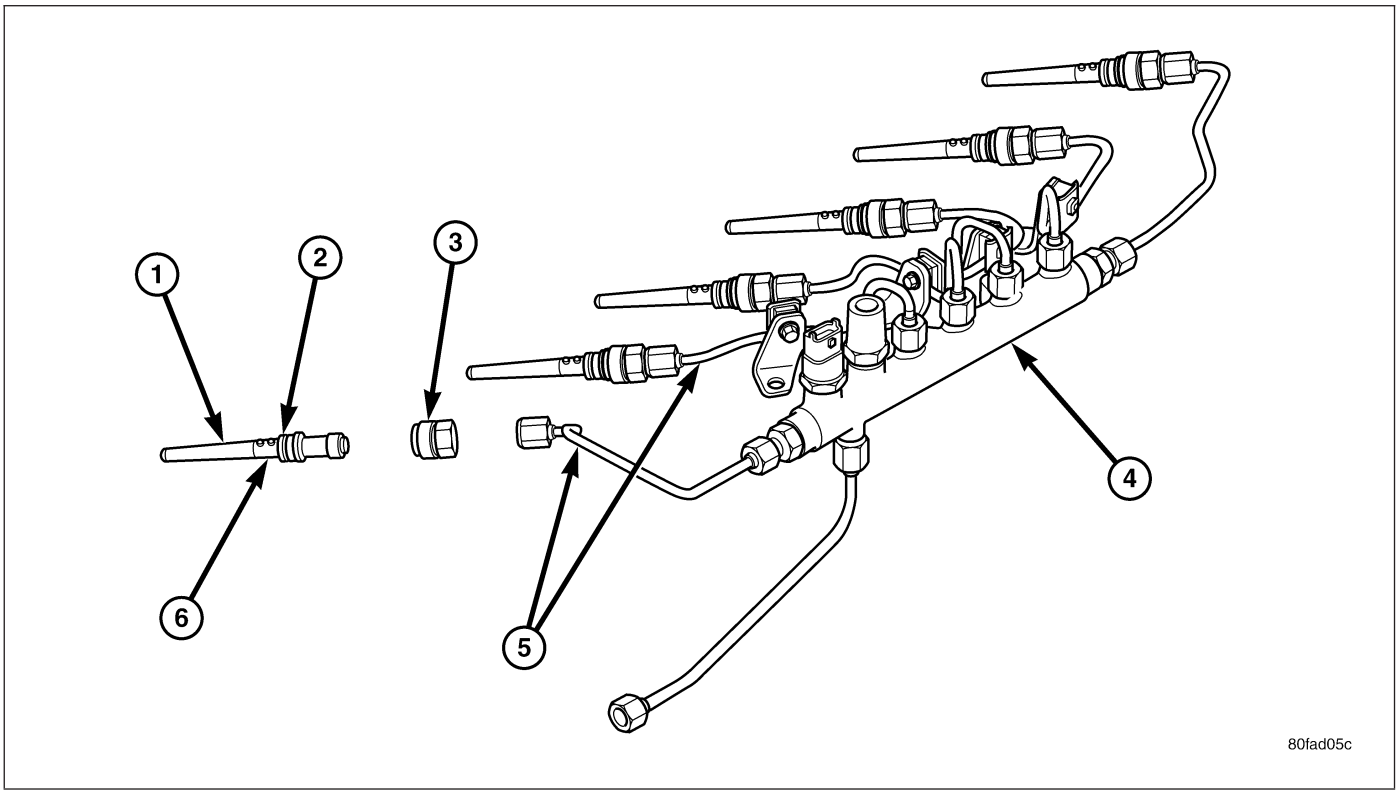

High-pressure connectors , mounted into the side of the cylinder head, connect each fuel injector to each high-pressure fuel line.is laser-burned onto the injector. Failure to replace with the proper injector will cause severe engine damage.

OPERATION

High-pressure fuel is supplied from the injection pump, through a high-pressure fuel line, into a fuel rail, through high-pressure lines, through steel connectors and into the solenoid actuated fuel injector. The ECM actuates the solenoid causing the needle valve to rise and fuel flows through the spray holes in the nozzle tip into the combustion chamber.

Each fuel injector is connected to the fuel rail by a high-pressure fuel line and a steel connector. This steel connector is positioned into the cylinder head and sealed with an o-ring. The connector is retained in the cylinder head by a nut (fitting) that is threaded into the cylinder head.

The torquing force of this threaded nut (fitting) provides a sealing pressure between the fuel line connector and the fuel injector. **Retaining nut torque is very critical.** If the nut (fitting) is under torqued, the mating surfaces will not seal and a high-pressure fuel leak will result. If the fitting is over torqued, the connector and injector will deform and also cause a high-pressure fuel leak. This leak will be inside the cylinder head and will not be visible. The result will be a possible fuel injector miss-fire and low power, or a no-start condition.

The fuel injectors use hole type nozzles. High-pressure flows into the side of the injector, the ECM activates the solenoid causing the injector needle to lift and fuel to be injected. The clearances in the nozzle bore are extremely small and any dirt or contaminants will cause the injector to stick. Because of this, it is very important to do a thorough cleaning of any lines before opening up any fuel system component. Always cover or cap any open fuel connections before a fuel system repair is performed.

Each fuel injector connector tube contains an edge filter that is designed to break up small contaminants before entering the fuel injector. **The edge filters are not a substitute for proper cleaning and covering of all fuel system components during repair.**

The bottom of each fuel injector is sealed to the cylinder head with a **1.5mm** thick copper shim (gasket). The correct thickness shim must always be re-installed after removing an injector.

Fuel pressure in the injector circuit decreases after injection. The injector needle valve is immediately closed and fuel flow into the combustion chamber is stopped. Exhaust gases are prevented from entering the injector nozzle by the needle valve.

REMOVAL

CAUTION: Refer to Cleaning Fuel System Parts.

Six individual, solenoid actuated high-pressure fuel injectors (7) are used. The injectors are vertically mounted into a bored hole in the top of the cylinder head. This bored hole is located between the intake/exhaust valves. High-pressure connectors, mounted into the side of the cylinder head, connect each fuel injector to each high-pressure fuel line.

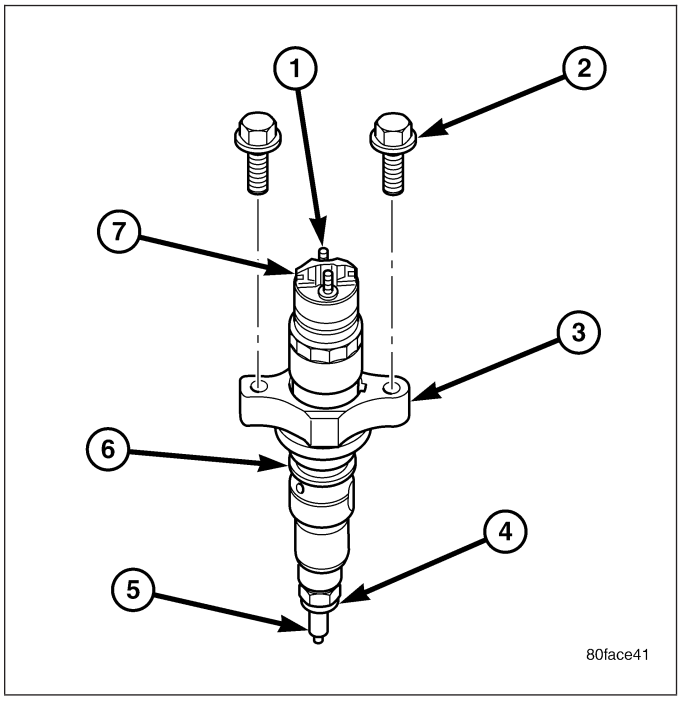

1. Disconnect both negative battery cables from both batteries. Cover and isolate ends of cables.
2. Remove breather assembly.

3. Remove valve cover. Refer to Engines for procedures.
4. Remove all 12 fuel injector wire harness nuts (1) securing integrated wiring harness to all 6 fuel injectors.

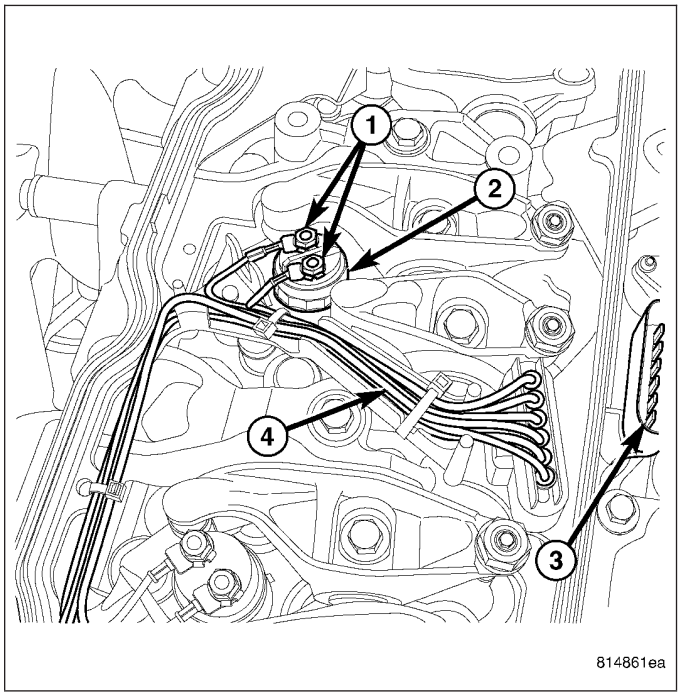

5. An integrated fuel injector wire harness / valve cover gasket (2) is used. After all 12 nuts (1) have been removed, remove this integrated gasket. Before removing gasket, disconnect engine wiring harness at both electrical connectors (3).

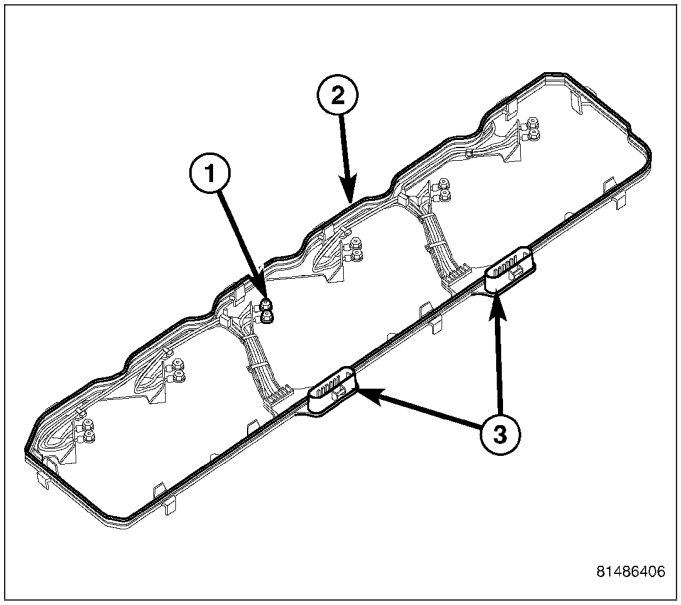

6. Remove necessary high pressure fuel line connecting necessary fuel injector rail to high pressure connector. Refer to Fuel Line Removal for procedures.
7. A connector retainer (nut) is used on each connector tube. Remove this nut(s) by unthreading from cylinder head.

8. Using special high-pressure connector removal tool #9015 (2) remove necessary high-pressure connector(s) from cylinder head. Tool #9015 threads onto connector tube. Use tool to pry connector tube(s) from cylinder head.

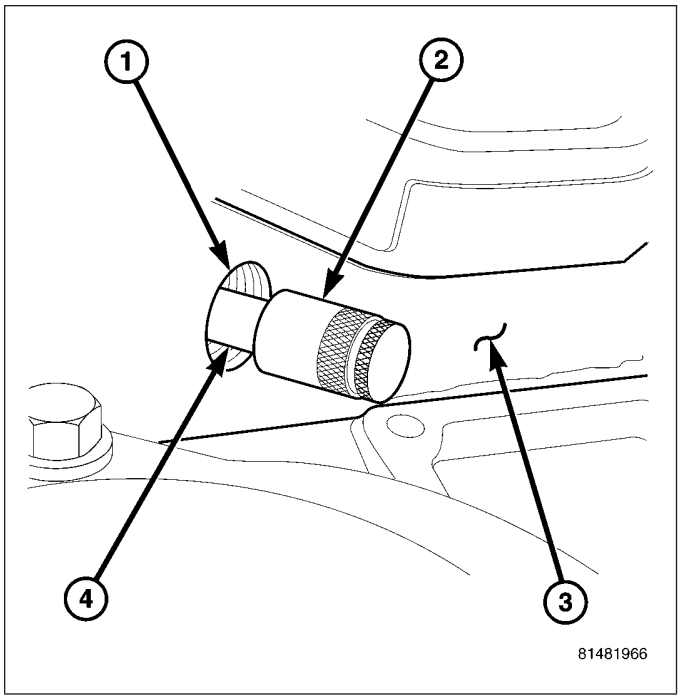

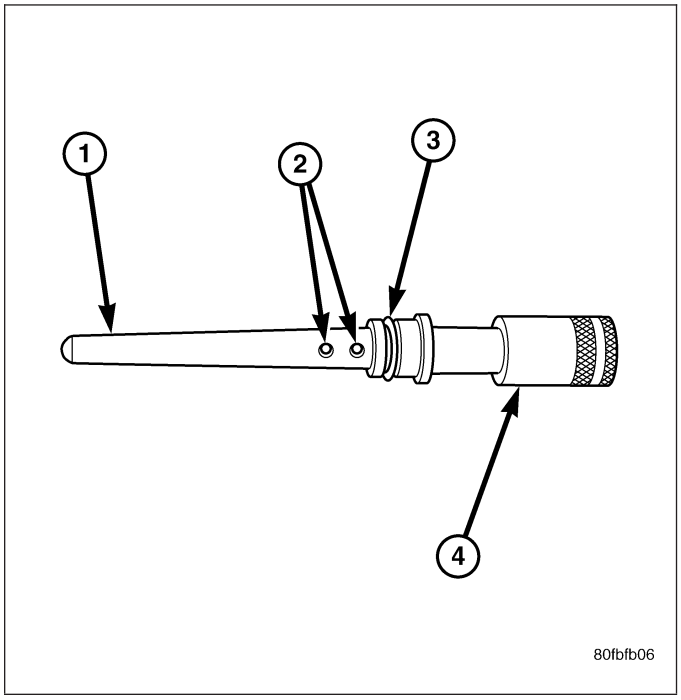

9. Remove 2 fuel injector hold-down clamp bolts (1) at each injector being removed.
10. Remove necessary exhaust rocker arm assembly(s).

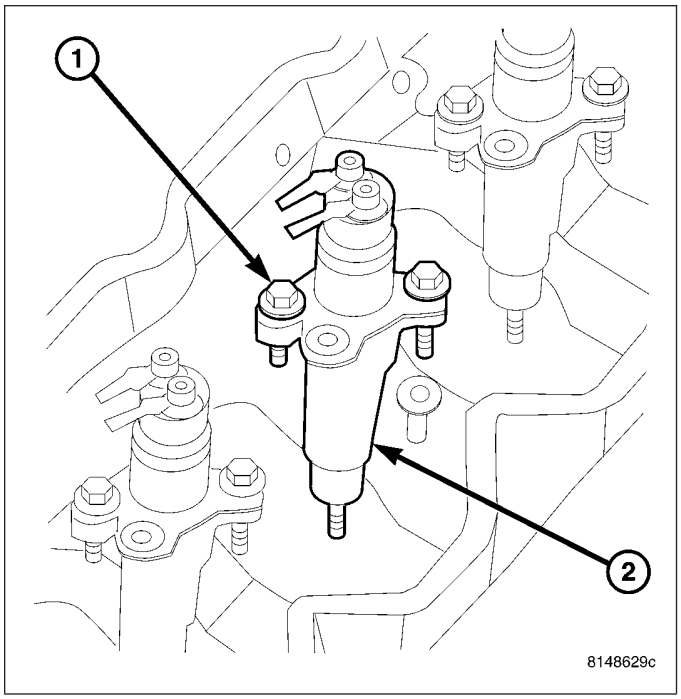

11. **USING TOOL #9010:**

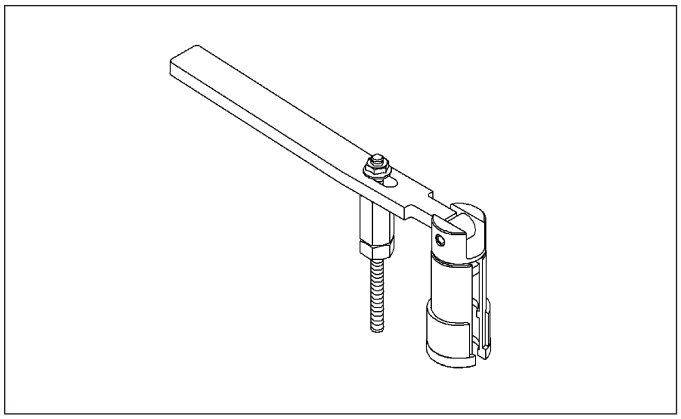

a. Special Tool #9010 is equipped with 2 clamshell clamps, a sliding retainer sleeve to retain the clamshell clamps, a 2–piece mounting stud, and a pivoting handle. **Do not attempt to remove the fuel injector with any other device. Damage to injector will occur.**

b. The rocker housing is bolted to the top of cylinder head. The mounting stud from tool #9010 was meant to temporarily replace a rocker housing mounting bolt. Remove the necessary rocker housing mounting bolt. These mounting bolts are located at the center of each of the 3 rocker housing support bridges.

c. Install and tighten 2–piece mounting stud to rocker housing. If removing the #6 fuel injector, separate the 2–piece mounting stud. Install lower half of mounting stud to center of rocker housing bridge. Install upper half of mounting stud to lower half.

d. Position tool handle to mounting stud and install handle nut. Leave handle nut loose to allow a pivoting action.

e. Position lower part of clamshell halves to sides of fuel injector (wider shoulder to bottom). The upper part of clamshell halves should also be positioned into machined shoulder on the handles pivoting head.

f. Slide the retainer sleeve over pivoting handle head to lock clamshell halves together.

g. Be sure handle pivot nut is loose.

h. Depress handle downward to remove fuel injector straight up from cylinder head bore.

12. Remove and discard injector sealing washer (2). This washer should be located on tip of injector, or may have remained in the injector bore..

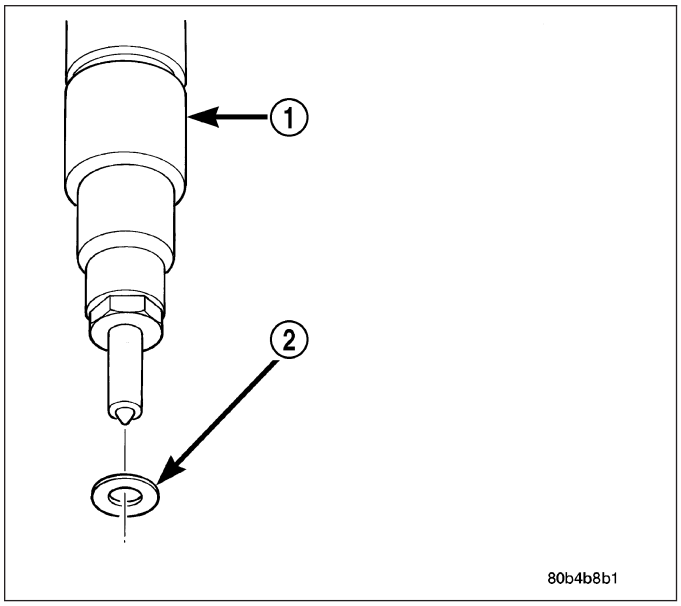

INSTALLATION

1. **Inspect fuel injector:**
   a. Look for burrs on injector inlet.
   b. Check nozzle holes for hole erosion or plugging.
   c. Inspect end of nozzle for burrs or rough machine marks.
   d. Look for cracks at nozzle end.
   e. If any of these conditions occur, replace injector.
2. Thoroughly clean fuel injector cylinder head bore. Blow out bore hole with compressed air.
3. The bottom of fuel injector is sealed to cylinder head bore with a copper sealing washer (shim) (1) of a certain thickness. A new shim (1) with correct thickness must always be re-installed after removing injector. Measure thickness of injector shim (1). **Shim Thickness: 1.5 mm (.060")**
4. Install new shim (1) (washer) to bottom of injector. Apply light coating of clean engine oil to washer. This will keep washer in place during installation.
5. Install new o-ring to fuel injector. Apply small amount of clean engine oil to o-ring.
6. Install injector into cylinder head with male (high-pressure) connector port facing the intake manifold. Push down on fuel injector mounting flange to engage o-ring and seat injector.
7. Tightening Sequence:
   a. Install fuel injector holdown clamp (mounting flange) bolts. **Do a preliminary tightening of these bolts to 5 N·m (44 in. lbs.) torque. This preliminary tightening insures the fuel injector is seated and centered.**

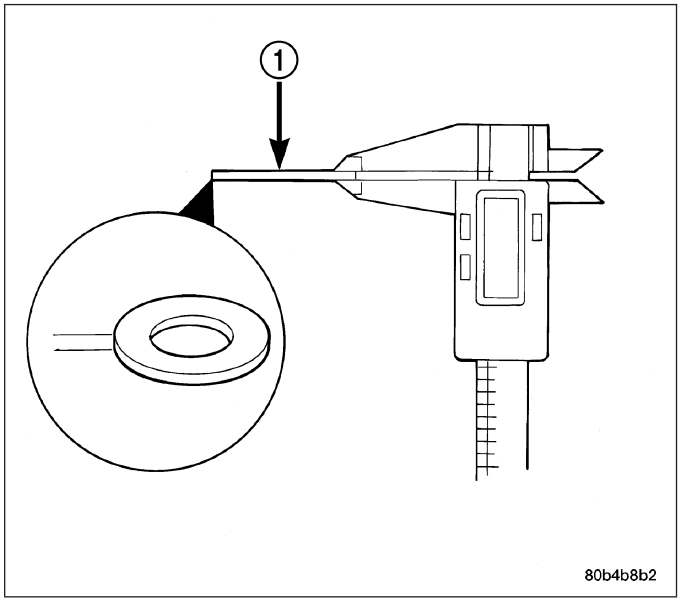

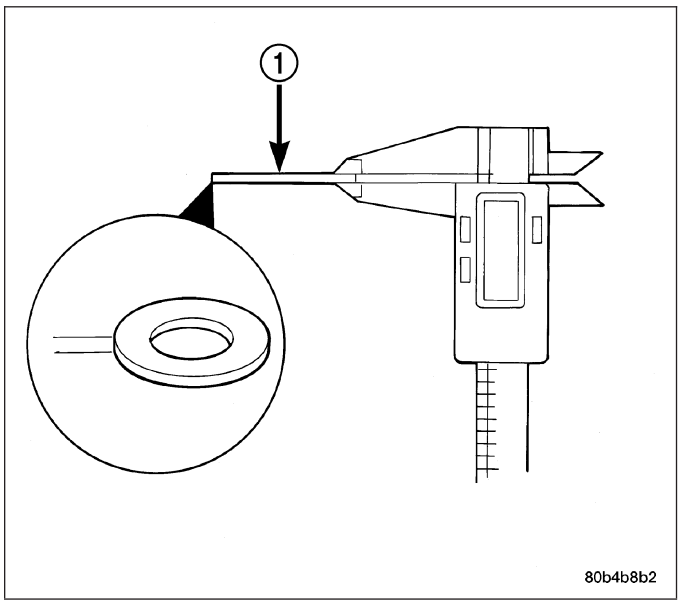

   b. After tightening, relieve bolt torque, but leave both bolts threaded in place.

c. Install high-pressure connector and retaining nut. Do a preliminary tightening to 15 N·m (11 ft. lbs.) torque.

d. Alternately tighten injector holdown bolts to 10 N·m (89 in. lbs.) torque.

e. Do a final tightening of the high-pressure connector and retaining nut. Tighten to 50 N·m (37 ft. lbs.) torque.

8. Connect injector solenoid wires and nuts to top of injectors. Tighten connector nuts to 1.25 N·m (11 in. lbs.) torque. **Be very careful not to overtighten these nuts as damage to fuel injector will occur.**
9. Install exhaust rocker arm assembly. Refer to the Diesel Engine section.
10. Set exhaust valve lash. Refer to the Diesel Engine section.
11. Install high pressure fuel line. Refer to Torque Specifications. **Be sure to use a secondary back-up wrench on the connector nut (fitting) while torquing fuel line fitting.** Refer to Fuel Line Installation for additional information.
12. Install valve cover. Refer to the Diesel Engine section.
13. Install breather assembly.
14. Connect negative battery cables to both batteries.

RAIL - FUEL INJECTOR

DESCRIPTION

The fuel injector rail is bolted to the top of the intake manifold.

OPERATION

The fuel rail is used as a distribution device to supply high-pressure fuel to the high-pressure fuel lines.

REMOVAL

CAUTION: Cleanliness cannot be overemphasized when handling or replacing diesel fuel system components. This especially includes the fuel injectors, high-pressure fuel lines and fuel injection pump. Very tight tolerances are used with these parts. Dirt contamination could cause rapid part wear and possible plugging of fuel injector nozzle tip holes. This in turn could lead to possible engine misfire. Always wash/clean any fuel system component thoroughly before disassembly and then air dry. Cap or cover any open part after disassembly. Before assembly, examine each part for dirt, grease or other contaminants and clean if necessary. When installing new parts, lubricate them with clean engine oil or clean diesel fuel only.

1. Disconnect both negative battery cables at both batteries. Isolate ends of both cables.
2. Disconnect electrical connector at fuel pressure sensor.
3. Remove banjo bolt at fuel limiting valve.
4. Disconnect necessary wiring harness retention clips from intake manifold.
5. Lift 2 rubber covers to gain access to positive (+), intake heater cable nuts. Remove 2 nuts and remove 2 cables from studs.
6. Carefully remove 4 high-pressure fuel lines from top of injector rail engine. Note position of each line while removing. **Do not bend lines while removing.**

CAUTION: WHEN LOOSENING OR TIGHTENING HIGH-PRESSURE LINES ATTACHED TO A SEPARATE FITTING, USE A BACK-UP WRENCH ON FITTING. DO NOT ALLOW FITTING TO ROTATE. DAMAGE TO BOTH FUEL LINE AND FITTING WILL RESULT.

7. Carefully remove 2 high-pressure fuel lines at each end of injector rail. Note position of each line while removing. **Do not bend lines while removing.**
8. Remove fuel line connecting injector pump to fuel rail.

9. Remove three injector rail mounting bolts (3).
10. Remove rail from top of intake manifold.

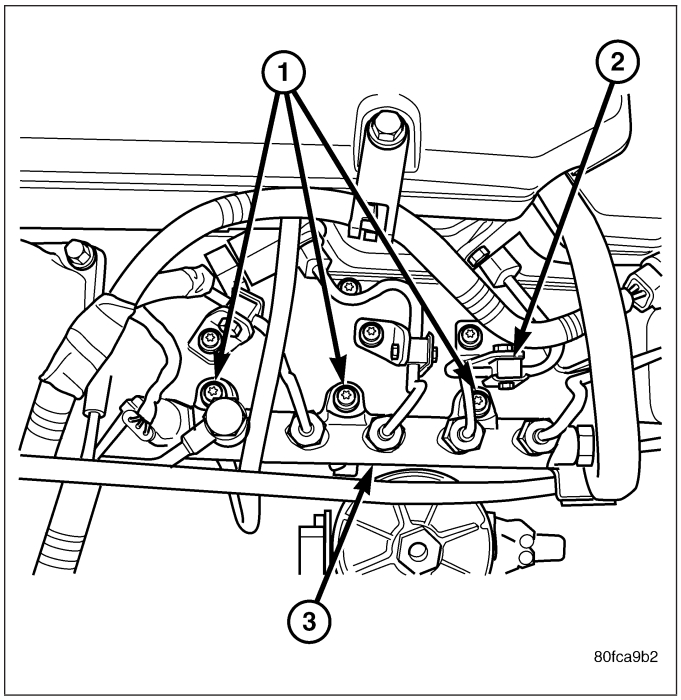

INSTALLATION

1. Clean any dirt/debris from top of intake manifold and bottom of fuel rail.
2. Position fuel rail to top of manifold and install 3 mounting bolts finger tight.
3. Install all high-pressure lines to rail. Refer to Fuel Lines for procedures. Refer to Torque Specifications.
4. Tighten 3 mounting bolts at fuel rail. Refer to Torque Specifications.
5. Reposition wiring harness to intake manifold and install new tie wraps.
6. Install and tighten fuel limiting valve banjo bolt. Refer to Torque Specifications.
7. Connect electrical connector to fuel pressure sensor.
8. Position 2 positive (+) cables to intake heater studs. Install 2 nuts.
9. Connect battery cables to both batteries.
10. Start engine and check for leaks.

SENSOR-TEMPERATURE/PRESSURE-INTAKE

DESCRIPTION

The combination, dual function Inlet Air Temperature/ Pressure Sensor (4) is located on the air cleaner (filter) cover.

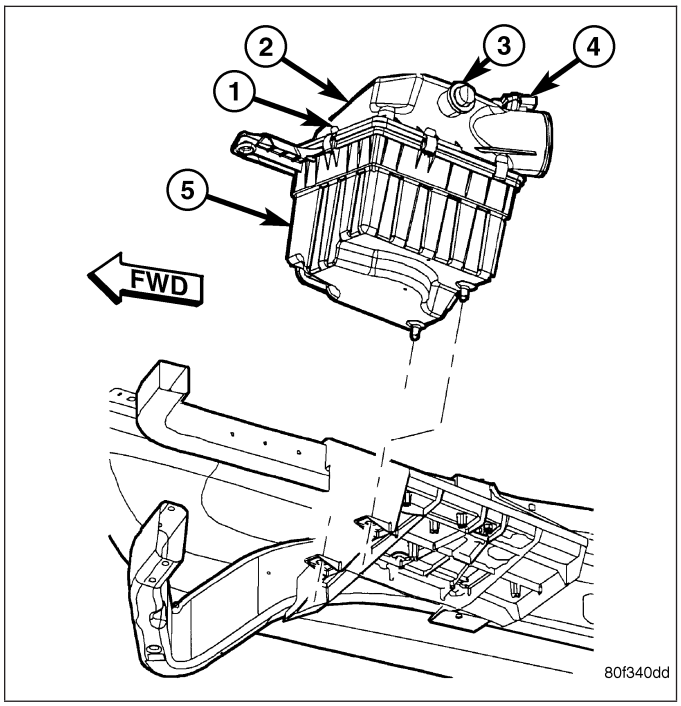

OPERATION

The Inlet Air Temperature/Pressure Sensor is a combination dual-function sensor. The sensor element extends into the intake air stream at the top of the air filter housing. Ambient air temperature as well as barometric pressure is monitored by this sensor. The Engine Control Module (ECM) monitors signals from this sensor.

REMOVAL

The Inlet Air Temperature/Pressure Sensor is located on the air cleaner cover.

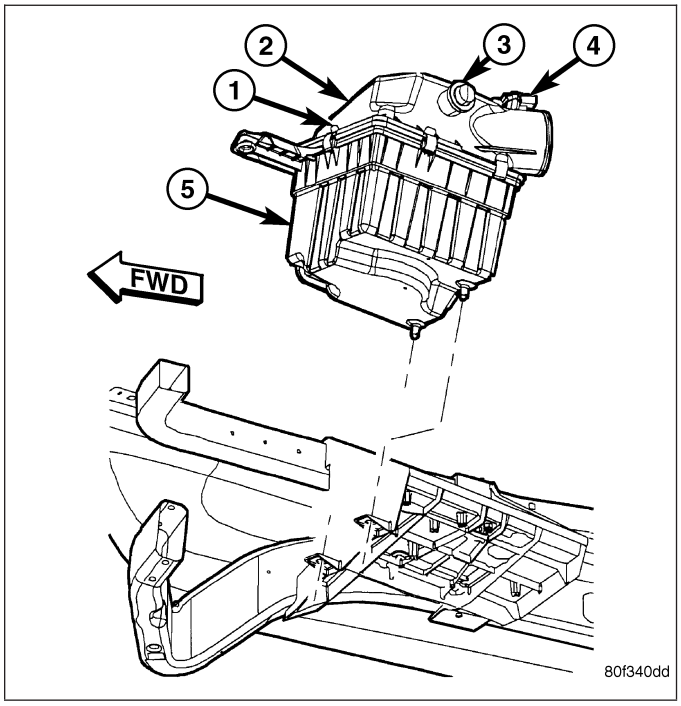

1. Disconnect electrical connector at sensor.
2. Remove two Torx-type mounting screws (3).
3. Remove sensor from air cleaner cover.

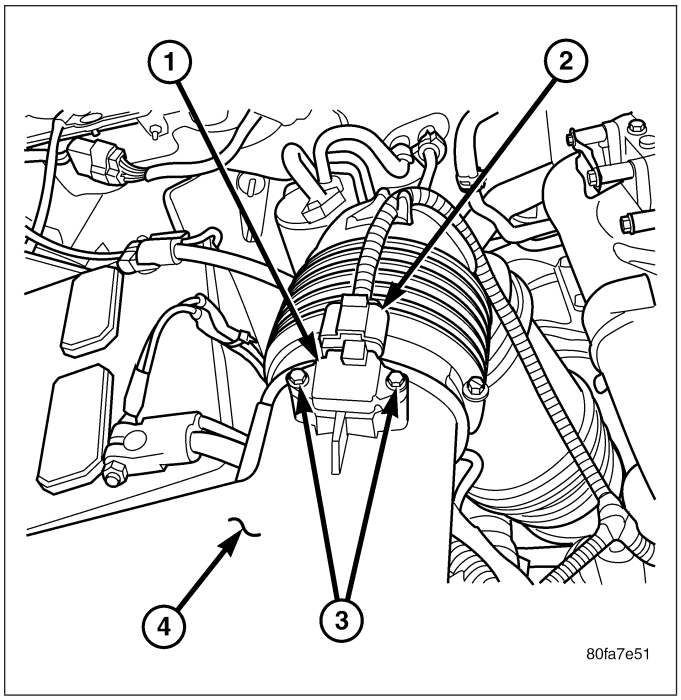

4. Check condition of sensor o-ring (2).

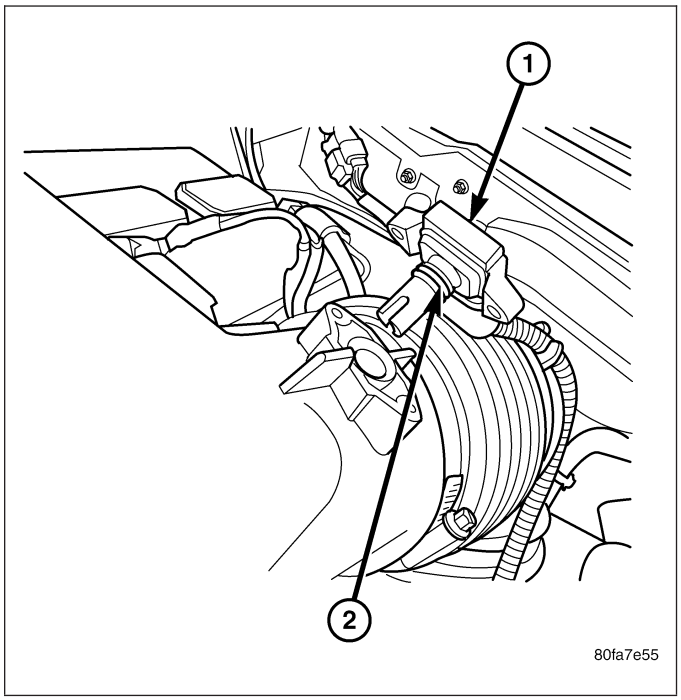

INSTALLATION

1. Check condition of sensor o-ring.
2. Position sensor into top of air cleaner cover with a slight twisting action.
3. Install 2 mounting screws.
4. Install electrical connector.

HEATER - INTAKE AIR

DESCRIPTION

The intake manifold air heater element assembly is located in the top of the intake manifold.

OPERATION

The air heater elements are used to heat incoming air to the intake manifold. This is done to help engine starting and improve driveability with cool or cold outside temperatures.

Electrical supply for the 2 air heater elements is controlled by the Engine Control Module (ECM) through the 2 air heater relays. Refer to Intake Manifold Air Heater Relays for more information.

Two heavy-duty cables connect the 2 air heater elements to the 2 air heater relays. Each of these cables will supply approximately 95 amps at 12 volts to an individual heating element within the heater block assembly.

CAUTION: The heater elements are no longer grounded using an external ground strap. Grounding is now accomplished using two electrically conductive gaskets. Failure to use these gaskets will result in faulty heater element operation.

Refer to the Powertrain Diagnostic Procedures manual for electrical operation and complete description of the intake heaters, including pre-heat and post-heat cycles.

REMOVAL

If servicing either of the heater elements, the entire block/element assembly must be replaced.

1. Disconnect both negative battery cables at both batteries. Cover and isolate ends of both cables.
2. Remove both the intake manifold air intake tube (above injection pump), and its rubber connector hose (2).

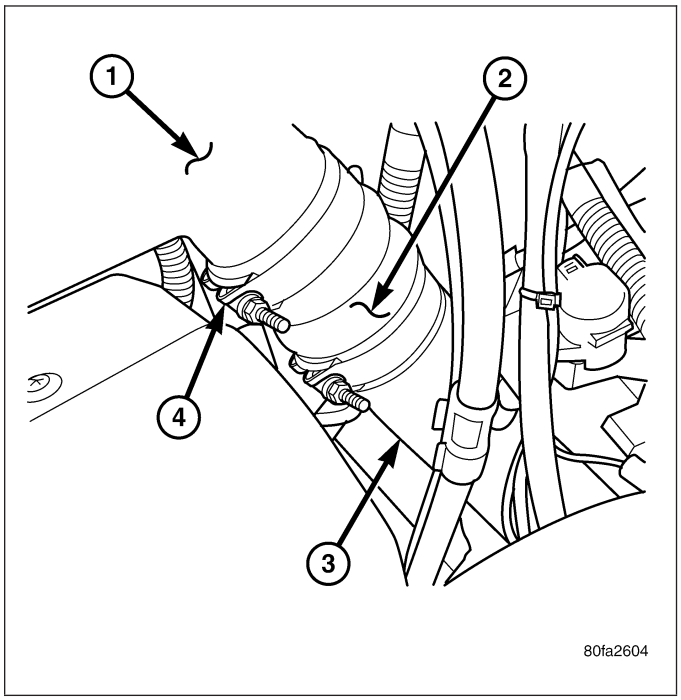

3. Lift 2 rubber covers (3) to gain access to 2 positive (+) cable nuts.

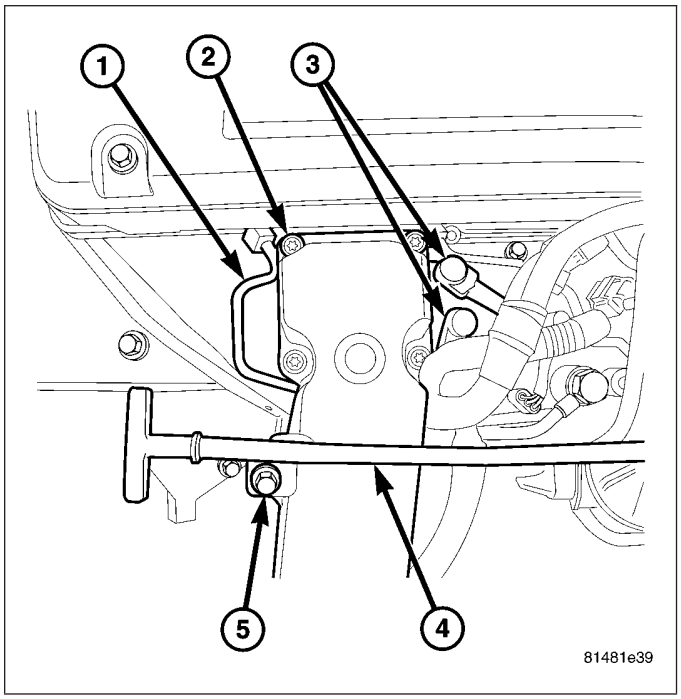

4. Remove two cable nuts (6) and remove 2 cables from studs.
5. Remove wiring harness clips.
6. Remove engine oil dipstick tube bracket from air inlet connection and fuel filter housing.
7. Remove four housing mounting bolts (1) and remove heater element assembly.

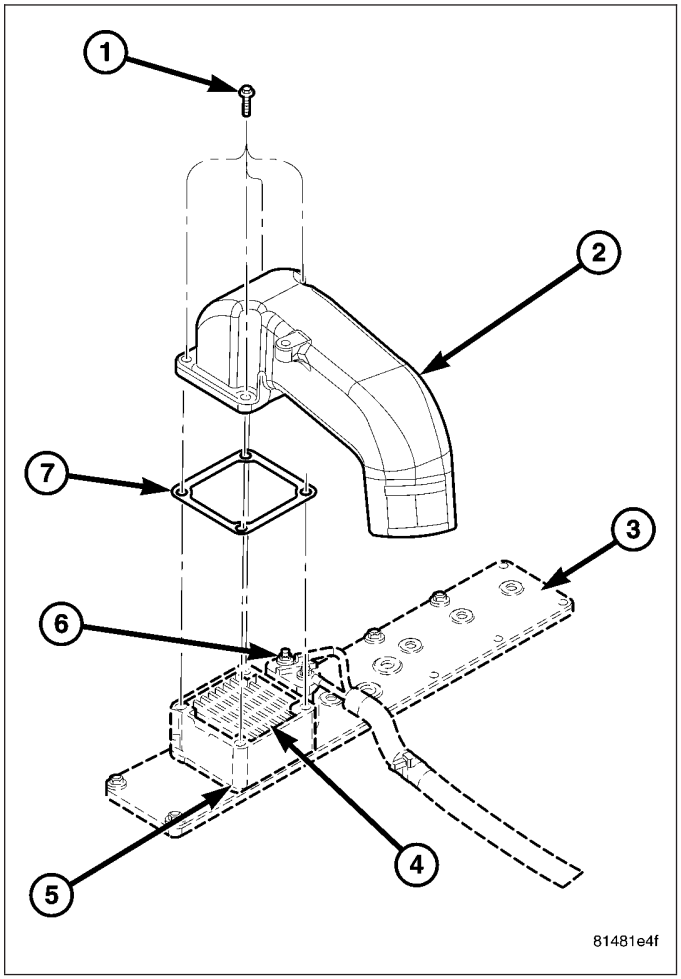

INSTALLATION

If servicing either of the heater elements, the entire block/element assembly must be replaced.

CAUTION: The heater elements are no longer grounded using an external ground strap. Grounding is now accomplished using two electrically conductive gaskets. Failure to use these gaskets will result in faulty heater element operation.

1. Using 2 new gaskets, position element assembly and air housing to intake manifold.
2. Install 4 housing bolts and tighten to 24 N·m (18 ft. lbs.) torque.
3. Connect 2 positive (+) heater cables at cable mounting studs. **Do not allow either of the cable eyelets to contact any other metal source other than the cable nuts/studs.**
4. Install engine oil dipstick tube and mounting bolt.
5. Connect rubber connector hose and intake tube to air intake housing. Tighten clamp bolts to 11 N·m (100 in. lbs.) torque.
6. Connect both negative battery cables at both batteries.

RELAY - INTAKE AIR HEATER

DESCRIPTION

The two intake manifold air heater relays (4) are located in the engine compartment. They are attached to a common bracket. This bracket is attached to the right battery tray.

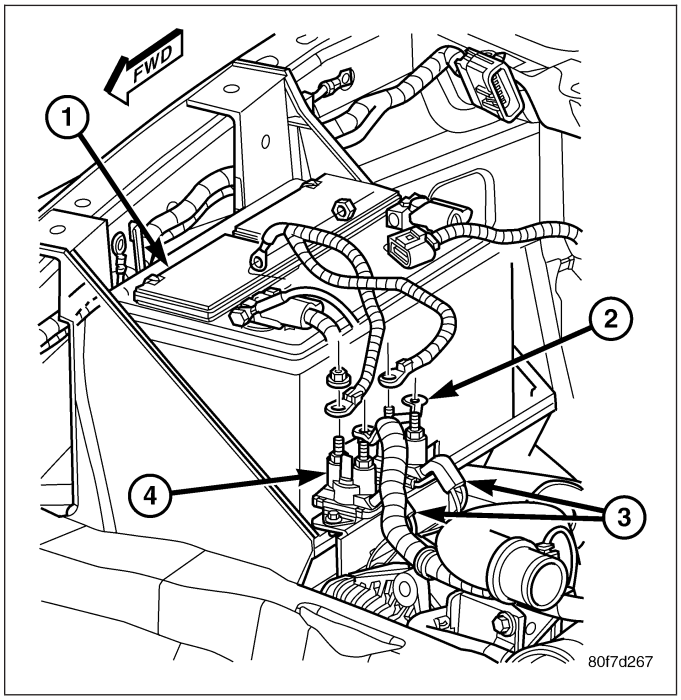

OPERATION

The Engine Control Module (ECM) operates the 2 heating elements through the 2 intake manifold air heater relays.

Refer to Powertrain Diagnostic Procedures for an electrical operation and complete description of the intake heaters, including pre-heat and post-heat cycles.

REMOVAL

The two intake manifold air heater relays (4) are located in the engine compartment. They are attached to a common bracket. This bracket is attached to the right battery tray.

The mounting bracket and both relays are replaced as an assembly.

1. Disconnect both negative battery cables at both batteries.
2. Disconnect four relay trigger wires at both relays. Note position of wiring before removing.
3. Lift four rubber shields from all 4 cables.
4. Remove four nuts at cable connectors. Note position of wiring before removing.
5. Remove relay mounting bracket bolts and remove relay assembly.

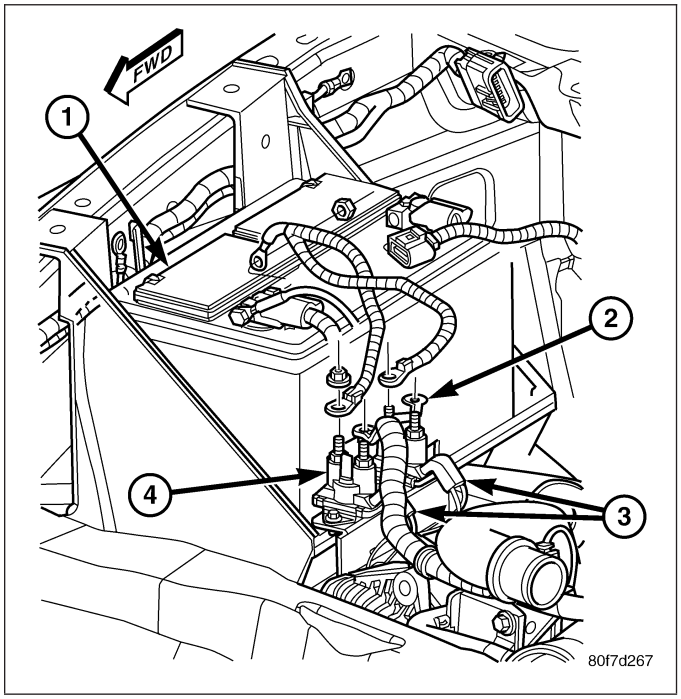

INSTALLATION

1. Install relay assembly to battery tray. Tighten mounting bolts to 4.5 N·m (40 in. lbs.) torque.
2. Connect eight electrical connectors to relays.
3. Connect battery cables to both batteries.

SENSOR-TEMPERATURE/PRESSURE-MAP

DESCRIPTION

The combination, dual function Intake Manifold Air Temperature Sensor/MAP Sensor (2) is installed into the top of the intake manifold.

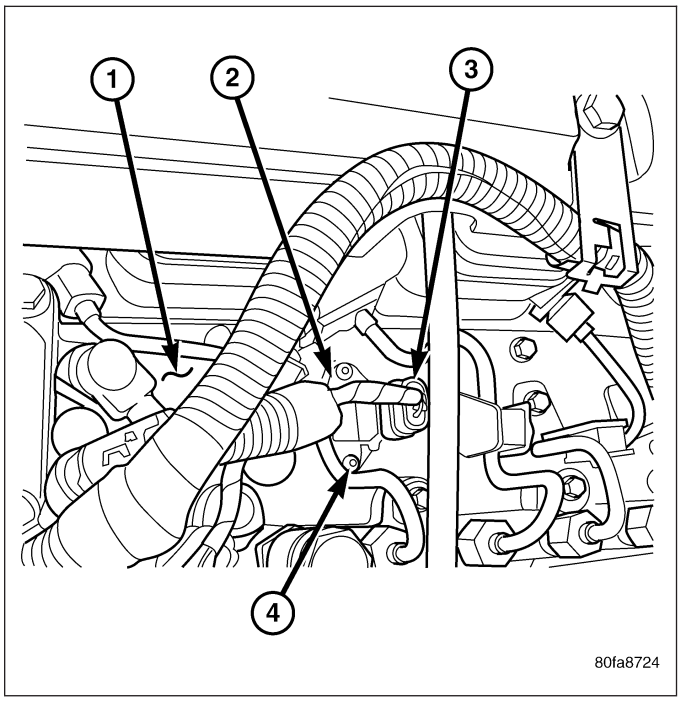

OPERATION

The combination, dual function Intake Manifold Air Temperature Sensor/MAP Sensor is installed into the top of the intake manifold with the sensor element extending into the air stream.

The IAT portion of the sensor provides an input voltage to the Engine Control Module (ECM) indicating intake manifold air temperature. The MAP portion of the sensor provides an input voltage to the ECM indicating turbocharger boost pressure.

REMOVAL

The combination, dual function Intake Manifold Air Temperature Sensor/MAP (IAT/MAP) sensor is installed (2) into the top of the intake manifold.

1. Clean area around sensor.
2. Disconnect electrical connector (3) from IAT/MAP sensor.
3. Remove two T-15 Torx headed screws (4).
4. Remove sensor from intake manifold.

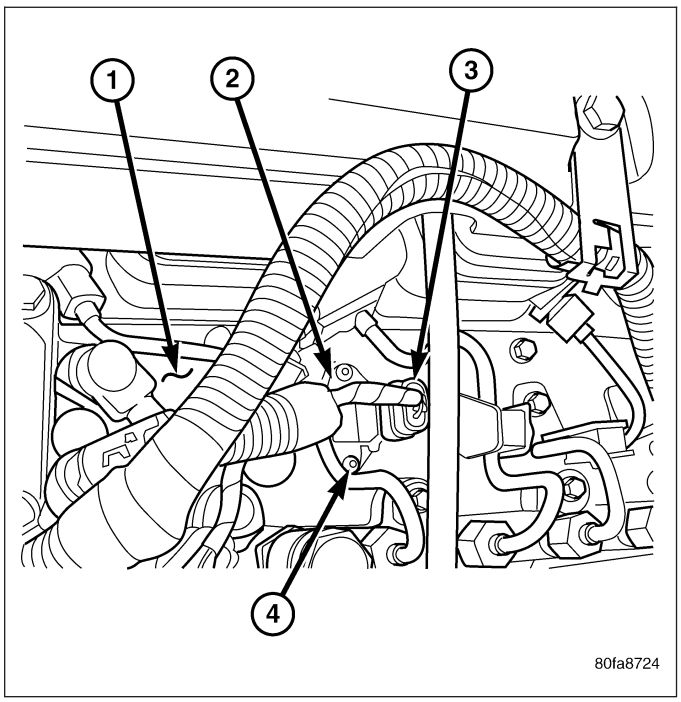

5. Check condition of sensor o-ring (2).

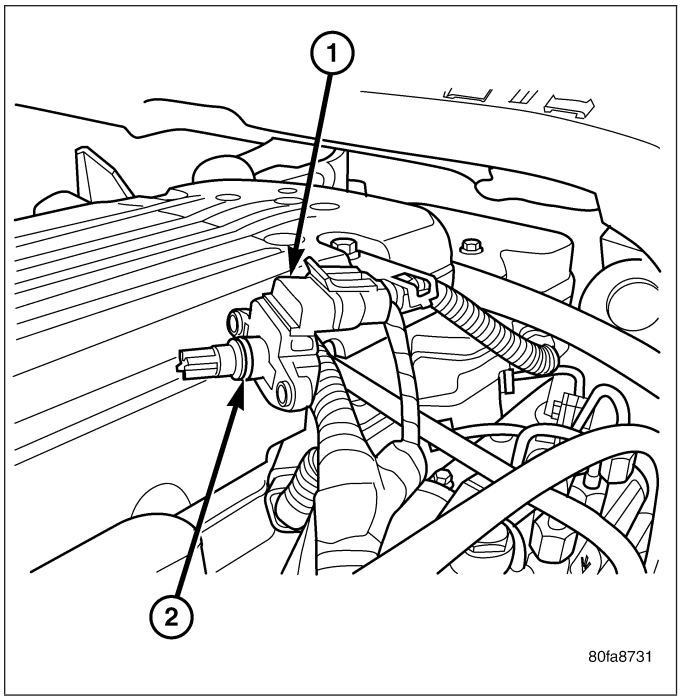

INSTALLATION

1. Check condition of sensor o-ring.
2. Lubricate sensor o-ring with clean engine oil.
3. Clean sensor mounting area at intake manifold.
4. Position sensor into intake manifold.
5. Install and tighten 2 sensor mounting screws to 1 N·m (9 in. lbs.) torque.
6. Connect electrical connector to sensor.

SENSOR-MAP

DESCRIPTION

A combination, dual function Intake Manifold Air Temperature Sensor/MAP Sensor is used. Refer to Intake Air Temperature Sensor/MAP Sensor for information.

SWITCH - PTO

DESCRIPTION

This Engine Control Module (ECM) input is used only on models equipped with aftermarket Power Take Off (PTO) units.

OPERATION

This input is used only to tell the ECM that the aftermarket PTO (Power Take Off) unit has been engaged. The ECM will disable (temporarily shut down) certain OBD II diagnostic trouble codes when the PTO unit is engaged.

STEERING

TABLE OF CONTENTS

	page
STEERING	
DESCRIPTION	1
OPERATION	1
DIAGNOSIS AND TESTING	
POWER STEERING SYSTEM	2
POWER STEERING FLOW AND PRESSURE	4
SPECIAL TOOLS	
STEERING	6
COLUMN	7
GEAR - INDEPENDENT FRONT SUSPENSION	31
GEAR - LINK/COIL	35
LINKAGE - INDEPENDENT FRONT SUSPENSION	53
LINKAGE - LINK/COIL	55
PUMP	63
PUMP - SRT-10	78

STEERING

DESCRIPTION

CAUTION: MOPAR® ATF+4 is to be used in the power steering system. No other power steering or automatic transmission fluid is to be used in the system. Damage may result to the power steering pump and system if any other fluid is used, and do not overfill.

Power steering systems consist of:

- Steering column
- Rack and pinion steering gear
- Belt driven hydraulic steering pump
- Pump pressure and return hoses
- Oil Cooler

OPERATION

The steering column shaft is attached to the gear pinion. The rotation of the pinion moves the gear rack from side-to-side. This lateral action of the rack pushes and pulls the tie rods (4) to change the direction of the front wheels.

Power assist is provided by an engine mounted hydraulic pump which supplies hydraulic fluid pressure to the steering gear (6).

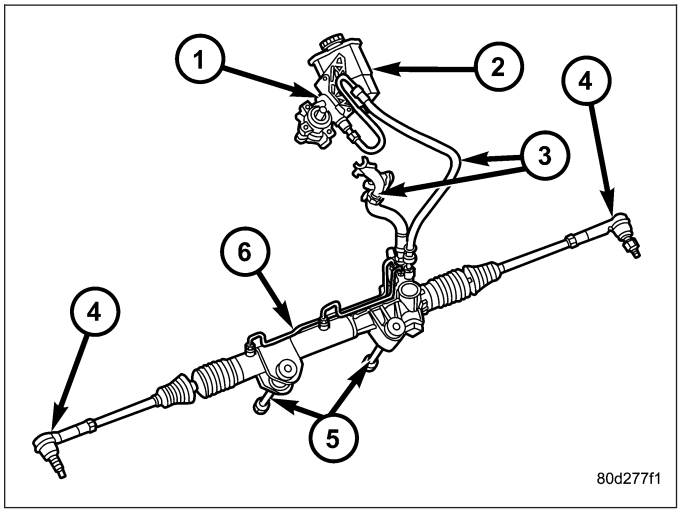

DIAGNOSIS AND TESTING

POWER STEERING SYSTEM

There is some noise in all power steering systems. One of the most common is a hissing sound evident at a standstill parking. Or when the steering wheel is at the end of it's travel. Hiss is a high frequency noise similar to that of a water tap being closed slowly. The noise is present in all valves that have a high velocity fluid passing through an orifice. There is no relationship between this noise and steering performance.

STEERING NOISE

CONDITION	POSSIBLE CAUSES	CORRECTION
OBJECTIONAL HISS OR WHISTLE	1. Steering intermediate shaft to dash panel seal.	1. Check and repair seal at dash panel.
	2. Noisy valve in power steering gear.	2. Replace steering gear.
RATTLE OR CLUNK	1. Gear mounting bolts loose.	1. Tighten bolts to specification.
	2. Loose or damaged suspension components.	2. Inspect and repair suspension.
	3. Internal gear noise.	3. Replace steering gear.
	4. Pressure hose in contact with other components.	4. Reposition hose.
	5. Loose or damaged intermediate shaft or column.	5. Inspect and repair or replace.
CHIRP OR SQUEAL	1. Loose belt.	1. Adjust or replace.
WHINE OR GROWL	1. Low fluid level.	1. Fill to proper level.
	2. Pressure hose in contact with other components.	2. Reposition hose.
	3. Internal pump noise.	3. Replace pump.
	4. Air in fluid	4. Check for lekas, Evacuate air from P/S system.
SUCKING AIR SOUND	1. Loose return line clamp.	1. Replace clamp.
	2. O-ring missing or damaged on hose fitting.	2. Replace o-ring.
	3. Low fluid level.	3. Fill to proper level.
	4. Air leak between pump and reservoir.	4. Repair as necessary.
	5. Reservoir cap not installed correctly.	5. Install reservoir cap correctly.
SCRUBBING OR KNOCKING	1. Wrong tire size.	1. Verify tire size.

BINDING AND STICKING

CONDITION	POSSIBLE CAUSE	CORRECTION
DIFFICULT TO TURN WHEEL STICKS OR BINDS	1. Low fluid level.	1. Fill to proper level.
	2. Tire pressure.	2. Adjust tire pressure.
	3. Steering components (ball joints/tie rod ends).	3 Inspect and repair as necessary.
	4. Loose belt.	4. Adjust or replace.
	5. Low pump pressure.	5. Pressure test and replace if necessary.
	6. Column shaft coupler binding.	6. Replace coupler.
	7. Steering gear worn.	7. Replace gear.
	8. Pump seized / Stuck valve	8. Replace pump.

INSUFFICIENT ASST. OR POOR RETURN TO CENTER

CONDITION	POSSIBLE CAUSE	CORRECTION
HARD TURNING OR MOMENTARY INCREASE IN TURNING EFFORT	1. Tire pressure.	1. Adjust tire pressure.
	2. Low fluid level.	2. Fill to proper level.
	3. Loose belt.	3. Adjust or replace.
	4. Low pump pressure.	4. Pressure test and repair as necessary.
	5. Internal gear leak.	5. Replace gear.
STEERING WHEEL DOES NOT WANT TO RETURN TO CENTER POSITION	1. Tire pressure.	1. Adjust tire pressure.
	2. Wheel alignment.	2. Align front end.
	3. Lack of lubrication.	3. Inspect and lubricate suspension compnents.
	4. High friction in steering gear.	4. Replace gear.

LOOSE STEERING AND VEHICLE LEAD

CONDITION	POSSIBLE CAUSE	CORRECTION
EXCESSIVE PLAY IN STEERING WHEEL	1. Worn or loose suspension or steering components.	1. Inspect and repair as necessary.
	2. Worn or loose wheel bearings.	2. Inspect and repair or adjust bearings.
	3. Steering gear mounting.	3. Tighten gear mounting bolts to specification.
	4. Gear out of adjustment.	4. Replace gear.
	5. Worn or loose steering coupler.	5. Inspect and replace as necessary.
VEHICLE PULLS OR LEADS TO ONE SIDE.	1. Tire Pressure.	1. Adjust tire pressure.
	2. Radial tire lead.	2. Rotate tires.
	3. Brakes dragging.	3. Repair as necessary.
	4. Wheel alignment.	4. Align front end.
	5. Steering gear valve bias.	5. Replace steering gear.

POWER STEERING FLOW AND PRESSURE

The following procedure is used to test the operation of the power steering system on the vehicle. This test will provide the gallons per minute (GPM) or flow rate of the power steering pump along with the maximum relief pressure. Perform test any time a power steering system problem is present. This test will determine if the power steering pump or power steering gear is not functioning properly. The following pressure and flow test is performed using Power Steering Analyzer Tool kit 6815 and Adapter Kit 6893.

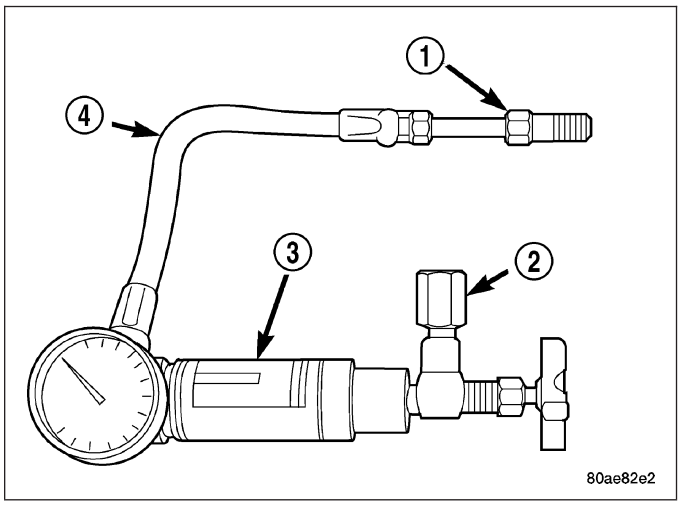

FLOW AND PRESSURE TEST

1. Check the power steering belt to ensure it is in good condition and adjusted properly.
2. Connect pressure gauge hose from the Power Steering Analyzer to adapter 6826.
3. Connect tube 6825A to Power Steering Analyzer test valve end.
4. Disconnect the high pressure hose from the power steering pump.
5. Connect the tube 6825A to the pump fitting.
6. Connect the power steering hose from the steering gear to the adapter 6826.
7. Open the test valve completely.
8. Start engine and let idle long enough to circulate power steering fluid through flow/pressure test gauge and to get air out of the fluid. Then shut off engine.
9. Check fluid level, add fluid as necessary. Start engine again and let idle.
10. Gauge should read below 862 kPa (125 psi), if above, inspect the hoses for restrictions and repair as necessary. The initial pressure reading should be in the range of 345-552 kPa (50-80 psi).
11. Increase the engine speed to 1500 RPM and read the flow meter. If the flow rate (GPM) is below specification, (refer to pump specification chart for GPM) the pump should be replaced.

CAUTION: The following test procedure involves testing maximum pump pressure output and flow control valve operation. Do not leave valve closed for more than three seconds as the pump could be damaged.

12. Close valve fully three times and record highest pressure indicated each time. **All three readings must be above specifications and within 345 kPa (50 psi) of each other.**
    - Pressures above specifications but not within 345 kPa (50 psi) of each other, replace pump.
    - Pressures within 345 kPa (50 psi) of each other but below specifications, replace pump.
13. Open the test valve and turn the steering wheel to the extreme left and right positions three times against the stops. Record the highest pressure reading at each position. Compare readings to the pump specifications chart. If pressures readings are not within 50 psi of each other, the gear is leaking internally and must be replaced.

CAUTION: Do not force the pump to operate against the stops for more than 2 to 3 seconds at a time because, pump damage will result.

PUMP SPECIFICATION

ENGINE	RELIEF PRESSURE ± 65	FLOW RATE (GPM) AT 1500 RPM
1500 series	11032 kPa (1615 ± 65 psi)	3.1 - 3.5
2500 & 3500 series	12400 kPa (1800 ± 50 psi)	3.5 - 4.0

SPECIAL TOOLS

STEERING

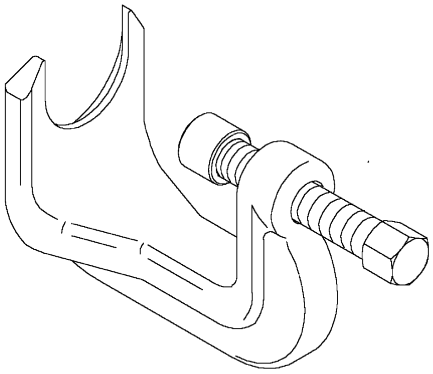

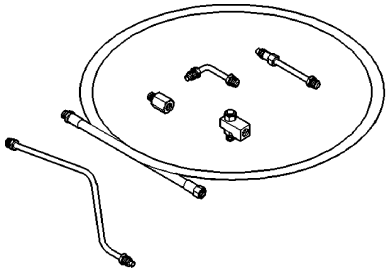

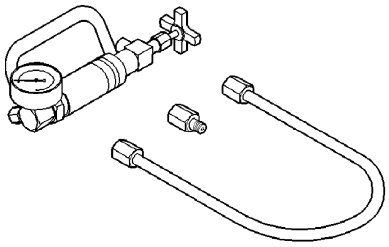

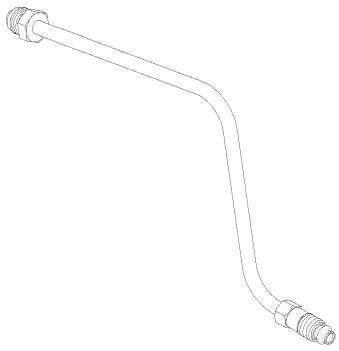

COLUMN

TABLE OF CONTENTS

page

COLUMN
DESCRIPTION
DESCRIPTION 7
DESCRIPTION - SRT-10 8
DIAGNOSIS AND TESTING
STEERING COLUMN 8
REMOVAL 8
INSTALLATION 10
IGNITION SWITCH
DESCRIPTION 13
OPERATION 13
DIAGNOSIS AND TESTING
IGNITION SWITCH 13
REMOVAL 13
INSTALLATION 15
IGNITION SWITCH - SRT-10
REMOVAL - SRT-10 17
INSTALLATION - SRT-10 19
KEY-IN IGNITION SWITCH
DESCRIPTION 19
DIAGNOSIS AND TESTING
IGNITION SWITCH AND KEY LOCK CYLINDER 19

page

KEY CYLINDER
REMOVAL 20
INSTALLATION 20
STEERING WHEEL
REMOVAL 21
INSTALLATION 21
TILT LEVER KNOB RELEASE
REMOVAL 21
INSTALLATION 23
GEAR SHIFT LEVER
REMOVAL 24
INSTALLATION 24
UPPER STEERING COUPLING
REMOVAL 25
INSTALLATION 26
LOWER STEERING COUPLING
REMOVAL
ALL LD & HD EXCEPT 4X4 HD 27
4X4 HD 27
INSTALLATION
ALL LD & HD EXCEPT 4X4 HD 29
4X4 HD 29

COLUMN

DESCRIPTION

DESCRIPTION

NOTE: The steering column on vehicles with an automatic transmission may not be equipped with an internal locking shaft that allows the ignition key cylinder to be locked with the key. Alternative methods of locking the steering wheel for service will have to be used.

The tilt and standard column (4) has been designed to be serviced as an assembly; less wiring, switches, shrouds, steering wheel, etc. Most steering column components can be serviced without removing the steering column from the vehicle.

To service the steering wheel, switches or airbag, refer to Restraints and follow all WARNINGS and CAUTIONS.

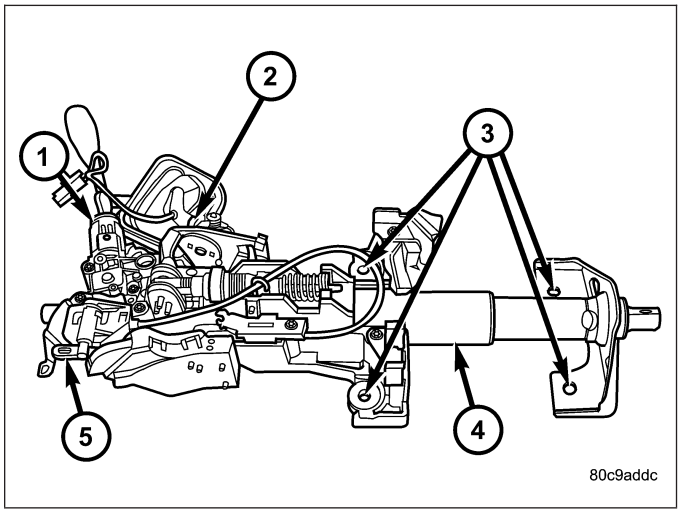

WARNING: THE AIRBAG SYSTEM IS A SENSITIVE, COMPLEX ELECTRO-MECHANICAL UNIT. BEFORE ATTEMPTING TO DIAGNOSE, REMOVE OR INSTALL THE AIRBAG SYSTEM COMPONENTS YOU MUST FIRST DISCONNECT AND ISOLATE THE BATTERY NEGATIVE (GROUND) CABLE. THEN WAIT TWO MINUTES FOR THE SYSTEM CAPACITOR TO DISCHARGE. FAILURE TO DO SO COULD RESULT IN ACCIDENTAL DEPLOYMENT OF THE AIRBAG AND POSSIBLE PERSONAL INJURY. THE FASTENERS, SCREWS, AND BOLTS, ORIGINALLY USED FOR THE AIRBAG COMPONENTS, HAVE SPECIAL COATINGS AND ARE SPECIFICALLY DESIGNED FOR THE AIRBAG SYSTEM. THEY MUST NEVER BE REPLACED WITH ANY SUBSTITUTES. ANYTIME A NEW FASTENER IS NEEDED, REPLACE WITH THE CORRECT FASTENERS PROVIDED IN THE SERVICE PACKAGE OR FASTENERS LISTED IN THE PARTS BOOKS.

CAUTION: Do not hammer on steering column shaft. This may cause damage to the shaft or bearing.

CAUTION: Do not attempt to remove the pivot bolts to disassemble the tilting mechanism. Do not remove shaft lock plate or plate retainer. This will damage the column.

CAUTION: Do not attempt to remove or modify the park lock slider or link.

NOTE: When servicing the steering wheel after removing the old bolt a new bolt must be used when installing.

NOTE: When servicing the coupler a new bolt must be used when installing.

DESCRIPTION - SRT-10

The SRT-10 column has no **START** position on the key cylinder. The push starter button switch is mounted on the Instrument panel center stack. All SRT-10 columns are Tilt columns, Standard cab trucks come with manual transmissions, Quad cab trucks come equipped with automatic transmissions.

DIAGNOSIS AND TESTING

STEERING COLUMN

If the vehicle is involved in a front end collision/the air bag has deployed the column must be inspected. This inspection will determine if the Column has collapsed. Inspect the column mounting capsules visually and manually push and pull them to check for separation or fractures. If capsules are fractured or have moved the column MUST be replaced.

REMOVAL

WARNING: BEFORE SERVICING THE STEERING COLUMN THE AIRBAG SYSTEM MUST BE DISARMED. REFER TO ELECTRICAL RESTRAINT SYSTEM FOR SERVICE PROCEDURES. FAILURE TO DO SO MAY RESULT IN ACCIDENTAL DEPLOYMENT OF THE AIRBAG AND POSSIBLE PERSONAL INJURY.

CAUTION: All fasteners must be torqued to specification to ensure proper operation of the steering column.

1. Position the front wheels **straight ahead**.
2. Disconnect the negative (ground) cable from the battery.
3. Remove the two switches from the steering wheel.
4. Remove the airbag, (Refer to 8 - ELECTRICAL/RESTRAINTS/DRIVER AIRBAG - REMOVAL).
5. Remove the steering wheel with special tool CJ98–1 or an appropriate steering wheel puller.

CAUTION: Ensure the puller bolts are fully engaged into the steering wheel and not into the clockspring, before attempting to remove the wheel. Failure to do so may damage the steering wheel/clockspring.

6. Remove the steering column opening cover (Refer to 23 - BODY/INSTRUMENT PANEL/STEERING COLUMN OPENING COVER - REMOVAL).
7. Remove the tilt lever.
8. Remove the column shrouds (1&2).

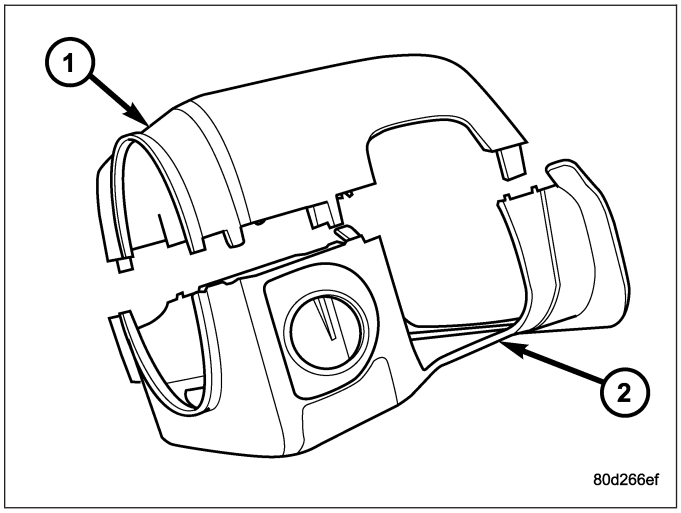

9. Remove the clock spring, (Refer to 8 - ELECTRICAL/RESTRAINTS/CLOCKSPRING - REMOVAL).
10. Disconnect the wiring harness to the column.
11. Remove the shift cable(2) from the column shift lever actuator (1) (Refer to 21 - TRANSMISSION/ TRANSAXLE/AUTOMATIC - 32RH/GEAR SHIFT CABLE - REMOVAL)..
12. Release the shift cable from the column bracket and remove it from the bracket.
13. Remove the SKIM module in order to disconnect the electrical connector.

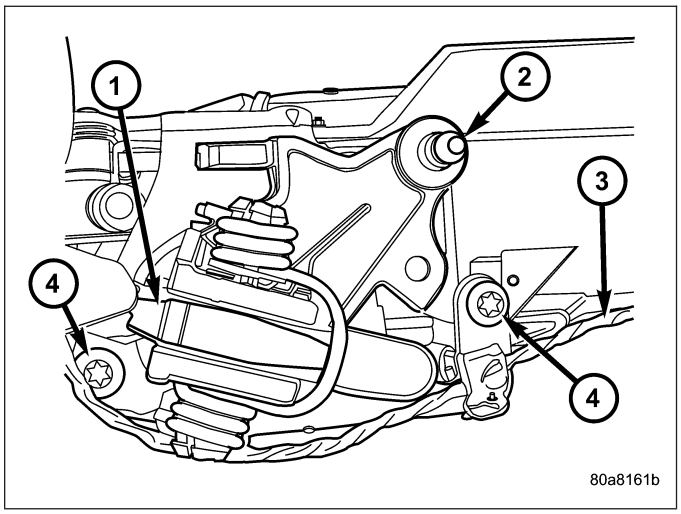

14. Remove the upper steering shaft coupler bolt (2)..

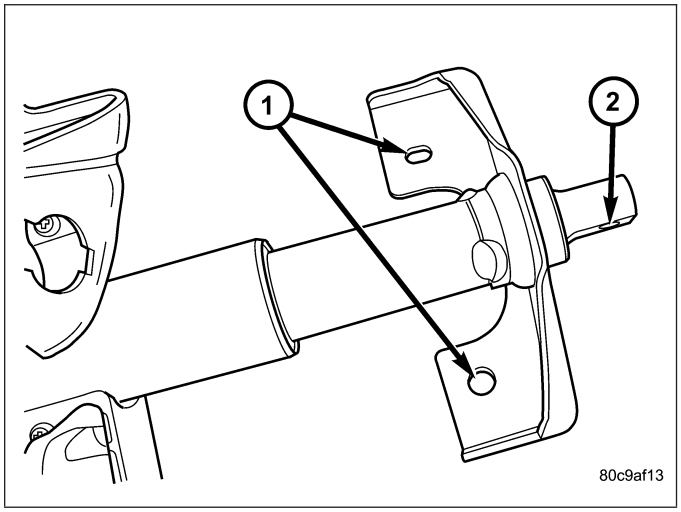

15. Seperate the shaft from the coupler (1).

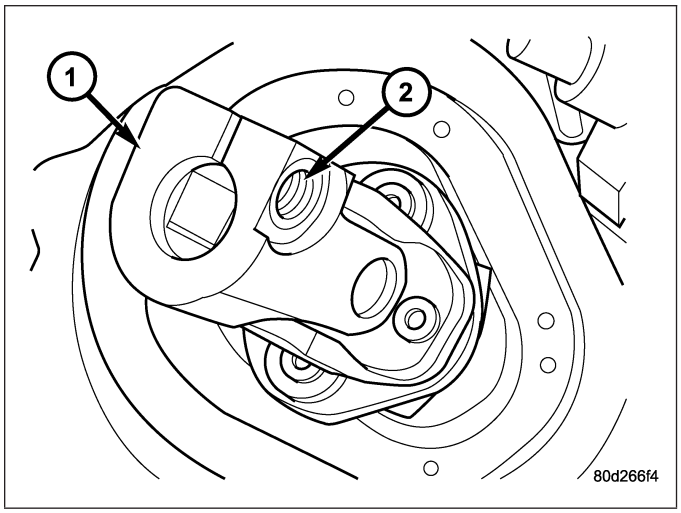

16. Remove the brake light switch and discard (Refer to 8 - ELECTRICAL/LAMPS/LIGHTING - EXTERIOR/BRAKE LAMP SWITCH - REMOVAL).
17. Remove the four steering column mounting nuts (1).

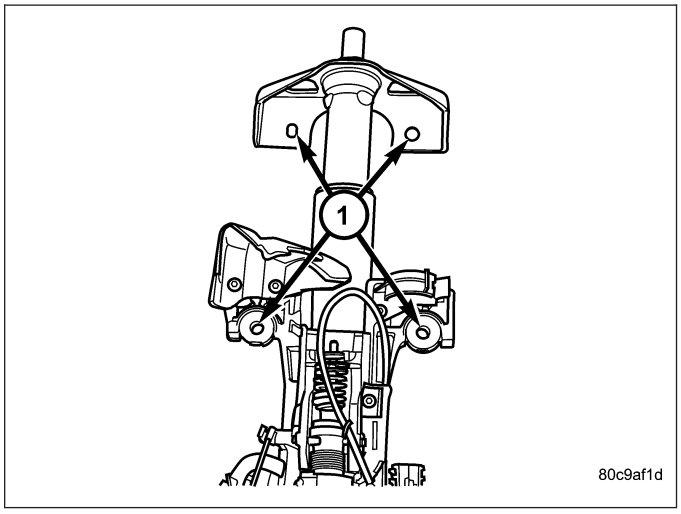

18. Remove the steering column assembly (4) from the vehicle..

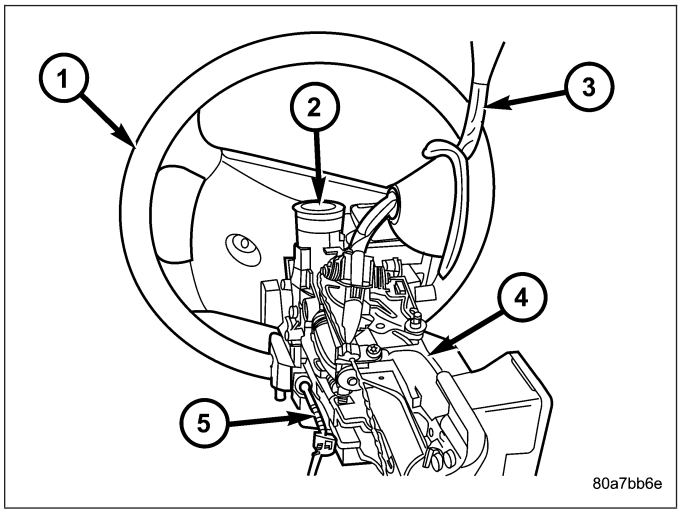

INSTALLATION

WARNING: BEFORE SERVICING THE STEERING COLUMN THE AIRBAG SYSTEM MUST BE DISARMED. REFER TO ELECTRICAL RESTRAINT SYSTEM FOR SERVICE PROCEDURES. FAILURE TO DO SO MAY RESULT IN ACCIDENTAL DEPLOYMENT OF THE AIRBAG AND POSSIBLE PERSONAL INJURY.

CAUTION: All fasteners must be torqued to specification to ensure proper operation of the steering column.

1. Position the steering column on the dash panel support and loosely install the mounting nuts (1).
2. Firmly slide the steering column upward against the studs in dash panel and hand tighten the nuts.

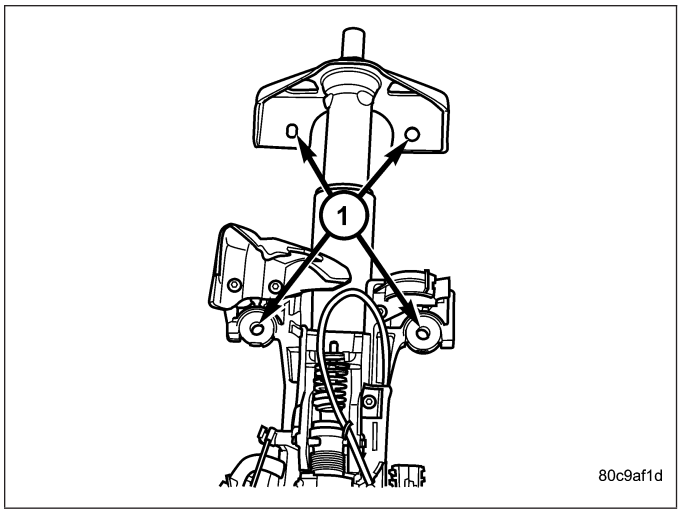

3. Install the steering shaft coupler (1) on the steering shaft and loosely install a **new** bolt.

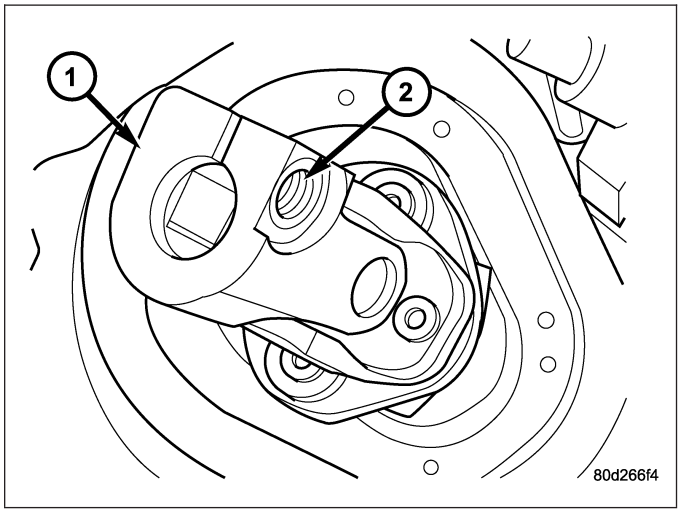

4. Center steering column in dash opening and tighten mounting nuts (1) to 28 N·m (250 in. lbs.).

NOTE: Torque the upper left nut first then the lower right nut. Then torque the lower left nut then the upper right nut.

NOTE: A new bolt must be used for reinstallation.

5. Tighten the coupler bolt (2) to 57 N·m (42 ft. lbs.).

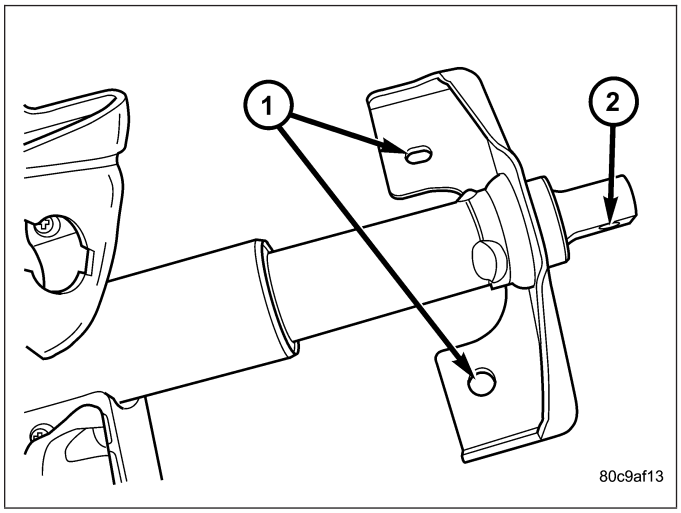

6. Install a new brake light switch (Refer to 8 - ELECTRICAL/LAMPS/LIGHTING - EXTERIOR/BRAKE LAMP SWITCH - REMOVAL).
7. Install the shifter cable (2). (Refer to 21 - TRANSMISSION/TRANSAXLE/AUTOMATIC - 32RH/GEAR SHIFT CABLE - INSTALLATION)
8. Connect the wiring harness to the column.
9. Install the SKIM module.
10. Install the clockspring (Refer to 8 - ELECTRICAL/RESTRAINTS/CLOCKSPRING - REMOVAL).

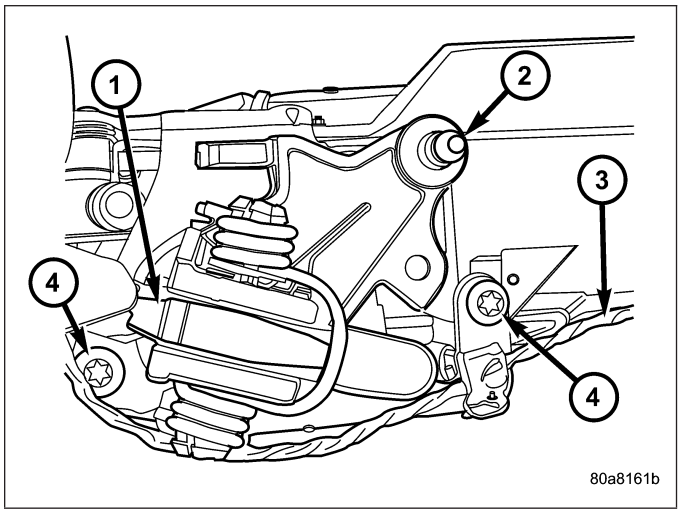

11. Install the shrouds (1&2).

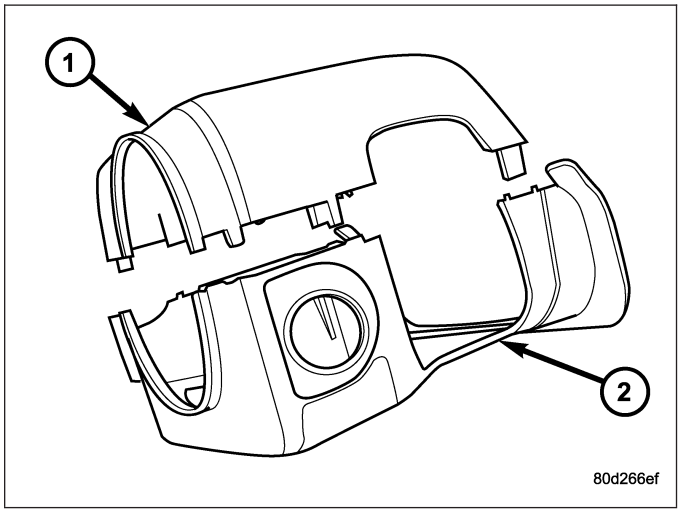

12. Install the steering column opening cover (Refer to 23 - BODY/INSTRUMENT PANEL/STEERING COLUMN OPENING COVER - INSTALLATION).
13. Align the spline on the wheel hub to shaft.
14. Then install the steering wheel (1) and install a **new** bolt. Tighten the bolt to 61 N·m (45 ft. lbs.).
15. Install the airbag (Refer to 8 - ELECTRICAL/RESTRAINTS/DRIVER AIRBAG - INSTALLATION).
16. Install the two steering wheel switches.
17. Install the tilt lever handle.
18. Install the negative battery terminal.
19. Test the operation of the horn, Electronic PRNDL Indicator, lights and any other functions that are steering column operated.

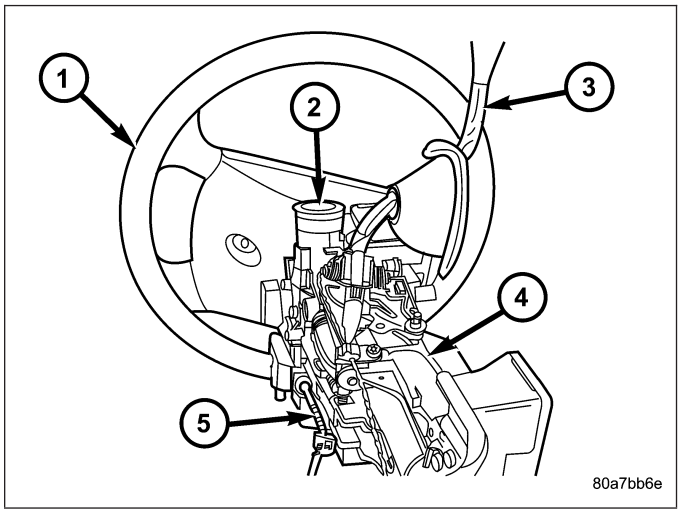

IGNITION SWITCH

DESCRIPTION

The ignition switch (5) is located on the steering column (4). It is used as the main on/off switching device for most electrical components. The mechanical key cylinder is used to engage/disengage the electrical ignition switch.

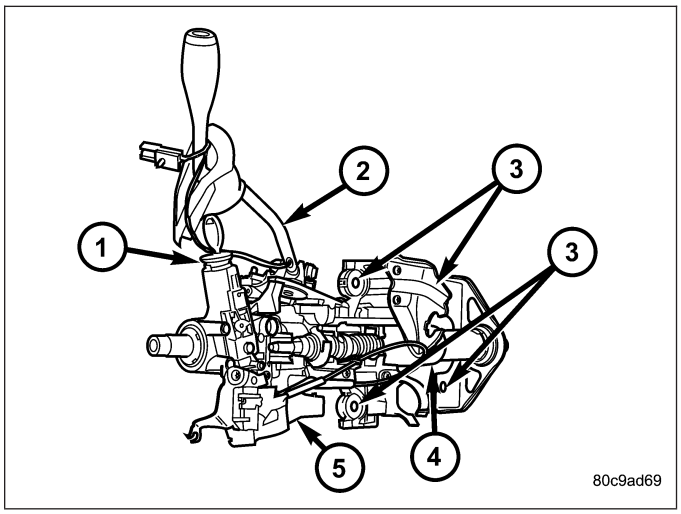

OPERATION

Vehicles equipped with an automatic transmission and a steering column mounted shifter: an interlock device is located within the shift cable. This interlock device is used to lock the transmission shifter in the PARK position when the key cylinder is in any position and the brake pedal is not depressed.

DIAGNOSIS AND TESTING

IGNITION SWITCH

TEST AND REPAIR

If the key removal effort is excessive on a vehicle with a automatic transmission first adjust the shift linkage, (Refer to 21 - TRANSMISSION/TRANSAXLE/AUTOMATIC - 46RE/GEAR SHIFT CABLE - ADJUSTMENTS).

If the ignition switch effort is excessive remove the ignition key cylinder from the steering column. (Refer to 19 - STEERING/COLUMN/LOCK CYLINDER HOUSING - REMOVAL). Check the turning effort of the key cylinder. If the ignition key cylinder effort is excessive replace the key cylinder.

REMOVAL

SERVICE PRECAUTIONS

NOTE: The steering column on vehicles equipped with an automatic transmission is not equipped with an internal locking shaft with the ignition cylinder. Alternative methods of locking the steering wheel for service will have to be used.

The tilt and standard column (4) have been designed to be serviced as an assembly; without wiring, switches, shrouds, steering wheel, etc. Most steering column components can be serviced without removing the steering column from the vehicle.

Safety goggles should be worn at all times when working on steering columns.

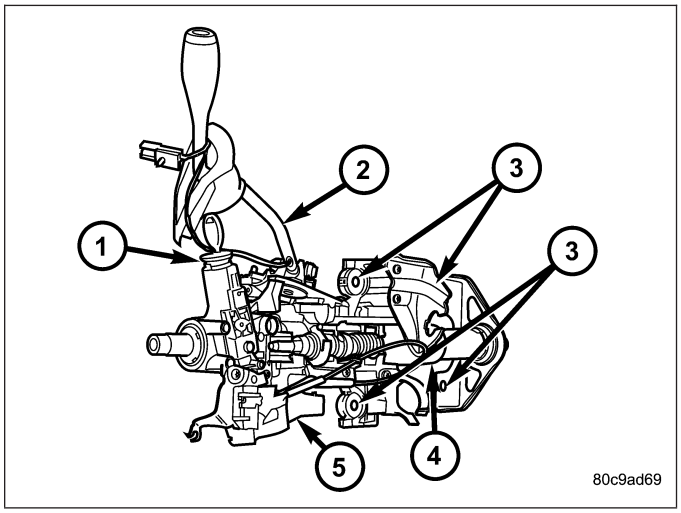

To service the steering wheel, switches or airbag, Refer to Electrical Restraints and follow all WARNINGS and CAUTIONS.

WARNING: THE AIRBAG SYSTEM IS A SENSITIVE, COMPLEX ELECTRO-MECHANICAL UNIT. BEFORE ATTEMPTING TO DIAGNOSE, REMOVE OR INSTALL THE AIRBAG SYSTEM COMPONENTS YOU MUST FIRST DISCONNECT AND ISOLATE THE BATTERY NEGATIVE (GROUND) CABLE. THEN WAIT TWO MINUTES FOR THE SYSTEM CAPACITOR TO DISCHARGE. FAILURE TO DO SO COULD RESULT IN ACCIDENTAL DEPLOYMENT OF THE AIRBAG AND POSSIBLE PERSONAL INJURY. THE FASTENERS, SCREWS, AND BOLTS, ORIGINALLY USED FOR THE AIRBAG COMPONENTS, HAVE SPECIAL COATINGS AND ARE SPECIFICALLY DESIGNED FOR THE AIRBAG SYSTEM. THEY MUST NEVER BE REPLACED WITH ANY SUBSTITUTES. ANYTIME A NEW FASTENER IS NEEDED, REPLACE WITH THE CORRECT FASTENERS PROVIDED IN THE SERVICE PACKAGE OR FASTENERS LISTED IN THE PARTS BOOKS.

CAUTION: Do not hammer on steering column shaft. This may cause damage to the shaft or bearing.

CAUTION: Do not attempt to remove the pivot bolts to disassemble the tilting mechanism.

The ignition key must be in the key cylinder for cylinder removal. The key cylinder must be removed first before removing ignition switch.

1. Remove the negative (ground) cable from the battery.
2. Disable the airbag, (Refer to 8 - ELECTRICAL/RESTRAINTS/DRIVER AIRBAG - REMOVAL).
3. Remove the lower and upper shrouds.
4. Remove key cylinder. (Refer to 19 - STEERING/COLUMN/LOCK CYLINDER HOUSING - REMOVAL).
5. Disconnect the lower clockspring connectors.
6. Remove the wire retainer from the tilt lever bracket.
7. Remove the tilt lever mounting screws to gain access to the ignition switch (1) mounting screws.

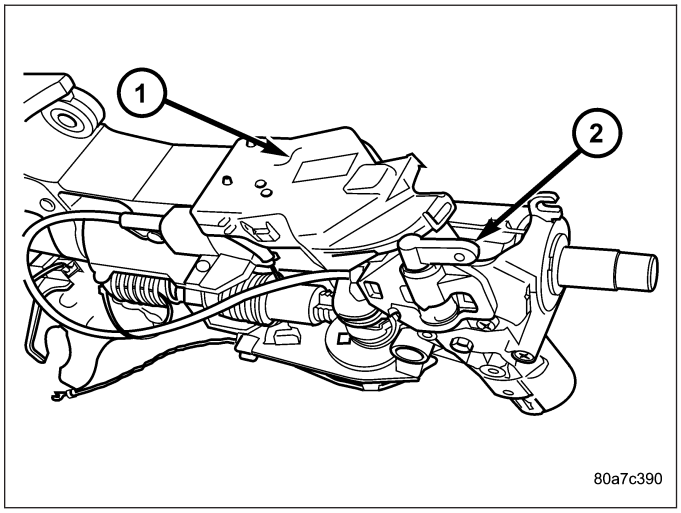

8. For columns without tilt remove the bracket (2) to gain access to the ignition switch mounting screws (2).

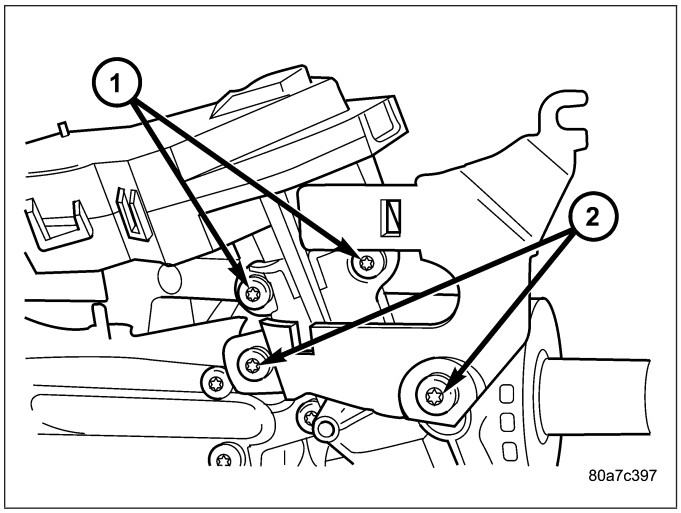

9. Disconnect the electrical connector at rear of ignition switch (1).
10. Remove ignition switch mounting screw (2).
11. Using a small screwdriver, push on locking tab and remove switch from steering column.

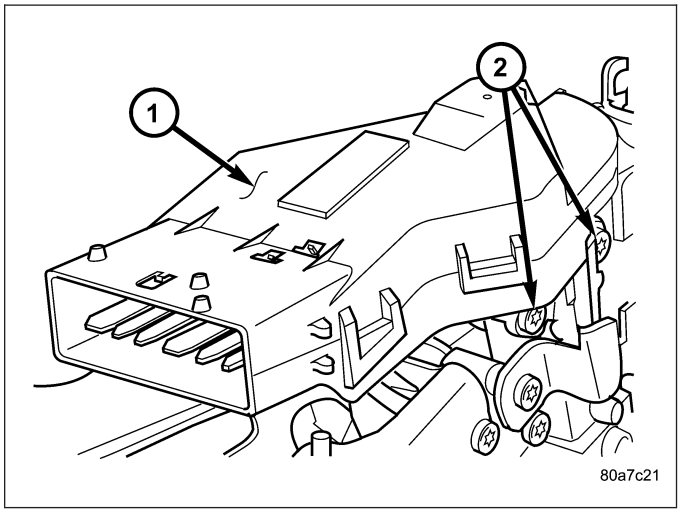

INSTALLATION

The ignition key must be in the key cylinder for cylinder removal. The key cylinder must be removed first before installing ignition switch.

1. Before installing ignition switch, rotate the slot in the switch to the ON position.
2. Connect the electrical connector to rear of the ignition switch. Make sure that locking tabs are fully seated into wiring connector.
3. Position switch (1) to column and install the mounting screw (2). Tighten screw to 3 N·m (26 in. lbs.).

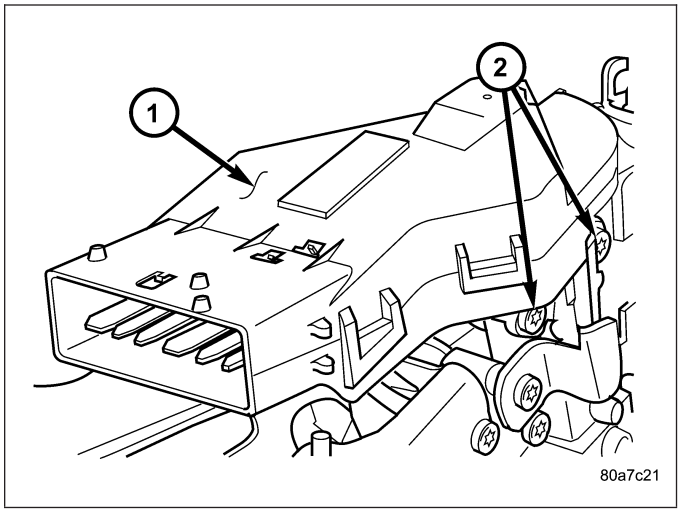

4. Install the tilt lever bracket (2) mounting screws. Tighten screws to 4.5 N·m (40 in. lbs.).

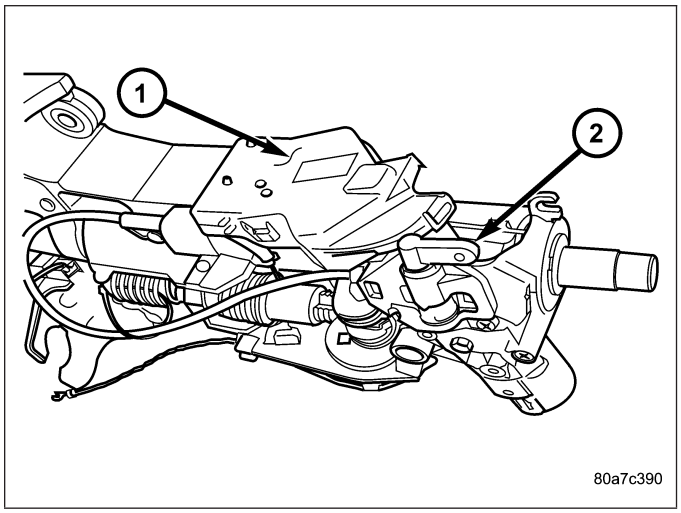

5. If the column is non-tilt install the bracket (2). Tighten screws to 4.5 N·m (40 in. lbs.)

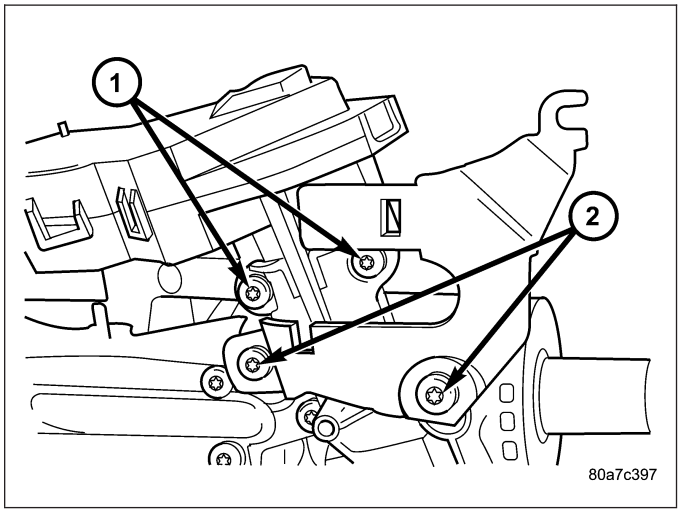

6. Position the wire retainer into the tilt lever bracket.
7. Reconnect the lower clockspring connectors.
8. Install the key cylinder (1)
9. Install steering column upper and lower shrouds.
10. Enable the airbag system. (Refer to 8 - ELECTRICAL/RESTRAINTS/DRIVER AIRBAG - INSTALLATION).

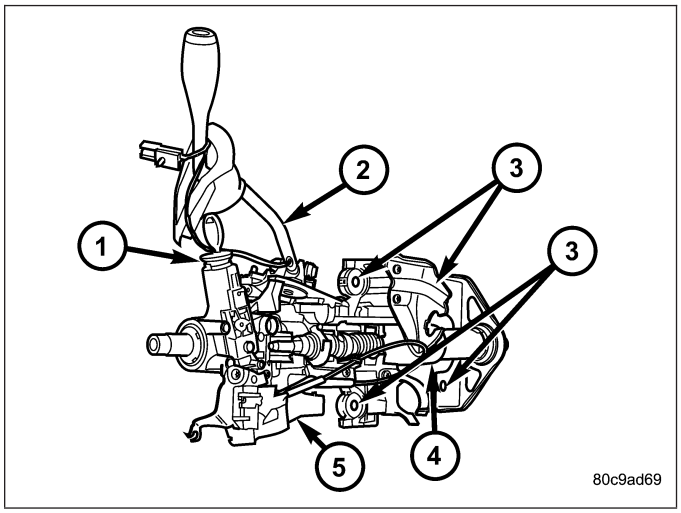

IGNITION SWITCH - SRT-10

REMOVAL - SRT-10

The ignition switch (1) attaches to the lock cylinder housing (2) on the end opposite the lock cylinder. For ignition switch terminal and circuit identification, refer to the Wiring Diagrams sections.

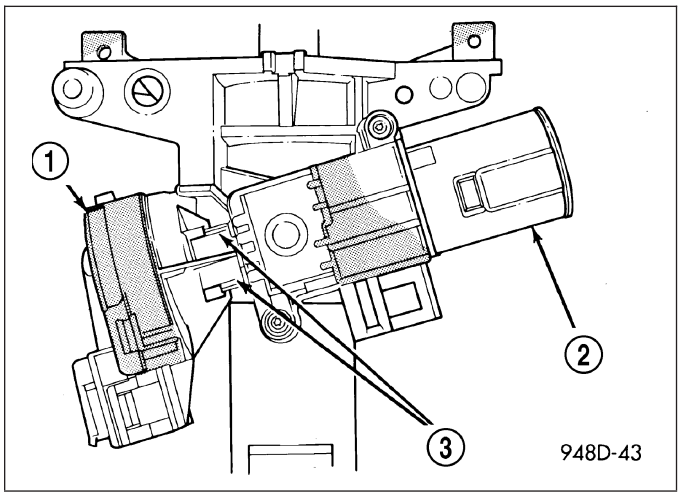

1. Disconnect negative cable from battery.
2. Place key cylinder in RUN position. Through the hole in the lower shroud (2), depress lock cylinder retaining tab and remove key cylinder.
3. Remove upper and lower shrouds (3) from steering column.

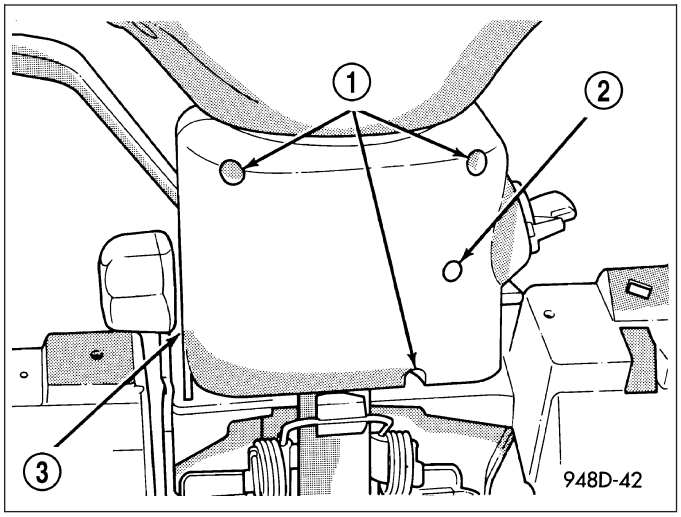

4. Disconnect electrical connectors from ignition switch (1).

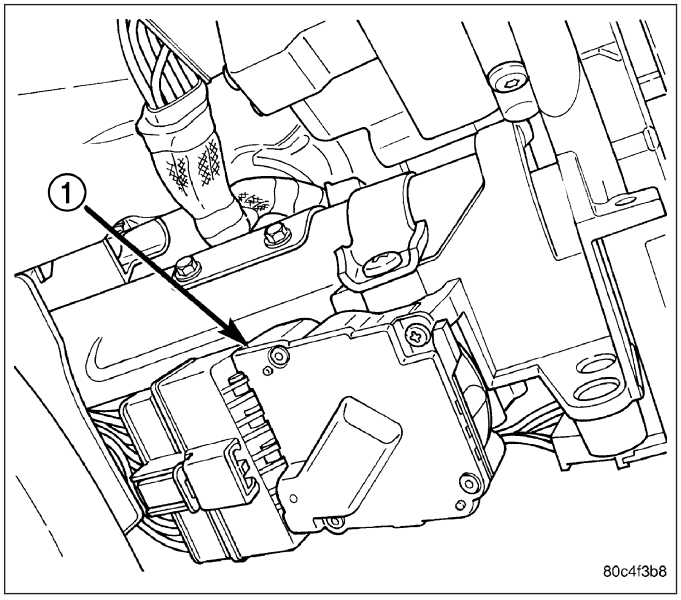

5. Remove the 2 screws on the top of the multi-function switch and relocate.

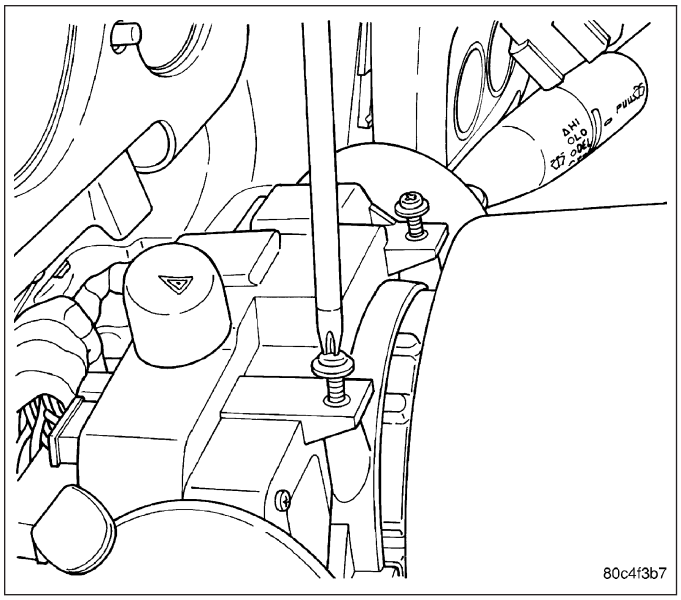

6. Remove ignition switch mounting screw with a #10 Torx® bit.

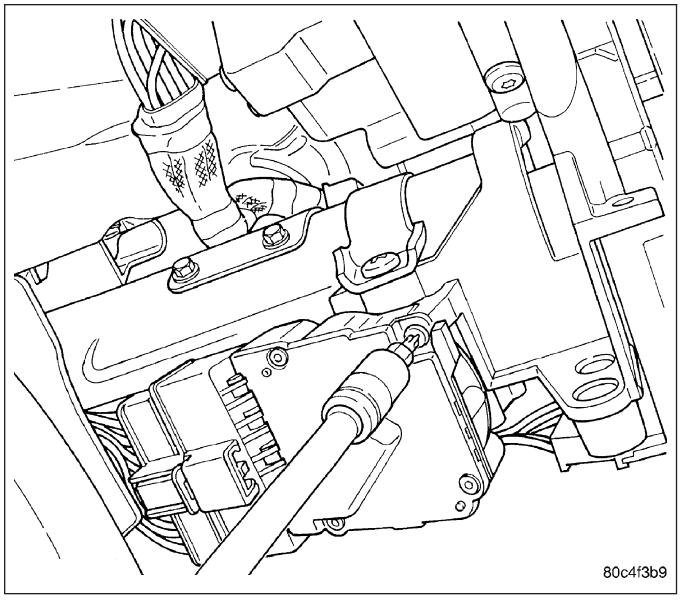

7. Pull ignition switch from steering column.

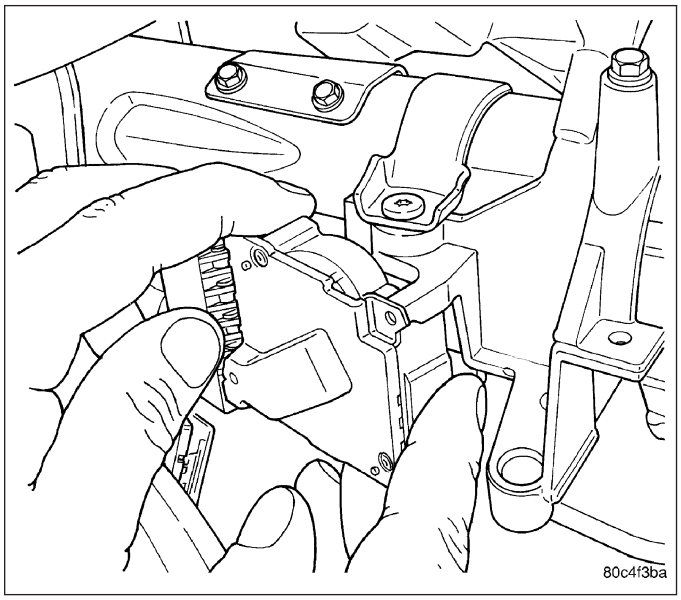

INSTALLATION - SRT-10

1. Ensure the ignition switch is in the RUN position and the actuator shaft (2) in the lock housing (1) is in the RUN position.
2. Carefully install the ignition switch. The switch will snap over the retaining tabs. Install mounting screw.
3. Install electrical connectors to ignition switch.
4. Install the multi-function switch and tighten the 2 screws.

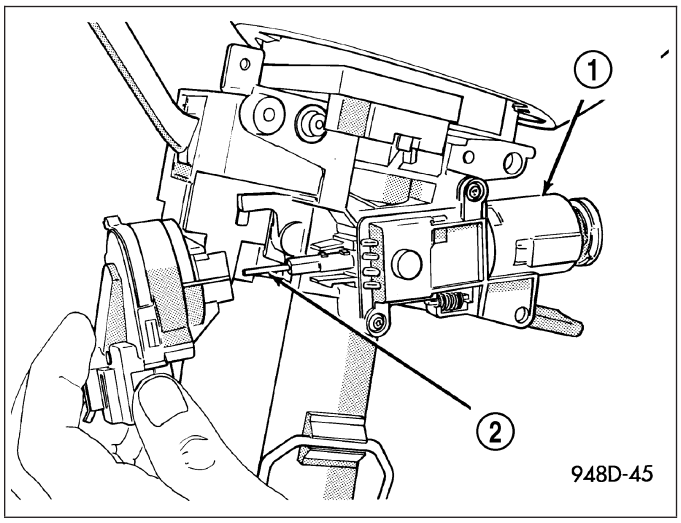

5. Install upper and lower shrouds.
6. Install key cylinder (cylinder retaining tab will depress only in the RUN position).
7. Connect negative cable to battery.
8. Check for proper operation of ignition switch and key-in warning switch.

KEY-IN IGNITION SWITCH

DESCRIPTION

The key-in ignition switch is integral to the ignition switch, which is mounted on the left side of the steering column. It closes a path to ground for the Central Timer Module (CTM) when the ignition key is inserted in the ignition key cylinder and the driver door ajar switch is closed (driver door is open). The key-in ignition switch opens the ground path when the key is removed from the ignition key cylinder. The ground path is also opened when the driver door ajar switch is open (driver door is closed).

The key-in ignition switch cannot be repaired and, if faulty or damaged, the entire ignition switch must be replaced, (Refer to 19 - STEERING/COLUMN/IGNITION SWITCH - REMOVAL).

DIAGNOSIS AND TESTING

IGNITION SWITCH AND KEY LOCK CYLINDER

ELECTRICAL DIAGNOSIS

For ignition switch electrical schematics, refer to Ignition Switch in the appropriate section of Electrical Wiring Diagrams.

MECHANICAL DIAGNOSIS (KEY DIFFICULT TO ROTATE)

(Refer to 19 - STEERING/COLUMN/IGNITION SWITCH - DIAGNOSIS AND TESTING).

KEY CYLINDER

REMOVAL

The ignition key (1) must be in the key cylinder (2) for cylinder removal.

1. Disconnect negative cable from battery.
2. Remove upper and lower covers (shrouds) from steering column.
3. Place shifter in PARK position.
4. A retaining pin is located at side of key cylinder assembly (2).

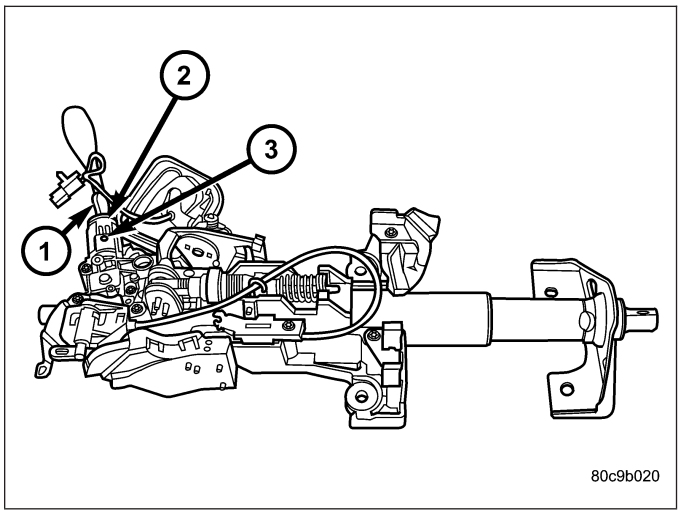

a. Rotate key to RUN position.

b. Press in on retaining pin while pulling key cylinder (1) from ignition switch.

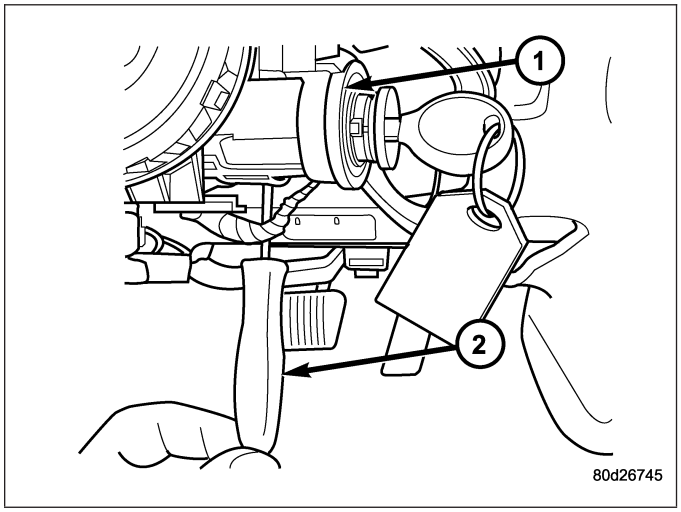

INSTALLATION

The ignition key (1) must be in the key cylinder (2) for cylinder installation.

1. Install the key cylinder into the housing using care to align the end of the key cylinder (2) with the ignition switch.
2. Push the key cylinder (2) in until it clicks.
3. Replace the upper and lower shrouds.
4. Reconnect the battery.

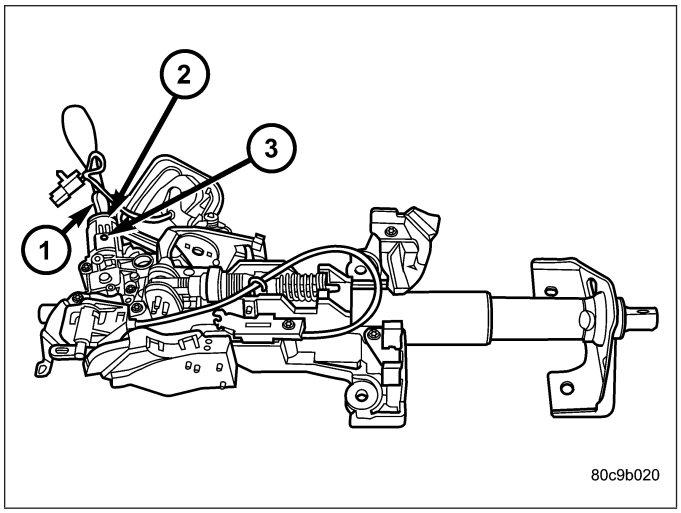

STEERING WHEEL

REMOVAL

1. Disable and remove the driver's side airbag. (Refer to 8 - ELECTRICAL/RESTRAINTS/DRIVER AIR-BAG - REMOVAL).
2. Partially remove the steering wheel bolt (1) and leave the bolt in the column.
3. Install puller CJ98-1 (2) or equivalent using the top of the bolt to push on.
4. Remove and discard the steering wheel bolt.
5. Remove the steering wheel (1).

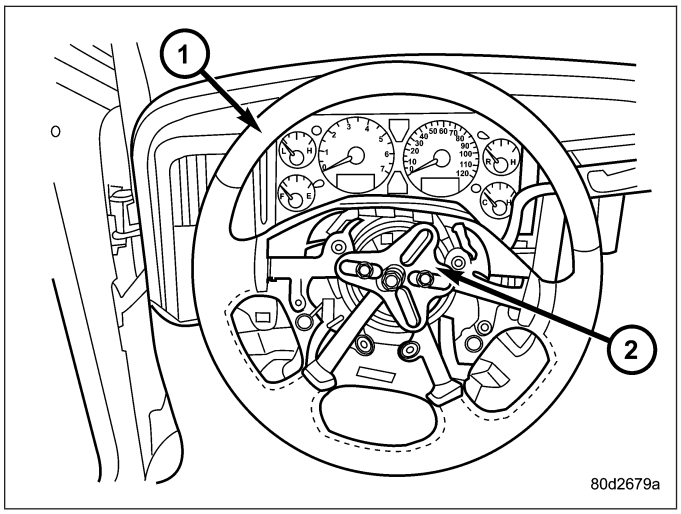

INSTALLATION

NOTE: Do not reuse the old steering wheel bolt (a new bolt must be used)

1. Install steering wheel to the column

NOTE: Be certain that the steering wheel mounting bolt is tightened to the proper torque specification to ensure proper clockspring operation.

2. Install the new steering wheel bolt. Tighten the bolt to 61 N·m (45 ft. lbs.).
3. Install the driver's side air bag. (Refer to 8 - ELECTRICAL/RESTRAINTS/DRIVER AIRBAG - INSTALLATION).

TILT LEVER KNOB RELEASE

REMOVAL

1. Remove the tilt lever handle.
2. Remove the steering column opening cover (Refer to 23 - BODY/INSTRUMENT PANEL/STEERING COLUMN OPENING COVER - REMOVAL).
3. Remove the lower shroud.

NOTE: Use special care not to pry on the clockspring electrical connector when removing or installing the mounting screw located next to the clockspring.

4. Remove the two mounting screws (3) from the tilt lever knob release bracket (1).
5. Disconnect the electrical harness plastic mounting tab (2) from the the bracket (1).

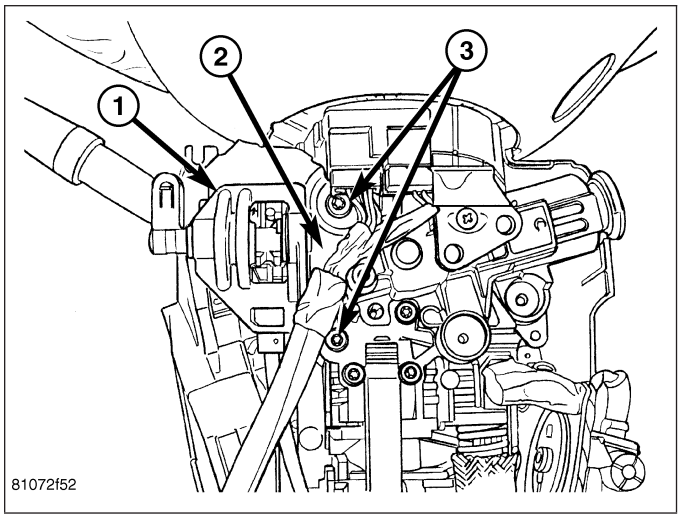

6. Unsnap the cable (2) from the bracket (1).

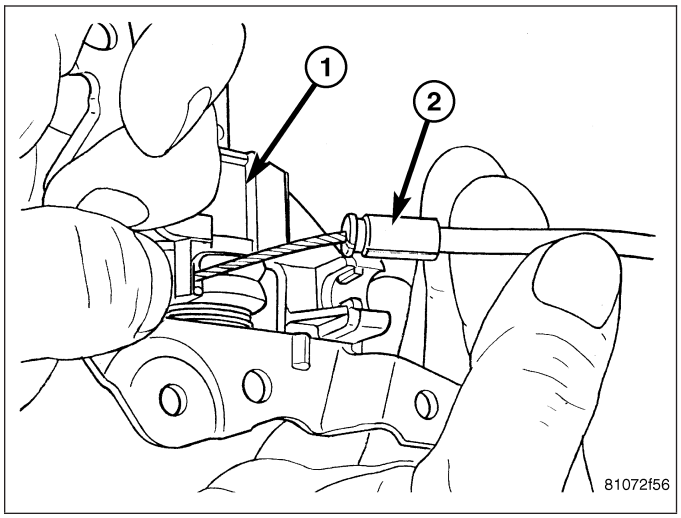

7. Remove the end of the cable (2) from the tilt lever knob release bracket (1).

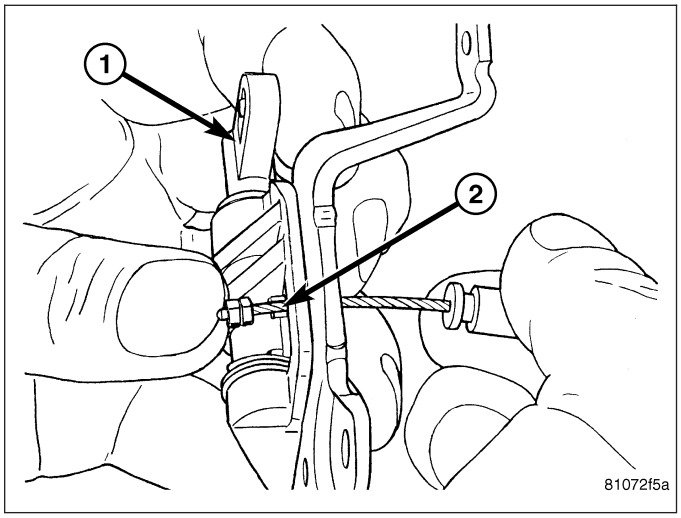

INSTALLATION

1. Route the cable (2) into the tilt lever release knob bracket (1).

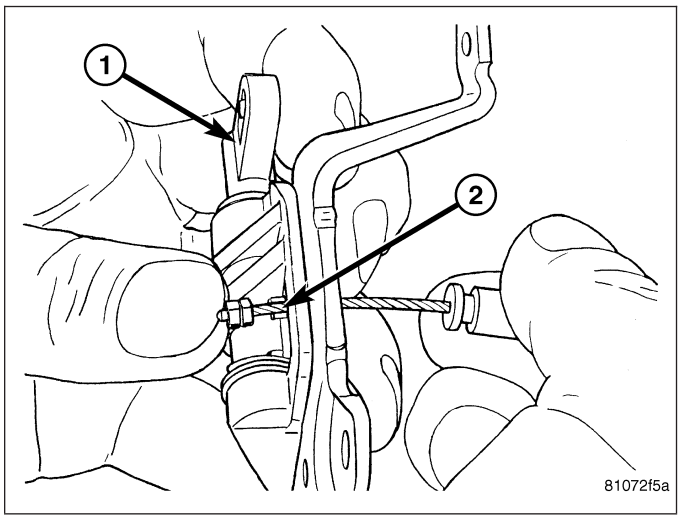

2. Snap the cable end (2) into the bracket (1).

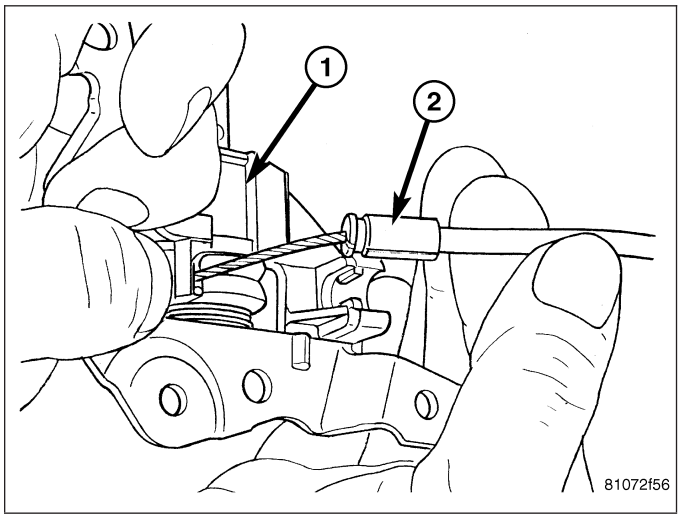

NOTE: Use special care not to pry on the clockspring electrical connector when removing or installing the mounting screw located next to the clockspring.

NOTE: New screws should be used when installing the tilt lever release knob bracket to the column.

3. Install the tilt lever release knob bracket (1) to the column and install the two new mounting screws (3) Tighten the two new screws to 4.5 N·m (40 in. lbs.).
4. Install the electrical harness plastic mounting tab (2) to the bracket (1).

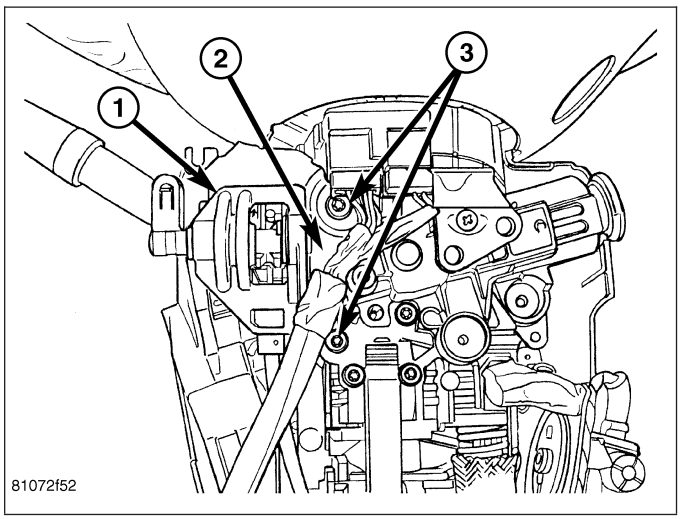

5. Install the lower shroud.
6. Install the steering column opening cover (Refer to 23 - BODY/INSTRUMENT PANEL/STEERING COLUMN OPENING COVER - INSTALLATION).
7. Install the tilt lever handle.

GEAR SHIFT LEVER

REMOVAL

1. Remove the kneeblocker. (Refer to 23 - BODY/INSTRUMENT PANEL/KNEE BLOCKER - REMOVAL).
2. Remove the upper and lower column shroud.
3. Remove and discard the brake light switch.
4. Loosen the column bolts and lower the column enough to allow clearance for the gear shift lever removal.
5. Disconnect the overdrive switch harness (if equipped).
6. Disconnect the shift cable from the shift lever.
7. Remove the SKIM.
8. Remove the gear shift lever mounting screws and remove the lever (2).
9. Remove the blocker pin from the inhibit link slot (1).

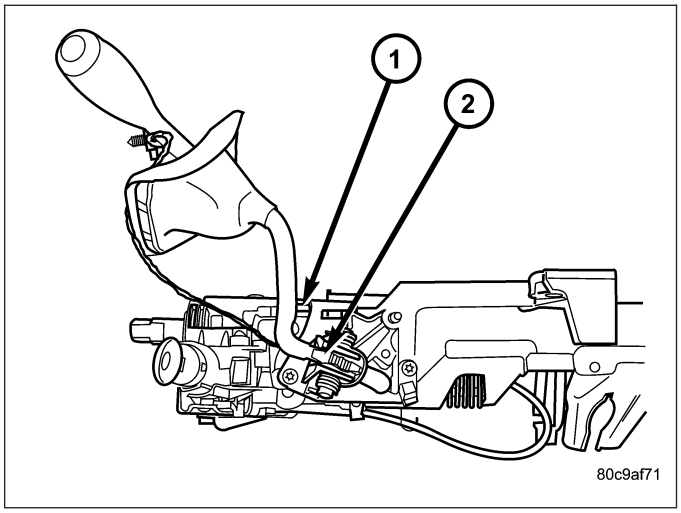

INSTALLATION

1. Install the lever assembly (2) using care to install the pin in the blocker to slider slot (1) and install the mounting screws and tighten to 12 N·m (105 in. lbs.).
2. Cycle the key from ACC to RUN and ensure that the blocker does not stick or bind.
3. Turn the key to the OFF position and ensure that the shifter will not pull from the PARK position.
4. Connect the over drive switch harness (if equipped).

NOTE: Route and tie off harness to original location.

5. Connect the shift cable to the lever (2).

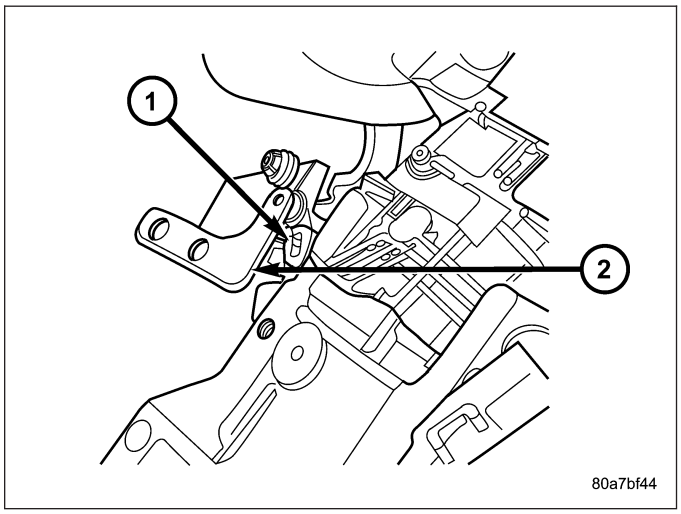

6. Ensure the gear shift lever and transmission are in the PARK position and snap the cable adjust clip in place.
7. Install a new brake light switch (Refer to 8 - ELECTRICAL/LAMPS/LIGHTING - EXTERIOR/BRAKE LAMP SWITCH - INSTALLATION).
8. Install the SKIM and halo.
9. Install the upper and lower column shroud.
10. Install the column back into place and tighten.
11. Install the kneeblocker. (Refer to 23 - BODY/INSTRUMENT PANEL/KNEE BLOCKER - INSTALLATION).

UPPER STEERING COUPLING

REMOVAL

1. Disconnect the negative battery cable.

NOTE: The steering column on vehicles with an automatic transmission may not be equipped with an internal locking shaft that allows the ignition key cylinder to be locked with the key. Alternative methods of locking the steering wheel for service will have to be used.

2. Lock the steering wheel with the tire in the straight position.
3. Remove and discard the lower pinch bolt.
4. Lower the steering coupler shaft from the column.
5. Remove the upper steering coupling shaft (2) seal by pushing in the four tags (1) securing it to the panel.

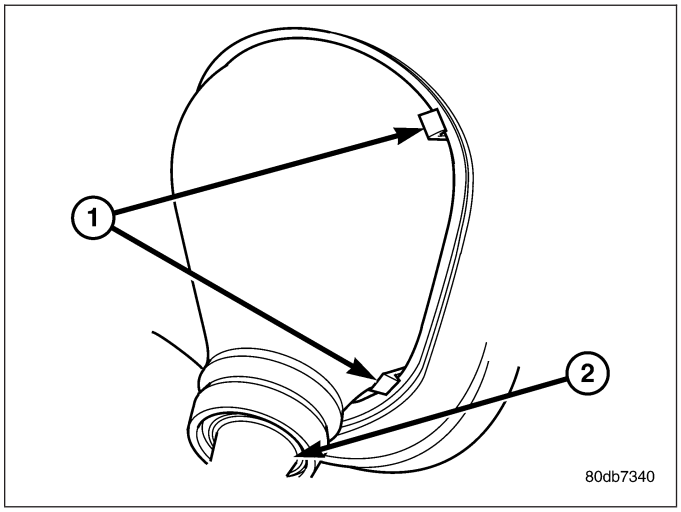

6. Remove and discard the lower coupler pinch bolt (1) from the lower steering coupling shaft (1).
7. Remove the upper steering coupling shaft (3) from the vehicle.

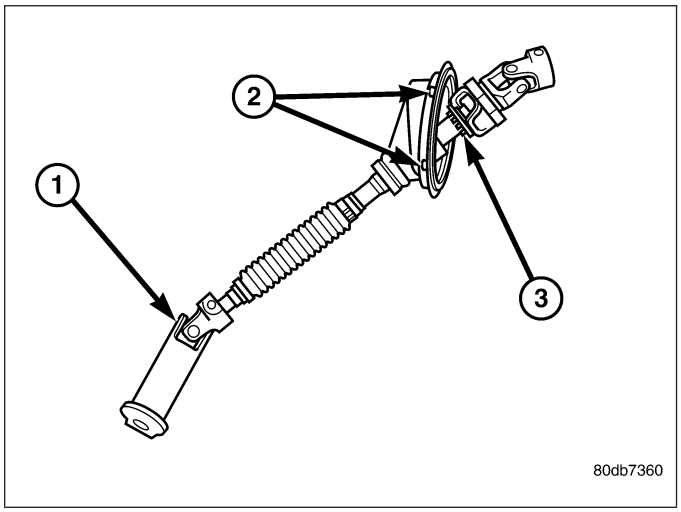

INSTALLATION

1. Install the upper steering coupling shaft (3) to the vehicle.

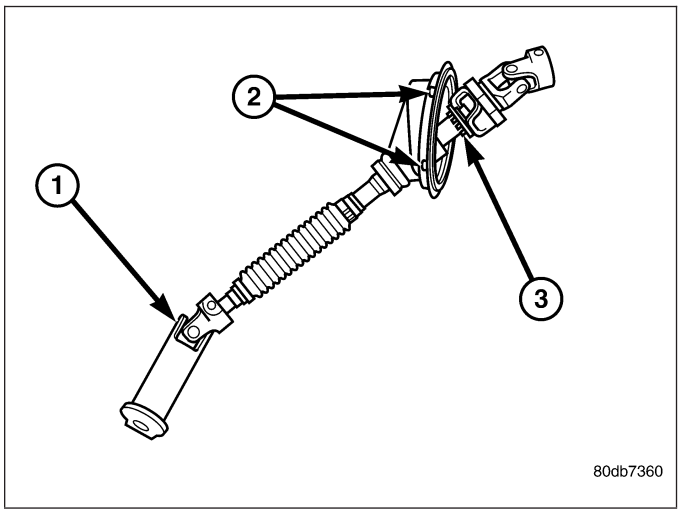

2. Install the upper steering coupling shaft seal (2) by pushing it in securing the four tangs (1) to the panel.

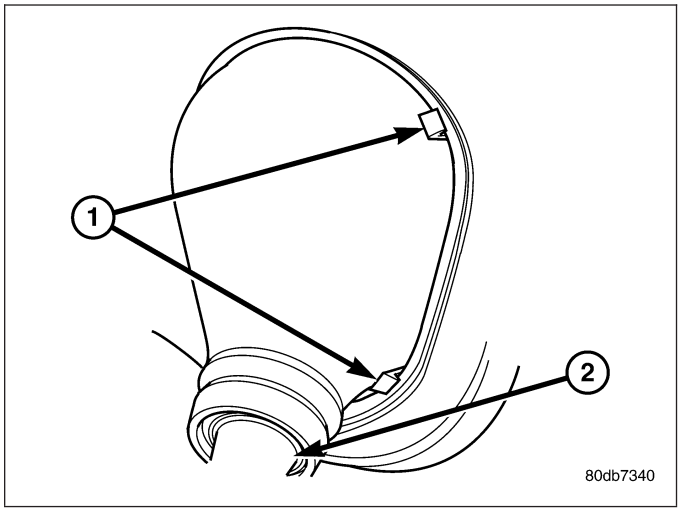

NOTE: Note: A new steering coupling shaft pinch bolt for the upper and lower shafts must be used.

3. Install the steering coupler shaft (1) to the column.
4. Install the upper pinch bolt (3) use new bolt and tighten to 57 N.m (42 ft.lbs).
5. Install the shaft to the lower coupler (1).
6. Install the lower pinch bolt (1) use new bolt and tighten to 57 N.m (42 ft.lbs).
7. Unlock the steering wheel.
8. Reconnect the negative battery cable.

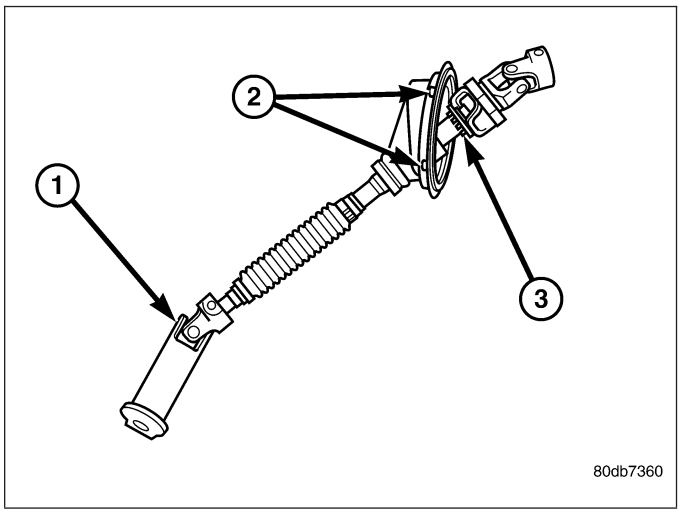

LOWER STEERING COUPLING

REMOVAL

ALL LD & HD EXCEPT 4X4 HD

1. Disconnect the negative battery cable.
2. Raise and support the vehicle.

NOTE: The steering column on vehicles with an automatic transmission may not be equipped with an internal locking shaft that allows the ignition key cylinder to be locked with the key. Alternative methods of locking the steering wheel for service will have to be used.

3. Lock the steering wheel with the tire in the straight position.
4. Remove the left front tire and wheel assembly.
5. Mark both coupler connections for proper installation.
6. Remove and discard the upper coupler pinch bolt.
7. Remove and discard the lower coupler pinch bolt.
8. Remove the lower steering shaft coupler.

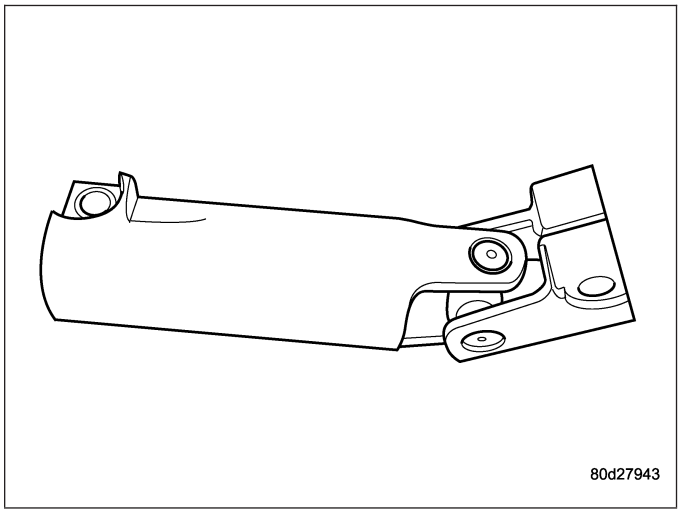

4X4 HD

1. Disconnect the negative battery cable.
2. Raise and support the vehicle.

NOTE: The steering column on vehicles with an automatic transmission may not be equipped with an internal locking shaft that allows the ignition key cylinder to be locked with the key. Alternative methods of locking the steering wheel for service will have to be used.

3. Lock the steering wheel with the tire in the straight position.
4. Remove the left front tire and wheel assembly.

5. Remove and discard the upper coupler pinch bolt (1).

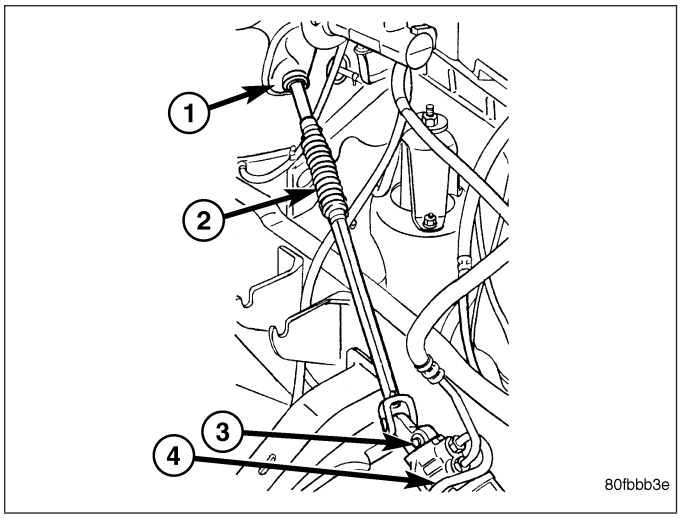

6. Remove and discard the lower coupler pinch bolt (2).

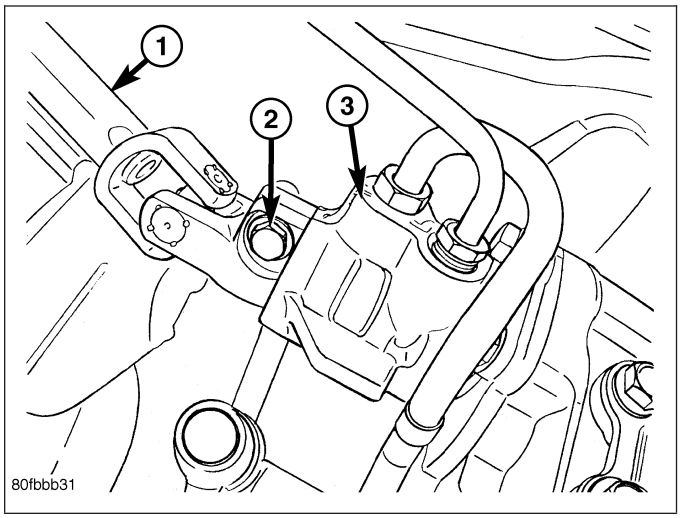

7. Remove the lower steering shaft coupler (3).

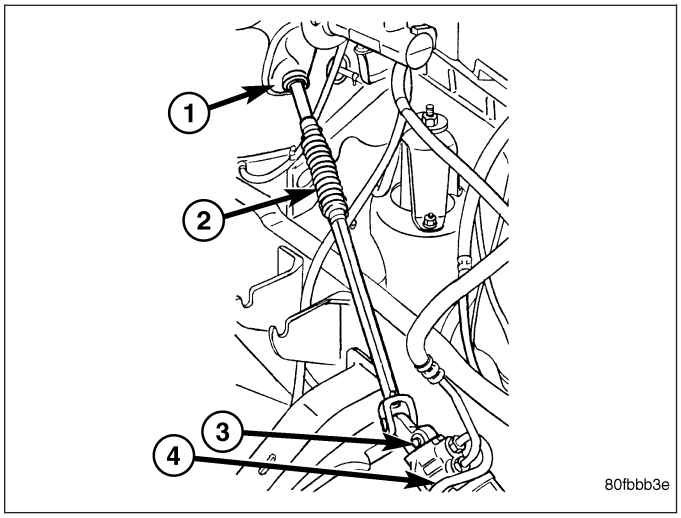

INSTALLATION

ALL LD & HD EXCEPT 4X4 HD

1. Install the coupler to the steering rack & pinion using the marks made in the removal process.
2. Install the coupler to the intermediate shaft using the marks made in the removal process.

NOTE: New pinch bolts must be used for reinstallation.

3. Install the lower pinch bolt and tighten to 57 N·m (42 ft. lbs.).
4. Install the upper pinch bolt and tighten to 57 N·m (42 ft. lbs.).

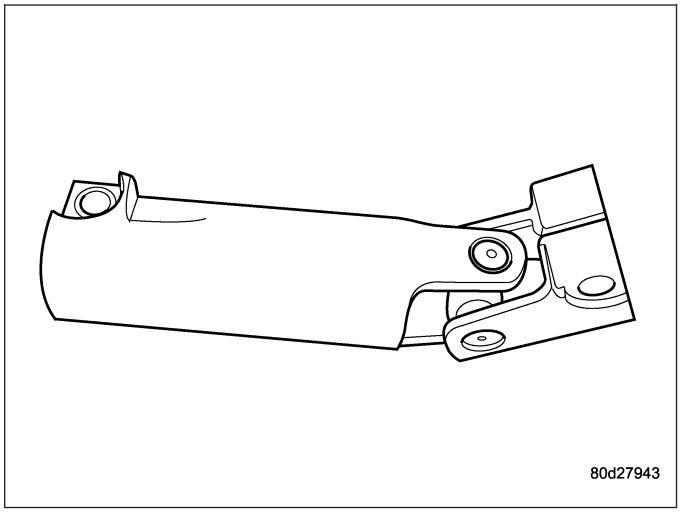

5. Install the left front tire and wheel assembly (Refer to 22 - TIRES/WHEELS/WHEELS - STANDARD PROCEDURE).
6. Lower the vehicle.
7. Reconnect the negative battery cable.
8. Unlock the steering wheel.

4X4 HD

1. Install the coupler (2) to the steering gear (3).

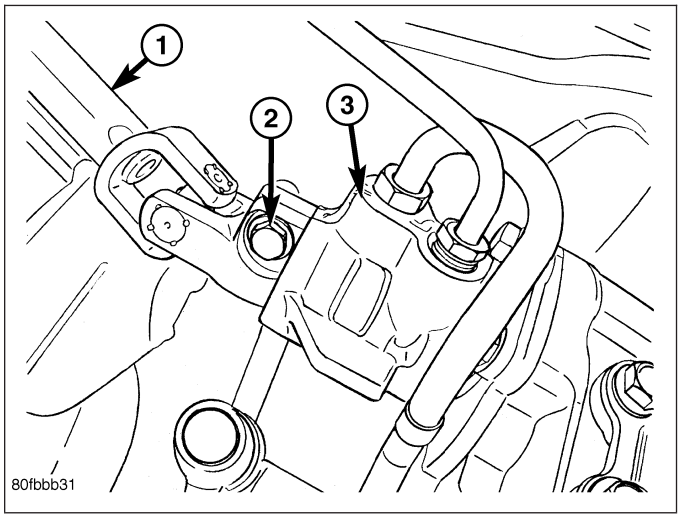

2. Install the coupler (3) to the intermediate shaft (2).

NOTE: New pinch bolts must be used for reinstallation.

3. Install the lower pinch bolt (3) and tighten to 28 N·m (250 in. lbs.).
4. Install the upper pinch bolt (1) and tighten to 57 N·m (42 ft. lbs.).

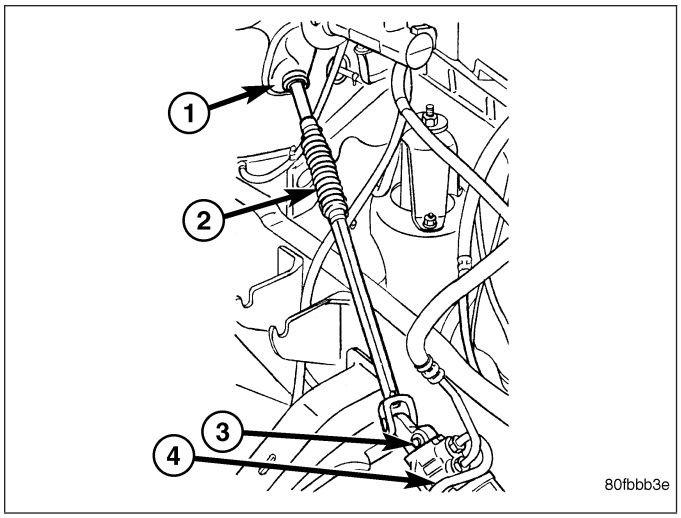

5. Install the left front tire and wheel assembly (Refer to 22 - TIRES/WHEELS/WHEELS - STANDARD PROCEDURE).
6. Lower the vehicle.
7. Reconnect the negative battery cable.
8. Unlock the steering wheel.

GEAR - INDEPENDENT FRONT SUSPENSION

TABLE OF CONTENTS

page

GEAR - INDEPENDENT FRONT SUSPENSION
- DESCRIPTION 31
- REMOVAL 31
- INSTALLATION 32
- SPECIFICATIONS
  - TORQUE CHART 33

page

BUSHING
- REMOVAL 34
- INSTALLATION 34

GEAR - INDEPENDENT FRONT SUSPENSION

DESCRIPTION

A rack and pinion steering gear is made up of two main components, the pinon shaft and the rack. The gear cannot be adjusted or internally serviced. If a malfunction or a fluid leak occurs, the gear must be replaced as an assembly.

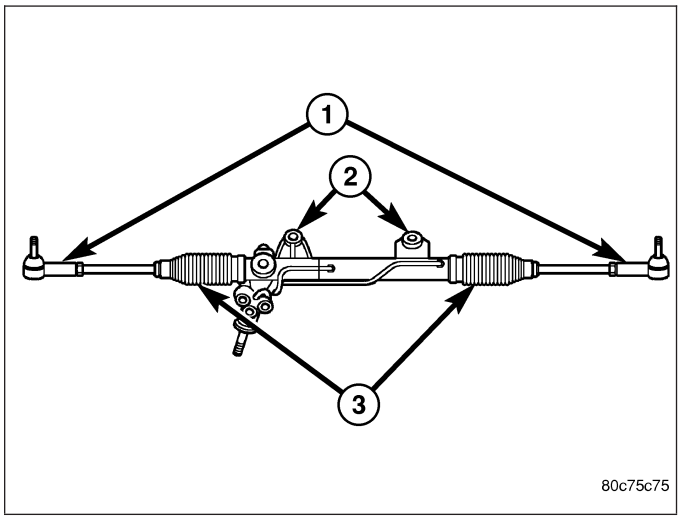

REMOVAL

NOTE: The steering column on vehicles with an automatic transmission may not be equipped with an internal locking shaft that allows the ignition key cylinder to be locked with the key. Alternative methods of locking the steering wheel for service will have to be used.

1. Lock the steering wheel.
2. Drain and siphon the power steering fluid from the reservoir.
3. Raise the vehicle.
4. Remove and discard the steering coupler pinch bolt.
5. Remove the power steering hoses from the rack & pinion.
6. Remove the tire and wheel assembly.
7. Remove the tie rod end nuts and separate tie rod ends from the knuckles with Special tool 8677 (Refer to 19 - STEERING/LINKAGE/TIE ROD END - REMOVAL).
8. Remove the skid plate (Refer to 13 - FRAME & BUMPERS/FRAME/FRONT SKID PLATE - REMOVAL).

9. Remove the rack & pinion mounting bolts (1)..

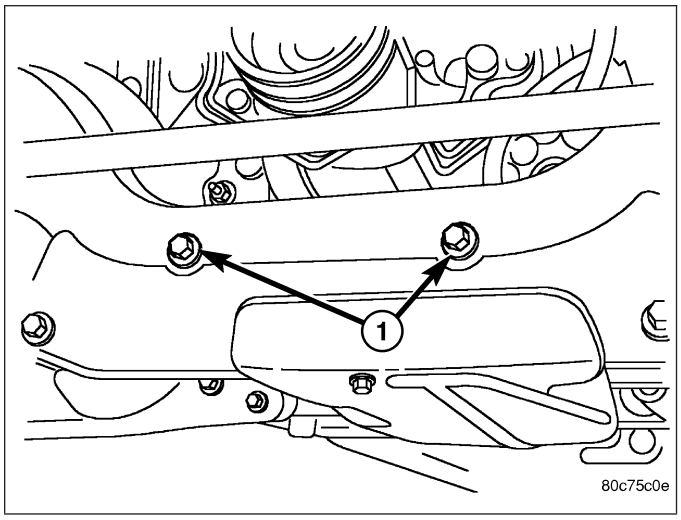

10. Remove the rack & pinion (2) from the vehicle.

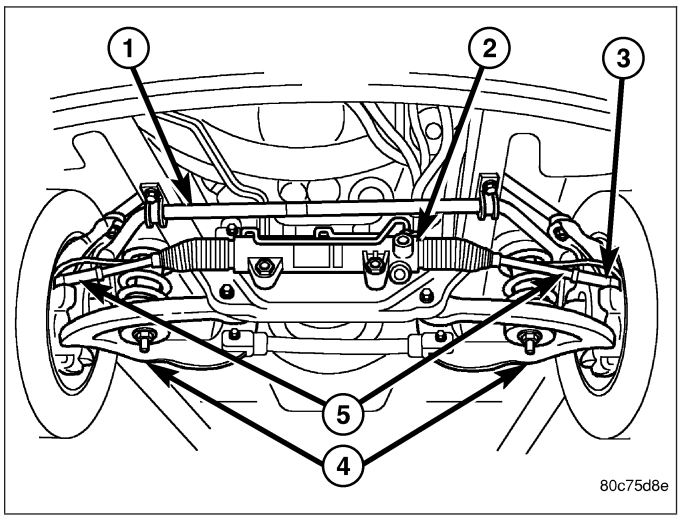

INSTALLATION

NOTE: Before installing gear inspect bushings and replace if worn or damaged.

NOTE: In the frame there is two holes for the mounting of the steering gear one is slotted and one is round, When tightening the gear to specifications make sure to tighten the mounting bolt with the hole first to avoid movement of the steering gear.

1. Install the gear on the front crossmember and tighten the mounting bolts (2) to 319 N·m (235 ft. lbs.) **LD torque specification**. Or tighten the mounting bolts to 251N·m (185 ft. lbs.) **4X2 HD torque specification** &.

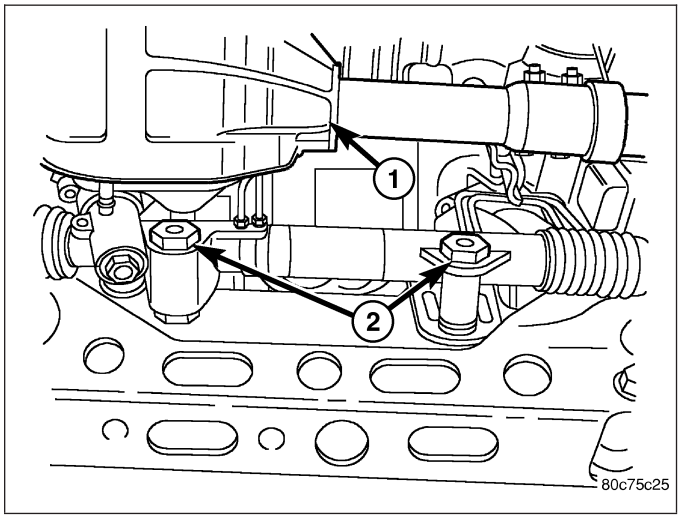

2. Slide the shaft coupler onto the gear. Install **new** pinch bolt and tighten to 49 N·m (36 ft. lbs.).
3. Clean and dry the tie rod end studs and the knuckle tapers.
4. Install the tie rod ends into the steering knuckles and tighten the nuts to 61 N·m (45 ft. lbs.) then an additional 90°. (Refer to 19 - STEERING/LINKAGE/TIE ROD END - INSTALLATION).
5. Install the pressure power steering hose to the steering gear and tighten to 32 N·m (23 ft. lbs.). (Refer to 19 - STEERING/PUMP/HOSES - INSTALLATION).
6. Install the return power steering hose to the steering gear and tighten to 71 N·m (52 ft. lbs.) **LD torque specification**. Or tighten the mounting bolts to 54N·m (40 ft. lbs.) **4X2 HD torque specification**. (Refer to 19 - STEERING/PUMP/HOSES - INSTALLATION).
7. Install the front skid plate (Refer to 13 - FRAME & BUMPERS/FRAME/FRONT SKID PLATE - INSTALLATION).
8. Install the tire and wheel assembly (Refer to 22 - TIRES/WHEELS/WHEELS - STANDARD PROCEDURE).
9. Remove the support and lower the vehicle.
10. Fill the system with fluid, (Refer to 19 - STEERING/PUMP - STANDARD PROCEDURE).
11. Adjust the toe position. (Refer to 2 - SUSPENSION/WHEEL ALIGNMENT - STANDARD PROCEDURE).

SPECIFICATIONS

TORQUE CHART

TORQUE SPECIFICATIONS

DESCRIPTION	N·m	Ft. Lbs.	In. Lbs.
Rack and Pinion Steering Gear Gear to Frame Bolts LD	319	235	—
Rack and Pinion Steering Gear Gear to Frame Bolts 2WD HD	251	185	—
Rack and Pinion Steering Gear Coupler Bolt	49	36	—
Tie Rod End Knuckle Nut	61 Then tighten an additional 90°	45 Then tighten an additional 90°	—
Tie Rod End Jam Nut	75	55	—
Power Steering Line Pressure Line	32	23	—
Power Steering Line Pressure Line To Pump	37	27	—
Power Steering Line Return Line LD	71	52	—
Power Steering Line Return Line HD	54	40	—

BUSHING

REMOVAL

1. Remove the steering gear (Refer to 19 - STEERING/GEAR - REMOVAL).

CAUTION: Do not overtighten the vise on the gear case.

2. Mount the steering gear in a soft jawed vise.

NOTE: If the bushings are seized a brass punch can be used to remove the bushings from the gear using care not to strike the gear.

3. Remove the front mounting bushings.
4. Remove the rear mounting bushings.
5. Remove the steering gear from the vise and place it on the bench.

INSTALLATION

NOTE: Coat all bushings with a thin rubber lubricate oil prior to installation.

NOTE: A rubber mallet can be used to assist in the installation of the bushings once lubricated.

1. Coat the rear bushings with a thin rubber lubricate oil then install the rear bushings using a rubber mallet to seat the bushings in the gear.
2. Coat the front bushings with a thin rubber lubricate oil then install the front bushings using a rubber mallet to seat the bushings in the gear.
3. Install the steering gear (Refer to 19 - STEERING/GEAR - INSTALLATION).
4. Adjust the toe position (if necessary) (Refer to 2 - SUSPENSION/WHEEL ALIGNMENT - STANDARD PROCEDURE).

GEAR - LINK/COIL

TABLE OF CONTENTS

page

GEAR - LINK/COIL
DESCRIPTION 35
OPERATION 35
REMOVAL 36
INSTALLATION 37
ADJUSTMENTS
ADJUSTMENT 38
SPECIFICATIONS
POWER STEERING GEAR 39
TORQUE CHART 39
SPECIAL TOOLS
POWER STEERING GEAR 40
PITMAN SHAFT SEAL
REMOVAL
REMOVAL - GAS ENGINE 42
REMOVAL - DIESEL 42
INSTALLATION
INSTALLATION - GAS ENGINE 43
INSTALLATION - DIESEL 44
STEERING GEAR INPUT SHAFT SEAL
REMOVAL 45
INSTALLATION 48
PITMAN SHAFT
REMOVAL
REMOVAL - GAS 50
REMOVAL - DIESEL 50
INSTALLATION
INSTALLATION - GAS 51
INSTALLATION - DIESEL 52

GEAR - LINK/COIL

DESCRIPTION

The power steering gear is a recirculating ball type gear (6). The gear ratio's used are 12.5:1.

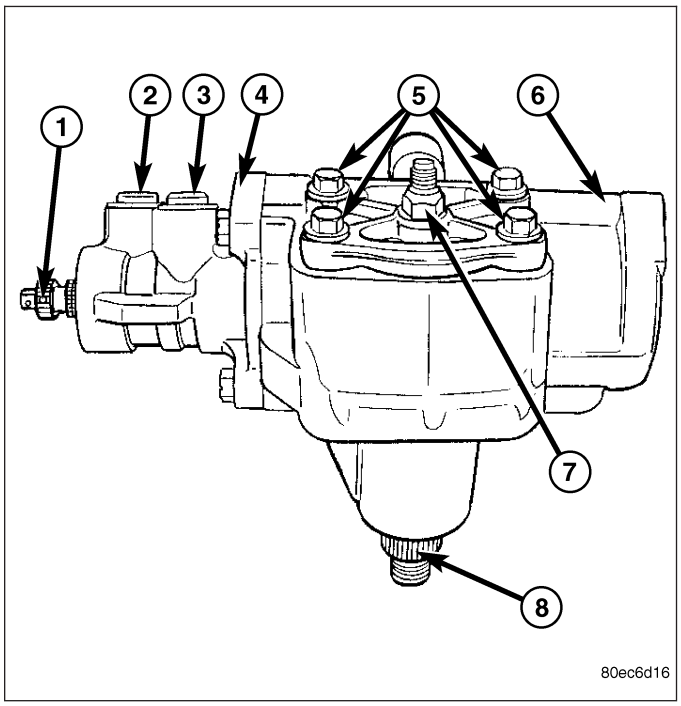

OPERATION

The gear acts as a rolling thread between the worm shaft and rack piston. The worm shaft is supported by a thrust bearing at the lower end and a bearing assembly at the upper end. When the worm shaft is turned from input from the steering column the rack piston moves. The rack piston teeth mesh with the pitman shaft. Turning the worm shaft, turns the pitman shaft, which turns the steering linkage.

REMOVAL

1. Place the front wheels in a straight-ahead position.

NOTE: The steering column on vehicles with an automatic transmission may not be equipped with an internal locking shaft that allows the ignition key cylinder to be locked with the key. Alternative methods of locking the steering wheel for service will have to be used.

2. Lock the steering wheel.
3. Siphon out as much power steering fluid as possible.
4. Disconnect and cap the fluid hoses from steering gear (Refer to 19 - STEERING/PUMP/HOSES - REMOVAL).
5. Remove coupler pinch bolt (1) at the steering gear and slide shaft off gear (2).

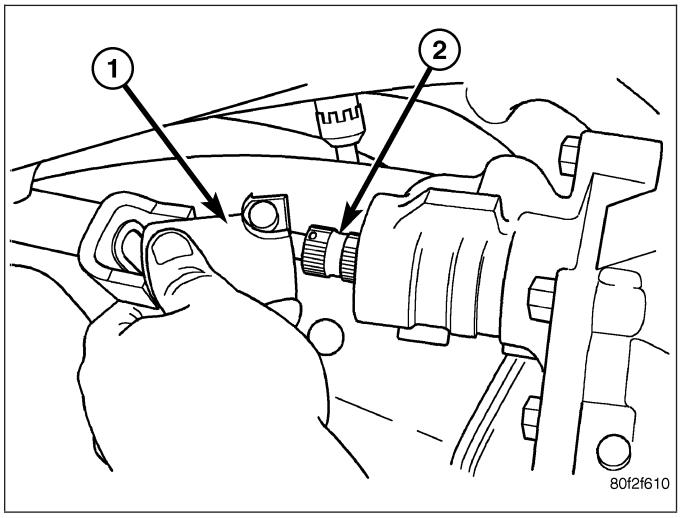

6. Mark the pitman shaft and pitman arm (4) for installation reference. Remove the pitman arm from the shaft with Puller 9615 (2) (Refer to 19 - STEERING/LINKAGE/PITMAN ARM - REMOVAL).

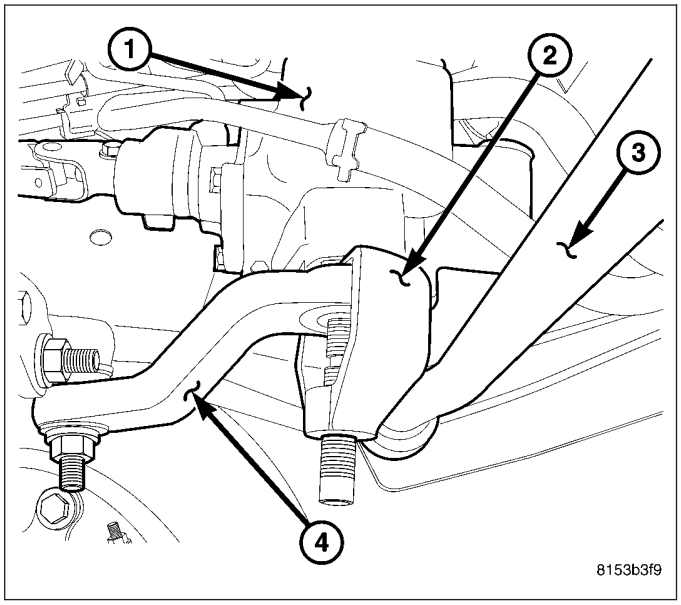

7. Remove steering gear (1) three mounting bolts (2). Remove the steering gear (1) from the vehicle.

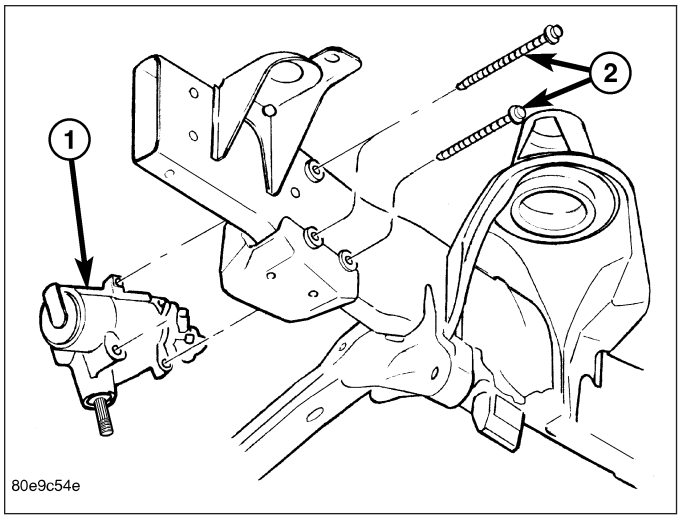

INSTALLATION

1. Position the steering gear (1) the frame rail and install the three mounting bolts (2). Tighten the mounting bolts to 196 N·m (145 ft. lbs.).

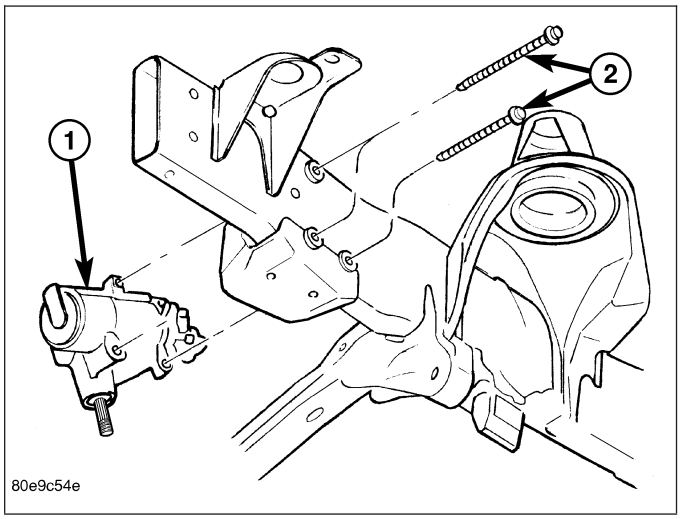

2. Align steering coupler (1) on gear shaft (2). Install pinch bolt and tighten to 49 N·m (36 ft. lbs.) torque.

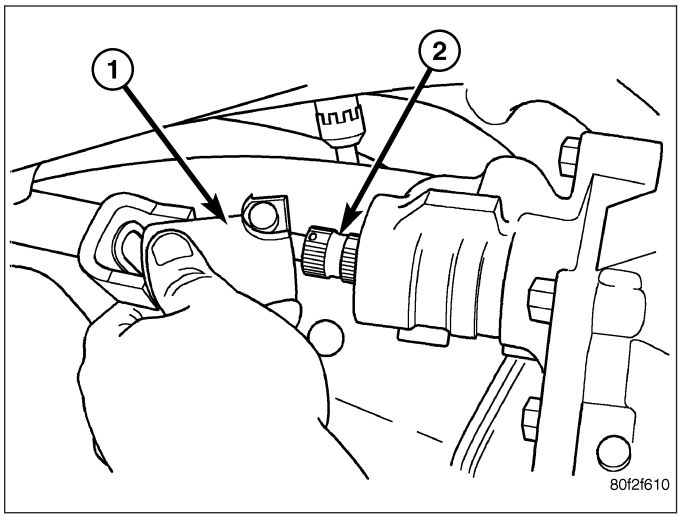

3. Align and install the pitman arm (5) (Refer to 19 - STEERING/LINKAGE/PITMAN ARM - INSTALLATION).
4. Install the washer and retaining nut (4) on the pitman shaft. Tighten the nut to 305 N·m (225 ft. lbs.).

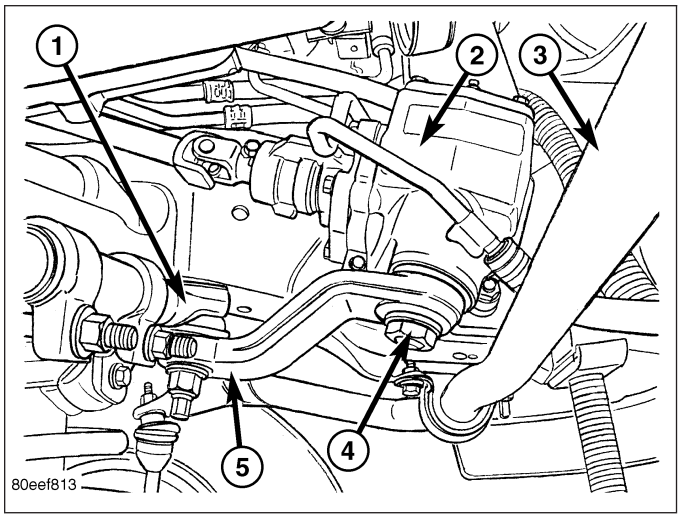

5. Connect fluid hoses to steering gear (Refer to 19 - STEERING/PUMP/HOSES - INSTALLATION), tighten to 31 N·m (23 ft. lbs.).
6. Add fluid, (Refer to 19 - STEERING/PUMP - STANDARD PROCEDURE).
7. Reset the toe and center the steering wheel (Refer to 2 - SUSPENSION/WHEEL ALIGNMENT - STANDARD PROCEDURE).

ADJUSTMENTS

ADJUSTMENT

CAUTION: Steering gear must be adjusted in the proper order. If adjustments are not performed in order, gear damage and improper steering response may result.

NOTE: Adjusting the steering gear in the vehicle is not recommended. Remove gear from the vehicle and drain the fluid. Then mount gear in a vise to perform adjustments.

1. Remove the steering gear from the vehicle (Refer to 19 - STEERING/GEAR - REMOVAL).
2. Mount the gear carefully into a soft-jawed vise.

CAUTION: Do not overtighten the vise on the gear case. This may affect the adjustment

3. Hold the steering gear upside down over a drain pan and rotate the input shaft back and forth several times lock-to-lock to discharge the fluid from the steering gear
4. Rotate the input shaft to the left stop and then back-off approximately 45 degrees. Using an inch-pound torque wrench on the input shaft, record the peak torque required to slowly and evenly rotate the input shaft clockwise ½ turn (180 degrees) starting from the 45 degree position. This peak torque reading is the preload torque. The preload torque must be within 2 - 10 in-lbs.
5. Rotate the input shaft to its center of travel (approximately 1.5 turns from either stop). Place the torque wrench on the input shaft with the handle in the vertical position. Rotate the torque wrench slowly and evenly ¼ turn (90 degrees) each side of center and record the peak torque measure on or near center. This total on-center torque reading must be 5 - 9 in-lbs higher than the previously measured preload torque without exceeding a total of 17 in-lbs. The value of the total on-center minus the preload torque is defined as the meshload torque
6. If required, adjust the on-center torque by loosening the adjuster screw lock nut and turning the adjuster screw until the total on-center and meshload torque readings fall within the specified values. Turn the adjuster screw clockwise to increase and counterclockwise to decrease the torque reading. While holding the adjuster screw in place, tighten the lock nut to 34 N·m (25 ft. lbs.).
7. Re-check the preload and on-center torque readings.
8. Install pitman arm on the steering gear (Refer to 19 - STEERING/LINKAGE/PITMAN ARM - INSTALLATION).
9. Reinstall steering gear to the vehicle (Refer to 19 - STEERING/GEAR - INSTALLATION).

SPECIFICATIONS

POWER STEERING GEAR

SPECIFICATIONS

DESCRIPTION	SPECIFICATION
Steering Gear Type	Recirculating Ball
Gear Code & Ratio	12.5:1

TORQUE SPECIFICATIONS

DESCRIPTION	N·m	Ft. Lbs.	In. Lbs.
Preload Torque	0.23-1.13	—	2-10
Meshload Torque	0.56-1.02	—	5-9 + Preload (17 Max)

TORQUE CHART

TORQUE SPECIFICATIONS

DESCRIPTION	N·m	Ft. Lbs.	In. Lbs.
Steering Gear Mounting Frame Bolts	196	145	—
Power Steering Line Pressure	32	23	—
Power Steering Line Return	54	40	—
Power Steering Line Pressure Line To Pump	37	27	—
Steering Gear Adjustment Screw Locknut	34	25	—
Steering Gear Pitman Shaft Nut	305	225	—
Steering Gear Pitman Shaft Cover Bolts	68	50	—
Steering Gear Valve Housing to Gear Bolts	54	40	—
Steering Gear Retainer Ring Screw	2.26	—	20
Steering Gear Retainer Ring	97	72	—

SPECIAL TOOLS

POWER STEERING GEAR

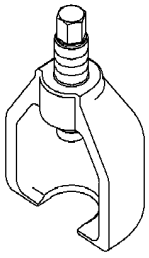

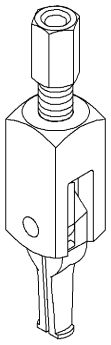

PITMAN ARM REMOVAL TOOL - 9615

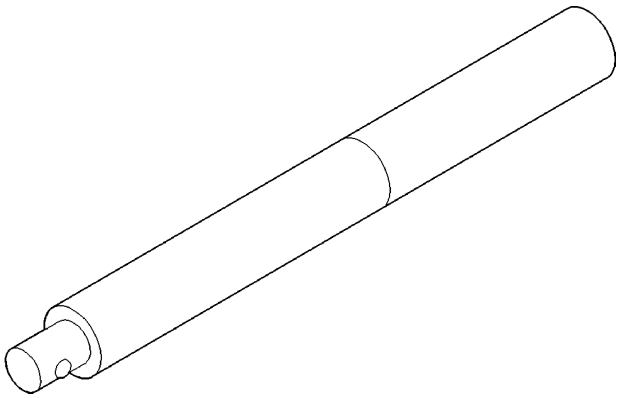

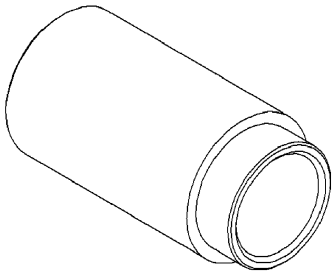

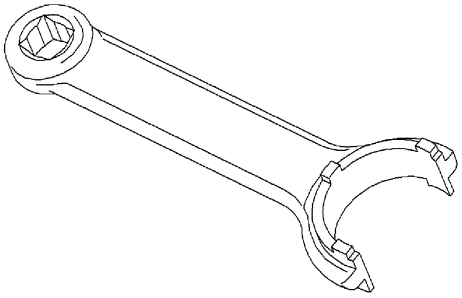

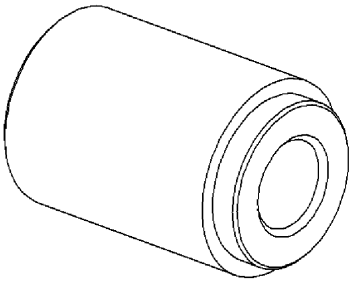

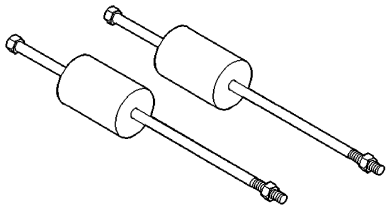

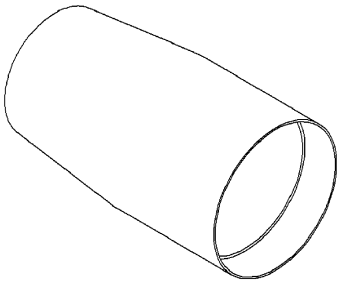

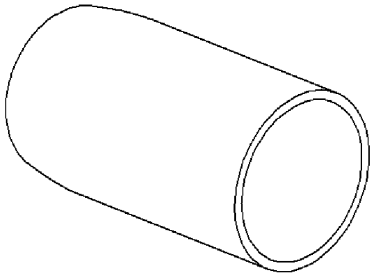

PITMAN SHAFT SEAL

REMOVAL

REMOVAL - GAS ENGINE

1. Seperate the pitman arm from the gear box (Refer to 19 - STEERING/LINKAGE/PITMAN ARM - REMOVAL).
2. Clean exposed end of pitman shaft and housing with a wire brush.
3. Rotate the steering wheel from stop to stop and count the number of turns.
4. Center the steering wheel by rotating it from the stop back 1 1/2 turns to achieve center position.
5. Remove the pitman shaft cover bolts.

NOTE: The pitman shaft will not clear the housing if it is not centered.

6. Remove the pitman shaft from the gear.
7. Remove dust seal from the housing with a special tool (2).

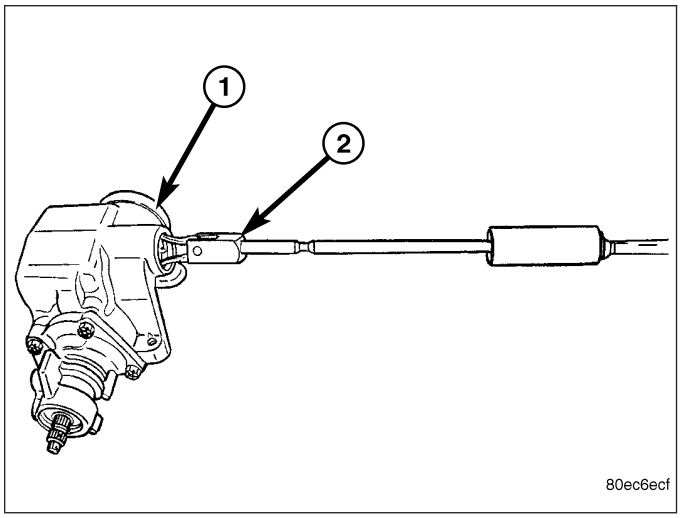

CAUTION: Use care not to score the housing bore when prying out seals and washer.

8. Remove retaining ring with snap ring pliers.
9. Remove washer from the housing.

NOTE: Tighten the slide hammer adapter 8990 into the seal using wrenches, in order to make a tight fit to pull the seal out. If this is not performed the seal may tear on the removal making it difficult to remove.

10. Remove oil seal from the housing with a special tool 8990 with slide hammer C-3752. (2).

REMOVAL - DIESEL

1. Seperate the pitman arm from the gear box (Refer to 19 - STEERING/LINKAGE/PITMAN ARM - REMOVAL).
2. Remove the steering gear box (Refer to 19 - STEERING/GEAR - REMOVAL).
3. Install the steering gear in a soft jawed bench vise.
4. Clean exposed end of pitman shaft and housing with a wire brush.
5. Rotate the input shaft with a 12 point socket (2) from stop to stop and count the number of turns.
6. Center the input shaft (4) by rotating it from the stop 1/2 of the total amount of turns.

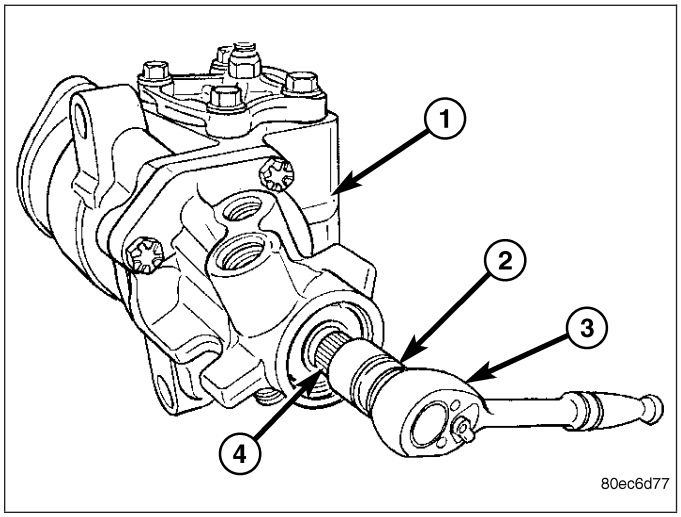

7. Remove the pitman shaft cover bolts.

NOTE: The pitman shaft will not clear the housing if it is not centered.

8. Remove the pitman shaft from the gear (1).
9. Remove dust seal from the housing with a special tool 8990 (2).

CAUTION: Use care not to score the housing bore when prying out seals.

10. Remove retaining ring with snap ring pliers.
11. Remove washer from the housing.

NOTE: Tighten the slide hammer adapter 8990 into the seal using wrenches, in order to make a tight fit to pull the seal out. If this is not performed the seal may tear on the removal making it difficult to remove.

12. Remove oil seal from the housing with a special tool 8990 (2) with slide hammer C-3752..

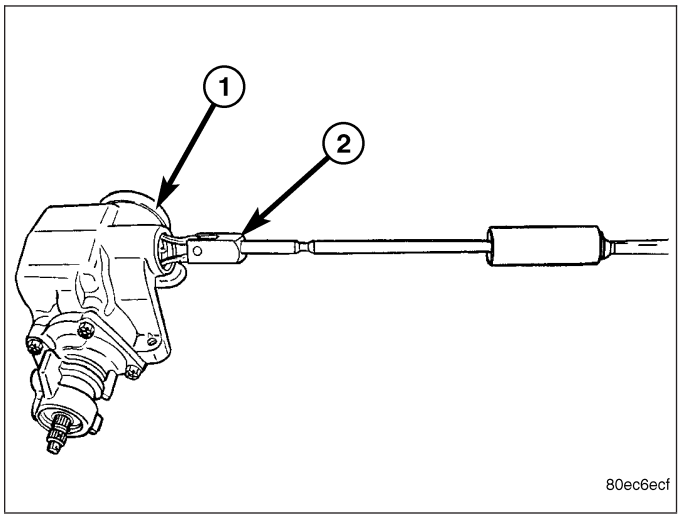

INSTALLATION

INSTALLATION - GAS ENGINE

NOTE: Generous amounts of the high temperature grease from the seal kit should be applied to areas between the pitman shaft bearing and oil seals and also between the dust seals and snap ring.

1. Coat the oil seal and washer with **high temp grease**.

NOTE: Install the oil seal with the lip facing inward. Flat side of the oil seal should be against the washer.

2. Install the oil seal with special tool 8989 driver (2) and C-4171 handle (1).
3. Install backup washer.
4. Install the retainer ring with snap ring pliers.
5. Coat the dust seal with **high temp grease**.
6. Install the dust seal with a driver (2) and handle (1).

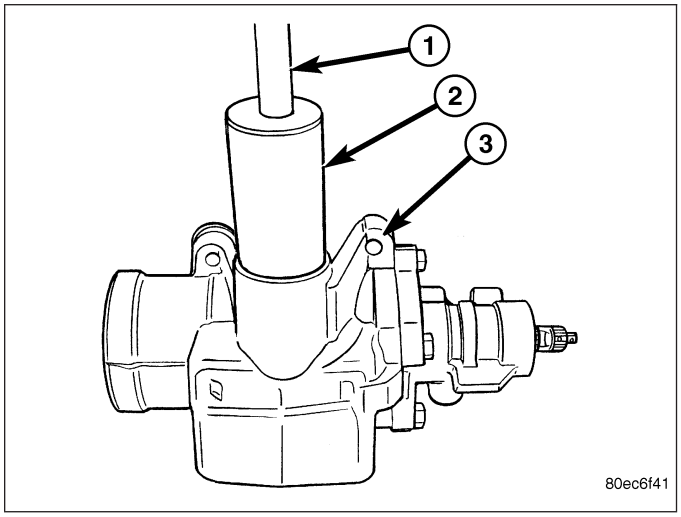

7. Install protective seal protector 8993 (2) over the shaft (1).
8. Install the pitman shaft into the steering gear until it fully seats into the bearing.
9. Install the new cover bolts and tighten to 68 N·m (50 ft. lbs.).
10. Install the pitman arm (Refer to 19 - STEERING/ LINKAGE/PITMAN ARM - INSTALLATION).

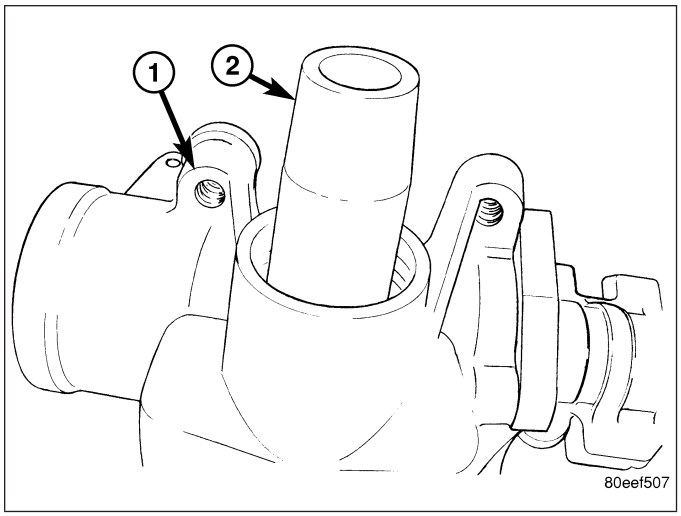

INSTALLATION - DIESEL

NOTE: Generous amounts of the high temperature grease from the seal kit should be applied to areas between the pitman shaft bearing and oil seals and also between the dust seals and snap ring.

1. Coat the oil seal and washer with **high temp grease**.

NOTE: Install the oil seal with the lip facing inward. Flat side of the oil seal should be against the washer.

2. Install the oil seal with special tool 8989 driver (2) and C-4171 handle (1).
3. Install backup washer.
4. Install the retainer ring with snap ring pliers.
5. Coat the dust seal with **high temp grease**.
6. Install the dust seal with special tool 8989 driver (2) and C-4171 handle (1).

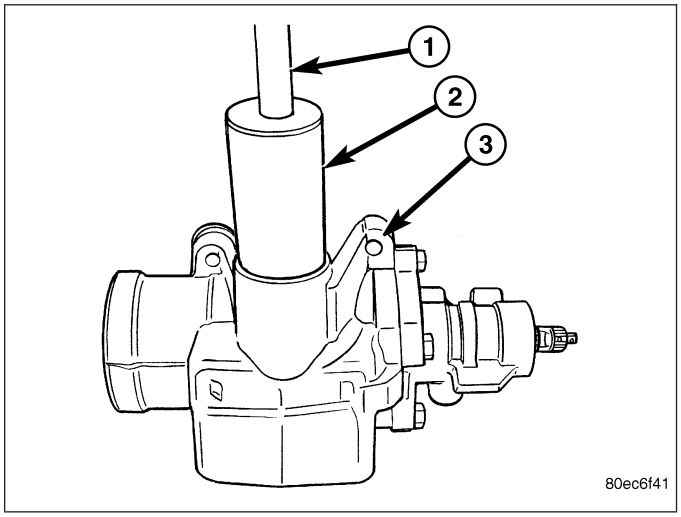

7. Install protective seal protector 8993 (2) over the shaft (1).
8. Install the pitman shaft into the steering gear until it fully seats into the bearing.
9. Install the new cover bolts and tighten to 68 N·m (50 ft. lbs.).
10. Install the steering gear (Refer to 19 - STEERING/GEAR - INSTALLATION).
11. Install the pitman arm (Refer to 19 - STEERING/ LINKAGE/PITMAN ARM - INSTALLATION).
12. Perform a wheel alignment (Refer to 2 - SUSPENSION/WHEEL ALIGNMENT - STANDARD PROCEDURE).

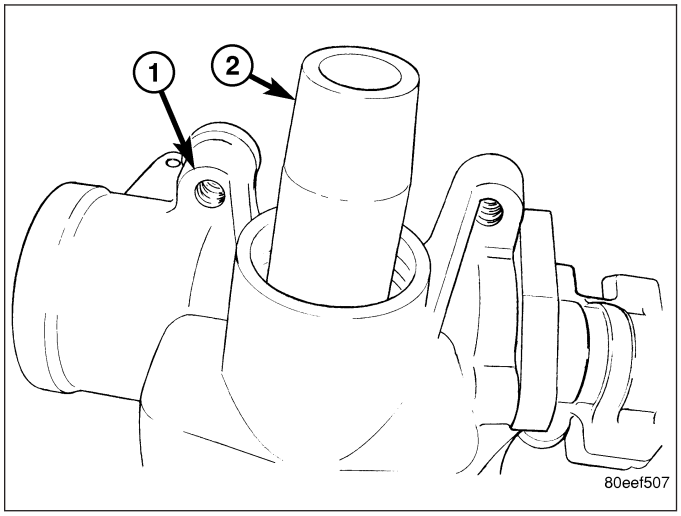

STEERING GEAR INPUT SHAFT SEAL

REMOVAL

1. Remove the steering gear from the vehicle (Refer to 19 - STEERING/GEAR - REMOVAL).

CAUTION: Do not overtighten the vise on the gear case. This may affect the adjustment

2. Mount the steering gear upside down over a drain pan in a soft jawed vise.
3. Place a drain pan under the gear and rotate the input shaft back and forth several times lock-to-lock to discharge the fluid from the steering gear
4. Drain all the remaining fluid from the gear.
5. Rotate the input shaft (4) from stop to stop and count the number of turns using a 12 point socket (2).

NOTE: The pitman shaft will not clear the housing if it is not centered.

6. Center the input shaft (4) by rotating it from the stop back 1 1/2 turns to achieve center position.

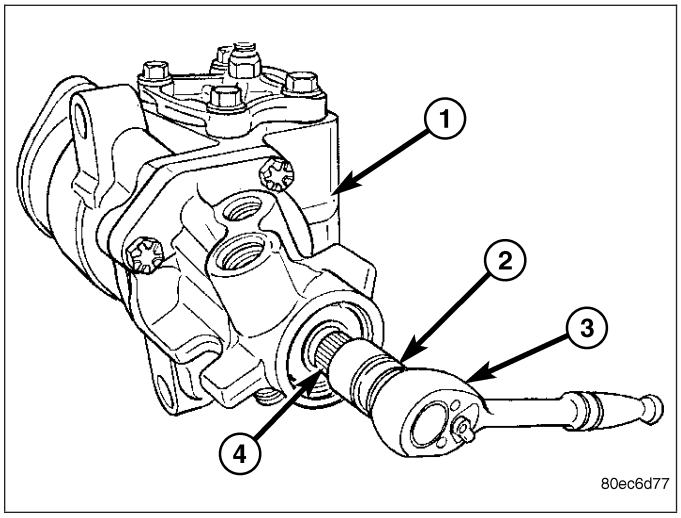

7. Remove the pitman shaft (Refer to 19 - STEERING/GEAR/PITMAN SHAFT - REMOVAL).
8. Remove the four bolts securing the valve housing (1).
9. Remove the valve housing (1) from the steering gear (3).

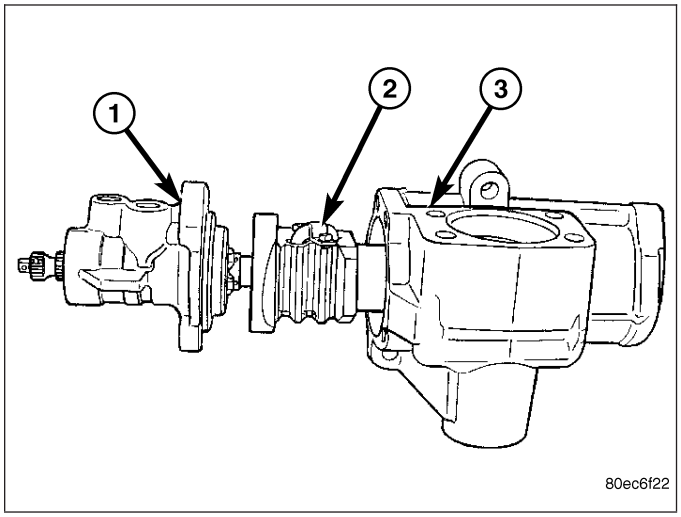

10. Remove the valve housing (1) and wormshaft assembly from the steering gear housing and place the valve housing in a soft jawed vise.

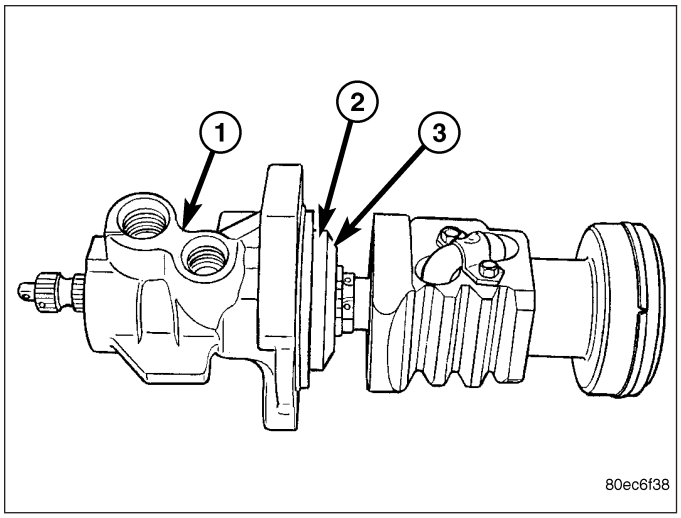

11. Remove the retainer ring (3) set screw (1) from the valve housing.

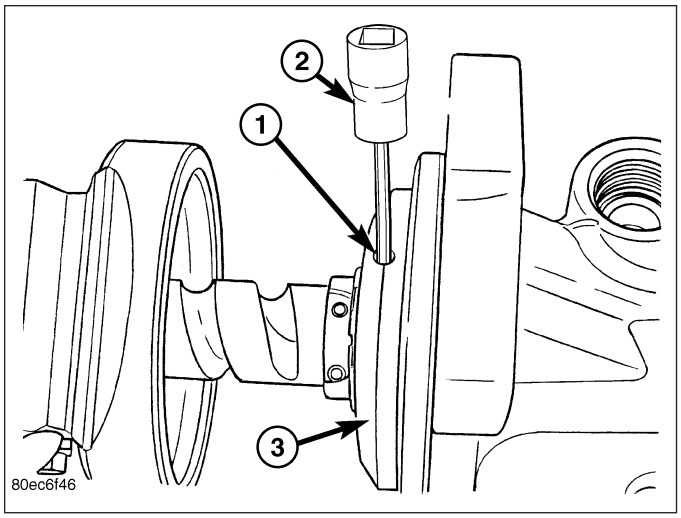

12. Using special tool reatainer ring wrench 8988 (1) to remove the steering gear worm thrust bearing reatainer ring.

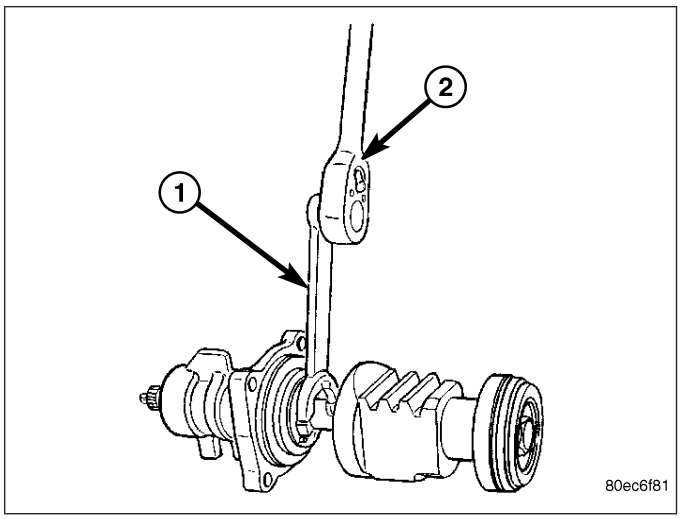

13. Separate the wormshaft assembly from the valve housing, Then remove the wormshaft assembly from the vise.

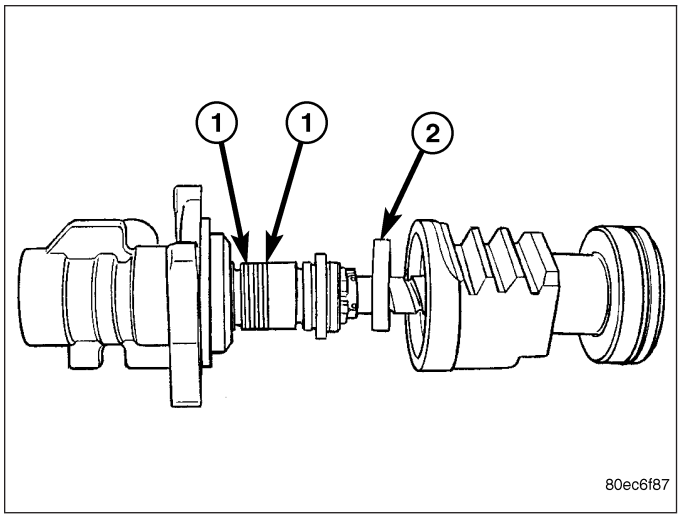

14. Remove the dust seal (3) with a pick (1).

CAUTION: Use care not to score the housing bore when removing seals.

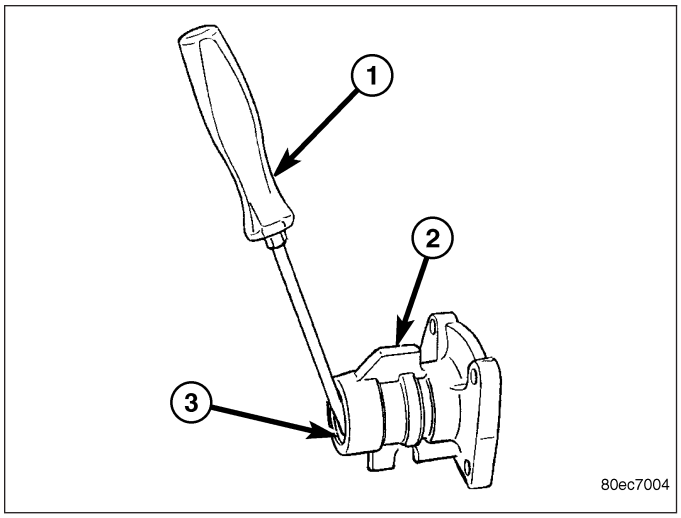

15. Remove the snap ring (2) with snap ring pliers (1).

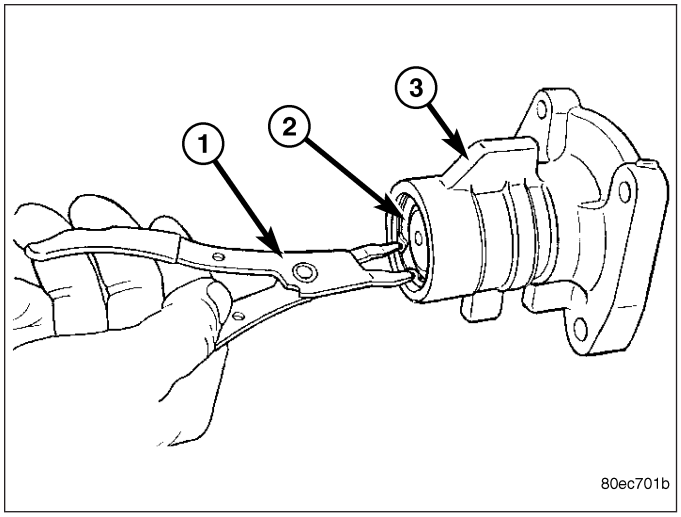

16. Using special tool slide hammer C-3752 (1) with adapter 8990 (1) remove the oil seal.

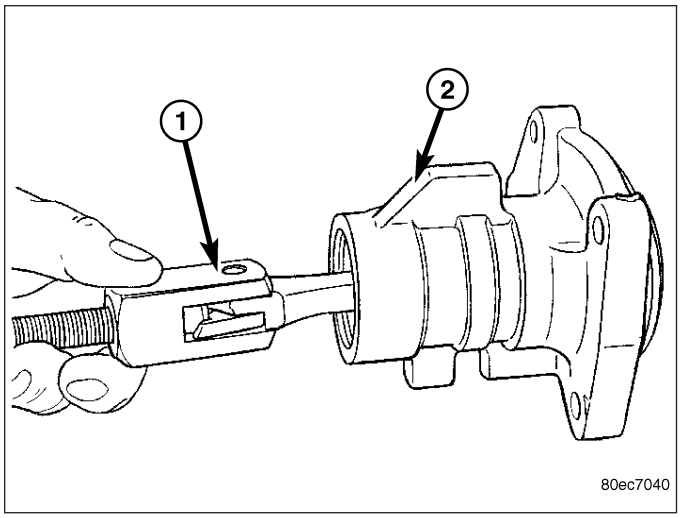

INSTALLATION

1. Inspect the piston teflon seals for damage. Replace if needed.

NOTE: To replace the teflon seals, use a pick to remove the teflon o-ring and the rubber o-ring underneath. Install a new rubber o-ring in the piston seal grove and a new teflon o-ring over the top of it.

2. Install the valve into the valve housing (1).
3. Thread the retainer ring into the valve housing (1). Tighten to 97 N·m (72 ft. lbs.).

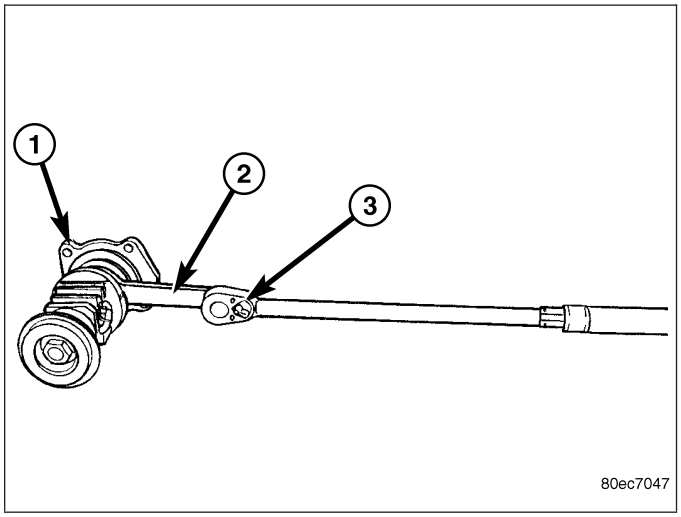

NOTE: It is very important to make sure to compensate for the added length of the torque wrench when torquing to proper specifications.

4. Install the retainer ring set screw. Tighten to 2.26 N·m (20 in. lbs.)
5. Clean the steering gear housing.

CAUTION: Valve assembly must be centered to the housing (1).

6. Install the valve assembly (2) into the steering gear. Tighten the new bolts to 54 N·m (40 ft. lbs.)

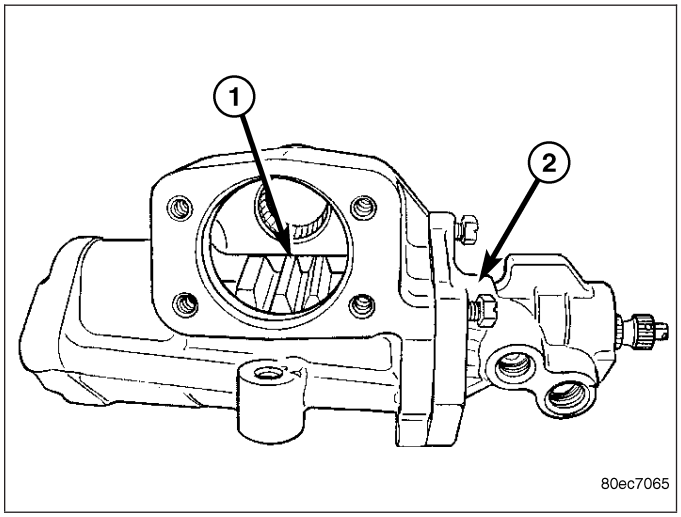

7. Install the input shaft seal protector 8986 (2).

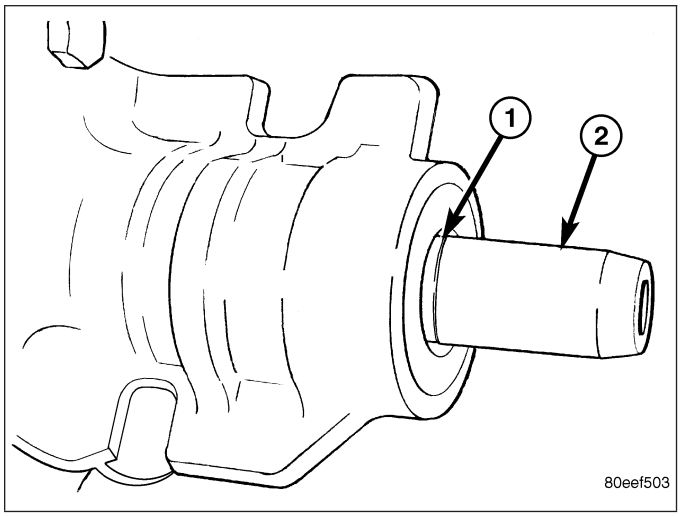

8. Coat the new seal in **high temp grease** and Install the new oil seal using special tool 8987 driver (2) and C-4171 handle (3).

NOTE: Drive the oil seal into the housing until the outer edge does not quite clear the snap ring groove.

9. Insert the snap ring into the housing. Using special tool 8987 driver (2) and C-4171 handle (3) push the snap ring and oil seal together until the snap ring seats in the groove.

NOTE: Generous amounts of the high temperature grease from the seal kit should be applied to areas between the pitman shaft bearing and oil seals and also between the dust seals and snap ring.

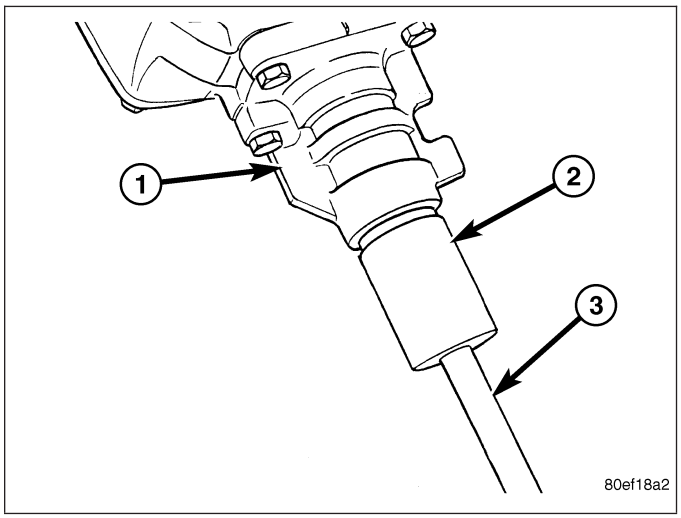

10. Install the new dust seal using **high temp grease**, special tool C-4171 (driver) (3) and 8987 (handle)(2).

11. Check to make sure the gear is centered in the middle tooth (1) before installing the pitman shaft.

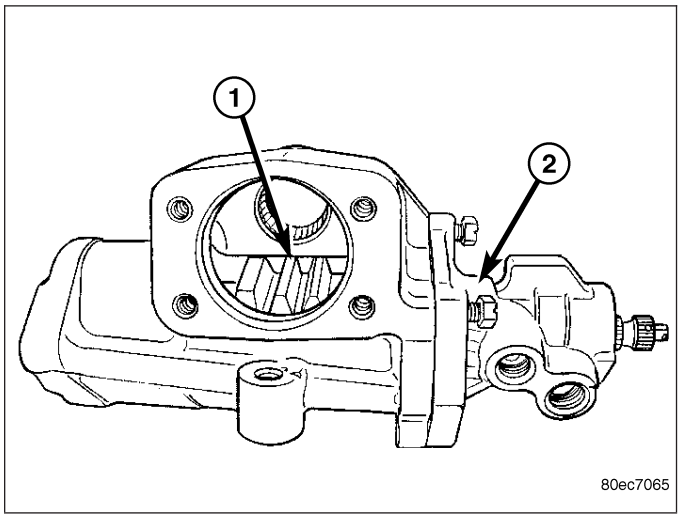

12. Install the pitman shaft into the steering gear (Refer to 19 - STEERING/GEAR/PITMAN SHAFT - INSTALLATION).
13. Perform over-center meshload adjustment (Refer to 19 - STEERING/GEAR - ADJUSTMENTS).
14. Install the steering gear to the vehicle (Refer to 19 - STEERING/GEAR - INSTALLATION).

15. Perform a wheel alignment (Refer to 2 - SUSPENSION/WHEEL ALIGNMENT - STANDARD PROCEDURE).

PITMAN SHAFT

REMOVAL

REMOVAL - GAS

1. Separate the pitman arm from the gear box (Refer to 19 - STEERING/LINKAGE/PITMAN ARM - REMOVAL).
2. Clean exposed end of pitman shaft (1) and housing with a wire brush.
3. Rotate the steering wheel from stop to stop and count the number of turns.
4. Center the steering wheel by rotating it from the stop back 1 1/2 turns to achieve center position.
5. Remove the pitman shaft cover bolts.

NOTE: The pitman shaft will not clear the housing if it is not centered.

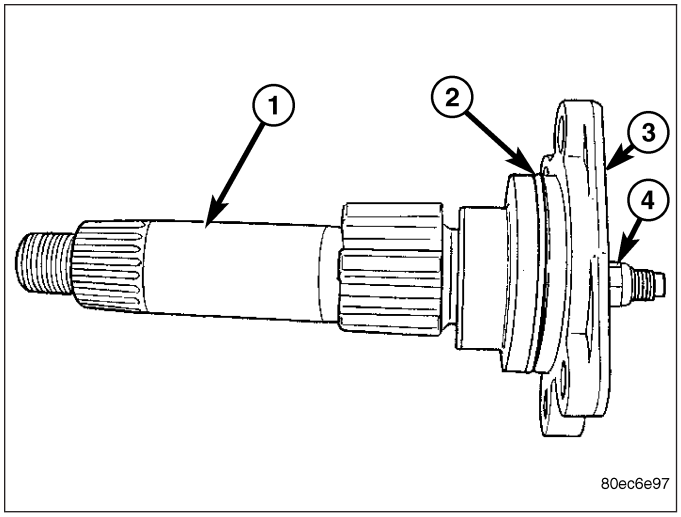

6. Remove the pitman shaft (1) from the gear.
7. Remove the cover if needed by loosing the adjuster nut (4), Then removing the cover (3) from the pitman shaft.

REMOVAL - DIESEL

1. Separate the pitman arm from the gear box (Refer to 19 - STEERING/LINKAGE/PITMAN ARM - REMOVAL).
2. Remove the steering gear box (Refer to 19 - STEERING/GEAR - REMOVAL).
3. Install the steering gear in a soft jawed bench vise.
4. Clean exposed end of pitman shaft and housing with a wire brush.
5. Rotate the stub shaft with a 12 point socket (2) from stop to stop and count the number of turns.
6. Center the stub shaft (4) by rotating it from the stop 1/2 of the total amount of turns.

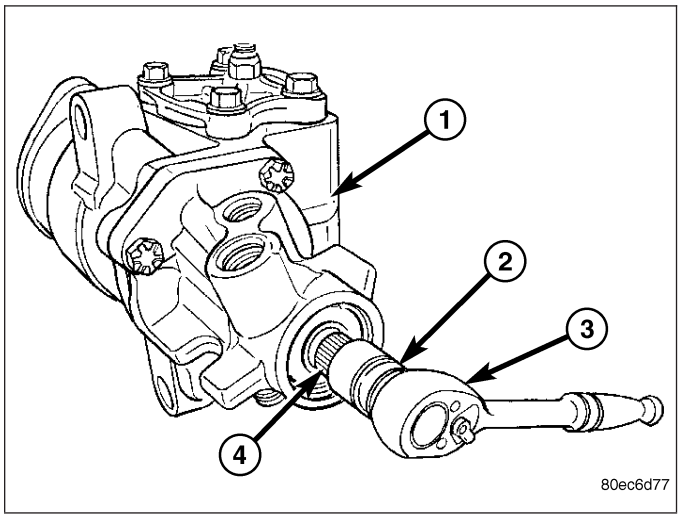

7. Remove the pitman shaft cover bolts (3).

NOTE: The pitman shaft will not clear the housing if it is not centered.

8. Remove the pitman shaft (1) from the gear.
9. Remove the cover (3) if needed by loosing the adjuster nut (4), Then removing the cover from the pitman shaft.

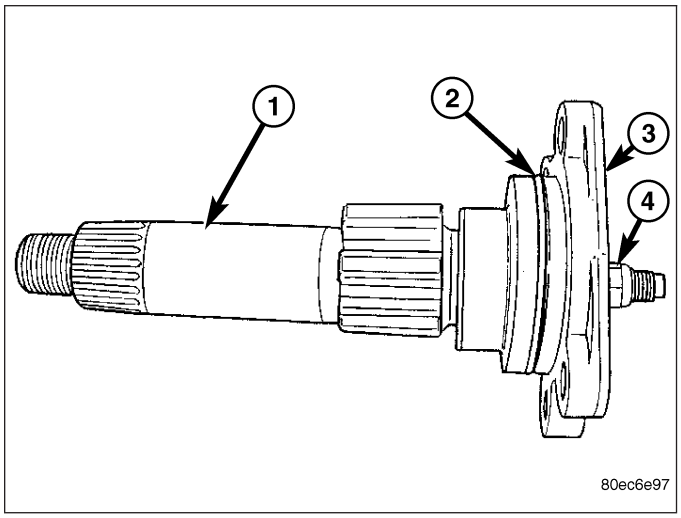

INSTALLATION

INSTALLATION - GAS

1. Coat the seal with **power steering fluid**.
2. Install pitman shaft (1) into the steering gear until it fully seats into the bearing.
3. Install the new cover bolts and tighten to 68 N·m (50 ft. lbs.).

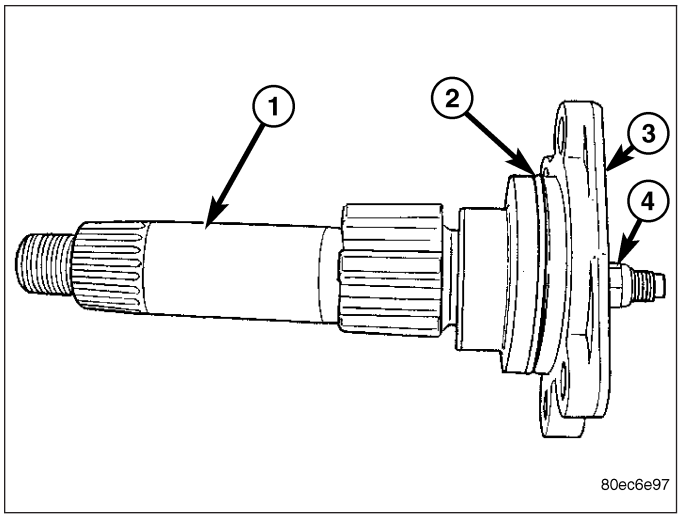

4. Perform over-center meshload adjustment, (Refer to 19 - STEERING/GEAR - ADJUSTMENTS).

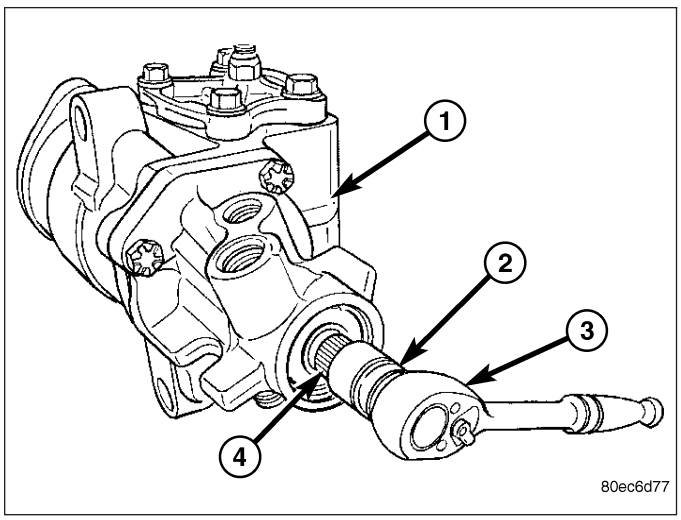

5. Install the pitman arm (Refer to 19 - STEERING/LINKAGE/PITMAN ARM - INSTALLATION).
6. Perform a wheel alignment (Refer to 2 - SUSPENSION/WHEEL ALIGNMENT - STANDARD PROCEDURE).

INSTALLATION - DIESEL

1. Coat the seal with **power steering fluid**.
2. Install the pitman shaft (1) into the steering gear until it fully seats into the bearing.
3. Install the new cover bolts (3) and tighten to 68 N·m (50 ft. lbs.).

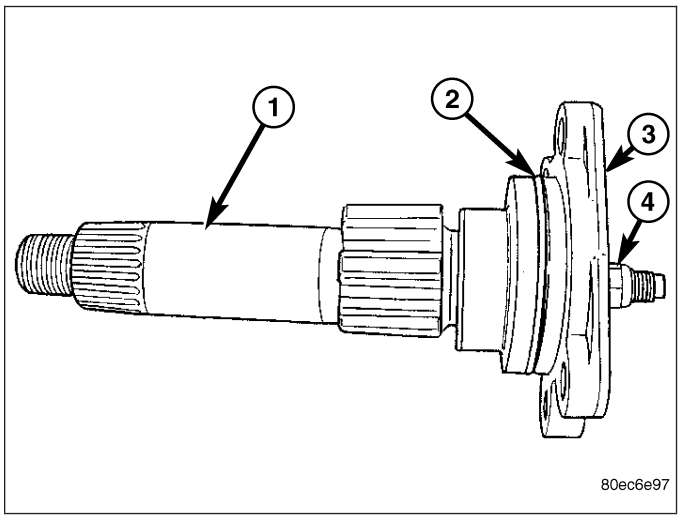

4. Perform over-center meshload adjustment (Refer to 19 - STEERING/GEAR - ADJUSTMENTS).

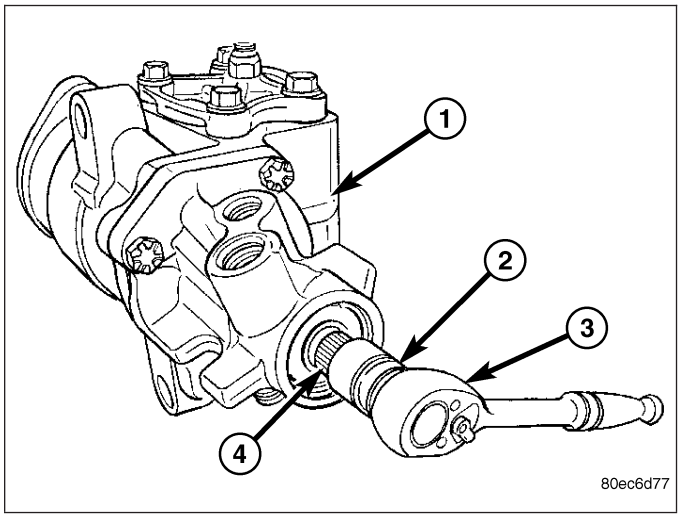

5. Install the steering gear (Refer to 19 - STEERING/GEAR - INSTALLATION).
6. Install the pitman arm (Refer to 19 - STEERING/LINKAGE/PITMAN ARM - INSTALLATION).
7. Perform a wheel alignment (Refer to 2 - SUSPENSION/WHEEL ALIGNMENT - STANDARD PROCEDURE).

LINKAGE - INDEPENDENT FRONT SUSPENSION

TABLE OF CONTENTS

page

LINKAGE - INDEPENDENT FRONT SUSPENSION
DIAGNOSIS AND TESTING
OUTER TIE ROD END 53

TIE ROD END
REMOVAL - OUTER TIE ROD END 53
INSTALLATION - OUTER TIE ROD END 54

LINKAGE - INDEPENDENT FRONT SUSPENSION

DIAGNOSIS AND TESTING

OUTER TIE ROD END

NOTE: If the outer tie rod end is equipped with a lubrication fitting, grease the joint then road test the vehicle before performing test.

1. Raise the front of the vehicle. Place safety floor stands under both lower control arms as far outboard as possible. Lower the vehicle to allow the stands to support some or all of the vehicle weight.
2. Remove the front tires.
3. Mount a dial indicator solidly to the vehicle steering knuckle and then zero the dial indicator.
4. Position indicator plunger on the topside of the outer tie rod end.

NOTE: The dial indicator plunger must be perpendicular to the machined surface of the outer tie rod end.

5. Position a pry bar in order to pry downwards on the outer tie rod end.
6. If the travel exceeds 0.5 mm (0.020 in.), replace the outer tie rod end (Refer to 19 - STEERING/LINKAGE/TIE ROD END - REMOVAL).
7. If the outer tie rod end is within specs reinstall the front tires (Refer to 22 - TIRES/WHEELS/WHEELS - STANDARD PROCEDURE).

TIE ROD END

REMOVAL - OUTER TIE ROD END

NOTE: Do not twist the boot anytime during removal or installation.

1. Loosen the jam nut.
2. Remove the outer tie rod end nut from the ball stud (1).
3. Separate the tie rod ball stud (1) from the knuckle with Remover 8677 (2).
4. Unthread the outer tie rod end (1) from the inner tie rod.

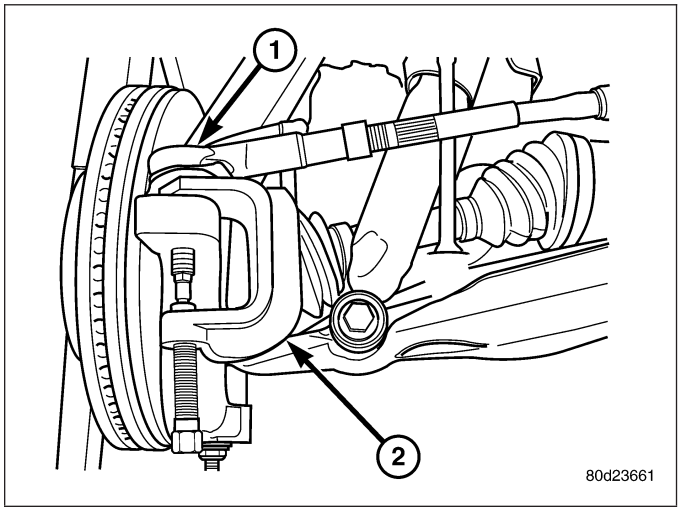

INSTALLATION - OUTER TIE ROD END

NOTE: Do not twist the boot at anytime during removal or installation.

1. Thread the outer tie rod end (3) onto the inner tie rod (2), to it's original position.
2. Install the outer tie rod end (3) into the steering knuckle.
3. Tighten the ball stud nut on the ball stud to 61 N·m (45 ft. lbs.) then an additional 90°.
4. Set wheel toe pattern, (Refer to 2 - SUSPENSION/ WHEEL ALIGNMENT - STANDARD PROCEDURE).
5. Tighten jam nut (1) to 75 N·m (55 ft. lbs.).

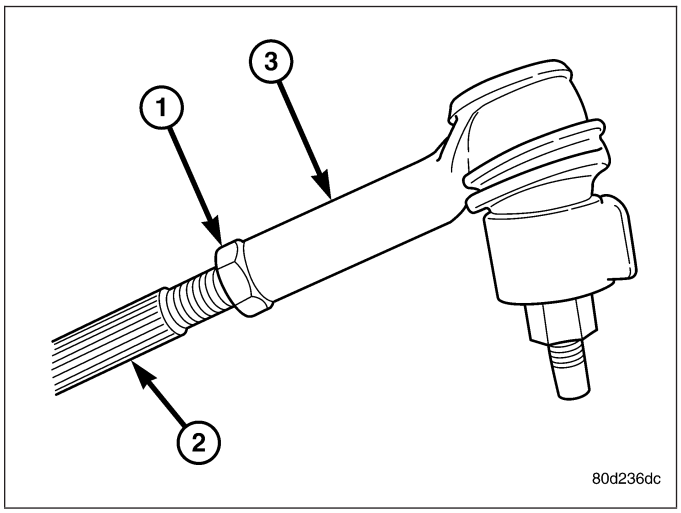

LINKAGE - LINK/COIL

TABLE OF CONTENTS

page

LINKAGE - LINK/COIL
DESCRIPTION 55
STANDARD PROCEDURE
LUBRICATION 56
SPECIFICATIONS
TORQUE CHART 56
SPECIAL TOOLS
STEERING LINKAGE 57
DAMPER
REMOVAL 58
INSTALLATION 58
DRAG LINK
REMOVAL 58
INSTALLATION 58
PITMAN ARM
REMOVAL 59
INSTALLATION 60
TIE ROD END
REMOVAL 60
INSTALLATION 61
TRACK BAR
REMOVAL 61
INSTALLATION 62

LINKAGE - LINK/COIL

DESCRIPTION

The steering linkage is comprised of a tie rod end (5), tie rod, drag link (7), steering damper (9) and pitman arm (2).

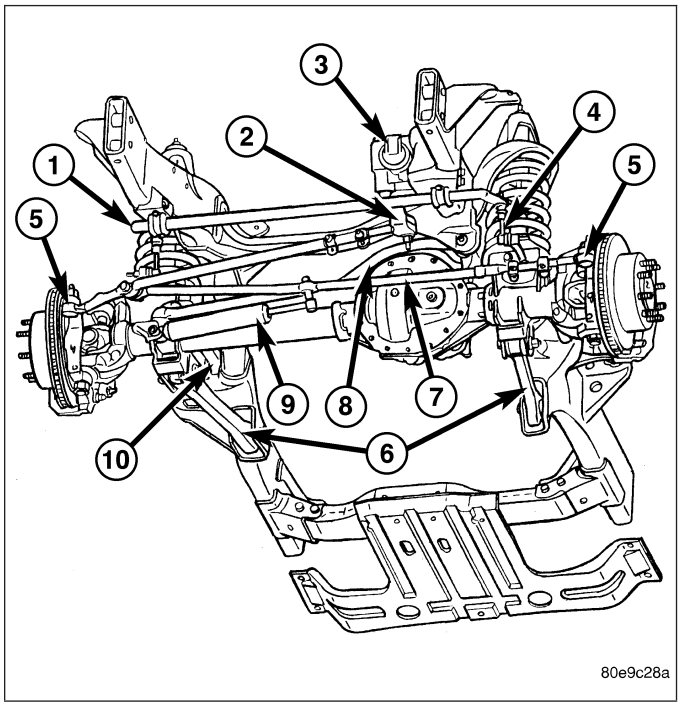

CAUTION: If any steering components are replaced or serviced an alignment must be performed.

NOTE: To avoid damaging ball stud seals, use Puller C-3894–A (3) or an appropriate puller to remove tie rod ends (5).

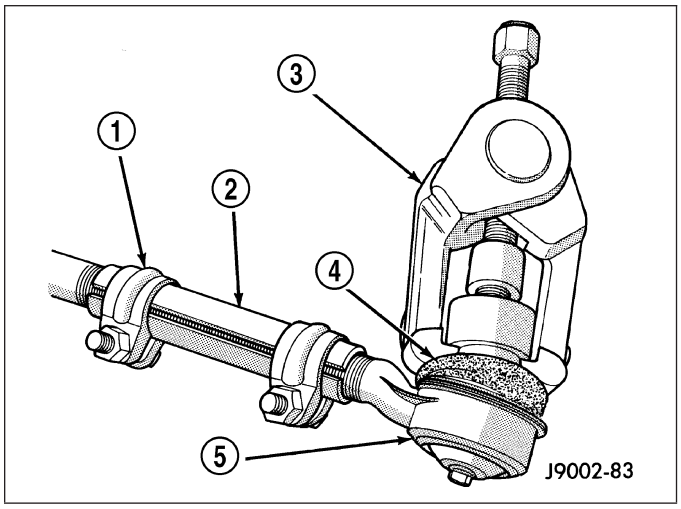

STANDARD PROCEDURE

LUBRICATION

Periodic lubrication of the steering system components is required. Refer to Lubrication And Maintenance for the recommended maintenance schedule.

The following components must be lubricated:

- Tie rod
- Tie rod end
- Drag link

SPECIFICATIONS

TORQUE CHART

TORQUE SPECIFICATIONS

DESCRIPTION	N·m	Ft. Lbs.	In. Lbs.
Pitman Arm Gear Shaft Nut	300	225	—
Drag Link Pitman Arm	88	65	—
Drag Link Tie Rod	54 Then an additional 90°	40 Then an additional 90°	—
Drag Link Adjuster Clamp	61	45	—
Tie Rod End Knuckle	54 Then an additional 90°	40 Then an additional 90°	—
Tie Rod End Adjuster Clamp	61	45	—
Stabilizer Bar Link to Axle	68	50	—
Steering Damper Axle	95	70	—
Steering Damper Tie Rod	81	60	—

SPECIAL TOOLS

STEERING LINKAGE

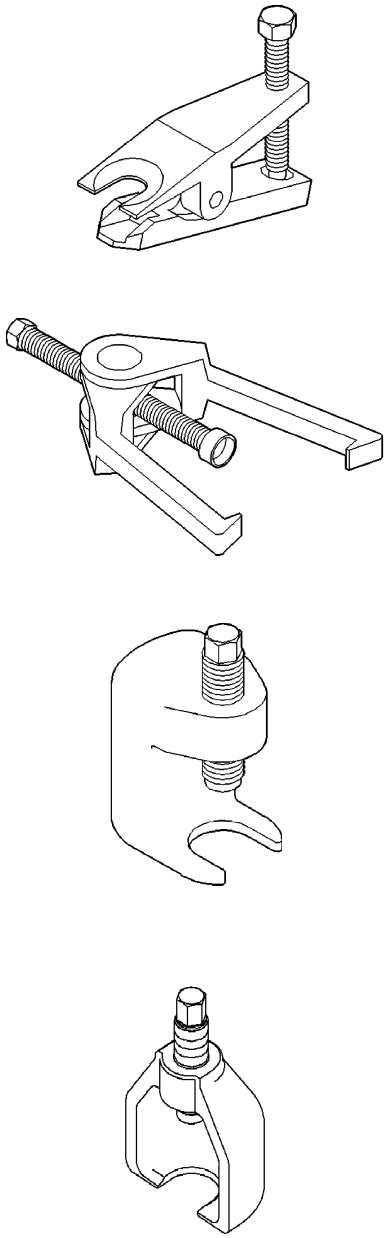

PITMAN ARM REMOVAL TOOL - 9615

DAMPER

REMOVAL

1. Remove the steering damper mounting nuts and bolts.
2. Slide the damper from the isolation bushing.
3. Remove the damper.

INSTALLATION

1. Install the steering damper on the axle and isolation bushing. Tighten nut to 95 N·m (75 ft. lbs.).
2. Install the steering damper on the tie rod. Tighten nut to 81 N·m (60 ft. lbs.).

DRAG LINK

REMOVAL

1. Remove the draglink nut (2) from the pitman arm side (1).
2. Remove the drag link nut from the knuckle side.
3. Remove the drag link (2) from the right knuckle and pitman arm (1) with Puller C-3894A (3).

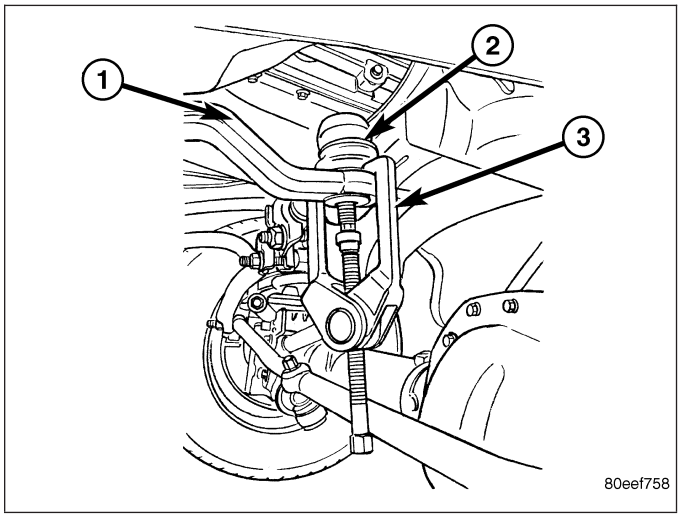

INSTALLATION

1. Install the drag link (2) to the pitman arm (1). Install the nut and tighten to 88 N·m (65 ft. lbs.).
2. Install the drag link to the right steering knuckle. Install the nut and tighten to 54 N·m (40 ft. lbs.) Then an additional 90°.
3. Install tie rod to the left steering knuckle and drag link. Install the nuts and tighten to 54 N·m (40 ft. lbs.) Then an additional 90°.
4. Remove the supports and lower the vehicle to the surface. Center steering wheel and adjust toe, (Refer to 2 - SUSPENSION/WHEEL ALIGNMENT - STANDARD PROCEDURE).
5. After adjustment tighten tie rod adjustment sleeve clamp bolts to 61 N·m (45 ft. lbs.).

NOTE: Position the clamp on the sleeve so retaining bolt is located on the bottom side of the sleeve.

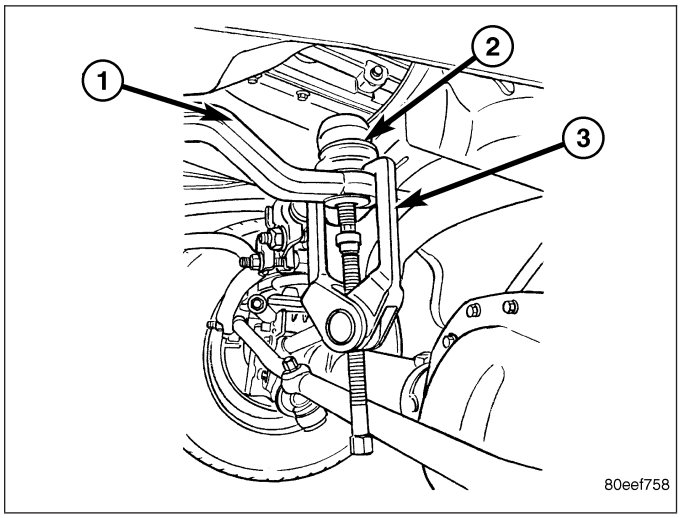

PITMAN ARM

REMOVAL

1. Remove the drag link nut (2) from the pitman arm (1).
2. Install puller C-3894-A (3) and separate the drag link (2) from the pitman arm (1).

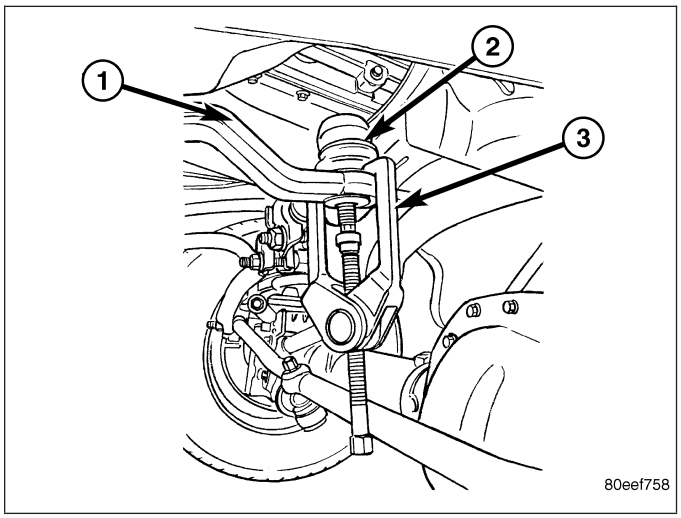

3. Mark the pitman arm (2) and shaft positions for installation reference. Remove the nut (3) and washer (4) from the pitman arm (2).

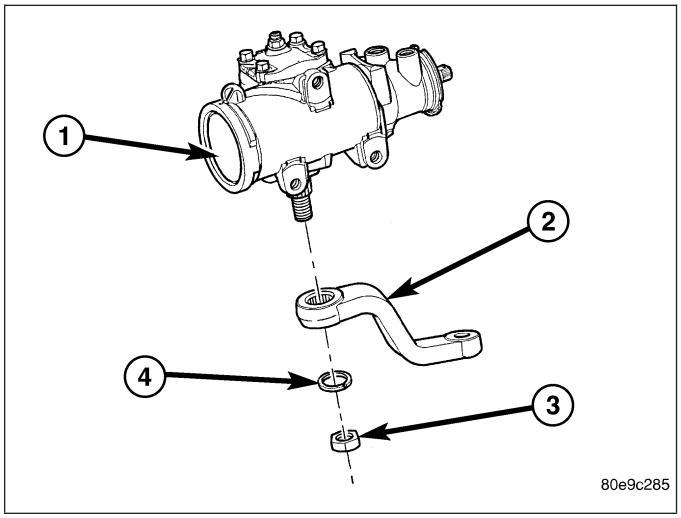

4. Remove the pitman arm (4) with Puller 9615 (2) or an equivalent pitman arm puller tool.

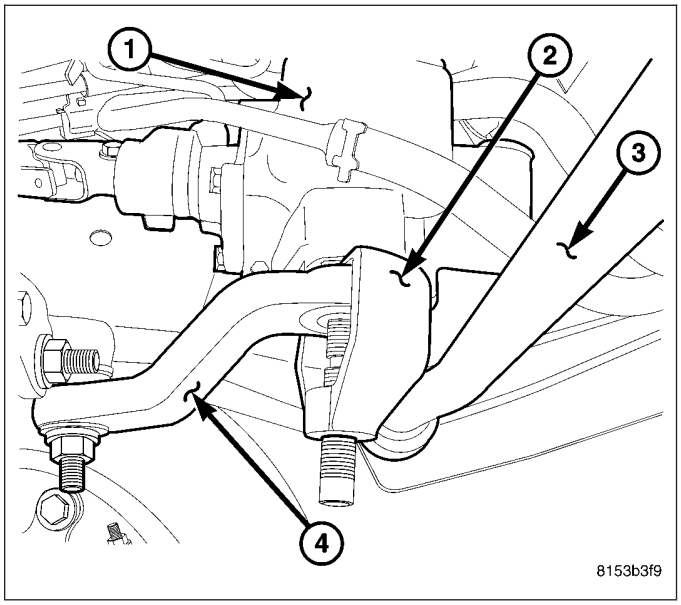

INSTALLATION

1. Align reference marks and install pitman arm.
2. Install the lock washer and retaining nut on the pitman shaft and tighten nut to 251 N·m (185 ft. lbs.).
3. Install the drag link (1) to the pitman arm (5). Install the nut (4) and tighten to 54 N·m (40 ft. lbs.) Then an additional 90°.
4. Remove the supports and lower the vehicle to the surface. Center steering wheel and adjust toe, (Refer to 2 - SUSPENSION/WHEEL ALIGNMENT - STANDARD PROCEDURE).
5. After adjustment tighten tie rod adjustment sleeve clamp bolts to 61 N·m (45 ft. lbs.).

NOTE: Position the clamp on the sleeve so retaining bolt is located on the bottom side of the sleeve.

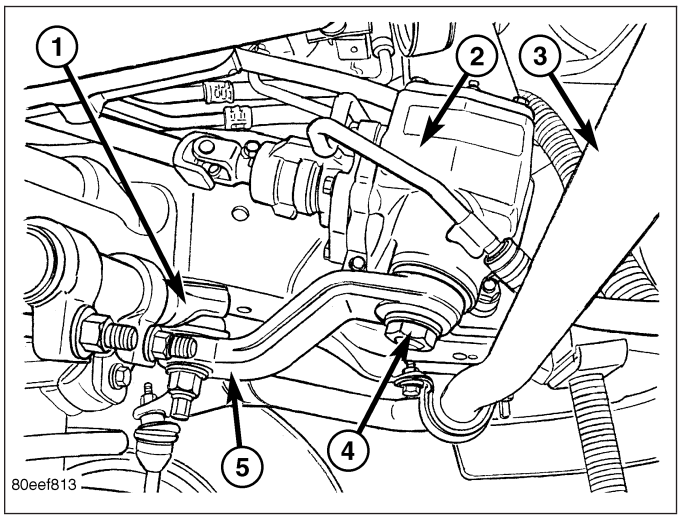

TIE ROD END

REMOVAL

1. Remove tie rod nuts (1).
2. Remove tie rod from drag link and left knuckle with Puller C-4150A.

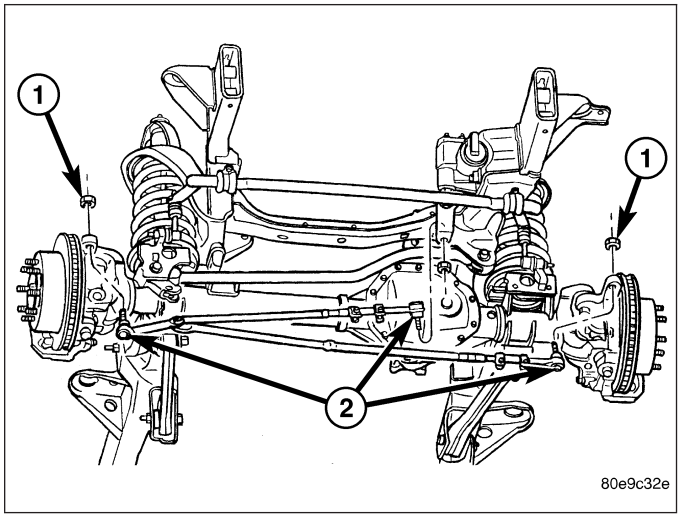

INSTALLATION

1. Install tie rod (2) to the left steering knuckle and drag link. Install the nuts (1) and tighten to 54 N·m (40 ft. lbs.) Then an additional 90°.
2. Remove the supports and lower the vehicle to the surface. Center steering wheel and adjust toe, (Refer to 2 - SUSPENSION/WHEEL ALIGNMENT - STANDARD PROCEDURE).
3. After adjustment tighten tie rod adjustment sleeve clamp bolts to 61 N·m (45 ft. lbs.).

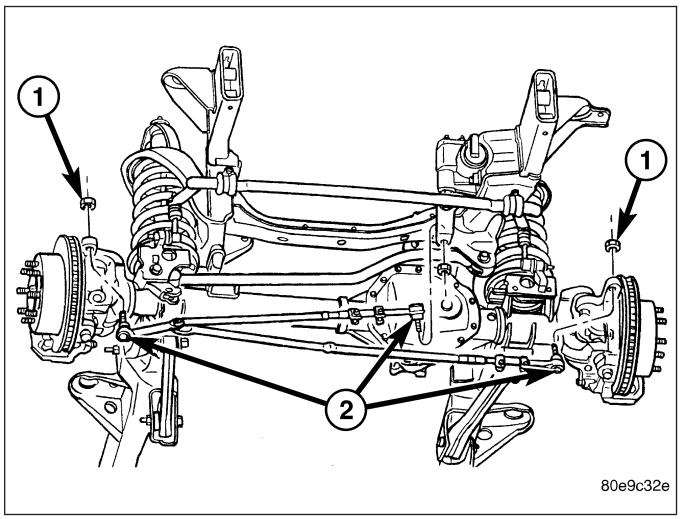

NOTE: Position the clamp on the sleeve so retaining bolt is located on the bottom side of the sleeve.

TRACK BAR

REMOVAL

1. Raise and support the axle.
2. Remove the track bar bolts (2) and nuts (3).
3. Remove the track bar (1).

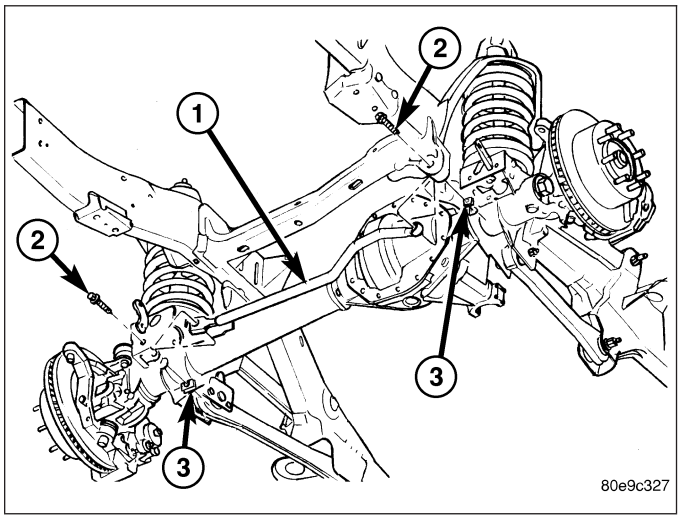

INSTALLATION

1. Install the track bar (1).
2. Install the new bolts (2) and nuts (3). Tighten to 203 N·m (150 ft lbs.).
3. Remove the supports under the axle and lower the vehicle to the ground.

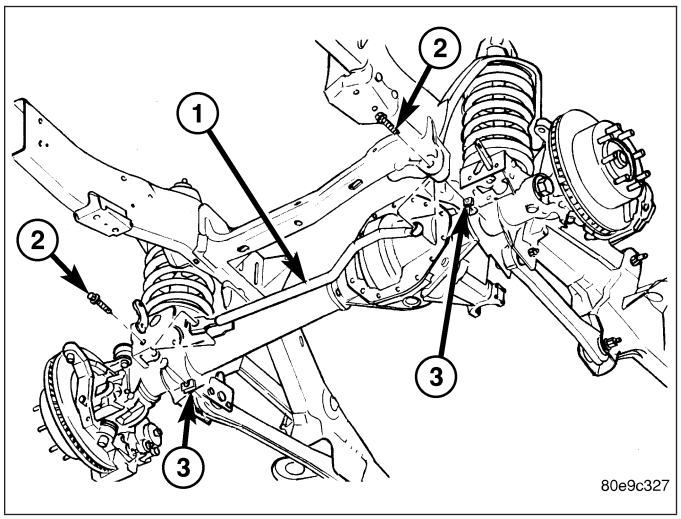

PUMP

TABLE OF CONTENTS

page

PUMP
- DESCRIPTION 63
- OPERATION 64
- DIAGNOSIS AND TESTING
  - PUMP LEAKAGE 64
- STANDARD PROCEDURE
  - FLUSHING POWER STEERING SYSTEM . . . 64
  - POWER STEERING PUMP - INITIAL OPERATION 65
- REMOVAL
  - GAS ENGINE 66
  - DIESEL ENGINE 66
- INSTALLATION
  - GAS ENGINE 67
  - DIESEL ENGINE 67
- SPECIFICATIONS
  - TORQUE CHART 68

FLUID
- DESCRIPTION 68
- STANDARD PROCEDURE
  - POWER STEERING FLUID LEVEL CHECKING 68

FLUID COOLER
- REMOVAL 69
- INSTALLATION 70

HOSES - I.F.S.
- REMOVAL
  - RETURN HOSE - GEAR TO COOLER 71
  - PRESSURE HOSE 71
  - RETURN HOSE - RESERVOIR TO COOLER . 71
- INSTALLATION
  - RETURN HOSE - GEAR TO COOLER 72
  - PRESSURE HOSE 72
  - RETURN HOSE - RESERVOIR TO COOLER . 72

HOSES - LINK/COIL
- REMOVAL
  - RETURN HOSE - GEAR TO COOLER 73
  - PRESSURE HOSE 73
  - RETURN HOSE - RESERVOIR TO COOLER . 73
- INSTALLATION
  - RETURN HOSE - GEAR TO COOLER 74
  - PRESSURE HOSE 74
  - RETURN HOSE - RESERVOIR TO COOLER . 74

SWITCH-POWER STEERING PRESSURE
- DESCRIPTION 75
- OPERATION 75
- REMOVAL - 5.7L - HD VEHICLES ONLY 75
- INSTALLATION - 5.7L - HD VEHICLES ONLY . . 75

PULLEY
- REMOVAL 76
- INSTALLATION 76

RESERVOIR
- REMOVAL 76
- INSTALLATION 77

PUMP

DESCRIPTION

CAUTION: MOPAR® ATF+4 is to be used in the power steering system. No other power steering or automatic transmission fluid is to be used in the system. Damage may result to the power steering pump and system if any other fluid is used, and do not overfill.

The pump is connected to the steering gear via the pressure hose and the return hose. The pump shaft has a pressed-on pulley that is belt driven by the crankshaft pulley.

All vehicles are equipped with a power steering fluid cooler.

NOTE: Power steering pumps are not interchangeable with pumps installed on other vehicles.

OPERATION

Hydraulic pressure is provided for the power steering gear by the belt driven power steering pump (2). The power steering pumps are constant flow rate and displacement, vane-type pumps.

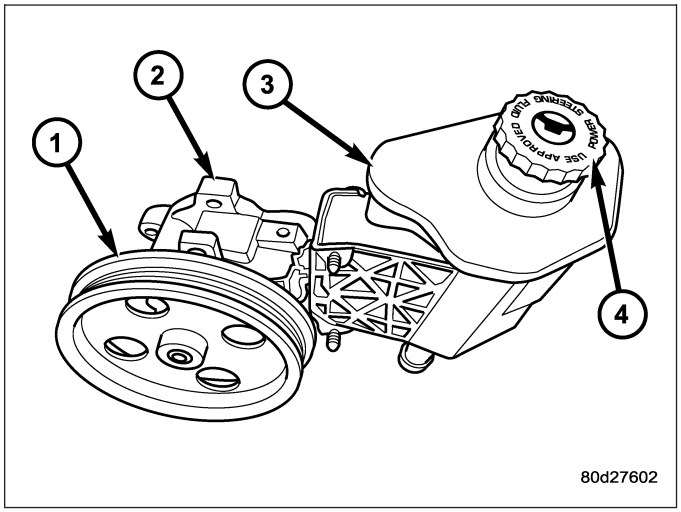

DIAGNOSIS AND TESTING

PUMP LEAKAGE

The pump is serviced as an assembly and should not be disassembled. The plastic pump reservoir and the reservoir o-rings can be replaced.

Check for leaks in the following areas:

- Pump shaft seal behind the pulley
- Pump to reservoir O-ring
- Reservoir cap
- Pressure and return lines
- Flow control valve fitting

STANDARD PROCEDURE

FLUSHING POWER STEERING SYSTEM

Flushing is required when the power steering/hydraulic booster system fluid has become contaminated. Contaminated fluid in the steering/booster system can cause seal deterioration and affect steering gear/booster spool valve operation.

1. Raise the front end of the vehicle off the ground until the wheels are free to turn.
2. Remove the return line from the pump.

NOTE: If vehicle is equipped with a hydraulic booster remove both return lines from the pump.

3. Plug the return line port/ports at the pump.
4. Position the return line/lines into a large container to catch the fluid.
5. While an assistant is filling the pump reservoir start the engine.
6. With the engine running at idle turn the wheel back and forth.

NOTE: Do not contact or hold the wheel against the steering stops.

7. Run a quart of fluid through the system then stop the engine and install the return line/lines.
8. Fill the system with fluid and perform Steering Pump Initial Operation, (Refer to 19 - STEERING/PUMP - STANDARD PROCEDURE).
9. Start the engine and run it for fifteen minutes then stop the engine.

10. Remove the return line/lines from the pump and plug the pump port/ports.
11. Pour fresh fluid into the reservoir and check the draining fluid for contamination. If the fluid is still contaminated, then flush the system again.
12. Install the return line/lines and perform Steering Pump Initial Operation, (Refer to 19 - STEERING/PUMP - STANDARD PROCEDURE).

POWER STEERING PUMP - INITIAL OPERATION

WARNING: THE FLUID LEVEL SHOULD BE CHECKED WITH ENGINE OFF TO PREVENT INJURY FROM MOVING COMPONENTS.

CAUTION: MOPAR® ATF+4 is to be used in the power steering system. No other power steering or automatic transmission fluid is to be used in the system. Damage may result to the power steering pump and system if any other fluid is used, and do not overfill.

Wipe filler cap clean, then check the fluid level. The dipstick should indicate **COLD** when the fluid is at normal temperature.

1. Turn steering wheel all the way to the left
2. Fill reservoir up to FULL HOT level and crank engine until it just starts. (DO NOT TURN STEERING WHEEL) Then turn vehicle off. And re check fluid level, to Full COLD.
3. Crank engine again until it just starts, (DO NOT MOVE STEERING WHEEL) and turn vehicle off. Recheck fluid level to Full COLD.
4. Turn engine on again, (DO NOT MOVE STEERING WHEEL) and let the vehicle idle for 5 minutes. If possible apply a 20 in-Hg vacuum to the reservoir, while engine is idling.
5. Turn engine off and recheck fluid level, to FULL COLD.
6. **If the Steering gear is replaced.** ensure reservoir is at FULL HOT level, start engine and turn wheel to left. Stop Engine and recheck fluid level to FULL HOT. Start engine and turn wheel to the right. Stop engine and check fluid level is at FULL COLD.
7. Fill the pump fluid reservoir to the proper level and let the fluid settle for at least two (2) minutes.
8. Start the engine. With the engine idling maintain the fluid level.
9. Raise the front wheels off the ground.
10. Slowly turn the steering wheel lock-to-lock 20 times with the engine off while checking the fluid level.

NOTE: For vehicles with long return lines or oil coolers turn wheel 40 times.

11. Lower the front wheels and let the engine idle for two minutes.
12. Turn the steering wheel in both direction and verify power assist and quiet operation of the pump.

If the fluid is extremely foamy or milky looking, allow the vehicle to stand a few minutes and repeat the procedure.

CAUTION: Do not run a vehicle with foamy fluid for an extended period. This may cause pump damage.

REMOVAL

GAS ENGINE

1. Drain and siphon the power steering fluid from the reservoir.
2. Remove the serpentine belt.

CAUTION: Do not remove the fitting on the pump that the high pressure hose screws into. The fitting may come loose unless it is backed up using another wrench. If the fitting does come loose, it must be retightened before continuing. (57 - 67Nm, 40 - 50 lbft) If this fitting comes out of the pump body, the internal spring and valve parts will fall out of the pump and they cannot be reinstalled properly. If this occurs the pump needs to be replaced with a new pump.

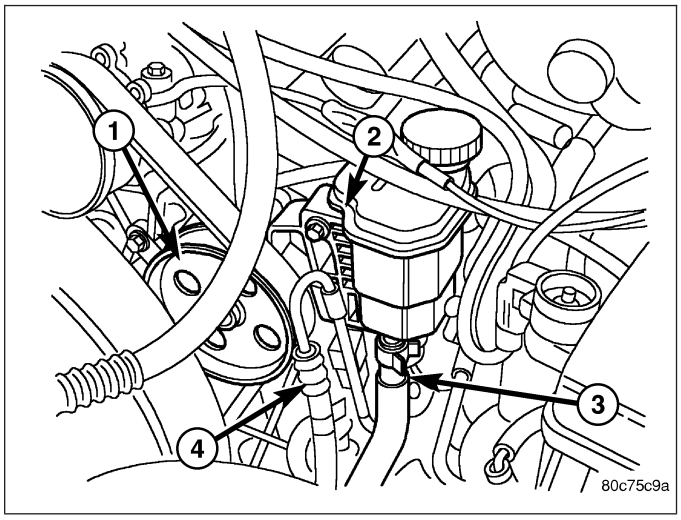

3. Disconnect the return hose (3).
4. Disconnect the pressure hose (4).
5. Access to remove the three bolts securing the pump to the cylinder head can be gained thru the pulley holes (1).

DIESEL ENGINE

1. Drain and siphon the power steering fluid from the reservoir.
2. Remove the serpentine belt.

CAUTION: Do not remove the fitting on the pump that the high pressure hose screws into. The fitting may come loose unless it is backed up using another wrench. If the fitting does come loose, it must be retightened before continuing. (57 - 67Nm, 40 - 50 lbft) If this fitting comes out of the pump body, the internal spring and valve parts will fall out of the pump and they cannot be reinstalled properly. If this occurs the pump needs to be replaced with a new pump.

3. Disconnect the return hose.
4. Disconnect the pressure hose.
5. Access to remove the three bolts securing the pump to the cylinder head can be gained thru the pulley holes.
6. Loosen the pump bracket to the block.
7. Remove the 6 intake plenum bolts (1).
8. loosen the inner cooler tube clamp at the intake plenum and remove the intake plenum.
9. Loosen the inner cooler tube clamp at the radiator support side and remove the tube from the vehicle.
10. Remove the power steering pump (2) from the top of the engine compartment where the intake plenum was.

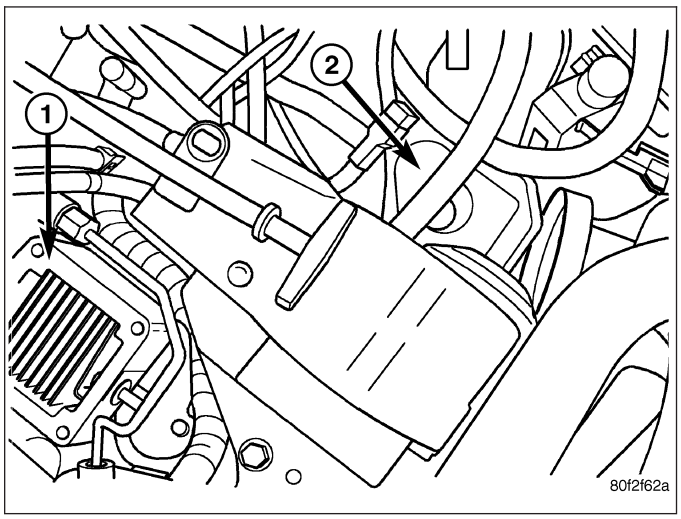

INSTALLATION

GAS ENGINE

1. Align the pump with the mounting holes in the left cylinder head.
2. Install 3 pump mounting bolts through the pulley access holes (1). Tighten the bolts to 28 N·m (21 ft. lbs.).
3. Reconnect the pressure line (4) and return hose (3) to the pump and reservoir (2). Tighten the pressure line to 37 N·m (27 ft. lbs.).
4. Install the serpentine drive belt, (Refer to 7 - COOLING/ACCESSORY DRIVE/DRIVE BELTS - INSTALLATION).
5. Fill the power steering pump, (Refer to 19 - STEERING/PUMP - STANDARD PROCEDURE).

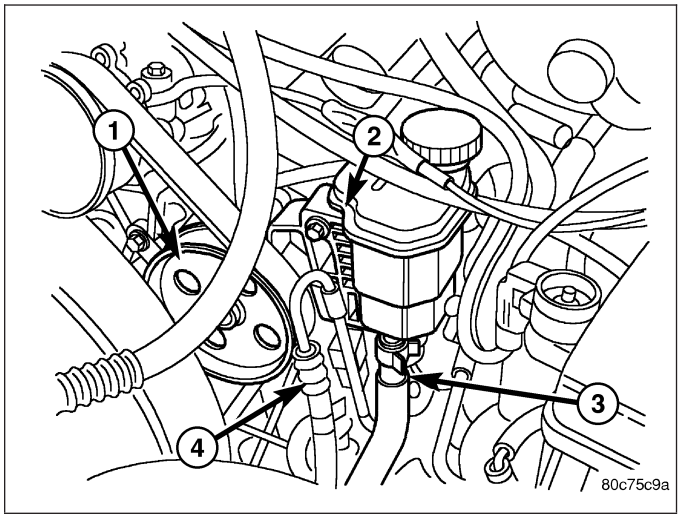

DIESEL ENGINE

1. Set the power steering pump (2) in place in the engine compartment from the top.
2. Install the inner cooler tube.
3. Tighten the inner cooler tube clamp at the radiator support side.
4. Install the 6 intake plenum bolts (2).
5. Tighten the inner cooler tube clamp at the intake plenum.

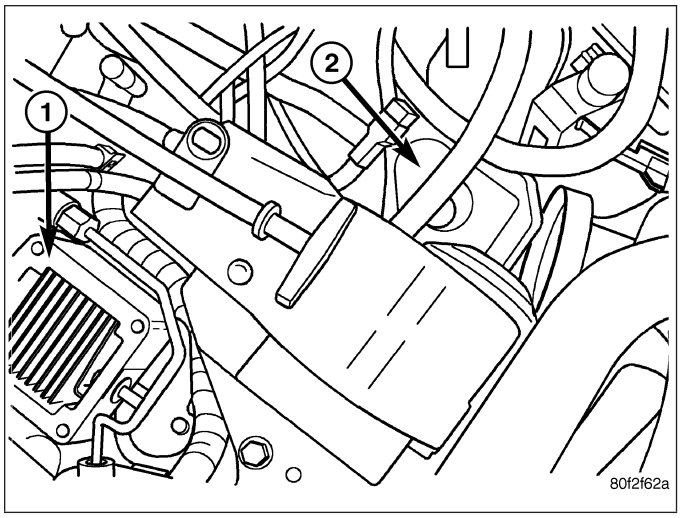

6. Install 3 pump mounting bolts through the pulley access holes. Tighten the bolts to 28 N·m (21 ft. lbs.).
7. Tighten the pump bracket to the block.
8. Reconnect the pressure line and return hose to the pump and reservoir. Tighten the pressure line to 37 N·m (27 ft. lbs.).
9. Install the serpentine drive belt, (Refer to 7 - COOLING/ACCESSORY DRIVE/DRIVE BELTS - INSTALLATION).
10. Fill the power steering pump, (Refer to 19 - STEERING/PUMP - STANDARD PROCEDURE).

SPECIFICATIONS

TORQUE CHART

TORQUE SPECIFICATIONS

DESCRIPTION	N·m	Ft. Lbs.	In. Lbs.
Power Steering Pressure Switch	10	—	80
Power Steering Line Pressure Line	32	23	—
Power Steering Line Return Line HD	51	38	—
Power Steering Line Return Line LD	70	52	—
Power Steering Line Pressure Line To Pump	37	27	—
Power Steering Pump Mounting Bolts	28	27	—
Power Steering Pump Reservoir Bolts	13	10	120
Power Steering Pump Bracket Bolts	5	5	62

FLUID

DESCRIPTION

NOTE: It is normal that some pressure will build up inside the reservoir, especially, with a warm vehicle. A slight popping noise upon removal of the cap is normal. The fluid level should read between the ADD and the FULL COLD marks. When the fluid is hot it should read between ADD and FULL HOT marks. Only add fluid when the vehicle is cold.

The recommended fluid for the power steering system is Mopar® ATF +4.

Mopar® ATF+4, when new is red in color. The ATF+4 is dyed red so it can be identified from other fluids used in the vehicle such as engine oil or antifreeze. The red color is not permanent and is not an indicator of fluid condition, As the vehicle is driven, the ATF+4 will begin to look darker in color and may eventually become brown. **THIS IS NORMAL.** ATF+4 also has a unique odor that may change with age. Consequently, odor and color cannot be used to indicate the fluid condition or the need for a fluid change.

STANDARD PROCEDURE

POWER STEERING FLUID LEVEL CHECKING

WARNING: FLUID LEVEL SHOULD BE CHECKED WITH THE ENGINE OFF TO PREVENT PERSONAL INJURY FROM MOVING PARTS.

CAUTION: MOPAR® ATF+4 is to be used in the power steering system. No other power steering or automatic transmission fluid is to be used in the system. Damage may result to the power steering pump and system if any other fluid is used, and do not overfill.

The power steering fluid level can be viewed on the dipstick attached to the filler cap. There are two ranges listed on the dipstick, COLD and HOT. Before opening power steering system, wipe the reservoir filler cap free of dirt and debris. Remove the cap and check the fluid level on its dipstick. When the fluid is at normal ambient temperature, approximately 21°C to 27°C (70°F to 80°F), the fluid level should read between the minimum and maximum area of the cold range. When the fluid is hot, fluid level is allowed to read up to the highest end of the HOT range. Only add fluid when the vehicle is cold.

Use only Mopar® ATF+4 Do not overfill the power steering system.

FLUID COOLER

REMOVAL

1. Drain and siphon the power steering fluid.
2. Disconnect the return and supply hoses connected to the power steering fluid cooler.
3. Remove the mounting bracket bolts (2) securing the fluid cooler (1) to the brace. (V6&V8)

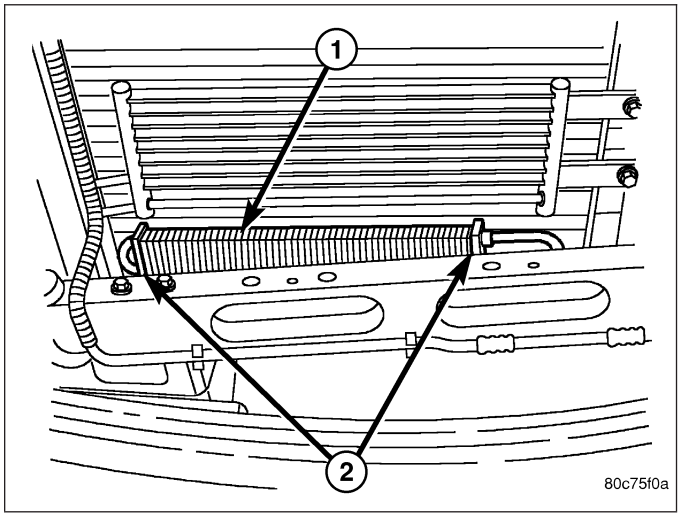

(Diesel engine)

4. Remove the fluid cooler from the vehicle.

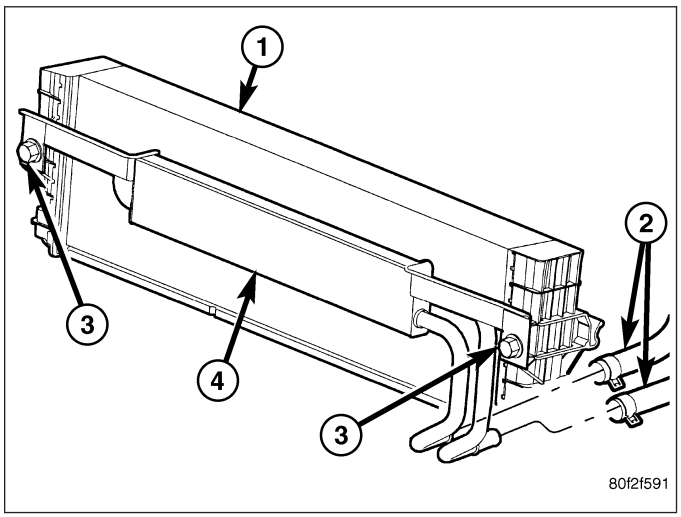

INSTALLATION

1. Install the fluid cooler (1) to the vehicle.
2. Install the mounting bracket bolts (2) securing the fluid cooler (1) to the brace (V6&V8).

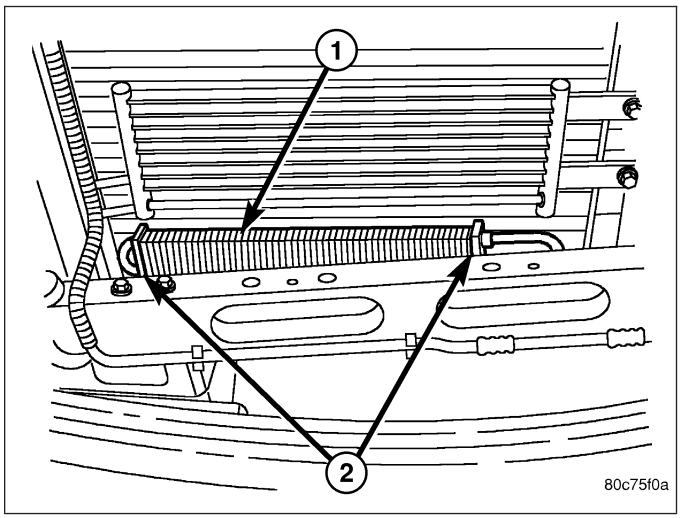

(Diesel Engine).

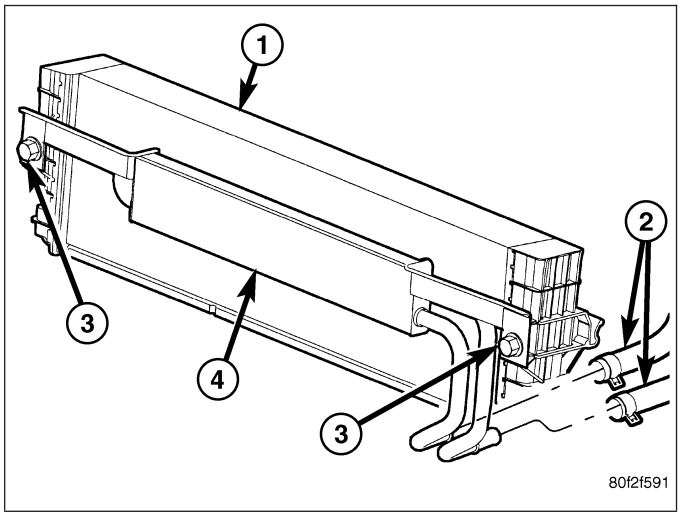

3. Reclamp the return and supply hoses to the power steering fluid cooler (4).
4. Refill the power steering fluid (Refer to 19 - STEERING/PUMP - STANDARD PROCEDURE).

HOSES - I.F.S.

REMOVAL

RETURN HOSE - GEAR TO COOLER

1. Drain and siphon the power steering system.
2. Raise and support the vehicle.
3. Disconnect the return hose at the cooler.
4. Disconnect the return hose (1) at the gear.
5. Remove the return hose from the routing clamp at the fan shroud and then remove from the vehicle.

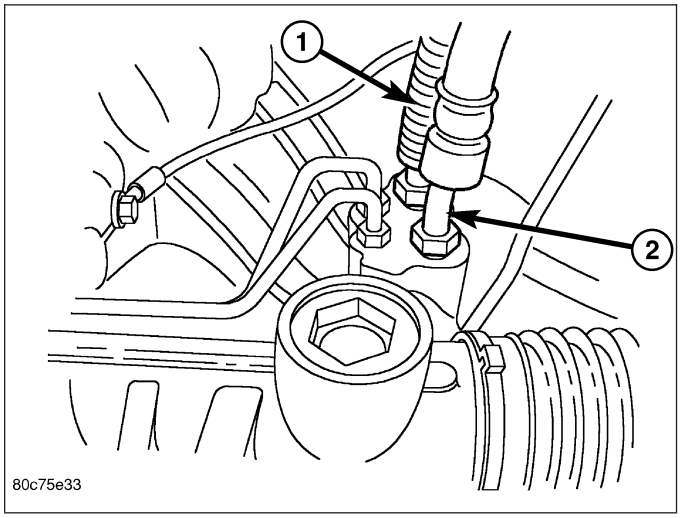

PRESSURE HOSE

1. Drain and siphon the power steering system.
2. Raise and support the vehicle.
3. Disconnect the pressure hose at the pump.
4. Disconnect the pressure hose (2) at the gear.
5. Remove the pressure hose from the vehicle.

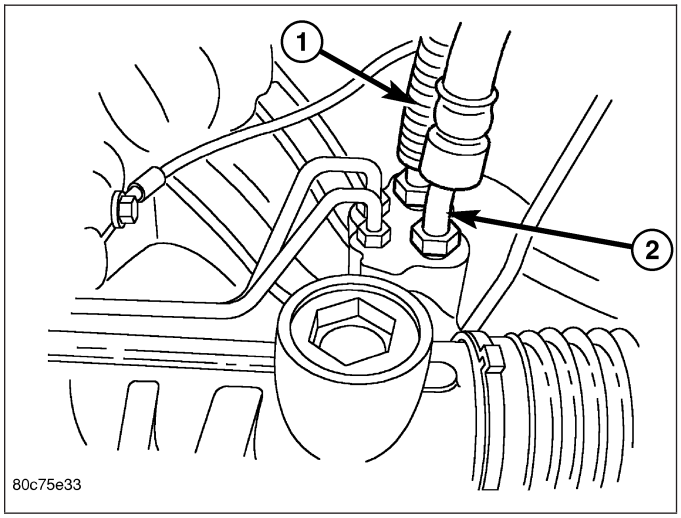

RETURN HOSE - RESERVOIR TO COOLER

1. Drain and siphon the power steering system.
2. Disconnect the return hose at the reservoir.
3. Raise and support the vehicle.
4. Remove the return hose from the routing clamp at the fan shroud.
5. Disconnect the return hose at the cooler.
6. Remove the hose from the vehicle.

INSTALLATION

RETURN HOSE - GEAR TO COOLER

1. Install the return hose to the vehicle.
2. Reconnect the return hose at the cooler.
3. Reconnect the return hose (1) at the gear. Tighten the hose to 71 N·m (52 ft. lbs.).
4. Reattach the hose to the routing clip at the fan shroud.
5. Remove the support and lower the vehicle.
6. Refill the power steering system, (Refer to 19 - STEERING/PUMP - STANDARD PROCEDURE).

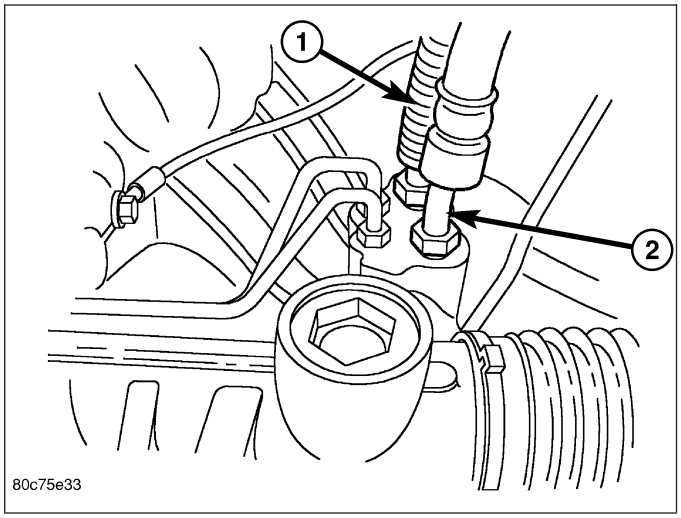

PRESSURE HOSE

NOTE: Be sure to align the pressure hose so it does not contact the fan shroud or the frame rail.

1. Install the pressure hose to the vehicle.
2. Reconnect the pressure hose (2) at the gear. Tighten the hose to 32 N·m (23 ft. lbs.).
3. Reconnect the pressure hose at the pump. Tighten the hose to 36 N·m (27 ft. lbs.).
4. Remove the support and lower the vehicle.
5. Refill the power steering system, (Refer to 19 - STEERING/PUMP - STANDARD PROCEDURE).

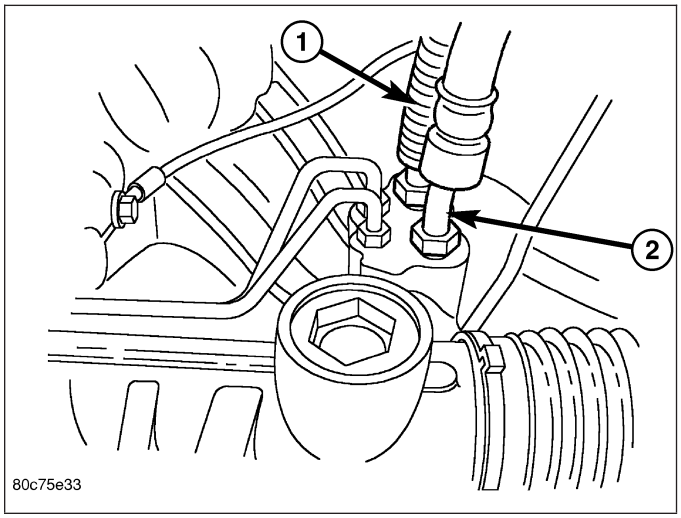

RETURN HOSE - RESERVOIR TO COOLER

1. Install the return hose to the vehicle.
2. Reconnect the return hose at the cooler.
3. Reattach the hose to the routing clip at the fan shroud.
4. Remove the support and lower the vehicle.
5. Reconnect the return hose at the reservoir.
6. Refill the power steering system, (Refer to 19 - STEERING/PUMP - STANDARD PROCEDURE).

HOSES - LINK/COIL

REMOVAL

RETURN HOSE - GEAR TO COOLER

1. Drain and siphon the power steering system.
2. Raise and support the vehicle.
3. Disconnect the return hoseat the cooler.
4. Disconnect the return hose (2) at the gear.
5. Remove the return hose from the routing clamp at the fan shroud and then remove from the vehicle.

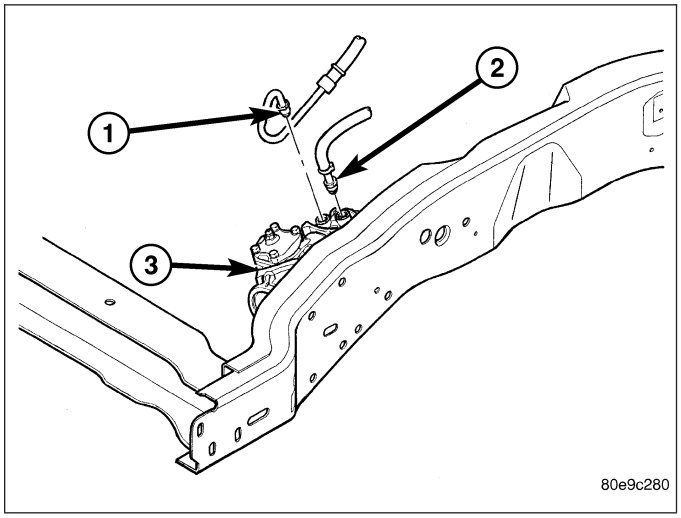

PRESSURE HOSE

1. Drain and siphon the power steering system.
2. Raise and support the vehicle.
3. Disconnect the pressure hose at the pump.
4. Disconnect the pressure hose (2) at the gear (4).
5. Remove the pressure hose from the vehicle.

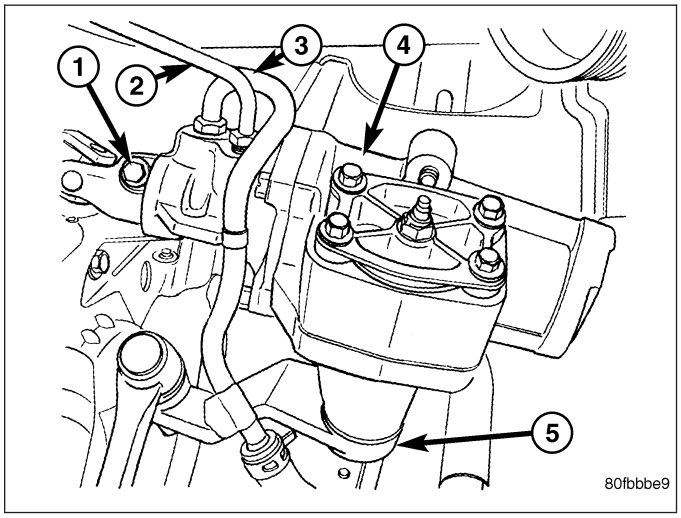

RETURN HOSE - RESERVOIR TO COOLER

1. Drain and siphon the power steering system.
2. Disconnect the return hose at the reservoir.
3. Raise and support the vehicle.
4. Remove the return hose from the routing clamp at the fan shroud.
5. Disconnect the return hose at the cooler.
6. Remove the hose from the vehicle.

INSTALLATION

RETURN HOSE - GEAR TO COOLER

1. Install the return hose to the vehicle.
2. Reconnect the return hose at the cooler.
3. Reconnect the return hose (2) at the gear. Tighten the hose to 51 N·m (38 ft. lbs.).
4. Reattach the hose to the routing clip at the fan shroud.
5. Remove the support and lower the vehicle.
6. Refill the power steering system, (Refer to 19 - STEERING/PUMP - STANDARD PROCEDURE).

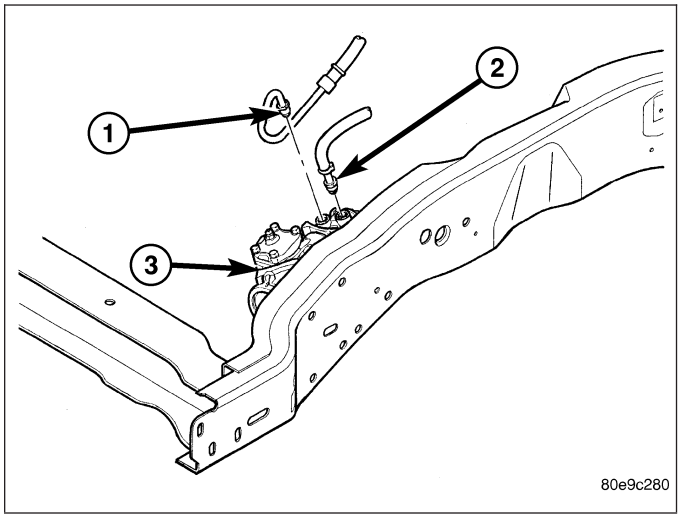

PRESSURE HOSE

NOTE: Be sure to align the pressure hose so it does not contact the fan shroud or the frame rail.

1. Install the pressure hose to the vehicle.
2. Reconnect the pressure hose (2) at the gear (4). Tighten the hose to 32 N·m (23 ft. lbs.).
3. Reconnect the pressure hose at the pump. Tighten the hose to 36 N·m (27 ft. lbs.).
4. Remove the support and lower the vehicle.
5. Refill the power steering system, (Refer to 19 - STEERING/PUMP - STANDARD PROCEDURE).

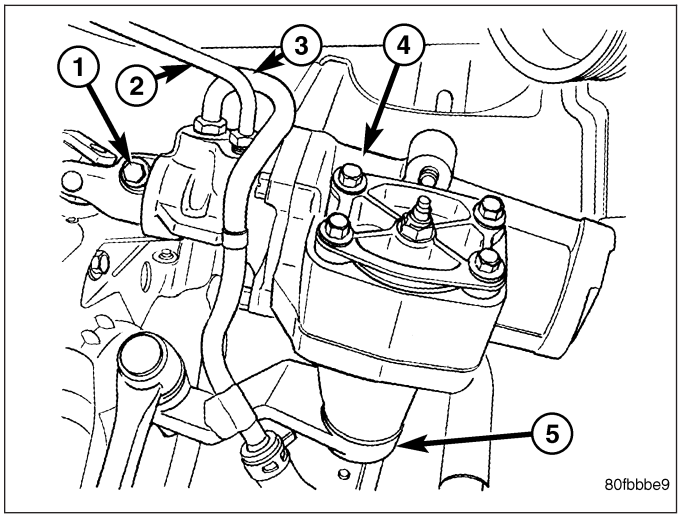

RETURN HOSE - RESERVOIR TO COOLER

1. Install the return hose to the vehicle.
2. Reconnect the return hose at the cooler.
3. Reattach the hose to the routing clip at the fan shroud.
4. Remove the support and lower the vehicle.
5. Reconnect the return hose at the reservoir.
6. Refill the power steering system, (Refer to 19 - STEERING/PUMP - STANDARD PROCEDURE).

SWITCH-POWER STEERING PRESSURE

DESCRIPTION

A pressure sensing switch is used in the power steering system. It is mounted on the high-pressure steering hose. This switch will only be used with on **HD vehicles** with the 5.7L engines. There is no pressure switch used for the 3.7L, 4.7L, 5.9L engines or the **5.7L LD vehicle** pump.

OPERATION

The switch is used on the 5.7L V-8 engines **HD vehicles only**.

The power steering pressure switch provides an input to the Powertrain Control Module (PCM). This input is provided during periods of high steering pump load and low engine rpm; such as during parking maneuvers. The PCM increases the idle speed through the Idle Air Control (IAC) motor. This is done to prevent the engine from stalling under the increased load.

When steering pump pressure exceeds 3275 kPa ± 690 kPa (475 psi ± 100 psi), the Normally Closed (NC) switch will open and the PCM will increase the engine idle speed. This will prevent the engine from stalling.

When pump pressure drops to approximately 1379 kPa (200 psi), the switch circuit will re-close and engine idle speed will return to its previous setting.

REMOVAL - 5.7L - HD VEHICLES ONLY

The power steering pressure switch (5) is installed in the power steering high-pressure hose (5).

1. Disconnect electrical connector from power steering pressure switch.
2. Place a small container or shop towel beneath switch to collect any excess fluid.
3. Remove switch. Use back-up wrench on power steering line to prevent line bending.

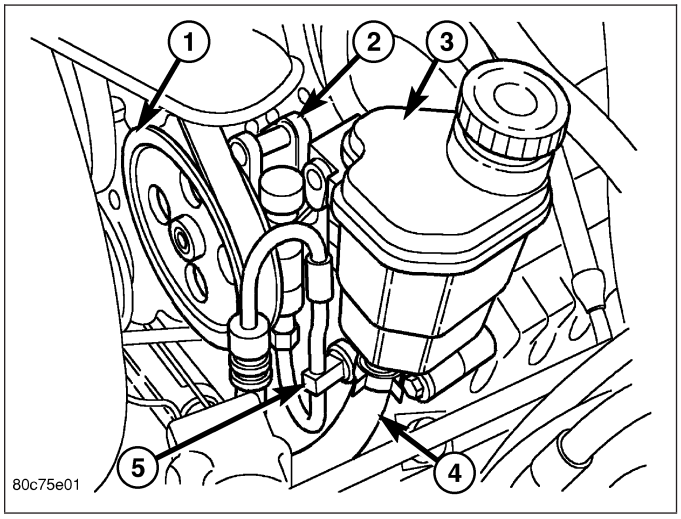

INSTALLATION - 5.7L - HD VEHICLES ONLY

This switch is used only with the 5.7L V-8 engines **HD vehicles only**.

1. Install power steering switch (5) into power steering line (5).
2. Tighten to 8–11 N·m (70–100 in. lbs.) torque.
3. Connect electrical connector to switch.
4. Check power steering fluid and add as necessary.
5. Start engine and again check power steering fluid. Add fluid if necessary.

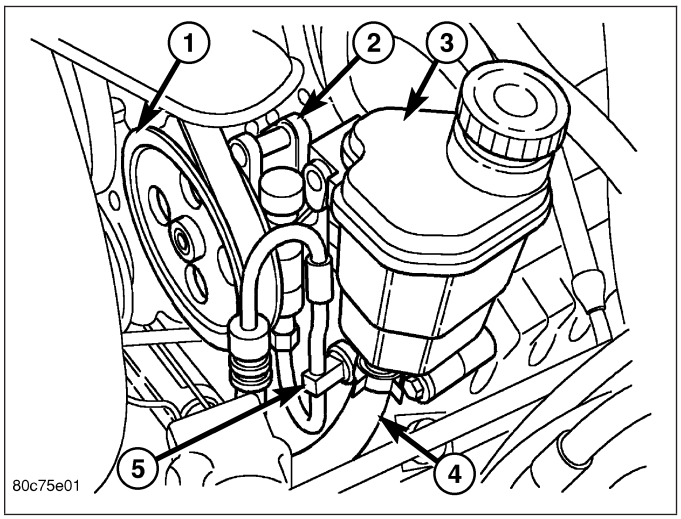

PULLEY

REMOVAL

CAUTION: Do not reuse the old power steering pump pulley it is not intended for reuse. A new pulley must be installed if removed.

1. Remove the power steering pump assembly (1), (Refer to 19 - STEERING/PUMP - REMOVAL).
2. Remove the pulley (2) from the pump using (OTC® 7185) power steering pulley removal tool or equivalent (3).

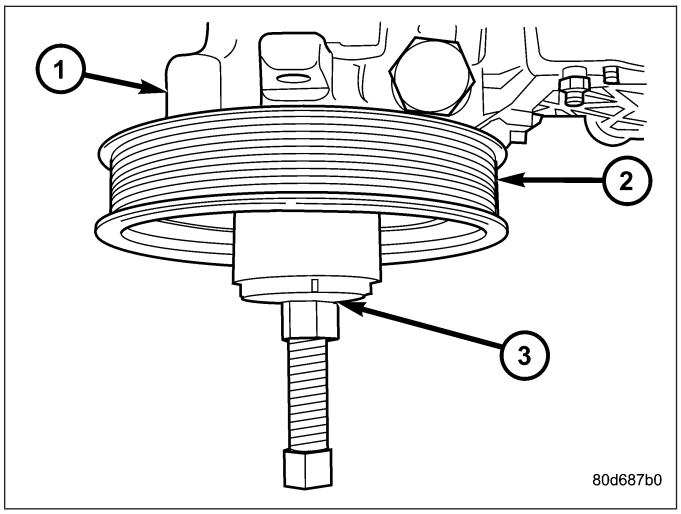

INSTALLATION

CAUTION: Do not reuse the old power steering pump pulley it is not intended for reuse. A new pulley must be installed if removed.

1. Replace the pulley (2) if it's bent, cracked, or loose.
2. Install the pulley (2) on the pump (1) using (OTC® 7771) power steering pulley installation tool or equivalent (3) making sure it is flush with the end of the shaft. Ensure the tool and pulley remain aligned with the pump shaft.
3. Install the power steering pump assembly, (Refer to 19 - STEERING/PUMP - INSTALLATION).

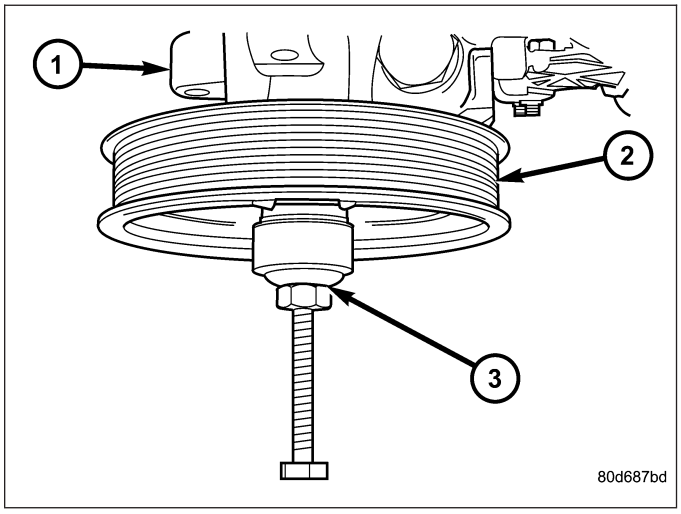

4. Run engine until warm (5 min.) and note any belt chirp. If chirp exists, move pulley outward approximately 0.5 mm (0.020 in.). If noise increases, press on 1.0 mm (0.040 in.). **Be careful that pulley does not contact mounting bolts.**

RESERVOIR

REMOVAL

1. Drain and siphon the power steering fluid from the reservoir.
2. Remove the serpentine belt.
3. Remove the power steering pump (Refer to 19 - STEERING/PUMP - REMOVAL).
4. Remove the reservoir mounting bolts.
5. Remove the reservoir.
6. Remove the rear bracket to the pump mounting bolts.

INSTALLATION

1. Install the reservoir bracket to the pump housing. **Do not reuse the o-rings (install new o-rings).** Tighten bolts to 7 N·m (62 in. lbs.).

NOTE: Ensure the reservoir is fully seated onto the pump.

2. Install the reservoir to the bracket/pump body.
3. Install the reservoir mounting bolts. Tighten bolts to 13 N·m (120 in. lbs.).
4. Install the power steering pump (Refer to 19 - STEERING/PUMP - INSTALLATION).
5. Install the serpentine drive belt, (Refer to 7 - COOLING/ACCESSORY DRIVE/DRIVE BELTS - INSTALLATION).
6. Fill the power steering pump, (Refer to 19 - STEERING/PUMP - STANDARD PROCEDURE).

PUMP - SRT-10

TABLE OF CONTENTS

page

PUMP - SRT-10
DIAGNOSIS AND TESTING - HYDRAULIC FLOW AND PRESSURE 78
STANDARD PROCEDURE
INITIAL OPERATION 80
STANDARD PROCEDURE - FLUID COOLER LINE QUICK CONNECT FITTING DISASSEMBLY/ASSEMBLY 81
REMOVAL 82
INSTALLATION 84
SPECIFICATIONS
TORQUE CHART 85
SPECIAL TOOLS
POWER STEERING 86
HOSES
REMOVAL
PRESSURE HOSE - PUMP TO FAN 87
PRESSURE HOSE - FAN TO GEAR 87
RETURN HOSE - FAN TO PUMP 88
RETURN HOSE - GEAR TO COOLER 89
RETURN HOSE - COOLER TO PUMP 90
INSTALLATION
PRESSURE HOSE - PUMP TO FAN 90
PRESSURE HOSE - FAN TO GEAR 91
RETURN HOSE - FAN TO PUMP 92
RETURN HOSE - GEAR TO COOLER 93
RETURN HOSE - COOLER TO PUMP 93
RESERVOIR
REMOVAL 94
INSTALLATION 94
PULLEY
REMOVAL 95
INSTALLATION 95
FLUID COOLER TUBE
REMOVAL 96
INSTALLATION 97
FLUID COOLER
REMOVAL 98
INSTALLATION 100

PUMP - SRT-10

DIAGNOSIS AND TESTING - HYDRAULIC FLOW AND PRESSURE

The following procedures are used to test the operation of the power steering and hydraulic fan systems on this vehicle. These tests will provide the gallons per minute (GPM) or flow rate of the power steering pump along with the maximum relief pressure at given points in the system. Perform the first test anytime a power steering system problem is present and the second as necessary once the first test is completed. These tests will determine if the power steering pump, hydraulic fan, or power steering gear is not functioning properly. They will also determine if the flow coming out of the hydraulic fan motor is sufficient for the power steering gear. The following pressure and flow tests are performed using the Power Steering Analyzer kit 6815 (with appropriate hoses) and Adapter kit 9091. (Refer to 19 - STEERING - SPECIAL TOOLS)

FLOW AND PRESSURE TEST - AT POWER STEERING PUMP

1. Check power steering belt to ensure it is in good condition and adjusted properly.
2. Assemble Power Steering Analyzer as follows :
   a. Gauge end (inlet) of Flow Meter And Gauge 6800 – Hose 6905, Hose 6713, Adapter Tube 9091-1
   b. Valve end (outlet) of Flow Meter And Gauge 6800 – Hose 6959, Adapter Fitting 9091-3
3. Unthread pressure hose quick-connect fitting from power steering pump.
4. Connect Adapter Tube 9091-1 to pressure fitting on power steering pump.
5. Connect power steering pressure hose to Adapter Fitting 9091-3.

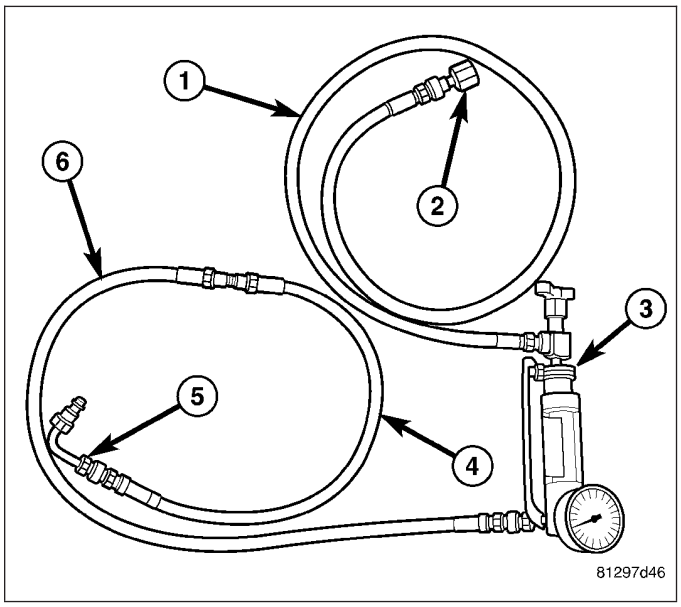

6. Open Analyzer test valve completely.
7. Start engine and allow to idle long enough to circulate power steering fluid through Analyzer flow meter and hoses.
8. Shut off engine and check fluid level; add fluid as necessary. Repeat Step 7 and Step 8 until air is bled from system.
9. Start engine and allow to idle.
10. Check Analyzer gauge pressure. Initial pressure reading should be 483-690 kPa (70-100 psi). If pressure is higher, inspect hoses for restrictions and repair as necessary.
11. Increase engine speed to 1100 rpm and read Analyzer Flow Meter. The reading should be 2.6 GPM minimum. If flow reading is below specification, replace power steering pump.

FLOW AND PRESSURE TEST - AT POWER STEERING GEAR

NOTE: This test should only be done if necessary after completing the Pump Flow And Pressure Test

1. Remove Analyzer from pump and pressure hose to fan. Reattach pressure hose to pump.
2. Assemble Power Steering Analyzer as follows :
   a. Gauge end (inlet) of Flow Meter And Gauge 6800 – Hose 6959, Adapter Fitting 9091-4
   b. Valve end (outlet) of Flow Meter And Gauge 6800 – Hose 6905, Hose 6713, Adapter Tube 9091-2
3. Unthread pressure hose tube nut from power steering gear.
4. Connect power steering pressure hose to Adapter Fitting 9091-4.
5. Connect Adapter Tube 9091-2 to power steering gear.

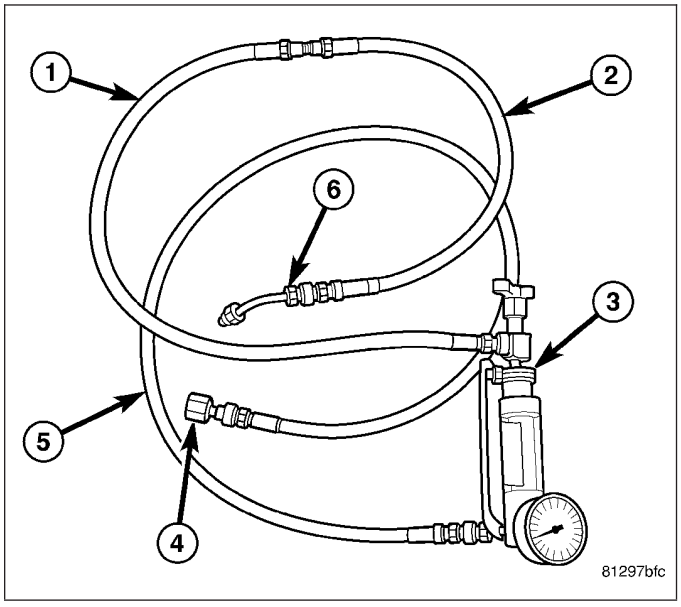

6. Open Analyzer test valve completely.

7. Start engine and allow to idle long enough to circulate power steering fluid through Analyzer flow meter and hoses.
8. Shut off engine and check fluid level; add fluid as necessary. Repeat Step 7 and Step 8 until air is bled from system.
9. Start engine and allow to idle.
10. Check Analyzer gauge pressure. Initial pressure reading should be 345-552 kPa (50-80 psi). If pressure is higher, inspect hoses for restrictions and repair as necessary.
11. Increase engine speed to 1500 RPM and read Analyzer Flow Meter. The reading should be 2.4 - 2.8 GPM. If flow reading is below specification, replace hydraulic fan.

CAUTION: This next step involves testing maximum fan motor steering relief pressure. Do not leave the valve closed for more than three seconds.

12. Close Analyzer valve fully three times for three seconds each time and record highest pressure indicated on Analyzer gauge each time. All three readings must be within fan motor steering relief pressure specifications.
13. Completely open test valve and turn steering wheel to the extreme left and right positions against stops. Record the highest pressure readings at each position. If pressure readings are not within 50 psi from each other, the gear is leaking internally and must be replaced.

PUMP OUTLET SPECIFICATIONS

ENGINE	RELIEF PRESSURE	FLOW RATE (GPM) @ 1100 RPM
ALL	9653 kPa ± 345 kPa (1400 psi ± 50 psi)	2.4-2.8 GPM Minimum @ 1379 kPa (200 psi)

GEAR INLET SPECIFICATIONS

ENGINE	RELIEF PRESSURE	FLOW RATE (GPM) @ 1500 RPM
ALL	9653 kPa ± 345 kPa (1400 psi ± 50 psi)	2.4-2.8 GPM Minimum @ 1379 kPa (200 psi)

STANDARD PROCEDURE

INITIAL OPERATION

WARNING: THE FLUID LEVEL SHOULD BE CHECKED WITH ENGINE OFF TO PREVENT INJURY FROM MOVING COMPONENTS.

NOTE: Remove as much of the old fluid out of the system as possible with a suction tool or by removing a hose, When a component has failed. Then refill it with fresh fluid until it is clean. This may have to be done more than once.

CAUTION: MOPAR® ATF+4 is to be used in the power steering system. No other power steering or automatic transmission fluid is to be used in the system. Damage may result to the power steering pump and system if any other fluid is used, and do not overfill.

Wipe filler cap clean, then check the fluid level. The dipstick should indicate **COLD** when the fluid is at normal ambient temperature.

1. Fill the pump fluid reservoir to the proper level and let the fluid settle for at least two minutes.
2. Start the engine and let run for a few seconds then turn engine off.
3. Add fluid if necessary. Repeat the above procedure until the fluid level remains constant after running the engine.
4. Raise the front wheels off the ground.
5. Slowly turn the steering wheel right and left, lightly contacting the wheel stops at least 20 times.
6. Check the fluid level add if necessary.

7. Lower the vehicle, start the engine, and use the DRB III to activate the hydraulic fan on full fan operation.
8. Turn the steering wheel slowly from lock to lock.
9. Stop the engine, check the fluid level and refill as required and repeat the process

CAUTION: Do not run a vehicle with foamy fluid for an extended period. This may cause pump damage.

10. If the fluid is extremely foamy or milky looking, allow the vehicle to stand a few minutes and repeat the procedure.
11. While the vehicle is in park, use the DRB III to activate the hydraulic fan to full fan operation and briefly rev the engine up to 3000 rpm to fully engage the hydraulic fan.
12. Check the fluid level add if necessary.

STANDARD PROCEDURE - FLUID COOLER LINE QUICK CONNECT FITTING DISASSEMBLY/ASSEMBLY

DISASSEMBLY

1. Remove dust cap (2) by pulling it straight back off of quick connect fitting (1).
2. Place disconnect tool (Special Tool 8875) (4) onto fluid cooler line with the fingers of the tool facing the quick connect fitting (1).
3. Slide disconnect tool down the line (3) and engage the fingers of the tool into the retaining clip. When properly engaged in the clip, the tool will fit flush against the quick connect fitting (1).
4. Rotate the disconnect tool 60° to expand the retaining clip.
5. While holding the disconnect tool (4) against the quick connect fitting (1), pull back on the oil cooler line to remove.

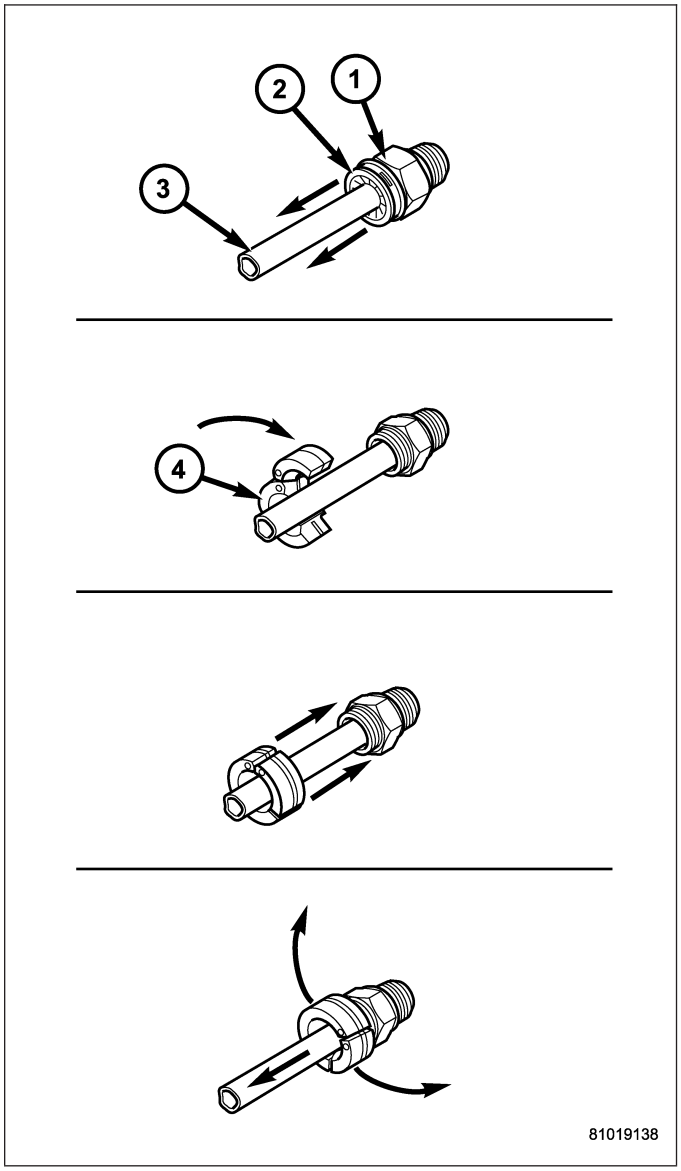

ASSEMBLY

1. Align fluid cooler line (3) with quick connect fitting (1) while pushing straight into the fitting.
2. Push in on oil cooler line until a “click” is heard or felt.
3. Slide dust cap (4) down the oil cooler line and snap it over the quick connect fitting until it is fully seated and rotates freely. Dust cap (4) will only snap over quick connect fitting when the cooler line is properly installed.

NOTE: If dust cap will not snap into place, repeat assembly step #2.

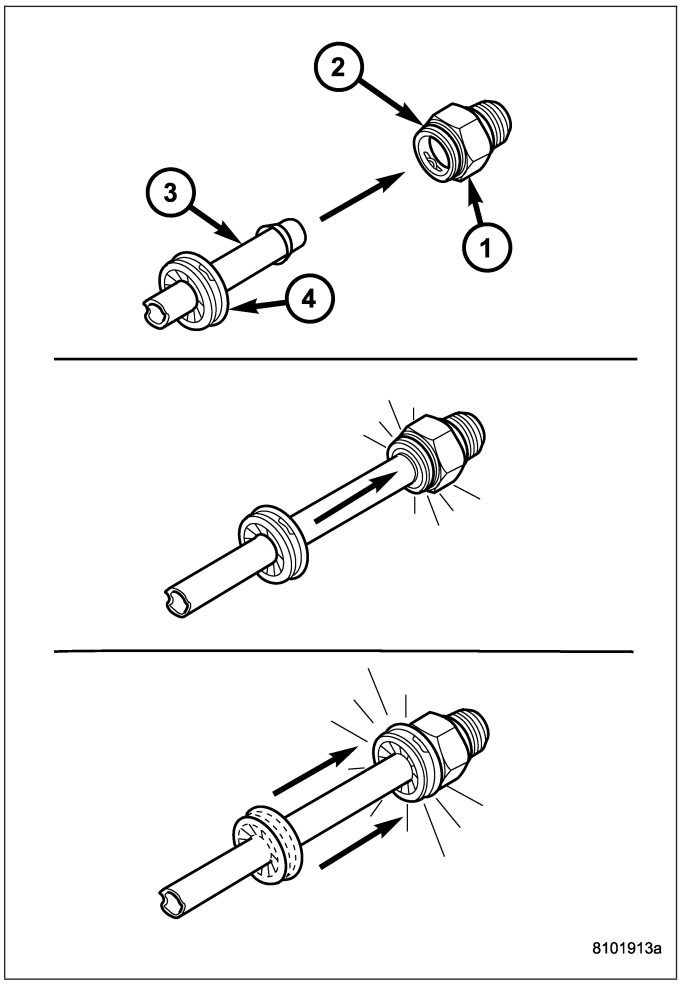

REMOVAL

NOTE: Review all Warnings and Cautions. (Refer to 19 - STEERING - WARNING).

CAUTION: Cap all open ends of power steering hoses, power steering pump fittings and steering gear ports when disconnected. This will prevent the entry of foreign material into the components during servicing.

1. Disconnect negative (-) cable from battery and isolate cable.
2. Siphon power steering fluid from fluid reservoir.
3. Remove the coolant recovery container (Refer to 7 - COOLING/ENGINE/COOLANT RECOVERY CONTAINER - REMOVAL).
4. Remove the air cleaner housing lid and tube assembly (Refer to 9 - ENGINE/AIR INTAKE SYSTEM/AIR CLEANER HOUSING - REMOVAL).
5. Remove accessory drive belt from tensioner pulley and power steering pump drive pulley. (Refer to 7 - COOLING/ACCESSORY DRIVE/DRIVE BELTS - REMOVAL)
6. Unthread quick-connect fitting and remove power steering pressure hose from power steering pump pressure fitting. Drain excess power steering fluid from line.

7. Disconnect A/C clutch coil wire connector (2).

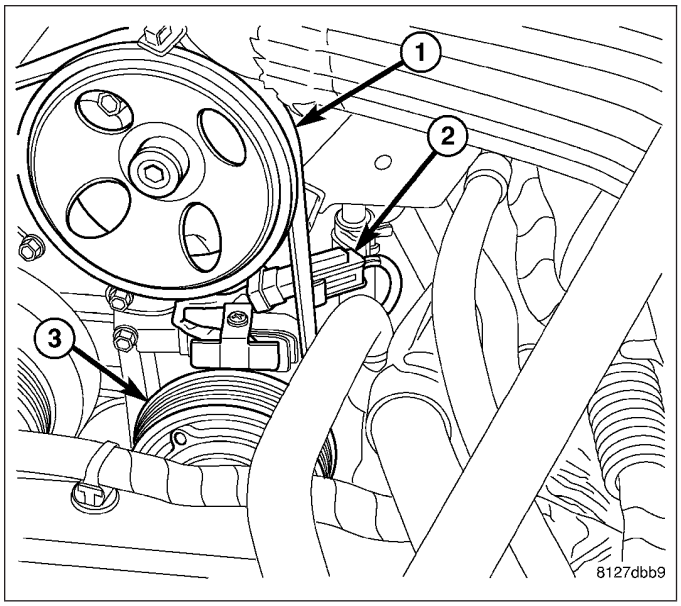

8. Remove return hose from radiator fan at power steering pump reservoir.
9. Remove return hose from fluid cooler at power steering pump reservoir.
10. Remove three bolts mounting power steering pump (5) to engine.
11. Remove power steering pump.
12. If required, transfer necessary parts from removed power steering pump to replacement power steering pump. (Refer to 19 - STEERING/PUMP - DISASSEMBLY).

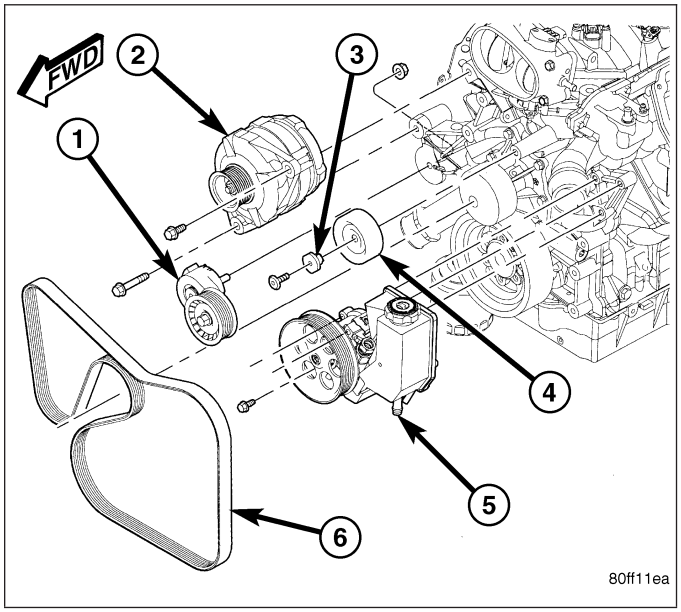

INSTALLATION

1. Install power steering pump (1) in reverse order of removal.
2. Install three power steering pump mounting bolts. Tighten mounting bolts to 23 N·m (200 in. lbs.) torque.

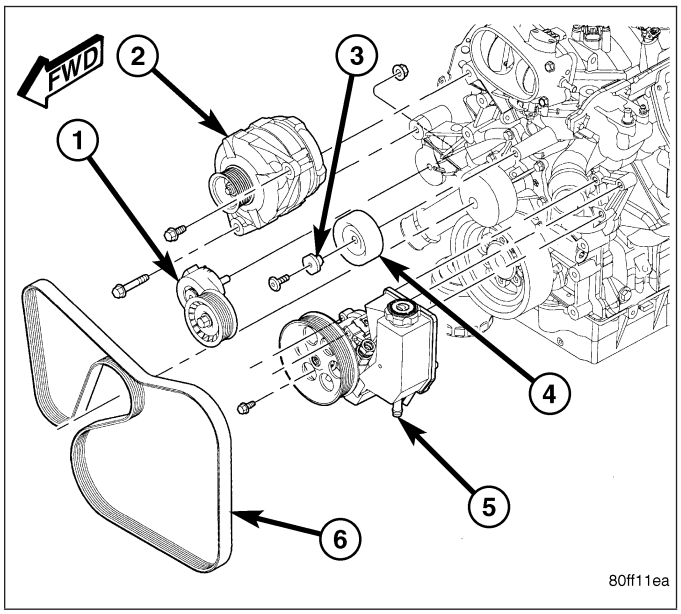

3. Install return hose from fluid cooler on fitting of power steering pump reservoir. Install hose clamp on return hose past upset bead on power steering reservoir fitting.
4. Install return hose from radiator fan on fitting of power steering pump reservoir. Install hose clamp on return hose past upset bead on power steering reservoir fitting.
5. Install power steering pressure hose in power steering pump pressure fitting. Tighten pressure hose quick-connect fitting to 28 N·m (21 ft. lbs.) torque.
6. Connect A/C clutch coil wire connector (2).

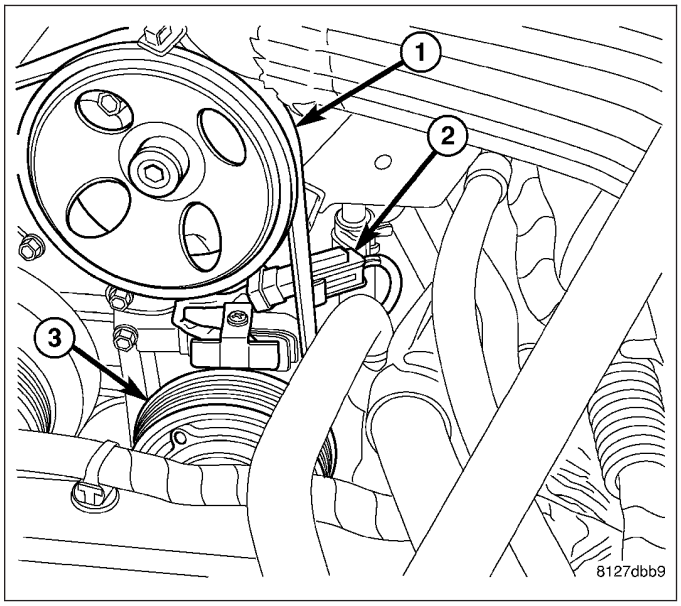

7. Install accessory drive belt. (Refer to 7 - COOLING/ACCESSORY DRIVE/DRIVE BELTS - INSTALLATION).
8. Install the air cleaner housing lid and tube assembly (Refer to 9 - ENGINE/AIR INTAKE SYSTEM/AIR CLEANER HOUSING - INSTALLATION).
9. Install the coolant recovery container (Refer to 7 - COOLING/ENGINE/COOLANT RECOVERY CONTAINER - INSTALLATION).
10. Connect the battery negative (-) cable to battery negative battery terminal.
11. Fill power steering pump reservoir to correct fluid level. (Refer to 19 - STEERING/PUMP/FLUID - STANDARD PROCEDURE)

12. Perform Power Steering Pump Initial Operation procedure. (Refer to 19 - STEERING/PUMP - STANDARD PROCEDURE).
13. Check for leaks at all hose connections.

SPECIFICATIONS

TORQUE CHART

TORQUE SPECIFICATIONS

DESCRIPTION	N·m	Ft. Lbs.	In. Lbs.
Power Steering Line nuts	28	21	—
Power Steering Pump Mounting Bolts	23	17	200

SPECIAL TOOLS

POWER STEERING

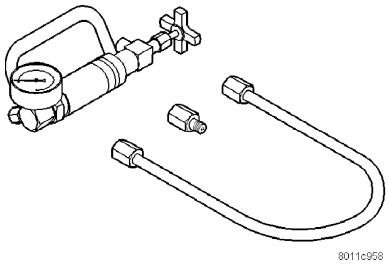

ANALYZER SET, POWER STEERING FLOW/ PRESSURE 6815

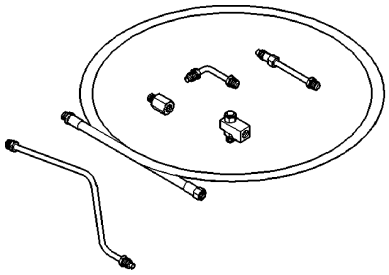

ADAPTERS, POWER STEERING FLOW/PRESSURE TESTER - 6893

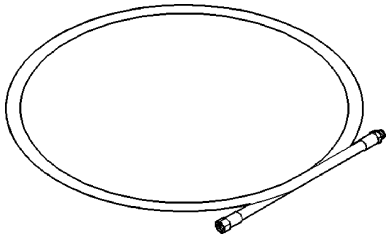

Hose, Power Steering

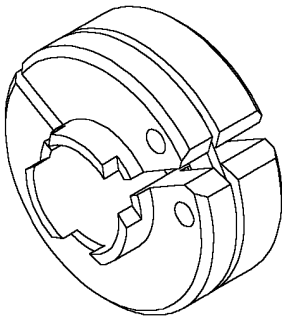

Transmission Cooler Line Disconnect Tool - 8875

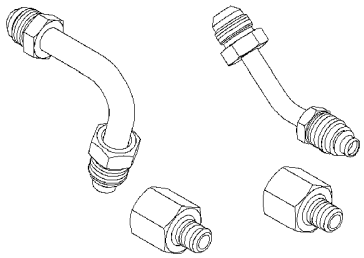

ADAPTERS, POWER STEERING 9091

HOSES

REMOVAL

PRESSURE HOSE - PUMP TO FAN

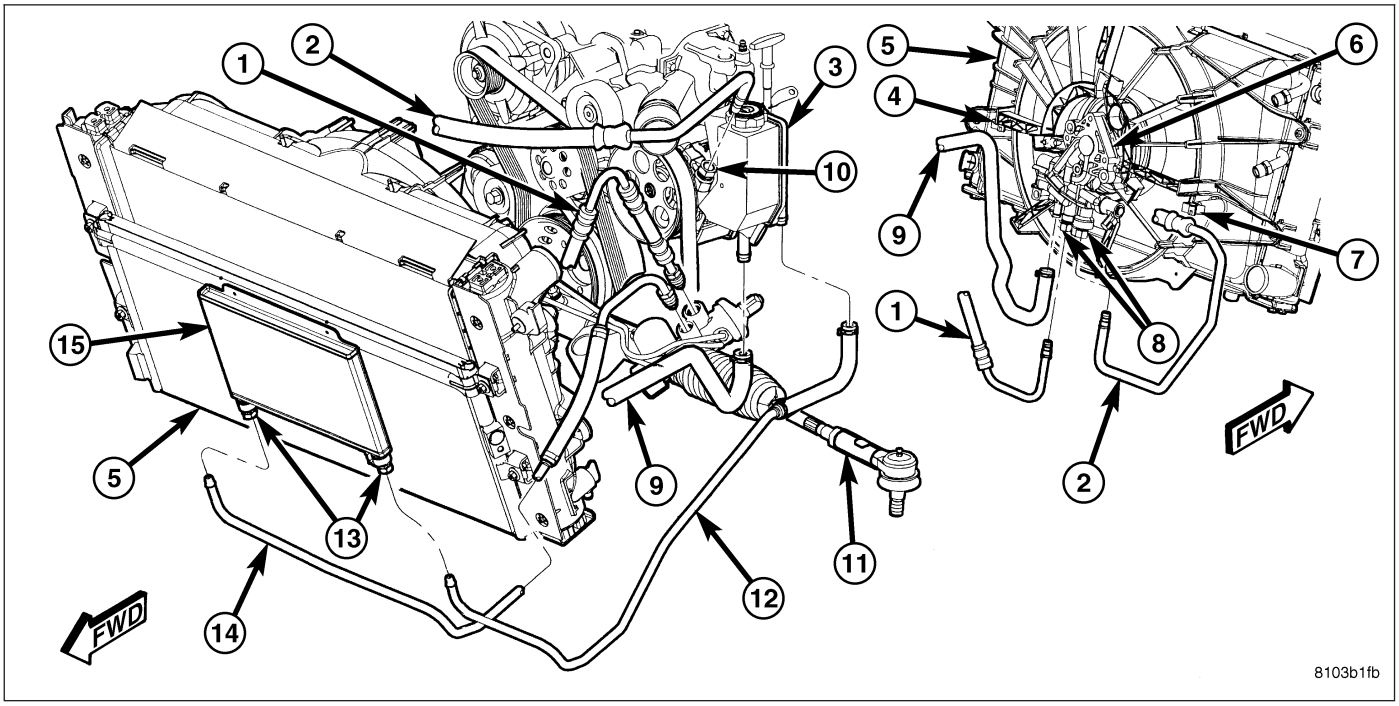

NOTE: Review all Warnings and Cautions. (Refer to 19 - STEERING - WARNING).

CAUTION: Cap all open ends of power steering hoses, power steering pump fittings and steering gear ports when disconnected. This will prevent the entry of foreign material into the components during servicing.

1. Siphon power steering fluid from fluid reservoir.
2. Unthread power steering pressure hose quick-connect (10) from power steering pump pressure fitting. Drain excess power steering fluid from line.
3. Unthread power steering pressure hose quick-connect (8) from hydraulic fan (6). Drain excess power steering fluid from line.
4. Remove power steering pressure hose (7) from routing clip on cooling module (5) . Remove hose.

PRESSURE HOSE - FAN TO GEAR

NOTE: Review all Warnings and Cautions. (Refer to 19 - STEERING - WARNING).

CAUTION: Cap all open ends of power steering hoses, power steering pump fittings and steering gear ports when disconnected. This will prevent the entry of foreign material into the components during servicing.

1. Siphon power steering fluid from fluid reservoir.

2. Unthread power steering pressure hose quick-connect (6) from hydraulic fan (1). Drain excess power steering fluid from line.
3. Unthread power steering pressure hose tube nut from power steering gear port. Drain excess power steering fluid from line.
4. Remove power steering pressure hose.

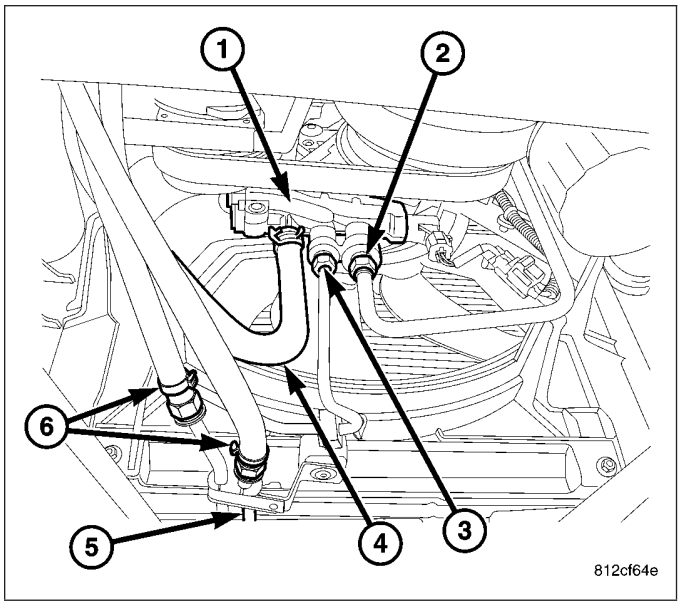

RETURN HOSE - FAN TO PUMP

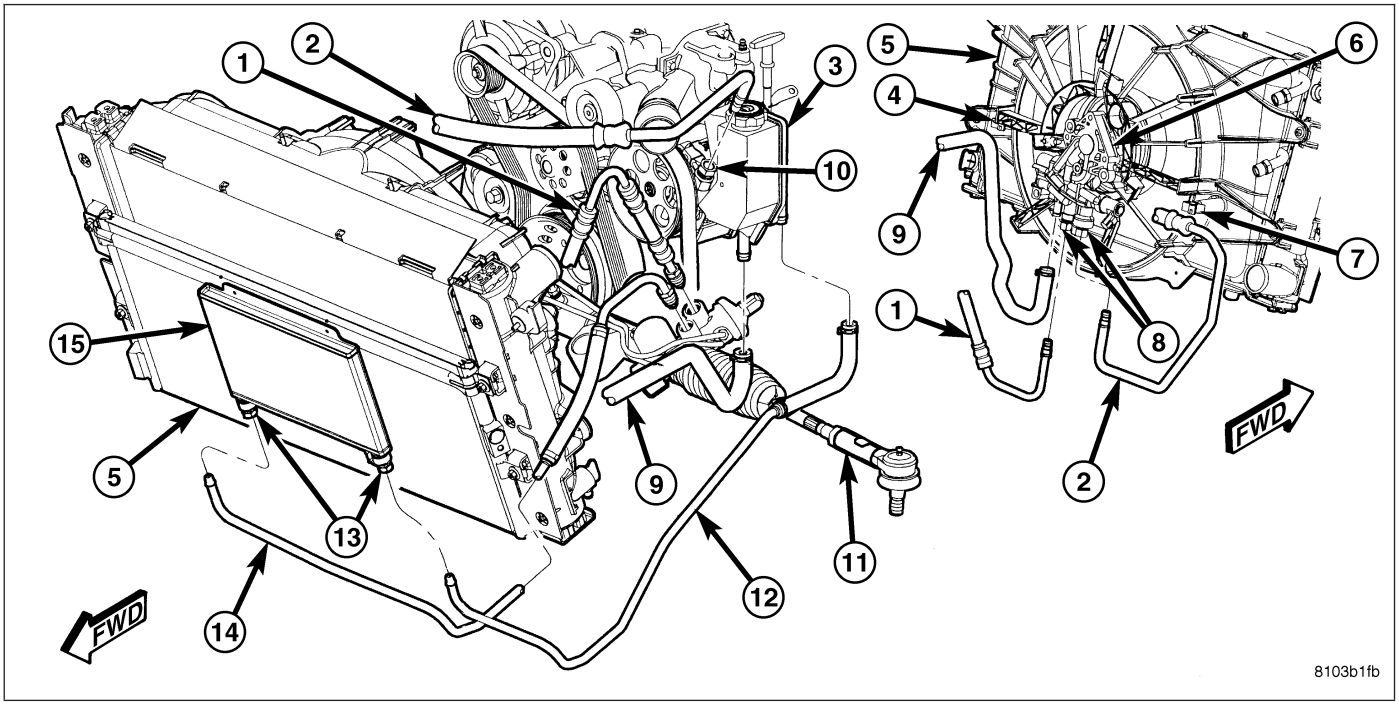

NOTE: Review all Warnings and Cautions. (Refer to 19 - STEERING - WARNING).

CAUTION: Cap all open ends of power steering hoses, power steering pump fittings and steering gear ports when disconnected. This will prevent the entry of foreign material into the components during servicing.

1. Siphon power steering fluid from fluid reservoir.
2. Remove clamp, then return hose at reservoir (9).
3. Remove clamp, then return hose at fan (9).
4. Remove hose.

RETURN HOSE - GEAR TO COOLER

NOTE: Review all Warnings and Cautions. (Refer to 19 - STEERING - WARNING).

CAUTION: Cap all open ends of power steering hoses, power steering pump fittings and steering gear ports when disconnected. This will prevent the entry of foreign material into the components during servicing.

1. Siphon power steering fluid from fluid reservoir.
2. Unthread power steering return hose tube nut from power steering gear port (1). Pull tube out of gear port and drain excess power steering fluid from line.

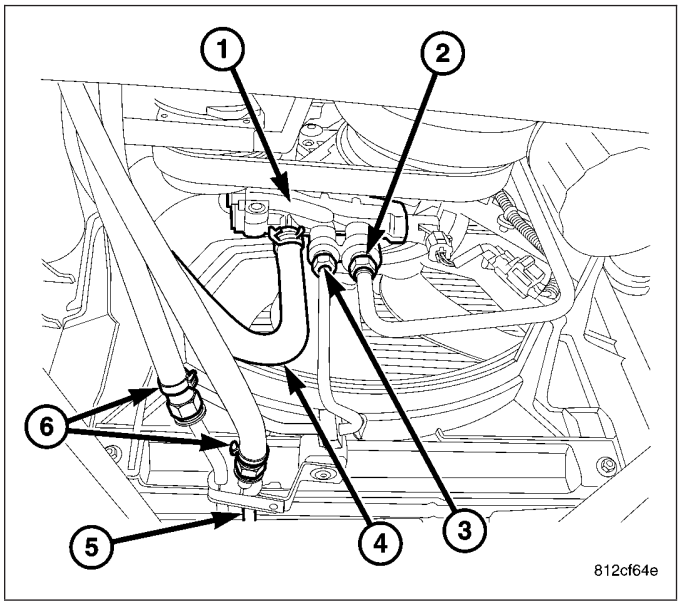

3. Raise vehicle. (Refer to LUBRICATION & MAINTENANCE/HOISTING - STANDARD PROCEDURE)
4. Remove front splash shield
5. Disconnect the quick connect fittings (1) on the cooler hose going to the cooler using special tool 8875..

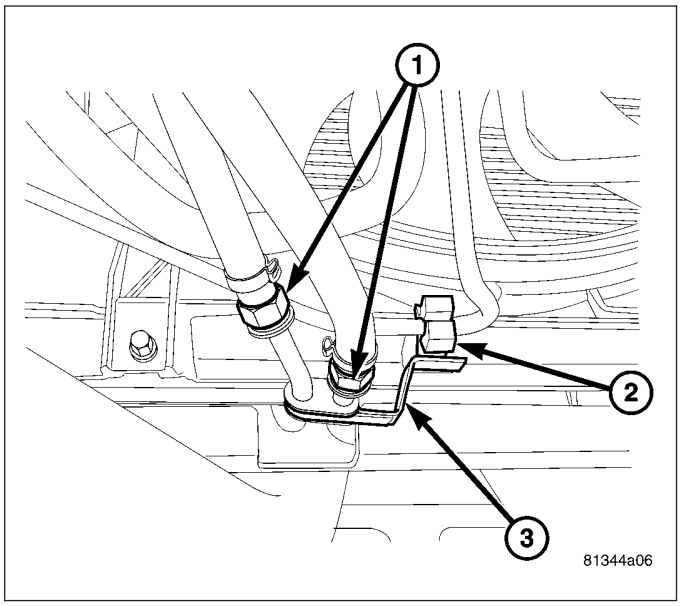

RETURN HOSE - COOLER TO PUMP

NOTE: Review all Warnings and Cautions. (Refer to 19 - STEERING - WARNING).

CAUTION: Cap all open ends of power steering hoses, power steering pump fittings and steering gear ports when disconnected. This will prevent the entry of foreign material into the components during servicing.

1. Siphon power steering fluid from fluid reservoir.
2. Remove clamp, then return hose at reservoir.
3. Raise vehicle. (Refer to LUBRICATION & MAINTENANCE/HOISTING - STANDARD PROCEDURE)
4. Remove front air deflector.
5. Disconnect the quick connect fitiing (6) at the return hose from the metal line at the cooler using special tool 8875.

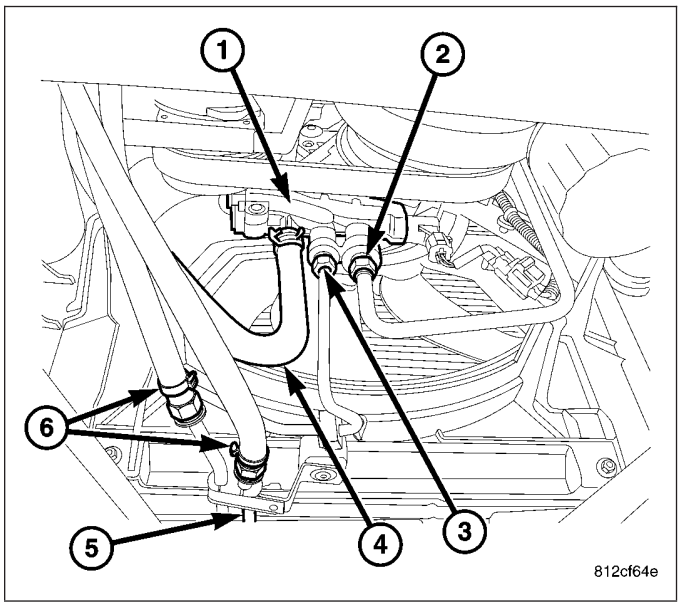

INSTALLATION

PRESSURE HOSE - PUMP TO FAN

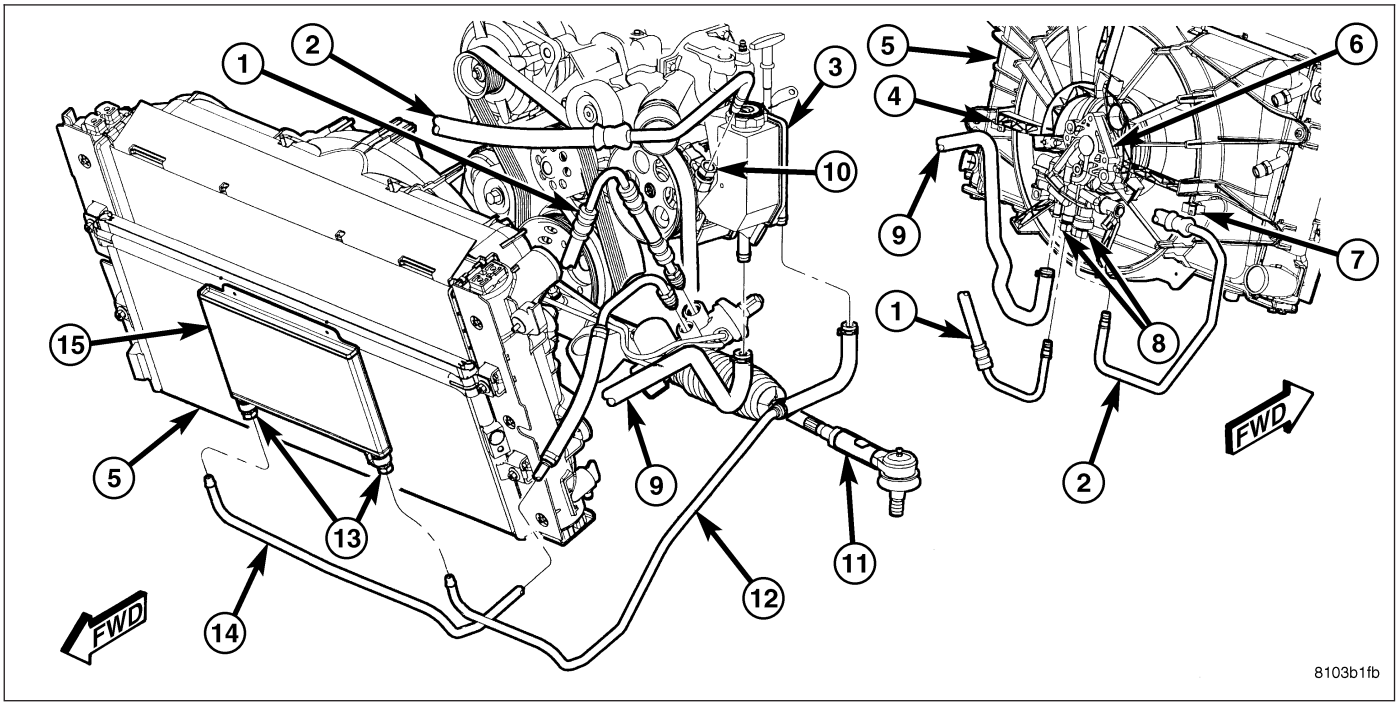

NOTE: Before installing power steering hose, replace used O-rings as necessary. Clean hose ends and open ports with a lint-free cloth. Lubricate O-rings with clean power steering fluid.

1. If pressure hose is separate from quick-connect fittings:
   a. Thread quick-connect fitting (8) into cooling fan port. Tighten fitting to 28 N·m (21 ft. lbs.) torque.
   b. Slide fan end of pressure hose tube into quick-connect fitting until it locks into place.
2. If pressure hose has quick-connect fittings installed on ends, thread fan end quick-connect fitting into fan port. Tighten hose fitting to 28 N·m (21 ft. lbs.) torque.

3. Install power steering pressure hose into routing clip (7) on cooling module (5).
4. If pressure hose is separate from quick-connect fittings:
   a. Thread quick-connect fitting into power steering pump pressure fitting (10). Tighten hose fitting to 28 N·m (21 ft. lbs.) torque.
   b. Slide pump end of pressure hose tube into quick-connect fitting until it locks into place.
5. If pressure hose has quick-connect fittings installed on ends, thread pump end quick-connect fitting into power steering pump pressure fitting. Tighten fitting to 28 N·m (21 ft. lbs.) torque.
6. Fill power steering pump reservoir to correct fluid level. (Refer to 19 - STEERING/PUMP/FLUID - STANDARD PROCEDURE)
7. Perform Power Steering Pump Initial Operation procedure. (Refer to 19 - STEERING/PUMP - STANDARD PROCEDURE).
8. Check for leaks at all hose connections.

PRESSURE HOSE - FAN TO GEAR

NOTE: Before installing power steering hose, replace used O-rings as necessary. Clean hose ends and open ports with a lint-free cloth. Lubricate O-rings with clean power steering fluid.

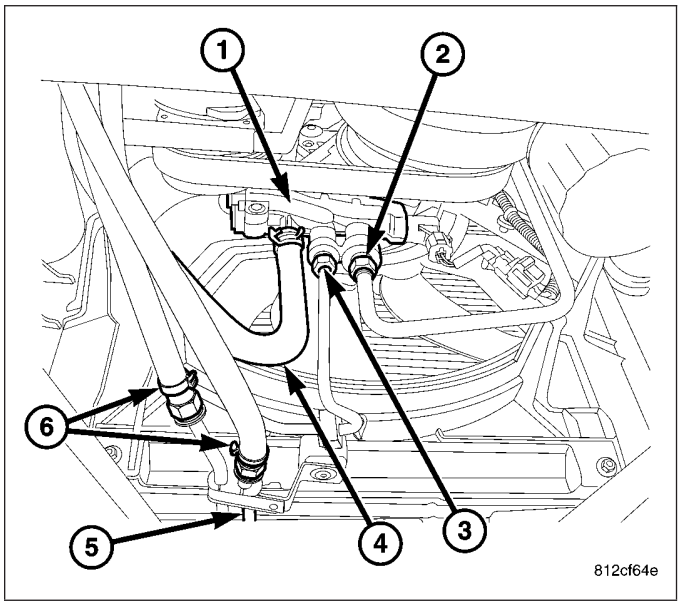

1. Thread power steering pressure hose tube nut on end of hose into power steering gear port. Tighten tube nut to 28 N·m (21 ft. lbs.) torque.
2. If fan end of pressure hose is separate from quick-connect fitting:
   a. Thread quick-connect fitting (6) into cooling fan port (1). Tighten fitting to 28 N·m (21 ft. lbs.) torque.
   b. Slide fan end of pressure hose tube into quick-connect fitting until it locks into place.
3. If fan end of pressure hose has quick-connect fitting installed, thread fan end quick-connect fitting into fan port. Tighten fitting to 28 N·m (21 ft. lbs.) torque.
4. Fill power steering pump reservoir to correct fluid level. (Refer to 19 - STEERING/PUMP/FLUID - STANDARD PROCEDURE)
5. Perform Power Steering Pump Initial Operation procedure. (Refer to 19 - STEERING/PUMP - STANDARD PROCEDURE).
6. Check for leaks at all hose connections.

RETURN HOSE - FAN TO PUMP

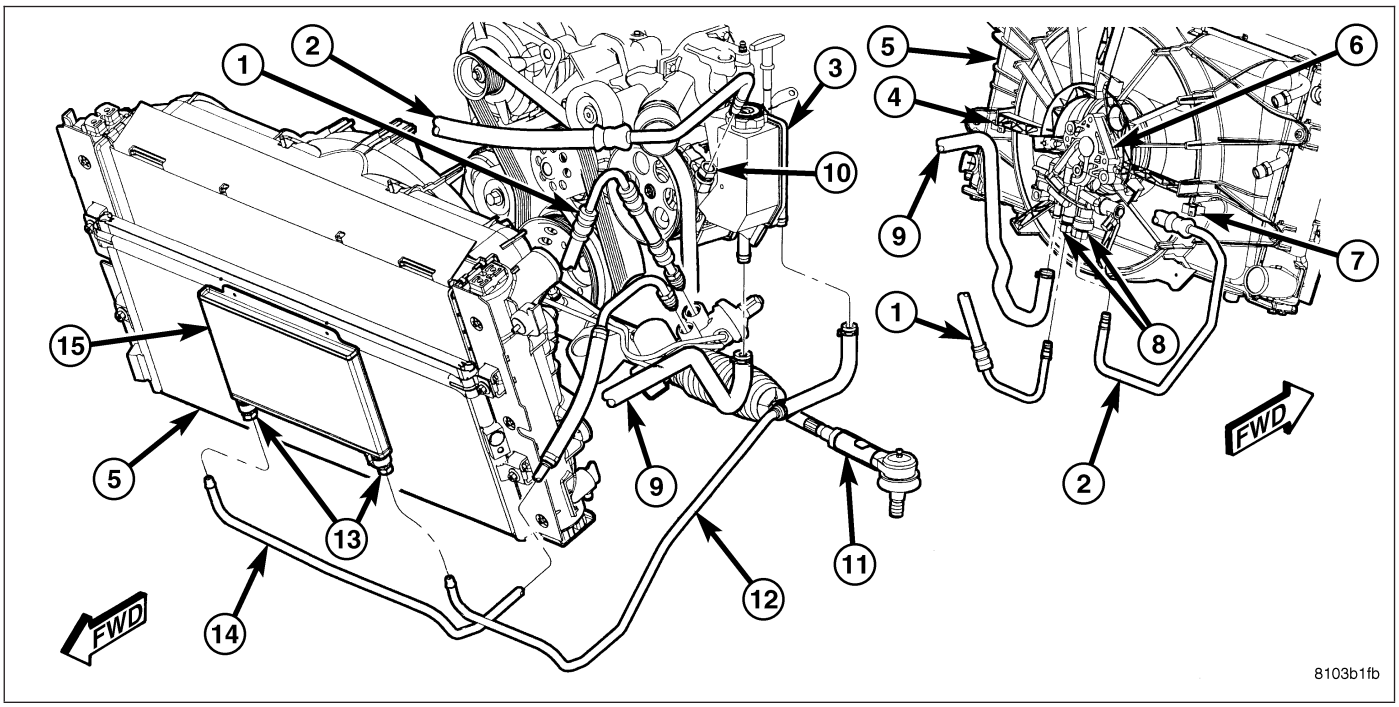

NOTE: Before installing power steering hose, clean open power steering hose ends and fittings with a lint-free towel.

1. Slide hose clamps onto ends of return hose far enough to clear molded fitting on pump reservoir and fan fitting once hose is installed.
2. Slide fan end of return hose (9) onto fan fluid fitting. Expand hose clamp and slide it into position on hose past bead formed into fitting.
3. Install power steering pressure hose into routing clip (7) on cooling module (5).
4. Slide pump end of return hose (9) onto molded fitting on pump reservoir (3). Expand hose clamp and slide it into position on hose past bead formed into reservoir fitting.
5. Fill power steering pump reservoir to correct fluid level. (Refer to 19 - STEERING/PUMP/FLUID - STANDARD PROCEDURE)
6. Perform Power Steering Pump Initial Operation procedure. (Refer to 19 - STEERING/PUMP - STANDARD PROCEDURE).
7. Check for leaks at all hose connections.

RETURN HOSE - GEAR TO COOLER

NOTE: Before installing power steering hose, replace used O-rings as necessary. Clean hose ends, fittings and open ports with a lint-free cloth. Lubricate O-rings with clean power steering fluid.

1. Install return hose into engine compartment using reverse of how it was removed.
2. Install hose at fluid cooler to the quick connect (1).
3. Install front air deflector.
4. Lower vehicle.
5. Thread return hose tube nut on gear end of hose into power steering gear port. Tighten tube nut to 28 N·m (21 ft. lbs.) torque.

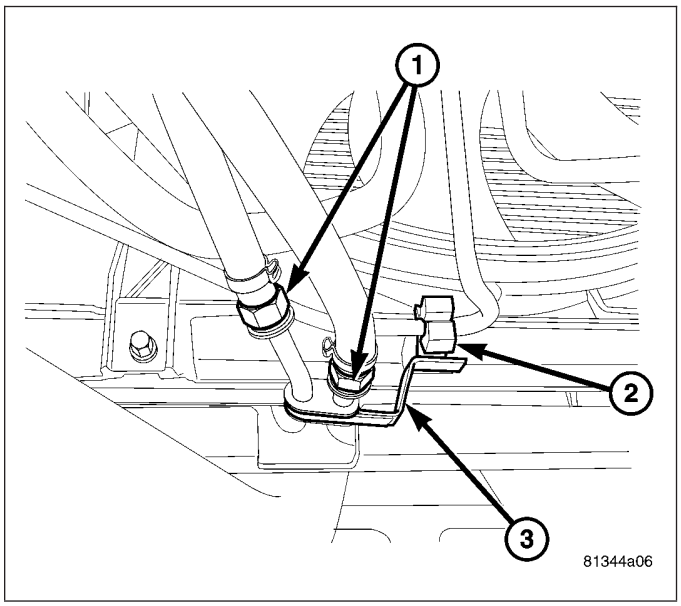

6. Fill power steering pump reservoir to correct fluid level. (Refer to 19 - STEERING/PUMP/FLUID - STANDARD PROCEDURE)
7. Perform Power Steering Pump Initial Operation procedure. (Refer to 19 - STEERING/PUMP - STANDARD PROCEDURE).
8. Check for leaks at all hose connections.

RETURN HOSE - COOLER TO PUMP

NOTE: Before installing power steering hose, replace used O-rings as necessary. Clean hose ends, fittings and open ports with a lint-free cloth. Lubricate O-rings with clean power steering fluid.

1. Install hose into engine compartment using reverse of how it was removed.
2. Reconnect the quick connect fitting (6) of the hose at fluid cooler (5).
3. Install front air deflector.
4. Lower vehicle.
5. Slide pump end of return hose onto molded fitting of pump reservoir. Expand hose clamp and slide it into position on hose past bead formed into reservoir fitting.

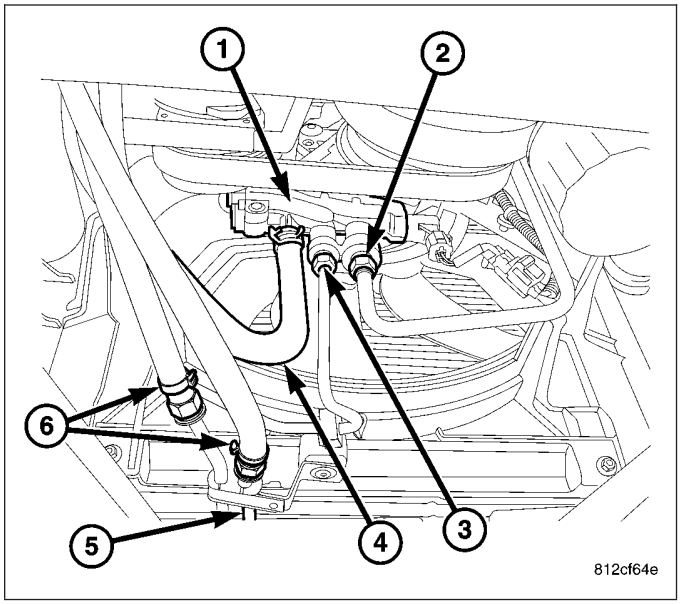

6. Fill power steering pump reservoir to correct fluid level. (Refer to 19 - STEERING/PUMP/FLUID - STANDARD PROCEDURE)
7. Perform Power Steering Pump Initial Operation procedure. (Refer to 19 - STEERING/PUMP - STANDARD PROCEDURE).
8. Check for leaks at all hose connections.

RESERVOIR

REMOVAL

1. Remove power steering pump from vehicle. (Refer to 19 - STEERING/PUMP - REMOVAL)
2. Clean exterior of pump.
3. Clamp pump body in a soft jaw vice.

NOTE: Use new retaining clips for installation.

4. Pry up tab and slide each retaining clip (2) off pump (1). Discard clips (2).
5. Remove fluid reservoir (1) from pump housing. Remove and discard O-ring seal.

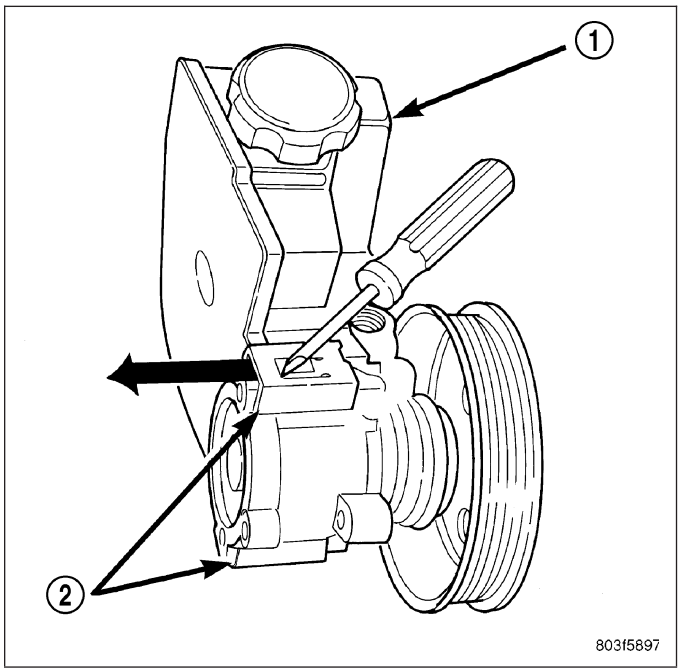

INSTALLATION

1. Lubricate new O-ring Seal with clean ATF+4 fluid or equivalent.
2. Install O-ring seal in housing.
3. Install reservoir (1) onto housing.
4. Slide and tap in NEW reservoir retainer clips (2) making sure each tab locks into place on housing.

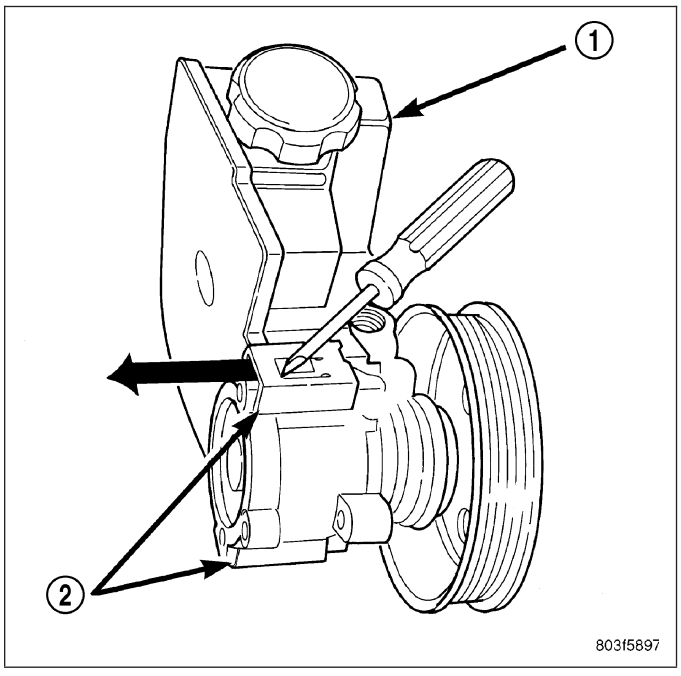

5. Install power steering pump on vehicle. (Refer to 19 - STEERING/PUMP - INSTALLATION)
6. Fill power steering pump reservoir to correct fluid level. (Refer to 19 - STEERING/PUMP/FLUID - STANDARD PROCEDURE)

PULLEY

REMOVAL

1. Remove the power steering pump assembly (1), (Refer to 19 - STEERING/PUMP - REMOVAL).
2. Remove the pulley (2) from the pump using (OTC® 7185) power steering pulley removal tool or equivalent (3).

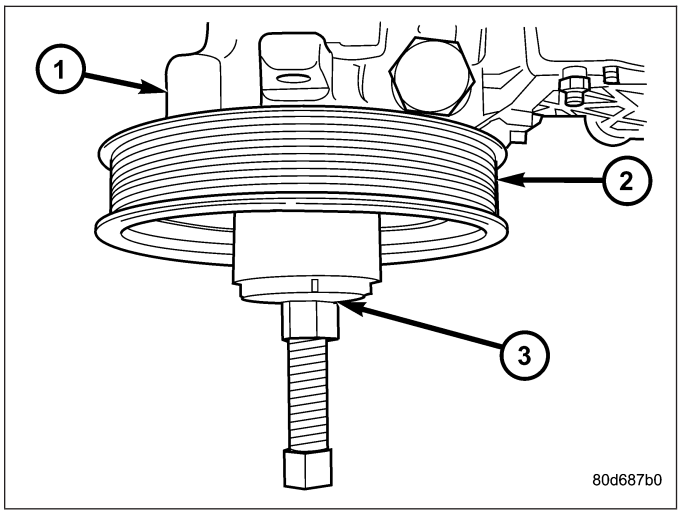

INSTALLATION

1. Replace pulley (1) if bent, cracked, or loose.
2. Install pulley (1) on pump with Installer C-4063-B (2) flush with the end of the shaft. Ensure the tool and pulley remain aligned with the pump shaft.
3. Install pump assembly.
4. With Serpentine Belts; Run engine until warm (5 min.) and note any belt chirp. If chirp exists, move pulley outward approximately 0.5 mm (0.020 in.). If noise increases, press on 1.0 mm (0.040 in.). **Be careful that pulley does not contact mounting bolts.**

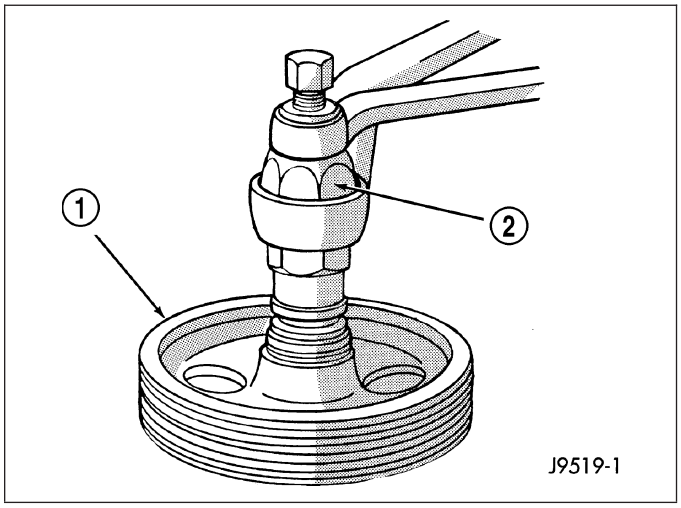

FLUID COOLER TUBE

REMOVAL

1. Drain and siphon the power steering fluid.
2. Remove the underneath splash shield.
3. Disconnect the quick connect power steering fluid cooler tubes(3) from the fluid cooler (1) using special tool 8875 (2).

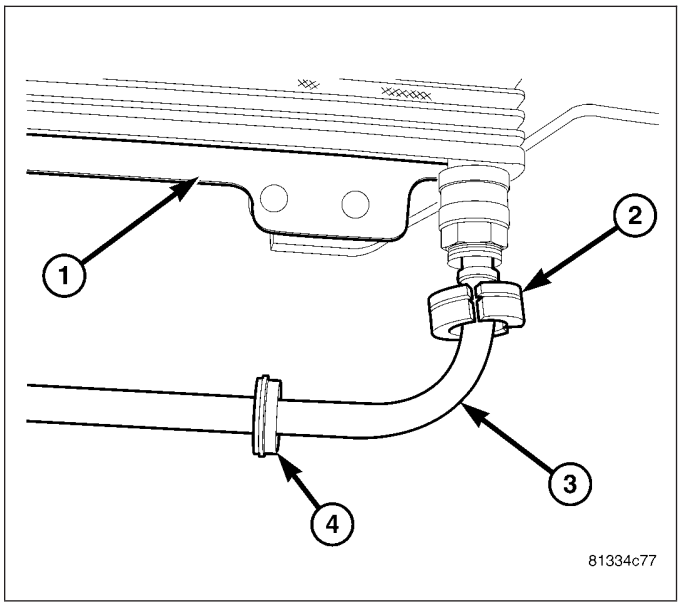

4. Disconnect the quick connect (1) return and supply tubes connected to the power steering fluid cooler using special tool 8875.

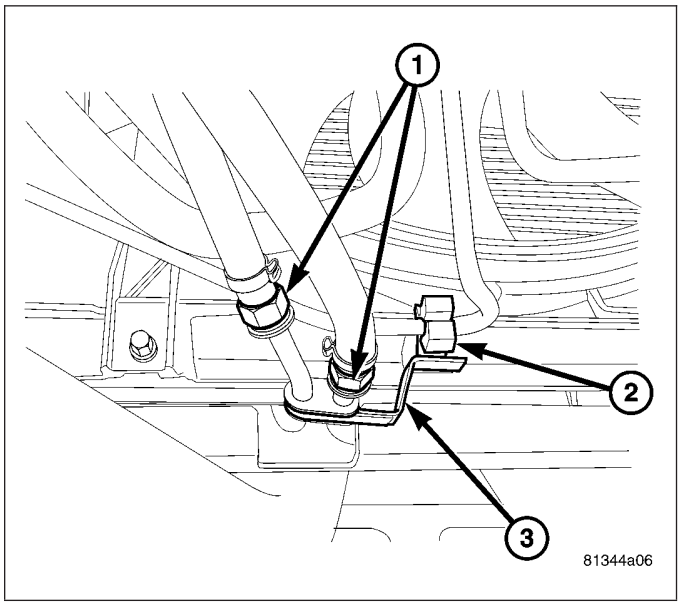

5. Remove the tube retaining bracket (4) and then the fluid cooler tubes (2).

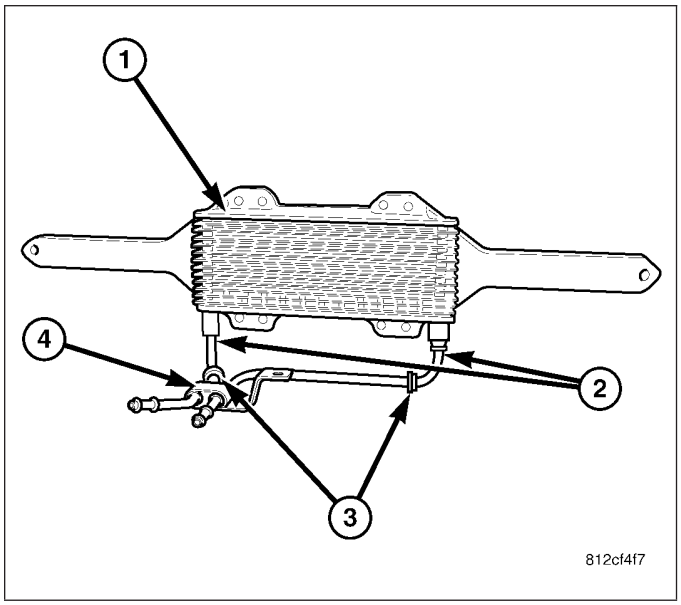

INSTALLATION

1. Reconnect the quick connect fitting (2) to the return and supply tubes (3) to the power steering fluid cooler (1).
2. Reconnect the quick connect fitting (2) to the return and supply tubes to the power steering fluid hoses.
3. Install the Tube retaining bracket (4).
4. Install the lower front air deflector.
5. Refill the power steering fluid (Refer to 19 - STEERING/PUMP - STANDARD PROCEDURE).

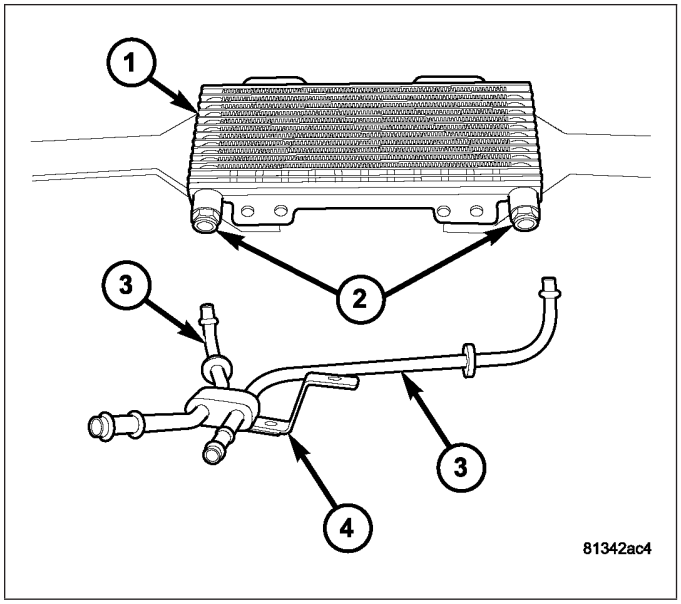

FLUID COOLER

REMOVAL

1. Drain and siphon the power steering fluid.
2. Remove the underneath splash shield.
3. Remove the two bolts (2) from the air deflector (40 between the bumper (3) and A/C condensor (1).

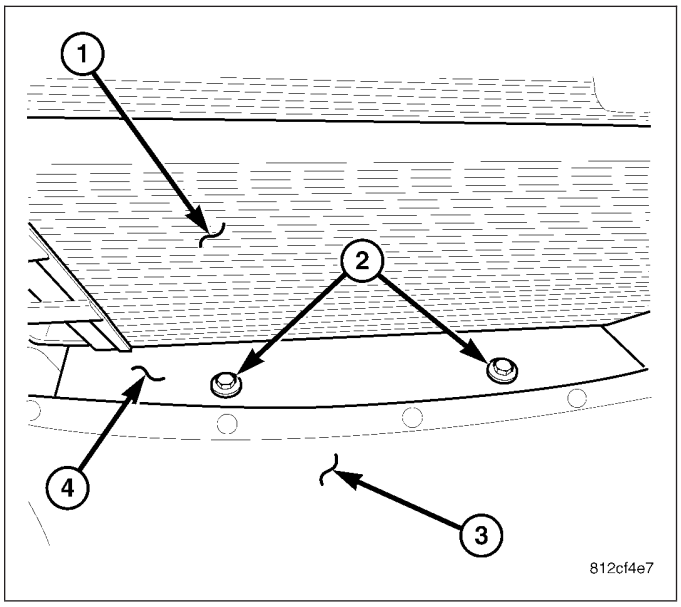

4. Disconnect the return and supply hoses connected to the power steering fluid cooler using special tool 8875.
5. Disconnect the hose mounting bracket (3).

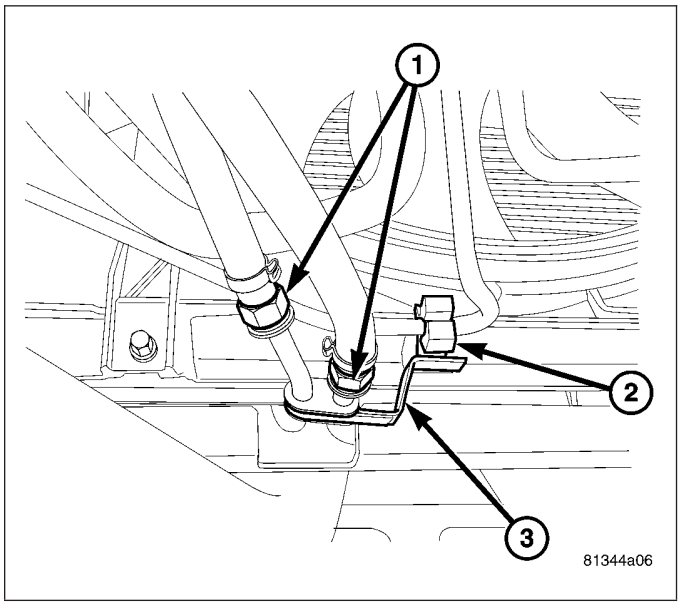

6. Remove the mounting bracket bolts (1) securing the fluid cooler (3) to the brace.

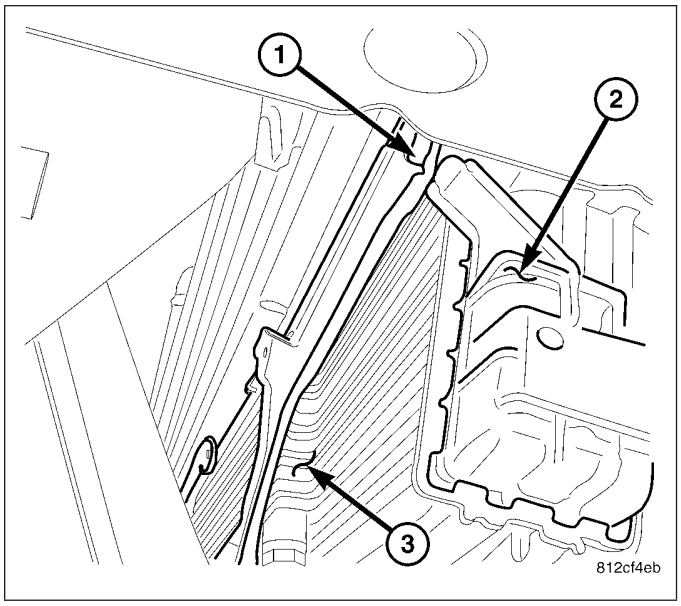

7. Remove the fluid cooler (1) from the vehicle.

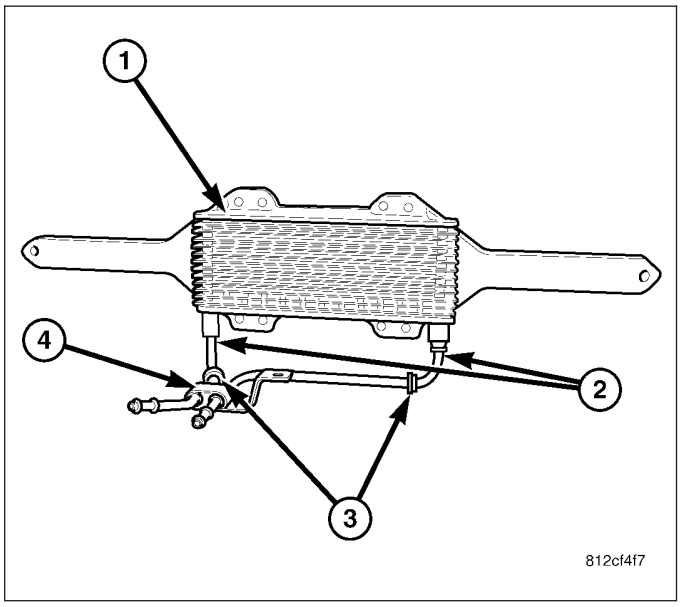

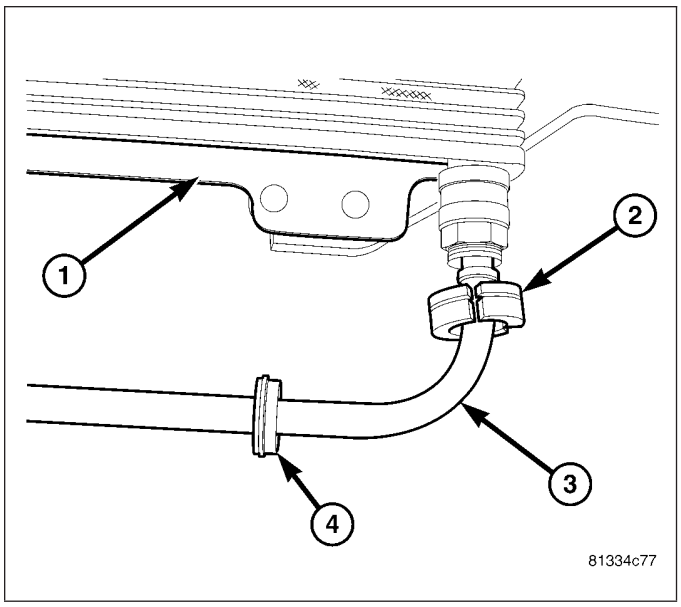

NOTE: If needed disconnect the power steering fluid cooler hoses (3) from the fluid cooler (1) using special tool 8875 (2).

INSTALLATION

1. Install the fluid cooler (1) to the vehicle.

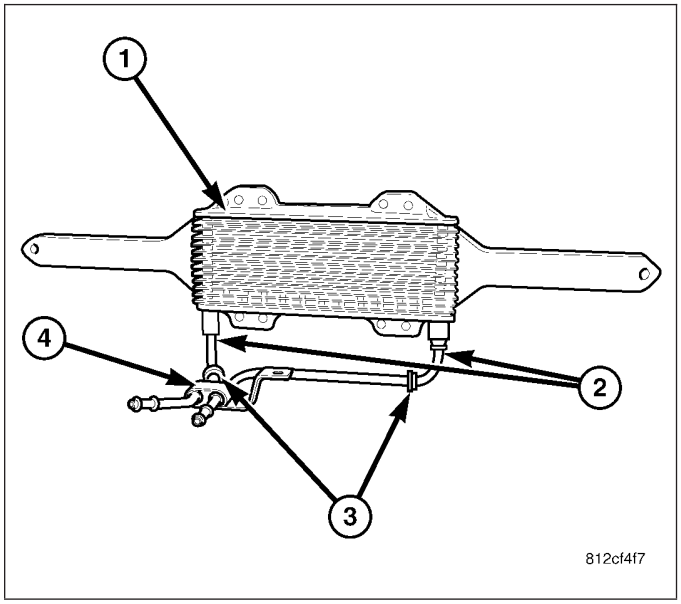

2. Install the mounting bracket bolts (1) securing the fluid cooler (3) to the brace.

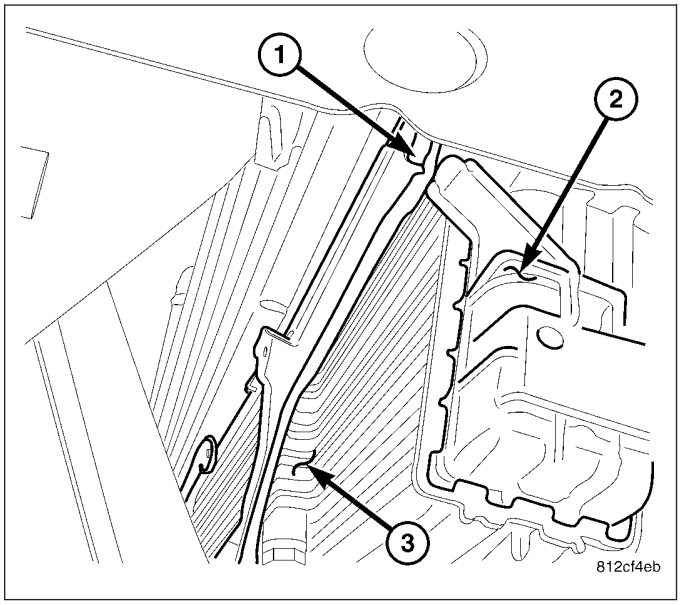

3. Reconnect the quick connect fitting (1) to the return and supply hoses to the power steering fluid cooler.
4. Install the hose retaining bracket (3).

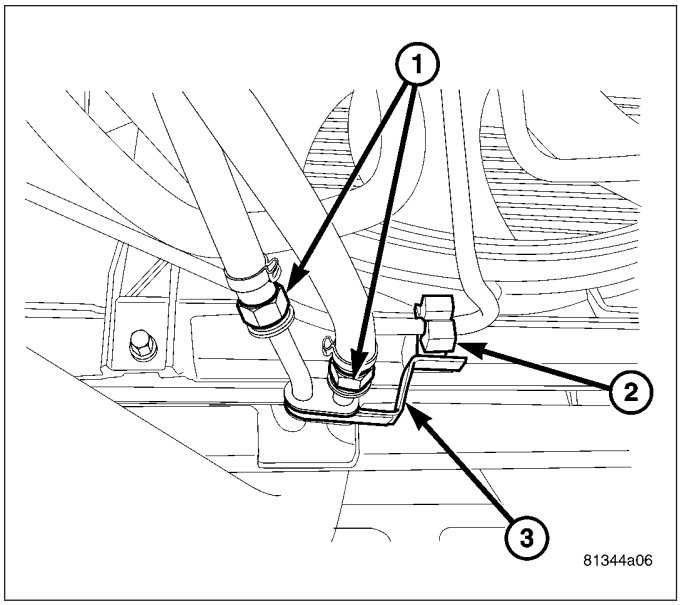

5. Install the air deflector shield (4).
6. Install the lower front air deflector.
7. Refill the power steering fluid (Refer to 19 - STEERING/PUMP - STANDARD PROCEDURE).

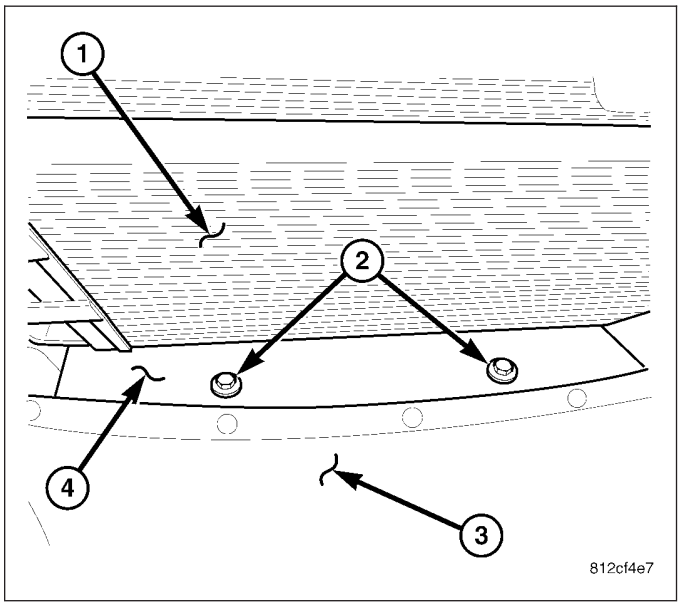

TRANSMISSION AND TRANSFER CASE

TABLE OF CONTENTS

page

MANUAL TRANSMISSION - NV4500 - SERVICE INFORMATION 1
MANUAL TRANSMISSION - NV5600 - SERVICE INFORMATION 57
MANUAL TRANSMISSION - GETRAG 238 - SERVICE INFORMATION 108
MANUAL TRANSMISSION - G56 - SERVICE INFORMATION 176
MANUAL TRANSMISSION - T56 - SERVICE INFORMATION 235
AUTOMATIC TRANSMISSION - 545RFE - ELECTRICAL DIAGNOSTICS 294
AUTOMATIC TRANSMISSION - 45RFE/545RFE - SERVICE INFORMATION 553
AUTOMATIC TRANSMISSION - 48RE - GAS - ELECTRICAL DIAGNOSTICS 694
AUTOMATIC TRANSMISSION - 48RE - DIESEL - ELECTRICAL DIAGNOSTICS 807

page

AUTOMATIC TRANSMISSION - 48RE - SERVICE INFORMATION 966
TRANSFER CASE - ELECTRICAL DIAGNOSTICS (ETC) 1196
TRANSFER CASE - ELECTRICAL DIAGNOSTICS (POWER WAGON) 1295
TRANSFER CASE - NV241 GENII - SERVICE INFORMATION 1331
TRANSFER CASE - NV271 - SERVICE INFORMATION 1373
TRANSFER CASE - NV243 - SERVICE INFORMATION 1426
TRANSFER CASE - NV244 GENII - SERVICE INFORMATION 1466
TRANSFER CASE - NV273 - SERVICE INFORMATION 1505

MANUAL TRANSMISSION - NV4500 - SERVICE INFORMATION

TABLE OF CONTENTS

page

MANUAL TRANSMISSION - NV4500 - SERVICE INFORMATION
DIAGNOSIS AND TESTING 2
REMOVAL 2
DISASSEMBLY 4
CLEANING 25
INSPECTION 25
ASSEMBLY 25
INSTALLATION 45
SPECIFICATIONS 47
SPECIAL TOOLS 48
SEAL-ADAPTER HOUSING
REMOVAL 52
INSTALLATION 52
SEAL-EXTENSION HOUSING
REMOVAL 52
INSTALLATION 53
MECHANISM-SHIFT
REMOVAL 53
INSTALLATION 55

page

MANUAL TRANSMISSION - NV4500 - SERVICE INFORMATION

DIAGNOSIS AND TESTING

LOW LUBRICANT LEVEL

A low transmission lubricant level is generally the result of a leak, inadequate lubricant fill or an incorrect lubricant level check. A correct lubricant level check can only be made when the vehicle is level. Also allow the lubricant to settle for a minute or so before checking. These recommendations will ensure an accurate check and avoid an underfill or overfill condition. Always check the lubricant level after any addition of fluid to avoid an incorrect lubricant level condition.

Leaks can occur at the mating surfaces of the gear case, adaptor or extension housing, or from the front/rear seals. A suspected leak could also be the result of an overfill condition. Leaks at the rear of the extension or adapter housing will be from the housing oil seals. Leaks at component mating surfaces will probably be the result of inadequate sealer, gaps in the sealer, incorrect bolt tightening or use of a non-recommended sealer. A leak at the front of the transmission will be from either the front bearing retainer or retainer seal. Lubricant may be seen dripping from the clutch housing after extended operation. If the leak is severe, it may also contaminate the clutch disc causing the disc to slip, grab and or chatter.

HARD SHIFTING

Hard shifting is usually caused by a low lubricant level, improper or contaminated lubricants. The consequence of using non-recommended lubricants is noise, excessive wear, internal bind and hard shifting. Substantial lubricant leaks can result in gear, shift rail, synchro, and bearing damage. If a leak goes undetected for an extended period, the first indications of component damage are usually hard shifting and noise.

Component damage, incorrect clutch adjustment or damaged clutch pressure plate or disc are additional probable causes of increased shift effort. Incorrect adjustment or a worn/damaged pressure plate or disc can cause incorrect release. If clutch problem is advanced, gear clash during shifts can result. Worn or damaged synchro rings can cause gear clash when shifting into any forward gear. In some new or rebuilt transmissions, new synchro rings may tend to stick slightly causing hard or noisy shifts. In most cases this condition will decline as the rings wear-in.

TRANSMISSION NOISE

Most manual transmissions make some noise during normal operation. Rotating gears generate a mild whine that is audible, but generally only at extreme speeds. Severe highly audible transmission noise is generally the initial indicator of a lubricant problem.

Insufficient, improper or contaminated lubricant will promote rapid wear of gears, synchros, shift rails, forks and bearings. The overheating caused by a lubricant problem, can also lead to gear breakage.

REMOVAL

1. Shift transmission into Neutral.
2. Remove shift boot screws from floorpan and slide boot upward on the shift lever.
3. Remove shift lever extension from shift tower and lever assembly.
4. Remove shift tower (1) bolts (3).

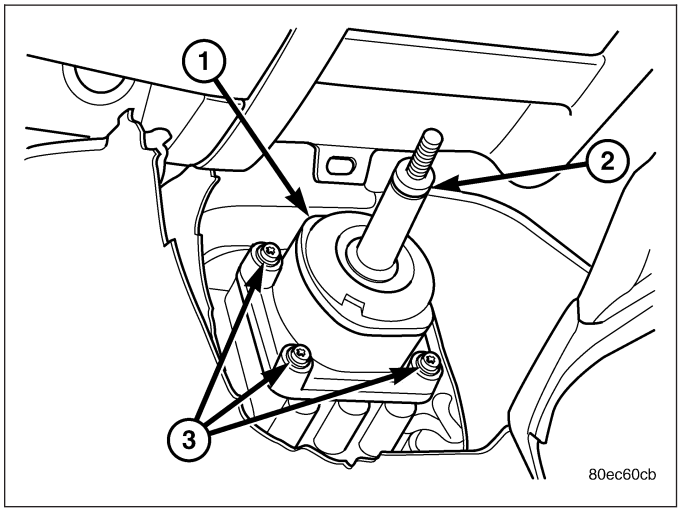

5. Remove shift tower and isolator plate from transmission shift cover.
6. Raise and support vehicle.
7. Remove skid plate, if equipped.
8. Mark propeller shaft and axle yokes for installation reference and remove shaft/shafts.
9. Remove exhaust system Y-pipe.
10. Disconnect speed sensor and backup light switch connectors.
11. Support engine with safety stand and a wood block.

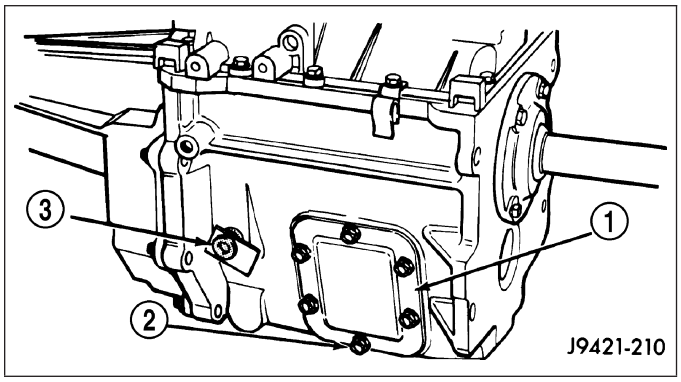

12. If transmission is to be disassembled, remove drain bolt (2) at bottom of PTO cover (1) and drain lubricant.

TWO WHEEL DRIVE

1. Remove bolts attaching transmission to rear crossmember mount.
2. Support and secure transmission with safety chains to a transmission jack.
3. Remove rear crossmember bolts and pry out crossmenber.
4. Remove clutch slave cylinder bolts and move cylinder aside for clearance.

NOTE: The hydraulic linkage has a quick connect at the slave cylinder. This fitting should not be disconnected.

5. Remove transmission harness wires from clips on transmission shift cover.
6. Remove transmission to clutch housing bolts.
7. Slide transmission and jack rearward until input shaft clears clutch housing.
8. Lower transmission jack and remove transmission from under vehicle.

FOUR WHEEL DRIVE

1. Disconnect transfer case shift linkage (2) at transfer case range lever. Then remove transfer case shift mechanism from transmission (1).
2. Support and secure transfer case to transmission jack with safety chains.
3. Remove transfer case mounting nuts.
4. Move transfer case rearward until input gear clears transmission mainshaft.
5. Lower transfer case assembly and move it from under vehicle.
6. Support and secure transmission with safety chains to a transmission jack.
7. Remove transmission harness from retaining clips on transmission shift cover.
8. Remove bolts/nuts attaching transmission mount to rear crossmember.

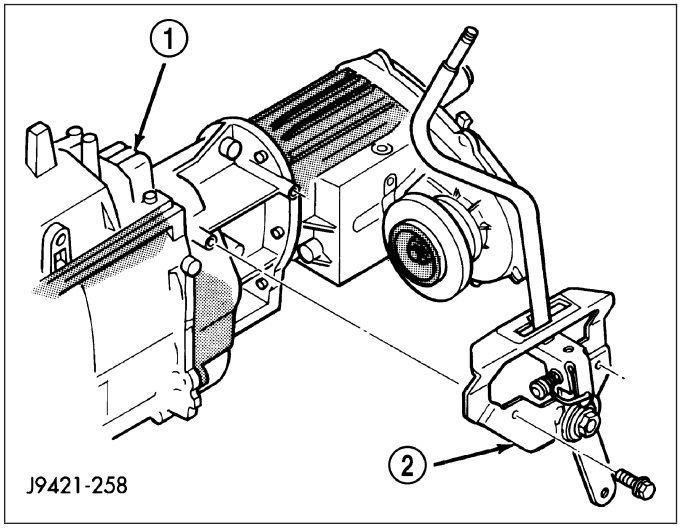

9. Remove rear crossmember bolts and pry out crossmenber.
10. Remove clutch slave cylinder splash shield, if equipped.
11. Remove clutch slave cylinder bolts and move cylinder aside for clearance.

NOTE: The hydraulic linkage has a quick connect at the slave cylinder. This fitting should not be disconnected.

12. Remove transmission to clutch housing bolts.

13. Slide transmission and jack rearward until input shaft clears clutch housing.
14. Remove transmission from under vehicle.

DISASSEMBLY

SHIFT MECHANISM

1. Remove bolts holding shift tower to shift mechanism cover and remove tower.
2. Remove bolts holding shift mechanism cover to transmission.
3. Pry up shift mechanism cover at slot (1) with screw driver (2).

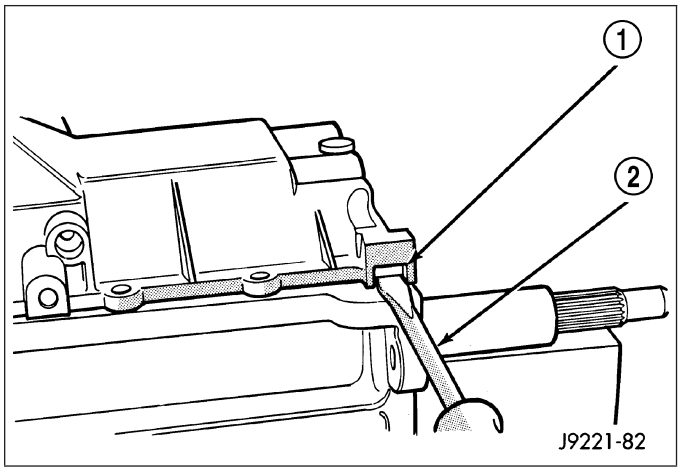

4. Raise shift cover (1) up enough to disengage it from the dowel pins (2).
5. Raise front of the mechanism and lift up and off the transmission.

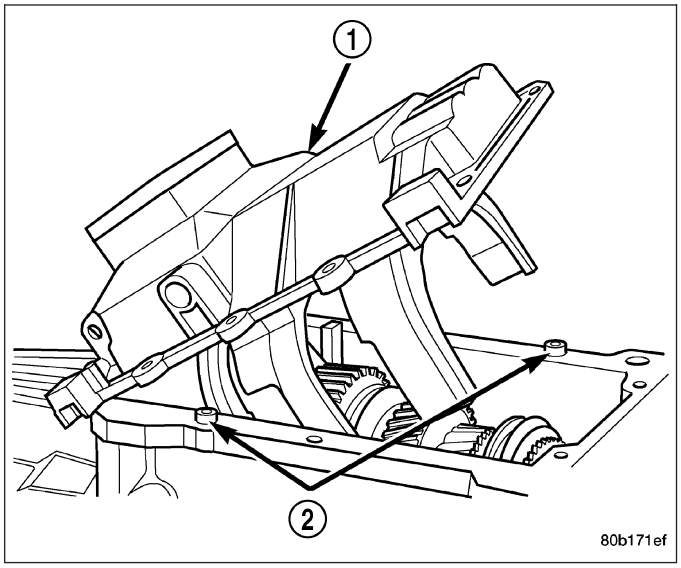

EXTENSION/ADAPTER HOUSING

1. Remove extension/adapter housing (1) bolts (2).

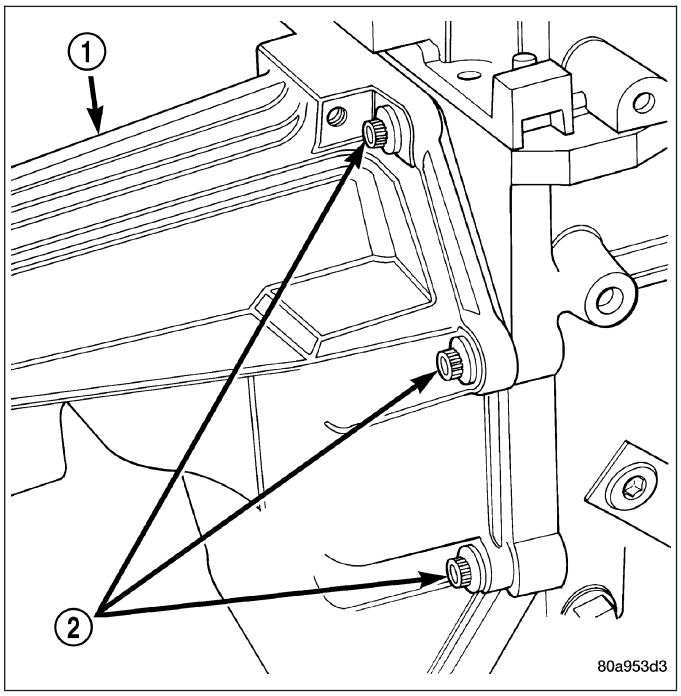

2. Remove extension/adapter housing (2) from gear case (1) and alignment dowels.

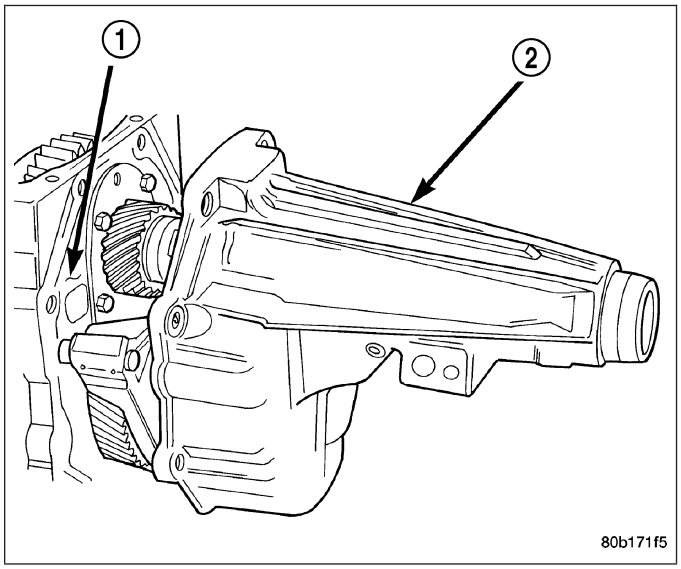

3. Remove rubber spline seal (2) from end of mainshaft (1) and discard shipping seal.

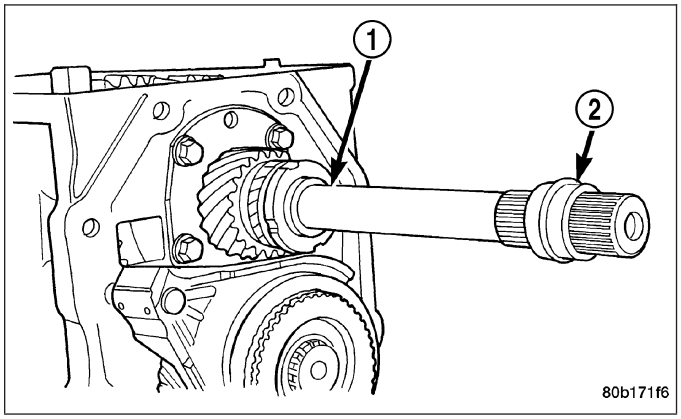

FIFTH GEAR

1. Remove extension/adapter housing.
2. Loosen fifth gear clamp nut clamping screw approximately 1 1/2 turns.
3. Install Wrench 6743 (1) on fifth gear nut (2).

NOTE: Wrench only fits one way on nut. Make sure wrench is fully engaged in nut slots and is not cocked.

4. Install Socket 6993 4X2 or Socket 6984 4X4 (3) with breaker bar to hold mainshaft and remove fifth gear nut.

NOTE: Wedge breaker bar handle against work-bench. Purpose of socket wrench and breaker bar is to prevent mainshaft from turning while nut is loosened.

5. Remove fifth gear nut, then remove belleville washer from mainshaft.

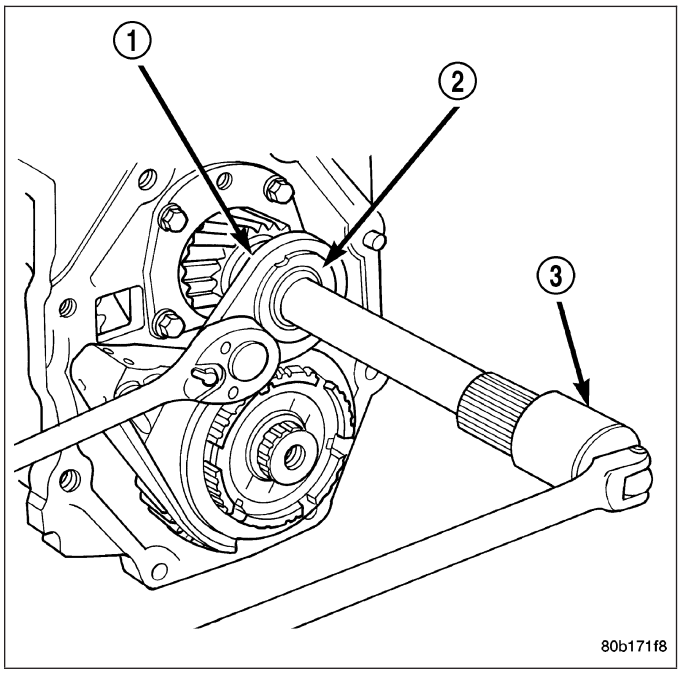

6. Remove fifth gear shift fork (2) roll pins (1). Drive roll pins out from the bottom of fork.

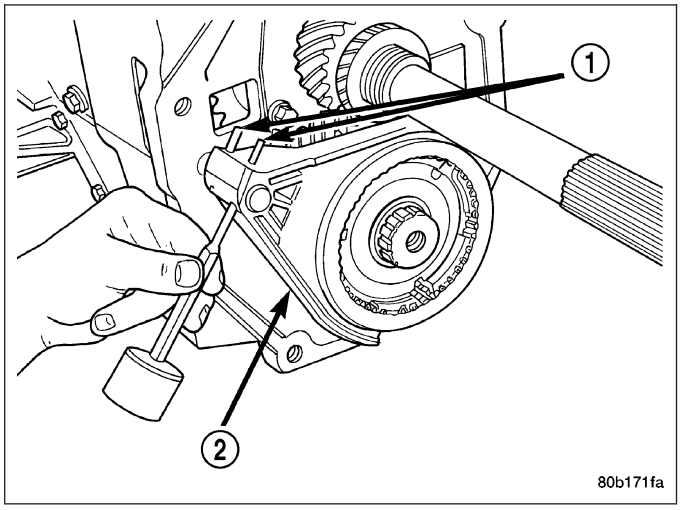

7. Remove fifth gear clutch hub (2) and gear snap ring (1) from countershaft.
8. Remove countershaft fifth gear clutch gear and stop ring.
9. Tap off fifth gear shift fork and gear assembly off rail with plastic mallet.
10. Remove fifth gear shift fork from sleeve.
11. Remove sleeve, struts and strut springs from countershaft fifth gear hub, if necessary.

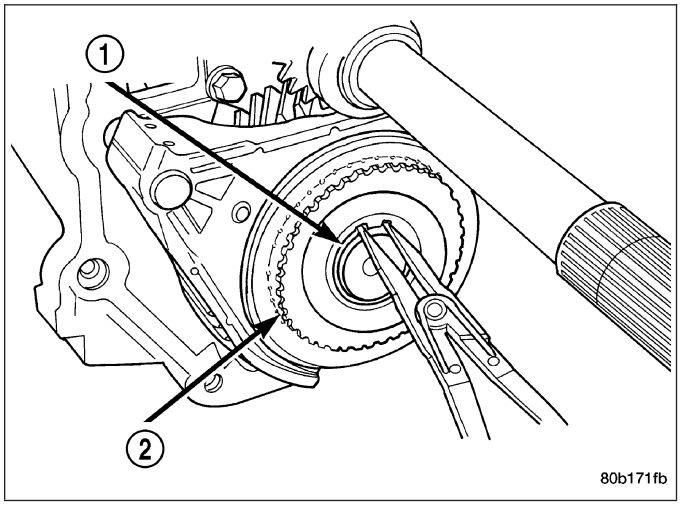

12. Remove countershaft (2) fifth gear needle bearing (1) assembly.

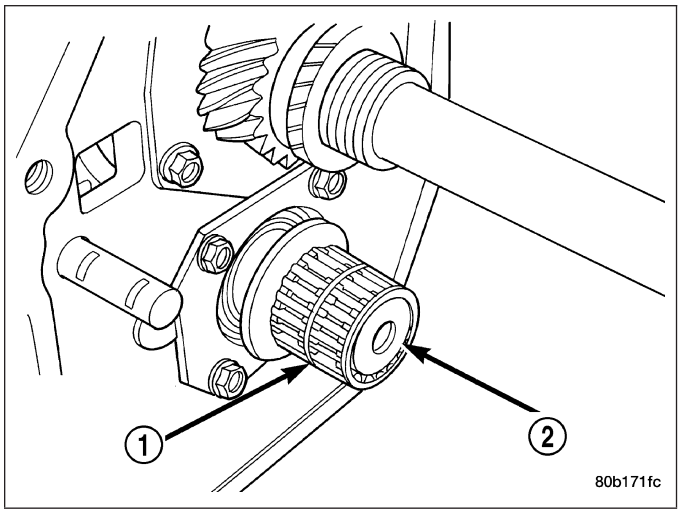

13. Remove coned shape rear bearing thrust washer (1) from countershaft.

NOTE: Note washer bore locating notch for assembly reference.

14. Remove thrust washer locating pin (2) from countershaft.

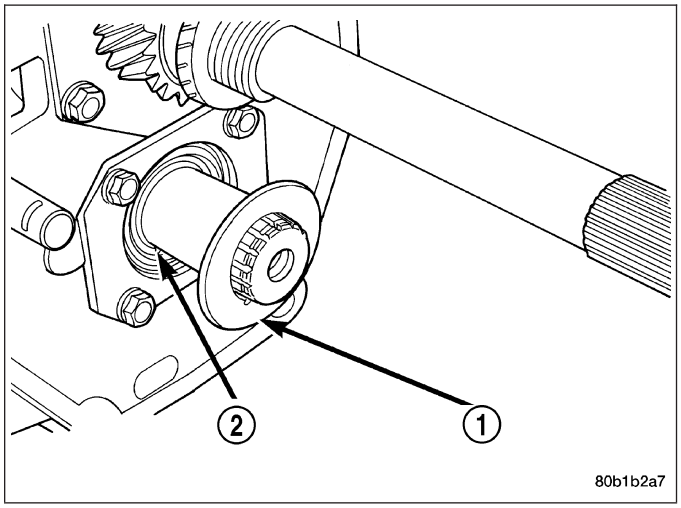

15. Remove mainshaft (3) fifth gear (1) with Puller Set 6444 and Jaw 6459 or 6820 (2). Position first Jaw on gear.

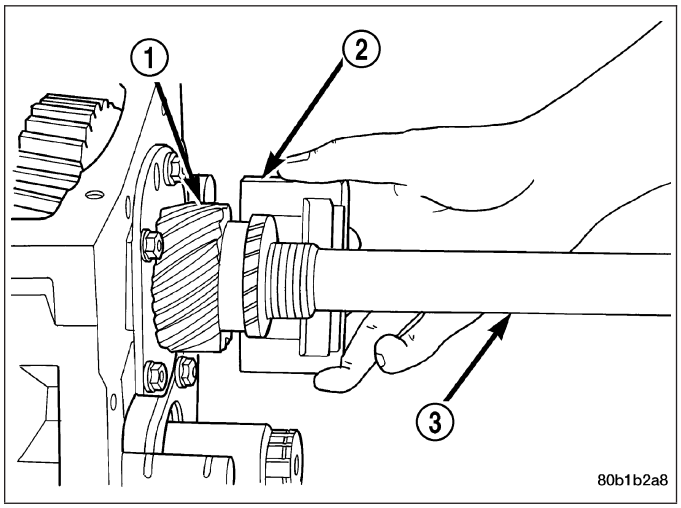

16. Assemble Puller Flange 6444-1(2) and Puller Rods 6444-3 4X2 or 6444-4 4X4. Slide assembly onto output shaft and seat flange in notch of jaw (1).

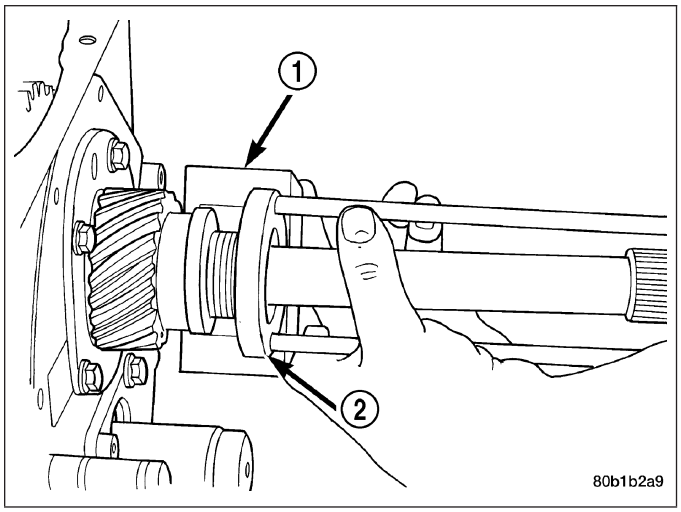

17. Position second puller jaw (1) on gear and in notch of puller flange. Slide Collar 6444-8 (2) over puller jaws to hold them in place.

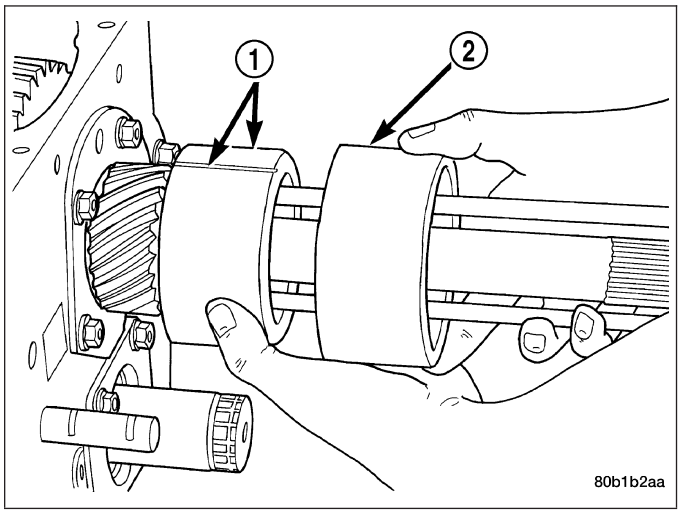

18. Install Puller and Bolt 6444 on puller rods and secure puller to rods with retaining nuts. Tighten puller bolt (3) to remove gear from shaft splines.

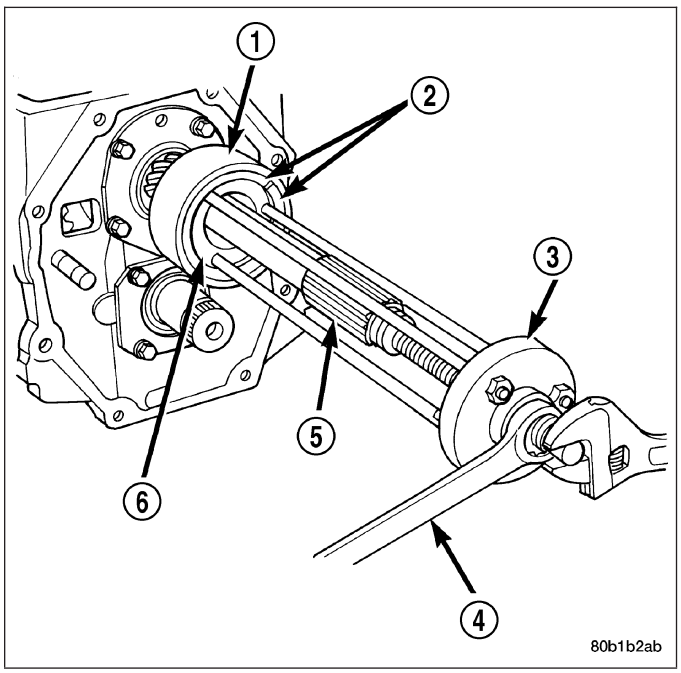

19. Remove mainshaft rear bearing (1) plate (3) bolts and remove fifth gear (4) plate end play shims (2) and bearing cup.

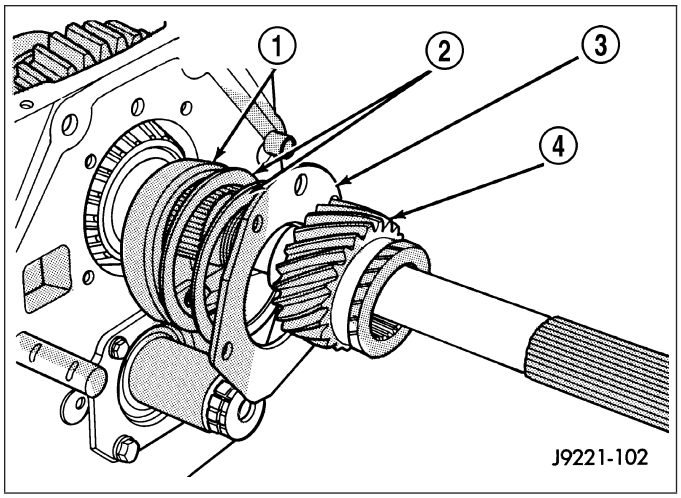

FRONT RETAINER

1. Remove and discard front bearing retainer (2) bolts and **discard** bolts.
2. Retainer flange extends into transmission case and is a **snug** fit. Lightly tap retainer (2) back and forth with plastic mallet to work it out of gear case.

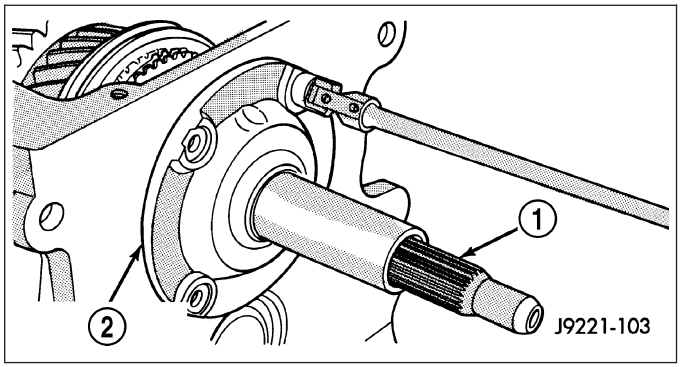

3. Remove front retainer (2) seal (1) by collapsing one side of seal then prying out with seal pick.

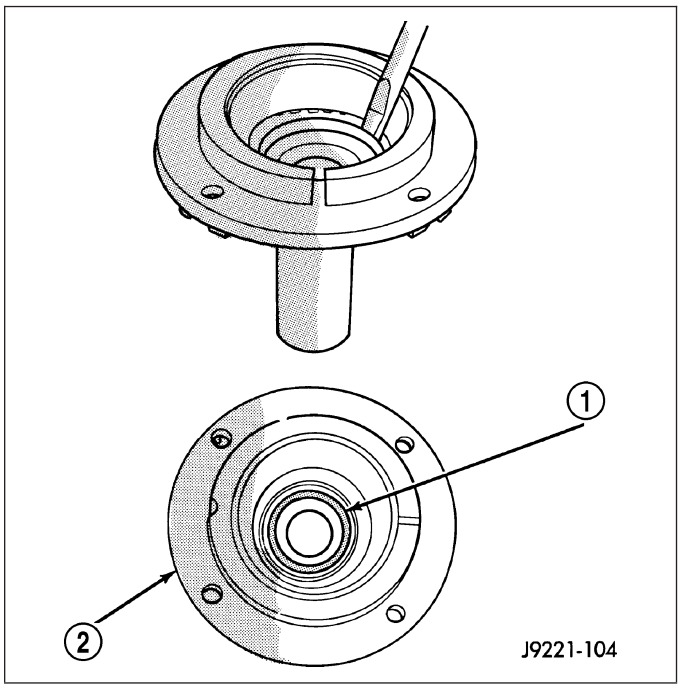

4. Remove front retainer bearing cup with Puller 6444. Assemble Puller Flange 6444-1 (2) and Puller Rods 6444-4 (1). Insert Jaws 6453-1 (3) in puller flange (2). Narrow lip of puller jaws will go under bearing cup.
5. Install Disc C-4487-1 into bearing retainer for Insert 6453-2 to rest upon.

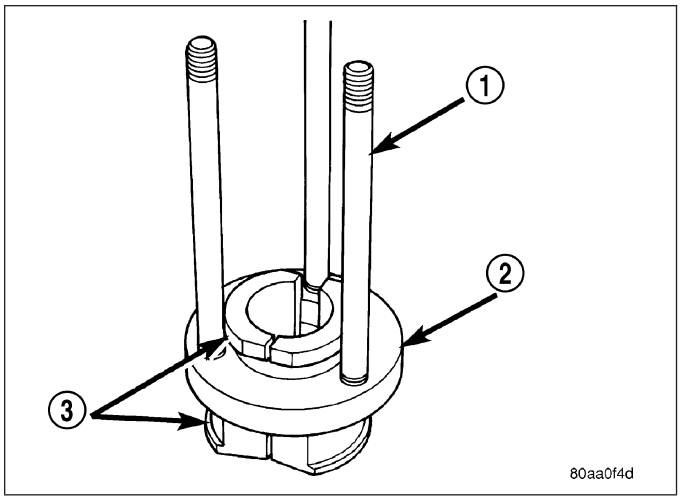

6. Install assembled tools in front retainer (2) with puller jaws seated under bearing cup. Place Insert 6453-2 (1) in center of puller jaws (3), to hold puller jaws in place.

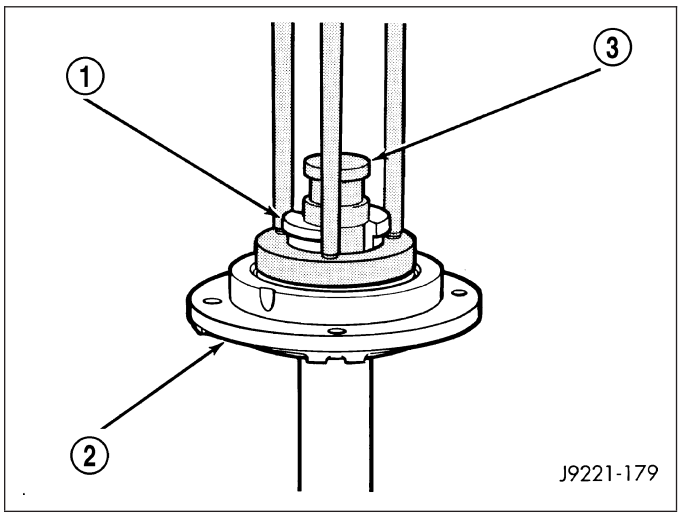

7. Install Puller 6444 (4) on puller rods and install retaining nuts on puller rods. Tighten puller bolt to draw bearing cup out of retainer (3).

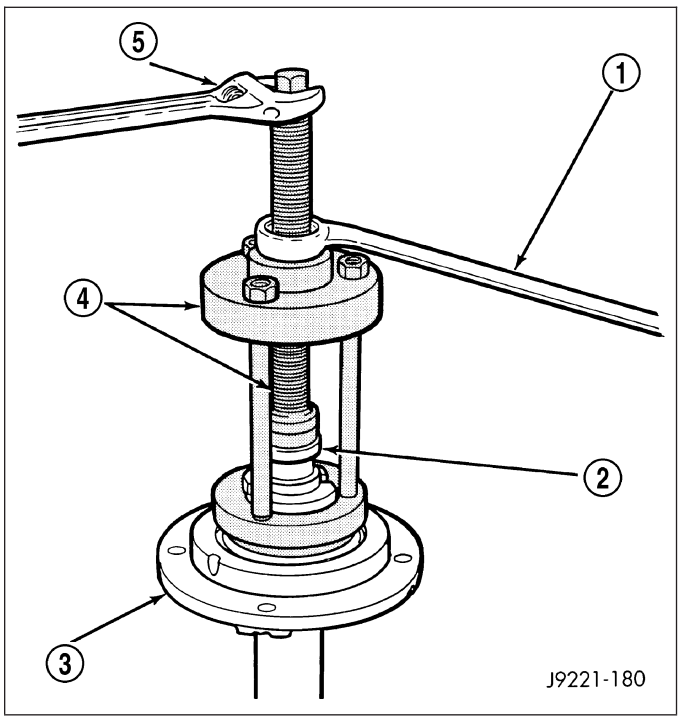

DRIVE GEAR

1. Remove drive gear (2) from mainshaft (1).

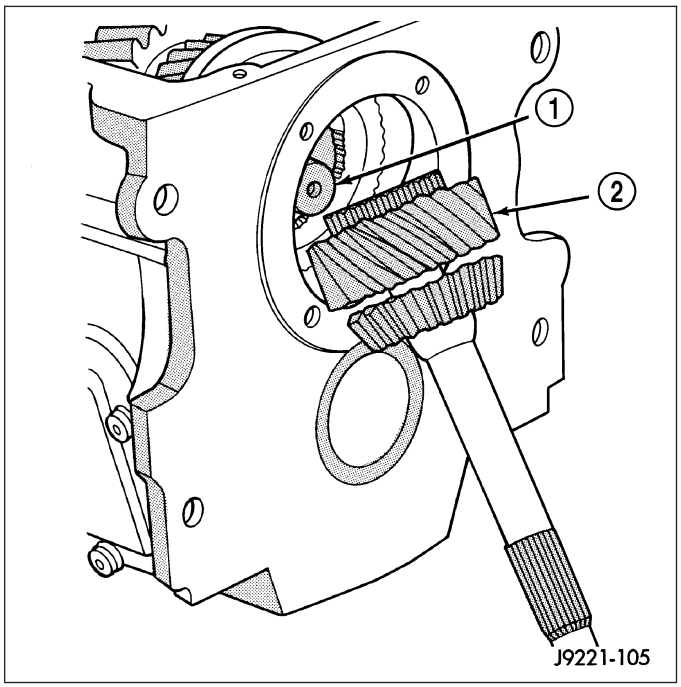

2. Remove pilot bearing (2) from drive gear (1).

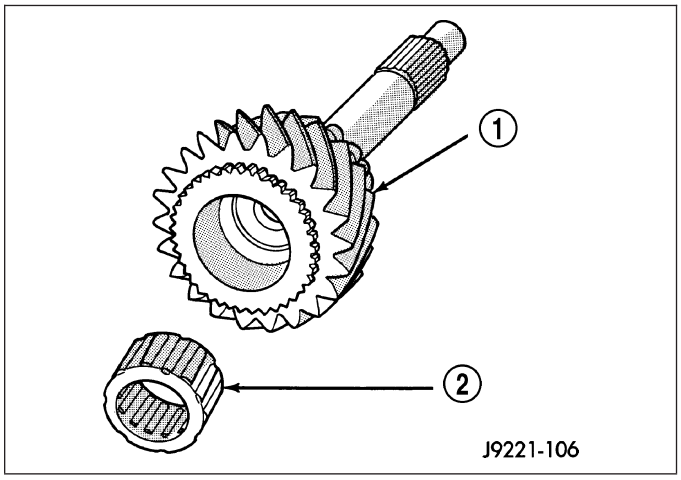

3. Remove tapered bearing from drive gear (6) with Puller Flange 6444-1 (5) and Puller Rods 6444-6 (2).
4. Position first Jaw 6447 (3) on bearing. Slide assembled puller flange and rod tools onto input shaft. Then seat flange in notch of puller jaw.
5. Position second Jaw 6447 on gear and in notch of puller flange. Slide Collar 6444-8 (4) over puller jaws to hold them in place.
6. Install Puller 6444 (1) on puller rods then install retaining nuts. Tighten puller bolt to remove bearing cone from drive gear.

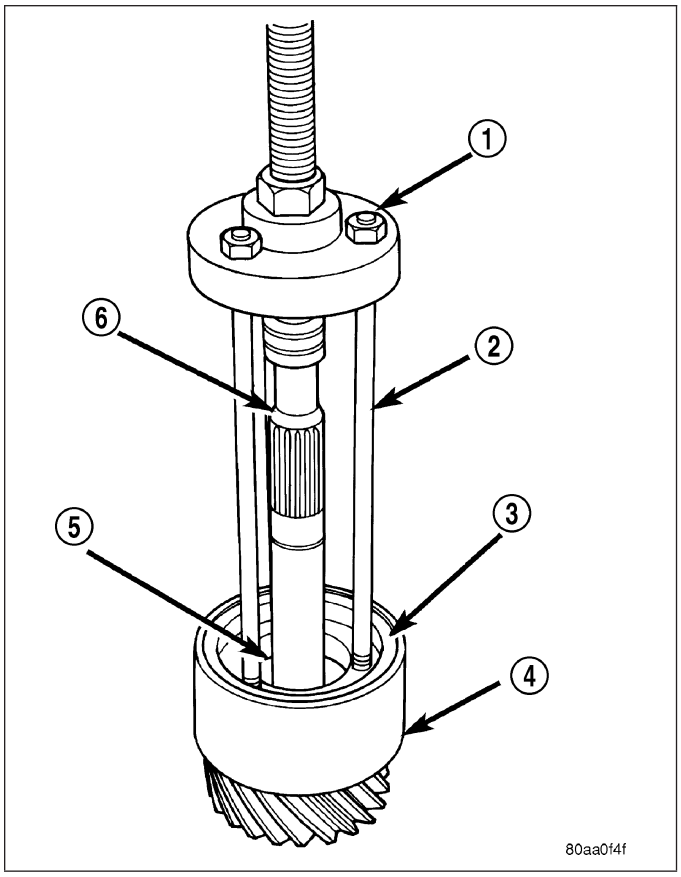

MAINSHAFT AND GEARTRAIN

1. Move 1-2 and 3-4 synchro sleeves into neutral.
2. Remove drive gear thrust bearing (1) from forward end of mainshaft (1).

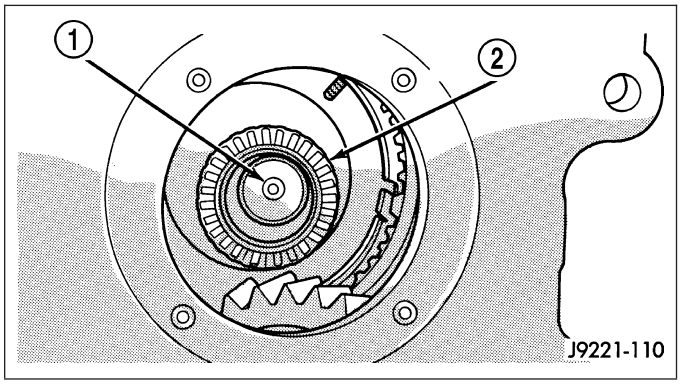

3. Remove fourth gear clutch gear (2) and synchro stop ring (1) from mainshaft.
4. Roll gear case onto left side.

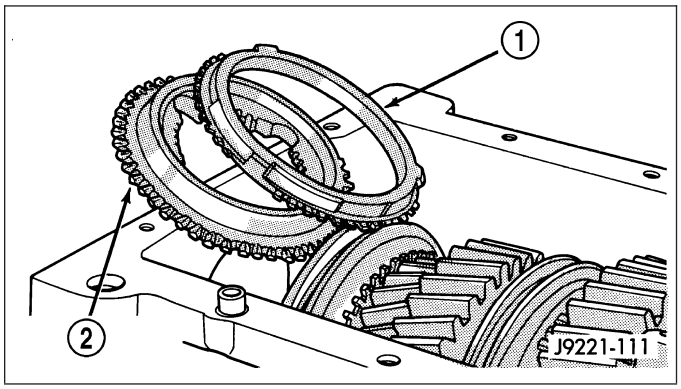

NOTE: Handling mainshaft carefully because gears are lose on the mainshaft.

5. Remove mainshaft assembly (1) by lifting front end of mainshaft slightly. Then grasp mainshaft rear splines and turn spline end of mainshaft counter-clockwise to rotate shaft and geartrain out of case. Tilt mainshaft outward and removed from case.

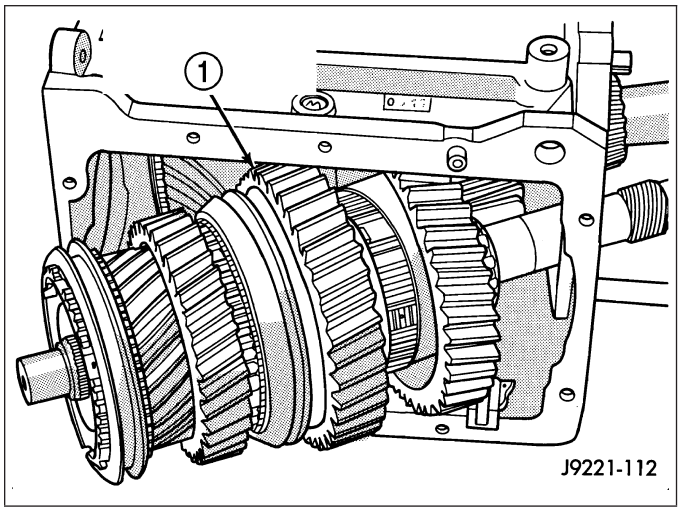

REVERSE IDLER AND COUNTERSHAFT

1. Remove countershaft (2) rear bearing plate (1).

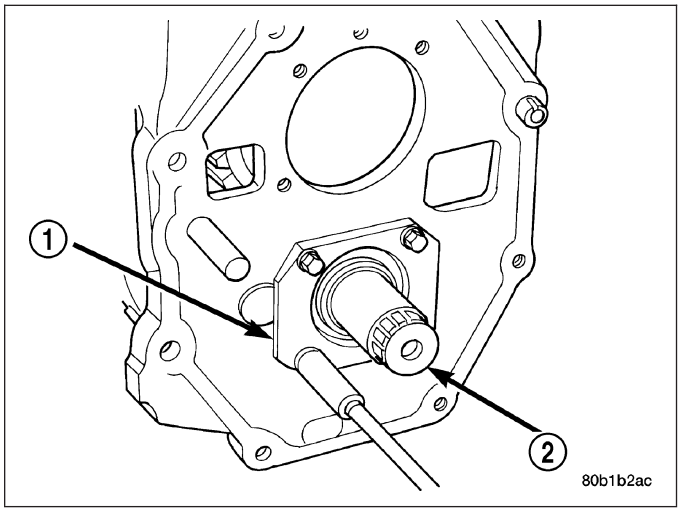

2. Remove countershaft end play shim (2) and rear bearing cup (1).

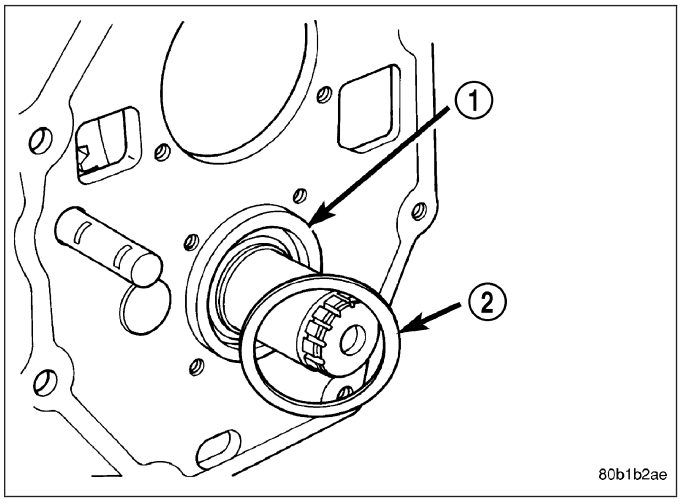

3. Remove reverse idler shaft (1).

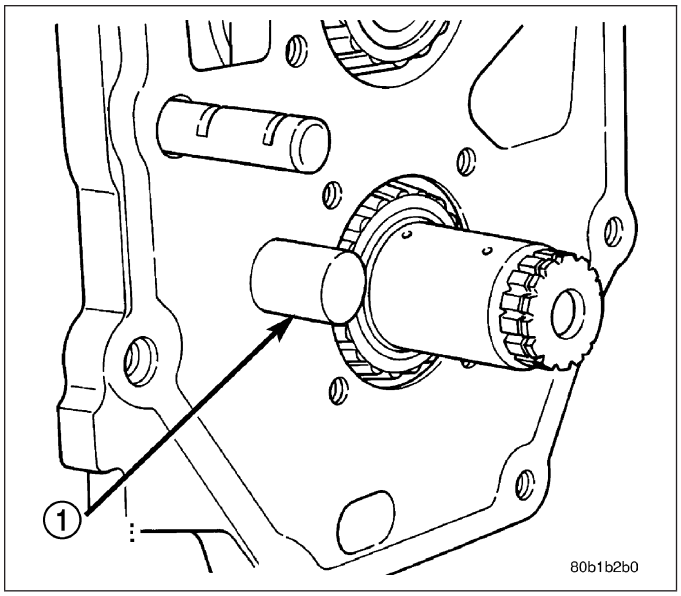

4. Rotate countershaft (2) outward and push reverse idler gear (1) away from countershaft and toward front of case.

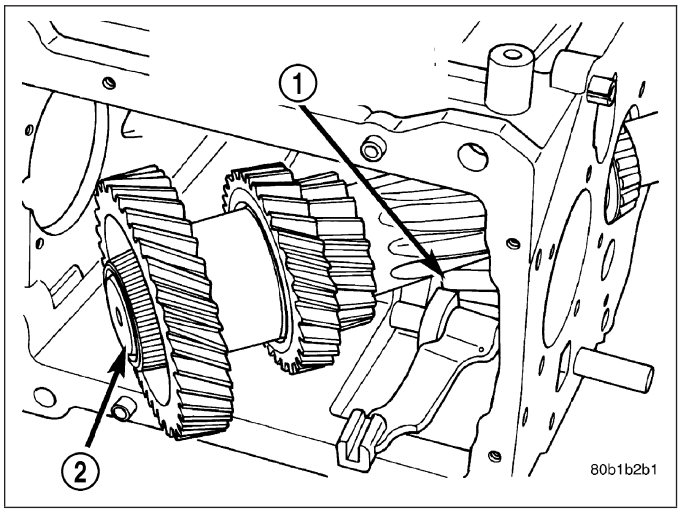

5. Remove idler gear (1).

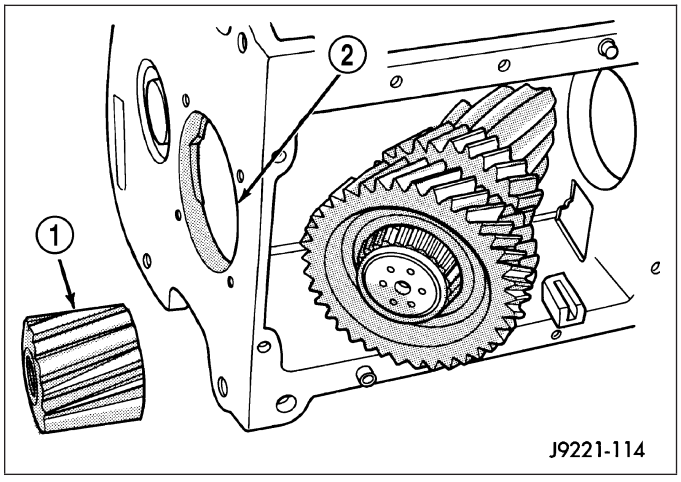

6. Keep reverse idler gear (2) bearings (1) and spacer together. Insert idler shaft through gear and bearings to keep them in place.
7. Remove idler gear thrust washers from gear case. Install washers on idler shaft to keep them together for cleaning and inspection.

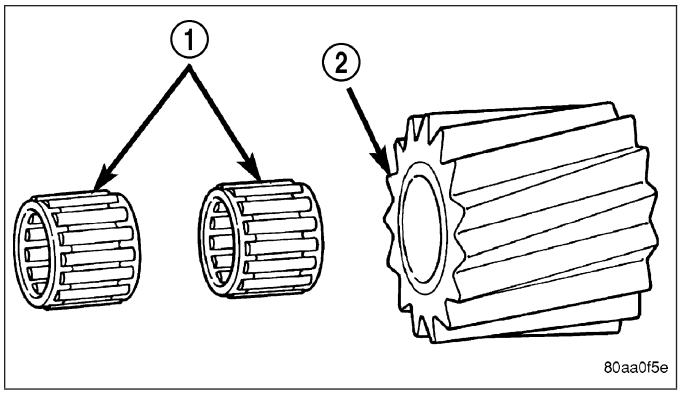

NOTE: Shaft cannot be removed from case until rear bearing has been removed.

8. Remove countershaft rear bearing with Puller Flange 6444-1 and Puller Rods 6444-4.
9. Position first Jaw 6449 (2) on bearing cone and seat puller flange in notch of puller.
10. Install second Jaw 6449 on bearing and in notch of puller flange. Slide Collar 6444-8 (1) over puller jaws.
11. Install Puller 6444 (3) on puller rods, then secure puller to rods with retaining nuts. Tighten puller bolt to remove bearing from shaft. Tap end of puller bolt with copper mallet to help loosen bearing if necessary.

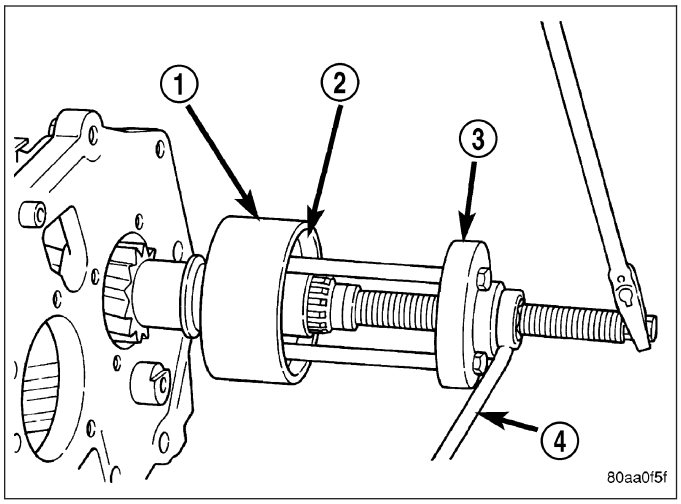

12. Remove bearing puller tools then rotate countershaft (1) out of case.

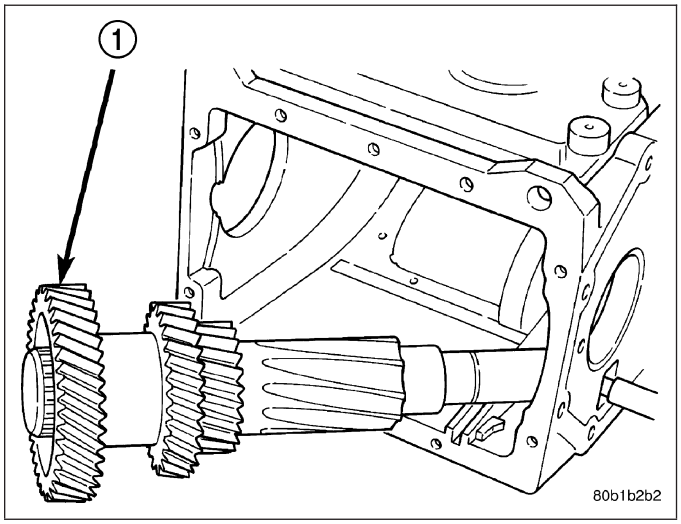

13. Position first Jaw 6451 (1) on countershaft front bearing and seat puller flange in notch of puller jaw.
14. Install second Jaw 6451 on bearing and in notch of puller flange. Slide Collar 6444-8 (2) over puller jaws.
15. Install puller bridge and bolt assembly 6444 on puller bolts and install retaining nuts. Tighten puller bolt to remove bearing from shaft. Tap end of puller bolt with mallet to help loosen bearing.

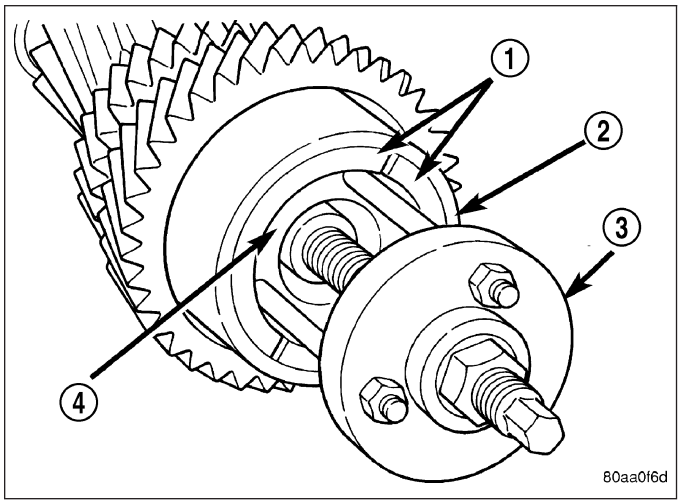

GEAR CASE

1. Remove countershaft front bearing cap (2) with hammer (1).

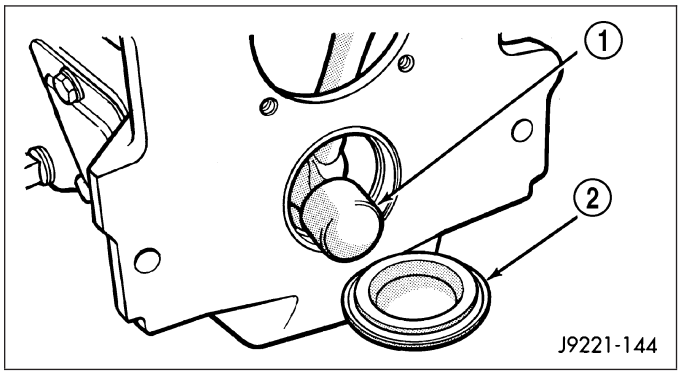

2. Remove countershaft front bearing cup with Remover 6454 (1) and Handle C-4171(2).

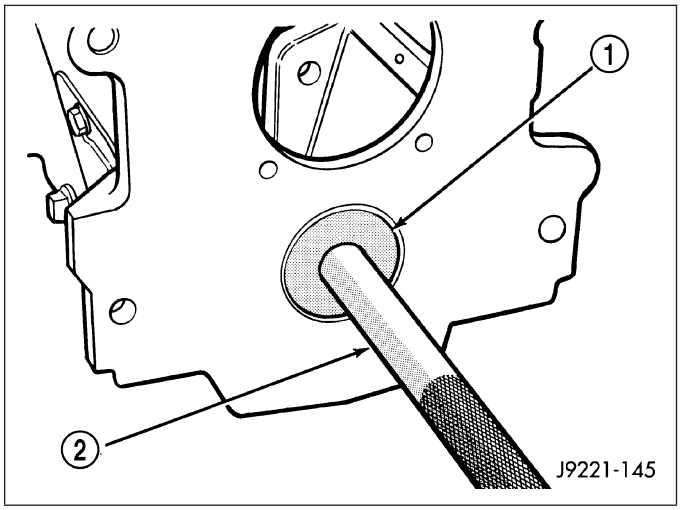

3. Remove roll pin that secures shift lug (4) on shift rail (5) in case. A small pin punch (1) can be modified (2) by putting a slight bend in it to drive pin completely out of shift rail.
4. Remove shift lug rail.

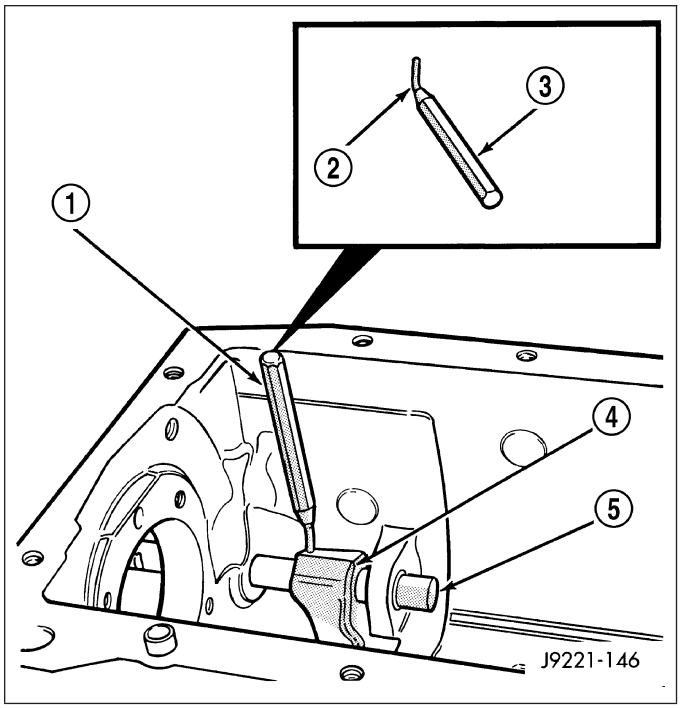

MAINSHAFT

NOTE: Gear and synchro components can be installed backwards. Paint or scribe gear and synchro components for installation reference. Then stack geartrain parts in order of removal.

1. Remove drive gear thrust bearing from end of mainshaft, if not previously removed.
2. Place 3-4 gear in a press with support under 3rd gear and Remove 3-4 synchro hub (3), third gear stop ring (2) and third gear (1) as an assembly.

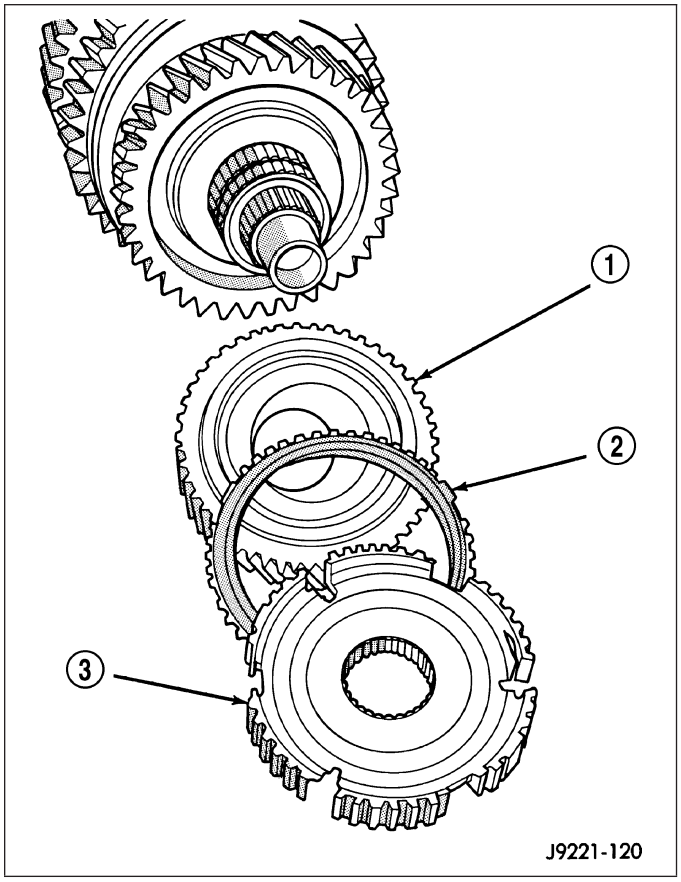

3. Remove third gear bearing (1) from mainshaft.

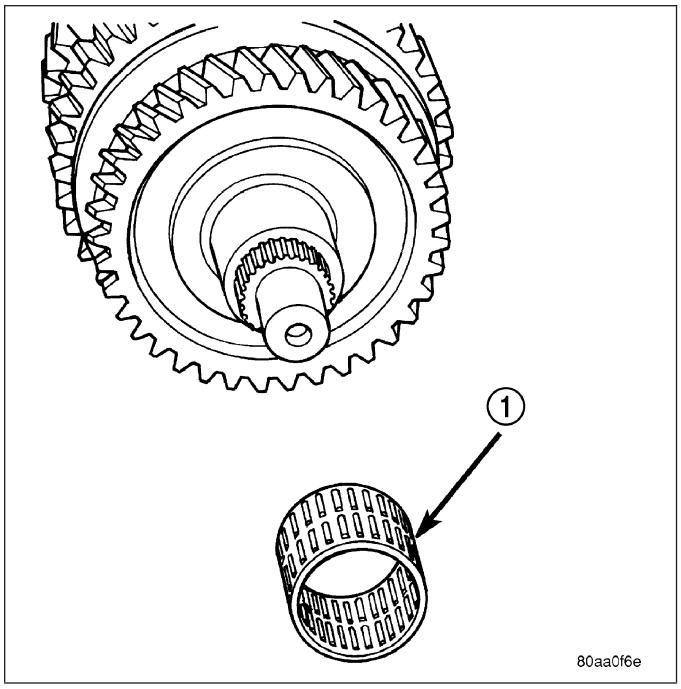

4. Remove third gear bearing spacer (3).
5. Remove second gear thrust washer snap ring (2) from mainshaft

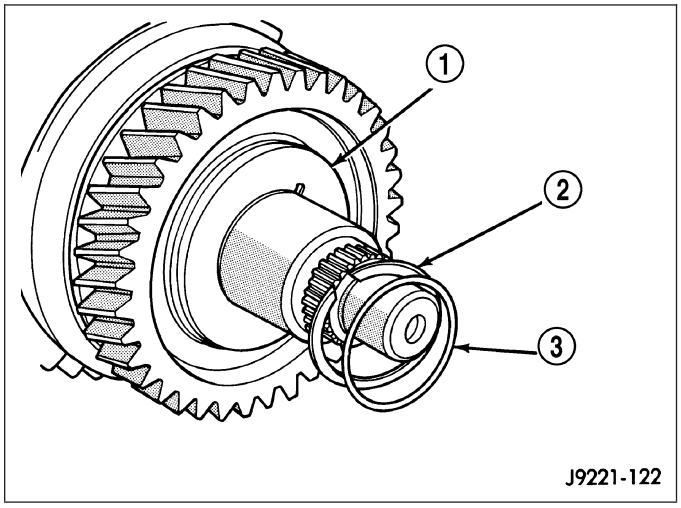

6. Remove second gear (1) thrust washer (2). Note washer notch for locating pin.

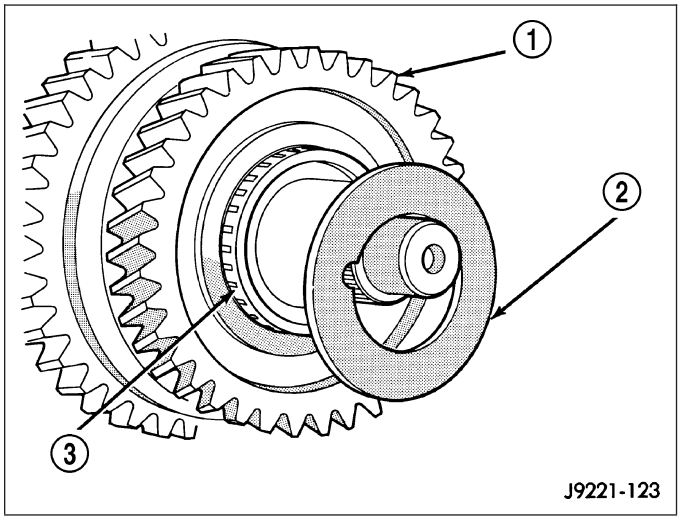

7. Remove thrust washer locating pin (1) with needle nose pliers.

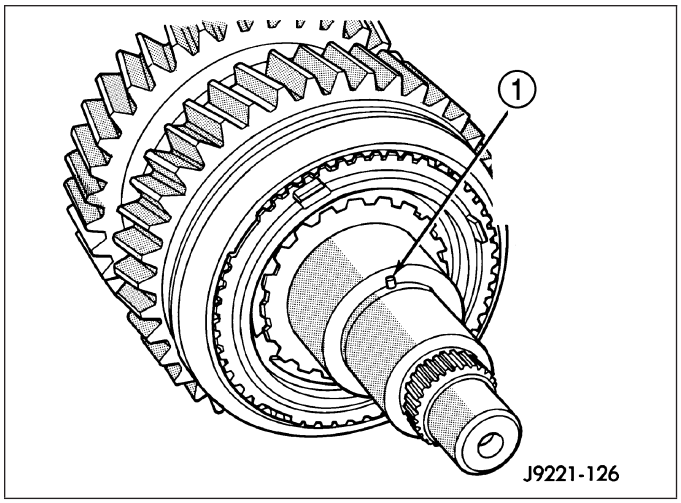

8. Remove second gear (1).

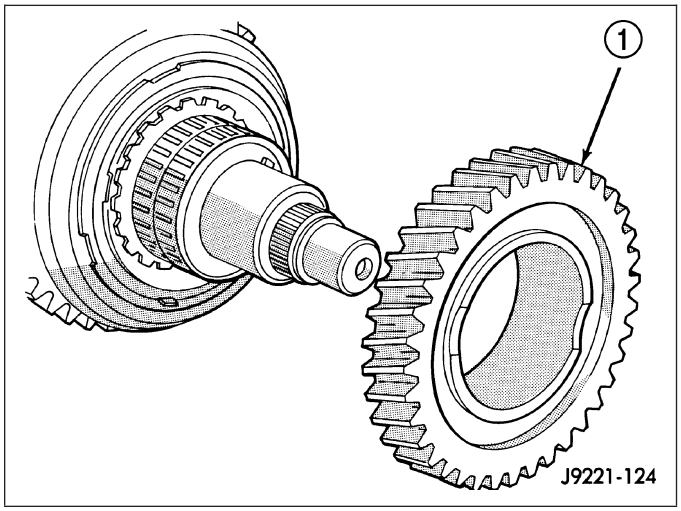

9. Remove second gear bearing (1).

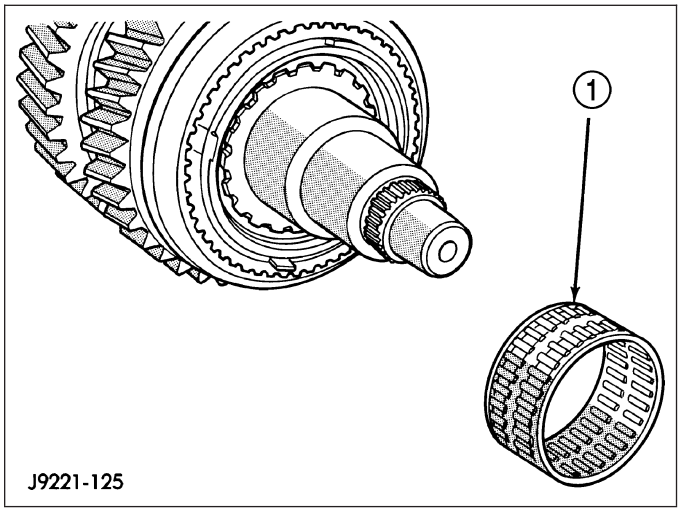

10. Remove second gear clutch cone (3) snap ring (2) from mainshaft synchro hub groove.

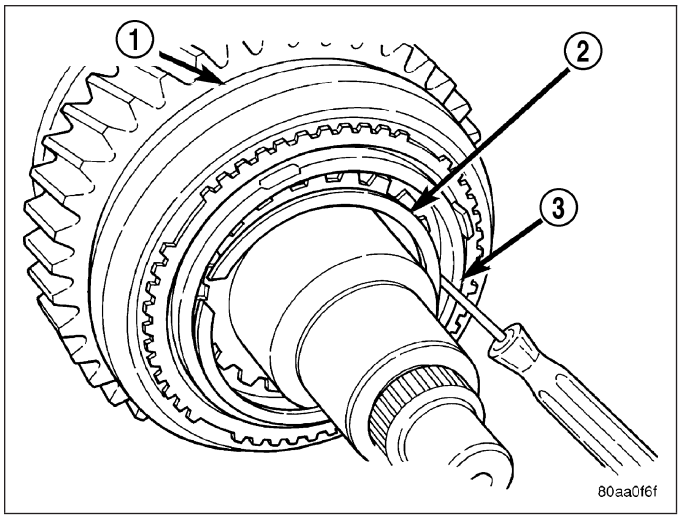

11. Remove second gear clutch cone (4), synchro clutch ring (3) and synchro stop ring (2).

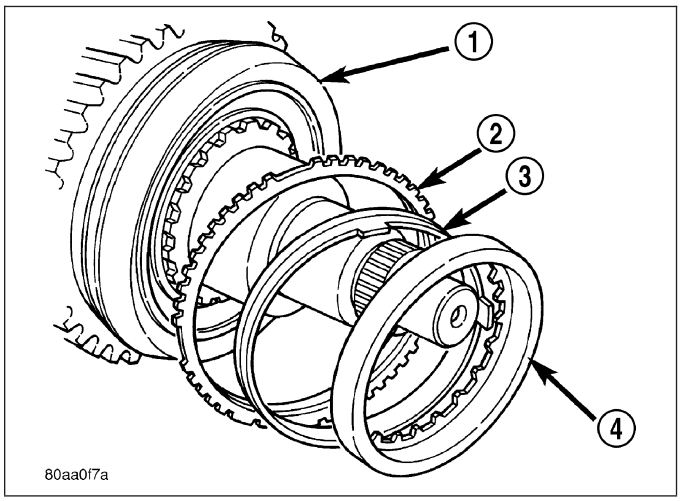

12. Remove 1-2 synchro hub snap ring (1).

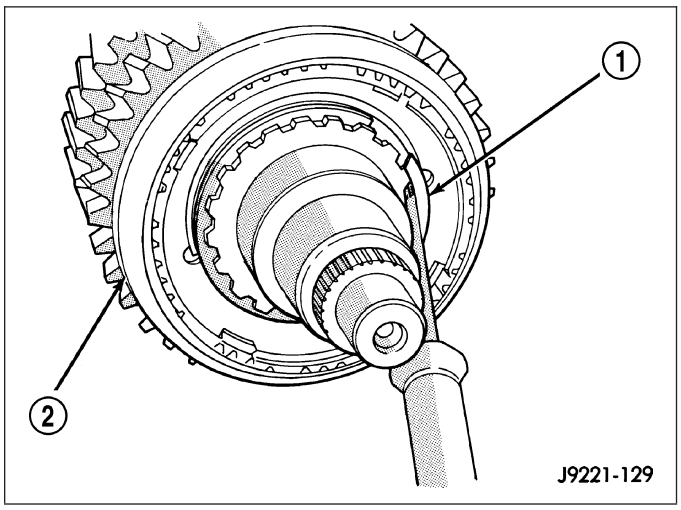

13. Remove 1-2 synchro sleeve, hub (1), struts and springs as an assembly. Tapered side of sleeve also goes toward front. Do not disassemble synchro components unless worn or damaged.

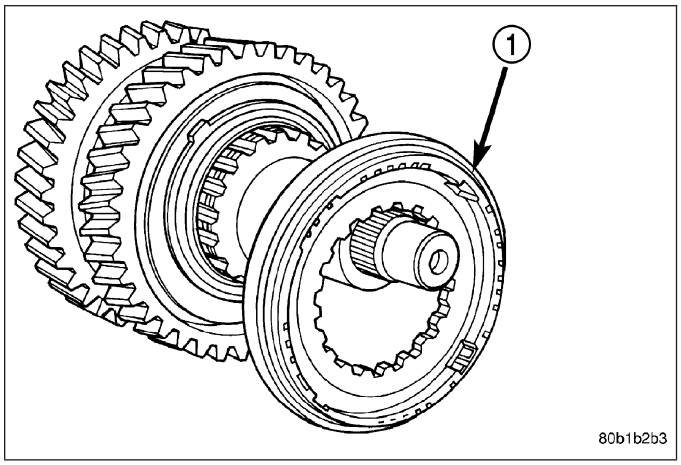

14. Remove first gear synchro stop ring (2) and clutch ring (1).

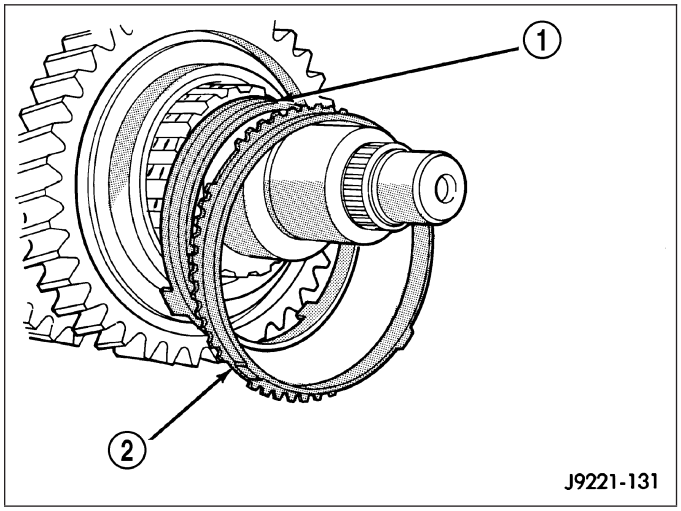

15. Remove first gear (1) clutch cone front snap ring (2) from mainshaft hub.

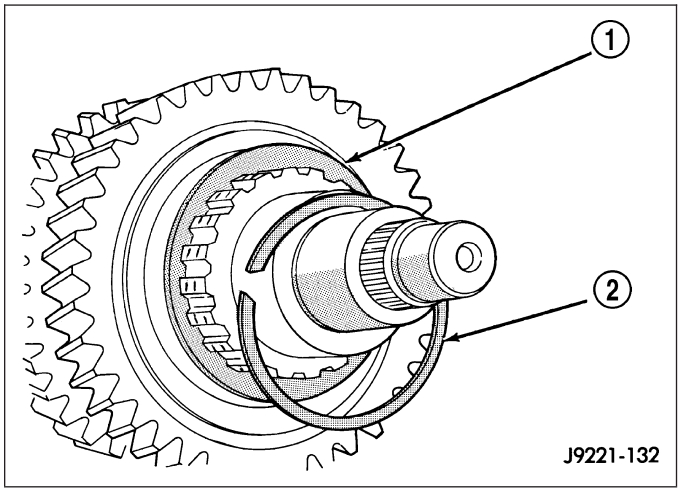

16. Remove first gear clutch cone.

NOTE: Do not remove this snap ring unless mainshaft is being replaced.

17. Remove first gear clutch gear (2) rear snap ring (1) from mainshaft hub.

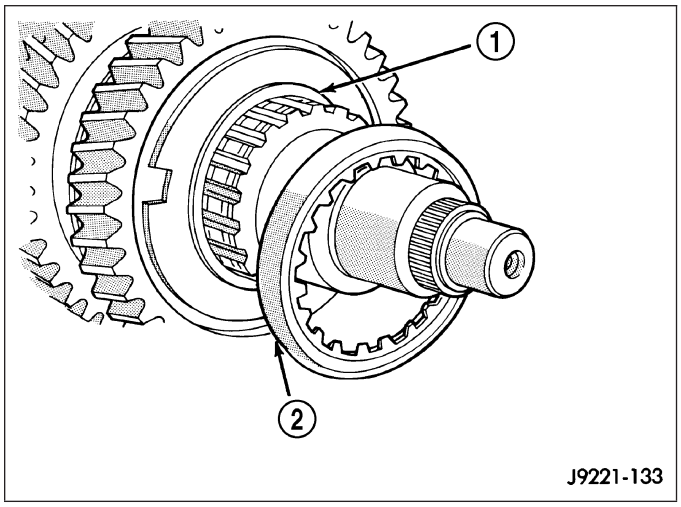

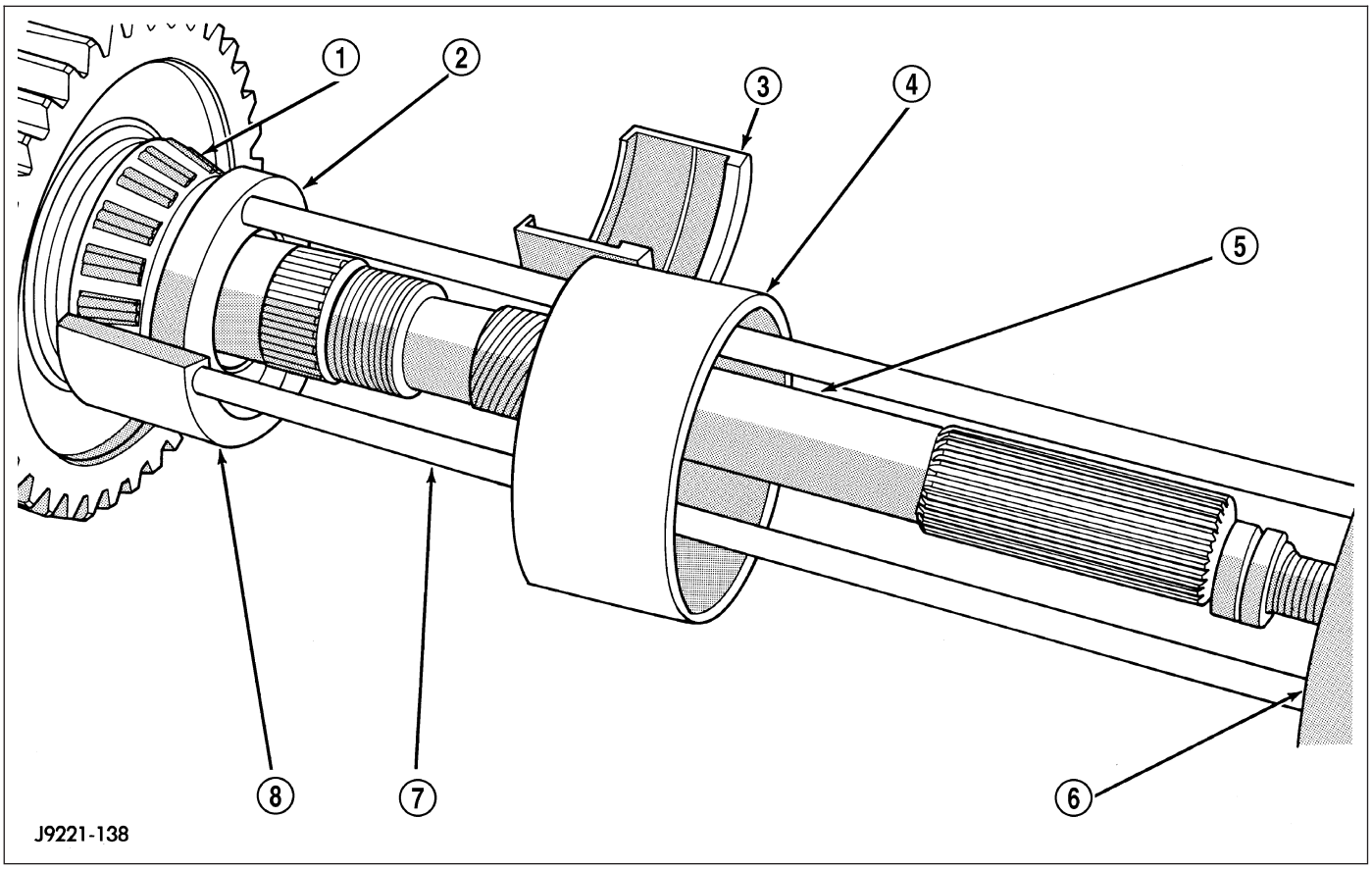

18. Remove mainshaft (5) rear bearing (1), with Puller Flange 6444-1 (6) and Puller Rods 6444-3 (7) for 4X2 or 6444-4 for 4X4.
19. Position the first Jaw 6445 (3) on the bearing cone and seat Puller Flange 6444-1(2) in notch of jaw.
20. Install second Jaw 6445 on the bearing cone and puller flange. Slide Collar 6444-8 (4) over jaws.

21. Install Puller 6444 (5) on the puller rods (8) and secure with nuts. Tighten puller bolt to the remove bearing.
22. Remove bearing puller tools and rear mainshaft bearing from output shaft.

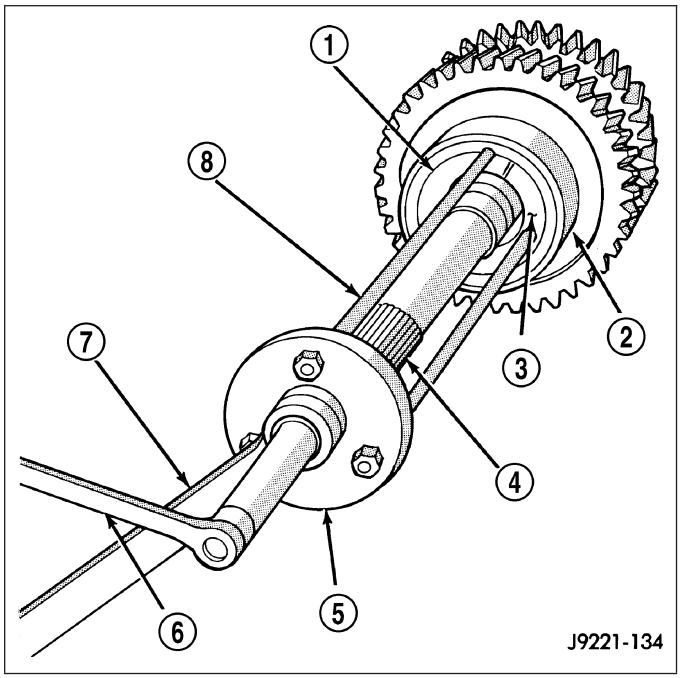

23. Remove reverse gear (1) thrust washer (2).

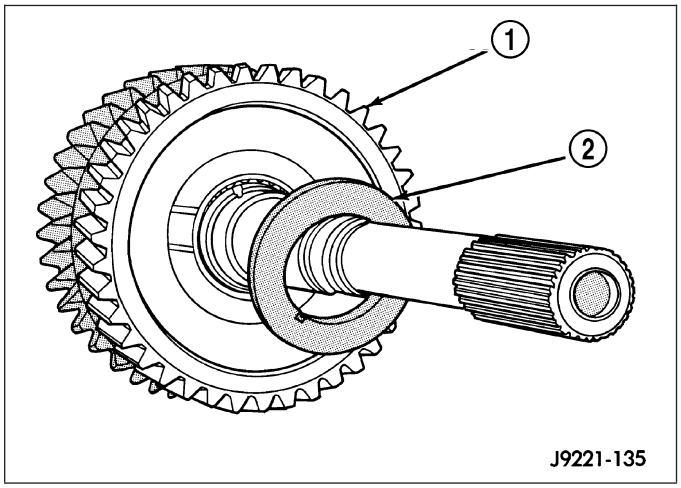

24. Remove reverse gear and synchro components as assembly (2).

CAUTION: Do not disassemble synchro components unless damaged. If synchro sleeve or struts require service, mark position of sleeve on hub before removal. Correct sleeve position is important as sleeve can be installed backwards causing shift problems.

25. Remove reverse gear bearing assembly (3) from mainshaft.

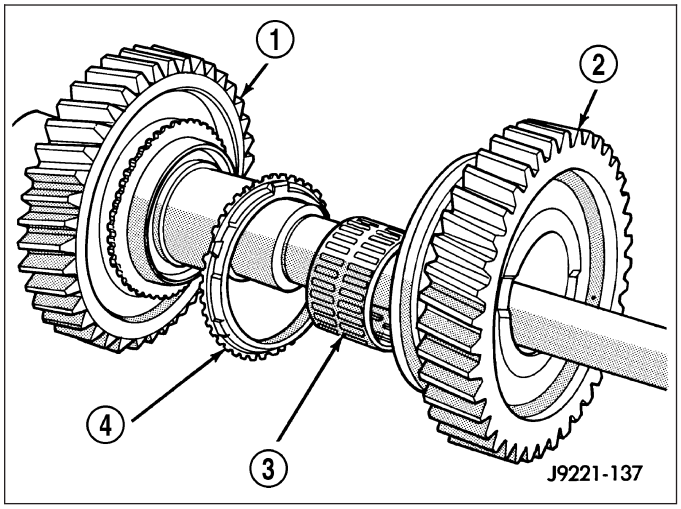

26. Remove reverse gear bearing spacer (2) from mainshaft.
27. Remove reverse clutch gear snap ring (1) with heavy duty snap ring pliers.

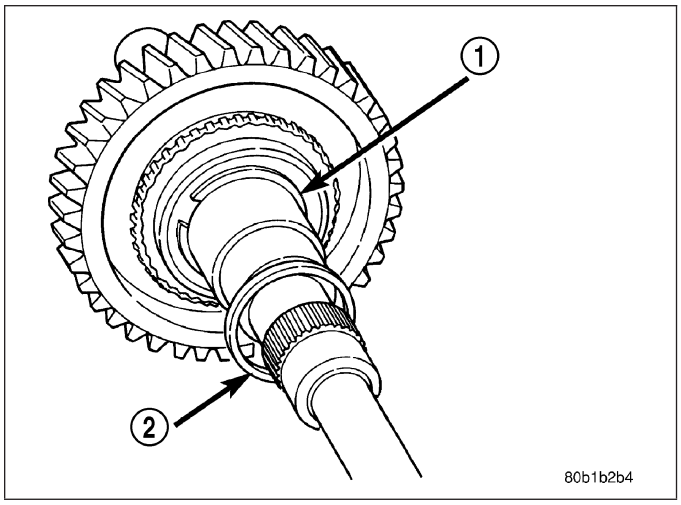

28. Remove reverse clutch gear (1).

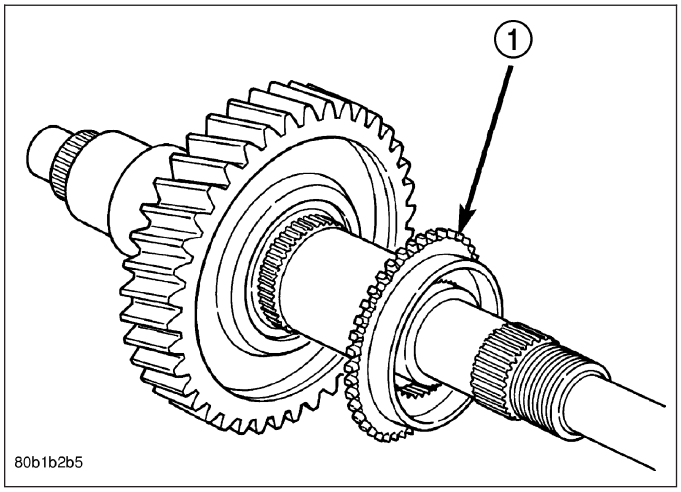

29. Remove first gear (1) from bearing and mainshaft.

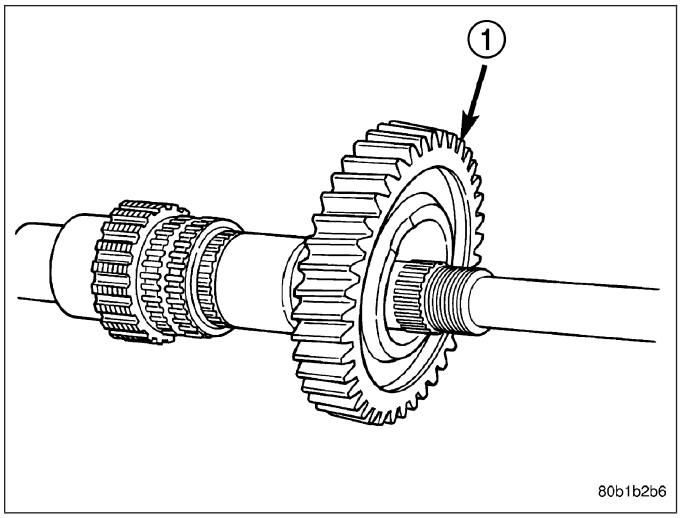

30. Remove first gear bearing (2) from mainshaft (1).

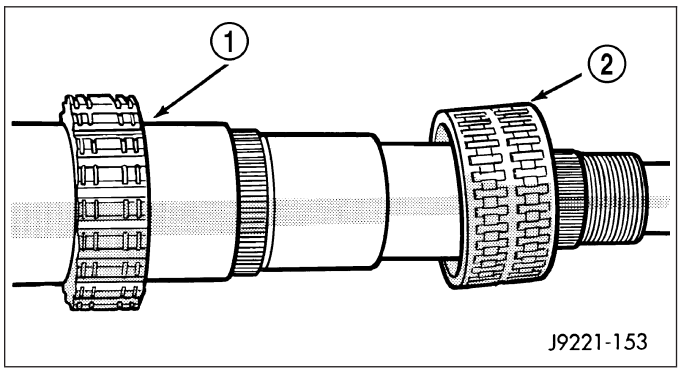

CLEANING

Clean the gears, shafts, shift components and transmission housings with a standard parts cleaning solvent. Do not use acid or corrosive base solvents. Dry all parts except bearings with compressed air.

Clean the shaft bearings with a mild solvent such as Mopar degreasing solvent, Gunk or similar solvents. Do not dry the bearings with compressed air. Allow the bearings to either air dry or wipe them dry with clean shop towels.

INSPECTION

NOTE: Minor corrosion, nicks, or pitting can be smoothed with 400 grit emery and polished out with crocus cloth.

Inspect the reverse idler gear, bearings, shaft and thrust washers. Replace the bearings if the rollers are worn, chipped, cracked, flat-spotted or brinnelled. Replace the gear if the teeth are chipped, cracked or worn thin.

Inspect the front bearing retainer and bearing cup. Replace the bearing cup if scored, cracked, brinnelled or rough. Check the release bearing slide surface of the retainer carefully. Replace the retainer if worn or damaged in any way.

Inspect mainshaft bearing surfaces, splines, snap ring grooves and threads. Replace the shaft if any surfaces exhibit considerable wear or damage.

Inspect the countershaft and bearings. Replace the shaft if any surfaces exhibit considerable wear or damage.

Inspect shift forks for wear and distortion. Check fit of the sleeve in the fork to be sure the two parts fit and work smoothly. Replace the fork if the roll pin holes are worn oversize or damaged. Do not attempt to salvage a worn fork. Replace shift fork roll pins if necessary or if doubt exists about their condition.

The all bearings for wear, roughness, flat spots, pitting or other damage. Replace the bearings if necessary.

Inspect the blocker rings and fiction cones. replace either part if worn or damaged in any way. Replace if the friction material is burned, flaking off or worn.

Inspect synchro components wear or damage. Replace parts if worn, cracked or distorted.

Inspect all of the thrust washers and locating pins. Replace the pins if bent or worn. Replace the washers if worn or the locating pin notches are distorted.

Inspect the case and housing/adapter sealing and mating surfaces are free of burrs and nicks. Inspcet the alignment dowels in the case top surface and in the housing/adapter are tight and in good condition. Replace the gear case or housing/adapter if cracked or broken.

ASSEMBLY

COUNTERSHAFT AND REVERSE IDLER GEAR

NOTE: Gaskets are not used in the transmission. Use Mopar Silicone Sealer or equivalent on all gear case and extension housing sealing surfaces.

1. Install countershaft front bearing cup in case with Handle C-4171 and Installer 6061-1.
2. Install front bearing (1) on countershaft with Installer C-4340 (2).

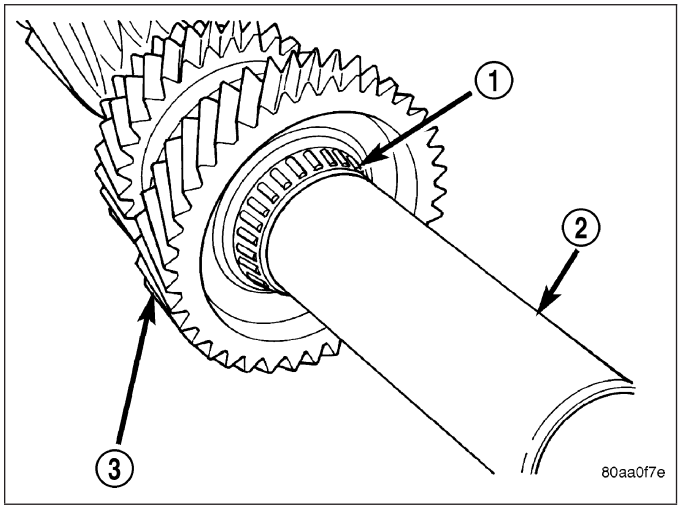

3. Lubricate countershaft front bearing cup and cone with petroleum jelly.
4. Position gear case (1) on end with rear of case facing up.
5. Install countershaft (2) in gear case. Do not install rear countershaft bearing on countershaft at this time.

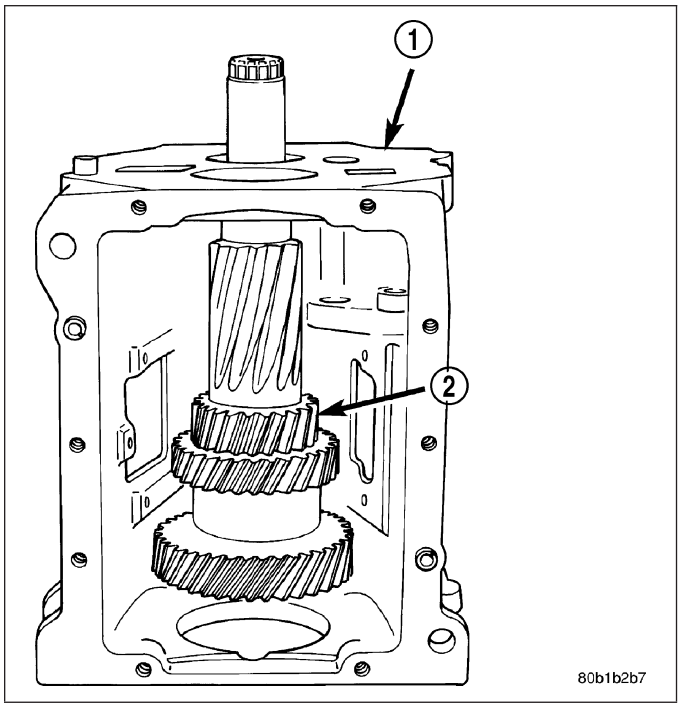

6. Lubricate reverse idler gear bearings with petroleum jelly and install first bearing and second bearing.
7. Install idler gear front thrust washer (1) on boss in gear case. Coat thrust washer with liberal quantity of petroleum jelly to hold it in place.

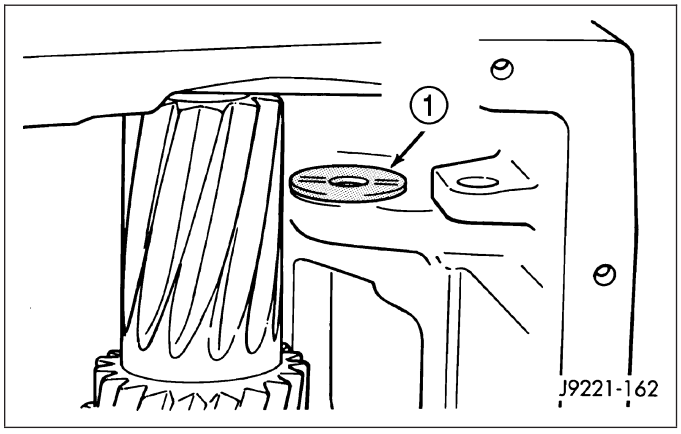

8. Install reverse idler gear (2) in case.
9. Install idler gear rear thrust washer (1) between idler gear and case boss.
10. Align idler gear bearings and thrust washers with a drift.

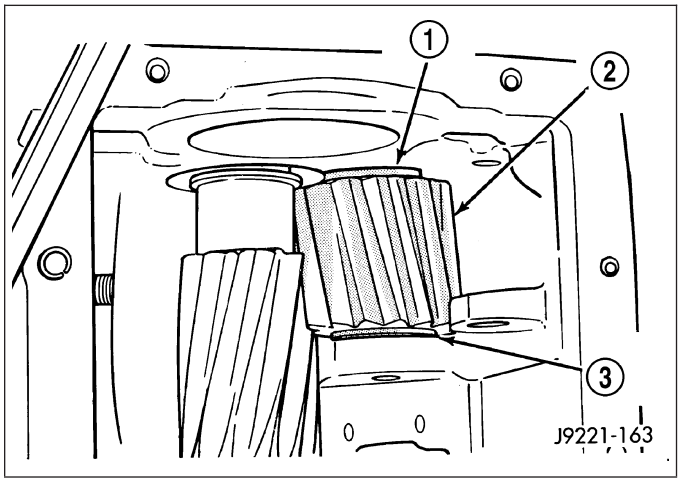

11. Install reverse idler shaft (3) with notched (2) end of shaft facing countershaft (1).

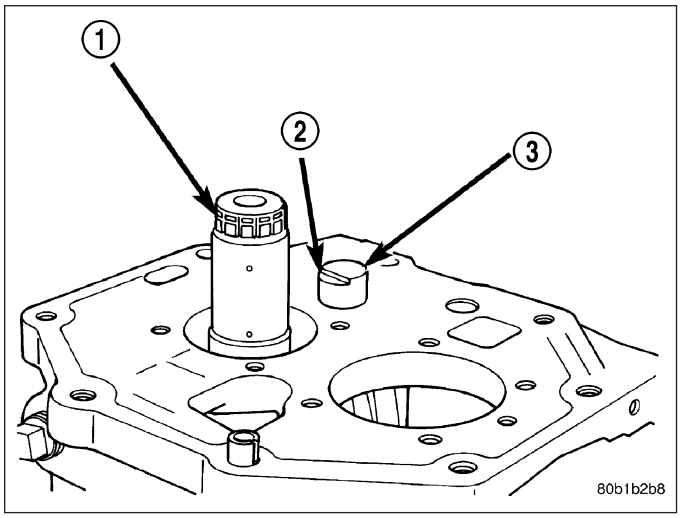

12. Lift countershaft (1) upward and position wood block (2) between front of shaft and case.

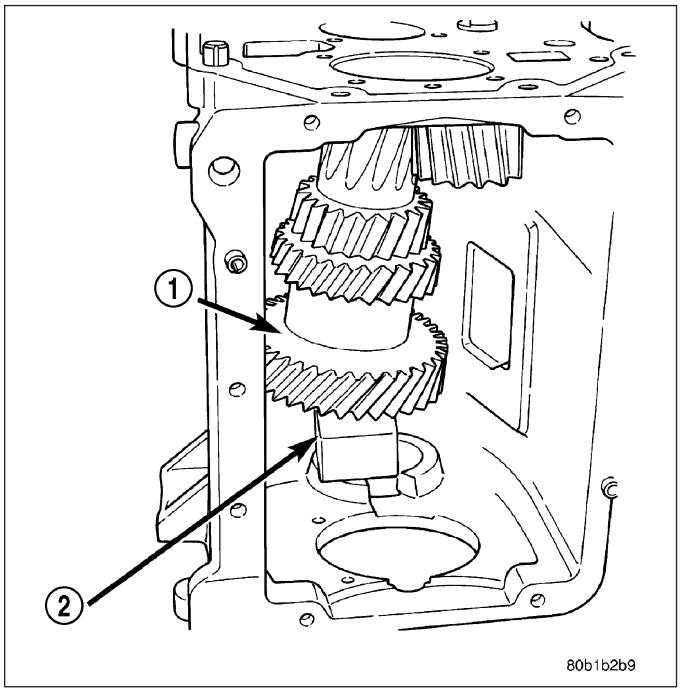

13. Install rear bearing (2) on countershaft (3) with Installer C-4040 (1).
14. Remove wood block from under countershaft and lower countershaft front bearing into front bearing cup.
15. Lubricate countershaft rear bearing cup and cone with petroleum jelly.

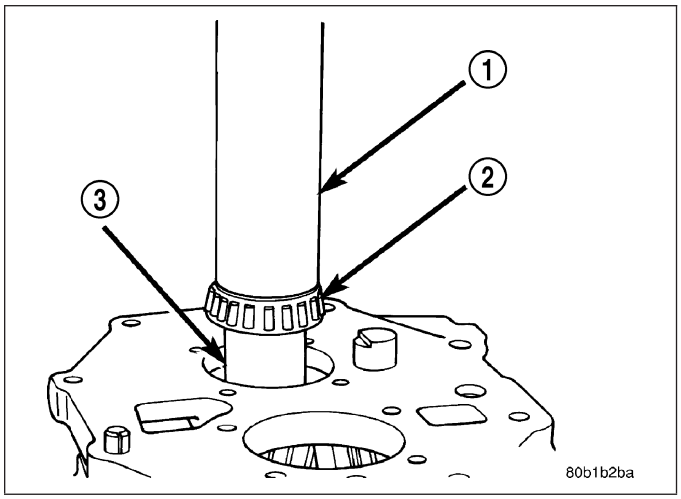

16. Install countershaft rear bearing cup (1) in gear case and over rear bearing. Tap cup into place with plastic mallet if necessary.

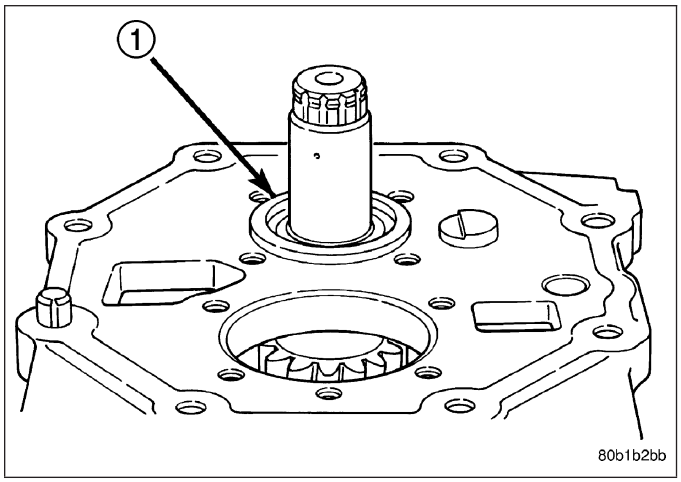

17. Install countershaft (1) rear bearing plate (2). Verify plate is seated in notch in reverse idler shaft before tightening bearing plate bolts.

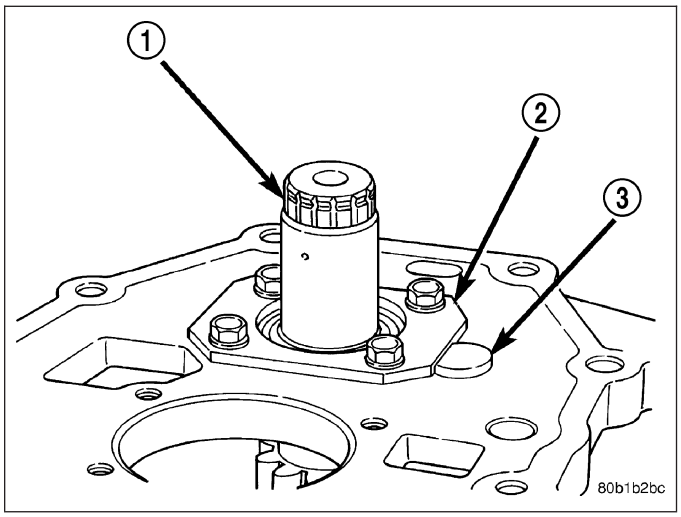

18. Apply Mopar silicone adhesive/sealer or equivalent to flange and lip of **new** front bearing cap (1). Install cap in gear case with Handle C-4171 and Installer C-3972-A.

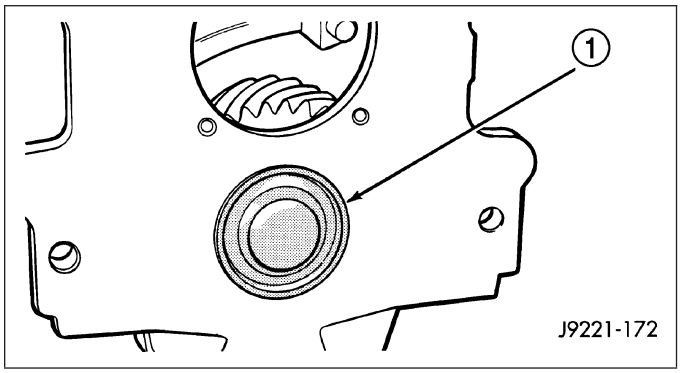

COUNTERSHAFT END PLAY

1. Rotate countershaft 4-5 times to seat bearings.
2. Mount dial indicator (1) on case. Then position indicator plunger on end of countershaft (2) and zero dial indicator.
3. Raise countershaft with screwdriver and note end play reading on dial indicator. End play should be 0.051 - 0.15 mm (0.002 - 0.006 in.).
4. Remove countershaft rear bearing plate.

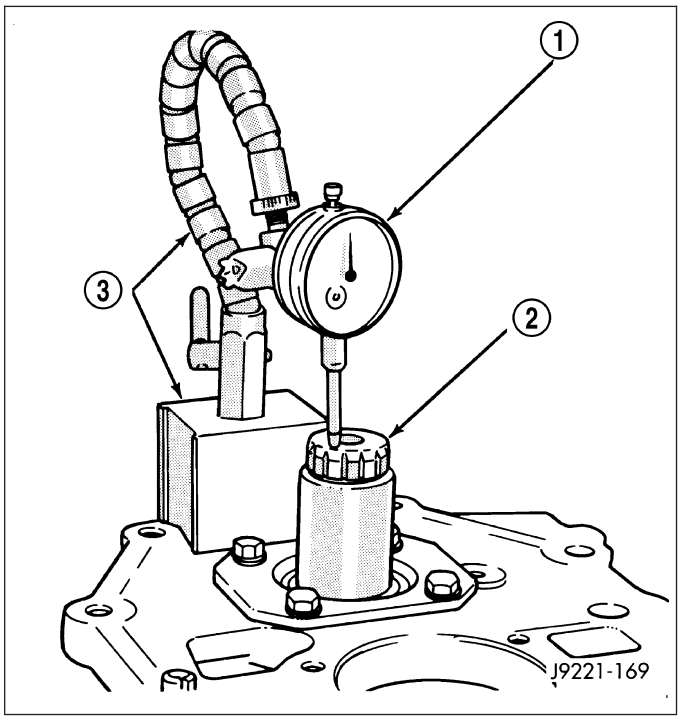

5. Install a end play shim (2) that will provide minimum countershaft end play. Position shim on rear bearing cup (1).
6. Install countershaft rear bearing plate. Verify plate is seated in reverse idler shaft notch and end play shims are still in position before installing bolts.
7. Apply 1-2 drops Mopar Loc N' Seal or equivalent to threads of rear bearing plate bolts. Then install and tighten bearing plate bolts to 23 N·m (200 in. lbs.).

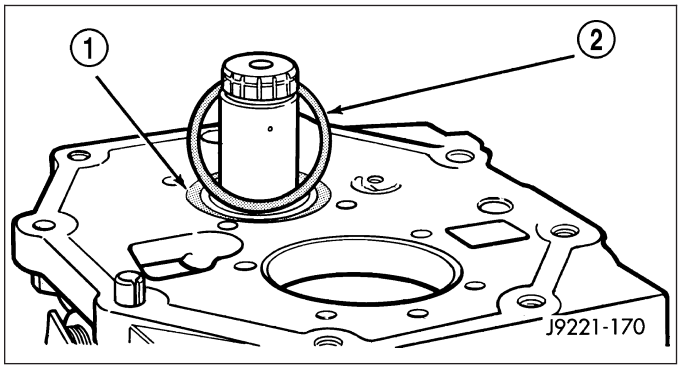

SHIFT LUG AND RAIL

1. Lubricate shift lug and rail with Castrol® Syntorq or equivalent.
2. Insert shift lug rail (2) part way into case.
3. Install shift lug (4) on rail.
4. Position shift rail so roll pin notches (1) are toward outside of case.
5. Install roll pin (3) that secures lug to rail.

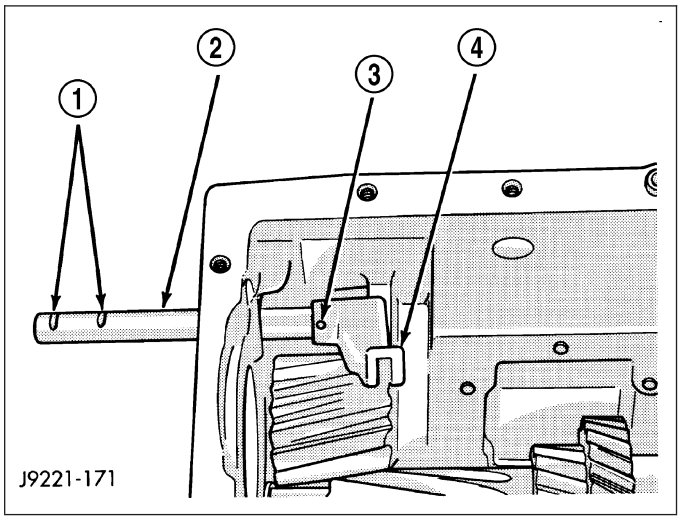

MAINSHAFT AND GEARTRAIN

CAUTION: The reverse, 1-2 and 3-4 synchro components can be assembled and installed incorrectly. Follow assembly procedures for component identification and location.

Lubricate mainshaft bearing surfaces and all bearing assemblies with Castrol® Syntorq or with petroleum jelly.

1. Install first gear clutch gear snap ring (1) in rear most groove of mainshaft hub (3).

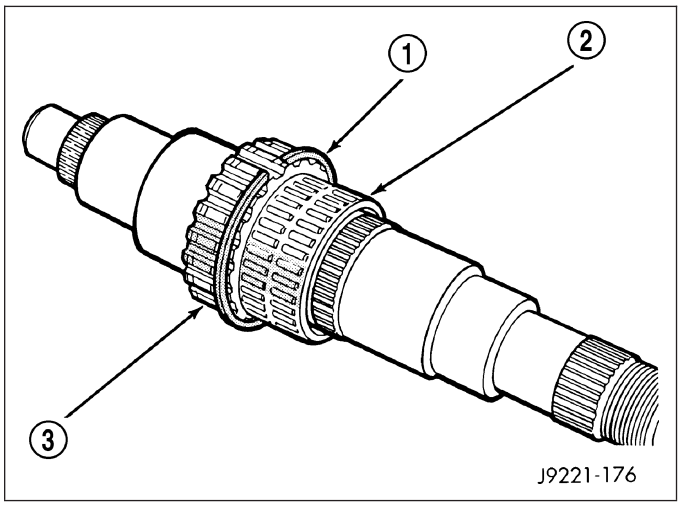

2. Install first gear clutch cone (2) on mainshaft 1-2 synchro hub (1) with recessed side of cone facing front. Verify cone is seated against snap ring on hub.

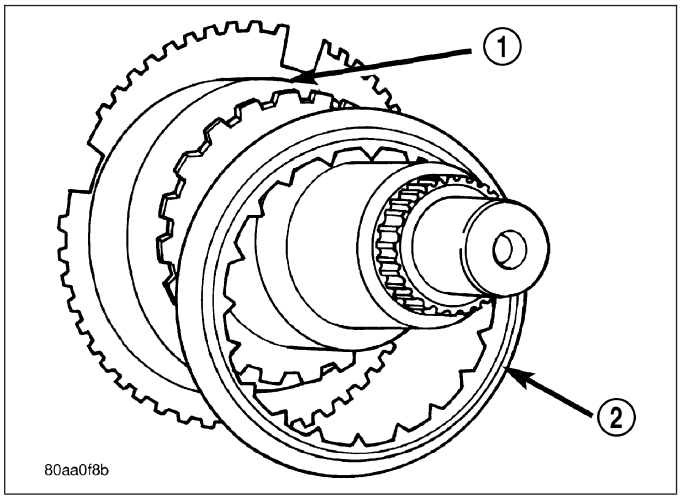

3. Install snap ring (3) on mainshaft 1-2 synchro hub (2) to secure clutch cone (1). Verify snap ring is seated in hub groove and against clutch cone.
4. Support mainshaft in upright position to install remaining gears, snap rings and synchro components. Shaft can be supported in gear case or hole can be cut in workbench to support shaft.

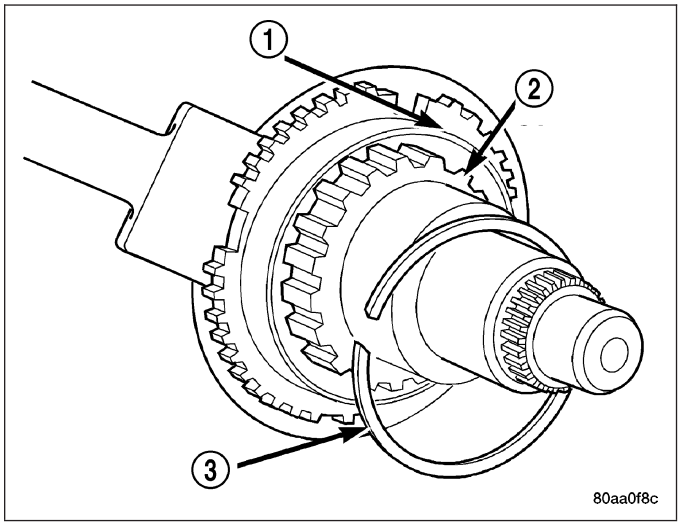

If 1-2 synchro hub (2) and sleeve (1) were disassembled for service, reassemble hub, sleeve, struts and springs as follows:

5. Align and install sleeve on hub. Rotate sleeve until it slides onto hub. Sleeve only fits one way and will easily slide onto hub when long slot in sleeve, aligns with long shoulder on hub.

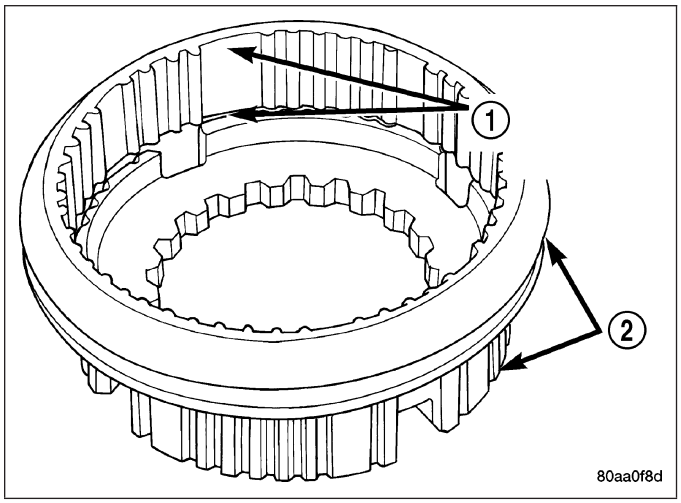

6. Place wood blocks (1) under hub (2) that will raise hub about 3.5 cm (1.375 in.) above surface of workbench. Then allow sleeve to drop down on hub.
7. Install springs and struts in hub (4). Use lots of petroleum jelly to hold them in place. Then compress struts with your fingers and move sleeve (3) upward until struts are started in sleeve. Verify that struts are engaged in sleeve before proceeding.
8. Turn synchro assembly upright. Then move sleeve into neutral position on hub and work struts into sleeve at same time. Be sure struts are seated and springs are not displaced during assembly.

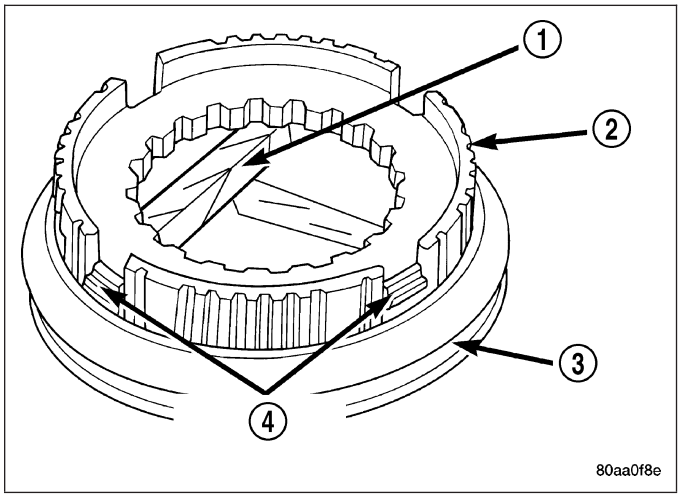

9. Install first gear stop ring in 1-2 synchro hub and sleeve. Verify stop ring is seated and engaged in hub and sleeve.

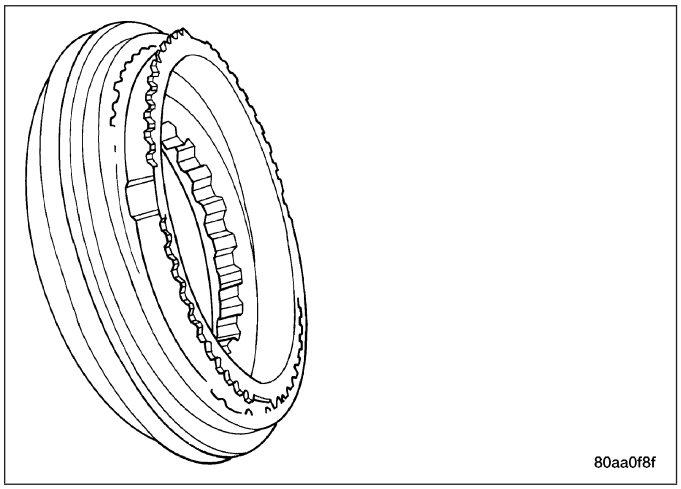

10. Install 1-2 synchro assembly (2) and stop ring on mainshaft with the taper on the sleeve (3) facing forward.

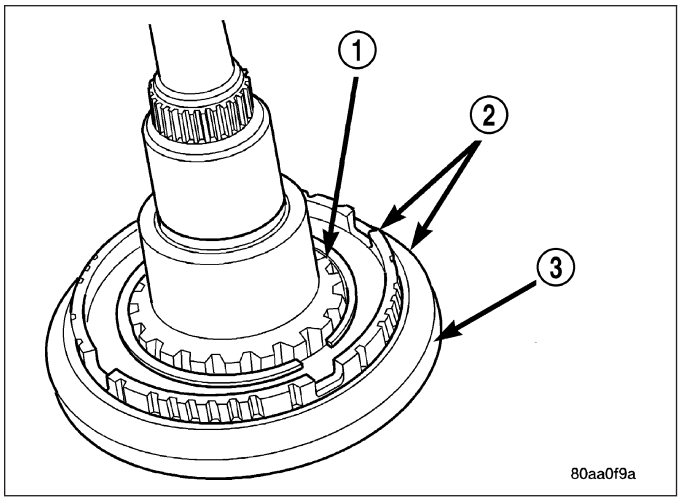

11. Install snap ring (1) that secures 1-2 synchro (2) on mainshaft hub (3). Verify snap ring is seated in groove in mainshaft hub.

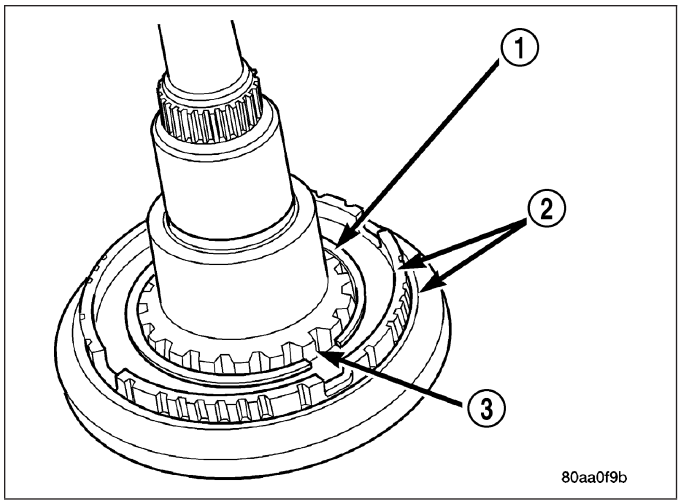

12. Assemble second gear clutch cone (3), clutch ring (2) and stop ring (1).

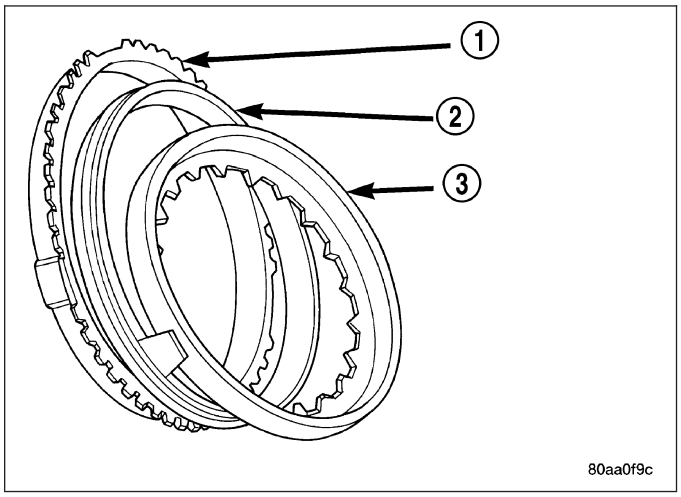

13. Install assembled second gear clutch cone (1) and rings (2) (3) on mainshaft and in 1-2 synchro hub.

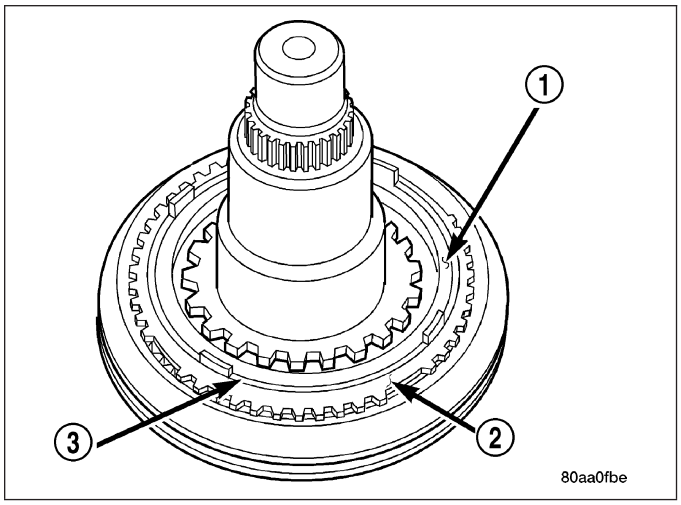

14. Install snap ring (3) that secures second gear clutch cone (4) on mainshaft (2) Use narrow blade screwdriver (1) to work snap ring into hub groove as shown. If snap ring will not fit in groove, clutch cone is slightly misaligned.

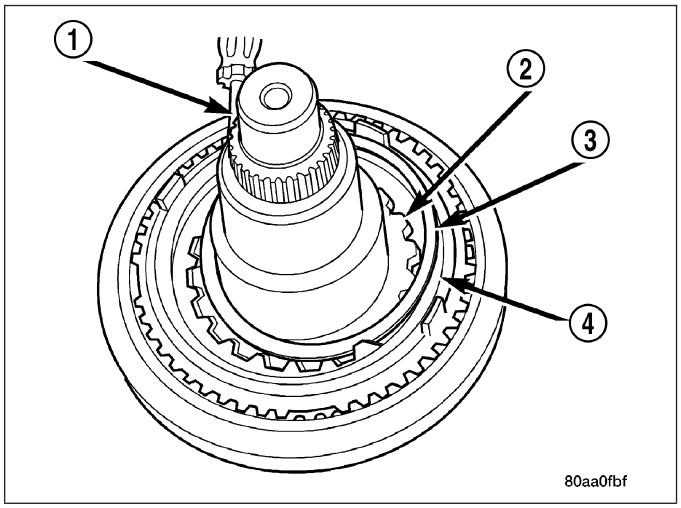

15. Install second gear bearing (1) on mainshaft.

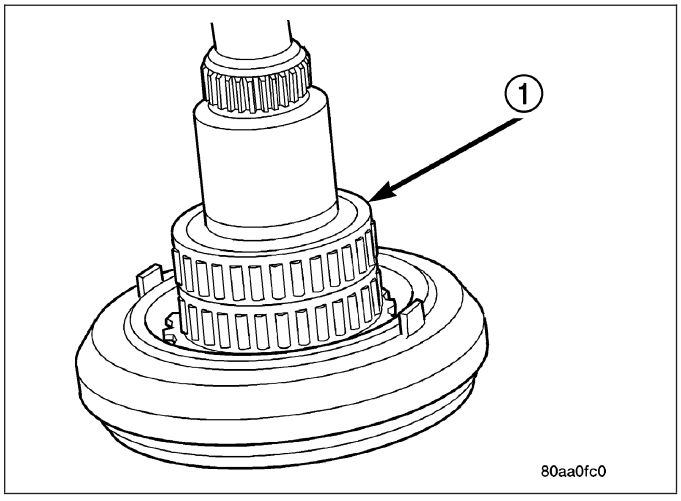

16. Install second gear (1) on mainshaft and bearing. Rotate gear until tabs (2) of second gear clutch ring are seated in tab slots (3) in gear.

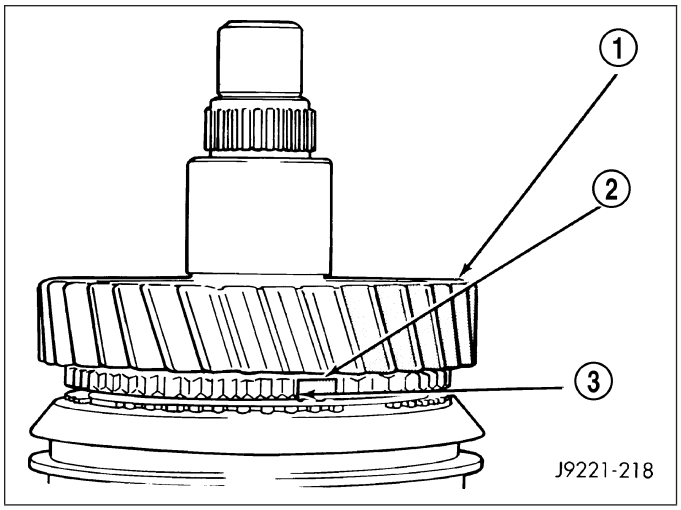

17. Install thrust washer pin (1) in shaft.

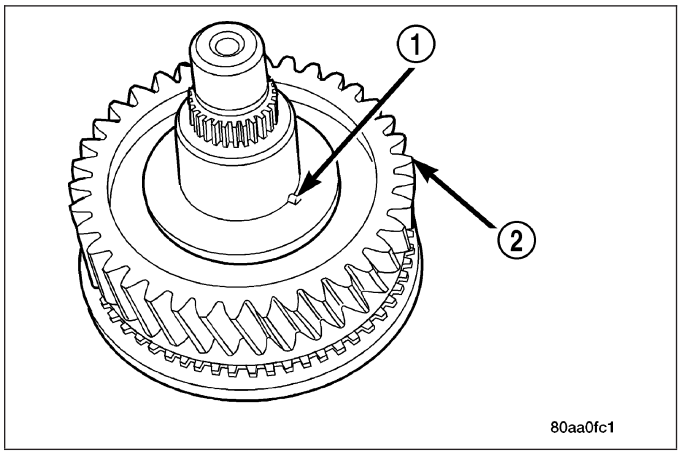

18. Install second gear (1) thrust washer (2). Verify washer is seated on gear and pin (3).

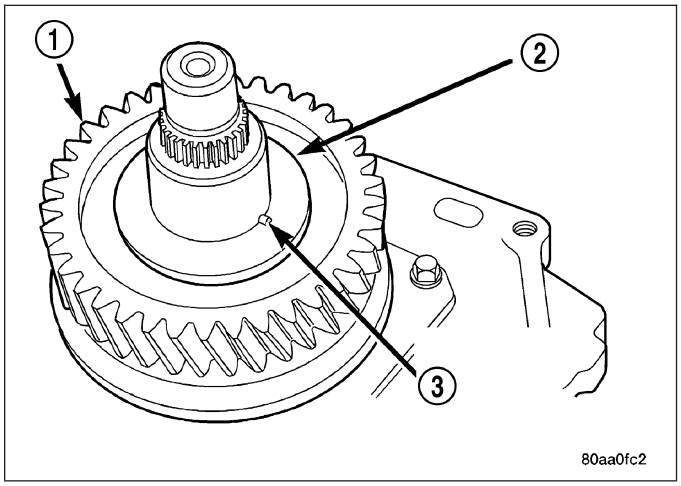

19. Install second gear thrust washer (1) snap ring (2). Verify snap ring is seated in mainshaft groove.
20. Install third gear bearing spacer (3) on shaft and seat it against thrust washer snap ring.

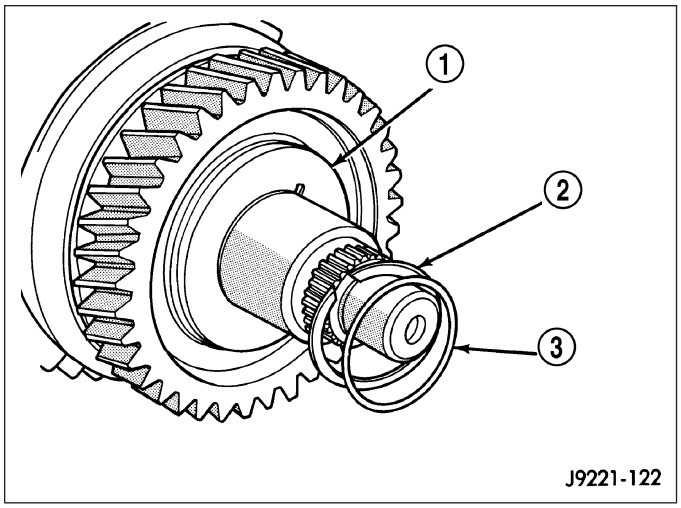

21. Install third gear bearing (1) on mainshaft. Bearing should be flush with mainshaft hub, if not bearing spacer or snap ring was not installed.

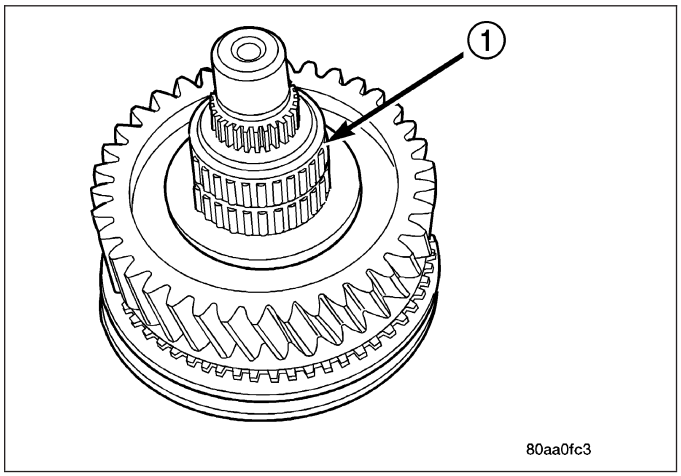

22. Install third gear (1) over bearing and onto mainshaft.

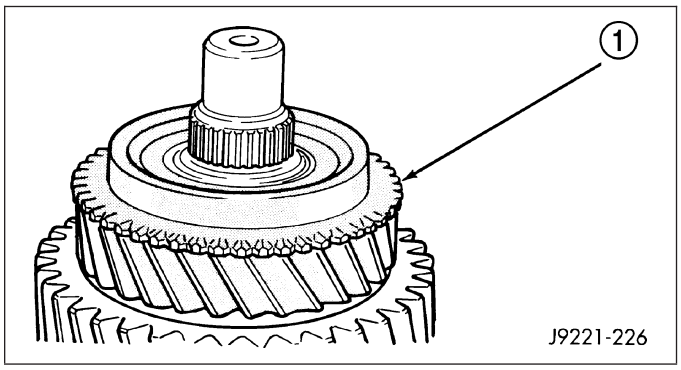

23. Install synchro stop ring (1) on third gear (2). Verify stop ring is seated on cone taper.

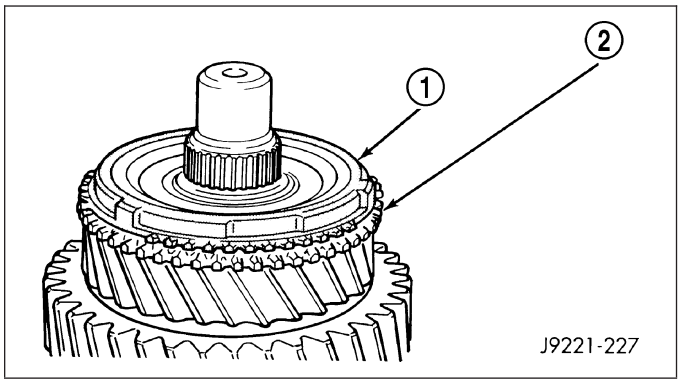

If 3-4 synchro was disassembled for service, reassemble synchro components as follows:

24. Align and install synchro sleeve (3) on hub (4). **Front side of hub has a narrow groove machined in it.** Insert all three synchro struts (1) in slots machined in sleeve and hub. Install and seat synchro springs (2). Use screwdriver to compress springs and seat them in struts and hub as shown.

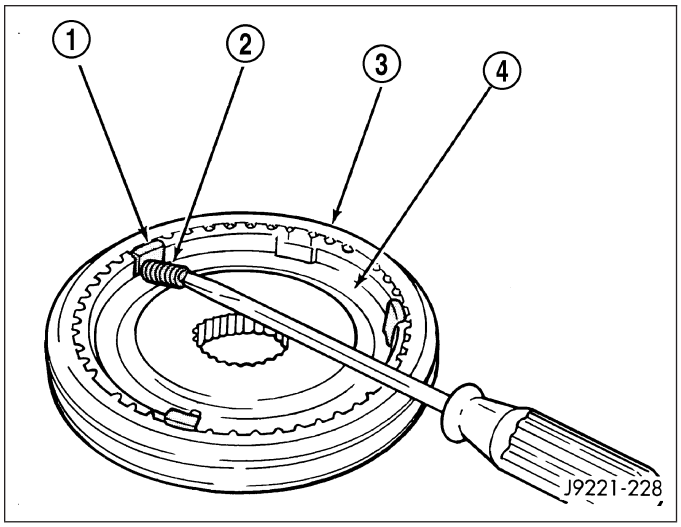

25. Start 3-4 synchro (1) assembly on mainshaft with the hub groove (2) and sleeve groove both facing forward. Tap assembly onto shaft splines until hub is about 3 mm (0.125 in.) away from third gear stop ring. Then align stop ring with synchro sleeve and hub and seat synchro assembly with Installer C-4040 (3).
26. Verify 3-4 synchro hub is seated on shaft with approximately 3 mm (0.125 in.) of shaft spline visible.

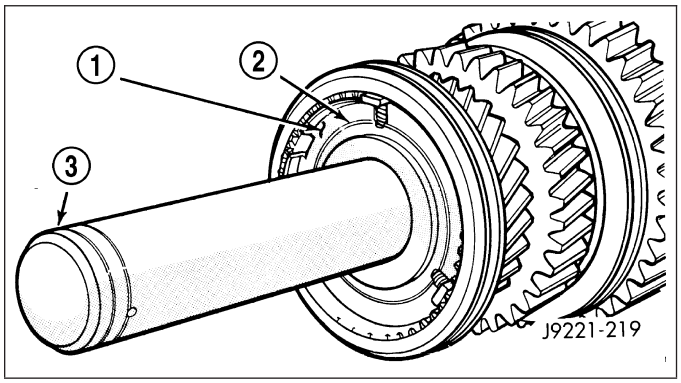

NOTE: If hub is not seated, stop ring lugs are misaligned. Rotate ring until lugs are engaged in 3-4 hub slots.

27. Verify that second and third gear rotate freely at this point. If not, determine the cause and correct.
28. Invert mainshaft in case or bench.
29. Install first gear bearing on mainshaft.

30. Install first gear (1) on shaft with clutch hub side of gear facing the front of shaft. 1-2 synchro hub will not seat properly if clutch ring tabs are misaligned.
31. Install reverse clutch gear (3) on first gear. Verify clutch gear is seated on shaft splines.
32. Install reverse clutch gear snap ring (2) with heavy duty snap ring pliers. Reverse gear will not fit properly if snap ring is not seated.

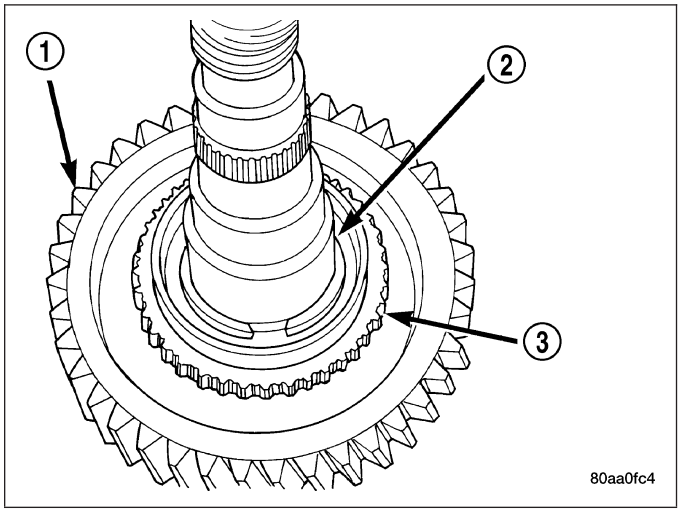

33. Install stop ring (1) on clutch cone (2). Verify stop ring is seated on cone taper.

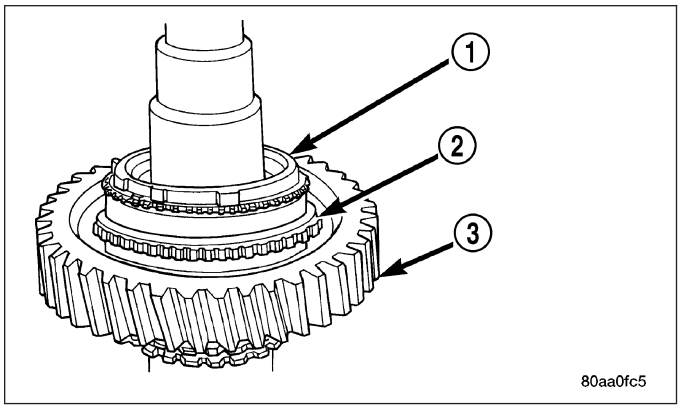

34. Install reverse gear bearing spacer (2) on mainshaft and seat against reverse clutch gear snap ring.
35. Install reverse gear bearing (1) on mainshaft.

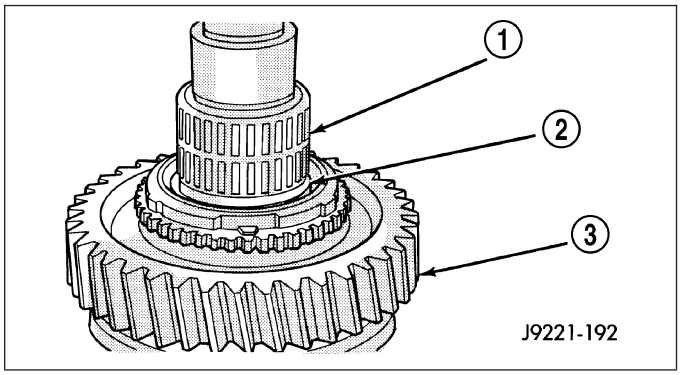

If reverse gear sleeve and struts were disassembled for service, reassemble sleeve, struts and springs as follows:

CAUTION: The reverse sleeve will fit either way on the hub. Verify tapered side of the sleeve faces rearward.

36. Position sleeve (2) on hub (5) so tapered side of sleeve faces rearward. Rotate sleeve to align teeth on sleeve and hub. Sleeve will slide easily into place on hub when properly aligned. Install springs in gear hub. Use petroleum jelly to hold springs (3) in place if desired. Compress first spring with flat blade screwdriver and slide strut (4) into position in hub slot. Then work spring into seat in strut with small hooked tool or screwdriver. Install second and third struts in same manner as described in step (d). Work sleeve upward on hub until struts are centered and seated in sleeve. Sleeve should be in neutral position after seating struts.

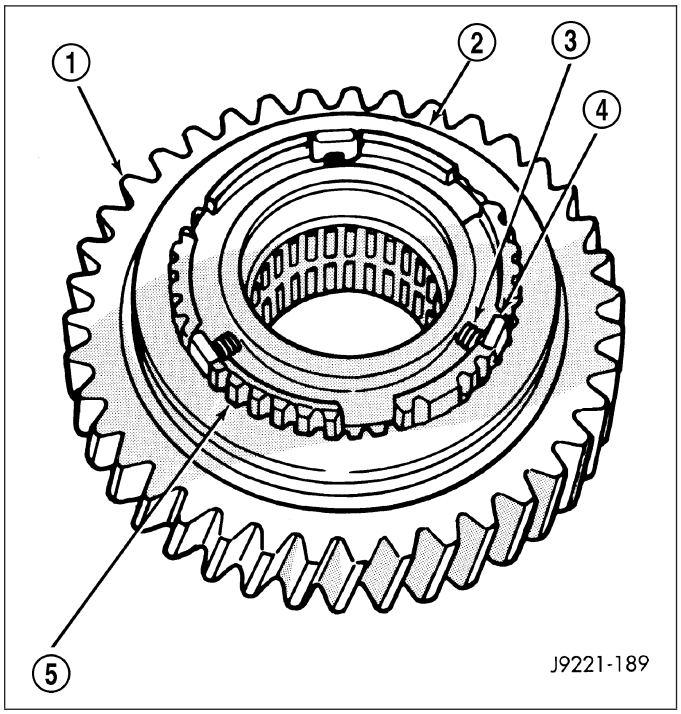

37. Install reverse gear and synchro assembly (1) on mainshaft. Rotate assembly until stop ring lugs engage in hub slots and gear drops into seated position.

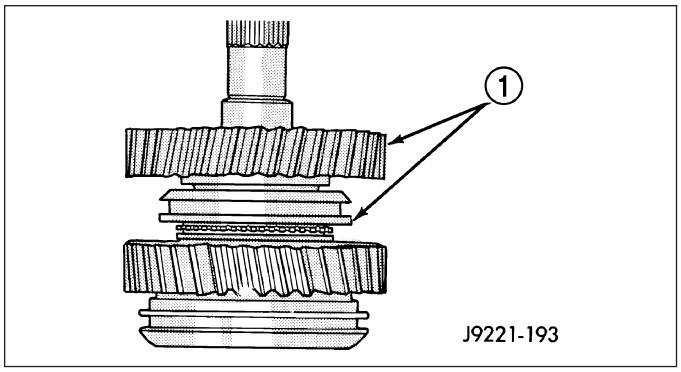

38. Install reverse gear (2) thrust washer (1).

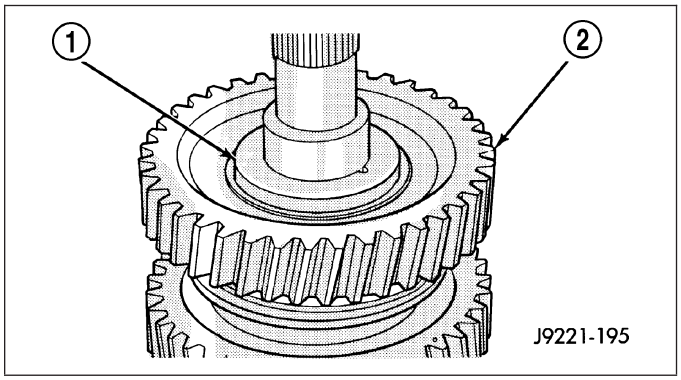

39. Install rear bearing (2) on mainshaft with Installer 6446 (1). Seat bearing on output shaft and against thrust washer.

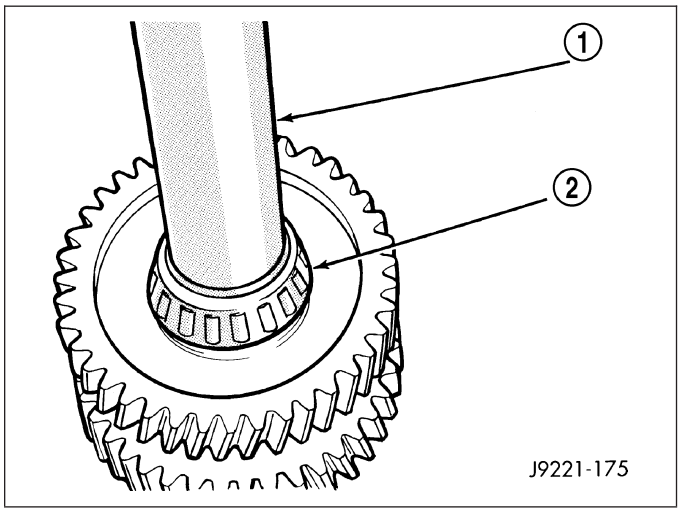

40. Install fourth gear stop ring (2) in 3-4 synchro sleeve (1).

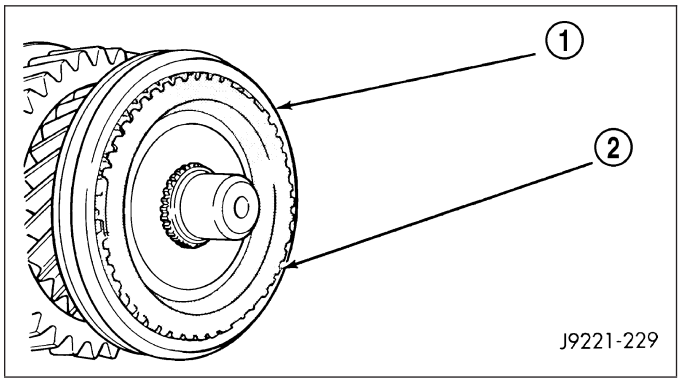

41. Install fourth gear clutch gear (1) in stop ring.
42. Roll gear case onto its left side.
43. Grip mainshaft at pilot bearing hub and just behind reverse gear. Then lift assembly and guide rear of shaft through bearing bore at rear of case.
44. Continue holding front of shaft but switch grip at rear to shaft output splines. Lift mainshaft assembly slightly, align gears and seat assembly in case.

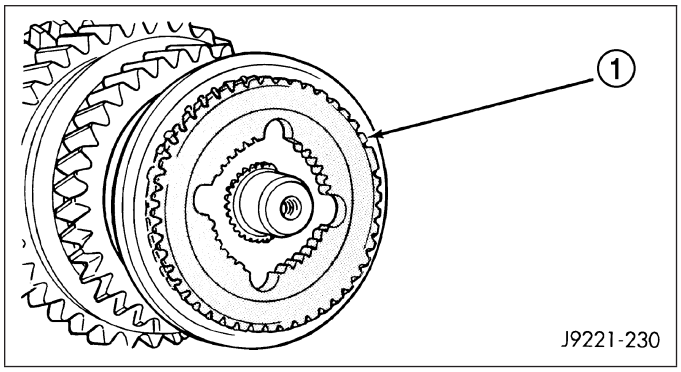

45. Set transmission case upright.

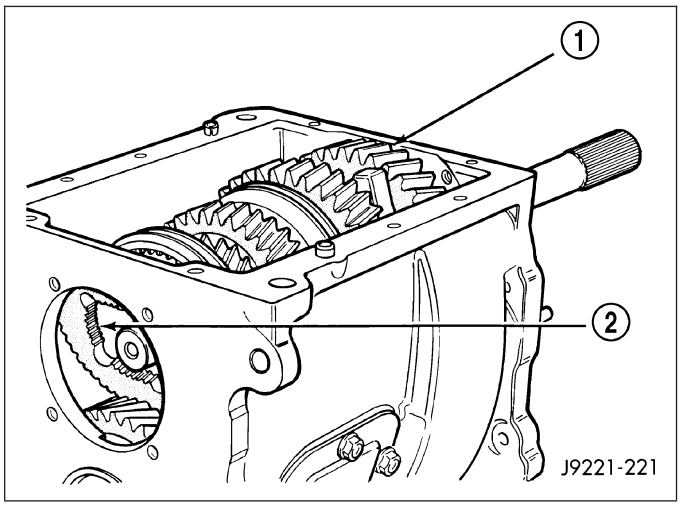

46. Install drive gear thrust bearing (2) on mainshaft (1). Use plenty of petroleum jelly to hold bearing in place.
47. Check alignment and mesh of mainshaft gears. If gears are not aligned, roll case on side and realign shaft and gears in case.

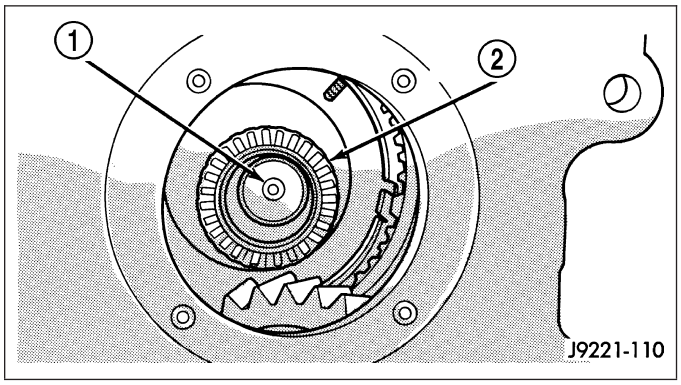

DRIVE GEAR AND RETAINER

1. Install bearing (2) on drive gear (3) with Installer 6448 (1).
2. Lubricate pilot bearing with petroleum jelly and install it in drive gear bore.
3. Install drive gear on mainshaft. Work gear rearward until mainshaft hub is seated in pilot bearing.

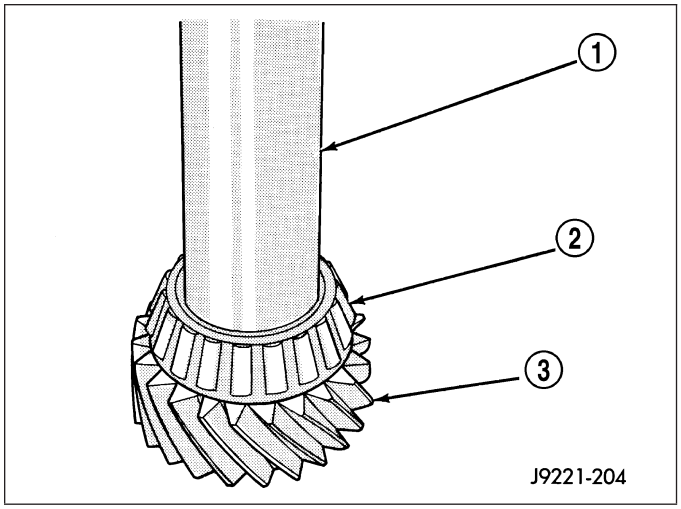

4. Install bearing cup in front retainer (4) with Handle C-4171 (2) and Installer C-4308 (1).

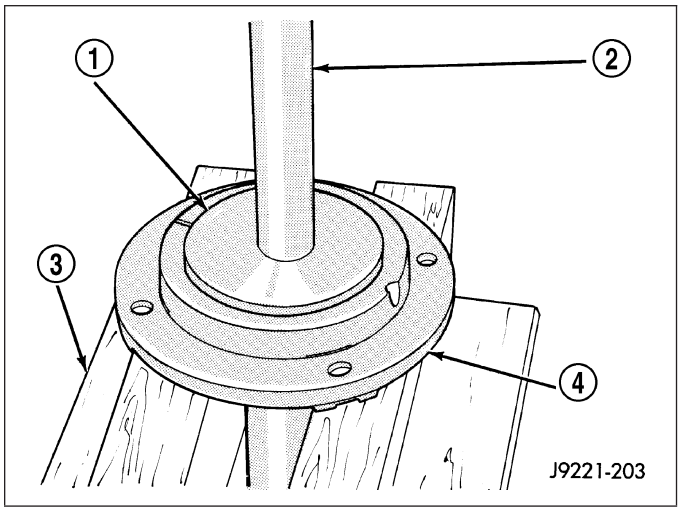

5. Install new oil seal in front bearing retainer (2) with Installer 6052 (1). Use one or two wood blocks (3) to support retainer as shown. Lubricate seal lip with petroleum jelly after installation.
6. Clean contact surfaces of gear case and front bearing retainer with a wax and grease remover.

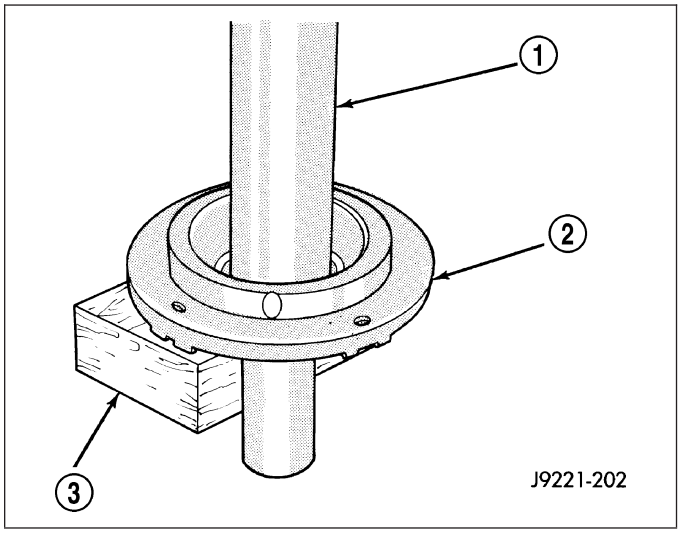

7. Apply Mopar Silicone Sealer (3) or equivalent to flange surface of front bearing retainer (2).
8. Install front bearing retainer over drive gear and start it into case.
9. Start front bearing retainer in gear case. Verify retainer lube channel (1) is at the top-center **(12 O'clock)** position.

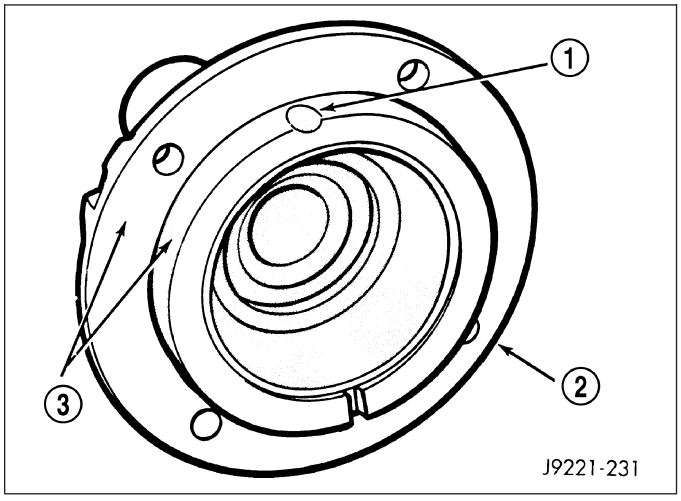

10. Align front bearing retainer (2) bolt holes and tap retainer into place with plastic mallet. Install **new** retainer bolts and tighten to 30 N·m (22 ft. lbs.).

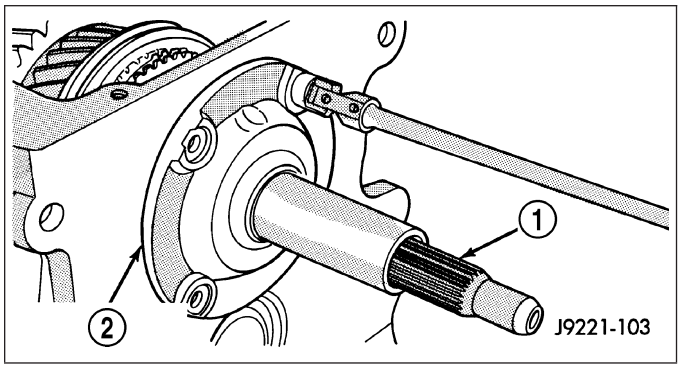

MAINSHAFT END PLAY

1. Install mainshaft rear bearing cup in case and over bearing. Tap bearing cup into place with plastic mallet.
2. Install rear bearing plate (2) to hold mainshaft and rear bearing in position with oil hole at the top (1).

NOTE: Do not install any end play shims at this time.

3. Tighten rear bearing plate bolts securely.
4. Place gear case in upright position on bench. Either cut hole in bench to accept drive gear and front retainer or use C-clamps to secure transmission on bench.

NOTE: Do not leave transmission unsupported.

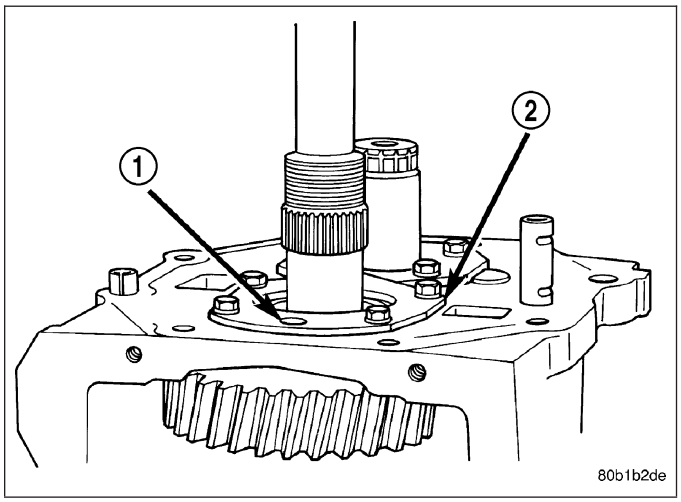

5. Install Extension Rod 8161 into a suitable threaded hole in rear of case.
6. Mount dial indicator on extension rod and position indicator plunger against end of mainshaft.
7. Move mainshaft forward to remove all play then zero dial indicator.
8. Move mainshaft upward and record dial indicator reading. Move mainshaft with pry tool positioned between drive gear and case.
9. End play should be 0.051-0.15 mm (0.002-0.006 in.). Select fit shims are available to adjust end play. If end play adjustment is required, remove bearing plate and install necessary shim.
10. Reinstall rear bearing plate with oil hole in bearing plate at the top.
11. Apply Mopar Lock N' Seal or equivalent to bearing plate bolt threads. Install and tighten bolts to 23 N·m (200 in. lbs.).

12. Install mainshaft fifth gear (1) with Installer 6446 (2). Gear is seated when it contacts rear bearing.

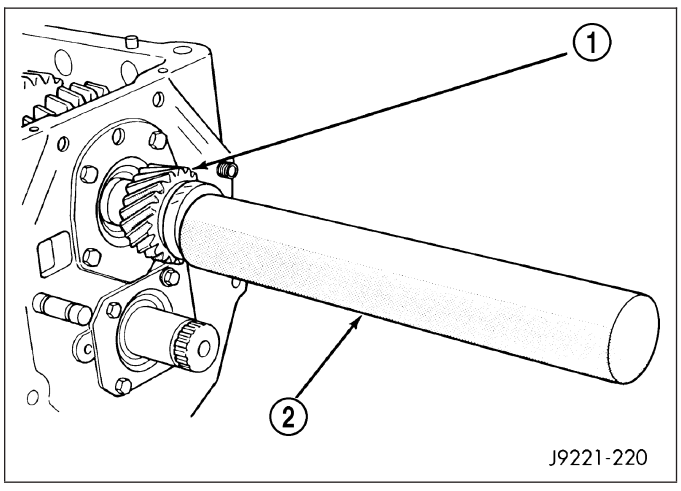

COUNTERSHAFT FIFTH GEAR SYNCHRO

1. Install thrust washer pin (1) in countershaft (2).

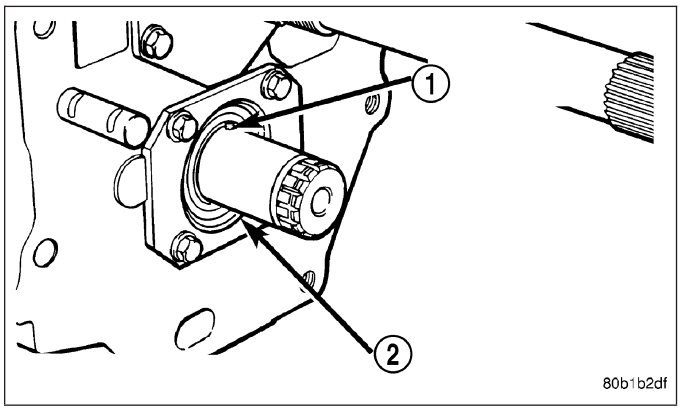

2. Install thrust washer (2) on countershaft. Turn washer until pin (1) engages in washer notch. The flat side of washer faces the rear and cone side faces the front.

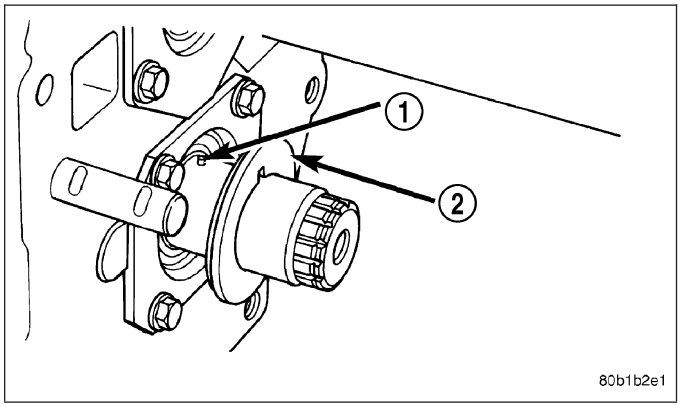

3. Lubricate and install fifth gear bearing (2) on countershaft (1).

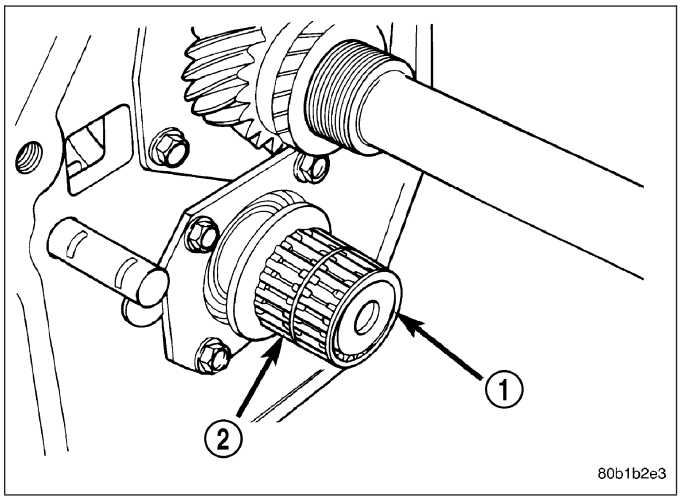

4. Install synchro sleeve (2) on hub (1) of countershaft fifth gear (3) with tapered side of sleeve facing front and the flat side facing rear.
   .

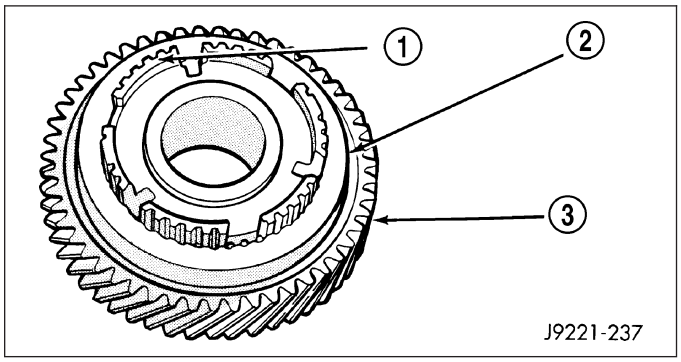

5. Install shift fork (2) in synchro sleeve (1).

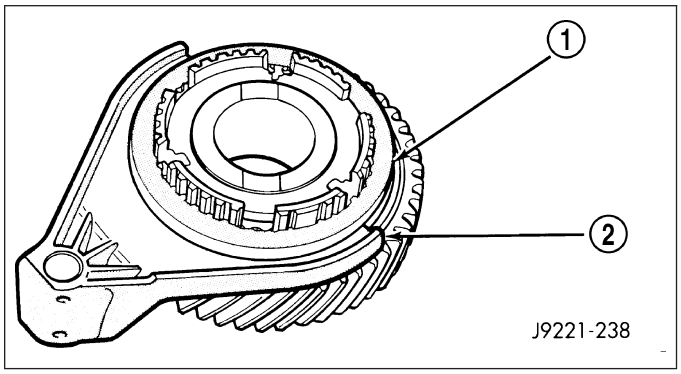

6. Install assembled fifth gear (2), synchro sleeve (1) and shift fork. Align fork with shift lug rail and align gear with bearings and countershaft. Start components onto shaft and rail, then tap gear and fork into place with plastic or rawhide mallet.

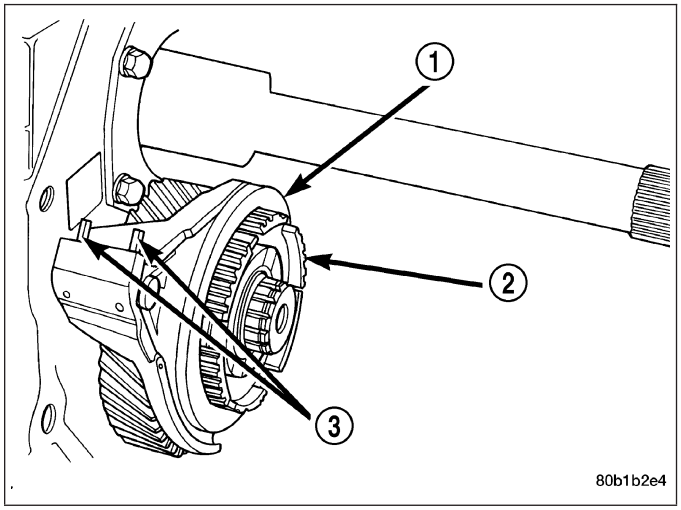

7. Install fifth gear synchro struts (3) and springs (2).

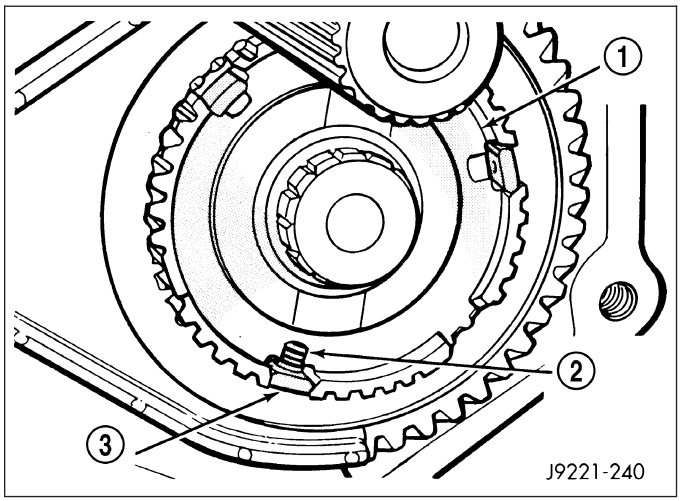

8. Assemble and install fifth synchro clutch gear (2) and stop ring (1) in fifth gear hub. Verify parts are seated in fifth gear hub.

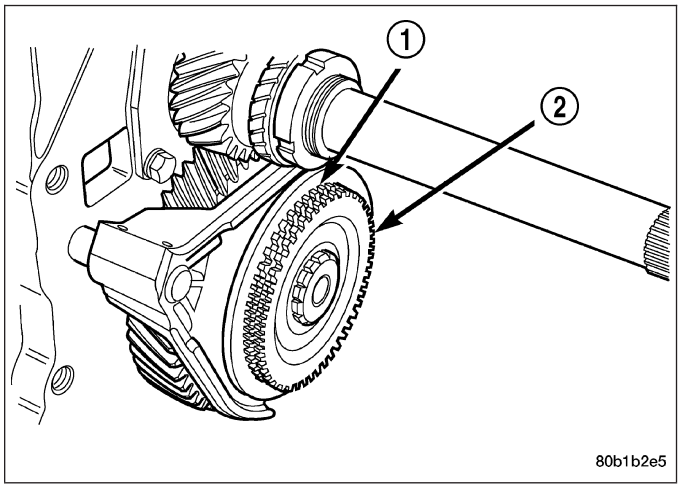

9. Install clutch gear snap ring (1).
10. Align roll pin holes in shift fork with notches in shift lug rail. Then install roll pins from top side of fork.

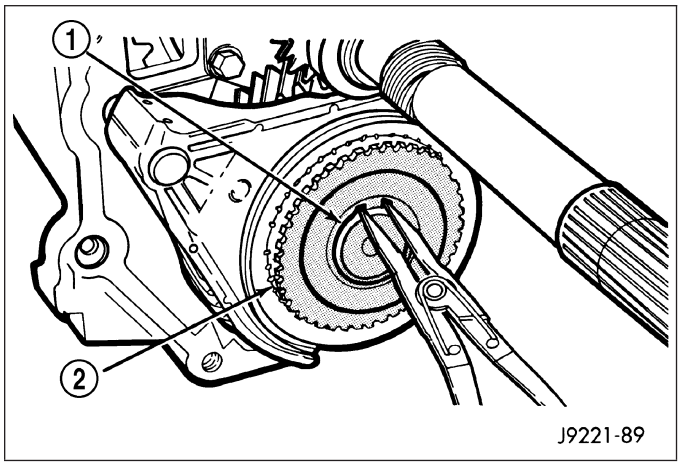

FIFTH GEAR NUT

1. Install belleville washer onto the mainshaft.
2. Install fifth gear nut over the mainshaft.
3. Tighten the clamp bolt until the gap in the clamp nut assembly is closed.
4. Back the clamp bolt off one full turn.
5. Place 10-15 drops of Loctite 272 onto the mainshaft threads where the fifth gear (1) nut (2) will be engaged.
6. Install fifth gear nut on mainshaft.

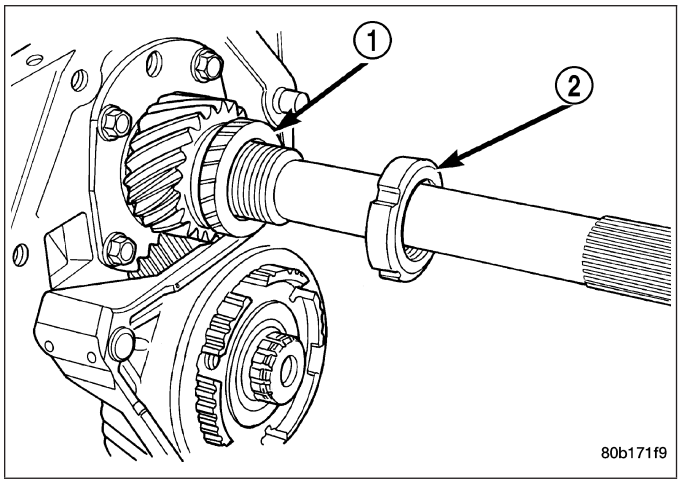

7. Hold mainshaft Socket 6993 4X2 (3) or Socket 6984 4X4 (3) while installing the fifth gear nut (2)
8. Tighten fifth gear nut as much as possible with Wrench 6743 (1), long handle ratchet, breaker bar and applicable socket wrench.
9. Lock mainshaft gears by shifting all synchro sleeves into engaged position.
10. Tighten fifth gear nut with Nut Wrench 6743 and high capacity torque wrench. Tighten nut to 366-380 N·m (270-280 ft. lbs.). Have helper hold transmission steady if necessary.
11. Torque the fifth gear clamp nut clamping bolt to 13.5 N·m (10 ft. lbs.).
12. Unlock the mainshaft gears by shifting all synchro sleeves out of the engaged position.

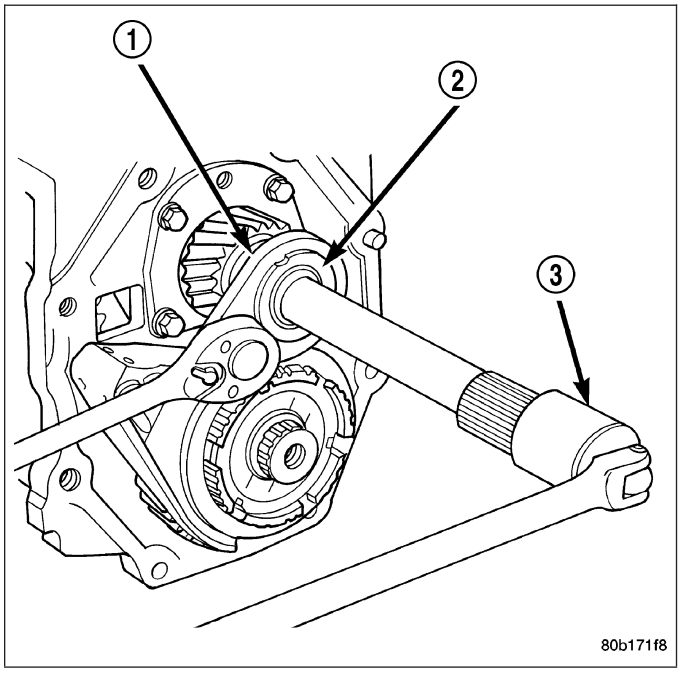

EXTENSION/ADAPTER HOUSING

1. Clean mating surfaces of extension/adapter housing (2) and gear case (1) with a wax and grease remover.
2. Check alignment dowels in gear case and housing or adapter. Be sure dowels are in position and seated.
3. Apply Mopar Silicone Sealer or equivalent to gear case and housing mating surfaces.
4. Align and install extension/adapter housing on gear case.
5. Apply Mopar Lock N' Seal or equivalent to threads of extension/adapter housing bolts.
6. Install and tighten housing bolts to 54 N·m (40 ft. lbs.).

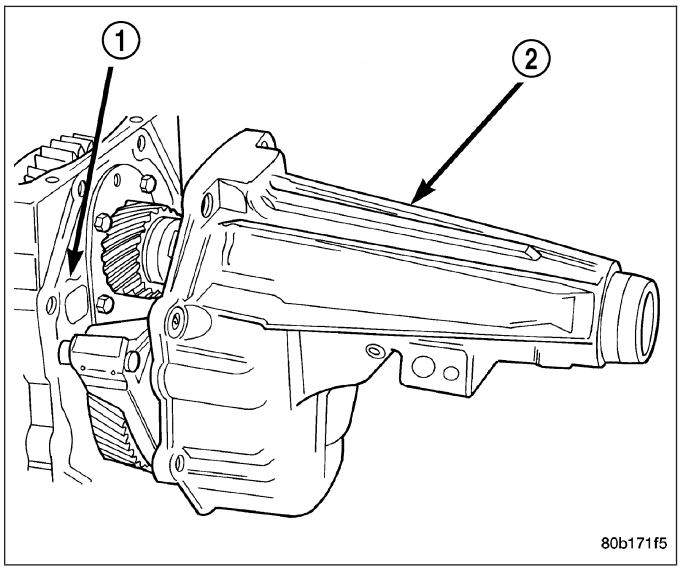

SHIFT MECHANISM

1. Clean mating surfaces of shift cover and gear case with wax and grease remover.
2. Apply a small amount of Mopar silicone sealer or equivalent to sealing surface of shift cover.

CAUTION: Do not over-apply an excessive amount sealer. Excess can squeezed into gear case and could block lubricant feed holes in time.

3. Lubricate synchro sleeves with Castrol® Syntorq gear lubricant or equivalent. Then apply light coat of petroleum jelly to shift fork contact surfaces.
4. Verify shift fork pads (1) are secure.
5. Verify 1-2 and 3-4 synchro sleeves and forks in shift cover are in neutral position.
6. Align and seat shift cover on transmission.

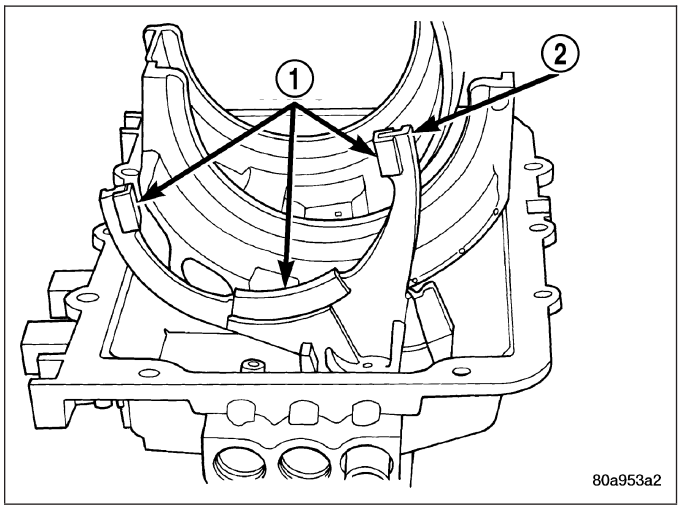

NOTE: If cover will not seat, it may not be aligned on gear case dowels or shift forks are not aligned with sleeves and shift lug.

7. Apply Mopar Lock N' Seal or equivalent to threads of shift cover bolts.
8. Install shift cover bolts and tighten to 27-31 N·m (216-276 in. lbs.).
9. Apply sealer to backup lamp switch. Install switch into cover and tighten to 22-34 N·m (193-265 in. lbs.).
10. Install vent assembly if removed. Apply an adhesive/sealer to vent tube to help secure it in cover.

INSTALLATION

NOTE: If a new transmission is being installed, use all components supplied with the new transmission. For example, if a new shift tower is supplied with the new transmission, do not re-use the original shift tower.

1. Apply light coat of Mopar high temperature bearing grease or equivalent to contact surfaces of the following components:
   - input shaft splines.

- release bearing slide surface of front retainer.
- release bearing bore.
- release fork.
- release fork ball stud.
- propeller shaft slip yoke.

2. Apply sealer to threads of bottom PTO cover bolt and install bolt in case.
3. Mount transmission on jack and position transmission under vehicle.
4. Raise transmission until input shaft is centered in release bearing and clutch disc hub.
5. Move transmission forward and start input shaft in release bearing, clutch disc and pilot bushing.
6. Work transmission forward until seated against clutch housing. Do not allow transmission to remain unsupported after input shaft has entered clutch disc.
7. Install transmission bolts and tighten to 108 N·m (80 ft. lbs.).
8. Install transmission mount on transmission or rear crossmember.
9. Install rear crossmember.
10. Remove transmission jack and engine support fixture.
11. Position transmission harness wires in clips on shift cover.
12. Install clutch slave cylinder and install slave cylinder shield, if equipped.
13. Connect speed sensor and backup light switch wires.

TWO WHEEL DRIVE

1. Fill transmission with recommended lubricant. Correct fill level is bottom edge of fill plug hole.
2. Align and install propeller shaft.
3. Lower vehicle.
4. Clean the mating surfaces of shift tower, isolator plate and shift cover with suitable wax and grease remover.
5. Apply Mopar Gasket Maker or equivalent to the sealing surface of the shift cover. Do not over apply sealant.
6. Install the isolator plate onto the shift cover, metal side down.
7. Install the shift tower onto the isolator plate. No sealant is necessary between the shift tower and the isolator plate.
8. Verify that the shift tower, isolator plate and the shift tower bushings are properly aligned.
9. Install the bolts to hold the shift tower to the isolator plate and the shift cover. Tighten the shift tower bolts to 10.2-11.25 N·m (7.5-8.3 ft. lbs.).
10. Install the shift lever extension onto the shift tower and lever assembly.
11. Install shift boot and bezel.
12. Connect battery negative cable.

FOUR WHEEL DRIVE

1. Install transfer case shift mechanism (2) on transmission (1).
2. Install transfer case on transmission jack. Secure transfer case to jack with safety chains.
3. Raise jack and align transfer case input gear with transmission mainshaft.
4. Move transfer case forward and seat it on adapter.
5. Install transfer case nuts and tighten to:
   - If 3/8 studs 41-47 N·m (30-35 ft. lbs.).
   - If 5/16 studs 30-41 N·m (22-30 ft. lbs.).
6. Install transfer case shift mechanism to side of transfer case.
7. Connect transfer case shift lever to range lever on transfer case.

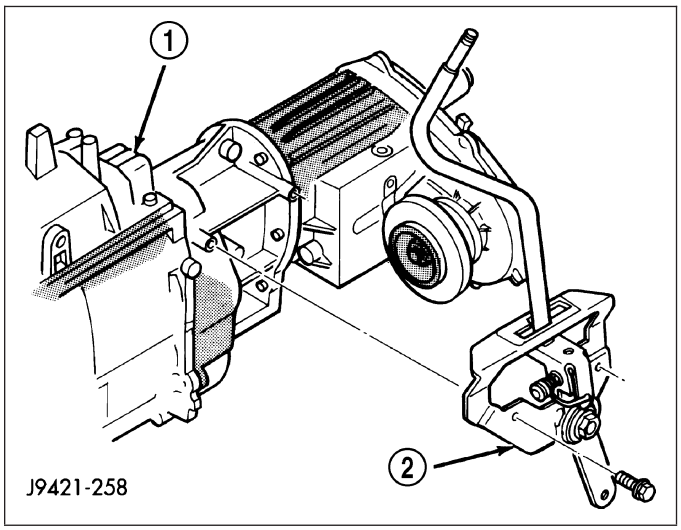

8. Align and connect propeller shafts.
9. Fill transmission with required lubricant. Check lubricant level in transfer case and add lubricant if necessary.
10. Install transfer case skid plate, if equipped and crossmember. Tighten attaching bolts/nuts to 41 N·m (30 ft. lbs.).
11. Install exhaust system components.
12. Lower vehicle.
13. Clean the mating surfaces of shift tower, isolator plate and shift cover with suitable wax and grease remover.
14. Apply Mopar Gasket Maker or equivalent to the sealing surface of the shift cover. Do not over apply sealant.
15. Install the isolator plate onto the shift cover, metal side down.
16. Install the shift tower onto the isolator plate. No sealant is necessary between the shift tower and the isolator plate.
17. Verify that the shift tower, isolator plate and the shift tower bushings are properly aligned.
18. Install shift tower (1) bolts (3) and tighten to 10.2-11.25 N·m (7.5-8.3 ft. lbs.).
19. Install shift lever extension onto the shift tower and lever assembly and tighten to 47 N·m (35 ft. lbs.).
20. Install shift lever boot and bezel.
21. Connect battery negative cable.

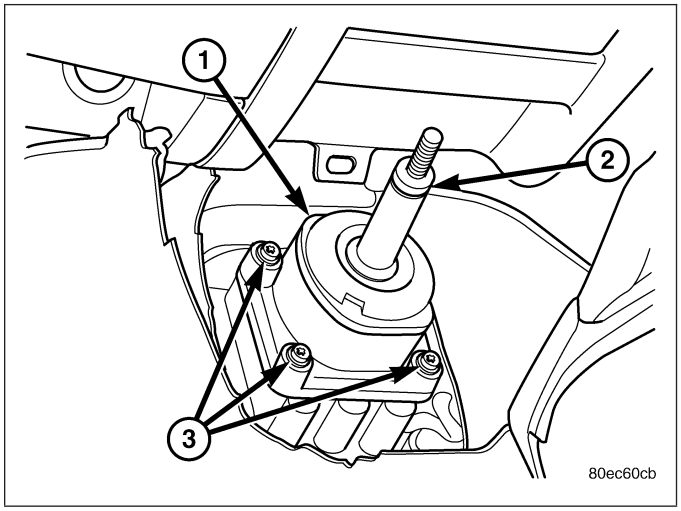

SPECIFICATIONS

TORQUE SPECIFICATIONS

DESCRIPTION	N·m	Ft. Lbs.	In. Lbs.
Switch, Back-up Lamp	22-34	16-25	-
Countershaft Bearing Plate Bolts	19-26	14-19	170-230
Fifth Gear Nut	366-380	270-280	-
Fifth Gear Nut Clamp Bolt	13.5	10	-
Drain and Fill Plug	34-47	25-35	-
Front Bearing Retainer Bolts	27-34	20-25	235-305
Mainshaft Bearing Plate Bolts	19-26	14-19	170-230
PTO Cover Bolts	27-54	20-40	-
Extension/Adapter Housing Bolts	41-68	30-50	-
Shift Mechanism Cover Bolts	27-31	20-23	-
Shift Lever Extension	47	35	-
Transmission Bolts	108	80	-

SPECIAL TOOLS

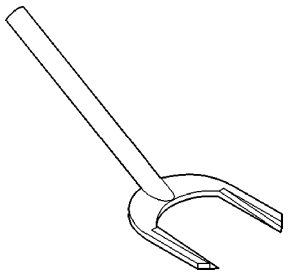

REMOVER C-3985-B

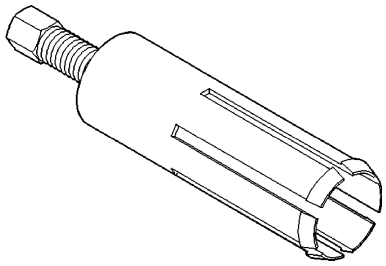

BUSHING REMOVER 6957

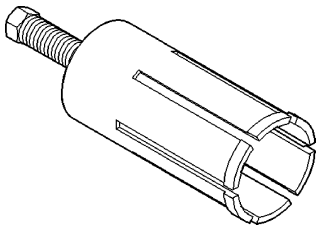

REMOVER BUSHING 8155

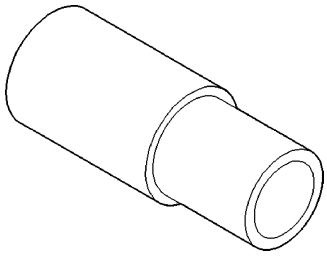

INSTALLER BUSHING 6951

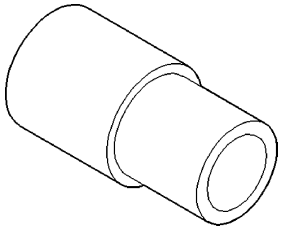

INSTALLER BUSHING 8156

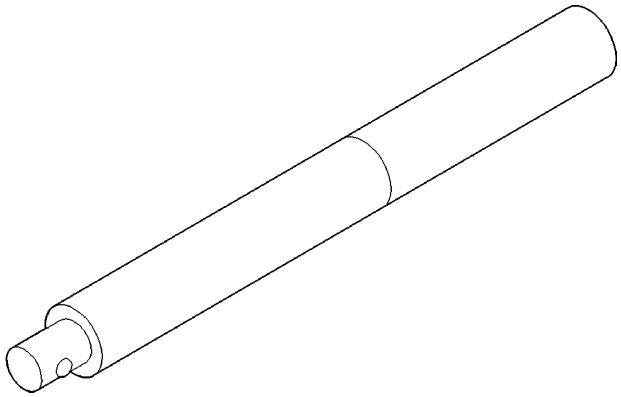

HANDLE C-4171

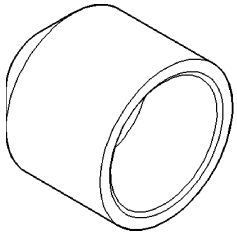

INSTALLER SEAL C-3972-A

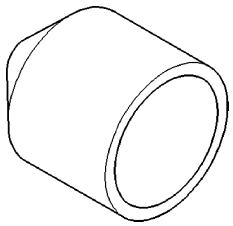

INSTALLER SEAL 8154

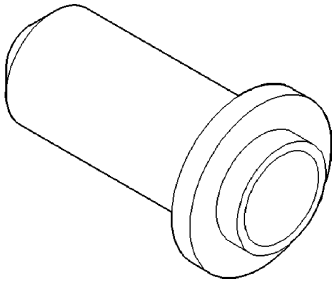

INSTALLER SEAL C-3860-A

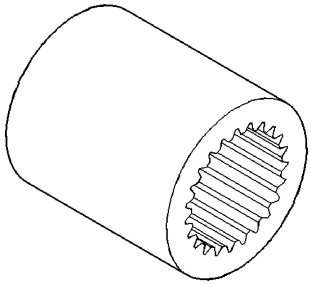

SOCKET 6442

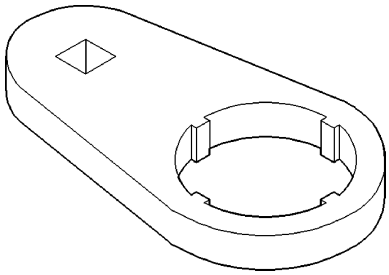

WRENCH 6443

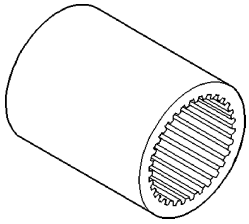

SOCKET 6993

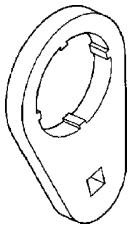

WRENCH 6743

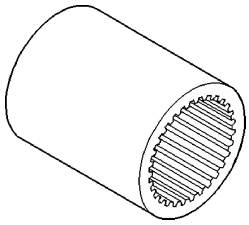

SOCKET 6984

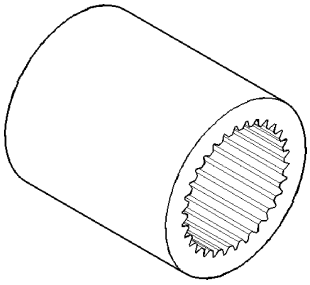

SOCKET 6441

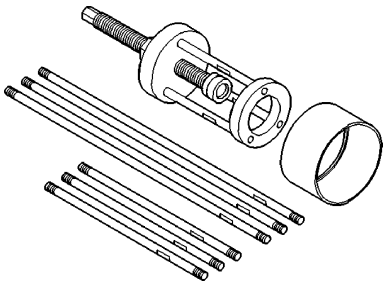

PULLER 6444

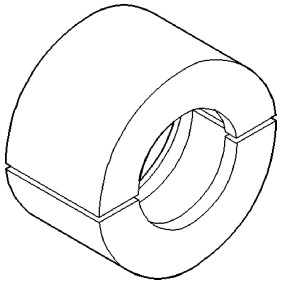

JAWS 6459

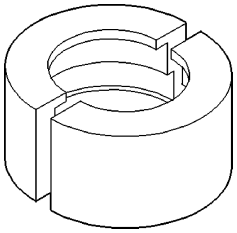

JAWS 6820

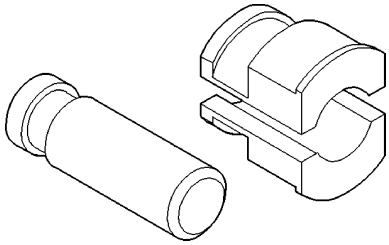

JAWS & INSERT 6453

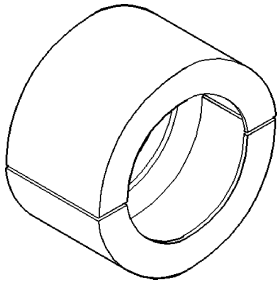

JAWS 6447

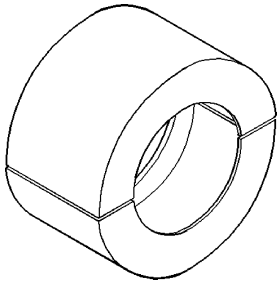

JAWS 6449

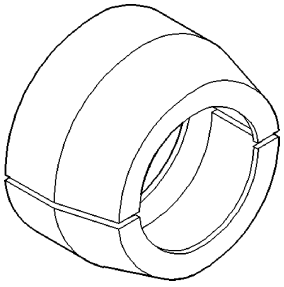

JAWS 6451

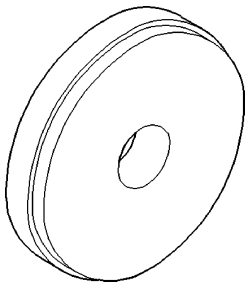

REMOVER 6454

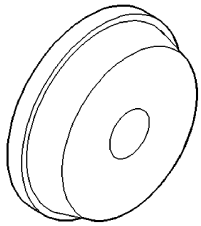

INSTALLER 6061

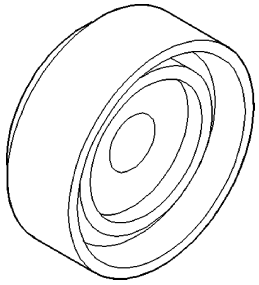

INSTALLER C-4340

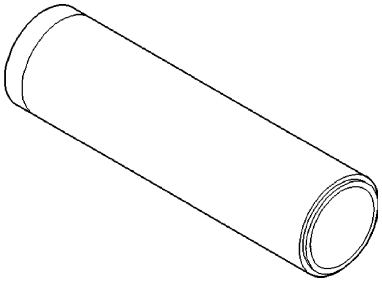

INSTALLER C-4040

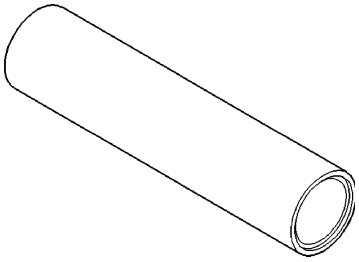

INSTALLER 6448

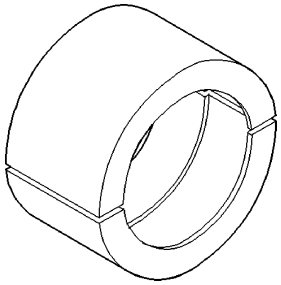

JAWS 6445

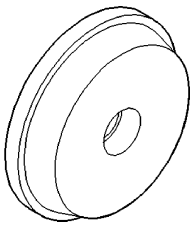

INSTALLER C-4308

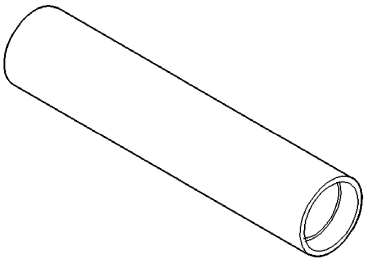

INSTALLER 6052

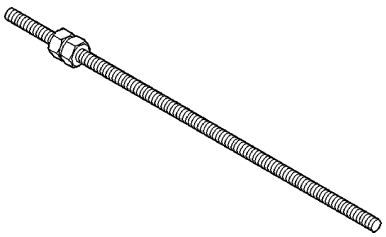

ROD EXTENSION 8161

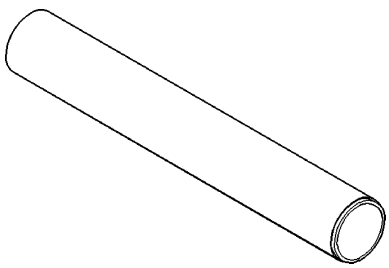

INSTALLER 6446

SEAL-ADAPTER HOUSING

REMOVAL

1. With vehicle in neutral, position vehicle on hoist.
2. Mark propeller shafts and yokes for installation reference and remove the shafts.
3. Support transmission with a transmission jack.
4. Remove engine rear support.
5. Remove transfer case.
6. Remove adapter housing (1) seal (2) with a seal pick.

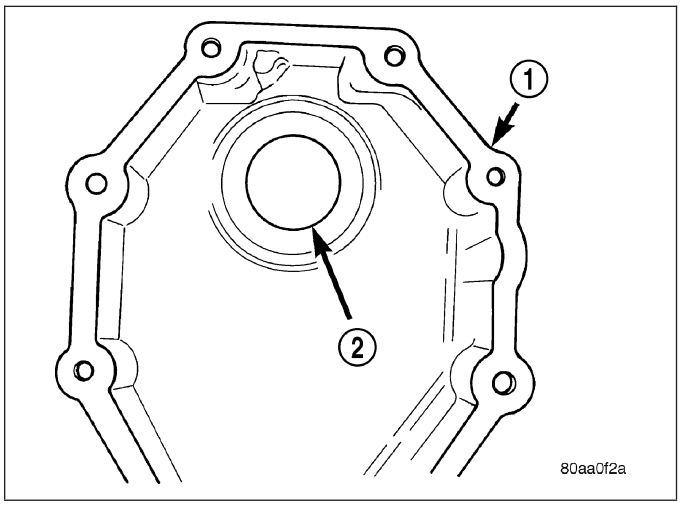

INSTALLATION

1. Install adapter housing (1) seal (2) with Installer C-3860-A and Handle C-4171.
2. Install transfer case.
3. Install propeller shafts with reference marks aligned.
4. Fill transfer case and transmission to proper level.

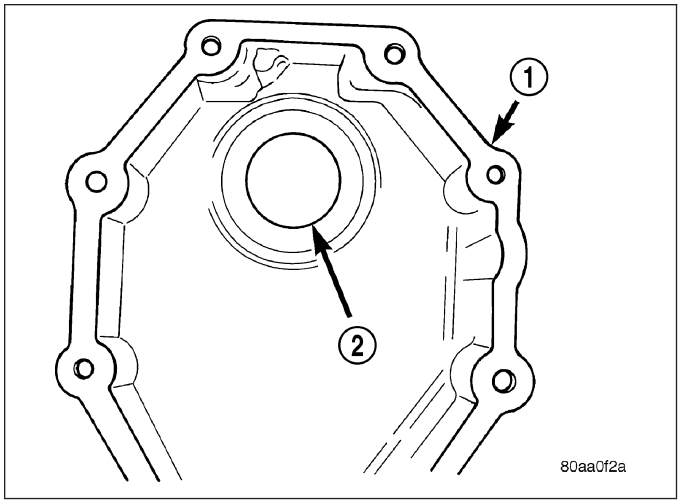

SEAL-EXTENSION HOUSING

REMOVAL

1. Remove the propeller shaft.
2. Remove extension housing (1) seal (2) with Remover C-3985-B.
3. On heavy duty 4X2 vehicles, remove extension housing seal with a seal pick.
4. On light duty transmissions, remove the extension housing bushing with Remover 6957.
5. On heavy duty transmissions, remove the extension housing bushing with Remover 8155.

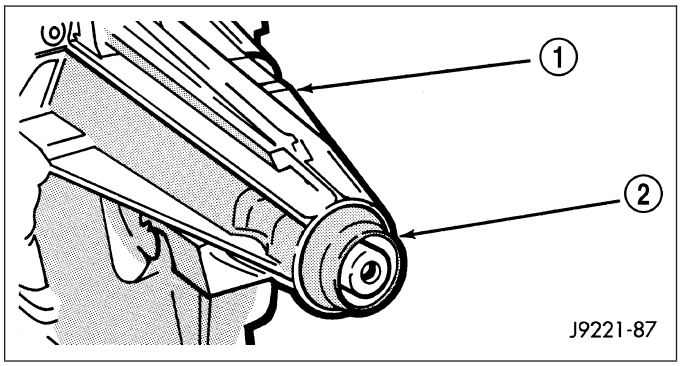

INSTALLATION

1. Install extension housing (3) bushing with Handle C-4171(1) and LD transmission - Installer 6951(2) or HD transmission - Installer 8161(2).

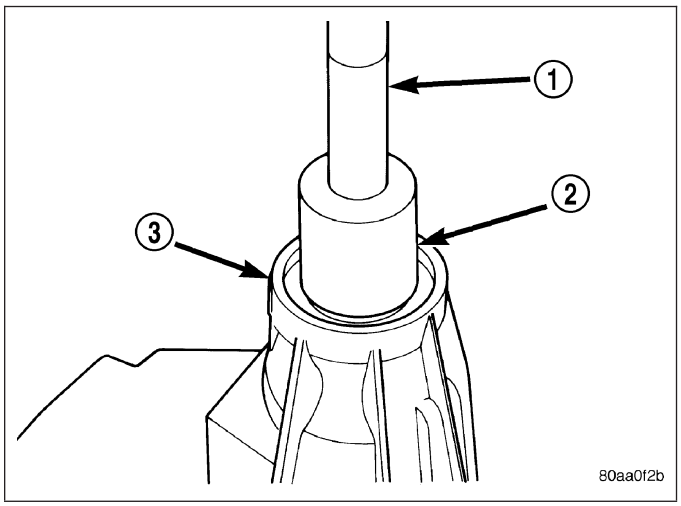

2. Install housing seal with Handle C-4171(1) and LD transmission - Installer C-3972-A or HD transmission - Installer 8154.
3. Install propeller shaft.
4. Check and fill transmission.

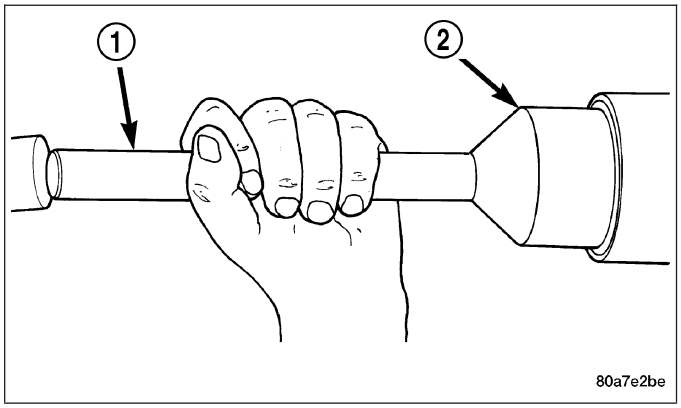

MECHANISM-SHIFT

REMOVAL

1. Remove transmission from vehicle.
2. Remove shift mechanism cover bolts.
3. Pry up shift mechanism cover at slots (1) provided in cover with screw driver (2).

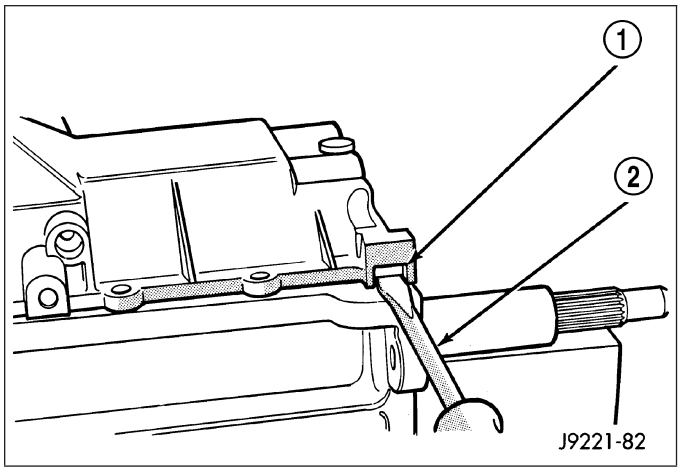

4. Raise cover enough to disengage it from alignment dowels (2) in gear case.
5. Raise front of shift mechanism cover (1) and lift cover up and off gear case.

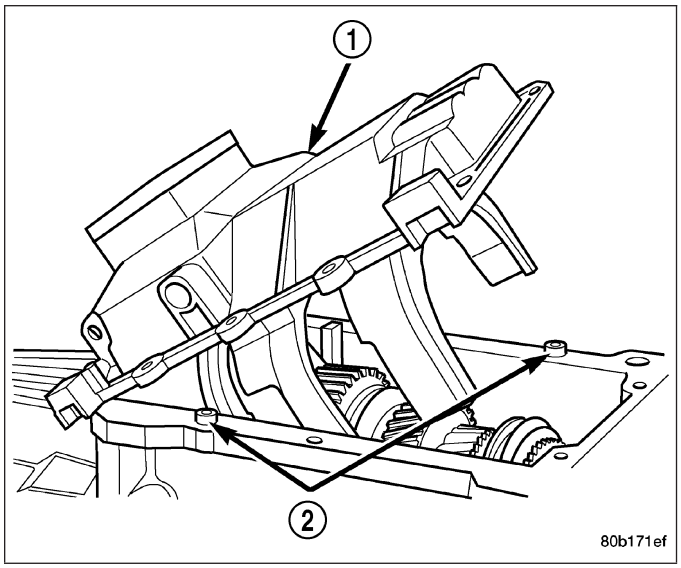

FIFTH-REVERSE SHIFT FORK PADS

The shift pads (1) on the forks (2) are held in place by tension and a small locating tang.

To remove the pads, grasp a pad with hand and tilt it out and off the fork. If pad is difficult to remove by hand, insert a screwdriver blade between the pad and fork and pry the pad off.

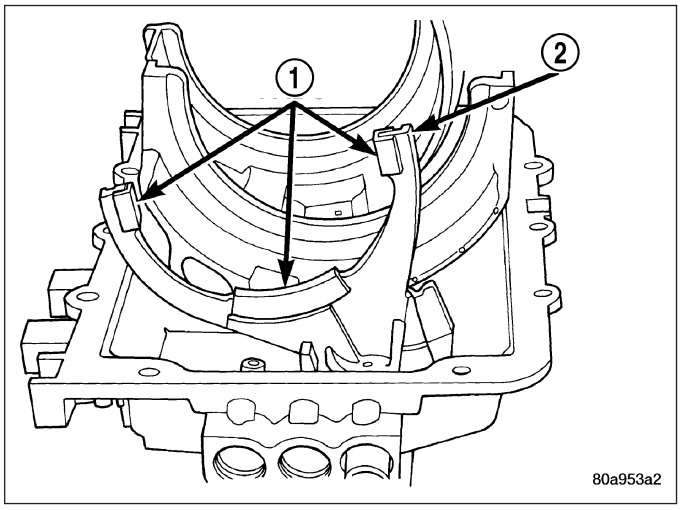

EXPANSION PLUG

1. Drill 6 mm (1/4 in.) diameter hole in center of the plug (1) to be removed.
2. Pry plug out of cover with tapered punch.
3. Clean all chips from shift cover and plug bores. Then clean plug bores with solvent and dry with clean shop towel.

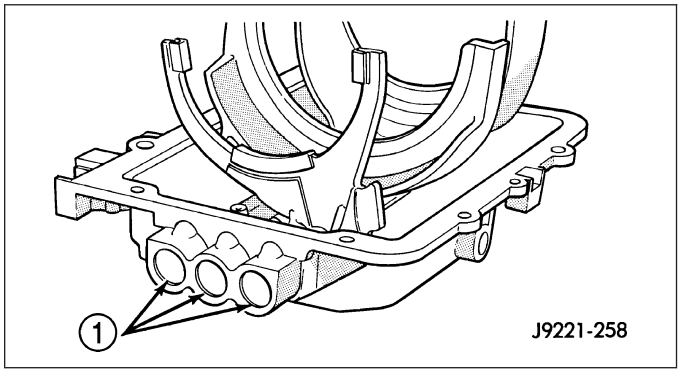

INSTALLATION

EXPANSION PLUG

1. Apply small bead of Mopar silicone sealer or equivalent to outer edge of each new plug.
2. Position each plug (1) in bore and tap into place with hammer and punch or socket.

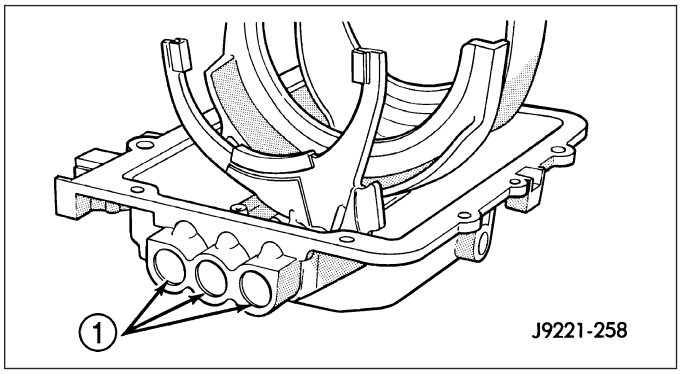

SHIFT FORK PADS

1. Align pad locating tab.
2. Snap pads (1) into place and verify locating tabs are locked-in to fork (2).

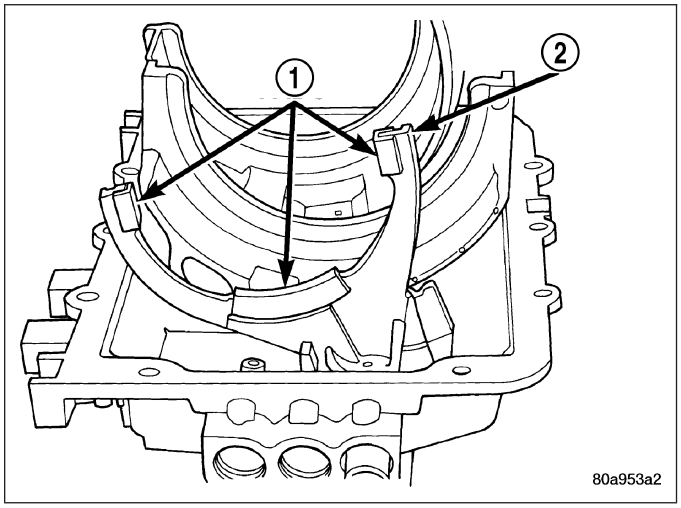

SHIFT COVER

1. Clean mating surfaces of shift mechanism cover and gear case with wax and grease remover.
2. Apply a small amount of Mopar silicone sealer or equivalent to sealing surface of shift mechanism cover.

CAUTION: Do not use an excessive amount sealer. Excess can squeezed into gear case and could block lubricant feed holes in time. Failure to follow these instructions will result in damage.

3. Lubricate synchro sleeves with Castrol® Syntorq gear lubricant or equivalent. Then apply light coat of petroleum jelly to shift fork contact surfaces.
4. Verify 1-2 and 3-4 synchro sleeves and forks in shift cover are in neutral position.
5. Align and seat shift mechanism cover on transmission.

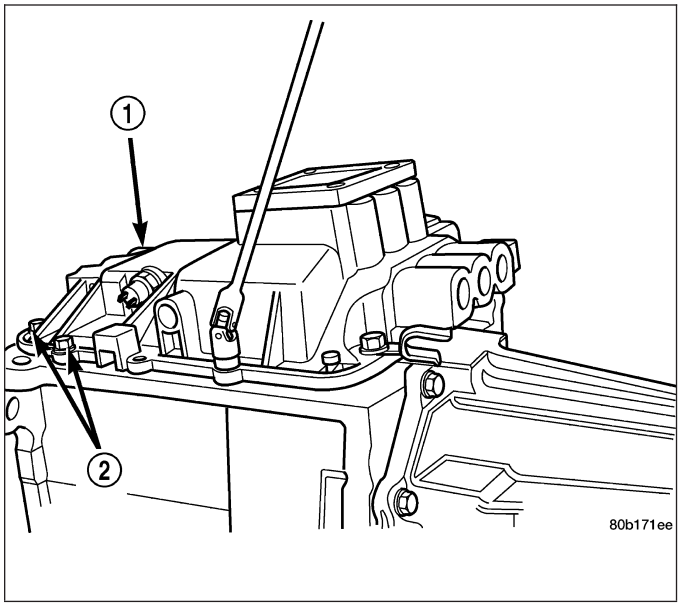

NOTE: If cover will not seat, it may not be aligned on gear case dowels or shift forks are not aligned with sleeves and shift lug.

6. Apply Mopar Lock N' Seal or equivalent to threads of shift cover bolts.
7. Install shift mechanism cover (1) bolts (2) and tighten to 27-31 N·m (216-276 in. lbs.).
8. Apply sealer to backup lamp switch. Install switch into cover and tighten to 22-34 N·m (193-265 in. lbs.).
9. Install vent assembly if removed. Apply an adhesive/sealer to vent tube to help secure it in cover.
10. Install transmission.

MANUAL TRANSMISSION - NV5600 - SERVICE INFORMATION

TABLE OF CONTENTS

page

MANUAL TRANSMISSION - NV5600 - SERVICE INFORMATION
DIAGNOSIS AND TESTING 57
REMOVAL 58
DISASSEMBLY 59
CLEANING - TRANSMISSION 76
INSPECTION 76
ASSEMBLY 77
INSTALLATION 97
SPECIFICATIONS - NV5600 99
SPECIAL TOOLS 100
SEAL-ADAPTER HOUSING - NV5600
REMOVAL 105
INSTALLATION 105
SEAL-EXTENSION HOUSING - NV5600
REMOVAL 105
INSTALLATION 105
COVER-SHIFT - NV5600
REMOVAL 106
INSTALLATION 107

MANUAL TRANSMISSION - NV5600 - SERVICE INFORMATION

DIAGNOSIS AND TESTING

LOW LUBRICANT LEVEL

A low transmission lubricant level is generally the result of a leak, inadequate lubricant fill or an incorrect lubricant level check. A correct lubricant level check can only be made when the vehicle is level. Also allow the lubricant to settle for a minute or so before checking. Always check the lubricant level after any addition of fluid to avoid an incorrect lubricant level condition.

Leaks can occur at mating surfaces of the gear case, adaptor or extension housing, or from the front/rear seals. A leak could also be the result of an overfill condition. Leaks at the rear of the extension or adapter housing will be from the housing oil seals. Leaks at component mating surfaces will probably be the result of inadequate sealer, gaps in the sealer, incorrect bolt tightening or use of a non-recommended sealer. A leak at the front of the transmission will be from either the front bearing retainer or retainer seal. Lubricant may be seen dripping from the clutch housing after extended operation. If the leak is severe, it may also contaminate the clutch disc causing the disc to slip, grab and or chatter.

HARD SHIFTING

Hard shifting is usually caused by a low lubricant level, improper or contaminated lubricants. The consequence of using non-recommended lubricants is noise, excessive wear, internal bind and hard shifting. Substantial lubricant leaks can result in gear, shift rail, synchro, and bearing damage. If a leak goes undetected for an extended period, the first indications of component damage are usually hard shifting and noise.

Component damage, incorrect clutch adjustment or damaged clutch pressure plate or disc are additional probable causes of increased shift effort. Incorrect adjustment or a worn/damaged pressure plate or disc can cause incorrect release. If clutch problem is advanced, gear clash during shifts can result. Worn or damaged synchronizer rings can cause gear clash when shifting into any forward gear. In some new or rebuilt transmissions, new synchro rings may tend to stick slightly causing hard or noisy shifts. In most cases this condition will decline as the rings wear-in.

TRANSMISSION NOISE

Most manual transmissions make some noise during normal operation. Rotating gears generate a mild whine that is audible, but generally only at extreme speeds. Severe highly audible transmission noise is generally the initial indicator of a lubricant problem.

Insufficient, improper or contaminated lubricant will promote rapid wear of gears, synchronizers, shift rails, forks and bearings. The overheating caused by a lubricant problem, can also lead to gear breakage.

REMOVAL

1. With vehicle in neutral, position it on a hoist.
2. Remove shift boot floorpan screws and slide boot upward on the shift lever.
3. Remove shift tower/isolator plate bolts and remove shift tower/isolator plate from transmission case.
4. Remove skid plate, if equipped.
5. Mark propeller shaft/shafts and axle yokes for installation reference and remove shaft/shafts.
6. Remove exhaust system as necessary.
7. Disconnect wires at backup light switch.
8. Support engine with safety stand and wood block.
9. If transmission is to be disassembled, remove drain bolt (2) at bottom of PTO cover (1) and drain lubricant from transmission.

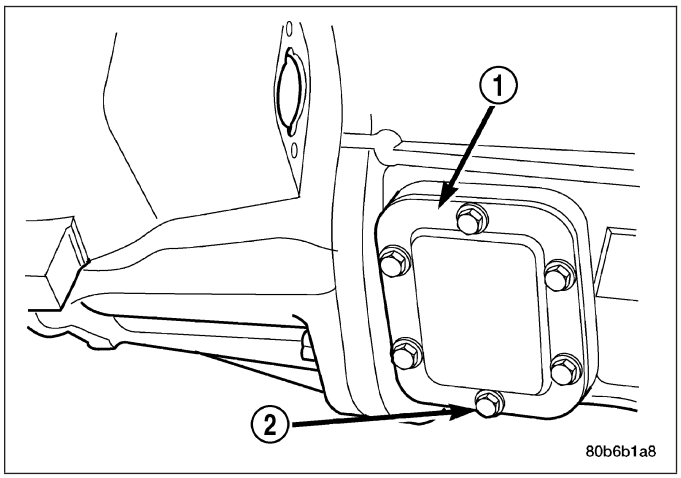

10. Remove clutch slave cylinder splash shield, if equipped.
11. Remove clutch slave cylinder bolts and move cylinder aside for clearance.
12. Remove wire harness from clips on transmission.

TWO WHEEL DRIVE

1. Remove bolts/nuts mounting transmission to the rear mount.
2. Support and secure transmission with safety chains to a transmission jack.
3. Remove rear crossmember bolts and pry out crossmember.
4. Remove transmission clutch housing bolts at the engine block.
5. Slide transmission and jack rearward until input shaft clears clutch disc and pressure plate.
6. Lower transmission jack and remove transmission from under vehicle.

FOUR WHEEL DRIVE

1. Disconnect transfer case shift linkage at transfer case range lever.
2. Support and secure transfer case with safety chains to a transmission jack.
3. Remove transfer case mounting nuts.
4. Move transfer case rearward until input gear clears transmission mainshaft.
5. Lower transfer case assembly and move it from under vehicle.
6. Support and secure transmission with safety chains to a transmission jack.
7. Remove bolts/nuts attaching transmission mount to rear crossmember.
8. Remove rear crossmember bolts and pry out crossmember.
9. Remove transmission clutch housing bolts at the engine block.
10. Move transmission rearward until input shaft clears clutch disc.
11. Lower transmission and remove it from under vehicle.

DISASSEMBLY

NOTE: Use Fixture 8241 for moving and handling the transmission. The fixture supports the transmission at the center of gravity in order to ease mounting the transmission into the build fixture.

1. Mount transmission (2) into Fixture 8230 (1).
2. Rotate transmission to a horizontal position.

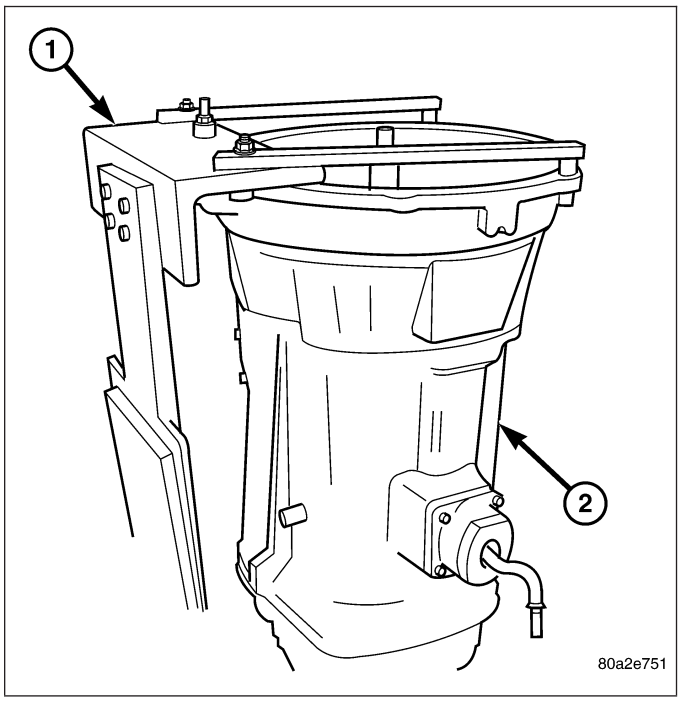

3. Remove shift tower (1) from transmission (2).

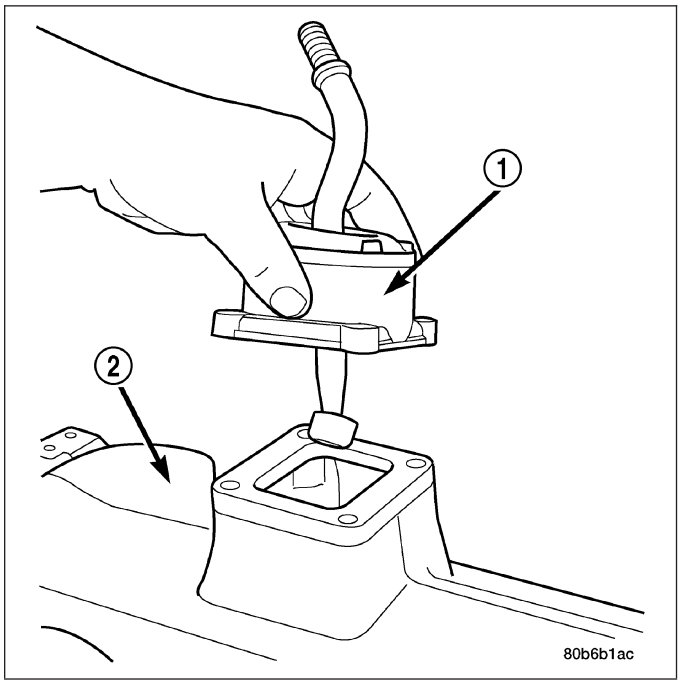

4. Remove isolator plate (1) from transmission (2) .

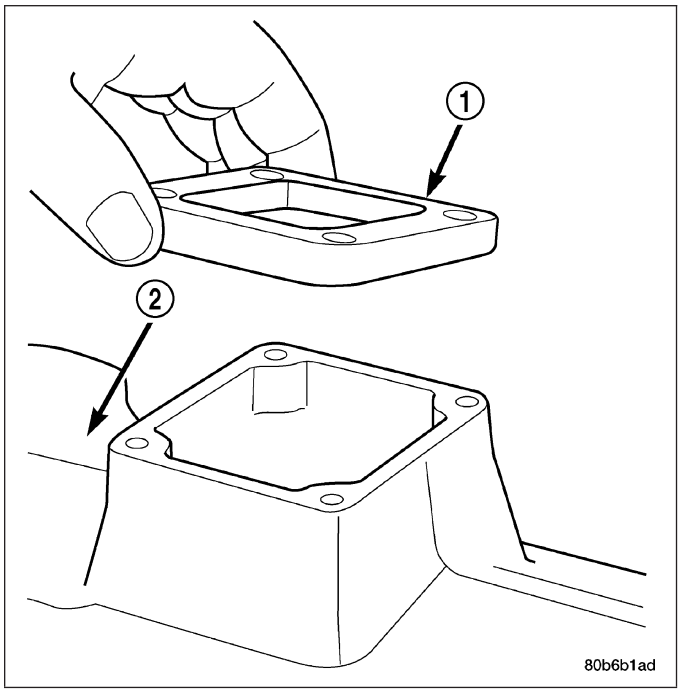

5. Remove primary shift rail detent plug (1).

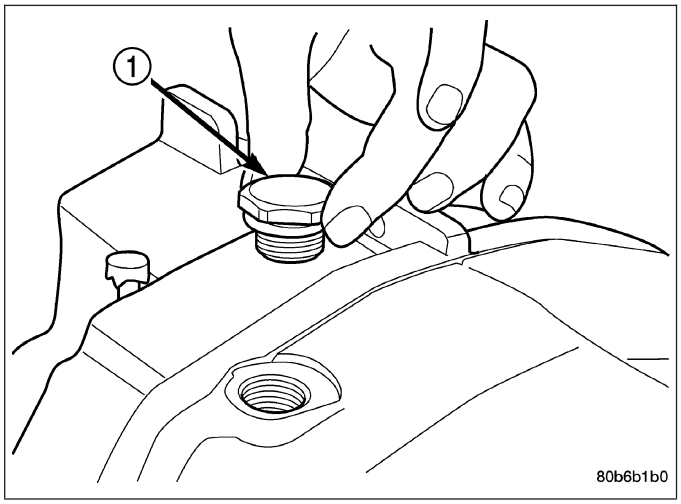

6. Remove primary shift rail detent spring (1).

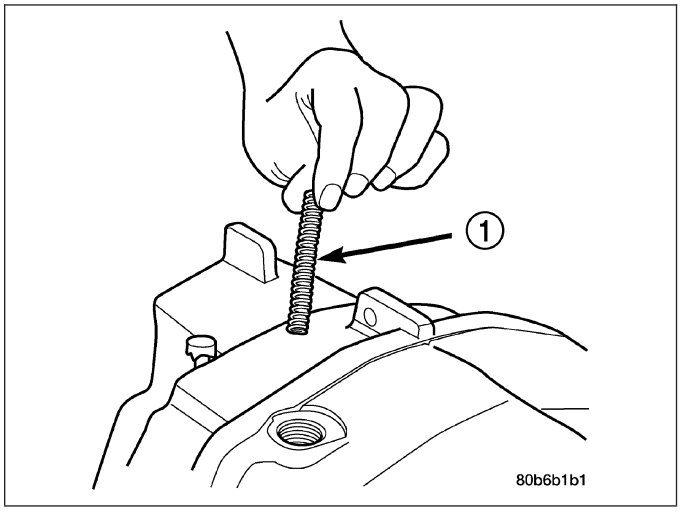

7. Remove primary shift rail detent plunger (1).

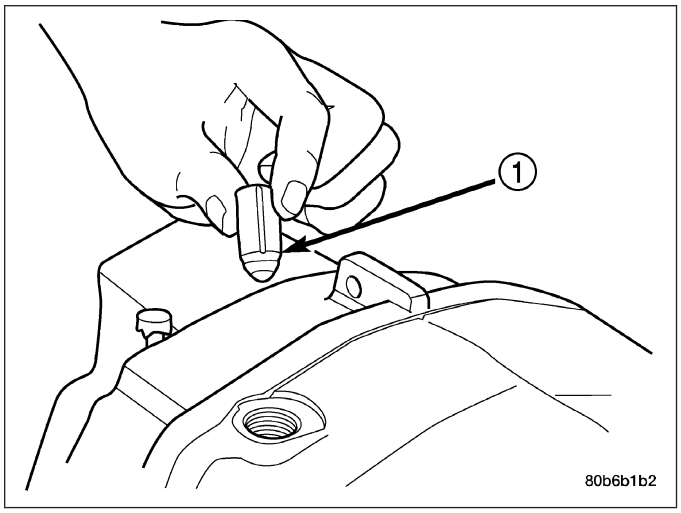

8. Remove clutch housing bolts (1) from inside the housing.

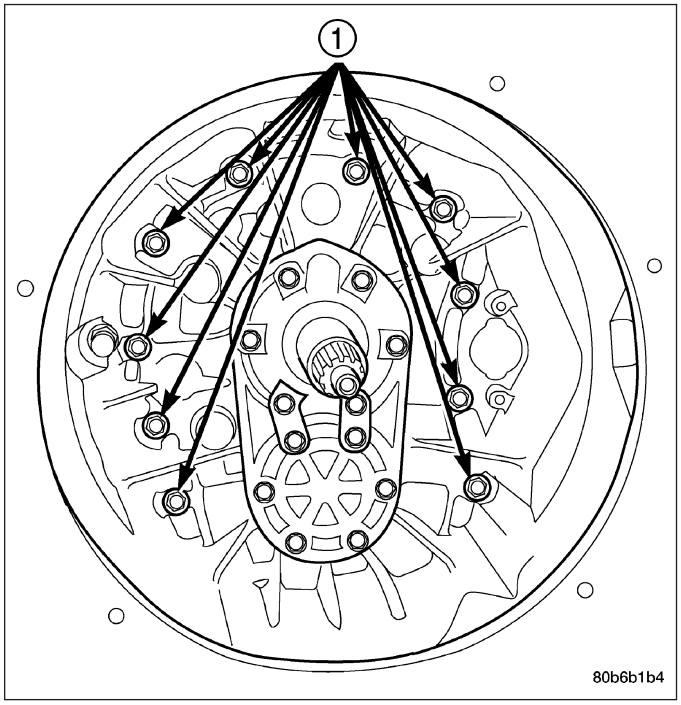

9. Remove shift rail blocker bolt (1) from transmission case.

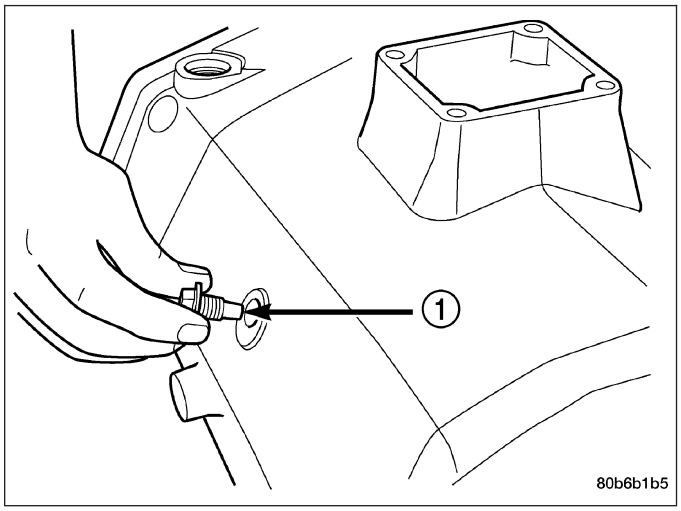

EXTENSION/ADAPTER HOUSING

1. Remove extension/adapter housing bolts from transmission case.
2. Remove extension/adapter housing (2) from the transmission gear case with Puller 8244 (1).

NOTE: Keep housing straight during removal due to reverse idler shaft may bind on one side of the housing.

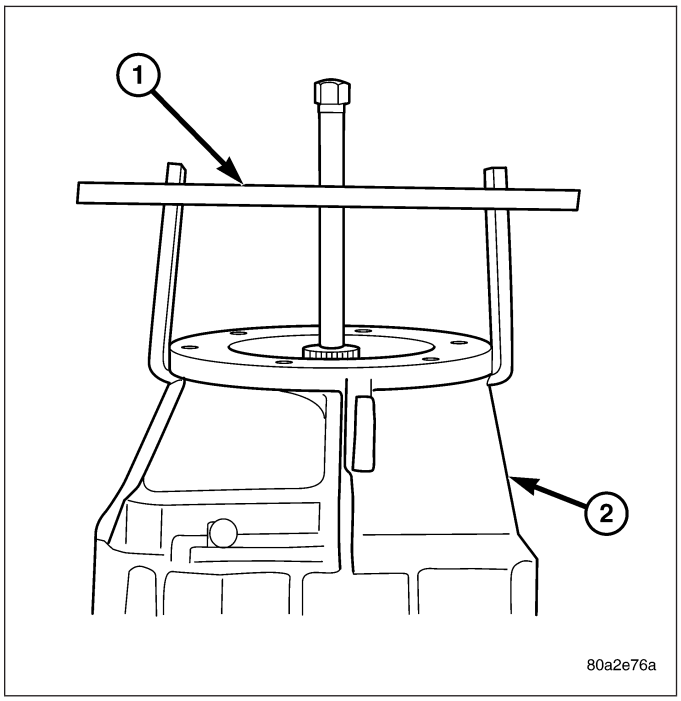

3. Remove crossover detent plug (1), spring and plunger from the extension/adapter housing (2).

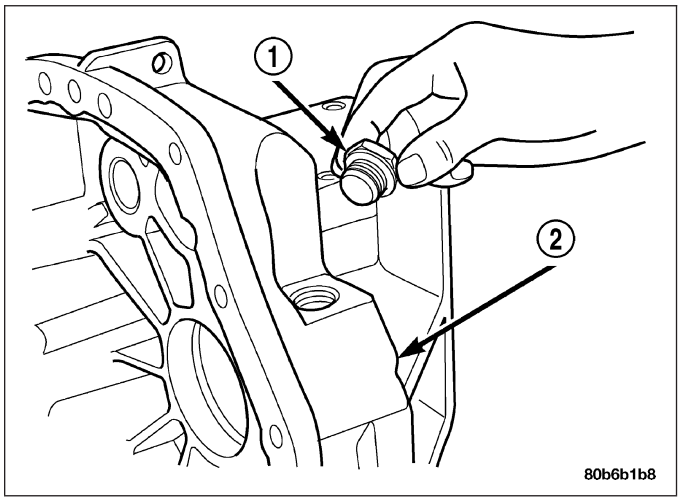

4. Remove bolt (2) and washer holding the crossover cam (1) to the extension/adapter housing (3).
5. Remove crossover cam from extension/adapter housing.
6. Remove back-up lamp switch from extension/adapter housing.

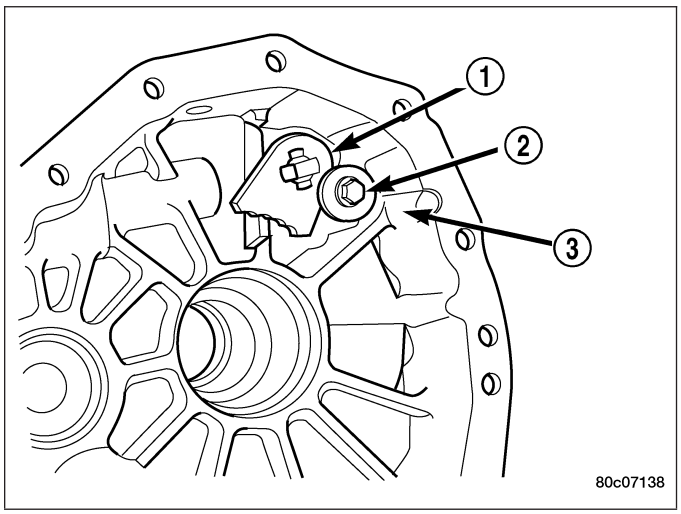

7. Remove countershaft rear bearing race from extension/adapter housing with Remover L-4518 (1).

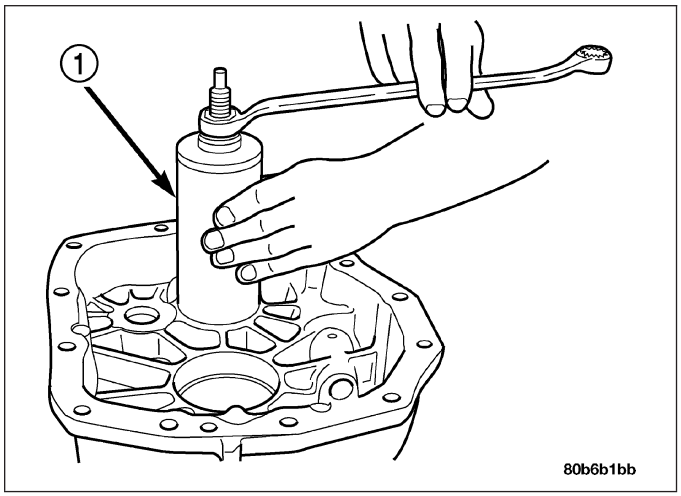

NOTE: Tag all countershaft pre-load shims (1) from between the bearing race (2) and the housing.

8. Remove crossover cam bushing from the extension/adapter housing with Remover 8240.
9. On 4X2 vehicles, remove extension housing seal with a pry tool or a slide hammer and screw.
10. On 4X4 vehicles, remove adapter housing seal with a pry tool or a slide hammer and screw.

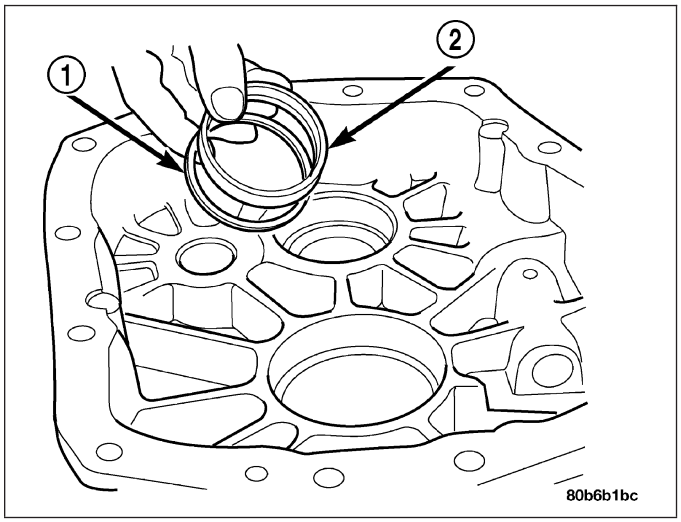

TRANSMISSION GEAR CASE

1. Remove remaining bolts from transmission case to the clutch housing.
2. Remove shift socket roll pin with a 6 mm (7/32 in.) punch and hammer.
3. Turn shift socket so it won't catch the case when lifting it up.
4. Install Fixture 8232 (1) to the transmission case (2).
5. Attach an engine crane or equivalent to Fixture 8232 and remove the transmission gear case from the clutch housing.
6. Remove rear output shaft and countershaft bearing races from the transmission gear case with a brass drift and hammer.

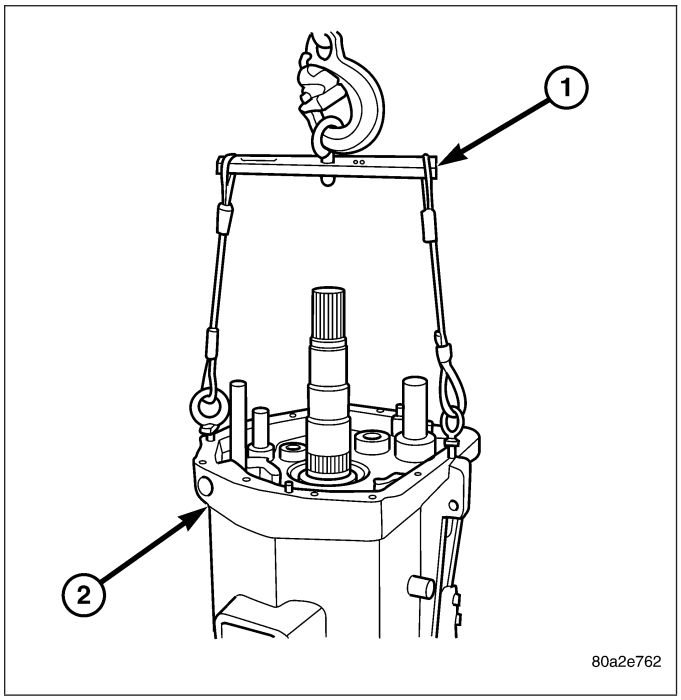

GEARTRAIN

1. Remove 5-6 crossover bracket (1) bolts.

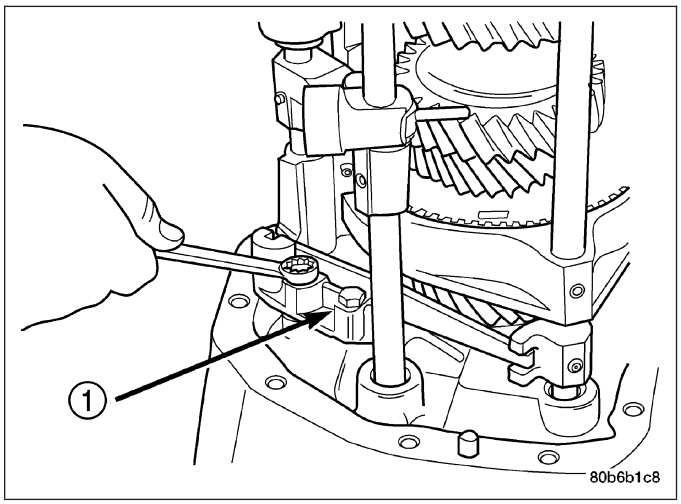

2. Mount Fixture 8232 (2) to output shaft (1) and countershaft.
3. Attach engine crane to Fixture 8232 and raise geartrain approximately 1/4 in. from the clutch housing.
4. Remove 5-6 crossover bracket from the clutch housing.
5. Lower geartrain back into the clutch housing.

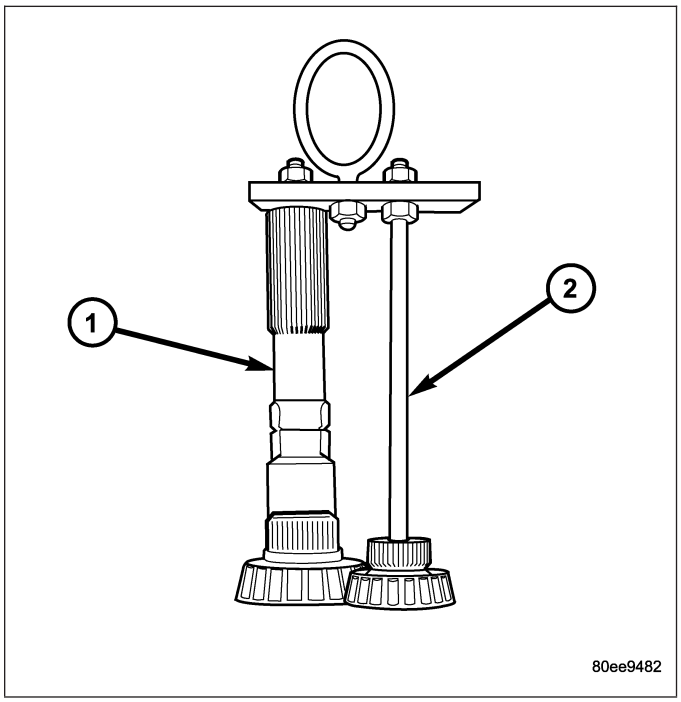

6. Install Holding Tool 8242 (1) onto 5-6 synchro (2) and tighten screw to hold 5-6 synchro together during removal.

NOTE: Note the order of the shift fork arms at the primary shift rail, while in the Neutral position.

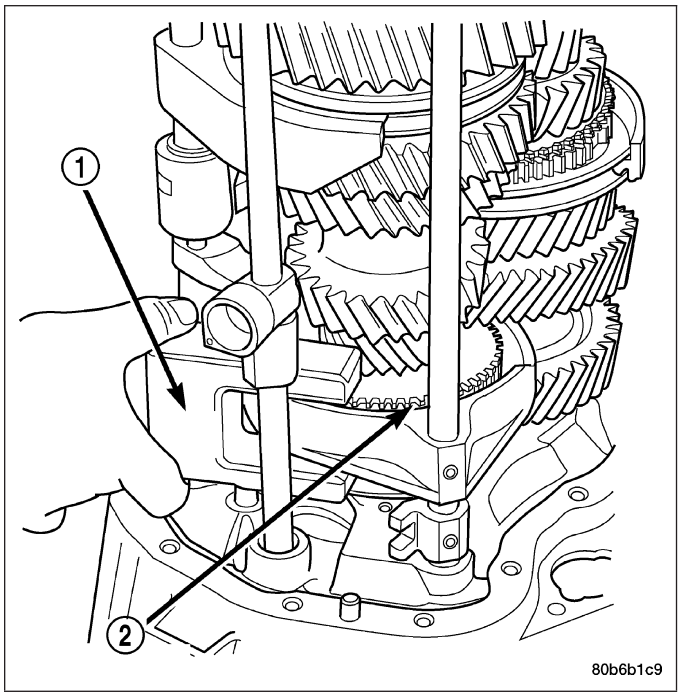

7. Raise geartrain and shift rails until all the shift rails clear the clutch housing.
8. Remove shift rails (1) from the rest of the geartrain.
9. Raise geartrain until the input shaft is clear of the clutch housing.

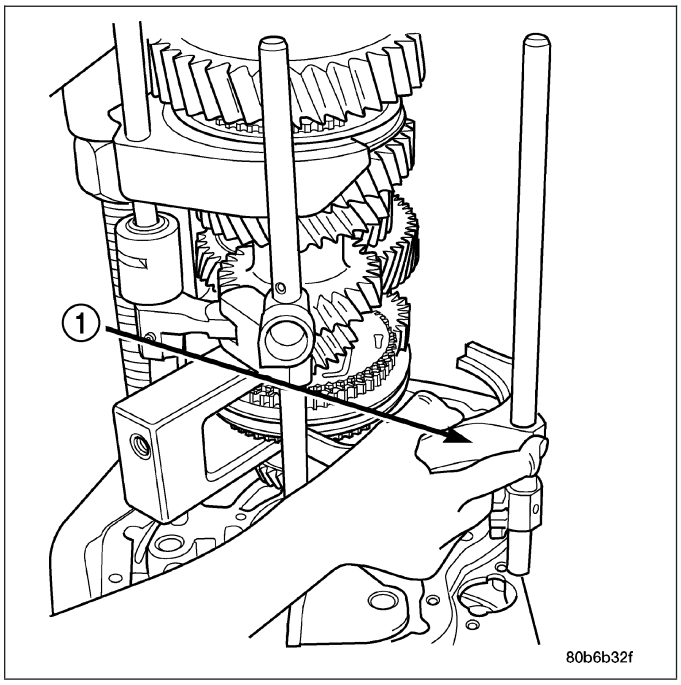

10. Remove geartrain from clutch housing and install geartrain into Support Stand 8246 (2).
11. Remove Fixture 8232 (1) from output shaft and countershaft.
12. Separate countershaft from output shaft.
13. Separate output shaft from the input shaft. Hold 5-6 synchro together while removing output shaft to prevent synchro sleeve from being dislodged from the synchro hub.

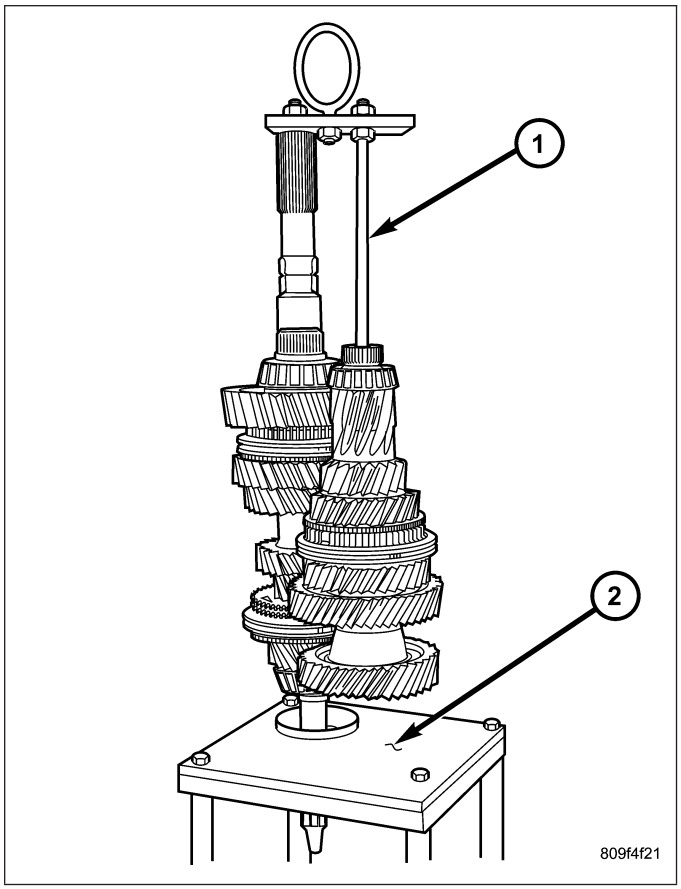

COUNTERSHAFT BEARINGS

1. Remove snap-ring holding the front countershaft bearing onto the countershaft.
2. Remove front countershaft bearing with Collar 6444-8, Jaws 6451 (2), Puller Rods 6444-4 and Puller 6444 (1).

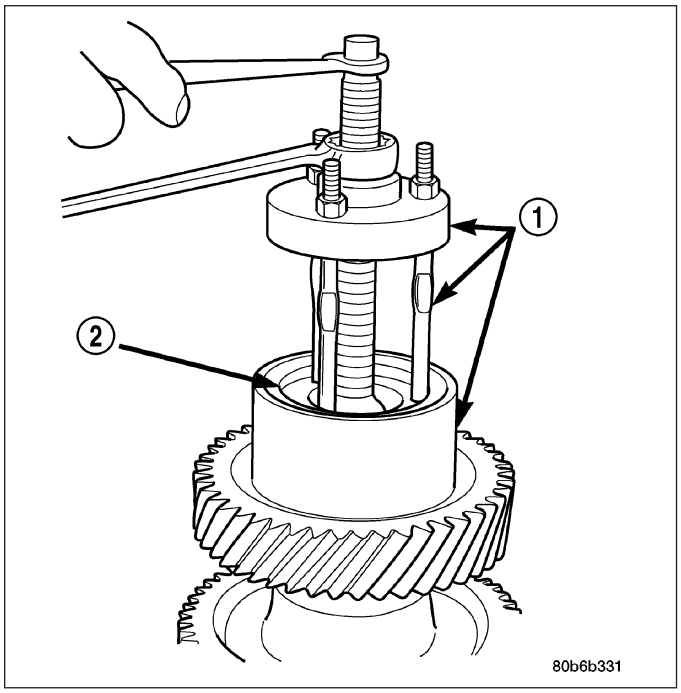

3. Remove rear countershaft bearing with Collar 6444-8, Jaws 6447 (2), Puller Rods 6444-4, Puller 6444 (1) and suitable press button.

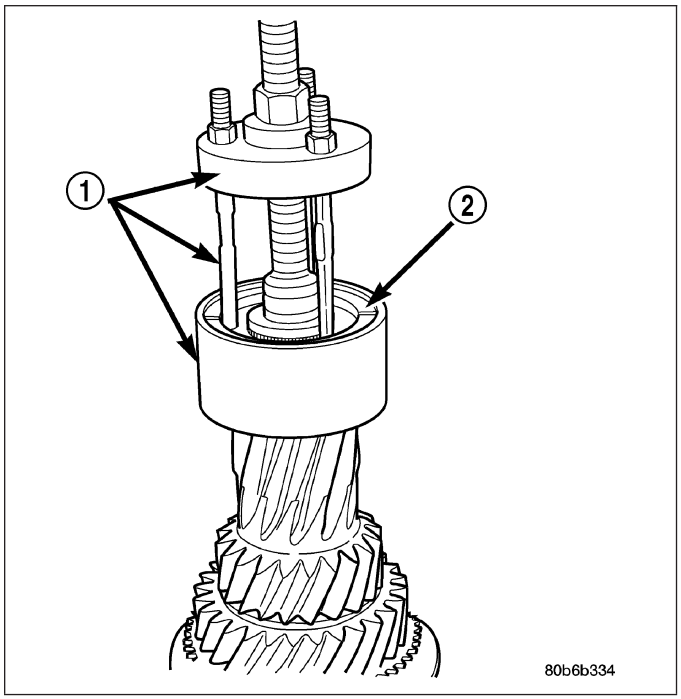

OUTPUT SHAFT BEARINGS

1. Remove snap-ring holding the pocket bearing onto the output shaft.
2. Remove pocket bearing from the output shaft with Sleeve 6444-8, Jaws 8234 (2), Puller Rods 6444-4 and the remainder of Puller 6444 (1).
3. Remove snap-ring holding the rear output shaft bearing onto the output shaft.
4. Use Collar 6444-8, Jaws 8271 and Puller Rods 6444-3 for 4X2 vehicles or Puller Rods 6444-4 for 4X4 vehicles with the remainder of Puller 6444 to remove the rear output shaft bearing from the output shaft.
5. Remove rear output shaft thrust washer from the output shaft.

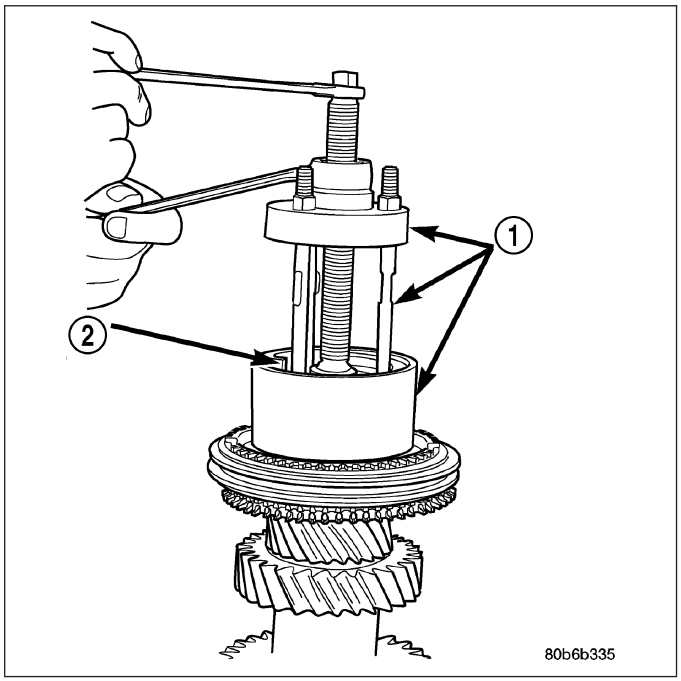

INPUT SHAFT

1. Remove fifth gear blocker ring (1) from the input shaft (2).

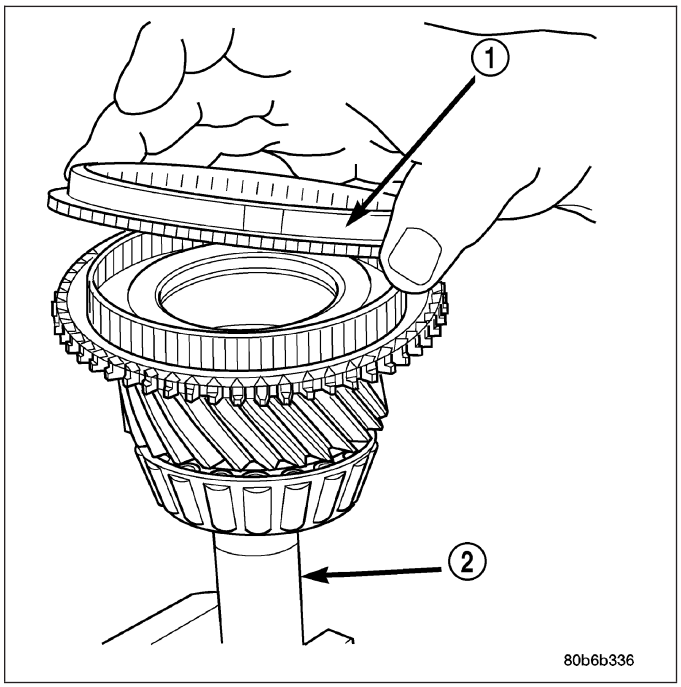

2. Remove fifth gear friction cone (1) from the input shaft (2).

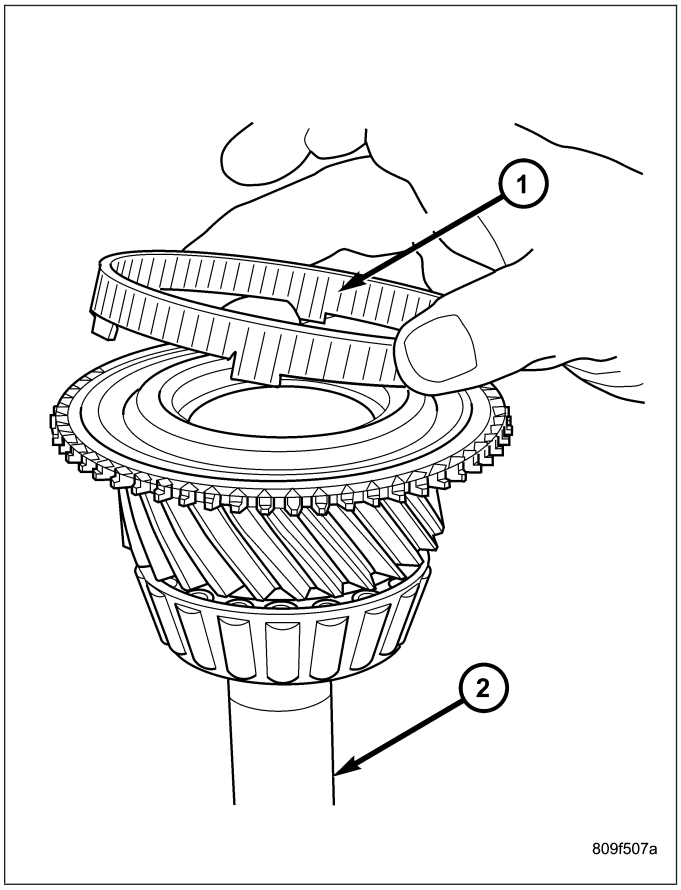

3. Remove output shaft bearing race from the input shaft (2) with Puller L-4518 (1).

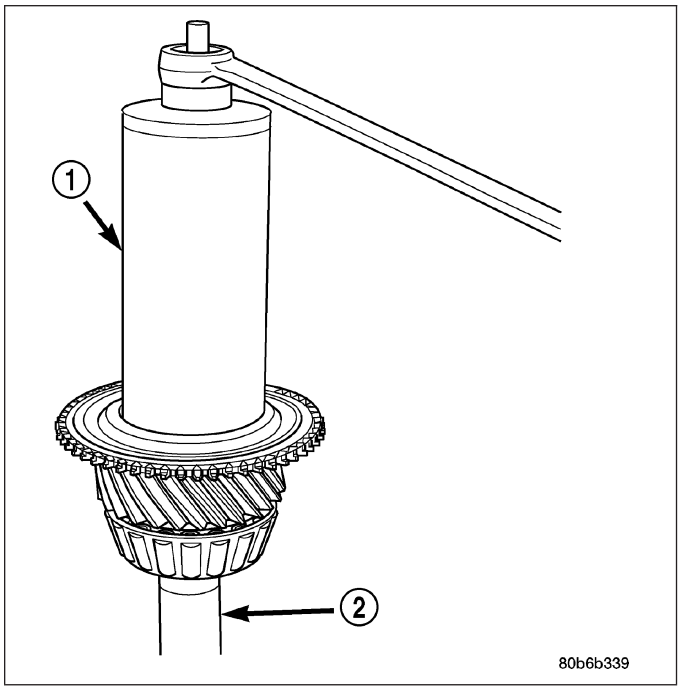

4. Remove input shaft bearing and oil guide from the input shaft with Collar 6444-8, Jaws 8243 (2), Puller Rods 6444-6 and the remainder of Puller 6444 (1).

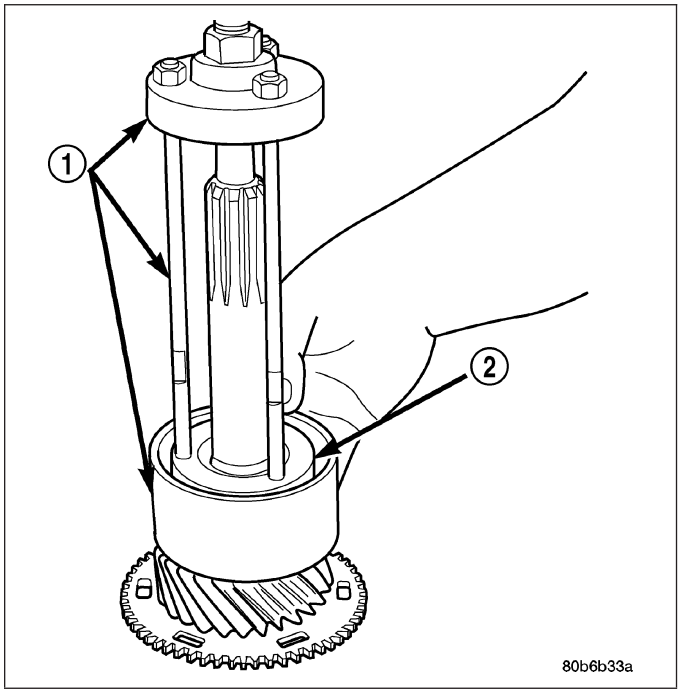

OUTPUT SHAFT

NOTE: Some gear and synchro components can be installed backwards. Mark the gears, clutch gears, synchro hubs, and sleeves for installation reference during disassembly. Use paint or a scribe for marking purposes. Then stack the geartrain parts in order of removal.

1. Remove first gear from the output shaft.
2. Remove first gear bearing (2) from the output shaft (1).

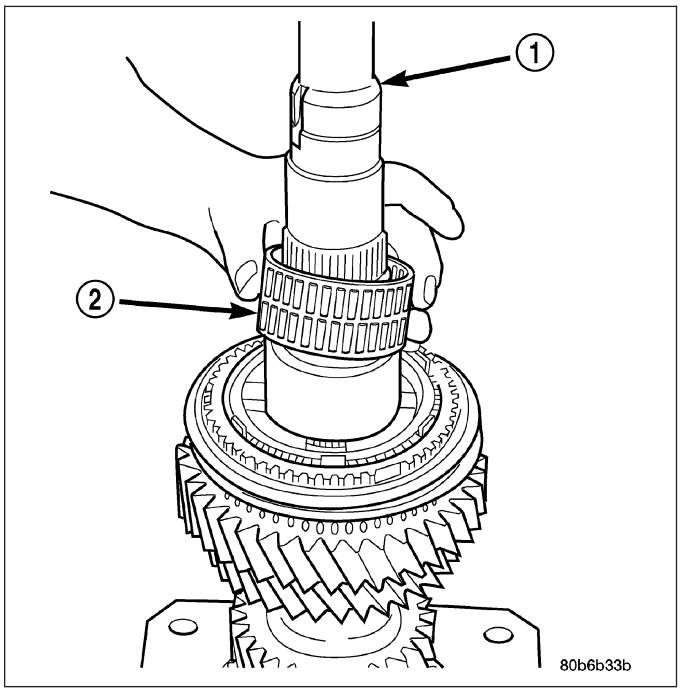

3. Remove first gear blocker rings (2) and cone (3) from the 1-2 synchro assembly.
4. Install the remainder of the output shaft into Fixture 8227 with press blocks under second gear.

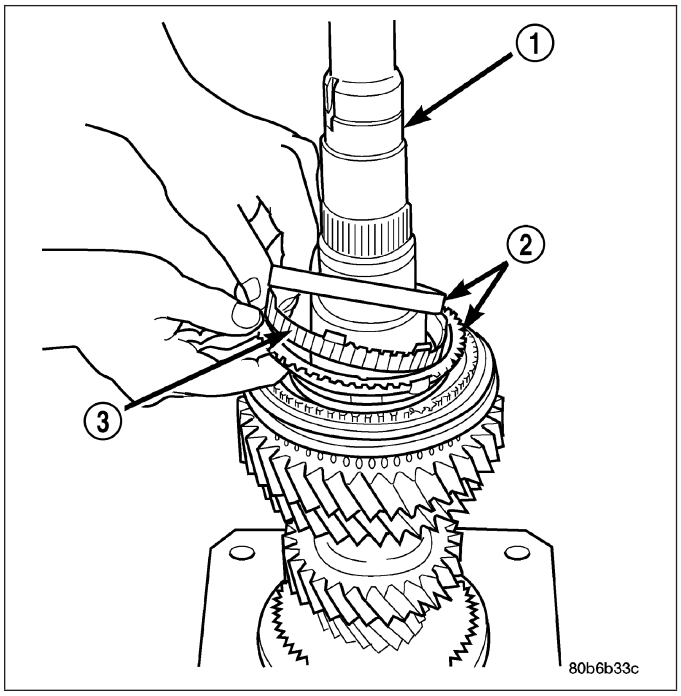

5. Install shaft and Fixture assembly into a shop press.
6. Press second gear (3), 1-2 synchro assembly (5) and first gear bearing sleeve (2) from the output shaft (1)
7. Remove second gear bearing from the output shaft.
8. Reverse output shaft in the Fixture 8227 with press blocks positioned under the 5-6 synchro assembly.
9. Press the 5-6 synchro assembly from the output shaft.

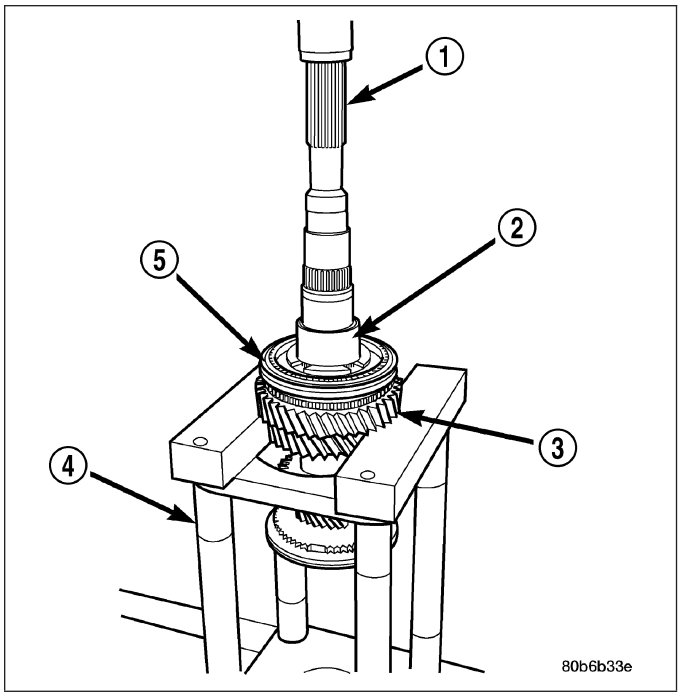

10. Remove sixth gear (2) and the sixth gear bearing from the output shaft (3).

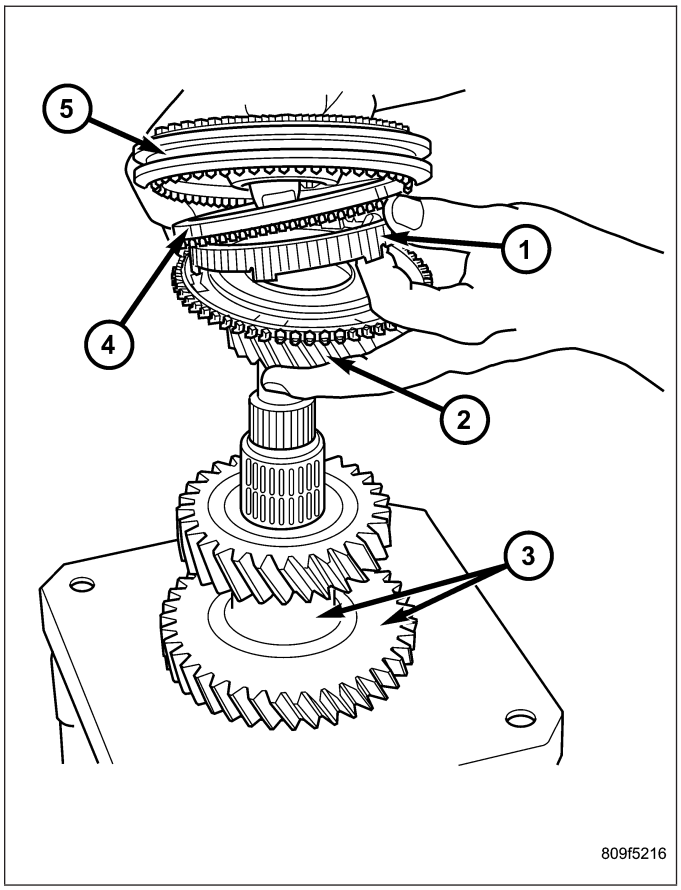

COUNTERSHAFT

1. Install the countershaft into Fixture 8227 (3) with press blocks located under the fifth countershaft gear (2).
2. Place the assembly into a shop press.
3. Use Guide 8235 (1) on end of countershaft and press the countershaft fifth gear from the countershaft.

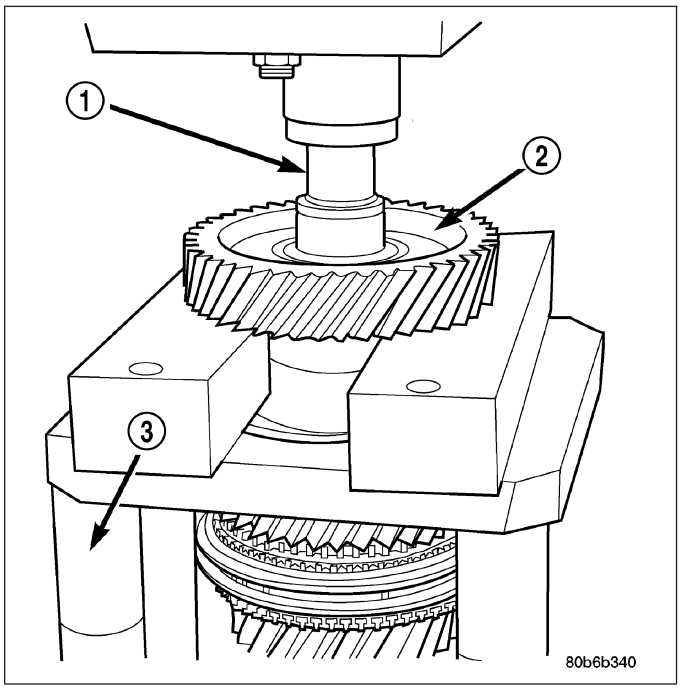

4. Place countershaft in Fixture 8227 (3) with press blocks placed under the sixth countershaft gear (2).
5. Use Guide 8235 (1) on end of countershaft and press the countershaft sixth gear from the countershaft.
6. Remove countershaft from the press and Fixture 8227.

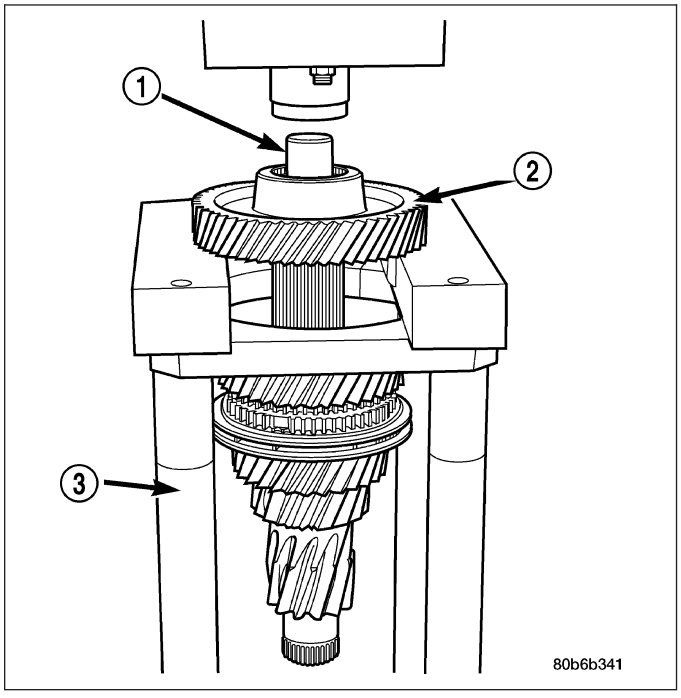

7. Remove fourth countershaft gear (5), friction cone (4), blocker ring (1) and bearing (2) from the countershaft (3).

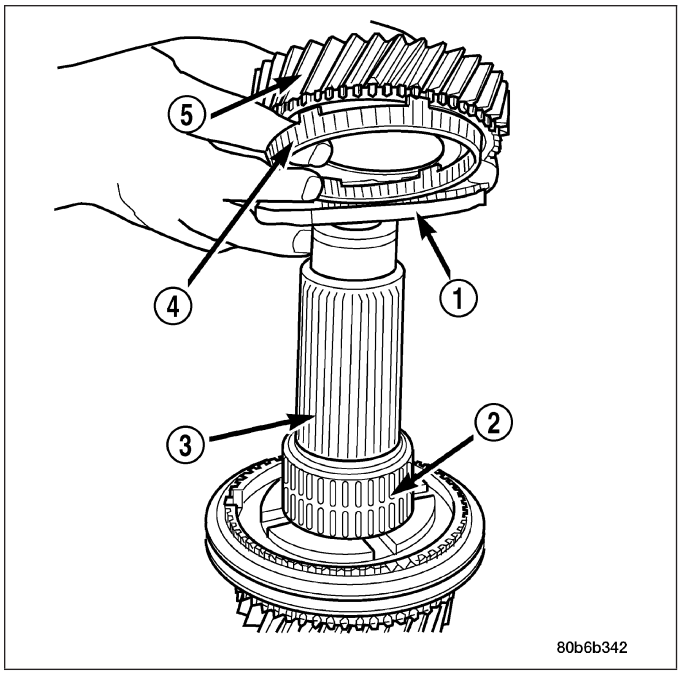

8. Install countershaft (5) into Fixture 8227 (2) with press blocks located under the third countershaft gear (1).
9. Place assembly into a shop press and press third countershaft gear, 3-4 synchro (3) and fourth countershaft gear bearing sleeve (4) from the countershaft.
10. Remove countershaft from the press and Fixture 8227.

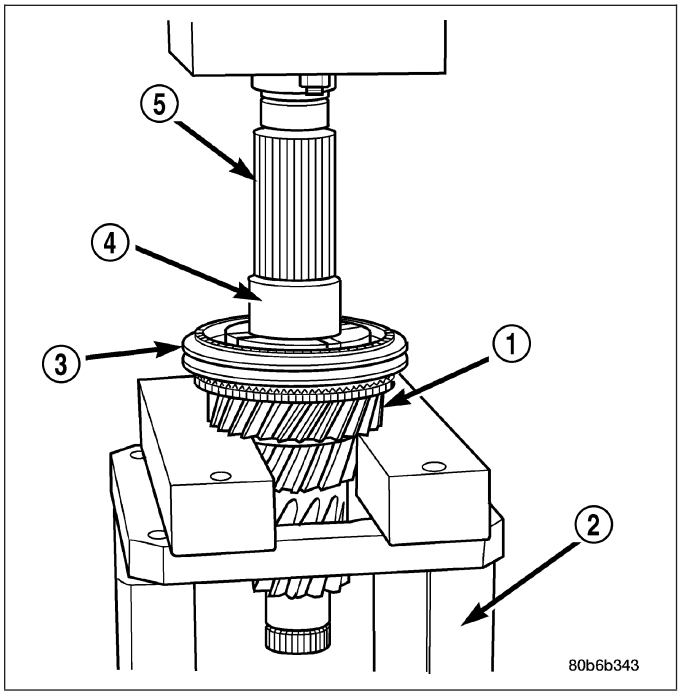

11. Remove third countershaft gear bearing (3) from the countershaft (1).
12. The 2-3 thrust washer (2) should not normally need to be removed from the countershaft. If necessary slide 2-3 thrust washer off countershaft.

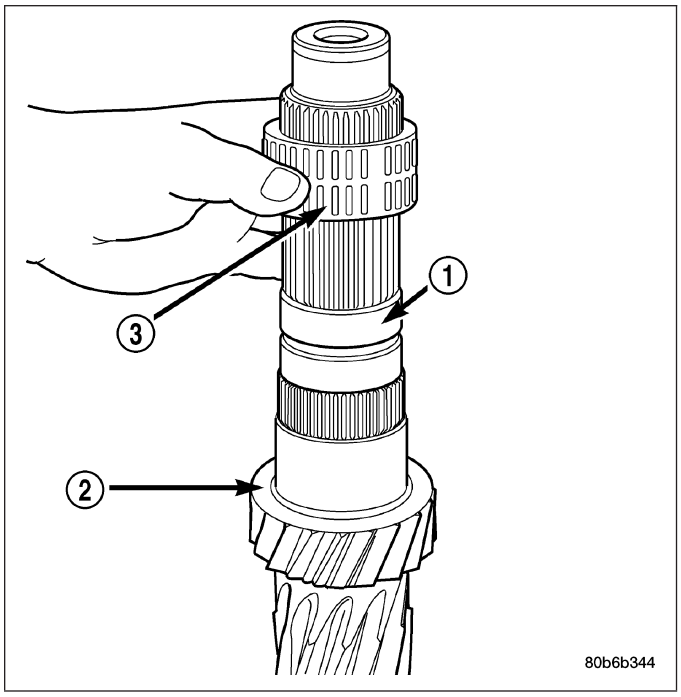

CLUTCH HOUSING

1. Remove input shaft retainer (1) bolts from the clutch housing (2) and remove retainer.

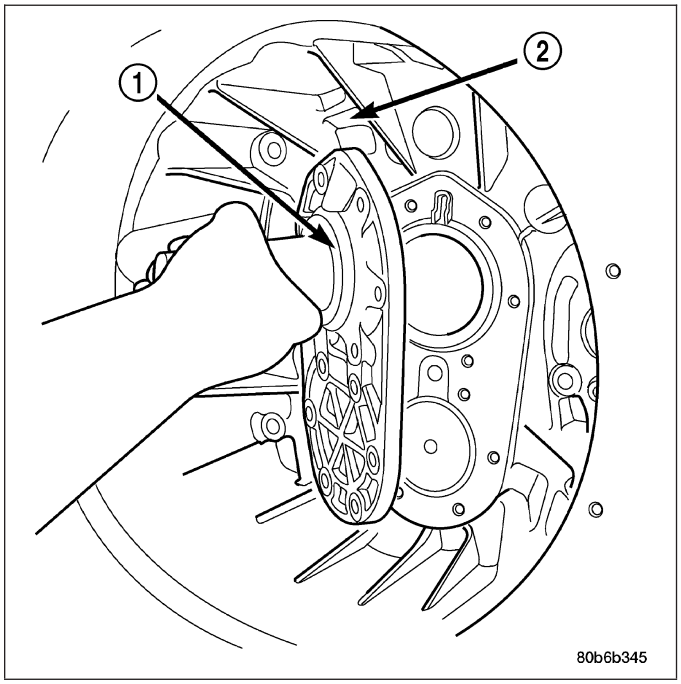

2. Remove countershaft oil guide (2) from the countershaft front bearing bore in the clutch housing (1).

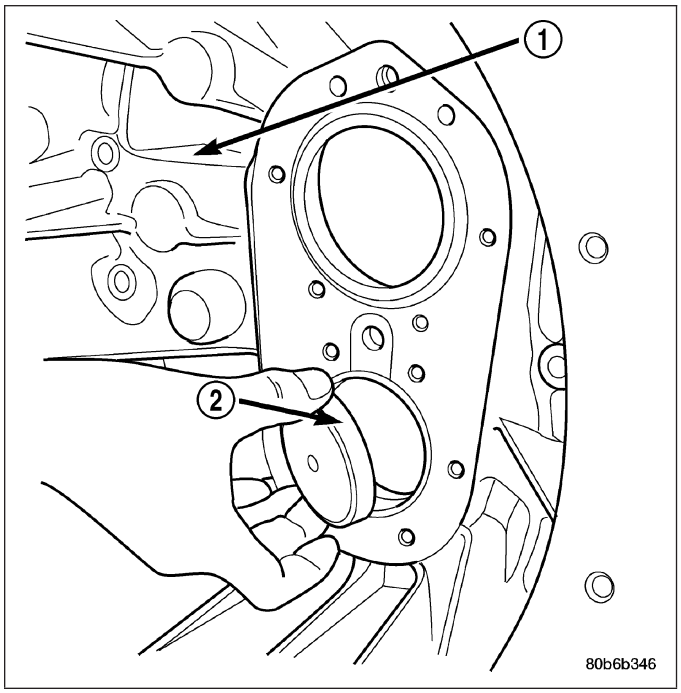

3. Remove countershaft front bearing race, endplay shims and spacer from clutch housing (1) with Remover 6061-1 (3) and Handle C-4171 (2).
4. Remove input shaft bearing race with Remover/Installer 8237 and Handle C-4171.

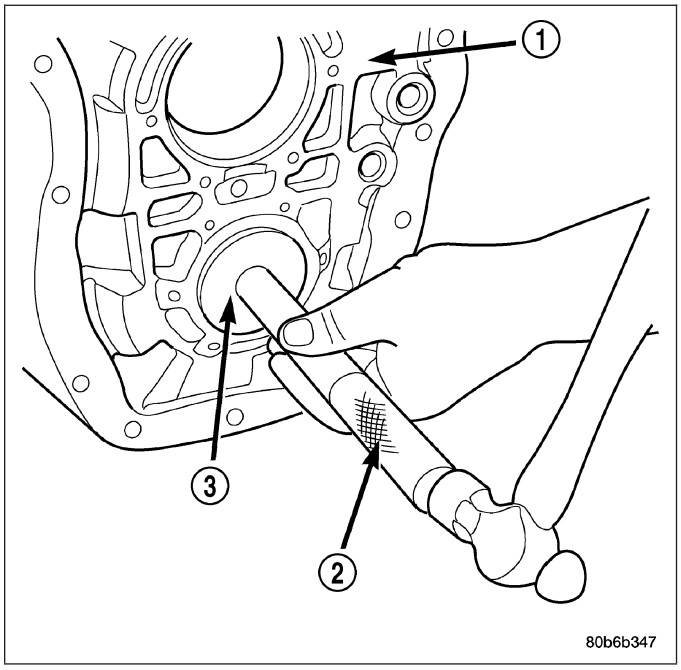

5. Remove input shaft oil guide (1) and retainer seal (2).

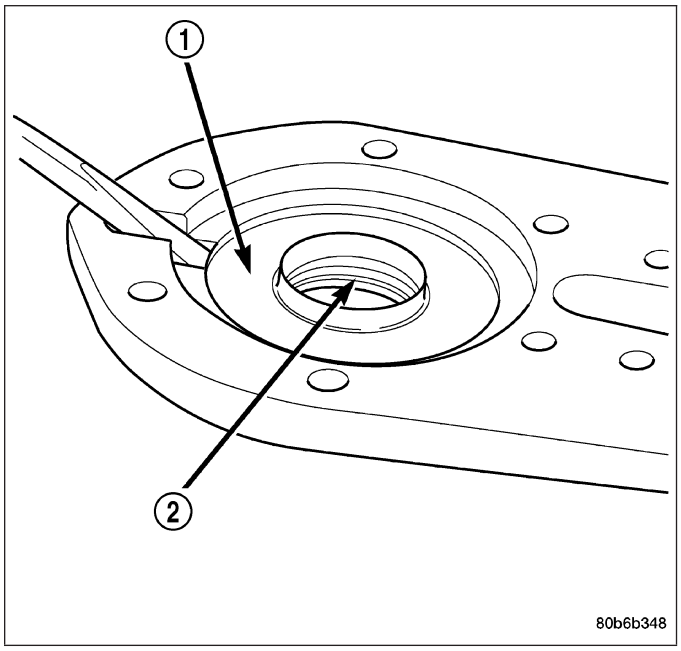

CLEANING - TRANSMISSION

Clean the gears, bearings shafts, extension/adapter housing and gear case with solvent. Dry all parts except the bearings with compressed air. Allow the bearings to either air dry or wipe them dry with clean shop towels.

INSPECTION

NOTE: Minor corrosion, nicks, or pitting can be smoothed with 400 grit emery and polished out with crocus cloth.

Inspect the reverse idler gear, bearings, shaft and thrust washers. Replace the bearings if the rollers are worn, chipped, cracked, flat-spotted or brinnelled. Replace the gear if the teeth are chipped, cracked or worn thin.

Inspect the front bearing retainer and bearing cup. Replace the bearing cup if scored, cracked, brinnelled or rough. Check the release bearing slide surface of the retainer carefully. Replace the retainer if worn or damaged in any way.

Inspect mainshaft bearing surfaces, splines, snap ring grooves and threads. Replace the shaft if any surfaces exhibit considerable wear or damage.

Inspect the countershaft and bearings. Replace the shaft if any surfaces exhibit considerable wear or damage.

Inspect shift forks for wear and distortion. Check fit of the sleeve in the fork to be sure the two parts fit and work smoothly. Replace the fork if the roll pin holes are worn oversize or damaged. Do not attempt to salvage a worn fork. Replace shift fork roll pins if necessary or if doubt exists about their condition.

The all bearings for wear, roughness, flat spots, pitting or other damage. Replace the bearings if necessary.

Inspect the blocker rings and fiction cones. replace either part if worn or damaged in any way. Replace if the friction material is burned, flaking off or worn.

Inspect synchro components wear or damage. Replace parts if worn, cracked or distorted.

Inspect all of the thrust washers and locating pins. Replace the pins if bent or worn. Replace the washers if worn or the locating pin notches are distorted.

Inspect the case and housing/adapter sealing and mating surfaces are free of burrs and nicks. Inspcet the alignment dowels in the case top surface and in the housing/adapter are tight and in good condition. Replace the gear case or housing/adapter if cracked or broken.

ASSEMBLY

OUTPUT SHAFT

1. Install second gear synchro inner blocker ring (1) onto second gear (1).

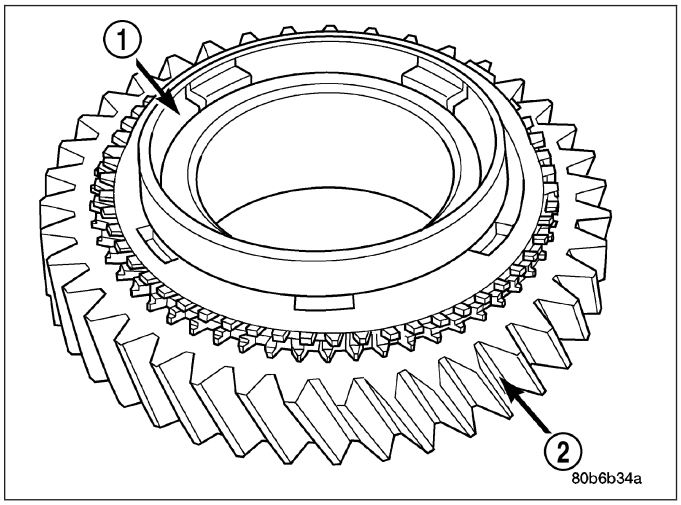

2. Install second gear friction cone (2) over blocker ring and onto second gear (1).

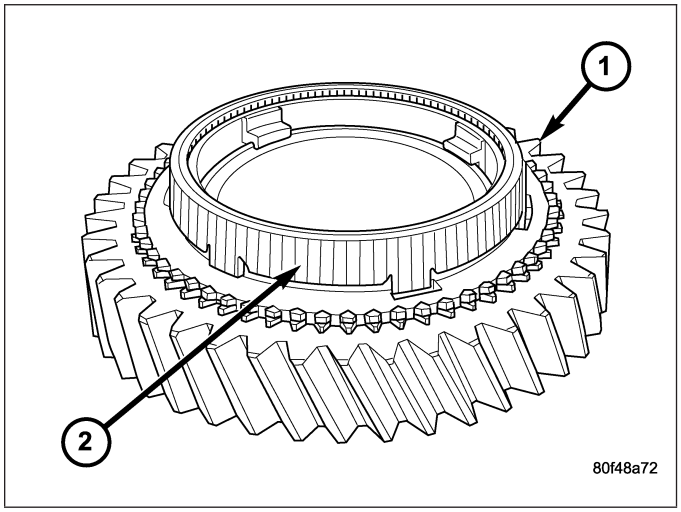

3. Install second gear outer blocker ring (1) on second gear (3) friction cone. Align the lugs on the outer ring with lugs on the inner ring.

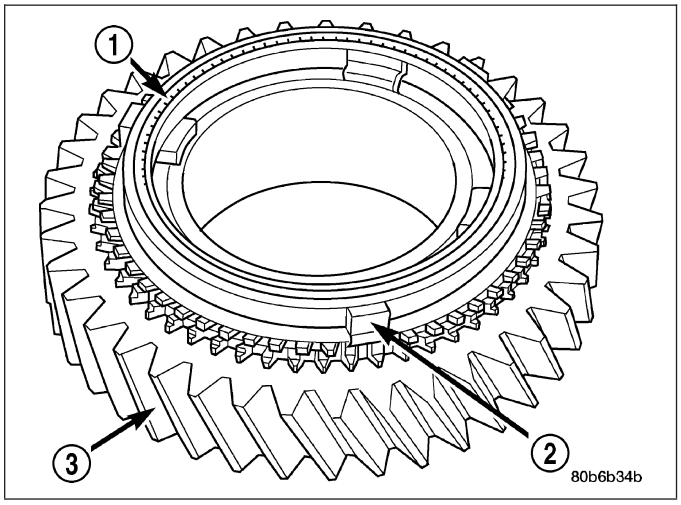

4. Install 1-2 synchro (1) assembly on second gear assembly (2).

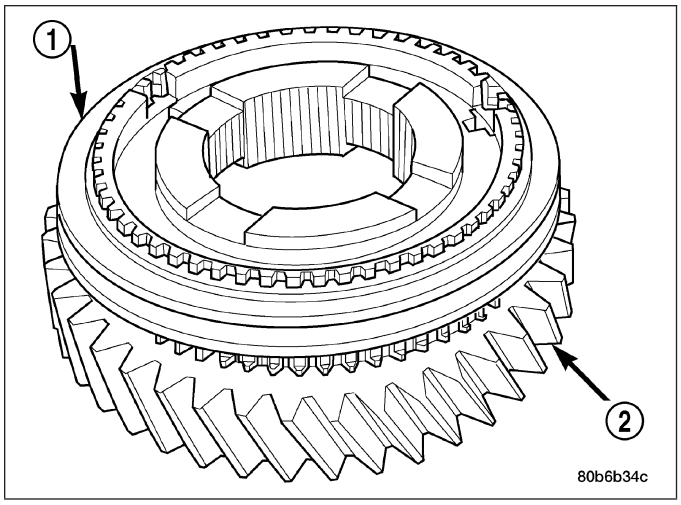

5. Reverse assembly on the bench.
6. Lubricate and install second gear (2) bearing (1).

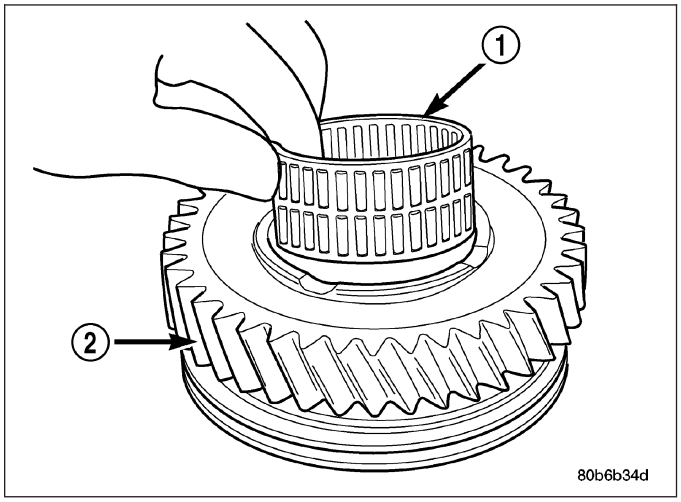

7. Place 1-2 synchro (1), second gear (3) with bearing assembly on shop press with second gear facing upward.
8. Install output shaft (1) into the second gear 1-2 synchro assembly with the front of the output shaft facing upward.
9. Press the output shaft into position.

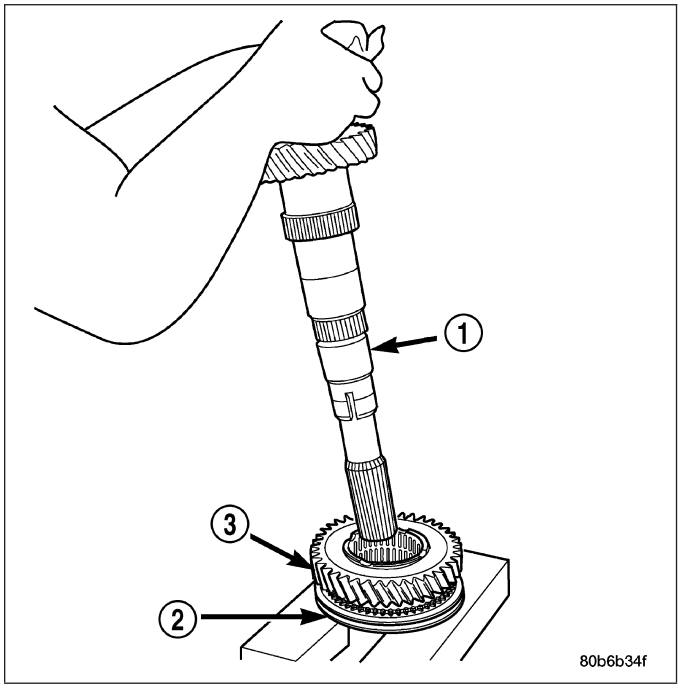

10. Place first gear on bench with the synchro clutch ring up.
11. Install first gear synchro inner blocker ring (1) onto first gear (2).

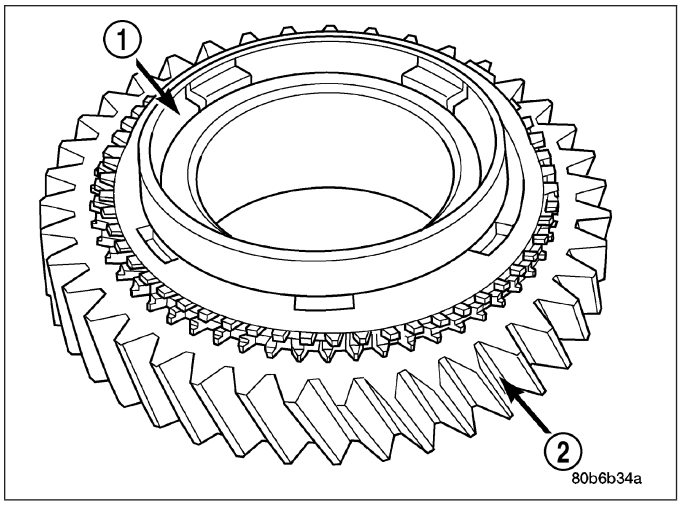

12. Install first gear synchro friction cone (2) over blocker ring and onto first gear (1).

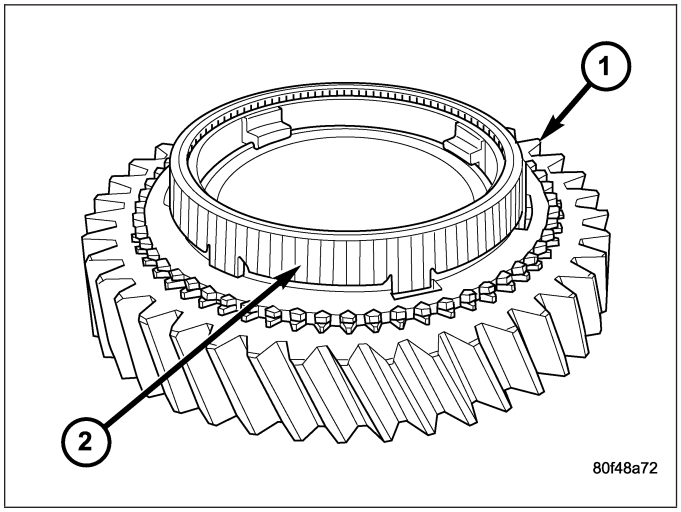

13. Install first gear synchro outer blocker ring (1) over first gear (3) synchro friction cone. Align one of the lugs (1) on the outer ring with a lug on the inner ring.

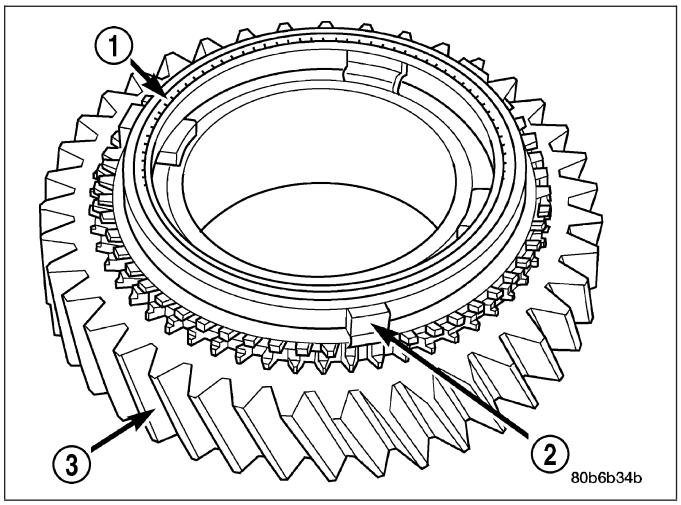

14. Reverse the output shaft in the press.
15. Install first gear bearing sleeve (2) on output shaft with Installer 8228 (1) and a shop press.

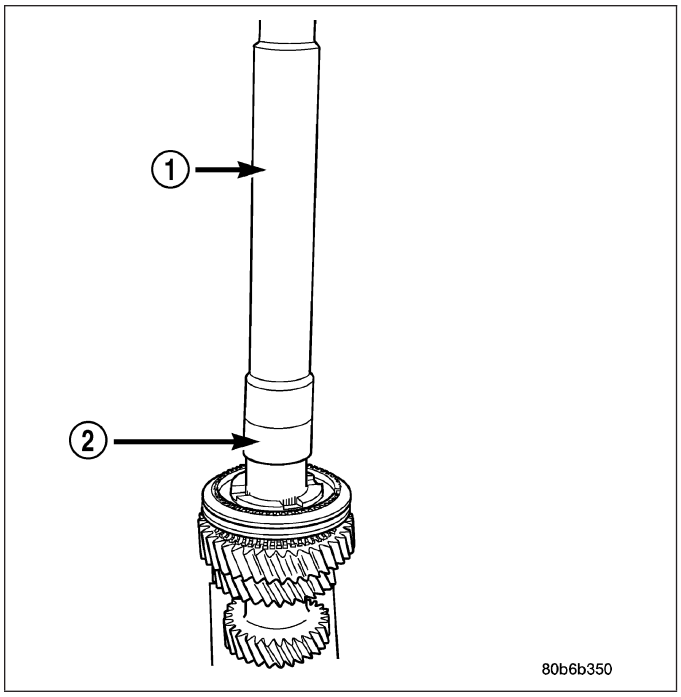

16. Install first gear and blocker assembly (2) onto output shaft (1).
17. Install first gear bearing over the output shaft and into first gear.

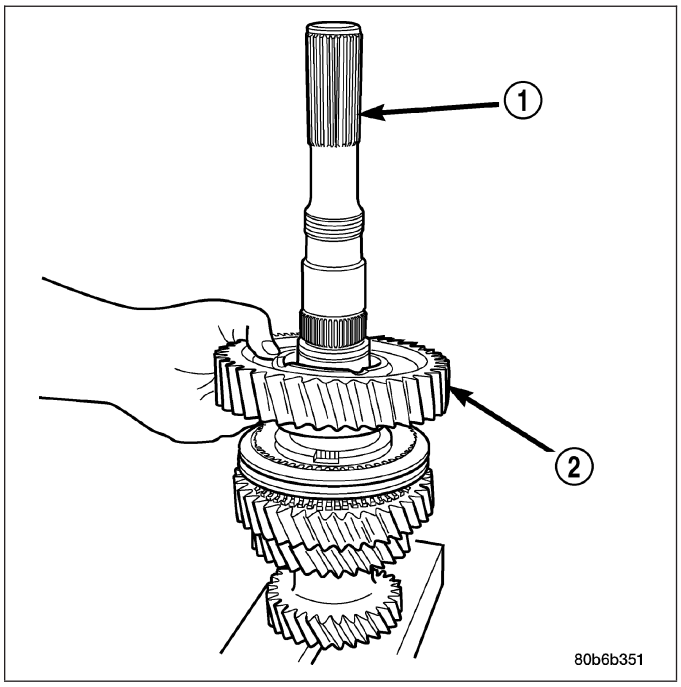

18. Install output shaft thrust washer (2) onto output shaft (1).

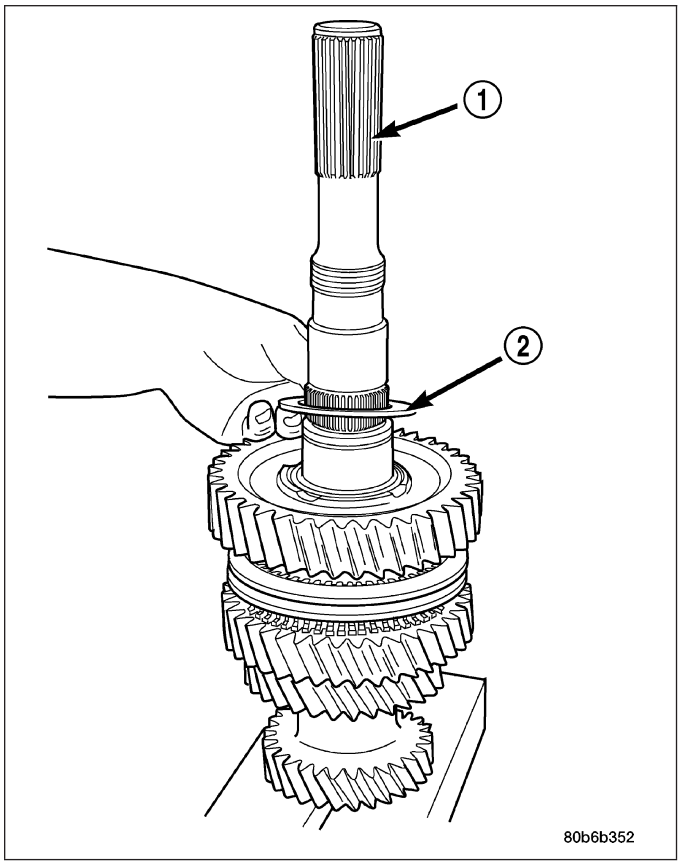

19. Install rear output shaft bearing (2) onto output shaft with Installer 8228 (1) and a shop press.
20. Install a **new** snap-ring to hold the rear output bearing onto the output shaft. Install the thickest snap-ring which will fit into the groove.

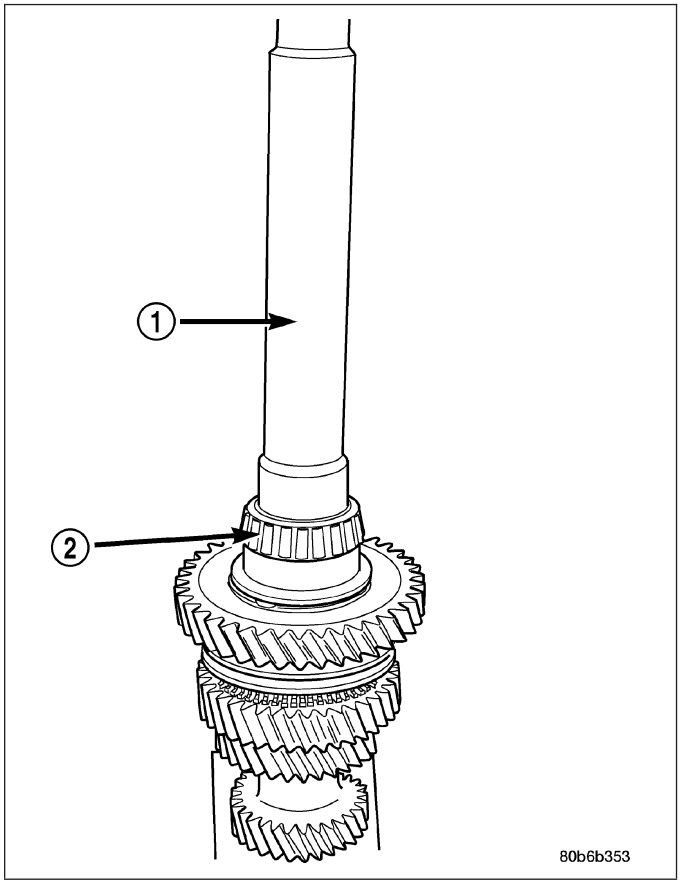

21. Reverse output shaft in the Fixture 8227 and support the shaft with press blocks under first gear.
22. Install sixth gear bearing (2) and sixth gear (1) onto output shaft.

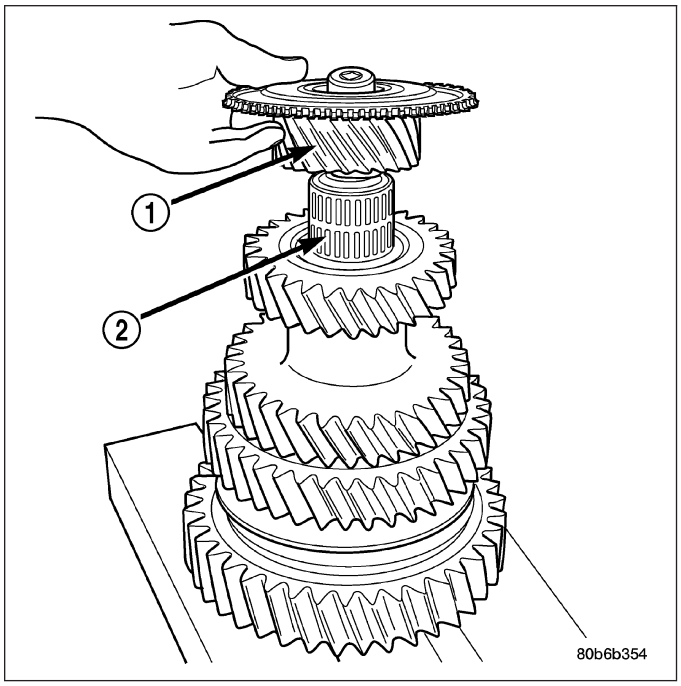

23. Install the sixth gear friction cone onto sixth gear.
24. Install sixth gear blocker ring (1) over the sixth gear friction cone (2).

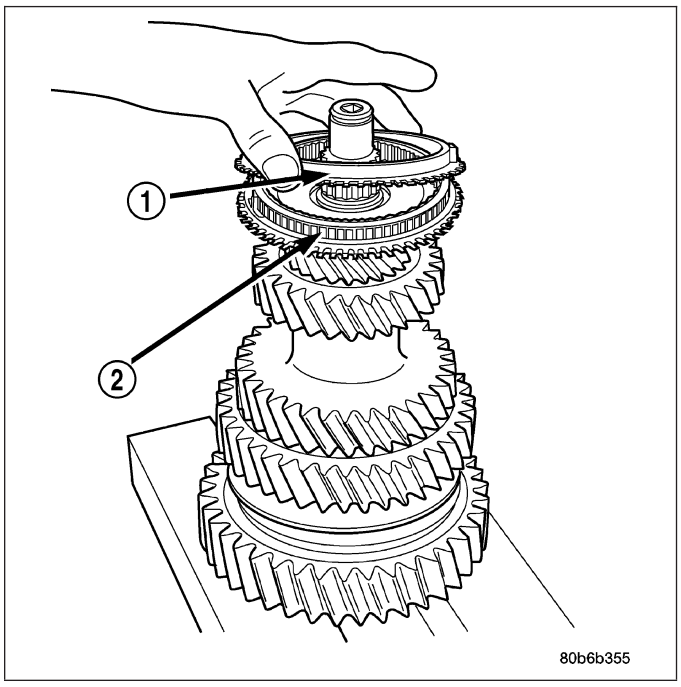

25. Install Guide 8235 (1) onto output shaft (2) end.

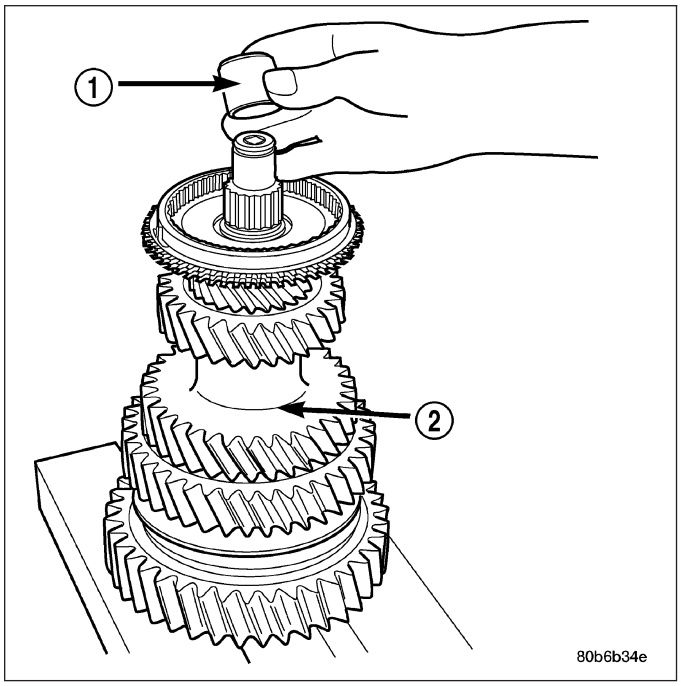

26. Install 5-6 synchro (2) over Guide 8235 and onto the output shaft.
27. Press 5-6 synchro onto the output shaft with Installer 8156 (1) and a shop press.

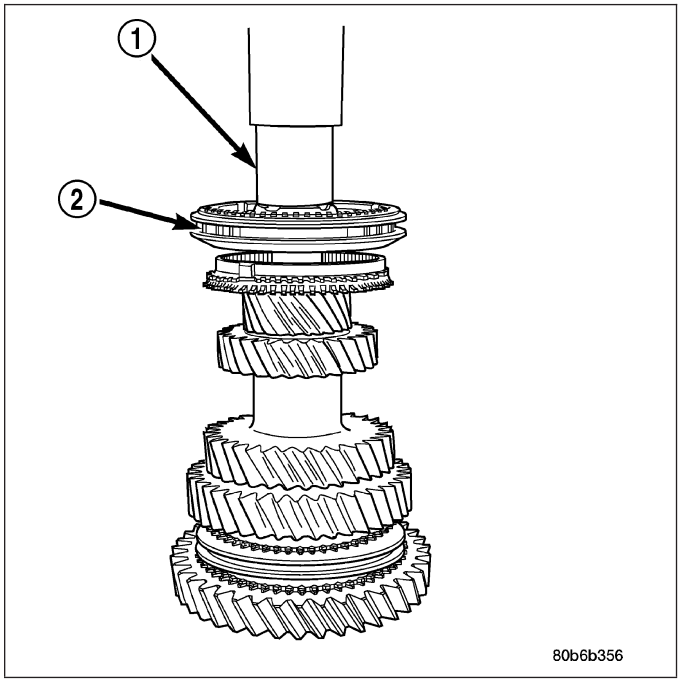

28. Install output shaft pocket bearing (2) onto the output shaft with Guide 8235 (1) and a shop press.
29. Install a **new** snap-ring to hold the output shaft pocket bearing onto the output shaft.

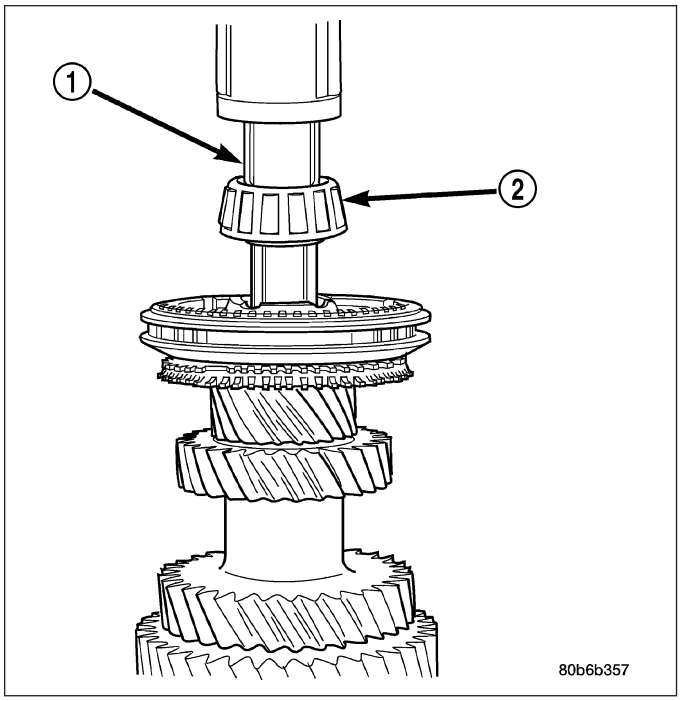

COUNTERSHAFT

1. Place third countershaft gear (2) on the bench with the synchro clutch ring up (3).
2. Install third countershaft gear friction cone (1) onto third gear.

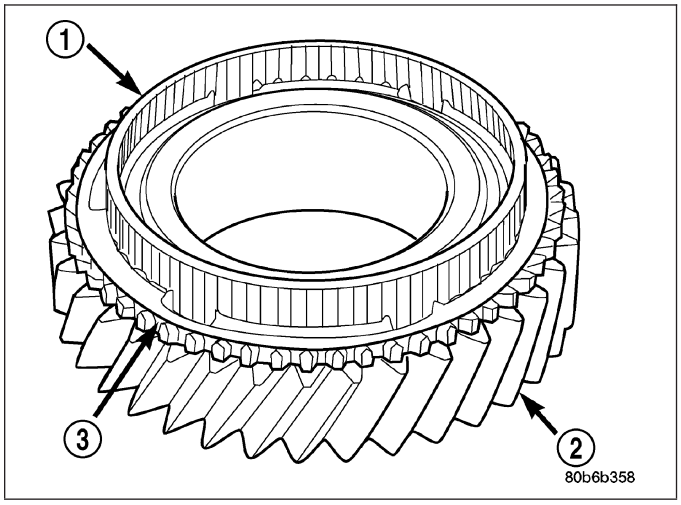

3. Install third countershaft gear (2) blocker ring (1) onto friction cone (3).

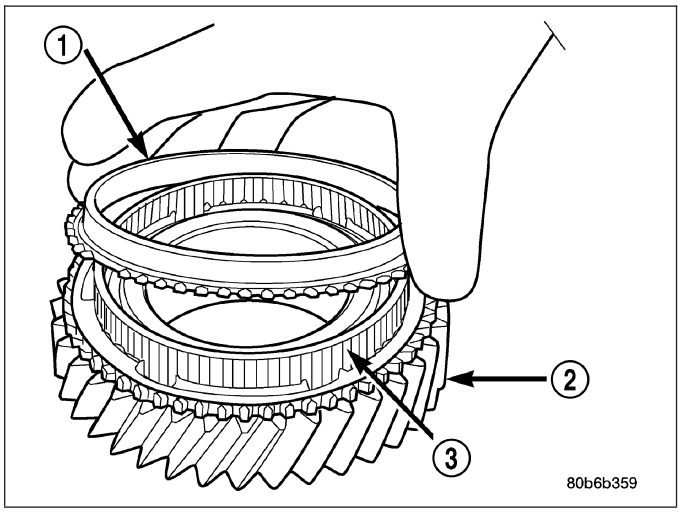

4. Install 3-4 synchro (1) assembly onto the blocker ring/gear (2) assembly.
5. Reverse the assembly on the bench.

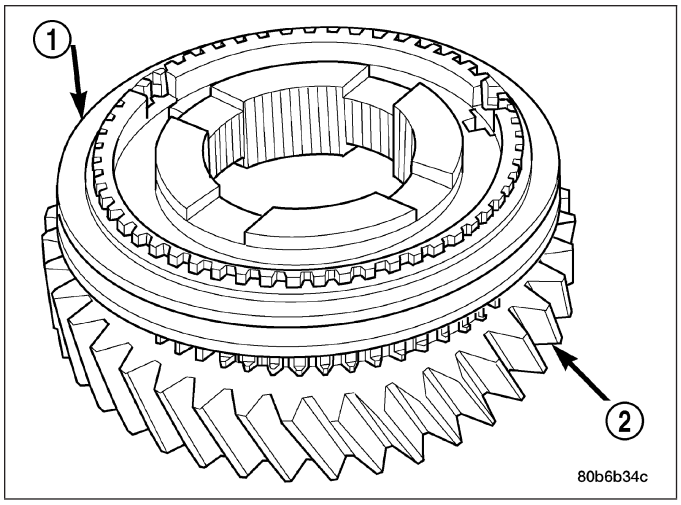

6. Install third countershaft gear (3) bearing into the third countershaft gear.
7. Install 2-3 thrust washer (2) onto the countershaft (1)
8. Place third gear/3-4 synchro assembly in a shop press.
9. Install countershaft through the third gear/3-4 synchro assembly.
10. Press countershaft into the 3-4 synchro assembly.

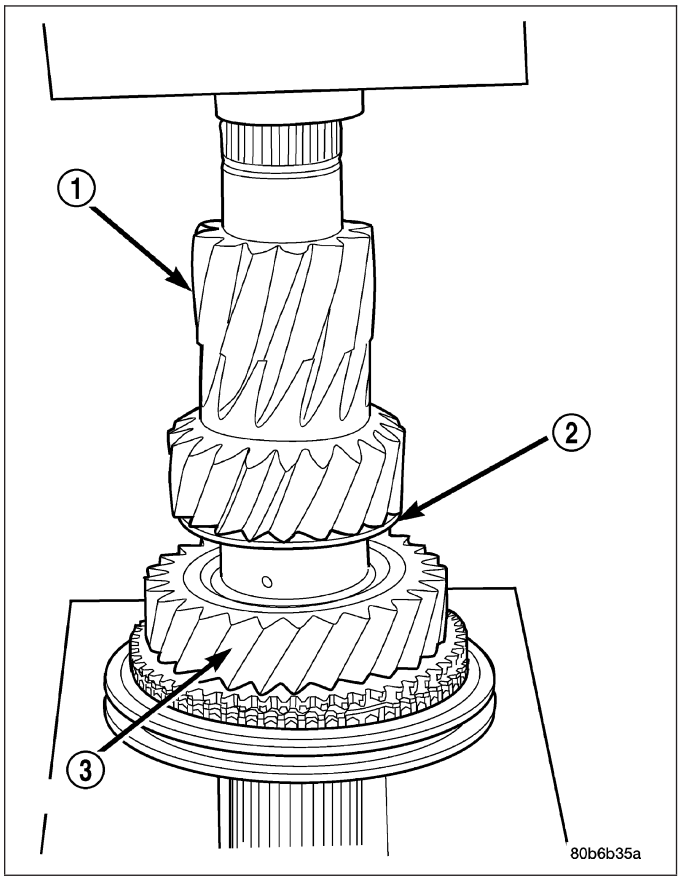

11. Install fourth countershaft gear bearing sleeve onto the output shaft.
12. Press fourth countershaft bearing sleeve onto the countershaft with Installer 8228 and a shop press.
13. Place fourth countershaft gear on the bench with the synchro clutch ring up.
14. Install fourth countershaft gear friction cone onto fourth countershaft gear.
15. Install fourth countershaft gear blocker ring onto the friction cone.
16. Install fourth countershaft gear bearing (1) into the fourth countershaft gear (2).

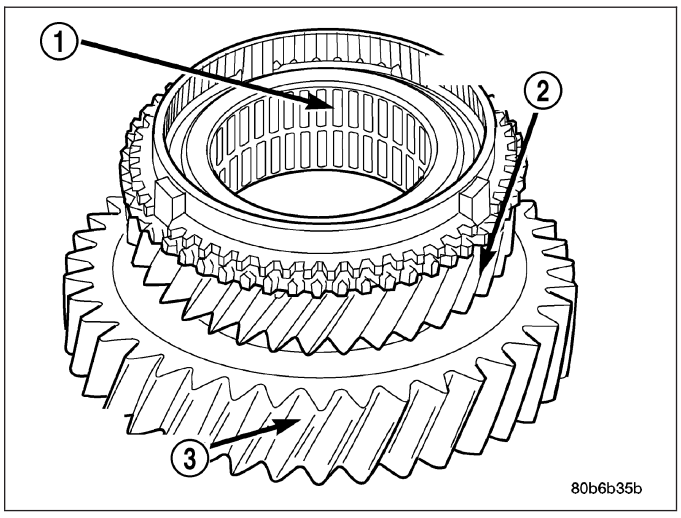

17. Place sixth countershaft gear (3) in the shop press.
18. Position fourth countershaft gear assembly onto the sixth countershaft gear.
19. Install countershaft (1) into the fourth/sixth countershaft gear (2) assembly in the shop press.
20. Press countershaft into sixth gear.

CAUTION: Gear and shaft must be aligned while pressing or the gear will bind on the shaft.

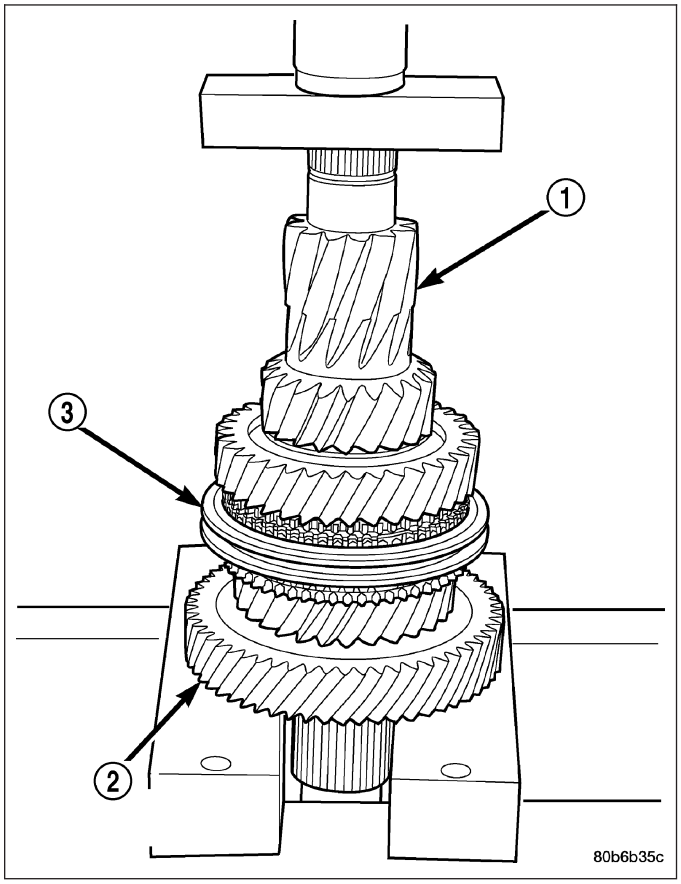

21. Place fifth countershaft gear (2) into the shop press.
22. Install countershaft (1) into the fifth countershaft gear (2) and press countershaft into fifth gear.

CAUTION: Gear and shaft must be aligned while pressing or the gear will bind on the shaft.

23. Place front countershaft bearing onto the countershaft.
24. Install front countershaft bearing onto the countershaft with Installer 8236 and Handle C-4171.
25. Install a **new** snap-ring to hold the front countershaft bearing onto the countershaft.
26. Place rear countershaft bearing onto the countershaft.

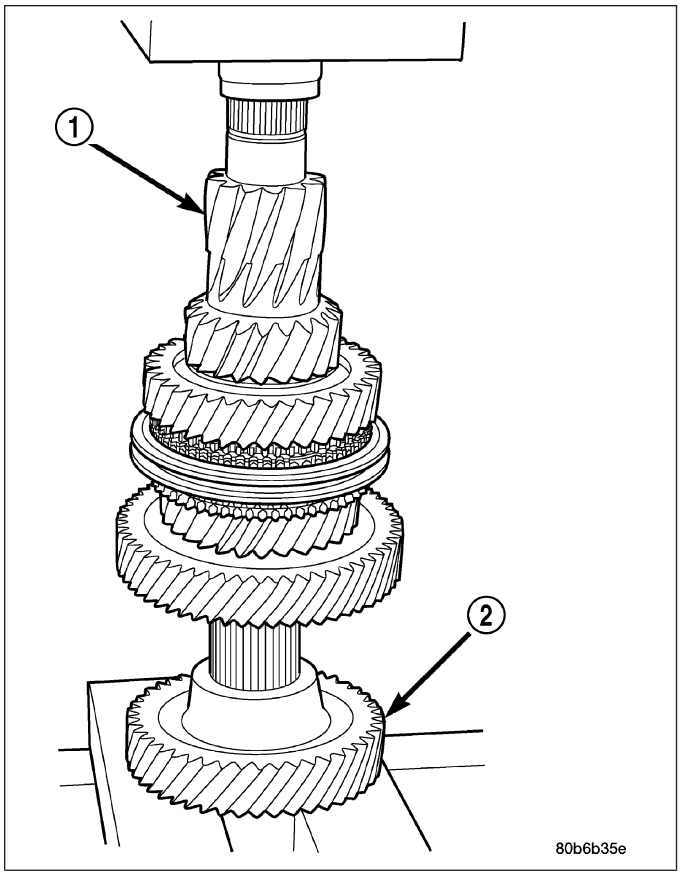

INPUT SHAFT

1. Install input shaft bearing (2) onto input shaft with Installer MD998805 (1).

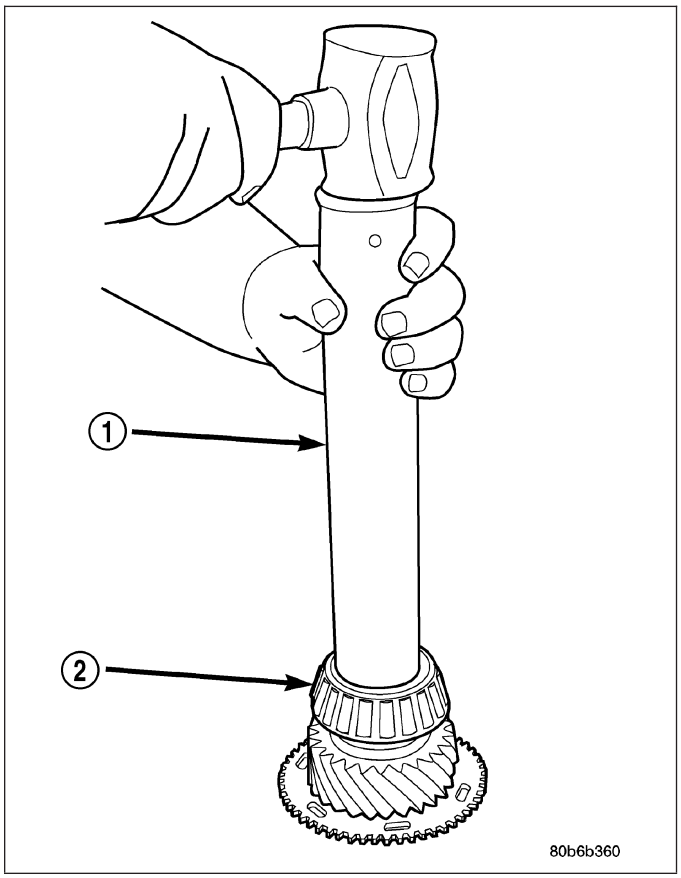

2. Position input shaft (1) bearing oil guide (2) on input shaft.

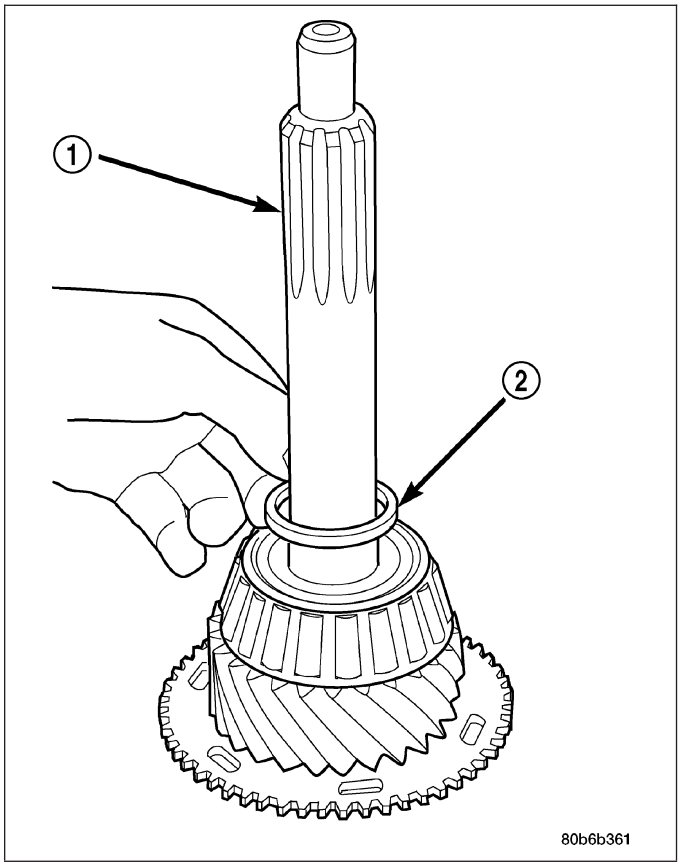

3. Install input shaft bearing oil guide with Installer MD998805.
4. Place the output shaft pocket bearing race in the input shaft.
5. Install output shaft bearing race into input shaft (2) with Installer C-4628 (3) and Handle C-4171(1).

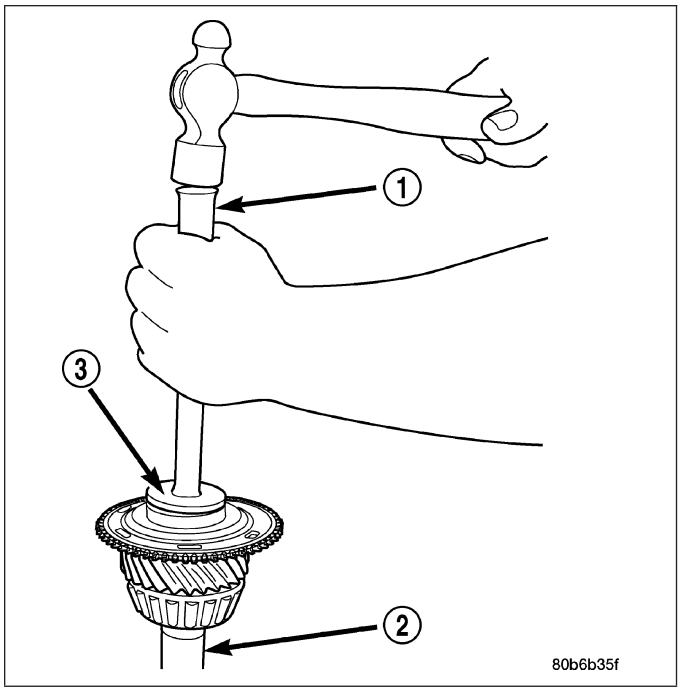

CLUTCH HOUSING

1. Install input shaft bearing race so that the bearing race protrudes 0.3 in. (1) above the front surface of the clutch housing. Install bearing race with Remover/Installer 8237 and Handle C-4171.
2. Install countershaft front bearing race into the clutch housing so that the bearing race protrudes 0.4 in. (2) above the front surface of the clutch housing. Install bearing race with Remover 6061-1 and Handle C-4171.
3. Install countershaft oil guide and spacer into the countershaft front bearing bore in the clutch housing.
4. Clean old sealer from input shaft retainer and clutch housing. **DO NOT** apply new sealer at this time. New sealer will be applied after all the preload measurements are made and end-play shims are installed.

NOTE: Do not replace the input shaft seal at this time. A new seal will be installed after all the preload measurements are made and endplay shims are installed.

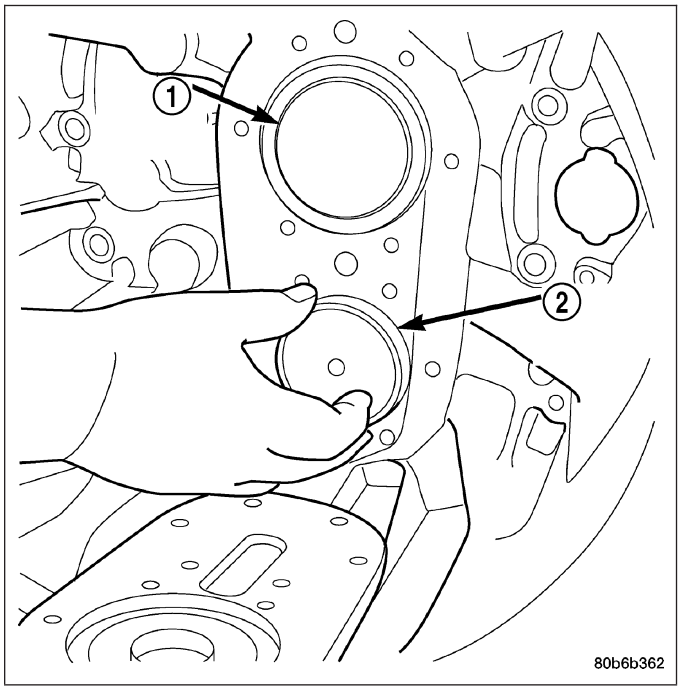

5. Install input shaft retainer onto the clutch housing and install bolts to hold the input shaft retainer.

GEARTRAIN

1. Install input shaft (2) into Support Stand 8246 (3).
2. Install fifth gear friction cone onto the input shaft.
3. Install fifth gear blocker ring onto the fifth gear friction cone.
4. Install output shaft into the input shaft (1).

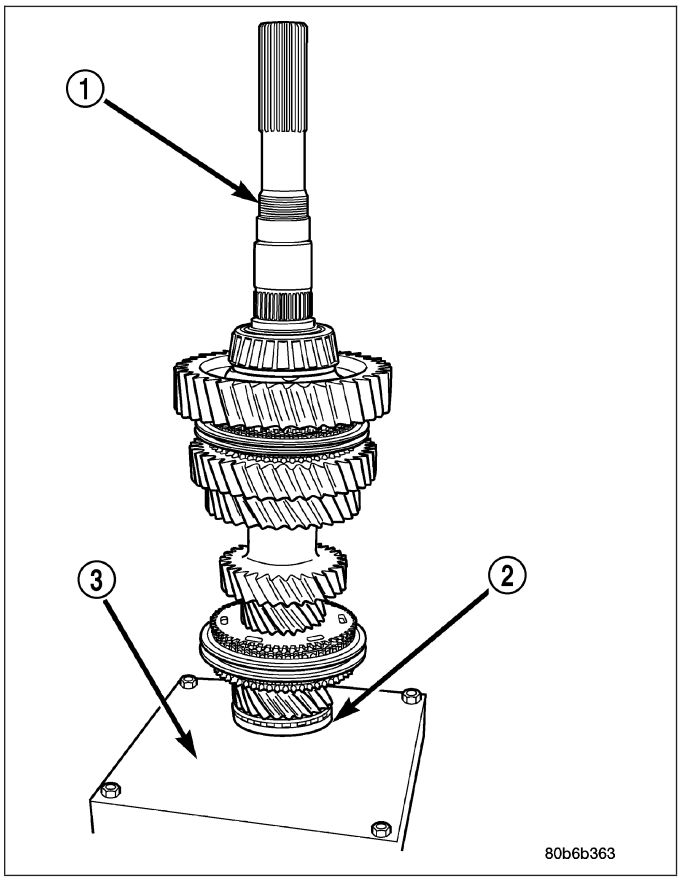

5. Install countershaft (1) into the Support Stand 8246 (3) and verify that all gears are meshed with their mates on the output shaft (2).

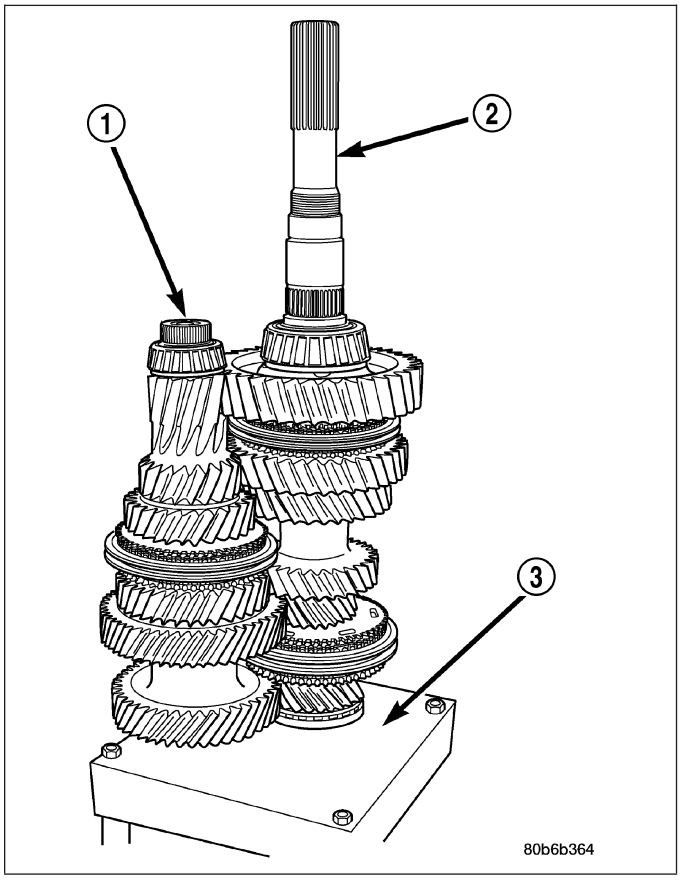

6. Install Fixture 8232 (1) to the output shaft and countershaft.
7. Install Holding Tool 8242 onto the 5-6 synchro and tighten the screw to hold the 5-6 synchro together during the remainder of the installation procedure.
8. Attach a engine crane or equivalent to Fixture 8232 (1) and move the geartrain from the Support Stand 8246 (2) to the clutch housing.

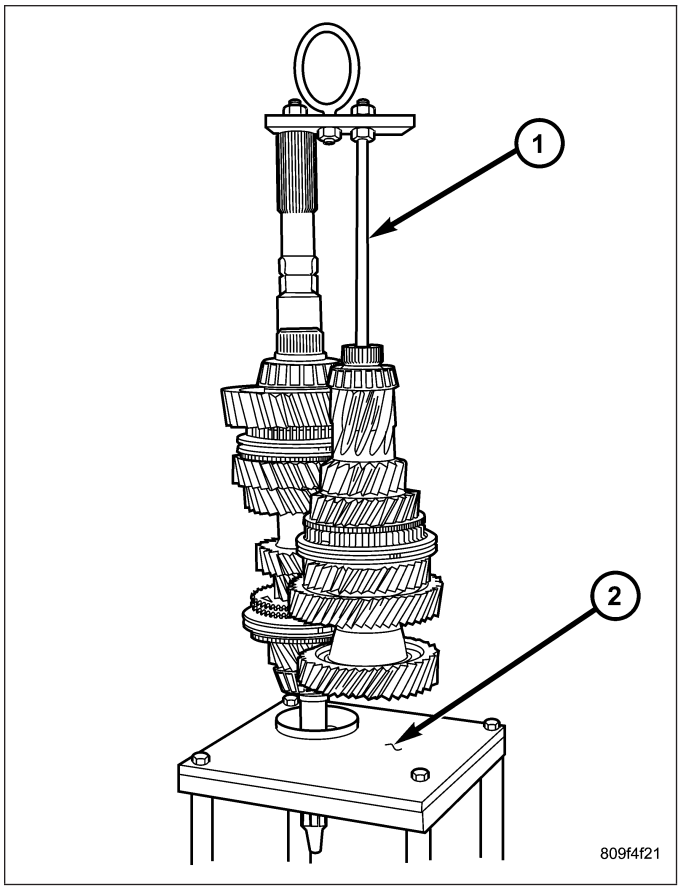

9. Install shift forks and rails (1) onto the geartrain.

NOTE: The closest shift arm to the geartrain is for Reverse. The next is 5-6, then 3-4 and then 1-2 when moving out from the geartrain.

10. Install geartrain and shift rails into the clutch housing. Lower the geartrain and rails into the housing slowly while guiding input shaft through input shaft seal. Avoid any binds on the shift rails, forks and synchros as the rails enter their bushings.

CAUTION: Do not damage input shaft seal with the input shaft splines.

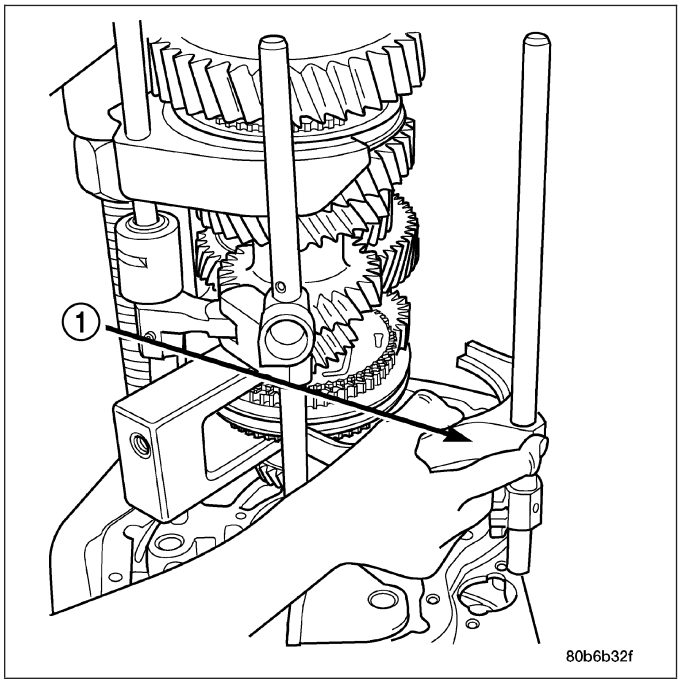

11. With the geartrain approximately 1/4 in. from the clutch housing, remove Holding Tool 8242 (1) from the 5-6 synchro (2).
12. Install 5-6 crossover bracket and arm to the shift rails and the clutch housing.
13. Lower geartrain the remainder of the way into the clutch housing.

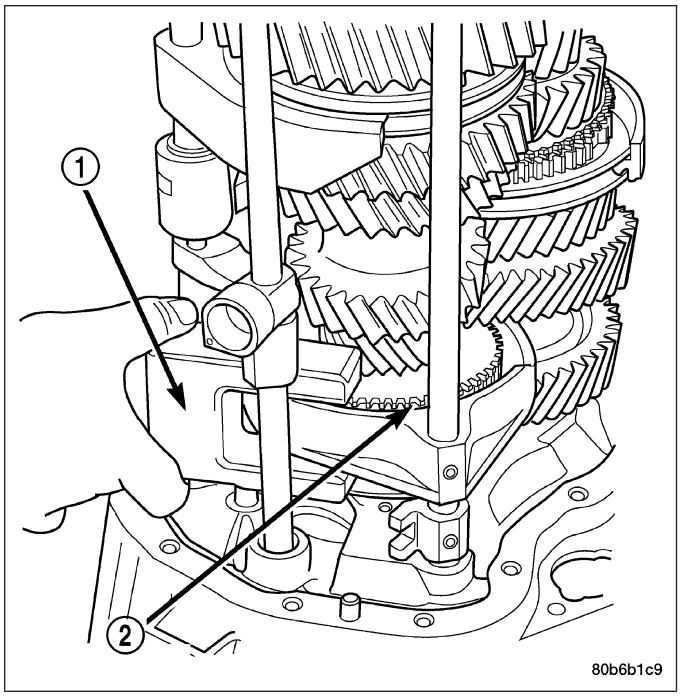

14. Install the 5-6 crossover bracket (1) bolts and tighten to 28 N·m (20 ft. lbs.).
15. Remove engine crane and Fixture 8232 from the output shaft and the countershaft.

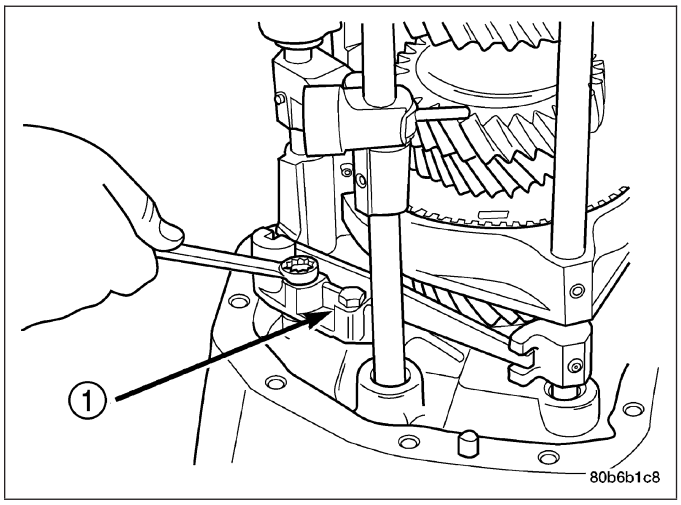

TRANSMISSION GEAR CASE

1. Install rear output shaft bearing race into the transmission gear case with Installer C-4308 and Handle C-4171.
2. Install rear countershaft bearing race into the transmission gear case with Installer 8153 and Handle C-4171.
3. Install Fixture 8232 (1) to the transmission case (2).

NOTE: Shift socket must be loose on the shift shaft and is rotated a minimum of 90° from its normal position. This will ensure enough clearance to install the transmission gear case.

4. Apply sealant to the clutch housing.
5. Attach an engine crane or equivalent to Fixture 8232 and install the transmission gear case onto the clutch housing.
6. Install clutch housing bolts and tighten to 48 N·m (35 ft.lbs.).
7. Install shift socket roll pin with a suitable 6 mm (7/32 in.) punch and hammer.

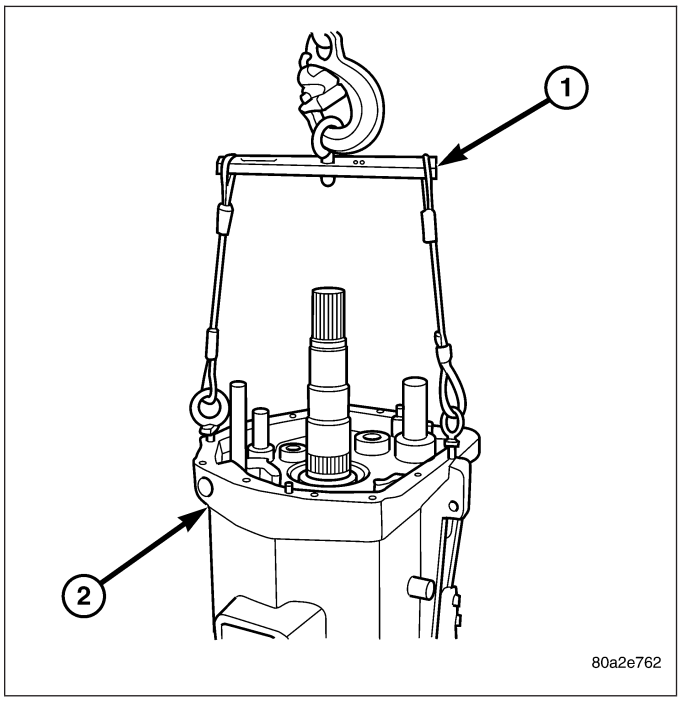

MAINSHAFT AND COUNTERSHAFT ENDPLAY

1. With transmission in vertical position, use Socket 6993 to rotate the shafts and seat the bearings.
2. Measure mainshaft (3) endplay with Dial Indicator Set C-3339 (1) and Extension Rod 8161 (2) installed onto the rear of the transmission gear case.

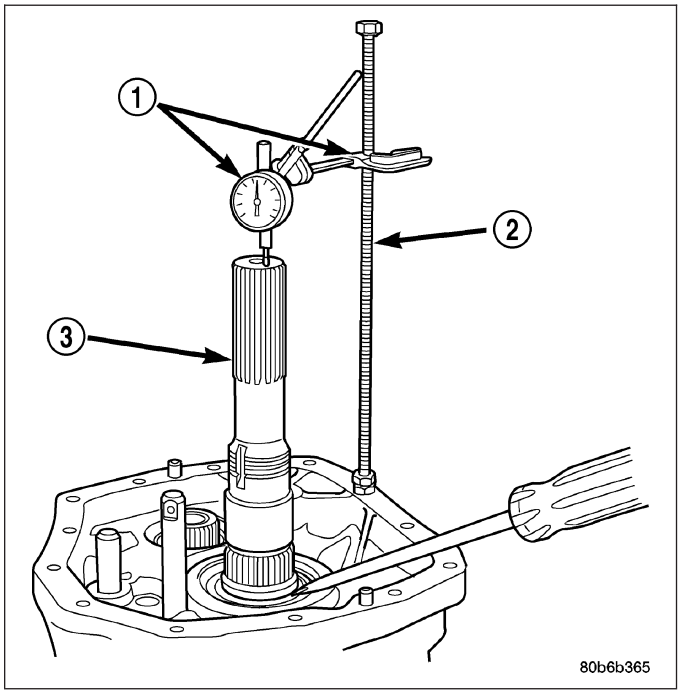

3. Measure countershaft (3) end-play with Dial Indicator Set C-3339 (2) and Extension Rod 8161 (1) installed onto the rear of the transmission gear case.
4. Rotate transmission into a horizontal position and remove the input shaft retainer.
5. Install shims necessary to achieve an end-play of 0-0.10 mm (0-0.004 in.) for the mainshaft and countershaft.

NOTE: Countershaft shims go between the bearing race and spacer. Mainshaft shims go into the input shaft retainer.

6. Install a **new** input shaft seal into the input shaft retainer with Installer C-4965.
7. Install input shaft oil guide with C-3972-A and Handle C-4171.
8. Apply sealer to the input shaft retainer and install retainer onto the clutch housing. Install bolts and tighten to 28 N·m (20 ft.lbs.).

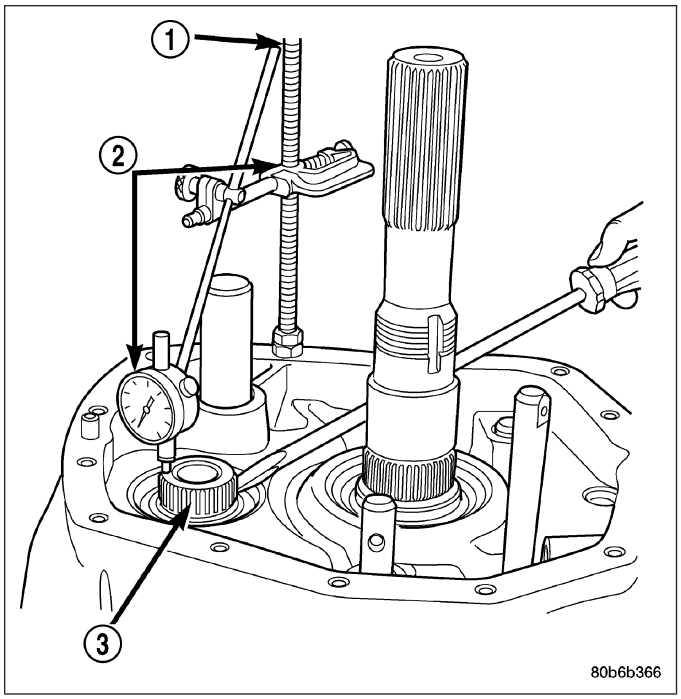

REVERSE GEAR

1. Install reverse shift fork (2) and synchronizer (1) as an assembly onto the reverse shift rail and output shaft.

NOTE: Raised square shoulder and snap-ring on the synchro face the case.

2. Install roll-pin securing the reverse shift fork to the reverse shift rail with 6 mm (7/32 in.) punch and a hammer.

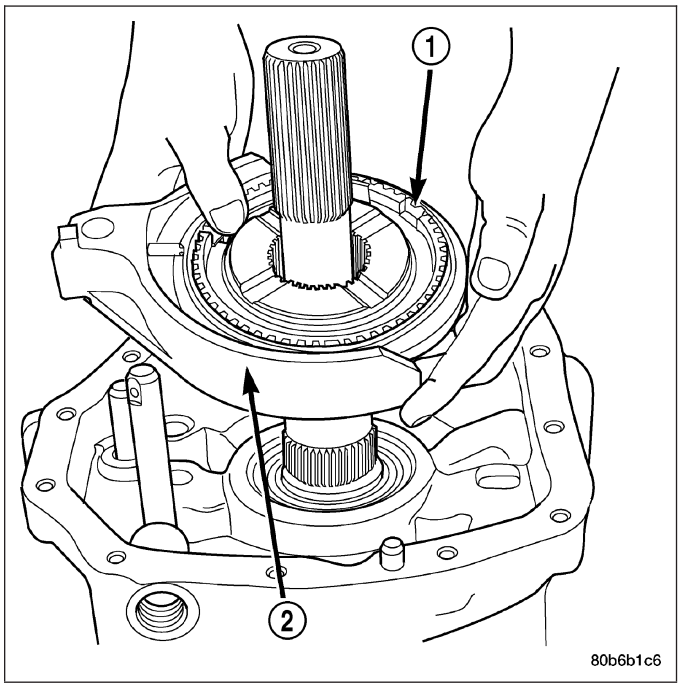

3. Install reverse gear bearing sleeve (1) onto the output shaft with Installer 6446 if necessary.

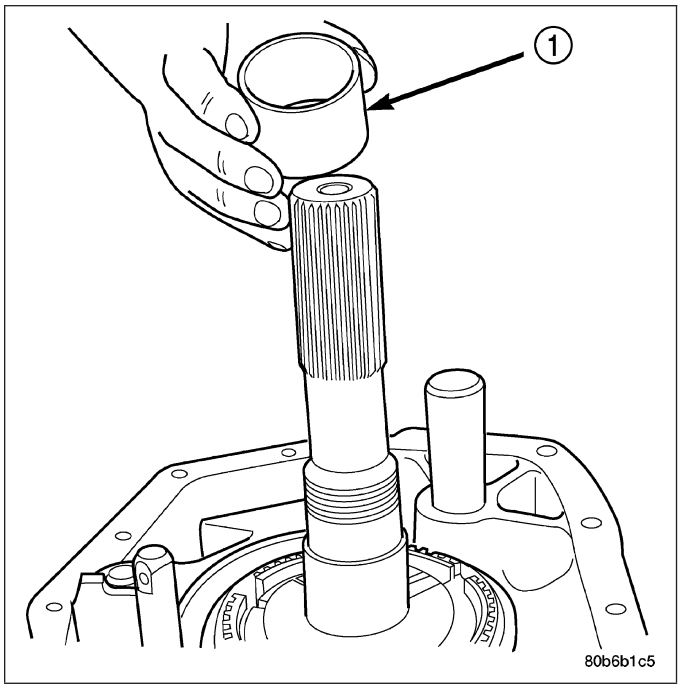

4. Install reverse gear (1) , reverse gear synchronizer cone (4), reverse gear outer blocker ring (3) and reverse gear bearing (2).

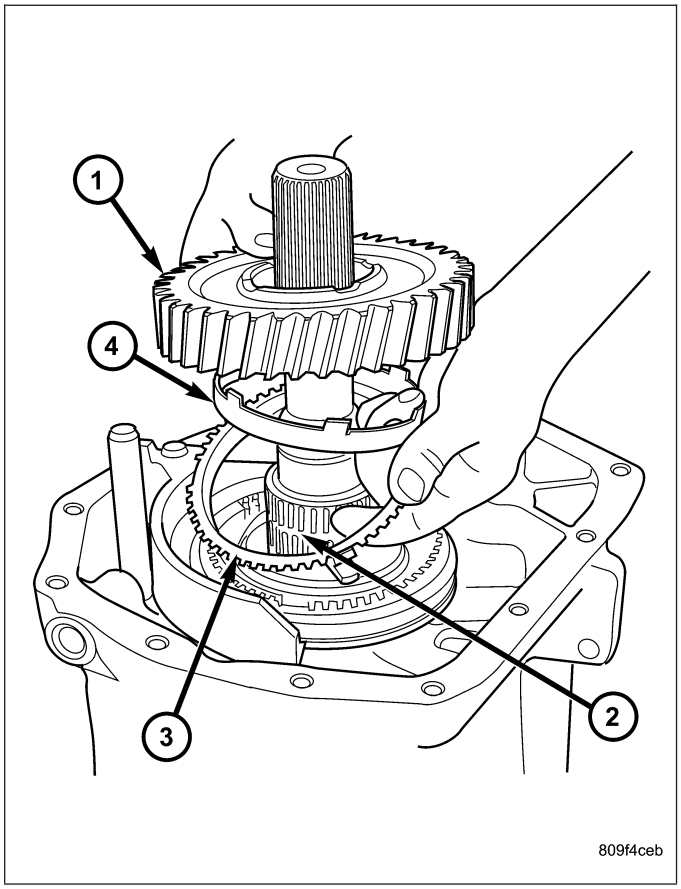

5. Install output shaft ball bearing (1) assembly and reverse thrust washer (2) onto the output shaft.

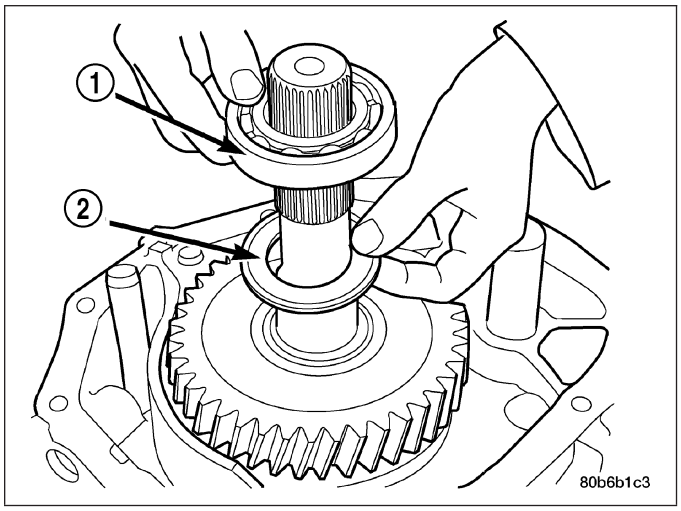

NOTE: Raised shoulder on thrust washer faces away from the reverse gear.

6. Install a **new** output shaft nut onto the output shaft.
7. With Wrench 8226 on the output shaft nut and Socket 6993 or 6984 holding the output shaft, tighten the nut to 339 N·m (250 ft.lbs.).
8. Stake nut into the slot in the output shaft with a 9 mm (5/16 in.) punch.
9. Press countershaft reverse gear into the sleeve with a shop press.
10. Install reverse countershaft rear bearing onto the countershaft reverse gear assembly with Installer C-4652 and Handle C-4171.
11. Install reverse idler gear rear bearing, bearing spacer, front bearing, and front thrust washer onto the idler gear shaft.
12. Install idler (1) and reverse countershaft gears (2) together.
13. Install reverse idler thrust washer from the reverse idler.

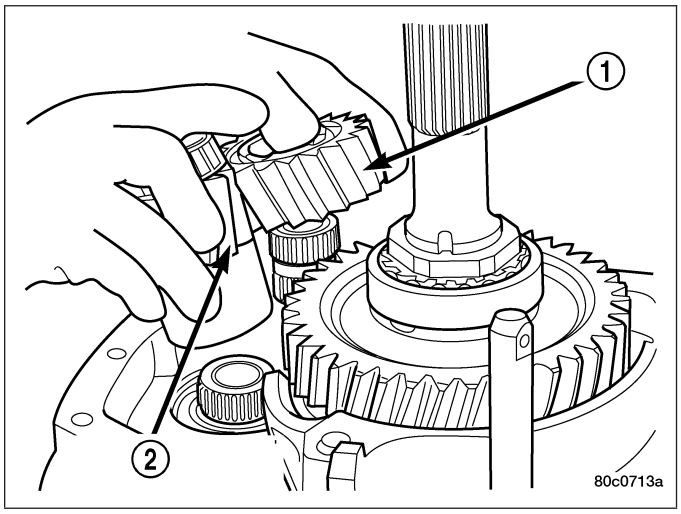

14. Install crossover cam rollers (2) and pin (1).

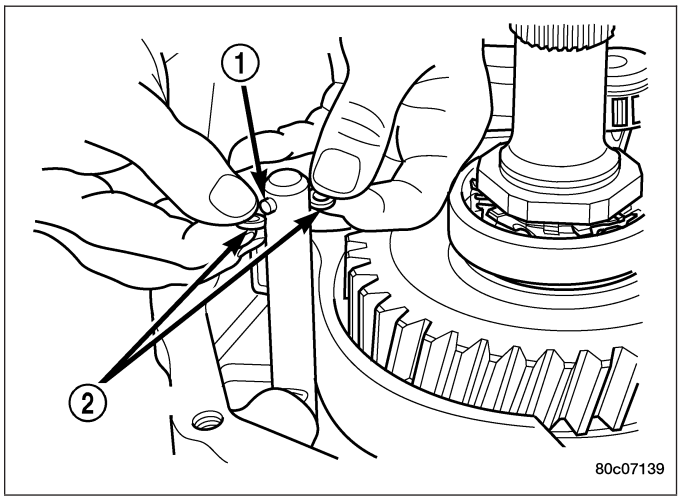

EXTENSION/ADAPTER HOUSING

1. Install extension housing bushing with Installer 8156 and Handle C-4171, if necessary. The oil feed hole must be at the 12 o'clock position when installed.
2. On 4X2 vehicles, install extension housing seal with Installer 8154 and Handle C-4171, with the weep hole at the bottom.

NOTE: Drain hole located in the dust boot portion of the seal must face downward (toward the ground) when installed.

3. On 4X4 vehicles, install adapter housing seal with Installer C-3860-A and Handle C-4171.
4. Install the crossover cam bushing into the extension/adapter housing with Installer 8239 and Handle C-4171.
5. Clean the rear of the transmission case of all sealer.
6. Install reverse countershaft gear bearing race onto the reverse countershaft gear bearing.

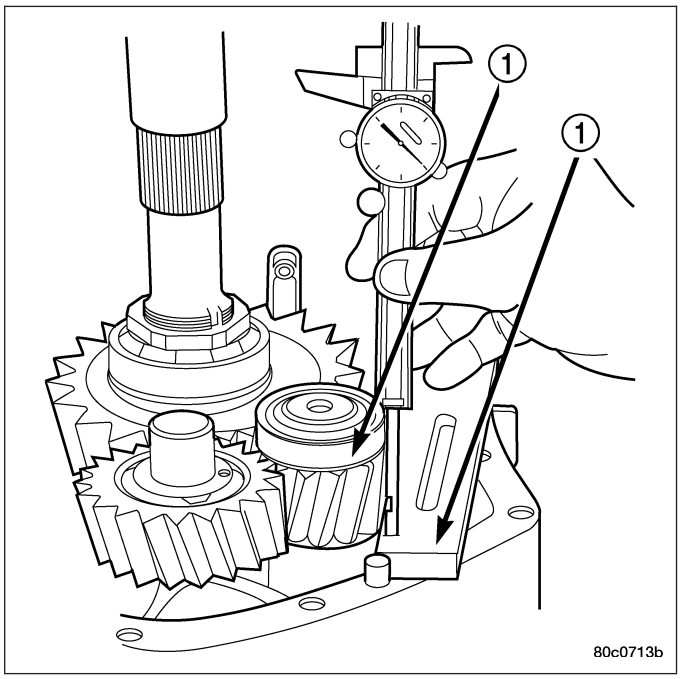

7. Measure the distance (1) from the back of the bearing race to Gauge Bar 6311.
8. Measure thickness of the gauge bar and record the total of the two measurements.
9. Clean all the sealer from the extension/adapter housing.
10. Place Gauge Bar 6311(1) across the housing face. Measure the distance from the top of the bar to the bottom of the reverse countershaft bearing race bore.
11. Subtract thickness of the gauge bar from the measurement and record the result.
12. The difference between the two measurements is the end-play for the reverse countershaft gear assembly.
13. Install shims to achieve 0.15-0.25 mm (0.006-0.010 in.) end-play for the reverse countershaft gear assembly into the reverse countershaft bearing race bore.
14. Use Installer to install the reverse countershaft bearing race into the extension/adapter housing.
15. Install back-up lamp switch into the extension/adapter housing and tighten to 28 N·m (20 ft.lbs.).

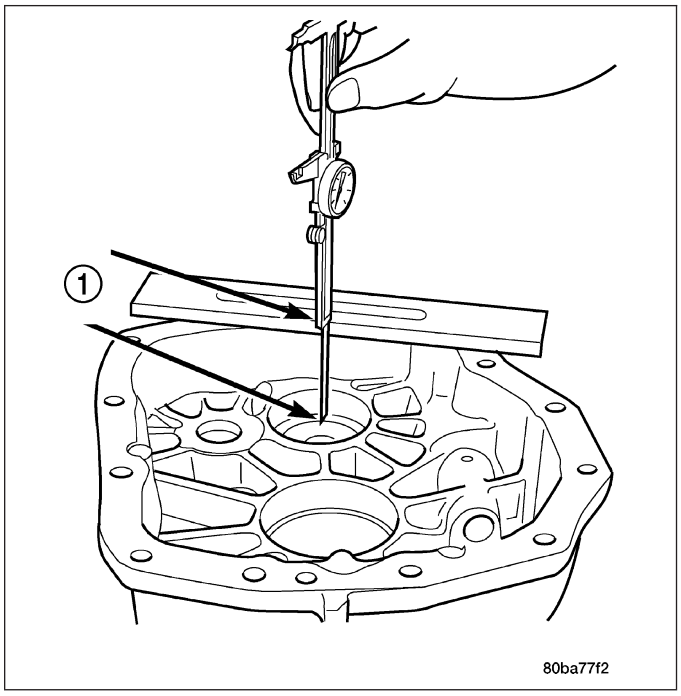

16. Install crossover cam (1) into the extension/adapter housing.
17. Install bolt (2) to hold the crossover cam to the extension/adapter housing (3).

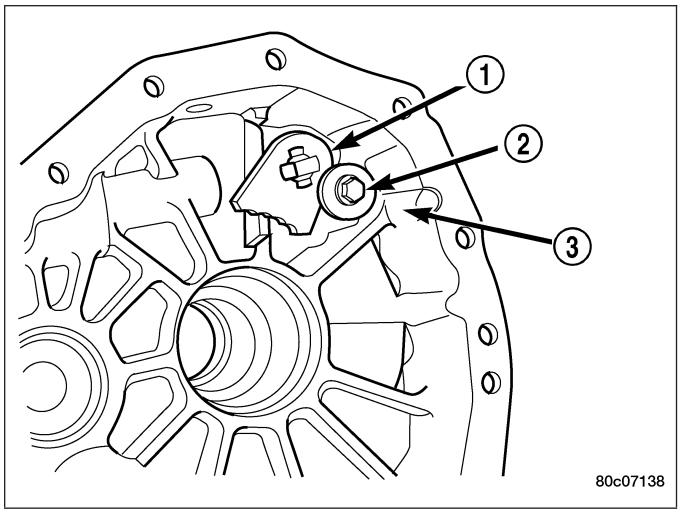

18. Install crossover detent plunger, spring and plug (1) into the extension/adapter housing (2). Tighten the plug to 47.5 N·m (35 ft.lbs.).
19. Apply sealer to the surface of the transmission case.
20. Install extension/adapter housing onto the transmission case.
21. Install bolts to hold the extension/adapter housing onto the transmission gear case. Tighten bolts to 48 N·m (35 ft.lbs.).
22. Install shift rail blocker bolt and tighten bolt to 55 N·m (41 ft.lbs.).
23. Install primary shift rail detent plunger, spring and plug into the transmission case. Tighten detent plug to 47.5 N·m (35 ft.lbs.).

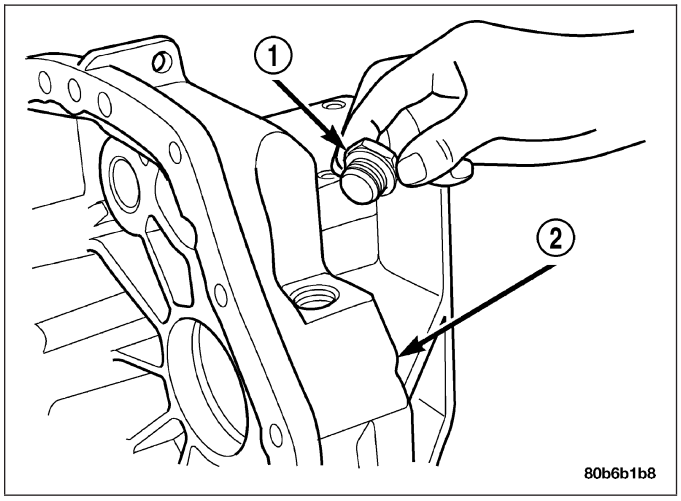

24. Install shift tower onto the transmission case and tighten bolts to 9 N·m (7 ft.lbs.).

INSTALLATION

NOTE: If installing a new transmission, use all components supplied with the transmission. If a new shift tower is supplied with the new transmission, do not re-use the original shift tower.

1. Apply a light coat of Mopar high temperature bearing grease or equivalent to contact surfaces of following components:
   - release fork (1)
   - release fork ball stud (2)
   - release bearing slide (3)
   - input shaft splines (4)
   - release bearing bore (5)
2. Apply sealer to threads of bottom PTO cover bolt and install bolt in case.

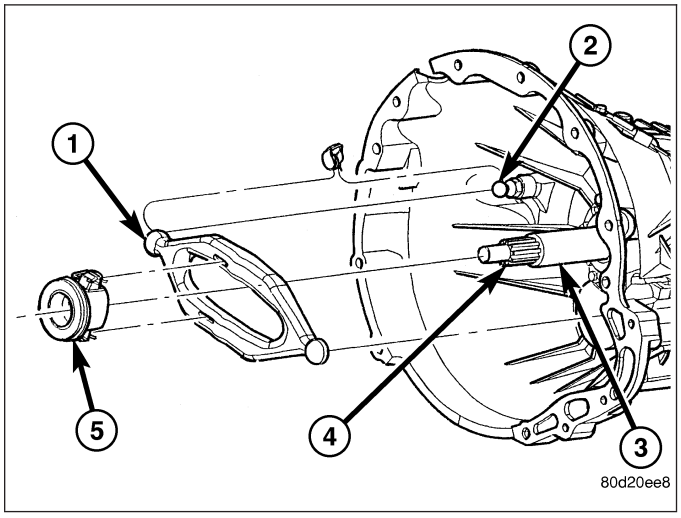

3. Mount transmission on jack and position transmission under vehicle.
4. Raise transmission until input shaft is centered in clutch disc hub.
5. Move transmission forward and start input shaft in clutch disc and pilot bushing/bearing.

6. Work transmission forward until seated against engine block. Do not allow transmission to remain unsupported after input shaft has entered clutch disc.
7. Install and tighten transmission-to-engine block bolts.
8. Install clutch slave cylinder.
9. Connect backup light switch wires.
10. Position transmission harness wires in clips on transmission.
11. Install transmission mount on transmission or rear crossmember.
12. Install rear crossmember.
13. Remove transmission jack and engine support fixture.
14. Remove transmission fill plug (1) and fill with required lubricant. Check lubricant level in transfer case if equipped.

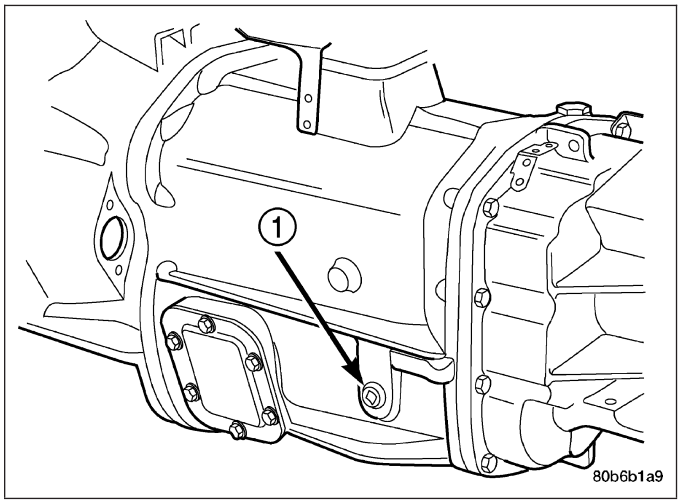

TWO WHEEL DRIVE

1. Install propeller shaft with reference marks aligned.
2. Install exhaust system components.
3. Remove support and lower vehicle.
4. Shift transmission into third gear.
5. Clean the mating surfaces of shift tower and isolator plate with suitable wax and grease remover.
6. Apply Mopar Gasket Maker or equivalent to sealing surface of the transmission case. Do not over apply sealant.
7. Install isolator plate onto the transmission case metal side down.
8. Install shift tower onto the isolator plate. No sealant is necessary between the shift tower and top of isolator plate.
9. Verify shift tower, isolator plate and the shift socket are properly aligned.
10. Install bolts to hold the shift tower to the isolator plate and the transmission case. Tighten bolts to 10.2–11.25 N·m (7.5–8.3 ft. lbs.).
11. Install shift boot and bezel.

FOUR WHEEL DRIVE

1. Install and secure transfer case on the transmission jack.
2. Raise and align transfer case input gear with transmission mainshaft.
3. Move transfer case forward and seat it on adapter.
4. Install and tighten transfer case mounting nuts to 41-47 N·m (30-35 ft. lbs.) if case has 3/8 studs. If case has 5/16 studs tighten to 30-41 N·m (22-30 ft. lbs.).
5. Connect transfer case shift lever to range lever on transfer case.
6. Install propeller shafts with reference marks aligned.
7. Install transfer case skid plate, if equipped, and crossmember. Tighten attaching bolts/nuts to 41 N·m (30 ft. lbs.).
8. Install exhaust system components.

9. Remove support and lower vehicle.
10. Shift transmission into third gear.
11. Clean the mating surfaces of shift tower, isolator plate and transmission case with suitable wax and grease remover.
12. Apply Mopar Gasket Maker or equivalent to the sealing surface of the transmission case. Do not over apply sealant.
13. Install isolator plate onto the transmission case, metal side down.
14. Install shift tower onto the isolator plate. No sealant is necessary between the shift tower and top of isolator plate.
15. Verify that the shift tower, isolator plate and the shift tower bushings are properly aligned.
16. Install the bolts to hold the shift tower to the isolator plate and the transmission case. Tighten the shift tower bolts to 10.2-11.25 N·m (7.5-8.3 ft. lbs.).
17. Install shift lever extension and tighten to 47 N·m (35 ft. lbs.).
18. Install shift lever boot and bezel.

SPECIFICATIONS - NV5600

TORQUE SPECIFICATIONS

DESCRIPTION	N·m	Ft. Lbs.	In. Lbs.
Plug, Crossover Cam and Detent	48	35	-
Bolt, Input Retainer	28	20	-
Bolt, 5-6 Crossover Bracket	28	20	-
Bolt, Clutch Housing	48	35	-
Bolt, Extension/Adapter Housing	48	35	-
Bolt, Shift Tower	9	7	80
Shift Lever Extension	47	35	-
Switch, Back-up Lamp	28	20	-
Bolt, Shift Blocker	55	41	-
Bolt, PTO Cover	40	30	-
Pivot, Clutch Release Lever	22	16	-
Plug, Fill	30	22	-
Nut, Output Shaft	339	250	-

SPECIAL TOOLS

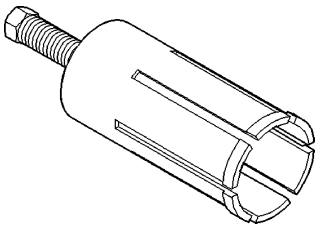

REMOVER 8155

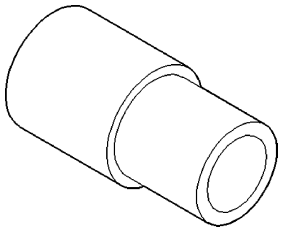

INSTALLER 8156

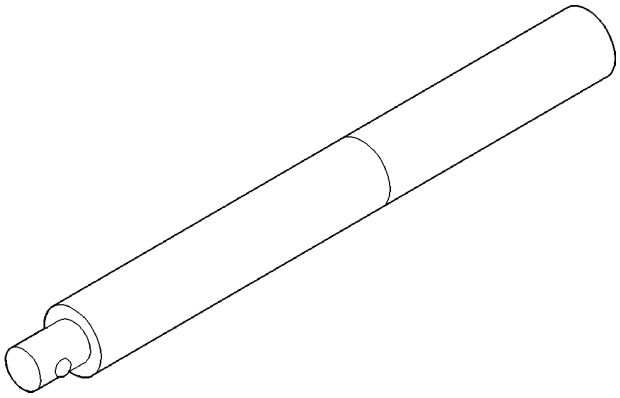

HANDLE C-4171

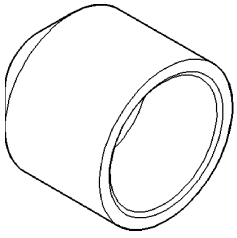

INSTALLER C-3972-A

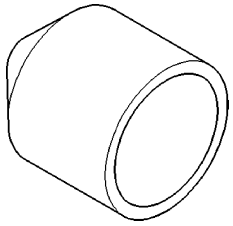

INSTALLER 8154

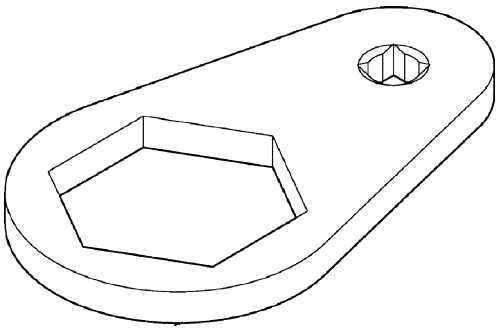

WRENCH 8226

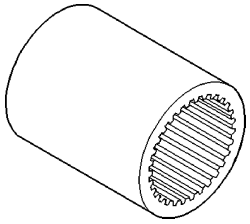

SOCKET 6984

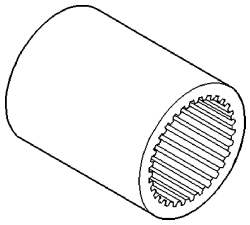

SOCKET 6984

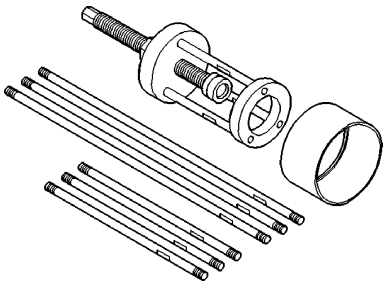

PULLER 6444

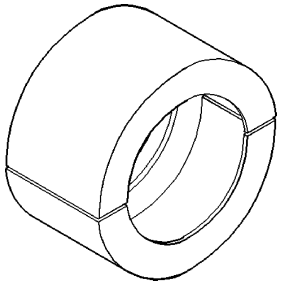

JAWS 6447

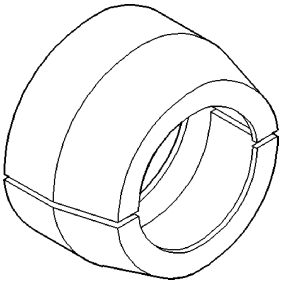

JAWS 6451

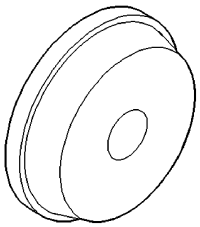

INSTALLER 6061

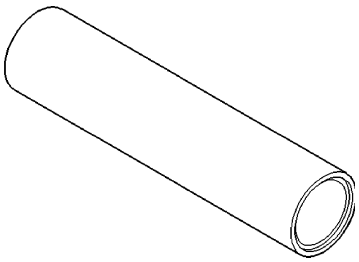

INSTALLER 6448

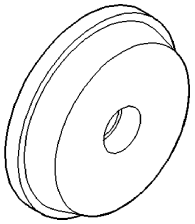

INSTALLER C-4308

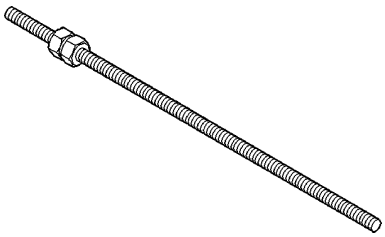

ROD EXTENSION 8161

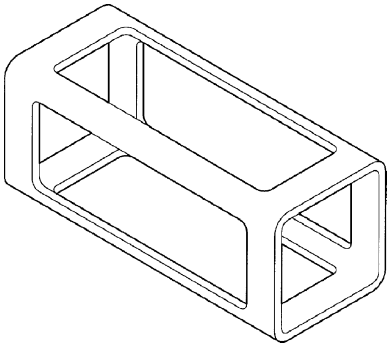

FIXTURE 8227

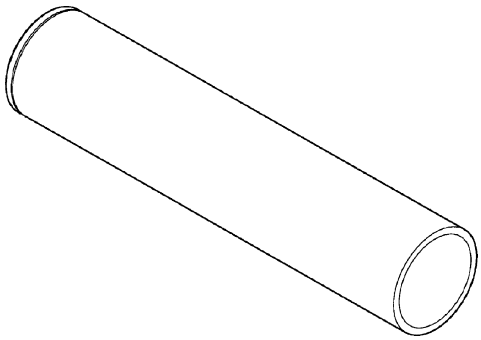

INSTALLER 8228

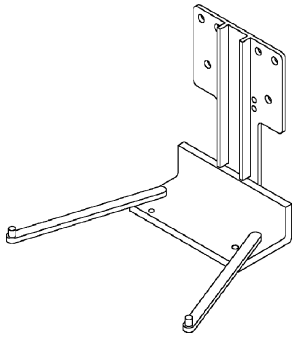

FIXTURE 8230

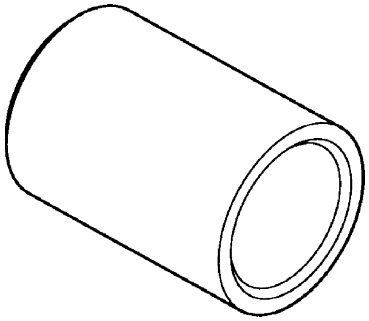

GUIDE 8235

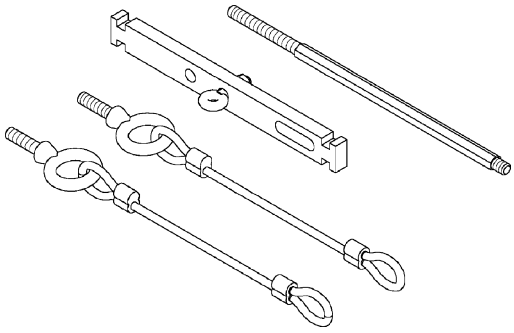

FIXTURE 8232

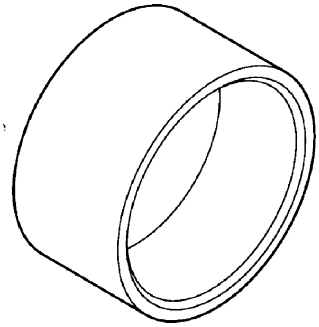

INSTALLER 8236

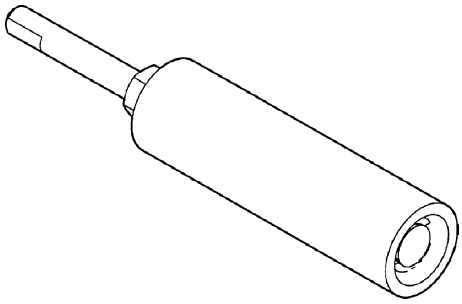

REMOVER 8233

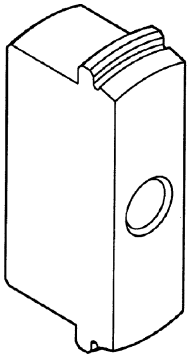

INSTALLER/REMOVER 8237

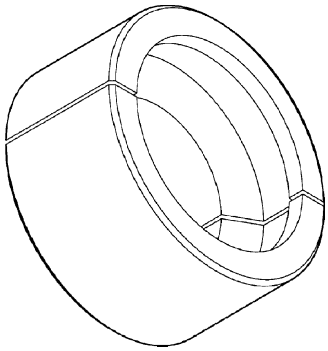

REMOVER 8234

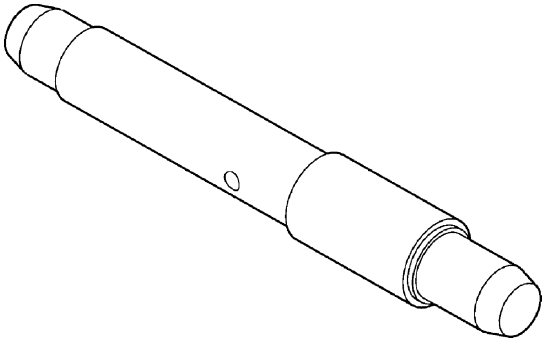

INSTALLER/REMOVE 8238

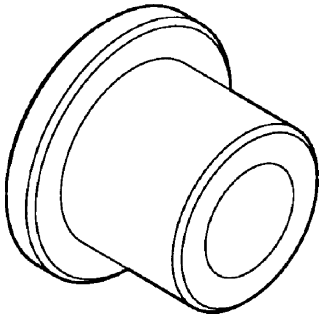

INSTALLER 8239

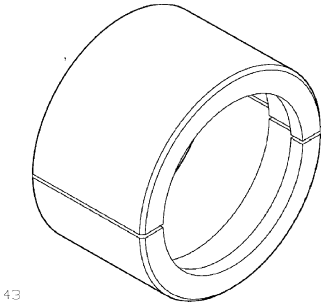

REMOVER 8243

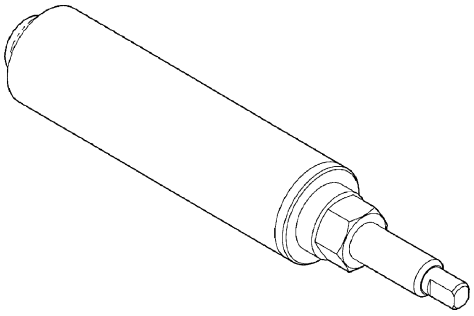

REMOVER 8240

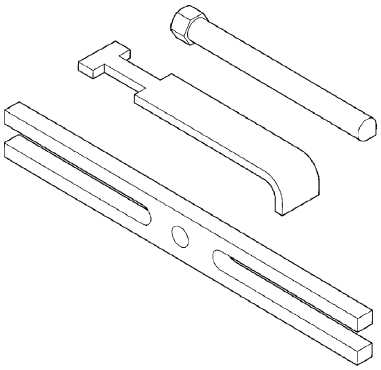

PULLER 8244

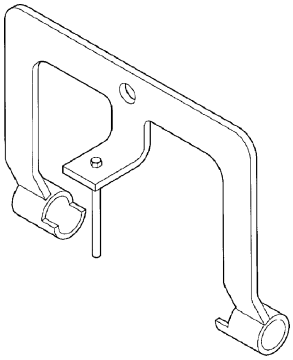

FIXTURE 8241

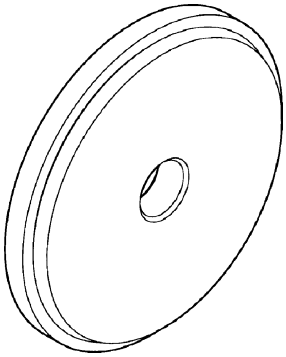

REMOVER 8245

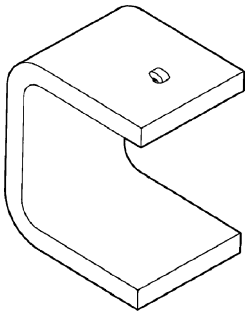

HOLDING 8242

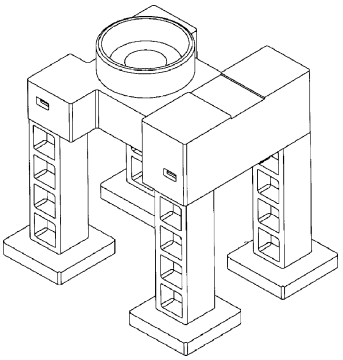

SUPPORT STAND 8246

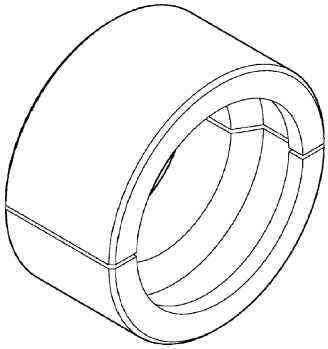

REMOVER 8262

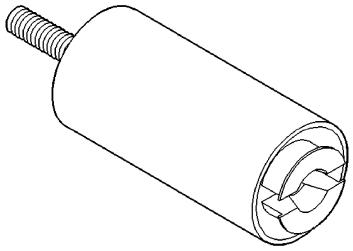

REMOVER L-4418

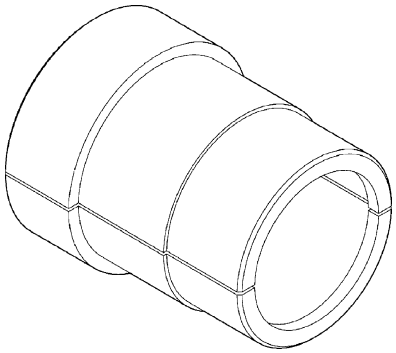

REMOVER 8271

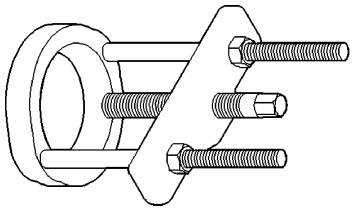

PULLER C-293-PA

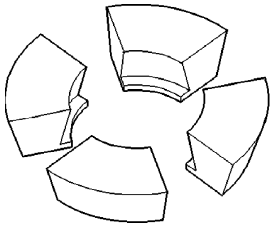

ADAPTERS C-293-52

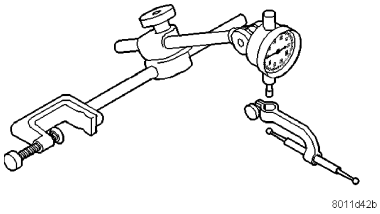

DIAL INDICATOR C-3339

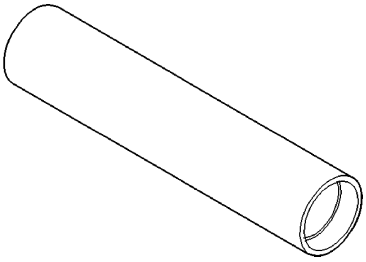

INSTALLER MD998805

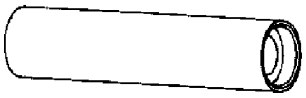

INSTALLER C-4965

SEAL-ADAPTER HOUSING - NV5600

REMOVAL

1. Raise and support vehicle.
2. Mark propeller shaft and yokes for installation reference and remove shaft.
3. Remove the transfer case.
4. Remove the adapter housing seal with a pry tool or slide hammer with a screw.

INSTALLATION

1. Install adapter housing seal with Installer 8154 and Handle C-4171.
2. Install transfer case.
3. Install propeller shaft with reference marks aligned.
4. Check fluid level.
5. Remove support and lower vehicle.

SEAL-EXTENSION HOUSING - NV5600

REMOVAL

1. Mark propeller shaft and pinion yoke for installation reference and remove the propeller shaft.
2. Remove extension housing seal with a pry tool or a slide hammer and screw.
3. Remove extension housing bushing with Remover 8155.

INSTALLATION

1. Install extension housing bushing with Installer 8156 and Handle C-4171.
2. Install extension housing seal with Installer 8154 and Handle C-4171.

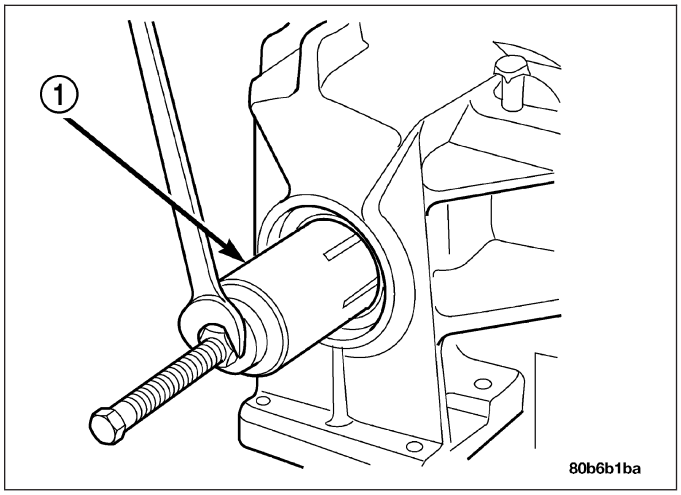

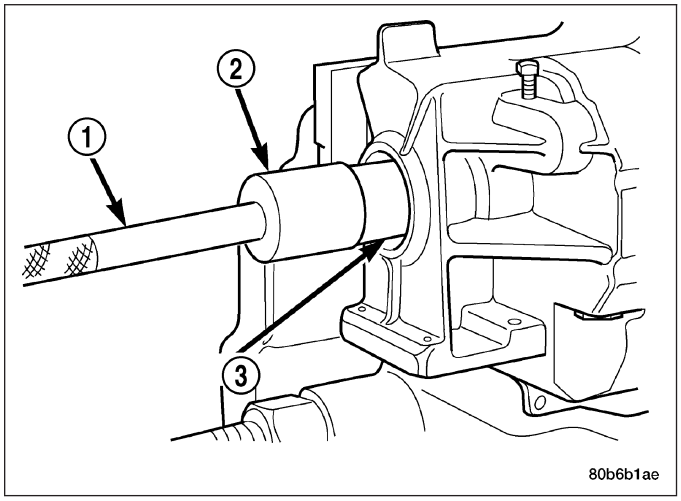

3. Install propeller shaft with reference marks aligned.
4. Check and fill transmission.

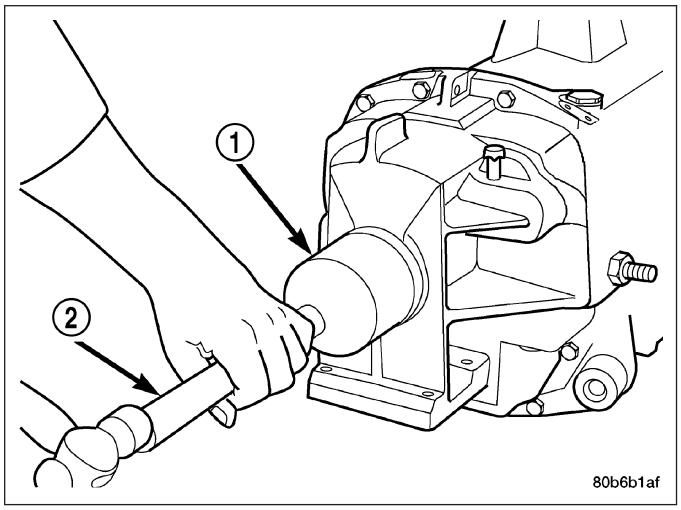

COVER-SHIFT - NV5600

REMOVAL

1. Shift transmission into Neutral.
2. Unscrew and remove the shift lever extension from the shift
3. Remove screws attaching shift boot to floorpan. Then slide boot upward on the shift lever.
4. Remove the bolts holding the shift tower to the isolator plate and transmission gear case.
5. Remove the shift tower and isolator plate from the transmission.

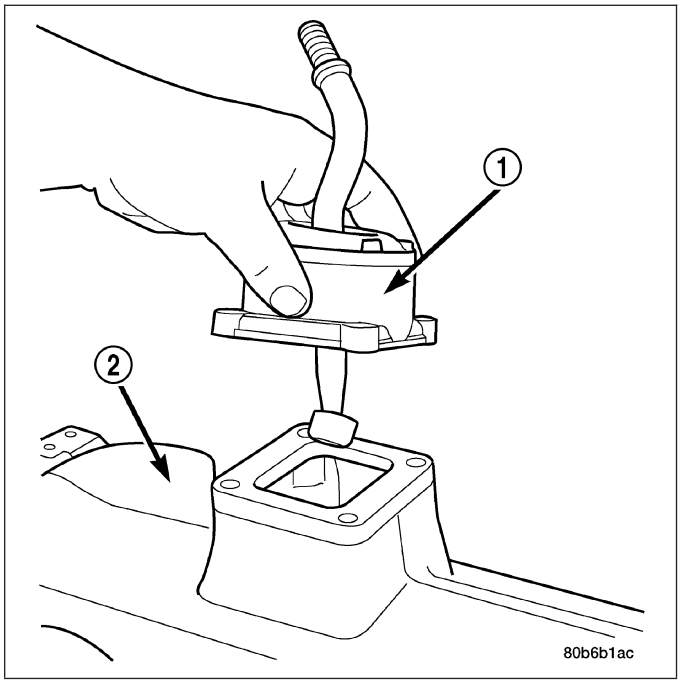

INSTALLATION

1. Shift transmission into third gear.
2. Clean the mating surfaces of shift tower, isolator plate and transmission gear case with suitable wax and grease remover.
3. Apply Mopar Gasket Maker or equivalent to the sealing surface of the transmission. Do not over apply sealant.
4. Install isolator plate onto the transmission, metal side down.
5. Install shift tower onto the isolator plate. No sealant is necessary between the shift tower and isolator plate.
6. Verify shift tower, isolator plate and shift tower bushings are properly aligned.
7. Install shift tower bolts and tighten the shift tower bolts to 8-10 N·m (7-9 ft. lbs.).
8. Install shift lever extension, shift boot and bezel.

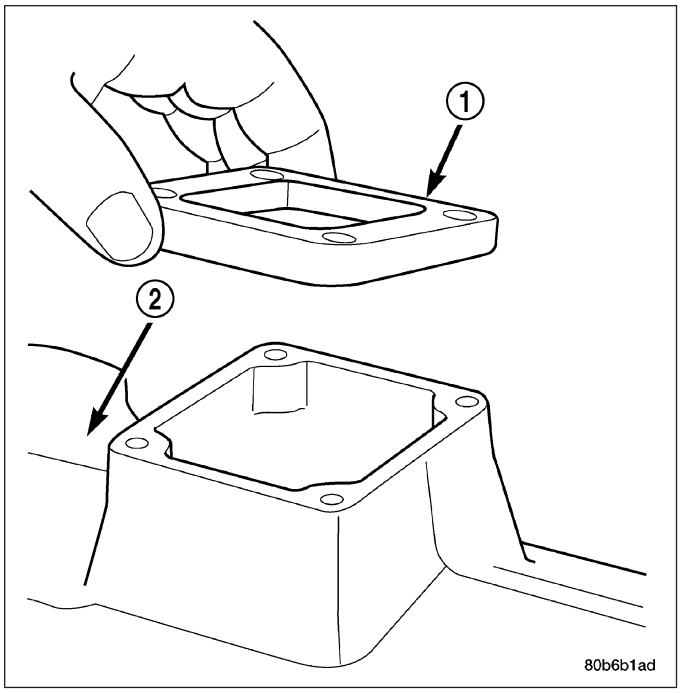

MANUAL TRANSMISSION - GETRAG 238 - SERVICE INFORMATION

TABLE OF CONTENTS

page

MANUAL TRANSMISSION - GETRAG 238 - SERVICE INFORMATION
DIAGNOSIS AND TESTING
MANUAL TRANSMISSION - GETRAG 238 . . 108
REMOVAL 109
DISASSEMBLY 110
CLEANING 136
INSPECTION 136
ASSEMBLY 139
INSTALLATION 170
SPECIFICATIONS
GETRAG 238 – MANUAL TRANSMISSION . . 171
SPECIAL TOOLS 172

MANUAL TRANSMISSION - GETRAG 238 - SERVICE INFORMATION

DIAGNOSIS AND TESTING

MANUAL TRANSMISSION - GETRAG 238

LOW LUBRICANT LEVEL

A low transmission lubricant level is generally the result of a leak, inadequate lubricant fill or incorrect lubricant level check.

Rear transmission leaks will be from the oil seals or component mating surfaces.

Front transmission leaks will be from the front input shaft retainer seal. Lubricant may drip from the clutch housing after extended operation. If leak is severe, it may contaminate the clutch disc.

Lubricant level check can only be made when the vehicle is level and allowing the lubricant to settle for a minute before checking. This will ensure an accurate check and avoid an under or overfill condition.

HARD SHIFTING

Hard shifting is usually caused by low lubricant level, improper or contaminated lubricants. This will cause noise, excessive wear, internal bind, and hard shifting. Substantial lubricant leaks can result in gear, shift rail, synchro, and bearing damage. The first indications of component damage is usually hard shifting and noise.

Shift component damage, clutch adjustment, worn pressure plate or disc are also causes of increased shift effort. If clutch problem is advanced, gear clash during shifts can result. Worn or damaged synchronizer rings can cause gear clash when shifting into any forward gear. In some new or rebuilt transmissions, new synchro rings may tend to stick slightly causing hard or noisy shifts. In most cases, this condition will decline as the rings wear-in.

TRANSMISSION NOISE

Most manual transmissions make some noise during normal operation. Rotating gears generate a mild whine that is audible, but generally only at extreme speeds.

Severe, highly audible transmission noise is generally the initial indicator of a lubricant problem. Insufficient, improper or contaminated lubricant will promote rapid wear of gears, synchronizer rings, shift rails, forks and bearings. The overheating caused by a lubricant problem, can also lead to gear and bearing damage.

REMOVAL

1. Remove drain plug (1) from rear housing (2) and drain fluid.
2. With vehicle in neutral, position vehicle on hoist.
3. Disconnect battery negative cable.
4. Remove shift boot bezel screws and slide boot upward on shift lever extension.
5. Remove shift lever extension from the shift tower and lever assembly.
6. Remove skid plate, if equipped.
7. Drain lubricant if transmission will be disassembled for service.
8. Mark propeller shaft/shafts and companion flange yoke/yokes for installation reference and remove propeller shaft/shafts.
9. Disconnect harness from clips on transmission housing.
10. Remove transfer case linkage if equipped.
11. Remove transfer case mounting nuts and remove transfer case if equipped.
12. Remove slave cylinder (2) mounting nut (1) and remove cylinder.

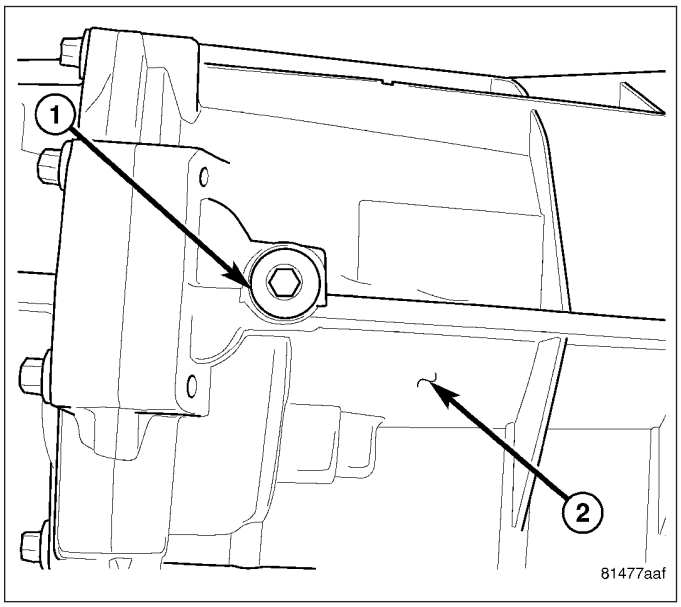

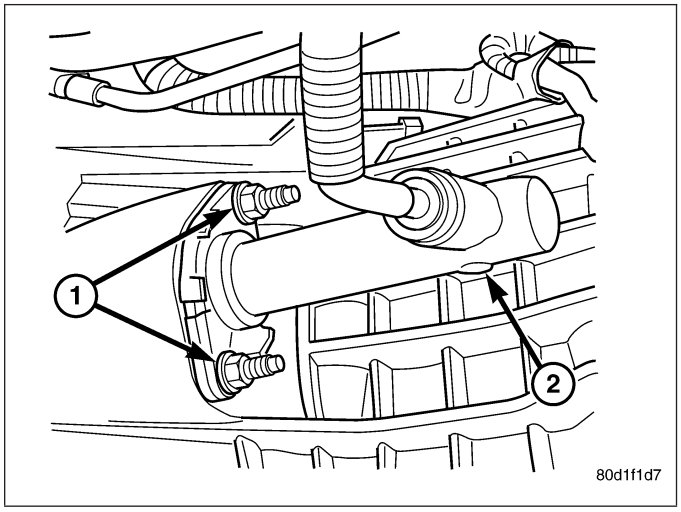

13. Remove starter motor (2), structural dust cover (3) bolts to clutch housing, dust shield (1) bolt and suspension crossmember (4).

CAUTION: Do not remove structural dust cover from enigne block. If cover is removed clutch housing and cover must be aligned with the engine.

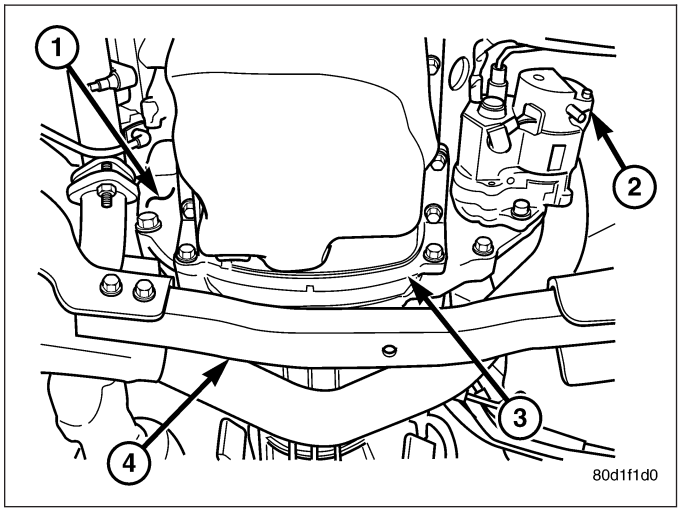

14. Remove exhaust pipe from the exhaust manifolds.
15. Support engine with adjustable jack stand and wood block.
16. Support and secure transmission to a transmission jack with safety chains.
17. Remove bolts from the rear transmission mount.
18. Remove the rear crossmember (2) and transmission mount (1).
19. Remove bolts attaching transmission to the engine.
20. Move transmission rearward until input shaft is clear of clutch disc and pressure plate. Then lower jack and remove transmission from under vehicle.

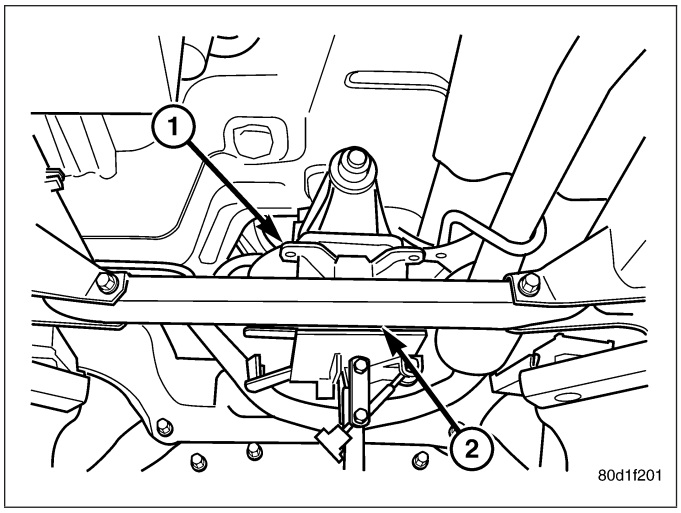

DISASSEMBLY

1. Remove shifter socket (1) from main shift rail.

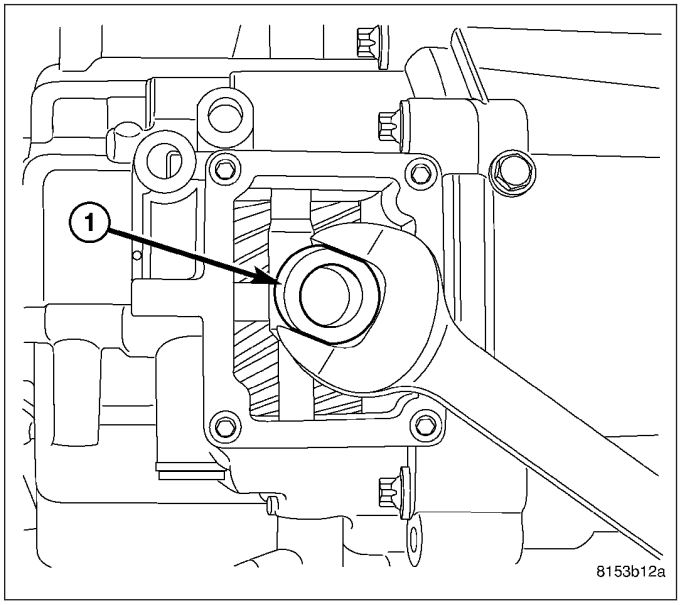

2. Remove back up lamp switch (1) bolt (2) and remove switch.

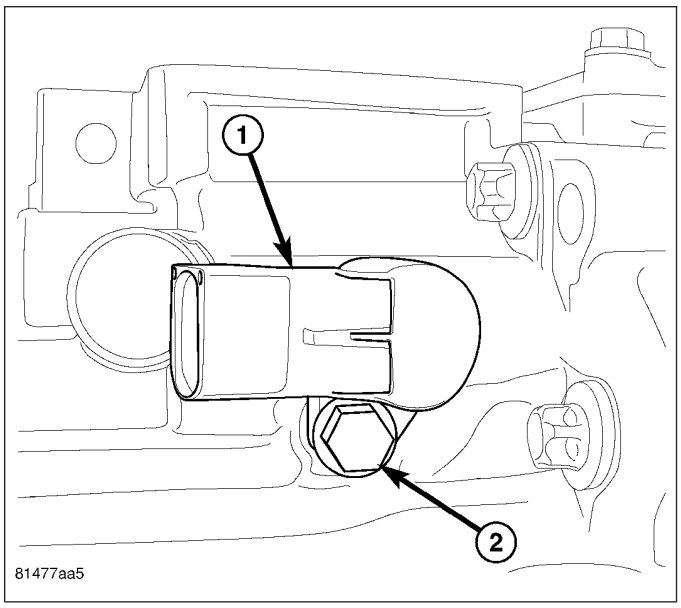

3. Remove large detent plug, next to back up lamp switch opening with Remover 9583 (1) and Slide Hammer C-3752 (2).

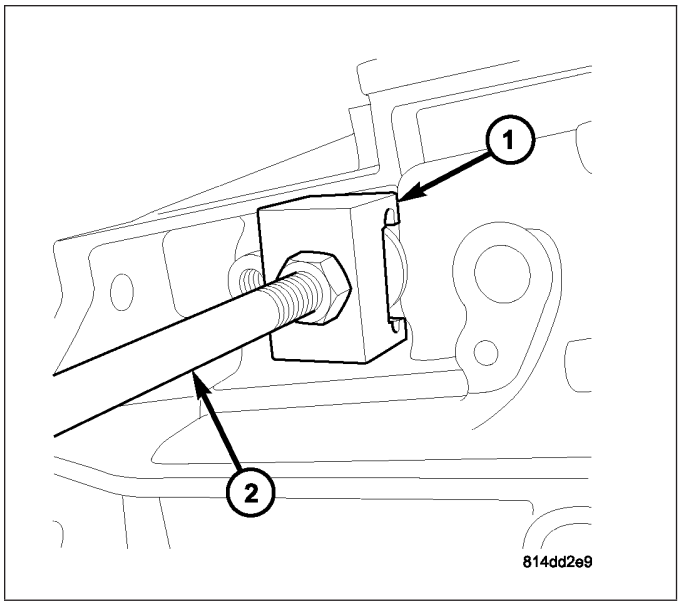

4. Remove two small detent plugs on top of rear housing with Remover 8870 (2) and Slide Hammer C-3752 (1).

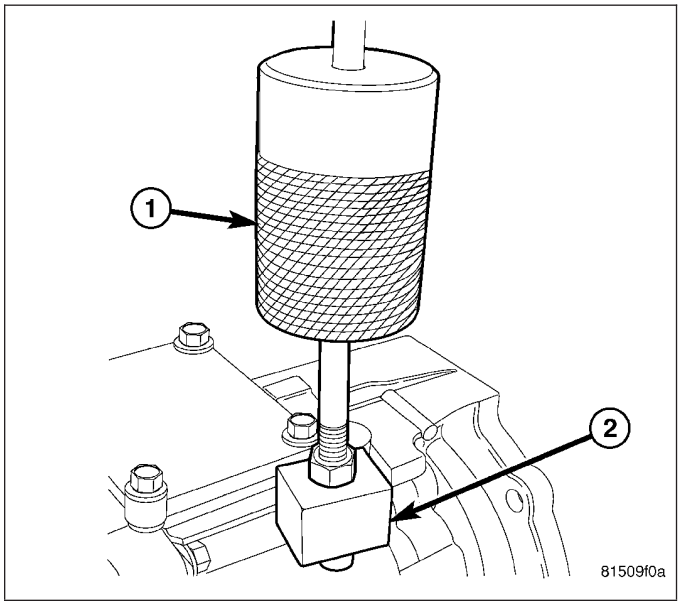

5. Install Wrench 9586 (1) on input shaft (2).

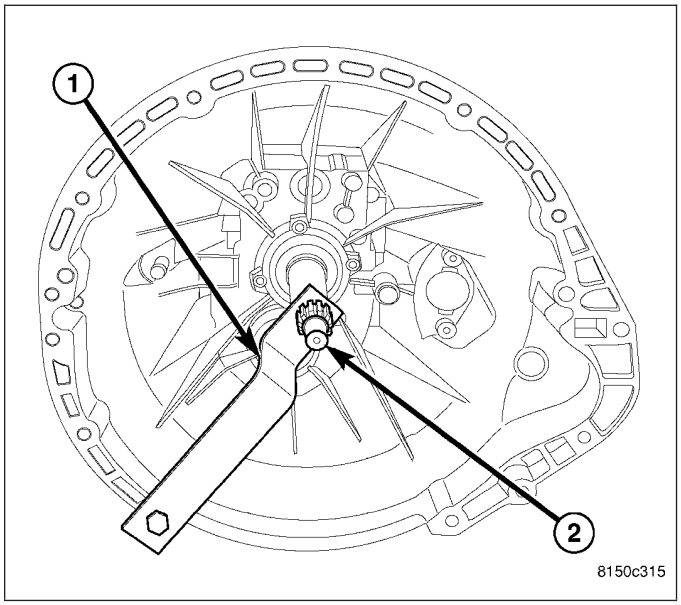

6. Remove output flange (1) nut (2) on 4x2 transmission.

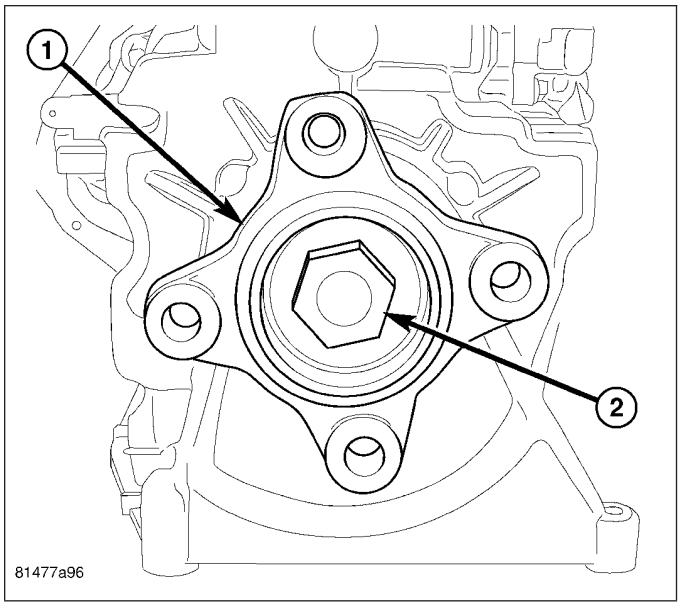

7. Remove output flange (1) on 4x2 transmission with Puller 8992 (2) and Button 9618-2.

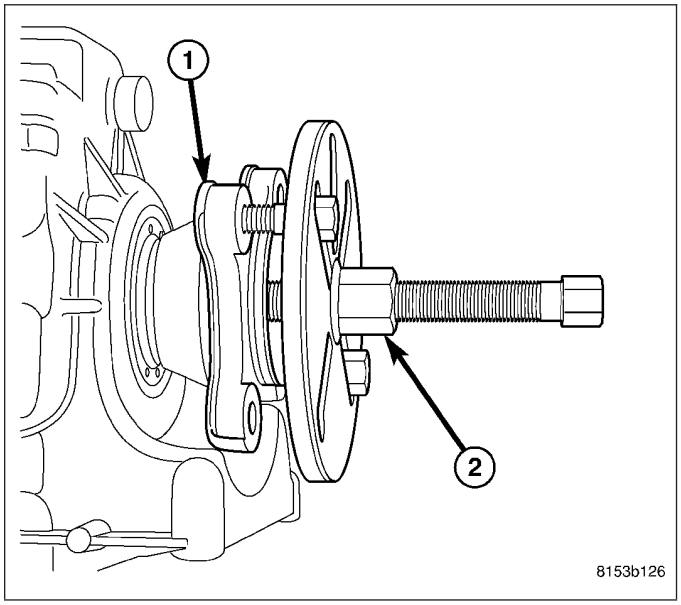

8. Remove output shaft nut with Socket 9584 (1) on 4x4 transmission (2).
9. Remove Wrench 9586 from input shaft.

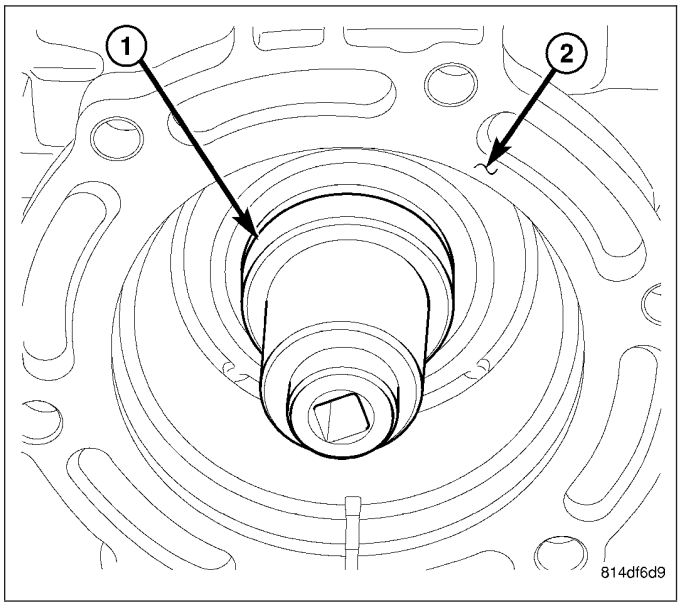

If necessary, remove the cover plate to access the one rear housing (2) bolt (1) located in the opening.

10. Place transmission on front housing and remove rear housing (2) bolts (1).

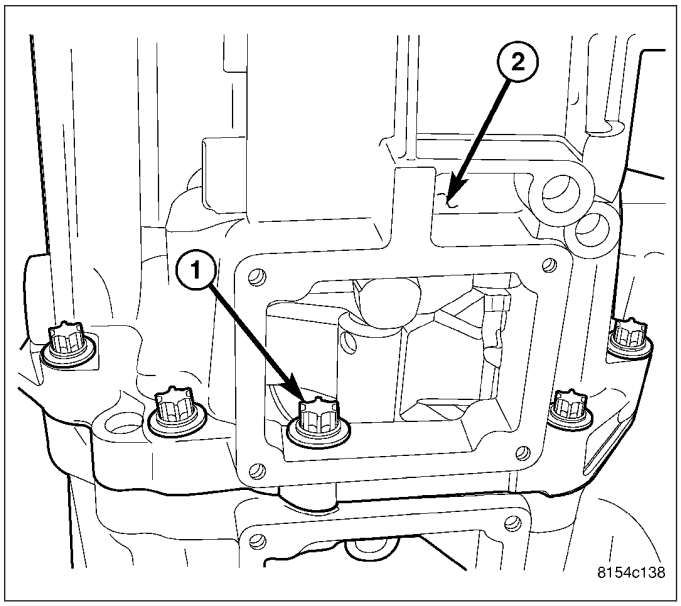

11. Install Button 9618-2 (1) into output shaft (2).

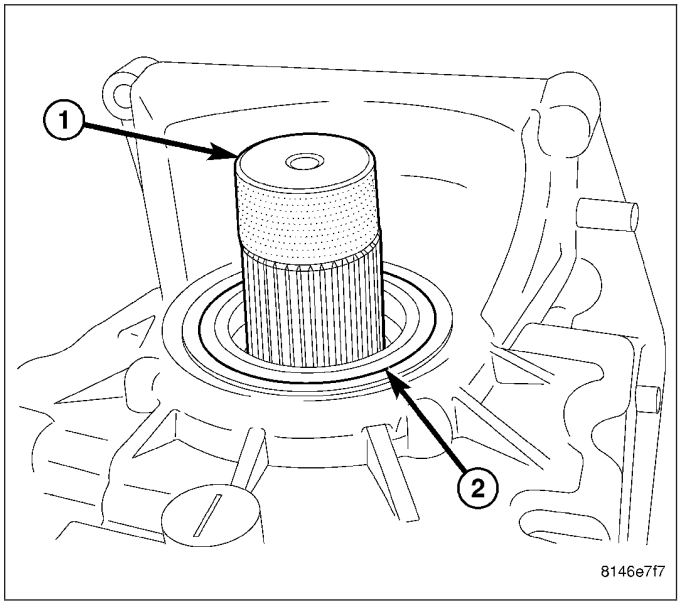

12. Separate rear housing (1) from mainshaft with Puller 9621(2). Bolt puller to the bottom of the rear housing, then turn puller bolt to push mainshaft out of the housing.

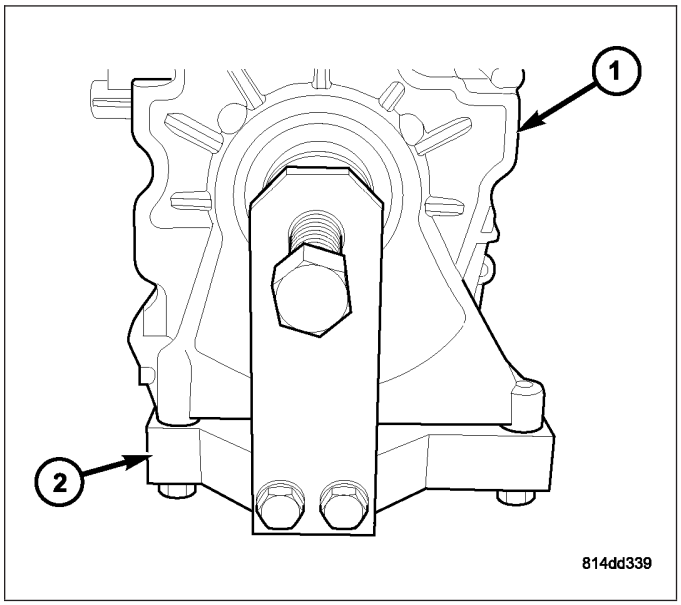

13. Remove reverse shift fork roll pin (1) from reverse shift rail (2).

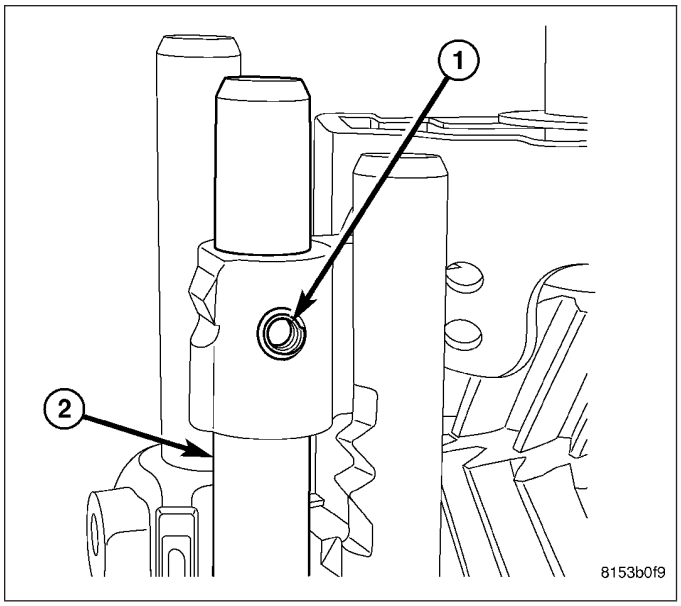

14. Slid reverse shift rail (1) down out of the shift fork (2) and remove reverse shift fork. Then slid shift rail up and out of the front housing.

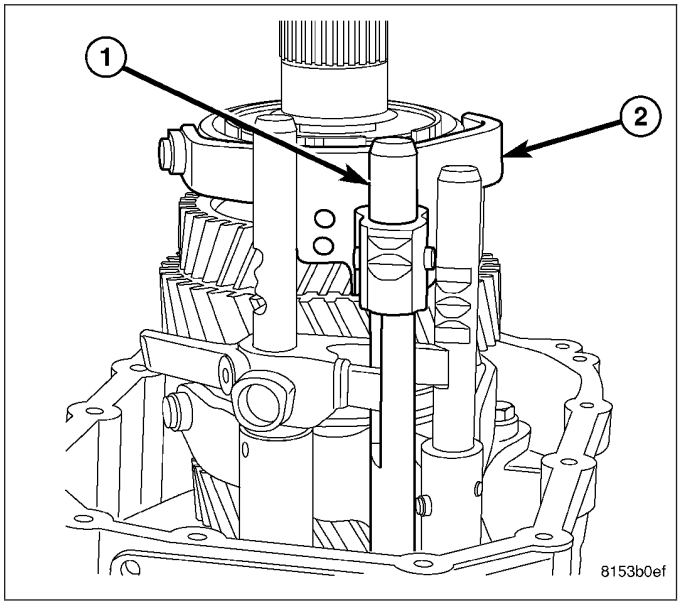

15. Remove 1-2 shift fork roll pin (1) from shift rail (2). Slid shift rail up out of shift fork and rear housing. Remove 1-2 shift fork.

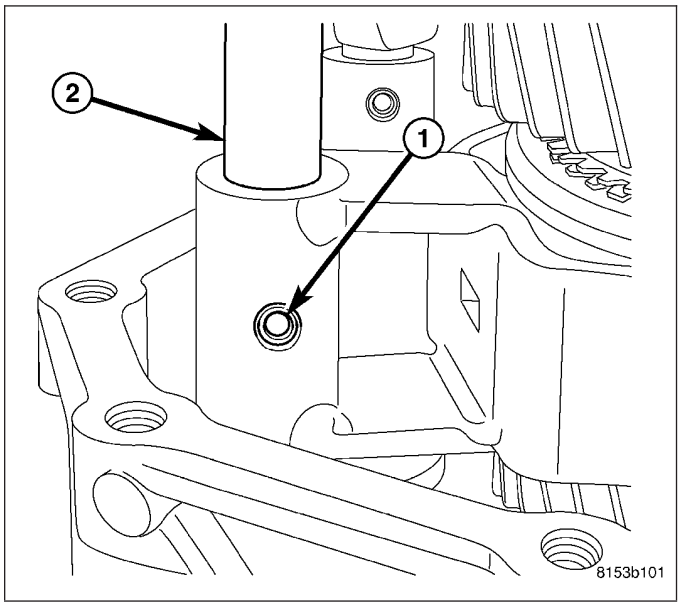

16. Rotate main shift rail (1) clockwise and pull up and out of the front housing.

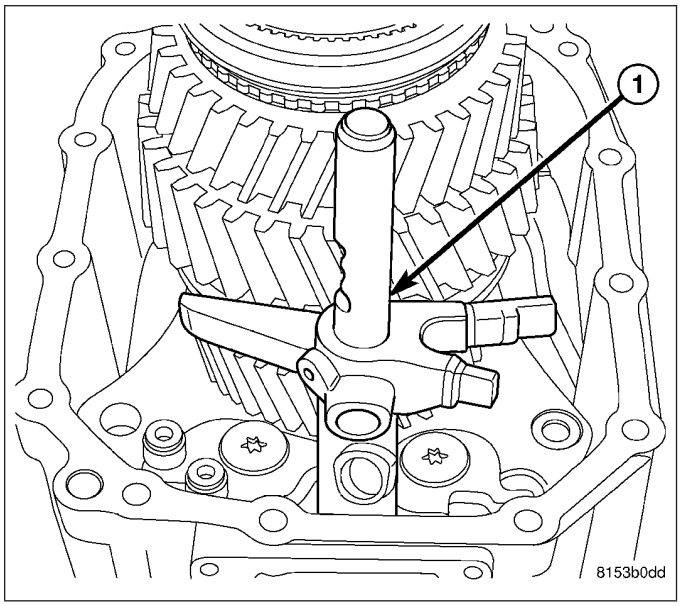

17. Remove first gear, reverse gear, reverse bearing, reverse gear bearing race and reverse synchronizer with Bridge 938 (1), Button 9618-2 (2) and puller Adapters 9628 (3). Position puller Adapters 9628 (3) under first gear.

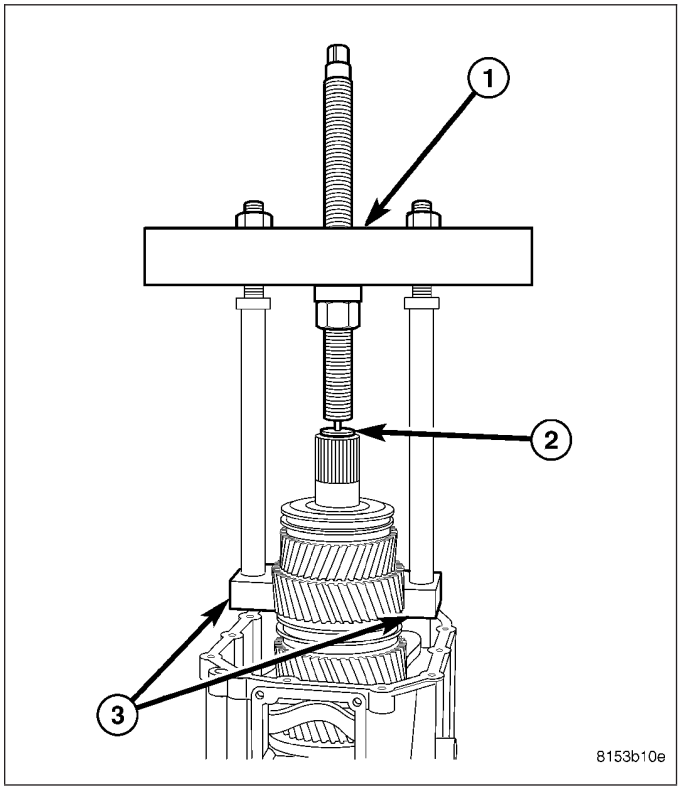

18. Remove first gear bearing (1) from mainshaft (2).

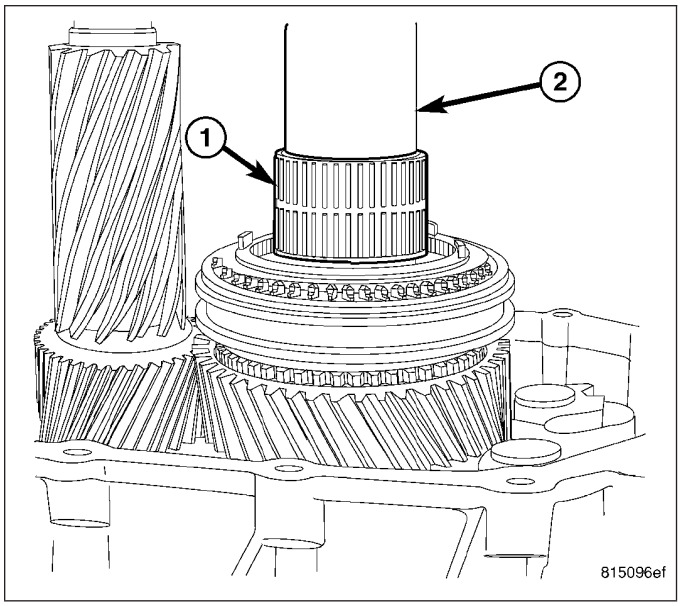

19. Remove first gear synchronizer inner friction ring (1) from 1-2 synchronizer hub (2).

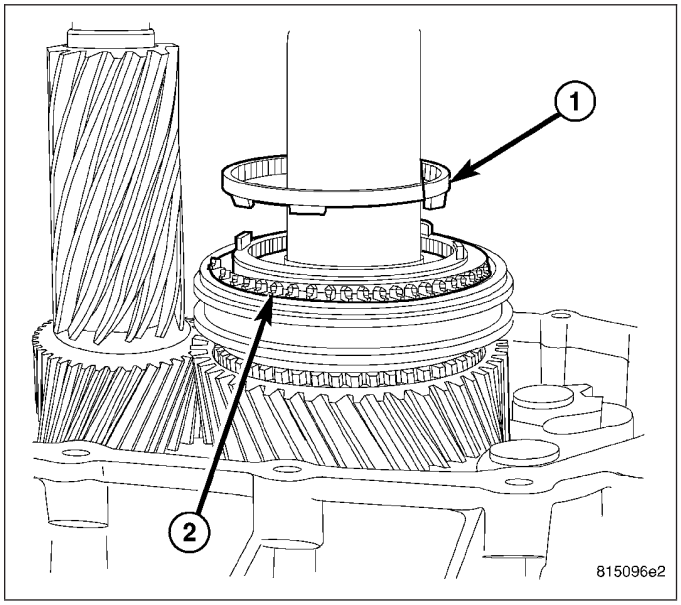

20. Remove first gear synchronizer outer friction ring (1) from 1-2 synchronizer hub (2).

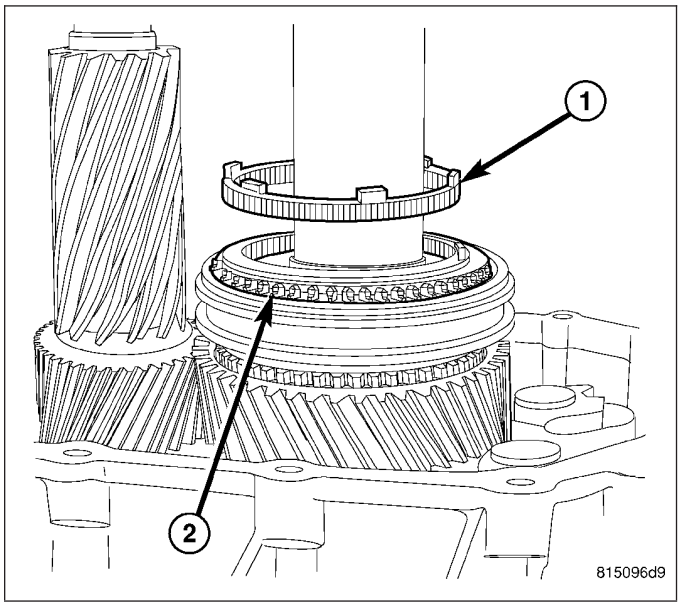

21. Remove first gear synchronizer blocker ring (1) from 1-2 synchronizer hub (2).

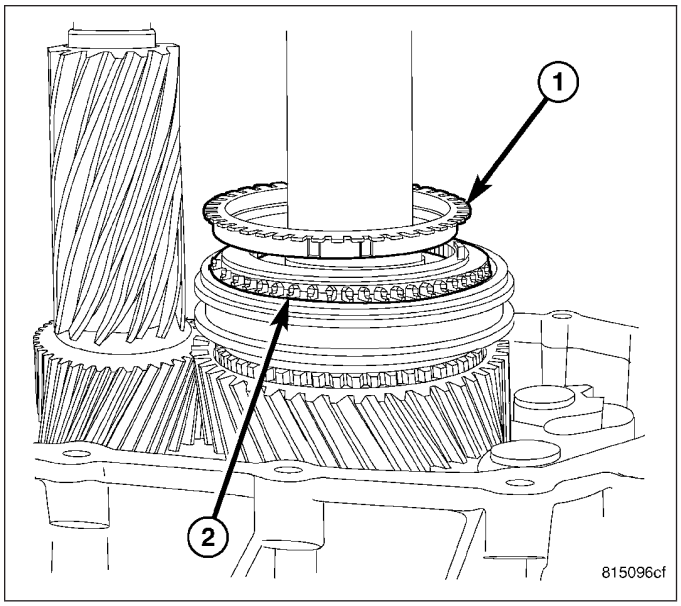

22. Remove 1-2 synchronizer hub (1) snap ring (2).

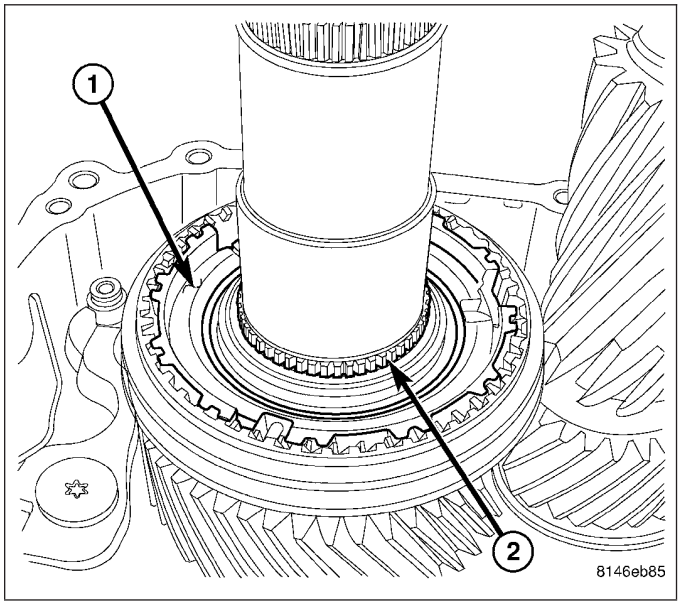

23. Remove 1-2 synchronizer sleeve (1) from 1-2 synchronizer hub (2).

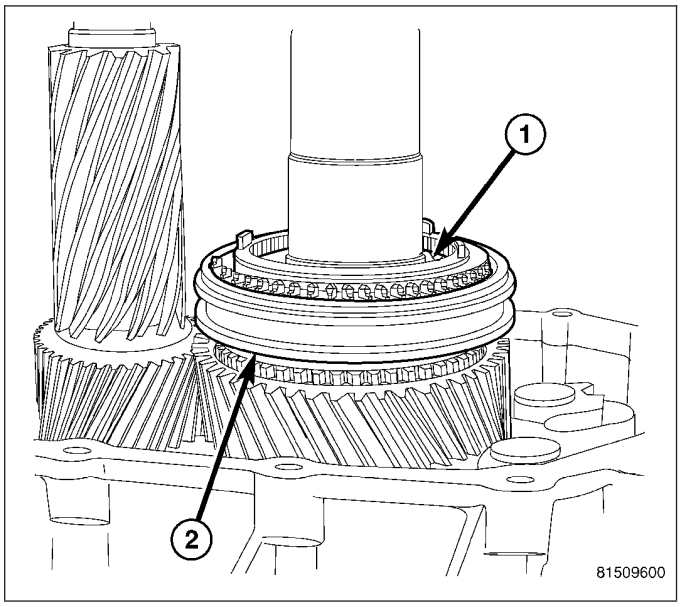

24. Remove 1-2 synchronizer hub (1) detents (2).

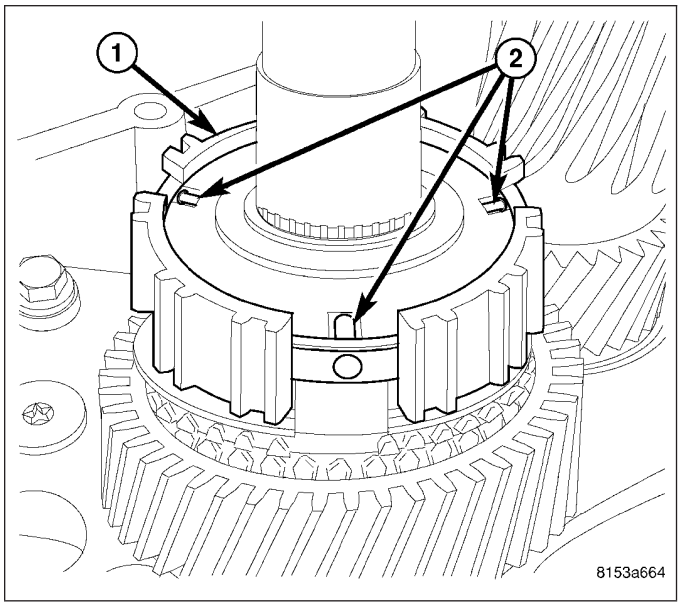

25. Remove second gear and 1-2 synchronizer hub with Bridge 938 (1), Button 9618-2 (2) and Puller Adapters 9627 (3).

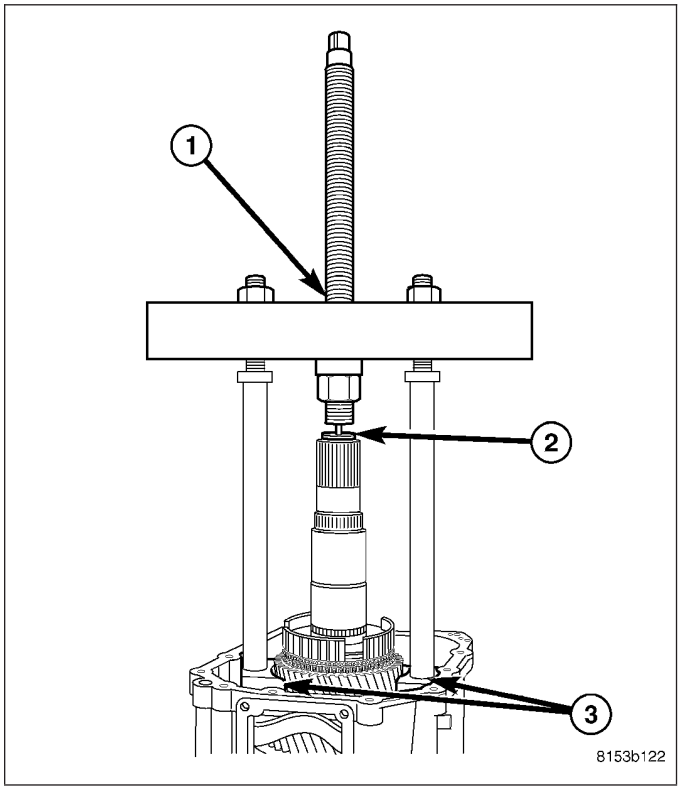

26. Remove interlock plate bolts (1) and remove interlock plate (2).

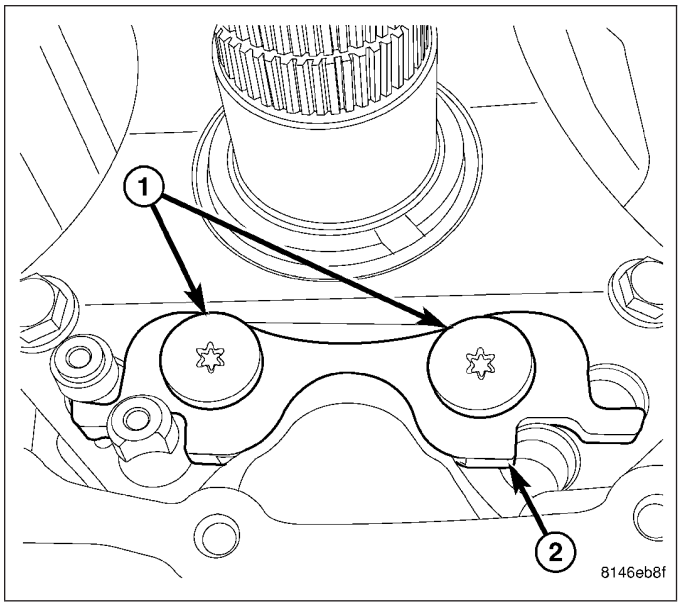

27. Remove washers (1) from intermediate plate (2).

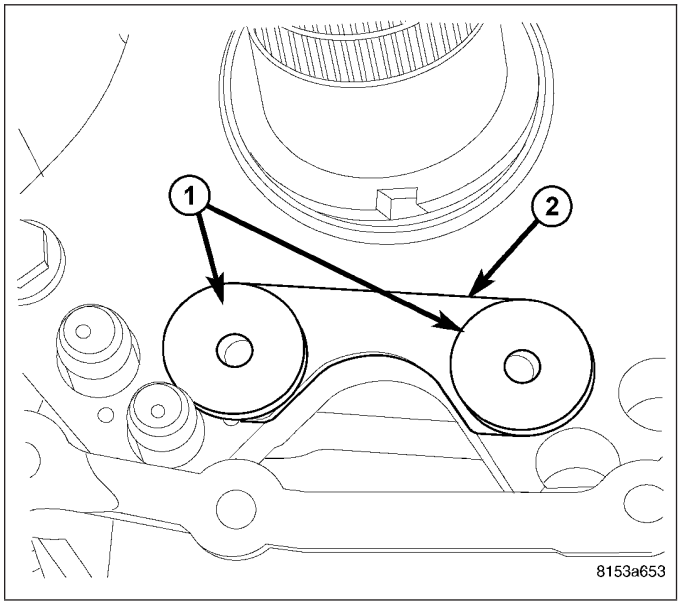

28. Remove intermediate plate (1) bolts (2).

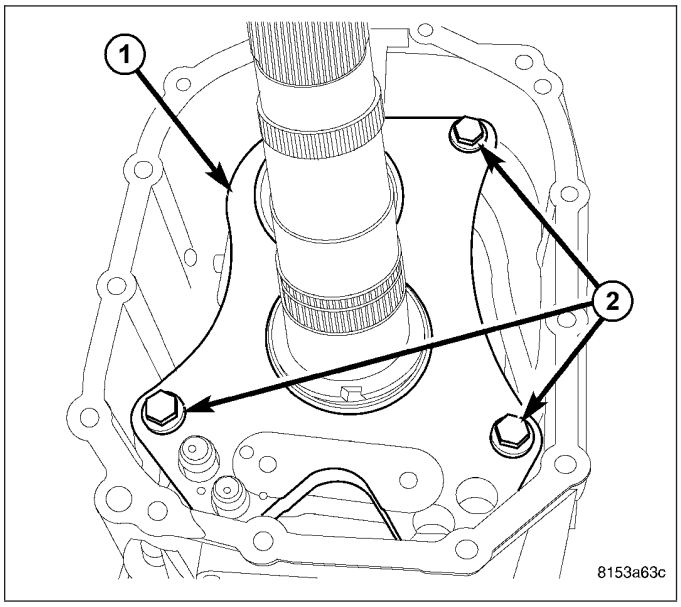

29. Remove intermediate plate (1) dowels (2) with a suitable tool and remove intermediate plate.

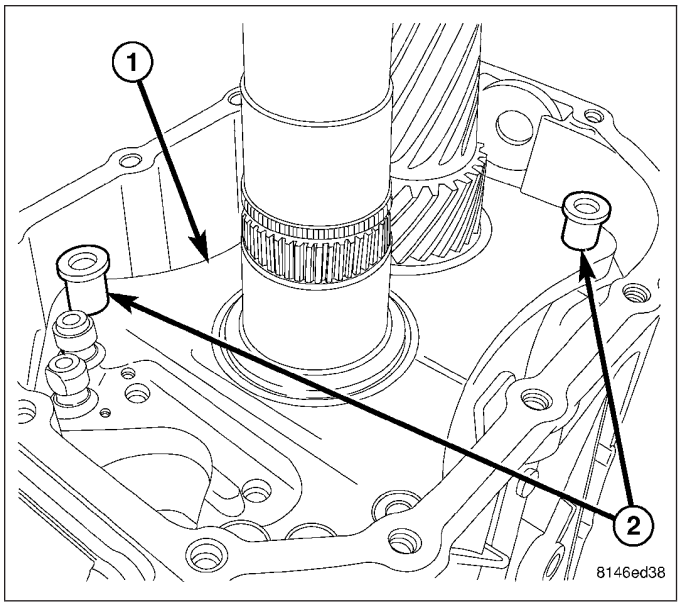

30. Install Fixture 9626 (2) on main/countershaft and shift rails. Turn fixture (2) with transmission (1) over onto the fixture.

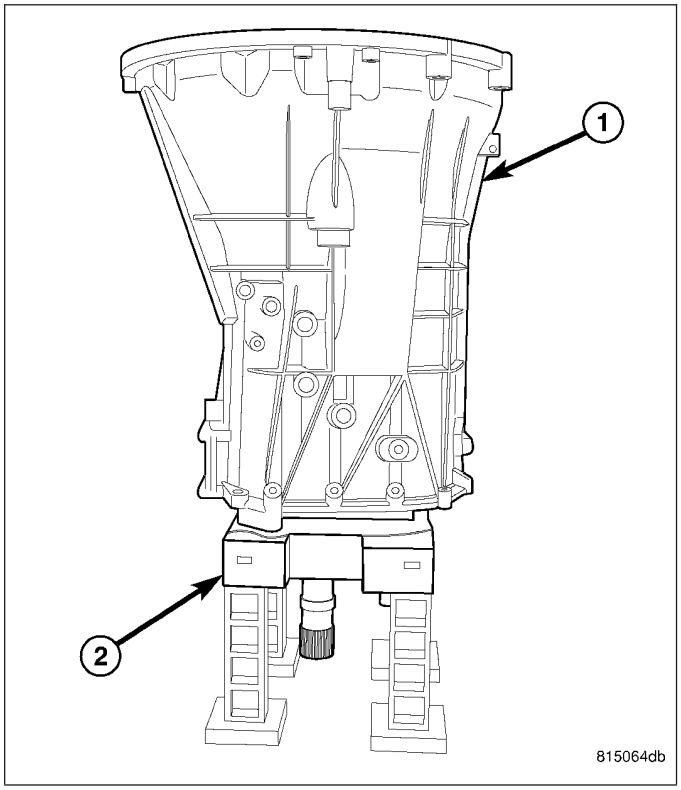

31. Remove clutch release bearing support bolts (2) and retainer (1).

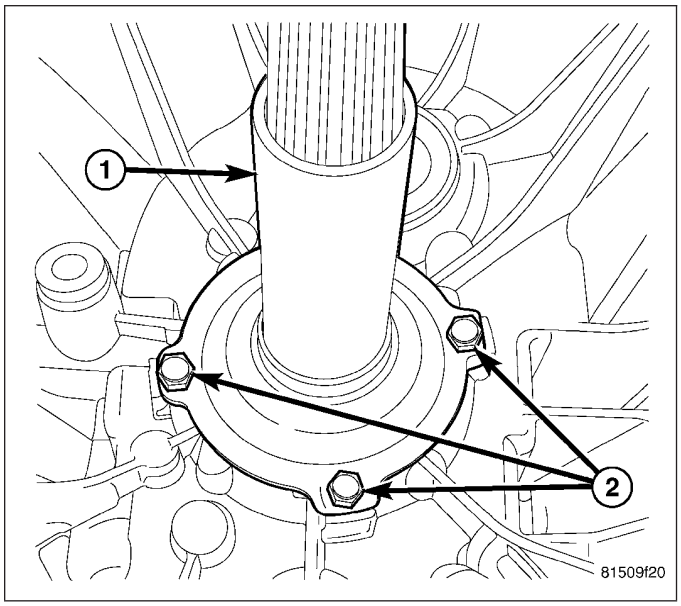

32. Insert seal Remover 9667 through one input shaft seal (1) disassembly hole (2).

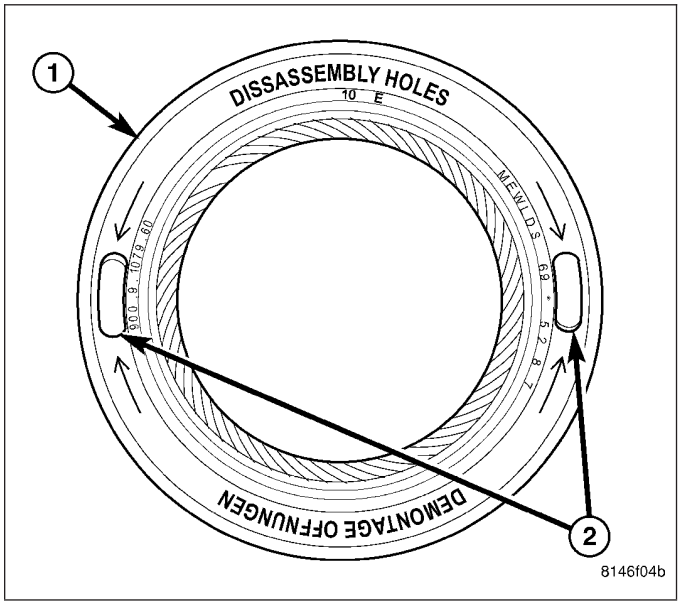

33. Remove input shaft seal with Remover 9667 (1) and Slide Hammer C-3752 (2).

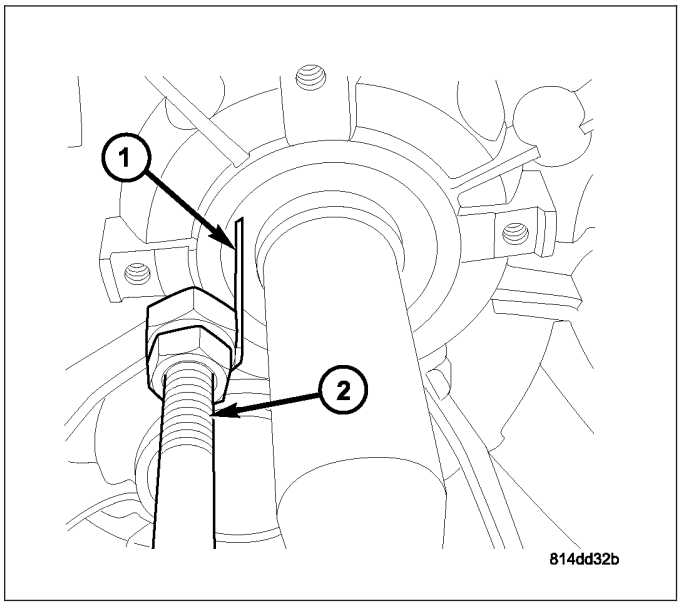

34. Remove input shaft snap ring.

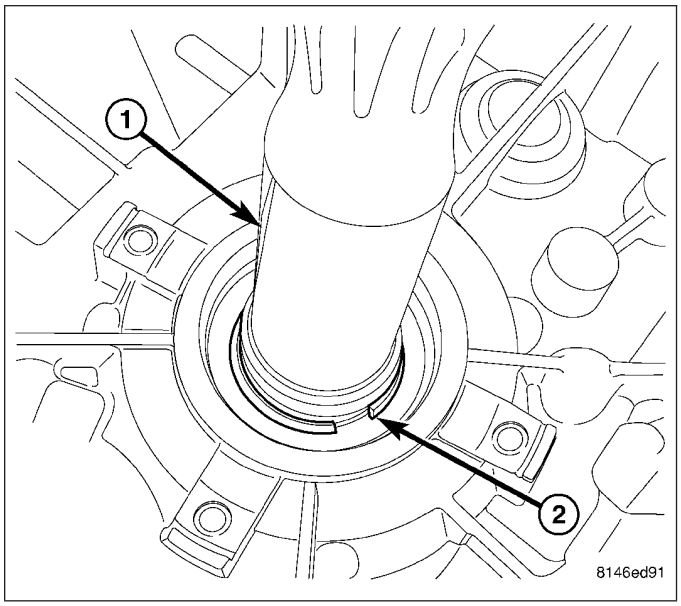

35. Put a hole in the center of the countershaft plug (2) with a punch (1).

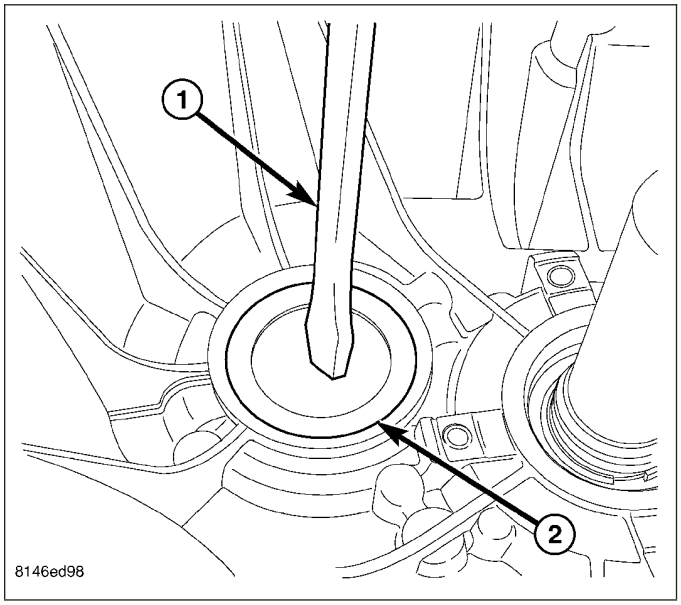

36. Remove countershaft plug (1) from front housing with Puller 9667 (2) and Slid Hammer C-3752.

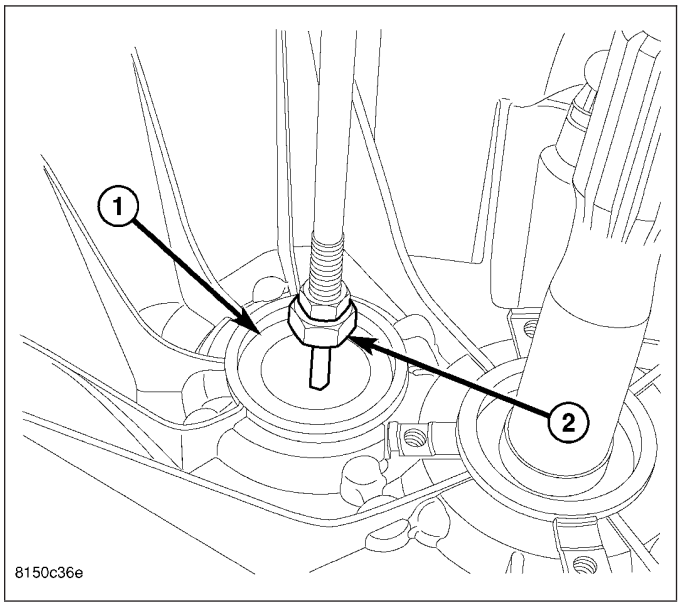

37. Install Wrench 9586 (1) on input shaft (2).

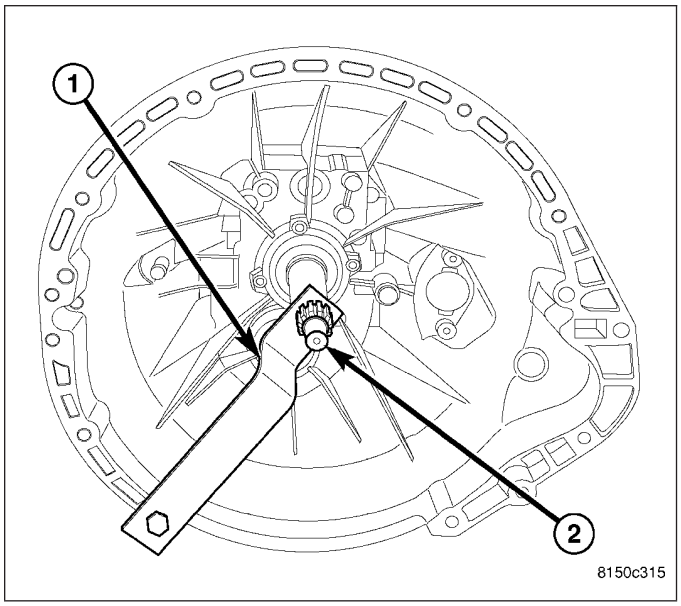

38. Remove countershaft allen bolt (1).
39. Remove input shaft wrench.

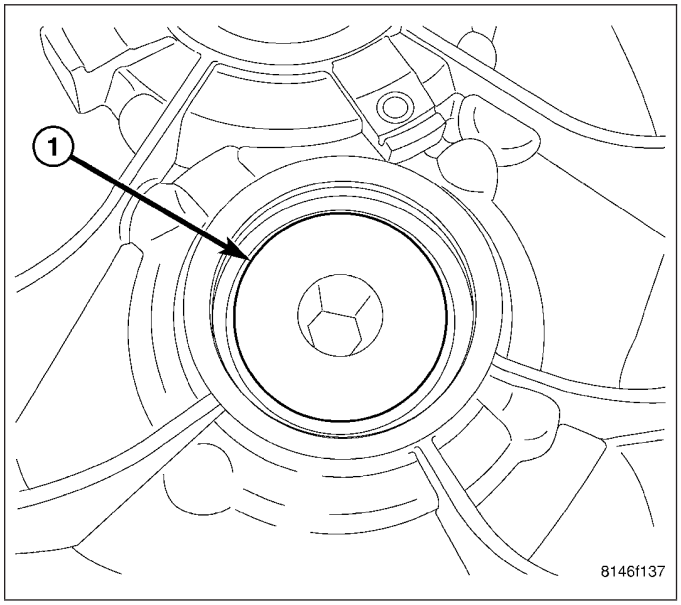

40. Remove two detent plugs from the side of the housing with Remover 8870 (1) and Slide Hammer C-3752 (2).

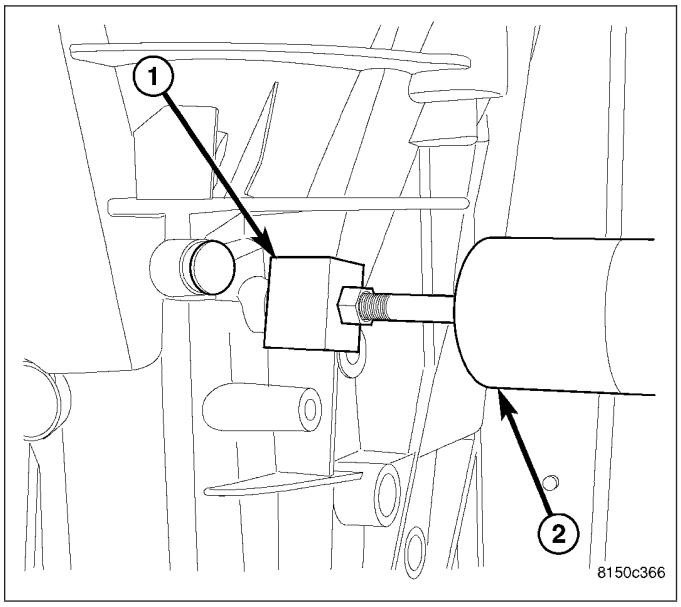

41. Remove 3-4 (2) and 5-6 (1) shift fork pivot bolts from both sides of the front housing.

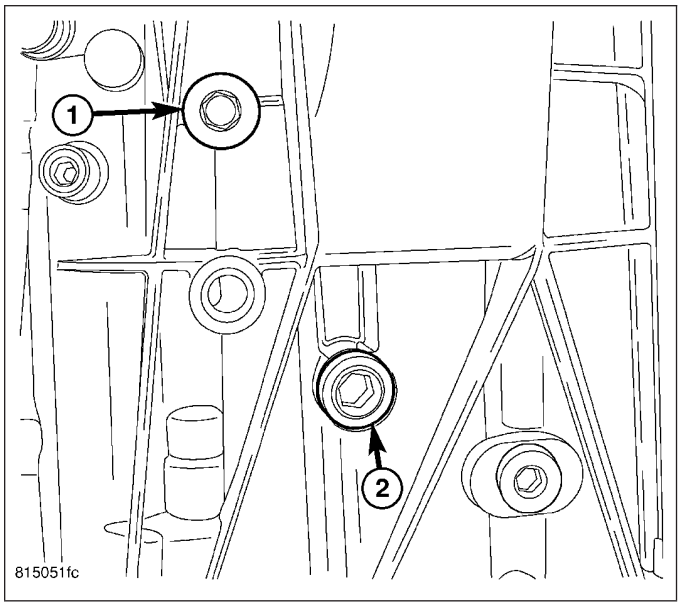

42. Install Puller 9621(1) with puller Plug 9621-2 (2) on front housing. Tighten puller bolts evenly and remove front housing from the mainshaft and countershaft.

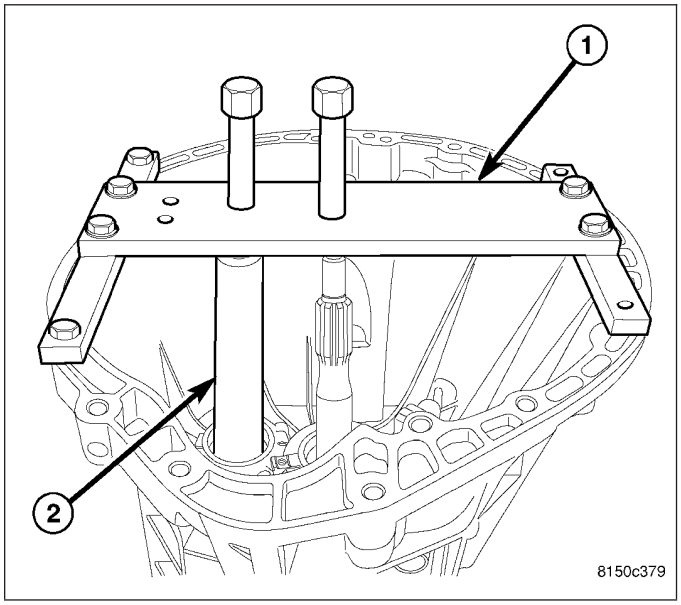

43. Remove 5-6 shift fork (3) and 3-4 shift fork (4). Then remove 5-6 shift rail (1) and 3-4 shift rail (2) from Fixture 9626.

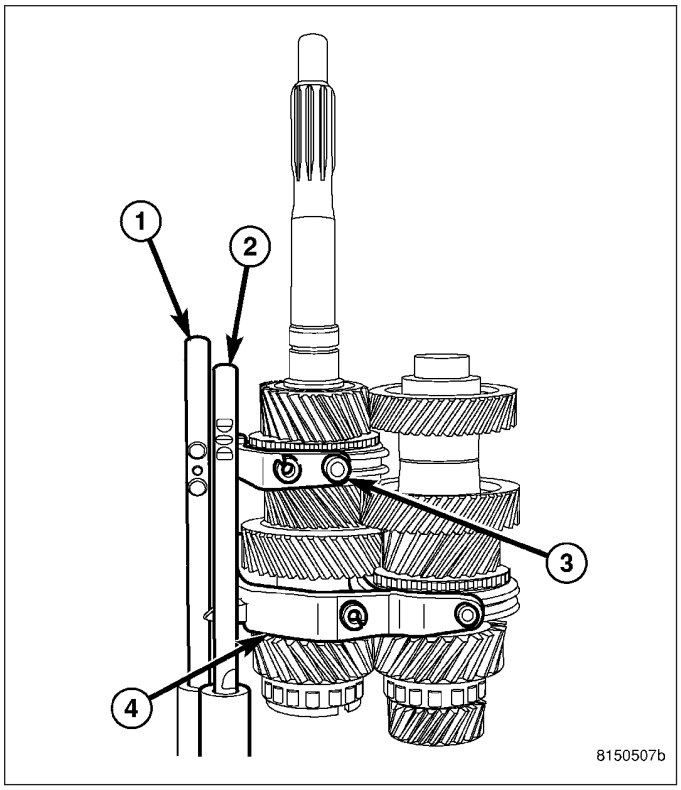

44. Remove input shaft (1) from mainshaft (2).

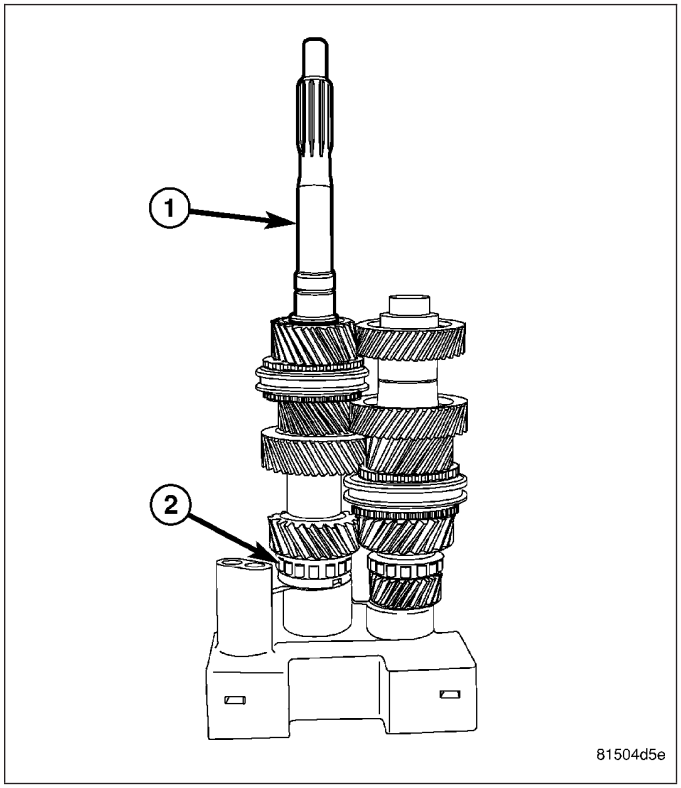

45. Remove input shaft bearing (1) from mainshaft (2).

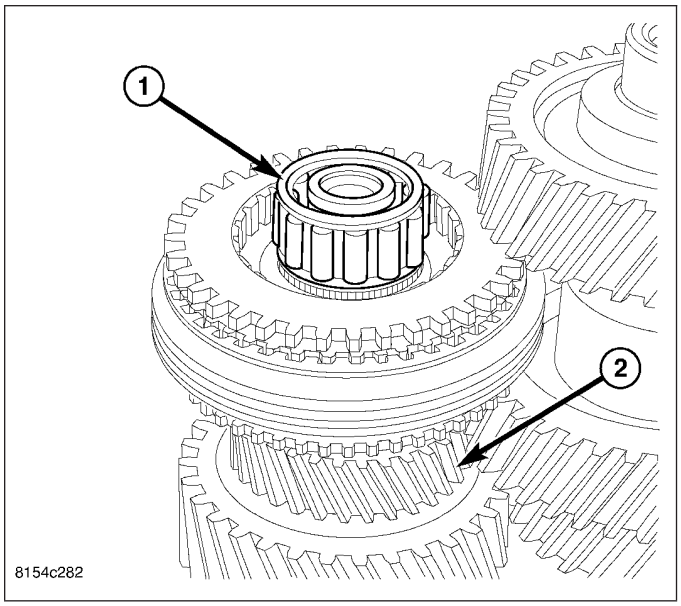

46. Remove countershaft (2) from fixture (3).

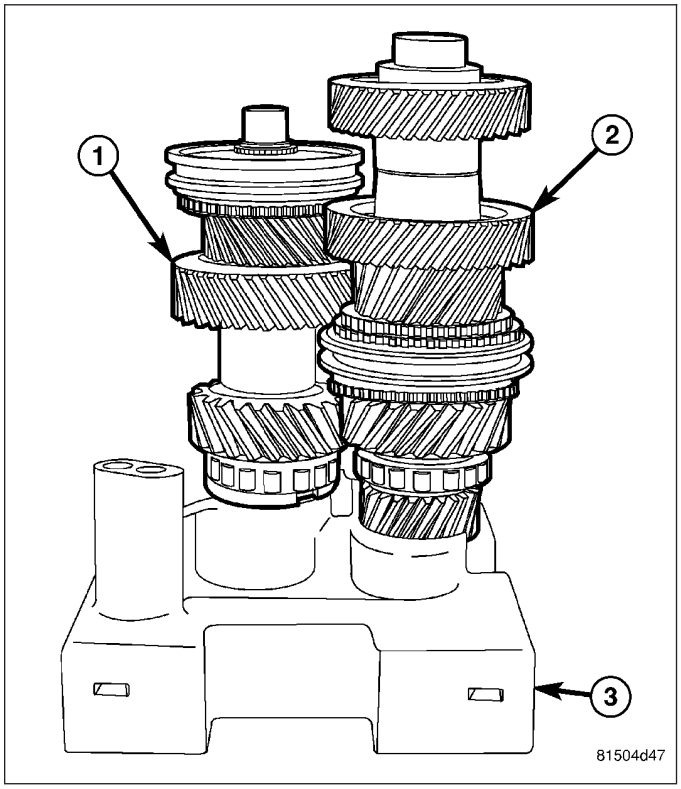

MAINSHAFT

1. Remove fifth gear synchronizer clutch body (1) from 5-6 synchronizer hub (2).

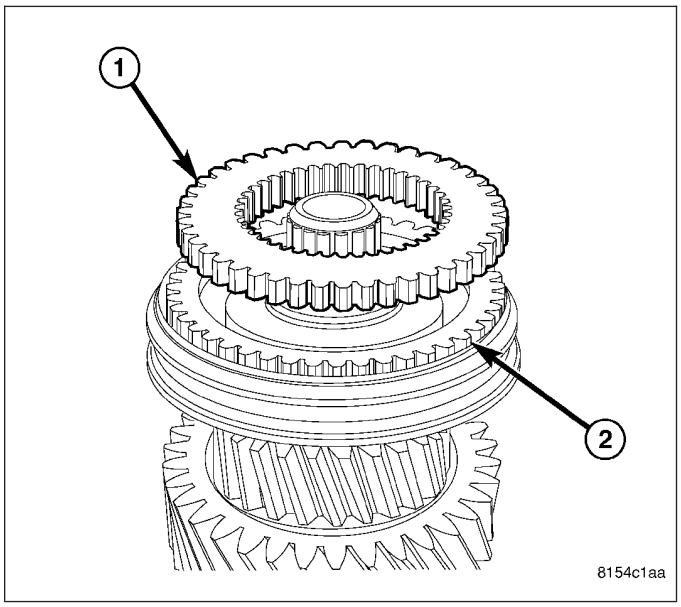

2. Remove fifth gear synchronizer friction ring (1) from 5-6 synchronizer hub (2).

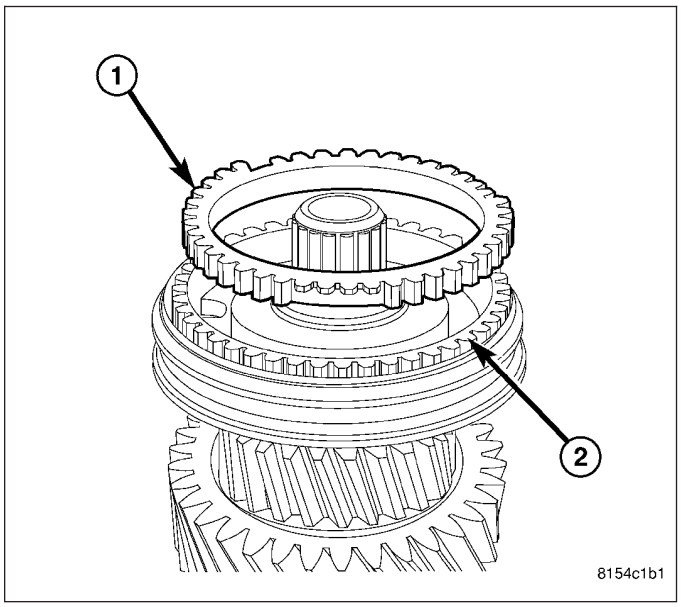

3. Remove 5-6 synchronizer sleeve (1) from hub (2).

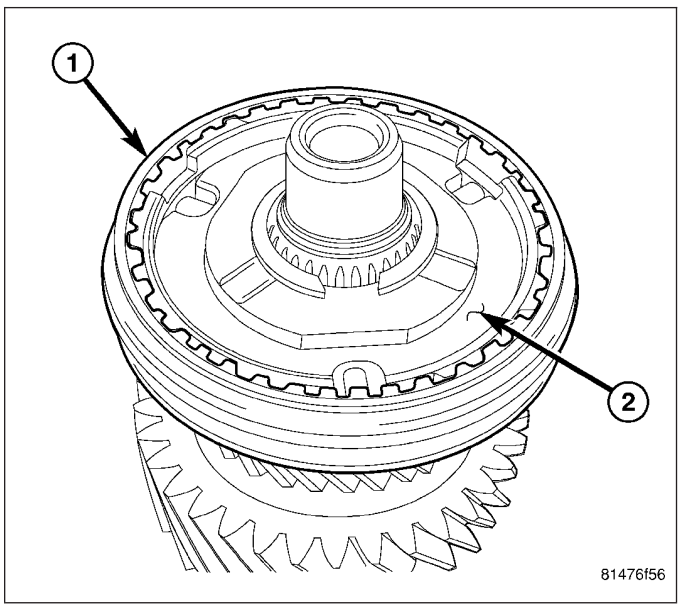

4. Remove 5-6 synchronizer detents (1) from hub (2).

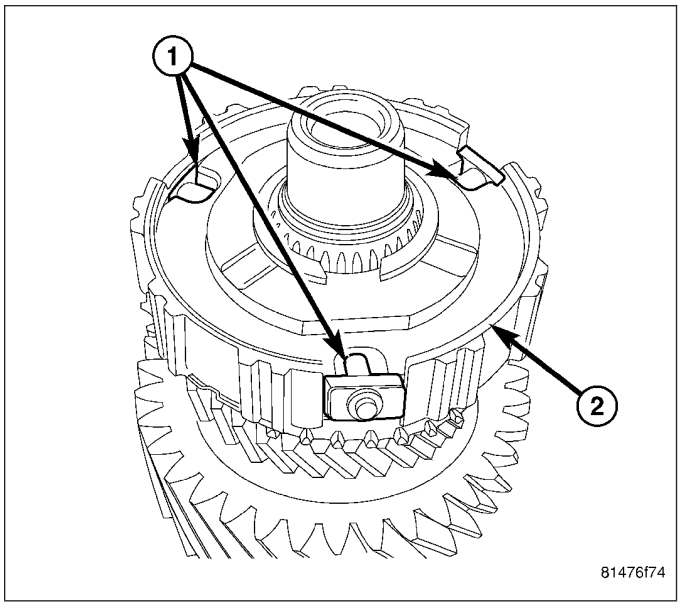

5. Remove 5-6 synchronizer hub (1) snap ring (2).

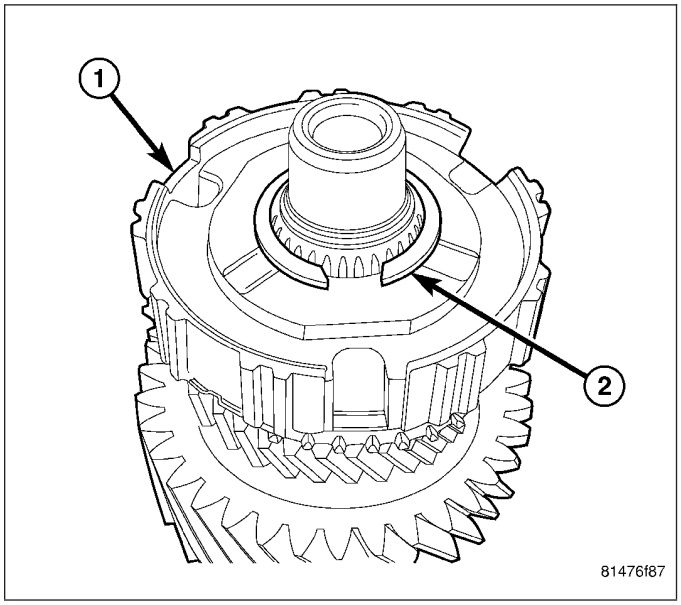

6. Remove 5-6 synchronizer hub (1) with three jaw puller (2) and Button 9618-2 (3). Position jaws under sixth gear clutch body (4).

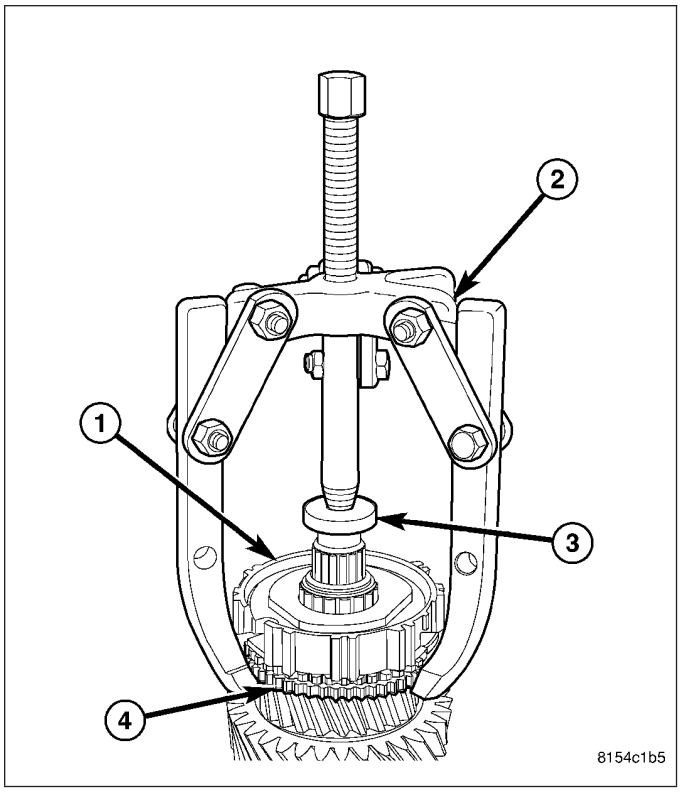

7. Remove sixth gear (1) from mainshaft (2).

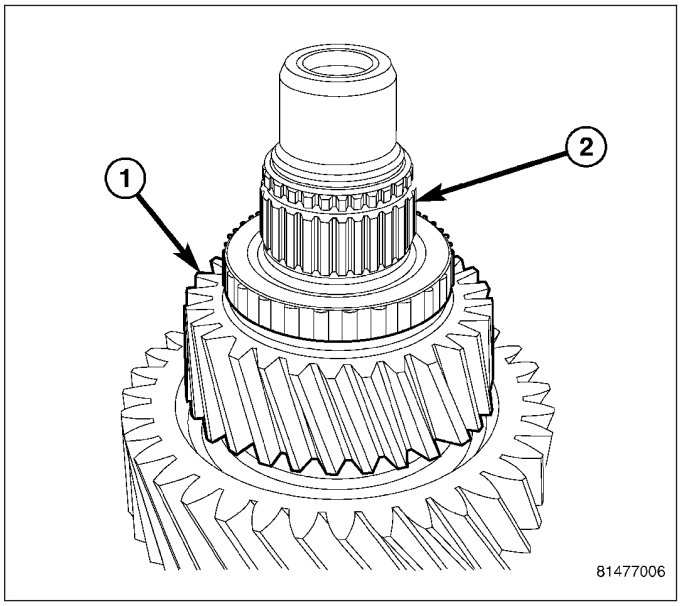

8. Remove sixth gear bearing (1) from mainshaft (2).

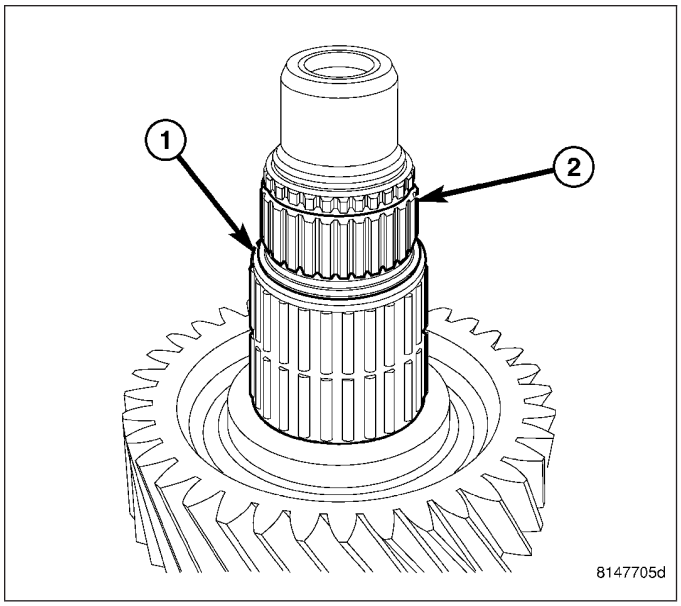

9. Remove mainshaft center support bearing (1) from mainshaft (2).

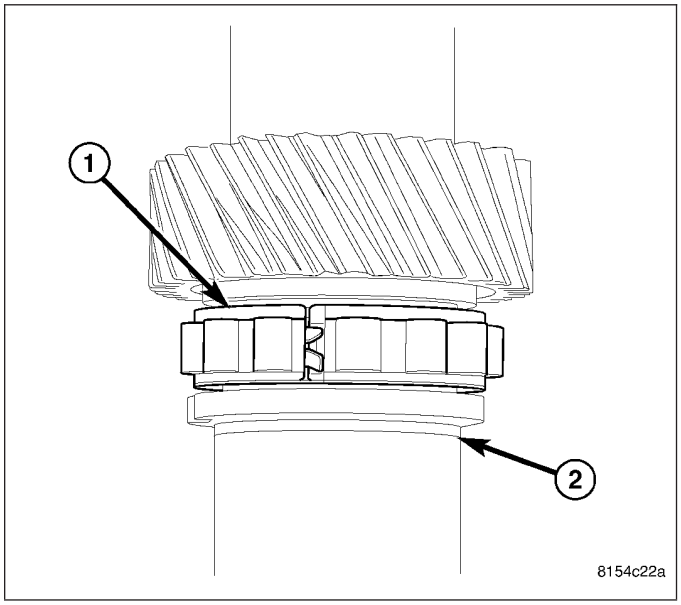

COUNTERSHAFT

1. Remove countershaft center support bearing (1) from counter shaft (2).

NOTE: Countershaft with 3-4 synchronizer, is serviced as an assembly except bearings.

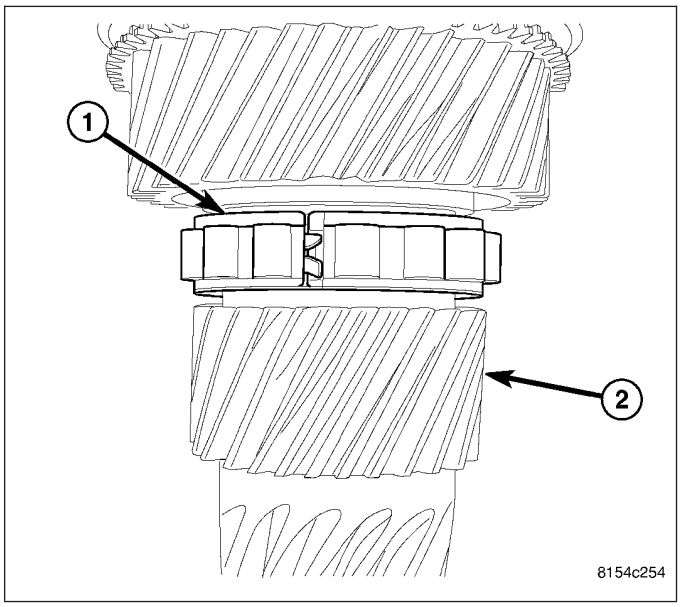

CENTER SUPPORT PLATE

1. Remove center support (1) roller bearing race retainer (2).

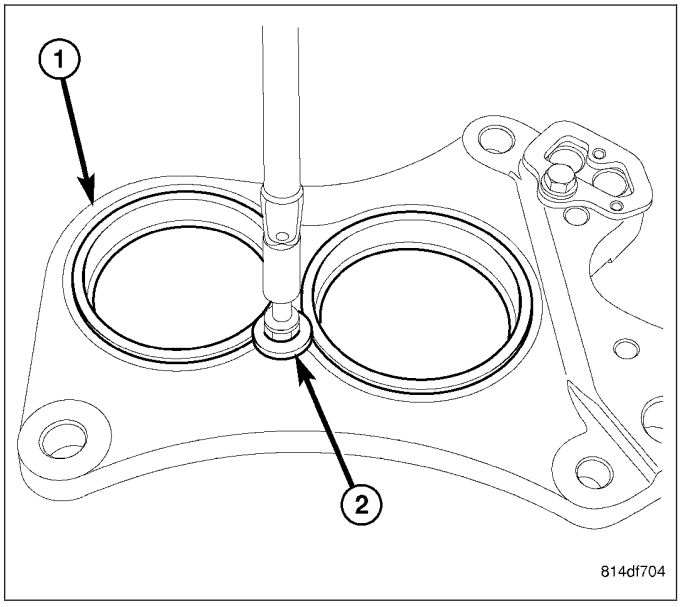

2. Remove mainshaft center support (1) bearing race with Remove/Installer 9668 (2) and Handle C4171.

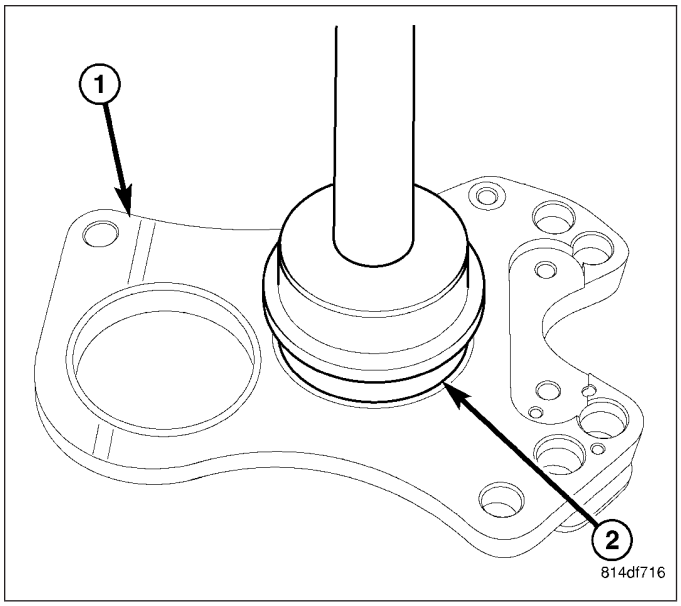

3. Remove countershaft center support (1) bearing race with Remove/Installer 9617 (2) and Handle C4171.

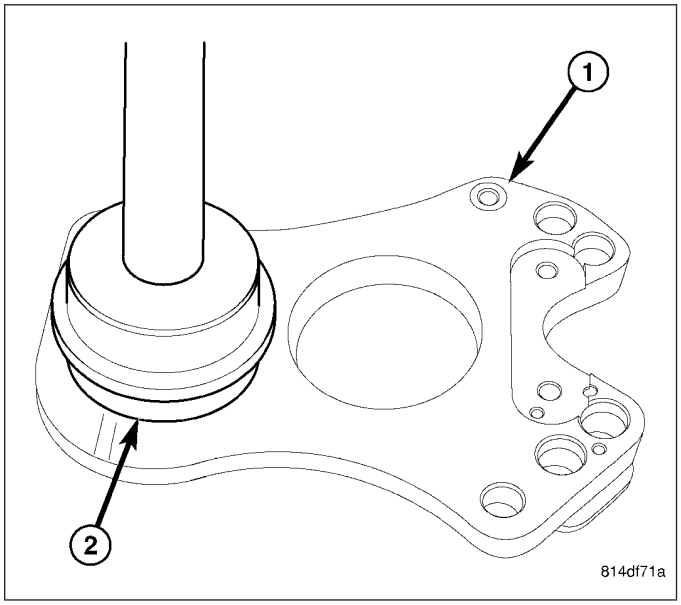

FRONT HOUSING

1. Remove mainshaft bearing retainer (1) and countershaft bearing retainers (2).
2. Remove mainshaft bearing and countershaft bearing with hammer and driver.

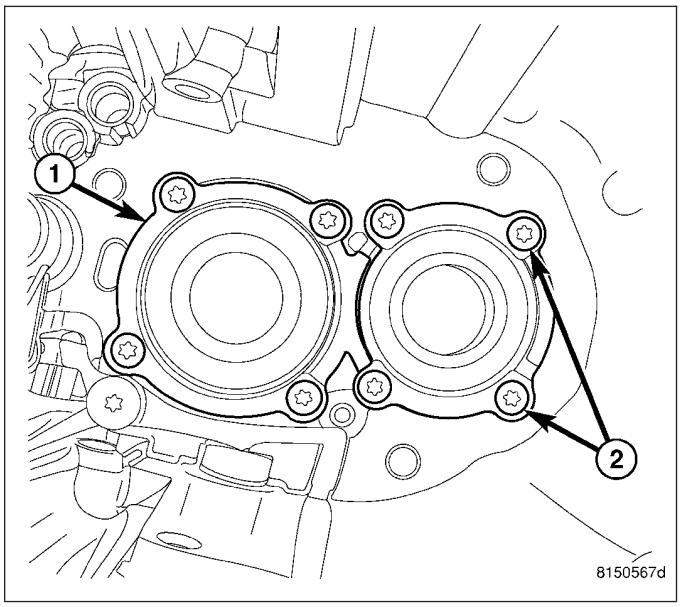

REAR HOUSING

1. Remove reverse idler gear shaft bolt (1) from housing (2).

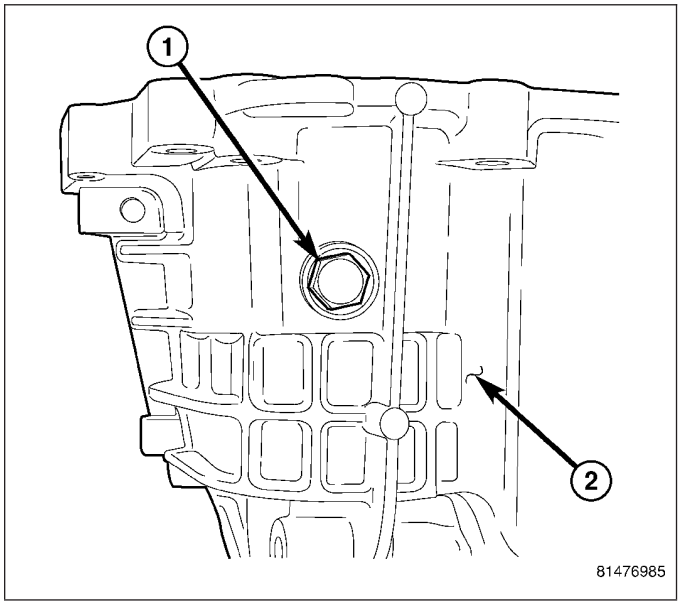

2. Remove reverse idler gear shaft (1) from idler gear (2).

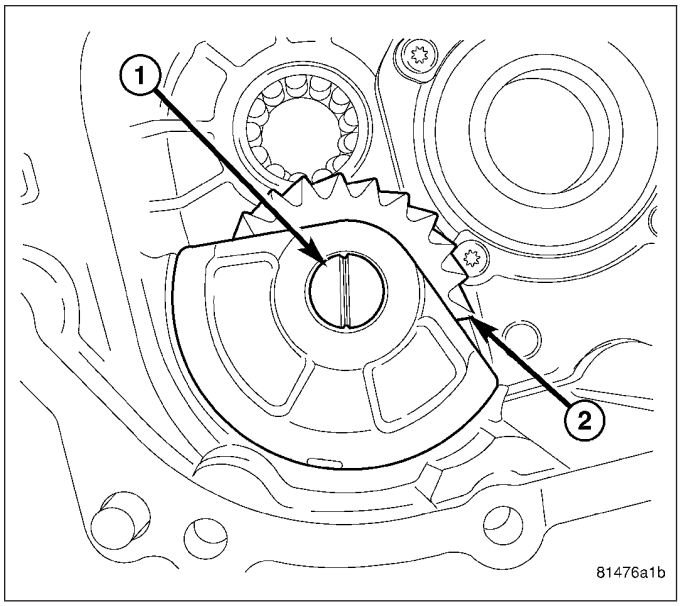

3. Remove reverse idler gear (1) shaft support (2).

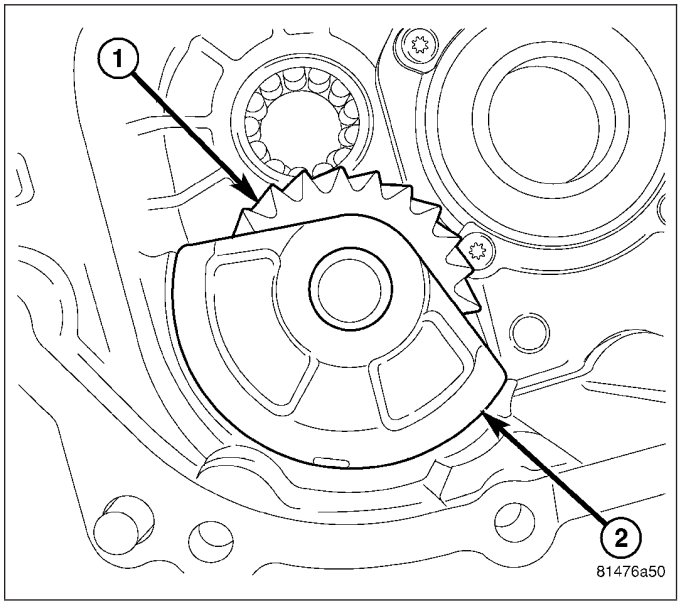

4. Remove reverse idler gear (1) and bearing (2).

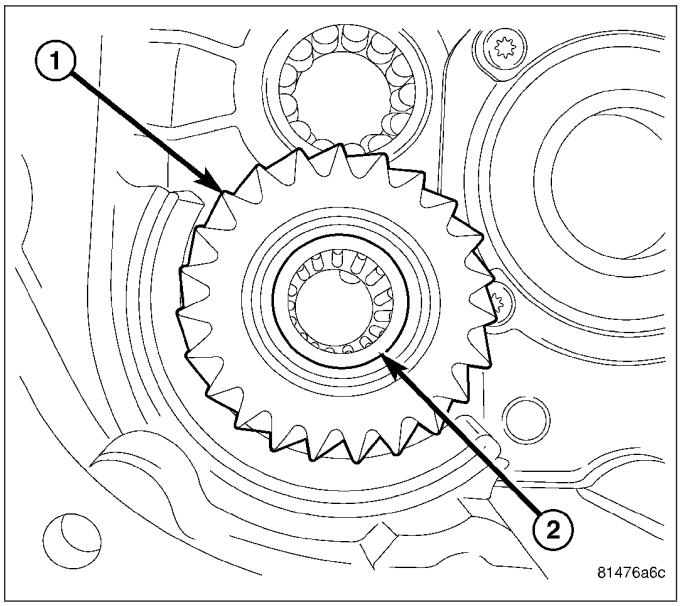

5. Remove mainshaft bearing (1) retainer (2) bolts and remove retainer.
6. Remove bearing from housing with a hammer and driver.

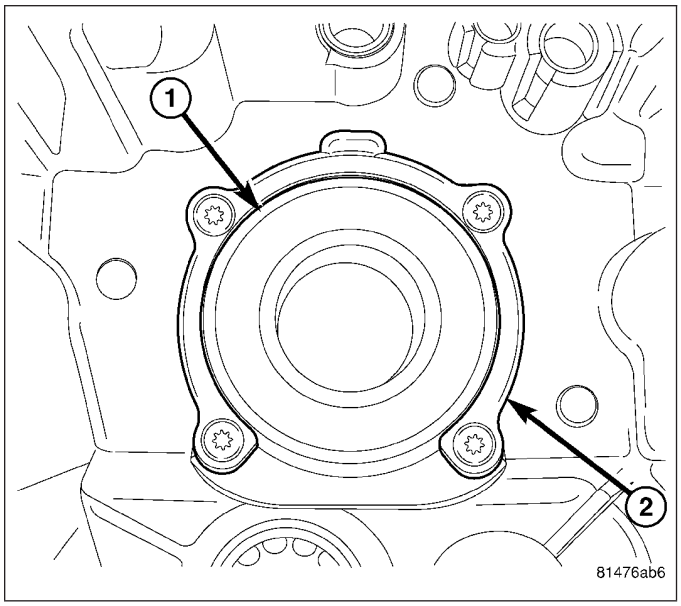

7. Break plastic countershaft roller bearing cage with a screw driver. Then remove cage and roller bearing.
8. Insert Remover 9585 through the countershaft roller bearing shell (1) and expand the tool (2) to grab the bottom (3) of the bearing shell (1).

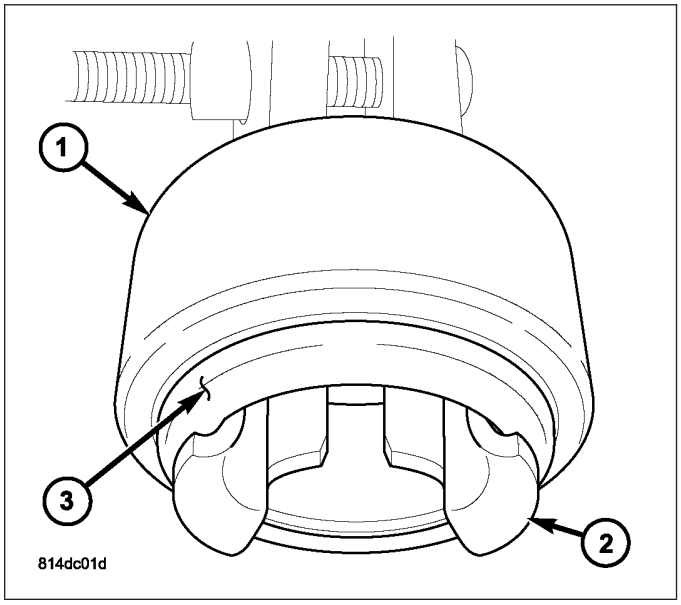

9. Remove countershaft roller bearing shell (1) from the rear housing with Remover 9585 (2) and Slide Hammer C-637.

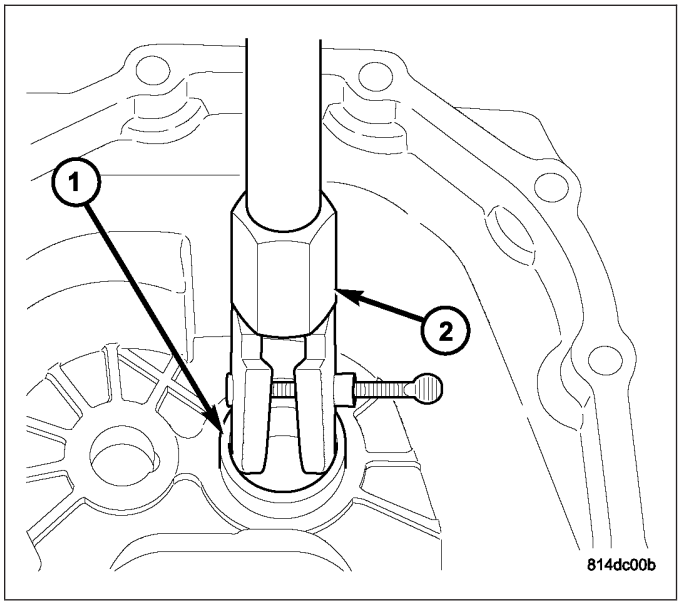

10. Remove shift rail roller bearing from rear housing (3) with Remover 9609 (1) and Slide Hammer C-637 (2).

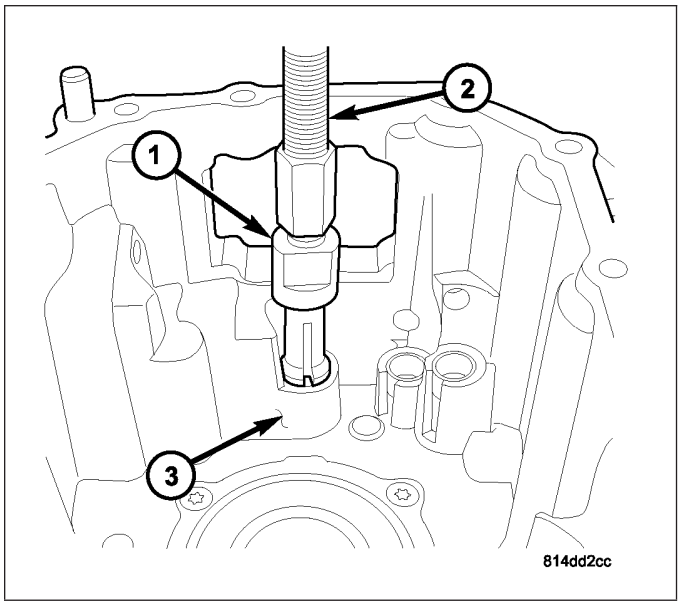

CLEANING

Clean gears, shafts, shift components and transmission housings with a standard parts cleaning solvent. Do not use acid or corrosive base solvents. Dry all parts except bearings with compressed air.

Clean shaft bearings with a mild solvent such as MOPAR® degreasing solvent, Gunk® or similar solvents. Do not dry the bearings with compressed air. Allow the bearings to either air dry or wipe them dry with clean shop towels.

INSPECTION

NOTE: Minor corrosion, nicks, or pitting can be smoothed with 400 grit emery and polished out with crocus cloth.

Bearings: Inspect roller bearings for wear, chips, cracks, flat-spots or brinnelling. Inspect sealed bearings, and verify bearings roll smoothly.

Gears: Inspect for worn, chipped, or cracked teeth. Inspect bearing surfaces for wear or flat-spots.

Mainshaft: Inspect for worn splines (1), snap ring grooves (2) and worn, chipped or cracked teeth (3). Inspect all bearing surfaces (4) for wear or flat-spots. **Third and fourth gear (3) are serviced with mainshaft.**

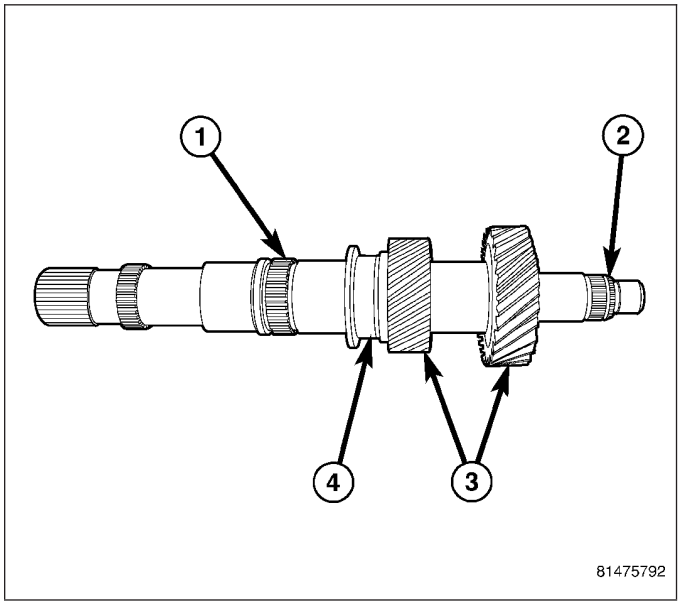

Countershaft: Inspect all gears for worn, chipped or cracked teeth (1). Inspect 3-4 synchronizer assembly for wear (2). Inspect center support bearing surfaces (3) for wear or flat-spots. **The countershaft with 3-4 synchronizer is serviced as an assembly, except for bearings.**

Synchronizer components: Inspect for worn, chipped, or cracked teeth and burned or flaking off friction material. **Synchronizers are serviced as an assembly.**

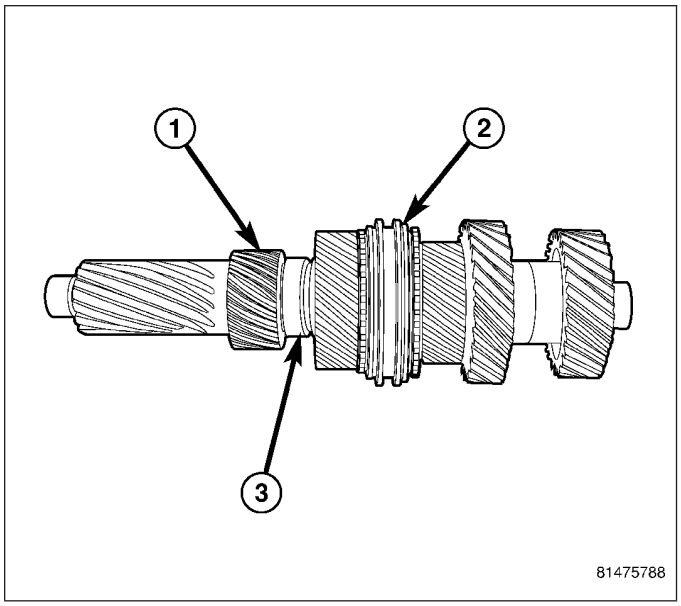

Input Shaft: Inspect input shaft bearing (1) and bearing surfaces for wear or flat-spots. Inspect input shaft splines (2) for wear. Inspect snap ring groove (3) for wear. Inspect fifth gear (4) for worn, chipped, or cracked teeth.

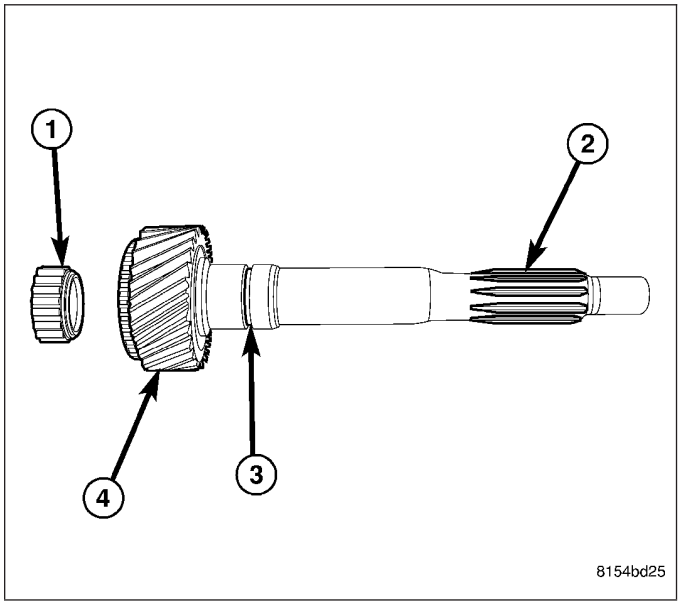

Shift forks: Inspect shift forks (1) for distortion. Inspect fork shoes (2) for wear and fit shoes in synchronizer sleeve to ensure parts fit and work smoothly.

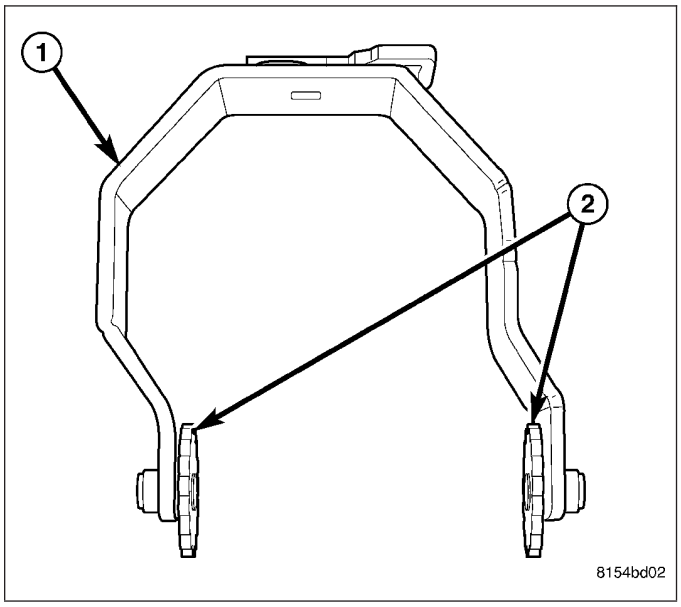

Shift Rails: Inspect shift rails, bushings, and bearing for wear. Verify main shift rail (1) bearings (2) roll smoothly.

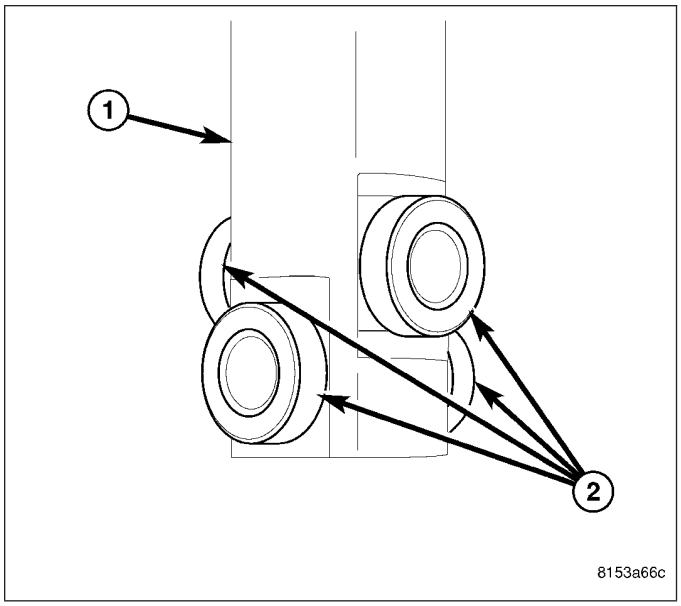

Clutch Release Bearing Support: Inspect clutch release bearing support (1) release bearing slide surface (2) for damage.

Housing/Tail housing: Inspect sealing and mating surfaces are free of burrs and nicks. Inspect alignment dowels are tight and in good condition. Inspect shift rail bushings for wear.

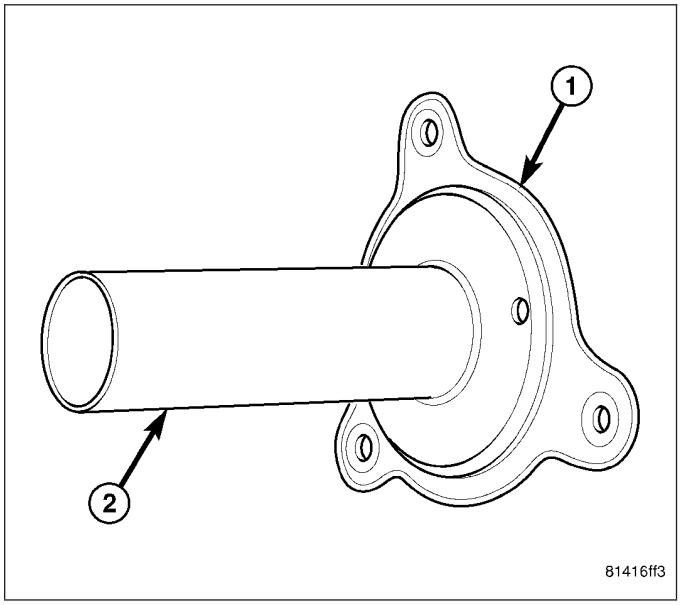

ASSEMBLY

MAINSHAFT

1. Install mainshaft center support bearing (1) on mainshaft (2).

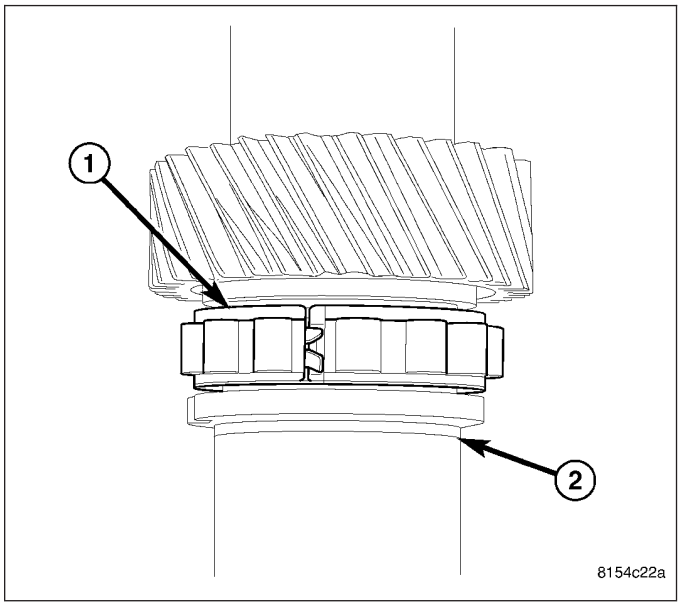

2. Install sixth gear bearing (1) on mainshaft (2).

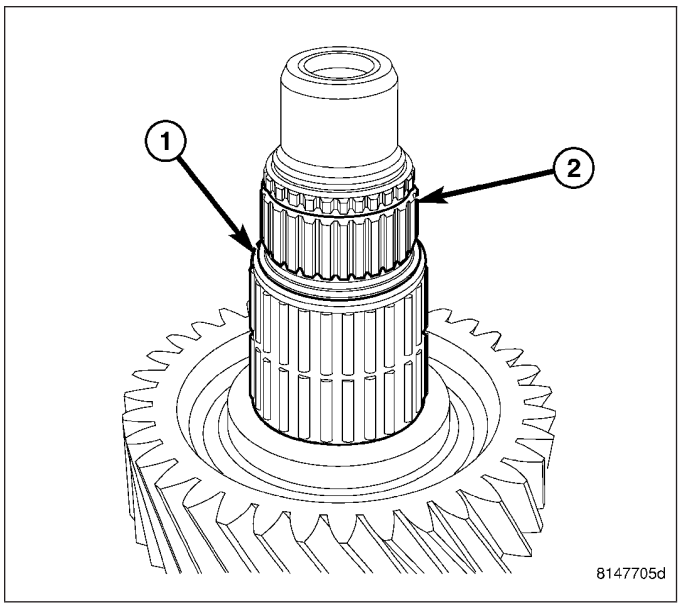

3. Install sixth gear (1) on mainshaft (2).

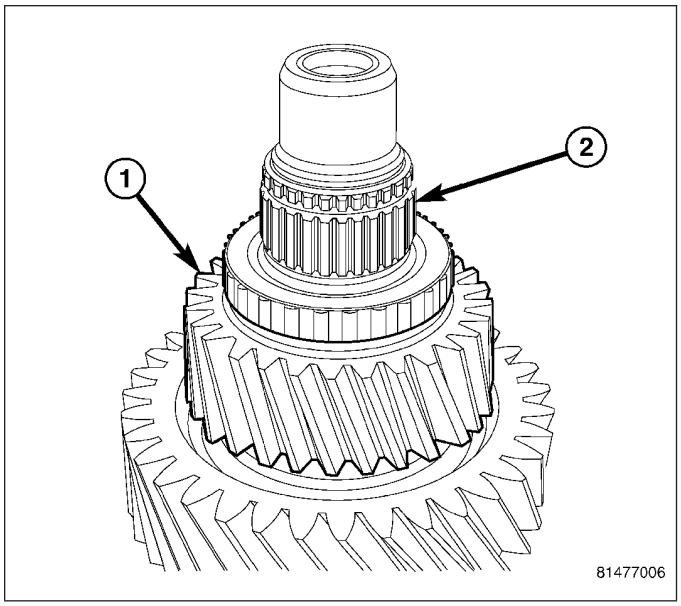

4. Install sixth gear clutch body (1) on sixth gear (2).

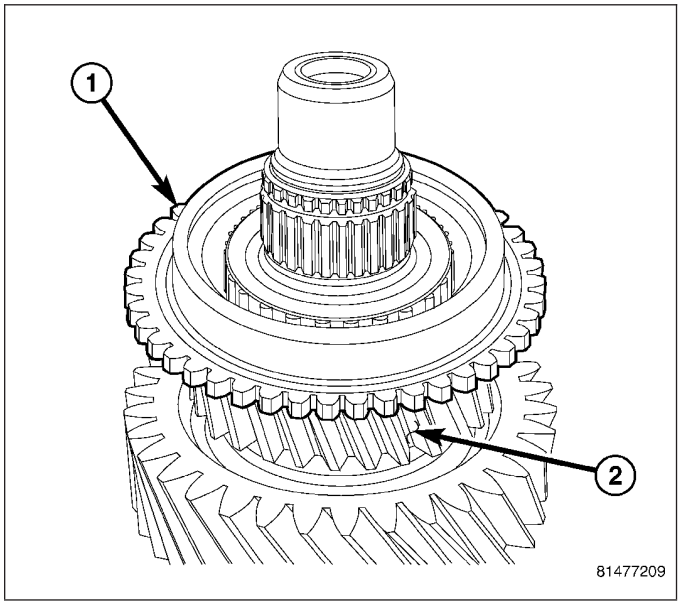

5. Install sixth gear friction ring (1) on clutch body (2).

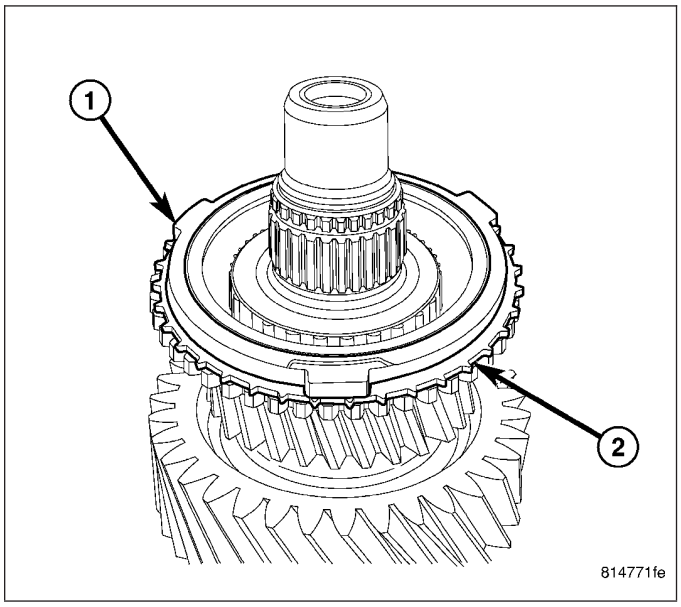

6. Install 5-6 synchronizer hub (1) on mainshaft with Installer W-262 (2).

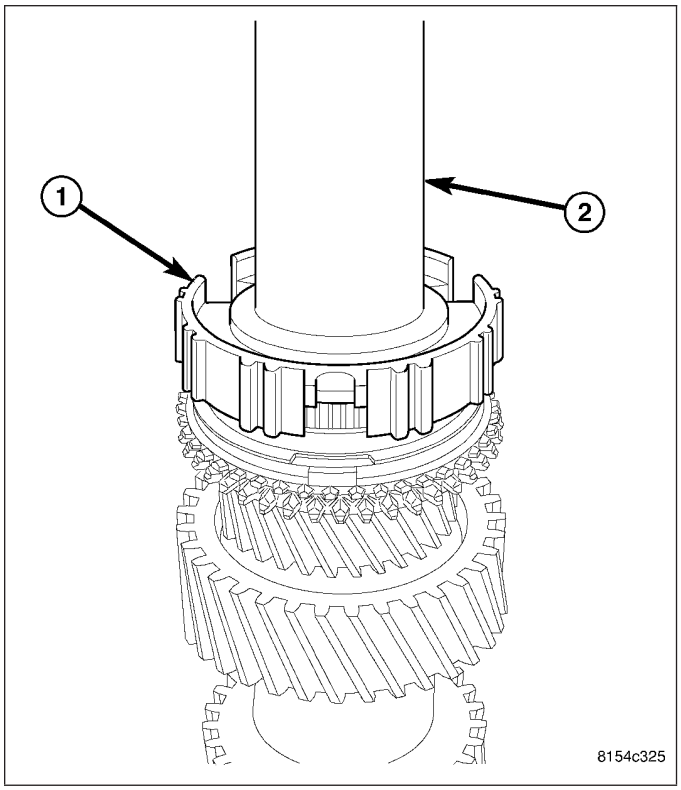

7. Install 5-6 synchronizer hub (1) snap ring (2).

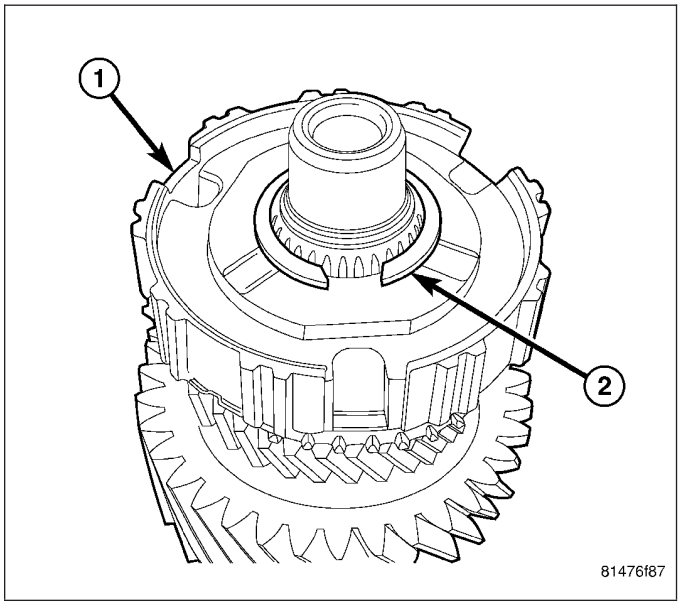

8. Install 5-6 synchronizer detents (1) in hub (2).

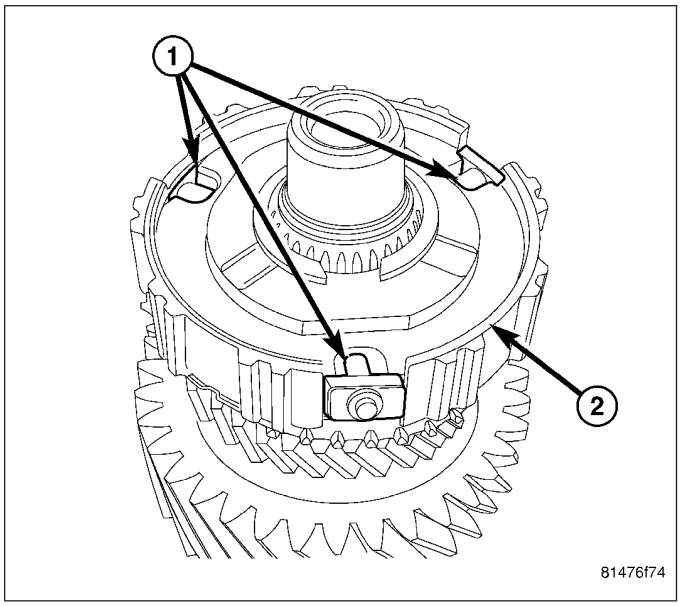

NOTE: Whenever installing a synchronizer sleeve onto the hub, make sure that the grooves in the sleeve are aligned with the detents in the hub.

9. Install 5-6 synchronizer sleeve (1) on hub (2).

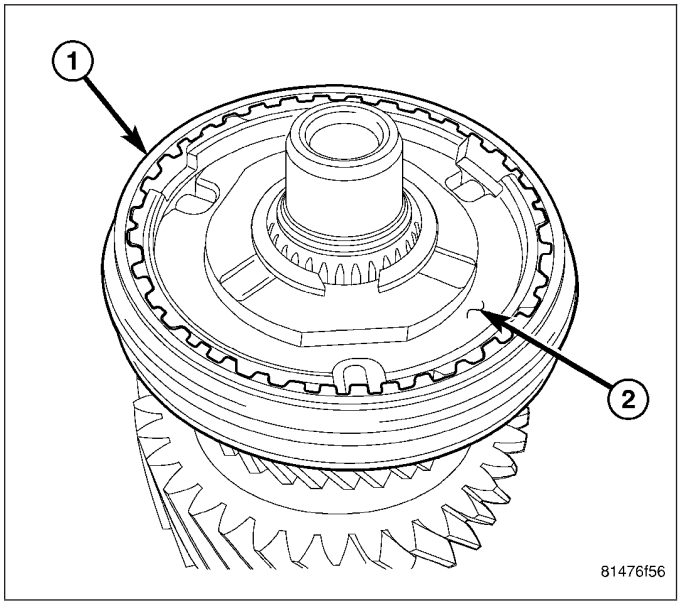

10. Install fifth gear synchronizer friction ring (1) on 5-6 synchronizer hub (2).

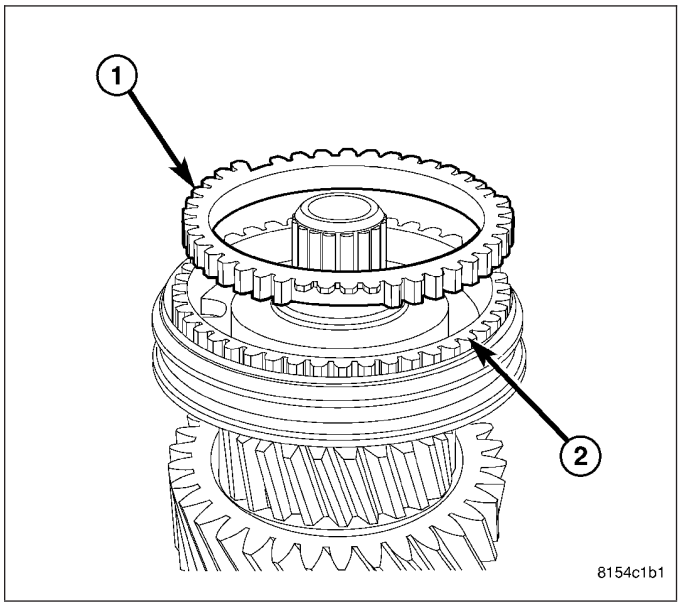

11. Install fifth gear synchronizer clutch body (1) on 5-6 synchronizer hub (2).

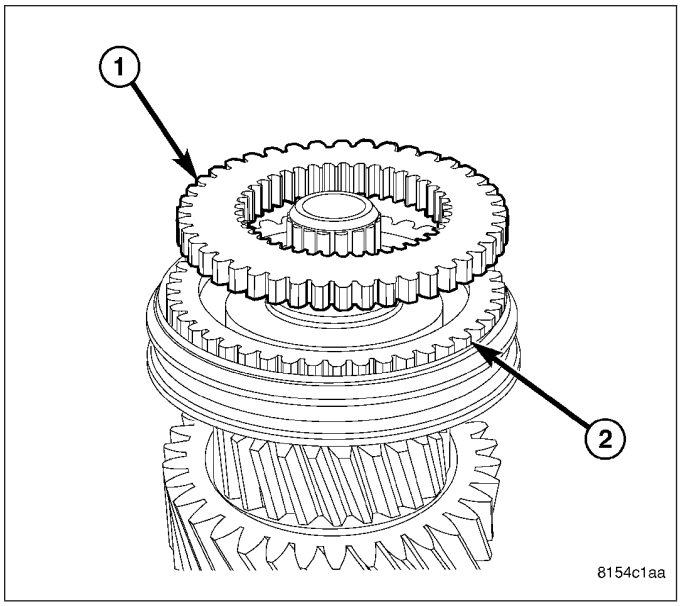

COUNTERSHAFT

1. Install countershaft center support bearing (1) on countershaft (2).

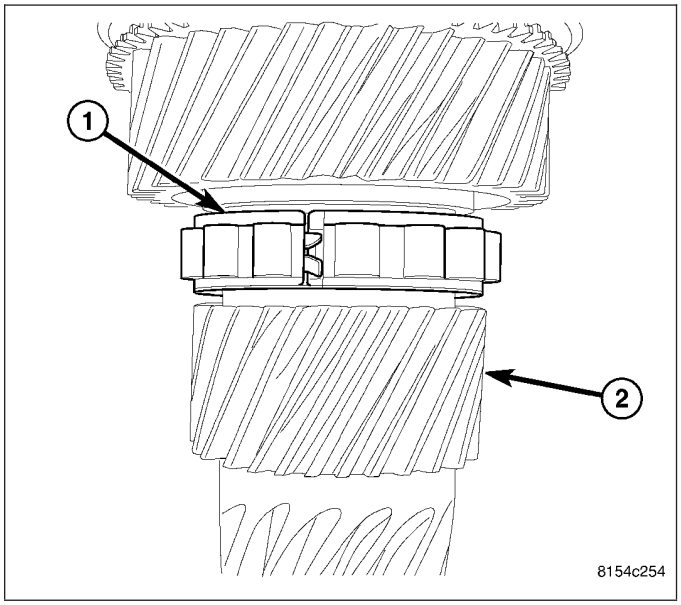

CENTER SUPPORT

1. Install center support (1) countershaft roller bearing race with Installer/Remover 9617 (2) and Handle C-4171.

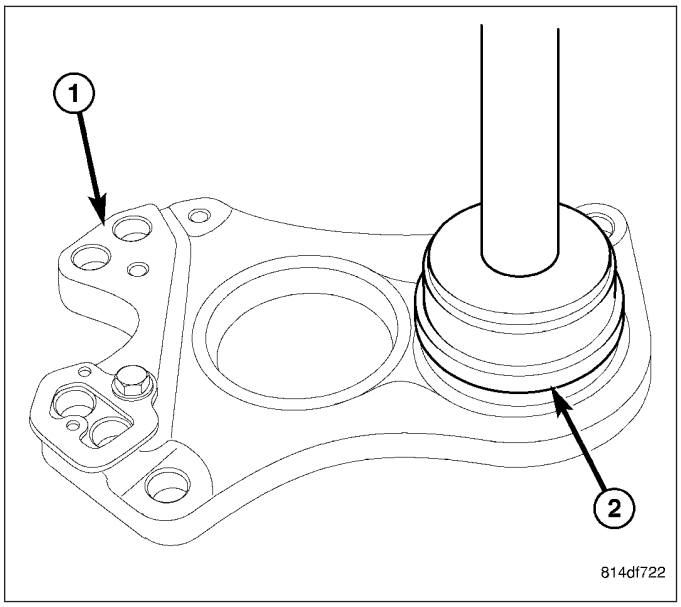

2. Install center support (1) mainshaft roller bearing race with Installer/Remover 9668 (2) and Handle C-4171.

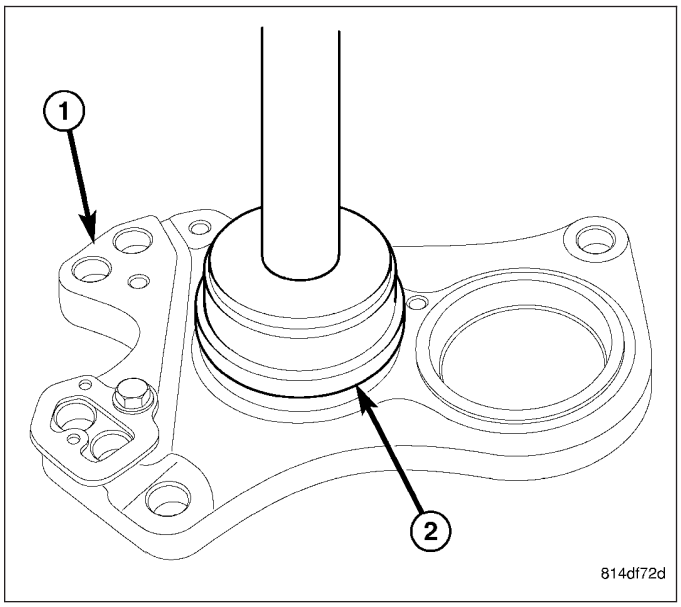

3. Install center support (1) race retainer screw (2) and tighten to 22 N·m (16 ft. lbs.).

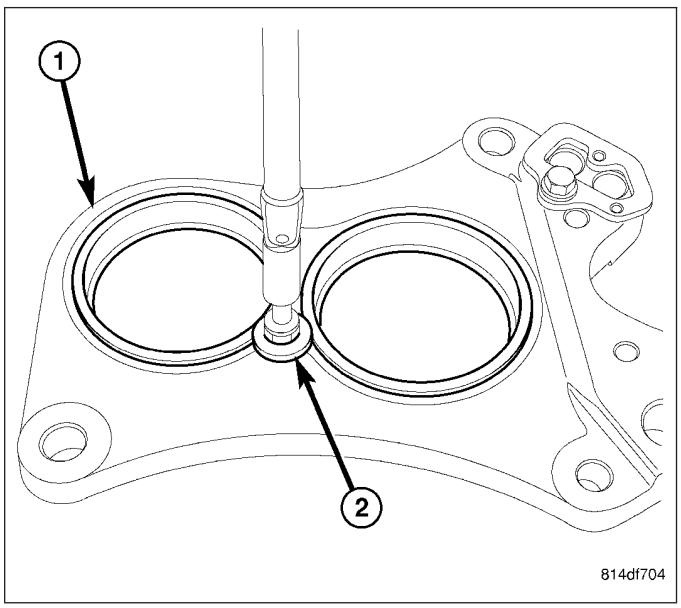

REAR HOUSING

1. Install mainshaft bearing (1) in rear housing with hammer and driver.
2. Install mainshaft bearing (1) retainer (2). Apply Mopar® Lock & Seal Adhesive or equivalent to retainer bolts and tighten to 10 N·m (88 in. lbs.).

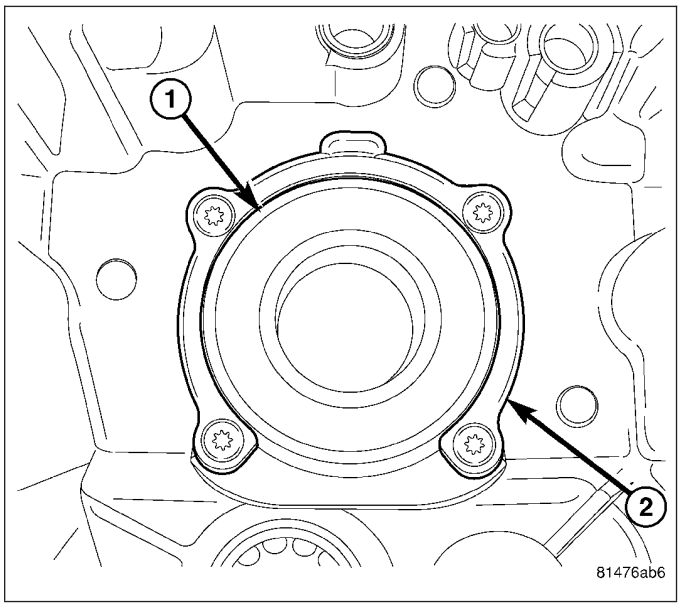

3. Install shift rail roller bearing (1) with Installer 8475 (2).

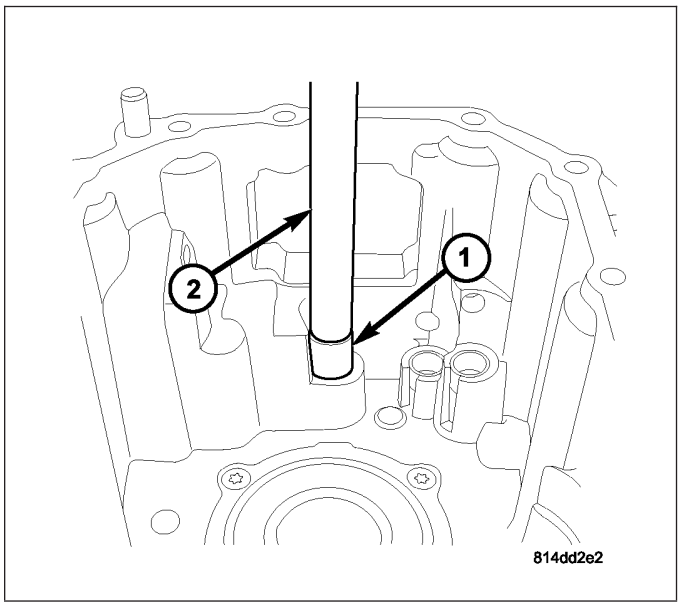

4. Install countershaft bearing with Installer 9624 (1) and Handle C-4171 (2).

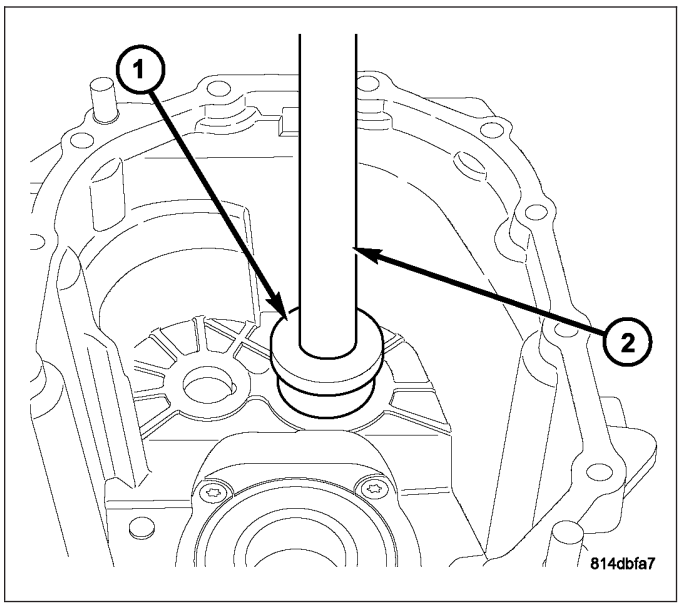

5. Install idler gear (1) in rear housing (2).

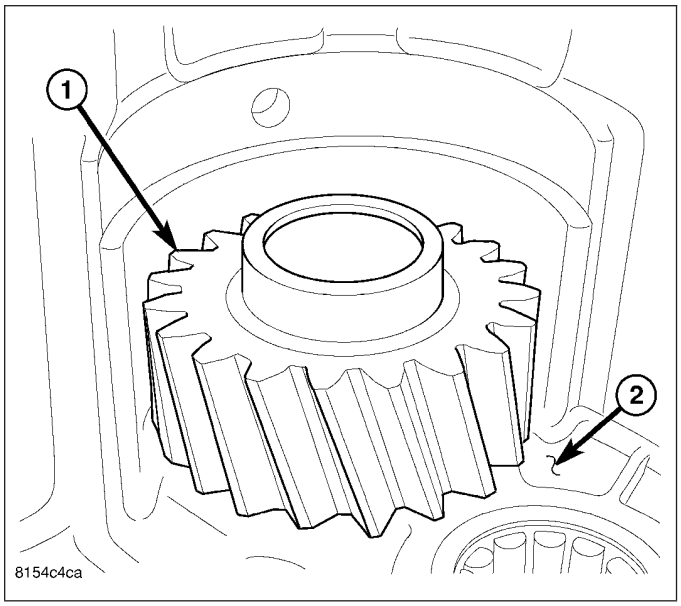

6. Install idler gear bearing (1) in idler gear (2).

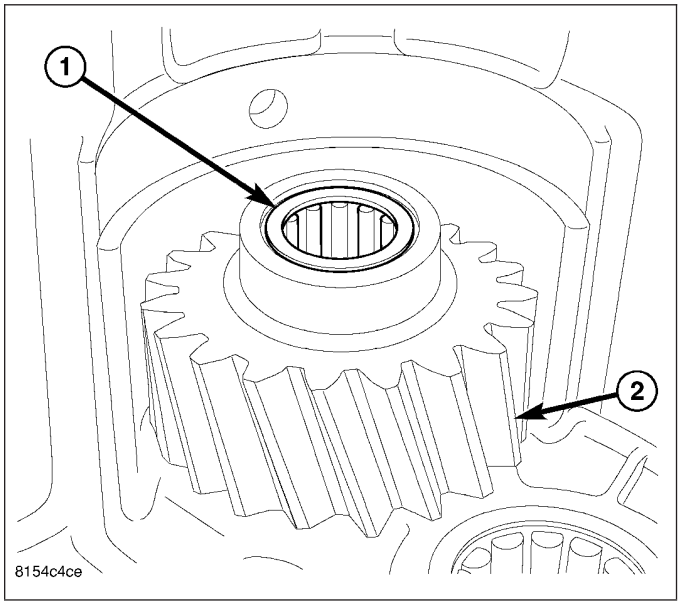

7. Install idler gear (1) shaft support (2).

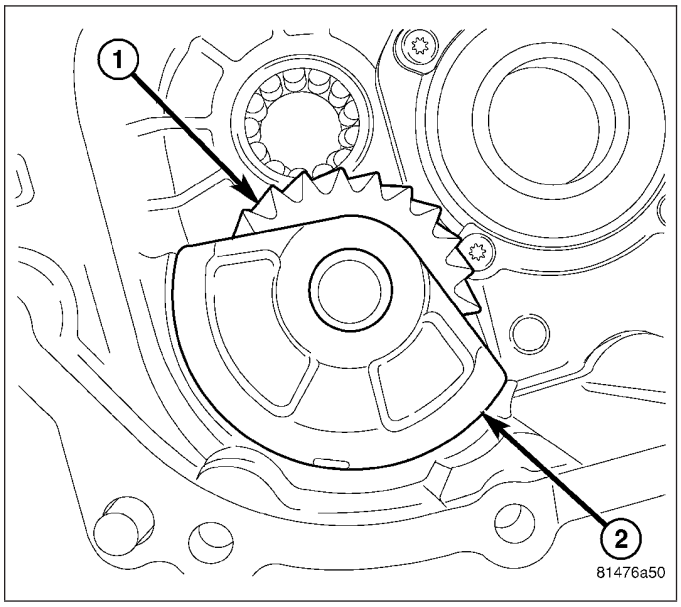

8. Install idler gear (1) shaft (2).

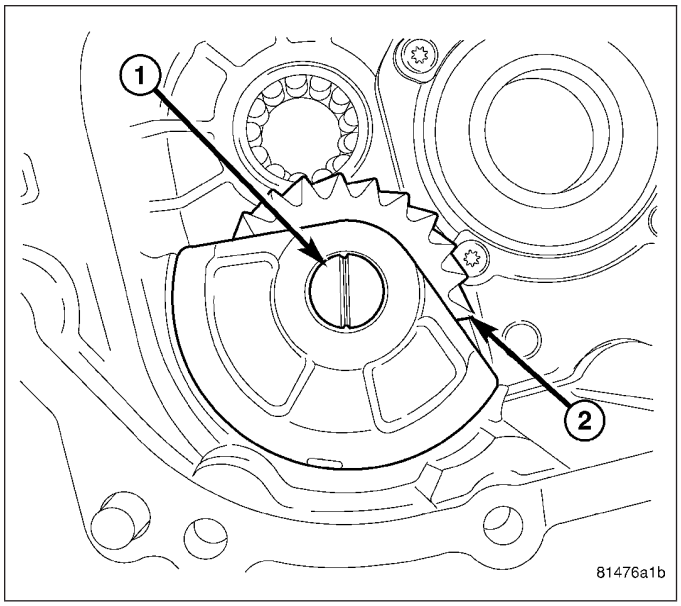

9. Install shaft bolt and align idler gear shaft (1) with shaft bolt (2).

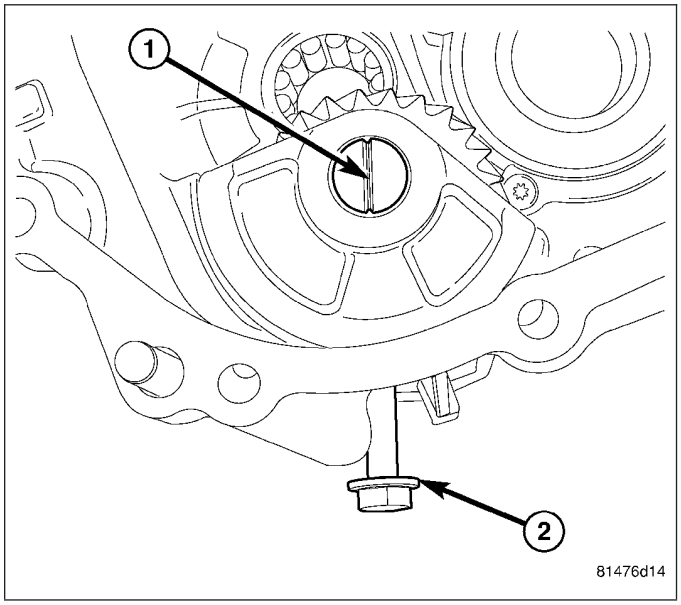

10. Apply Mopar® Lock & Seal Adhesive or equivalent to idler shaft bolt. Tighten bolt (1) in rear housing (2) to 25 N·m (18 ft. lbs.).

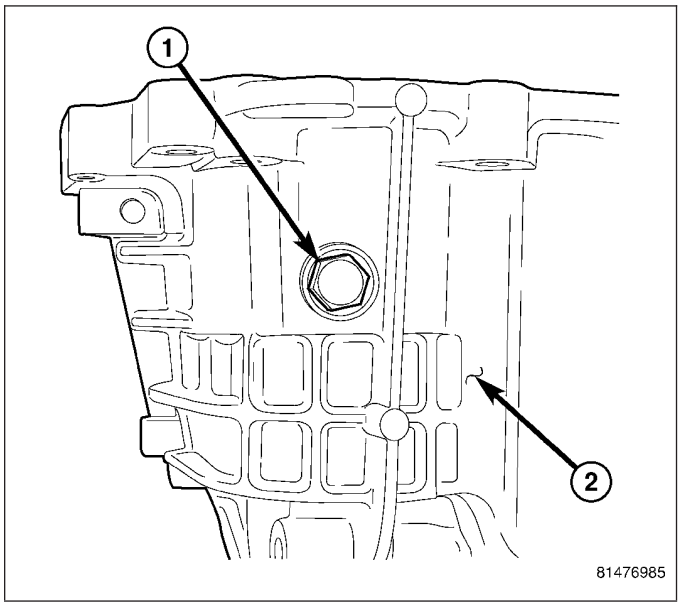

FRONT HOUSING

1. Install mainshaft and countershaft bearings in front housing with hammer and driver.
2. Install mainshaft bearing retainer (1) and countershaft bearing retainers (2). Apply Mopar® Lock & Seal Adhesive or equivalent to retainer bolts and tighten to 10 N·m (88 in. lbs.).

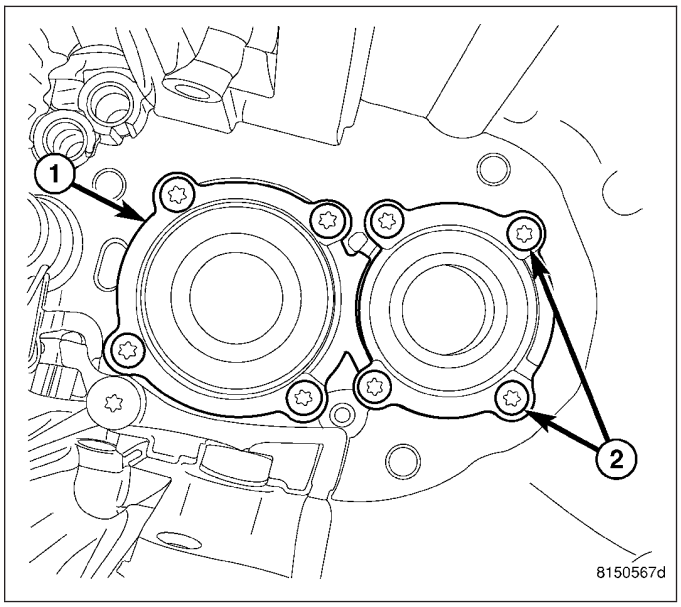

3. Install mainshaft (1) and countershaft (2) in build Fixture 9626 (3).

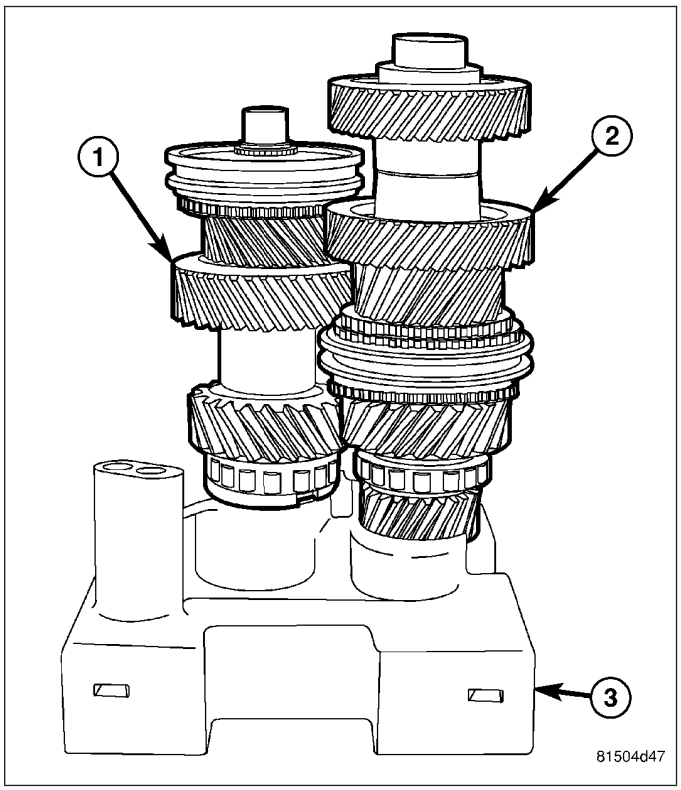

4. Install input shaft bearing (1) on mainshaft (2).

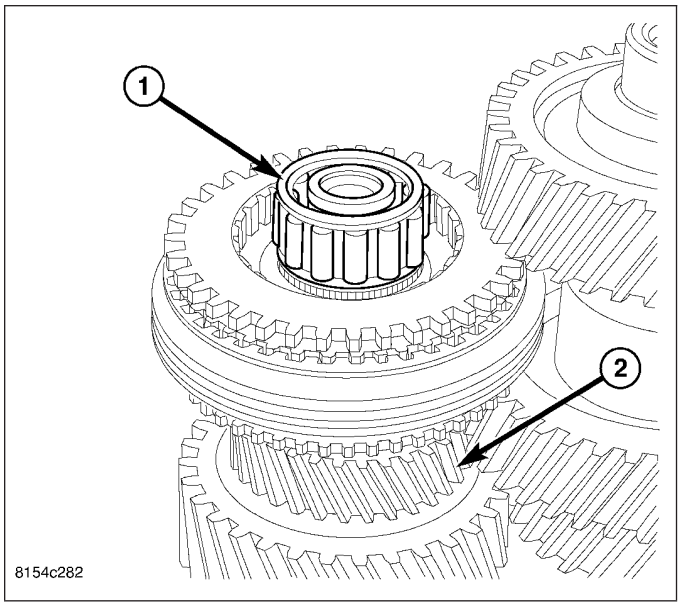

5. Install input shaft (1) on mainshaft (2).

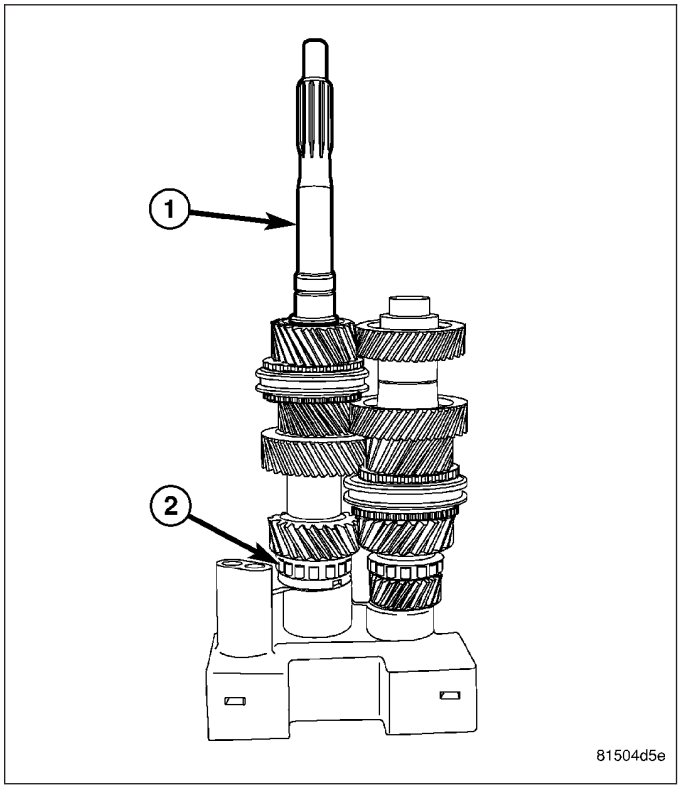

6. Install 5-6 shift rail (1) and 3-4 shift rail (2) in build Fixture 9626. Then install 5-6 shift fork (3) and 3-4 shift fork (4)

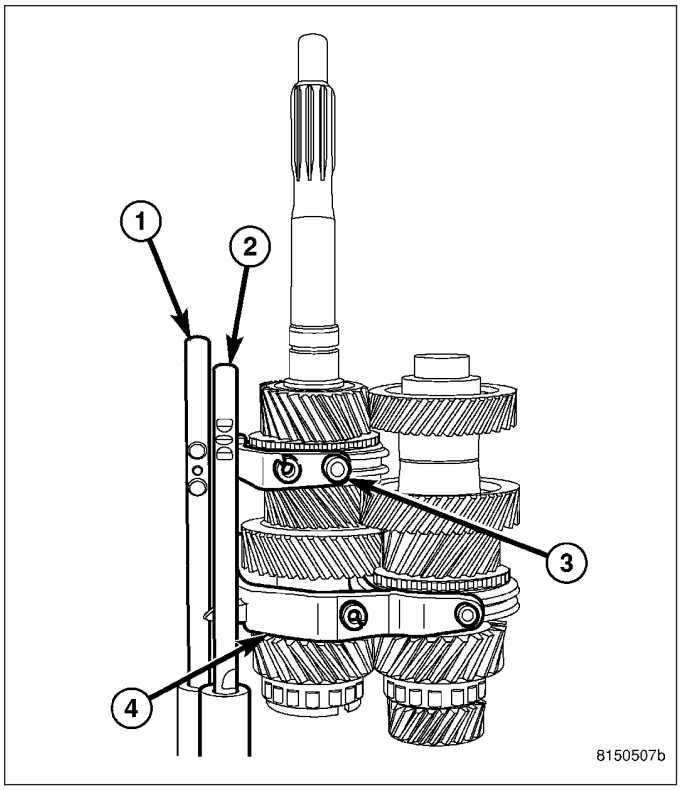

WARNING: Use tongs when handling heated components. Failure to follow these instructions will result in personal injury.

CAUTION: A bearing heater (3) is used to heat Plug 9625 (1) and Plug 9619-1 (2). Use only a bearing heater/hot plate and follow manufactures instructions. Heat components to 100 - 177 Celsius (212° Min - 350° Max Fahrenheit). Never use an open flame to heat components. Never leave components on heater for an extended amount of time. If component is discolored after heating the component has been overheated and must not be used. Failure to follow these instructions will result in component damage.

7. Heat Plug 9625 (1) and Plug 9619-1 (2) to 177 Celsius (350° Fahrenheit) with bearing heater (3).

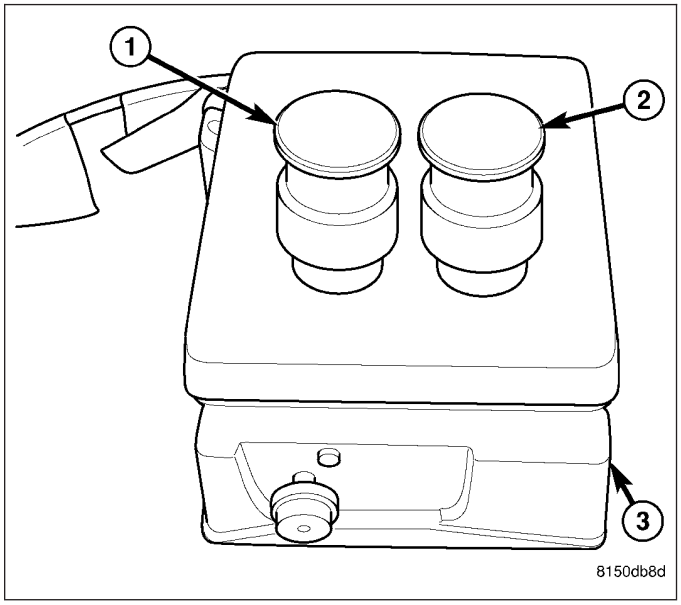

8. With tongs place heated Plug 9625 in countershaft bearing and heated Plug 9619-1 into mainshaft bearing. Allow plugs to heat bearings for two minutes.

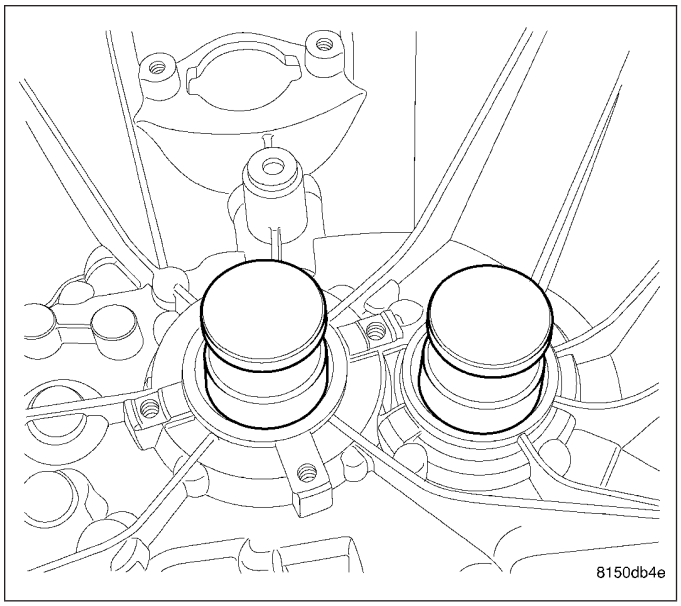

9. Remove Plug 9625 and Plug 9619 with welding gloves or tongs, then install front housing (1) on mainshaft and countershaft in fixture (2).

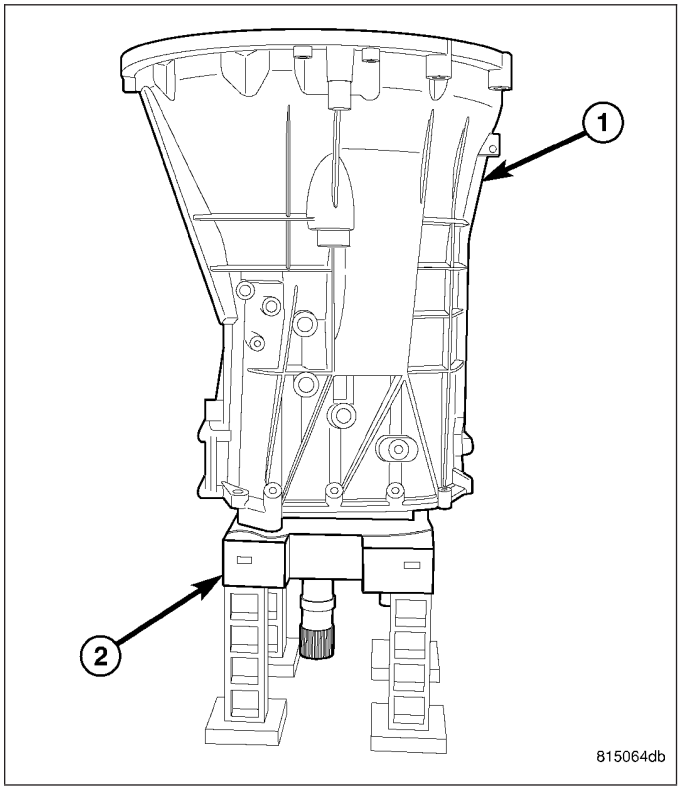

10. Apply Mopar® Lock & Seal Adhesive or equivalent to shift fork pivot bolts. Install 5-6 (1) and 3-4 (2) shift fork pivot bolts, in both sides of the front housing and tighten to 35 N·m (26 ft. lbs.).

NOTE: Verify shift fork pivot holes are aligned with pivot bolt holes before installing bolts.

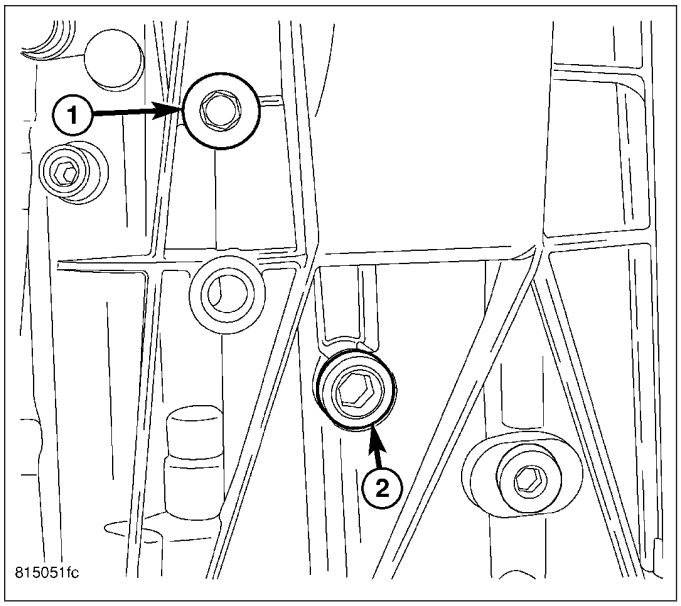

11. Install two detents (1) in the side of the front housing (2).

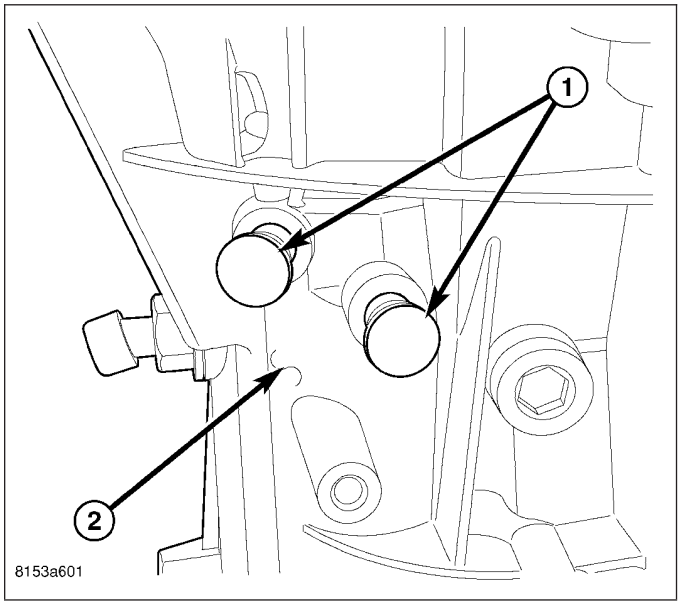

FINAL ASSEMBLY

1. Turn front housing (1) with fixture (2) over onto the front housing and remove fixture.

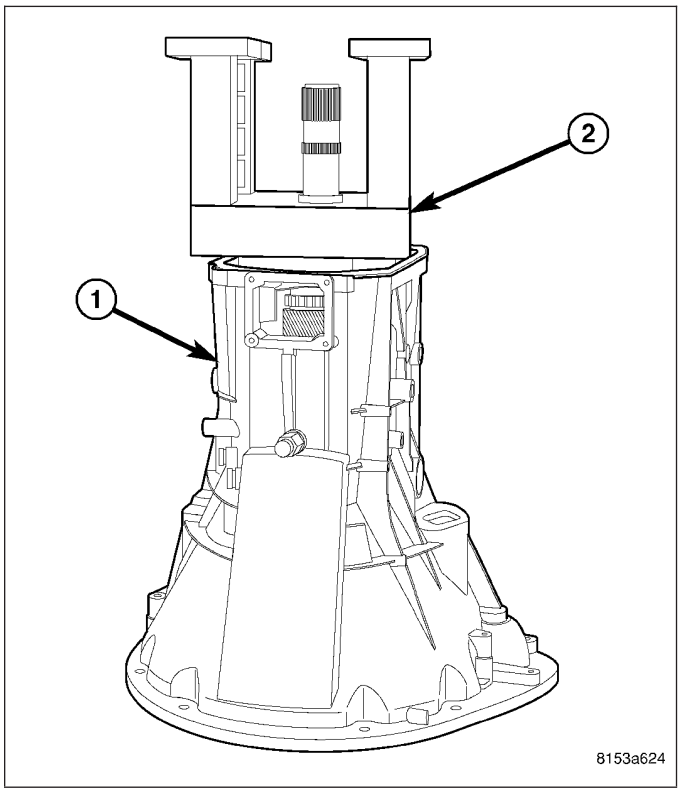

2. Install intermediate plate (1) and two dowels (2).

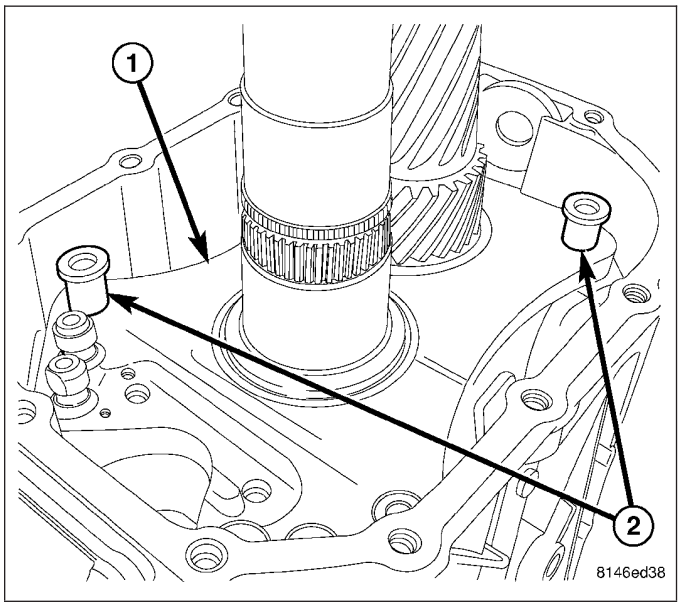

3. Install intermediate plate (1) bolts (2) and tighten to 22 N·m (16 ft. lbs.).

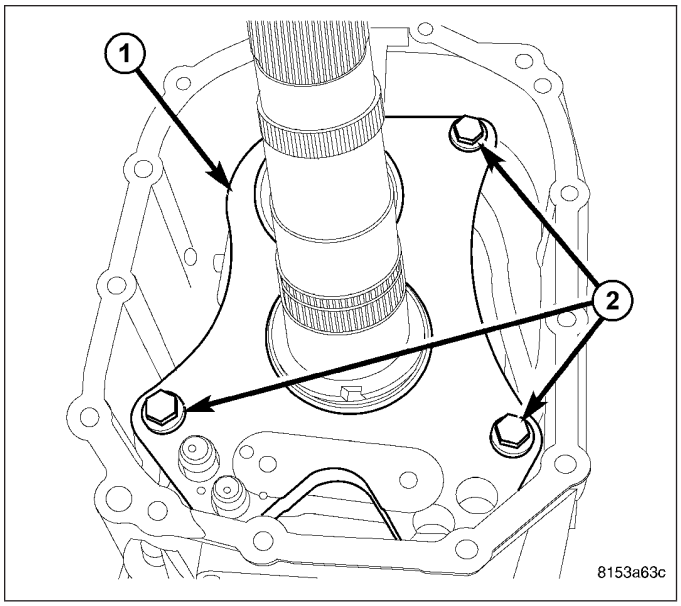

4. Install interlock plate washers (1) on support (2).

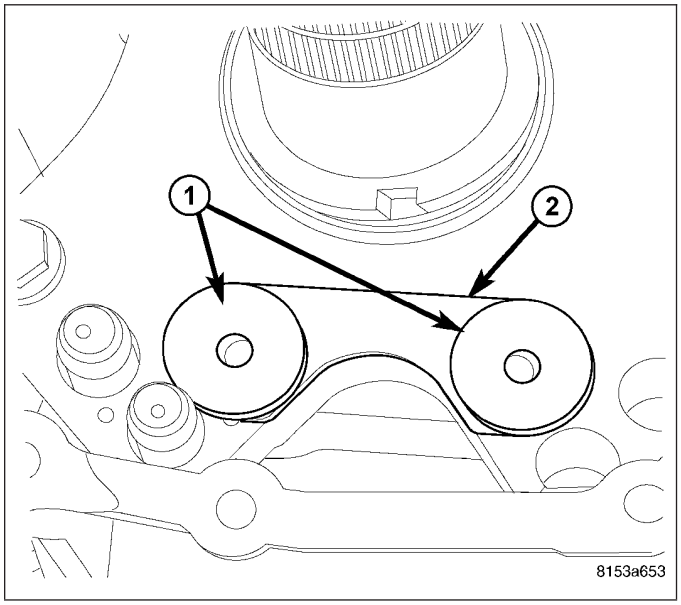

5. Install interlock plate (2) and tighten bolts (1) to 10 N·m (88 in. lbs.).

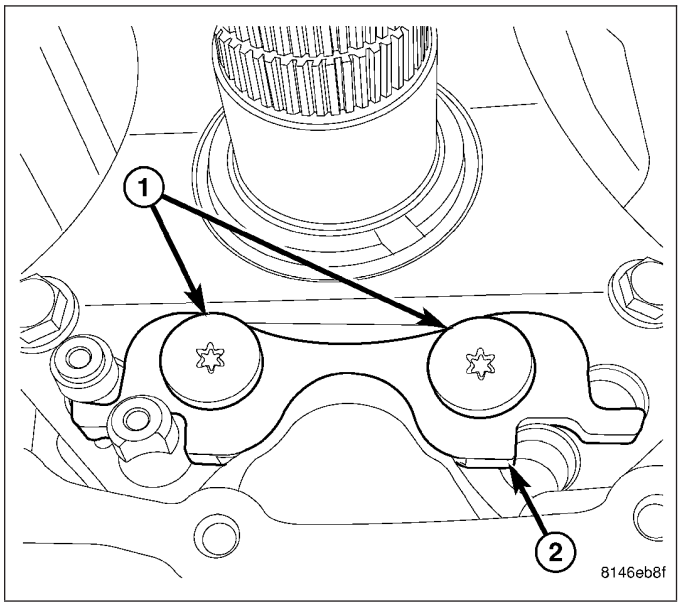

6. Install second gear bearing (1) on mainshaft (2).

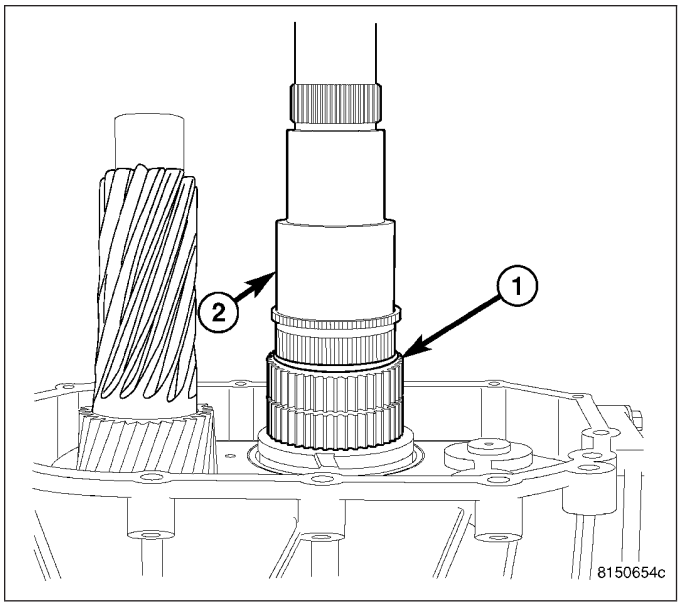

7. Install second gear (1) on mainshaft (2).

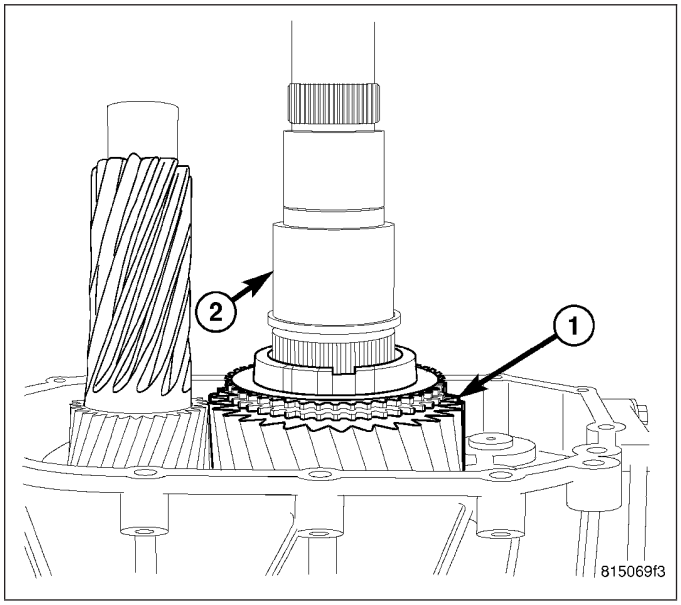

8. Install second gear inner friction ring (1) on second gear (2).

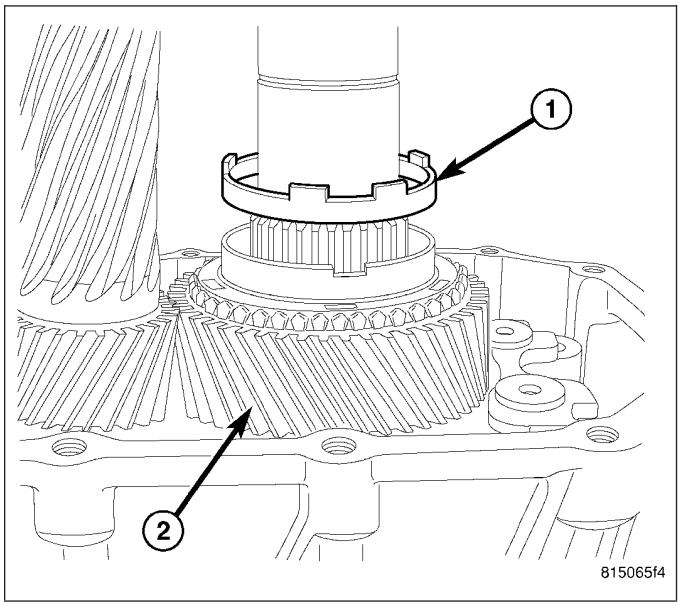

9. Install second gear outer friction ring (1) on second gear (2).

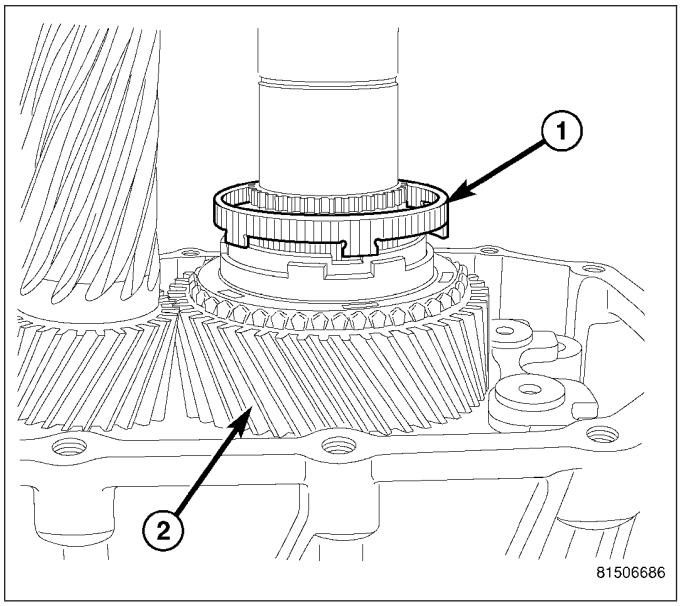

10. Install second gear blocker ring (1) on second gear (2).

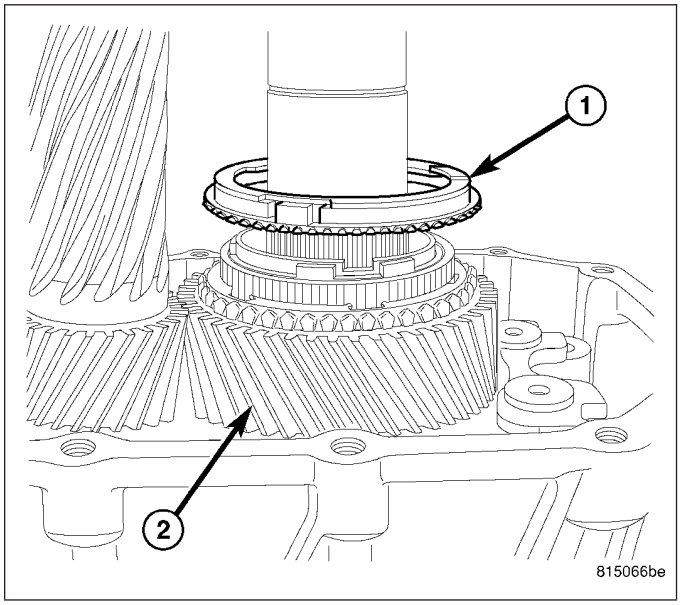

11. Align 1-2 synchronizer hub (1) with blocker ring on mainshaft and install hub with Installer D-389 (2).

NOTE: If 1-2 synchronizer hub is installed incorrectly the snap ring groove will not be visible.

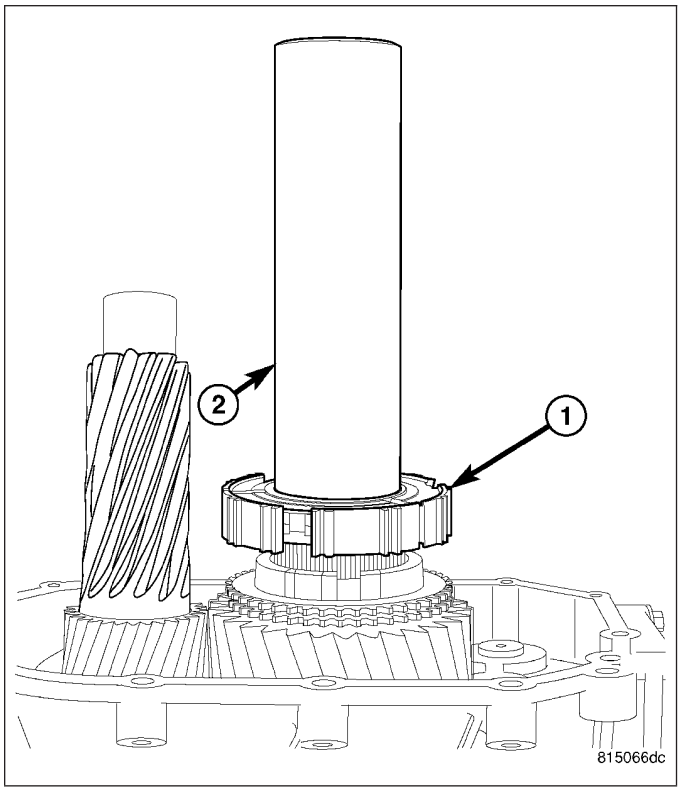

12. Install 1-2 synchronizer hub (1) snap ring (2).

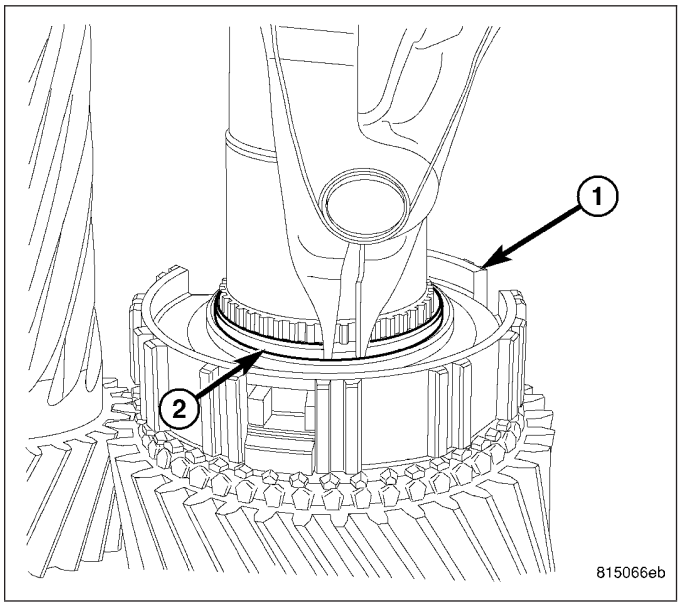

13. Install 1-2 synchronizer hub (1) detents (2).

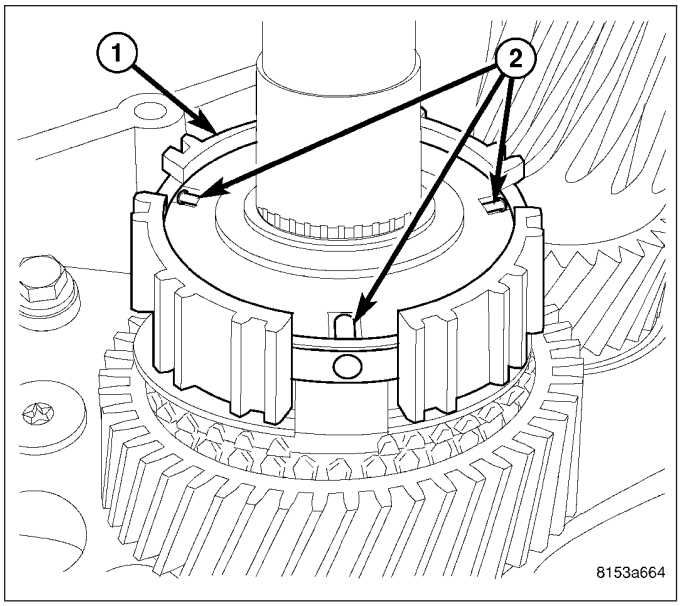

14. Install 1-2 synchronizer sleeve (2) on 1-2 hub (1).

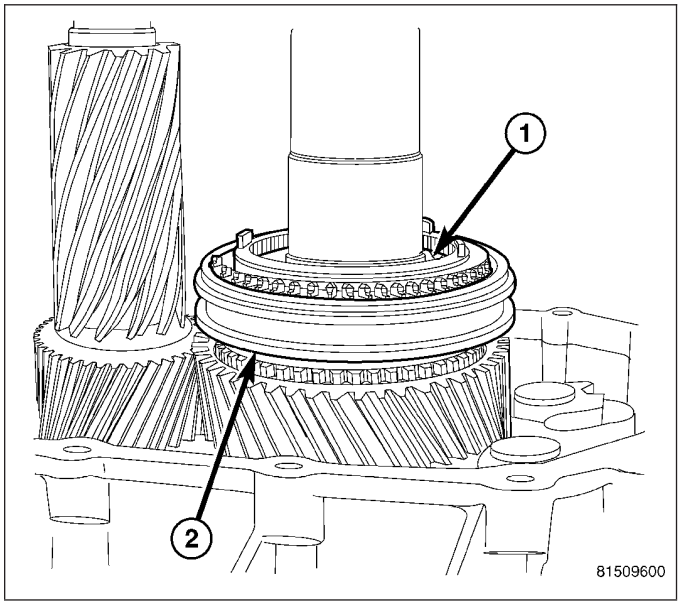

15. Install first gear blocker ring (1) on 1-2 hub (2).

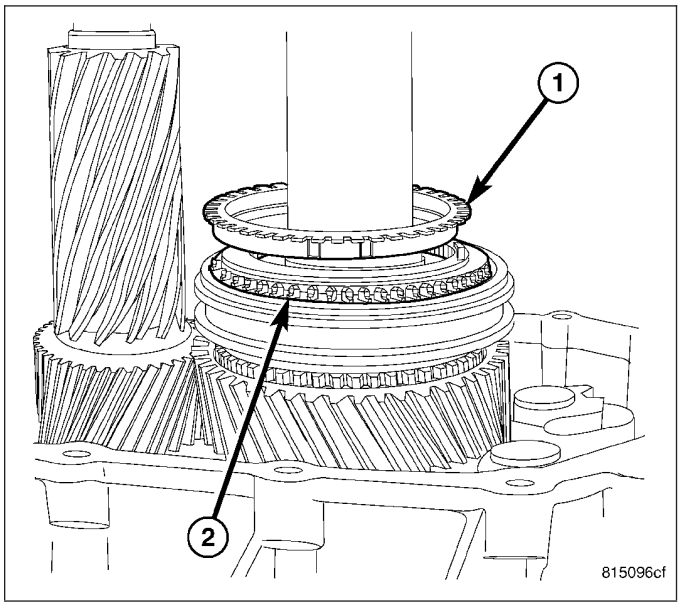

16. Install first gear outer friction ring (1) on 1-2 hub (2).

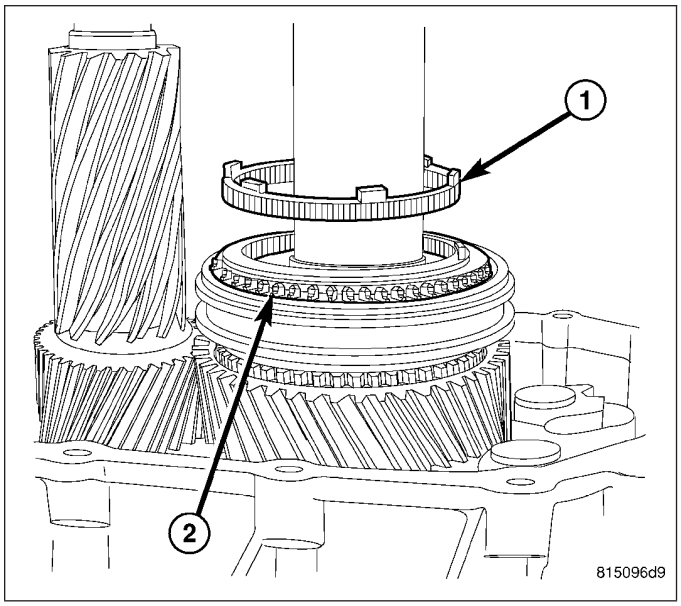

17. Install first gear inner friction ring (1) on 1-2 hub (2).

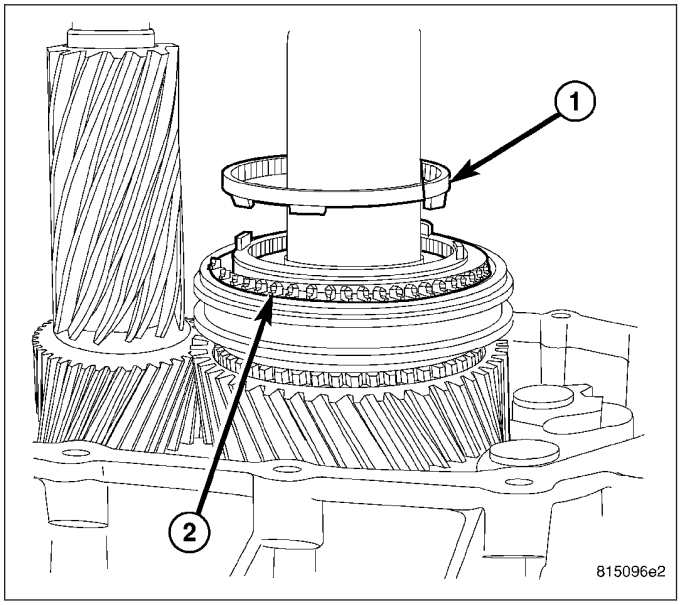

18. Install first gear bearing (1) on mainshaft (2).

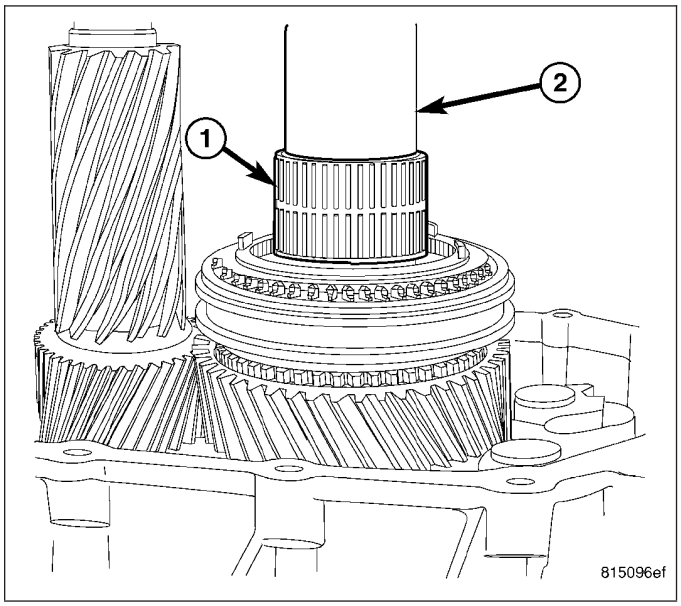

19. Install first gear (1) on mainshaft (2).

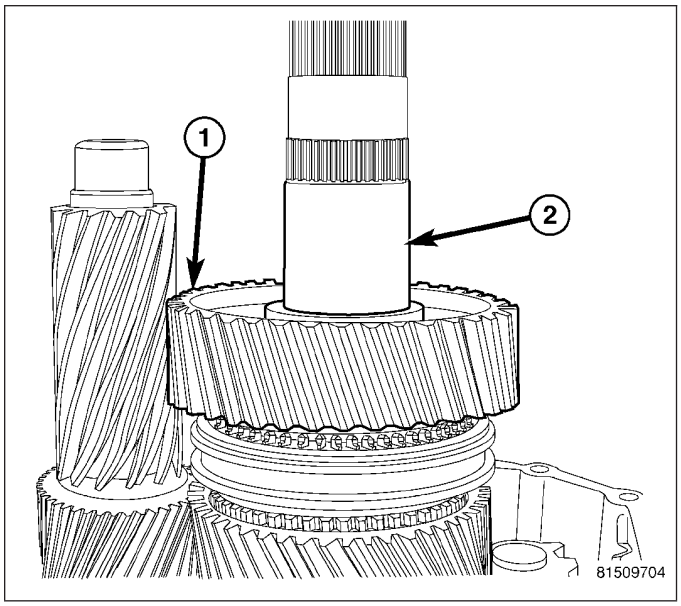

WARNING: Use welding gloves or tongs when handling heated components. Failure to follow these instructions will result in personal injury.

CAUTION: A bearing heater is used to heat reverse bearing race (1). Use only a bearing heater/hot plate and follow manufacturer's instructions. Heat components to 100 - 177 Celsius (212° Min - 350° Max Fahrenheit). Never use an open flame to heat components. Never leave components on heater for an extended amount of time. If component is discolored after heating the component has been overheated and must not be used. Failure to follow these instructions will result in component damage.

20. Heat reverse bearing race (1) with bearing (2) to 121 Celsius (250° Fahrenheit).

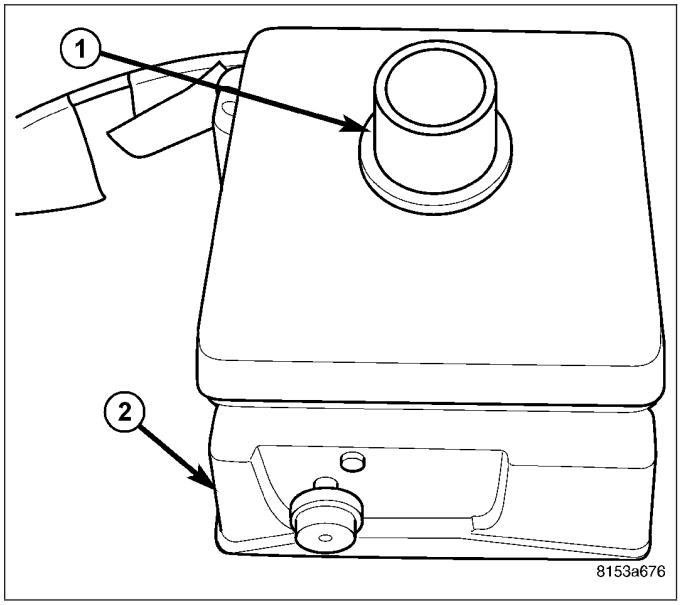

21. With welding gloves or tongs install reverse bearing race (1) on mainshaft (2).

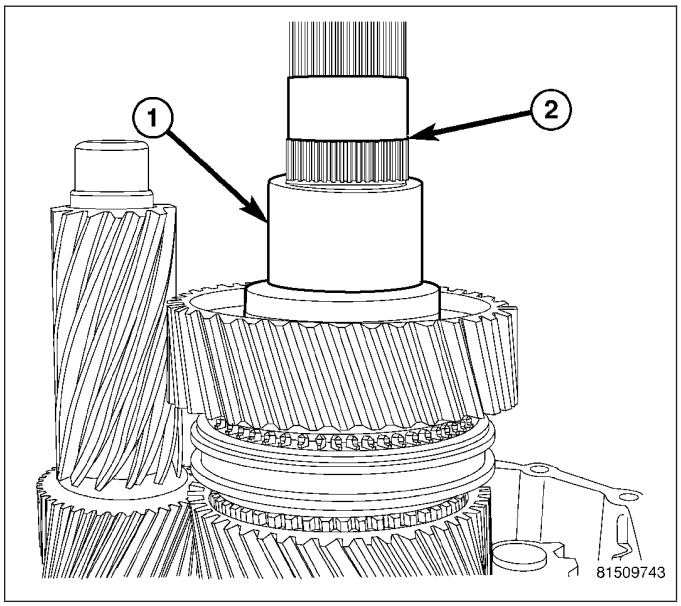

22. Install reverse gear bearing (1) on bearing race (2).

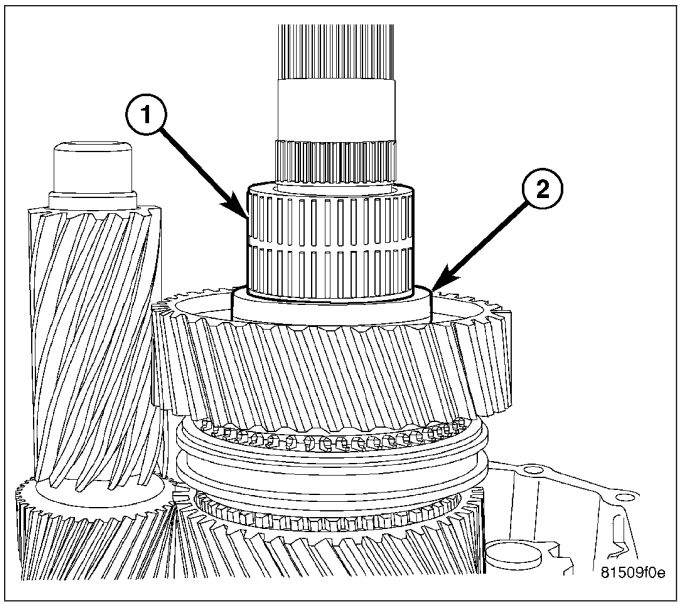

23. Install reverse gear (1) on mainshaft (2).

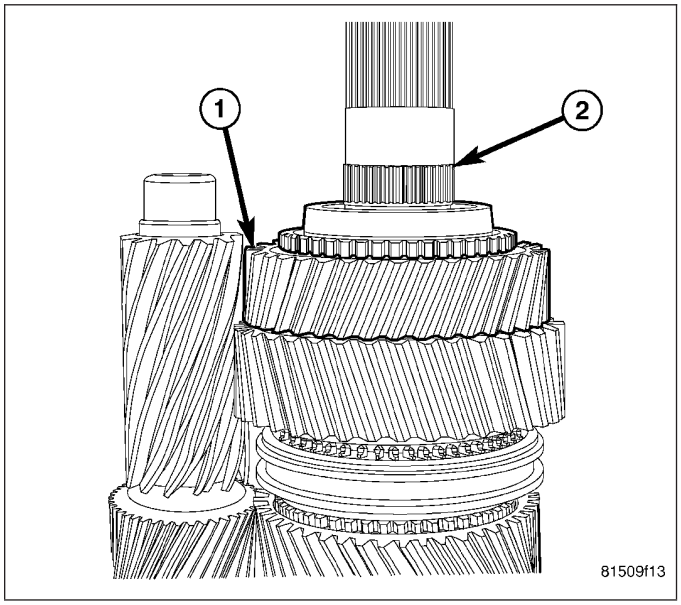

24. Install reverse gear friction/blocker ring (1) on reverse gear (2).

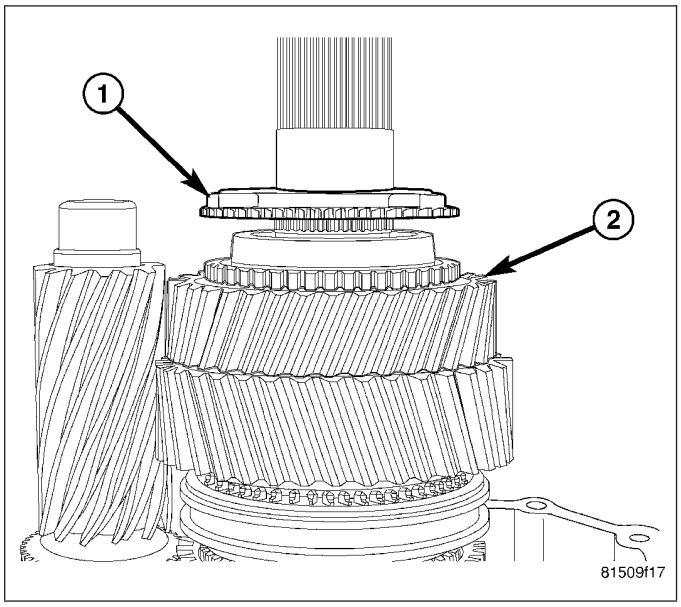

25. Install reverse synchronizer detents (1) in reverse hub (2).

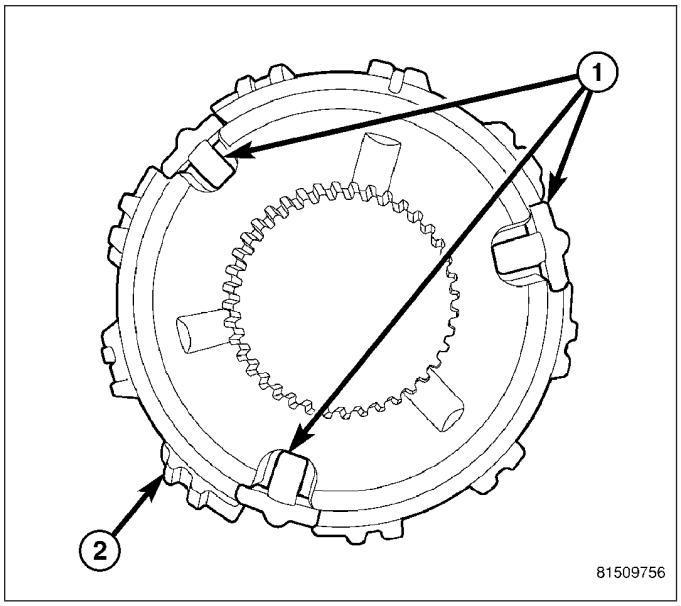

26. Install reverse synchronizer sleeve (1) on reverse hub (2).

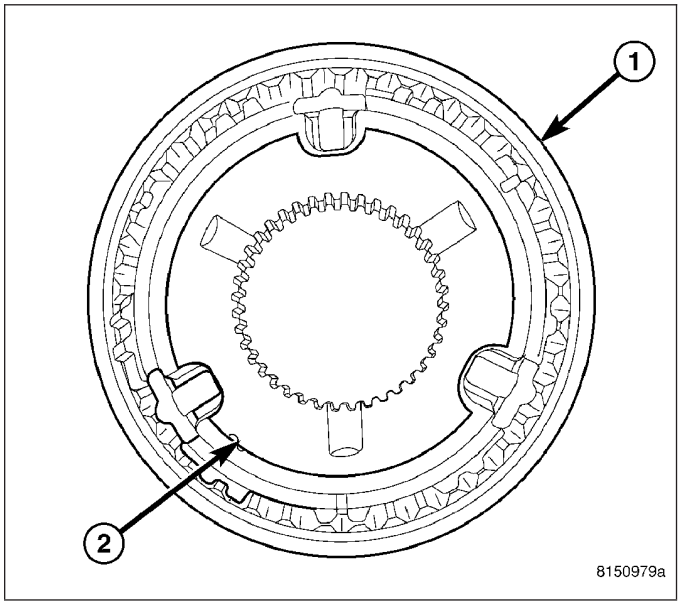

27. Install reverse gear synchronizer hub (1) with Installer D-389 (2).

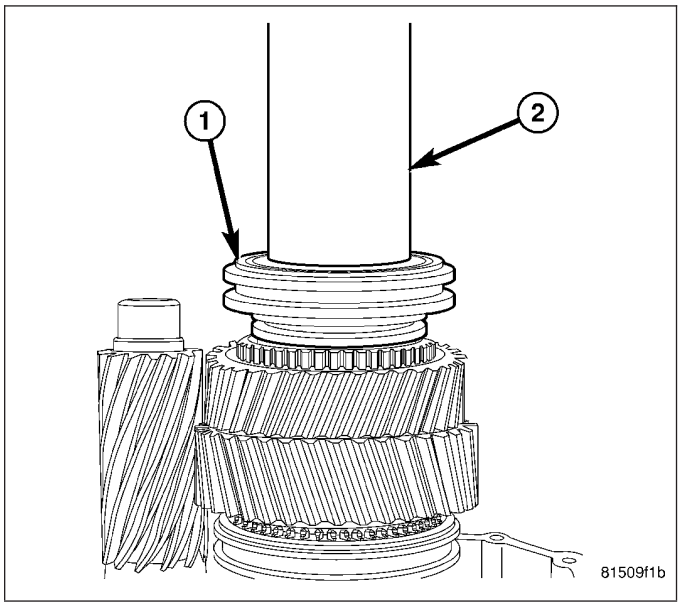

28. Install main shift rail (1) bearings (2) on main shift rail.

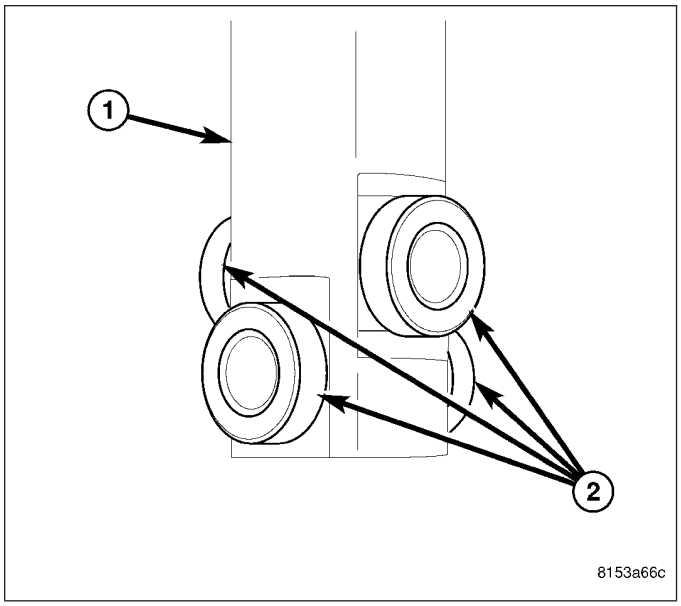

29. Install main shift rail (1) through rail support (2) and housing, then rotate counterclockwise into place.

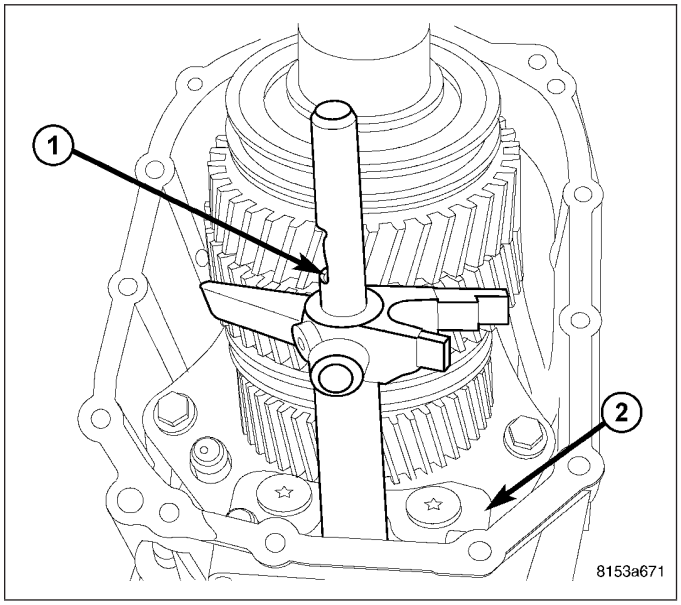

30. Install 1-2 shift fork then, install 1-2 shift rail (2) into shift fork and housing. Install shift fork roll pin (1).

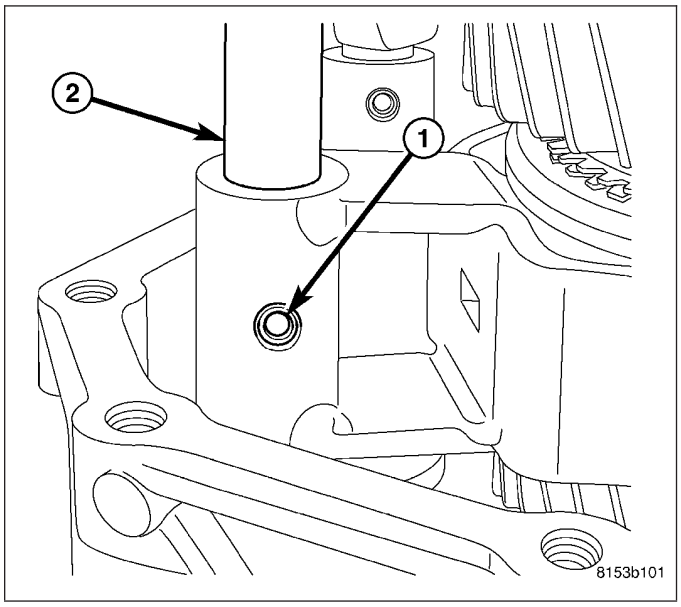

31. Install reverse shift rail (1) into the housing. Then install reverse shift fork (2) and pull shift rail (1) up into the shift fork.

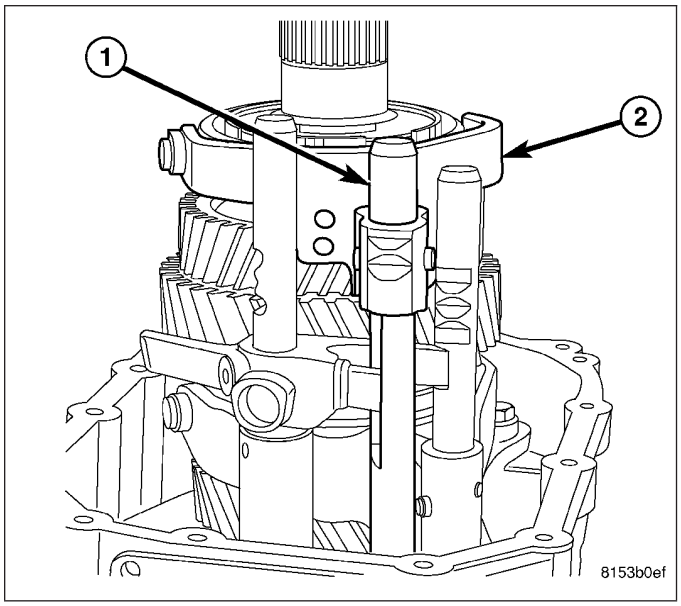

32. Install reverse shift fork roll pin (1).

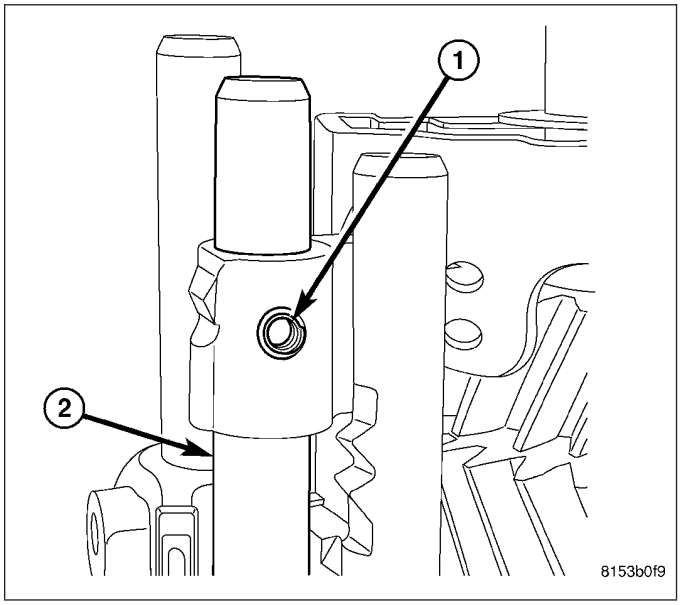

WARNING: Use tongs when handling heated components. Failure to follow these instructions will result in personal injury.

CAUTION: A bearing heater (2) is used to heat Plug 9619-2 (1). Use only a bearing heater/hot plate and follow manufacturer's instructions. Heat components to 100 - 177 Celsius (212° Min - 350° Max Fahrenheit). Never use an open flame to heat components. Never leave components on heater for an extended amount of time. If component is discolored after heating the component has been overheated and must not be used. Failure to follow these instructions will result in component damage.

33. Heat Plug 9619-2 (1) to 177 Celsius (350° Fahrenheit) with bearing heater (2).

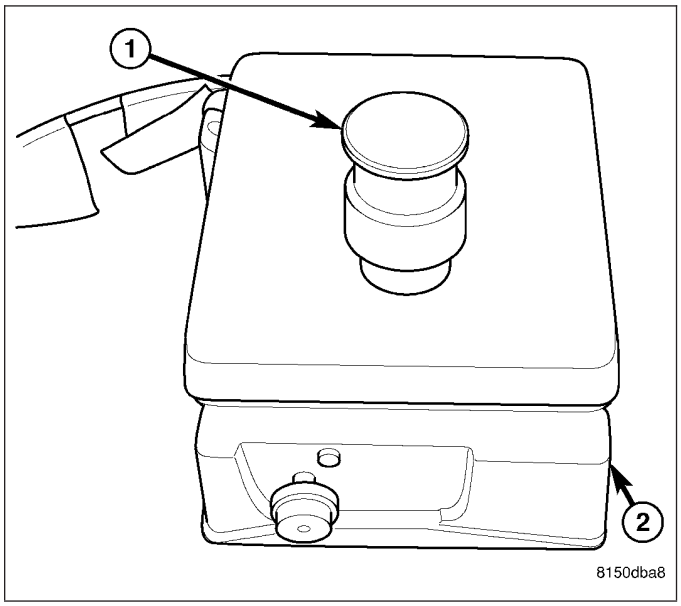

34. With tongs place Plug 9619-2 in rear housing mainshaft bearing (2). Allow plug to heat bearing for two minutes.

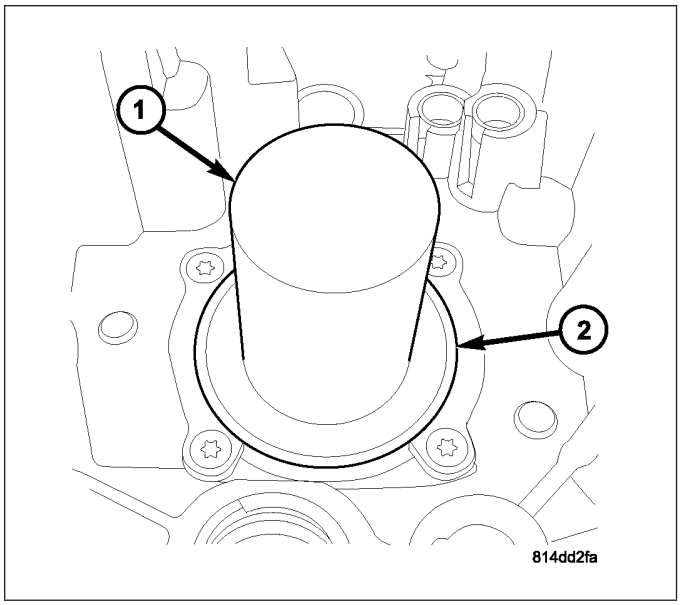

35. Apply a bead of Mopar® Gasket Maker or equivalent to the front housing sealing surface.
36. Remove plug and install rear housing (1) on front housing (2).
37. Install housing bolts and tighten to 22 N·m (16 ft. lbs.).

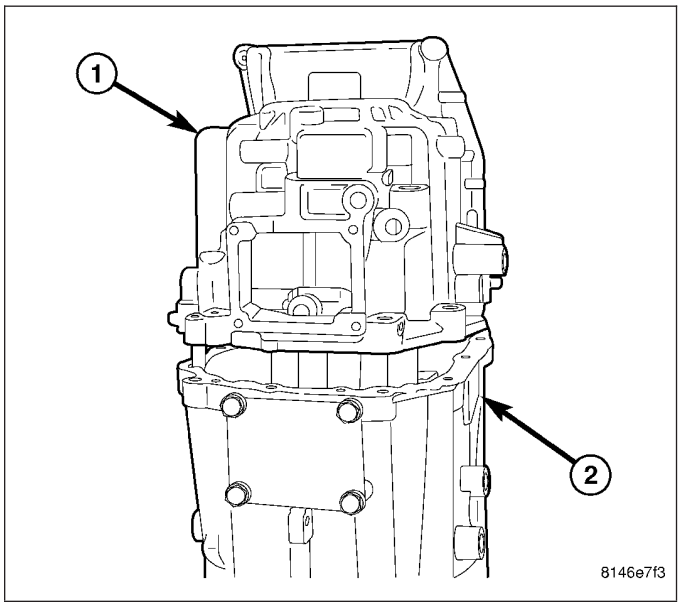

38. Install output shaft seal in rear housing (1) with Installer 9629 (2).

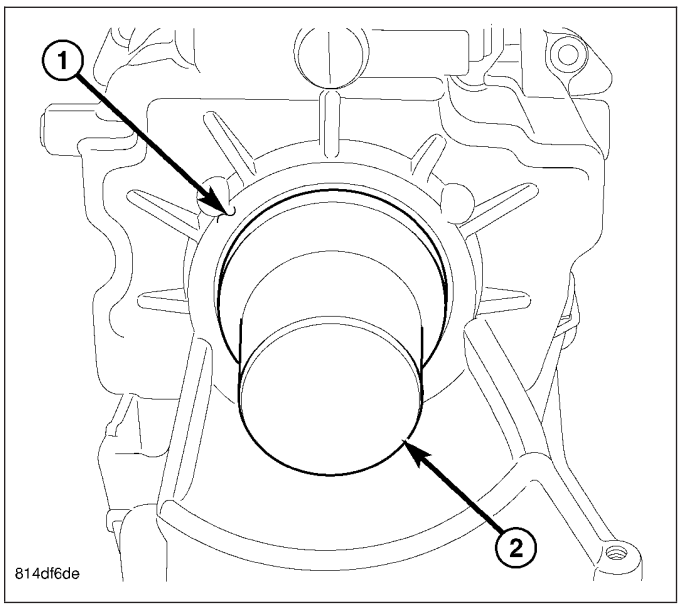

39. Install 4x4 transmission output shaft nut with Socket 9584 and tighten to 200 N·m (147 ft. lbs.). Then loosen nut and tighten to 170 N·m (125 ft. lbs.).

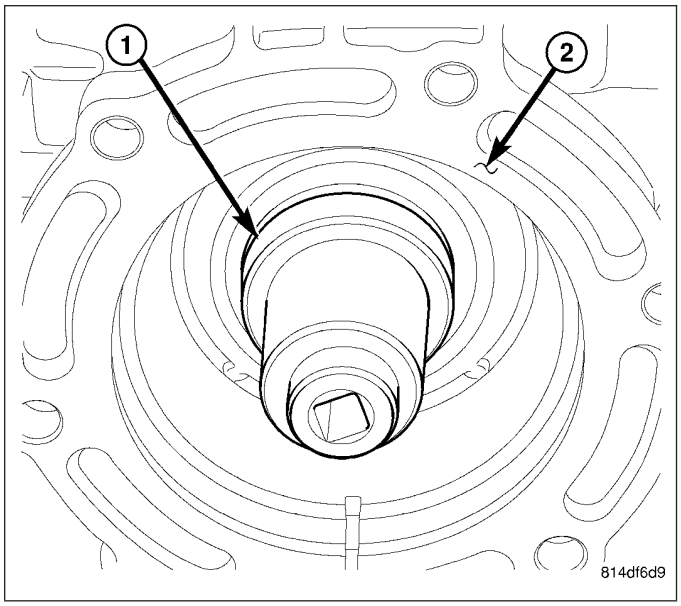

40. Drive output shaft flange onto the output shaft with Installer D-389.
41. Install 4x2 transmission output shaft flange (1) and tighten bolt (2) to 200 N·m (147 ft. lbs.). Then loosen bolt and tighten to 170 N·m (125 ft. lbs.). Remove Wrench 9586 from input shaft.

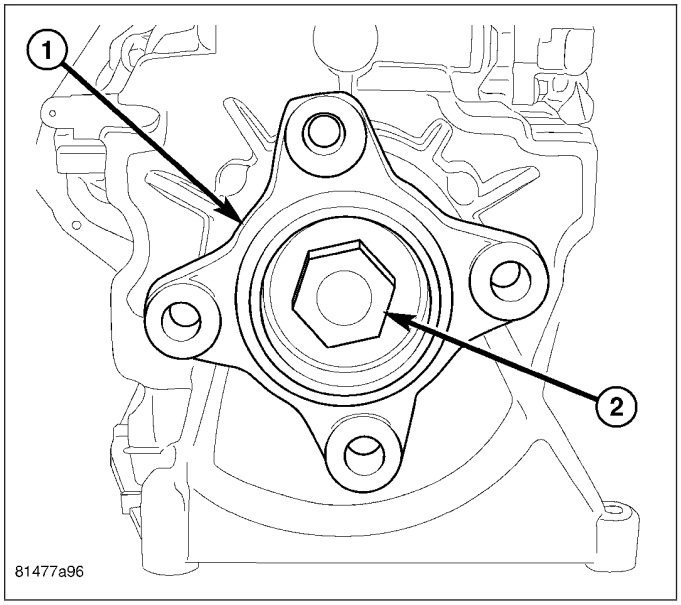

42. Install two detent plugs in the top of the rear housing.
43. Install large detent plunger (1) and spring (2) in the side of the rear housing.

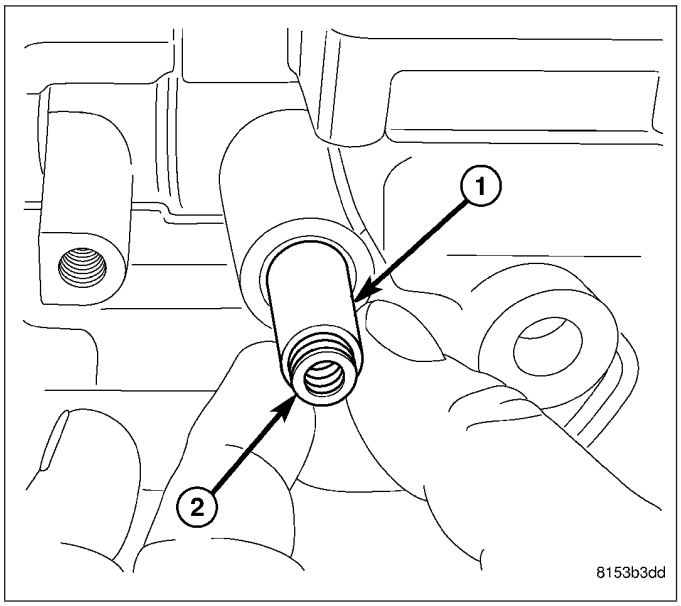

44. Install large detent plug (1) in the side of the rear housing (2).

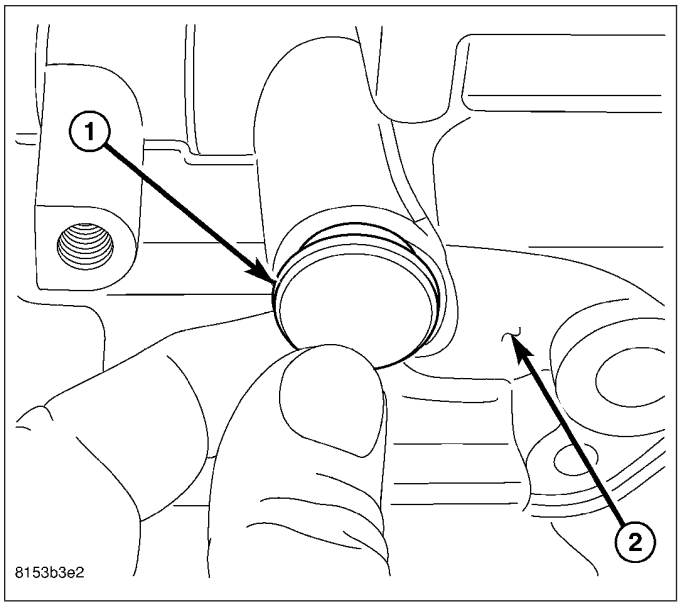

45. Install back up lamp switch (1) and tighten bolt (2) to 10 N·m (88 in. lbs.). Then lay transmission down on bench.

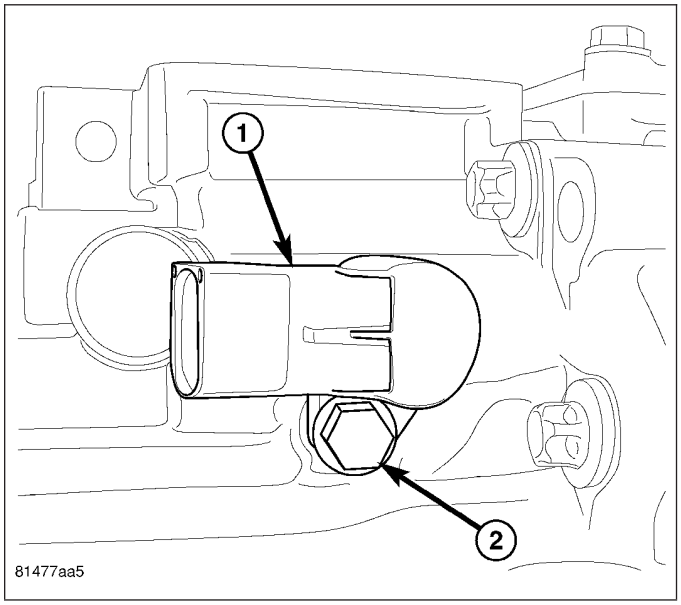

46. Install input shaft (1) snap ring (2).

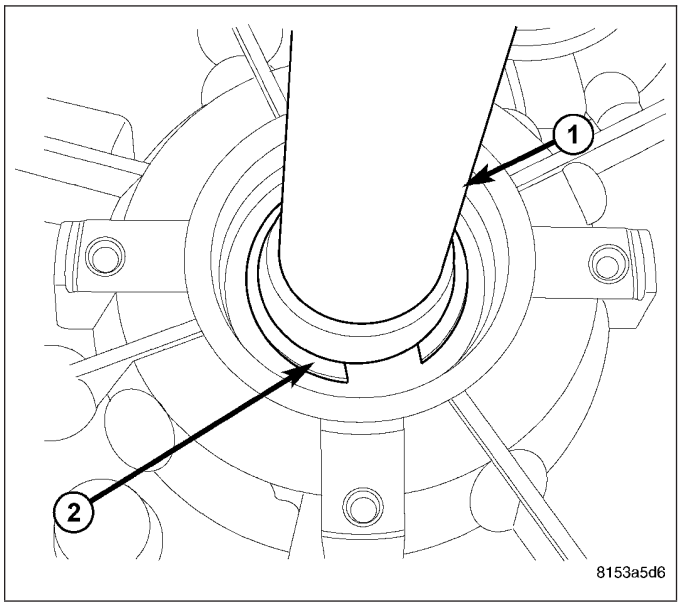

47. Install input shaft seal in front housing with Installer 9620 (1) and Tube C-3717 (2).

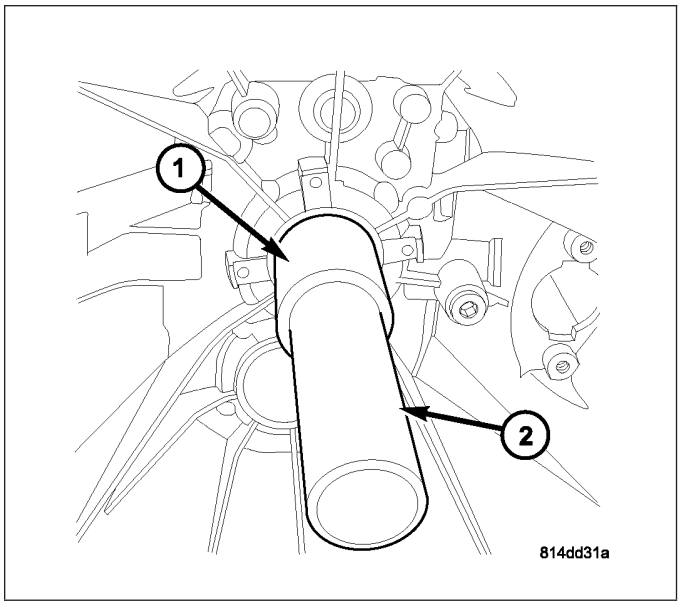

48. Install clutch bearing release support (1) and tighten bolts (2) to 10 N·m (88 in. lbs.).

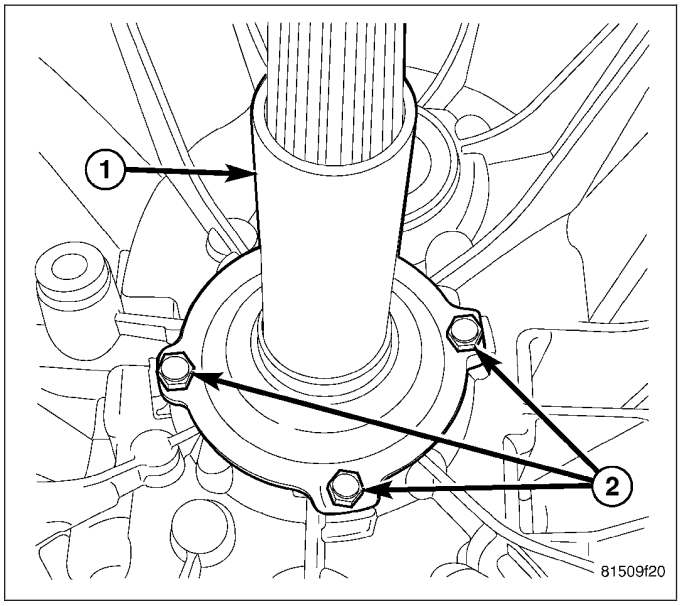

49. Install Wrench 9586 (1) on input shaft (2).

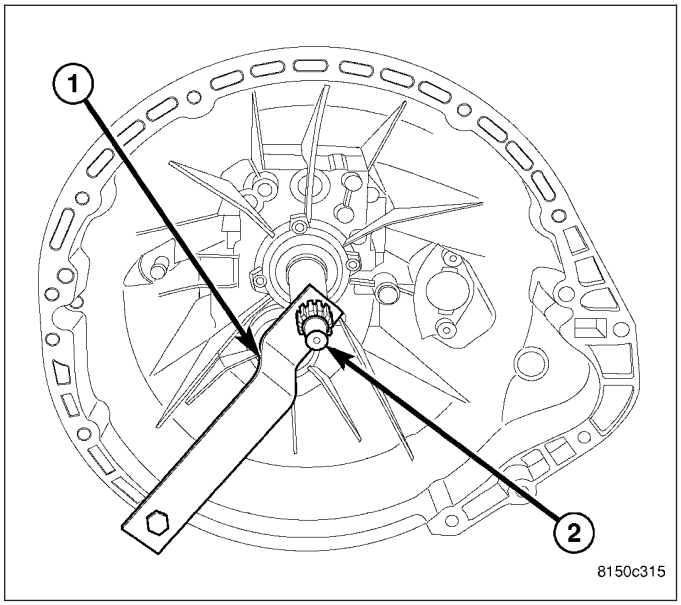

50. Install countershaft allen bolt (1) in front housing. Tighten allen bolt (1) to 90 N·m (66 ft. lbs.).

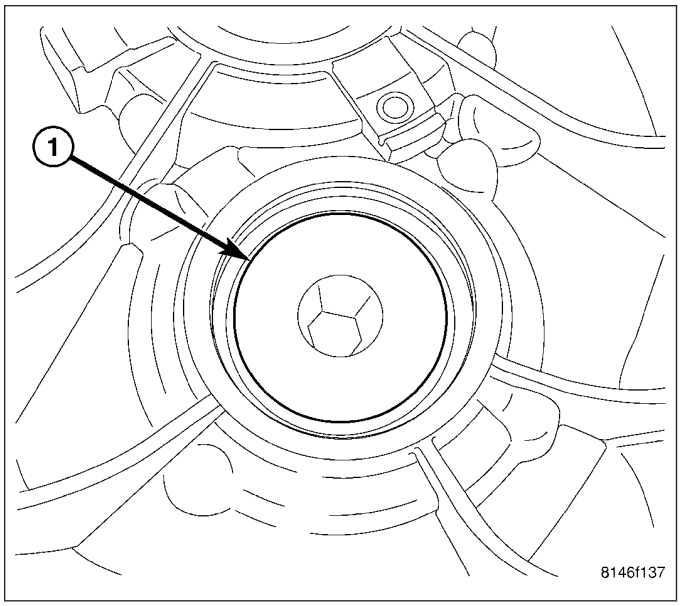

51. Install countershaft plug in front housing (1) with Installer 9622 (2) and Handle C-4171.

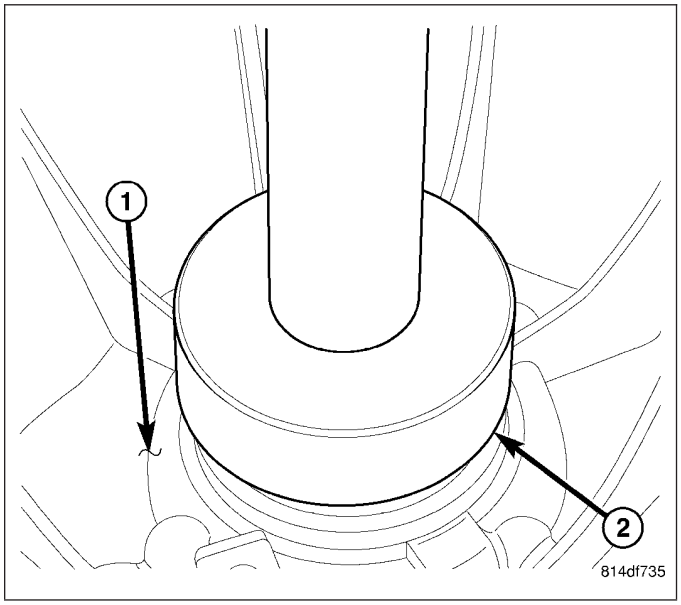

52. Install the cover plate for the second shift tower location, if necessary.
53. Apply Mopar® Lock & Seal or equivalent to shifter socket threads and install shifter socket (1).

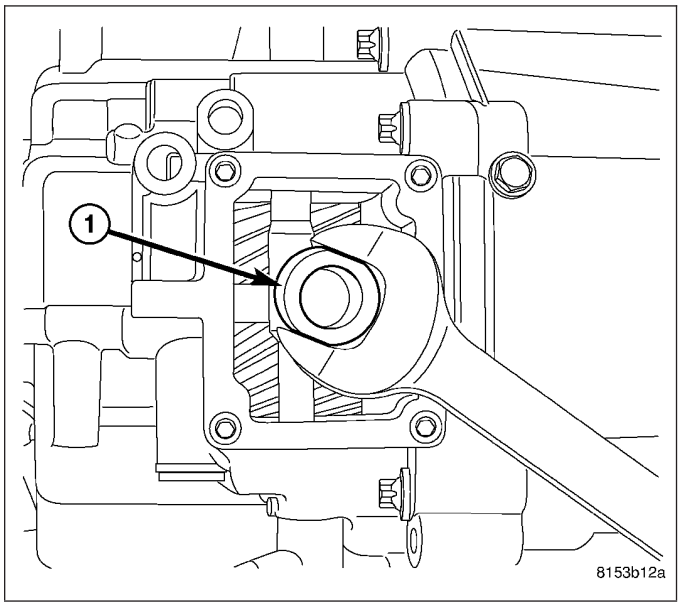

INSTALLATION

1. Clean transmission front housing mounting surface.
2. Apply light coat of Mopar high temperature bearing grease or equivalent to contact surfaces of following components:
   - release fork (1) ball stud (2)
   - release bearing slide surface (3)
   - input shaft splines (4)
   - release bearing bore (5)
   - propeller shaft slip yoke.

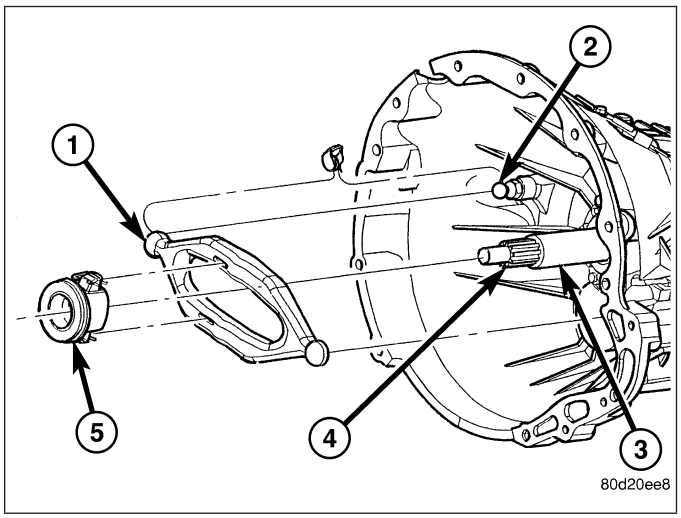

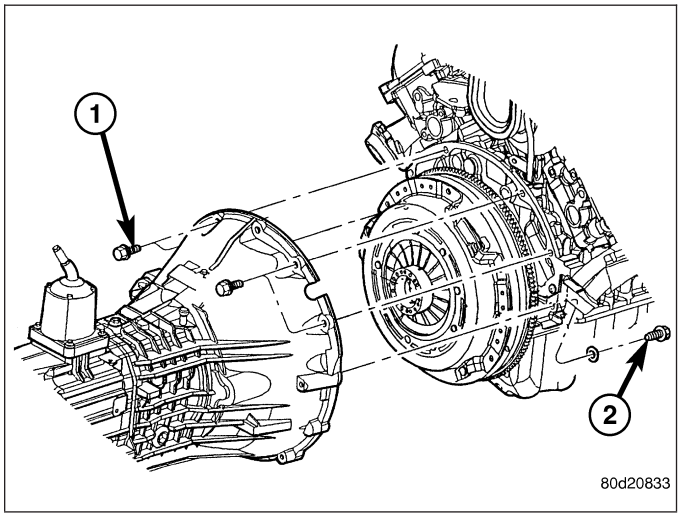

3. Support and secure transmission to jack.
4. Raise and align transmission input shaft with clutch disc, then slide transmission into place.
5. Verify front housing is fully seated. Install transmission bolts without washers (1) and tighten bolts into the engine to 41 N·m (30 ft. lbs.). Tighten the bolts with washers (2) into the transmission to 68 N·m (50 ft. lbs.).
6. Install rear crossmember and tighten nuts to 102 N·m (75 ft. lbs.).
7. Install transmission rear mounting bolts and tighten to 68 N·m (50 ft. lbs.).
8. Install front dust shield tighten bolt to 4.5 N·m (40 in. lbs.). If cover was removed, install onto the transmission and engine (Refer to 9 - ENGINE/ENGINE BLOCK/STRUCTURAL COVER - INSTALLATION).
9. Install structural dust cover and tighten the bolts to 54 N·m (40 ft. lbs.).
10. Install starter motor.
11. Install suspension crossmember and tighten nuts to 102 N·m (75 ft. lbs.).
12. Connect transmission harnesses to clips on case and connect switches.
13. Install slave cylinder and tighten cylinder nuts to 23 N·m (200 in. lbs.).
14. Install transfer case and transfer case linkage if equipped.
15. Remove transmission jack.
16. Install propeller shaft/shafts with reference marks aligned.
17. Install exhaust on the exhaust manifolds.
18. Fill transmission with lubricant. Correct fill level is to bottom edge of fill plug hole.

SPECIFICATIONS

GETRAG 238 – MANUAL TRANSMISSION

TORQUE SPECIFICATIONS

DESCRIPTION	N·m	Ft. Lbs.	In. Lbs.
Drain Plug	50	37	-
Fill Plug	50	37	-
Shift Tower Bolts	10	-	88
Back Up Lamp Switch Bolt	10	-	88
4x2 Output Flange Bolt	200 then loosen and tighten to 170	147 then loosen and tighten to 125	-
4x4 Output Shaft Nut	200 then loosen and tighten to 170	147 then loosen and tighten to 125	-
Housing Bolts	22	16	-
Shift Rail Support Bolts	10	-	88
Intermediate Support Bolts	22	16	-
Intermediate Support Race Retainer Bolt	22	16	-
Countershaft Bolt	90	66	-
Reverse Idler Gear Shaft Bolt	25	18	-
Mainshaft, Countershaft Bearing Retainer Bolts	10	-	88
Input Shaft Retainer Bolts	10	-	88
Shift Fork Pivot Bolts	35	26	-
Support Braket to Trans Bolts	54	40	-

GEAR SPECIFICATIONS

GEAR	RATIO
FIRST	4.23
SECOND	2.53
THIRD	1.67
FOURTH	1.23
FIFTH	1.00
SIXTH	0.79
REVERSE	3.84

SPECIAL TOOLS

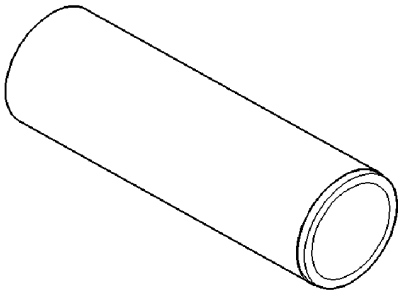

TUBE C-3717

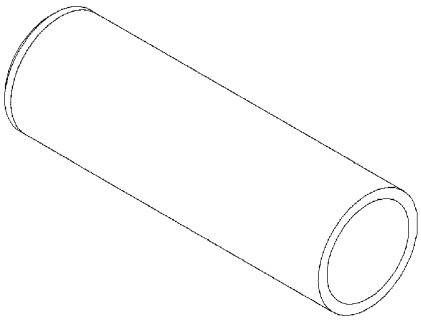

TUBE D-389

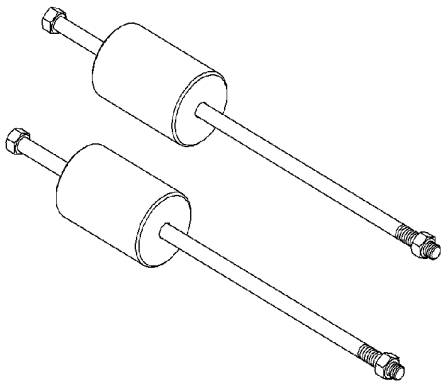

SLIDE HAMMER C-3752

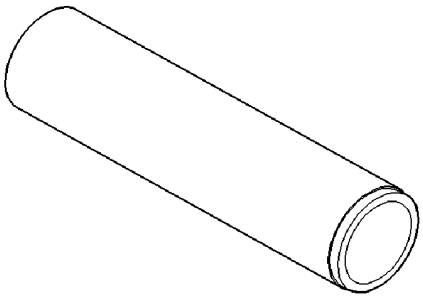

TUBE W-262

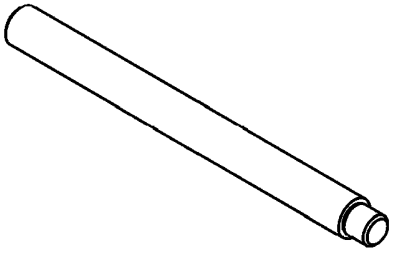

BEARING INSTALLER 8475

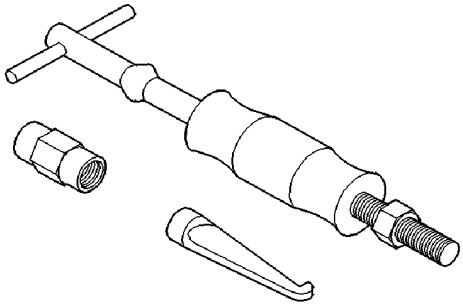

SLIDE HAMMER C-637

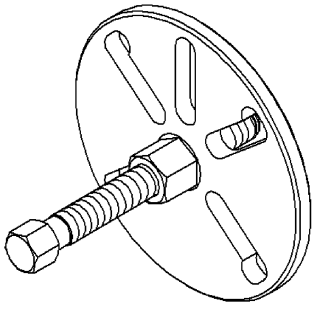

FLANGE PULLER 8992

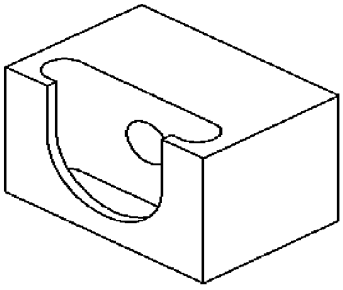

DETENT PULLER 9583

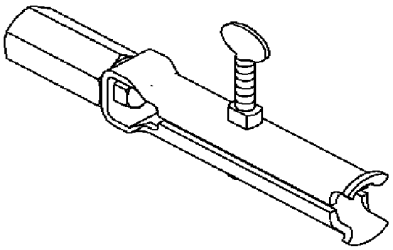

BEARING PULLER 9585

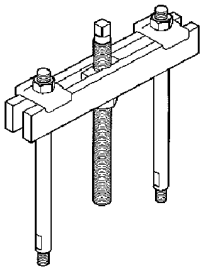

BRIDGE 938

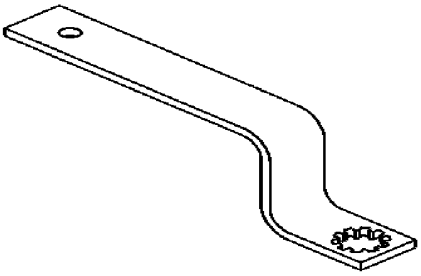

INPUT SHAFT WRENCH 9586

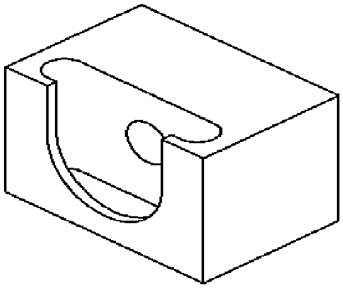

DETENT PULLER 9583

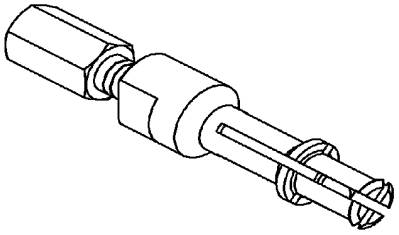

BEARING PULLER 9609

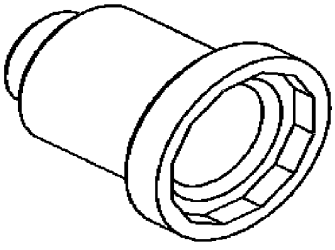

SOCKET 9584

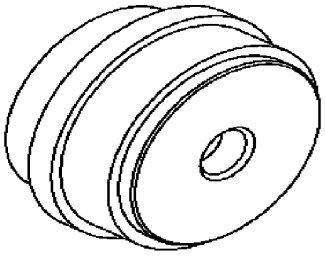

RACE REMOVER/INSTALLER 9617

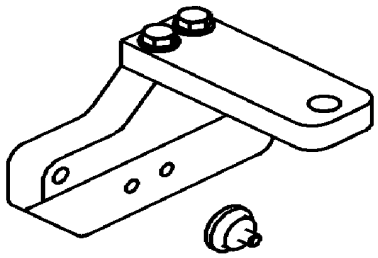

HOUSING PULLER 9618

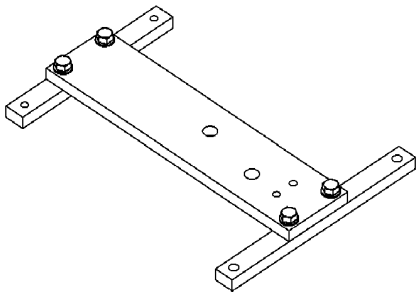

HOUSING PULLER 9621



BUTTON 9618-2

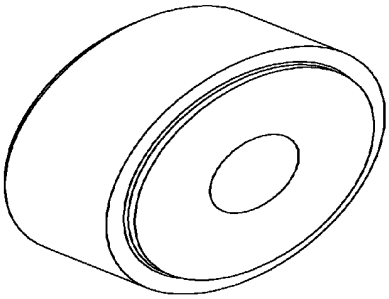

PLUG INSTALLER 9622

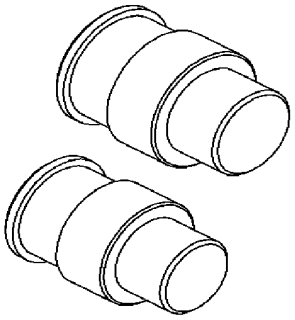

HEAT PLUG 9619-1 & 9619-2

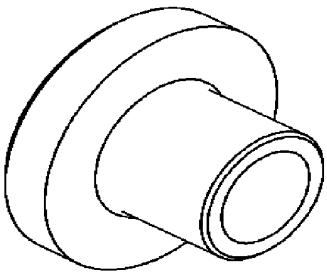

BEARING INSTALLER 9624

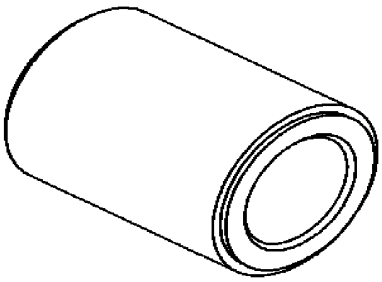

INPUT SEAL INSTALLER 9620

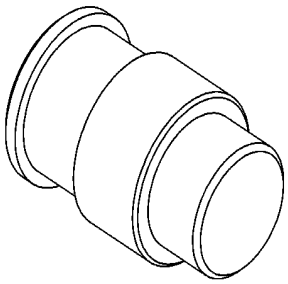

HEAT PLUG 9625

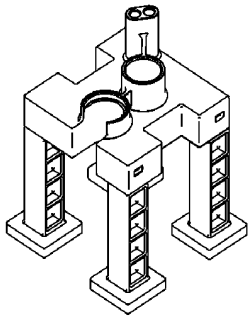

BUILD FIXTURE 9626

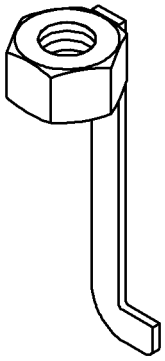

SEAL REMOVER 9667

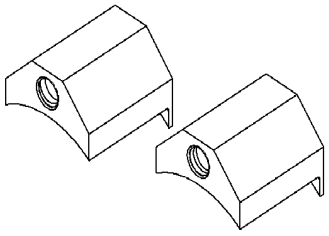

GEAR PULLER ADAPTER 9627

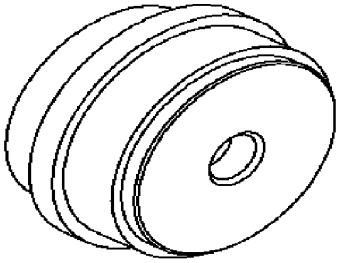

RACE REMOVER/INSTALLER 9668

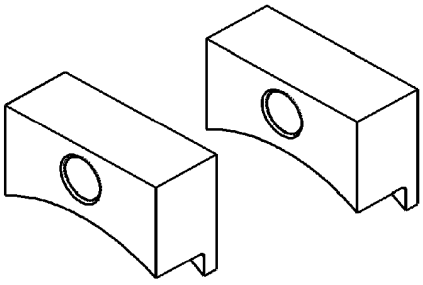

GEAR PULLER ADAPTER 9628

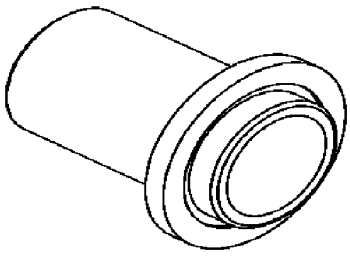

SEAL INSTALLER 9629

MANUAL TRANSMISSION - G56 - SERVICE INFORMATION

TABLE OF CONTENTS

page

MANUAL TRANSMISSION - G56 - SERVICE INFORMATION
DIAGNOSIS AND TESTING 176
REMOVAL 176
DISASSEMBLY 178
CLEANING 197
INSPECTION 197
ASSEMBLY 199
INSTALLATION 227
ADJUSTMENTS
MAINSHAFT/COUNTERSHAFT BEARING PRELOAD 228
SPECIFICATIONS
G56 - MANUAL TRANSMISSION 231
SPECIAL TOOLS 232

MANUAL TRANSMISSION - G56 - SERVICE INFORMATION

DIAGNOSIS AND TESTING

LOW LUBRICANT LEVEL

A low transmission lubricant level is generally the result of a leak, inadequate lubricant fill or incorrect lubricant level check.

Rear transmission leaks will be from the oil seals or component mating surfaces.

Front transmission leaks will be from the front input shaft retainer seal. Lubricant may drip from the clutch housing after extended operation. If leak is severe, it may contaminate the clutch disc.

Lubricant level check can only be made when the vehicle is level and allowing the lubricant to settle for a minute before checking. This will ensure an accurate check and avoid an under or overfill condition.

HARD SHIFTING

Hard shifting is usually caused by low lubricant level, improper or contaminated lubricants. This will cause noise, excessive wear, internal bind, and hard shifting. Substantial lubricant leaks can result in gear, shift rail, synchro, and bearing damage. The first indications of component damage is usually hard shifting and noise.

Shift component damage, clutch adjustment, worn pressure plate or disc are also causes of increased shift effort. If clutch problem is advanced, gear clash during shifts can result. Worn or damaged synchronizer rings can cause gear clash when shifting into any forward gear. In some new or rebuilt transmissions, new synchro rings may tend to stick slightly causing hard or noisy shifts. In most cases, this condition will decline as the rings wear-in.

TRANSMISSION NOISE

Most manual transmissions make some noise during normal operation. Rotating gears generate a mild whine that is audible, but generally only at extreme speeds.

Severe, highly audible transmission noise is generally the initial indicator of a lubricant problem. Insufficient, improper or contaminated lubricant will promote rapid wear of gears, synchronizer rings, shift rails, forks and bearings. The overheating caused by a lubricant problem, can also lead to gear and bearing damage.

REMOVAL

1. With vehicle in neutral, position vehicle on hoist.
2. Disconnect battery negative cable.
3. Remove shift boot bezel screws and slide boot upward on shift lever extension.
4. Remove shift lever extension from the shift tower and lever assembly.
5. Remove skid plate, if equipped.
6. Remove drain plug and drain fluid.

7. Mark propeller shaft/shafts and companion flange yoke/yokes for installation reference and remove propeller shaft/shafts.
8. Disconnect harness from clips on transmission housing.
9. Remove transfer case linkage 4x4 equipped.
10. Remove transfer case mounting nuts and remove transfer case 4x4 equipped.
11. Remove slave cylinder (1) mounting nut (2) and remove cylinder.

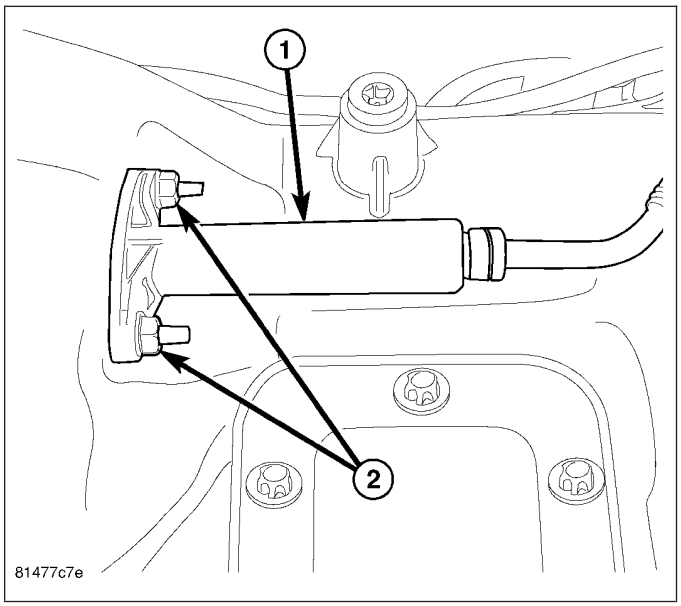

12. Remove starter motor (2), 5.7L structural dust cover (3) bolts to clutch housing, dust shield (1) bolt and suspension crossmember (4).

CAUTION: 5.7L engine only do not remove structural dust cover from enigne block. If cover is removed clutch housing and cover must be aligned with the engine.

13. Remove exhaust bracket (1) bolts and remove bracket.

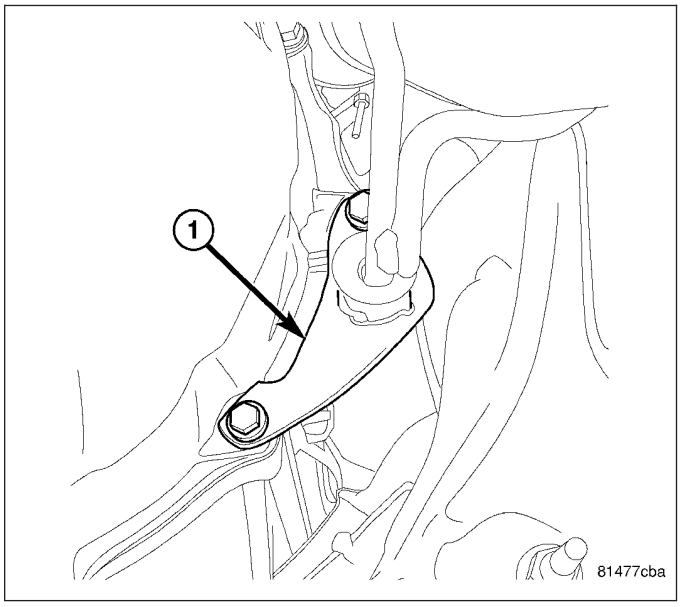

14. Support engine with adjustable jack stand and wood block.
15. Support and secure transmission to a transmission jack with safety chains.
16. Remove transmission mount bolts (1).
17. Remove rear crossmember bolts (2) and remove crossmember with transmission mount.
18. Remove bolts attaching transmission to the engine.
19. Move transmission rearward until input shaft is clear of clutch disc and pressure plate. Then lower jack and remove transmission from under vehicle.

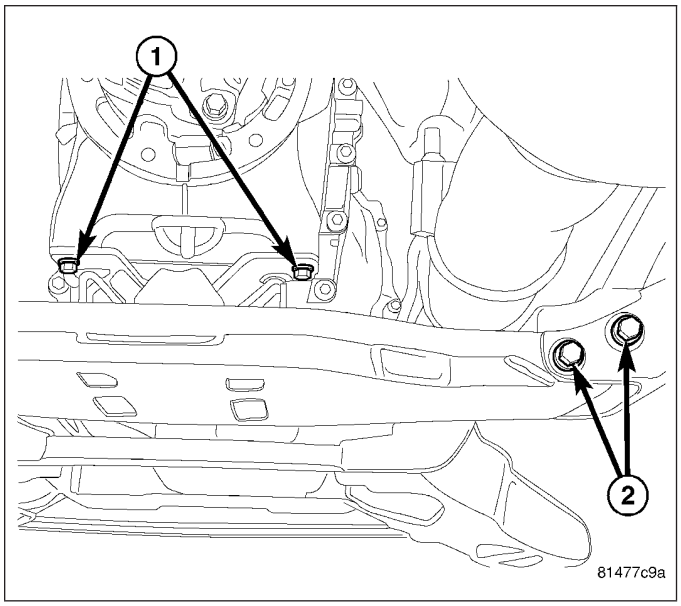

DISASSEMBLY

1. Set transmission on rear housing.
2. Remove shift tower bolts (1) and shift tower (2).

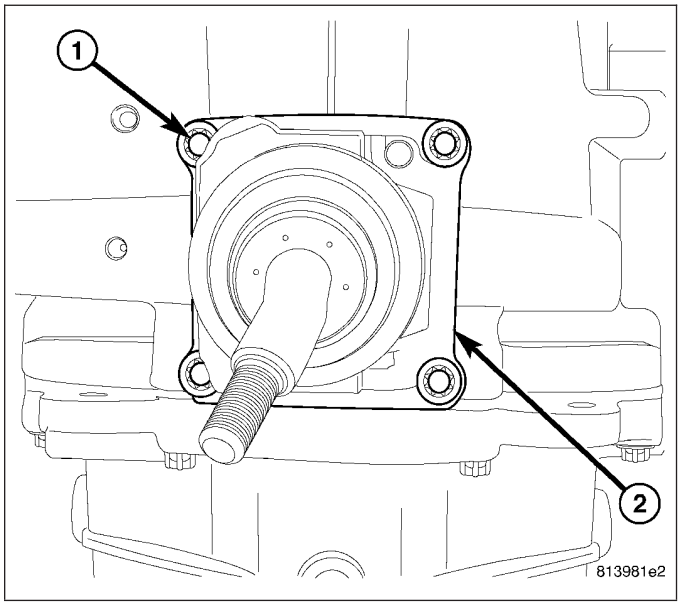

3. Pry off shift tower boot (1) with a screw driver (2).

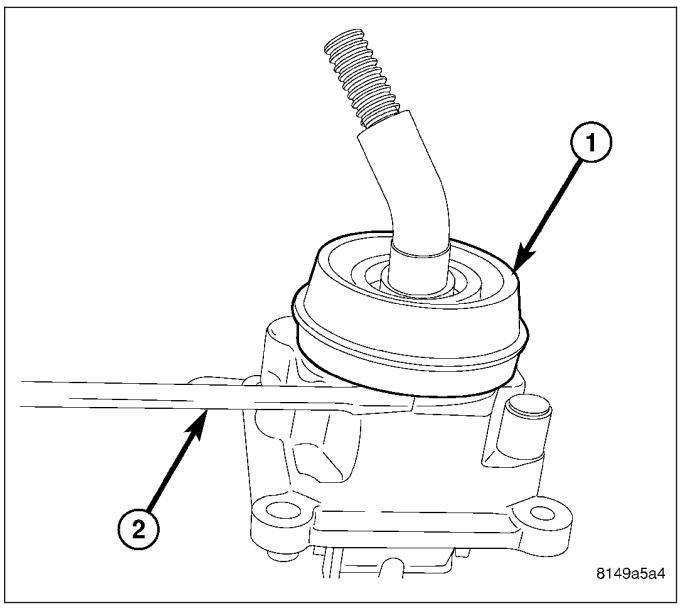

4. Through the shift tower opening (1) align shift rails (2) and install tie strap to shift rails.

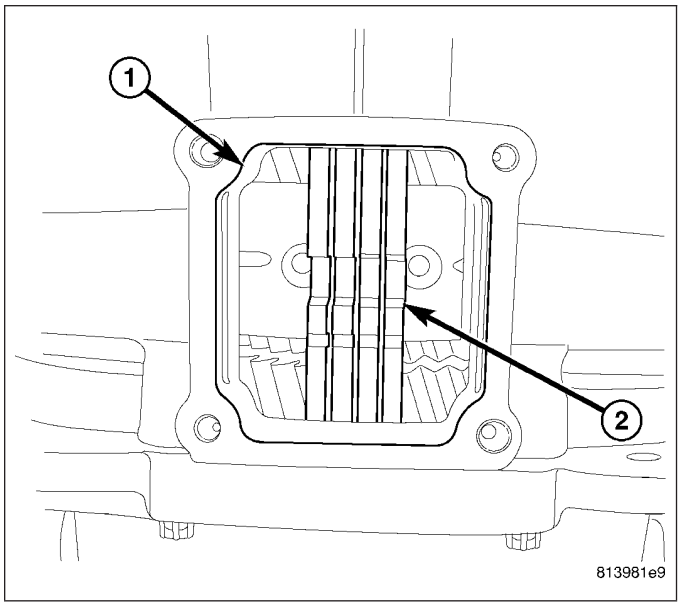

5. Remove 5-6 shift fork pivot pin (1) from both sides of the case.

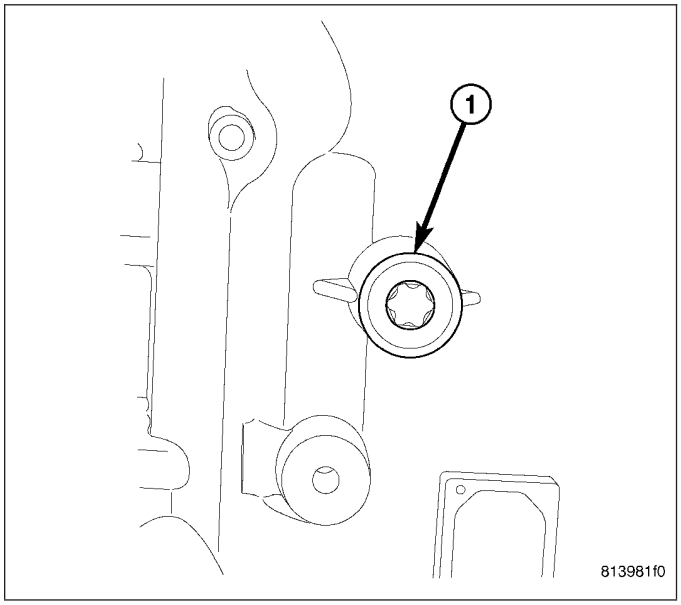

6. Remove reverse idler gear shaft pin (1) from the rear housing (2).

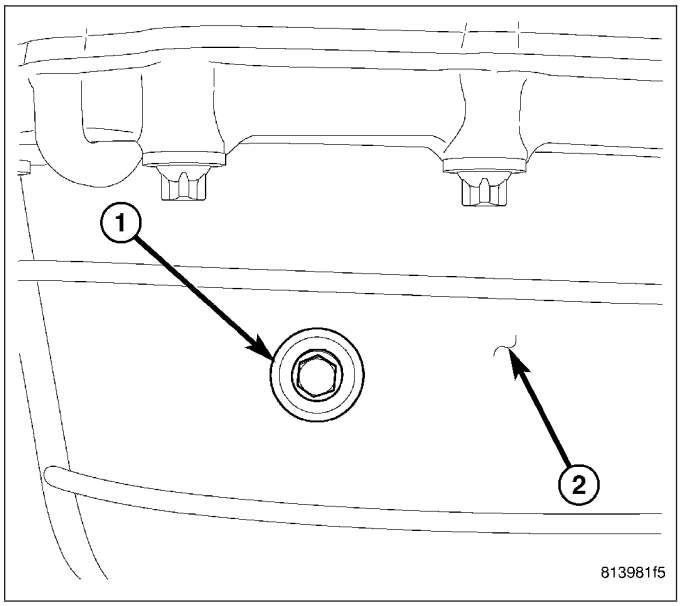

7. Remove back-up lamp switch (1) bolt (2) and remove switch.

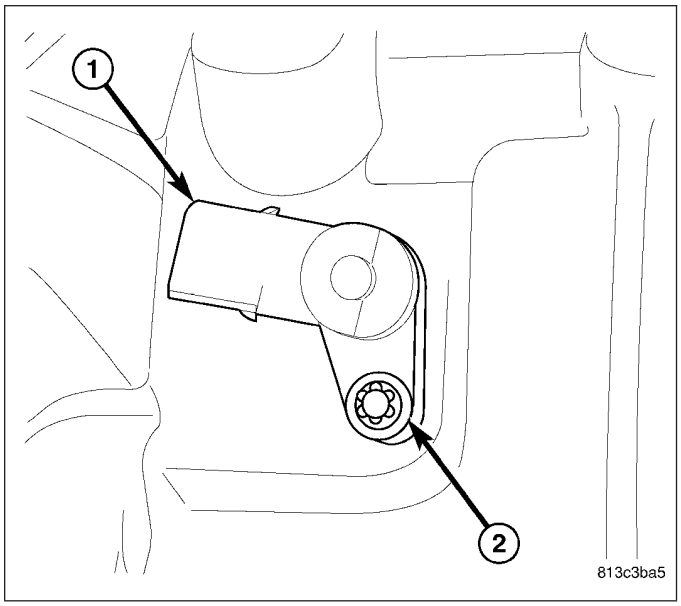

8. Remove transmission housing bolts.
9. Tap housing with dead-blow hammer and lift front housing (1) off rear housing (2).

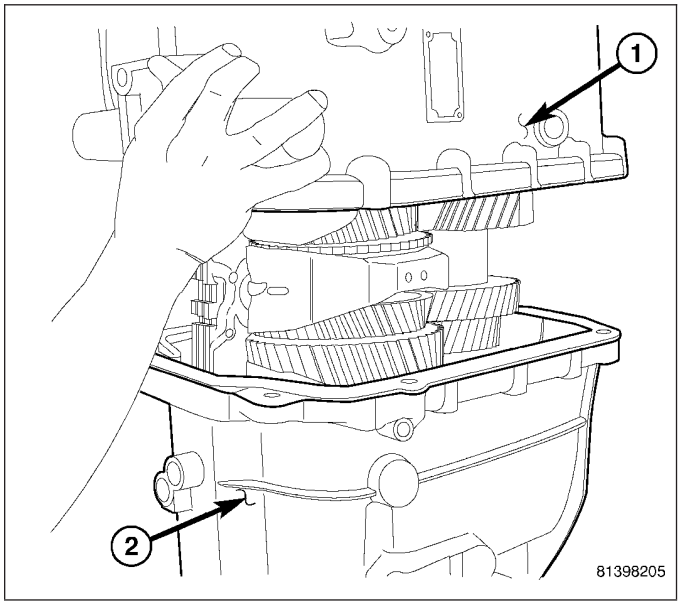

10. Remove 5-6 shift fork (1) from shift rail and synchronizer sleeve (2).

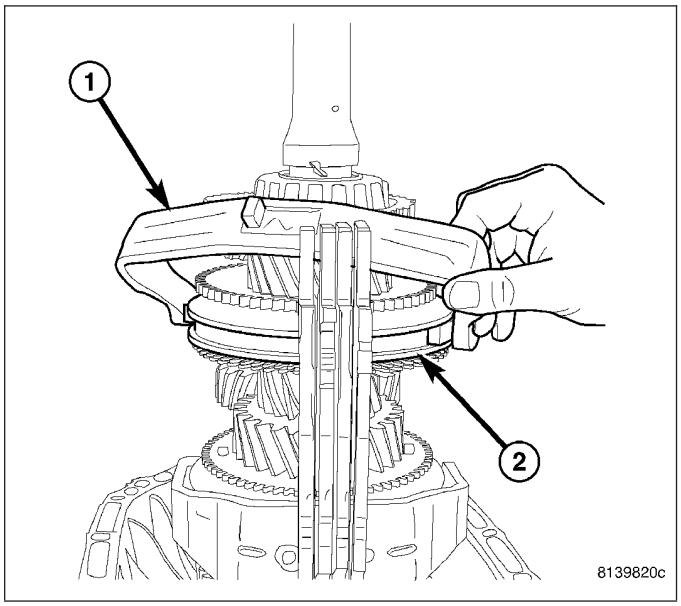

11. Remove input shaft (1) from mainshaft (2).

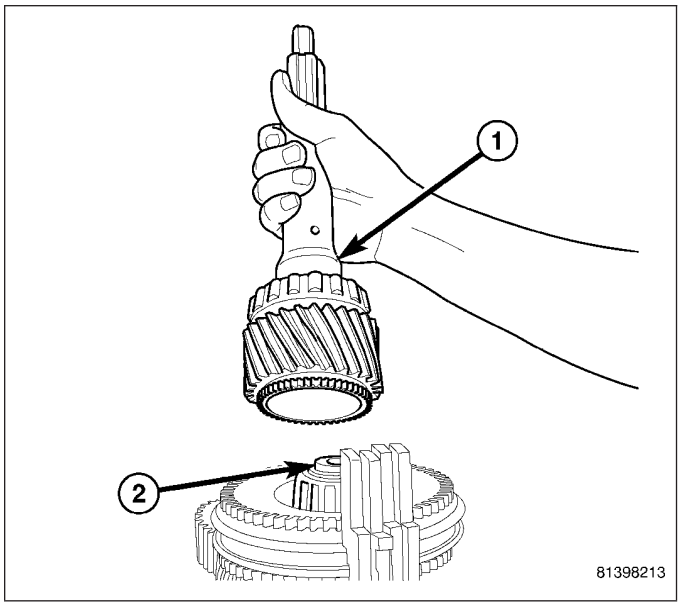

12. Thread a M6x1bolt (1) into the reverse idler gear shaft (2) and pull shaft out of rear housing.

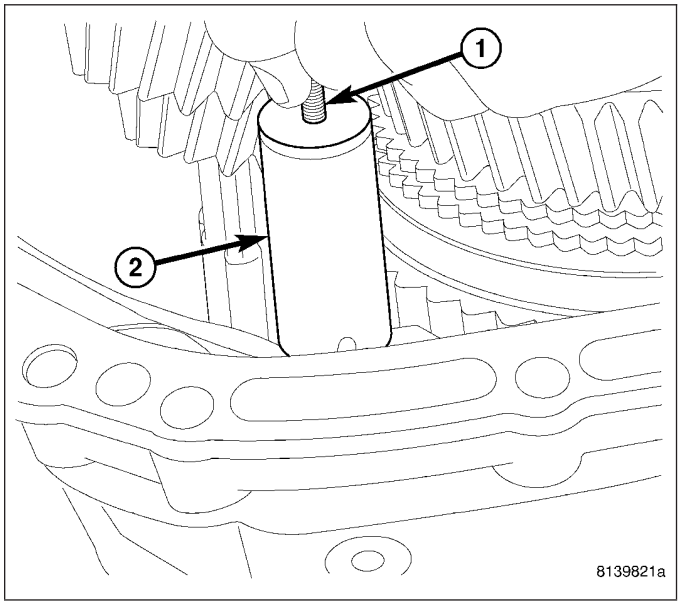

13. Slide reverse idler gear (1) off to the side of the case (2) for disassembly clearance.

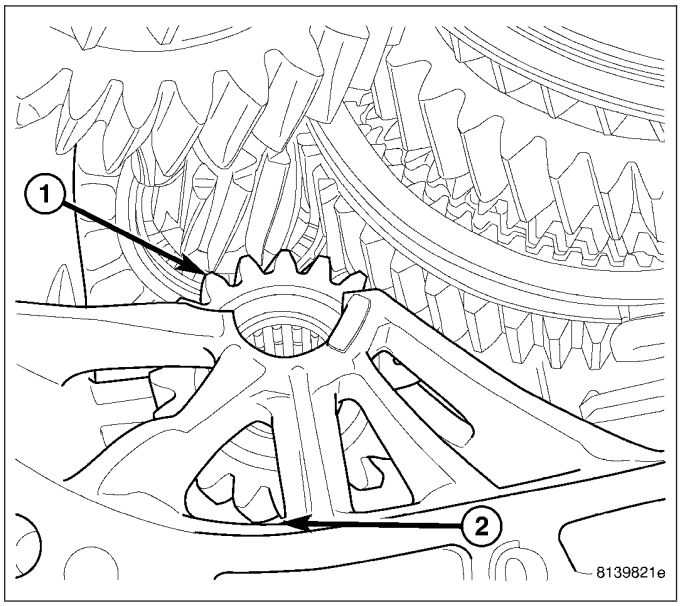

14. Lift and tilt countershaft (1) then remove mainshaft with shift rails (2).
15. Remove countershaft.

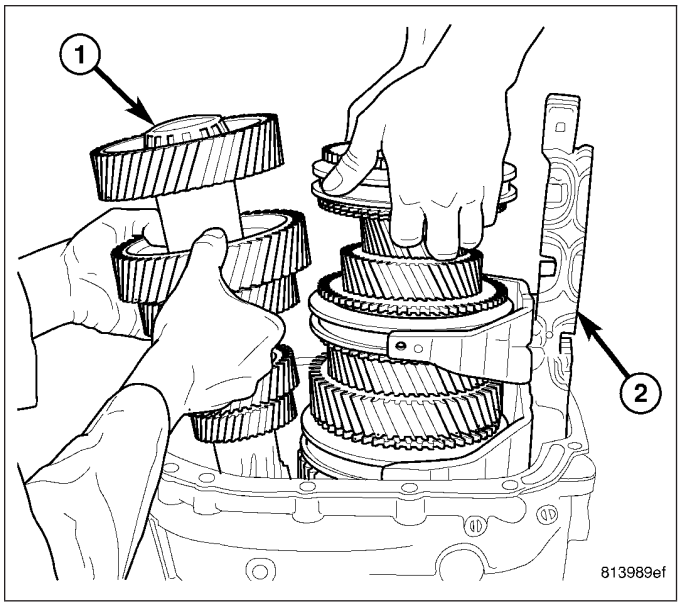

16. Remove reverse idler gear (1) from rear housing (2).

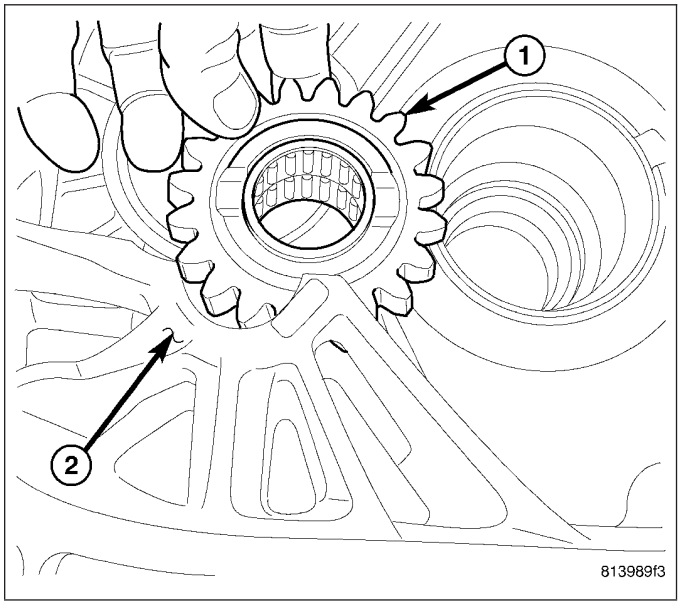

MAINSHAFT

1. Remove reverse (1) 1-2 (2) and 3-4 (3) shift forks and shift rails as an assembly from mainshaft.

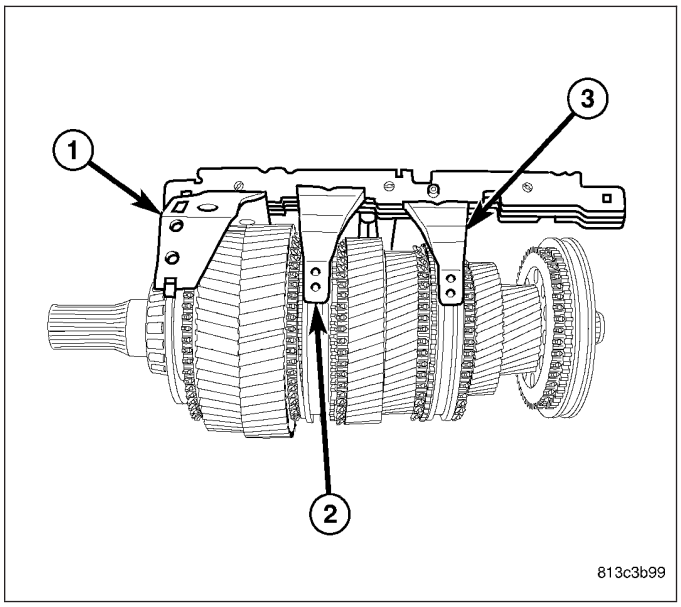

2. Position mainshaft in Fixture 9605 mounted in a vise with sixth gear up.
3. Remove fifth gear synchronizer rings (1) from 5-6 synchronizer hub (2).

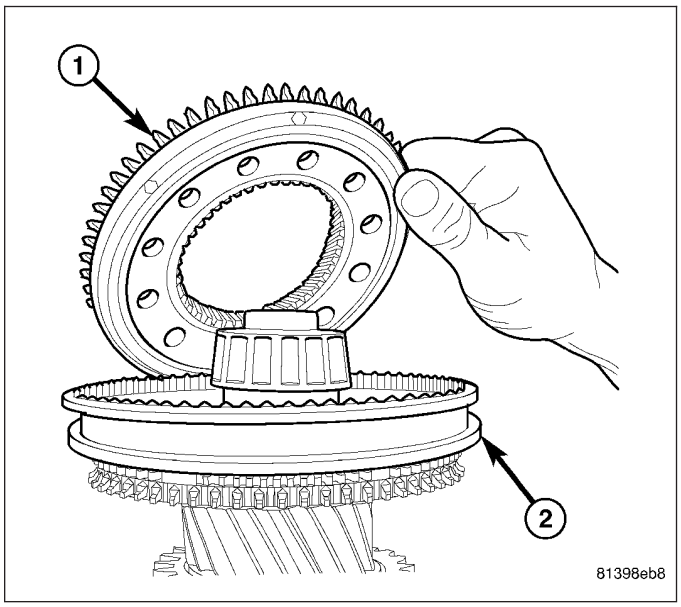

4. Slowly pull 5-6 synchronizer sleeve (1) up on hub (2) enough to remove detents and springs (3).

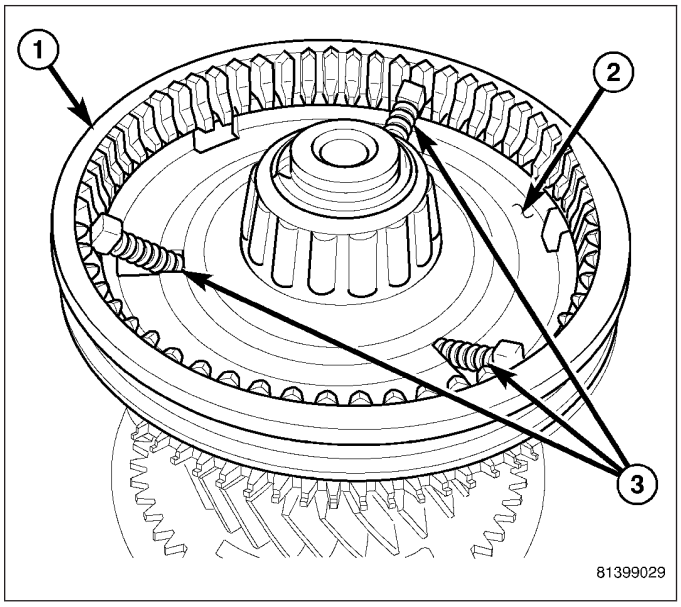

5. Remove 5-6 synchronizer sleeve (1) from hub (2).

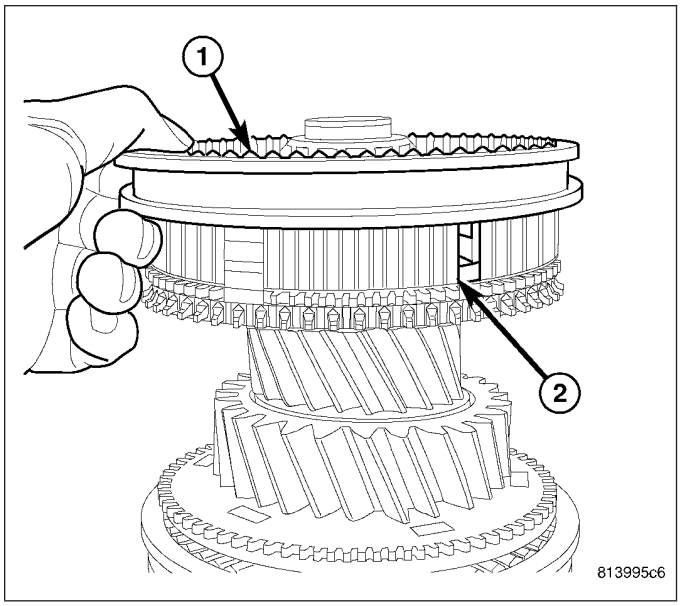

6. Remove mainshaft bearing (1) snap ring (2).

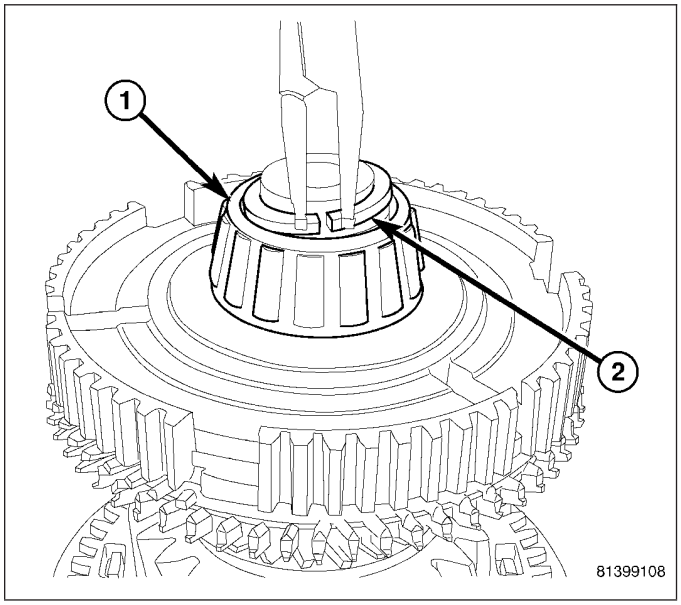

7. Remove mainshaft bearing (1), 5-6 synchronizer hub (2), and sixth gear synchronizer rings (3) with three jaw puller (4). Position puller jaws under sixth gear synchronizer rings (3).

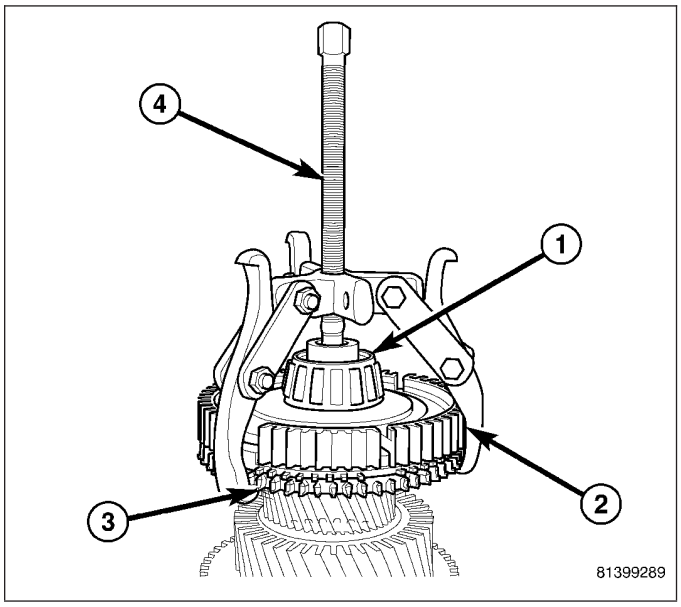

8. Remove sixth gear (1) and bearing (2) from mainshaft (3).

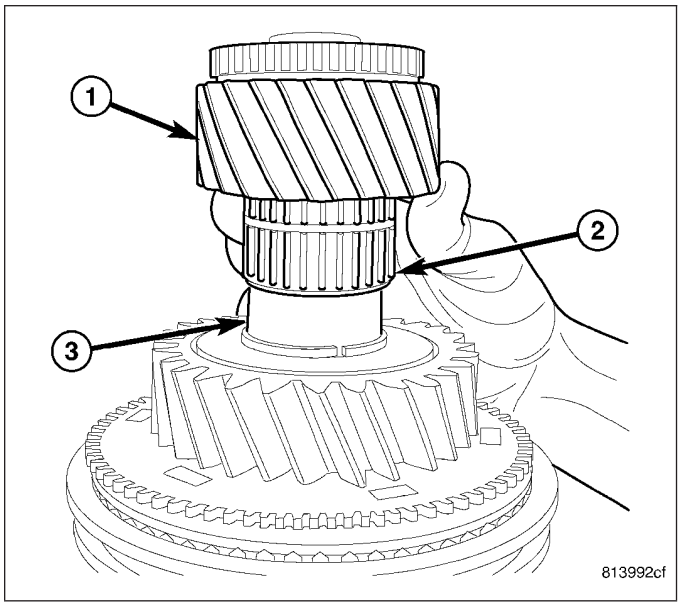

9. Remove fourth gear (1) snap ring (2).

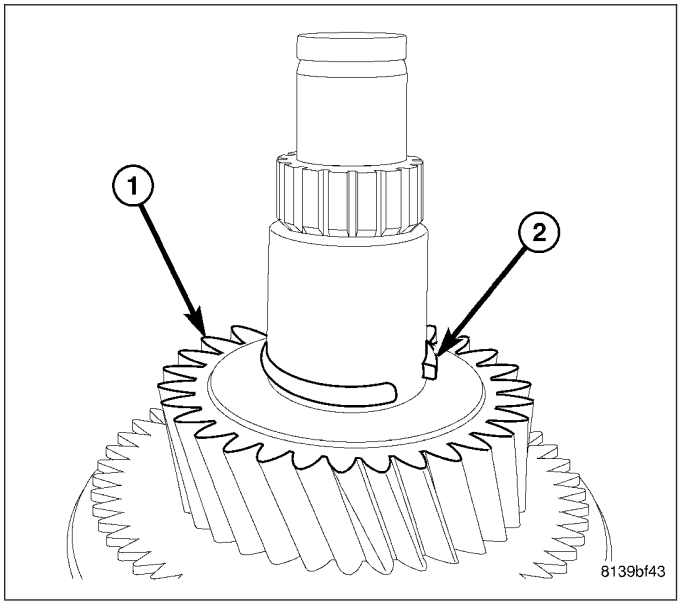

10. Remove fourth gear thrust washer (1) with Puller 9594. Position puller under fourth gear synchronizer stop ring (2).

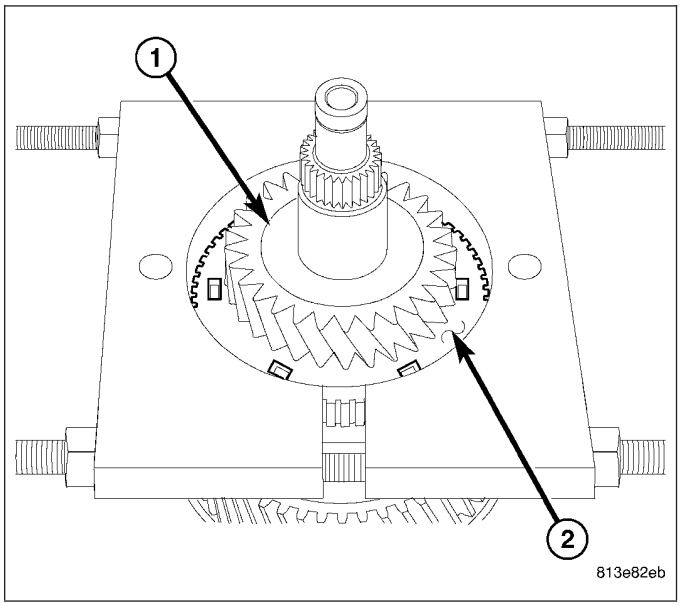

11. Install Bridge 938 (1) into Puller 9594 (2) and remove fourth gear thrust washer (3).

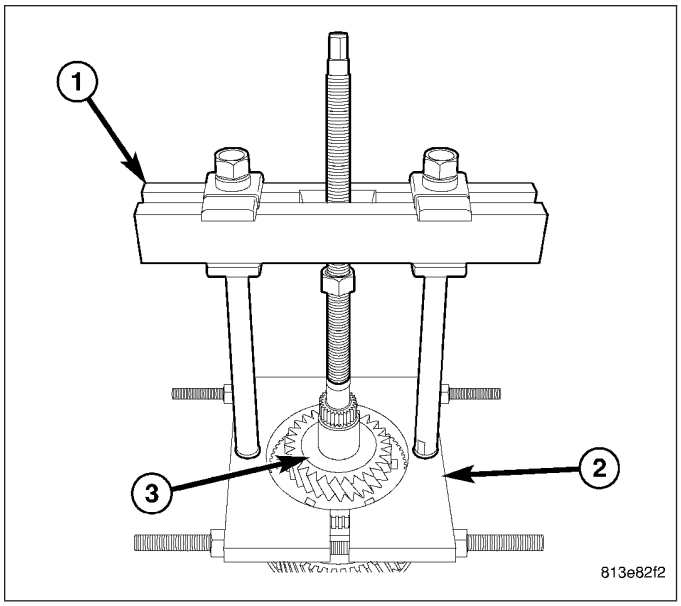

12. Remove fourth gear (1) and bearing (2).

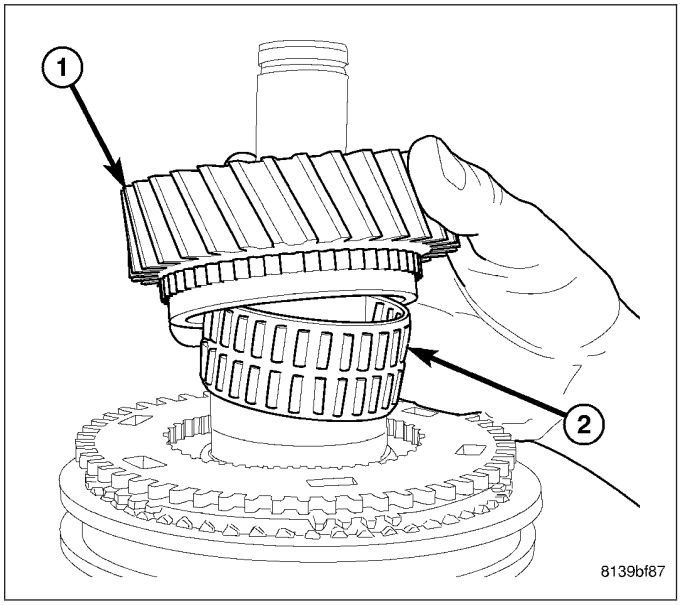

13. Remove fourth gear synchronizer rings (1) from 3-4 synchronizer hub (2) and mark installation reference.

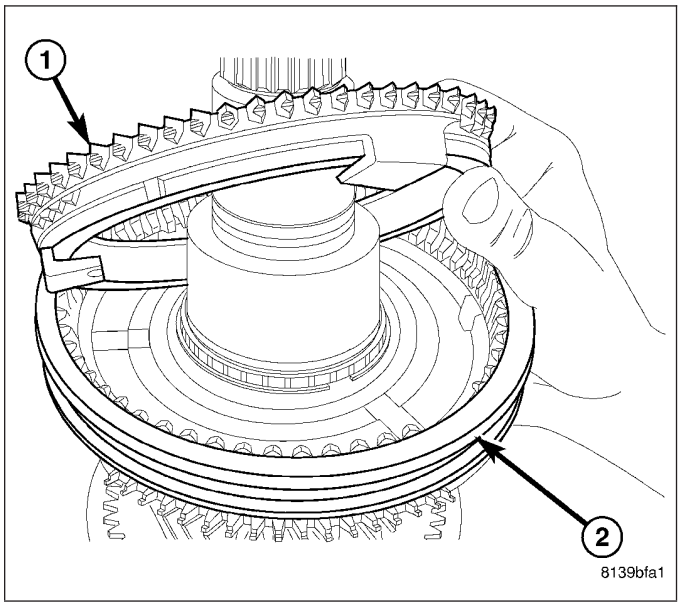

14. Slowly pull 3-4 synchronizer sleeve (1) up on hub enough to remove detents and springs (2).
15. Remove 3-4 synchronizer sleeve (1) from hub (2).

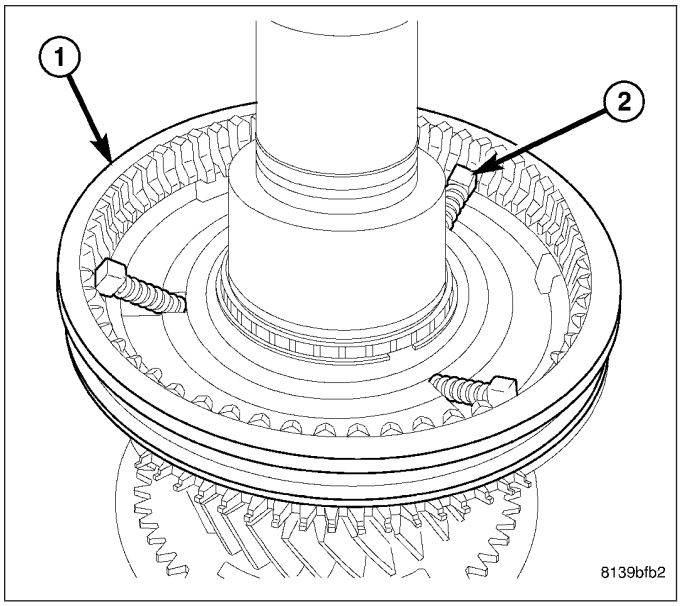

16. Remove 3-4 synchronizer hub (1) snap ring (2).

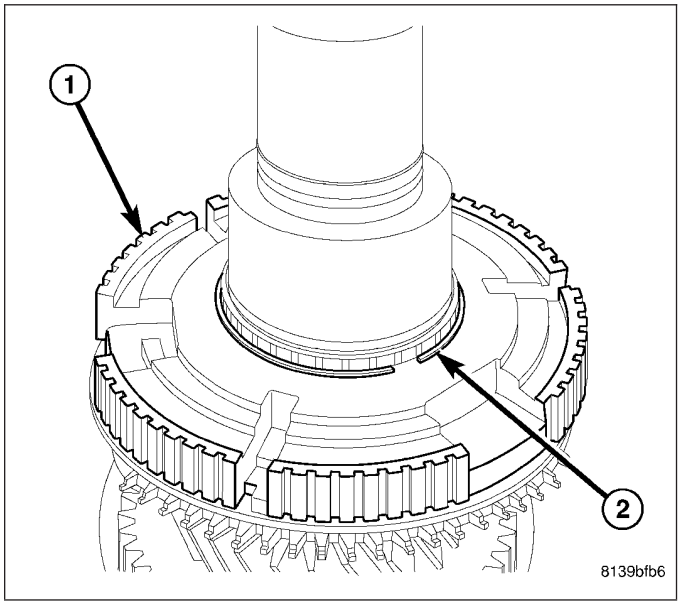

17. Remove 3-4 synchronizer hub (1) and third gear synchronizer rings (2). Mark components for installation reference.

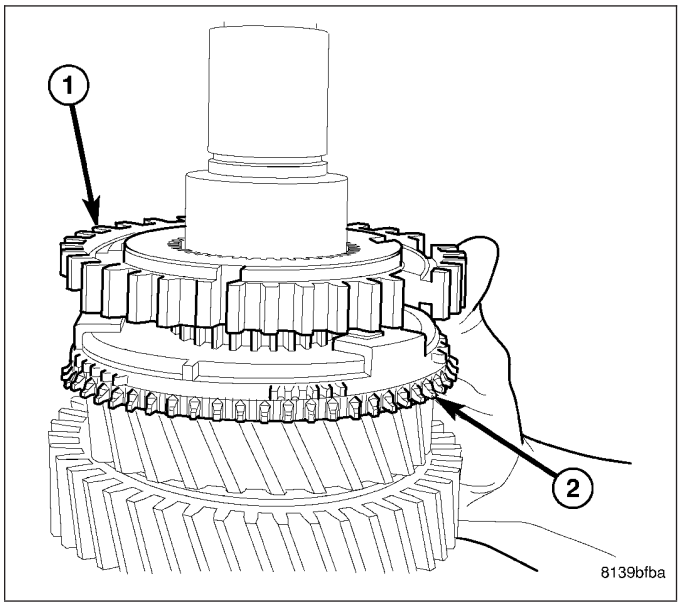

18. Remove third gear (1) and bearing (2).

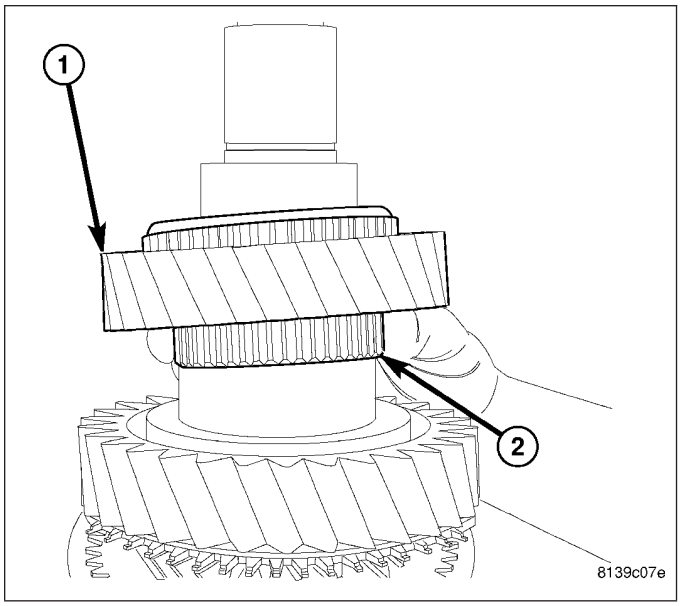

19. Turn mainshaft and Fixture 9605 and secured in vise.
20. Remove 4x4 mainshaft snap ring.
21. Remove reverse gear synchronizer sleeve (1) from reverse gear (2) synchronizer hub.

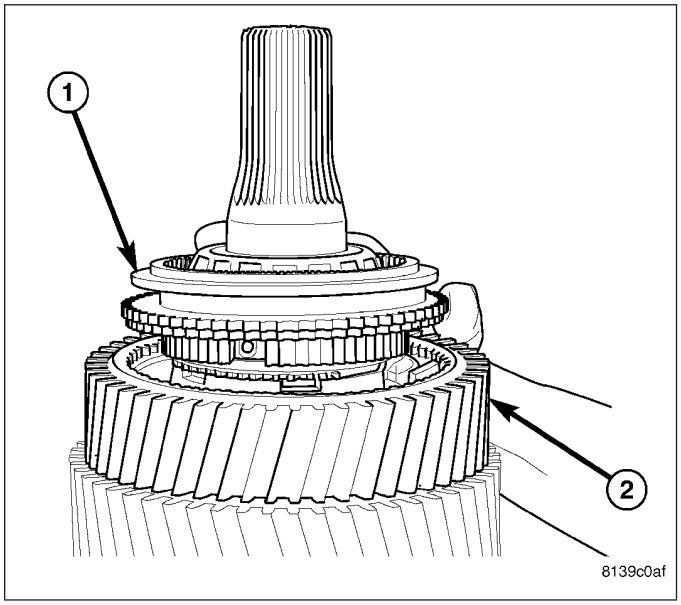

22. Remove reverse gear synchronizer hub (1) detents (2).

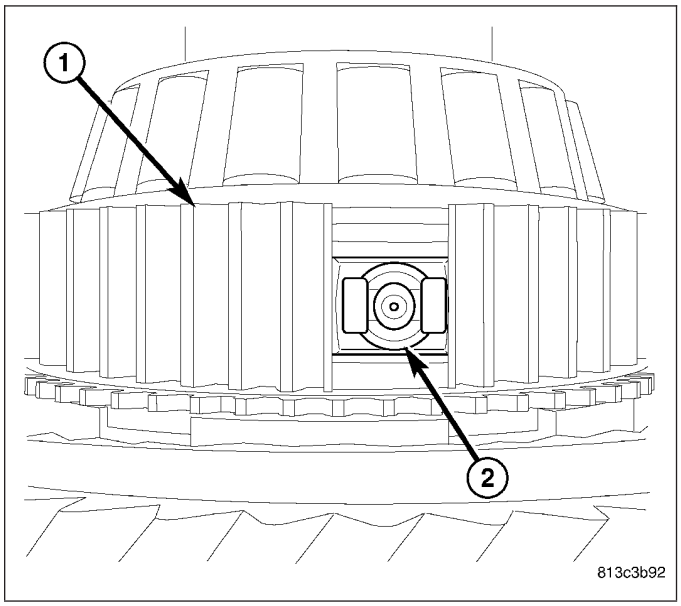

23. Remove mainshaft bearing (1) with Bridge 938 (2) and bearing Puller 9647 (3).

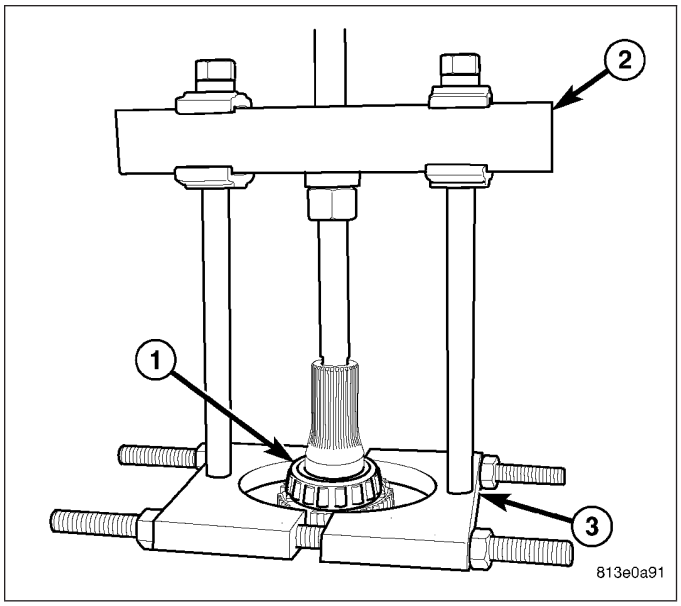

24. Position puller (1) behind reverse synchronizer hub and outer blocker ring (2).

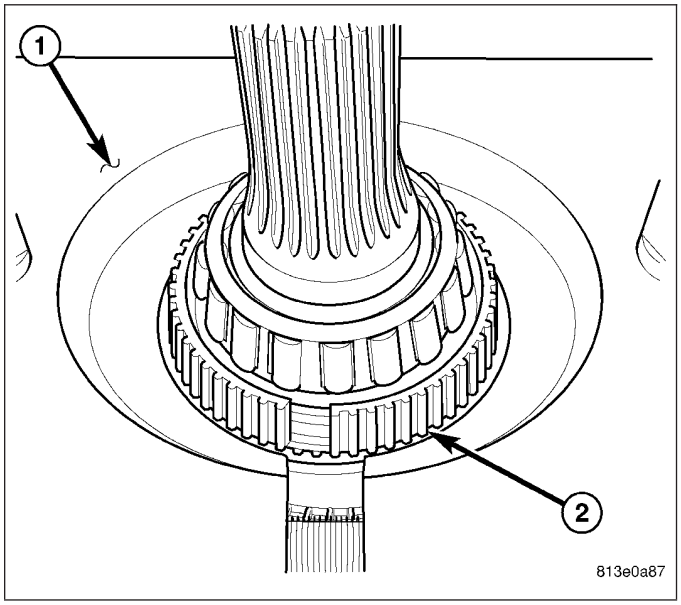

25. Remove reverse gear (1) and bearing (2).

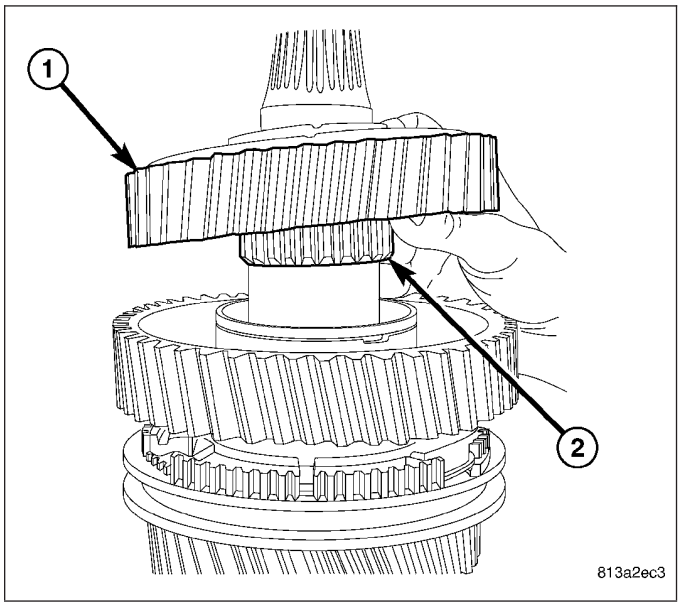

26. Remove reverse gear bearing race (1) and thrust washer (2). Use Puller 9646 and Bridge 938 on first gear (3) to pull off reverse gear bearing race (1) and thrust washer (2).

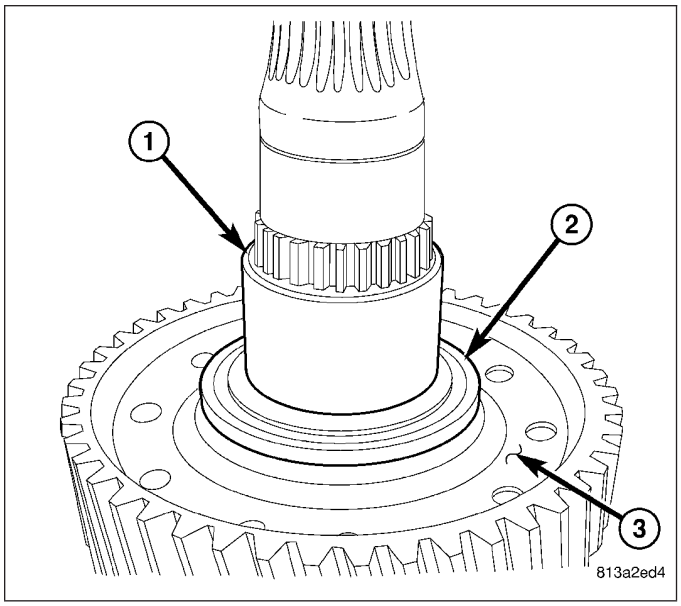

27. Remove first gear and bearing.

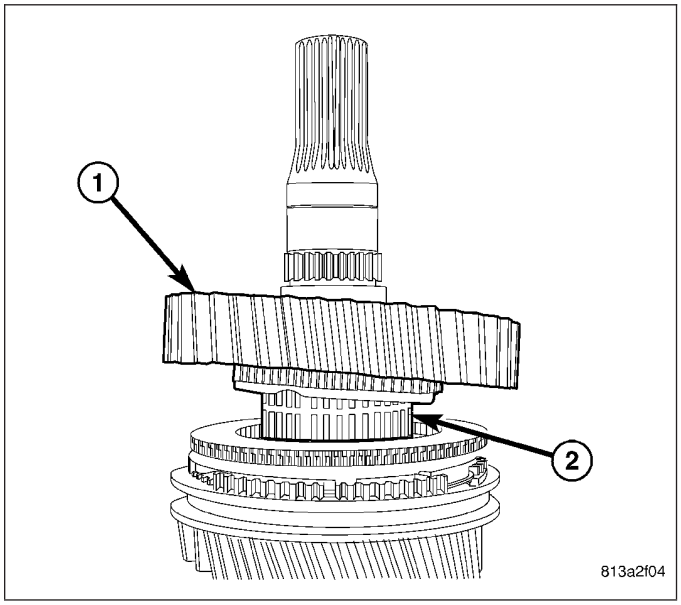

28. Remove first gear synchronizer rings (1) from 1-2 synchronizer hub (2) and mark for installation reference.

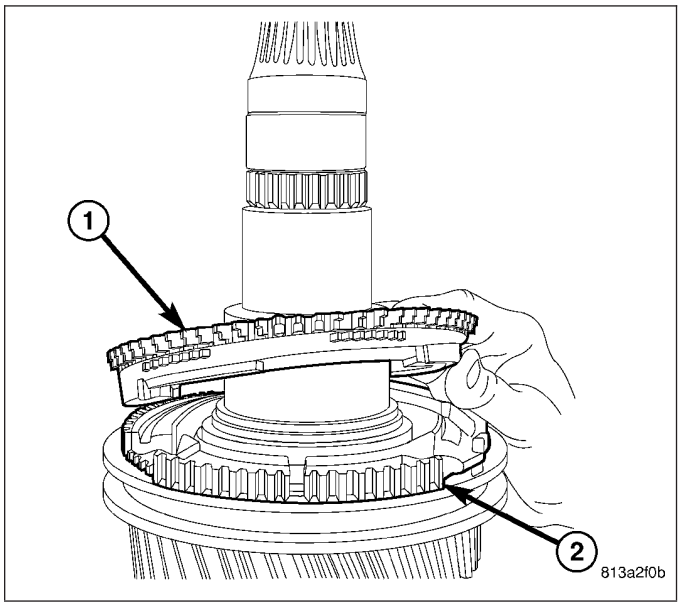

29. Slowly pull 1-2 synchronizer sleeve (1) up on hub (2) enough to remove detents and springs (3).

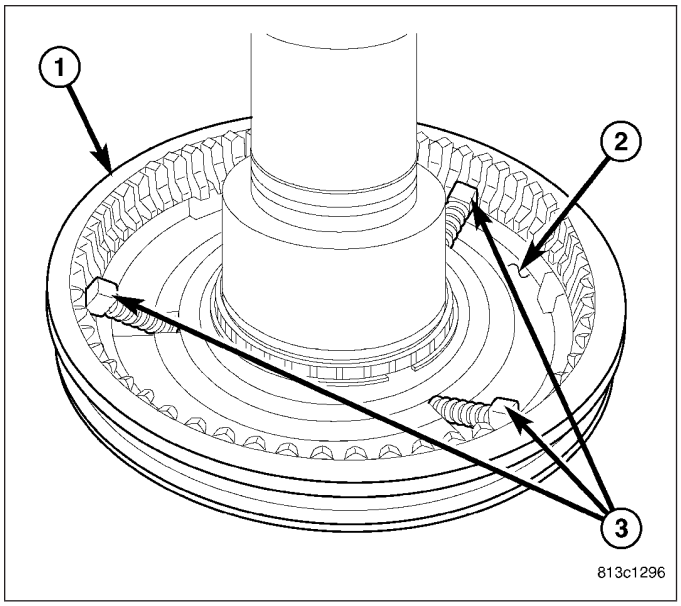

30. Remove 1-2 synchronizer hub (1) snap ring (2) and remove hub with second gear synchronizer rings. Mark components for installation reference.

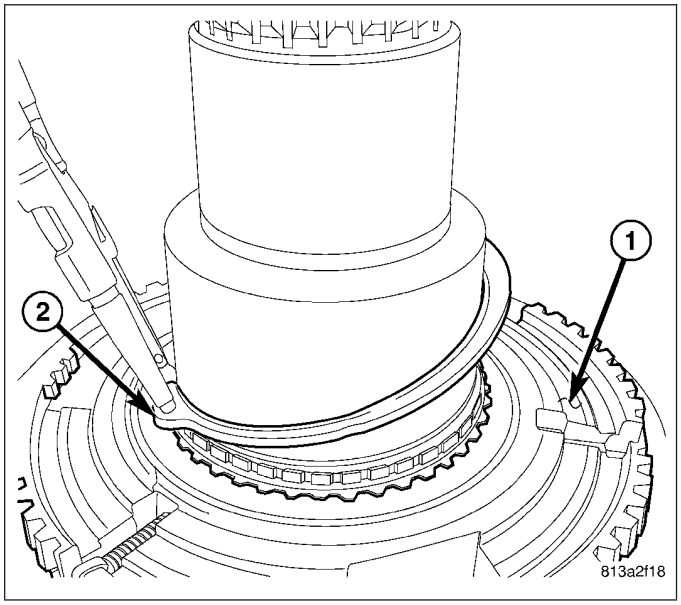

31. Remove second gear (1) from mainshaft (2).

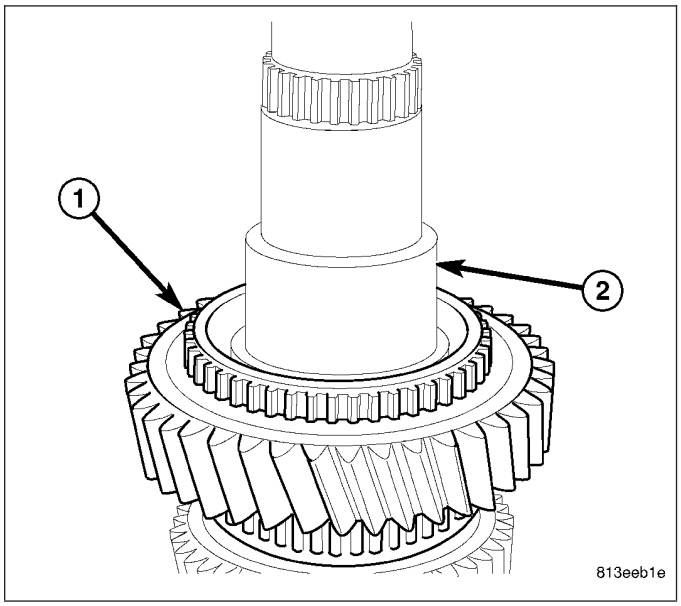

32. Remove second gear bearing (1) from mainshaft (2).

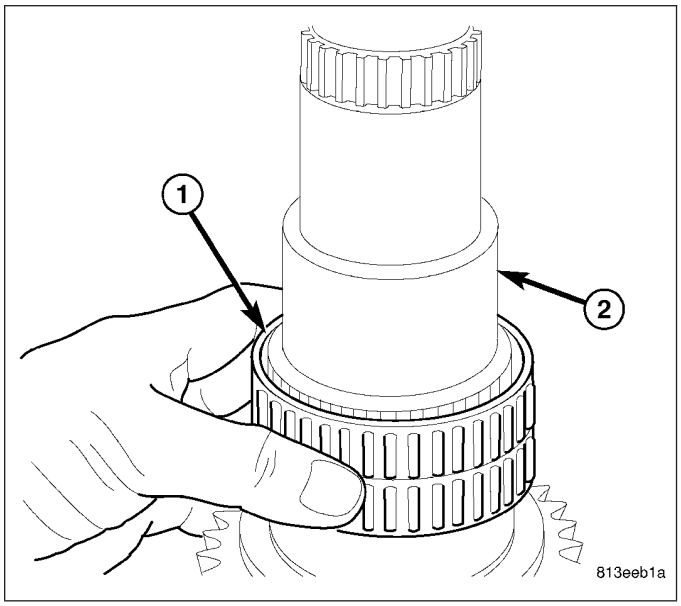

COUNTERSHAFT

NOTE: Bearings are the only component serviced on the countershaft.

1. Remove countershaft rear housing bearing with Puller 6444 (1), Button 8513A (2), Puller Jaws 9597 (3) , Puller Collar 6444-8 (4), Puller Rods 6444-3 and Puller Flange 6444-1. Position Puller Jaws 9597 around bearing and puller flange. Position puller collar around the puller jaws. Tighten the puller bolt and remove countershaft bearing.
2. Remove countershaft first/reverse gear bearing oil slinger from countershaft.

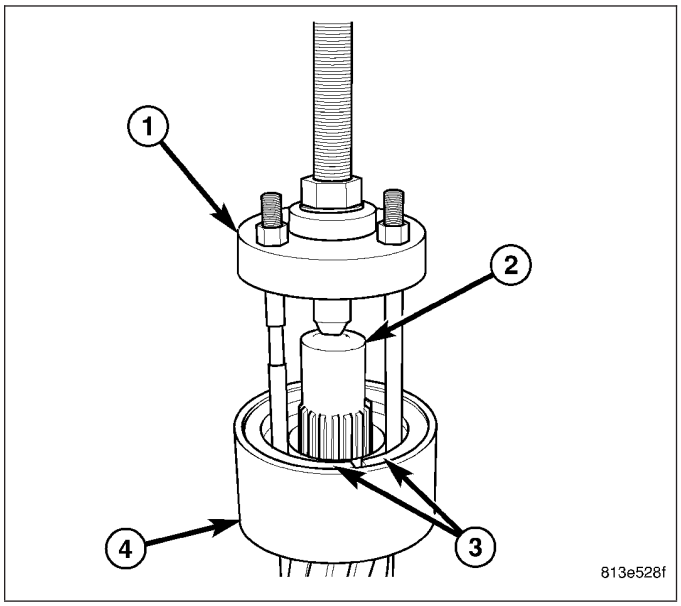

3. Remove countershaft front housing bearing with Puller 6444 (1), Puller Collar 6444-8 (2), Puller Jaws 9597 (3), Puller Rods 6444-3 and Puller Flange 6444-1. Position puller jaws around bearing and puller flange. Position puller collar around the puller jaws. Tighten the puller bolt and remove countershaft bearing.

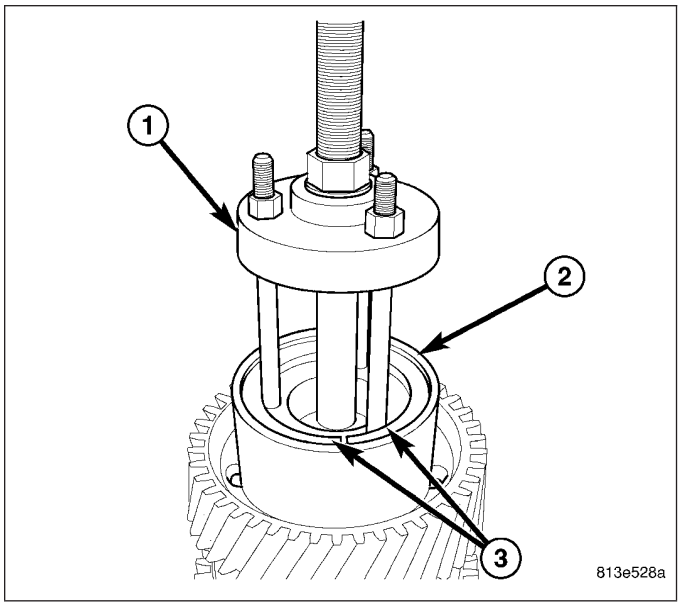

INPUT SHAFT

1. Remove input shaft (1) bearing with Puller C-293 (2) and Adapters C-293-47 (3).
2. Remove input shaft mainshaft bearing gasket.

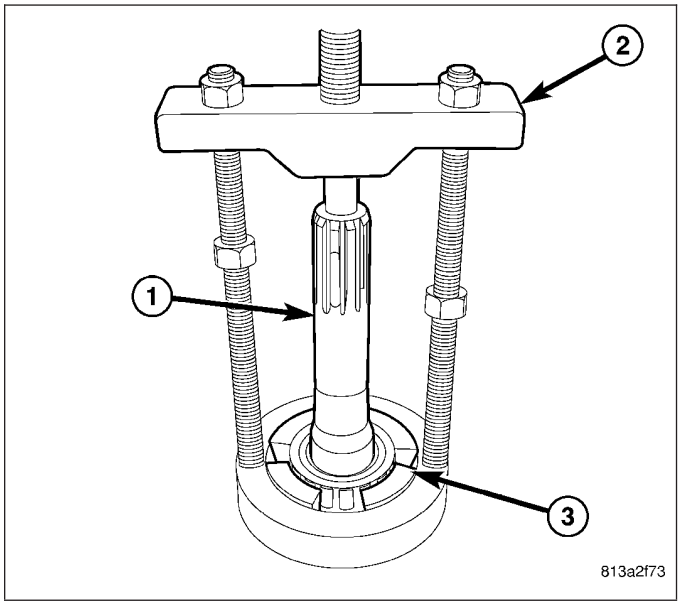

3. Position input shaft (1) mainshaft bearing seal (2) in a vice then twist input shaft (1) out of the seal (2).

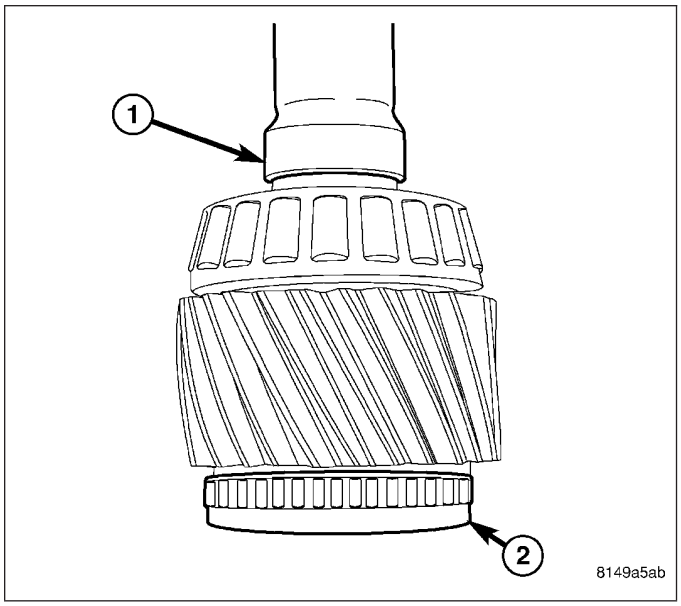

REAR HOUSING

1. Remove countershaft bearing cup and mainshaft bearing cup with Puller 9593 (1) installed in cup (2).

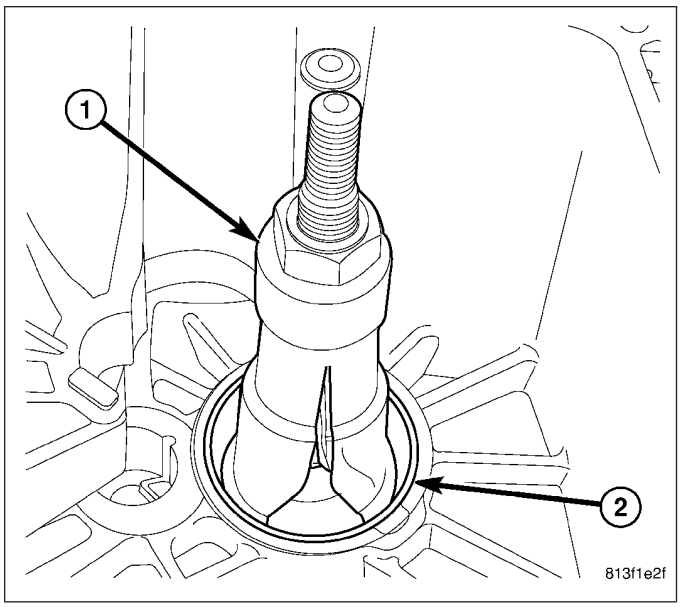

2. Install Remover 8915 (1) on puller (2) and tighten remover nut (3) to pull cups out of the housing.

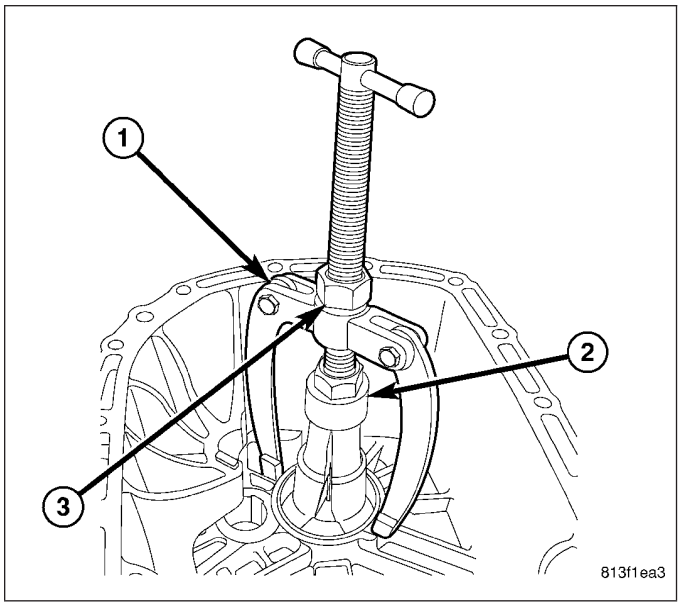

3. Remove output shaft seal (1) from housing (2) with seal pick.

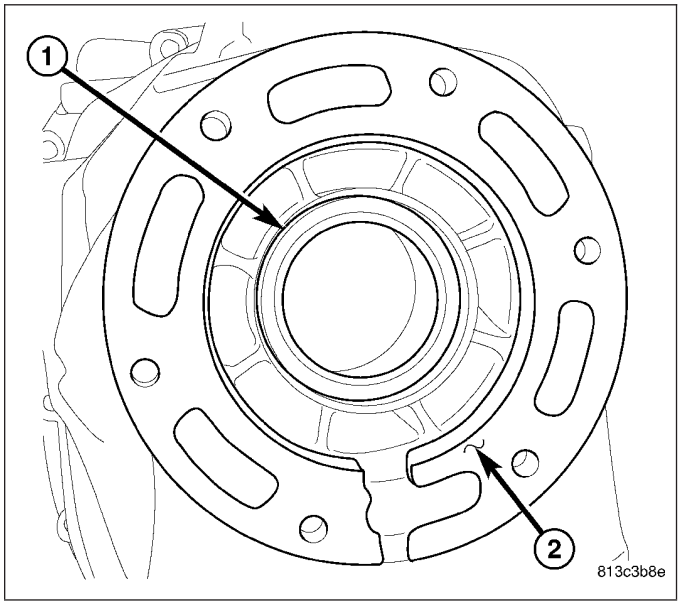

FRONT HOUSING

1. Remove countershaft bearing cup and mainshaft bearing cup with Puller 9593 (1) installed in cup (2).

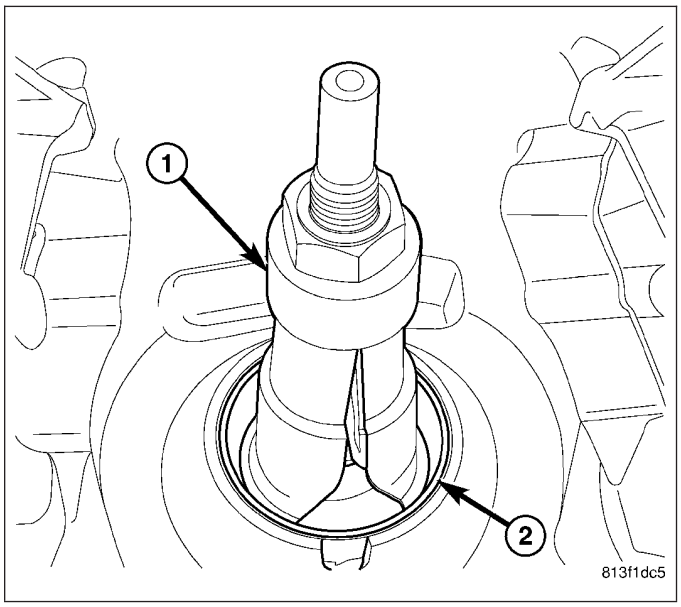

2. Install Remover 8915 (1) on puller (2) and tighten remover nut (3) to pull cups out of the housing. Then remove end-play shims from bearing bores and oil supply washer from mainshaft bearing bore.

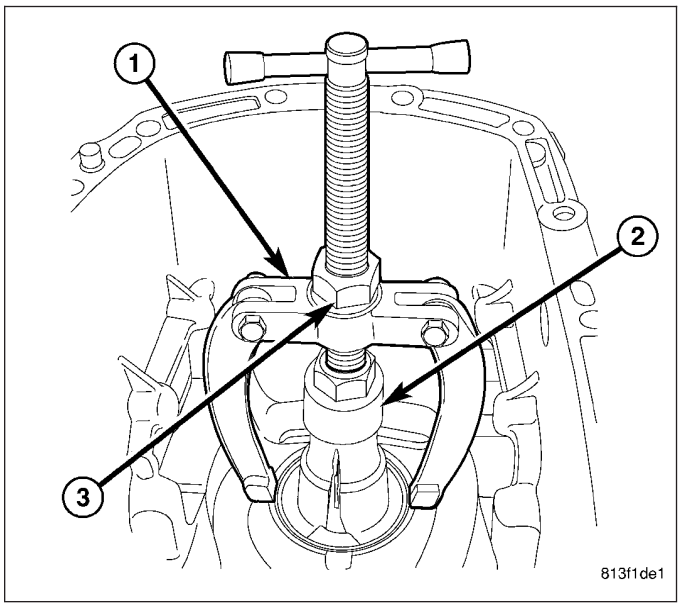

3. Remove input shaft retainer (1) bolts (2) and remove retainer.

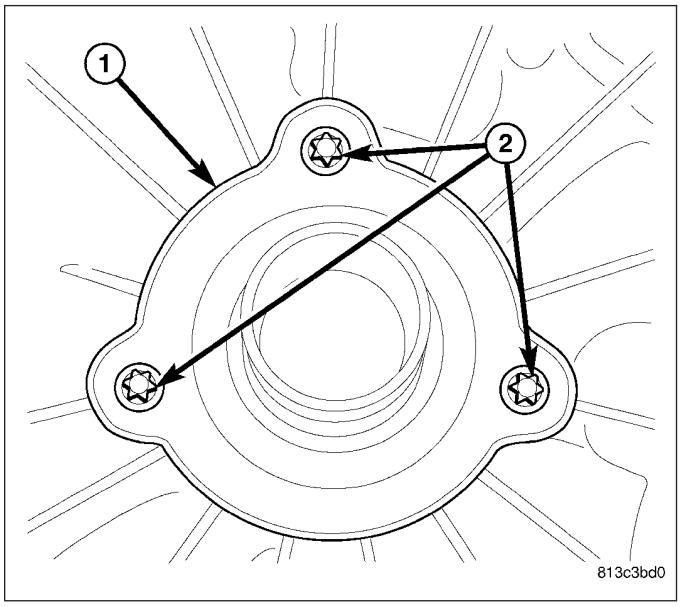

4. Remove input shaft seal (1) from retainer bore (2) with a seal pick.

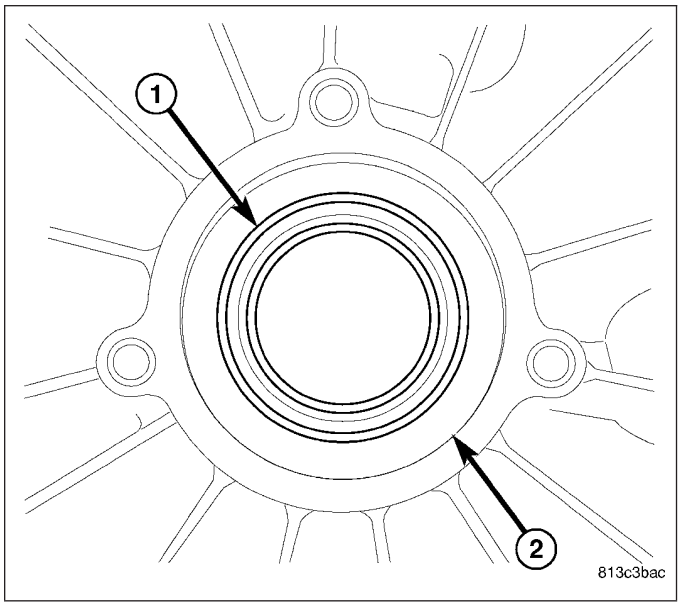

CLEANING

Clean gears, shafts, shift components and transmission housings with a standard parts cleaning solvent. Do not use acid or corrosive base solvents. Dry all parts except bearings with compressed air.

Clean shaft bearings with a mild solvent such as MOPAR® degreasing solvent, Gunk® or similar solvents. Do not dry the bearings with compressed air. Allow the bearings to either air dry or wipe them dry with clean shop towels.

INSPECTION

NOTE: Minor corrosion, nicks, or pitting can be smoothed with 400 grit emery and polished out with crocus cloth.

Bearings: Inspect for worn, chipped, cracked, flat-spotted or brinnelled.

Gears: Inspect for worn, chipped or cracked teeth. Inspect bearing surfaces for wear or flat-spotted.

Mainshaft: Inspect for worn splines, snap ring grooves and threads.

Countershaft: Inspect all gears for worn, chipped or cracked teeth (1). Inspect all bearings (2) and bearing surfaces for ware or flat-spotted. **The countershaft is serviced as an assembly, except for bearings.**

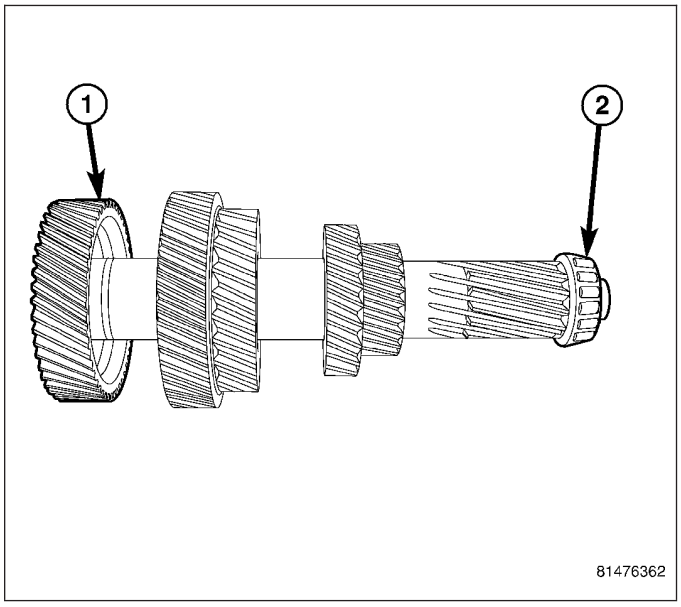

Synchronizer components: Inspect for worn, chipped or cracked teeth and burned or flaking off friction material. **Synchronizer are serviced as an assembly.**

Input Shaft: Inspect shaft (1), bearing (2) surfaces for wear or flat-spotted. Inspect fifth gear (3) for worn, chipped or cracked teeth. Inspect splines (4) for wear and chips.

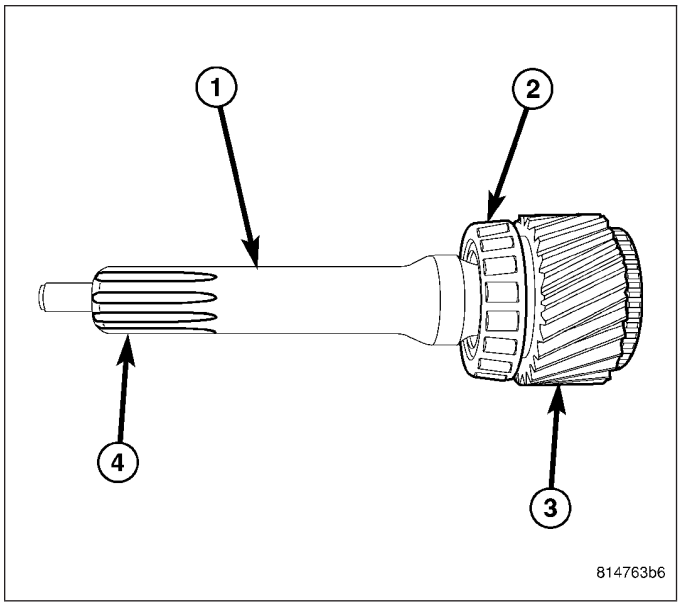

Shift forks and Rails: Inspect shift forks (1) and shoes for wear and distortion. Check fit of fork shoes in synchronizer sleeve to ensure parts fit and work smoothly. Inspect shift rails (2), for wear and distortion. **5-6 shift fork shoes (3) are serviced separately.**

Housing/Tail housing: Inspect sealing and mating surfaces are free of burrs and nicks. Inspect alignment dowels are tight and in good condition. Inspect shift rail bushings for wear.

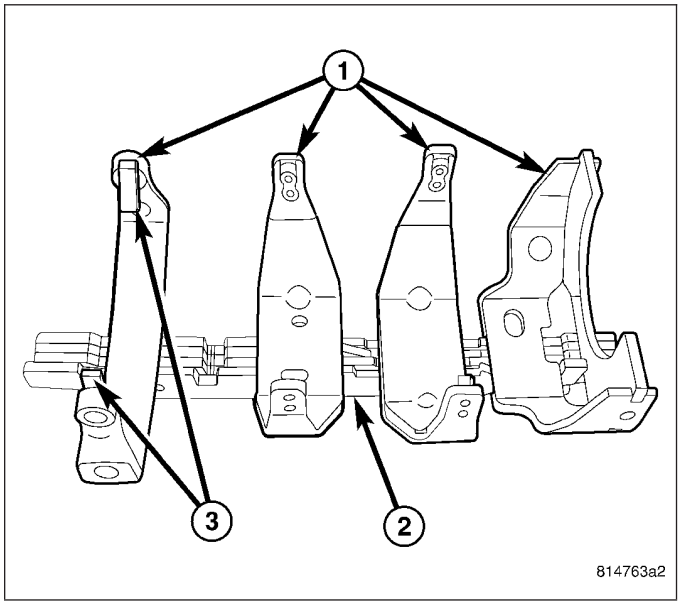

Input Retainer: Inspect release bearing slide surface (2) and sealing surface.

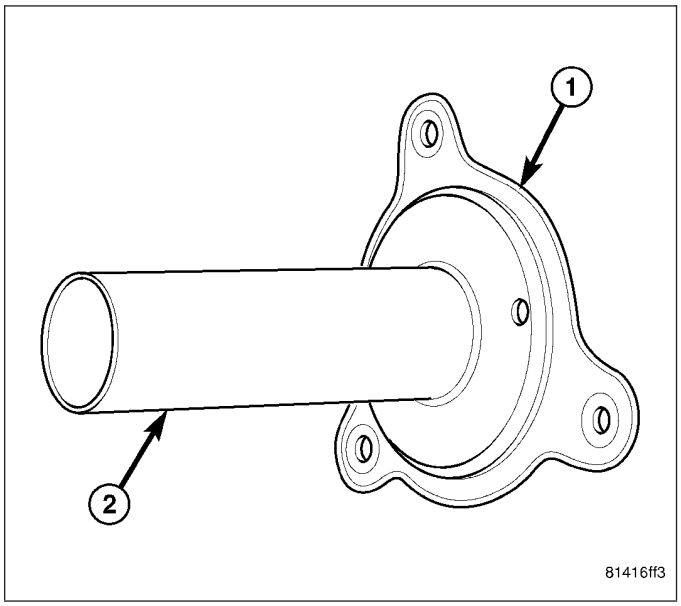

ASSEMBLY

WARNING: Use welding gloves when handling heated components. Failure to follow these instructions will result in personal injury.

CAUTION: A bearing heater is used to assembly some components. Use only a bearing heater/hot plate and follow manufactures instructions. Heat components to 100 - 177 Celsius (212° Min - 350° Max Fahrenheit). Never use an open flame to heat components. Never leave components on heater for and extended amount of time. If component is discolored after heating the component has been overheated and must not be used. Failure to follow these instructions will result in component damage.

INPUT SHAFT

1. Heat input shaft bearing (1) on bearing heater (2).

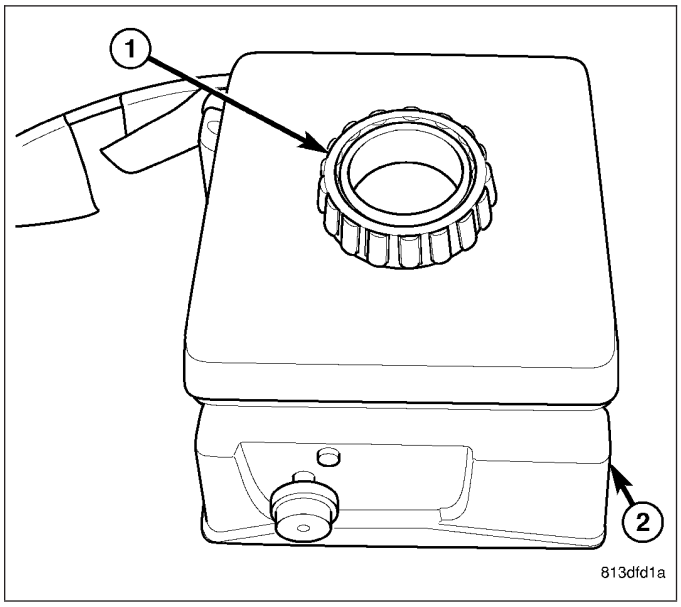

2. Using welding gloves, install bearing (2) on input shaft (1).

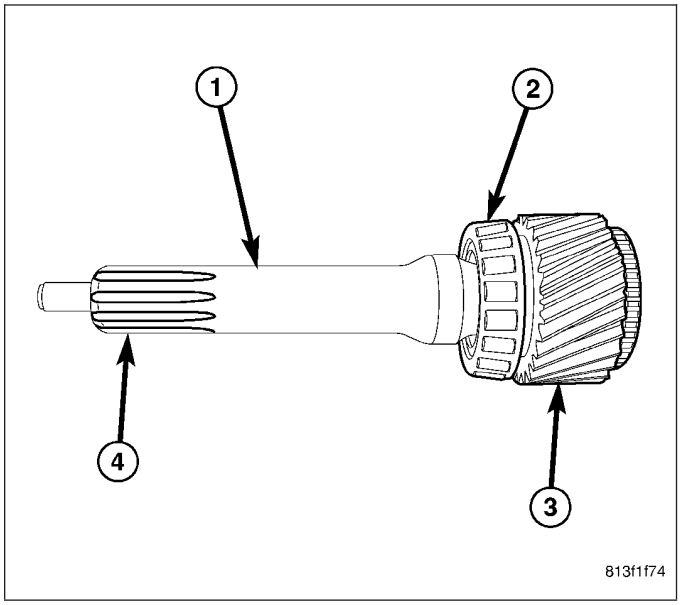

3. Push input shaft mainshaft bearing seal (1) on the end of fifth gear (2).

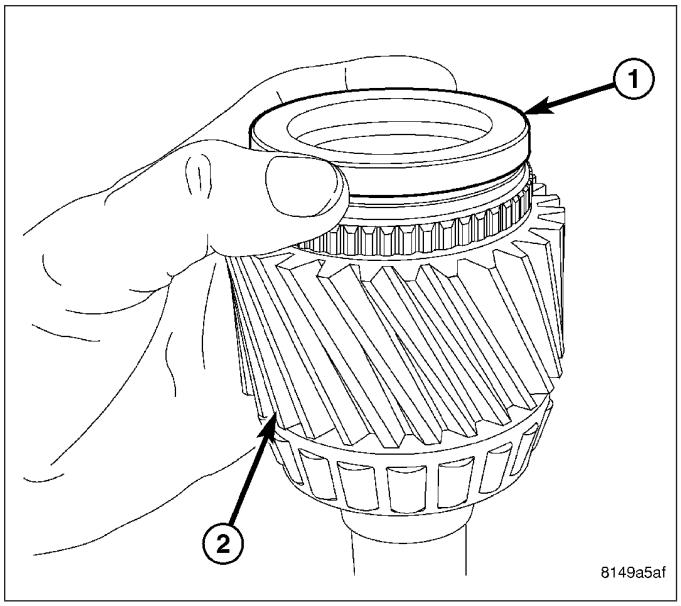

COUNTERSHAFT

1. Install first/reverse gear bearing oil slinger on the rear housing end of the countershaft.
2. Heat rear housing countershaft bearing (1) on bearing heater (2).

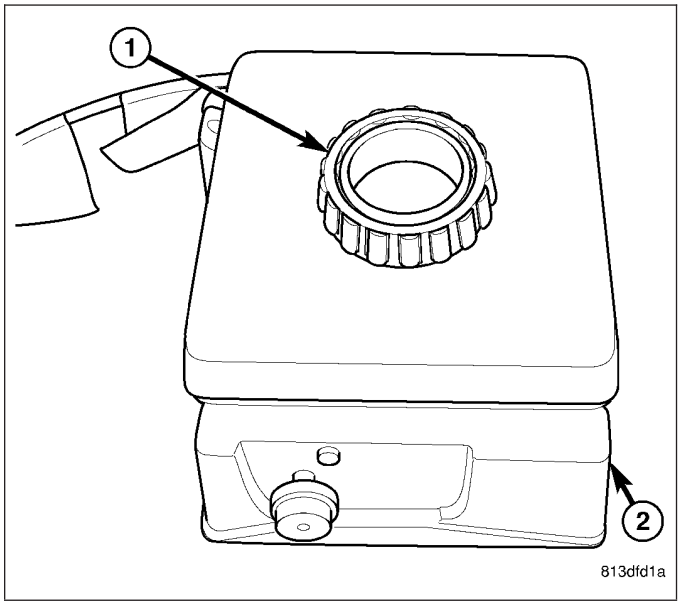

3. Using welding gloves, install countershaft bearing (1) on countershaft (2).

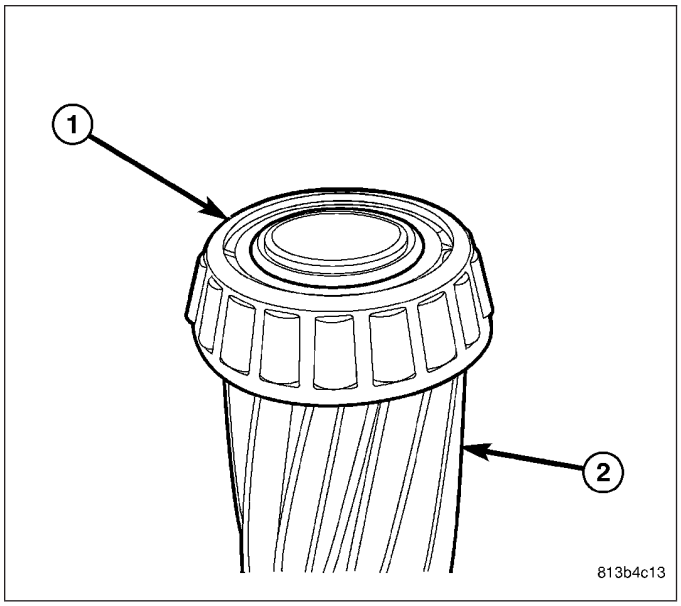

4. Heat front housing countershaft bearing (1) on bearing heater (2).

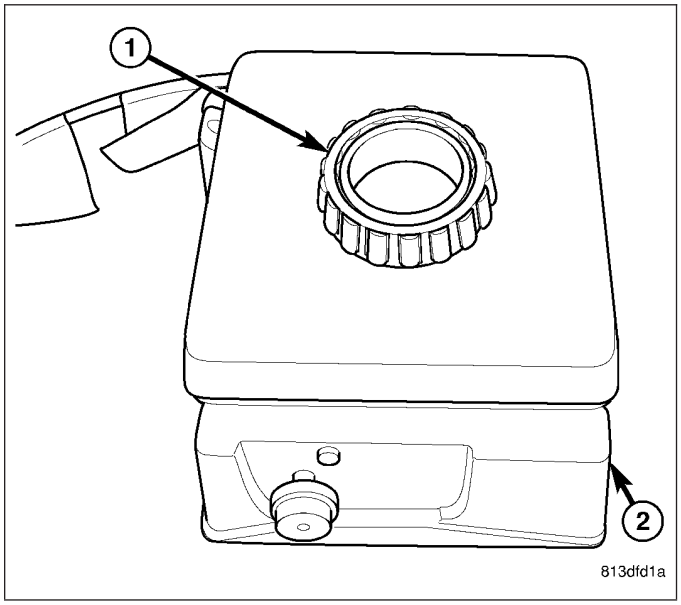

5. Using welding gloves, install front housing countershaft bearing (1) on countershaft (2).

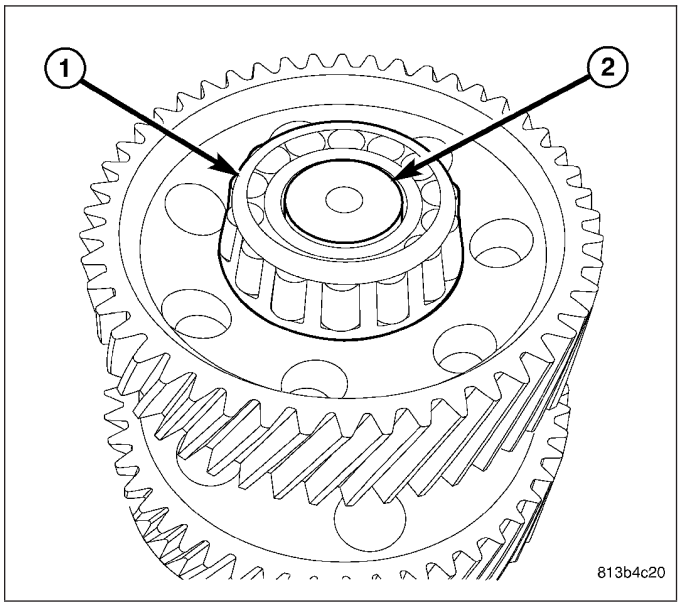

MAINSHAFT

1. Position mainshaft in Fixture 9605 mounted in vise.
2. Install second gear bearing (1) on mainshaft (2).

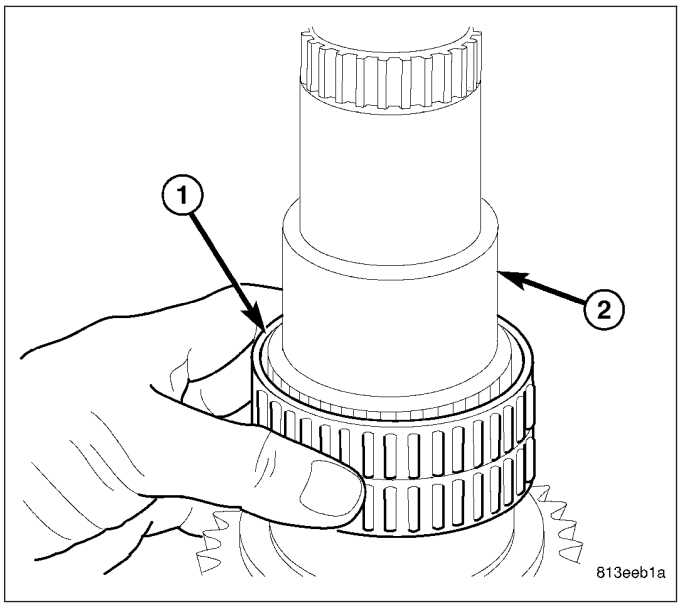

3. Install second gear (1) on mainshaft (2).

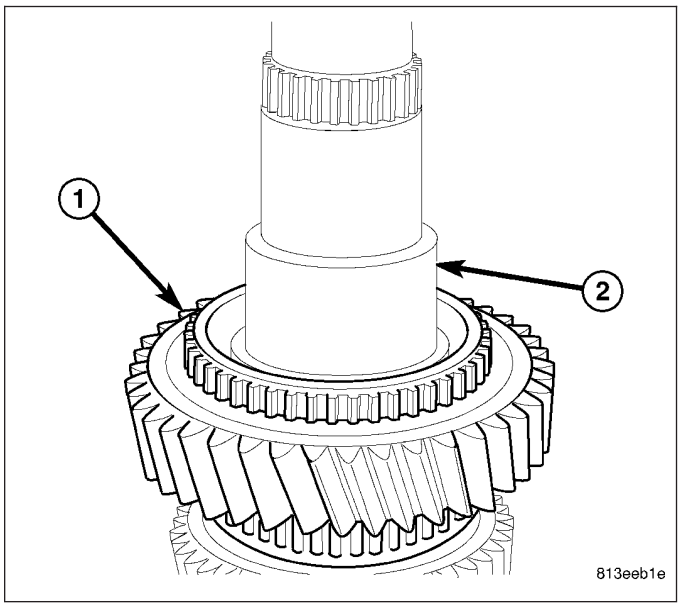

4. Install second gear stop ring (1) with teeth pointing up on second gear (2).

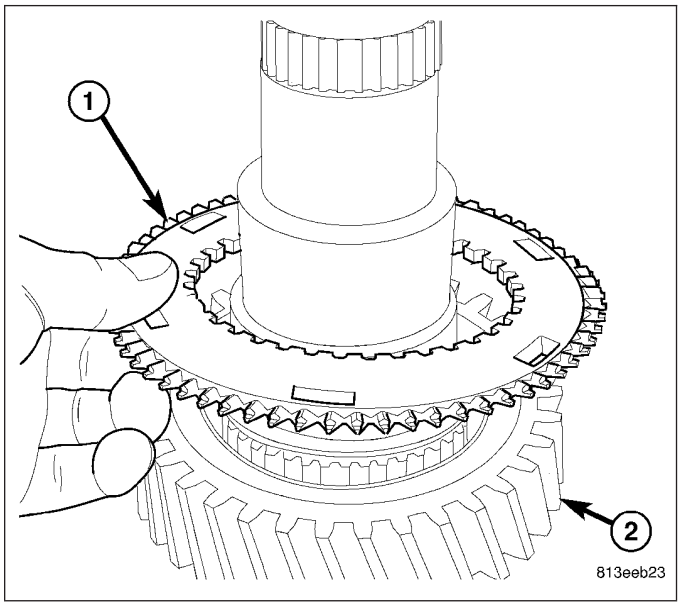

5. Install second gear inner friction ring (1) on stop ring (2).

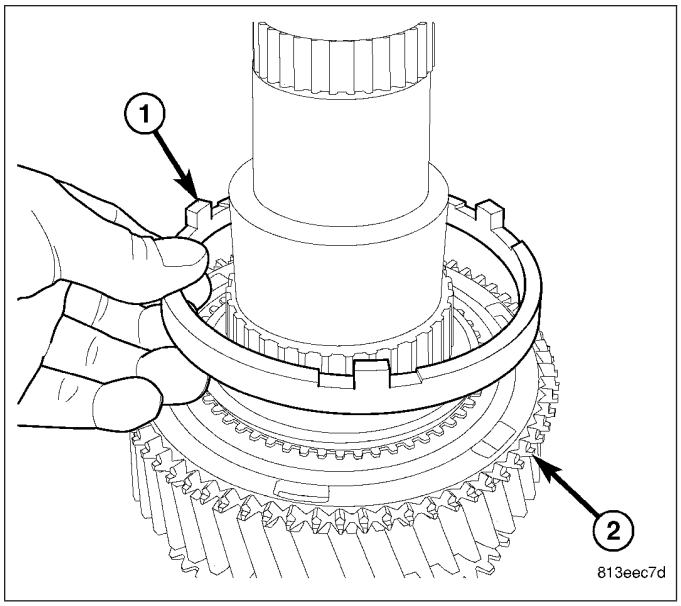

6. Install second gear outer friction ring (1) on stop ring (2).

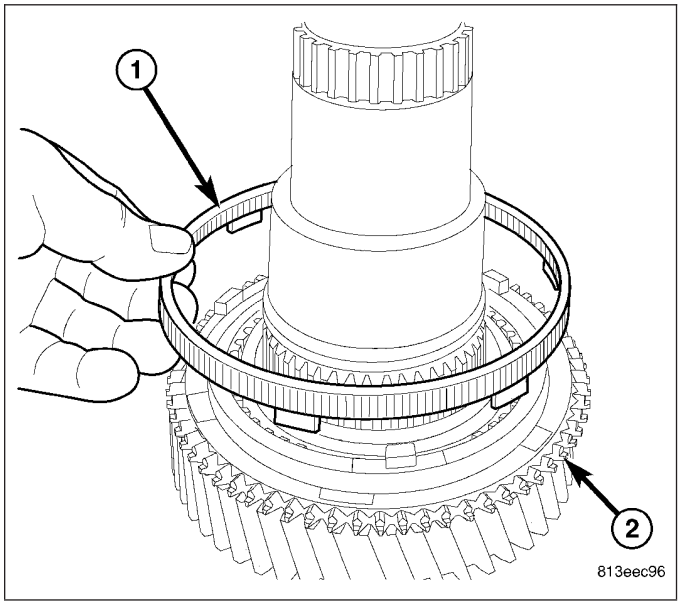

7. Install second gear blocker ring (1) on stop ring (2).

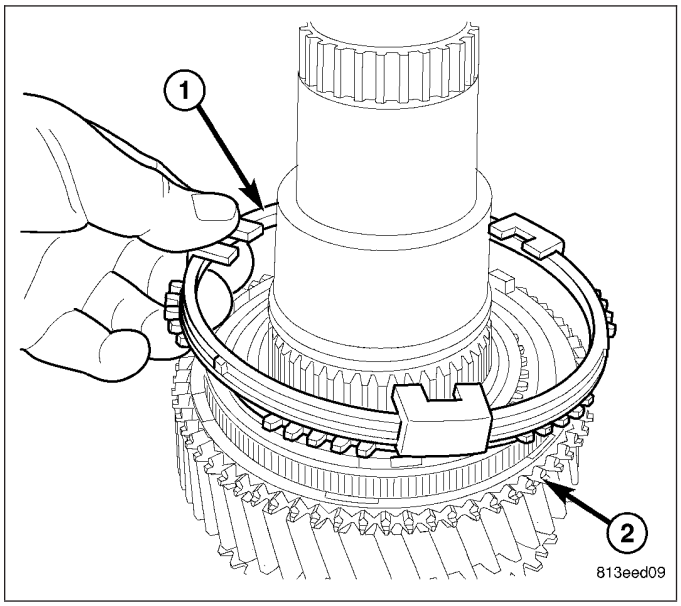

8. Install 1-2 synchronizer hub (1) on mainshaft and synchronizer rings (2).

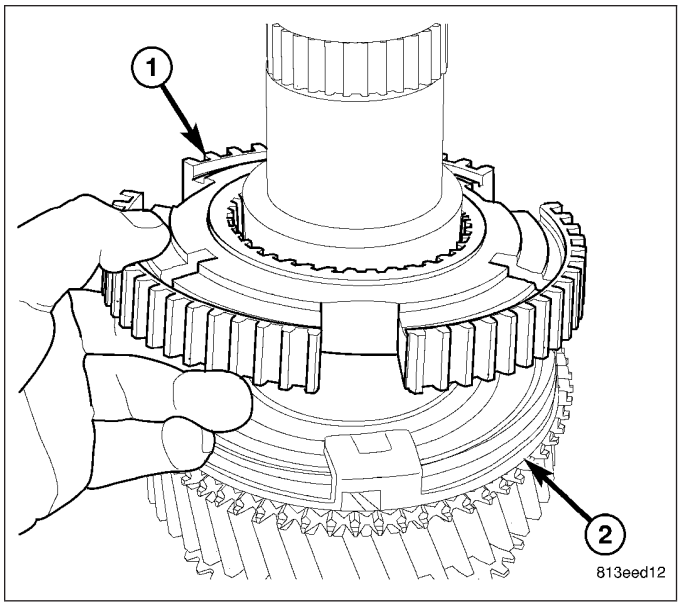

9. Install 1-2 synchronizer hub (1) and hub snap ring (2).

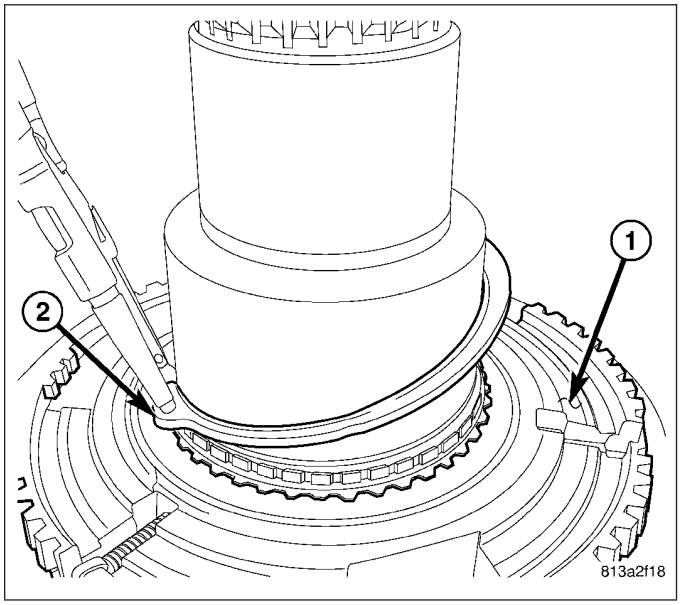

10. Install 1-2 synchronizer sleeve (3) on the hub (2) and push sleeve to the bottom of the hub.

NOTE: 1-2 synchronizer sleeve (3) and hub (2) have one small tooth. They must be aligned to install synchronizer sleeve (3) on hub (2).

11. Install 1-2 synchronizer detents and springs (1) into synchronizer hub (2) slots. Then push detents behind synchronizer sleeve (3).

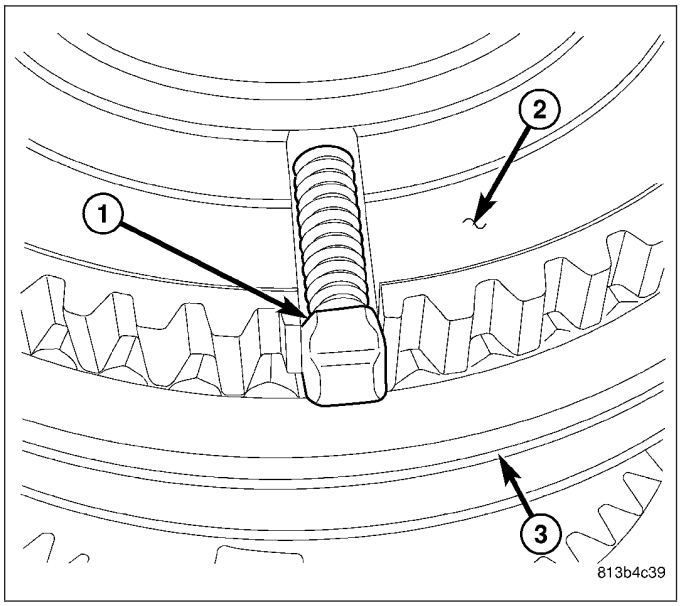

12. Install first gear blocker ring (1) on synchronizer hub (2).

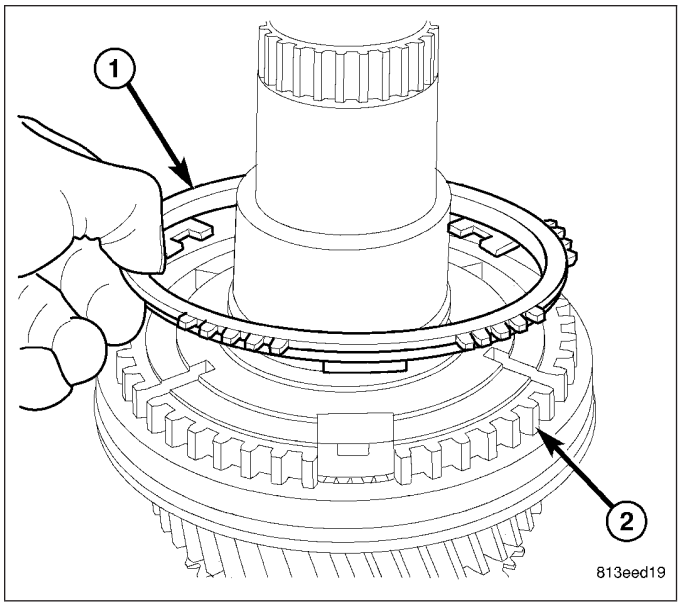

13. Install first gear outer friction ring (1) on synchronizer hub (2).

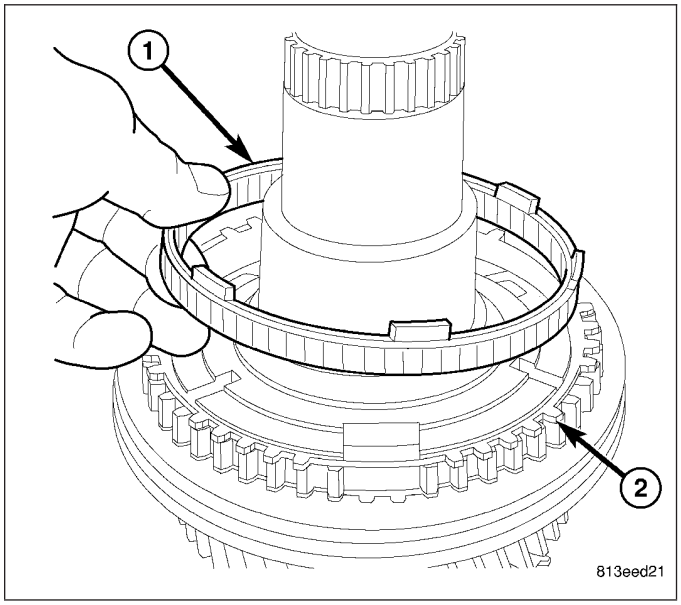

14. Install first gear inner friction ring (1) on synchronizer hub (2).

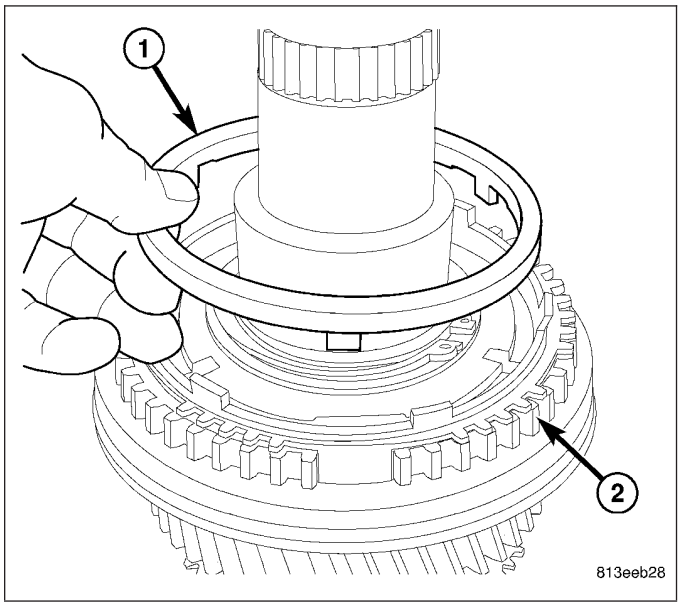

15. Install first gear stop ring (1) with teeth pointing down on synchronizer rings and hub (2).
16. Hold first gear stop ring (1) on synchronizer rings (2) and center 1-2 synchronizer sleeve on the hub.

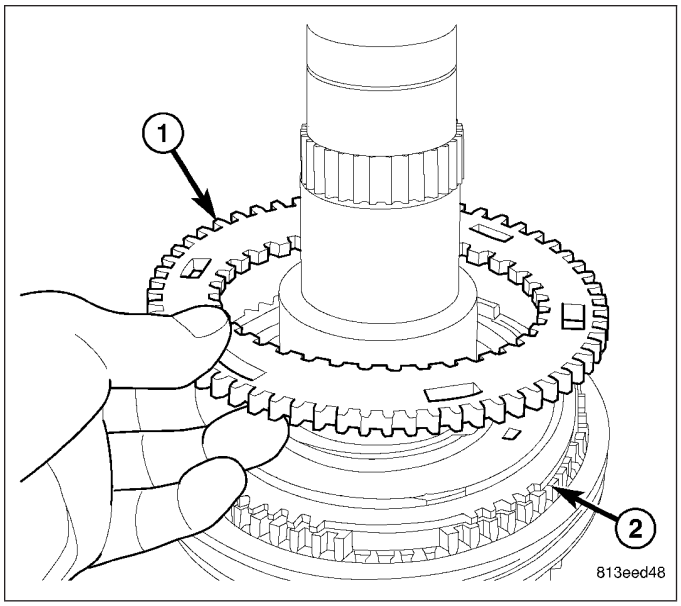

17. Install first gear (1) and bearing (2).

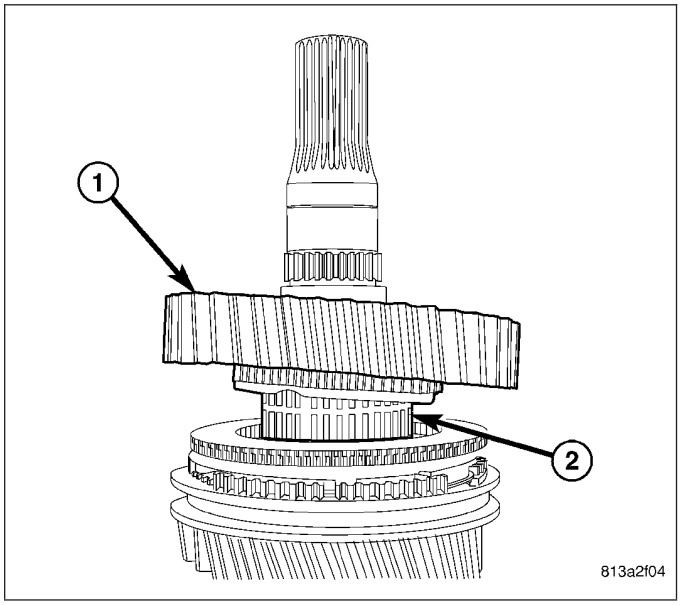

18. Heat thrust washer (1) and reverse gear bearing race (2) on bearing heater.

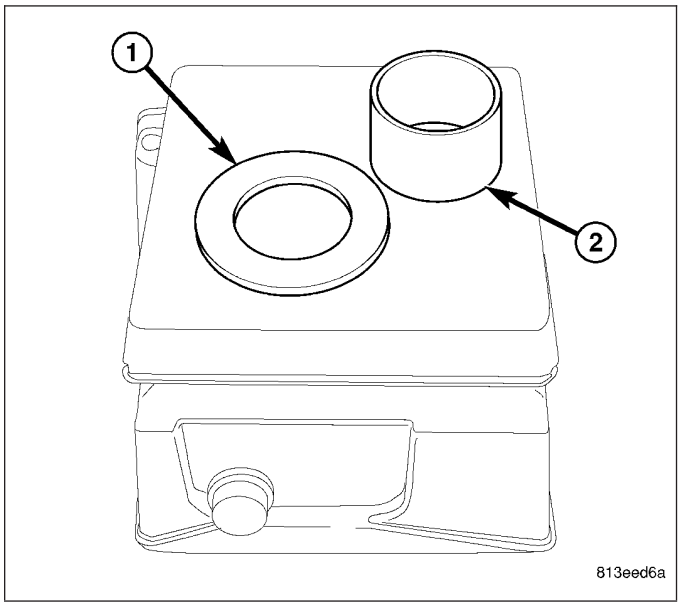

19. Using welding gloves, install thrust washer (2) and reverse gear bearing race (1) on mainshaft.

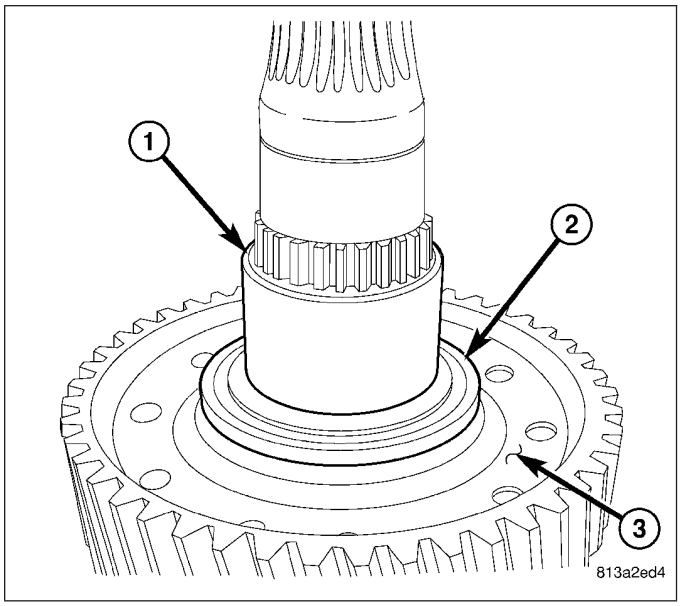

20. Install reverse gear (1) and bearing (2).

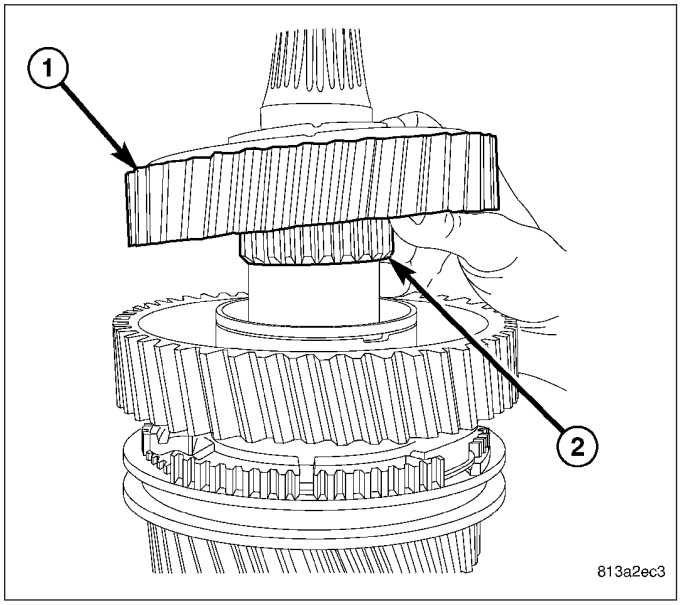

21. Install reverse gear inner friction ring (1) on reverse gear (2).

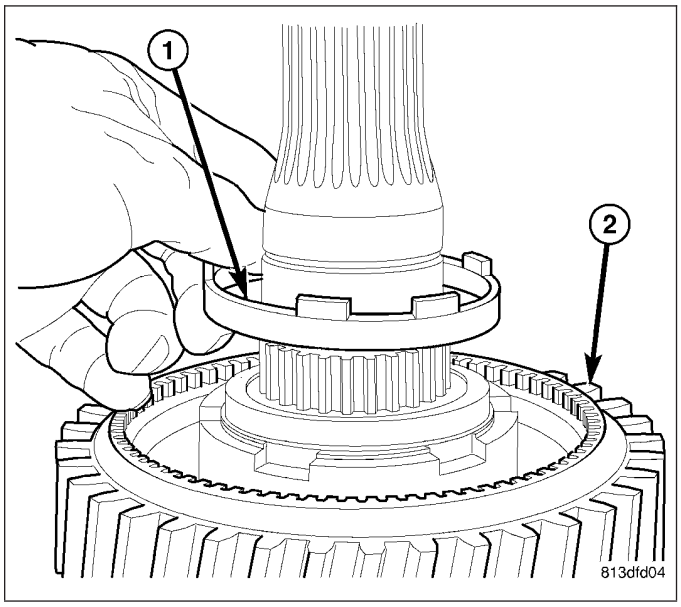

22. Install reverse gear outer friction ring (1) on inner blocker ring (2).

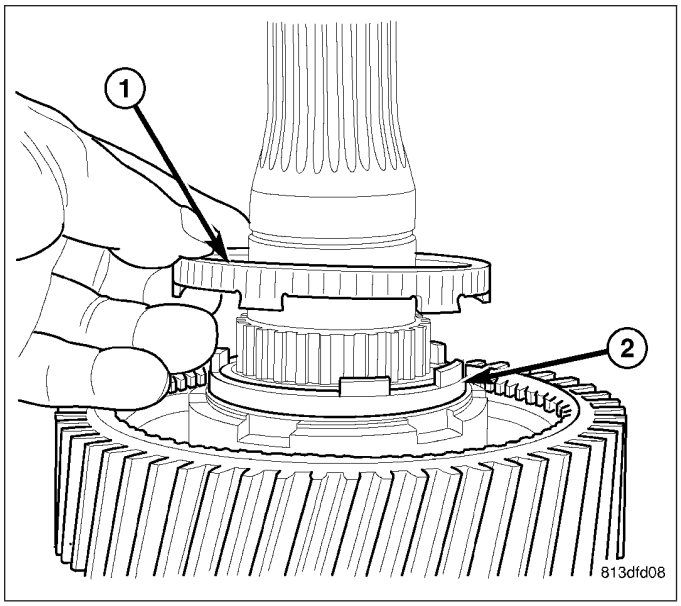

23. Install reverse gear blocker ring (1) on friction ring (2).

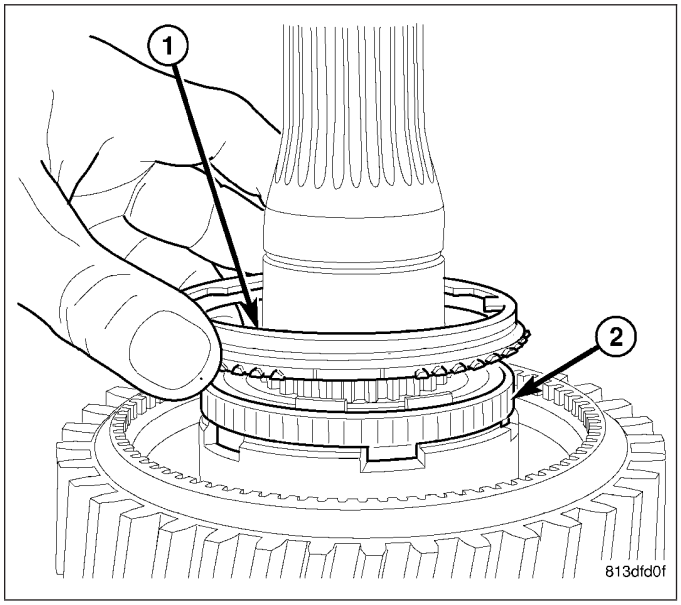

24. Install reverse gear synchronizer hub (1) with snap ring (2) on the top on mainshaft.

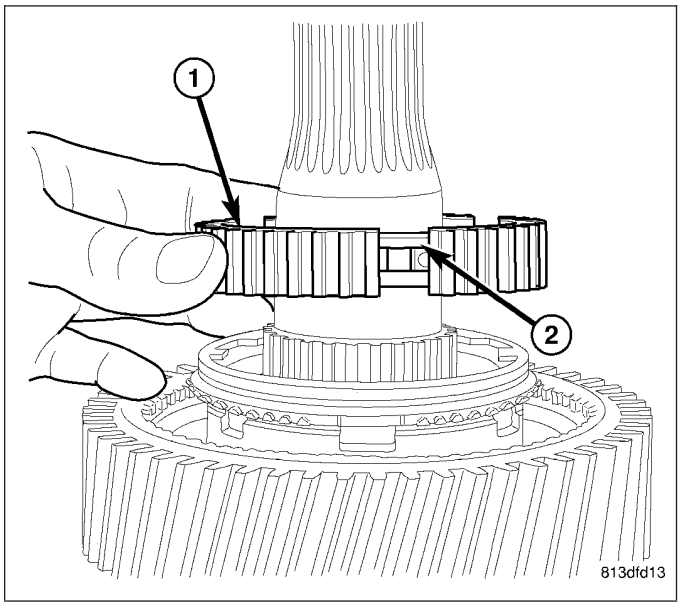

25. Heat mainshaft bearing (1) on bearing heater (2).

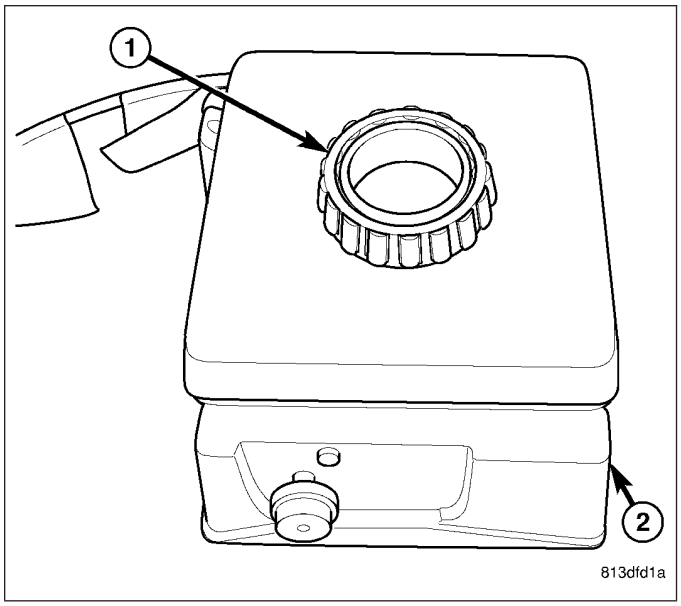

26. Using welding gloves, install mainshaft (1) bearing (2) on mainshaft.
27. On 4x4 transmission install mainshaft (1) bearing (2) snap ring.

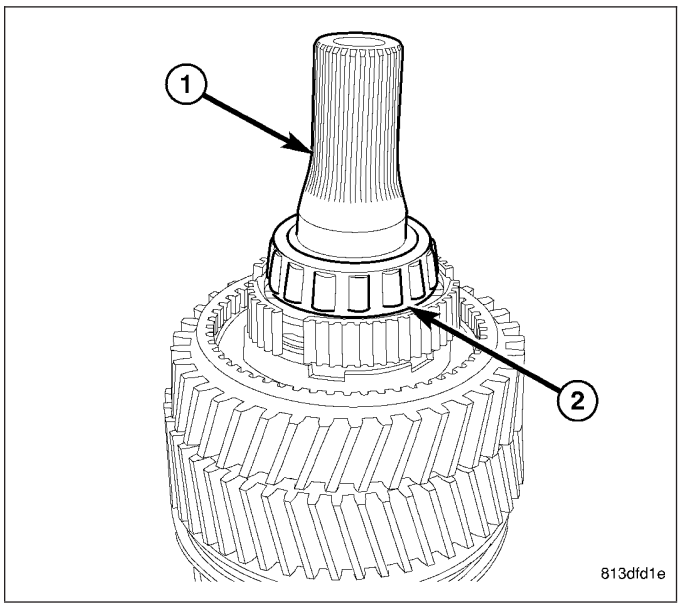

28. Install reverse synchronizer hub (1) detents (2).

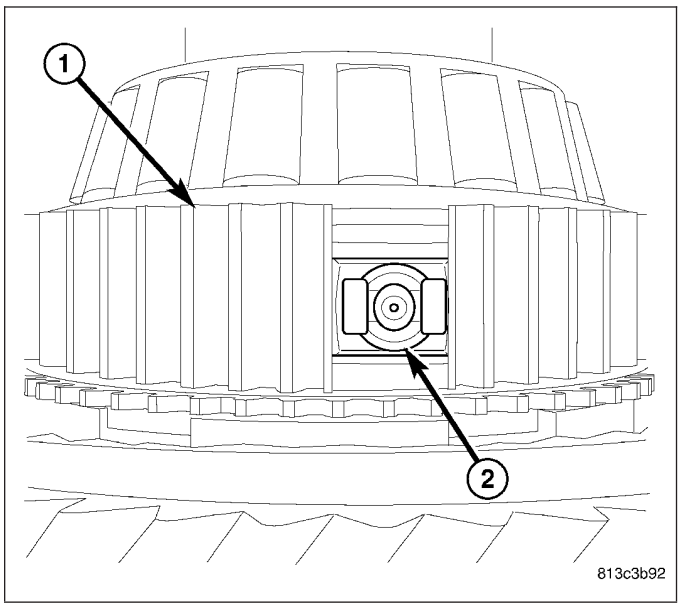

29. Install reverse gear (2) synchronizer sleeve (1) on hub and center sleeve on hub.

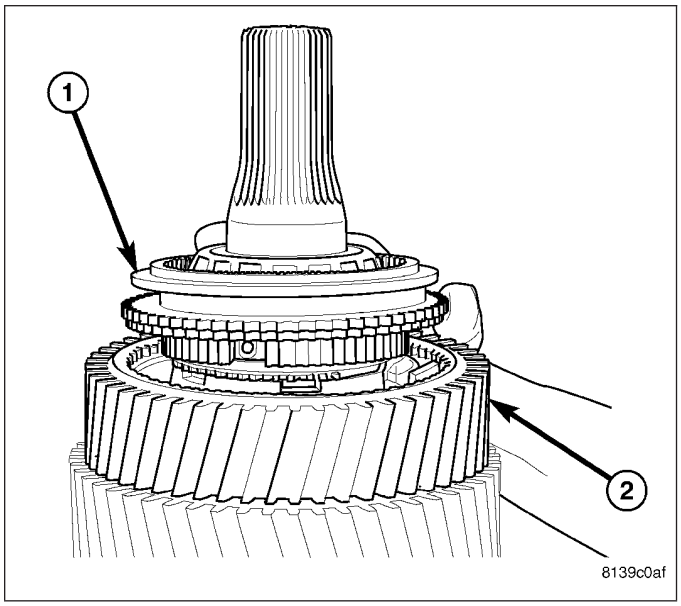

30. Turn mainshaft and Fixture 9605 over and secure in vise.
31. Install third gear bearing (1) on mainshaft (2).

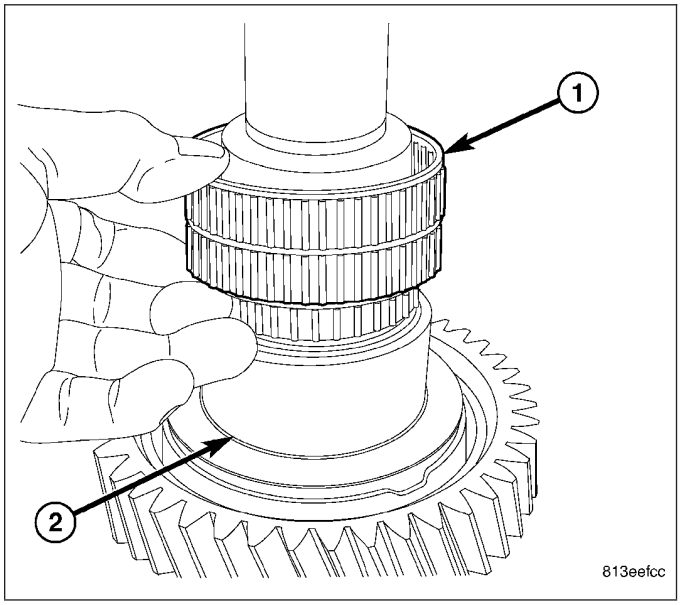

32. Install third gear (1) on mainshaft (2).

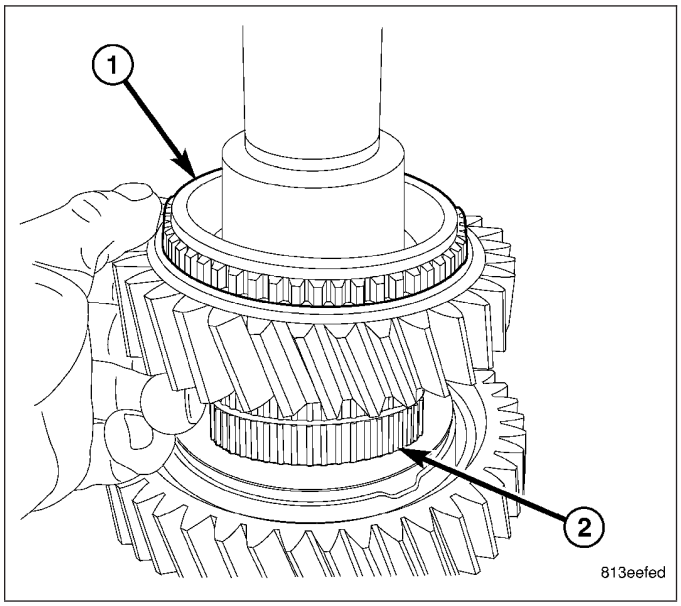

33. Install third gear stop ring (1) with teeth pointing up on third gear (2).

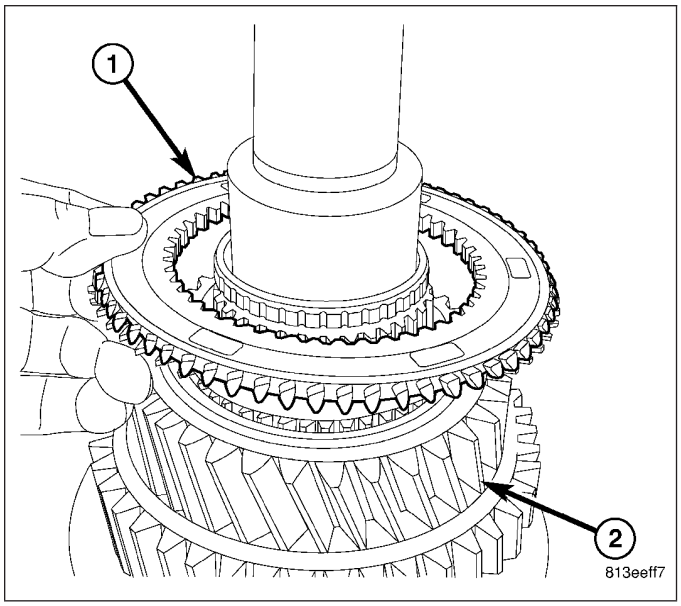

34. Install third gear inner friction ring (1) on stop ring (2).

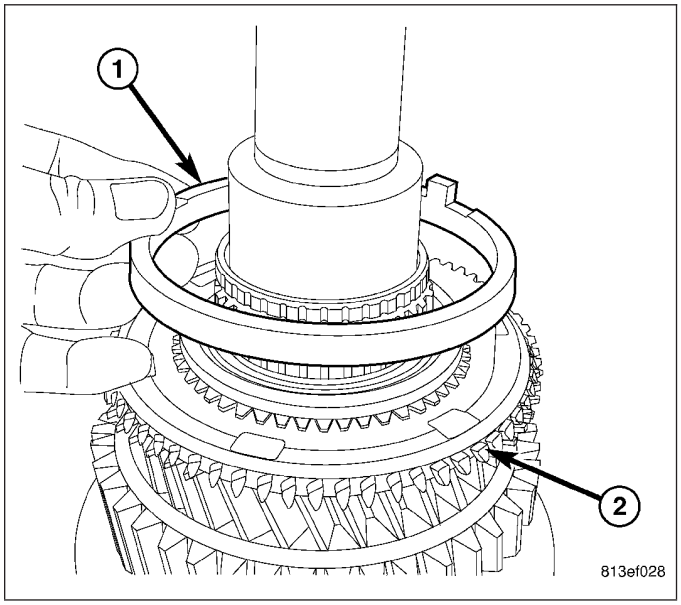

35. Install third gear outer friction ring (1) on stop ring (2).

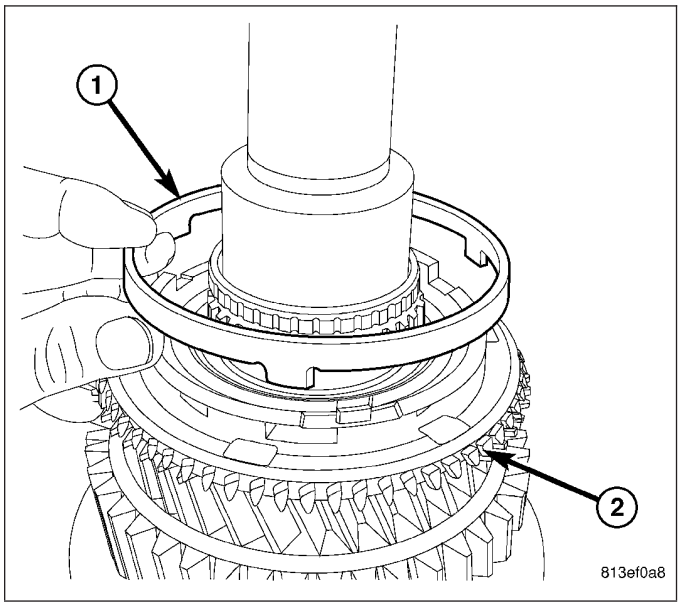

36. Install third gear blocker ring (1) on stop ring (2).

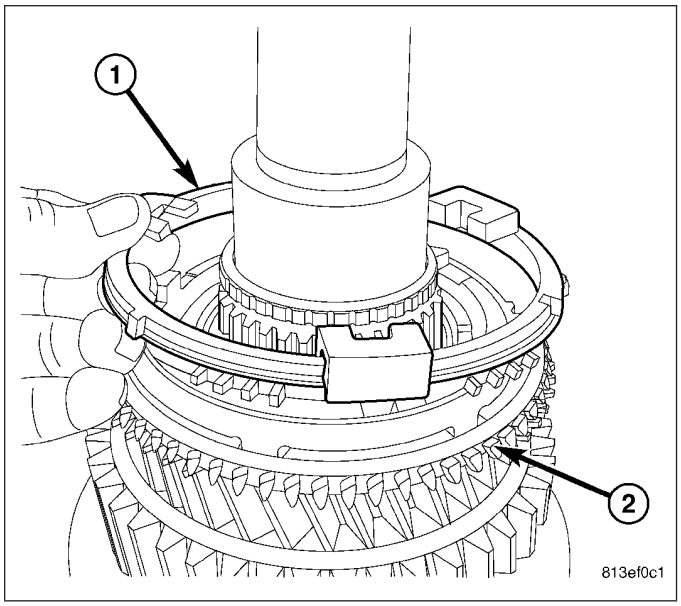

37. Install 3-4 synchronizer hub (1) on third gear synchronizer rings (2).

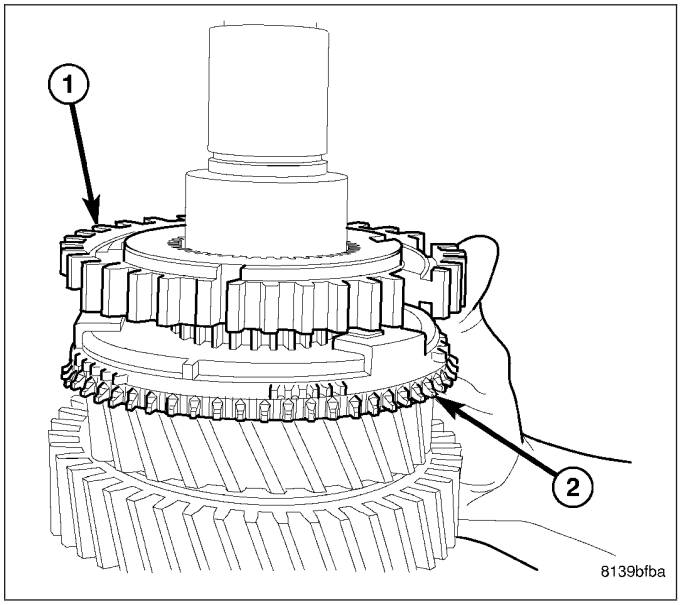

38. Install third gear synchronizer hub (1) snap ring (2).

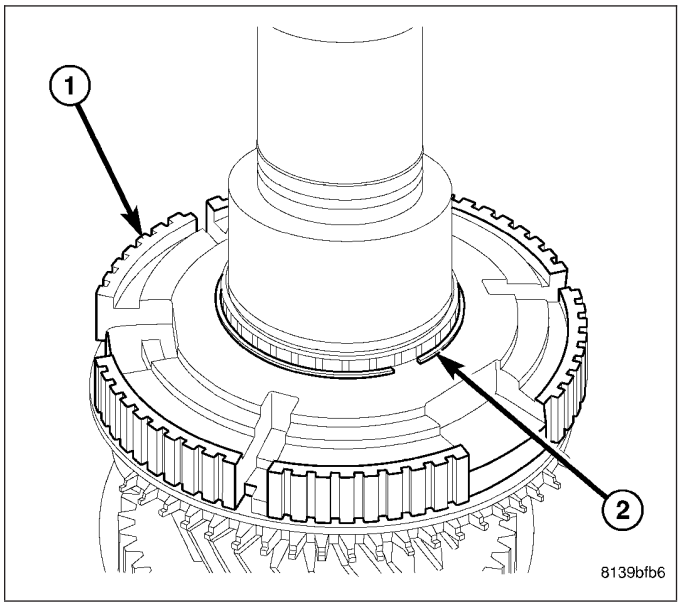

39. Install 3-4 synchronizer sleeve (3) on hub (2) and push sleeve to the bottom of the hub.

NOTE: 3-4 synchronizer sleeve (3) and hub (2) have one small tooth. They must be aligned to install synchronizer sleeve (3).

40. Install 3-4 synchronizer detents and springs (1) into synchronizer hub (2) slots. Then push detents (1) behind synchronizer sleeve (3).

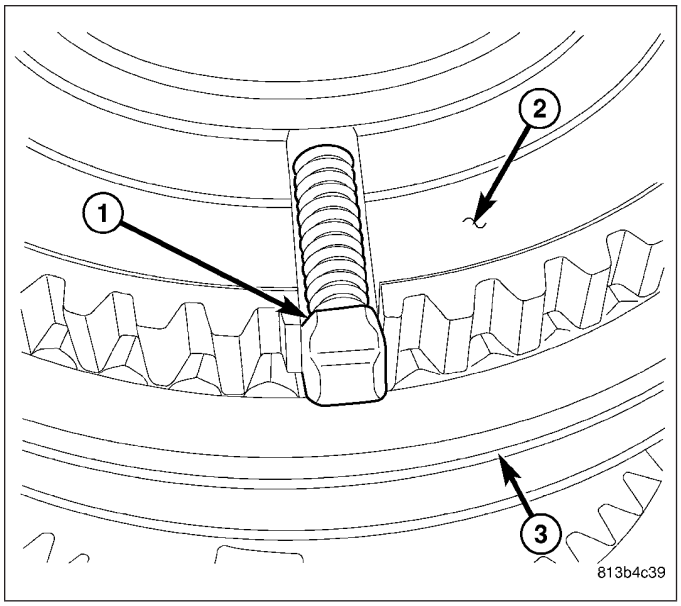

41. Install fourth gear blocker ring (1) on synchronizer hub (2).

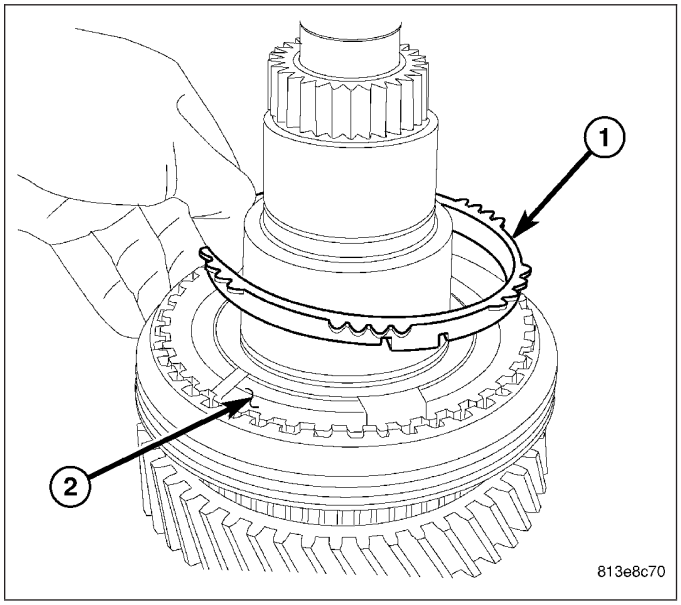

42. Install fourth gear outer friction ring (1) on synchronizer hub (2).

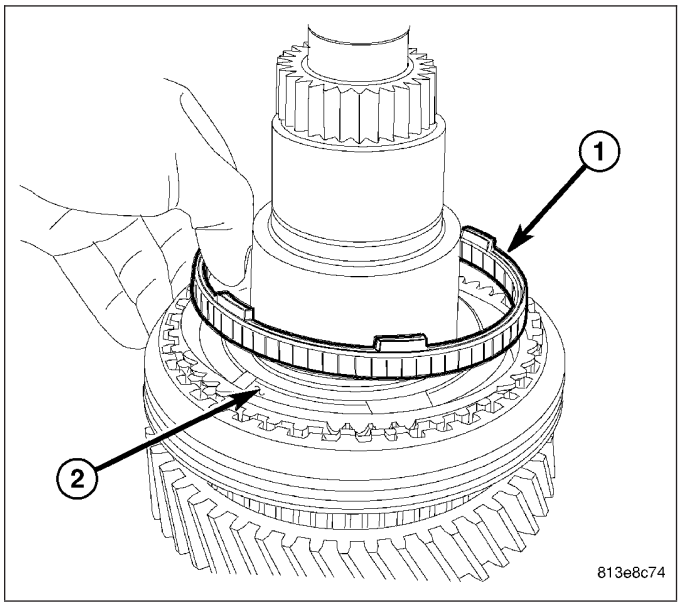

43. Install fourth gear inner friction ring (1) on synchronizer hub (2).

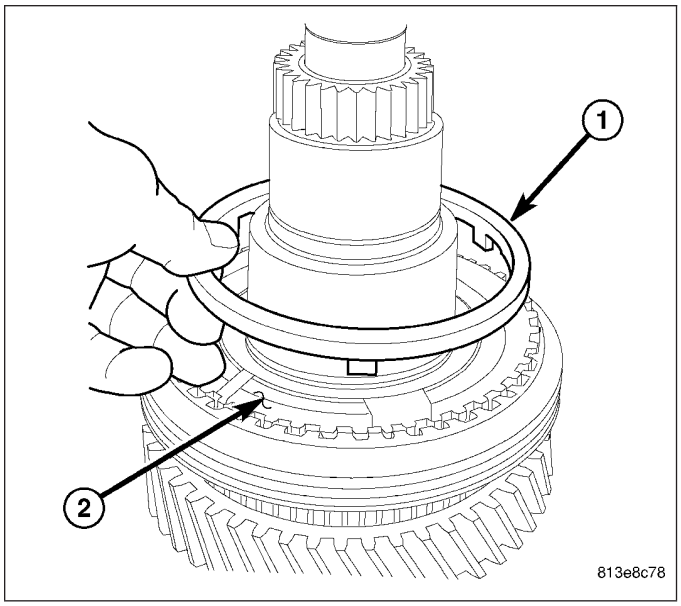

44. Install fourth gear stop ring (1) with teeth pointing down on synchronizer hub (2).
45. Hold fourth gear stop ring (1) on synchronizer hub (2) and center 3-4 synchronizer sleeve on hub.

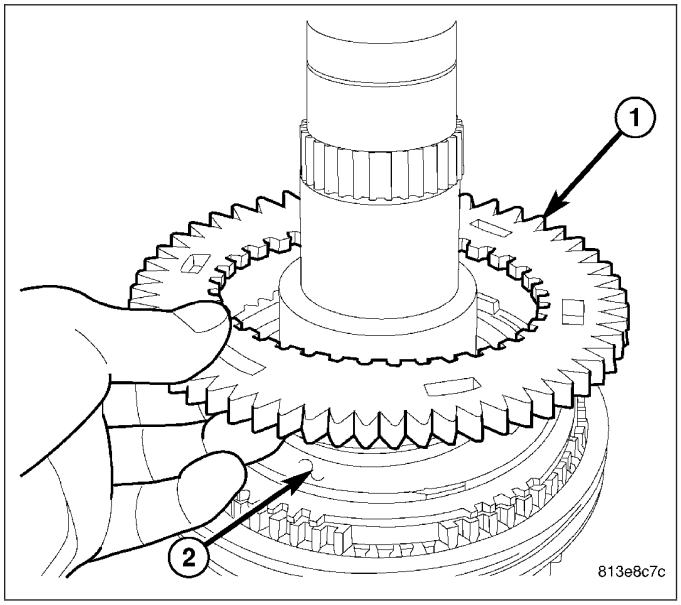

46. Install fourth gear (1) and bearing (2).

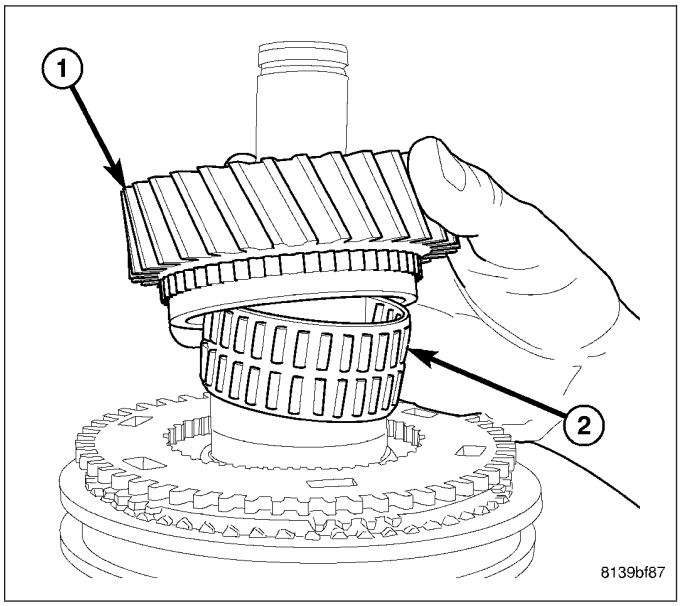

47. Heat fourth gear thrust washer (1) on bearing heater (2).

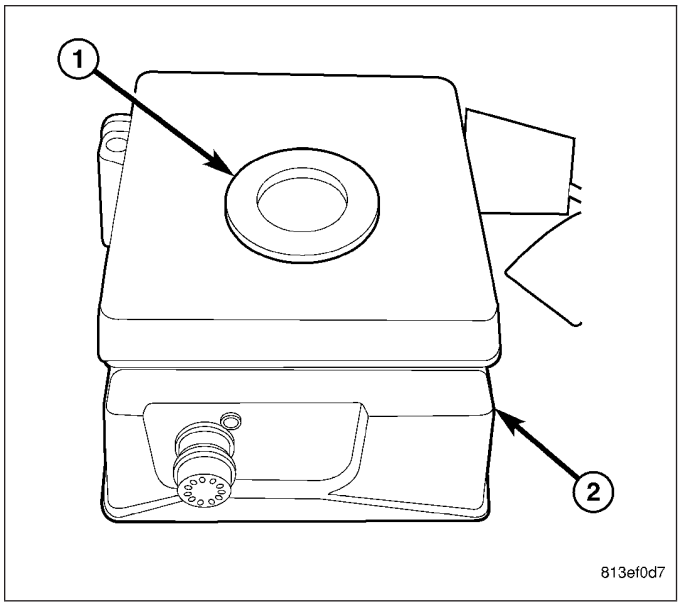

48. Using welding gloves, install fourth gear (1) thrust washer (2).

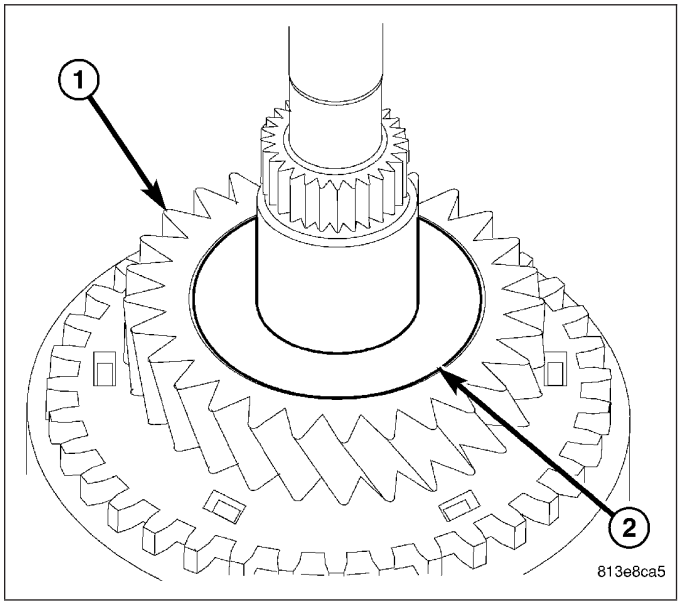

49. Install fourth gear (1) snap ring (2).

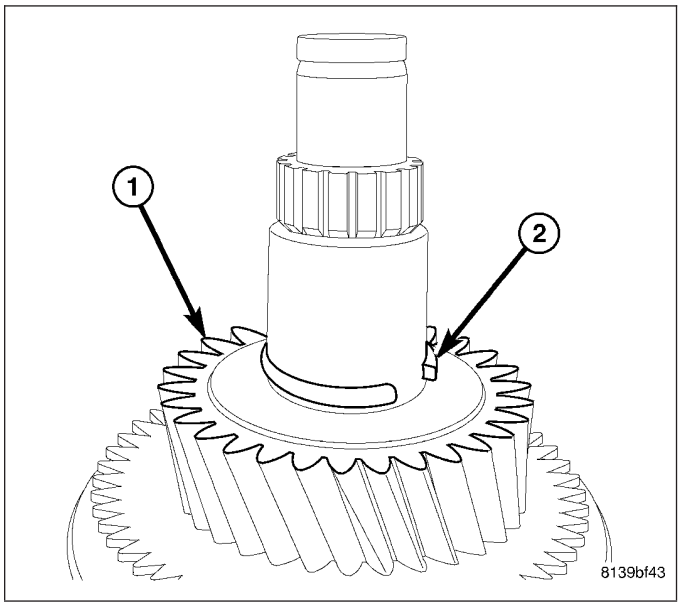

50. Install sixth gear (1) and bearing (2) on mainshaft (3).

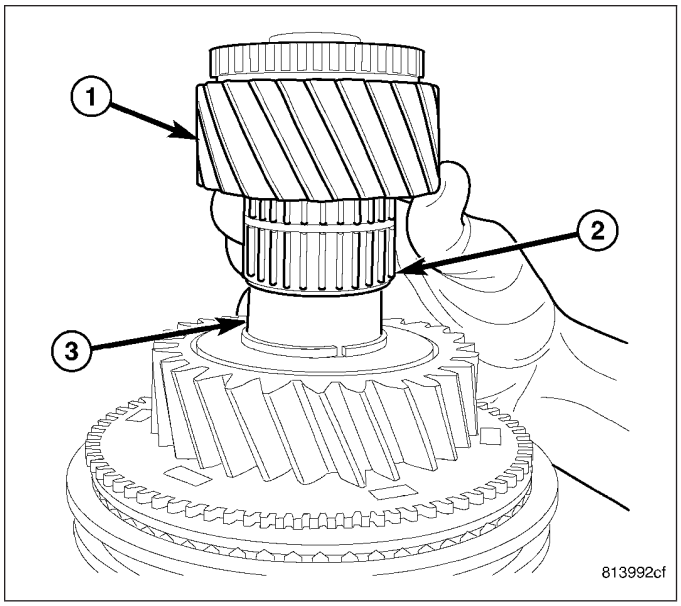

51. Install sixth gear stop ring (1) on sixth gear (2).

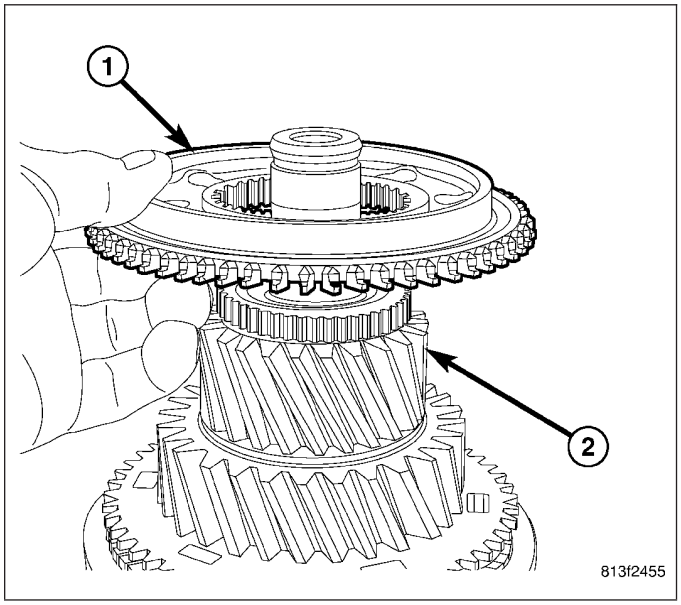

52. Install sixth gear friction ring (1) on stop ring (2).

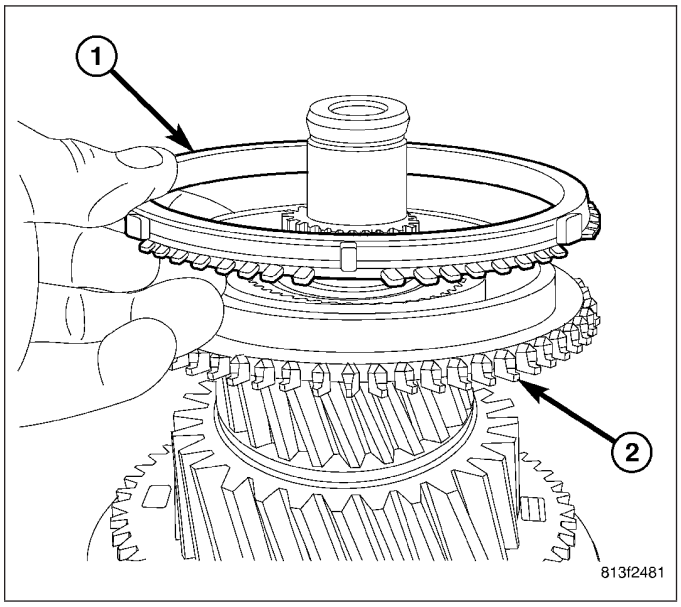

53. Install 5-6 synchronizer hub (1) on sixth gear synchronizer rings (2).

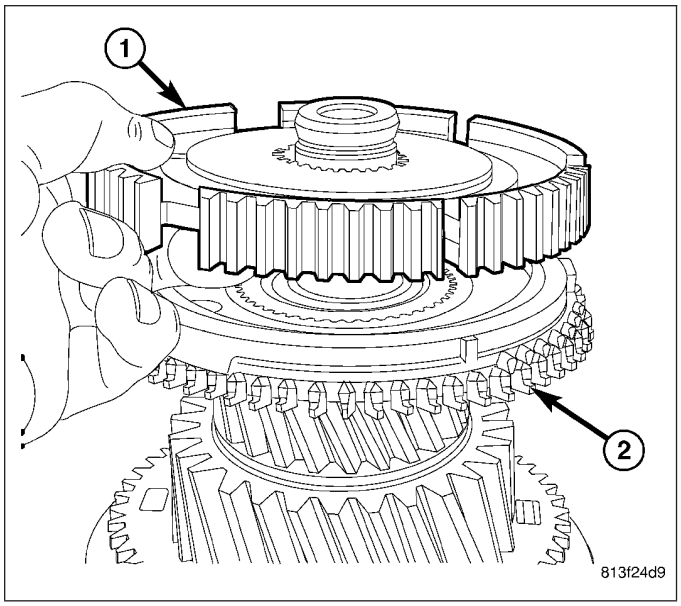

54. Heat mainshaft bearing (1) on bearing heater.

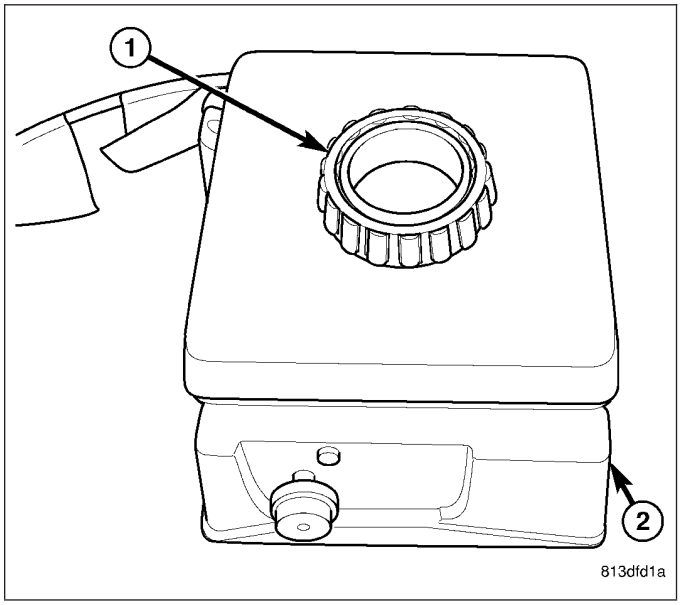

55. Using welding gloves, install mainshaft bearing (1) on mainshaft.
56. Install mainshaft bearing (1) snap ring (2).

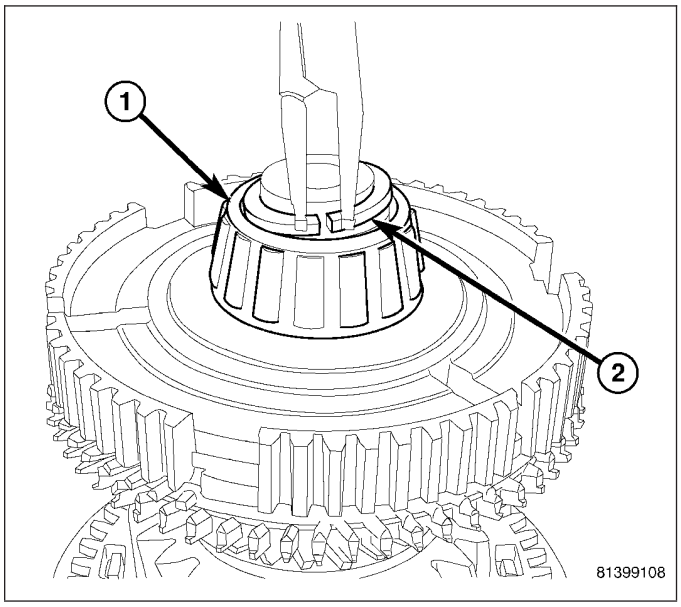

57. Install 5-6 synchronizer sleeve (1) on hub (2) and push sleeve to the bottom of the hub.

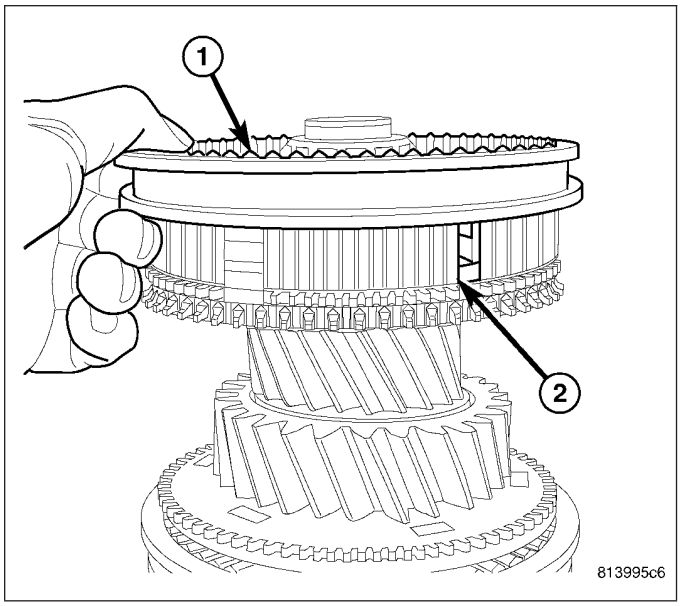

58. Install 5-6 synchronizer detents and springs (1) into synchronizer hub (2) slots. Then push detents behind synchronizer sleeve (3).

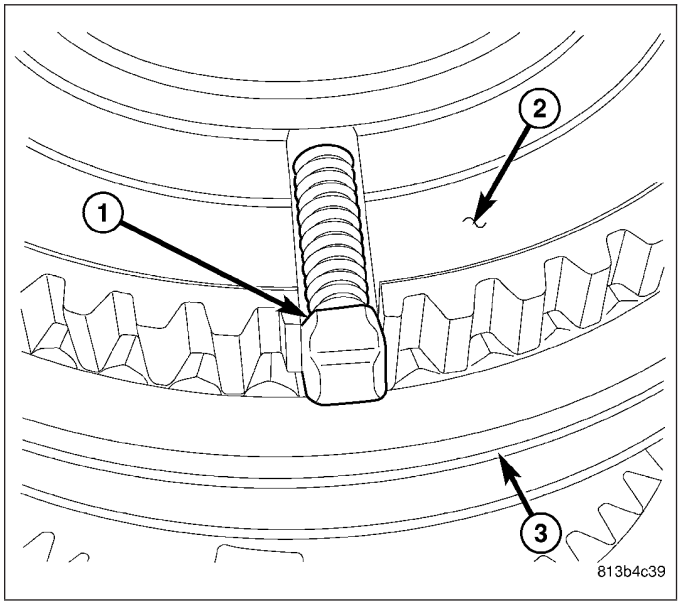

59. Install fifth gear friction ring (1) onto hub (2).

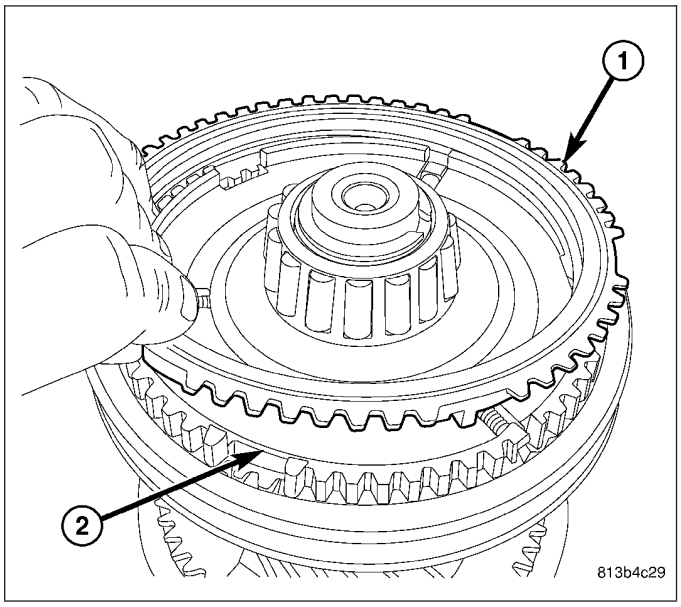

60. Install fifth gear blocker ring with teeth pointing down (1) onto hub (2).
61. Hold fifth gear blocker ring (1) onto hub (2) and center 5-6 synchronizer sleeve on hub (2).

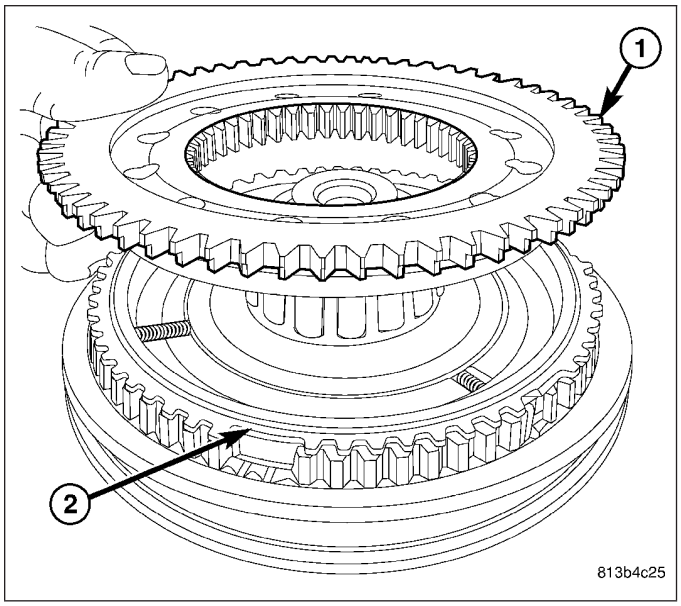

REAR HOUSING

1. Install countershaft bearing cup with Installer 9589 (1) and Handle C-4171 (2).

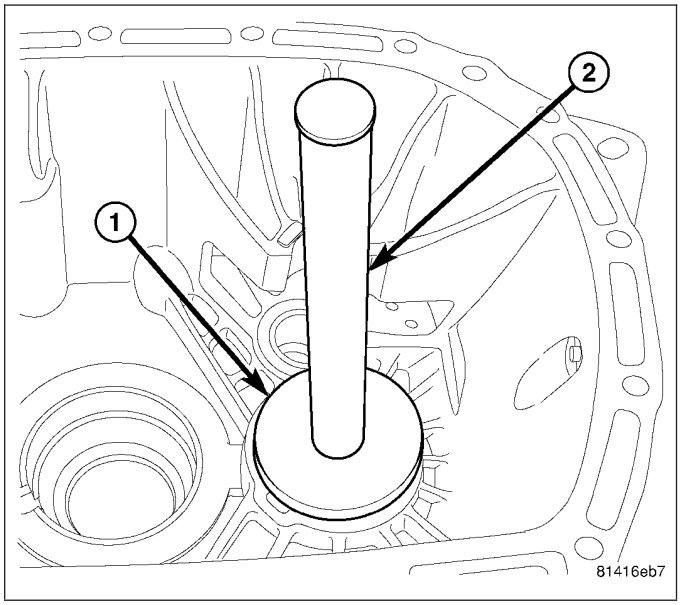

2. Install mainshaft bearing cup with Installer 9588 (1) and Handle C-4171(2).
3. Install output shaft seal with Installer 9598.

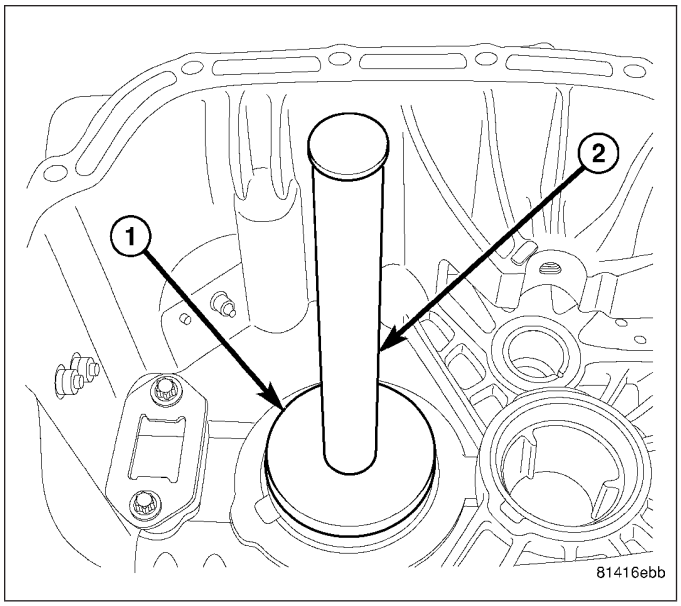

4. Install reverse idler bearing (1) into idler gear (2).

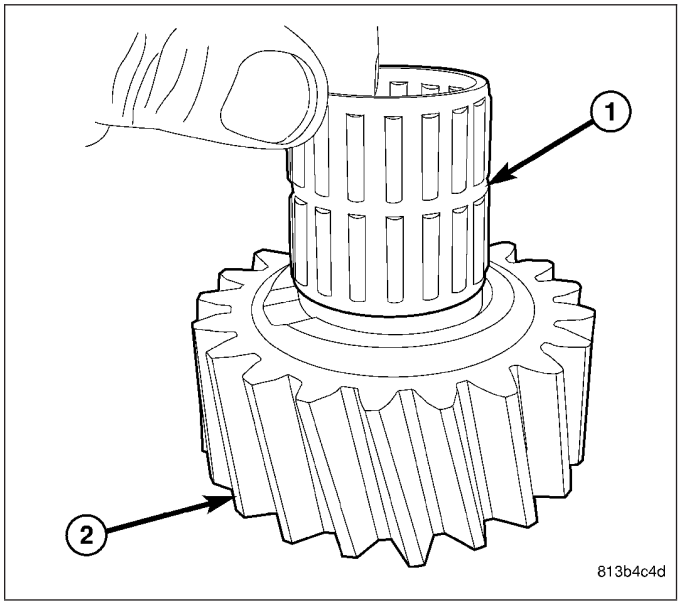

5. Install idler gear (1) into rear housing (2) off to the side. For mainshaft/countershaft installation clearance.

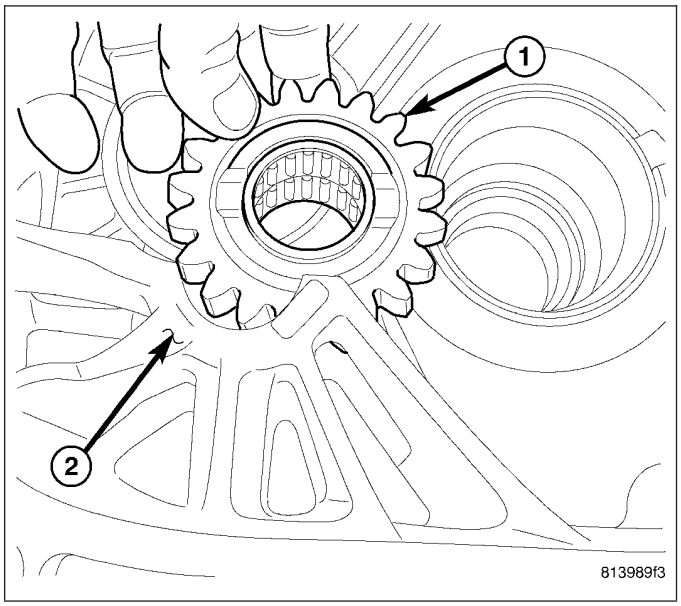

6. Tie strap (2) shift rails (1) together.

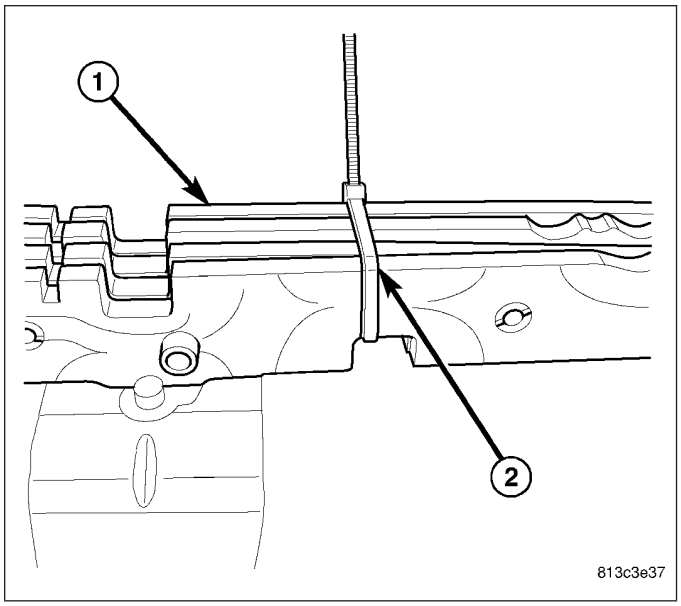

7. Install reverse (1), 1-2 (2) and 3-4 (3) shift rails and forks as and assembly on synchronizer sleeves.

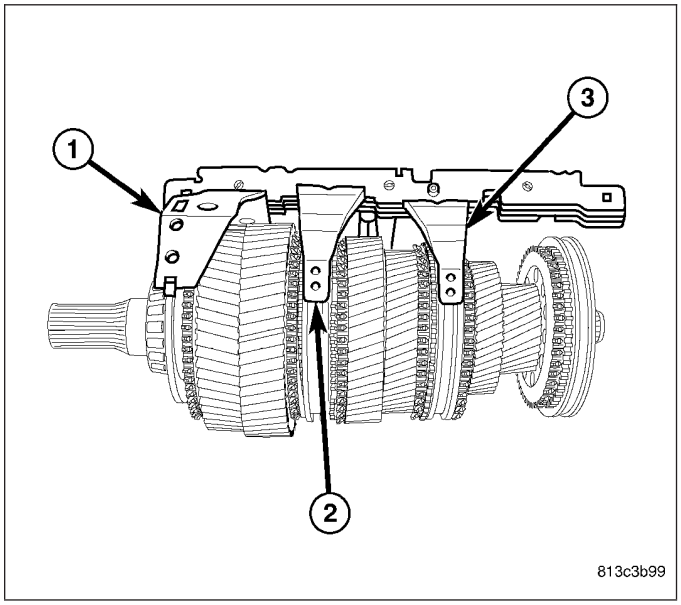

8. Install mainshaft with shift rails (2) into the rear housing. Tilt the mainshaft then tilt the countershaft (1) into the housing.

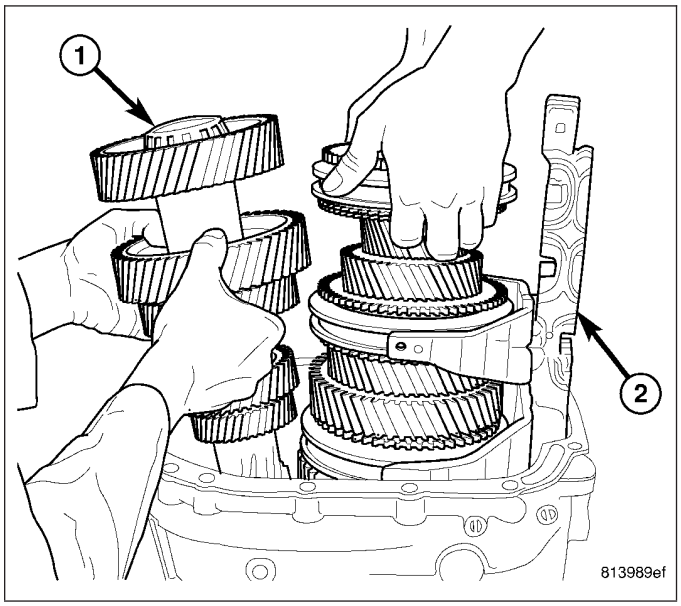

9. Position first/reverse oil slinger (1) between the mainshaft first (2) and reverse gears.

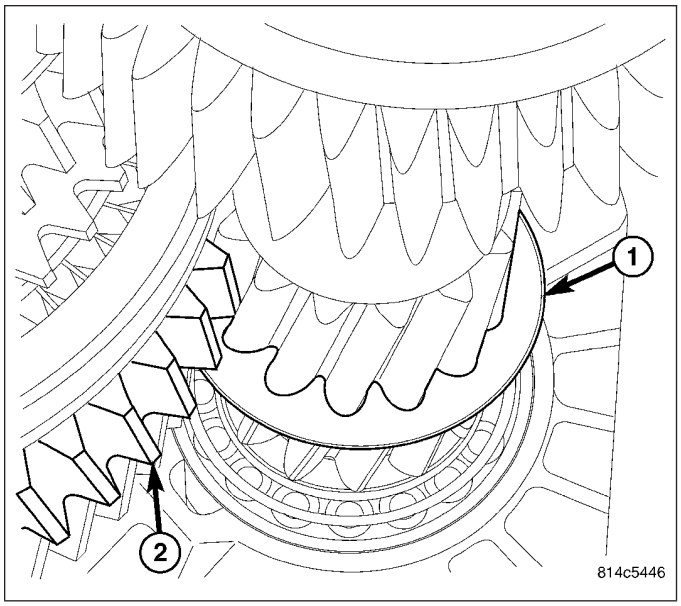

10. Position reverse idler gear and install idler shaft (2) with bolt (1).

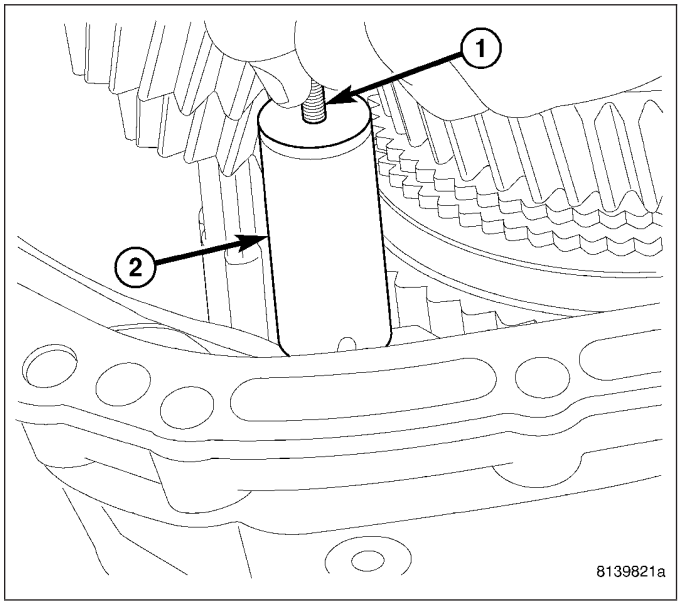

11. Install reverse idler gear shaft pin (1) into rear housing (2) and tighten to 58 N·m (43 ft. lbs.).

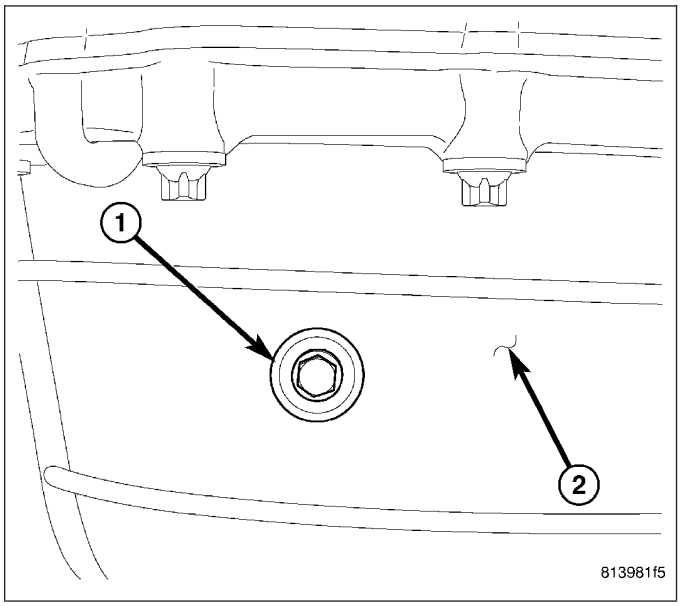

12. Install 5-6 shift shoe narrow ends (1) into the 5-6 synchronizer sleeves (2).

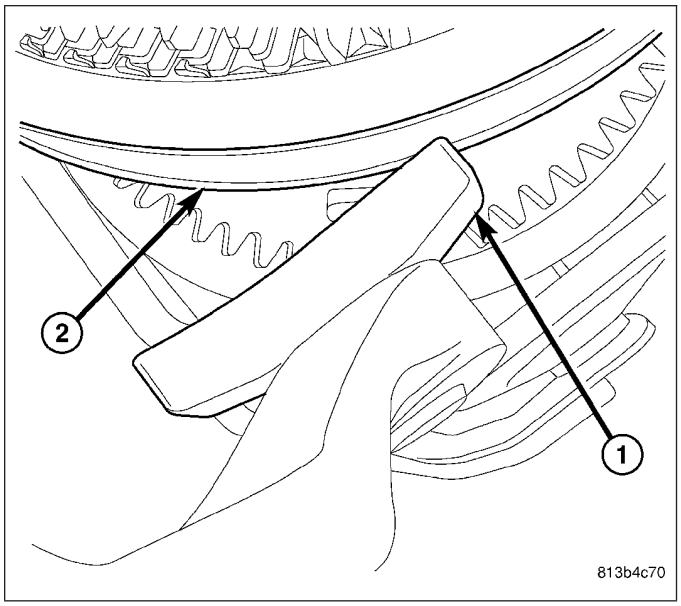

13. Install 5-6 shift fork (1) into the shift rail.

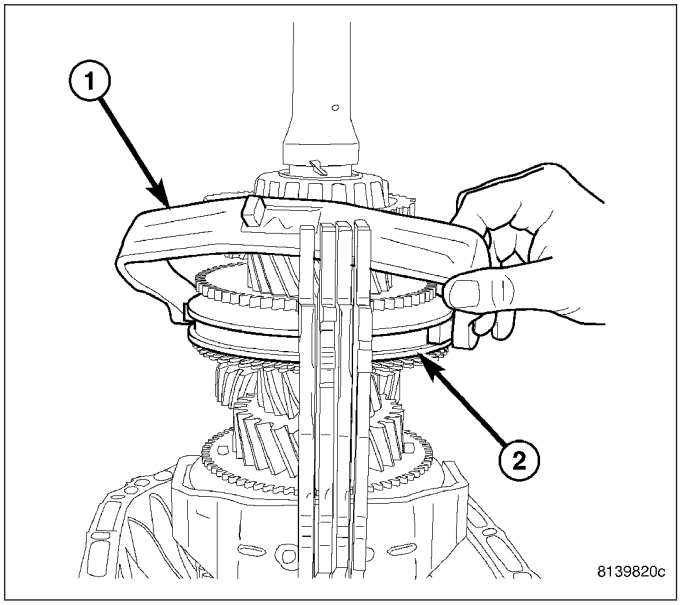

FRONT HOUSING

CAUTION: If mainshaft/bearings or countershaft/ bearings are replaced endplay measurements, must taken to ensure proper bearing preload. Failure to follow these instruction will result in bearing damage.

1. Install input shaft seal front housing bore (1) with Installer 9595 (2).

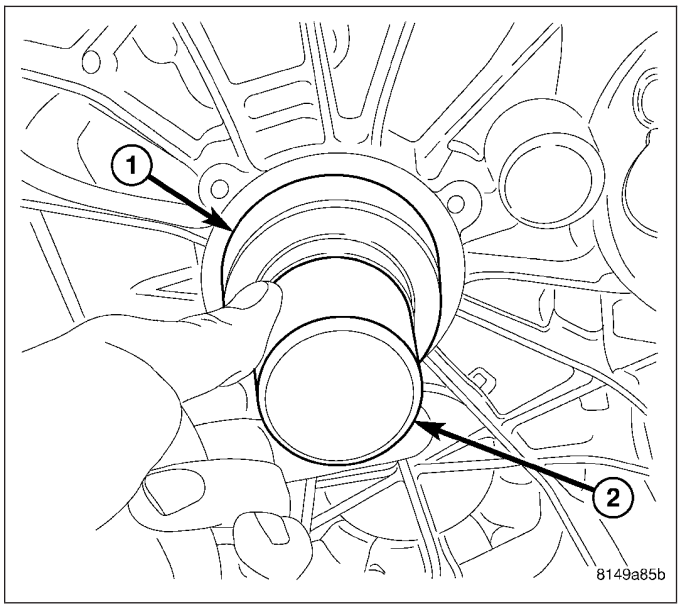

2. Install input shaft retainer (1) and tighten bolts (2) to 23 N·m (17 ft. lbs.).

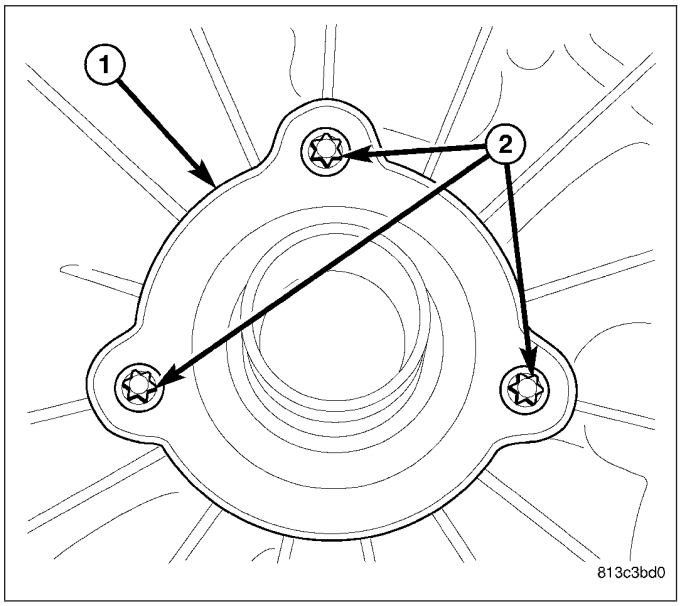

3. Install select end play shims into the countershaft bearing cup bore.
4. Install countershaft bearing cup with Installer 9589 (1) and Handle C-4171(2).

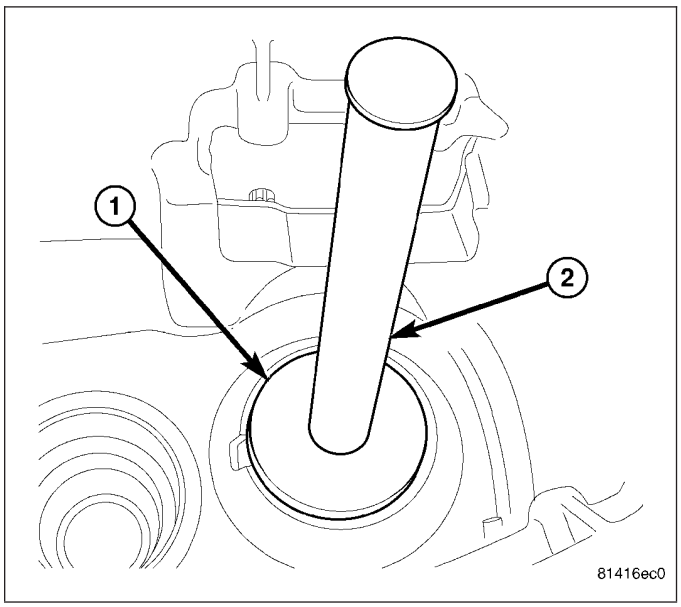

5. Install input shaft bearing oil supply washer and select end play shims into mainshaft bearing cup bore.
6. Install mainshaft bearing cup with Installer 9588 (1) and Handle C-4171 (2).

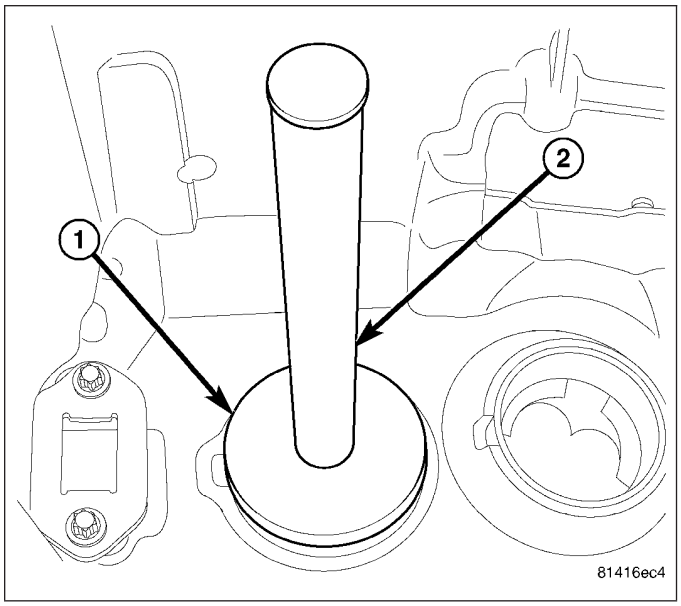

7. Apply Mopar Gasket Maker to the rear housing sealing surface.
8. Install front housing (1) onto the rear housing (2).
9. Install housing bolts and tighten to 58 N·m (43 ft. lbs.).

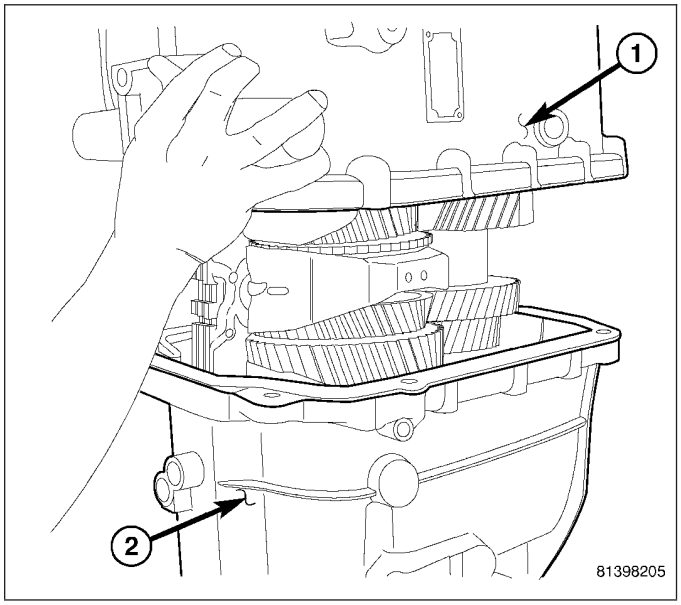

10. Install 5-6 shift fork pins (1) into housing and tighten to 58 N·m (43 ft. lbs.).

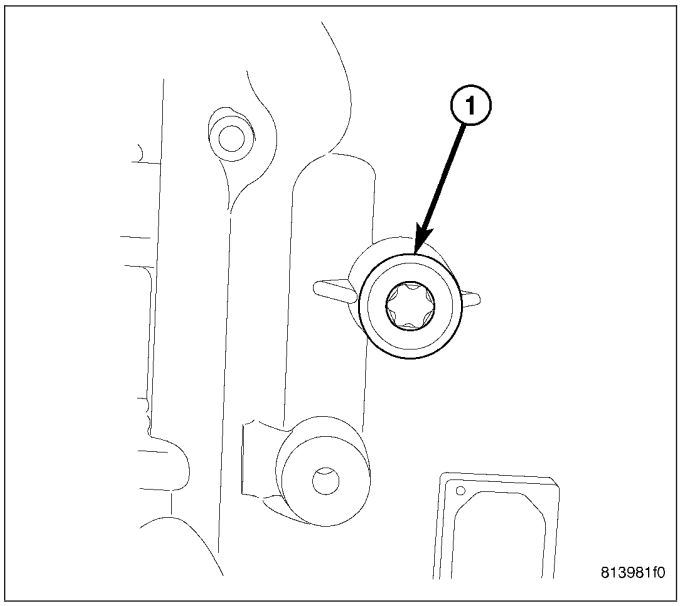

11. Push shift tower boot (1) onto shift tower (2).

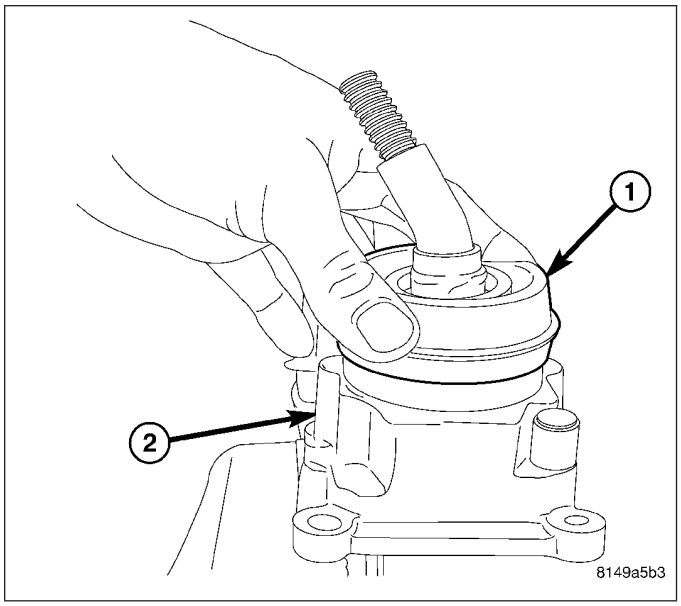

12. Remove shift fork tie strap.
13. Apply Mopar Gasket Maker to the shift tower opening.
14. Install shift tower (2) and tighten bolts (1) to 23 N·m (17 ft. lbs.).

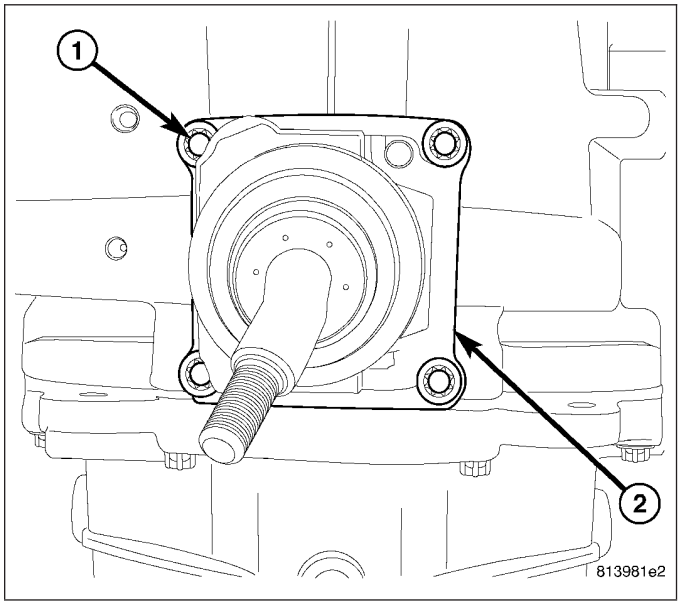

15. Install back up lamp switch (1) and bolt (2).

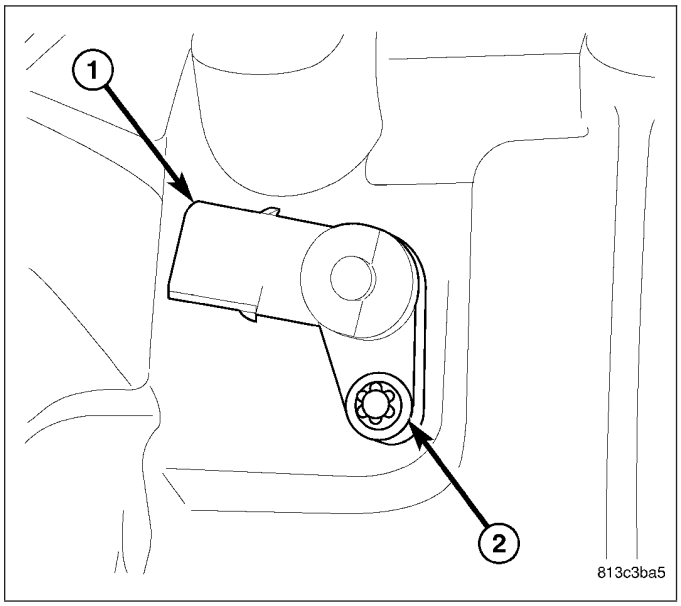

INSTALLATION

1. Clean transmission front housing mounting surface.
2. Apply light coat of Mopar high temperature bearing grease or equivalent to contact surfaces of following components:
   - release fork (1) ball stud (2)
   - release bearing slide surface (3)
   - input shaft splines (4)
   - release bearing bore (5)
   - propeller shaft slip yoke.

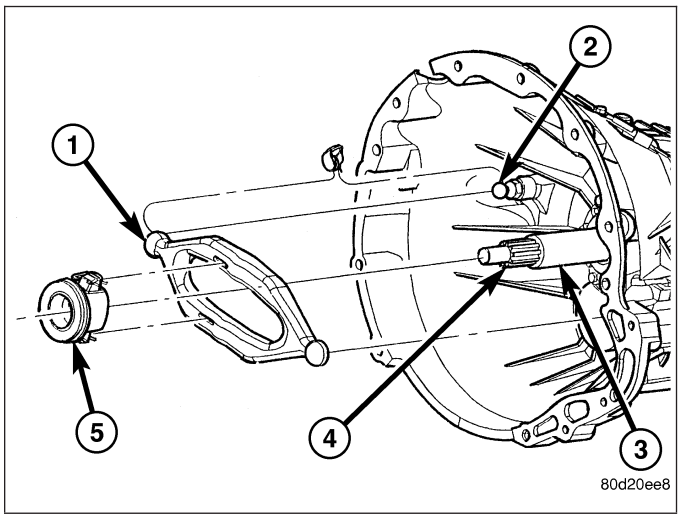

3. Support and secure transmission to jack.
4. Raise and align transmission input shaft with clutch disc, then slide transmission into place.
5. Install exhaust bracket.
6. Verify front housing is fully seated. Install transmission bolts without washers (1) and tighten bolts into the engine to 41 N·m (30 ft. lbs.). Tighten the bolts with washers (2) into the transmission to 68 N·m (50 ft. lbs.).

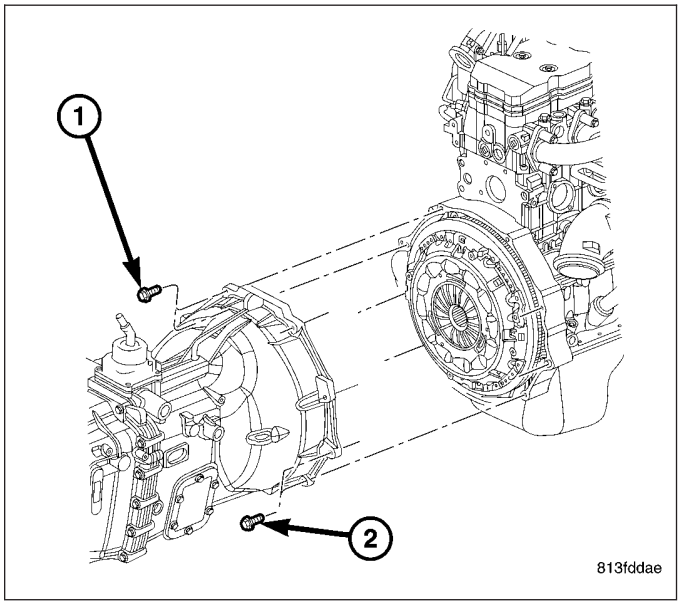

7. Install crossmember and tighten nuts (2) to 102 N·m (75 ft. lbs.).
8. Install transmission mount bolts (1) and tighten to 68 N·m (50 ft. lbs.).
9. Install front dust shield tighten bolt to 4.5 N·m (40 in. lbs.). On 5.7L if structural dust cover was removed, install onto the transmission and engine (Refer to 9 - ENGINE/ENGINE BLOCK/STRUCTURAL COVER - INSTALLATION).
10. Install structural dust cover and tighten the bolts to 54 N·m (40 ft. lbs.).
11. Install starter motor 5.7L.

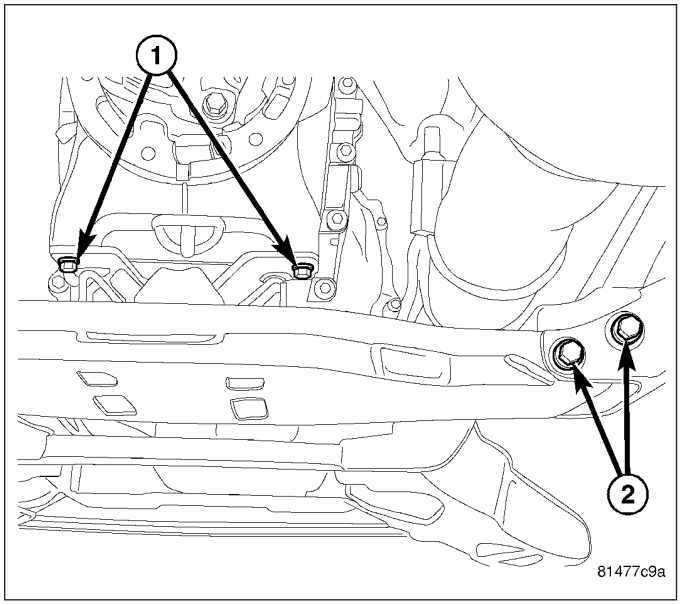

12. Connect transmission harnesses to clips on case and connect switches.
13. Install slave cylinder and tighten cylinder nuts to 23 N·m (200 in. lbs.).
14. Install transfer case and transfer case linkage 4x4 equipped.
15. Remove transmission jack.
16. Install propeller shaft/shafts with reference marks aligned.
17. Install exhaust on the exhaust manifolds.
18. Fill transmission with lubricant. Correct fill level is to bottom edge of fill plug hole.

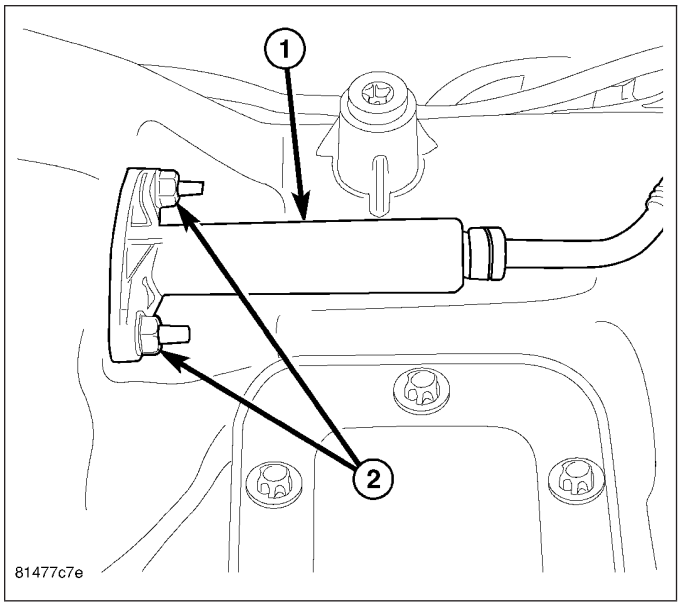

ADJUSTMENTS

MAINSHAFT/COUNTERSHAFT BEARING PRELOAD

CAUTION: This procedure must be performed any time a mainshaft, countershaft or input shaft bearing or shaft is replaced. Failure to follow these instructions will result in damaging the transmission.

MAINSHAFT

1. Set mainshaft, input shaft and countershaft into the rear housing. Rotate the shafts to seat bearing in rear housing.
2. Remove mainshaft bearing cup, shims and oiler washer from the rear housing.
3. Position Fixture 9592 (1) on front housing over the mainshaft bearing cup bore.
4. Loosen the knob (2) on the fixture and lower the shaft onto the mainshaft bearing cup (3) bore shoulder. Then tighten the knob to hold the shaft.
5. Remove the fixture from the front housing.

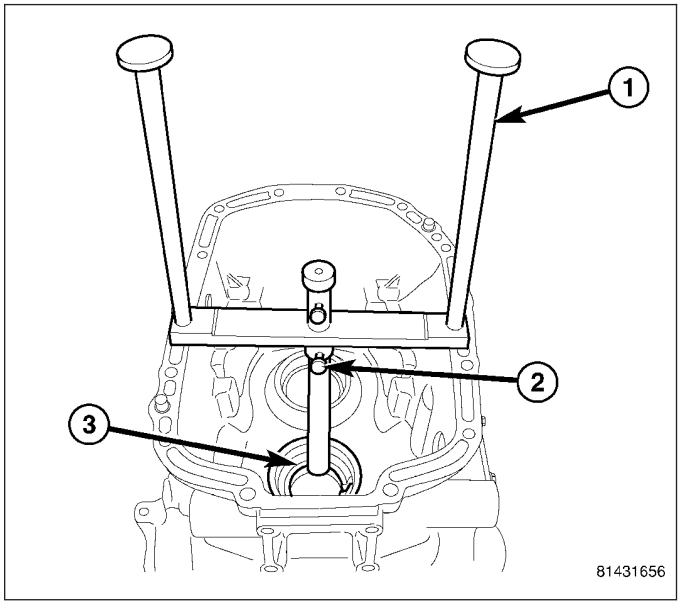

6. Place mainshaft shaft bearing cup on mainshaft bearing.
7. Position Fixture 9592 (1) on rear housing over the mainshaft bearing (2).
8. Loosen the knob (3) on the fixture (1). This will allow the rod plunger to drop down on the bearing cup.

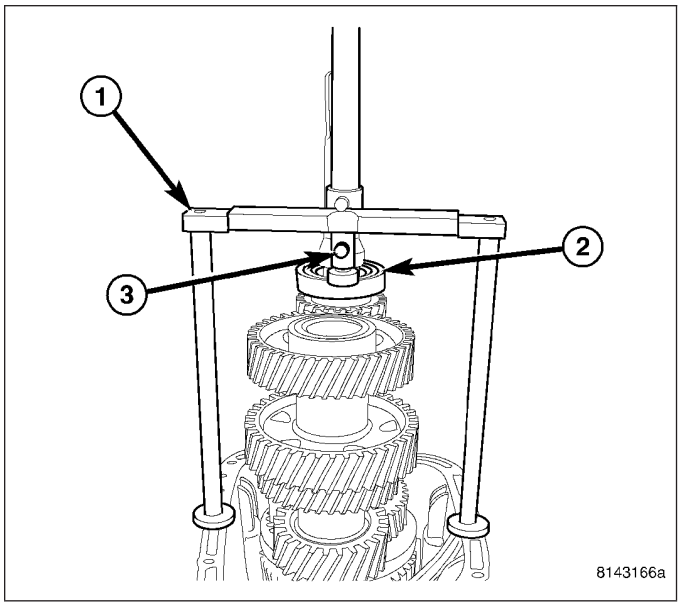

9. Measure the gap (1) between the fixture shaft (2) and the fixture plunger (3). Repeat measurement on the opposite side of the mainshaft cup and bearing. The average of the two measurement, will be the size of the mainshaft select shim.
10. Install new oil supply washer and select shim in front housing mainshaft bearing cup bore and install bearing cup.

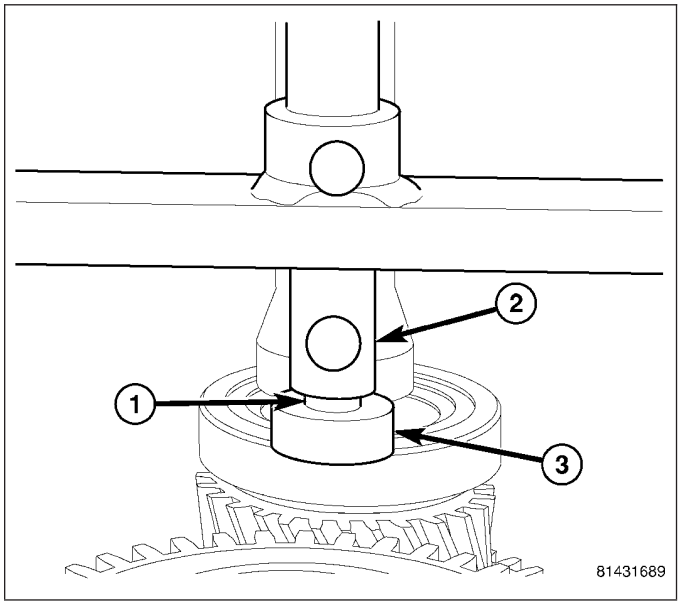

COUNTERSHAFT

1. Remove countershaft bearing cup and shims from the rear housing.
2. Position Fixture 9592 (1) on rear housing over the countershaft bearing cup bore.
3. Loosen the knob (2) on the fixture and lower the shaft onto the countershaft bearing cup (3) bore shoulder. Then tighten the knob to hold the shaft.
4. Remove the fixture from the front housing.

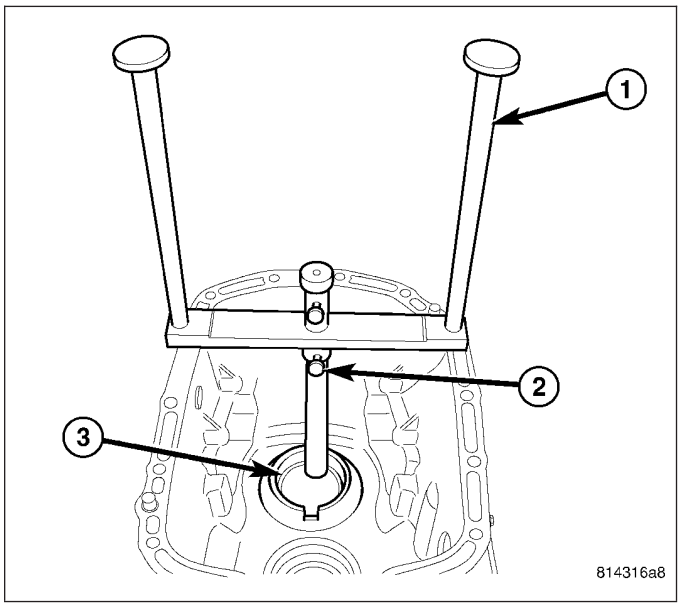

5. Place countershaft bearing cup on countershaft bearing.
6. Position Fixture 9592 (1) on rear housing over the countershaft bearing (2).
7. Loosen the knob (3) on the fixture (1). This will allow the rod plunger to drop down on the bearing cup.

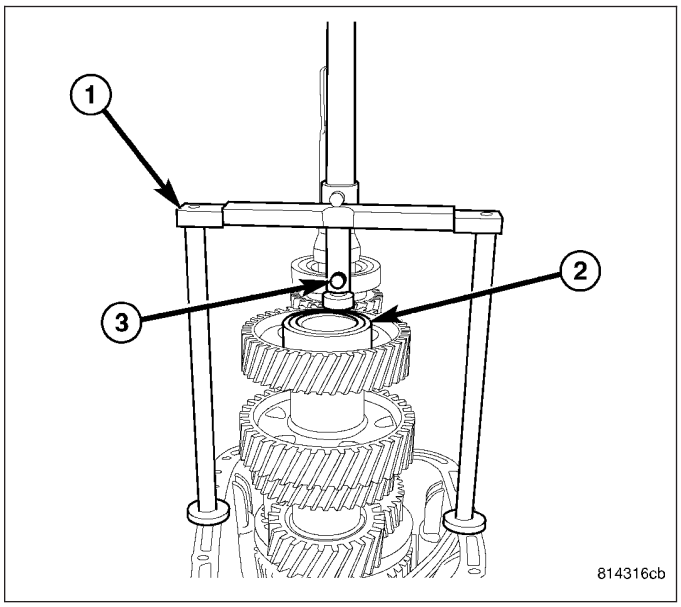

8. Measure the gap (1) between the fixture shaft (2) and the fixture plunger (3). Repeat measurement on the opposite side of the countershaft cup and bearing. The average of the two measurements, will be the size of the countershaft select shim.
9. Install select shim in front housing countershaft bearing cup bore and install bearing cup.

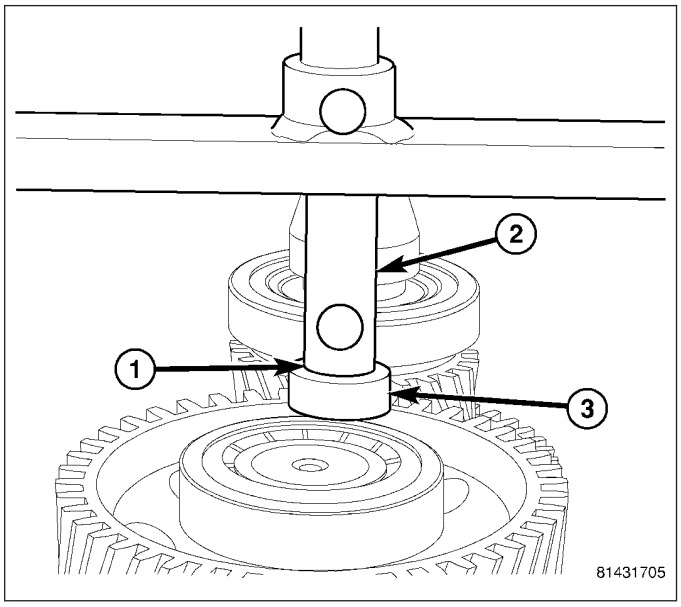

SPECIFICATIONS

G56 - MANUAL TRANSMISSION

TORQUE SPECIFICATIONS

DESCRIPTION	N·m	Ft. Lbs.	In. Lbs.
Fill Plug	57	42	-
Drain Plug	57	42	-
Housing Bolts	58	43	-
Input Shaft Retainer Bolts	23	17	-
Shift Tower bolts	23	17	-
5-6 Shift Fork Bolts	58	43	-
Shift Rail Support bolts	58	43	-
Reverse Idler Gear Shaft Bolt	58	43	-
P.T.O. Cover Bolts	58	43	-
Clutch Release Pivot Ball	22	16	-

GEAR SPECIFICATIONS

GEAR	RATIO
FIRST	6.29
SECOND	3.48
THIRD	2.10
FOURTH	1.38
FIFTH	1.00
SIXTH	0.79
REVERSE	5.74

SPECIAL TOOLS

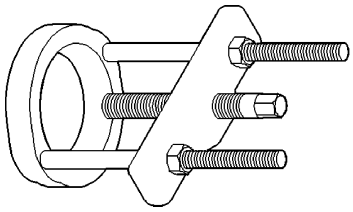

PULLER C-293-PA

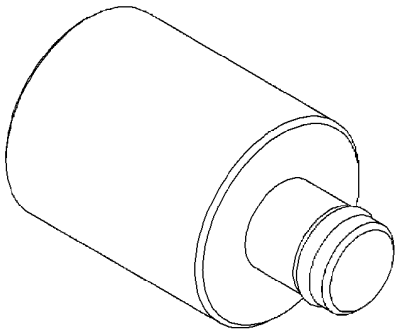

PLUG 8513A

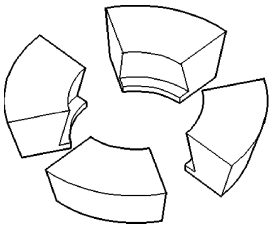

ADAPTERS C-293-47

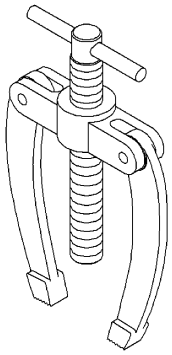

REMOVER 8915

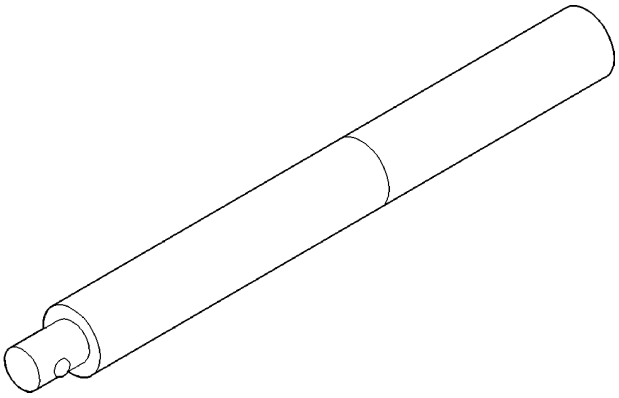

HANDLE C-4171

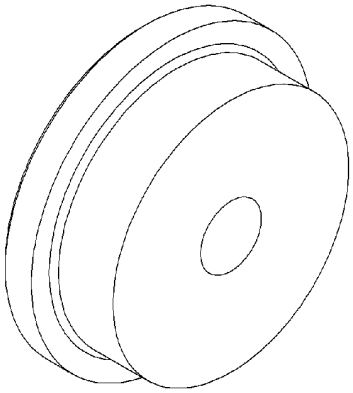

CUP INSTALLER 9588

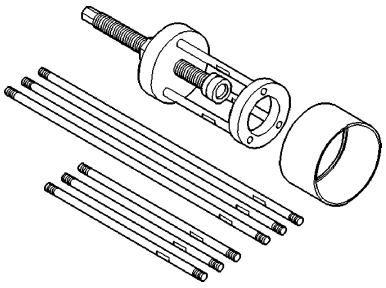

PULLER 6444

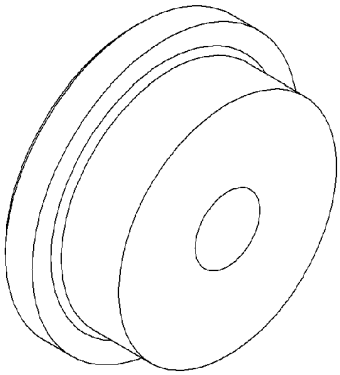

CUP INSTALLER 9589

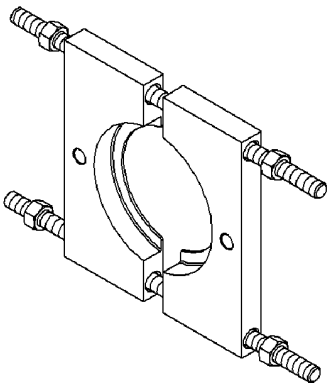

PULLER 9594

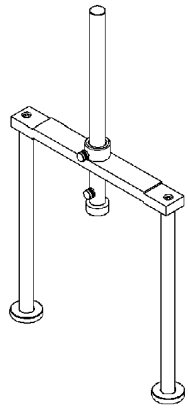

MEASUREMENT FIXTURE 9592

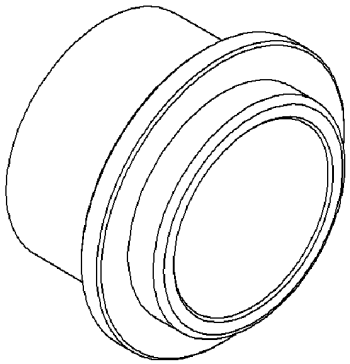

SEAL INSTALLER 9595

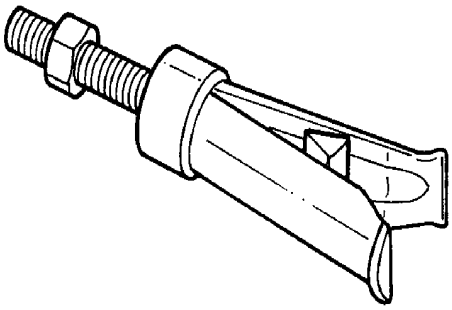

CUP REMOVER 9593

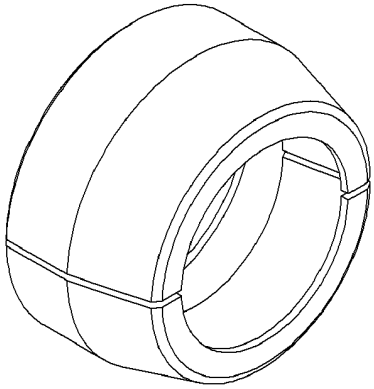

JAWS 9597

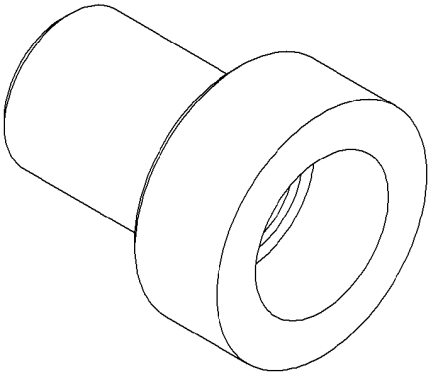

SEAL INSTALLER 9598

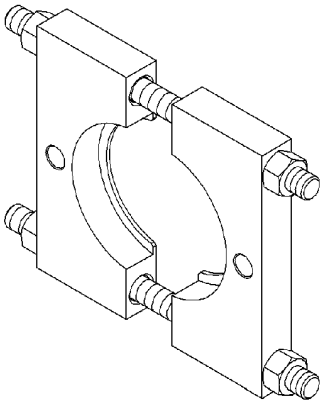

PULLER PLATE 9647

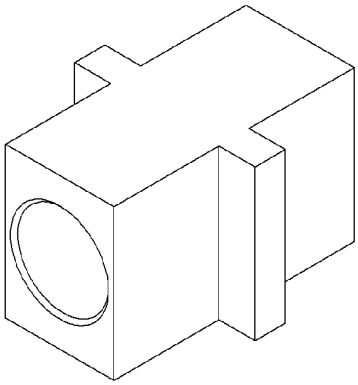

MAINSHAFT FIXTURE 9605

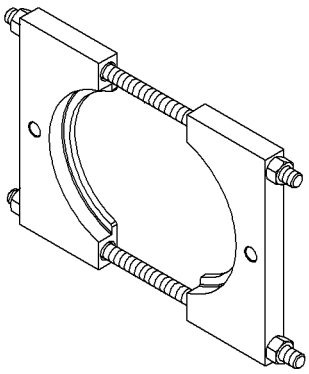

PULLER PLATE 9646

MANUAL TRANSMISSION - T56 - SERVICE INFORMATION

TABLE OF CONTENTS

page

MANUAL TRANSMISSION - T56 - SERVICE INFORMATION
OPERATION 235
DIAGNOSIS AND TESTING
MANUAL TRANSMISSION - T56 236
STANDARD PROCEDURE - DRAIN AND FILL . 237
REMOVAL 238
DISASSEMBLY 240
CLEANING 262
INSPECTION 262
ASSEMBLY 263
INSTALLATION 282
ADJUSTMENTS
ADUSTMENTS 284
SPECIFICATIONS
MANUAL TRANSMISSION - T56 286
SPECIAL TOOLS 287
SEAL-EXTENSION HOUSING
REMOVAL 291
INSTALLATION 291
SHAFT-INPUT
REMOVAL 291
INSTALLATION 292
SOLENOID-REVERSE LOCKOUT
DESCRIPTION 293
OPERATION 293
SOLENOID-REVERSE LOCK-OUT
DESCRIPTION 293
OPERATION 293

MANUAL TRANSMISSION - T56 - SERVICE INFORMATION

OPERATION

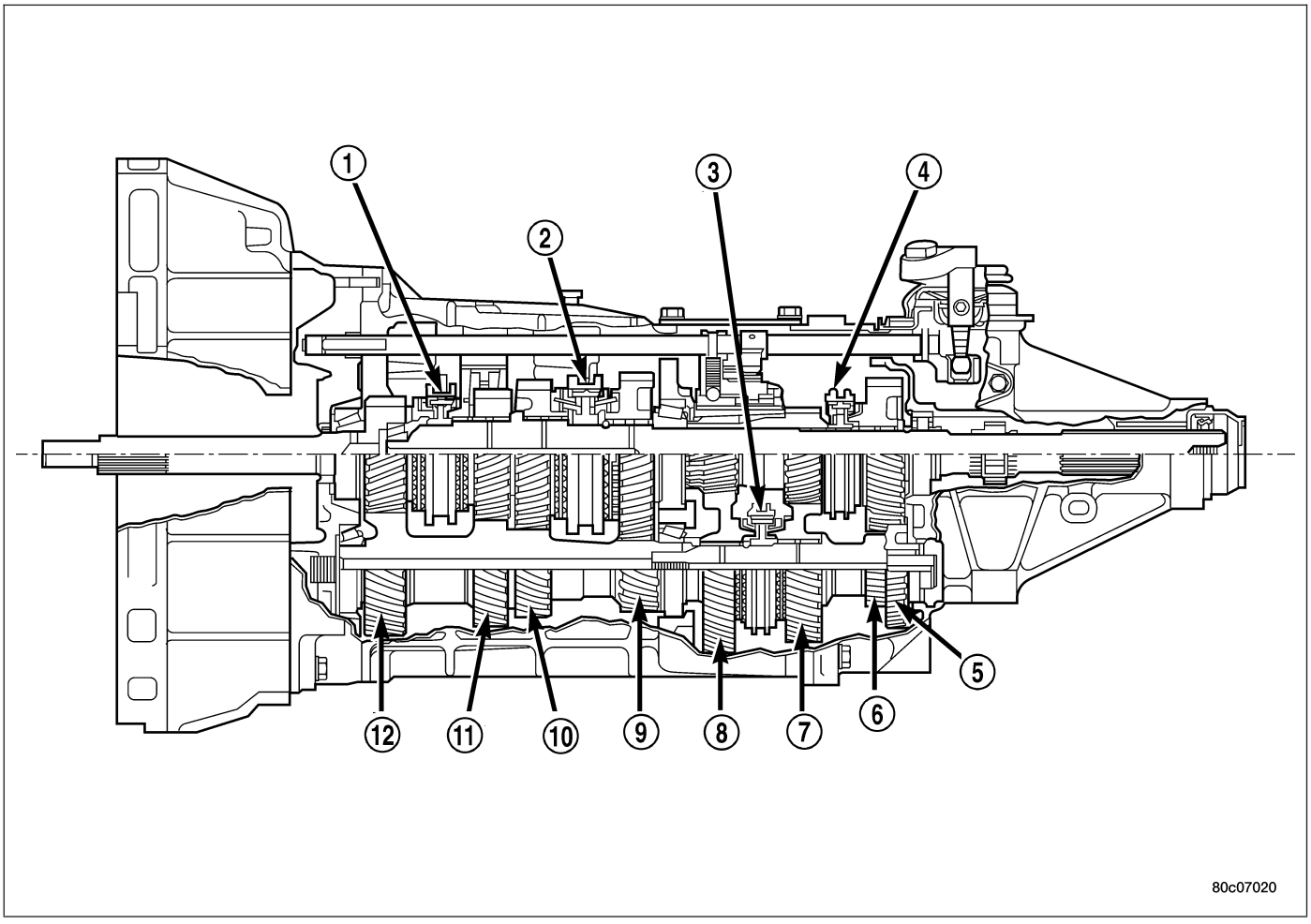

NEUTRAL

The input gear supplies input torque from the engine crankshaft via the clutch assembly. All gears turn, but the synchronizers are not engaged with the gear teeth. Because the synchronizers are not engaged, power is not transferred to the main shaft.

1ST GEAR

The 1-2 synchronizer (2) sleeve shifts rearward to engage with the clutch teeth on the first speed gear (1). In this condition, the power from the input gear is transmitted through the cluster gear to the first speed gear. Power is transferred from the speed gear, across the synchronizer sleeve to the main shaft. The gear ratio for first gear is 2.66:1.

2ND GEAR

The 1-2 synchronizer (2) sleeve shifts forward to engage with the clutch teeth on the second speed gear (10). In this condition, the power from the input gear will go through the cluster gear, across the second speed gear, and into the synchronizer sleeve. The sleeve turns the synchronizer hub and main shaft. The gear ratio for second gear is 1.78:1.

3RD GEAR

The 3-4 synchronizer (1) sleeve moves rearward to engage with the clutch teeth of the third speed gear (11). The power is transferred through the input gear to the cluster gear, across the third speed gear, to the synchronizer sleeve. The sleeve turns the synchronizer hub and the main shaft. The gear ratio for third gear is 1.30:1.

4TH GEAR

The 3-4 synchronizer (1) sleeve moves forward to engage with the clutch teeth of the fourth speed gear (12). Input power is transferred straight through the input gear into the synchronizer sleeve. The sleeve turns the synchronizer hub and the main shaft. The gear ratio for fourth gear is 1.00:1.

5TH GEAR

The 5-6 synchronizer (3) sleeve moves rearward to engage with the clutch teeth of the fifth speed gear (7). In this condition, the power from the input gear is transferred through the cluster gear to the cluster gear extension. Power then flows from the extension into the synchronizer hub. The hub turns the synchronizer sleeve, fifth speed gear and the main shaft. The gear ratio for fifth gear is 0.74:1.

6TH GEAR

The 5-6 synchronizer (3) sleeve moves forward to engage with the clutch teeth of the sixth speed gear (8). In this condition, the power from the input gear is transferred through the cluster gear to the cluster gear extension. Power then flows from the extension into the synchronizer hub. The hub turns the synchronizer sleeve, sixth speed gear and the main shaft. The gear ratio for sixth gear is 0.50:1.

REVERSE

The reverse gear synchronizer (4) moves rearward to engage with the reverse speed gear (6). Input power from the input gear travels through the cluster gear to the cluster gear extension. Power flows from the reverse cluster gear to the reverse idler gear, and across the reverse speed gear and synchronizer sleeve to the main shaft. The input gear moves in a clockwise direction, turning the cluster gear and its extension in a counter-clockwise direction. The cluster gear and extension turn the reverse idler gear (5) in a clockwise direction, and the idler gear turns the reverse speed gear in a counter-clockwise direction, resulting in reverse. The gear ratio for reverse gear is 2.90:1.

DIAGNOSIS AND TESTING

MANUAL TRANSMISSION - T56

LOW LUBRICANT LEVEL

A low transmission lubricant level is generally the result of a leak, inadequate lubricant fill or incorrect lubricant level check.

Rear transmission leaks will be from the oil seals or component mating surfaces.

Front transmission leaks will be from the front bearing retainer or retainer seal. Lubricant may drip from the clutch housing after extended operation. If leak is severe, it may contaminate the clutch disc.

Lubricant level check can only be made when the vehicle is level and allowing the lubricant to settle for a minute before checking. This will ensure an accurate check and avoid an underfill or overfill condition.

HARD SHIFTING

Hard shifting is usually caused by low lubricant level, improper or contaminated lubricants. This will cause noise, excessive wear, internal bind, and hard shifting. Substantial lubricant leaks can result in gear, shift rail, synchro, and bearing damage. The first indications of component damage is usually hard shifting and noise.

Shift component damage, clutch adjustment, worn pressure plate or disc are also causes of increased shift effort. If clutch problem is advanced, gear clash during shifts can result. Worn or damaged synchro rings can cause gear clash when shifting into any forward gear. In some new or rebuilt transmissions, new synchro rings may tend to stick slightly causing hard or noisy shifts. In most cases, this condition will decline as the rings wear-in.

TRANSMISSION NOISE

Most manual transmissions make some noise during normal operation. Rotating gears generate a mild whine that is audible, but generally only at extreme speeds.

Severe, highly audible transmission noise is generally the initial indicator of a lubricant problem. Insufficient, improper or contaminated lubricant will promote rapid wear of gears, synchros, shift rails, forks and bearings. The overheating caused by a lubricant problem, can also lead to gear and bearing damage.

STANDARD PROCEDURE - DRAIN AND FILL

1. Raise and support vehicle.
2. Remove drain plug (1) on transmission tail housing and drain fluid.
3. Install drain plug.
4. Remove transmission fill plug on left side of the transmission case.
5. Fill transmission with Mopar® Synthetic Manual Trans Lubricant 75W-85. The transmission is full when the fluid level is even with the bottom of the fill hole.
6. Install transmission fill plug.

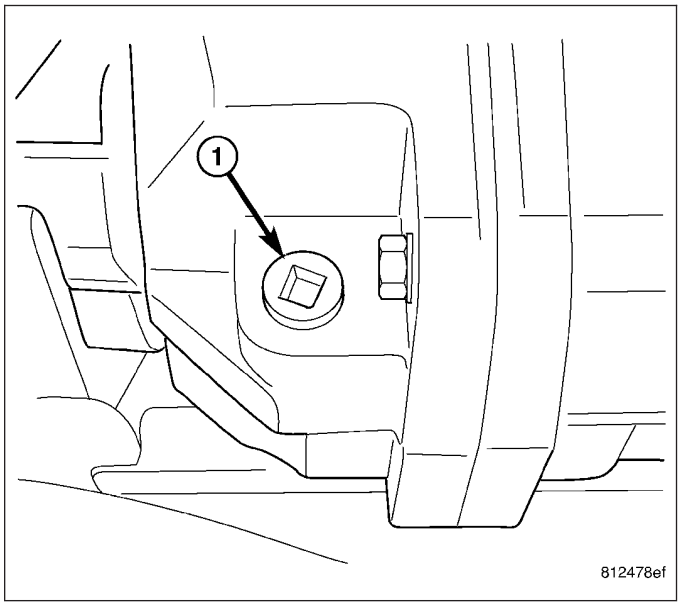

REMOVAL

1. With vehicle in neutral, position it on a hoist.
2. Mark installtion reference marks on the propeller shaft, pinion yoke and transmission output shaft.
3. Remove propeller shaft (4) clamp (3) bolts (1) and remove shaft.

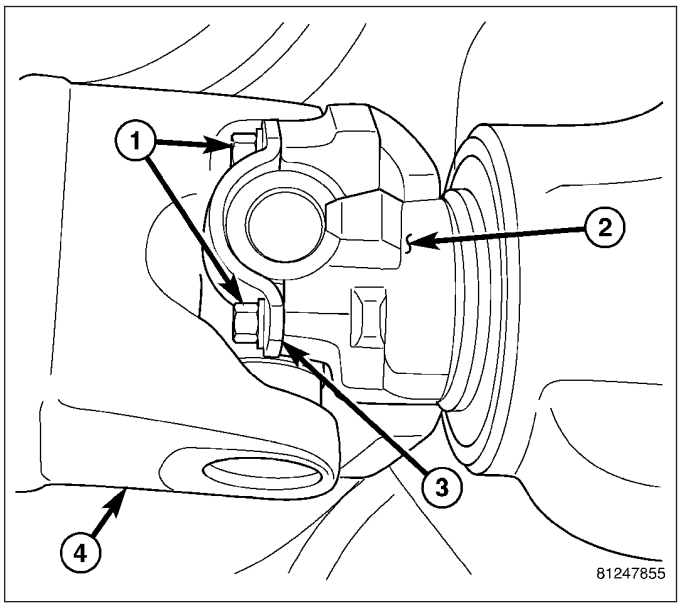

4. Remove shift cover bolts.
5. Remove hydraulic clutch line (2) quick connector (1) at the transmission with Clutch Line Disconnect Tool 6638 or 6638A to disconnect.

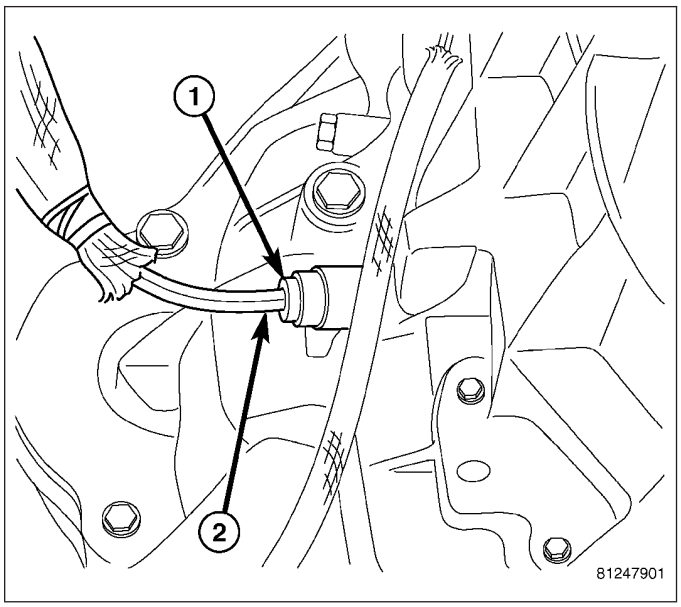

6. Remove reverse lockout solenoid (1) connector (2).
7. Remove fuel line clip fron top plate stud.

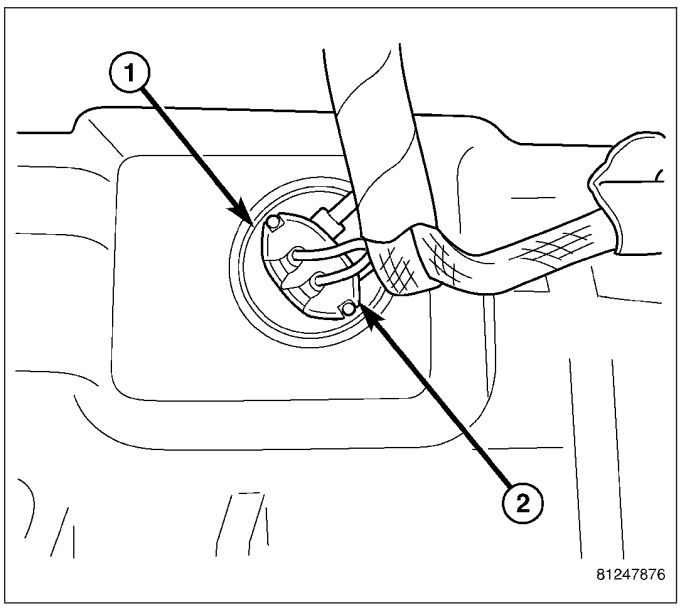

8. Remove back up lamp switch (2) connector (1).

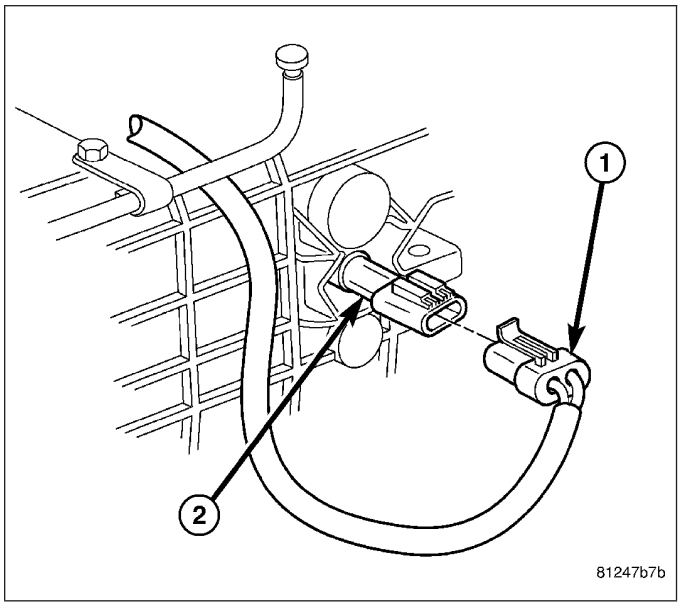

9. Position transmission jack (2) and secure to transmission (1).
10. Remove transmission to clutch housing bolts.

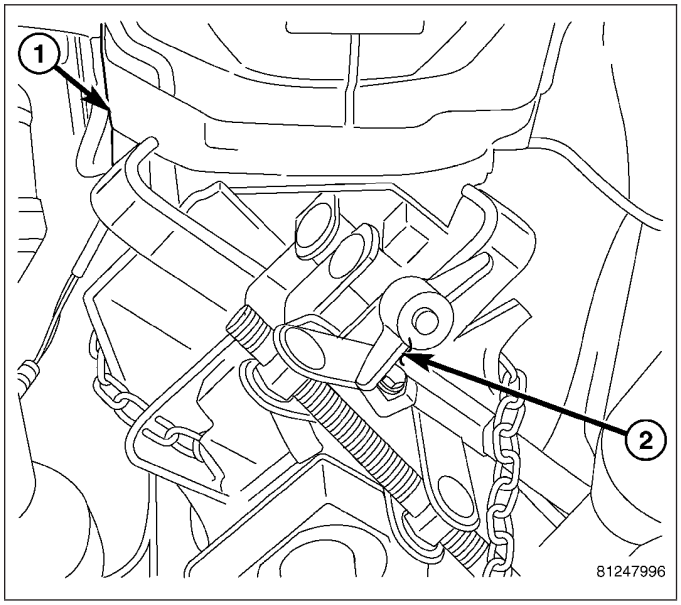

11. Remove transmission mount (2) bolts (1).

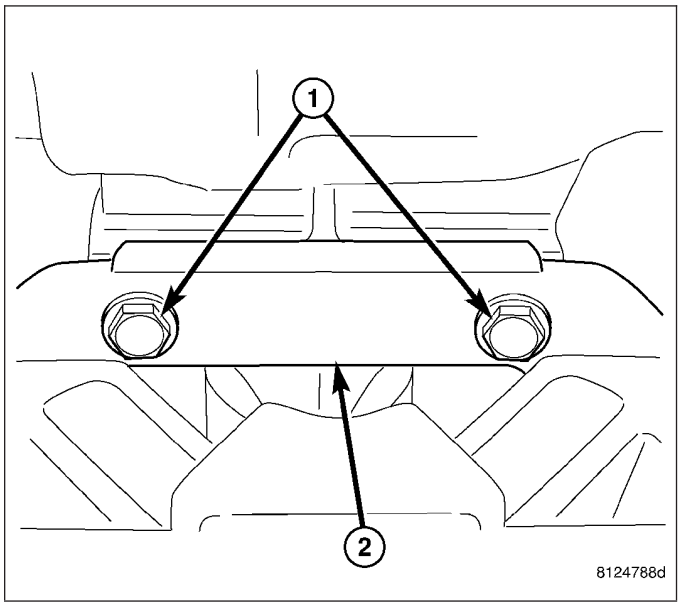

12. Remove transmission crossmember (2) bolts (1).
13. Slide transmission back to clear the bell housing. Then lower transmission.

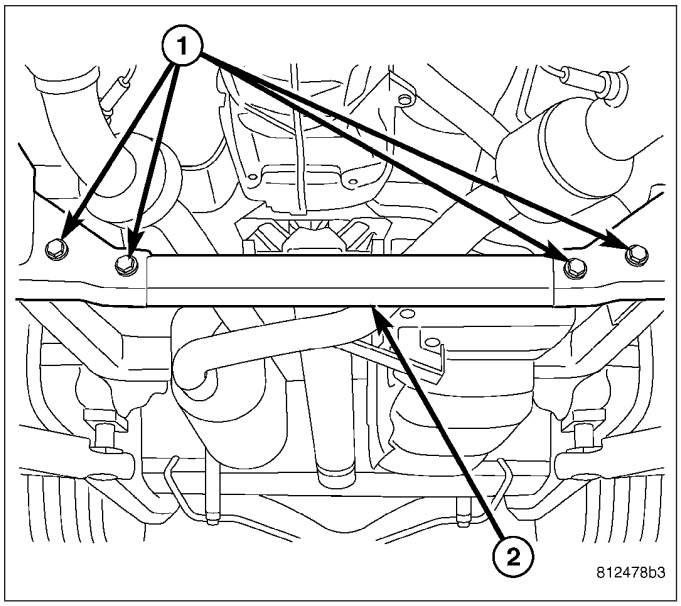

DISASSEMBLY

1. Remove shift cover bolts and remove shift cover.
2. Remove roll pin from rear offset lever (3) with a hammer (1) and punch (2).

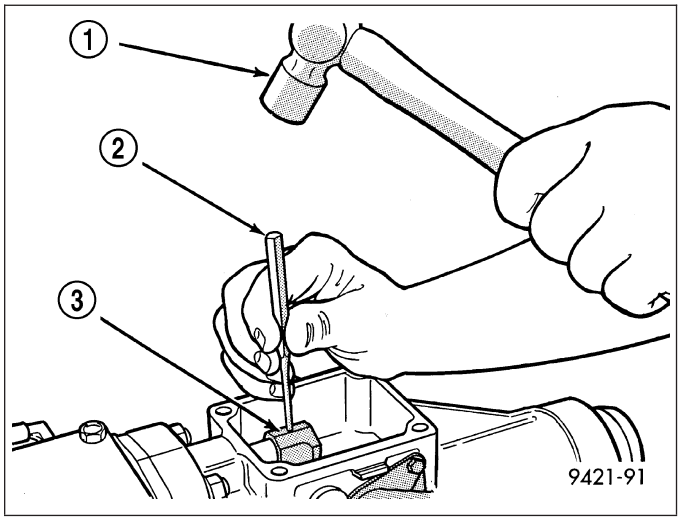

3. Remove offset lever (1) from tail housing (2).
.

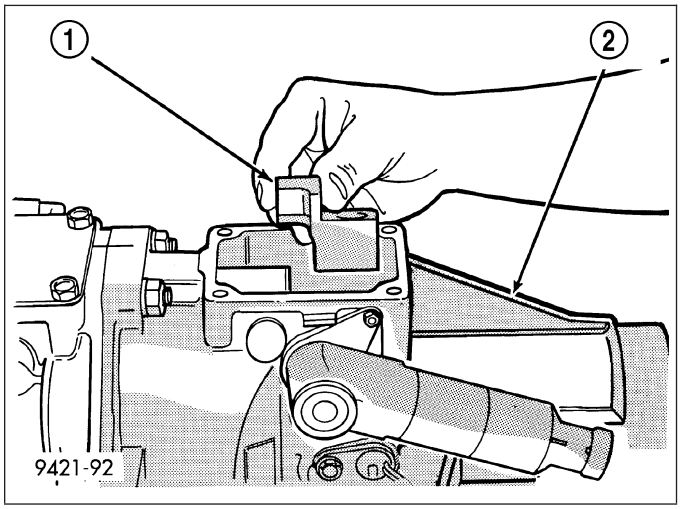

4. Remove two tail housing nuts (2) from top of the transmission tail housing (3).

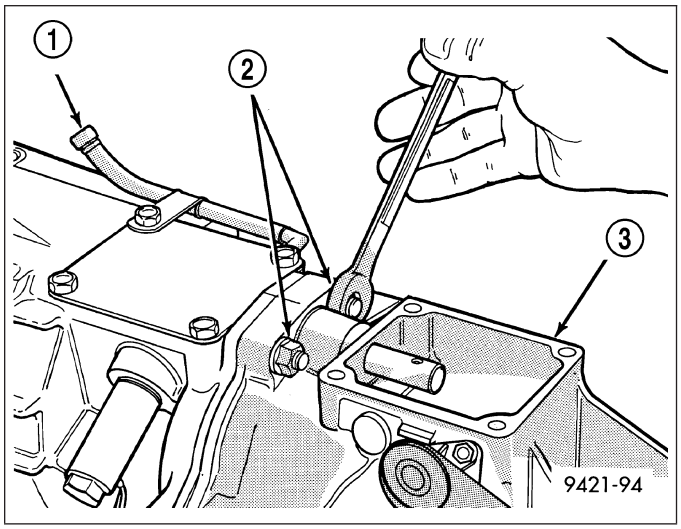

5. Remove six tail housing (1) bolts (2).

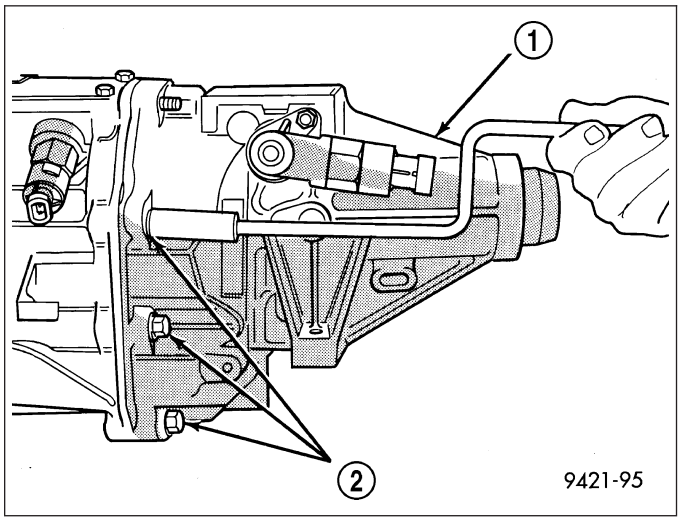

6. Pry tail housing (1) off case at pry points (2) (4) only.

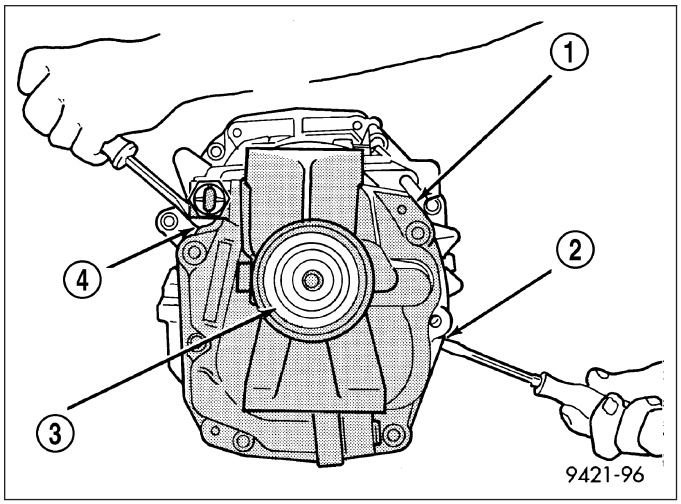

7. Remove mainshaft (3) roller bearing snap ring, roller bearing (4) and spacers (2).

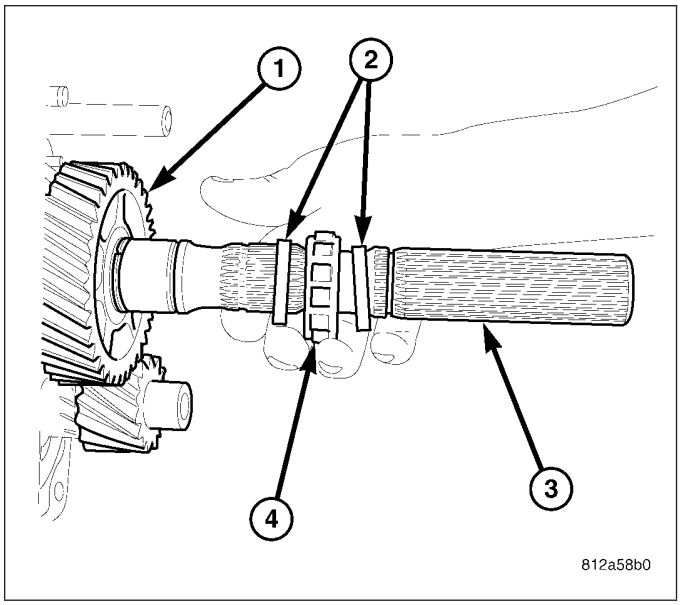

8. Remove reverse gear (1) snap ring (4) and thrust washer (2) from mainshaft.

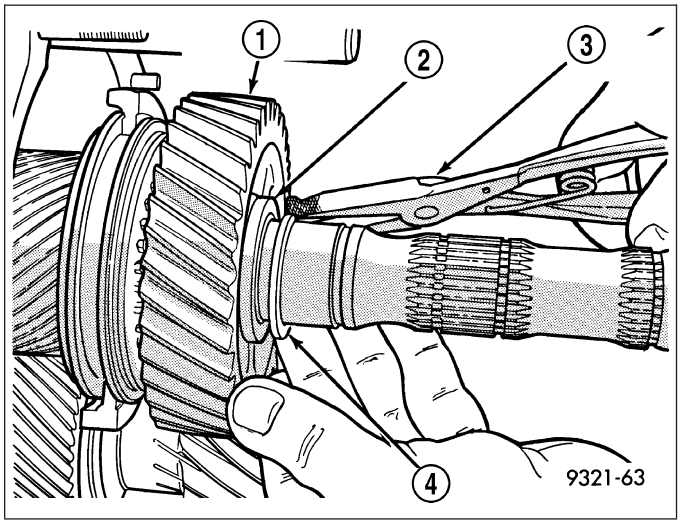

9. Remove reverse gear (3), bearing (5), wave washer (2) and brass reverse blocker ring (1) from mainshaft (4).

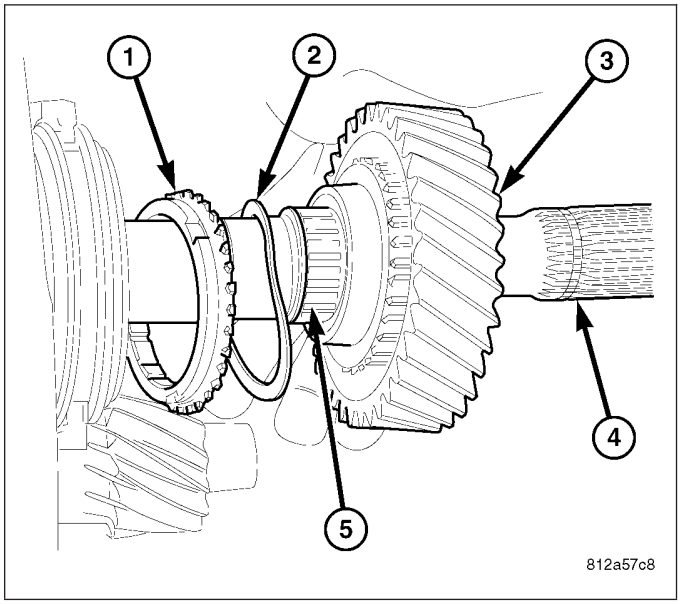

10. Tap reverse synchronizer (3) to relieve pressure on snap ring and remove snap ring.

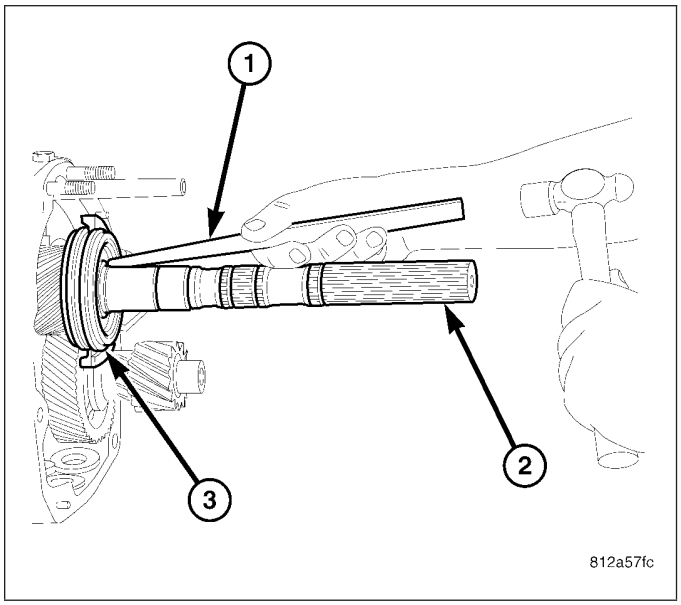

11. Remove reverse shift fork (1) snap ring (2) and discard snap ring.

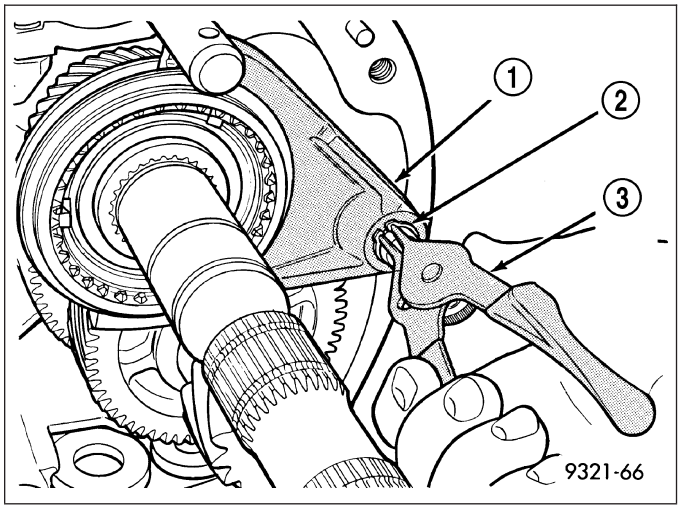

12. Remove reverse synchronizer (1) sleeve snap ring (2).

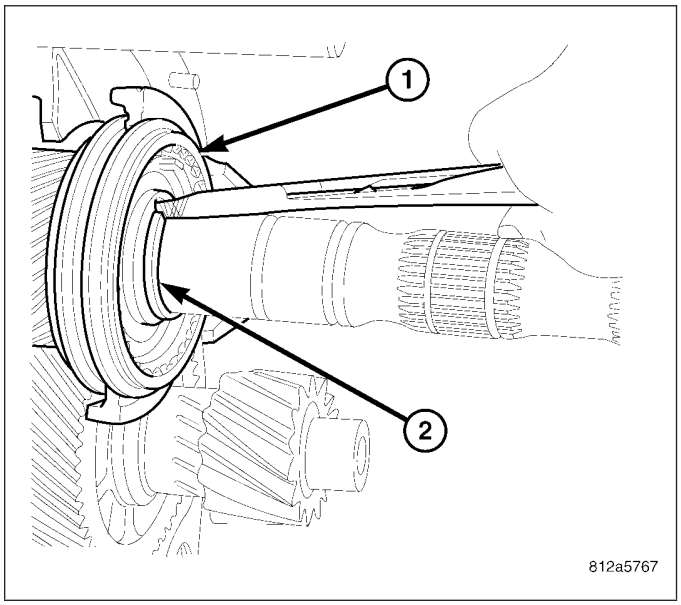

13. Remove shift fork (1) and synchronizer (2) sleeve as an assembly.

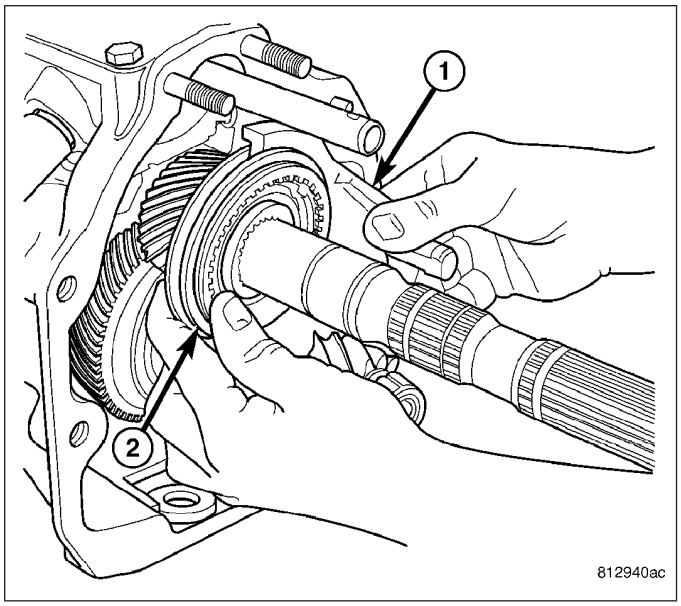

14. Remove 5-6 gear shift fork (1) snap ring (2).

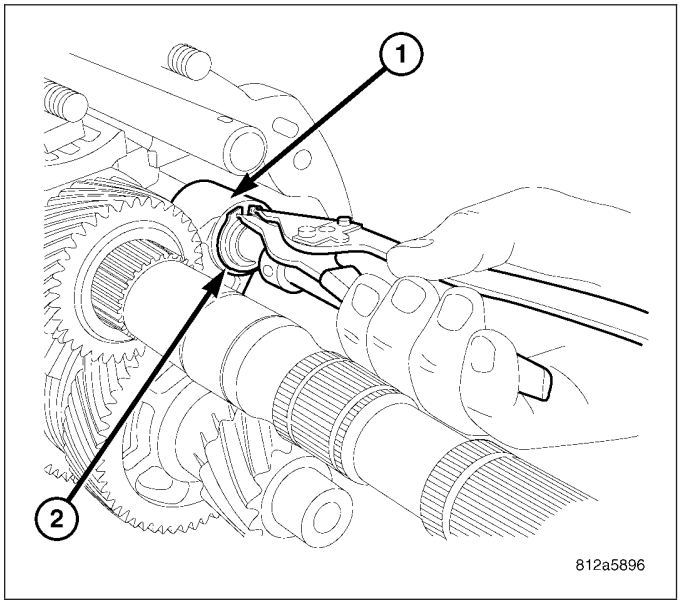

15. Remove reverse gear (1) from countershaft with three jaw puller (2).

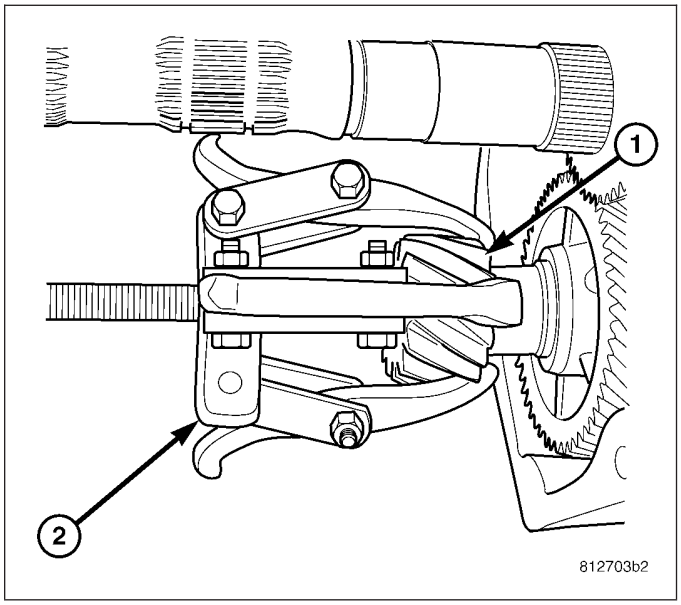

16. Remove fifth gear (1) snap ring (2) from countershaft.

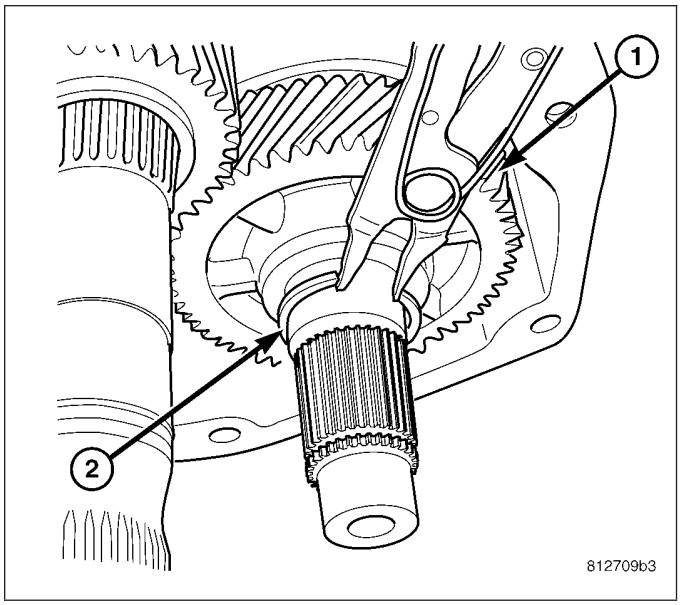

17. Remove fifth gear (1) thrust washer (2) from countershaft.

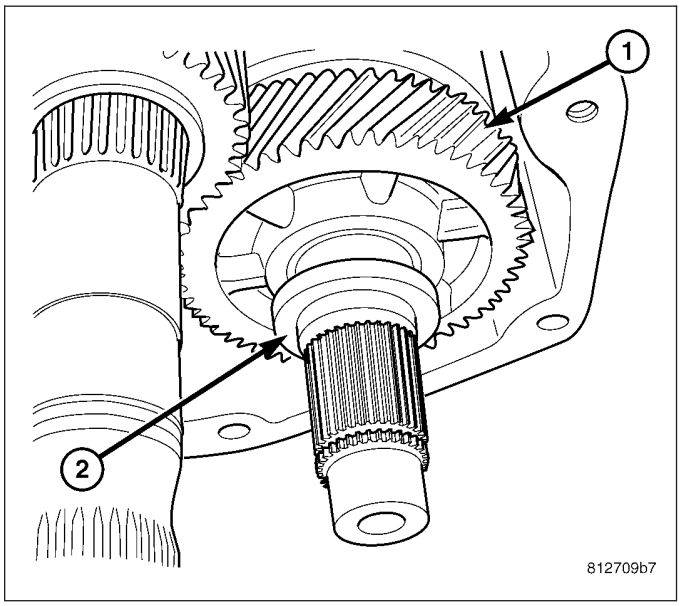

18. Remove fifth gear (1) and bearing from countershaft (2).

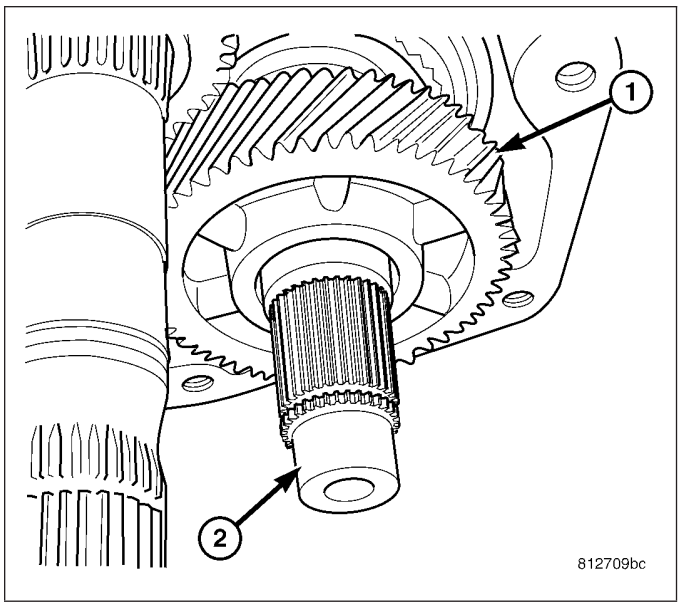

19. Remove 5-6 gear (1) from mainshaft with Puller 9379 (2), Bolts 9378 and Bridge 9382.

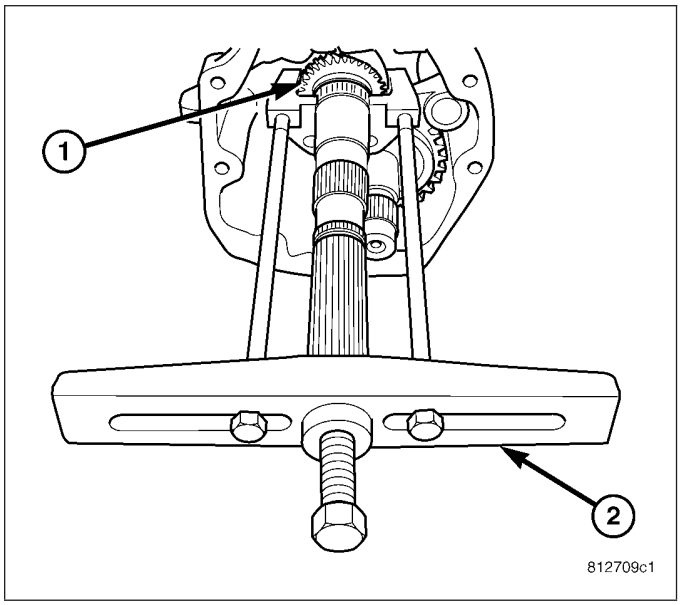

20. Remove shift fork (1) and 5-6 synchronizer sleeve (2).

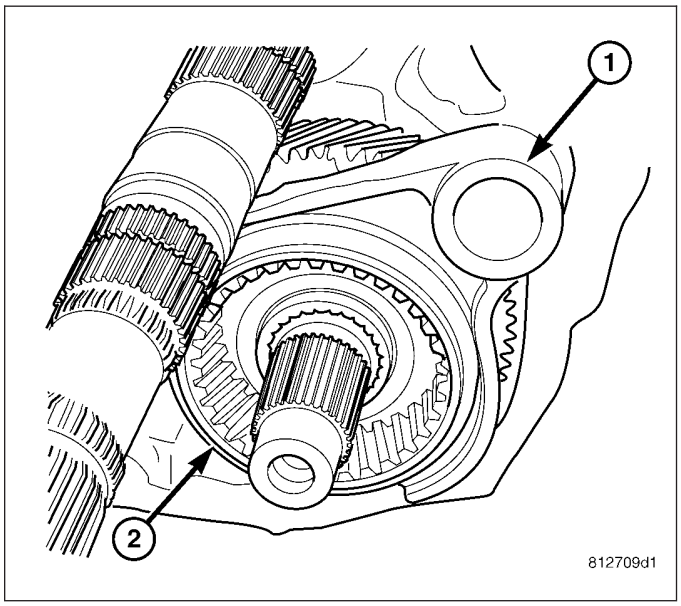

21. Remove 5-6 synchronizer snap ring and synchronizer hub (1) from countershaft (2).

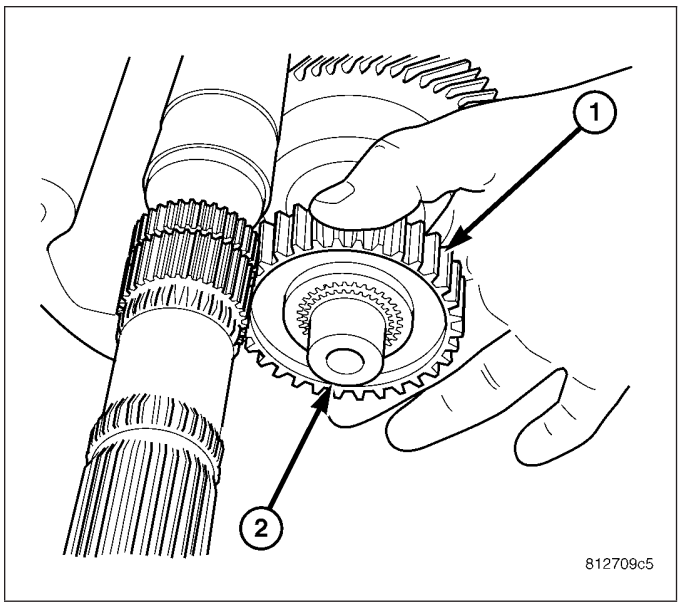

22. Remove sixth gear synchronizer stop ring (1) from countershaft (2).

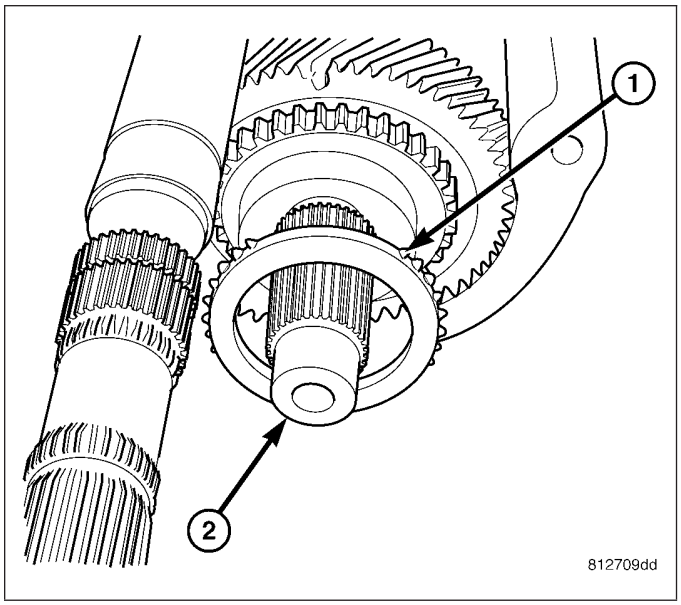

23. Remove sixth gear (1), bearing and thrust washer from countershaft (2).

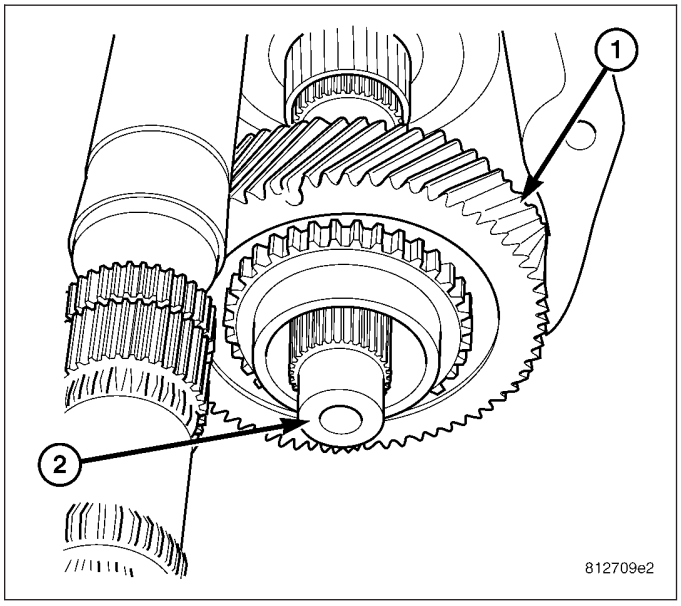

24. Remove top cover plate (2) bolts and pry off cover.

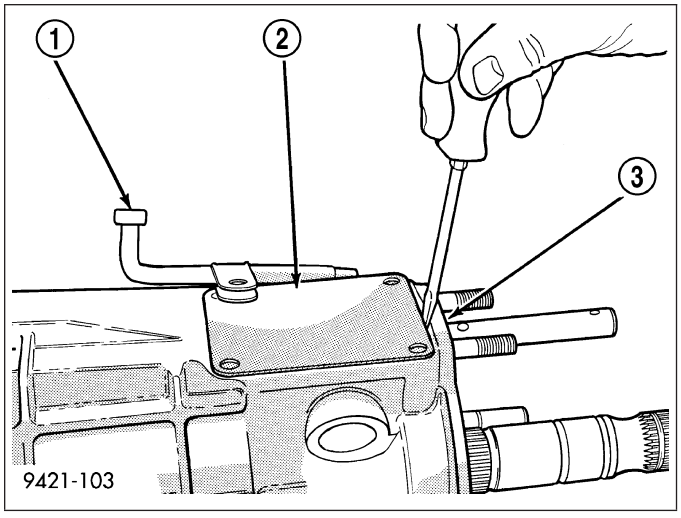

25. Remove shift detent (1) assembly.

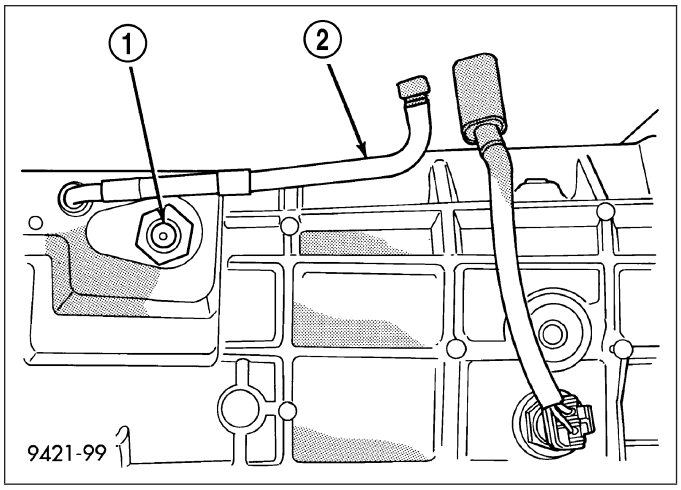

26. Drive roll pin down into front offset lever (3) until loose.

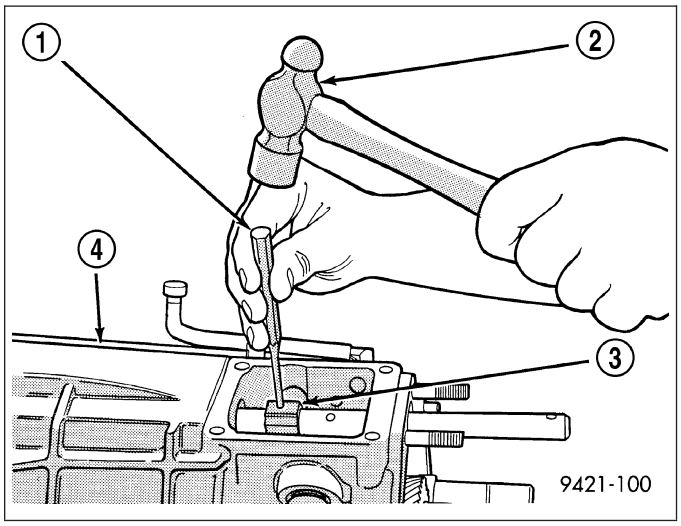

27. Remove reverse lockout solenoid
28. Separate offset lever and guide plate to remove the roll pin that was driven down in Step 26of this procedure.
29. Remove two torx screws (2) located on the top of the transmission case (1).
30. Remove clutch slave cylinder from transmission.

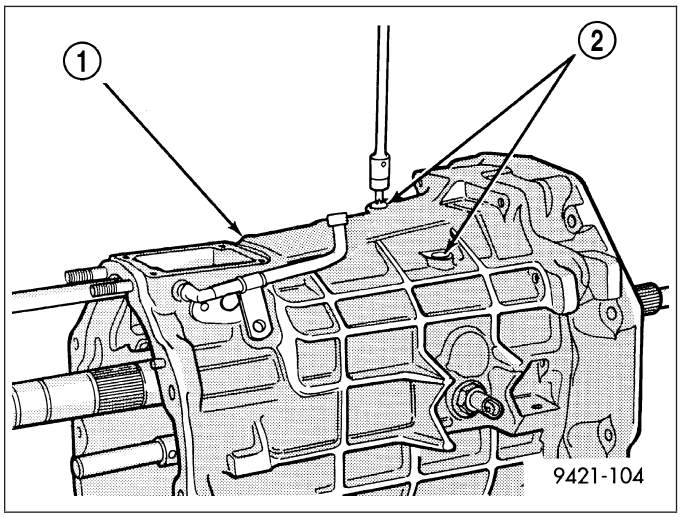

31. Remove all front adapter plate (2) bolts (3) except one to hold the front adapter in place.
32. Stand transmission on Fixture 9387 and bolt adapter to fixture.
33. Install on bench Fixture 9385.

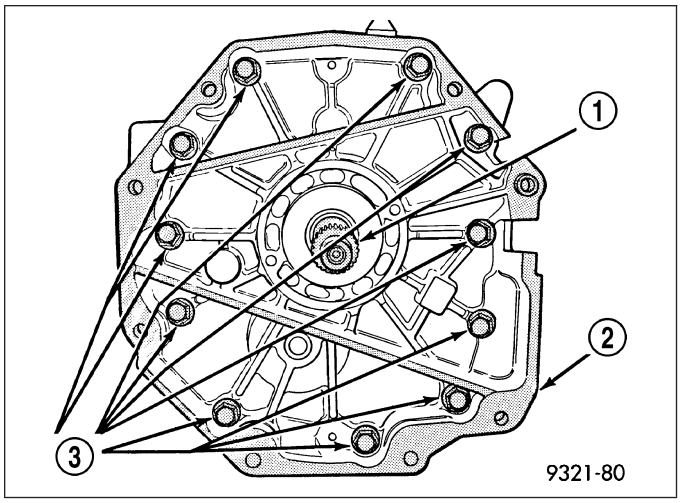

34. Remove remaining adapter bolt and pry transmission case (1) upward. Remove offset lever from shift rail and case from adapter plate (2).

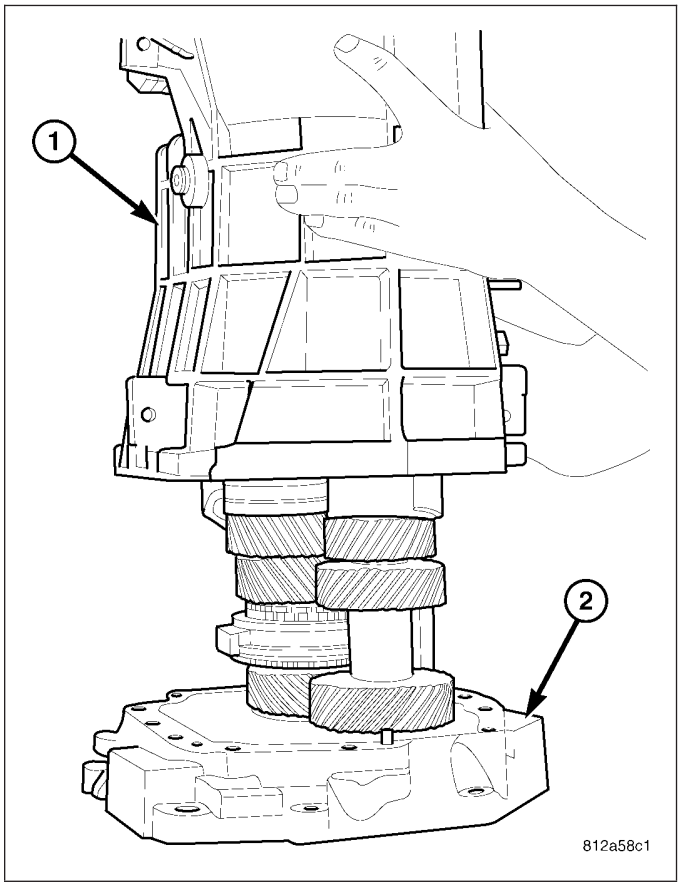

35. Remove reverse rail (2) assembly.

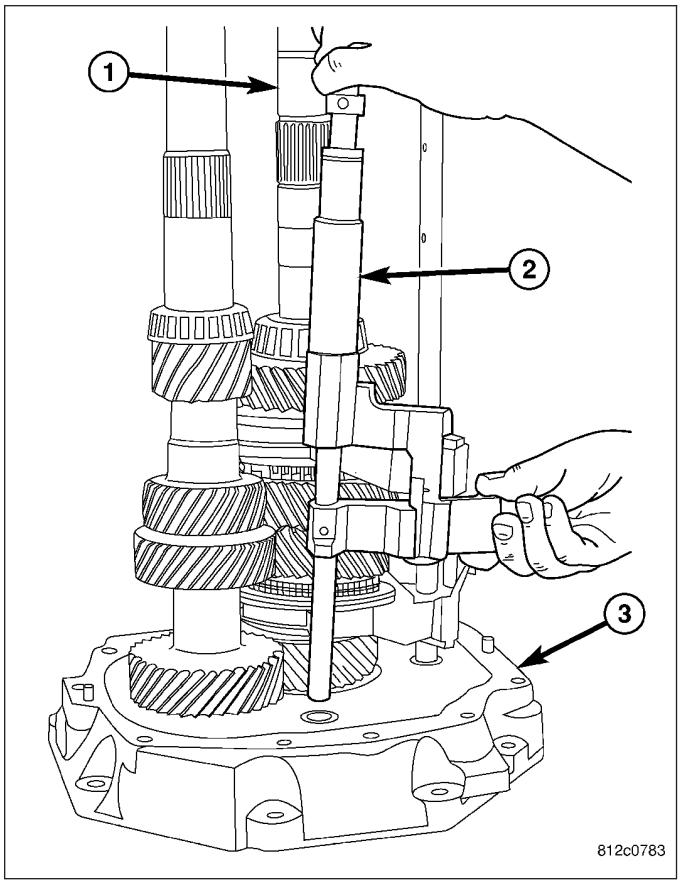

36. Tilt countershaft (4) sideways and lift mainshaft (1) and shift rail a (2) assemblies out of adapter plate (3).

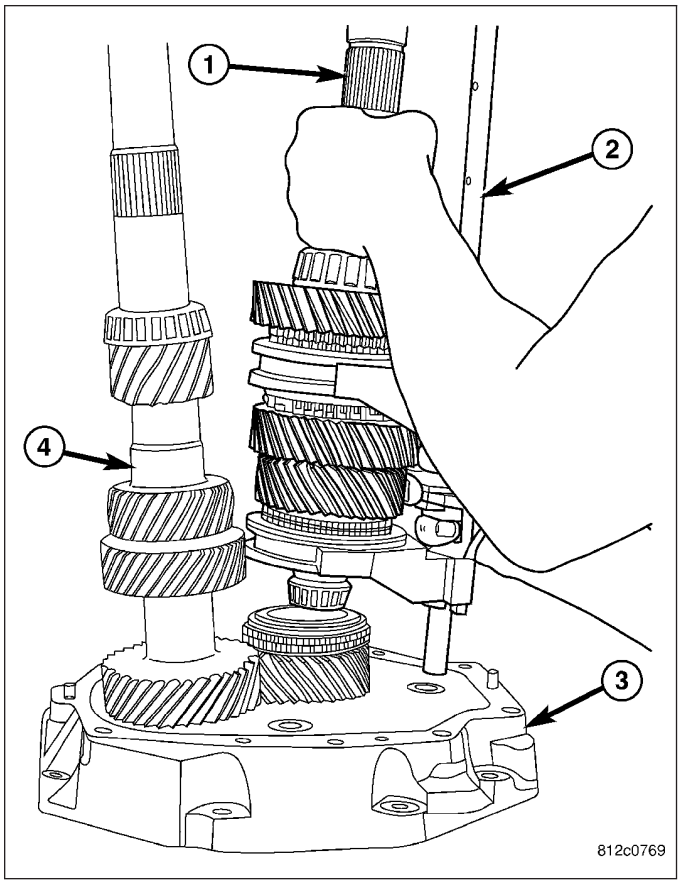

37. Remove countershaft (1) assembly.

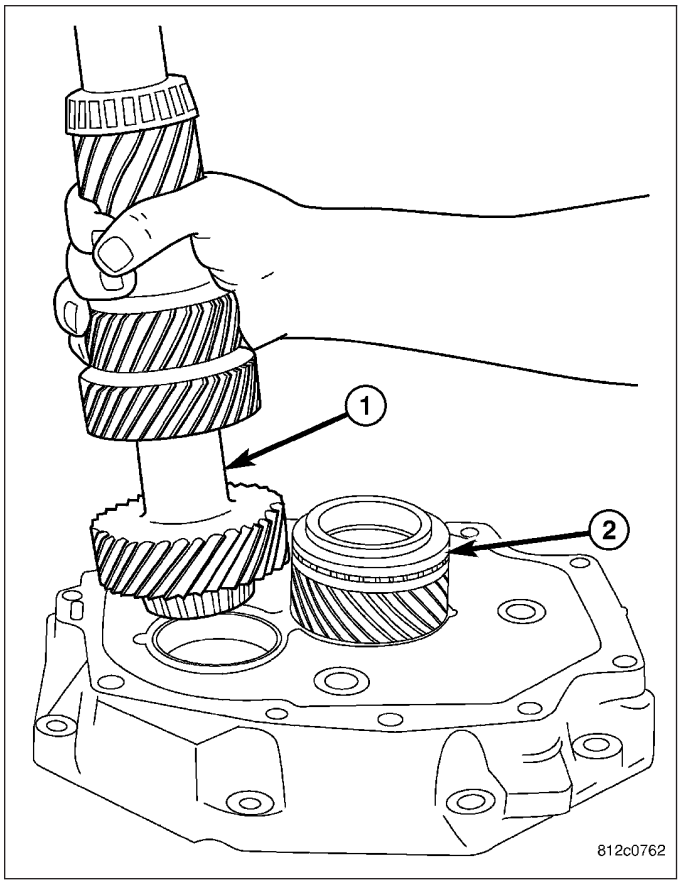

38. Remove input shaft (2) from adapter (3).

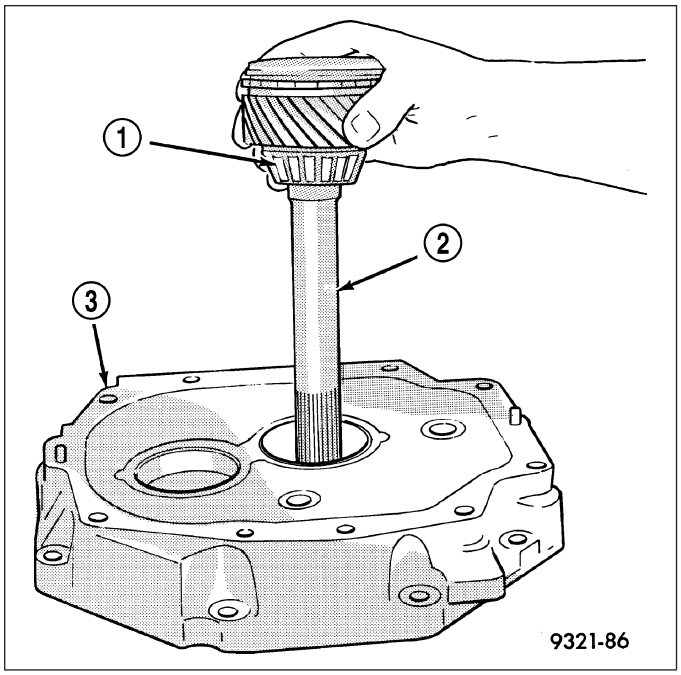

MAINSHAFT

NOTE: Mainshaft snap rings are not interchangeable.

1. Remove and discard mainshaft (2) O-ring (3).

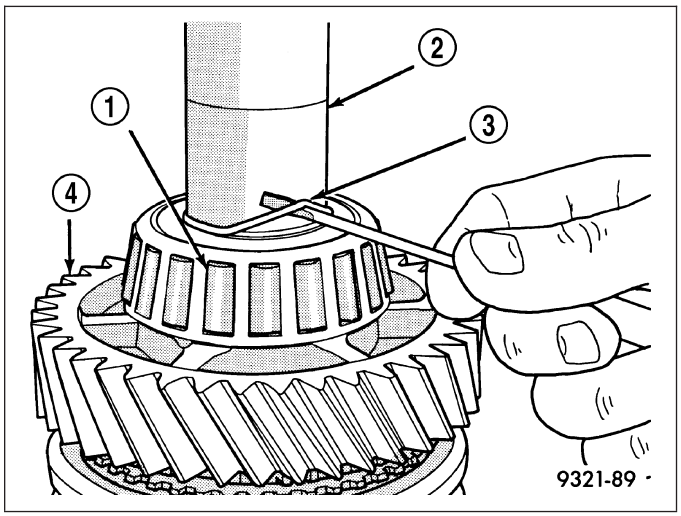

2. Remove rear mainshaft (2) bearing (1).

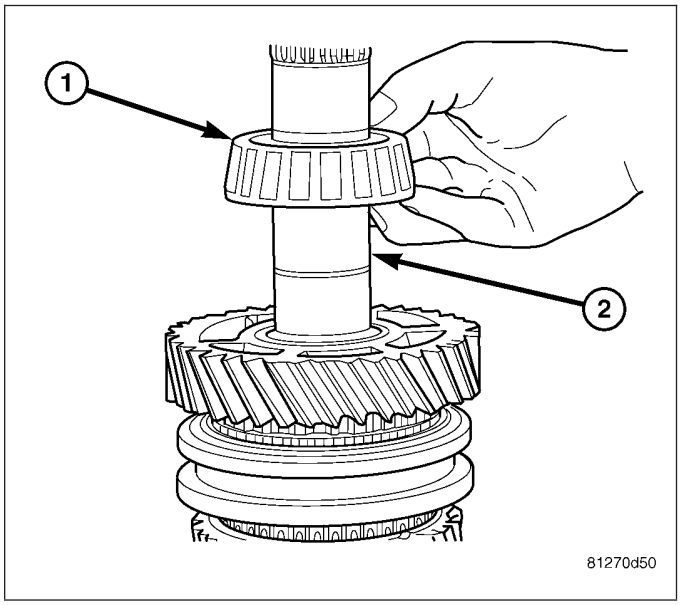

3. Remove first gear (1) and bearing (2) from mainshaft.

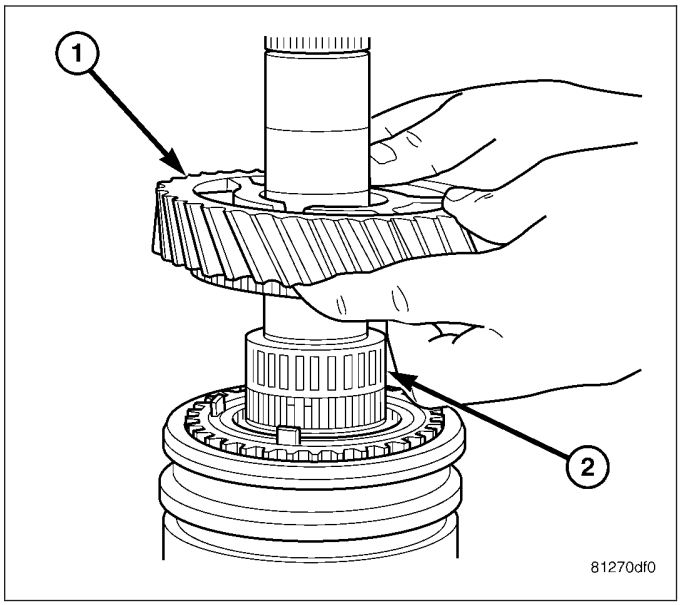

4. Remove 1-2 synchronizer (1) snap ring (2) from mainshaft.

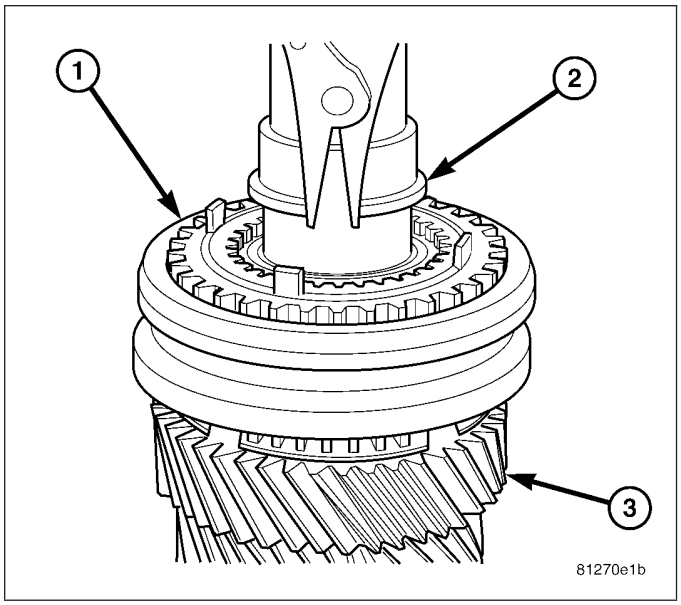

5. Remove 1-2 thrust washer (1) and blocker ring assembly from mainshaft.

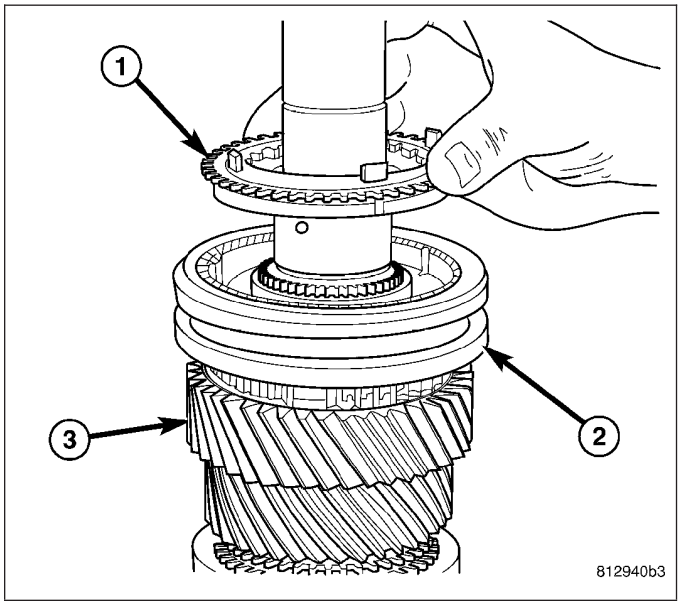

6. Press second gear (3) and synchronizer (2) hub off mainshaft (1) with Splitter 9375 (4).

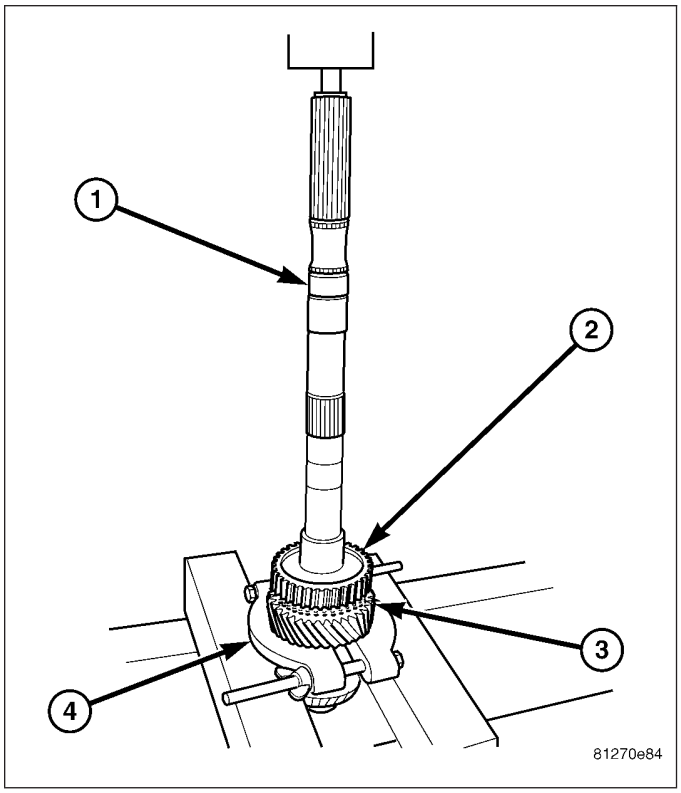

7. Remove 3-4 synchronizer (1) snap ring (2).

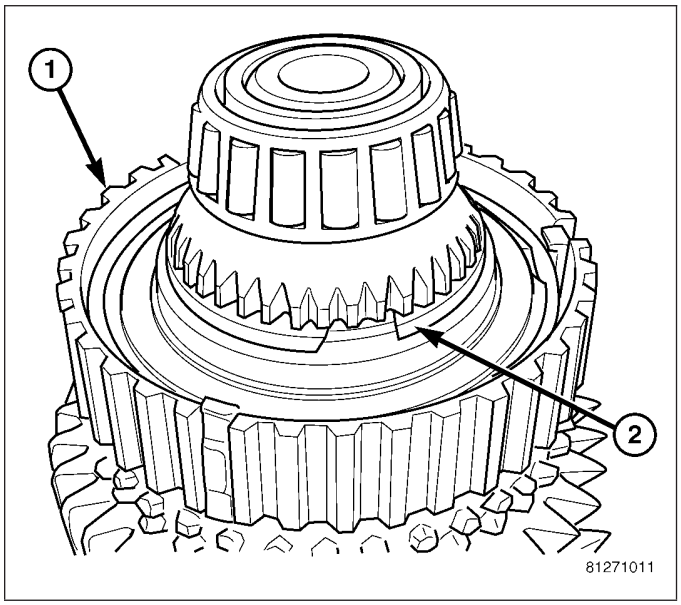

8. Press third gear (1), 3-4 synchronizer (2) hub and sleeve off mainshaft with Splitter 9375 (3).

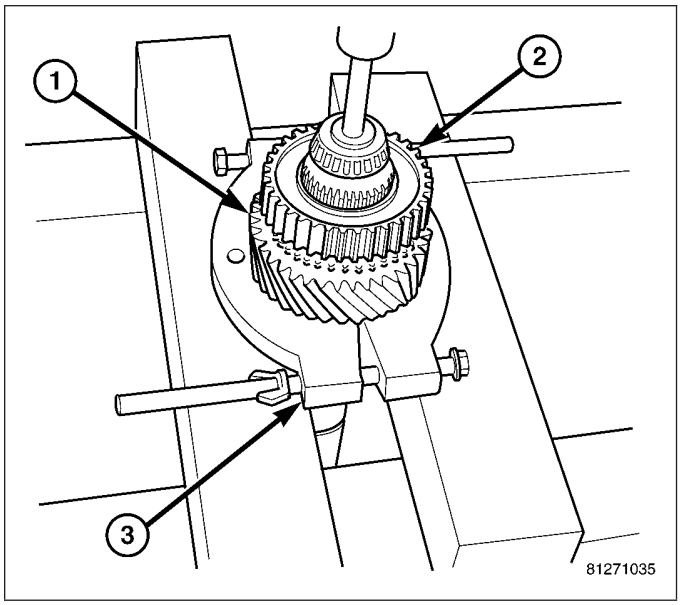

9. Remove third gear bearing (2) and spacer (1) from mainshaft.

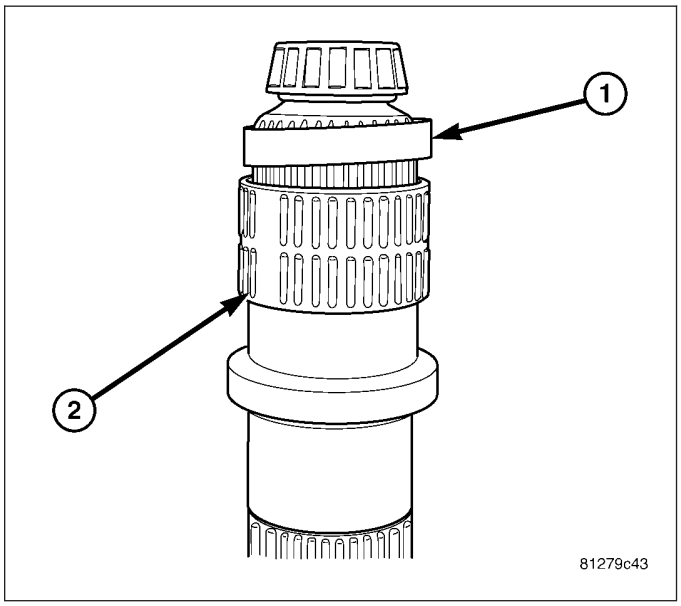

10. Remove mainshaft tapered bearing (1) with bearing Splitter 9386 (2) and press.

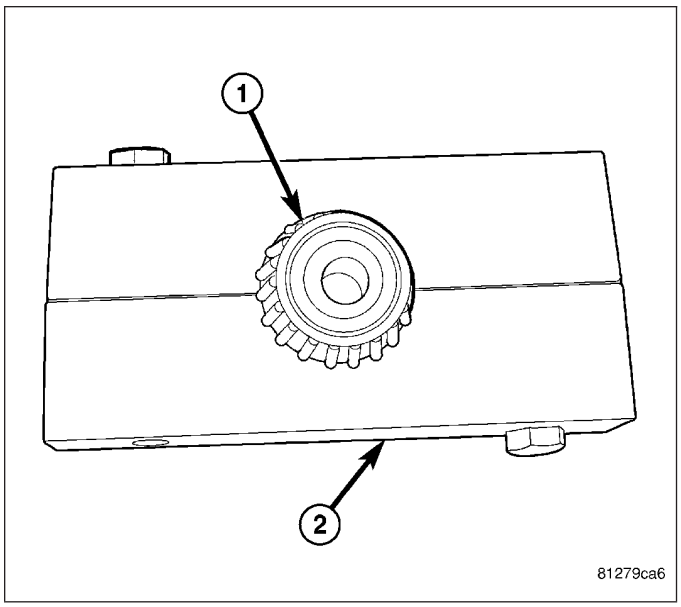

COUNTERSHAFT

1. Remove countershaft adapter plate bearing (2) with Splitter 9388 (1) and Press Adapter 9377 (3).

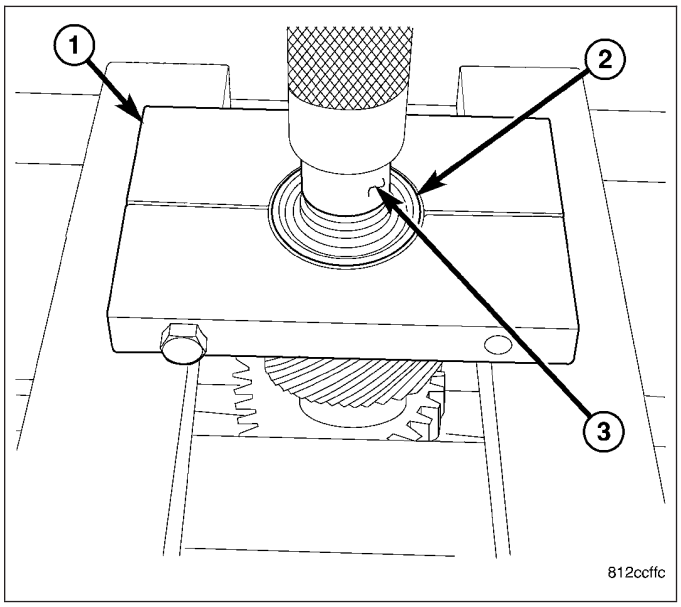

2. Remove countershaft (1) housing bearing (2) with Splitter 9384 (3) and a press.

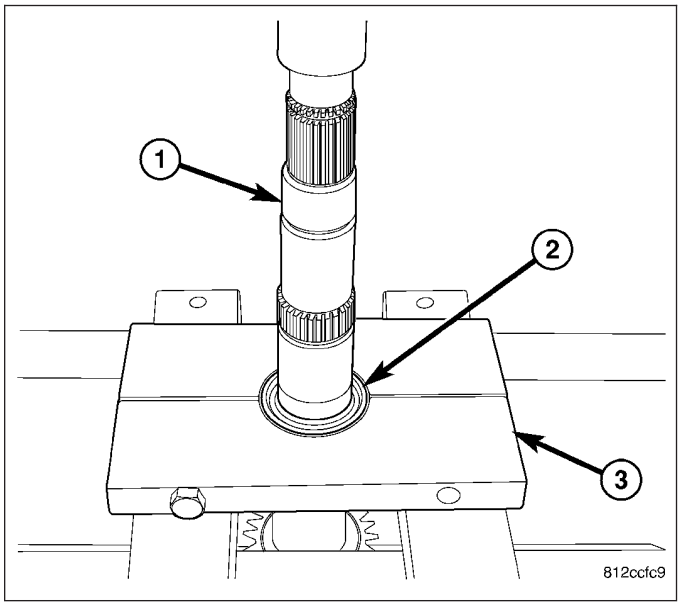

INPUT SHAFT

1. Remove input shaft (1) bearing (2) with Splitter 9384 (3) and a press.

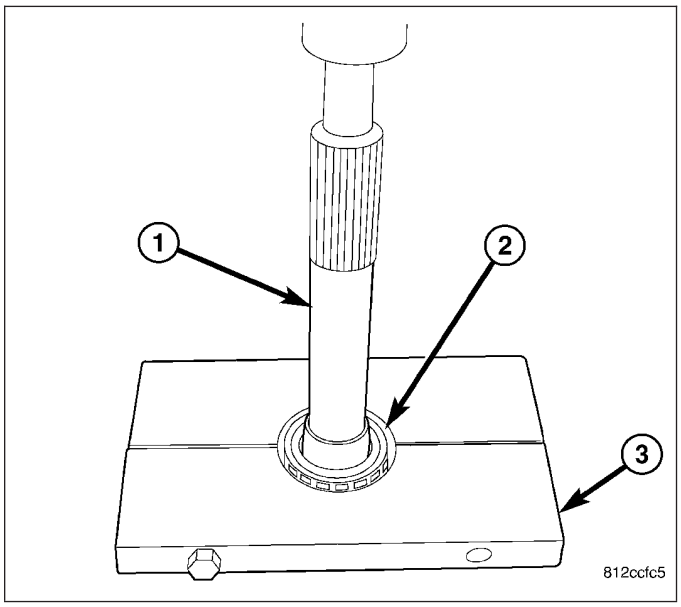

2. Remove input shaft bearing cup (2) with Remover 9381 (1) and Slide Hammer C-3752.

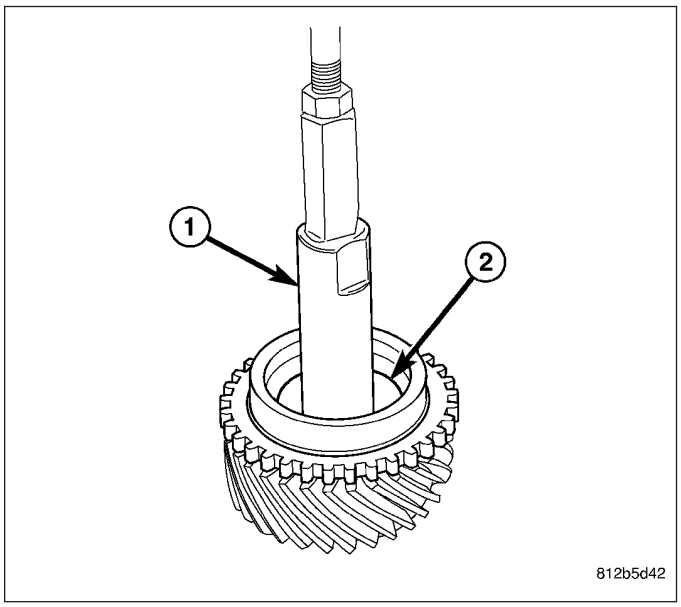

EXTENSION HOUSING

1. Remove idler gear bracket bolts (2) and bracket.

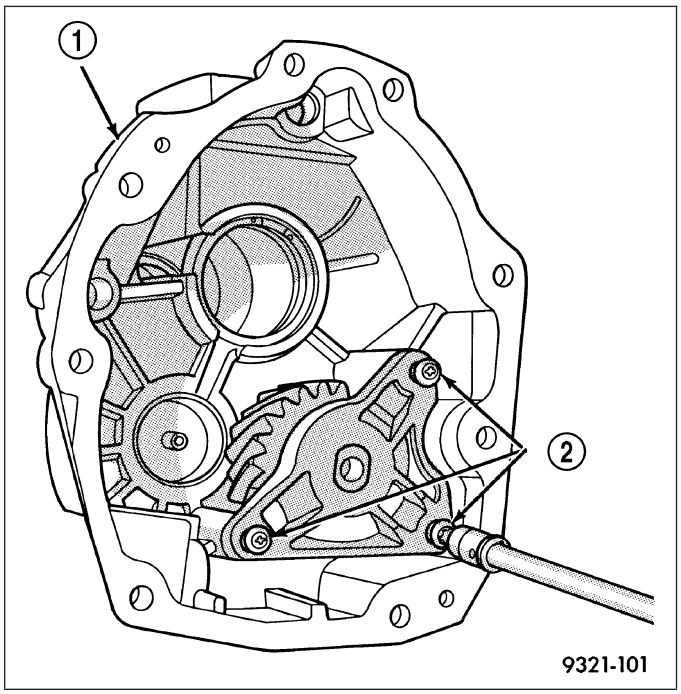

2. Remove thrust washer, gear (3) and bearing (2) from tail housing (1).
3. Remove gear shaft.

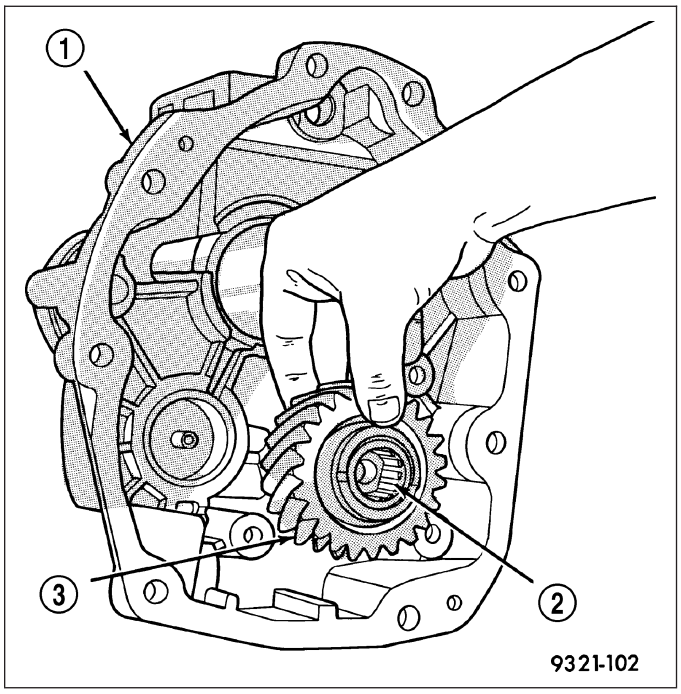

4. Remove mainshaft bearing race (1) snap ring (2).

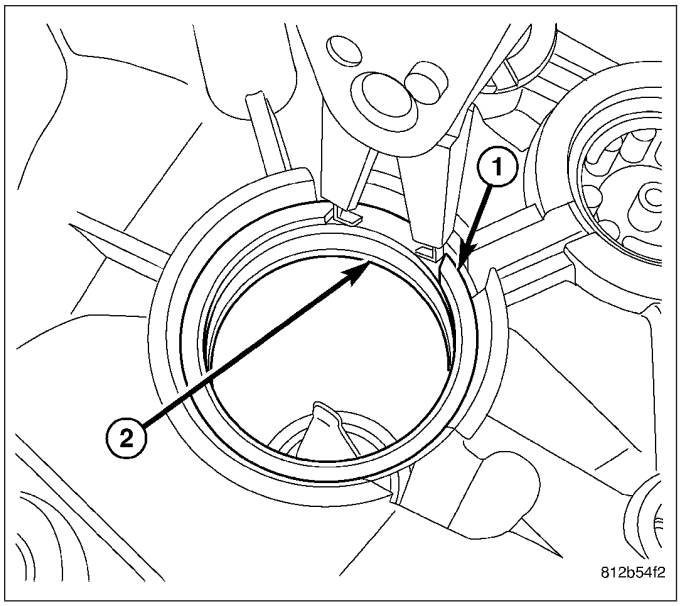

5. Remove mainshaft race (2) with Remove 7794-A (1) and Slide Hammer C-637.

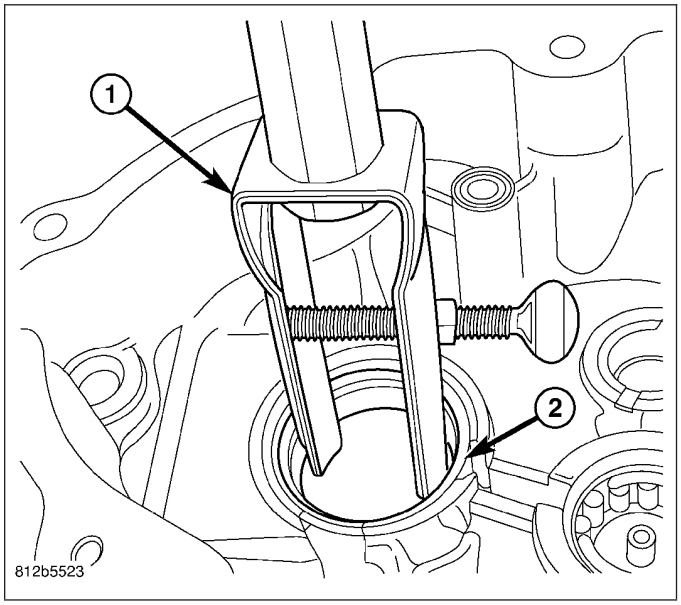

6. Remove countershaft bearing plastic bearing cage (2) and remove roller bearings (3).

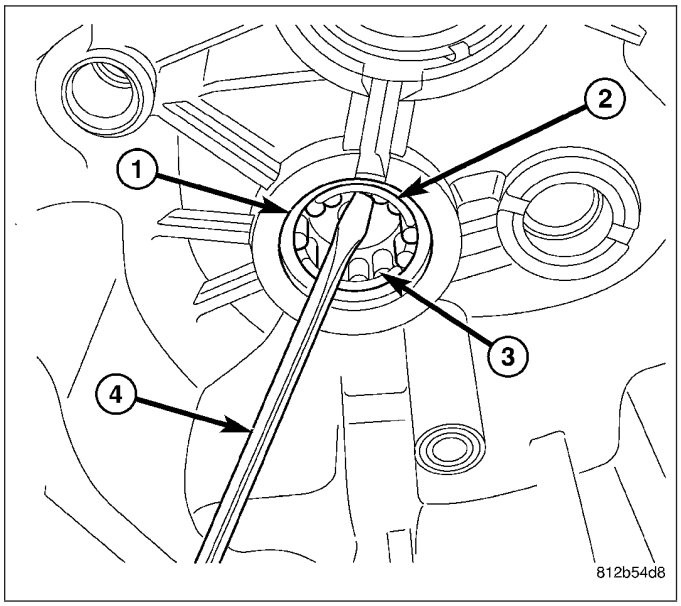

7. Remove countershaft bearing race (1) with Remover 9395 (2) and Slide Hammer C-637.

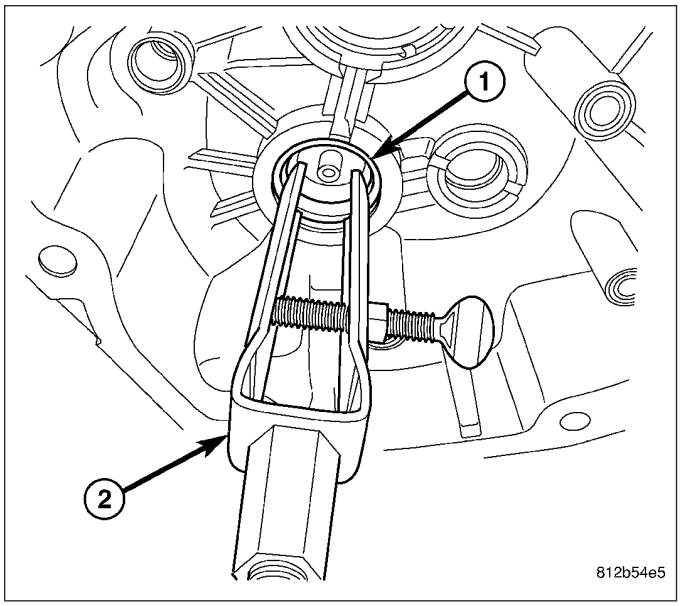

8. Remove shift rail bushings with Remover 9367 (1) and Slide Hammer C-3752 (2).

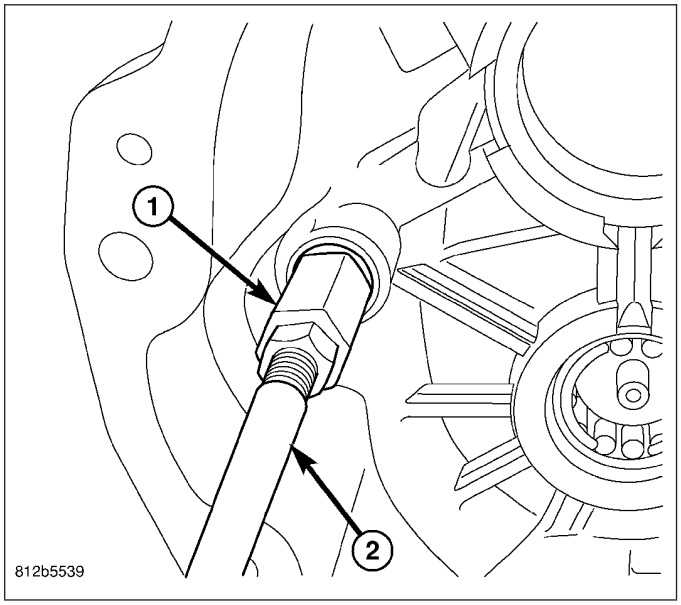

TRANSMISSION CASE

1. Remove shift rail bushings with Remover 9367 and Slide Hammer C-3752.
39. Remove countershaft bearing cups with Remover 9369 (1) and Handle C-4171(2).

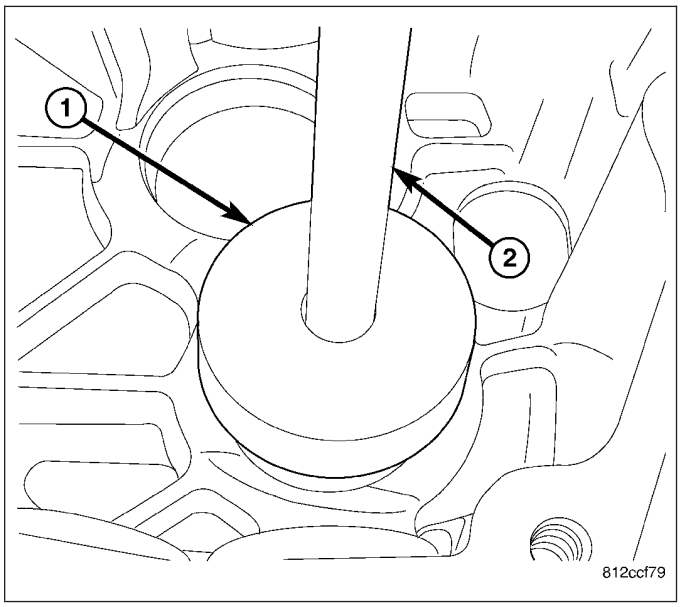

40. Remove mainshaft bearing cups with Remover 9369 (2) and Handle C-4171(1).
41. Remove offset lever guide plate.

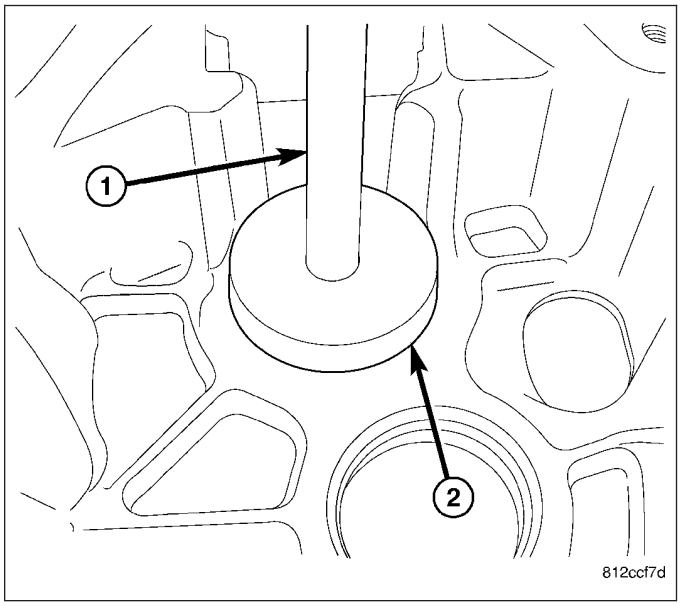

TRANSMISSION ADAPTER

1. Remove shift rail bushings (2) with Remover 9367 (3) and Slide Hammer C-3752 (1).
2. Remove countershaft and mainshaft bearing cups and select shims.
3. Remove input shaft seal.

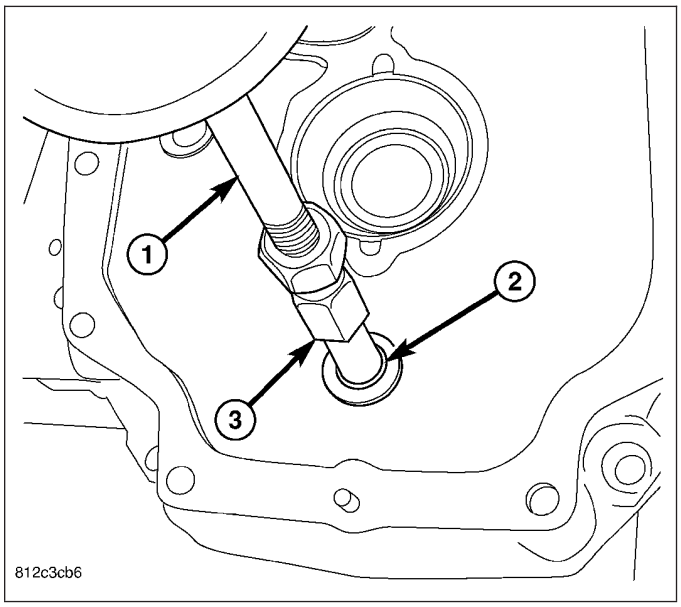

CLEANING

Clean the gears, bearings shafts, extension/adapter housing and gear case with solvent. Dry all parts except the bearings with compressed air. Allow the bearings to either air dry or wipe them dry with clean shop towels.

INSPECTION

1. Inspect bearings, shaft and thrust washers. Replace bearings and mating components if worn, chipped, cracked, flat-spotted or brinnelled.
2. Inspect gear tooth surface and replace gear if worn, chipped, cracked.
3. Inspect synchronizers components, if any component is worn or damage, the synchro must be replaced as and assembly.
4. Inspect blocker rings and fiction cones. replace if worn, damaged or if friction material is burned.
5. Inspect shift forks for wear and distortion. Check fit of the sleeve in the fork. Replace fork if the roll pin holes are worn oversize or damaged. Replace shift fork roll pins if necessary or if doubt exists about their condition.
6. Inspect case and housing/adapter sealing and mating surfaces are free of burrs and nicks. Inspect alignment dowels in case, housing and adapter. Replace gear case housing, adapter or extension housing if cracked or broken.

ASSEMBLY

TRANSMISSION ADAPTER

1. Install shift rail bushings (2) with Installer 9368 (3) and Handle C-4171 (1).
2. Install input shaft seal with Installer 9366.

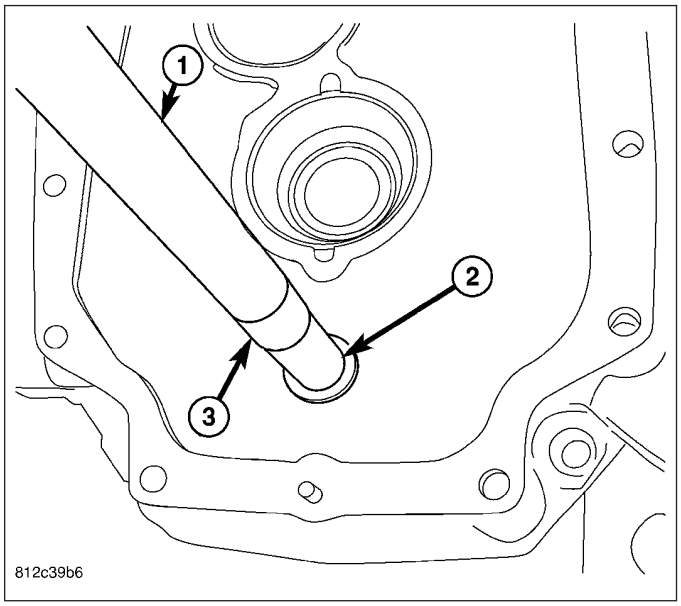

3. Install countershaft and mainshaft select shims (1) in bearing cup bores (2).

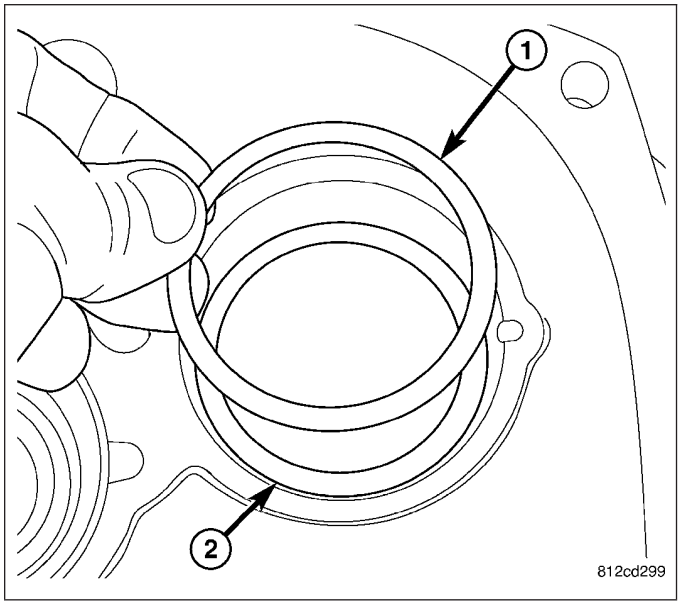

4. Install countershaft and mainshaft bearing cups (2) into adapter plate (2).

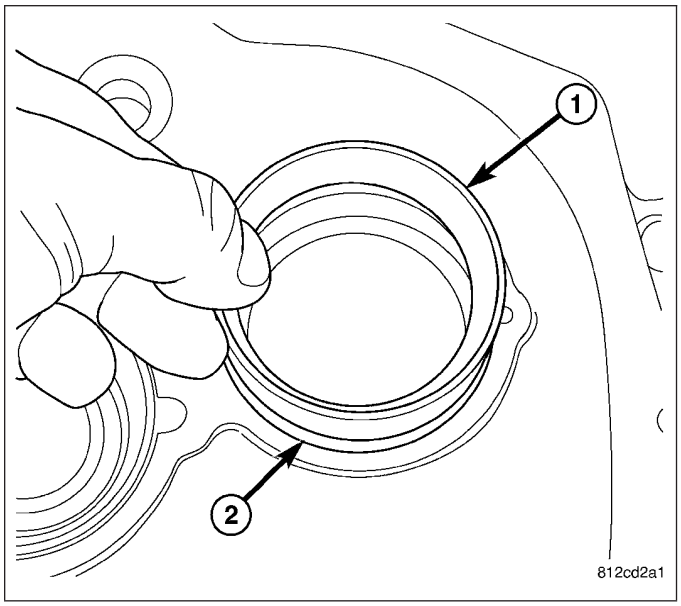

TRANSMISSION CASE

1. Install shift rail bushings with Installer 9368 and Handle C-4171.
2. Install mainshaft bearing cup with Installer 9373 (2) and Handle C-4171 (1).

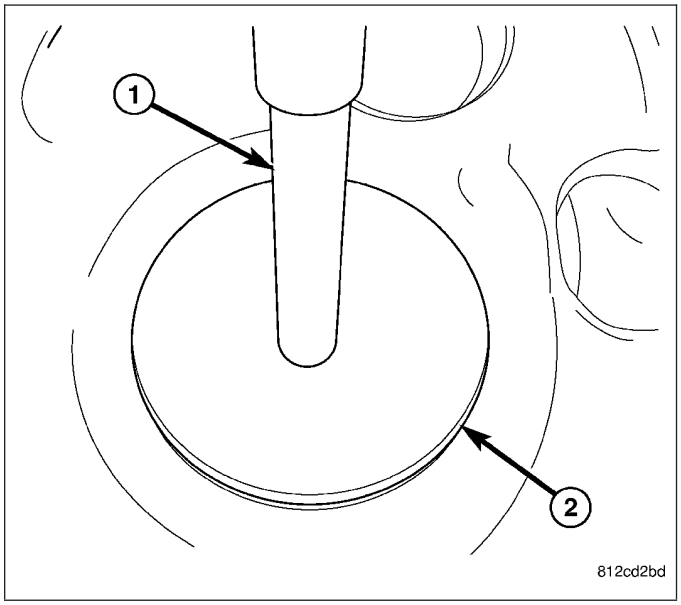

3. Install countershaft bearing cup with Installer 9373 (2) and Handle C-4171 (1).

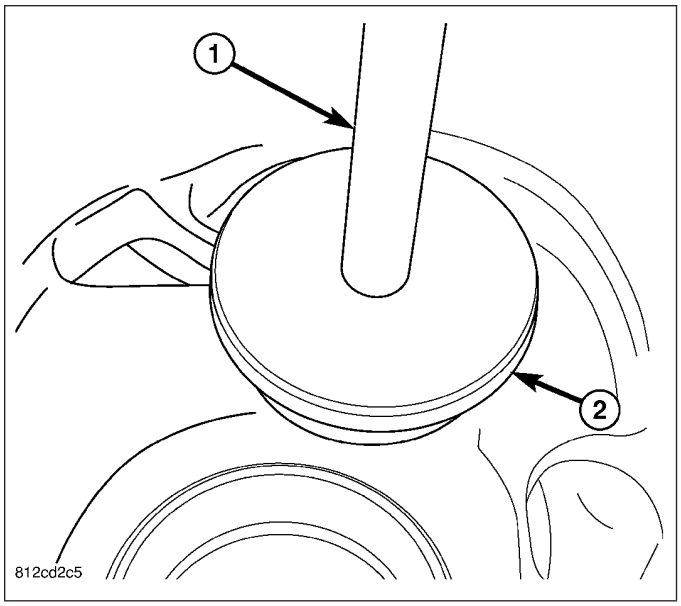

EXTENSION HOUSING

1. Install countershaft bearing (1) with Installer 9394 (2) and Handle C-4171 (3).

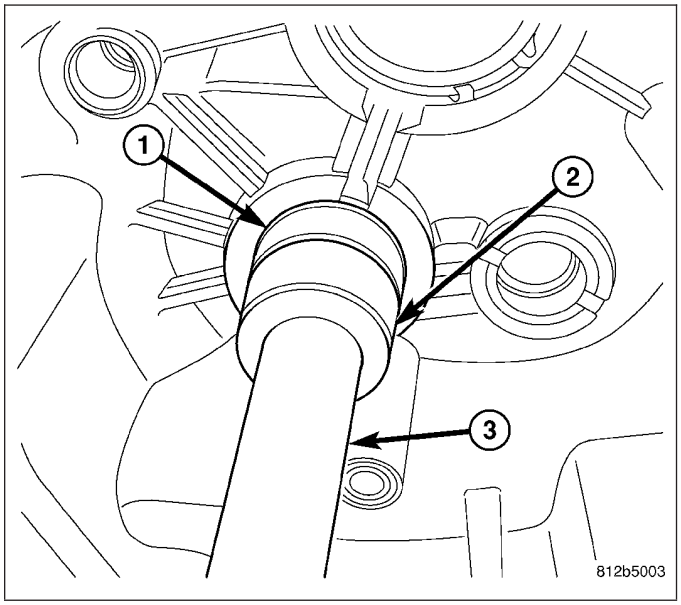

2. Install mainshaft roller bearing race (1) with Installer 9392 (2) and Handle C-4171 (3).
3. Install mainshaft roller bearing race snap ring.
4. Install shift rail bushings with Installer 9368 and Handle C-4171.

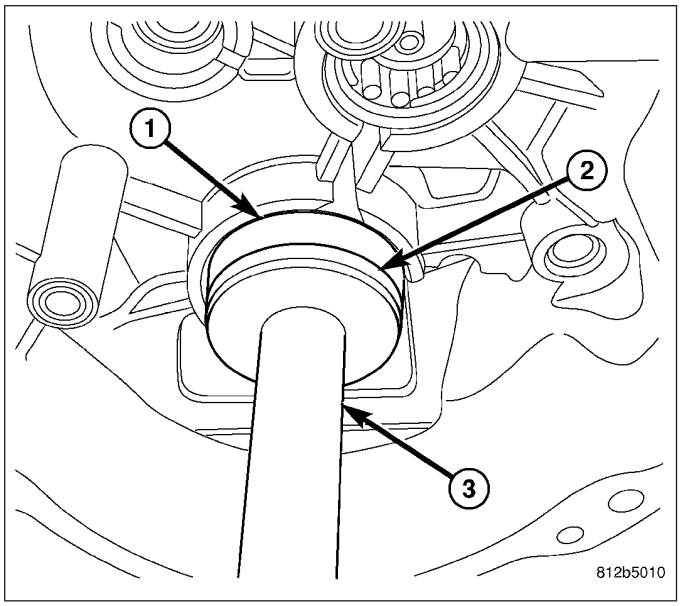

5. Install reverse idler gear shaft.
6. Install thrust washer, reverse idler gear (3) and bearing (2).

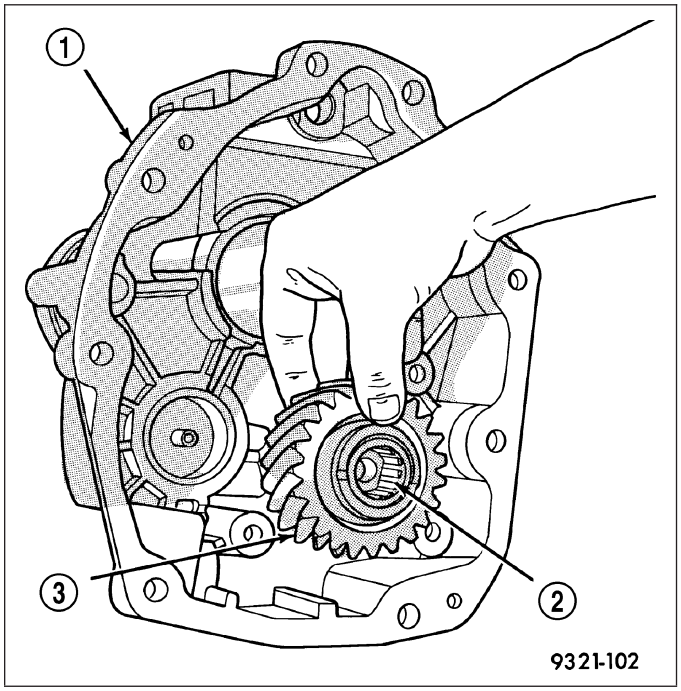

7. Install idler gear bracket into the tail housing (1). Install bolts (2) with Loctite® 242 and tighten to 24 N·m (18 ft. lbs.).

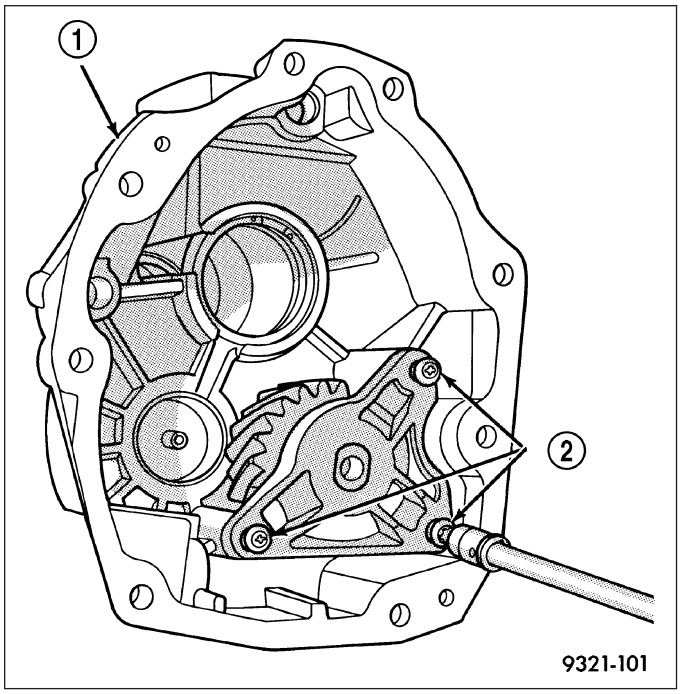

INPUT SHAFT

1. Install input shaft bearing cup with Installer 9380 (1) and Handle C-4171 (2).

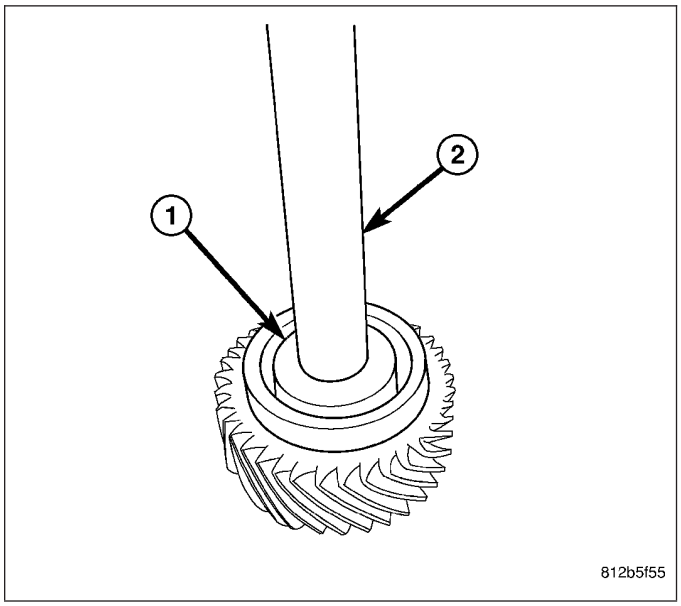

2. Install input shaft bearing (3) with Installer 6052 (2) and Tube MB991317 (1).

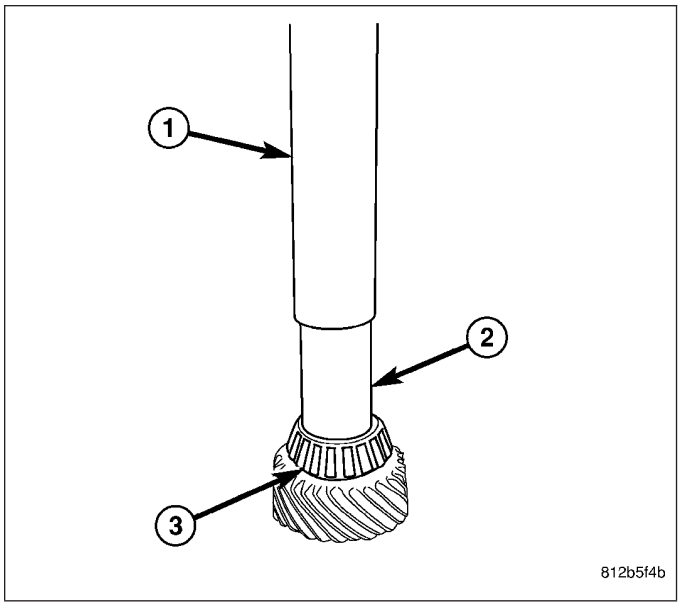

COUNTERSHAFT

1. Install countershaft (3) bearings (2) with Installer MB998909 (1) and a press.

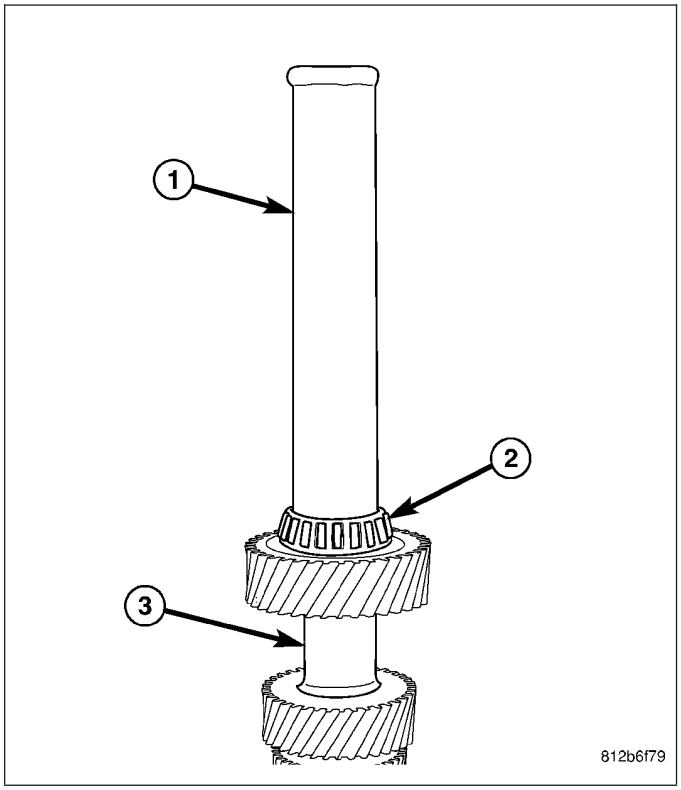

MAINSHAFT

CAUTION: Mainshaft snap rings are not interchangeable.

1. Install mainshaft (3) tapered bearing (2) with Installer 9377 (1) and a press.

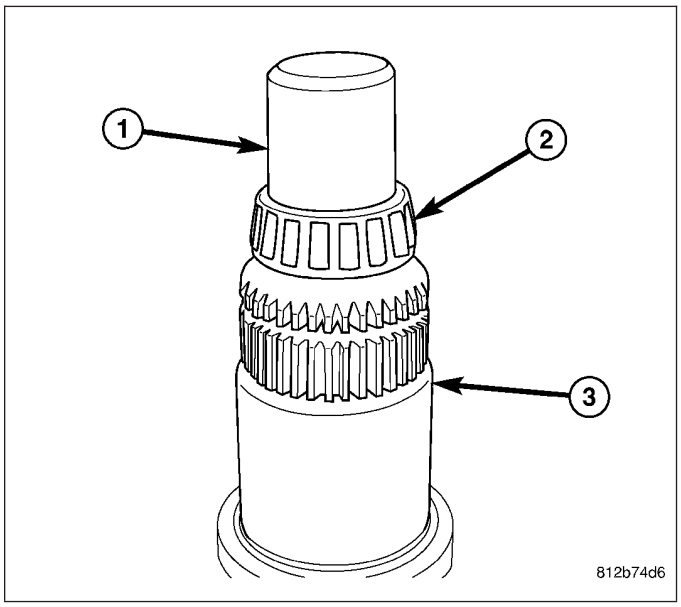

2. Install third gear bearing (2) and spacer (1) on mainshaft.

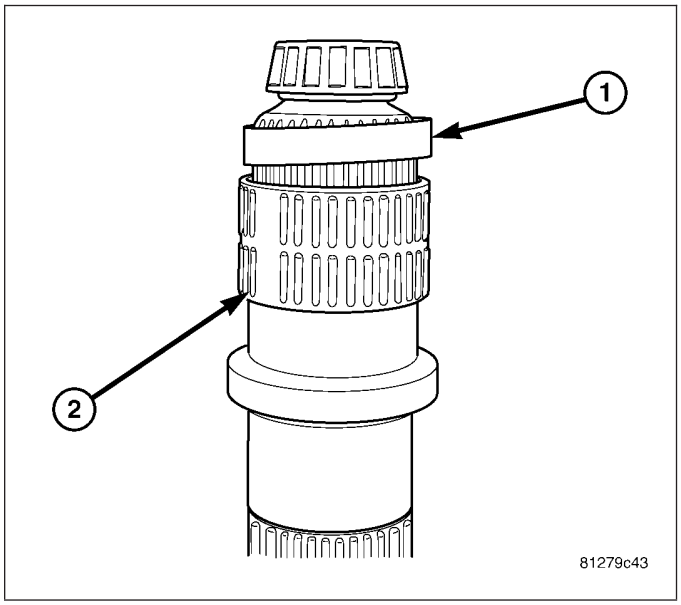

3. Press third gear (1) and 3-4 synchronizer hub (2) onto the mainshaft with Splitter 9375.

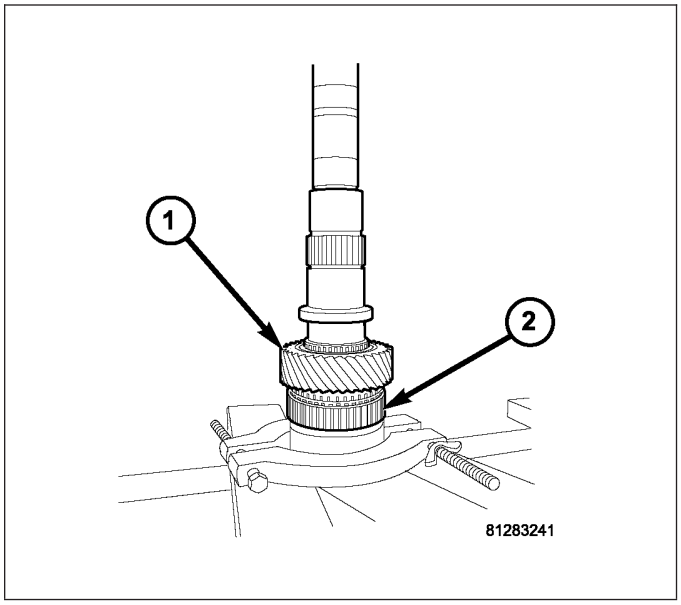

4. Install 3-4 synchronizer sleeve.
5. Install 3-4 synchronizer (1) **original** or **new** snap ring (2).

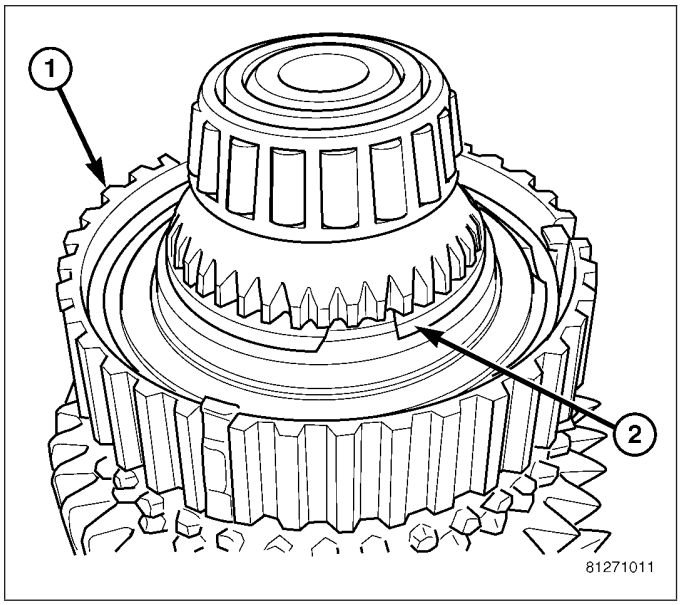

6. Press second gear (1) and 1-2 synchronizer hub (2) onto mainshaft with Splitter 9375.

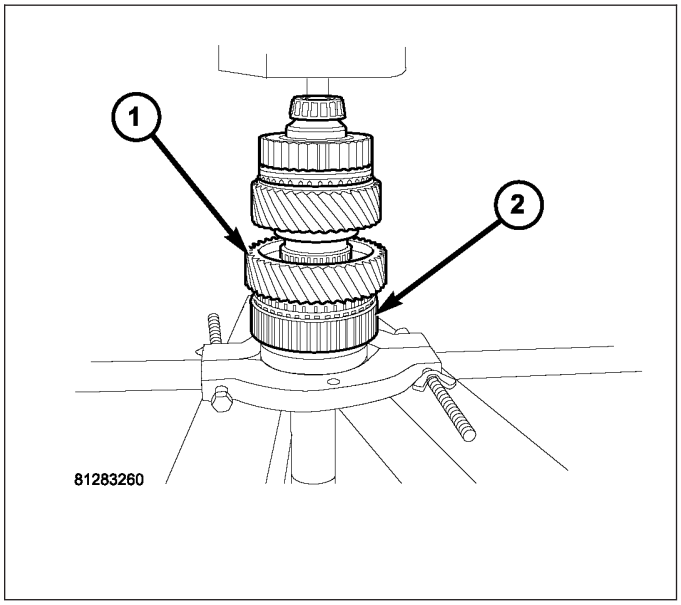

7. Install 1-2 thrust washer and blocker ring (1) assembly onto 1-2 synchronizer (2).

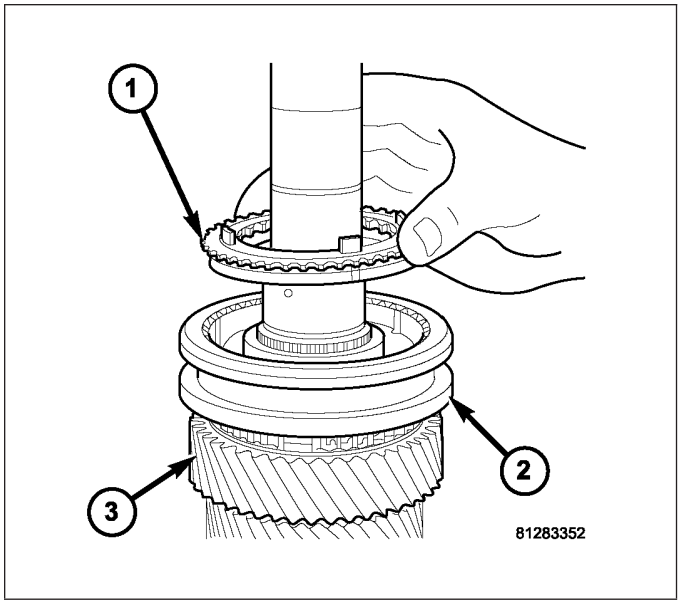

8. Install **original** or **new** 1-2 synchronizer (1) snap ring (2) on mainshaft.

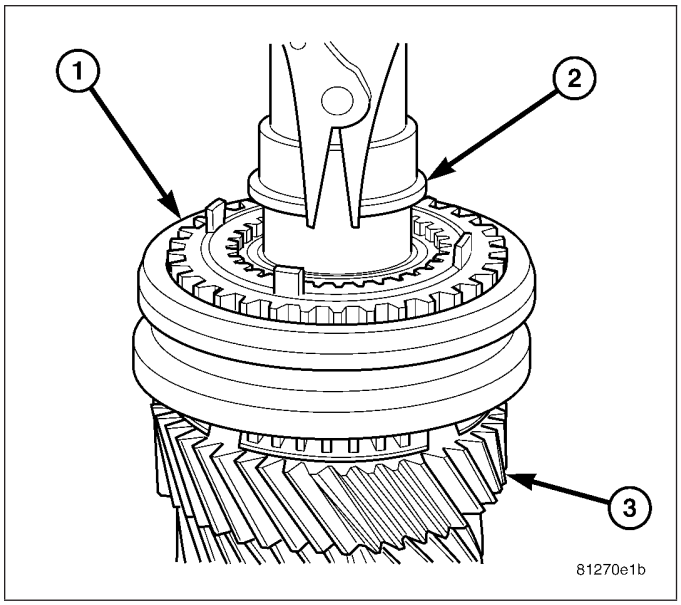

9. Install first gear (1) and bearing (2) on mainshaft.

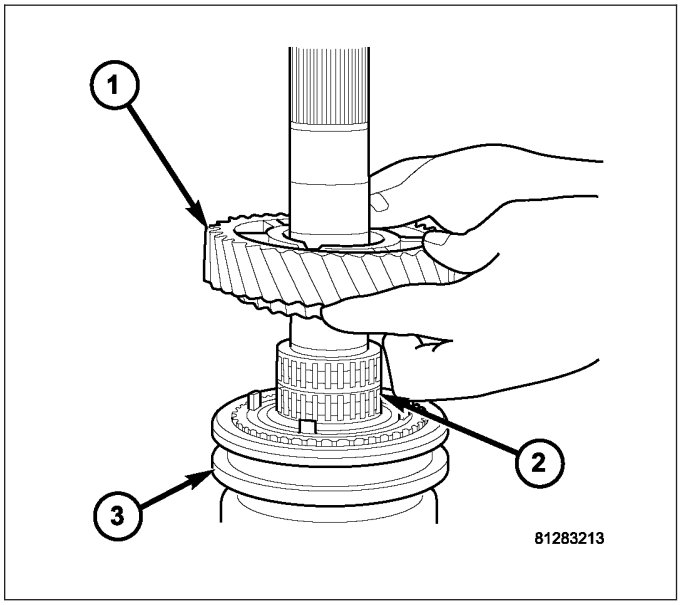

10. Install rear mainshaft tapered bearing (1) on top of first gear (2).

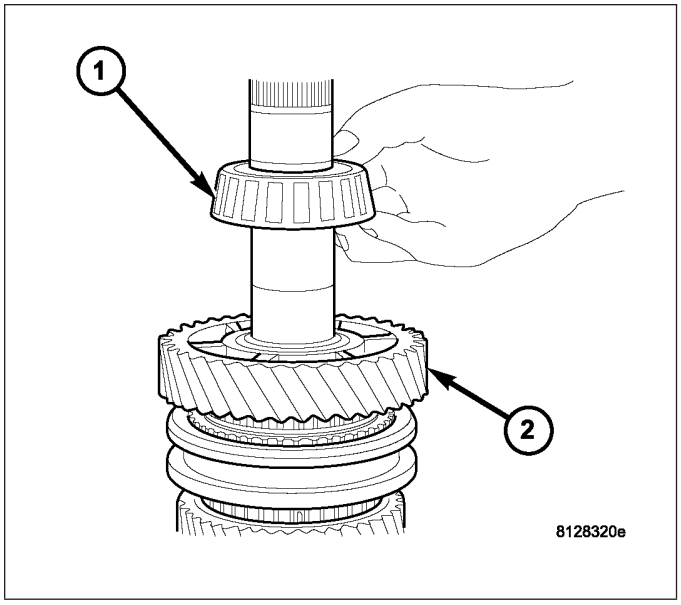

TRANSMISSION HOUSING

NOTE: During assembly refer to Adjustments for Main shaft and Countershaft End Play

1. Install input shaft seal into adapter plate with Installer 9366.
2. Install input shaft (2) into adapter plate (3).

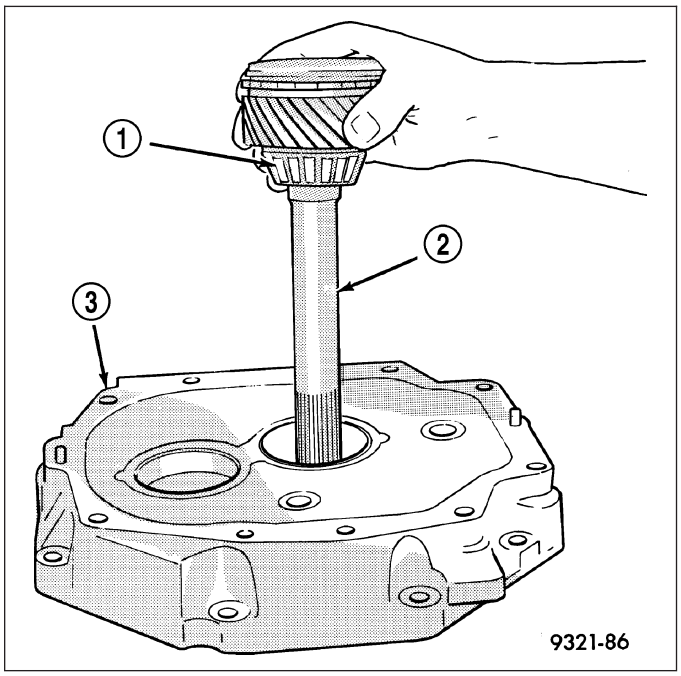

3. Install countershaft (1) assembly into adapter.

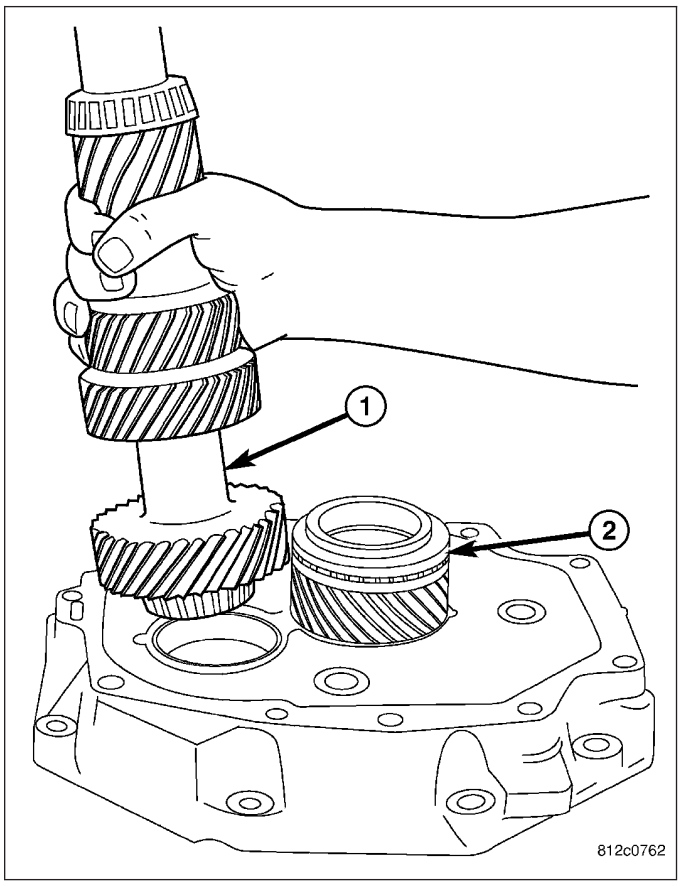

4. Tilt countershaft (4) sideways then install mainshaft (1) and shift rail (2) assemblies into adapter (3).

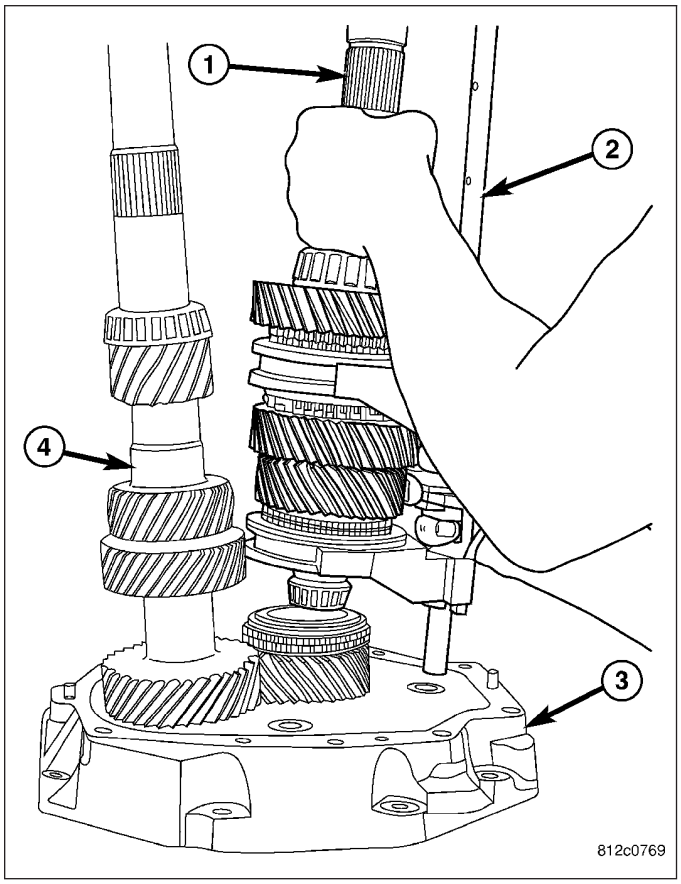

5. Install reverse rail assembly (2) into adapter (3) and on mainshaft (1).
6. Install guide plate and tighten torx bolts to 22 N·m (16 ft. lbs.).
7. Apply Mopar® Gasket Maker to adapter sealing surface.

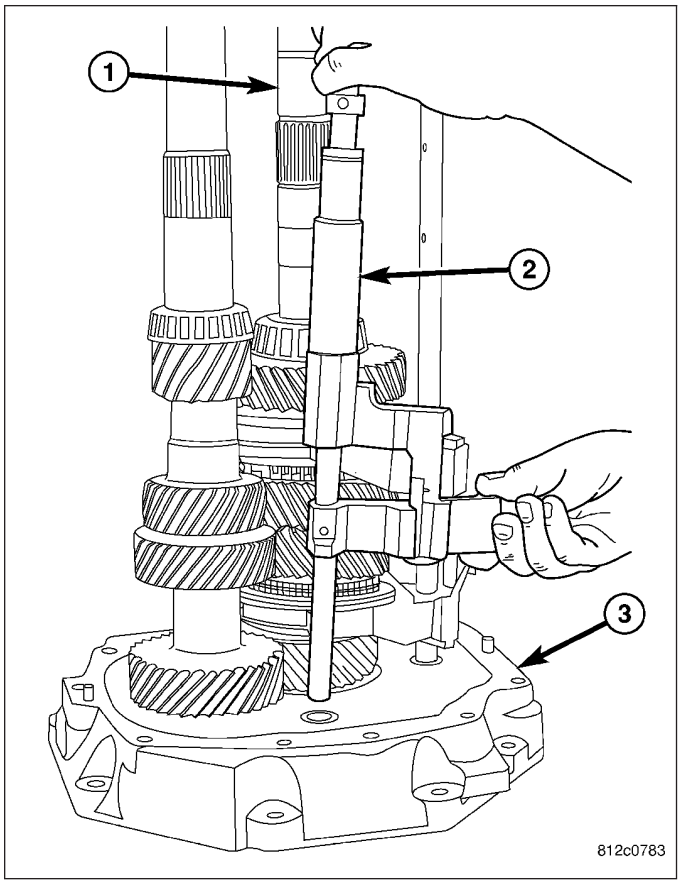

8. Install transmission case (1) on gear set until shift rail through the guide plate. Then install offset lever spring, ball and lever on shift rail and seat transmission case on adapter (2).

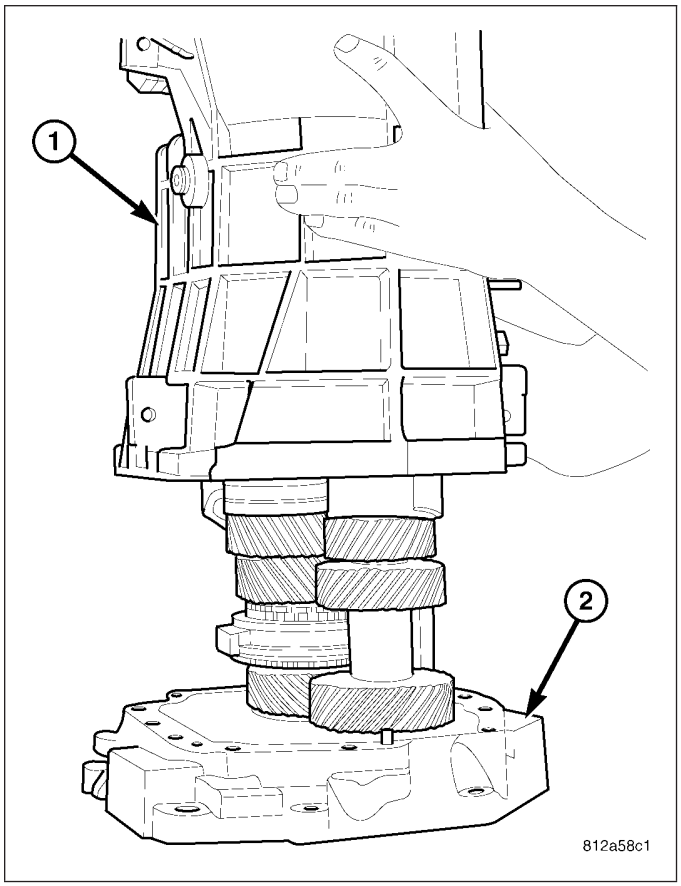

9. Install front adapter (2) bolts (3) and tighten to 34 N·m (25 ft. lbs.).

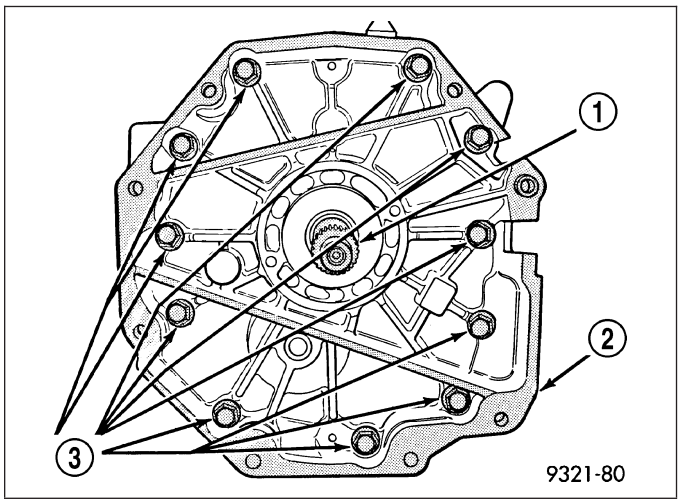

10. Install two torx screws (2) on top of transmission case (1).

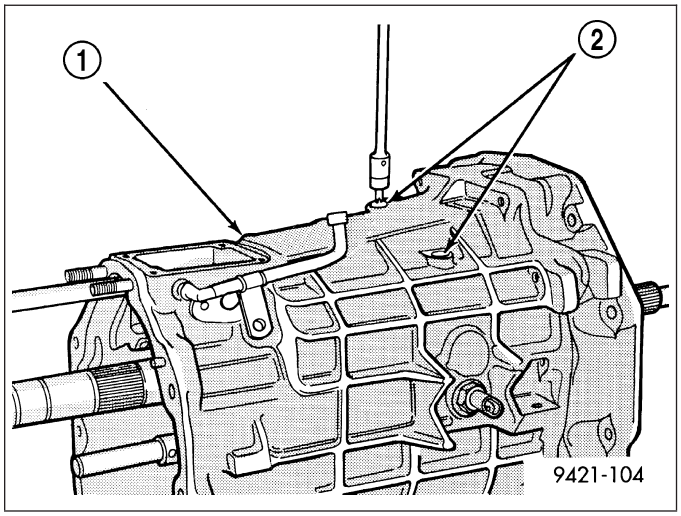

11. Drive roll pin down into offset lever (3) with hammer (2) and punch (1).

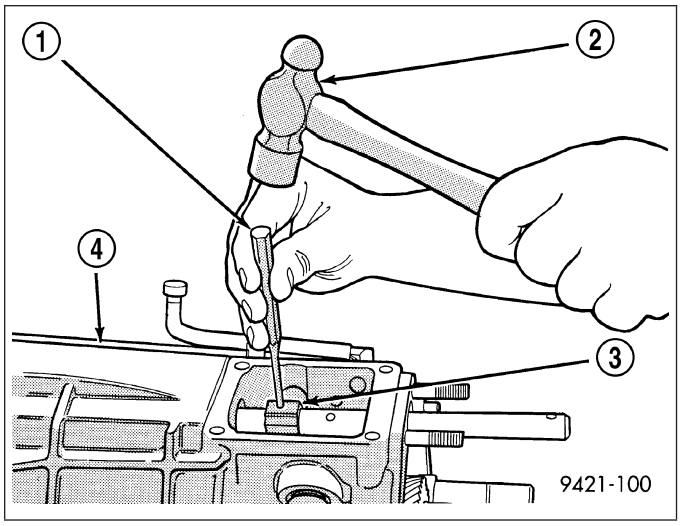

12. Apply Loctite® 242 to shift detente (1) threads. Install shift detente assembly with **new** O-ring and tighten to 34 N·m (25 ft. lbs.).
13. Install reverse lock-out solenoid.
14. Apply Mopar® Gasket Maker to top plate sealing surface.
15. Install top plate bolts and tighten to 20 N·m (15 ft. lbs.).

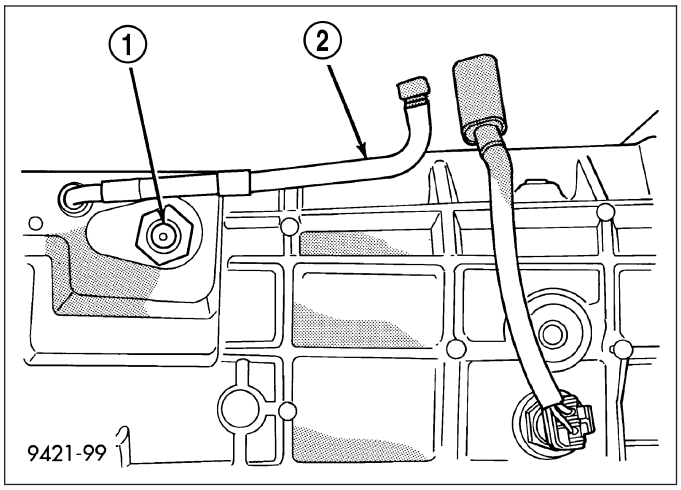

16. Install sixth gear bearing and gear (1) on countershaft (2).
.

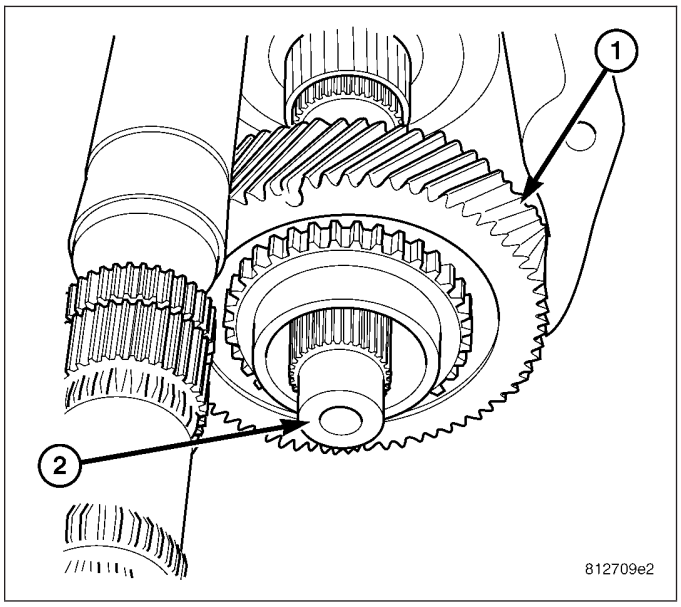

17. Install sixth gear stop ring (1).

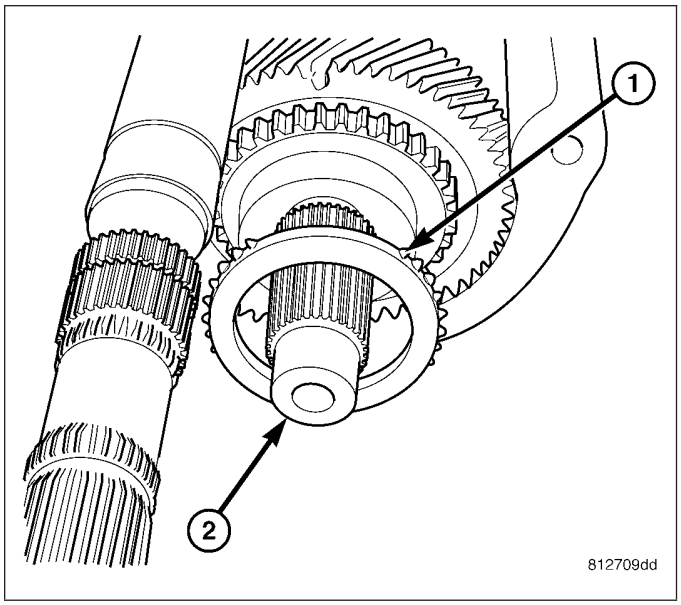

18. Install 5-6 synchronizer (1) on countershaft (2).
19. Install 5-6 synchronizer snap ring.

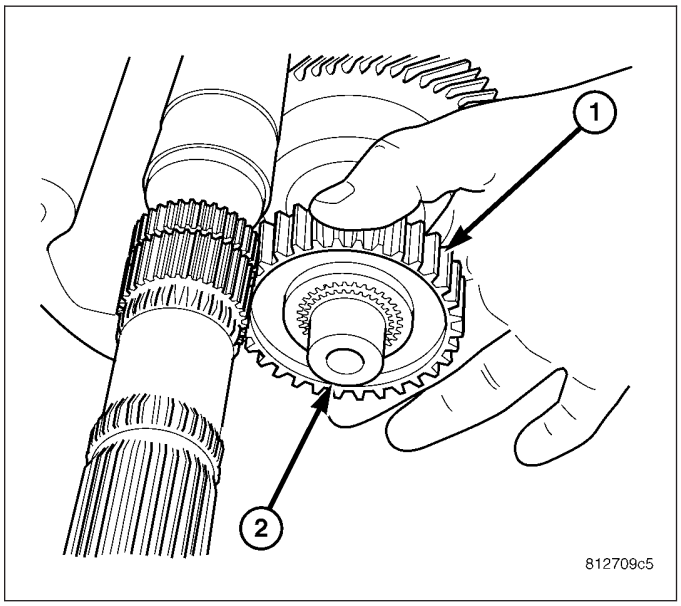

20. Install 5-6 shift fork (1) and synchronizer sleeve (2).

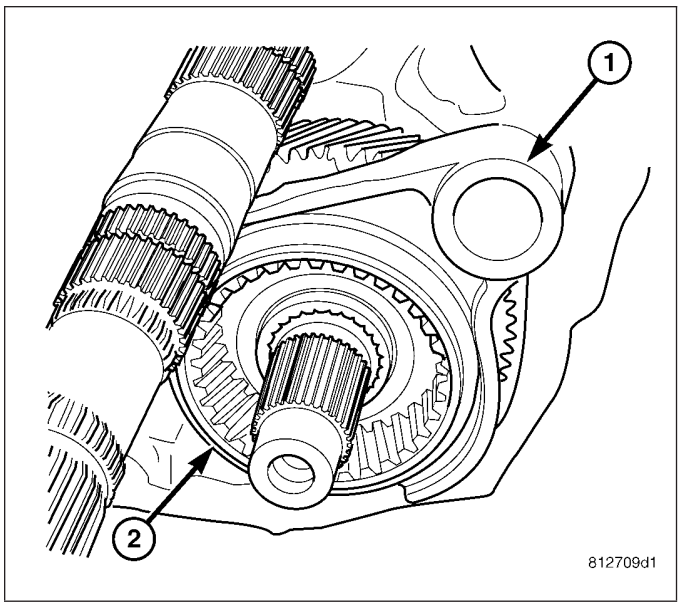

21. Install **new** 5-6 gear shift fork (1) snap ring (2).

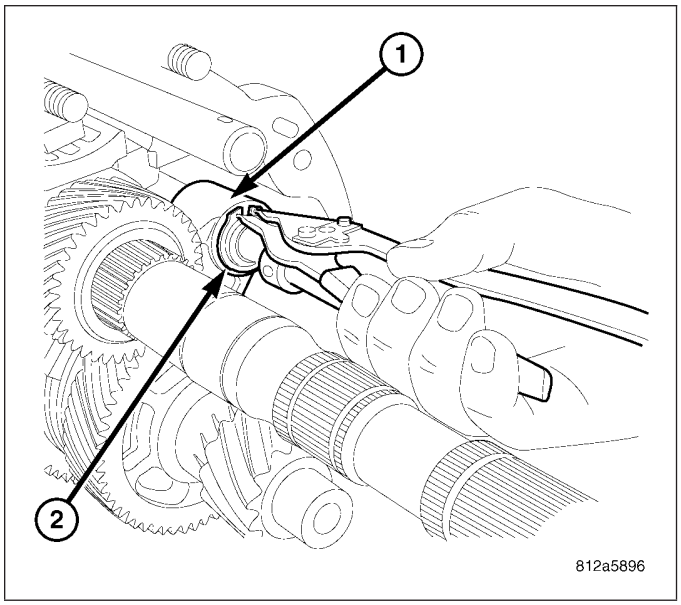

22. Install 5-6 gear (2) on mainshaft with Installer 9391(1).
23. Install fifth gear stop ring.

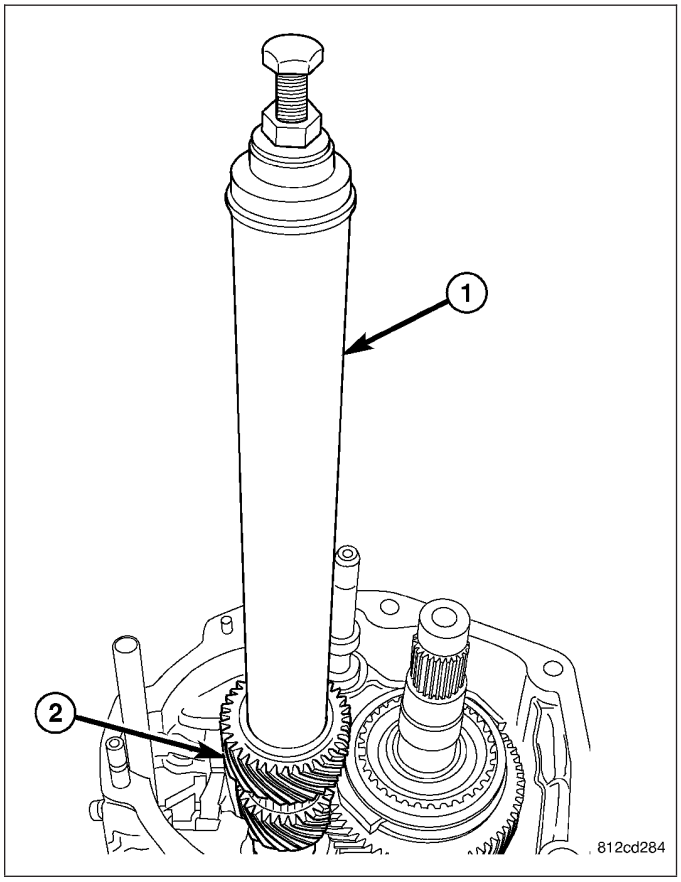

24. Install fifth gear bearing and gear (1) on countershaft (2).

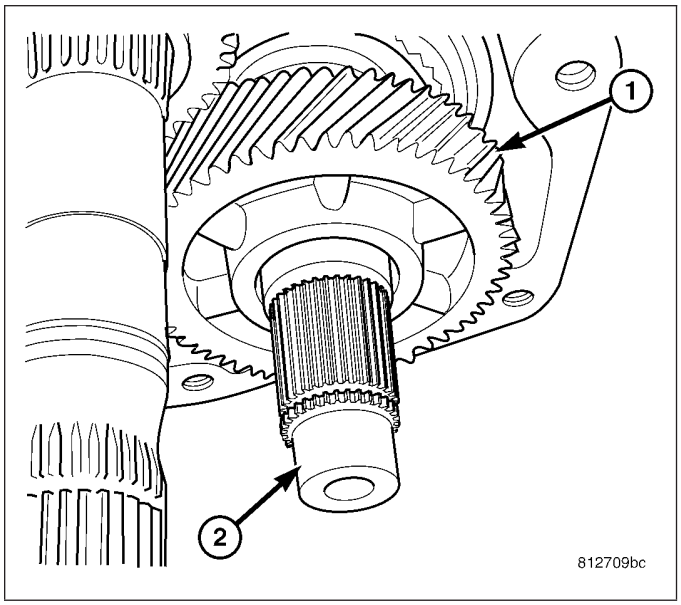

25. Install fifth gear (1) thrust washer (2).

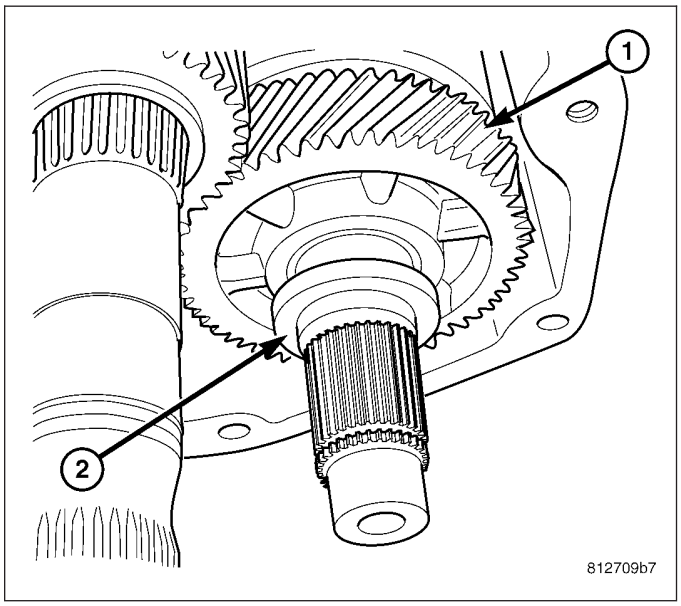

26. Install **new** fifth gear (1) snap ring (2).

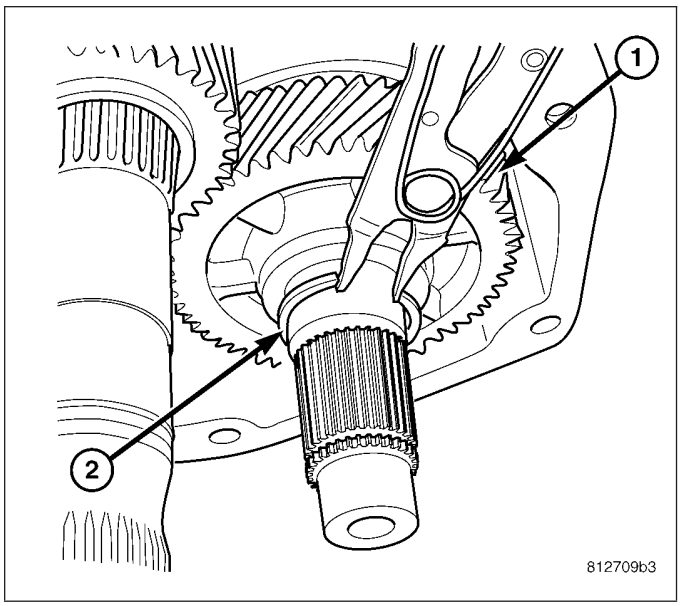

27. Install reverse shift fork (1) and synchronizer (2) sleeve onto main shaft.

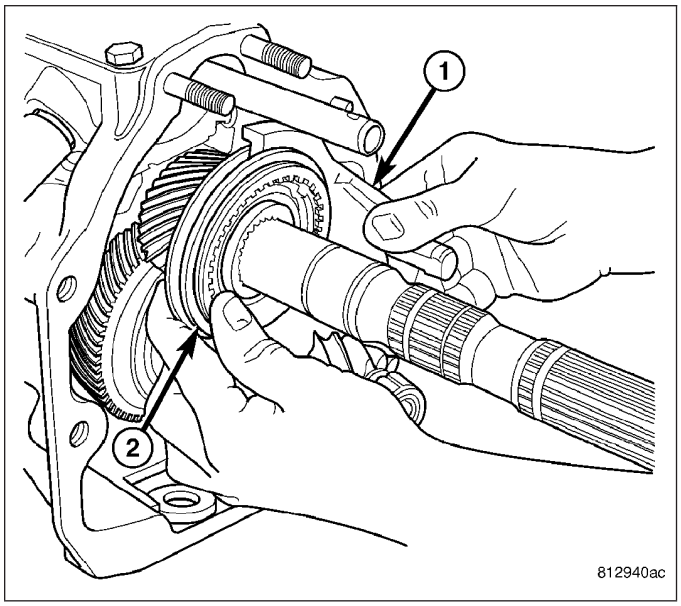

28. Install reverse gear (3) on countershaft with Installer 9391 (2) bolt, bearing and washer and 1 3/16 half inch drive socket (1).
29. Install reverse gear snap ring on countershaft.

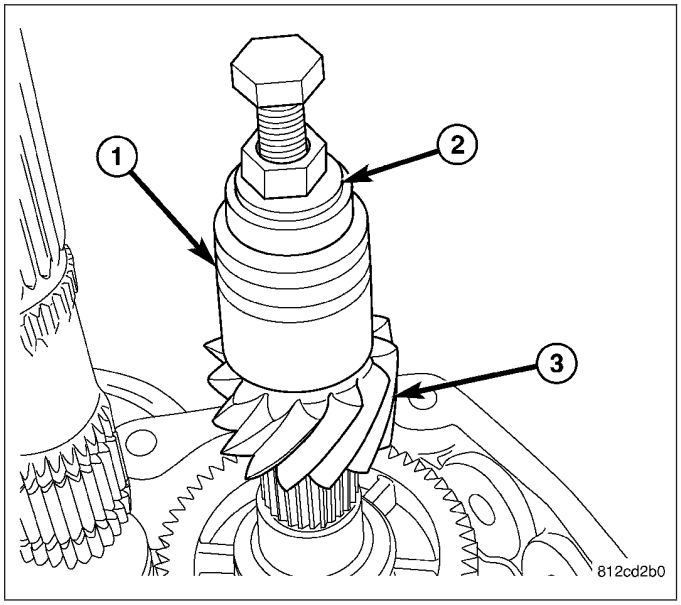

30. Install reverse synchronizer (1) snap ring (2).

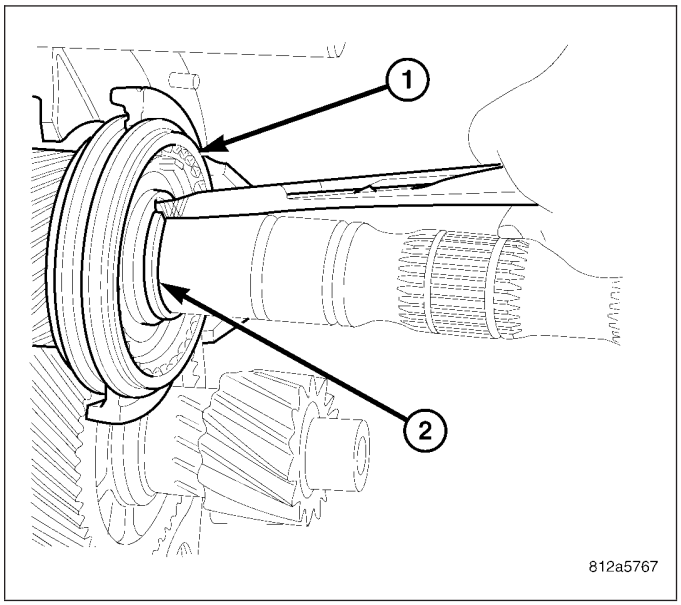

31. Install **new** reverse shift fork (1) snap ring (2) with the flat side facing rearward.

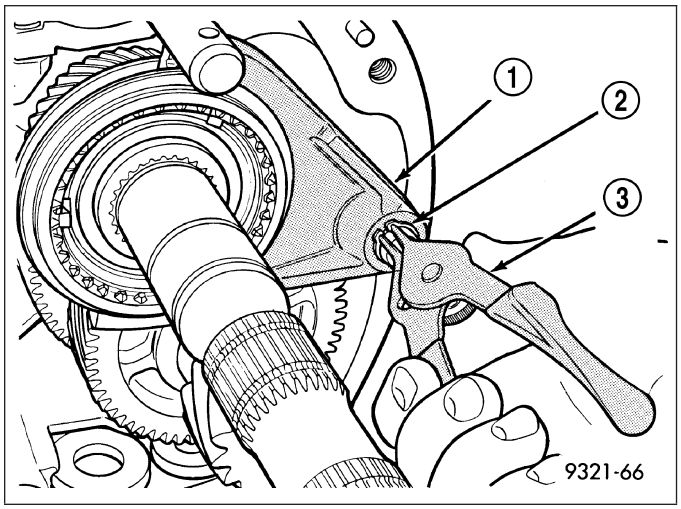

32. Install reverse gear (3), bearing (5), wave washer (2) and brass blocker ring (1) on mainshaft (4).

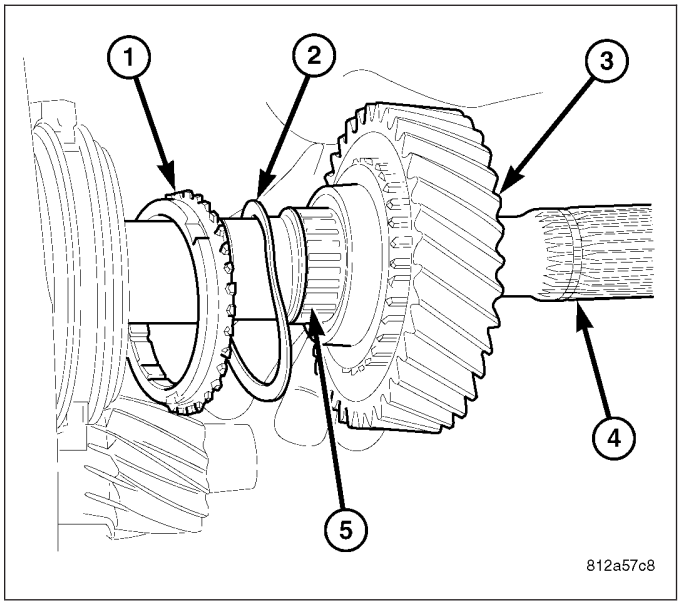

33. Install reverse gear (1) thrust washer (2) and snap ring (4).

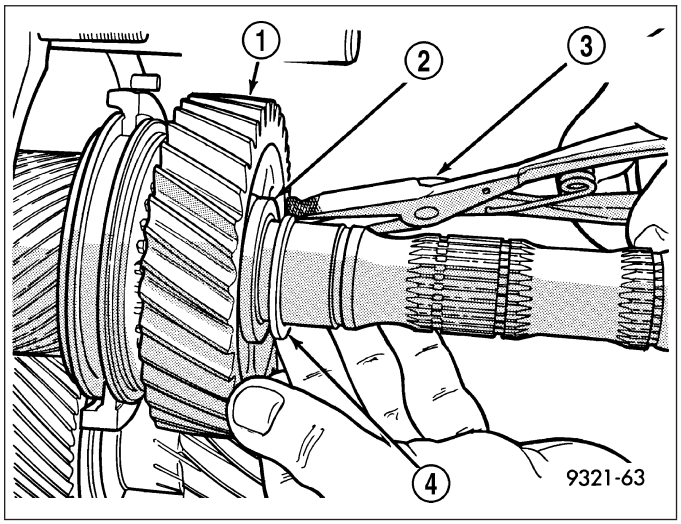

34. Install mainshaft (3) roller bearing (4), spacers (2) and snap ring.
35. Apply Mopar® Gasket Maker to tail housing sealing surface.

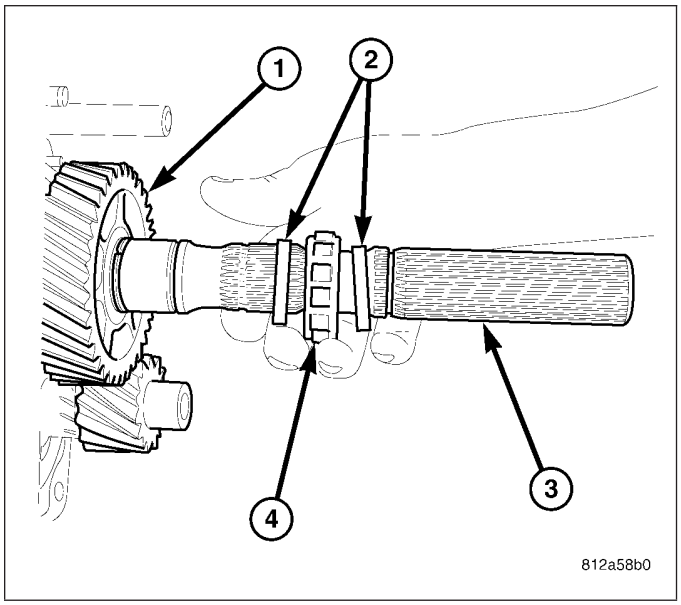

36. Install the six tail housing (1) to case bolts (2) and tighten bolts to 41 N·m (30 ft. lbs.).

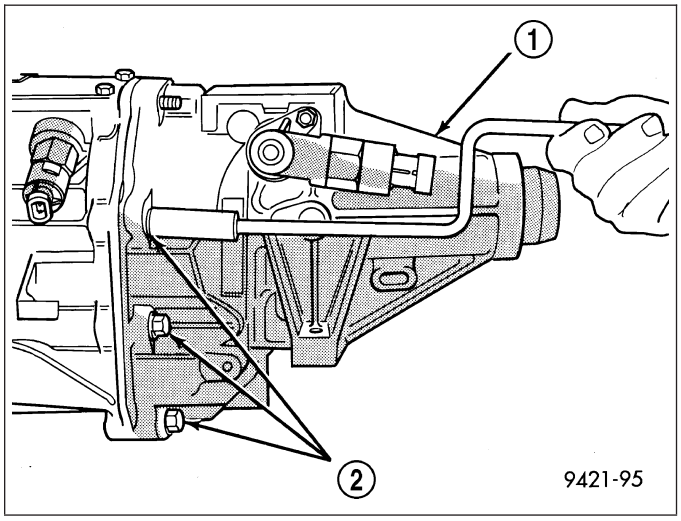

37. Install two tail housing nuts (2) on top of transmission tail housing (3).

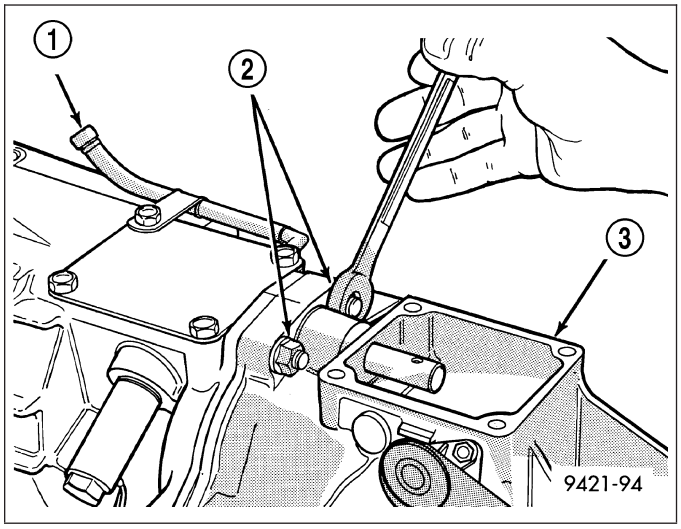

38. Slide offset lever (1) onto shaft in tail housing (2).

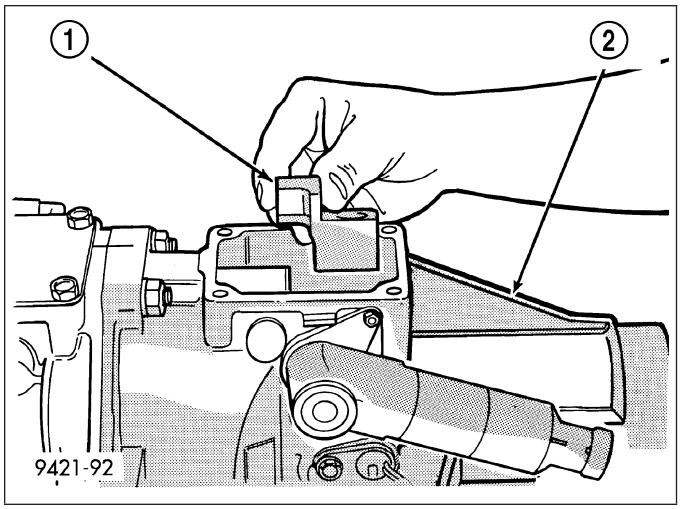

.

39. Install offset lever (3) roll pin with hammer (1) and punch (2)..
40. Install Mopar® Gasket Maker to the shift cover sealing surface and position cover on the transmission.
41. Install shift cover four mounting bolts and tighten to 18 N·m (13 ft. lbs.).

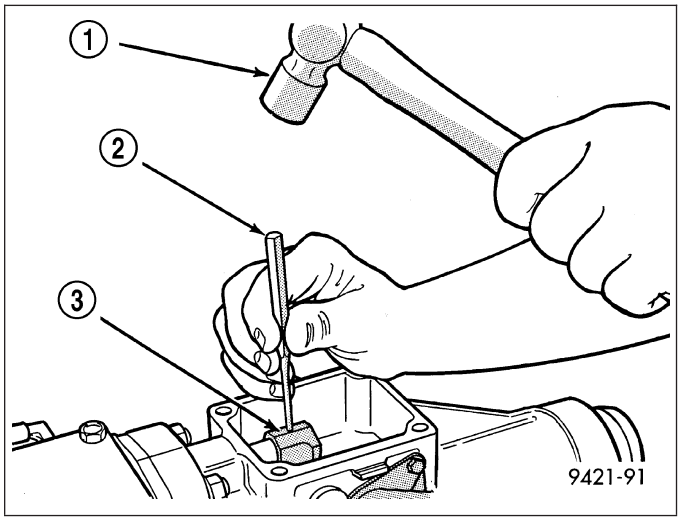

INSTALLATION

1. Slide transmission back into the clutch and seat against clutch housing.
2. Install transmission bolts to clutch housing bolts and tighten to and tighten bolts to 35 N·m (26 ft. lbs.)
3. Install transmission crossmember (2) and bolts/nuts (1). Tighten nuts to 61 N·m (45 ft. lbs.).

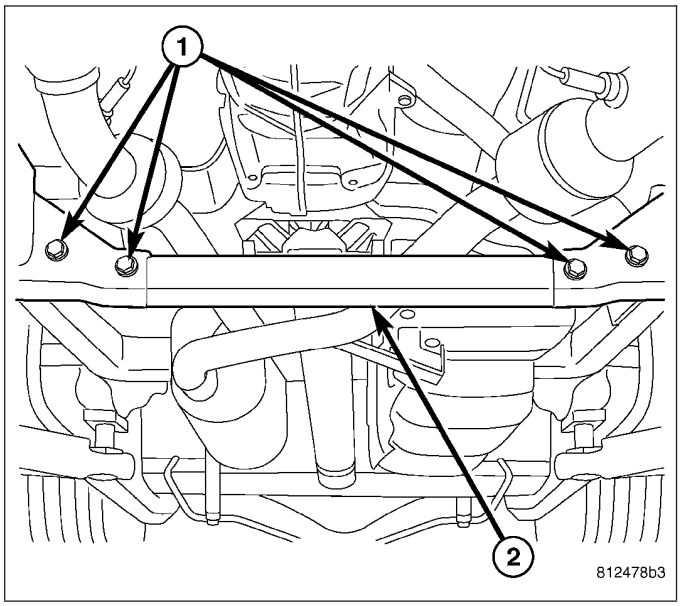

4. Install transmission mount (2) bolts (1) and tighten to 41 N·m (30 ft. lbs.).
5. Remove transmission jack.

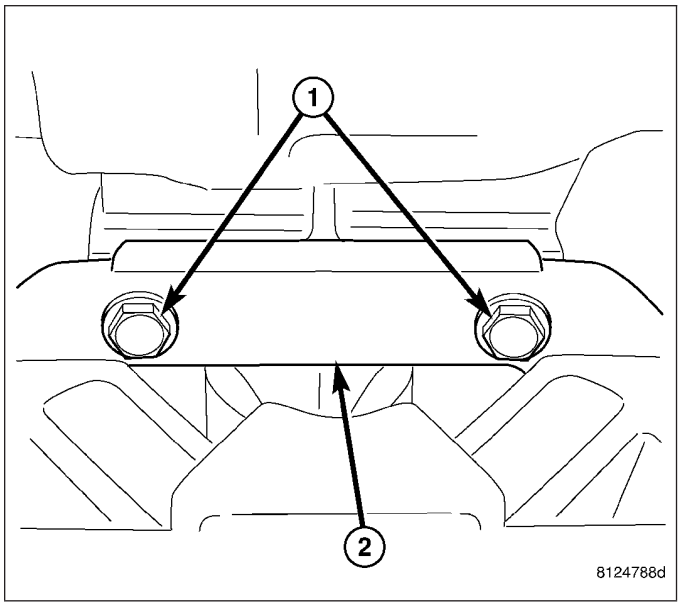

6. Install back up lamp switch (2) connector (1).

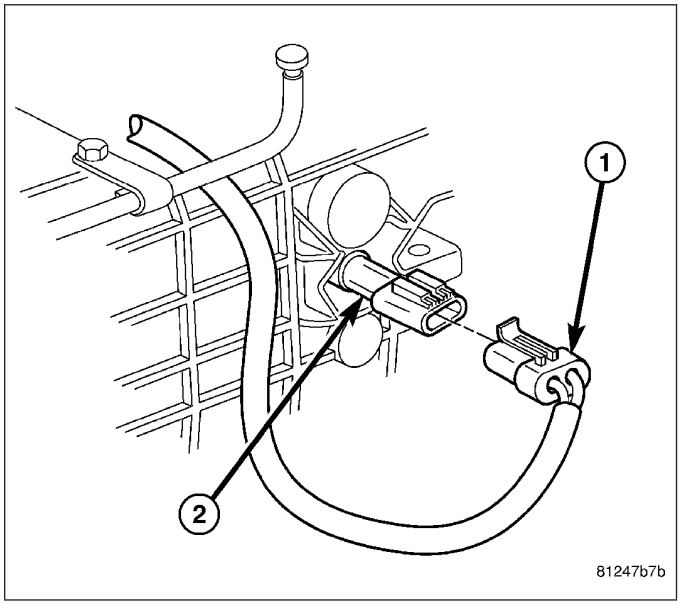

7. Install fuel line to top plate stud.
8. Install reverse lockout solenoid (1) harness connector (2).

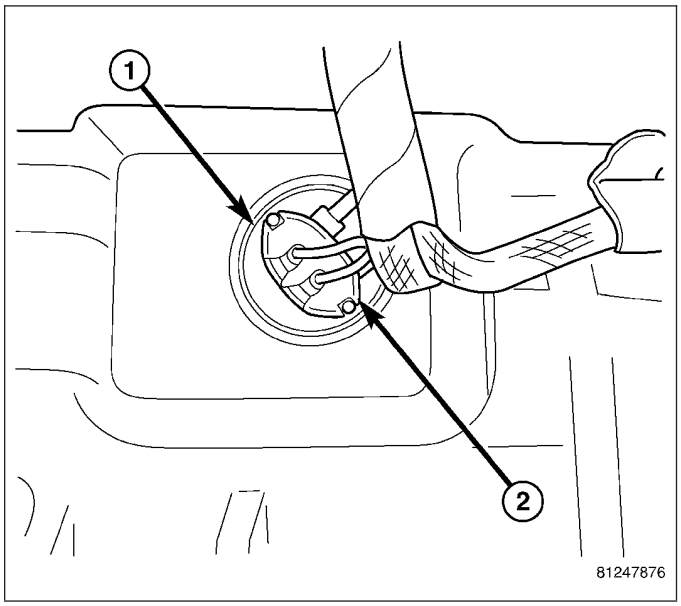

9. Install hydraulic clutch quick connector (1) to the slave cylinder.
10. Clean transmission shifter tower sealing surfaces and apply a bead of Mopar® Gasket Maker.
11. Install shifter tower and tighten bolts to 18 N·m (156 in. lbs.).
12. Install propeller shaft with reference marks aligned.

CAUTION: The drive shaft strap bolts must be replaced or cleaned and Loctite® 242 applied.

CAUTION: Replace drive shaft joint straps whenever they are removed. The straps slightly deform when torqued in place. Reuse of the straps may result in reduced clamp load on the universal joint cap.

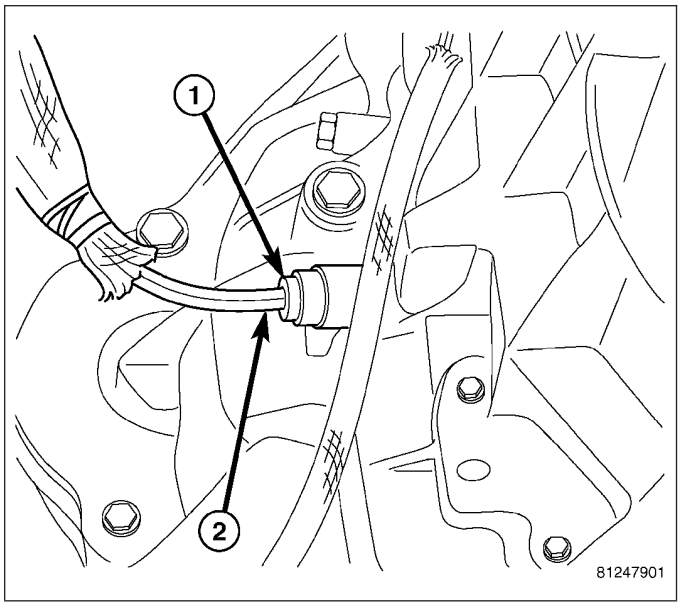

ADJUSTMENTS

ADUSTMENTS

MAINSHAFT BEARINGS PRELOAD

1. Install input shaft (2) in to front adapter.
2. Install mainshaft and bearing.
3. Install case and bolt together using all bolts.
4. Rotate input shaft and mainshaft to seat bearings.

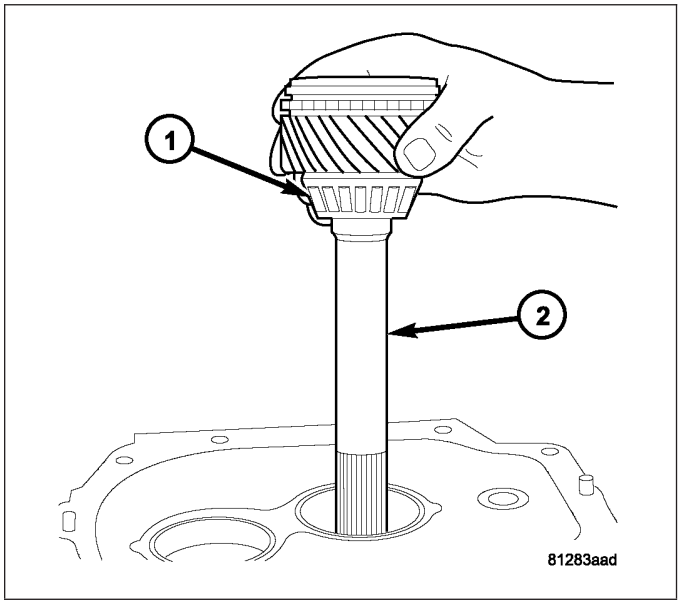

5. Screw Stud 8161 into the case and set up dial indicator (1) on the end of the mainshaft (2).
6. Zero the dial indicator, then push up on the input shaft and record the end play reading. If there is no end play, a thinner shim must be installed behind the input shaft bearing cup in the front adapter. Install .010 in. thinner shims until an end play is obtained.
7. Once an end play reading is obtained, add .002 in. to the reading.
8. Install shim(s) behind the input shaft bearing cup in the front adapter.

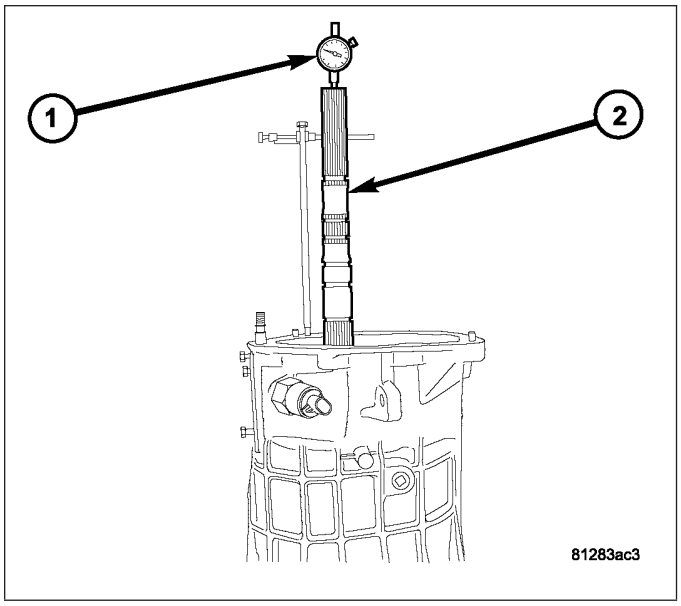

COUNTERSHAFT BEARINGS PRELOAD

1. Install countershaft with original shim into adapter.
2. Install case and bolt together using all bolts.
3. Rotate countershaft to seat bearings.
4. Screw Stud 8161 into the case and set up dial indicator (1)on the countershaft (2).
5. Zero dial indicator and record end play. If there is no end play, install .010 in. thinner shim until an end play is obtained.
6. Once an end play reading is obtained, add end play number to the shims in the transmission.
7. Install shim(s) behind the countershaft bearing cup in the front adapter.

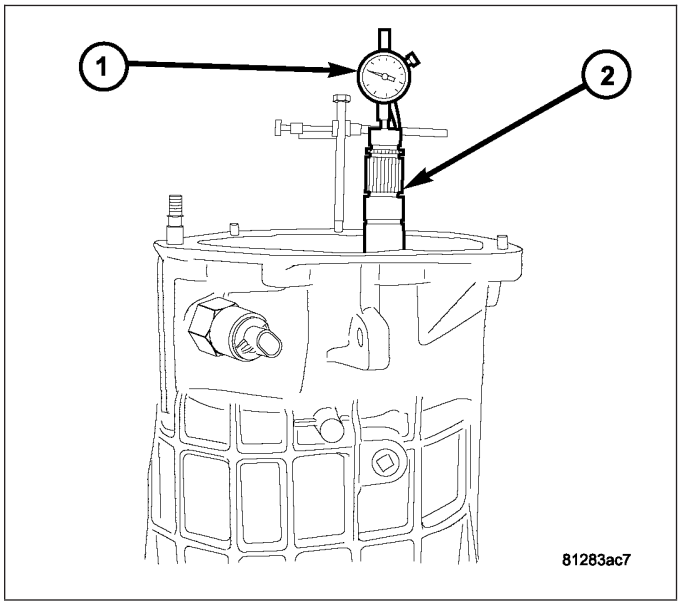

SPECIFICATIONS

MANUAL TRANSMISSION - T56

TORQUE SPECIFICATIONS

DESCRIPTION	N·m	Ft. Lbs.	In. Lbs.
Adapter Bolts	34	25	-
Back-up Lamp Switch	34	25	-
Dust Shield Bolts	11	-	95
Clutch Release Bearing	20	15	-
Drain Plug	38	28	-
Fill Plug	27	20	-
Flywheel Bolts	74	55	-
Guide Plate Bolts	22	16	-
Inspection Plug	27	20	-
Interlock Bolt	27	20	-
*Reverse Idler Brkt. Bolts	24	18	-
Reverse Lock-Out Bolt	18	13	-
Shifter Assembly	20	15	-
*Shift Detent Assembly	34	25	-
Trans. Top Cover Bolts	20	15	-
Trans. Crossmember Bolts	61	45	-
Trans. Mount Bolts	41	30	-
Trans. To Clutch Cover Bolts (3/8)	35	26	-
Trans. To Eng. Bolts (7/16)	68	50	-
Trans. To Oil Pan (5/16)	23	-	200
* Needs application of Loctite® 242			

SPECIAL TOOLS

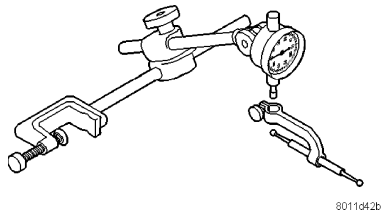

DIAL INDICATOR C-3339



BEARING INSTALLER MB998909

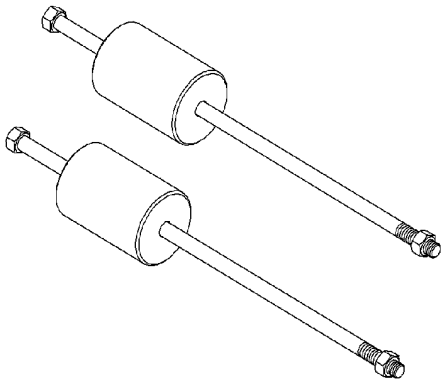

SLIDE HAMMER C-3752

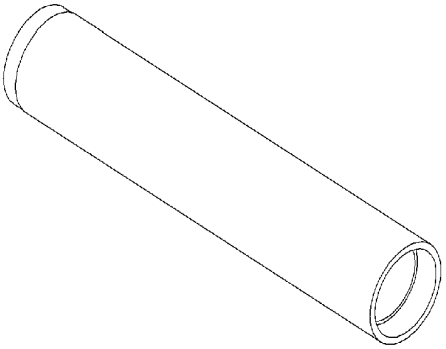

BEARING INSTALLER 6052

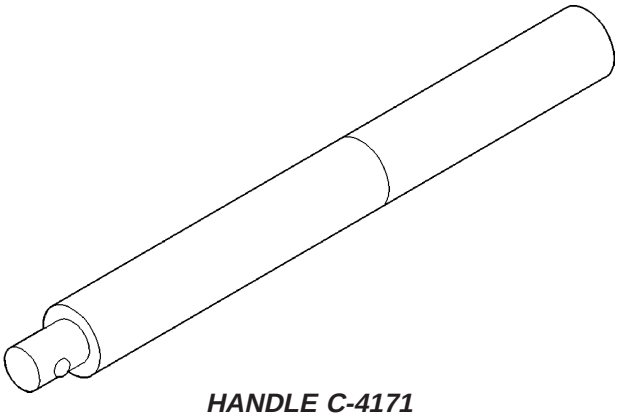

HANDLE C-4171

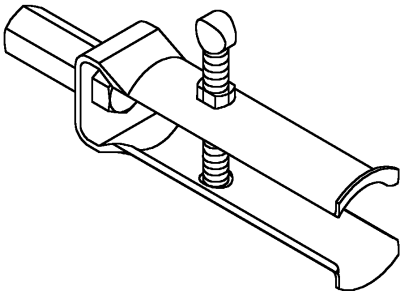

RACE REMOVER 7794-A

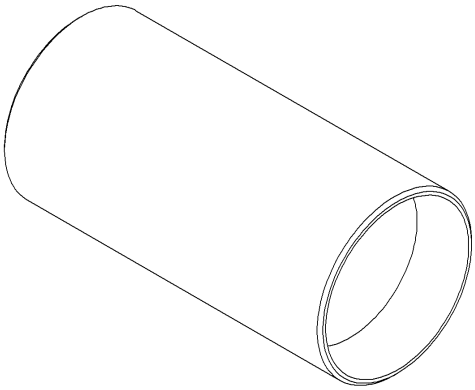

INSTALLER MB-991317

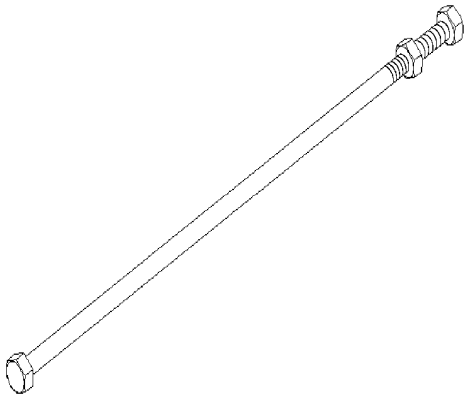

STUD 8161

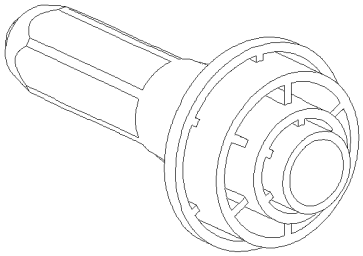

INPUT SHAFT SEAL INSTALLER 9366

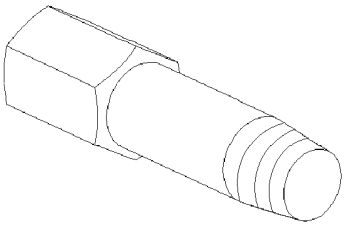

BUSHING REMOVER 9367

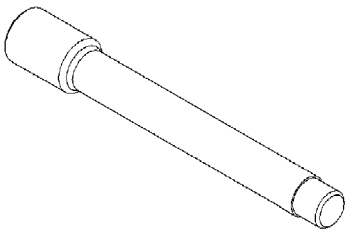

BUSHING INSTALLER 9368

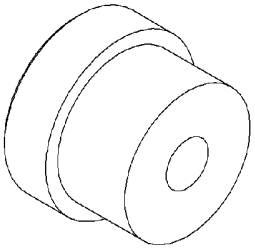

CASE CUP REMOVER 9369

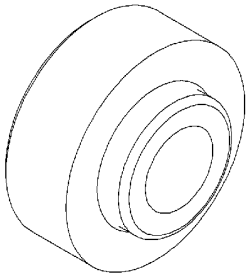

OUTPUT SHAFT SEAL INSTALLER 9372

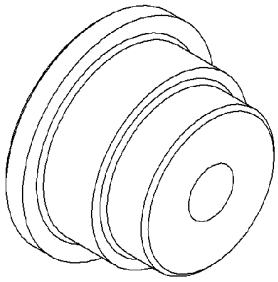

CASE CUP INSTALLER 9373

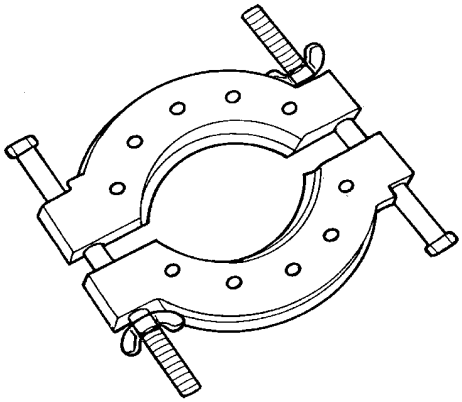

GEAR SPLITTER 9375

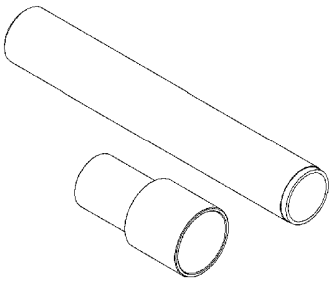

3-4 GEAR PRESS TUBE 9376

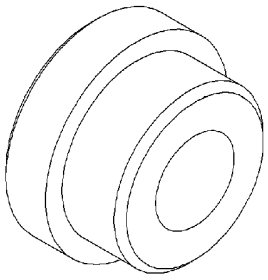

INPUT SHAFT CUP INSTALLER 9380

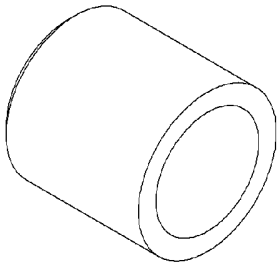

THIRD GEAR PRESS ADAPTER 9377

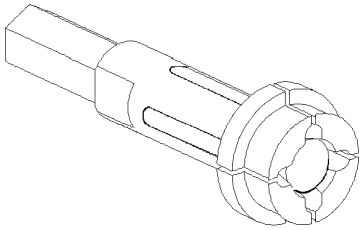

BRIDGE 9382

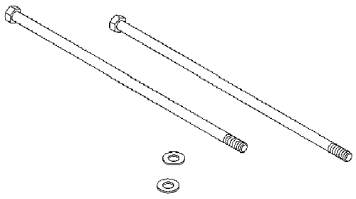

5-6 GEAR REMOVER BOLTS 9378

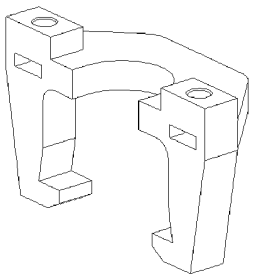

5-6 GEAR REMOVER 9379

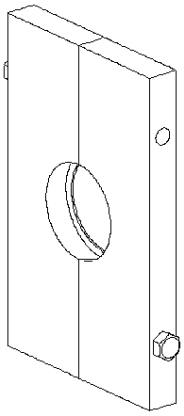

BEARING SPLITTER 9384

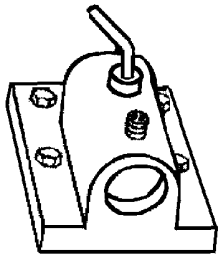

BENCH FIXTURE 9385

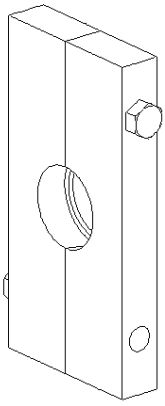

BEARING SPLITTER 9386

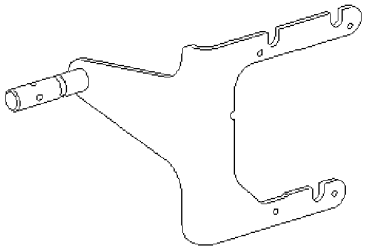

TRANSMISSION FIXTURE 9387

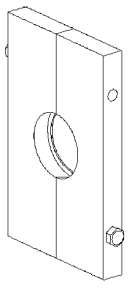

BEARING SPLITTER 9388

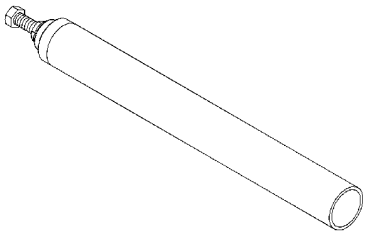

5-6 GEAR INSTALLER 9391

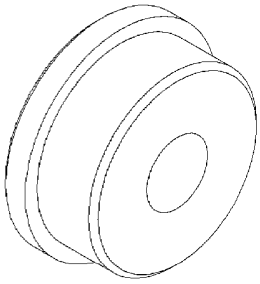

BEARING CUP INSTALLER 9392

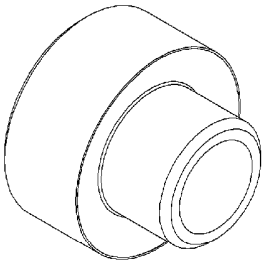

BEARING INSTALLER 9394

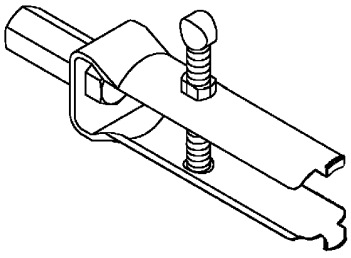

BEARING REMOVER 9395

SEAL-EXTENSION HOUSING

REMOVAL

NOTE: If extension housing slip yoke bushing is worn the housing must be replaced,

1. Remove propeller shaft.
2. Remove seal with a seal pick.
3. Clean and inspect extension housing where the seal was located.

INSTALLATION

1. Install seal into extension housing with Installer 9372 and Handle C-4171.
2. Install propeller shaft.
3. Check transmission fluid level.

SHAFT-INPUT

REMOVAL

NOTE: If input shaft is damaged behind the seal, the transmission must be disassembled and inspected.

1. Remove transmission from the vehicle.
2. Measure output shaft end play and record number.
3. Remove clutch slave cylinder from transmission adapter plate.
4. Remove front adapter plate bolts.
5. Pry front cover adapter loose.
6. Hold input shaft while removing adapter.

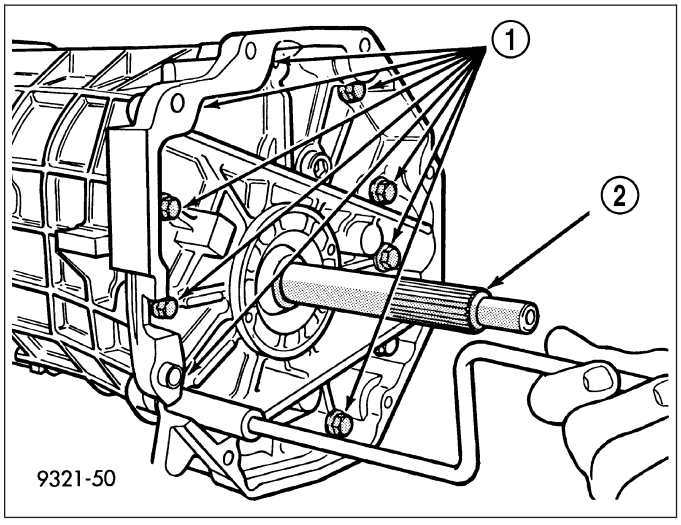

7. Remove seal from transmission adapter.
8. Clean and inspect all sealing surfaces for wear or damage.
9. Lift cluster shaft slightly and remove input shaft from transmission.
10. Remove input shaft bearing with Splitter P-334 and a press.

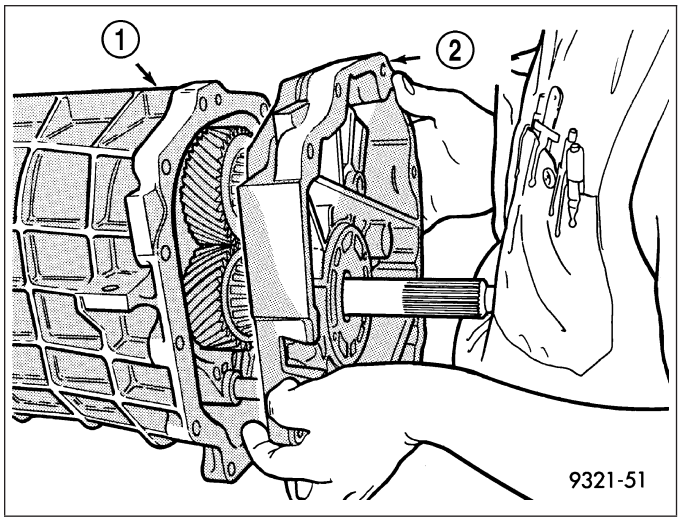

INSTALLATION

1. Install new seal from the fluid side with Installer 9366.
2. Install input shaft bearing on shaft with Installer 6052 and Installer MB-991317.

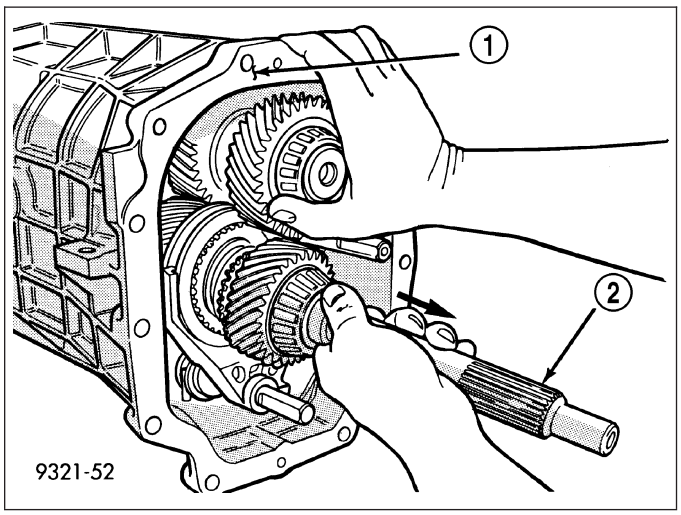

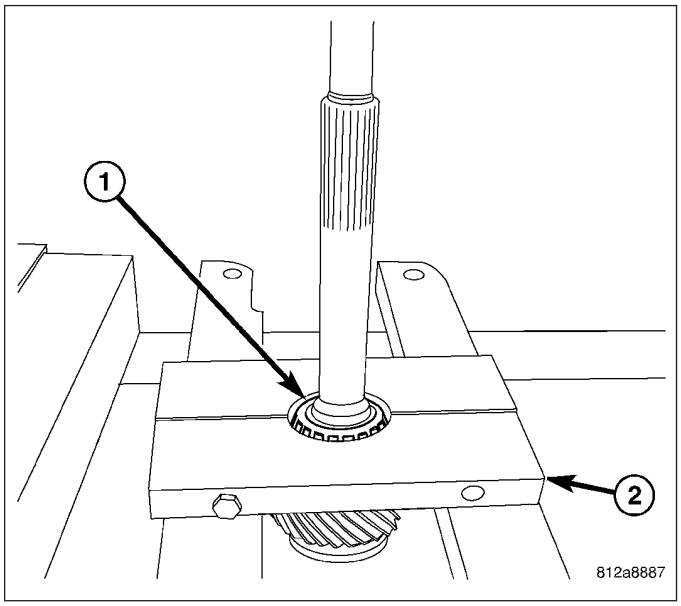

3. Install new bearing cup in front adapter withl original shim behind cup.
4. Clean sealing surfaces of the transmission case and adapter plate.
5. Install new input shaft and adapter plate (without any Mopar Gasket Maker).
6. Check output shaft end play. It should be the same as measured during the disassemble procedure. If end play is greater than original reading, install a thicker shim. If end play is less than original reading, install a thinner shim.
7. After the correct shim has been installed, remove the adapter plate and apply Mopar Gasket Maker to the sealing surfaces.
8. Install adapter and tighten adapter bolts to 34 N·m (25 ft. lbs.).
9. Install transmission.

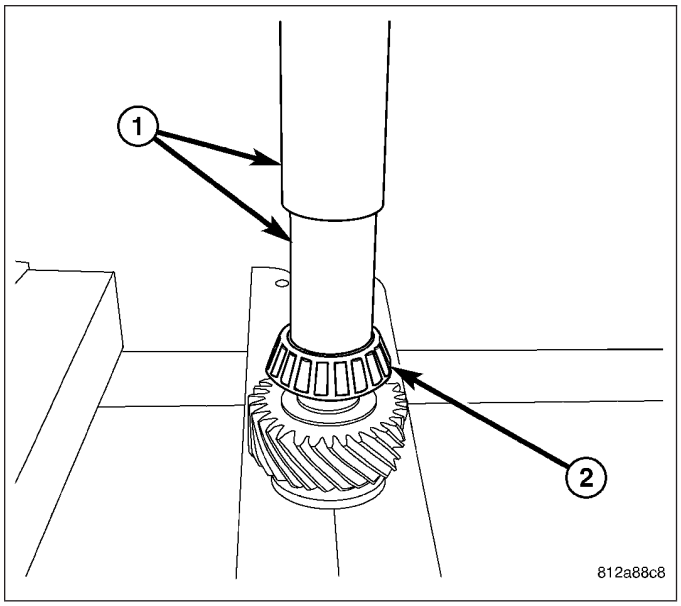

SOLENOID-REVERSE LOCKOUT

DESCRIPTION

The reverse lockout solenoid prevents shifting into reverse when the vehicle speed is greater than 3 mph. Solenoid is threaded into the left side of the transmission.

OPERATION

When vehicle speed is less than 5 mph, the PCM provides a ground for the solenoid (energized) and allows shifting. When vehicle speed is greater than 5 mph, the solenoid is deactivated and prevents the transmission from being shifted into reverse.

SOLENOID-REVERSE LOCK-OUT

DESCRIPTION

The reverse lockout solenoid prevents the operator from shifting into reverse when the vehicle speed is greater than 5 mph. The solenoid is threaded into the left side of the transmission.

OPERATION

When vehicle speed is less than 5 mph, the PCM provides a ground for the solenoid (energized) and allows shifting. When vehicle speed is greater than 5 mph, the solenoid is deactivated and prevents the transmission from being shifted into reverse.

AUTOMATIC TRANSMISSION - 545RFE - ELECTRICAL DIAGNOSTICS

TABLE OF CONTENTS

page

AUTOMATIC TRANSMISSION - 545RFE - ELECTRICAL DIAGNOSTICS
DIAGNOSIS AND TESTING
PRE-DIAGNOSTIC CHECK OUT 296
P0122-TPS/APP CIRCUIT LOW 297
P0123- TPS/APP CIRCUIT HIGH 299
P0124-TPS/APP INTERMITTENT 301
P0218-HIGH TEMPERATURE OPERATION ACTIVATED 303
P0562-BATTERY VOLTAGE LOW 304
P0602-CONTROL MODULE PROGRAMMING ERROR/NOT PROGRAMMED 309
P0604-INTERNAL CONTROL MODULE RAM 310
P0605-INTERNAL CONTROL MODULE ROM 311
P0613-INTERNAL TCM 312
P0706-TRANSMISSION RANGE SENSOR RATIONALITY 313
P0711-TRANSMISSION TEMPERATURE SENSOR PERFORMANCE 317
P0712-TRANSMISSION TEMPERATURE SENSOR LOW 320
P0713-TRANSMISSION TEMPERATURE SENSOR HIGH 324
P0714-TRANSMISSION TEMPERATURE SENSOR INTERMITTENT 328
P0715-INPUT SPEED SENSOR 1 CIRCUIT . 331
P0720-OUTPUT SPEED SENSOR CIRCUIT . 337
P0725-ENGINE SPEED SENSOR CIRCUIT . 344
P0731-GEAR RATIO ERROR IN 1ST 346
P0732-GEAR RATIO ERROR IN 2ND 349
P0733-GEAR RATIO ERROR IN 3RD 355
P0734-GEAR RATIO ERROR IN 4TH 361
P0735-GEAR RATIO ERROR IN 5TH 365
P0736-GEAR RATIO ERROR IN REVERSE . 368
P0740–TCC OUT OF RANGE 371
P0750-LR SOLENOID CIRCUIT 374
P0755-2C SOLENOID CIRCUIT 378
P0760-OD SOLENOID CIRCUIT 382
P0765-UD SOLENOID CIRCUIT 386
P0770-4C SOLENOID CIRCUIT 390
P0841-LR PRESSURE SWITCH RATIONALITY 394
P0845-2C HYDRAULIC PRESSURE TEST . . 402
P0846-2C PRESSURE SWITCH RATIONALITY 410
P0868-LINE PRESSURE LOW 417

page

P0869-LINE PRESSURE HIGH 423
P0870-OD HYDRAULIC PRESSURE TEST . 429
P0871-OD PRESSURE SWITCH RATIONALITY 438
P0875-UD HYDRAULIC PRESSURE TEST . . 447
P0876-UD PRESSURE SWITCH RATIONALITY 455
P0884-POWER UP AT SPEED 463
P0888-TRANSMISSION RELAY ALWAYS OFF 465
P0890-SWITCHED BATTERY 471
P0891-TRANSMISSION RELAY ALWAYS ON 475
P0932-LINE PRESSURE SENSOR CIRCUIT . 480
P0934-LINE PRESSURE SENSOR CIRCUIT LOW 484
P0935-LINE PRESSURE SENSOR CIRCUIT HIGH 489
P0944-LOSS OF HYDRAULIC PUMP PRIME 494
P0987-4C HYDRAULIC PRESSURE TEST . . 497
P0988-4C PRESSURE SWITCH RATIONALITY 505
P1684-BATTERY WAS DISCONNECTED . . . 512
P1715-RESTRICTED MANUAL VALVE IN T3 RANGE 514
P1736-GEAR RATIO ERROR IN 2ND PRIME 516
P1775-SOLENOID SWITCH VALVE LATCHED IN TCC POSITION 522
P1776-SOLENOID SWITCH VALVE LATCHED IN LR POSITION 526
P1790-FAULT IMMEDIATELY AFTER SHIFT . 531
P1794-SPEED SENSOR GROUND ERROR . 532
P2700-INADEQUATE ELEMENT VOLUME LR 537
P2701-INADEQUATE ELEMENT VOLUME 2C 539
P2702-INADEQUATE ELEMENT VOLUME OD 541
P2703- INADEQUATE ELEMENT VOLUME UD 543
P2704-INADEQUATE ELEMENT VOLUME 4C 545
P2706-MS SOLENOID CIRCUIT 547
45RFE/545RFE TRANSMISSION VERIFICATION TEST - VER 1 551
SCHEMATICS AND DIAGRAMS 552

AUTOMATIC TRANSMISSION - 545RFE - ELECTRICAL DIAGNOSTICS

DIAGNOSIS AND TESTING

PRE-DIAGNOSTIC CHECK OUT

For a complete wiring diagram **Refer to Section 8W**.

Diagnostic Test

1. PRE-DIAGNOSTIC CHECK OUT

Check the transmission fluid level. If the fluid level is low, locate and repair any leaks and fill the transmission to the proper level. Refer to the appropriate Service Information for procedures. Many transmission symptoms can be caused by a low fluid level.

Check the battery. To avoid false diagnosis, testing should only be performed with the battery fully charged.

With the scan tool, read Engine (PCM) DTCs. If DTCs are present, refer to the Driveability Category and perform to the appropriate diagnostic procedure(s) before proceeding.

With the scan tool, read Transmission (TCM) DTCs. Record all Stored, Active, and Pending DTC information. Diagnose any Pending DTC as a matured DTC.

With the scan tool, read EATX DTC EVENT DATA. Use this data to identify the conditions in which the DTC was set.

Performing a Battery Disconnect will clear all EATX DTC EVENT DATA and reset all learned Transmission values to the default values, which may temporarily result in erratic shift schedules.

With the scan tool, perform the Shift Lever Position Test. If the test does not pass, refer to the diagnostic procedure for P0706 Check Shifter Signal.

For Gear Ratio Error DTCs, use the scan tool to view CVI Monitor data. Read and record the Clutch Volume Index information.

Use the wiring diagram as a guide. Inspect the wiring and connectors related to this circuit. Repair as necessary.

Refer to the When Monitored and Set Conditions for this DTC. DTCs can set at ignition on, at start up, after driving under specific conditions and after diagnostic monitors have been run.

Refer to applicable Technical Service Bulletins (TSBs) for controller software update information. Some conditions can be corrected by upgrading the Engine (PCM) or Transmission (TCM) controller software.

Refer to any Service Information Tune Ups or Technical Service Bulletins that apply to this symptom.

Were there any repairs made that fixed the vehicle?

Yes >> Testing complete.

No >> Refer to the Transmission category and perform the appropriate diagnostic procedure(s).

P0122-TPS/APP CIRCUIT LOW

For the Transmission circuit diagram (Refer to 21 - TRANSMISSION/TRANSAXLE/AUTOMATIC - DIAGNOSIS AND TESTING).

For a complete wiring diagram **Refer to Section 8W**.

- **When Monitored:**
  Continuously with the ignition on and engine running.
- **Set Condition:**
  This DTC will set if the monitored TPS voltage drops below .078 volts for the period of 0.48 seconds.

Possible Causes
RELATED ENGINE TPS/APPS DTC'S PRESENT
POWERTRAIN CONTROL MODULE

Always perform the Pre-Diagnostic Troubleshooting procedure before proceeding. (Refer to 21 - TRANSMISSION/TRANSAXLE/AUTOMATIC - 45RFE/545RFE - DIAGNOSIS AND TESTING).

Theory of Operation

Due to the integration of the Powertrain and Transmission Control Modules the New Generation Control Module III will be referred to as the Powertrain Control Module (PCM). The 3–wire TPS (4.7L V-8 Engine) provides the PCM with an input signal voltage that represents the throttle blade position of the throttle body. The Throttle Position Sensor (TPS) is connected to the throttle blade shaft. As the position of the throttle blade changes, the output voltage of the TPS changes.

The PCM supplies approximately 5.0 volts to the TPS. The TPS output voltage (input signal to the PCM) represents the throttle blade position. The PCM receives an input signal voltage from the TPS. This will vary in an approximate range from 0.26 volts at minimum throttle opening (idle), to 4.49 volts at maximum opening (wide open throttle).

The Accelerator Pedal Position Sensor (APPS) is currently used only with the 5.7L V-8 engine. The APPS is a linear potentiometer. It provides the PCM with a voltage signal proportional to the angle, or position of the accelerator pedal. The APPS signal along with inputs from other sensors is used by the PCM to calculate the throttle plate position.

A mechanical cable is used between the accelerator pedal and the APPS assembly. Although a cable is used between the accelerator pedal and the APPS assembly, a mechanical cable is not used between the accelerator pedal and the throttle body. The throttle plate position is electronically controlled by the PCM.

Diagnostic Test

1. DETERMINING IF RELATED ENGINE TPS/APPS DTC'S ARE PRESENT

With the scan tool, check Engine DTC's.

Are there any Engine TPS/APPS DTCs present?

Yes >> Refer to the Drivability Category and perform the appropriate Symptom.

No >> Go To 2

P0122-TPS/APP CIRCUIT LOW (CONTINUED)

2. CHECK TO SEE IF DTC IS CURRENT

With the scan tool, record the EATX DTC EVENT DATA to help identify the conditions in which the DTC was set.

With the scan tool, erase Transmission DTCs.

NOTE: To erase EATX DTC DTC EVENT DATA information, a BATTERY DISCONNECT must be performed. Performing a BATTERY DISCONNECT may reset learned Transmission values to controller defaults which may lead to erratic shift schedules.

Drive the vehicle and try to duplicate the conditions in which the DTC was reported by the EATX DTC EVENT DATA.

With the scan tool, read Transmission DTCs.

Did the DTC P0122 TPS/APPS LOW, reset?

Yes >> Using the schematics as a guide, check the Powertrain Control Module (PCM) terminals for corrosion, damage, or terminal push out. Pay particular attention to all power and ground circuits. If no problems are found, replace the PCM per the Service Information. With the scan tool, perform QUICK LEARN.
Perform 45RFE/545RFE TRANSMISSION VERIFICATION TEST - VER 1.

No >> Go To 3

---

3. INTERMITTENT WIRING AND CONNECTORS

The conditions necessary to set the DTC are not present at this time.

Using the schematics as a guide, inspect the wiring and connectors specific to this circuit.

Wiggle the wiring and connectors while checking for shorted and open circuits.

With the scan tool, check the EATX DTC EVENT DATA to help identify the conditions in which the DTC was set.

Were there any problems found?

Yes >> Repair as necessary.
Perform 45RFE/545RFE TRANSMISSION VERIFICATION TEST - VER 1.

No >> Test Complete.

P0123- TPS/APP CIRCUIT HIGH

For the Transmission circuit diagram (Refer to) (Refer to 21 - TRANSMISSION/TRANSAXLE/AUTOMATIC - 45RFE/545RFE - SCHEMATICS AND DIAGRAMS).

For a complete wiring diagram **Refer to Section 8W**.

- **When Monitored:**
  Continuously with the ignition on and engine running.
- **Set Condition:**
  This DTC will set if the monitored TPS voltage rises above 4.94 volts for the period of 0.48 seconds.

Possible Causes
RELATED ENGINE TPS/APPS DTC'S PRESENT
POWERTRAIN CONTROL MODULE

Always perform the Pre-Diagnostic Troubleshooting procedure before proceeding. (Refer to 21 - TRANSMISSION/TRANSAXLE/AUTOMATIC - 45RFE/545RFE - DIAGNOSIS AND TESTING).

Theory of Operation

Due to the integration of the Powertrain and Transmission Control Modules the New Generation Control Module III will be referred as the Powertrain Control Module (PCM). The 4.7L V-8 Throttle Positioning Sensor (TPS) provides the PCM with an input signal voltage that represents the throttle blade position of the throttle body. The TPS is connected to the throttle blade shaft. As the position of the throttle blade changes, the output voltage of the TPS changes.

The 5.7L V-8 Accelerator Pedal Position Sensor (APPS) is a linear potentiometer that provides the PCM with a voltage signal proportional to the angle, or position of the accelerator pedal. The APPS signal along with inputs from other sensors is used by the PCM to calculate the throttle plate position which is electronically controlled.

Diagnostic Test

1. DETERMINING IF RELATED ENGINE TPS/APPS DTC'S ARE PRESENT

With the scan tool, check Engine DTC's, this includes all one trip failures.

Are there any Engine TPS/APPS DTCs present?

Yes >> Refer to the Drivability category and perform the appropriate symptom.

No >> Go To 2

P0123- TPS/APP CIRCUIT HIGH (CONTINUED)

2. CHECK IF THE DTC IS CURRENT

With the scan tool, record the EATX DTC EVENT DATA to help identify the conditions in which the DTC was set.

With the scan tool, erase Transmission DTCs.

NOTE: To erase EATX DTC EVENT DATA information, a BATTERY DISCONNECT must be performed. Performing a BATTERY DISCONNECT may reset all learned Transmission values to controller defaults that could lead to an inconsistent shift schedule.

Drive the vehicle and try to duplicate the conditions in which the DTC was reported by the EATX DTC EVENT DATA.

With the scan tool, read Transmission DTCs.

Did the DTC P0123 TPS/APPS HIGH, reset?

Yes >> Using the schematics as a guide, check the Powertrain Control Module (PCM) terminals for corrosion, damage, or terminal push out. Pay particular attention to all power and ground circuits. If no problems are found, replace the PCM per the Service Information. With the scan tool, perform QUICK LEARN.
Perform 45RFE/545RFE TRANSMISSION VERIFICATION TEST - VER 1.

No >> Go To 3

---

3. INTERMITTENT WIRING AND CONNECTORS

The conditions necessary to set the DTC are not present at this time.

Using the schematics as a guide, inspect the wiring and connectors specific to this circuit.

Wiggle the wiring and connectors while checking for shorted and open circuits.

With the scan tool, check the EATX DTC EVENT DATA to help identify the conditions in which the DTC was set.

Were there any problems found?

Yes >> Repair as necessary.
Perform 45RFE/545RFE TRANSMISSION VERIFICATION TEST - VER 1.

No >> Test Complete.

P0124-TPS/APP INTERMITTENT

For the Transmission circuit diagram (Refer to 21 - TRANSMISSION/TRANSAXLE/AUTOMATIC - 45RFE/545RFE - SCHEMATICS AND DIAGRAMS).

For a complete Transmission wiring diagram **Refer to Section 8W**

- **When Monitored:**
  Continuously with the ignition on and engine running.
- **Set Condition:**
  This DTC will set if the monitored TPS throttle angle between the angles of 6° and 120° and the degree change is greater than 5° within a period of less than 7.0 ms

Possible Causes
RELATED TPS ENGINE DTC'S PRESENT
THROTTLE POSITION SENSOR
POWERTRAIN CONTROL MODULE

Always perform the Pre-Diagnostic Troubleshooting procedure before proceeding. (Refer to 21 - TRANSMISSION/TRANSAXLE/AUTOMATIC - 45RFE/545RFE - DIAGNOSIS AND TESTING).

Theory of Operation

Due to the integration of the Powertrain and Transmission Control Modules the New Generation Control Module III will be referred as the Powertrain Control Module (PCM). The 4.7L V-8 Throttle Positioning Sensor (TPS) provides the PCM with an input signal voltage that represents the throttle blade position of the throttle body. The TPS is connected to the throttle blade shaft. As the position of the throttle blade changes, the output voltage of the TPS changes.

The 5.7L V-8 Accelerator Pedal Position Sensor (APPS) is a linear potentiometer that provides the PCM with a voltage signal proportional to the angle, or position of the accelerator pedal. The APPS signal along with inputs from other sensors is used by the PCM to calculate the throttle plate position which is electronically controlled.

Diagnostic Test

1. DETERMINING IF RELATED ENGINE TPS DTC'S ARE PRESENT

With the scan tool, check Engine DTC's including all one trip failures.

Are there any Engine TPS/APPS DTCs present?

Yes >> Refer to the Powertrain category and perform the appropriate symptom.
Perform 45RFE/545RFE TRANSMISSION VERIFICATION TEST - VER 1.

No >> Go To 2

---

2. CHECK TO SEE IF DTC IS CURRENT

With the scan tool, record the DTC EVENT DATA to help identify the conditions in which the DTC was set.

With the scan tool, erase Transmission DTCs.

NOTE: To erase EATX EVENT DATA information, a BATTERY DISCONNECT must be performed. Performing a BATTERY DISCONNECT may reset all learned transmission values to controller default. This may lead to erratic shift schedules.

Drive the vehicle and try to duplicate the conditions in which the DTC was reported by the DTC EVENT DATA.

With the scan tool, read Transmission DTCs.

Did the DTC P0124 TPS/APPS INTERMITTENT, reset?

Yes >> Go To 3

No >> Go To 4

P0124-TPS/APP INTERMITTENT (CONTINUED)

3. CHECK THROTTLE POSITION SENSOR OPERATION

Ignition On, Engine Not Running.

With the scan tool, under Transmission Sensors, monitor the TPS voltage in the following step.

Slowly open and close the throttle while checking for erratic voltage changes.

Was the TPS voltage change smooth and consistent?

Yes >> Using the schematics as a guide, check the Powertrain Control Module (PCM) terminals for corrosion, damage, or terminal push out. Pay particular attention to all power and ground circuits. If no problems are found, replace the PCM per the Service Information. With the scan tool, perform QUICK LEARN.
Perform 45RFE/545RFE TRANSMISSION VERIFICATION TEST - VER 1.

No >> Replace the Throttle Position Sensor per the Service Information.
Perform 45RFE/545RFE TRANSMISSION VERIFICATION TEST - VER 1.

---

4. INTERMITTENT WIRING AND CONNECTORS

The conditions necessary to set the DTC are not present at this time.

Using the schematics as a guide, inspect the wiring and connectors specific to this circuit.

Wiggle the wiring and connectors while checking for shorted and open circuits.

With the scan tool, check the EATX DTC EVENT DATA to help identify the conditions in which the DTC was set.

Were there any problems found?

Yes >> Repair as necessary.
Perform 45RFE/545RFE TRANSMISSION VERIFICATION TEST - VER 1.

No >> Test Complete.

P0218-HIGH TEMPERATURE OPERATION ACTIVATED

For the Transmission circuit diagram. (Refer to 21 - TRANSMISSION/TRANSAXLE/AUTOMATIC - 45RFE/545RFE - SCHEMATICS AND DIAGRAMS).

For a complete wiring diagram **Refer to Section 8W**.

- **When Monitored:**
  Whenever the engine is running.
- **Set Condition:**
  Immediately after a Overheat shift schedule is activated when the Transmission temperature exceeds 127° C or 260° F.

Possible Causes
HIGH TEMPERATURE OPERATION ACTIVATED
TORQUE CONVERTER CLUTCH SLIPPING / NOT ACTIVATING
EXCESSIVE TIME IDLING IN GEAR

Always perform the Pre-Diagnostic Troubleshooting procedure before proceeding. (Refer to 21 - TRANSMISSION/TRANSAXLE/AUTOMATIC - 45RFE/545RFE - SCHEMATICS AND DIAGRAMS).

Theory of Operation

The DTC is intended as an informational DTC to aid the technician in determining the root cause of a customer dirveability issue. The DTC is also intended to alert the technicain to determine if a cooling system malfunction has occurred or if an additional transmission air to oil cooler is needed to support the customers driving behavior.

Diagnostic Test

1. HIGH TEMPERATURE OPERATION

This DTC is an informational DTC designed to aid the Technician in diagnosing shift quality complaints.

This DTC indicates that the transmission has been operating in the ″Overheat″ shift schedule which may generate a customer complaint.

The customer driving patterns may indicate the need for an additional transmission oil cooler.

Verify proper Engine cooling system operation which would affect proper transmission operation.

Verify proper torque converter clutch operation.

With the scan tool, check the DTC EVENT DATA to help identify the conditions in which the DTC was set.

If there are no possible causes remaining, view repair.

Repair

Repair the cause of transmission overheating. Refer to the Service Information for the proper repair procedure. Make sure to check for any Service Bulletins pertaining to this problem.

Perform 45RFE/545RFE TRANSMISSION VERIFICATION TEST - VER 1.

P0562-BATTERY VOLTAGE LOW

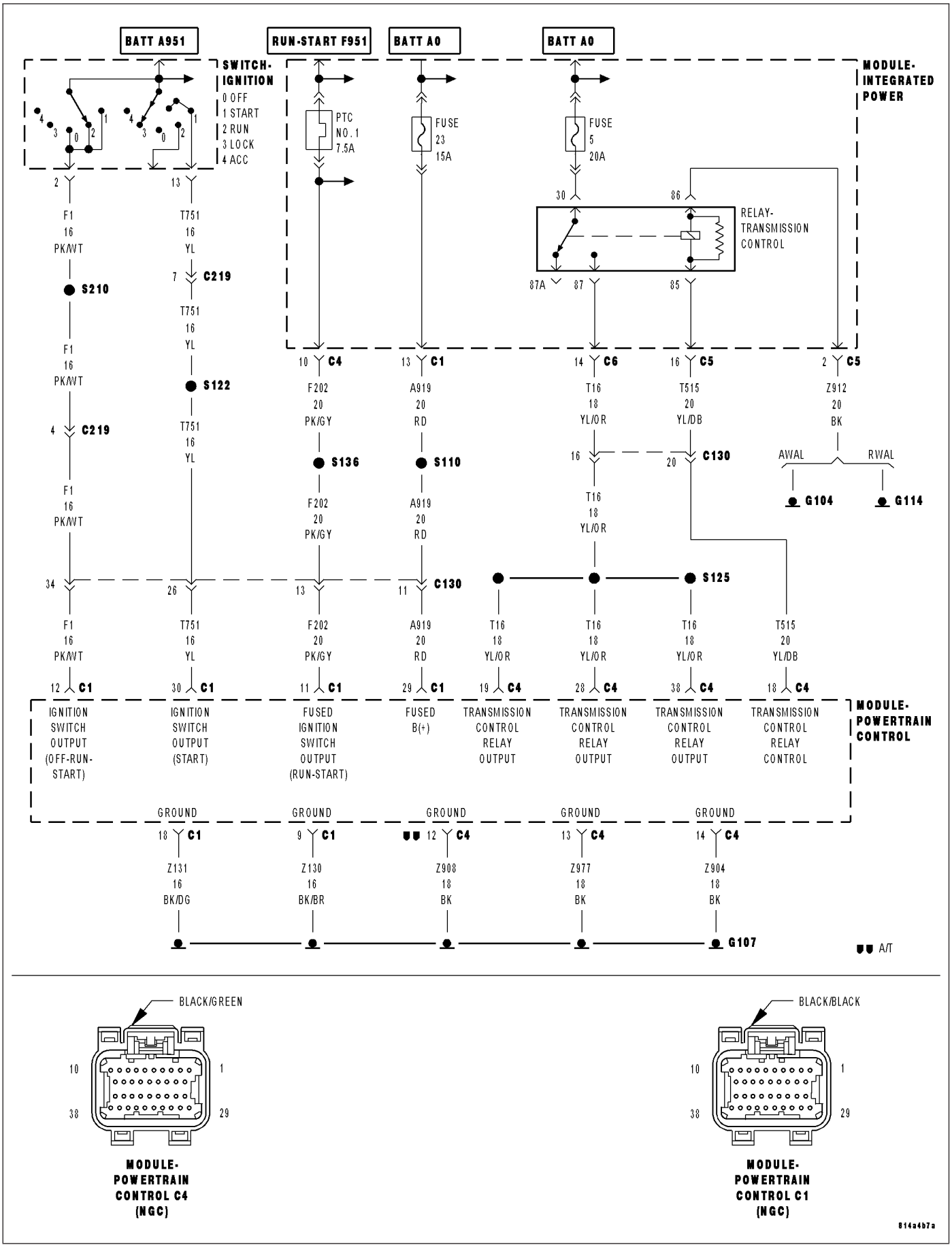

MODULE-POWERTRAIN CONTROL C4 (NGC)

MODULE-POWERTRAIN CONTROL C1 (NGC)

814a4b7a

P0562-BATTERY VOLTAGE LOW (CONTINUED)

For the Transmission circuit diagram. (Refer to 21 - TRANSMISSION/TRANSAXLE/AUTOMATIC - 45RFE/545RFE - SCHEMATICS AND DIAGRAMS).

For a complete wiring diagram **Refer to Section 8W**.

- **When Monitored:**
  With the engine running and the PCM has closed the Transmission Control Relay.
- **Set Condition:**
  If the battery voltage of the Transmission Control Relay Output Sense circuit(s) to the PCM is less than 10.0 volts for the period of 15 seconds. Note: P0562 generally indicates a gradually falling battery voltage or a resistive connection(s) to the PCM. The DTC will also set if the battery voltage sensed at the PCM is less than 6.5-volts for 200ms or where Transmission Control Relay Output circuits are less than 7.2-volts for 200ms.

Possible Causes
RELATED CHARGING SYSTEM DTC'S
(Z908, Z977) GROUND CIRCUIT OPEN OR HIGH RESISTANCE
(A104) FUSED B+ CIRCUIT TO PCM OPEN OR HIGH RESISTANCE
(T16) TRANSMISSION CONTROL RELAY OUTPUT CIRCUIT OPEN OR HIGH RESISTANCE
TRANSMISSION CONTROL RELAY
POWERTRAIN CONTROL MODULE

Always perform the Pre-Diagnostic Troubleshooting procedure before proceeding. (Refer to 21 - TRANSMISSION/TRANSAXLE/AUTOMATIC - 45RFE/545RFE - DIAGNOSIS AND TESTING).

Theory of Operation

Friction element distress could result from an insufficient supply voltage to properly control the solenoids. To prevent this possibility, the battery voltage is monitored and the system is placed in logical limp-in if the battery voltage drops below the limit.

Diagnostic Test

1. RELATED CHARGING SYSTEM DTC'S

With the scan tool, read the Engine DTC's.

Are there any related Charging System DTC's also present?

Yes >> Refer to the Charging System category and repair any Engine Charging System DTC's, before testing DTC P0562. NOTE: After repairing the Engine Charging System DTC's, perform the Transmission Verification test to verify the transmission was not damaged.
Perform 45RFE/545RFE TRANSMISSION VERIFICATION TEST - VER 1.

No >> Go To 2

P0562-BATTERY VOLTAGE LOW (CONTINUED)

2. CONDITION P0562 PRESENT

NOTE: Generator, battery, and charging system must be fully functional before performing this test.
With the scan tool, read Transmission DTC's.

With the scan tool, Check the STARTS SINCE SET counter for P0562.

NOTE: This counter only applies to the last DTC set.

Is the STARTS SINCE SET counter set at 0?

Yes >> Go To 3

No >> Go To 7

---

3. CHECKING (Z908, Z977) GROUND CIRCUITS

Turn the ignition off to the lock position.

Disconnect the PCM C4 harness connector and connect Miller tool #8815.

NOTE: Check connectors - Clean/repair as necessary.

CAUTION: Do not probe the PCM harness connectors. Probing the PCM harness connectors will damage the PCM terminals resulting in poor terminal to pin connection. Install Miller tool #8815 to perform diagnosis.

Using a 12-volt test light connected to 12-volts, check the PCM (Z908, Z977) Ground circuits at the appropriate terminals of Miller tool #8815.

NOTE: The test light must illuminate brightly. Compare the brightness to that of a direct connection to the battery.

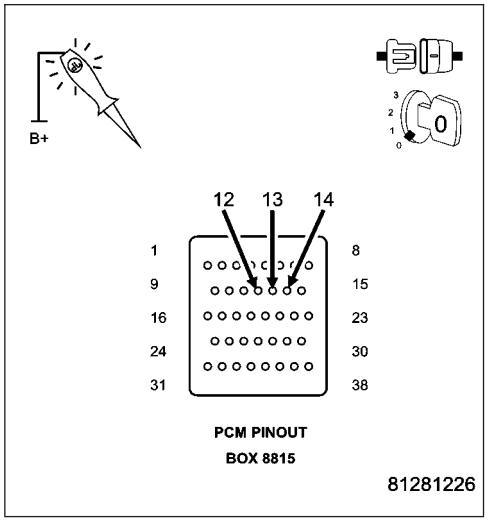

Does the test light illuminate brightly for the PCM (Z908, Z977) Ground circuits?

Yes >> Go To 4

No >> Repair the (Z908, Z977) Ground circuit(s) for an open or high resistance.
Perform 45RFE/545RFE TRANSMISSION VERIFICATION TEST - VER 1.

---

4. CHECKING (A104) FUSED B+ CIRCUIT

Remove the Transmission Control Relay.

Ignition on, engine not running.

Using a 12-volt test light connected to ground, check the (A104) Fused B+ circuit at the Transmission Control Relay connector.

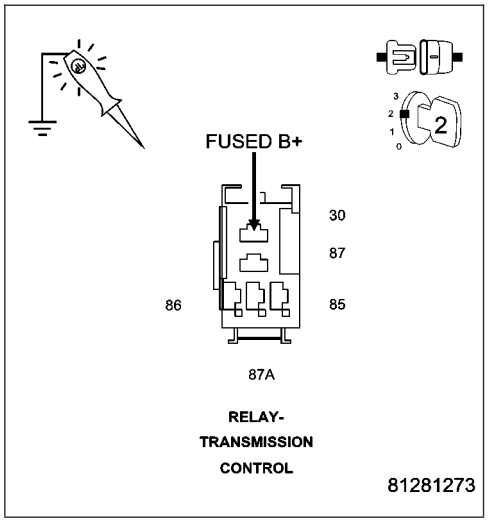

Does the test light illuminate brightly?

Yes >> Go To 5

No >> Repair the (A104) Fused B+ circuit for an open or high resistance.
Perform 45RFE/545RFE TRANSMISSION VERIFICATION TEST - VER 1.

P0562-BATTERY VOLTAGE LOW (CONTINUED)

5. CHECKING THE (T16) TRANSMISSION CONTROL RELAY OUTPUT CIRCUIT

Turn the ignition off to the lock position.

NOTE: Check connectors - Clean/repair as necessary.

Connect a jumper wire between (A104) Fused B+ circuit and the (T16) Transmission Control Relay Output circuit in the Transmission Control Relay connector.

Ignition on, engine not running.

Using a 12-volt test light connected to ground, check all (T16) Transmission Control Relay Output circuits at the appropriate terminals of Miller tool #8815.

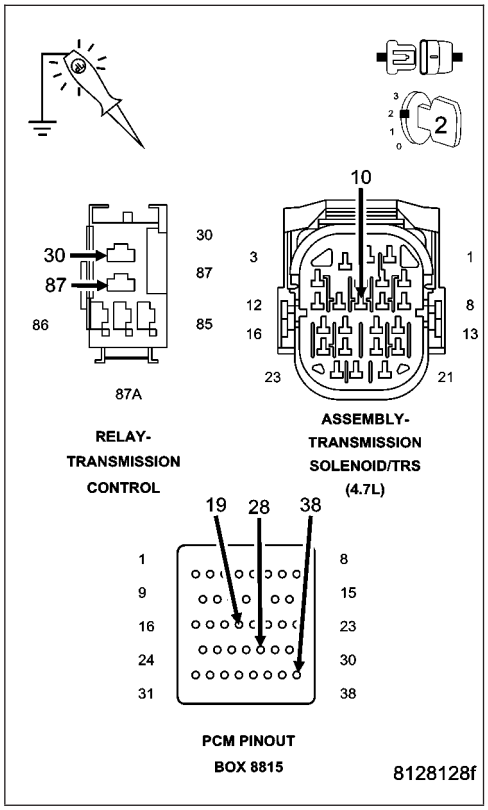

Does the test light illuminate brightly?

Yes >> Go To 6

No >> Repair the (T16) Transmission Control Relay Output circuit for an open or high resistance.
Perform 45RFE/545RFE TRANSMISSION VERIFICATION TEST - VER 1.

---

6. TRANSMISSION CONTROL RELAY

Turn the ignition off to the lock position.

Reconnect all previously disconnected connectors.

Install a substitute Relay in place of the Transmission Control Relay.

Start the engine.

Using a voltmeter, measure the vehicles battery voltage.

With the scan tool, monitor the Transmission Switched Battery Voltage.

Compare the scan tool Transmission Switched Battery voltage to the actual battery voltage reading on the voltmeter.

Is the scan tool voltage within 1.0 volt of the battery voltage?

Yes >> Replace the Transmission Control Relay.
Perform 45RFE/545RFE TRANSMISSION VERIFICATION TEST - VER 1.

No >> Using the schematics as a guide, check the Powertrain Control Module (PCM) terminals for corrosion, damage, or terminal push out. Pay particular attention to all power and ground circuits. If no problems are found, replace the PCM per the Service Information. With the scan tool, perform QUICK LEARN.
Perform 45RFE/545RFE TRANSMISSION VERIFICATION TEST - VER 1.

P0562-BATTERY VOLTAGE LOW (CONTINUED)

7. INTERMITTENT WIRING AND CONNECTORS

The conditions necessary to set this DTC are not present at this time.
Using the schematics as a guide, inspect the wiring and connectors specific to this circuit.
Wiggle the wires while checking for shorted and open circuits.
With the scan tool, check the EATX DTC EVENT DATA to help identify the conditions in which the DTC was set.

Where there any problems found?

Yes >> Repair as necessary.
Perform 45RFE/545RFE TRANSMISSION VERIFICATION TEST - VER 1.

No >> Test Complete.

P0602-CONTROL MODULE PROGRAMMING ERROR/NOT PROGRAMMED

For the Transmission circuit diagram (Refer to 21 - TRANSMISSION/TRANSAXLE/AUTOMATIC - 45RFE/545RFE - SCHEMATICS AND DIAGRAMS)

For a complete wiring diagram **Refer to Section 8W**

- **When Monitored:**
  Check for generic software is made at power-up
- **Set Condition:**
  If genic software is found , the MIL will light immediately. This DTC is designed to signal the technician that the controller still has generic software installed.

Possible Causes
PCM - PROGRAMMING ERROR

Always perform the Pre-Diagnostic Troubleshooting procedure before proceeding. (Refer to 21 - TRANSMISSION/TRANSAXLE/AUTOMATIC - 45RFE/545RFE - DIAGNOSIS AND TESTING)

Theory of Operation

The controller is programmed during manufacturing with generic software to facilitate testing. This software does not have the proper calibrations to control a transmission in a vehicle. The check for generic software is made at power-up. If generic software is found , the MIL will light immediately and the MIL will stay on even if the fault is cleared, until the proper software is installed. Note: Transmission will be placed in limp-in mode.

Diagnostic Test

1. CONTROL MODULE PROGRAMMING ERROR

NOTE: Controller is programmed with generic software and will not allow the correct vehicle Powertrain management.

With the scan tool.

Record the vehicles controller part number.

Select Use Controller Part Number under the Flash Tab.

Flash the controller with the correct software.

Verify the controller flashed successfully.

Test Complete

Perform 45RFE/545RFE TRANSMISSION VERIFICATION TEST - VER 1. Perform the Quick Learn Procedure.

P0604-INTERNAL CONTROL MODULE RAM

For the Transmission circuit diagram (Refer to 21 - TRANSMISSION/TRANSAXLE/AUTOMATIC - 45RFE/545RFE - SCHEMATICS AND DIAGRAMS).

For a complete wiring diagram **Refer to Section 8W**.

- **When Monitored:**
  One time after the controller is reset (ignition turned to the RUN position).
- **Set Condition:**
  Whenever the Powertrain Control Module (PCM) detects an internal controller problem.

Possible Causes
POWER OR GROUND CIRCUIT
POWERTRAIN CONTROL MODULE

Always perform the Pre-Diagnostic Troubleshooting procedure before proceeding. (Refer to 21 - TRANSMISSION/TRANSAXLE/AUTOMATIC - 45RFE/545RFE - DIAGNOSIS AND TESTING).

Theory of Operation

After the controller is reset (ignition turned to the RUN position), the microprocessor checks the integrity of each RAM location by writing to it and reading back from it. The read value should be same as value written.

Diagnostic Test

1. CHECK WIRING AND CONNECTORS FOR INTERMITTENT OPERATION

Using the schematics as a guide, check the Powertrain Control Module (PCM) terminals for corrosion, damage, or terminal push out. Pay particular attention to all power and ground circuits.

NOTE: Due to the integration of the Powertrain and Transmission Control Modules, the transmission part of the PCM has it's own specific power and ground circuits.
Wiggle the wires while checking for shorted and open circuits.

Check for any Service Bulletins that may apply.

Were there any problems found?

Yes >> Repair the power and/or ground circuits to the PCM and Transmission Control Relay as necessary. Perform 45RFE/545RFE TRANSMISSION VERIFICATION TEST - VER 1.

No >> Replace the PCM per the Service Information. With the scan tool, perform QUICK LEARN. Perform 45RFE/545RFE TRANSMISSION VERIFICATION TEST - VER 1.

P0605-INTERNAL CONTROL MODULE ROM

For the Transmission circuit diagram (Refer to 21 - TRANSMISSION/TRANSAXLE/AUTOMATIC - 45RFE/545RFE - SCHEMATICS AND DIAGRAMS).

For a complete wiring diagram **Refer to Section 8W**.

- **When Monitored:**
  One time after the controller is reset (ignition turned to the RUN position).
- **Set Condition:**
  Whenever the Powertrain Control Module (PCM) detects an internal controller problem.

Possible Causes
POWER OR GROUND CIRCUIT
POWERTRAIN CONTROL MODULE

Always perform the Pre-Diagnostic Troubleshooting procedure before proceeding. (Refer to 21 - TRANSMISSION/TRANSAXLE/AUTOMATIC - 45RFE/545RFE - DIAGNOSIS AND TESTING).

Theory of Operation

After the controller is reset (ignition turned to the RUN position) the microprocessor checks the integrity of the program memory (ROM). A checksum is calculated by adding all used bytes in the program memory. The sum should be the same as a known constant stored in the program memory.

Diagnostic Test

1. CHECK WIRING AND CONNECTORS FOR INTERMITTENT OPERATION

Using the schematics as a guide, check the Powertrain Control Module (PCM) terminals for corrosion, damage, or terminal push out. Pay particular attention to all power and ground circuits.

NOTE: Due to the integration of the Powertrain and Transmission Control Modules, the transmission part of the PCM has it's own specific power and ground circuits.
Wiggle the wires while checking for shorted and open circuits.
Check for any Service Bulletins that may apply.

Were there any problems found?

Yes >> Repair the power and/or ground circuits as necessary.
Perform 45RFE/545RFE TRANSMISSION VERIFICATION TEST - VER 1.

No >> Replace the PCM per the Service Information. With the scan tool, perform QUICK LEARN.
Perform 45RFE/545RFE TRANSMISSION VERIFICATION TEST - VER 1.

P0613-INTERNAL TCM

For the Transmission circuit diagram (Refer to 21 - TRANSMISSION/TRANSAXLE/AUTOMATIC - 45RFE/545RFE - SCHEMATICS AND DIAGRAMS).

For a complete wiring diagram **Refer to Section 8W**.

- **When Monitored:**
  1) One time after the controller is reset (ignition turned to the RUN position) and every 60 seconds thereafter. The Delay Test is executed after a reset only.
  2) 2 seconds after an invalid test.
- **Set Condition:**
  If either of the following conditions occur 3 times:
  1) The watchdog fault line remains high after the period has elapsed for the too early - too late watchdog test.
  2) The Transmission Control Relay remains on after the watchdog delay expired.

Possible Causes
POWER OR GROUND CIRCUIT
POWERTRAIN CONTROL MODULE

Always perform the Pre-Diagnostic Troubleshooting procedure before proceeding. (Refer to 21 - TRANSMISSION/TRANSAXLE/AUTOMATIC - 45RFE/545RFE - DIAGNOSIS AND TESTING).

Theory of Operation

The internal Watchdog (WD) is a separate hardware circuit that continuously monitors the microprocessor. To insure the proper operation of the EATX controller the watchdog must receive a signal from the microprocessor within a specific time window (14ms ± 1ms) to prevent a system shutdown after a short delay (570ms). The microprocessor periodically tests the WD's ability to provide this shutdown function using a three phase test;

1) Send the signal too late > 15ms

2) Send the signal too early < 13ms

3) Delay test < 590ms

If the watchdog input signal arrives too early or too late, the Watchdog Fault line will go low and the watchdog delay will start to time out. The delay will be reset by the correct timing of watchdog signal sent during subsequent operations.

The Delay Test checks the delay time out. The Delay Monitor line is pulled low, which forces the delay to start timing out. At the end of the delay time the Transmission Relay will be turned off. The delay test, upon detection of the relay turning off, will immediately turn the relay back on before shutdown can occur.

Diagnostic Test

1. CHECK THE WIRING AND CONNECTORS

Using the schematics as a guide, check the Powertrain Control Module (PCM) terminals for corrosion, damage, or terminal push out. Pay particular attention to all power and ground circuits.

NOTE: Due to the integration of the Powertrain and Transmission Control Modules, the transmission part of the PCM has it's own specific power and ground circuits.
Wiggle the wires while checking for shorted and open circuits.

Check for any Service Bulletins that may apply.

Were there any problems found?

Yes >> Repair the power and/or ground circuits as necessary.
Perform 45RFE/545RFE TRANSMISSION VERIFICATION TEST - VER 1.

No >> Replace the PCM per the Service Information. With the scan tool, perform QUICK LEARN.
Perform 45RFE/545RFE TRANSMISSION VERIFICATION TEST - VER 1.

P0706-TRANSMISSION RANGE SENSOR RATIONALITY

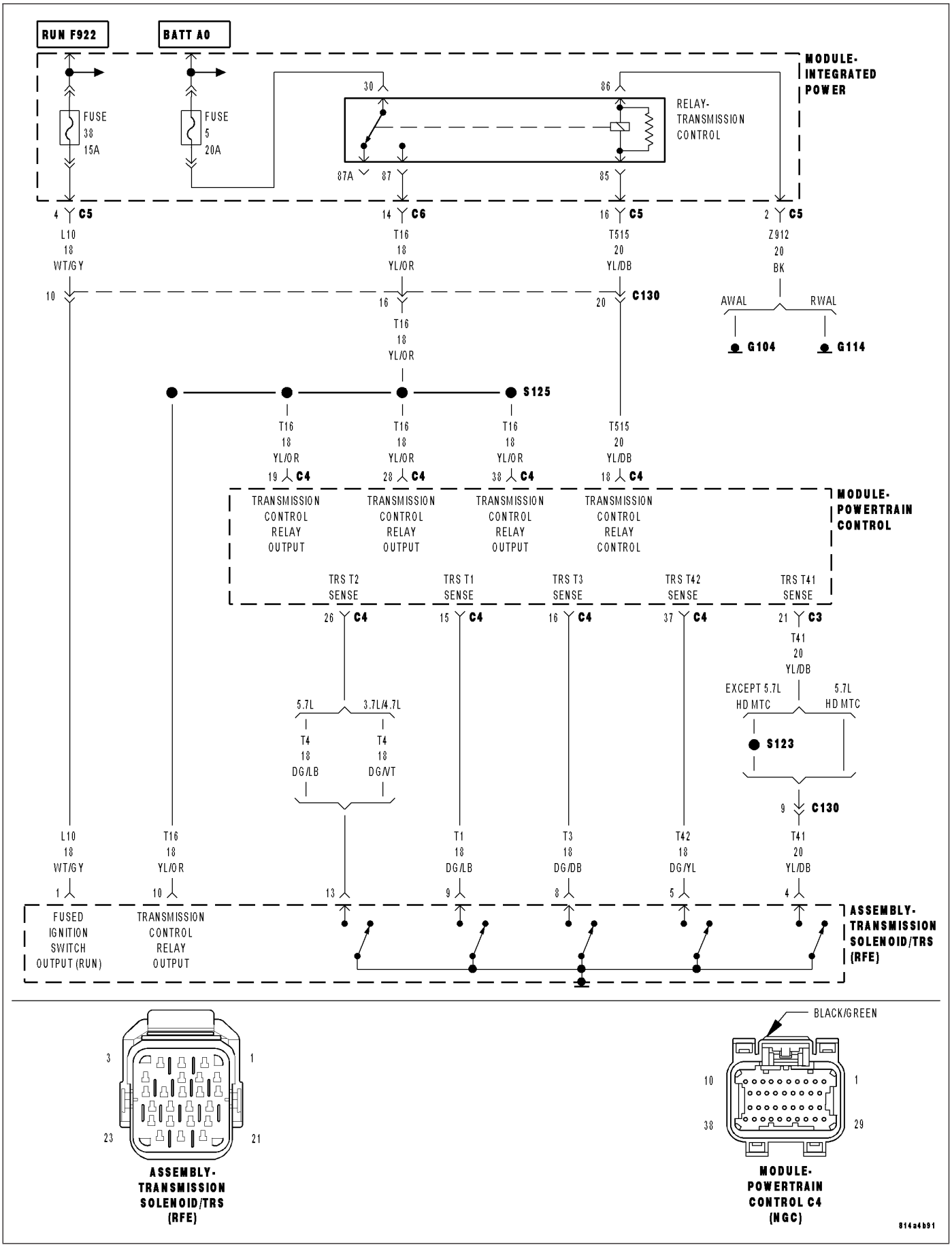

P0706-TRANSMISSION RANGE SENSOR RATIONALITY (CONTINUED)

For the Transmission circuit diagram (Refer to 21 - TRANSMISSION/TRANSAXLE/AUTOMATIC - 45RFE/545RFE - SCHEMATICS AND DIAGRAMS).

For a complete wiring diagram **Refer to Section 8W**.

- **When Monitored:**
  Continuously with the ignition on.
- **Set Condition:**
  The DTC will set if the controller detects an invalid PRNDL code which lasts for more than 0.042 seconds.

Possible Causes
SHIFTER OUT OF ADJUSTMENT
TRS SENSE CIRCUIT OPEN
TRS SENSE CIRCUIT SHORT TO GROUND
TRS SENSE CIRCUIT SHORT TO VOLTAGE
METAL DEBRIS IN OIL PAN
TRANSMISSION RANGE SENSOR
POWERTRAIN CONTROL MODULE

Always perform the Pre-Diagnostic Troubleshooting procedure before proceeding. (Refer to 21 - TRANSMISSION/TRANSAXLE/AUTOMATIC - 45RFE/545RFE - DIAGNOSIS AND TESTING).

Theory of Operation

The T1, T2, T3, T41, or T42 (C1 - C5) Sense circuits communicate the shift lever position to the Transmission Control System. Each circuit is terminated at the transmission by a switch (TRS). Each switch can be either open or closed, depending on the shift lever position. The PCM can decode this information and determine the shift lever position.

Each shift lever position has it own unique combination of closed and open switches. This is called a PRNDL code. There are 5 switches, therefore: there are many possible combinations of open and closed switches (codes). There are 12 valid codes: two for neutral, one for each other gear position (5), and five temporary (transition zone) codes. The remainder of the codes should never occur, these are called invalid codes.

Diagnostic Test

1. CHECK TO SEE IF P0706 DTC IS CURRENT

With the scan tool, perform the Shift Lever Position Test.

Select the test outcome from the following:

Test passes:
Go To 6

Test fails with Error Code:
Go To 2

Test fails without Error Code:
Perform the Gearshift Adjustment Procedure per the Service Information.
Perform 45RFE/545RFE TRANSMISSION VERIFICATION TEST - VER 1.

P0706-TRANSMISSION RANGE SENSOR RATIONALITY (CONTINUED)

2. ASSEMBLY-TRANSMISSION SOLENOID/TRS

Turn the ignition off to the lock position.

Remove the Starter Relay.

NOTE: Removal of the Starter Relay is to prevent a Transmission, NO RESPONSE, condition and disable the starter.

NOTE: Check connectors - Clean/repair as necessary.

Install Transmission Simulator, Miller tool #8333.

Ignition on, engine not running.

With the scan tool, perform the Shift Lever Position Test.

When the scan tool instructs you to put the Gear Selector in a particular position, you must do so using the selector switch on the Transmission Simulator.

The LED for the gear position in question must be illuminated on the Transmission Simulator prior to pressing ″ENTER″ on the scan tool.

NOTE: When the scan tool requests the O/D off button be depressed, you must use the O/D OFF button in the vehicle or you will fail the Shift Lever Position Test with an error code 11 or OD-TOW/HALL STUCK OPEN.

NOTE: If the Shift Lever Position test fails, make sure to note the identification of the TRS Sense circuit for future reference.

Did the Shift Lever Position test pass?

Yes >> Remove the Oil Pan and Main Valve Body Assembly per the Service Information. Check for metal debris on top of the Solenoid/TRS Assembly and the manual valve code plate. If debris is present, determine the cause of the debris and repair the transmission as necessary. If no problems are found, replace the Transmission Solenoid/TRS Assembly per the Service Information.
Perform 45RFE/545RFE TRANSMISSION VERIFICATION TEST - VER 1.

No >> Go To 3

---

3. TRS SENSE CIRCUIT OPEN

Turn the ignition off to the lock position.

Disconnect the Transmission Simulator, Miller tool #8333.

Disconnect the PCM harness connectors and install Miller tool #8815.

CAUTION: Do not probe the PCM harness connectors. Probing the PCM harness connectors will damage the PCM terminals resulting in poor terminal to pin connection. Install Miller tool #8815 to perform diagnosis.

Measure the resistance of the identified (T1, T2, T3, T41, or T42) TRS Sense circuit, from the Transmission Solenoid/TRS Assembly harness connector to the appropriate terminal of Miller tool #8815.

Is the resistance above 5.0 ohms?

Yes >> Repair the identified (T1, T2, T3, T41, or T42) TRS Sense circuit for an open.
Perform 45RFE/545RFE TRANSMISSION VERIFICATION TEST - VER 1.

No >> Go To 4

P0706-TRANSMISSION RANGE SENSOR RATIONALITY (CONTINUED)

4. TRS SENSE CIRCUIT SHORT TO GROUND

Measure the resistance between ground and the identified (T1, T2, T3, T41, or T42) TRS Sense circuit.

Is the resistance below 5.0 ohms?

Yes >> Repair the identified (T1, T2, T3, T41, or T42) TRS Sense circuit for a short to ground.
Perform 45RFE/545RFE TRANSMISSION VERIFICATION TEST - VER 1.

No >> Go To 5

---

5. TRS SENSE CIRCUIT SHORT TO OTHER CIRCUITS

Measure the resistance between the identified (T1, T2, T3, T41, or T42) TRS Sense circuit and all other circuits in the Transmission Solenoid/TRS Assembly harness connector.

Is the resistance below 100k ohms between the identified (T1, T2, T3, T41, or T42) TRS Sense circuit and any other circuit(s) in the Transmission Solenoid/TRS Assembly harness connector?

Yes >> Repair the identified (T1, T2, T3, T41, or T42) TRS Sense circuit for a short to other circuit(s).
Perform 45RFE/545RFE TRANSMISSION VERIFICATION TEST - VER 1.

No >> Using the schematics as a guide, check the Powertrain Control Module (PCM) terminals for corrosion, damage, or terminal push out. Pay particular attention to all power and ground circuits. If no problems are found, replace the PCM per the Service Information. With the scan tool, perform QUICK LEARN.
Perform 45RFE/545RFE TRANSMISSION VERIFICATION TEST - VER 1.

---

6. INTERMITTENT WIRING AND CONNECTORS

The conditions necessary to set the DTC are not present at this time.

Using the schematics as a guide, inspect the wiring and connectors specific to this circuit.

Wiggle the wiring and connectors while checking for shorted and open circuits.

With the scan tool, check the EATX DTC EVENT DATA to help identify the conditions in which the DTC was set.

Were there any problems found?

Yes >> Repair as necessary.
Perform 45RFE/545RFE TRANSMISSION VERIFICATION TEST - VER 1.

No >> Test Complete.

P0711-TRANSMISSION TEMPERATURE SENSOR PERFORMANCE

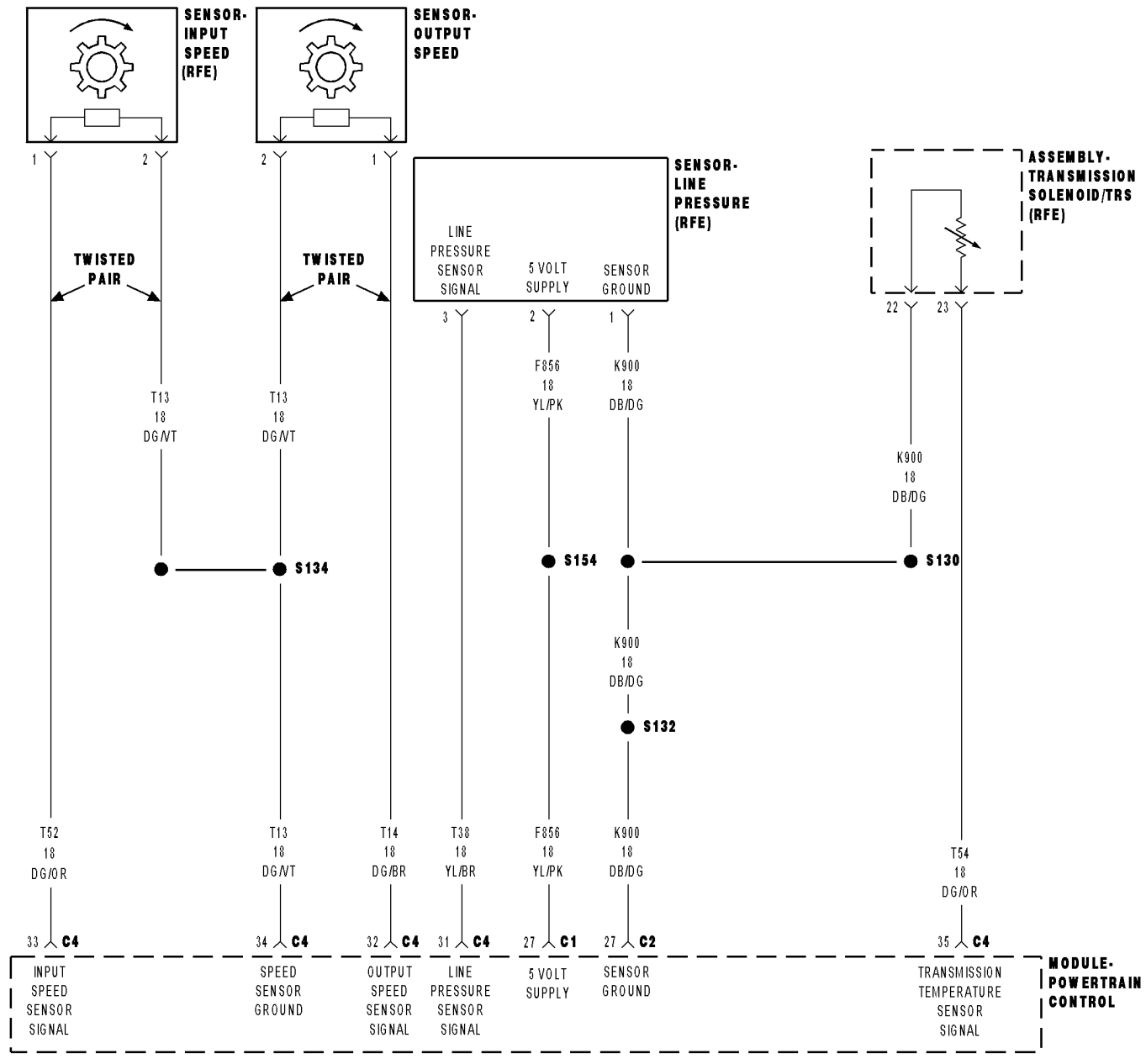

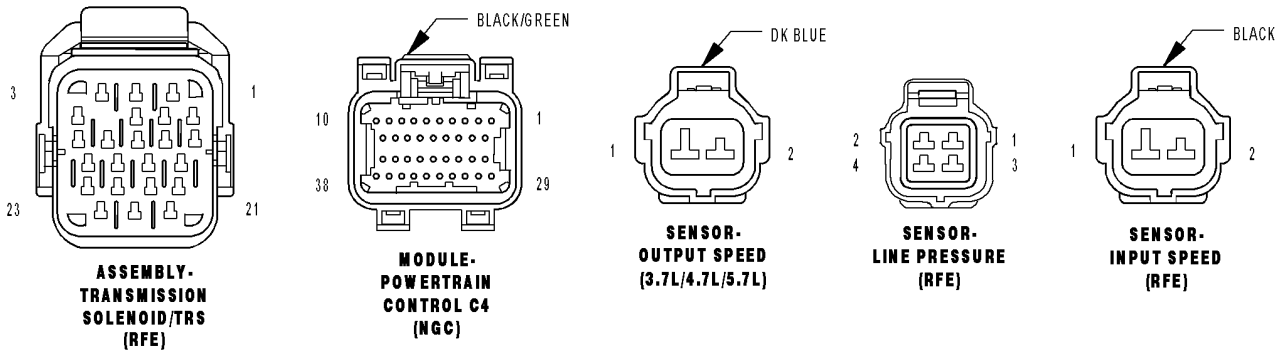

814a4ba3

P0711-TRANSMISSION TEMPERATURE SENSOR PERFORMANCE (CONTINUED)

For the Transmission circuit diagram (Refer to 21 - TRANSMISSION/TRANSAXLE/AUTOMATIC - 45RFE/545RFE - SCHEMATICS AND DIAGRAMS) .

For a complete wiring diagram **Refer to Section 8W**.

- **When Monitored:**
  Continuously with the ignition on and engine running.
- **Set Condition:**
  This DTC will set when the desired transmission temperature does not reach a normal operating temperature within a given time frame. Time is variable due to ambient temperature. Approximate times are starting temperature to warm up time: (-40° F / -40° C - 35 min) (-20° F / -28° C - 25 min) (20° F / -6.6° C - 20 min) (60° F / 15.5 ° C - 10 min)

Possible Causes
RELATED DTC'S PRESENT
TRANSMISSION TEMPERATURE SENSOR
POWERTRAIN CONTROL MODULE

Always perform the Pre-Diagnostic Troubleshooting procedure before proceeding. (Refer to 21 - TRANSMISSION/TRANSAXLE/AUTOMATIC - 45RFE/545RFE - DIAGNOSIS AND TESTING).

Theory of Operation

The Transmission Temperature Sensor is a variable resistor that changes with temperature, or otherwise known as a thermister. The temperature of the transmission fluid can affect a variety of electronically controlled transmission operations such as shift quality, torque converter lock-up, and when and/or if certain OBDII or system self-diagnostic test are performed. The Powertrain Control Module (PCM) substitutes a calculated transmission temperature value if a fault is detected in the Transmission Temperature Sensor circuit.

Diagnostic Test

1. DETERMINE IF RELATED DTC'S ARE PRESENT

With the scan tool, check Transmission DTC's.

Are there any other related Transmission Temperature Sensor DTCs present?

Yes >> Refer to the Transmission category and perform the appropriate symptom.
Perform 45RFE/545RFE TRANSMISSION VERIFICATION TEST - VER 1.

No >> Go To 2

---

2. CHECK TO SEE IF DTC IS CURRENT

With the scan tool, Check the STARTS SINCE SET counter for P0711.

NOTE: This counter only applies to the last DTC set.

Is the STARTS SINCE SET counter 2 or less?

Yes >> Go To 3

No >> Go To 4

P0711-TRANSMISSION TEMPERATURE SENSOR PERFORMANCE (CONTINUED)

3. TRANSMISSION TEMPERATURE SENSOR

Turn the ignition off to the lock position.

Remove the Starter Relay.

NOTE: Removal of the Starter Relay is to prevent a Transmission, NO RESPONSE, condition and disable the starter.

Install the Transmission Simulator, Miller tool #8333.

NOTE: Check connectors - Clean/repair as necessary.

Ignition on, engine not running.

With the Transmission Simulator, turn the Input/Output switch to OFF.

With the scan tool, monitor the TRANS TEMP VOLTS while turning the Thermistor Voltage switch to all three positions on the Transmission Simulator.

Compare the scan tool readings to the voltage readings listed on the Transmission Simulator.

Do the readings on the scan tool match the Transmission Simulator readings ± 0.2 volts?

Yes >> Replace Transmission Solenoid/TRS Assembly per the Service Information.
Perform 45RFE/545RFE TRANSMISSION VERIFICATION TEST - VER 1.

No >> Using the schematics as a guide, check the Powertrain Control Module (PCM) terminals for corrosion, damage, or terminal push out. Pay particular attention to all power and ground circuits. If no problems are found, replace the PCM per the Service Information. With the scan tool, perform QUICK LEARN.
Perform 45RFE/545RFE TRANSMISSION VERIFICATION TEST - VER 1.

---

4. INTERMITTENT WIRING AND CONNECTORS

The conditions necessary to set this DTC are not present at this time.

Using the schematics as a guide, inspect the wiring and connectors specific to this circuit.

Wiggle the wires while checking for shorted and open circuits.

With the scan tool, check the DTC EVENT DATA to help identify the conditions in which the DTC was set.

Were there any problems found?

Yes >> Repair as necessary.
Perform 45RFE/545RFE TRANSMISSION VERIFICATION TEST - VER 1.

No >> Test Complete.

P0712-TRANSMISSION TEMPERATURE SENSOR LOW

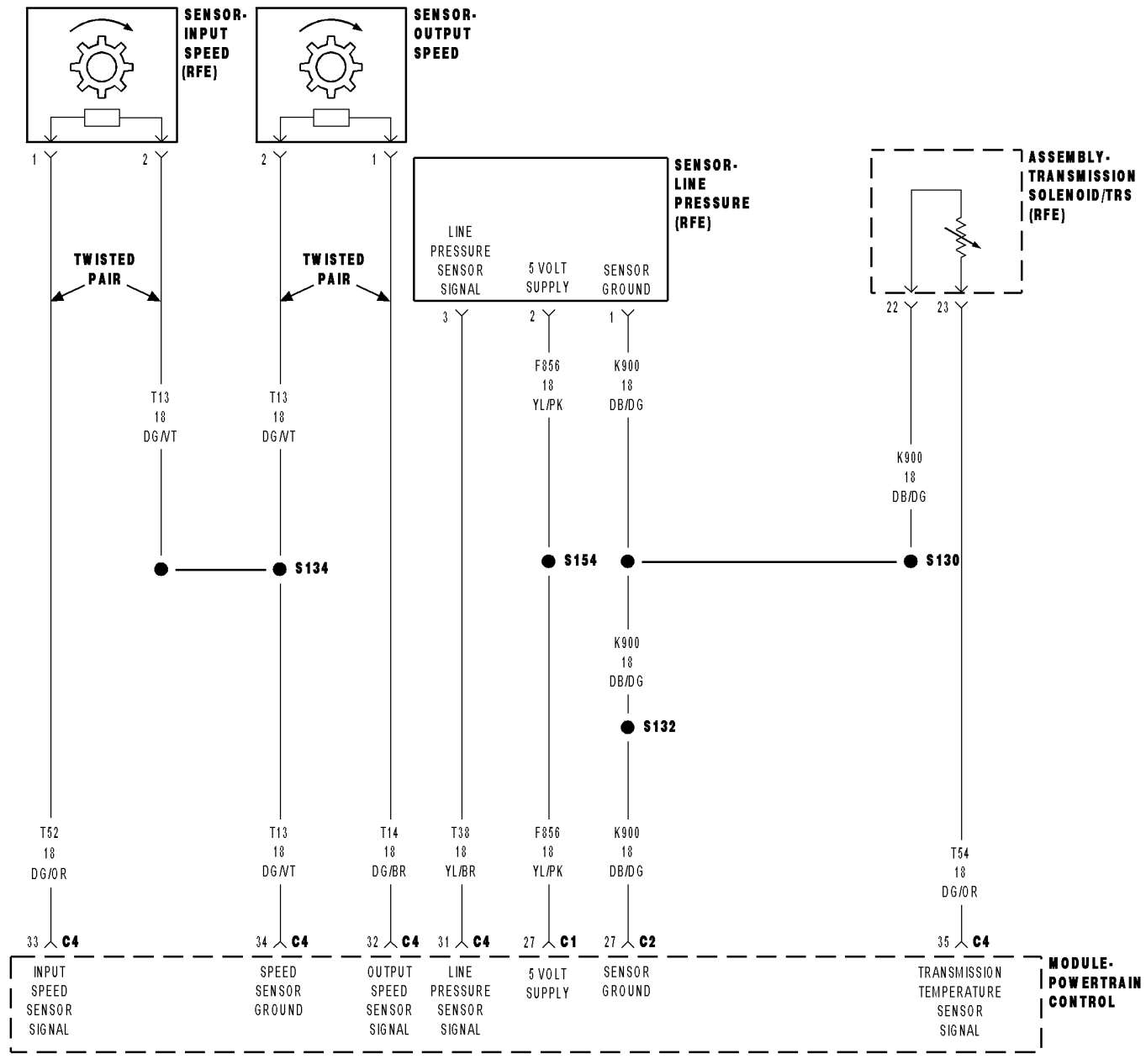

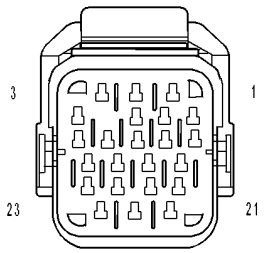

ASSEMBLY- TRANSMISSION SOLENOID/TRS (RFE)

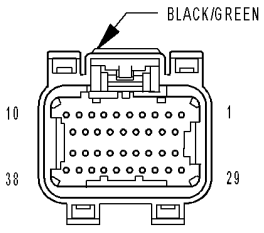

MODULE- POWERTRAIN CONTROL C4 (NGC)

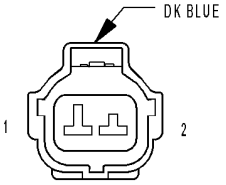

SENSOR- OUTPUT SPEED (3.7L/4.7L/5.7L)



SENSOR- LINE PRESSURE (RFE)

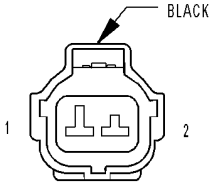

SENSOR- INPUT SPEED (RFE)

814a4ba3

P0712-TRANSMISSION TEMPERATURE SENSOR LOW (CONTINUED)

For the Transmission circuit diagram (Refer to 21 - TRANSMISSION/TRANSAXLE/AUTOMATIC - 45RFE/545RFE - SCHEMATICS AND DIAGRAMS).

For a complete wiring diagram **Refer to Section 8W**.

- **When Monitored:**
  Continuously with the ignition on and engine running.
- **Set Condition:**
  The DTC will set when the monitored Temperature Sensor voltage drops below 0.078 volts for the period of 0.45 seconds.

Possible Causes
RELATED DTC'S PRESENT
(T54) TRANSMISSION TEMPERATURE SENSOR SIGNAL CIRCUIT SHORT TO GROUND
TRANSMISSION TEMPERATURE SENSOR
POWERTRAIN CONTROL MODULE

Always perform the Pre-Diagnostic Troubleshooting procedure before proceeding. (Refer to 21 - TRANSMISSION/TRANSAXLE/AUTOMATIC - 45RFE/545RFE - DIAGNOSIS AND TESTING).

Theory of Operation

The Transmission Temperature Sensor is a variable resistor that changes with temperature, or otherwise known as a thermister. The temperature of the transmission fluid can affect a variety of electronically controlled transmission operations such as shift quality, torque converter lock-up, and when and/or if certain OBDII or system self-diagnostic test are performed. The Powertrain Control Module (PCM) substitutes a calculated transmission temperature value if a fault is detected in the Transmission Temperature Sensor circuit.

Diagnostic Test

1. DETERMINE IF RELATED DTC'S ARE PRESENT

With the scan tool, check Transmission DTC's.

Are there any line pressure sensor or throttle position sensor DTCs present?

Yes >> Refer to the Transmission category and perform the appropriate symptom.

No >> Go To 2

---

2. CHECK TO SEE IF DTC IS CURRENT

With the scan tool, Check the STARTS SINCE SET counter for P0712.

NOTE: This counter only applies to the last DTC set.

Is the STARTS SINCE SET counter 2 or less?

Yes >> Go To 3

No >> Go To 5

P0712-TRANSMISSION TEMPERATURE SENSOR LOW (CONTINUED)

3. TRANSMISSION TEMPERATURE SENSOR

Turn the ignition off to the lock position.

Remove the Starter Relay.

NOTE: Removal of the Starter Relay is to prevent a Transmission, NO RESPONSE, condition and disable the starter.

Install the Transmission Simulator, Miller tool #8333.

NOTE: Check connectors - Clean/repair as necessary.

Ignition on, engine not running.

With the Transmission Simulator, turn the Input/Output switch to OFF.

With the scan tool, monitor the TRANS TEMP VOLTS while turning the Thermistor Voltage switch to all three positions on the Transmission Simulator.

Compare the scan tool readings with the numbers listed on the Transmission Simulator.

Do the readings on the Transmission Simulator match the scan tool readings ± 0.2 volts?

Yes >> Replace Transmission Solenoid/TRS Assembly per the Service Information.
Perform 45RFE/545RFE TRANSMISSION VERIFICATION TEST - VER 1.

No >> Go To 4

---

4. (T54) TRANSMISSION TEMPERATURE SENSOR SIGNAL CIRCUIT SHORT TO GROUND

Turn the ignition off to the lock position.

Disconnect the Transmission Simulator, Miller tool #8333.

Disconnect the PCM C4 harness connector and connect Miller tool #8815.

NOTE: Check connectors - Clean/repair as necessary.

CAUTION: Do not probe the PCM harness connectors. Probing the PCM harness connectors will damage the PCM terminals resulting in poor terminal to pin connection. Install Miller tool #8815 to perform diagnosis.

Measure the resistance between ground and the (T54) Transmission Temperature Sensor Signal circuit.

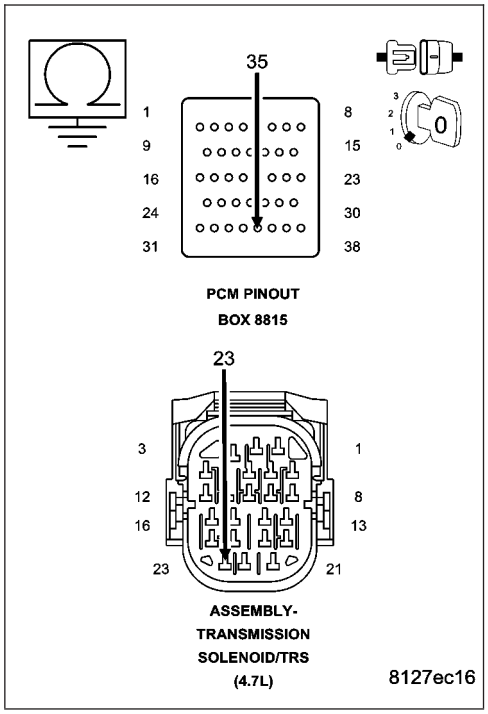

Is the resistance below 5.0 ohms?

Yes >> Repair the (T54) Transmission Temperature Sensor Signal circuit for a short to ground.
Perform 45RFE/545RFE TRANSMISSION VERIFICATION TEST - VER 1.

No >> Using the schematics as a guide, check the Powertrain Control Module (PCM) terminals for corrosion, damage, or terminal push out. Pay particular attention to all power and ground circuits. If no problems are found, replace the PCM per the Service Information. With the scan tool, perform QUICK LEARN.
Perform 45RFE/545RFE TRANSMISSION VERIFICATION TEST - VER 1.

P0712-TRANSMISSION TEMPERATURE SENSOR LOW (CONTINUED)

5. INTERMITTENT WIRING AND CONNECTORS

The conditions necessary to set this DTC are not present at this time.
Using the schematics as a guide, inspect the wiring and connectors specific to this circuit.
Wiggle the wires while checking for shorted and open circuits.
With the scan tool, check the EATX DTC EVENT DATA to help identify the conditions in which the DTC was set.

Were there any problems found?

Yes >> Repair as necessary.
Perform 45RFE/545RFE TRANSMISSION VERIFICATION TEST - VER 1.

No >> Test Complete.

P0713-TRANSMISSION TEMPERATURE SENSOR HIGH

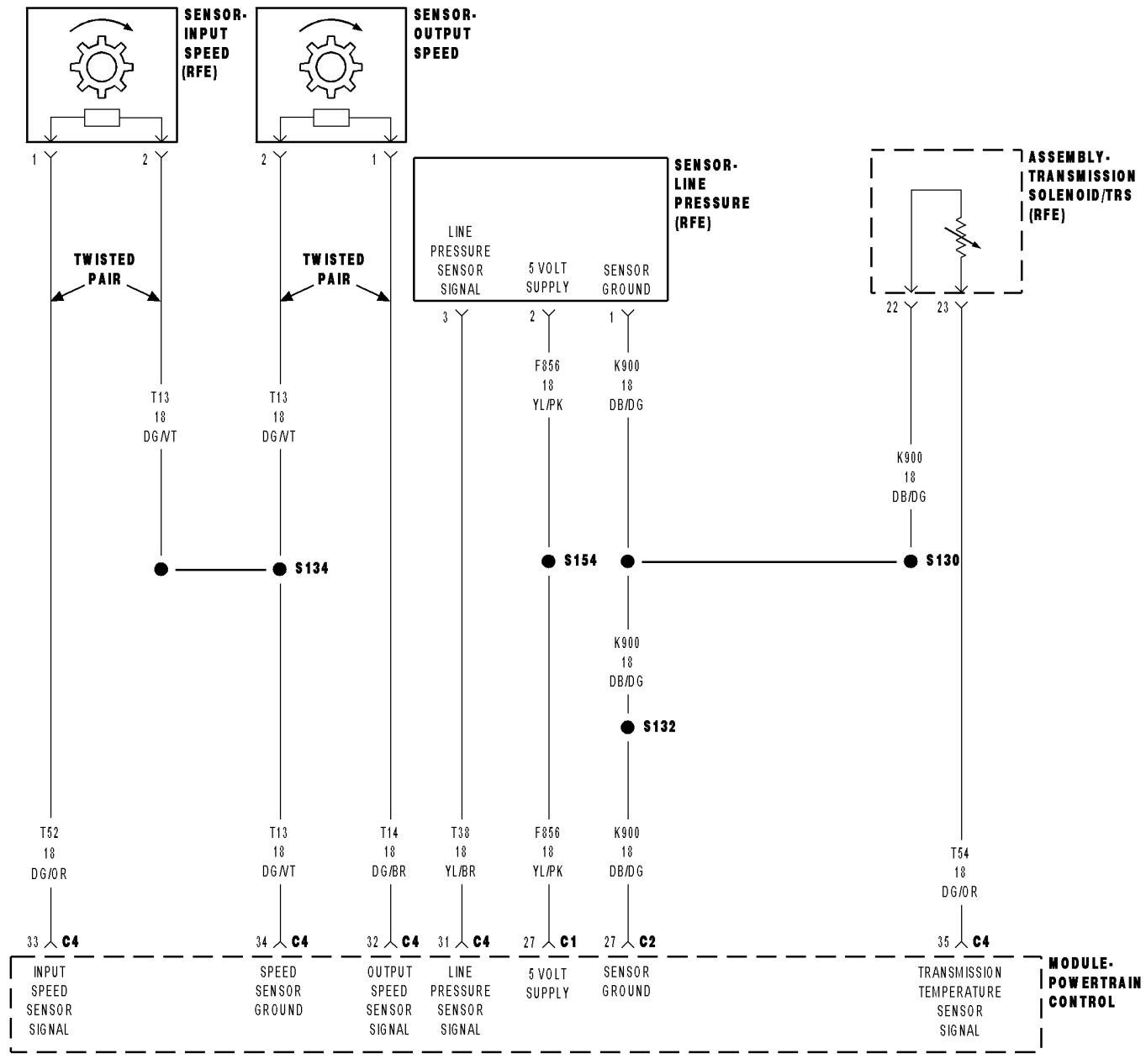

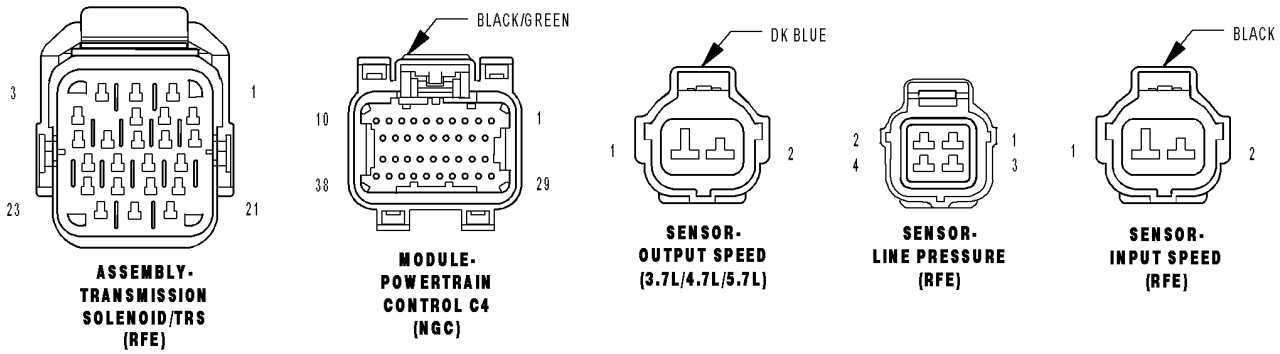

814a4ba3

P0713-TRANSMISSION TEMPERATURE SENSOR HIGH (CONTINUED)

For the Transmission circuit diagram (Refer to 21 - TRANSMISSION/TRANSAXLE/AUTOMATIC - 45RFE/545RFE - SCHEMATICS AND DIAGRAMS).

For a complete wiring diagram **Refer to Section 8W**.

- **When Monitored:**
  Continuously with the ignition on and engine running.
- **Set Condition:**
  The DTC will set when the monitored Temperature Sensor voltage rises above 4.94 volts for the period of 0.45 seconds.

Possible Causes
RELATED DTC'S PRESENT
(T54) TRANSMISSION TEMPERATURE SENSOR SIGNAL CIRCUIT SHORT TO OTHER CIRCUITS
TRANSMISSION TEMPERATURE SENSOR
POWERTRAIN CONTROL MODULE

Always perform the Pre-Diagnostic Troubleshooting procedure before proceeding. (Refer to 21 - TRANSMISSION/TRANSAXLE/AUTOMATIC - 45RFE/545RFE - DIAGNOSIS AND TESTING).

Theory of Operation

The Transmission Temperature Sensor is a variable resistor that changes with temperature, or otherwise known as a thermister. The temperature of the transmission fluid can affect a variety of electronically controlled transmission operations such as shift quality, torque converter lock-up, and when and/or if certain OBDII or system self-diagnostic test are performed. The Powertrain Control Module (PCM) substitutes a calculated transmission temperature value if a fault is detected in the Transmission Temperature Sensor circuit.

Diagnostic Test

1. DETERMINE IF RELATED DTC'S ARE PRESENT

With the scan tool, check Transmission DTC's.

Are there any line pressure sensor or throttle position sensor DTCs present?

Yes >> Refer to the Transmission category and perform the appropriate symptom.

No >> Go To 2

---

2. CHECK TO SEE IF DTC IS CURRENT

With the scan tool, check the STARTS SINCE SET counter for P0713.

NOTE: This counter only applies to the last DTC set.

Is the STARTS SINCE SET counter 2 or less?

Yes >> Go To 3

No >> Go To 5

P0713-TRANSMISSION TEMPERATURE SENSOR HIGH (CONTINUED)

3. TRANSMISSION TEMPERATURE SENSOR

Turn the ignition off to the lock position.

Remove the Starter Relay.

NOTE: Removal of the Starter Relay is to prevent a Transmission, NO RESPONSE, condition and disable the starter.

Install the Transmission Simulator, Miller tool #8333.

NOTE: Note: Check connectors - Clean/repair as necessary.

Ignition on, engine not running.

With the Transmission Simulator, turn the Input/Output switch to OFF.

With the scan tool, monitor the TRANS TEMP VOLTS while turning the Thermistor Voltage switch to all three positions on the Transmission Simulator.

Compare the scan tool readings with the numbers listed on the Transmission Simulator.

Do the readings on the Transmission Simulator match the scan tool readings ± 0.2 volts?

Yes >> Replace Transmission Solenoid/TRS assembly per the Service Information.
Perform 45RFE/545RFE TRANSMISSION VERIFICATION TEST - VER 1.

No >> Go To 4

---

4. (T54) TRANSMISSION SENSOR SIGNAL CIRCUIT SHORT TO OTHER CIRCUITS

Turn the ignition off to the lock position.

Disconnect the Transmission Simulator, Miller tool #8333.

Disconnect the PCM harness connectors.

Measure the resistance between the (T54) Transmission Temperature Sensor Signal circuit and all other circuits in the Transmission Solenoid/TRS Assembly harness connector.

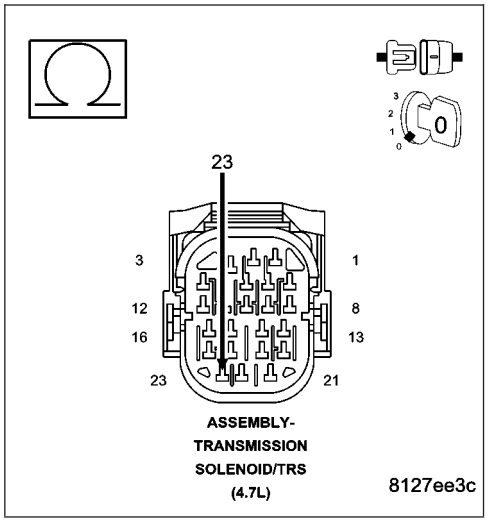

Is the resistance below 5.0 ohms between the (T54) Transmission Temperature Sensor Signal circuit and any other circuit(s) in the Transmission Solenoid/TRS Assembly harness connector?

Yes >> Repair the Transmission Temperature Sensor Signal circuit for a short to other circuit(s).
Perform 45RFE/545RFE TRANSMISSION VERIFICATION TEST - VER 1.

No >> Using the schematics as a guide, check the Powertrain Control Module (PCM) terminals for corrosion, damage, or terminal push out. Pay particular attention to all power and ground circuits. If no problems are found, replace the PCM per the Service Information. With the scan tool, perform QUICK LEARN.
Perform 45RFE/545RFE TRANSMISSION VERIFICATION TEST - VER 1.

P0713-TRANSMISSION TEMPERATURE SENSOR HIGH (CONTINUED)

5. INTERMITTENT WIRING AND CONNECTORS

The conditions necessary to set this DTC are not present at this time.
Using the schematics as a guide, inspect the wiring and connectors specific to this circuit.
Wiggle the wires while checking for shorted and open circuits.
With the scan tool, check the EATX DTC EVENT DATA to help identify the conditions in which the DTC was set.

Were there any problems found?

Yes >> Repair as necessary.
Perform 45RFE/545RFE TRANSMISSION VERIFICATION TEST - VER 1.

No >> Test Complete.

P0714-TRANSMISSION TEMPERATURE SENSOR INTERMITTENT

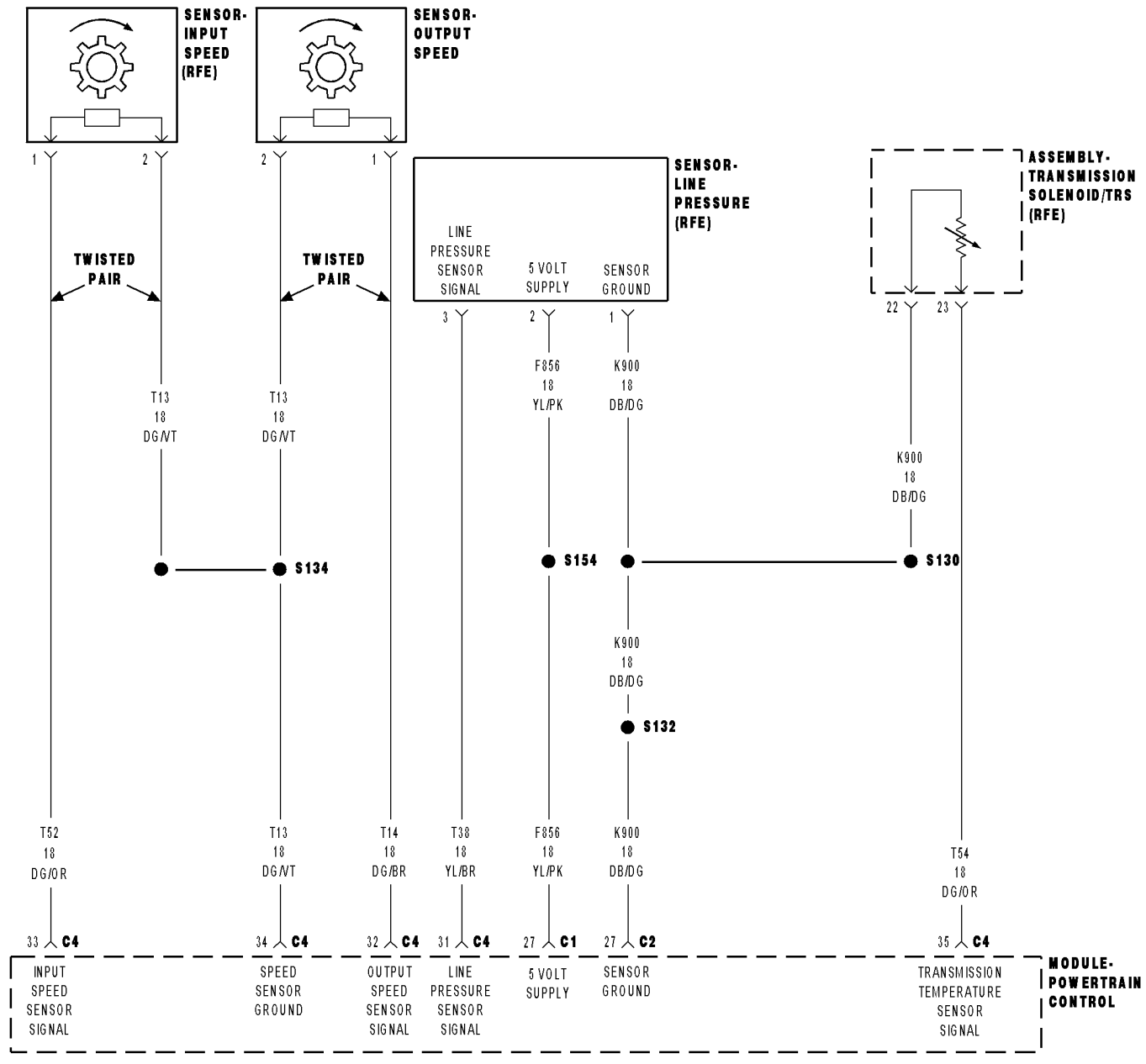

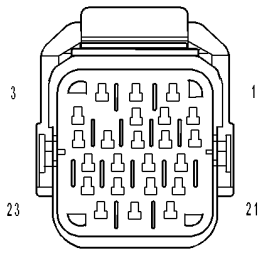

ASSEMBLY- TRANSMISSION SOLENOID/TRS (RFE)

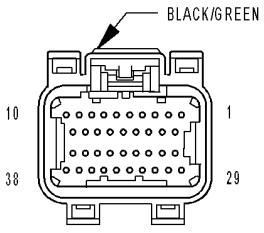

MODULE- POWERTRAIN CONTROL C4 (NGC)

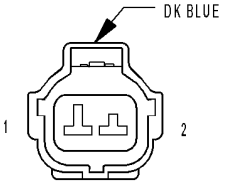

SENSOR- OUTPUT SPEED (3.7L/4.7L/5.7L)



SENSOR- LINE PRESSURE (RFE)

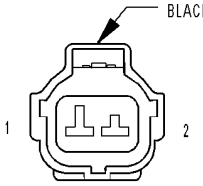

SENSOR- INPUT SPEED (RFE)

814a4ba3

P0714-TRANSMISSION TEMPERATURE SENSOR INTERMITTENT (CONTINUED)

For the Transmission circuit diagram (Refer to 21 - TRANSMISSION/TRANSAXLE/AUTOMATIC - 45RFE/545RFE - SCHEMATICS AND DIAGRAMS) .

For a complete wiring diagram **Refer to Section 8W**.

- **When Monitored:**
  Continuously with the ignition on and engine running.
- **Set Condition:**
  The DTC will set when the monitored Temperature Sensor voltage fluctuates or changes abruptly within a predetermined period of time.

Possible Causes
RELATED DTC'S PRESENT
TRANSMISSION TEMPERATURE SENSOR
POWERTRAIN CONTROL MODULE

Always perform the Pre-Diagnostic Troubleshooting procedure before proceeding. (Refer to 21 - TRANSMISSION/TRANSAXLE/AUTOMATIC - 45RFE/545RFE - DIAGNOSIS AND TESTING).

Theory of Operation

The Transmission Temperature Sensor is a variable resistor that changes with temperature, or otherwise known as a thermister. The temperature of the transmission fluid can affect a variety of electronically controlled transmission operations such as shift quality, torque converter lock-up, and when and/or if certain OBDII or system self-diagnostic test are performed. The Powertrain Control Module (PCM) substitutes a calculated transmission temperature value if a fault is detected in the Transmission Temperature Sensor circuit.

Diagnostic Test

1. DETERMINE IF RELATED DTC'S ARE PRESENT

With the scan tool, check Transmission DTC's.

Are there any line pressure sensor or throttle position sensor DTCs present?

Yes >> Refer to the Transmission category and perform the appropriate symptom.

No >> Go To 2

---

2. CHECK TO SEE IF DTC IS CURRENT

With the scan tool, Check the STARTS SINCE SET counter for P0714.

NOTE: This counter only applies to the last DTC set.

Is the STARTS SINCE SET counter 2 or less?

Yes >> Go To 3

No >> Go To 4

P0714-TRANSMISSION TEMPERATURE SENSOR INTERMITTENT (CONTINUED)

3. TRANSMISSION TEMPERATURE SENSOR

Turn the ignition off to the lock position.

Remove the Starter Relay.

NOTE: Removal of the Starter Relay is to prevent a Transmission, NO RESPONSE, condition and disable the starter.

Install the Transmission Simulator, Miller tool #8333.

NOTE: Check connectors - Clean/repair as necessary.

Ignition on, engine not running.

With the Transmission Simulator, turn the Input/Output switch to OFF.

With the scan tool, monitor the TRANS TEMP VOLTS while turning the Thermistor Voltage switch to all three positions on the Transmission Simulator.

Compare the scan tool readings with the numbers listed on the Transmission Simulator.

Do the readings on the Transmission Simulator match a non-fluctuating scan tool reading ± 0.2 volts?

Yes >> Replace Transmission Solenoid/TRS assembly per the Service Information.
Perform 45RFE/545RFE TRANSMISSION VERIFICATION TEST - VER 1.

No >> Using the schematics as a guide, check the Powertrain Control Module (PCM) terminals for corrosion, damage, or terminal push out. Pay particular attention to all power and ground circuits. If no problems are found, replace the PCM per the Service Information. With the scan tool, perform QUICK LEARN.
Perform 45RFE/545RFE TRANSMISSION VERIFICATION TEST - VER 1.

---

4. INTERMITTENT WIRING AND CONNECTORS

The conditions necessary to set this DTC are not present at this time.

Using the schematics as a guide, inspect the wiring and connectors specific to this circuit.

Wiggle the wires while checking for shorted and open circuits.

With the scan tool, check the EATX DTC EVENT DATA to help identify the conditions in which the DTC was set.

Were there any problems found?

Yes >> Repair as necessary.
Perform 45RFE/545RFE TRANSMISSION VERIFICATION TEST - VER 1.

No >> Test Complete.

P0715-INPUT SPEED SENSOR 1 CIRCUIT

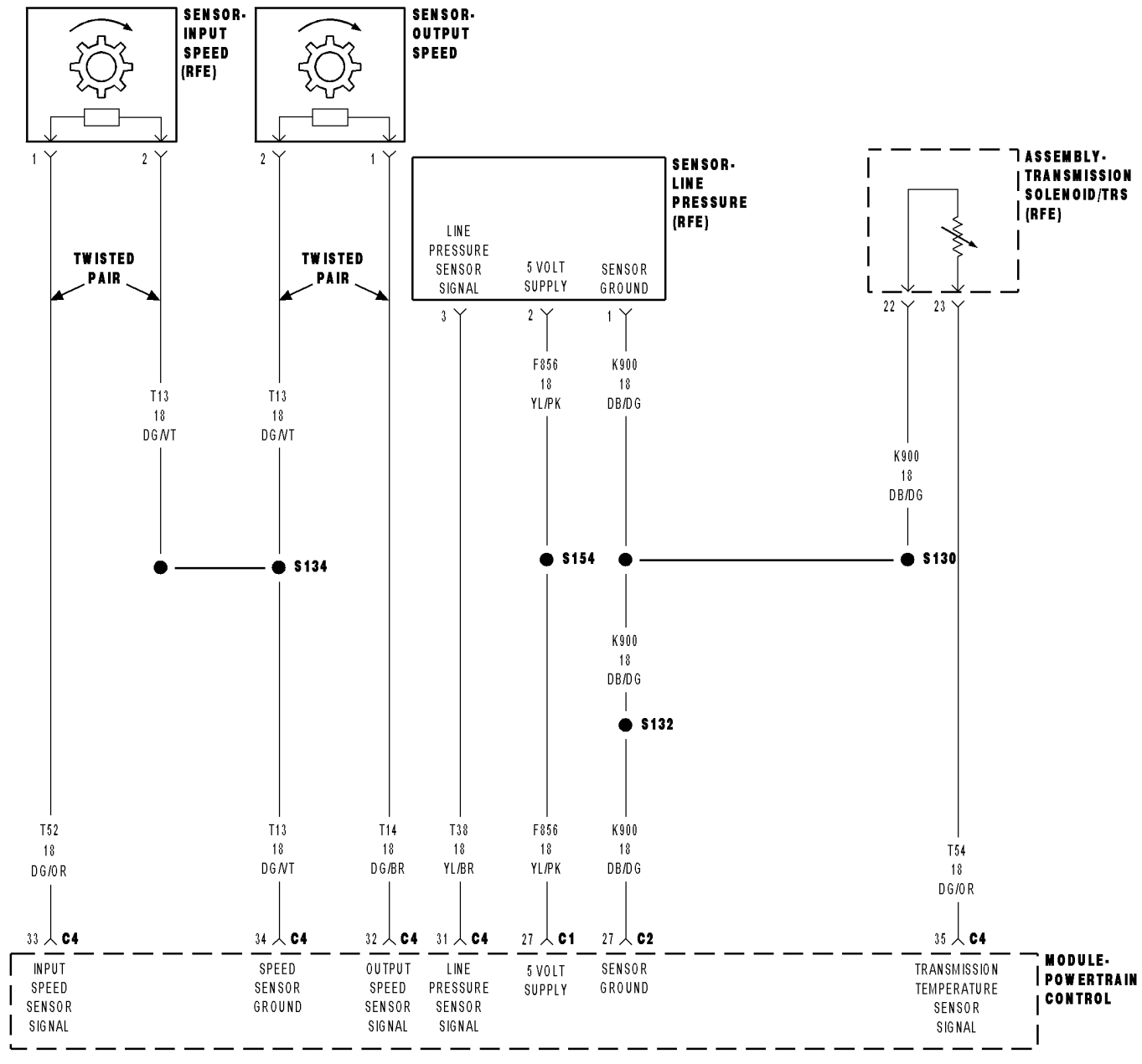

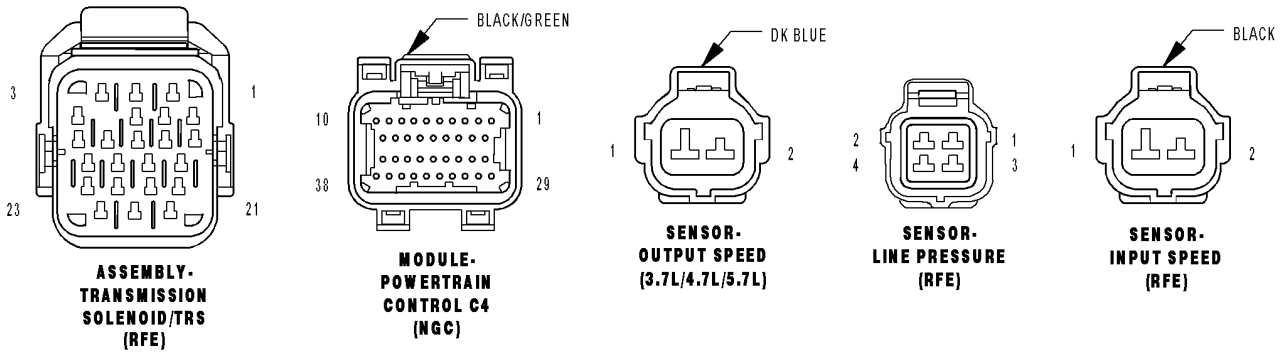

814a4ba3

P0715-INPUT SPEED SENSOR 1 CIRCUIT (CONTINUED)

For the Transmission circuit diagram (Refer to 21 - TRANSMISSION/TRANSAXLE/AUTOMATIC - 45RFE/545RFE - SCHEMATICS AND DIAGRAMS) .

For a complete wiring diagram **Refer to Section 8W**.

- **When Monitored:**
  The transmission gear ratio is monitored continuously while the transmission is in gear.
- **Set Condition:**
  If there is an excessive change in input RPM in any gear. This DTC can take up to five minutes of problem identification before illuminating the MIL.

Possible Causes
(T52) INPUT SPEED SENSOR SIGNAL CIRCUIT OPEN
(T13) SPEED SENSOR GROUND CIRCUIT OPEN
(T52) INPUT SPEED SENSOR SIGNAL CIRCUIT SHORT TO GROUND
(T13) SPEED SENSOR GROUND CIRCUIT SHORT TO GROUND
(T52) INPUT SPEED SENSOR SIGNAL CIRCUIT SHORT TO VOLTAGE
(T13) SPEED SENSOR GROUND CIRCUIT SHORT TO VOLTAGE
INPUT SPEED SENSOR
POWERTRAIN CONTROL MODULE

Always perform the Pre-Diagnostic Troubleshooting procedure before proceeding. (Refer to 21 - TRANSMISSION/TRANSAXLE/AUTOMATIC - 45RFE/545RFE - DIAGNOSIS AND TESTING).

Theory of Operation

The transmission system uses two speed sensors, one to measure input RPM and one to measure output RPM. These inputs are essential for proper transmission operation. Therefore, the integrity of this data is verified through the following checks:

1) When in gear, if the gear ratio does not compare to a known gear ratio, the corresponding in-gear trouble code is set (DTCs P0731–36).

2) An excessive change in input or output speeds indicating signal intermittent which may result in the DTCs P0715 and/or P0720 to set.

3) If the common speed sensor ground circuit is lost, both sensor inputs will read the signal from the input speed sensor at idle in neutral. Since the input speed sensor reads 60 teeth from the input clutch hub and the output speed sensor reads 30 teeth from the park gear, the result is an apparent speed ratio of 1:2 and may cause the DTC P1794 to set when at a stop.

Diagnostic Test

1. CHECK TO SEE IF DTC P0715 IS CURRENT

Start the engine in park.

With the scan tool, monitor the Input Speed Sensor RPM.

Is the Input Speed Sensor RPM below 400 RPM?

Yes >> Go To 2

No >> Go To 9

P0715-INPUT SPEED SENSOR 1 CIRCUIT (CONTINUED)

2. INPUT SPEED SENSOR

Turn the ignition off to the lock position.

Remove the Starter Relay.

NOTE: Removal of the Starter Relay is to prevent a Transmission, NO RESPONSE, condition and disable the starter.

Install the Transmission Simulator, Miller tool #8333.

NOTE: Check connectors - Clean/repair as necessary.

Ignition on, engine not running.

With the Transmission Simulator, set the selector switch to 3000/1000 and the Input/Output switch to ON.

With the scan tool, monitor the Input and Output Speed Sensor RPM.

Does the Input speed read 3000 RPM and the Output speed read 1000 RPM ± 50 RPM?

Yes >> Replace the Input Speed Sensor per the Service Information.
Perform 45RFE/545RFE TRANSMISSION VERIFICATION TEST - VER 1.

No >> Go To 3

---

3. (T52) INPUT SPEED SENSOR SIGNAL CIRCUIT SHORT TO VOLTAGE

Turn the ignition off to the lock position.

Disconnect the PCM C4 harness connector and connect Miller tool #8815.

NOTE: Make sure to leave the Speed Sensor, Transmission Solenoid/TRS Assembly, and Line Pressure Sensor harness connectors disconnected.

CAUTION: Do not probe the PCM harness connectors. Probing the PCM harness connectors will damage the PCM terminals resulting in poor terminal to pin connection. Install Miller tool #8815 to perform diagnosis.

Remove the Transmission Control Relay.

Place a jumper wire between the (A104) Fused B+ circuit and the (T16) Transmission Control Relay Output circuit in the Transmission Control Relay connector.

Ignition on, engine not running.

Measure the voltage of the (T52) Input Speed Sensor Signal circuit.

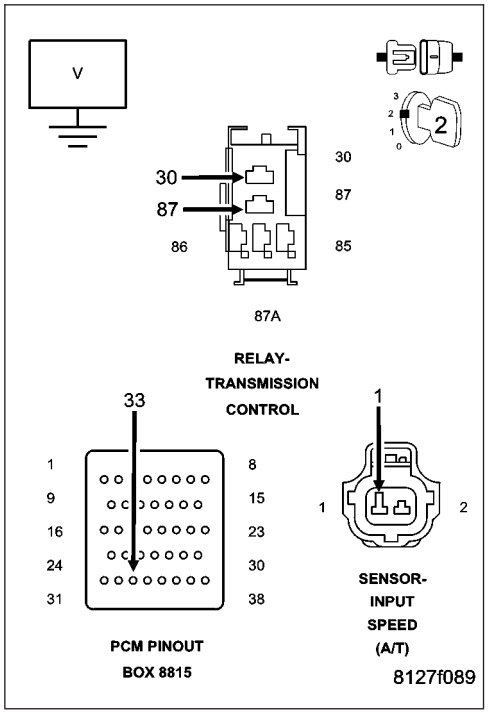

Is the voltage above 0.5 volts?

Yes >> Repair the (T52) Input Speed Sensor Signal circuit for a short to voltage.
Perform (NGC) 45RFE/545RFE TRANSMISSION VERIFICATION TEST - VER 1.

No >> Go To 4

P0715-INPUT SPEED SENSOR 1 CIRCUIT (CONTINUED)

4. (T13) SPEED SENSOR GROUND CIRCUIT SHORT TO VOLTAGE

Measure the voltage of the (T13) Speed Sensor Ground circuit.

Is the voltage above 0.5 volts?

Yes >> Repair the (T13) Speed Sensor Ground circuit for a short to voltage.
Perform (NGC) 45RFE/545RFE TRANSMISSION VERIFICATION TEST - VER 1.

No >> Go To 5

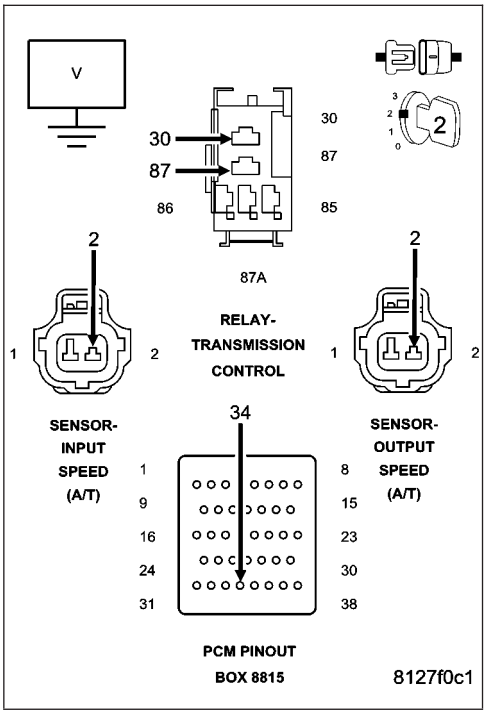

5. (T52) INPUT SPEED SENSOR SIGNAL CIRCUIT OPEN

Turn the ignition off to the lock position.

Disconnect the jumper wire between the (A104) Fused B+ circuit and the (T16) Transmission Control Relay Output circuit in the Transmission Control Relay connector.

Measure the resistance of the (T52) Input Speed Sensor Signal circuit between the Input Speed Sensor harness connector and the appropriate terminal of Miller tool #8815.

Is the resistance above 5.0 ohms?

Yes >> Repair the (T52) Input Speed Sensor Signal circuit for an open.
Perform 45RFE/545RFE TRANSMISSION VERIFICATION TEST - VER 1.

No >> Go To 6

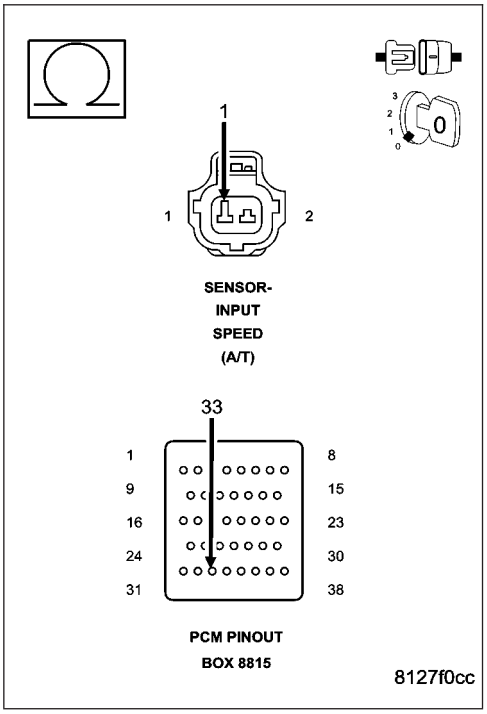

P0715-INPUT SPEED SENSOR 1 CIRCUIT (CONTINUED)

6. (T13) SPEED SENSOR GROUND CIRCUIT OPEN

Measure the resistance of the (T13) Speed Sensor Ground circuit between the Input Speed Sensor harness connector and the appropriate terminal of Miller tool #8815.

Is the resistance above 5.0 ohms?

Yes >> Repair the (T13) Speed Sensor Ground circuit for an open.
Perform 45RFE/545RFE TRANSMISSION VERIFICATION TEST - VER 1.

No >> Go To 7

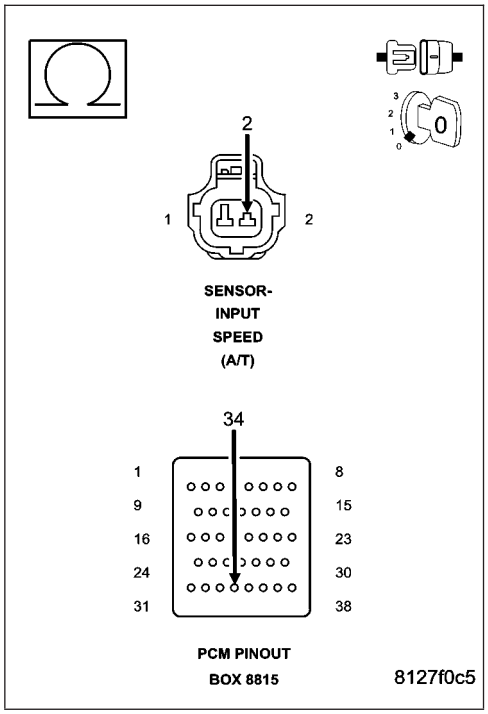

7. (T52) INPUT SPEED SENSOR SIGNAL CIRCUIT SHORT TO GROUND

Measure the resistance between ground and the Input Speed Sensor Signal circuit.

Is the resistance below 5.0 ohms?

Yes >> Repair the (T52) Input Speed Sensor Signal circuit for a short to ground.
Perform 45RFE/545RFE TRANSMISSION VERIFICATION TEST - VER 1.

No >> Go To 8

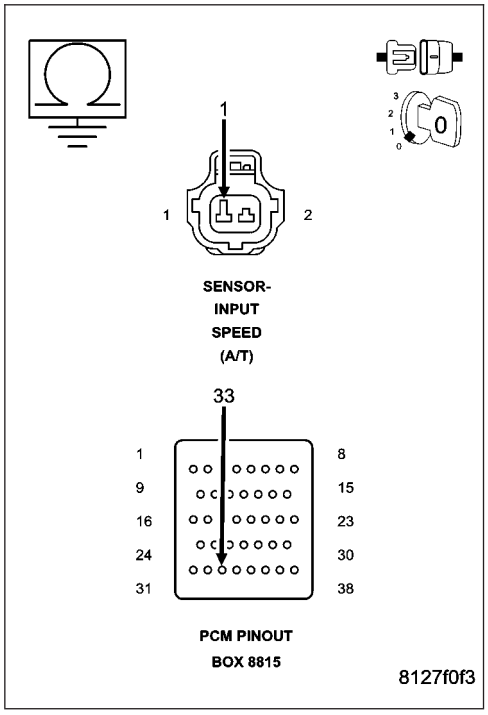

P0715-INPUT SPEED SENSOR 1 CIRCUIT (CONTINUED)

8. (T13) SPEED SENSOR GROUND CIRCUIT SHORT TO GROUND

Measure the resistance between ground and the (T13) Speed Sensor Ground circuit.

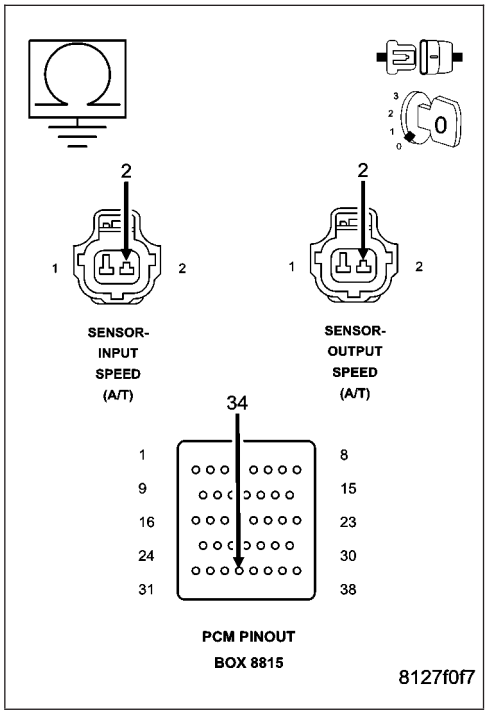

Is the resistance below 5.0 ohms?

Yes >> Repair the (T13) Speed Sensor Ground circuit for a short to ground.
Perform 45RFE/545RFE TRANSMISSION VERIFICATION TEST - VER 1.

No >> Using the schematics as a guide, check the Powertrain Control Module (PCM) terminals for corrosion, damage, or terminal push out. Pay particular attention to all power and ground circuits. If no problems are found, replace the PCM per the Service Information. With the scan tool, perform QUICK LEARN.
Perform 45RFE/545RFE TRANSMISSION VERIFICATION TEST - VER 1.

---

9. INTERMITTENT WIRING AND CONNECTORS

The conditions necessary to set this DTC are not present at this time.
Using the schematics as a guide, inspect the wiring and connectors specific to this circuit.
Wiggle the wires while checking for shorted and open circuits.
With the scan tool, check the EATX DTC EVENT DATA to help identify the conditions in which the DTC was set.

Were there any problems found?

Yes >> Repair as necessary.
Perform 45RFE/545RFE TRANSMISSION VERIFICATION TEST - VER 1.

No >> Test Complete.

P0720-OUTPUT SPEED SENSOR CIRCUIT

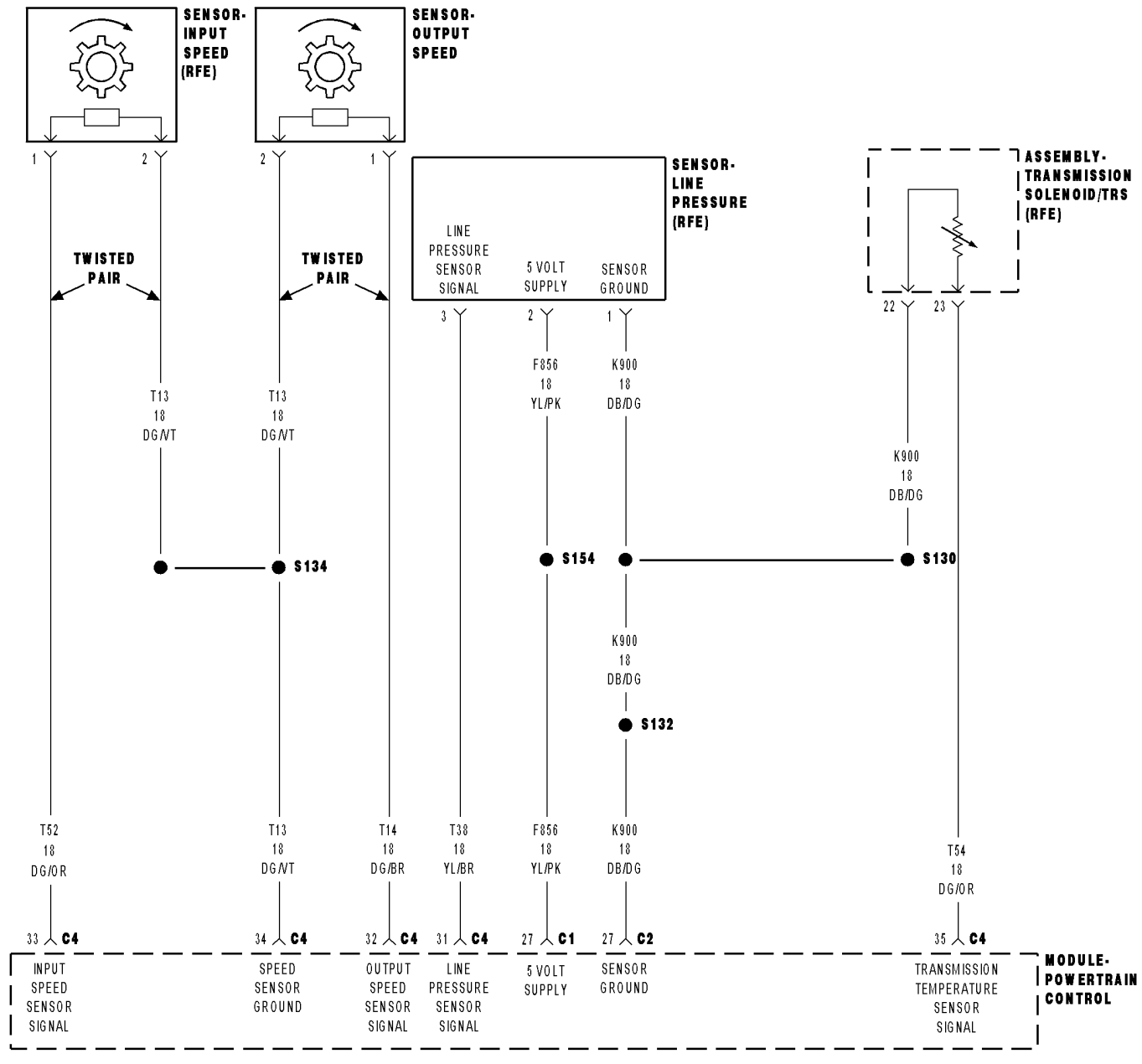

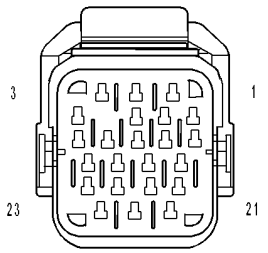

ASSEMBLY- TRANSMISSION SOLENOID/TRS (RFE)

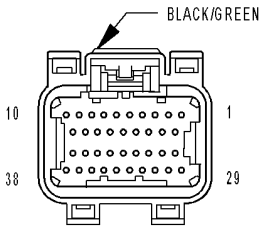

MODULE- POWERTRAIN CONTROL C4 (NGC)

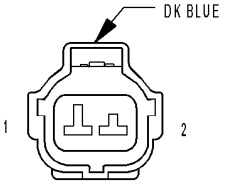

SENSOR- OUTPUT SPEED (3.7L/4.7L/5.7L)



SENSOR- LINE PRESSURE (RFE)

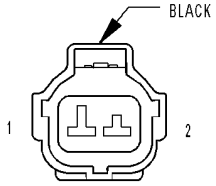

SENSOR- INPUT SPEED (RFE)

814a4ba3

P0720-OUTPUT SPEED SENSOR CIRCUIT (CONTINUED)

For the Transmission circuit diagram (Refer to 21 - TRANSMISSION/TRANSAXLE/AUTOMATIC - 45RFE/545RFE - SCHEMATICS AND DIAGRAMS).

For a complete wiring diagram **Refer to Section 8W**.

- **When Monitored:**
  The transmission gear ratio is monitored continuously while the transmission is in gear.
- **Set Condition:**
  If there is an excessive change in output RPM in any gear. This DTC can take up to five minutes of problem identification before illuminating the MIL.

Possible Causes
OUTPUT SPEED SENSOR SIGNAL CIRCUIT OPEN
SPEED SENSOR GROUND CIRCUIT OPEN
OUTPUT SPEED SENSOR SIGNAL CIRCUIT SHORT TO GROUND
SPEED SENSOR GROUND CIRCUIT SHORT TO GROUND
OUTPUT SPEED SENSOR SIGNAL CIRCUIT SHORT TO VOLTAGE
SPEED SENSOR GROUND CIRCUIT SHORT TO VOLTAGE
OUTPUT SPEED SENSOR
POWERTRAIN CONTROL MODULE

Always perform the Pre-Diagnostic Troubleshooting procedure before proceeding. (Refer to 21 - TRANSMISSION/TRANSAXLE/AUTOMATIC - 45RFE/545RFE - DIAGNOSIS AND TESTING).

Theory of Operation

The transmission system uses two speed sensors, one to measure input RPM and one to measure output RPM. These inputs are essential for proper transmission operation. Therefore, the integrity of this data is verified through the following checks:

1) When in gear, if the gear ratio does not compare to a known gear ratio, the corresponding in-gear trouble code is set (codes P0731 through P0736).

2) An excessive change in input or output speeds indicating signal intermittent will result in codes P0715 and/or P0720 being set.

3) If the common speed sensor ground circuit is lost, both sensor inputs will read the signal from the input speed sensor at idle in neutral. Since the input speed sensor has 60 teeth and the output speed sensor has 30 teeth, this results in a an apparent speed ratio of 1:2 and may cause the DTC P1794 to set.

P0720-OUTPUT SPEED SENSOR CIRCUIT (CONTINUED)

Diagnostic Test

1. CHECK TO SEE IF DTC P0720 IS CURRENT

Turn the ignition off to the lock position.

CAUTION: Properly support the vehicle and raise all drive wheels off the ground.

Release the parking brake.

Start the engine in park.

Place the transmission gear selector in drive, release foot from brake.

WARNING: BE SURE TO KEEP HANDS AND FEET CLEAR OF ROTATING WHEELS.

With the scan tool, monitor the Output Speed Sensor RPM.

Is the Output Speed Sensor RPM below 100 RPM?

Yes >> Go To 2

No >> Go To 9

---

2. OUTPUT SPEED SENSOR

Turn the ignition off to the lock position.

Remove the Starter Relay.

NOTE: Removal of the Starter Relay is to prevent a Transmission, NO RESPONSE, condition and disable the starter.

Install the Transmission Simulator, Miller tool #8333.

NOTE: Check connectors - Clean/repair as necessary.

Ignition on, engine not running.

With the Transmission Simulator, set the selector switch to 3000/1000 and the Input/Output switch to ON.

With the scan tool, monitor the Input and Output Speed Sensor RPM

Does the Input Speed read 3000 RPM and the Output Speed read 1000 RPM, ± 50 RPM?

Yes >> Replace the Output Speed Sensor per the Service Information.
Perform 45RFE/545RFE TRANSMISSION VERIFICATION TEST - VER 1.

No >> Go To 3

P0720-OUTPUT SPEED SENSOR CIRCUIT (CONTINUED)

3. OUTPUT SPEED SENSOR SIGNAL CIRCUIT OPEN

Turn the ignition off to the lock position.

Disconnect the Transmission Simulator, Miller tool #8333.

Disconnect the PCM harness connectors and connect Miller special tool #8815.

CAUTION: Do not probe the PCM harness connectors. Probing the PCM harness connectors will damage the PCM terminals resulting in poor terminal to pin connection. Install Miller special tool #8815 to perform diagnosis.

Measure the resistance of the Output Speed Sensor Signal circuit from the Output Speed Sensor harness connector to the appropriate terminal of special tool #8815.

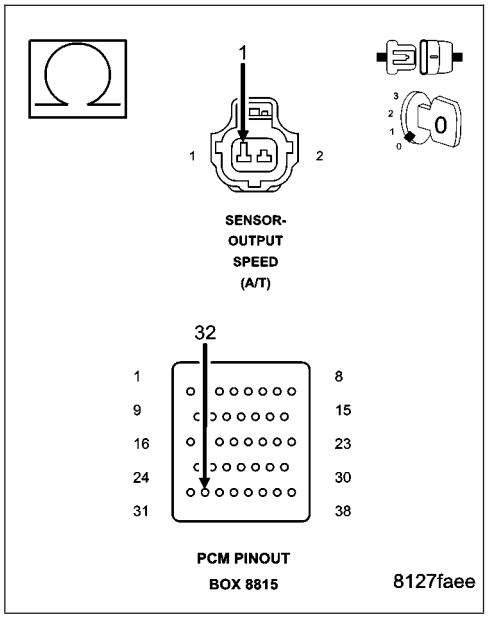

Is the resistance above 5.0 ohms?

Yes >> Repair the Output Speed Sensor Signal circuit for an open.
Perform 45RFE/545RFE TRANSMISSION VERIFICATION TEST - VER 1.

No >> Go To 4

4. SPEED SENSOR GROUND CIRCUIT OPEN

Measure the resistance of the Speed Sensor Ground circuit from the Output Speed Sensor harness connector to the appropriate terminal in the special tool #8815.

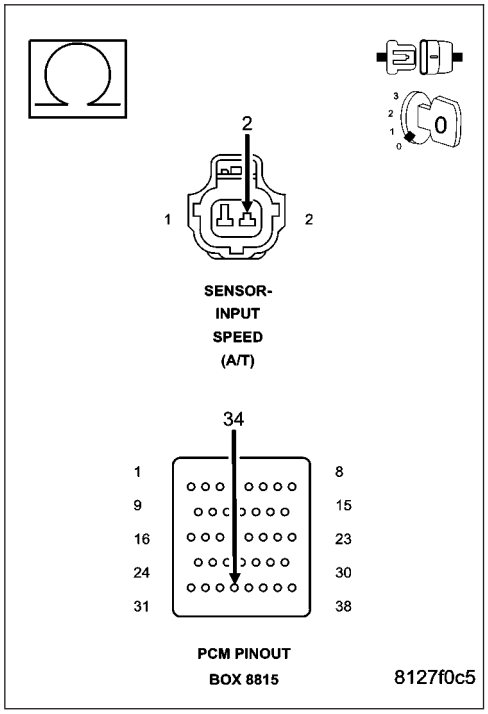

Is the resistance above 5.0 ohms?

Yes >> Repair the Speed Sensor Ground circuit for an open.
Perform 45RFE/545RFE TRANSMISSION VERIFICATION TEST - VER 1.

No >> Go To 5

P0720-OUTPUT SPEED SENSOR CIRCUIT (CONTINUED)

5. OUTPUT SPEED SENSOR SIGNAL CIRCUIT SHORT TO GROUND

Measure the resistance between ground and the Output Speed Sensor Signal circuit.

Is the resistance below 5.0 ohms?

Yes >> Repair the Output Speed Sensor Signal circuit for a short to ground.
Perform 45RFE/545RFE TRANSMISSION VERIFICATION TEST - VER 1.

No >> Go To 6

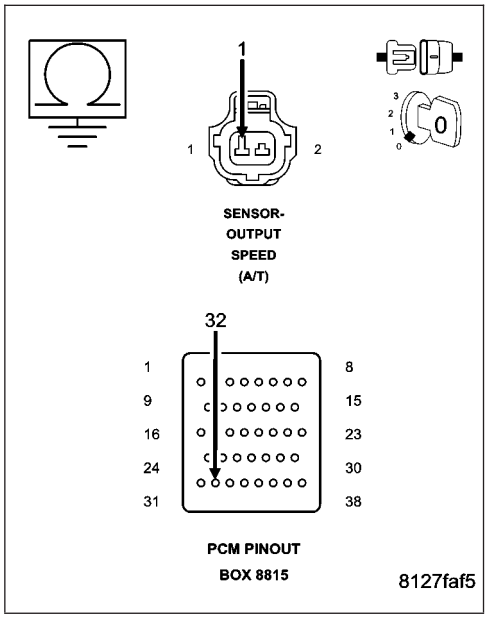

6. SPEED SENSOR GROUND CIRCUIT SHORT TO GROUND

Measure the resistance between ground and the Speed Sensor Ground circuit.

Is the resistance below 5.0 ohms?

Yes >> Repair the Speed Sensor Ground circuit for a short to ground.
Perform 45RFE/545RFE TRANSMISSION VERIFICATION TEST - VER 1.

No >> Go To 7

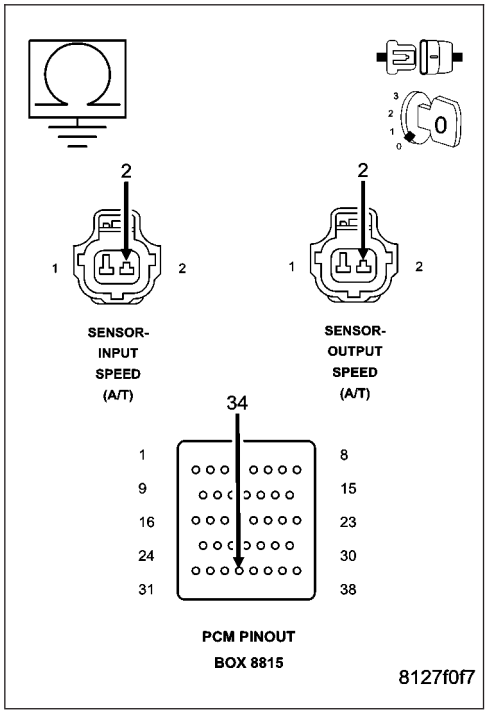

P0720-OUTPUT SPEED SENSOR CIRCUIT (CONTINUED)

7. OUTPUT SPEED SENSOR SIGNAL CIRCUIT SHORT TO VOLTAGE

Remove the Transmission Control Relay.

Place a jumper wire between the Fused B+ circuit and the Transmission Relay Output circuit in the Transmission Control Relay connector.

Ignition on, engine not running.

Measure the voltage of the Output Speed Sensor Signal circuit.

Is the voltage above 0.5 volts?

Yes >> Repair the Output Speed Sensor Signal circuit for a short to voltage.

Perform 45RFE/545RFE TRANSMISSION VERIFICATION TEST - VER 1.

No >> Go To 8

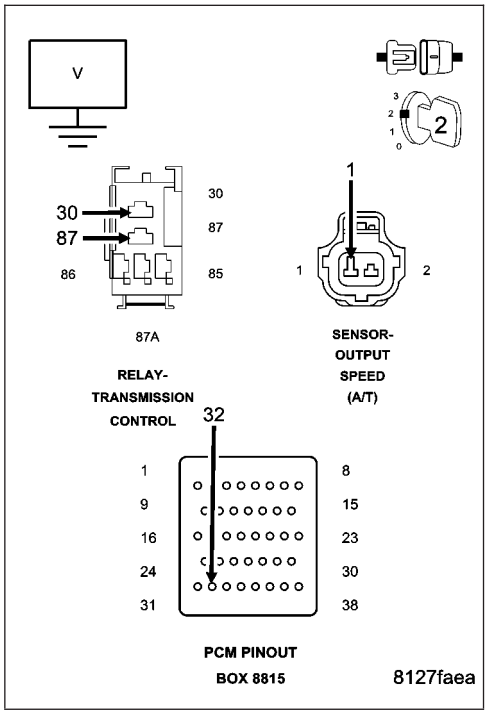

8. SPEED SENSOR GROUND CIRCUIT SHORT TO VOLTAGE

Measure the voltage of the Speed Sensor Ground circuit.

Is the voltage above 0.5 volts?

Yes >> Repair the Speed Sensor Ground circuit for a short to voltage.

Perform 45RFE/545RFE TRANSMISSION VERIFICATION TEST - VER 1.

No >> Using the schematics as a guide, check the Powertrain Control Module (PCM) terminals for corrosion, damage, or terminal push out. Pay particular attention to all power and ground circuits. If no problems are found, replace the PCM per the Service Information. With the scan tool, perform QUICK LEARN.

Perform 45RFE/545RFE TRANSMISSION VERIFICATION TEST - VER 1.

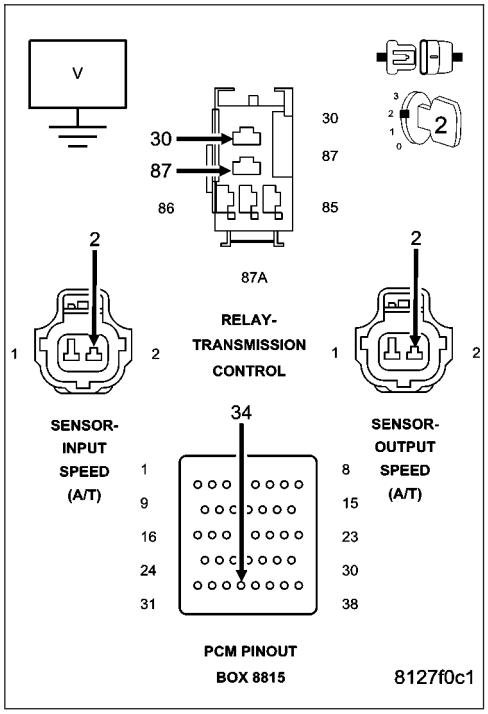

P0720-OUTPUT SPEED SENSOR CIRCUIT (CONTINUED)

9. INTERMITTENT WIRING AND CONNECTORS

The conditions necessary to set this DTC are not present at this time.
Using the schematics as a guide, inspect the wiring and connectors specific to this circuit.
Wiggle the wires while checking for shorted and open circuits.
With the scan tool, check the EATX DTC EVENT DATA to help identify the conditions in which the DTC was set.

Were there any problems found?

Yes >> Repair as necessary.
Perform 45RFE/545RFE TRANSMISSION VERIFICATION TEST - VER 1.

No >> Test Complete.

P0725-ENGINE SPEED SENSOR CIRCUIT

For the Transmission circuit diagram (Refer to 21 - TRANSMISSION/TRANSAXLE/AUTOMATIC - 45RFE/545RFE - SCHEMATICS AND DIAGRAMS).

For a complete wiring diagram **Refer to Section 8W**.

- **When Monitored:**
  Continuously every 7 msec with the ignition on and engine running.
- **Set Condition:**
  This DTC will set when the calculated engine speed is less than 390 RPM with the engine running, or greater than 8000 RPM, for the period of 2.0 seconds. The PCM will place the Transmission in Limp-in when this DTC is set. **Note: This is not a Transmission Input Speed Sensor DTC.**

Possible Causes
RELATED ENGINE DTC'S PRESENT
CRANK POSITION SENSOR OR WIRING
POWERTRAIN CONTROL MODULE

Always perform the Pre-Diagnostic Troubleshooting procedure before proceeding. (Refer to 21 - TRANSMISSION/TRANSAXLE/AUTOMATIC - 45RFE/545RFE - DIAGNOSIS AND TESTING).

Theory of Operation

The Transmission Control System calculates the engine RPM by directly reading the engine crank position sensor. It compares the calculated value to the engine speed sensor signal transmitted from the Engine Control System over the controllers internal bus. The calculated engine RPM is also compared to a minimum and a maximum value. **Note: Due to the integration of the Powertrain Control Module (PCM) and Transmission Control Module (TCM), bus communication between the modules is internal and unserviceable.**

Diagnostic Test

1. RELATED ENGINE DTCS PRESENT

NOTE: This is not a Transmission Input Speed Sensor DTC.
Ignition on, engine not running.
With the scan tool, read all Engine DTC's. This includes any active or stored or one trip DTCs.

Are there any engine RPM related DTCs present?

Yes >> Refer to the Powertrain category and perform the appropriate symptom.
Perform 45RFE/545RFE TRANSMISSION VERIFICATION TEST - VER 1.

No >> Go To 2

P0725-ENGINE SPEED SENSOR CIRCUIT (CONTINUED)

2. VERIFY IF THE DTC IS CURRENT

Ignition on, engine not running.

With a scan tool, read and record all EATX DTC EVENT DATA.

With the scan tool, erase all active and stored transmission DTCs. (Note: it may be necessary to perform a battery disconnect with the scan tool to clear EATX DTC EVENT DATA.)

Using the EATX DTC EVENT DATA, duplicate the conditions in which the original DTC set.

With the scan tool, read transmission and engine DTCs.

NOTE: Refer to all engine DTCs first in the following question.

Pick the answer below that best describes your findings, (this includes one trip failures).

Transmission DTC P0725 set

Using the schematics as a guide, check the Powertrain Control Module (PCM) terminals for corrosion, damage, or terminal push out. Also check the Crank Position sensor and wiring. Pay particular attention to all power and ground circuits. If no problems are found, replace the PCM per the Service Information. With the scan tool, perform QUICK LEARN.

Perform 45RFE/545RFE TRANSMISSION VERIFICATION TEST - VER 1.

Engine DTC set

Refer to the Driveability category and perform the appropriate symptom.

Perform 45RFE/545RFE TRANSMISSION VERIFICATION TEST - VER 1.

No DTC set at all

Go To 3

---

3. INTERMITTENT WIRING AND CONNECTORS

The conditions necessary to set this DTC are not present at this time.

Using the schematics as a guide, inspect the wiring and connectors specific to this circuit.

Wiggle the wires while checking for shorted and open circuits.

With the scan tool, check the EATX DTC EVENT DATA to help identify the conditions in which the DTC was set.

Were there any problems found?

Yes >> Repair as necessary.

Perform 45RFE/545RFE TRANSMISSION VERIFICATION TEST - VER 1.

No >> Test Complete.

P0731-GEAR RATIO ERROR IN 1ST

For the Transmission circuit diagram (Refer to 21 - TRANSMISSION/TRANSAXLE/AUTOMATIC - 45RFE/545RFE - SCHEMATICS AND DIAGRAMS).

For a complete wiring diagram **Refer to Section 8W**

- **When Monitored:**
  Continuously with the ignition on, engine running, with the transmission in gear.
- **Set Condition:**
  If the ratio of the Input RPM to the Output RPM does not match the current gear ratio. This DTC can take up to five minutes of problem identification before illuminating the MIL

Possible Causes
CUT UD PISTON SEAL
LOW FLUID LEVEL
CRACKED OR MISINSTALLED PRIMARY OIL FILTER OR SEAL
STUCK OR STICKING MAIN REGULATOR VALVE
FAILED OVERRUNNING CLUTCH
CUT UD ACCUMULATOR SEAL RING
BROKEN UD ACCUMULATOR PISTON
BROKEN REACTION SHAFT SUPPORT SEAL RING
LOW LINE PRESSURE
BROKEN / MISSING MAIN VALVE BODY BLEED ORIFICE
BROKEN / MISSING DRIBBLER ORIFICE ASSEMBLY IN REACTION SHAFT SUPPORT
POOR MACHINING ON PUMP VALVE BODY FACE
INPUT SPEED SENSOR AND RELATED WIRING
TRANSMISSION SOLENOID/TRS ASSEMBLY
POWERTRAIN CONTROL MODULE

Always perform the Pre-Diagnostic Troubleshooting procedure before proceeding. (Refer to 21 - TRANSMISSION/TRANSAXLE/AUTOMATIC - 45RFE/545RFE - DIAGNOSIS AND TESTING).

Theory of Operation

The transmission system uses two speed sensors, one to measure input RPM and one to measure output RPM. These inputs are essential for proper transmission operation. Therefore, the integrity of this data is verified through the following checks:

1) Once in a particular gear, if the gear ratio varies from the correct gear ratio, the corresponding in-gear trouble code is set (DTCs P0731–36).

2) An excessive change in input or output speeds indicating signal intermittent may result in the DTCs P0715 and/or P0720 being set.

3) If the common speed sensor ground circuit is lost, both sensor inputs will read the pulses from the input speed sensor when at a stop in neutral. Since the input speed sensor reads 60 teeth from the input clutch hub and the output speed sensor reads 30 teeth from the park gear, the result is an apparent speed ratio of 1:2 and may cause the DTC P1794 to set.

P0731-GEAR RATIO ERROR IN 1ST (CONTINUED)
Diagnostic Test

1. DETERMINING IF RELATED DTC'S ARE PRESENT

With the scan tool, check for other transmission DTC's

If any of these DTC's are present, perform their respective tests first.

Are there any Transmission; solenoid, line pressure, speed sensor, and/or loss of prime DTC's present?

Yes >> Refer to the Transmission category and perform the appropriate symptom. If any of these DTCs are present, they may cause a Speed Ratio Error. Perform the test for P0944 first if it is present.
Perform 45RFE/545RFE TRANSMISSION VERIFICATION TEST - VER 1.

No >> Go To 2

---

2. CHECK TO SEE IF DTC P0731 IS CURRENT

With the scan tool, perform the 1st Gear Clutch Test. Follow the instructions on the scan tool.

Increase the throttle angle or TPS Degree to 30° for no more than a few seconds.

CAUTION: Do not overheat the transmission.

Did the Clutch Test pass, Input Speed remain at zero?

Yes >> Go To 3

No >> Go To 4

---

3. CHECK FOR INTERMITTENT OPERATION

The conditions to set this DTC are not currently present.

With the scan tool, check the EATX DTC EVENT DATA to help identify the conditions in which the DTC was set.

- If the DTC Event Data shows fault P0731 was set in Park, Reverse, or Neutral, replace the Powertrain Control Module.

- If the DTC Event Data shows fault P0731 set with input RPM = zero, check the input speed sensor and related wiring.

- If the DTC Event Data shows fault P0731 set with line pressure significantly below desired line pressure, check for the cause of low line pressure (i.e., oil level, misinstalled or damaged primary filter or filter seal, sticking main regulator valve in pump, etc.).

- If the DTC Event Data shows fault P0731 set with the UD pressure switch open (but line pressure matches Desired Line Pressure), air check the UD hydraulic clutch circuit for leakage per the Service Information. If the UD hydraulic clutch circuit is OK, replace the solenoid/TRS assembly.

Check the gearshift linkage adjustment.

Intermittent Gear Ratio DTCs can be set by problems in the Input and Output Speed Sensor circuits and/or Speed Sensor Ground circuit.

Remove the Starter Relay.

NOTE: Failure to remove the Starter Relay can cause a Transmission - No Response condition.

Install Transmission Simulator, Miller tool #8333.

Wiggle wiring and connectors while checking for intermittent operation with the Transmission Simulator.

Gear ratio DTC's can also be set under extreme temperature conditions.

Verify if the problem is only experienced under extreme hot or cold conditions.

Were there any problems found.

Yes >> Repair as necessary.
Perform 45RFE/545RFE TRANSMISSION VERIFICATION TEST - VER 1.

No >> Test Complete.

P0731-GEAR RATIO ERROR IN 1ST (CONTINUED)

4. INTERNAL TRANSMISSION

Repair internal transmission as necessary. Refer to the Service Information.

If there were any line pressure DTC's present along with this DTC, make sure to inspect the: Primary oil filter and seal, Transmission Oil Pump, and the Main regulator valve per the Service Information.

If DTC's P0876 and/or P0875 were present in addition to the P0731, replace the Transmission Solenoid/TRS Assembly in addition to necessary internal repairs.

Pay particular attention to the following list of possible causes when repairing the transmission condition.

- Cut UD piston seal
- Failed overrunning clutch
- Cut UD accumulator seal ring
- Broken UD accumulator piston
- Broken reaction shaft support seal ring
- Low line pressure
- Broken/missing main valve body bleed orifice
- Broken/missing dribbler orifice assembly in reaction shaft support
- Poor machining on pump valve body face
- Transmission Solenoid/TRS Assembly

View repair.

Repair

Repair internal transmission per the Service Information.

Perform 45RFE/545RFE TRANSMISSION VERIFICATION TEST - VER 1.

P0732-GEAR RATIO ERROR IN 2ND

For the Transmission circuit diagram (Refer to 21 - TRANSMISSION/TRANSAXLE/AUTOMATIC - 45RFE/545RFE - SCHEMATICS AND DIAGRAMS)

For a complete wiring diagram **Refer to Section 8W**

- **When Monitored:**
  Continuously with the ignition on, engine running, with the transmission in gear.
- **Set Condition:**
  If the ratio of the Input RPM to the Output RPM does not match the current gear ratio. This DTC can take up to five minutes of problem identification before illuminating the MIL

Possible Causes
RELATED DTC'S PRESENT
INPUT SPEED SENSOR OR WIRING
LOW FLUID LEVEL
CRACKED OR MISINSTALLED PRIMARY OIL FILTER OR SEAL
WORN SOLENOID SWITCH VALVE OR PLUGS
STUCK OR STICKING MAIN REGULATOR VALVE
BURNED UD OR 2C CLUTCH
CUT 2C OR UD PISTON SEAL
BROKEN 2C PISTON CASTING
BROKEN OR MISSING 2C BLEED ORIFICE
BROKEN OR MISSING UD BLEED ORIFICE
CUT 2C OR UD ACCUMULATOR PISTON SEAL
CRACKED 2C OR UD ACCUMULATOR PISTON
CUT OR MISSING #5 OR #7 CHECK BALL
TRANSMISSION SOLENOID/TRS ASSEMBLY
BROKEN WELD - REACTION CARRIER TO REVERSE SUN GEAR
MISSING TEETH ON INPUT CLUTCH HUB TONE WHEEL

Always perform the Pre-Diagnostic Troubleshooting procedure before proceeding. (Refer to 21 - TRANSMISSION/TRANSAXLE/AUTOMATIC - 45RFE/545RFE - DIAGNOSIS AND TESTING).

Theory of Operation

The transmission system uses two speed sensors, one to measure input RPM and one to measure output RPM. These inputs are essential for proper transmission operation. Therefore, the integrity of this data is verified through the following checks:

1) Once in a particular gear, if the gear ratio varies from the correct gear ratio, the corresponding in-gear trouble code is set (DTCs P0731–36).

2) An excessive change in input or output speeds indicating signal intermittent may result in the DTCs P0715 and/or P0720 being set.

3) If the common speed sensor ground circuit is lost, both sensor inputs will read the pulses from the input speed sensor when at a stop in neutral. Since the input speed sensor reads 60 teeth from the input clutch hub and the output speed sensor reads 30 teeth from the park gear, the result is an apparent speed ratio of 1:2 and may cause the DTC P1794 to set.

P0732-GEAR RATIO ERROR IN 2ND (CONTINUED)
Diagnostic Test

1. DETERMINING IF RELATED DTC'S ARE PRESENT
With the scan tool, check for other transmission DTC's

Are there any Transmission; solenoid, line pressure, speed sensor, and/or loss of prime DTC's present?

Yes >> Refer to appropriate symptom in the Transmission category. Perform the test for P0944–LOSS OF PRIME first if it is present.
Perform 45RFE/545RFE TRANSMISSION VERIFICATION TEST - VER 1.

No >> Go To 2

---

2. CHECK IF DTC IS CURRENT
With the scan tool, read and record the EATX DTC EVENT DATA.

NOTE: Make sure to record all EATX DTC EVENT DATA stored in the scan tool for future reference in this test procedure.

Does the EATX DTC EVENT DATA display information for the DTC P0732?

Yes >> Go To 4

No >> Go To 3

---

3. CHECK EATX DTC EVENT DATA
In the EATX DTC EVENT DATA, identify the DTC that was recorded earlier.

Does the EATX DTC EVENT DATA display information for the DTC P1790, with target gear = 2nd, or with both 2C and UD clutches applying?

Yes >> Go To 4

No >> Go To 7

---

4. CHECK RPM IN EATX DTC EVENT DATA
Refer to the EATX DTC EVENT DATA recorded earlier.

Does the Input RPM read zero?

Yes >> Check the input speed sensor and wiring. Refer to test P0715 and diagnose as if the DTC is current.
Perform 45RFE/545RFE TRANSMISSION VERIFICATION TEST - VER 1.

No >> Go To 5

---

5. CHECK LINE PRESSURE READING
Refer to the EATX DTC EVENT DATA recorded earlier.

Is the line pressure reading more than 10 psi below the desired line pressure?

Yes >> Go To 6

No >> Go To 7

P0732-GEAR RATIO ERROR IN 2ND (CONTINUED)

6. CHECK TRANSMISSION OIL FILTER

Turn the ignition off to the lock position.

Remove and inspect the Transmission Oil Pan for excessive debris per the Service Information.

Remove and inspect the Primary Oil Filter per the Service Information.

NOTE: Make sure the Primary Transmission Oil Filter and seal are properly installed and are not cracked or split.

Does the Oil Pan contain excessive debris and/or is the Primary Oil Filter cracked, plugged or misinstalled?

Yes >> Repair the plugged, cracked, or split Primary Transmission Oil Filter and/or seal. If excessive clutch debris is present, check the clutches for damage. Refer to the Service Information for the proper hydraulic clutch repair procedure.
Perform 45RFE/545RFE TRANSMISSION VERIFICATION TEST - VER 1.

No >> Remove the Transmission Oil Pump per the Service Information. Check the main Regulator Valve for sticking in its bore, scoring, and/or damage and clean and repair as necessary. If no problem is found, replace the Transmission Solenoid/TRS Assembly.
Perform 45RFE/545RFE TRANSMISSION VERIFICATION TEST - VER 1.

---

7. CHECK TO SEE IF DTC P0732 IS CURRENT

With the scan tool, perform the 2nd Gear Clutch Test. Follow the instructions on the scan tool.

Increase the throttle angle, TPS Degree, to 30° for no more than a few seconds.

CAUTION: Do not overheat the transmission.

NOTE: If the 2C clutch is faulty, the overrunning clutch will hold and the slip test will pass. The 2nd gear clutch test will not detect a faulty 2C clutch. However, it will detect a faulty UD clutch.

Did the clutch test pass, did the Input Speed remain at zero?

Yes >> Go To 8

No >> Go To 10

---

8. CHECK FOR INTERMITTENT OPERATION

Check the Shifter adjustment per the Service Information.

Intermittent gear ratio DTCs can be set by problems in the Input and Output Speed Sensor circuits and/or Speed Sensor Ground circuit.

Check the Speed Sensor wiring and connectors for good connection, then perform a wiggle test using the Transmission Simulator, Miller tool #8333.

Were there any problems found?

Yes >> Repair as necessary.
Perform 45RFE/545RFE TRANSMISSION VERIFICATION TEST - VER 1.

No >> Go To 9

P0732-GEAR RATIO ERROR IN 2ND (CONTINUED)

9. CHECK FOR SLIPPAGE

With the scan tool, erase Transmission DTCs.

Road test the vehicle.

Is there an obvious slippage noticed in 2nd gear, or runaway on the 1–2 shift?

Yes >> Go To 12

No >> Go To 15

---

10. UD HYDRAULIC CLUTCH CIRCUIT

Remove Transmission Oil Pan and check for excessive debris.

Remove the Valve Body and air check the UD hydraulic clutch circuit (in the case) per the Service Information.

NOTE: The UD clutch passage contains a small bleed orifice, a small amount of air leakage is normal.

Were there any problems found, excessive debris and/or excessive air leakage in the UD clutch hydraulic circuit?

Yes >> Repair as necessary. Check the UD clutch piston seals, reaction shaft support seal rings and the dribbler assembly, and the flatness of the pump valve body and pump housing faces. Check main regulator valve for sticking in the bore.

Perform 45RFE/545RFE TRANSMISSION VERIFICATION TEST - VER 1.

No >> Go To 11

---

11. UD ACCUMULATOR PISTON

Check the UD bleed orifice, accumulator piston, and accumulator piston seal in the main valve body.

Were there any problems found?

Yes >> Repair as necessary. Refer to the Service Information for proper repair procedures.

No >> Replace the Transmission Solenoid/TRS Assembly per the Service Information.

Perform 45RFE/545RFE TRANSMISSION VERIFICATION TEST - VER 1.

---

12. EXCESSIVE DEBRIS

Remove the Transmission Oil Pan and check for excessive debris.

If grey sludge is present, check for a improperly assembled 2C clutch with the thick reaction plate not against the case.

Remove the valve body and air check the 2C hydraulic clutch circuit (in the 2C/4C clutch retainer) per the Service Information.

NOTE: The 2C clutch passage contains a small bleed orifice, a small amount of air leakage is normal.

Were there any problems found, excessive debris, improperly assembled 2C clutch and/or excessive air leakage in the 2C hydraulic clutch circuit?

Yes >> Repair as necessary. Refer to the Service Information for proper repair procedures. Note: Check the 2C piston seals and bleed orifice.

Perform 45RFE/545RFE TRANSMISSION VERIFICATION TEST - VER 1.

No >> Go To 13

P0732-GEAR RATIO ERROR IN 2ND (CONTINUED)

13. 2C ACCUMULATOR

Check the 2C Accumulator piston for cracks or a cut seal.

Check for a cut or missing #7 or #5 check balls.

Check the Solenoid Switch Valve and its plugs for sticking in its bore or excessive wear.

Were there any problems found

Yes >> Repair as necessary. Refer to the Service Information for proper repair procedures.
Perform 45RFE/545RFE TRANSMISSION VERIFICATION TEST - VER 1.

No >> Go To 14

---

14. CHECK FOR BROKEN REVERSE SUN GEAR WELD

Working through the windows in the bottom of the case, check for a broken Reverse Sun gear weld to the reaction carrier as follows:

(1) Hold the Transmission Output Shaft by holding the Transmission Manual Lever in the park position.

(2) Rotate the Input Annulus gear and drive shell, (the drum that encloses the two rearmost carriers).

(3) Check to see if the reaction carrier (the frontmost carrier, whose outer shell is splined to the 2C clutch) is rotating faster than the drive shell is being turned.

Is the reaction carrier turning faster than the drive shell?

Yes >> Replace the Transmission Solenoid/TRS Assembly per the Service Information.
Perform 45RFE/545RFE TRANSMISSION VERIFICATION TEST - VER 1.

No >> Replace the reaction carrier per the Service Information.
Perform 45RFE/545RFE TRANSMISSION VERIFICATION TEST - VER 1.

---

15. CHECK IF DTC RESET

Did the DTC P0732 reset during the road test?

Yes >> Go To 16

No >> Go To 17

P0732-GEAR RATIO ERROR IN 2ND (CONTINUED)

16. LIST OF POSSIBLE CAUSES

If any other DTC's set during the road test, refer to the appropriate symptom in the Transmission category.

If no other DTC's set during the road test, below is a list of possible causes, but not strictly limited to those:

— Check for excessive debris in the Transmission Oil pan, plugged, cracked, or misinstalled Primary Transmission Oil Filter and/or seal.

— Check for cut and/or missing #7 and #5 check balls in the main valve body.

— Check the 2C and UD accumulator pistons and seals, UD bleed orifice, and the Solenoid Switch Valve and Plugs in the main valve body.

— Check the UD clutch piston seals, reaction shaft support seal rings and dribbler assembly.

— Check the 2C clutch piston seals, and bleed orifice.

— Check the main regulator valve for sticking in its bore and the flatness of the pump valve body and pump housing faces.

— Check for a improperly assembled 2C clutch with the thick reaction plate not against the case.

View repair

Repair

Repair as necessary. Refer to the Service Information for proper repair procedures.
Perform 45RFE/545RFE TRANSMISSION VERIFICATION TEST - VER 1.

---

17. INTERMITTENT DTC

The conditions to set this DTC are not currently present.

With the scan tool, check the EATX DTC EVENT DATA to help identify the conditions in which the DTC was set.

- If the DTC Event Data shows fault P0732 was set in Park, Reverse, or Neutral, replace the Powertrain Control Module.

- If the DTC Event Data shows fault P0732 set with input RPM = zero, check the input speed sensor and related wiring.

- If the DTC Event Data shows fault P0732 set with line pressure significantly below desired line pressure, check for the cause of low line pressure (i.e., oil level, misinstalled or damaged primary filter or filter seal, sticking main regulator valve in pump, etc.).

- If the DTC Event Data shows fault P0732 set with the UD or 2C pressure switch open (but line pressure matches Desired Line Pressure), air check the UD and 2C hydraulic clutch circuits for leakage per the Service Information. If the UD and 2C hydraulic clutch circuits are OK, replace the Transmission Solenoid/TRS assembly.

Check the gearshift linkage adjustment.

Intermittent Gear Ratio DTCs can be set by problems in the Input and Output Speed Sensor circuits and/or Speed Sensor Ground circuit.

Remove the Starter Relay.

NOTE: Failure to remove the Starter Relay can cause a Transmission - No Response condition.
Install Transmission Simulator, Miller tool #8333.

Wiggle wiring and connectors while checking for intermittent operation with the Transmission Simulator.

Gear ratio DTC's can also be set under extreme temperature conditions.

Verify if the problem is only experienced under extreme hot or cold conditions.

Were there any problems found.

Yes >> Repair as necessary.
Perform 45RFE/545RFE TRANSMISSION VERIFICATION TEST - VER 1.

No >> Test Complete.

P0733-GEAR RATIO ERROR IN 3RD

For the Transmission circuit diagram (Refer to 21 - TRANSMISSION/TRANSAXLE/AUTOMATIC - 45RFE/545RFE - SCHEMATICS AND DIAGRAMS)

For a complete wiring diagram **Refer to Section 8W**

- **When Monitored:**
  Continuously with the ignition on, engine running, with the transmission in gear.
- **Set Condition:**
  If the ratio of the Input RPM to the Output RPM does not match the current gear ratio. This DTC can take up to five minutes of problem identification before illuminating the MIL

Possible Causes
RELATED DTC'S PRESENT
INPUT SPEED SENSOR OR WIRING
LOW FLUID LEVEL
CRACKED OR MISINSTALLED PRIMARY OIL FILTER OR SEAL
BENT OR BROKEN ACCUMULATOR COVER ON MAIN VALVE BODY
WORN SOLENOID SWITCH VALVE OR PLUGS
STUCK OR STICKING MAIN REGULATOR VALVE
BURNED UD OR OD CLUTCH
CUT OD OR UD PISTON SEAL
BROKEN OR MISSING UD OR OD BLEED ORIFICE IN MAIN VALVE BODY
BROKEN OR MISSING BLEED ORIFICE IN UD OR OD CLUTCH PISTON
CUT OD OR UD ACCUMULATOR PISTON SEAL
CRACKED OD OR UD ACCUMULATOR PISTON
CUT OR MISSING #6 CHECK BALL
TRANSMISSION SOLENOID/TRS ASSEMBLY
BROKEN WELD - REVERSE CARRIER HUB TO CARRIER
BROKEN REACTION SHAFT SUPPORT SEAL RING
POOR MACHINING ON PUMP VALVE BODY FACE

Always perform the Pre-Diagnostic Troubleshooting procedure before proceeding. (Refer to 21 - TRANSMISSION/TRANSAXLE/AUTOMATIC - 45RFE/545RFE - DIAGNOSIS AND TESTING).

Theory of Operation

The transmission system uses two speed sensors, one to measure input RPM and one to measure output RPM. These inputs are essential for proper transmission operation. Therefore, the integrity of this data is verified through the following checks:

1) Once in a particular gear, if the gear ratio varies from the correct gear ratio, the corresponding in-gear trouble code is set (DTCs P0731–36).

2) An excessive change in input or output speeds indicating signal intermittent may result in the DTCs P0715 and/or P0720 being set.

3) If the common speed sensor ground circuit is lost, both sensor inputs will read the pulses from the input speed sensor when at a stop in neutral. Since the input speed sensor reads 60 teeth from the input clutch hub and the output speed sensor reads 30 teeth from the park gear, the result is an apparent speed ratio of 1:2 and may cause the DTC P1794 to set.

P0733-GEAR RATIO ERROR IN 3RD (CONTINUED)

Diagnostic Test

1. DETERMINING IF RELATED DTC'S ARE PRESENT

With the scan tool, check for other transmission DTC's

Are there any Transmission; solenoid, line pressure, speed sensor, and/or loss of prime DTC's present?

Yes >> Refer to appropriate symptom in the Transmission category. Perform the test for P0944–LOSS OF PRIME first if it is present.
Perform 45RFE/545RFE TRANSMISSION VERIFICATION TEST - VER 1.

No >> Go To 2

---

2. CHECK EATX DTC EVENT DATA

With the scan tool, read and record the EATX DTC EVENT DATA.

NOTE: Make sure to record all EATX DTC EVENT DATA stored in the scan tool for future reference in this test procedure.

Does the EATX DTC EVENT DATA display information for the DTC P0733?

Yes >> Go To 4

No >> Go To 3

---

3. TARGET GEAR IN EATX DTC EVENT DATA

In the EATX DTC EVENT DATA, identify the DTC that was recorded earlier.

Does the EATX DTC EVENT DATA display information for the DTC P1790, with target gear = 3rd, or with both OD and UD clutches applying?

Yes >> Go To 4

No >> Go To 7

---

4. CHECK RPM IN EATX DTC EVENT DATA

Refer to the EATX DTC EVENT DATA recorded earlier.

Does the Input RPM read zero?

Yes >> Check the input speed sensor and wiring. Refer to test P0715 and diagnose as if the DTC is current.
Perform 45RFE/545RFE TRANSMISSION VERIFICATION TEST - VER 1.

No >> Go To 5

---

5. CHECK LINE PRESSURE READING

Refer to the EATX DTC EVENT DATA recorded earlier.

Is the line pressure reading more than 10 psi below the desired line pressure?

Yes >> Go To 6

No >> Go To 7

P0733-GEAR RATIO ERROR IN 3RD (CONTINUED)

6. CHECK TRANSMISSION OIL FILTER

Turn the ignition off to the lock position.

Remove and inspect the Transmission Oil Pan for excessive debris per the Service Information.

Remove and inspect the Primary Oil Filter per the Service Information.

NOTE: Make sure the Primary Transmission Oil Filter and seal are properly installed and are not cracked or split.

Does the Oil Pan contain excessive debris and/or is the Primary Oil Filter cracked, plugged or misinstalled?

Yes >> Repair the plugged, cracked, or split Primary Transmission Oil Filter and/or seal. If excessive clutch debris is present, check the clutches for damage. Refer to the Service Information for the proper hydraulic clutch repair procedure.
Perform 45RFE/545RFE TRANSMISSION VERIFICATION TEST - VER 1.

No >> Remove the Transmission Oil Pump per the Service Information. Check the main Regulator Valve for sticking in its bore, scoring, and/or damage and clean and repair as necessary. If no problem is found, replace the Transmission Solenoid/TRS Assembly.
Perform 45RFE/545RFE TRANSMISSION VERIFICATION TEST - VER 1.

---

7. CHECK TO SEE IF DTC P0733 IS CURRENT

With the scan tool, perform the 3rd Gear Clutch Test. Follow the instructions on the scan tool.

Increase the throttle angle, TPS Degree, to 30° for no more than a few seconds.

CAUTION: Do not overheat the transmission.

NOTE: If the OD clutch is faulty, the overrunning clutch will hold and the slip test will pass. The 3rd gear clutch test will not detect a faulty OD clutch. However, it will detect a faulty UD clutch.

Did the clutch test pass, did the Input Speed remain at zero?

Yes >> Go To 8

No >> Go To 10

---

8. CHECK FOR INTERMITTENT OPERATION

Check the Shifter adjustment per the Service Information.

Intermittent gear ratio DTCs can be set by problems in the Input and Output Speed Sensor circuits and/or Speed Sensor Ground circuit.

Check the Speed Sensor wiring and connectors for good connection, then perform a wiggle test using the Transmission Simulator, Miller tool #8333.

Were there any problems found?

Yes >> Repair as necessary.
Perform 45RFE/545RFE TRANSMISSION VERIFICATION TEST - VER 1.

No >> Go To 9

P0733-GEAR RATIO ERROR IN 3RD (CONTINUED)

9. CHECK FOR SLIPPAGE

With the scan tool, erase Transmission DTCs.

Road test the vehicle. Check operation in 3rd gear, 4th gear, and Reverse.

Is there an obvious slippage noticed in 3rd gear, or runaway on the 2–3 shift?

Yes >> Go To 12

No >> Go To 16

---

10. UD HYDRAULIC CLUTCH CIRCUIT

Remove Transmission Oil Pan and check for excessive debris.

Remove the Valve Body and air check the UD hydraulic clutch circuit (in the case) per the Service Information.

NOTE: The UD clutch passage contains a small bleed orifice, a small amount of air leakage is normal.

Were there any problems found, excessive debris and/or excessive air leakage in the UD hydraulic clutch circuit?

Yes >> Repair as necessary. Check the UD clutch piston seals, reaction shaft support seal rings and dribbler assemblies, and the flatness of the pump valve body and pump housing faces. Check main regulator valve for sticking in the bore.
Perform 45RFE/545RFE TRANSMISSION VERIFICATION TEST - VER 1.

No >> Go To 11

---

11. UD ACCUMULATOR PISTON

Check the UD bleed orifice, accumulator piston, and accumulator piston seal in the main valve body.

Were there any problems found?

Yes >> Repair as necessary. Refer to the Service Information for proper repair procedures.

No >> Replace the Transmission Solenoid/TRS Assembly per the Service Information.
Perform 45RFE/545RFE TRANSMISSION VERIFICATION TEST - VER 1.

---

12. EXCESSIVE DEBRIS

Remove the Transmission Oil Pan and check for excessive debris.

Remove the valve body and check if the accumulator cover is intact.

Air check the OD hydraulic clutch circuit (in the case) per the Service Information.

NOTE: The OD clutch passage contains a small bleed orifice which connects to the Reverse clutch hydraulic circuit, a small amount of air leakage into the Reverse clutch passage is normal.

Were there any problems found, excessive debris, and/or excessive air leakage in the OD hydraulic clutch circuit?

Yes >> Repair as necessary. Refer to the Service Information for proper repair procedures. Note: Check the bleed orifice in the OD/Reverse clutch piston.
Perform 45RFE/545RFE TRANSMISSION VERIFICATION TEST - VER 1.

No >> Go To 13

P0733-GEAR RATIO ERROR IN 3RD (CONTINUED)

13. OD ACCUMULATOR

Check the OD Accumulator piston for cracks or a cut seal.

Check for a cut or missing #6 check ball.

Check the Solenoid Switch Valve and its plugs for sticking in its bore or excessive wear.

Were there any problems found?

Yes >> Repair as necessary. Refer to the Service Information for proper repair procedures.
Perform 45RFE/545RFE TRANSMISSION VERIFICATION TEST - VER 1.

No >> Go To 14

---

14. CHECK FOR NO REVERSE

During the road test on a previous test, did the vehicle have no reverse and no 3rd gear, but 1st and 2nd gears were OK?

Yes >> Go To 15

No >> Replace the Transmission Solenoid/TRS Assembly per the Service Information.
Perform 45RFE/545RFE TRANSMISSION VERIFICATION TEST - VER 1.

---

15. CHECK FOR BROKEN REVERSE CARRIER WELD

Remove the Transmission per the Service Information and inspect the weld on the reverse carrier hub.

Were there any problems found?

Yes >> Repair as necessary.

No >> Disassemble and inspect the input clutch assembly. Check the OD and Reverse clutch seals, discs, and bleed orifice (in the OD/Reverse clutch piston). Check the OD hub and shaft. Repair as necessary. Refer to the Service Information for proper repair procedures.
Perform 45RFE/545RFE TRANSMISSION VERIFICATION TEST - VER 1.

---

16. CHECK IF DTC RESET

Did the DTC P0733 reset during the road test?

Yes >> Go To 17

No >> Go To 18

P0733-GEAR RATIO ERROR IN 3RD (CONTINUED)

17. LIST OF POSSIBLE CAUSES

If any other DTC's set during the road test, refer to the appropriate symptom in the Transmission category.

If no other DTC's set during the road test, below is a list of possible causes, but not strictly limited to those.

Check for:

— Excessive debris in the Transmission Oil pan, plugged, cracked, or misinstalled Primary Transmission Oil Filter and/or seal.

— Cut or missing #6 check ball in the main valve body.

— OD and UD accumulator pistons and seals and bleed orifices, and the Solenoid Switch Valve and Plugs in the main valve body.

— OD and UD clutch piston seals, reaction shaft support seal rings and dribbler assemblies, and the flatness of the pump valve body and pump housing faces.

— Main regulator valve for sticking in its bore.

View repair

Repair

Repair as necessary. Refer to the Service Information for proper repair procedures.

Perform 45RFE/545RFE TRANSMISSION VERIFICATION TEST - VER 1.

---

18. CHECK FOR INTERMITTENT OPERATION

The conditions to set this DTC are not currently present.

With the scan tool, check the EATX DTC EVENT DATA to help identify the conditions in which the DTC was set.

— If the DTC Event Data shows fault P0733 was set in the Park, Reverse, or Neutral, replace the Powertrain Control Module.

— If the DTC Event Data shows fault P0733 set with input RPM = zero, check the input speed sensor and related wiring.

— If the DTC Event Data shows fault P0733 set with line pressure significantly below desired line pressure, check for the cause of low line pressure (i.e., oil level, misinstalled or damaged primary filter or filter seal, sticking main regulator valve in pump, etc.).

— If the DTC Event Data shows fault P0733 set with the OD or UD pressure switch open (but line pressure matches Desired Line Pressure), air check the OD and UD hydraulic clutch circuits for leakage per the Service Information. If the OD and UD hydraulic clutch circuits are OK, replace the Transmission Solenoid/TRS assembly.

Check the gearshift linkage adjustment.

Intermittent Gear Ratio DTCs can be set by problems in the Input and Output Speed Sensor circuits and/or Speed Sensor Ground circuit.

Remove the Starter Relay.

NOTE: Failure to remove the Starter Relay can cause a Transmission - No Response condition.

Install the Transmission Simulator, Miller tool #8333.

Wiggle wiring and connectors while checking for intermittent operation with the Transmission Simulator.

Gear ratio DTC's can also be set under extreme temperature conditions.

Verify if the problem is only experienced under extreme hot or cold conditions.

Were there any problems found.

Yes >> Repair as necessary.
Perform 45RFE/545RFE TRANSMISSION VERIFICATION TEST - VER 1.

No >> Test Complete.

P0734-GEAR RATIO ERROR IN 4TH

For the Transmission circuit diagram (Refer to 21 - TRANSMISSION/TRANSAXLE/AUTOMATIC - 45RFE/545RFE - SCHEMATICS AND DIAGRAMS).

For a complete wiring diagram **Refer to Section 8W**

- **When Monitored:**
  Continuously with the ignition on, engine running, with the transmission in gear.
- **Set Condition:**
  If the ratio of the Input RPM to the Output RPM does not match the current gear ratio. This DTC can take up to five minutes of problem identification before illuminating the MIL.

Possible Causes
LOW FLUID LEVEL
INPUT SPEED SENSOR OR WIRING
VALVE BODY ACCUMULATOR COVER FAILED
CUT OD OR 4C ACCUMULATOR SEAL
CRACKED OD OR 4C ACCUMULATOR PISTON
BROKEN OR MISSING OD BLEED ORIFICE IN MAIN VALVE BODY
CUT 4C TOWER SEAL
TRANSMISSION SOLENOID/TRS ASSEMBLY
CUT OR MISSING #5 OR #6 CHECK BALL
WORN SOLENOID SWITCH VALVE OR PLUGS
CUT OD OR 4C PISTON SEAL
STUCK MAIN REGULATOR VALVE
BURNED OD OR 4C CLUTCH
BROKEN OR MISSING 4C BLEED ORIFICE IN 2C/4C RETAINER
BROKEN REACTION SHAFT SUPPORT SEAL RING
POOR MACHINING ON PUMP VALVE BODY FACE
LOOSE / MISSING DRIBBLER ORIFICE ASSEMBLY IN REACTION SHAFT SUPPORT
CRACKED / LOOSE / MISSING OD/REVERSE PISTON BLEED ORIFICE
BROKEN REVERSE CARRIER HUB WELD
BROKEN REVERSE SUN GEAR WELD TO REACTION CARRIER

Always perform the Pre-Diagnostic Troubleshooting procedure before proceeding. (Refer to 21 - TRANSMISSION/TRANSAXLE/AUTOMATIC - 45RFE/545RFE - DIAGNOSIS AND TESTING).

P0734-GEAR RATIO ERROR IN 4TH (CONTINUED)

Theory of Operation

The transmission system uses two speed sensors, one to measure input RPM and one to measure output RPM. These inputs are essential for proper transmission operation. Therefore, the integrity of this data is verified through the following checks:

1) Once in a particular gear, if the gear ratio varies from the correct gear ratio, the corresponding in-gear trouble code is set (DTCs P0731–36).

2) An excessive change in input or output speeds indicating signal intermittent may result in the DTCs P0715 and/or P0720 being set.

3) If the common speed sensor ground circuit is lost, both sensor inputs will read the pulses from the input speed sensor when at a stop in neutral. Since the input speed sensor reads 60 teeth from the input clutch hub and the output speed sensor reads 30 teeth from the park gear, the result is an apparent speed ratio of 1:2 and may cause the DTC P1794 to set.

1. DETERMINING IF RELATED DTC'S ARE PRESENT

With the scan tool, check for other transmission DTC's

If any of these DTC's are present, perform their respective tests first.

Are there any Transmission; solenoid, line pressure, speed sensor, and/or loss of prime DTC's present?

Yes >> Refer to the Transmission category and perform the appropriate symptom. If any of these DTCs are present, they may cause a Speed Ratio Error. Perform the test for P0944 first if it is present.
Perform 45RFE/545RFE TRANSMISSION VERIFICATION TEST - VER 1.

No >> Go To 2

---

2. CHECK DTC EVENT DATA

With the scan tool, read and record the DTC EVENT DATA.

NOTE: Make sure to record all DTC EVENT DATA stored in the scan tool for future reference in this test procedure.

Does the DTC EVENT DATA display information for the DTC P0734?

Yes >> Go To 4

No >> Go To 3

---

3. CHECK FOR OTHER DTC

In the DTC EVENT DATA recorded earlier, does the DTC EVENT DATA show the DTC P1790, with Target Gear = 4th, or with both the 4C and OD clutches applying?

Yes >> Go To 4

No >> Go To 6

---

4. CHECK INPUT RPM

In the DTC EVENT DATA recorded earlier, does the Input RPM read zero?

Yes >> Refer to the Transmission category and perform the diagnostic procedure for P0715 (Input Speed Sensor Error). Diagnose the DTC as if it is set and current.

No >> Go To 5

P0734-GEAR RATIO ERROR IN 4TH (CONTINUED)

5. CHECK LINE PRESSURE READING

In the DTC EVENT DATA recorded earlier, is the line pressure reading more than 10 PSI below the desired line pressure reading?

Yes >> Remove the Transmission Oil pan and check the Transmission Oil filter for improper installation or plugged, if Primary oil filter is OK, check the main regulator valve in pump. If excessive debris is in the oil pan, check clutches and repair as necessary. Refer to the Service Information for proper repair procedures.

Perform 45RFE/545RFE TRANSMISSION VERIFICATION TEST - VER 1.

No >> Go To 6

---

6. CHECK TRANSMISSION FOR SLIPPAGE

Erase DTCs and road test the vehicle.

Check the transmission operation in reverse and all forward gears.

During the road test, was there any obvious slippage noted in 4th gear or a runaway during the 3–4 shift?

Yes >> Go To 8

No >> Go To 7

---

7. CHECK IF DTC RESET

With the scan tool, check for Transmission DTCs after the road test.

Did the DTC P0734 reset?

Yes >> Go To 8

No >> Test Complete.

---

8. CHECK INTERNAL TRANSMISSION

— Remove the Transmission Oil Pan and Valve Body per the Service Information and check for the following:
— Excessive debris in the oil pan.
— Remove the Valve Body and check if the accumulator cover is intact and the 4C tower seal is not cut or split.
— OD and 4C accumulator pistons for cracks and/or cut seals.
— Solenoid Switch Valve and its plugs for stickiness or wear.
— Cut or missing #5 and/or #6 check ball.
— OD bleed orifice on top of the Valve Body
— Air check the OD and 4C hydraulic clutch circuits for excessive leakage. Refer to the Service information.

NOTE: Both the OD and 4C hydraulic clutch circuits contain a small bleed orifice. A small amount of air leakage is considered normal. The OD hydraulic clutch circuit bleed orifice connects to the Reverse input clutch hydraulic cavity. A small amount of air leakage into the Reverse hydraulic clutch circuit is considered normal.

Were there any problems found?

Yes >> Repair as necessary. Refer to the Service Information for proper repair procedures.

No >> Go To 9

P0734-GEAR RATIO ERROR IN 4TH (CONTINUED)

9. TRANSMISSION SOLENOID/TRS ASSEMBLY

Was there no reverse gear during the road test?

Yes >> Go To 10

No >> Replace the Solenoid/TRS Assembly per the Service Information.

---

10. CHECK ROAD TEST RESULTS

During the road test, was there no 2nd gear and no 4th gear, but 3rd gear (limp-in) was OK?

Yes >> Go To 11

No >> Go To 12

---

11. CHECK FOR BROKEN REVERSE SUN GEAR WELD

Working through the windows in the bottom of the case, check for a broken Reverse Sun gear weld to the reaction carrier as follows:

(1) Hold the Transmission Output Shaft by holding the Transmission Manual Lever in the park position.

(2) Rotate the Input Annulus gear and drive shell, (the drum that encloses the two rearmost carriers).

(3) Check to see if the reaction carrier (the frontmost carrier, whose outer shell is splined to the 2C clutch) is rotating faster than the drive shell is being turned.

Is the reaction carrier turning faster than the drive shell?

Yes >> Replace the Transmission Solenoid/TRS Assembly per the Service Information.
Perform 45RFE/545RFE TRANSMISSION VERIFICATION TEST - VER 1.

No >> Replace the reaction carrier per the Service Information.
Perform 45RFE/545RFE TRANSMISSION VERIFICATION TEST - VER 1.

---

12. CHECK FOR NO REVERSE

Remove the Transmission per the Service Information and inspect the weld on the reverse carrier hub.

Were there any problems found?

Yes >> Repair as necessary. Refer to the Service Information for proper repair procedures.

No >> Disassemble and inspect the input clutch assembly. Check the OD and Reverse clutch seals, discs, and bleed orifice (in the OD/Reverse clutch piston). Check the OD hub and shaft. Repair as necessary. Refer to the Service Information for proper repair procedures.
Perform 45RFE/545RFE TRANSMISSION VERIFICATION TEST - VER 1.

P0735-GEAR RATIO ERROR IN 5TH

For the Transmission circuit diagram (Refer to 21 - TRANSMISSION/TRANSAXLE/AUTOMATIC - 45RFE/545RFE - SCHEMATICS AND DIAGRAMS).

For a complete wiring diagram **Refer to Section 8W**

- **When Monitored:**
  Continuously with the ignition on, engine running, with the transmission in gear.
- **Set Condition:**
  If the ratio of the Input RPM to the Output RPM does not match the current gear ratio. This DTC can take up to five minutes of problem identification before illuminating the MIL.

Possible Causes
LOW FLUID LEVEL
INPUT SPEED SENSOR OR WIRING
VALVE BODY ACCUMULATOR COVER FAILED
CUT OD OR 2C ACCUMULATOR SEAL
CRACKED OD OR 2C ACCUMULATOR PISTON
BROKEN OR MISSING OD BLEED ORIFICE IN MAIN VALVE BODY
CUT 2C TOWER SEAL
TRANSMISSION SOLENOID/TRS ASSEMBLY
CUT OR MISSING #5, #6, OR #7 CHECK BALL
WORN SOLENOID SWITCH VALVE OR PLUGS
CUT OD OR 2C PISTON SEAL
STUCK MAIN REGULATOR VALVE
BURNED OD OR 2C CLUTCH
BROKEN OR MISSING 2C BLEED ORIFICE IN 2C/4C RETAINER
BROKEN REACTION SHAFT SUPPORT SEAL RING
POOR MACHINING ON PUMP VALVE BODY FACE
LOOSE / MISSING DRIBBLER ORIFICE ASSEMBLY IN REACTION SHAFT SUPPORT
CRACKED / LOOSE / MISSING OD/REVERSE PISTON BLEED ORIFICE
BROKEN REVERSE CARRIER HUB WELD
BROKEN REVERSE SUN GEAR WELD TO REACTION CARRIER

Always perform the Pre-Diagnostic Troubleshooting procedure before proceeding. (Refer to 21 - TRANSMISSION/TRANSAXLE/AUTOMATIC - 45RFE/545RFE - DIAGNOSIS AND TESTING).

P0735-GEAR RATIO ERROR IN 5TH (CONTINUED)

Theory of Operation

The transmission system uses two speed sensors, one to measure input RPM and one to measure output RPM. These inputs are essential for proper transmission operation. Therefore, the integrity of this data is verified through the following checks:

1) Once in a particular gear, if the gear ratio varies from the correct gear ratio, the corresponding in-gear trouble code is set (DTCs P0731–36).

2) An excessive change in input or output speeds indicating signal intermittent may result in the DTCs P0715 and/or P0720 being set.

3) If the common speed sensor ground circuit is lost, both sensor inputs will read the pulses from the input speed sensor when at a stop in neutral. Since the input speed sensor reads 60 teeth from the input clutch hub and the output speed sensor reads 30 teeth from the park gear, the result is an apparent speed ratio of 1:2 and may cause the DTC P1794 to set.

1. DETERMINING IF RELATED DTC'S ARE PRESENT

With the scan tool, check for other transmission DTC's

If any of these DTC's are present, perform their respective tests first.

Are there any Transmission; solenoid, line pressure, speed sensor, and/or loss of prime DTC's present?

Yes >> Refer to the Transmission category and perform the appropriate symptom. If any of these DTCs are present, they may cause a Speed Ratio Error. Perform the test for P0944 first if it is present.
Perform 45RFE/545RFE TRANSMISSION VERIFICATION TEST - VER 1.

No >> Go To 2

---

2. CHECK EATX DTC EVENT DATA

With the scan tool, read and record the EATX DTC EVENT DATA.

NOTE: Make sure to record all EATX DTC EVENT DATA stored in the scan tool for future reference in this test procedure.

Does the EATX DTC EVENT DATA display information for the DTC P0735?

Yes >> Go To 4

No >> Go To 3

---

3. CHECK TARTET GEAR

In the EATX DTC EVENT DATA recorded earlier, does the DTC EVENT DATA show the DTC P1790, with Target gear = 5th, or with both the 2C and OD clutches applying?

Yes >> Go To 4

No >> Go To 6

---

4. CHECK INPUT RPM

In the EATX DTC EVENT DATA recorded earlier, does the Input RPM read zero?

Yes >> Refer to the Transmission category and perform the diagnostic procedure for P0715 (Input Speed Sensor Error). Diagnose the DTC as if it is set and current.

No >> Go To 5

P0735-GEAR RATIO ERROR IN 5TH (CONTINUED)

5. CHECK LINE PRESSURE READING

In the EATX DTC EVENT DATA recorded earlier, is the line pressure reading more than 10 PSI below the desired line pressure reading?

Yes >> Remove the Transmission Oil pan and check the Transmission Oil filter for improper installation or plugged, if Primary oil filter is OK, check the main regulator valve in pump. If excessive debris is in the oil pan, check clutches and repair as necessary. Refer to the Service Information for proper repair procedures.

Perform 45RFE/545RFE TRANSMISSION VERIFICATION TEST - VER 1.

No >> Go To 6

---

6. CHECK TRANSMISSION FOR SLIPPAGE

Erase DTCs and road test the vehicle.

Check the transmission operation in reverse and all forward gears.

During the road test, was there any obvious slippage noted in 5th gear or a runaway during the 4–5 shift?

Yes >> Go To 8

No >> Go To 7

---

7. CHECK IF DTC RESET

With the scan tool, check for Transmission DTCs after the road test.

Did the DTC P0735 reset?

Yes >> Go To 8

No >> Test Complete.

---

8. CHECK INTERNAL TRANSMISSION

Remove the Transmission Oil Pan and Valve Body, per the Service Information, and check for the following:

— Excessive clutch and or metal debris in the oil pan.

— If the accumulator cover is intact and the 2C tower seal is not cut or split.

— OD and 2C accumulator pistons for cracks or cut seals.

— Solenoid Switch Valve and its plugs for stickiness or wear.

— Cut or missing #5, #6, or #7 check ball.

— OD bleed orifice on top of the valve body.

— Air check the OD and 2C hydraulic clutch circuits for excessive leakage. Refer to the Service information.

NOTE: Both the OD and 2C hydraulic clutch circuits contain a small bleed orifice. A small amount of air leakage is considered normal. The OD hydraulic clutch circuit bleed orifice connects to the Reverse input clutch hydraulic cavity. A small amount of air leakage into the Reverse hydraulic clutch circuit is considered normal.

Were there any problems found?

Yes >> Repair as necessary. Refer to the Service Information for proper repair procedures.

No >> Replace the Transmission Solenoid/TRS Assembly per the Service Information.

P0736-GEAR RATIO ERROR IN REVERSE

For the Transmission circuit diagram (Refer to 21 - TRANSMISSION/TRANSAXLE/AUTOMATIC - 45RFE/545RFE - SCHEMATICS AND DIAGRAMS)

For a complete wiring diagram **Refer to Section 8W**

- **When Monitored:**
  Continuously with the ignition on, engine running, with the transmission in gear.
- **Set Condition:**
  If the ratio of the Input RPM to the Output RPM does not match the current gear ratio. This DTC can take up to five minutes of problem identification before illuminating the MIL

Possible Causes
LOW FLUID LEVEL
CUT LR TOWER SEAL ON MAIN VALVE BODY
CUT LR CLUTCH PISTON SEALS
BROKEN OR MISSING LR CLUTCH BLEED ORIFICE (IN LR CLUTCH RETAINER)
CUT LR ACCUMULATOR PISTON SEAL IN MAIN VALVE BODY
CRACKED LR ACCUMULATOR PISTON IN MAIN VALVE BODY
CUT OD/REV PISTON SEALS
BROKEN OR MISSING OD/REV BLEED ORIFICE (IN OD/REV CLUTCH PISTON)
BROKEN REVERSE CARRIER HUB WELD
BROKEN REVERSE SUN GEAR WELD TO THE REACTION CARRIER

Always perform the Pre-Diagnostic Troubleshooting procedure before proceeding. (Refer to 21 - TRANSMISSION/TRANSAXLE/AUTOMATIC - 45RFE/545RFE - DIAGNOSIS AND TESTING).

Theory of Operation

The transmission system uses two speed sensors, one to measure input RPM and one to measure output RPM. These inputs are essential for proper transmission operation. Therefore, the integrity of this data is verified through the following checks:

1) Once in a particular gear, if the gear ratio varies from the correct gear ratio, the corresponding in-gear trouble code is set (DTCs P0731–36).

2) An excessive change in input or output speeds indicating signal intermittent may result in the DTCs P0715 and/or P0720 being set.

3) If the common speed sensor ground circuit is lost, both sensor inputs will read the pulses from the input speed sensor when at a stop in neutral. Since the input speed sensor reads 60 teeth from the input clutch hub and the output speed sensor reads 30 teeth from the park gear, the result is an apparent speed ratio of 1:2 and may cause the DTC P1794 to set.

Diagnostic Test

1. DETERMINING IF RELATED DTC'S ARE PRESENT

With the scan tool, check for other transmission DTC's

Are there any Transmission; solenoid, line pressure, speed sensor, and/or loss of prime DTC's present?

Yes >> Refer to appropriate symptom in the Transmission category. Perform the test for P0944–LOSS OF PRIME first if it is present.
Perform 45RFE/545RFE TRANSMISSION VERIFICATION TEST - VER 1.

No >> Go To 2

P0736-GEAR RATIO ERROR IN REVERSE (CONTINUED)

2. CHECK TO SEE IF DTC IS CURRENT

With the scan tool, perform the Reverse Gear Clutch test. Follow the instructions on the scan tool.

Increase the throttle angle, TPS degree, to 30°, for no more than a few seconds.

CAUTION: Do not overheat the transmission.

NOTE: Make sure to record all EATX DTC EVENT DATA stored in the scan tool for future reference in this test procedure.

Did the clutch test pass, input speed remain at zero?

Yes >> Go To 3

No >> Go To 4

---

3. CHECK DTC EVENT DATA

The conditions necessary to set this DTC are not currently present.

With the scan tool, check the DTC EVENT DATA to help identify the conditions in which the DTC was set.

Does the DTC EVENT DATA show an input speed reading of zero?

Yes >> Go To 8

No >> Go To 4

---

4. POSSIBLE INTERNAL TRANSMISSION CAUSES

Remove the Transmission Oil Pan and Valve Body and check the following per the Service Information:

Clutch or metal debris in the pan

LR clutch tower seal on the main valve body or cuts and the LR accumulator piston and seals.

Air check the Reverse and LR Hydraulic Clutch circuits (in the case) for excessive air leakage.

NOTE: Both Hydraulic Clutch circuits contain a small bleed orifice , a small amount of air leakage is normal. The Reverse hydraulic clutch circuit bleed orifice connects to the OD hydraulic clutch cavity. A small amount of air leakage into the OD hydraulic clutch circuit is considered normal.

Were there any problems found?

Yes >> Repair as necessary. If clutch debris is present, remove the transmission and inspect the Reverse and LR clutches, and inspect the Transmission Oil Pump and Main Regulator Valve for damage or sticking in its bore.

Perform 45RFE/545RFE TRANSMISSION VERIFICATION TEST - VER 1.

No >> Go To 5

---

5. CLUTCH TEST FAILURE

Did the clutch test fail in reverse?

Yes >> Go To 6

No >> Test complete.

P0736-GEAR RATIO ERROR IN REVERSE (CONTINUED)

6. CHECK FOR BROKEN REVERSE SUN GEAR WELD

Working through the windows in the bottom of the case, check for a broken Reverse Sun gear weld to the reaction carrier as follows:

(1) Hold the Transmission Output Shaft by holding the Transmission Manual Lever in the park position.

(2) Rotate the Input Annulus gear and drive shell, (the drum that encloses the two rearmost carriers).

(3) Check to see if the reaction carrier (the frontmost carrier, whose outer shell is splined to the 2C clutch) is rotating faster than the drive shell is being turned.

Is the reaction carrier turning faster than the drive shell?

Yes >> Go To 7

No >> Replace the reaction carrier per the Service Information.
Perform 45RFE/545RFE TRANSMISSION VERIFICATION TEST - VER 1.

---

7. CHECK REVERSE CARRIER HUB

Remove the Transmission per the Service Information and inspect the weld on the reverse carrier hub.

Were there any problems found?

Yes >> Repair as necessary. Refer to the Service Information for proper repair procedures.

No >> Disassemble and inspect the input clutch assembly. Check the Reverse clutch reaction plate snap ring. Check the OD and Reverse clutch seals, discs, and bleed orifice (in the OD/Reverse clutch piston). Check the Reverse hub and shaft. Repair as necessary. Refer to the Service Information for proper repair procedures.
Perform 45RFE/545RFE TRANSMISSION VERIFICATION TEST - VER 1.

---

8. CHECK FOR INTERMITTENT OPERATION

Intermittent gear ratio DTCs can be set by problems in the Input and Output Speed Sensor circuits and/or Speed Sensor Ground circuit.

Remove the Starter Relay

NOTE: Failure to remove the Starter Relay can cause a Transmission - No Response condition.
Check the Speed Sensor wiring and connectors for good connection, then perform a wiggle test using the Transmission Simulator, Miller tool #8333.

Were there any problems found?

Yes >> Repair as necessary.
Perform 45RFE/545RFE TRANSMISSION VERIFICATION TEST - VER 1.

No >> Test complete.

P0740–TCC OUT OF RANGE

For the Transmission circuit diagram (Refer to 21 - TRANSMISSION/TRANSAXLE/AUTOMATIC - 45RFE/545RFE - SCHEMATICS AND DIAGRAMS) .

For a complete wiring diagram **Refer to Section 8W**

- **When Monitored:**
  During Electronically Modulated Converter Clutch (EMCC) Operation.
- **Set Condition:**
  Transmission must be in EMCC, with input speed greater than 1750 RPM. TCC-L/R Solenoid achieves the maximum duty cycle and can not pull engine speed within 60 RPM of input speed. Also when the transmission is in FEMCC and the engine slips TCC less than 100 RPM for 10 seconds. This DTC can take up to five minutes of problem identification before illuminating the MIL.

Possible Causes
RELATED DTC P0750 PRESENT
L/R SOLENOID
TORQUE CONVERTER AND/OR INTERNAL TRANSMISSION

Always perform the Pre-Diagnostic Troubleshooting procedure before proceeding. (Refer to 21 - TRANSMISSION/TRANSAXLE/AUTOMATIC - 45RFE/545RFE - DIAGNOSIS AND TESTING).

Theory of Operation

When in 2nd, 2nd Prime, 3rd, or 4th gear, the torque converter clutch (TCC) can be engaged when certain conditions are met. The TCC piston is electronically modulated by increasing the duty cycle of the LR Solenoid until the torque converter slip difference (difference between engine and transmission input speed) is within 60 RPM. Then the LR solenoid is fully energized (FEMCC / 100% duty cycle). Torque converter slip is monitored in FEMCC to ensure adequate clutch capacity.

Diagnostic Test

1. DETERMINING IF RELATED DTC P0750 IS PRESENT

With the scan tool, read transmission DTC's

Is the DTC P0750 present also?

Yes >> Refer to the Transmission category and perform the appropriate symptom.
Perform 45RFE/545RFE TRANSMISSION VERIFICATION TEST - VER 1.

No >> Go To 2

P0740–TCC OUT OF RANGE (CONTINUED)

2. CHECK TO SEE IF DTC P0740 IS CURRENT

With the scan tool, Read and RECORD ALL Transmission DTC's. After recording DTC's, erase DTC's.

Drive the vehicle until the transmission temperature is at least 43° C or 110° F and the engine temperature at least 49° C or 120° F.

Perform the following steps 3 times.

Drive the vehicle to the speed of at least 88 km/h or 55 MPH.

Allow 4th gear to engage for at least 10 seconds.

Close the throttle.

Tip back into the throttle until the TPS angle is between 25 and 29 degrees.

NOTE: If the throttle angle goes over 30 degrees, you must close the throttle and try again.

Did the TCC engage during any of the attempts, Engine speed approximately equal to input speed?

Yes >> Go To 3

No >> Go To 4

---

3. INTERMITTENT WIRING AND CONNECTORS

The conditions necessary to set this DTC are not present at this time. Using the schematics as a guide, inspect the wiring and connectors specific to this circuit. Wiggle the wires while checking for shorts and open circuits.

Using the schematics as a guide, inspect the wiring and connectors specific to this circuit.

Wiggle the wires while checking for shorts and open circuits.

With the scan tool, check the EATX DTC EVENT DATA to help identify the conditions in which the DTC was set.

Were there any problems found?

Yes >> Repair as necessary.
Perform 45RFE/545RFE TRANSMISSION VERIFICATION TEST - VER 1.

No >> Test Complete.

---

4. LR SOLENOID

With the scan tool, check for other transmission DTC's.

Are the DTCs P1775 and P0841 present also?

Yes >> Replace the Transmission Solenoid/TRS Assembly per the Service Information.
Perform 45RFE/545RFE TRANSMISSION VERIFICATION TEST - VER 1.

No >> Go To 5

P0740–TCC OUT OF RANGE (CONTINUED)

5. TORQUE CONVERTER AND/OR INTERNAL TRANSMISSION

Repair internal transmission as necessary.

Check for the following possible causes. Refer to the Service information for the proper repair procedures.

Inspect the Transmission Oil Pump.

If no problems are found, replace the Transmission Solenoid/TRS Assembly.

Check the Torque Converter Switch Valve and the Torque Converter Clutch Control Valve for sticking in the bore.

Check the Teflon seal rings on the input shaft.

View repair.

Repair

In all cases, replace the Torque Converter. Make sure to check all other possible causes in addition to the Torque Converter.

Perform 45RFE/545RFE TRANSMISSION VERIFICATION TEST - VER 1.

P0750-LR SOLENOID CIRCUIT

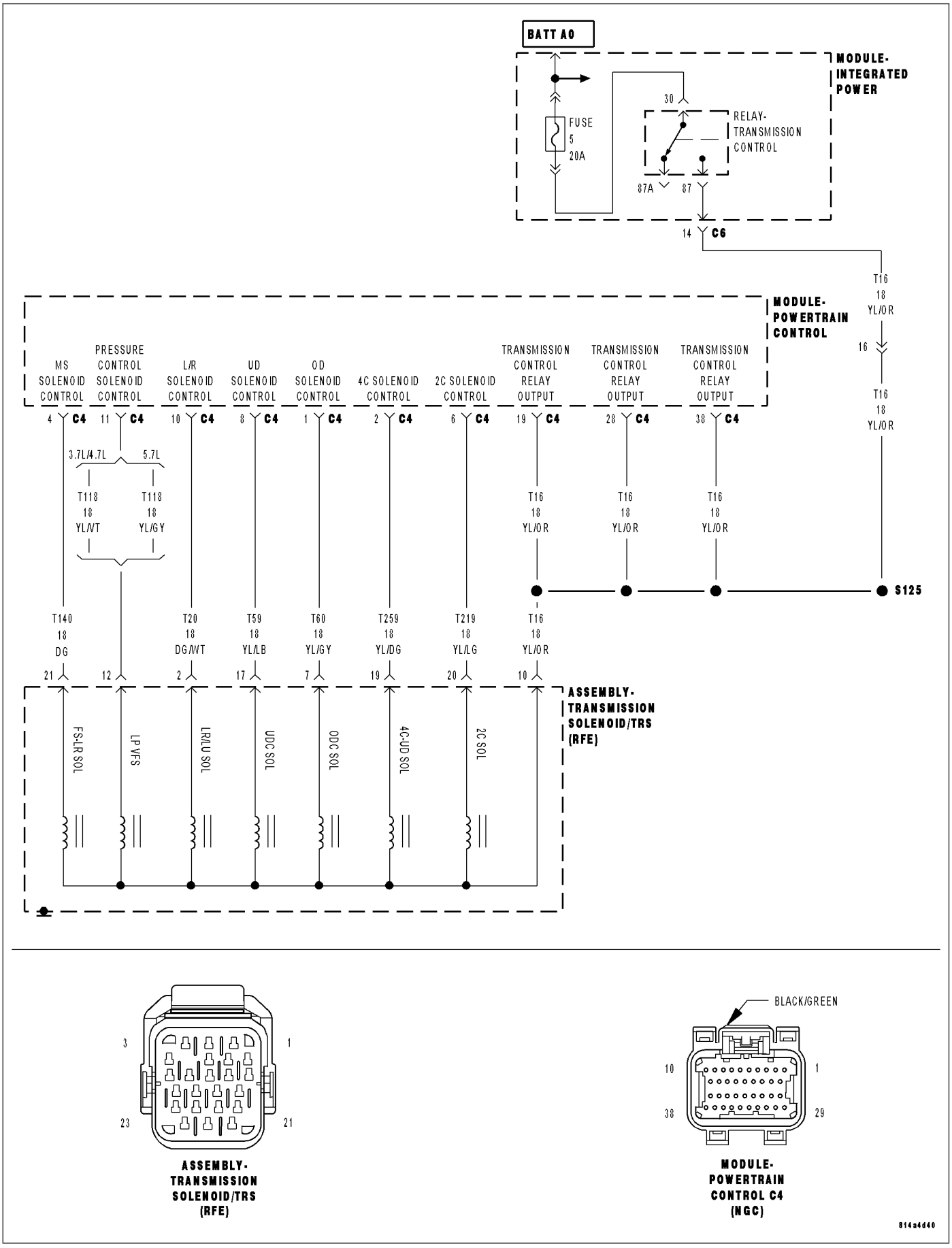

ASSEMBLY-
TRANSMISSION
SOLENOID/TRS
(RFE)

MODULE-
POWERTRAIN
CONTROL C4
(NGC)

814a4d40

P0750-LR SOLENOID CIRCUIT (CONTINUED)

For the Transmission circuit diagram (Refer to 21 - TRANSMISSION/TRANSAXLE/AUTOMATIC - 45RFE/545RFE - SCHEMATICS AND DIAGRAMS).

For a complete wiring diagram **Refer to Section 8W**

- **When Monitored:**
  Initially at power-up, then every 10 seconds thereafter. The solenoid circuits will also be tested immediately after a gear ratio or pressure switch error is detected.
- **Set Condition:**
  After three consecutive solenoid continuity test failures, or one failure if test is run in response to a gear ratio or pressure switch error. **Note: This DTC is strictly an electrical fault and does not apply to any internal transmission failures.**

Possible Causes
RELATED RELAY DTC'S PRESENT
(T20) LR SOLENOID CONTROL CIRCUIT SHORT TO OTHER CIRCUITS
(T20) LR SOLENOID CONTROL CIRCUIT OPEN
(T20) LR SOLENOID CONTROL CIRCUIT SHORT TO GROUND
TRANSMISSION SOLENOID/TRS ASSEMBLY
POWERTRAIN CONTROL MODULE

Always perform the Pre-Diagnostic Troubleshooting procedure before proceeding. (Refer to 21 - TRANSMISSION/TRANSAXLE/AUTOMATIC - 45RFE/545RFE - DIAGNOSIS AND TESTING).

Theory of Operation

The Transmission Control System uses six electronically controlled solenoids that allow hydraulic fluid to be applied to various friction elements (clutches), which enables the gear requested. The continuity of each solenoid circuit is periodically tested. Each inactive solenoid is turned on for a few milliseconds, then off. Each active solenoid is turned off for a few milliseconds, then on. This pulsing of voltage to the solenoid causes an inductive spike which can be sensed by the Transmission Control System. If an inductive spike is not sensed by the Transmission Control System during the continuity check, it is tested again. If the test fails three consecutive times, the appropriate Diagnostic Trouble Code (DTC) is set. If the solenoid test is run in response to a gear ratio or pressure switch error, one failure will result in setting the appropriate DTC. **Note: This DTC is strictly an electrical fault and does not apply to any internal transmission failures.**

Diagnostic Test

1. RELATED TRANSMISSION RELAY DTC'S PRESENT

With the scan tool, check for other transmission DTC's.

Are there any Transmission Control Relay DTC's present?

Yes >> Refer to the Transmission category and perform the appropriate symptom.
Perform 45RFE/545RFE TRANSMISSION VERIFICATION TEST - VER 1.

No >> Go To 2

P0750-LR SOLENOID CIRCUIT (CONTINUED)

2. CHECK TO SEE IF P0750 IS PRESENT

Ignition on, engine not running.

With the scan tool, erase all Transmission DTC's.

Turn the ignition off to the lock position.

Remove the Starter Relay.

NOTE: Removal of the Starter Relay is to prevent a Transmission, NO RESPONSE, condition and disable the starter.

Install the Transmission Simulator, Miller tool #8333.

NOTE: Check connectors - Clean/repair as necessary.

Ignition on, engine not running.

With the scan tool, actuate the LR Solenoid.

Monitor the LR Solenoid LED on the Transmission Simulator.

Did the LR Solenoid LED on the Transmission Simulator blink on and off?

Yes >> Go To 3

No >> Go To 4

---

3. TRANSMISSION SOLENOID/TRS ASSEMBLY

With the scan tool, continue to actuate the LR Solenoid for the period of 2 minutes with the Transmission Simulator still connected.

After 2 minutes of actuation, with the scan tool, stop the actuation and check for transmission DTCs.

Did the DTC P0750 reset during the actuation test?

Yes >> Go To 4

No >> Replace the Transmission Solenoid/TRS Assembly per the Service Information.
Perform 45RFE/545RFE TRANSMISSION VERIFICATION TEST - VER 1.

---

4. (T20) LR SOLENOID CONTROL CIRCUIT SHORT TO OTHER CIRCUITS

Turn the ignition off to the lock position.

Disconnect the Transmission Simulator, Miller tool #8333.

Disconnect the PCM harness connectors.

Measure the resistance between the (T20) LR Solenoid Control circuit and all other circuits in the Transmission Solenoid/TRS Assembly harness connector.

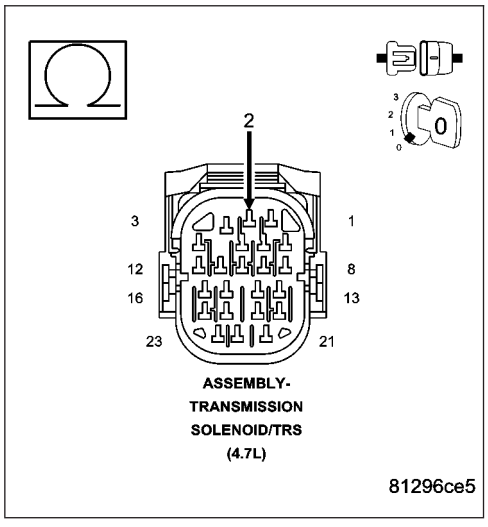

Is the resistance below 5.0 ohms between the (T20) LR Solenoid Control circuit and any other circuit(s) in the Transmission Solenoid/TRS Assembly harness connector?

Yes >> Repair the (T20) LR Solenoid Control circuit for a short to other circuit(s).
Perform 45RFE/545RFE TRANSMISSION VERIFICATION TEST - VER 1.

No >> Go To 5

P0750-LR SOLENOID CIRCUIT (CONTINUED)

5. (T20) LR SOLENOID CONTROL CIRCUIT OPEN

Connect Miller tool #8815 to the PCM C4 harness connector.

CAUTION: Do not probe the PCM harness connectors. Probing the PCM harness connectors will damage the PCM terminals resulting in poor terminal to pin connection. Install Miller tool #8815 to perform diagnosis.

Measure the resistance of the (T20) LR Solenoid Control circuit from the Transmission Solenoid/TRS Assembly harness connector to the appropriate terminal of Miller tool #8815.

Is the resistance above 5.0 ohms?

Yes >> Repair the (T20) LR Solenoid Control circuit for an open.
Perform 45RFE/545RFE TRANSMISSION VERIFICATION TEST - VER 1.

No >> Go To 6

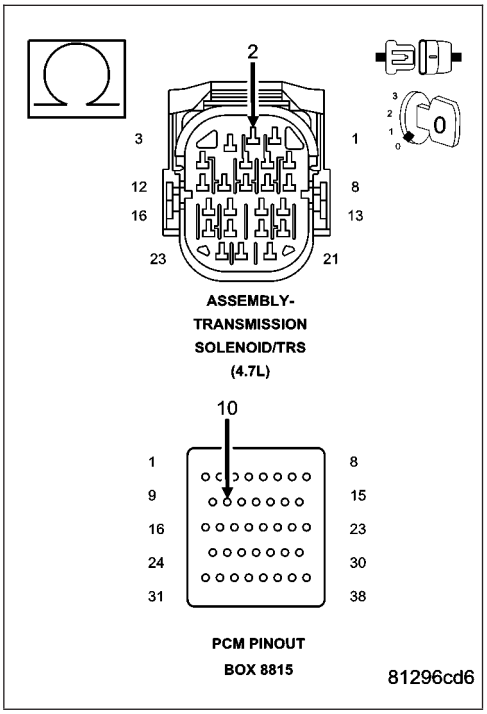

6. (T20) LR SOLENOID CONTROL CIRCUIT SHORT TO GROUND

Measure the resistance between ground and the (T20) LR Solenoid Control circuit.

Is the resistance below 5.0 ohms?

Yes >> Repair the (T20) LR Solenoid Control circuit for a short to ground.
Perform 45RFE/545RFE TRANSMISSION VERIFICATION TEST - VER 1.

No >> Using the schematics as a guide, check the Powertrain Control Module (PCM) terminals for corrosion, damage, or terminal push out. Pay particular attention to all power and ground circuits. If no problems are found, replace the PCM per the Service Information. With the scan tool, perform QUICK LEARN.
Perform 45RFE/545RFE TRANSMISSION VERIFICATION TEST - VER 1.

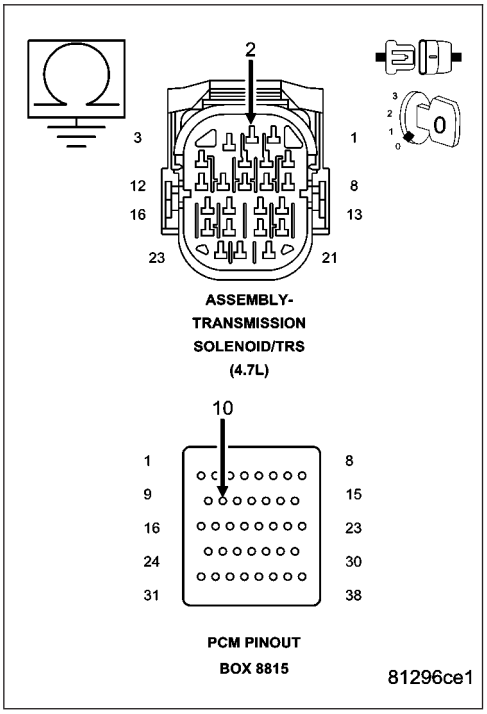

P0755-2C SOLENOID CIRCUIT

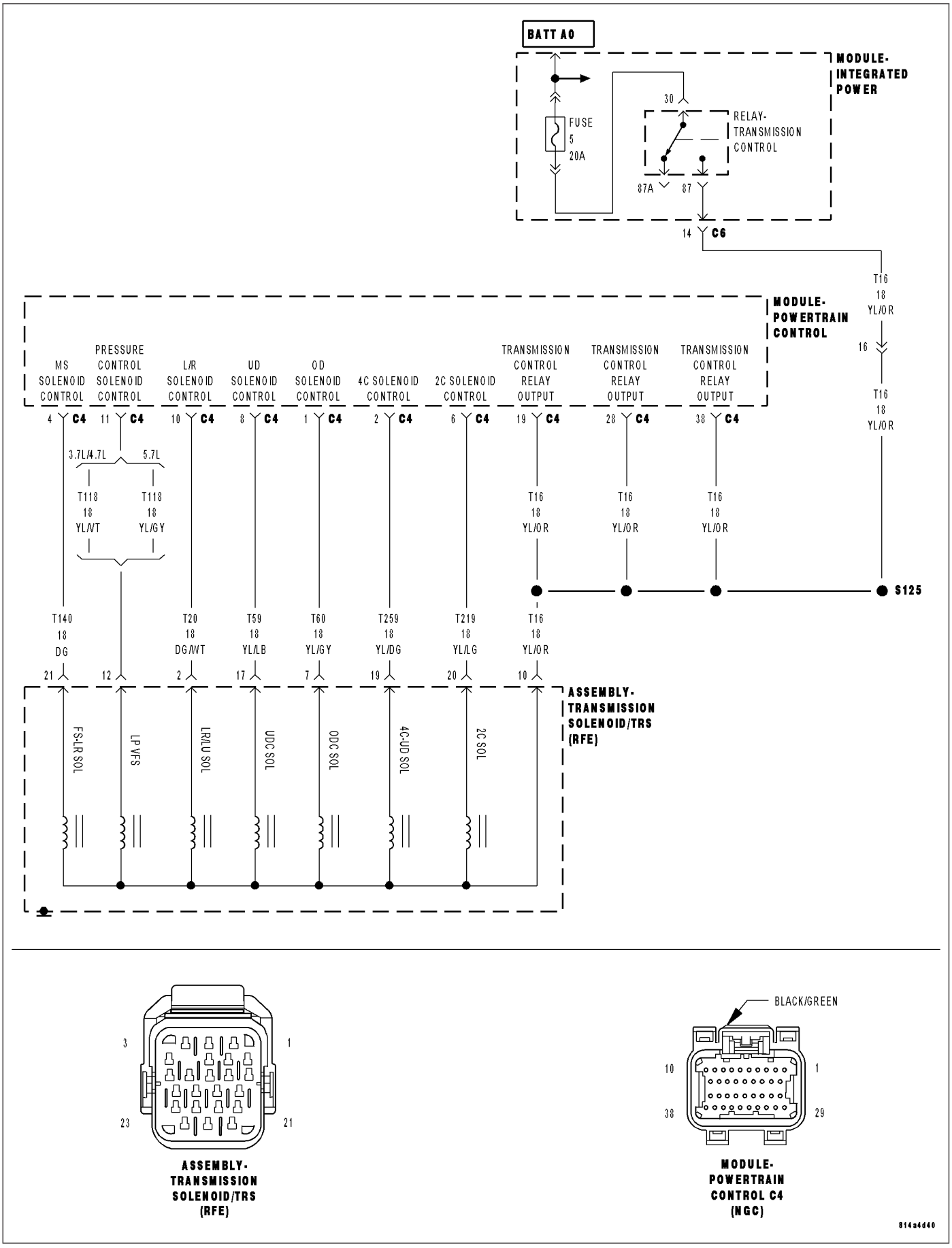

P0755-2C SOLENOID CIRCUIT (CONTINUED)

For the Transmission circuit diagram (Refer to 21 - TRANSMISSION/TRANSAXLE/AUTOMATIC - 45RFE/545RFE - SCHEMATICS AND DIAGRAMS).

For a complete wiring diagram **Refer to Section 8W**

- **When Monitored:**
  Initially at power-up, then every 10 seconds thereafter. The solenoid circuits will also be tested immediately after a gear ratio or pressure switch error is detected.
- **Set Condition:**
  After three consecutive solenoid continuity test failures, or one failure if test is run in response to a gear ratio or pressure switch error. **Note: This DTC is strictly an electrical fault and does not apply to any internal transmission failures.**

Possible Causes
RELATED RELAY DTC'S PRESENT
(T219) 2C SOLENOID CONTROL CIRCUIT SHORT TO OTHER CIRCUITS
(T219) 2C SOLENOID CONTROL CIRCUIT OPEN
(T219) 2C SOLENOID CONTROL CIRCUIT SHORT TO GROUND
TRANSMISSION SOLENOID/TRS ASSEMBLY
POWERTRAIN CONTROL MODULE

Always perform the Pre-Diagnostic Troubleshooting procedure before proceeding. (Refer to 21 - TRANSMISSION/TRANSAXLE/AUTOMATIC - 45RFE/545RFE - DIAGNOSIS AND TESTING).

Theory of Operation

The Transmission Control System uses six electronically controlled solenoids that allow hydraulic fluid to be applied to various friction elements (clutches), which enables the gear requested. The continuity of each solenoid circuit is periodically tested. Each inactive solenoid is turned on for a few milliseconds, then off. Each active solenoid is turned off for a few milliseconds, then on. This pulsing of voltage to the solenoid causes an inductive spike which can be sensed by the Transmission Control System. If an inductive spike is not sensed by the Transmission Control System during the continuity check, it is tested again. If the test fails three consecutive times, the appropriate Diagnostic Trouble Code (DTC) is set. If the solenoid test is run in response to a gear ratio or pressure switch error, one failure will result in setting the appropriate DTC. **Note: This DTC is strictly an electrical fault and does not apply to any internal transmission failures.**

Diagnostic Test

1. RELATED TRANSMISSION RELAY DTC'S PRESENT

With the scan tool, check for other transmission DTC's.

Are there any Transmission Control Relay DTC's present?

Yes >> Refer to the Transmission category and perform the appropriate symptom.
Perform 45RFE/545RFE TRANSMISSION VERIFICATION TEST - VER 1.

No >> Go To 2

P0755-2C SOLENOID CIRCUIT (CONTINUED)

2. CHECK TO SEE IF P0755 IS PRESENT

Turn the ignition off to the lock position.

Remove the Starter Relay.

NOTE: Removal of the Starter Relay is to prevent a Transmission, NO RESPONSE, condition and disable the starter.

Install Transmission Simulator, Miller tool #8333.

NOTE: Check connectors - Clean/repair as necessary.

Ignition on, engine not running.

With the scan tool, actuate the 2C Solenoid.

Did the 2C Solenoid LED blink on and off on the Transmission Simulator?

Yes >> Go To 3

No >> Go To 4

---

3. TRANSMISSION SOLENOID/TRS ASSEMBLY

With the scan tool, continue to actuate the 2C Solenoid for the period of 2 minutes with the Transmission Simulator still connected.

After 2 minutes of actuation, with the scan tool, stop the actuation and check for transmission DTCs.

Did the DTC P0755 reset during the actuation test?

Yes >> Go To 4

No >> Replace the Transmission Solenoid/TRS Assembly per the Service Information.
Perform 45RFE/545RFE TRANSMISSION VERIFICATION TEST - VER 1.

---

4. (T219) 2C SOLENOID CONTROL CIRCUIT SHORT TO OTHER CIRCUITS

Turn the ignition off to the lock position.

Disconnect the Transmission Simulator, Miller tool #8333.

Disconnect the PCM harness connectors.

Measure the resistance between the (T219) 2C Solenoid Control circuit and all other circuits in the Transmission Solenoid/TRS Assembly harness connector.

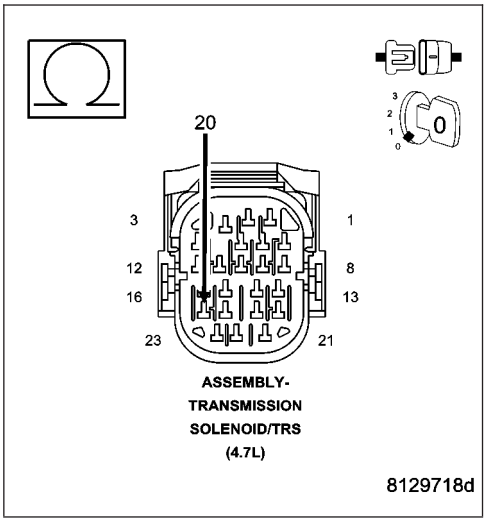

Is the resistance below 5.0 ohms between the (T219) 2C Solenoid Control circuit and any other circuit(s) in the Transmission Solenoid/TRS Assembly harness connector?

Yes >> Repair the (T219) 2C Solenoid Control circuit for a short to other circuit(s).
Perform 45RFE/545RFE TRANSMISSION VERIFICATION TEST - VER 1.

No >> Go To 5

P0755-2C SOLENOID CIRCUIT (CONTINUED)

5. (T219) 2C SOLENOID CONTROL CIRCUIT OPEN

Connect Miller tool #8815 to the PCM C4 harness connector.

CAUTION: Do not probe the PCM harness connectors. Probing the PCM harness connectors will damage the PCM terminals resulting in poor terminal to pin connection. Install Miller tool #8815 to perform diagnosis.

Measure the resistance of the (T219) 2C Solenoid Control circuit from the Transmission Solenoid/TRS Assembly harness connector to the appropriate terminal of Miller tool #8815.

Is the resistance above 5.0 ohms?

Yes >> Repair the (T219) 2C Solenoid Control circuit for an open.
Perform 45RFE/545RFE TRANSMISSION VERIFICATION TEST - VER 1.

No >> Go To 6

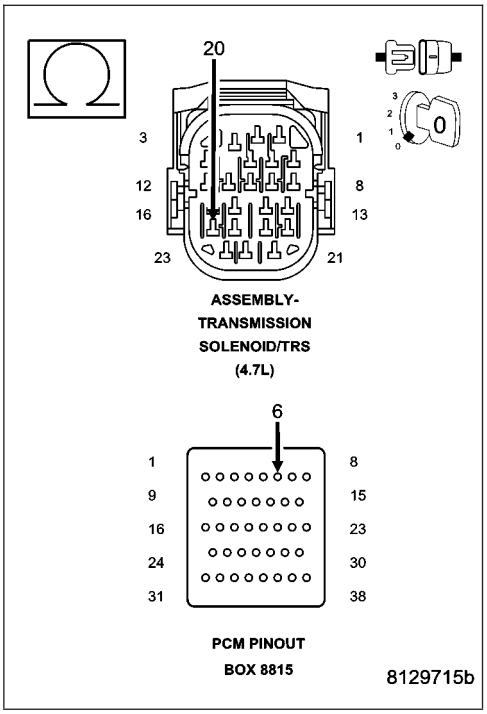

6. (T219) 2C SOLENOID CONTROL CIRCUIT SHORT TO GROUND

Measure the resistance between ground and the (T219) 2C Solenoid Control circuit.

Is the resistance below 5.0 ohms?

Yes >> Repair the (T219) 2C Solenoid Control circuit for a short to ground.
Perform 45RFE/545RFE TRANSMISSION VERIFICATION TEST - VER 1.

No >> Using the schematics as a guide, check the Powertrain Control Module (PCM) terminals for corrosion, damage, or terminal push out. Pay particular attention to all power and ground circuits. If no problems are found, replace the PCM per the Service Information. With the scan tool, perform QUICK LEARN.
Perform 45RFE/545RFE TRANSMISSION VERIFICATION TEST - VER 1.

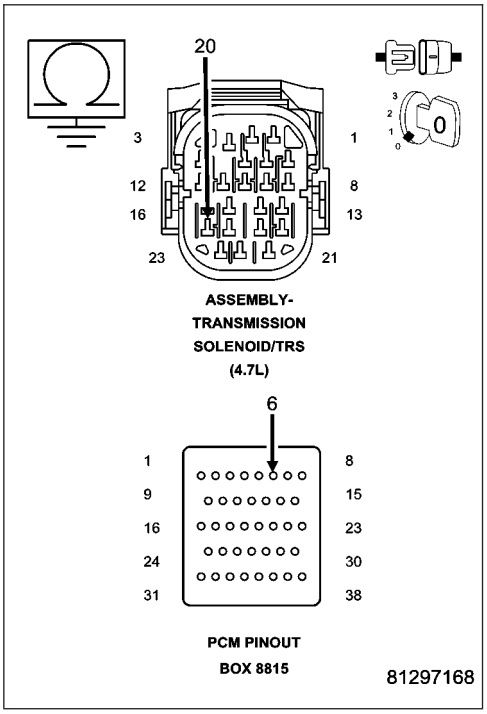

P0760-OD SOLENOID CIRCUIT

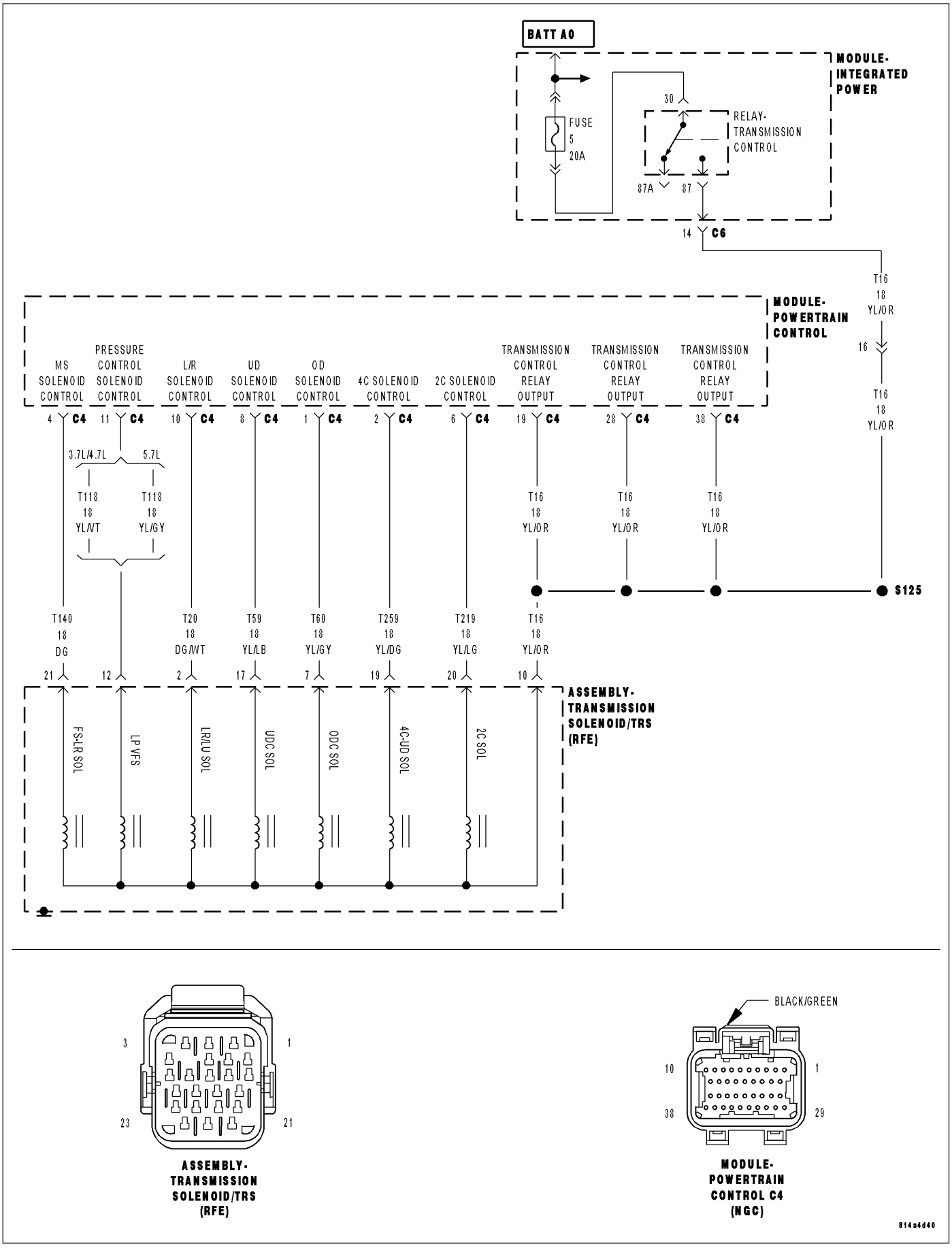

ASSEMBLY-
TRANSMISSION
SOLENOID/TRS
(RFE)

MODULE-
POWERTRAIN
CONTROL C4
(NGC)

814a4d40

P0760-OD SOLENOID CIRCUIT (CONTINUED)

For the Transmission circuit diagram (Refer to 21 - TRANSMISSION/TRANSAXLE/AUTOMATIC - 45RFE/545RFE - SCHEMATICS AND DIAGRAMS) .

For a complete wiring diagram **Refer to Section 8W**

- **When Monitored:**
  Initially at power-up, then every 10 seconds thereafter. The solenoid circuits will also be tested immediately after a gear ratio or pressure switch error is detected.
- **Set Condition:**
  After three consecutive solenoid continuity test failures, or one failure if test is run in response to a gear ratio or pressure switch error. **Note: This DTC is strictly an electrical fault and does not apply to any internal transmission failures.**

Possible Causes
RELATED RELAY DTC'S PRESENT
(T60) OD SOLENOID CONTROL CIRCUIT SHORT TO OTHER CIRCUITS
(T60) OD SOLENOID CONTROL CIRCUIT OPEN
(T60) OD SOLENOID CONTROL CIRCUIT SHORT TO GROUND
TRANSMISSION SOLENOID/TRS ASSEMBLY
POWERTRAIN CONTROL MODULE

Always perform the Pre-Diagnostic Troubleshooting procedure before proceeding. (Refer to 21 - TRANSMISSION/TRANSAXLE/AUTOMATIC - 45RFE/545RFE - DIAGNOSIS AND TESTING).

Theory of Operation

The Transmission Control System uses six electronically controlled solenoids that allow hydraulic fluid to be applied to various friction elements (clutches), which enables the gear requested. The continuity of each solenoid circuit is periodically tested. Each inactive solenoid is turned on for a few milliseconds, then off. Each active solenoid is turned off for a few milliseconds, then on. This pulsing of voltage to the solenoid causes an inductive spike which can be sensed by the Transmission Control System. If an inductive spike is not sensed by the Transmission Control System during the continuity check, it is tested again. If the test fails three consecutive times, the appropriate Diagnostic Trouble Code (DTC) is set. If the solenoid test is run in response to a gear ratio or pressure switch error, one failure will result in setting the appropriate DTC. **Note: This DTC is strictly an electrical fault and does not apply to any internal transmission failures.**

Diagnostic Test

1. RELATED TRANSMISSION RELAY DTC'S PRESENT

With the scan tool, check for other transmission DTC's.

Are there any Transmission Control Relay DTC's present?

Yes >> Refer to the Transmission category and perform the appropriate symptom.
Perform 45RFE/545RFE TRANSMISSION VERIFICATION TEST - VER 1.

No >> Go To 2

P0760-OD SOLENOID CIRCUIT (CONTINUED)

2. CHECK TO SEE IF P0760 IS PRESENT

Turn the ignition off to the lock position.

Remove the Starter Relay.

NOTE: Removal of the Starter Relay is to prevent a Transmission, NO RESPONSE, condition and disable the starter.

Install Transmission Simulator, Miller tool #8333.

NOTE: Check connectors - Clean/repair as necessary.

Ignition on, engine not running.

With the scan tool, actuate the OD Solenoid.

Monitor the OD Solenoid LED on the Transmission Simulator.

Did the OD Solenoid LED on the Transmission Simulator blink on and off?

Yes >> Go To 3

No >> Go To 4

---

3. TRANSMISSION SOLENOID/TRS ASSEMBLY

With the scan tool, continue to actuate the OD Solenoid for the period of 2 minutes with the Transmission Simulator still connected.

After 2 minutes of actuation, with the scan tool, stop the actuation and check for transmission DTCs.

Did the DTC P0760 reset during the actuation test?

Yes >> Go To 4

No >> Replace the Transmission Solenoid/TRS Assembly per the Service Information.
Perform 45RFE/545RFE TRANSMISSION VERIFICATION TEST - VER 1.

---

4. (T60) OD SOLENOID CONTROL CIRCUIT SHORT TO OTHER CIRCUITS

Turn the ignition off to the lock position.

Disconnect the Transmission Simulator, Miller tool #8333.

Disconnect the PCM harness connectors.

Measure the resistance between the (T60) OD Solenoid Control circuit and all other circuits in the Transmission Solenoid/TRS Assembly harness connector.

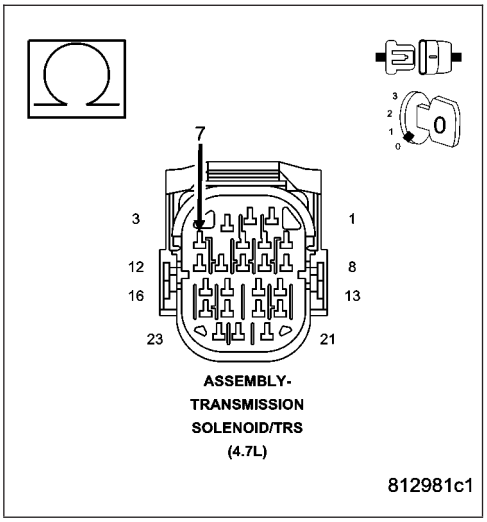

Is the resistance below 5.0 ohms between the (T60) OD Solenoid Control circuit and any other circuit(s) in the Transmission Solenoid/TRS Assembly harness connector?

Yes >> Repair the (T60) OD Solenoid Control circuit for a short to other circuit(s).
Perform 45RFE/545RFE TRANSMISSION VERIFICATION TEST - VER 1.

No >> Go To 5

P0760-OD SOLENOID CIRCUIT (CONTINUED)

5. (T60) OD SOLENOID CONTROL CIRCUIT OPEN

Connect Miller tool #8815 to the PCM C4 harness connector.

CAUTION: Do not probe the PCM harness connectors. Probing the PCM harness connectors will damage the PCM terminals resulting in poor terminal to pin connection. Install Miller special tool #8815 to perform diagnosis.

Measure the resistance of the (T60) OD Solenoid Control circuit from the Transmission Solenoid/TRS Assembly harness connector to the appropriate terminal of Miller tool #8815.

Is the resistance above 5.0 ohms?

Yes >> Repair the (T60) OD Solenoid Control circuit for an open.
Perform 45RFE/545RFE TRANSMISSION VERIFICATION TEST - VER 1.

No >> Go To 6

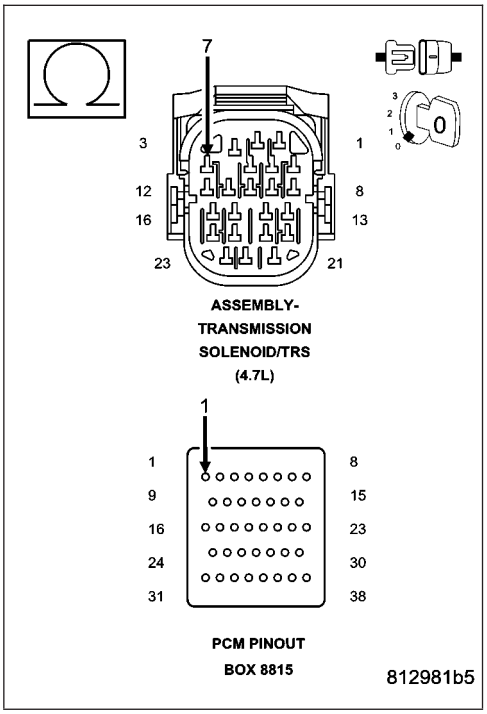

6. (T60) OD SOLENOID CONTROL CIRCUIT SHORT TO GROUND

Measure the resistance between ground and the (T60) OD Solenoid Control circuit.

Is the resistance below 5.0 ohms?

Yes >> Repair the (T60) OD Solenoid Control circuit for a short to ground.
Perform 45RFE/545RFE TRANSMISSION VERIFICATION TEST - VER 1.

No >> Using the schematics as a guide, check the Powertrain Control Module (PCM) terminals for corrosion, damage, or terminal push out. Pay particular attention to all power and ground circuits. If no problems are found, replace the PCM per the Service Information. With the scan tool, perform QUICK LEARN.
Perform 45RFE/545RFE TRANSMISSION VERIFICATION TEST - VER 1.

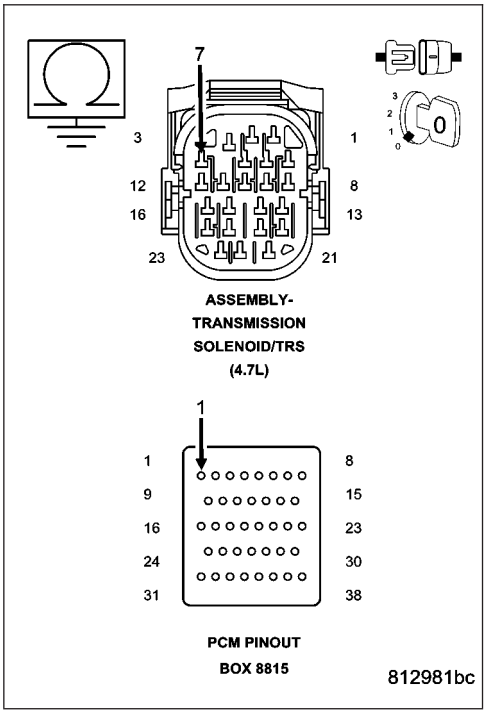

P0765-UD SOLENOID CIRCUIT

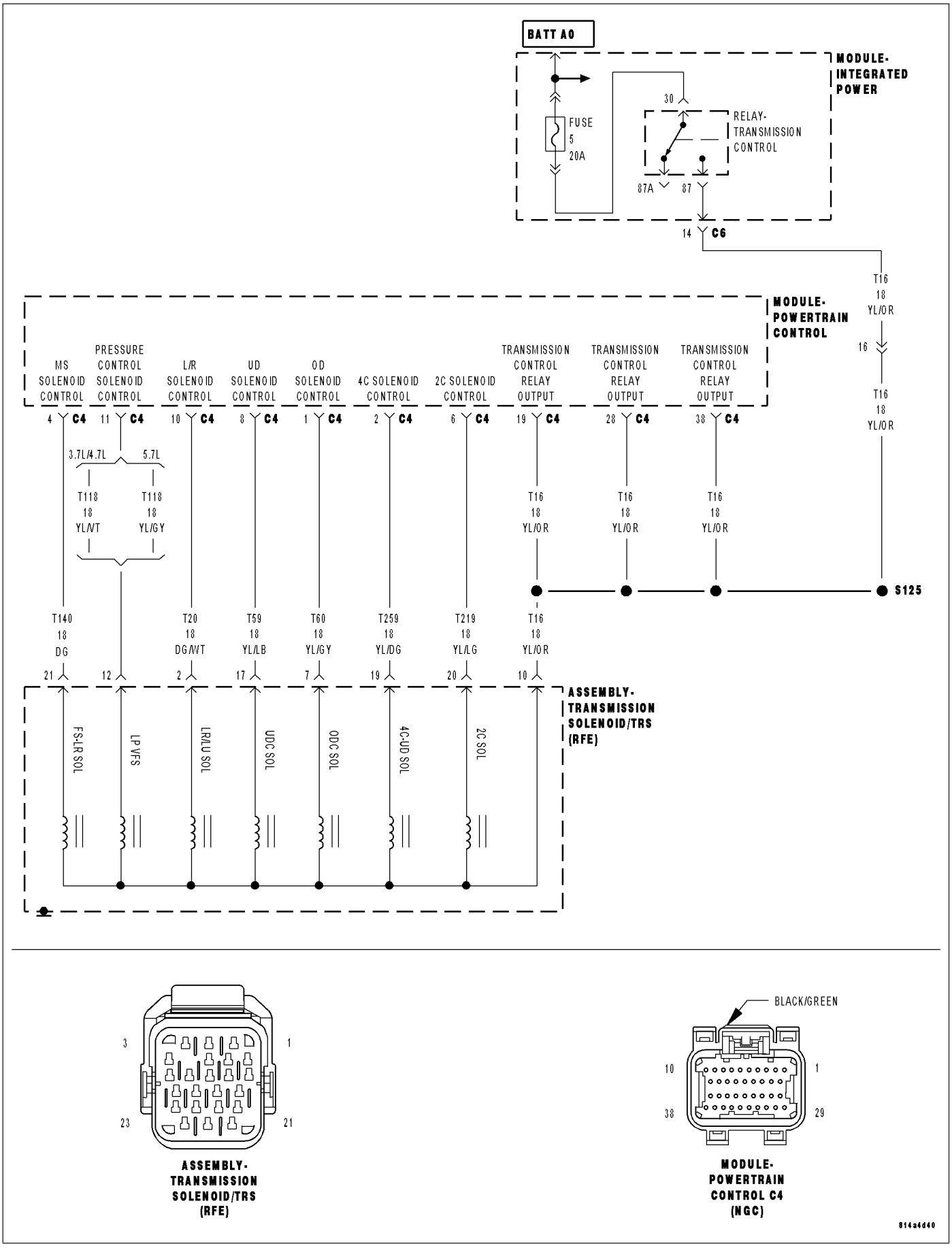

ASSEMBLY-
TRANSMISSION
SOLENOID/TRS
(RFE)

MODULE-
POWERTRAIN
CONTROL C4
(NGC)

814a4d40

P0765-UD SOLENOID CIRCUIT (CONTINUED)

For the Transmission circuit diagram (Refer to 21 - TRANSMISSION/TRANSAXLE/AUTOMATIC - 45RFE/545RFE - SCHEMATICS AND DIAGRAMS).

For a complete wiring diagram **Refer to Section 8W**

- **When Monitored:**
  Initially at power-up, then every 10 seconds thereafter. The solenoid circuits will also be tested immediately after a gear ratio or pressure switch error is detected.
- **Set Condition:**
  After three consecutive solenoid continuity test failures, or one failure if test is run in response to a gear ratio or pressure switch error. **Note: This DTC is strictly an electrical fault and does not apply to any internal transmission failures.**

Possible Causes
RELATED RELAY DTC'S PRESENT
(T59) UD SOLENOID CONTROL CIRCUIT SHORT TO OTHER CIRCUITS
(T59) UD SOLENOID CONTROL CIRCUIT OPEN
(T59) UD SOLENOID CONTROL CIRCUIT SHORT TO GROUND
TRANSMISSION SOLENOID/TRS ASSEMBLY
POWERTRAIN CONTROL MODULE

Always perform the Pre-Diagnostic Troubleshooting procedure before proceeding. (Refer to 21 - TRANSMISSION/TRANSAXLE/AUTOMATIC - 45RFE/545RFE - DIAGNOSIS AND TESTING).

Theory of Operation

The Transmission Control System uses six electronically controlled solenoids that allow hydraulic fluid to be applied to various friction elements (clutches), which enables the gear requested. The continuity of each solenoid circuit is periodically tested. Each inactive solenoid is turned on for a few milliseconds, then off. Each active solenoid is turned off for a few milliseconds, then on. This pulsing of voltage to the solenoid causes an inductive spike which can be sensed by the Transmission Control System. If an inductive spike is not sensed by the Transmission Control System during the continuity check, it is tested again. If the test fails three consecutive times, the appropriate Diagnostic Trouble Code (DTC) is set. If the solenoid test is run in response to a gear ratio or pressure switch error, one failure will result in setting the appropriate DTC. **Note: This DTC is strictly an electrical fault and does not apply to any internal transmission failures.**

Diagnostic Test

1. RELATED TRANSMISSION RELAY DTC'S PRESENT

With the scan tool, check for other transmission DTC's.

Are there any Transmission Control Relay DTC's present?

Yes >> Refer to the Transmission category and perform the appropriate symptom.
Perform 45RFE/545RFE TRANSMISSION VERIFICATION TEST - VER 1.

No >> Go To 2

P0765-UD SOLENOID CIRCUIT (CONTINUED)

2. CHECK TO SEE IF P0765 IS PRESENT

Turn the ignition off to the lock position.

Remove the Starter Relay.

NOTE: Removal of the Starter Relay is to prevent a Transmission, NO RESPONSE, condition and disable the starter.

Install Transmission Simulator, Miller tool #8333.

NOTE: Check connectors - Clean/repair as necessary.

Ignition on, engine not running.

With the scan tool, actuate the UD Solenoid.

Monitor the UD Solenoid LED on the Transmission Simulator.

Did the UD Solenoid LED on the Transmission Simulator blink on and off?

Yes >> Go To 3

No >> Go To 4

---

3. TRANSMISSION SOLENOID/TRS ASSEMBLY

With the scan tool, continue to actuate the UD Solenoid for the period of 2 minutes with the Transmission Simulator still connected.

After 2 minutes of actuation, with the scan tool, stop the actuation and check for transmission DTCs.

Did the DTC P0765 reset during the actuation test?

Yes >> Go To 4

No >> Replace the Transmission Solenoid/TRS Assembly per the Service Information.
Perform 45RFE/545RFE TRANSMISSION VERIFICATION TEST - VER 1.

---

4. (T59) UD SOLENOID CONTROL CIRCUIT SHORT TO OTHER CIRCUITS

Turn the ignition off to the lock position.

Disconnect the Transmission Simulator, Miller tool #8333.

Disconnect the PCM harness connectors.

Measure the resistance between the (T59) UD Solenoid Control circuit and all other circuits in the Transmission Solenoid/TRS Assembly harness connector.

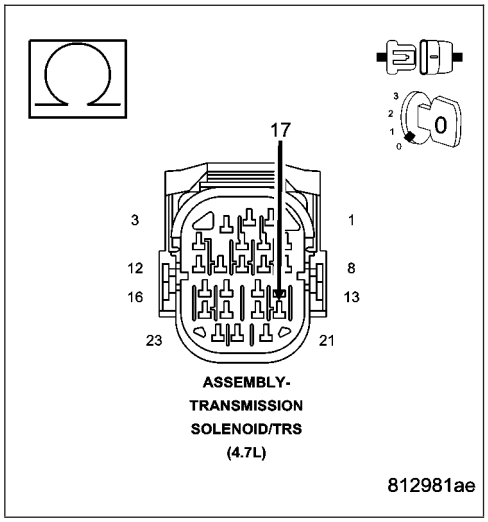

Is the resistance below 5.0 ohms between the (T59) UD Solenoid Control circuit and any other circuit(s) in the Transmission Solenoid/TRS Assembly harness connector?

Yes >> Repair the (T59) UD Solenoid Control circuit for a short to other circuit(s).
Perform 45RFE/545RFE TRANSMISSION VERIFICATION TEST - VER 1.

No >> Go To 5

P0765-UD SOLENOID CIRCUIT (CONTINUED)

5. (T59) UD SOLENOID CONTROL CIRCUIT OPEN

Connect Miller tool #8815 to the PCM C4 harness connector.

CAUTION: Do not probe the PCM harness connectors. Probing the PCM harness connectors will damage the PCM terminals resulting in poor terminal to pin connection. Install Miller tool #8815 to perform diagnosis.

Measure the resistance of the (T59) UD Solenoid Control circuit from the Transmission Solenoid/TRS Assembly harness connector to the appropriate terminal of Miller tool #8815.

Is the resistance above 5.0 ohms?

Yes >> Repair the (T59) UD Solenoid Control circuit for an open.
Perform 45RFE/545RFE TRANSMISSION VERIFICATION TEST - VER 1.

No >> Go To 6

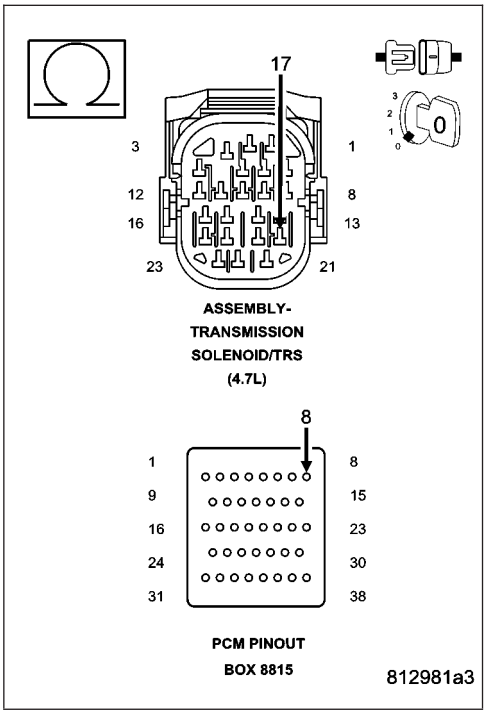

6. (T59) UD SOLENOID CONTROL CIRCUIT SHORT TO GROUND

Measure the resistance between ground and the (T59) UD Solenoid Control circuit.

Is the resistance below 5.0 ohms?

Yes >> Repair the (T59) UD Solenoid Control circuit for a short to ground.
Perform 45RFE/545RFE TRANSMISSION VERIFICATION TEST - VER 1.

No >> Using the schematics as a guide, check the Powertrain Control Module (PCM) terminals for corrosion, damage, or terminal push out. Pay particular attention to all power and ground circuits. If no problems are found, replace the PCM per the Service Information. With the scan tool, perform QUICK LEARN.
Perform 45RFE/545RFE TRANSMISSION VERIFICATION TEST - VER 1.

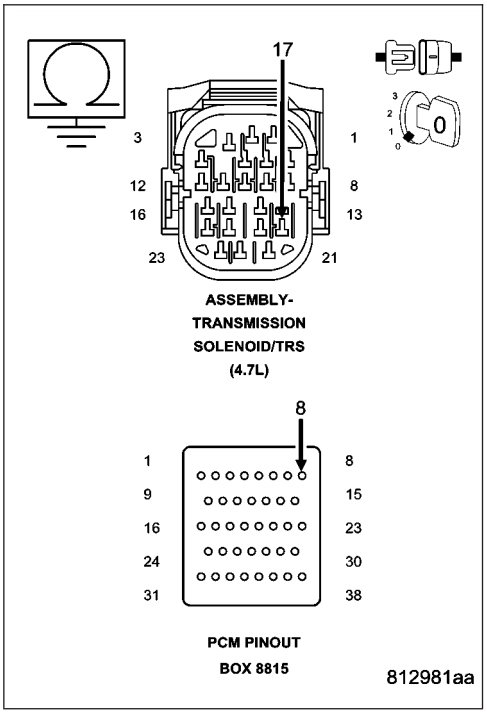

P0770-4C SOLENOID CIRCUIT

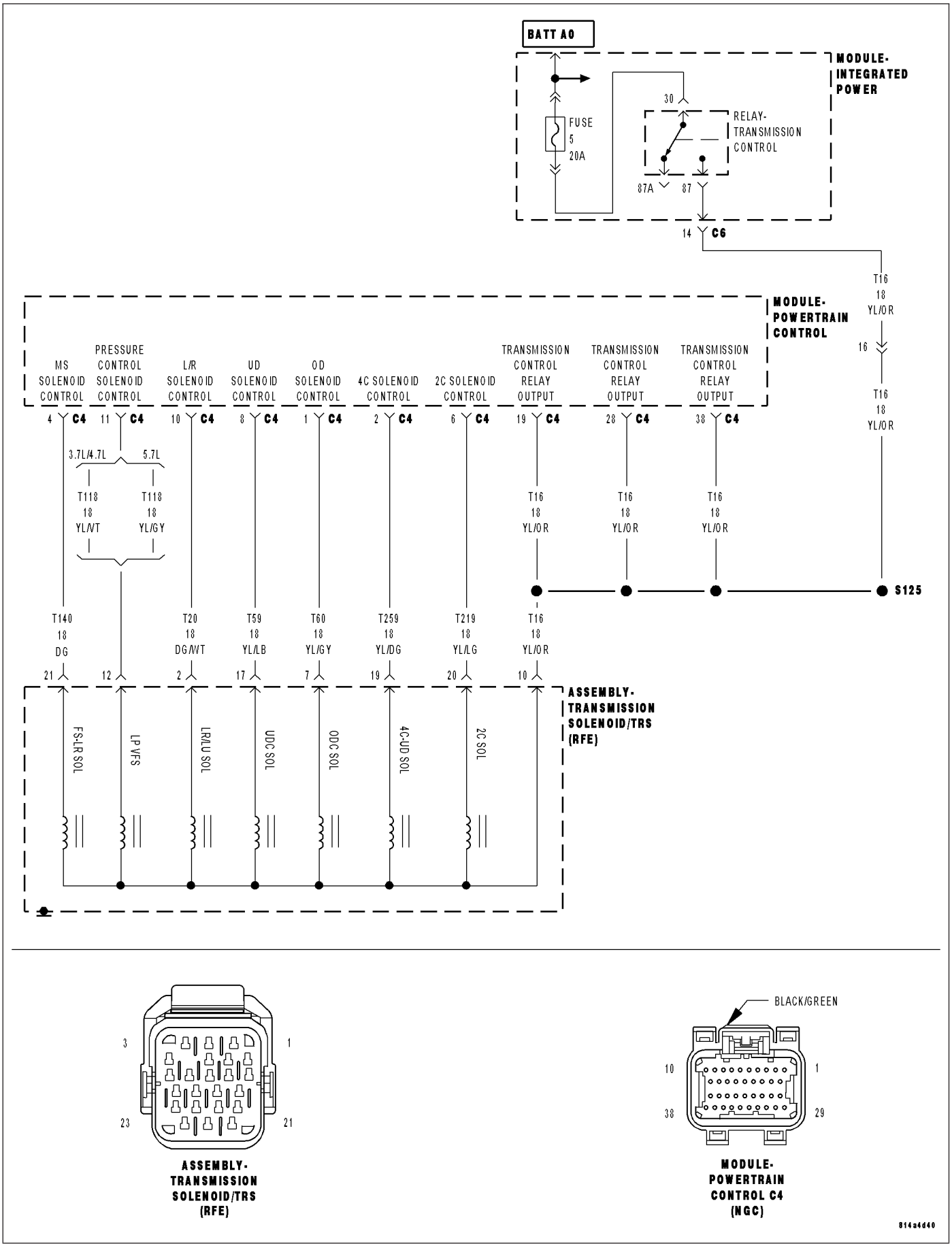

ASSEMBLY-
TRANSMISSION
SOLENOID/TRS
(RFE)

MODULE-
POWERTRAIN
CONTROL C4
(NGC)

814a4d40

P0770-4C SOLENOID CIRCUIT (CONTINUED)

For the Transmission circuit diagram (Refer to 21 - TRANSMISSION/TRANSAXLE/AUTOMATIC - 45RFE/545RFE - SCHEMATICS AND DIAGRAMS).

For a complete wiring diagram **Refer to Section 8W**

- **When Monitored:**
  Initially at power-up, then every 10 seconds thereafter. The solenoid circuits will also be tested immediately after a gear ratio or pressure switch error is detected.
- **Set Condition:**
  After three consecutive solenoid continuity test failures, or one failure if test is run in response to a gear ratio or pressure switch error. **Note: This DTC is strictly an electrical fault and does not apply to any internal transmission failures.**

Possible Causes
RELATED RELAY DTC'S PRESENT
(T259) 4C SOLENOID CONTROL CIRCUIT SHORT TO OTHER CIRCUITS
(T259) 4C SOLENOID CONTROL CIRCUIT OPEN
(T259) 4C SOLENOID CONTROL CIRCUIT SHORT TO GROUND
TRANSMISSION SOLENOID/TRS ASSEMBLY
POWERTRAIN CONTROL MODULE

Always perform the Pre-Diagnostic Troubleshooting procedure before proceeding. (Refer to 21 - TRANSMISSION/TRANSAXLE/AUTOMATIC - 45RFE/545RFE - DIAGNOSIS AND TESTING).

Theory of Operation

The Transmission Control System uses six electronically controlled solenoids that allow hydraulic fluid to be applied to various friction elements (clutches), which enables the gear requested. The continuity of each solenoid circuit is periodically tested. Each inactive solenoid is turned on for a few milliseconds, then off. Each active solenoid is turned off for a few milliseconds, then on. This pulsing of voltage to the solenoid causes an inductive spike which can be sensed by the Transmission Control System. If an inductive spike is not sensed by the Transmission Control System during the continuity check, it is tested again. If the test fails three consecutive times, the appropriate Diagnostic Trouble Code (DTC) is set. If the solenoid test is run in response to a gear ratio or pressure switch error, one failure will result in setting the appropriate DTC. **Note: This DTC is strictly an electrical fault and does not apply to any internal transmission failures.**

Diagnostic Test

1. RELATED TRANSMISSION RELAY DTC'S PRESENT

With the scan tool, check for other transmission DTC's.

Are there any Transmission Control Relay DTC's present?

Yes >> Refer to the Transmission category and perform the appropriate symptom.
Perform 45RFE/545RFE TRANSMISSION VERIFICATION TEST - VER 1.

No >> Go To 2

P0770-4C SOLENOID CIRCUIT (CONTINUED)

2. CHECK TO SEE IF P0770 IS PRESENT

Turn the ignition off to the lock position.

Remove the Starter Relay.

NOTE: Removal of the Starter Relay is to prevent a Transmission, NO RESPONSE, condition and disable the starter.

Install Transmission Simulator, Miller tool #8333.

NOTE: Check connectors - Clean/repair as necessary.

Ignition on, engine not running.

With the scan tool, actuate the 4C Solenoid.

Monitor the 4C Solenoid LED on the Transmission Simulator.

Did the 4C Solenoid LED on the Transmission Simulator blink on and off?

Yes >> Go To 3

No >> Go To 4

---

3. TRANSMISSION SOLENOID/TRS ASSEMBLY

With the scan tool, continue to actuate the 4C Solenoid for the period of 2 minutes with the Transmission Simulator still connected.

After 2 minutes of actuation, with the scan tool, stop the actuation and check for transmission DTCs.

Did the DTC P0770 reset during the actuation test?

Yes >> Go To 4

No >> Replace the Transmission Solenoid/TRS Assembly per the Service Information.
Perform 45RFE/545RFE TRANSMISSION VERIFICATION TEST - VER 1.

---

4. (T259) 4C SOLENOID CONTROL CIRCUIT SHORT TO OTHER CIRCUITS

Turn the ignition off to the lock position.

Disconnect the Transmission Simulator, Miller tool #8333.

Disconnect the PCM harness connectors.

Measure the resistance between the (T259) 4C Solenoid Control circuit and all other circuits in the Transmission Solenoid/TRS Assembly harness connector.

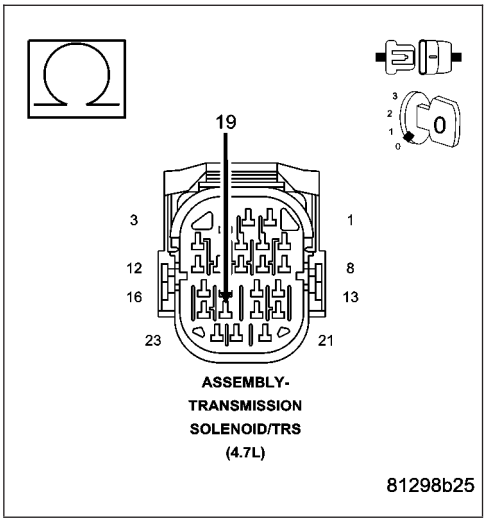

Is the resistance below 5.0 ohms between the (T259) 4C Solenoid Control circuit and any other circuit(s) in the Transmission Solenoid/TRS Assembly harness connector?

Yes >> Repair the (T259) 4C Solenoid Control circuit for a short to other circuit(s).
Perform 45RFE/545RFE TRANSMISSION VERIFICATION TEST - VER 1.

No >> Go To 5

P0770-4C SOLENOID CIRCUIT (CONTINUED)

5. (T259) 4C SOLENOID CONTROL CIRCUIT OPEN

Connect Miller tool #8815 to the PCM C4 harness connector.

CAUTION: Do not probe the PCM harness connectors. Probing the PCM harness connectors will damage the PCM terminals resulting in poor terminal to pin connection. Install Miller special tool #8815 to perform diagnosis.

Measure the resistance of the (T259) 4C Solenoid Control circuit from the Transmission Solenoid/TRS Assembly harness connector to the appropriate terminal of Miller tool #8815.

Is the resistance above 5.0 ohms?

Yes >> Repair the (T259) 4C Solenoid Control circuit for an open.
Perform 45RFE/545RFE TRANSMISSION VERIFICATION TEST - VER 1.

No >> Go To 6

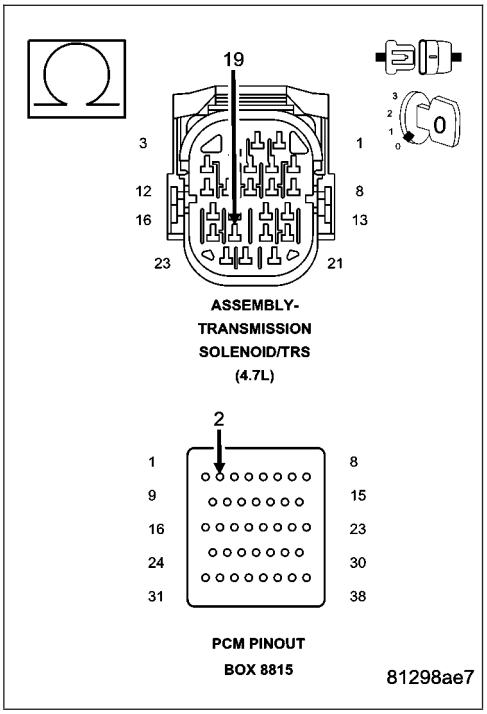

6. (T259) 4C SOLENOID CONTROL CIRCUIT SHORT TO GROUND

Measure the resistance between ground and the (T259) 4C Solenoid Control circuit.

Is the resistance below 5.0 ohms?

Yes >> Repair the (T259) 4C Solenoid Control circuit for a short to ground.
Perform 45RFE/545RFE TRANSMISSION VERIFICATION TEST - VER 1.

No >> Using the schematics as a guide, check the Powertrain Control Module (PCM) terminals for corrosion, damage, or terminal push out. Pay particular attention to all power and ground circuits. If no problems are found, replace the PCM per the Service Information. With the scan tool, perform QUICK LEARN.
Perform 45RFE/545RFE TRANSMISSION VERIFICATION TEST - VER 1.

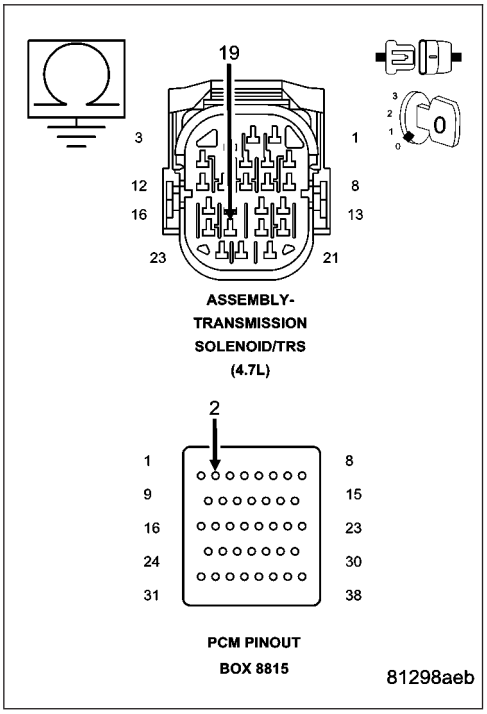

P0841-LR PRESSURE SWITCH RATIONALITY

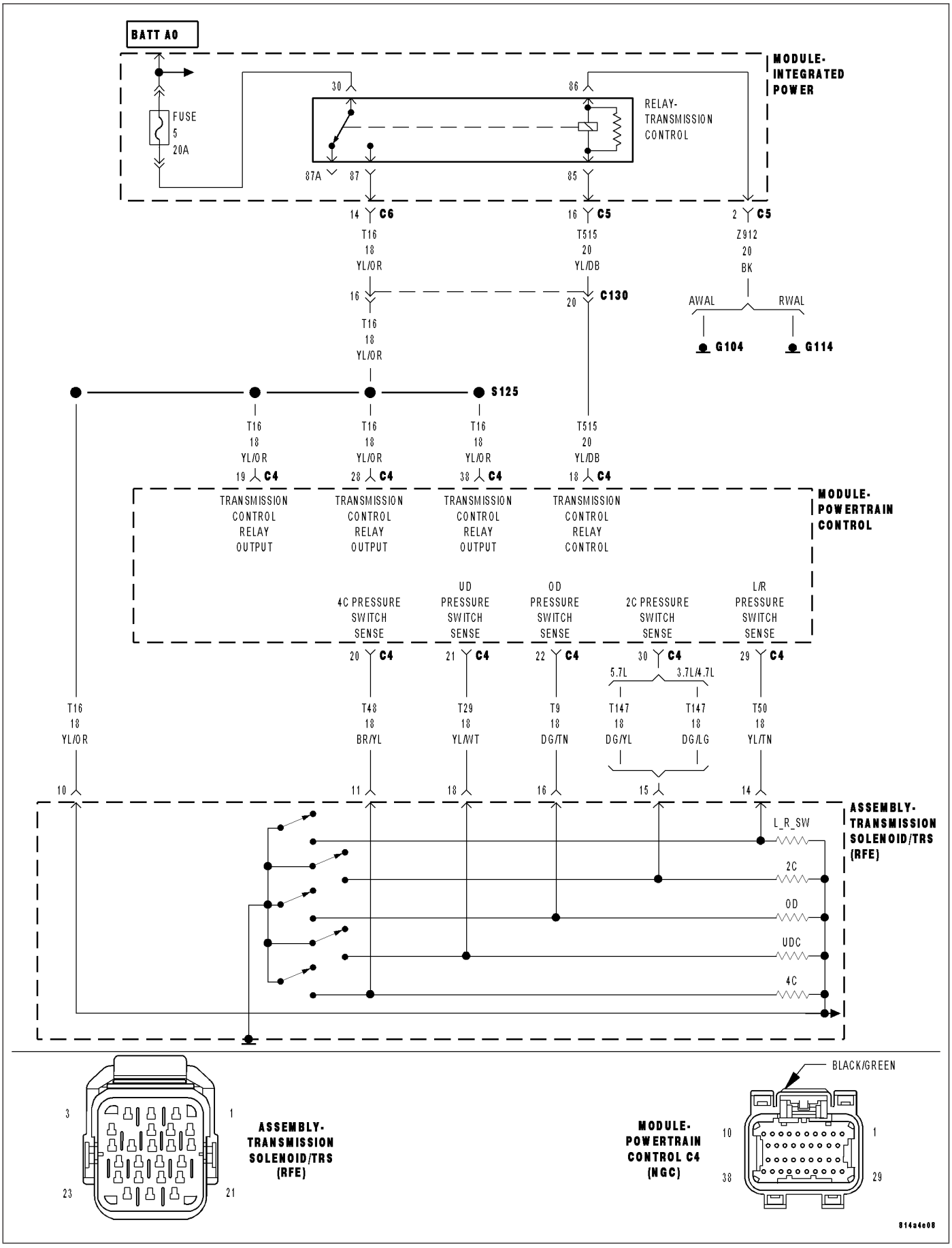

P0841-LR PRESSURE SWITCH RATIONALITY (CONTINUED)

For the Transmission circuit diagram (Refer to 21 - TRANSMISSION/TRANSAXLE/AUTOMATIC - 45RFE/545RFE - SCHEMATICS AND DIAGRAMS).

For a complete wiring diagram **Refer to Section 8W**

- **When Monitored:**
  Continuously with the ignition on and engine running.
- **Set Condition:**
  The DTC will set if the LR Pressure Switch reads open or closed at the wrong time in a given gear.

Possible Causes
LOSS OF PRIME AND/OR TRANSMISSION CONTROL RELAY DTC PRESENT
LOW FLUID LEVEL
LOW LINE PRESSURE
REVERSE CARRIER SNAP RING DISLODGED
CRACKED OR MISINSTALLED PRIMARY OIL FILTER OR FILTER SEAL
STICKING MAIN REGULATOR VALVE IN PUMP VALVE BODY
NO. 1 CHECK BALL CUT OR DAMAGED
WIRING AND CONNECTORS
(T50) LR PRESSURE SWITCH SENSE CIRCUIT OPEN
(T50) LR PRESSURE SWITCH SENSE CIRCUIT SHORT TO GROUND
(T50) LR PRESSURE SWITCH SENSE CIRCUIT SHORT TO VOLTAGE
TRANSMISSION SOLENOID/TRS ASSEMBLY
POWERTRAIN CONTROL MODULE

Always perform the Pre-Diagnostic Troubleshooting procedure before proceeding. (Refer to 21 - TRANSMISSION/TRANSAXLE/AUTOMATIC - 45RFE/545RFE - DIAGNOSIS AND TESTING).

Theory of Operation

The Transmission system uses five pressure switches to monitor the fluid pressure in the LR, 2C, 4C, UD, and OD clutch circuits. The pressure switches are continuously monitored for the correct states in each gear as shown.

GEAR	L/R	2C	4C	UD	OD
REVERSE	OPEN	OPEN	OPEN	OPEN	OPEN
P/N	CLOSED**	OPEN	OPEN	OPEN	OPEN
1ST	CLOSED*	OPEN	OPEN	CLOSED	OPEN
2ND	OPEN	CLOSED	OPEN	CLOSED	OPEN
2ND PRIME	OPEN	OPEN	CLOSED	CLOSED	OPEN
3RD	OPEN	OPEN	OPEN	CLOSED	CLOSED
4TH	OPEN	OPEN	CLOSED	OPEN	CLOSED
5TH	OPEN	CLOSED	OPEN	OPEN	CLOSED

*L/R is closed if output speed is below 100 rpm in Drive and Manual 2. L/R is closed in Manual 1.

**May be open when rolling in Neutral or at low oil temperatures.

P0841-LR PRESSURE SWITCH RATIONALITY (CONTINUED)

Diagnostic Test

1. OTHER RELATED DTC'S PRESENT

Ignition on, engine not running.

With the scan tool, check for other transmission DTC's.

Are there any Loss of Prime and/or Transmission Control Relay related DTC's present?

Yes >> Refer to the Transmission category and perform the appropriate symptom. If the DTC P0944 is present, perform its respective test first.

Perform 45RFE/545RFE TRANSMISSION VERIFICATION TEST - VER 1.

No >> Go To 2

---

2. CONDITION P0841 PRESENT

With the scan tool, check the EATX DTC EVENT DATA for P0841.

NOTE: Make sure to record all EATX DTC EVENT DATA stored in the scan tool for future reference in this test procedure.

Does the EATX DTC EVENT DATA show the DTC P0841?

Yes >> Go To 3

No >> Refer to the Symptom Catagory and perform diagnostics for the DTC reported in the EATX DTC EVENT DATA.

---

3. DTC SET IN REVERSE

Does the EATX DTC EVENT DATA show the DTC P0841 set while in Reverse?

Yes >> Go To 10

No >> Go To 4

---

4. LR PRESSURE SWITCH CLOSED

Does the EATX DTC EVENT DATA show the LR Pressure Switch reading CLOSED when the DTC P0841 was set?

Yes >> Go To 5

No >> Go To 14

P0841-LR PRESSURE SWITCH RATIONALITY (CONTINUED)

5. PCM AND WIRING

Turn the ignition off to the lock position.

Remove the Starter Relay.

NOTE: Removal of the Starter Relay is to prevent a Transmission, NO RESPONSE, condition and disable the starter.

Install the Transmission Simulator, Miller tool #8333.

NOTE: Check connectors - Clean/repair as necessary.

Ignition on, engine not running.

Turn the Pressure Switch selector to LR on the Transmission Simulator.

With the scan tool, monitor the LR Pressure Switch state while pressing the Pressure Switch Test button on the Transmission Simulator.

Did the LR Pressure Switch state change from open to closed while pressing the Pressure Switch Test button on the Transmission Simulator?

Yes >> Go To 6

No >> Go To 10

---

6. POOR WIRING AND CONNECTIONS

Using the schematics as a guide, inspect the wiring and connectors specific to this circuit.

Wiggle the wires while checking for shorted and open circuits.

Were there any problems found?

Yes >> Repair as necessary.
Perform 45RFE/545RFE TRANSMISSION VERIFICATION TEST - VER 1.

No >> Go To 7

---

7. DTC SET IN FIRST GEAR

With the EATX DTC EVENT DATA recorded earlier, check what gear the transmission was in when the DTC P0841 was set.

Does the EATX DTC EVENT DATA show the Present Gear as first gear when the DTC P0841 was set ?

Yes >> Go To 8

No >> Replace the Transmission Solenoid/TRS Assembly per the Service Information.
Perform 45RFE/545RFE TRANSMISSION VERIFICATION TEST - VER 1.

---

8. NO. 1 CHECK BALL CUT OR DAMAGED

Turn the ignition off to the lock position.

Remove the Transmission Valve Body per the Service Information.

Check the No. 1 Check Ball for any possible cuts or damage.

Is the No. 1 Check Ball cut or damaged?

Yes >> Replace the No. 1 Check Ball and check for clutch debris in the transmission oil pan. If there is excessive debris, perform internal repairs to the LR Clutch assembly. Refer to the Service Information for proper repair procedures.
Perform 45RFE/545RFE TRANSMISSION VERIFICATION TEST - VER 1.

No >> Go To 9

P0841-LR PRESSURE SWITCH RATIONALITY (CONTINUED)

9. REVERSE CARRIER SNAP RING DISLODGED OR TRANSMISSION SOLENOID/TRS ASSEMBLY

Looking through the windows in the bottom of the case, check whether the snap ring at the front of the Reverse (center) Carrier has dislodged.

NOTE: It may be necessary to pry the Input Annulus Gear Shell rearward to check this snap ring.

Is the Reverse Carrier Snap Ring dislodged?

Yes >> Repair as necessary.
Perform 45RFE/545RFE TRANSMISSION VERIFICATION TEST - VER 1.

No >> Replace the Transmission Solenoid/TRS Assembly per the Service Information.
Perform 45RFE/545RFE TRANSMISSION VERIFICATION TEST - VER 1.

---

10. (T50) LR PRESSURE SWITCH SENSE CIRCUIT OPEN

Turn the ignition off to the lock position.

Disconnect the Transmission Simulator, Miller tool #8333 if connected in a previous step or disconnect the Transmission Solenoid /TRS Assembly harness connector.

Disconnect the PCM C4 harness connector and connect Miller tool #8815.

NOTE: Check connectors - Clean/repair as necessary.

CAUTION: Do not probe the PCM harness connectors. Probing the PCM harness connectors will damage the PCM terminals resulting in poor terminal to pin connection. Install Miller tool #8815 to perform diagnosis.

Measure the resistance of the (T50) LR Pressure Switch Sense circuit from the Solenoid/TRS Assembly harness connector to the appropriate terminal of the Miller tool #8815.

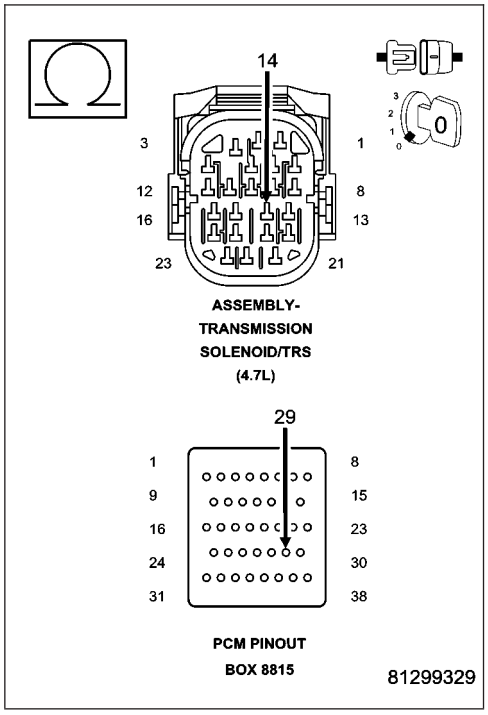

Is the resistance above 5.0 ohms?

Yes >> Repair the (T50) LR Pressure Switch Sense circuit for an open.
Perform 45RFE/545RFE TRANSMISSION VERIFICATION TEST - VER 1.

No >> Go To 11

P0841-LR PRESSURE SWITCH RATIONALITY (CONTINUED)

11. (T50) LR PRESSURE SWITCH SENSE CIRCUIT SHORT TO GROUND

Measure the resistance between ground and the (T50) LR Pressure Switch Sense circuit.

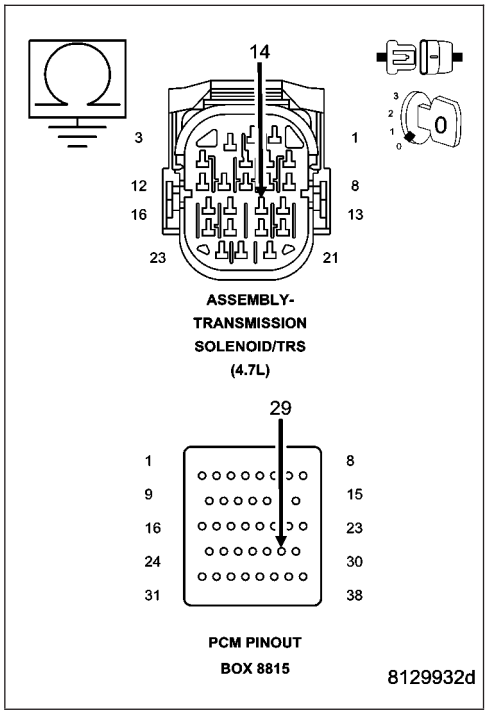

Is the resistance below 5.0 ohms?

Yes >> Repair the (T50) LR Pressure Switch Sense circuit for a short to ground.
Perform 45RFE/545RFE TRANSMISSION VERIFICATION TEST - VER 1.

No >> Go To 12

---

12. PCM POWERS AND GROUNDS

Using the schematics as a guide, check the Powertrain Control Module (PCM) terminals for corrosion, damage, or terminal push out. Pay particular attention to all power and ground circuits.

Were there any problems found?

Yes >> Repair as necessary.
Perform 45RFE/545RFE TRANSMISSION VERIFICATION TEST - VER 1.

No >> Go To 13

---

13. ROAD TEST THE VEHICLE

With the scan tool, clear the DTC and road test the vehicle.

Try to duplicate the conditions in which the DTC originally set using the EATX DTC EVENT DATA recorded earlier.

Did the DTC P0841 reset?

Yes >> Replace the PCM per the Service Information. With the scan tool, perform QUICK LEARN.
Perform 45RFE/545RFE TRANSMISSION VERIFICATION TEST - VER 1.

No >> Go To 17

P0841-LR PRESSURE SWITCH RATIONALITY (CONTINUED)

14. LOW LINE PRESSURE

In the EATX DTC EVENT DATA recorded earlier, compare the Line Pressure and the Desired Line Pressure.

Is the Line Pressure less than 40 psi, and significantly below the Desired Line Pressure?

Yes >> Repair as necessary to correct low line pressure. Check for low fluid level. Check the Primary Oil Filter seal for a split, crack, or improperly installed. Refer to the Service Information for the proper installation procedure. If the fluid level and Primary Oil Filter are OK, check the Main Regulator Valve in the Oil Pump per the Service Information.
Perform 45RFE/545RFE TRANSMISSION VERIFICATION TEST - VER 1.

No >> Go To 15

---

15. (T50) LR PRESSURE SWITCH SENSE CIRCUIT SHORT TO OTHER CIRCUITS

Turn the ignition off to the lock position.

Disconnect the Transmission Solenoid/TRS Assembly harness connector.

Disconnect all PCM harness connectors.

Measure the resistance between the (T50) LR Pressure Switch Sense circuit and all other circuits in the Transmission Solenoid/TRS Assembly harness connector.

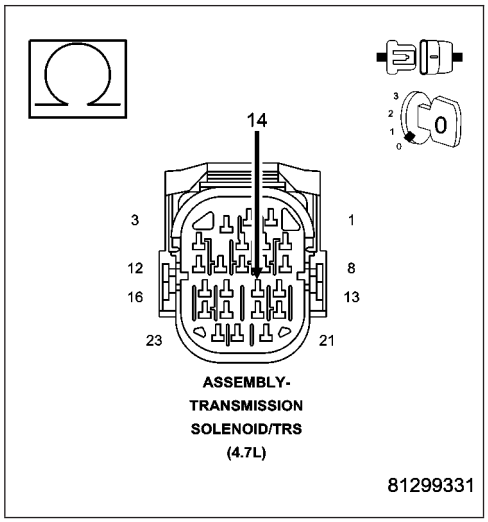

Is the resistance below 5.0 ohms between the (T50) LR Pressure Switch Sense circuit and all other circuit(s) in the Transmission Solenoid/TRS Assembly harness connector?

Yes >> Repair the (T50) LR Pressure Switch Sense circuit for a short to other circuit(s).
Perform 45RFE/545RFE TRANSMISSION VERIFICATION TEST - VER 1.

No >> Go To 16

---

16. ROAD TEST THE VEHICLE

With the scan tool, clear the DTC and road test the vehicle.

Try to duplicate the conditions in which the DTC originally set using the EATX DTC EVENT DATA recorded earlier.

Did the DTC P0841 reset?

Yes >> Replace the Transmission Solenoid/TRS Assembly per the Service Information.
Perform 45RFE/545RFE TRANSMISSION VERIFICATION TEST - VER 1.

No >> Go To 17

P0841-LR PRESSURE SWITCH RATIONALITY (CONTINUED)

17. INTERMITTENT WIRING AND CONNECTORS

The conditions necessary to set this DTC are not present at this time.
Using the schematics as a guide, inspect the wiring and connectors specific to this circuit.
Wiggle the wires while checking for shorted and open circuits.
With the scan tool, check the EATX DTC EVENT DATA to help identify the conditions in which the DTC was set.

Were there any problems found?

Yes >> Repair as necessary.
Perform 45RFE/545RFE TRANSMISSION VERIFICATION TEST - VER 1.

No >> Test Complete.

P0845-2C HYDRAULIC PRESSURE TEST

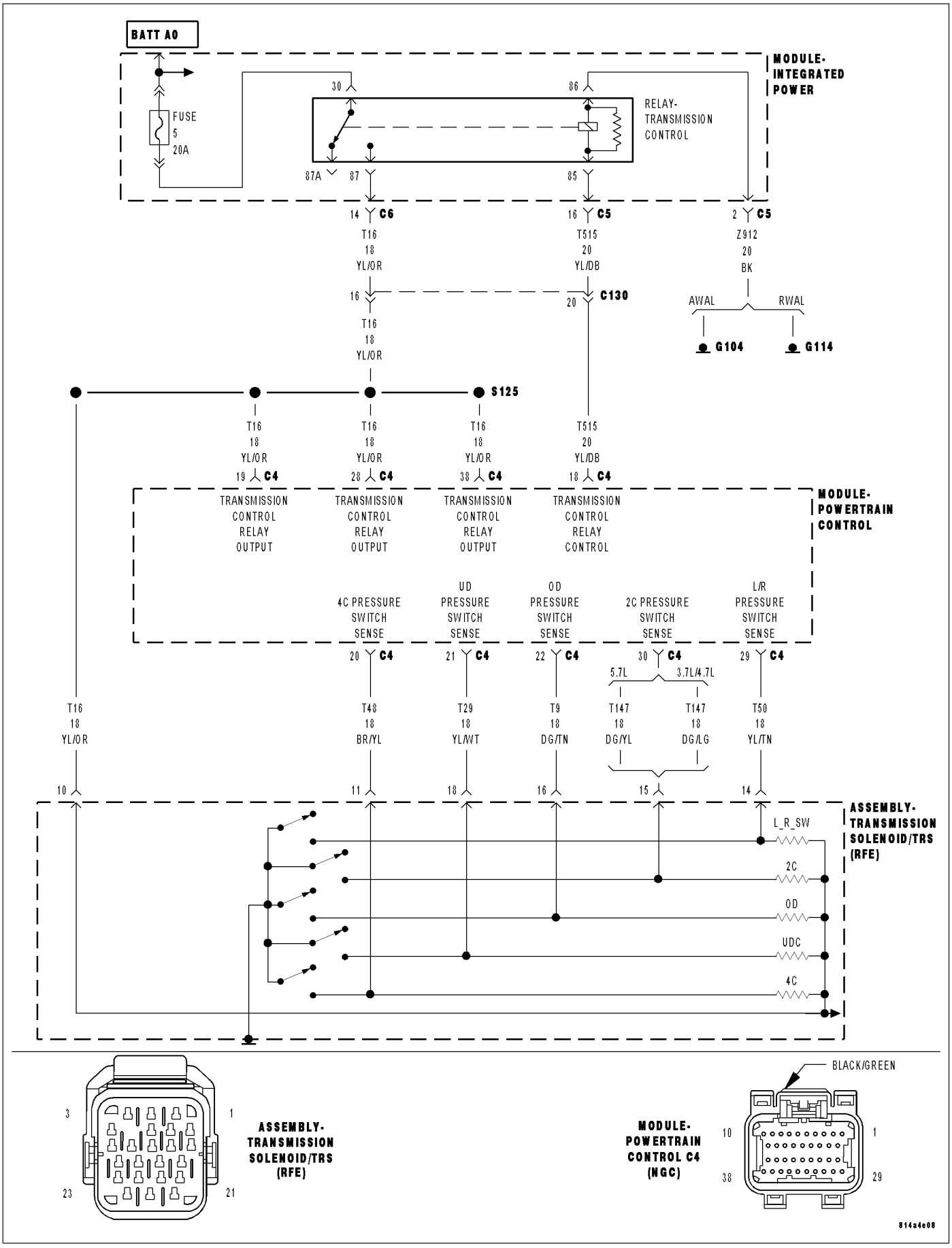

P0845-2C HYDRAULIC PRESSURE TEST (CONTINUED)

For the Transmission circuit diagram (Refer to 21 - TRANSMISSION/TRANSAXLE/AUTOMATIC - 45RFE/545RFE - SCHEMATICS AND DIAGRAMS).

For a complete wiring diagram **Refer to Section 8W**.

- **When Monitored:**
  In any forward gear with engine speed above 1000 RPM shortly after a shift and every minute thereafter.
- **Set Condition:**
  After a shift into a forward gear, with engine speed above 1000 RPM, the PCM momentarily turns on element pressure to the Clutch circuits that don't have pressure to identify the correct Pressure Switch closes. If the Pressure Switch does not close 2 times, the DTC sets.

Possible Causes
LINE PRESSURE SENSOR
TRANSMISSION FLUID CONTAMINATION
RELATED DTC'S PRESENT
TRANSMISSION SOLENOID/TRS ASSEMBLY
EXCESSIVE DEBRIS IN OIL PAN
POOR LINE PRESSURE SENSOR CONNECTION
(T147) 2C PRESSURE SWITCH SENSE CIRCUIT OPEN
TRANSMISSION CONTROL RELAY DTCS PRESENT
(T147) 2C PRESSURE SWITCH SENSE CIRCUIT OPEN
(F856) 5-VOLT SUPPLY CIRCUIT OPEN
(T147) 2C PRESSURE SWITCH SENSE CIRCUIT SHORT TO GROUND
(F856) 5-VOLT SUPPLY CIRCUIT SHORT TO GROUND
(T147) 2C PRESSURE SWITCH SENSE CIRCUIT SHORT TO VOLTAGE
TRANSMISSION SOLENOID/TRS ASSEMBLY
INTERNAL TRANSMISSION
POWERTRAIN CONTROL MODULE

Always perform the Pre-Diagnostic Troubleshooting procedure before proceeding. (Refer to 21 - TRANSMISSION/TRANSAXLE/AUTOMATIC - 45RFE/545RFE - DIAGNOSIS AND TESTING).

Theory of Operation

The Transmission Control System tests the pressure switches when they are off. The test verifies that the switches are operational (They will close with pressure applied). The Transmission Control System verifies that the switch closes when the corresponding element is applied. If a switch fails to close, it is re-tested. If it fails the second test, the DTC will set, the MIL will illuminate and the transmission system will default to the orderly Shutdown routine.

Diagnostic Test

1. DETERMINING IF RELATED DTC'S ARE PRESENT

With the scan tool, check for other transmission DTC's

Is there any Loss of Prime, Transmission Control Relay, and/or Line Pressure Sensor DTCs present?

Yes >> Refer to the Transmission category and perform the appropriate symptom. If the DTC, P0944-LOSS OF PRIME is present, perform its respective test first.
Perform 45RFE/545RFE TRANSMISSION VERIFICATION TEST - VER 1.

No >> Go To 2

P0845-2C HYDRAULIC PRESSURE TEST (CONTINUED)

2. DTC P0755 PRESENT

With the scan tool, check Transmission DTCs.

Is the DTC P0755 also present?

Yes >> Refer to the symptom list and perform diagnostics for P0755–2C SOLENOID CIRCUIT.

No >> Go To 3

---

3. DTCS P0732, P0735 AND/OR P0846 PRESENT

With the scan tool, check for other transmission DTC's

Are the DTCs P0732, P0735, and/or P0846 present also?

Yes >> Go To 12

No >> Go To 4

---

4. CHECK TO SEE IF DTC P0845 IS CURRENT

With the scan tool, Check the STARTS SINCE SET counter for P0845.

NOTE: This counter only applies to the last DTC set.

Is the STARTS SINCE SET counter 2 or less?

Yes >> Go To 5

No >> Go To 17

---

5. LINE PRESSURE STAYS THE SAME

Start the engine.

Warm the transmission to 82° C or 180° F.

Firmly apply the brakes.

With the scan tool, monitor the Line Pressure during the following step.

Move the shift lever to each gear position, pausing momentarily in each position and record the line pressure reading. Allow the pressure to stabilize for at least 5 seconds in each range.

Did the line pressure remain at a steady value between 585 and 655 kPa or 85 and 95 PSI in each position?

Yes >> Go To 6

No >> Go To 10

---

6. CHECK LINE PRESSURE SENSOR CONNECTION

Ignition on, **engine not running.**

With the scan tool, monitor the Line Pressure while firmly pushing the Transmission Line Pressure Sensor connector inwards towards the Transmission.

Did the Line Pressure reading on the scan tool change to about 207 kPa or 30 PSI when the connector was pushed inward?

Yes >> Disconnect and properly reconnect the Line Pressure Sensor connector. Inspect terminals and repair as necessary.

Perform 45RFE/545RFE TRANSMISSION VERIFICATION TEST - VER 1.

No >> Go To 7

P0845-2C HYDRAULIC PRESSURE TEST (CONTINUED)

7. LINE PRESSURE SENSOR OPERATION

Turn the ignition off to the lock position.

Remove the Starter Relay.

NOTE: Removal of the Starter Relay is to prevent a Transmission, NO RESPONSE, condition and disable the starter.

Install the Transmission Simulator, Miller tool #8333.

NOTE: Check connectors - Clean/repair as necessary.

With the Transmission Simulator select the ″OFF″ position on the ″Input/Output Speed″ switch.

Ignition on, engine not running.

With the scan tool, monitor the Line Pressure while turning the Pressure Switch selector to each of the 3 line pressure positions on the Transmission Simulator.

NOTE: All three scan tool Line Pressure readings should be steady and ±14 kPa or 2.0 PSI of the reading specified on the Transmission Simulator.

Did the scan tool Line Pressure readings match the specified readings on the Transmission Simulator and remain steady in all three positions?

Yes >> Replace the Line Pressure Sensor per the Service Information.
Perform 45RFE/545RFE TRANSMISSION VERIFICATION TEST - VER 1.

No >> Go To 8

---

8. (F856) 5-VOLT SUPPLY CIRCUIT OPEN

Turn the ignition off to the lock position.

Disconnect Transmission Simulator.

Disconnect the PCM C1 harness connector and connect Miller tool #8815.

CAUTION: Do not probe the PCM harness connectors. Probing the PCM harness connectors will damage the PCM terminals resulting in poor terminal to pin connection. Install Miller tool #8815 to perform diagnosis.

Measure the resistance of the (F856) 5-volt Supply circuit from the Line Pressure Sensor harness connector to the appropriate terminal of Miller tool #8815.

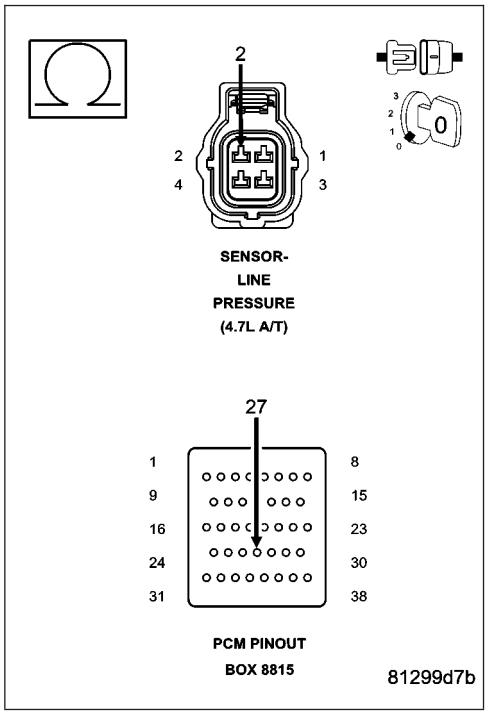

Is the resistance above 5.0 ohms?

Yes >> Repair the (F856) 5-volt Supply circuit for an open.
Perform 45RFE/545RFE TRANSMISSION VERIFICATION TEST - VER 1.

No >> Go To 9

P0845-2C HYDRAULIC PRESSURE TEST (CONTINUED)

9. (F856) 5-VOLT SUPPLY CIRCUIT SHORT TO GROUND

Measure the resistance between ground and the (F856) 5-volt Supply circuit.

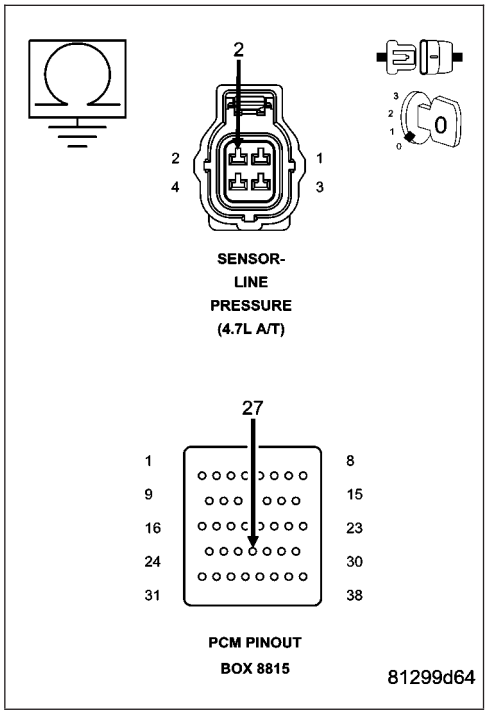

Is the resistance below 5.0 ohms?

Yes >> Repair the (F856) 5-volt Supply circuit for a short to ground.
Perform 45RFE/545RFE TRANSMISSION VERIFICATION TEST - VER 1.

No >> Using the schematics as a guide, check the Powertrain Control Module (PCM) terminals for corrosion, damage, or terminal push out. Pay particular attention to all power and ground circuits. If no problems are found, replace the PCM per the Service Information. With the scan tool, perform QUICK LEARN.
Perform 45RFE/545RFE TRANSMISSION VERIFICATION TEST - VER 1.

---

10. COMPARE SCAN TOOL TO PRESSURE GAUGE

Turn the ignition off to the lock position.

Connect the Line Pressure Adapter, Miller tool #8259 and 0-300 psi Test Gauge, Miller tool #C-3293-SP. Refer to the Service Information for proper installation procedure.

CAUTION: Apply parking brake.

Start the engine.

In the following steps, compare the scan tool Line Pressure to the Pressure Gauge readings in each gear.

CAUTION: Do not overheat transmission.

With the gear selector in park, raise the RPM to 1500, and compare line pressure readings.

Firmly apply the brakes, move the gear selector into reverse, raise the RPM to 1500, and compare the line pressure readings.

Firmly apply the brakes, move the gear selector into drive, raise the RPM to 1500, and compare the line pressure readings.

Did the scan tool Line Pressure readings match the Pressure Gauge readings ± 10 psi?

Yes >> Go To 11

No >> Replace the Line Pressure Sensor per the Service Information.
Perform 45RFE/545RFE TRANSMISSION VERIFICATION TEST - VER 1.

P0845-2C HYDRAULIC PRESSURE TEST (CONTINUED)

11. WIRING AND CONNECTORS

Turn the ignition off to the lock position.

Remove the Starter Relay.

NOTE: Failure to remove the Starter Relay can cause a Transmission - No Response condition.

Remove the Line Pressure Adapter, Miller tool #8259 and 0-300 psi Test Gauge, Miller tool #C-3293-SP.

Install the Transmission Simulator, Miller tool #8333.

On the Transmission Simulator, turn the Pressure Switch selector switch to 2C.

Ignition on, engine not running.

With the scan tool, monitor the 2C Pressure Switch state while pressing and holding the Pressure Switch test button and wiggling the wire harness and connectors that pertain to the 2C Pressure Switch.

Did the 2C Pressure Switch state change to closed and remain closed while wiggling the wires?

Yes >> Go To 12

No >> Go To 14

---

12. CHECK FOR EXCESSIVE DEBRIS

Turn the ignition off to the lock position.

Remove the Transmission Simulator, Miller tool #8333.

Remove and inspect the Transmission Oil Pan per the Service Information.

Does the Transmission Oil Pan contain excessive debris or contamination?

Yes >> Repair the cause of the excessive debris in the Transmission Oil Pan. Refer to the Service Information for the proper procedures.

Perform 45RFE/545RFE TRANSMISSION VERIFICATION TEST - VER 1.

No >> Go To 13

---

13. CHECK 2C HYDRAULIC CLUTCH CIRCUIT

Remove the Valve Body and air check the 2C clutch hydraulic circuit, in the 2C/4C clutch retainer, for leakage per the Service Information.

NOTE: The 2C hydraulic clutch circuit contains a small bleed orifice, a small amount of air leakage is normal.

Was there excessive air leakage noticed during the air check?

Yes >> Repair as necessary. Check the 2C clutch piston, piston seals and bleed orifice assembly.

Perform 45RFE/545RFE TRANSMISSION VERIFICATION TEST - VER 1.

No >> Disassemble and inspect the Valve Body and repair as necessary. Inspect the 2C Accumulator piston and seals. Check for an extra check ball downstream from the #7 check ball pocket and repair as necessary. If no problems are found in the Valve Body, replace the Transmission Solenoid/TRS Assembly per the Service Information.

Perform 45RFE/545RFE TRANSMISSION VERIFICATION TEST - VER 1.

P0845-2C HYDRAULIC PRESSURE TEST (CONTINUED)

14. (T147) 2C PRESSURE SWITCH SENSE CIRCUIT OPEN

Turn the ignition off to the lock position.

Remove the Transmission Simulator, Miller tool #8333.

Disconnect the PCM C4 harness connector and connect Miller tool #8815.

Measure the resistance of the (T147) 2C Pressure Switch Sense circuit from the Transmission Solenoid/TRS Assembly harness connector to the appropriate terminal of Miller tool #8815.

Is the resistance above 5.0 ohms?

Yes >> Repair the (T147) 2C Pressure Switch Sense circuit for an open.

Perform 45RFE/545RFE TRANSMISSION VERIFICATION TEST - VER 1.

No >> Go To 15

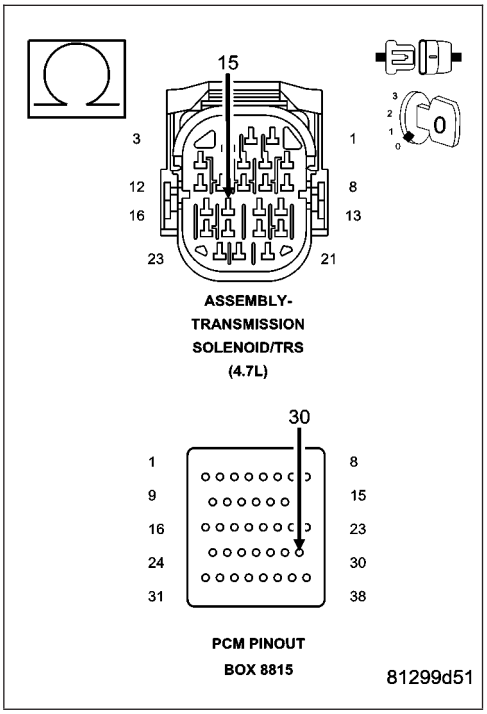

15. (T147) 2C PRESSURE SWITCH SENSE CIRCUIT SHORT TO GROUND

Measure the resistance between ground and the (T147) 2C Pressure Switch Sense circuit.

Is the resistance below 5.0 ohms?

Yes >> Repair the (T147) 2C Pressure Switch Sense circuit for a short to ground.

Perform 45RFE/545RFE TRANSMISSION VERIFICATION TEST - VER 1.

No >> Go To 16

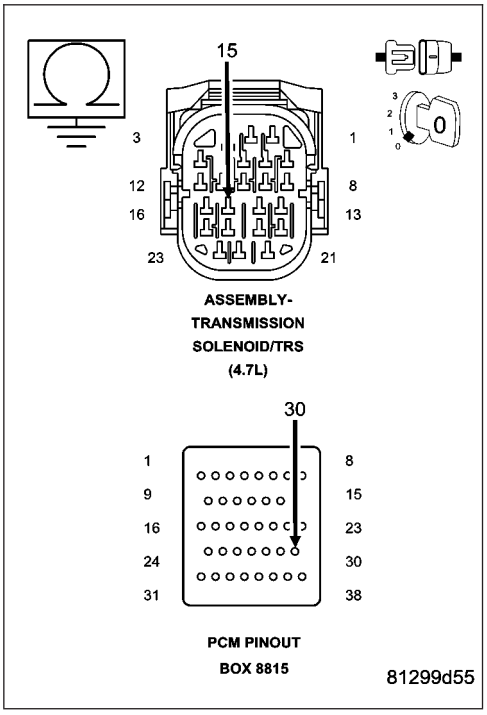

P0845-2C HYDRAULIC PRESSURE TEST (CONTINUED)

16. (T147) 2C PRESSURE SWITCH SENSE CIRCUIT SHORT TO OTHER CIRCUITS

Disconnect all PCM harness connectors.

Disconnect the Transmission Solenoid/TRS Assembly harness connector.

NOTE: Make sure the Transmission Solenoid/TRS Assembly harness connector is disconnected.

NOTE: Check connectors - Clean/repair as necessary.

Measure the resistance between the (T147) 2C Pressure Switch Sense circuit and all other circuits in the Transmission Solenoid/TRS Assembly harness connector.

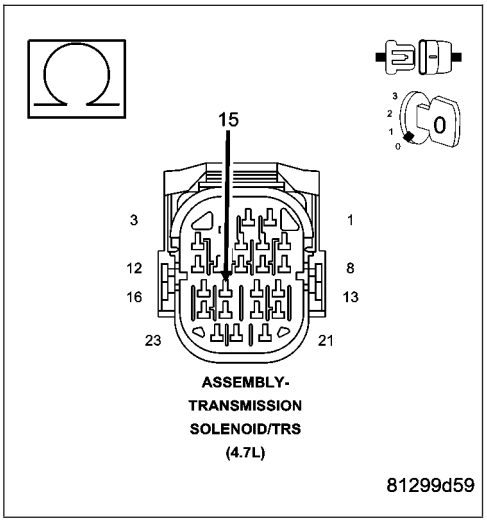

Is the resistance below 5.0 ohms between the (T147) 2C Pressure Switch Sense circuit and any other circuit(s) in the Transmission Solenoid/TRS Assembly harness connector?

Yes >> Repair the (T147) 2C Pressure Switch Sense circuit for a short to other circuit(s).
Perform 45RFE/545RFE TRANSMISSION VERIFICATION TEST - VER 1.

No >> Using the schematics as a guide, check the Powertrain Control Module (PCM) terminals for corrosion, damage, or terminal push out. Pay particular attention to all power and ground circuits. If no problems are found, replace the PCM per the Service Information. With the scan tool, perform QUICK LEARN.
Perform 45RFE/545RFE TRANSMISSION VERIFICATION TEST - VER 1.

---

17. INTERMITTENT WIRING AND CONNECTORS

The conditions necessary to set this DTC are not present at this time.

Using the schematics as a guide, inspect the wiring and connectors specific to this circuit.

Wiggle the wires while checking for shorted and open circuits.

With the scan tool, check the EATX DTC EVENT DATA to help identify the conditions in which the DTC was set.

If the EATX DTC EVENT DATA shows the DTC P0845 set while the Line Pressure was significantly below the Desired Line Pressure reading, check for causes of low line pressure (low fluid level, broken or mis-installed primary oil filter or filter seal, sticking Main Regulator Valve in the Pump Valve Body etc.). If the data shows the DTC set while the Line Pressure reading was significantly higher than the Desired Line Pressure, check the Line Pressure Sensor and related wiring.

Where there any problems found?

Yes >> Repair as necessary.
Perform 45RFE/545RFE TRANSMISSION VERIFICATION TEST - VER 1.

No >> Test Complete.

P0846-2C PRESSURE SWITCH RATIONALITY

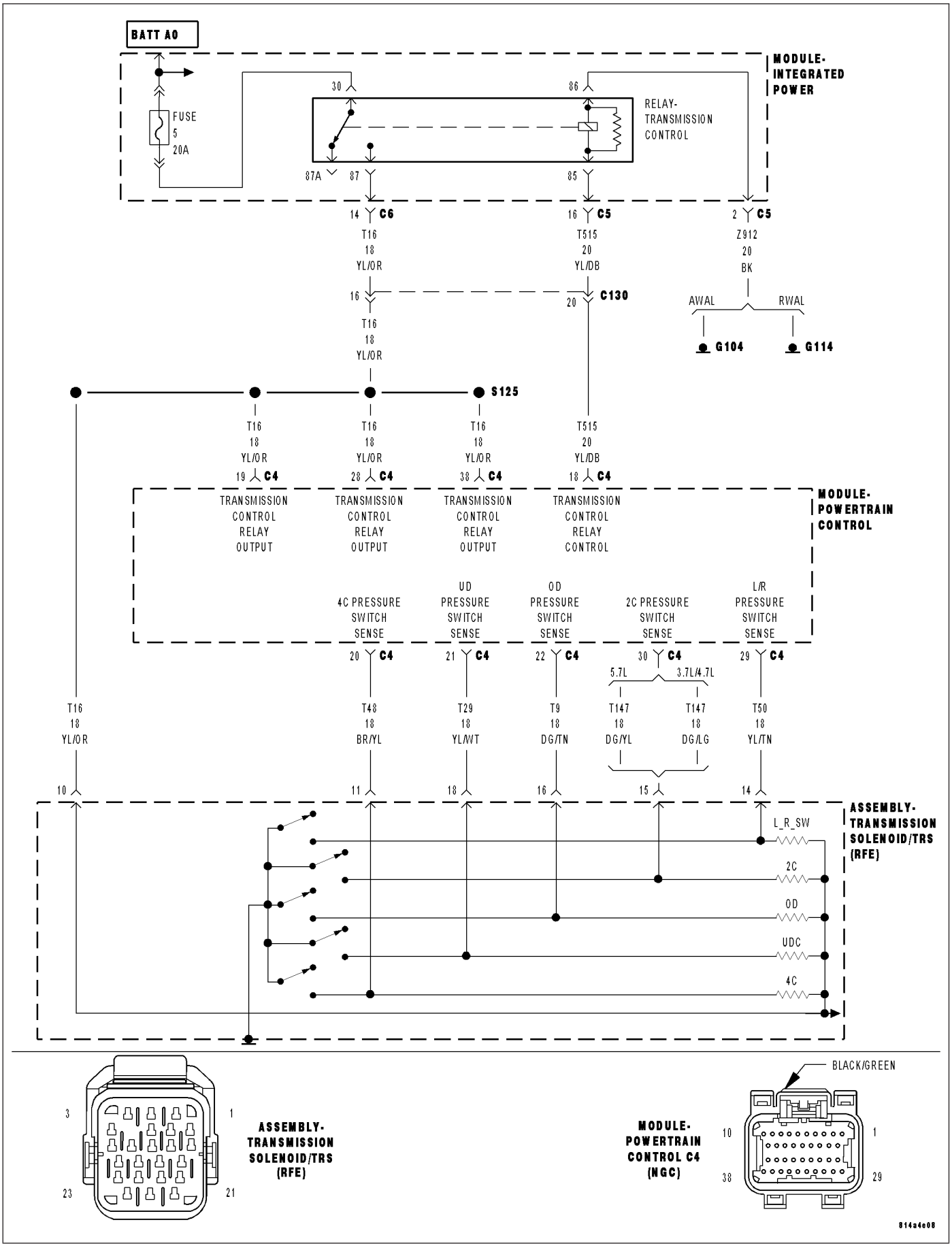

P0846-2C PRESSURE SWITCH RATIONALITY (CONTINUED)

For the Transmission circuit diagram (Refer to 21 - TRANSMISSION/TRANSAXLE/AUTOMATIC - 45RFE/545RFE - SCHEMATICS AND DIAGRAMS).

For a complete wiring diagram **Refer to Section 8W**

- **When Monitored:**
  Continuously with the ignition on, engine running, with the transmission in gear.
- **Set Condition:**
  The DTC is set if the 2C Pressure Switch reads open or closed at the wrong time in a given gear.

Possible Causes
RELATED RELAY DTC'S PRESENT
(T147) 2C PRESSURE SWITCH SENSE CIRCUIT OPEN
(T147) 2C PRESSURE SWITCH SENSE CIRCUIT SHORT TO GROUND
(T147) 2C PRESSURE SWITCH SENSE CIRCUIT SHORT TO OTHER CIRCUITS
EXCESSIVE FLUID LEAKAGE IN 2C CLUTCH CIRCUIT
NO. 5 AND/OR NO. 7 CHECK BALL CUT OR DAMAGED
EXTRA CHECK BALL DOWNSTREAM OF THE NO. 7 CHECK BALL SOCKET
LOW LINE PRESSURE
TRANSMISSION SOLENOID/TRS ASSEMBLY
POWERTRAIN CONTROL MODULE
WIRING AND CONNECTORS

Always perform the Pre-Diagnostic Troubleshooting procedure before proceeding. (Refer to 21 - TRANSMISSION/TRANSAXLE/AUTOMATIC - 45RFE/545RFE - DIAGNOSIS AND TESTING).

Theory of Operation

The Transmission system uses five pressure switches to monitor the fluid pressure in the LR, 2C, 4C, UD, and OD clutch circuits. The pressure switches are continuously monitored for the correct states in each gear as shown.

GEAR	L/R	2C	4C	UD	OD
REVERSE	OPEN	OPEN	OPEN	OPEN	OPEN
P/N	CLOSED**	OPEN	OPEN	OPEN	OPEN
1ST	CLOSED*	OPEN	OPEN	CLOSED	OPEN
2ND	OPEN	CLOSED	OPEN	CLOSED	OPEN
2ND PRIME	OPEN	OPEN	CLOSED	CLOSED	OPEN
3RD	OPEN	OPEN	OPEN	CLOSED	CLOSED
4TH	OPEN	OPEN	CLOSED	OPEN	CLOSED
5TH	OPEN	CLOSED	OPEN	OPEN	CLOSED

*L/R is closed if output speed is below 100 rpm in Drive and Manual 2. L/R is closed in Manual 1.

**May be open when rolling in Neutral or at low oil temperatures.

P0846-2C PRESSURE SWITCH RATIONALITY (CONTINUED)

Diagnostic Test

1. DETERMINING IF RELATED RELAY DTC'S ARE PRESENT

With the scan tool, check for other transmission DTC's.

Are there any Transmission Control Relay related DTC's present?

Yes >> Refer to the Transmission category and perform the appropriate symptom.
Perform 45RFE/545RFE TRANSMISSION VERIFICATION TEST - VER 1.

No >> Go To 2

---

2. EATX DTC DATA SHOW CURRENT DTC

With the scan tool, check the EATX DTC EVENT DATA.

Does the EATX DTC EVENT DATA show data for DTC P0846?

Yes >> Go To 3

No >> Refer to the Transmission category and perform the appropriate symptom shown in the EATX DTC EVENT DATA.
Perform 45RFE/545RFE TRANSMISSION VERIFICATION TEST - VER 1.

---

3. MULTIPLE DTCS PRESENT

With the scan tool, check for other transmission DTC's.

Are there two or more related pressure switch rationality DTCs present in addition to P0846?

Yes >> Go To 4

No >> Go To 7

---

4. RELATED DTC PRESENT

With the scan tool, check the EATX DTC EVENT DATA for P0846.

NOTE: Make sure to record all EATX DTC EVENT DATA stored in the scan tool for future reference in this test procedure.

Do all the pressure switches read CLOSED in the EATX DTC EVENT DATA for P0846?

Yes >> Refer to Transmission category and perform diagnostics for P0888.
Perform 45RFE/545RFE TRANSMISSION VERIFICATION TEST - VER 1.

No >> Go To 5

---

5. EATX DTC EVENT DATA READ OPEN

In the EATX DTC EVENT DATA recorded earlier, read the state of all pressure switches.

Do all the pressure switches read OPEN?

Yes >> Go To 6

No >> Go To 7

P0846-2C PRESSURE SWITCH RATIONALITY (CONTINUED)

6. LOW LINE PRESSURE

In the EATX DTC EVENT DATA recorded earlier, compare the Line Pressure and the Desired Line Pressure.

Is the Line Pressure less than 40 psi, and significantly below the Desired Line Pressure?

Yes >> Repair as necessary to correct low line pressure. Check fluid level and adjust as necessary. If fluid level is OK, check the Primary Oil Filter seal for a split, crack, or improperly installed. If the filter and seal are OK, check the Main Regulator Valve in the Oil Pump. Refer to the Service Information for the above procedures.

Perform 45RFE/545RFE TRANSMISSION VERIFICATION TEST - VER 1.

No >> Replace the Transmission Solenoid/TRS Assembly per the Service Information.

Perform 45RFE/545RFE TRANSMISSION VERIFICATION TEST - VER 1.

---

7. EATX DTC EVENT DATA READ PARK REVERSE OR NEUTRAL

With the scan tool, check the EATX DTC EVENT DATA for P0846.

NOTE: Make sure to record all EATX DTC EVENT DATA stored in the scan tool for future reference in this test procedure.

Does the EATX DTC EVENT DATA show the DTC P0846 set in Park, Neutral, or Reverse?

Yes >> Go To 12

No >> Go To 8

---

8. EATX DTC EVENT DATA READ CLOSED

With the scan tool, check the EATX DTC EVENT DATA for P0846.

NOTE: Make sure to record all EATX DTC EVENT DATA stored in the scan tool for future reference in this test procedure.

Does the EATX DTC EVENT DATA show the 2C Pressure Switch reading CLOSED?

Yes >> Go To 10

No >> Go To 9

---

9. PRIMARY OIL FILTER SEAL

In the EATX DTC EVENT DATA recorded earlier, compare the Line Pressure and the Desired Line Pressure.

Is the Line Pressure less than 40 psi, and significantly below the Desired Line Pressure?

Yes >> Repair as necessary to correct low line pressure. Check fluid level and adjust as necessary. If fluid level is OK, check the Primary Oil Filter seal for a split, crack, or improperly installed. If the filter and seal are OK, check the Main Regulator Valve in the Oil Pump. Refer to the Service Information for the above procedures.

Perform 45RFE/545RFE TRANSMISSION VERIFICATION TEST - VER 1.

No >> Go To 15

P0846-2C PRESSURE SWITCH RATIONALITY (CONTINUED)

10. PCM AND WIRING

Turn the ignition off to the lock position.

Remove the Starter Relay.

NOTE: Removal of the Starter Relay is to prevent a Transmission, NO RESPONSE, condition and disable the starter.

Install the Transmission Simulator, Miller tool #8333.

NOTE: Check connectors - Clean/repair as necessary.

Ignition on, engine not running.

With the Transmission Simulator, turn the Pressure Switch selector switch to the 2C position.

With the scan tool, monitor the 2C Pressure Switch while pressing the Pressure Switch test button on the Transmission Simulator.

Did the state of the 2C Pressure Switch change while pressing the Pressure Switch Test button?

Yes >> Go To 11

No >> Go To 12

---

11. TRANSMISSION SOLENOID/TRS ASSEMBLY

Using the schematics as a guide, inspect the wiring and connectors specific to this circuit.

Wiggle the wires while checking for shorted and open circuits.

Where there any problems found?

Yes >> Repair as necessary.
Perform 45RFE/545RFE TRANSMISSION VERIFICATION TEST - VER 1.

No >> Replace the Transmission Solenoid/TRS Assembly per the Service Information.
Perform 45RFE/545RFE TRANSMISSION VERIFICATION TEST - VER 1.

---

12. (T147) 2C PRESSURE SWITCH SENSE CIRCUIT OPEN

Turn the ignition off to the lock position.

Disconnect the Transmission Simulator, Miller tool #8333.

Disconnect the PCM C4 harness connector.

NOTE: Check connectors - Clean/repair as necessary.

Connect Miller tool #8815 to the PCM C4 harness connector.

CAUTION: Do not probe the PCM harness connectors. Probing the PCM harness connectors will damage the PCM terminals resulting in poor terminal to pin connection. Install Miller tool #8815 to perform diagnosis.

Measure the resistance of the (T147) 2C Pressure Switch Sense circuit from the appropriate terminal of Miller tool #8815 to the Transmission Solenoid/TRS Assembly harness connector.

Is the resistance above 5.0 ohms?

Yes >> Repair the (T147) 2C Pressure Switch Sense circuit for an open.
Perform 45RFE/545RFE TRANSMISSION VERIFICATION TEST - VER 1.

No >> Go To 13

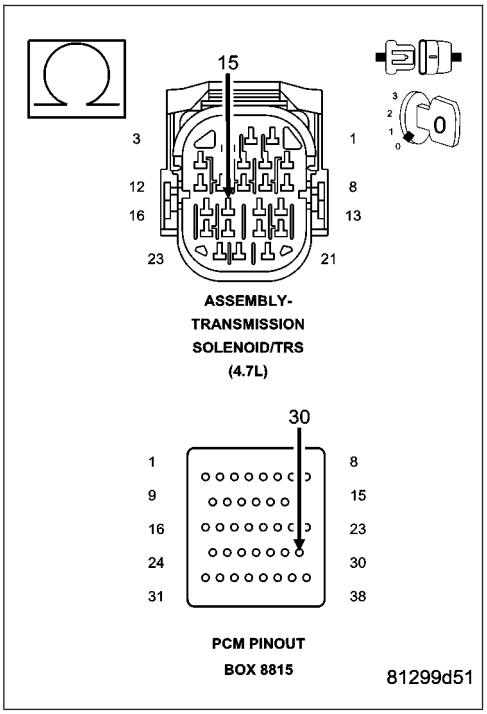

P0846-2C PRESSURE SWITCH RATIONALITY (CONTINUED)

13. (T147) 2C PRESSURE SWITCH SENSE CIRCUIT SHORT TO GROUND

Measure the resistance between ground and the (T147) 2C Pressure Switch Sense circuit.

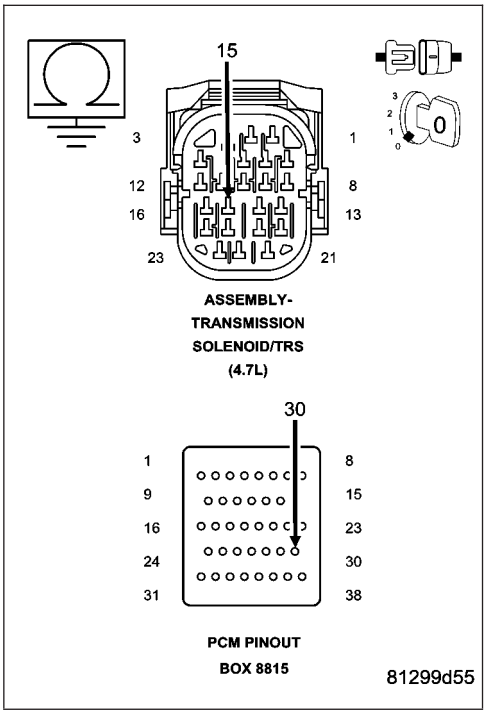

Is the resistance below 5.0 ohms?

Yes >> Repair the (T147) 2C Pressure Switch Sense circuit for a short to ground.

Perform 45RFE/545RFE TRANSMISSION VERIFICATION TEST - VER 1.

No >> Go To 14

14. (T147) 2C PRESSURE SWITCH SENSE CIRCUIT SHORT TO ANOTHER CIRCUIT

Measure the resistance between the (T147) 2C Pressure Switch Sense circuit and all the other circuits in the Transmission Solenoid/ TRS Assembly harness connector.

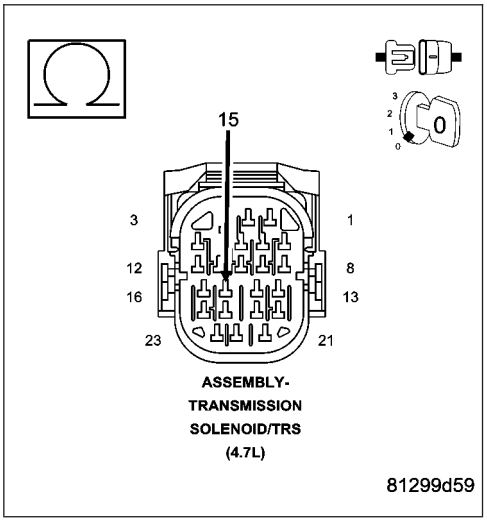

Is the resistance below 5.0 ohms?

Yes >> Repair the (T147) 2C Pressure Switch Sense circuit for a short to another circuit(s).

Perform 45RFE/545RFE TRANSMISSION VERIFICATION TEST - VER 1.

No >> Replace the Powertrain Control Module per the Service Information. With the scan tool, perform the QUICK LEARN procedure.

Perform 45RFE/545RFE TRANSMISSION VERIFICATION TEST - VER 1.

P0846-2C PRESSURE SWITCH RATIONALITY (CONTINUED)

15. #5 AND/OR #7 CHECK BALL CUT OR DAMAGED

Turn the Ignition off to the lock position.

Remove the Valve Body Assembly per the Service Information.

Inspect the #5 and #7 check balls for any cuts or damage.

Inspect the 2C accumulator piston and seals and also the 2C tower seal on top of the valve body. Refer to the Service Information.

Where there any problems found?

Yes >> Repair as necessary. Check for excessive clutch debris in the transmission oil pan. If excessive clutch debris is present, repair 2C clutch as necessary. Refer to the Service Information for proper repair procedures.
Perform 45RFE/545RFE TRANSMISSION VERIFICATION TEST - VER 1.

No >> Go To 16

---

16. EXCESSIVE FLUID LEAKAGE WITH 2C CLUTCH CIRCUIT

Air check the 2C Clutch hydraulic circuit. Refer to the Service Information.

NOTE: This hydraulic clutch circuit contains a small bleed orifice. Small leakage is considered normal.

Was there excessive air leakage in the 2C Clutch hydraulic circuit?

Yes >> Repair as necessary. Refer to the Service Information.
Perform 45RFE/545RFE TRANSMISSION VERIFICATION TEST - VER 1.

No >> Replace the Transmission Solenoid/TRS Assembly per the Service Information.
Perform 45RFE/545RFE TRANSMISSION VERIFICATION TEST - VER 1.

P0868-LINE PRESSURE LOW

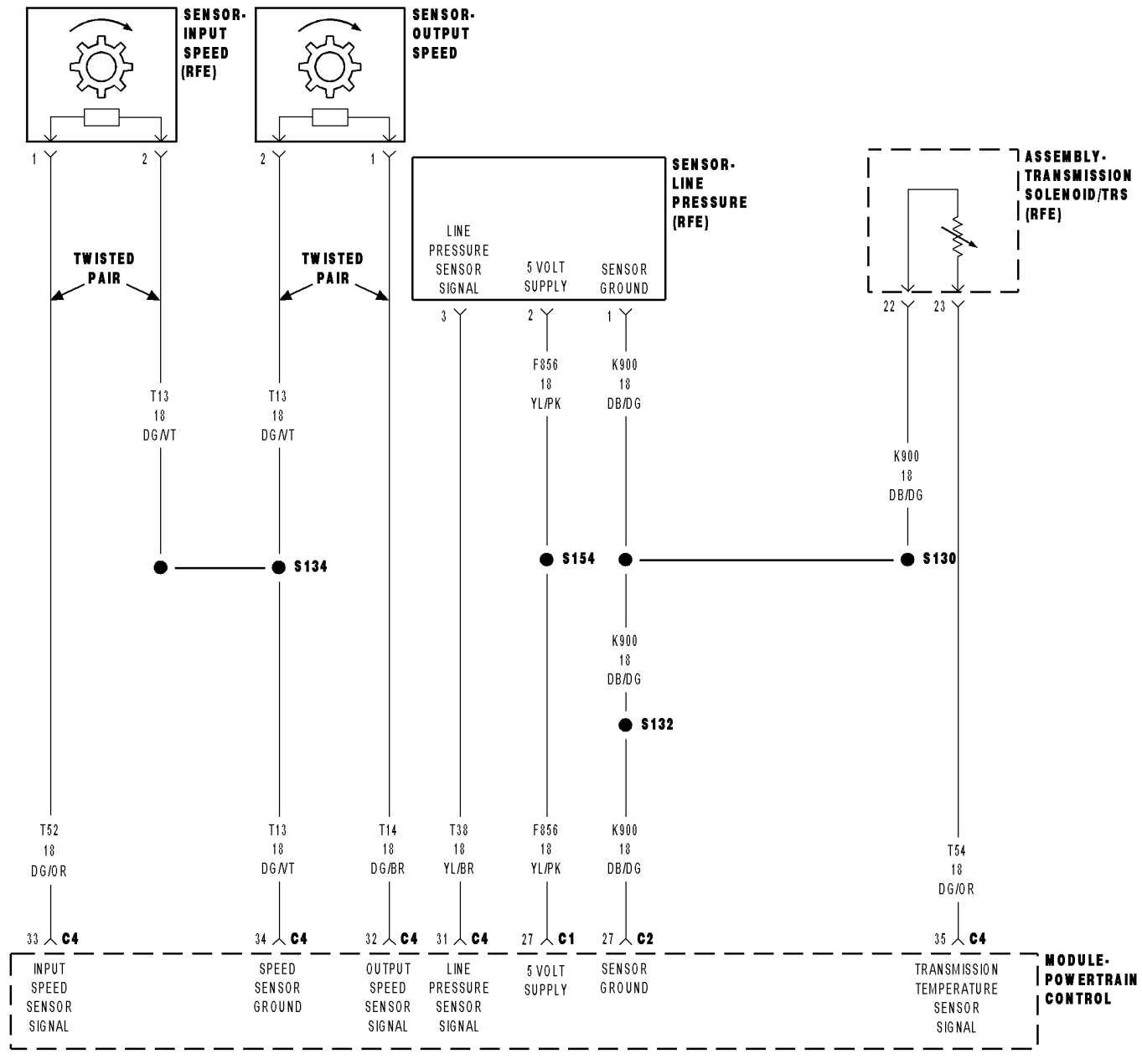

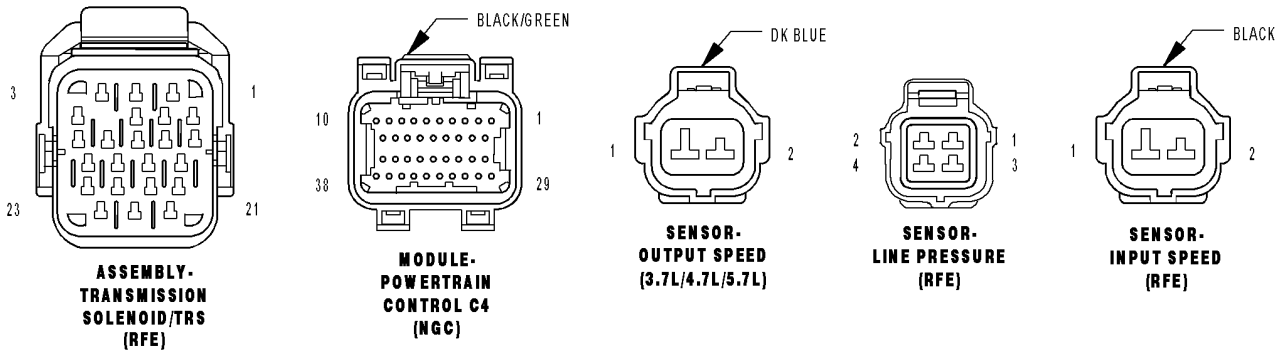

814a4ba3

P0868-LINE PRESSURE LOW (CONTINUED)

For the Transmission circuit diagram (Refer to 21 - TRANSMISSION/TRANSAXLE/AUTOMATIC - 45RFE/545RFE - SCHEMATICS AND DIAGRAMS).

For a complete wiring diagram **Refer to Section 8W**

- **When Monitored:**
  Continuously while driving in a forward gear.
- **Set Condition:**
  The PCM continuously monitors Actual Line Pressure and compares it to Desired Line Pressure. If the Actual Line Pressure is more than 10 PSI below Desired Line Pressure, this DTC will set.

Possible Causes
CHECK FOR RELATED DTC'S
LOW FLUID LEVEL
(F856) 5-VOLT SUPPLY CIRCUIT OPEN
POOR LINE PRESSURE SENSOR CONNECTION
(F856) 5-VOLT SUPPLY CIRCUIT SHORT TO GROUND
(F856) 5-VOLT SUPPLY CIRCUIT SHORT TO VOLTAGE
(T140) PRESSURE CONTROL SOLENOID CONTROL CIRCUIT SHORT TO ANOTHER CIRCUIT
INTERNAL TRANSMISSION
LINE PRESSURE SENSOR
CRACKED, PLUGGED, OR MISINSTALLED PRIMARY OIL FILTER
STUCK OR STICKING MAIN REGULATOR VALVE
POWERTRAIN CONTROL MODULE

Always perform the Pre-Diagnostic Troubleshooting procedure before proceeding. (Refer to 21 - TRANSMISSION/TRANSAXLE/AUTOMATIC - 45RFE/545RFE - DIAGNOSIS AND TESTING).

Theory of Operation

Line pressure is measured by the Line Pressure Sensor (LPS) and regulation is achieved by changing the duty cycle of the Pressure Control Solenoid (PCS) controlled by the Transmission Control System. (5% duty cycle = solenoid off = max line pressure, 62% duty cycle = solenoid on = min line pressure). The Transmission Control System calculates the desired line pressure based on inputs from both the engine and transmission.

The Transmission Control System calculates torque input to the transmission and uses it as the primary input to the desired line pressure calculation. This is called Torque Based Line Pressure. In addition, the line pressure is set to a preset level 827 or 931kPa (120 or 135 PSI) during shifts and in Park and Neutral to ensure consistent shift quality. The desired line pressure is continuously being compared to the actual line pressure. If the actual line pressure is consistently lower than the target while driving, the line pressure low DTC P0868 will set.

Diagnostic Test

1. CHECK FOR RELATED DTC'S

With the scan tool, check for other transmission DTC's

Is the DTC P0932 present also?

Yes >> Refer to the Transmission category and perform the appropriate symptom.
Perform 45RFE/545RFE TRANSMISSION VERIFICATION TEST - VER 1.

No >> Go To 2

P0868-LINE PRESSURE LOW (CONTINUED)

2. CONDITION P0868 PRESENT

With the scan tool, check the STARTS SINCE SET counter for P0868.

NOTE: This counter only applies to the last DTC set.

Is the START SINCE SET COUNTER 2 or less?

Yes >> Go To 3

No >> Go To 11

---

3. CHECK LINE PRESSURE SENSOR CONNECTION

Ignition on, **engine not running.**

With the scan tool, monitor the Line Pressure, firmly push the Line Pressure Sensor harness connector towards the Transmission.

Did the Line Pressure change to about 207 kPa or 30 PSI when the connector was pushed?

Yes >> Disconnect and properly reconnect the Line Pressure Sensor connector. Inspect terminals and repair as necessary.

Perform 45RFE/545RFE TRANSMISSION VERIFICATION TEST - VER 1.

No >> Go To 4

---

4. PCM AND WIRING

Turn the ignition off to the lock position.

Remove the Starter Relay.

NOTE: Removal of the Starter Relay is to prevent a Transmission, NO RESPONSE, condition and disable the starter.

Install the Transmission Simulator, Miller tool #8333.

With the Transmission Simulator select the ″OFF″ position on the ″Input/Output Speed″ switch.

NOTE: Check connectors - Clean/repair as necessary.

Ignition on, engine not running.

With the scan tool, monitor the Line Pressure during the following steps.

Using the Transmission Simulator, set the rotary knob to each of the 3 line pressure positions.

NOTE: All three scan tool Line Pressure readings should be steady and ± 14 kPa or 2.0 PSI of the reading specified on the Transmission Simulator.

Did the Line Pressure read within ± 14 kPa or 2.0 PSI in all three positions?

Yes >> Go To 5

No >> Go To 7

P0868-LINE PRESSURE LOW (CONTINUED)

5. LINE PRESSURE SENSOR

Turn the ignition off to the lock position.

Disconnect the Transmission Simulator, Miller tool #8333 and reconnect all previously disconnected connectors.

Install the Line Pressure Adaptor, Miller tool #8259, and the Pressure Gauge, Miller tool #C-3293, 0 to 2000 kPa or 0 to 300 PSI.

Start the engine in park.

Monitor the line pressure readings of both the scan tool and the pressure gauge and compare the two readings.

Is the line pressure gauge reading within 34 kPa or 5 PSI of the scan tool reading?

Yes >> Go To 6

No >> Replace the Line Pressure Sensor per the Service Information.
Perform 45RFE/545RFE TRANSMISSION VERIFICATION TEST - VER 1.

---

6. PLUGGED TRANSMISSION OIL FILTER

Turn the ignition off to the lock position.

Remove and inspect the Transmission Oil Pan for excessive debris per the Service Information.

Remove and inspect the Primary Oil Filter per the Service Information.

NOTE: Make sure the Primary Transmission Oil Filter and/or O-ring is not cracked or split.

Does the Oil Pan contain excessive debris and/or is the Primary Oil Filter cracked or plugged?

Yes >> Repair the plugged, cracked, or split Primary Transmission Oil Filter and/or O-ring. If the Primary Transmission Oil Filter is plugged refer to the Service Information for the proper Hydraulic repair procedure.
Perform 45RFE/545RFE TRANSMISSION VERIFICATION TEST - VER 1.

No >> Repair internal transmission and inspect the Transmission Oil Pump per the Service Information and replace if necessary. If no problem is found, replace the Solenoid/TRS Assembly.
Perform 45RFE/545RFE TRANSMISSION VERIFICATION TEST - VER 1.

---

7. (F856) 5-VOLT SUPPLY CIRCUIT SHORT TO VOLTAGE

Disconnect the Transmission Simulator, Miller tool #8333.

Reconnect all previously disconnected connectors except the Line Pressure Sensor harness connector.

Ignition on, engine not running.

Measure the voltage of the (F856) 5-volt Supply circuit in the Line Pressure Sensor harness connector.

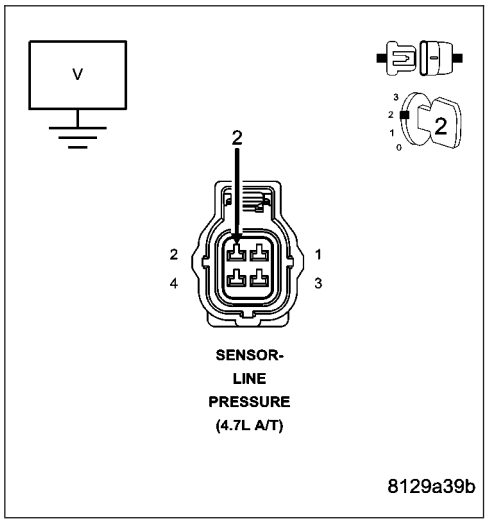

Is the voltage above 5.5 volts?

Yes >> Repair the (F856) 5-volt Supply circuit for a short to voltage.
Perform 45RFE/545RFE TRANSMISSION VERIFICATION TEST - VER 1.

No >> Go To 8

P0868-LINE PRESSURE LOW (CONTINUED)

8. (F856) 5-VOLT SUPPLY CIRCUIT OPEN

Turn the ignition off to the lock position.

Disconnect the PCM C1 harness connector and connect Miller tool #8815.

CAUTION: Do not probe the PCM harness connectors. Probing the PCM harness connectors will damage the PCM terminals resulting in poor terminal to pin connection. Install Miller tool #8815 to perform diagnosis.

Measure the resistance of the (F856) 5-volt Supply circuit from the Line Pressure Sensor harness connector to the appropriate terminal of Miller tool #8815.

Is the resistance above 5.0 ohms?

Yes >> Repair the (F856) 5-volt Supply circuit for an open.
Perform 45RFE/545RFE TRANSMISSION VERIFICATION TEST - VER 1.

No >> Go To 9

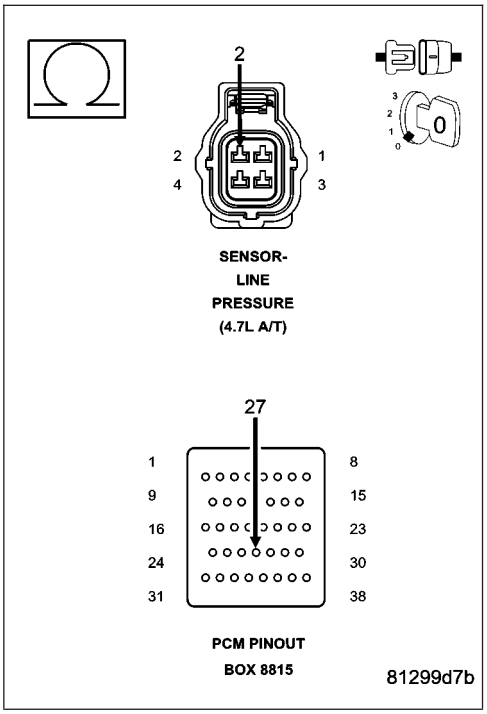

9. (F856) 5-VOLT SUPPLY CIRCUIT SHORT TO GROUND

Measure the resistance between ground and the (F856) 5-volt Supply circuit.

Is the resistance below 5.0 ohms?

Yes >> Repair the (F856) 5-volt Supply circuit for a short to ground.
Perform 45RFE/545RFE TRANSMISSION VERIFICATION TEST - VER 1.

No >> Go To 10

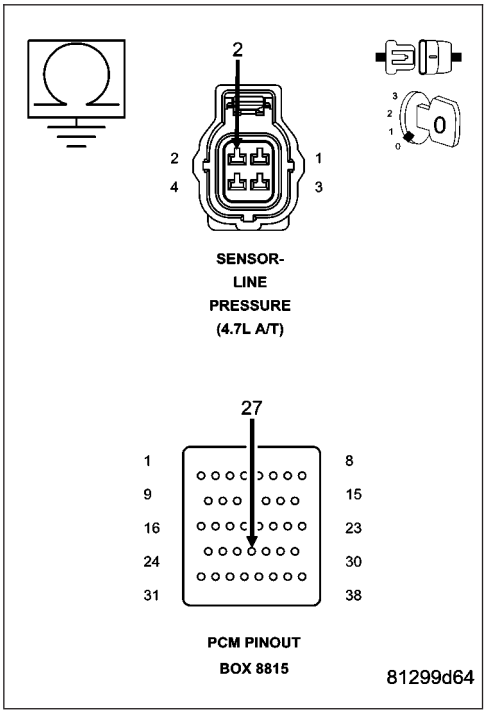

P0868-LINE PRESSURE LOW (CONTINUED)

10. (T140) PRESSURE CONTROL SOLENOID CONTROL CIRCUIT SHORT TO ANOTHER CIRCUIT

Turn the ignition off to the lock position.

Disconnect the Transmission Solenoid/TRS Assembly harness connector.

Disconnect all PCM harness connectors.

Measure the resistance between the (T140) Pressure Control Solenoid Control circuit and all other circuits in the Transmission Solenoid/TRS Assembly harness connector.

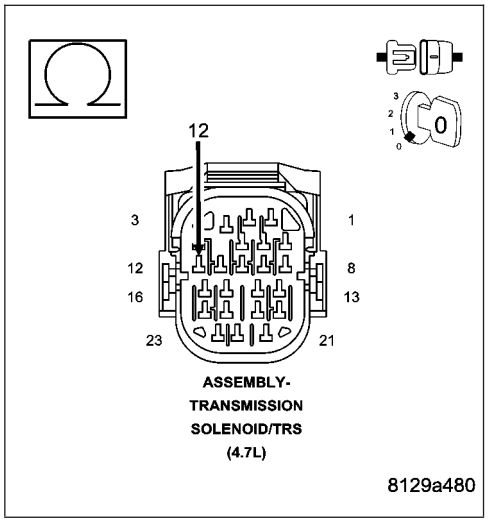

Is the resistance below 5.0 ohms between the (T140) Pressure Control Solenoid Control circuit and any other circuit(s) in the Transmission Solenoid/TRS Assembly harness connector?

Yes >> Repair the (T140) Pressure Control Solenoid Control circuit for a short to another circuit(s).
Perform 45RFE/545RFE TRANSMISSION VERIFICATION TEST - VER 1.

No >> Using the schematics as a guide, check the Powertrain Control Module (PCM) terminals for corrosion, damage, or terminal push out. Pay particular attention to all power and ground circuits. If no problems are found, replace the PCM per the Service Information. With the scan tool, perform QUICK LEARN.
Perform 45RFE/545RFE TRANSMISSION VERIFICATION TEST - VER 1.

---

11. INTERMITTENT WIRING AND CONNECTORS

The conditions necessary to set this DTC are not present at this time.

Using the schematics as a guide, inspect the wiring and connectors specific to this circuit.

Wiggle the wires while checking for shorted and open circuits.

With the scan tool, check the EATX DTC EVENT DATA to help identify the conditions in which the DTC was set.

Where there any problems found?

Yes >> Repair as necessary.
Perform 45RFE/545RFE TRANSMISSION VERIFICATION TEST - VER 1.

No >> Test Complete.

P0869-LINE PRESSURE HIGH

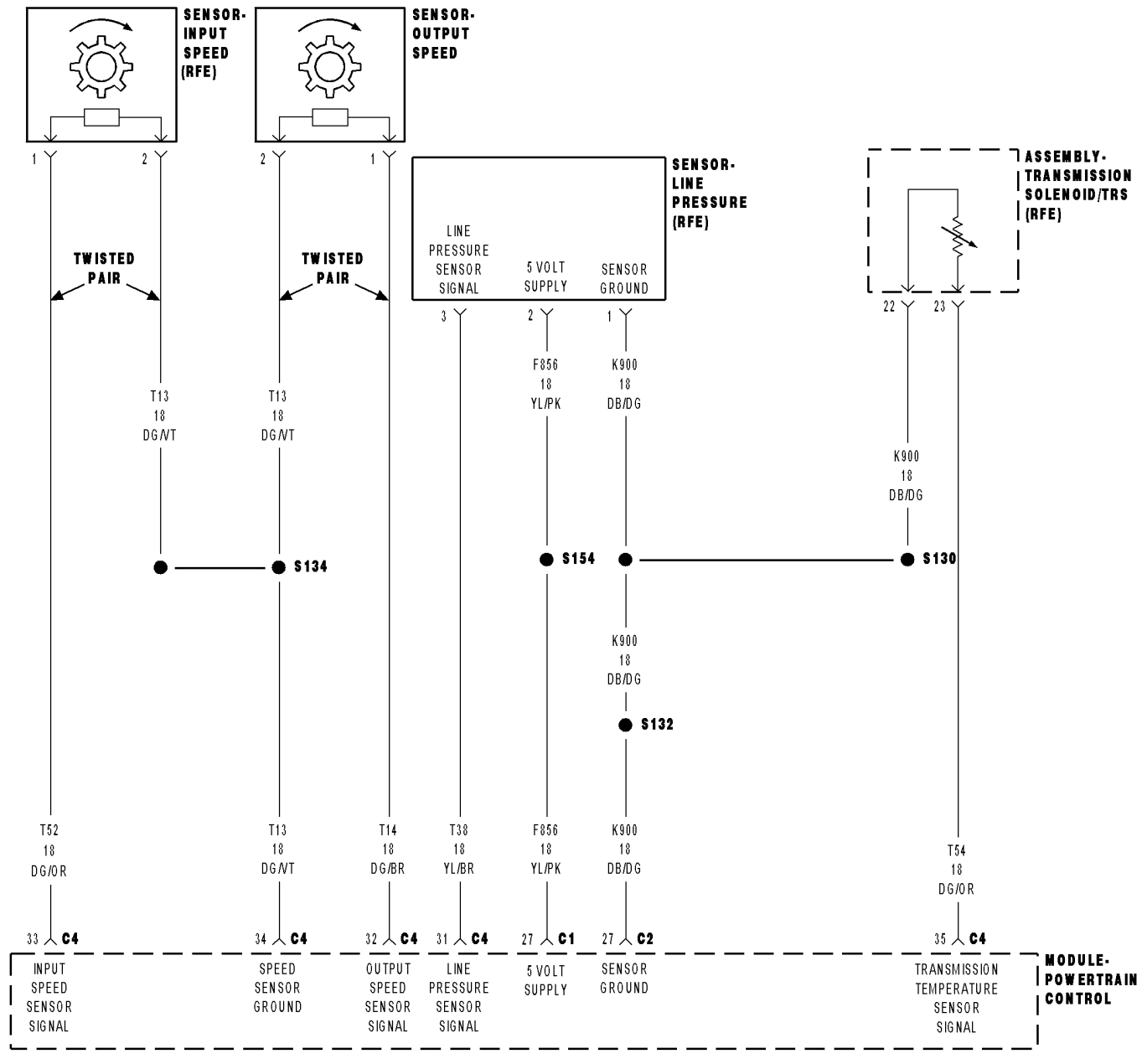

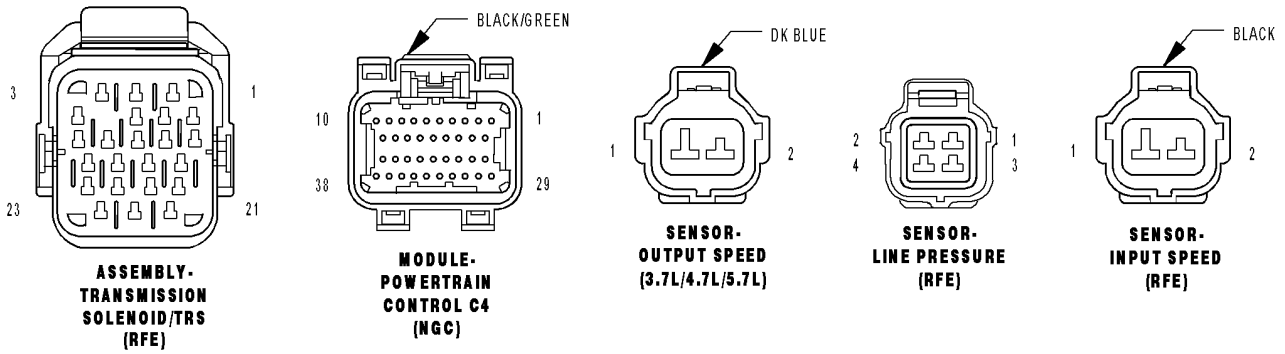

814a4ba3

P0869-LINE PRESSURE HIGH (CONTINUED)

For the Transmission circuit diagram (Refer to 21 - TRANSMISSION/TRANSAXLE/AUTOMATIC - 45RFE/545RFE - SCHEMATICS AND DIAGRAMS).

For a complete wiring diagram **Refer to Section 8W**

- **When Monitored:**
  Continuously while driving in a forward gear.
- **Set Condition:**
  The PCM continuously monitors Actual Line Pressure. If the Actual Line Pressure reading is greater than the highest Desired Line Pressure ever used in the current gear, while the Pressure Control Solenoid duty cycle is at or near its maximum value (which should result in minimum line pressure), the DTC will set.

Possible Causes
(F856) 5-VOLT SUPPLY CIRCUIT OPEN
LINE PRESSURE SENSOR CONNECTION
(T140) PRESSURE CONTROL SOLENOID CONTROL CIRCUIT OPEN
(F856) 5-VOLT SUPPLY CIRCUIT SHORT TO GROUND
(T140) PRESSURE CONTROL SOLENOID CONTROL CIRCUIT SHORT TO GROUND
ITRANSMISSION CONTROL RELAY OUTPUT CIRCUIT
LINE PRESSURE SENSOR
STUCK OR STICKING MAIN REGULATOR VALVE
POWERTRAIN CONTROL MODULE

Always perform the Pre-Diagnostic Troubleshooting procedure before proceeding. (Refer to 21 - TRANSMISSION/TRANSAXLE/AUTOMATIC - 45RFE/545RFE - DIAGNOSIS AND TESTING).

Theory of Operation

Line pressure is measured by the Line Pressure Sensor (LPS) and regulation is achieved by changing the duty cycle of the Pressure Control Solenoid (PCS) controlled by the Transmission Control System. (5% duty cycle = solenoid off = max line pressure, 62% duty cycle = solenoid on = min line pressure). The Transmission Control System calculates the desired line pressure based on inputs from both the engine and transmission.

The Transmission Control System calculates torque input to the transmission and uses it as the primary input to the desired line pressure calculation. This is called Torque Based Line Pressure. In addition, the line pressure is set to a preset level 827 or 931kPa (120 or 135 PSI) during shifts and in Park and Neutral to ensure consistent shift quality. The desired line pressure is continuously being compared to the actual line pressure. If the actual line pressure is consistently higher than the highest desired line pressure ever used in the current gear, the line pressure high DTC P0869 will set.

Diagnostic Test

1. CHECK FOR RELATED DTC'S

With the scan tool, check for other Transmission DTC's

Is the DTC P0932 or P0888 present also?

Yes >> Refer to the Transmission category and perform the appropriate symptom.
Perform 45RFE/545RFE TRANSMISSION VERIFICATION TEST - VER 1.

No >> Go To 2

P0869-LINE PRESSURE HIGH (CONTINUED)

2. CONDITION P0869 PRESENT

With the scan tool, check the STARTS SINCE SET counter for P0869.

Is the STARTS SINCE SET COUNTER 2 or less?

Yes >> Go To 3

No >> Go To 10

---

3. CHECK LINE PRESSURE SENSOR CONNECTION

Ignition on, engine not running.

With the scan tool, monitor the Transmission Line Pressure.

Firmly push the Line Pressure Sensor harness connector inward towards the Transmission.

Did the Line Pressure change to about 207 kPa or 30 PSI when the sensor connector was pushed?

Yes >> Disconnect and properly reconnect the Line Pressure Sensor connector. Inspect terminals and repair as necessary.
Perform 45RFE/545RFE TRANSMISSION VERIFICATION TEST - VER 1.

No >> Go To 4

---

4. PCM AND WIRING

Turn the ignition off to the lock position.

Remove the Starter Relay.

NOTE: Removal of the Starter Relay is to prevent a Transmission, NO RESPONSE, condition and disable the starter.

Install the Transmission Simulator, Miller tool #8333.

With the Transmission Simulator select the ″OFF″ position on the ″Input/Output Speed″ switch.

NOTE: Check connectors - Clean/repair as necessary.

Ignition on, engine not running.

With the scan tool, monitor the Line Pressure during the following step.

Using the Transmission Simulator, set the rotary switch to each of the 3 line pressure positions.

NOTE: All three scan tool Line Pressure readings should be steady and ±14 kPa or 2.0 PSI of the reading specified on the Transmission Simulator.

Did the Line Pressure read within ±14 kPA or 2.0 PSI in all three positions?

Yes >> Go To 5

No >> Go To 6

P0869-LINE PRESSURE HIGH (CONTINUED)

5. CHECK LINE PRESSURE SENSOR CALIBRATION

Turn the ignition off to the lock position.

Disconnect the Transmission Simulator, Miller tool #8333 and reconnect all previously disconnected connectors.

Install the Line Pressure Adaptor, Miller tool #8259, and Pressure Gauge, Miller tool #C-3293, 0 to 2000 kPa or 0 to 300 PSI.

Start the engine in park.

Monitor the Line Pressure readings on the scan tool and the pressure gauge.

Compare the Line Pressure readings between the scan tool and the pressure gauge.

Is the pressure gauge reading within 34 kPa or 5 PSI of the scan tool reading?

Yes >> Repair the internal transmission and inspect the Transmission Oil Pump per the Service Information and replace if necessary. If no problem is found, replace the Transmission Solenoid/TRS Assembly, possible cause is a stuck Pressure Control Solenoid.

Perform 45RFE/545RFE TRANSMISSION VERIFICATION TEST - VER 1.

No >> Replace the Line Pressure Sensor per the Service information.

Perform 45RFE/545RFE TRANSMISSION VERIFICATION TEST - VER 1.

---

6. (T140) PRESSURE CONTROL SOLENOID CONTROL CIRCUIT OPEN

Turn the ignition off to the lock position.

Disconnect the Transmission Simulator, Miller tool #8333.

Disconnect the Powertrain Control Module C4 harness connector.

CAUTION: Do not probe the PCM harness connectors. Probing the PCM harness connectors will damage the PCM terminals resulting in poor terminal to pin connection. Install Miller tool #8815 to perform diagnosis.

Measure the resistance of the (T140) Pressure Control Solenoid Control circuit from the appropriate terminal of Miller tool #8815 to the Solenoid/TRS harness connector.

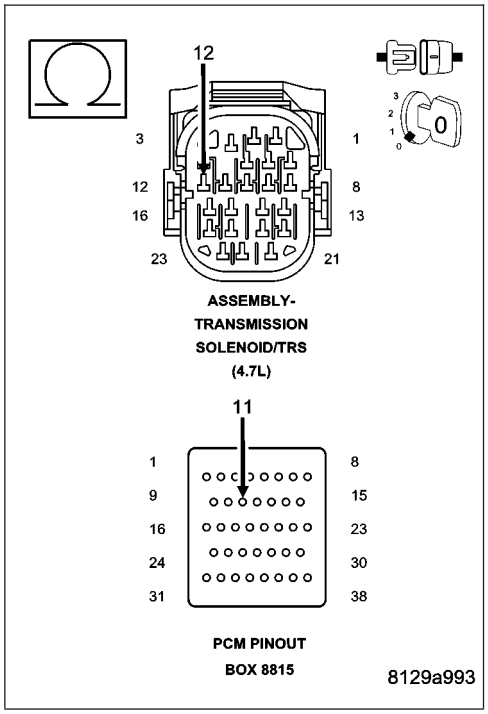

Is the resistance above 5.0 ohms?

Yes >> Repair the (T140) Pressure Control Solenoid Control circuit for an open.

Perform 45RFE/545RFE TRANSMISSION VERIFICATION TEST - VER 1.

No >> Go To 7

P0869-LINE PRESSURE HIGH (CONTINUED)

7. (T140) PRESSURE CONTROL SOLENOID CONTROL CIRCUIT SHORT TO GROUND

Measure the resistance between ground and the (T140) Pressure Control Solenoid Control circuit.

Is the resistance below 5.0 ohms?

Yes >> Repair the (T140) Pressure Control Solenoid Control circuit for a short to ground.
Perform 45RFE/545RFE TRANSMISSION VERIFICATION TEST - VER 1.

No >> Go To 8

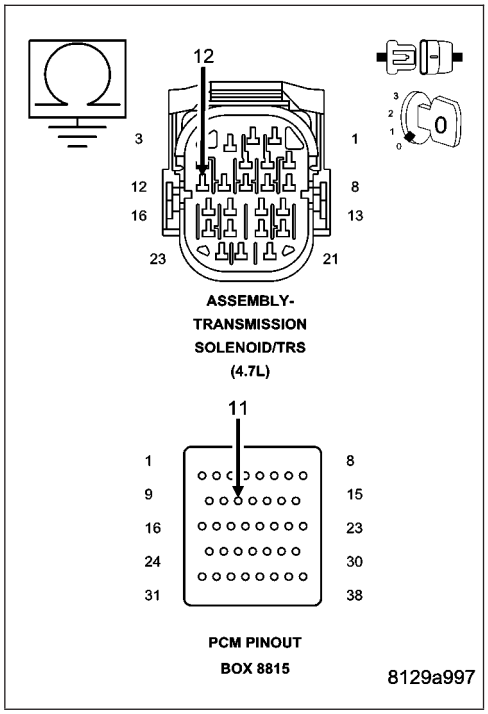

8. (F856) 5-VOLT SUPPLY CIRCUIT OPEN

Measure the resistance of the (F856) 5-volt Supply circuit between the Line Pressure Sensor harness connector to the appropriate terminal of Miller tool #8815.

Is the resistance above 5.0 ohms?

Yes >> Repair the (F856) 5-volt Supply circuit for an open.
Perform 45RFE/545RFE TRANSMISSION VERIFICATION TEST - VER 1.

No >> Go To 9

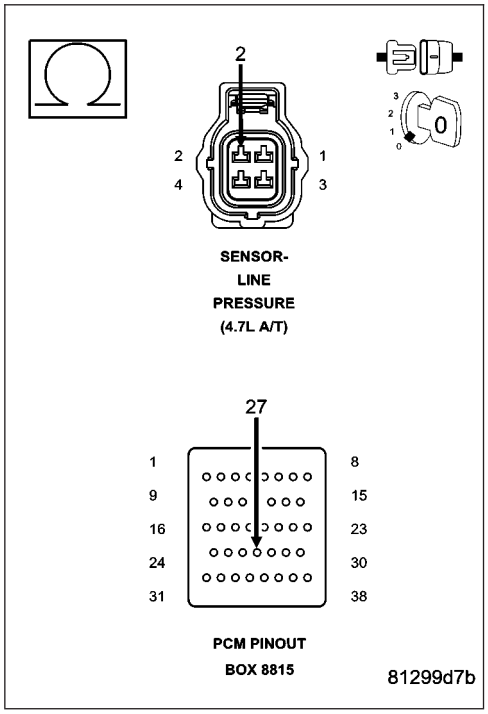

P0869-LINE PRESSURE HIGH (CONTINUED)

9. (F856) 5-VOLT SUPPLY CIRCUIT SHORT TO GROUND

Disconnect the PCM C1 harness connector.

Disconnect the Line Pressure Sensor harness connector.

CAUTION: Do not probe the PCM harness connectors. Probing the PCM harness connectors will damage the PCM terminals resulting in poor terminal to pin connection. Install Miller tool #8815 to perform diagnosis.

Measure the resistance between ground and the (F856) 5-volt Supply circuit.

Is the resistance below 5.0 ohms?

Yes >> Repair the (F856) 5-volt Supply circuit for a short to ground.
Perform 45RFE/545RFE TRANSMISSION VERIFICATION TEST - VER 1.

No >> Replace the Powertrain Control Module per the Service Information. With the scan tool perform the QUICK LEARN procedure.
Perform 45RFE/545RFE TRANSMISSION VERIFICATION TEST - VER 1.

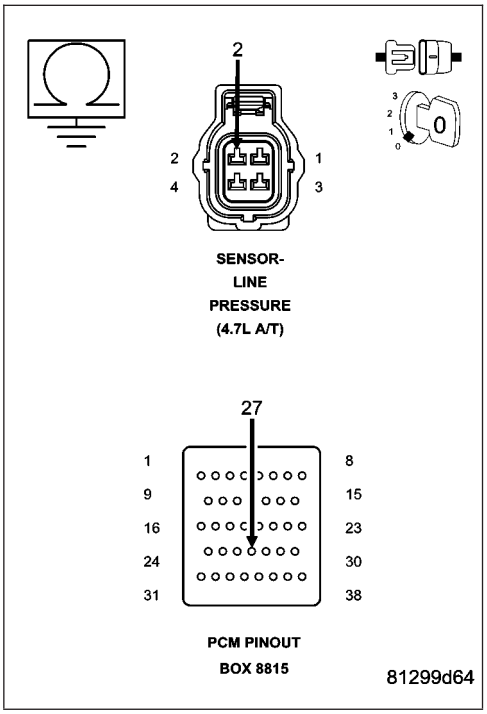

10. INTERMITTENT WIRING AND CONNECTORS

The conditions necessary to set this DTC are not present at this time.

Using the schematics as a guide, inspect the wiring and connectors specific to this circuit.

Wiggle the wires while checking for shorted and open circuits.

With the scan tool, check the EATX DTC EVENT DATA to help identify the conditions in which the DTC was set.

Where there any problems found?

Yes >> Repair as necessary.
Perform 45RFE/545RFE TRANSMISSION VERIFICATION TEST - VER 1.

No >> Test Complete.

P0870-OD HYDRAULIC PRESSURE TEST

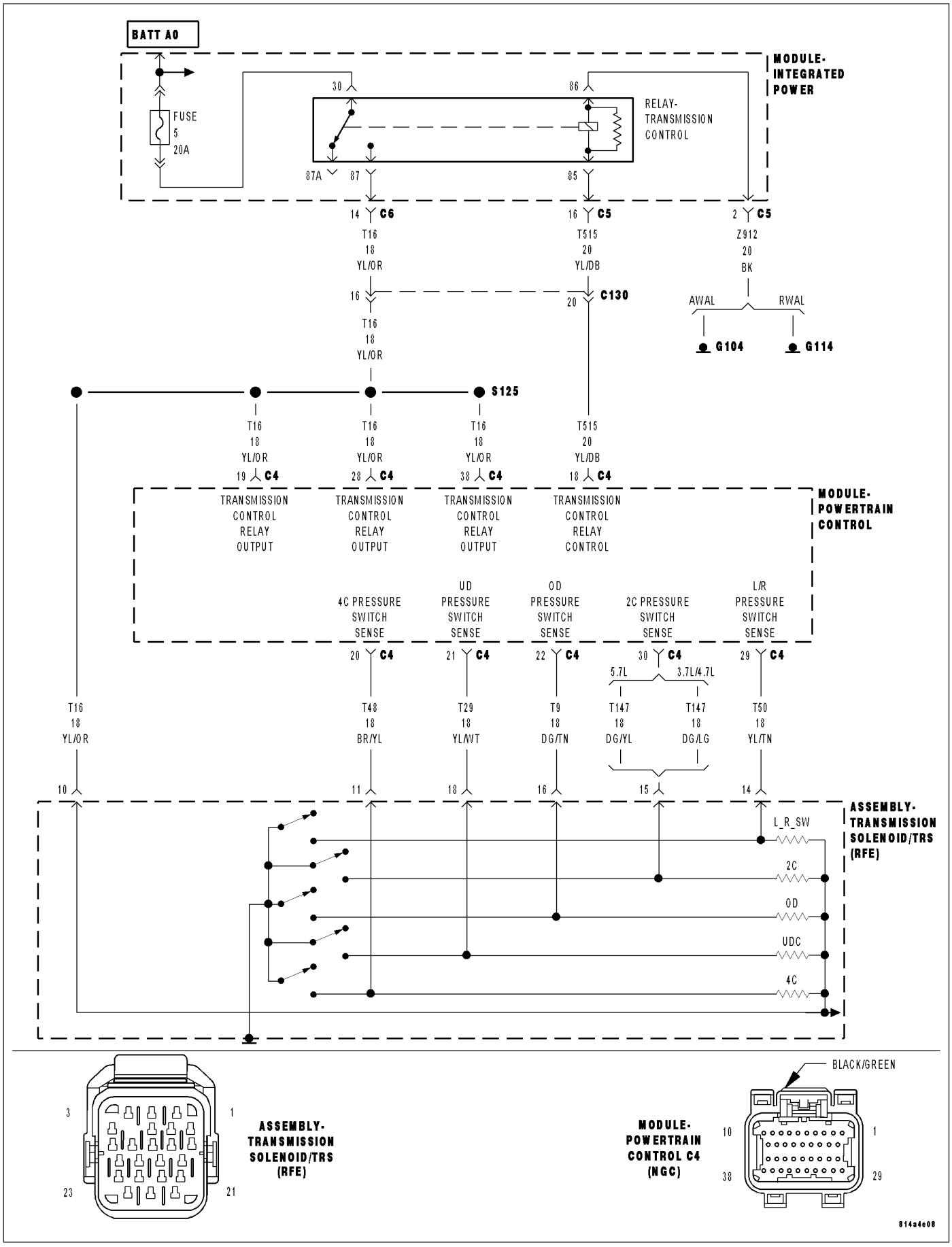

P0870-OD HYDRAULIC PRESSURE TEST (CONTINUED)

For the Transmission circuit diagram (Refer to 21 - TRANSMISSION/TRANSAXLE/AUTOMATIC - 45RFE/545RFE - SCHEMATICS AND DIAGRAMS)

For a complete wiring diagram **Refer to Section 8W**

- **When Monitored:**
  In any forward gear with engine speed above 1000 RPM shortly after a shift and every minute thereafter.
- **Set Condition:**
  After a shift into a forward gear, with engine speed above 1000 RPM, the PCM momentarily turns on element pressure to the Clutch circuits that don't have pressure to identify the correct Pressure Switch closes. If the Pressure Switch does not close 2 times, the DTC sets.

Possible Causes
LINE PRESSURE SENSOR
TRANSMISSION FLUID CONTAMINATION
RELATED DTC'S PRESENT
TRANSMISSION SOLENOID/TRS ASSEMBLY
EXCESSIVE DEBRIS IN OIL PAN
POOR LINE PRESSURE SENSOR CONNECTION
(T9) OD PRESSURE SWITCH SENSE CIRCUIT OPEN
TRANSMISSION CONTROL RELAY DTCS PRESENT
(T9) OD PRESSURE SWITCH SENSE CIRCUIT OPEN
(F856) 5-VOLT SUPPLY CIRCUIT OPEN
TRANSMISSION CONTROL RELAY OUTPUT CIRCUIT OPEN
(T9) OD PRESSURE SWITCH SENSE CIRCUIT SHORT TO GROUND
(F856) 5-VOLT SUPPLY CIRCUIT SHORT TO GROUND
(T9) OD PRESSURE SWITCH SENSE CIRCUIT SHORT TO OTHER CIRCUITS
TRANSMISSION SOLENOID/TRS ASSEMBLY
INTERNAL TRANSMISSION
POWERTRAIN CONTROL MODULE

Always perform the Pre-Diagnostic Troubleshooting procedure before proceeding. (Refer to 21 - TRANSMISSION/TRANSAXLE/AUTOMATIC - 45RFE/545RFE - DIAGNOSIS AND TESTING).

Theory of Operation

The Transmission Control System tests the pressure switches when they are off. The test verifies that the switches are operational (They will close with pressure applied). The Transmission Control System verifies that the switch closes when the corresponding element is applied. If a switch fails to close, it is re-tested. If it fails the second test, the DTC will set, the MIL will illuminate and the transmission system will default to the orderly Shutdown routine.

P0870-OD HYDRAULIC PRESSURE TEST (CONTINUED)

Diagnostic Test

1. DETERMINING IF RELATED DTC'S ARE PRESENT

With the scan tool, check for other transmission DTC's

Is there any Loss of Prime, Transmission Control Relay, and/or Line Pressure Sensor DTCs present?

Yes >> Refer to the Transmission category and perform the appropriate symptom. If the DTC, P0944-LOSS OF PRIME is present, perform its respective test first.
Perform 45RFE/545RFE TRANSMISSION VERIFICATION TEST - VER 1.

No >> Go To 2

---

2. DTC P0760 PRESENT

With the scan tool, check Transmission DTCs.

Is the DTC P0760 also present?

Yes >> Refer to the symptom list and perform diagnostics for P0760–OD SOLENOID CIRCUIT.

No >> Go To 3

---

3. OTHER DTCS PRESENT

With the scan tool, check for other transmission DTC's

Are any of the DTCs, P0733, P0734 ,P0735 and/or P0871 present also?

Yes >> Go To 12

No >> Go To 4

---

4. CHECK TO SEE IF DTC P0870 IS CURRENT

With the scan tool, check the STARTS SINCE SET counter for P0870.

Is the STARTS SINCE SET COUNTER 2 or less?

Yes >> Go To 5

No >> Go To 17

---

5. LINE PRESSURE STAYS THE SAME

Start the engine.

Warm the transmission to 82° C or 180° F.

Firmly apply the brakes.

With the scan tool, monitor the Line Pressure during the following step.

Move the shift lever to each gear position, pausing momentarily in each position and record the line pressure reading. Allow the pressure to stabilize for at least 5 seconds in each range.

Did the line pressure remain at a steady value between 585 and 655 kPa or 85 and 95 PSI in each position?

Yes >> Go To 6

No >> Go To 10

P0870-OD HYDRAULIC PRESSURE TEST (CONTINUED)

6. CHECK LINE PRESSURE SENSOR CONNECTION

Ignition on, **engine not running.**

With the scan tool, monitor the Line Pressure while firmly pushing the Transmission Line Pressure Sensor connector inwards towards the Transmission.

Did the Line Pressure reading on the scan tool change to about 207 kPa or 30 PSI when the connector was pushed inward?

Yes >> Disconnect and properly reconnect the Line Pressure Sensor connector. Inspect terminals and repair as necessary.
Perform 45RFE/545RFE TRANSMISSION VERIFICATION TEST - VER 1.

No >> Go To 7

---

7. LINE PRESSURE SENSOR OPERATION

Turn the ignition off to the lock position.

Remove the Starter Relay.

NOTE: Removal of the Starter Relay is to prevent a Transmission, NO RESPONSE, condition and disable the starter.

Install the Transmission Simulator, Miller tool #8333.

NOTE: Check connectors - Clean/repair as necessary.

With the Transmission Simulator select the ″OFF″ position on the ″Input/Output Speed″ switch.

Ignition on, engine not running.

With the scan tool, monitor the Line Pressure while turning the Pressure Switch selector to each of the 3 line pressure positions on the Transmission Simulator.

NOTE: All three scan tool Line Pressure readings should be steady and ±14 kPa or 2.0 PSI of the reading specified on the Transmission Simulator.

Did the scan tool Line Pressure readings match the specified readings on the Transmission Simulator and remain steady in all three positions?

Yes >> Replace the Line Pressure Sensor per the Service Information.
Perform 45RFE/545RFE TRANSMISSION VERIFICATION TEST - VER 1.

No >> Go To 8

P0870-OD HYDRAULIC PRESSURE TEST (CONTINUED)

8. (F856) 5-VOLT SUPPLY CIRCUIT OPEN

Turn the ignition off to the lock position.

Disconnect Transmission Simulator.

Disconnect the PCM C4 harness connector and connect Miller tool #8815.

CAUTION: Do not probe the PCM harness connectors. Probing the PCM harness connectors will damage the PCM terminals resulting in poor terminal to pin connection. Install Miller tool #8815 to perform diagnosis.

Measure the resistance of the (F856) 5-volt Supply circuit from the Line Pressure Sensor harness connector to the appropriate terminal of Miller tool #8815.

Is the resistance above 5.0 ohms?

Yes >> Repair the (F856) 5-volt Supply circuit for an open.
Perform 45RFE/545RFE TRANSMISSION VERIFICATION TEST - VER 1.

No >> Go To 9

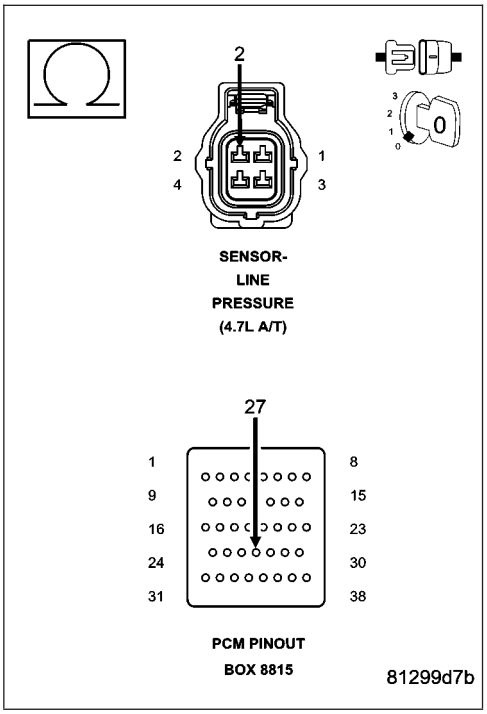

9. (F856) 5-VOLT SUPPLY CIRCUIT SHORT TO GROUND

Measure the resistance between ground and the (F856) 5-volt Supply circuit.

Is the resistance below 5.0 ohms?

Yes >> Repair the (F856) 5-volt Supply circuit for a short to ground.
Perform 45RFE/545RFE TRANSMISSION VERIFICATION TEST - VER 1.

No >> Using the schematics as a guide, check the Powertrain Control Module (PCM) terminals for corrosion, damage, or terminal push out. Pay particular attention to all power and ground circuits. If no problems are found, replace the PCM per the Service Information. With the scan tool, perform QUICK LEARN.
Perform 45RFE/545RFE TRANSMISSION VERIFICATION TEST - VER 1.

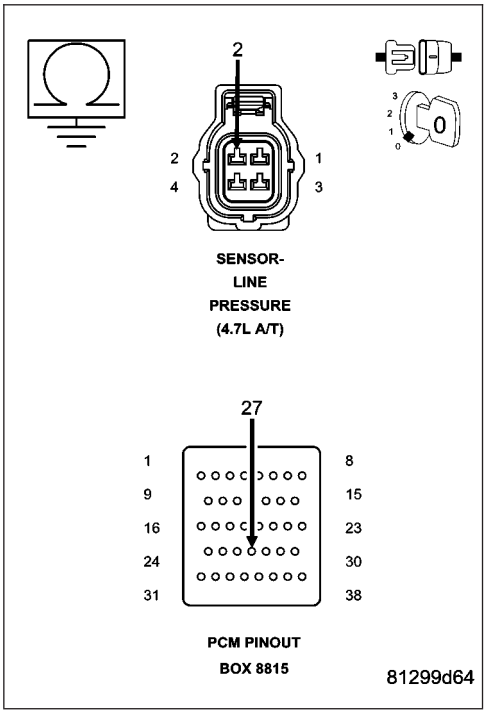

P0870-OD HYDRAULIC PRESSURE TEST (CONTINUED)

10. COMPARE SCAN TOOL TO PRESSURE GAUGE

Turn the ignition off to the lock position.

Connect the Line Pressure Adapter, Miller tool #8259 and 0-300 psi Test Gauge, Miller tool #C-3293-SP. Refer to the Service Information for proper installation procedure.

CAUTION: Apply parking brake.

Start the engine.

In the following steps, compare the scan tool Line Pressure to the Pressure Gauge readings in each gear.

CAUTION: Do not overheat transmission.

With the gear selector in park, raise the RPM to 1500, and compare line pressure readings.

Firmly apply the brakes, move the gear selector into reverse, raise the RPM to 1500, and compare the line pressure readings.

Firmly apply the brakes, move the gear selector into drive, raise the RPM to 1500, and compare the line pressure readings.

Did the scan tool Line Pressure readings match the Pressure Gauge readings ± 10 psi?

Yes >> Go To 11

No >> Replace the Line Pressure Sensor per the Service Information.
Perform 45RFE/545RFE TRANSMISSION VERIFICATION TEST - VER 1.

---

11. WIRING AND CONNECTORS

Turn the ignition off to the lock position.

Remove the Starter Relay.

NOTE: Failure to remove the Starter Relay can cause a Transmission - No Response condition.

Remove the Line Pressure Adapter, Miller tool #8259 and 0-300 psi Test Gauge, Miller tool #C-3293-SP.

Install the Transmission Simulator, Miller tool #8333.

On the Transmission Simulator, turn the Pressure Switch selector switch to OD.

Ignition on, engine not running.

With the scan tool, monitor the OD Pressure Switch state while pressing and holding the Pressure Switch test button and wiggling the wire harness and connectors that pertain to the OD Pressure Switch.

Did the OD Pressure Switch state change to closed and remain closed while wiggling the wires?

Yes >> Go To 12

No >> Go To 14

---

12. CHECK FOR EXCESSIVE DEBRIS

Turn the ignition off to the lock position.

Remove the Transmission Simulator, Miller tool #8333.

Remove and inspect the Transmission Oil Pan per the Service Information.

Does the Transmission Oil Pan contain excessive debris or contamination?

Yes >> Repair the cause of the excessive debris in the Transmission Oil Pan. Refer to the Service Information for the proper procedures.
Perform 45RFE/545RFE TRANSMISSION VERIFICATION TEST - VER 1.

No >> Go To 13

P0870-OD HYDRAULIC PRESSURE TEST (CONTINUED)

13. CHECK OD HYDRAULIC CLUTCH CIRCUIT

Remove the Valve Body and air check the OD hydraulic clutch circuit (in the case) for leakage per the Service Information.

NOTE: The OD hydraulic clutch circuit contains a small bleed orifice which connects to the Reverse hydraulic clutch circuit. A small amount of air leakage is normal.

Was there excessive air leakage noticed during the air check?

Yes >> Repair as necessary. Check the OD/Rev clutch piston seals, bleed orifice assembly, reaction shaft support seal rings, and machining of the main mating faces on the pump housing, pump valve boday, and reaction shaft support..

Perform 45RFE/545RFE TRANSMISSION VERIFICATION TEST - VER 1.

No >> Disassemble and inspect the Valve Body and repair as necessary. Inspect the OD Accumulator piston and seals. Check for an extra check ball downstream from the #6 check ball pocket and repair as necessary. If no problems are found in the Valve Body, replace the Transmission Solenoid/TRS Assembly per the Service Information.

Perform 45RFE/545RFE TRANSMISSION VERIFICATION TEST - VER 1.

---

14. (T9) OD PRESSURE SWITCH SENSE CIRCUIT OPEN

Turn the ignition off to the lock position.

Remove the Transmission Simulator, Miller tool #8333.

Disconnect the PCM C4 harness connector and connect Miller tool #8815.

Measure the resistance of the (T9) OD Pressure Switch Sense circuit from the Transmission Solenoid/TRS Assembly harness connector to the appropriate terminal of Miller tool #8815.

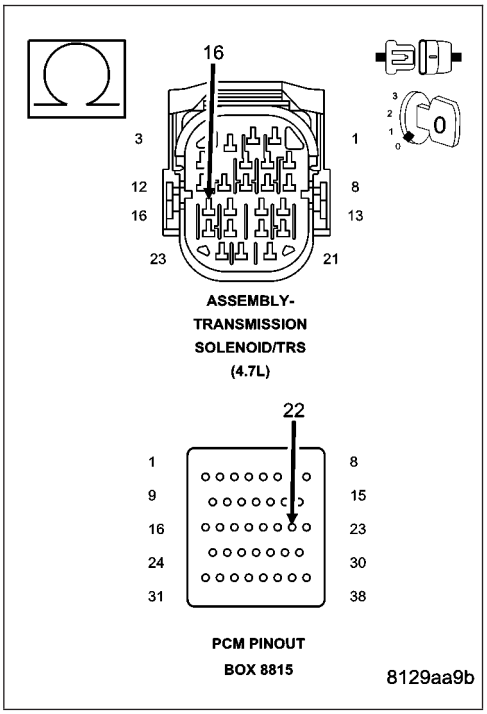

Is the resistance above 5.0 ohms?

Yes >> Repair the (T9) OD Pressure Switch Sense circuit for an open.

Perform 45RFE/545RFE TRANSMISSION VERIFICATION TEST - VER 1.

No >> Go To 15

P0870-OD HYDRAULIC PRESSURE TEST (CONTINUED)

15. OD PRESSURE SWITCH SENSE CIRCUIT SHORT TO GROUND

Measure the resistance between ground and the (T9) OD Pressure Switch Sense circuit.

Is the resistance below 5.0 ohms?

Yes >> Repair the (T9) OD Pressure Switch Sense circuit for a short to ground.
Perform 45RFE/545RFE TRANSMISSION VERIFICATION TEST - VER 1.

No >> Go To 16

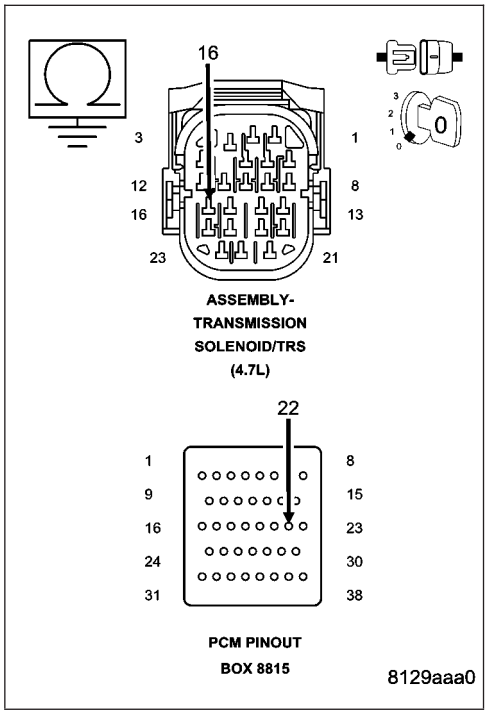

16. OD PRESSURE SWITCH SENSE CIRCUIT SHORT TO OTHER CIRCUITS

Disconnect all PCM harness connectors.

Disconnect the Transmission Solenoid/TRS Assembly harness connector.

NOTE: Make sure the Transmission Solenoid/TRS Assembly harness connector is disconnected.

NOTE: Check connectors - Clean/repair as necessary.

Measure the resistance between the (T9) OD Pressure Switch Sense circuit and all other circuits in the Transmission Solenoid/TRS Assembly harness connector.

Is the resistance below 5.0 ohms between the (T9) OD Pressure Switch Sense circuit and any other circuit(s) in the Transmission Solenoid/TRS Assembly harness connector?

Yes >> Repair the (T9) OD Pressure Switch Sense circuit for a short to other circuit(s).
Perform 45RFE/545RFE TRANSMISSION VERIFICATION TEST - VER 1.

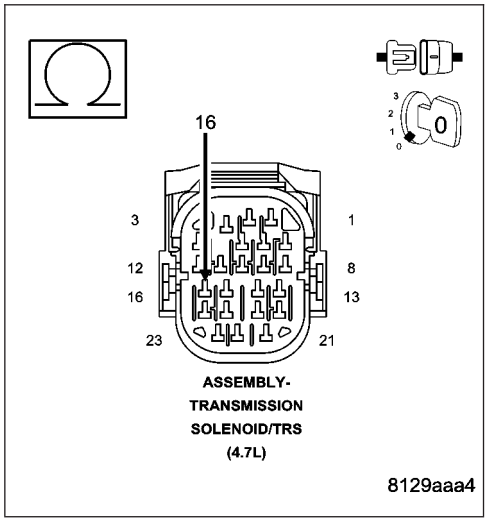

No >> Using the schematics as a guide, check the Powertrain Control Module (PCM) terminals for corrosion, damage, or terminal push out. Pay particular attention to all power and ground circuits. If no problems are found, replace the PCM per the Service Information. With the scan tool, perform QUICK LEARN.
Perform 45RFE/545RFE TRANSMISSION VERIFICATION TEST - VER 1.

P0870-OD HYDRAULIC PRESSURE TEST (CONTINUED)

17. INTERMITTENT WIRING AND CONNECTORS

The conditions necessary to set this DTC are not present at this time.

Using the schematics as a guide, inspect the wiring and connectors specific to this circuit.

Wiggle the wires while checking for shorted and open circuits.

With the scan tool, check the EATX DTC EVENT DATA to help identify the conditions in which the DTC was set.

If the EATX DTC EVENT DATA shows the DTC P0870 set while the Line Pressure was significantly below the Desired Line Pressure reading, check for causes of low line pressure (low fluid level, broken or mis-installed primary oil filter or filter seal, sticking Main Regulator Valve in the Pump Valve Body etc.). If the data shows the DTC set while the Line Pressure reading was significantly higher than the Desired Line Pressure, check the Line Pressure Sensor and related wiring.

Where there any problems found?

Yes >> Repair as necessary.
Perform 45RFE/545RFE TRANSMISSION VERIFICATION TEST - VER 1.

No >> Test Complete.

P0871-OD PRESSURE SWITCH RATIONALITY

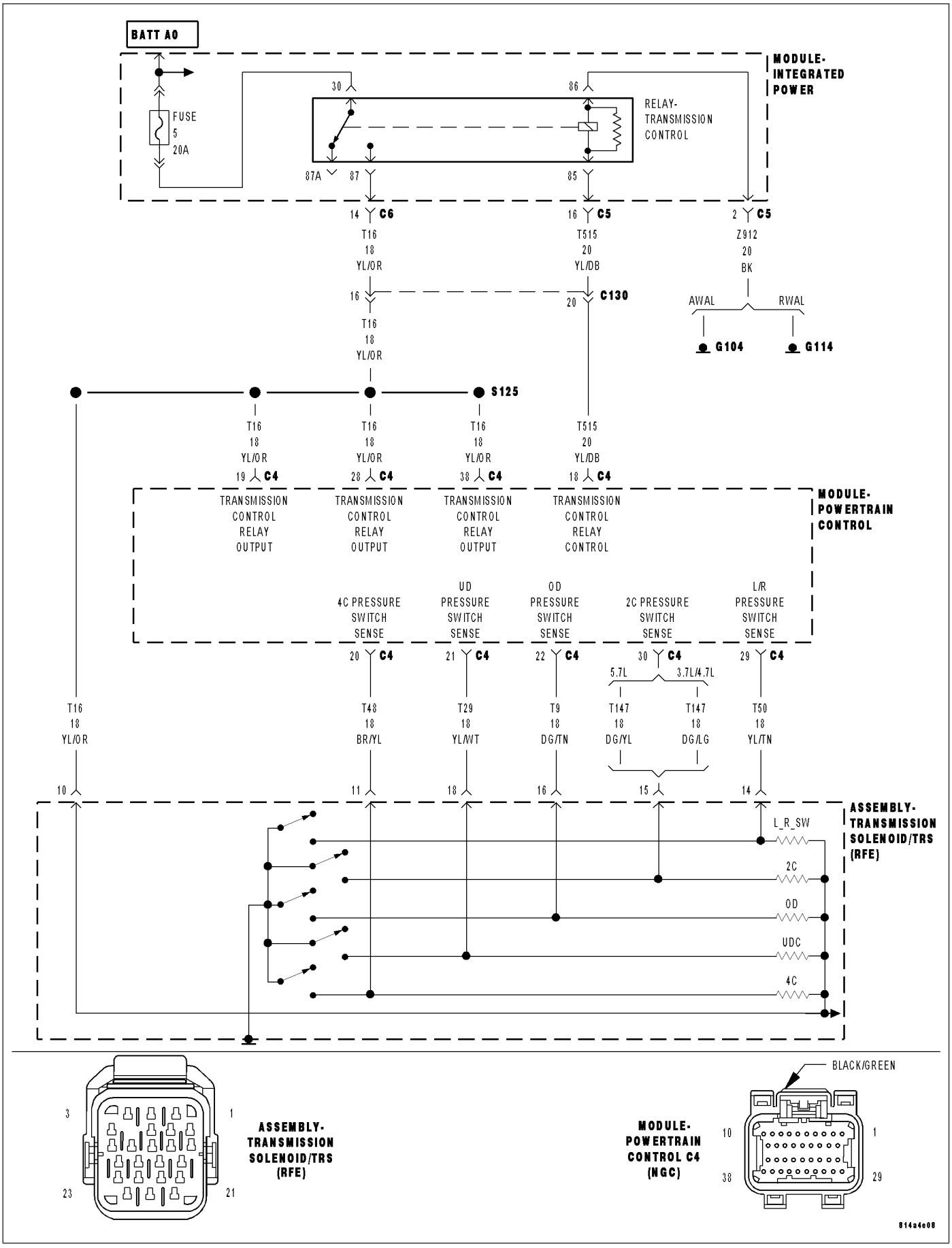

P0871-OD PRESSURE SWITCH RATIONALITY (CONTINUED)

For the Transmission circuit diagram (Refer to 21 - TRANSMISSION/TRANSAXLE/AUTOMATIC - 45RFE/545RFE - SCHEMATICS AND DIAGRAMS).

For a complete wiring diagram **Refer to Section 8W**

- **When Monitored:**
  Continuously with the ignition on and engine running.
- **Set Condition:**
  The appropriate DTC is set if one of the pressure switches are open or closed at the wrong time in a given gear.

Possible Causes
RELATED RELAY DTC'S PRESENT
LINE PRESSURE DTCS PRESENT
NO. 4 OR 6 CHECK BALL CUT OR DAMAGED
(T9) OD PRESSURE SWITCH SENSE CIRCUIT OPEN
(T9) OD PRESSURE SWITCH SENSE CIRCUIT SHORT TO GROUND
(T9) OD PRESSURE SWITCH SENSE CIRCUIT SHORT TO OTHER CIRCUITS
LOW LINE PRESSURE
WIRING AND CONNECTORS
CUT OD/REV PISTON SEAL
BROKEN OR MISSING DO/REV PISTON BLEED ORIFICE
BROKEN REACTION SHAFT SUPPORT SEAL RING
POOR MACHINING ON PUMP VALVE BODY FACE
BROKEN OR MISSING DRIBBLER ORIFICE ASSEMBLY IN REACTION SHAFT SUPPORT
TRANSMISSION SOLENOID/TRS ASSEMBLY
CUT OD ACCUMULATOR PISTON SEAL
CRACKED OD ACCUMULATOR PISTON
BROKEN OR MISSING OD BLEED ORIFICE IN MAIN VALVE BODY
POWERTRAIN CONTROL MODULE

Always perform the Pre-Diagnostic Troubleshooting procedure before proceeding. (Refer to 21 - TRANSMISSION/TRANSAXLE/AUTOMATIC - 45RFE/545RFE - DIAGNOSIS AND TESTING).

P0871-OD PRESSURE SWITCH RATIONALITY (CONTINUED)

Theory of Operation

The Transmission system uses five pressure switches to monitor the fluid pressure in the LR, 2C, 4C, UD, and OD clutch circuits. The pressure switches are continuously monitored for the correct states in each gear as shown.

GEAR	L/R	2C	4C	UD	OD
REVERSE	OPEN	OPEN	OPEN	OPEN	OPEN
P/N	CLOSED**	OPEN	OPEN	OPEN	OPEN
1ST	CLOSED*	OPEN	OPEN	CLOSED	OPEN
2ND	OPEN	CLOSED	OPEN	CLOSED	OPEN
2ND PRIME	OPEN	OPEN	CLOSED	CLOSED	OPEN
3RD	OPEN	OPEN	OPEN	CLOSED	CLOSED
4TH	OPEN	OPEN	CLOSED	OPEN	CLOSED
5TH	OPEN	CLOSED	OPEN	OPEN	CLOSED

*L/R is closed if output speed is below 100 rpm in Drive and Manual 2. L/R is closed in Manual 1.

**May be open when rolling in Neutral or at low oil temperatures.

Diagnostic Test

1. DETERMINING IF RELATED RELAY DTC'S ARE PRESENT

With the scan tool, check for other transmission DTC's.

Are there any Transmission Control Relay related DTC's present?

Yes >> Refer to the Transmission category and perform the appropriate symptom. Perform 45RFE/545RFE TRANSMISSION VERIFICATION TEST - VER 1.

No >> Go To 2

---

2. LINE PRESSURE DTCS PRESENT

With the scan tool, read Transmission DTCs.

Are there any Line Pressure DTCs present?

Yes >> Refer to the Transmission category and perform the appropriate symptom. Perform 45RFE/545RFE TRANSMISSION VERIFICATION TEST - VER 1.

No >> Go To 3

---

3. CHECK FOR OTHER PRESSURE SWITCH DTCS

With the scan tool, check Transmission DTCs.

Are there two or more other pressure switch rationality DTCs present in addition to P0871?

Yes >> Go To 5

No >> Go To 4

P0871-OD PRESSURE SWITCH RATIONALITY (CONTINUED)

4. CHECK IF DTC IS CURRENT

With the scan tool, check and record the EATX DTC EVENT DATA.

NOTE: Make sure to record all EATX DTC EVENT DATA stored in the scan tool for future reference in this test procedure.

Does the EATX DTC EVENT DATA show data for P0871

Yes >> Go To 8

No >> Refer to the Transmission Category and perform the appropriate symptom.

---

5. RELATED DTC PRESENT

With the scan tool, check and record the EATX DTC EVENT DATA.

NOTE: Make sure to record all EATX DTC EVENT DATA stored in the scan tool for future reference in this test procedure.

Do all the pressure switches read CLOSED in the EATX DTC EVENT DATA?

Yes >> Refer to the Transmission category and perform diagnostics for P0888. Follow instructions as if the DTC is current.

No >> Go To 6

---

6. CHECK IF PRESSURE SWITCHES READ OPEN

In the EATX DTC EVENT DATA recorded earlier, read the state of all pressure switches.

Do all the pressure switches read open?

Yes >> Go To 7

No >> Go To 8

---

7. CHECK FOR LOW LINE PRESSURE

In the EATX DTC EVENT DATA recorded earlier, compare the Line Pressure to the Desired Line Pressure.

Is the Line Pressure less than 40 PSI, and significantly below the Desired Line Pressure?

Yes >> Repair as necessary to correct low line pressure. Check fluid level and adjust as necessary. If fluid level is OK, check the Primary Oil Filter weal for a spit, crack , or improperly installed. If the filer and seal are OK, check the Main Regulator Valve in the Oil Pump. Refer to the Service Information for the above procedures.
Perform 45RFE/545RFE TRANSMISSION VERIFICATION TEST - VER 1.

No >> Replace the Transmission Solenoid/TRS Assembly per the Service Information.
Perform 45RFE/545RFE TRANSMISSION VERIFICATION TEST - VER 1.

P0871-OD PRESSURE SWITCH RATIONALITY (CONTINUED)

8. CHECK IF IN PARK, NEUTRAL, OR REVERSE

Ignition on, engine not running.

With the scan tool, read and record the EATX DTC EVENT DATA for P0871.

NOTE: Make sure to record all EATX DTC EVENT DATA stored in the scan tool for future reference in this test procedure.

Does the EATX DTC EVENT DATA show the OD Pressure Switch DTC set while in Park, Neutral, or Reverse?

Yes >> Go To 18

No >> Go To 9

---

9. OD PRESSURE SWITCH OPEN

Refer to the EATX DTC EVENT DATA recorded earlier for P0871.

Did the OD Pressure Switch read OPEN?

Yes >> Go To 10

No >> Go To 15

---

10. LOW LINE PRESSURE

Refer to the EATX DTC EVENT DATA recorded earlier and compare the Line Pressure and the Desired Line Pressure.

Is the Line Pressure less than 40 psi, and significantly below the Desired Line Pressure?

Yes >> Repair as necessary to correct low line pressure. Check the fluid level. Check the Primary Oil Filter seal for a split, crack, or improperly installed. Refer to the Service Information for the proper installation procedure. If the fluid level and filter are OK, check the Main Regulator Valve in the Oil Pump.

Perform 45RFE/545RFE TRANSMISSION VERIFICATION TEST - VER 1.

No >> Go To 11

---

11. (T9) OD PRESSURE SWITCH SENSE CIRCUIT SHORT TO OTHER CIRCUITS

Turn the ignition off to the lock position.

Disconnect all PCM harness connectors.

Disconnect the Transmission Solenoid/TRS Assembly harness connector.

NOTE: Check connectors - Clean/repair as necessary.

Measure the resistance between the (T9) OD Pressure Switch Sense circuit and all other circuits in the Transmission Solenoid/TRS Assembly harness connector.

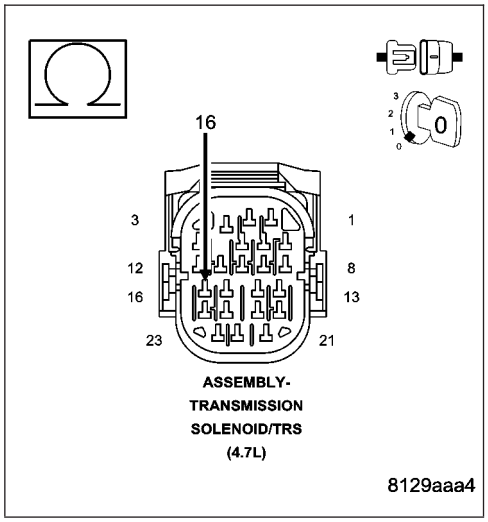

Is the resistance below 5.0 ohms between the (T9) OD Pressure Switch Sense circuit and any other circuit(s) in the Transmission Solenoid/TRS Assembly harness connector?

Yes >> Repair the (T9) OD Pressure Switch Sense circuit for a short to other circuit(s).

Perform 45RFE/545RFE TRANSMISSION VERIFICATION TEST - VER 1.

No >> Go To 12

P0871-OD PRESSURE SWITCH RATIONALITY (CONTINUED)

12. CHECK TO SEE IF DTC RESETS

Reconnect all previously disconnected connectors.

With the scan too, erase transmission DTCs.

Test drive the vehicle, use the EATX DTC EVENT DATA recored earlier to help duplicate the conditions when the DTC originality set.

Does the DTC P0871 reset?

Yes >> Go To 13

No >> Go To 22

---

13. POWERTRAIN CONTROL MODULE

Remove the Transmission Control Relay.

Operate the vehicle in Drive.

Is the transmission slipping while in Drive?

Yes >> Go To 14

No >> Using the schematics as a guide, check the Powertrain Control Module (PCM) terminals for corrosion, damage, or terminal push out. Pay particular attention to all power and ground circuits. If no problems are found, replace the PCM per the Service Information. With the scan tool, perform QUICK LEARN.
Perform 45RFE/545RFE TRANSMISSION VERIFICATION TEST - VER 1.

---

14. INTERNAL TRANSMISSION

Perform an Air Check Transmission Clutch Operation procedure per the Service Information.

NOTE: The OD/Rev piston contains a small bleed orifice, a small amount of leakage between the OD and Reverse hydraulic clutch circuits is considered normal.

Is there excessive air leakage in any clutch circuit?

Yes >> Check the OD/Rev piston seals and bleed orifice, reaction shaft support seal rings, dribbler orifice assemblies in the reaction shaft support and for poor machine on the pump valve body faces. Refer to the Service Information.
Perform 45RFE/545RFE TRANSMISSION VERIFICATION TEST - VER 1.

No >> Repair the Valve Body. Check the OD Accumulator piston and seals, OD bleed orifice, and No.6 check ball cuts or damage. If no problems are found in the Valve Body, replace the Transmission Solenoid/ TRS Assembly. Refer to the Service Information for proper repair procedures.
Perform 45RFE/545RFE TRANSMISSION VERIFICATION TEST - VER 1.

P0871-OD PRESSURE SWITCH RATIONALITY (CONTINUED)

15. PCM AND WIRING

Turn the ignition off to the lock position.

Remove the Starter Relay.

NOTE: Removal of the Starter Relay is to prevent a Transmission, NO RESPONSE, condition and disable the starter.

Install Transmission Simulator, Miller tool #8333.

NOTE: Check connectors - Clean/repair as necessary.

Ignition on, engine not running.

With the Transmission Simulator, turn the Pressure Switch selector switch to OD.

With the scan tool, monitor the OD Pressure Switch state while pressing the Pressure Switch Test button on the Transmission Simulator.

Did the state of the OD Pressure Switch change from OPEN to CLOSED while pressing the Test button?

Yes >> Go To 16

No >> Go To 18

---

16. NO. 4 AND/OR NO. 6 CHECK BALL CUT OR DAMAGED

With the scan tool, erase previously stored DTC's and test drive the vehicle, use the EATX DTC EVENT DATA to help duplicate the conditions when the DTC originality set. Note any DTCs that may set.

Remove the Transmission Valve Body per the Service Information.

Check the No. 4 and No. 6 Check Balls for cuts or damage.

Is the No. 4 and/or No. 6 Check Ball cut or damaged?

Yes >> Replace the No. 4 and/or No. 6 Check Ball and check for clutch debris in the transmission oil pan. If there is excessive debris, perform internal repairs to the OD Clutch Assembly. Refer to the Service Information for proper repair procedures.
Perform 45RFE/545RFE TRANSMISSION VERIFICATION TEST - VER 1.

No >> Go To 17

---

17. TRANSMISSION SOLENOID/TRS ASSEMBLY

Did the DTC P0871 reset during the test drive in the previous step?

Yes >> Replace the Transmission Solenoid/TRS Assembly per the Service Information.
Perform 45RFE/545RFE TRANSMISSION VERIFICATION TEST - VER 1.

No >> Go To 22

P0871-OD PRESSURE SWITCH RATIONALITY (CONTINUED)

18. (T9) OD PRESSURE SWITCH SENSE CIRCUIT OPEN

Turn the ignition off to the lock position.

Disconnect the PCM C4 harness connector and connect Miller tool #8815.

Disconnect the Transmission Solenoid /TRS Assembly harness connector

NOTE: Check connectors - Clean/repair as necessary.

CAUTION: Do not probe the PCM harness connectors. Probing the PCM harness connectors will damage the PCM terminals resulting in poor terminal to pin connection. Install Miller tool #8815 to perform diagnosis.

Measure the resistance of the (T9) OD Pressure Switch Sense circuit from the appropriate terminal of Miller tool #8815 to the Solenoid/TRS Assembly harness connector.

Is the resistance above 5.0 ohms?

Yes >> Repair the (T9) OD Pressure Switch Sense circuit for an open.

Perform 45RFE/545RFE TRANSMISSION VERIFICATION TEST - VER 1.

No >> Go To 19

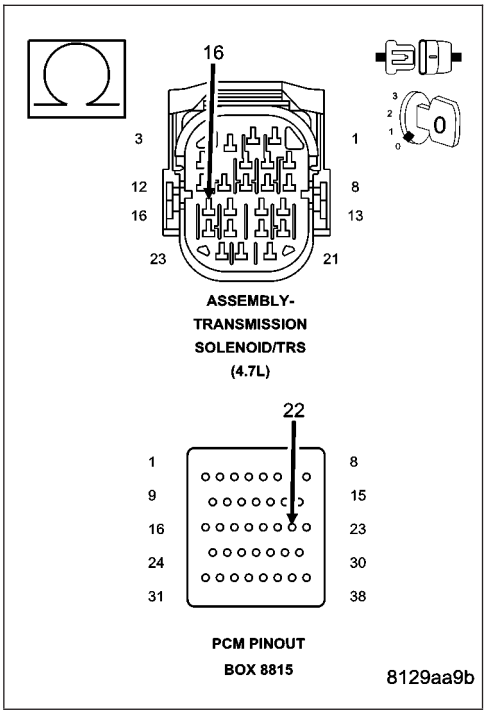

19. (T9) OD PRESSURE SWITCH SENSE CIRCUIT SHORT TO GROUND

Measure the resistance between ground and the (T9) OD Pressure Switch Sense circuit.

Is the resistance below 5.0 ohms?

Yes >> Repair the (T9) OD Pressure Switch Sense circuit for a short to ground.

Perform 45RFE/545RFE TRANSMISSION VERIFICATION TEST - VER 1.

No >> Go To 20

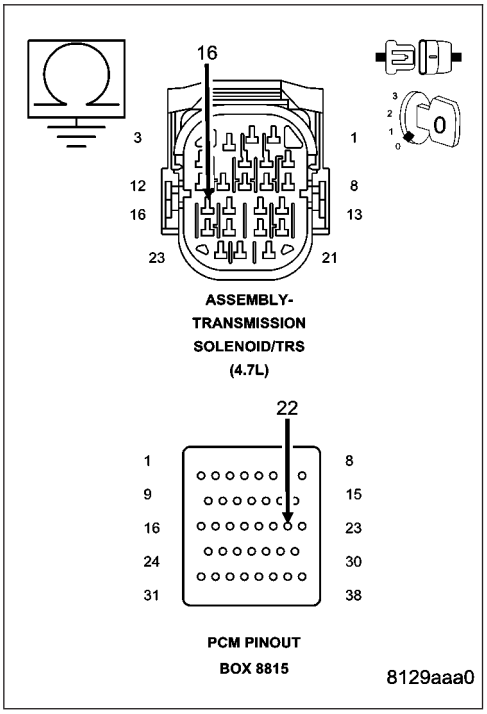

P0871-OD PRESSURE SWITCH RATIONALITY (CONTINUED)

20. WIRING AND CONNECTORS

Using the schematics as a guide, inspect the wiring and connectors. Pay particular attention to all power and ground circuits.

Were there any problems found

Yes >> Repair as necessary.
Perform 45RFE/545RFE TRANSMISSION VERIFICATION TEST - VER 1.

No >> Go To 21

---

21. POWERTRAIN CONTROL MODULE

Reconnect all previously disconnected connectors.

Make sure all EATX DTC EVENT DATA is recorded.

With the scan tool, erase previously stored DTC's and test drive the vehicle, use the EATX DTC EVENT DATA to help duplicate the conditions when the DTC originality set.

Does the DTC P0871 reset?

Yes >> Using the schematics as a guide, check the Powertrain Control Module (PCM) terminals for corrosion, damage, or terminal push out. Pay particular attention to all power and ground circuits. If no problems are found, replace the PCM per the Service Information. With the scan tool, perform QUICK LEARN.
Perform 45RFE/545RFE TRANSMISSION VERIFICATION TEST - VER 1.

No >> Go To 22

---

22. INTERMITTENT WIRING AND CONNECTORS

The conditions necessary to set this DTC are not present at this time.

Using the schematics as a guide, inspect the wiring and connectors specific to this circuit.

Wiggle the wires while checking for shorted and open circuits.

With the scan tool, check the EATX DTC EVENT DATA to help identify the conditions in which the DTC was set.

Where there any problems found?

Yes >> Repair as necessary.
Perform 45RFE/545RFE TRANSMISSION VERIFICATION TEST - VER 1.

No >> Test Complete.

P0875-UD HYDRAULIC PRESSURE TEST

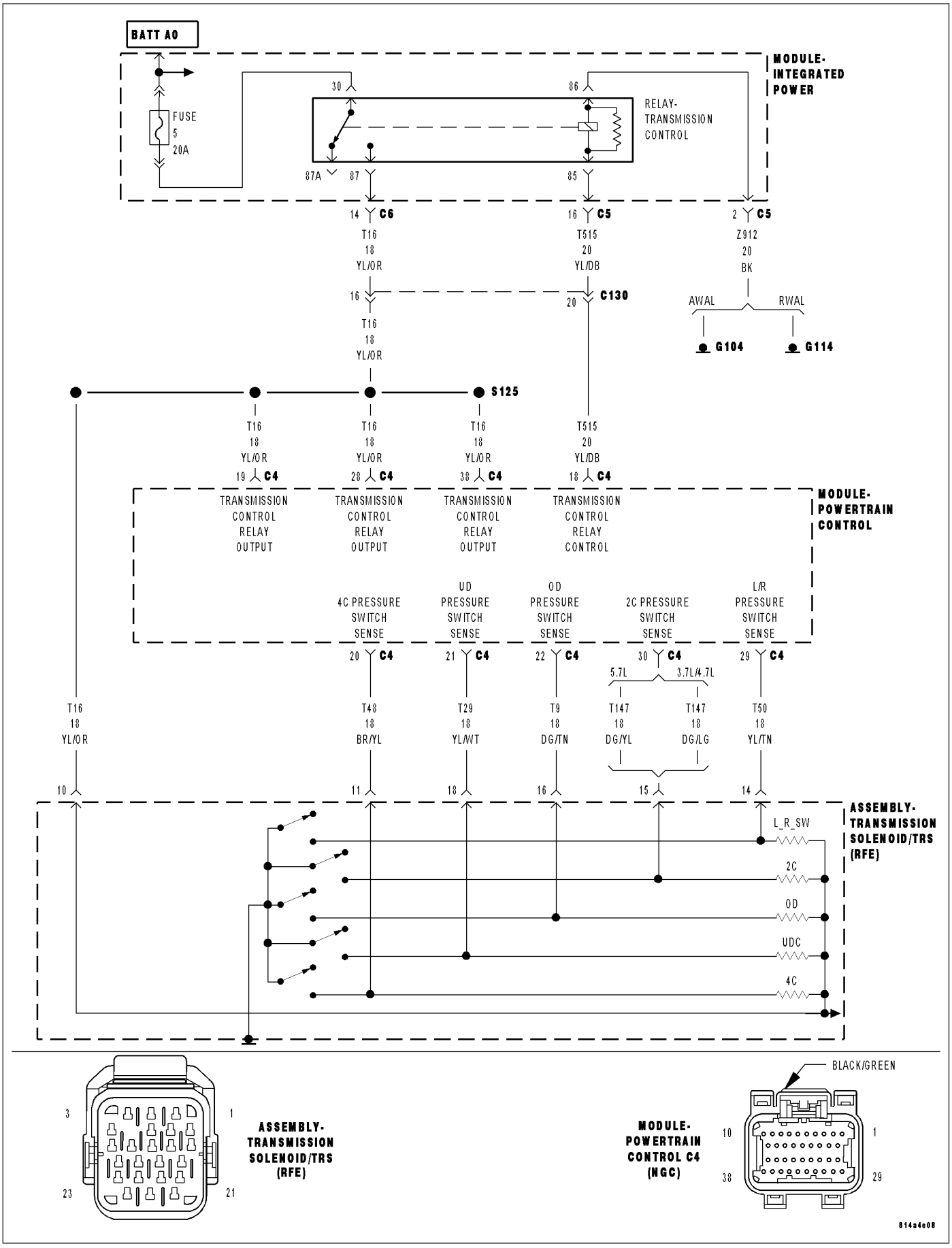

P0875-UD HYDRAULIC PRESSURE TEST (CONTINUED)

For the Transmission circuit diagram (Refer to 21 - TRANSMISSION/TRANSAXLE/AUTOMATIC - 45RFE/545RFE - SCHEMATICS AND DIAGRAMS)

For a complete wiring diagram **Refer to Section 8W**

- **When Monitored:**
  In any forward gear with engine speed above 1000 RPM shortly after a shift and every minute thereafter.
- **Set Condition:**
  After a shift into a forward gear, with engine speed above 1000 RPM, the PCM momentarily turns on element pressure to the Clutch circuits that don't have pressure to identify the correct Pressure Switch closes. If the Pressure Switch does not close 2 times, the DTC sets.

Possible Causes
LINE PRESSURE SENSOR
TRANSMISSION FLUID CONTAMINATION
RELATED DTC'S PRESENT
TRANSMISSION SOLENOID/TRS ASSEMBLY
EXCESSIVE DEBRIS IN OIL PAN
POOR LINE PRESSURE SENSOR CONNECTION
(T29) UD PRESSURE SWITCH SENSE CIRCUIT OPEN
TRANSMISSION CONTROL RELAY DTCS PRESENT
(T29) UD PRESSURE SWITCH SENSE CIRCUIT OPEN
(F856) 5-VOLT SUPPLY CIRCUIT OPEN
(T29) UD PRESSURE SWITCH SENSE CIRCUIT SHORT TO GROUND
(F856) 5-VOLT SUPPLY CIRCUIT SHORT TO GROUND
(T29) UD PRESSURE SWITCH SENSE CIRCUIT SHORT TO VOLTAGE
TRANSMISSION SOLENOID/TRS ASSEMBLY
INTERNAL TRANSMISSION
POWERTRAIN CONTROL MODULE

Always perform the Pre-Diagnostic Troubleshooting procedure before proceeding. (Refer to 21 - TRANSMISSION/TRANSAXLE/AUTOMATIC - 45RFE/545RFE - DIAGNOSIS AND TESTING).

Theory of Operation

The Transmission Control System tests the pressure switches when they are off. The test verifies that the switches are operational (They will close with pressure applied). The Transmission Control System verifies that the switch closes when the corresponding element is applied. If a switch fails to close, it is re-tested. If it fails the second test, the DTC will set, the MIL will illuminate and the transmission system will default to the orderly Shutdown routine.

Diagnostic Test

1. DETERMINING IF RELATED DTC'S ARE PRESENT

With the scan tool, check for other transmission DTC's

Is there any Loss of Prime, Transmission Control Relay, and/or Line Pressure Sensor DTCs present?

Yes >> Refer to the Transmission category and perform the appropriate symptom. If the DTC, P0944-LOSS OF PRIME is present, perform its respective test first.
Perform 45RFE/545RFE TRANSMISSION VERIFICATION TEST - VER 1.

No >> Go To 2

P0875-UD HYDRAULIC PRESSURE TEST (CONTINUED)

2. DTC P0765 PRESENT

With the scan tool, check Transmission DTCs.

Is the DTC P0765 also present?

Yes >> Refer to the symptom list and perform diagnostics for P0765–UD SOLENOID CIRCUIT.

No >> Go To 3

---

3. OTHER DTCS PRESENT

With the scan tool, check for other transmission DTC's

Are any of the DTCs, P0731, P0732, P0733, P0876, and/or P1736 present also?

Yes >> Go To 12

No >> Go To 4

---

4. CHECK TO SEE IF DTC P0875 IS CURRENT

With the scan tool, check the STARTS SINCE SET counter for P0875.

Is the STARTS SINCE SET COUNTER 2 or less?

Yes >> Go To 5

No >> Go To 17

---

5. LINE PRESSURE STAYS THE SAME

Start the engine.

Warm the transmission to 82° C or 180° F.

Firmly apply the brakes.

With the scan tool, monitor the Line Pressure during the following step.

Move the shift lever to each gear position, pausing momentarily in each position and record the line pressure reading. Allow the pressure to stabilize for at least 5 seconds in each range.

Did the line pressure remain at a steady value between 585 and 655 kPa or 85 and 95 PSI in each position?

Yes >> Go To 6

No >> Go To 10

---

6. CHECK LINE PRESSURE SENSOR CONNECTION

Ignition on, **engine not running.**

With the scan tool, monitor the Line Pressure while firmly pushing the Transmission Line Pressure Sensor connector inwards towards the Transmission.

Did the Line Pressure reading on the scan tool change to about 207 kPa or 30 PSI when the connector was pushed inward?

Yes >> Disconnect and properly reconnect the Line Pressure Sensor connector. Inspect terminals and repair as necessary.

Perform 45RFE/545RFE TRANSMISSION VERIFICATION TEST - VER 1.

No >> Go To 7

P0875-UD HYDRAULIC PRESSURE TEST (CONTINUED)

7. LINE PRESSURE SENSOR OPERATION

Turn the ignition off to the lock position.

Remove the Starter Relay.

NOTE: Removal of the Starter Relay is to prevent a Transmission, NO RESPONSE, condition and disable the starter.

Install the Transmission Simulator, Miller tool #8333.

NOTE: Check connectors - Clean/repair as necessary.

With the Transmission Simulator select the ″OFF″ position on the ″Input/Output Speed″ switch.

Ignition on, engine not running.

With the scan tool, monitor the Line Pressure while turning the Pressure Switch selector to each of the 3 line pressure positions on the Transmission Simulator.

NOTE: All three scan tool Line Pressure readings should be steady and ±14 kPa or 2.0 PSI of the reading specified on the Transmission Simulator.

Did the scan tool Line Pressure readings match the specified readings on the Transmission Simulator and remain steady in all three positions?

Yes >> Replace the Line Pressure Sensor per the Service Information.
Perform 45RFE/545RFE TRANSMISSION VERIFICATION TEST - VER 1.

No >> Go To 8

---

8. (F856) 5-VOLT SUPPLY CIRCUIT OPEN

Turn the ignition off to the lock position.

Disconnect Transmission Simulator.

Disconnect the PCM C1 harness connector and connect Miller tool #8815.

CAUTION: Do not probe the PCM harness connectors. Probing the PCM harness connectors will damage the PCM terminals resulting in poor terminal to pin connection. Install Miller tool #8815 to perform diagnosis.

Measure the resistance of the (F856) 5-volt Supply circuit from the Line Pressure Sensor harness connector to the appropriate terminal of Miller tool #8815.

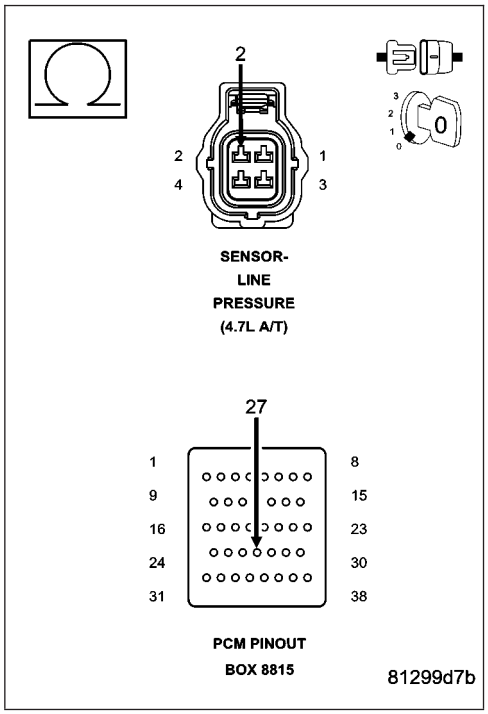

Is the resistance above 5.0 ohms?

Yes >> Repair the (F856) 5-volt Supply circuit for an open.
Perform 45RFE/545RFE TRANSMISSION VERIFICATION TEST - VER 1.

No >> Go To 9

P0875-UD HYDRAULIC PRESSURE TEST (CONTINUED)

9. (F856) 5-VOLT SUPPLY CIRCUIT SHORT TO GROUND

Measure the resistance between ground and the (F856) 5-volt Supply circuit.

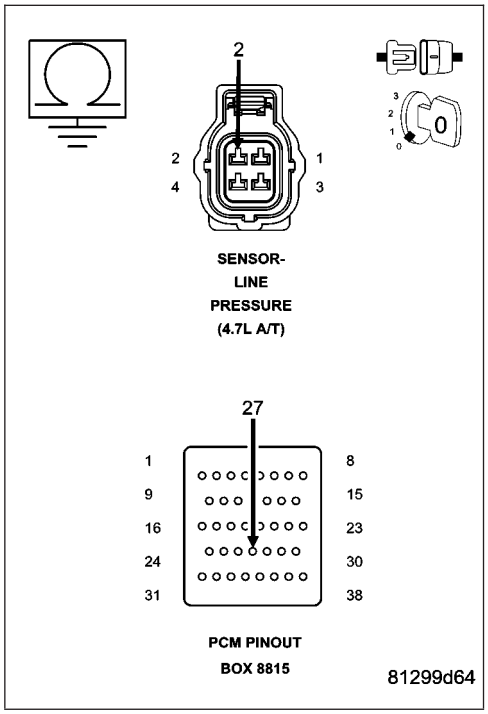

Is the resistance below 5.0 ohms?

Yes >> Repair the (F856) 5-volt Supply circuit for a short to ground.
Perform 45RFE/545RFE TRANSMISSION VERIFICATION TEST - VER 1.

No >> Using the schematics as a guide, check the Powertrain Control Module (PCM) terminals for corrosion, damage, or terminal push out. Pay particular attention to all power and ground circuits. If no problems are found, replace the PCM per the Service Information. With the scan tool, perform QUICK LEARN.
Perform 45RFE/545RFE TRANSMISSION VERIFICATION TEST - VER 1.

---

10. COMPARE SCAN TOOL TO PRESSURE GAUGE

Turn the ignition off to the lock position.

Connect the Line Pressure Adapter, Miller tool #8259 and 0-300 psi Test Gauge, Miller tool #C-3293-SP. Refer to the Service Information for proper installation procedure.

CAUTION: Apply parking brake.

Start the engine.

In the following steps, compare the scan tool Line Pressure to the Pressure Gauge readings in each gear.

CAUTION: Do not overheat transmission.

With the gear selector in park, raise the RPM to 1500, and compare line pressure readings.

Firmly apply the brakes, move the gear selector into reverse, raise the RPM to 1500, and compare the line pressure readings.

Firmly apply the brakes, move the gear selector into drive, raise the RPM to 1500, and compare the line pressure readings.

Did the scan tool Line Pressure readings match the Pressure Gauge readings ± 10 psi?

Yes >> Go To 11

No >> Replace the Line Pressure Sensor per the Service Information.
Perform 45RFE/545RFE TRANSMISSION VERIFICATION TEST - VER 1.

P0875-UD HYDRAULIC PRESSURE TEST (CONTINUED)

11. WIRING AND CONNECTORS

Turn the ignition off to the lock position.

Remove the Starter Relay.

NOTE: Failure to remove the Starter Relay can cause a Transmission - No Response condition.

Remove the Line Pressure Adapter, Miller tool #8259 and 0-300 psi Test Gauge, Miller tool #C-3293-SP.

Install the Transmission Simulator, Miller tool #8333.

On the Transmission Simulator, turn the Pressure Switch selector switch to UD.

Ignition on, engine not running.

With the scan tool, monitor the UD Pressure Switch state while pressing and holding the Pressure Switch test button and wiggling the wire harness and connectors that pertain to the UD Pressure Switch.

Did the UD Pressure Switch state change to closed and remain closed while wiggling the wires?

Yes >> Go To 12

No >> Go To 14

---

12. CHECK FOR EXCESSIVE DEBRIS

Turn the ignition off to the lock position.

Remove the Transmission Simulator, Miller tool #8333.

Remove and inspect the Transmission Oil Pan per the Service Information.

Does the Transmission Oil Pan contain excessive debris or contamination?

Yes >> Repair the cause of the excessive debris in the Transmission Oil Pan. Refer to the Service Information for the proper procedures.
Perform 45RFE/545RFE TRANSMISSION VERIFICATION TEST - VER 1.

No >> Go To 13

---

13. CHECK UD HYDRAULIC CLUTCH CIRCUIT

Remove the Valve Body and air check the UD hydraulic clutch circuit (in the case) for leakage per the Service Information.

NOTE: The UD hydraulic clutch circuit contains a small bleed orifice. A small amount of air leakage is normal.

Was there excessive air leakage noticed during the air check?

Yes >> Repair as necessary. Check the UD clutch piston, piston seals and bleed orifice, reaction shaft wupport seal rings, and machining of the main mationg faces of the pump housing, pump valve boday, and reaction shaft support.
Perform 45RFE/545RFE TRANSMISSION VERIFICATION TEST - VER 1.

No >> Disassemble and inspect the Valve Body and repair as necessary. Inspect the UD Accumulator piston and seals. If no problems are found in the Valve Body, replace the Transmission Solenoid/TRS Assembly per the Service Information.
Perform 45RFE/545RFE TRANSMISSION VERIFICATION TEST - VER 1.

P0875-UD HYDRAULIC PRESSURE TEST (CONTINUED)

14. (T29) UD PRESSURE SWITCH SENSE CIRCUIT OPEN

Turn the ignition off to the lock position.

Remove the Transmission Simulator, Miller tool #8333.

Disconnect the PCM C4 harness connector and connect Miller tool #8815.

Measure the resistance of the (T29) UD Pressure Switch Sense circuit from the Transmission Solenoid/TRS Assembly harness connector to the appropriate terminal of Miller tool #8815.

Is the resistance above 5.0 ohms?

Yes >> Repair the (T29) UD Pressure Switch Sense circuit for an open.

Perform 45RFE/545RFE TRANSMISSION VERIFICATION TEST - VER 1.

No >> Go To 15

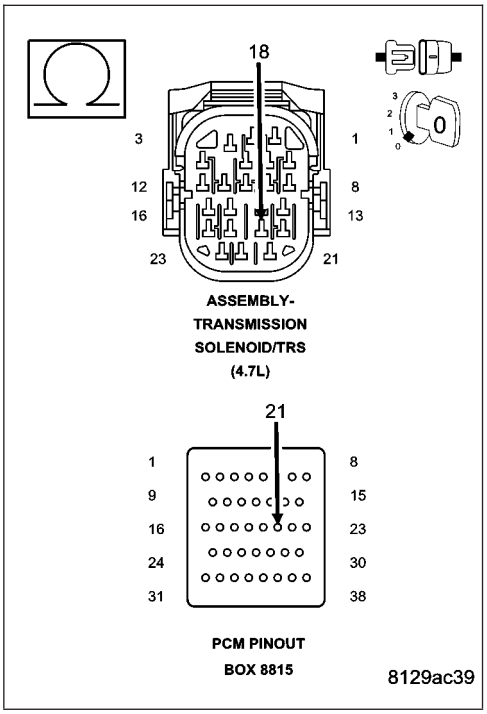

15. (T29) UD PRESSURE SWITCH SENSE CIRCUIT SHORT TO GROUND

Measure the resistance between ground and the (T29) UD Pressure Switch Sense circuit.

Is the resistance below 5.0 ohms?

Yes >> Repair the (T29) UD Pressure Switch Sense circuit for a short to ground.

Perform 45RFE/545RFE TRANSMISSION VERIFICATION TEST - VER 1.

No >> Go To 16

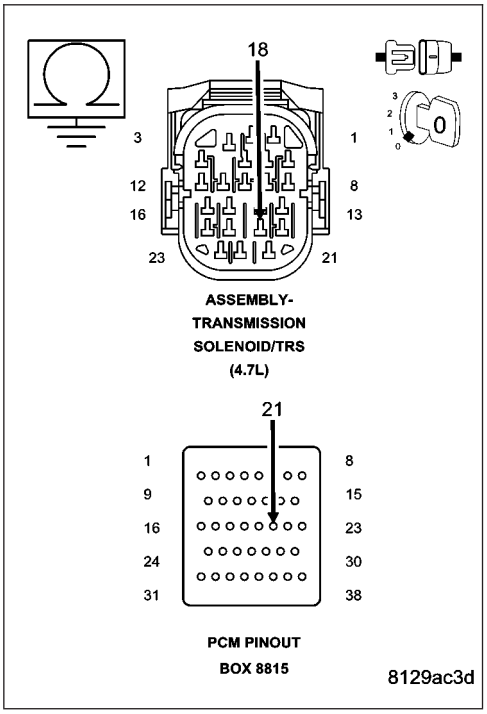

P0875-UD HYDRAULIC PRESSURE TEST (CONTINUED)

16. (T29) UD PRESSURE SWITCH SENSE CIRCUIT SHORT TO OTHER CIRCUITS

Disconnect all PCM harness connectors.

Disconnect the Transmission Solenoid/TRS Assembly harness connector.

NOTE: Make sure the Transmission Solenoid/TRS Assembly harness connector is disconnected.

NOTE: Check connectors - Clean/repair as necessary.

Measure the resistance between the (T29) UD Pressure Switch Sense circuit and all other circuits in the Transmission Solenoid/TRS Assembly harness connector.

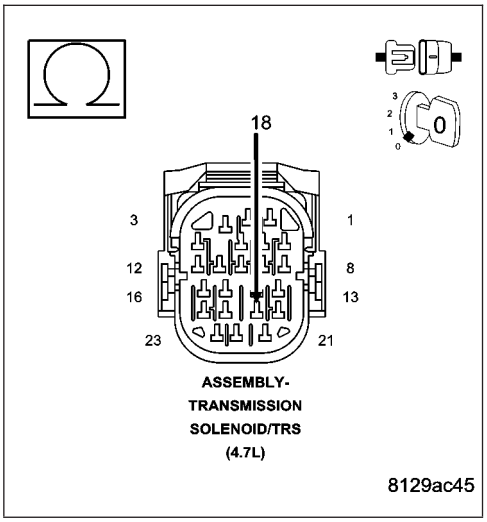

Is the resistance below 5.0 ohms between the (T29) UD Pressure Switch Sense circuit and any other circuit(s) in the Transmission Solenoid/TRS Assembly harness connector?

Yes >> Repair the (T29) UD Pressure Switch Sense circuit for a short to other circuit(s).
Perform 45RFE/545RFE TRANSMISSION VERIFICATION TEST - VER 1.

No >> Using the schematics as a guide, check the Powertrain Control Module (PCM) terminals for corrosion, damage, or terminal push out. Pay particular attention to all power and ground circuits. If no problems are found, replace the PCM per the Service Information. With the scan tool, perform QUICK LEARN.
Perform 45RFE/545RFE TRANSMISSION VERIFICATION TEST - VER 1.

---

17. INTERMITTENT WIRING AND CONNECTORS

The conditions necessary to set this DTC are not present at this time.

Using the schematics as a guide, inspect the wiring and connectors specific to this circuit.

Wiggle the wires while checking for shorted and open circuits.

With the scan tool, check the EATX DTC EVENT DATA to help identify the conditions in which the DTC was set.

If the EATX DTC EVENT DATA shows the DTC P0875 set while the Line Pressure was significantly below the Desired Line Pressure reading, check for causes of low line pressure (low fluid level, broken or mis-installed primary oil filter or filter seal, sticking Main Regulator Valve in the Pump Valve Body etc.). If the data shows the DTC set while the Line Pressure reading was significantly higher than the Desired Line Pressure, check the Line Pressure Sensor and related wiring.

Where there any problems found?

Yes >> Repair as necessary.
Perform 45RFE/545RFE TRANSMISSION VERIFICATION TEST - VER 1.

No >> Test Complete.

P0876-UD PRESSURE SWITCH RATIONALITY

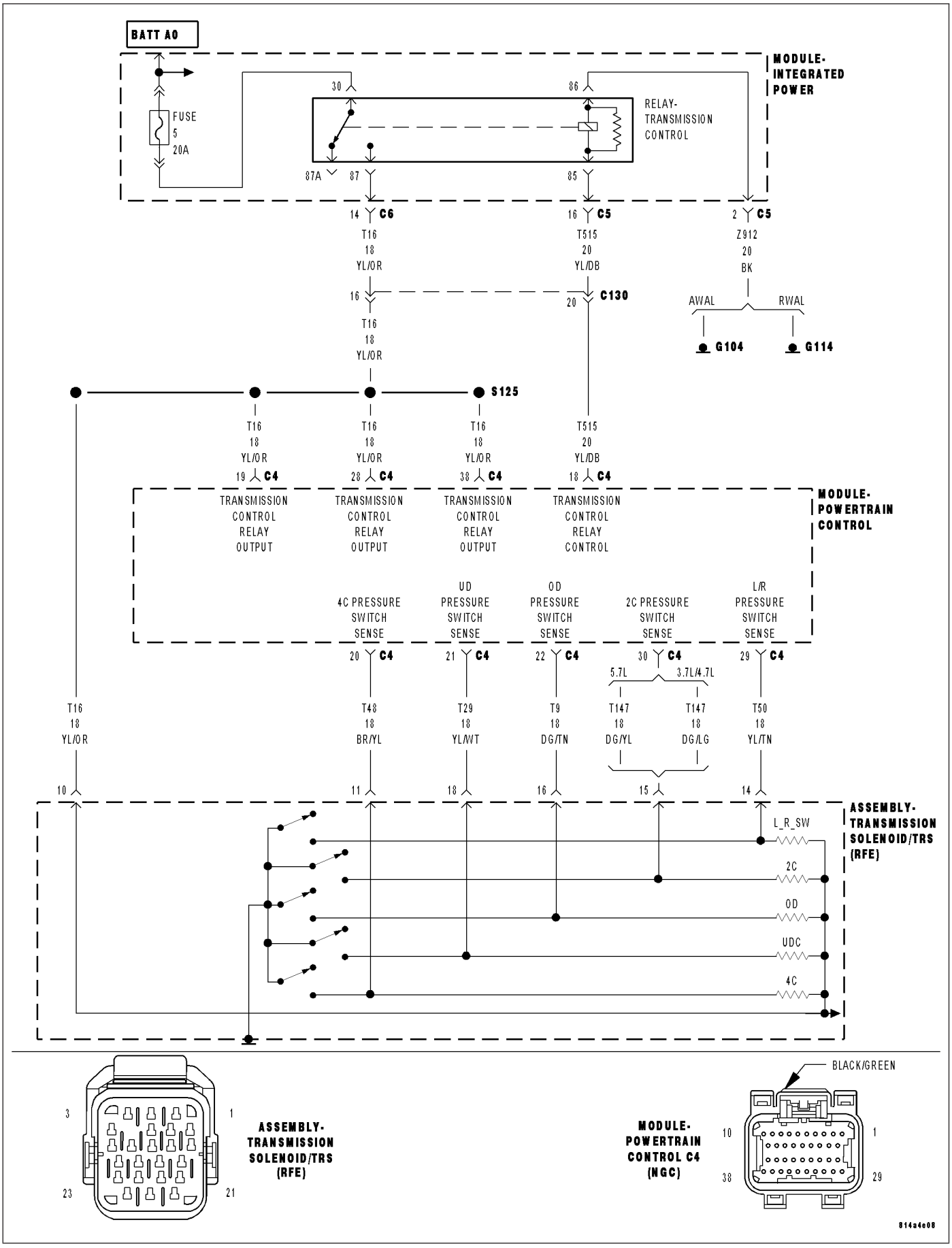

P0876-UD PRESSURE SWITCH RATIONALITY (CONTINUED)

For the Transmission circuit diagram (Refer to 21 - TRANSMISSION/TRANSAXLE/AUTOMATIC - 45RFE/545RFE - SCHEMATICS AND DIAGRAMS).

For a complete wiring diagram **Refer to Section 8W**

- **When Monitored:**
  Continuously with the ignition on and engine running.
- **Set Condition:**
  This DTC is set if the UD pressure switch is in the wrong state for the current gear. For example, this code would be set if the UD pressure switch remained off while the transmission was in second gear.

Possible Causes
RELATED RELAY DTC'S PRESENT
LOW FLUID LEVEL
NO. 2 CHECK BALL CUT OR DAMAGED
LOW LINE PRESSURE
CRACKED OR MISINSTALLED SUMP FILTER OR SEAL
STICKING MAIN REGULATOR VALVE IN PUMP VALVE BODY
(T29) UD PRESSURE SWITCH SENSE CIRCUIT OPEN
(T29) UD PRESSURE SWITCH CIRCUIT SHORT TO GROUND
(T29) UD PRESSURE SWITCH SENSE CIRCUIT SHORT TO ANOTHER CIRCUITS
TRANSMISSION SOLENOID/TRS ASSEMBLY
POWERTRAIN CONTROL MODULE

Always perform the Pre-Diagnostic Troubleshooting procedure before proceeding. (Refer to 21 - TRANSMISSION/TRANSAXLE/AUTOMATIC - 45RFE/545RFE - DIAGNOSIS AND TESTING).

Theory of Operation

The Transmission system uses five pressure switches to monitor the fluid pressure in the LR, 2C, 4C, UD, and OD clutch circuits. The pressure switches are continuously monitored for the correct states in each gear as shown.

GEAR	L/R	2C	4C	UD	OD
REVERSE	OPEN	OPEN	OPEN	OPEN	OPEN
P/N	CLOSED**	OPEN	OPEN	OPEN	OPEN
1ST	CLOSED*	OPEN	OPEN	CLOSED	OPEN
2ND	OPEN	CLOSED	OPEN	CLOSED	OPEN
2ND PRIME	OPEN	OPEN	CLOSED	CLOSED	OPEN
3RD	OPEN	OPEN	OPEN	CLOSED	CLOSED
4TH	OPEN	OPEN	CLOSED	OPEN	CLOSED
5TH	OPEN	CLOSED	OPEN	OPEN	CLOSED

*L/R is closed if output speed is below 100 rpm in Drive and Manual 2. L/R is closed in Manual 1.

**May be open when rolling in Neutral or at low oil temperatures.

P0876-UD PRESSURE SWITCH RATIONALITY (CONTINUED)

Diagnostic Test

1. CHECK IF RELATED DTC'S ARE PRESENT

With the scan tool, check for other transmission DTC's.

Are there any Transmission Control Relay, Line Pressure, and/or Loss of Prime DTC's present?

Yes >> Refer to the Transmission category and perform the appropriate symptom. If a Loss of Prime DTC is present, perform its respective test first.
Perform 45RFE/545RFE TRANSMISSION VERIFICATION TEST - VER 1.

No >> Go To 2

---

2. CHECK FOR PRESSURE SWITCH DTCS

Are there two or more other pressure switch rationality DTC's present in addition to P0876?

Yes >> Go To 3

No >> Go To 4

---

3. CHECK IF ALL PRESSURE SWITCHES READ CLOSED

With the scan tool, read and record all EATX DTC EVENT DATA.

NOTE: Make sure to record all EATX DTC EVENT DATA stored in the scan tool for future reference in this test procedure.

Does the EATX DTC EVENT DATA show all pressure switches reading CLOSED?

Yes >> Refer to the symptom category and perform diagnostics for P0888. Diagnose the symptom as if the DTC is current.

No >> Go To 4

---

4. CHECK FOR OTHER DTCS

With the scan tool, check for other transmission DTC's.

Is the DTC P2704 present also?

Yes >> Replace the Transmission Solenoid/TRS Assembly per the Service Information.
Perform 45RFE/545RFE TRANSMISSION VERIFICATION TEST - VER 1.

No >> Go To 5

---

5. CHECK EATX DTC EVENT DATA

With the scan tool, read and record the DTC EVENT DATA.

NOTE: Make sure to record all EATX DTC EVENT DATA stored in the scan tool for future reference in this test procedure.

Does the DTC EVENT DATA display information for the DTC P0876?

Yes >> Go To 6

No >> Refer to the symptom list and perform diagnostics for the DTC listed in the EATX DTC EVENT DATA.
Perform 45RFE/545RFE TRANSMISSION VERIFICATION TEST - VER 1.

P0876-UD PRESSURE SWITCH RATIONALITY (CONTINUED)

6. CHECK IF DTC EVENT DATA WAS SET IN PARK, NEUTRAL OR REVERSE

Refer to the DTC EVENT DATA recorded earlier.

Did the DTC P0876 set in Park, Neutral, or Reverse?

Yes >> Go To 10

No >> Go To 7

---

7. CHECK FOR UD PRESSURE SWITCH STATUS

Refer to the DTC EVENT DATA recorded earlier.

Did the DTC P0876 set with the UD Pressure Switch closed?

Yes >> Go To 10

No >> Go To 8

---

8. CHECK LINE PRESSURE

In the EATX DTC EVENT DATA recorded earlier, compare the Line Pressure and the Desired Line Pressure.

Is the Line Pressure less than 40 PSI, and significantly below the Desired Line Pressure?

Yes >> Repair as necessary to correct low line pressure. Check fluid level and adjust as necessary. If fluid level is OK, check the Primary Oil Filter seal for a split, crack, or improperly installed. If the filter and seal are OK, check the Main Regulator Valve in the Oil Pump. Refer to the Service Information for the above procedures.

Perform 45RFE/545RFE TRANSMISSION VERIFICATION TEST - VER 1.

No >> Go To 9

---

9. (T29) UD PRESSURE SWITCH SENSE CIRCUIT SHORT TO OTHER CIRCUITS

Turn the ignition off to the lock position.

Disconnect all PCM harness connectors.

Disconnect the Transmission Solenoid/TRS Assembly harness connector.

Measure the resistance between the (T29) UD Pressure Switch Sense circuit and all other circuits in the Transmission Solenoid/TRS Assembly harness connector.

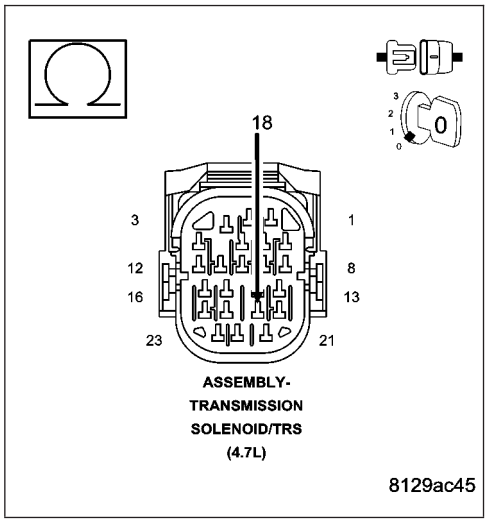

Is the resistance below 5.0 ohms between the (T29) UD Pressure Switch Sense circuit and any other circuit(s) in the Transmission Solenoid/TRS Assembly harness connector?

Yes >> Repair the (T29) UD Pressure Switch Sense circuit for a short to other circuit(s).

Perform 45RFE/545RFE TRANSMISSION VERIFICATION TEST - VER 1.

No >> Replace the Transmission Solenoid/TRS Assembly per the Service Information.

Perform 45RFE/545RFE TRANSMISSION VERIFICATION TEST - VER 1.

P0876-UD PRESSURE SWITCH RATIONALITY (CONTINUED)

10. PCM AND WIRING

Turn the ignition off to the lock position.

Remove the Starter Relay.

NOTE: Removal of the Starter Relay is to prevent a Transmission, NO RESPONSE, condition and disable the starter.

Install the Transmission Simulator, Miller tool #8333.

NOTE: Check connectors - Clean/repair as necessary.

Ignition on, engine not running.

With the Transmission Simulator, turn the Pressure Switch selector switch to the UD position.

With the scan tool, monitor the UD Pressure Switch state while pressing the Pressure Switch Test button on the Transmission Simulator.

Did the state of the UD Pressure Switch change while pressing the Pressure Switch Test button?

Yes >> Go To 14

No >> Go To 11

---

11. (T29) UD PRESSURE SWITCH SENSE CIRCUIT OPEN

Turn the ignition off to the lock position.

Disconnect the Transmission Simulator, Miller tool #8333.

Disconnect the PCM C4 harness connector and connect Miller tool #8815.

CAUTION: Do not probe the PCM harness connectors. Probing the PCM harness connectors will damage the PCM terminals resulting in poor terminal to pin connection. Install Miller tool #8815 to perform diagnosis.

Measure the resistance of the (T29) UD Pressure Switch Sense circuit from the Transmission Solenoid/TRS Assembly harness connector and the appropriate terminal of the special tool #8815.

Is the resistance above 5.0 ohms?

Yes >> Repair the (T29) UD Pressure Switch Sense circuit for an open.

Perform 45RFE/545RFE TRANSMISSION VERIFICATION TEST - VER 1.

No >> Go To 12

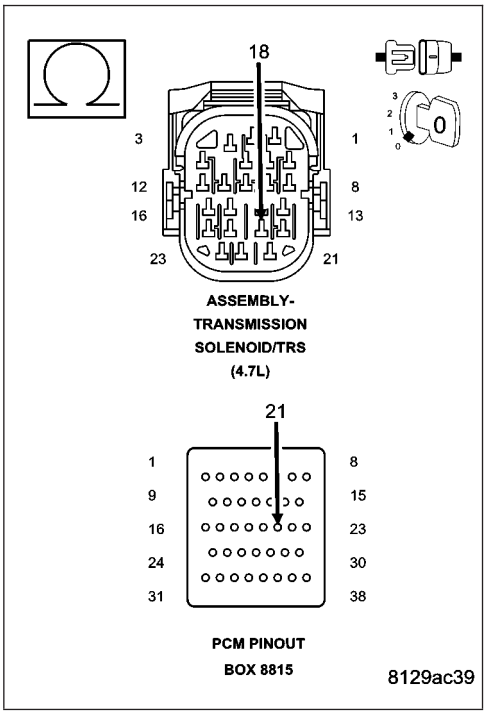

P0876-UD PRESSURE SWITCH RATIONALITY (CONTINUED)

12. (T29) UD PRESSURE SWITCH SENSE CIRCUIT SHORT TO GROUND

Measure the resistance between ground and the (T29) UD Pressure Switch Sense circuit.

Is the resistance below 5.0 ohms?

Yes >> Repair the (T29) UD Pressure Switch Sense circuit for a short to ground.
Perform 45RFE/545RFE TRANSMISSION VERIFICATION TEST - VER 1.

No >> Go To 13

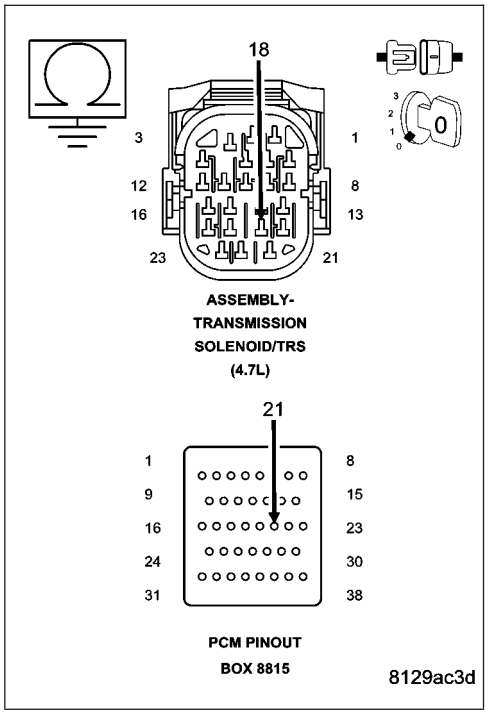

13. (T29) UD PRESSURE SWITCH SENSE CIRCUIT SHORT TO ANOTHER CIRCUIT

Disconnect all PCM harness connectors.

NOTE: Make sure the Transmission Solenoid/TRS Assembly harness connector is disconnected.
Measure the resistance between the (T29) UD Pressure Switch Sense circuit and all other circuits in the Transmission Solenoid/TRS Assembly harness connector.

Is the resistance below 5.0 ohms between the (T29) UD Pressure Switch Sense circuit and any other circuit(s) in the Transmission Solenoid/TRS Assembly harness connector?

Yes >> Repair the (T29) UD Pressure Switch Sense circuit for a short to another circuit(s).
Perform 45RFE/545RFE TRANSMISSION VERIFICATION TEST - VER 1.

No >> Using the schematics as a guide, check the Powertrain Control Module (PCM) terminals for corrosion, damage, or terminal push out. Pay particular attention to all power and ground circuits. If no problems are found, replace the PCM per the Service Information. With the scan tool, perform QUICK LEARN.
Perform 45RFE/545RFE TRANSMISSION VERIFICATION TEST - VER 1.

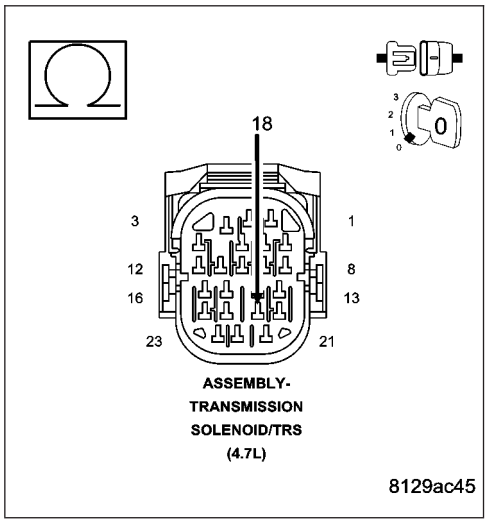

P0876-UD PRESSURE SWITCH RATIONALITY (CONTINUED)

14. WIGGLE TEST WITH SIMULATOR

Perform the steps in the previous test while wiggling the wiring harness and connectors pertaining to the UD Pressure Switch.

Did the state of the UD Pressure Switch change while pressing the Pressure Switch Test button?

Yes >> Repair the wiring harness and/or connectors as necessary.
Perform 45RFE/545RFE TRANSMISSION VERIFICATION TEST - VER 1.

No >> Go To 15

---

15. CHECK FOR TRANSMISSION SOLENOID/TRS ASSEMBLY FOR A SHORT TO GROUND

Disconnect the Transmission Simulator and reconnect the Transmission Solenoid/TRS Assembly harness connector.

Disconnect the PCM C4 harness connector and connect Miller tool #8815.

Measure the resistance between ground and the (T29) UD Pressure Switch Sense circuit in the appropriate terminal of Miller tool #8815.

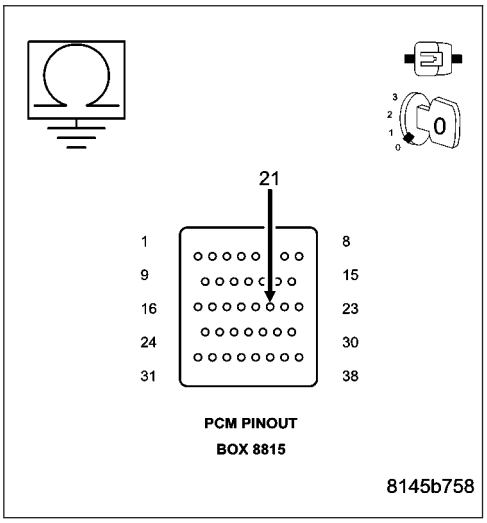

Is the resistance below 5.0 ohms?

Yes >> Replace the Transmission Solenoid/TRS Assembly per the Service Information.
Perform 45RFE/545RFE TRANSMISSION VERIFICATION TEST - VER 1.

No >> Go To 16

---

16. CHECK IF DTC RESETS

Reconnect all previously disconnected connectors.

With the scan tool, erase all transmission DTCs.

Test drive the vehicle. Using the EATX DTC EVENT DATA recorded earlier, try to duplicate the conditions in which the DTC originally set.

Does the DTC P0876 reset?

Yes >> Go To 17

No >> Go To 18

P0876-UD PRESSURE SWITCH RATIONALITY (CONTINUED)

17. CHECK FOR CUT NO. 2 CHECK BALL

Remove the Valve Body per the Service Information.

Check the No. 2 check ball for cuts or damage.

Is the No. 2 check ball cut or damaged?

Yes >> Replace the No. 2 check ball. Check for excessive clutch debris in the oil pan. If excessive debris is present, check the UD Clutch and repair as necessary.
Perform 45RFE/545RFE TRANSMISSION VERIFICATION TEST - VER 1.

No >> Replace the Transmission Solenoid/TRS Assembly per the Service Information. Check for excessive clutch debris in the oil pan. If excessive debris is present, check the UD Clutch and repair as necessary.
Perform 45RFE/545RFE TRANSMISSION VERIFICATION TEST - VER 1.

---

18. INTERMITTENT WIRING AND CONNECTORS

The conditions necessary to set this DTC are not present at this time.

Using the schematics as a guide, inspect the wiring and connectors specific to this circuit.

Wiggle the wires while checking for shorted and open circuits.

With the scan tool, check the EATX DTC EVENT DATA to help identify the conditions in which the DTC was set.

Were there any problems found?

Yes >> Repair as necessary.
Perform 45RFE/545RFE TRANSMISSION VERIFICATION TEST - VER 1.

No >> Test Complete.

P0884-POWER UP AT SPEED

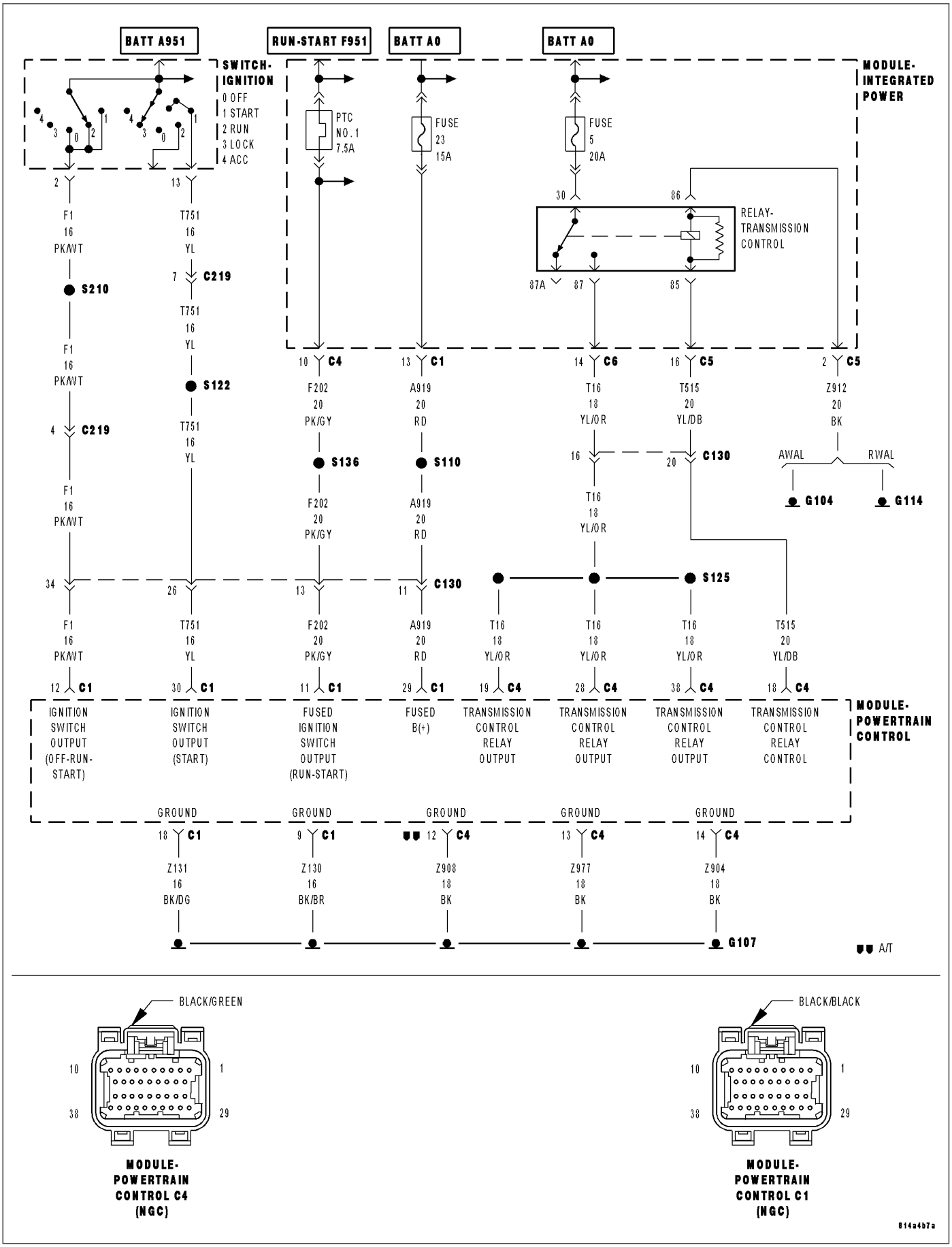

MODULE-POWERTRAIN CONTROL C4 (NGC)

MODULE-POWERTRAIN CONTROL C1 (NGC)

814a4b7a

P0884-POWER UP AT SPEED (CONTINUED)

For the Transmission circuit diagram (Refer to 21 - TRANSMISSION/TRANSAXLE/AUTOMATIC - 45RFE/545RFE - SCHEMATICS AND DIAGRAMS)

For a complete wiring diagram **Refer to Section 8W**.

- **When Monitored:**
  When Powertrain Control Module initially powers up. Due to the integration of the Powertrain and Transmission Control Modules, the transmission part of the PCM has its own specific power and ground circuits.
- **Set Condition:**
  This DTC will set if the PCM powers up and senses the vehicle in a valid forward gear, with no PRNDL DTCs, and an output speed above 800 RPM, approximately 32Km/h or 20 MPH.

Possible Causes
POWER UP AT SPEED

Always perform the Pre-Diagnostic Troubleshooting procedure before proceeding. (Refer to 21 - TRANSMISSION/TRANSAXLE/AUTOMATIC - 45RFE/545RFE - DIAGNOSIS AND TESTING).

Theory of Operation

If a vehicle loses power to the Transmission Control System, the solenoids (LR, 2C, OD, UD, 4C) will go to their respective power off state. Some solenoids are normally vented and some are normally applied in their power off state. The transmission is designed to be in 3rd gear with all of the solenoids in this state. However, if power is restored, the Transmission Control System will power-up and normal operation will be restored.

This code identifies that power to the Transmission Control System was restored when the gear selector was in a ″Drive″ position while the vehicle was moving at speeds above 32 km/h (20 MPH). **This DTC does not indicate a problem with the transmission or Transmission Control System,** instead, it suggests intermittent problems in the fused ignition switch output, fused B(+), or ground circuits to the TCM. Alternately, if a person performs a rolling restart maneuver, the DTC can be set. Therefore it is critical that this DTC be investigated if the vehicle is experiencing intermittent 3rd gear operation and a subsequent return to normal operation.

Diagnostic Test

1. CHECK FOR INTERMITTENT POWER AND GROUND CIRCUITS

This DTC is set when the Transmission portion of the Powertrain Control Module is initialized while the vehicle is moving down the road in a valid forward gear.

Using the wiring diagram/schematic as a guide, inspect the wiring and connectors.

NOTE: Due to the integration of the Powertrain and Transmission Control Modules, the transmission part of the PCM has its own specific power and ground circuits.

Check all of the Fused B+, Fused Ignition Switch Output, and ground circuits to the PCM for an intermittent open or short to ground.

With the scan tool, check the EATX DTC EVENT DATA to help identify the conditions in which the DTC was set.

If there are no possible causes remaining, view repair.

Repair

Check all power and ground circuits to the PCM and repair as necessary.

Perform 45RFE/545RFE TRANSMISSION VERIFICATION TEST - VER 1.

P0888-TRANSMISSION RELAY ALWAYS OFF

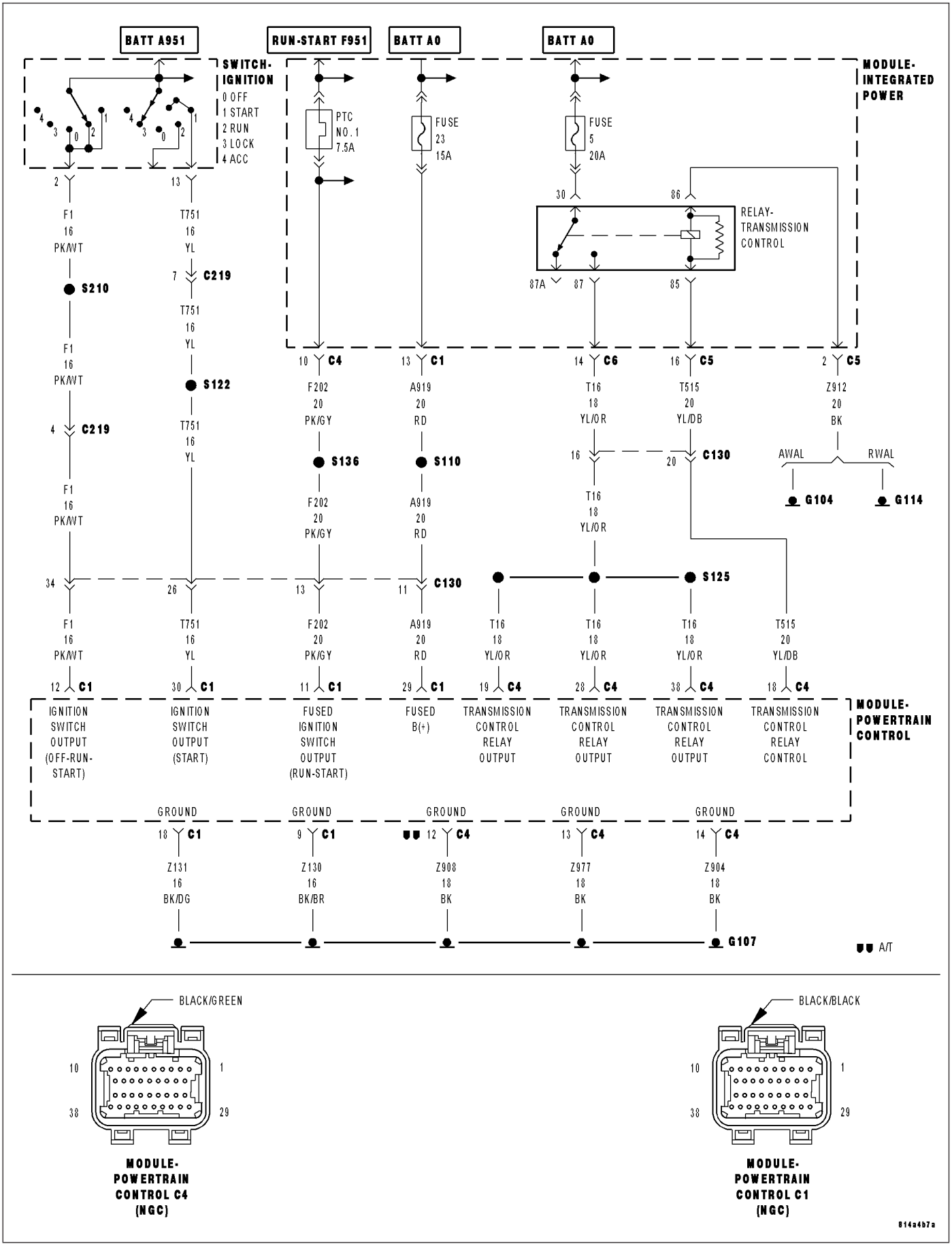

MODULE-POWERTRAIN CONTROL C4 (NGC)

MODULE-POWERTRAIN CONTROL C1 (NGC)

814a4b7a

P0888-TRANSMISSION RELAY ALWAYS OFF (CONTINUED)

For the Transmission circuit diagram (Refer to 21 - TRANSMISSION/TRANSAXLE/AUTOMATIC - 45RFE/545RFE - SCHEMATICS AND DIAGRAMS)

For a complete wiring diagram **Refer to Section 8W**

- **When Monitored:**
  When the ignition is turned from ″OFF″ position to ″RUN″ position and/or the ignition is turned from ″START″ position to ″RUN″ position.
- **Set Condition:**
  This DTC is set when less than 3.0 volts are present at the transmission control relay output circuits at the Powertrain Control Module when the PCM is energizing the relay.

Possible Causes
(A104) FUSED B+ CIRCUIT OPEN
(T16) TRANSMISSION CONTROL RELAY OUTPUT CIRCUIT OPEN
(T16) TRANSMISSION CONTROL RELAY OUTPUT CIRCUIT SHORT TO GROUND
(T15) TRANSMISSION CONTROL RELAY CONTROL CIRCUIT OPEN
(T15) TRANSMISSION CONTROL RELAY CONTROL CIRCUIT SHORT TO GROUND
(Z915) TRANSMISSION CONTROL RELAY GROUND CIRCUIT OPEN
TRANSMISSION CONTROL RELAY STUCK OPEN
POWERTRAIN CONTROL MODULE

Always perform the Pre-Diagnostic Troubleshooting procedure before proceeding. (Refer to 21 - TRANSMISSION/TRANSAXLE/AUTOMATIC - 45RFE/545RFE - DIAGNOSIS AND TESTING).

Theory of Operation

The transmission control relay is used to supply power to the solenoids and pressure switches when the transmission is in normal operating mode. The relay output is fed back to the TCM through pins 16, 17, and 36. It is referred to as ″Transmission Control Relay Output″. This circuit does not supply power to the TCM, it is only a sense circuit. When the relay is off, no power is supplied to the solenoids and pressure switches, and the transmission is in ″limp-in″ or ″default″ mode. **Note: Inadequate Transmission Control Relay Output voltage can also cause DTCs P0846, P0869, P0871, P0876 or P0988 to set. This does not indicate an internal transmission or solenoid/TRS problem. Repairing the P0888 fault should also eliminate the related DTCs.**

Diagnostic Test

1. CHECK TO SEE IF DTC P0888 IS CURRENT

With the scan tool, Check the STARTS SINCE SET counter for P0888.

NOTE: This counter only applies to the last DTC set.

Is the STARTS SINCE SET counter equal to 0?

Yes >> Go To 2

No >> Go To 9

P0888-TRANSMISSION RELAY ALWAYS OFF (CONTINUED)

2. (A104) FUSED B+ CIRCUIT OPEN

Turn the ignition off to the lock position.

Remove the Transmission Control Relay.

NOTE: Check connectors - Clean/repair as necessary.

Ignition on, engine not running.

Using a 12-volt test light connected to ground, check the (A104) Fused B+ circuit in the Transmission Control Relay connector.

NOTE: The test light must illuminate brightly. Compare the brightness to that of a direct connection to the battery.

Does the test light illuminate brightly?

Yes >> Go To 3

No >> Repair the (A104) Fused B+ circuit for an open. If the fuse is open make sure to check for a short to ground.
Perform 45RFE/545RFE TRANSMISSION VERIFICATION TEST - VER 1.

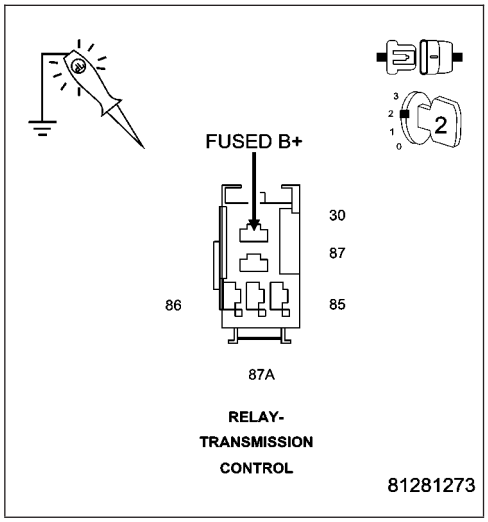

3. (Z915) TRANSMISSION CONTROL RELAY GROUND CIRCUIT OPEN

Turn the ignition off to the lock position.

Using a 12-volt test light connected to 12-volts, check the (Z915) Transmission Control Relay Ground circuit in the Transmission Control Relay connector.

Does the test light illuminate brightly?

Yes >> Repair the (Z915) Transmission Control Relay Ground circuit for an open.
Perform 45RFE/545RFE TRANSMISSION VERIFICATION TEST - VER 1.

No >> Go To 4

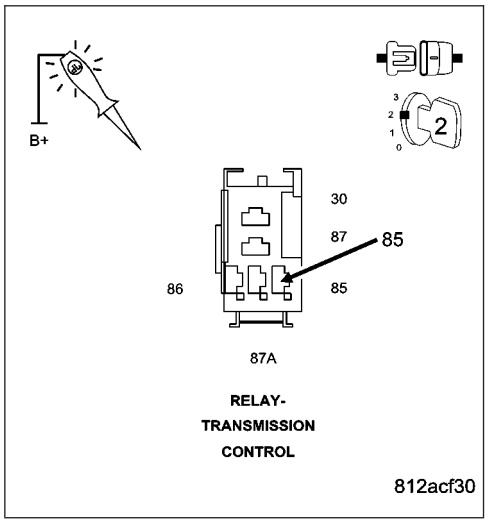

4. TRANSMISSION CONTROL RELAY

Install a substitute relay in place of the Transmission Control Relay.

Start the vehicle.

With the scan tool, check transmission DTCs.

Did the DTC P0888 reset?

Yes >> Replace the Transmission Control Relay.
Perform 45RFE/545RFE TRANSMISSION VERIFICATION TEST - VER 1.

No >> Go To 5

P0888-TRANSMISSION RELAY ALWAYS OFF (CONTINUED)

5. (T16) TRANSMISSION CONTROL RELAY OUTPUT CIRCUIT OPEN

Turn the ignition off to the lock position.

Disconnect the PCM C4 harness connector and connect Miller tool #8815.

Disconnect the Transmission Solenoid/TRS Assembly harness connector.

CAUTION: Do not probe the PCM harness connectors. Probing the PCM harness connectors will damage the PCM terminals resulting in poor terminal to pin connection. Install Miller tool #8815 to perform diagnosis.

Connect a jumper wire between the (A104) Fused B+ circuit and the Transmission Control Relay Output circuit in the Transmission Control Relay connector.

Ignition on, engine not running.

Using a 12-volt test light connected to ground, check all four (T16) Transmission Control Relay Output circuits in the PCM C4 harness connector and Transmission Solenoid/TRS Assembly harness connector.

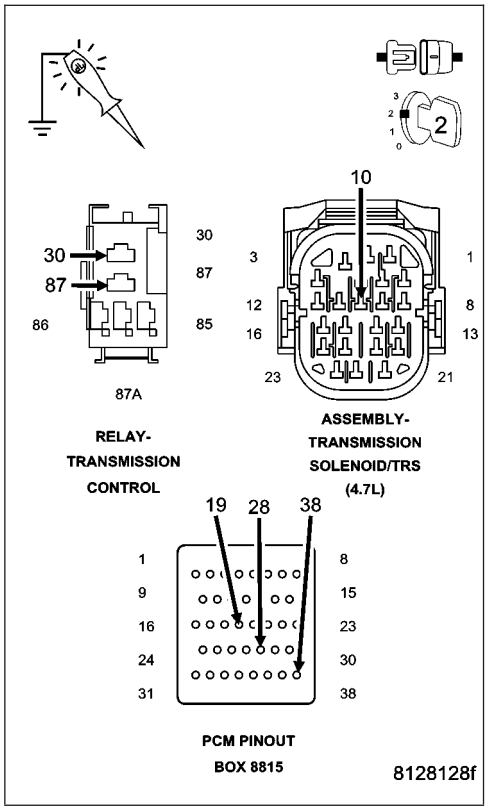

Does the test light illuminate brightly on all four (T16) Transmission Control Relay Output circuits?

Yes >> Go To 6

No >> Repair the (T16) Transmission Control Relay Output circuit(s) for an open or high resistance.

Perform 45RFE/545RFE TRANSMISSION VERIFICATION TEST - VER 1.

6. (T16) TRANSMISSION RELAY OUTPUT CIRCUIT SHORT TO GROUND

Turn the ignition off to the lock position.

Measure the resistance between ground and the (T16) Transmission Control Relay Output circuit.

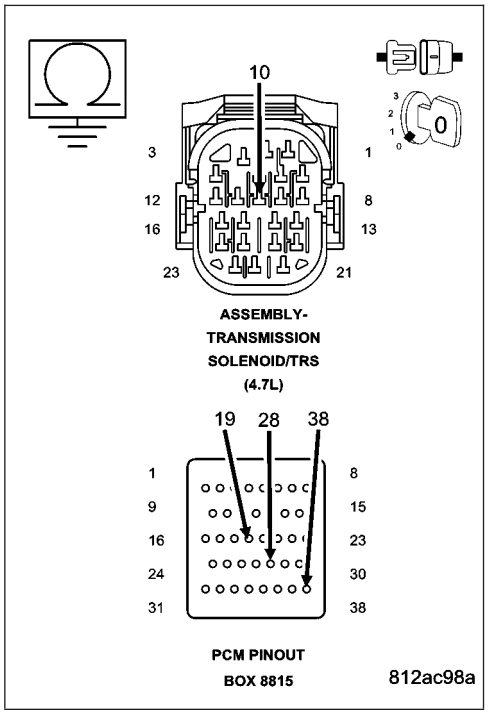

Is the resistance below 5.0 ohms?

Yes >> Repair the (T16) Transmission Control Relay Output circuit for a short to ground.

Perform 45RFE/545RFE TRANSMISSION VERIFICATION TEST - VER 1.

No >> Go To 7

P0888-TRANSMISSION RELAY ALWAYS OFF (CONTINUED)

7. (T15) TRANSMISSION CONTROL RELAY CONTROL CIRCUIT SHORT TO GROUND

Measure the resistance between ground and the (T15) Transmission Control Relay Control circuit.

Is the resistance below 5.0 ohms?

Yes >> Repair the (T15) Transmission Control Relay Control circuit for a short to ground.
Perform 45RFE/545RFE TRANSMISSION VERIFICATION TEST - VER 1.

No >> Go To 8

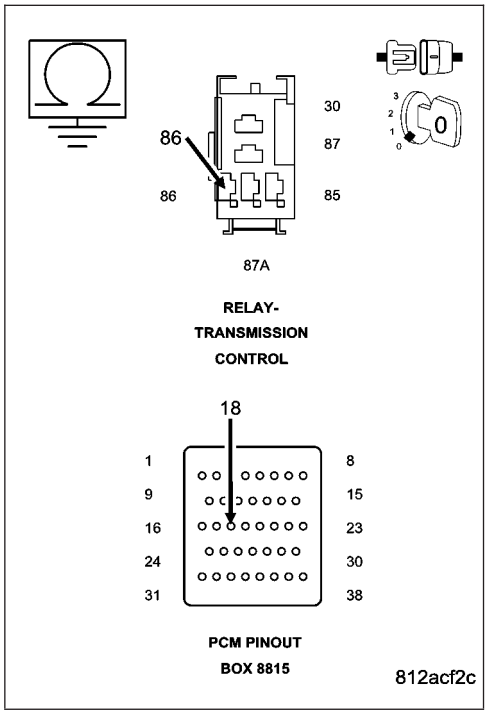

8. (T15) TRANSMISSION CONTROL RELAY CONTROL CIRCUIT OPEN

Measure the resistance of the (T15) Transmission Control Relay Control circuit between the Transmission Control Relay connector and the appropriate terminal of Miller tool #8815.

Is the resistance above 5.0 ohms?

Yes >> Repair the (T15) Transmission Control Relay Control circuit for an open.
Perform 45RFE/545RFE TRANSMISSION VERIFICATION TEST - VER 1.

No >> Using the schematics as a guide, check the Powertrain Control Module (PCM) terminals for corrosion, damage, or terminal push out. Pay particular attention to all power and ground circuits. If no problems are found, replace the PCM per the Service Information. With the scan tool, perform QUICK LEARN.
Perform 45RFE/545RFE TRANSMISSION VERIFICATION TEST - VER 1.

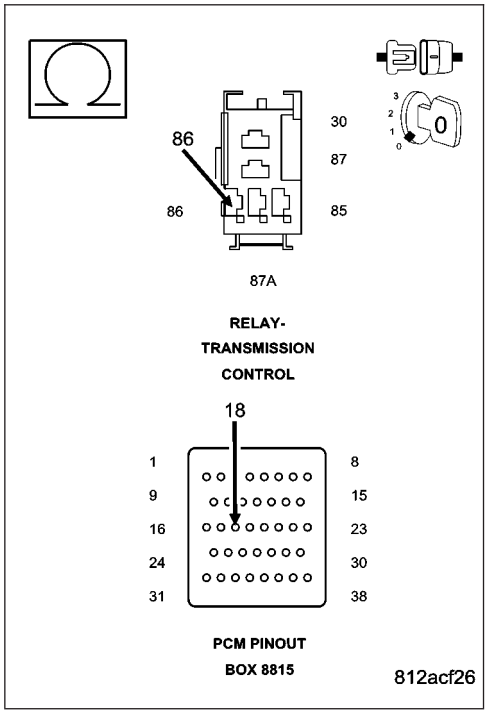

P0888-TRANSMISSION RELAY ALWAYS OFF (CONTINUED)

9. INTERMITTENT WIRING AND CONNECTORS

The conditions necessary to set this DTC are not present at this time.

Using the schematics as a guide, inspect the wiring and connectors specific to this circuit.

Wiggle the wires while checking for shorted and open circuits.

With the scan tool, check the EATX DTC EVENT DATA to help identify the conditions in which the DTC was set.

Where there any problems found?

Yes >> Repair as necessary.
Perform 45RFE/545RFE TRANSMISSION VERIFICATION TEST - VER 1.

No >> Test Complete.

P0890-SWITCHED BATTERY

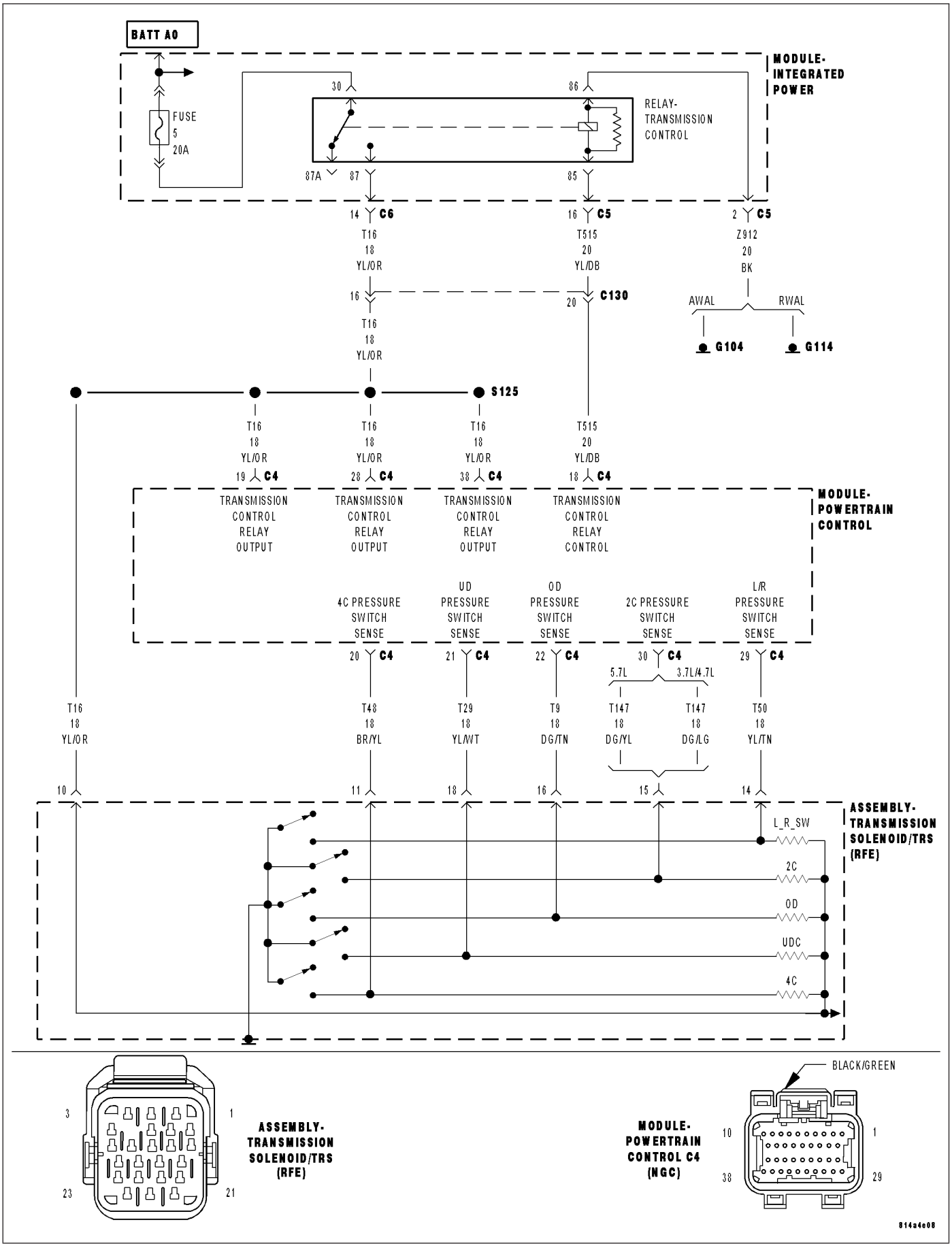

P0890-SWITCHED BATTERY (CONTINUED)

For the Transmission circuit diagram (Refer to 21 - TRANSMISSION/TRANSAXLE/AUTOMATIC - 45RFE/545RFE - SCHEMATICS AND DIAGRAMS)

For a complete wiring diagram **Refer to Section 8W**.

- **When Monitored:**
  When the ignition is turned from ″OFF″ position to ″RUN″ position and/or the ignition is turned from ″START″ position to ″RUN″ position.
- **Set Condition:**
  This DTC is set if the Powertrain Control Module senses voltage on any of the pressure switch inputs prior to the Transmission Control Relay being energized.

Possible Causes
PRESSURE SWITCH SENSE CIRCUITS SHORT TO VOLTAGE
TRANSMISSION SOLENOID/TRS ASSEMBLY
POWERTRAIN CONTROL MODULE

Always perform the Pre-Diagnostic Troubleshooting procedure before proceeding. (Refer to 21 - TRANSMISSION/TRANSAXLE/AUTOMATIC - 45RFE/545RFE - DIAGNOSIS AND TESTING).

Theory of Operation

The Transmission control relay is used to supply power to the solenoids and pressure switches (Transmission Solenid/TRS Assembly) when the transmission is in normal operating mode. When the relay is off, no power is supplied and the transmission is in ″limp-in″ mode. The relay output is fed back to the PCM through pins C4–19, C4–28 and C4–38 and are referred to as ″Transmission Control Relay Output″.

Immediately after a controller reset (ignition key turned to the ″run″ position or after cranking engine), the TCM verifies that the relay contacts are open by checking for no voltage at the transmission control relay output terminals. After this is verified, the voltage at the pressure switches are checked. There should be no voltage on the pressure switches at this time. The PCM will then activate the relay.

Diagnostic Test

1. CHECK TO SEE IF DTC P0890 IS PRESENT

With the scan tool, Check the STARTS SINCE SET counter for P0890.

NOTE: This counter only applies to the last DTC set.

Is the ″Starts Since Set″ counter set at 0?

Yes >> Go To 2

No >> Go To 4

P0890-SWITCHED BATTERY (CONTINUED)

2. PRESSURE SWITCH SENSE CIRCUITS SHORT TO VOLTAGE

Turn the ignition off to the lock position.

Disconnect the PCM C4 harness connector and connect Miller tool #8815.

Disconnect the Transmission Solenoid/TRS Assembly harness connector.

Remove the Transmission Control Relay.

NOTE: Note: Check connectors - Clean/repair as necessary.

CAUTION: Do not probe the PCM harness connectors. Probing the PCM harness connectors will damage the PCM terminals resulting in poor terminal to pin connection. Install Miller tool #8815 to perform diagnosis.

Connect a jumper wire between the Fused B+ circuit and the Transmission Control Relay Output circuit in the Transmission Control Relay connector.

Ignition on, engine not running.

Measure the voltage of the (T147) 2C, (T48) 4C, (T50) LR, (T9) OD, and (T29) UD Pressure Switch Sense circuits in Miller tool #8815.

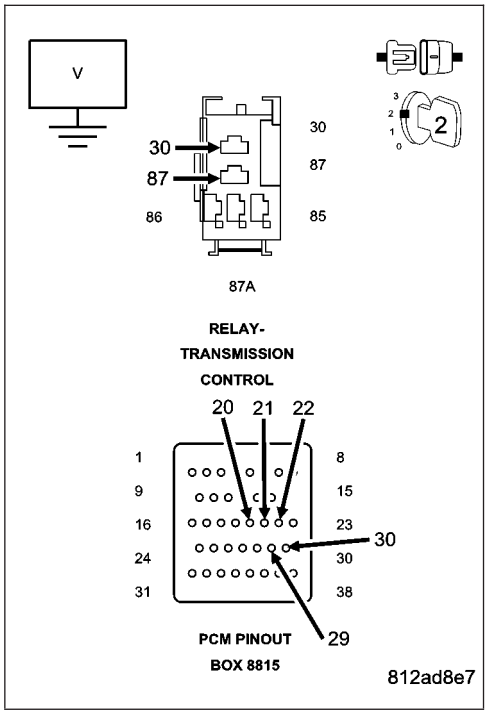

Is the voltage above 0.5 volt on any of the measured circuits?

Yes >> Repair the (T147) 2C, (T48) 4C, (T50) LR, (T9) OD, and/or (T29) UD Pressure Switch Sense circuit(s) for a short to voltage.

Perform 45RFE/545RFE TRANSMISSION VERIFICATION TEST - VER 1.

No >> Go To 3

3. TRANSMISSION SOLENOID/TRS ASSEMBLY

Turn the ignition off.

Remove the jumper wire.

NOTE: Do not reinstall the Transmission Relay.

Reconnect the Transmission Solenoid/TRS Assembly harness connector.

Ignition on, engine not running.

Measure the voltage of the (T147) 2C, (T48) 4C, (T50) LR, (T9) OD, and (T29) UD Pressure Switch Sense circuits in Miller tool #8815.

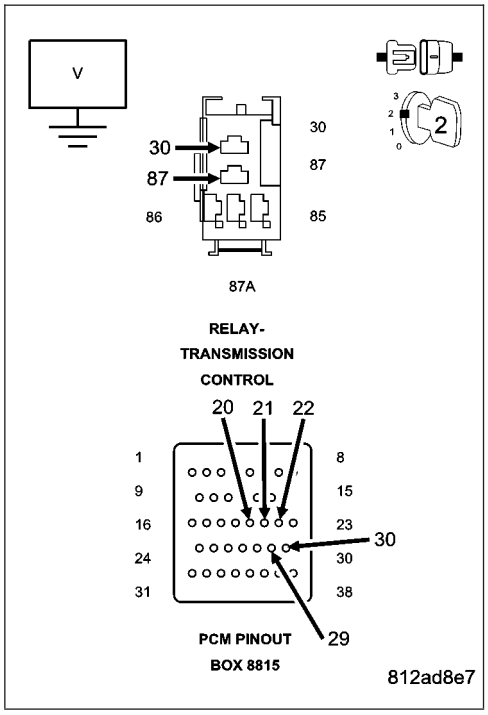

Is the voltage above 0.5 volts on any of the sense circuits?

Yes >> Replace the Transmission Solenoid/TRS Assembly.

Perform 45RFE/545RFE TRANSMISSION VERIFICATION TEST - VER 1.

No >> Using the schematics as a guide, check the Powertrain Control Module (PCM) terminals for corrosion, damage, or terminal push out. Pay particular attention to all power and ground circuits. If no problems are found, replace the PCM per the Service Information. With the scan tool, perform QUICK LEARN.

Perform 45RFE/545RFE TRANSMISSION VERIFICATION TEST - VER 1.

P0890-SWITCHED BATTERY (CONTINUED)

4. INTERMITTENT WIRING AND CONNECTORS

The conditions necessary to set this DTC are not present at this time.
Using the schematics as a guide, inspect the wiring and connectors specific to this circuit.
Wiggle the wires while checking for shorted and open circuits.
With the scan tool, check the EATX DTC EVENT DATA to help identify the conditions in which the DTC was set.

Where there any problems found?

Yes >> Repair as necessary.
Perform 45RFE/545RFE TRANSMISSION VERIFICATION TEST - VER 1.

No >> Test Complete.

P0891-TRANSMISSION RELAY ALWAYS ON

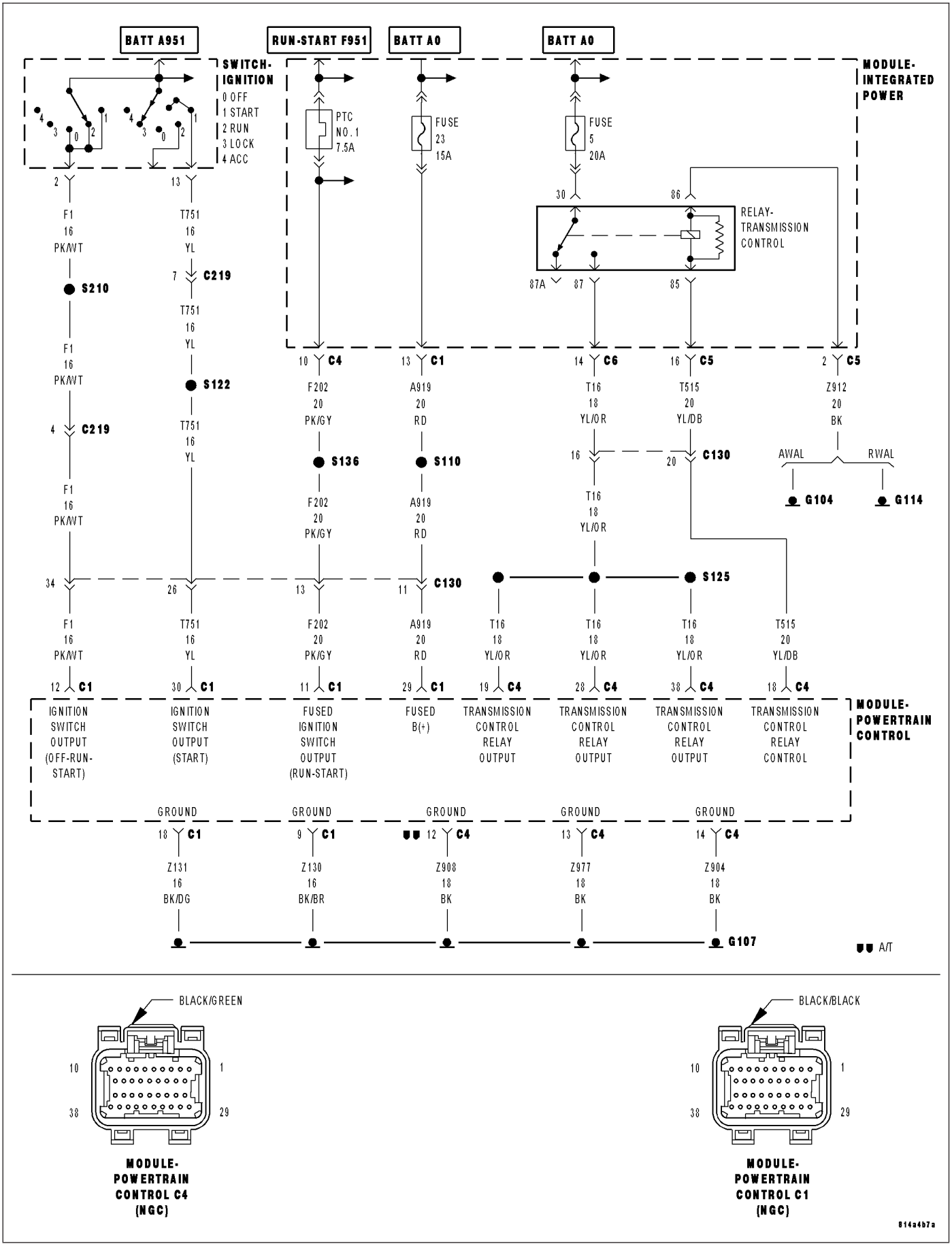

MODULE-POWERTRAIN CONTROL C4 (NGC)

MODULE-POWERTRAIN CONTROL C1 (NGC)

814a4b7a

P0891-TRANSMISSION RELAY ALWAYS ON (CONTINUED)

For the Transmission circuit diagram (Refer to 21 - TRANSMISSION/TRANSAXLE/AUTOMATIC - 45RFE/545RFE - SCHEMATICS AND DIAGRAMS)

For a complete wiring diagram **Refer to Section 8W**.

- **When Monitored:**
  When the ignition is turned from ″OFF″ position to ″RUN″ position and/or the ignition is turned from ″START″ position to ″RUN″ position.
- **Set Condition:**
  This DTC is set if the Powertrain Control Module senses greater than 3.0 volts on the Transmission Control Relay Output circuits prior to a request from the PCM to energize the Transmission Control Relay.

Possible Causes
(T15) TRANSMISSION CONTROL RELAY CONTROL CIRCUIT SHORT TO VOLTAGE
(T16) TRANSMISSION CONTROL RELAY OUTPUT CIRCUIT SHORT VOLTAGE
TRANSMISSION CONTROL RELAY
TRANSMISSION SOLENOID/TRS ASSEMBLY
POWERTRAIN CONTROL MODULE

Always perform the Pre-Diagnostic Troubleshooting procedure before proceeding. (Refer to 21 - TRANSMISSION/TRANSAXLE/AUTOMATIC - 45RFE/545RFE - DIAGNOSIS AND TESTING).

Theory of Operation

The Transmission Control Relay is used to supply power (Transmission Control Relay Output) to the Transmission Solenoid/TRS Assembly when in normal operating mode and to pins C4–19, C4–28 and C4–38 of the PCM. The purpose of the Transmission Control Relay is to allow the PCM to turn off the power to the Transmission Solenoid/TRS Assembly in event that the transmission should need to be placed into “limp-in” mode due to a DTC.

After a PCM reset, (ignition switch turned to the run position, or after cranking engine) the PCM verifies that the Transmission Control Relay contacts are open by checking for voltage on the Transmission Control Relay Output circuit before the Transmission Control Relay is energized. If voltage is detected, the DTC will set.

Diagnostic Test

1. CHECK TO SEE IF DTC P0891 IS CURRENT

With the scan tool, check the STARTS SINCE SET counter.

NOTE: This counter only applies to the last DTC set.

Is the STARTS SINCE SET counter set to 0?

Yes >> Go To 2

No >> Go To 6

P0891-TRANSMISSION RELAY ALWAYS ON (CONTINUED)

2. TRANSMISSION CONTROL RELAY

Turn the ignition off to the lock position.

Disconnect the Transmission Control Relay.

NOTE: Note: Check connectors - Clean/repair as necessary.
Measure the resistance between the (A104) Fused B+ circuit and the (T16) Transmission Control Relay Output Circuit of the Transmission Control Relay.

Is the resistance above 5.0 ohms?

Yes >> Go To 3

No >> Replace the Transmission Control Relay.
Perform 45RFE/545RFE TRANSMISSION VERIFICATION TEST - VER 1.

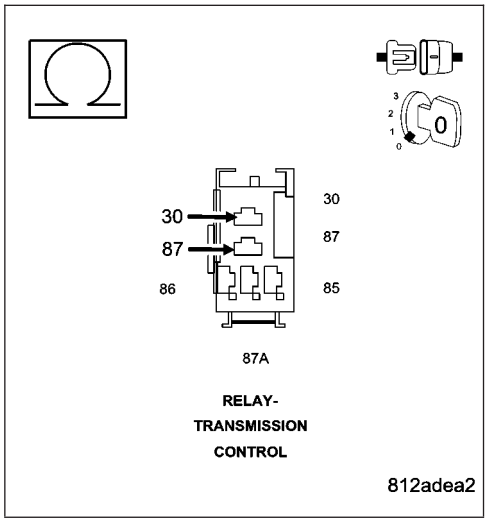

3. (T16) TRANSMISSION RELAY OUTPUT CIRCUIT SHORT TO VOLTAGE

Ignition on, engine not running.

Measure the voltage at the (T16) Transmission Control Relay Output circuit in the Transmission Control Relay connector.

Is the voltage above 0.5 volts?

Yes >> Go To 4

No >> Go To 5

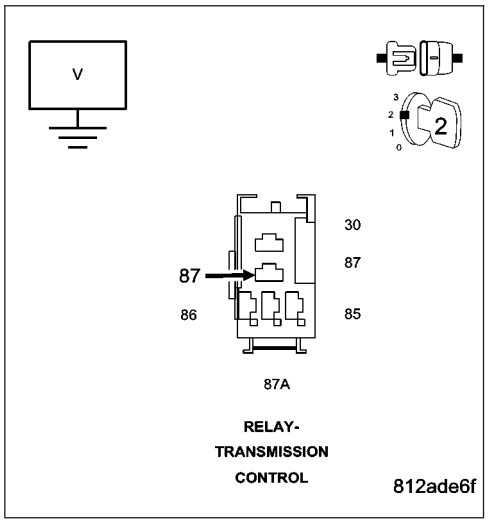

P0891-TRANSMISSION RELAY ALWAYS ON (CONTINUED)

4. TRANSMISSION SOLENOID/TRS ASSEMBLY

Turn the ignition off to the lock position.

Disconnect the Transmission Solenoid/TRS Assembly harness connector.

NOTE: NOTE: Check connectors - Clean/repair as necessary.
Ignition on, engine not running.

Measure the voltage at the (T16) Transmission Control Relay Output circuit in the Transmission Control Relay connector.

Is the voltage above 0.5 volts?

Yes >> Repair the (T16) Transmission Control Relay Output circuit for a short to voltage.
Perform 45RFE/545RFE TRANSMISSION VERIFICATION TEST - VER 1.

No >> Replace the Transmission Solenoid/TRS Assembly per the Service Information.
Perform 45RFE/545RFE TRANSMISSION VERIFICATION TEST - VER 1.

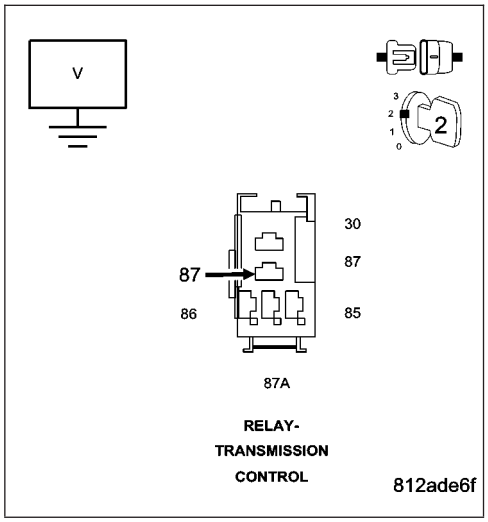

5. (T15)TRANSMISSION CONTROL RELAY CONTROL CIRCUIT SHORT TO VOLTAGE

Turn the ignition off to the lock position.

Disconnect the PCM C4 harness connector and connect Miller tool #8815.

Disconnect the Transmission Solenoid/TRS Assembly harness connector.

CAUTION: Do not probe the PCM harness connectors. Probing the PCM harness connectors will damage the PCM terminals resulting in poor terminal to pin connection. Install Miller tool #8815 to perform diagnosis.
Connect a jumper wire between the (A104) Fused B+ circuit and the (T16) Transmission Control Relay Output circuit in the Transmission Control Relay connector.

Ignition on, engine not running.

Measure the voltage of the (T15) Transmission Control Relay Control circuit.

Is the voltage above 0.5 volts?

Yes >> Repair the (T15) Transmission Control Relay Control circuit for a short to voltage.
Perform 45RFE/545RFE TRANSMISSION VERIFICATION TEST - VER 1.

No >> Using the schematics as a guide, check the Powertrain Control Module (PCM) terminals for corrosion, damage, or terminal push out. Pay particular attention to all power and ground circuits. If no problems are found, replace the PCM per the Service Information. With the scan tool, perform QUICK LEARN.
Perform 45RFE/545RFE TRANSMISSION VERIFICATION TEST - VER 1.

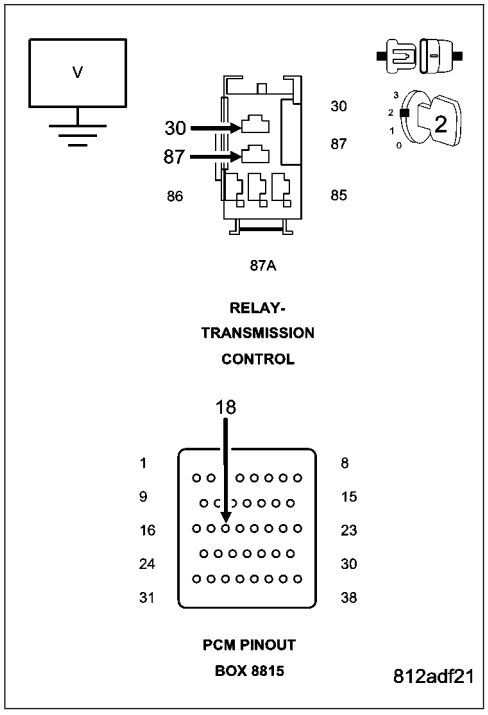

P0891-TRANSMISSION RELAY ALWAYS ON (CONTINUED)

6. INTERMITTENT WIRING AND CONNECTORS

The conditions necessary to set this DTC are not present at this time.
Using the schematics as a guide, inspect the wiring and connectors specific to this circuit.
Wiggle the wires while checking for shorted and open circuits.
With the scan tool, check the EATX DTC EVENT DATA to help identify the conditions in which the DTC was set.

Where there any problems found?

Yes >> Repair as necessary.
Perform 45RFE/545RFE TRANSMISSION VERIFICATION TEST - VER 1.

No >> Test Complete.

P0932-LINE PRESSURE SENSOR CIRCUIT

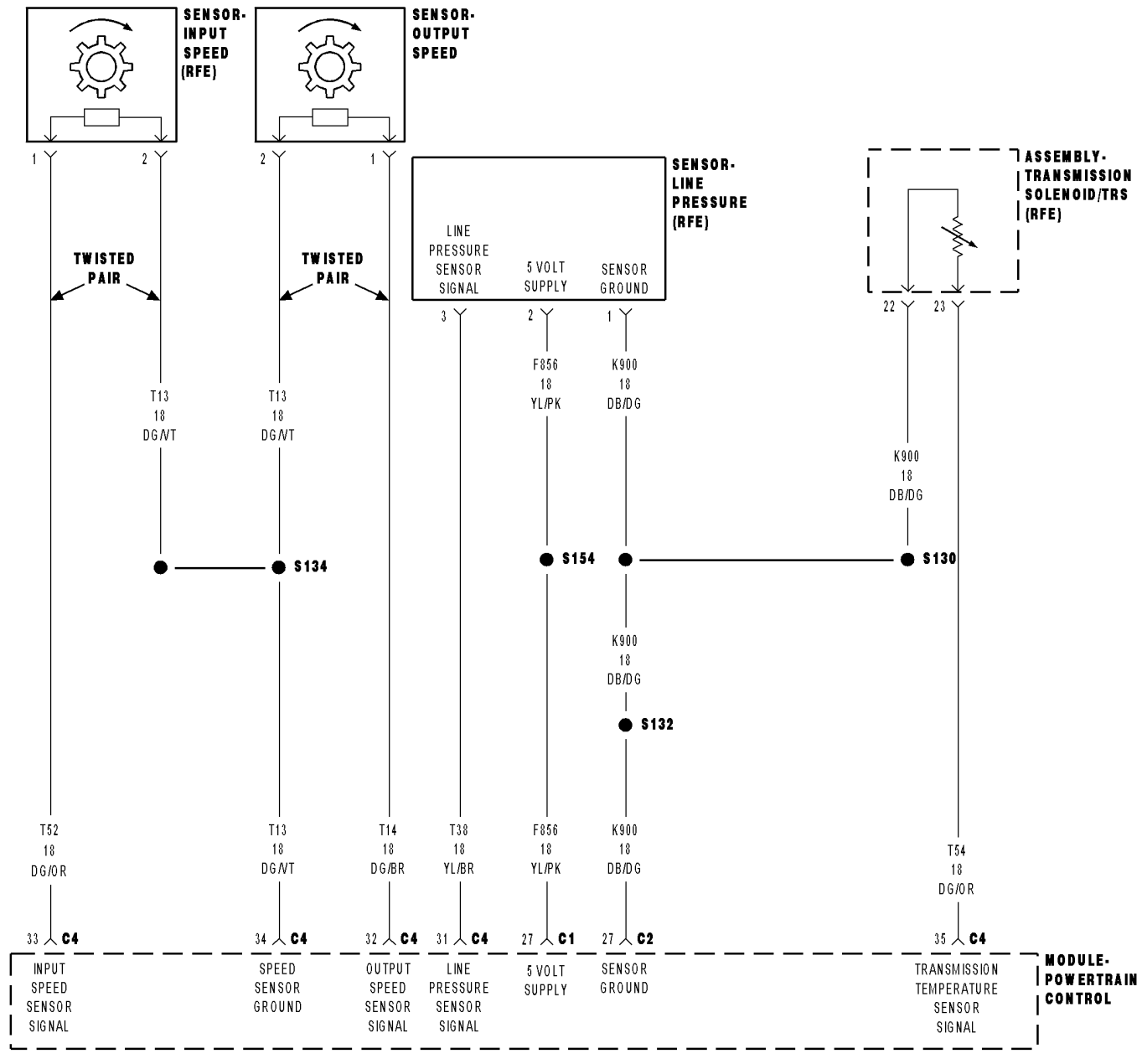

P0932-LINE PRESSURE SENSOR CIRCUIT (CONTINUED)

For the Transmission circuit diagram (Refer to 21 - TRANSMISSION/TRANSAXLE/AUTOMATIC - 45RFE/545RFE - SCHEMATICS AND DIAGRAMS)

For a complete wiring diagram **Refer to Section 8W**

- **When Monitored:**
  Continuously with the ignition on, engine running, with the transmission in gear.
- **Set Condition:**
  The PCM continuously monitors Actual Line Pressure and compares it to Desired Line Pressure. If the Actual Line Pressure reading is more than 172.4 kPa (25 psi) higher than the Desired Line Pressure, but is less than the highest Line Pressure ever used in the current gear, the DTC sets.

Possible Causes
RELATED DTC'S PRESENT
LINE PRESSURE CONNECTOR AND WIRING
INTERNAL TRANSMISSION
POWERTRAIN CONTROL MODULE

Always perform the Pre-Diagnostic Troubleshooting procedure before proceeding. (Refer to 21 - TRANSMISSION/TRANSAXLE/AUTOMATIC - 45RFE/545RFE - DIAGNOSIS AND TESTING).

Theory of Operation

Line pressure is electronically controlled by the Transmission Control System and is measured by the Line Pressure Sensor (LPS). The desired line pressure is continuously being compared to the actual line pressure and is regulated by electronically changing the duty cycle of the Pressure Control Solenoid (PCS). (5% duty cycle = solenoid off = max line pressure, 62% duty cycle = solenoid on = min line pressure).

The Transmission Control System calculates the desired line pressure based on inputs from the transmission and engine. A calculated torque input to the transmission is used as the primary input of the desired line pressure calculation and is called Torque Based Line Pressure. In addition, the line pressure is set to a preset level 827 to 931kPa (120 to 135 PSI) during shifts and in Park and Neutral to ensure consistent shift quality.

Diagnostic Test

1. DETERMINING IF RELATED DTC'S ARE PRESENT

With the scan tool, check for other transmission DTC's.

Are there any other line pressure related DTC's present?

Yes >> Refer to the Transmission category and perform the appropriate symptom. Perform the test for P0934 and/or P0935 first if present.
Perform 45RFE/545RFE TRANSMISSION VERIFICATION TEST - VER 1.

No >> Go To 2

P0932-LINE PRESSURE SENSOR CIRCUIT (CONTINUED)

2. CONDITION P0932 PRESENT

CAUTION: Apply Parking Brake
Start the engine.

CAUTION: Firmly apply the brakes.
With the scan tool, monitor the Line Pressure, Desired Line Pressure and the TPS degrees.

While firmly applying the brakes, place the shifter in reverse, then slowly press the accelerator pedal to a TPS degree of 15°.

Compare the Line Pressure reading to the Desired Line Pressure reading on the scan tool.

Does the Line Pressure stay within ± 34 kPa or 5 PSI of the Desired Line Pressure?

No >> Go To 3

Yes >> Go To 5

---

3. CHECK LINE PRESSURE CONNECTOR AND WIRING

Ignition on, engine not running.

With the scan tool, monitor the Line Pressure Sensor voltage while wiggling the wiring harness and connectors pertaining to the Line Pressure Sensor and the Transmission Solenoid/TRS Assembly.

Did the voltage remain steady while wiggling the wiring harness and connectors?

Yes >> Go To 4

No >> Disconnect and properly reconnect the Line Pressure Sensor connector. Inspect terminals and repair as necessary.

Perform 45RFE/545RFE TRANSMISSION VERIFICATION TEST - VER 1.

---

4. PCM AND WIRING

Turn the ignition off to the lock position.

Remove the Starter Relay.

NOTE: Removal of the Starter Relay is to prevent a Transmission, NO RESPONSE, condition and disable the starter.

Install the Transmission Simulator, Miller tool #8333.

With the Transmission Simulator select the ″OFF″ position on the ″Input/Output Speed″ switch.

Ignition on, engine not running.

With the scan tool, monitor the Line Pressure during the following step.

With the Transmission Simulator, turn the selector switch to each of the 3 Line Pressure positions.

NOTE: All three scan tool Line Pressure readings should be steady and ±14 kPa or 2.0 PSI of the reading specified on the Transmission Simulator.

Does the Line Pressure on the scan tool fluctuate up and down more than 69 kPa or 10 PSI at any of the 3 line pressure positions on the Transmission Simulator?

Yes >> Using the schematics as a guide, check the Powertrain Control Module (PCM) terminals for corrosion, damage, or terminal push out. Pay particular attention to all power and ground circuits. If no problems are found, replace the PCM per the Service Information. With the scan tool, perform QUICK LEARN.

Perform 45RFE/545RFE TRANSMISSION VERIFICATION TEST - VER 1.

No >> Repair internal transmission and inspect the oil pump per the Service information and replace if necessary. If no problems are found, replace the Transmission Solenoid/TRS Assembly — possible cause is the Pressure Control Solenoid is stuck.

Perform 45RFE/545RFE TRANSMISSION VERIFICATION TEST - VER 1.

P0932-LINE PRESSURE SENSOR CIRCUIT (CONTINUED)

5. INTERMITTENT WIRING AND CONNECTORS

The conditions necessary to set this DTC are not present at this time.
Using the schematics as a guide, inspect the wiring and connectors specific to this circuit.
Wiggle the wires while checking for shorted and open circuits.
With the scan tool, check the EATX DTC EVENT DATA to help identify the conditions in which the DTC was set.

Where there any problems found?

Yes >> Repair as necessary.
Perform 45RFE/545RFE TRANSMISSION VERIFICATION TEST - VER 1.

No >> Test Complete.

P0934-LINE PRESSURE SENSOR CIRCUIT LOW

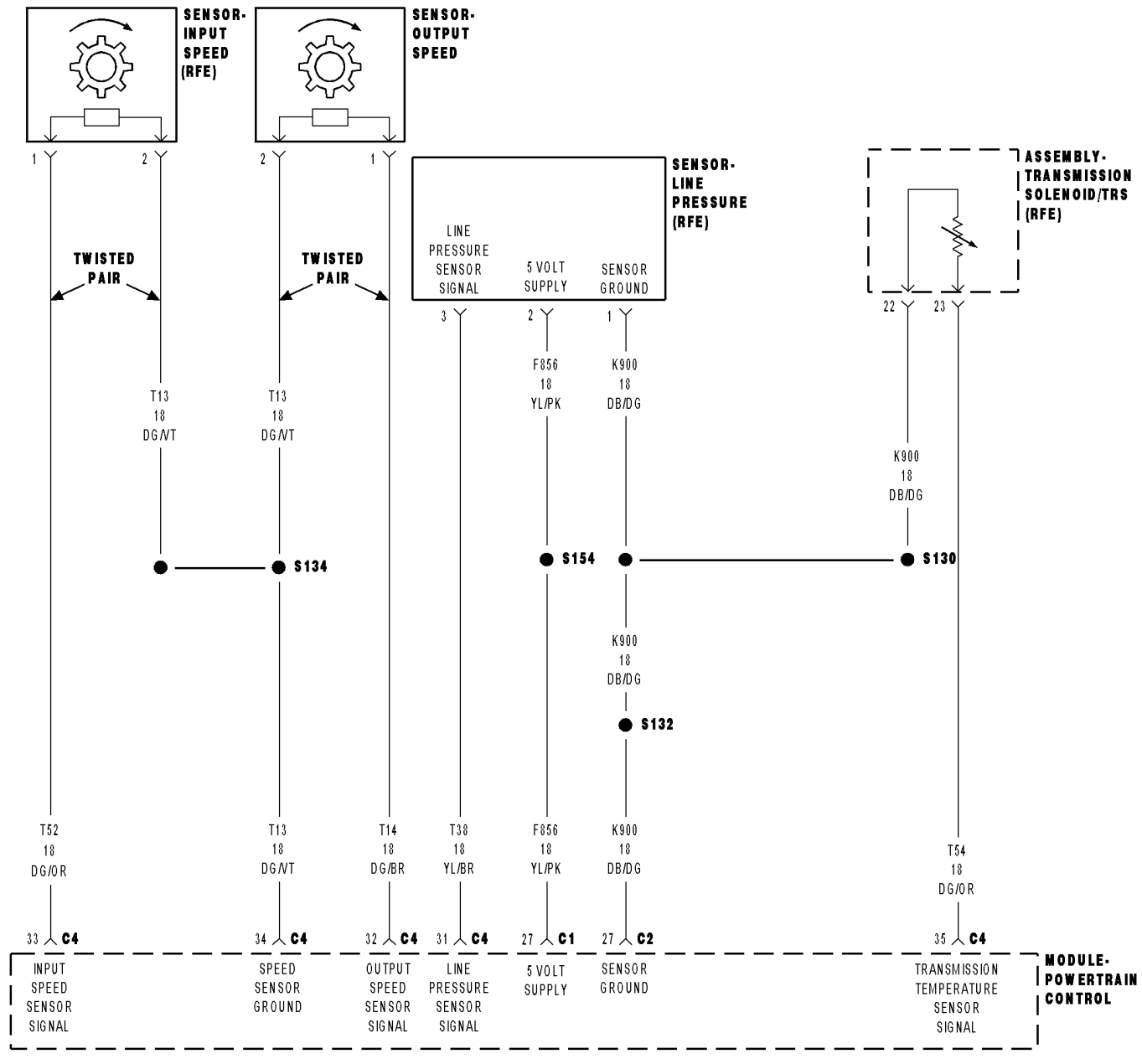

P0934-LINE PRESSURE SENSOR CIRCUIT LOW (CONTINUED)

For the Transmission circuit diagram (Refer to 21 - TRANSMISSION/TRANSAXLE/AUTOMATIC - 45RFE/545RFE - SCHEMATICS AND DIAGRAMS)

For a complete wiring diagram **Refer to Section 8W**.

- **When Monitored:**
  Continuously with the ignition on and engine running.
- **Set Condition:**
  This DTC will set when the monitored Line Pressure Sensor voltage is less than or equal to 0.35 volts for 0.18 seconds.

Possible Causes
(F856) 5-VOLT SUPPLY CIRCUIT OPEN
(F856) 5-VOLT SUPPLY CIRCUIT SHORT TO GROUND
(T38) LINE PRESSURE SENSOR SIGNAL CIRCUIT SHORT TO GROUND
LINE PRESSURE SENSOR
POWERTRAIN CONTROL MODULE

Always perform the Pre-Diagnostic Troubleshooting procedure before proceeding. (Refer to 21 - TRANSMISSION/TRANSAXLE/AUTOMATIC - 45RFE/545RFE - DIAGNOSIS AND TESTING).

Theory of Operation

Line pressure is electronically controlled by the Transmission Control System and is measured by the Line Pressure Sensor (LPS). The desired line pressure is continuously being compared to the actual line pressure and is regulated by electronically changing the duty cycle of the Pressure Control Solenoid (PCS). (5% duty cycle = solenoid off = max line pressure, 62% duty cycle = solenoid on = min line pressure).

The Transmission Control System calculates the desired line pressure based on inputs from the transmission and engine. A calculated torque input to the transmission is used as the primary input of the desired line pressure calculation and is called Torque Based Line Pressure. In addition, the line pressure is set to a preset level 827 to 931 kPa (120 to 135 PSI) during shifts and in Park and Neutral to ensure consistent shift quality.

The monitored Line Pressure Sensor voltage should always be between 0.35 and 4.75 volts. Any monitored voltages outside these parameters indicate an Line Pressure Sensor or wiring problem and will cause either DTC P0934 or P0935 to set.

Diagnostic Test

1. CHECK TO SEE IF DTC IS CURRENT

With the scan tool, check the STARTS SINCE SET counter for P0934.

NOTE: This counter only applies to the last DTC set.

Is the STARTS SINCE SET counter 2 or less?

Yes >> Go To 2

No >> Go To 6

P0934-LINE PRESSURE SENSOR CIRCUIT LOW (CONTINUED)

2. PCM AND WIRING

Turn the ignition off to the lock position.

Remove the Starter Relay.

NOTE: Removal of the Starter Relay is to prevent a Transmission, NO RESPONSE, condition and disable the starter.

Install the Transmission Simulator, Miller tool #8333.

Ignition on, engine not running.

With the scan tool, under Transmission Sensors, monitor the Line Pressure.

Using the Transmission Simulator, set the rotary switch to each of the 3 line pressure positions.

NOTE: The readings should be within ±14 kPa or 2.0 PSI on the scan tool to the pressure readings specified on Transmission Simulator.

Does the Line Pressure on the scan tool match the line pressures on the Transmission Simulator?

Yes >> Replace the Line Pressure Sensor per the Service Information.
Perform (NGC) 45RFE/545RFE TRANSMISSION VERIFICATION TEST - VER 1.

No >> Go To 3

---

3. (T38) LINE PRESSURE SENSOR SIGNAL CIRCUIT SHORT TO GROUND

Turn the ignition off to the lock position.

Disconnect the PCM C4 harness connector and connect Miller tool #8815.

Disconnect the Transmission Simulator, Miller tool #8333.

CAUTION: Do not probe the PCM harness connectors. Probing the PCM harness connectors will damage the PCM terminals resulting in poor terminal to pin connection. Install Miller tool #8815 to perform diagnosis.

Measure the resistance between ground and the (T38) Line Pressure Sensor Signal circuit.

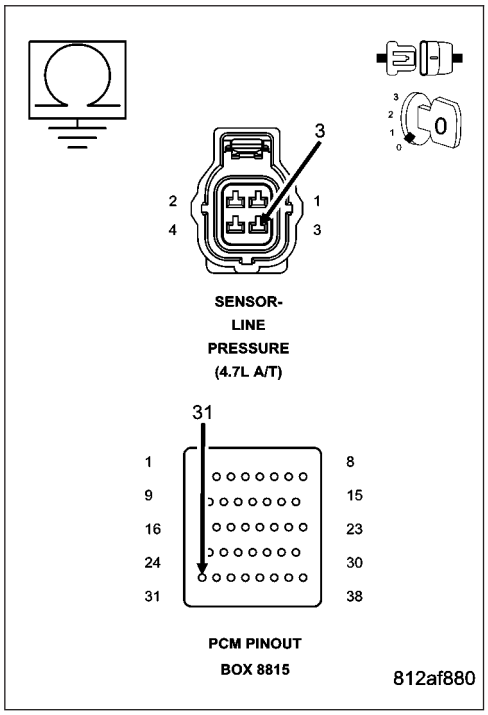

Is the resistance below 5.0 ohms?

Yes >> Repair the (T38) Line Pressure Sensor Signal circuit for a short to ground.
Perform (NGC) 45RFE/545RFE TRANSMISSION VERIFICATION TEST - VER 1.

No >> Go To 4

P0934-LINE PRESSURE SENSOR CIRCUIT LOW (CONTINUED)

4. (F856) 5-VOLT SUPPLY CIRCUIT OPEN

Disconnect the PCM C1 harness connector and connect Miller tool #8815.

Measure the resistance of the (F856) 5-volt Supply circuit between Line Pressure sensor harness connector and the appropriate terminal of Miller tool #8815.

Is the resistance below 5.0 ohms?

Yes >> Repair the (F856) 5-volt Supply circuit for an open.
Perform 45RFE/545RFE TRANSMISSION VERIFICATION TEST - VER 1.

No >> Go To 5

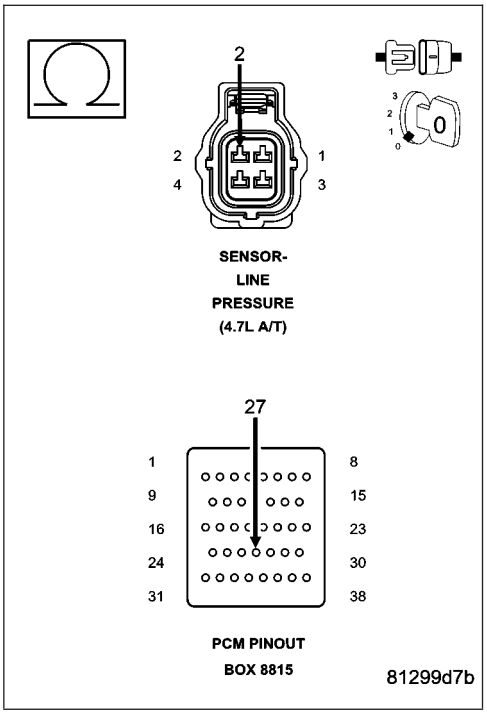

5. (F856) 5-VOLT SUPPLY CIRCUIT SHORT TO GROUND

Disconnect the PCM C1 harness connector and connect Miller tool #8815.

Measure the resistance between ground and the (F856) 5-volt Supply circuit.

Is the resistance below 5.0 ohms?

Yes >> Repair the (F856) 5-volt Supply circuit for a short to ground.
Perform (NGC) 45RFE/545RFE TRANSMISSION VERIFICATION TEST - VER 1.

No >> Using the schematics as a guide, check the Powertrain Control Module (PCM) terminals for corrosion, damage, or terminal push out. Pay particular attention to all power and ground circuits. If no problems are found, replace the PCM per the Service Information. With the scan tool, perform QUICK LEARN.
Perform 45RFE/545RFE TRANSMISSION VERIFICATION TEST - VER 1.

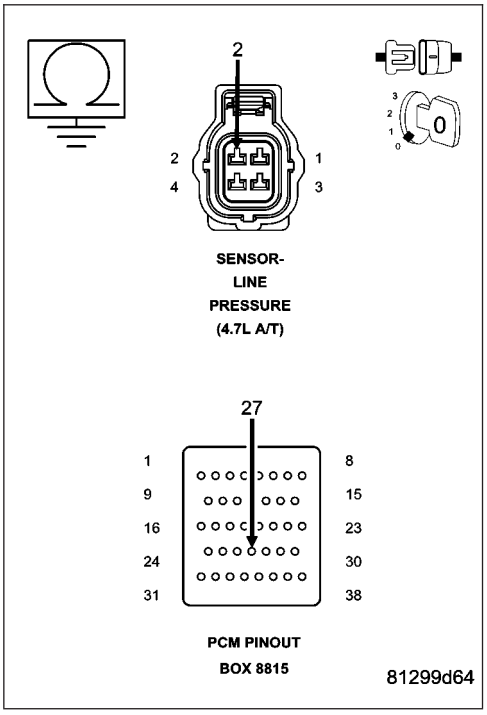

P0934-LINE PRESSURE SENSOR CIRCUIT LOW (CONTINUED)

6. INTERMITTENT WIRING AND CONNECTORS

The conditions necessary to set this DTC are not present at this time.
Using the schematics as a guide, inspect the wiring and connectors specific to this circuit.
Wiggle the wires while checking for shorted and open circuits.
With the scan tool, check the EATX DTC EVENT DATA to help identify the conditions in which the DTC was set.

Where there any problems found?

Yes >> Repair as necessary.
Perform 45RFE/545RFE TRANSMISSION VERIFICATION TEST - VER 1.

No >> Test Complete.

P0935-LINE PRESSURE SENSOR CIRCUIT HIGH

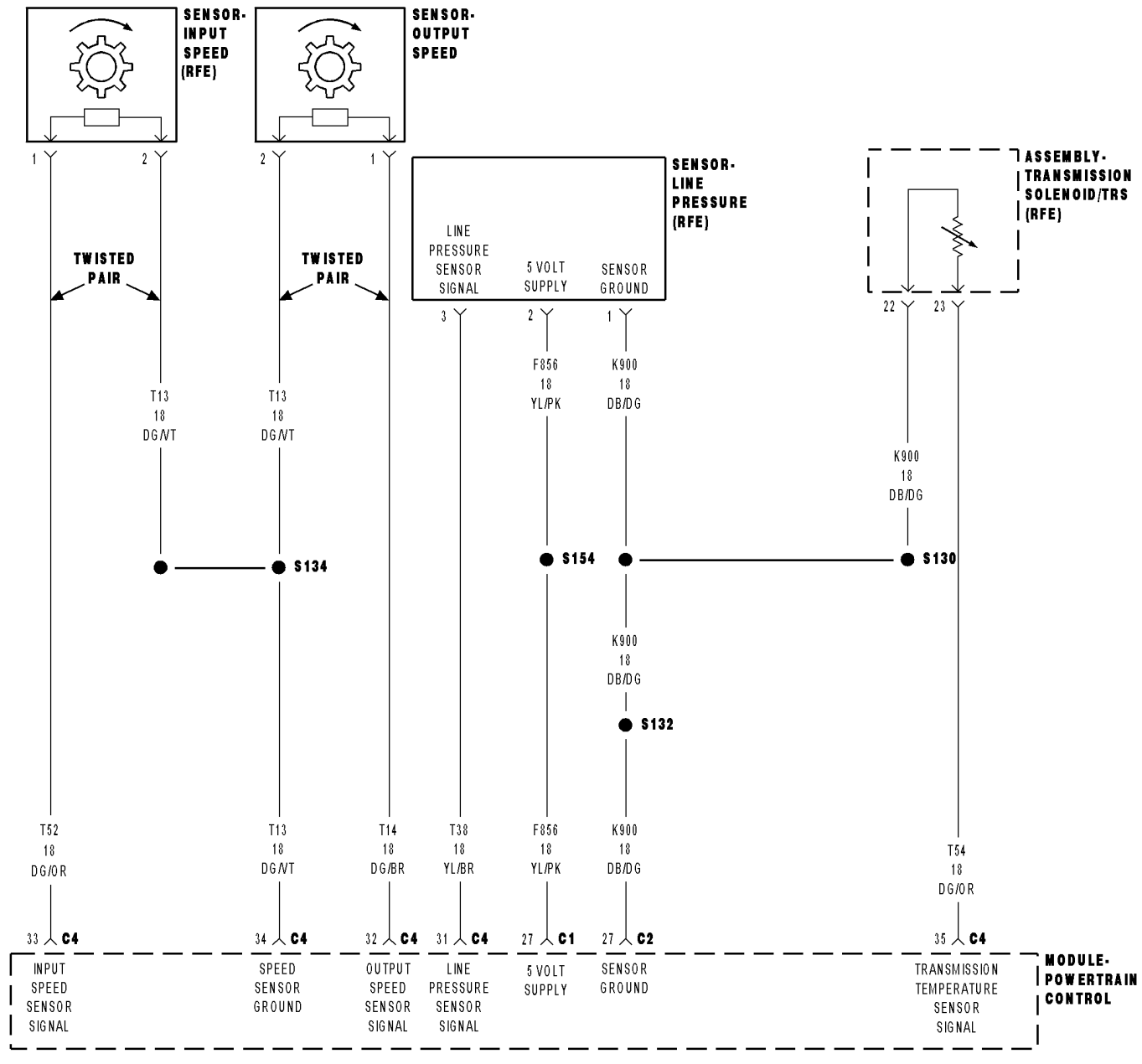

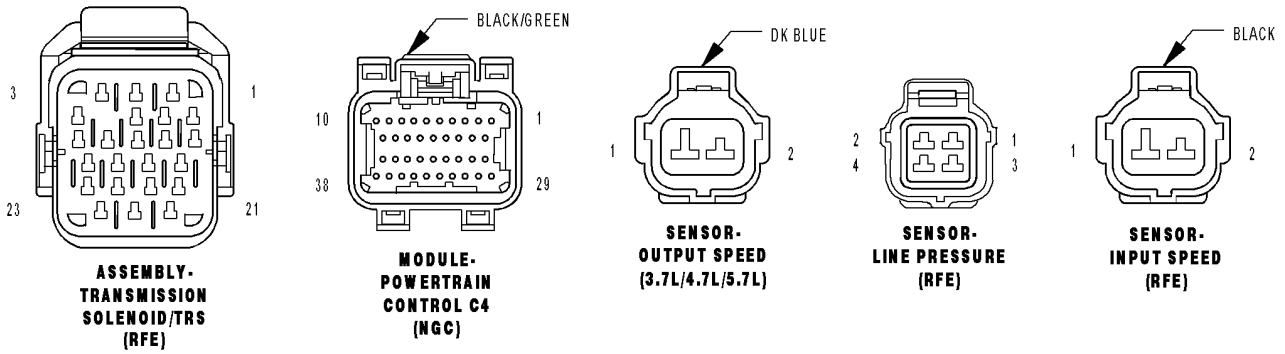

814a4ba3

P0935-LINE PRESSURE SENSOR CIRCUIT HIGH (CONTINUED)

For the Transmission circuit diagram (Refer to 21 - TRANSMISSION/TRANSAXLE/AUTOMATIC - 45RFE/545RFE - SCHEMATICS AND DIAGRAMS)

For a complete wiring diagram **Refer to Section 8W**

- **When Monitored:**
  Continuously with ignition on and engine running.
- **Set Condition:**
  This DTC will set if the monitored Line Pressure Sensor voltage is greater than or equal to 4.75 volts for the period of 0.18 seconds

Possible Causes
(T38) LINE PRESSURE SENSOR SIGNAL CIRCUIT OPEN
(K900) SENSOR GROUND CIRCUIT OPEN
(T38) LINE PRESSURE SENSOR SIGNAL CIRCUIT SHORT TO VOLTAGE
LINE PRESSURE SENSOR
POWERTRAIN CONTROL MODULE

Always perform the Pre-Diagnostic Troubleshooting procedure before proceeding. (Refer to 21 - TRANSMISSION/TRANSAXLE/AUTOMATIC - 45RFE/545RFE - DIAGNOSIS AND TESTING).

Theory of Operation

Line pressure is electronically controlled by the Transmission Control System and is measured by the Line Pressure Sensor (LPS). The desired line pressure is continuously being compared to the actual line pressure and is regulated by electronically changing the duty cycle of the Pressure Control Solenoid (PCS). (5% duty cycle = solenoid off = max line pressure, 62% duty cycle = solenoid on = min line pressure).

The Transmission Control System calculates the desired line pressure based on inputs from the transmission and engine. A calculated torque input to the transmission is used as the primary input of the desired line pressure calculation and is called Torque Based Line Pressure. In addition, the line pressure is set to a preset level 827 to 931 kPa (120 to 135 PSI) during shifts and in Park and Neutral to ensure consistent shift quality.

The monitored Line Pressure Sensor voltage should always be between 0.35 and 4.75 volts. Any monitored voltages outside these parameters indicate an Line Pressure Sensor or wiring problem and will cause either DTC P0934 or P0935 to set.

Diagnostic Test

1. CHECK TO SEE IF DTC IS CURRENT

With the scan tool, Check the STARTS SINCE SET counter for P0935.

NOTE: This counter only applies to the last DTC set.

Is the STARTS SINCE SET counter 2 or less?

Yes >> Go To 2

No >> Go To 6

P0935-LINE PRESSURE SENSOR CIRCUIT HIGH (CONTINUED)

2. PCM AND WIRING

Turn the ignition off to the lock position.

Remove the Starter Relay.

NOTE: Removal of the Starter Relay is to prevent a Transmission, NO RESPONSE, condition and disable the starter.

Install the Transmission Simulator, Miller tool #8333.

NOTE: Check connectors - Clean/repair as necessary.

Ignition on, engine not running.

With the scan tool, monitor the Line Pressure.

Using the Transmission Simulator, set the rotary switch to each of the 3 line pressure positions.

NOTE: The readings should be within ±14 kPa or 2.0 PSI on the scan tool of the pressure reading specified on Transmission Simulator.

Does the 3 line pressures on the scan tool match the Line pressure readings on the Transmission Simulator?

Yes >> Replace the Line Pressure Sensor per the Service Information.
Perform 45RFE/545RFE TRANSMISSION VERIFICATION TEST - VER 1.

No >> Go To 3

---

3. (K900) SENSOR GROUND CIRCUIT OPEN

Turn the ignition off to the lock position.

Disconnect the Transmission Simulator, Miller tool #8333.

Disconnect the PCM C2 harness connector and connect Miller tool #8815.

CAUTION: Do not probe the PCM harness connectors. Probing the PCM harness connectors will damage the PCM terminals resulting in poor terminal to pin connection. Install Miller tool #8815 to perform diagnosis.

Measure the resistance of the (K900) Sensor Ground circuit from the Line Pressure Sensor harness connector to the appropriate terminal of Miller tool #8815.

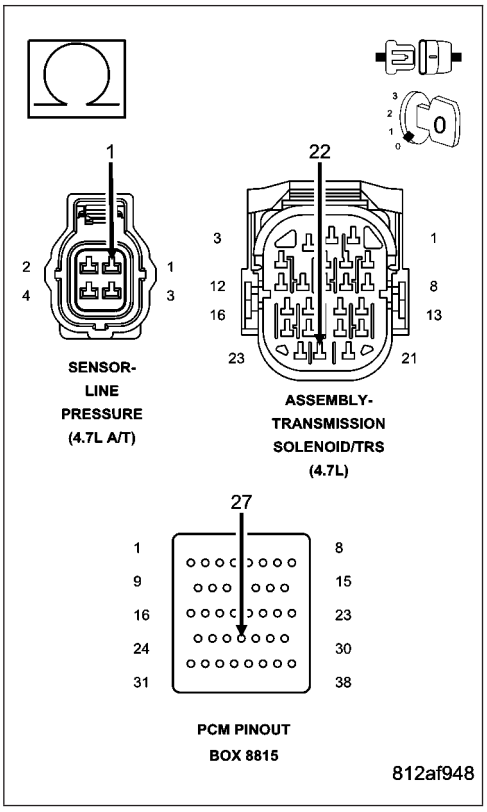

Is the resistance above 5.0 ohms?

Yes >> Repair the (K900) Sensor Ground circuit for an open.
Perform 45RFE/545RFE TRANSMISSION VERIFICATION TEST - VER 1.

No >> Go To 4

P0935-LINE PRESSURE SENSOR CIRCUIT HIGH (CONTINUED)

4. (T38) LINE PRESSURE SENSOR SIGNAL CIRCUIT OPEN

Disconnect the PCM C4 harness connector and connect Miller tool #8815.

Measure the resistance of the (T38) Line Pressure Sensor Signal circuit from the Line Pressure Sensor harness connector to the appropriate terminal of Miller tool #8815.

Is the resistance above 5.0 ohms?

Yes >> Repair the (T38) Line Pressure Sensor Signal circuit for an open.

Perform 45RFE/545RFE TRANSMISSION VERIFICATION TEST - VER 1.

No >> Go To 5

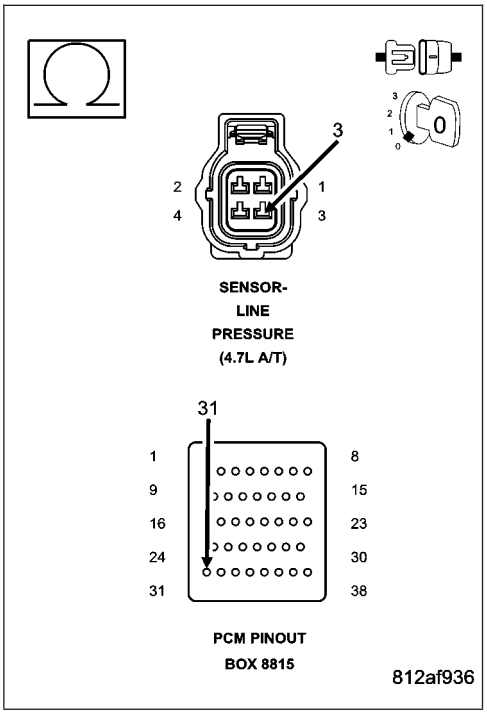

5. (T38) LINE PRESSURE SENSOR SIGNAL CIRCUIT SHORT TO VOLTAGE

Remove the Transmission Control Relay.

Connect a jumper wire between the (A104) Fused B+ circuit and the (T16) Transmission Control Relay Output circuit in the Transmission Control Relay connector.

Ignition on, engine not running.

Measure the voltage of the (T38) Line Pressure Sensor Signal circuit.

Is the voltage above 5.5 volts?

Yes >> Repair the (T38) Line Pressure Sensor Signal circuit for a short to voltage.

Perform 45RFE/545RFE TRANSMISSION VERIFICATION TEST - VER 1.

No >> Using the schematics as a guide, check the Powertrain Control Module (PCM) terminals for corrosion, damage, or terminal push out. Pay particular attention to all power and ground circuits. If no problems are found, replace the PCM per the Service Information. With the scan tool, perform QUICK LEARN.

Perform 45RFE/545RFE TRANSMISSION VERIFICATION TEST - VER 1.

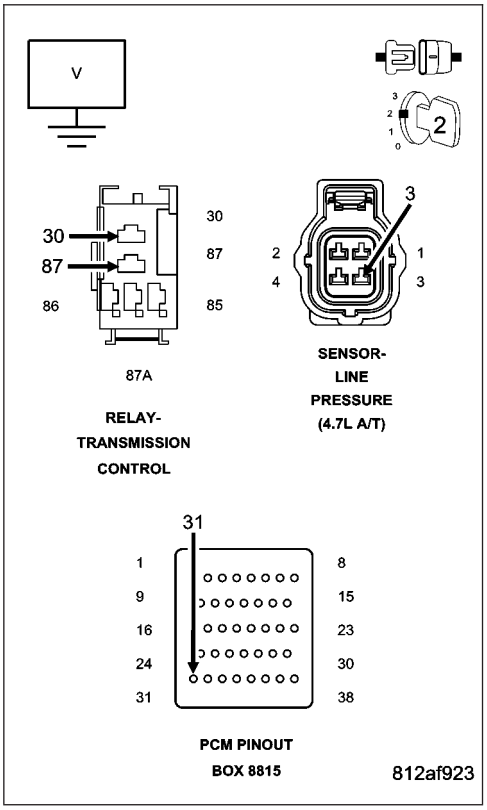

P0935-LINE PRESSURE SENSOR CIRCUIT HIGH (CONTINUED)

6. INTERMITTENT WIRING AND CONNECTORS

The conditions necessary to set this DTC are not present at this time.
Using the schematics as a guide, inspect the wiring and connectors specific to this circuit.
Wiggle the wires while checking for shorted and open circuits.
With the scan tool, check the EATX DTC EVENT DATA to help identify the conditions in which the DTC was set.

Where there any problems found?

Yes >> Repair as necessary.
Perform 45RFE/545RFE TRANSMISSION VERIFICATION TEST - VER 1.

No >> Test Complete.

P0944-LOSS OF HYDRAULIC PUMP PRIME

For the Transmission circuit diagram (Refer to 21 - TRANSMISSION/TRANSAXLE/AUTOMATIC - 45RFE/545RFE - SCHEMATICS AND DIAGRAMS)

For a complete wiring diagram **Refer to Section 8W**

- **When Monitored:**
  If the transmission is slipping in any forward gear and all the pressure switches are not indicating pressure, a loss of prime test is run.
- **Set Condition:**
  If the transmission begins to slip in a forward gear and all the pressure switch(s) that should be closed are open a loss of prime test begins. Available elements are turned on by the PCM to see if pump prime exists. The DTC sets if no pressure switch(s) respond.

Possible Causes
SHIFT LEVER OUT OF ADJUSTMENT
INPROPER FLUID LEVEL
CRACKED OR IMPROPERLY INSTALLED PRIMARY OIL FILTER OR SEAL
LOOSE COOLER RETURN FILTER
STUCK OR STICKING MAIN REGULATOR VALVE
TRANSMISSION OIL PUMP

Always perform the Pre-Diagnostic Troubleshooting procedure before proceeding. (Refer to 21 - TRANSMISSION/TRANSAXLE/AUTOMATIC - 45RFE/545RFE - DIAGNOSIS AND TESTING).

Theory of Operation

The Loss of prime test is used to prevent transmission defaults and erroneous fault codes during temporary loss of pump prime that may occur with low transmission fluid under severe braking conditions, start-up, etc. and to point towards more subtle problems such as a plugged or cracked oil filter.

The Loss of Prime DTC is set by a loss of hydraulic pressure in the transmission system. This condition, if sustained, will result in the vehicle being unable to move.

Diagnostic Test

1. SHIFT LEVER POSITION TEST

Using the scan tool, perform a Shift Lever Position test. Follow the instructions on the scan tool.

Did the Shift Lever Position Test pass?

Yes >> Go To 2

No >> Refer to the Transmission category and perform the appropriate symptom.
Perform 45RFE/545RFE TRANSMISSION VERIFICATION TEST - VER 1.

P0944-LOSS OF HYDRAULIC PUMP PRIME (CONTINUED)

2. CHECK TO SEE IF DTC P0944 IS CURRENT

Place the gear selector in Park.

Start the engine.

The transmission must be at operating temperature prior to checking pressure. A cold transmission will give higher readings.

Run the engine at 1500 RPM.

With the scan tool, monitor the Transmission Line Pressure.

Does the Line Pressure match the Desired Line Pressure within ± 5 psi?

No >> Go To 6

Yes >> Go To 3

---

3. CHECK LINE PRESSURE IN DRIVE AND REVERSE

Firmly apply the brake and repeat the previous test in both Drive and the Reverse gear positions.

With the scan tool, monitor the Transmission Line Pressure.

Does the Line Pressure match the Desired Line Pressure within ± 5 psi in all gear ranges?

Yes >> Go To 4

No >> Go To 5

---

4. REVIEW CUSTOMER COMMENTS

The conditions necessary to set this DTC are not present at this time.

Verify with the customer if a delayed engagement and/or an intermittent ″No Drive″ condition has occurred.

If the customers answer is ″No″ erase the DTC and return the vehicle to the customer.

Make sure to check for any TSBs or controller flash updates that my apply.

With the scan tool, check the EATX DTC EVENT DATA to help identify the conditions in which the DTC was set.

Has the customer experienced any delayed engagement and/or ″No Drive″ conditions?

Yes >> Repair internal transmission as necessary. Replace the Transmission Oil Pump if inspection reveals no signs of internal seal leakage. Refer to the Service Information for the proper repair procedure.
Perform 45RFE/545RFE TRANSMISSION VERIFICATION TEST - VER 1.

No >> Test Complete.

---

5. DTC VERIFICATION

Read and record the DTC and the EATX DTC EVENT DATA information.

Test drive the vehicle and attempt to operate the vehicle within the parameters in which the DTC set.

With the scan tool, read DTCs.

Did any following DTCs set, P0868, P0944, P0841, P0846, P0871, P0876, or P0988?

Yes >> Go To 6

No >> Test Complete.

P0944-LOSS OF HYDRAULIC PUMP PRIME (CONTINUED)

6. CHECK TRANSMISSION OIL FILTER

Remove and inspect the Transmission Oil Pan per the Service Information.

Remove and inspect the Primary Oil Filter per the Service Information.

Inspect the oil filter seal for damage and proper installation.

Does the Oil Pan contain excessive debris and/or is the Oil Filter plugged or seal damaged?

Yes >> Repair the cause of the plugged transmission oil filter or excessive debris. Check the Transmission Oil Filter seal for improper installation onto filter neck instead of into the pump bore, not fully seated against pump housing, filter neck not engaged into pump. Repair as necessary.

Perform 45RFE/545RFE TRANSMISSION VERIFICATION TEST - VER 1.

No >> Repair the Transmission Oil Pump as necessary. Check for a stuck main regulator valve and clean if necessary. Refer to the Service Information for the proper repair procedure.

Perform 45RFE/545RFE TRANSMISSION VERIFICATION TEST - VER 1.

P0987-4C HYDRAULIC PRESSURE TEST

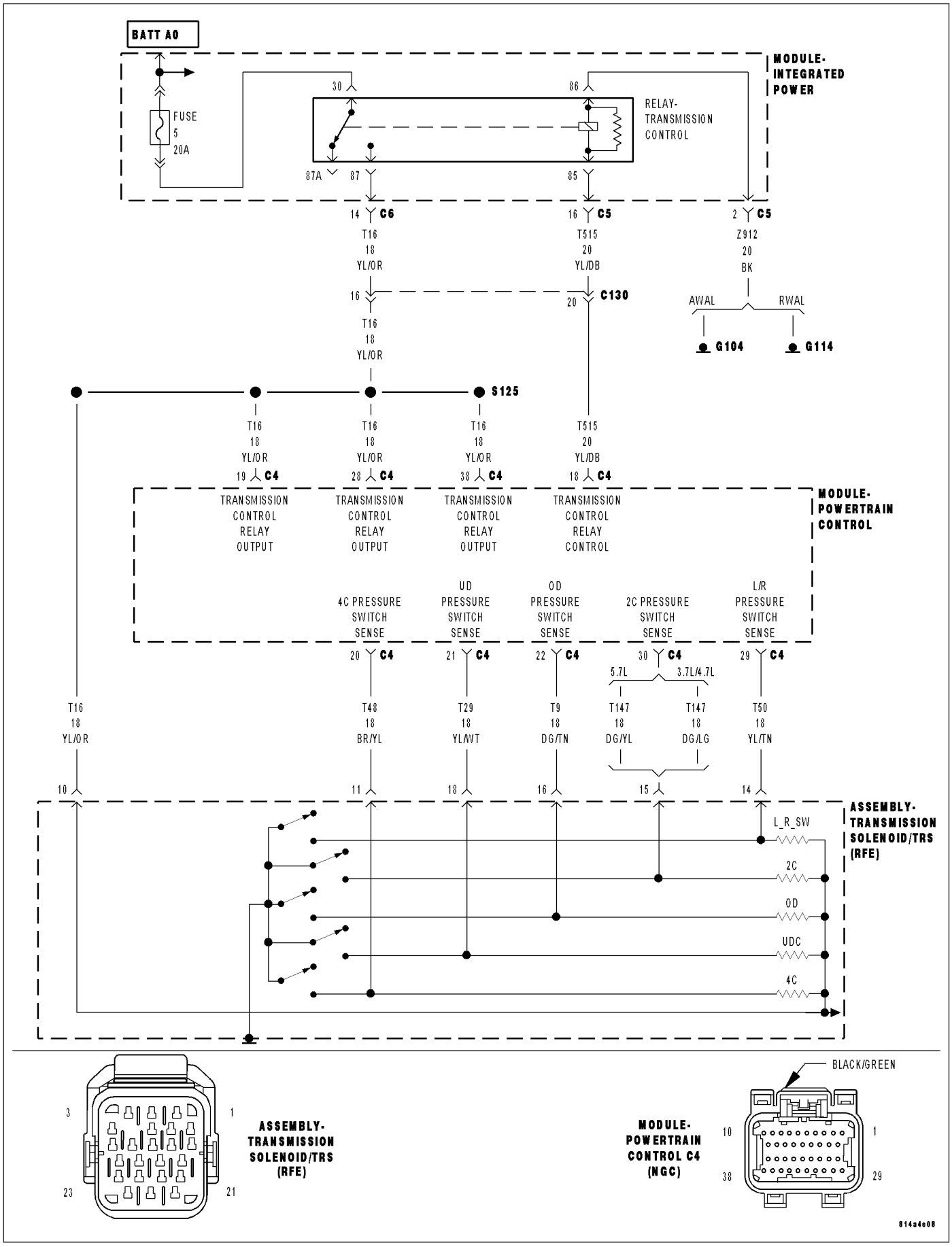

P0987-4C HYDRAULIC PRESSURE TEST (CONTINUED)

For the Transmission circuit diagram (Refer to 21 - TRANSMISSION/TRANSAXLE/AUTOMATIC - 45RFE/545RFE - SCHEMATICS AND DIAGRAMS)

For a complete wiring diagram **Refer to Section 8W**.

- **When Monitored:**
  In any forward gear with engine speed above 1000 RPM shortly after a shift and every minute thereafter.
- **Set Condition:**
  After a shift into a forward gear, with engine speed above 1000 RPM, the PCM momentarily turns on element pressure to the Clutch circuits that don't have pressure to identify the correct Pressure Switch closes. If the Pressure Switch does not close 2 times, the DTC sets.

Possible Causes
LINE PRESSURE SENSOR
TRANSMISSION FLUID CONTAMINATION
RELATED DTC'S PRESENT
TRANSMISSION SOLENOID/TRS ASSEMBLY
EXCESSIVE DEBRIS IN OIL PAN
POOR LINE PRESSURE SENSOR CONNECTION
TRANSMISSION CONTROL RELAY DTCS PRESENT
(T48) 4C PRESSURE SWITCH SENSE CIRCUIT OPEN
(F856) 5-VOLT SUPPLY CIRCUIT OPEN
(T48) 4C PRESSURE SWITCH SENSE CIRCUIT SHORT TO GROUND
(F856) 5-VOLT SUPPLY CIRCUIT SHORT TO GROUND
(T48) 4C PRESSURE SWITCH SENSE CIRCUIT SHORT TO OTHERS
TRANSMISSION SOLENOID/TRS ASSEMBLY
INTERNAL TRANSMISSION
POWERTRAIN CONTROL MODULE

Always perform the Pre-Diagnostic Troubleshooting procedure before proceeding. (Refer to 21 - TRANSMISSION/TRANSAXLE/AUTOMATIC - 45RFE/545RFE - DIAGNOSIS AND TESTING).

Theory of Operation

The Transmission Control System tests the pressure switches when they are off. The test verifies that the switches are operational (They will close with pressure applied). The Transmission Control System verifies that the switch closes when the corresponding element is applied. If a switch fails to close, it is re-tested. If it fails the second test, the DTC will set, the MIL will illuminate and the transmission system will default to the orderly Shutdown routine.

Diagnostic Test

1. DETERMINING IF RELATED DTC'S ARE PRESENT

With the scan tool, check for other transmission DTC's

Is there any Loss of Prime, Transmission Control Relay, and/or Line Pressure Sensor DTCs present?

Yes >> Refer to the Transmission category and perform the appropriate symptom. If the DTC P0944 is present, perform its respective test first.
Perform 45RFE/545RFE TRANSMISSION VERIFICATION TEST - VER 1.

No >> Go To 2

P0987-4C HYDRAULIC PRESSURE TEST (CONTINUED)

2. DTC P0770 PRESENT

With the scan tool, check Transmission DTCs.

Is the DTC P0770 also present?

Yes >> Refer to the symptom list and perform diagnostics for P0770.

No >> Go To 3

---

3. OTHER DTCS PRESENT

With the scan tool, check for other transmission DTC's

Are the DTCs P0988 and/or P1736 present also?

Yes >> Go To 12

No >> Go To 4

---

4. CHECK TO SEE IF DTC P0987 IS CURRENT

With the scan tool, check if the DTC P0987-4C HYDRAULIC PRESSURE TEST FAILURE is active or stored.

Is the DTC P0987-4C HYDRAULIC PRESSURE TEST FAILURE active?

Yes >> Go To 5

No >> Go To 17

---

5. LINE PRESSURE STAYS THE SAME

Start the engine.

Warm the transmission to 82° C or 180° F.

Firmly apply the brakes.

With the scan tool, monitor the Line Pressure during the following step.

Move the shift lever to each gear position, pausing momentarily in each position and record the line pressure reading. Allow the pressure to stabilize for at least 5 seconds in each range.

Did the line pressure remain at a steady value between 585 and 655 kPa or 85 and 95 PSI in each position?

Yes >> Go To 6

No >> Go To 10

---

6. CHECK LINE PRESSURE SENSOR CONNECTION

Ignition on, **engine not running.**

With the scan tool, monitor the Line Pressure while firmly pushing the Transmission Line Pressure Sensor connector inwards towards the Transmission.

Did the Line Pressure reading on the scan tool change to about 207 kPa or 30 PSI when the connector was pushed inward?

Yes >> Disconnect and properly reconnect the Line Pressure Sensor connector. Inspect terminals and repair as necessary.

Perform 45RFE/545RFE TRANSMISSION VERIFICATION TEST - VER 1.

No >> Go To 7

P0987-4C HYDRAULIC PRESSURE TEST (CONTINUED)

7. LINE PRESSURE SENSOR OPERATION

Turn the ignition off to the lock position.

Remove the Starter Relay.

NOTE: Removal of the Starter Relay is to prevent a Transmission, NO RESPONSE, condition and disable the starter.

Install the Transmission Simulator, Miller tool #8333.

NOTE: Check connectors - Clean/repair as necessary.

With the Transmission Simulator select the ″OFF″ position on the ″Input/Output Speed″ switch.

Ignition on, engine not running.

With the scan tool, monitor the Line Pressure while turning the Pressure Switch selector to each of the 3 line pressure positions on the Transmission Simulator.

NOTE: All three scan tool Line Pressure readings should be steady and ±14 kPa or 2.0 PSI of the reading specified on the Transmission Simulator.

Did the scan tool Line Pressure readings match the specified readings on the Transmission Simulator and remain steady in all three positions?

Yes >> Replace the Line Pressure Sensor per the Service Information.
Perform 45RFE/545RFE TRANSMISSION VERIFICATION TEST - VER 1.

No >> Go To 8

---

8. (F856) 5-VOLT SUPPLY CIRCUIT OPEN

Turn the ignition off to the lock position.

Disconnect Transmission Simulator.

Disconnect the PCM C1 harness connector and connect Miller tool #8815.

CAUTION: Do not probe the PCM harness connectors. Probing the PCM harness connectors will damage the PCM terminals resulting in poor terminal to pin connection. Install Miller tool #8815 to perform diagnosis.

Measure the resistance of the (F856) 5-volt Supply circuit from the Line Pressure Sensor harness connector to the appropriate terminal of Miller tool #8815.

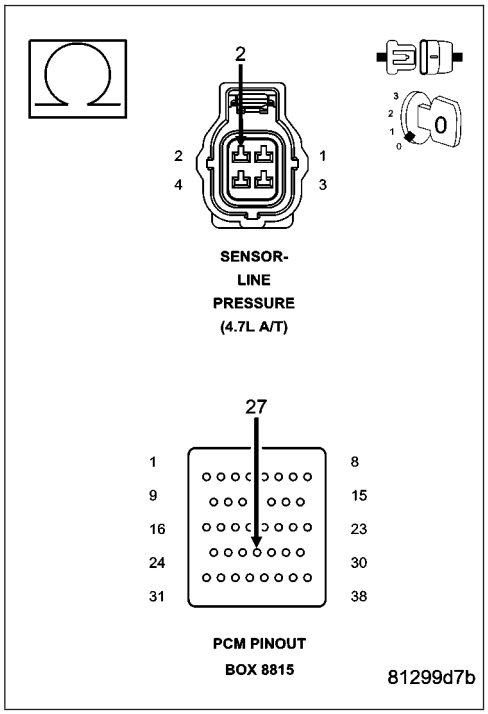

Is the resistance above 5.0 ohms?

Yes >> Repair the (F856) 5-volt Supply circuit for an open.
Perform 45RFE/545RFE TRANSMISSION VERIFICATION TEST - VER 1.

No >> Go To 9

P0987-4C HYDRAULIC PRESSURE TEST (CONTINUED)

9. (F856) 5-VOLT SUPPLY CIRCUIT SHORT TO GROUND

Measure the resistance between ground and the (F856) 5-volt Supply circuit.

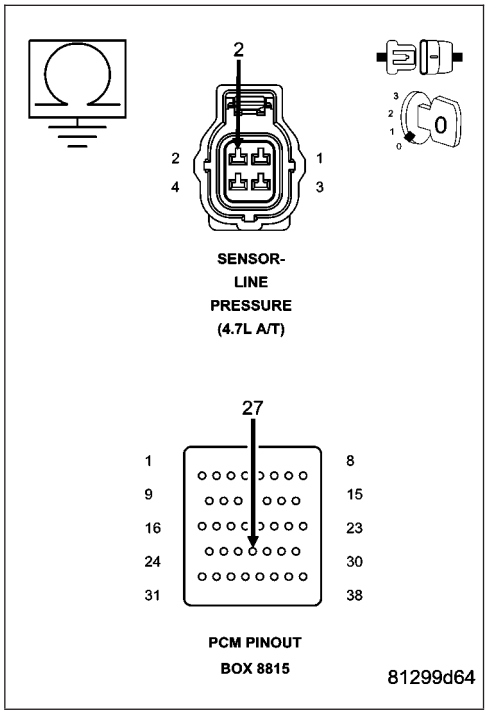

Is the resistance below 5.0 ohms?

Yes >> Repair the (F856) 5-volt Supply circuit for a short to ground.
Perform 45RFE/545RFE TRANSMISSION VERIFICATION TEST - VER 1.

No >> Using the schematics as a guide, check the Powertrain Control Module (PCM) terminals for corrosion, damage, or terminal push out. Pay particular attention to all power and ground circuits. If no problems are found, replace the PCM per the Service Information. With the scan tool, perform QUICK LEARN.
Perform 45RFE/545RFE TRANSMISSION VERIFICATION TEST - VER 1.

---

10. COMPARE SCAN TOOL TO PRESSURE GAUGE

Turn the ignition off to the lock position.

Connect the Line Pressure Adapter, Miller tool #8259 and 0-300 psi Test Gauge, Miller tool #C-3293-SP. Refer to the Service Information for proper installation procedure.

CAUTION: Apply parking brake.

Start the engine.

In the following steps, compare the scan tool Line Pressure to the Pressure Gauge readings in each gear.

CAUTION: Do not overheat transmission.

With the gear selector in park, raise the RPM to 1500, and compare line pressure readings.

Firmly apply the brakes, move the gear selector into reverse, raise the RPM to 1500, and compare the line pressure readings.

Firmly apply the brakes, move the gear selector into drive, raise the RPM to 1500, and compare the line pressure readings.

Did the scan tool Line Pressure readings match the Pressure Gauge readings ± 10 psi?

Yes >> Go To 11

No >> Replace the Line Pressure Sensor per the Service Information.
Perform 45RFE/545RFE TRANSMISSION VERIFICATION TEST - VER 1.

P0987-4C HYDRAULIC PRESSURE TEST (CONTINUED)

11. WIRING AND CONNECTORS

Turn the ignition off to the lock position.

Remove the Starter Relay.

NOTE: Failure to remove the Starter Relay can cause a Transmission - No Response condition.

Remove the Line Pressure Adapter, Miller tool #8259 and 0-300 psi Test Gauge, Miller tool #C-3293-SP.

Install the Transmission Simulator, Miller tool #8333.

On the Transmission Simulator, turn the Pressure Switch selector switch to 4C.

Ignition on, engine not running.

With the scan tool, monitor the 4C Pressure Switch state while pressing and holding the Pressure Switch test button and wiggling the wire harness and connectors that pertain to the 4C Pressure Switch.

Did the 4C Pressure Switch state change to closed and remain closed while wiggling the wires?

Yes >> Go To 12

No >> Go To 14

---

12. CHECK FOR EXCESSIVE DEBRIS

Turn the ignition off to the lock position.

Remove the Transmission Simulator, Miller tool #8333.

Remove and inspect the Transmission Oil Pan per the Service Information.

Does the Transmission Oil Pan contain excessive debris or contamination?

Yes >> Repair the cause of the excessive debris in the Transmission Oil Pan. Refer to the Service Information for the proper procedures.
Perform 45RFE/545RFE TRANSMISSION VERIFICATION TEST - VER 1.

No >> Go To 13

---

13. CHECK 4C HYDRAULIC CLUTCH CIRCUIT

Remove the Valve Body and air check the 4C hydraulic clutch circuit (in the case) for leakage per the Service Information.

NOTE: The 4C hydraulic clutch circuit contains a small bleed orifice. A small amount of air leakage is normal.

Was there excessive air leakage noticed during the air check?

Yes >> Repair as necessary. Check the 4C clutch piston, piston seals and bleed orifice assembly.
Perform 45RFE/545RFE TRANSMISSION VERIFICATION TEST - VER 1.

No >> Disassemble and inspect the Valve Body and repair as necessary. Inspect the 4C Accumulator piston and seals. If no problems are found in the Valve Body, replace the Transmission Solenoid/TRS Assembly per the Service Information.
Perform 45RFE/545RFE TRANSMISSION VERIFICATION TEST - VER 1.

P0987-4C HYDRAULIC PRESSURE TEST (CONTINUED)

14. (T48) 4C PRESSURE SWITCH SENSE CIRCUIT OPEN

Turn the ignition off to the lock position.

Remove the Transmission Simulator, Miller tool #8333 and connect Miller tool #8815.

Disconnect the PCM C4 harness connector.

Measure the resistance of the (T48) 4C Pressure Switch Sense circuit from the Transmission Solenoid/TRS Assembly harness connector to the appropriate terminal of Miller tool #8815.

Is the resistance above 5.0 ohms?

Yes >> Repair the (T48) 4C Pressure Switch Sense circuit for an open.
Perform 45RFE/545RFE TRANSMISSION VERIFICATION TEST - VER 1.

No >> Go To 15

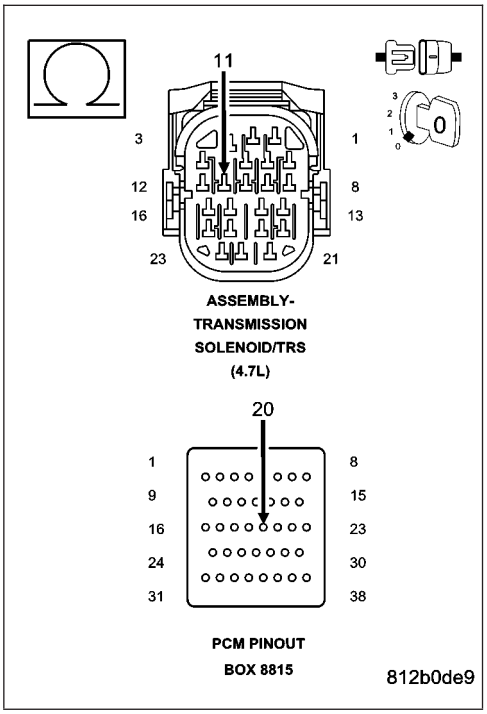

15. (T48) 4C PRESSURE SWITCH SENSE CIRCUIT SHORT TO GROUND

Measure the resistance between ground and the (T48) 4C Pressure Switch Sense circuit.

Is the resistance below 5.0 ohms?

Yes >> Repair the (T48) 4C Pressure Switch Sense circuit for a short to ground.
Perform 45RFE/545RFE TRANSMISSION VERIFICATION TEST - VER 1.

No >> Go To 16

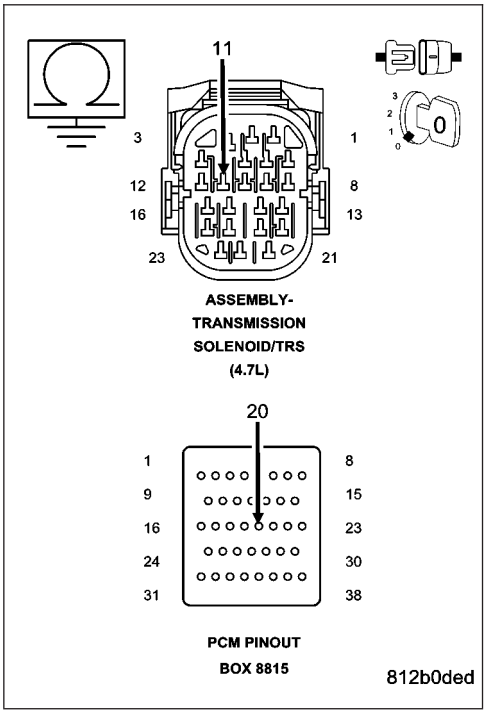

P0987-4C HYDRAULIC PRESSURE TEST (CONTINUED)

16. (T48) 4C PRESSURE SWITCH SENSE CIRCUIT SHORT TO OTHER CIRCUITS

Disconnect all PCM harness connectors.

Disconnect the Transmission Solenoid/TRS Assembly harness connector.

NOTE: Make sure the Transmission Solenoid/TRS Assembly harness connector is disconnected.

NOTE: Check connectors - Clean/repair as necessary.

Measure the resistance between the (T48) 4C Pressure Switch Sense circuit and all other circuits in the Transmission Solenoid/TRS Assembly harness connector.

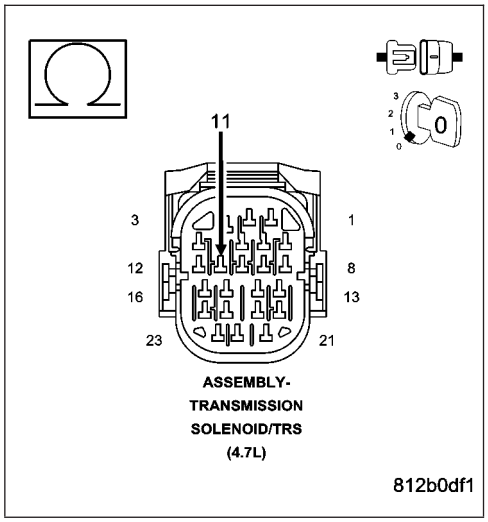

Is the resistance below 5.0 ohms between the (T48) 4C Pressure Switch Sense circuit and any other circuit(s) in the Transmission Solenoid/TRS Assembly harness connector?

Yes >> Repair the (T48) 4C Pressure Switch Sense circuit for a short to other circuit(s).
Perform 45RFE/545RFE TRANSMISSION VERIFICATION TEST - VER 1.

No >> Using the schematics as a guide, check the Powertrain Control Module (PCM) terminals for corrosion, damage, or terminal push out. Pay particular attention to all power and ground circuits. If no problems are found, replace the PCM per the Service Information. With the scan tool, perform QUICK LEARN.
Perform 45RFE/545RFE TRANSMISSION VERIFICATION TEST - VER 1.

---

17. INTERMITTENT WIRING AND CONNECTORS

The conditions necessary to set this DTC are not present at this time.

Using the schematics as a guide, inspect the wiring and connectors specific to this circuit.

Wiggle the wires while checking for shorted and open circuits.

With the scan tool, check the EATX DTC EVENT DATA to help identify the conditions in which the DTC was set.

If the EATX DTC EVENT DATA shows the DTC P0987 set while the Line Pressure was significantly below the Desired Line Pressure reading, check for causes of low line pressure (low fluid level, broken or mis-installed primary oil filter or filter seal, sticking Main Regulator Valve in the Pump Valve Body etc.). If the data shows the DTC set while the Line Pressure reading was significantly higher than the Desired Line Pressure, check the Line Pressure Sensor and related wiring.

Where there any problems found?

Yes >> Repair as necessary.
Perform 45RFE/545RFE TRANSMISSION VERIFICATION TEST - VER 1.

No >> Test Complete.

P0988-4C PRESSURE SWITCH RATIONALITY

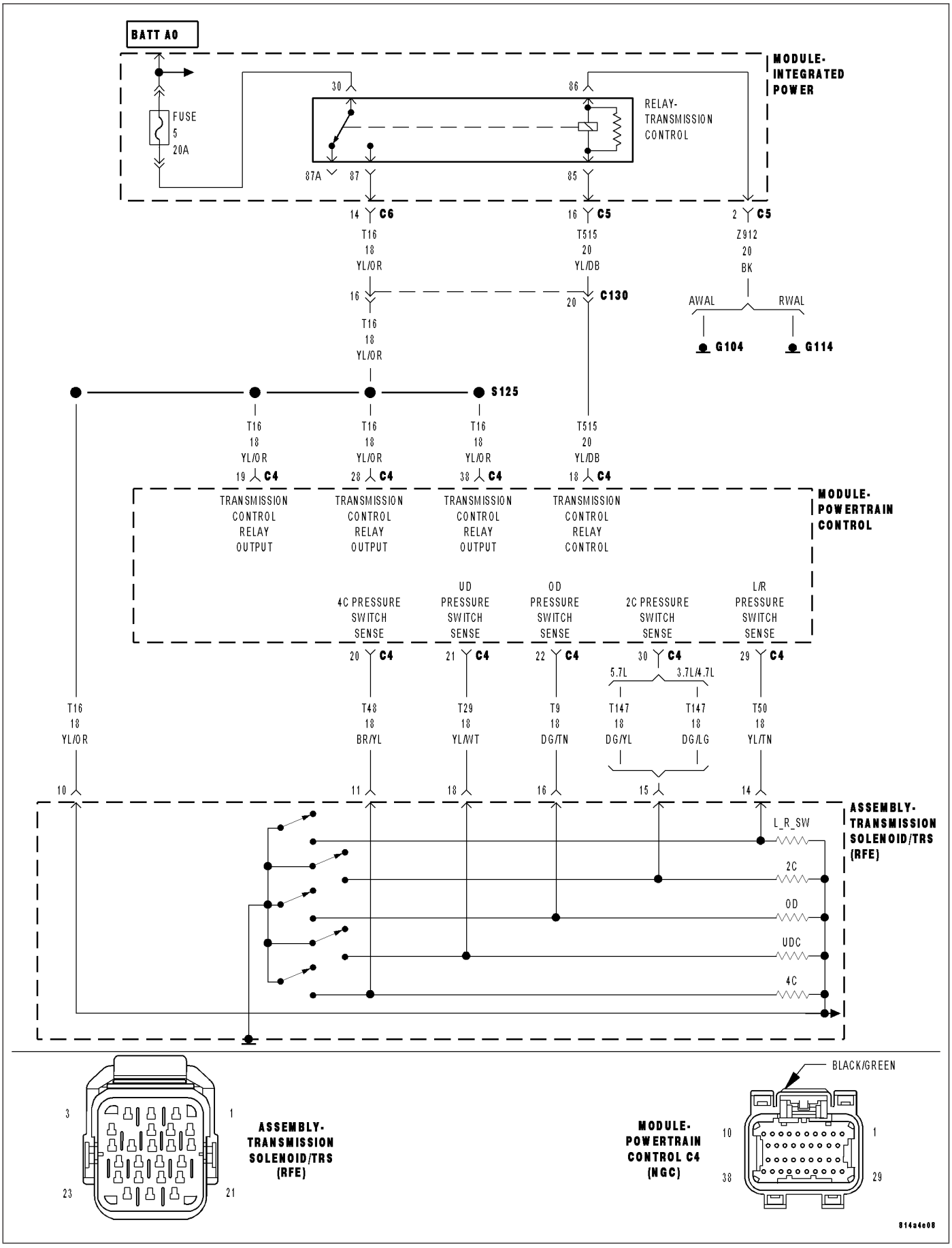

P0988-4C PRESSURE SWITCH RATIONALITY (CONTINUED)

For the Transmission circuit diagram (Refer to)(Refer to 21 - TRANSMISSION/TRANSAXLE/AUTOMATIC - 45RFE/545RFE - SCHEMATICS AND DIAGRAMS).

For a complete wiring diagram **Refer to Section 8W**

- **When Monitored:**
  Continuously with the ignition on, engine running, with the transmission in gear.
- **Set Condition:**
  The DTC is set if the 4C Pressure Switch reads open or closed at the wrong time in a given gear.

Possible Causes
RELATED RELAY DTC'S PRESENT
DTC P0871 ALSO PRESENT
LOSS OF 12-VOLT FEED
(T48) 4C PRESSURE SWITCH SENSE CIRCUIT OPEN
(T48) 4C PRESSURE SWITCH SENSE CIRCUIT SHORT TO GROUND
EXCESSIVE FLUID LEAKAGE WITH 2C CLUTCH CIRCUIT
#5 AND/OR #7 CHECK BALL CUT OR DAMAGED
LOW LINE PRESSURE
TRANSMISSION SOLENOID/TRS ASSEMBLY
POWERTRAIN CONTROL MODULE
WIRING AND CONNECTORS

Always perform the Pre-Diagnostic Troubleshooting procedure before proceeding. (Refer to 21 - TRANSMISSION/TRANSAXLE/AUTOMATIC - 45RFE/545RFE - DIAGNOSIS AND TESTING).

Theory of Operation

The Transmission system uses five pressure switches to monitor the fluid pressure in the LR, 2C, 4C, UD, and OD clutch circuits. The pressure switches are continuously monitored for the correct states in each gear as shown.

GEAR	L/R	2C	4C	UD	OD
REVERSE	OPEN	OPEN	OPEN	OPEN	OPEN
P/N	CLOSED	OPEN	OPEN	OPEN	OPEN
1ST	CLOSED*	OPEN	OPEN	CLOSED	OPEN
2ND	OPEN	CLOSED	OPEN	CLOSED	OPEN
2ND PRIME	OPEN	OPEN	CLOSED	CLOSED	OPEN
DRIVE	OPEN	OPEN	OPEN	CLOSED	CLOSED
4TH	OPEN	OPEN	CLOSED	OPEN	CLOSED
5TH	OPEN	CLOSED	OPEN	OPEN	CLOSED

*L/R is closed if output speed is below 100 rpm in Drive and Manual 2. L/R is open in Manual 1.

P0988-4C PRESSURE SWITCH RATIONALITY (CONTINUED)

Diagnostic Test

1. DETERMINING IF RELATED RELAY DTC'S ARE PRESENT

With the scan tool, check for other transmission DTC's.

Are there any Transmission Control Relay related DTC's present?

Yes >> Refer to the Transmission category and perform the appropriate symptom.
Perform 45RFE/545RFE TRANSMISSION VERIFICATION TEST - VER 1.

No >> Go To 2

---

2. EATX DTC DATA SHOW CURRENT DTC

With the scan tool, check the EATX DTC EVENT DATA.

Does the EATX DTC EVENT DATA show data for DTC P0988?

Yes >> Go To 3

No >> Refer to the Transmission category and perform the appropriate symptom shown in the EATX DTC EVENT DATA.
Perform 45RFE/545RFE TRANSMISSION VERIFICATION TEST - VER 1.

---

3. MULTIPLE DTCS PRESENT

With the scan tool, check for other transmission DTC's.

Are there two or more related Pressure Switch Sense DTCs present in addition to P0988?

Yes >> Go To 4

No >> Go To 7

---

4. RELATED DTC PRESENT

With the scan tool, check the EATX DTC EVENT DATA for P0988.

NOTE: Make sure to record all EATX DTC EVENT DATA stored in the scan tool for future reference in this test procedure.

Do all the pressure switches read CLOSED in the EATX DTC EVENT DATA for P0988?

Yes >> Refer to Transmission category and perform diagnostics for the DTC P0888.
Perform 45RFE/545RFE TRANSMISSION VERIFICATION TEST - VER 1.

No >> Go To 5

---

5. EATX DTC EVENT DATA READ OPEN

In the EATX DTC EVENT DATA recorded earlier, read the state of all pressure switches.

Do all the pressure switches read OPEN?

Yes >> Go To 6

No >> Go To 7

P0988-4C PRESSURE SWITCH RATIONALITY (CONTINUED)

6. LOW LINE PRESSURE

In the EATX DTC EVENT DATA recorded earlier, compare the Line Pressure and the Desired Line Pressure.

Is the Line Pressure less than 40 psi, and significantly below the Desired Line Pressure?

Yes >> Repair as necessary to correct low line pressure. Check fluid level and adjust as necessary. If fluid level is OK, check the Primary Oil Filter seal for a split, crack, or improperly installed. If the filter and seal are OK, check the Main Regulator Valve in the Oil Pump. Refer to the Service Information for the above procedures.
Perform 45RFE/545RFE TRANSMISSION VERIFICATION TEST - VER 1.

No >> Replace the Transmission Solenoid/TRS Assembly per the Service Information.
Perform 45RFE/545RFE TRANSMISSION VERIFICATION TEST - VER 1.

---

7. DTC P0871 ALSO PRESENT

With the scan tool, check Transmission DTCs.

Is the DTC P0871 also present?

Yes >> Refer to the Transmission category and perform the appropriate symptom.
Perform 45RFE/545RFE TRANSMISSION VERIFICATION TEST - VER 1.

No >> Go To 8

---

8. EATX DTC EVENT DATA READ PARK REVERSE OR NEUTRAL

With the scan tool, check the EATX DTC EVENT DATA for P0988.

NOTE: Make sure to record all EATX DTC EVENT DATA stored in the scan tool for future reference in this test procedure.

Does the EATX DTC EVENT DATA show the DTC set in Park, Neutral, or Reverse for P0988?

Yes >> Go To 13

No >> Go To 9

---

9. EATX DTC EVENT DATA READ CLOSED

With the scan tool, check the EATX DTC EVENT DATA for P0988.

NOTE: Make sure to record all EATX DTC EVENT DATA stored in the scan tool for future reference in this test procedure.

Does the EATX DTC EVENT DATA show the 4C Pressure Switch reading CLOSED?

Yes >> Go To 11

No >> Go To 10

P0988-4C PRESSURE SWITCH RATIONALITY (CONTINUED)

10. PRIMARY OIL FILTER SEAL

In the EATX DTC EVENT DATA recorded earlier, compare the Line Pressure and the Desired Line Pressure.

Is the Line Pressure less than 40 psi, and significantly below the Desired Line Pressure?

Yes >> Repair as necessary to correct low line pressure. Check fluid level and adjust as necessary. If fluid level is OK, check the Primary Oil Filter seal for a split, crack, or improperly installed. If the filter and seal are OK, check the Main Regulator Valve in the Oil Pump. Refer to the Service Information for the above procedures.
Perform 45RFE/545RFE TRANSMISSION VERIFICATION TEST - VER 1.

No >> Go To 15

---

11. PCM AND WIRING

Turn the ignition off to the lock position.

Remove the Starter Relay.

NOTE: Removal of the Starter Relay is to prevent a Transmission, NO RESPONSE, condition and disable the starter.

Install the Transmission Simulator, Miller tool #8333.

NOTE: Check connectors - Clean/repair as necessary.

Ignition on, engine not running.

With the Transmission Simulator, turn the Pressure Switch selector switch to the 4C position.

With the scan tool, monitor the 4C Pressure Switch while pressing the Pressure Switch test button on the Transmission Simulator.

Did the state of the 4C Pressure Switch change while pressing the Pressure Switch Test button?

Yes >> Go To 12

No >> Go To 13

---

12. TRANSMISSION SOLENOID/TRS ASSEMBLY

Using the schematics as a guide, inspect the wiring and connectors specific to this circuit.

Wiggle the wires while checking for shorted and open circuits.

Where there any problems found?

Yes >> Repair as necessary.
Perform 45RFE/545RFE TRANSMISSION VERIFICATION TEST - VER 1.

No >> Replace the Transmission Solenoid/TRS Assembly per the Service Information.
Perform 45RFE/545RFE TRANSMISSION VERIFICATION TEST - VER 1.

P0988-4C PRESSURE SWITCH RATIONALITY (CONTINUED)

13. (T48) 4C PRESSURE SWITCH SENSE CIRCUIT OPEN

Turn the ignition off to the lock position.

Disconnect the Transmission Simulator, Miller tool #8333.

Disconnect the PCM C4 harness connector.

NOTE: Check connectors - Clean/repair as necessary.
Connect Miller tool #8815 to the PCM C4 harness connector.

CAUTION: Do not probe the PCM harness connectors. Probing the PCM harness connectors will damage the PCM terminals resulting in poor terminal to pin connection. Install Miller tool #8815 to perform diagnosis.
Measure the resistance of the (T48) 4C Pressure Switch Sense circuit from the appropriate terminal of Miller tool #8815 to the Transmission Solenoid/TRS Assembly harness connector.

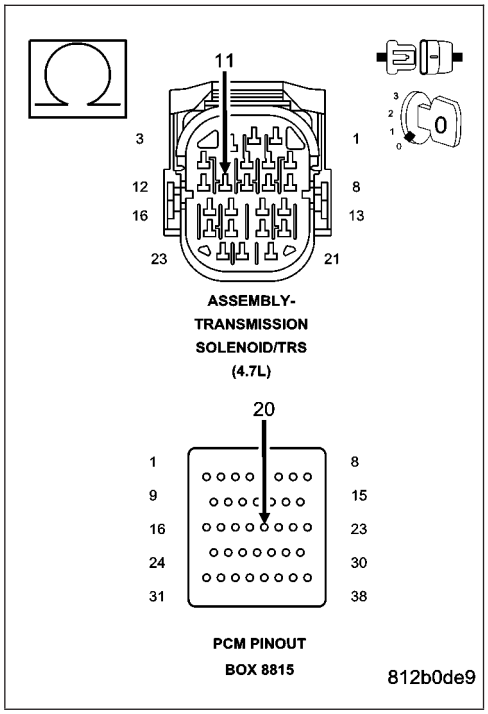

Is the resistance above 5.0 ohms?

Yes >> Repair the (T48) 4C Pressure Switch Sense circuit for an open.
Perform 45RFE/545RFE TRANSMISSION VERIFICATION TEST - VER 1.

No >> Go To 14

14. (T48) 4C PRESSURE SWITCH SENSE CIRCUIT SHORT TO GROUND

Measure the resistance between ground and the (T48) 4C Pressure Switch Sense circuit.

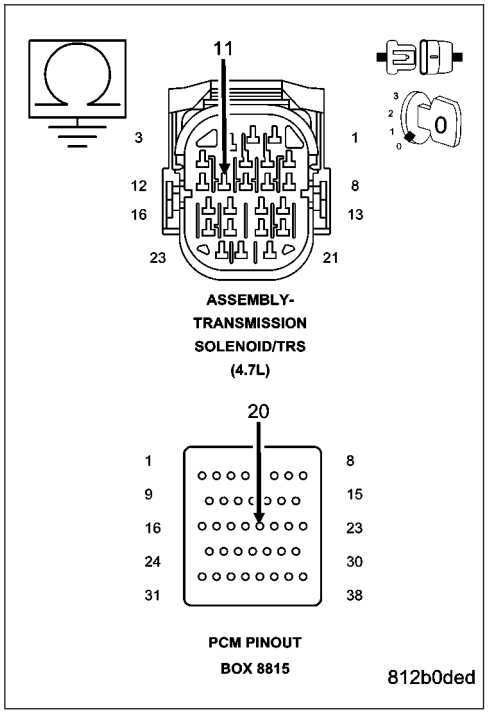

Is the resistance below 5.0 ohms?

Yes >> Repair the (T48) 4C Pressure Switch Sense circuit for a short to ground.
Perform 45RFE/545RFE TRANSMISSION VERIFICATION TEST - VER 1.

No >> Replace the Powertrain Control Module per the Service Information. With the scan tool, perform the QUICK LEARN procedure.
Perform 45RFE/545RFE TRANSMISSION VERIFICATION TEST - VER 1.

P0988-4C PRESSURE SWITCH RATIONALITY (CONTINUED)

15. #5 AND/OR #7 CHECK BALL CUT OR DAMAGED

Turn the Ignition off to the lock position.

Remove the Valve Body Assembly per the Service Information.

Inspect the #5 and #7 check balls for any cuts or damage.

Inspect the 4C accumulator piston and seals and also the 4C tower seal on top of the valve body. Refer to the Service Information.

Where there any problems found?

Yes >> Repair as necessary. Check for excessive clutch debris in the transmission oil pan. If excessive clutch debris is present, repair 4C clutch as necessary. Refer to the Service Information for proper repair procedures.
Perform 45RFE/545RFE TRANSMISSION VERIFICATION TEST - VER 1.

No >> Go To 16

---

16. EXCESSIVE FLUID LEAKAGE WITH 4C CLUTCH CIRCUIT

Air check the 4C Clutch hydraulic circuit. Refer to the Service Information.

NOTE: This hydraulic clutch circuit contains a small bleed orifice. Small leakage is considered normal.

Was there excessive air leakage in the 4C Clutch hydraulic circuit?

Yes >> Repair as necessary. Refer to the Service Information.
Perform 45RFE/545RFE TRANSMISSION VERIFICATION TEST - VER 1.

No >> Replace the Transmission Solenoid/TRS Assembly per the Service Information.
Perform 45RFE/545RFE TRANSMISSION VERIFICATION TEST - VER 1.

P1684-BATTERY WAS DISCONNECTED

For the Transmission circuit diagram (Refer to 21 - TRANSMISSION/TRANSAXLE/AUTOMATIC - 45RFE/545RFE - SCHEMATICS AND DIAGRAMS)

For a complete wiring diagram **Refer to Section 8W**.

- **When Monitored:**
  Whenever the ignition is in the Run/Start position.
- **Set Condition:**
  This DTC will set whenever Powertrain Control Module is disconnected from Fused B+ or ground. It will also be set during the DRBIII® Battery Disconnect and/or Quick Learn procedure.

Possible Causes
BATTERY WAS DISCONNECTED
SCAN TOOL BATTERY DISCONNECT PERFORMED
PCM WAS REPLACED OR DISCONNECTED
QUICK LEARN WAS PERFORMED

Always perform the Pre-Diagnostic Troubleshooting procedure before proceeding. (Refer to 21 - TRANSMISSION/TRANSAXLE/AUTOMATIC - 45RFE/545RFE - DIAGNOSIS AND TESTING).

Theory of Operation

The PCM uses a battery backed RAM (Random Access Memory) is used to maintain some learned values. When the battery B(+) is disconnected, the memory is lost. When the B(+) is restored, this memory loss is detected by the Transmission Control System. The DTC is set and the learned values are initialized to known constants or previously learned values from EEPROM (Electronic Erasable Programmable Read Only Memory). This results in the reinitialization of some parameters.

Diagnostic Test

1. POSSIBLE CAUSES

This DTC is an informational DTC only.

This DTC is set due to a momentary loss of power and/or the ground circuits to the PCM.

Below are a list of possible causes associated with this DTC.

Battery was disconnected.

The BATTERY DISCONNECT feature on the scan tool was performed.

The QUICK LEARN feature on the scan tool was performed.

PCM was replaced or disconnected.

Were any of the above possible causes performed?

Yes >> This is the cause of the DTC. Erase the DTC and return vehicle to customer. Perform 45RFE/545RFE TRANSMISSION VERIFICATION TEST - VER 1.

No >> Go To 2

P1684-BATTERY WAS DISCONNECTED (CONTINUED)

2. INTERMITTENT WIRING AND CONNECTORS

The conditions necessary to set this DTC are not present at this time.

Using the schematics as a guide, inspect the wiring and connectors specific to this circuit.

NOTE: Check all power and ground circuits to the PCM for a intermittent or high resistance condition.
Wiggle the wires while checking for shorted and open circuits.

With the scan tool, check the EATX DTC EVENT DATA to help identify the conditions in which the DTC was set.

Where there any problems found?

Yes >> Repair as necessary.
Perform 45RFE/545RFE TRANSMISSION VERIFICATION TEST - VER 1.

No >> Test Complete.

P1715-RESTRICTED MANUAL VALVE IN T3 RANGE

For the Transmission circuit diagram (Refer to 21 - TRANSMISSION/TRANSAXLE/AUTOMATIC - 45RFE/545RFE - SCHEMATICS AND DIAGRAMS)

For a complete wiring diagram **Refer to Section 8W**

- **When Monitored:**
  Whenever the PRNDL code indicates Temp3.
- **Set Condition:**
  This DTC sets when conditions for the DTC P1776 are satisfied or 3 unsuccessful attempts to engage 1st gear while the shifter is in the temp3 zone. This indicates a restricted port at the manual valve because the shifter is not fully engaged in the drive position.

Possible Causes
RELATED TRANSMISSION DTC'S PRESENT
CUSTOMER DRIVING HABITS
MISADJUSTED SHIFTER

Always perform the Pre-Diagnostic Troubleshooting procedure before proceeding. (Refer to 21 - TRANSMISSION/TRANSAXLE/AUTOMATIC - 45RFE/545RFE - DIAGNOSIS AND TESTING).

Diagnostic Test

1. DETERMINING IF RELATED DTC'S ARE PRESENT

With the scan tool, check for other transmission DTC's

Are any of the following DTC's P0731, P0732, P0733, P0734, P1736 or P0715 present?

Yes >> Refer to the Transmission category and perform the appropriate symptom.
Perform 45RFE/545RFE TRANSMISSION VERIFICATION TEST - VER 1.

No >> Go To 2

---

2. CHECK SHIFTER ADJUSTMENT

Check Shifter adjustment per the Service Information.

Is the shifter properly adjusted?

Yes >> Go To 3

No >> Adjust the Shifter Assembly per the Service Information.
Perform 45RFE/545RFE TRANSMISSION VERIFICATION TEST - VER 1.

P1715-RESTRICTED MANUAL VALVE IN T3 RANGE (CONTINUED)

3. CHECK CUSTOMER DRIVING HABIT

This DTC can be set if the customer rests their hand on the shift lever while they are driving. The transmission can be put in the T3 position if just enough forward pressure is exerted on the shift lever.

When this occurs, the feed port to the clutch is restricted, the transmission will declare neutral, and this DTC will be set. The customer should be informed not to rest their hand on the shifter while driving.

This DTC can also be set by simply bumping the shift lever toward neutral while accelerating.

With the scan tool, check the EATX DTC EVENT DATA to help identify the conditions in which the DTC was set.

If there are no possible causes remaining, view repair.

Repair

This DTC can be set by putting too much forward pressure on the shift lever while it is in the OD position. Make sure the customer is informed.

Perform 45RFE/545RFE TRANSMISSION VERIFICATION TEST - VER 1.

P1736-GEAR RATIO ERROR IN 2ND PRIME

For the Transmission circuit diagram (Refer to 21 - TRANSMISSION/TRANSAXLE/AUTOMATIC - 45RFE/545RFE - SCHEMATICS AND DIAGRAMS)

For a complete wiring diagram **Refer to Section 8W**.

- **When Monitored:**
  Continuously with the ignition on, engine running, with the transmission in gear.
- **Set Condition:**
  If the ratio of the Input RPM to the Output RPM does not match the current gear ratio. This DTC can take up to five minutes of problem identification before illuminating the MIL

Possible Causes
RELATED DTC'S PRESENT
INPUT SPEED SENSOR OR WIRING
LOW FLUID LEVEL
CRACKEC OR MISINSTALLED PRIMARY OIL FILTER OR SEAL
WORN SOLENOID SWITCH VALVE OR PLUGS
STUCK OR STICKING MAIN REGULATOR VALVE
BURNED UD OR 4C CLUTCH
CUT 4C OR UD PISTON SEAL
BROKEN 4C PISTON CASTING
BROKEN OR MISSING 4C BLEED ORIFICE
BROKEN OR MISSING UD BLEED ORIFICE
CUT 4C OR UD ACCUMULATOR PISTON SEAL
CRACKED 4C OR UD ACCUMULATOR PISTON
EXTRA CHECK BALL IN PASSAGE DOWNSTREAM OF #7 CHECK BALL POCKET
TRANSMISSION SOLENOID/TRS ASSEMBLY
BROKEN WELD - REACTION CARRIER TO REVERSE SUN GEAR
MISSING TEETH ON INPUT CLUTCH HUB TONE WHEEL

Always perform the Pre-Diagnostic Troubleshooting procedure before proceeding. (Refer to 21 - TRANSMISSION/TRANSAXLE/AUTOMATIC - 45RFE/545RFE - DIAGNOSIS AND TESTING).

Theory of Operation

The transmission system uses two speed sensors, one to measure input RPM and one to measure output RPM. These inputs are essential for proper transmission operation. Therefore, the integrity of this data is verified through the following checks:

1) When in gear, if the gear ratio does not compare to a known gear ratio, the corresponding in-gear trouble code is set (DTCs P0731–36).

2) An excessive change in input or output speeds indicating signal intermittent which may result in the DTCs P0715 and/or P0720 to set.

3) If the common speed sensor ground circuit is lost, both sensor inputs will read the signal from the input speed sensor at idle in neutral. Since the input speed sensor reads 60 teeth from the input clutch hub and the output speed sensor reads 30 teeth from the park gear, the result is an apparent speed ratio of 1:2 and may cause the DTC P1794 to set when at a stop.

P1736-GEAR RATIO ERROR IN 2ND PRIME (CONTINUED)

Diagnostic Test

1. DETERMINING IF RELATED DTC'S ARE PRESENT

With the scan tool, check for other transmission DTC's

Are any Transmission: solenoid, line pressure, speed sensor, or loss of prime DTC's present?

Yes >> Refer to appropriate symptom in the Transmission category. Perform the test for P0944–LOSS OF PRIME first if it is present.
Perform 45RFE/545RFE TRANSMISSION VERIFICATION TEST - VER 1.

No >> Go To 2

---

2. CHECK EATX DTC EVENT DATA

With the scan tool, read and record the EATX DTC EVENT DATA.

NOTE: Make sure to record all EATX DTC EVENT DATA stored in the scan tool for future reference in this test procedure.

Does the EATX DTC EVENT DATA display information for the DTC P1736?

Yes >> Go To 3

No >> Go To 6

---

3. CHECK RPM IN EATX DTC EVENT DATA

Refer to the EATX DTC EVENT DATA recorded earlier.

Does the Input RPM read zero?

Yes >> Check the input speed sensor and wiring. Refer to test P0715 and diagnose as if the DTC is current. Perform 45RFE/545RFE TRANSMISSION VERIFICATION TEST - VER 1.

No >> Go To 4

---

4. CHECK LINE PRESSURE READING

Refer to the EATX DTC EVENT DATA recorded earlier.

Is the line pressure reading more than 10 psi below the desired line pressure?

Yes >> Go To 5

No >> Go To 6

P1736-GEAR RATIO ERROR IN 2ND PRIME (CONTINUED)

5. PLUGGED TRANSMISSION OIL FILTER

Turn the ignition off to the lock position.

Remove and inspect the Transmission Oil Pan for excessive debris per the Service Information.

Remove and inspect the Primary Oil Filter per the Service Information.

NOTE: Make sure the Primary Transmission Oil Filter and/or seal is not cracked or split.

Does the Oil Pan contain excessive debris and/or is the Primary Oil Filter cracked or plugged?

Yes >> Repair the plugged, cracked, or split Primary Transmission Oil Filter and/or seal. If the Primary Transmission Oil Filter is plugged, refer to the Service Information for the proper hydraulic clutch repair procedure.

Perform 45RFE/545RFE TRANSMISSION VERIFICATION TEST - VER 1.

No >> Remove the Transmission Oil Pump per the Service Information. Check the main Regulator Valve for sticking in its bore, scoring, and/or damage and clean and repair as necessary. If no problem is found, replace the Transmission Solenoid/TRS Assembly.

Perform 45RFE/545RFE TRANSMISSION VERIFICATION TEST - VER 1.

---

6. CHECK TO SEE IF DTC P1736 IS CURRENT

With the scan tool, perform the 2nd Prime Gear Clutch Test. Follow the instructions on the scan tool.

Increase the throttle angle, TPS Degree, to 30° for no more than a few seconds.

CAUTION: Do not overheat the transmission.

NOTE: If the 4C clutch is faulty, the overrunning clutch will hold and the slip test will pass. The 2nd Prime gear clutch test will not detect a faulty 4C clutch. However, it will detect a faulty UD clutch.

Did the clutch test pass, did the Input Speed remain at zero?

Yes >> Go To 7

No >> Go To 9

---

7. CHECK FOR INTERMITTENT OPERATION

Check the Shifter adjustment per the Service Information.

Intermittent gear ratio DTCs can be set by problems in the Input and Output Speed Sensor circuits and/or Speed Sensor Ground circuit.

Check the Speed Sensor wiring and connectors for good connection, then perform a wiggle test using the Transmission Simulator, Miller tool #8333.

Were there any problems found?

Yes >> Repair as necessary.

Perform 45RFE/545RFE TRANSMISSION VERIFICATION TEST - VER 1.

No >> Go To 8

---

8. CHECK FOR SLIPPAGE

With the scan tool, erase Transmission DTCs.

Road test the vehicle.

Durning the road test, operate in 4th gear, and perform kickdown shifts from 4th to 2nd (prime) gears.

Is there an obvious slippage noticed in 4th or 2nd prime gears, or runaway on the 4-2 shift?

Yes >> Go To 11

No >> Go To 14

P1736-GEAR RATIO ERROR IN 2ND PRIME (CONTINUED)

9. UD CLUTCH HYDRAULIC CIRCUIT

Remove Transmission Oil Pan and check for excessive debris.

Remove the Valve Body and air check the UD clutch hydraulic circuit (in the case) per the Service Information.

NOTE: The UD clutch passage contains a small bleed orifice, a small amount of air leakage is normal.

Were there any problems found, excessive debris and/or excessive air leakage in the UD clutch hydraulic circuit?

Yes >> Repair as necessary. Check the UD clutch piston seals and the dribbler assembly, reaction shaft support seal rings, and the flatness of the pump valve body and pump housing faces. Check main regulator valve for sticking in the bore.
Perform 45RFE/545RFE TRANSMISSION VERIFICATION TEST - VER 1.

No >> Go To 10

---

10. UD ACCUMULATOR PISTON

Check the UD bleed orifice, accumulator piston, and accumulator piston seal in the main valve body.

Were there any problems found?

Yes >> Repair as necessary. Refer to the Service Information for proper repair procedures.

No >> Replace the Transmission Solenoid/TRS Assembly per the Service Information.
Perform 45RFE/545RFE TRANSMISSION VERIFICATION TEST - VER 1.

---

11. EXCESSIVE DEBRIS

Remove the Transmission Oil Pan and check for excessive debris.

Remove the valve body and air check the 4C clutch hydraulic circuit per the Service Information.

NOTE: The 4C clutch passage contains a small bleed orifice, a small amount of air leakage is normal.

Were there any problems found, excessive debris, improperly assembled 4C clutch and/or excessive air leakage in the 4C clutch hydraulic circuit?

Yes >> Repair as necessary. Refer to the Service Information for proper repair procedures. Note: Check the 4C piston seals and bleed orifice.
Perform 45RFE/545RFE TRANSMISSION VERIFICATION TEST - VER 1.

No >> Go To 12

---

12. 4C ACCUMULATOR

Check the 4C Accumulator piston for cracks or a cut seal.

Check for a cut or missing #7 or #5 check balls.

Check the Solenoid Switch Valve and its plugs for sticking in its bore or excessive wear.

Were there any problems found

Yes >> Repair as necessary. Refer to the Service Information for proper repair procedures.
Perform 45RFE/545RFE TRANSMISSION VERIFICATION TEST - VER 1.

No >> Go To 13

P1736-GEAR RATIO ERROR IN 2ND PRIME (CONTINUED)

13. CHECK FOR BROKEN REVERSE SUN GEAR WELD

Working through the windows in the bottom of the case, check for a broken Reverse Sun gear weld to the reaction carrier as follows:

(1) Hold the Transmission Output Shaft by holding the Transmission Manual Lever in the park position.

(2) Rotate the Input Annulus gear and drive shell, (the drum that encloses the two rearmost carriers).

(3) Check to see if the reaction carrier (the frontmost carrier, whose outer shell is splined to the 4C clutch) is rotating faster than the drive shell is being turned.

Is the reaction carrier turning faster than the drive shell?

Yes >> Replace the Transmission Solenoid/TRS Assembly per the Service Information.
Perform 45RFE/545RFE TRANSMISSION VERIFICATION TEST - VER 1.

No >> Replace the reaction carrier per the Service Information.
Perform 45RFE/545RFE TRANSMISSION VERIFICATION TEST - VER 1.

---

14. CHECK IF DTC RESET

Did the DTC P1736 reset during the road test?

Yes >> Go To 15

No >> Go To 16

---

15. LIST OF POSSIBLE CAUSES

If any other DTC's set during the road test, refer to the appropriate symptom in the Transmission category.

If no other DTC's set during the road test, below is a list of possible causes, but not strictly limited to those:

Check for excessive debris in the Transmission Oil pan, plugged, cracked, or split Primary Transmission Oil Filter and/or seal.

Check for cuts or missing #7 and #5 check balls in the main valve body.

Check the 4C and UD accumulator pistons and seals, UD bleed orifice, and the Solenoid Switch Valve and Plugs in the main valve body.

Check the UD clutch piston seals, reaction shaft support seal rings, and the flatness of the pump valve body and pump housing faces.

Check the 4C clutch piston seals, and bleed orifice.

Check the UD clutch piston seals, reaction shaft support seal rings, and dribbler assemblies, and the flatness of the pump valve body and pump housing faces.

View repair

Repair

Repair as necessary. Refer to the Service Information for proper repair procedures.
Perform 45RFE/545RFE TRANSMISSION VERIFICATION TEST - VER 1.

P1736-GEAR RATIO ERROR IN 2ND PRIME (CONTINUED)

16. INTERMITTENT DTC

The conditions necessary to set this DTC are not present at this time.

Use the EATX DTC EVENT DATA to help identify the conditions and/or possible causes that may have caused the DTC to set.

Check for any Service Information Tune-ups or Technical Service Bulletins that may apply.

Where there any problems found?

Yes >> Repair as necessary.
Perform 45RFE/545RFE TRANSMISSION VERIFICATION TEST - VER 1.

No >> Test Complete.

P1775-SOLENOID SWITCH VALVE LATCHED IN TCC POSITION

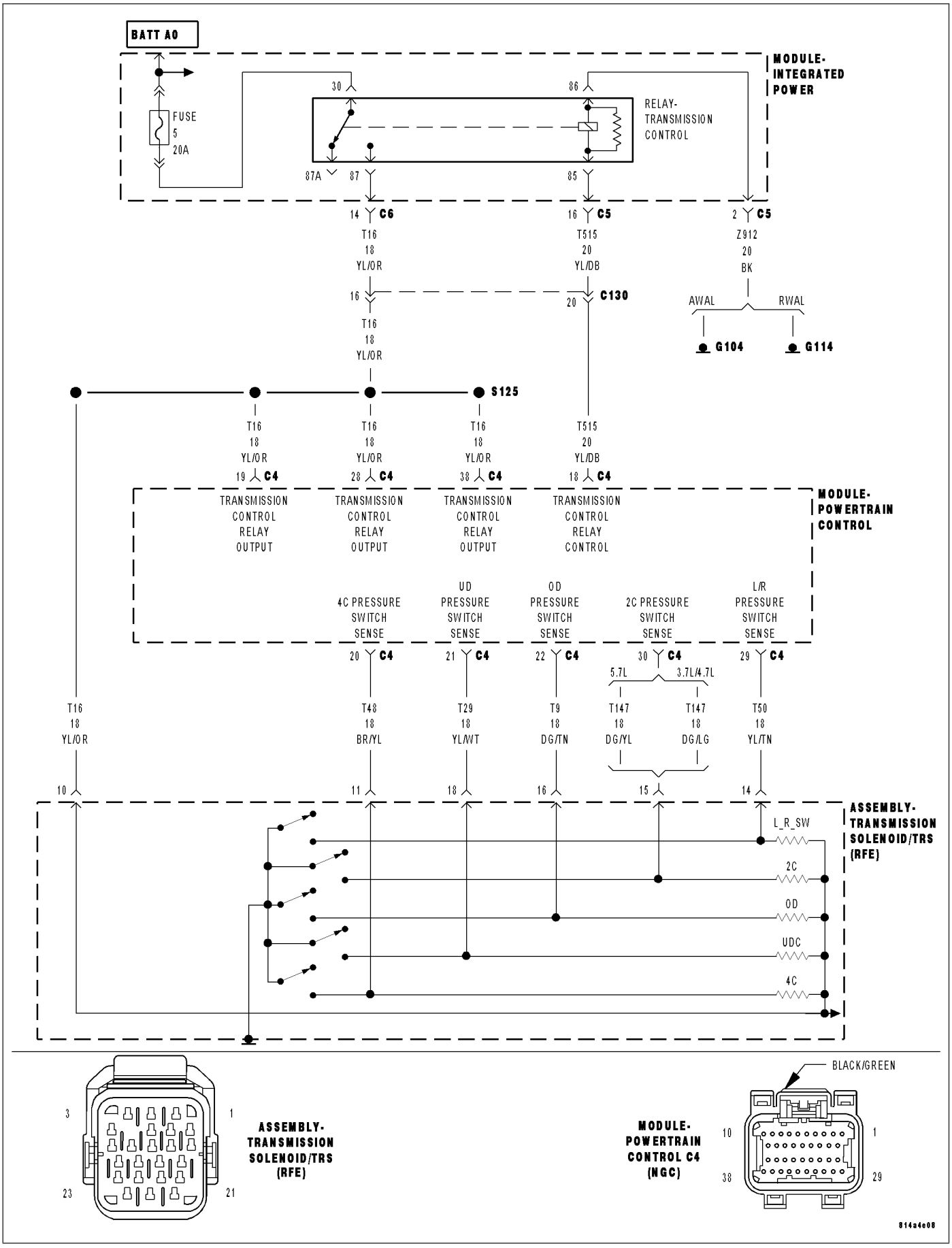

P1775-SOLENOID SWITCH VALVE LATCHED IN TCC POSITION (CONTINUED)

For the Transmission circuit diagram (Refer to 21 - TRANSMISSION/TRANSAXLE/AUTOMATIC - 45RFE/545RFE - SCHEMATICS AND DIAGRAMS)

For a complete wiring diagram **Refer to Section 8W**.

- **When Monitored:**
  During an attempted shift into 1st gear.
- **Set Condition:**
  This DTC is set if three unsuccessful attempts are made to shift the Solenoid Switch Valve (SSV) into the downshifted position in one given ignition start. This DTC can take up to five minutes to mature before illuminating the MIL.

Possible Causes
RELATED DTC P0841 PRESENT
SOLENOID SWITCH VALVE STICKING
L/R PRESSURE SWITCH SENSE CIRCUIT SHORT TO OTHER CIRCUITS
TRANSMISSION SOLENOID/TRS ASSEMBLY
POWERTRAIN CONTROL MODULE

Always perform the Pre-Diagnostic Troubleshooting procedure before proceeding. (Refer to 21 - TRANSMISSION/TRANSAXLE/AUTOMATIC - 45RFE/545RFE - DIAGNOSIS AND TESTING).

Theory of Operation

The Solenoid Switch Valve (SSV) controls the direction of the transmission fluid when the L/R Solenoid is energized. The SSV will be in the downshifted position in 1st gear, thus directing the fluid to the L/R clutch circuit. In 2nd through 5th gears, it will be in the upshifted position and directing the fluid into the torque converter clutch (TCC).

When shifting into 1st gear, a special hydraulic sequence is performed to ensure SSV movement into the downshifted position. The L/R Pressure Switch is monitored to confirm SSV movement. If movement is not confirmed (the L/R pressure switch does not close), EMCC is inhibited until SSV operation is confirmed.

Diagnostic Test

1. DETERMINING IF RELATED DTC'S ARE PRESENT

With the scan tool, check for other transmission DTC's

Is the DTC P0841 present also?

Yes >> Refer to the Transmission category and perform the appropriate symptom.
Perform 45RFE/545RFE TRANSMISSION VERIFICATION TEST - VER 1.

No >> Go To 2

---

2. CHECK TO SEE IF DTC P1775 IS CURRENT

Perform a visual inspection of all connectors, wiring, and cooler connections before proceeding. Repair as necessary.

With the scan tool, Check the STARTS SINCE SET counter.

NOTE: This counter only applies to the last DTC set.

Is the STARTS SINCE SET counter for P1775 at 2 or less?

Yes >> Go To 3

No >> Go To 6

P1775-SOLENOID SWITCH VALVE LATCHED IN TCC POSITION (CONTINUED)

3. PCM AND WIRING

Turn the ignition off to the lock position.

Remove the Starter Relay.

NOTE: Removal of the Starter Relay is to prevent a Transmission, NO RESPONSE, condition and disable the starter.

Install the Transmission Simulator, Miller tool #8333.

NOTE: Check connectors - Clean/repair as necessary.

Ignition on, engine not running.

With the Transmission Simulator, turn the Pressure Switch selector switch to L/R.

With the scan tool, monitor the L/R Pressure Switch state while pressing the Pressure Switch Test button on the Transmission Simulator.

Did the state of the L/R Pressure Switch change while pressing the Pressure Switch Test button?

Yes >> Go To 4

No >> Go To 5

---

4. SOLENOID SWITCH VALVE STICKING

Turn the ignition off to the lock position.

Remove the Transmission Oil Pan per the Service Information.

Remove the Transmission Valve body per the Service Information.

Inspect the Solenoid Switch Valve and Plugs for sticking.

Is the Solenoid Switch Valve or Plugs sticking?

Yes >> Clean and inspect per the Service Information.
Perform 45RFE/545RFE TRANSMISSION VERIFICATION TEST - VER 1.

No >> Replace the Transmission Solenoid/TRS Assembly per the Service Information.
Perform 45RFE/545RFE TRANSMISSION VERIFICATION TEST - VER 1.

P1775-SOLENOID SWITCH VALVE LATCHED IN TCC POSITION (CONTINUED)

5. L/R PRESSURE SWITCH SENSE CIRCUIT SHORT TO OTHER CIRCUITS

Turn the ignition off to the lock position.

Disconnect the Transmission Solenoid/TRS Assembly harness connector.

Disconnect all PCM harness connectors.

Measure the resistance between the (T50) L/R Pressure Switch Sense circuit and all other circuits in the Transmission Solenoid/TRS Assembly harness connector.

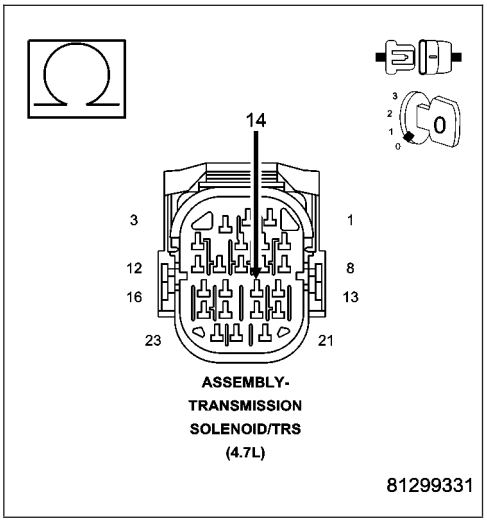

Is the resistance below 5.0 ohms between the (T50) L/R Pressure Switch Sense circuit and all other circuit(s) in the Transmission Solenoid/TRS Assembly harness connector?

Yes >> Repair the (T50) L/R Pressure Switch Sense circuit for a short to other circuit(s).
Perform 45RFE/545RFE TRANSMISSION VERIFICATION TEST - VER 1.

No >> Using the schematics as a guide, check the Powertrain Control Module (PCM) terminals for corrosion, damage, or terminal push out. Pay particular attention to all power and ground circuits. If no problems are found, replace the PCM per the Service Information. With the scan tool, perform QUICK LEARN.
Perform 45RFE/545RFE TRANSMISSION VERIFICATION TEST - VER 1.

---

6. INTERMITTENT WIRING AND CONNECTORS

The conditions necessary to set this DTC are not present at this time.

Using the schematics as a guide, inspect the wiring and connectors specific to this circuit.

Wiggle the wires while checking for shorted and open circuits.

With the scan tool, check the EATX DTC EVENT DATA to help identify the conditions in which the DTC was set.

Where there any problems found?

Yes >> Repair as necessary.
Perform 45RFE/545RFE TRANSMISSION VERIFICATION TEST - VER 1.

No >> Test Complete.

P1776-SOLENOID SWITCH VALVE LATCHED IN LR POSITION

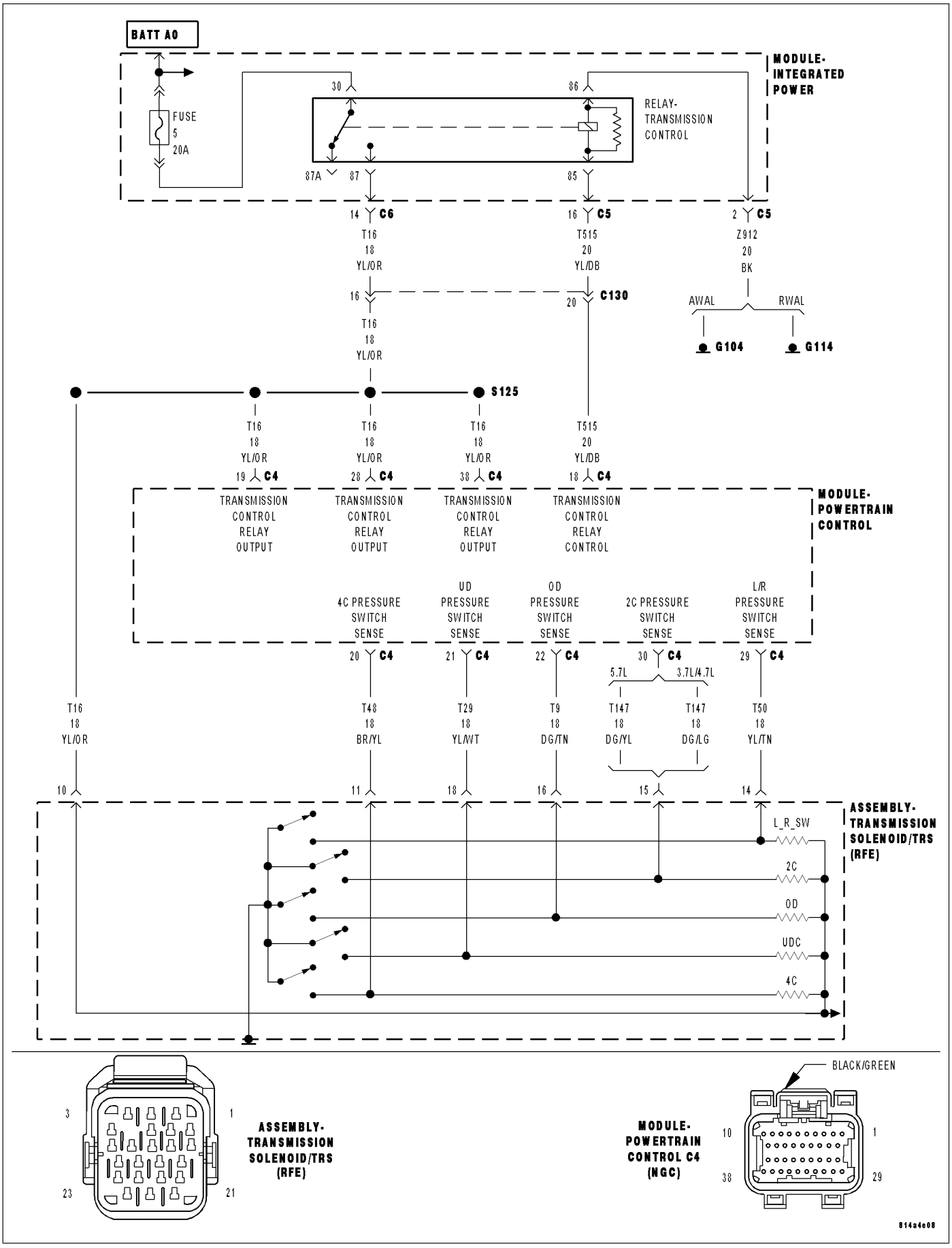

P1776-SOLENOID SWITCH VALVE LATCHED IN LR POSITION (CONTINUED)

For the Transmission circuit diagram (Refer to 21 - TRANSMISSION/TRANSAXLE/AUTOMATIC - 45RFE/545RFE - SCHEMATICS AND DIAGRAMS)

For a complete wiring diagram **Refer to Section 8W**.

- **When Monitored:**
  Continuously when performing partial or full EMCC - PEMCC or FEMCC.
- **Set Condition:**
  If the transmission senses the L/R pressure switch closing while performing PEMCC or FEMCC. This DTC will set after two unsuccessful attempts to perform PEMCC or FEMCC. This DTC can take up to five minutes of problem identification before illuminating the MIL.

Possible Causes
RELATED DTC P0841 PRESENT
LR PRESSURE SWITCH SENSE CIRCUIT OPEN
LR PRESSURE SWITCH SENSE CIRCUIT SHORT TO GROUND
SOLENOID SWITCH VALVE
POWERTRAIN CONTROL MODULE
INTERMITTENT WIRING AND CONNECTORS

Always perform the Pre-Diagnostic Troubleshooting procedure before proceeding. (Refer to 21 - TRANSMISSION/TRANSAXLE/AUTOMATIC - 45RFE/545RFE - DIAGNOSIS AND TESTING).

Theory of Operation

The Solenoid Switch Valve (SSV) controls the direction of the transmission fluid when the L/R Solenoid is energized. The SSV will be in the downshifted position in 1st gear, thus directing the fluid to the L/R clutch circuit. In 2nd through 5th gears, it will be in the upshifted position and directing the fluid into the torque converter clutch (TCC).

When in 2nd, 2nd Prime, 3rd, 4th, or 5th gear, the Torque Converter Clutch (TCC) can be engaged when certain conditions are met. The TCC piston is electronically modulated by increasing the duty cycle of the L/R solenoid until the torque converter slip difference (difference between engine and transmission input speed) is within 60 RPM. Then the L/R solenoid is fully energized (FEMCC / 100% duty cycle). Torque converter slip is monitored in FEMCC to ensure adequate clutch capacity.

Diagnostic Test

1. DETERMINING IF RELATED DTC'S ARE PRESENT

With the scan tool, check for other transmission DTC's

Is the DTC P0841 present also?

Yes >> Refer to the Transmission category and perform the appropriate symptom.
Perform 45RFE/545RFE TRANSMISSION VERIFICATION TEST - VER 1.

No >> Go To 2

P1776-SOLENOID SWITCH VALVE LATCHED IN LR POSITION (CONTINUED)

2. CHECK TO SEE IF DTC P1776 IS CURRENT

With the scan tool, Check the STARTS SINCE SET counter.

NOTE: NOTE: This counter only applies to the last DTC set.

Is the STARTS SINCE SET counter 2 or less?

Yes >> Go To 3

No >> Go To 7

---

3. PCM AND WIRING

Turn the ignition off to the lock position.

Remove the Starter Relay.

NOTE: Removal of the Starter Relay is to prevent a Transmission, NO RESPONSE, condition and disable the starter.

Install the Transmission Simulator, Miller tool #8333.

NOTE: Check connectors - Clean/repair as necessary.

Ignition on, engine not running.

With the Transmission Simulator, turn the Pressure Switch selector switch to the LR position.

With the scan tool, monitor the LR Pressure Switch state while pressing the Pressure Switch Test button on the Transmission Simulator.

Did the state of the LR Pressure Switch change while pressing the Pressure Switch Test button?

Yes >> Go To 4

No >> Go To 5

---

4. SOLENOID SWITCH VALVE

Remove the Valve Body per the Service Information.

Inspect the Solenoid Switch Valve and plugs for sticking in the bore and/or wear.

Were there any problems found?

Yes >> Clean and repair as necessary per the Service Information.
Perform 45RFE/545RFE TRANSMISSION VERIFICATION TEST - VER 1.

No >> Go To 7

P1776-SOLENOID SWITCH VALVE LATCHED IN LR POSITION (CONTINUED)

5. LR PRESSURE SWITCH SENSE CIRCUIT OPEN

Turn the ignition off to the lock position.

Disconnect the Transmission Simulator, Miller tool #8333.

Disconnect the PCM C4 harness connector and connect Miller tool #8815.

NOTE: Note: Check connectors - Clean/repair as necessary.

CAUTION: Do not probe the PCM harness connectors. Probing the PCM harness connectors will damage the PCM terminals resulting in poor terminal to pin connection. Install Miller tool #8815 to perform diagnosis.

Measure the resistance of the (T50) LR Pressure Switch Sense circuit between the appropriate terminal of Miller tool #8815 to the Solenoid/ TRS Assembly harness connector.

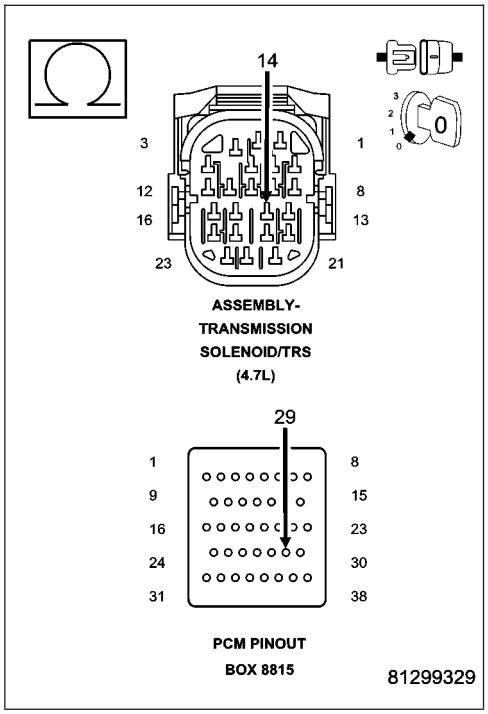

Is the resistance above 5.0 ohms?

Yes >> Repair the (T50) LR Pressure Switch Sense circuit for an open.

Perform 45RFE/545RFE TRANSMISSION VERIFICATION TEST - VER 1.

No >> Go To 6

6. (T50) LR PRESSURE SWITCH SENSE CIRCUIT SHORT TO GROUND

Measure the resistance between ground and the (T50) LR Pressure Switch Sense circuit.

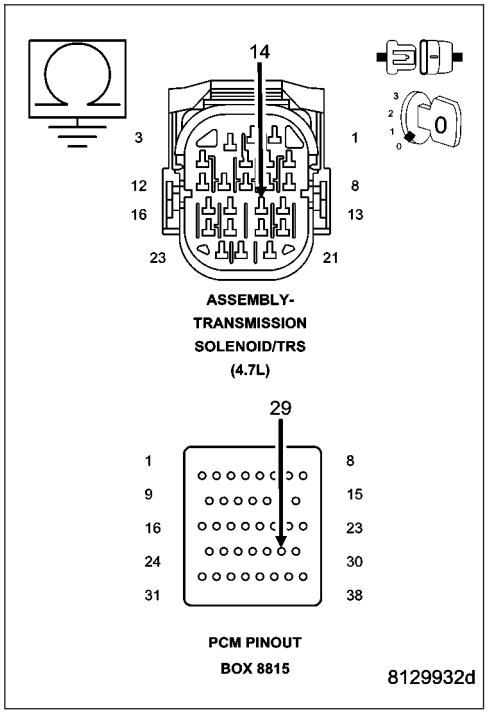

Is the resistance below 5.0 ohms?

Yes >> Repair the (T50) LR Pressure Switch Sense circuit for a short to ground.

Perform 45RFE/545RFE TRANSMISSION VERIFICATION TEST - VER 1.

No >> Using the schematics as a guide, check the Powertrain Control Module (PCM) terminals for corrosion, damage, or terminal push out. Pay particular attention to all power and ground circuits. If no problems are found, replace the PCM per the Service Information. With the scan tool, perform QUICK LEARN.

Perform 45RFE/545RFE TRANSMISSION VERIFICATION TEST - VER 1.

P1776-SOLENOID SWITCH VALVE LATCHED IN LR POSITION (CONTINUED)

7. INTERMITTENT WIRING AND CONNECTORS

The conditions necessary to set this DTC are not present at this time.

Using the schematics as a guide, inspect the wiring and connectors specific to this circuit.

Wiggle the wires while checking for shorted and open circuits.

This DTC can also be set by the Solenoid Switch Valve intermittently sticking in it's bore under extreame temperature conditions, or by a worn Solenid Switch Valve or plugs.

With the scan tool, check the EATX DTC EVENT DATA to help identify the conditions in which the DTC was set.

Where there any problems found?

Yes >> Repair as necessary.
Perform 45RFE/545RFE TRANSMISSION VERIFICATION TEST - VER 1.

No >> Test Complete.

P1790-FAULT IMMEDIATELY AFTER SHIFT

For the Transmission circuit diagram (Refer to 21 - TRANSMISSION/TRANSAXLE/AUTOMATIC - 45RFE/545RFE - SCHEMATICS AND DIAGRAMS)

For a complete wiring diagram **Refer to Section 8W**

- **When Monitored:**
  After a speed ratio error is stored.
- **Set Condition:**
  This DTC is set if the associated speed ratio DTC is stored within 1.3 seconds after a shift.

Possible Causes
FAULT AFTER SHIFT

Always perform the Pre-Diagnostic Troubleshooting procedure before proceeding. (Refer to 21 - TRANSMISSION/TRANSAXLE/AUTOMATIC - 45RFE/545RFE - DIAGNOSIS AND TESTING).

Theory of Operation

This DTC will only be stored along with a gear ratio DTC. If this DTC is set, it indicates a probable hydraulic (line pressure) or mechanical problem exists. Diagnosing the transmission should be based on the associated speed ratio DTC and mechanical causes should be considered first.

INTENDED GEAR	CLUTCHES APPLYING	RECOMENDED DTC
REVERSE	UD** - MS	P0738
1ST	UD - LR*	P0731
2ND	UD - 2C	P0732
2ND PRIME	UD - 4C	P1736
3RD	UD - OD/MS	P0733
4TH	OD/MS - 2C	P0734
5TH	OD/MS - 2C	P0735

* L/R is used only up to 150 output RPM in 1st gear. ** UD will show as applied in Reverse but the UD clutch is actually released. OD/MS is OD and/or MS.

Diagnostic Test

1. INTENDED GEAR TO APPLIED CLUTCH

With the scan tool, check the EATX DTC EVENT DATA to determine in which gear the slippage occurred and the clutches that were applied.

With the EATX DTC EVENT DATA, use the information provided above to determine the proper symptom for diagnosis.

View repair

Repair

Refer to the Transmission category and perform the appropriate symptom identified from the EATX DTC EVENT DATA, intended gear, and applied clutches.

Perform 45RFE/545RFE TRANSMISSION VERIFICATION TEST - VER 1.

P1794-SPEED SENSOR GROUND ERROR

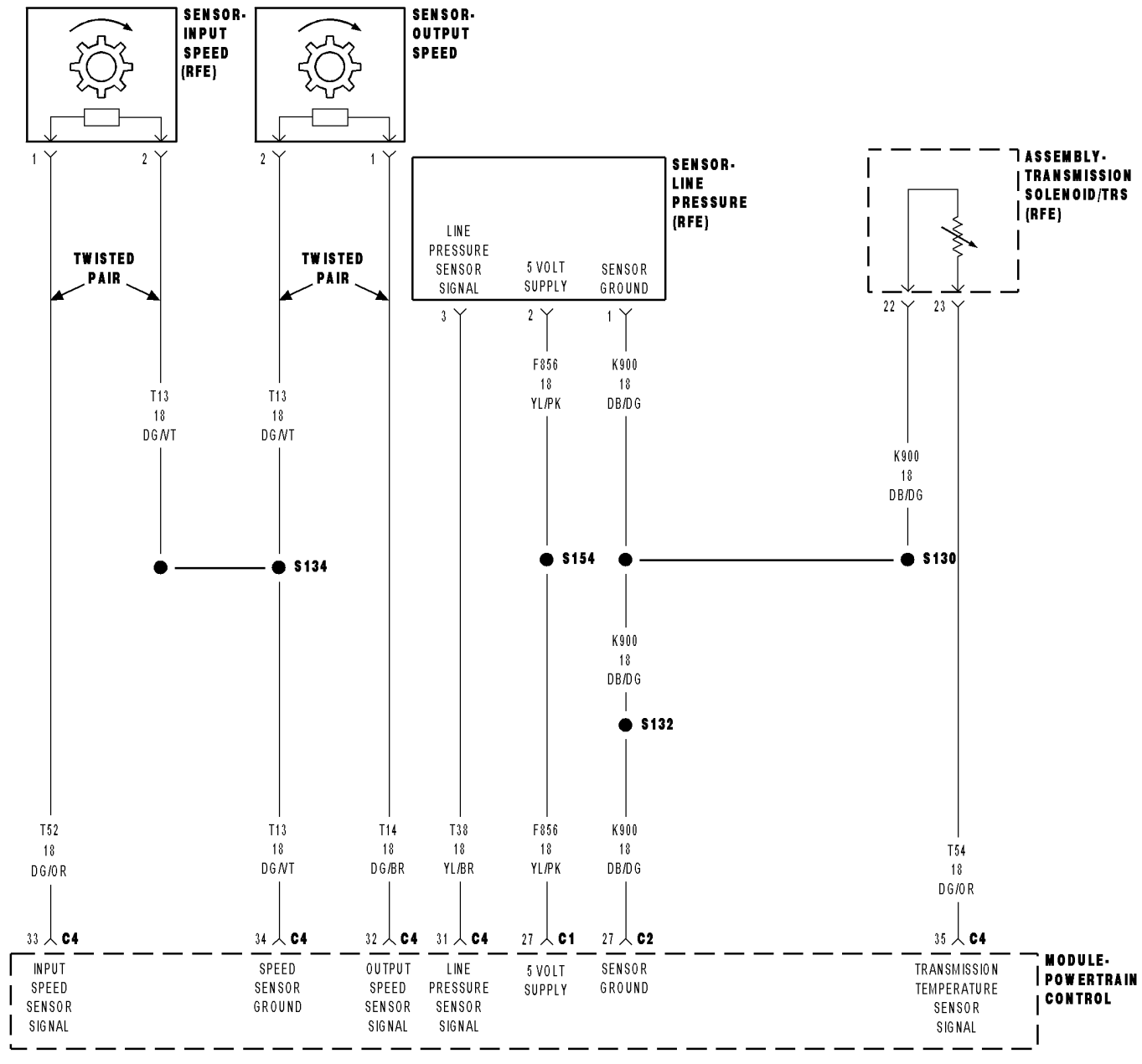

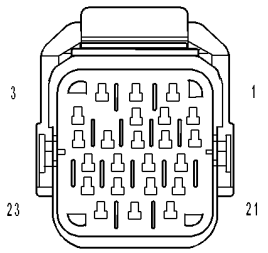

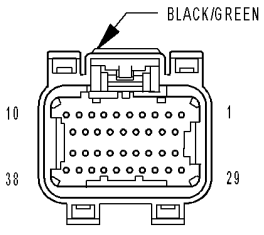

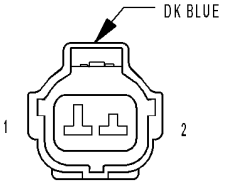



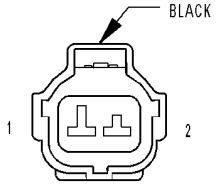

814a4ba3

P1794-SPEED SENSOR GROUND ERROR (CONTINUED)

For the Transmission circuit diagram (Refer to 21 - TRANSMISSION/TRANSAXLE/AUTOMATIC - 45RFE/545RFE - SCHEMATICS AND DIAGRAMS)

For a complete wiring diagram **Refer to Section 8W**

- **When Monitored:**
  The gear ratio is monitored continuously while the Transmission is in gear.
- **Set Condition:**
  After a controller reset in neutral and a ratio of input to output, of 1 to 2. This DTC can take up to five minutes of problem identification before illuminating the MIL.

Possible Causes
(T13) SPEED SENSOR GROUND CIRCUIT OPEN
(T13) SPEED SENSOR GROUND CIRCUIT SHORT TO GROUND
(T13) SPEED SENSOR GROUND CIRCUIT SHORT TO VOLTAGE
POWERTRAIN CONTROL MODULE

Always perform the Pre-Diagnostic Troubleshooting procedure before proceeding. (Refer to 21 - TRANSMISSION/TRANSAXLE/AUTOMATIC - 45RFE/545RFE - DIAGNOSIS AND TESTING).

Theory of Operation

The transmission system uses two speed sensors, one to measure input RPM and one to measure output RPM. These inputs are essential for proper transmission operation. Therefore, the integrity of this data is verified through the following checks:

1) When in gear, if the gear ratio does not compare to a known gear ratio, the corresponding in-gear trouble code is set (DTCs P0731–36).

2) An excessive change in input or output speeds indicating signal intermittent which may result in the DTCs P0715 and/or P0720 to set.

3) If the common speed sensor ground circuit is lost, both sensor inputs will read the signal from the input speed sensor at idle in neutral. Since the input speed sensor reads 60 teeth from the input clutch hub and the output speed sensor reads 30 teeth from the park gear, the result is an apparent speed ratio of 1:2 and may cause the DTC P1794 to set when at a stop.

Diagnostic Test

1. CHECK TO SEE IF DTC P1794 IS CURRENT

Engine Running, Shift lever in park.

With the scan tool, read the Transmission Output and Input Speed Sensor states.

Is the Output Speed Sensor reading twice the Input Speed Sensor reading?

Yes >> Go To 2

No >> Go To 6

P1794-SPEED SENSOR GROUND ERROR (CONTINUED)

2. PCM AND WIRING

Turn the ignition off to the lock position.

Remove the Starter Relay.

NOTE: Removal of the Starter Relay is to prevent a Transmission, NO RESPONSE, condition and disable the starter.

Install the Transmission Simulator, Miller tool 8333.

NOTE: Check connectors - Clean/repair as necessary.

With the Transmission Simulator, set the Input/Output Speed selector switch to the ″3000/1000″ position. Turn the Input/Output Speed switch to ″ON″.

Ignition on, engine not running.

With the scan tool, monitor the Input and Output Speed Sensor state.

Does the Input speed read 3000 RPM and the Output speed read 1000 RPM, within 50 RPM?

Yes >> Go To 6

No >> Go To 3

---

3. (T13) SPEED SENSOR GROUND CIRCUIT OPEN

Turn the ignition off to the lock position.

Disconnect the PCM C4 harness connector and connect Miller tool #8815.

Disconnect the Transmission Simulator, Miller tool #8333.

CAUTION: Do not probe the PCM harness connectors. Probing the PCM harness connectors will damage the PCM terminals resulting in poor terminal to pin connection. Install Miller tool #8815 to perform diagnosis.

Measure the resistance of the (T13) Speed Sensor Ground circuit from the appropriate terminal of Miller tool #8815 to the Transmission Solenoid/TRS Assembly and both Input and Output Speed Sensor harness connectors.

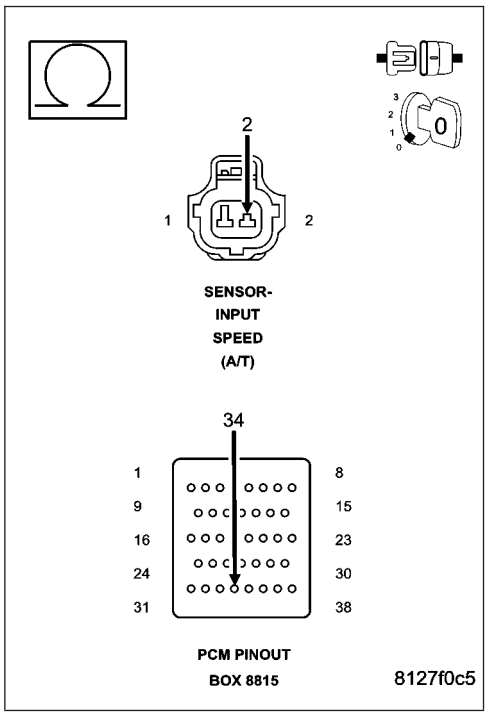

Is the resistance above 5.0 ohms on any of the above measurements?

Yes >> Repair the (T13) Speed Sensor Ground circuit for an open.

Perform 45RFE/545RFE TRANSMISSION VERIFICATION TEST - VER 1.

No >> Go To 4

P1794-SPEED SENSOR GROUND ERROR (CONTINUED)

4. (T13) SPEED SENSOR GROUND CIRCUIT SHORT TO GROUND

Measure the resistance between ground and the (T13) Speed Sensor Ground circuit.

Is the resistance below 5.0 ohms?

Yes >> Repair the (T13) Speed Sensor Ground circuit for a short to ground.
Perform 45RFE/545RFE TRANSMISSION VERIFICATION TEST - VER 1.

No >> Go To 5

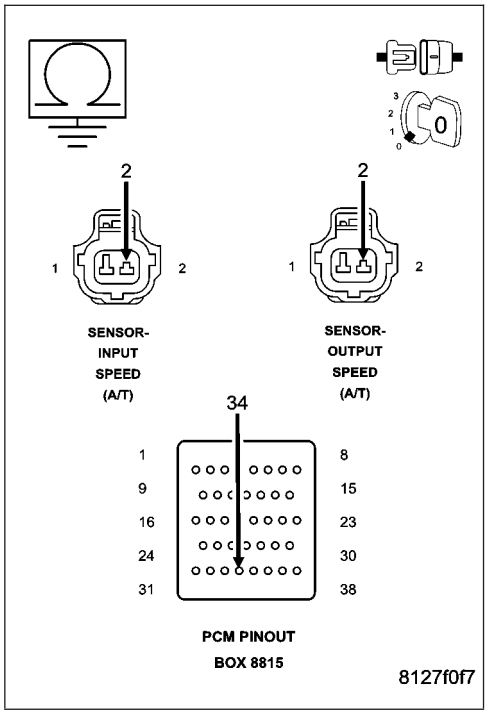

5. (T13) SPEED SENSOR GROUND CIRCUIT SHORT TO VOLTAGE

Ignition on, engine not running.
Measure the voltage of the (T13) Speed Sensor Ground circuit.

Is the voltage above 0.5 volt?

Yes >> Repair the (T13) Speed Sensor Ground circuit for a short to voltage.
Perform 45RFE/545RFE TRANSMISSION VERIFICATION TEST - VER 1.

No >> Using the schematics as a guide, check the Powertrain Control Module (PCM) terminals for corrosion, damage, or terminal push out. Pay particular attention to all power and ground circuits. If no problems are found, replace the PCM per the Service Information. With the scan tool, perform QUICK LEARN.
Perform 45RFE/545RFE TRANSMISSION VERIFICATION TEST - VER 1.

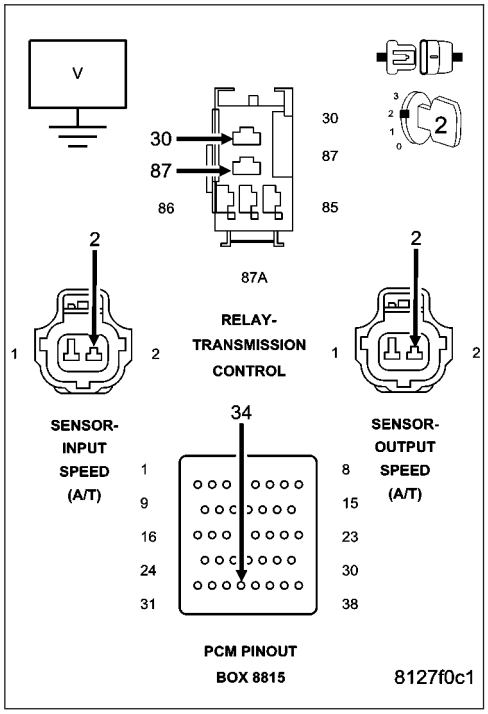

P1794-SPEED SENSOR GROUND ERROR (CONTINUED)

6. INTERMITTENT WIRING AND CONNECTORS

The conditions necessary to set this DTC are not present at this time.
Using the schematics as a guide, inspect the wiring and connectors specific to this circuit.
Wiggle the wires while checking for shorted and open circuits.
With the scan tool, check the EATX DTC EVENT DATA to help identify the conditions in which the DTC was set.

Where there any problems found?

Yes >> Repair as necessary.
Perform 45RFE/545RFE TRANSMISSION VERIFICATION TEST - VER 1.

No >> Test Complete.

P2700-INADEQUATE ELEMENT VOLUME LR

For the Transmission circuit diagram (Refer to 21 - TRANSMISSION/TRANSAXLE/AUTOMATIC - 45RFE/545RFE - SCHEMATICS AND DIAGRAMS)

For a complete wiring diagram **Refer to Section 8W**.

- **When Monitored:**
  Whenever the engine is running. The LR clutch volume index (CVI) is updated during a 3-1 or 2-1 manual downshift with throttle angle below 5 degrees. Transmission temperature must be at least 43° C (110° F).
- **Set Condition:**
  When the LR clutch volume index (CVI) falls below 16.

Possible Causes
HYDRAULIC LEAK IN THE VALVE BODY
BROKEN L/R CLUTCH PISTON RETURN SPRING OR SPRING RETAINERS
BROKEN L/R ACCUMULATOR SPRING(S)
TRANSMISSION SOLENOID/TRS ASSEMBLY
POWERTRAIN CONTROL MODULE

Always perform the Pre-Diagnostic Troubleshooting procedure before proceeding. (Refer to 21 - TRANSMISSION/TRANSAXLE/AUTOMATIC - 45RFE/545RFE - DIAGNOSIS AND TESTING).

Theory of Operation

The volumes of the transmission fluid needed to apply the friction elements are continuously monitored and learned for adaptive controls. As the clutch friction material wears, the volume of fluid needed to apply the clutch increases. Certain transmission mechanical problems can cause near-zero learned volumes resulting in setting a DTC. The DTC will usually set with other DTC's, which indicates an internal transmission problem.

Diagnostic Test

1. OTHER DTCS PRESENT

With the scan tool, check for other transmission DTCs.

Are there any Pressure Switch Sense circuit DTCs present also?

Yes >> Refer to the Transmission category and perform the appropriate symptom.
Perform 45RFE/545RFE TRANSMISSION VERIFICATION TEST - VER 1.

No >> Go To 2

---

2. CHECK LR CLUTCH VOLUME INDEX

With the scan tool, erase DTCs.

Start the engine and warm the transmission.

NOTE: The TRANS TEMP DEG must be at least 43° C or 110° F before performing the following steps.
Drive the vehicle and perform at least ten 3-1 manual downshifts at closed throttle from speeds of about 32 Kmh or 20 MPH.

With the scan tool, read the LR CL VOL INDEX.

Is the LR CL VOL INDEX below 20?

Yes >> Go To 3

No >> Go To 5

P2700-INADEQUATE ELEMENT VOLUME LR (CONTINUED)

3. L/R CLUTCH CIRCUIT LEAKS IN THE VALVE BODY

Turn the ignition off to the lock position.
Remove the transmission oil pan per the Service Information.
Remove the valve body per the service information.
Check condition of the L/R accumulator springs.
Look for possible leak paths into the L/R clutch hydraulics circuit within the valve body.

Were any problems found?

Yes >> Repair as necessary.
Perform 45RFE/545RFE TRANSMISSION VERIFICATION TEST - VER 1.

No >> Go To 4

---

4. AIR CHECK L/R CLUTCH CIRCUITS

Perform an air check on the L/R Clutch circuit per the Service Information.
Watch and listen for L/R Clutch piston movement.

Does the L/R piston stroke and return properly?

Yes >> Replace the Transmission/TRS Solenoid Assembly per the service information. With the scan tool, perform Quick Learn.
Perform 45RFE/545RFE TRANSMISSION VERIFICATION TEST - VER 1.

No >> Repair internal transmission as necessary. Pay attention to the components related to the L/R clutch. A broken or weak L/R clutch return spring, Accumulator Spring, and/or dislocated snap ring could cause this problem.
Perform 45RFE/545RFE TRANSMISSION VERIFICATION TEST - VER 1.

---

5. VERIFY PCM OPERATION

NOTE: The TRANS TEMP DEG must be at least 43° C or 110° F before performing the following steps.
Perform eight learnable starts. A learnable start is defined as follows: Start engine. From a standstill, accelerate lightly to 80 Kmh or 50 MPH, then brake lightly to a stop. Turn off engine.
With the scan tool, record the CL VOL INDEX (CVI) for all clutches
With the scan tool, perform a BATTERY DISCONNECT.
With the scan tool, read the CVI's and compare them to the readings recorded before the BATTERY DISCONNECT.

Are any of the CVI's less than 5 or different than before the BATTERY DISCONNECT?

Yes >> Using the schematics as a guide, check the Powertrain Control Module (PCM) terminals for corrosion, damage, or terminal push out. Pay particular attention to all power and ground circuits. If no problems are found, replace the PCM per the Service Information. With the scan tool, perform QUICK LEARN.
Perform 45RFE/545RFE TRANSMISSION VERIFICATION TEST - VER 1.

No >> Test Complete.

P2701-INADEQUATE ELEMENT VOLUME 2C

For the Transmission circuit diagram (Refer to 21 - TRANSMISSION/TRANSAXLE/AUTOMATIC - 45RFE/545RFE - SCHEMATICS AND DIAGRAMS)

For a complete wiring diagram **Refer to Section 8W**.

- **When Monitored:**
  Whenever the engine is running. The 2C clutch volume index (CVI) is updated during a 3-2 kickdown with throttle angle between 10 and 54 degrees. Transmission temperature must be at least 43° C (110° F).
- **Set Condition:**
  When the 2C CVI falls below 5.

Possible Causes
HYDRAULIC LEAK IN THE VALVE BODY
BROKEN 2C CLUTCH PISTON RETURN SPRING / DISLODGED SNAP RING
BROKEN ACCUMULATOR SPRING(S)
TRANSMISSION SOLENOID/TRS ASSEMBLY
POWERTRAIN CONTROL MODULE

Always perform the Pre-Diagnostic Troubleshooting procedure before proceeding. (Refer to 21 - TRANSMISSION/TRANSAXLE/AUTOMATIC - 45RFE/545RFE - DIAGNOSIS AND TESTING).

Theory of Operation

The volumes of the transmission fluid needed to apply the friction elements are continuously monitored and learned for adaptive controls. As the clutch friction material wears, the volume of fluid needed to apply the clutch increases. Certain transmission mechanical problems can cause near-zero learned volumes resulting in setting a DTC. The DTC will usually set with other DTC's, which indicates an internal transmission problem.

Diagnostic Test

1. OTHER DTCS PRESENT

With the scan tool, check for other transmission DTCs.

Are there any Pressure Switch Sense circuit DTCs present also?

Yes >> Refer to the Transmission category and perform the appropriate symptom.
Perform 45RFE/545RFE TRANSMISSION VERIFICATION TEST - VER 1.

No >> Go To 2

---

2. CHECK 2C CLUTCH VOLUME INDEX

With the scan tool, erase Transmission DTCs.

Drive the vehicle at about 80 Kmh or 50 MPH, then depress the OD off button. This will put the vehicle into third gear.

NOTE: The TRANS TEMP DEG must be at least 43° C or 110° F before performing the following steps.
Perform at least ten 3-2 kickdowns by depressing the throttle between 10 and 54 TPS DEGREES at speeds of about 80 Kmh or 50 MPH.

With the scan tool, read the 2C CL VOL INDEX.

Is the 2C CL VOL INDEX below 10?

Yes >> Go To 3

No >> Go To 5

P2701-INADEQUATE ELEMENT VOLUME 2C (CONTINUED)

3. 2C CLUTCH CIRCUIT LEAKS IN THE VALVE BODY

Turn the ignition off to the lock position.

Remove the transmission oil pan per the Service Information.

Remove the valve body per the service information.

Check condition of the 2C accumulator springs.

Look for possible leak paths into the 2C clutch hydraulics circuit within the valve body.

Were any problems found?

Yes >> Repair as necessary.
Perform 45RFE/545RFE TRANSMISSION VERIFICATION TEST - VER 1.

No >> Go To 4

---

4. AIR CHECK 2C CLUTCH CIRCUIT

Turn the ignition off to the lock position.

Perform an air check on the 2C Clutch circuit per the Service Information.

Watch and listen for 2C Clutch piston movement.

Dose the piston stroke and return properly?

Yes >> Replace the Transmission/TRS Solenoid Assembly per the service information. With the scan tool, perform Quick Learn.
Perform 45RFE/545RFE TRANSMISSION VERIFICATION TEST - VER 1.

No >> Repair internal transmission as necessary. Pay attention to the components related to the 2C clutch. A broken or dislodged 2C return spring, snap ring or broken 2C Accumulator Spring could cause this problem.
Perform 45RFE/545RFE TRANSMISSION VERIFICATION TEST - VER 1.

---

5. VERIFY PCM OPERATION

NOTE: NOTE: The TRANS TEMP DEG must be at least 43° C or 110° F before performing the following steps.

Perform eight learnable starts. A learnable start is defined as follows: Start engine. From a standstill, accelerate lightly to 80 Kmh or 50 MPH, then brake lightly to a stop. Turn off engine.

With the scan tool, record the CL VOL INDEX (CVI) for all clutches

With the scan tool, perform a BATTERY DISCONNECT.

With the scan tool, read the CVI's and compare them to the readings recorded before the BATTERY DISCONNECT.

Are any of the CVI's less than 5 or different than before the BATTERY DISCONNECT?

Yes >> Using the schematics as a guide, check the Powertrain Control Module (PCM) terminals for corrosion, damage, or terminal push out. Pay particular attention to all power and ground circuits. If no problems are found, replace the PCM per the Service Information. With the scan tool, perform QUICK LEARN.
Perform 45RFE/545RFE TRANSMISSION VERIFICATION TEST - VER 1.

No >> Test Complete.

P2702-INADEQUATE ELEMENT VOLUME OD

For the Transmission circuit diagram (Refer to 21 - TRANSMISSION/TRANSAXLE/AUTOMATIC - 45RFE/545RFE - SCHEMATICS AND DIAGRAMS)

For a complete wiring diagram **Refer to Section 8W**.

- **When Monitored:**
  Whenever the engine is running. The OD clutch volume index (CVI) is updated during a 2-3 upshift with throttle angle between 10 and 54 degrees. Transmission temperature must be at least 43° C (110° F).
- **Set Condition:**
  When the OD CVI falls below 5.

Possible Causes
HYDRAULIC LEAK IN THE VALVE BODY
BROKEN OD ACCUMULATOR SPRING
BROKEN OD/REV PISTON BELLEVILLE SPRING OR DISLODGED SNAP RING
INTERNAL LEAKAGE IN PUMP ASSEMBLY
TRANSMISSION SOLENOID/TRS ASSEMBLY
POWERTRAIN CONTROL MODULE

Always perform the Pre-Diagnostic Troubleshooting procedure before proceeding. (Refer to 21 - TRANSMISSION/TRANSAXLE/AUTOMATIC - 45RFE/545RFE - DIAGNOSIS AND TESTING).

Theory of Operation

The volumes of the transmission fluid needed to apply the friction elements are continuously monitored and learned for adaptive controls. As the clutch friction material wears, the volume of fluid needed to apply the clutch increases. Certain transmission mechanical problems can cause near-zero learned volumes resulting in setting a DTC. The DTC will usually set with other DTC's, which indicates an internal transmission problem.

Diagnostic Test

1. OTHER DTCS PRESENT

With the scan tool, check for other transmission DTCs.

Are there any Pressure Switch Sense circuit DTCs present also?

Yes >> Refer to the Transmission category and perform the appropriate symptom.
Perform 45RFE/545RFE TRANSMISSION VERIFICATION TEST - VER 1.

No >> Go To 2

---

2. CHECK THE OD CLUTCH VOLUME INDEX

With the scan tool, erase DTCs.

NOTE: The TRANS TEMP DEG must be at least 43° C or 110° F before performing the following steps.
Drive the vehicle and perform at least ten 2-3 upshifts with the TPS degree between 10 and 54.
With the scan tool, read the OD CL VOL INDEX.

Is the OD CL VOL INDEX below 10?

Yes >> Go To 3

No >> Go To 5

P2702-INADEQUATE ELEMENT VOLUME OD (CONTINUED)

3. OD CLUTCH CIRCUIT LEAKS IN THE VALVE BODY

Turn the ignition off to the lock position.

Remove the transmission oil pan per the Service Information.

Remove the valve body per the service information.

Check condition of the OD accumulator spring.

Look for possible leak paths into the OD clutch hydraulics circuit within the valve body.

Were any problems found?

Yes >> Repair as necessary.
Perform 45RFE/545RFE TRANSMISSION VERIFICATION TEST - VER 1.

No >> Go To 4

---

4. AIR CHECK OD CLUTCH CIRCUIT

Perform an air check on the OD Clutch circuit per the Service Information.

Watch and listen for OD Clutch piston movement.

Air check all other pump passages and watch for air leakage into the OD clutch passage.

NOTE: There is a bleed orifice between the OD and Reverse Clutch passages, so a small amount of air leakage from Reverse to OD is normal.

Were any problems found?

Yes >> Repair internal transmission. Pay attention to the OD Clutch. Broken or weak return spring or a dislocated snap ring could cause this problem. If no problems were found in the OD clutch, or if leakage into the OD passage was noted, replace Pump Assembly per the Service Information.
Perform 45RFE/545RFE TRANSMISSION VERIFICATION TEST - VER 1.

No >> Replace the Transmission/TRS Solenoid Assembly per the service information. With the scan tool, perform Quick Learn.
Perform 45RFE/545RFE TRANSMISSION VERIFICATION TEST - VER 1.

---

5. VERIFY PCM OPERATION

NOTE: The TRANS TEMP DEG must be at least 43° C or 110° F before performing the following steps.

Perform eight learnable starts. A learnable start is defined as follows: Start engine. From a standstill, accelerate lightly to 80 Kmh or 50 MPH, then brake lightly to a stop. Turn off engine.

With the scan tool, record the CL VOL INDEX (CVI) for all clutches.

With the scan tool, perform a BATTERY DISCONNECT.

With the scan tool, read the CVI's and compare them to the readings recorded before the BATTERY DISCONNECT.

Are any of the CVI's less than 5 or different than before the BATTERY DISCONNECT?

Yes >> Using the schematics as a guide, check the Powertrain Control Module (PCM) terminals for corrosion, damage, or terminal push out. Pay particular attention to all power and ground circuits. If no problems are found, replace the PCM per the Service Information. With the scan tool, perform QUICK LEARN.
Perform 45RFE/545RFE TRANSMISSION VERIFICATION TEST - VER 1.

No >> Test Complete.

P2703- INADEQUATE ELEMENT VOLUME UD

For the Transmission circuit diagram (Refer to 21 - TRANSMISSION/TRANSAXLE/AUTOMATIC - 45RFE/545RFE - SCHEMATICS AND DIAGRAMS)

For a complete wiring diagram **Refer to Section 8W**.

- **When Monitored:**
  Whenever the engine is running. The UD clutch volume index (CVI) is updated during a 4-3 kickdown with throttle angle between 10 and 54 degrees. Transmission temperature must be at least 43° C (110° F).
- **Set Condition:**
  When the UD CVI falls below 11.

Possible Causes
BROKEN UD ACCUMULATOR SPRING(S)
BROKEN UD CLUTCH PISTON SPRING OR DISLODGED SNAP RING
INTERNAL LEAKAGE IN PUMP OR VALVE BODY ASSEMBLIES
TRANSMISSION SOLENOID/TRS ASSEMBLY
POWERTRAIN CONTROL MODULE

Always perform the Pre-Diagnostic Troubleshooting procedure before proceeding. (Refer to 21 - TRANSMISSION/TRANSAXLE/AUTOMATIC - 45RFE/545RFE - DIAGNOSIS AND TESTING).

Theory of Operation

The volumes of the transmission fluid needed to apply the friction elements are continuously monitored and learned for adaptive controls. As the clutch friction material wears, the volume of fluid needed to apply the clutch increases. Certain transmission mechanical problems can cause near-zero learned volumes resulting in setting a DTC. The DTC will usually set with other DTC's, which indicates an internal transmission problem.

Diagnostic Test

1. OTHER DTCS PRESENT

With the scan tool, check for other transmission DTCs.

Are there any Pressure Switch Sense circuit DTCs present also?

Yes >> Refer to the Transmission category and perform the appropriate symptom.
Perform 45RFE/545RFE TRANSMISSION VERIFICATION TEST - VER 1.

No >> Go To 2

---

2. CHECK UD CLUTCH VOLUME INDEX

With the scan tool, erase Transmission DTCs.

NOTE: The TRANS TEMP DEG must be at least 43° C or 110° F before performing the following steps.
Drive the vehicle and perform at least ten 4-3 kickdowns by depressing the throttle between 30 and 54 TPS degrees at speeds about 80 Kmh or 50 MPH.

With the scan tool, read the UD clutch volume index (CVI).

Is the UD CVI below 10?

Yes >> Go To 3

No >> Go To 5

P2703- INADEQUATE ELEMENT VOLUME UD (CONTINUED)

3. UD CLUTCH CIRCUIT LEAKS IN THE VALVE BODY

Turn the ignition off to the lock position.

Remove the transmission oil pan and valve body per the Service Information.

Check the condition of the UD accumulator springs.

Look for possible leak paths into the UD clutch hydraulics circuit within the valve body.

Were there any problems found?

Yes >> Repair as necessary.
Perform 45RFE/545RFE TRANSMISSION VERIFICATION TEST - VER 1.

No >> Go To 4

---

4. AIR CHECK UD CLUTCH CIRCUIT

Perform an air check on the UD Clutch circuit per the Service Information.

Watch and listen for UD Clutch piston movement.

Air check all other pump passages for air leakage into the UD Clutch circuit.

Were any problems found?

Yes >> Repair internal transmission. Pay attention to components related to the UD clutch. Broken or weak return spring or a dislocated snap ring. If no trouble is found in UD clutch component or UD clutch leakage was noted in the clutch passage, replace the Pump Assembly.
Perform 45RFE/545RFE TRANSMISSION VERIFICATION TEST - VER 1.

No >> Replace the Transmission/TRS Solenoid Assembly per the service information. With the scan tool, perform Quick Learn.
Perform 45RFE/545RFE TRANSMISSION VERIFICATION TEST - VER 1.

---

5. VERIFY PCM OPERATION

NOTE: The TRANS TEMP DEG must be at least 43° C or 110° F before performing the following steps.

Perform eight learnable starts. A learnable start is defined as follows: Start engine. From a standstill, accelerate lightly to 80 Kmh or 50 MPH, then brake lightly to a stop. Turn off engine.

With the scan tool, record the clutch volume index (CVI) for all clutches.

With the scan tool, perform a BATTERY DISCONNECT.

With the scan tool, read the CVI's and compare them to the readings recorded before the BATTERY DISCONNECT.

Are any of the CVI's less than 5 or different than before the BATTERY DISCONNECT?

Yes >> Using the schematics as a guide, check the Powertrain Control Module (PCM) terminals for corrosion, damage, or terminal push out. Pay particular attention to all power and ground circuits. If no problems are found, replace the PCM per the Service Information. With the scan tool, perform QUICK LEARN.
Perform 45RFE/545RFE TRANSMISSION VERIFICATION TEST - VER 1.

No >> Test Complete.

P2704-INADEQUATE ELEMENT VOLUME 4C

For the Transmission circuit diagram (Refer to 21 - TRANSMISSION/TRANSAXLE/AUTOMATIC - 45RFE/545RFE - SCHEMATICS AND DIAGRAMS)

For a complete wiring diagram **Refer to Section 8W**.

- **When Monitored:**
  Whenever the engine is running. The 4C clutch volume index (CVI) is updated during a 3-4 upshift with throttle angle between 10 and 54 degrees. Transmission temperature must be at least 43° C (110° F).
- **Set Condition:**
  When the 4C CVI falls below 5.

Possible Causes
BROKEN 4C RETURN SPRING OR DISLODGED SNAP RING
BROKEN 4C ACCUMULATOR SPRING(S)
HYDRAULIC LEAK IN THE VALVE BODY
TRANSMISSION SOLENOID/TRS ASSEMBLY
POWERTRAIN CONTROL MODULE

Always perform the Pre-Diagnostic Troubleshooting procedure before proceeding. (Refer to 21 - TRANSMISSION/TRANSAXLE/AUTOMATIC - 45RFE/545RFE - DIAGNOSIS AND TESTING).

Theory of Operation

The volumes of the transmission fluid needed to apply the friction elements are continuously monitored and learned for adaptive controls. As the clutch friction material wears, the volume of fluid needed to apply the clutch increases. Certain transmission mechanical problems can cause near-zero learned volumes resulting in setting a DTC. The DTC will usually set with other DTC's, which indicates an internal transmission problem.

Diagnostic Test

1. CHECK THE 4C CLUTCH VOLUME

With the scan tool, record the 4C clutch volume index (CVI) and erase DTC's.

Perform at least 10, 3-4 upshifts with the throttle between 10 and 54 degrees. The Transmission temperature must be at least 43° C or 110° F.

With the scan tool, read the 4C CVI.

Is the current 4C CVI below 10?

Yes >> Go To 2

No >> Go To 5

---

2. DTC P0876 PRESENT

With the scan tool, read DTCs.

NOTE: The DTC P0876 must also be set with P2704 in order for this test to be valid.

Is the DTC P0876 also present?

Yes >> Replace the Transmission Solenoid/TRS Assembly per the Service Information. Perform 45RFE/545RFE TRANSMISSION VERIFICATION TEST - VER 1.

No >> Go To 3

P2704-INADEQUATE ELEMENT VOLUME 4C (CONTINUED)

3. 4C CLUTCH CIRCUIT LEAKS IN THE VALVE BODY

Turn the ignition off to the lock position.

Remove the transmission oil pan per the Service Information.

Remove the valve body per the Service Information.

Check condition of the 4C accumulator springs.

Look for possible leak paths into the 4C clutch hydraulics circuit within the valve body.

Were any problems found?

Yes >> Repair as necessary.
Perform 45RFE/545RFE TRANSMISSION VERIFICATION TEST - VER 1.

No >> Go To 4

---

4. AIR CHECK 4C CLUTCH CIRCUIT

Perform an air check on the 4C Clutch circuit per the Service Information.

Listen for proper 4C Clutch piston movement.

Were any problems found?

Yes >> Repair Internal transmission as necessary. Pay attention to the mechanical components related to the 4th clutch. A broken or weak return spring or a dislocated snap ring could cause this problem.
Perform 45RFE/545RFE TRANSMISSION VERIFICATION TEST - VER 1.

No >> Replace the Transmission Solenoid/TRS Assembly per the service information. With the scan tool, perform Quick Learn.
Perform 45RFE/545RFE TRANSMISSION VERIFICATION TEST - VER 1.

---

5. VERIFY PCM OPERATION

Perform eight learnable starts. A learnable start is defined as follows: Start engine. From a standstill, accelerate lightly to 50 MPH, then brake lightly to a stop. Turn off engine.

With the scan tool, record Transmission CL VOL INDEX (CVI) for all clutches.

With the scan tool, perform a BATTERY DISCONNECT.

With the scan tool, read the CVI's and compare them to the reading recorded before the BATTERY DISCONNECT.

Are any of the CVI's less than 5 or are they different than before the battery disconnect?

Yes >> Using the schematics as a guide, check the Powertrain Control Module (PCM) terminals for corrosion, damage, or terminal push out. Pay particular attention to all power and ground circuits. If no problems are found, replace the PCM per the Service Information. With the scan tool, perform QUICK LEARN.
Perform 45RFE/545RFE TRANSMISSION VERIFICATION TEST - VER 1.

No >> Test Complete.

P2706-MS SOLENOID CIRCUIT

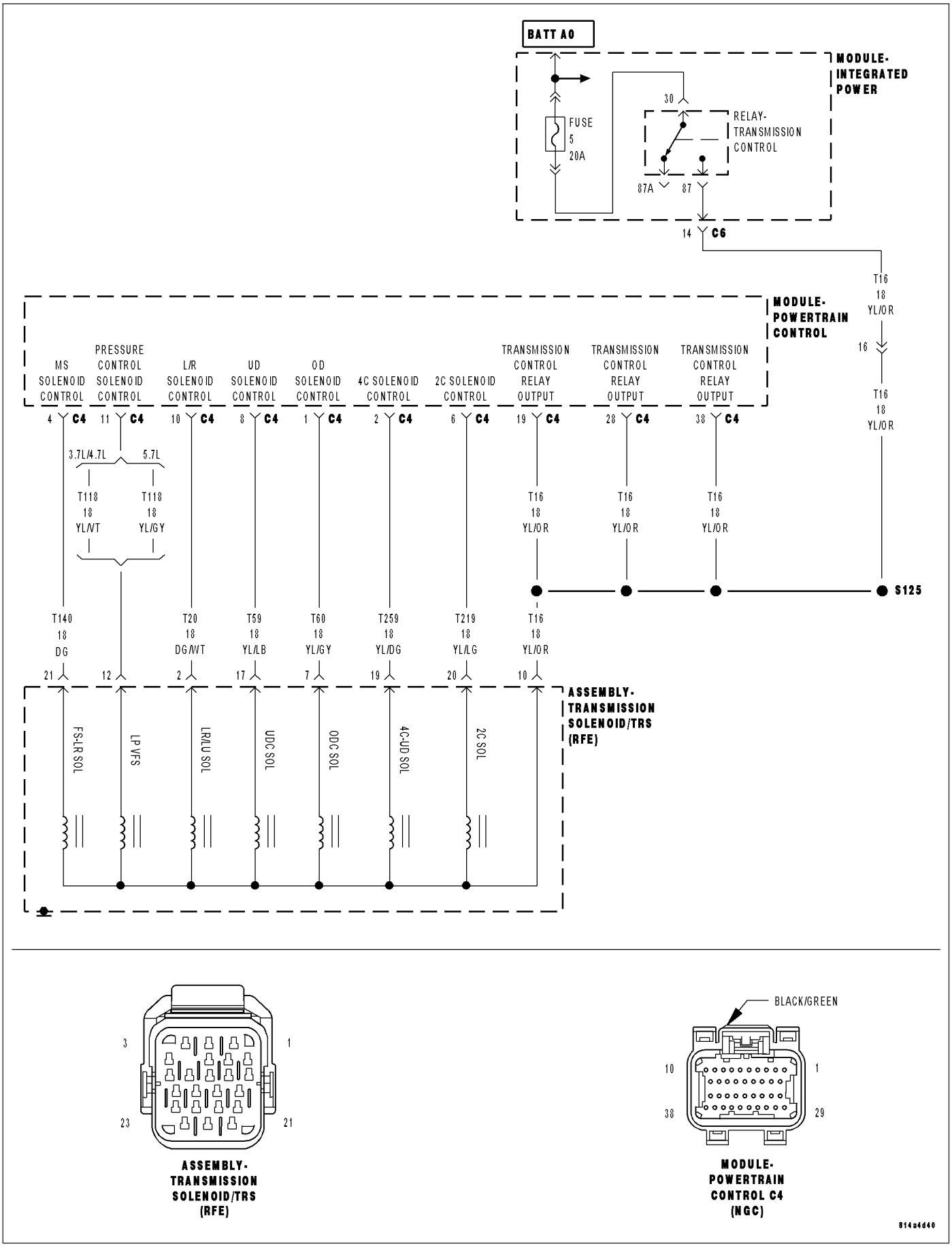

ASSEMBLY-
TRANSMISSION
SOLENOID/TRS
(RFE)

MODULE-
POWERTRAIN
CONTROL C4
(NGC)

814a4d40

P2706-MS SOLENOID CIRCUIT (CONTINUED)

For the Transmission circuit diagram (Refer to)(Refer to 21 - TRANSMISSION/TRANSAXLE/AUTOMATIC - 45RFE/545RFE - SCHEMATICS AND DIAGRAMS).

For a complete wiring diagram **Refer to Section 8W**.

- **When Monitored:**
  Initially at power-up, then every 10 seconds thereafter. The solenoid circuits will also be tested immediately after a gear ratio or pressure switch error is detected.
- **Set Condition:**
  After three consecutive solenoid continuity test failures, or one failure if test is run in response to a gear ratio or pressure switch error. **Note: This DTC is strictly an electrical fault and does not apply to any internal transmission failures.**

Possible Causes
RELATED RELAY DTC'S PRESENT
(T118) MS SOLENOID CONTROL CIRCUIT SHORT TO OTHER CIRCUITS
(T118) MS SOLENOID CONTROL CIRCUIT OPEN
(T118) MS SOLENOID CONTROL CIRCUIT SHORT TO GROUND
TRANSMISSION SOLENOID/TRS ASSEMBLY
POWERTRAIN CONTROL MODULE

Always perform the Pre-Diagnostic Troubleshooting procedure before proceeding. (Refer to 21 - TRANSMISSION/TRANSAXLE/AUTOMATIC - 45RFE/545RFE - DIAGNOSIS AND TESTING).

Theory of Operation

The Transmission Control System uses six electronically controlled solenoids that allow hydraulic fluid to be applied to various friction elements (clutches), which enables the gear requested. The continuity of each solenoid circuit is periodically tested. Each inactive solenoid is turned on for a few milliseconds, then off. Each active solenoid is turned off for a few milliseconds, then on. This pulsing of voltage to the solenoid causes an inductive spike which can be sensed by the Transmission Control System. If an inductive spike is not sensed by the Transmission Control System during the continuity check, it is tested again. If the test fails three consecutive times, the appropriate Diagnostic Trouble Code (DTC) is set. If the solenoid test is run in response to a gear ratio or pressure switch error, one failure will result in setting the appropriate DTC. **Note: This DTC is strictly an electrical fault and does not apply to any internal transmission failures.**

Diagnostic Test

1. RELATED TRANSMISSION RELAY DTC'S PRESENT

With the scan tool, check for other transmission DTC's.

Are there any Transmission Control Relay DTC's present?

Yes >> Refer to the Transmission category and perform the appropriate symptom.
Perform 45RFE/545RFE TRANSMISSION VERIFICATION TEST - VER 1.

No >> Go To 2

P2706-MS SOLENOID CIRCUIT (CONTINUED)

2. TRANSMISSION SOLENOID/TRS ASSEMBLY

Turn the ignition off to the lock position.

Remove the Starter Relay.

NOTE: Removal of the Starter Relay is to prevent a Transmission, NO RESPONSE, condition and disable the starter.

Install Transmission Simulator, Miller tool #8333.

NOTE: Check connectors - Clean/repair as necessary.

Ignition on, engine not running.

With the scan tool, actuate the MS Solenoid.

Monitor the MS Solenoid LED on the Transmission Simulator.

Did the MS Solenoid LED on the Transmission Simulator blink on and off?

Yes >> Replace the Transmission Solenoid/TRS Assembly per the Service Information.
Perform 45RFE/545RFE TRANSMISSION VERIFICATION TEST - VER 1.

No >> Go To 3

---

3. TRANSMISSION SOLENOID/TRS ASSEMBLY

With the scan tool, continue to actuate the MS Solenoid for the period of 2 minutes with the Transmission Simulator still connected.

After 2 minutes of actuation, with the scan tool, stop the actuation and check for transmission DTCs.

Did the DTC P2706 reset during the actuation test?

Yes >> Go To 4

No >> Replace the Transmission Solenoid/TRS Assembly per the Service Information.
Perform 45RFE/545RFE TRANSMISSION VERIFICATION TEST - VER 1.

---

4. (T118) MS SOLENOID CONTROL CIRCUIT SHORT TO OTHER CIRCUITS

Turn the ignition off to the lock position.

Disconnect the Transmission Simulator, Miller tool #8333.

Disconnect the PCM harness connectors.

Measure the resistance between the (T118) MS Solenoid Control circuit and all other circuits in the Transmission Solenoid/TRS Assembly harness connector.

Is the resistance below 5.0 ohms between the (T118) MS Solenoid Control circuit and any other circuit(s) in the Transmission Solenoid/TRS Assembly harness connector?

Yes >> Repair the (T118) MS Solenoid Control circuit for a short to other circuit(s).
Perform 45RFE/545RFE TRANSMISSION VERIFICATION TEST - VER 1.

No >> Go To 5

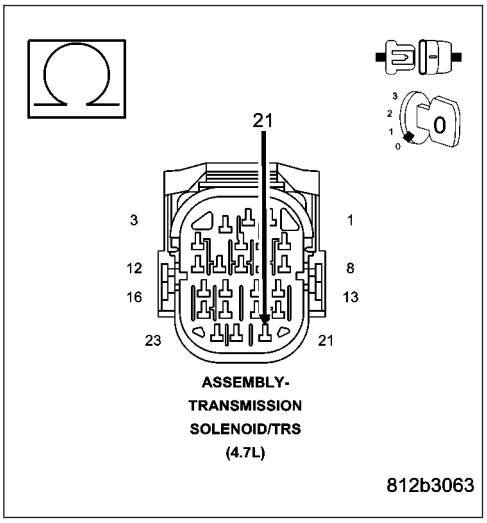

P2706-MS SOLENOID CIRCUIT (CONTINUED)

5. (T118) MS SOLENOID CONTROL CIRCUIT OPEN

Connect Miller tool #8815 to the PCM C4 harness connector.

CAUTION: Do not probe the PCM harness connectors. Probing the PCM harness connectors will damage the PCM terminals resulting in poor terminal to pin connection. Install Miller special tool #8815 to perform diagnosis.

Measure the resistance of the (T118) MS Solenoid Control circuit from the Transmission Solenoid/TRS Assembly harness connector to the appropriate terminal of Miller tool #8815.

Is the resistance above 5.0 ohms?

Yes >> Repair the (T118) MS Solenoid Control circuit for an open.
Perform 45RFE/545RFE TRANSMISSION VERIFICATION TEST - VER 1.

No >> Go To 6

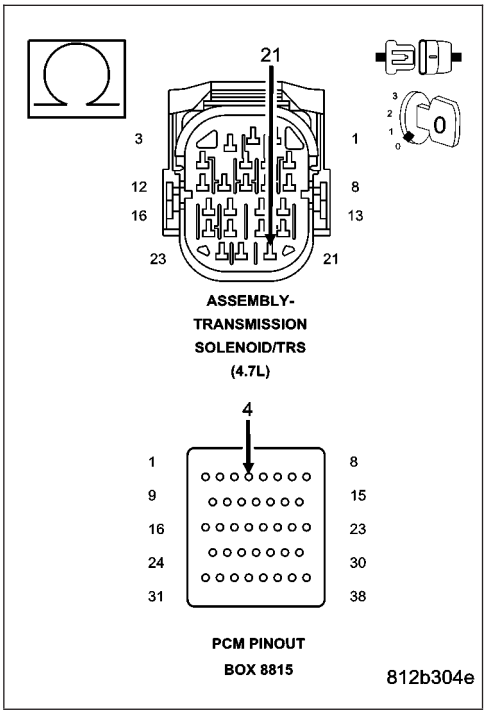

6. (T118) MS SOLENOID CONTROL CIRCUIT SHORT TO GROUND

Measure the resistance between ground and the (T118) MS Solenoid Control circuit.

Is the resistance below 5.0 ohms?

Yes >> Repair the (T118) MS Solenoid Control circuit for a short to ground.
Perform 45RFE/545RFE TRANSMISSION VERIFICATION TEST - VER 1.

No >> Using the schematics as a guide, check the Powertrain Control Module (PCM) terminals for corrosion, damage, or terminal push out. Pay particular attention to all power and ground circuits. If no problems are found, replace the PCM per the Service Information. With the scan tool, perform QUICK LEARN.
Perform 45RFE/545RFE TRANSMISSION VERIFICATION TEST - VER 1.

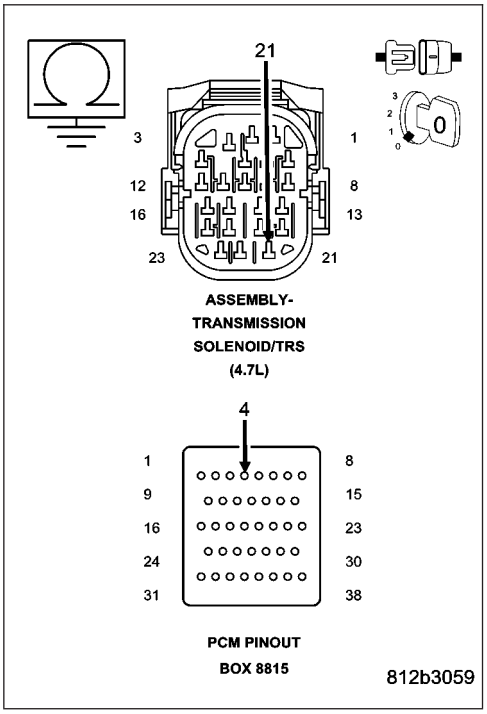

45RFE/545RFE TRANSMISSION VERIFICATION TEST - VER 1

For the Transmission circuit diagram (Refer to)(Refer to 21 - TRANSMISSION/TRANSAXLE/AUTOMATIC - 45RFE/545RFE - SCHEMATICS AND DIAGRAMS).

For a complete wiring diagram **Refer to Section 8W**.

45RFE/545RFE TRANSMISSION VERIFICATION TEST - VER 1

1. 45RFE/545RFE TRANSMISSION VERIFICATION TEST - VER 1

1. After completion of the Transmission Verification Test, the Powertrain Verification Test must be performed.

2. Connect the scan tool to the Data Link Connector (DLC).

3. Reconnect any disconnected components.

4. If the PCM has been replaced or reflashed, or the transmission has been repaired or replaced, it is necessary to perform the scan tool Quick Learn Procedure.

5. With the scan tool, erase all Transmission and Engine DTC's.

6. With the scan tool, display Transmission Temperature. Start and run the engine until the Transmission Temperature is HOT.

7. Check the Transmission fluid level and adjust if necessary. Refer to the Service Information for the Fluid Fill procedure. (Refer to 21 - TRANSMISSION/TRANSAXLE/AUTOMATIC - 45RFE/545RFE/FLUID - STANDARD PROCEDURE)

8. Road test the vehicle.

9. Perform the following shifts from a standing start with a constant throttle opening of 20 to 25 degrees to the speeds of 97 Km/h or 60 MPH; make fifteen to twenty 1 to 2, 2 to 3, 3 to 4 upshifts and for 545RFE, 4 to 5.

10. Perform the following shifts with speeds below 40 Km/h or 25 MPH; make five to eight wide open throttle kickdowns to 1st gear. Allow at least 5 seconds each in 2nd and 3rd gear between each kickdown.

11. Check for DTC's during the road test.

12. Use the EATX OBDII task manager to run Good Trip time in each gear, this will confirm the repair and to ensure that the DTC has not re-matured.

13. With the scan tool, perform a BATTERY DISCONNECT, this will clear the EATX DTC EVENT DATA

Were there any Diagnostic Trouble Codes (DTCs) set during the road test?

Yes >> Refer to the Symptom List for the appropriate diagnostic tests.

No >> Repair is complete.

SCHEMATICS AND DIAGRAMS

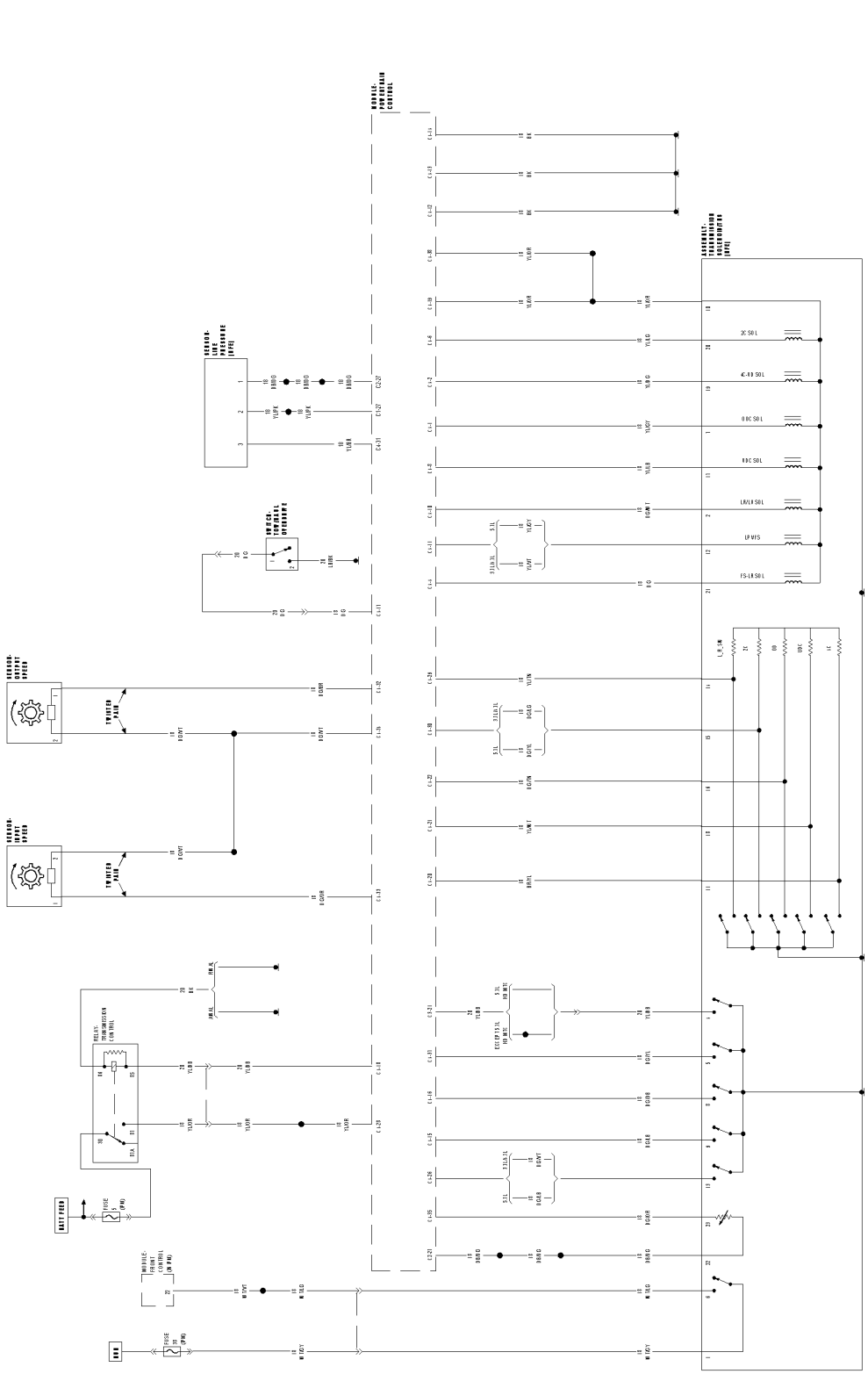

RFE TRANSMISSION CIRCUIT DIAGRAM

AUTOMATIC TRANSMISSION - 45RFE/545RFE - SERVICE INFORMATION

TABLE OF CONTENTS

page

AUTOMATIC TRANSMISSION - 45RFE/545RFE - SERVICE INFORMATION
DESCRIPTION 554
OPERATION 555
DIAGNOSIS AND TESTING
AUTOMATIC TRANSMISSION 556
PRELIMINARY 556
ROAD TESTING 557
HYDRAULIC PRESSURE TEST 558
AIR CHECKING TRANSMISSION CLUTCH OPERATION 561
CONVERTER HOUSING FLUID LEAK 561
STANDARD PROCEDURE - ALUMINUM THREAD REPAIR 562
REMOVAL 562
DISASSEMBLY 565
CLEANING 573
INSPECTION 573
ASSEMBLY 573
INSTALLATION 585
SCHEMATICS AND DIAGRAMS
HYDRAULIC SCHEMATICS 588
SPECIFICATIONS
TRANSMISSION 609
SPECIAL TOOLS
AUTOMATIC TRANSMISSION - RFE 611
RETAINER/BULKHEAD-4C
DISASSEMBLY 614
ASSEMBLY 615
SEAL-ADAPTER HOUSING
REMOVAL 619
INSTALLATION 619
SYSTEM-BRAKE TRANSMISSION SHIFT INTERLOCK
DESCRIPTION 620
OPERATION 620
DIAGNOSIS AND TESTING - BRAKE TRANSMISSION SHIFT INTERLOCK 620
ADJUSTMENTS - BRAKE TRANSMISSION SHIFT INTERLOCK 620
FLUID AND FILTER
DIAGNOSIS AND TESTING
EFFECTS OF INCORRECT FLUID LEVEL . . 622
CAUSES OF BURNT FLUID 622
FLUID CONTAMINATION 622
STANDARD PROCEDURE
FLUID LEVEL CHECK 622
FLUID AND FILTER REPLACEMENT 624
TRANSMISSION FILL 625

page

CABLE-GEARSHIFT
DIAGNOSIS AND TESTING - GEARSHIFT CABLE 625
REMOVAL 625
INSTALLATION 626
ADJUSTMENTS - GEARSHIFT CABLE 627
CLUTCHES-HOLDING
DESCRIPTION 628
OPERATION 629
ASSEMBLY-INPUT CLUTCH
DESCRIPTION 630
OPERATION 631
DISASSEMBLY 633
ASSEMBLY 637
SENSOR-INPUT SPEED
DESCRIPTION 645
OPERATION 645
REMOVAL 645
INSTALLATION 646
CLUTCH-LOW/REVERSE
DISASSEMBLY 647
CLEANING 648
INSPECTION 648
ASSEMBLY 649
PUMP-OIL
DESCRIPTION 651
OPERATION 653
STANDARD PROCEDURE - OIL PUMP VOLUME CHECK 653
DISASSEMBLY 654
CLEANING 656
INSPECTION 657
ASSEMBLY 657
SEAL-OIL PUMP FRONT
REMOVAL 660
INSTALLATION 661
SENSOR-OUTPUT SPEED
DESCRIPTION 661
OPERATION 661
REMOVAL 662
INSTALLATION 662
SENSOR-LINE PRESSURE
DESCRIPTION 662
OPERATION 663
REMOVAL 663
INSTALLATION 663
SWITCH-TOW/HAUL OVERDRIVE
DESCRIPTION 664
OPERATION 664
REMOVAL 664

INSTALLATION 665
GEARTRAIN-PLANETARY
DESCRIPTION 666
OPERATION 667
DISASSEMBLY 668
CLEANING 668
INSPECTION 668
ASSEMBLY 669
MECHANISM-SHIFT
DESCRIPTION 669
OPERATION 670
VALVE-SOLENOID SWITCH
DESCRIPTION 670
OPERATION 670
CONVERTER-TORQUE
DESCRIPTION 671
OPERATION 675
REMOVAL 677
INSTALLATION 678
RELAY-TRANSMISSION CONTROL
DESCRIPTION 678
OPERATION 678
SENSOR-TRANSMISSION RANGE
DESCRIPTION 678
OPERATION 679
ASSEMBLY-TRANSMISSION SOLENOID/TRS
DESCRIPTION 679
OPERATION 680
REMOVAL 681
INSTALLATION 682
SENSOR-TRANSMISSION TEMPERATURE
DESCRIPTION 682
OPERATION 682
BODY-VALVE
DESCRIPTION 683
OPERATION 684
REMOVAL 685
DISASSEMBLY 686
CLEANING 688
INSPECTION 689
ASSEMBLY 690
INSTALLATION 693

AUTOMATIC TRANSMISSION - 45RFE/545RFE - SERVICE INFORMATION

DESCRIPTION

The 45RFE/545RFE automatic transmissions is a sophisticated, multi-range, electronically controlled transmission which combines optimized gear ratios for responsive performance, state of the art efficiency features and low NVH. Other features include driver adaptive shifting and three planetary gear sets to provide wide ratio capability with precise ratio steps for optimum driveability. The three planetary gear sets also make available a unique alternate second gear ratio. The primary 2nd gear ratio fits between 1st and 3rd gears for normal through-gear accelerations. The alternate second gear ratio (2prime) allows smoother 4-2 kickdowns at high speeds to provide 2nd gear passing performance over a wider highway cruising range.

The hydraulic portion of the transmission consists of the transmission fluid, fluid passages, hydraulic valves, and various line pressure control components.

The primary mechanical components of the transmission consist of the following:

- Three multiple disc input clutches
- Three multiple disc holding clutches
- Five hydraulic accumulators
- Three planetary gear sets
- Dual Stage Hydraulic oil pump
- Valve body
- Solenoid pack

The Transmission Control Module (TCM) is the “heart” or “brain” of the electronic control system and relies on information from various direct and indirect inputs (sensors, switches, etc.) to determine driver demand and vehicle operating conditions. Depending on the vehicle configuration, the TCM may be a standalone module or it it may be housed along with the Powertrain Control Module (PCM) in a single module. With this information, the TCM can calculate and perform timely and quality shifts through various output or control devices (solenoid pack, transmission control relay, etc.).

TRANSMISSION IDENTIFICATION

Transmission identification numbers are stamped (1) on the left side of the case just above the oil pan sealing surface. Refer to this information when ordering replacement parts. A label is attached to the transmission case above the stamped numbers. The label gives additional information which may also be necessary for identification purposes.

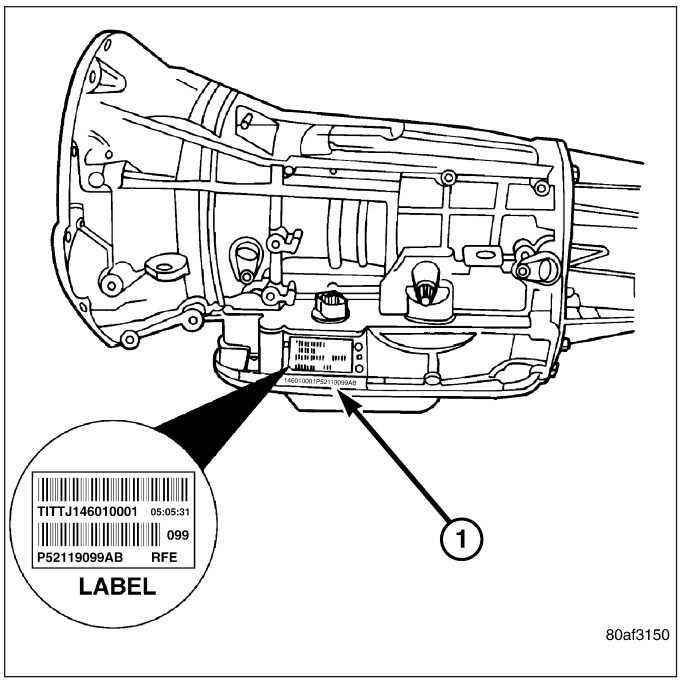

GEAR RATIOS

The 45RFE gear ratios are:

1st	3.00:1
2nd	1.67:1
2nd Prime	1.50:1
3rd	1.00:1
4th	0.75:1
Reverse	3.00:1

GEAR RATIOS

The 545RFE gear ratios are:

1st	3.00:1
2nd	1.67:1
2nd Prime	1.50:1
3rd	1.00:1
4th	0.75:1
5th	0.67:1
Reverse	3.00:1

OPERATION

The 45RFE/545RFE offers full electronic control of all automatic up and downshifts, and features real-time adaptive closed-loop shift and pressure control. Electronic shift and torque converter clutch controls help protect the transmission from damage due to high temperatures, which can occur under severe operating conditions. By altering shift schedules, line pressure, and converter clutch control, these controls reduce heat generation and increase transmission cooling.

To help reduce efficiency-robbing parasitic losses, the transmissions includes a dual-stage transmission fluid pump with electronic output pressure control. Under most driving conditions, pump output capacity greatly exceeds that which is needed to keep the clutches applied. The 45RFE/545RFE pump-pressure control system monitors input torque and adjusts the pump pressure accordingly. The primary stage of the pump works continuously; the second stage is bypassed when demand is low. The control system also monitors input and output speed and, if incipient

clutch slip is observed, the pressure control solenoid duty cycle is varied, increasing pressure in proportion to demand.

A high-travel torque converter damper assembly allows earlier torque converter clutch engagement to reduce slippage. Needle-type thrust bearings reduce internal friction. The 45RFE/545RFE is packaged in a one-piece die-cast aluminum case. To reduce NVH, the case has high lateral, vertical and torsional stiffness. It is also designed to maximize the benefit of the structural dust cover that connects the bottom of the bell housing to the engine bedplate, enhancing overall power train stiffness. Dual filters protect the pump and other components. A cooler return filter is added to the customary main sump filter. Independent lubrication and cooler circuits assure ample pressure for normal transmission operation even if the cooler is obstructed or the fluid cannot flow due to extremely low temperatures.

The hydraulic control system design (without electronic assist) provides the transmission with PARK, REVERSE, NEUTRAL, SECOND, and THIRD gears, based solely on driver shift lever selection. This design allows the vehicle to be driven (in “limp-in” mode) in the event of a electronic control system failure, or a situation that the Transmission Control Module (TCM) recognizes as potentially damaging to the transmission.

The TCM also performs certain self-diagnostic functions and provides comprehensive information (sensor data, DTC’s, etc.) which is helpful in proper diagnosis and repair. This information can be viewed with the DRB® scan tool.

DIAGNOSIS AND TESTING

AUTOMATIC TRANSMISSION

CAUTION: Before attempting any repair on a RFE automatic transmission, check for Diagnostic Trouble Codes with the scan tool.

Transmission malfunctions may be caused by these general conditions:

- Poor engine performance
- Improper adjustments
- Hydraulic malfunctions
- Mechanical malfunctions
- Electronic malfunctions

Diagnosis of these problems should always begin by checking the easily accessible variables: fluid level and condition, gearshift cable adjustment. Then perform a road test to determine if the problem has been corrected or if more diagnosis is necessary. If the problem persists after the preliminary tests and corrections are completed, hydraulic pressure checks should be performed.

PRELIMINARY

Two basic procedures are required. One procedure for vehicles that are drivable and an alternate procedure for disabled vehicles (will not back up or move forward).

VEHICLE IS DRIVABLE

1. Check for transmission fault codes using scan tool.
2. Check fluid level and condition.
3. Adjust gearshift cable if complaint was based on delayed, erratic, or harsh shifts.
4. Road test and note how transmission upshifts, downshifts, and engages.
5. Perform hydraulic pressure test if shift problems were noted during road test.
6. Perform air-pressure test to check clutch operation.

VEHICLE IS DISABLED

1. Check fluid level and condition.
2. Check for broken or disconnected gearshift cable.
3. Check for cracked, leaking cooler lines, or loose or missing pressure-port plugs.
4. Raise and support vehicle on safety stands, start engine, shift transmission into gear, and note following:

a. If propeller shaft turns but wheels do not, problem is with differential or axle shafts.

b. If propeller shaft does not turn and transmission is noisy, stop engine. Remove oil pan, and check for debris. If pan is clear, remove transmission and check for damaged driveplate, converter, oil pump, or input shaft.

c. If propeller shaft does not turn and transmission is not noisy, perform hydraulic-pressure test to determine if problem is hydraulic or mechanical.

ROAD TESTING

Before road testing, be sure the fluid level and control cable adjustments have been checked and adjusted if necessary. Verify that all diagnostic trouble codes have been resolved.

Observe engine performance during the road test. A poorly tuned engine will not allow accurate analysis of transmission operation.

Operate the transmission in all gear ranges. Check for shift variations and engine flare which indicates slippage. Note if shifts are harsh, spongy, delayed, early, or if part throttle downshifts are sensitive.

Slippage indicated by engine flare, usually means clutch, overrunning clutch, or line pressure problems.

A slipping clutch can often be determined by comparing which internal units are applied in the various gear ranges. The Clutch Application charts provide a basis for analyzing road test results.

45RFE CLUTCH APPLICATION CHART

SLP	UD	OD	R	2C	4C	L/R	OVERRUNNING
P–PARK						ON	
R–REVERSE			ON			ON	
N-NEUTRAL						ON	
D-FIRST	ON					ON*	ON
D-SECOND	ON			ON			
D-SECOND PRIME	ON				ON		
D-THIRD	ON	ON					
D-FOURTH		ON			ON		
D-LIMP-IN	ON	ON					
2–FIRST	ON					ON*	ON
2–SECOND	ON			ON			
2–LIMP-IN	ON			ON			
1–LOW	ON					ON	ON

*L/R clutch is on only with the output shaft speed below 150 rpm.

545RFE CLUTCH APPLICATION CHART

SLP	UD	OD	R	2C	4C	L/R	OVERRUNNING
P–PARK						ON	
R–REVERSE			ON			ON	
N-NEUTRAL						ON	
D–FIRST	ON					ON*	ON
D–SECOND	ON			ON			
D–SECOND PRIME	ON				ON		
D–THIRD	ON	ON					
D–FOURTH		ON			ON		
D–FIFTH		ON		ON			
D–LIMP-IN	ON	ON					
2–FIRST	ON					ON*	ON
2–SECOND	ON			ON			
2–LIMP-IN	ON			ON			
1–LOW	ON					ON	ON

*L/R clutch is on only with the output shaft speed below 150 rpm.

HYDRAULIC PRESSURE TEST

An accurate tachometer and pressure test gauges are required. Test Gauge C-3293-SP has a 300 psi range and is used at all locations where pressures exceed 100 psi.

Pressure Test Port Locations

Only two pressure ports are supplied on the transmission case. The torque converter clutch apply (3) and release (1) ports are located on the right side of the transmission case.

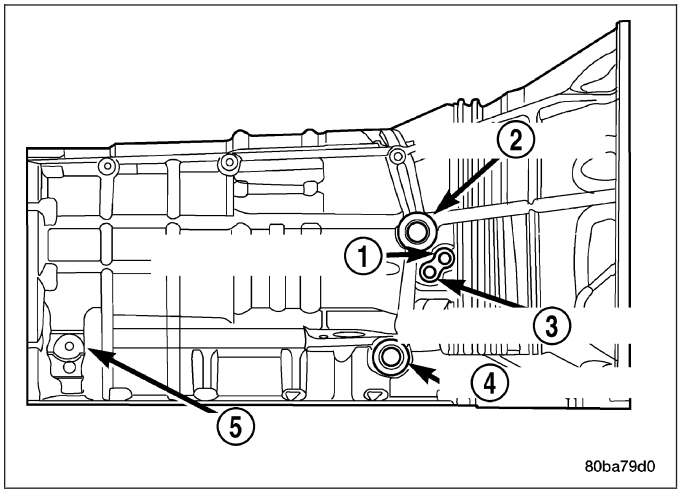

To determine the line pressure, there are two available methods. The scan tool can be used to read line pressure from the line pressure sensor. The second method is to install Line Pressure Adapter 8259 (3) into the transmission case and then install the pressure gauge and the original sensor (2) into the adapter. This will allow a comparison of the scan tool readings and the gauge reading to determine the accuracy of the line pressure sensor. The scan tool line pressure reading should match the gauge reading within ±10 psi.

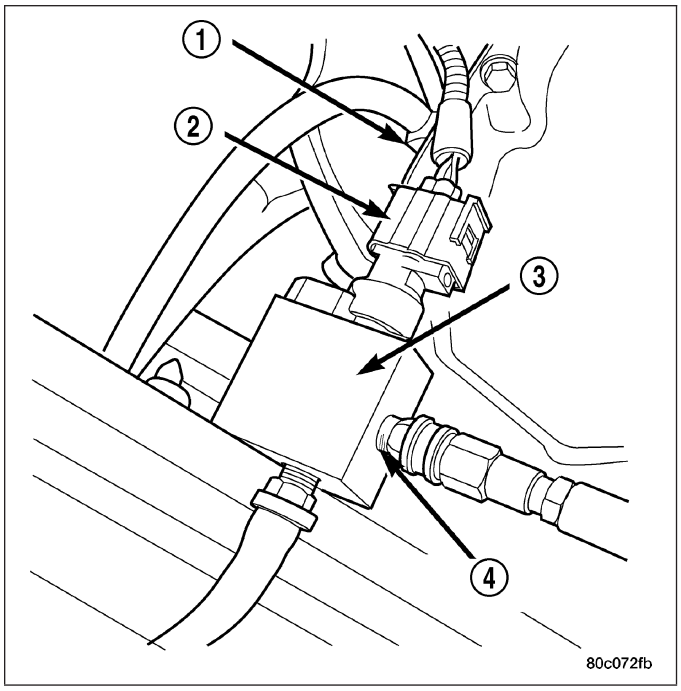

In order to access any other pressure tap locations, the transmission oil pan must be removed, the pressure port plugs removed and Valve Body Pressure Tap Adapter 8258-A (2) installed. The extensions supplied with Adapter 8258-A will allow the installation of pressure gauges to the valve body.

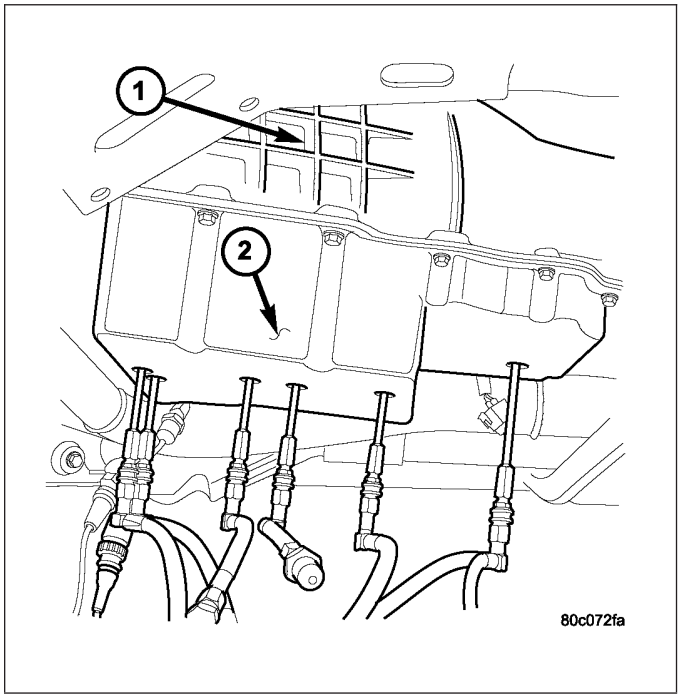

Refer to the Pressure Tap Locations graphic for correct pressure tap location identification.

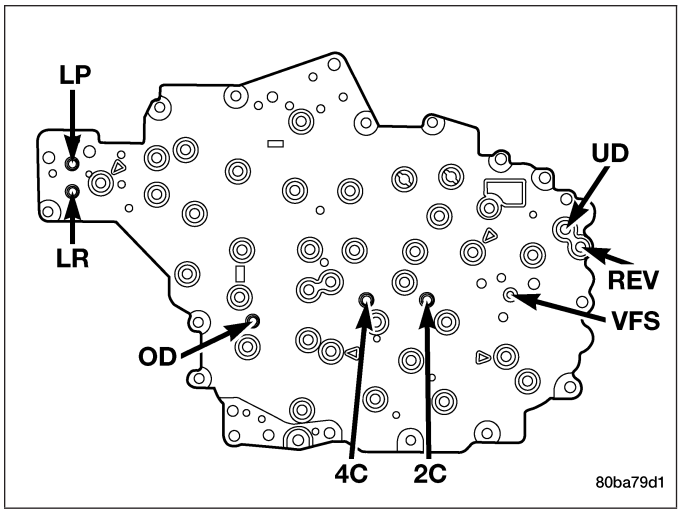

TEST PROCEDURE

All pressure readings should be taken with the transmission fluid level full, transmission oil at the normal operating temperature, and the engine at 1500 rpm. Check the transmission for proper operation in each gear position that is in question or if a specific element is in question, check the pressure readings in at least two gear positions that employ that element. Refer to the Hydraulic Schematics at the rear of this section to determine the correct pressures for each element in a given gear position.

NOTE: The 45RFE/545RFE utilizes closed loop control of pump line pressure. The pressure readings may therefore vary greatly but should always follow line pressure.

Some common pressures that can be measured to evaluate pump and clutch performance are the upshift/downshift pressures, garage shift pressures, and TCC pressure. The upshift/downshift pressure for all shifts are shown in UPSHIFT PRESSURES and DOWNSHIFT PRESSURES . In-gear maximum pressure for each gear position is shown in IN-GEAR PRESSURES . The garage shift pressure when performing a N-R shift is 220 psi for 3.7L/4.7L equipped vehicles and 250 psi for 5.7L equipped vehicles. The garage shift pressure for the R-N shift is 120 psi. The garage shift pressure for the N-1 shift is 135 psi for 3.7L/4.7L equipped vehicles and 165 psi for 5.7L equipped vehicles. Torque converter lock-up pressure is 120 psi for 3.7L/4.7L equipped vehicles and 125 psi for 5.7L equipped vehicles.

UPSHIFT PRESSURES

ENGINE	1-2	2-3	2prime-3	3-4	2prime-4	2-5	3-5	4-5
5.7L	150	125	125	135	135	135	135	135
3.7L/4.7L	120	120	120	120	120	120	120	130

DOWNSHIFT PRESSURES

ENGINE	5-4	5-3	5-2	4-3	4-2prime	3-2	3-2prime	2prime-1	2-1	3-1
5.7L	135	135	135	135	135	135	135	135	135	135
3.7L/ 4.7L	120	120	120	120	120	120	120	120	120	120

IN-GEAR PRESSURES

ENGINE	1	2	2prime	3	4	5	NEUTRAL	REVERSE
5.7L	160	135	135	135	135	135	120	250
3.7L/4.7L	135	120	120	120	120	120	120	220

AIR CHECKING TRANSMISSION CLUTCH OPERATION

Air-pressure testing can be used to check transmission clutch operation. The test can be conducted with the transmission either in the vehicle or on the work bench, as a final check.

Air-pressure testing requires that the oil pan and valve body be removed from the transmission. The clutch apply passages are shown in the Air Pressure Test Passages graphic.

NOTE: The air supply which is used must be free of moisture and dirt. Use a pressure of 30 psi to test clutch operation.

Apply air pressure at each port. If the clutch is functioning, a soft thump will be heard as the clutch is applied. The clutch application can also be felt by touching the appropriate element while applying air pressure. As the air pressure is released, the clutch should also release.

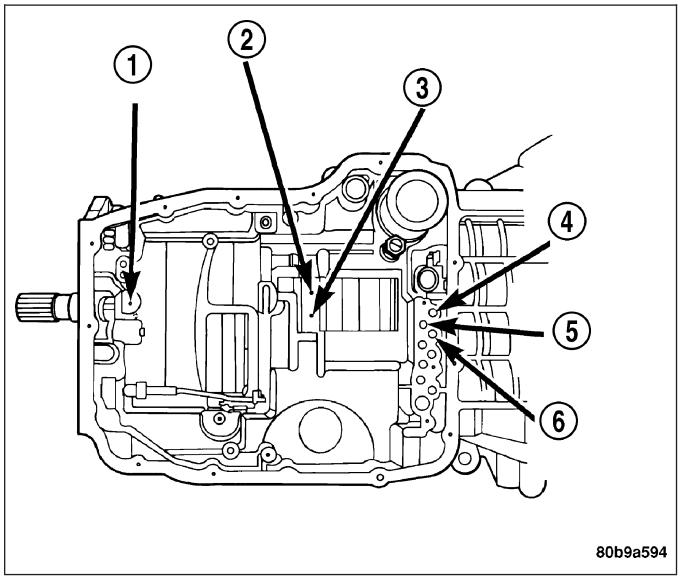

1 - LOW REVERSE CLUTCH
2 - 4TH CLUTCH
3 - 2ND CLUTCH
4 - OVERDRIVE CLUTCH
5 - UNDERDRIVE CLUTCH
6 - REVERSE CLUTCH

CONVERTER HOUSING FLUID LEAK

When diagnosing converter housing fluid leaks, two items must be established before repair.

1. Verify that a leak condition actually exists.
2. Determined the true source of the leak.

Some suspected converter housing fluid leaks may not be leaks at all. They may only be the result of residual fluid in the converter housing, or excess fluid spilled during factory fill or fill after repair. Converter housing leaks have several potential sources. Through careful observation, a leak source can be identified before removing the transmission for repair. Torque converter seal leaks tend to move along the drive hub and onto the rear of the converter. Pump cover seal leaks tend to run down the cover and the inside surface of the bellhousing.

Some leaks, or suspected leaks, may be particularly difficult to locate. If necessary, a Mopar® approved dye should be used to locate and confirm a leak.

TORQUE CONVERTER LEAK POINTS

Possible sources of converter leaks are:

1. Leaks at the weld joint around the outside diameter weld.
2. Leaks at the converter hub weld.

In most cases, a torque converter which is wet from transmission fluid indicates a leak at one of these areas.

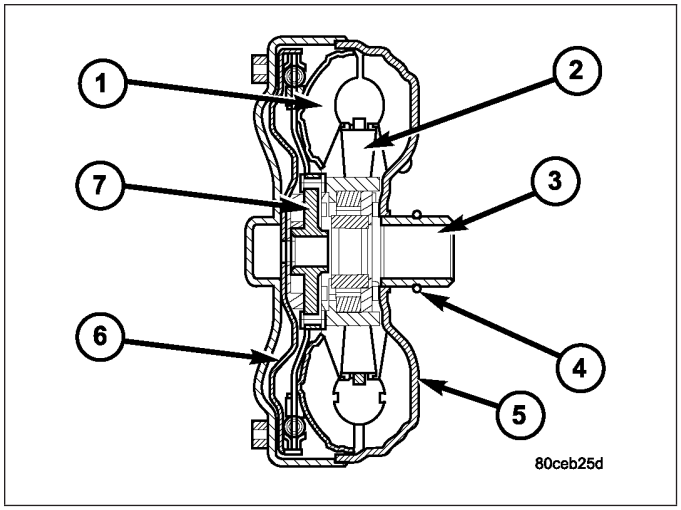

STANDARD PROCEDURE - ALUMINUM THREAD REPAIR

Damaged or worn threads in the aluminum transmission case and valve body can be repaired by the use of Heli-Coils™, or equivalent. This repair consists of drilling out the worn-out damaged threads. Then tap the hole with a special Heli-Coil™ tap, or equivalent, and installing a Heli-Coil™ insert, or equivalent, into the hole. This brings the hole back to its original thread size.

Heli-Coil™, or equivalent, tools and inserts are readily available from most automotive parts suppliers.

REMOVAL

1. Disconnect the negative battery cable.
2. Raise and support the vehicle
3. Remove any necessary skid plates. (Refer to 13 - FRAMES & BUMPERS/FRAME/TRANSFER CASE SKID PLATE - REMOVAL)
4. Mark propeller shaft and axle companion flanges for assembly alignment.
5. Remove the rear propeller shaft
6. Remove the front propeller shaft, if necessary.
7. Remove the engine (1) to transmission (3) structural dust cover (2).

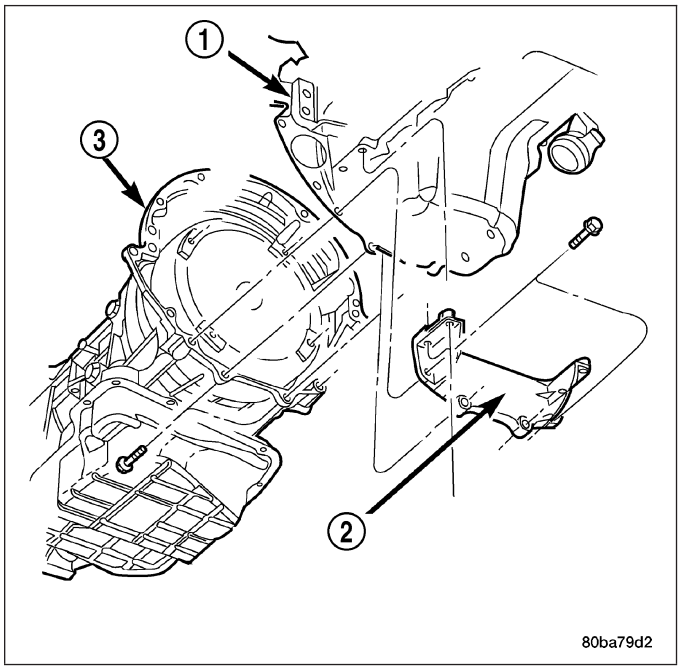

8. Remove the exhaust support bracket from the rear of the transmission.
9. Disconnect and lower or remove any necessary exhaust components.
10. Remove the starter motor.
11. Rotate crankshaft in clockwise direction until converter bolts are accessible. Then remove bolts one at a time. Rotate crankshaft with socket wrench on dampener bolt.
12. Disengage the output speed sensor connector from the output speed sensor (2).

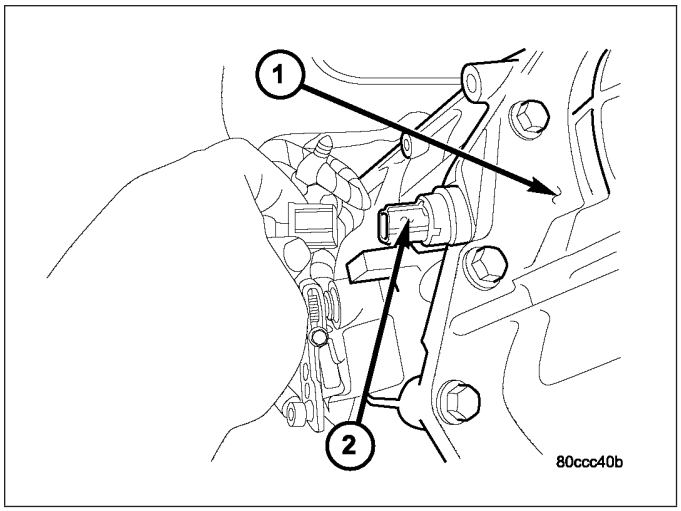

13. Disengage the input speed sensor connector from the input speed sensor (2).

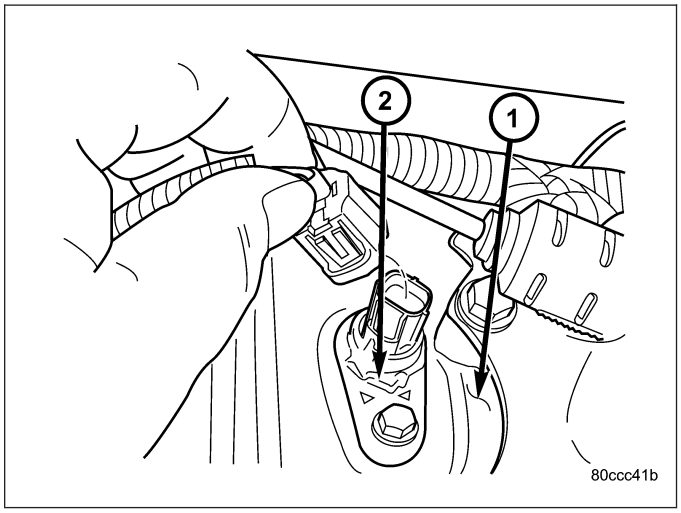

14. Disengage the transmission solenoid/TRS assembly connector from the transmission solenoid/TRS assembly (2).

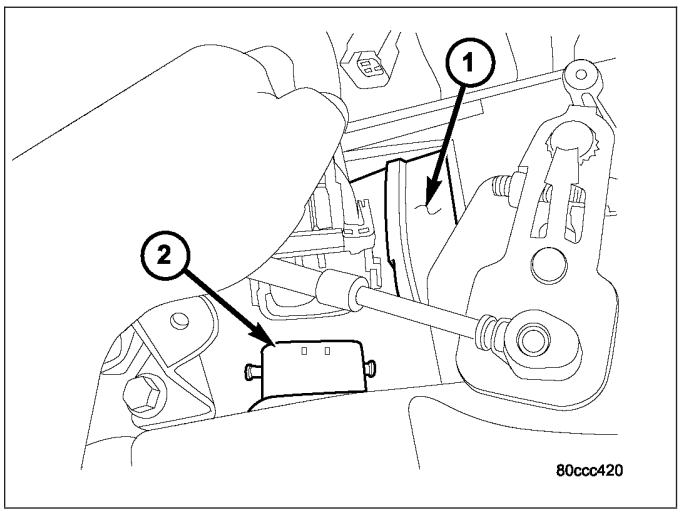

15. Disengage the line pressure sensor connector from the line pressure sensor (2).

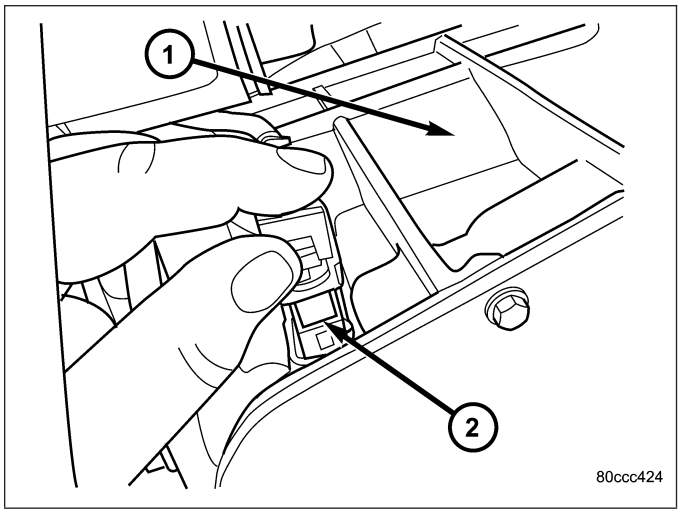

16. Disconnect gearshift cable (1) from transmission manual valve lever (3).

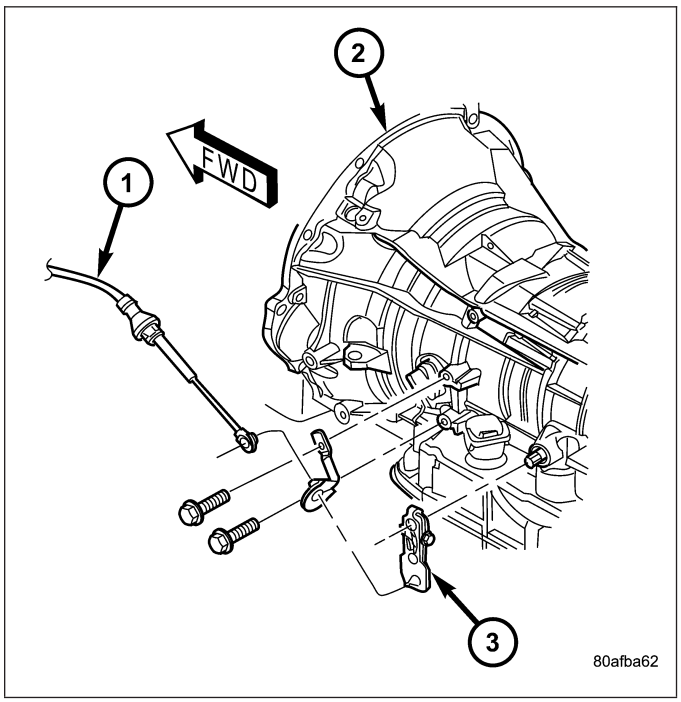

17. Disconnect the transmission vent hose from the transmission.
18. Support rear of engine with safety stand or jack.
19. Raise transmission slightly with service jack to relieve load on crossmember and supports.
20. Remove bolts securing rear support and cushion to transmission and crossmember.
21. Remove transfer case, if necessary.
22. Disconnect transmission fluid cooler lines at transmission fittings and clips.
23. Remove all remaining converter housing bolts.
24. Carefully work transmission and torque converter assembly rearward off engine block dowels.

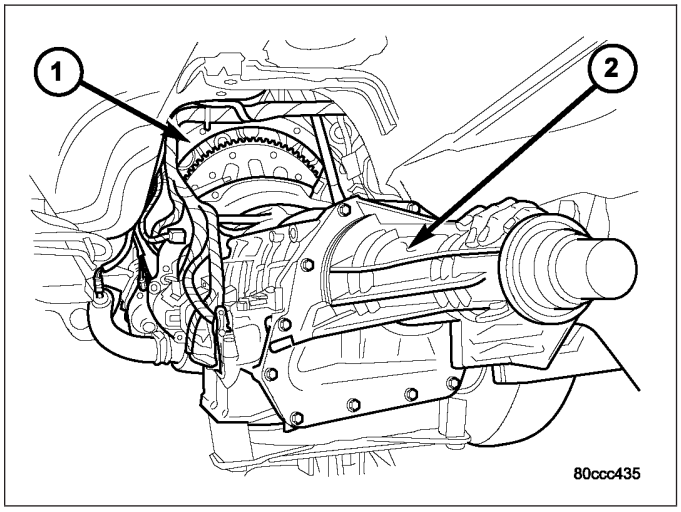

25. Hold torque converter in place during transmission removal.
26. Lower transmission (2) and remove assembly from under the vehicle.
27. To remove torque converter, carefully slide torque converter out of the transmission.

DISASSEMBLY

1. Drain fluid from transmission.
2. Clean exterior of transmission with suitable solvent or pressure washer.
3. Remove the torque converter from the transmission.
4. Remove the manual shift lever (1) from the transmission.

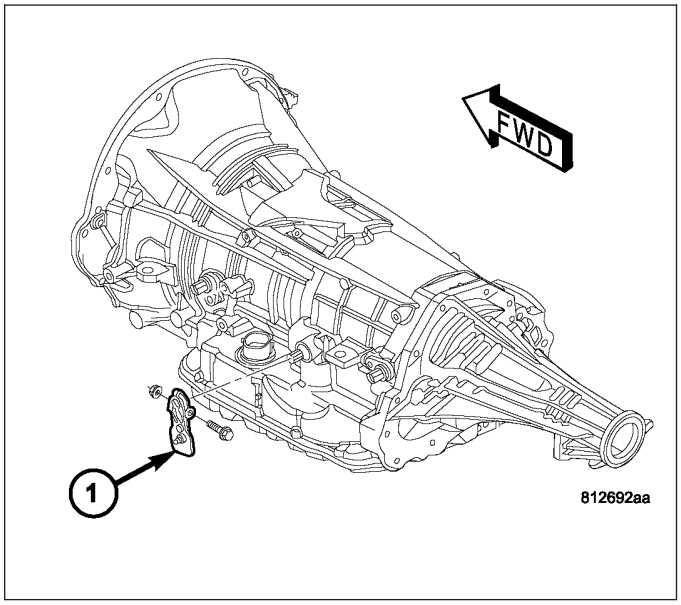

5. Remove the input (3), output (1), and line pressure sensors (2) from the transmission case.
6. Inspect the ends of the sensors for debris, which may indicate the nature of the transmission failure.

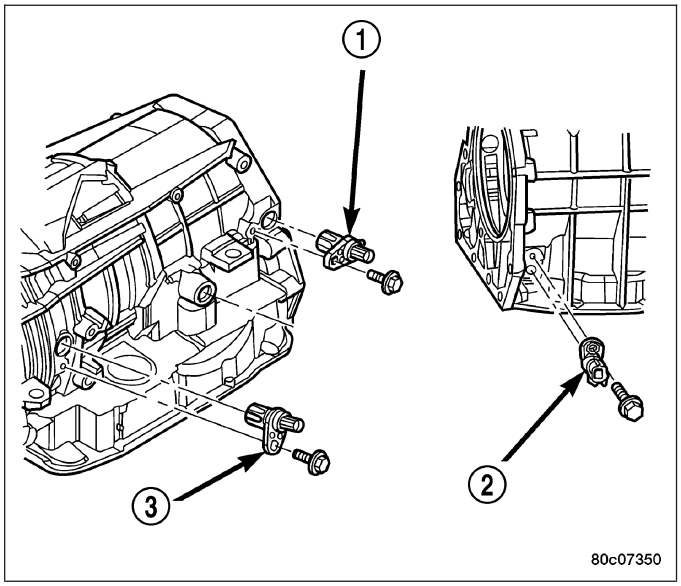

7. Install Support Stand 8257 (1) onto the transmission case.

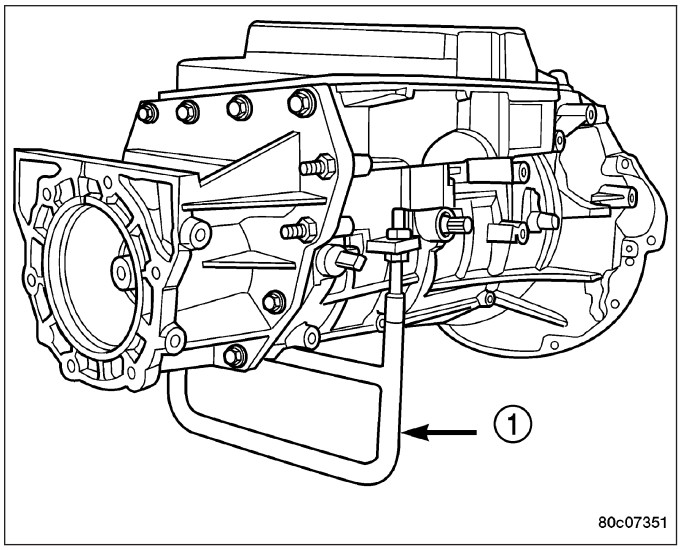

8. Using Adapter 8266-1 from End-Play Tool Set 8266 (1) and Dial Indicator C-3339 (2), measure and record the input shaft end-play.

NOTE: When measuring the input shaft end-play, two ″stops″ will be felt. When the input shaft is pushed inward and the dial indicator zeroed, the first ″stop″ felt when the input shaft is pulled outward is the movement of the input shaft in the input clutch housing hub. This value should not be included in the end-play measured value and therefore must be recorded and subtracted from the dial indicator reading.

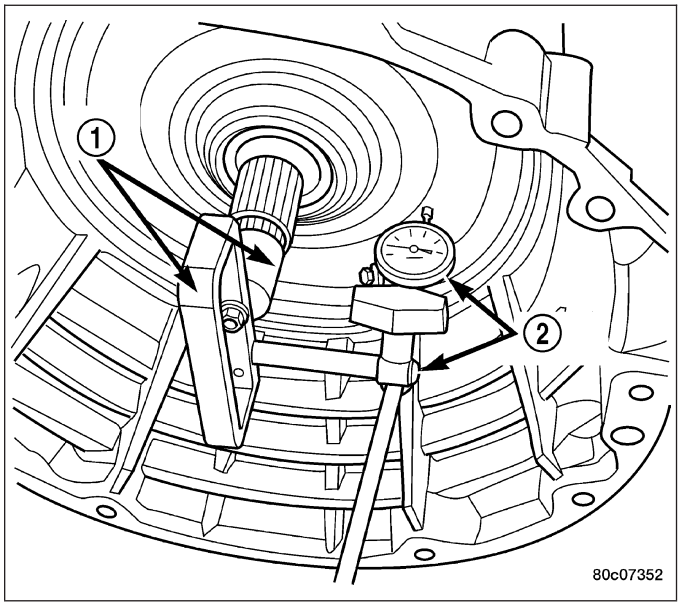

9. Remove the bolts holding the transmission extension/adapter housing to the transmission case.
10. Remove the extension/adapter housing from the transmission case.
11. Using Alignment Plate 8261 (1), Adapter 8266-17 from End-Play Tool Set 8266 (2) and Dial Indicator C-3339 (3), measure and record the output shaft end-play.

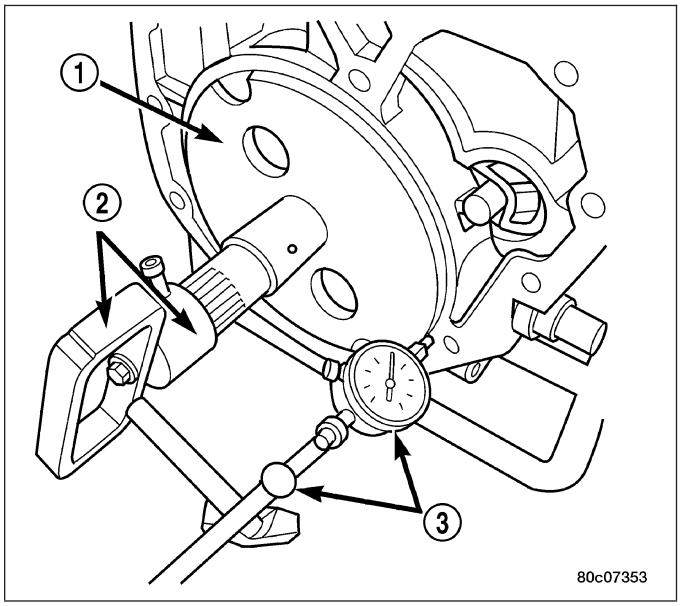

12. Remove the bolts holding the transmission oil pan to the transmission case.
13. Remove the transmission oil pan from the transmission case.
14. Remove the primary oil filter (1) and the oil cooler return filter (2).
15. Remove the cooler return filter bypass valve (3).

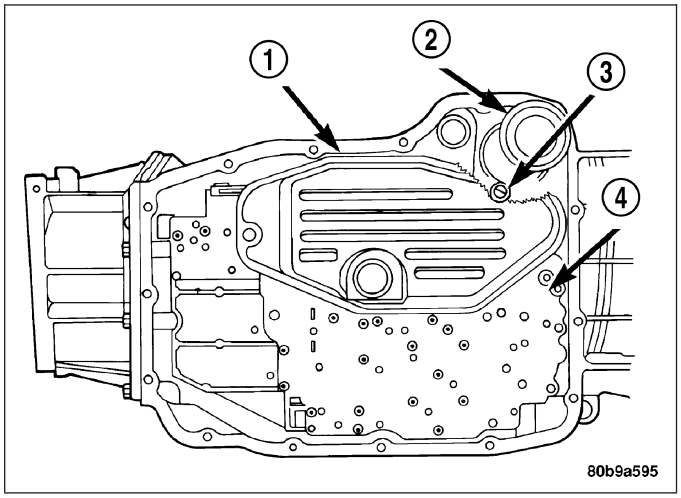

16. Remove the bolts (1) holding the valve body to the transmission case.
17. Remove the valve body from the transmission case.

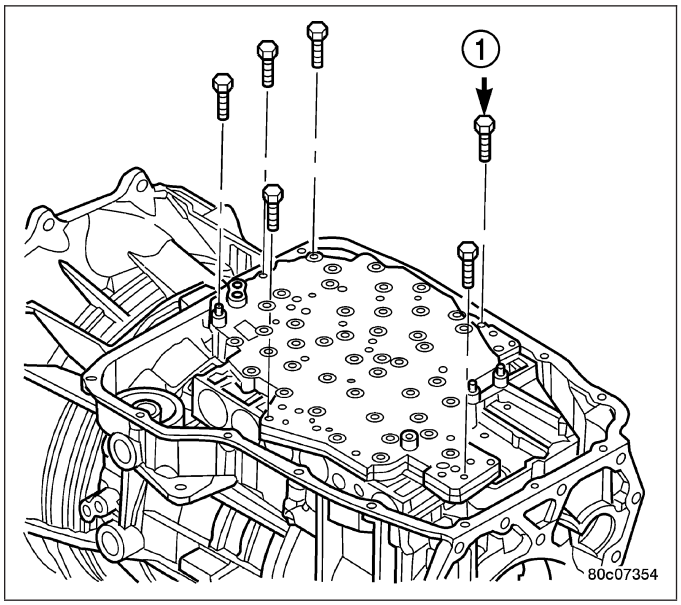

18. Remove the outer snap-ring (3) securing the transmission front cover (2) into the transmission case.
19. Remove the inner snap-ring (1) securing the transmission front cover to the oil pump.
20. Reaching through a case opening in the valve body area with a long blunted tool, remove the transmission front cover from the transmission case.

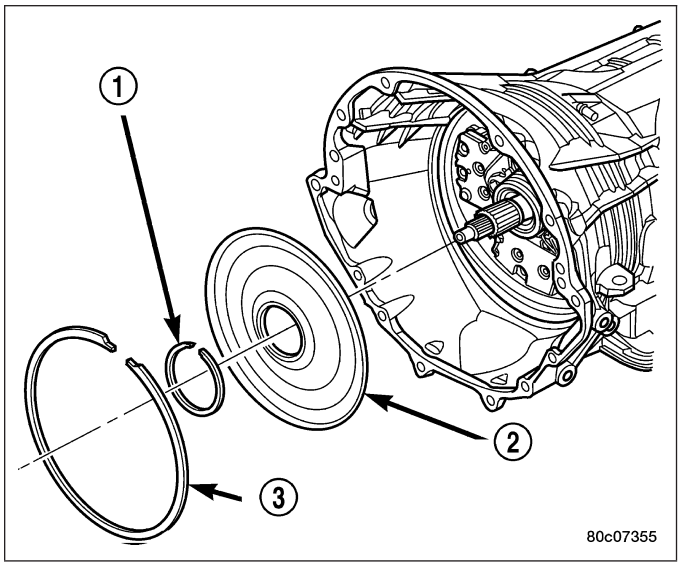

21. Remove the bolts (1) holding the oil pump into the transmission case.
22. Remove the oil pump (2). Hold inward on the input shaft to prevent pulling the input clutch assembly with the oil pump.

CAUTION: If the input shaft is not held during oil pump removal, the input clutch assembly will attempt to move forward with the oil pump and the numbers 2, 3, or 4 bearings inside the input clutch assembly may become dislodged.

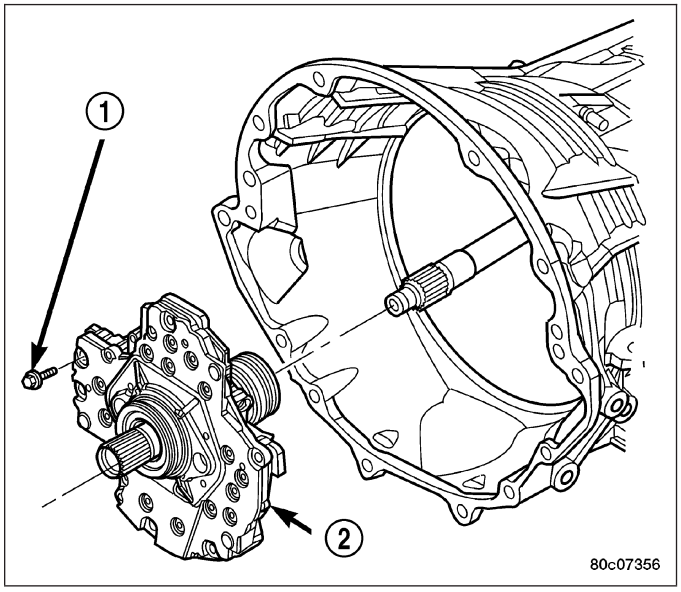

23. Remove the number 1 thrust bearing (4) from the input clutch assembly.
24. Remove the input clutch assembly (3) from the transmission case.
25. Remove the number 5 thrust bearing (1) and selective thrust plate (2) from the input clutch assembly (3) , or the 4C clutch retainer/bulkhead.

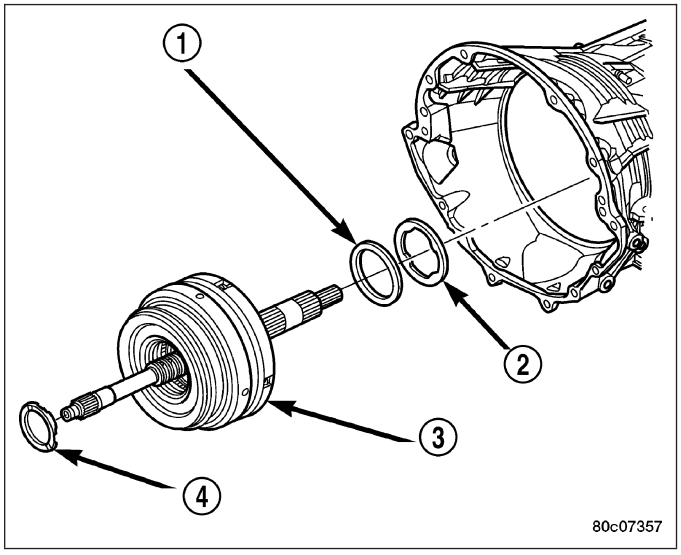

26. Remove the 4C clutch retainer/bulkhead tapered snap-ring (1) from the transmission case.
27. Remove the 4C clutch retainer/bulkhead (2) from the transmission case.

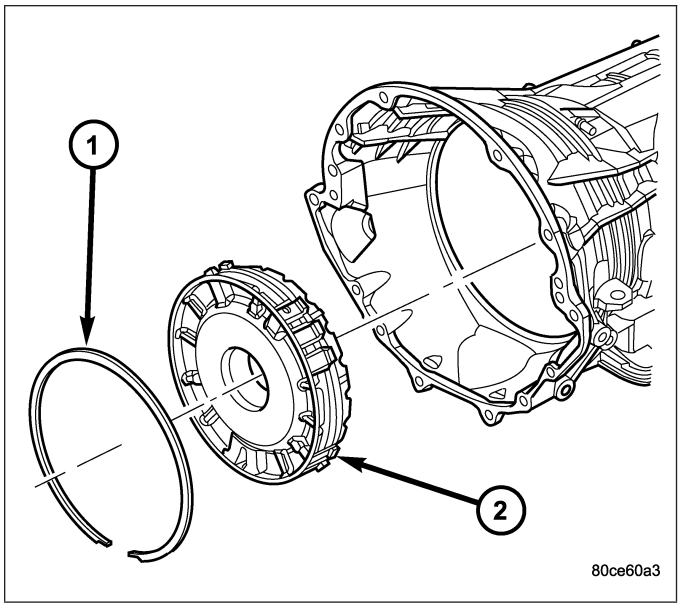

28. Remove the front 2C clutch pack snap-ring (1) from the transmission case.
29. Remove the 2C clutch pack (2, 3, 4) from the transmission case.

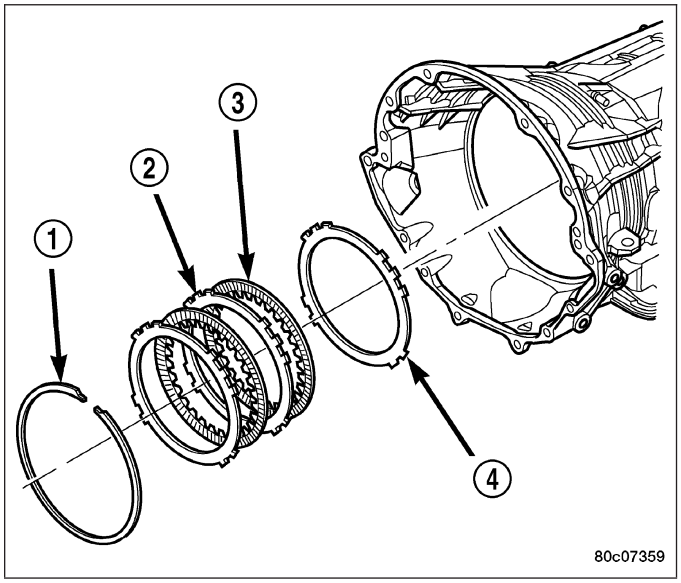

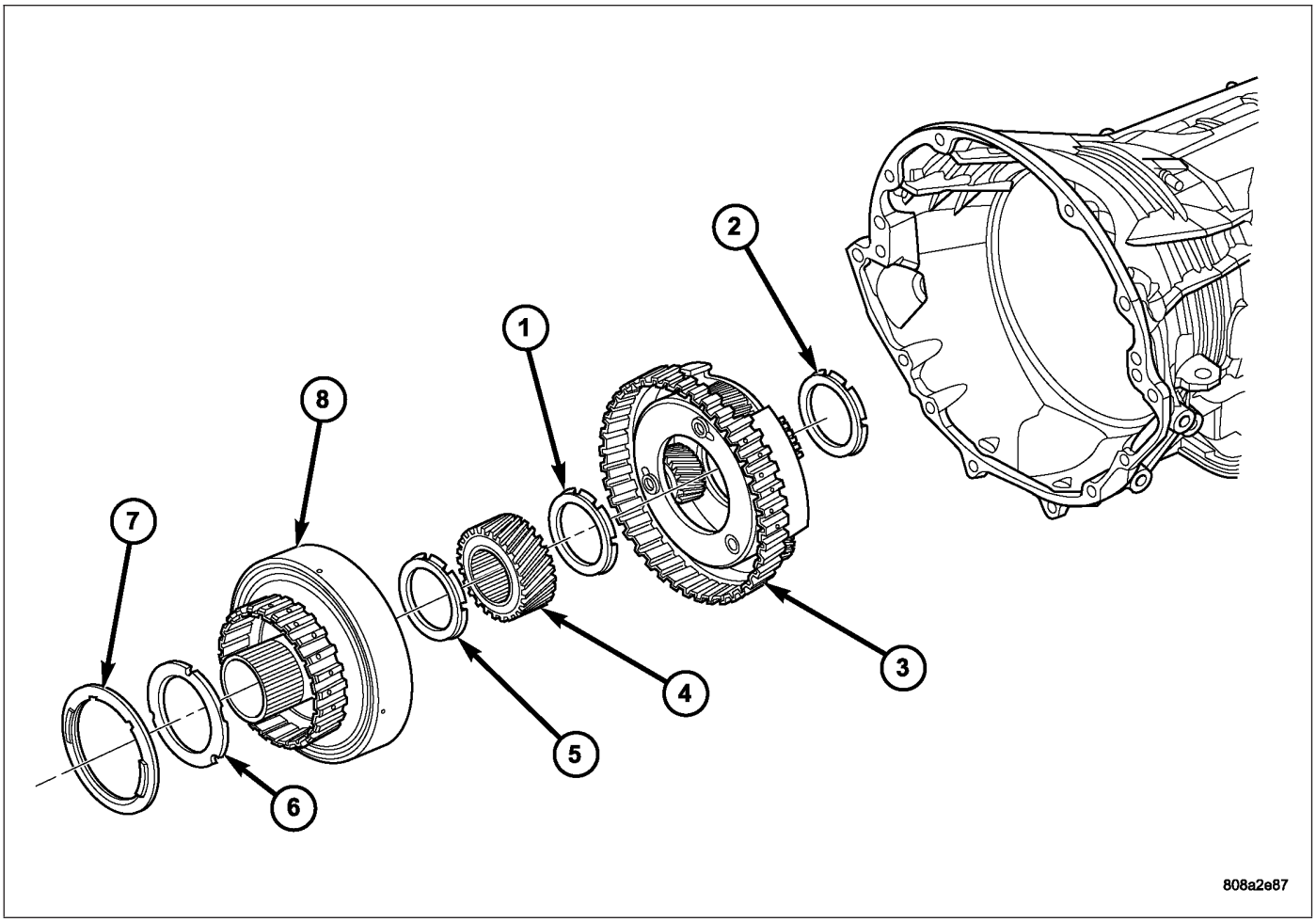

Remove Reaction Annulus and Carrier

1 - THRUST BEARING NUMBER 8
2 - THRUST BEARING NUMBER 9
3 - REACTION PLANETARY CARRIER
4 - REACTION SUN GEAR
5 - THRUST BEARING NUMBER 7
6 - THRUST PLATE (SELECT)
7 - THRUST BEARING NUMBER 6
8 - REACTION ANNULUS

30. Remove the rear selective plate (6) and number 6 thrust bearing (7) from the reaction annulus (8).
31. Remove the reaction annulus (8) from the reaction planetary carrier (3).
32. Remove the number 7 thrust bearing (5).
33. Remove the reaction sun gear (4).
34. Remove the number 8 thrust bearing (1) from the reaction planetary carrier (3).
35. Remove the reaction planetary carrier (3). Note that this planetary gear set has three pinion gears.
36. Remove the number 9 thrust bearing (2) from the reverse planetary gear set.

37. Remove the snap-ring (1) holding the park sprag gear onto the output shaft.

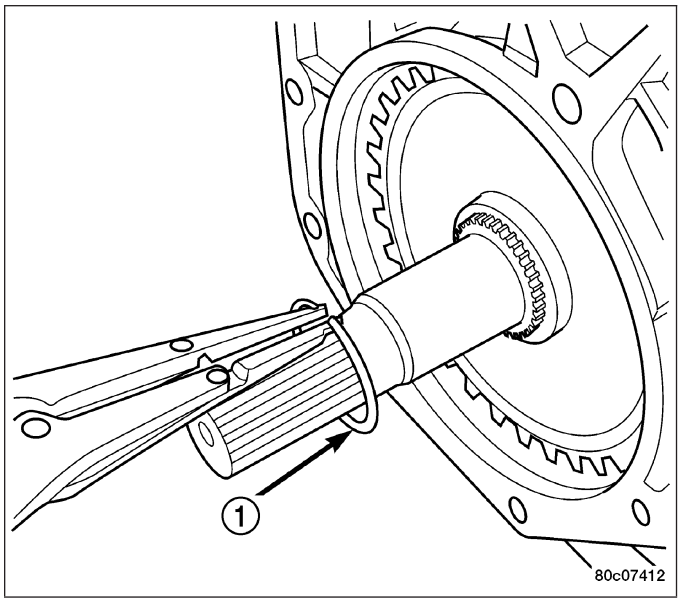

38. Remove the park sprag gear (1) from the output shaft.

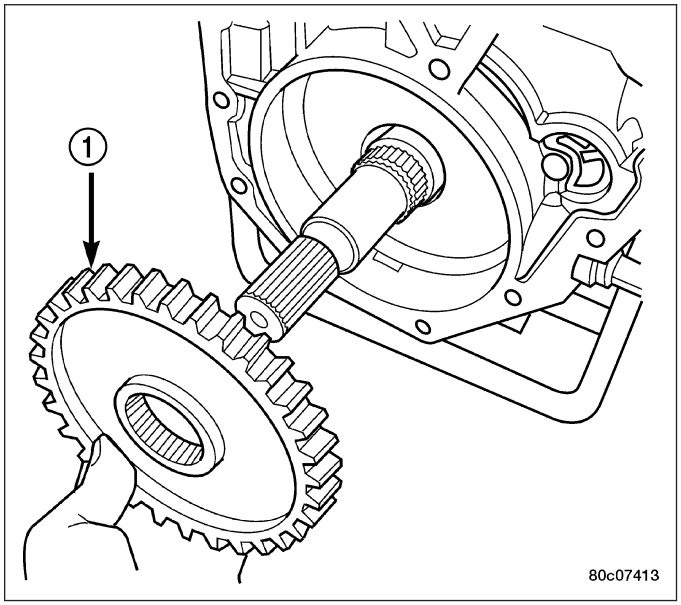

39. Remove the input/reverse planetary assembly (1).
40. Remove the number 12 thrust bearing (3) from the input/reverse planetary assembly (1).

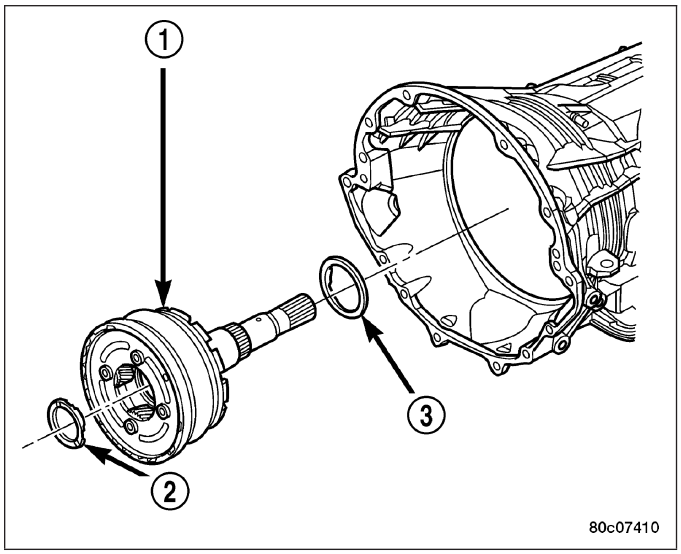

41. Remove the snap-ring (2) holding the low/reverse clutch retainer (1) into the transmission case.
42. Remove the low/reverse clutch retainer (1) from the transmission case.

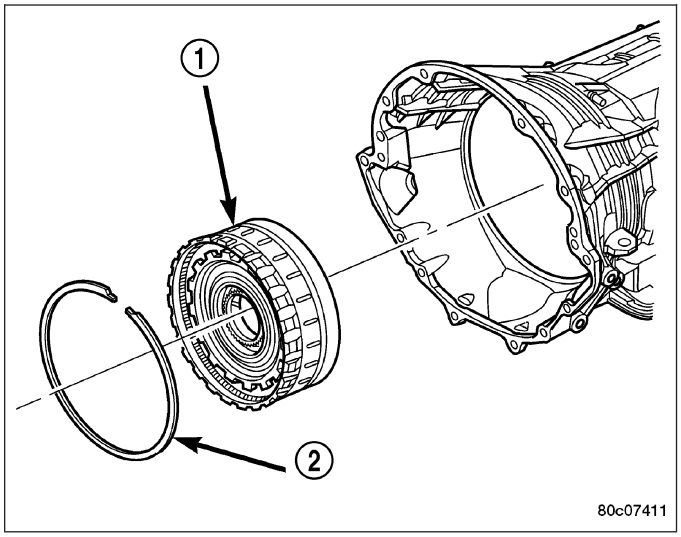

43. Remove the park rod (7) and e-clip.
44. Remove the park rod guide snap-ring (2).
45. Remove the park rod guide (1).
46. Remove the park pawl pivot shaft (3), park pawl (5), and spring (4).
47. Remove the manual selector shaft (6).
48. Remove the manual selector shaft seal.
49. Remove the dipstick tube seal.

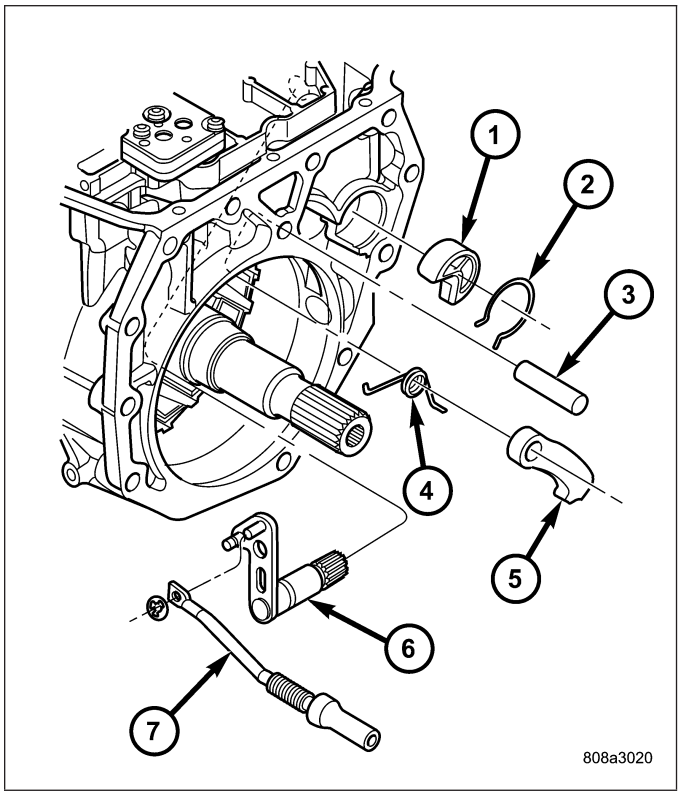

CLEANING

The use of crocus cloth is permissible where necessary, providing it is used carefully. When used on shafts, or valves, use extreme care to avoid rounding off sharp edges. Sharp edges are vital as they prevent foreign matter from getting between the valve and valve bore.

Do not reuse oil seals, gaskets, seal rings, or O-rings during overhaul. Replace these parts as a matter of course. Also do not reuse snap rings or E-clips that are bent or distorted. Replace these parts as well.

Lubricate transmission parts with Mopar® ATF +4, Automatic Transmission Fluid, during overhaul and assembly. Use petroleum jelly, Mopar® Door Ease, or Ru-Glyde to prelubricate seals, O-rings, and thrust washers. Petroleum jelly can also be used to hold parts in place during reassembly.

Clean the case in a solvent tank. Flush the case bores and fluid passages thoroughly with solvent. Dry the case and all fluid passages with compressed air. Be sure all solvent is removed from the case and that all fluid passages are clear.

NOTE: Do not use shop towels or rags to dry the case (or any other transmission component) unless they are made from lint-free materials. Lint will stick to case surfaces and transmission components and circulate throughout the transmission after assembly. A sufficient quantity of lint can block fluid passages and interfere with valve body operation.

INSPECTION

Inspect the case for cracks, porous spots, worn bores, or damaged threads. Damaged threads can be repaired with Helicoil® thread inserts. However, the case will have to be replaced if it exhibits any type of damage or wear.

ASSEMBLY

NOTE: Clean and inspect all components. Replace any components which show evidence of excessive wear or scoring.

1. Install the cooler filter bypass valve. Torque the bypass valve to specification. The valve uses a tapered pipe thread and excessive torque can damage the transmission case. Tighten the cooler filter bypass valve to 4.5 N·m (40 in.lbs.).
2. Install a new selector shaft seal (1) using Seal Installer 8253 (2).

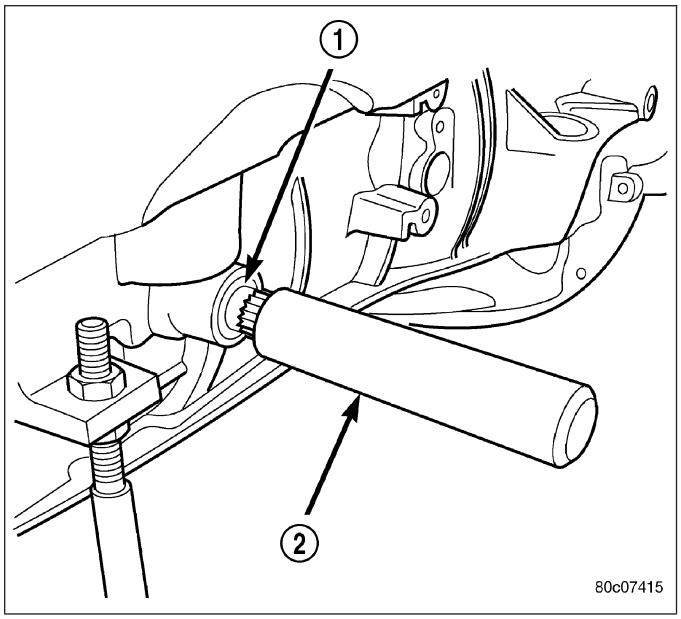

3. Install the manual selector shaft and retaining screw. Tighten the manual selector shaft retaining screw to 28 N·m (250 in.lbs.).
4. Install the manual shift lever (1) onto the manual selector shaft. Torque the retaining cross-bolt to 16 N·m (140 in.lbs.).

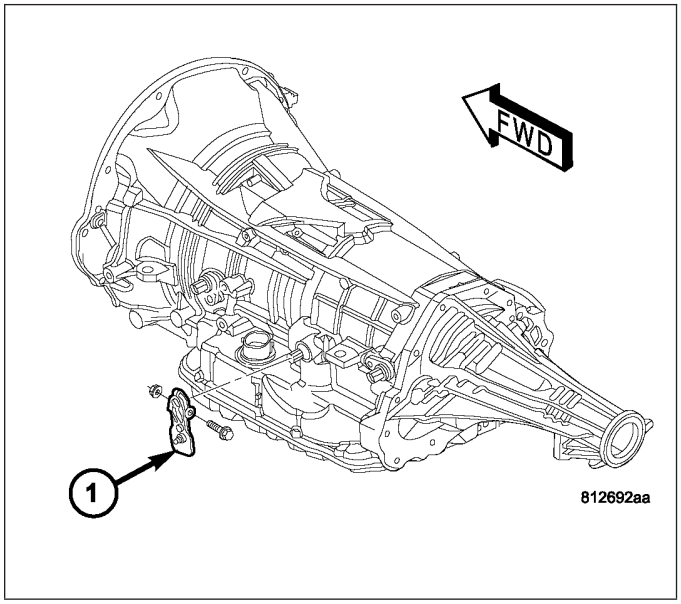

5. Install the park pawl (5), spring (4), and shaft (3).
6. Install the park rod (7) and e-clip.
7. Install the park rod guide (1) and snap-ring (2).

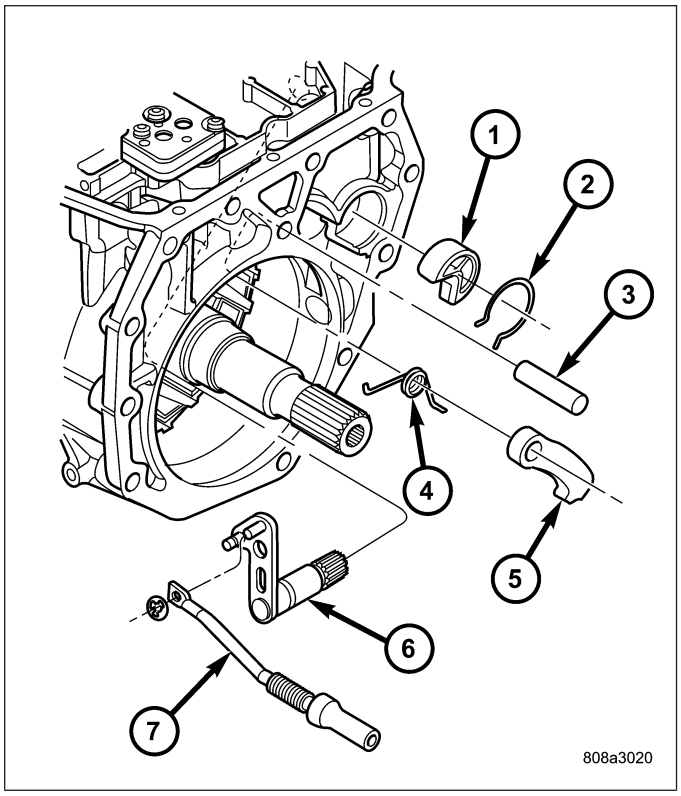

8. Install a new dipstick tube seal (2) using Seal Installer 8254 (1).

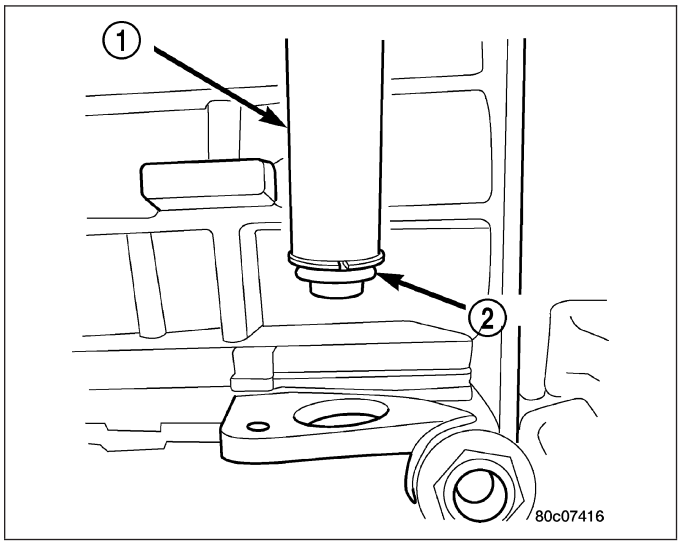

NOTE: Before final assembly of transmission centerline, the 2C/4C clutch components should be installed into position and measured as follows:

9. Install the 2C reaction plate (4) into the transmission case.
10. Install the 2C clutch pack (2, 3) into the transmission case.
11. Install the flat 2C clutch snap-ring (1) into the transmission case.

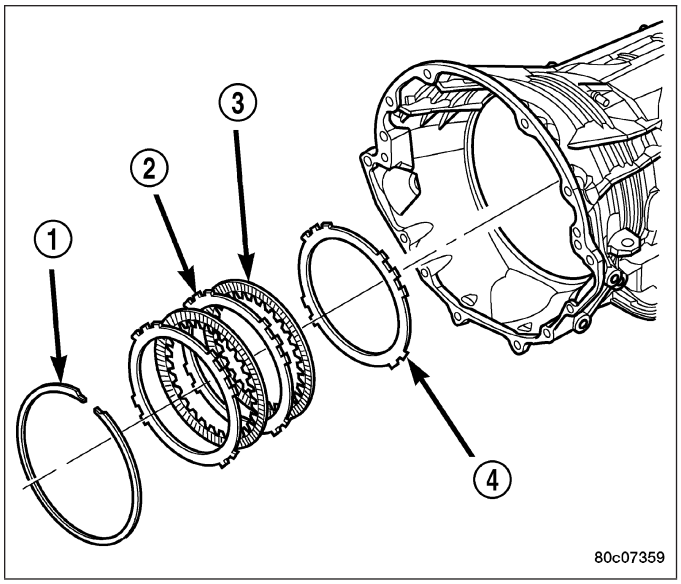

12. Install the 4C retainer/bulkhead (2) into the transmission case. Make sure that the oil feed holes are pointing toward the valve body area.
13. Install the 4C retainer/bulkhead tapered snap-ring (1) into the transmission case. Make sure that the open ends of the snap-ring are located in the case opening toward the valve body area.
14. Using a feeler gauge through the opening in the rear of the transmission case, measure the 2C clutch pack clearance between the 2C reaction plate and the transmission case at four different points. The average of these measurements is the 2C clutch pack clearance. The correct clutch clearance is 0.455-1.335 mm (0.018-0.053 in.). The reaction plate is not selective. If the clutch pack clearance is not within specification, the reaction plate, all the friction discs, and steels must be replaced.
15. Remove the 4C retainer/bulkhead and all of the 2C clutch components from the transmission case.

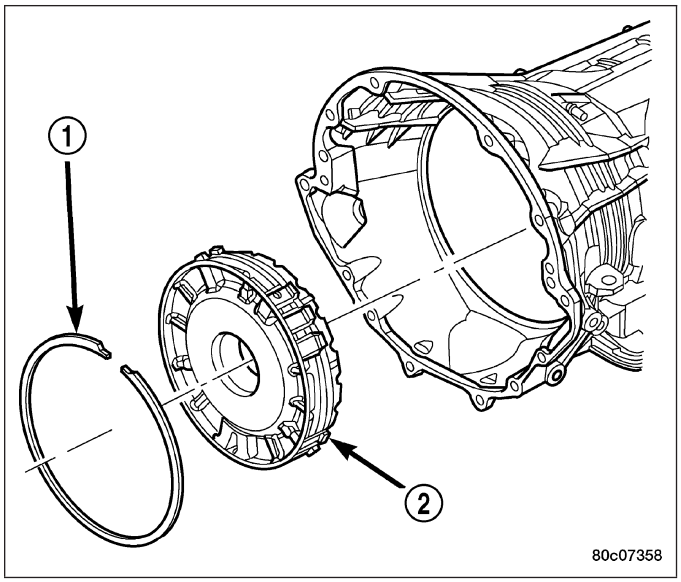

16. Install the low/reverse clutch assembly (1). Make sure that the oil feed hole points toward the valve body area and that the bleed orifice is aligned with the notch in the rear of the transmission case.
17. Install the snap-ring (2) to hold the low/reverse clutch retainer into the transmission case. The snap-ring is tapered and must be installed with the tapered side forward. Once installed, verify that the snap-ring is fully seated in the snap-ring groove.
18. Air check the low/reverse clutch and verify correct overrunning clutch operation.

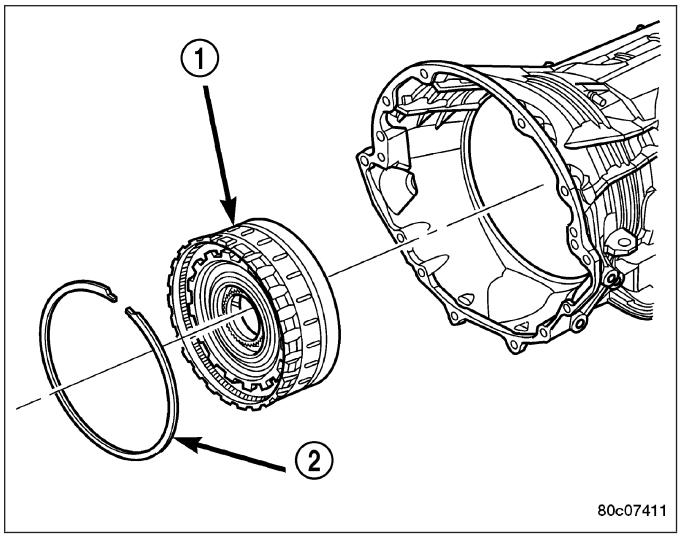

19. Install the number 12 thrust bearing (3) over the output shaft and against the rear planetary gear set. The flat side of the bearing goes toward the planetary gearset and the raised tabs on the inner race should face the rear of the transmission.

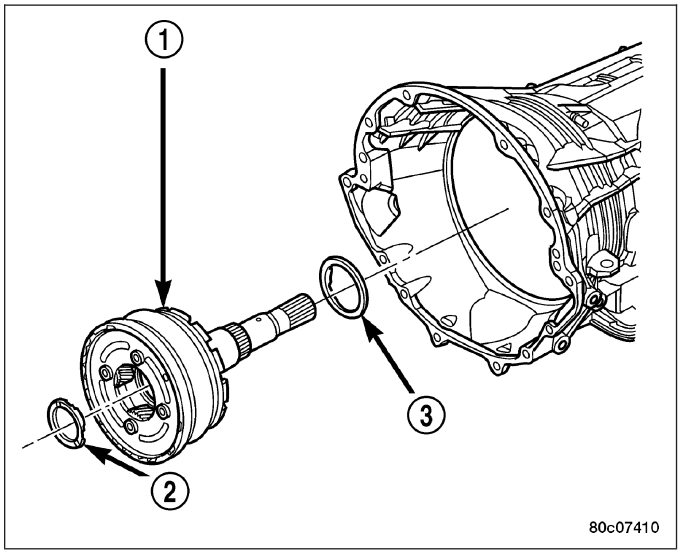

20. Install the reverse/input planetary assembly (1) through the low/reverse clutch assembly.

21. Install the park sprag gear (1) onto the output shaft.

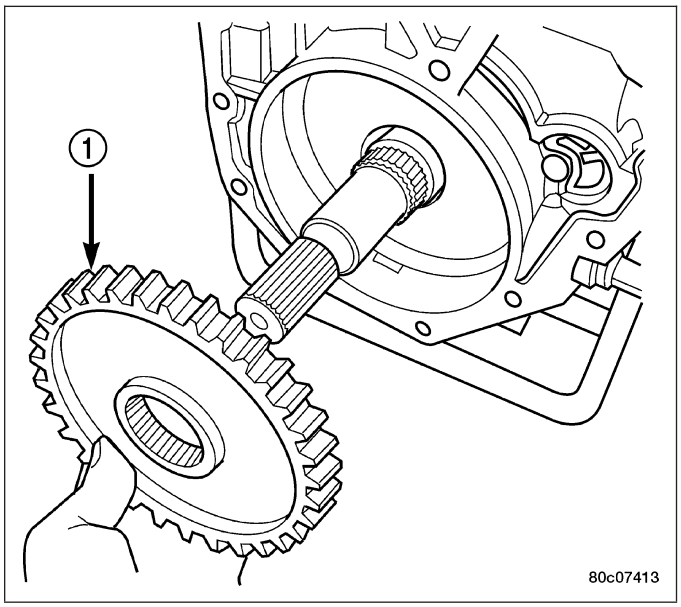

22. Install the snap-ring (1) to hold the park sprag onto the output shaft.

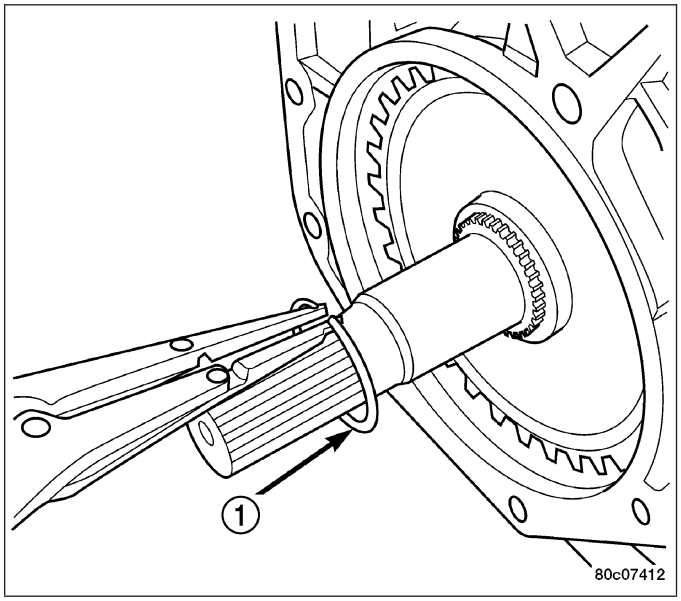

23. Install the 2C reaction plate (4) into the transmission case.
24. Install the 2C clutch pack (2, 3, 4) into the transmission case.

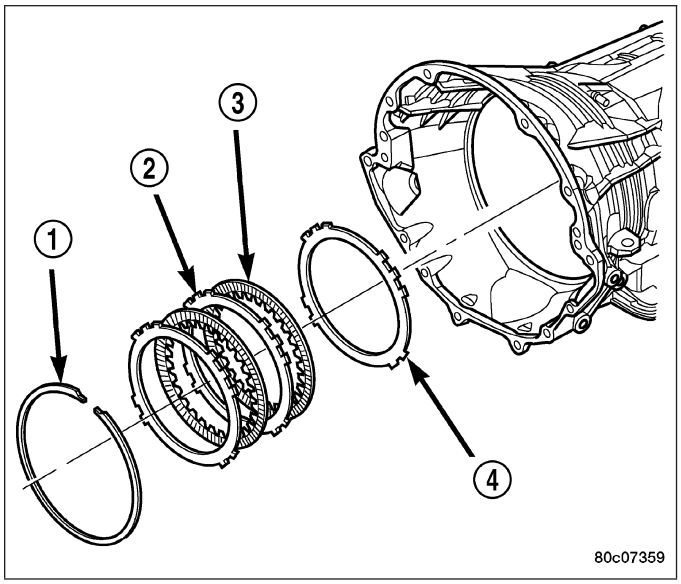

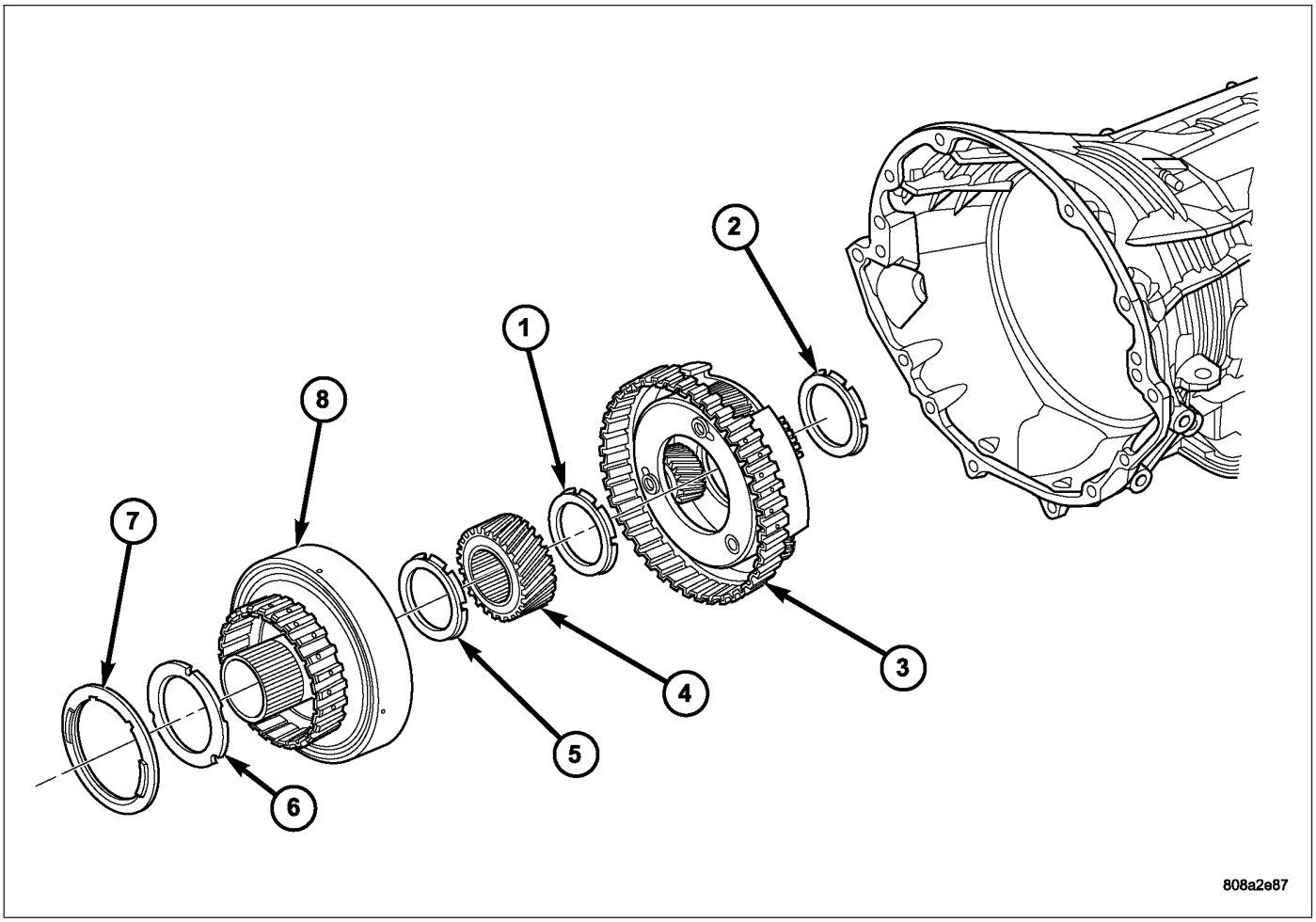

Install Reaction Annulus and Carrier

1 - THRUST BEARING NUMBER 8
2 - THRUST BEARING NUMBER 9
3 - REACTION PLANETARY CARRIER
4 - REACTION SUN GEAR
5 - THRUST BEARING NUMBER 7
6 - THRUST PLATE (SELECT)
7 - THRUST BEARING NUMBER 6
8 - REACTION ANNULUS

25. Install the number 8 thrust bearing (1) inside the reaction carrier with the outer race against the reaction planetary carrier (3).
26. Install the reaction planetary gear set and the number 9 thrust bearing (2), with the inner race against the reaction planetary carrier (3), into the transmission case.
27. Install the flat 2C clutch snap-ring into the transmission case.
28. Install the reaction sun gear (4) into the reaction planetary gear set. **Make sure** the small shoulder is facing the front of the transmission.
29. Install the number 7 thrust bearing (5) onto the reaction sun gear (4) with the inner race against the sun gear.

30. Install the output shaft selective thrust plate (2) onto the reaction annulus with the oil grooves facing the annulus gear and the lugs (1) and notches aligned as shown.
31. Install the number 6 thrust bearing (7) against the output shaft selective thrust plate (6) with the flat side against the thrust plate and the raised tabs on the inner race facing the front of the transmission.
32. Install the reaction annulus (8) into the reaction planetary gear set.

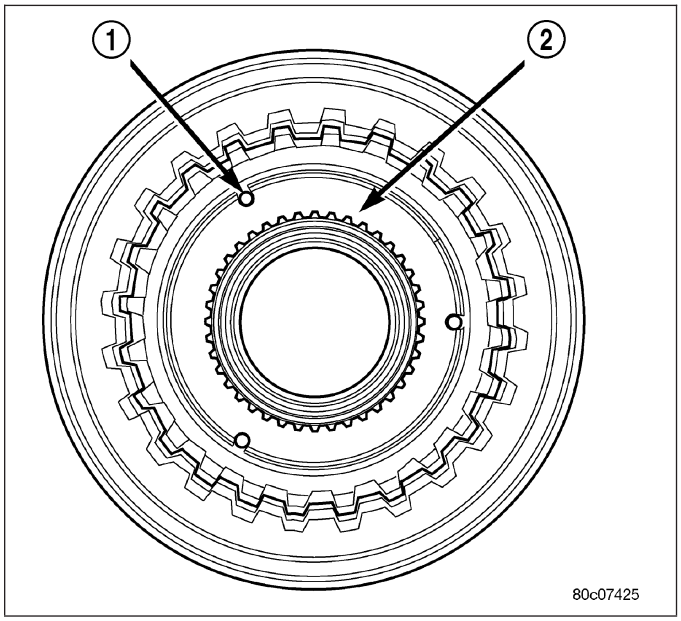

33. Install the 4C retainer/bulkhead (2) into the transmission case. Make sure that the oil feed holes are pointing toward the valve body area. Rotate the reaction annulus during the installation of the 4C retainer/bulkhead to ease installation.
34. Install the 4C retainer/bulkhead tapered snap-ring (1) into the transmission case with the taper toward the front of the case. Make sure that the open ends of the snap-ring are located in the case opening toward the valve body area.
35. Air check the 2C and 4C clutch operation.

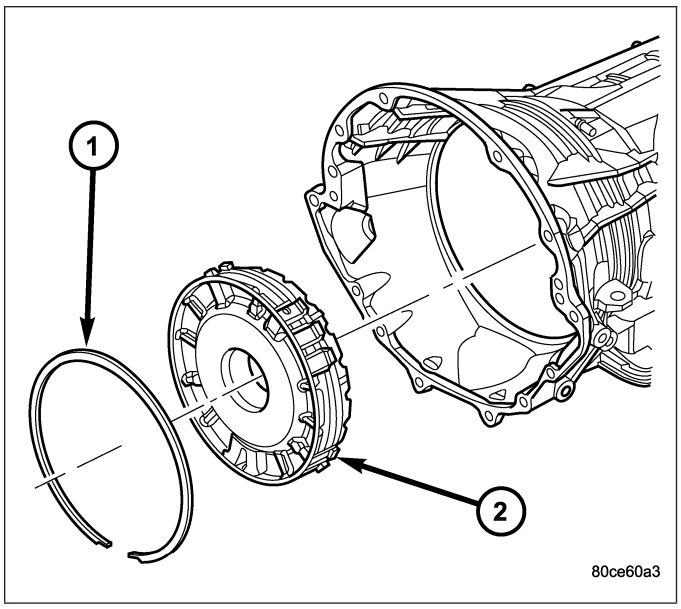

36. Using Alignment Plate 8261 (1), Adapter 8266-17 from End-Play Tool Set 8266 (2) and Dial Indicator C-3339 (3), measure and record the output shaft end-play. The correct output shaft end-play is 0.22-0.55 mm (0.009-0.021 in.). Adjust as necessary. Install the chosen output shaft selective thrust plate and re-measure end-play to verify selection.
37. Apply a bead of RTV silicone and install the extension/adapter housing onto the transmission case.
38. Install and torque the bolts to hold the extension/adapter housing onto the transmission case. The correct torque is 54 N·m (40 ft.lbs.).

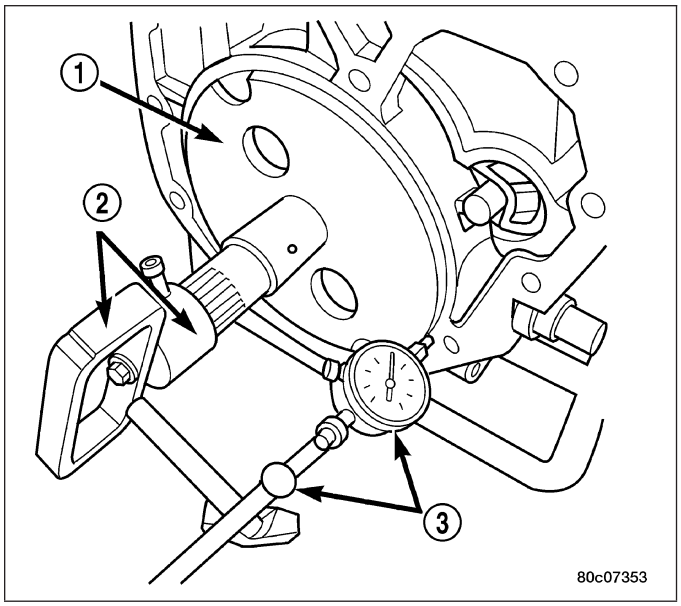

39. Install the number 5 thrust bearing (1) and selective thrust plate (2) onto the 4C retainer/bulkhead. Be sure that the outer race of the bearing is against the thrust plate.
40. Install the input clutch assembly (3) into the transmission case. Make sure that the input clutch assembly is fully installed by performing a visual inspection through the input speed sensor hole. If the tone wheel teeth on the input clutch assembly are centered in the hole, the assembly is fully installed.
41. Install the number 1 thrust bearing (4) with the outer race up in the pocket of the input clutch assembly.

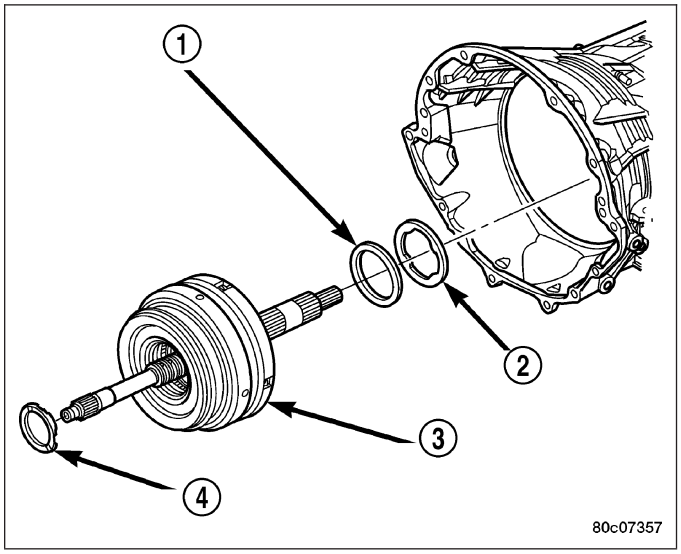

42. Install the oil pump (2) into the transmission case.
43. Install the bolts (1) to hold the oil pump into the transmission case. Tighten the oil pump bolts to 28 N·m (250 in.lbs.).

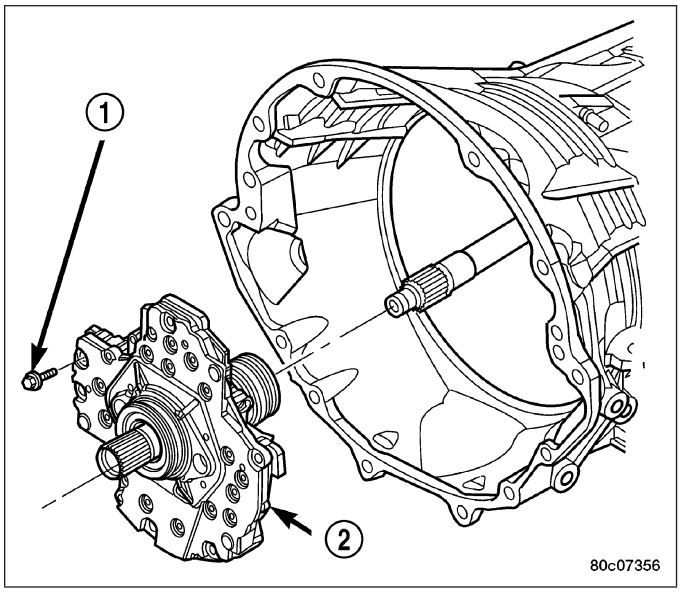

44. Using Adapter 8266-1 from End-Play Tool Set 8266 (1) and Dial Indicator C-3339 (2), measure and record the input shaft end-play. The correct end-play is 0.46-0.89 mm (0.018-0.035 in.). Adjust as necessary. Install the chosen thrust plate on the number 5 thrust bearing and re-measure end-play to verify selection.

NOTE: When measuring the input shaft end-play, two ″stops″ will be felt. When the input shaft is pushed inward and the dial indicator zeroed, the first ″stop″ felt when the input shaft is pulled outward is the movement of the input shaft in the input clutch housing hub. This value should not be included in the end-play measured value and therefore must be recorded and subtracted from the dial indicator reading.

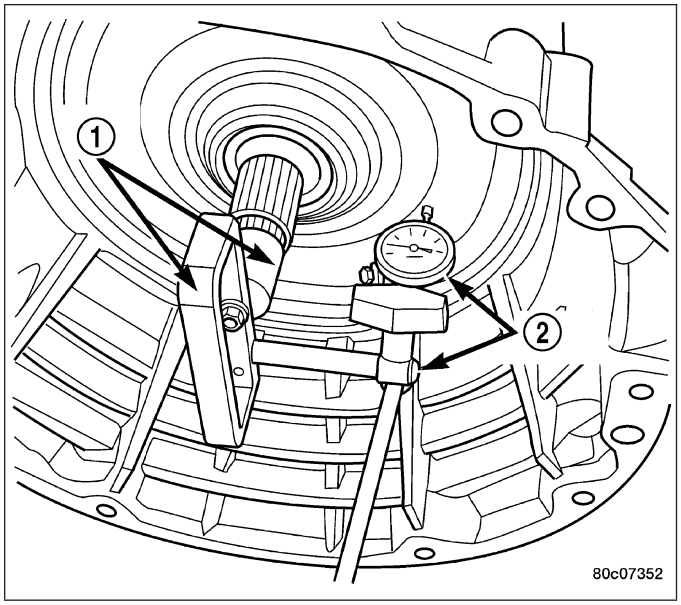

45. Install the transmission front cover (2) into the transmission case.
46. Install the outer snap-ring (3) to hold the transmission front cover (2) into the transmission case.

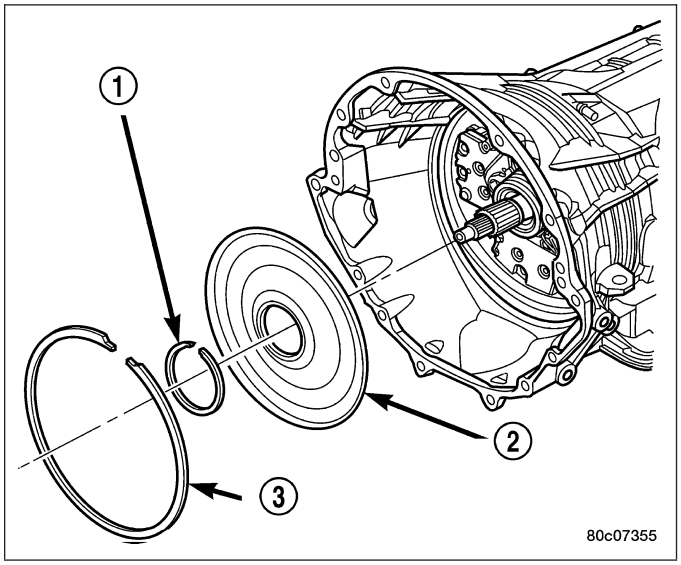

47. Partially install the inner transmission front cover snap-ring (1) onto the oil pump.

48. Using Installer 8255 (1), install the inner transmission front cover snap-ring (2) the remainder of the way onto the oil pump.

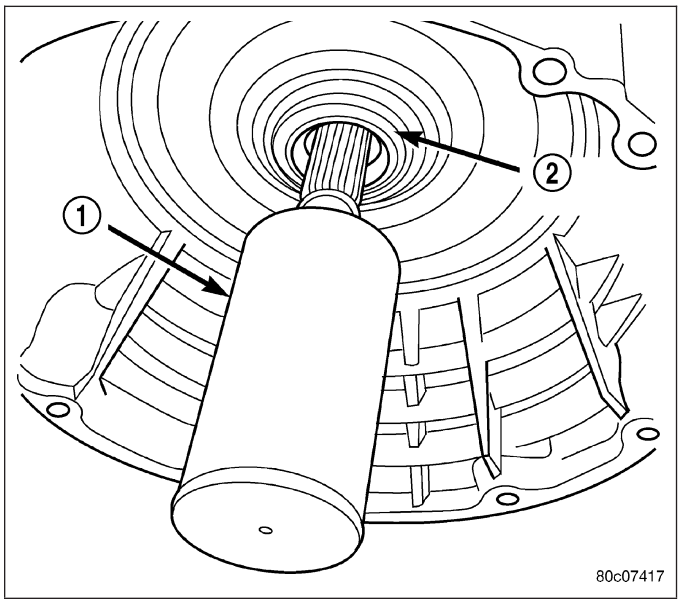

49. Install the valve body. Verify that the pin on the manual lever has properly engaged the TRS selector plate. Tighten the valve body to transmission case bolts (1) to 12 N·m (105 in.lbs.).

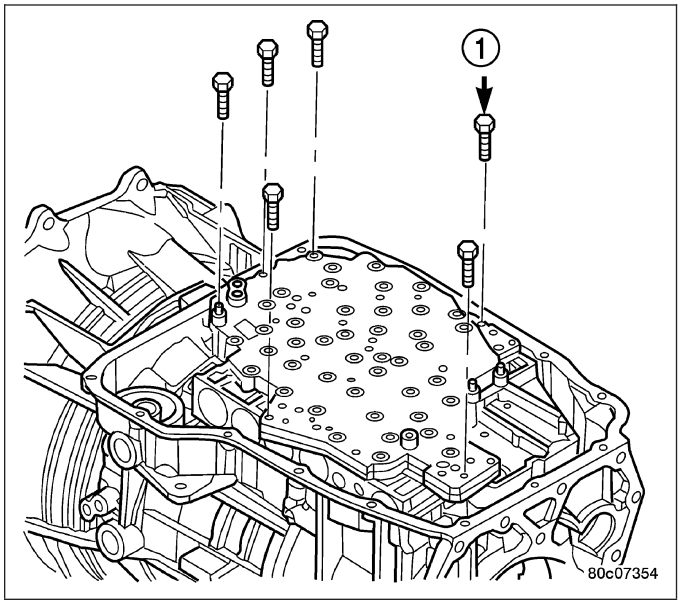

CAUTION: The primary oil filter seal MUST be fully installed flush against the oil pump body. DO NOT install the seal onto the filter neck and attempt to install the filter and seal as an assembly. Damage to the transmission will result.

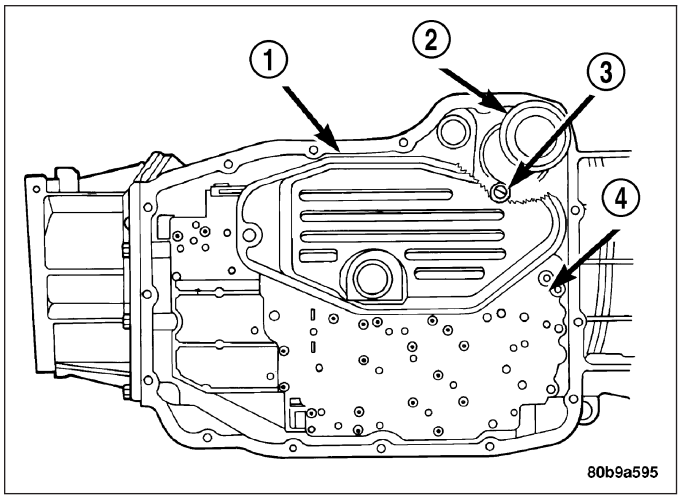

50. Install a new primary oil filter seal in the oil pump inlet bore. Seat the seal in the bore with the butt end of a hammer, or other suitable tool.
51. Install the primary oil filter (1) and the oil cooler return filter (2). Tighten the screw to hold the primary oil filter to the valve body to 4.5 N·m (40 in.lbs.). Using Oil Filter Wrench 8321, tighten the cooler return oil filter to the transmission case to 14 N·m (125 in.lbs.).
52. Apply RTV silicone to the oil pan and install the transmission oil pan. Tighten the bolts to 12 N·m (105 in.lbs.).
53. Install the input (3), output (1), and line pressure sensors (2). Tighten the bolts to 12 N·m (105 in.lbs.).

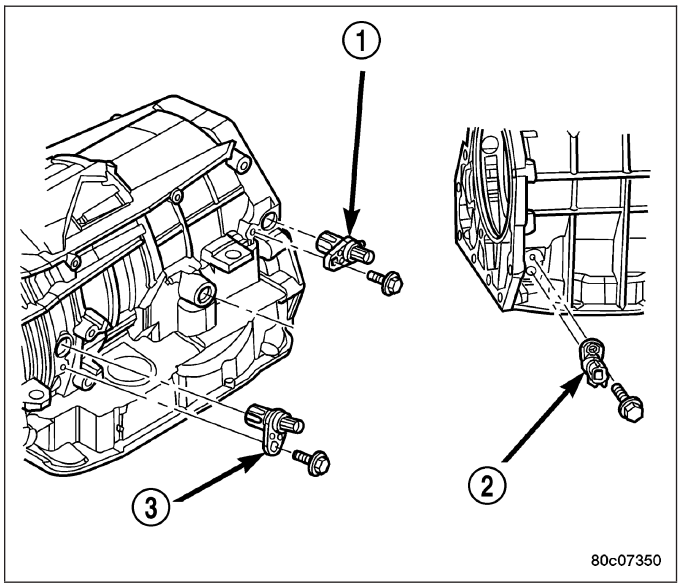

INSTALLATION

1. Check torque converter hub and hub drive flats for sharp edges burrs, scratches, or nicks. Polish the hub and flats with 320/400 grit paper and crocus cloth if necessary. Verify that the converter hub o-ring is properly installed and is free of any debris. The hub must be smooth to avoid damaging pump seal at installation.
2. If a replacement transmission is being installed, transfer any components necessary, such as the manual shift lever and shift cable bracket, from the original transmission onto the replacement transmission.
3. Lubricate oil pump seal lip with transmission fluid.
4. Align converter and oil pump.
5. Carefully insert converter in oil pump. Then rotate converter back and forth until fully seated in pump gears.
6. Check converter seating with steel scale (1) and straightedge (2). Surface of converter lugs should be at least 13mm (1/2 in.) to rear of straightedge when converter is fully seated.
7. Temporarily secure converter with C-clamp.

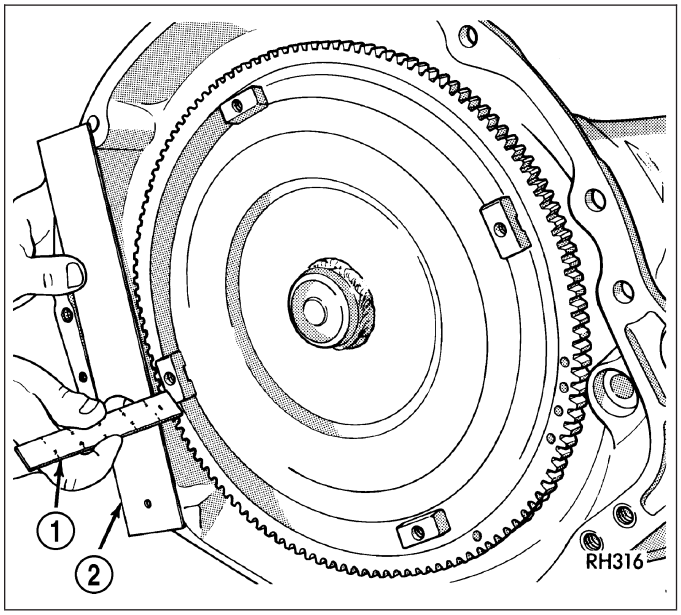

8. Position transmission on jack and secure it with chains.
9. Check condition of converter driveplate. Replace the plate if cracked, distorted or damaged. **Also be sure transmission dowel pins are seated in engine block and protrude far enough to hold transmission in alignment.**
10. Apply a light coating of Mopar® High Temp Grease to the torque converter hub pocket in the rear pocket of the engine's crankshaft.
11. Raise transmission (2) and align the torque converter with the drive plate and transmission converter housing with the engine block.

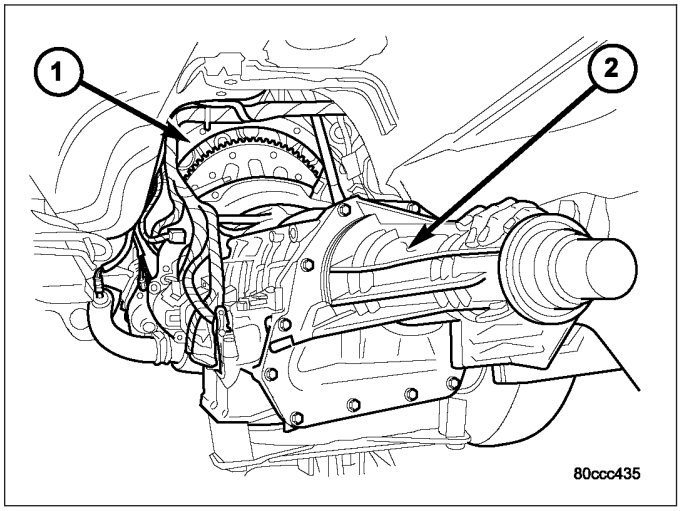

12. Move transmission forward. Then raise, lower or tilt transmission to align the converter housing with engine block dowels.
13. Carefully work transmission forward and over engine block dowels until converter hub is seated in crankshaft. Verify that no wires, or the transmission vent hose, have become trapped between the engine block and the transmission.
14. Install two bolts to attach the transmission to the engine.
15. Install remaining torque converter housing to engine bolts. Tighten to 68 N·m (50 ft.lbs.).
16. Install transfer case, if equipped. Tighten transfer case nuts to 35 N·m (26 ft.lbs.).
17. Install rear support to transmission. Tighten bolts to 47 N·m (35 ft.lbs.).

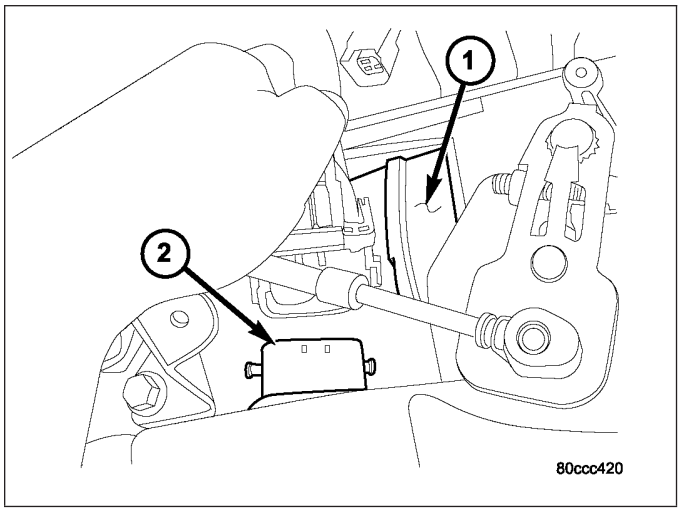

18. Lower transmission onto crossmember and install bolts attaching transmission mount to crossmember. Tighten clevis bracket to crossmember bolts to 47 N·m (35 ft.lbs.). Tighten the clevis bracket to rear support bolt to 68 N·m (50 ft.lbs.).
19. Remove engine support fixture.
20. Connect gearshift cable to transmission.
21. Connect wires to solenoid and pressure switch assembly (2) connector.
22. Connect wires to input speed sensor (2).

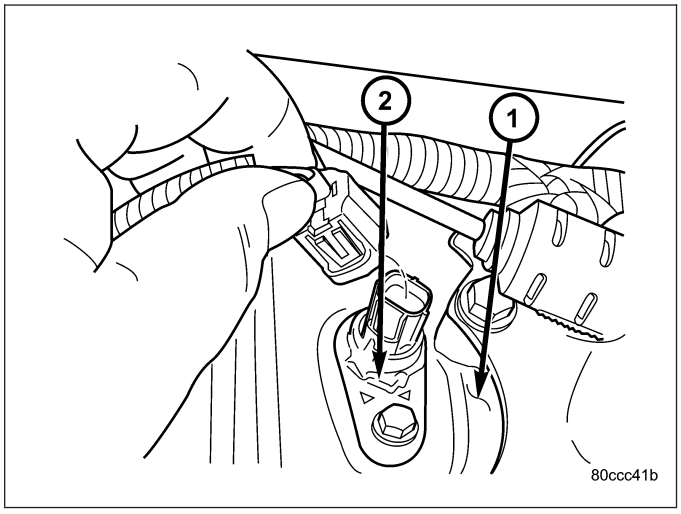

23. Connect wires to output speed sensor (2).

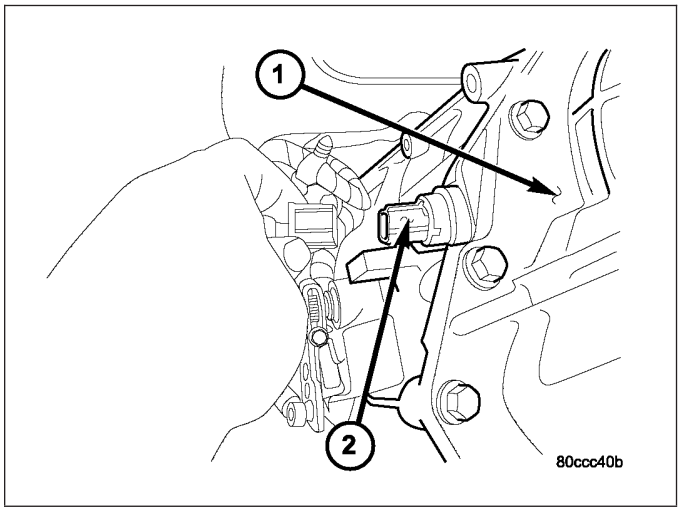

24. Connect wires to line pressure sensor (2). Be sure transmission harnesses are properly routed.

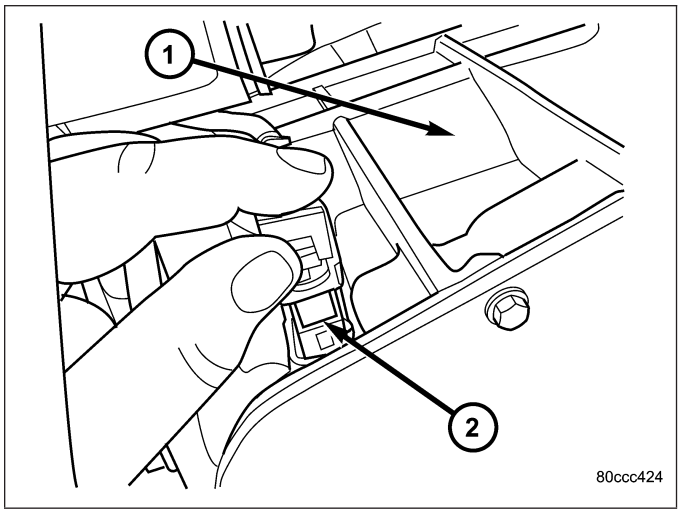

CAUTION: It is essential that correct length bolts be used to attach the converter to the driveplate. Bolts that are too long will damage the clutch surface inside the converter.

25. Install torque converter-to-driveplate bolts. Tighten bolts to 31 N·m (270 in. lbs.).
26. Install starter motor and cooler line bracket.
27. Connect cooler lines to transmission.
28. Install transmission fill tube.
29. Install exhaust components, if necessary.
30. Install the structural dust cover (2) (Refer to 9 - ENGINE/ENGINE BLOCK/STRUCTURAL COVER - INSTALLATION) onto the transmission and the engine.
31. Align and connect propeller shaft(s).
32. Adjust gearshift cable if necessary.
33. Install any skid plates removed previously. (Refer to 13 - FRAMES & BUMPERS/FRAME/TRANSFER CASE SKID PLATE - INSTALLATION)
34. Lower vehicle.
35. Fill transmission with Mopar® ATF +4, Automatic Transmission Fluid.

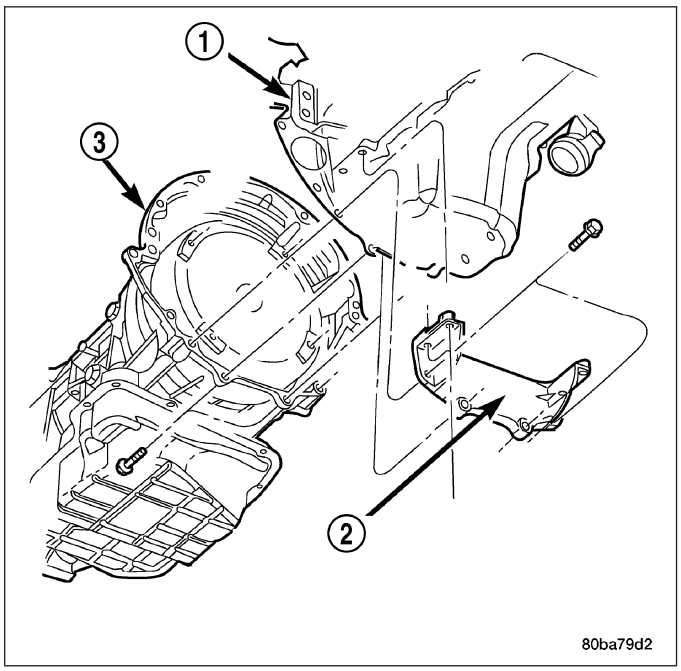

SCHEMATICS AND DIAGRAMS

HYDRAULIC SCHEMATICS

80a0df0a

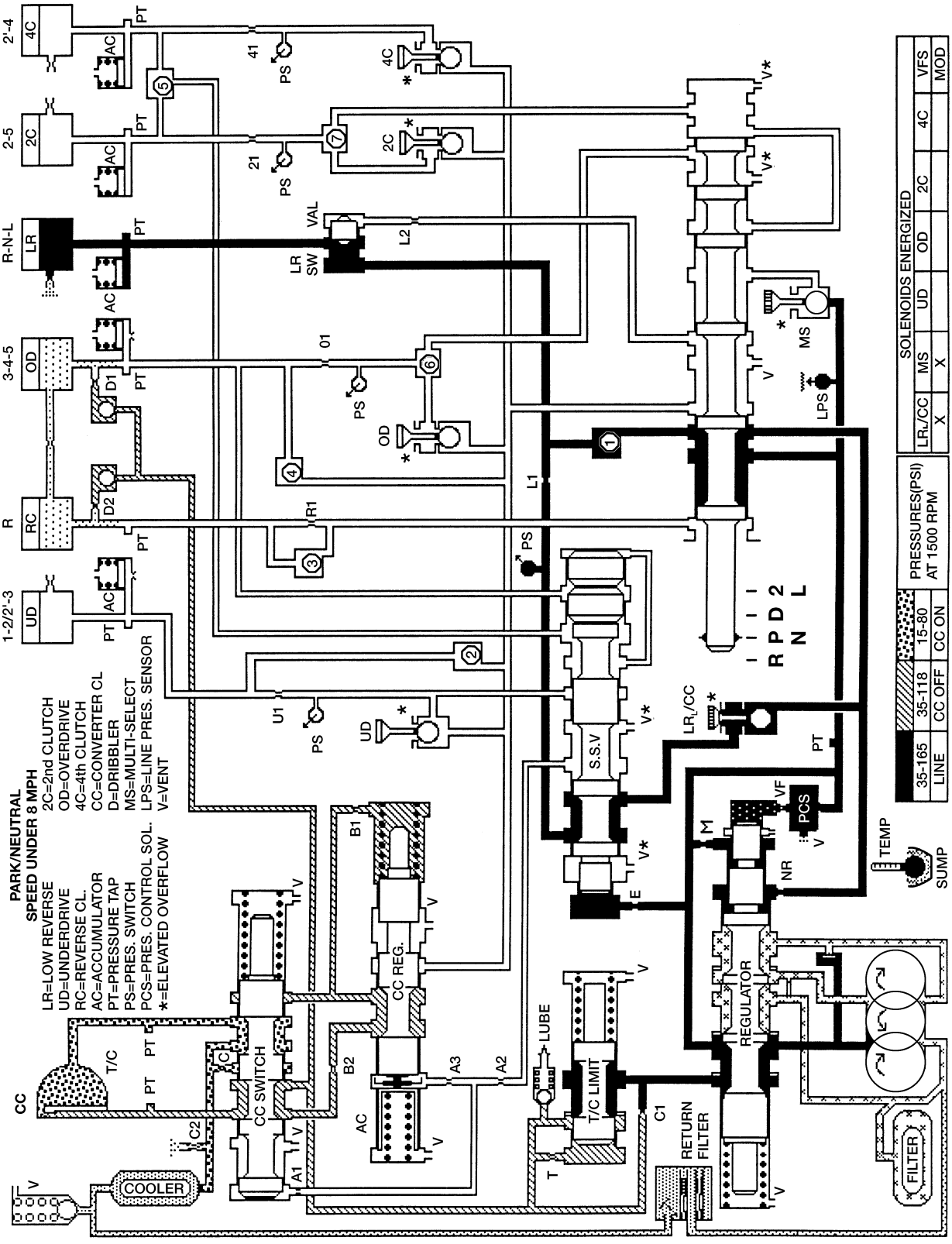

HYDRAULIC FLOW IN PARK/NEUTRAL

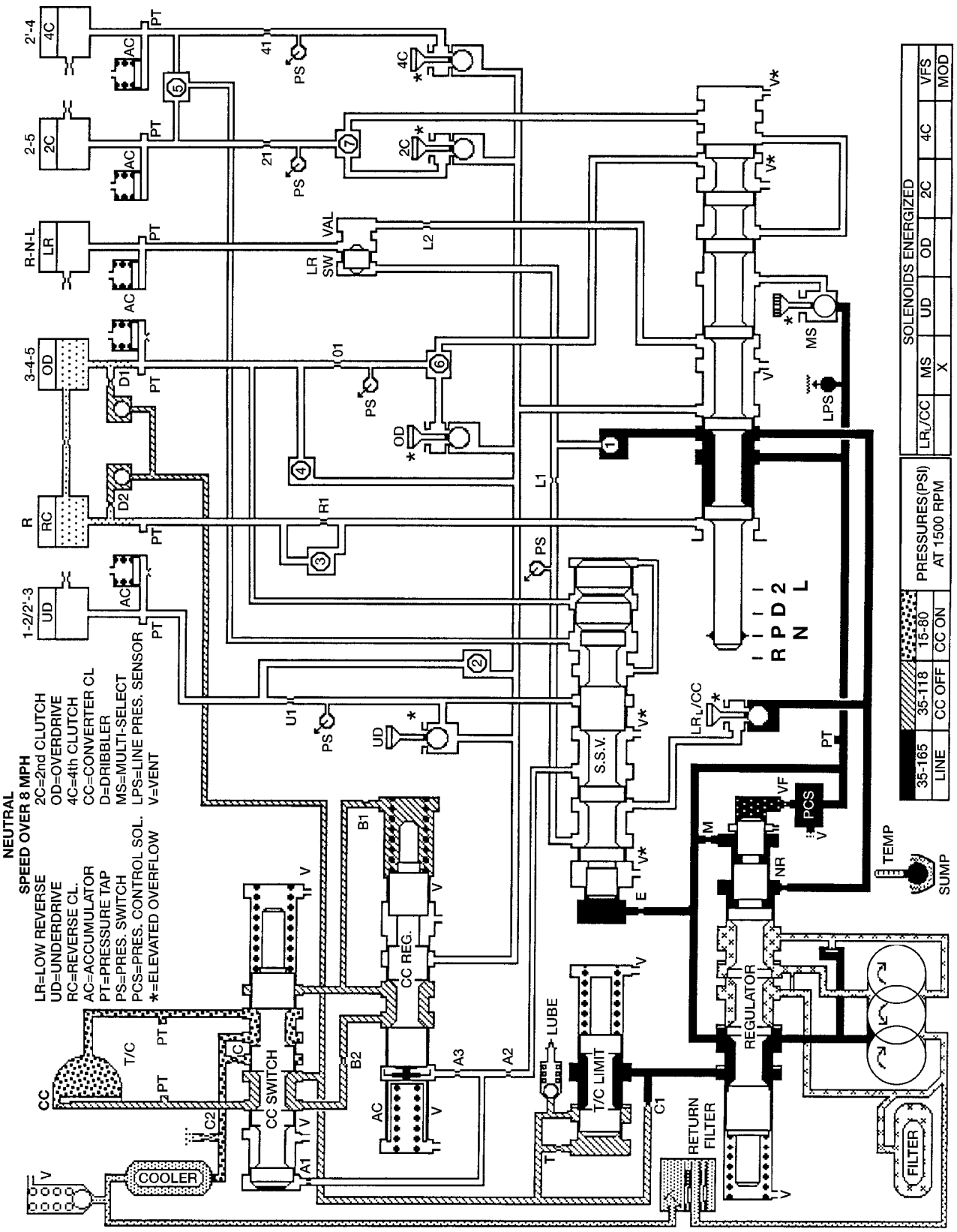

HYDRAULIC FLOW IN NEUTRAL OVER 8MPH

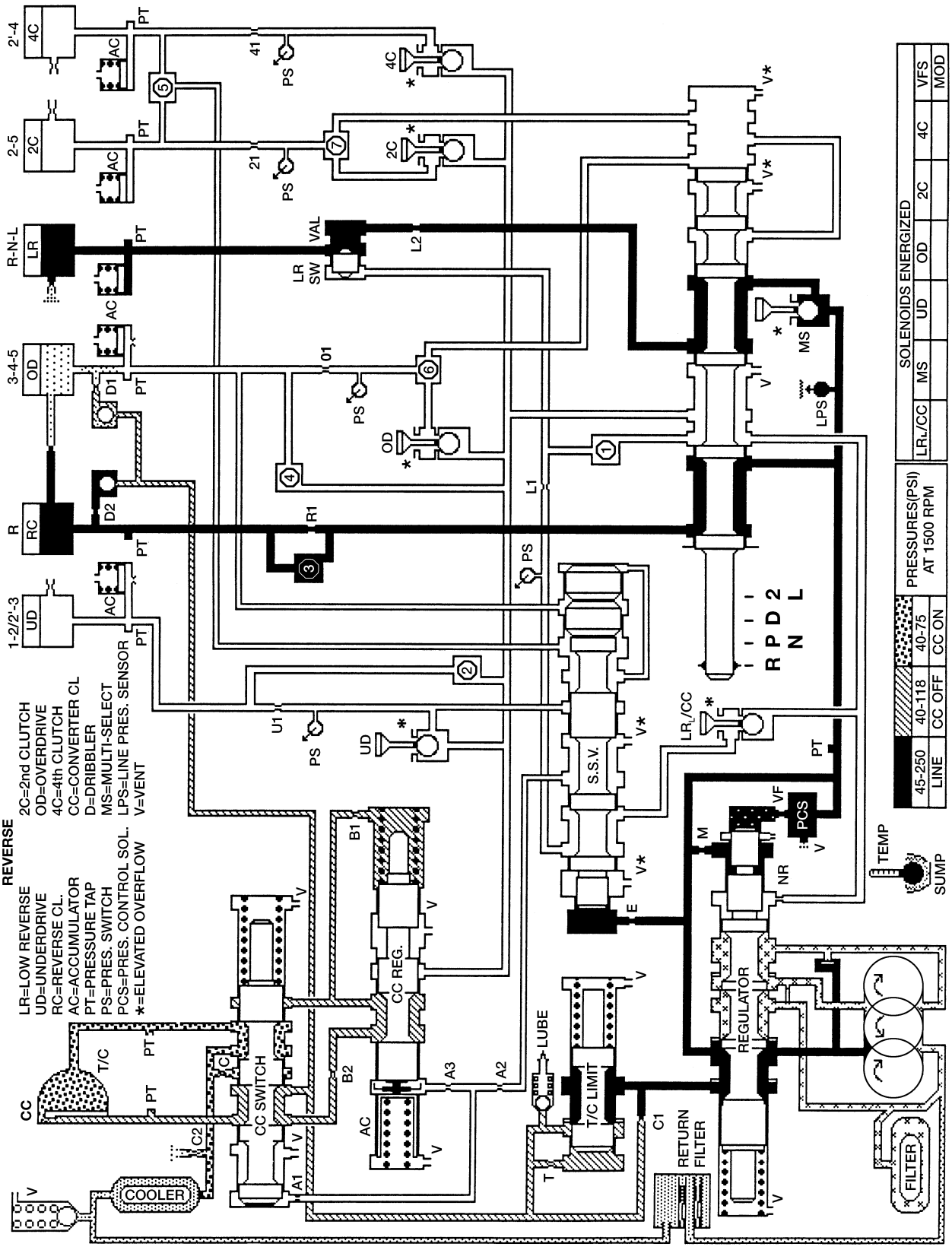

HYDRAULIC FLOW IN REVERSE

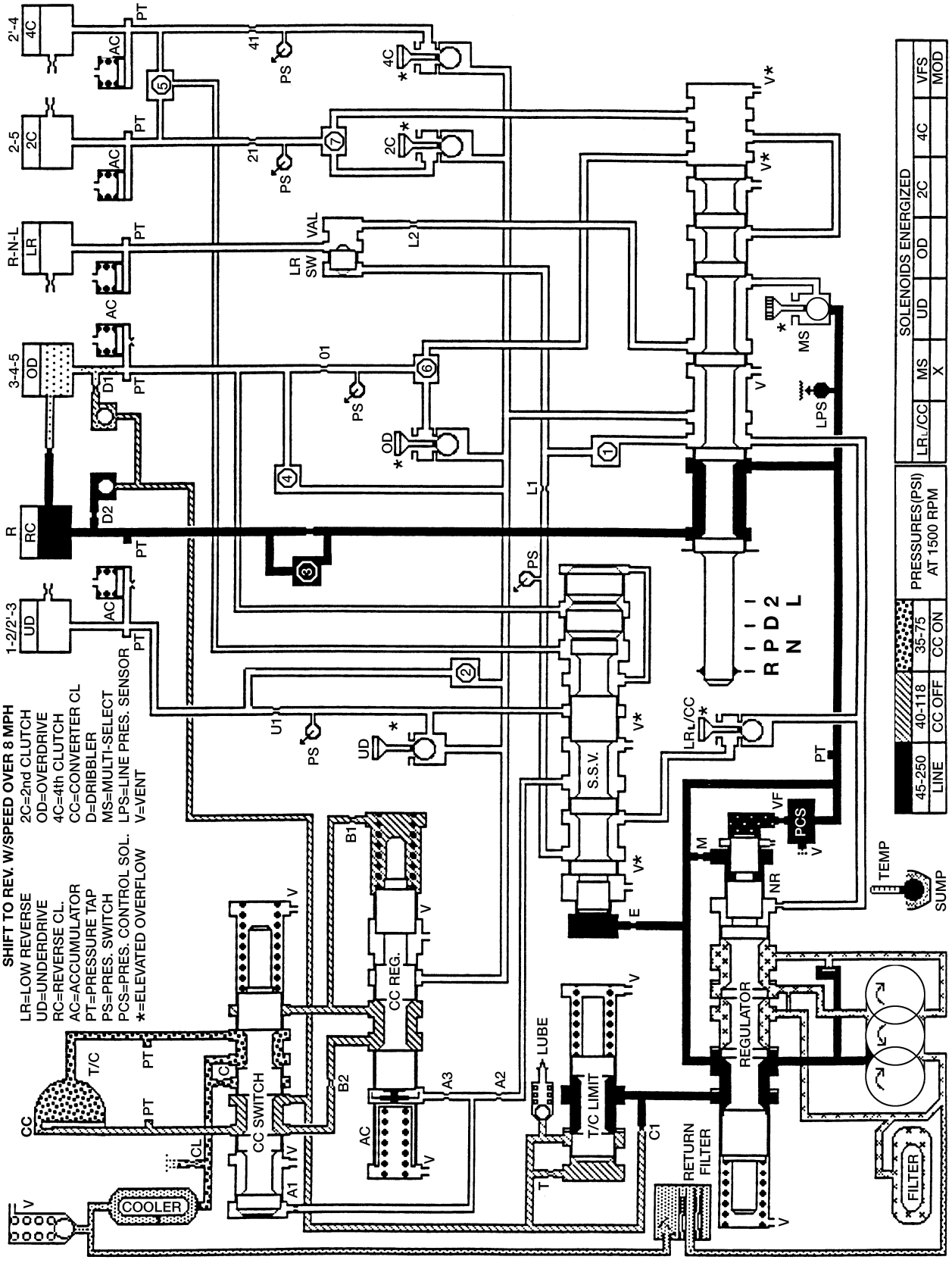
80a0dfc5
REVERSE BLOCK
SHIFT TO REV. W/SPEED OVER 8 MPH
LR=LOW REVERSE
UD=UNDERDRIVE
RC=REVERSE CL.
AC=ACCUMULATOR
PT=PRESSURE TAP
PS=PRES. SWITCH
PCS=PRES. CONTROL SOL.
*=ELEVATED OVERFLOW
2C=2nd CLUTCH
OD=OVERDRIVE
4C=4th CLUTCH
CC=CONVERTER CL
D=DRIBBLER
MS=MULTI-SELECT
LPS=LINE PRES. SENSOR
V=VENT
PRESSURES(PSI) AT 1500 RPM
45-250 LINE
40-118 CC OFF
35-75 CC ON
SOLENOIDS ENERGIZED
LR/CC
MS
UD
OD
2C
4C
VFS
MOD
X
R P D 2 N L
1-2/2'-3
R
3-4-5
R-N-L
2-5
2'-4
UD
RC
OD
LR
4C
2C
4C
T/C
CC
CL
CC SWITCH
CC REG.
AC
LUBE
T/C LIMIT
REGULATOR
RETURN FILTER
FILTER
COOLER
SUMP
TEMP
S.S.V.
PCS
VAL
LR SW
PS
V
V*
PT
AC
D1
D2
U1
U2
L1
L2
01
21
41
A1
A2
A3
B1
B2
C1
E
M
NR
VF
LPS
MS
HYDRAULIC FLOW IN REVERSE BLOCK

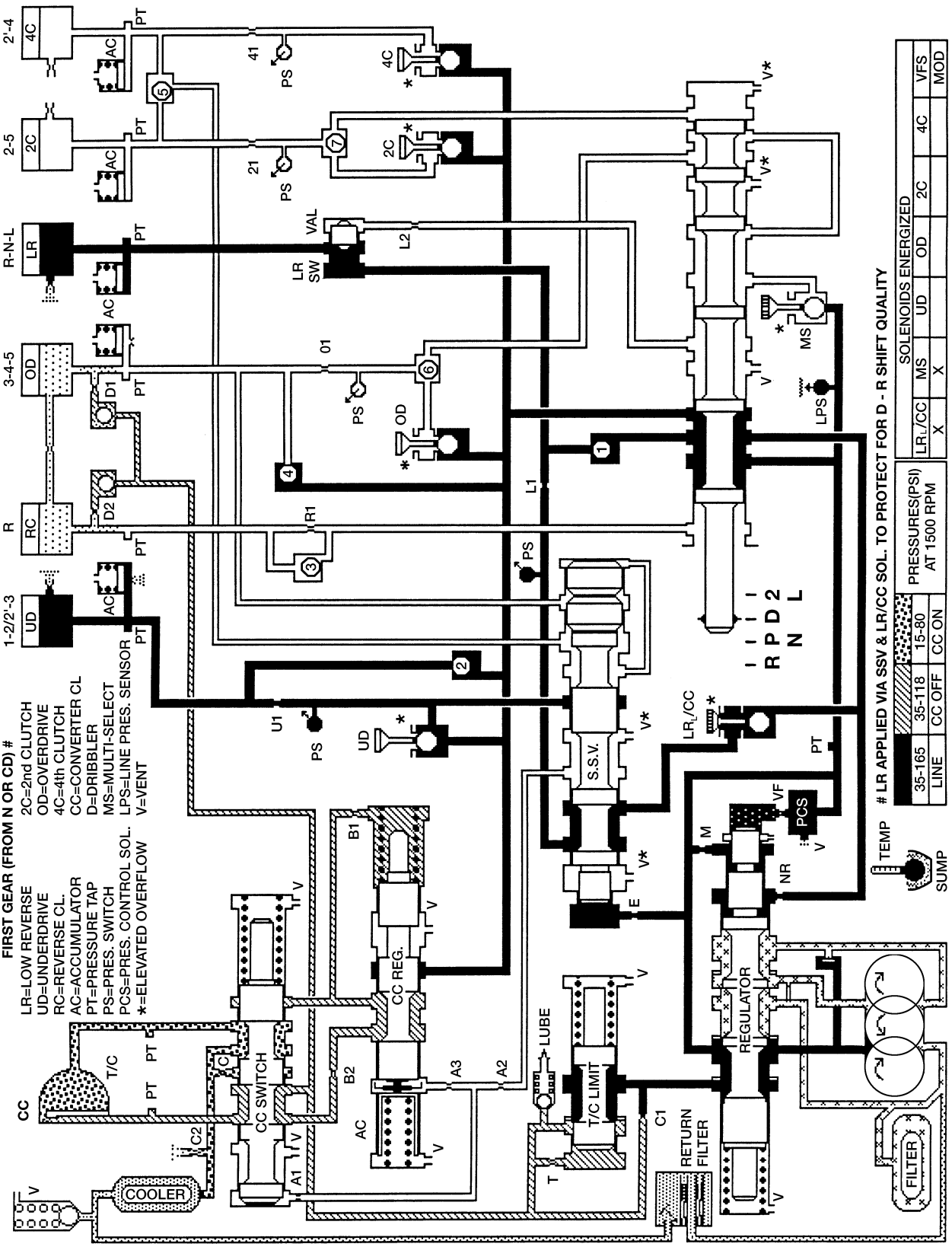

HYDRAULIC FLOW IN FIRST GEAR (FROM N OR OD)

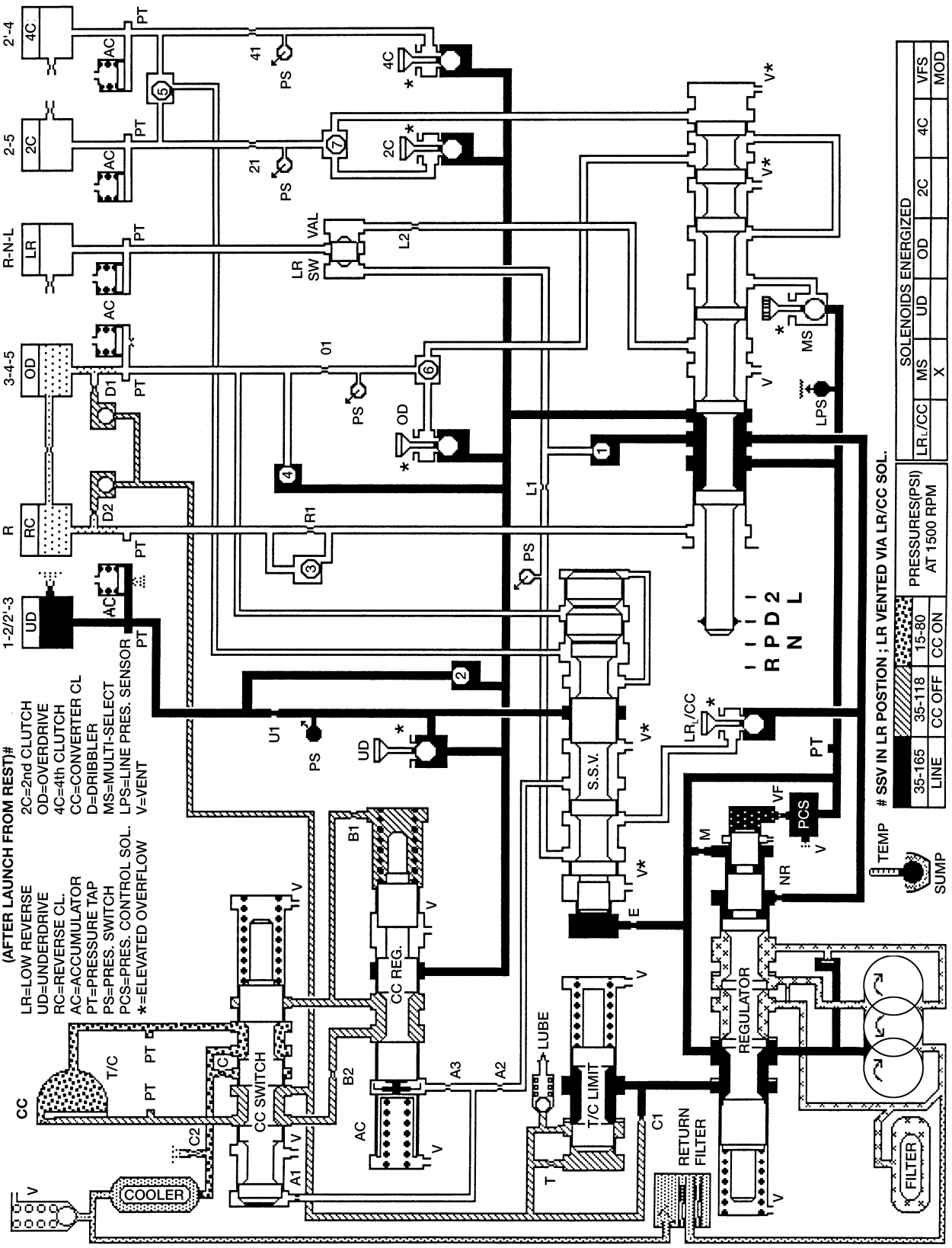

80a0e087

HYDRAULIC FLOW IN FIRST GEAR (AFTER LAUNCH FROM REST)

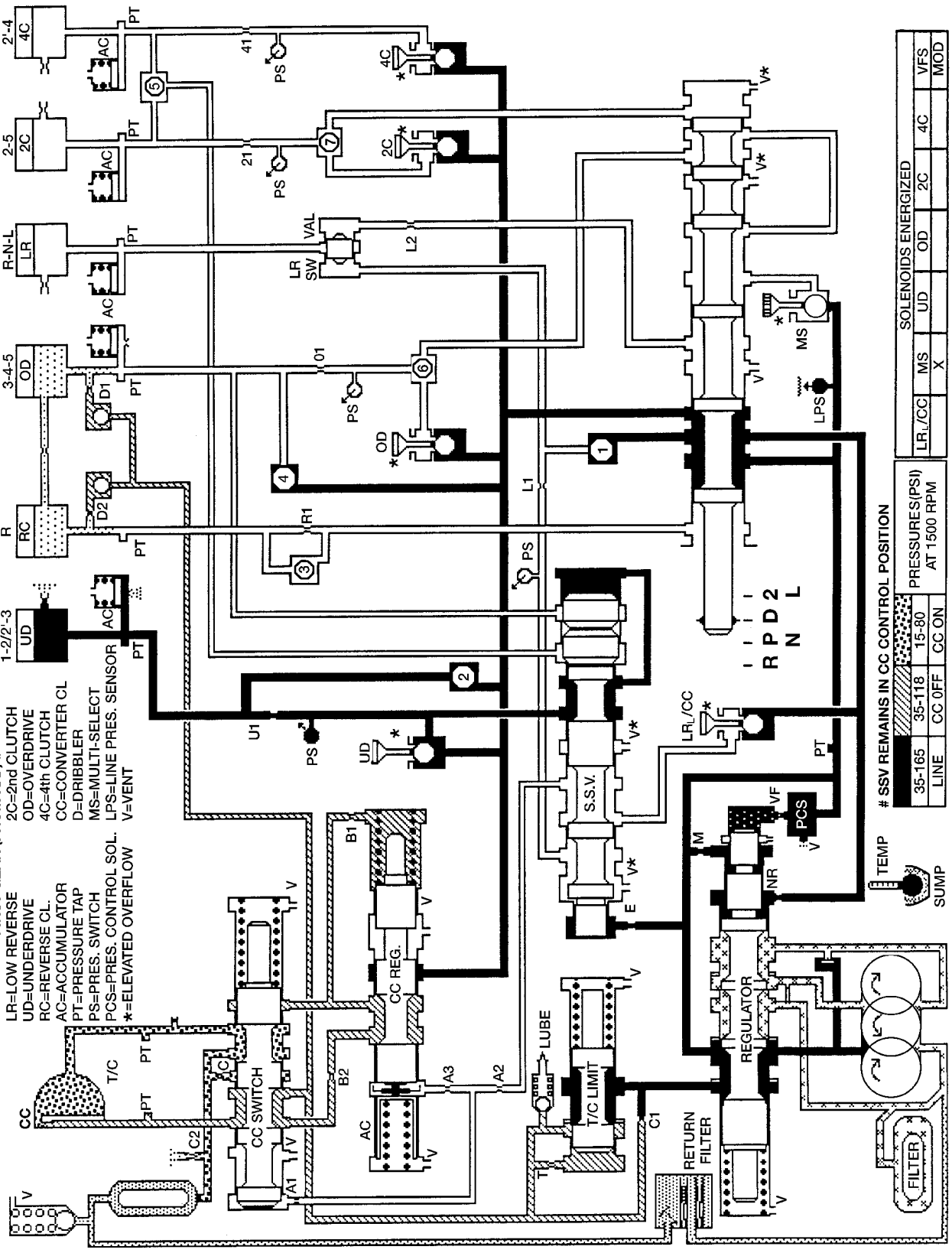

HYDRAULIC FLOW IN FIRST GEAR (FROM K/D)

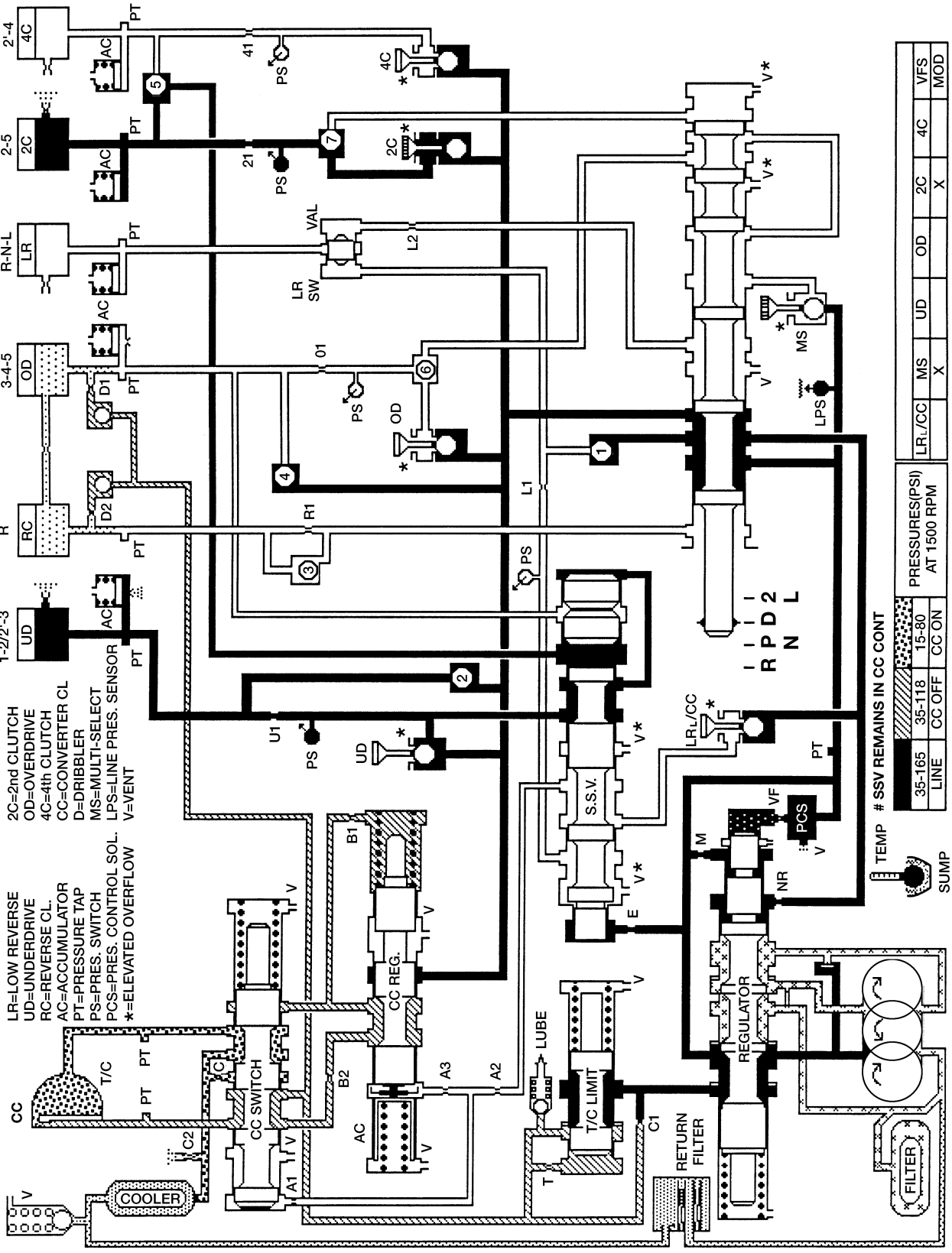

HYDRAULIC FLOW IN SECOND GEAR

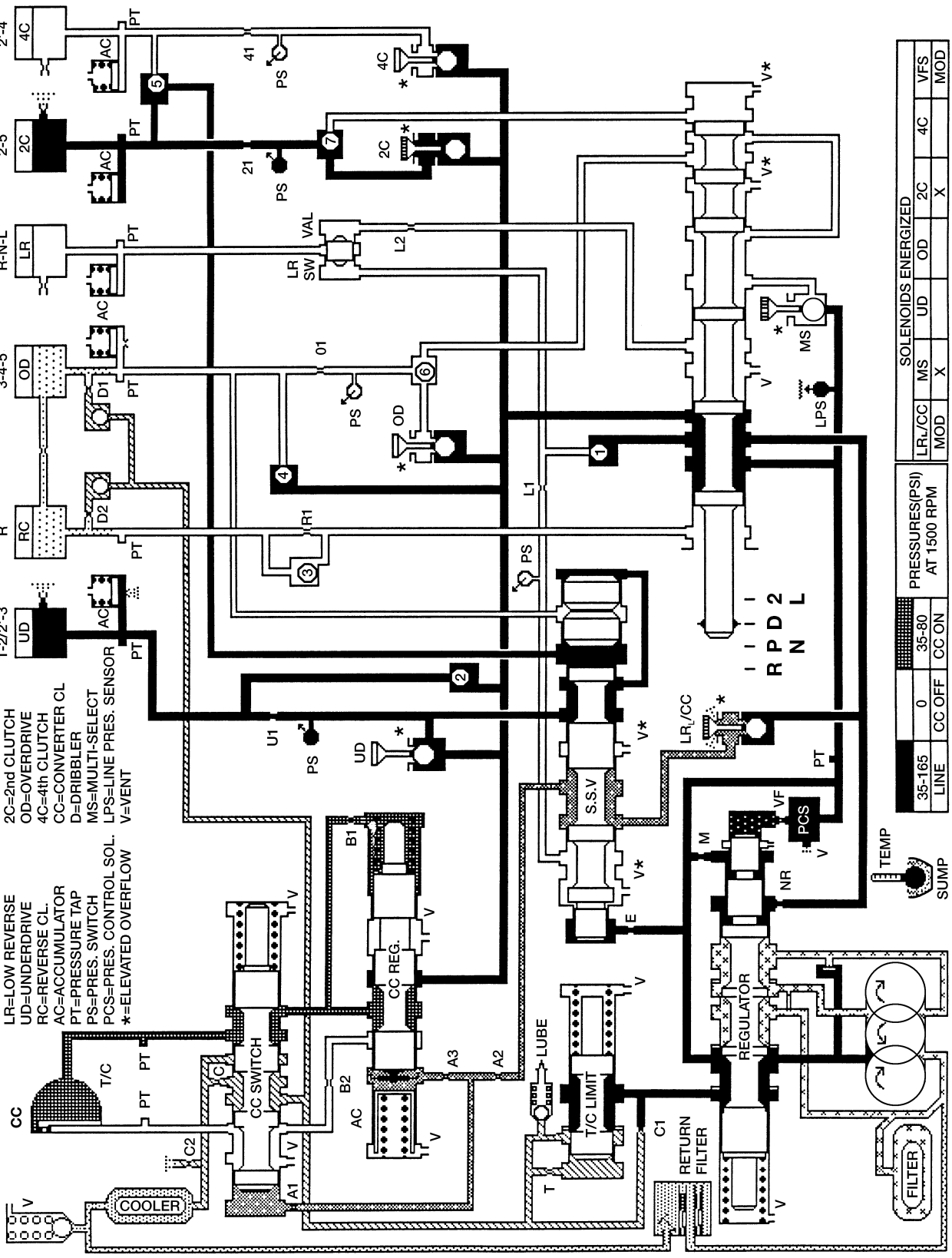

HYDRAULIC FLOW IN SECOND GEAR EMCC

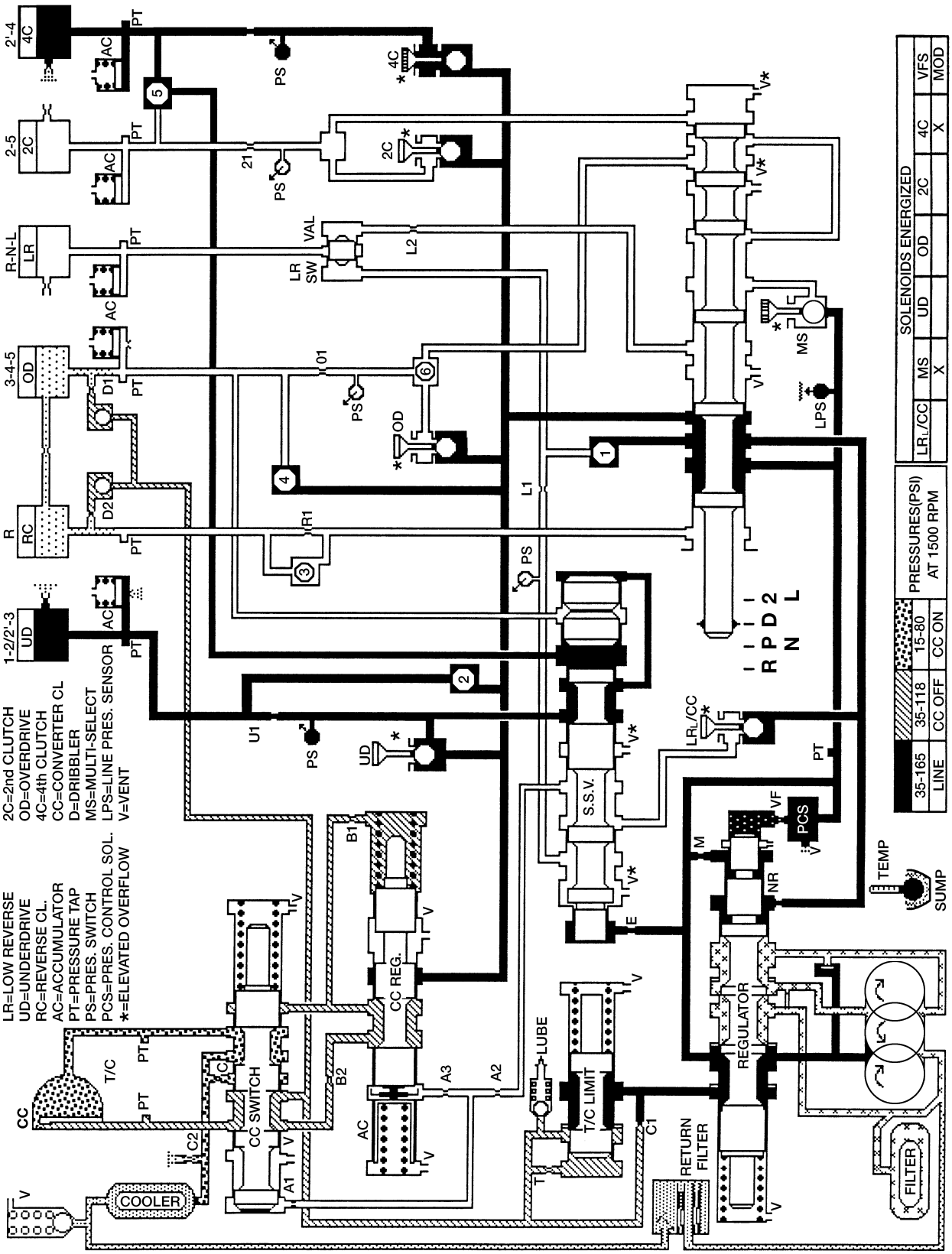

HYDRAULIC FLOW IN SECOND PRIME GEAR

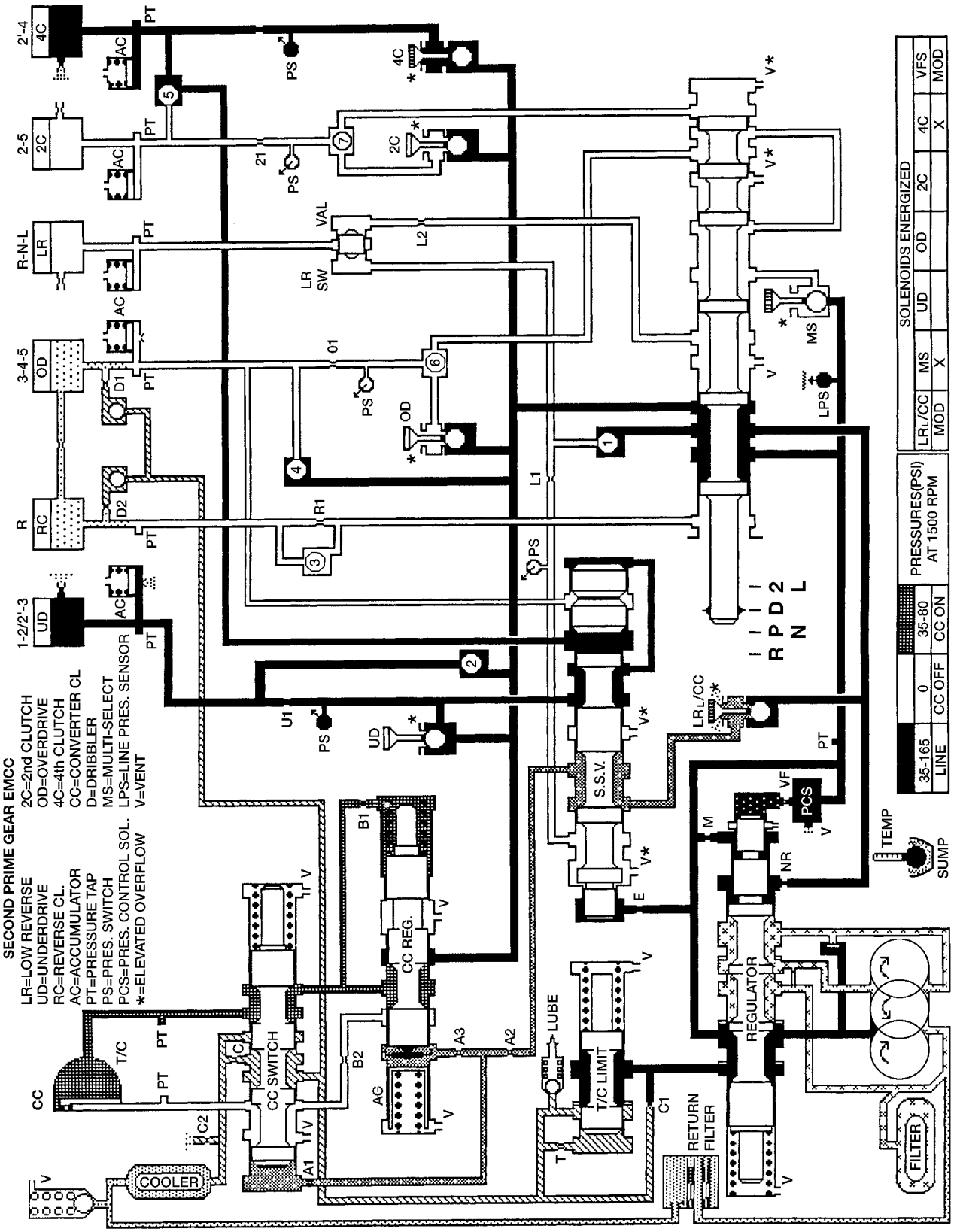

80a0e238

HYDRAULIC FLOW IN SECOND PRIME GEAR EMCC

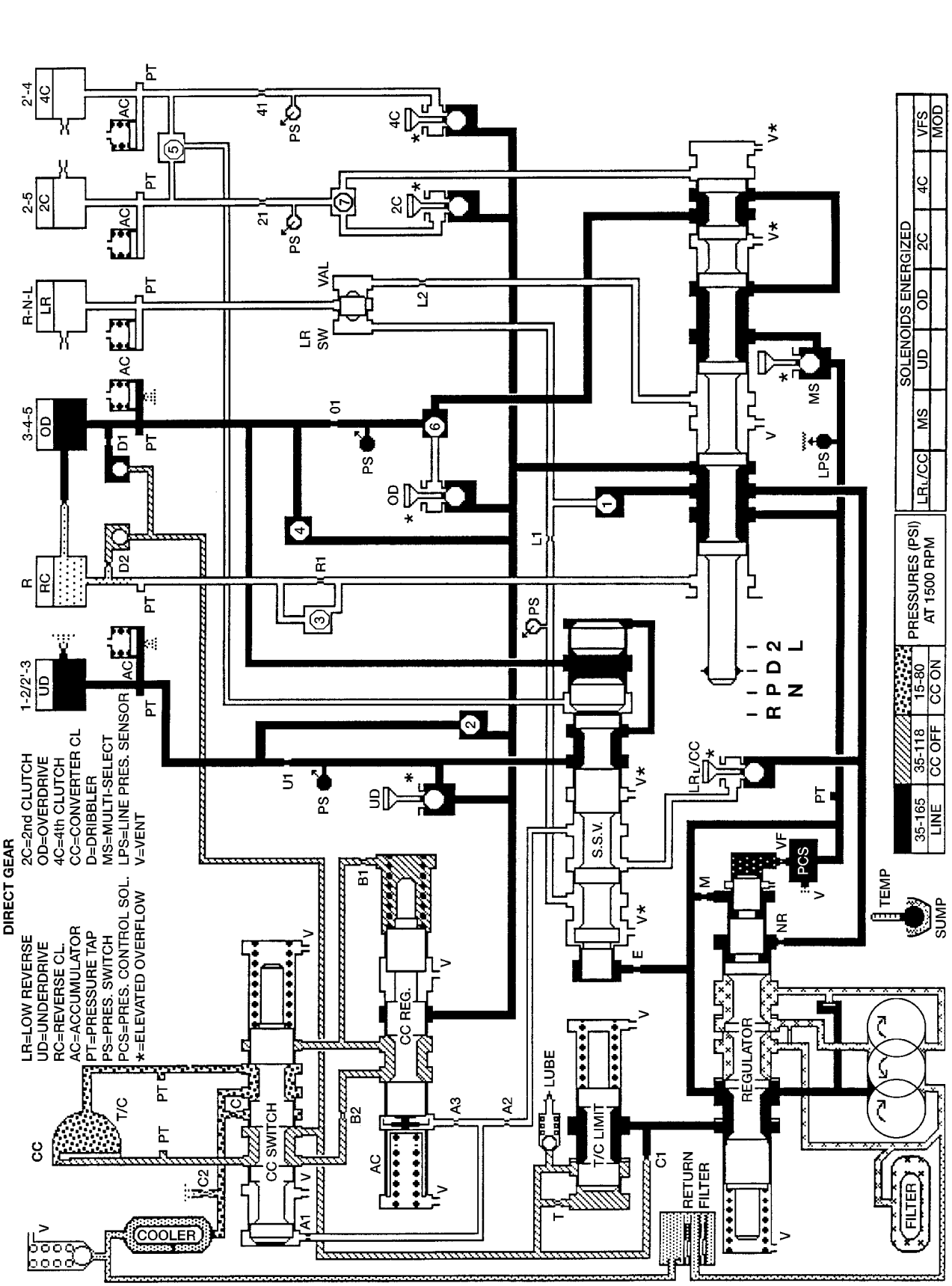
80a0e258
DIRECT GEAR
LR=LOW REVERSE
UD=UNDERDRIVE
RC=REVERSE CL.
AC=ACCUMULATOR
PT=PRESSURE TAP
PS=PRES. SWITCH
PCS=PRES. CONTROL SOL.
*=ELEVATED OVERFLOW
2C=2nd CLUTCH
OD=OVERDRIVE
4C=4th CLUTCH
CC=CONVERTER CL
D=DRIBBLER
MS=MULTI-SELECT
LPS=LINE PRES. SENSOR
V=VENT
SOLENOIDS ENERGIZED
LR/CC
MS
UD
OD
2C
4C
VFS
MOD
PRESSURES (PSI) AT 1500 RPM
35-165 LINE
35-118 CC OFF
15-80 CC ON
P R N D 2 1 L
1-2/2'-3
2'-4
2-5
R-N-L
3-4-5
R
CC
T/C
COOLER
CC SWITCH
CC REG.
S.S.V.
T/C LIMIT
LUBE
REGULATOR
RETURN FILTER
FILTER
SUMP
TEMP
VAL
LR SW
PCS
LPS
HYDRAULIC FLOW IN DIRECT GEAR

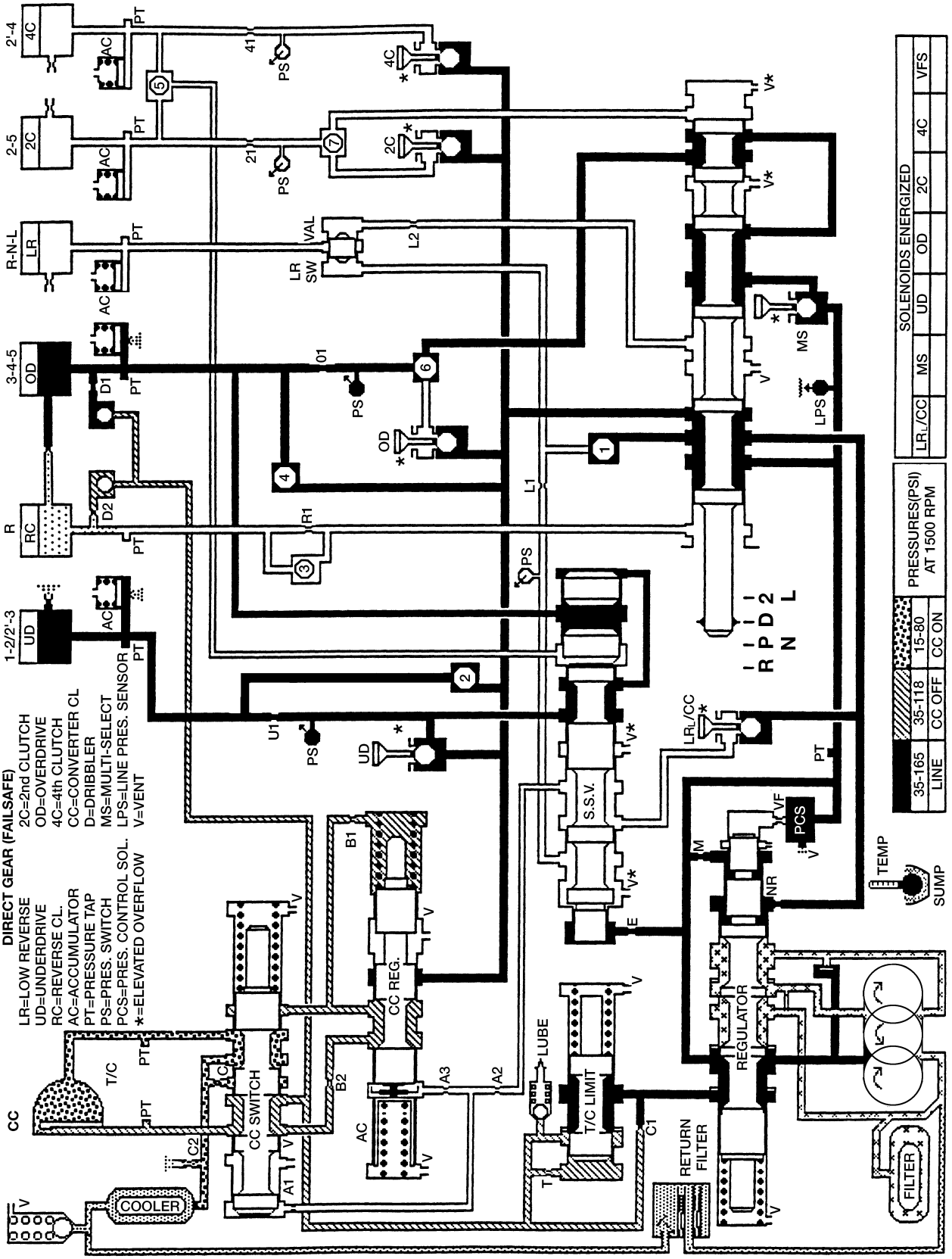

HYDRAULIC FLOW IN DIRECT GEAR (FAILSAFE)

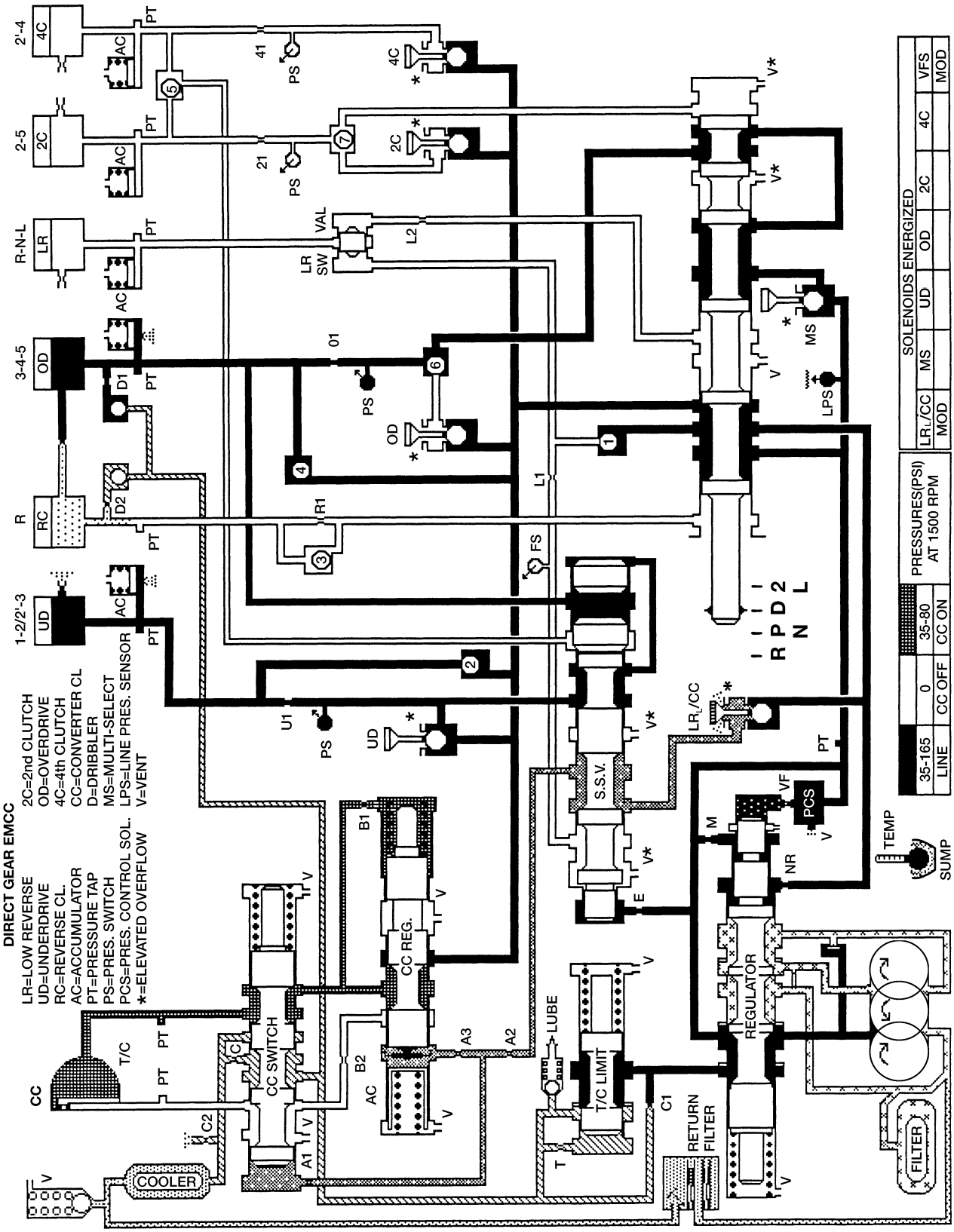

HYDRAULIC FLOW IN DIRECT GEAR EMCC

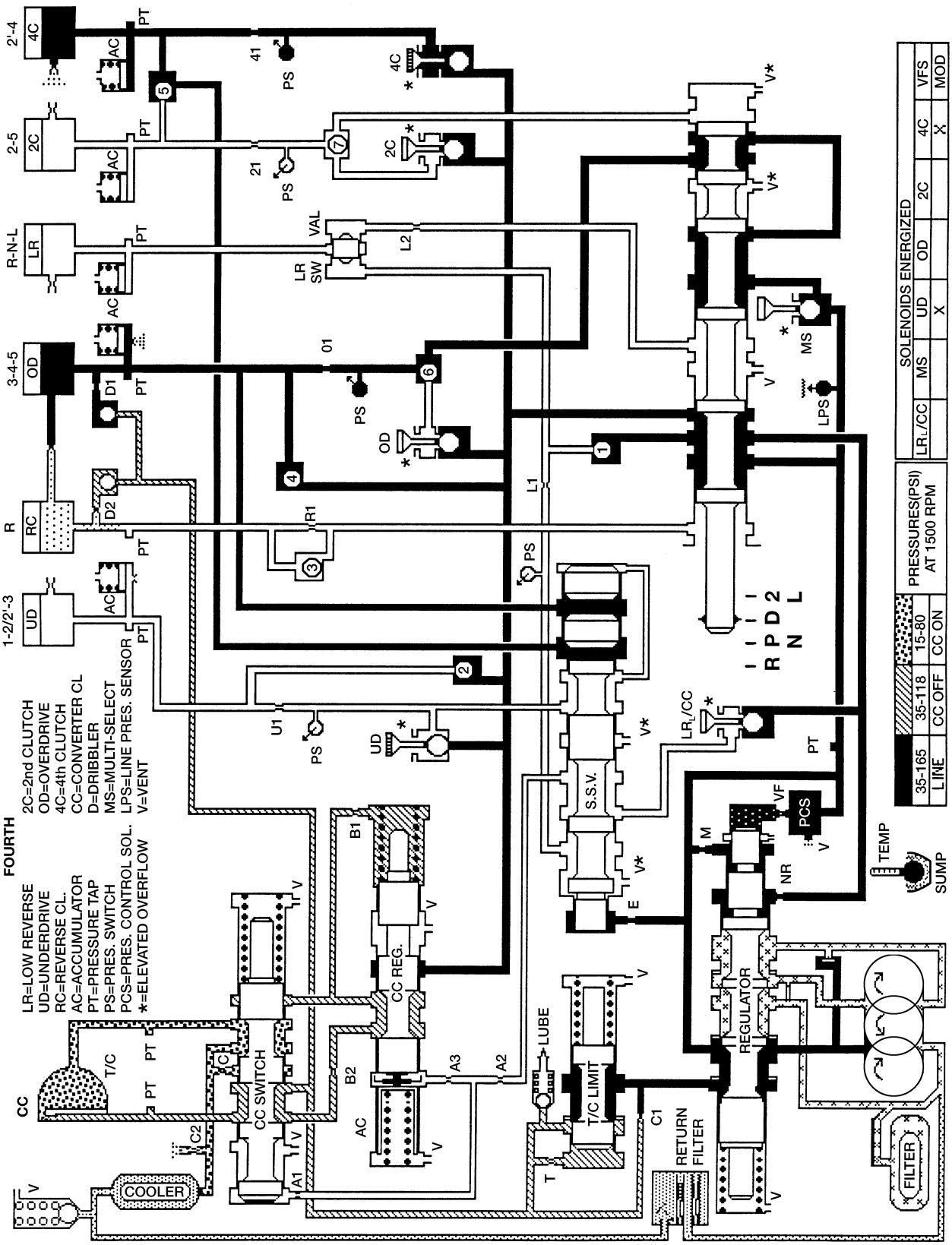

HYDRAULIC FLOW IN FOURTH

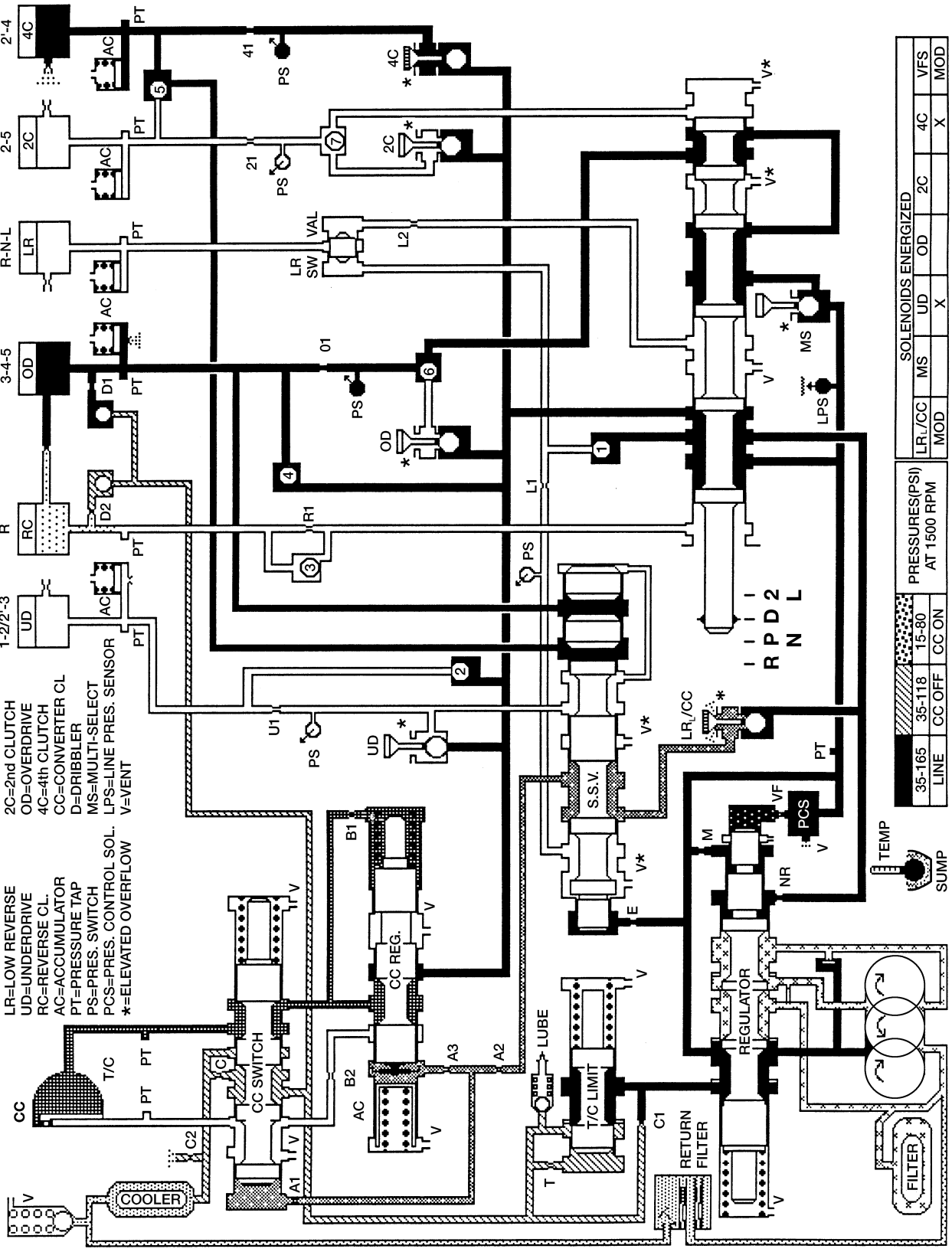
80a0e384
FOURTH EMCC
LR=LOW REVERSE
UD=UNDERDRIVE
RC=REVERSE CL.
AC=ACCUMULATOR
PT=PRESSURE TAP
PS=PRES. SWITCH
PCS=PRES. CONTROL SOL.
*=ELEVATED OVERFLOW
2C=2nd CLUTCH
OD=OVERDRIVE
4C=4th CLUTCH
CC=CONVERTER CL
D=DRIBBLER
MS=MULTI-SELECT
LPS=LINE PRES. SENSOR
V=VENT
PRESSURES(PSI) AT 1500 RPM
35-165 LINE
35-118 CC OFF
15-80 CC ON
SOLENOIDS ENERGIZED
LR/CC MOD
MS
UD X
OD
2C
4C X
VFS MOD
HYDRAULIC FLOW IN FOURTH EMCC

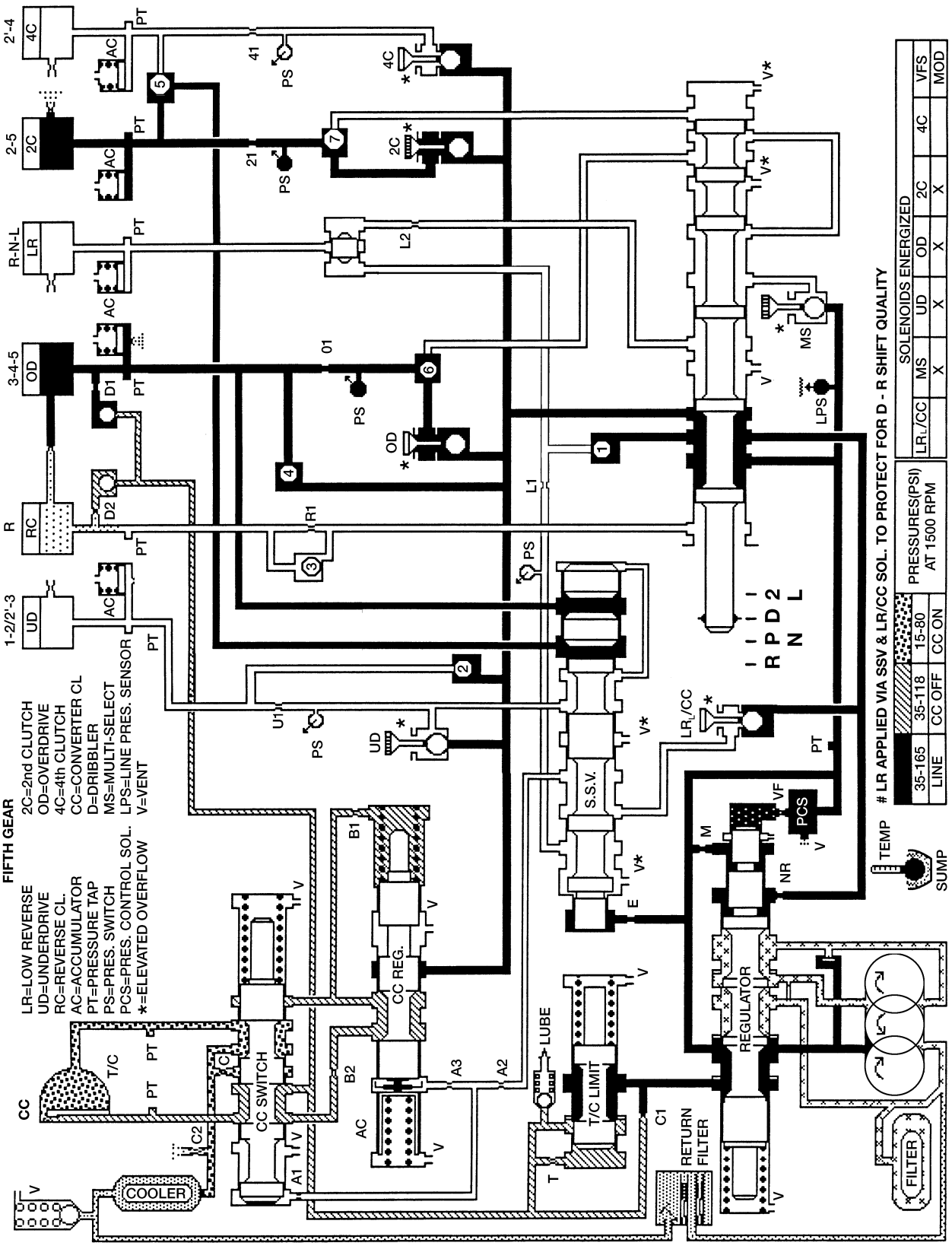
80a0e564
FIFTH GEAR
LR=LOW REVERSE
UD=UNDERDRIVE
RC=REVERSE CL.
AC=ACCUMULATOR
PT=PRESSURE TAP
PS=PRES. SWITCH
PCS=PRES. CONTROL SOL.
*=ELEVATED OVERFLOW
2C=2nd CLUTCH
OD=OVERDRIVE
4C=4th CLUTCH
CC=CONVERTER CL
D=DRIBBLER
MS=MULTI-SELECT
LPS=LINE PRES. SENSOR
V=VENT
# LR APPLIED VIA SSV & LR/CC SOL. TO PROTECT FOR D - R SHIFT QUALITY
PRESSURES(PSI) AT 1500 RPM
35-165 LINE
35-118 CC OFF
15-80 CC ON
SOLENOIDS ENERGIZED
LR/CC MS UD OD 2C 4C VFS
X X X X MOD
2-4 4C
2-5 2C
R-N-L LR
3-4-5 OD
1-2/2'-3 UD
R RC
CC
T/C
C1
C2
A1
A2
A3
B1
B2
AC
D1
D2
R1
L1
L2
01
21
41
U1
PT
AC
PS
V
V*
MS
LPS
LR/CC
UD
OD
S.S.V.
CC REG.
CC SWITCH
LUBE
T/C LIMIT
REGULATOR
RETURN FILTER
FILTER
COOLER
VF
PCS
NR
M
E
TEMP
SUMP
R P D 2
N L
HYDRAULIC FLOW IN FIFTH

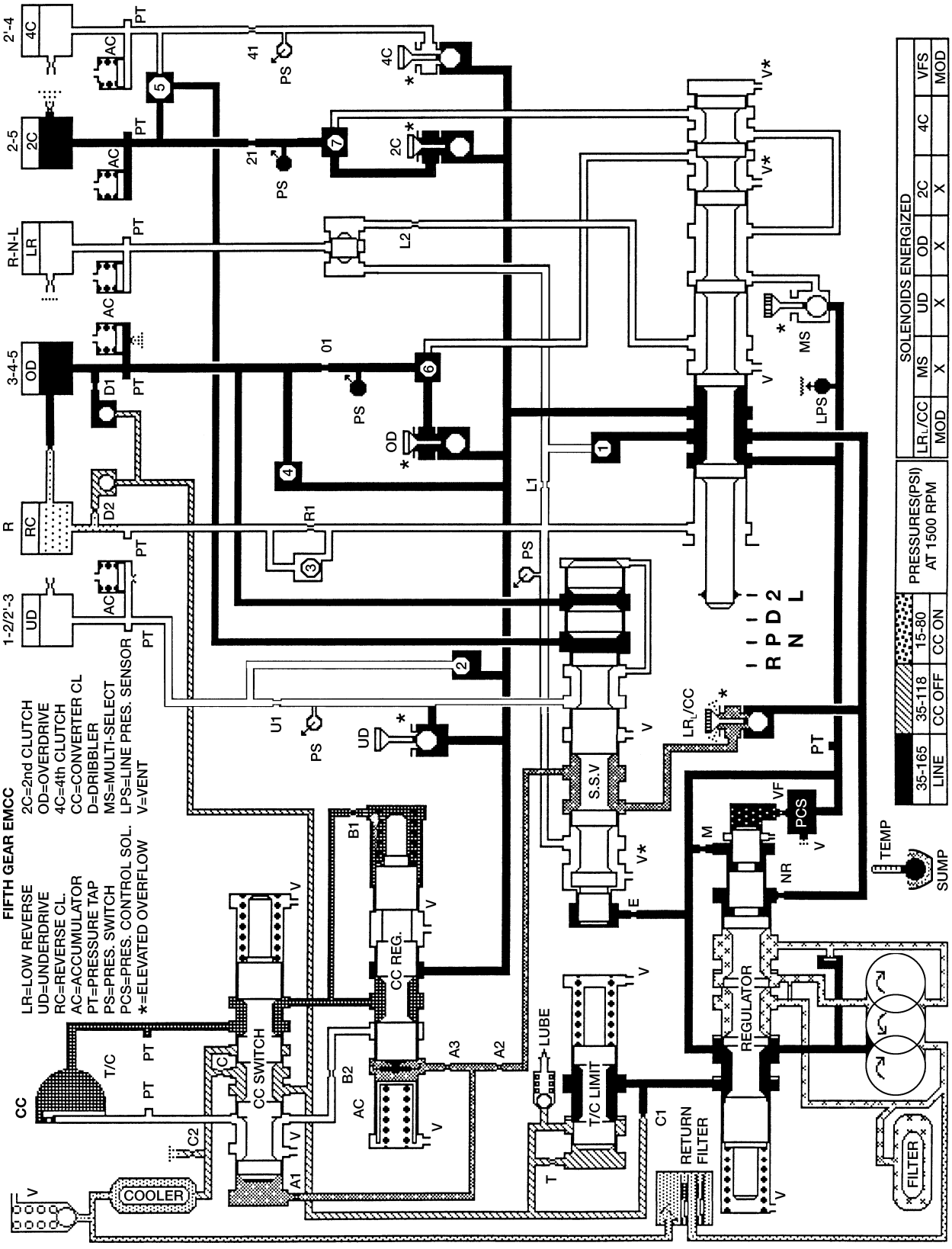

HYDRAULIC FLOW IN FIFTH EMCC

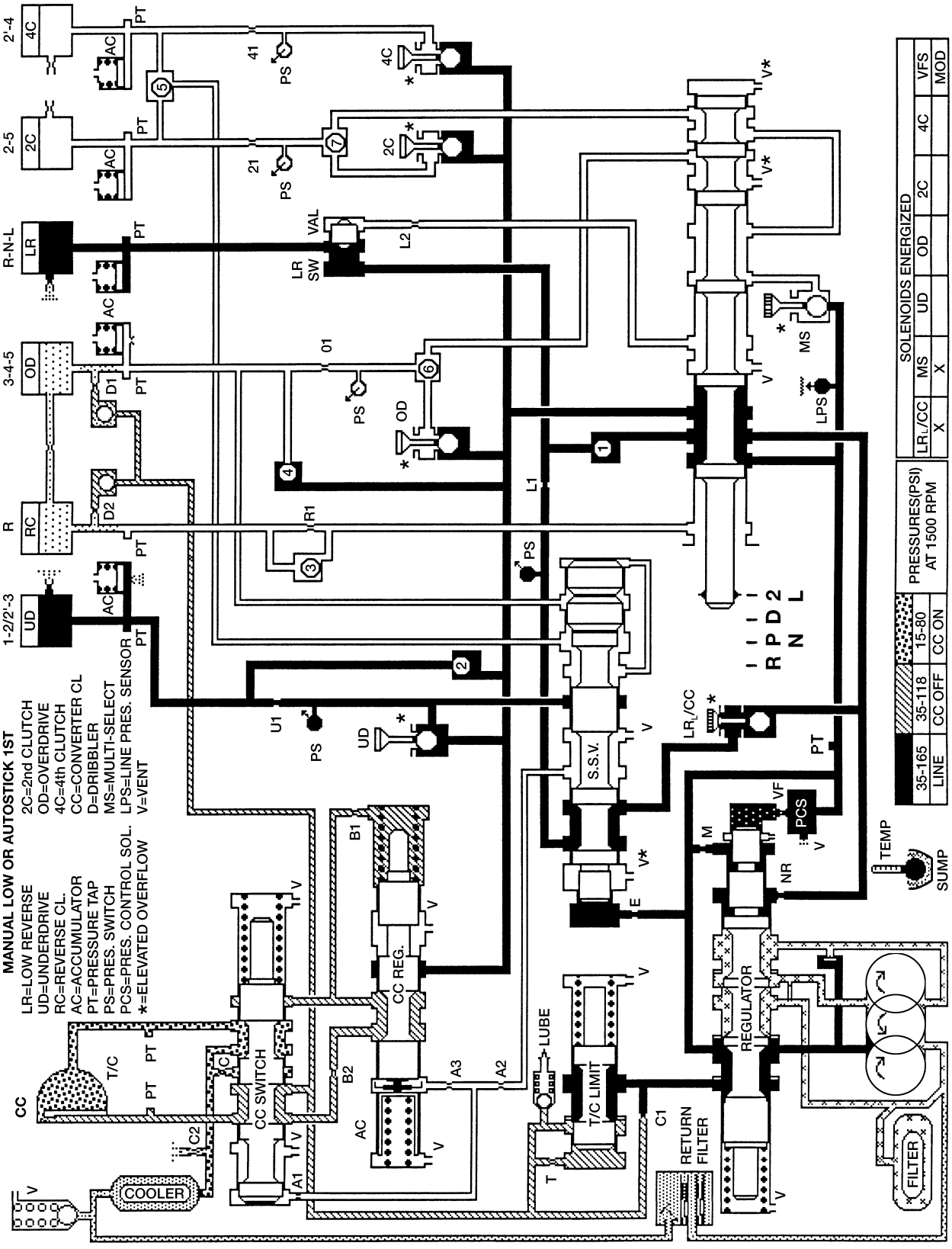
80a0e3c7
MANUAL LOW OR AUTOSTICK 1ST
LR=LOW REVERSE
UD=UNDERDRIVE
RC=REVERSE CL.
AC=ACCUMULATOR
PT=PRESSURE TAP
PS=PRES. SWITCH
PCS=PRES. CONTROL SOL.
*=ELEVATED OVERFLOW
2C=2nd CLUTCH
OD=OVERDRIVE
4C=4th CLUTCH
CC=CONVERTER CL
D=DRIBBLER
MS=MULTI-SELECT
LPS=LINE PRES. SENSOR
V=VENT
PRESSURES(PSI) AT 1500 RPM
35-165 LINE
35-118 CC OFF
15-80 CC ON
SOLENOIDS ENERGIZED
LR/CC
MS
UD
OD
2C
4C
VFS
MOD
HYDRAULIC FLOW IN MANUAL LOW OR AUTOSTICK 1ST

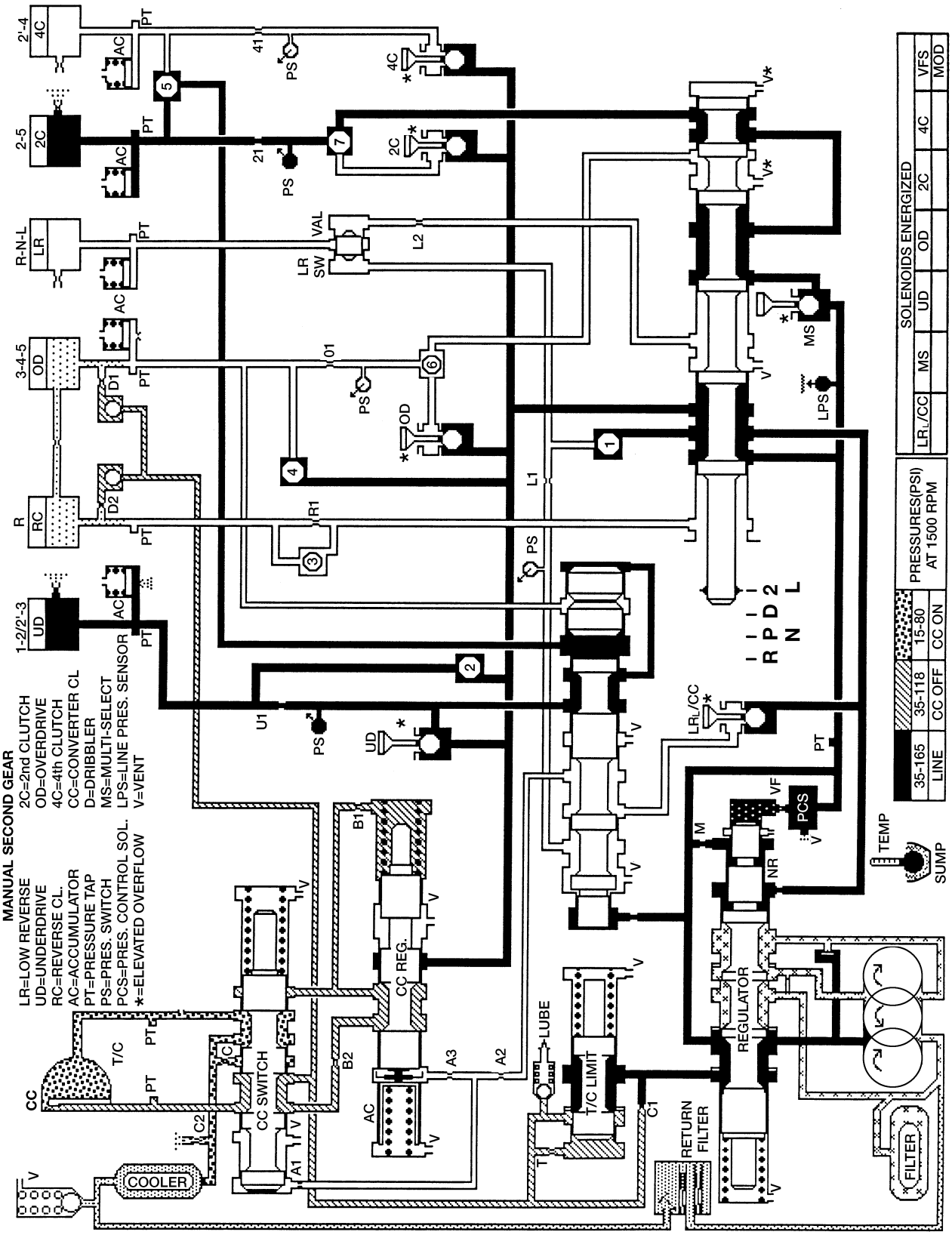

HYDRAULIC FLOW IN MANUAL SECOND

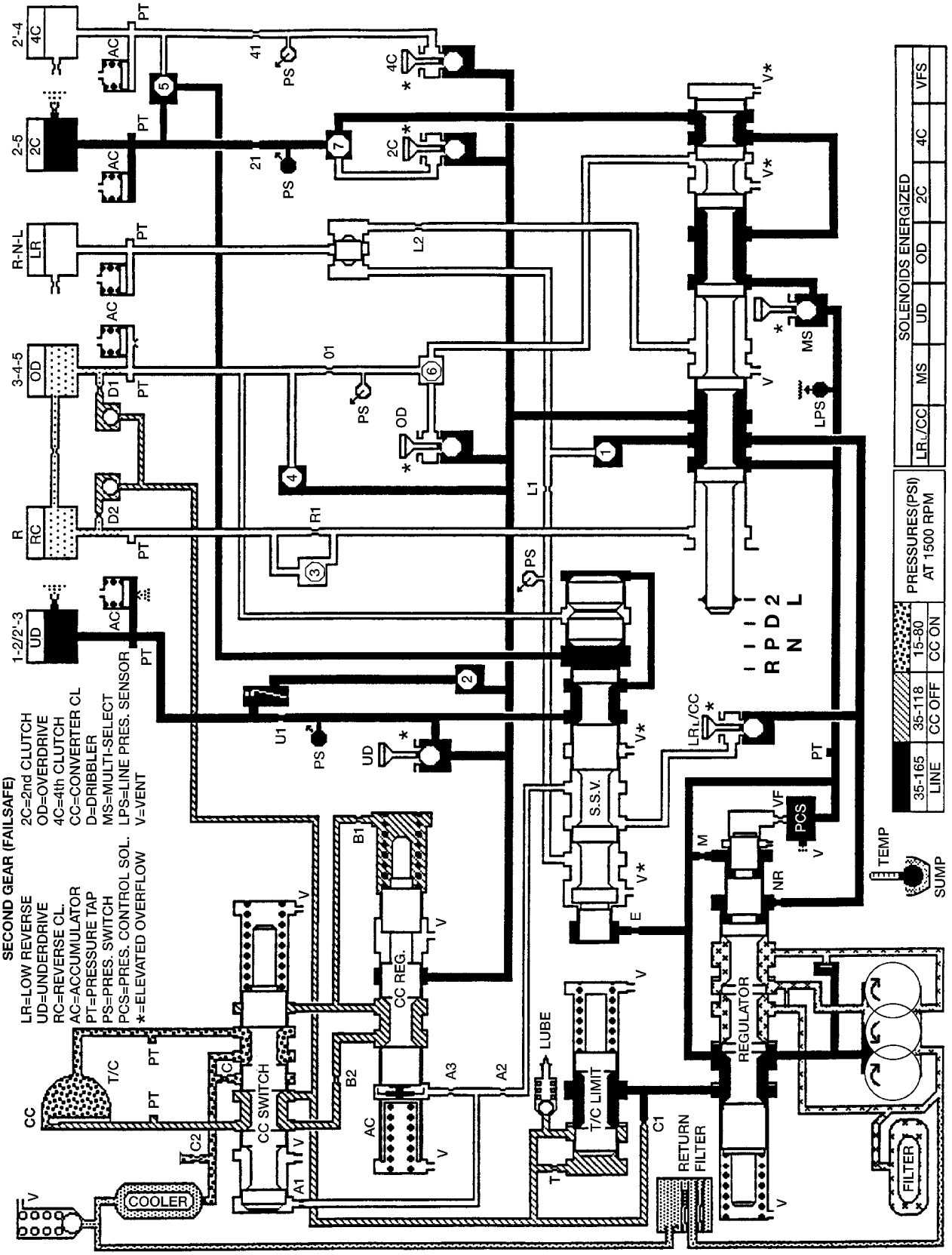

HYDRAULIC FLOW IN MANUAL SECOND (FAILSAFE)

SPECIFICATIONS

TRANSMISSION

GENERAL

Component	Metric	Inch
Output Shaft End Play	0.22-0.55 mm	0.009-0.021 in.
Input Shaft End Play	0.46-0.89 mm	0.018-0.035 in.
2C Clutch Pack Clearance	0.455-1.335 mm	0.018-0.053 in.
4C Clutch Pack Clearance	0.770-1.390 mm	0.030-0.055 in.
L/R Clutch Pack Clearance	1.00-1.74 mm	0.039-0.069 in.
OD Clutch Pack Clearance	1.103-1.856 mm	0.043-0.073 in.
UD Clutch Pack Clearance	0.84-1.54 mm	0.033-0.061 in.
Reverse Clutch Pack Clearance	0.81-1.24 mm	0.032-0.049 in.
Recommended fluid	Mopar® ATF +4	

GEAR RATIOS

1ST	3.00:1
2ND	1.67:1
2ND Prime	1.50:1
3RD	1.0:1
4TH	0.75:1
5TH	0.67:1
REVERSE	3.00:1

TORQUE SPECIFICATIONS

DESCRIPTION	N·m	Ft. Lbs.	In. Lbs.
Fitting, cooler line at trans	17.5	-	155
Bolt, torque convertor	31	23	-
Bolt/nut, crossmember	68	50	-
Bolt, driveplate to crankshaft	75	55	-
Bolt, oil pan	11.8	-	105
Screw, primary fluid filter	4.5	-	40
Bolt, oil pump	28.2	-	250
Bolt, oil pump body to cover	4.5	-	40
Screw, plate to oil pump body	4.5	-	40
Bolt, valve body to case	11.8	-	105
Plug, pressure test port	5.1	-	45
Bolt, reaction shaft support	11.8	-	105
Screw, valve body to transfer plate	5.6	-	50
Screw, solenoid module to transfer plate	5.7	-	50
Screw, accumulator cover	7	-	60
Screw, detent spring	4.5	-	40
Bolt, input speed sensor	11.8	-	105
Bolt, output speed sensor	11.8	-	105
Bolt, line pressure sensor	11.8	-	105
Bolt, extension housing	54	40	-
Valve, cooler return filter bypass	4.5	-	40
Screw, manual valve cam retaining	4.5	-	40
Bolt, manual lever	28.2	-	250

SPECIAL TOOLS

AUTOMATIC TRANSMISSION - RFE

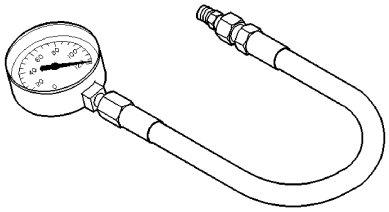

Gauge, Oil Pressure - C-3292

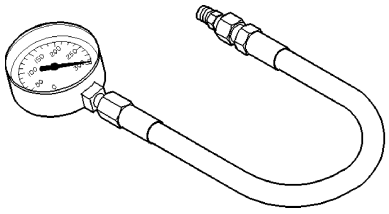

Gauge, Oil Pressure - C-3293SP

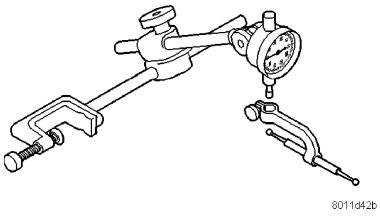

Dial Indicator - C-3339

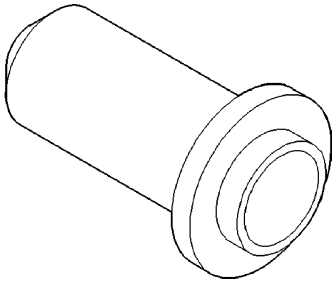

Installer, Seal - C-3860-A

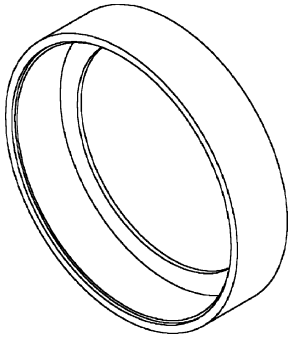

Compressor, Spring - 8249

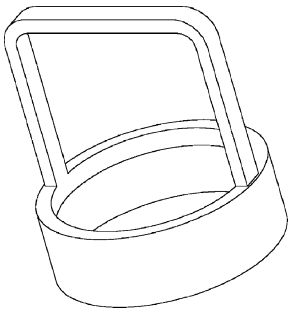

Compressor, Spring - 8250

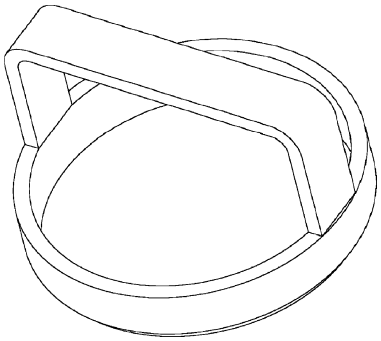

Compressor, Spring - 8251

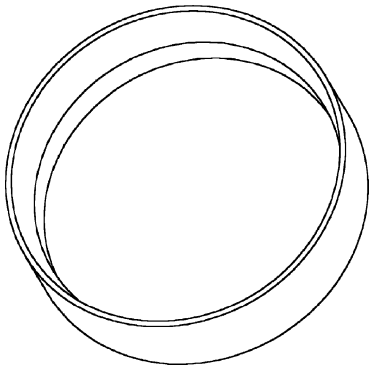

Installer, Piston - 8252

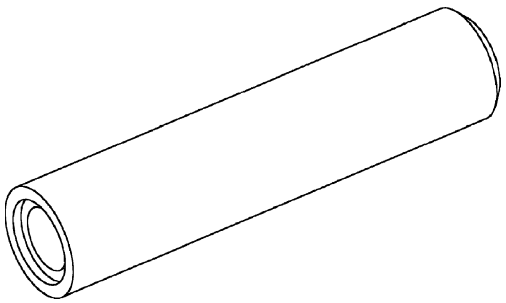

Installer, Seal - 8253

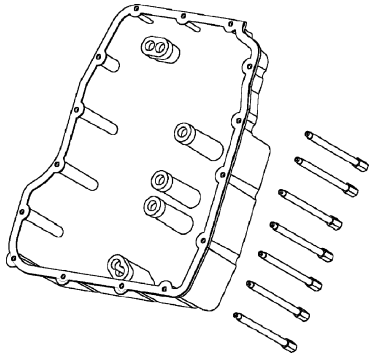

Adapter, Pressure Tap - 8258-A

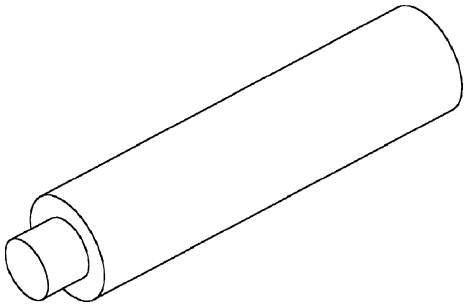

Installer, Seal - 8254

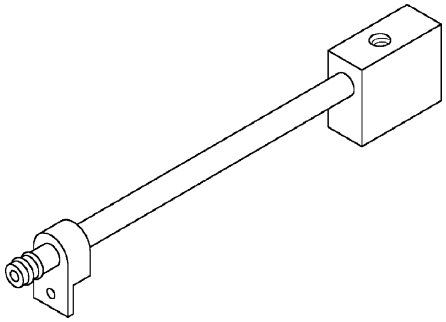

Adapter, Line Pressure - 8259

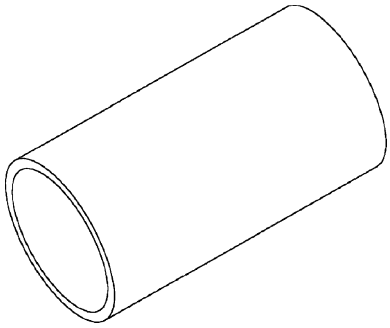

Installer, Snap-ring - 8255

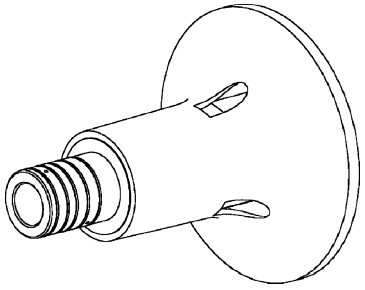

Fixture, Input Clutch Pressure - 8260

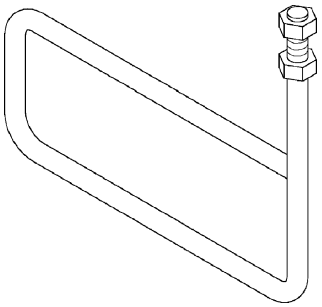

Stand, Support - 8257

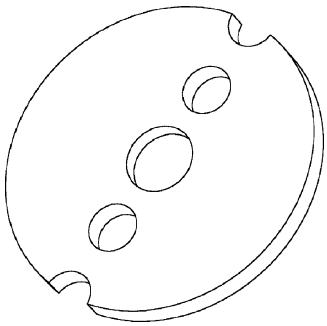

Plate, Alignment - 8261

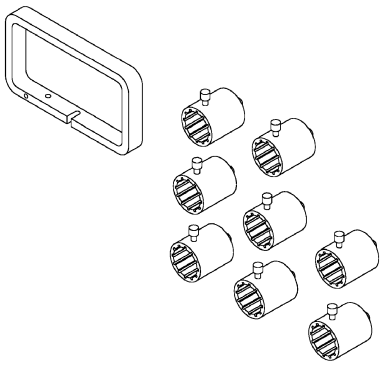

End Play Set - 8266

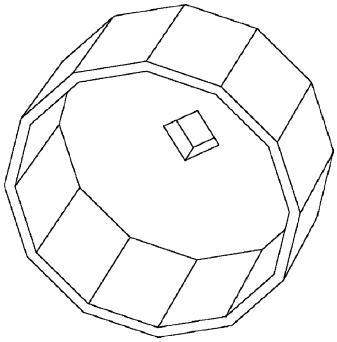

Wrench, Filter - 8321

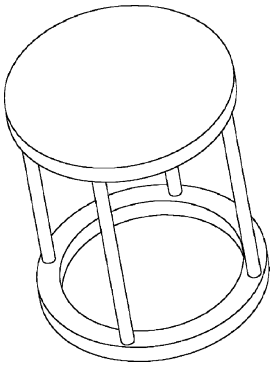

Compressor, Spring - 8285

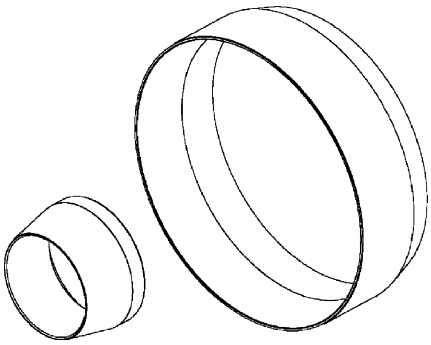

Installer, Piston - 8504

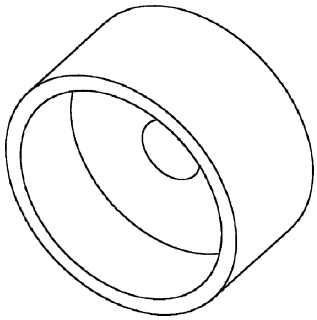

Installer, Bearing - 8320

RETAINER/BULKHEAD-4C

DISASSEMBLY

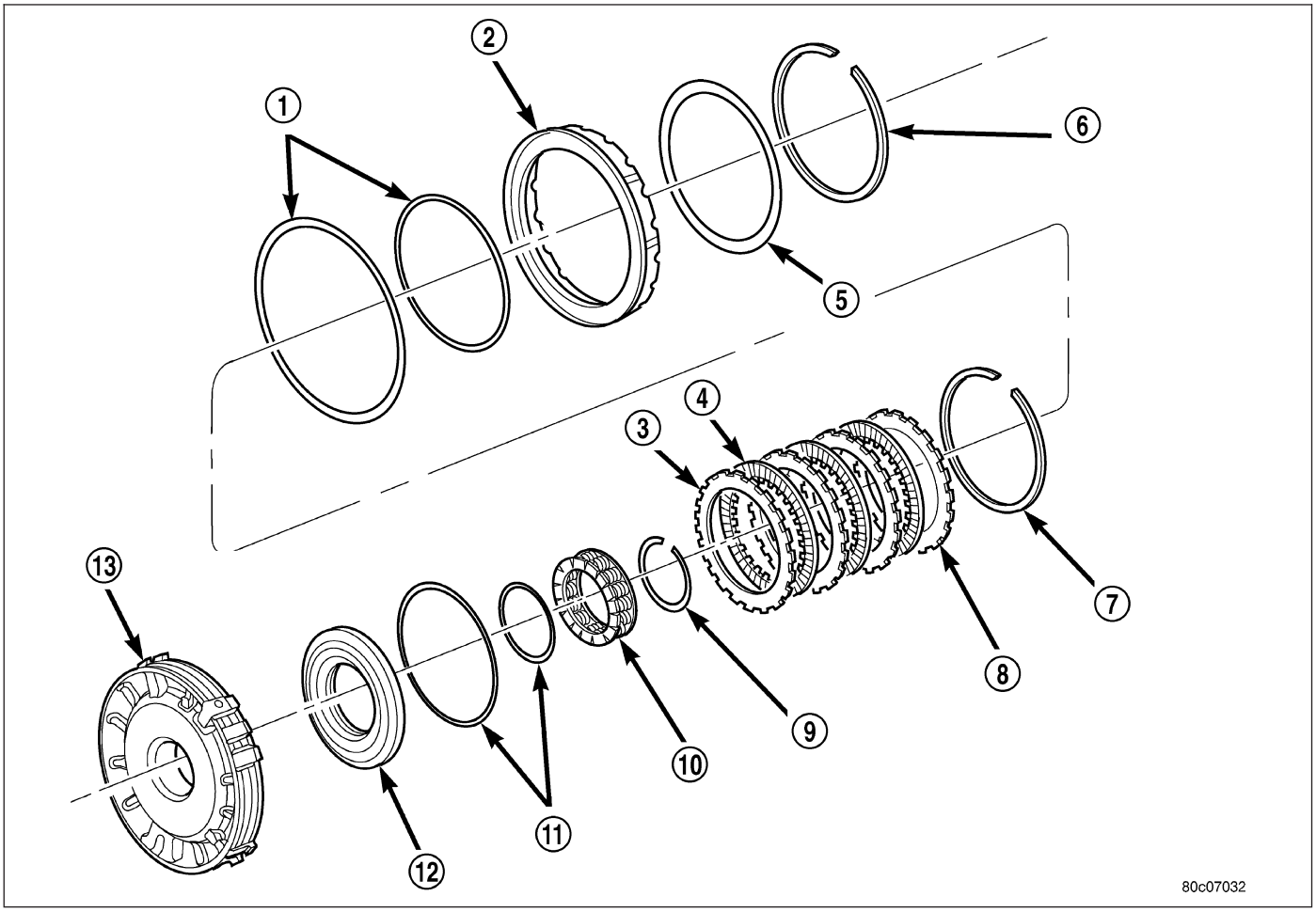

4C Retainer/Bulkhead Components

1 - SEAL
2 - 2C PISTON
3 - PLATE
4 - DISC
5 - 2C BELLEVILLE SPRING
6 - SNAP-RING
7 - SNAP-RING (SELECT)
8 - REACTION PLATE
9 - SNAP-RING
10 - RETURN SPRING
11 - SEAL
12 - 4C PISTON
13 - 4C RETAINER/BULKHEAD

1. Remove the 2C piston Belleville spring snap-ring (6) from the 4C retainer /bulkhead (13).
2. Remove the 2C piston Belleville spring (5) from the retainer/bulkhead (13).
3. Remove the 2C piston (2) from the retainer/bulkhead (13). Use 20 psi of air pressure to remove the piston if necessary.
4. Remove the 4C clutch snap-ring (7) from the retainer/bulkhead (13).
5. Remove the 4C clutch pack (3, 4, 8) from the retainer/bulkhead (13).

6. Using Spring Compressor 8250 (2) and a suitable shop press (1), compress the 4C piston return spring (10) and remove the snap-ring (9).
7. Remove the 4C piston return spring (10) and piston (12) from the retainer/bulkhead (13). Use 20 psi of air pressure to remove the piston if necessary.

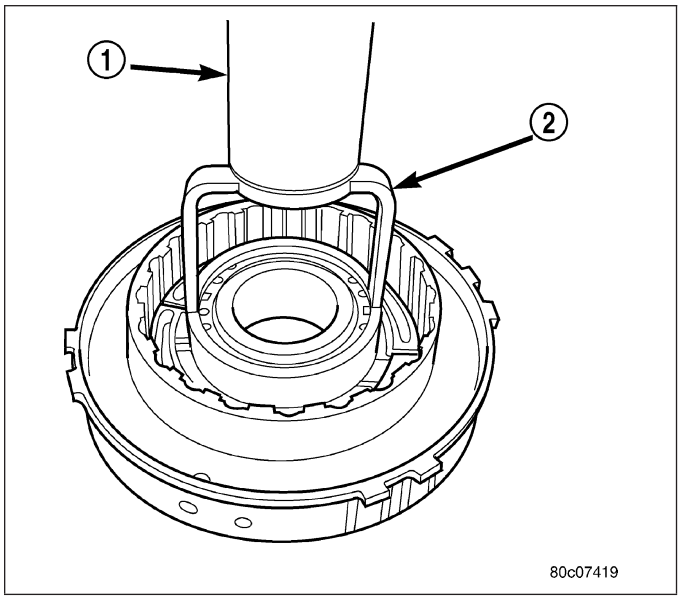

ASSEMBLY

NOTE: Clean and inspect all components. Replace any components which show evidence of excessive wear or scoring.

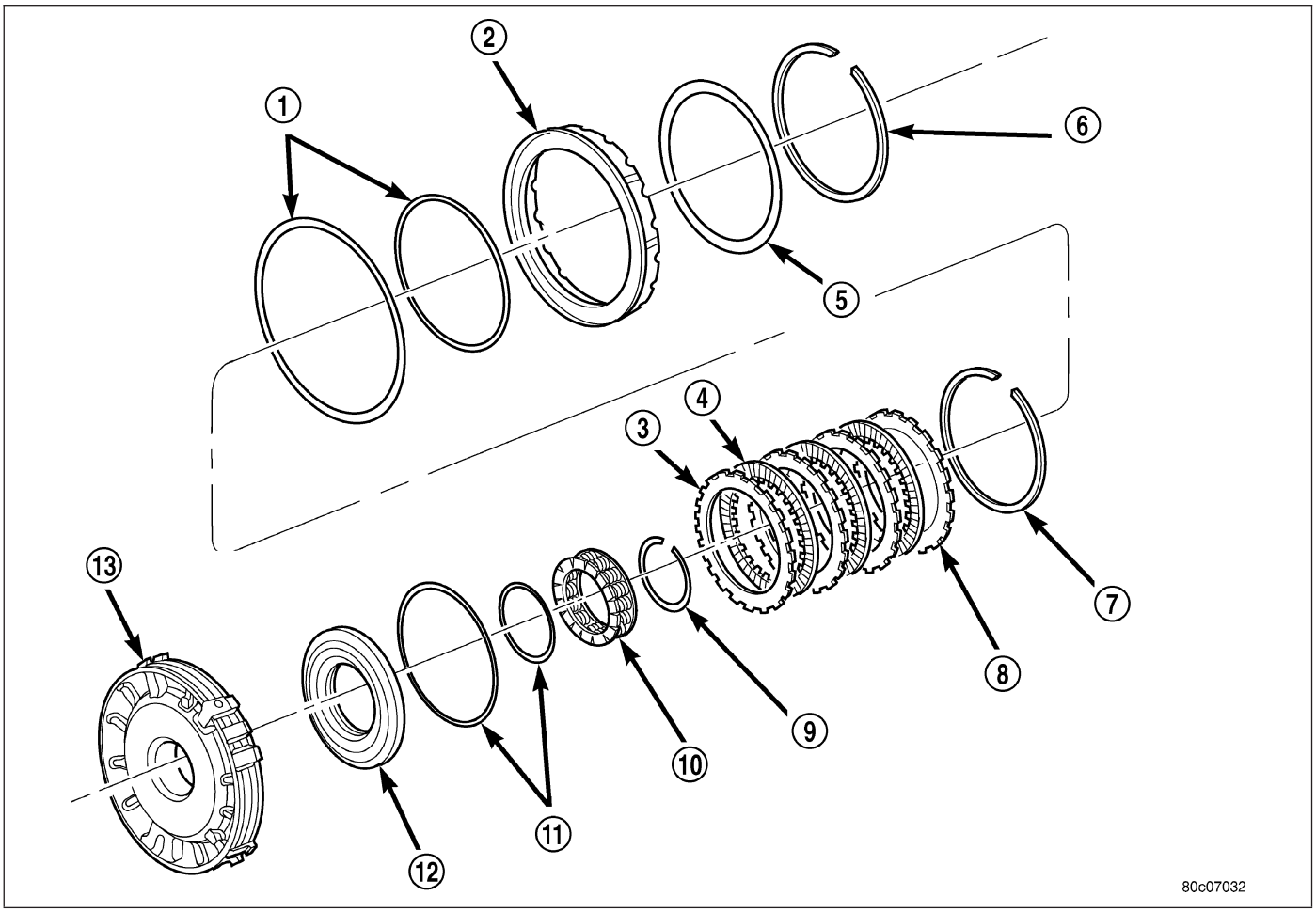

4C Retainer/Bulkhead Components

1 - SEAL
2 - 2C PISTON
3 - PLATE
4 - DISC
5 - 2C BELLEVILLE SPRING
6 - SNAP-RING
7 - SNAP-RING (SELECT)
8 - REACTION PLATE
9 - SNAP-RING
10 - RETURN SPRING
11 - SEAL
12 - 4C PISTON
13 - 4C RETAINER/BULKHEAD

1. Install new seals (1, 11) on the 2C and 4C pistons or in the piston retainers.
2. Lubricate all seals with Mopar® ATF +4 prior to installation.
3. Install the 4C piston (12) into the 4C retainer/bulkhead (13).
4. Position the 4C piston return spring (10) onto the 4C piston (12).

5. Using Spring Compressor 8250 (2) and a suitable shop press (1), compress the 4C piston return spring and install the snap-ring.

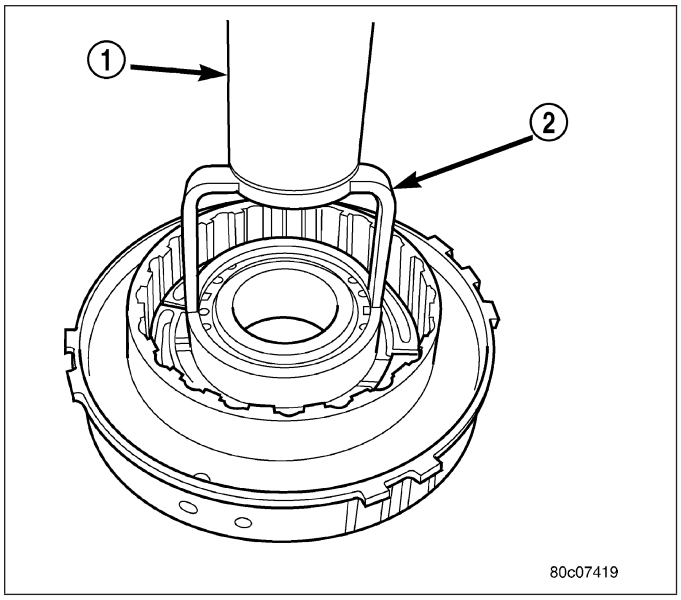

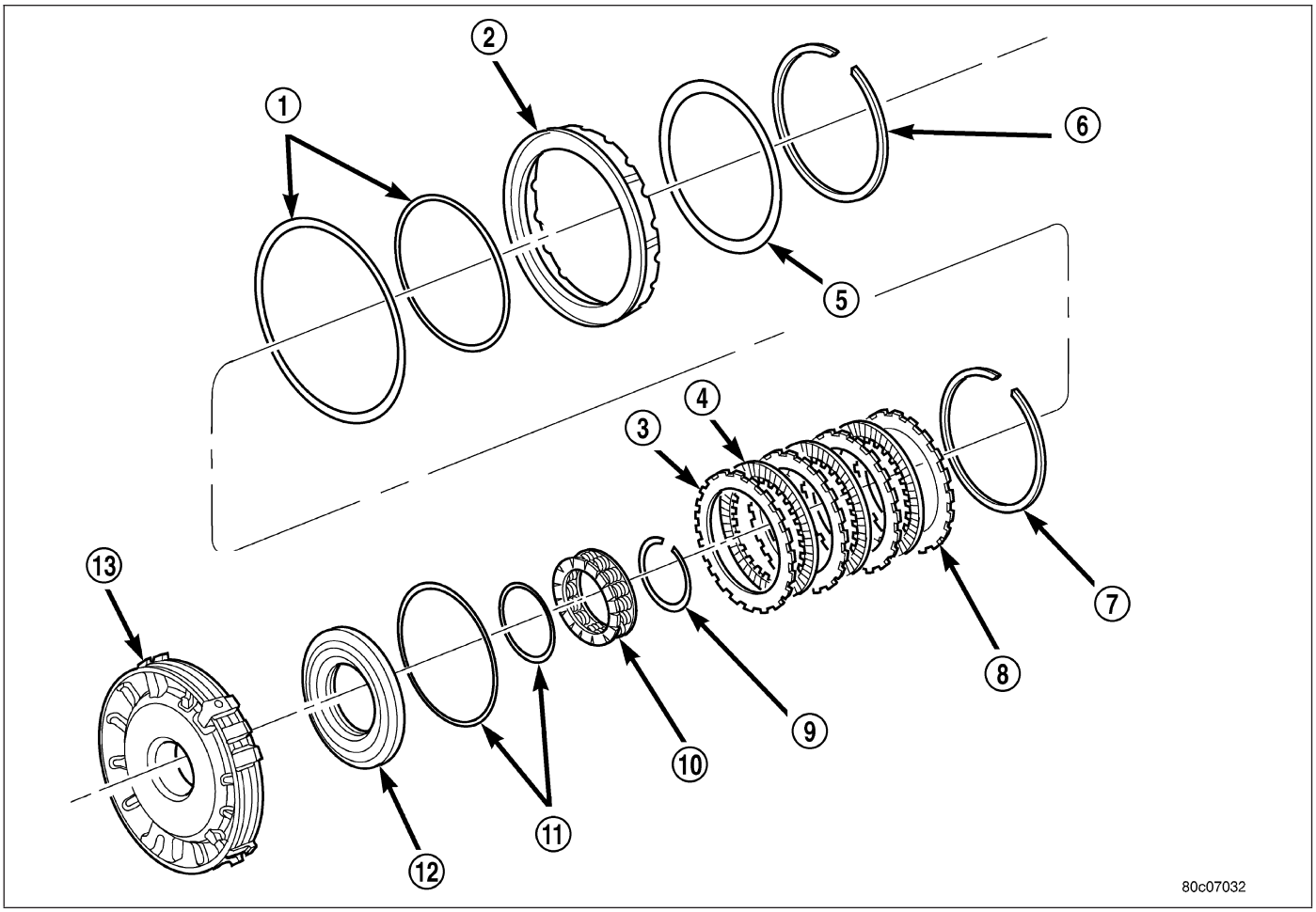

4C Retainer/Bulkhead Components

1 - SEAL
2 - 2C PISTON
3 - PLATE
4 - DISC
5 - 2C BELLEVILLE SPRING
6 - SNAP-RING
7 - SNAP-RING (SELECT)
8 - REACTION PLATE
9 - SNAP-RING
10 - RETURN SPRING
11 - SEAL
12 - 4C PISTON
13 - 4C RETAINER/BULKHEAD

6. Assemble and install the 4C clutch pack (3, 4) into the retainer/bulkhead (13) with the steel separator plate against the piston.
7. Install the 4C reaction plate (8) and snap-ring (7) into the retainer/bulkhead (13). The 4C reaction plate is non-directional.
8. Measure the 4C clutch clearance. The correct clutch clearance is 0.77-1.39 mm (0.030-0.055 in.). The snap-ring (7) is selectable. Install the chosen snap-ring and re-measure to verify the selection.
9. Install the 2C piston (2) into the retainer/bulkhead (13).
10. Position the 2C Belleville spring (5) onto the 2C piston (2).
11. Position the 2C Belleville spring snap-ring (6) onto the 2C Belleville spring (5).

12. Using Spring Compressor 8249 (2) and a suitable shop press (1), compress the Belleville spring (5) until the snap-ring (6) is engaged with the snap-ring groove in the retainer/bulkhead.

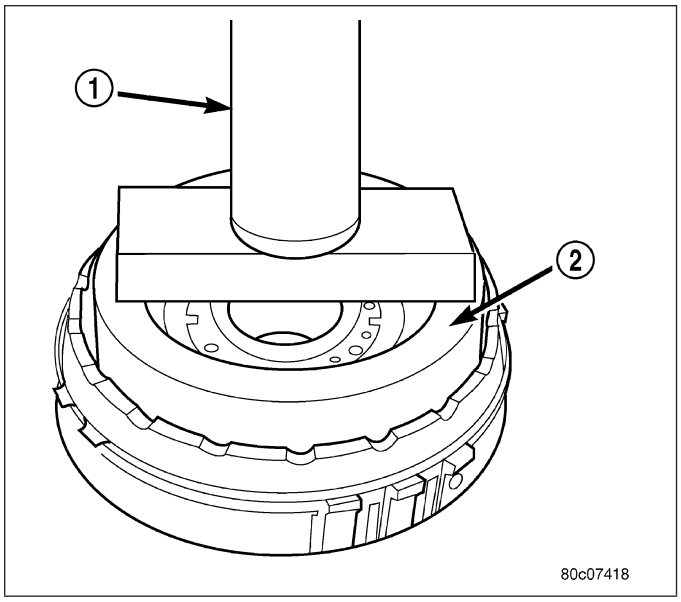

SEAL-ADAPTER HOUSING

REMOVAL

1. Remove the transfer case from the transmission.
2. Using a screw mounted on a slide hammer, remove the adapter housing seal.

INSTALLATION

1. Clean the adapter seal bore in the adapter housing of any residue or particles remaining from the original seal.
2. Install new oil seal in the adapter housing using Seal Installer C-3860-A (1). A properly installed seal is flush to the face of the seal bore.
3. Install the transfer case onto the transmission.

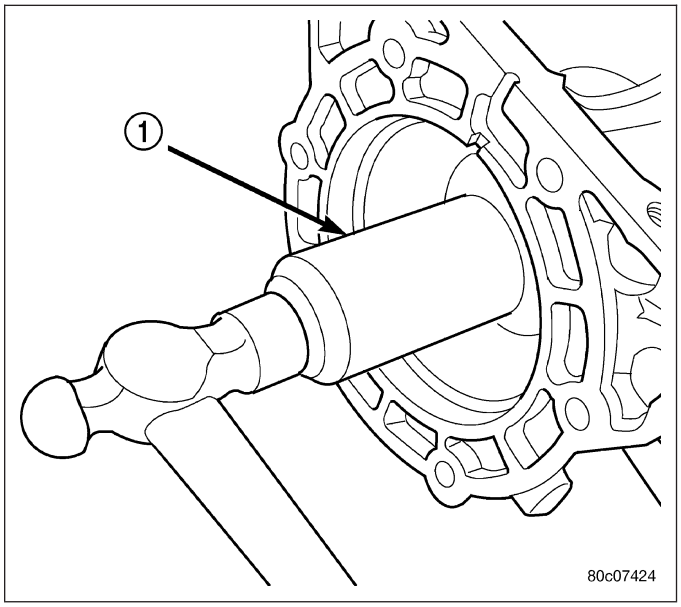

SYSTEM-BRAKE TRANSMISSION SHIFT INTERLOCK

DESCRIPTION

The Brake Transmission Shifter Interlock (BTSI), is a solenoid operated system. It consists of a solenoid permanently mounted on the gearshift cable.

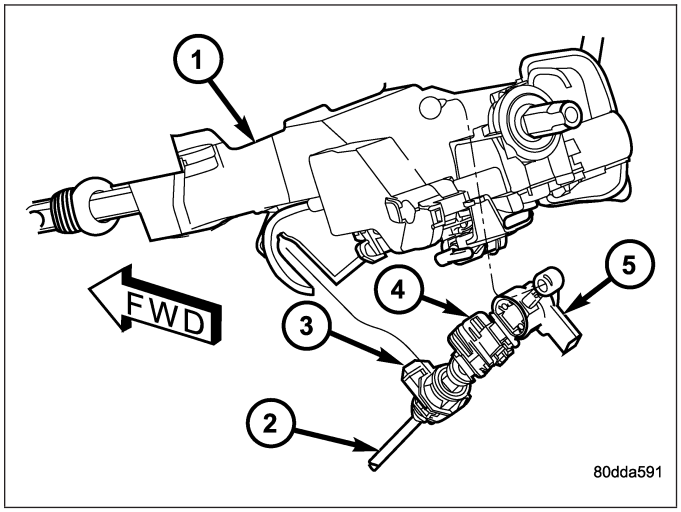

OPERATION

The system locks the shifter into the PARK position. The interlock system is engaged whenever the ignition switch is in the LOCK or ACCESSORY position. An additional electrically activated feature will prevent shifting out of the PARK position unless the brake pedal is depressed approximately one-half an inch. A magnetic holding device in line with the park lock cable is energized when the ignition is in the RUN position. When the key is in the RUN position and the brake pedal is depressed, the shifter is unlocked and will move into any position. The interlock system also prevents the ignition switch from being turned to the LOCK or ACCESSORY position, unless the shifter is fully locked into the PARK position.

DIAGNOSIS AND TESTING - BRAKE TRANSMISSION SHIFT INTERLOCK

1. Verify that the key can only be removed in the PARK position.
2. When the shift lever is in PARK And the shift handle pushbutton is in the “OUT” position, the ignition key cylinder should rotate freely from OFF to LOCK. When the shifter is in any other gear or neutral position, the ignition key cylinder should not rotate to the LOCK position.
3. Shifting out of PARK should not be possible when the ignition key cylinder is in the OFF position.
4. Shifting out of PARK should not be possible while applying normal pushbutton force and ignition key cylinder is in the RUN or START positions unless the foot brake pedal is depressed approximately 1/2 inch (12mm).
5. Shifting out of PARK should not be possible when the ignition key cylinder is in the ACCESSORY or LOCK positions.
6. Shifting between any gears, NEUTRAL or into PARK may be done without depressing foot brake pedal with ignition switch in RUN or START positions.

ADJUSTMENTS - BRAKE TRANSMISSION SHIFT INTERLOCK

Correct cable adjustment is important to proper interlock operation. The gearshift cable must be correctly adjusted in order to shift out of PARK.

ADJUSTMENT PROCEDURE

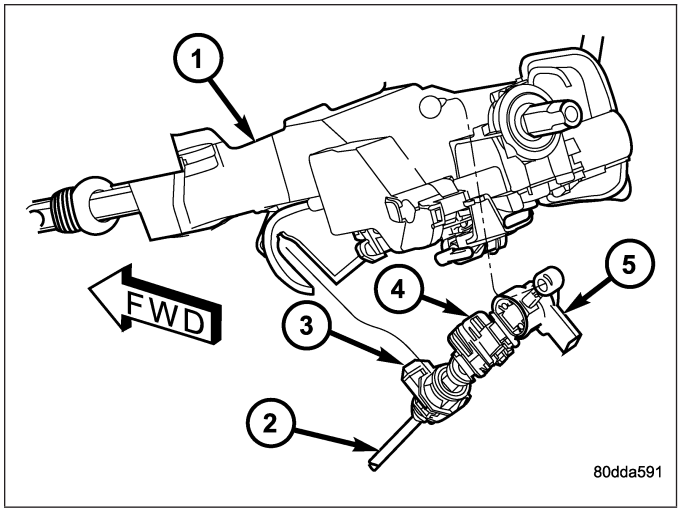

1. Remove the steering column trim as necessary for access to the brake transmission shift interlock.
2. Shift the transmission into the PARK position.
3. Pull upward on both the BTSI lock tab (4) and the gearshift cable lock tab (3).
4. Verify that the shift lever is in the PARK position.
5. Verify positive engagement of the transmission park lock by attempting to rotate the propeller shaft. The shaft will not rotate when the park lock is engaged.
6. Turn ignition switch to LOCK position. **Be sure ignition key cylinder is in the LOCK position. Cable will not adjust correctly in any other position.**
7. Ensure that the cable is free to self-adjust by pushing cable rearward and releasing.
8. Push the gearshift cable lock tab (3) down until it snaps in place.
9. Locate the BTSI alignment hole in the bottom of the BTSI mechanism between the BTSI lock tab and the BTSI connector.
10. Move the BTSI assembly up or down on the gearshift cable until an appropriate size drill bit can be inserted into the alignment hole and through the assembly.
11. Push the BTSI lock tab (4) down until it snaps into place and remove the drill bit.
12. Install any steering column trim previously removed.

BTSI FUNCTION CHECK

1. Verify removal of ignition key allowed in PARK position only.
2. When the shift lever is in PARK, the ignition key cylinder should rotate freely from off to lock. When the shifter is in any other position, the ignition key should not rotate from off to lock.
3. Shifting out of PARK should be possible when the ignition key cylinder is in the off position.
4. Shifting out of PARK should not be possible while applying normal force, and ignition key cylinder is in the run or start positions, unless the foot brake pedal is depressed approximately 1/2 inch (12mm).
5. Shifting out of PARK should not be possible when the ignition key cylinder is in the accessory or lock position.
6. Shifting between any gear and NEUTRAL, or PARK, may be done without depressing foot brake with ignition switch in run or start positions.
7. Engine starts must be possible with shifter lever in PARK or NEUTRAL positions only. Engine starts must not be possible in any position other than PARK or NEUTRAL.
8. With shifter lever in the:
   - PARK position - Apply upward force on the shift arm and remove pressure. Engine starts must be possible.
   - PARK position - Apply downward force on the shift arm and remove pressure. Engine starts must be possible.
   - NEUTRAL position - Normal position. Engine starts must be possible.
   - NEUTRAL position - Engine running and brakes applied, apply upward force on the shift arm. Transmission shall not be able to shift from neutral to reverse.

FLUID AND FILTER

DIAGNOSIS AND TESTING

EFFECTS OF INCORRECT FLUID LEVEL

A low fluid level allows the pump to take in air along with the fluid. Air in the fluid will cause fluid pressures to be low and develop slower than normal. If the transmission is overfilled, the gears churn the fluid into foam. This aerates the fluid and causing the same conditions occurring with a low level. In either case, air bubbles cause fluid overheating, oxidation, and varnish buildup which interferes with valve and clutch operation. Foaming also causes fluid expansion which can result in fluid overflow from the transmission vent or fill tube. Fluid overflow can easily be mistaken for a leak if inspection is not careful.

CAUSES OF BURNT FLUID

Burnt, discolored fluid is a result of overheating which has three primary causes.

1. Internal clutch slippage, usually caused by low line pressure, inadequate clutch apply pressure, or clutch seal failure.
2. A result of restricted fluid flow through the main and/or auxiliary cooler. This condition is usually the result of a faulty or improperly installed drainback valve, a damaged oil cooler, or severe restrictions in the coolers and lines caused by debris or kinked lines.
3. Heavy duty operation with a vehicle not properly equipped for this type of operation. Trailer towing or similar high load operation will overheat the transmission fluid if the vehicle is improperly equipped. Such vehicles should have an auxiliary transmission fluid cooler, a heavy duty cooling system, and the engine/axle ratio combination needed to handle heavy loads.

FLUID CONTAMINATION

Transmission fluid contamination is generally a result of:

- adding incorrect fluid
- failure to clean dipstick and fill tube when checking level
- engine coolant entering the fluid
- internal failure that generates debris
- overheat that generates sludge (fluid breakdown)
- failure to replace contaminated converter after repair

The use of non-recommended fluids can result in transmission failure. The usual results are erratic shifts, slippage, abnormal wear and eventual failure due to fluid breakdown and sludge formation. Avoid this condition by using recommended fluids only.

The dipstick cap and fill tube should be wiped clean before checking fluid level. Dirt, grease and other foreign material on the cap and tube could fall into the tube if not removed beforehand. Take the time to wipe the cap and tube clean before withdrawing the dipstick.

Engine coolant in the transmission fluid is generally caused by a cooler malfunction. The only remedy is to replace the radiator as the cooler in the radiator is not a serviceable part. If coolant has circulated through the transmission, an overhaul is necessary.

The torque converter should also be replaced whenever a failure generates sludge and debris. This is necessary because normal converter flushing procedures will not remove all contaminants.

STANDARD PROCEDURE

FLUID LEVEL CHECK

Low fluid level can cause a variety of conditions because it allows the pump to take in air along with the fluid. As in any hydraulic system, air bubbles make the fluid spongy, therefore, pressures will be low and build up slowly.

Improper filling can also raise the fluid level too high. When the transmssion has too much fluid, the geartrain churns up foam and cause the same conditions which occur with a low fluid level.

In either case, air bubbles can cause overheating and/or fluid oxidation, and varnishing. This can interfere with normal valve, clutch, and accumulator operation. Foaming can also result in fluid escaping from the transmission vent where it may be mistaken for a leak.

After the fluid has been checked, seat the dipstick fully to seal out water and dirt.

The transmission has a dipstick to check oil level. It is located on the right side of the engine. Be sure to wipe all dirt from dipstick handle before removing.

The torque converter fills in both the P (PARK) and N (NEUTRAL) positions. Place the selector lever in P (PARK) to be sure that the fluid level check is accurate. **The engine should be running at idle speed for at least one minute, with the vehicle on level ground.** At normal operating temperature (approximately 82 C. or 180 F.), the fluid level is correct if it is in the HOT region (cross-hatched area) on the oil level indicator. The fluid level will be approximately at the upper COLD hole of the dipstick at 70° F fluid temperature.

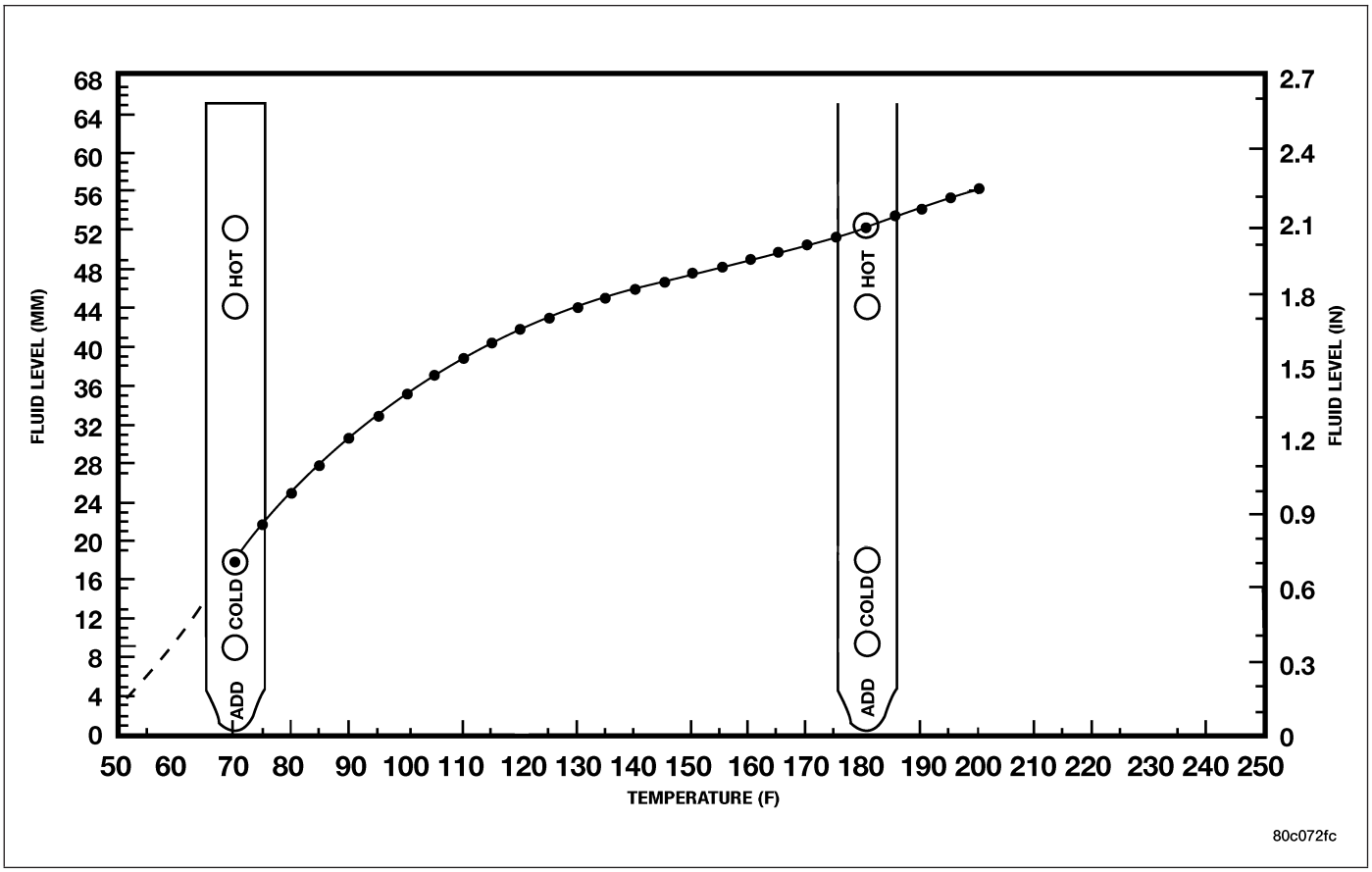

NOTE: Engine and Transmission should be at normal operating temperature before performing this procedure.

1. Start engine and apply parking brake.
2. Shift the transmission into DRIVE for approximately 2 seconds.
3. Shift the transmission into REVERSE for approximately 2 seconds.
4. Shift the transmission into PARK.
5. Hook up scan tool and select transmission.
6. Select sensors.
7. Read the transmission temperature value.
8. Compare the fluid temperature value with the chart.
9. Adjust transmission fluid level shown on the dipstick according to the Transmission Fluid Temperature Chart.

NOTE: After adding any fluid to the transmission, wait a minimum of 2 minutes for the oil to fully drain from the fill tube into the transmission before rechecking the fluid level.

10. Check transmission for leaks.

FLUID AND FILTER REPLACEMENT

For proper service intervals (Refer to LUBRICATION & MAINTENANCE/MAINTENANCE SCHEDULES - DESCRIPTION).

REMOVAL

1. Hoist and support vehicle on safety stands.
2. Place a large diameter shallow drain pan beneath the transmission pan.
3. Remove bolts holding front and sides of pan to transmission.
4. Loosen bolts holding rear of pan to transmission.
5. Slowly separate front of pan away from transmission allowing the fluid to drain into drain pan.
6. Hold up pan and remove remaining bolts holding pan to transmission.
7. While holding pan level, lower pan away from transmission.
8. Pour remaining fluid in pan into drain pan.
9. Remove the screw holding the primary oil filter (1) to valve body.
10. Separate filter from valve body and oil pump and pour fluid in filter into drain pan.
11. Inspect the oil filter seal in the bottom of the oil pump. If the seal is not installed completely in the oil pump, or is otherwise damaged, then remove and discard the oil filter seal from the bottom of the oil pump. If the seal is installed correctly and is in good condition, it can be reused.
12. If replacing the cooler return filter (2), use Oil Filter Wrench 8321 to remove the filter from the transmission.
13. Dispose of used trans fluid and filter(s) properly.

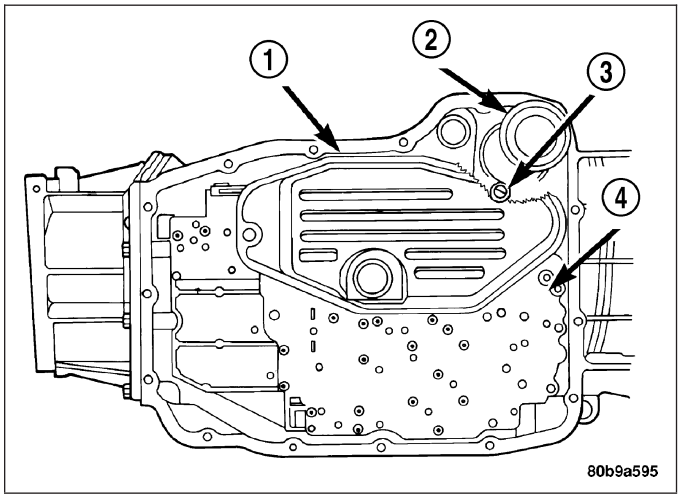

INSPECTION

Inspect bottom of pan and magnet for excessive amounts of metal. A light coating of clutch material on the bottom of the pan does not indicate a problem unless accompanied by a slipping condition or shift lag. If fluid and pan are contaminated with excessive amounts of debris, refer to the diagnosis section of this group.

CLEANING

1. Using a suitable solvent, clean pan and magnet.
2. Using a suitable gasket scraper, clean original sealing material from surface of transmission case and the transmission pan.

INSTALLATION

CAUTION: The primary oil filter seal MUST be fully installed flush against the oil pump body. DO NOT install the seal onto the filter neck and attempt to install the filter and seal as an assembly. Damage to the transmission will result.

1. If necessary, install a new primary oil filter seal in the oil pump inlet bore. Seat the seal in the bore with a suitable tool (appropriately sized drift or socket, the butt end of a hammer, or other suitable tool).
2. Place replacement filter in position on valve body and into the oil pump.
3. Install screw to hold the primary oil filter (1) to valve body. Tighten screw to 4.5 N·m (40 in. lbs.) torque.
4. Install new cooler return filter (2) onto the transmission, if necessary. Torque the filter to 14.12 N·m (125 in.lbs.).

5. Place bead of Mopar® RTV sealant onto the transmission case sealing surface.
6. Place pan in position on transmission.
7. Install bolts to hold pan to transmission. Tighten bolts to 11.8 N·m (105 in. lbs.) torque.
8. Lower vehicle and fill transmission with Mopar® ATF +4.

TRANSMISSION FILL

To avoid overfilling transmission after a fluid change or overhaul, perform the following procedure:

1. Remove dipstick and insert clean funnel in transmission fill tube.
2. Add following initial quantity of Mopar® ATF +4 to transmission:
   a. If only fluid and filter were changed, add **10 pints (5 quarts)** of ATF +4 to transmission.
   b. If transmission was completely overhauled and the torque converter was replaced or drained, add **24 pints (12 quarts)** of ATF +4 to transmission.
3. Check the transmission fluid (Refer to 21 - TRANSMISSION/AUTOMATIC - RFE/FLUID - STANDARD PROCEDURE) and adjust as required.

CABLE-GEARSHIFT

DIAGNOSIS AND TESTING - GEARSHIFT CABLE

1. Engine starts must be possible with shift lever in PARK or NEUTRAL positions only. Engine starts must not be possible in any other gear position.
2. With the shift lever in the:
   a. PARK position - Apply upward force on the shift arm and remove pressure. Engine starts must be possible.
   b. PARK position - Apply downward force on the shift arm and remove pressure. Engine starts must be possible.
   c. NEUTRAL position - Normal position. Engine starts must be possible.
   d. NEUTRAL position - Engine running and brakes applied, apply upward force on the shift arm. Transmission shall not be able to shift from neutral to reverse.

REMOVAL

1. Shift transmission into PARK.
2. Raise vehicle.
3. Disengage cable (1) eyelet at transmission manual shift lever (3) and pull cable adjuster out of mounting bracket.

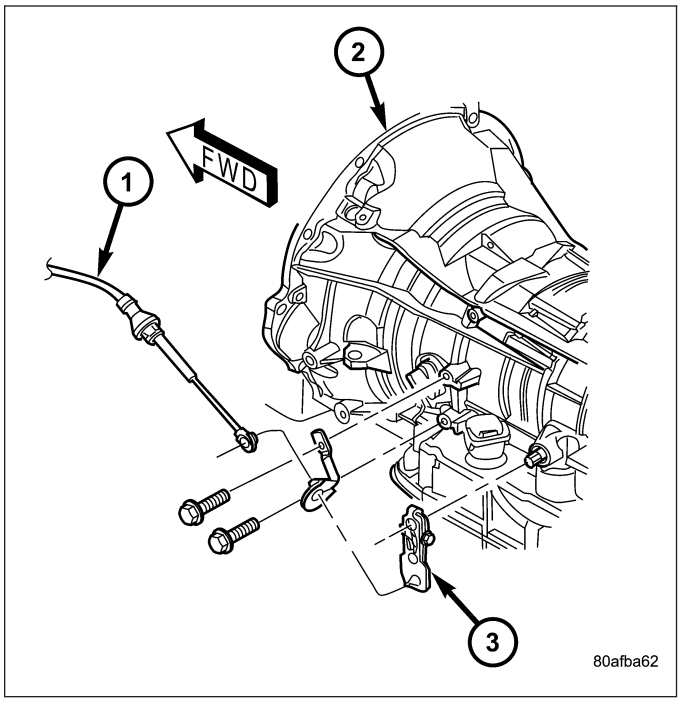

4. Lower the vehicle.
5. Remove the dash panel insulation pad as necessary to access the gearshift cable grommet (2).
6. Remove grommet (2) from the dash panel.

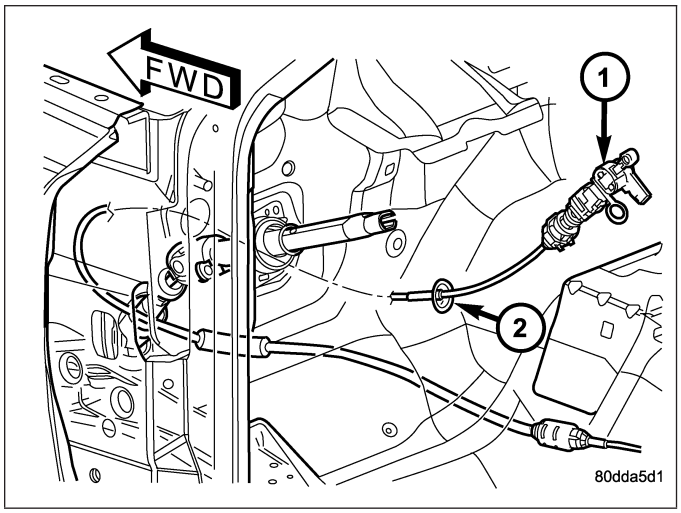

7. Remove any steering column (1) trim necessary to access the gearshift cable (2) and BTSI mechanism.
8. Disconnect the BTSI wiring connector (5).
9. Disconnect cable at lower column bracket and shift lever pin and pull the cable through the dash panel opening into the vehicle.
10. Remove gearshift cable (2) from vehicle.

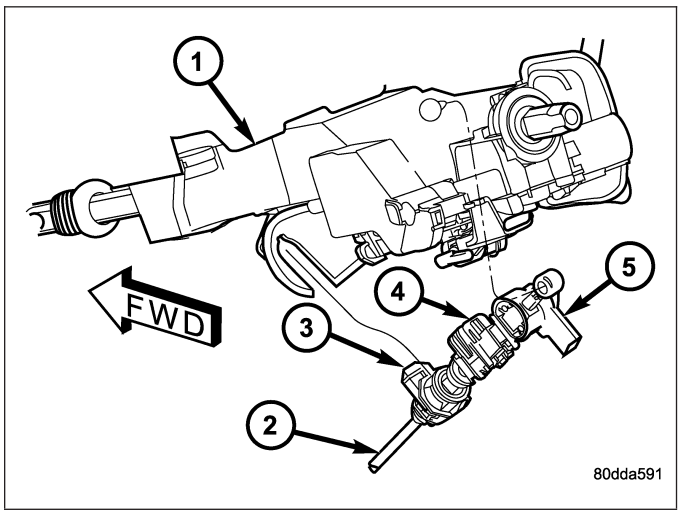

INSTALLATION

1. Route the transmission end of the gearshift cable (1) through the opening in the dash panel.

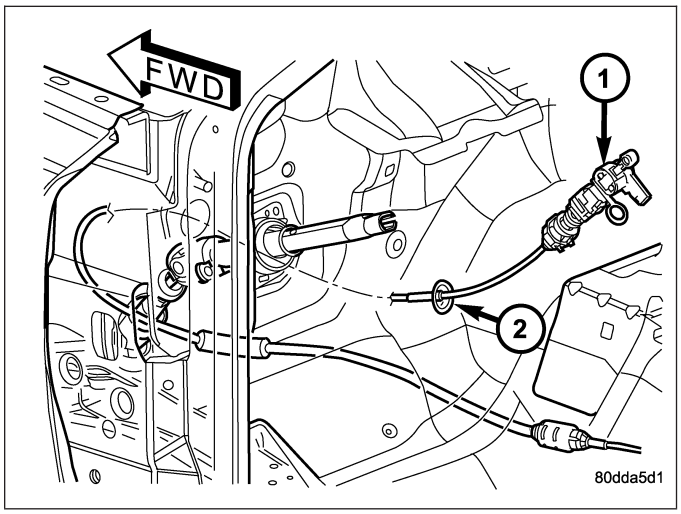

2. Seat the cable grommet (2) into the dash panel opening.
3. Snap the cable into the steering column (1) bracket so the retaining ears are engaged and snap the cable eyelet onto the shift lever ball stud.
4. Raise the vehicle.
5. Place the transmission manual shift lever in the “PARK” detent (rearmost) position and rotate prop shaft to ensure transmission is in PARK.
6. Route the gearshift cable through the transmission mounting bracket and secure the cable by snapping the cable retaining ears into the transmission bracket and snapping the cable eyelet on the manual shift lever ball stud.
7. Lower vehicle.
8. Lock the shift cable adjustment by pressing the cable adjuster lock tab (3) downward until it snaps into place.

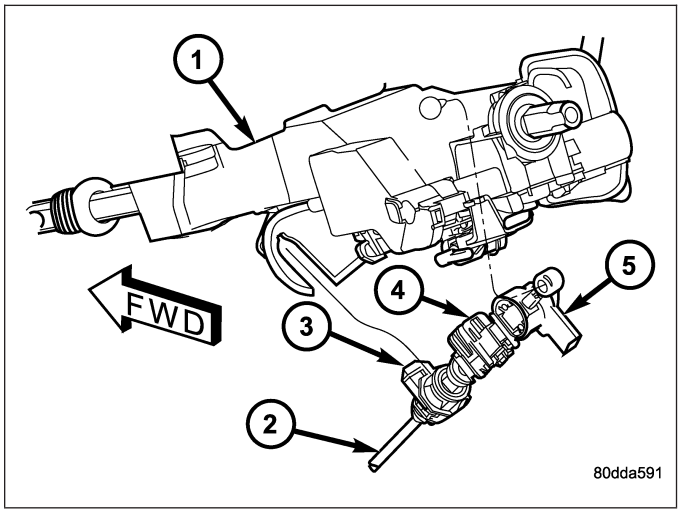

9. Check for proper operation of the transmission range sensor.
10. Adjust the gearshift cable (Refer to 21 - TRANSMISSION/AUTOMATIC/GEAR SHIFT CABLE - ADJUSTMENTS) and BTSI mechanism (Refer to 21 - TRANSMISSION/AUTOMATIC/BRAKE TRANSMISSION SHIFT INTERLOCK SYSTEM - ADJUSTMENTS) as necessary.

ADJUSTMENTS - GEARSHIFT CABLE

Check adjustment by starting the engine in PARK and NEUTRAL. Adjustment is CORRECT if the engine starts only in these positions. Adjustment is INCORRECT if the engine starts in one but not both positions. If the engine starts in any position other than PARK or NEUTRAL, or if the engine will not start at all, the transmission range sensor may be faulty.

Gearshift Adjustment Procedure

1. Shift transmission into PARK.
2. Release cable adjuster lock tab (3) (underneath the steering column) to unlock cable.
3. Raise vehicle.
4. Disengage the cable eyelet from the transmission manual shift lever.
5. Verify transmission shift lever is in PARK detent by moving lever fully rearward. Last rearward detent is PARK position.
6. Verify positive engagement of transmission park lock by attempting to rotate propeller shaft. Shaft will not rotate when park lock is engaged.
7. Snap the cable eyelet onto the transmission manual shift lever.
8. Lower vehicle.

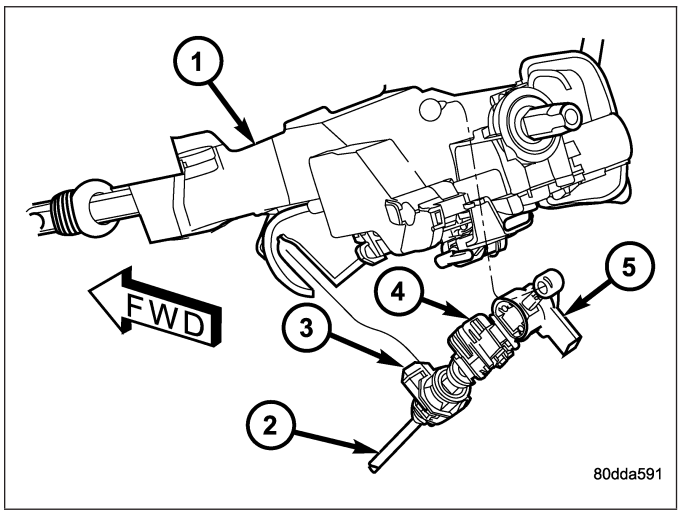

9. Lock shift cable by pressing cable adjuster lock tab (3) downward until it snaps into place.
10. Check engine starting. Engine should start only in PARK and NEUTRAL.

CLUTCHES-HOLDING

DESCRIPTION

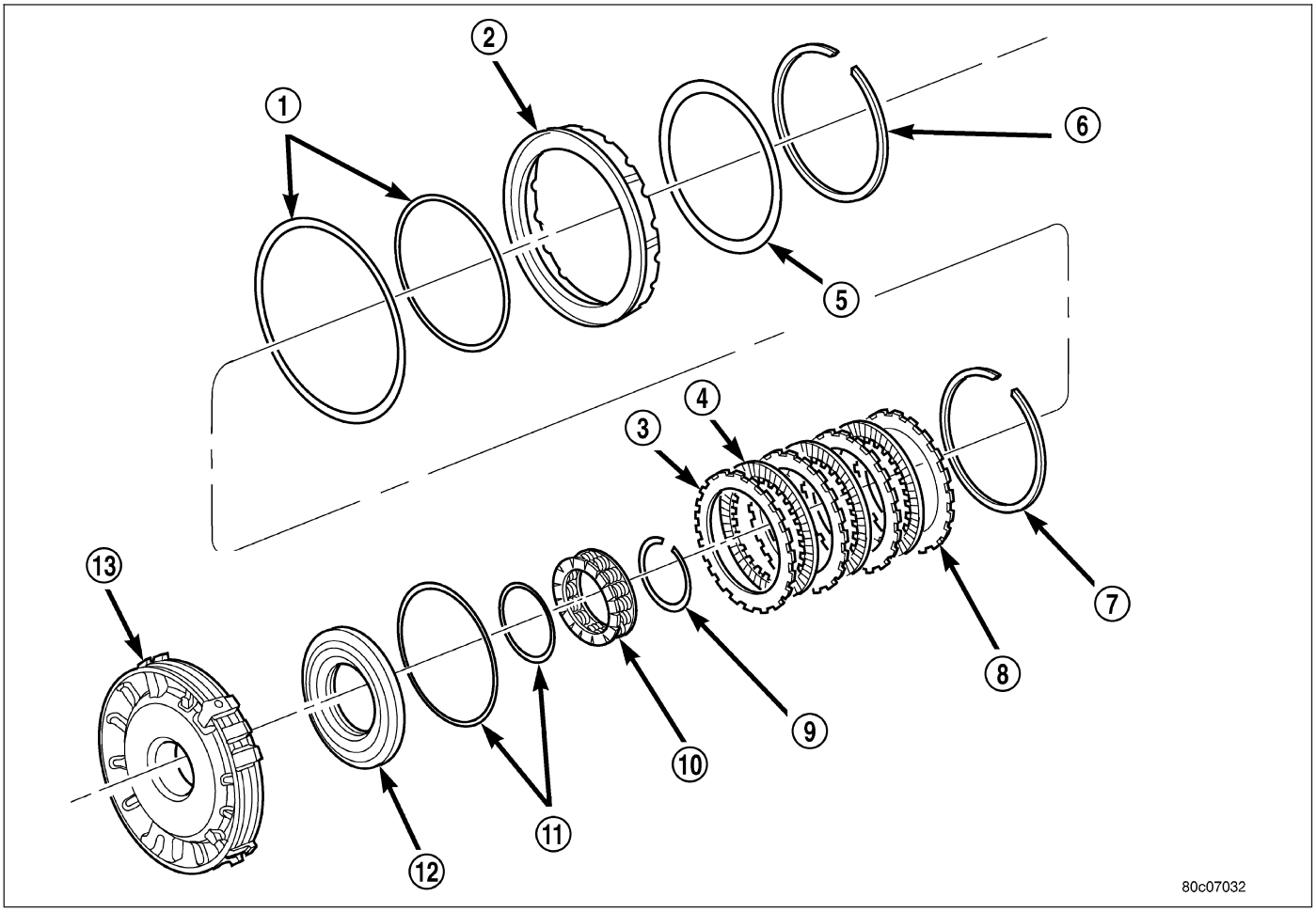

2C and 4C Clutches

1 - SEAL
2 - 2C PISTON
3 - PLATE
4 - DISC
5 - 2C BELLEVILLE SPRING
6 - SNAP-RING
7 - SNAP-RING (SELECT)
8 - REACTION PLATE
9 - SNAP-RING
10 - RETURN SPRING
11 - SEAL
12 - 4C PISTON
13 - 4C RETAINER/BULKHEAD

Three hydraulically applied multi-disc clutches are used to hold some planetary geartrain components stationary while the input clutches drive others. The 2C, 4C, and Low/Reverse clutches are considered holding clutches. The 2C and 4C clutches are located in the 4C retainer/bulkhead (13).

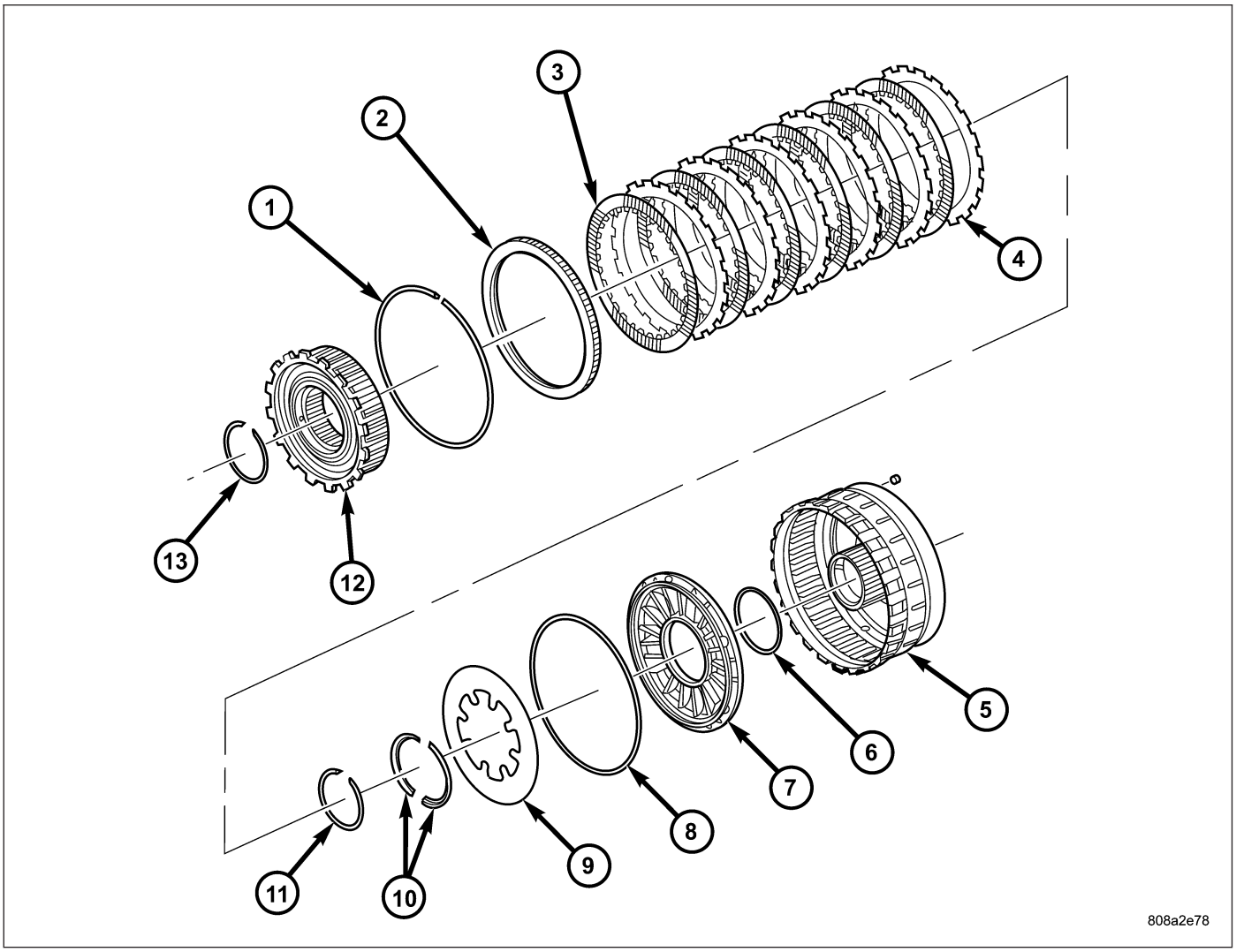

Low/Reverse Clutch

1 - SNAP-RING (SELECT)
2 - REACTION PLATE
3 - DISC
4 - PLATE
5 - L/R CLUTCH RETAINER
6 - SEAL
7 - PISTON
8 - SEAL
9 - BELLEVILLE SPRING
10 - RETAINER
11 - SNAP-RING
12 - OVERRUNNING CLUTCH
13 - SNAP-RING

The Low/Reverse clutch is located at the rear of the transmission case.

OPERATION

2C CLUTCH

The 2C clutch is hydraulically applied in second and fifth gear by pressurized fluid against the 2C piston. When the 2C clutch is applied, the reverse sun gear assembly is held or grounded to the transmission case by holding the reaction planetary carrier.

4C CLUTCH

The 4C clutch is hydraulically applied in second prime and fourth gear by pressurized fluid against the 4C clutch piston. When the 4C clutch is applied, the reaction annulus gear is held or grounded to the transmission case.

LOW/REVERSE CLUTCH

The Low/Reverse clutch is hydraulically applied in park, reverse, neutral, and first gear, only at low speeds, by pressurized fluid against the Low/Reverse clutch piston. When the Low/Reverse clutch is applied, the input annulus assembly is held or grounded to the transmission case.

ASSEMBLY-INPUT CLUTCH

DESCRIPTION

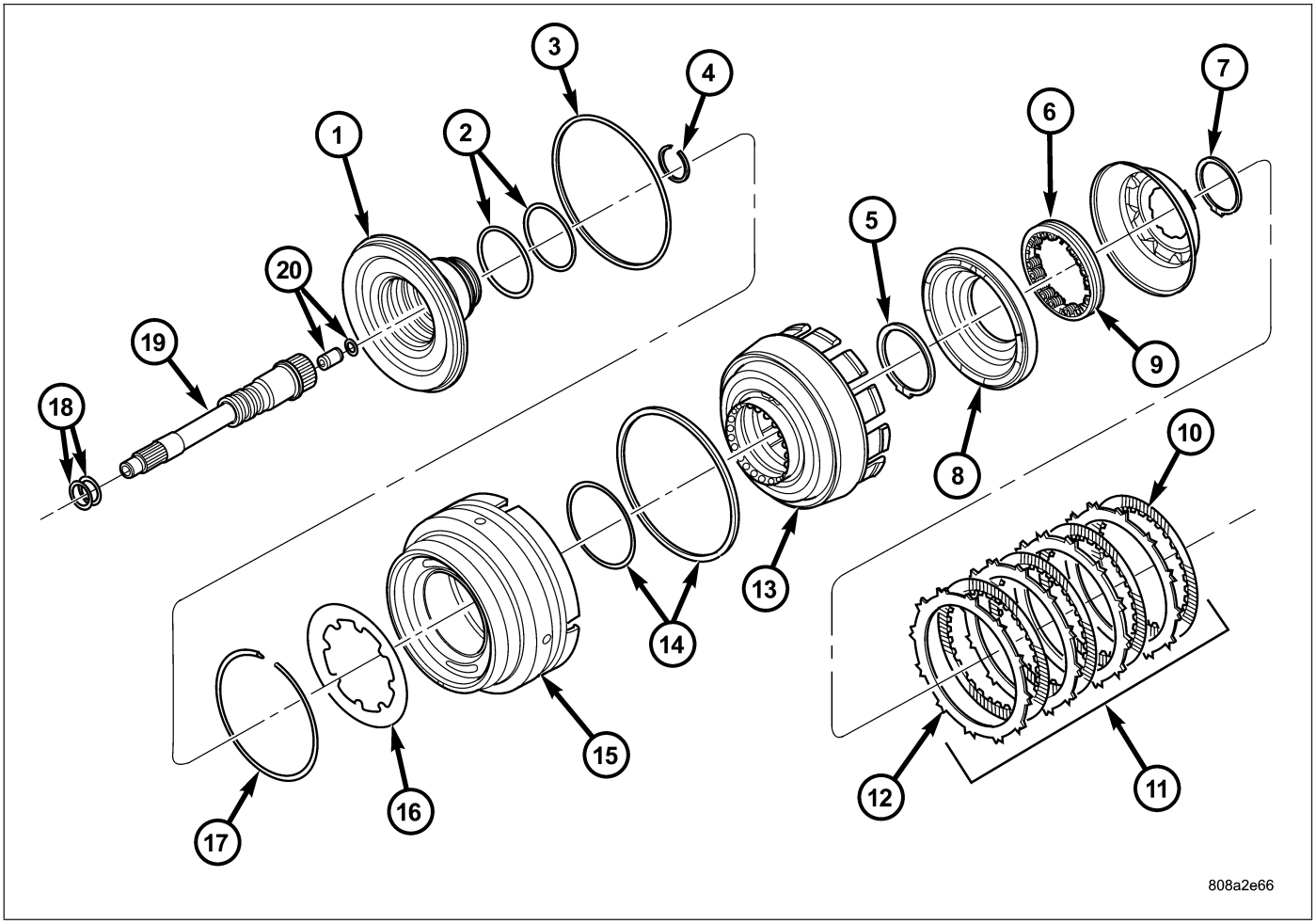

Input Clutch Assembly - Part 1

1 - INPUT CLUTCH HUB
2 - O-RING SEALS
3 - SEAL
4 - SNAP-RING
5 - SNAP-RING
6 - UD BALANCE PISTON
7 - SNAP-RING
8 - UD PISTON
9 - SPRING
10 - DISC
11 - UD CLUTCH
12 - PLATE
13 - CLUTCH RETAINER
14 - SEAL
15 - OD/REV PISTON
16 - BELLEVILLE SPRING
17 - SNAP-RING
18 - SEAL RINGS
19 - INPUT SHAFT
20 - LUBRICATION CHECK VALVE AND SNAP-RING

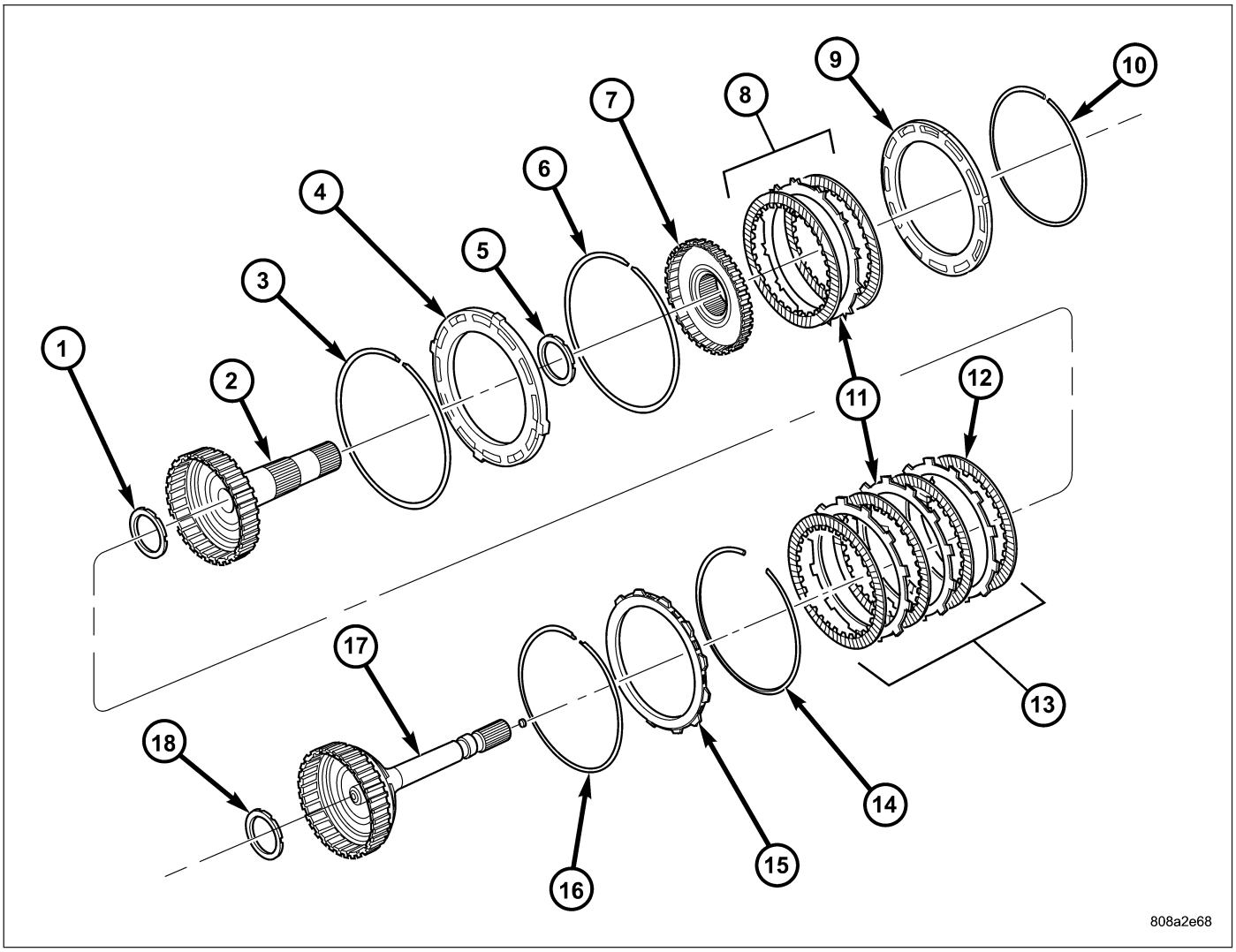

Input Clutch Assembly - Part 2

1 - THRUST BEARING NUMBER 3
2 - OD HUB/SHAFT
3 - SNAP-RING (WAVE)
4 - REV/OD REACTION PLATE
5 - THRUST BEARING NUMBER 4
6 - SNAP-RING (FLAT)
7 - REVERSE HUB/SHAFT
8 - REVERSE CLUTCH
9 - REVERSE REACTION PLATE
10 - SNAP-RING (SELECT)
11 - PLATE
12 - DISC
13 - OD CLUTCH
14 - SNAP-RING (TAPERED)
15 - UD/OD REACTION PLATE
16 - SNAP-RING (FLAT)
17 - UD HUB/SHAFT
18 - THRUST BEARING NUMBER 2

Three hydraulically applied input clutches are used to drive planetary components. The underdrive, overdrive, and reverse clutches are considered input clutches and are contained within the input clutch assembly.

The input clutch assembly also contains:

- Input shaft
- Input hub
- Clutch retainer
- Underdrive piston
- Overdrive/reverse piston
- Overdrive hub
- Underdrive hub

OPERATION

The three input clutches are responsible for driving different components of the planetary geartrain.

UNDERDRIVE CLUTCH

The underdrive clutch is hydraulically applied in first, second, second prime, and third (direct) gears by pressurized fluid against the underdrive piston. When the underdrive clutch is applied, the underdrive hub drives the input sun gear.

OVERDRIVE CLUTCH

The overdrive clutch is hydraulically applied in third (direct), fourth, and fifth gears by pressurized fluid against the overdrive/reverse piston. When the overdrive clutch is applied, the overdrive hub drives the reverse carrier/input annulus assembly.

REVERSE CLUTCH

The reverse clutch is hydraulically applied in reverse gear by pressurized fluid against the overdrive/reverse piston. When the reverse clutch is applied, the reaction annulus gear is driven.

DISASSEMBLY

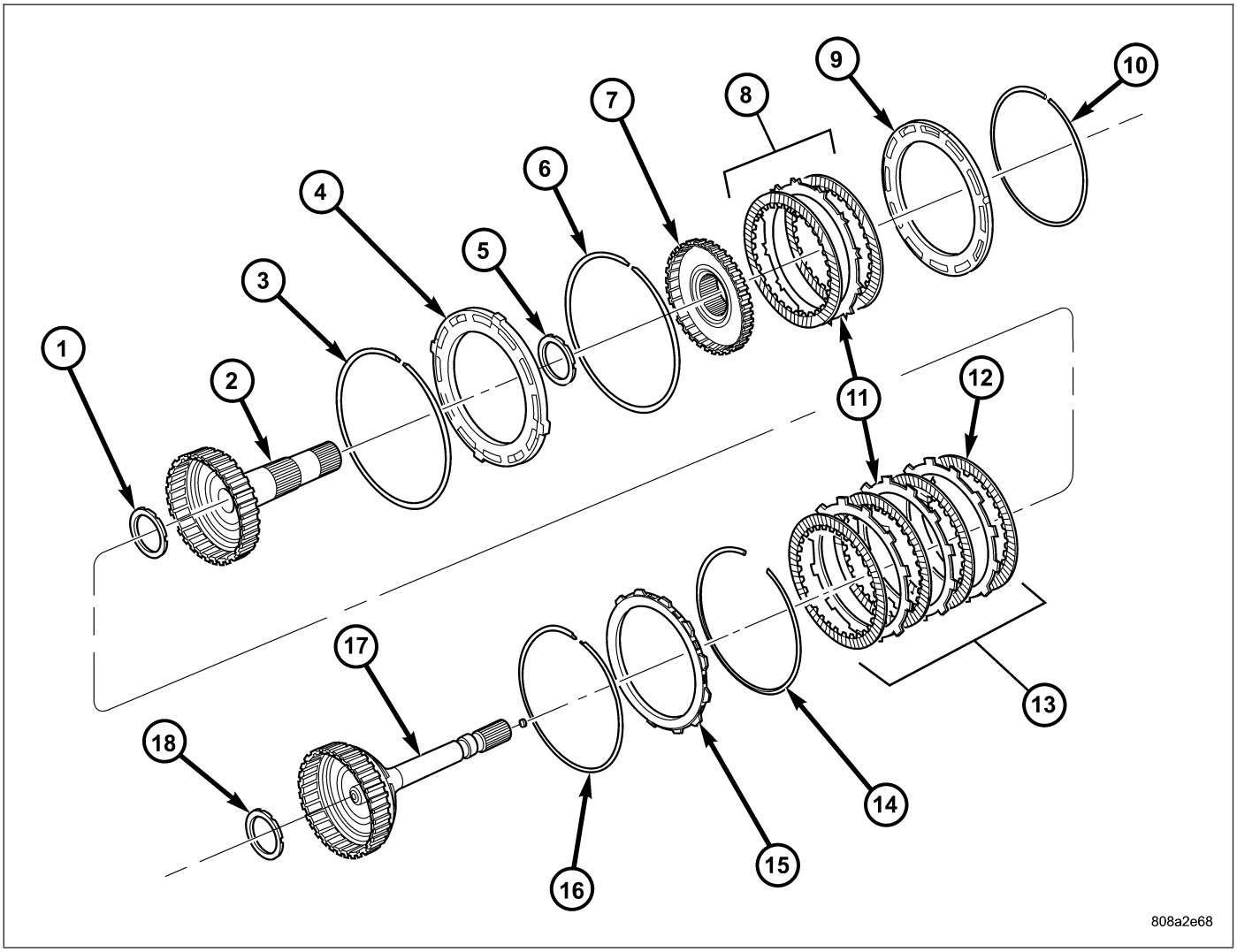

Input Clutch Assembly - Part 2

1 - THRUST BEARING NUMBER 3
2 - OD HUB/SHAFT
3 - SNAP-RING (WAVE)
4 - REV/OD REACTION PLATE
5 - THRUST BEARING NUMBER 4
6 - SNAP-RING (FLAT)
7 - REVERSE HUB/SHAFT
8 - REVERSE CLUTCH
9 - REVERSE REACTION PLATE
10 - SNAP-RING (SELECT)
11 - PLATE
12 - DISC
13 - OD CLUTCH
14 - SNAP-RING (TAPERED)
15 - UD/OD REACTION PLATE
16 - SNAP-RING (FLAT)
17 - UD HUB/SHAFT
18 - THRUST BEARING NUMBER 2

1. Remove the reverse reaction plate selective snap-ring (10) from the input clutch retainer (13).
2. Remove the reverse reaction plate (9) from the input clutch retainer (13).
3. Remove the reverse hub (7) and reverse clutch pack (8) from the input clutch retainer (13).
4. Remove the number 4 thrust bearing (5) from the overdrive hub (2).
5. Remove the overdrive hub (2) from the input clutch retainer (13).
6. Remove the number 3 thrust bearing (1) from the underdrive hub (17).
7. Remove the OD/reverse reaction plate snap-ring (6) from the input clutch retainer (13).
8. Remove the underdrive hub (17), overdrive clutch (13), and overdrive reaction plate (15) from the input clutch retainer (13).

NOTE: The overdrive friction discs and steel discs are thicker than the matching components in the underdrive and reverse clutches.

9. Remove the number 2 thrust bearing (18) from the input clutch hub (1).
10. Remove the overdrive clutch wave snap-ring (3) from the input clutch retainer (13).
11. Remove the UD/OD reaction plate tapered snap-ring (14) from the input clutch retainer (13).
12. Remove the UD/OD reaction plate (15) from the input clutch retainer (13).
13. Remove the UD/OD reaction plate flat snap-ring (16) from the input clutch retainer (13).

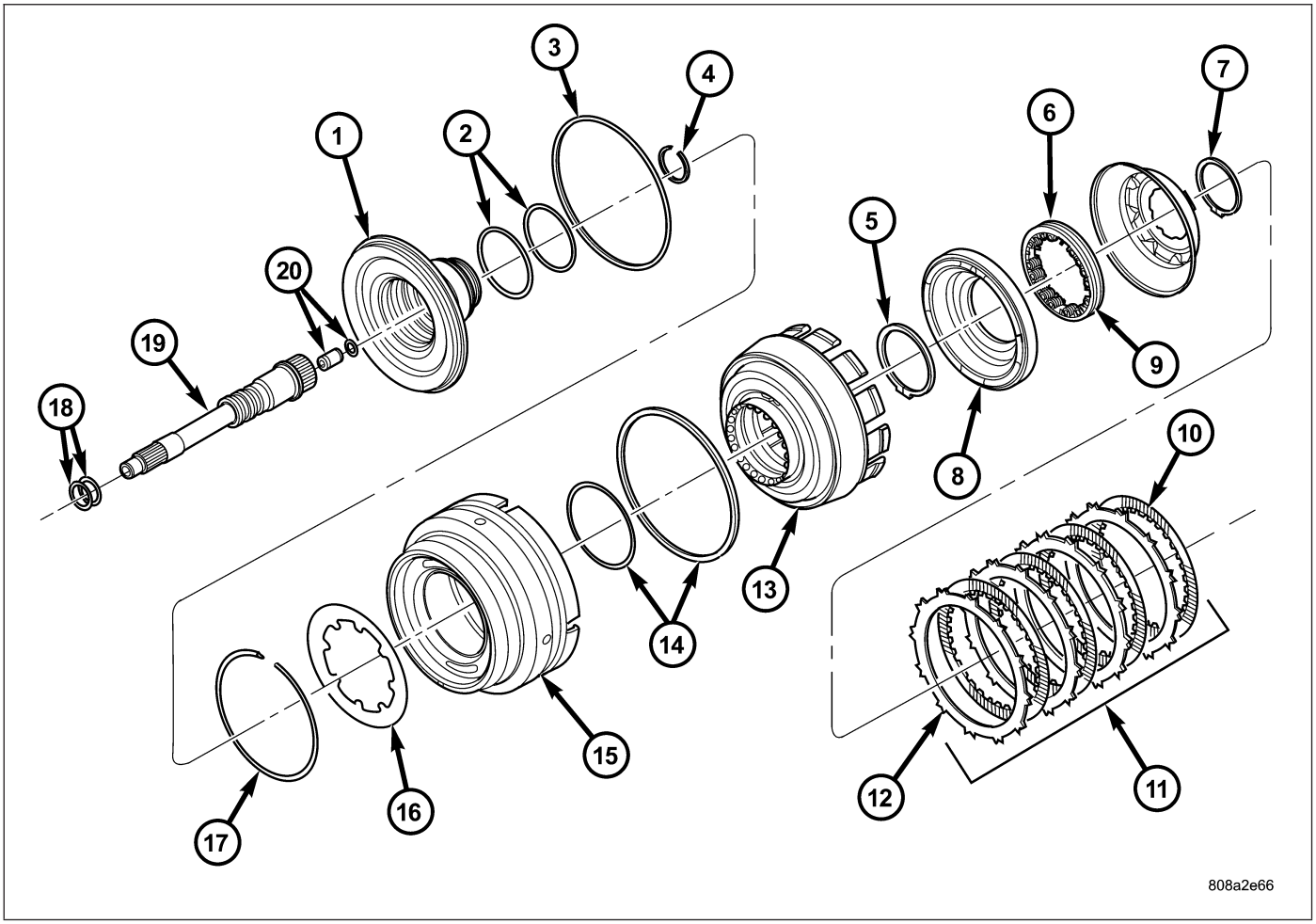

Input Clutch Assembly - Part 1

1 - INPUT CLUTCH HUB
2 - O-RING SEALS
3 - SEAL
4 - SNAP-RING
5 - SNAP-RING
6 - UD BALANCE PISTON
7 - SNAP-RING
8 - UD PISTON
9 - SPRING
10 - DISC
11 - UD CLUTCH
12 - PLATE
13 - CLUTCH RETAINER
14 - SEAL
15 - OD/REV PISTON
16 - BELLEVILLE SPRING
17 - SNAP-RING
18 - SEAL RINGS
19 - INPUT SHAFT
20 - LUBRICATION CHECK VALVE AND SNAP-RING

14. Remove the underdrive clutch pack (11) from the input clutch retainer (13).

15. Using Spring Compressor 8251 (2) , compress the UD/OD balance piston (3) and remove the snap-ring from the input clutch hub (1).

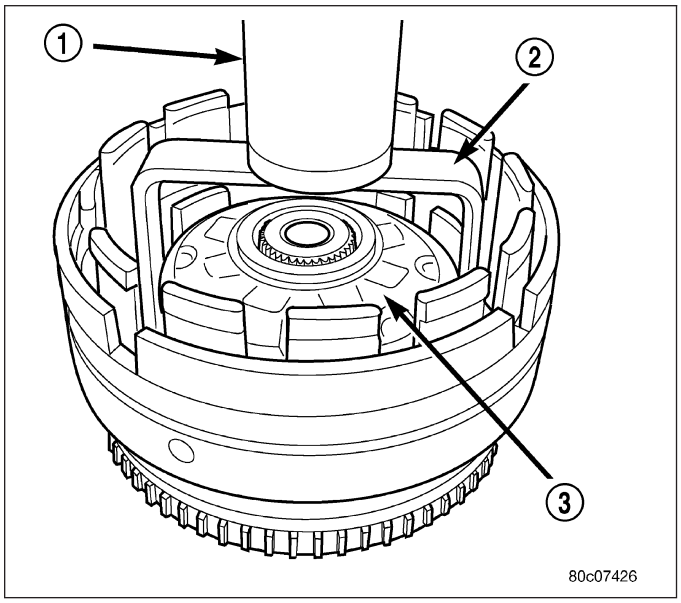

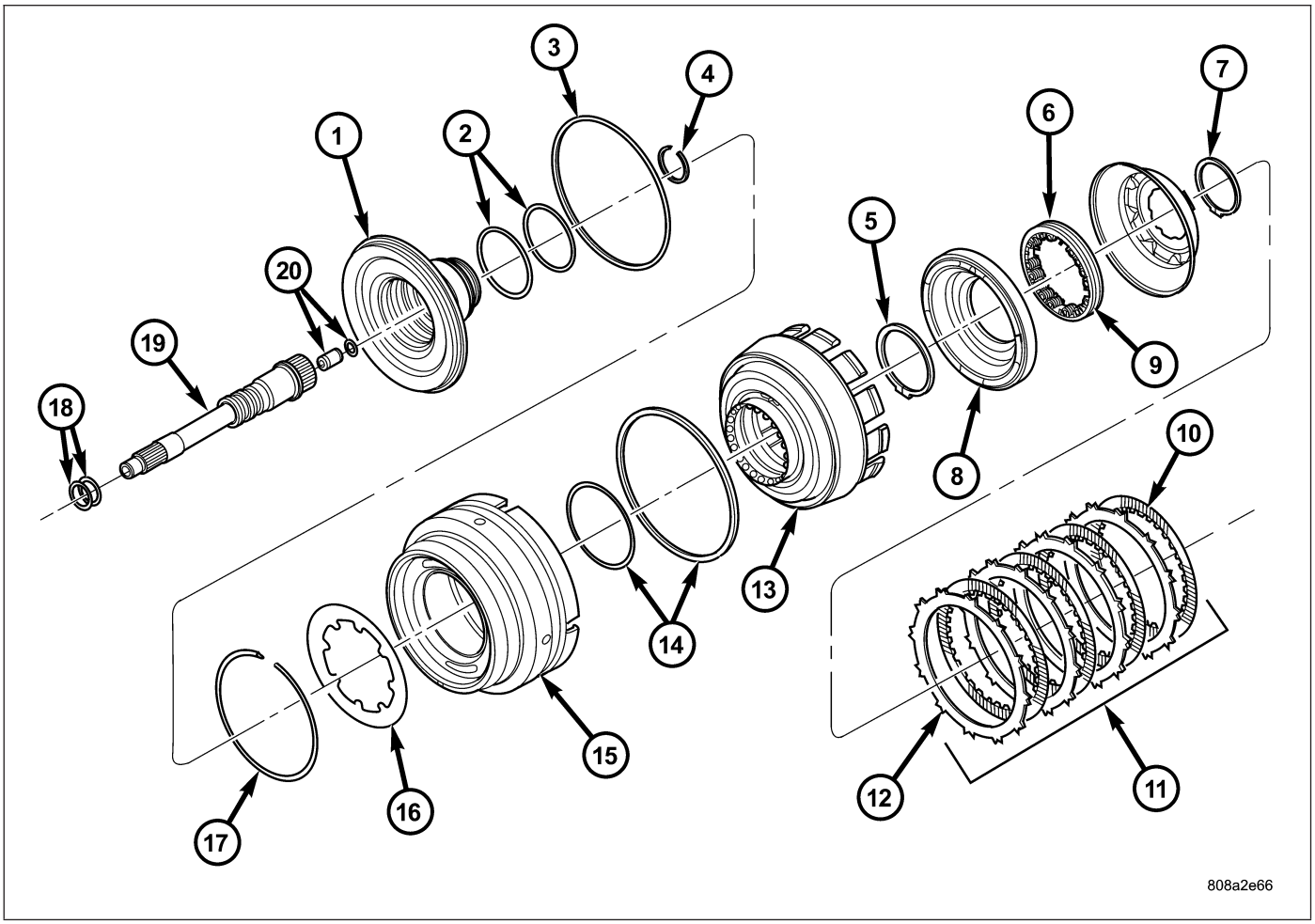

Input Clutch Assembly - Part 1

1 - INPUT CLUTCH HUB	11 - UD CLUTCH
2 - O-RING SEALS	12 - PLATE
3 - SEAL	13 - CLUTCH RETAINER
4 - SNAP-RING	14 - SEAL
5 - SNAP-RING	15 - OD/REV PISTON
6 - UD BALANCE PISTON	16 - BELLEVILLE SPRING
7 - SNAP-RING	17 - SNAP-RING
8 - UD PISTON	18 - SEAL RINGS
9 - SPRING	19 - INPUT SHAFT
10 - DISC	20 - LUBRICATION CHECK VALVE AND SNAP-RING

16. Remove the UD/OD balance piston (6) and piston return spring (9) from the input clutch retainer (13).
17. Remove the underdrive piston (8) from the input clutch retainer (13).

NOTE: Both the UD/OD balance piston and the underdrive piston have seals molded onto them. If the seal is damaged, do not attempt to install a new seal onto the piston. The piston/seal must be replaced as an assembly.

18. Remove the input clutch retainer tapered snap-ring (5).
19. Separate input clutch retainer (13) from input clutch hub (1).
20. Separate OD/reverse piston (15) from input clutch hub retainer (13).
21. Remove all seals and o-rings from the input shaft and input hub. The o-rings on the input hub are color coded. Be sure to make note of which o-ring belongs in which location.

ASSEMBLY

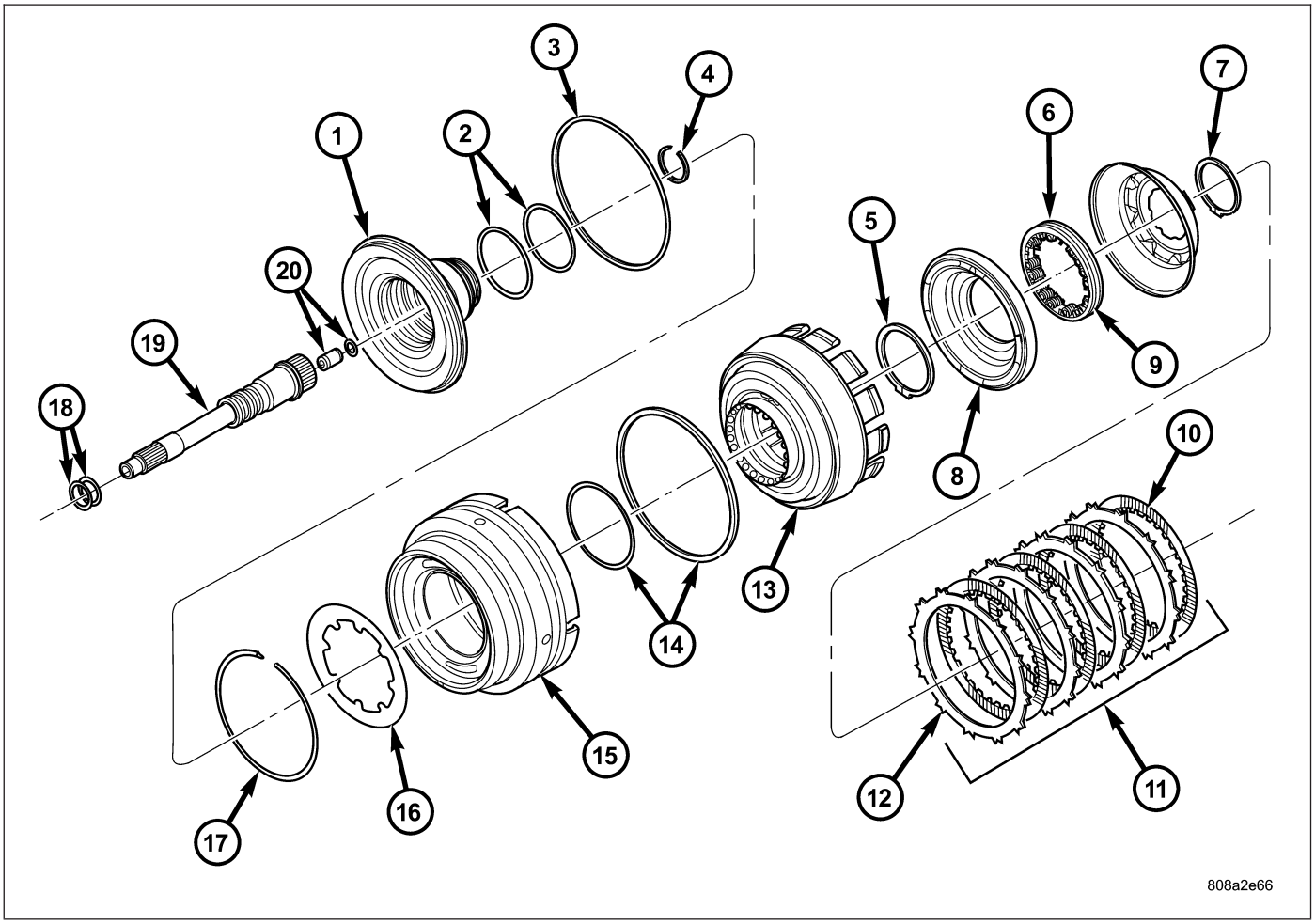

Input Clutch Assembly - Part 1

1 - INPUT CLUTCH HUB
2 - O-RING SEALS
3 - SEAL
4 - SNAP-RING
5 - SNAP-RING
6 - UD BALANCE PISTON
7 - SNAP-RING
8 - UD PISTON
9 - SPRING
10 - DISC
11 - UD CLUTCH
12 - PLATE
13 - CLUTCH RETAINER
14 - SEAL
15 - OD/REV PISTON
16 - BELLEVILLE SPRING
17 - SNAP-RING
18 - SEAL RINGS
19 - INPUT SHAFT
20 - LUBRICATION CHECK VALVE AND SNAP-RING

NOTE: Install all new seals and o-rings onto the input shaft and input hub. The o-rings on the input hub are color coded. Be sure to install the correct o-ring in the correct location.

1. Check the transmission lubrication check valve (20) located in the input shaft using shop air. The valve should only allow air flow in one direction. If the valve allows no air flow, or air flow in both directions, the valve will need to be replaced.
2. Lubricate all seals with Mopar® ATF +4, Automatic Transmission Fluid, prior to installation.
3. Assemble the OD/reverse piston (15) onto the input clutch hub (1).
4. Assemble the input clutch retainer (13) onto the input clutch hub (1).
5. Install the input clutch retainer tapered snap-ring (5) with tapered side up onto the input clutch hub (1).

6. Install Piston Guides 8504 (1) into the input clutch retainer (13) and onto the input clutch hub (1) to guide the inner and outer underdrive piston (8) seals into position.
7. Install the underdrive piston (8) into the input clutch retainer (13) and over the input clutch hub (1).

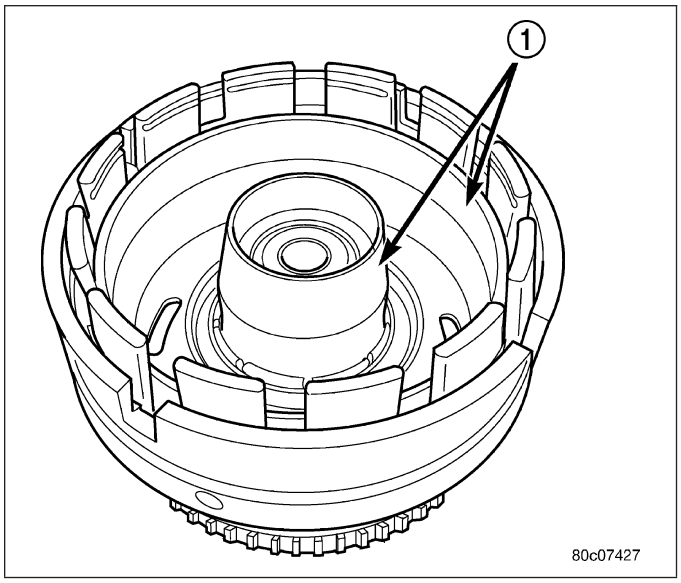

8. Install the UD/OD balance piston return spring pack (9) into the input clutch retainer (13).
9. Install Piston Guide 8252 (1) into the input clutch retainer (13) to guide the UD/OD balance piston (6) seal into position inside the underdrive piston (8).

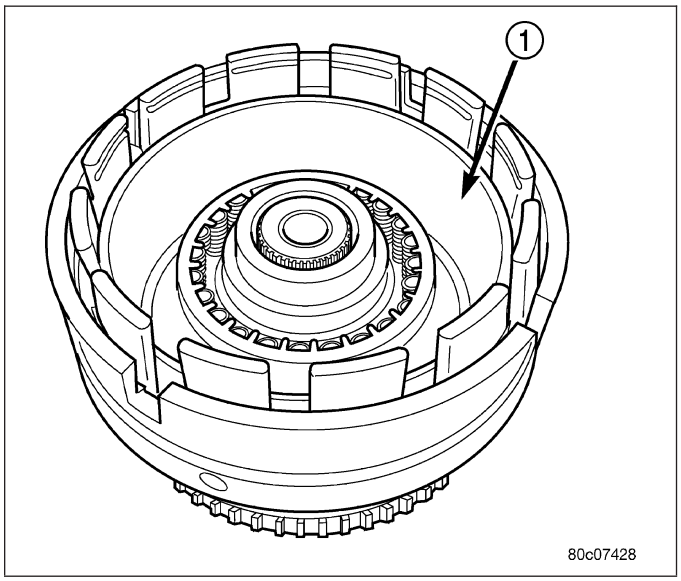

10. Install the UD/OD balance piston (3) into the input clutch retainer and the underdrive piston.
11. Using Spring Compressor 8251 (2), compress the UD/OD return spring pack and secure the piston in place with the snap-ring.
12. Install the underdrive clutch pack (11) into the input clutch retainer.

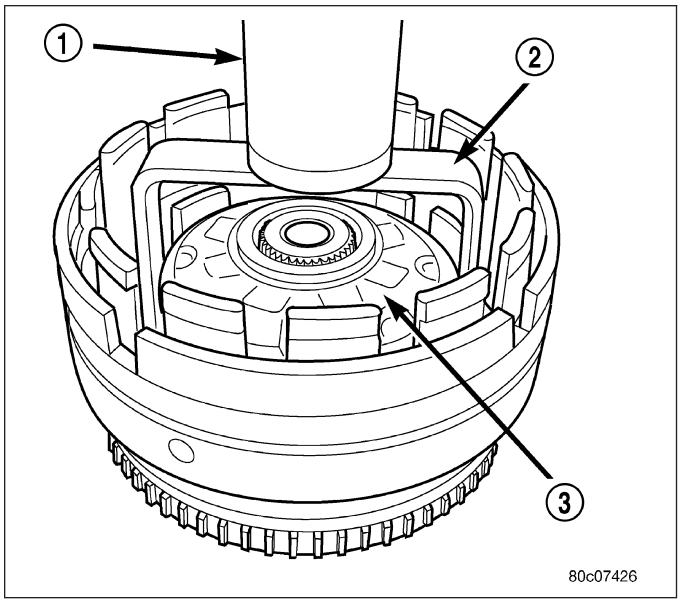

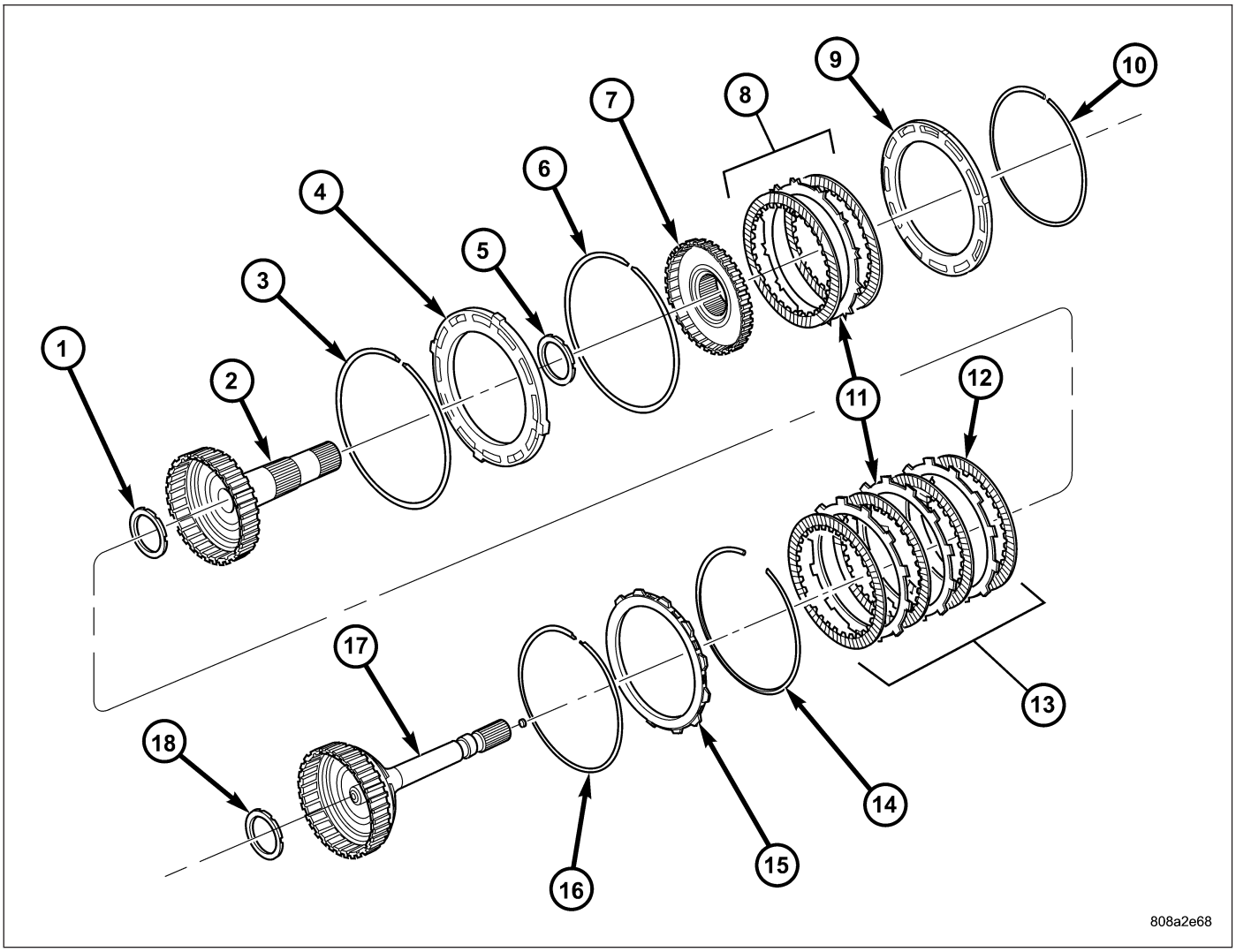

Input Clutch Assembly - Part 2

1 - THRUST BEARING NUMBER 3
2 - OD HUB/SHAFT
3 - SNAP-RING (WAVE)
4 - REV/OD REACTION PLATE
5 - THRUST BEARING NUMBER 4
6 - SNAP-RING (FLAT)
7 - REVERSE HUB/SHAFT
8 - REVERSE CLUTCH
9 - REVERSE REACTION PLATE
10 - SNAP-RING (SELECT)
11 - PLATE
12 - DISC
13 - OD CLUTCH
14 - SNAP-RING (TAPERED)
15 - UD/OD REACTION PLATE
16 - SNAP-RING (FLAT)
17 - UD HUB/SHAFT
18 - THRUST BEARING NUMBER 2

13. Install the UD/OD reaction plate lower flat snap-ring (16). The correct snap-ring can be identified by the two tabbed ears.
14. Install the UD/OD reaction plate (15) into the input clutch retainer. The reaction plate is to be installed with the big step down.
15. Install the UD/OD reaction plate upper tapered snap-ring (14) with tapered side up.

16. Install the input clutch assembly into Input Clutch Pressure Fixture 8260 (2).

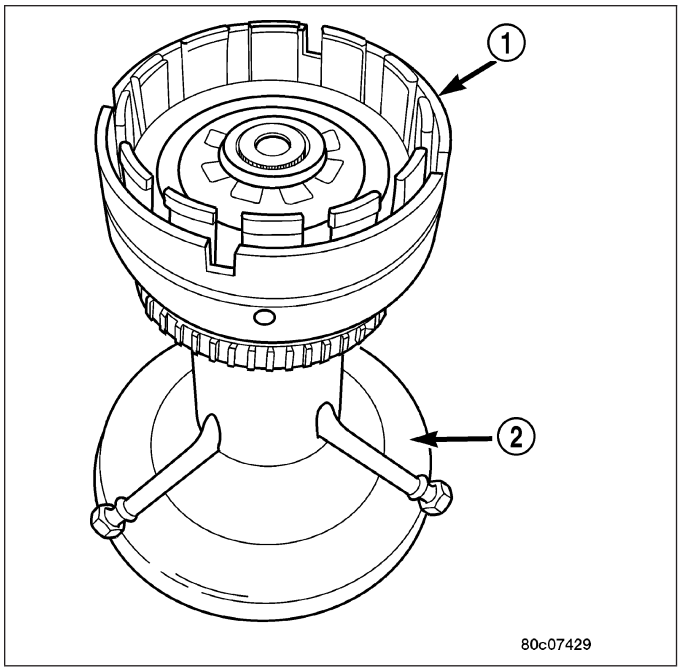

17. Mount a dial indicator to the assembly, push down on the clutch discs and zero the indicator against the underdrive clutch discs. Apply 20 psi of air pressure to the underdrive clutch and record the dial indicator reading. Measure and record UD clutch pack measurement in four (4) places, 90° apart. Take average of four measurements and compare with UD clutch pack clearance specification. The correct clutch clearance is 0.84-1.54 mm (0.033-0.061 in.). The reaction plate is not selective. If the clutch clearance is not within specification, replace the reaction plate along with all the friction and steel discs.

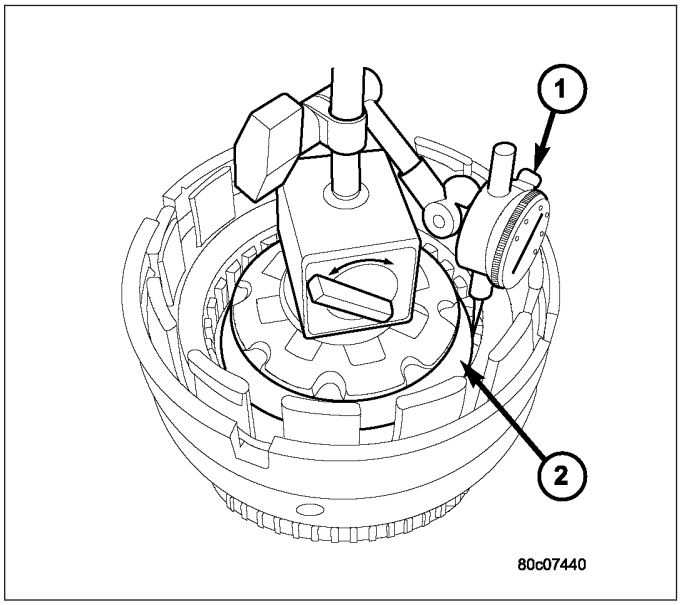

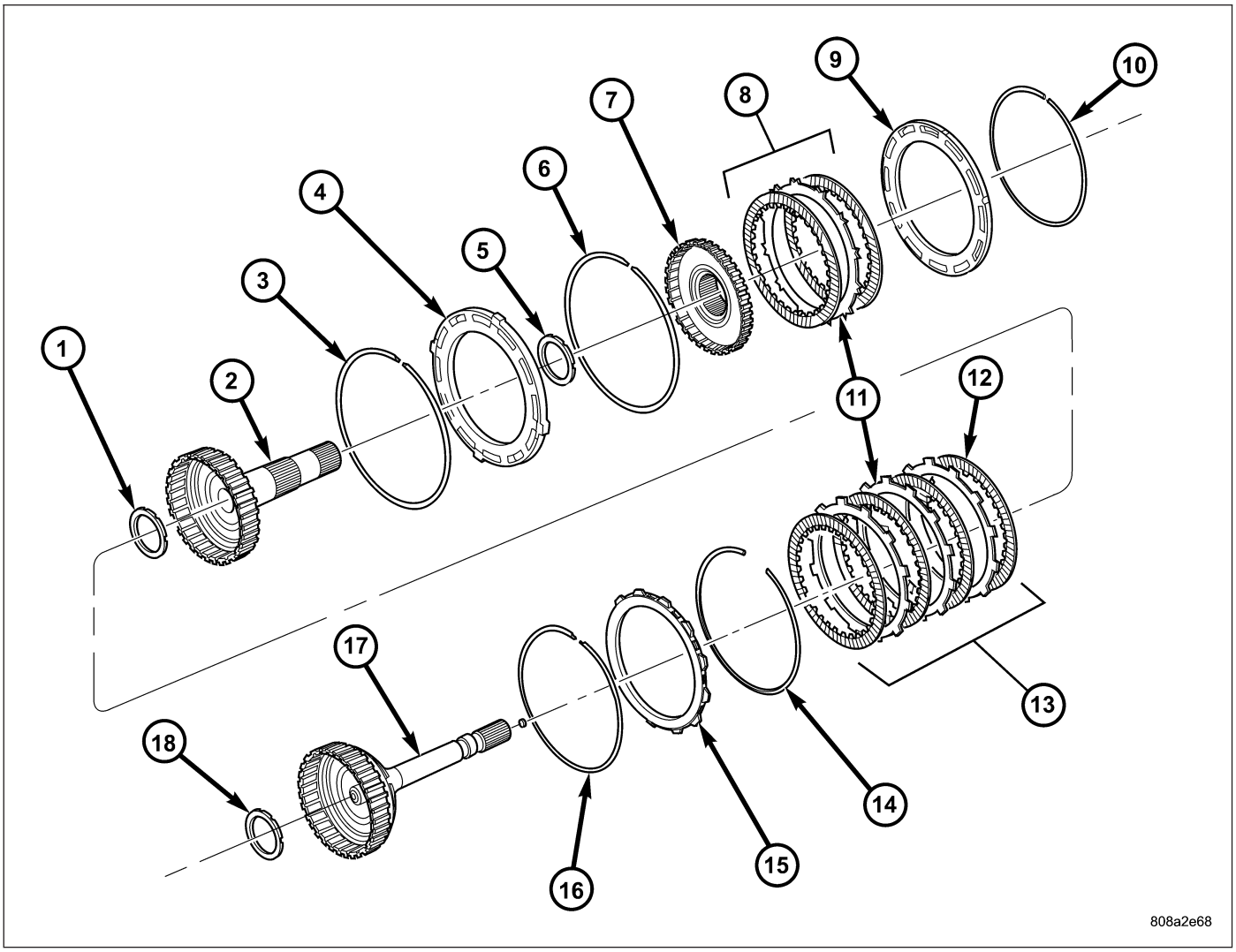

Input Clutch Assembly - Part 2

1 - THRUST BEARING NUMBER 3
2 - OD HUB/SHAFT
3 - SNAP-RING (WAVE)
4 - REV/OD REACTION PLATE
5 - THRUST BEARING NUMBER 4
6 - SNAP-RING (FLAT)
7 - REVERSE HUB/SHAFT
8 - REVERSE CLUTCH
9 - REVERSE REACTION PLATE
10 - SNAP-RING (SELECT)
11 - PLATE
12 - DISC
13 - OD CLUTCH
14 - SNAP-RING (TAPERED)
15 - UD/OD REACTION PLATE
16 - SNAP-RING (FLAT)
17 - UD HUB/SHAFT
18 - THRUST BEARING NUMBER 2

18. Install the overdrive clutch pack (13) into the input clutch retainer. The overdrive steel separator plates can be identified by the lack of the half-moon cuts in the locating tabs.
19. Install the overdrive clutch wavy snap-ring (3) with the two tabbed ears into the input clutch retainer.
20. Install the OD/reverse reaction plate (4) into the input clutch retainer. The reaction plate is non-directional.
21. Install the OD/reverse reaction plate flat snap-ring (6) into the input clutch retainer.

22. Mount a dial indicator to the assembly and zero the indicator against the OD/reverse reaction plate (2). Apply 20 psi of air pressure to the overdrive clutch and record the dial indicator reading. Measure and record OD clutch pack measurement in four (4) places, 90° apart. Take average of four measurements and compare with OD clutch pack clearance specification.Verify that the clutch clearance is 1.103-1.856 mm (0.043-0.073 in.). The reaction plate is not selective. If the clutch clearance is not within specification, replace the reaction plate along with all the friction and steel discs.

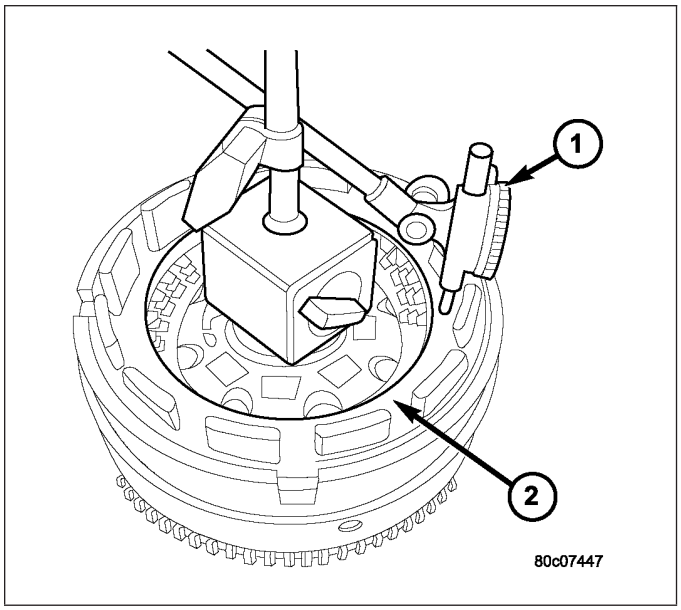

23. Install the reverse clutch pack (8) into the input clutch retainer.
24. Install the reverse reaction plate(9) into the input clutch retainer.
25. Install the reverse reaction plate selective snap-ring (10) into the input clutch retainer.

26. Mount a dial indicator to the assembly, push down on the clutch discs, pull up on the reaction plate to ensure the plate is properly seated and zero the indicator against the reverse clutch discs (2). Apply 20 psi of air pressure to the reverse clutch and record the dial indicator reading. Measure and record Reverse clutch pack measurement in four (4) places, 90° apart. Take average of four measurements and compare with Reverse clutch pack clearance specification. The correct clutch clearance is 0.58-1.47 mm (0.023-0.058 in.). Adjust as necessary. Install the chosen snap-ring and re-measure to verify selection.

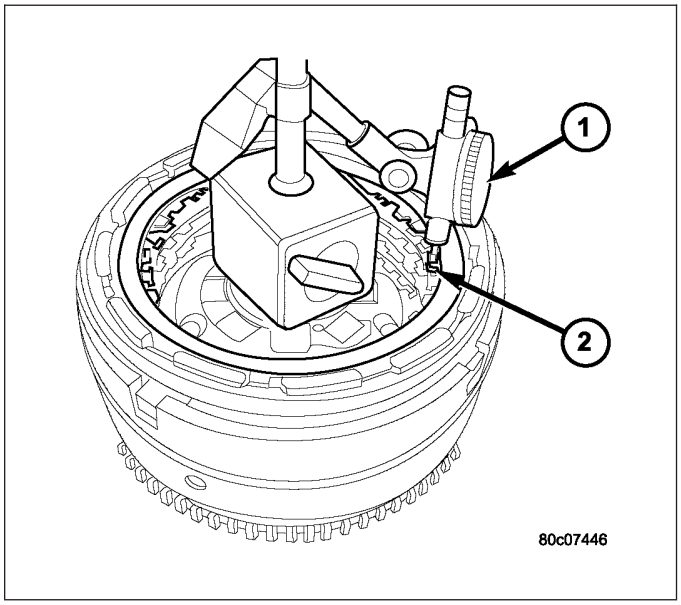

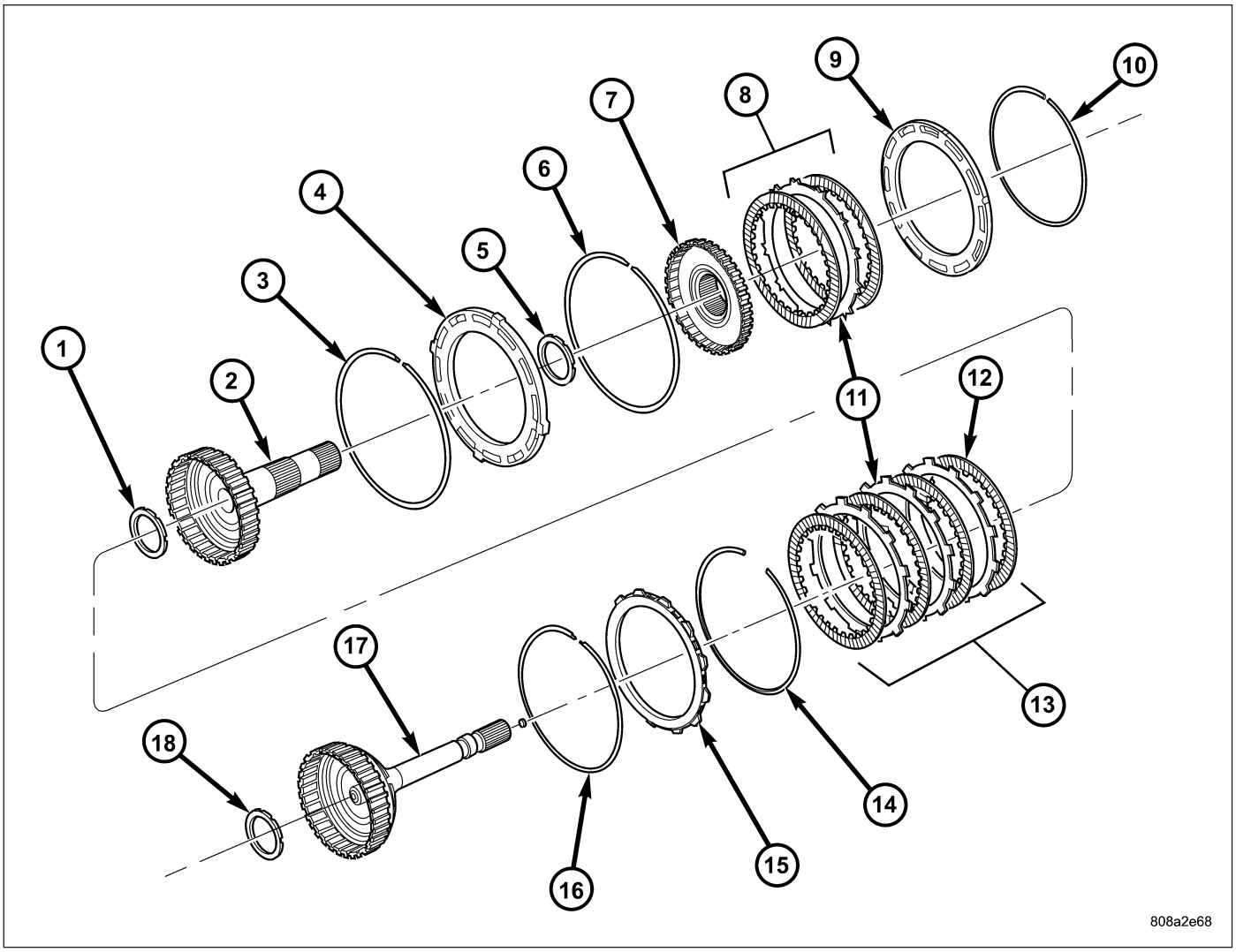

Input Clutch Assembly - Part 2

1 - THRUST BEARING NUMBER 3
2 - OD HUB/SHAFT
3 - SNAP-RING (WAVE)
4 - REV/OD REACTION PLATE
5 - THRUST BEARING NUMBER 4
6 - SNAP-RING (FLAT)
7 - REVERSE HUB/SHAFT
8 - REVERSE CLUTCH
9 - REVERSE REACTION PLATE
10 - SNAP-RING (SELECT)
11 - PLATE
12 - DISC
13 - OD CLUTCH
14 - SNAP-RING (TAPERED)
15 - UD/OD REACTION PLATE
16 - SNAP-RING (FLAT)
17 - UD HUB/SHAFT
18 - THRUST BEARING NUMBER 2

27. Remove the reverse clutch pack (8) from the input clutch retainer.
28. Install the number 2 thrust bearing (18) onto the underdrive hub (17) with outer race against the hub with petroleum jelly.
29. Install the underdrive hub (17) into the input clutch retainer.
30. Install the number 3 thrust bearing (1) into the overdrive hub (2) with the outer race against the hub with petroleum jelly.
31. Install the overdrive hub (2) into the input clutch retainer.
32. Install the number 4 thrust bearing (5) into the reverse hub with outer race against the hub with petroleum jelly.
33. Install the reverse hub (7) into the input clutch retainer.
34. Install the complete reverse clutch pack (8).
35. Install the reverse reaction plate (9) and snap-ring (10).
36. Push up on reaction plate to allow reverse clutch to move freely.

SENSOR-INPUT SPEED

DESCRIPTION

The Input and Output Speed Sensors are two-wire magnetic pickup devices that generate AC signals as rotation occurs. They are mounted in the left side of the transmission case and are considered primary inputs to the Transmission Control Module (TCM).

OPERATION

The Input Speed Sensor provides information on how fast the input shaft is rotating. As the teeth of the input clutch hub pass by the sensor coil, an AC voltage is generated and sent to the TCM. The TCM interprets this information as input shaft rpm.

The Output Speed Sensor generates an AC signal in a similar fashion, though its coil is excited by rotation of the rear planetary carrier lugs. The TCM interprets this information as output shaft rpm.

The TCM compares the input and output speed signals to determine the following:

- Transmission gear ratio
- Speed ratio error detection
- CVI calculation

The TCM also compares the input speed signal and the engine speed signal to determine the following:

- Torque converter clutch slippage
- Torque converter element speed ratio

REMOVAL

1. Raise vehicle.
2. Place a suitable fluid catch pan under the transmission.
3. Remove the wiring connector from the input speed sensor (3).
4. Remove the bolt holding the input speed sensor to the transmission case.
5. Remove the input speed sensor (3) from the transmission case.

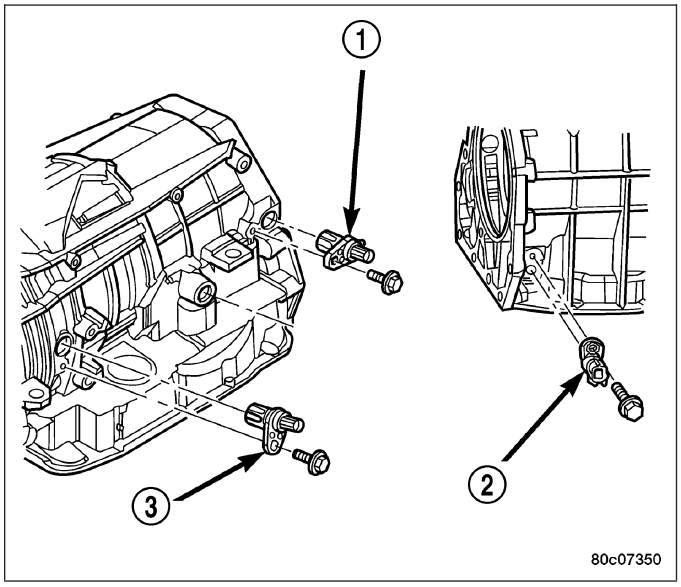

INSTALLATION

1. Install the input speed sensor (3) into the transmission case.
2. Install the bolt to hold the input speed sensor (3) into the transmission case. Tighten the bolt to 11.9 N·m (105 in.lbs.).
3. Install the wiring connector onto the input speed sensor.
4. Verify the transmission fluid level. Add fluid as necessary.
5. Lower vehicle.

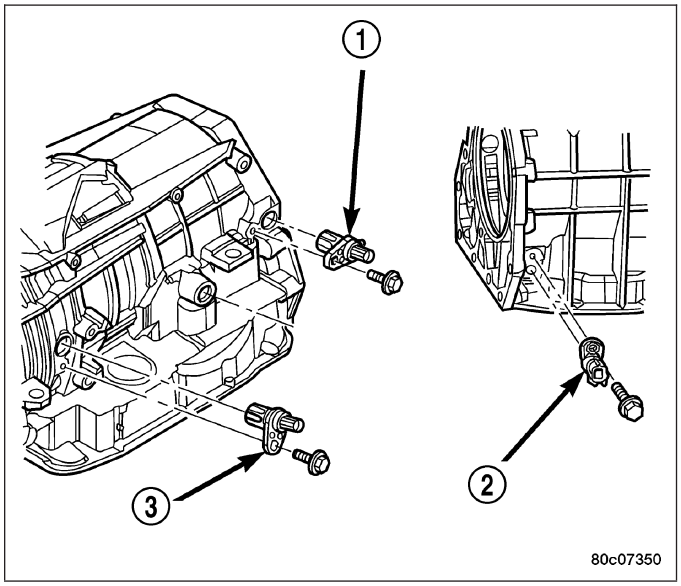

CLUTCH-LOW/REVERSE

DISASSEMBLY

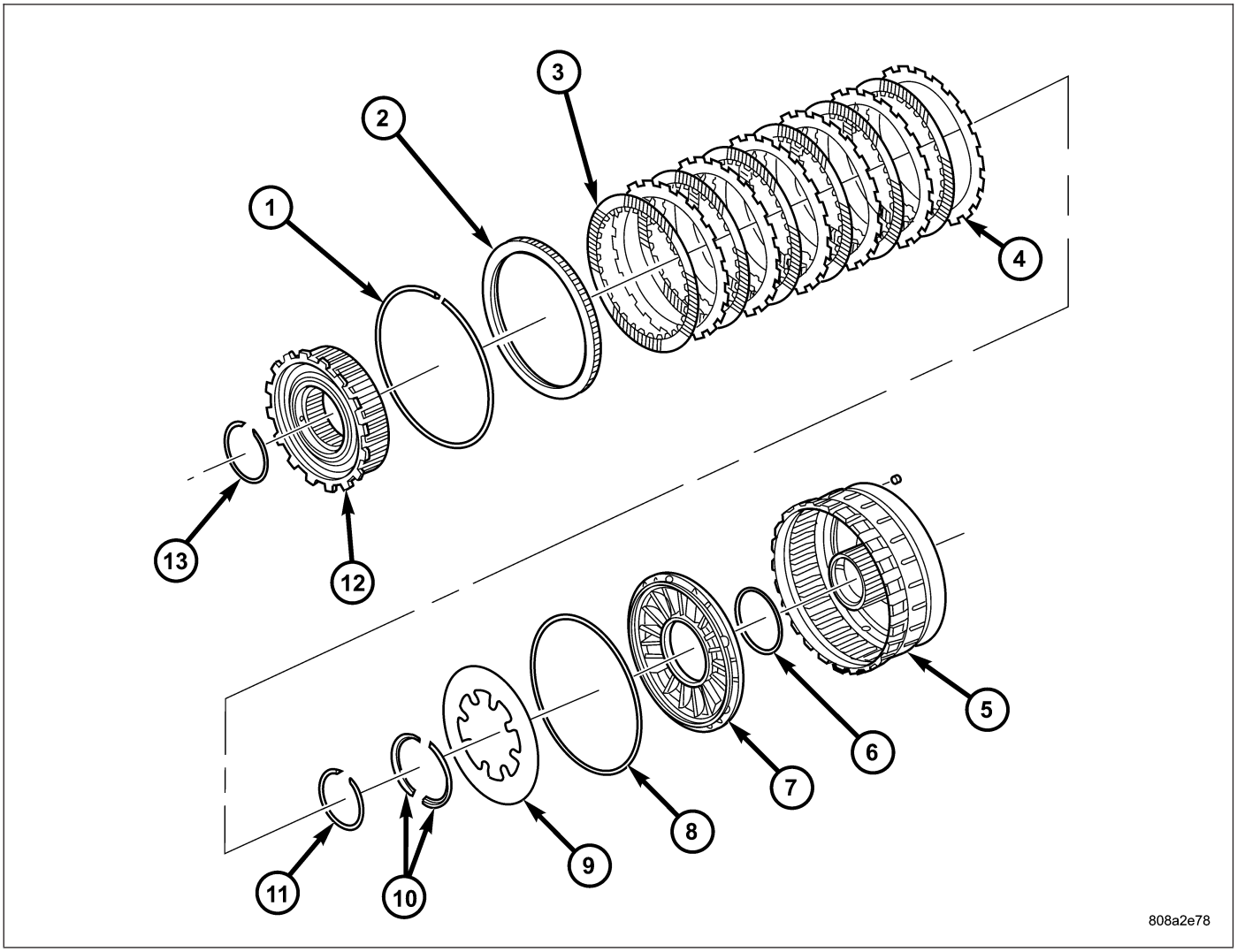

Low/Reverse Clutch Assembly

1 - SNAP-RING (SELECT)
2 - REACTION PLATE
3 - DISC
4 - PLATE
5 - L/R CLUTCH RETAINER
6 - SEAL
7 - PISTON
8 - SEAL
9 - BELLEVILLE SPRING
10 - RETAINER
11 - SNAP-RING
12 - OVERRUNNING CLUTCH
13 - SNAP-RING

1. Remove the inner overrunning clutch snap-ring (13) from the low/reverse clutch retainer (5).
2. Remove the outer low/reverse reaction plate flat snap-ring (1.
3. Remove the low/reverse clutch (3, 4) and the overrunning clutch (12) from the low/reverse clutch retainer (5) as an assembly.
4. Separate the low/reverse clutch (3, 4) from the overrunning clutch (12).

5. Remove the overrunning clutch snap-ring (1).
6. Remove the spacer (4) from the overrunning clutch (3).
7. Separate the inner and outer races (2) of the overrunning clutch (3).
8. Remove the overrunning clutch lower snap-ring.

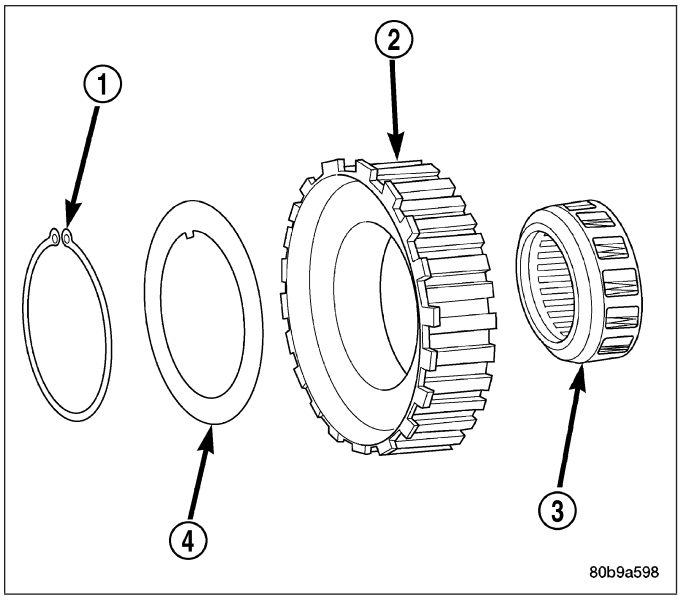

9. Using Spring Compressor 8285 (2) and a suitable shop press (1), compress the low/reverse piston Belleville spring (3) and remove the split retaining ring holding the Belleville spring into the low/reverse clutch retainer.
10. Remove the low/reverse clutch Belleville spring (3) and piston from the low/reverse clutch retainer. Use 20 psi of air pressure to remove the piston if necessary.

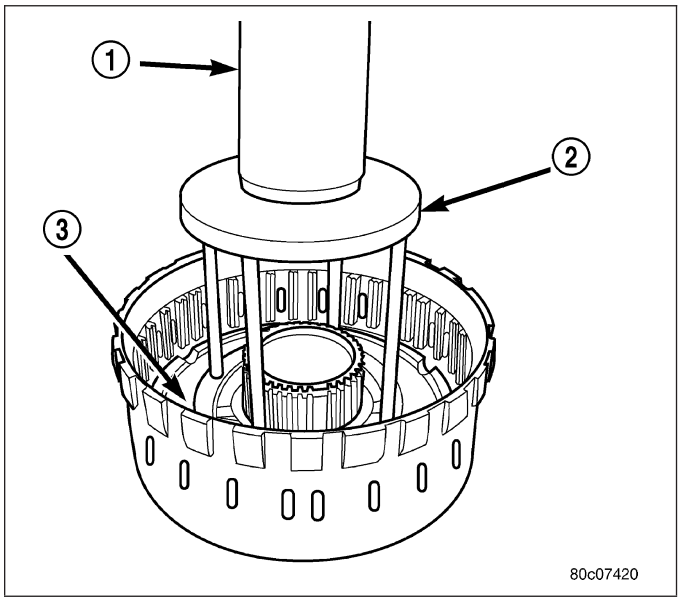

CLEANING

Clean the overrunning clutch assembly, clutch cam, and low-reverse clutch retainer. Dry them with compressed air after cleaning.

INSPECTION

Inspect condition of each clutch part after cleaning. Replace the overrunning clutch roller and spring assembly if any rollers or springs are worn or damaged, or if the roller cage is distorted, or damaged. Replace the cam if worn, cracked or damaged.

Replace the low-reverse clutch retainer if the clutch race, roller surface or inside diameter is scored, worn or damaged.

ASSEMBLY

1. Check the bleed orifice to ensure that it is not plugged or restricted.
2. Install a new seal on the low/reverse piston. Lubricate the seal with Mopar® ATF +4, Automatic Transmission Fluid, prior to installation.
3. Install the low/reverse piston into the low/reverse clutch retainer.
4. Position the low/reverse piston Belleville spring (3) on the low/reverse piston.
5. Using Spring Compressor 8285 (2) and a suitable shop press (1), compress the low/reverse piston Belleville spring (3) and install the split retaining ring to hold the Belleville spring into the low/reverse clutch retainer.

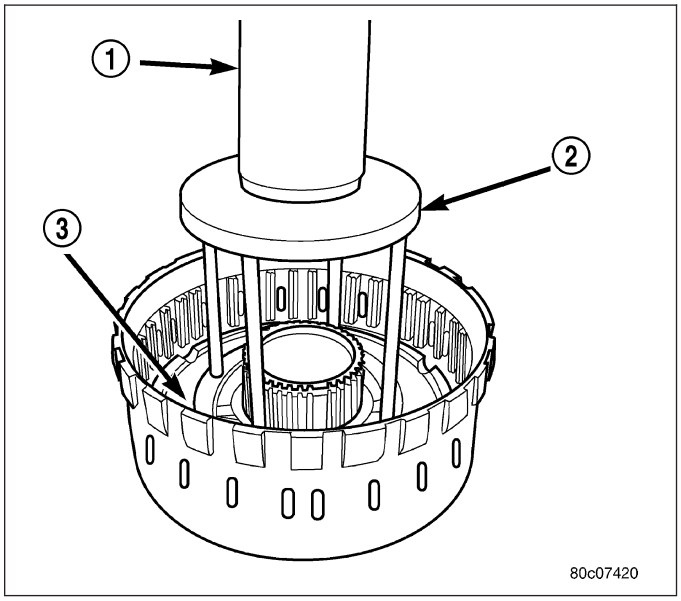

6. Install the lower overrunning clutch snap-ring.
7. Assemble the inner and outer races (2) of the overrunning clutch (3).
8. Position the overrunning clutch spacer (4) on the overrunning clutch (3).
9. Install the upper overrunning clutch snap-ring (1).

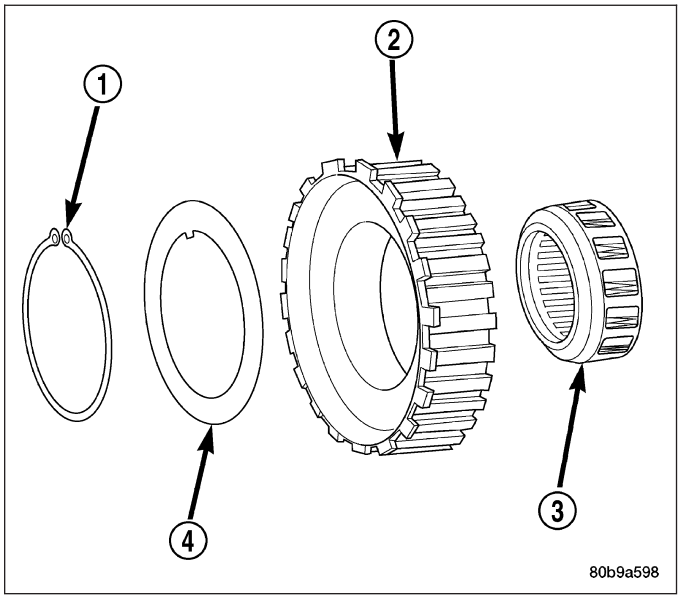

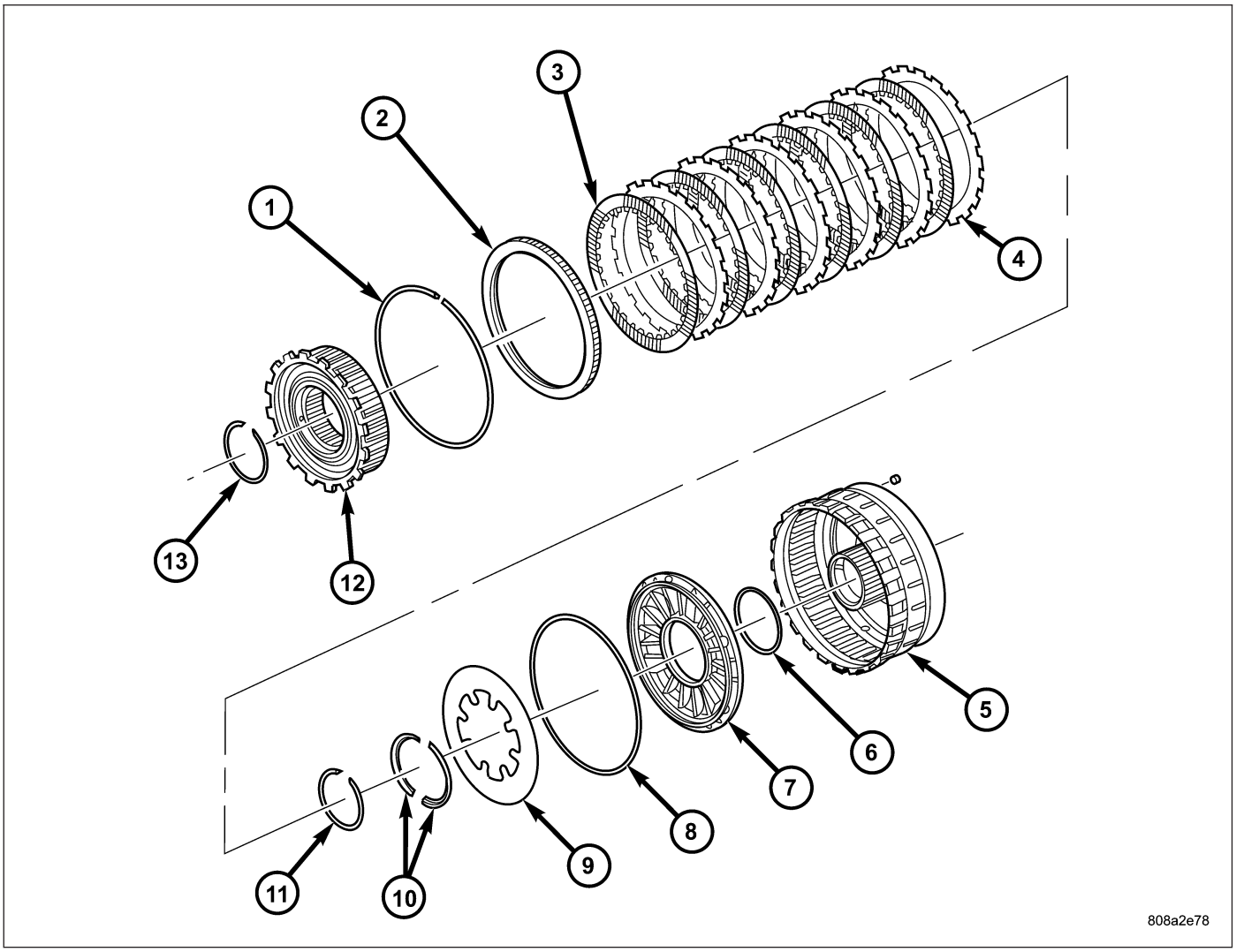

Low/Reverse Clutch Assembly

1 - SNAP-RING (SELECT)
2 - REACTION PLATE
3 - DISC
4 - PLATE
5 - L/R CLUTCH RETAINER
6 - SEAL
7 - PISTON
8 - SEAL
9 - BELLEVILLE SPRING
10 - RETAINER
11 - SNAP-RING
12 - OVERRUNNING CLUTCH
13 - SNAP-RING

10. Assemble and install the low/reverse clutch pack (3, 4) into the low/reverse clutch retainer (5).
11. Install the low/reverse reaction plate (2) into the low/reverse clutch retainer (5). The reaction plate is directional and must be installed with the flat side down.
12. Install the low/reverse clutch pack snap-ring (1). The snap-ring is selectable and should be chosen to give the correct clutch pack clearance.
13. Measure the low/reverse clutch pack clearance and adjust as necessary. The correct clutch clearance is 1.00-1.74 mm (0.039-0.075 in.).
14. Install the overrunning clutch (12) into the low/reverse clutch retainer (5) making sure that the index splines are aligned with the retainer.
15. Install the overrunning clutch inner snap-ring (13).

PUMP-OIL

DESCRIPTION

The oil pump (2) is located at the front of the transmission inside the bell housing and behind the transmission front cover.

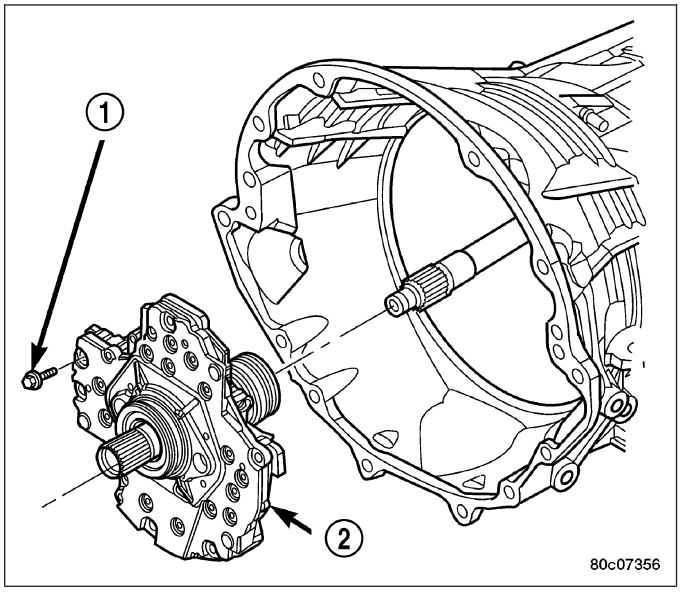

The oil pump consists of two independent pumps.

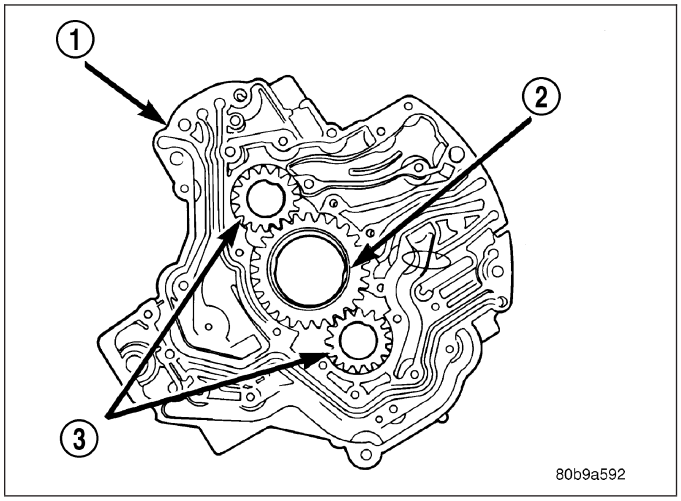

Oil Pump Gears

1 - PUMP HOUSING
2 - DRIVE GEAR
3 - DRIVEN GEARS

The oil pump also contains a number of valves. The converter clutch switch (3) and control valves (2), pressure regulator valve (5), and converter pressure limit valve (6) are all located in the oil pump valve body.

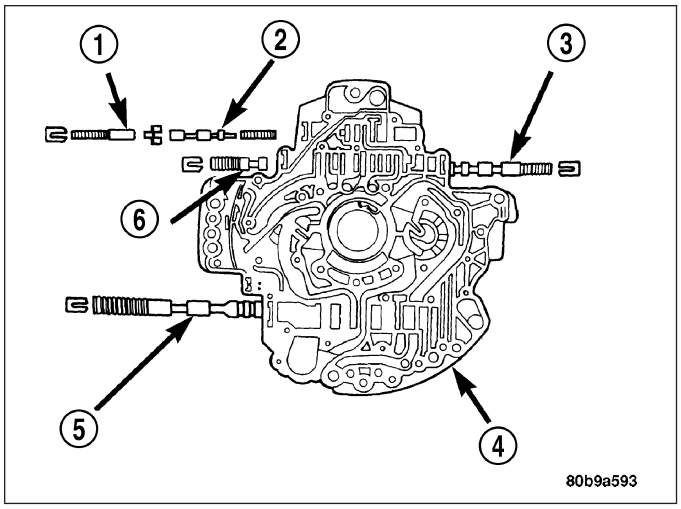

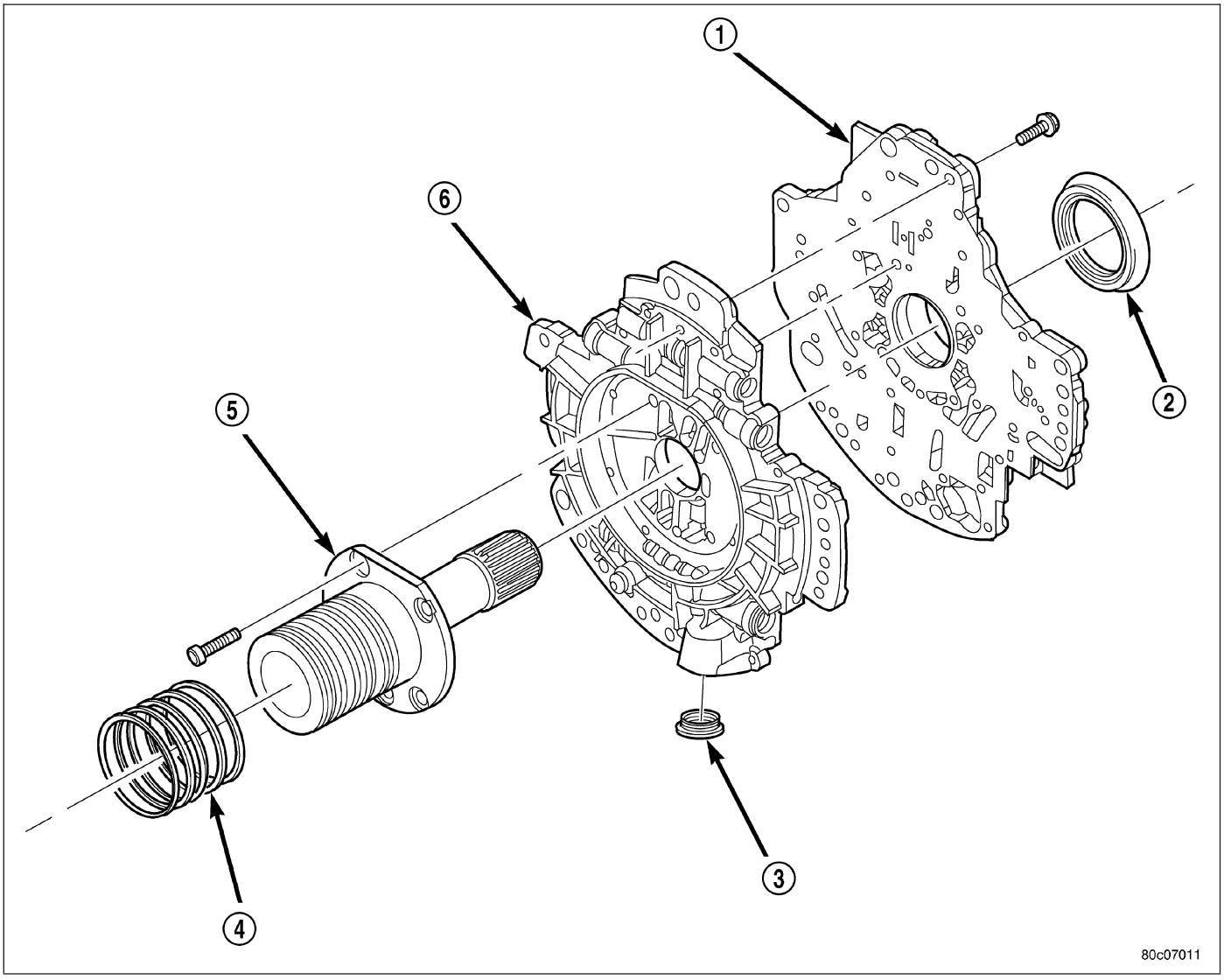

Oil Pump Reaction Shaft

1 - PUMP HOUSING
2 - SEAL
3 - OIL FILTER SEAL
4 - SEAL RING (5)
5 - REACTION SHAFT SUPPORT
6 - PUMP VALVE BODY

A front seal (2), and a bolt on reaction shaft (5) complete the oil pump assembly.

OPERATION

As the torque converter rotates, the converter hub rotates the oil pump drive gear. As the drive gear rotates both driven gears, a vacuum is created when the gear teeth come out of mesh. This suction draws fluid through the pump inlet from the oil pan. As the gear teeth come back into mesh, pressurized fluid is forced into the pump outlet and to the oil pump valves.

At low speeds, both sides of the pump supply fluid to the transmission. As the speed of the torque converter increases, the flow from both sides increases until the flow from the primary side alone is sufficient to meet system demands. At this point, the check valve located between the two pumps closes. The secondary side is shut down and the primary side supplies all the fluid to the transmission.

CONVERTER CLUTCH SWITCH VALVE

The converter clutch switch valve is used to control the hydraulic pressure supplied to the front (OFF) side of the torque converter clutch.

CONVERTER CLUTCH REGULATOR VALVE

The converter clutch regulator valve is used to control the hydraulic pressure supplied to the back (ON) side of the torque converter clutch.

TORQUE CONVERTER LIMIT VALVE

The torque converter limit valve serves to limit the available line pressure to the torque converter clutch.

STANDARD PROCEDURE - OIL PUMP VOLUME CHECK

Measuring the oil pump output volume will determine if sufficient oil flow to the transmission oil cooler exists, and whether or not an internal transmission failure is present.

Verify that the transmission fluid is at the proper level. Refer to the Fluid Level Check procedure in this section. If necessary, fill the transmission to the proper level with Mopar® ATF +4, Automatic Transmission Fluid.

1. Disconnect the **To cooler** line at the cooler inlet and place a collecting container under the disconnected line.

CAUTION: With the fluid set at the proper level, fluid collection should not exceed (1) quart or internal damage to the transmission may occur.

2. Run the engine **at 1800 rpm**, with the shift selector in neutral. Verify that the transmission fluid temperature is below 104.5° C (220° F) for this test.
3. If one quart of transmission fluid is collected in the container in 30 seconds or less, oil pump flow volume is within acceptable limits. If fluid flow is intermittent, or it takes more than 30 seconds to collect one quart of fluid, refer to the Hydraulic Pressure tests in this section for further diagnosis.
4. Re-connect the **To cooler** line to the transmission cooler inlet.
5. Refill the transmission to proper level.

DISASSEMBLY

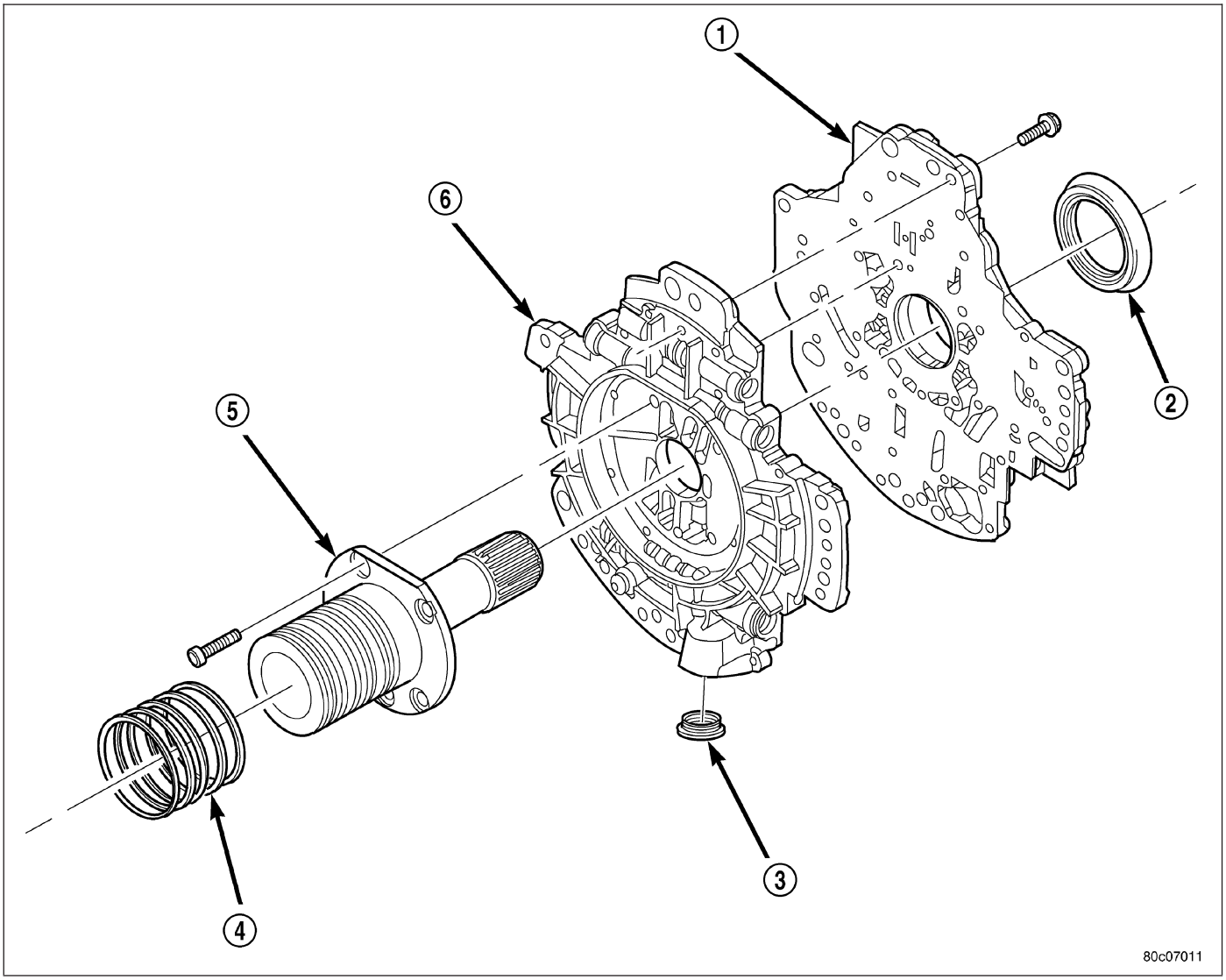

Oil Pump Assembly

1 - PUMP HOUSING
2 - SEAL
3 - OIL FILTER SEAL
4 - SEAL RING (5)
5 - REACTION SHAFT SUPPORT
6 - PUMP VALVE BODY

1. Remove the bolts holding the reaction shaft support (5) to the oil pump.
2. Remove the reaction shaft support (5) from the oil pump.
3. Remove all bolts holding the oil pump halves together.
4. Using suitable prying tools, separate the oil pump sections by inserting the tools in the supplied areas and prying the halves apart.

NOTE: The oil pump halves are aligned to each other through the use of two dowels. Be sure to pry upward evenly to prevent damage to the oil pump components.

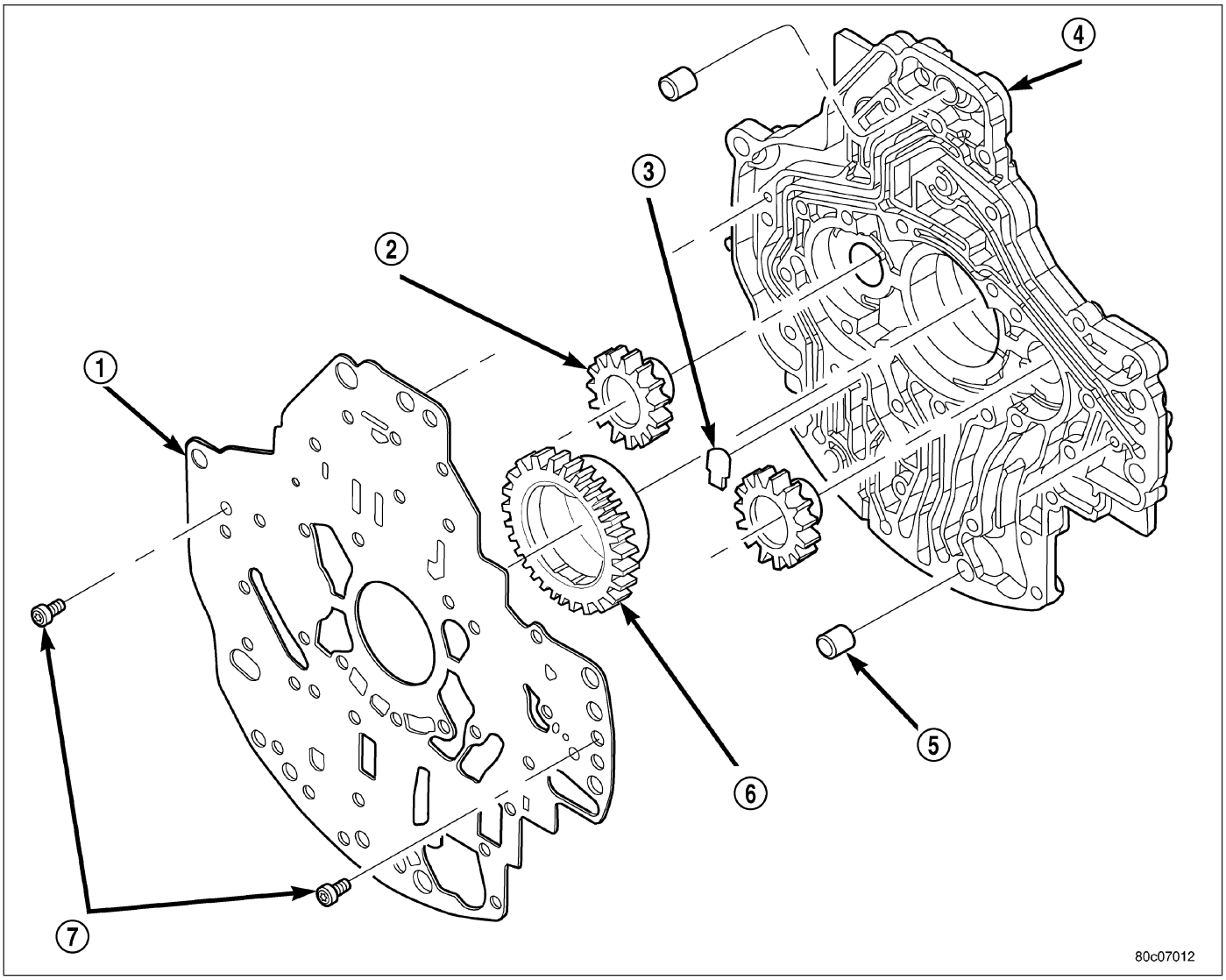

5. Remove the screws (7) holding the separator plate (1) onto the oil pump housing (4).
6. Remove the separator plate (1) from the oil pump housing (4).
7. Mark all gears for location. The gears are select fit and if the oil pump is to be reused, the gears must be returned to their original locations.
8. Remove the oil pump gears (2, 6) from the oil pump housing (4).

9. Remove the oil pump valve retainers (1) and associated valve (2) and spring one at a time. Mark the combination of components as a group and tag them as to the location from which they were removed.

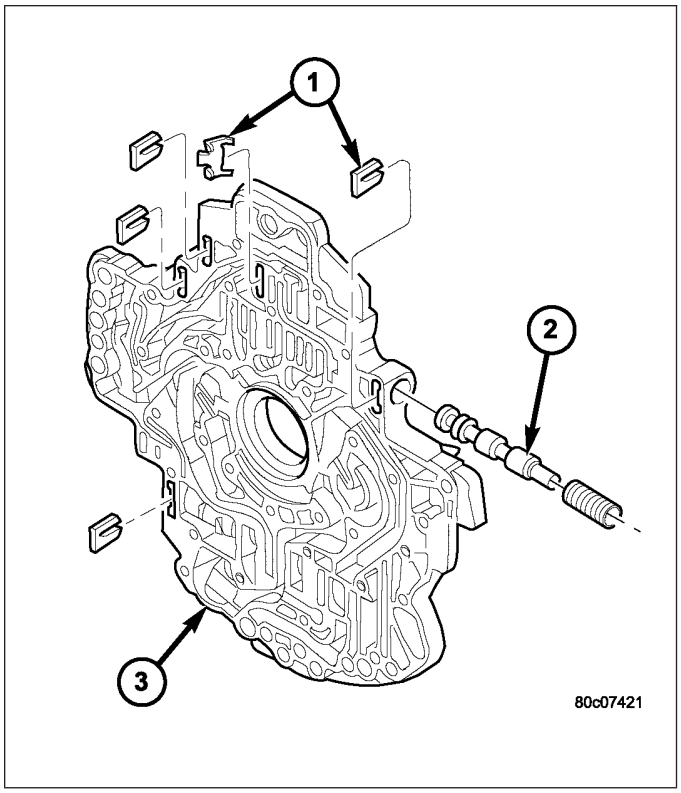

10. Remove the T/C regulator valve (1), T/C limit valve (2), and regulator valve (3).

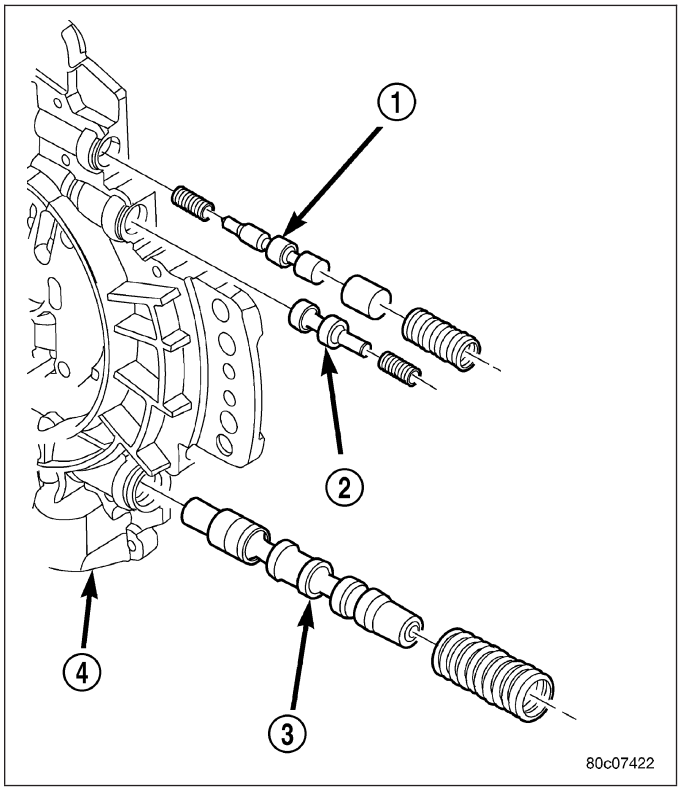

CLEANING

Clean pump and support components with solvent and dry them with compressed air.

INSPECTION

Check condition of the seal rings and thrust washer on the reaction shaft support. The seal rings do not need to be replaced unless cracked, broken, or severely worn.

Inspect the pump and support components. Replace the pump or support if the seal ring grooves or machined surfaces are worn, scored, pitted, or damaged. Replace the pump gears if pitted, worn chipped, or damaged.

Inspect the pump reaction shaft support bushings. Replace either bushing only if heavily worn, scored or damaged. It is not necessary to replace the bushings unless they are actually damaged.

Inspect the valves and plugs for scratches, burrs, nicks, or scores. Minor surface scratches on steel valves and plugs can be removed with crocus cloth but **do not round off the edges of the valve or plug lands.** Maintaining sharpness of these edges is vitally important. The edges prevent foreign matter from lodging between the valves and plugs and the bore.

Inspect all the valve and plug bores in the oil pump cover. Use a penlight to view the bore interiors. Replace the oil pump if any bores are distorted or scored. Inspect all of the valve springs. The springs must be free of distortion, warpage or broken coils.

Trial fit each valve and plug in its bore to check freedom of operation. When clean and dry, the valves and plugs should drop freely into the bores.

ASSEMBLY

NOTE: Clean and inspect all components. Make sure that all passages are thoroughly cleaned and are free from dirt or debris. Make sure that all valves move freely in their proper bore. Make sure that all gear pockets and bushings are free from excessive wear and scoring. Replace the oil pump if any excessive wear or scoring is found.

1. Install the T/C regulator valve (1), T/C limit valve (2), and regulator valve (3).

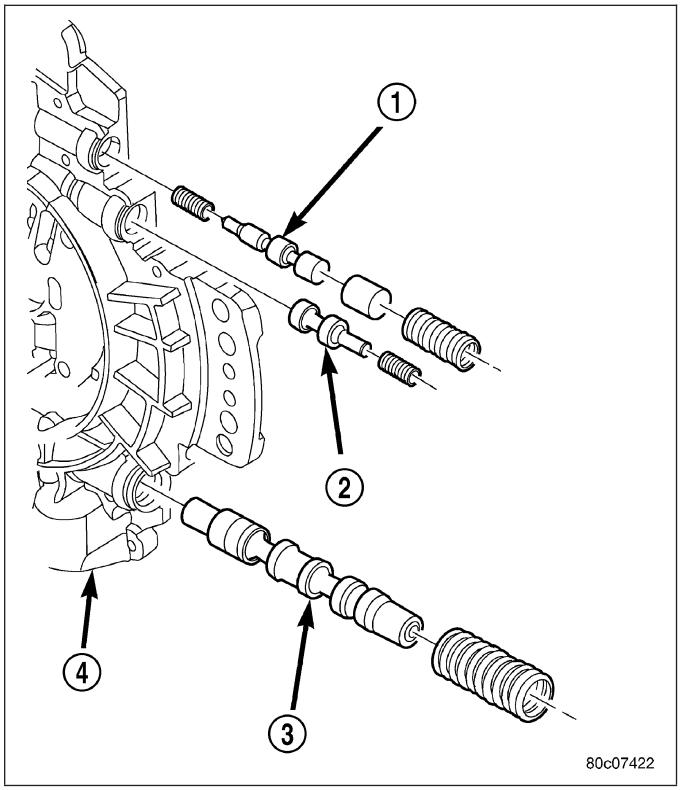

2. Lubricate the oil pump valves with Mopar® ATF +4 and install the valve (2), spring, and retainer (1) into the appropriate oil pump valve body (3) bore.

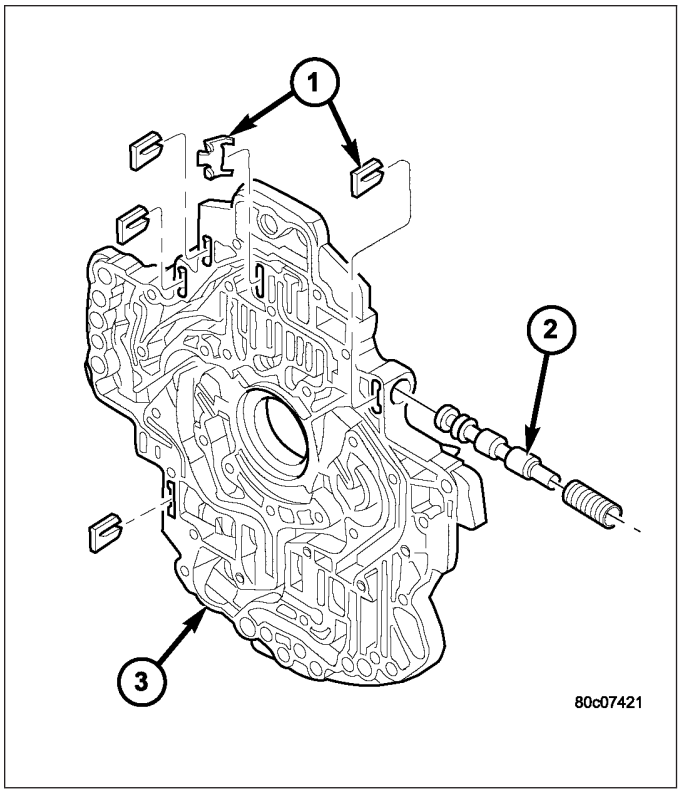

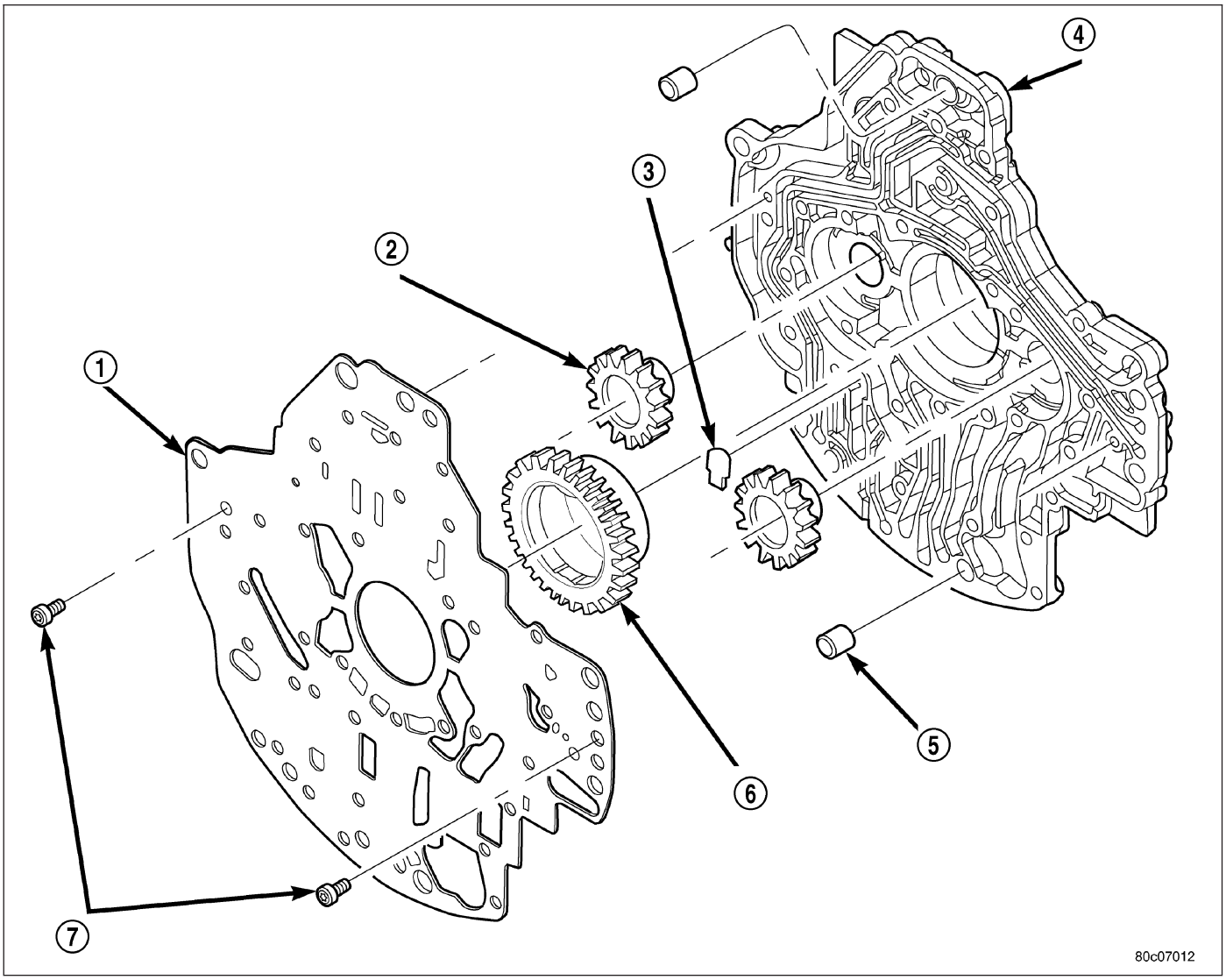

3. Coat the gears (2, 6) with Mopar® ATF +4 and install into their original locations.
4. Place the separator plate (1) onto the oil pump housing (4).
5. Install the screws(7) to hold the separator plate (1) onto the oil pump housing (4). Tighten the screws to 4.5 N·m (40 in.lbs.).

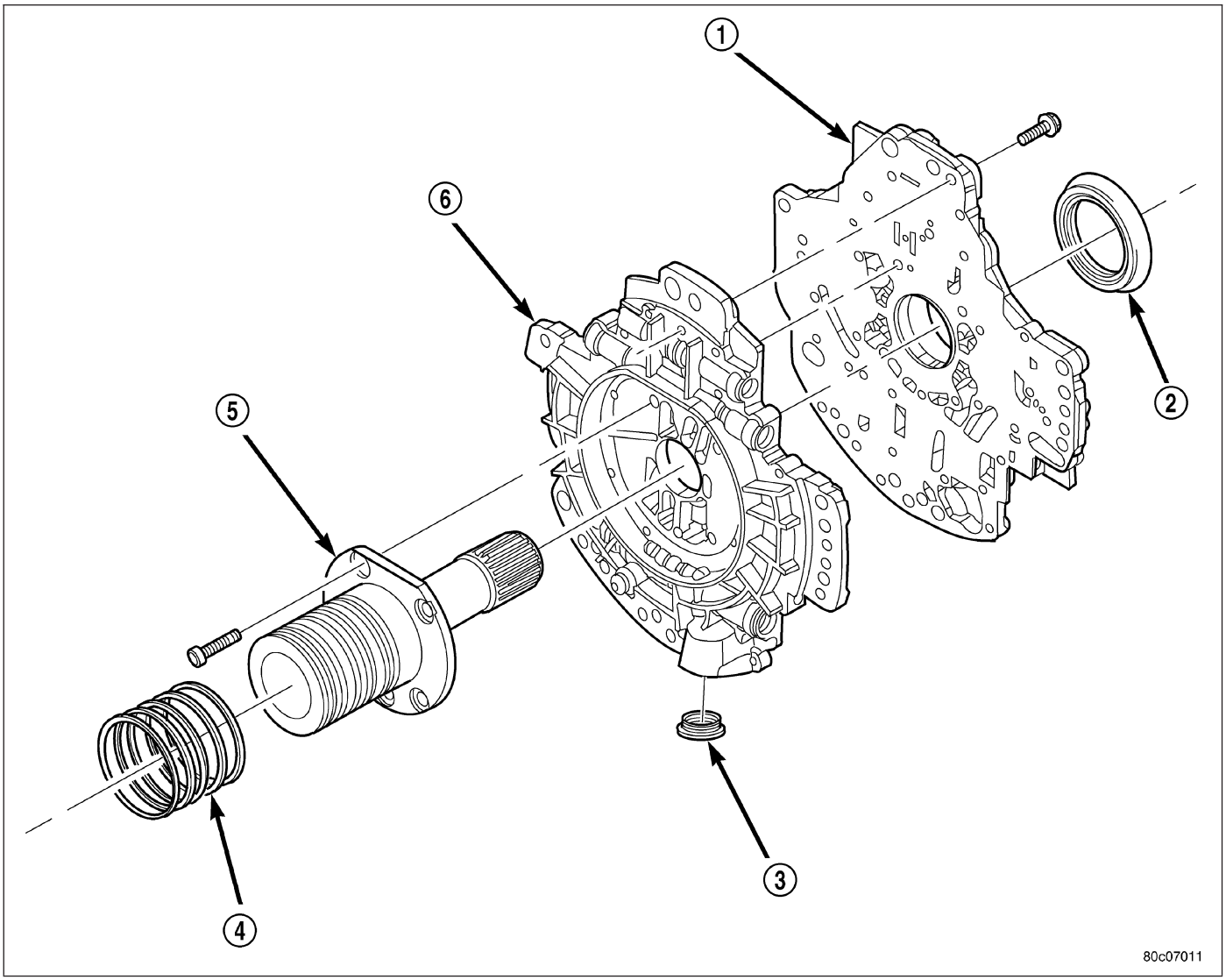

Oil Pump Assembly

1 - PUMP HOUSING	4 - SEAL RING (5)
2 - SEAL	5 - REACTION SHAFT SUPPORT
3 - OIL FILTER SEAL	6 - PUMP VALVE BODY

6. Position the oil pump valve body (6) onto the locating dowels.
7. Seat the two oil pump halves together and install all bolts finger tight.
8. Torque all bolts down slowly starting in the center and working outward. The correct torque is 4.5 N·m (40 in.lbs.).
9. Verify that the oil pump gears rotate freely and smoothly.
10. Position the reaction shaft support (5) onto the oil pump valve body (6).
11. Install and torque the bolts to hold the reaction shaft support (5) to the oil pump valve body (6). The correct torque is 12 N·m (105 in.lbs.).

SEAL-OIL PUMP FRONT

REMOVAL

1. Remove transmission from the vehicle.
2. Remove the torque converter from the transmission.
3. Using a screw mounted in a slide hammer, remove the oil pump front seal.

INSTALLATION

1. Clean seal bore of the oil pump of any residue or particles from the original seal.
2. Install new oil seal in the oil pump housing using Seal Installer C-3860-A (1).

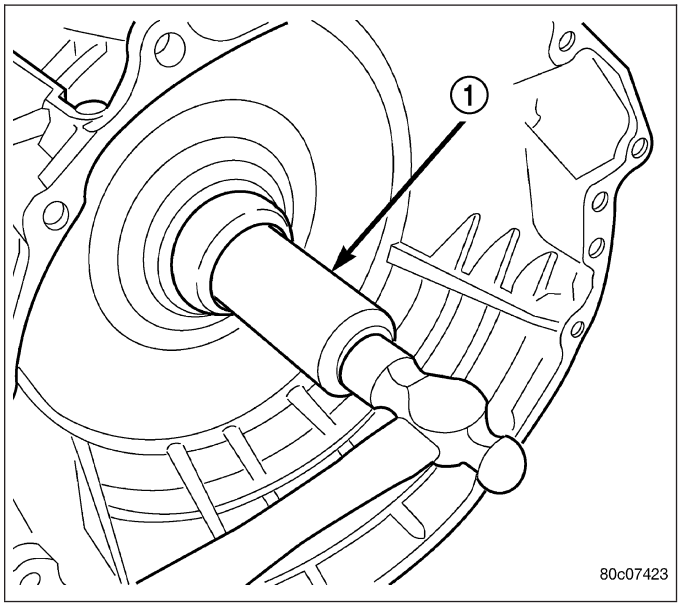

SENSOR-OUTPUT SPEED

DESCRIPTION

The Input and Output Speed Sensors are two-wire magnetic pickup devices that generate AC signals as rotation occurs. They are mounted in the left side of the transmission case and are considered primary inputs to the Transmission Control Module (TCM).

OPERATION

The Input Speed Sensor provides information on how fast the input shaft is rotating. As the teeth of the input clutch hub pass by the sensor coil, an AC voltage is generated and sent to the TCM. The TCM interprets this information as input shaft rpm.

The Output Speed Sensor generates an AC signal in a similar fashion, though its coil is excited by rotation of the rear planetary carrier lugs. The TCM interprets this information as output shaft rpm.

The TCM compares the input and output speed signals to determine the following:

- Transmission gear ratio
- Speed ratio error detection
- CVI calculation

The TCM also compares the input speed signal and the engine speed signal to determine the following:

- Torque converter clutch slippage
- Torque converter element speed ratio

REMOVAL

1. Raise vehicle.
2. Place a suitable fluid catch pan under the transmission.
3. Remove the wiring connector from the output speed sensor (1).
4. Remove the bolt holding the output speed sensor (1) to the transmission case.
5. Remove the output speed sensor (1) from the transmission case.

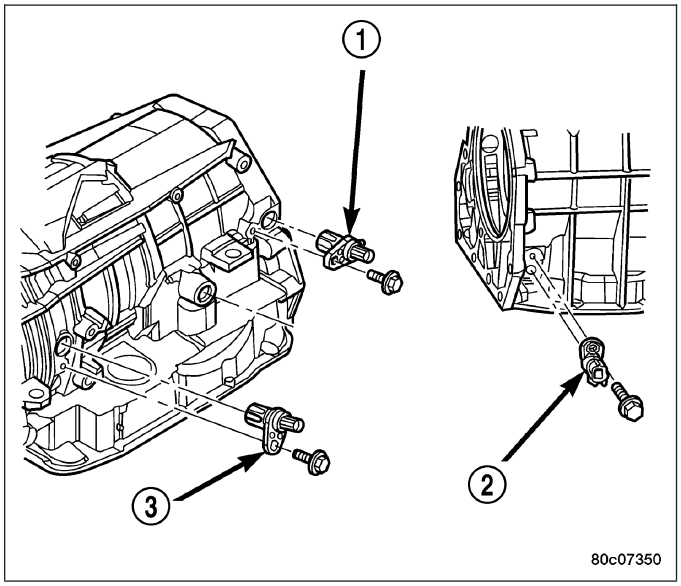

INSTALLATION

1. Install the output speed sensor (1) into the transmission case.
2. Install the bolt to hold the output speed sensor (1) into the transmission case. Tighten the bolt to 11.9 N·m (105 in.lbs.).
3. Install the wiring connector onto the output speed sensor (1).
4. Verify the transmission fluid level. Add fluid as necessary.
5. Lower vehicle.

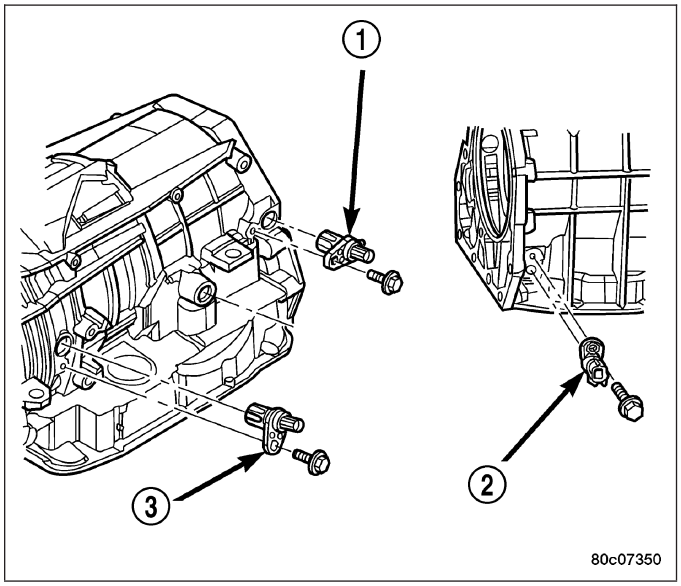

SENSOR-LINE PRESSURE

DESCRIPTION

The TCM utilizes a closed-loop system to control transmission line pressure. The system contains a variable force style solenoid, the Pressure Control Solenoid, mounted on the side of the solenoid and pressure switch assembly. The solenoid is duty cycle controlled by the TCM to vent the unnecessary line pressure supplied by the oil pump back to the sump. The system also contains a variable pressure style sensor, the Line Pressure Sensor, which is a direct input to the TCM. The line pressure solenoid monitors the transmission line pressure and completes the feedback loop to the TCM. The TCM uses this information to adjust its control of the pressure control solenoid to achieve the desired line pressure.

OPERATION

The TCM calculates the desired line pressure based upon inputs from the transmission and engine. The TCM calculates the torque input to the transmission and uses that information as the primary input to the calculation. The line pressure is set to a predetermined value during shifts and when the transmission is in the PARK and NEUTRAL positions. This is done to ensure consistent shift quality. During all other operation, the actual line pressure is compared to the desired line pressure and adjustments are made to the pressure control solenoid duty cycle.

REMOVAL

1. Raise vehicle.
2. Place a suitable fluid catch pan under the transmission.
3. Remove the wiring connector from the line pressure sensor (2).
4. Remove the bolt holding the line pressure sensor (2) to the transmission case.
5. Remove the line pressure sensor (2) from the transmission case.

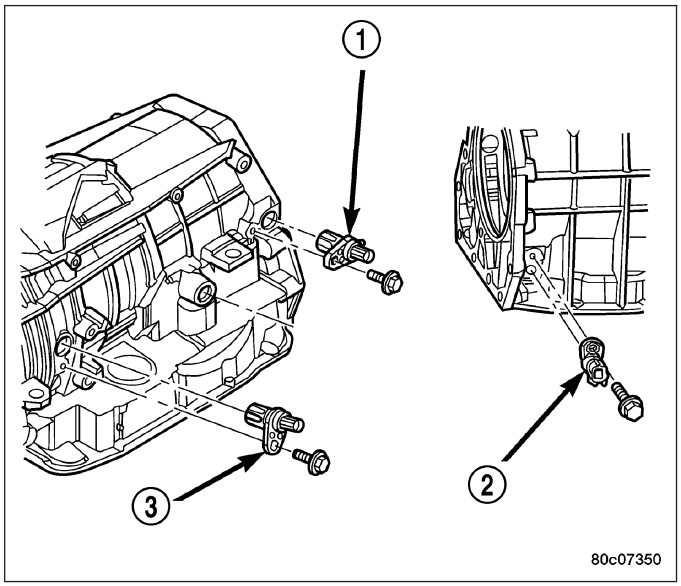

INSTALLATION

1. Install the line pressure sensor (2) into the transmission case.
2. Install the bolt to hold the line pressure sensor (2) into the transmission case. Tighten the bolt to 11.9 N·m (105 in.lbs.).
3. Install the wiring connector onto the line pressure sensor (2).
4. Verify the transmission fluid level. Add fluid as necessary.
5. Lower vehicle.

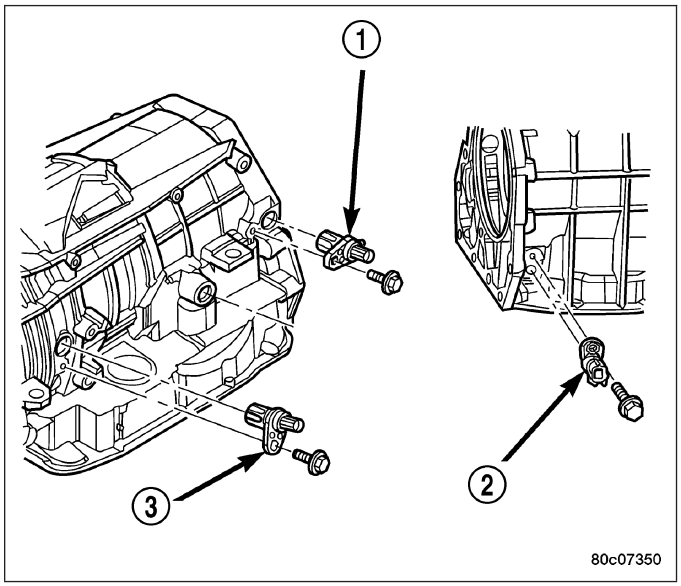

SWITCH-TOW/HAUL OVERDRIVE

DESCRIPTION

The tow/haul overdrive OFF (control) switch is located in the shift lever arm. The switch is a momentary contact device that signals the PCM to toggle current status of the overdrive function.

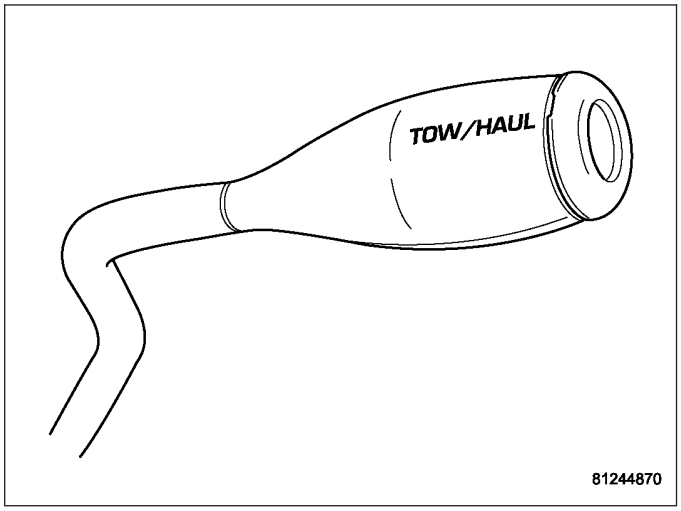

OPERATION

At key-on, overdrive operation is allowed. Pressing the switch once causes the tow/haul overdrive OFF mode to be entered and the Tow/Haul lamp to be illuminated. Pressing the switch a second time causes normal overdrive operation to be restored and the tow/haul lamp to be turned off. The tow/haul overdrive OFF mode defaults to ON after the ignition switch is cycled OFF and ON. The normal position for the control switch is the ON position. The switch must be in this position to energize the solenoid and allow a 3-4 upshift. The control switch indicator light illuminates only when the tow/haul overdrive switch is turned to the OFF position, or when illuminated by the transmission control module.

REMOVAL

1. Using a plastic trim tool, remove the tow/haul overdrive off switch retainer (2) from the shift lever (1).

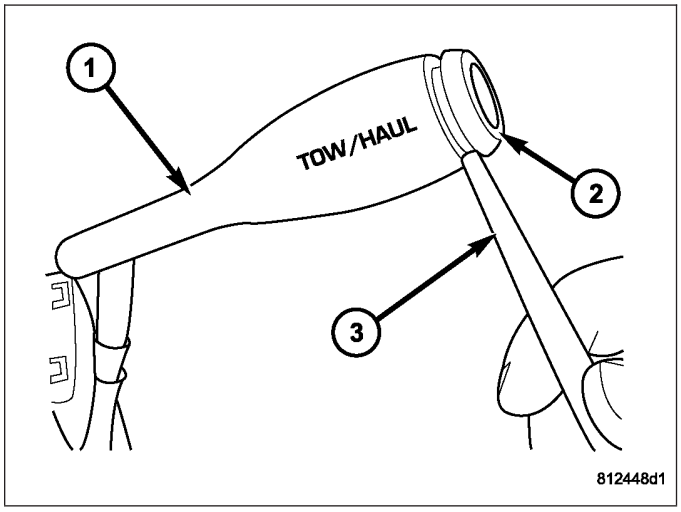

2. Pull the switch (2) outwards to release it from the connector in the lever (1)

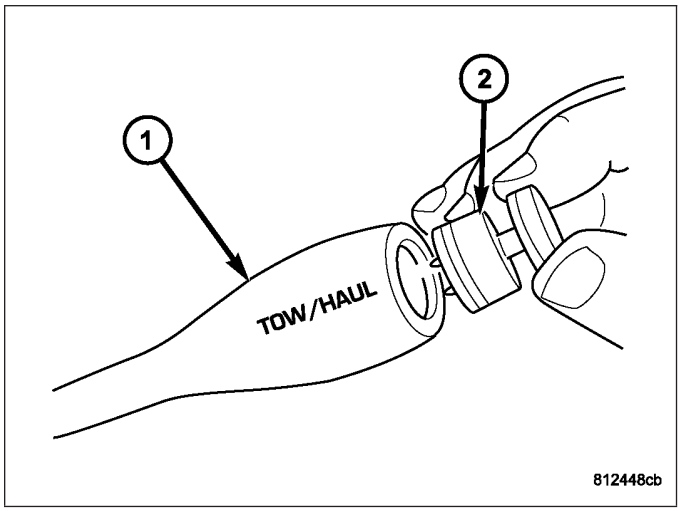

INSTALLATION

NOTE: There is enough slack in the wire to pull out the connector from the lever.

1. Pull the connector (2) out of the lever (1) just enough to grasp it.

CAUTION: Be careful not to bend the pins on the tow/haul overdrive off switch. Use care when installing the switch, as it is not indexed, and can be accidentally installed incorrectly.

2. Install the tow/haul overdrive off switch (3) into the connector (2)
3. Push the tow/haul overdrive off switch (3) and wiring into the shift lever (1).
4. Install the tow/haul overdrive off switch retainer onto the shift lever.

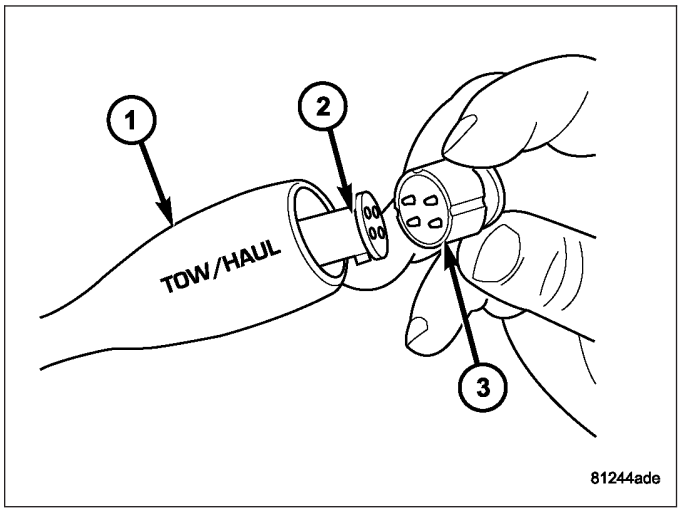

GEARTRAIN-PLANETARY

DESCRIPTION

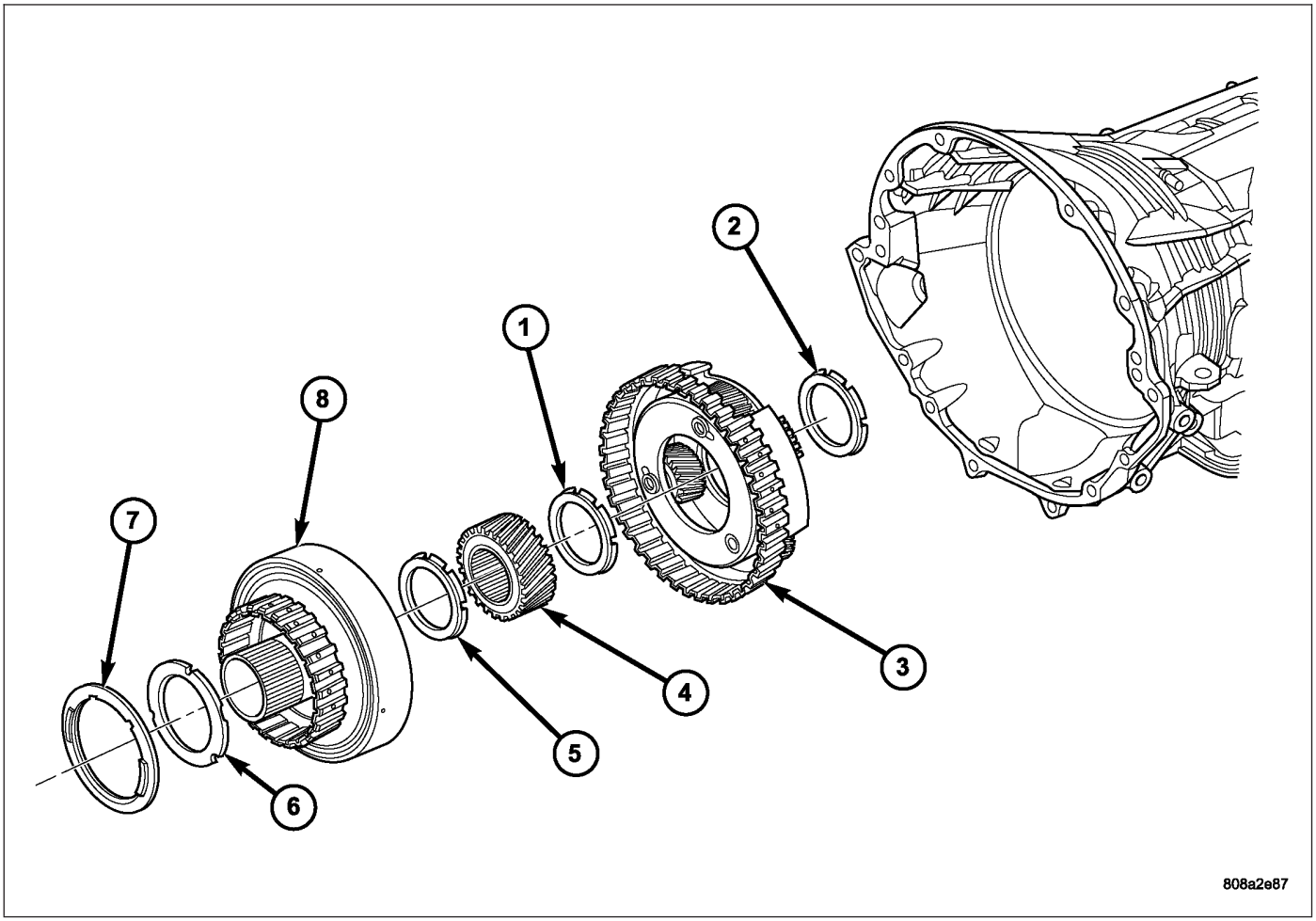

Reaction Planetary Geartrain

1 - THRUST BEARING NUMBER 8
2 - THRUST BEARING NUMBER 9
3 - REACTION PLANETARY CARRIER
4 - REACTION SUN GEAR
5 - THRUST BEARING NUMBER 7
6 - THRUST PLATE (SELECT)
7 - THRUST BEARING NUMBER 6
8 - REACTION ANNULUS

The planetary geartrain is located behind the 4C retainer/bulkhead, toward the rear of the transmission. The planetary geartrain consists of three primary assemblies:

- Reaction (3, 4, 8).

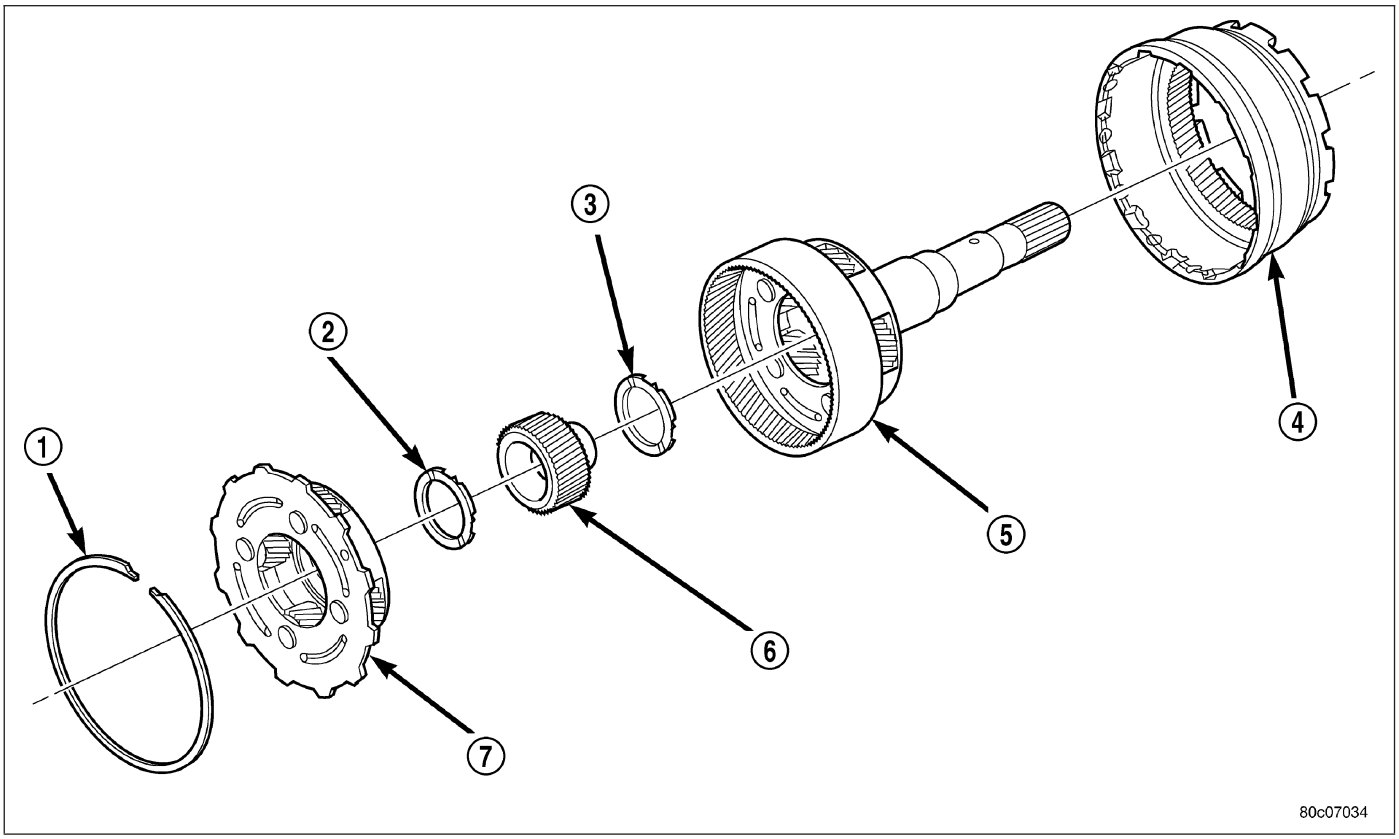

Reverse/Input Planetary Geartrain

1 - SNAP-RING
2 - THRUST BEARING NUMBER 10
3 - THRUST BEARING NUMBER 11
4 - INPUT ANNULUS
5 - INPUT PLANETARY CARRIER
6 - INPUT SUN GEAR
7 - REVERSE PLANETARY CARRIER

- Reverse (7).
- Input (4, 5, 6).

OPERATION

REACTION PLANETARY GEARTRAIN

The reaction planetary carrier and reverse sun gear of the reaction planetary geartrain are a single component which is held by the 2C clutch when required. The reaction annulus gear is a stand alone component that can be driven by the reverse clutch or held by the 4C clutch. The reaction sun gear is driven by the overdrive clutch.

REVERSE PLANETARY GEARTRAIN

The reverse planetary geartrain is the middle of the three planetary sets. The reverse planetary carrier can be driven by the overdrive clutch as required. The reverse planetary carrier is also splined to the input annulus gear, which can be held by the low/reverse clutch. The reverse planetary annulus, input planetary carrier, and output shaft are all one piece.

INPUT PLANETARY GEARTRAIN

The input sun gear of the input planetary geartrain is driven by the underdrive clutch.

DISASSEMBLY

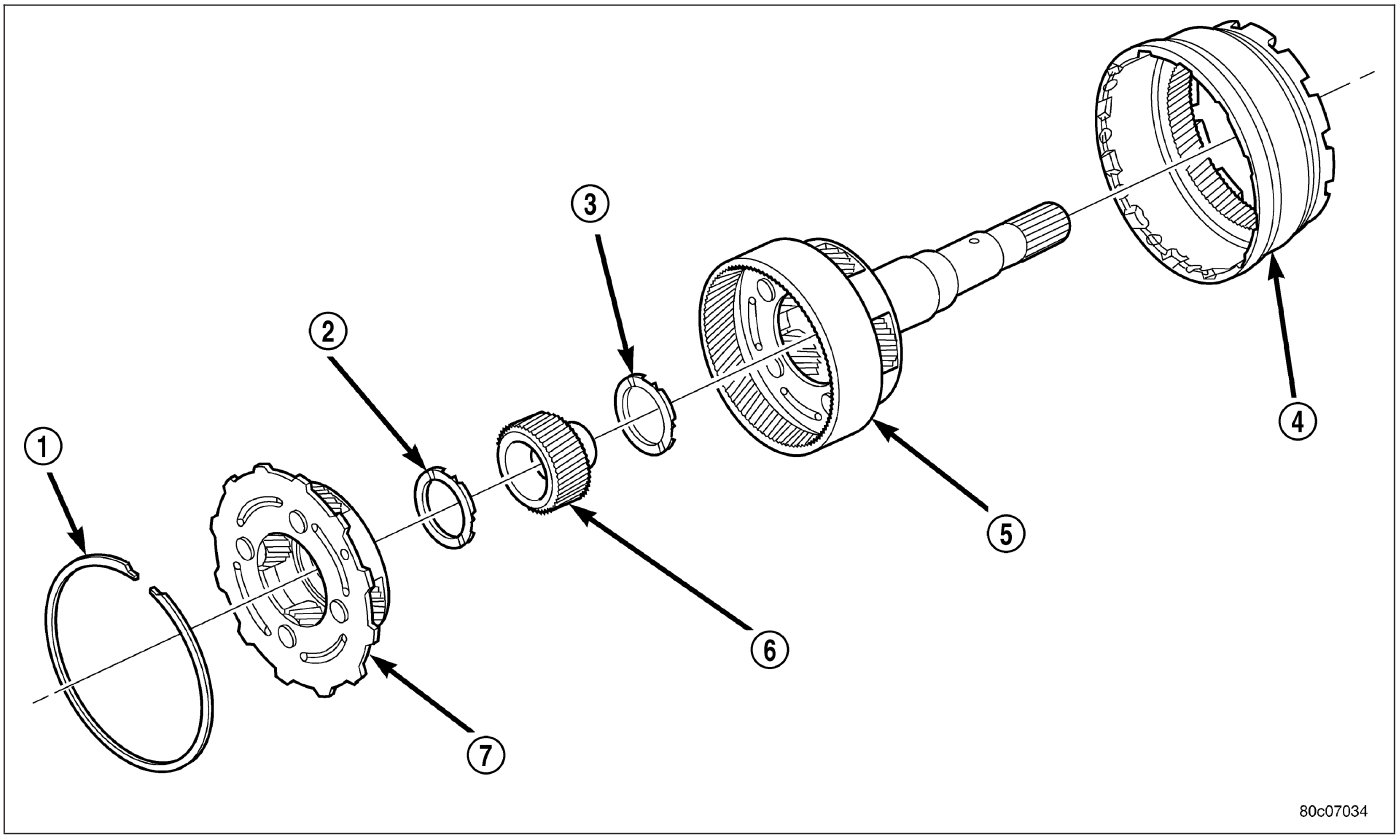

Reverse/Input Planetary Carrier Assembly

1 - SNAP-RING
2 - THRUST BEARING NUMBER 10
3 - THRUST BEARING NUMBER 11
4 - INPUT ANNULUS
5 - INPUT PLANETARY CARRIER
6 - INPUT SUN GEAR
7 - REVERSE PLANETARY CARRIER

1. Remove the snap-ring (1) holding the input annulus (4) into the input carrier (5).
2. Remove the input annulus (4) from the input carrier (5).
3. Remove the number 9 thrust bearing from the reverse planetary carrier. Note that this planetary carrier has four pinion gears.
4. Remove the reverse planetary gear carrier (7).
5. Remove the number 10 thrust bearing (2) from the input sun gear (6).
6. Remove the input sun gear (6) from the input carrier (5).
7. Remove the number 11 thrust bearing (3) from the input carrier (5).

CLEANING

Clean the planetary components in solvent and dry them with compressed air.

INSPECTION

Check sun gear and driving shell condition. Replace the gear if damaged or if the bushings are scored or worn. The bushings are not serviceable. Replace the driving shell if worn, cracked or damaged.

Replace planetary gear sets if gears, pinion pins, or carrier are damaged in any way. Replace the annulus gears and supports if either component is worn or damaged.

Replace the output shaft if the machined surfaces are scored, pitted, or damaged in any way. Also replace the shaft if the splines are damaged, or exhibits cracks at any location.

ASSEMBLY

NOTE: Clean and inspect all components. Replace any components which show evidence of excessive wear or scoring.

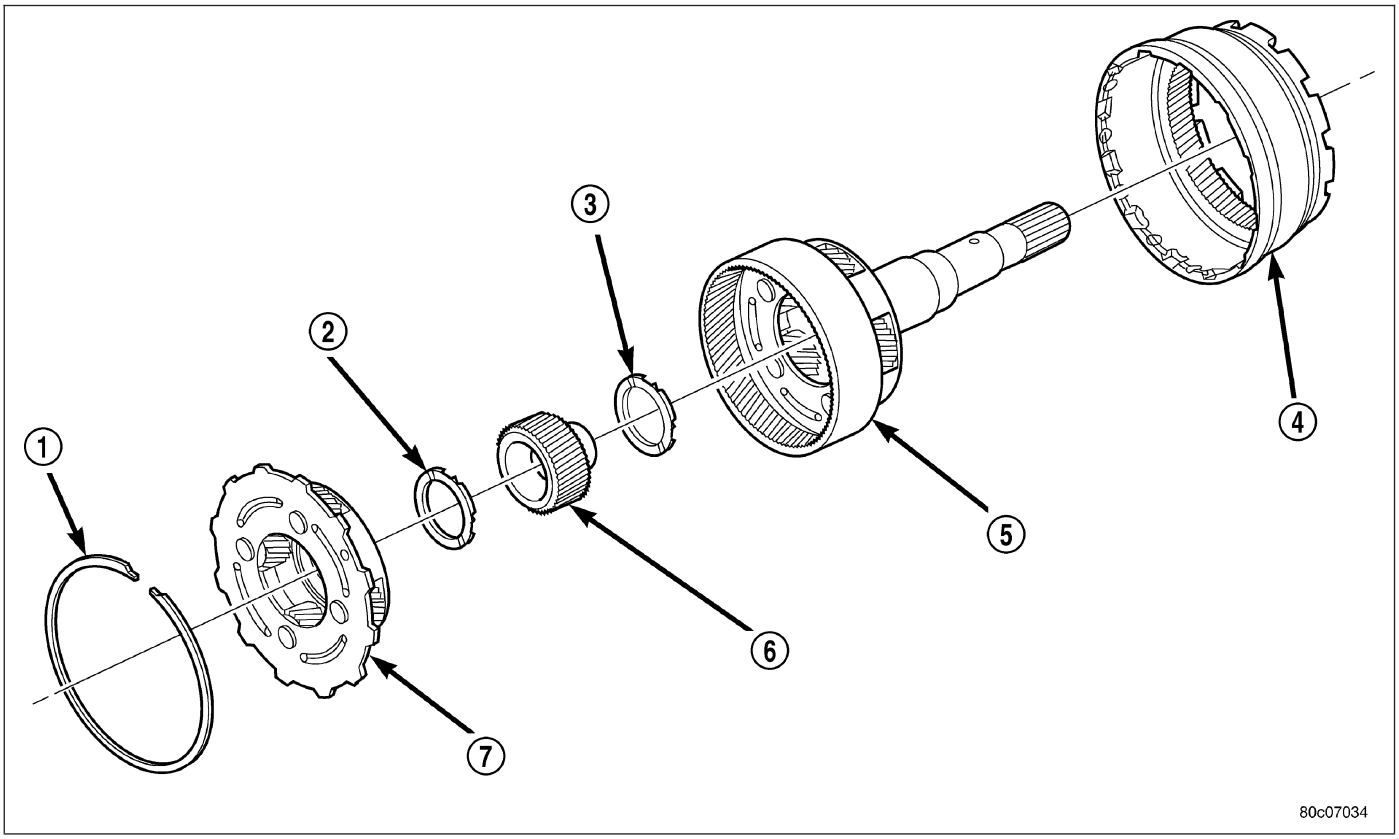

Reverse/Input Planetary Carrier Assembly

1 - SNAP-RING
2 - THRUST BEARING NUMBER 10
3 - THRUST BEARING NUMBER 11
4 - INPUT ANNULUS
5 - INPUT PLANETARY CARRIER
6 - INPUT SUN GEAR
7 - REVERSE PLANETARY CARRIER

1. Install the number 11 thrust bearing (3) into the input planetary carrier (5) so that the inner race will be toward the front of the transmission.
2. Install the input sun gear (6) into the input carrier (5).
3. Install the number 10 thrust bearing (2) onto the rear of the reverse planetary carrier (7) with the inner race toward the carrier.
4. Install the number 9 thrust bearing onto the front of the reverse planetary carrier (7) with the outer race toward the carrier and the inner race facing upward.
5. Install the reverse planetary gear carrier (7) into the input carrier (5).
6. Install the input annulus gear (4) into the input carrier (5).
7. Install the snap-ring (1) to hold the input annulus gear (4) into the input carrier (5).

MECHANISM-SHIFT

DESCRIPTION

The gear shift mechanism provides six shift positions which are:

- Park (P)
- Reverse (R)

- Neutral (N)
- Drive (D)
- Manual second (2)
- Manual low (1)

OPERATION

MANUAL LOW (1) range provides first gear only. Overrun braking is also provided in this range. MANUAL SECOND (2) range provides first and second gear only.

DRIVE range provides FIRST, SECOND, THIRD, OVERDRIVE FOURTH, and OVERDRIVE FIFTH (if applicable) gear ranges. The shift into OVERDRIVE FOURTH and FIFTH (if applicable) gear ranges occurs only after the transmission has completed the shift into D THIRD gear range. No further movement of the shift mechanism is required to complete the 3-4 or 4-5 (if applicable) shifts.

The FOURTH and FIFTH (if applicable) gear upshifts occur automatically when the overdrive selector switch is in the ON position. No upshift to FOURTH or FIFTH (if applicable) gears will occur if any of the following are true:

- The transmission fluid temperature is below 10° C (50° F) or above 121° C (250° F).
- The shift to THIRD is not yet complete.
- Vehicle speed is too low for the 3-4 or 4-5 (if applicable) shifts to occur.

Upshifts into FOURTH or FIFTH (if applicable) will be delayed when the transmission fluid temperature is below 4.5° C (40° F) or above 115.5° C (240° F).

VALVE-SOLENOID SWITCH

DESCRIPTION

The Solenoid Switch Valve (SSV) is located in the valve body and controls the direction of the transmission fluid when the L/R-TCC solenoid is energized.

OPERATION

The Solenoid Switch Valve controls line pressure from the LR-TCC solenoid. In 1st gear, the SSV will be in the downshifted position, thus directing fluid to the L/R clutch circuit. In 2nd, 3rd, 4th, and 5th (if applicable) gears, the solenoid switch valve will be in the upshifted position and directs the fluid into the torque converter clutch (TCC) circuit.

When shifting into 1st gear, a special hydraulic sequence is performed to ensure SSV movement into the downshifted position. The L/R pressure switch is monitored to confirm SSV movement. If the movement is not confirmed (the L/R pressure switch does not close), 2nd gear is substituted for 1st. A DTC will be set after three unsuccessful attempts are made to get into 1st gear in one given key start.

CONVERTER-TORQUE

DESCRIPTION

The torque converter is a hydraulic device that couples the engine crankshaft to the transmission. The torque converter consists of an outer shell with an internal turbine (1), a stator (2), an overrunning clutch, an impeller (5), and an electronically applied converter clutch (6). The converter clutch provides reduced engine speed and greater fuel economy when engaged. Clutch engagement also provides reduced transmission fluid temperatures. The torque converter hub (3) drives the transmission oil (fluid) pump and contains an o-ring seal (4) to better control oil flow.

The torque converter is a sealed, welded unit that is not repairable and is serviced as an assembly.

CAUTION: The torque converter must be replaced if a transmission failure resulted in large amounts of metal or fiber contamination in the fluid.

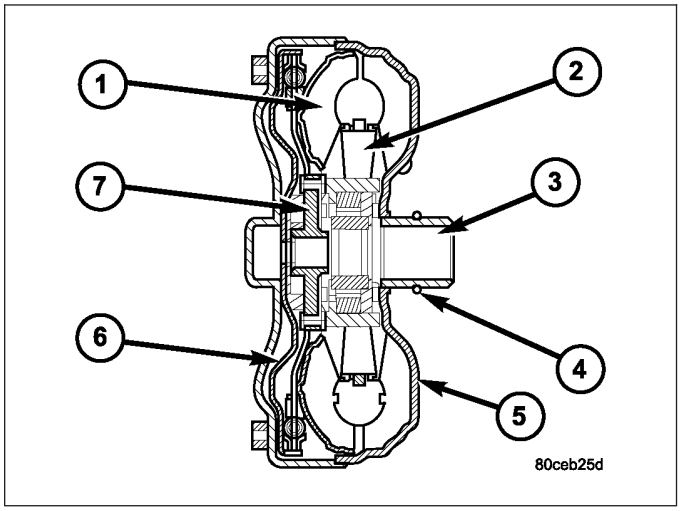

IMPELLER

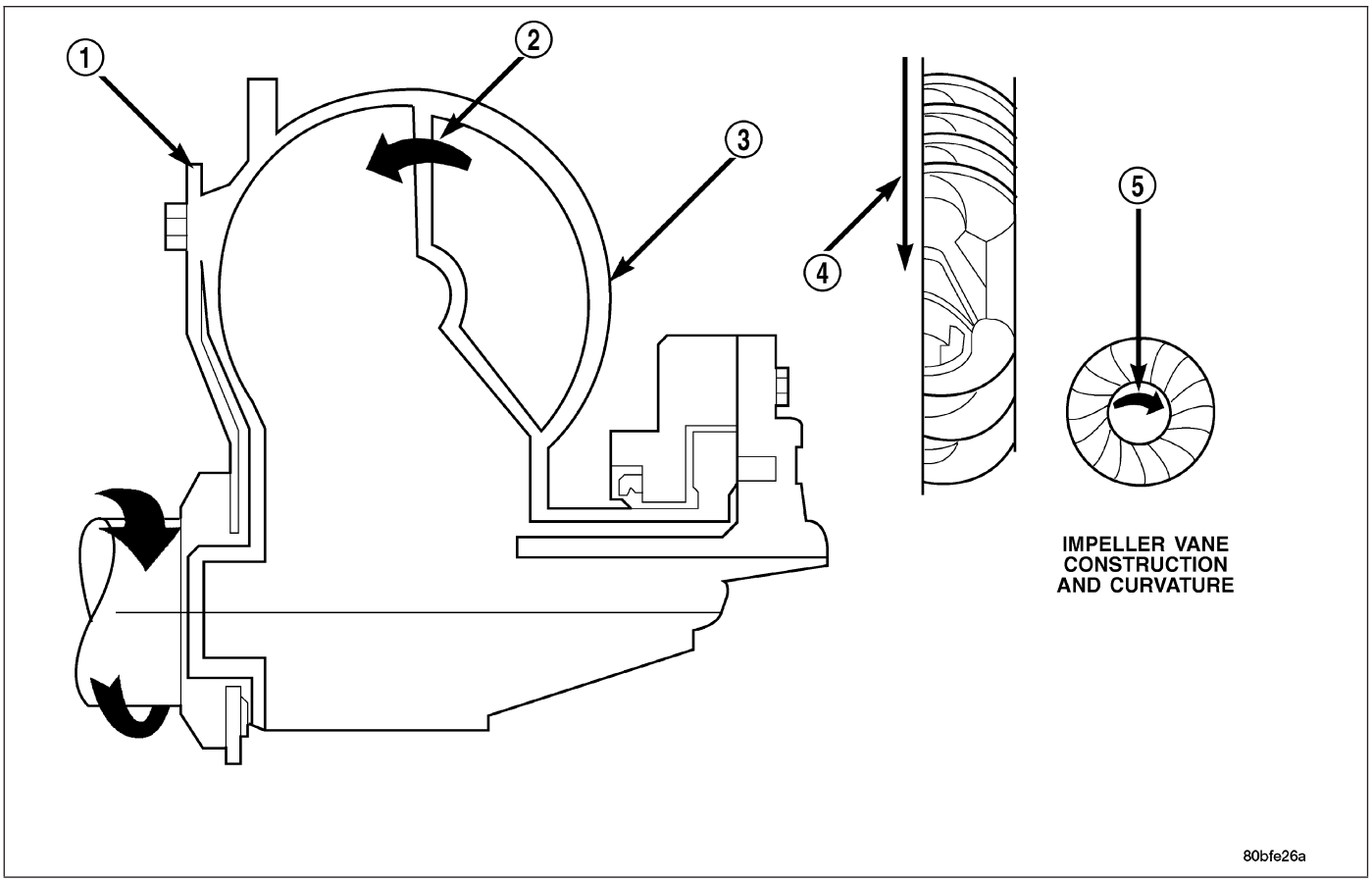

Impeller

1 - ENGINE FLEXPLATE
2 - OIL FLOW FROM IMPELLER SECTION INTO TURBINE SECTION
3 - IMPELLER VANES AND COVER ARE INTEGRAL
4 - ENGINE ROTATION
5 - ENGINE ROTATION

The impeller is an integral part of the converter housing. The impeller consists of curved blades placed radially along the inside of the housing on the transmission side of the converter. As the converter housing is rotated by the engine, so is the impeller, because they are one and the same and are the driving members of the system.

TURBINE

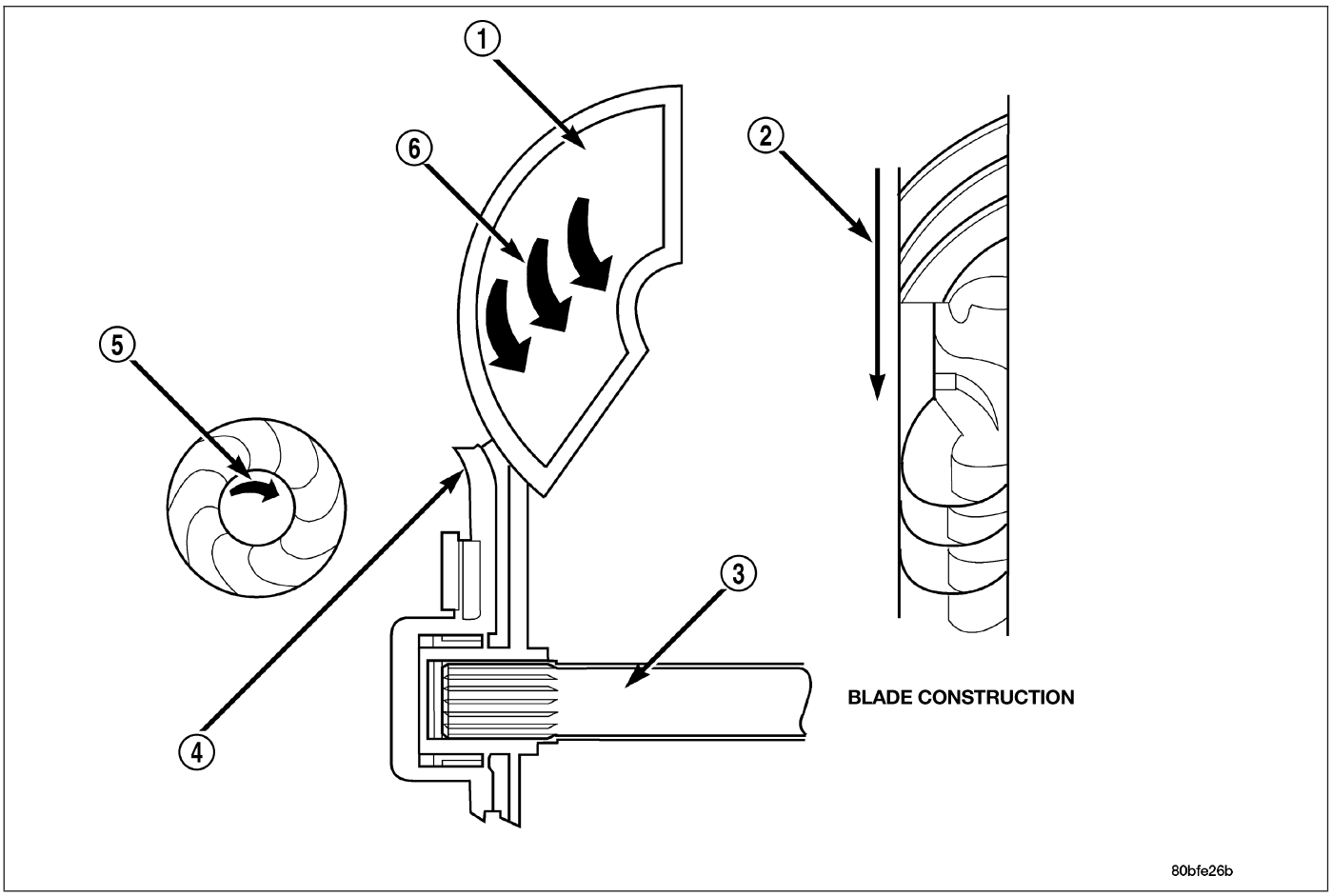

Turbine

1 - TURBINE VANE
2 - ENGINE ROTATION
3 - INPUT SHAFT
4 - PORTION OF TORQUE CONVERTER COVER
5 - ENGINE ROTATION
6 - OIL FLOW WITHIN TURBINE SECTION

The turbine is the output, or driven, member of the converter. The turbine is mounted within the housing opposite the impeller, but is not attached to the housing. The input shaft is inserted through the center of the impeller and splined into the turbine. The design of the turbine is similar to the impeller, except the blades of the turbine are curved in the opposite direction.

STATOR

The stator assembly is mounted on a stationary shaft which is an integral part of the oil pump. The stator (1) is located between the impeller (2) and the turbine (4) within the torque converter case.

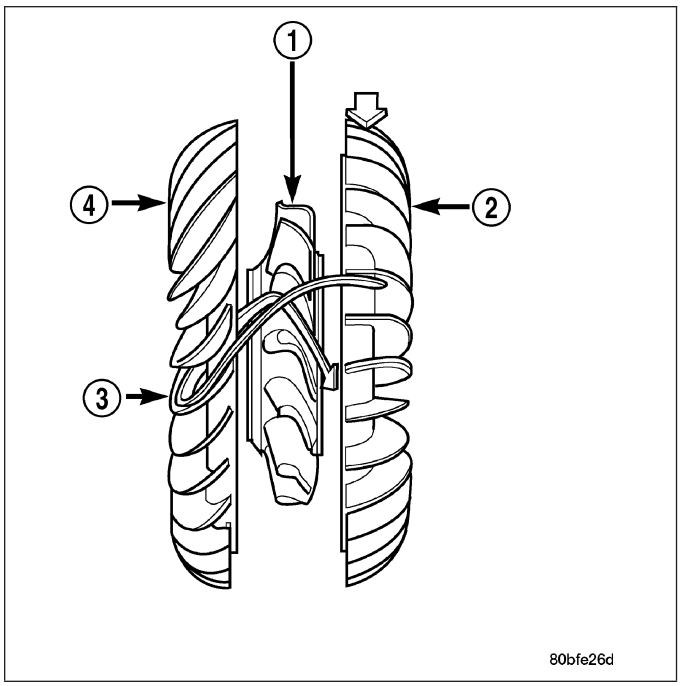

The stator contains an over-running clutch (1-4), which allows the stator to rotate only in a clockwise direction. When the stator is locked against the over-running clutch, the torque multiplication feature of the torque converter is operational.

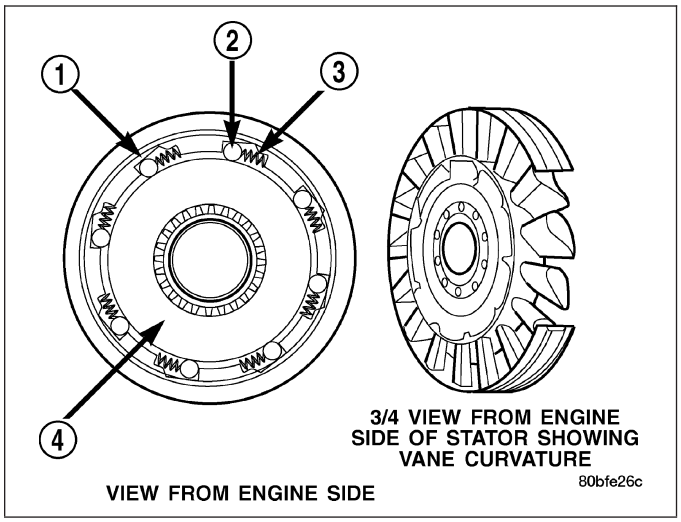

TORQUE CONVERTER CLUTCH (TCC)

The TCC was installed to improve the efficiency of the torque converter that is lost to the slippage of the fluid coupling. Although the fluid coupling provides smooth, shock-free power transfer, it is natural for all fluid couplings to slip. If the impeller (3) and turbine (5) were mechanically locked together, a zero slippage condition could be obtained. A hydraulic piston (6) with friction material (7) was added to the turbine assembly (5) to provide this mechanical lock-up.

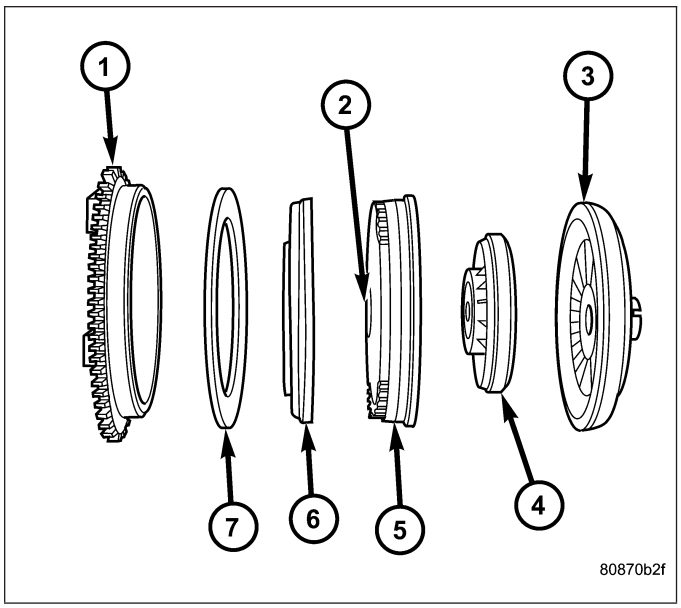

In order to reduce heat build-up in the transmission and buffer the powertrain against torsional vibrations, the TCM can duty cycle the L/R-CC Solenoid to achieve a smooth application of the torque converter clutch. This function, referred to as Electronically Modulated Converter Clutch (EMCC) can occur at various times depending on the following variables:

- Shift lever position
- Current gear range
- Transmission fluid temperature
- Engine coolant temperature
- Input speed
- Throttle angle
- Engine speed

OPERATION

The converter impeller (driving member), which is integral to the converter housing and bolted to the engine drive plate, rotates at engine speed. The converter turbine (driven member), which reacts from fluid pressure generated by the impeller, rotates and turns the transmission input shaft.

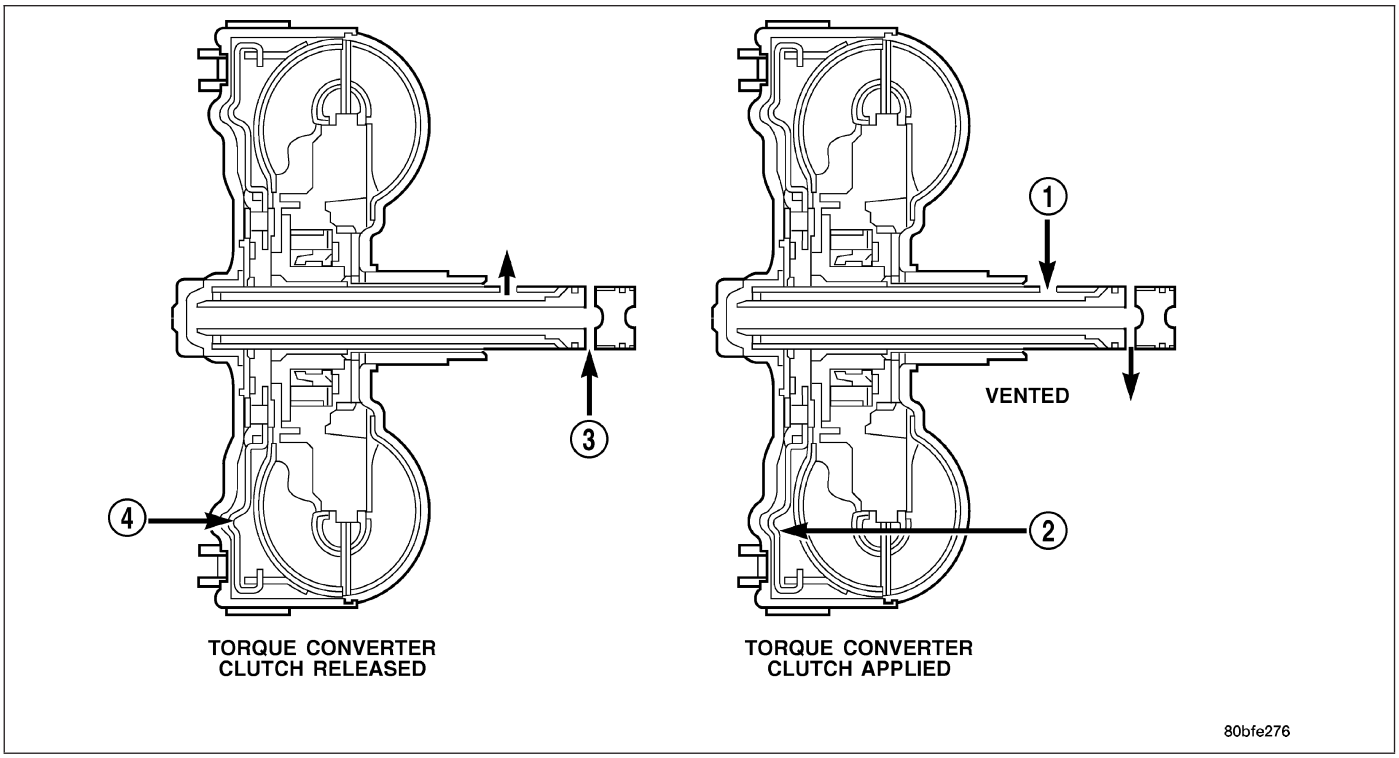

Torque Converter Fluid Operation - Typical

1 - APPLY PRESSURE
2 - THE PISTON MOVES SLIGHTLY FORWARD
3 - RELEASE PRESSURE
4 - THE PISTON MOVES SLIGHTLY REARWARD

TURBINE

As the fluid that was put into motion by the impeller blades strikes the blades of the turbine, some of the energy and rotational force is transferred into the turbine and the input shaft. This causes both of them (turbine and input shaft) to rotate in a clockwise direction following the impeller. As the fluid is leaving the trailing edges of the turbine's blades it continues in a "hindering" direction back toward the impeller. If the fluid is not redirected before it strikes the impeller, it will strike the impeller in such a direction that it would tend to slow it down.

STATOR

Torque multiplication is achieved by locking the stator's over-running clutch to its shaft. Under stall conditions (the turbine is stationary), the oil leaving the turbine blades strikes the face of the stator blades and tries to rotate them in a counterclockwise direction. When this happens the over-running clutch of the stator locks and holds the stator from rotating. With the stator locked, the oil strikes the stator blades and is redirected into a "helping" direction before it enters the impeller. This circulation of oil from impeller to turbine, turbine to stator, and stator to impeller, can produce a maximum torque multiplication of about 2.4:1. As the turbine begins to match the speed of the impeller, the fluid that was hitting the stator in such as way as to cause it to lock-up is no longer doing so. In this condition of operation, the stator begins to free wheel and the converter acts as a fluid coupling.

TORQUE CONVERTER CLUTCH (TCC)

In a standard torque converter, the impeller and turbine are rotating at about the same speed and the stator is freewheeling, providing no torque multiplication. By applying the turbine's piston and friction material to the front cover, a total converter engagement can be obtained. The result of this engagement is a direct 1:1 mechanical link between the engine and the transmission.

The clutch can be engaged in second, third, fourth, and fifth (if appicable) gear ranges depending on overdrive control switch position. If the overdrive control switch is in the normal ON position, the clutch will engage after the shift to fourth gear. If the control switch is in the OFF position, the clutch will engage after the shift to third gear.

The TCM controls the torque converter by way of internal logic software. The programming of the software provides the TCM with control over the L/R-CC Solenoid. There are four output logic states that can be applied as follows:

- No EMCC
- Partial EMCC
- Full EMCC
- Gradual-to-no EMCC

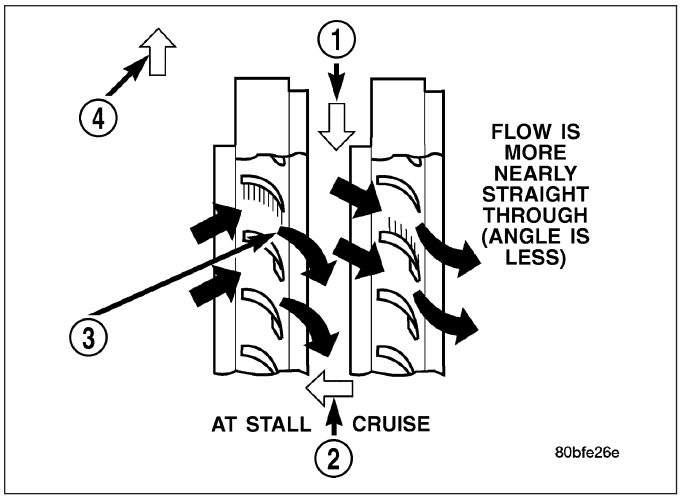

Stator Operation

1 - DIRECTION STATOR WILL FREE WHEEL DUE TO OIL PUSHING ON BACKSIDE OF VANES
2 - FRONT OF ENGINE
3 - INCREASED ANGLE AS OIL STRIKES VANES
4 - DIRECTION STATOR IS LOCKED UP DUE TO OIL PUSHING AGAINST STATOR VANES

NO EMCC

Under No EMCC conditions, the L/R Solenoid is OFF. There are several conditions that can result in NO EMCC operations. No EMCC can be initiated due to a fault in the transmission or because the TCM does not see the need for EMCC under current driving conditions.

PARTIAL EMCC

Partial EMCC operation modulates the L/R Solenoid (duty cycle) to obtain partial torque converter clutch application. Partial EMCC operation is maintained until Full EMCC is called for and actuated. During Partial EMCC some slip does occur. Partial EMCC will usually occur at low speeds, low load and light throttle situations.

FULL EMCC

During Full EMCC operation, the TCM increases the L/R Solenoid duty cycle to full ON after Partial EMCC control brings the engine speed within the desired slip range of transmission input speed relative to engine rpm.

GRADUAL-TO-NO EMCC

This operation is to soften the change from Full or Partial EMCC to No EMCC. This is done at mid-throttle by decreasing the L/R Solenoid duty cycle.

REMOVAL

1. Remove transmission and torque converter from vehicle. (Refer to 21 - TRANSMISSION/AUTOMATIC - 45RFE/545RFE - REMOVAL)
2. Place a suitable drain pan under the converter housing end of the transmission.

CAUTION: Verify that transmission is secure on the lifting device or work surface, the center of gravity of the transmission will shift when the torque converter is removed creating an unstable condition. The torque converter is a heavy unit. Use caution when separating the torque converter from the transmission.

3. Pull the torque converter forward until the center hub clears the oil pump seal.

4. Separate the torque converter from the transmission.

INSTALLATION

NOTE: Check converter hub and drive flats for sharp edges, burrs, scratches, or nicks. Polish the hub and flats with 320/400 grit paper or crocus cloth if necessary. Verify that the converter hub o-ring is properly installed and is free from debris. The hub must be smooth to avoid damaging the pump seal at installation.

1. Lubricate oil pump seal lip with transmission fluid.
2. Place torque converter in position on transmission.

CAUTION: Do not damage oil pump seal or converter hub o-ring while inserting torque converter into the front of the transmission.

3. Align torque converter to oil pump seal opening.
4. Insert torque converter hub into oil pump.
5. While pushing torque converter inward, rotate converter until converter is fully seated in the oil pump gears.
6. Check converter seating with a scale (1) and straightedge (2). Surface of converter lugs should be at least 13 mm (1/2 in.) to rear of straightedge when converter is fully seated.
7. If necessary, temporarily secure converter with C-clamp attached to the converter housing.
8. Install the transmission in the vehicle.
9. Fill the transmission with the recommended fluid.

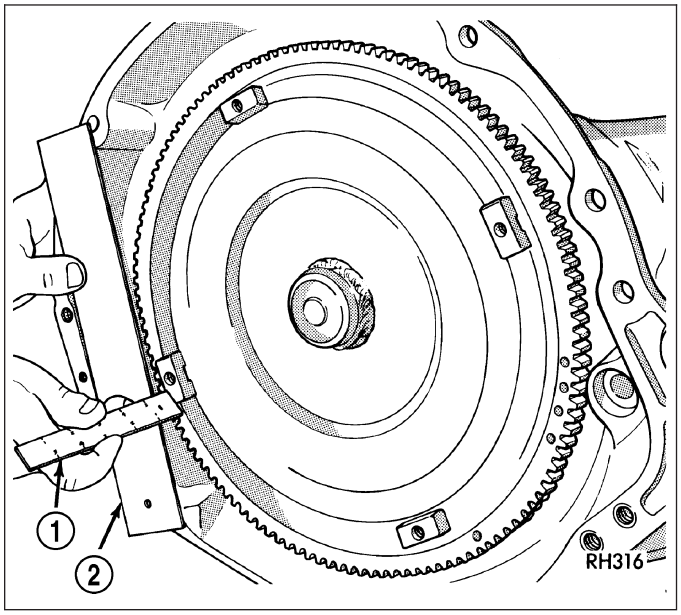

RELAY-TRANSMISSION CONTROL

DESCRIPTION

The relay is supplied fused B+ voltage, energized by the TCM, and is used to supply power to the solenoid pack when the transmission is in normal operating mode.

OPERATION

When the relay is “off”, no power is supplied to the solenoid pack and the transmission is in “limp-in” mode. After a controller reset, the TCM energizes the relay. Prior to this, the TCM verifies that the contacts are open by checking for no voltage at the switched battery terminals. After this is verified, the voltage at the solenoid pack pressure switches is checked. After the relay is energized, the TCM monitors the terminals to verify that the voltage is greater than 3 volts.

SENSOR-TRANSMISSION RANGE

DESCRIPTION

The Transmission Range Sensor (TRS) is part of the solenoid module, which is mounted to the top of the valve body inside the transmission.

The Transmission Range Sensor (TRS) has five switch contact pins that:

- Determine shift lever position
- Supply ground to the Starter Relay in Park and Neutral only.
- Supply +12 V to the backup lamps in Reverse only.

The TRS also has an integrated temperature sensor (thermistor) that communicates transmission temperature to the TCM and PCM.

OPERATION

The Transmission Range Sensor (TRS) communicates shift lever position to the TCM as a combination of open and closed switches. Each shift lever position has an assigned combination of switch states (open/closed) that the TCM receives from four sense circuits. The TCM interprets this information and determines the appropriate transmission gear position and shift schedule.

There are many possible combinations of open and closed switches (codes). Seven of these possible codes are related to gear position and five are recognized as “between gear” codes. This results in many codes which should **never occur**. These are called “invalid” codes. An invalid code will result in a DTC, and the TCM will then determine the shift lever position based on pressure switch data. This allows reasonably normal transmission operation with a TRS failure.

GEAR	C5	C4	C3	C2	C1
Park	CL	OP	OP	CL	CL
Temp 1	CL	OP	OP	CL	OP
Reverse	OP	OP	OP	CL	OP
Temp 2	OP	OP	CL	CL	OP
Neutral 1	OP	OP	CL	CL	CL
Neutral 2	OP	CL	CL	CL	CL
Temp 3	OP	CL	CL	CL	OP
Drive	OP	CL	CL	OP	OP
Temp 4	OP	CL	OP	OP	OP
Manual 2	CL	CL	OP	OP	OP
Temp 5	CL	OP	OP	OP	OP
Manual 1	CL	OP	CL	OP	OP

ASSEMBLY-TRANSMISSION SOLENOID/TRS

DESCRIPTION

The transmission solenoid/TRS assembly is internal to the transmission and mounted on the valve body assembly. The assembly consists of six solenoids that control hydraulic pressure to the six friction elements (transmission clutches), and the torque converter clutch. The pressure control solenoid is located on the side of the solenoid/TRS assembly. The solenoid/TRS assembly also contains five pressure switches that feed information to the TCM.

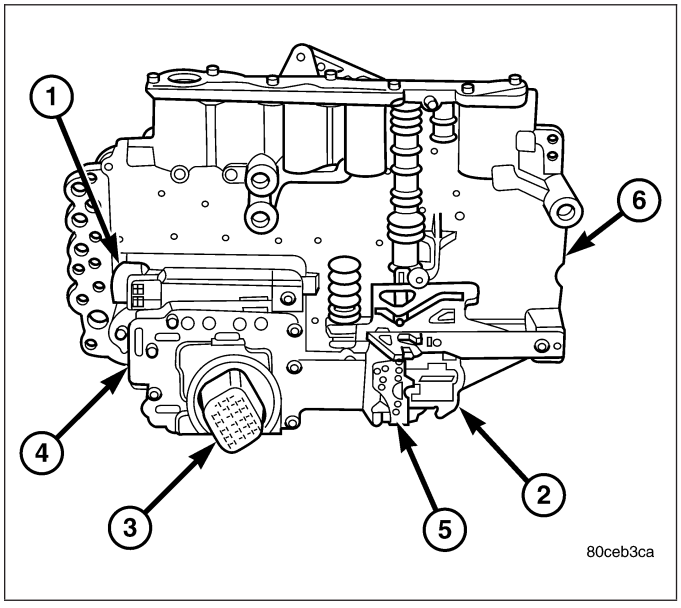

OPERATION

SOLENOIDS

Solenoids are used to control the L/R, 2C, 4C, OD, and UD friction elements. The reverse clutch is controlled by line pressure and the position of the manual valve in the valve body. All the solenoids are contained within the Solenoid and Pressure Switch Assembly. The solenoid and pressure switch assembly contains one additional solenoid, Multi-Select (MS), which serves primarily to provide 2nd and 3rd gear limp-in operation.

The solenoids receive electrical power from the Transmission Control Relay through a single wire. The TCM energizes or operates the solenoids individually by grounding the return wire of the solenoid as necessary. When a solenoid is energized, the solenoid valve shifts, and a fluid passage is opened or closed (vented or applied), depending on its default operating state. The result is an apply or release of a frictional element.

The MS and UD solenoids are normally applied to allow transmission limp-in in the event of an electrical failure.

The continuity of the solenoids and circuits are periodically tested. Each solenoid is turned on or off depending on its current state. An inductive spike should be detected by the TCM during this test. If no spike is detected, the circuit is tested again to verify the failure. In addition to the periodic testing, the solenoid circuits are tested if a speed ratio or pressure switch error occurs.

PRESSURE SWITCHES

The TCM relies on five pressure switches to monitor fluid pressure in the L/R, 2C, 4C, UD, and OD hydraulic circuits. The primary purpose of these switches is to help the TCM detect when clutch circuit hydraulic failures occur. The switches close at 23 psi and open at 11 psi, and simply indicate whether or not pressure exists. The switches are continuously monitored by the TCM for the correct states (open or closed) in each gear as shown in the following charts 45RFE PRESSURE SWITCH STATES and 545RFE PRESSURE SWITCH STATES :

45RFE PRESSURE SWITCH STATES

GEAR	L/R	2C	4C	UD	OD
R	OP	OP	OP	OP	OP
P/N	CL	OP	OP	OP	OP
1ST	CL*	OP	OP	CL	OP
2ND	OP	CL	OP	CL	OP
2ND PRIME	OP	OP	CL	CL	OP
D	OP	OP	OP	CL	CL
FOURTH	OP	OP	CL	OP	CL

*L/R is closed if output speed is below 100 rpm in Drive and Manual 2. L/R is open in Manual 1.

545RFE PRESSURE SWITCH STATES

GEAR	L/R	2C	4C	UD	OD
R	OP	OP	OP	OP	OP
P/N	CL	OP	OP	OP	OP
1ST	CL*	OP	OP	CL	OP
2ND	OP	CL	OP	CL	OP
2ND PRIME	OP	OP	CL	CL	OP
D	OP	OP	OP	CL	CL
4TH	OP	OP	CL	OP	CL
5TH	OP	CL	OP	OP	CL

*L/R is closed if output speed is below 100 rpm in Drive and Manual 2. L/R is open in Manual 1.

A Diagnostic Trouble Code (DTC) will set if the TCM senses any switch open or closed at the wrong time in a given gear.

REMOVAL

1. Remove the valve body from the transmission. (Refer to 21 - TRANSMISSION/AUTOMATIC - 45RFE/545RFE/VALVE BODY - REMOVAL)

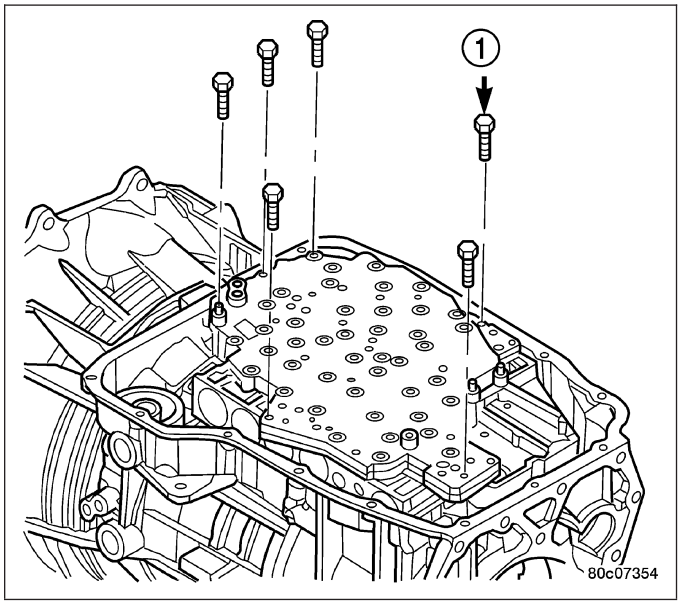

2. Remove the bolts (1) holding the transmission solenoid/TRS assembly onto the valve body.
3. Separate the transmission solenoid/TRS assembly from the valve body.

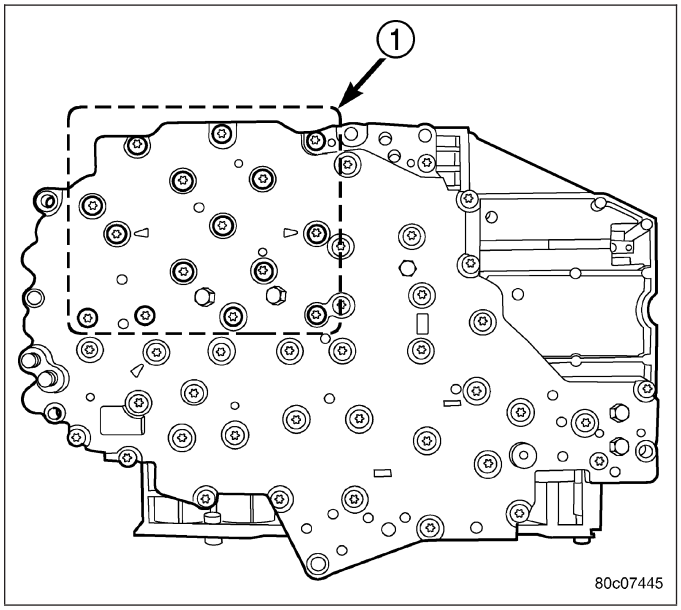

INSTALLATION

1. Place TRS selector plate in the PARK position.
2. Position the transmission solenoid/TRS assembly onto the valve body. Be sure that both alignment dowels are fully seated in the valve body and that the TRS switch contacts are properly positioned in the selector plate
3. Install the bolts (1) to hold the transmission solenoid/TRS assembly onto the valve body.
4. Tighten the solenoid assembly screws adjacent to the arrows cast into the bottom of the valve body first. Tighten the screws to 5.7 N·m (50 in.lbs.).
5. Tighten the remainder of the solenoid assembly screws to 5.7 N·m (50 in.lbs.).
6. Install the valve body into the transmission.

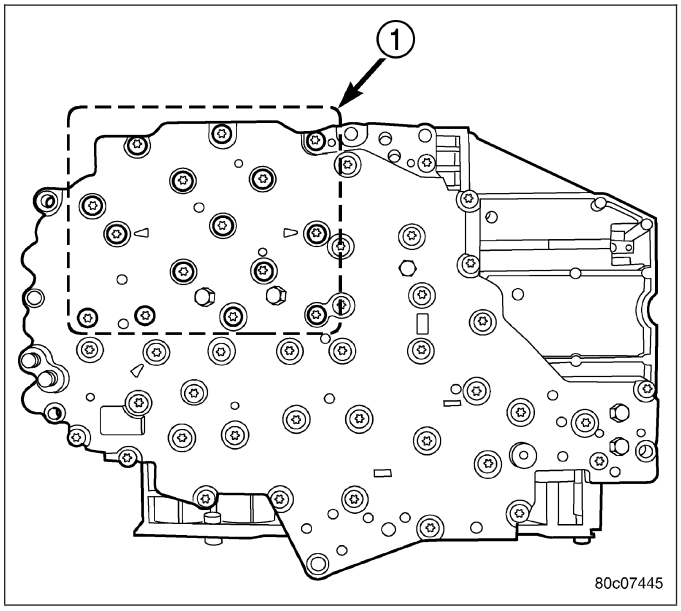

SENSOR-TRANSMISSION TEMPERATURE

DESCRIPTION

The transmission temperature sensor is a thermistor that is integral to the Transmission Range Sensor (TRS).

OPERATION

The transmission temperature sensor is used by the TCM to sense the temperature of the fluid in the sump. Since fluid temperature can affect transmission shift quality and convertor lock up, the TCM requires this information to determine which shift schedule to operate in.

Calculated Temperature

A failure in the temperature sensor or circuit will result in calculated temperature being substituted for actual temperature. Calculated temperature is a predicted fluid temperature which is calculated from a combination of inputs:

- Battery (ambient) temperature
- Engine coolant temperature
- In-gear run time since start-up

BODY-VALVE

DESCRIPTION

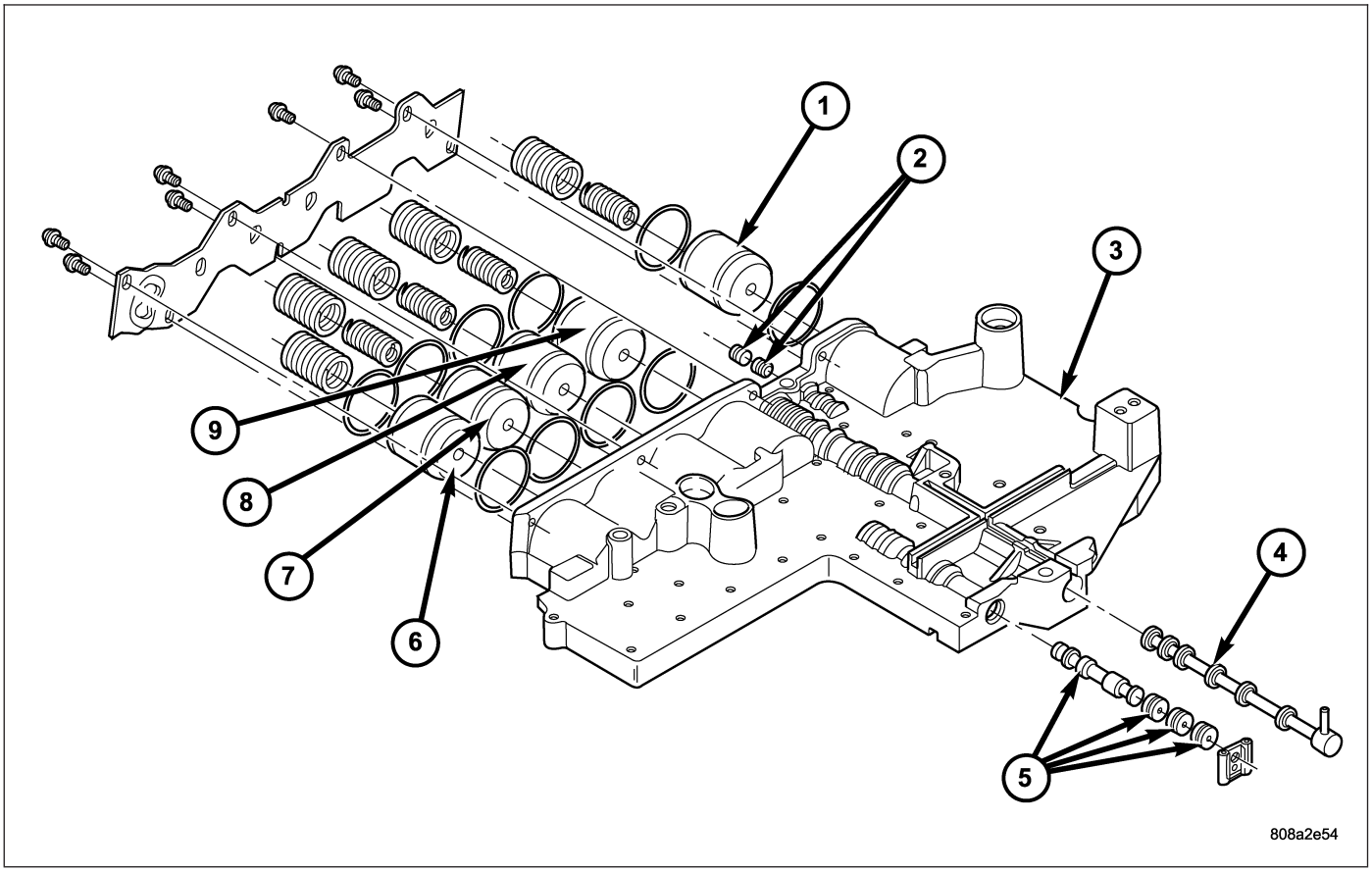

Valve Body Components

1 - LOW/REVERSE ACCUMULATOR
2 - LOW/REVERSE SWITCH VALVE
3 - UPPER VALVE BODY
4 - MANUAL VALVE
5 - SOLENOID SWITCH VALVE
6 - OVERDRIVE ACCUMULATOR
7 - UNDERDRIVE ACCUMULATOR
8 - 4C ACCUMULATOR
9 - 2C ACCUMULATOR

The valve body consists of a cast aluminum valve body, a separator plate, and a transfer plate. The valve body contains valves and check balls that control fluid delivery to the torque converter clutch, bands, and frictional clutches. The valve body contains the following components :

- Solenoid switch valve
- Manual valve
- Low/reverse switch valve
- 5 Accumulators

- 7 check balls

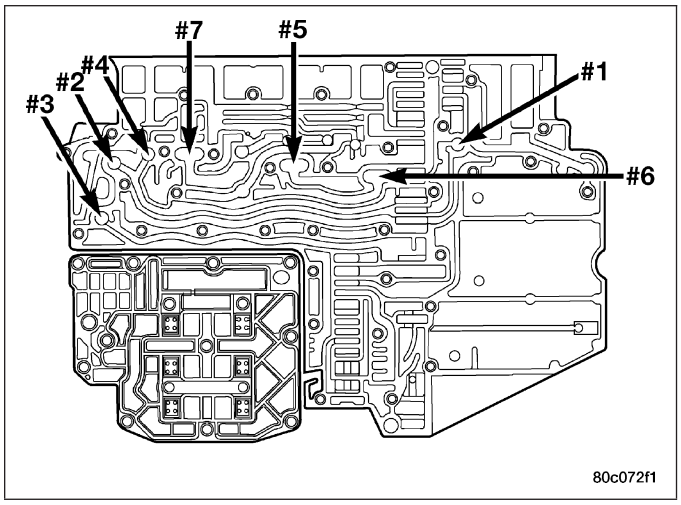

OPERATION

NOTE: Refer to the Hydraulic Schematics for a visual aid in determining valve location, operation and design.

SOLENOID SWITCH VALVE

The Solenoid Switch Valve (SSV) controls the direction of the transmission fluid when the L/R-TCC solenoid is energized.

The Solenoid Switch Valve controls line pressure from the LR-TCC solenoid. In 1st gear, the SSV will be in the downshifted position, thus directing fluid to the L/R clutch circuit. In 2nd, 3rd, 4th, and fifth gears, the solenoid switch valve will be in the upshifted position and directs the fluid into the torque converter clutch (TCC) circuit.

When shifting into 1st gear, a special hydraulic sequence is performed to ensure SSV movement into the downshifted position. The L/R pressure switch is monitored to confirm SSV movement. If the movement is not confirmed (the L/R pressure switch does not close), 2nd gear is substituted for 1st. A DTC will be set after three unsuccessful attempts are made to get into 1st gear in one given key start.

MANUAL VALVE

The manual valve is a relay valve. The purpose of the manual valve is to direct fluid to the correct circuit needed for a specific gear or driving range. The manual valve, as the name implies, is manually operated by the driver with a lever located on the top of the valve body. The valve is connected mechanically by a cable to the gearshift mechanism. The valve is held in each of its positions by a roller detent spring (2) that engages the “roostercomb” of the TRS selector plate (1).

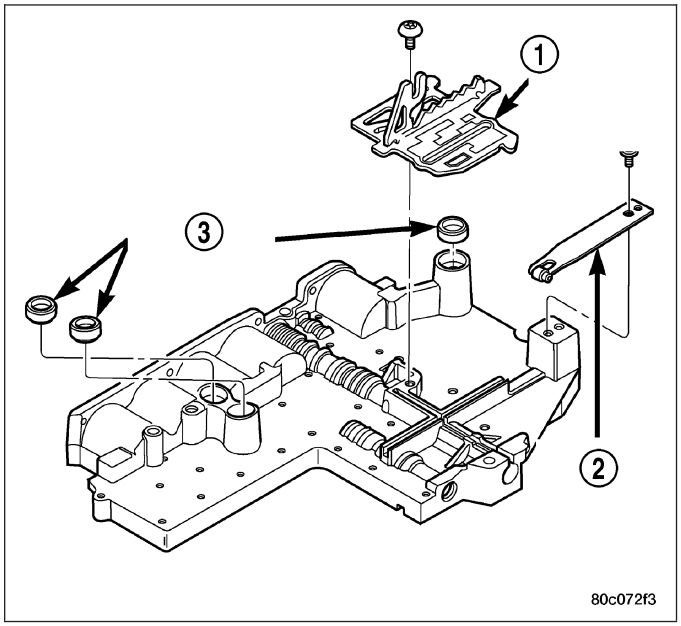

LOW/REVERSE SWITCH VALVE

The low/reverse switch valve allows the low/reverse clutch to be operated by either the LR/CC solenoid or the MS solenoid.

REMOVAL

NOTE: The valve body can be removed for service without having to remove the transmission assembly. The valve body can be disassembled for cleaning and inspection of the individual components. (Refer to 21 - TRANSMISSION/AUTOMATIC - 45RFE/VALVE BODY - DISASSEMBLY)

1. Shift transmission into PARK.
2. Raise vehicle.
3. Disconnect wires at the solenoid and pressure switch assembly connector.
4. Position drain pan under transmission oil pan.
5. Remove transmission oil pan.
6. Remove the primary oil filter (1) from valve body.

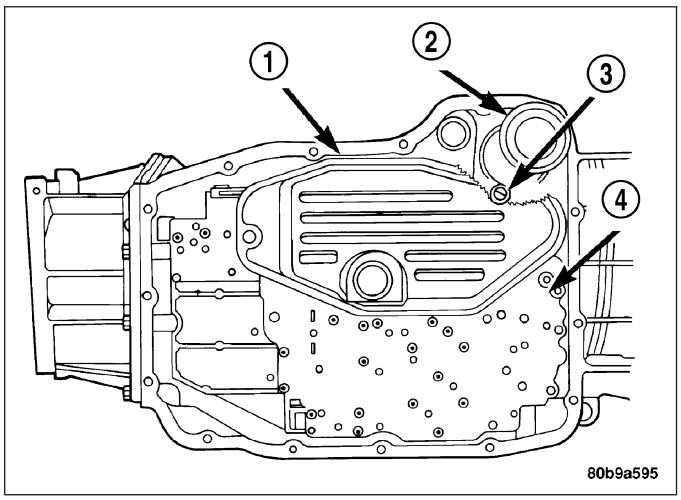

7. Remove bolts (1) attaching valve body to transmission case.
8. Lower the valve body and work the electrical connector out of transmission case.
9. Separate the valve body from the transmission.

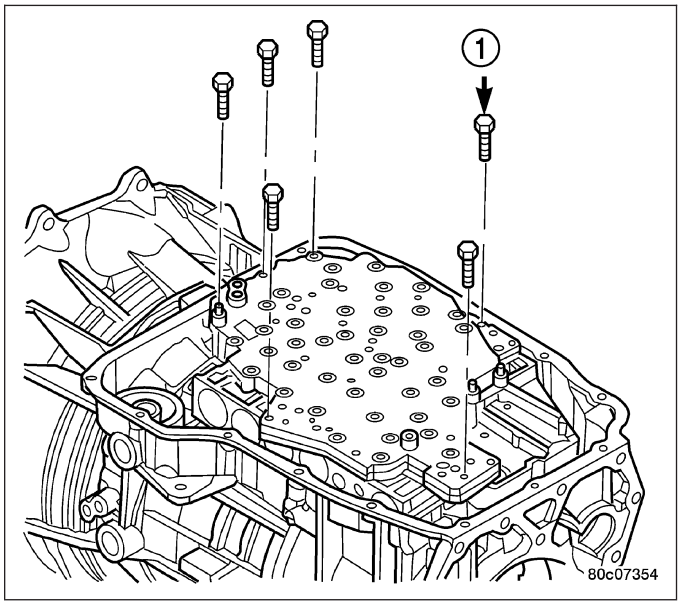

DISASSEMBLY

1. Remove the bolts (1) holding the solenoid and pressure switch assembly to the valve body. Do not remove the screws on the top of the solenoid and pressure switch assembly.
2. Separate the solenoid and pressure switch assembly from the valve body.

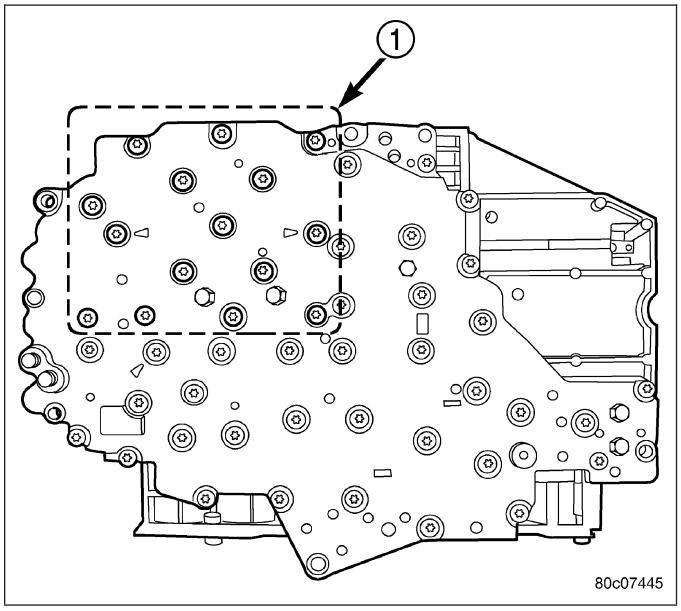

3. Remove the screw holding the detent spring (2) onto the valve body.
4. Remove the detent spring (2) from the valve body.
5. Remove the TRS selector plate (1) from the valve body and the manual valve.
6. Remove the clutch passage seals (3) from the valve body, if necessary.

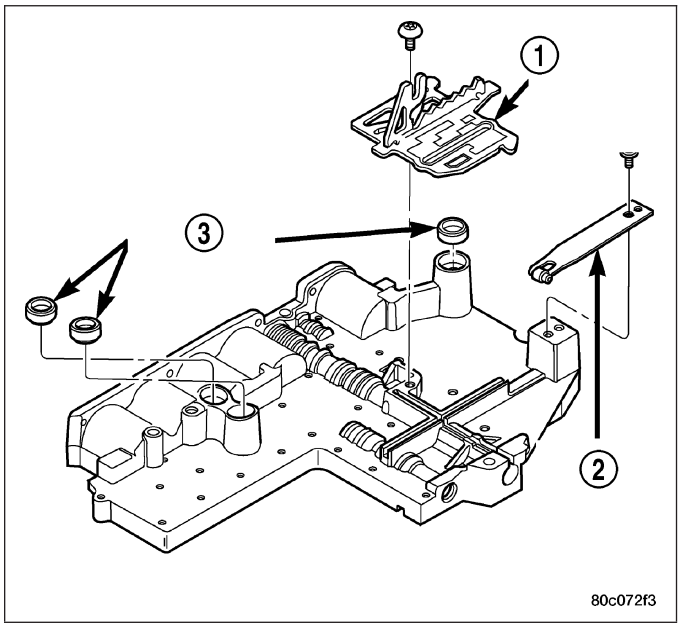

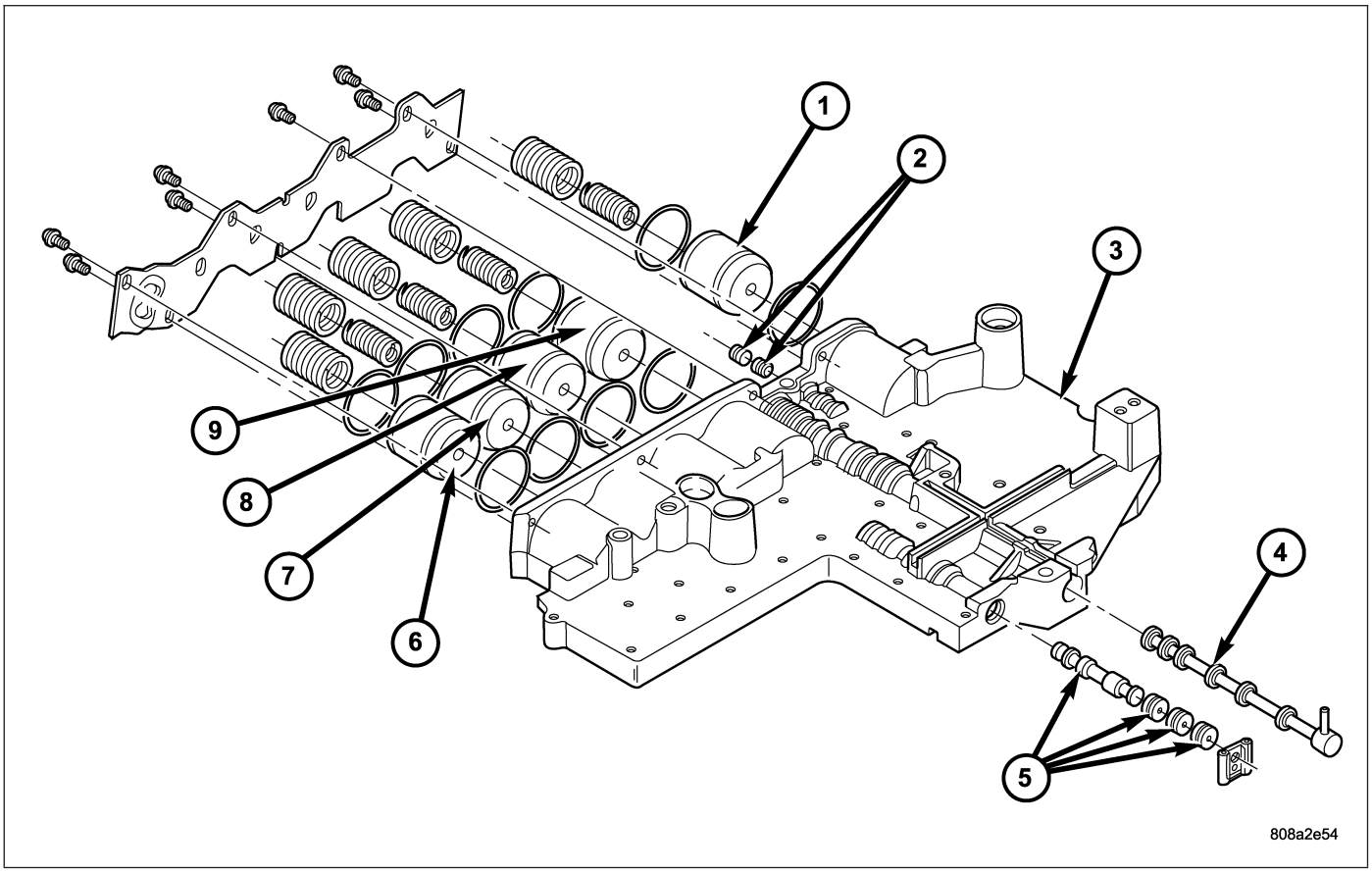

Valve Body Components

1 - LOW/REVERSE ACCUMULATOR
2 - LOW/REVERSE SWITCH VALVE
3 - UPPER VALVE BODY
4 - MANUAL VALVE
5 - SOLENOID SWITCH VALVE
6 - OVERDRIVE ACCUMULATOR
7 - UNDERDRIVE ACCUMULATOR
8 - 4C ACCUMULATOR
9 - 2C ACCUMULATOR

7. Remove the screws holding the accumulator cover onto the valve body.
8. Remove the accumulator springs and pistons (1, 6-9) from the valve body. Note which accumulator piston and spring belong in each location.

9. Place the valve body on the bench with the transfer plate upward.

NOTE: The valve body contains seven check balls. The transfer plate must be placed upward to prevent losing the check balls when the transfer plate is removed from the valve body.

10. Remove the screws holding the valve body to the valve body transfer plate.
11. Remove the transfer plate from the valve body. Note the location of all check balls.
12. Remove the check balls from the valve body.

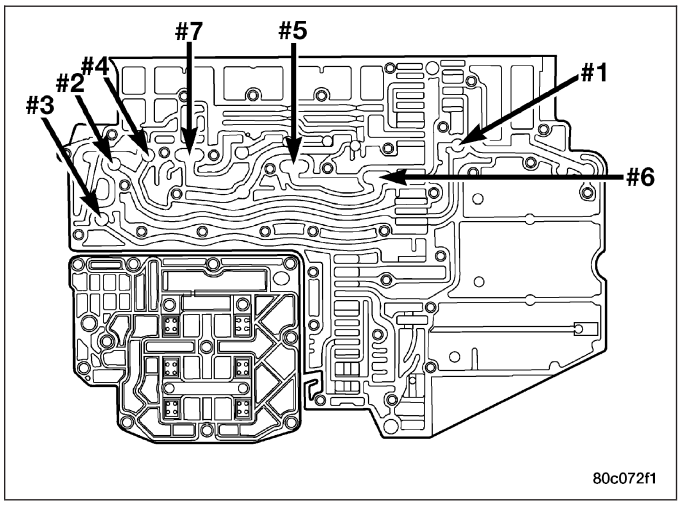

13. Remove the retainers securing the solenoid switch valve (1), manual valve (2), and the low/reverse switch valve (3) from the valve body and remove the associated valve and spring. Tag each valve and spring combination with location information to aid in assembly.

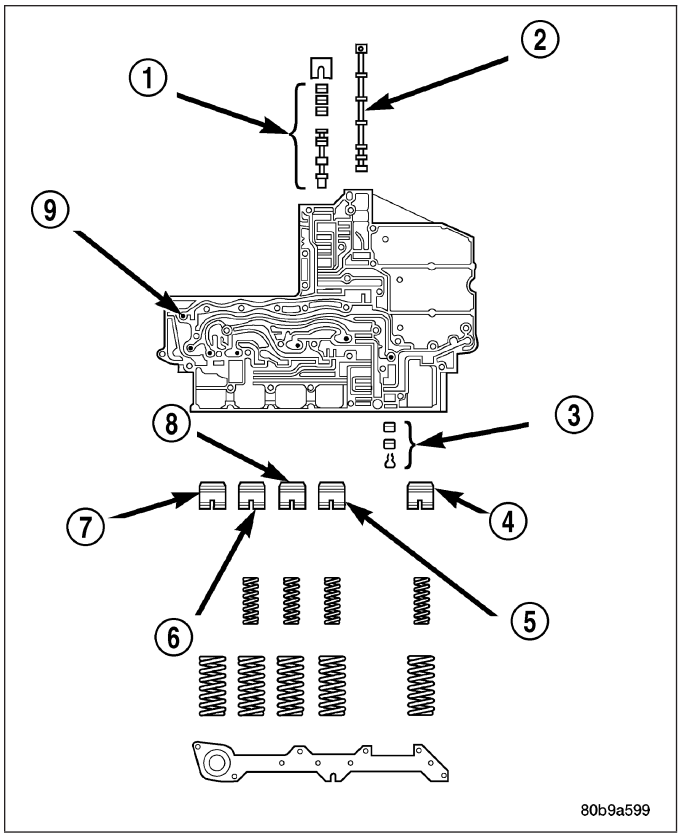

CLEANING

Clean the valve housings, valves, plugs, springs, and separator plates with a standard parts cleaning solution only. Do not use gasoline, kerosene, or any type of caustic solution.

Do not immerse any of the electrical components in cleaning solution. Clean the electrical components by wiping them off with dry shop towels only.

Dry all except the electrical parts with compressed air. Make sure all passages are clean and free from obstructions. **Do not use rags or shop towels to dry or wipe off valve body components. Lint from these materials can stick to valve body parts, interfere with valve operation, and clog filters and fluid passages.**

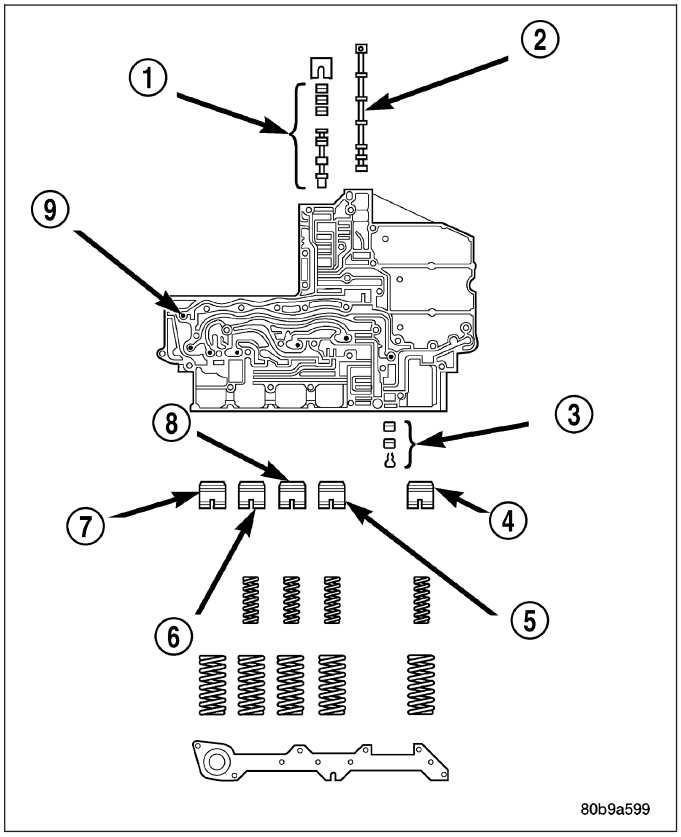

INSPECTION

Inspect all of the valve body mating surfaces for scratches, nicks, burrs, or distortion. Use a straight-edge to check surface flatness. Minor scratches may be removed with crocus cloth using only very light pressure.

Minor distortion of a valve body mating surface may be corrected by smoothing the surface with a sheet of crocus cloth. Position the crocus cloth on a surface plate, sheet of plate glass or equally flat surface. If distortion is severe or any surfaces are heavily scored, the valve body will have to be replaced.

Inspect the valves and plugs for scratches, burrs, nicks, or scores. Minor surface scratches on steel valves and plugs can be removed with crocus cloth but **do not round off the edges of the valve or plug lands.** Maintaining sharpness of these edges is vitally important. The edges prevent foreign matter from lodging between the valves and plugs and the bore.

Inspect all the valve and plug bores in the valve body. Use a penlight to view the bore interiors. Replace the valve body if any bores are distorted or scored. Inspect all of the valve body springs. The springs must be free of distortion, warpage or broken coils.

Trial fit each valve and plug in its bore to check freedom of operation. When clean and dry, the valves and plugs should drop freely into the bores.

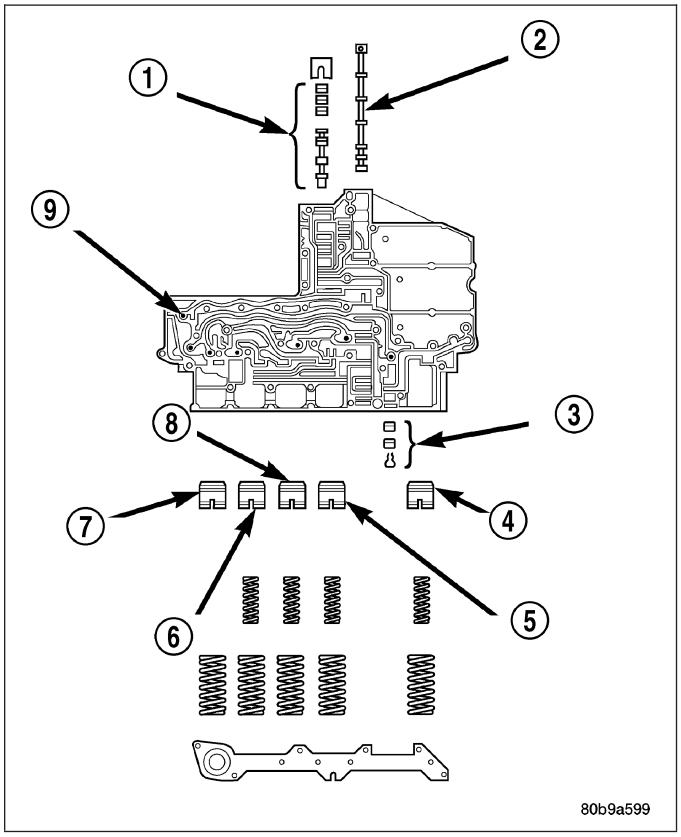

Valve body bores do not change dimensionally with use. If the valve body functioned correctly when new, it will continue to operate properly after cleaning and inspection. It should not be necessary to replace a valve body assembly unless it is damaged in handling.

Inspect all the accumulator bores in the valve body. Use a penlight to view the bore interiors. Replace the valve body if any bores are distorted or scored. Inspect all of the accumulator springs. The springs must be free of distortion, warpage or broken coils.

Inspect all the fluid seals on the valve body. Replace any seals that are cracked, distorted, or damaged in any way. These seals pass fluid pressure directly to the clutches. Any pressure leak at these points, may cause transmission performance problems.

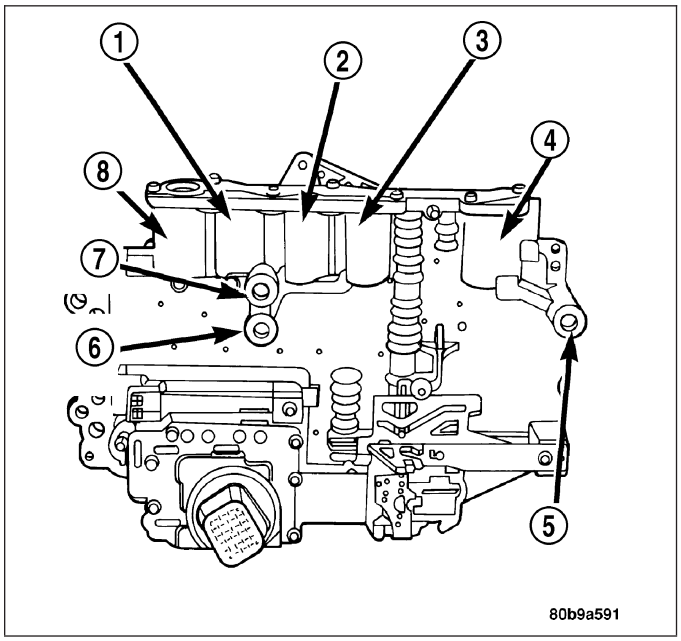

ASSEMBLY

1. Lubricate valves, springs, and the housing valve bores with clean transmission fluid.
2. Install solenoid switch valve (1), manual valve (2), and the low/reverse switch valve (3) into the valve body.
3. Install the retainers to hold each valve into the valve body.

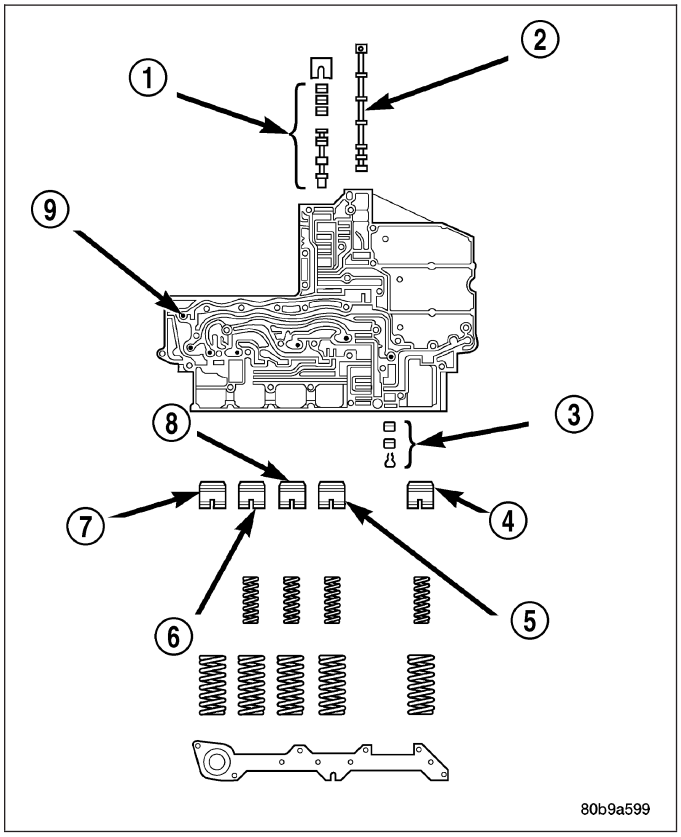

4. Install the valve body check balls into their proper locations.
5. Position the transfer plate onto the valve body.
6. Install the screws to hold the transfer plate to the valve body. Tighten the screws to 5.6 N·m (50 in. lbs.).

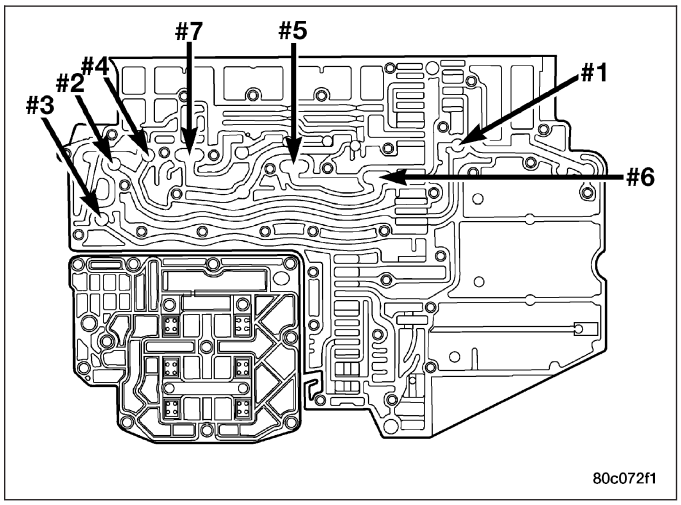

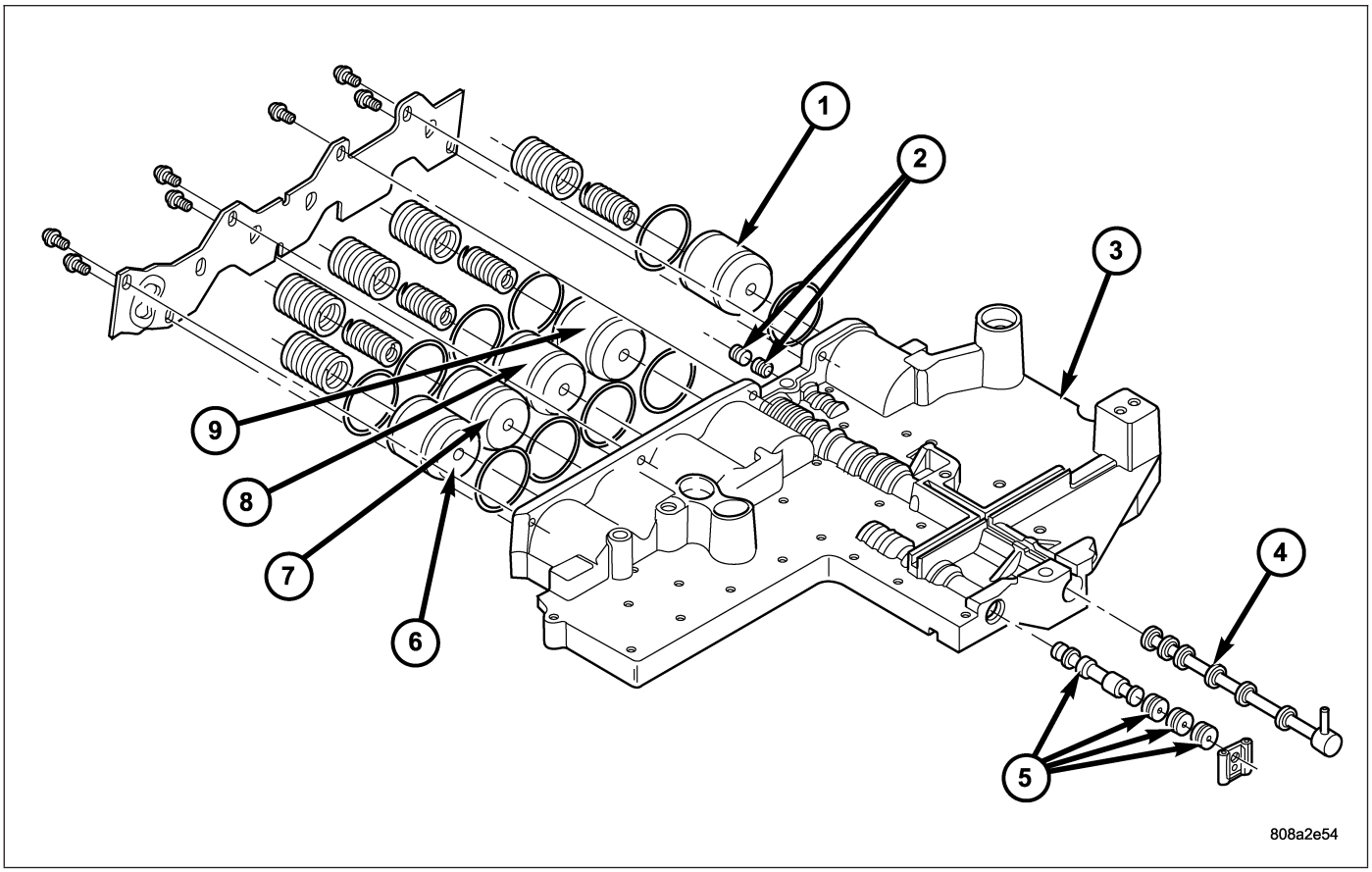

Valve Body Components

1 - LOW/REVERSE ACCUMULATOR
2 - LOW/REVERSE SWITCH VALVE
3 - UPPER VALVE BODY
4 - MANUAL VALVE
5 - SOLENOID SWITCH VALVE
6 - OVERDRIVE ACCUMULATOR
7 - UNDERDRIVE ACCUMULATOR
8 - 4C ACCUMULATOR
9 - 2C ACCUMULATOR

7. Install the accumulator pistons (1, 6-9) and springs into the valve body in the location from which they were removed. Note that all accumulators except the overdrive have two springs. The overdrive accumulator piston (6) has only one spring.
8. Position the accumulator cover onto the valve body.
9. Install the screws to hold the accumulator cover onto the valve body. Tighten the screws to 7 N·m (60 in. lbs.).

10. Install the TRS selector plate (1) onto the valve body and the manual valve.
11. Position the detent spring (2) onto the valve body.
12. Install the screw to hold the detent spring (2) onto the valve body. Tighten the screw to 4.5 N·m (40 in. lbs.).
13. Install new clutch passage seals (3) onto the valve body, if necessary.

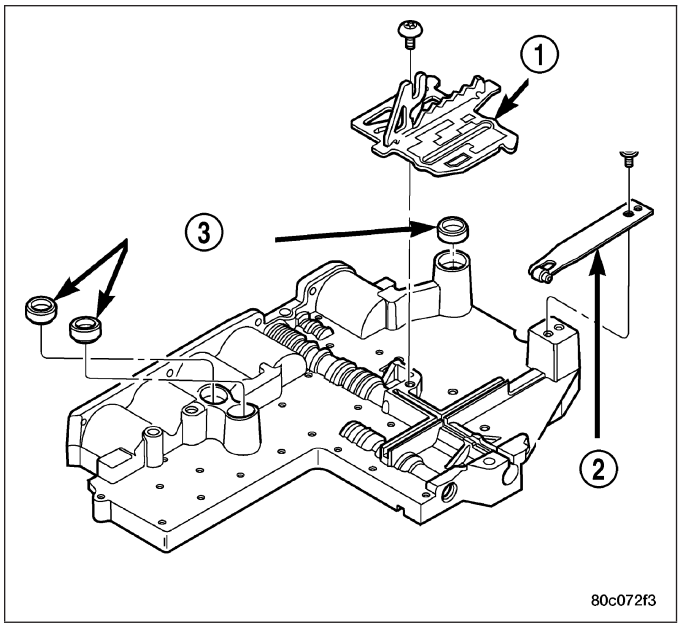

14. Install the solenoid and pressure switch assembly onto the valve body.
15. Install the bolts (1) to hold the solenoid and pressure switch assembly onto the valve body. Tighten the bolts to 5.7 N·m (50 in. lbs.). Tighten the bolts adjacent to the arrows cast into the bottom of the transfer plate first.

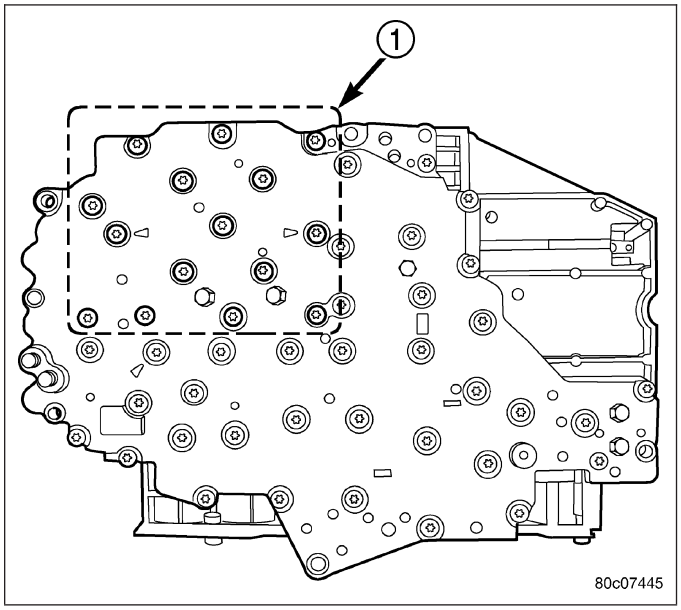

INSTALLATION

1. Check condition of seals on valve body and the solenoid and pressure switch assembly. Replace seals if cut or worn.
2. Place TRS selector plate in the PARK position.
3. Place the transmission in the PARK position.
4. Lubricate seal on the solenoid and pressure switch assembly connector with petroleum jelly.
5. Position valve body in transmission and align the manual lever on the valve body to the pin on the transmission manual shift lever.
6. Seat valve body in case and install one or two bolts to hold valve body in place.
7. Tighten valve body bolts alternately and evenly to 12 N·m (105 in. lbs.) torque.

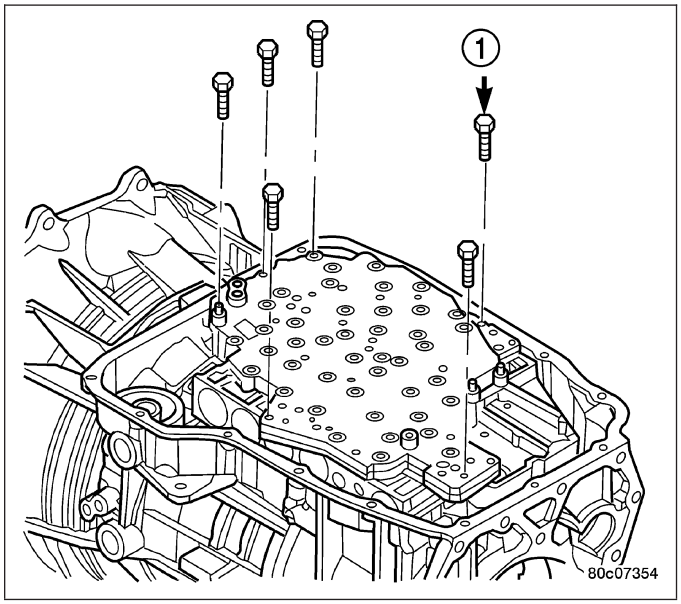

CAUTION: The primary oil filter seal MUST be fully installed flush against the oil pump body. DO NOT install the seal onto the filter neck and attempt to install the filter and seal as an assembly. Damage to the transmission will result.

8. Install a new primary oil filter seal in the oil pump inlet bore. Seat the seal in the bore with the butt end of a hammer, or other suitable tool.
9. Place replacement filter (1) in position on valve body and into the oil pump.
10. Install screw to hold filter to valve body. Tighten screw to 4.5 N·m (40 in. lbs.) torque.
11. Connect the solenoid and pressure switch assembly connector.

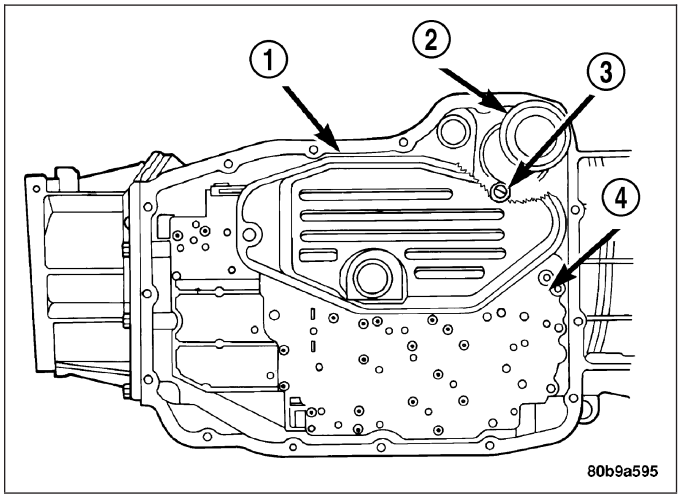

12. Install oil pan. Tighten pan bolts to 12 N·m (105 in. lbs.) torque.
13. Lower vehicle and fill transmission with Mopar® ATF +4.
14. Check and adjust gearshift cable, if necessary.

AUTOMATIC TRANSMISSION - 48RE - GAS - ELECTRICAL DIAGNOSTICS

TABLE OF CONTENTS

page

AUTOMATIC TRANSMISSION - 48RE - GAS - ELECTRICAL DIAGNOSTICS
DIAGNOSIS AND TESTING
P0711-TRANS TEMP SENSOR, NO TEMP RISE AFTER START (GAS) 695
P0712-TRANS TEMP SENSOR VOLTAGE TOO LOW (GAS) 700
P0713-TRANS TEMP SENSOR VOLTAGE TOO HIGH (GAS) 706
P0720-LOW OUTPUT SPEED SENSOR - RPM ABOVE 15 MPH (GAS) 714
P0740-TORQ CON CLU, NO RPM DROP AT LOCKUP (GAS) 720
P0743-TORQUE CONVERTER CLUTCH SOLENOID/TRANS RELAY CIRCUITS 724
P0748-PRESSURE SOL CONTROL/TRANS RELAY CIRCUITS (GAS) 731
P0751-O/D SWITCH PRESSED (LO) MORE THAN 5 MINUTES 739
P0753-TRANS 3-4 SHIFT SOL/TRANS RELAY CIRCUITS (GAS) 742
P0783-3-4 SHIFT SOL, NO RPM DROP AT LOCKUP (GAS) 750

page

P1740-TCC O/D SOL PERFORMANCE (GAS) 754
P1756-GOV PRESS NOT EQUAL TO TARGET @ 35 - 40 PSI (GAS) 759
P1757-GOV PRESS ABOVE 3 PSI IN GEAR WITH 0 MPH (GAS) 767
P1762-GOV PRESS SENSOR OFFSET VOLTS TOO LOW OR HIGH (GAS) 774
P1763-GOVERNOR PRESSURE SENSOR VOLTS TOO HI (GAS) 780
P1764-GOVERNOR PRESSURE SENSOR VOLTS TOO LOW (GAS) 787
P1765-TRANS 12 VOLT SUPPLY RELAY CONTROL CIRCUIT (GAS) 792
P0850-P/N SWITCH PERFORMANCE (GAS) 799
STANDARD PROCEDURE
PRE-DIAGNOSTIC TROUBLE SHOOTING PROCEDURE - 48RE GAS 804
TRANSMISSION VERIFICATION TEST VER - 1 (GAS) 805
SCHEMATICS AND DIAGRAMS 806

AUTOMATIC TRANSMISSION - 48RE - GAS - ELECTRICAL DIAGNOSTICS

DIAGNOSIS AND TESTING

P0711-TRANS TEMP SENSOR, NO TEMP RISE AFTER START (GAS)

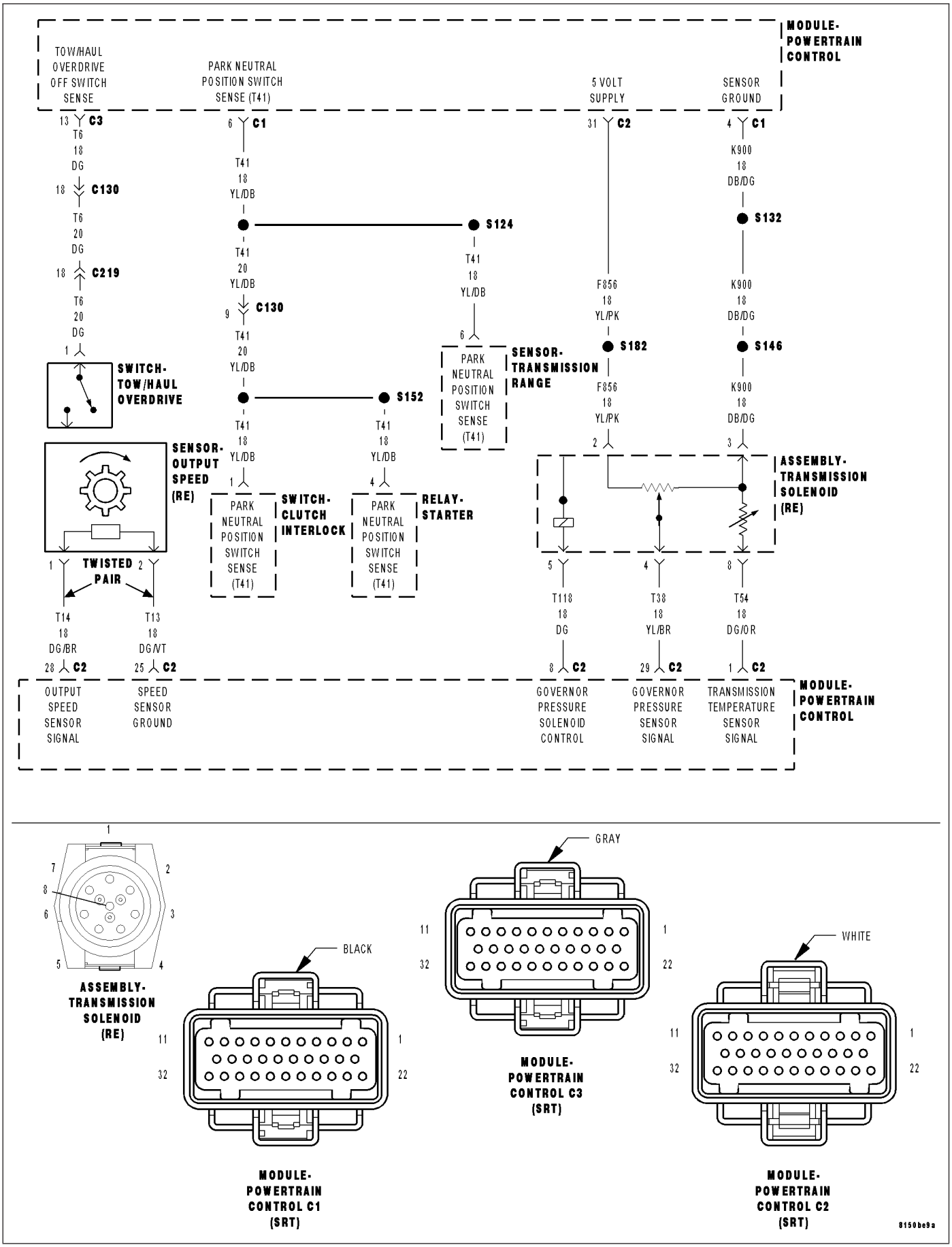

P0711-TRANS TEMP SENSOR, NO TEMP RISE AFTER START (GAS) (CONTINUED)

For the Transmission circuit diagram (Refer to 21 - TRANSMISSION/TRANSAXLE/AUTOMATIC - 48RE - SCHEMATICS AND DIAGRAMS).

For a complete wiring diagram **Refer to Section 8W.**

Theory of Operation

The Transmission Temperature Sensor is used to sense when the transmission temperature is too hot or too cold to operate overdrive and/or the torque convertor clutch. When the transmission sensor detects a temperature below 0° C (32° F), overdrive and the torque convertor clutch are disabled. When the detected temperature is above 127° C (260° F), overdrive is disabled and 3rd gear with TCC is engaged, this strategy is used to increase transmission fluid flow to help cool the transmission.

- **When Monitored:**
  Continuously with the ignition on and the engine running.
- **Set Condition:**
  The DTC will set after two consecutive trips in which the transmission oil temperature is greater than 5° C (40° F) and the transmission oil temperature does not rise more than 8° C (16° F) after 20 minutes of run time with a vehicle speed greater than 48 Kmh (30 mph). The DTC will also set if the engine temperature is greater than 38° C (100° F) with the transmission oil temperature greater than 127° C (260° F).

Possible Causes
OTHER TRANSMISSION DTC'S SET
INTERMITTENT TRANSMISSION TEMPERATURE SENSOR
TRANSMISSION TEMPERATURE SENSOR

Always perform the Pre-Diagnostic Troubleshooting procedure before proceeding. (Refer to 21 - TRANSMISSION/TRANSAXLE/AUTOMATIC - 48RE - STANDARD PROCEDURE)

Diagnostic Test

1. CHECK IF THE DTC IS CURRENT

Ignition on, engine not running.

With the scan tool, read Engine DTCs.

Record the Freeze Frame data for the reported DTC.

With the scan tool, erase DTCs.

Turn the ignition off to the lock position.

Using the Freeze Frame data recorded earlier, try to duplicate the conditions in which the DTC originally set.

NOTE: It may be necessary to road test the vehicle to duplicate the original set conditions.
With the scan tool, read Engine DTCs.

Did the DTC reset?

Yes >> Go To 2

No >> Go To 6

---

2. CHECK FOR OTHER TRANSMISSION DTCS

Does the scan tool show any Park/Neutral DTCs?

Yes >> Refer to the Transmission category and perform the appropriate symptom(s). (Refer to 21 - TRANSMISSION/TRANSAXLE/AUTOMATIC - 48RE - DIAGNOSIS AND TESTING)

No >> Go To 3

P0711-TRANS TEMP SENSOR, NO TEMP RISE AFTER START (GAS) (CONTINUED)

3. COMPARE THE TRANSMISSION TEMPERATURE TO ENGINE COOLANT TEMPERATURE

NOTE: To test the transmission temperature sensor, the engine and transmission temperature must be at or below 29.4° C (85° F).

With the scan tool, read the Transmission and Engine temperatures.

Is the transmission temperature within 5° C (9° F) of the engine coolant temperature?

Yes >> Go To 4

No >> Go To 5

---

4. CHECK IF THE TRANSMISSION TEMPERATURE INCREASES 15 DEGREES OVER 10 MINUTE PERIOD

NOTE: To test the transmission temperature sensor, the engine and transmission temperature must be at or below 29.4° C (85° F).

CAUTION: Apply the parking brake.

Start the engine, firmly apply the brakes and allow the engine to idle in Drive.

With the scan tool, monitor the Transmission Temperature.

NOTE: If the transmission temperature sensor is working properly, the transmission temperature should rise at least 8° C (15° F) within a ten minute period.

Did the transmission temperature increase at a steady rate and rise at least 8° C (15° F) over a 10 minute period?

Yes >> Go To 6

No >> Go To 5

P0711-TRANS TEMP SENSOR, NO TEMP RISE AFTER START (GAS) (CONTINUED)

5. CHECK THE TRANSMISSION TEMPERATURE SENSOR

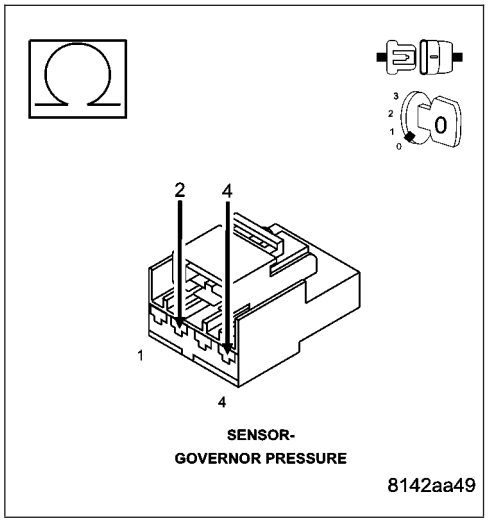

TYPICAL VALUES FOR TRANSMISSION TEMPERATURE SENSOR

TEMPERATURE	MIN TO MAX OHM RANGE
-40° C (-40° F)	1094 to 1176 ohms
0.0° C (32° F)	1587 to 1672 ohms
25° C (77° F)	1960 to 2040 ohms
70° C (158° F)	2709 to 2860 ohms
0° C (212° F)	3284 to 3500 ohms
120° C (120° F)	3684 to 3950 ohms
150° C (302° F)	4110 to 4450 ohms

Turn the ignition off to the lock position.

Remove the Transmission Oil Pan per the Service Information. (Refer to 21 - TRANSMISSION/TRANSAXLE/AUTOMATIC - 48RE/FLUID - STANDARD PROCEDURE)

Disconnect the Governor Pressure Sensor harness connector internal to the transmission.

NOTE: Check connectors - Clean/repair as necessary

Measure the resistance of the Transmission Temperature Sensor between the (T54) Transmission Temperature Sensor Signal circuit and the (K900) Sensor Ground circuit.

Using the chart at the chart above, compare the Temperature Sensor temperature to the correlating resistance value.

Is the resistance within the specified range when the sensor is at the given temperature?

Yes >> Test Complete.

No >> Replace the Governor Pressure/Transmission Temperature Sensor per the Service Information. (Refer to 21 - TRANSMISSION/TRANSAXLE/AUTOMATIC - 48RE/GOVERNOR PRESSURE SENSOR - REMOVAL)

Perform RE TRANSMISSION VERIFICATION TEST VER - 1 (GAS). (Refer to 21 - TRANSMISSION/TRANSAXLE/AUTOMATIC - 48RE - STANDARD PROCEDURE)

P0711-TRANS TEMP SENSOR, NO TEMP RISE AFTER START (GAS) (CONTINUED)

6. INTERMITTENT WIRING AND CONNECTORS

The conditions necessary to set this DTC are not present at this time.

Use the Freeze Frame Data to help duplicate the conditions in which the DTC originally set. Pay particular attention to the DTC set conditions, such as, VSS, MAP, ECT, and Load.

Using the schematics as a guide, visually inspect the related wiring harness. Look for any chafed, pierced, pinched, or partially broken wires.

Visually inspect the related wiring harness connectors. Look for broken, bent, pushed out, or corroded terminals.

Wiggle the wiring and connectors while checking for any possible open or shorted circuits.

Check for any Service Information Tune-ups or Technical Service Bulletins that may apply.

Were there any problems found?

Yes >> Repair as necessary.
Perform RE TRANSMISSION VERIFICATION TEST VER - 1 (GAS). (Refer to 21 - TRANSMISSION/ TRANSAXLE/AUTOMATIC - 48RE - STANDARD PROCEDURE)

No >> Test Complete.

P0712-TRANS TEMP SENSOR VOLTAGE TOO LOW (GAS)

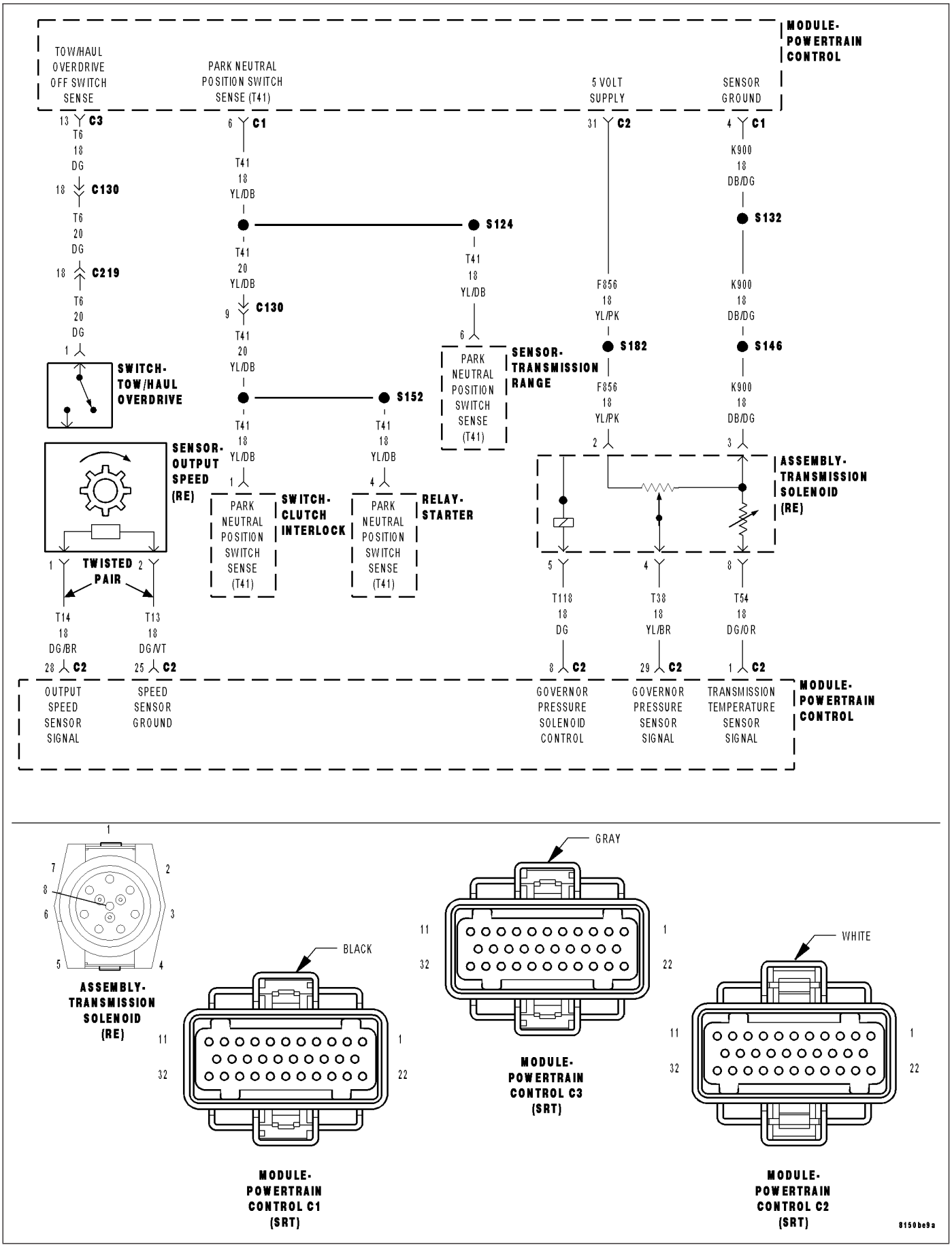

P0712-TRANS TEMP SENSOR VOLTAGE TOO LOW (GAS) (CONTINUED)

For the Transmission circuit diagram (Refer to 21 - TRANSMISSION/TRANSAXLE/AUTOMATIC - 48RE - SCHEMATICS AND DIAGRAMS)

For a complete wiring diagram **Refer to Section 8W**

Theory of Operation

The Transmission Temperature Sensor is used to sense when the transmission temperature is too hot or too cold to operate overdrive and/or the torque convertor clutch. When the transmission sensor detects a temperature below 0° C (32° F), overdrive and the torque convertor clutch are disabled. When the detected temperature is above 127° C (260° F), overdrive is disabled and 3rd gear with TCC is engaged, this strategy is used to increase transmission fluid flow to help cool the transmission.

- **When Monitored:**
  Continuously with the ignition on and the engine running.
- **Set Condition:**
  The DTC will set if the monitored Transmission Temperature Sensor Signal circuit drops below 1.55 volts for the period of 2.25 seconds.

Possible Causes
(T54) TRANSMISSION TEMPERATURE SENSOR SIGNAL CIRCUIT SHORT TO GROUND
(T54) TRANSMISSION TEMPERATURE SENSOR SIGNAL CIRCUIT SHORT TO (K900) SENSOR GROUND CIRCUIT
(T54) TRANSMISSION TEMPERATURE SENSOR SIGNAL CIRCUIT SHORT TO GROUND INSIDE TRANSMISSION
(T54) TRANSMISSION TEMPERATURE SENSOR SIGNAL CIRCUIT SHORT TO THE (K900) SENSOR GROUND CIRCUIT INSIDE TRANSMISSION
TRANSMISSION TEMPERATURE SENSOR
POWERTRAIN CONTROL MODULE

Always perform the Pre-Diagnostic Troubleshooting procedure before proceeding. (Refer to 21 - TRANSMISSION/TRANSAXLE/AUTOMATIC - 48RE - STANDARD PROCEDURE)

Diagnostic Test

1. CHECK IF THE DTC IS CURRENT

Ignition on, engine not running.

With the scan tool, read Engine DTCs.

Record the Freeze Frame data for the reported DTC.

With the scan tool, erase DTCs.

Turn the ignition off to the lock position.

Using the Freeze Frame data recorded earlier, try to duplicate the conditions in which the DTC originally set.

NOTE: It may be necessary to road test the vehicle to duplicate the original set conditions.

With the scan tool, read Engine DTCs.

Did the DTC reset?

Yes >> Go To 2

No >> Go To 8

P0712-TRANS TEMP SENSOR VOLTAGE TOO LOW (GAS) (CONTINUED)

2. CHECK THE (T54) TRANSMISSION TEMPERATURE SENSOR SIGNAL CIRCUIT FOR A SHORT TO GROUND

Turn the ignition off to the lock position.

Disconnect the PCM C2 harness connector.

Disconnect the Transmission Solenoid Assembly harness connector.

NOTE: Check connectors - Clean/repair as necessary
Measure the resistance between ground and the (T54) Transmission Temperature Sensor Signal circuit.

Is the resistance above 100k ohms?

Yes >> Go To 3

No >> Repair the (T54) Transmission Temperature Sensor Signal circuit for a short to ground.
Perform RE TRANSMISSION VERIFICATION TEST VER - 1 (GAS). (Refer to 21 - TRANSMISSION/TRANSAXLE/ AUTOMATIC - 48RE - STANDARD PROCEDURE)

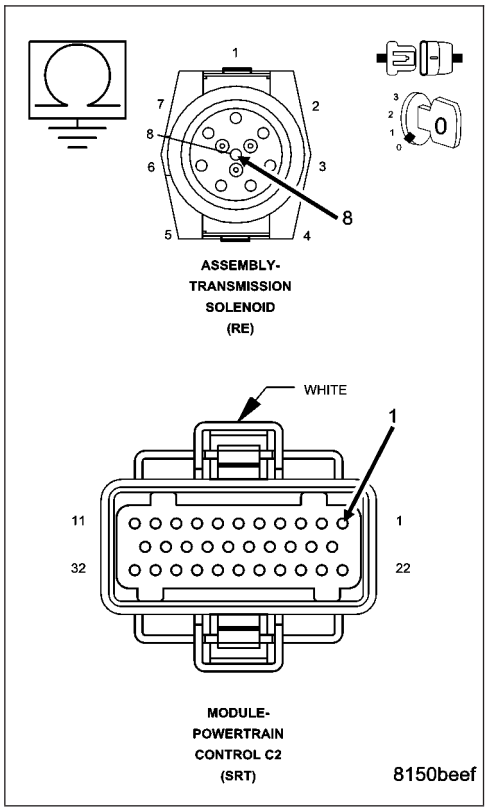

3. CHECK THE (T54) TRANSMISSION TEMPERATURE SENSOR SIGNAL CIRCUIT FOR A SHORT TO (K900) SENSOR GROUND CIRCUIT

Measure the resistance between the (T54) Transmission Temperature Sensor Signal circuit and (K900) Sensor Ground circuit in the Transmission Solenoid Assembly harness connector.

Is the resistance above 100k ohms?

Yes >> Go To 4

No >> Repair the (T54) Transmission Temperature Sensor Signal circuit for a short to the (K900) Sensor Ground circuit.
Perform RE TRANSMISSION VERIFICATION TEST VER - 1 (GAS). (Refer to 21 - TRANSMISSION/TRANSAXLE/ AUTOMATIC - 48RE - STANDARD PROCEDURE)

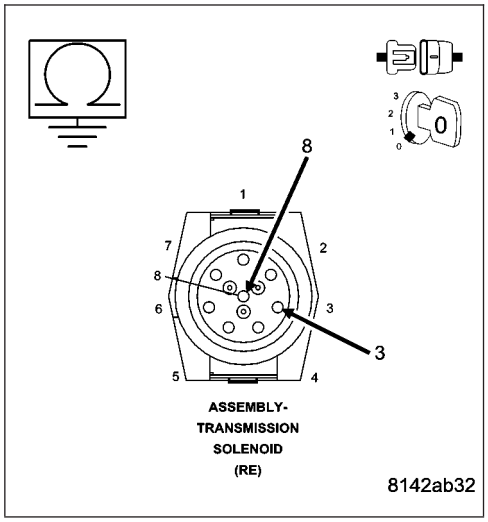

P0712-TRANS TEMP SENSOR VOLTAGE TOO LOW (GAS) (CONTINUED)

4. CHECK THE (T54) TRANSMISSION TEMPERATURE SENSOR SIGNAL CIRCUIT FOR A SHORT TO GROUND INSIDE TRANSMISSION

Remove the Transmission Oil Pan per the Service Information. (Refer to 21 - TRANSMISSION/TRANSAXLE/AUTOMATIC - 48RE/FLUID - STANDARD PROCEDURE)

Disconnect the Governor Pressure Sensor connector internal to the transmission.

Measure the resistance between ground and the (T54) Transmission Temperature Sensor Signal circuit at the Governor Pressure Sensor connector.

Is the resistance above 100k ohms?

Yes >> Go To 5

No >> Replace the Transmission Solenoid Assembly per the Service Information. (Refer to 21 - TRANSMISSION/TRANSAXLE/AUTOMATIC - 48RE/VALVE BODY - REMOVAL)

Perform RE TRANSMISSION VERIFICATION TEST VER - 1 (GAS). (Refer to 21 - TRANSMISSION/TRANSAXLE/AUTOMATIC - 48RE - STANDARD PROCEDURE)

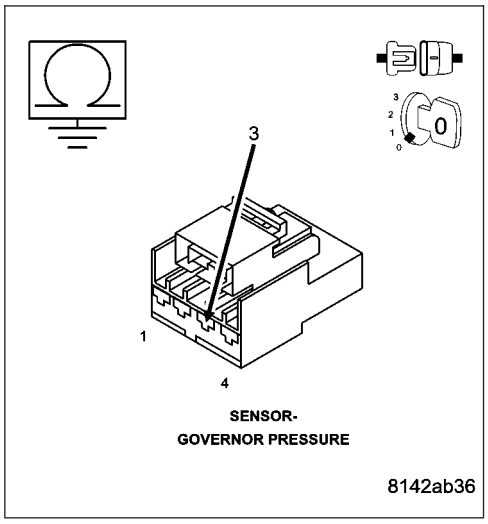

5. CHECK THE (T54) TRANSMISSION TEMPERATURE SENSOR SIGNAL CIRCUIT FOR A SHORT TO (K900) SENSOR GROUND CIRCUIT INSIDE TRANSMISSION

Measure the resistance between the (T54) Transmission Temperature Sensor Signal circuit and (K900) Sensor Ground circuit at the Governor Pressure Sensor connector.

Is the resistance above 100k ohms?

Yes >> Go To 6

No >> Replace the Transmission Solenoid Assembly per the Service Information. (Refer to 21 - TRANSMISSION/TRANSAXLE/AUTOMATIC - 48RE/VALVE BODY - REMOVAL)

Perform RE TRANSMISSION VERIFICATION TEST VER - 1 (GAS). (Refer to 21 - TRANSMISSION/TRANSAXLE/AUTOMATIC - 48RE - STANDARD PROCEDURE)

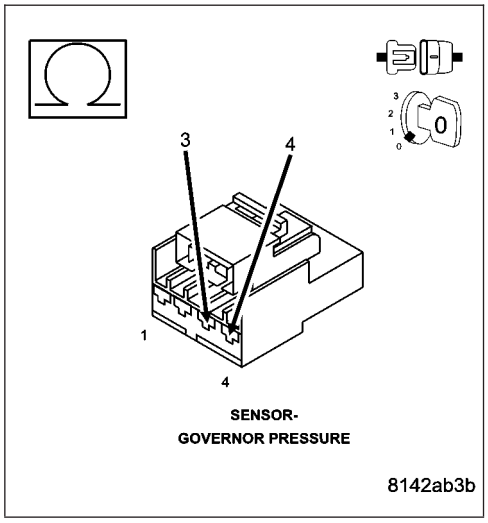

P0712-TRANS TEMP SENSOR VOLTAGE TOO LOW (GAS) (CONTINUED)

6. **TRANSMISSION TEMPERATURE SENSOR**

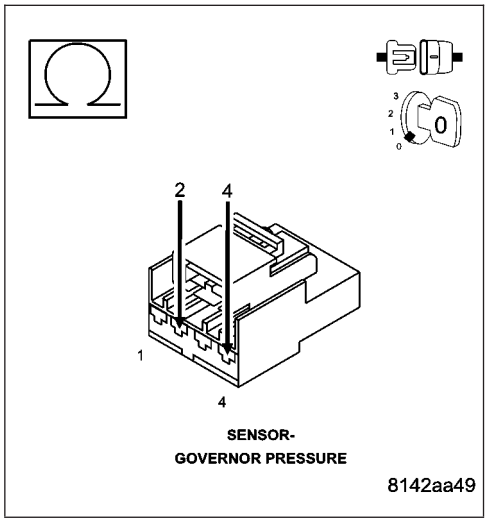

TYPICAL VALUES FOR TRANSMISSION TEMPERATURE SENSOR

TEMPERATURE	MIN TO MAX OHM RANGE
-40° C (-40° F)	1094 to 1176 ohms
0.0° C (32° F)	1587 to 1672 ohms
25° C (77° F)	1960 to 2040 ohms
70° C (158° F)	2709 to 2860 ohms
0° C (212° F)	3284 to 3500 ohms
120° C (120° F)	3684 to 3950 ohms
150° C (302° F)	4110 to 4450 ohms

Measure the resistance of the Transmission Temperature Sensor between the (T54) Transmission Temperature Sensor Signal circuit and (K900) Sensor Ground circuit.

Using the chart above, compare the Temperature Sensor temperature to the correlating resistance value.

Is the resistance below the minimum specification for the sensor temperature?

Yes >> Replace the Governor Pressure/Transmission Temperature Sensor per the Service Information. (Refer to 21 - TRANSMISSION/TRANSAXLE/AUTOMATIC - 48RE/GOVERNOR PRESSURE SENSOR - REMOVAL)

Perform RE TRANSMISSION VERIFICATION TEST VER - 1 (GAS). (Refer to 21 - TRANSMISSION/TRANSAXLE/AUTOMATIC - 48RE - STANDARD PROCEDURE)

No >> Go To 7

P0712-TRANS TEMP SENSOR VOLTAGE TOO LOW (GAS) (CONTINUED)

7. POWERTRAIN CONTROL MODULE

Reconnect the all disconnected connectors.

Ignition on, engine not running.

With the scan tool, erase Engine DTCs.

With the scan tool, monitor Engine DTC's.

Disconnect the Transmission Temperature Sensor connector.

Did the DTC P0713 set?

Yes >> Go To 8

No >> Using the schematics as a guide, check the Powertrain Control Module (PCM) pins, terminals, and connectors for corrosion, damage, or terminal push out. Pay particular attention to all power and ground circuits. If no problems are found, replace and program the PCM per the Service Information. (Refer to 8 - ELECTRICAL/ELECTRONIC CONTROL MODULES/POWERTRAIN CONTROL MODULE - REMOVAL)

Perform RE TRANSMISSION VERIFICATION TEST VER - 1 (GAS). (Refer to 21 - TRANSMISSION/ TRANSAXLE/AUTOMATIC - 48RE - STANDARD PROCEDURE)

---

8. INTERMITTENT WIRING AND CONNECTORS

The conditions necessary to set this DTC are not present at this time.

Use the Freeze Frame Data to help duplicate the conditions in which the DTC originally set. Pay particular attention to the DTC set conditions, such as, VSS, MAP, ECT, and Load

Using the schematics as a guide, visually inspect the related wiring harness. Look for any chafed, pierced, pinched, or partially broken wires.

Visually inspect the related wiring harness connectors. Look for broken, bent, pushed out, or corroded terminals.

Wiggle the wiring and connectors while checking for any possible open or shorted circuits.

Check for any Service Information Tune-ups or Technical Service Bulletins that may apply.

Were there any problems found?

Yes >> Repair as necessary.

Perform RE TRANSMISSION VERIFICATION TEST VER - 1 (GAS). (Refer to 21 - TRANSMISSION/ TRANSAXLE/AUTOMATIC - 48RE - STANDARD PROCEDURE)

No >> Test Complete.

P0713-TRANS TEMP SENSOR VOLTAGE TOO HIGH (GAS)

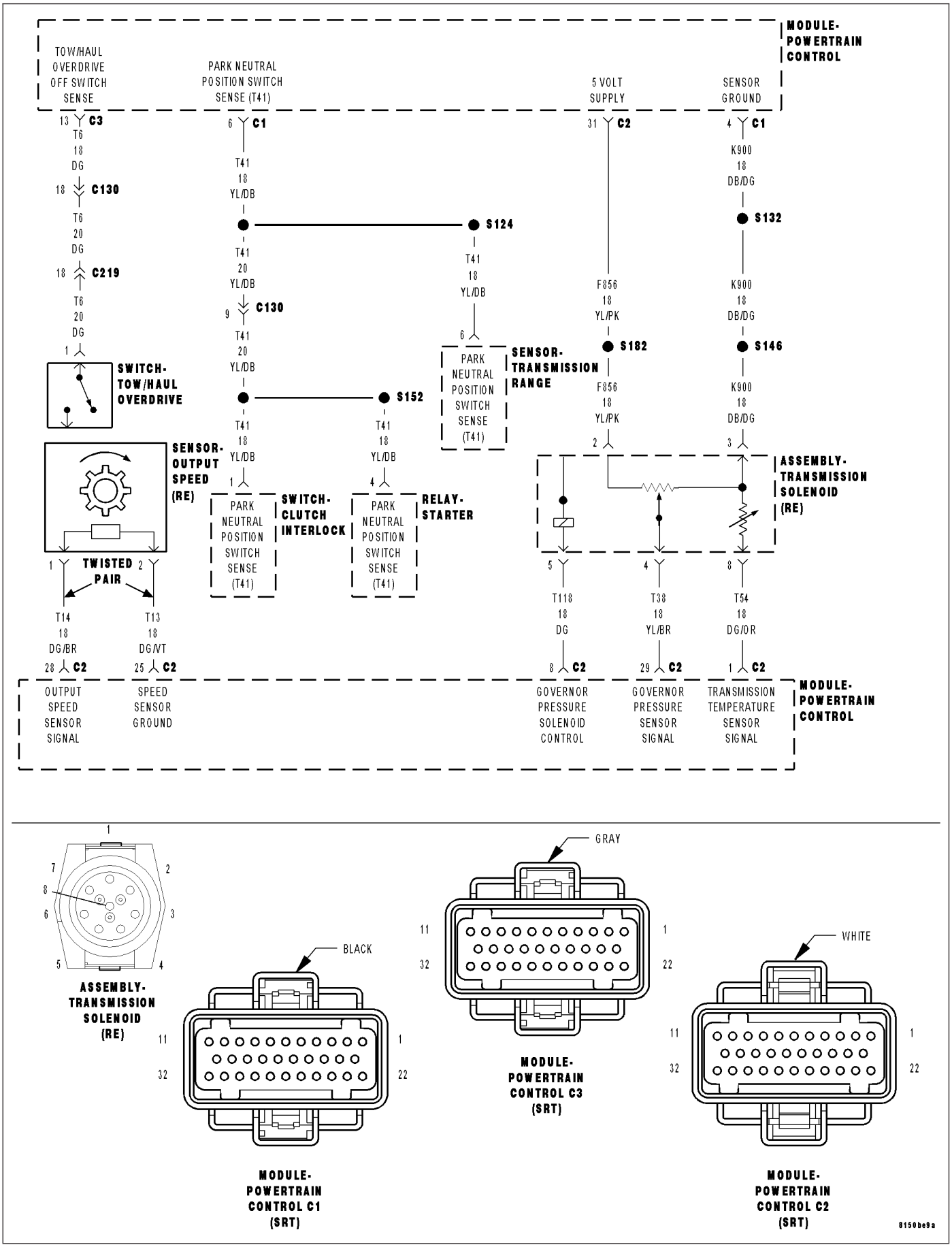

P0713-TRANS TEMP SENSOR VOLTAGE TOO HIGH (GAS) (CONTINUED)

For the Transmission circuit diagram (Refer to 21 - TRANSMISSION/TRANSAXLE/AUTOMATIC - 48RE - SCHEMATICS AND DIAGRAMS)

For a complete wiring diagram **Refer to Section 8W**

Theory of Operation

The Transmission Temperature Sensor is used to sense when the transmission temperature is too hot or too cold to operate overdrive and/or the torque convertor clutch. When the transmission sensor detects a temperature below 0° C (32° F), overdrive and the torque convertor clutch are disabled. When the detected temperature is above 127° C (260° F), overdrive is disabled and 3rd gear with TCC is engaged, this strategy is used to increase transmission fluid flow to help cool the transmission.

- **When Monitored:**
  Continuously with the ignition on and the engine running.
- **Set Condition:**
  This DTC will set if the (T54) Transmission Temperature Sensor Signal circuit voltage exceeds 3.76 volts for the period of 2.2 seconds.

Possible Causes
(T54) TRANSMISSION TEMPERATURE SENSOR SIGNAL CIRCUIT SHORT TO VOLTAGE
(T54) TRANSMISSION TEMPERATURE SENSOR SIGNAL CIRCUIT SHORT TO (F856) 5-VOLT SUPPLY CIRCUIT
(T54) TRANSMISSION TEMPERATURE SENSOR SIGNAL CIRCUIT OPEN
(K900) SENSOR GROUND CIRCUIT OPEN
(T54) 5-VOLT SUPPLY OPEN IN TRANSMISSION
(T54) TRANSMISSION TEMPERATURE SENSOR SIGNAL CIRCUIT SHORT TO (F856) 5-VOLT SUPPLY CIRCUIT INTERNAL TO THE TRANSMISSION
(T54) TRANSMISSION TEMPERATURE SENSOR SIGNAL CIRCUIT OPEN INTERNAL TO THE TRANSMISSION
(K900) SENSOR GROUND CIRCUIT OPEN INTERNAL TO THE TRANSMISSION
TRANSMISSION TEMPERATURE SENSOR
POWERTRAIN CONTROL MODULE

Always perform the Pre-Diagnostic Troubleshooting procedure before proceeding. (Refer to 21 - TRANSMISSION/TRANSAXLE/AUTOMATIC - 48RE - STANDARD PROCEDURE)

1. CHECK IF THE DTC IS CURRENT

Ignition on, engine not running.

With the scan tool, read Engine DTCs.

Record the Freeze Frame data for the reported DTC.

With the scan tool, erase DTCs.

Turn the ignition off to the lock position.

Using the Freeze Frame data recorded earlier, try to duplicate the conditions in which the DTC originally set.

NOTE: It may be necessary to road test the vehicle to duplicate the original set conditions.
With the scan tool, read Engine DTCs.

Did the DTC reset?

Yes >> Go To 2

No >> Go To 12

P0713-TRANS TEMP SENSOR VOLTAGE TOO HIGH (GAS) (CONTINUED)

2. CHECK THE (T54) TRANSMISSION TEMPERATURE SENSOR SIGNAL CIRCUIT FOR A SHORT TO VOLTAGE

Turn the ignition off to the lock position.

Disconnect the PCM C1 and C2 harness connectors.

Disconnect the Transmission Solenoid Assembly harness connector.

NOTE: Check connectors - Clean/repair as necessary

Ignition on, engine not running.

Measure the voltage of the (T54) Transmission Temperature Sensor Signal circuit in the PCM C2 harness connector.

Is the voltage above 0.5 volts?

Yes >> Repair the (T54) Transmission Temperature Sensor Signal circuit for a short to voltage.
Perform RE TRANSMISSION VERIFICATION TEST VER - 1 (GAS). (Refer to 21 - TRANSMISSION/TRANSAXLE/ AUTOMATIC - 48RE - STANDARD PROCEDURE)

No >> Go To 3

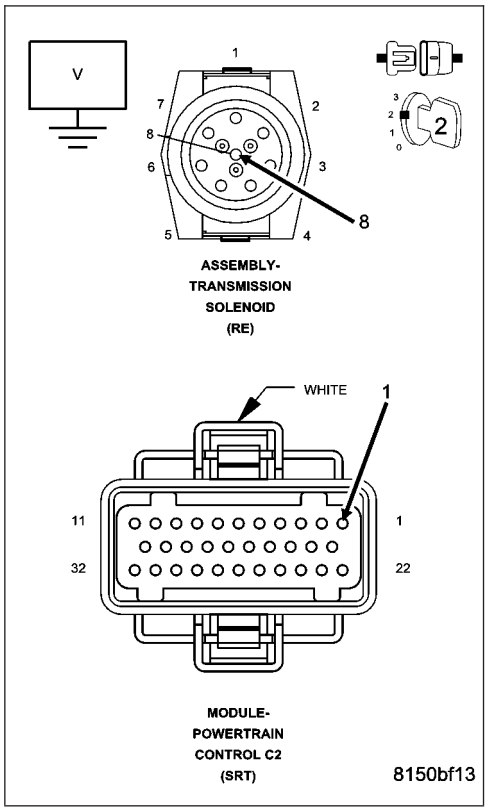

3. CHECK THE (T54) TRANSMISSION TEMPERATURE SENSOR SIGNAL CIRCUIT FOR A SHORT TO (F856) 5-VOLT SUPPLY CIRCUIT

Turn the ignition off to the lock position.

Measure the resistance between the (T54) Transmission Temperature Sensor Signal circuit and the (F856) 5-volt Supply circuit in the Transmission Solenoid Assembly harness connector.

Is the resistance above 100k ohms?

Yes >> Go To 4

No >> Repair the (T54) Transmission Temperature Sensor Signal circuit for a short to the (F856) 5-volt Supply circuit.
Perform RE TRANSMISSION VERIFICATION TEST VER - 1 (GAS). (Refer to 21 - TRANSMISSION/TRANSAXLE/ AUTOMATIC - 48RE - STANDARD PROCEDURE)

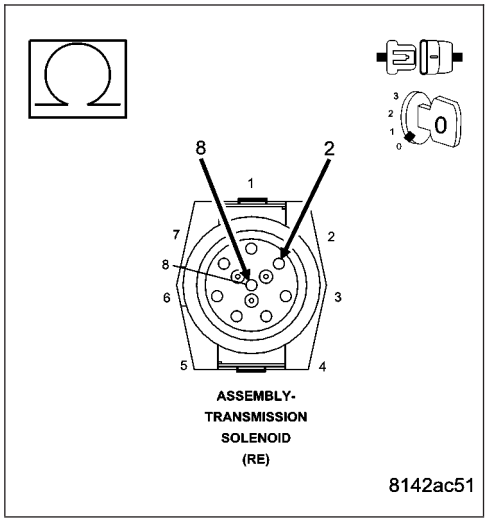

P0713-TRANS TEMP SENSOR VOLTAGE TOO HIGH (GAS) (CONTINUED)

4. CHECK THE (T54) TRANSMISSION TEMPERATURE SENSOR SIGNAL CIRCUIT FOR AN OPEN

Measure the resistance of the (T54) Transmission Temperature Sensor Signal circuit between the PCM C2 harness connector and the Transmission Solenoid Assembly harness connector.

Is the resistance below 5.0 ohms?

Yes >> Go To 5

No >> Repair the (T54) Transmission Temperature Sensor Signal circuit for an open.
Perform RE TRANSMISSION VERIFICATION TEST VER - 1 (GAS). (Refer to 21 - TRANSMISSION/TRANSAXLE/ AUTOMATIC - 48RE - STANDARD PROCEDURE)

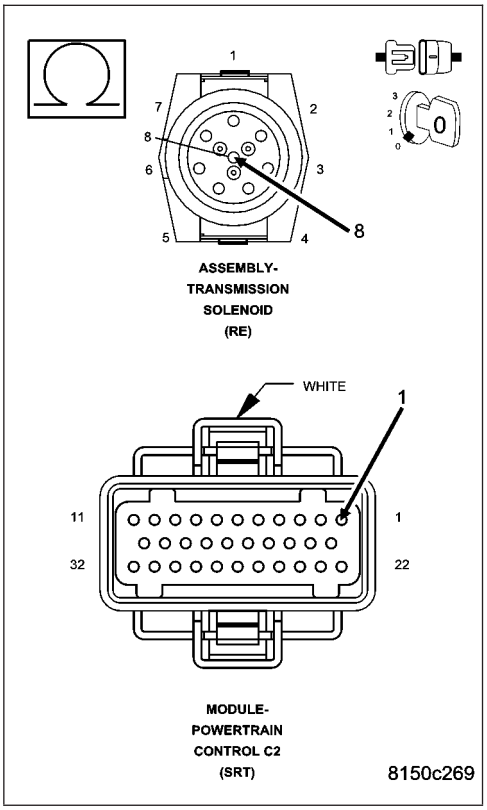

5. CHECK THE (K900) SENSOR GROUND CIRCUIT FOR AN OPEN

Measure the resistance of the (K900) Sensor Ground circuit between the PCM C1 harness connector and the Transmission Solenoid Assembly harness connector.

Is the resistance below 5.0 ohms?

Yes >> Go To 6

No >> Repair the (K900) Sensor Ground circuit for an open.
Perform RE TRANSMISSION VERIFICATION TEST VER - 1 (GAS). (Refer to 21 - TRANSMISSION/TRANSAXLE/ AUTOMATIC - 48RE - STANDARD PROCEDURE)

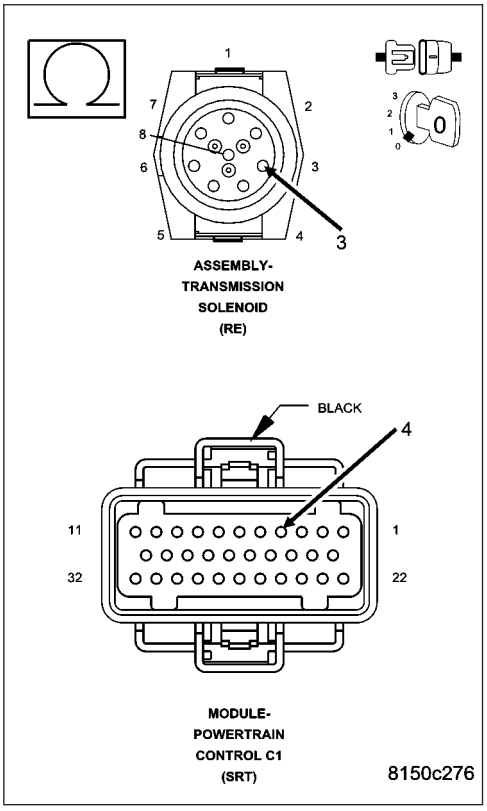

P0713-TRANS TEMP SENSOR VOLTAGE TOO HIGH (GAS) (CONTINUED)

6. CHECK THE (T54) TRANSMISSION TEMPERATURE SENSOR SIGNAL CIRCUIT FOR A SHORT TO THE (F856) 5-VOLT SUPPLY CIRCUIT INTERNAL TO THE TRANSMISSION

Remove the Transmission Oil Pan. (Refer to 21 - TRANSMISSION/TRANSAXLE/AUTOMATIC - 48RE/FLUID - STANDARD PROCEDURE)

Disconnect the Governor Pressure Sensor connector internal to the transmission.

Measure the resistance between the (T54) Transmission Temperature Sensor Signal circuit and (F856) 5-volt Supply circuit in the Governor Pressure Sensor connector internal to the transmission.

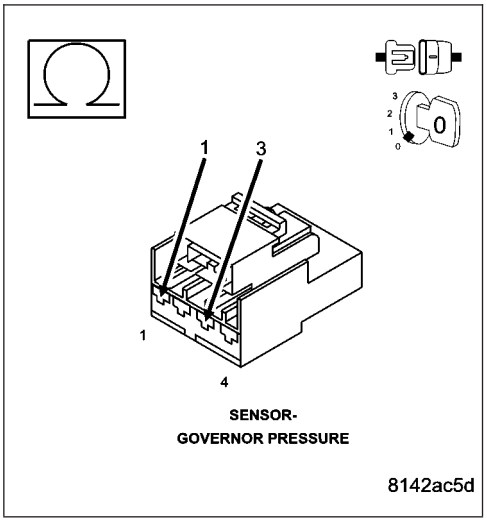

Is the resistance above 100k ohms?

Yes >> Go To 7

No >> Replace the Transmission Solenoid Assembly per the Service Information. (Refer to 21 - TRANSMISSION/TRANSAXLE/AUTOMATIC - 48RE/VALVE BODY - REMOVAL)

Perform RE TRANSMISSION VERIFICATION TEST VER - 1 (GAS). (Refer to 21 - TRANSMISSION/TRANSAXLE/AUTOMATIC - 48RE - STANDARD PROCEDURE)

---

7. CHECK THE (T54) TRANSMISSION TEMPERATURE SENSOR SIGNAL CIRCUIT FOR AN OPEN INTERNAL TO THE TRANSMISSION

Reconnect the Transmission Solenoid Assembly harness connector.

Measure the resistance of the (T54) Transmission Temperature Sensor Signal circuit between the PCM C2 harness connector and the Governor Pressure Sensor connector internal to the transmission.

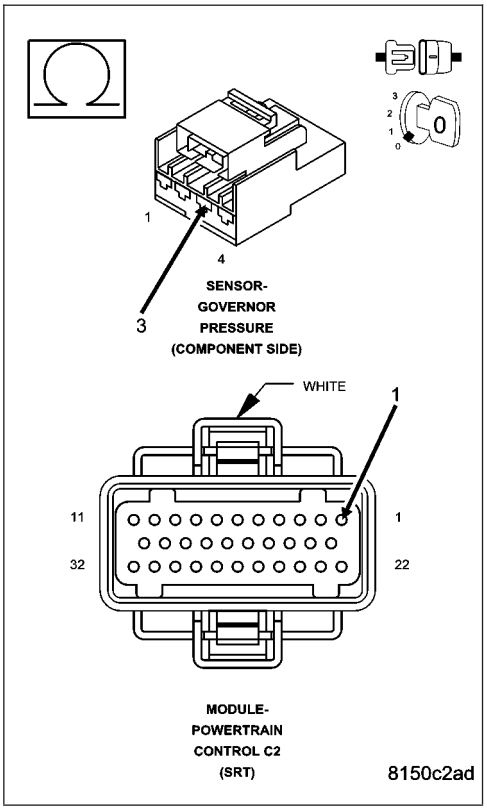

Is the resistance below 5.0 ohms?

Yes >> Go To 8

No >> Replace the Transmission Solenoid Assembly per the Service Information. (Refer to 21 - TRANSMISSION/TRANSAXLE/AUTOMATIC - 48RE/VALVE BODY - REMOVAL)

Perform RE TRANSMISSION VERIFICATION TEST VER - 1 (GAS). (Refer to 21 - TRANSMISSION/TRANSAXLE/AUTOMATIC - 48RE - STANDARD PROCEDURE)

P0713-TRANS TEMP SENSOR VOLTAGE TOO HIGH (GAS) (CONTINUED)

8. CHECK THE (F856) 5-VOLT SUPPLY CIRCUIT FOR AN OPEN INTERNAL TO THE TRANSMISSION

Measure the resistance of the (F856) 5-volt Supply circuit between PCM C2 harness connector and the Governor Pressure Sensor connector internal to the transmission.

Is the resistance below 5.0 ohms?

Yes >> Go To 9

No >> Replace the Transmission Solenoid Assembly per the Service Information. (Refer to 21 - TRANSMISSION/TRANSAXLE/AUTOMATIC - 48RE/VALVE BODY - REMOVAL)
Perform RE TRANSMISSION VERIFICATION TEST VER - 1 (GAS). (Refer to 21 - TRANSMISSION/TRANSAXLE/AUTOMATIC - 48RE - STANDARD PROCEDURE)

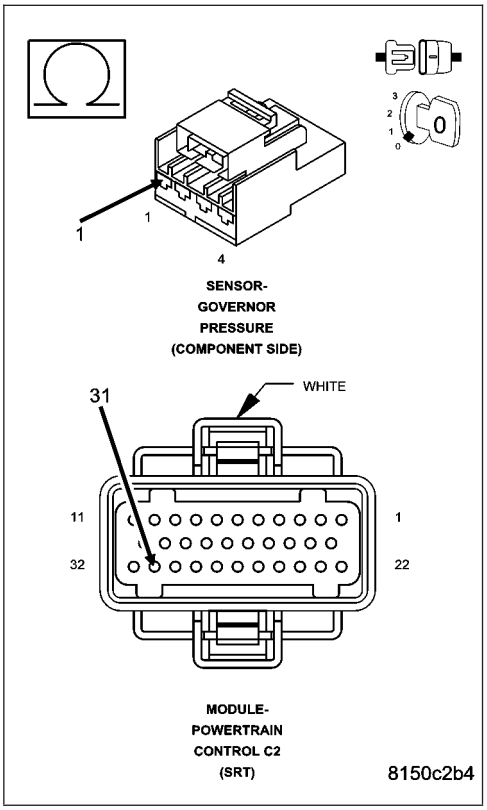

9. CHECK THE (K900) SENSOR GROUND CIRCUIT FOR AN OPEN INTERNAL TO THE TRANSMISSION

Measure the resistance of the (K900) Sensor Ground circuit between the PCM C1 harness connector and the Governor Pressure Sensor connector internal to the transmission.

Is the resistance below 5.0 ohms?

Yes >> Go To 10

No >> Replace the Transmission Solenoid Assembly per the Service Information. (Refer to 21 - TRANSMISSION/TRANSAXLE/AUTOMATIC - 48RE/VALVE BODY - REMOVAL)
Perform RE TRANSMISSION VERIFICATION TEST VER - 1 (GAS). (Refer to 21 - TRANSMISSION/TRANSAXLE/AUTOMATIC - 48RE - STANDARD PROCEDURE)

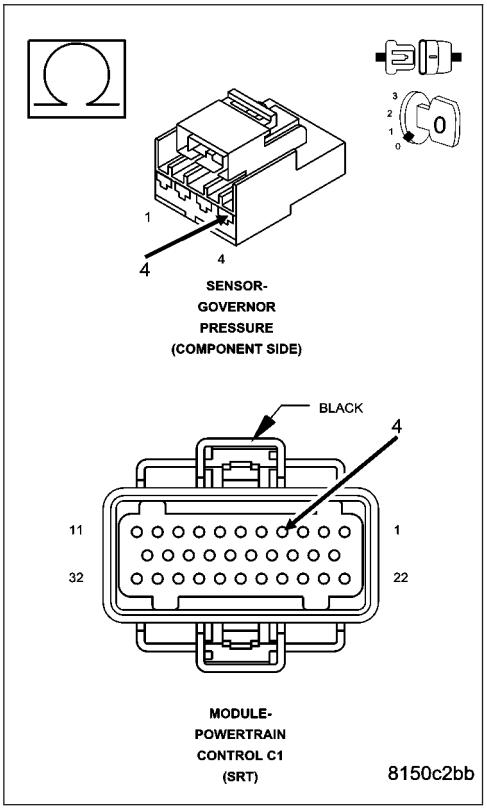

P0713-TRANS TEMP SENSOR VOLTAGE TOO HIGH (GAS) (CONTINUED)

10. CHECK THE TRANSMISSION TEMPERATURE SENSOR

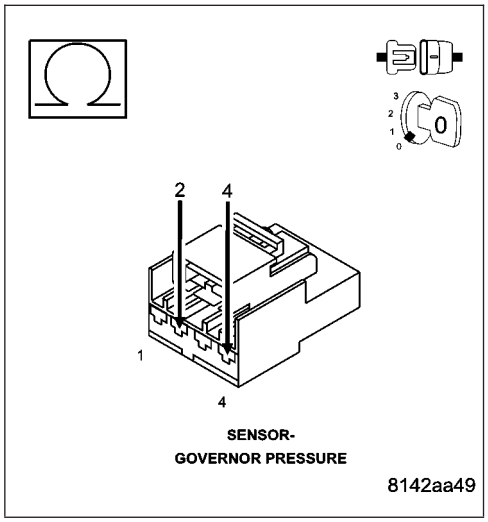

TYPICAL VALUES FOR TRANSMISSION TEMPERATURE SENSOR

TEMPERATURE	MIN TO MAX OHM RANGE
-40° C (-40° F)	1094 to 1176 ohms
0.0° C (32° F)	1587 to 1672 ohms
25° C (77° F)	1960 to 2040 ohms
70° C (158° F)	2709 to 2860 ohms
0° C (212° F)	3284 to 3500 ohms
120° C (120° F)	3684 to 3950 ohms
150° C (302° F)	4110 to 4450 ohms

Measure the resistance of the Transmission Temperature Sensor between the (T54) Transmission Temperature Sensor Signal circuit and the (K900) Sensor Ground circuit.

Using the chart above, compare the Temperature Sensor temperature to the correlating resistance value.

Is the Temperature Sensor resistance above the maximum specification listed in the chart?

Yes >> Replace the Governor Pressure/Transmission Temperature Sensor per the Service Information. (Refer to 21 - TRANSMISSION/TRANSAXLE/AUTOMATIC - 48RE/GOVERNOR PRESSURE SENSOR - REMOVAL)

Perform RE TRANSMISSION VERIFICATION TEST VER - 1 (GAS). (Refer to 21 - TRANSMISSION/TRANSAXLE/AUTOMATIC - 48RE - STANDARD PROCEDURE)

No >> Go To 11

P0713-TRANS TEMP SENSOR VOLTAGE TOO HIGH (GAS) (CONTINUED)

11. CHECK THE POWERTRAIN CONTROL MODULE

Reconnect all disconnected connectors.

Ignition on, engine not running.

With the scan tool, erase Engine DTCs.

Turn the ignition off to the lock position.

Disconnect the Governor Pressure Sensor connector internal to the transmission.

Connect a jumper wire between the (T54) Transmission Temperature Sensor Signal circuit and the (K900) Sensor Ground circuit in the Transmission Solenoid Assembly harness connector.

Ignition on, engine not running.

With the scan tool, read Engine DTCs.

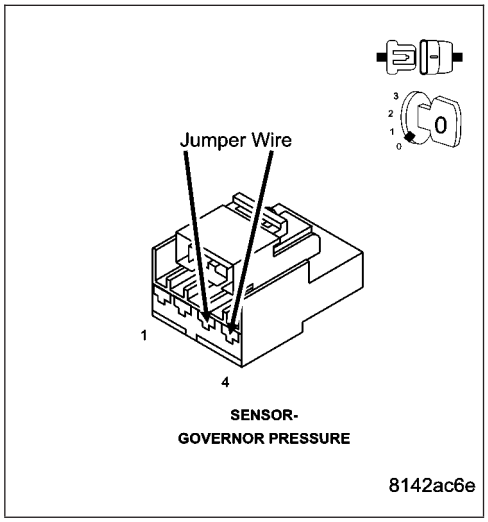

Did the DTC Transmission Oil Temperature Sensor Voltage Too Low set?

Yes >> Go To 12

No >> Using the schematics as a guide, check the Powertrain Control Module (PCM) pins, terminals, and connectors for corrosion, damage, or terminal push out. Pay particular attention to all power and ground circuits. If no problems are found, replace and program the PCM per the Service Information. (Refer to 8 - ELECTRICAL/ELECTRONIC CONTROL MODULES/ POWERTRAIN CONTROL MODULE - REMOVAL)

Perform RE TRANSMISSION VERIFICATION TEST VER - 1 (GAS). (Refer to 21 - TRANSMISSION/ TRANSAXLE/AUTOMATIC - 48RE - STANDARD PROCEDURE)

---

12. INTERMITTENT WIRING AND CONNECTORS

The conditions necessary to set this DTC are not present at this time.

Use the Freeze Frame Data to help duplicate the conditions in which the DTC originally set. Pay particular attention to the DTC set conditions, such as, VSS, MAP, ECT, and Load

Using the schematics as a guide, visually inspect the related wiring harness. Look for any chafed, pierced, pinched, or partially broken wires.

Visually inspect the related wiring harness connectors. Look for broken, bent, pushed out, or corroded terminals.

Wiggle the wiring and connectors while checking for any possible open or shorted circuits.

Check for any Service Information Tune-ups or Technical Service Bulletins that may apply.

Were there any problems found?

Yes >> Repair as necessary.

Perform RE TRANSMISSION VERIFICATION TEST VER - 1 (GAS). (Refer to 21 - TRANSMISSION/ TRANSAXLE/AUTOMATIC - 48RE - STANDARD PROCEDURE)

No >> Test Complete.

P0720-LOW OUTPUT SPEED SENSOR - RPM ABOVE 15 MPH (GAS)

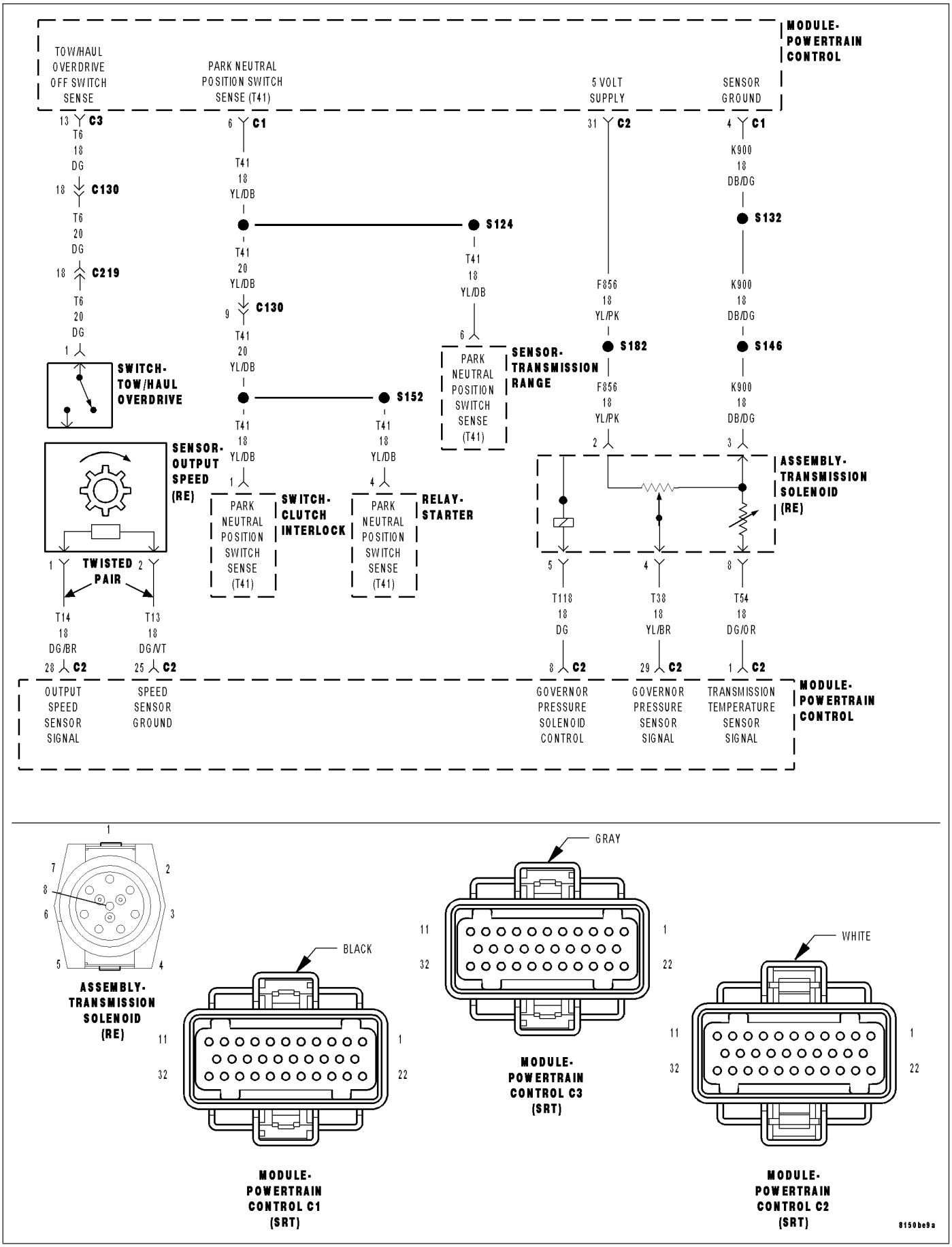

P0720-LOW OUTPUT SPEED SENSOR - RPM ABOVE 15 MPH (GAS) (CONTINUED)

For the Transmission circuit diagram (Refer to 21 - TRANSMISSION/TRANSAXLE/AUTOMATIC - 48RE - SCHEMATICS AND DIAGRAMS)

For a complete wiring diagram**Refer to Section 8W**

- **When Monitored:**
  Continuously with the ignition on, engine running, and gear selector NOT in park or neutral.
- **Set Condition:**
  This DTC will set if the vehicle speed (reported from the CAB module) is above 24 Kmh (15 mph), and the monitored Output Shaft Speed is below 60 RPM for 2.6 seconds.

Possible Causes
PARK/NEUTRAL DTC PRESENT
(T13) SENSOR GROUND CIRCUIT OPEN
(T14) OUTPUT SPEED SENSOR SIGNAL CIRCUIT OPEN
(T13) SENSOR GROUND CIRCUIT SHORT TO ANOTHER CIRCUIT
(T14) OUTPUT SPEED SENSOR SIGNAL CIRCUIT SHORT TO GROUND
(T14) OUTPUT SPEED SENSOR SIGNAL CIRCUIT SHORT TO ANOTHER CIRCUIT
(T13) SENSOR GROUND CIRCUIT SHORT TO VOLTAGE
(T14) OUTPUT SPEED SENSOR SIGNAL CIRCUIT SHORT TO VOLTAGE
OUTPUT SPEED SENSOR
POWERTRAIN CONTROL MODULE

Always perform the Pre-Diagnostic Troubleshooting procedure before proceeding. (Refer to 21 - TRANSMISSION/TRANSAXLE/AUTOMATIC - 48RE - STANDARD PROCEDURE)

Diagnostic Test

1. CHECK IF THE DTC IS CURRENT

Ignition on, engine not running.

With the scan tool, read Engine DTCs.

Record the Freeze Frame data for the reported DTC.

With the scan tool, erase DTCs.

Turn the ignition off to the lock position.

Using the Freeze Frame data recorded earlier, try to duplicate the conditions in which the DTC originally set.

NOTE: It may be necessary to road test the vehicle to duplicate the original set conditions.

With the scan tool, read Engine DTCs.

Did the DTC reset?

Yes >> Go To 2

No >> Go To 11

---

2. CHECK IF A PARK/NEUTRAL DTC IS PRESENT

Is there a Park/Neutral DTC present?

Yes >> Refer to the Transmission category and perform the appropriate symptom(s). (Refer to 21 - TRANSMISSION/TRANSAXLE/AUTOMATIC - 48RE - DIAGNOSIS AND TESTING)

No >> Go To 3

P0720-LOW OUTPUT SPEED SENSOR - RPM ABOVE 15 MPH (GAS) (CONTINUED)

3. CHECK THE (T14) OUTPUT SPEED SENSOR SIGNAL CIRCUIT FOR AN OPEN

Turn the ignition off to the lock position.

Disconnect the PCM C2 harness connector.

Disconnect the Output Speed Sensor harness connector.

NOTE: Check connectors - Clean/repair as necessary

Measure the resistance of the (T14) Output Speed Sensor Signal circuit between the PCM C2 harness connector and the Output Speed Sensor harness connector.

Is the resistance below 5.0 ohms?

Yes >> Go To 4

No >> Repair the (T14) Output Speed Sensor Signal circuit for an open.

Perform RE TRANSMISSION VERIFICATION TEST VER - 1 (GAS). (Refer to 21 - TRANSMISSION/TRANSAXLE/ AUTOMATIC - 48RE - STANDARD PROCEDURE)

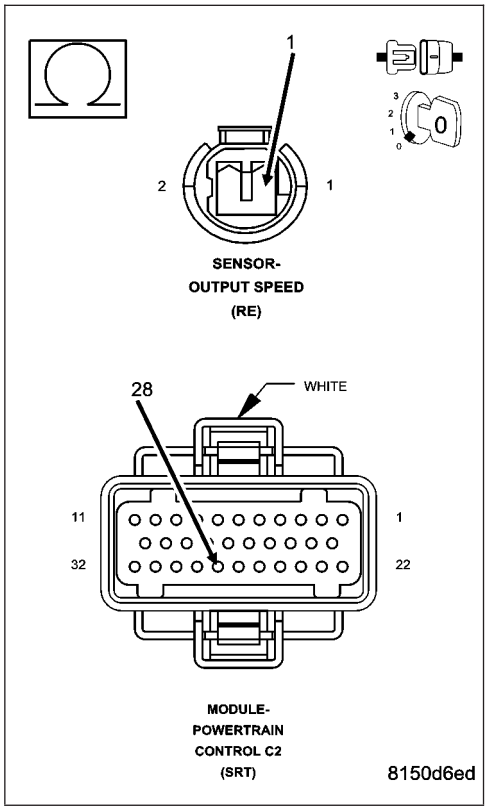

4. CHECK THE (T13) SENSOR GROUND CIRCUIT FOR AN OPEN

Measure the resistance of the (T13) Sensor Ground circuit between the PCM C2 harness connector and the Output Speed Sensor harness connector.

Is the resistance below 5.0 ohms?

Yes >> Go To 5

No >> Repair the (T13) Sensor Ground circuit for an open.

Perform RE TRANSMISSION VERIFICATION TEST VER - 1 (GAS). (Refer to 21 - TRANSMISSION/TRANSAXLE/ AUTOMATIC - 48RE - STANDARD PROCEDURE)

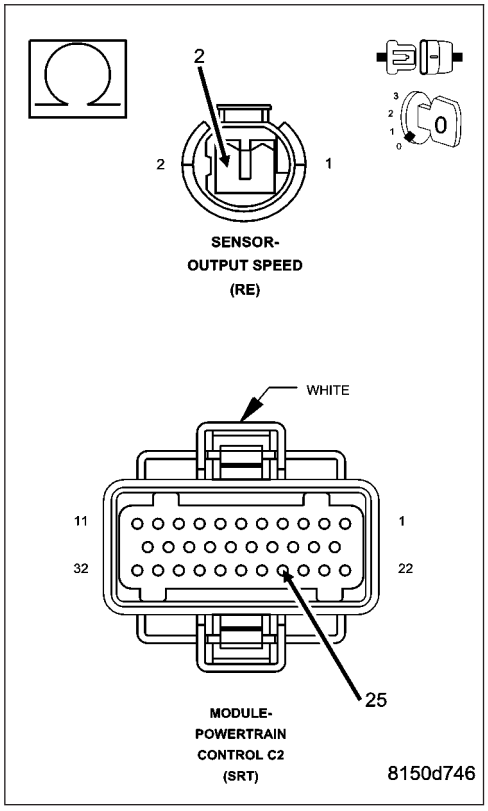

P0720-LOW OUTPUT SPEED SENSOR - RPM ABOVE 15 MPH (GAS) (CONTINUED)

5. CHECK THE (T14) OUTPUT SPEED SENSOR SIGNAL CIRCUIT FOR A SHORT TO GROUND

Measure the resistance between ground and the (T14) Output Speed Sensor Signal circuit.

Is the resistance greater than 100K ohms?

Yes >> Go To 6

No >> Repair the (T14) Output Speed Sensor Signal circuit for a short to ground.
Perform RE TRANSMISSION VERIFICATION TEST VER - 1 (GAS). (Refer to 21 - TRANSMISSION/TRANSAXLE/ AUTOMATIC - 48RE - STANDARD PROCEDURE)

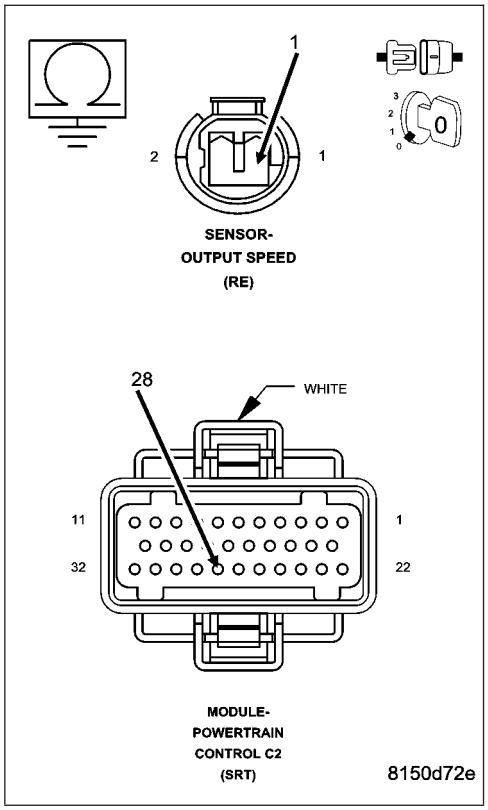

6. CHECK THE (T14) OUTPUT SPEED SENSOR SIGNAL CIRCUIT FOR A SHORT TO ANOTHER CIRCUIT

Measure the resistance between the (T14) Output Speed Sensor Signal circuit and all other circuits in the PCM C2 harness connector.

Is the resistance greater than 100K ohms between the (T14) Output Speed Sensor Signal circuit and any other circuit(s) in the PCM C2 harness connector?

Yes >> Go To 7

No >> Repair the (T14) Output Speed Sensor Signal circuit for a short to another circuit(s).
Perform RE TRANSMISSION VERIFICATION TEST VER - 1 (GAS). (Refer to 21 - TRANSMISSION/TRANSAXLE/ AUTOMATIC - 48RE - STANDARD PROCEDURE)

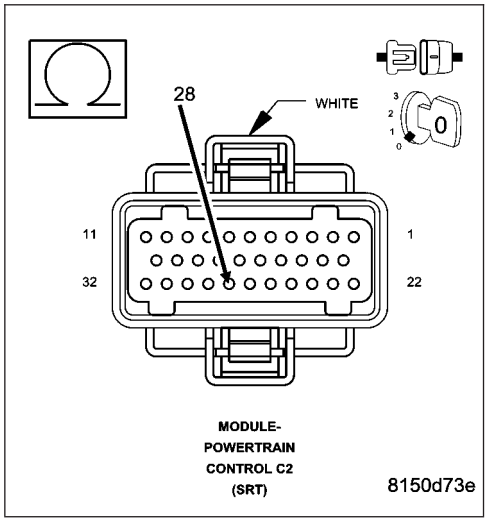

P0720-LOW OUTPUT SPEED SENSOR - RPM ABOVE 15 MPH (GAS) (CONTINUED)

7. CHECK THE (T13) SENSOR GROUND CIRCUIT FOR A SHORT TO ANOTHER CIRCUIT

Measure the resistance between the (T13) Sensor Ground circuit and all other circuits in the PCM C2 harness connector.

Is the resistance greater than 100K ohms?

Yes >> Go To 8

No >> Repair the (T13) Sensor Ground circuit for a short to another circuit(s).
Perform RE TRANSMISSION VERIFICATION TEST VER - 1 (GAS). (Refer to 21 - TRANSMISSION/TRANSAXLE/ AUTOMATIC - 48RE - STANDARD PROCEDURE)

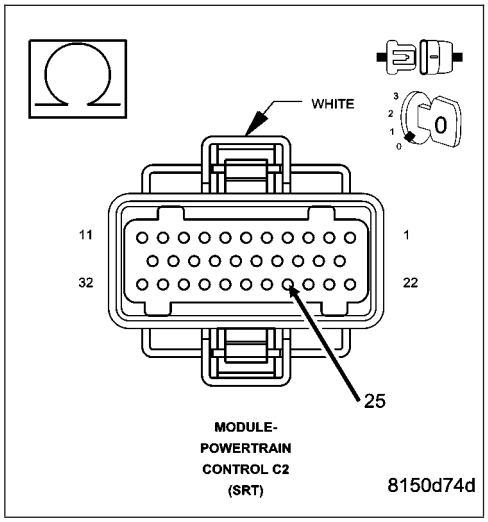

8. CHECK THE (T14) OUTPUT SPEED SENSOR SIGNAL CIRCUIT FOR A SHORT TO VOLTAGE

Ignition on, engine not running.

Measure the voltage of the (T14) Output Speed Sensor Signal circuit in the Output Speed Sensor harness connector.

Is there any voltage present?

Yes >> Repair the (T14) Output Speed Sensor Signal circuit for a short to voltage.
Perform RE TRANSMISSION VERIFICATION TEST VER - 1 (GAS). (Refer to 21 - TRANSMISSION/TRANSAXLE/ AUTOMATIC - 48RE - STANDARD PROCEDURE)

No >> Go To 9

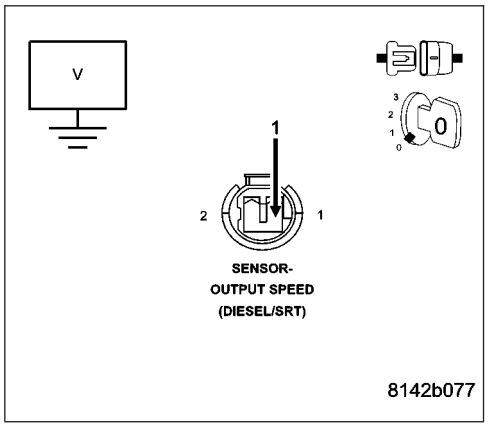

9. CHECK THE (T13) SENSOR GROUND CIRCUIT FOR A SHORT TO VOLTAGE

Measure the voltage of the (T13) Sensor Ground circuit in the Output Speed Sensor harness connector.

Is there any voltage present?

Yes >> Repair the (T13) Sensor Ground circuit for a short to voltage.
Perform RE TRANSMISSION VERIFICATION TEST VER - 1 (GAS). (Refer to 21 - TRANSMISSION/TRANSAXLE/ AUTOMATIC - 48RE - STANDARD PROCEDURE)

No >> Go To 10

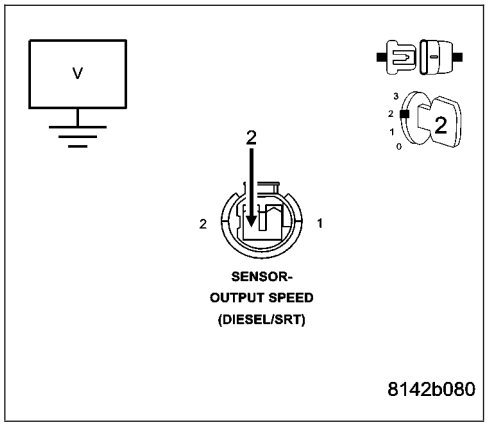

P0720-LOW OUTPUT SPEED SENSOR - RPM ABOVE 15 MPH (GAS) (CONTINUED)

10. CHECK THE OUTPUT SPEED SENSOR

Measure the resistance between the terminals of the Output Speed Sensor.

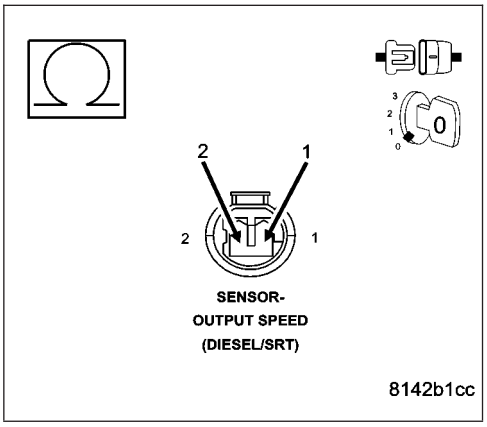

Is the resistance between 300.0 and 1200.0 ohms?

Yes >> Using the schematics as a guide, check the Powertrain Control Module (PCM) pins, terminals, and connectors for corrosion, damage, or terminal push out. Pay particular attention to all power and ground circuits. If no problems are found, replace and program the PCM per the Service Information. (Refer to 8 - ELECTRICAL/ELECTRONIC CONTROL MODULES/POWERTRAIN CONTROL MODULE - REMOVAL)

Perform RE TRANSMISSION VERIFICATION TEST VER - 1 (GAS). (Refer to 21 - TRANSMISSION/TRANSAXLE/AUTOMATIC - 48RE - STANDARD PROCEDURE)

No >> Replace the Output Speed Sensor.

Perform RE TRANSMISSION VERIFICATION TEST VER - 1 (GAS). (Refer to 21 - TRANSMISSION/TRANSAXLE/AUTOMATIC - 48RE - STANDARD PROCEDURE)

---

11. INTERMITTENT WIRING AND CONNECTORS

The conditions necessary to set this DTC are not present at this time.

Use the Freeze Frame Data to help duplicate the conditions in which the DTC originally set. Pay particular attention to the DTC set conditions, such as, VSS, MAP, ECT, and Load

Using the schematics as a guide, visually inspect the related wiring harness. Look for any chafed, pierced, pinched, or partially broken wires.

Visually inspect the related wiring harness connectors. Look for broken, bent, pushed out, or corroded terminals.

Wiggle the wiring and connectors while checking for any possible open or shorted circuits.

Check for any Service Information Tune-ups or Technical Service Bulletins that may apply.

Were there any problems found?

Yes >> Repair as necessary.

Perform RE TRANSMISSION VERIFICATION TEST VER - 1 (GAS). (Refer to 21 - TRANSMISSION/TRANSAXLE/AUTOMATIC - 48RE - STANDARD PROCEDURE)

No >> Test Complete.

P0740-TORQ CON CLU, NO RPM DROP AT LOCKUP (GAS)

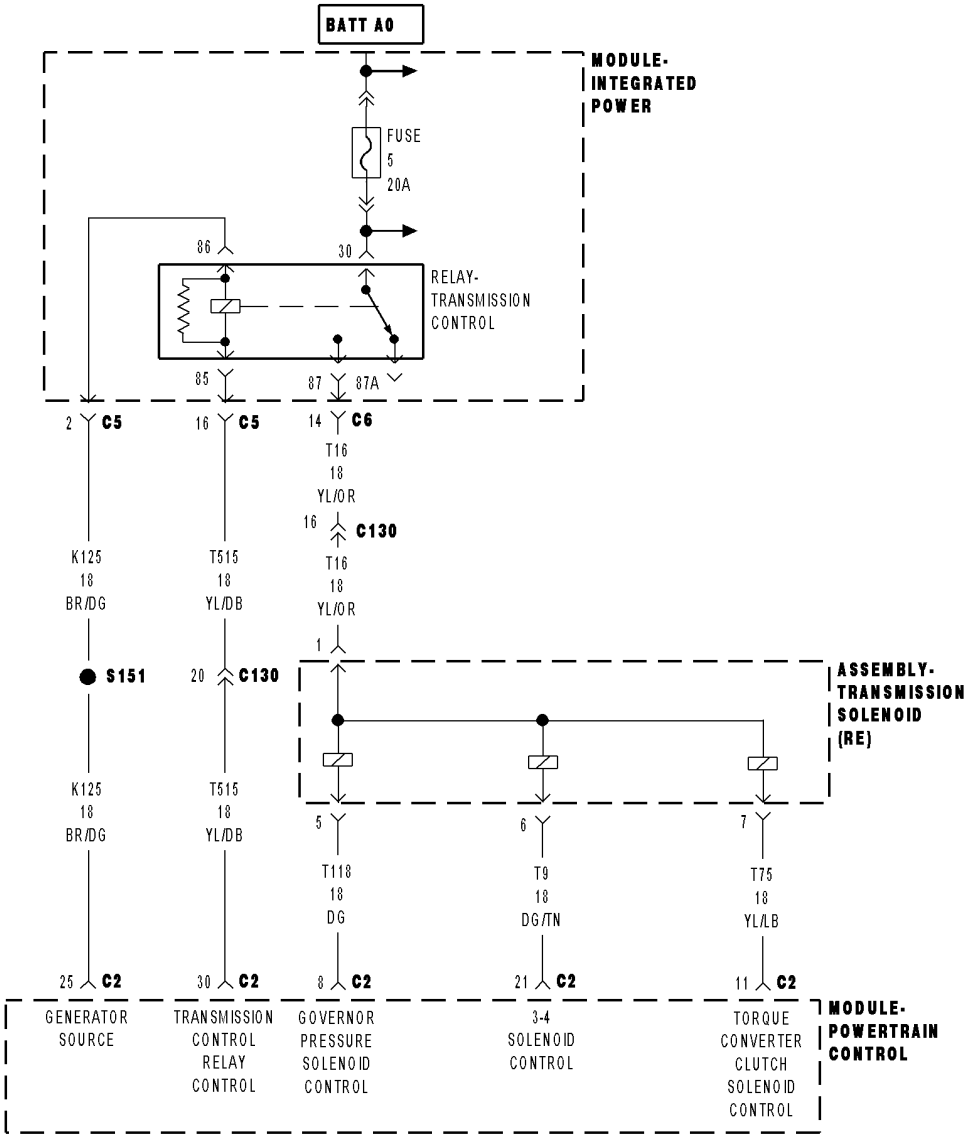

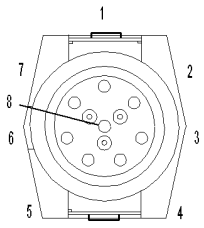

ASSEMBLY-
TRANSMISSION
SOLENOID
(RE)

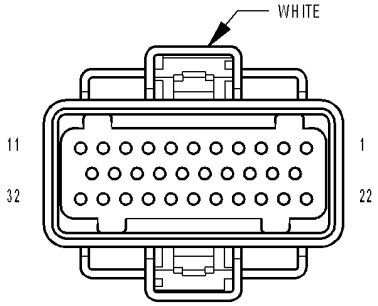

MODULE-
POWERTRAIN
CONTROL C2
(SRT)

81511462

P0740-TORQ CON CLU, NO RPM DROP AT LOCKUP (GAS) (CONTINUED)

For the Transmission circuit diagram (Refer to 21 - TRANSMISSION/TRANSAXLE/AUTOMATIC - 48RE - SCHEMATICS AND DIAGRAMS)

For a complete wiring diagram**Refer to Section 8W**

Theory of Operation

The Torque Converter Clutch (TCC) solenoid is used to engage the TCC which improves fuel economy.

- **When Monitored:**
  Continuously with the ignition on.
- **Set Condition:**
  This DTC will set if the Torque Convertor Clutch (TCC) can not achieve the desired engine RPM drop when the TCC Solenoid is near the maximum duty cycle after three consecutive test failures.

Possible Causes
TRANSMISSION FLUID LEVEL LOW OR CONTAMINATED
WORN OR DAMAGED REACTION SHAFT, INPUT SHAFT OR INPUT SHAFT SEALS
BLOCKED OR LEAK IN THE TCC HYDRAULIC CIRCUIT IN THE VALVE BODY
TORQUE CONVERTER CLUTCH SOLENOID
TORQUE CONVERTER

Always perform the Pre-Diagnostic Troubleshooting procedure before proceeding. (Refer to 21 - TRANSMISSION/TRANSAXLE/AUTOMATIC - 48RE - STANDARD PROCEDURE)

1. CHECK IF THERE ANY ENGINE DTCS PRESENT

Ignition on, engine not running.

With the scan tool, read Engine DTCs.

Is the DTC P0743 also present?

Yes >> Refer to the Transmission category and perform the appropriate symptom(s). (Refer to 21 - TRANSMISSION/TRANSAXLE/AUTOMATIC - 48RE - DIAGNOSIS AND TESTING)

No >> Go To 2

---

2. CHECK TRANSMISSION FLUID LEVEL

Check the transmission fluid level.

Is the Transmission fluid level low?

Yes >> Inspect the transmission, cooler, and lines for leakage and repair as necessary. With the scan tool read and record the Freeze Frame data for the reported DTC. Erase DTCs and test drive the vehicle to the conditions in which the DTC originally set. Recheck for DTCs. If the DTC resets, follow the “No” path in this test procedure and proceed to the next step.

If the DTC does not reset, test is complete, perform RE TRANSMISSION VERIFICATION TEST VER - 1 (GAS). (Refer to 21 - TRANSMISSION/TRANSAXLE/AUTOMATIC - 48RE - STANDARD PROCEDURE)

No >> Go To 3

P0740-TORQ CON CLU, NO RPM DROP AT LOCKUP (GAS) (CONTINUED)

3. CHECK TRANSMISSION FLUID

Check the transmission fluid for contamination or a burnt condition.

Is the Transmission fluid contaminated or burnt?

Yes >> Remove the valve body and inspect the components related to the Torque Converter Clutch. (Refer to 21 - TRANSMISSION/TRANSAXLE/AUTOMATIC - 48RE/VALVE BODY - REMOVAL) Check the valves for sticking or binding in its bore, internal valve body leakage, or the TCC hydraulic circuits plugged with debris. Repair as necessary. If no problems are found in the Valve Body, replace the Torque Convertor. (Refer to 21 - TRANSMISSION/TRANSAXLE/AUTOMATIC - 48RE/TORQUE CONVERTER - REMOVAL)

Perform RE TRANSMISSION VERIFICATION TEST VER - 1 (GAS). (Refer to 21 - TRANSMISSION/TRANSAXLE/AUTOMATIC - 48RE - STANDARD PROCEDURE)

No >> Go To 4

---

4. CHECK IF THE DTC IS CURRENT

With the scan tool, read Engine DTCs.

Record the Freeze Frame data for the reported DTC.

With the scan tool, erase DTCs.

Turn the ignition off to the lock position.

Using the Freeze Frame data recorded earlier, try to duplicate the conditions in which the DTC originally set.

NOTE: It may be necessary to road test the vehicle to duplicate the original set conditions.

With the scan tool, read Engine DTCs.

Did the DTC reset?

Yes >> Go To 5

No >> Go To 9

---

5. PERFORM TCC SYSTEM TEST

With the scan tool, perform the TCC System Test.

Follow the instructions on the screen.

Did the engine stall?

Yes >> Go To 6

No >> Go To 7

---

6. PERFORM GOV AND 3-4 SHIFT VALVE SYSTEM TEST

With the scan tool, perform the Gov and 3-4 Shift Valve System Test.

Follow the instructions on the screen.

Did the engine stall?

Yes >> Go To 8

No >> Go To 7

P0740-TORQ CON CLU, NO RPM DROP AT LOCKUP (GAS) (CONTINUED)

7. CHECK THE COOLER OUT PRESSURE

Turn the ignition off to the lock position.

Connect a pressure gauge to the transmission cooler out port with a “T” connector. (Refer to 21 - TRANSMISSION/TRANSAXLE/AUTOMATIC - 48RE - DIAGNOSIS AND TESTING)

Start the engine, with the scan tool, perform the TCC System Test.

Did the cooler out pressure on the gauge increase when the TCC was actuated?

Yes >> Remove the transmission oil pump and inspect the reaction shaft, input shaft and input shaft seals for damage or wear and repair or replace as necessary. Replace the Torque Convertor.

Perform RE TRANSMISSION VERIFICATION TEST VER - 1 (GAS). (Refer to 21 - TRANSMISSION/TRANSAXLE/AUTOMATIC - 48RE - STANDARD PROCEDURE)

No >> Remove the Valve Body and inspect for an internal blockage or an internal leak in the TCC hydraulic circuit. Repair as necessary. (Refer to 21 - TRANSMISSION/TRANSAXLE/AUTOMATIC - 48RE/VALVE BODY - REMOVAL)

Perform RE TRANSMISSION VERIFICATION TEST VER - 1 (GAS). (Refer to 21 - TRANSMISSION/TRANSAXLE/AUTOMATIC - 48RE - STANDARD PROCEDURE)

---

8. TCC SOLENOID

Turn the ignition off to the lock position.

Replace the TCC Solenoid per the Service Information (Refer to 21 - TRANSMISSION/TRANSAXLE/AUTOMATIC - 48RE/GOVERNOR PRESSURE SENSOR - REMOVAL).

With the scan tool, perform the Gov and 3-4 Shift Valve System Test.

Follow the instructions on the screen.

Did the engine stall?

Yes >> Repair internal transmission as necessary. Check for blocked or cross linked passages in the Valve Body. (Refer to 21 - TRANSMISSION/TRANSAXLE/AUTOMATIC - 48RE/VALVE BODY - REMOVAL)

Perform RE TRANSMISSION VERIFICATION TEST VER - 1 (DIESEL). (Refer to 21 - TRANSMISSION/TRANSAXLE/AUTOMATIC - 48RE - STANDARD PROCEDURE)

No >> Test Complete.

Perform RE TRANSMISSION VERIFICATION TEST VER - 1 (DIESEL). (Refer to 21 - TRANSMISSION/TRANSAXLE/AUTOMATIC - 48RE - STANDARD PROCEDURE)

---

9. INTERMITTENT WIRING AND CONNECTORS

The conditions necessary set this DTC are not present at this time.

Use the Freeze Frame Data to help duplicate the conditions that set the DTC. Pay particular attention to the DTC set conditions, such as, VSS, MAP, ECT, and Load.

Visually inspect the related wiring harness. Look for any chafed, pierced, pinched, or partially broken wires.

Visually inspect the related wiring harness connectors. Look for broken, bent, pushed out, or corroded terminals.

Refer to any technical service bulletins that may apply.

Were there any problems found?

Yes >> Repair as necessary.

Perform RE TRANSMISSION VERIFICATION TEST VER - 1 (DIESEL). (Refer to 21 - TRANSMISSION/TRANSAXLE/AUTOMATIC - 48RE - STANDARD PROCEDURE)

No >> Test Complete.

P0743-TORQUE CONVERTER CLUTCH SOLENOID/TRANS RELAY CIRCUITS

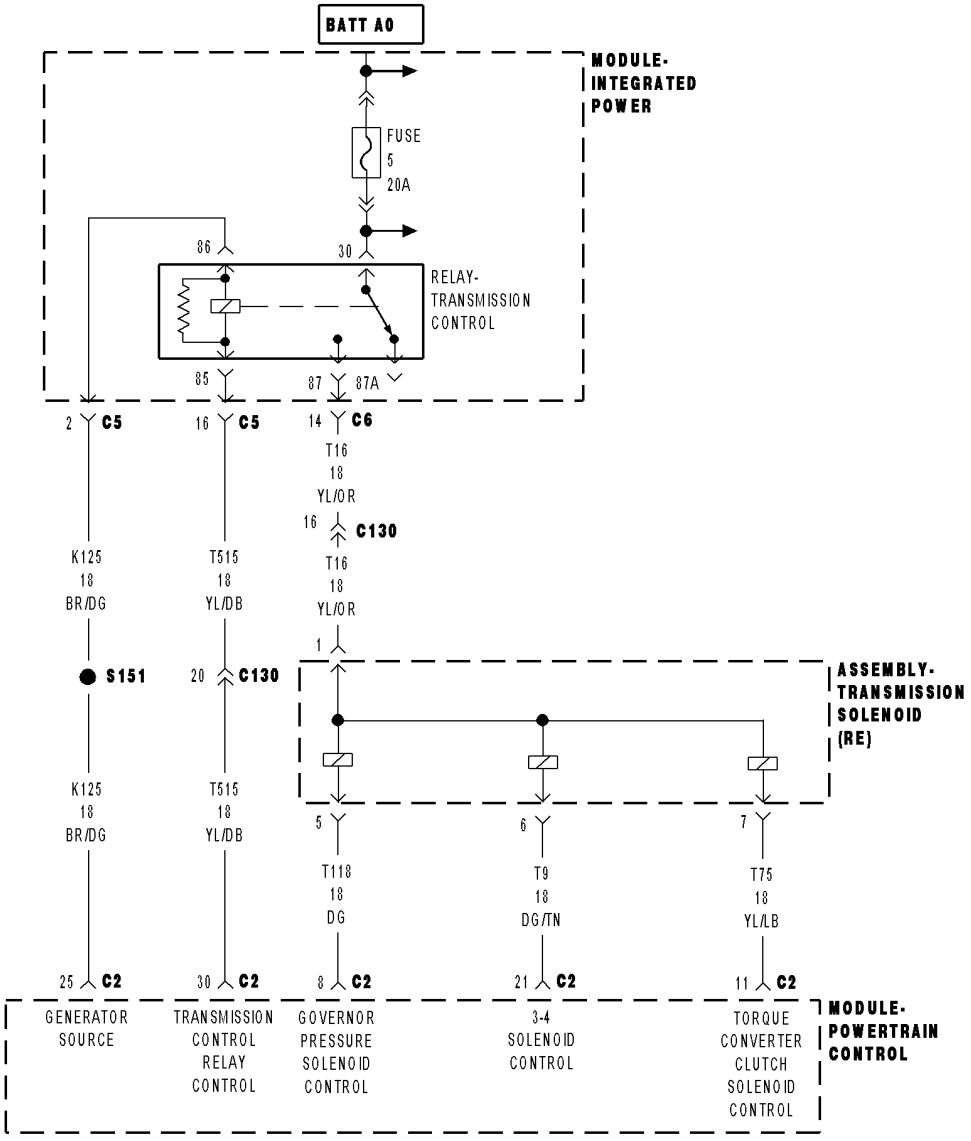

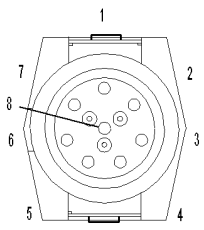

ASSEMBLY-
TRANSMISSION
SOLENOID
(RE)

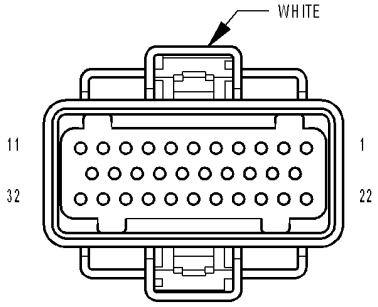

MODULE-
POWERTRAIN
CONTROL C2
(SRT)

81511462

P0743-TORQUE CONVERTER CLUTCH SOLENOID/TRANS RELAY CIRCUITS (CONTINUED)

For the Transmission circuit diagram (Refer to 21 - TRANSMISSION/TRANSAXLE/AUTOMATIC - 48RE - SCHEMATICS AND DIAGRAMS)

For a complete wiring diagram**Refer to Section 8W**

Theory of Operation

The Torque Converter Clutch (TCC) solenoid is used to engage the TCC which improves fuel economy.

- **When Monitored:**
  Continuously with the ignition on.
- **Set Condition:**
  This DTC will set if the voltage detected by the PCM for the Torque Converter Clutch Solenoid Control circuit is different than the expected voltage. Note: To clear this DTC it is necessary to drive the vehicle at a sustained speed which would allow the TCC and/or Overdrive Clutch to operate.

Possible Causes
TRANSMISSION CONTROL RELAY DTCS PRESENT
(F941) FUSED IGNITION SWITCH OUTPUT CIRCUIT (RUN-START) OPEN
(T16) TRANSMISSION CONTROL RELAY OUTPUT CIRCUIT OPEN
(T16) TRANSMISSION CONTROL RELAY OUTPUT CIRCUIT SHORT TO GROUND
(T75) TCC SOLENOID CONTROL CIRCUIT SHORT TO GROUND
(T75) TCC SOLENOID CONTROL CIRCUIT SHORT TO OTHER CIRCUITS
TRANSMISSION CONTROL RELAY - POOR CONTACTS
TORQUE CONVERTER CLUTCH SOLENOID
POWERTRAIN CONTROL MODULE

Always perform the Pre-Diagnostic Troubleshooting procedure before proceeding. (Refer to 21 - TRANSMISSION/TRANSAXLE/AUTOMATIC - 48RE - STANDARD PROCEDURE)

Diagnostic Test

1. CHECK IF THERE ANY TRANSMISSION CONTROL RELAY DTCS PRESENT

Ignition on, engine not running.

With the scan tool, read Engine DTCs.

Are there any Transmission Control Relay DTCs also present?

Yes >> Refer to the Transmission category and perform the appropriate symptom(s). (Refer to 21 - TRANSMISSION/TRANSAXLE/AUTOMATIC - 48RE - DIAGNOSIS AND TESTING)

No >> Go To 2

P0743-TORQUE CONVERTER CLUTCH SOLENOID/TRANS RELAY CIRCUITS (CONTINUED)

2. CHECK IF THE DTC IS CURRENT

With the scan tool, read Engine DTCs.

Record the Freeze Frame data for the reported DTC.

With the scan tool, erase DTCs.

Turn the ignition off to the lock position.

Using the Freeze Frame data recorded earlier, try to duplicate the conditions in which the DTC originally set.

NOTE: It may be necessary to road test the vehicle to duplicate the original set conditions.

With the scan tool, read Engine DTCs.

Did the DTC reset?

Yes >> Go To 3

No >> Go To 11

---

3. CHECK THE (T16) TRANSMISSION CONTROL RELAY OUTPUT CIRCUIT

Turn the ignition off to the lock position.

Disconnect the Transmission Solenoid Assembly harness connector.

NOTE: Check connectors - Clean/repair as necessary.

Ignition on, engine not running.

With the scan tool, actuate the Transmission Control Relay.

Using a 12-volt test light connected to ground, check the (T16) Transmission Control Relay Output circuit in the Transmission Solenoid Assembly harness connector.

NOTE: The test light must illuminate brightly. Compare the brightness to that of a direct connection to the battery.

Does the test light cycle on and off and illuminate brightly?

Yes >> Go To 4

No >> Go To 8

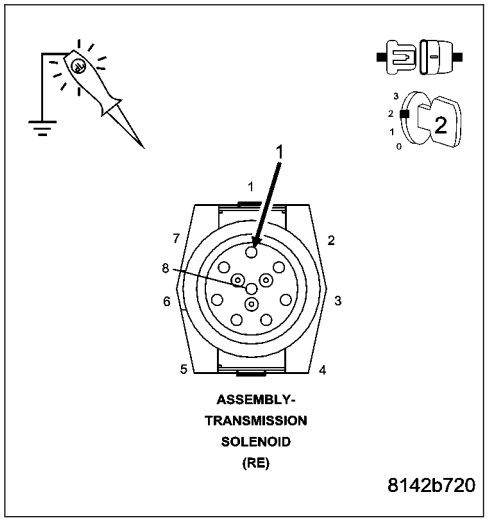

P0743-TORQUE CONVERTER CLUTCH SOLENOID/TRANS RELAY CIRCUITS (CONTINUED)

4. CHECK THE (T75) TORQUE CONVERTER CLUTCH SOLENOID CIRCUIT

Turn the ignition off to the lock position.

Disconnect the Transmission Solenoid Assembly harness connector.

Ignition on, engine not running.

With the scan tool, actuate the TCC Solenoid.

Using a 12-volt test light connected to 12-volts, check the (T75) TCC Solenoid Control circuit in the Transmission Solenoid Assembly harness connector.

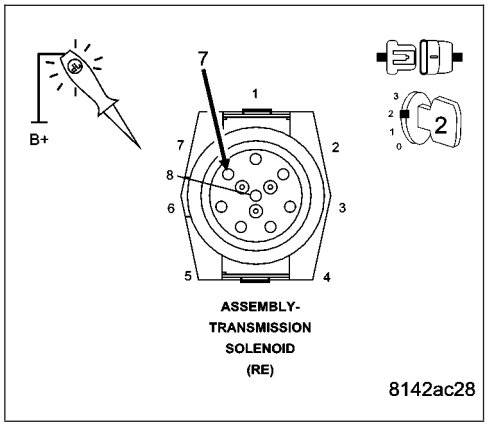

NOTE: The test light must illuminate brightly. Compare the brightness to that of a direct connection to the battery.

Does the test light cycle on and off and illuminate brightly?

Yes >> Check all internal wiring pertaining to the (T75) TCC Solenoid for an open, short, and bent or broken terminals. If no internal wiring problems are found, replace the Transmission Solenoid Assembly per the Service Information. (Refer to 21 - TRANSMISSION/TRANSAXLE/AUTOMATIC - 48RE/VALVE BODY - REMOVAL)
Perform RE TRANSMISSION VERIFICATION TEST VER - 1 (GAS). (Refer to 21 - TRANSMISSION/TRANSAXLE/AUTOMATIC - 48RE - STANDARD PROCEDURE)

No >> Go To 5

---

5. (T75) TCC SOLENOID CONTROL CIRCUIT SHORT TO GROUND

Turn the ignition off to the lock position.

Disconnect the PCM harness connectors.

Measure the resistance between ground and the (T75) TCC Solenoid Control circuit.

Is the resistance below 5.0 ohms?

Yes >> Repair the (T75) TCC Solenoid Control circuit for a short to ground.
Perform RE TRANSMISSION VERIFICATION TEST VER - 1 (GAS). (Refer to 21 - TRANSMISSION/TRANSAXLE/AUTOMATIC - 48RE - STANDARD PROCEDURE)

No >> Go To 6

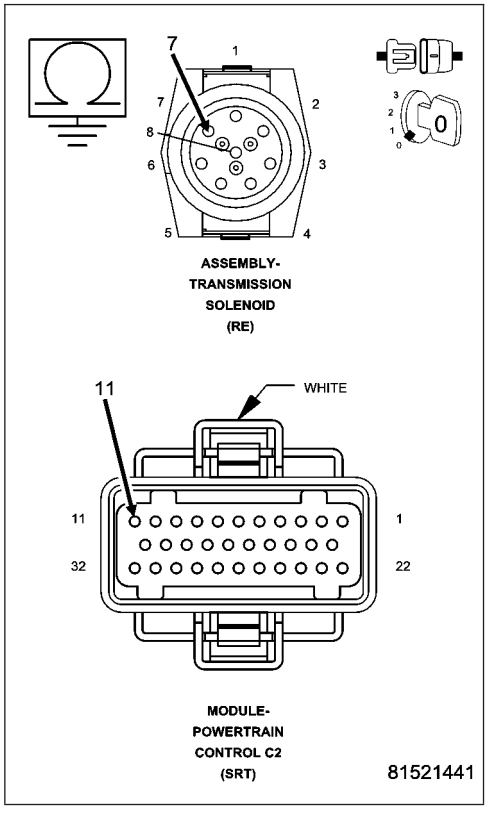

P0743-TORQUE CONVERTER CLUTCH SOLENOID/TRANS RELAY CIRCUITS (CONTINUED)

6. (T75) TCC SOLENOID CONTROL CIRCUIT OPEN

Measure the resistance of the (T75) TCC Solenoid Control circuit between the PCM C2 harness connector and the Transmission Solenoid Assembly harness connector.

Is the resistance below 5.0 ohms?

Yes >> Repair the (T75) TCC Solenoid Control circuit for an open.
Perform RE TRANSMISSION VERIFICATION TEST VER - 1 (GAS). (Refer to 21 - TRANSMISSION/TRANSAXLE/ AUTOMATIC - 48RE - STANDARD PROCEDURE)

No >> Go To 7

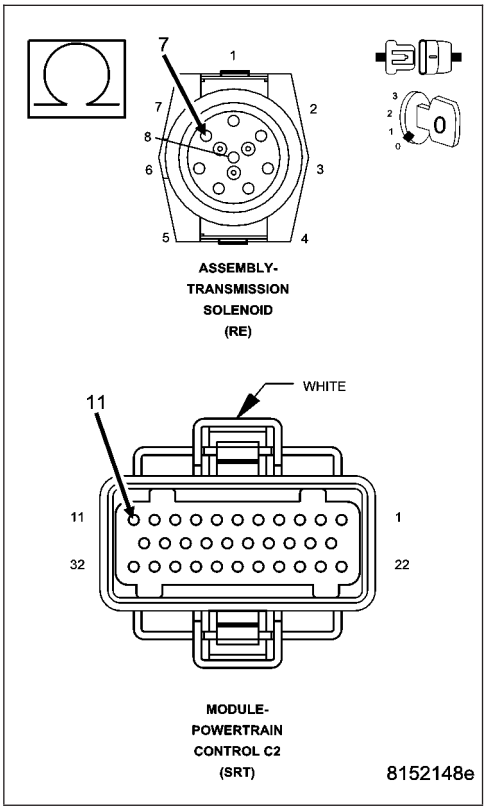

7. (T75) TCC SOLENOID CONTROL CIRCUIT SHORT TO OTHER CIRCUITS

Measure the resistance between the (T75) TCC Solenoid Control circuit and all other circuits in the Transmission Solenoid Assembly harness connector.

Is the resistance below 5.0 ohms between the (T75) TCC Solenoid Control circuit and any other circuit in the Transmission Solenoid Assembly harness connector?

Yes >> Repair the (T75) TCC Solenoid Control circuit for a short to another circuit(s).
Perform RE TRANSMISSION VERIFICATION TEST VER - 1 (GAS). (Refer to 21 - TRANSMISSION/TRANSAXLE/ AUTOMATIC - 48RE - STANDARD PROCEDURE)

No >> Using the schematics as a guide, check the Powertrain Control Module (PCM) pins, terminals, and connectors for corrosion, damage, or terminal push out. Pay particular attention to all power and ground circuits. If no problems are found, replace and program the PCM per the Service Information. (Refer to 8 - ELECTRICAL/ELECTRONIC CONTROL MODULES/POWERTRAIN CONTROL MODULE - REMOVAL)
Perform RE TRANSMISSION VERIFICATION TEST VER - 1 (GAS). (Refer to 21 - TRANSMISSION/ TRANSAXLE/AUTOMATIC - 48RE - STANDARD PROCEDURE)

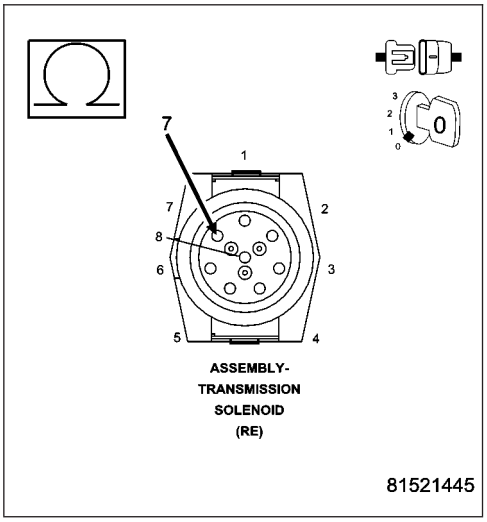

P0743-TORQUE CONVERTER CLUTCH SOLENOID/TRANS RELAY CIRCUITS (CONTINUED)

8. (941) FUSED IGNITION SWITCH OUPUT (RUN-START) CIRCUIT OPEN

Turn the ignition off to the lock position.

Remove the Transmission Control Relay.

Ignition on, engine not running.

Using a 12-volt test light connected to ground, check the (F941) Fused Ignition Swich Output (Run-Start) circuit in the Transmission Control Relay connector.

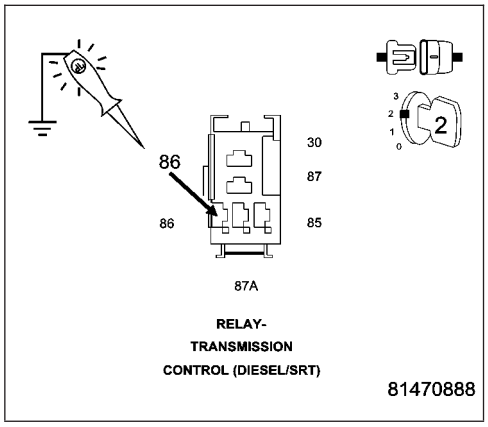

Does the test light illuminate brightly?

Yes >> Go To 9

No >> Repair the (F941) Fused Ignition Swich Output (Run-Start) circuit for an open.

Perform RE TRANSMISSION VERIFICATION TEST VER - 1 (GAS). (Refer to 21 - TRANSMISSION/TRANSAXLE/ AUTOMATIC - 48RE - STANDARD PROCEDURE)

9. (T16) TRANSMISSION CONTROL RELAY OUTPUT CIRCUIT OPEN

Connect a jumper wire between the Fused B(+) circuit and the Transmission Control Relay Output circuit in the Transmission Control Relay connector.

Using a 12-volt test light connected to ground, check the Fused Transmission Relay Control Output circuit in the Transmission Solenoid Assembly harness connector.

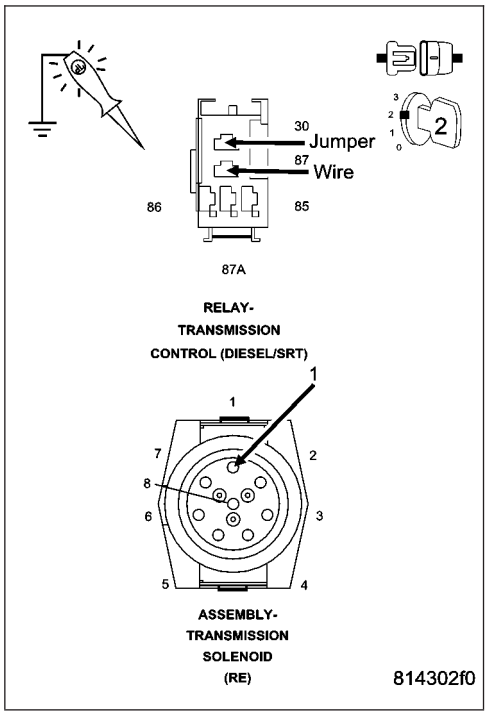

Does the test light illuminate brightly?

Yes >> Go To 10

No >> Repair the (T16) Transmission Control Relay Output circuit for an open. If the fuse is open make sure to check for a short to ground.

Perform RE TRANSMISSION VERIFICATION TEST VER - 1 (GAS). (Refer to 21 - TRANSMISSION/TRANSAXLE/ AUTOMATIC - 48RE - STANDARD PROCEDURE)

P0743-TORQUE CONVERTER CLUTCH SOLENOID/TRANS RELAY CIRCUITS (CONTINUED)

10. (T16) TRANSMISSION CONTROL RELAY OUTPUT CIRCUIT SHORT TO GROUND

Turn the ignition off to the lock position.

Measure the resistance between ground and the (T16) Transmission Control Relay Output circuit in the Transmission Control Relay connector.

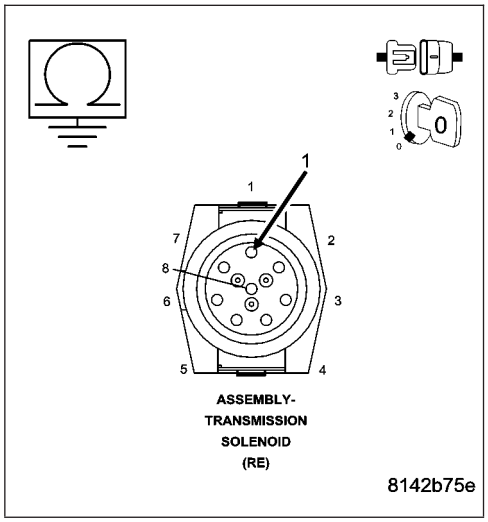

Is the resistance above 100k ohms?

Yes >> Replace the Transmission Control Relay.
Perform RE TRANSMISSION VERIFICATION TEST VER - 1 (GAS). (Refer to 21 - TRANSMISSION/TRANSAXLE/AUTOMATIC - 48RE - STANDARD PROCEDURE)

No >> Repair the (T16) Transmission Control Relay Output circuit for a short to ground.
Perform RE TRANSMISSION VERIFICATION TEST VER - 1 (GAS). (Refer to 21 - TRANSMISSION/TRANSAXLE/AUTOMATIC - 48RE - STANDARD PROCEDURE)

---

11. INTERMITTENT WIRING AND CONNECTORS

The conditions necessary set this DTC are not present at this time.

Use the Freeze Frame Data to help duplicate the conditions that set the DTC. Pay particular attention to the DTC set conditions, such as, VSS, MAP, ECT, and Load.

Visually inspect the related wiring harness. Look for any chafed, pierced, pinched, or partially broken wires.

Visually inspect the related wiring harness connectors. Look for broken, bent, pushed out, or corroded terminals.

Refer to any technical service bulletins that may apply.

Were there any problems found?

Yes >> Repair as necessary.
Perform RE TRANSMISSION VERIFICATION TEST VER - 1 (GAS). (Refer to 21 - TRANSMISSION/TRANSAXLE/AUTOMATIC - 48RE - STANDARD PROCEDURE)

No >> Test Complete.

P0748-PRESSURE SOL CONTROL/TRANS RELAY CIRCUITS (GAS)

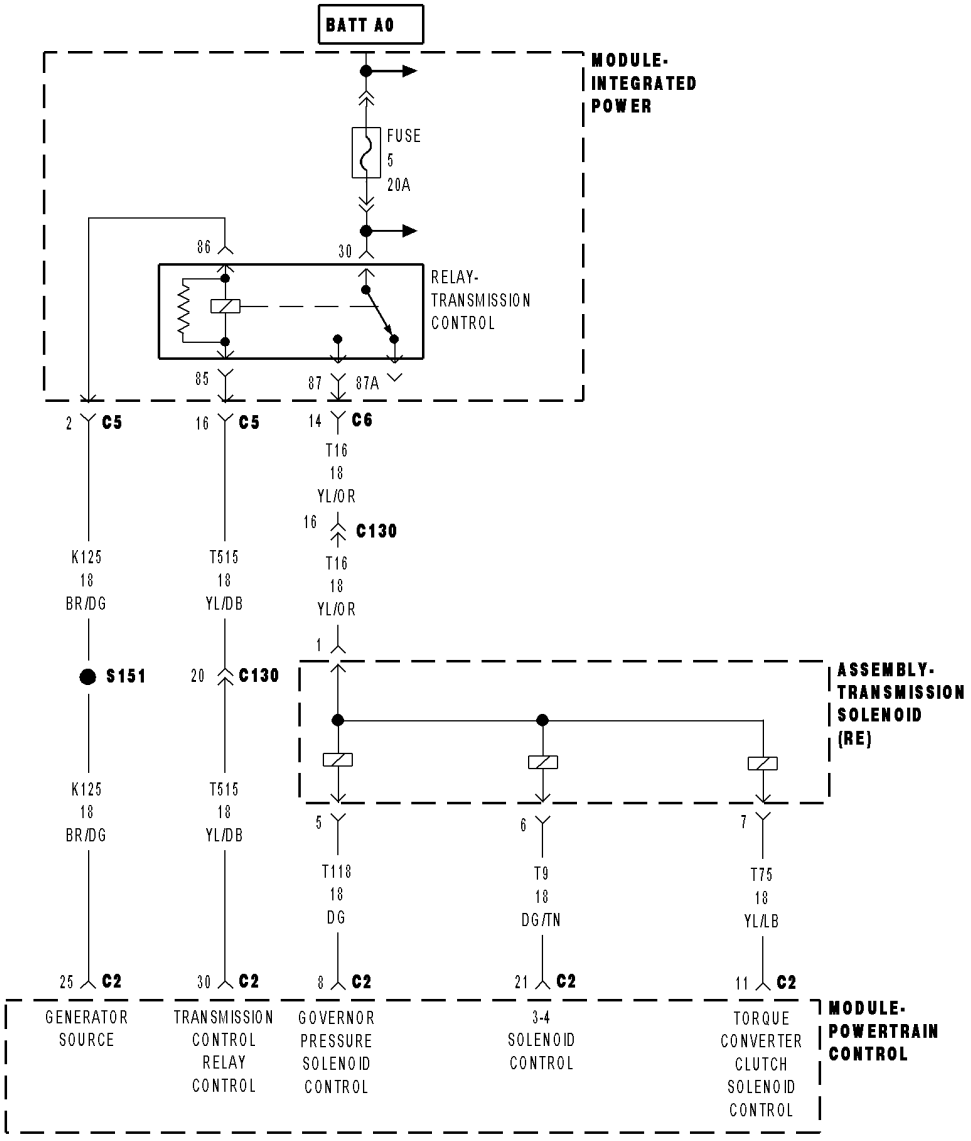

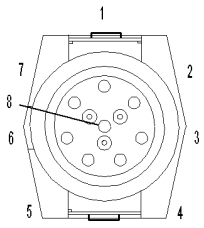

ASSEMBLY-
TRANSMISSION
SOLENOID
(RE)

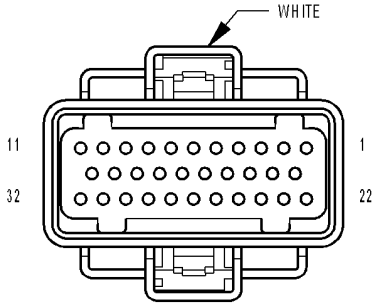

MODULE-
POWERTRAIN
CONTROL C2
(SRT)

81511462

P0748-PRESSURE SOL CONTROL/TRANS RELAY CIRCUITS (GAS) (CONTINUED)

For the Transmission circuit diagram (Refer to 21 - TRANSMISSION/TRANSAXLE/AUTOMATIC - 48RE - SCHEMATICS AND DIAGRAMS)

For a complete wiring diagram**Refer to Section 8W**

Theory of Operation

The Governor Pressure Solenoid is used to control governor pressure. Governor pressure is used to shift between first, second, and third gear.

- **When Monitored:**
  Continuously with the ignition on.
- **Set Condition:**
  This DTC will set if the PCM monitored voltage detected on the Governor Pressure Solenoid Control circuit is different than the expected voltage. Note: To clear this DTC, it is necessary to drive the vehicle at a sustained speed which would allow the TCC and/or Overdrive Clutch to operate.

Possible Causes
FUSED B+ CIRCUIT OPEN
(T16) TRANSMISSION CONTROL RELAY OUTPUT CIRCUIT OPEN
(T16) TRANSMISSION CONTROL RELAY OUTPUT CIRCUIT SHORT TO GROUND
(T118) GOVERNOR PRESSURE SOLENOID CONTROL CIRCUIT OPEN
(T118) GOVERNOR PRESSURE SOLENOID CONTROL CIRCUIT SHORT TO GROUND
(T118) GOVERNOR PRESSURE SOLENOID CONTROL CIRCUIT SHORT TO VOLTAGE
(T118) GOVERNOR PRESSURE SOLENOID CONTROL CIRCUIT SHORT TO ANOTHER CIRCUIT
TRANSMISSION CONTROL RELAY - POOR CONTACTS
GOVERNOR PRESSURE SOLENOID
POWERTRAIN CONTROL MODULE

Always perform the Pre-Diagnostic Troubleshooting procedure before proceeding. (Refer to 21 - TRANSMISSION/TRANSAXLE/AUTOMATIC - 48RE - STANDARD PROCEDURE)

Diagnostic Test

1. CHECK IF THE DTC P0882 IS PRESENT

Ignition on, engine not running.

With the scan tool, read Engine DTCs.

Is the DTC P0882 present also?

Yes >> Refer to the Transmission category and perform the appropriate symptom. (Refer to 21 - TRANSMISSION/TRANSAXLE/AUTOMATIC - 48RE - DIAGNOSIS AND TESTING)

No >> Go To 2

P0748-PRESSURE SOL CONTROL/TRANS RELAY CIRCUITS (GAS) (CONTINUED)

2. CHECK IF THE DTC IS CURRENT

With the scan tool, read Engine DTCs.

Record the Freeze Frame data for the reported DTC.

With the scan tool, erase DTCs.

Turn the ignition off to the lock position.

Using the Freeze Frame data recorded earlier, try to duplicate the conditions in which the DTC originally set.

NOTE: It may be necessary to road test the vehicle to duplicate the original set conditions.

With the scan tool, read Engine DTCs.

Did the DTC reset?

Yes >> Go To 3

No >> Go To 12

---

3. CHECK THE (T16) TRANSMISSION CONTROL RELAY OUTPUT CIRCUIT

Turn the ignition off to the lock position.

Disconnect the Transmission Solenoid Assembly harness connector.

NOTE: Check connectors - Clean/repair as necessary.

Ignition on, engine not running.

With the scan tool, actuate the Transmission Control Relay.

Using a 12-volt test light connected to ground, check the (T16) Transmission Control Relay Output circuit in the Transmission Solenoid Assembly harness connector.

NOTE: The test light must illuminate brightly. Compare the brightness to that of a direct connection to the battery.

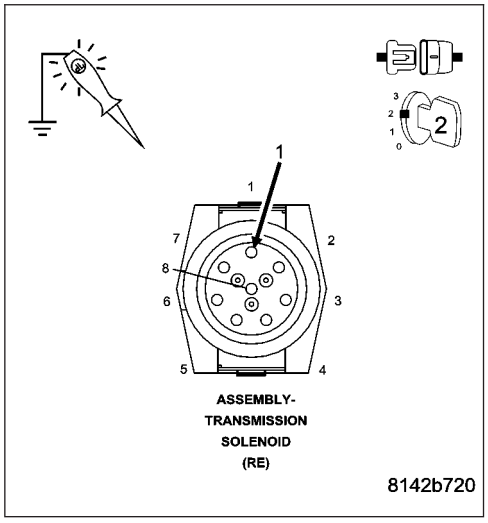

Does the test light cycle on and off and illuminate brightly?

Yes >> Go To 4

No >> Go To 9

P0748-PRESSURE SOL CONTROL/TRANS RELAY CIRCUITS (GAS) (CONTINUED)

4. CHECK THE (T118) GOVERNOR PRESSURE SOLENOID CONTROL CIRCUIT FOR AN OPEN

Turn the ignition off to the lock position.

Disconnect the Transmission Solenoid Assembly harness connectors.

Disconnect the PCM C2 harness connector.

NOTE: Check connectors - Clean/repair as necessary.

Measure the resistance of the (T118) Governor Pressure Solenoid Control circuit between the Transmission Solenoid Assembly harness connector and the PCM C2 harness connector.

Is the resistance below 5.0 ohms?

Yes >> Go To 5

No >> Repair the (T118) Governor Pressure Solenoid Control circuit for an open.

Perform RE TRANSMISSION VERIFICATION TEST VER - 1 (GAS). (Refer to 21 - TRANSMISSION/TRANSAXLE/ AUTOMATIC - 48RE - STANDARD PROCEDURE)

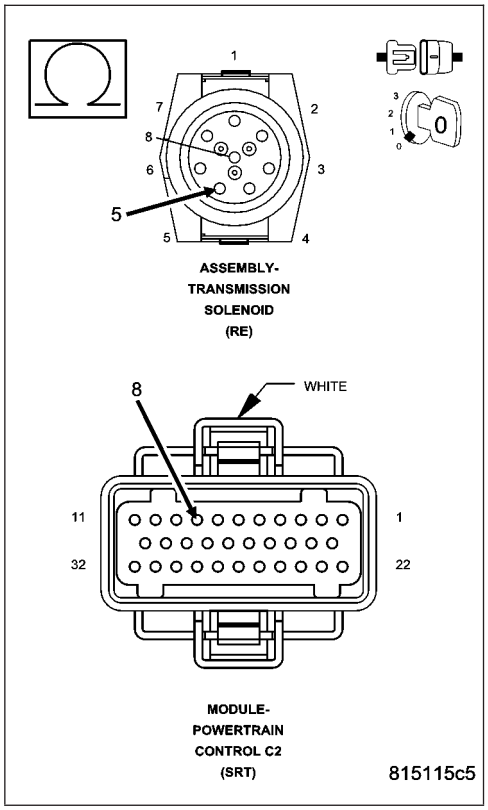

P0748-PRESSURE SOL CONTROL/TRANS RELAY CIRCUITS (GAS) (CONTINUED)

5. CHECK THE (T118) GOVERNOR PRESSURE SOLENOID CONTROL CIRCUIT FOR A SHORT TO GROUND

Measure the resistance between ground and the (T118) Governor Pressure Solenoid Control circuit.

Is the resistance below 5.0 ohms?

Yes >> Repair the (T118) Governor Pressure Solenoid Control circuit for a short to ground.
Perform RE TRANSMISSION VERIFICATION TEST VER - 1 (GAS). (Refer to 21 - TRANSMISSION/TRANSAXLE/ AUTOMATIC - 48RE - STANDARD PROCEDURE)

No >> Go To 6

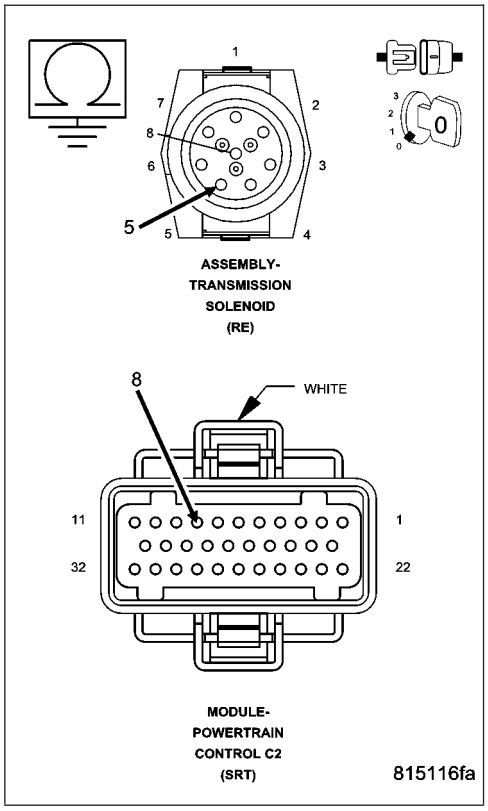

6. CHECK THE (T118) GOVERNOR PRESSURE SOLENOID CONTROL CIRCUIT SHORT TO VOLTAGE

Ignition on, engine not running.

Measure the voltage of the (T118) Governor Pressure Solenoid Control circuit.

Is the voltage above 0.5 volt?

Yes >> Repair the (T118) Governor Pressure Solenoid Control circuit for a short to voltage.
Perform RE TRANSMISSION VERIFICATION TEST VER - 1 (GAS). (Refer to 21 - TRANSMISSION/TRANSAXLE/ AUTOMATIC - 48RE - STANDARD PROCEDURE)

No >> Go To 7

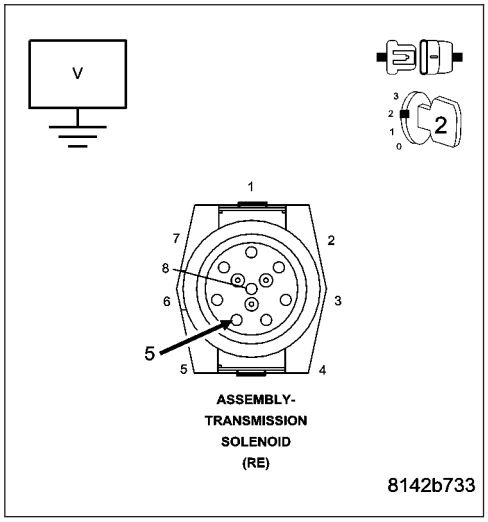

P0748-PRESSURE SOL CONTROL/TRANS RELAY CIRCUITS (GAS) (CONTINUED)

7. CHECK THE (T118) GOVERNOR PRESSURE SOLENOID CONTROL CIRCUIT FOR A SHORT TO ANOTHER CIRCUIT

Turn the ignition off to the lock position.

Remove the Transmission Control Relay.

Measure the resistance between the (T118) Governor Pressure Solenoid Control circuit and all other circuits in the Transmission Solenoid Assembly harness connector.

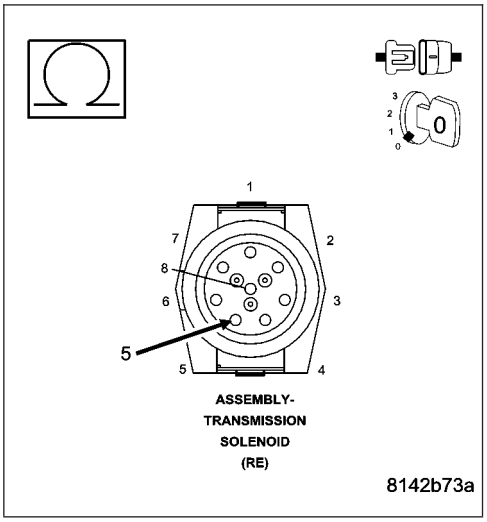

Is the resistance below 5.0 ohms between the (T118) Governor Pressure Solenoid Control circuit and any other circuit in the Transmission Solenoid Assembly harness connector?

Yes >> Repair the (T118) Governor Pressure Solenoid Control circuit for a short to another circuit(s).

Perform RE TRANSMISSION VERIFICATION TEST VER - 1 (GAS). (Refer to 21 - TRANSMISSION/TRANSAXLE/AUTOMATIC - 48RE - STANDARD PROCEDURE)

No >> Go To 8

---

8. CHECK THE GOVERNOR PRESSURE SOLENOID

Remove the Transmission Oil Pan per the Service Information. (Refer to 21 - TRANSMISSION/TRANSAXLE/AUTOMATIC - 48RE/FLUID - STANDARD PROCEDURE)

Check all internal wiring pertaining to the Governor Pressure Solenoid for an open, short, and bent or broken terminals.

If no internal wiring problems are found, replace the Governor Pressure Solenoid per the Service Information. (Refer to 21 - TRANSMISSION/TRANSAXLE/AUTOMATIC - 48RE/GOVERNOR PRESSURE SENSOR - REMOVAL)

Drive the vehicle performing multiple upshifts and downshifts.

With the scan tool, read Transmission DTCs.

Does the DTC reset?

Yes >> Using the schematics as a guide, check the Powertrain Control Module (PCM) pins, terminals, and connectors for corrosion, damage, or terminal push out. Pay particular attention to all power and ground circuits. If no problems are found, replace and program the PCM per the Service Information. (Refer to 8 - ELECTRICAL/ELECTRONIC CONTROL MODULES/POWERTRAIN CONTROL MODULE - REMOVAL)

Perform RE TRANSMISSION VERIFICATION TEST VER - 1 (GAS). (Refer to 21 - TRANSMISSION/TRANSAXLE/AUTOMATIC - 48RE - STANDARD PROCEDURE)

No >> Test Complete.

Perform RE TRANSMISSION VERIFICATION TEST VER - 1 (GAS). (Refer to 21 - TRANSMISSION/TRANSAXLE/AUTOMATIC - 48RE - STANDARD PROCEDURE)

P0748-PRESSURE SOL CONTROL/TRANS RELAY CIRCUITS (GAS) (CONTINUED)

9. CHECK THE FUSED B(+) CIRCUIT

Turn the ignition off to the lock position.

Remove the Transmission Control Relay.

Ignition on, engine not running.

Using a 12-volt test light connected to ground, check the Fused B(+) circuit in the Transmission Control Relay connector.

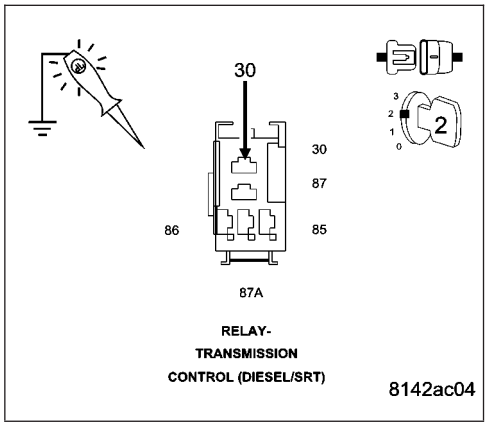

Does the test light illuminate brightly?

Yes >> Go To 10

No >> Repair the Fused B(+) circuit for an open. If the fuse is open, make sure to check for a short to ground.

Perform RE TRANSMISSION VERIFICATION TEST VER - 1 (GAS). (Refer to 21 - TRANSMISSION/TRANSAXLE/ AUTOMATIC - 48RE - STANDARD PROCEDURE)

10. CHECK THE (T16) TRANSMISSION CONTROL RELAY OUTPUT CIRCUIT FOR A SHORT TO GROUND

Turn the ignition off to the lock position.

Disconnect the Transmission Solenoid Assembly harness connector.

Measure the resistance between ground and the (T16) Transmission Control Relay Output circuit.

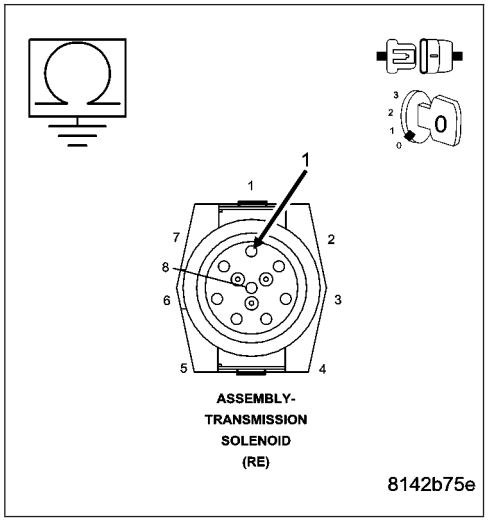

Is the resistance below 5.0 ohms?

Yes >> Repair the (T16) Transmission Control Relay Output circuit for a short to ground.

Perform RE TRANSMISSION VERIFICATION TEST VER - 1 (GAS). (Refer to 21 - TRANSMISSION/TRANSAXLE/ AUTOMATIC - 48RE - STANDARD PROCEDURE)

No >> Go To 11

P0748-PRESSURE SOL CONTROL/TRANS RELAY CIRCUITS (GAS) (CONTINUED)

11. CHECK THE (T16) TRANSMISSION CONTROL RELAY OUTPUT CIRCUIT OPEN

Connect a jumper wire between Fused B(+) and the (T16) Transmission Control Relay Output circuit in the Transmission Control Relay connector.

Ignition on, engine not running.

Using a 12-volt test light connected to ground, check the (T16) Transmission Control Relay Output circuit in the Transmission Solenoid Assembly harness connector.

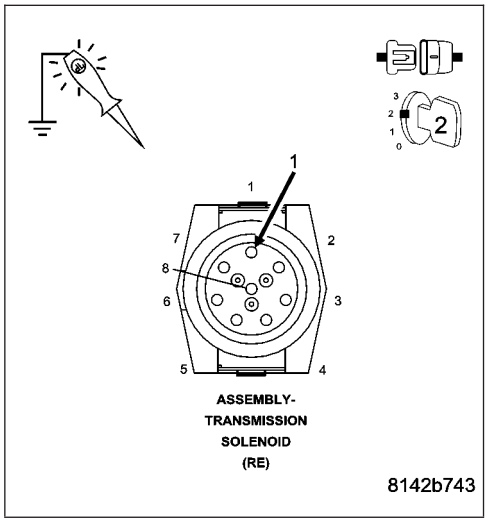

Does the test light illuminate brightly?

Yes >> Replace the Transmission Control Relay.
Perform RE TRANSMISSION VERIFICATION TEST VER - 1 (GAS). (Refer to 21 - TRANSMISSION/TRANSAXLE/ AUTOMATIC - 48RE - STANDARD PROCEDURE)

No >> Replace the (T16) Transmission Control Relay Output circuit for an open.
Perform RE TRANSMISSION VERIFICATION TEST VER - 1 (GAS). (Refer to 21 - TRANSMISSION/TRANSAXLE/AUTOMATIC - 48RE - STANDARD PROCEDURE)

---

12. INTERMITTENT WIRING AND CONNECTORS

The conditions necessary to set this DTC are not present at this time.

Use the Freeze Frame Data to help duplicate the conditions in which the DTC originally set. Pay particular attention to the DTC set conditions, such as, VSS, MAP, ECT, and Load

Using the schematics as a guide, visually inspect the related wiring harness. Look for any chafed, pierced, pinched, or partially broken wires.

Visually inspect the related wiring harness connectors. Look for broken, bent, pushed out, or corroded terminals.

Wiggle the wiring and connectors while checking for any possible open or shorted circuits.

Check for any Service Information Tune-ups or Technical Service Bulletins that may apply.

Were there any problems found?

Yes >> Repair as necessary.
Perform RE TRANSMISSION VERIFICATION TEST VER - 1 (GAS). (Refer to 21 - TRANSMISSION/ TRANSAXLE/AUTOMATIC - 48RE - STANDARD PROCEDURE)

No >> Test Complete.

P0751-O/D SWITCH PRESSED (LO) MORE THAN 5 MINUTES

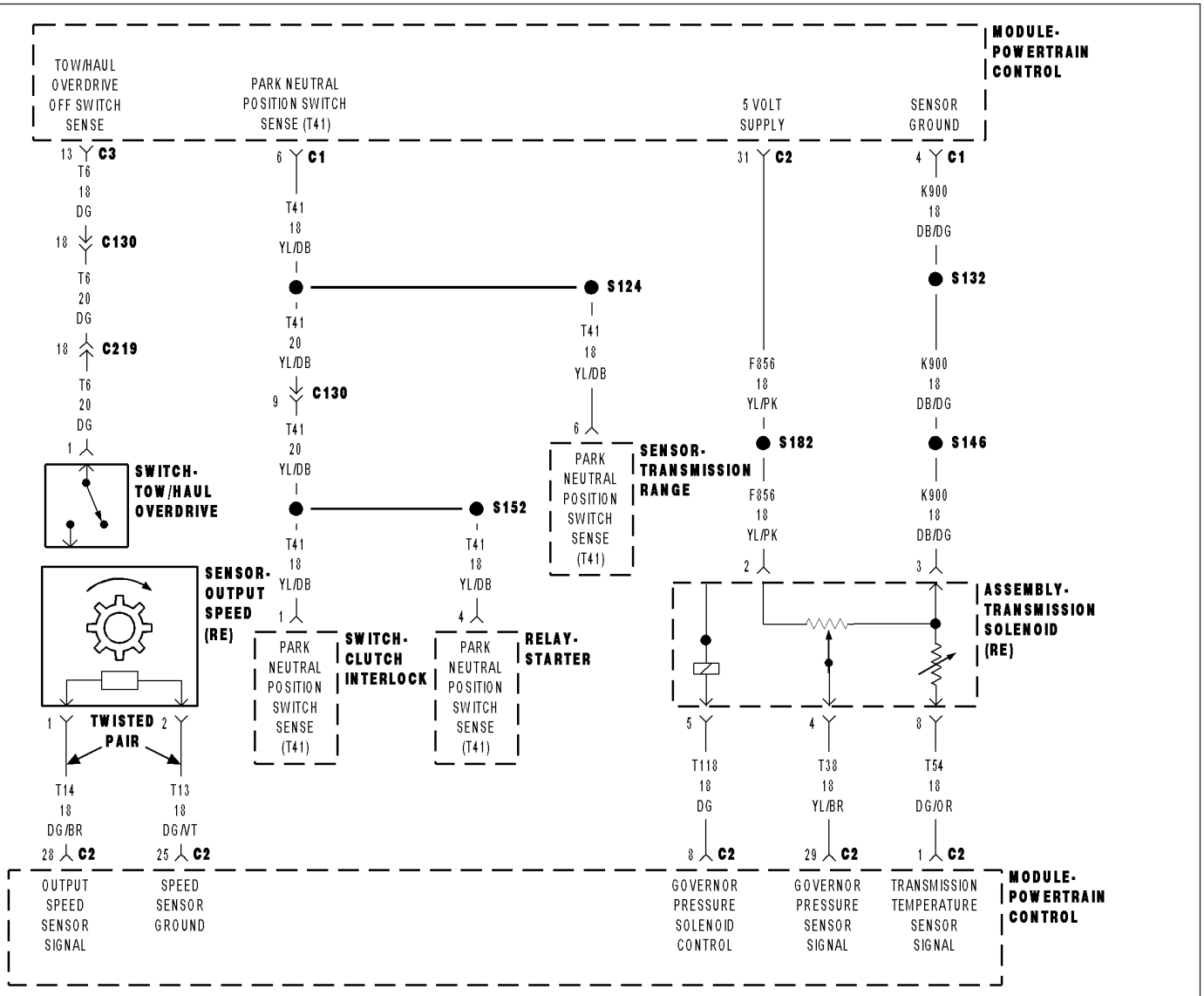

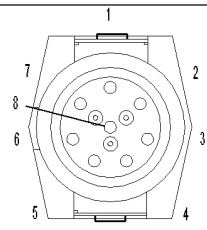

ASSEMBLY-TRANSMISSION SOLENOID (RE)

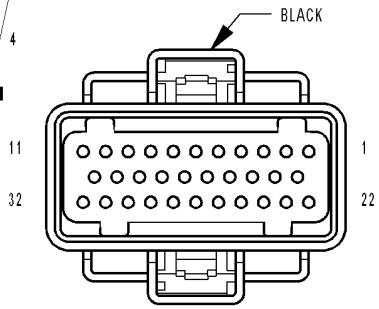

MODULE-POWERTRAIN CONTROL C1 (SRT)

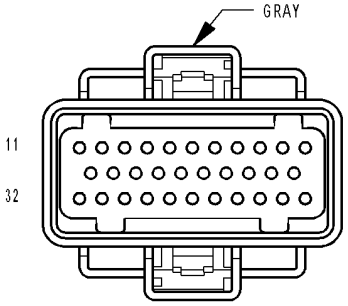

MODULE-POWERTRAIN CONTROL C3 (SRT)

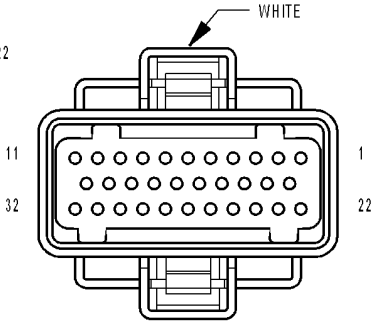

MODULE-POWERTRAIN CONTROL C2 (SRT)

8150be9a

P0751-O/D SWITCH PRESSED (LO) MORE THAN 5 MINUTES (CONTINUED)

For the Transmission circuit diagram (Refer to 21 - TRANSMISSION/TRANSAXLE/AUTOMATIC - 48RE - SCHEMATICS AND DIAGRAMS)

For a complete wiring diagram**Refer to Section 8W**

Theory of Operation

The Tow/haul Overdrive OFF (control) Switch is located in the shift lever arm. The switch is a momentary contact device that signals the ECM/PCM to toggle current status of the overdrive function. At ignition on, overdrive operation is allowed. Pressing the Tow/Haul Overdrive Off switch once causes the Tow/haul Overdrive OFF mode to be entered and the Tow/Haul lamp to be illuminated. Pressing the switch a second time causes normal overdrive operation to be restored and the Tow/haul lamp to be turned off. The Tow/haul Overdrive OFF mode defaults to ON after the ignition switch is cycled OFF and ON. The normal position for the control switch is the ON position. The switch must be in this position to energize the solenoid and allow a 3-4 upshift. The control switch indicator light illuminates only when the Tow/haul Overdrive Off switch is turned to the OFF position, or when illuminated by the transmission control module.

- **When Monitored:**
  The engine must have been running for at minimum of 10 seconds. The circuit is tested every 440ms.
- **Set Condition:**
  This DTC will set if the Tow/Haul Overdrive Off Switch Sense circuit is held low for 5 minutes or more from the time of switch closure or ignition on with the engine running.

Possible Causes
TOW/HAUL OVERDRIVE OFF SWITCH SENSE CIRCUIT SHORT TO GROUND
TOW/HAUL OVERDRIVE OFF SWITCH
ENGINE CONTROL MODULE

Always perform the Pre-Diagnostic Troubleshooting procedure before proceeding. (Refer to 8 - ELECTRICAL/ELECTRONIC CONTROL MODULES/TRANSMISSION CONTROL MODULE - DIAGNOSIS AND TESTING)

Diagnostic Test

1. TOW/HAUL OVERDRIVE OFF SWITCH SENSE CIRCUIT SHORT TO GROUND

Turn the ignition off.

Disconnect the PCM C3 harness connector.

Disconnect the Tow/Haul Overdrive Off switch harness connector.

Measure the resistance between ground and the Tow/Haul Overdrive Off switch sense circuit in the PCM C3 harness connector.

Is the resistance below 5.0 ohms?

Yes >> Repair the Tow/Haul Overdrive Off switch sense circuit for a short to ground.
Perform RE TRANSMISSION VERIFICATION TEST VER - 1 (GAS). (Refer to 21 - TRANSMISSION/TRANSAXLE/AUTOMATIC - 48RE - STANDARD PROCEDURE)

No >> Go To 2

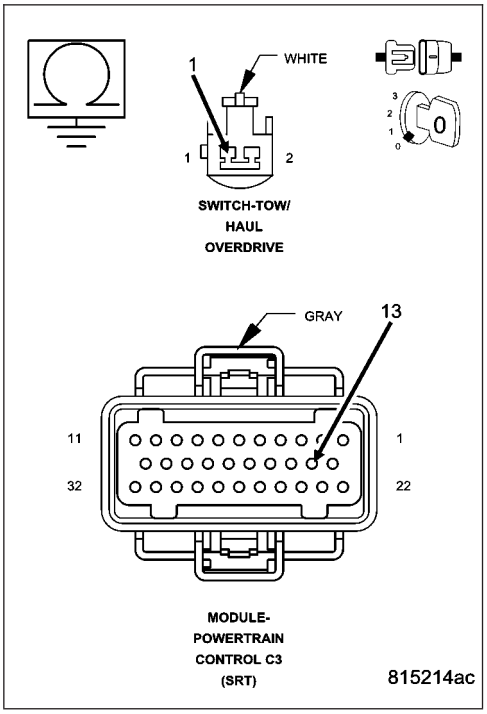

P0751-O/D SWITCH PRESSED (LO) MORE THAN 5 MINUTES (CONTINUED)

2. CHECK THE TOW/HAUL OVERDRIVE OFF SWITCH

Reconnect the Tow/Haul Overdrive Off switch harness connector.

Measure the resistance between ground and the O/D Tow/Haul Switch Sense circuit in the PCM C3 harness connector.

Press the Tow/Haul Overdrive Off switch button.

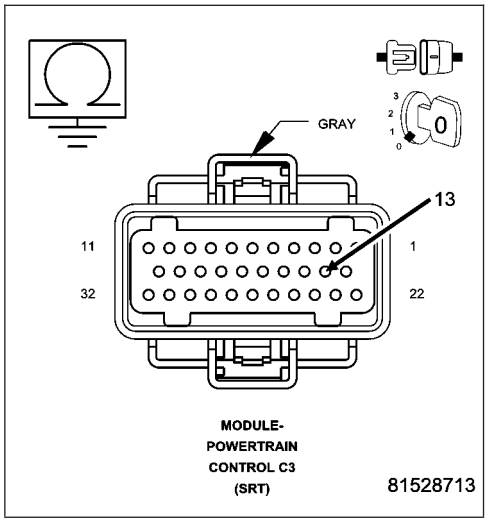

Does the resistance change from above 5.0 ohms to below 5.0 ohms while pressing the Tow/Haul Overdrive Off switch button?

Yes >> Using the schematics as a guide, check the Powertrain Control Module (PCM) pins, terminals, and connectors for corrosion, damage, or terminal push out. Pay particular attention to all power and ground circuits. If no problems are found, replace and program the PCM per the Service Information. (Refer to 8 - ELECTRICAL/ELECTRONIC CONTROL MODULES/POWERTRAIN CONTROL MODULE - REMOVAL)

Perform RE TRANSMISSION VERIFICATION TEST VER - 1 (GAS). (Refer to 21 - TRANSMISSION/TRANSAXLE/AUTOMATIC - 48RE - STANDARD PROCEDURE)

No >> Replace the Tow/Haul Overdrive Off switch per the Service Information. (Refer to 21 - TRANSMISSION/TRANSAXLE/AUTOMATIC - 48RE/OVERDRIVE SWITCH - REMOVAL)

Perform RE TRANSMISSION VERIFICATION TEST VER - 1 (GAS). (Refer to 21 - TRANSMISSION/TRANSAXLE/AUTOMATIC - 48RE - STANDARD PROCEDURE)

P0753-TRANS 3-4 SHIFT SOL/TRANS RELAY CIRCUITS (GAS)

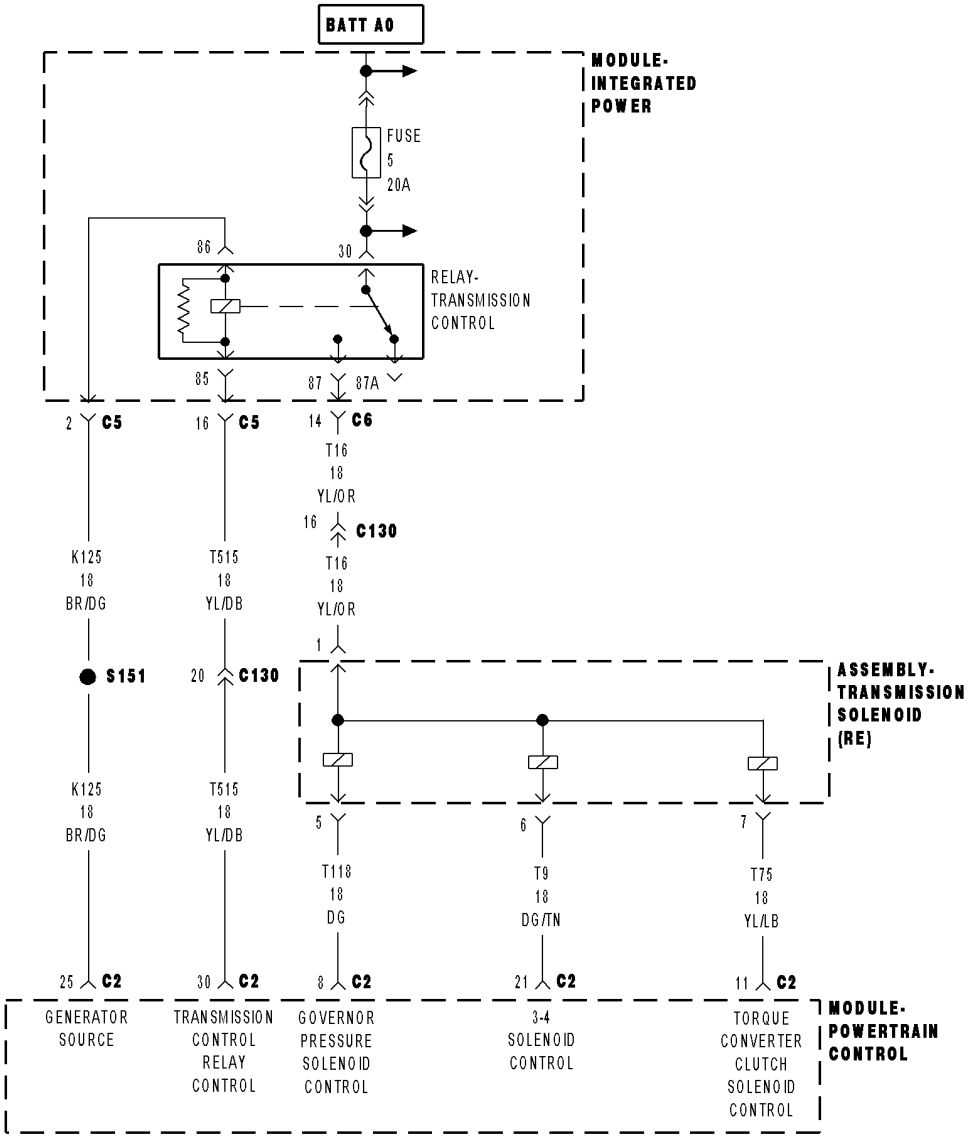

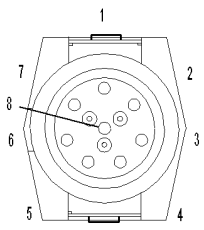

ASSEMBLY-
TRANSMISSION
SOLENOID
(RE)

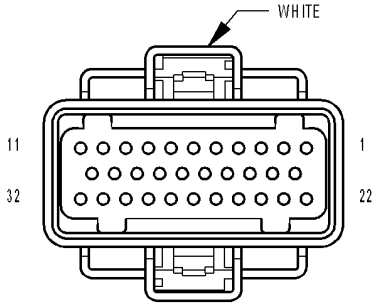

MODULE-
POWERTRAIN
CONTROL C2
(SRT)

81511462

P0753-TRANS 3-4 SHIFT SOL/TRANS RELAY CIRCUITS (GAS) (CONTINUED)

For the Transmission circuit diagram (Refer to 21 - TRANSMISSION/TRANSAXLE/AUTOMATIC - 48RE - SCHEMATICS AND DIAGRAMS)

For a complete wiring diagram**Refer to Section 8W**

Theory of Operation

The 3-4 Solenoid is used the engage the gear change form 3rd gear to 4th gear.

The solenoids used in transmission applications are attached to valves which can be classified as normally open or normally closed. The normally open solenoid valve is defined as a valve which allows hydraulic flow when no current or voltage is applied to the solenoid. The normally closed solenoid valve is defined as a valve which does not allow hydraulic flow when no current or voltage is applied to the solenoid. These valves perform hydraulic control functions for the transmission and must therefore be durable and tolerant of dirt particles. For these reasons, the valves have hardened steel poppets and ball valves. The solenoids operate the valves directly, which means that the solenoids must have very high outputs to close the valves against the sizable flow areas and line pressures found in current transmissions. Fast response time is also necessary to ensure accurate control.

- **When Monitored:**
  Continuously with ignition on.
- **Set Condition:**
  This DTC will set if the voltage detected on the 3-4 Shift Solenoid Control circuit at the PCM is different then the expected voltage. Note: To clear this DTC it is necessary to drive the vehicle at a sustained speed which would allow the TCC and/or Overdrive Clutch to operate

Possible Causes
TRANSMISSION CONTROL RELAY DTC PRESENT
(T9) 3-4 SOLENOID CONTROL CIRCUIT OPEN
FUSED B+ CIRCUIT OPEN
(T16) TRANSMISSION CONTROL RELAY OUTPUT CIRCUIT OPEN
(T9) 3-4 SOLENOID CONTROL CIRCUIT SHORT TO VOLTAGE
(T9) 3-4 SOLENOID CONTROL CIRCUIT SHORT TO GROUND
(T16) TRANSMISSION RELAY OUTPUT CIRCUIT SHORT TO GROUND
(T9) 3-4 SOLENOID CIRCUIT SHORT TO OTHER CIRCUITS
TRANSMISSION CONTROL RELAY - POOR CONTACTS
3-4 SHIFT SOLENOID
POWERTRAIN CONTROL MODULE

Always perform the Pre-Diagnostic Troubleshooting procedure before proceeding. (Refer to 21 - TRANSMISSION/TRANSAXLE/AUTOMATIC - 48RE - STANDARD PROCEDURE)

Diagnostic Test

1. CHECK FOR TRANSMISSION CONTROL RELAY DTCS

Ignition on, engine not running.

With the scan tool, read Engine DTCs.

Are there any Transmission Control Relay DTCs present?

Yes >> Refer to the Transmission category, and perform the appropriate symptom(s). (Refer to 21 - TRANSMISSION/TRANSAXLE/AUTOMATIC - 48RE - DIAGNOSIS AND TESTING)

No >> Go To 2

P0753-TRANS 3-4 SHIFT SOL/TRANS RELAY CIRCUITS (GAS) (CONTINUED)

2. CHECK IF THE DTC IS CURRENT

Ignition on, engine not running.
With the scan tool, read Engine DTCs.
Record the Freeze Frame data for the reported DTC.
With the scan tool, erase DTCs.
Turn the ignition off to the lock position.
Using the Freeze Frame data recorded earlier, try to duplicate the conditions in which the DTC originally set.

NOTE: It may be necessary to road test the vehicle to duplicate the original set conditions.
With the scan tool, read Engine DTCs.

Did the DTC reset?

Yes >> Go To 3
No >> Go To 13

---

3. CHECK THE (T16) TRANSMISSION CONTROL RELAY OUTPUT CIRCUIT

Turn the ignition off to the lock position.
Disconnect the Transmission Solenoid Assembly harness connector.

NOTE: Check connectors - Clean/repair as necessary.
Ignition on, engine not running.
With the scan tool, actuate the Transmission Control Relay.
Using a 12-volt test light connected to ground, check the (T16) Transmission Control Relay Output circuit in the Transmission Solenoid Assembly harness connector.

NOTE: The test light must illuminate brightly. Compare the brightness to that of a direct connection to the battery.

Does the test light cycle on and off and illuminate brightly?

Yes >> Go To 4
No >> Go To 10

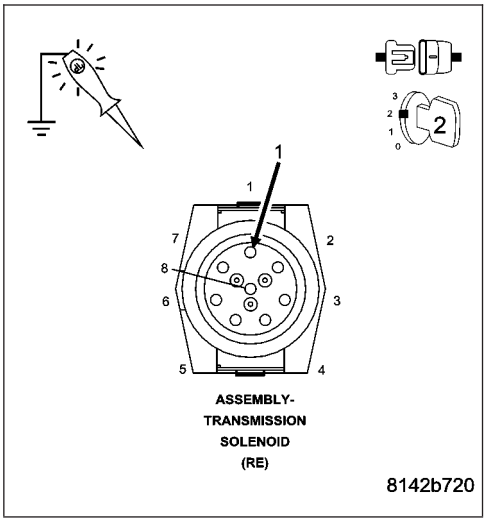

P0753-TRANS 3-4 SHIFT SOL/TRANS RELAY CIRCUITS (GAS) (CONTINUED)

4. CHECK THE 3-4 SHIFT SOLENOID

With the scan tool, actuate the Overdrive (3-4) Solenoid.

Using a 12-volt test light connected to 12-volts, check the (T9) 3-4 Shift Solenoid Control circuit in the Transmission Solenoid Assembly harness connector.

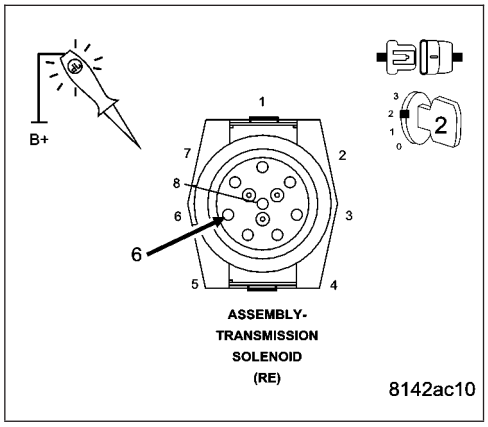

Does the test light cycle on and off and illuminate brightly?

Yes >> Check all internal wiring pertaining to the 3-4 Shift Solenoid for an open, short, and bent or broken terminals. If no internal wiring problems are found, replace the Transmission Solenoid Assembly per the Service Information. (Refer to 21 - TRANSMISSION/TRANSAXLE/AUTOMATIC - 48RE/VALVE BODY - REMOVAL)

Perform RE TRANSMISSION VERIFICATION TEST VER - 1 (GAS). (Refer to 21 - TRANSMISSION/TRANSAXLE/AUTOMATIC - 48RE - STANDARD PROCEDURE)

No >> Go To 5

---

5. CHECK THE (T9) 3-4 SOLENOID CONTROL CIRCUIT FOR A SHORT TO VOLTAGE

Turn the ignition off to the lock position.

Disconnect the PCM C1 and C2 harness connectors.

Ignition on, engine not running.

Measure the voltage of the (T9) 3-4 Solenoid Control circuit.

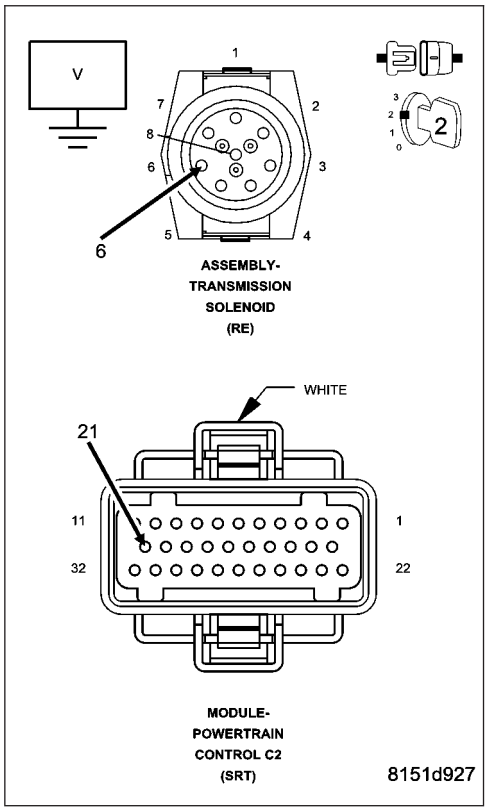

Is the voltage above 0.5 volts?

Yes >> Repair the (T9) 3-4 Solenoid Control circuit for a short to voltage.

Perform RE TRANSMISSION VERIFICATION TEST VER - 1 (GAS). (Refer to 21 - TRANSMISSION/TRANSAXLE/AUTOMATIC - 48RE - STANDARD PROCEDURE)

No >> Go To 6

P0753-TRANS 3-4 SHIFT SOL/TRANS RELAY CIRCUITS (GAS) (CONTINUED)

6. CHECK THE (T9) 3-4 SOLENOID CONTROL CIRCUIT FOR AN OPEN

Turn the ignition off to the lock position.

Measure the resistance of the (T9) 3-4 Solenoid Control circuit between the Transmission Solenoid Assembly harness connector and the PCM C2 harness connector.

Is the resistance below 5.0 ohms?

Yes >> Go To 7

No >> Repair the (T9) 3-4 Solenoid Control circuit for an open.
Perform RE TRANSMISSION VERIFICATION TEST VER - 1 (GAS). (Refer to 21 - TRANSMISSION/TRANSAXLE/ AUTOMATIC - 48RE - STANDARD PROCEDURE)

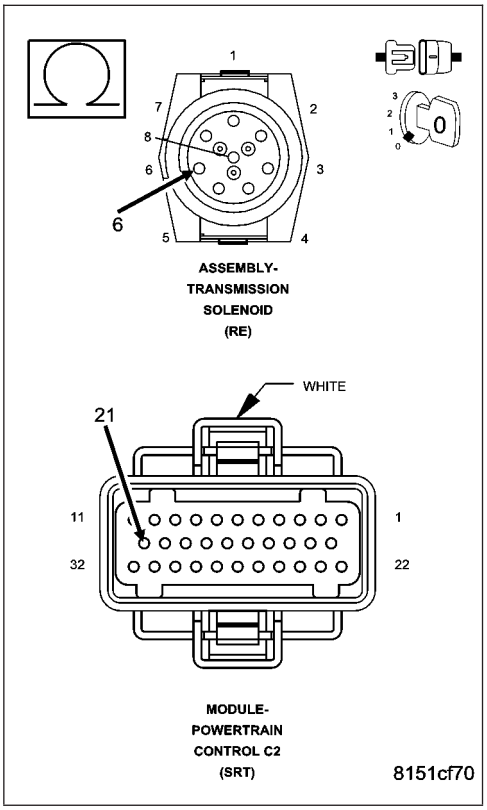

7. CHECK THE (T9) 3-4 SOLENOID CONTROL CIRCUIT FOR A SHORT TO GROUND

Measure the resistance between ground and the (T9) 3-4 Solenoid Control circuit.

Is the resistance above 100k ohms?

Yes >> Go To 8

No >> Repair the (T9) 3-4 Solenoid Control circuit for a short to ground.
Perform RE TRANSMISSION VERIFICATION TEST VER - 1 (GAS). (Refer to 21 - TRANSMISSION/TRANSAXLE/ AUTOMATIC - 48RE - STANDARD PROCEDURE)

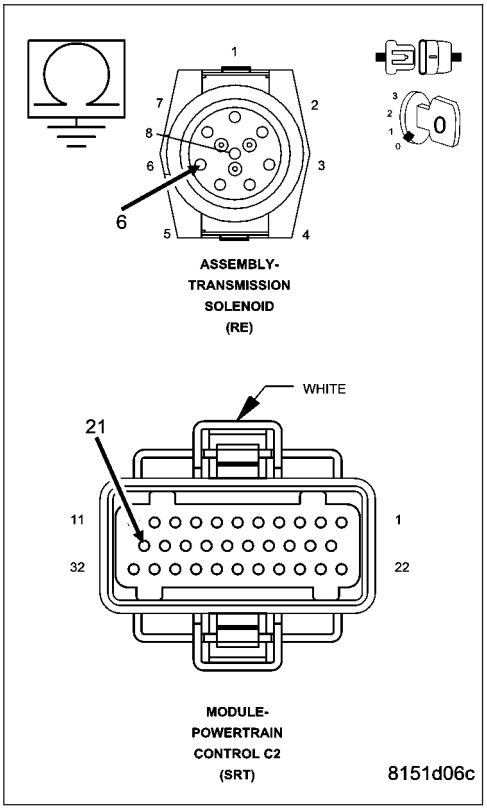

P0753-TRANS 3-4 SHIFT SOL/TRANS RELAY CIRCUITS (GAS) (CONTINUED)

8. CHECK THE (T9) 3-4 SHIFT SOLENOID CONTROL CIRCUIT FOR A SHORT TO ANOTHER CIRCUIT

Measure the resistance between the (T9) 3-4 Solenoid Control circuit and all other circuits in the PCM C1 and C2 harness connectors.

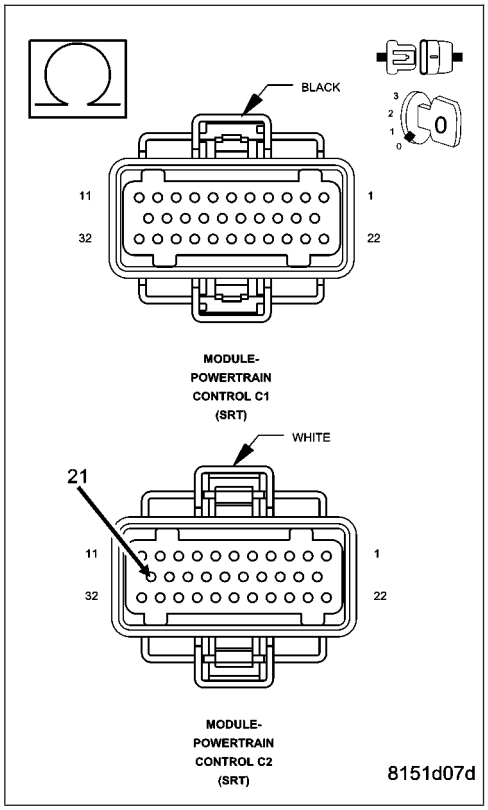

Is the resistance above 100k ohms between the (T9) 3-4 Solenoid Control circuit and any other circuit(s) in the PCM C1 or C2 harness connectors?

Yes >> Go To 9

No >> Repair the (T9) 3-4 Shift Solenoid Control circuit for a short to another circuit(s).

Perform RE TRANSMISSION VERIFICATION TEST VER - 1 (GAS). (Refer to 21 - TRANSMISSION/TRANSAXLE/ AUTOMATIC - 48RE - STANDARD PROCEDURE)

---

9. CHECK THE POWERTRAIN CONTROL MODULE

Reconnect the PCM harness connectors.

Turn the ignition on, engine not running.

With the scan tool, actuate the 3-4 (Overdrive) Solenoid.

Using a 12-volt test light connected to 12-volts, check the (T9) 3-4 Solenoid Control circuit in the Transmission Solenoid Assembly harness connector.

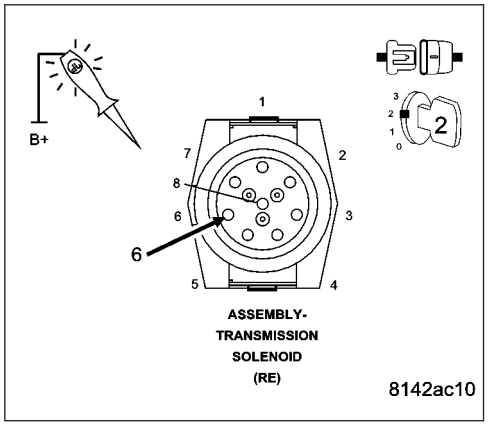

Does the test Light cycle on and off and illuminate brightly?

Yes >> Go To 13

No >> Perform RE TRANSMISSION VERIFICATION TEST VER - 1 (GAS). (Refer to 21 - TRANSMISSION/TRANSAXLE/ AUTOMATIC - 48RE - STANDARD PROCEDURE)

Perform RE TRANSMISSION VERIFICATION TEST VER - 1 (GAS). (Refer to 21 - TRANSMISSION/TRANSAXLE/AUTOMATIC - 48RE - STANDARD PROCEDURE)

P0753-TRANS 3-4 SHIFT SOL/TRANS RELAY CIRCUITS (GAS) (CONTINUED)

10. CHECK THE FUSED B(+) CIRCUIT

Turn the ignition off to the lock position.

Remove the Transmission Control Relay.

Ignition on, engine not running.

Using a 12-volt test light connected to ground, check the Fused B(+) circuit in the Transmission Control Relay connector.

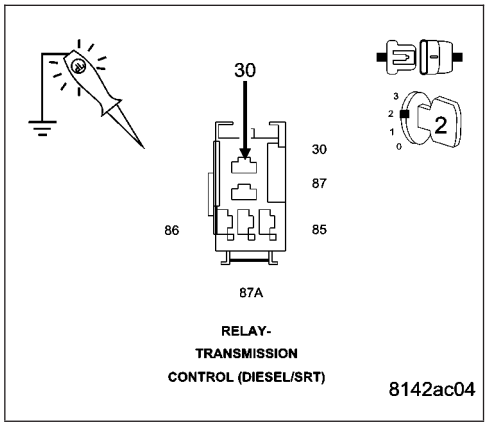

Does the test light illuminate brightly?

Yes >> Go To 11

No >> Repair the Fused B(+) circuit for an open. Note: if the fuse is open, check for a short to ground.

Perform RE TRANSMISSION VERIFICATION TEST VER - 1 (GAS). (Refer to 21 - TRANSMISSION/TRANSAXLE/ AUTOMATIC - 48RE - STANDARD PROCEDURE)

---

11. CHECK THE (T16) TRANSMISSION CONTROL RELAY OUTPUT CIRCUIT FOR A SHORT TO GROUND

Turn ignition off to the lock position.

Measure the resistance between ground and the (T16) Transmission Control Relay Output circuit.

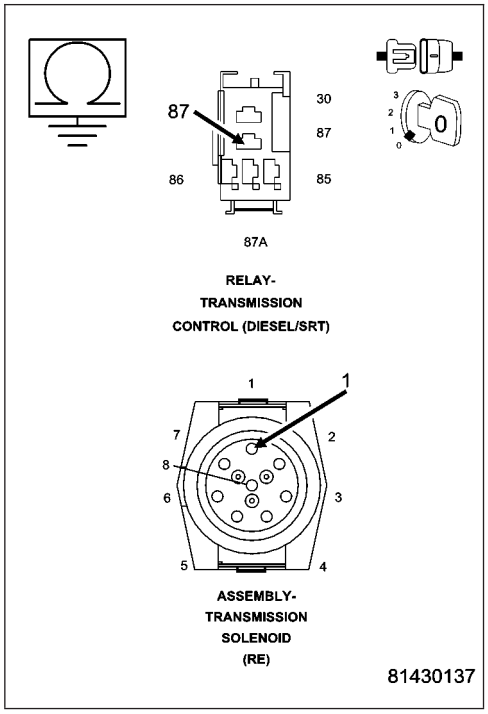

Is the resistance below 5.0 ohms?

Yes >> Repair the Fused Transmission Control Relay Output circuit for a short to ground.

Perform RE TRANSMISSION VERIFICATION TEST VER - 1 (GAS). (Refer to 21 - TRANSMISSION/TRANSAXLE/ AUTOMATIC - 48RE - STANDARD PROCEDURE)

No >> Go To 12

P0753-TRANS 3-4 SHIFT SOL/TRANS RELAY CIRCUITS (GAS) (CONTINUED)

12. CHECK THE (T16) TRANSMISSION CONTROL RELAY OUTPUT CIRCUIT FOR AN OPEN

Ignition on, engine not running.

Connect a jumper wire between the Fused B(+) circuit and the (T16) Transmission Relay Output circuit in the Transmission Relay connector.

Using a 12-volt test light connected to ground, check the (T16) Transmission Control Relay Output circuit in the Transmission Solenoid Assembly harness connector.

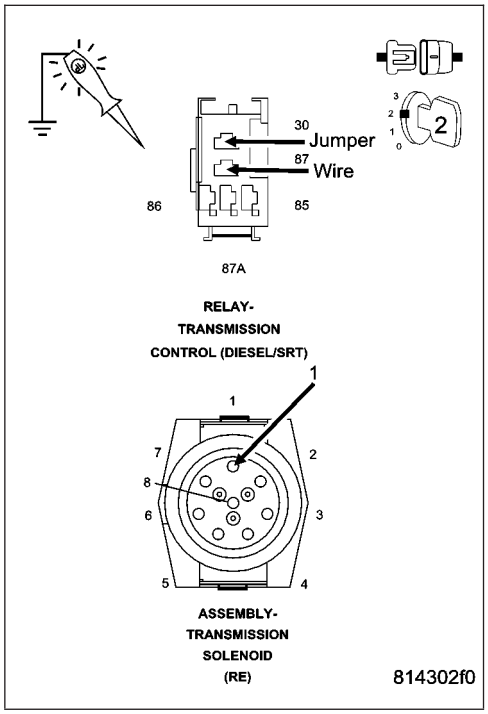

Does the test light illuminate brightly?

Yes >> Replace the Transmission Control Relay.
Perform RE TRANSMISSION VERIFICATION TEST VER - 1 (GAS). (Refer to 21 - TRANSMISSION/TRANSAXLE/AUTOMATIC - 48RE - STANDARD PROCEDURE)

No >> Repair the (T16) Transmission Control Relay Output circuit for an open.
Perform RE TRANSMISSION VERIFICATION TEST VER - 1 (GAS). (Refer to 21 - TRANSMISSION/TRANSAXLE/AUTOMATIC - 48RE - STANDARD PROCEDURE)

---

13. INTERMITTENT WIRING AND CONNECTORS

The conditions necessary to set this DTC are not present at this time.

Use the Freeze Frame Data to help duplicate the conditions in which the DTC originally set. Pay particular attention to the DTC set conditions, such as, VSS, MAP, ECT, and Load

Using the schematics as a guide, visually inspect the related wiring harness. Look for any chafed, pierced, pinched, or partially broken wires.

Visually inspect the related wiring harness connectors. Look for broken, bent, pushed out, or corroded terminals.

Wiggle the wiring and connectors while checking for any possible open or shorted circuits.

Check for any Service Information Tune-ups or Technical Service Bulletins that may apply.

Were there any problems found?

Yes >> Repair as necessary.
Perform RE TRANSMISSION VERIFICATION TEST VER - 1 (GAS). (Refer to 21 - TRANSMISSION/TRANSAXLE/AUTOMATIC - 48RE - STANDARD PROCEDURE)

No >> Test Complete.

P0783-3-4 SHIFT SOL, NO RPM DROP AT LOCKUP (GAS)

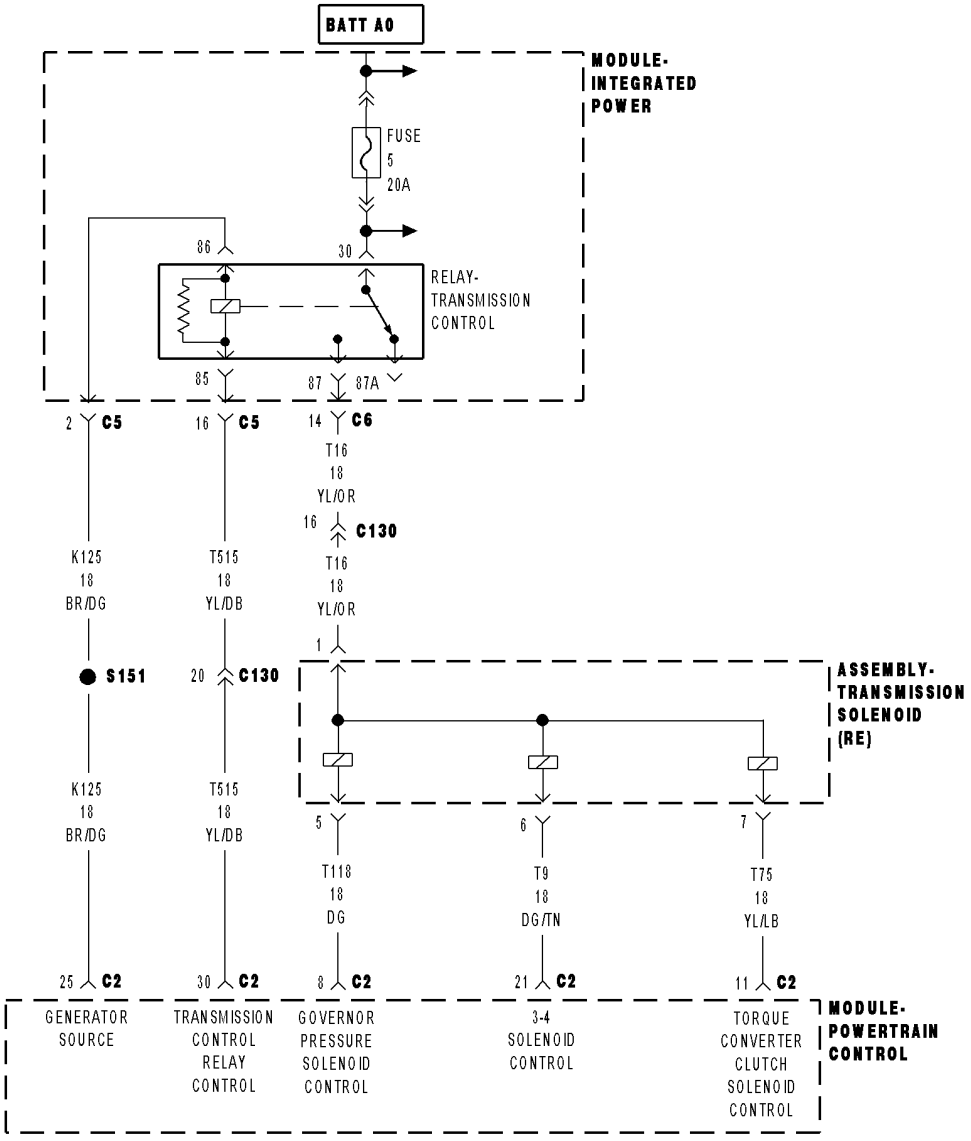

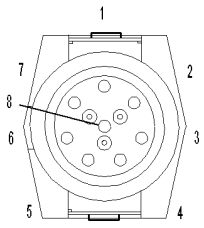

ASSEMBLY-
TRANSMISSION
SOLENOID
(RE)

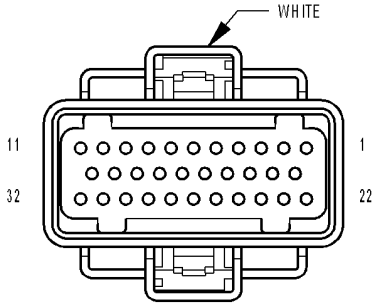

MODULE-
POWERTRAIN
CONTROL C2
(SRT)

81511462

P0783-3-4 SHIFT SOL, NO RPM DROP AT LOCKUP (GAS) (CONTINUED)

For the Transmission circuit diagram (Refer to 21 - TRANSMISSION/TRANSAXLE/AUTOMATIC - 48RE - SCHEMATICS AND DIAGRAMS)

For a complete wiring diagram**Refer to Section 8W**

Theory of Operation

The Torque Converter Clutch (TCC) Solenoid is used to engage the TCC which improves fuel economy. The Overdrive Solenoid is used to engage the gear change from third to Overdrive.

- **When Monitored:**
  Continuously with the ignition on and the engine running.
- **Set Condition:**
  This DTC will set if the expected engine RPM drop does not occur within 4 seconds of the gear change being requested by the PCM three consecutive failed tests.

Possible Causes
FLUID LEVEL AND CONDITION - EXCESSIVE DEBRIS OR BURNT
3-4 SHIFT SOLENOID
INTERNAL TRANSMISSION FAILURE

Always perform the Pre-Diagnostic Troubleshooting procedure before proceeding. (Refer to 21 - TRANSMISSION/TRANSAXLE/AUTOMATIC - 48RE - STANDARD PROCEDURE)

Diagnostic Test

1. CHECK FOR ANY TRANSMISSION CONTROL RELAY DTCS

Ignition on, engine not running.

With the scan tool, read Engine DTCs.

Are there any other Transmission or Engine DTCs present?

Yes >> Refer to the Transmission or Engine category and perform the appropriate symptom(s).

No >> Go To 2

---

2. CHECK IF THE DTC IS CURRENT

With the scan tool, read Engine DTCs.

Record the Freeze Frame data for the reported DTC.

With the scan tool, erase DTCs.

Turn the ignition off to the lock position.

Using the Freeze Frame data recorded earlier, try to duplicate the conditions in which the DTC originally set.

NOTE: It may be necessary to road test the vehicle to duplicate the original set conditions.

With the scan tool, read Engine DTCs.

Did the DTC reset?

Yes >> Go To 3

No >> Go To 6

P0783-3-4 SHIFT SOL, NO RPM DROP AT LOCKUP (GAS) (CONTINUED)

3. CHECK THE GOVERNOR AND OVERDRIVE PRESSURE

Turn the ignition off to the lock position.

Connect a 0 - 2068 KPa (0 - 300 PSI) pressure gauge to the Overdrive Clutch test port.

Connect another 0 - 2068 KPa (0 - 300 PSI) pressure gauge to the Governor Pressure test port. (Refer to 21 - TRANSMISSION/TRANSAXLE/AUTOMATIC - 48RE - DIAGNOSIS AND TESTING)

Start the engine and allow the transmission temperature to rise to normal operating temperature.

CAUTION: Apply the parking brake.
Firmly apply the brakes and place the gear selector in Drive.

While observing the pressure gauges, with the scan tool, select 4th gear from the Gov and 3-4 Shift Valve Test.

NOTE: The governor pressure should rise above 138 kPa (20 PSI). Shortly after the O/D pressure should rise above 276 kPa (40 PSI).

Did the pressures act as previously described?

Yes >> Go To 4

No >> Go To 5

---

4. CHECK THE TRANSMISSION OIL CONDITION

Turn the ignition off to the lock position.

Remove the transmission oil pan and inspect for excessive debris and burnt oil.

Is the oil burnt or does the transmission oil pan contain excessive debris?

Yes >> Repair the transmission as necessary. Refer to the Service Informtion for the proper repair procedures. (Refer to 21 - TRANSMISSION/TRANSAXLE/AUTOMATIC - 48RE - DIAGNOSIS AND TESTING)

Perform RE TRANSMISSION VERIFICATION TEST VER - 1 (GAS). (Refer to 21 - TRANSMISSION/TRANSAXLE/AUTOMATIC - 48RE - STANDARD PROCEDURE)

No >> Go To 6

---

5. CHECK THE GOVERNOR AND OVERDRIVE PRESSURE AFTER REPLACEMENT OF THE 3-4 SHIFT SOLENOID

Turn the ignition off to the lock position.

Replace the 3-4 Shift Solenoid per the Service Information. (Refer to 21 - TRANSMISSION/TRANSAXLE/AUTOMATIC - 48RE/VALVE BODY - DISASSEMBLY)

With the pressure gauges still attached, start the engine and allow the transmission temperature to rise to normal operating temperature.

CAUTION: Apply the parking brake.
Firmly apply the brakes and place the gear selector in Drive.

While observing the pressure gauges, with the scan tool, select 4th gear from the Gov and 3-4 Shift Valve Test.

NOTE: The governor pressure should rise to above 138 kPa (20 PSI). Shortly after the O/D pressure should rise above 276 kPa (40 PSI).

Did the pressures act as previously described?

Yes >> Test Complete.

Perform RE TRANSMISSION VERIFICATION TEST VER - 1 (DIESEL). (Refer to 21 - TRANSMISSION/TRANSAXLE/AUTOMATIC - 48RE - STANDARD PROCEDURE)

No >> Overhaul the transmission per the Service Informtion. Pay attention to seals and clutches related to the OD clutch.

Perform RE TRANSMISSION VERIFICATION TEST VER - 1 (GAS). (Refer to 21 - TRANSMISSION/TRANSAXLE/AUTOMATIC - 48RE - STANDARD PROCEDURE)

P0783-3-4 SHIFT SOL, NO RPM DROP AT LOCKUP (GAS) (CONTINUED)

6. INTERMITTENT WIRING AND CONNECTORS

The conditions necessary to set this DTC are not present at this time.

Use the Freeze Frame Data to help duplicate the conditions in which the DTC originally set. Pay particular attention to the DTC set conditions, such as, VSS, MAP, ECT, and Load

The vehicle must be driven (road load) to set this code. Drive the vehicle 4 times from 0 to 89 kmh (0 to 55 MPH) with a constant 20 % throttle position through all gears. Stop the vehicle, shut the engine off and then repeat the procedure.

Using the schematics as a guide, visually inspect the related wiring harness. Look for any chafed, pierced, pinched, or partially broken wires.

Visually inspect the related wiring harness connectors. Look for broken, bent, pushed out, or corroded terminals.

Wiggle the wiring and connectors while checking for any possible open or shorted circuits.

Check for any Service Information Tune-ups or Technical Service Bulletins that may apply.

Were there any problems found?

Yes >> Repair as necessary.
Perform RE TRANSMISSION VERIFICATION TEST VER - 1 (GAS). (Refer to 21 - TRANSMISSION/ TRANSAXLE/AUTOMATIC - 48RE - STANDARD PROCEDURE)

No >> Test Complete.
Perform RE TRANSMISSION VERIFICATION TEST VER - 1 (GAS). (Refer to 21 - TRANSMISSION/ TRANSAXLE/AUTOMATIC - 48RE - STANDARD PROCEDURE)

P1740-TCC O/D SOL PERFORMANCE (GAS)

For the Transmission circuit diagram (Refer to 21 - TRANSMISSION/TRANSAXLE/AUTOMATIC - 48RE - SCHEMATICS AND DIAGRAMS)

For a complete wiring diagram**Refer to Section 8W**

Theory of Operation

The Torque Converter Clutch (TCC) Solenoid is used to engage the TCC which improves fuel economy.

- **When Monitored:**
  The Torque Convertor Clutch (TCC) and Overdrive Clutch (OD) will be tested each time the PCM requests TCC engagement in 3rd gear and OD.
- **Set Condition:**
  The DTC will set if the expected RPM drop is not achieved while attempting to engage TCC or OD. This indicates a malfunctioning torque convertor or overdrive clutch.

Possible Causes
ENGINE DTCS PRESENT
TRANSMISSION DTCS PRESENT
TRANSMISSION TEMPERATURE TOO COLD
OIL PAN CONTAINS EXCESSIVE DEBRIS
3-4 SHIFT SOLENOID
SHAFT OR SEAL DAMAGE
TCC SOLENOID
TORQUE CONVERTER

Always perform the Pre-Diagnostic Troubleshooting procedure before proceeding. (Refer to 21 - TRANSMISSION/TRANSAXLE/AUTOMATIC - 48RE - STANDARD PROCEDURE)

Diagnostic Test

1. ENGINE DTCS PRESENT

Ignition on, engine not running.
With the scan tool, read Engine DTCs.

Are there any Engine Temperature, Cam, Engine RPM, Misfire, P/N, or TPS DTC's present?

Yes >> Refer to 9 - ENGINE ELECTRICAL DIAGNOSTICS - DIESEL and perform the appropriate symptom. Perform RE TRANSMISSION VERIFICATION TEST VER - 1 (GAS). (Refer to 21 - TRANSMISSION/TRANSAXLE/AUTOMATIC - 48RE - STANDARD PROCEDURE)

No >> Go To 2

---

2. CHECK FOR OTHER TRANSMISSION DTCS PRESENT

Are any of the DTCs P0720, P0973, P0974, P2769, and/or P2770, also present?

Yes >> Refer to the Transmission category, and perform the appropriate symptom(s). (Refer to 21 - TRANSMISSION/TRANSAXLE/AUTOMATIC - 48RE - DIAGNOSIS AND TESTING)

No >> Go To 3

P1740-TCC O/D SOL PERFORMANCE (GAS) (CONTINUED)

3. CHECK IF THE DTC IS CURRENT

With the scan tool, read Engine DTCs.

Record the Freeze Frame data for the reported DTC.

With the scan tool, erase DTCs.

Turn the ignition off to the lock position.

Using the Freeze Frame data recorded earlier, try to duplicate the conditions in which the DTC originally set.

NOTE: It may be necessary to road test the vehicle to duplicate the original set conditions.

With the scan tool, read Engine DTCs.

Did the DTC reset?

Yes >> Go To 4

No >> Go To 14

---

4. VERIFY THE TOW/ HAUL OVERDRIVE FEATURE

NOTE: The transmission fluid temperature must be above 0.0° C (32° F) before proceeding.

With the scan tool, build a custom display using: Engine RPM, Output Shaft Speed, TCC Solenoid, O/D Solenoid and TPS.

NOTE: This display will monitor the operation of the components.

Start the engine, turn off Overdrive or Tow Haul and test drive the vehicle.

Attain a steady speed of 88.5 Km/h or 55 MPH with a minimum of 1.15 volts throttle opening for 20 seconds.

NOTE: Check the Shift pattern as the vehicle upshifts to speeds of 88.5 Km/h or 55 MPH.

Is the Engine RPM within 60 RPM of the Output Shaft Speed RPM?

Yes >> Go To 10

No >> Go To 5

---

5. CHECK IF THE OUTPUT SPEED IS GREATER THAN ENGINE RPM

In the previous test, is the Output Shaft Speed greater than Engine RPM?

Yes >> Go To 6

No >> Go To 10

---

6. CALCULATE EXPECTED ENGINE RPM

With the scan tool, build a custom display using: Engine RPM, Output Shaft Speed, TCC Solenoid, O/D Solenoid and TPS.

NOTE: This display will monitor the operation of the components.

Start the engine, turn off Overdrive or Tow Haul and test drive the vehicle.

Attain a steady speed of 88.5 Km/h or 55 MPH with a minimum of 1.15 volts throttle opening for 20 seconds.

With the scan tool, verify the 3-4 Solenoid (O/D) Solenoid is on and the TCC solenoid is locked

NOTE: Use this formula, Output Shaft Speed x 0.69 = expected Engine RPM.

Did the Engine RPM drop to 0.69 of the Output Shaft Speed RPM?

Yes >> Go To 10

No >> Go To 7

P1740-TCC O/D SOL PERFORMANCE (GAS) (CONTINUED)

7. GOVERNOR PRESSURE SYSTEM TEST

Turn the ignition off to the lock position.

Connect a 0 to 2068 kPa or 0 to 300 PSI pressure gauge to the Overdrive Clutch Test Port.

Connect a 0 to 2068 kPa or 0 to 300 PSI pressure gauge to the Governor Test Port.

Start the engine.

NOTE: Allow the transmission temperature to rise to normal operating temperature.
While observing both pressure gauges, select 4th Gear from Gov and 3-4 System Test.

NOTE: The Governor pressure should rise to above 137.8 kPa or 20 PSI, shortly after the OD pressure should rise above 275.7 kPa or 40 PSI.

Did the pressures act as described?

Yes >> Go To 8

No >> Go To 9

---

8. CHECK IF THE OIL PAN CONTAINS EXCESSIVE DEBRIS

Remove the transmission oil pan per the Service information.

Is the transmission fluid burnt or does the transmission oil pan contain excessive debris?

Yes >> Repair internal transmission as necessary. (Refer to 21 - TRANSMISSION/TRANSAXLE/AUTOMATIC - 48RE - REMOVAL)
Perform RE TRANSMISSION VERIFICATION TEST VER - 1 (GAS). (Refer to 21 - TRANSMISSION/TRANSAXLE/AUTOMATIC - 48RE - STANDARD PROCEDURE)

No >> Go To 10

---

9. CHECK THE 3-4 SHIFT SOLENOID

Turn the ignition off to the lock position.

Replace the 3-4 Solenoid per the Service information. (Refer to 21 - TRANSMISSION/TRANSAXLE/AUTOMATIC - 48RE/VALVE BODY - REMOVAL)

Connect a 0 to 2068 kPa or 0 to 300 PSI pressure gauge to the Overdrive Clutch Test Port.

Connect a 0 to 2068 kPa or 0 to 300 PSI pressure gauge to the Governor Test Port.

Start the engine.

NOTE: Allow the transmission temperature to rise to normal operating temperature.
While observing both pressure gauges, select 4th gear from the Governor 3-4 shift valve system test.

NOTE: The Governor pressure should rise above 137.8 kPa or 20 PSI, shortly after the OD pressure should rise above 275.7 kPa or 40 PSI.

Did the pressures act as described?

Yes >> Test Complete.

No >> Overhaul the transmission per the Service Information. Carefully inspect the seals and clutches related to the OD Clutch. (Refer to 21 - TRANSMISSION/TRANSAXLE/AUTOMATIC - 48RE - REMOVAL)
Perform RE TRANSMISSION VERIFICATION TEST VER - 1 (GAS). (Refer to 21 - TRANSMISSION/TRANSAXLE/AUTOMATIC - 48RE - STANDARD PROCEDURE)

P1740-TCC O/D SOL PERFORMANCE (GAS) (CONTINUED)

10. TORQUE CONVERTER CLUTCH

Turn the ignition on.

With the scan tool, perform the Torque Converter Clutch test.

Did the engine stall?

Yes >> Go To 11

No >> Go To 13

---

11. GOVERNOR/3-4 SHIFT VALVE

Start the engine.

Perform the Governor and 3-4 Shift Valve System Test, select 4th gear.

Did the engine stall?

Yes >> Go To 12

No >> Go To 13

---

12. TCC SOLENOID

Replace the TCC Solenoid. (Refer to 21 - TRANSMISSION/TRANSAXLE/AUTOMATIC - 48RE/VALVE BODY - REMOVAL)

With the scan tool, perform the Governor and 3-4 Solenoid test, select 4th gear.

Did the engine stall?

Yes >> Repair internal transmission as necessary. Check for blocked passages. (Refer to 21 - TRANSMISSION/TRANSAXLE/AUTOMATIC - 48RE - REMOVAL)

Perform RE TRANSMISSION VERIFICATION TEST VER - 1 (GAS). (Refer to 21 - TRANSMISSION/TRANSAXLE/AUTOMATIC - 48RE - STANDARD PROCEDURE)

No >> Test Complete.

Perform RE TRANSMISSION VERIFICATION TEST VER - 1 (GAS). (Refer to 21 - TRANSMISSION/TRANSAXLE/AUTOMATIC - 48RE - STANDARD PROCEDURE)

---

13. SHAFT OR SEAL DAMAGE

Remove the Transmission Oil Pump per the Service information. (Refer to 21 - TRANSMISSION/TRANSAXLE/AUTOMATIC - 48RE/OIL PUMP - DISASSEMBLY)

Inspect the Reaction shaft, Input Shaft and Input seal.

Are any of the parts damaged or worn?

Yes >> Repair as necessary, also replace the Torque Converter.

Perform RE TRANSMISSION VERIFICATION TEST VER - 1 (GAS). (Refer to 21 - TRANSMISSION/TRANSAXLE/AUTOMATIC - 48RE - STANDARD PROCEDURE)

No >> Replace the Torque Converter. NOTE: Inspect the Reaction Shaft, Input Shaft and Input Seal. Replace as necessary if any of the parts are damaged or worn.

Perform RE TRANSMISSION VERIFICATION TEST VER - 1 (GAS). (Refer to 21 - TRANSMISSION/TRANSAXLE/AUTOMATIC - 48RE - STANDARD PROCEDURE)

P1740-TCC O/D SOL PERFORMANCE (GAS) (CONTINUED)

14. INTERMITTENT WIRING & CONNECTORS

The conditions necessary to set this DTC are not present at this time.

Use the Freeze Frame Data to help duplicate the conditions in which the DTC originally set. Pay particular attention to the DTC set conditions, such as, VSS, MAP, ECT, and Load

Using the schematics as a guide, visually inspect the related wiring harness. Look for any chafed, pierced, pinched, or partially broken wires.

Visually inspect the related wiring harness connectors. Look for broken, bent, pushed out, or corroded terminals.

Wiggle the wiring and connectors while checking for any possible open or shorted circuits.

Check for any Service Information Tune-ups or Technical Service Bulletins that may apply.

Were there any problems found?

Yes >> Repair as necessary.
Perform RE TRANSMISSION VERIFICATION TEST VER - 1 (GAS). (Refer to 21 - TRANSMISSION/ TRANSAXLE/AUTOMATIC - 48RE - STANDARD PROCEDURE)

No >> Test Complete.

P1756-GOV PRESS NOT EQUAL TO TARGET @ 35 - 40 PSI (GAS)

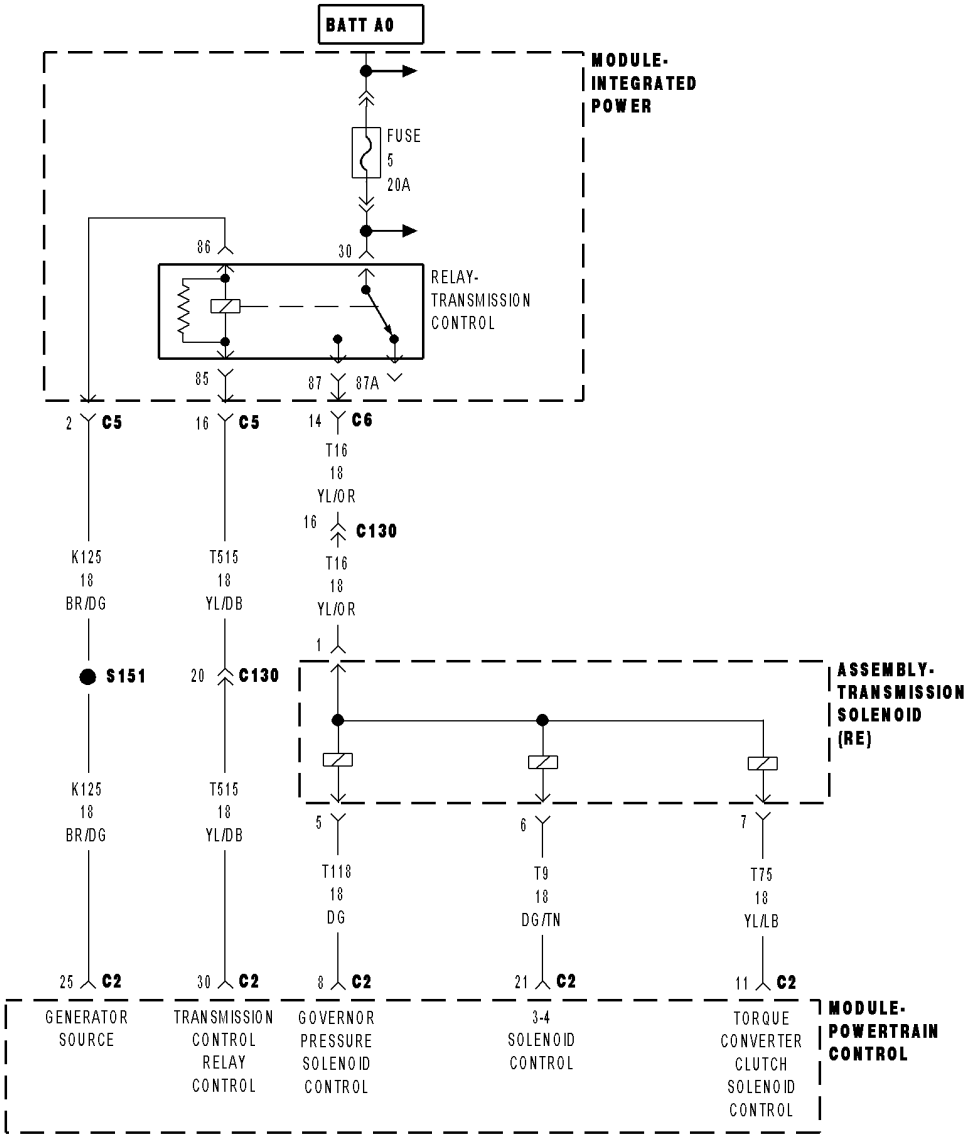

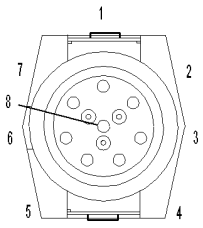

ASSEMBLY-
TRANSMISSION
SOLENOID
(RE)

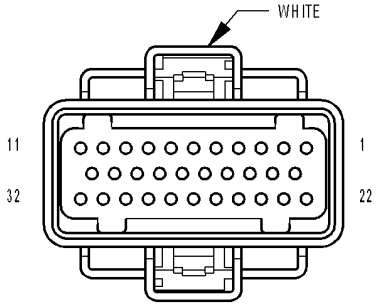

MODULE-
POWERTRAIN
CONTROL C2
(SRT)

81511462

P1756-GOV PRESS NOT EQUAL TO TARGET @ 35 - 40 PSI (GAS) (CONTINUED)

For the Transmission circuit diagram (Refer to 21 - TRANSMISSION/TRANSAXLE/AUTOMATIC - 48RE - SCHEMATICS AND DIAGRAMS)

For a complete wiring diagram**Refer to Section 8W**

Theory of Operation

The Governor Pressure Control System is used to regulate the governor pressure which controls the shifts for first, second, and third gear. The Governor Pressure Control System test verifies that the requested pressure and the actual pressure are within a predetermined tolerance.

- **When Monitored:**
  While driving and the commanded governor pressure is equal to the pressure required for third gear.
- **Set Condition:**
  If the governor pressure sensor output is less than 407 kPa (60 psi) or greater than 621 kPa (80 psi) when the requested pressure is 407 - 621 kPa (60 - 80 psi) for 2.2 seconds. This DTC will set if there are two trips of five consecutive bad 2.2 second tests with the transmission oil temperature between 23.5 - 88° C (74 - 190° F).

Possible Causes
OTHER TRANSMISSION DTCS PRESENT
(F856) 5-VOLT SUPPLY CIRCUIT OPEN
(F856) 5-VOLT SUPPLY CIRCUIT OPEN - INTERNAL
GOVERNOR PRESSURE SENSOR
VALVE BODY
INTERNAL TRANSMISSION
POWERTRAIN CONTROL MODULE
TRANSMISSION - INTERNAL DAMAGE

Always perform the Pre-Diagnostic Troubleshooting procedure before proceeding. (Refer to 21 - TRANSMISSION/TRANSAXLE/AUTOMATIC - 48RE - STANDARD PROCEDURE)

Diagnostic Test

1. CHECK IF OTHER TRANSMISSION DTCS ARE PRESENT

Ignition on, engine not running.

With the scan tool, read Engine DTCs.

Are any other transmission DTCs present?

Yes >> Refer to the Transmission category and perform the appropriate symptom(s). (Refer to 21 - TRANSMISSION/TRANSAXLE/AUTOMATIC - 48RE - DIAGNOSIS AND TESTING)

No >> Go To 2

P1756-GOV PRESS NOT EQUAL TO TARGET @ 35 - 40 PSI (GAS) (CONTINUED)

2. CHECK IF THE GOVERNOR PRESSURE IS ABOVE 3 PSI IN DRIVE

CAUTION: Apply the parking brake.
Start the engine and allow the transmission to reach normal operating temperature above 43° C (110° F).

CAUTION: Apply the brakes.
With the engine at idle, place the gear selector in Drive.
With the scan tool, read the Governor Pressure.

Is the Governor Pressure above 21 kPa (3 psi)?

Yes >> Go To 3

No >> Go To 4

---

3. CHECK IF THE GOVERNOR PRESSURE IS BELOW 3 PSI

Turn the ignition off to the lock position.
Install a pressure gauge at the Governor Pressure test port. (Refer to 21 - TRANSMISSION/TRANSAXLE/AUTOMATIC - 48RE - DIAGNOSIS AND TESTING)

NOTE: Use the appropriate pressure gauge for the pressure range measured.

CAUTION: Apply the parking brake.
Start the engine and allow the transmission to reach normal operating temperature above 43° C (110° F).

CAUTION: Apply the brakes.
With the engine at idle, place the gear selector in Drive.
Read the governor pressure on the pressure gauge.

Is the governor pressure on the pressure gauge below 21 kPa (3 psi) with the engine at idle and the gear selector in Drive?

Yes >> The Governor Pressure Solenoid is functioning properly. Go To 7

No >> Go To 10

---

4. GOVERNOR PRESSURE BETWEEN 40-55 WITH RELAY REMOVED

Place the gear selector in Park.
With the engine still running, remove the Transmission Control Relay.

WARNING: Do not wear loose clothing or jewelry when working on or near a running engine. Failure to follow these instructions can result in personal injury or death.

NOTE: Relay removal may set various DTCs. Disregard any DTC that may set due to relay removal.

CAUTION: Apply the brakes.
Place the gear selector in Drive and allow the engine to idle for 30 seconds.
With the scan tool, read the Actual Governor Pressure at idle.

Is the governor pressure on the scan tool between 276 - 379 kPa (40 - 55 psi)?

Yes >> Go To 5

No >> Go To 6

P1756-GOV PRESS NOT EQUAL TO TARGET @ 35 - 40 PSI (GAS) (CONTINUED)

5. GOVERNOR PRESSURE SOLENOID

Turn the ignition off to the lock position.

Replace the Governor Pressure Solenoid per the Service Information. (Refer to 21 - TRANSMISSION/TRANSAXLE/AUTOMATIC - 48RE/GOVERNOR PRESSURE SENSOR - REMOVAL)

Start the engine and allow the transmission to reach normal operating temperature above 43° C (110° F).

With the scan tool, monitor the target governor pressure and actual governor pressure.

Drive the vehicle at a constant speed 40 - 48 Kmh (25 - 30 MPH).

NOTE: The Actual Governor Pressure should be within 21 kPa (3 psi) of the Target Governor Pressure within 3 seconds.

Is the Actual Governor Pressure within 21 kPa (3 psi) of the Target Governor Pressure?

Yes >> Go To 13

No >> Repair internal transmission leak. Inspect all components pertaining to the Governor Pressure Sensor and the Governor Pressure Solenoid. (Refer to 21 - TRANSMISSION/TRANSAXLE/AUTOMATIC - 48RE/GOVERNOR PRESSURE SENSOR - REMOVAL)

Perform RE TRANSMISSION VERIFICATION TEST VER - 1 (GAS). (Refer to 21 - TRANSMISSION/TRANSAXLE/AUTOMATIC - 48RE - STANDARD PROCEDURE)

---

6. CHECK GAUGE PRESSURE 40-55 WITH RELAY OUT

Place the gear selector in Park.

With the engine still running, remove the Transmission Control Relay.

WARNING: Do not wear loose clothing or jewelry when working on or near a running engine. Failure to follow these instructions can result in personal injury or death.

NOTE: Relay removal may set various codes. Disregard any DTC that may set due to relay removal.

CAUTION: Apply the brakes.

Place the gear selector in Drive with the engine at idle.

Read the governor pressure on the pressure gauge.

Is the governor pressure on the pressure gauge read between 276 - 379 kPa (40 - 55 psi)?

Yes >> Go To 7

No >> Go To 10

P1756-GOV PRESS NOT EQUAL TO TARGET @ 35 - 40 PSI (GAS) (CONTINUED)

7. CHECK THE 5 VOLT SUPPLY CIRCUIT FOR AN OPEN - EXTERNAL

Turn the ignition off to the lock position.

Disconnect the Transmission Solenoid Assembly harness connector.

Disconnect the PCM harness connectors.

NOTE: Check connectors - Clean/repair as necessary

Measure the resistance of the 5-volt Supply circuit between the Transmission Solenoid Assembly harness connector and the PCM C2 harness connector.

Is the resistance below 5.0 ohms?

Yes >> Go To 8

No >> Repair the 5-volt Supply circuit for an open.

Perform RE TRANSMISSION VERIFICATION TEST VER - 1 (GAS). (Refer to 21 - TRANSMISSION/TRANSAXLE/ AUTOMATIC - 48RE - STANDARD PROCEDURE)

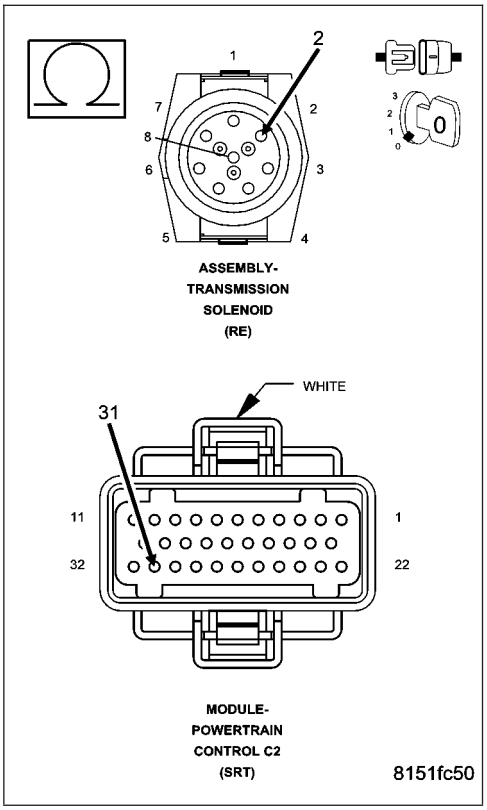

8. CHECK THE 5 VOLT SUPPLY CIRCUIT FOR AN OPEN - INTERNAL

Remove the transmission oil pan. (Refer to 21 - TRANSMISSION/ TRANSAXLE/AUTOMATIC - 48RE/FLUID - STANDARD PROCEDURE)

Reconnect the Transmission Solenoid Assembly harness connector.

Disconnect the Governor Pressure Sensor connector internal to the transmission.

Measure the resistance of the 5-volt Supply circuit between the PCM C2 harness connector and the Governor Pressure sensor connector internal to the transmission.

Is the resistance below 5.0 ohms?

Yes >> Go To 9

No >> Repair or replace the 5-volt Supply circuit for an open internal to the transmission.

Perform RE TRANSMISSION VERIFICATION TEST VER - 1 (GAS). (Refer to 21 - TRANSMISSION/TRANSAXLE/ AUTOMATIC - 48RE - STANDARD PROCEDURE)

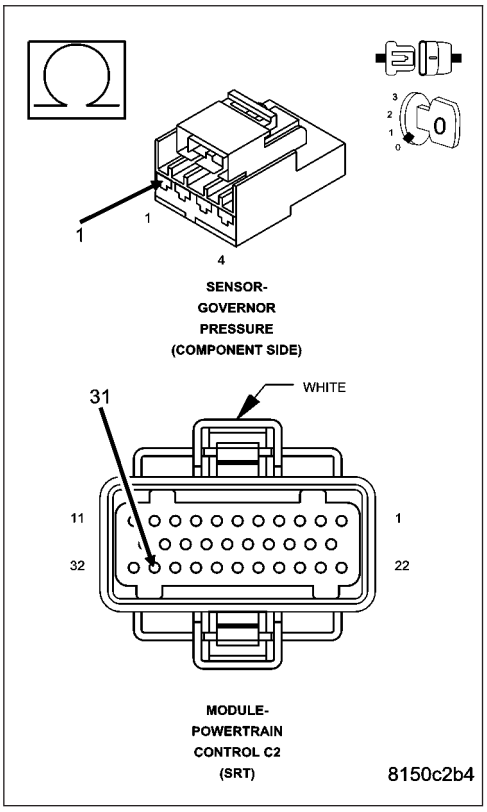

P1756-GOV PRESS NOT EQUAL TO TARGET @ 35 - 40 PSI (GAS) (CONTINUED)

9. GOVERNOR PRESSURE SENSOR

Reconnect the PCM harness connectors.

NOTE: The PCM harness connectors must not be disconnected during this test.

Ignition on, engine not running.

Measure the voltage of the 5-volt Supply circuit at the Governor Pressure Sensor connector internal to the transmission.

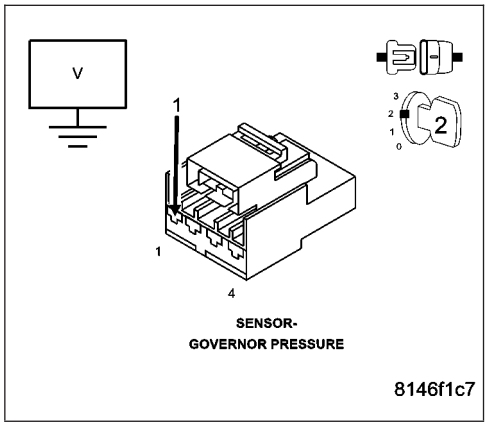

Is the voltage between 4.5 and 5.5 volts?

Yes >> Replace the Governor Pressure/Transmission Temperature Sensor per the Service Information. (Refer to 21 - TRANSMISSION/TRANSAXLE/AUTOMATIC - 48RE/GOVERNOR PRESSURE SENSOR - REMOVAL)

Perform RE TRANSMISSION VERIFICATION TEST VER - 1 (GAS). (Refer to 21 - TRANSMISSION/TRANSAXLE/AUTOMATIC - 48RE - STANDARD PROCEDURE)

No >> Using the schematics as a guide, check the Powertrain Control Module (PCM) pins, terminals, and connectors for corrosion, damage, or terminal push out. Pay particular attention to all power and ground circuits. If no problems are found, replace and program the PCM per the Service Information. (Refer to 8 - ELECTRICAL/ELECTRONIC CONTROL MODULES/POWERTRAIN CONTROL MODULE - REMOVAL)

Perform RE TRANSMISSION VERIFICATION TEST VER - 1 (GAS). (Refer to 21 - TRANSMISSION/TRANSAXLE/AUTOMATIC - 48RE - STANDARD PROCEDURE)

---

10. TRANSMISSION - INTERNAL DAMAGE

Turn the ignition off to the lock position.

Remove the transmission oil pan per the Service Information. (Refer to 21 - TRANSMISSION/TRANSAXLE/AUTOMATIC - 48RE/FLUID - STANDARD PROCEDURE)

Inspect the transmission oil pan for burnt transmission fluid and/or excessive debris.

Is the transmission fluid burnt and/or contain excessive debris?

Yes >> Repair the internal transmission per the Service Information. (Refer to 21 - TRANSMISSION/TRANSAXLE/AUTOMATIC - 48RE - REMOVAL)

Perform RE TRANSMISSION VERIFICATION TEST VER - 1 (GAS). (Refer to 21 - TRANSMISSION/TRANSAXLE/AUTOMATIC - 48RE - STANDARD PROCEDURE)

No >> Go To 11

P1756-GOV PRESS NOT EQUAL TO TARGET @ 35 - 40 PSI (GAS) (CONTINUED)

11. CHECK THE VALVE BODY

Replace the Governor Pressure Solenoid per the Service Information. (Refer to 21 - TRANSMISSION/TRANSAXLE/AUTOMATIC - 48RE/GOVERNOR PRESSURE SENSOR - REMOVAL)

Install a pressure gauge at the governor pressure test port. (Refer to 21 - TRANSMISSION/TRANSAXLE/AUTOMATIC - 48RE - DIAGNOSIS AND TESTING)

Start the engine.

Warm the transmission to normal operating temperature.

CAUTION: Apply the brakes.

Place the gear selector in Drive and allow the engine to idle.

Read the governor pressure on the pressure gauge in Drive.

Is the governor pressure on the gauge below 21 kPa (3 psi)?

Yes >> Go To 12

No >> Repair or replace the Valve Body per the Service Information. (Refer to 21 - TRANSMISSION/TRANSAXLE/AUTOMATIC - 48RE/VALVE BODY - REMOVAL)

Perform RE TRANSMISSION VERIFICATION TEST VER - 1 (GAS). (Refer to 21 - TRANSMISSION/TRANSAXLE/AUTOMATIC - 48RE - STANDARD PROCEDURE)

---

12. VERIFY OPERATION - TEST DRIVE

Remove the pressure gauge from the transmission. (Refer to 21 - TRANSMISSION/TRANSAXLE/AUTOMATIC - 48RE - DIAGNOSIS AND TESTING)

Test drive the vehicle.

Be sure to drive the vehicle at a constant speed of 40-48 Kmh or 25-30 MPH during the drive cycle.

With the scan tool, read Engine DTCs.

Did the DTC reset?

Yes >> Using the schematics as a guide, check the Powertrain Control Module (PCM) pins, terminals, and connectors for corrosion, damage, or terminal push out. Pay particular attention to all power and ground circuits. If no problems are found, replace and program the PCM per the Service Information. (Refer to 8 - ELECTRICAL/ELECTRONIC CONTROL MODULES/POWERTRAIN CONTROL MODULE - REMOVAL)

Perform RE TRANSMISSION VERIFICATION TEST VER - 1 (GAS). (Refer to 21 - TRANSMISSION/TRANSAXLE/AUTOMATIC - 48RE - STANDARD PROCEDURE)

No >> Test Complete.

Perform RE TRANSMISSION VERIFICATION TEST VER - 1 (GAS). (Refer to 21 - TRANSMISSION/TRANSAXLE/AUTOMATIC - 48RE - STANDARD PROCEDURE)

P1756-GOV PRESS NOT EQUAL TO TARGET @ 35 - 40 PSI (GAS) (CONTINUED)

13. INTERMITTENT WIRING AND CONNECTORS

The conditions necessary set this DTC are not present at this time.

Use the Freeze Frame Data to help duplicate the conditions that set the DTC. Pay particular attention to the DTC set conditions, such as, VSS, MAP, ECT, and Load.

Visually inspect the related wiring harness. Look for any chafed, pierced, pinched, or partially broken wires.

Visually inspect the related wiring harness connectors. Look for broken, bent, pushed out, or corroded terminals.

Check for any Service Information Tune-ups or Technical Service Bulletins that may apply.

Were there any problems found?

Yes >> Repair as necessary.
Perform RE TRANSMISSION VERIFICATION TEST VER - 1 (GAS). (Refer to 21 - TRANSMISSION/ TRANSAXLE/AUTOMATIC - 48RE - STANDARD PROCEDURE)

No >> Test Complete.

P1757-GOV PRESS ABOVE 3 PSI IN GEAR WITH 0 MPH (GAS)

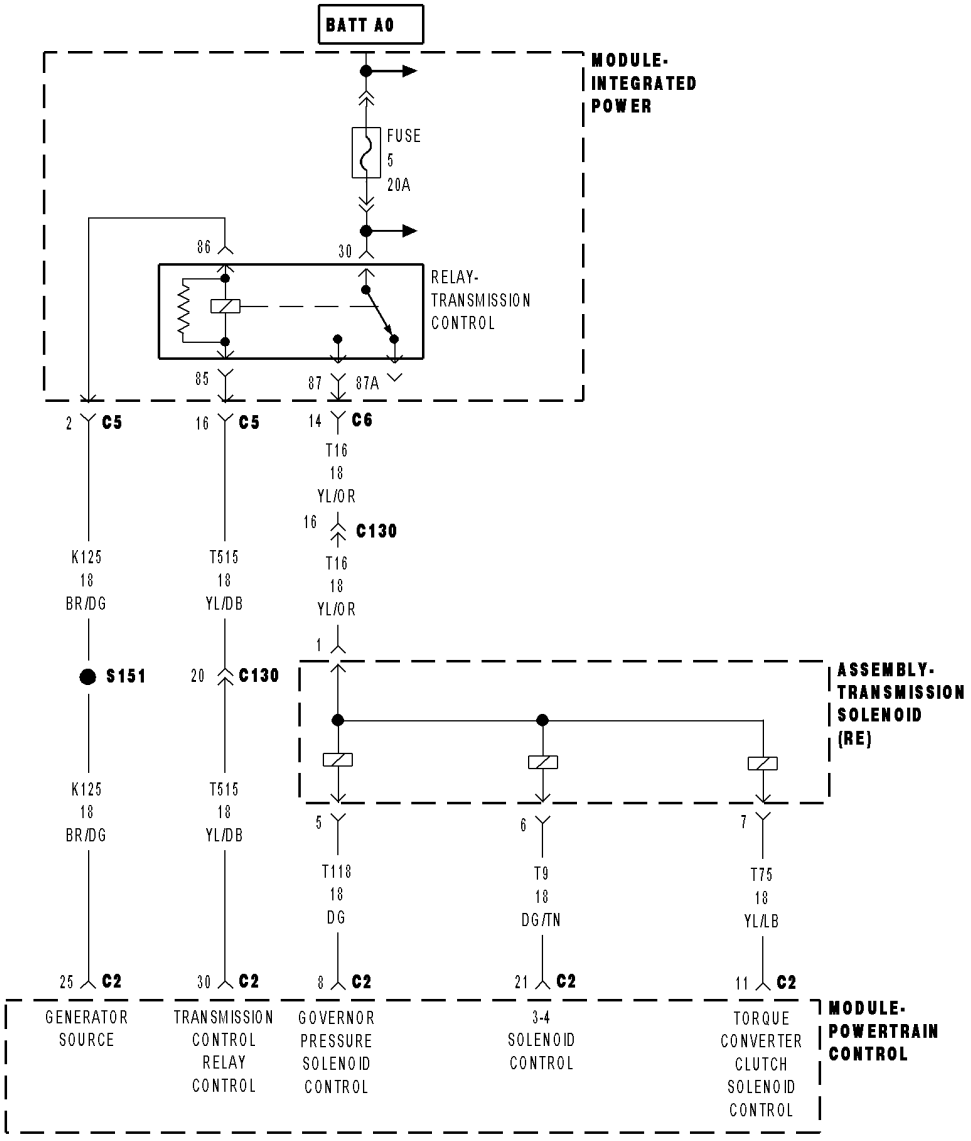

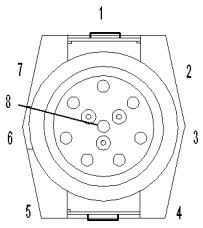

ASSEMBLY-
TRANSMISSION
SOLENOID
(RE)

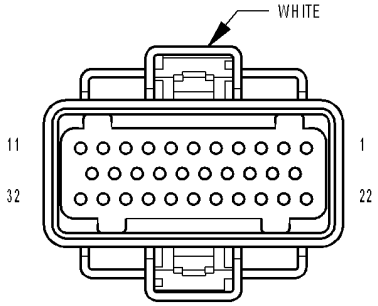

MODULE-
POWERTRAIN
CONTROL C2
(SRT)

81511462

P1757-GOV PRESS ABOVE 3 PSI IN GEAR WITH 0 MPH (GAS) (CONTINUED)

For the Transmission circuit diagram (Refer to 21 - TRANSMISSION/TRANSAXLE/AUTOMATIC - 48RE - SCHEMATICS AND DIAGRAMS)

For a complete wiring diagram**Refer to Section 8W**

Theory of Operation

The Governor Pressure Control System is used to regulate the governor pressure which controls the shifts for first, second, and third gear. The Governor Pressure Control System test verifies that the requested pressure and the actual pressure are within a predetermined tolerance.

- **When Monitored:**
  While the engine is running and the gear selector is in the Drive position.
- **Set Condition:**
  This DTC will set if the monitored Governor Pressure is greater than 41.4 kPa (6 psi) for 5 seconds while the gear selector is in the Drive position with the road speed equal to zero - six times during a drive cycle. The transmission oil temperature must be between 23 - 88° C (73 - 190° F).

Possible Causes
OTHER TRANSMISSION DTC'S PRESENT
(F856) 5 VOLT SUPPLY CIRCUIT OPEN
(F856) 5 VOLT SUPPLY CIRCUIT OPEN INSIDE THE TRANSMISSION
TRANSMISSION OIL BURNT OR OIL PAN HAS EXCESSIVE DEBRIS - INTERNAL TRANSMISSION DAMAGE
GOVERNOR PRESSURE SENSOR
GOVERNOR PRESSURE SOLENOID
VALVE BODY
ENGINE CONTROL MODULE 5 VOLT SUPPLY
POWERTRAIN CONTROL MODULE

Always perform the Pre-Diagnostic Troubleshooting procedure before proceeding. (Refer to 21 - TRANSMISSION/TRANSAXLE/AUTOMATIC - 48RE - STANDARD PROCEDURE)

Diagnostic Test

1. OTHER TRANSMISSION DTC'S PRESENT

Ignition on, engine not running.

With the scan tool, read Engine DTCs.

Are there any other Transmission DTCs present?

Yes >> Refer to the Transmission category and perform the appropriate symptom(s). (Refer to 21 - TRANSMISSION/TRANSAXLE/AUTOMATIC - 48RE - DIAGNOSIS AND TESTING)

No >> Go To 2

P1757-GOV PRESS ABOVE 3 PSI IN GEAR WITH 0 MPH (GAS) (CONTINUED)

2. CHECK IF THE DTC IS CURRENT

With the scan tool, read Engine DTCs.

Record the Freeze Frame data for the reported DTC.

With the scan tool, erase DTCs.

Turn the ignition off to the lock position.

Using the Freeze Frame data recorded earlier, try to duplicate the conditions in which the DTC originally set.

NOTE: It may be necessary to road test the vehicle to duplicate the original set conditions.

With the scan tool, read Engine DTCs.

Did the DTC reset?

Yes >> Go To 3

No >> Go To 11

---

3. CHECKING FOR GOVERNOR PRESSURE ABOVE 6 PSI

Start the engine.

CAUTION: Apply the parking brake.

Warm the transmission to a normal operating temperature above 43° C (110° F).

CAUTION: Firmly apply the brakes.

With the engine RPM at idle, place the gear selector in Drive.

With the scan tool, read the governor pressure.

Is the governor pressure above 41.4 kPa (6 psi)?

Yes >> Go To 4

No >> Go To 11

---

4. GOVERNOR PRESSURE MATCH GAUGE PRESSURE

Turn the ignition off to the lock position.

Install a 700 kPa (100 psi) pressure gauge to the Governor Pressure Test Port. (Refer to 21 - TRANSMISSION/ TRANSAXLE/AUTOMATIC - 48RE - DIAGNOSIS AND TESTING)

Start the engine.

Warm the transmission to a normal operating temperature above 43° C (110° F).

CAUTION: Firmly apply the brakes.

With the engine RPM at idle, place the gear selector in Drive.

With the scan tool, read the governor pressure and compare the scan tool reading to the pressure gauge reading.

Does the scan tool Governor Pressure reading match the pressure gauge reading within 6.9 kPa (1 psi)?

Yes >> Go To 5

No >> Go To 8

P1757-GOV PRESS ABOVE 3 PSI IN GEAR WITH 0 MPH (GAS) (CONTINUED)

5. CHECK FOR BURNT TRANSMISSION FLUID AND/OR EXCESSIVE DEBRIS IN THE TRANSMISSION OIL PAN

Turn the ignition off to the lock position.

Remove the transmission oil pan per the Service Information and inspect for burnt transmission fluid and excessive debris. (Refer to 21 - TRANSMISSION/TRANSAXLE/AUTOMATIC - 48RE/FLUID - STANDARD PROCEDURE)

Is the transmission fluid burnt or does the transmission oil pan contain excessive debris?

Yes >> Repair internal transmission as necessary. (Refer to 21 - TRANSMISSION/TRANSAXLE/AUTOMATIC - 48RE - REMOVAL)

Perform RE TRANSMISSION VERIFICATION TEST VER - 1 (GAS). (Refer to 21 - TRANSMISSION/TRANSAXLE/AUTOMATIC - 48RE - STANDARD PROCEDURE)

No >> Go To 6

---

6. REPLACE THE GOVERNOR PRESSURE SOLENOID AND CHECK THE VALVE BODY

Replace the Governor Pressure Solenoid per with the Service Information. (Refer to 21 - TRANSMISSION/TRANSAXLE/AUTOMATIC - 48RE/GOVERNOR PRESSURE SENSOR - REMOVAL)

Start the engine.

Warm the transmission to a normal operating temperature above 43° C (110° F).

CAUTION: Firmly apply the brakes.

With the engine RPM at idle, place the gear selector in Drive.

Read the governor pressure on the pressure gauge.

Is the governor pressure on the pressure gauge above 41.4 kPa (6 psi) with the engine RPM at idle and the gear selector in Drive?

Yes >> Replace the Valve Body per the Service Information. (Refer to 21 - TRANSMISSION/TRANSAXLE/AUTOMATIC - 48RE/VALVE BODY - REMOVAL)

Perform RE TRANSMISSION VERIFICATION TEST VER - 1 (GAS). (Refer to 21 - TRANSMISSION/TRANSAXLE/AUTOMATIC - 48RE - STANDARD PROCEDURE)

No >> Go To 7

P1757-GOV PRESS ABOVE 3 PSI IN GEAR WITH 0 MPH (GAS) (CONTINUED)

7. POWERTRAIN CONTROL MODULE

Turn the ignition off to the lock position.

Remove pressure gauge from transmission.

Install the Transmission Oil Pan and refill the transmission fluid per the service information. (Refer to 21 - TRANSMISSION/TRANSAXLE/AUTOMATIC - 48RE/FLUID - STANDARD PROCEDURE)

With the scan tool, erase Engine DTCs.

Test drive the vehicle.

Be sure to stop the vehicle, with the vehicle in drive on six separate occurrences for at least 6 seconds each stop.

With the scan tool, read Engine DTCs.

Did the P1757 DTC reset?

Yes >> Using the schematics as a guide, check the Powertrain Control Module (PCM) pins, terminals, and connectors for corrosion, damage, or terminal push out. Pay particular attention to all power and ground circuits. If no problems are found, replace and program the PCM per the Service Information. (Refer to 8 - ELECTRICAL/ELECTRONIC CONTROL MODULES/POWERTRAIN CONTROL MODULE - REMOVAL)

Perform RE TRANSMISSION VERIFICATION TEST VER - 1 (GAS). (Refer to 21 - TRANSMISSION/TRANSAXLE/AUTOMATIC - 48RE - STANDARD PROCEDURE)

No >> Go To 11

---

8. CHECK THE 5 VOLT SUPPLY CIRCUIT FOR AN OPEN

Turn the ignition off to the lock position.

Disconnect the PCM C2 harness connector.

Disconnect the Transmission Solenoid Assembly harness connector.

NOTE: Check connectors - Clean/repair as necessary

Measure the resistance of the 5- volt Supply circuit between the Transmission Solenoid Assembly harness connector and the PCM C2 harness connector.

Is the resistance below 5.0 ohms?

Yes >> Go To 9

No >> Repair the (F856) 5-volt Supply circuit for an open.

Perform RE TRANSMISSION VERIFICATION TEST VER - 1 (GAS). (Refer to 21 - TRANSMISSION/TRANSAXLE/AUTOMATIC - 48RE - STANDARD PROCEDURE)

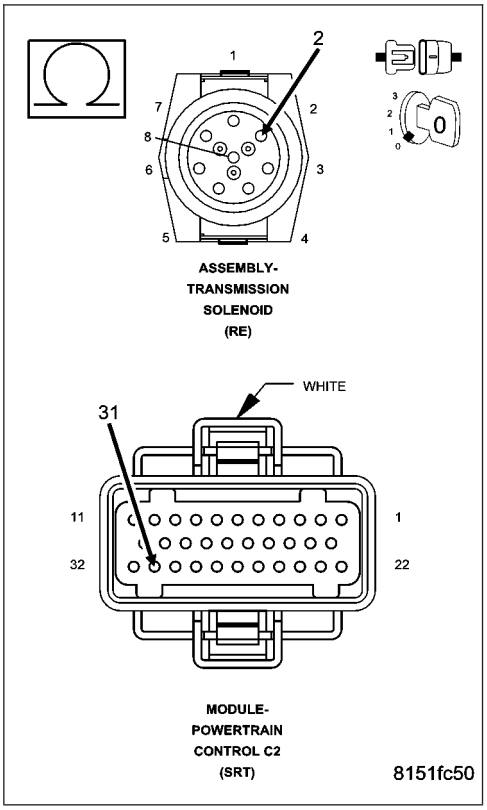

P1757-GOV PRESS ABOVE 3 PSI IN GEAR WITH 0 MPH (GAS) (CONTINUED)

9. CHECK THE 5 VOLT SUPPLY CIRCUIT FOR AN OPEN INSIDE THE TRANSMISSION

Reconnect the Transmission Solenoid Assembly harness connector.

Remove the transmission oil pan per the Service Information. (Refer to 21 - TRANSMISSION/TRANSAXLE/AUTOMATIC - 48RE/FLUID - STANDARD PROCEDURE)

Disconnect the Governor Pressure Sensor connector internal to the transmission.

Measure the resistance of the (F856) 5-volt Supply circuit between the PCM C2 harness connector and the Transmission Solenoid Assembly connector internal to the transmission.

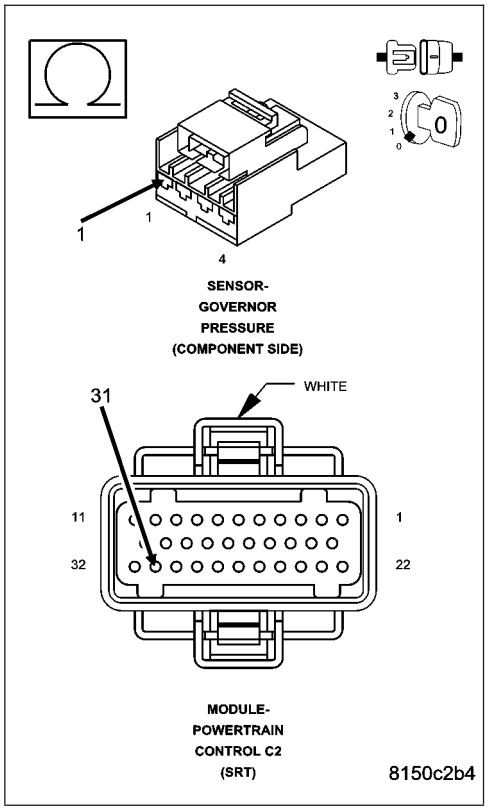

Is the resistance below 5.0 ohms?

Yes >> Go To 10

No >> Repair or replace the (F856) 5-volt Supply circuit for an open internal to the transmission.

Perform RE TRANSMISSION VERIFICATION TEST VER - 1 (GAS). (Refer to 21 - TRANSMISSION/TRANSAXLE/AUTOMATIC - 48RE - STANDARD PROCEDURE)

---

10. CHECK THE ENGINE CONTROL MODULE - 5 VOLT SUPPLY

Reconnect the PCM harness connectors.

Ignition on, engine not running.

Measure the voltage of the (F856) 5-volt Supply circuit in the Governor Pressure Sensor connector internal to the transmission.

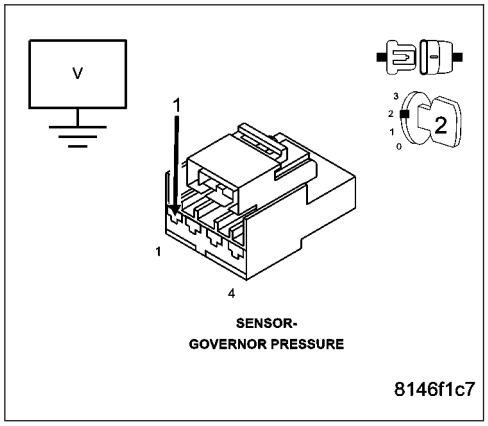

Is the voltage between 4.5 and 5.5 volts?

Yes >> Replace the Governor Pressure Sensor per the Service Information. (Refer to 21 - TRANSMISSION/TRANSAXLE/AUTOMATIC - 48RE/GOVERNOR PRESSURE SENSOR - REMOVAL)

Perform RE TRANSMISSION VERIFICATION TEST VER - 1 (GAS). (Refer to 21 - TRANSMISSION/TRANSAXLE/AUTOMATIC - 48RE - STANDARD PROCEDURE)

No >> Using the schematics as a guide, check the Powertrain Control Module (PCM) pins, terminals, and connectors for corrosion, damage, or terminal push out. Pay particular attention to all power and ground circuits. If no problems are found, replace and program the PCM per the Service Information. (Refer to 8 - ELECTRICAL/ELECTRONIC CONTROL MODULES/POWERTRAIN CONTROL MODULE - REMOVAL)

Perform RE TRANSMISSION VERIFICATION TEST VER - 1 (GAS). (Refer to 21 - TRANSMISSION/TRANSAXLE/AUTOMATIC - 48RE - STANDARD PROCEDURE)

P1757-GOV PRESS ABOVE 3 PSI IN GEAR WITH 0 MPH (GAS) (CONTINUED)

11. INTERMITTENT WIRING AND CONNECTORS

The conditions necessary to set this DTC are not present at this time.

Use the Freeze Frame Data to help duplicate the conditions in which the DTC originally set. Pay particular attention to the DTC set conditions, such as, VSS, MAP, ECT, and Load

Using the schematics as a guide, visually inspect the related wiring harness. Look for any chafed, pierced, pinched, or partially broken wires.

Visually inspect the related wiring harness connectors. Look for broken, bent, pushed out, or corroded terminals.

Wiggle the wiring and connectors while checking for any possible open or shorted circuits.

Check for any Service Information Tune-ups or Technical Service Bulletins that may apply.

Were there any problems found?

Yes >> Repair as necessary.
Perform RE TRANSMISSION VERIFICATION TEST VER - 1 (GAS). (Refer to 21 - TRANSMISSION/ TRANSAXLE/AUTOMATIC - 48RE - STANDARD PROCEDURE)

No >> Test Complete.

P1762-GOV PRESS SENSOR OFFSET VOLTS TOO LOW OR HIGH (GAS)

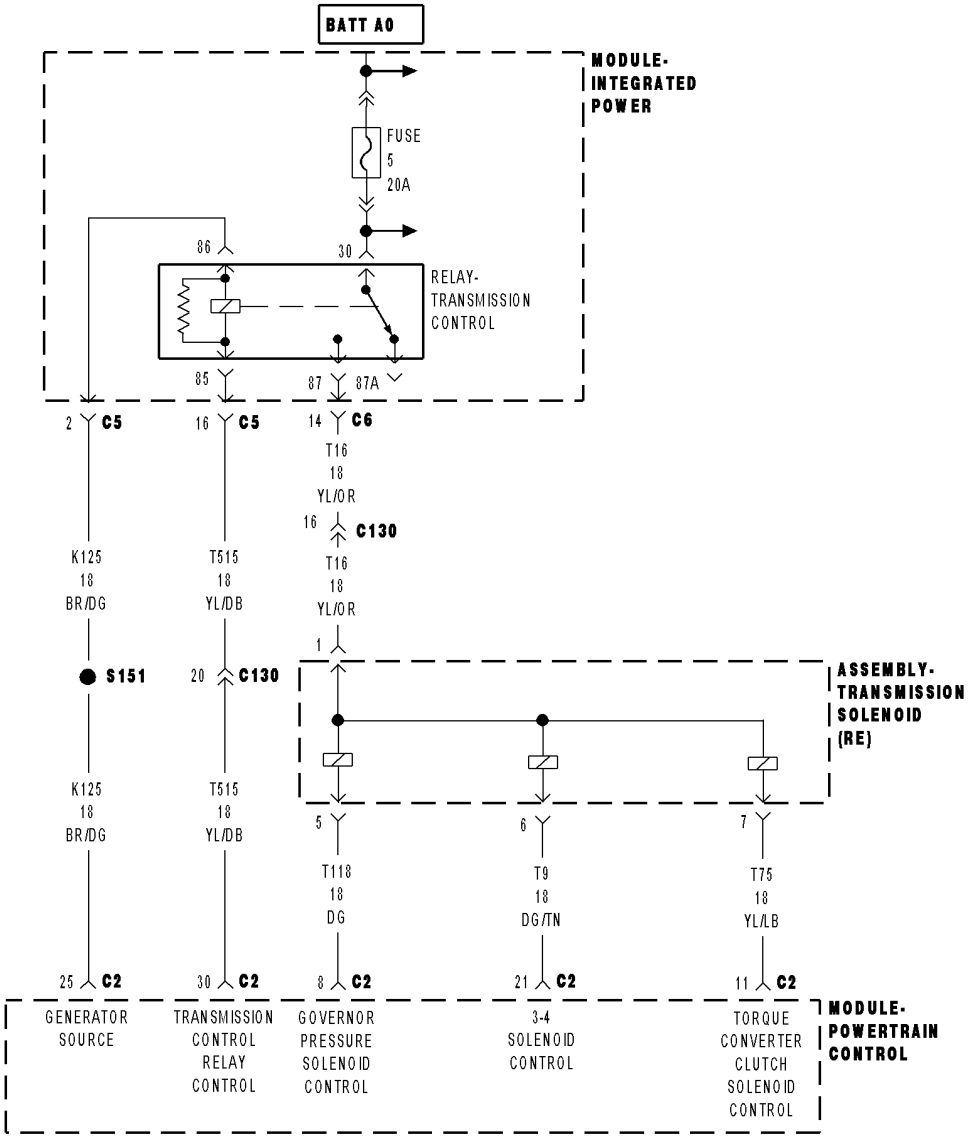

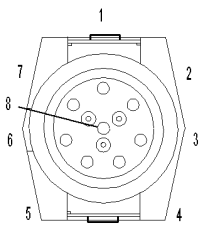

ASSEMBLY-
TRANSMISSION
SOLENOID
(RE)

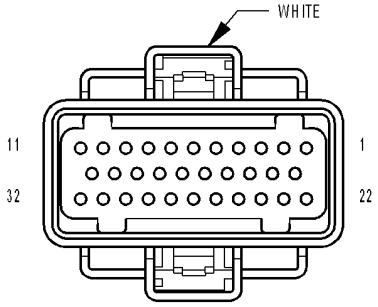

MODULE-
POWERTRAIN
CONTROL C2
(SRT)

81511462

P1762-GOV PRESS SENSOR OFFSET VOLTS TOO LOW OR HIGH (GAS) (CONTINUED)

For the Transmission circuit diagram (Refer to 21 - TRANSMISSION/TRANSAXLE/AUTOMATIC - 48RE - SCHEMATICS AND DIAGRAMS)

For a complete wiring diagram**Refer to Section 8W**

Theory of Operation

The Governor Pressure Sensors output is used as a control input to the Governor Pressure Control System. The Governor Pressure Control System is used to regulate the governor pressure which controls the shifts for first, second, and third gear.

- **When Monitored:**
  While the engine is running and the vehicle gear selector is in park or neutral for more than 3.0 seconds with the throttle position less than 10%.
- **Set Condition:**
  This DTC will set if the Governor Pressure is greater than 3 psi while the vehicle is in Park 3 times in a drive cycle.

Possible Causes
OTHER TRANSMISSION DTCS PRESENT
(F856) 5 VOLT SUPPLY CIRCUIT OPEN - EXTERNAL
(F856) 5 VOLT SUPPLY CIRCUIT OPEN - INTERNAL
GOVERNOR PRESSURE SENSOR
TRANSMISSION - INTERNAL DAMAGE
TRANSMISSION - INTERNAL LEAK
POWERTRAIN CONTROL MODULE
INTERMITTENT WIRING AND CONNECTORS

Always perform the Pre-Diagnostic Troubleshooting procedure before proceeding. (Refer to 21 - TRANSMISSION/TRANSAXLE/AUTOMATIC - 48RE - STANDARD PROCEDURE)

Diagnostic Test

1. OTHER TRANSMISSION DTCS PRESENT

Ignition on, engine not running.

With the scan tool, read Engine DTCs.

Are any other transmission DTCs present?

Yes >> Refer to the Transmission category and perform the appropriate symptom(s). (Refer to 21 - TRANSMISSION/TRANSAXLE/AUTOMATIC - 48RE - DIAGNOSIS AND TESTING)

No >> Go To 2

---

2. CHECK IF THE GOVERNOR PRESSURE IS ABOVE 21 KPA (3 PSI) IN PARK

CAUTION: Apply the parking brake.

Start the engine and allow the engine to idle.

Warm the transmission to a normal operating temperature above 43° C (110° F).

With the scan tool in Sensors, read the Governor Pressure with the Transmission Shift selector in Park.

Is the Governor Pressure reading on the scan tool above 21 kPa or 3 psi?

Yes >> Go To 3

No >> Go To 10

P1762-GOV PRESS SENSOR OFFSET VOLTS TOO LOW OR HIGH (GAS) (CONTINUED)

3. COMPARE SCAN TOOL GOVERNOR PRESSURE READING TO PRESSURE GAUGE READING

Turn the ignition off to the lock position.

Connect a 700 kPa (100 psi) Pressure Gauge to the Governor Pressure test port. (Refer to 21 - TRANSMISSION/TRANSAXLE/AUTOMATIC - 48RE - DIAGNOSIS AND TESTING)

Start the engine and allow the engine to idle.

Warm the transmission to a normal operating temperature above 43° C (110° F).

With the scan tool, read the Governor Pressure and compare the scan tool Governor Pressure reading to the Pressure Gauge reading.

Does the scan tool Governor Pressure reading match the Pressure Gauge reading within 6.9 kPa (1 psi)?

Yes >> Go To 4

No >> Go To 7

---

4. TRANSMISSION - INTERNAL DAMAGE

Turn the ignition off to the lock position.

Remove the transmission oil pan per the Service Information. (Refer to 21 - TRANSMISSION/TRANSAXLE/AUTOMATIC - 48RE/FLUID - STANDARD PROCEDURE)

Inspect the transmission oil pan for burnt oil and/or excessive debris.

Does the transmission contain burnt oil and/or excessive debris?

Yes >> Repair internal transmission as necessary. (Refer to 21 - TRANSMISSION/TRANSAXLE/AUTOMATIC - 48RE - REMOVAL)

Perform RE TRANSMISSION VERIFICATION TEST VER - 1 (GAS). (Refer to 21 - TRANSMISSION/TRANSAXLE/AUTOMATIC - 48RE - STANDARD PROCEDURE)

No >> Go To 5

---

5. CHECK INTERNAL TRANSMISSION FOR A FLUID LEAK

Inspect the transmission for internal fluid leakage in the Valve Body or the Governor Pressure Solenoid. (Refer to 21 - TRANSMISSION/TRANSAXLE/AUTOMATIC - 48RE/VALVE BODY - REMOVAL)

Were there any problems found?

Yes >> Repair the internal transmission as necessary per the Service Information. (Refer to 21 - TRANSMISSION/TRANSAXLE/AUTOMATIC - 48RE/VALVE BODY - REMOVAL)

Perform RE TRANSMISSION VERIFICATION TEST VER - 1 (GAS). (Refer to 21 - TRANSMISSION/TRANSAXLE/AUTOMATIC - 48RE - STANDARD PROCEDURE)

No >> Go To 6

P1762-GOV PRESS SENSOR OFFSET VOLTS TOO LOW OR HIGH (GAS) (CONTINUED)

6. VERIFY OPERATION - TEST DRIVE

Remove the pressure gauge from the transmission.

Install the transmission oil pan and refill the transmission per the Service Information. (Refer to 21 - TRANSMISSION/TRANSAXLE/AUTOMATIC - 48RE/FLUID - STANDARD PROCEDURE)

With the scan tool, erase Engine DTCs.

Test drive the vehicle.

Be sure to stop the vehicle and move the gear selector into the park position for a minimum of 5 seconds at least three times during the drive cycle.

With the scan tool, read Engine DTCs.

Did the DTC reset?

Yes >> Using the schematics as a guide, check the Powertrain Control Module (PCM) pins, terminals, and connectors for corrosion, damage, or terminal push out. Pay particular attention to all power and ground circuits. If no problems are found, replace and program the PCM per the Service Information. (Refer to 8 - ELECTRICAL/ELECTRONIC CONTROL MODULES/POWERTRAIN CONTROL MODULE - REMOVAL)

Perform RE TRANSMISSION VERIFICATION TEST VER - 1 (GAS). (Refer to 21 - TRANSMISSION/TRANSAXLE/AUTOMATIC - 48RE - STANDARD PROCEDURE)

No >> Go To 10

---

7. CHECK THE 5 VOLT SUPPLY CIRCUIT FOR AN OPEN

Turn the ignition off to the lock position.

Disconnect the PCM C2 harness connector.

Disconnect the Transmission Solenoid Assembly harness connector.

NOTE: Check connectors - Clean/repair as necessary

Measure the resistance of the 5-volt Supply circuit between the Transmission Solenoid Assembly harness connector and the PCM C2 harness connector.

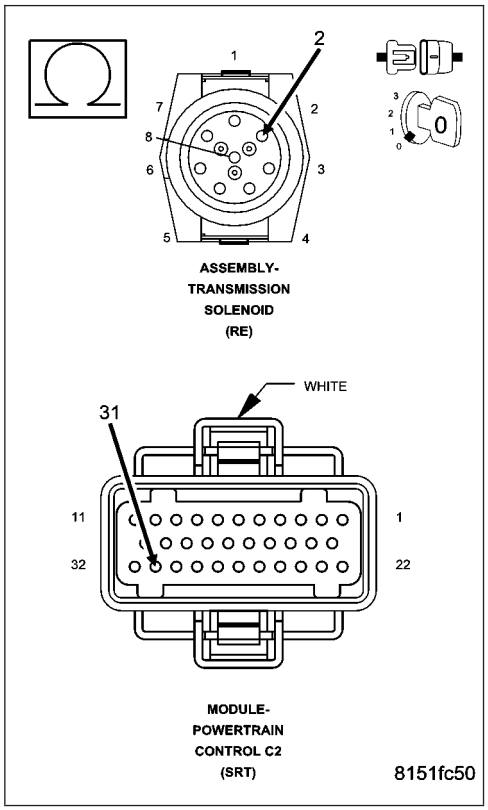

Is the resistance below 5.0 ohms?

Yes >> Go To 8

No >> Repair 5-volt Supply circuit for an open.

Perform RE TRANSMISSION VERIFICATION TEST VER - 1 (GAS). (Refer to 21 - TRANSMISSION/TRANSAXLE/AUTOMATIC - 48RE - STANDARD PROCEDURE)

P1762-GOV PRESS SENSOR OFFSET VOLTS TOO LOW OR HIGH (GAS) (CONTINUED)

8. CHECK THE 5 VOLT SUPPLY CIRCUIT FOR AN OPEN - INTERNAL

Reconnect the Transmission Solenoid Assembly harness connector.

Remove the Transmission Oil Pan per the Service Information. (Refer to 21 - TRANSMISSION/TRANSAXLE/AUTOMATIC - 48RE/FLUID - STANDARD PROCEDURE)

Disconnect the Governor Pressure Sensor harness connector internal to the transmission.

NOTE: Check connectors - Clean/repair as necessary

Measure the resistance of the 5-volt Supply circuit between the PCM C2 harness connector and the Governor Pressure Sensor connector internal to the transmission.

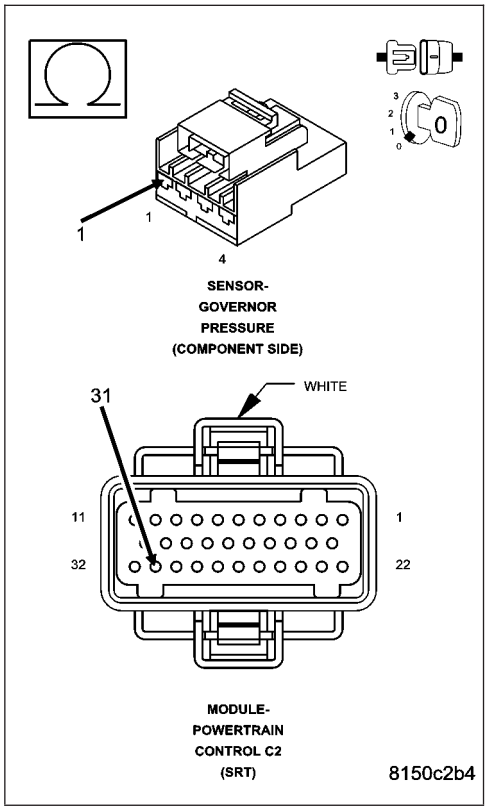

Is the resistance below 5.0 ohms?

Yes >> Go To 9

No >> Repair or replace the 5-volt Supply circuit for an open internal to the transmission.

Perform RE TRANSMISSION VERIFICATION TEST VER - 1 (GAS). (Refer to 21 - TRANSMISSION/TRANSAXLE/AUTOMATIC - 48RE - STANDARD PROCEDURE)

---

9. GOVERNOR PRESSURE SENSOR

Reconnect the PCM harness connectors.

NOTE: The PCM harness connectors must be connected during this test.

Ignition on, engine not running.

Measure the voltage of the 5-volt Supply circuit at the Governor Pressure Sensor connector internal to the transmission.

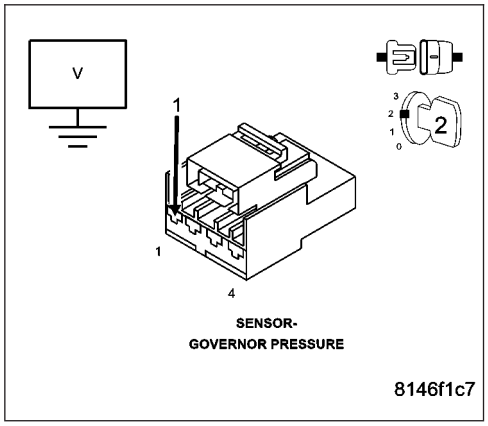

Is the voltage between 4.5 and 5.5 volts?

Yes >> Replace the Governor Pressure Sensor per the Service Information. (Refer to 21 - TRANSMISSION/TRANSAXLE/AUTOMATIC - 48RE/GOVERNOR PRESSURE SENSOR - REMOVAL)

Perform RE TRANSMISSION VERIFICATION TEST VER - 1 (GAS). (Refer to 21 - TRANSMISSION/TRANSAXLE/AUTOMATIC - 48RE - STANDARD PROCEDURE)

No >> Using the schematics as a guide, check the Powertrain Control Module (PCM) pins, terminals, and connectors for corrosion, damage, or terminal push out. Pay particular attention to all power and ground circuits. If no problems are found, replace and program the PCM per the Service Information. (Refer to 8 - ELECTRICAL/ELECTRONIC CONTROL MODULES/POWERTRAIN CONTROL MODULE - REMOVAL)

Perform RE TRANSMISSION VERIFICATION TEST VER - 1 (GAS). (Refer to 21 - TRANSMISSION/TRANSAXLE/AUTOMATIC - 48RE - STANDARD PROCEDURE)

P1762-GOV PRESS SENSOR OFFSET VOLTS TOO LOW OR HIGH (GAS) (CONTINUED)

10. INTERMITTENT WIRING AND CONNECTORS

The conditions necessary to set this DTC are not present at this time.

Use the Freeze Frame Data to help duplicate the conditions in which the DTC originally set. Pay particular attention to the DTC set conditions, such as, VSS, MAP, ECT, and Load

Using the schematics as a guide, visually inspect the related wiring harness. Look for any chafed, pierced, pinched, or partially broken wires.

Visually inspect the related wiring harness connectors. Look for broken, bent, pushed out, or corroded terminals.

Wiggle the wiring and connectors while checking for any possible open or shorted circuits.

Check for any Service Information Tune-ups or Technical Service Bulletins that may apply.

Were there any problems found?

Yes >> Repair as necessary.
Perform RE TRANSMISSION VERIFICATION TEST VER - 1 (GAS). (Refer to 21 - TRANSMISSION/ TRANSAXLE/AUTOMATIC - 48RE - STANDARD PROCEDURE)

No >> Test Complete.

P1763-GOVERNOR PRESSURE SENSOR VOLTS TOO HI (GAS)

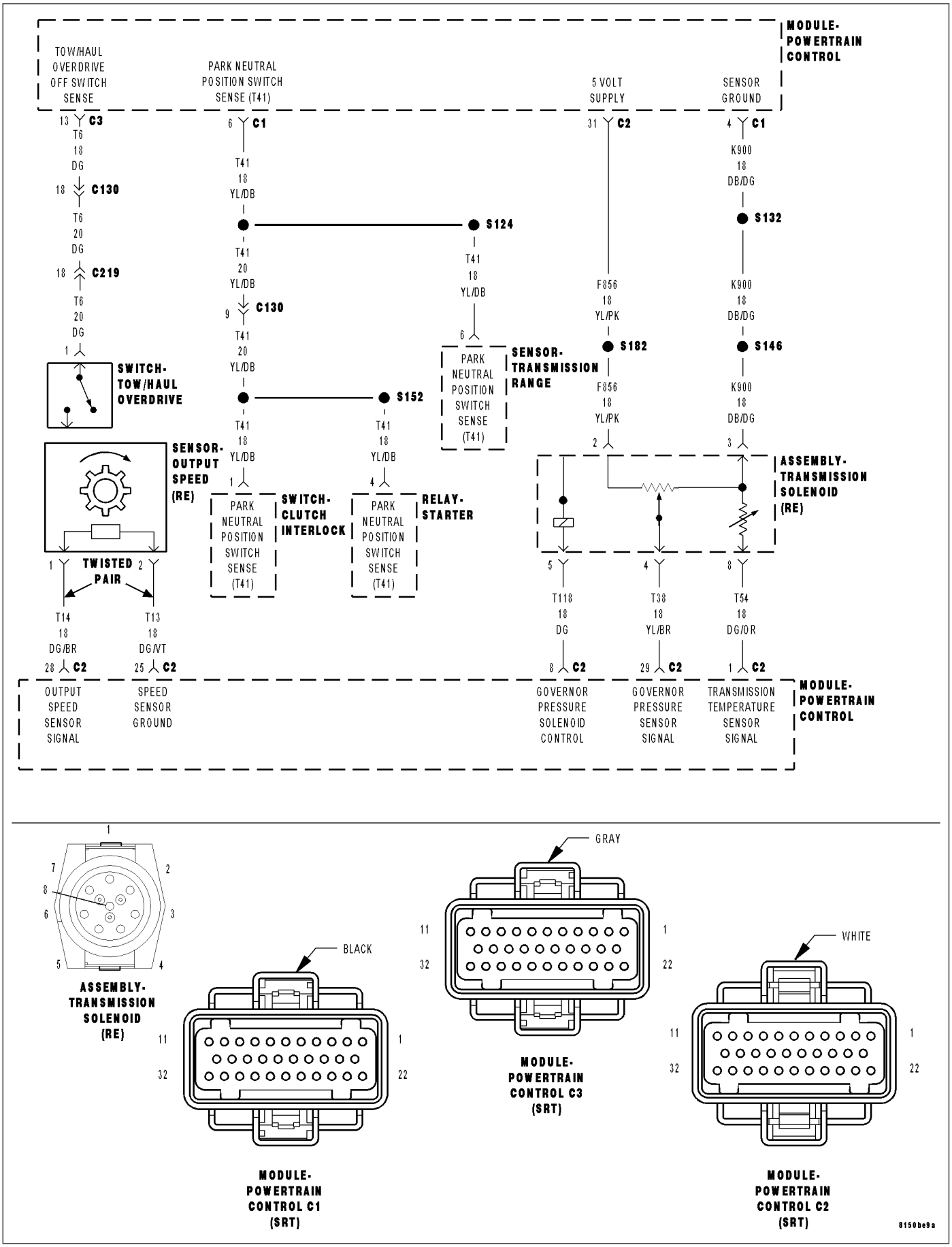

P1763-GOVERNOR PRESSURE SENSOR VOLTS TOO HI (GAS) (CONTINUED)

For the Transmission circuit diagram (Refer to 21 - TRANSMISSION/TRANSAXLE/AUTOMATIC - 48RE - SCHEMATICS AND DIAGRAMS)

For a complete wiring diagram**Refer to Section 8W**

Theory of Operation

The Governor Pressure Sensor is used by the PCM to adjust the Governor Pressure to a desired level for shifts in first, second, and third gear. If the PCM detects the monitored sense voltage is greater than or less than a predetermined specification, the PCM will set the desired DTC.

- **When Monitored:**
  Continuously with the ignition on and the engine running.
- **Set Condition:**
  This DTC will set when the monitored sense voltage from the Governor Pressure Sensor is above 4.89 volts for the period of 8.5 seconds.

Possible Causes
OTHER TRANSMISSION DTC'S PRESENT
PARK NEUTRAL DTC PRESENT
(T38) GOVERNOR PRESSURE SENSOR SIGNAL CIRCUIT OPEN
(K900) SENSOR GROUND CIRCUIT OPEN
(T38) GOVERNOR PRESSURE SENSOR SIGNAL CIRCUIT SHORT TO VOLTAGE
(T38) GOVERNOR PRESSURE SENSOR SIGNAL CIRCUIT SHORT TO ANOTHER CIRCUIT
(T38) GOVERNOR PRESSURE SENSOR SIGNAL CIRCUIT OPEN INSIDE TRANSMISSION
(K900) SENSOR GROUND CIRCUIT OPEN INSIDE TRANSMISSION
(T38) GOVERNOR PRESSURE SENSOR SIGNAL CIRCUIT SHORT TO VOLTAGE INSIDE TRANSMISSION
GOVERNOR PRESSURE SENSOR
POWERTRAIN CONTROL MODULE

Always perform the Pre-Diagnostic Troubleshooting procedure before proceeding. (Refer to 21 - TRANSMISSION/TRANSAXLE/AUTOMATIC - 48RE - STANDARD PROCEDURE)

Diagnostic Test

1. CHECK IF THE DTC IS CURRENT

Ignition on, engine not running.

With the scan tool, read Engine DTCs.

Record the Freeze Frame data for the reported DTC.

With the scan tool, erase DTCs.

Turn the ignition off to the lock position.

Using the Freeze Frame data recorded earlier, try to duplicate the conditions in which the DTC originally set.

NOTE: It may be necessary to road test the vehicle to duplicate the original set conditions.

With the scan tool, read Engine DTCs.

Did the DTC reset?

Yes >> Go To 2

No >> Go To 11

P1763-GOVERNOR PRESSURE SENSOR VOLTS TOO HI (GAS) (CONTINUED)

2. CHECK FOR OTHER TRANSMISSION DTC'S PRESENT

Are there any Park/Neutral or other Transmission DTCs present?

Yes >> Refer to the Transmission category and perform the appropriate symptom(s). If a Park/Neutral DTC is present, perform its respective test first. (Refer to 21 - TRANSMISSION/TRANSAXLE/AUTOMATIC - 48RE - DIAGNOSIS AND TESTING)

No >> Go To 3

---

3. CHECK THE (T38) GOVERNOR PRESSURE SENSOR SIGNAL CIRCUIT FOR AN OPEN

Turn the ignition off to the lock position.

Disconnect the PCM C2 harness connectors.

Disconnect the Transmission Solenoid Assembly harness connector.

NOTE: Check connectors - Clean/repair as necessary

Measure the resistance of the (T38) Governor Pressure Sensor Signal circuit between the Transmission Solenoid Assembly harness connector and the PCM C2 harness connector.

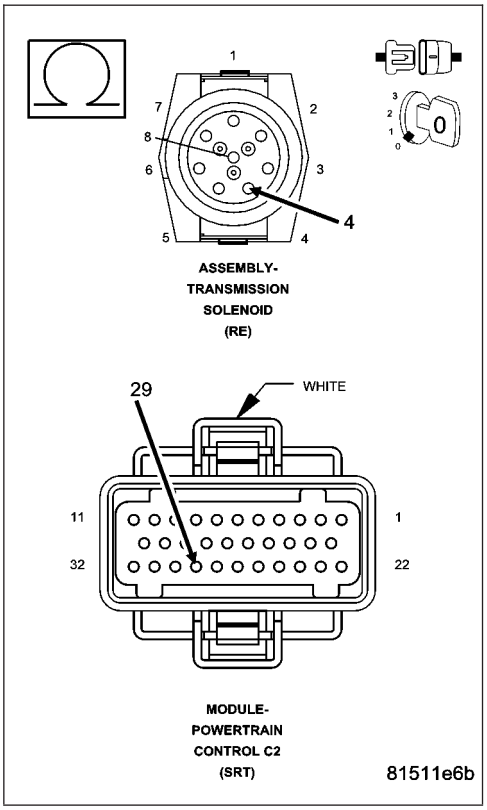

Is the resistance below 5.0 ohms?

Yes >> Go To 4

No >> Repair the (T38) Governor Pressure Sensor Signal circuit for an open.

Perform RE TRANSMISSION VERIFICATION TEST VER - 1 (GAS). (Refer to 21 - TRANSMISSION/TRANSAXLE/ AUTOMATIC - 48RE - STANDARD PROCEDURE)

P1763-GOVERNOR PRESSURE SENSOR VOLTS TOO HI (GAS) (CONTINUED)

4. CHECK THE (K900) SENSOR GROUND CIRCUIT FOR AN OPEN

Measure the resistance of the (K900) Sensor Ground circuit between the Transmission Solenoid Assembly harness connector and the PCM C2 harness connector.

Is the resistance below 5.0 ohms?

Yes >> Go To 5

No >> Repair the (K900) Sensor Ground circuit for an open.
Perform RE TRANSMISSION VERIFICATION TEST VER - 1 (GAS). (Refer to 21 - TRANSMISSION/TRANSAXLE/ AUTOMATIC - 48RE - STANDARD PROCEDURE)

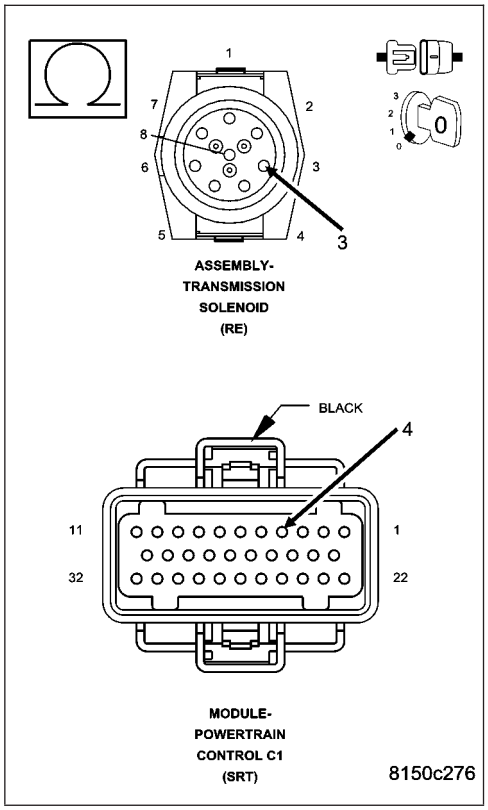

5. CHECK THE (T38) GOVERNOR PRESSURE SENSOR SIGNAL CIRCUIT FOR A SHORT TO VOLTAGE

Ignition on, engine not running.

Measure the voltage of the (T38) Governor Pressure Sensor Signal circuit in the Transmission Solenoid Assembly harness connector.

Is the voltage above 0.5 volts?

Yes >> Repair the (T38) Governor Pressure Sensor Signal circuit for a short to voltage.
Perform RE TRANSMISSION VERIFICATION TEST VER - 1 (GAS). (Refer to 21 - TRANSMISSION/TRANSAXLE/ AUTOMATIC - 48RE - STANDARD PROCEDURE)

No >> Go To 6

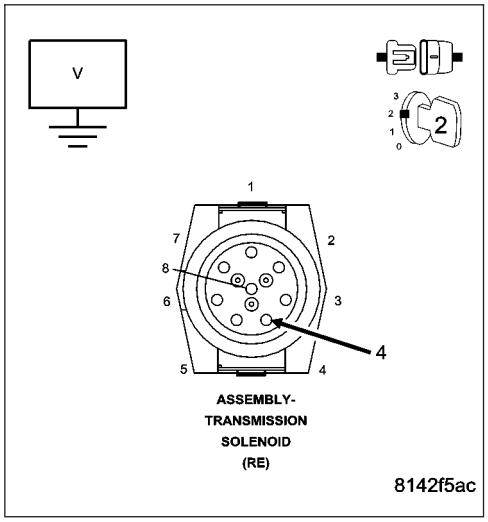

P1763-GOVERNOR PRESSURE SENSOR VOLTS TOO HI (GAS) (CONTINUED)

6. CHECK THE (T38) GOVERNOR PRESSURE SENSOR SIGNAL CIRCUIT FOR A SHORT TO ANOTHER CIRCUIT

Turn the ignition off to the lock position.

Measure the resistance between the (T38) Governor Pressure Sensor Signal circuit and all other circuits in the Transmission Solenoid Assembly harness connector.

Is the resistance below 100k ohms between the (T38) Governor Pressure Sensor Signal circuit and any other circuit(s) in the Transmission Solenoid Assembly harness connector?

Yes >> Repair the (T38) Governor Pressure Sensor Signal circuit for a short to another circuit(s).

Perform RE TRANSMISSION VERIFICATION TEST VER - 1 (GAS). (Refer to 21 - TRANSMISSION/TRANSAXLE/ AUTOMATIC - 48RE - STANDARD PROCEDURE)

No >> Go To 7

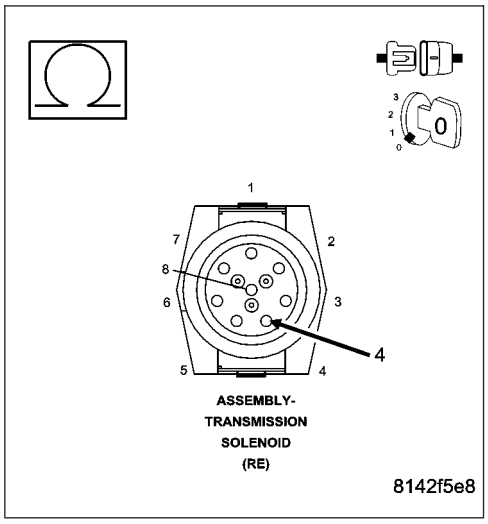

7. CHECK THE (T38) GOVERNOR PRESSURE SENSOR SIGNAL CIRCUIT OR AN OPEN INTERNAL

Remove the Transmission Oil Pan. (Refer to 21 - TRANSMISSION/ TRANSAXLE/AUTOMATIC - 48RE/FLUID - STANDARD PROCEDURE)

Reconnect the Transmission Solenoid Assembly harness connector.

Disconnect the Governor Pressure Sensor harness connector.

Measure the resistance of the (T38) Governor Pressure Sensor Signal circuit between the PCM C2 harness connector and the Governor Pressure Sensor harness connector internal to the transmission.

Is the resistance below 5.0 ohms?

Yes >> Go To 8

No >> Replace the Transmission Solenoid Assembly per the Service Information. (Refer to 21 - TRANSMISSION/TRANSAXLE/AUTOMATIC - 48RE/VALVE BODY - REMOVAL)

Perform RE TRANSMISSION VERIFICATION TEST VER - 1 (GAS). (Refer to 21 - TRANSMISSION/TRANSAXLE/ AUTOMATIC - 48RE - STANDARD PROCEDURE)

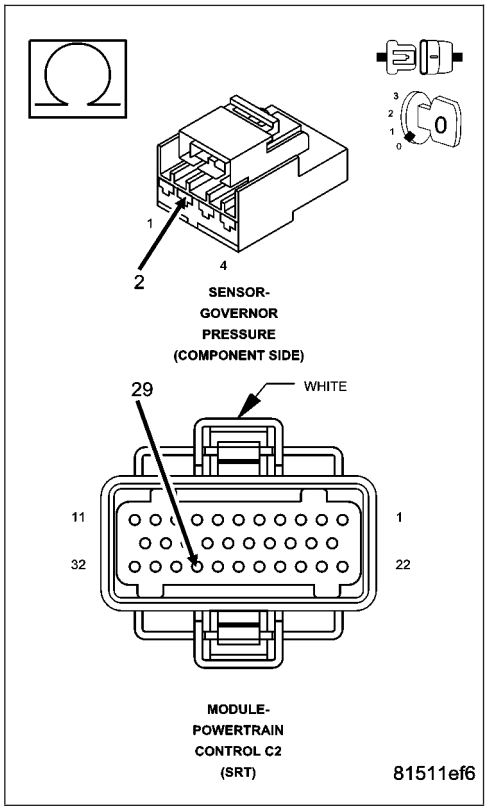

P1763-GOVERNOR PRESSURE SENSOR VOLTS TOO HI (GAS) (CONTINUED)

8. CHECK THE (K900) SENSOR GROUND CIRCUIT FOR AN OPEN INTERNAL

Measure the resistance of the (K900) Sensor Ground circuit between the PCM C2 harness connector and the Governor Pressure Sensor harness connector.

Is the resistance below 5.0 ohms?

Yes >> Go To 9

No >> Replace the Transmission Solenoid Assembly per the Service Information. (Refer to 21 - TRANSMISSION/TRANSAXLE/AUTOMATIC - 48RE/VALVE BODY - REMOVAL)
Perform RE TRANSMISSION VERIFICATION TEST VER - 1 (GAS). (Refer to 21 - TRANSMISSION/TRANSAXLE/AUTOMATIC - 48RE - STANDARD PROCEDURE)

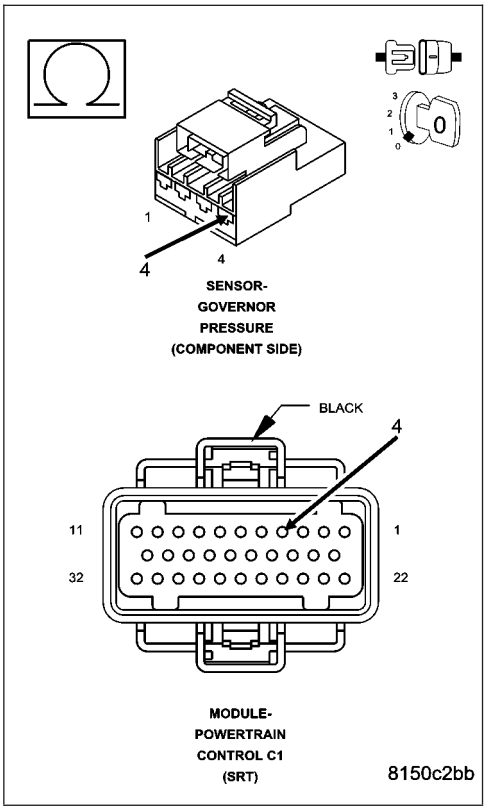

9. CHECK THE (T38) GOVERNOR PRESSURE SENSOR SIGNAL CIRCUIT FOR A SHORT TO VOLTAGE INTERNAL

NOTE: The Transmission Solenoid Assembly harness connector must be connected before proceeding.
Ignition on, engine not running.
Measure the voltage of the (T38) Governor Pressure Sensor Signal circuit in the Governor Pressure Sensor harness connector (inside transmission).

Is the voltage above 0.5 volt?

Yes >> Replace the Transmission Solenoid Assembly per the Service Information. (Refer to 21 - TRANSMISSION/TRANSAXLE/AUTOMATIC - 48RE/VALVE BODY - REMOVAL)
Perform RE TRANSMISSION VERIFICATION TEST VER - 1 (GAS). (Refer to 21 - TRANSMISSION/TRANSAXLE/AUTOMATIC - 48RE - STANDARD PROCEDURE)

No >> Go To 10

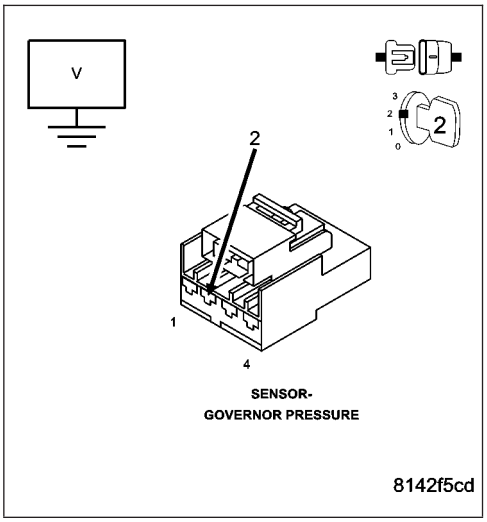

P1763-GOVERNOR PRESSURE SENSOR VOLTS TOO HI (GAS) (CONTINUED)

10. ENGINE CONTROL MODULE

Turn the ignition off to the lock position.

Reconnect the PCM harness connector.

Reconnect the Transmission Solenoid Assembly harness connector.

Ignition on, engine not running.

With the scan tool, erase DTCs.

Connect a jumper wire between the (T38) Governor Pressure Sensor Signal circuit and the (K900) Sensor Ground circuit in the Transmission Governor Pressure Sensor harness connector.

With the scan tool, read DTCs.

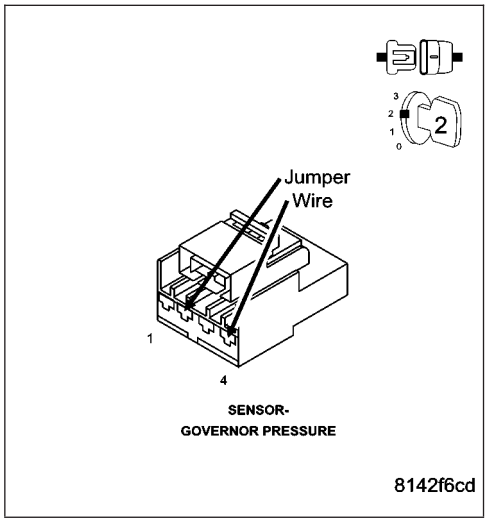

Did the DTC P0869 set?

Yes >> Replace the Governor Pressure Sensor per the Service Information. (Refer to 21 - TRANSMISSION/TRANSAXLE/AUTOMATIC - 48RE/GOVERNOR PRESSURE SENSOR - REMOVAL)

Perform RE TRANSMISSION VERIFICATION TEST VER - 1 (GAS). (Refer to 21 - TRANSMISSION/TRANSAXLE/AUTOMATIC - 48RE - STANDARD PROCEDURE)

No >> Using the schematics as a guide, check the Powertrain Control Module (PCM) pins, terminals, and connectors for corrosion, damage, or terminal push out. Pay particular attention to all power and ground circuits. If no problems are found, replace and program the PCM per the Service Information. (Refer to 8 - ELECTRICAL/ELECTRONIC CONTROL MODULES/POWERTRAIN CONTROL MODULE - REMOVAL)

Perform RE TRANSMISSION VERIFICATION TEST VER - 1 (GAS). (Refer to 21 - TRANSMISSION/TRANSAXLE/AUTOMATIC - 48RE - STANDARD PROCEDURE)

---

11. INTERMITTENT WIRING AND CONNECTORS

The conditions necessary to set this DTC are not present at this time.

Use the Freeze Frame Data to help duplicate the conditions in which the DTC originally set. Pay particular attention to the DTC set conditions, such as, VSS, MAP, ECT, and Load

Using the schematics as a guide, visually inspect the related wiring harness. Look for any chafed, pierced, pinched, or partially broken wires.

Visually inspect the related wiring harness connectors. Look for broken, bent, pushed out, or corroded terminals.

Wiggle the wiring and connectors while checking for any possible open or shorted circuits.

Check for any Service Information Tune-ups or Technical Service Bulletins that may apply.

Were there any problems found?

Yes >> Repair as necessary.

Perform RE TRANSMISSION VERIFICATION TEST VER - 1 (GAS). (Refer to 21 - TRANSMISSION/TRANSAXLE/AUTOMATIC - 48RE - STANDARD PROCEDURE)

No >> Test Complete.

P1764-GOVERNOR PRESSURE SENSOR VOLTS TOO LOW (GAS)

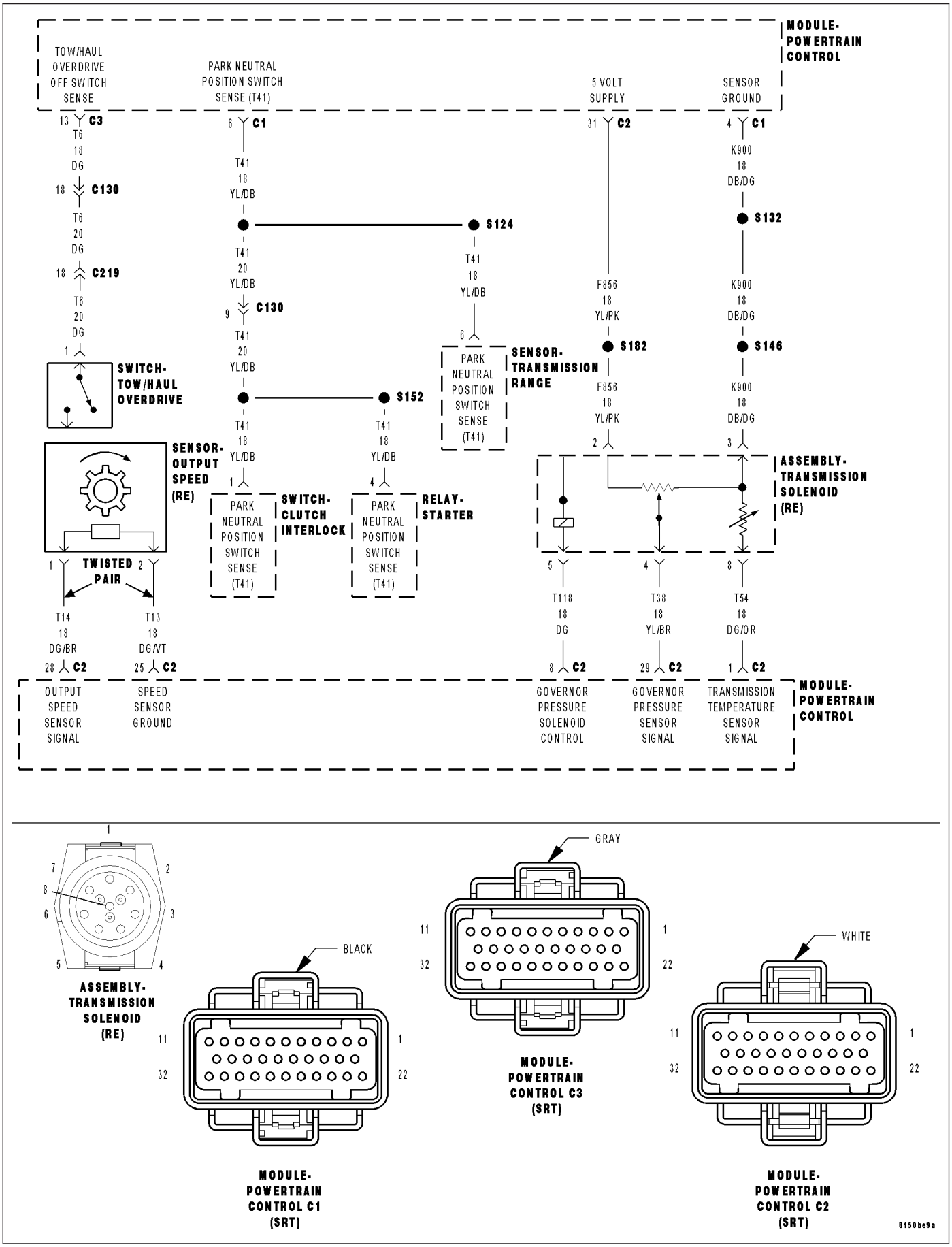

P1764-GOVERNOR PRESSURE SENSOR VOLTS TOO LOW (GAS) (CONTINUED)

For the Transmission circuit diagram (Refer to 21 - TRANSMISSION/TRANSAXLE/AUTOMATIC - 48RE - SCHEMATICS AND DIAGRAMS)

For a complete wiring diagram**Refer to Section 8W**

Theory of Operation

The Governor Pressure Sensor is used by the PCM to adjust the Governor Pressure to a desired level for shifts in first, second, and third gear. If the PCM detects the monitored sense voltage is greater than or less than a predetermined specification, the PCM will set the desired DTC.

- **When Monitored:**
  Continuously with the ignition on and the engine running.
- **Set Condition:**
  This DTC will set if the monitored voltage from the Governor Pressure Sensor drops below 0.12 volts for the period of 8.5 seconds.

Possible Causes
PARK NEUTRAL DTC PRESENT OR OTHER TRANSMISSION DTC'S PRESENT
(T38) GOVERNOR PRESSURE SENSOR SIGNAL CIRCUIT SHORT TO GROUND
(T38) GOVERNOR PRESSURE SENSOR SIGNAL CIRCUIT SHORT TO OTHER CIRCUITS
TRANSMISSION SOLENOID ASSEMBLY
GOVERNOR PRESSURE SENSOR
POWERTRAIN CONTROL MODULE

Always perform the Pre-Diagnostic Troubleshooting procedure before proceeding. (Refer to 21 - TRANSMISSION/TRANSAXLE/AUTOMATIC - 48RE - STANDARD PROCEDURE)

Diagnostic Test

1. CHECK IF THE DTC IS CURRENT

Ignition on, engine not running.

With the scan tool, read Engine DTCs.

Record the Freeze Frame data for the reported DTC.

With the scan tool, erase DTCs.

Turn the ignition off to the lock position.

Using the Freeze Frame data recorded earlier, try to duplicate the conditions in which the DTC originally set.

NOTE: It may be necessary to road test the vehicle to duplicate the original set conditions.
With the scan tool, read Engine DTCs.

Did the DTC reset?

Yes >> Go To 2

No >> Go To 7

---

2. CHECK FOR OTHER TRANSMISSION DTC'S PRESENT

Are there any Park/Neutral or other Transmission DTCs present?

Yes >> Refer to the Transmission category and perform the appropriate symptom(s). If a Park/Neutral DTC is present, perform its respective test first. (Refer to 21 - TRANSMISSION/TRANSAXLE/AUTOMATIC - 48RE - DIAGNOSIS AND TESTING)

No >> Go To 3

P1764-GOVERNOR PRESSURE SENSOR VOLTS TOO LOW (GAS) (CONTINUED)

3. CHECK THE (T38) GOVERNOR PRESSURE SENSOR SIGNAL CIRCUIT FOR A SHORT TO GROUND

Turn the ignition off to the lock position.

Disconnect the Transmission Solenoid Assembly harness connector.

Disconnect the PCM C1 and C2 harness connectors.

NOTE: Check connectors - Clean/repair as necessary

Measure the resistance between Ground and the (T38) Governor Pressure Sensor Signal circuit in the Transmission Solenoid Assembly harness connector.

Is the resistance greater than 100k ohms?

Yes >> Go To 4

No >> Repair the (T38) Governor Pressure Sensor Signal circuit for a short to ground.

Perform RE TRANSMISSION VERIFICATION TEST VER - 1 (GAS). (Refer to 21 - TRANSMISSION/TRANSAXLE/ AUTOMATIC - 48RE - STANDARD PROCEDURE)

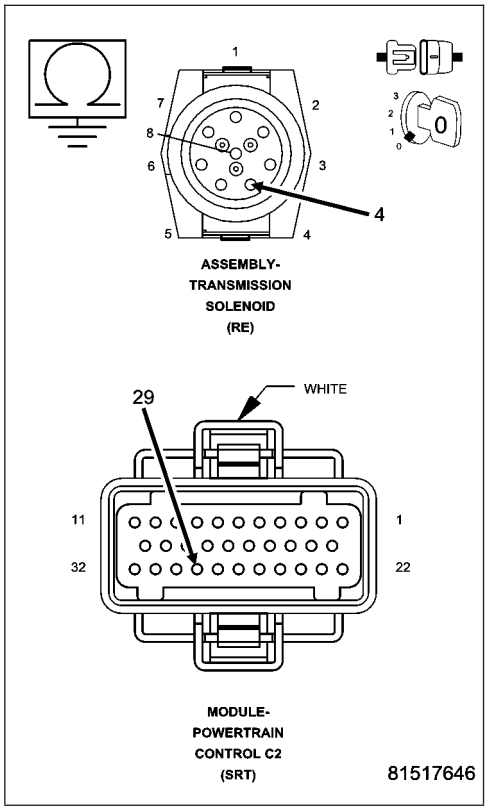

4. CHECK THE (T38) GOVERNOR PRESSURE SENSOR SIGNAL CIRCUIT FOR A SHORT TO ANOTHER CIRCUIT

Measure the resistance between the (T38) Governor Pressure Sensor Signal circuit and all other circuits in the Transmission Solenoid Assembly harness connector.

Is the resistance below 100k ohms between the (T38) Governor Pressure Sensor Signal circuit and any other circuit(s) in the Transmission Solenoid Assembly harness connector?

Yes >> Repair the (T38) Governor Pressure Sensor Signal circuit for a short to another circuit(s).

Perform RE TRANSMISSION VERIFICATION TEST VER - 1 (GAS). (Refer to 21 - TRANSMISSION/TRANSAXLE/ AUTOMATIC - 48RE - STANDARD PROCEDURE)

No >> Go To 5

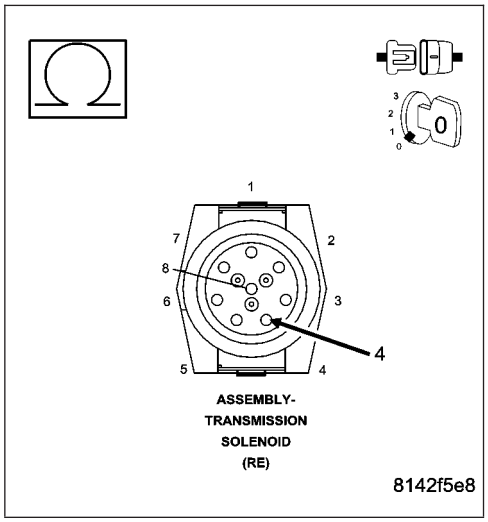

P1764-GOVERNOR PRESSURE SENSOR VOLTS TOO LOW (GAS) (CONTINUED)

5. CHECK THE TRANSMISSION SOLENOID ASSEMBLY

Reconnect the Transmission Solenoid Assembly harness connector.

Remove the Transmission Oil Pan per the Service Information. (Refer to 21 - TRANSMISSION/TRANSAXLE/AUTOMATIC - 48RE/FLUID - STANDARD PROCEDURE)

Disconnect the Governor Pressure/Transmission Temperature Sensor connector (inside transmission).

Measure the resistance between the (T38) Governor Pressure Sensor Signal circuit and all other circuits in the PCM C1 and C2 harness connectors.

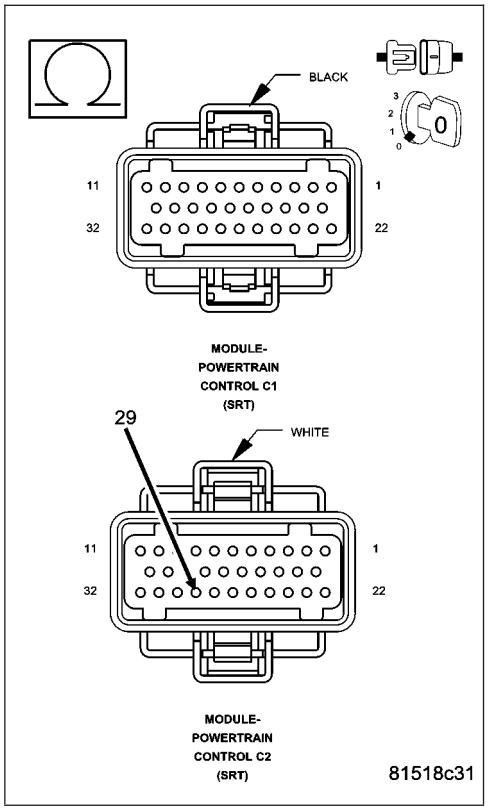

Is the resistance below 100k ohms between the (T38) Governor Pressure Sensor Signal circuit any other circuit(s) in the PCM C1 or C2 harness connectors?

Yes >> Replace the Transmission Solenoid Assembly per the Service Information.

Perform RE TRANSMISSION VERIFICATION TEST VER - 1 (GAS). (Refer to 21 - TRANSMISSION/TRANSAXLE/AUTOMATIC - 48RE - STANDARD PROCEDURE)

No >> Go To 6

6. CHECK THE GOVERNOR PRESSURE SENSOR SENSOR

Turn the ignition on.

With the scan tool, erase DTCs.

Connect a jumper wire between the (T38) Governor Pressure Sensor Signal circuit and the (F856) 5-volt Supply circuit in the Governor Pressure Sensor connector.

With the scan tool, read DTCs.

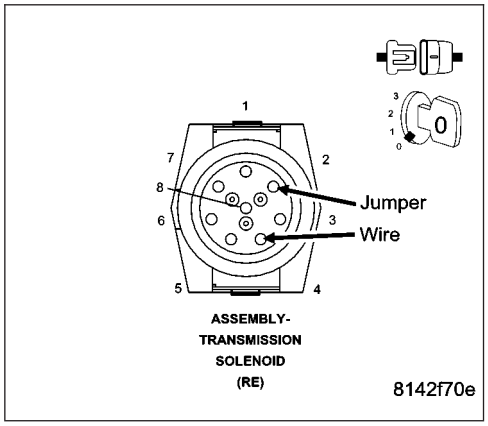

Did the DTC P0868 set?

Yes >> Inspect the Governor Pressure Sensor wiring for damage. If no problems are found, replace the Governor Pressure Sensor per the Service Information.

Perform RE TRANSMISSION VERIFICATION TEST VER - 1 (GAS). (Refer to 21 - TRANSMISSION/TRANSAXLE/AUTOMATIC - 48RE - STANDARD PROCEDURE)

No >> Using the schematics as a guide, check the Powertrain Control Module (PCM) pins, terminals, and connectors for corrosion, damage, or terminal push out. Pay particular attention to all power and ground circuits. If no problems are found, replace and program the PCM per the Service Information. (Refer to 8 - ELECTRICAL/ELECTRONIC CONTROL MODULES/POWERTRAIN CONTROL MODULE - REMOVAL)

Perform RE TRANSMISSION VERIFICATION TEST VER - 1 (GAS). (Refer to 21 - TRANSMISSION/TRANSAXLE/AUTOMATIC - 48RE - STANDARD PROCEDURE)

P1764-GOVERNOR PRESSURE SENSOR VOLTS TOO LOW (GAS) (CONTINUED)

7. INTERMITTENT WIRING AND CONNECTORS

The conditions necessary to set this DTC are not present at this time.

Use the Freeze Frame Data to help duplicate the conditions in which the DTC originally set. Pay particular attention to the DTC set conditions, such as, VSS, MAP, ECT, and Load

Using the schematics as a guide, visually inspect the related wiring harness. Look for any chafed, pierced, pinched, or partially broken wires.

Visually inspect the related wiring harness connectors. Look for broken, bent, pushed out, or corroded terminals.

Wiggle the wiring and connectors while checking for any possible open or shorted circuits.

Check for any Service Information Tune-ups or Technical Service Bulletins that may apply.

Were there any problems found?

Yes >> Repair as necessary.
Perform RE TRANSMISSION VERIFICATION TEST VER - 1 (GAS). (Refer to 21 - TRANSMISSION/ TRANSAXLE/AUTOMATIC - 48RE - STANDARD PROCEDURE)

No >> Test Complete.

P1765-TRANS 12 VOLT SUPPLY RELAY CONTROL CIRCUIT (GAS)

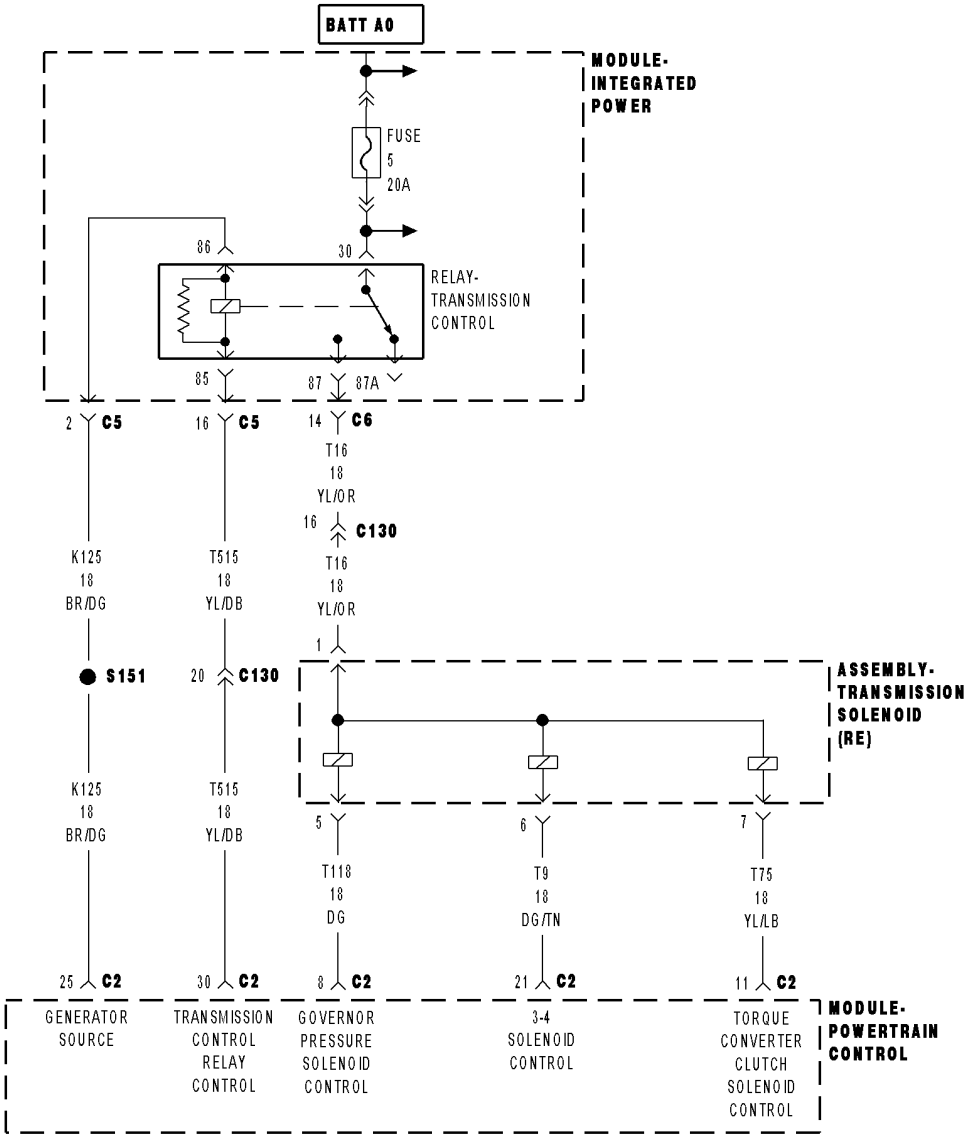

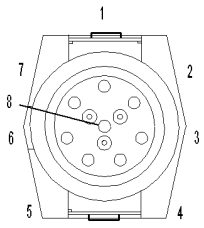

ASSEMBLY-
TRANSMISSION
SOLENOID
(RE)

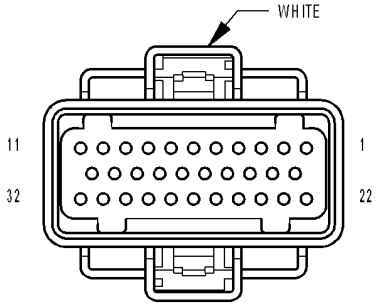

MODULE-
POWERTRAIN
CONTROL C2
(SRT)

81511462

P1765-TRANS 12 VOLT SUPPLY RELAY CONTROL CIRCUIT (GAS) (CONTINUED)

For the Transmission circuit diagram (Refer to 21 - TRANSMISSION/TRANSAXLE/AUTOMATIC - 48RE - SCHEMATICS AND DIAGRAMS)

For a complete wiring diagram**Refer to Section 8W**

Theory of Operation

The Transmission Control Relay supplies power to the TCC, Overdrive, and Governor Pressure Solenoids when in normal operating mode. The Transmission Control Relay Control circuit is constantly monitored by the PCM. If the expected state of the Transmission Control Relay Control circuit is different then the expected state, a corresponding DTC will set and the PCM will de-energize the Transmission Control Relay and place the transmission in Limp-in.

- **When Monitored:**
  Continuously with the Ignition on.
- **Set Condition:**
  This DTC will set if the PCM monitored voltage of the Transmission Control Relay Control circuit is different than the expected voltage for the period 3.0 seconds.

Possible Causes
FUSED B(+) CIRCUIT OPEN
(T515) TRANSMISSION CONTROL RELAY CONTROL CIRCUIT OPEN
(K125) GENERATOR SOURCE CIRCUIT OPEN
(T515) TRANSMISSION CONTROL RELAY CONTROL SHORT TO VOLTAGE
(T515) TRANSMISSION CONTROL RELAY CONTROL CIRCUIT SHORT TO GROUND
(T515) TRANSMISSION CONTROL RELAY CONTROL CIRCUIT SHORT TO ANOTHER CIRCUIT
TRANSMISSION CONTROL RELAY
POWERTRAIN CONTROL MODULE

Always perform the Pre-Diagnostic Troubleshooting procedure before proceeding. (Refer to 21 - TRANSMISSION/TRANSAXLE/AUTOMATIC - 48RE - STANDARD PROCEDURE)

1. CHECK IF THE DTC IS CURRENT

Ignition on, engine not running.
With the scan tool, read Engine DTCs.
Record the Freeze Frame data for the reported DTC.
With the scan tool, erase DTCs.
Turn the ignition off to the lock position.
Using the Freeze Frame data recorded earlier, try to duplicate the conditions in which the DTC originally set.

NOTE: It may be necessary to road test the vehicle to duplicate the original set conditions.
With the scan tool, read Engine DTCs.

Did the DTC reset?

Yes >> Go To 2

No >> Go To 11

P1765-TRANS 12 VOLT SUPPLY RELAY CONTROL CIRCUIT (GAS) (CONTINUED)

2. TRANSMISSION CONTROL RELAY NOT CLICKING

With the scan tool, actuate the Transmission Control Relay.

Is the Transmission Control Relay clicking?

Yes >> Go To 11

No >> Go To 3

---

3. CHECK THE TRANSMISSION CONTROL RELAY

Turn the ignition off to the lock position.

Remove the Transmission Control Relay.

NOTE: Check connectors - Clean/repair as necessary.

Install a substitute relay in place of the Transmission Control Relay.

Ignition on, engine not running.

With the scan tool, erase DTCs.

Start the engine.

With the scan tool, read Engine DTCs.

Does the scan tool display the DTC P1765?

Yes >> Go To 4

No >> Replace the Transmission Control Relay.

Perform RE TRANSMISSION VERIFICATION TEST VER - 1 (GAS). (Refer to 21 - TRANSMISSION/TRANSAXLE/AUTOMATIC - 48RE - STANDARD PROCEDURE)

---

4. CHECK THE FUSED B(+) CIRCUIT FOR AN OPEN

Turn the ignition off to the lock position.

Remove the Transmission Control Relay.

Ignition on, engine not running.

Using a 12-volt test light connected to ground, check the Fused B(+) circuit in the Transmission Control Relay connector.

NOTE: The test light must illuminate brightly. Compare the brightness to that of a direct connection to the battery.

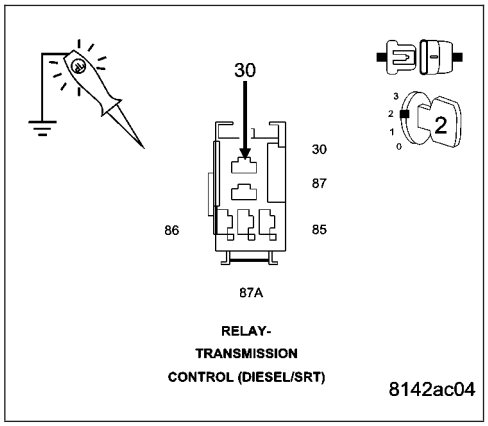

Does the test light illuminate brightly?

Yes >> Go To 5

No >> Repair the Fused B(+) circuit for an open. If the fuse is open, make sure to check for a short to ground.

Perform RE TRANSMISSION VERIFICATION TEST VER - 1 (GAS). (Refer to 21 - TRANSMISSION/TRANSAXLE/AUTOMATIC - 48RE - STANDARD PROCEDURE)

P1765-TRANS 12 VOLT SUPPLY RELAY CONTROL CIRCUIT (GAS) (CONTINUED)

5. CHECK THE (K125) GENERATOR SOURCE CIRCUIT FOR AN OPEN

Using a 12-volt test light connected to ground, check the (K125) Generator Source circuit in the Transmission Control Relay connector.

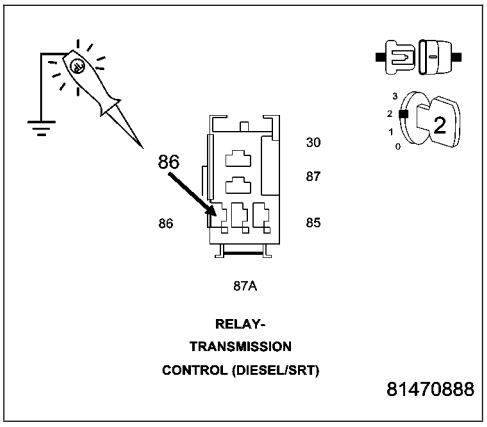

Does the test light illuminate brightly?

Yes >> Go To 6

No >> Repair the (K125) Generator Source circuit for an open.
Perform RE TRANSMISSION VERIFICATION TEST VER - 1 (GAS). (Refer to 21 - TRANSMISSION/TRANSAXLE/ AUTOMATIC - 48RE - STANDARD PROCEDURE)

---

6. CHECK THE (T515) TRANSMISSION CONTROL RELAY CONTROL CIRCUIT FOR A SHORT TO VOLTAGE

Turn the ignition off to the lock position.

Disconnect the PCM C2 harness connector.

Ignition on, engine not running.

Measure the voltage of the (T515) Transmission Control Relay Control circuit in the Transmission Control Relay connector.

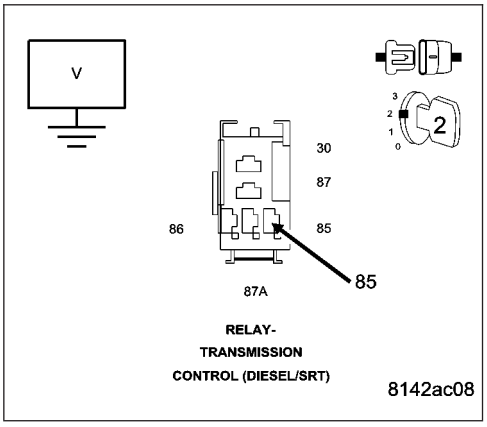

Is the voltage above 1.0 volts?

Yes >> Repair the (T515) Transmission Control Relay Control circuit for a short to voltage.
Perform RE TRANSMISSION VERIFICATION TEST VER - 1 (GAS). (Refer to 21 - TRANSMISSION/TRANSAXLE/ AUTOMATIC - 48RE - STANDARD PROCEDURE)

No >> Go To 7

P1765-TRANS 12 VOLT SUPPLY RELAY CONTROL CIRCUIT (GAS) (CONTINUED)

7. CHECK THE (T515) TRANSMISSION CONTROL RELAY CONTROL CIRCUIT FOR AN OPEN

Measure the resistance of the (T515) Transmission Control Relay Control circuit between the Transmission Control Relay connector and the PCM C2 harness connector.

Is the resistance below 5.0 ohms?

Yes >> Go To 8

No >> Repair the (T515) Transmission Control Relay Control circuit for an open.

Perform RE TRANSMISSION VERIFICATION TEST VER - 1 (GAS). (Refer to 21 - TRANSMISSION/TRANSAXLE/ AUTOMATIC - 48RE - STANDARD PROCEDURE)

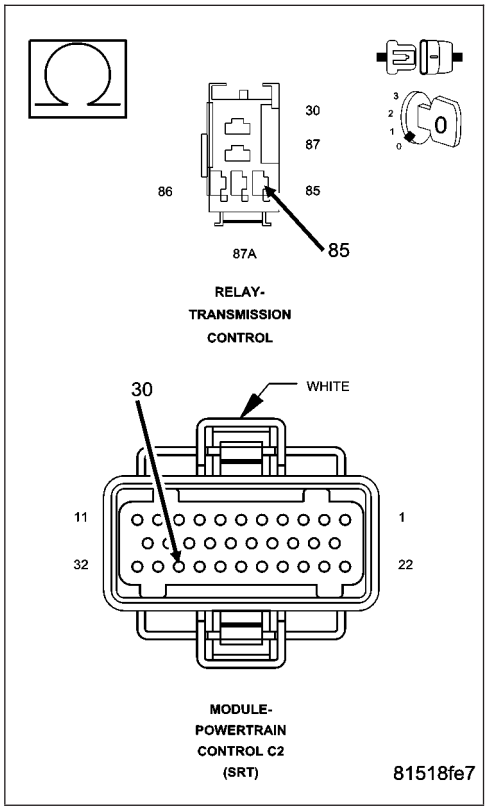

8. CHECK THE (T515) TRANSMISSION CONTROL RELAY CONTROL CIRCUIT SHORT TO GROUND

Measure the resistance between ground and the (T515) Transmission Control Relay Control circuit in the Transmission Control Relay connector.

Is the resistance above 100k ohms?

Yes >> Go To 9

No >> Repair the (T515) Transmission Control Relay Control circuit for a short to ground.

Perform RE TRANSMISSION VERIFICATION TEST VER - 1 (GAS). (Refer to 21 - TRANSMISSION/TRANSAXLE/ AUTOMATIC - 48RE - STANDARD PROCEDURE)

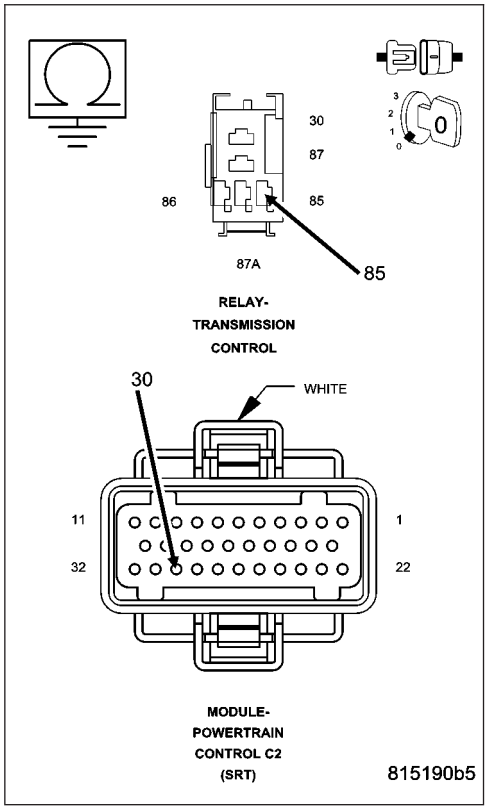

P1765-TRANS 12 VOLT SUPPLY RELAY CONTROL CIRCUIT (GAS) (CONTINUED)

9. CHECK THE (T515) TRANSMISSION CONTROL RELAY CONTROL CIRCUIT FOR A SHORT TO ANOTHER CIRCUIT

Measure the resistance between the Transmission Control Relay Control circuit and all other circuits in the PCM C2 harness connector.

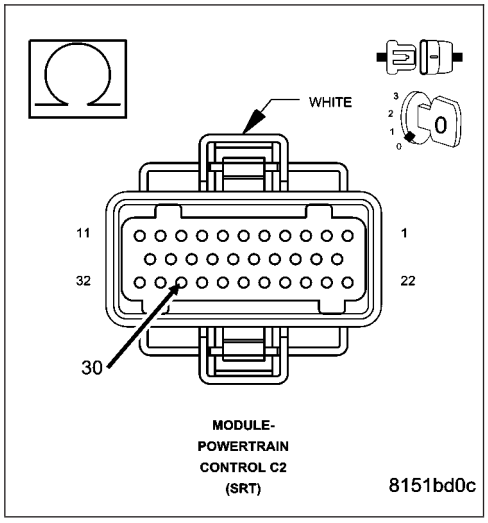

Is the resistance below 100k ohms between the (T515) Transmission Control Relay Control circuit and any other circuit(s) in the PCM C2 harness connector?

Yes >> Repair the Transmission Control Relay Control circuit for a short to another circuit(s).

Perform RE TRANSMISSION VERIFICATION TEST VER - 1 (GAS). (Refer to 21 - TRANSMISSION/TRANSAXLE/ AUTOMATIC - 48RE - STANDARD PROCEDURE)

No >> Go To 10

---

10. CHECK THE POWERTRAIN CONTROL MODULE

Turn the ignition off to the lock position.

Ignition on, engine not running.

With the scan tool, actuate the Transmission Relay.

Using a 12-volt test light connected to 12-volts, check the Transmission Control Relay Control circuit in the Transmission Control Relay Control connector.

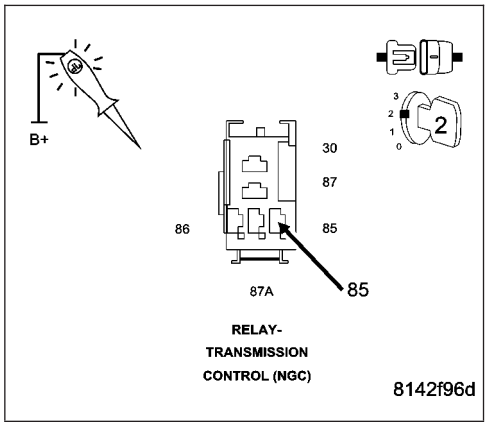

NOTE: The test light must illuminate brightly. Compare the brightness to that of a direct connection to the battery.

Does the Test Light cycle on and off and illuminate brightly?

Yes >> Go To 11

No >> Using the schematics as a guide, check the Powertrain Control Module (PCM) pins, terminals, and connectors for corrosion, damage, or terminal push out. Pay particular attention to all power and ground circuits. If no problems are found, replace and program the PCM per the Service Information. (Refer to 8 - ELECTRICAL/ELECTRONIC CONTROL MODULES/POWERTRAIN CONTROL MODULE - REMOVAL)

Perform RE TRANSMISSION VERIFICATION TEST VER - 1 (GAS). (Refer to 21 - TRANSMISSION/ TRANSAXLE/AUTOMATIC - 48RE - STANDARD PROCEDURE)

P1765-TRANS 12 VOLT SUPPLY RELAY CONTROL CIRCUIT (GAS) (CONTINUED)

11. INTERMITTENT WIRING AND CONNECTORS

The conditions necessary to set this DTC are not present at this time.

Use the Freeze Frame Data to help duplicate the conditions in which the DTC originally set. Pay particular attention to the DTC set conditions, such as, VSS, MAP, ECT, and Load

Using the schematics as a guide, visually inspect the related wiring harness. Look for any chafed, pierced, pinched, or partially broken wires.

Visually inspect the related wiring harness connectors. Look for broken, bent, pushed out, or corroded terminals.

Wiggle the wiring and connectors while checking for any possible open or shorted circuits.

Check for any Service Information Tune-ups or Technical Service Bulletins that may apply.

Were there any problems found?

Yes >> Repair as necessary.
Perform RE TRANSMISSION VERIFICATION TEST VER - 1 (GAS). (Refer to 21 - TRANSMISSION/ TRANSAXLE/AUTOMATIC - 48RE - STANDARD PROCEDURE)

No >> Test Complete.

P0850-P/N SWITCH PERFORMANCE (GAS)

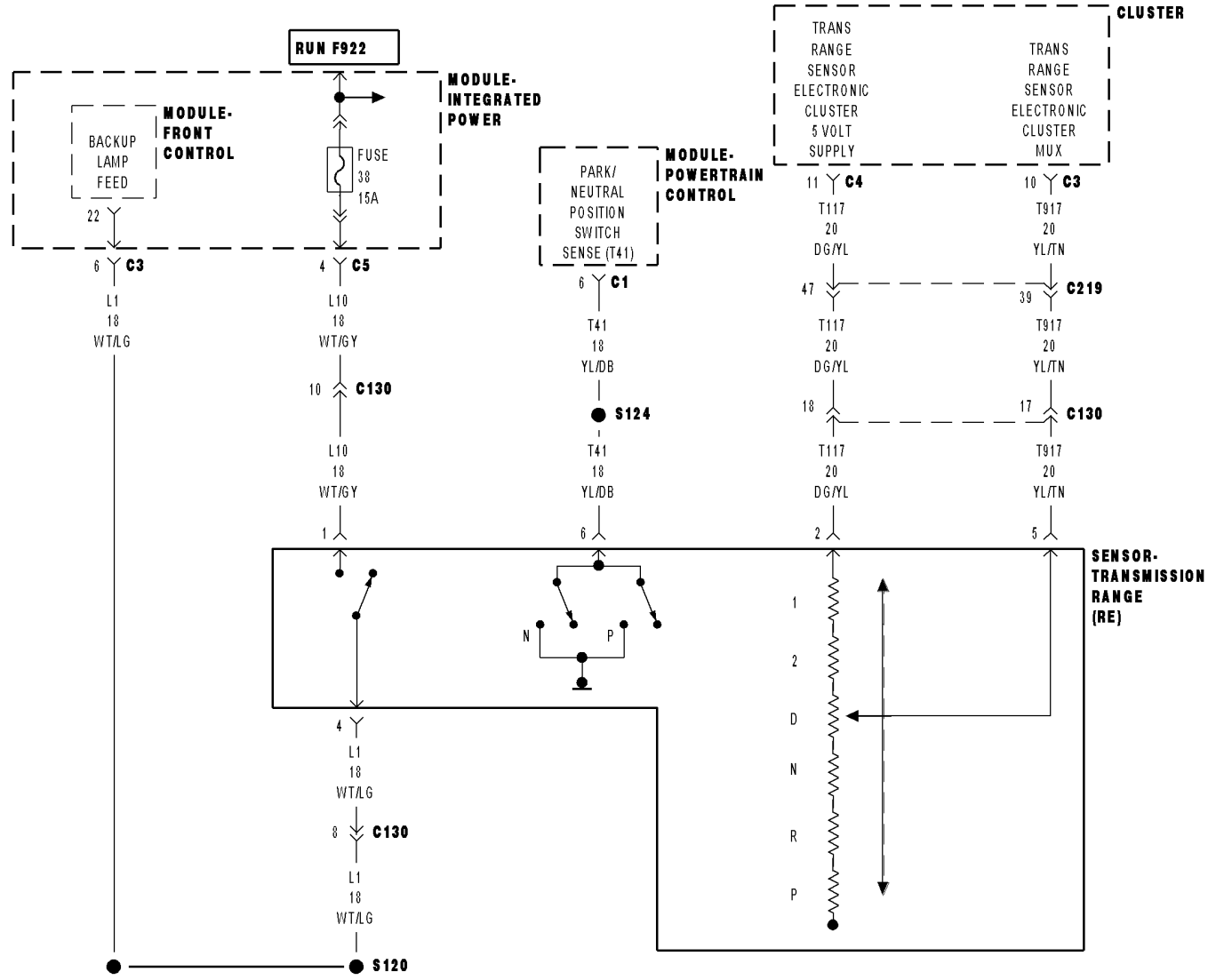

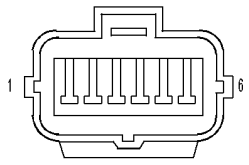

SENSOR-
TRANSMISSION RANGE
(RE)

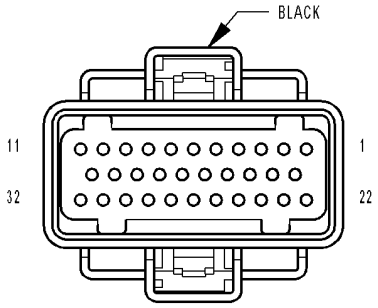

MODULE-
POWERTRAIN
CONTROL C1
(SRT)

81511c68

P0850-P/N SWITCH PERFORMANCE (GAS) (CONTINUED)

For the Transmission circuit diagram (Refer to 21 - TRANSMISSION/TRANSAXLE/AUTOMATIC - 48RE - SCHEMATICS AND DIAGRAMS)

For a complete wiring diagram**Refer to Section 8W**

- **When Monitored:**
  Continuously with the ignition on and engine running.
- **Set Condition:**
  The Transmission governor pressure set point is above a threshold while in park or the P/N switch is in drive during an engine start.

Possible Causes
TRS CONNECTOR DAMAGE OR CORROSION
PCM CONNECTOR DAMAGE OR CORROSION
(T41) P/N POSITION SWITCH SENSE CIRCUIT OPEN
(T41) P/N POSITION SWITCH SENSE CIRCUIT SHORT TO GROUND
(T41) P/N POSITION SWITCH SENSE CIRCUIT SHORT TO ANOTHER CIRCUIT
TRANSMISSION RANGE SENSOR
POWERTRAIN CONTROL MODULE

Always perform the Pre-Diagnostic Troubleshooting procedure before proceeding. (Refer to 21 - TRANSMISSION/TRANSAXLE/AUTOMATIC - 48RE - STANDARD PROCEDURE)

Diagnostic Test

1. CHECK IF THE SCAN TOOL DISPLAYS P/N AND D/R IN THE CORRECT POSITION

Ignition on, engine not running.

With the scan tool, monitor the PNP switch input state.

Move the gear selector through all gear positions Park to 1st and back to Park..

Did the scan tool display P/N and D/R in the correct gear positions?

Yes >> Go To 8

No >> Go To 2

---

2. CHECK THE TRS CONNECTOR FOR DAMAGE OR CORROSION

Turn the ignition off to the lock position.

Disconnect the Transmission Range Sensor harness connector.

Inspect the Transmission Range Sensor harness wiring and connector for damage, pushed out pins, or corrosion, etc.

Were there any problems found?

Yes >> Repair as necessary.
Perform RE TRANSMISSION VERIFICATION TEST VER - 1 (GAS). (Refer to 21 - TRANSMISSION/TRANSAXLE/AUTOMATIC - 48RE - STANDARD PROCEDURE)

No >> Go To 3

P0850-P/N SWITCH PERFORMANCE (GAS) (CONTINUED)

3. CHECK THE PCM CONNECTOR FOR DAMAGE OR CORROSION

Disconnect the PCM C1 harness connector.

Inspect the PCM wiring and connector for damage, pushed out pins, or corrosion, etc.

Were there any problems found?

Yes >> Repair as necessary.
Perform RE TRANSMISSION VERIFICATION TEST VER - 1 (GAS). (Refer to 21 - TRANSMISSION/TRANSAXLE/AUTOMATIC - 48RE - STANDARD PROCEDURE)

No >> Go To 4

---

4. CHECK THE (T41) P/N POSITION SWITCH SENSE CIRCUIT FOR AN OPEN

Measure the resistance of the (T41) P/N Position Switch Sense circuit between the PCM C1 harness connector and the Transmission Range Sensor harness connector.

Is the resistance below 5.0 ohms?

Yes >> Go To 5

No >> Repair the (T41) P/N Position Switch Sense circuit for an open.
Perform RE TRANSMISSION VERIFICATION TEST VER - 1 (GAS). (Refer to 21 - TRANSMISSION/TRANSAXLE/AUTOMATIC - 48RE - STANDARD PROCEDURE)

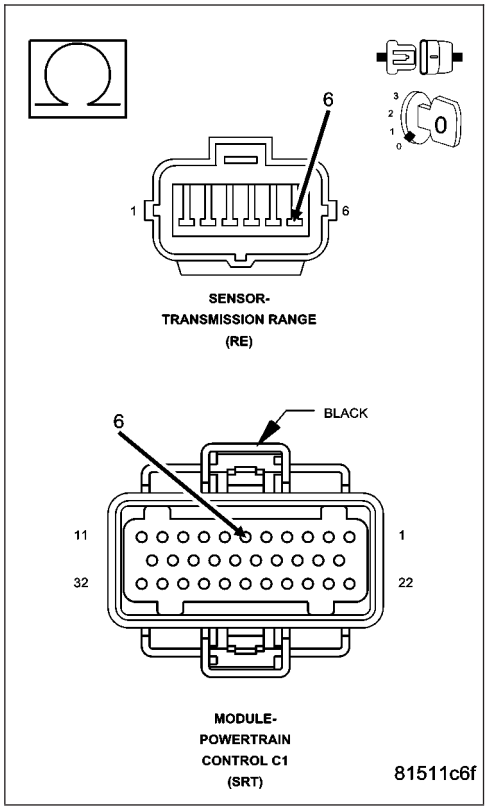

P0850-P/N SWITCH PERFORMANCE (GAS) (CONTINUED)

5. CHECK THE (T41) P/N POSITION SWITCH SENSE CIRCUIT FOR A SHORT TO GROUND

Measure the resistance between ground and the (T41) P/N Position Switch Sense circuit.

Is the resistance greater then 100k ohms?

Yes >> Go To 6

No >> Repair the (T41) P/N Position Switch Sense circuit for a short to ground.

Perform RE TRANSMISSION VERIFICATION TEST VER - 1 (GAS). (Refer to 21 - TRANSMISSION/TRANSAXLE/ AUTOMATIC - 48RE - STANDARD PROCEDURE)

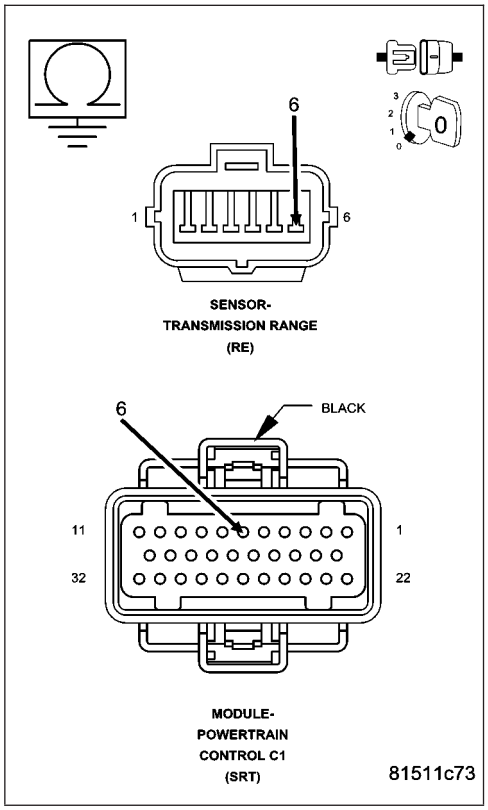

6. CHECK THE (T41) P/N POSITION SWITCH SENSE CIRCUIT FOR A SHORT TO ANOTHER CIRCUIT

Measure the resistance between the (T41) P/N Position Switch Sense circuit and all other circuits in the PCM C1 and C2 harness connectors.

Is the resistance greater 100k ohms between the (T41) P/N Position Switch Sense circuit and any other circuit(s) in the PCM C1 and C2 harness connectors?

Yes >> Go To 7

No >> Repair the (T41) P/N Position Switch Sense circuit for a short to another circuit(s).

Perform RE TRANSMISSION VERIFICATION TEST VER - 1 (GAS). (Refer to 21 - TRANSMISSION/TRANSAXLE/ AUTOMATIC - 48RE - STANDARD PROCEDURE)

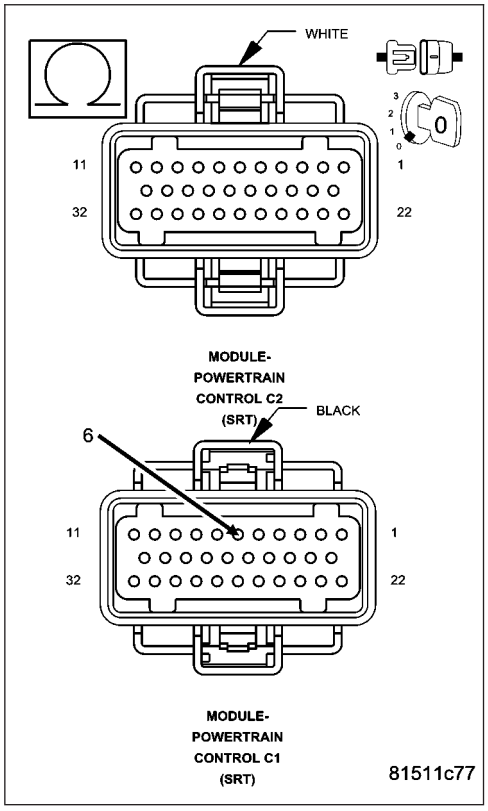

P0850-P/N SWITCH PERFORMANCE (GAS) (CONTINUED)

7. CHECK THE TRANSMISSION RANGE SENSOR

Reconnect the Transmission Range Sensor harness connector.

Move the gear selector through all gear positions, from Park to 1st and back.

While moving the gear selector through the gear positions, measure the resistance between ground and the (T41) P/N Position Switch Sense circuit in the PCM harness connector.

NOTE: The circuit is grounded in Park and Neutral and open in the other positions.

Did the display change from above 100k ohms (open) to below 5.0 ohms (grounded)?

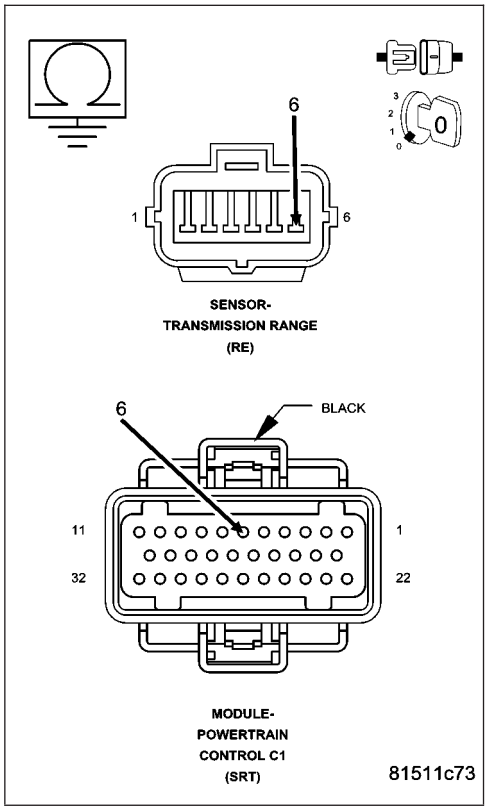

Yes >> Using the schematics as a guide, check the Powertrain Control Module (PCM) pins, terminals, and connectors for corrosion, damage, or terminal push out. Pay particular attention to all power and ground circuits. If no problems are found, replace and program the PCM per the Service Information. (Refer to 8 - ELECTRICAL/ELECTRONIC CONTROL MODULES/POWERTRAIN CONTROL MODULE - REMOVAL)

Perform RE TRANSMISSION VERIFICATION TEST VER - 1 (GAS). (Refer to 21 - TRANSMISSION/TRANSAXLE/AUTOMATIC - 48RE - STANDARD PROCEDURE)

No >> Replace the Transmission Range Sensor per Service Information. (Refer to 21 - TRANSMISSION/TRANSAXLE/AUTOMATIC - 48RE/TRANSMISSION RANGE SENSOR - REMOVAL)

Perform RE TRANSMISSION VERIFICATION TEST VER - 1 (GAS). (Refer to 21 - TRANSMISSION/TRANSAXLE/AUTOMATIC - 48RE - STANDARD PROCEDURE)

---

8. INTERMITTENT WIRING AND CONNECTORS

The conditions necessary to set this DTC are not present at this time.

Use the Freeze Frame Data to help duplicate the conditions in which the DTC originally set. Pay particular attention to the DTC set conditions, such as, VSS, MAP, ECT, and Load

Using the schematics as a guide, visually inspect the related wiring harness. Look for any chafed, pierced, pinched, or partially broken wires.

Visually inspect the related wiring harness connectors. Look for broken, bent, pushed out, or corroded terminals.

Wiggle the wiring and connectors while checking for any possible open or shorted circuits.

Check for any Service Information Tune-ups or Technical Service Bulletins that may apply.

Were there any problems found?

Yes >> Repair as necessary.

Perform RE TRANSMISSION VERIFICATION TEST VER - 1 (GAS). (Refer to 21 - TRANSMISSION/TRANSAXLE/AUTOMATIC - 48RE - STANDARD PROCEDURE)

No >> Test Complete.

STANDARD PROCEDURE

PRE-DIAGNOSTIC TROUBLE SHOOTING PROCEDURE - 48RE GAS

For a complete wiring diagram**Refer to Section 8W**

1.

NOTE: Always perform diagnostics with a fully charged battery to avoid false symptoms.

NOTE: Low fluid level can be the cause of many transmission problems. If the fluid level is low locate and repair the leak then check and adjust the fluid level per the Service Information.

With the scan tool, read engine DTC's. Check and repair all engine DTCs prior to performing transmission symptom diagnostics.

Using the wiring diagram/schematic as a guide, inspect the wiring and connectors. Repair as necessary.

Verify the flash level of the Powertrain Control Module. Some problems are corrected by software upgrades.

Check for any Service Information Tune-ups or Technical Service Bulletins that may apply.

Did any of the above checks or procedures correct the symptom?

Yes >> Repair is complete.
Perform RE TRANSMISSION VERIFICATION TEST VER - 1 (GAS). (Refer to 21 - TRANSMISSION/ TRANSAXLE/AUTOMATIC - 48RE - STANDARD PROCEDURE)

No >> Refer to the Transmission category and perform the appropriate symptom(s). (Refer to 21 - TRANSMISSION/TRANSAXLE/AUTOMATIC - 48RE - DIAGNOSIS AND TESTING)

PRE-DIAGNOSTIC TROUBLE SHOOTING PROCEDURE - 48RE GAS (CONTINUED)

TRANSMISSION VERIFICATION TEST VER - 1 (GAS)

1.

1. Inspect the vehicle to ensure that all engine and transmission components are properly installed and connected. Reassemble and reconnect components as necessary.
2. If any existing diagnostic trouble codes have not been repaired, go to Symptom List and follow path specified.
3. Connect a scan tool to the data link connector.
4. Ensure the fuel tank has at least a quarter tank of fuel. Turn off all accessories.
5. Start and run the engine until the transmission temperature is above 43°C (110°F).
6. Check the transmission fluid level per the Service Information. Adjust if necessary.
7. Road test the vehicle. Make 15 to 20 1-2, 2-3 and 3-4 up shifts. Perform these shifts from a standing start to 72 km/h (45 MPH) with a constant throttle opening of 20-25%.
8. Below 40 km/h (25 MPH), make 5 to 8 wide open throttle kick downs to 1st gear. Allow at least 5 seconds each in 2nd and 3rd between each kick down.
9. For a specific DTC, drive the vehicle in accordance with the Symptom's When Monitored and Set Conditions to verify the repair.
10. If a DTC sets during the road test, return to the Symptom List and follow the path. If no DTC sets, the repair is complete.

Are there any DTCs or symptoms remaining?

Yes >> Repair is not complete, refer to appropriate symptom.

No >> Repair is complete.

SCHEMATICS AND DIAGRAMS

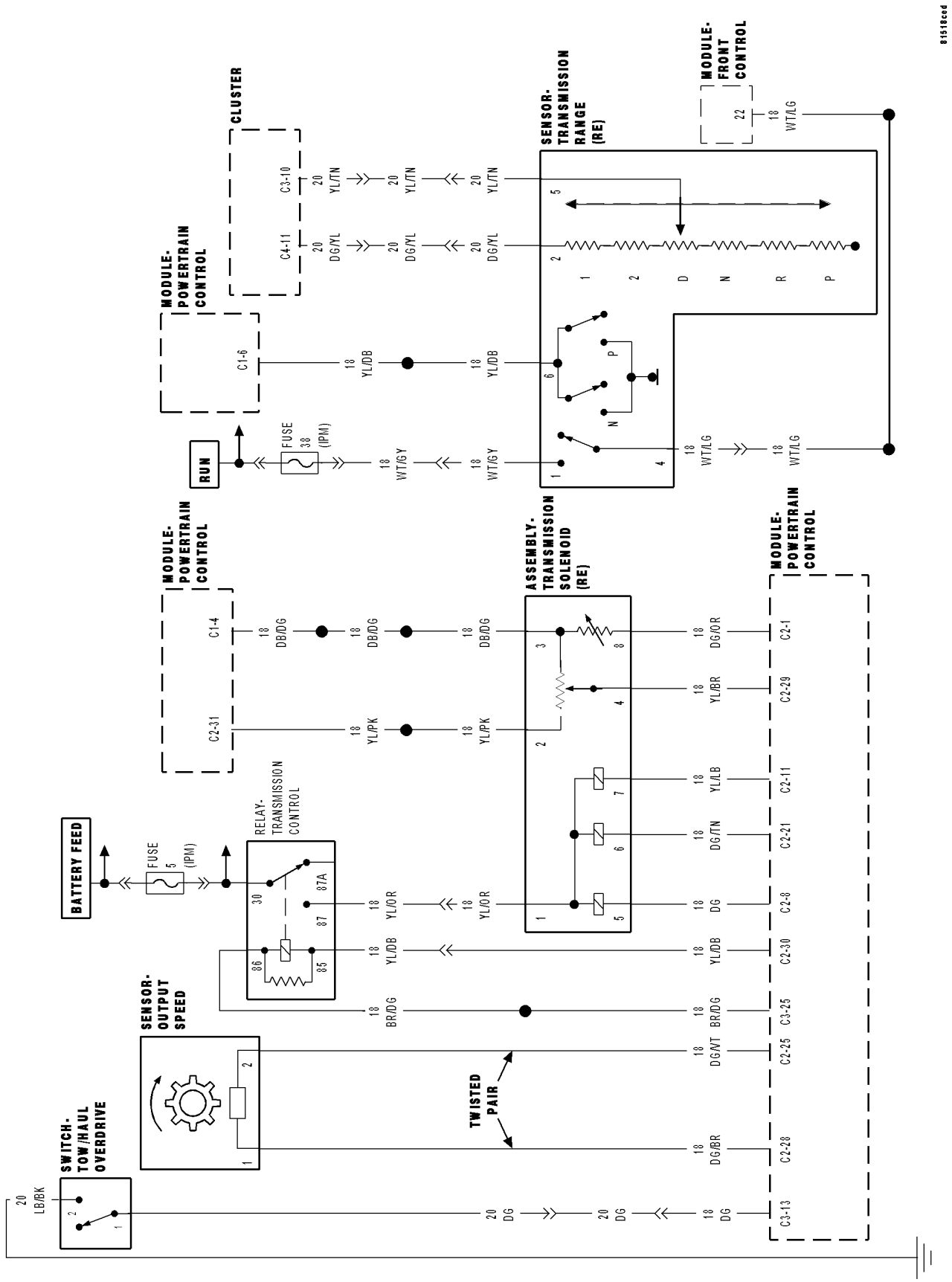

RE TRANSMISSION CIRCUIT DIAGRAM (GAS)

AUTOMATIC TRANSMISSION - 48RE - DIESEL - ELECTRICAL DIAGNOSTICS

TABLE OF CONTENTS

page

AUTOMATIC TRANSMISSION - 48RE - DIESEL - ELECTRICAL DIAGNOSTICS
DIAGNOSIS AND TESTING
P0711-TRANS TEMP SENSOR, NO TEMP RISE AFTER START (DIESEL) 808
P0712-TRANS TEMP SENSOR VOLTAGE TOO LOW (DIESEL) 813
P0713-TRANS TEMP SENSOR VOLTAGE TOO HIGH 819
P0720-LOW OUTPUT SPEED SENSOR - RPM ABOVE 15 MPH (DIESEL) 827
P0748-PRESSURE SOL CONTROL/TRANS RELAY CIRCUITS (DIESEL) 833
P0850-P/N SWITCH PERFORMANCE (DIESEL) 841
P0868-GOVERNOR PRESSURE SENSOR VOLTS TOO HI (DIESEL) 846
P0869-GOVERNOR PRESSURE SENSOR VOLTS TOO LOW (DIESEL) 853
P0882-TRANS 12 VOLT SUPPLY RELAY CONTROL CIRCUIT LOW (DIESEL) 858
P0883-TRANS 12 VOLT SUPPLY RELAY CONTROL CIRCUIT HIGH (DIESEL) 864
P0973-TRANSMISSION OVERDRIVE CIRCUIT VOLTAGE TOO LOW (DIESEL) . . . 868
P0974-TRANSMISSION OVERDRIVE CIRCUIT VOLTAGE TOO HIGH (DIESEL) . . . 876
P1740-TCC O/D SOL PERFORMANCE (DIESEL) 881
P1749-TRANSMISSION THROTTLE VALVE POSITION SENSOR CIRCUIT LOW 886

page

P1750-TRANSMISSION THROTTLE VALVE POSITION SENSOR CIRCUIT HIGH 893
P1751-TRANSMISSION THROTTLE VALVE POSITION MINIMUM RANGE PERFORMANCE 898
P1752-TRANSMISSION THROTTLE VALVE SPAN PERFORMANCE 902
P1753-TRANSMISSION THROTTLE VALVE MECHANICAL PERFORMANCE 906
P1754-TRANSMISSION THROTTLE VALVE ACTUATOR STUCK 910
P1755-TRANSMISSION THROTTLE VALVE CONTROL CIRCUIT 920
P1756-GOV PRESS NOT EQUAL TO TARGET @ 35 - 40 PSI (DIESEL) 928
P1757-GOV PRESS ABOVE 3 PSI IN GEAR WITH 0 MPH (DIESEL) 936
P1762-GOV PRESS SENSOR OFFSET VOLTS TOO LOW OR HIGH (DIESEL) 942
P2769-TRANSMISSION TCC CONTROL CIRCUIT LOW 948
P2770-TRANSMISSION TCC CONTROL CIRCUIT HIGH (DIESEL) 955
*TOW /HAUL OVERDRIVE OFF SWITCH (DIESEL) 960
STANDARD PROCEDURE
PRE-DIAGNOSTIC CHECKOUT (DIESEL) . . 963
TRANSMISSION VERIFICATION TEST VER - 1 (DIESEL) 964
SCHEMATICS AND DIAGRAMS 965

AUTOMATIC TRANSMISSION - 48RE - DIESEL - ELECTRICAL DIAGNOSTICS

DIAGNOSIS AND TESTING

P0711-TRANS TEMP SENSOR, NO TEMP RISE AFTER START (DIESEL)

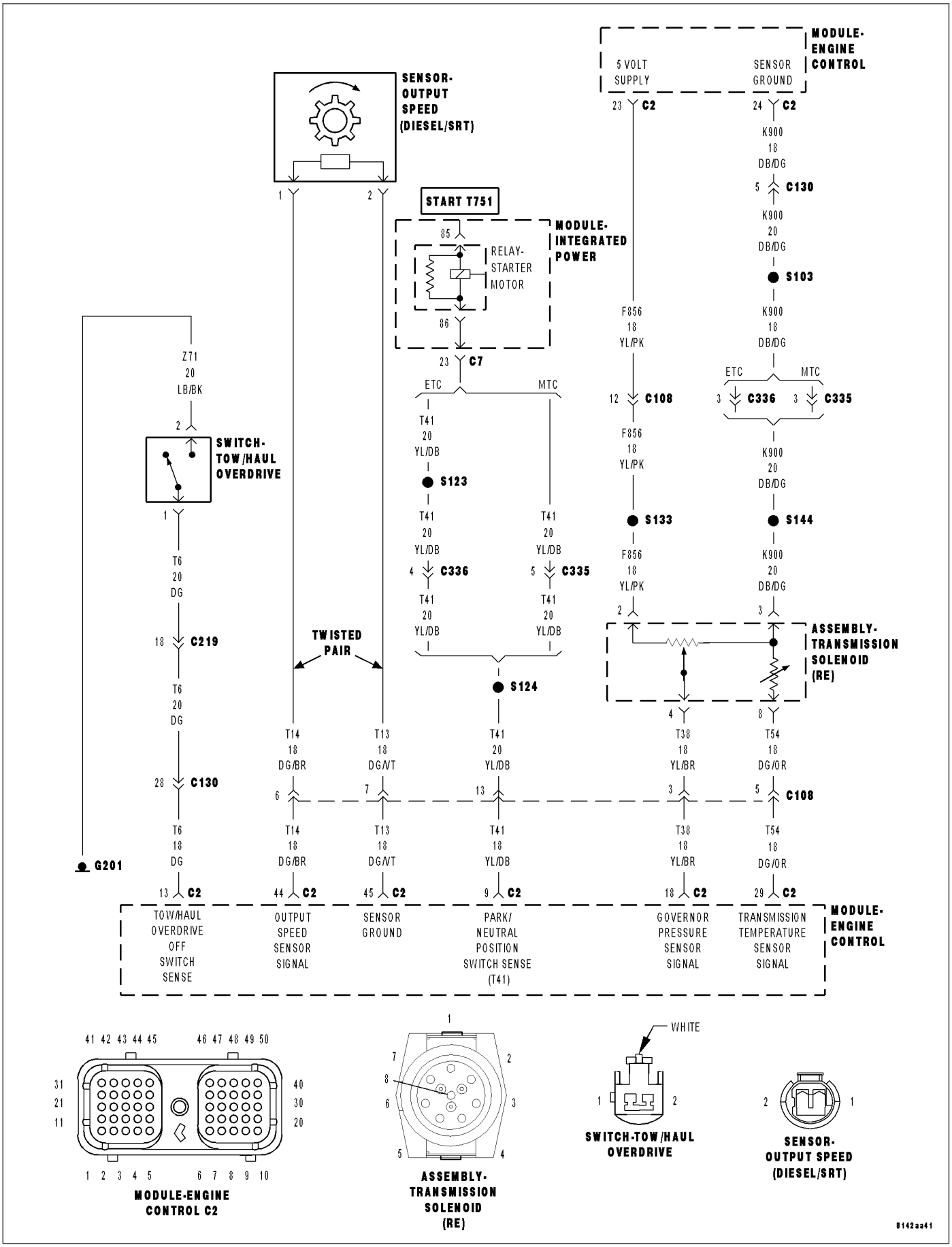

P0711-TRANS TEMP SENSOR, NO TEMP RISE AFTER START (DIESEL) (CONTINUED)

For the Transmission circuit diagram (Refer to 21 - TRANSMISSION/TRANSAXLE/AUTOMATIC - 48RE - SCHEMATICS AND DIAGRAMS).

For a complete wiring diagram **Refer to Section 8W.**

Theory of Operation

The Transmission Temperature Sensor is used to sense when the transmission temperature is too hot or too cold to operate overdrive and/or the torque convertor clutch. When the transmission sensor detects a temperature below 0° C (32° F), overdrive and the torque convertor clutch are disabled. When the detected temperature is above 127° C (260° F), overdrive is disabled and 3rd gear with TCC is engaged, this strategy is used to increase transmission fluid flow to help cool the transmission.

- **When Monitored:**
  Continuously with the ignition on and the engine running.
- **Set Condition:**
  The DTC will set after two consecutive trips in which the transmission oil temperature is greater than 5° C (40° F) and the transmission oil temperature does not rise more than 8° C (16° F) after 20 minutes of run time with a vehicle speed greater than 48 Kmh (30 mph). The DTC will also set if the engine temperature is greater than 38° C (100° F) with the transmission oil temperature greater than 127° C (260° F).

Possible Causes
OTHER TRANSMISSION DTC'S SET
INTERMITTENT TRANSMISSION TEMPERATURE SENSOR
TRANSMISSION TEMPERATURE SENSOR

Always perform the Pre-Diagnostic Troubleshooting procedure before proceeding. (Refer to 21 - TRANSMISSION/TRANSAXLE/AUTOMATIC - 48RE - STANDARD PROCEDURE)

Diagnostic Test

1. CHECK IF THE DTC IS CURRENT

Ignition on, engine not running.

With the scan tool, read Engine DTCs.

Record the Freeze Frame data for the reported DTC.

With the scan tool, erase DTCs.

Turn the ignition off to the lock position.

Using the Freeze Frame data recorded earlier, try to duplicate the conditions in which the DTC originally set.

NOTE: It may be necessary to road test the vehicle to duplicate the original set conditions.
With the scan tool, read Engine DTCs.

Did the DTC reset?

Yes >> Go To 2

No >> Go To 6

---

2. CHECK FOR OTHER TRANSMISSION DTCS

Does the scan tool show any Park/Neutral DTCs?

Yes >> Refer to the Transmission category and perform the appropriate symptom(s). (Refer to 21 - TRANSMISSION/TRANSAXLE/AUTOMATIC - 48RE - DIAGNOSIS AND TESTING)

No >> Go To 3

P0711-TRANS TEMP SENSOR, NO TEMP RISE AFTER START (DIESEL) (CONTINUED)

3. COMPARE THE TRANSMISSION TEMPERATURE TO ENGINE COOLANT TEMPERATURE

NOTE: To test the transmission temperature sensor, the engine and transmission temperature must be at or below 29.4° C (85° F).

With the scan tool, read the Transmission and Engine temperatures.

Is the transmission temperature within 5° C (9° F) of the engine coolant temperature?

Yes >> Go To 4

No >> Go To 5

---

4. CHECK IF THE TRANSMISSION TEMPERATURE INCREASES 15 DEGREES OVER 10 MINUTE PERIOD

NOTE: To test the transmission temperature sensor, the engine and transmission temperature must be at or below 29.4° C (85° F).

CAUTION: Apply the parking brake.

Start the engine, firmly apply the brakes and allow the engine to idle in Drive.

With the scan tool, monitor the Transmission Temperature.

NOTE: If the transmission temperature sensor is working properly, the transmission temperature should rise at least 8° C (15° F) within a ten minute period.

Did the transmission temperature increase at a steady rate and rise at least 8° C (15° F) over a 10 minute period?

Yes >> Go To 6

No >> Go To 5

P0711-TRANS TEMP SENSOR, NO TEMP RISE AFTER START (DIESEL) (CONTINUED)

5. CHECK THE TRANSMISSION TEMPERATURE SENSOR

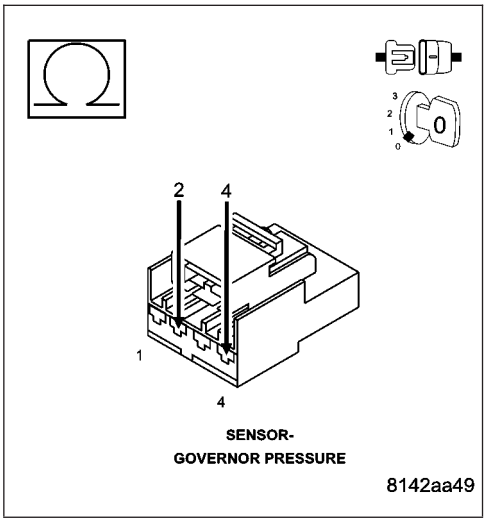

TYPICAL VALUES FOR TRANSMISSION TEMPERATURE SENSOR

TEMPERATURE	MIN TO MAX OHM RANGE
-40° C (-40° F)	1094 to 1176 ohms
0.0° C (32° F)	1587 to 1672 ohms
25° C (77° F)	1960 to 2040 ohms
70° C (158° F)	2709 to 2860 ohms
0° C (212° F)	3284 to 3500 ohms
120° C (120° F)	3684 to 3950 ohms
150° C (302° F)	4110 to 4450 ohms

Turn the ignition off to the lock position.

Remove the Transmission Oil Pan per the Service Information. (Refer to 21 - TRANSMISSION/TRANSAXLE/AUTOMATIC - 48RE/FLUID - STANDARD PROCEDURE)

Disconnect the Governor Pressure Sensor harness connector internal to the transmission.

NOTE: Check connectors - Clean/repair as necessary

Measure the resistance of the Transmission Temperature Sensor between the (T54) Transmission Temperature Sensor Signal circuit and the (K900) Sensor Ground circuit.

Using the chart at the chart above, compare the Temperature Sensor temperature to the correlating resistance value.

Is the resistance within the specified range when the sensor is at the given temperature?

Yes >> Test Complete.

No >> Replace the Governor Pressure/Transmission Temperature Sensor per the Service Information. (Refer to 21 - TRANSMISSION/TRANSAXLE/AUTOMATIC - 48RE/GOVERNOR PRESSURE SENSOR - REMOVAL)

Perform RE TRANSMISSION VERIFICATION TEST VER - 1 (DIESEL). (Refer to 21 - TRANSMISSION/TRANSAXLE/AUTOMATIC - 48RE - STANDARD PROCEDURE)

P0711-TRANS TEMP SENSOR, NO TEMP RISE AFTER START (DIESEL) (CONTINUED)

6. INTERMITTENT WIRING AND CONNECTORS

The conditions necessary to set this DTC are not present at this time.

Use the Freeze Frame Data to help duplicate the conditions in which the DTC originally set. Pay particular attention to the DTC set conditions, such as, VSS, MAP, ECT, and Load.

Using the schematics as a guide, visually inspect the related wiring harness. Look for any chafed, pierced, pinched, or partially broken wires.

Visually inspect the related wiring harness connectors. Look for broken, bent, pushed out, or corroded terminals.

Wiggle the wiring and connectors while checking for any possible open or shorted circuits.

Check for any Service Information Tune-ups or Technical Service Bulletins that may apply.

Were there any problems found?

Yes >> Repair as necessary.
Perform RE TRANSMISSION VERIFICATION TEST VER - 1 (DIESEL). (Refer to 21 - TRANSMISSION/ TRANSAXLE/AUTOMATIC - 48RE - STANDARD PROCEDURE)

No >> Test Complete.

P0712-TRANS TEMP SENSOR VOLTAGE TOO LOW (DIESEL)

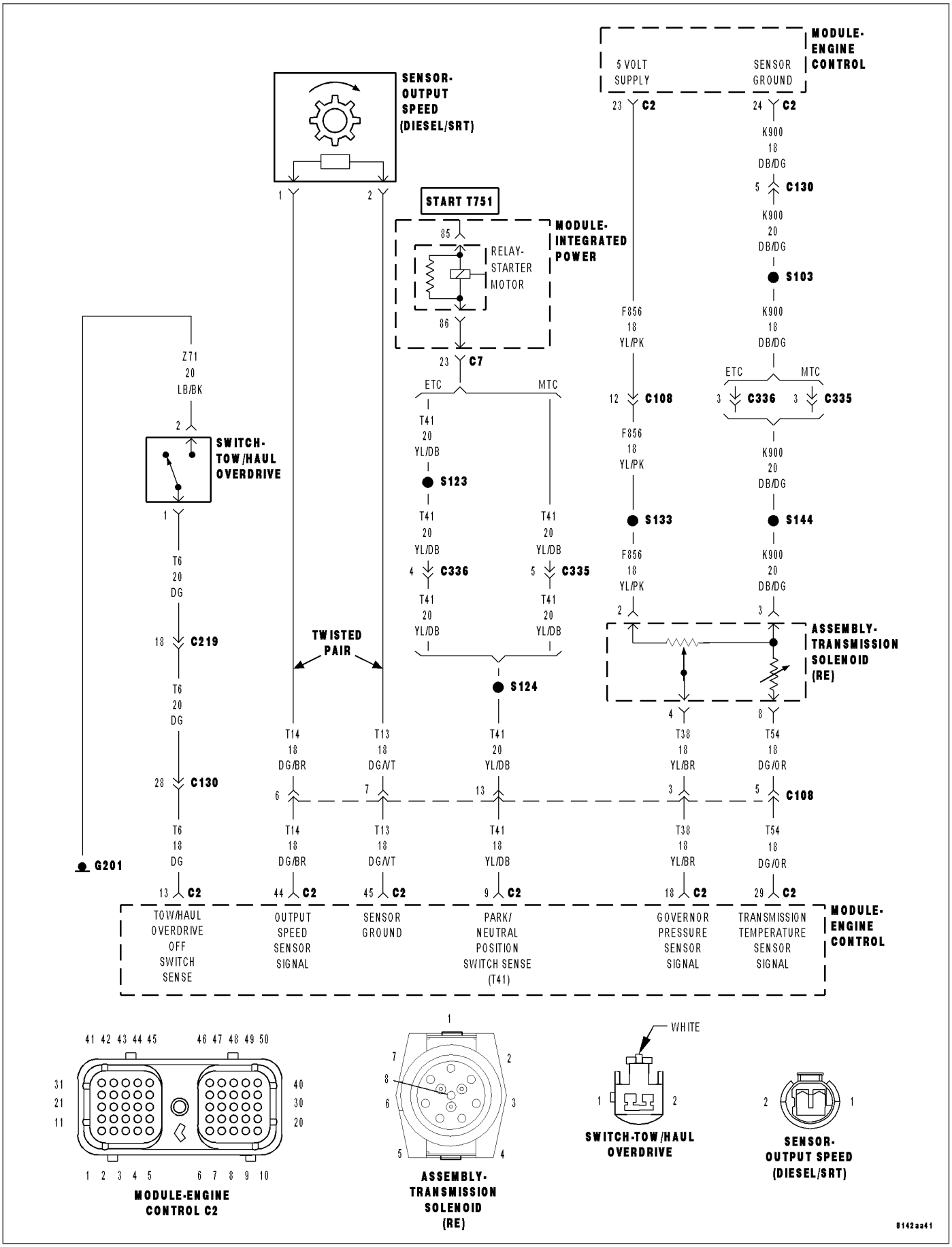

P0712-TRANS TEMP SENSOR VOLTAGE TOO LOW (DIESEL) (CONTINUED)

For the Transmission circuit diagram (Refer to 21 - TRANSMISSION/TRANSAXLE/AUTOMATIC - 48RE - SCHEMATICS AND DIAGRAMS)

For a complete wiring diagram **Refer to Section 8W**

Theory of Operation

The Transmission Temperature Sensor is used to sense when the transmission temperature is too hot or too cold to operate overdrive and/or the torque convertor clutch. When the transmission sensor detects a temperature below 0° C (32° F), overdrive and the torque convertor clutch are disabled. When the detected temperature is above 127° C (260° F), overdrive is disabled and 3rd gear with TCC is engaged, this strategy is used to increase transmission fluid flow to help cool the transmission.

- **When Monitored:**
  Continuously with the ignition on and the engine running.
- **Set Condition:**
  The DTC will set if the monitored Transmission Temperature Sensor Signal circuit drops below 1.55 volts for the period of 2.25 seconds.

Possible Causes
(T54) TRANSMISSION TEMPERATURE SENSOR SIGNAL CIRCUIT SHORT TO GROUND
(T54) TRANSMISSION TEMPERATURE SENSOR SIGNAL CIRCUIT SHORT TO (K900) SENSOR GROUND CIRCUIT
(T54) TRANSMISSION TEMPERATURE SENSOR SIGNAL CIRCUIT SHORT TO GROUND INSIDE TRANSMISSION
(T54) TRANSMISSION TEMPERATURE SENSOR SIGNAL CIRCUIT SHORT TO THE (K900) SENSOR GROUND CIRCUIT INSIDE TRANSMISSION
TRANSMISSION TEMPERATURE SENSOR
ENGINE CONTROL MODULE

Always perform the Pre-Diagnostic Troubleshooting procedure before proceeding. (Refer to 21 - TRANSMISSION/TRANSAXLE/AUTOMATIC - 48RE - STANDARD PROCEDURE)

Diagnostic Test

1. CHECK IF THE DTC IS CURRENT

Ignition on, engine not running.

With the scan tool, read Engine DTCs.

Record the Freeze Frame data for the reported DTC.

With the scan tool, erase DTCs.

Turn the ignition off to the lock position.

Using the Freeze Frame data recorded earlier, try to duplicate the conditions in which the DTC originally set.

NOTE: It may be necessary to road test the vehicle to duplicate the original set conditions.

With the scan tool, read Engine DTCs.

Did the DTC reset?

Yes >> Go To 2

No >> Go To 8

P0712-TRANS TEMP SENSOR VOLTAGE TOO LOW (DIESEL) (CONTINUED)

2. CHECK THE (T54) TRANSMISSION TEMPERATURE SENSOR SIGNAL CIRCUIT FOR A SHORT TO GROUND

Turn the ignition off to the lock position.

Disconnect the ECM C2 harness connector.

Disconnect the Transmission Solenoid Assembly harness connector.

NOTE: Check connectors - Clean/repair as necessary

Measure the resistance between ground and the (T54) Transmission Temperature Sensor Signal circuit in the Transmission Solenoid Assembly harness connector.

Is the resistance above 100k ohms?

Yes >> Go To 3

No >> Repair the (T54) Transmission Temperature Sensor Signal circuit for a short to ground.

Perform RE TRANSMISSION VERIFICATION TEST VER - 1 (DIESEL). (Refer to 21 - TRANSMISSION/TRANSAXLE/ AUTOMATIC - 48RE - STANDARD PROCEDURE)

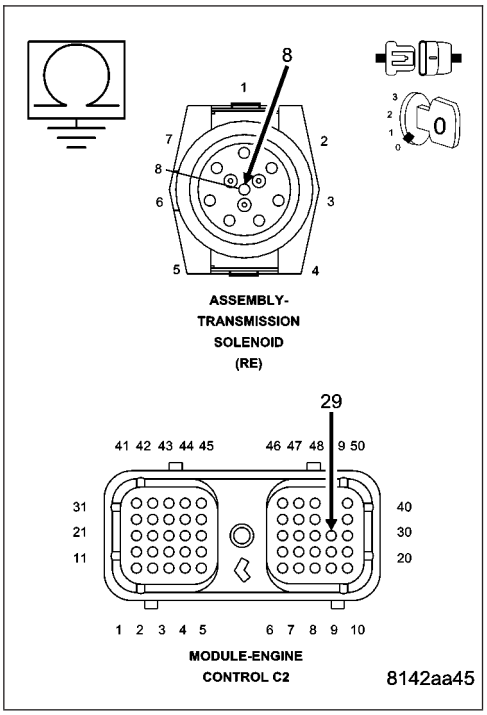

3. CHECK THE (T54) TRANSMISSION TEMPERATURE SENSOR SIGNAL CIRCUIT FOR A SHORT TO (K900) SENSOR GROUND CIRCUIT

Measure the resistance between the (T54) Transmission Temperature Sensor Signal circuit and (K900) Sensor Ground circuit in the Transmission Solenoid Assembly harness connector.

Is the resistance above 100k ohms?

Yes >> Go To 4

No >> Repair the (T54) Transmission Temperature Sensor Signal circuit for a short to the (K900) Sensor Ground circuit.

Perform RE TRANSMISSION VERIFICATION TEST VER - 1 (DIESEL). (Refer to 21 - TRANSMISSION/TRANSAXLE/ AUTOMATIC - 48RE - STANDARD PROCEDURE)

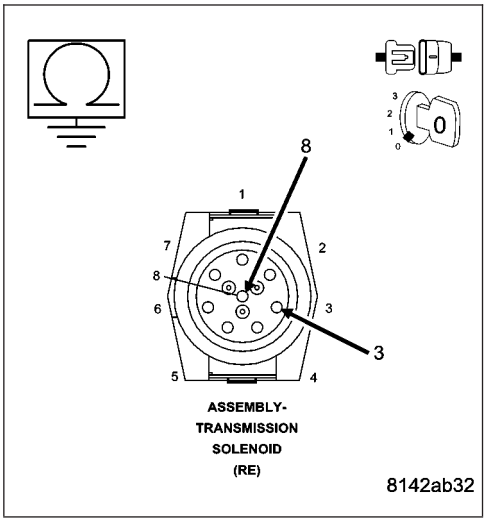

P0712-TRANS TEMP SENSOR VOLTAGE TOO LOW (DIESEL) (CONTINUED)

4. CHECK THE (T54) TRANSMISSION TEMPERATURE SENSOR SIGNAL CIRCUIT FOR A SHORT TO GROUND INSIDE TRANSMISSION

Remove the Transmission Oil Pan per the Service Information. (Refer to 21 - TRANSMISSION/TRANSAXLE/AUTOMATIC - 48RE/FLUID - STANDARD PROCEDURE)

Disconnect the Governor Pressure Sensor connector interal to the transmission.

Measure the resistance between ground and the (T54) Transmission Temperature Sensor Signal circuit at the Governor Pressure Sensor connector.

Is the resistance above 100k ohms?

Yes >> Go To 5

No >> Replace the Transmission Solenoid Assembly per the Service Information. (Refer to 21 - TRANSMISSION/TRANSAXLE/AUTOMATIC - 48RE/VALVE BODY - REMOVAL)

Perform RE TRANSMISSION VERIFICATION TEST VER - 1 (DIESEL). (Refer to 21 - TRANSMISSION/TRANSAXLE/AUTOMATIC - 48RE - STANDARD PROCEDURE)

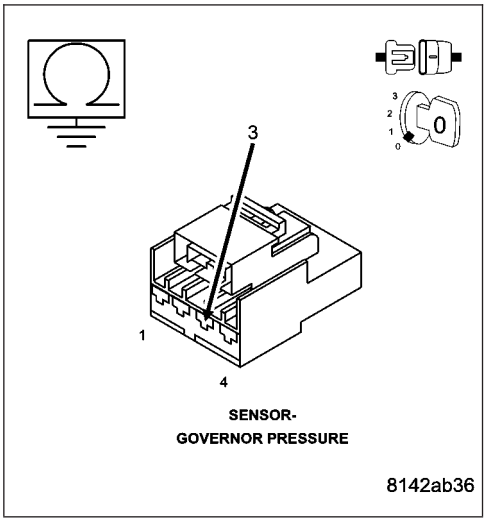

5. CHECK THE (T54) TRANSMISSION TEMPERATURE SENSOR SIGNAL CIRCUIT FOR A SHORT TO (K900) SENSOR GROUND CIRCUIT INSIDE TRANSMISSION

Measure the resistance between the (T54) Transmission Temperature Sensor Signal circuit and (K900) Sensor Ground circuit at the Governor Pressure Sensor connector.

Is the resistance above 100k ohms?

Yes >> Go To 6

No >> Replace the Transmission Solenoid Assembly per the Service Information. (Refer to 21 - TRANSMISSION/TRANSAXLE/AUTOMATIC - 48RE/VALVE BODY - REMOVAL)

Perform RE TRANSMISSION VERIFICATION TEST VER - 1 (DIESEL). (Refer to 21 - TRANSMISSION/TRANSAXLE/AUTOMATIC - 48RE - STANDARD PROCEDURE)

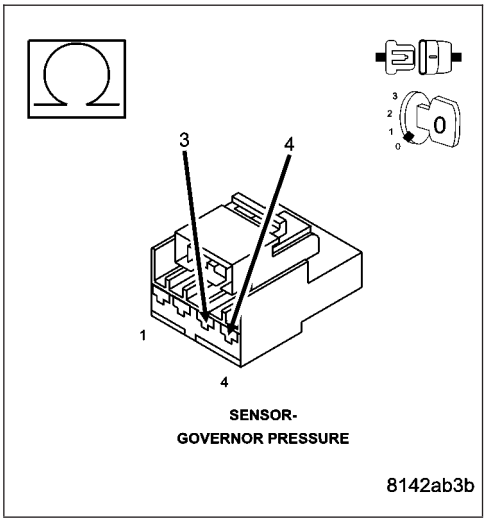

P0712-TRANS TEMP SENSOR VOLTAGE TOO LOW (DIESEL) (CONTINUED)

6. TRANSMISSION TEMPERATURE SENSOR

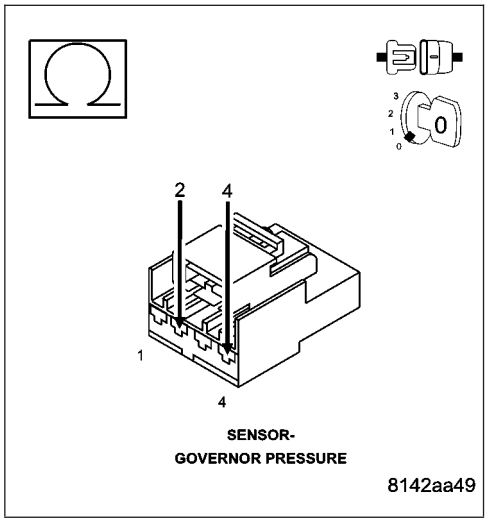

TYPICAL VALUES FOR TRANSMISSION TEMPERATURE SENSOR

TEMPERATURE	MIN TO MAX OHM RANGE
-40° C (-40° F)	1094 to 1176 ohms
0.0° C (32° F)	1587 to 1672 ohms
25° C (77° F)	1960 to 2040 ohms
70° C (158° F)	2709 to 2860 ohms
0° C (212° F)	3284 to 3500 ohms
120° C (120° F)	3684 to 3950 ohms
150° C (302° F)	4110 to 4450 ohms

Measure the resistance of the Transmission Temperature Sensor between the (T54) Transmission Temperature Sensor Signal circuit and (K900) Sensor Ground circuit.

Using the chart above, compare the Temperature Sensor temperature to the correlating resistance value.

Is the resistance below the minimum specification for the sensor temperature?

Yes >> Replace the Governor Pressure/Transmission Temperature Sensor per the Service Information. (Refer to 21 - TRANSMISSION/TRANSAXLE/AUTOMATIC - 48RE/GOVERNOR PRESSURE SENSOR - REMOVAL)

Perform RE TRANSMISSION VERIFICATION TEST VER - 1 (DIESEL). (Refer to 21 - TRANSMISSION/TRANSAXLE/AUTOMATIC - 48RE - STANDARD PROCEDURE)

No >> Go To 7

P0712-TRANS TEMP SENSOR VOLTAGE TOO LOW (DIESEL) (CONTINUED)

7. ENGINE CONTROL MODULE

Reconnect the all disconnected connectors.

Ignition on, engine not running.

With the scan tool, erase Engine DTCs.

With the scan tool, monitor Engine DTC's.

Disconnect the Transmission Temperature Sensor connector.

Did the DTC P0713 set?

Yes >> Go To 8

No >> Replace and program the Engine Control Module per the Service Information.
Perform RE TRANSMISSION VERIFICATION TEST VER - 1 (DIESEL). (Refer to 21 - TRANSMISSION/ TRANSAXLE/AUTOMATIC - 48RE - STANDARD PROCEDURE)

---

8. INTERMITTENT WIRING AND CONNECTORS

The conditions necessary to set this DTC are not present at this time.

Use the Freeze Frame Data to help duplicate the conditions in which the DTC origionaly set. Pay particular attention to the DTC set conditions, such as, VSS, MAP, ECT, and Load

Using the schematics as a guide, visually inspect the related wiring harness. Look for any chafed, pierced, pinched, or partially broken wires.

Visually inspect the related wiring harness connectors. Look for broken, bent, pushed out, or corroded terminals.

Wiggle the wiring and connectors while checking for any possible open or shorted circuits.

Check for any Service Information Tune-ups or Technical Service Bulletins that may apply.

Were there any problems found?

Yes >> Repair as necessary.
Perform RE TRANSMISSION VERIFICATION TEST VER - 1 (DIESEL). (Refer to 21 - TRANSMISSION/ TRANSAXLE/AUTOMATIC - 48RE - STANDARD PROCEDURE)

No >> Test Complete.

P0713-TRANS TEMP SENSOR VOLTAGE TOO HIGH

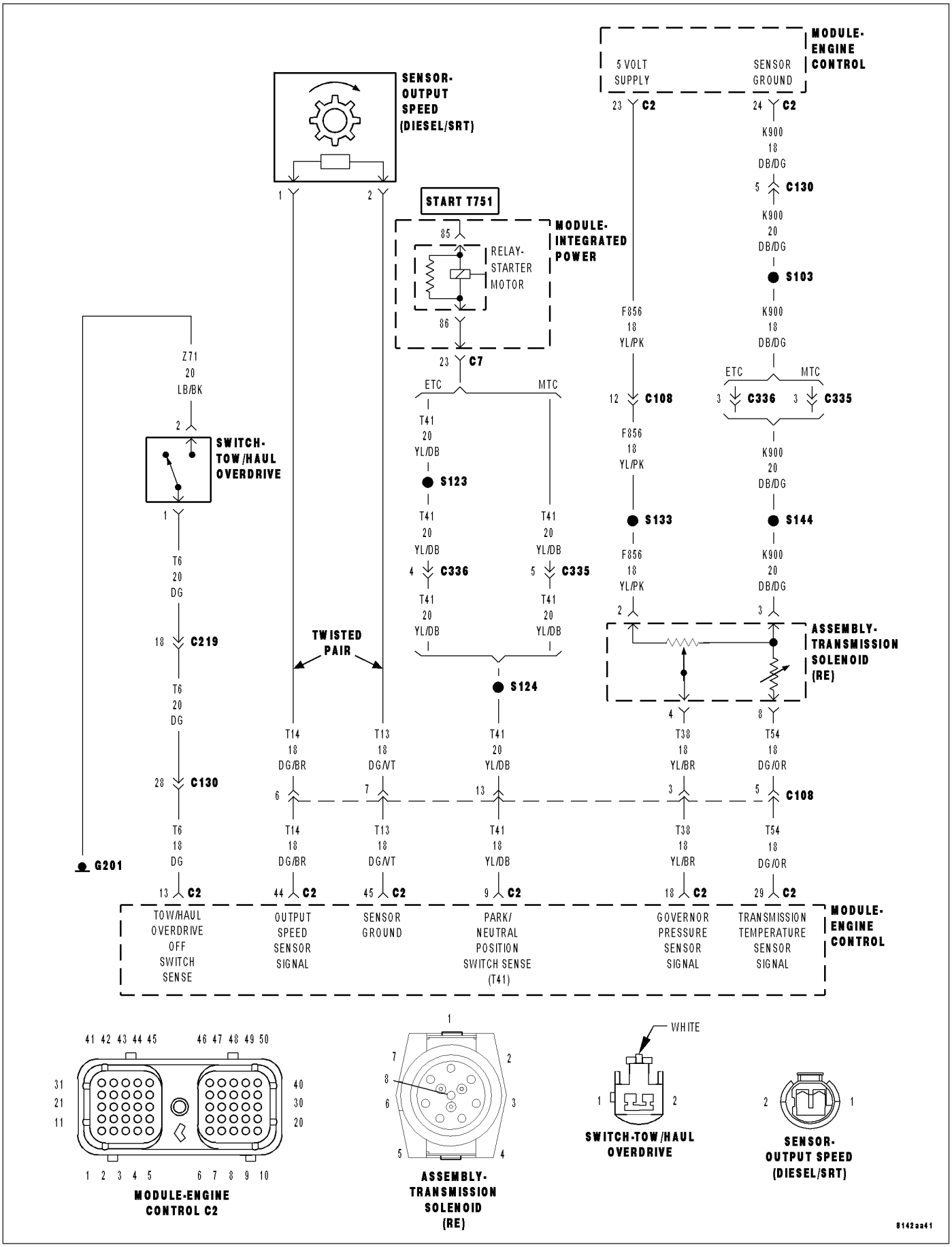

P0713-TRANS TEMP SENSOR VOLTAGE TOO HIGH (CONTINUED)

For the Transmission circuit diagram (Refer to 21 - TRANSMISSION/TRANSAXLE/AUTOMATIC - 48RE - SCHEMATICS AND DIAGRAMS)

For a complete wiring diagram **Refer to Section 8W**

Theory of Operation

The Transmission Temperature Sensor is used to sense when the transmission temperature is too hot or too cold to operate overdrive and/or the torque convertor clutch. When the transmission sensor detects a temperature below 0° C (32° F), overdrive and the torque convertor clutch are disabled. When the detected temperature is above 127° C (260° F), overdrive is disabled and 3rd gear with TCC is engaged, this strategy is used to increase transmission fluid flow to help cool the transmission.

- **When Monitored:**
  Continuously with the ignition on and the engine running.
- **Set Condition:**
  This DTC will set if the (T54) Transmission Temperature Sensor Signal circuit voltage exceeds 3.76 volts for the period of 2.2 seconds.

Possible Causes
(T54) TRANSMISSION TEMPERATURE SENSOR SIGNAL CIRCUIT SHORT TO VOLTAGE
(T54) TRANSMISSION TEMPERATURE SENSOR SIGNAL CIRCUIT SHORT TO (F856) 5-VOLT SUPPLY CIRCUIT
(T54) TRANSMISSION TEMPERATURE SENSOR SIGNAL CIRCUIT OPEN
(K900) SENSOR GROUND CIRCUIT OPEN
(T54) 5-VOLT SUPPLY OPEN IN TRANSMISSION
(T54) TRANSMISSION TEMPERATURE SENSOR SIGNAL CIRCUIT SHORT TO (F856) 5-VOLT SUPPLY CIRCUIT INTERNAL TO THE TRANSMISSION
(T54) TRANSMISSION TEMPERATURE SENSOR SIGNAL CIRCUIT OPEN INTERNAL TO THE TRANSMISSION
(K900) SENSOR GROUND CIRCUIT OPEN INTERNAL TO THE TRANSMISSION
TRANSMISSION TEMPERATURE SENSOR
ENGINE CONTROL MODULE

Always perform the Pre-Diagnostic Troubleshooting procedure before proceeding. (Refer to 21 - TRANSMISSION/TRANSAXLE/AUTOMATIC - 48RE - STANDARD PROCEDURE)

1. CHECK IF THE DTC IS CURRENT

Ignition on, engine not running.

With the scan tool, read Engine DTCs.

Record the Freeze Frame data for the reported DTC.

With the scan tool, erase DTCs.

Turn the ignition off to the lock position.

Using the Freeze Frame data recorded earlier, try to duplicate the conditions in which the DTC originally set.

NOTE: It may be necessary to road test the vehicle to duplicate the original set conditions.

With the scan tool, read Engine DTCs.

Did the DTC reset?

Yes >> Go To 2

No >> Go To 12

P0713-TRANS TEMP SENSOR VOLTAGE TOO HIGH (CONTINUED)

2. CHECK THE (T54) TRANSMISSION TEMPERATURE SENSOR SIGNAL CIRCUIT FOR A SHORT TO VOLTAGE

Turn the ignition off to the lock position.

Disconnect the ECM C2 harness connector.

Disconnect the Transmission Solenoid Assembly harness connector.

NOTE: Check connectors - Clean/repair as necessary

Ignition on, engine not running.

Measure the voltage of the (T54) Transmission Temperature Sensor Signal circuit in the ECM C2 harness connector.

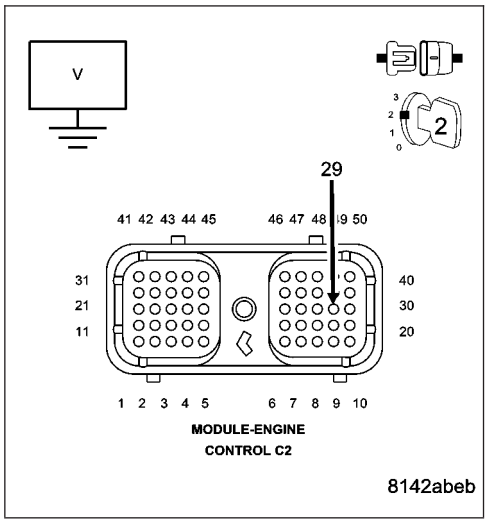

Is the voltage above 0.5 volts?

Yes >> Repair the (T54) Transmission Temperature Sensor Signal circuit for a short to voltage.

Perform RE TRANSMISSION VERIFICATION TEST VER - 1 (DIESEL). (Refer to 21 - TRANSMISSION/TRANSAXLE/ AUTOMATIC - 48RE - STANDARD PROCEDURE)

No >> Go To 3

---

3. CHECK THE (T54) TRANSMISSION TEMPERATURE SENSOR SIGNAL CIRCUIT FOR A SHORT TO (F856) 5-VOLT SUPPLY CIRCUIT

Turn the ignition off to the lock position.

Measure the resistance between the (T54) Transmission Temperature Sensor Signal circuit and the (F856) 5-volt Supply circuit in the Transmission Solenoid Assembly harness connector.

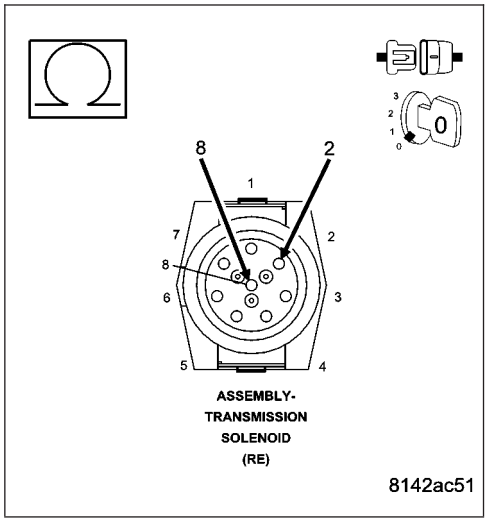

Is the resistance above 100k ohms?

Yes >> Go To 4

No >> Repair the (T54) Transmission Temperature Sensor Signal circuit for a short to the (F856) 5-volt Supply circuit.

Perform RE TRANSMISSION VERIFICATION TEST VER - 1 (DIESEL). (Refer to 21 - TRANSMISSION/TRANSAXLE/ AUTOMATIC - 48RE - STANDARD PROCEDURE)

P0713-TRANS TEMP SENSOR VOLTAGE TOO HIGH (CONTINUED)

4. CHECK THE (T54) TRANSMISSION TEMPERATURE SENSOR SIGNAL CIRCUIT FOR AN OPEN

Measure the resistance of the (T54) Transmission Temperature Sensor Signal circuit between the ECM C2 harness connector and the Transmission Solenoid Assembly harness connector.

Is the resistance below 5.0 ohms?

Yes >> Go To 5

No >> Repair the (T54) Transmission Temperature Sensor Signal circuit for an open.
Perform RE TRANSMISSION VERIFICATION TEST VER - 1 (DIESEL). (Refer to 21 - TRANSMISSION/TRANSAXLE/ AUTOMATIC - 48RE - STANDARD PROCEDURE)

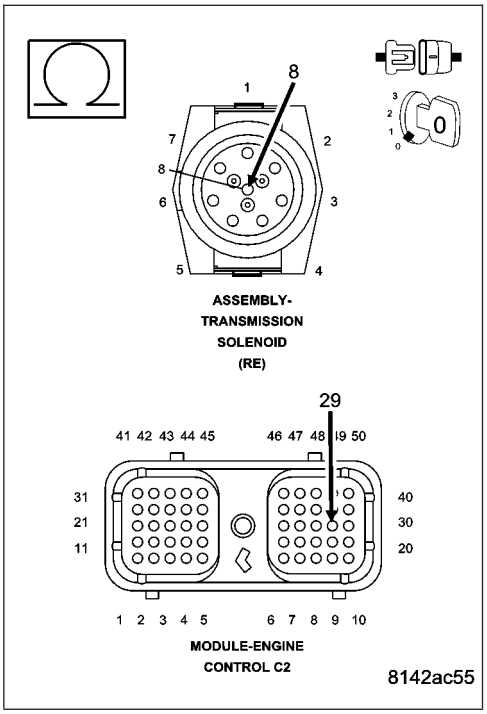

5. CHECK THE (K900) SENSOR GROUND CIRCUIT FOR AN OPEN

Measure the resistance of the (K900) Sensor Ground circuit between the ECM C2 harness connector and the Transmission Solenoid Assembly harness connector.

Is the resistance below 5.0 ohms?

Yes >> Go To 6

No >> Repair the (K900) Sensor Ground circuit for an open.
Perform RE TRANSMISSION VERIFICATION TEST VER - 1 (DIESEL). (Refer to 21 - TRANSMISSION/TRANSAXLE/ AUTOMATIC - 48RE - STANDARD PROCEDURE)

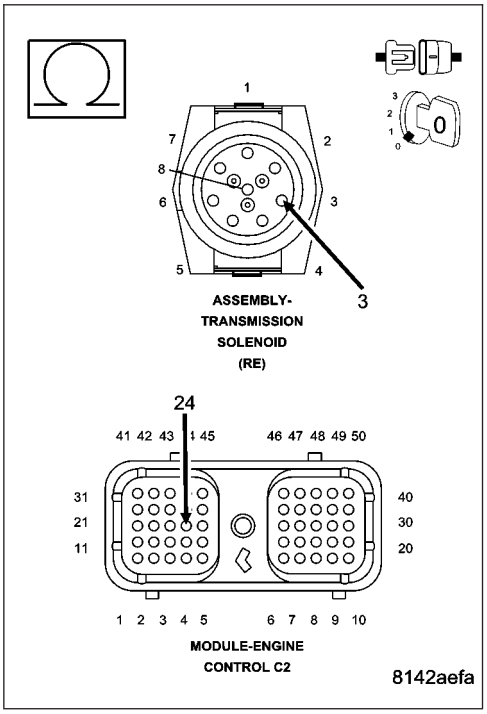

P0713-TRANS TEMP SENSOR VOLTAGE TOO HIGH (CONTINUED)

6. CHECK THE (T54) TRANSMISSION TEMPERATURE SENSOR SIGNAL CIRCUIT FOR A SHORT TO THE (F856) 5-VOLT SUPPLY CIRCUIT INTERNAL TO THE TRANSMISSION

Remove the Transmission Oil Pan. (Refer to 21 - TRANSMISSION/TRANSAXLE/AUTOMATIC - 48RE/FLUID - STANDARD PROCEDURE)

Disconnect the Governor Pressure Sensor connector internal to the transmission.

Measure the resistance between the (T54) Transmission Temperature Sensor Signal circuit and (F856) 5-volt Supply circuit in the Governor Pressure Sensor connector internal to the transmission.

Is the resistance above 100k ohms?

Yes >> Go To 7

No >> Replace the Transmission Solenoid Assembly per the Service Information. (Refer to 21 - TRANSMISSION/TRANSAXLE/AUTOMATIC - 48RE/VALVE BODY - REMOVAL)

Perform RE TRANSMISSION VERIFICATION TEST VER - 1 (DIESEL). (Refer to 21 - TRANSMISSION/TRANSAXLE/AUTOMATIC - 48RE - STANDARD PROCEDURE)

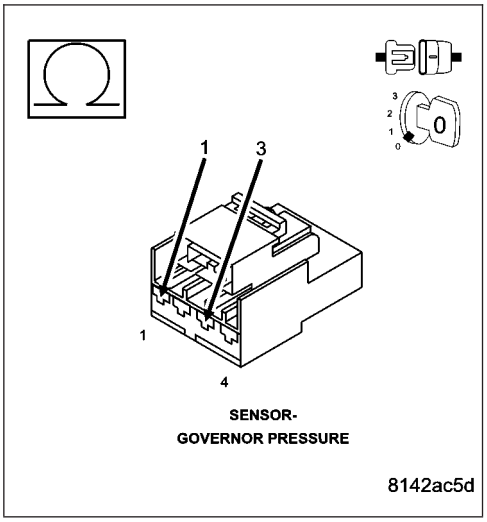

7. CHECK THE (T54) TRANSMISSION TEMPERATURE SENSOR SIGNAL CIRCUIT FOR AN OPEN INTERNAL TO THE TRANSMISSION

Reconnect the Transmission Solenoid Assembly harness connector.

Measure the resistance of the (T54) Transmission Temperature Sensor Signal circuit between the ECM C2 harness connector and the Governor Pressure Sensor connector internal to the transmission.

Is the resistance below 5.0 ohms?

Yes >> Go To 8

No >> Replace the Transmission Solenoid Assembly per the Service Information. (Refer to 21 - TRANSMISSION/TRANSAXLE/AUTOMATIC - 48RE/VALVE BODY - REMOVAL)

Perform RE TRANSMISSION VERIFICATION TEST VER - 1 (DIESEL). (Refer to 21 - TRANSMISSION/TRANSAXLE/AUTOMATIC - 48RE - STANDARD PROCEDURE)

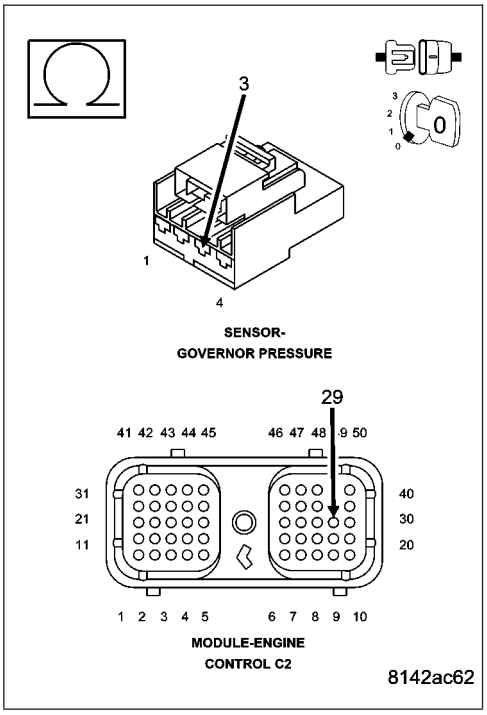

P0713-TRANS TEMP SENSOR VOLTAGE TOO HIGH (CONTINUED)

8. CHECK THE (F856) 5-VOLT SUPPLY CIRCUIT FOR AN OPEN INTERNAL TO THE TRANSMISSION

Measure the resistance of the (F856) 5-volt Supply circuit between ECM C2 harness connector and the Governor Pressure Sensor connector internal to the transmission.

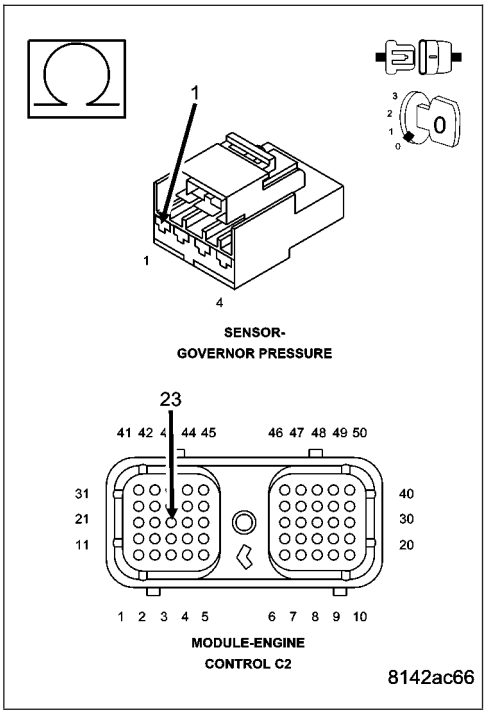

Is the resistance below 5.0 ohms?

Yes >> Go To 9

No >> Replace the Transmission Solenoid Assembly per the Service Information. (Refer to 21 - TRANSMISSION/TRANSAXLE/AUTOMATIC - 48RE/VALVE BODY - REMOVAL)
Perform RE TRANSMISSION VERIFICATION TEST VER - 1 (DIESEL). (Refer to 21 - TRANSMISSION/TRANSAXLE/AUTOMATIC - 48RE - STANDARD PROCEDURE)

9. CHECK THE (K900) SENSOR GROUND CIRCUIT FOR AN OPEN INTERNAL TO THE TRANSMISSION

Measure the resistance of the (K900) Sensor Ground circuit between the ECM C2 harness connector and the Governor Pressure Sensor connector internal to the transmission.

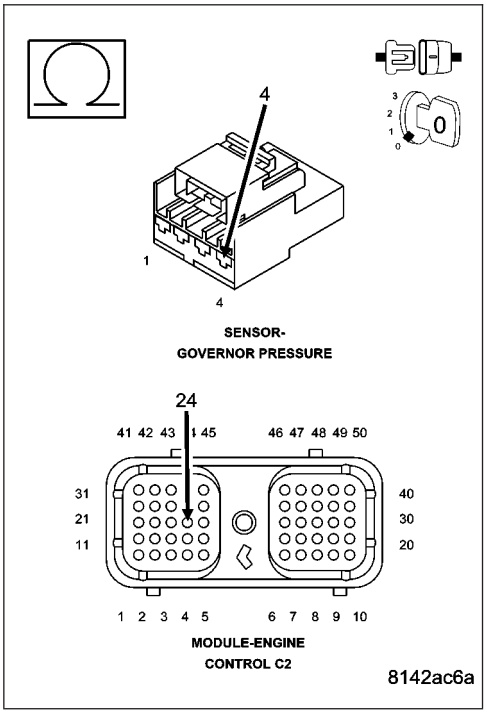

Is the resistance below 5.0 ohms?

Yes >> Go To 10

No >> Replace the Transmission Solenoid Assembly per the Service Information. (Refer to 21 - TRANSMISSION/TRANSAXLE/AUTOMATIC - 48RE/VALVE BODY - REMOVAL)
Perform RE TRANSMISSION VERIFICATION TEST VER - 1 (DIESEL). (Refer to 21 - TRANSMISSION/TRANSAXLE/AUTOMATIC - 48RE - STANDARD PROCEDURE)

P0713-TRANS TEMP SENSOR VOLTAGE TOO HIGH (CONTINUED)

10. CHECK THE TRANSMISSION TEMPERATURE SENSOR

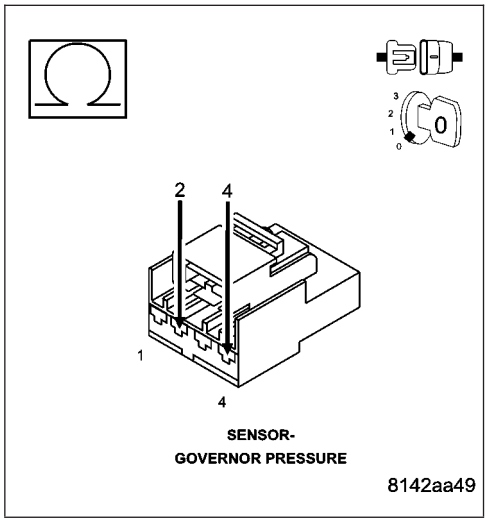

TYPICAL VALUES FOR TRANSMISSION TEMPERATURE SENSOR

TEMPERATURE	MIN TO MAX OHM RANGE
-40° C (-40° F)	1094 to 1176 ohms
0.0° C (32° F)	1587 to 1672 ohms
25° C (77° F)	1960 to 2040 ohms
70° C (158° F)	2709 to 2860 ohms
0° C (212° F)	3284 to 3500 ohms
120° C (120° F)	3684 to 3950 ohms
150° C (302° F)	4110 to 4450 ohms

Measure the resistance of the Transmission Temperature Sensor between the (T54) Transmission Temperature Sensor Signal circuit and the (K900) Sensor Ground circuit.

Using the chart above, compare the Temperature Sensor temperature to the correlating resistance value.

Is the Temperature Sensor resistance above the maximum specification listed in the chart?

Yes >> Replace the Governor Pressure/Transmission Temperature Sensor per the Service Information. (Refer to 21 - TRANSMISSION/TRANSAXLE/AUTOMATIC - 48RE/GOVERNOR PRESSURE SENSOR - REMOVAL)

Perform RE TRANSMISSION VERIFICATION TEST VER - 1 (DIESEL). (Refer to 21 - TRANSMISSION/TRANSAXLE/AUTOMATIC - 48RE - STANDARD PROCEDURE)

No >> Go To 11

P0713-TRANS TEMP SENSOR VOLTAGE TOO HIGH (CONTINUED)

11. CHECK THE ENGINE CONTROL MODULE

Reconnect all disconnected connectors.

Ignition on, engine not running.

With the scan tool, erase Engine DTCs.

Turn the ignition off to the lock position.

Disconnect the Governor Pressure Sensor connector internal to the transmission.

Connect a jumper wire between the (T54) Transmission Temperature Sensor Signal circuit and the (K900) Sensor Ground circuit in the Transmission Solenoid Assembly harness connector.

Ignition on, engine not running.

With the scan tool, read Engine DTCs.

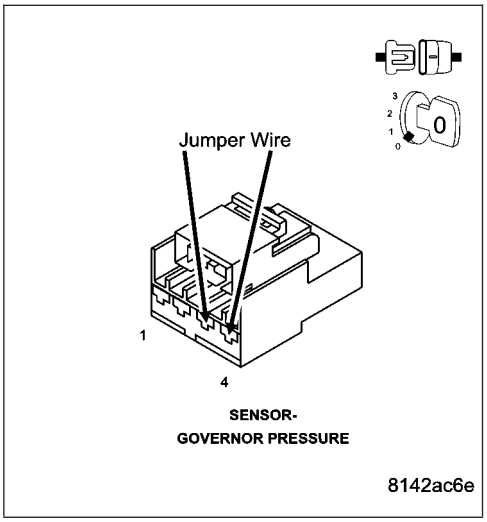

Did the DTC Transmission Oil Temperature Sensor Voltage Too Low set?

Yes >> Go To 12

No >> Using the schematics as a guide, check the Engine Control Module (ECM) pins, terminals, and connectors for corrosion, damage, or terminal push out. Pay particular attention to all power and ground circuits. If no problems are found, replace and program the ECM per the Service Information. (Refer to 8 - ELECTRICAL/ELECTRONIC CONTROL MODULES/ENGINE CONTROL MODULE - REMOVAL)

Perform RE TRANSMISSION VERIFICATION TEST VER - 1 (DIESEL). (Refer to 21 - TRANSMISSION/TRANSAXLE/AUTOMATIC - 48RE - STANDARD PROCEDURE)

---

12. INTERMITTENT WIRING AND CONNECTORS

The conditions necessary to set this DTC are not present at this time.

Use the Freeze Frame Data to help duplicate the conditions in which the DTC originally set. Pay particular attention to the DTC set conditions, such as, VSS, MAP, ECT, and Load

Using the schematics as a guide, visually inspect the related wiring harness. Look for any chafed, pierced, pinched, or partially broken wires.

Visually inspect the related wiring harness connectors. Look for broken, bent, pushed out, or corroded terminals.

Wiggle the wiring and connectors while checking for any possible open or shorted circuits.

Check for any Service Information Tune-ups or Technical Service Bulletins that may apply.

Were there any problems found?

Yes >> Repair as necessary.

Perform RE TRANSMISSION VERIFICATION TEST VER - 1 (DIESEL). (Refer to 21 - TRANSMISSION/TRANSAXLE/AUTOMATIC - 48RE - STANDARD PROCEDURE)

No >> Test Complete.

P0720-LOW OUTPUT SPEED SENSOR - RPM ABOVE 15 MPH (DIESEL)

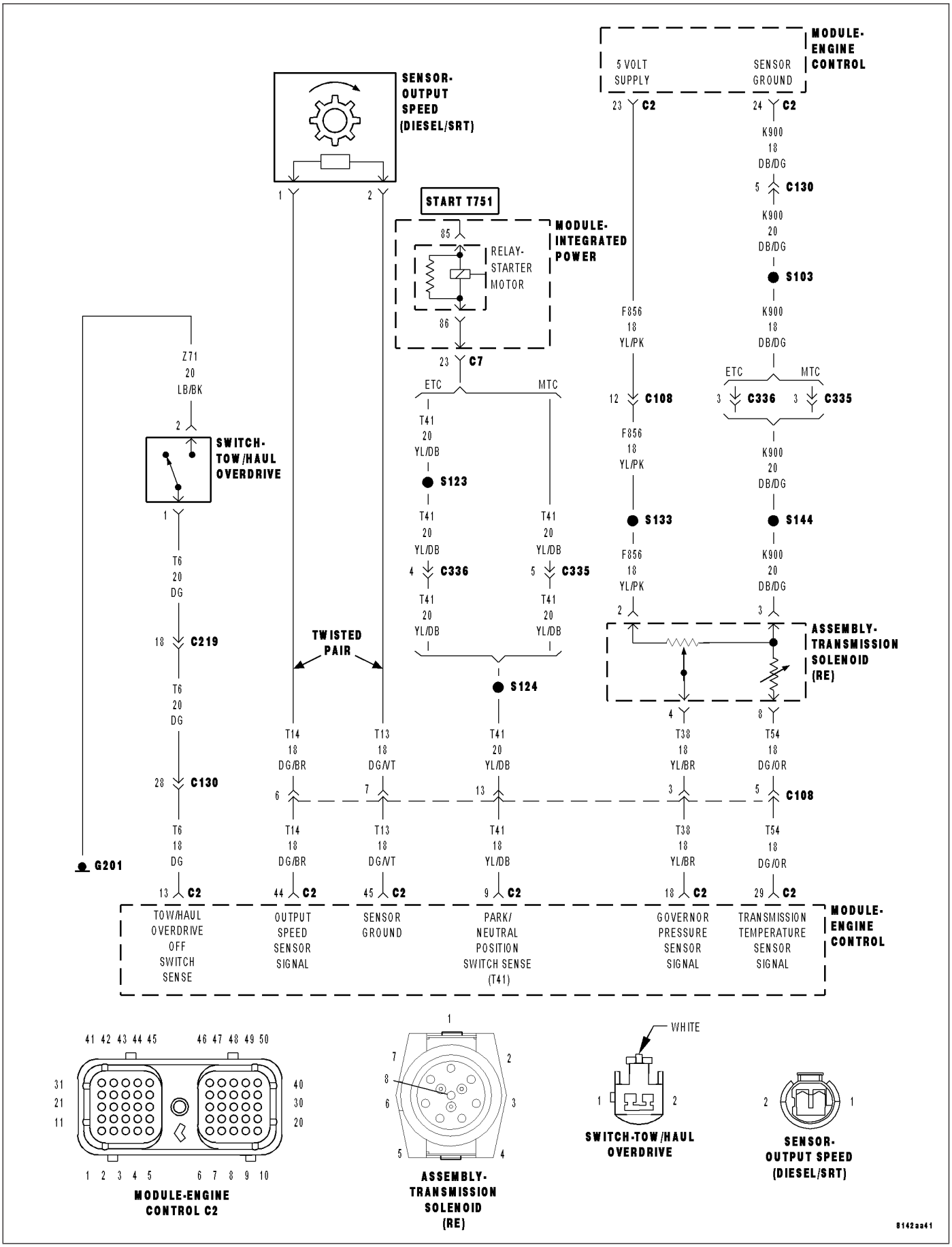

P0720-LOW OUTPUT SPEED SENSOR - RPM ABOVE 15 MPH (DIESEL) (CONTINUED)

For the Transmission circuit diagram (Refer to 21 - TRANSMISSION/TRANSAXLE/AUTOMATIC - 48RE - SCHEMATICS AND DIAGRAMS)

For a complete wiring diagram**Refer to Section 8W**

Theory of Operation

- **When Monitored:**
  Continuously with the ignition on, engine running, and gear selector NOT in park or neutral.
- **Set Condition:**
  This DTC will set if the vehicle speed (reported from the CAB module) is above 24 Kmh (15 mph), and the monitored Output Shaft Speed is below 60 RPM for 2.6 seconds.

Possible Causes
PARK/NEUTRAL DTC PRESENT
(T13) SENSOR GROUND CIRCUIT OPEN
(T14) OUTPUT SPEED SENSOR SIGNAL CIRCUIT OPEN
(T13) SENSOR GROUND CIRCUIT SHORT TO ANOTHER CIRCUIT
(T14) OUTPUT SPEED SENSOR SIGNAL CIRCUIT SHORT TO GROUND
(T14) OUTPUT SPEED SENSOR SIGNAL CIRCUIT SHORT TO ANOTHER CIRCUIT
(T13) SENSOR GROUND CIRCUIT SHORT TO VOLTAGE
(T14) OUTPUT SPEED SENSOR SIGNAL CIRCUIT SHORT TO VOLTAGE
OUTPUT SPEED SENSOR
ENGINE CONTROL MODULE

Always perform the Pre-Diagnostic Troubleshooting procedure before proceeding. (Refer to 21 - TRANSMISSION/TRANSAXLE/AUTOMATIC - 48RE - STANDARD PROCEDURE)

Diagnostic Test

1. CHECK IF THE DTC IS CURRENT

Ignition on, engine not running.
With the scan tool, read Engine DTCs.
Record the Freeze Frame data for the reported DTC.
With the scan tool, erase DTCs.
Turn the ignition off to the lock position.
Using the Freeze Frame data recorded earlier, try to duplicate the conditions in which the DTC originally set.

NOTE: It may be necessary to road test the vehicle to duplicate the original set conditions.
With the scan tool, read Engine DTCs.

Did the DTC reset?

Yes >> Go To 2
No >> Go To 11

P0720-LOW OUTPUT SPEED SENSOR - RPM ABOVE 15 MPH (DIESEL) (CONTINUED)

2. CHECK IF A PARK/NEUTRAL DTC IS PRESENT

Is there a Park/Neutral DTC present?

Yes >> Refer to the Transmission category and perform the appropriate symptom(s). (Refer to 21 - TRANSMISSION/TRANSAXLE/AUTOMATIC - 48RE - DIAGNOSIS AND TESTING)

No >> Go To 3

---

3. CHECK THE (T14) OUTPUT SPEED SENSOR SIGNAL CIRCUIT FOR AN OPEN

Turn the ignition off to the lock position.

Disconnect the ECM C2 harness connector.

Disconnect the Output Speed Sensor harness connector.

NOTE: Check connectors - Clean/repair as necessary

Measure the resistance of the (T14) Output Speed Sensor Signal circuit between the ECM C2 harness connector and the Output Speed Sensor harness connector.

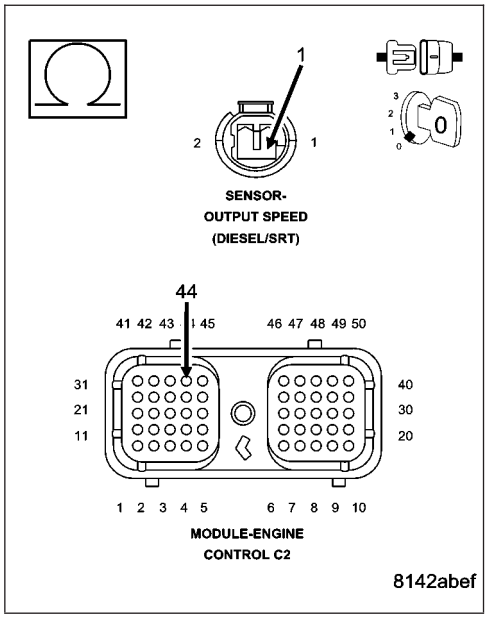

Is the resistance below 5.0 ohms?

Yes >> Go To 4

No >> Repair the (T14) Output Speed Sensor Signal circuit for an open.

Perform RE TRANSMISSION VERIFICATION TEST VER - 1 (DIESEL). (Refer to 21 - TRANSMISSION/TRANSAXLE/AUTOMATIC - 48RE - STANDARD PROCEDURE)

---

4. CHECK THE (T13) SENSOR GROUND CIRCUIT FOR AN OPEN

Measure the resistance of the (T13) Sensor Ground circuit between the ECM C2 harness connector and the Output Speed Sensor harness connector.

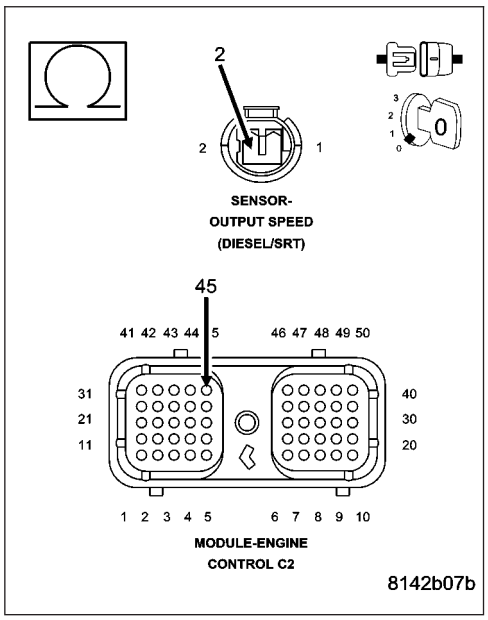

Is the resistance below 5.0 ohms?

Yes >> Go To 5

No >> Repair the (T13) Sensor Ground circuit for an open.

Perform RE TRANSMISSION VERIFICATION TEST VER - 1 (DIESEL). (Refer to 21 - TRANSMISSION/TRANSAXLE/AUTOMATIC - 48RE - STANDARD PROCEDURE)

P0720-LOW OUTPUT SPEED SENSOR - RPM ABOVE 15 MPH (DIESEL) (CONTINUED)

5. CHECK THE (T14) OUTPUT SPEED SENSOR SIGNAL CIRCUIT FOR A SHORT TO GROUND

Measure the resistance between ground and the (T14) Output Speed Sensor Signal circuit.

Is the resistance greater than 100K ohms?

Yes >> Go To 6

No >> Repair the (T14) Output Speed Sensor Signal circuit for a short to ground.
Perform RE TRANSMISSION VERIFICATION TEST VER - 1 (DIESEL). (Refer to 21 - TRANSMISSION/TRANSAXLE/ AUTOMATIC - 48RE - STANDARD PROCEDURE)

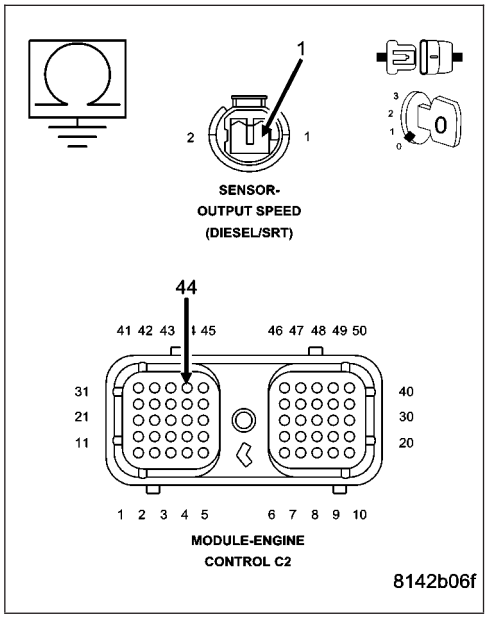

6. CHECK THE (T14) OUTPUT SPEED SENSOR SIGNAL CIRCUIT FOR A SHORT TO ANOTHER CIRCUIT

Measure the resistance between the (T14) Output Speed Sensor Signal circuit and all other circuits in the ECM C2 harness connector.

Is the resistance greater than 100K ohms between the (T14) Output Speed Sensor Signal circuit and any other circuit(s) in the ECM C2 harness connector?

Yes >> Go To 7

No >> Repair the (T14) Output Speed Sensor Signal circuit for a short to another circuit(s).
Perform RE TRANSMISSION VERIFICATION TEST VER - 1 (DIESEL). (Refer to 21 - TRANSMISSION/TRANSAXLE/ AUTOMATIC - 48RE - STANDARD PROCEDURE)

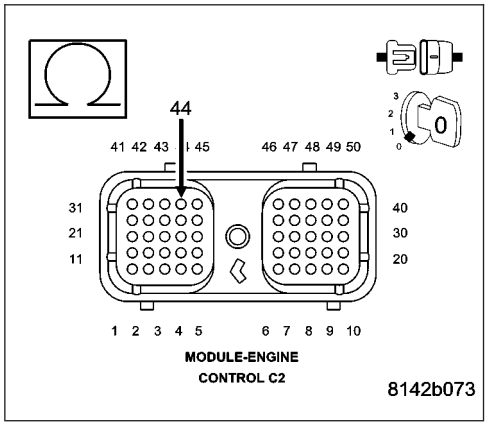

P0720-LOW OUTPUT SPEED SENSOR - RPM ABOVE 15 MPH (DIESEL) (CONTINUED)

7. CHECK THE (T13) SENSOR GROUND CIRCUIT FOR A SHORT TO ANOTHER CIRCUIT

Measure the resistance between the (T13) Sensor Ground circuit and all other circuits in the ECM C2 harness connector.

Is the resistance greater than 100K ohms?

Yes >> Go To 8

No >> Repair the (T13) Sensor Ground circuit for a short to another circuit(s).
Perform RE TRANSMISSION VERIFICATION TEST VER - 1 (DIESEL). (Refer to 21 - TRANSMISSION/TRANSAXLE/ AUTOMATIC - 48RE - STANDARD PROCEDURE)

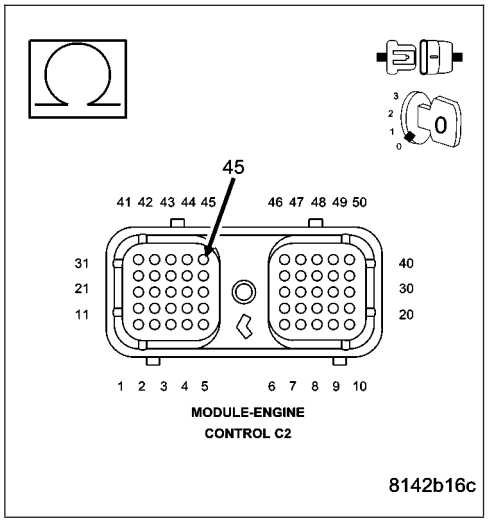

8. CHECK THE (T14) OUTPUT SPEED SENSOR SIGNAL CIRCUIT FOR A SHORT TO VOLTAGE

Ignition on, engine not running.

Measure the voltage of the (T14) Output Speed Sensor Signal circuit in the Output Speed Sensor harness connector.

Is there any voltage present?

Yes >> Repair the (T14) Output Speed Sensor Signal circuit for a short to voltage.
Perform RE TRANSMISSION VERIFICATION TEST VER - 1 (DIESEL). (Refer to 21 - TRANSMISSION/TRANSAXLE/ AUTOMATIC - 48RE - STANDARD PROCEDURE)

No >> Go To 9

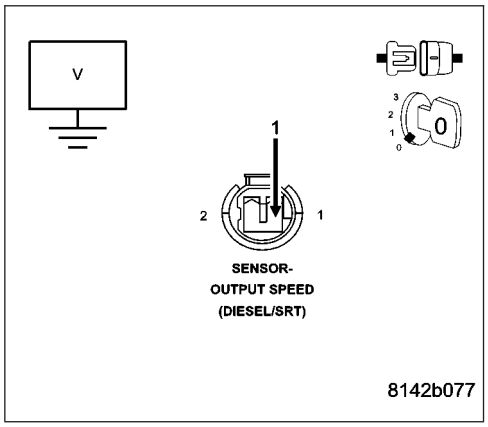

9. CHECK THE (T13) SENSOR GROUND CIRCUIT FOR A SHORT TO VOLTAGE

Measure the voltage of the (T13) Sensor Ground circuit in the Output Speed Sensor harness connector.

Is there any voltage present?

Yes >> Repair the (T13) Sensor Ground circuit for a short to voltage.
Perform RE TRANSMISSION VERIFICATION TEST VER - 1 (DIESEL). (Refer to 21 - TRANSMISSION/TRANSAXLE/ AUTOMATIC - 48RE - STANDARD PROCEDURE)

No >> Go To 10

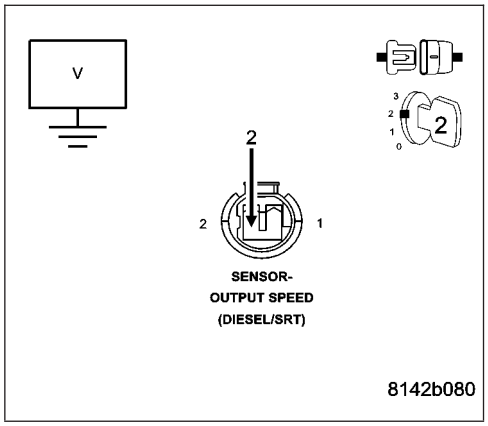

P0720-LOW OUTPUT SPEED SENSOR - RPM ABOVE 15 MPH (DIESEL) (CONTINUED)

10. CHECK THE OUTPUT SPEED SENSOR

Measure the resistance between the terminals of the Output Speed Sensor.

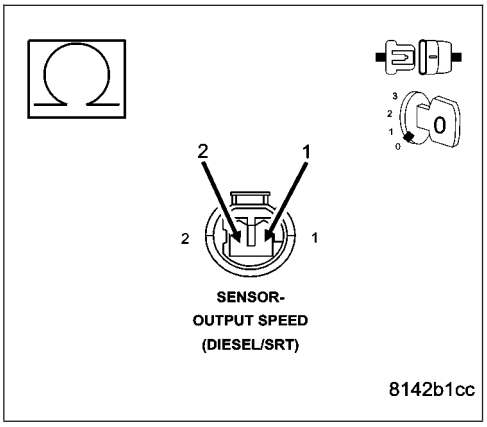

Is the resistance between 300.0 and 1200.0 ohms?

Yes >> Using the schematics as a guide, check the Engine Control Module (ECM) pins, terminals, and connectors for corrosion, damage, or terminal push out. Pay particular attention to all power and ground circuits. If no problems are found, replace and program the ECM per the Service Information. (Refer to 8 - ELECTRICAL/ELECTRONIC CONTROL MODULES/ENGINE CONTROL MODULE - REMOVAL)

Perform RE TRANSMISSION VERIFICATION TEST VER - 1 (DIESEL). (Refer to 21 - TRANSMISSION/TRANSAXLE/AUTOMATIC - 48RE - STANDARD PROCEDURE)

No >> Replace the Output Speed Sensor.

Perform RE TRANSMISSION VERIFICATION TEST VER - 1 (DIESEL). (Refer to 21 - TRANSMISSION/TRANSAXLE/AUTOMATIC - 48RE - STANDARD PROCEDURE)

---

11. INTERMITTENT WIRING AND CONNECTORS

The conditions necessary to set this DTC are not present at this time.

Use the Freeze Frame Data to help duplicate the conditions in which the DTC originally set. Pay particular attention to the DTC set conditions, such as, VSS, MAP, ECT, and Load

Using the schematics as a guide, visually inspect the related wiring harness. Look for any chafed, pierced, pinched, or partially broken wires.

Visually inspect the related wiring harness connectors. Look for broken, bent, pushed out, or corroded terminals.

Wiggle the wiring and connectors while checking for any possible open or shorted circuits.

Check for any Service Information Tune-ups or Technical Service Bulletins that may apply.

Were there any problems found?

Yes >> Repair as necessary.

Perform RE TRANSMISSION VERIFICATION TEST VER - 1 (DIESEL). (Refer to 21 - TRANSMISSION/TRANSAXLE/AUTOMATIC - 48RE - STANDARD PROCEDURE)

No >> Test Complete.

P0748-PRESSURE SOL CONTROL/TRANS RELAY CIRCUITS (DIESEL)

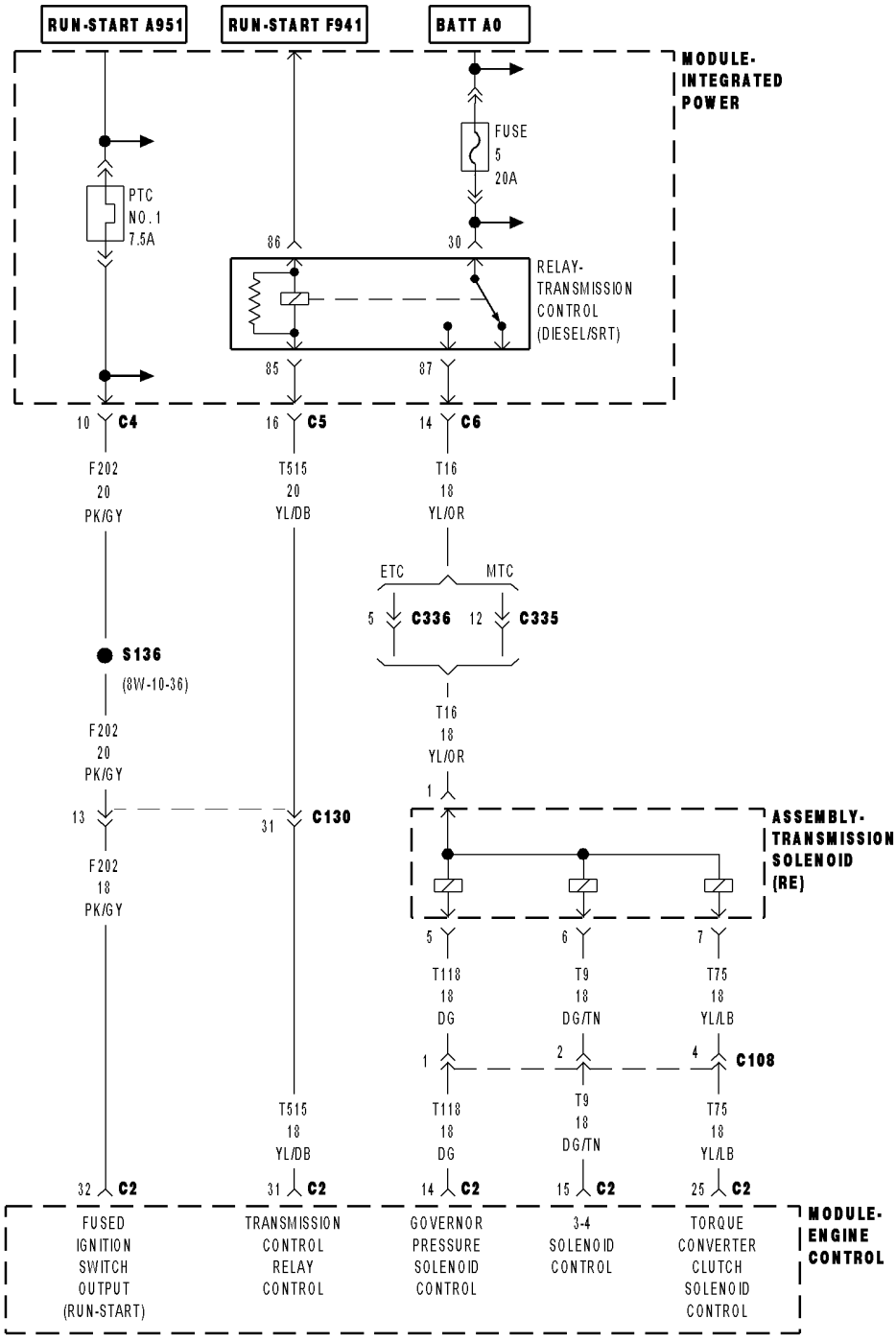

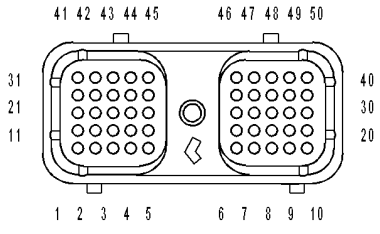

MODULE-ENGINE CONTROL C2

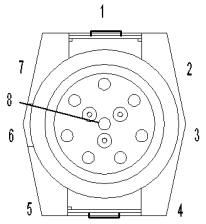

ASSEMBLY-TRANSMISSION SOLENOID (RE)

8142abf3

P0748-PRESSURE SOL CONTROL/TRANS RELAY CIRCUITS (DIESEL) (CONTINUED)

For the Transmission circuit diagram (Refer to 21 - TRANSMISSION/TRANSAXLE/AUTOMATIC - 48RE - SCHEMATICS AND DIAGRAMS)

For a complete wiring diagram**Refer to Section 8W**

Theory of Operation

The Governor Pressure Solenoid is used to control governor pressure. Governor pressure is used to shift between first, second, and third gear.

- **When Monitored:**
  Continuously with the ignition on.
- **Set Condition:**
  This DTC will set if the ECM monitored voltage detected on the Governor Pressure Solenoid Control circuit is different than the expected voltage. Note: To clear this DTC, it is necessary to drive the vehicle at a sustained speed which would allow the TCC and/or Overdrive Clutch to operate.

Possible Causes
FUSED B+ CIRCUIT OPEN
(T16) TRANSMISSION CONTROL RELAY OUTPUT CIRCUIT OPEN
(T16) TRANSMISSION CONTROL RELAY OUTPUT CIRCUIT SHORT TO GROUND
(T118) GOVERNOR PRESSURE SOLENOID CONTROL CIRCUIT OPEN
(T118) GOVERNOR PRESSURE SOLENOID CONTROL CIRCUIT SHORT TO GROUND
(T118) GOVERNOR PRESSURE SOLENOID CONTROL CIRCUIT SHORT TO VOLTAGE
(T118) GOVERNOR PRESSURE SOLENOID CONTROL CIRCUIT SHORT TO ANOTHER CIRCUIT
TRANSMISSION CONTROL RELAY - POOR CONTACTS
GOVERNOR PRESSURE SOLENOID
ENGINE CONTROL MODULE

Always perform the Pre-Diagnostic Troubleshooting procedure before proceeding. (Refer to 21 - TRANSMISSION/TRANSAXLE/AUTOMATIC - 48RE - STANDARD PROCEDURE)

Diagnostic Test

1. CHECK IF THE DTC P0882 IS PRESENT

Ignition on, engine not running.

With the scan tool, read Engine DTCs.

Is the DTC P0882 present also?

Yes >> Refer to the Transmission category and perform the appropriate symptom. (Refer to 21 - TRANSMISSION/TRANSAXLE/AUTOMATIC - 48RE - DIAGNOSIS AND TESTING)

No >> Go To 2

P0748-PRESSURE SOL CONTROL/TRANS RELAY CIRCUITS (DIESEL) (CONTINUED)

2. CHECK IF THE DTC IS CURRENT

With the scan tool, read Engine DTCs.

Record the Freeze Frame data for the reported DTC.

With the scan tool, erase DTCs.

Turn the ignition off to the lock position.

Using the Freeze Frame data recorded earlier, try to duplicate the conditions in which the DTC originally set.

NOTE: It may be necessary to road test the vehicle to duplicate the original set conditions.

With the scan tool, read Engine DTCs.

Did the DTC reset?

Yes >> Go To 3

No >> Go To 12

---

3. CHECK THE (T16) TRANSMISSION CONTROL RELAY OUTPUT CIRCUIT

Turn the ignition off to the lock position.

Disconnect the Transmission Solenoid Assembly harness connector.

NOTE: Check connectors - Clean/repair as necessary.

Ignition on, engine not running.

With the scan tool, actuate the Transmission Control Relay.

Using a 12-volt test light connected to ground, check the (T16) Transmission Control Relay Output circuit in the Transmission Solenoid Assembly harness connector.

NOTE: The test light must illuminate brightly. Compare the brightness to that of a direct connection to the battery.

Does the test light cycle on and off and illuminate brightly?

Yes >> Go To 4

No >> Go To 9

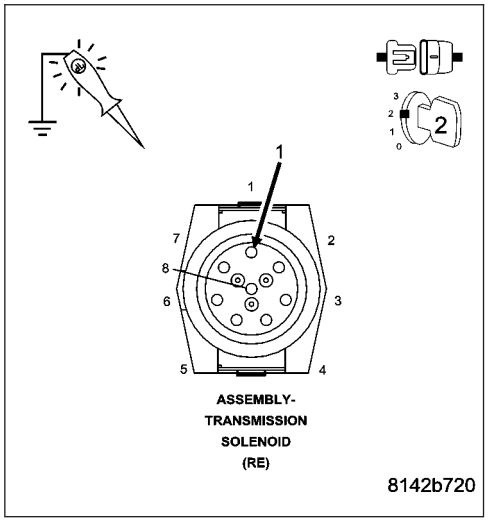

P0748-PRESSURE SOL CONTROL/TRANS RELAY CIRCUITS (DIESEL) (CONTINUED)

4. CHECK THE (T118) GOVERNOR PRESSURE SOLENOID CONTROL CIRCUIT FOR AN OPEN

Turn the ignition off to the lock position.

Disconnect the Transmission Solenoid Assembly harness connectors.

Disconnect the ECM C2 harness connector.

NOTE: Check connectors - Clean/repair as necessary.

Measure the resistance of the (T118) Governor Pressure Solenoid Control circuit between the Transmission Solenoid Assembly harness connector and the ECM C2 harness connector.

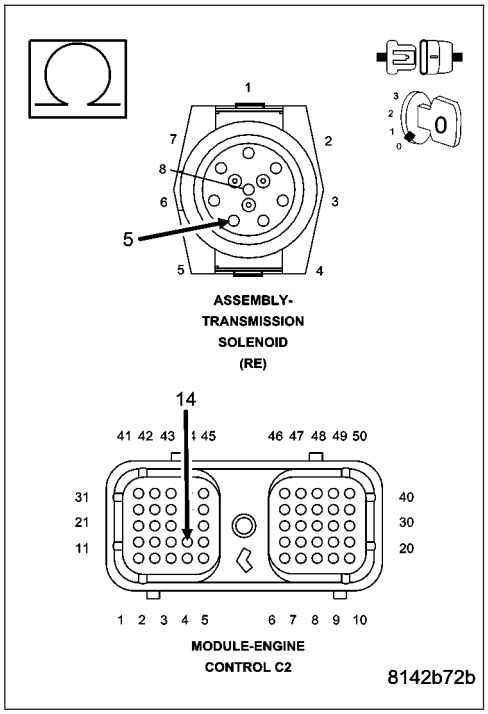

Is the resistance below 5.0 ohms?

Yes >> Go To 5

No >> Repair the (T118) Governor Pressure Solenoid Control circuit for an open.

Perform RE TRANSMISSION VERIFICATION TEST VER - 1 (DIESEL). (Refer to 21 - TRANSMISSION/TRANSAXLE/ AUTOMATIC - 48RE - STANDARD PROCEDURE)

5. CHECK THE (T118) GOVERNOR PRESSURE SOLENOID CONTROL CIRCUIT FOR A SHORT TO GROUND

Measure the resistance between ground and the (T118) Governor Pressure Solenoid Control circuit.

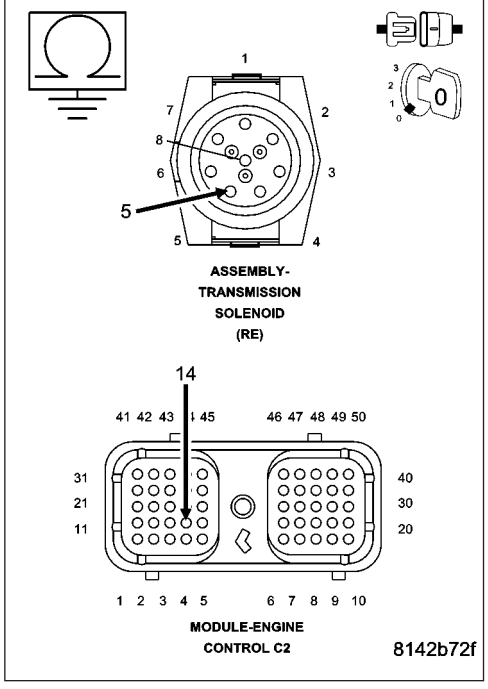

Is the resistance below 5.0 ohms?

Yes >> Repair the (T118) Governor Pressure Solenoid Control circuit for a short to ground.

Perform RE TRANSMISSION VERIFICATION TEST VER - 1 (DIESEL). (Refer to 21 - TRANSMISSION/TRANSAXLE/ AUTOMATIC - 48RE - STANDARD PROCEDURE)

No >> Go To 6

P0748-PRESSURE SOL CONTROL/TRANS RELAY CIRCUITS (DIESEL) (CONTINUED)

6. CHECK THE (T118) GOVERNOR PRESSURE SOLENOID CONTROL CIRCUIT SHORT TO VOLTAGE

Ignition on, engine not running.

Measure the voltage of the (T118) Governor Pressure Solenoid Control circuit.

Is the voltage above 0.5 volt?

Yes >> Repair the (T118) Governor Pressure Solenoid Control circuit for a short to voltage.

Perform RE TRANSMISSION VERIFICATION TEST VER - 1 (DIESEL). (Refer to 21 - TRANSMISSION/TRANSAXLE/ AUTOMATIC - 48RE - STANDARD PROCEDURE)

No >> Go To 7

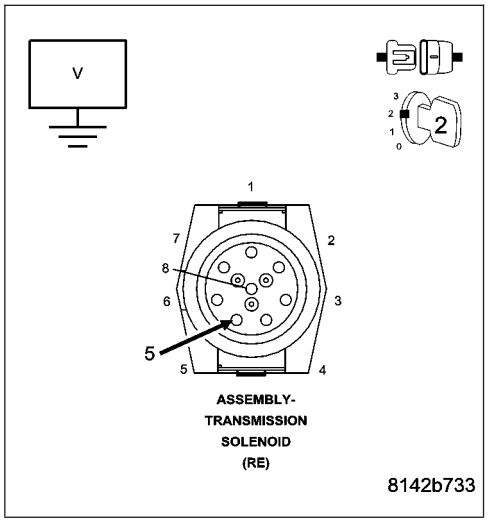

7. CHECK THE (T118) GOVERNOR PRESSURE SOLENOID CONTROL CIRCUIT FOR A SHORT TO ANOTHER CIRCUIT

Turn the ignition off to the lock position.

Remove the Transmission Control Relay.

Measure the resistance between the (T118) Governor Pressure Solenoid Control circuit and all other circuits in the Transmission Solenoid Assembly harness connector.

Is the resistance below 5.0 ohms between the (T118) Governor Pressure Solenoid Control circuit and any other circuit in the Transmission Solenoid Assembly harness connector?

Yes >> Repair the (T118) Governor Pressure Solenoid Control circuit for a short to another circuit(s).

Perform RE TRANSMISSION VERIFICATION TEST VER - 1 (DIESEL). (Refer to 21 - TRANSMISSION/TRANSAXLE/ AUTOMATIC - 48RE - STANDARD PROCEDURE)

No >> Go To 8

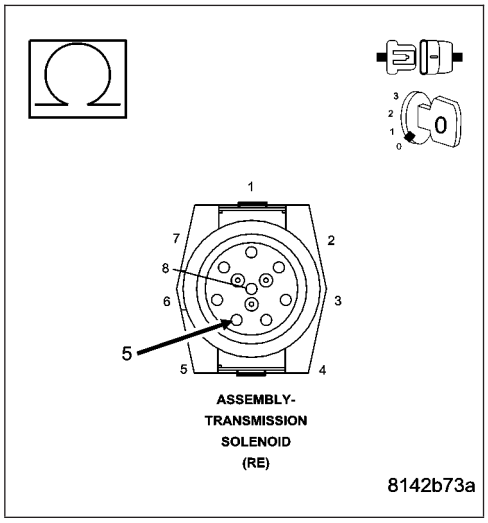

P0748-PRESSURE SOL CONTROL/TRANS RELAY CIRCUITS (DIESEL) (CONTINUED)

8. CHECK THE GOVERNOR PRESSURE SOLENOID

Remove the Transmission Oil Pan per the Service Information. (Refer to 21 - TRANSMISSION/TRANSAXLE/AUTOMATIC - 48RE/FLUID - STANDARD PROCEDURE)

Check all internal wiring pertaining to the Governor Pressure Solenoid for an open, short, and bent or broken terminals.

If no internal wiring problems are found, replace the Governor Pressure Solenoid per the Service Information. (Refer to 21 - TRANSMISSION/TRANSAXLE/AUTOMATIC - 48RE/GOVERNOR PRESSURE SENSOR - REMOVAL)

Drive the vehicle performing multiple upshifts and downshifts.

With the scan tool, read Transmission DTCs.

Does the DTC reset?

Yes >> Using the schematics as a guide, check the Engine Control Module (ECM) pins, terminals, and connectors for corrosion, damage, or terminal push out. Pay particular attention to all power and ground circuits. If no problems are found, replace and program the ECM per the Service Information. (Refer to 8 - ELECTRICAL/ELECTRONIC CONTROL MODULES/ENGINE CONTROL MODULE - REMOVAL)

Perform RE TRANSMISSION VERIFICATION TEST VER - 1 (DIESEL). (Refer to 21 - TRANSMISSION/TRANSAXLE/AUTOMATIC - 48RE - STANDARD PROCEDURE)

No >> Test Complete.

Perform RE TRANSMISSION VERIFICATION TEST VER - 1 (DIESEL). (Refer to 21 - TRANSMISSION/TRANSAXLE/AUTOMATIC - 48RE - STANDARD PROCEDURE)

---

9. CHECK THE FUSED B(+) CIRCUIT

Turn the ignition off to the lock position.

Remove the Transmission Control Relay.

Ignition on, engine not running.

Using a 12-volt test light connected to ground, check the Fused B(+) circuit in the Transmission Control Relay connector.

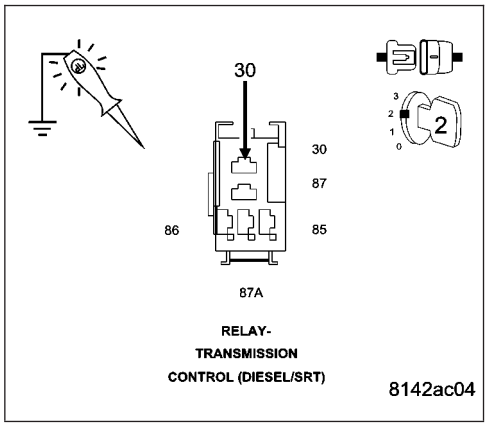

Does the test light illuminate brightly?

Yes >> Go To 10

No >> Repair the Fused B(+) circuit for an open. If the fuse is open, make sure to check for a short to ground.

Perform RE TRANSMISSION VERIFICATION TEST VER - 1 (DIESEL). (Refer to 21 - TRANSMISSION/TRANSAXLE/AUTOMATIC - 48RE - STANDARD PROCEDURE)

P0748-PRESSURE SOL CONTROL/TRANS RELAY CIRCUITS (DIESEL) (CONTINUED)

10. CHECK THE (T16) TRANSMISSION CONTROL RELAY OUTPUT CIRCUIT FOR A SHORT TO GROUND

Turn the ignition off to the lock position.

Disconnect the Transmission Solenoid Assembly harness connector.

Measure the resistance between ground and the (T16) Transmission Control Relay Output circuit.

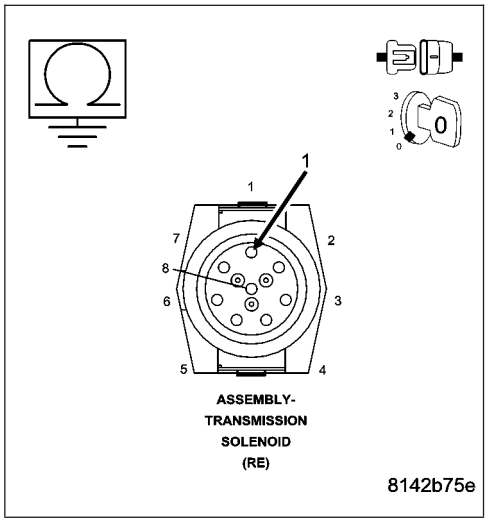

Is the resistance below 5.0 ohms?

Yes >> Repair the (T16) Transmission Control Relay Output circuit for a short to ground.
Perform RE TRANSMISSION VERIFICATION TEST VER - 1 (DIESEL). (Refer to 21 - TRANSMISSION/TRANSAXLE/ AUTOMATIC - 48RE - STANDARD PROCEDURE)

No >> Go To 11

11. CHECK THE (T16) TRANSMISSION CONTROL RELAY OUTPUT CIRCUIT OPEN

Connect a jumper wire between Fused B(+) and the (T16) Transmission Control Relay Output circuit in the Transmission Control Relay connector.

Ignition on, engine not running.

Using a 12-volt test light connected to ground, check the (T16) Transmission Control Relay Output circuit in the Transmission Solenoid Assembly harness connector.

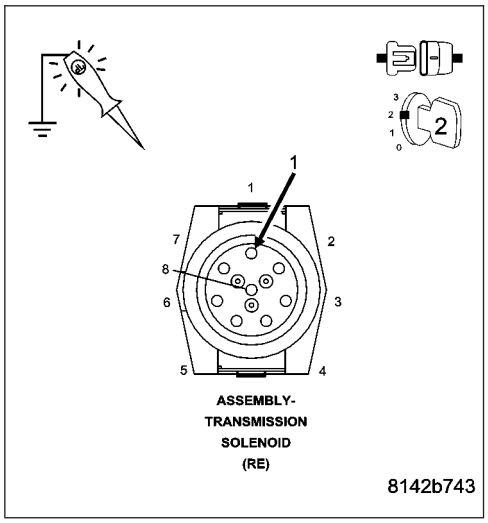

Does the test light illuminate brightly?

Yes >> Replace the Transmission Control Relay.
Perform RE TRANSMISSION VERIFICATION TEST VER - 1 (DIESEL). (Refer to 21 - TRANSMISSION/TRANSAXLE/ AUTOMATIC - 48RE - STANDARD PROCEDURE)

No >> Replace the (T16) Transmission Control Relay Output circuit for an open.
Perform RE TRANSMISSION VERIFICATION TEST VER - 1 (DIESEL). (Refer to 21 - TRANSMISSION/TRANSAXLE/AUTOMATIC - 48RE - STANDARD PROCEDURE)

P0748-PRESSURE SOL CONTROL/TRANS RELAY CIRCUITS (DIESEL) (CONTINUED)

12. INTERMITTENT WIRING AND CONNECTORS

The conditions necessary to set this DTC are not present at this time.

Use the Freeze Frame Data to help duplicate the conditions in which the DTC originally set. Pay particular attention to the DTC set conditions, such as, VSS, MAP, ECT, and Load

Using the schematics as a guide, visually inspect the related wiring harness. Look for any chafed, pierced, pinched, or partially broken wires.

Visually inspect the related wiring harness connectors. Look for broken, bent, pushed out, or corroded terminals.

Wiggle the wiring and connectors while checking for any possible open or shorted circuits.

Check for any Service Information Tune-ups or Technical Service Bulletins that may apply.

Were there any problems found?

Yes >> Repair as necessary.
Perform RE TRANSMISSION VERIFICATION TEST VER - 1 (DIESEL). (Refer to 21 - TRANSMISSION/ TRANSAXLE/AUTOMATIC - 48RE - STANDARD PROCEDURE)

No >> Test Complete.

P0850-P/N SWITCH PERFORMANCE (DIESEL)

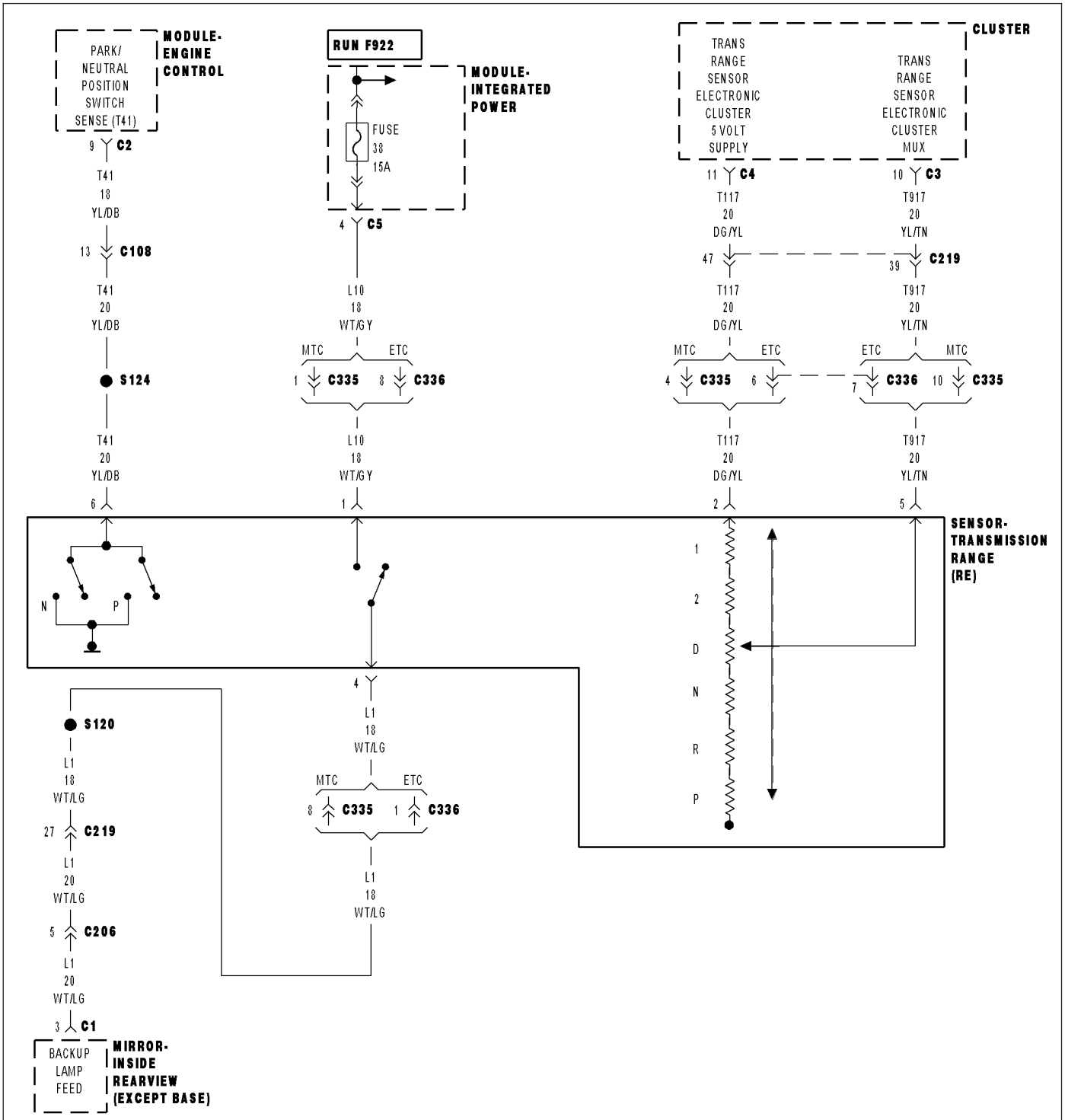

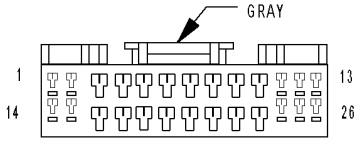

CLUSTER C3

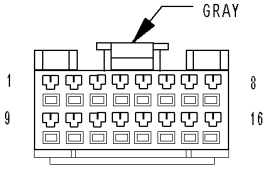

CLUSTER C4

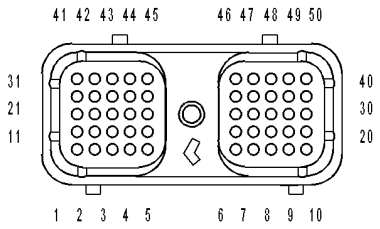

MODULE-
ENGINE
CONTROL C2

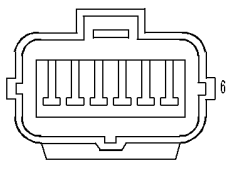

SENSOR-
TRANSMISSION RANGE
(RE)

8142c9e6

P0850-P/N SWITCH PERFORMANCE (DIESEL) (CONTINUED)

For the Transmission circuit diagram (Refer to 21 - TRANSMISSION/TRANSAXLE/AUTOMATIC - 48RE - SCHEMATICS AND DIAGRAMS)

For a complete wiring diagram**Refer to Section 8W**

- **When Monitored:**
  Continuously with the ignition on and engine running.
- **Set Condition:**
  The Transmission governor pressure set point is above a threshold while in park or the P/N switch is in drive during an engine start.

Possible Causes
TRS CONNECTOR DAMAGE OR CORROSION
ECM CONNECTOR DAMAGE OR CORROSION
(T41) P/N POSITION SWITCH SENSE CIRCUIT OPEN
(T41) P/N POSITION SWITCH SENSE CIRCUIT SHORT TO GROUND
(T41) P/N POSITION SWITCH SENSE CIRCUIT SHORT TO ANOTHER CIRCUIT
TRANSMISSION RANGE SENSOR
ENGINE CONTROL MODULE

Always perform the Pre-Diagnostic Troubleshooting procedure before proceeding. (Refer to 21 - TRANSMISSION/TRANSAXLE/AUTOMATIC - 48RE - STANDARD PROCEDURE)

Diagnostic Test

1. CHECK IF THE SCAN TOOL DISPLAYS P/N AND D/R IN THE CORRECT POSITION

Ignition on, engine not running.

With the scan tool, monitor the PNP switch input state.

Move the gear selector through all gear positions Park to 1st and back to Park..

Did the scan tool display P/N and D/R in the correct gear positions?

Yes >> Go To 8

No >> Go To 2

---

2. CHECK THE TRS CONNECTOR FOR DAMAGE OR CORROSION

Turn the ignition off to the lock position.

Disconnect the Transmission Range Sensor harness connector.

Inspect the Transmission Range Sensor harness wiring and connector for damage, pushed out pins, or corrosion, etc.

Were there any problems found?

Yes >> Repair as necessary.
Perform RE TRANSMISSION VERIFICATION TEST VER - 1 (DIESEL). (Refer to 21 - TRANSMISSION/TRANSAXLE/AUTOMATIC - 48RE - STANDARD PROCEDURE)

No >> Go To 3

P0850-P/N SWITCH PERFORMANCE (DIESEL) (CONTINUED)

3. CHECK THE ECM CONNECTOR FOR DAMAGE OR CORROSION

Disconnect the ECM C2 harness connector.

Inspect the ECM wiring and connector for damage, pushed out pins, or corrosion, etc.

Were there any problems found?

Yes >> Repair as necessary.
Perform RE TRANSMISSION VERIFICATION TEST VER - 1 (DIESEL). (Refer to 21 - TRANSMISSION/TRANSAXLE/AUTOMATIC - 48RE - STANDARD PROCEDURE)

No >> Go To 4

---

4. CHECK THE (T41) P/N POSITION SWITCH SENSE CIRCUIT FOR AN OPEN

Measure the resistance of the (T41) P/N Position Switch Sense circuit between the ECM C2 harness connector and the Transmission Range Sensor harness connector.

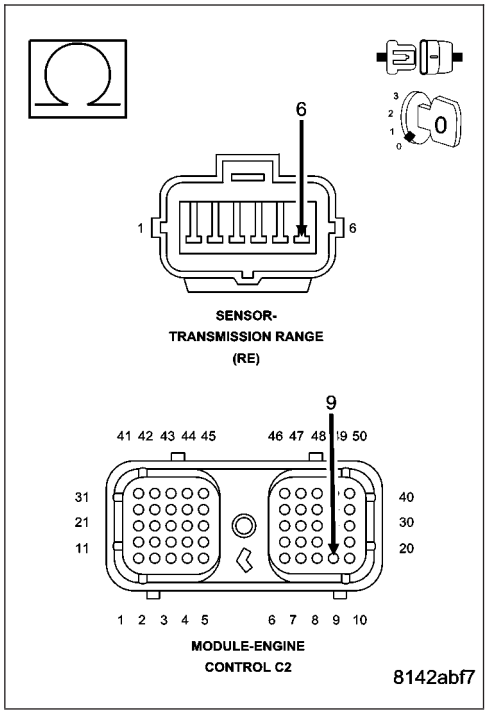

Is the resistance below 5.0 ohms?

Yes >> Go To 5

No >> Repair the (T41) P/N Position Switch Sense circuit for an open.
Perform RE TRANSMISSION VERIFICATION TEST VER - 1 (DIESEL). (Refer to 21 - TRANSMISSION/TRANSAXLE/AUTOMATIC - 48RE - STANDARD PROCEDURE)

P0850-P/N SWITCH PERFORMANCE (DIESEL) (CONTINUED)

5. CHECK THE (T41) P/N POSITION SWITCH SENSE CIRCUIT FOR A SHORT TO GROUND

Measure the resistance between ground and the (T41) P/N Position Switch Sense circuit.

Is the resistance greater then 100k ohms?

Yes >> Go To 6

No >> Repair the (T41) P/N Position Switch Sense circuit for a short to ground.
Perform RE TRANSMISSION VERIFICATION TEST VER - 1 (DIESEL). (Refer to 21 - TRANSMISSION/TRANSAXLE/ AUTOMATIC - 48RE - STANDARD PROCEDURE)

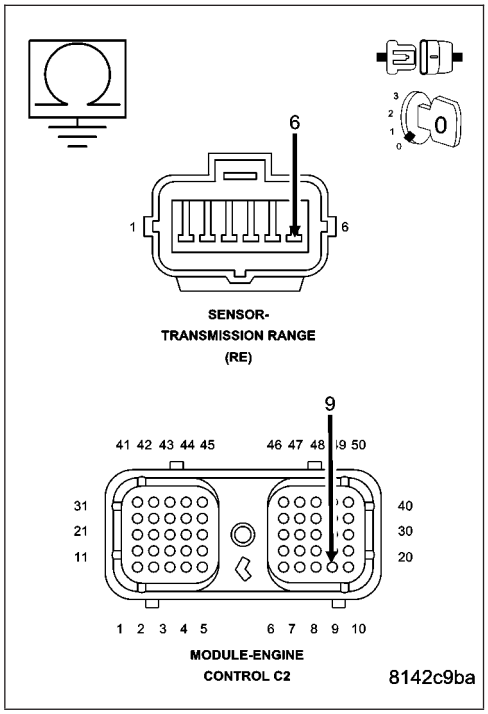

6. CHECK THE (T41) P/N POSITION SWITCH SENSE CIRCUIT FOR A SHORT TO ANOTHER CIRCUIT

Measure the resistance between the (T41) P/N Position Switch Sense circuit and all other circuits in the ECM C1 and C2 harness connectors.

Is the resistance greater 100k ohms between the (T41) P/N Position Switch Sense circuit and any other circuit(s) in the ECM C1 and C2 harness connectors?

Yes >> Go To 7

No >> Repair the (T41) P/N Position Switch Sense circuit for a short to another circuit(s).
Perform RE TRANSMISSION VERIFICATION TEST VER - 1 (DIESEL). (Refer to 21 - TRANSMISSION/TRANSAXLE/ AUTOMATIC - 48RE - STANDARD PROCEDURE)

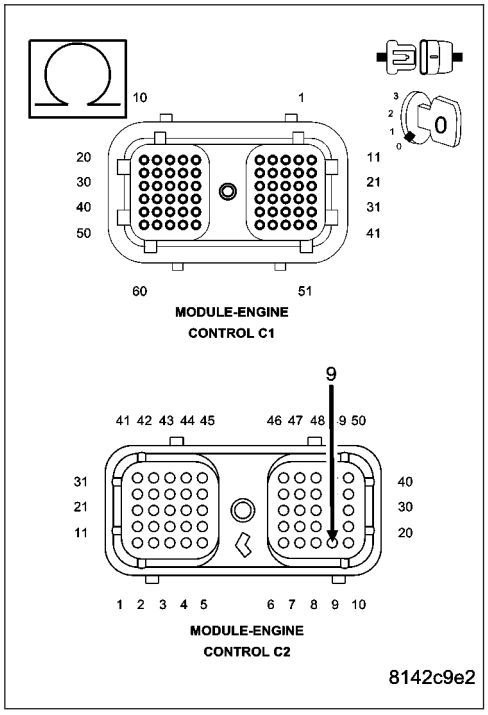

P0850-P/N SWITCH PERFORMANCE (DIESEL) (CONTINUED)

7. CHECK THE TRANSMISSION RANGE SENSOR

Reconnect the Transmission Range Sensor harness connector.

Move the gear selector through all gear positions, from Park to 1st and back.

While moving the gear selector through the gear positions, measure the resistance between ground and the (T41) P/N Position Switch Sense circuit in the ECM harness connector.

NOTE: The circuit is grounded in Park and Neutral and open in the other positions.

Did the display change from above 100k ohms (open) to below 5.0 ohms (grounded)?

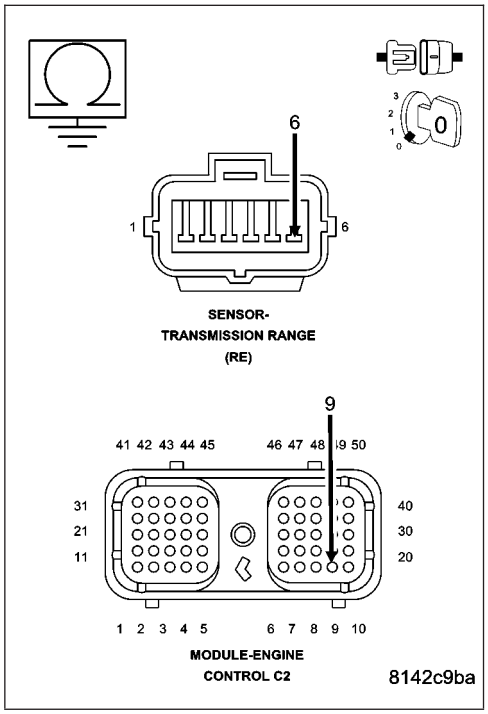

Yes >> Using the schematics as a guide, check the Engine Control Module (ECM) pins, terminals, and connectors for corrosion, damage, or terminal push out. Pay particular attention to all power and ground circuits. If no problems are found, replace and program the ECM per the Service Information. (Refer to 8 - ELECTRICAL/ELECTRONIC CONTROL MODULES/ENGINE CONTROL MODULE - REMOVAL)

Perform RE TRANSMISSION VERIFICATION TEST VER - 1 (DIESEL). (Refer to 21 - TRANSMISSION/TRANSAXLE/AUTOMATIC - 48RE - STANDARD PROCEDURE)

No >> Replace the Transmission Range Sensor per Service Information. (Refer to 21 - TRANSMISSION/TRANSAXLE/AUTOMATIC - 48RE/TRANSMISSION RANGE SENSOR - REMOVAL)

Perform RE TRANSMISSION VERIFICATION TEST VER - 1 (DIESEL). (Refer to 21 - TRANSMISSION/TRANSAXLE/AUTOMATIC - 48RE - STANDARD PROCEDURE)

---

8. INTERMITTENT WIRING AND CONNECTORS

The conditions necessary to set this DTC are not present at this time.

Use the Freeze Frame Data to help duplicate the conditions in which the DTC originally set. Pay particular attention to the DTC set conditions, such as, VSS, MAP, ECT, and Load

Using the schematics as a guide, visually inspect the related wiring harness. Look for any chafed, pierced, pinched, or partially broken wires.

Visually inspect the related wiring harness connectors. Look for broken, bent, pushed out, or corroded terminals.

Wiggle the wiring and connectors while checking for any possible open or shorted circuits.

Check for any Service Information Tune-ups or Technical Service Bulletins that may apply.

Were there any problems found?

Yes >> Repair as necessary.

Perform RE TRANSMISSION VERIFICATION TEST VER - 1 (DIESEL). (Refer to 21 - TRANSMISSION/TRANSAXLE/AUTOMATIC - 48RE - STANDARD PROCEDURE)

No >> Test Complete.

P0868-GOVERNOR PRESSURE SENSOR VOLTS TOO HI (DIESEL)

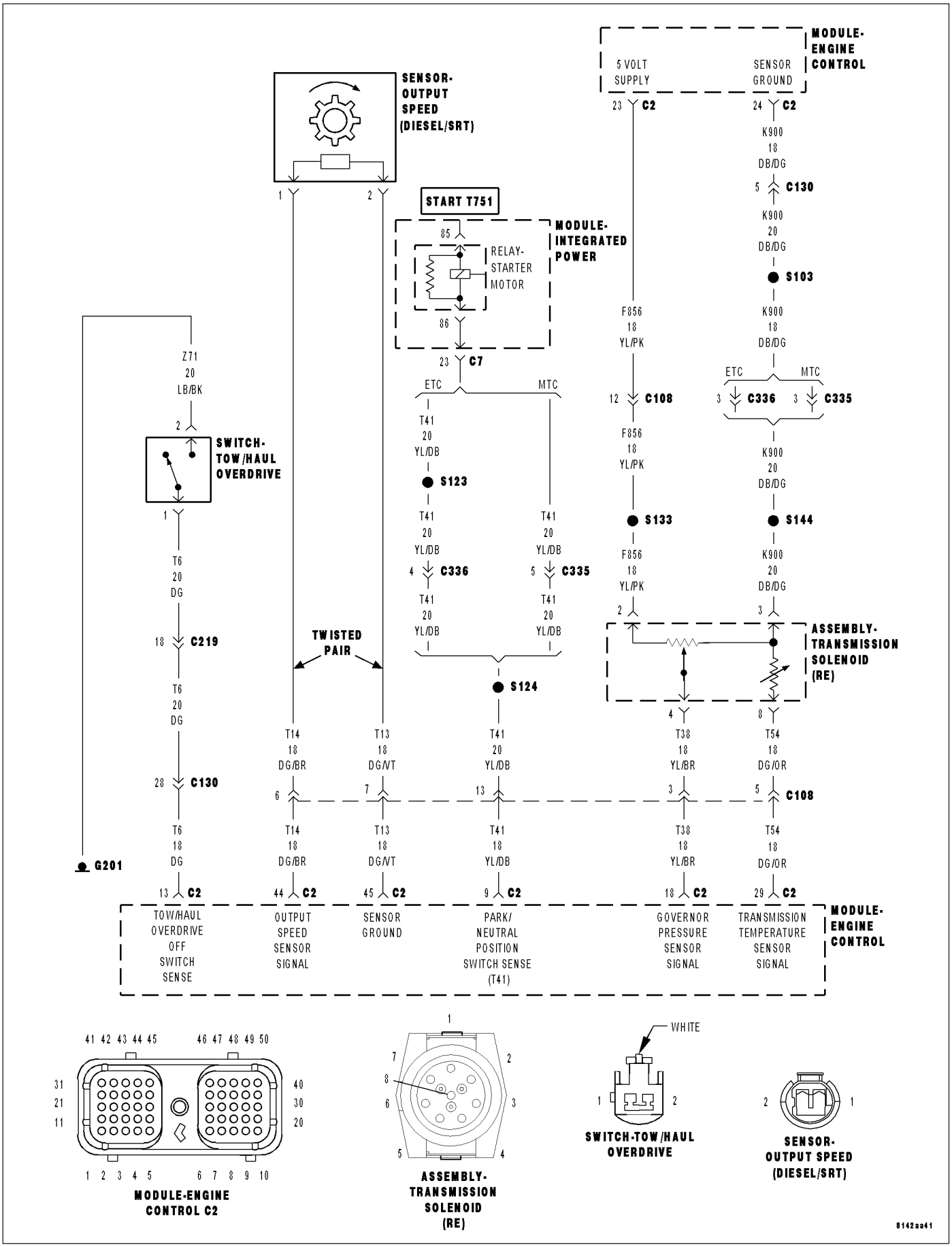

P0868-GOVERNOR PRESSURE SENSOR VOLTS TOO HI (DIESEL) (CONTINUED)

For the Transmission circuit diagram (Refer to 21 - TRANSMISSION/TRANSAXLE/AUTOMATIC - 48RE - SCHEMATICS AND DIAGRAMS)

For a complete wiring diagram**Refer to Section 8W**

Theory of Operation

The Governor Pressure Sensor is used by the ECM to adjust the Governor Pressure to a desired level for shifts in first, second, and third gear. If the ECM detects the monitored sense voltage is greater than or less than a predetermined specification, the ECM will set the desired DTC.

- **When Monitored:**
  Continuously with the ignition on and the engine running.
- **Set Condition:**
  This DTC will set when the monitored sense voltage from the Governor Pressure Sensor is above 4.89 volts for the period of 8.5 seconds.

Possible Causes
OTHER TRANSMISSION DTC'S PRESENT
PARK NEUTRAL DTC PRESENT
(T38) GOVERNOR PRESSURE SENSOR SIGNAL CIRCUIT OPEN
(K900) SENSOR GROUND CIRCUIT OPEN
(T38) GOVERNOR PRESSURE SENSOR SIGNAL CIRCUIT SHORT TO VOLTAGE
(T38) GOVERNOR PRESSURE SENSOR SIGNAL CIRCUIT SHORT TO ANOTHER CIRCUIT
(T38) GOVERNOR PRESSURE SENSOR SIGNAL CIRCUIT OPEN INSIDE TRANSMISSION
(K900) SENSOR GROUND CIRCUIT OPEN INSIDE TRANSMISSION
(T38) GOVERNOR PRESSURE SENSOR SIGNAL CIRCUIT SHORT TO VOLTAGE INSIDE TRANSMISSION
GOVERNOR PRESSURE SENSOR
ENGINE CONTROL MODULE

Always perform the Pre-Diagnostic Troubleshooting procedure before proceeding. (Refer to 21 - TRANSMISSION/TRANSAXLE/AUTOMATIC - 48RE - STANDARD PROCEDURE)

Diagnostic Test

1. CHECK IF THE DTC IS CURRENT

Ignition on, engine not running.

With the scan tool, read Engine DTCs.

Record the Freeze Frame data for the reported DTC.

With the scan tool, erase DTCs.

Turn the ignition off to the lock position.

Using the Freeze Frame data recorded earlier, try to duplicate the conditions in which the DTC originally set.

NOTE: It may be necessary to road test the vehicle to duplicate the original set conditions.

With the scan tool, read Engine DTCs.

Did the DTC reset?

Yes >> Go To 2

No >> Go To 11

P0868-GOVERNOR PRESSURE SENSOR VOLTS TOO HI (DIESEL) (CONTINUED)

2. CHECK FOR OTHER TRANSMISSION DTC'S PRESENT

Are there any Park/Neutral or other Transmission DTCs present?

Yes >> Refer to the Transmission category and perform the appropriate symptom(s). If a Park/Neutral DTC is present, perform its respective test first. (Refer to 21 - TRANSMISSION/TRANSAXLE/AUTOMATIC - 48RE - DIAGNOSIS AND TESTING)

No >> Go To 3

---

3. CHECK THE (T38) GOVERNOR PRESSURE SENSOR SIGNAL CIRCUIT FOR AN OPEN

Turn the ignition off to the lock position.

Disconnect the ECM C2 harness connectors.

Disconnect the Transmission Solenoid Assembly harness connector.

NOTE: Check connectors - Clean/repair as necessary

Measure the resistance of the (T38) Governor Pressure Sensor Signal circuit between the Transmission Solenoid Assembly harness connector and the ECM C2 harness connector.

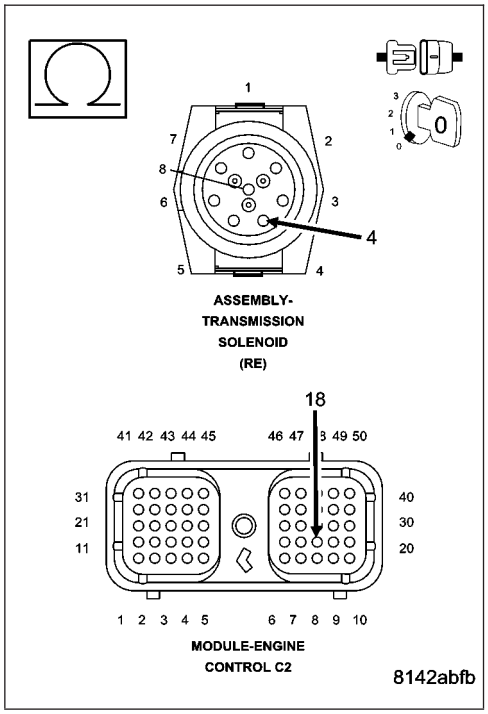

Is the resistance below 5.0 ohms?

Yes >> Go To 4

No >> Repair the (T38) Governor Pressure Sensor Signal circuit for an open.

Perform RE TRANSMISSION VERIFICATION TEST VER - 1 (DIESEL). (Refer to 21 - TRANSMISSION/TRANSAXLE/AUTOMATIC - 48RE - STANDARD PROCEDURE)

P0868-GOVERNOR PRESSURE SENSOR VOLTS TOO HI (DIESEL) (CONTINUED)

4. CHECK THE (K900) SENSOR GROUND CIRCUIT FOR AN OPEN

Measure the resistance of the (K900) Sensor Ground circuit between the Transmission Solenoid Assembly harness connector and the ECM C2 harness connector.

Is the resistance below 5.0 ohms?

Yes >> Go To 5

No >> Repair the (K900) Sensor Ground circuit for an open.
Perform RE TRANSMISSION VERIFICATION TEST VER - 1 (DIESEL). (Refer to 21 - TRANSMISSION/TRANSAXLE/ AUTOMATIC - 48RE - STANDARD PROCEDURE)

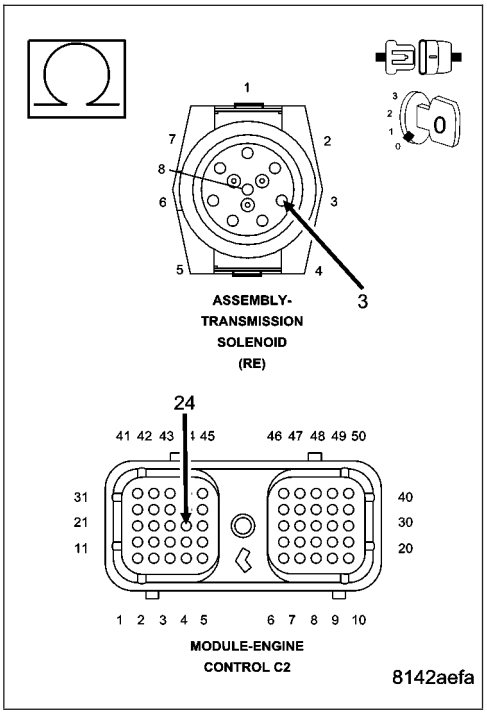

5. CHECK THE (T38) GOVERNOR PRESSURE SENSOR SIGNAL CIRCUIT FOR A SHORT TO VOLTAGE

Ignition on, engine not running.

Measure the voltage of the (T38) Governor Pressure Sensor Signal circuit in the Transmission Solenoid Assembly harness connector.

Is the voltage above 0.5 volts?

Yes >> Repair the (T38) Governor Pressure Sensor Signal circuit for a short to voltage.
Perform RE TRANSMISSION VERIFICATION TEST VER - 1 (DIESEL). (Refer to 21 - TRANSMISSION/TRANSAXLE/ AUTOMATIC - 48RE - STANDARD PROCEDURE)

No >> Go To 6

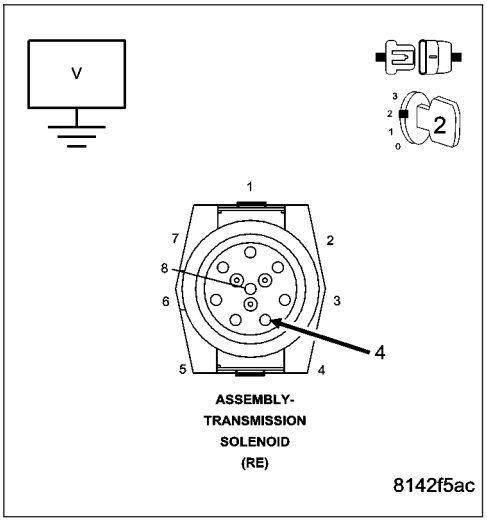

P0868-GOVERNOR PRESSURE SENSOR VOLTS TOO HI (DIESEL) (CONTINUED)

6. CHECK THE (T38) GOVERNOR PRESSURE SENSOR SIGNAL CIRCUIT FOR A SHORT TO ANOTHER CIRCUIT

Turn the ignition off to the lock position.

Measure the resistance between the (T38) Governor Pressure Sensor Signal circuit and all other circuits in the Transmission Solenoid Assembly harness connector.

Is the resistance below 100k ohms between the (T38) Governor Pressure Sensor Signal circuit and any other circuit(s) in the Transmission Solenoid Assembly harness connector?

Yes >> Repair the (T38) Governor Pressure Sensor Signal circuit for a short to another circuit(s).

Perform RE TRANSMISSION VERIFICATION TEST VER - 1 (DIESEL). (Refer to 21 - TRANSMISSION/TRANSAXLE/AUTOMATIC - 48RE - STANDARD PROCEDURE)

No >> Go To 7

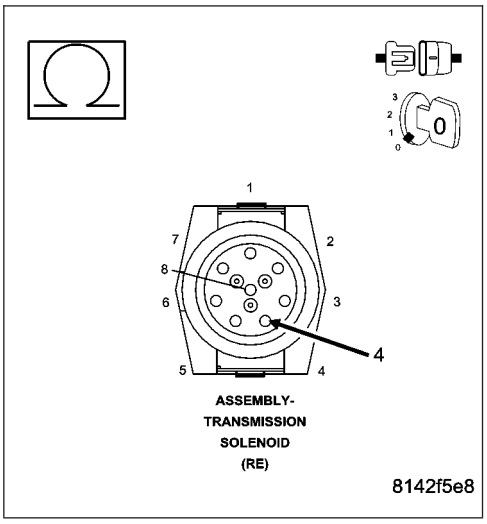

7. CHECK THE (T38) GOVERNOR PRESSURE SENSOR SIGNAL CIRCUIT OR AN OPEN INTERNAL

Remove the Transmission Oil Pan. (Refer to 21 - TRANSMISSION/TRANSAXLE/AUTOMATIC - 48RE/FLUID - STANDARD PROCEDURE)

Reconnect the Transmission Solenoid Assembly harness connector.

Disconnect the Governor Pressure Sensor harness connector.

Measure the resistance of the (T38) Governor Pressure Sensor Signal circuit between the ECM C2 harness connector and the Governor Pressure Sensor harness connector internal to the transmission.

Is the resistance below 5.0 ohms?

Yes >> Go To 8

No >> Replace the Transmission Solenoid Assembly per the Service Information. (Refer to 21 - TRANSMISSION/TRANSAXLE/AUTOMATIC - 48RE/VALVE BODY - REMOVAL)

Perform RE TRANSMISSION VERIFICATION TEST VER - 1 (DIESEL). (Refer to 21 - TRANSMISSION/TRANSAXLE/AUTOMATIC - 48RE - STANDARD PROCEDURE)

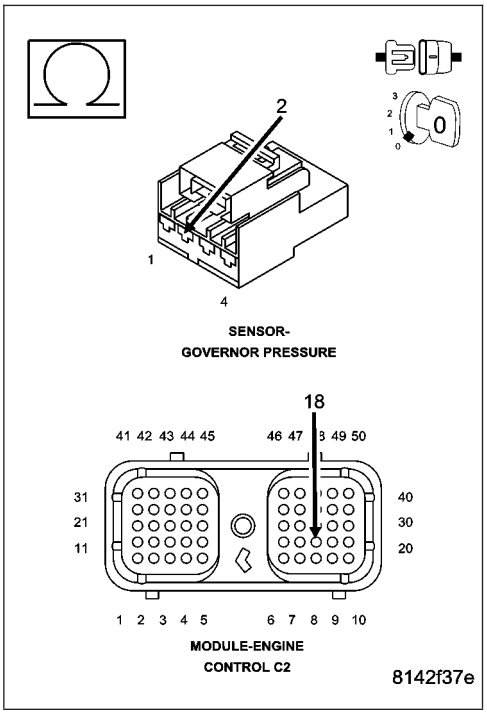

P0868-GOVERNOR PRESSURE SENSOR VOLTS TOO HI (DIESEL) (CONTINUED)

8. CHECK THE (K900) SENSOR GROUND CIRCUIT FOR AN OPEN INTERNAL

Measure the resistance of the (K900) Sensor Ground circuit between the ECM C2 harness connector and the Governor Pressure Sensor harness connector.

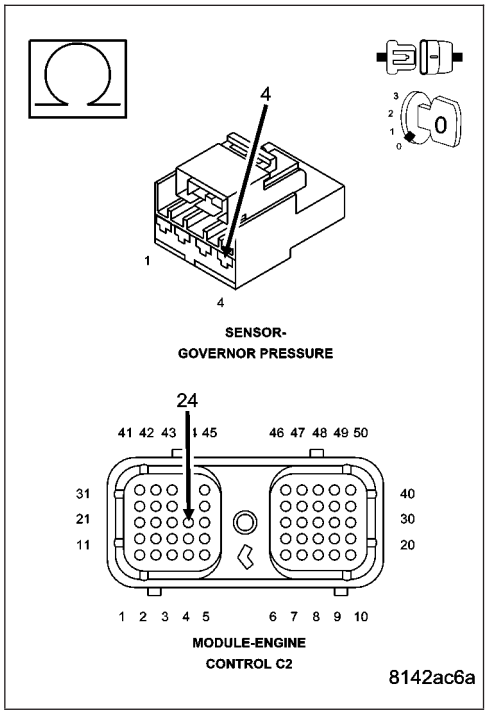

Is the resistance below 5.0 ohms?

Yes >> Go To 9

No >> Replace the Transmission Solenoid Assembly per the Service Information. (Refer to 21 - TRANSMISSION/TRANSAXLE/AUTOMATIC - 48RE/VALVE BODY - REMOVAL)
Perform RE TRANSMISSION VERIFICATION TEST VER - 1 (DIESEL). (Refer to 8 - ELECTRICAL/ELECTRONIC CONTROL MODULES/TRANSMISSION CONTROL MODULE - DIAGNOSIS AND TESTING)

---

9. CHECK THE (T38) GOVERNOR PRESSURE SENSOR SIGNAL CIRCUIT FOR A SHORT TO VOLTAGE INTERAL

NOTE: The Transmission Solenoid Assembly harness connector must be connected before proceeding.

Ignition on, engine not running.

Measure the voltage of the (T38) Governor Pressure Sensor Signal circuit in the Governor Pressure Sensor harness connector (inside transmission).

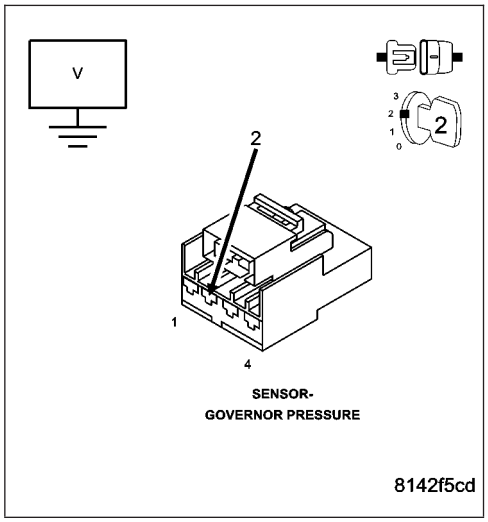

Is the voltage above 0.5 volt?

Yes >> Replace the Transmission Solenoid Assembly per the Service Information. (Refer to 21 - TRANSMISSION/TRANSAXLE/AUTOMATIC - 48RE/VALVE BODY - REMOVAL)
Perform RE TRANSMISSION VERIFICATION TEST VER - 1 (DIESEL). (Refer to 21 - TRANSMISSION/TRANSAXLE/AUTOMATIC - 48RE - STANDARD PROCEDURE)

No >> Go To 10

P0868-GOVERNOR PRESSURE SENSOR VOLTS TOO HI (DIESEL) (CONTINUED)

10. ENGINE CONTROL MODULE

Turn the ignition off to the lock position.

Reconnect the ECM harness connector.

Reconnect the Transmission Solenoid Assembly harness connector.

Ignition on, engine not running.

With the scan tool, erase DTCs.

Connect a jumper wire between the (T38) Governor Pressure Sensor Signal circuit and the (K900) Sensor Ground circuit in the Transmission Governor Pressure Sensor harness connector.

With the scan tool, read DTCs.

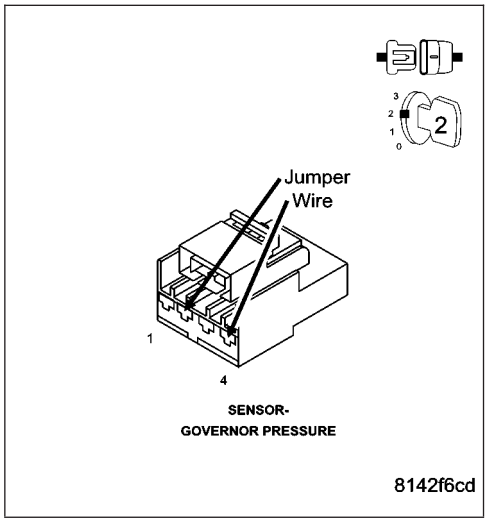

Did the DTC P0869 set?

Yes >> Replace the Governor Pressure Sensor per the Service Information. (Refer to 21 - TRANSMISSION/TRANSAXLE/AUTOMATIC - 48RE/GOVERNOR PRESSURE SENSOR - REMOVAL)

Perform RE TRANSMISSION VERIFICATION TEST VER - 1 (DIESEL). (Refer to 21 - TRANSMISSION/TRANSAXLE/AUTOMATIC - 48RE - STANDARD PROCEDURE)

No >> Using the schematics as a guide, check the Engine Control Module (ECM) pins, terminals, and connectors for corrosion, damage, or terminal push out. Pay particular attention to all power and ground circuits. If no problems are found, replace and program the ECM per the Service Information. (Refer to 8 - ELECTRICAL/ELECTRONIC CONTROL MODULES/ENGINE CONTROL MODULE - REMOVAL)

Perform RE TRANSMISSION VERIFICATION TEST VER - 1 (DIESEL). (Refer to 21 - TRANSMISSION/TRANSAXLE/AUTOMATIC - 48RE - STANDARD PROCEDURE)

---

11. INTERMITTENT WIRING AND CONNECTORS

The conditions necessary to set this DTC are not present at this time.

Use the Freeze Frame Data to help duplicate the conditions in which the DTC originally set. Pay particular attention to the DTC set conditions, such as, VSS, MAP, ECT, and Load

Using the schematics as a guide, visually inspect the related wiring harness. Look for any chafed, pierced, pinched, or partially broken wires.

Visually inspect the related wiring harness connectors. Look for broken, bent, pushed out, or corroded terminals.

Wiggle the wiring and connectors while checking for any possible open or shorted circuits.

Check for any Service Information Tune-ups or Technical Service Bulletins that may apply.

Were there any problems found?

Yes >> Repair as necessary.

Perform RE TRANSMISSION VERIFICATION TEST VER - 1 (DIESEL). (Refer to 21 - TRANSMISSION/TRANSAXLE/AUTOMATIC - 48RE - STANDARD PROCEDURE)

No >> Test Complete.

P0869-GOVERNOR PRESSURE SENSOR VOLTS TOO LOW (DIESEL)

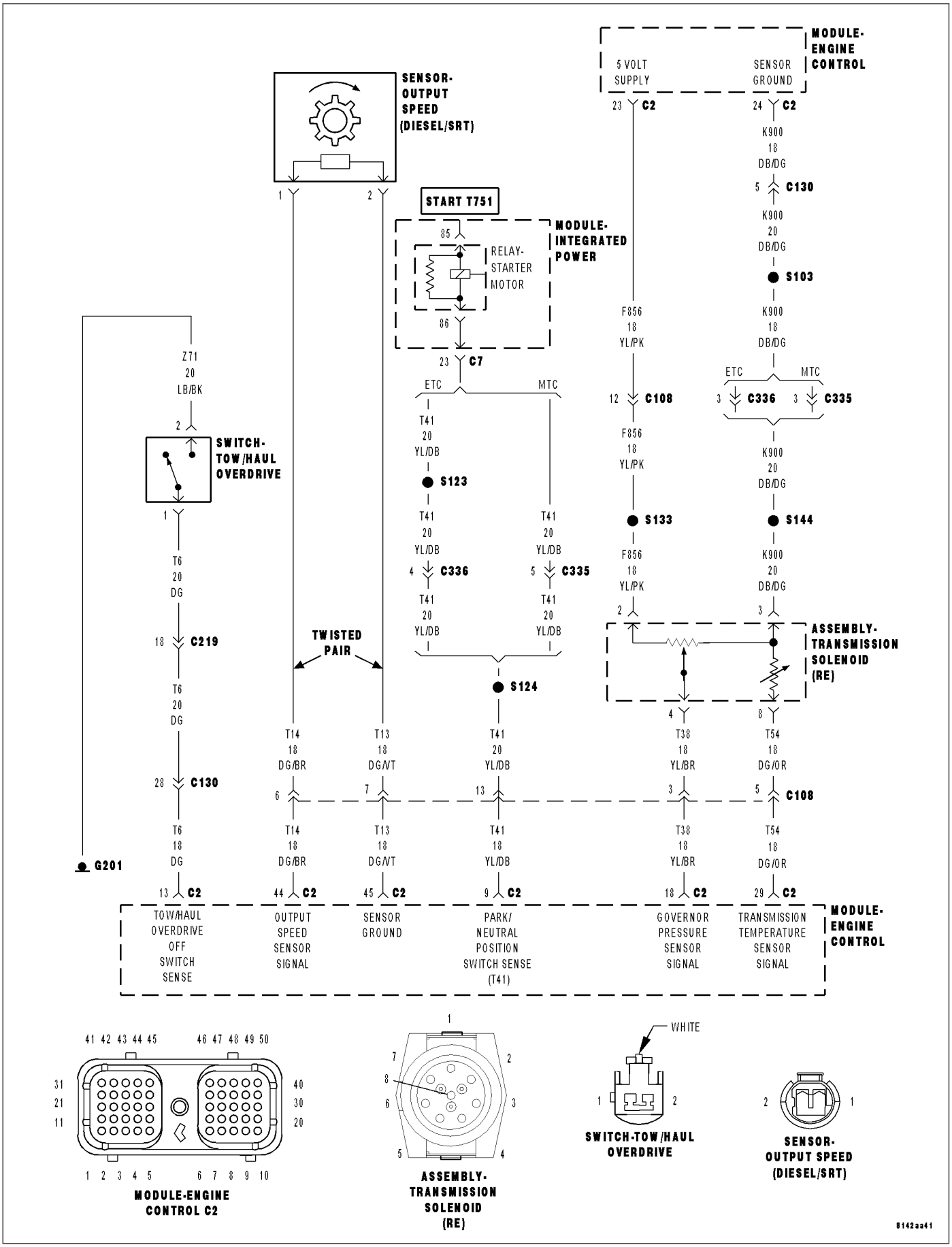

P0869-GOVERNOR PRESSURE SENSOR VOLTS TOO LOW (DIESEL) (CONTINUED)

For the Transmission circuit diagram (Refer to 21 - TRANSMISSION/TRANSAXLE/AUTOMATIC - 48RE - SCHEMATICS AND DIAGRAMS)

For a complete wiring diagram**Refer to Section 8W**

Theory of Operation

The Governor Pressure Sensor is used by the ECM to adjust the Governor Pressure to a desired level for shifts in first, second, and third gear. If the ECM detects the monitored sense voltage is greater than or less than a predetermined specification, the ECM will set the desired DTC.

- **When Monitored:**
  Continuously with the ignition on and the engine running.
- **Set Condition:**
  This DTC will set if the monitored voltage from the Governor Pressure Sensor drops below 0.12 volts for the period of 8.5 seconds.

Possible Causes
PARK NEUTRAL DTC PRESENT OR OTHER TRANSMISSION DTC'S PRESENT
(T38) GOVERNOR PRESSURE SENSOR SIGNAL CIRCUIT SHORT TO GROUND
(T38) GOVERNOR PRESSURE SENSOR SIGNAL CIRCUIT SHORT TO OTHER CIRCUITS
TRANSMISSION SOLENOID ASSEMBLY
GOVERNOR PRESSURE SENSOR
ENGINE CONTROL MODULE

Always perform the Pre-Diagnostic Troubleshooting procedure before proceeding. (Refer to 21 - TRANSMISSION/TRANSAXLE/AUTOMATIC - 48RE - STANDARD PROCEDURE)

Diagnostic Test

1. CHECK IF THE DTC IS CURRENT

Ignition on, engine not running.

With the scan tool, read Engine DTCs.

Record the Freeze Frame data for the reported DTC.

With the scan tool, erase DTCs.

Turn the ignition off to the lock position.

Using the Freeze Frame data recorded earlier, try to duplicate the conditions in which the DTC originally set.

NOTE: It may be necessary to road test the vehicle to duplicate the original set conditions.
With the scan tool, read Engine DTCs.

Did the DTC reset?

Yes >> Go To 2

No >> Go To 7

---

2. CHECK FOR OTHER TRANSMISSION DTC'S PRESENT

Are there any Park/Neutral or other Transmission DTCs present?

Yes >> Refer to the Transmission category and perform the appropriate symptom(s). If a Park/Neutral DTC is present, perform its respective test first. (Refer to 21 - TRANSMISSION/TRANSAXLE/AUTOMATIC - 48RE - DIAGNOSIS AND TESTING)

No >> Go To 3

P0869-GOVERNOR PRESSURE SENSOR VOLTS TOO LOW (DIESEL) (CONTINUED)

3. CHECK THE (T38) GOVERNOR PRESSURE SENSOR SIGNAL CIRCUIT FOR A SHORT TO GROUND

Turn the ignition off to the lock position.

Disconnect the Transmission Solenoid Assembly harness connector.

Disconnect the ECM C1 and C2 harness connectors.

NOTE: Check connectors - Clean/repair as necessary

Measure the resistance between Ground and the (T38) Governor Pressure Sensor Signal circuit in the Transmission Solenoid Assembly harness connector.

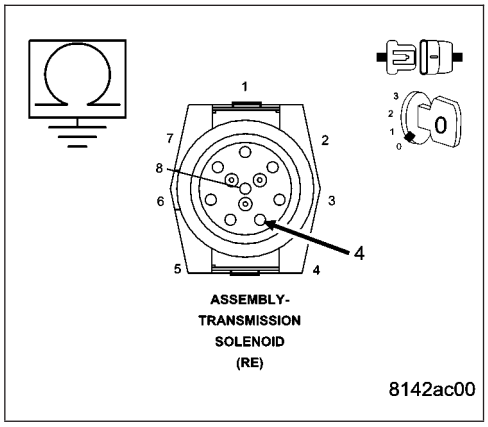

Is the resistance greater than 100k ohms?

Yes >> Go To 4

No >> Repair the (T38) Governor Pressure Sensor Signal circuit for a short to ground.

Perform RE TRANSMISSION VERIFICATION TEST VER - 1 (DIESEL). (Refer to 21 - TRANSMISSION/TRANSAXLE/AUTOMATIC - 48RE - STANDARD PROCEDURE)

---

4. CHECK THE (T38) GOVERNOR PRESSURE SENSOR SIGNAL CIRCUIT FOR A SHORT TO ANOTHER CIRCUIT

Measure the resistance between the (T38) Governor Pressure Sensor Signal circuit and all other circuits in the Transmission Solenoid Assembly harness connector.

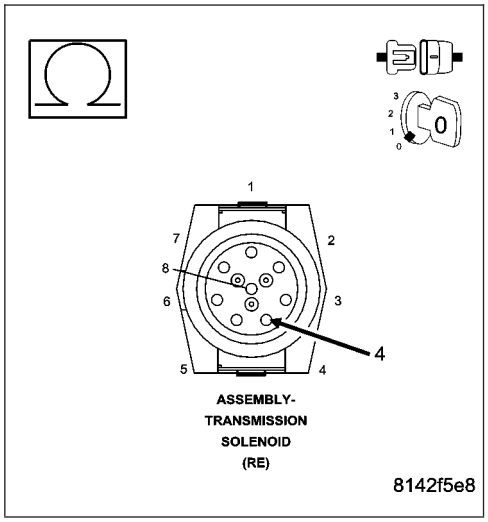

Is the resistance below 100k ohms between the (T38) Governor Pressure Sensor Signal circuit and any other circuit(s) in the Transmission Solenoid Assembly harness connector?

Yes >> Repair the (T38) Governor Pressure Sensor Signal circuit for a short to another circuit(s).

Perform RE TRANSMISSION VERIFICATION TEST VER - 1 (DIESEL). (Refer to 21 - TRANSMISSION/TRANSAXLE/AUTOMATIC - 48RE - STANDARD PROCEDURE)

No >> Go To 5

P0869-GOVERNOR PRESSURE SENSOR VOLTS TOO LOW (DIESEL) (CONTINUED)

5. CHECK THE TRANSMISSION SOLENOID ASSEMBLY

Reconnect the Transmission Solenoid Assembly harness connector.

Remove the Transmission Oil Pan per the Service Information. (Refer to 21 - TRANSMISSION/TRANSAXLE/AUTOMATIC - 48RE/FLUID - STANDARD PROCEDURE)

Disconnect the Governor Pressure/Transmission Temperature Sensor connector (inside transmission).

Measure the resistance between the (T38) Governor Pressure Sensor Signal circuit and all other circuits in the ECM C1 and C2 harness connectors.

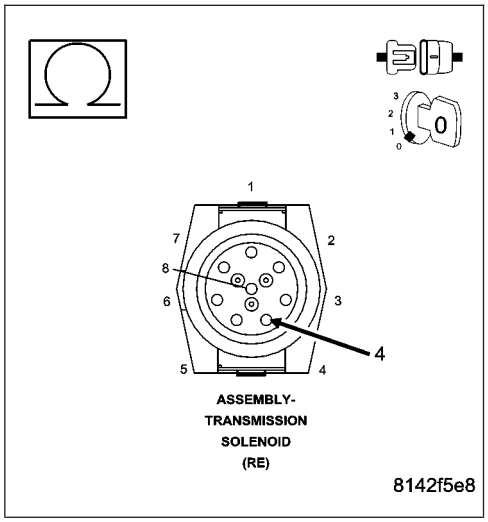

Is the resistance below 100k ohms between the (T38) Governor Pressure Sensor Signal circuit any other circuits in the ECM C2 harness connector?

Yes >> Replace the Transmission Solenoid Assembly per the Service Information.

Perform RE TRANSMISSION VERIFICATION TEST VER - 1 (DIESEL). (Refer to 21 - TRANSMISSION/TRANSAXLE/AUTOMATIC - 48RE - STANDARD PROCEDURE)

No >> Go To 6

---

6. CHECK THE GOVERNOR PRESSURE SENSOR SENSOR

Turn the ignition on.

With the scan tool, erase DTCs.

Connect a jumper wire between the (T38) Governor Pressure Sensor Signal circuit and the (F856) 5-volt Supply circuit in the Governor Pressure Sensor connector.

With the scan tool, read DTCs.

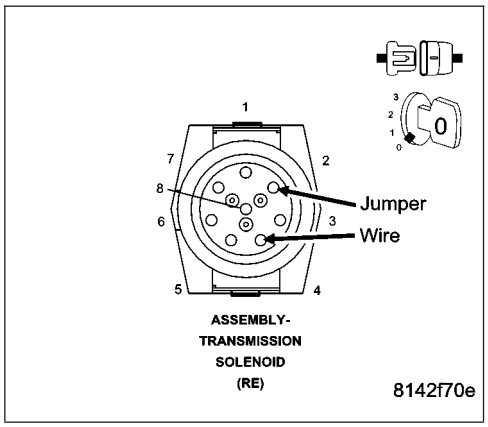

Did the DTC P0868 set?

Yes >> Inspect the Governor Pressure Sensor wiring for damage. If no problems are found, replace the Governor Pressure Sensor per the Service Information.

Perform RE TRANSMISSION VERIFICATION TEST VER - 1 (DIESEL). (Refer to 21 - TRANSMISSION/TRANSAXLE/AUTOMATIC - 48RE - STANDARD PROCEDURE)

No >> Using the schematics as a guide, check the Engine Control Module (ECM) pins, terminals, and connectors for corrosion, damage, or terminal push out. Pay particular attention to all power and ground circuits. If no problems are found, replace and program the ECM per the Service Information. (Refer to 8 - ELECTRICAL/ELECTRONIC CONTROL MODULES/ENGINE CONTROL MODULE - REMOVAL)

Perform RE TRANSMISSION VERIFICATION TEST VER - 1 (DIESEL). (Refer to 21 - TRANSMISSION/TRANSAXLE/AUTOMATIC - 48RE - STANDARD PROCEDURE)

P0869-GOVERNOR PRESSURE SENSOR VOLTS TOO LOW (DIESEL) (CONTINUED)

7. INTERMITTENT WIRING AND CONNECTORS

The conditions necessary to set this DTC are not present at this time.

Use the Freeze Frame Data to help duplicate the conditions in which the DTC originally set. Pay particular attention to the DTC set conditions, such as, VSS, MAP, ECT, and Load

Using the schematics as a guide, visually inspect the related wiring harness. Look for any chafed, pierced, pinched, or partially broken wires.

Visually inspect the related wiring harness connectors. Look for broken, bent, pushed out, or corroded terminals.

Wiggle the wiring and connectors while checking for any possible open or shorted circuits.

Check for any Service Information Tune-ups or Technical Service Bulletins that may apply.

Were there any problems found?

Yes >> Repair as necessary.
Perform RE TRANSMISSION VERIFICATION TEST VER - 1 (DIESEL). (Refer to 21 - TRANSMISSION/ TRANSAXLE/AUTOMATIC - 48RE - STANDARD PROCEDURE)

No >> Test Complete.

P0882-TRANS 12 VOLT SUPPLY RELAY CONTROL CIRCUIT LOW (DIESEL)

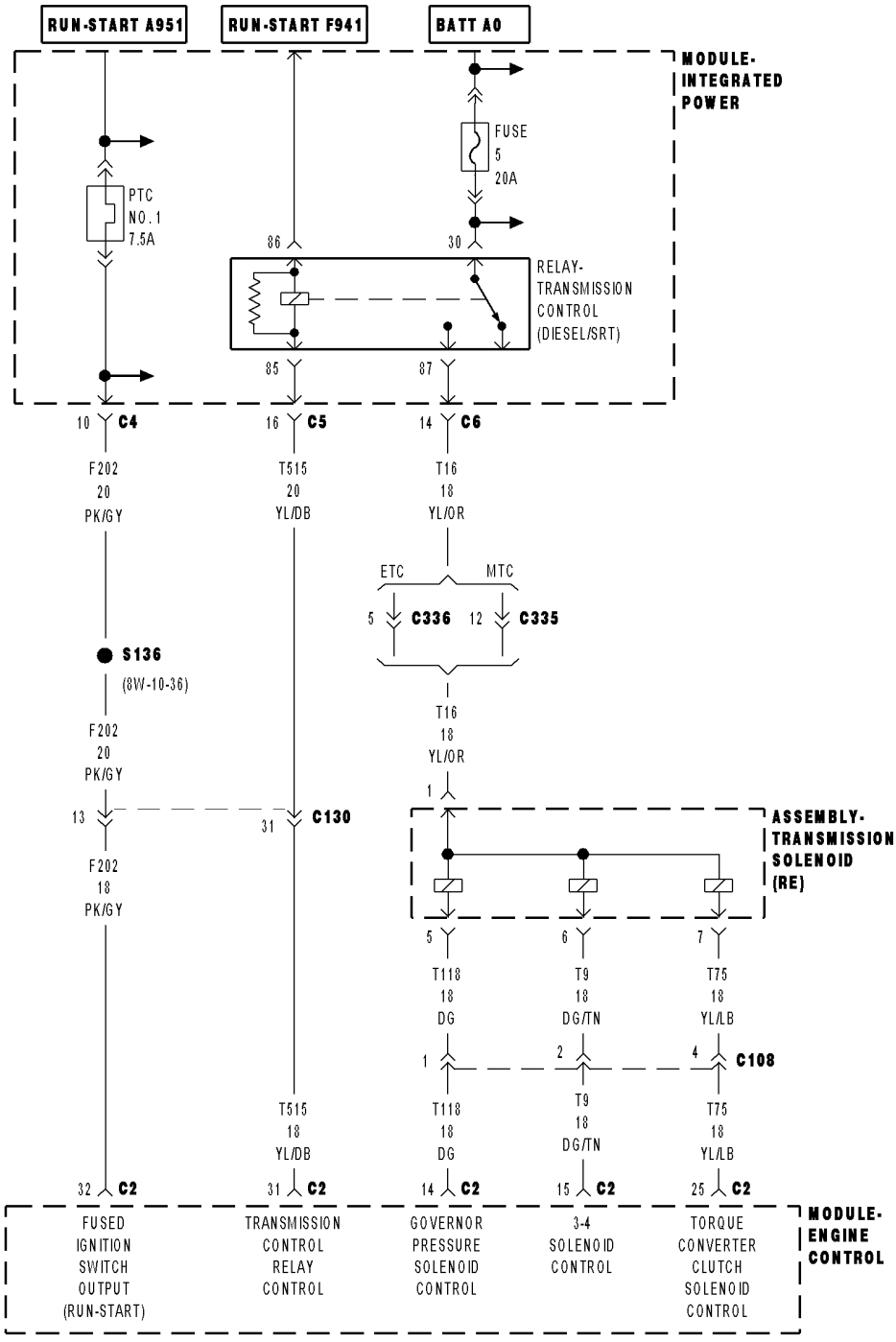

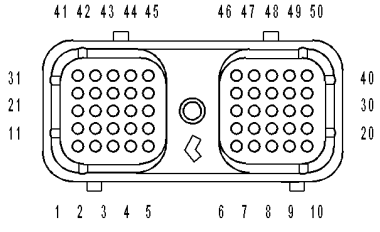

MODULE-ENGINE CONTROL C2

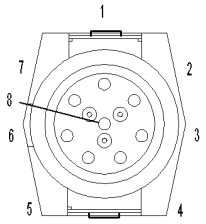

ASSEMBLY-TRANSMISSION SOLENOID (RE)

8142abf3

P0882-TRANS 12 VOLT SUPPLY RELAY CONTROL CIRCUIT LOW (DIESEL) (CONTINUED)

For the Transmission circuit diagram (Refer to 21 - TRANSMISSION/TRANSAXLE/AUTOMATIC - 48RE - SCHEMATICS AND DIAGRAMS)

For a complete wiring diagram**Refer to Section 8W**

Theory of Operation

The Transmission Control Relay supplies power to the TCC, Overdrive, and Governor Pressure Solenoids when in normal operating mode. The Transmission Control Relay Control circuit is constantly monitored by the ECM. If the expected state of the Transmission Control Relay Control circuit is different then the expected state, a corresponding DTC will set and the ECM will de-energize the Transmission Control Relay and place the transmission in Limp-in.

- **When Monitored:**
  Continuously with the Ignition on.
- **Set Condition:**
  This DTC will set if the ECM monitored voltage of the Transmission Control Relay Control circuit is different than the expected voltage for the period 3.0 seconds.

Possible Causes
FUSED B(+) CIRCUIT OPEN
(T515) TRANSMISSION CONTROL RELAY CONTROL CIRCUIT OPEN
FUSED B(+) CIRCUIT SHORT TO GROUND
(T515) TRANSMISSION CONTROL RELAY CONTROL CIRCUIT SHORT TO GROUND
(T515) TRANSMISSION CONTROL RELAY CONTROL CIRCUIT SHORT TO ANOTHER CIRCUIT
TRANSMISSION CONTROL RELAY
ENGINE CONTROL MODULE

Always perform the Pre-Diagnostic Troubleshooting procedure before proceeding. (Refer to 21 - TRANSMISSION/TRANSAXLE/AUTOMATIC - 48RE - STANDARD PROCEDURE)

1. CHECK IF THE DTC IS CURRENT

Ignition on, engine not running.
With the scan tool, read Engine DTCs.
Record the Freeze Frame data for the reported DTC.
With the scan tool, erase DTCs.
Turn the ignition off to the lock position.
Using the Freeze Frame data recorded earlier, try to duplicate the conditions in which the DTC originally set.

NOTE: It may be necessary to road test the vehicle to duplicate the original set conditions.
With the scan tool, read Engine DTCs.

Did the DTC reset?

Yes >> Go To 2
No >> Go To 10

P0882-TRANS 12 VOLT SUPPLY RELAY CONTROL CIRCUIT LOW (DIESEL) (CONTINUED)

2. TRANSMISSION CONTROL RELAY NOT CLICKING

With the scan tool, actuate the Transmission Control Relay.

Is the Transmission Control Relay clicking?

Yes >> Go To 10

No >> Go To 3

---

3. CHECK THE TRANSMISSION CONTROL RELAY

Turn the ignition off to the lock position.

Remove the Transmission Control Relay.

NOTE: Check connectors - Clean/repair as necessary.

Install a substitute relay in place of the Transmission Control Relay.

Ignition on, engine not running.

With the scan tool, erase DTCs.

Start the engine.

With the scan tool, read Engine DTCs.

Does the scan tool display the DTC P0882?

Yes >> Go To 4

No >> Replace the Transmission Control Relay.
Perform RE TRANSMISSION VERIFICATION TEST VER - 1 (DIESEL). (Refer to 21 - TRANSMISSION/TRANSAXLE/AUTOMATIC - 48RE - STANDARD PROCEDURE)

---

4. CHECK THE FUSED B(+) CIRCUIT FOR AN OPEN

Turn the ignition off to the lock position.

Remove the Transmission Control Relay.

Ignition on, engine not running.

Using a 12-volt test light connected to ground, check the Fused B(+) circuit in the Transmission Control Relay connector.

NOTE: The test light must illuminate brightly. Compare the brightness to that of a direct connection to the battery.

Does the test light illuminate brightly?

Yes >> Go To 4

No >> Repair the Fused B(+) circuit for an open.
Perform RE TRANSMISSION VERIFICATION TEST VER - 1 (DIESEL). (Refer to 21 - TRANSMISSION/TRANSAXLE/AUTOMATIC - 48RE - STANDARD PROCEDURE)

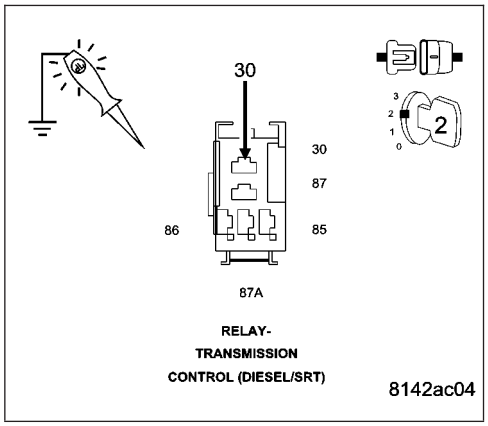

P0882-TRANS 12 VOLT SUPPLY RELAY CONTROL CIRCUIT LOW (DIESEL) (CONTINUED)

5. CHECK THE FUSED B(+) CIRCUIT FOR A SHORT TO GROUND

Turn the ignition off to the lock position.

Disconnect the ECM C2 harness connector.

Measure the resistance between ground and the Fused B(+) circuit in the Transmission Control Relay connector.

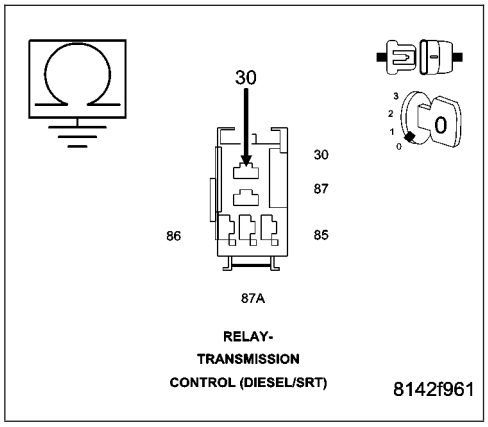

Is the resistance above 100k ohms?

Yes >> Go To 6

No >> Repair the Fused B(+) circuit for a short to ground.

Perform RE TRANSMISSION VERIFICATION TEST VER - 1 (DIESEL). (Refer to 21 - TRANSMISSION/TRANSAXLE/ AUTOMATIC - 48RE - STANDARD PROCEDURE)

6. CHECK THE (T515) TRANSMISSION CONTROL RELAY CONTROL CIRCUIT FOR AN OPEN

Measure the resistance of the (T515) Transmission Control Relay Control circuit between the Transmission Control Relay connector and the ECM C2 harness connector.

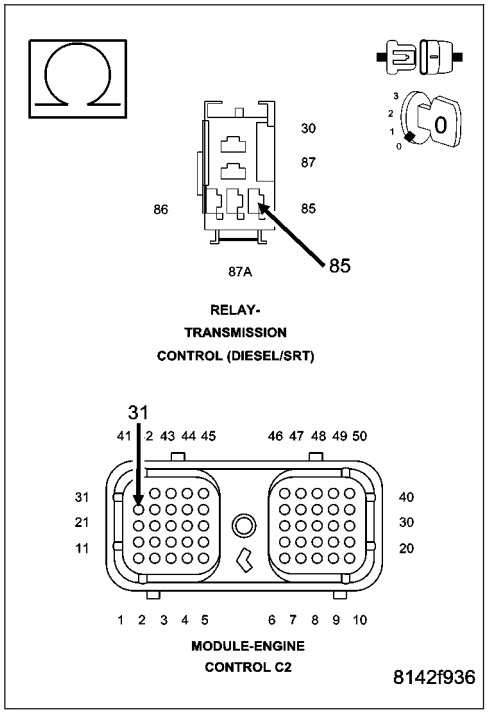

Is the resistance below 5.0 ohms?

Yes >> Go To 7

No >> Repair the (T515) Transmission Control Relay Control circuit for an open.

Perform RE TRANSMISSION VERIFICATION TEST VER - 1 (DIESEL). (Refer to 21 - TRANSMISSION/TRANSAXLE/ AUTOMATIC - 48RE - STANDARD PROCEDURE)

P0882-TRANS 12 VOLT SUPPLY RELAY CONTROL CIRCUIT LOW (DIESEL) (CONTINUED)

7. CHECK THE (T515) TRANSMISSION CONTROL RELAY CONTROL CIRCUIT SHORT TO GROUND

Measure the resistance between ground and the (T515) Transmission Control Relay Control circuit in the Transmission Control Relay connector.

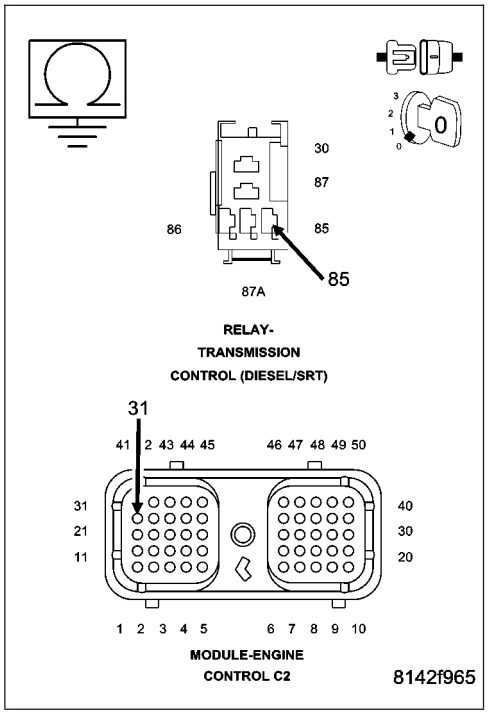

Is the resistance above 100k ohms?

Yes >> Go To 8

No >> Repair the (T515) Transmission Control Relay Control circuit for a short to ground.

Perform RE TRANSMISSION VERIFICATION TEST VER - 1 (DIESEL). (Refer to 21 - TRANSMISSION/TRANSAXLE/ AUTOMATIC - 48RE - STANDARD PROCEDURE)

8. CHECK THE (T515) TRANSMISSION CONTROL RELAY CONTROL CIRCUIT FOR A SHORT TO ANOTHER CIRCUIT

Measure the resistance between the Transmission Control Relay Control circuit and all other circuits in the ECM C2 harness connector.

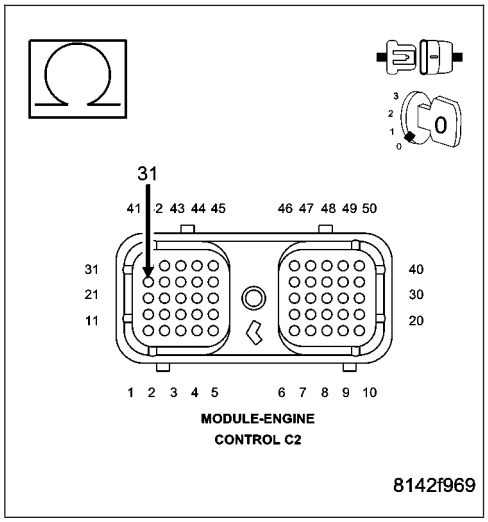

Is the resistance below 100k ohms between the (T515) Transmission Control Relay Control circuit and any other circuit(s) in the ECM C2 harness connector?

Yes >> Repair the Transmission Control Relay Control circuit for a short to another circuit(s).

Perform RE TRANSMISSION VERIFICATION TEST VER - 1 (DIESEL). (Refer to 21 - TRANSMISSION/TRANSAXLE/ AUTOMATIC - 48RE - STANDARD PROCEDURE)

No >> Go To 9

P0882-TRANS 12 VOLT SUPPLY RELAY CONTROL CIRCUIT LOW (DIESEL) (CONTINUED)

9. CHECK THE ENGINE CONTROL MODULE

Turn the ignition off to the lock position.

Ignition on, engine not running.

With the scan tool, actuate the Transmission Relay.

Using a 12-volt test light connected to 12-volts, check the Transmission Control Relay Control circuit in the Transmission Control Relay Control connector.

NOTE: The test light must illuminate brightly. Compare the brightness to that of a direct connection to the battery.

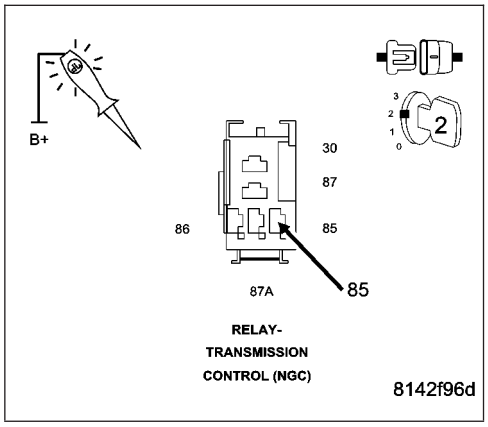

Does the Test Light cycle on and off and illuminate brightly?

Yes >> Go To 10

No >> Using the schematics as a guide, check the Engine Control Module (ECM) pins, terminals, and connectors for corrosion, damage, or terminal push out. Pay particular attention to all power and ground circuits. If no problems are found, replace and program the ECM per the Service Information. (Refer to 8 - ELECTRICAL/ELECTRONIC CONTROL MODULES/ENGINE CONTROL MODULE - REMOVAL)

Perform RE TRANSMISSION VERIFICATION TEST VER - 1 (DIESEL). (Refer to 21 - TRANSMISSION/TRANSAXLE/AUTOMATIC - 48RE - STANDARD PROCEDURE)

---

10. INTERMITTENT WIRING AND CONNECTORS

The conditions necessary to set this DTC are not present at this time.

Use the Freeze Frame Data to help duplicate the conditions in which the DTC originally set. Pay particular attention to the DTC set conditions, such as, VSS, MAP, ECT, and Load

Using the schematics as a guide, visually inspect the related wiring harness. Look for any chafed, pierced, pinched, or partially broken wires.

Visually inspect the related wiring harness connectors. Look for broken, bent, pushed out, or corroded terminals.

Wiggle the wiring and connectors while checking for any possible open or shorted circuits.

Check for any Service Information Tune-ups or Technical Service Bulletins that may apply.

Were there any problems found?

Yes >> Repair as necessary.

Perform RE TRANSMISSION VERIFICATION TEST VER - 1 (DIESEL). (Refer to 21 - TRANSMISSION/TRANSAXLE/AUTOMATIC - 48RE - STANDARD PROCEDURE)

No >> Test Complete.

P0883-TRANS 12 VOLT SUPPLY RELAY CONTROL CIRCUIT HIGH (DIESEL)

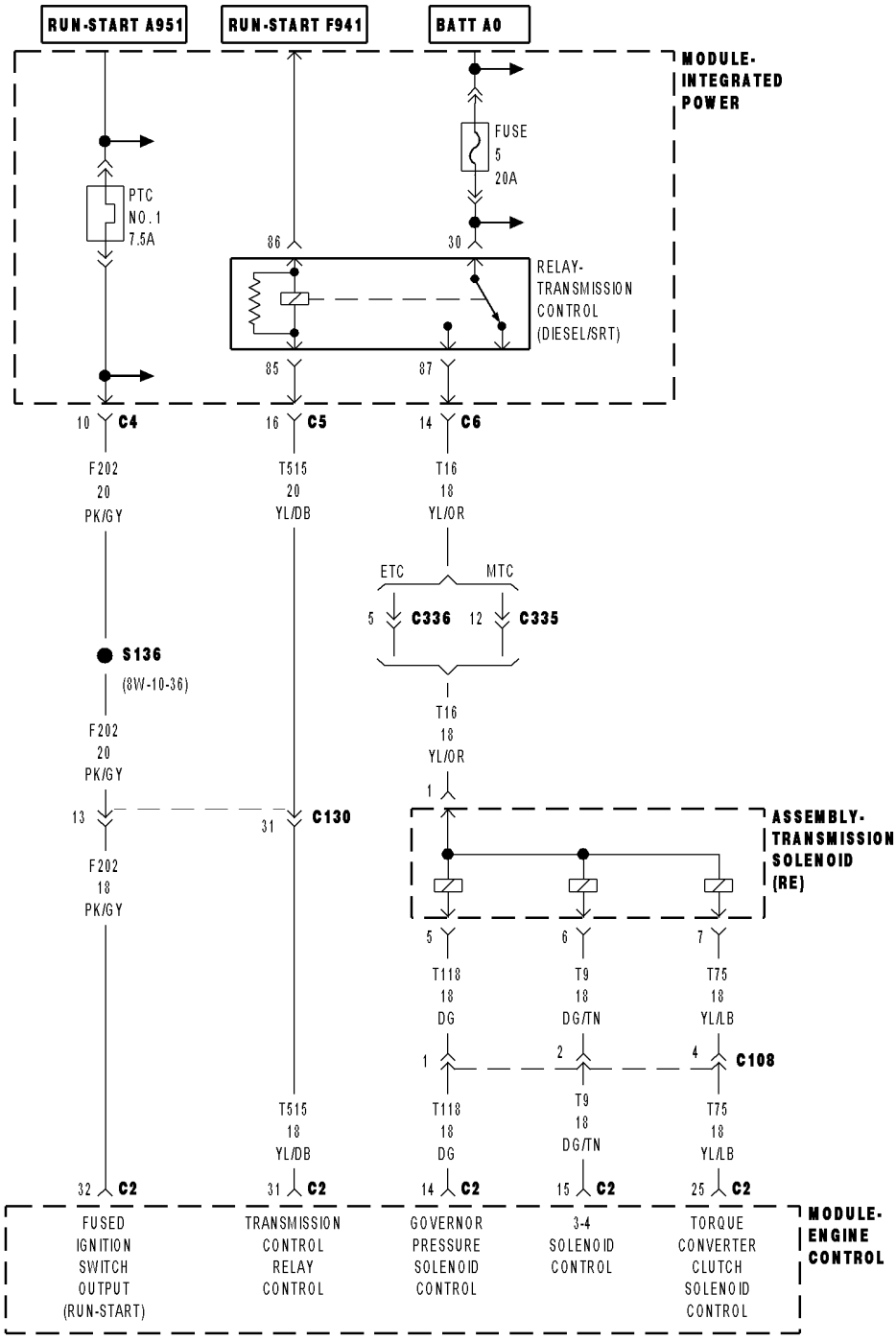

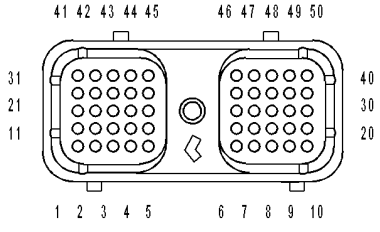

MODULE-ENGINE CONTROL C2

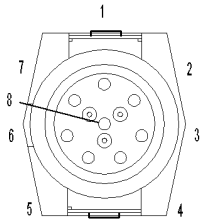

ASSEMBLY-TRANSMISSION SOLENOID (RE)

8142abf3

P0883-TRANS 12 VOLT SUPPLY RELAY CONTROL CIRCUIT HIGH (DIESEL) (CONTINUED)

For the Transmission circuit diagram (Refer to 21 - TRANSMISSION/TRANSAXLE/AUTOMATIC - 48RE - SCHEMATICS AND DIAGRAMS)

For a complete wiring diagram**Refer to Section 8W**

Theory of Operation

The Transmission Control Relay supplies power to the TCC, Overdrive, and Governor Pressure Solenoids when in normal operating mode. The Transmission Control Relay Control circuit is constantly monitored by the ECM. If the expected state of the Transmission Control Relay Control circuit is different then the expected state, a corresponding DTC will set and the ECM will de-energize the Transmission Control Relay and place the transmission in Limp-in.

- **When Monitored:**
  Continuously with the ignition on.
- **Set Condition:**
  This DTC will set if the ECM monitored voltage of the Transmission Control Relay Control circuit is different than the expected voltage for the period 3.0 seconds.

Possible Causes
(T515) TRANSMISSION CONTROL RELAY CONTROL CIRCUIT SHORT TO VOLTAGE
(T515) TRANSMISSION CONTROL RELAY CONTROL CIRCUIT SHORT TO ANOTHER CIRCUIT
TRANSMISSION CONTROL RELAY
ENGINE CONTROL MODULE

Always perform the Pre-Diagnostic Troubleshooting procedure before proceeding. (Refer to 21 - TRANSMISSION/TRANSAXLE/AUTOMATIC - 48RE - STANDARD PROCEDURE)

Diagnostic Test

1. CHECK IF THE DTC IS CURRENT

Ignition on, engine not running.

With the scan tool, read Engine DTCs.

Record the Freeze Frame data for the reported DTC.

With the scan tool, erase DTCs.

Turn the ignition off to the lock position.

Using the Freeze Frame data recorded earlier, try to duplicate the conditions in which the DTC originally set.

NOTE: It may be necessary to road test the vehicle to duplicate the original set conditions.

With the scan tool, read Engine DTCs.

Did the DTC reset?

Yes >> Go To 2

No >> Go To 7

---

2. CHECK IF THE TRANSMISSION CONTROL RELAY IS CLICKING

With the scan tool, actuate the Transmission Control Relay.

Is the Transmission Control Relay clicking?

Yes >> Go To 7

No >> Go To 3

P0883-TRANS 12 VOLT SUPPLY RELAY CONTROL CIRCUIT HIGH (DIESEL) (CONTINUED)

3. CHECK THE TRANSMISSION CONTROL RELAY

Turn the ignition off to the lock position.

Remove the Transmission Control Relay.

NOTE: Check connectors - Clean/repair as necessary.

Install a substitute relay in place of the Transmission Control Relay.

Ignition on, engine not running.

With the scan tool, actuate the Transmission Control Relay.

Is the Transmission Control Relay Clicking?

Yes >> Replace the Transmission Control Relay.
Perform RE TRANSMISSION VERIFICATION TEST VER - 1 (DIESEL). (Refer to 21 - TRANSMISSION/TRANSAXLE/AUTOMATIC - 48RE - STANDARD PROCEDURE)

No >> Go To 4

---

4. CHECK THE (T515) TRANSMISSION CONTROL RELAY CONTROL CIRCUIT FOR A SHORT TO VOLTAGE

Turn the ignition off to the lock position.

Remove the Transmission Control Relay.

Disconnect the ECM C2 harness connector.

Ignition on, engine not running.

Measure the voltage of the (T515) Transmission Control Relay Control circuit in the Transmission Control Relay connector.

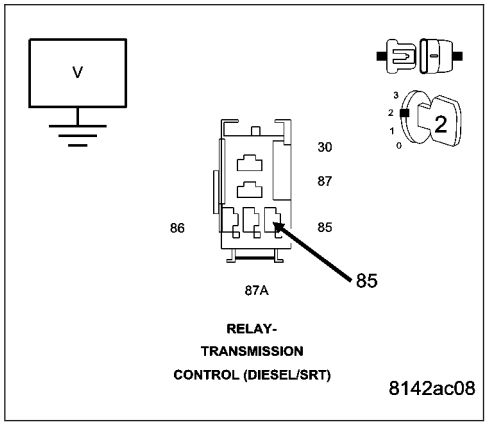

Is the voltage above 1.0 volts?

Yes >> Repair the (T515) Transmission Control Relay Control circuit for a short to voltage.
Perform RE TRANSMISSION VERIFICATION TEST VER - 1 (DIESEL). (Refer to 21 - TRANSMISSION/TRANSAXLE/AUTOMATIC - 48RE - STANDARD PROCEDURE)

No >> Go To 5

---

5. CHECK THE (T515) TRANSMISSION CONTROL RELAY CONTROL CIRCUIT FOR A SHORT TO ANOTHER CIRCUIT

Turn the ignition off to the lock position.

Measure the resistance between the (T515) Transmission Control Relay Control Circuit and all other circuits in the ECM C2 harness connector.

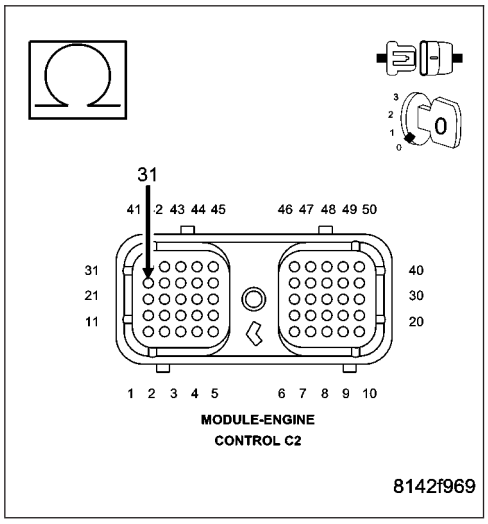

Is the resistance below 100k ohms between the Transmission Control Relay Control Circuit and any other circuit(s) in the ECM C2 harness connector?

Yes >> Repair the (T515) Transmission Control Relay Control circuit for a short to another circuit(s).
Perform RE TRANSMISSION VERIFICATION TEST VER - 1 (DIESEL). (Refer to 21 - TRANSMISSION/TRANSAXLE/AUTOMATIC - 48RE - STANDARD PROCEDURE)

No >> Go To 6

P0883-TRANS 12 VOLT SUPPLY RELAY CONTROL CIRCUIT HIGH (DIESEL) (CONTINUED)

6. CHECK THE ENGINE CONTROL MODULE

Turn the ignition off to the lock position.

Remove the Transmission Relay.

Reconnect the ECM harness connectors.

With the scan tool, actuate the Transmission Relay.

Using a 12-volt test light connected to 12-volts, check the (T515) Transmission Control Relay Control circuit in the Transmission Control Relay connector.

NOTE: NOTE: The test light must illuminate brightly. Compare the brightness to that of a direct connection to the battery.

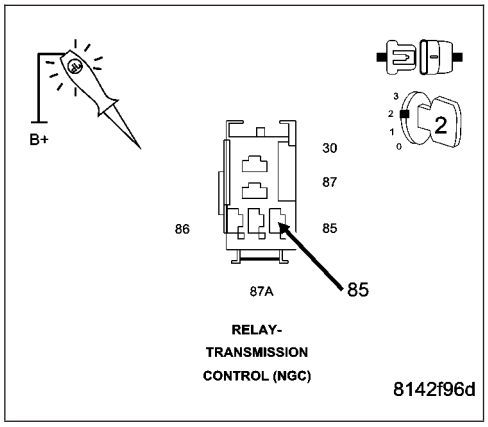

Does the Test Light cycle on and off and illuminate brightly?

Yes >> Go to 7

No >> Using the schematics as a guide, check the Engine Control Module (ECM) pins, terminals, and connectors for corrosion, damage, or terminal push out. Pay particular attention to all power and ground circuits. If no problems are found, replace and program the ECM per the Service Information. (Refer to 8 - ELECTRICAL/ELECTRONIC CONTROL MODULES/ENGINE CONTROL MODULE - REMOVAL)

Perform RE TRANSMISSION VERIFICATION TEST VER - 1 (DIESEL). (Refer to 21 - TRANSMISSION/TRANSAXLE/AUTOMATIC - 48RE - STANDARD PROCEDURE)

---

7. INTERMITTENT WIRING AND CONNECTORS

The conditions necessary to set this DTC are not present at this time.

Use the Freeze Frame Data to help duplicate the conditions in which the DTC originally set. Pay particular attention to the DTC set conditions, such as, VSS, MAP, ECT, and Load

Using the schematics as a guide, visually inspect the related wiring harness. Look for any chafed, pierced, pinched, or partially broken wires.

Visually inspect the related wiring harness connectors. Look for broken, bent, pushed out, or corroded terminals.

Wiggle the wiring and connectors while checking for any possible open or shorted circuits.

Check for any Service Information Tune-ups or Technical Service Bulletins that may apply.

Were there any problems found?

Yes >> Repair as necessary.

Perform RE TRANSMISSION VERIFICATION TEST VER - 1 (DIESEL). (Refer to 21 - TRANSMISSION/TRANSAXLE/AUTOMATIC - 48RE - STANDARD PROCEDURE)

No >> Test Complete.

P0973-TRANSMISSION OVERDRIVE CIRCUIT VOLTAGE TOO LOW (DIESEL)

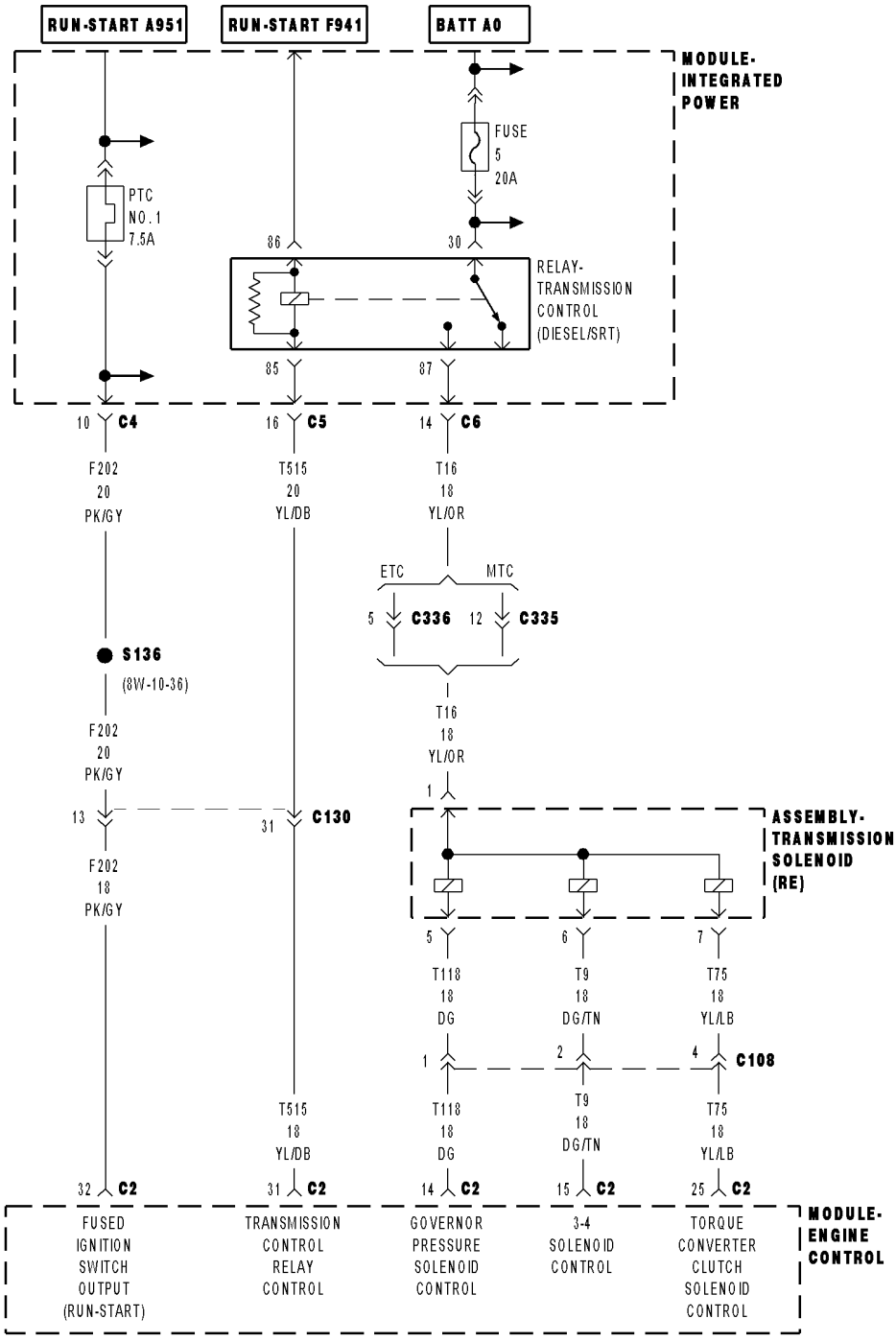

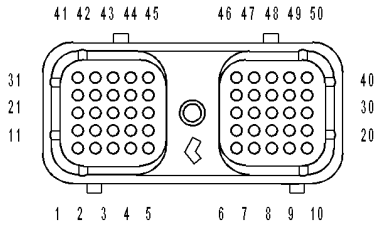

MODULE-ENGINE CONTROL C2

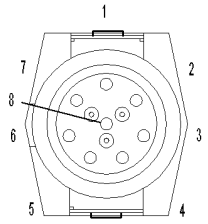

ASSEMBLY-TRANSMISSION SOLENOID (RE)

8142abf3

P0973-TRANSMISSION OVERDRIVE CIRCUIT VOLTAGE TOO LOW (DIESEL) (CONTINUED)

For the Transmission circuit diagram (Refer to 21 - TRANSMISSION/TRANSAXLE/AUTOMATIC - 48RE - SCHEMATICS AND DIAGRAMS)

For a complete wiring diagram**Refer to Section 8W**

Theory of Operation

The 3-4 Solenoid is used the engage the gear change form 3rd gear to 4th gear.

The solenoids used in transmission applications are attached to valves which can be classified as normally open or normally closed. The normally open solenoid valve is defined as a valve which allows hydraulic flow when no current or voltage is applied to the solenoid. The normally closed solenoid valve is defined as a valve which does not allow hydraulic flow when no current or voltage is applied to the solenoid. These valves perform hydraulic control functions for the transmission and must therefore be durable and tolerant of dirt particles. For these reasons, the valves have hardened steel poppets and ball valves. The solenoids operate the valves directly, which means that the solenoids must have very high outputs to close the valves against the sizable flow areas and line pressures found in current transmissions. Fast response time is also necessary to ensure accurate control.

- **When Monitored:**
  Continuously with ignition on.
- **Set Condition:**
  This code will set if the voltage detected on the 3-4 Shift Solenoid Control circuit at the ECM is different then the expected voltage. Note: To clear this DTC it is necessary to drive the vehicle at a sustained speed which would allow the TCC and/or Overdrive Clutch to operate

Possible Causes
TRANSMISSION CONTROL RELAY DTC PRESENT
(T9) 3-4 SOLENOID CONTROL CIRCUIT OPEN
FUSED B+ CIRCUIT OPEN
(T16) TRANSMISSION CONTROL RELAY OUTPUT CIRCUIT OPEN
(T9) 3-4 SOLENOID CONTROL CIRCUIT SHORT TO GROUND
(T16) TRANSMISSION RELAY OUTPUT CIRCUIT SHORT TO GROUND
(T9) 3-4 SOLENOID CIRCUIT SHORT TO OTHER CIRCUITS
TRANSMISSION CONTROL RELAY - POOR CONTACTS
3-4 SHIFT SOLENOID
ENGINE CONTROL MODULE

Always perform the Pre-Diagnostic Troubleshooting procedure before proceeding. (Refer to 21 - TRANSMISSION/TRANSAXLE/AUTOMATIC - 48RE - STANDARD PROCEDURE)

Diagnostic Test

1. CHECK FOR TRANSMISSION CONTROL RELAY DTCS

Ignition on, engine not running.

With the scan tool, read Engine DTCs.

Are there any Transmission Control Relay DTCs present?

Yes >> Refer to the Transmission category, and perform the appropriate symptom(s). (Refer to 21 - TRANSMISSION/TRANSAXLE/AUTOMATIC - 48RE - DIAGNOSIS AND TESTING)

No >> Go To 2

P0973-TRANSMISSION OVERDRIVE CIRCUIT VOLTAGE TOO LOW (DIESEL) (CONTINUED)

2. CHECK IF THE DTC IS CURRENT

Ignition on, engine not running.

With the scan tool, read Engine DTCs.

Record the Freeze Frame data for the reported DTC.

With the scan tool, erase DTCs.

Turn the ignition off to the lock position.

Using the Freeze Frame data recorded earlier, try to duplicate the conditions in which the DTC originally set.

NOTE: It may be necessary to road test the vehicle to duplicate the original set conditions.

With the scan tool, read Engine DTCs.

Did the DTC reset?

Yes >> Go To 3

No >> Go To 12

---

3. CHECK THE (T16) TRANSMISSION CONTROL RELAY OUTPUT CIRCUIT

Turn the ignition off to the lock position.

Disconnect the Transmission Solenoid Assembly harness connector.

NOTE: Check connectors - Clean/repair as necessary.

Ignition on, engine not running.

With the scan tool, actuate the Transmission Control Relay.

Using a 12-volt test light connected to ground, check the (T16) Transmission Control Relay Output circuit in the Transmission Solenoid Assembly harness connector.

NOTE: The test light must illuminate brightly. Compare the brightness to that of a direct connection to the battery.

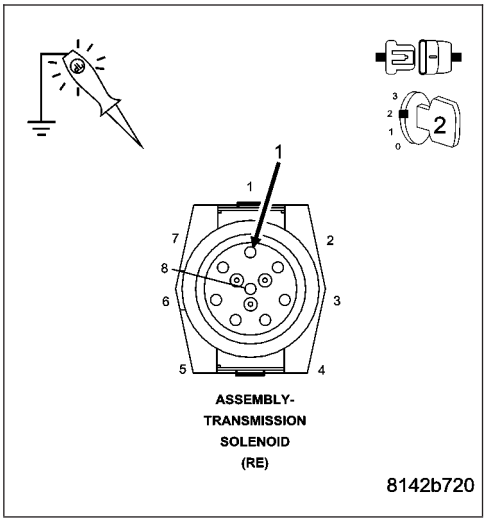

Does the test light cycle on and off and illuminate brightly?

Yes >> Go To 4

No >> Go To 9

P0973-TRANSMISSION OVERDRIVE CIRCUIT VOLTAGE TOO LOW (DIESEL) (CONTINUED)

4. CHECK THE 3-4 SHIFT SOLENOID

With the scan tool, actuate the Overdrive (3-4) Solenoid.

Using a 12-volt test light connected to 12-volts, check the (T9) 3-4 Shift Solenoid Control circuit in the Transmission Solenoid Assembly harness connector.

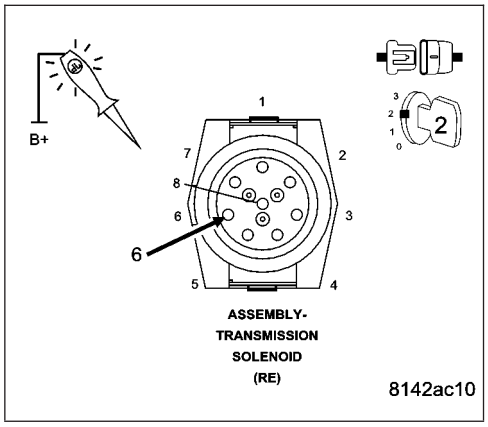

Does the test light cycle on and off and illuminate brightly?

Yes >> Check all internal wiring pertaining to the 3-4 Shift Solenoid for an open, short, and bent or broken terminals. If no internal wiring problems are found, replace the Transmission Solenoid Assembly per the Service Information. (Refer to 21 - TRANSMISSION/TRANSAXLE/AUTOMATIC - 48RE/VALVE BODY - REMOVAL)

Perform RE TRANSMISSION VERIFICATION TEST VER - 1 (DIESEL). (Refer to 21 - TRANSMISSION/TRANSAXLE/AUTOMATIC - 48RE - STANDARD PROCEDURE)

No >> Go To 5

---

5. CHECK THE (T9) 3-4 SOLENOID CONTROL CIRCUIT FOR AN OPEN

Turn the ignition off to the lock position.

Disconnect the ECM C2 and C2 harness connectors.

Measure the resistance of the (T9) 3-4 Solenoid Control circuit between the Transmission Solenoid Assembly harness connector and the ECM C2 harness connector.

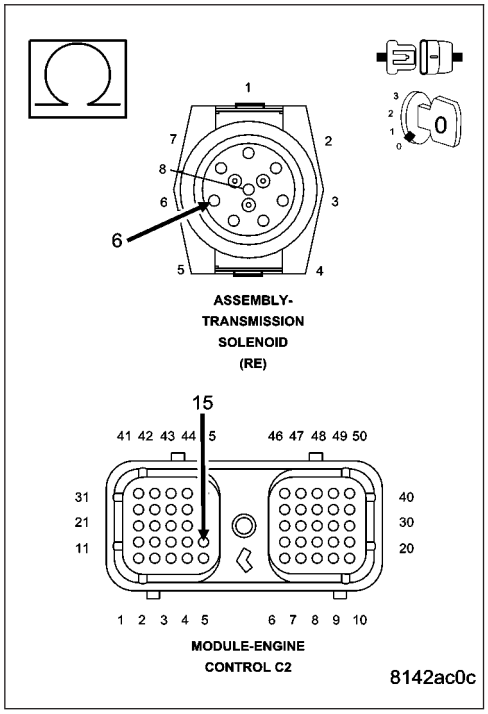

Is the resistance below 5.0 ohms?

Yes >> Go To 6

No >> Repair the (T9) 3-4 Solenoid Control circuit for an open.

Perform RE TRANSMISSION VERIFICATION TEST VER - 1 (DIESEL). (Refer to 21 - TRANSMISSION/TRANSAXLE/AUTOMATIC - 48RE - STANDARD PROCEDURE)

P0973-TRANSMISSION OVERDRIVE CIRCUIT VOLTAGE TOO LOW (DIESEL) (CONTINUED)

6. CHECK THE (T9) 3-4 SOLENOID CONTROL CIRCUIT FOR A SHORT TO GROUND

Measure the resistance between ground and the (T9) 3-4 Solenoid Control circuit.

Is the resistance above 100k ohms?

Yes >> Go To 7

No >> Repair the (T9) 3-4 Solenoid Control circuit for a short to ground.
Perform RE TRANSMISSION VERIFICATION TEST VER - 1 (DIESEL). (Refer to 21 - TRANSMISSION/TRANSAXLE/ AUTOMATIC - 48RE - STANDARD PROCEDURE)

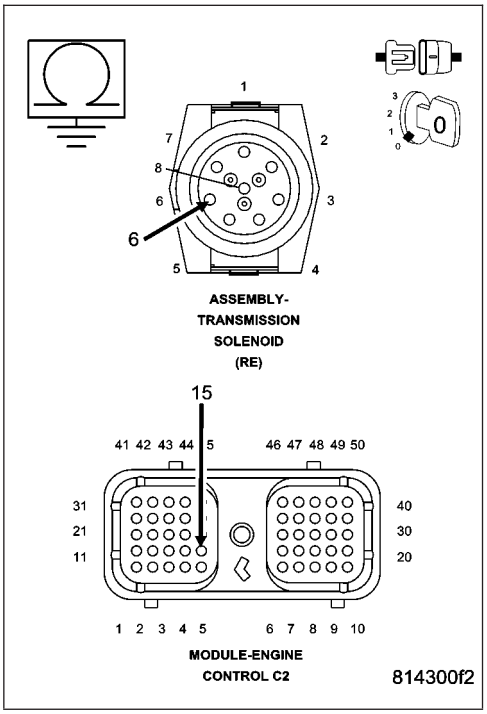

7. CHECK THE (T9) 3-4 SHIFT SOLENOID CONTROL CIRCUIT FOR A SHORT TO ANOTHER CIRCUIT

Measure the resistance between the (T9) 3-4 Solenoid Control circuit and all other circuits in the ECM C1 and C2 harness connectors.

Is the resistance above 100k ohms between the (T9) 3-4 Solenoid Control circuit and any other circuit(s) in the ECM C1 or C2 harness connectors?

Yes >> Go To 8

No >> Repair the (T9) 3-4 Shift Solenoid Control circuit for a short to another circuit(s).
Perform RE TRANSMISSION VERIFICATION TEST VER - 1 (DIESEL). (Refer to 21 - TRANSMISSION/TRANSAXLE/ AUTOMATIC - 48RE - STANDARD PROCEDURE)

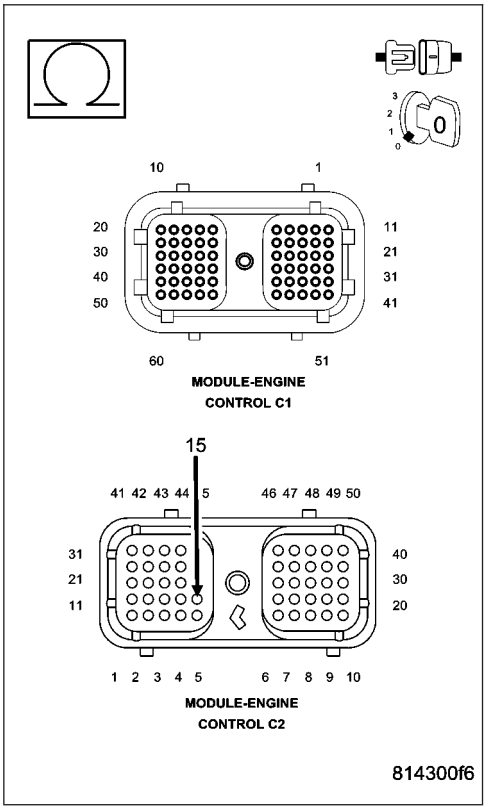

P0973-TRANSMISSION OVERDRIVE CIRCUIT VOLTAGE TOO LOW (DIESEL) (CONTINUED)

8. CHECK THE ENGINE CONTROL MODULE

Reconnect the ECM harness connectors.

Turn the ignition on, engine not running.

With the scan tool, actuate the 3-4 (Overdrive) Solenoid.

Using a 12-volt test light connected to 12-volts, check the (T9) 3-4 Solenoid Control circuit in the Transmission Solenoid Assembly harness connector.

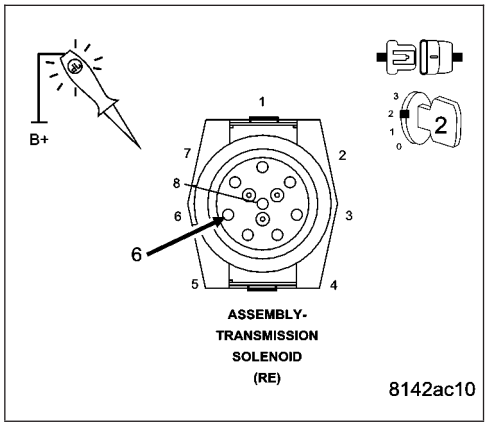

Does the test Light cycle on and off and illuminate brightly?

Yes >> Go To 12

No >> Using the schematics as a guide, check the Engine Control Module (ECM) pins, terminals, and connectors for corrosion, damage, or terminal push out. Pay particular attention to all power and ground circuits. If no problems are found, replace and program the ECM per the Service Information. (Refer to 8 - ELECTRICAL/ELECTRONIC CONTROL MODULES/ENGINE CONTROL MODULE - REMOVAL)

Perform RE TRANSMISSION VERIFICATION TEST VER - 1 (DIESEL). (Refer to 21 - TRANSMISSION/TRANSAXLE/AUTOMATIC - 48RE - STANDARD PROCEDURE)

---

9. CHECK THE FUSED B(+) CIRCUIT

Turn the ignition off to the lock position.

Remove the Transmission Control Relay.

Ignition on, engine not running.

Using a 12-volt test light connected to ground, check the Fused B(+) circuit in the Transmission Control Relay connector.

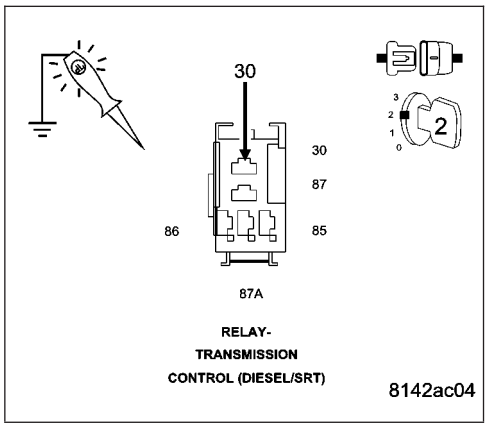

Does the test light illuminate brightly?

Yes >> Go To 10

No >> Repair the Fused B(+) circuit for an open. Note: if the fuse is open, check for a short to ground.

Perform RE TRANSMISSION VERIFICATION TEST VER - 1 (DIESEL). (Refer to 21 - TRANSMISSION/TRANSAXLE/AUTOMATIC - 48RE - STANDARD PROCEDURE)

P0973-TRANSMISSION OVERDRIVE CIRCUIT VOLTAGE TOO LOW (DIESEL) (CONTINUED)

10. CHECK THE (T16) TRANSMISSION CONTROL RELAY OUTPUT CIRCUIT FOR A SHORT TO GROUND

Turn ignition off to the lock position.

Measure the resistance between ground and the (T16) Transmission Control Relay Output circuit.

Is the resistance below 5.0 ohms?

Yes >> Repair the Fused Transmission Control Relay Output circuit for a short to ground.

Perform RE TRANSMISSION VERIFICATION TEST VER - 1 (DIESEL). (Refer to 21 - TRANSMISSION/TRANSAXLE/ AUTOMATIC - 48RE - STANDARD PROCEDURE)

No >> Go To 11

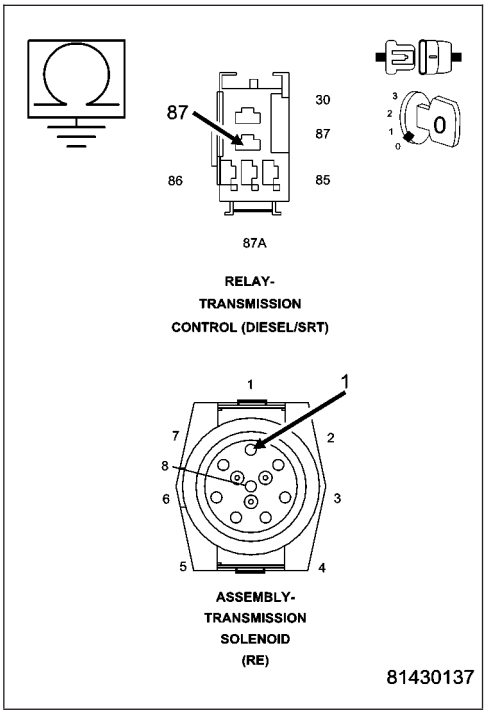

11. CHECK THE (T16) TRANSMISSION CONTROL RELAY OUTPUT CIRCUIT FOR AN OPEN

Ignition on, engine not running.

Connect a jumper wire between the Fused B(+) circuit and the (T16) Transmission Relay Output circuit in the Transmission Relay connector.

Using a 12-volt test light connected to ground, check the (T16) Transmission Control Relay Output circuit in the Transmission Solenoid Assembly harness connector.

Does the test light illuminate brightly?

Yes >> Replace the Transmission Control Relay.

Perform RE TRANSMISSION VERIFICATION TEST VER - 1 (DIESEL). (Refer to 21 - TRANSMISSION/TRANSAXLE/ AUTOMATIC - 48RE - STANDARD PROCEDURE)

No >> Repair the (T16) Transmission Control Relay Output circuit for an open.

Perform RE TRANSMISSION VERIFICATION TEST VER - 1 (DIESEL). (Refer to 21 - TRANSMISSION/TRANSAXLE/ AUTOMATIC - 48RE - STANDARD PROCEDURE)

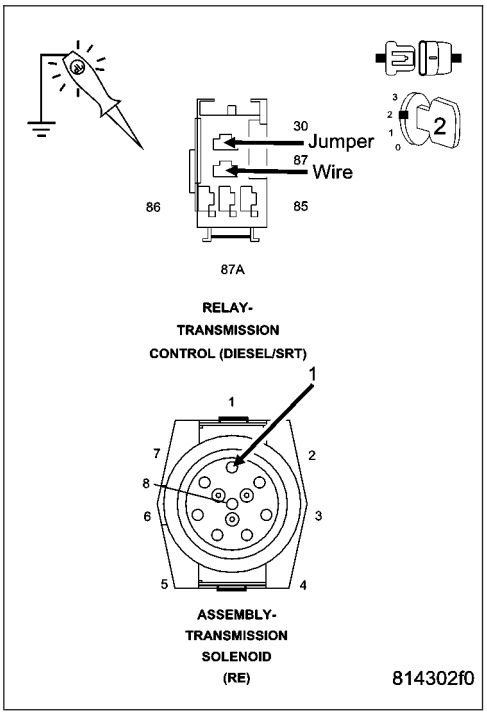

P0973-TRANSMISSION OVERDRIVE CIRCUIT VOLTAGE TOO LOW (DIESEL) (CONTINUED)

12. INTERMITTENT WIRING AND CONNECTORS

The conditions necessary to set this DTC are not present at this time.

Use the Freeze Frame Data to help duplicate the conditions in which the DTC originally set. Pay particular attention to the DTC set conditions, such as, VSS, MAP, ECT, and Load

Using the schematics as a guide, visually inspect the related wiring harness. Look for any chafed, pierced, pinched, or partially broken wires.

Visually inspect the related wiring harness connectors. Look for broken, bent, pushed out, or corroded terminals.

Wiggle the wiring and connectors while checking for any possible open or shorted circuits.

Check for any Service Information Tune-ups or Technical Service Bulletins that may apply.

Were there any problems found?

Yes >> Repair as necessary.
Perform RE TRANSMISSION VERIFICATION TEST VER - 1 (DIESEL). (Refer to 21 - TRANSMISSION/ TRANSAXLE/AUTOMATIC - 48RE - STANDARD PROCEDURE)

No >> Test Complete.

P0974-TRANSMISSION OVERDRIVE CIRCUIT VOLTAGE TOO HIGH (DIESEL)

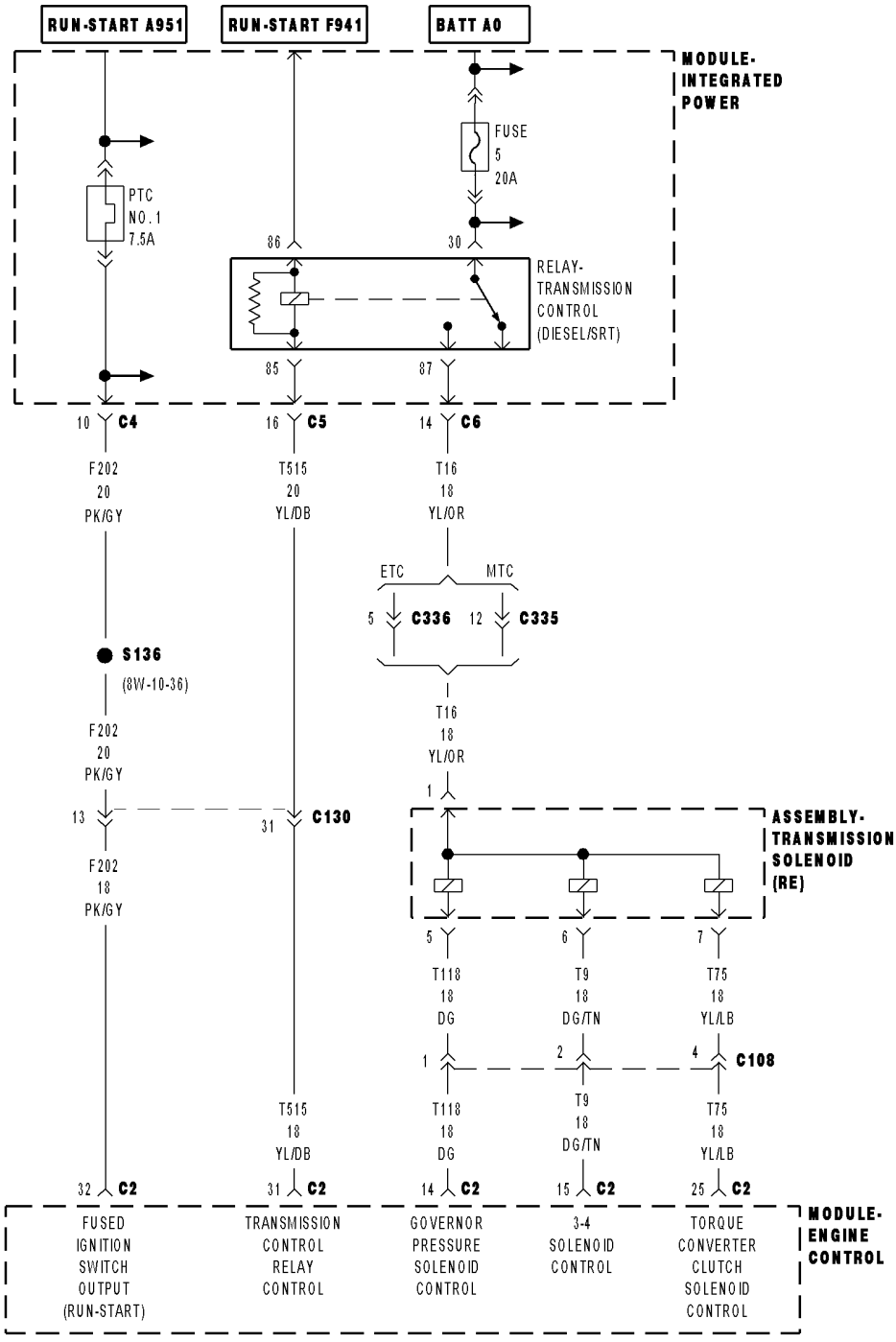

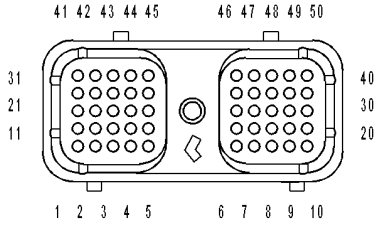

MODULE-ENGINE
CONTROL C2

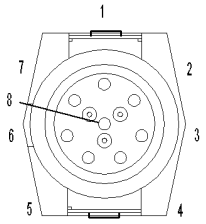

ASSEMBLY-
TRANSMISSION
SOLENOID
(RE)

8142abf3

P0974-TRANSMISSION OVERDRIVE CIRCUIT VOLTAGE TOO HIGH (DIESEL) (CONTINUED)

For the Transmission circuit diagram (Refer to 21 - TRANSMISSION/TRANSAXLE/AUTOMATIC - 48RE - SCHEMATICS AND DIAGRAMS)

For a complete wiring diagram**Refer to Section 8W**

Theory of Operation

The 3-4 Solenoid is used the engage the gear change from 3rd gear to 4th gear.

The solenoids used in transmission applications are attached to valves which can be classified as normally open or normally closed. The normally open solenoid valve is defined as a valve which allows hydraulic flow when no current or voltage is applied to the solenoid. The normally closed solenoid valve is defined as a valve which does not allow hydraulic flow when no current or voltage is applied to the solenoid. These valves perform hydraulic control functions for the transmission and must therefore be durable and tolerant of dirt particles. For these reasons, the valves have hardened steel poppets and ball valves. The solenoids operate the valves directly, which means that the solenoids must have very high outputs to close the valves against the sizable flow areas and line pressures found in current transmissions. Fast response time is also necessary to ensure accurate control.

- **When Monitored:**
  Continuously with ignition on.
- **Set Condition:**
  This code will set if the voltage detected on the 3-4 Shift Solenoid Control circuit at the ECM is different then the expected voltage. Note: To clear this DTC it is necessary to drive the vehicle at a sustained speed which would allow the TCC and/or Overdrive Clutch to operate

Possible Causes
TRANSMISSION CONTROL RELAY DTC PRESENT
(T9) 3-4 SOLENOID CONTROL CIRCUIT SHORT TO VOLTAGE
(T9) 3-4 SOLENOID CONTROL CIRCUIT SHORT TO ANOTHER CIRCUIT
3-4 SOLENOID
ENGINE CONTROL MODULE

Always perform the Pre-Diagnostic Troubleshooting procedure before proceeding. (Refer to 21 - TRANSMISSION/TRANSAXLE/AUTOMATIC - 48RE - STANDARD PROCEDURE)

Diagnostic Test

1. CHECK IF ANY RELAY DTCS ARE PRESENT

Ignition on, engine not running.

With the scan tool, read Engine DTCs.

Are there any Transmission Control Relay DTC's present?

Yes >> Refer to the Transmission category, (Refer to 21 - TRANSMISSION/TRANSAXLE/AUTOMATIC - 48RE - DIAGNOSIS AND TESTING) and perform the appropriate symptom(s).

No >> Go To 2

P0974-TRANSMISSION OVERDRIVE CIRCUIT VOLTAGE TOO HIGH (DIESEL) (CONTINUED)

2. CHECK IF THE DTC IS CURRENT

Ignition on, engine not running.

With the scan tool, read Engine DTCs.

Record the Freeze Frame data for the reported DTC.

With the scan tool, erase DTCs.

Turn the ignition off to the lock position.

Using the Freeze Frame data recorded earlier, try to duplicate the conditions in which the DTC originally set.

NOTE: It may be necessary to road test the vehicle to duplicate the original set conditions.

With the scan tool, read Engine DTCs.

Did the DTC reset?

Yes >> Go To 3

No >> Go To 7

---

3. CHECK THE 3-4 SOLENOID

Turn the ignition off to the lock position.

Disconnect the Transmission Solenoid Assembly harness connector.

NOTE: Check connectors - Clean/repair as necessary

Ignition on, engine not running.

With the scan tool, actuate the 3-4 (Overdrive) Solenoid.

Using a 12-volt test light connected to 12-volts, check the 3-4 Solenoid Control circuit in the Transmission Solenoid Assembly harness connector.

NOTE: The test light must illuminate brightly. Compare the brightness to that of a direct connection to the battery.

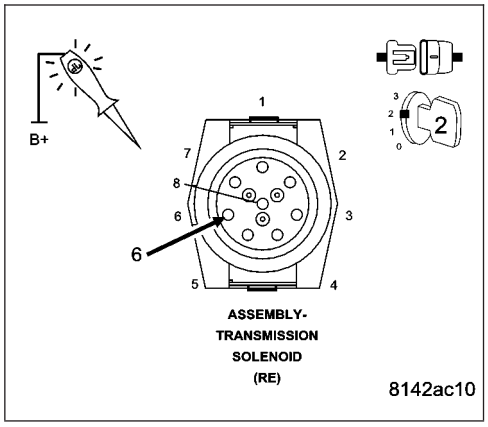

Does the test light cycle on and off and illuminate brightly?

Yes >> Check all internal wiring pertaining to the 3-4 Solenoid for an open, short and bent or broken terminals. If no internal wiring problems are found, replace the Transmission Solenoid Assembly per the Service Information. (Refer to 21 - TRANSMISSION/TRANSAXLE/AUTOMATIC - 48RE/VALVE BODY - REMOVAL)

Perform RE TRANSMISSION VERIFICATION TEST VER - 1 (DIESEL). (Refer to 21 - TRANSMISSION/TRANSAXLE/AUTOMATIC - 48RE - STANDARD PROCEDURE)

No >> Go To 4

P0974-TRANSMISSION OVERDRIVE CIRCUIT VOLTAGE TOO HIGH (DIESEL) (CONTINUED)

4. CHECK TO (T9) 3-4 SOLENOID CONTROL CIRCUIT FOR A SHORT TO VOLTAGE

Turn the ignition off to the lock position.

Disconnect the ECM harness connectors.

Ignition on, engine not running.

Measure the voltage of the (T9) 3-4 Solenoid Control circuit.

Is the voltage above 0.5 volts?

Yes >> Repair the (T9) 3-4 Solenoid Control circuit for a short to voltage.

Perform RE TRANSMISSION VERIFICATION TEST VER - 1 (DIESEL). (Refer to 21 - TRANSMISSION/TRANSAXLE/ AUTOMATIC - 48RE - STANDARD PROCEDURE)

No >> Go To 5

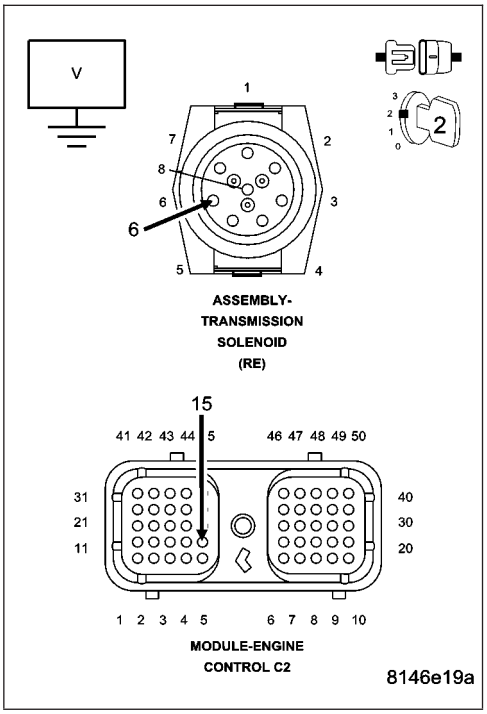

5. CHECK THE (T9) 3-4 SHIFT SOLENOID CONTROL CIRCUIT FOR A SHORT TO ANOTHER CIRCUIT

Turn the ignition off to the lock position.

Disconnect the ECM C1 and C2 harness connectors.

Disconnect the Transmission Solenoid Assembly harness connector.

Remove the Transmission Control Relay.

Measure the resistance between the (T9) 3-4 Shift Solenoid Control circuit and all other circuits in the Transmission Solenoid Assembly harness connector.

Is the resistance below 5.0 ohms between the (T9) 3-4 Shift Solenoid Control circuit and any other circuit(s) in the ECM C1 and C2 harness connectors?

Yes >> Repair the 3-4 Shift Solenoid Control circuit for a short to another circuit(s).

Perform RE TRANSMISSION VERIFICATION TEST VER - 1 (DIESEL). (Refer to 21 - TRANSMISSION/TRANSAXLE/ AUTOMATIC - 48RE - STANDARD PROCEDURE)

No >> Go To 6

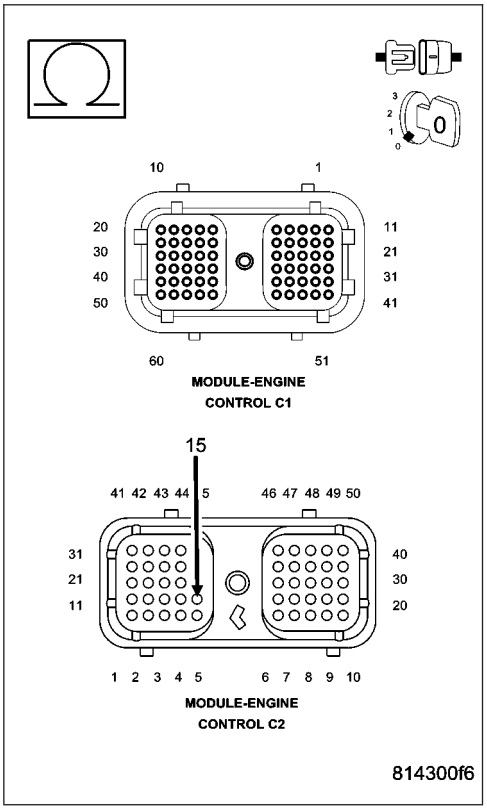

P0974-TRANSMISSION OVERDRIVE CIRCUIT VOLTAGE TOO HIGH (DIESEL) (CONTINUED)

6. CHECK THE 3-4 SOLENOID

Turn the ignition off to the lock position.

Disconnect the Transmission Solenoid Assembly harness connector.

NOTE: Check connectors - Clean/repair as necessary

Ignition on, engine not running.

With the scan tool, actuate the 3-4 (Overdrive) Solenoid.

Using a 12-volt test light connected to 12-volts, check the 3-4 Solenoid Control circuit in the Transmission Solenoid Assembly harness connector.

NOTE: The test light must illuminate brightly. Compare the brightness to that of a direct connection to the battery.

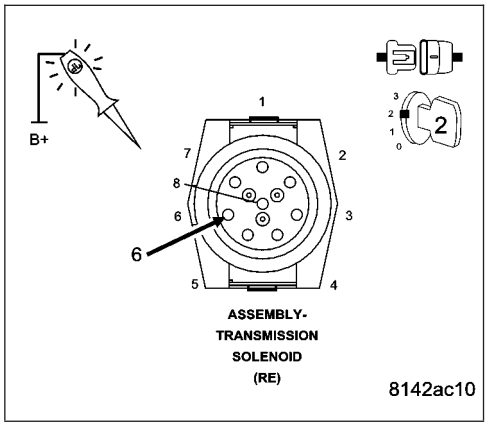

Does the test light cycle on and off and illuminate brightly?

Yes >> Go To 7

No >> Using the schematics as a guide, check the Engine Control Module (ECM) pins, terminals, and connectors for corrosion, damage, or terminal push out. Pay particular attention to all power and ground circuits. If no problems are found, replace and program the ECM per the Service Information. (Refer to 8 - ELECTRICAL/ELECTRONIC CONTROL MODULES/ENGINE CONTROL MODULE - REMOVAL)

Perform RE TRANSMISSION VERIFICATION TEST VER - 1 (DIESEL). (Refer to 21 - TRANSMISSION/TRANSAXLE/AUTOMATIC - 48RE - STANDARD PROCEDURE)

---

7. INTERMITTENT WIRING AND CONNECTORS

The conditions necessary set this DTC are not present at this time.

Use the Freeze Frame Data to help duplicate the conditions that set the DTC. Pay particular attention to the DTC set conditions, such as, VSS, MAP, ECT, and Load.

Visually inspect the related wiring harness. Look for any chafed, pierced, pinched, or partially broken wires.

Visually inspect the related wiring harness connectors. Look for broken, bent, pushed out, or corroded terminals.

Refer to any technical service bulletins that may apply.

Were there any problems found?

Yes >> Repair as necessary.

Perform RE TRANSMISSION VERIFICATION TEST VER - 1 (DIESEL). (Refer to 21 - TRANSMISSION/TRANSAXLE/AUTOMATIC - 48RE - STANDARD PROCEDURE)

No >> Test Complete.

P1740-TCC O/D SOL PERFORMANCE (DIESEL)

For the Transmission circuit diagram (Refer to 21 - TRANSMISSION/TRANSAXLE/AUTOMATIC - 48RE - SCHEMATICS AND DIAGRAMS)

For a complete wiring diagram**Refer to Section 8W**

Theory of Operation

The Torque Converter Clutch (TCC) Solenoid is used to engage the TCC which inproves fuel economy.

- **When Monitored:**
  The Torque Convertor Clutch (TCC) and Overdrive Clutch (O/D) will be tested each time the ECM requests TCC engagement in 3rd gear and O/D.
- **Set Condition:**
  The DTC will set if the expected RPM drop is not achieved while attempting to engage TCC or O/D. This indicates a malfunctioning torque convertor or overdrive clutch.

Possible Causes
ENGINE DTCS PRESENT
TRANSMISSION DTCS PRESENT
TRANSMISSION TEMPERATURE TOO COLD
OIL PAN CONTAINS EXCESSIVE DEBRIS
3-4 SHIFT SOLENOID
SHAFT OR SEAL DAMAGE
TCC SOLENOID
TORQUE CONVERTER

Always perform the Pre-Diagnostic Troubleshooting procedure before proceeding. (Refer to 21 - TRANSMISSION/TRANSAXLE/AUTOMATIC - 48RE - STANDARD PROCEDURE)

Diagnostic Test

1. ENGINE DTCS PRESENT

Ignition on, engine not running.
With the scan tool, read Engine DTCs.

Are there any Engine Temperature, Cam, Engine RPM, Misfire, P/N, or TPS DTC's present?

Yes >> Refer to 9 - ENGINE ELECTRICAL DIAGNOSTICS - DIESEL and perform the appropriate symptom. Perform RE TRANSMISSION VERIFICATION TEST VER - 1 (DIESEL). (Refer to 21 - TRANSMISSION/TRANSAXLE/AUTOMATIC - 48RE - STANDARD PROCEDURE)

No >> Go To 2

---

2. CHECK FOR OTHER TRANSMISSION DTCS PRESENT

Are any of the DTCs P0720, P0973, P0974, P2769, and/or P2770, also present?

Yes >> Refer to the Transmission category, and perform the appropriate symptom(s). (Refer to 21 - TRANSMISSION/TRANSAXLE/AUTOMATIC - 48RE - DIAGNOSIS AND TESTING)

No >> Go To 3

P1740-TCC O/D SOL PERFORMANCE (DIESEL) (CONTINUED)

3. CHECK IF THE DTC IS CURRENT

With the scan tool, read Engine DTCs.

Record the Freeze Frame data for the reported DTC.

With the scan tool, erase DTCs.

Turn the ignition off to the lock position.

Using the Freeze Frame data recorded earlier, try to duplicate the conditions in which the DTC originally set.

NOTE: It may be necessary to road test the vehicle to duplicate the original set conditions.

With the scan tool, read Engine DTCs.

Did the DTC reset?

Yes >> Go To 4

No >> Go To 14

---

4. VERIFY THE TOW/ HAUL OVERDRIVE FEATURE

NOTE: The transmission fluid temperature must be above 0.0° C (32° F) before proceeding.

With the scan tool, build a custom display using: Engine RPM, Output Shaft Speed, TCC Solenoid, O/D Solenoid and TPS.

NOTE: This display will monitor the operation of the components.

Start the engine, turn off Overdrive or Tow Haul and test drive the vehicle.

Attain a steady speed of 88.5 Km/h or 55 MPH with a minimum of 1.15 volts throttle opening for 20 seconds.

NOTE: Check the Shift pattern as the vehicle upshifts to speeds of 88.5 Km/h or 55 MPH.

Is the Engine RPM within 60 RPM of the Output Shaft Speed RPM?

Yes >> Go To 10

No >> Go To 5

---

5. CHECK IF THE OUTPUT SPEED IS GREATER THAN ENGINE RPM

In the previous test, is the Output Shaft Speed greater than Engine RPM?

Yes >> Go To 6

No >> Go To 10

---

6. CALCULATE EXPECTED ENGINE RPM

With the scan tool, build a custom display using: Engine RPM, Output Shaft Speed, TCC Solenoid, O/D Solenoid and TPS.

NOTE: This display will monitor the operation of the components.

Start the engine, turn off Overdrive or Tow Haul and test drive the vehicle.

Attain a steady speed of 88.5 Km/h or 55 MPH with a minimum of 1.15 volts throttle opening for 20 seconds.

With the scan tool, verify the 3-4 Solenoid (O/D) Solenoid is on and the TCC solenoid is locked

NOTE: Use this formula, Output Shaft Speed x 0.69 = expected Engine RPM.

Did the Engine RPM drop to 0.69 of the Output Shaft Speed RPM?

Yes >> Go To 10

No >> Go To 7

P1740-TCC O/D SOL PERFORMANCE (DIESEL) (CONTINUED)

7. GOVERNOR PRESSURE SYSTEM TEST

Turn the ignition off to the lock position.

Connect a 0 to 2068 Kpa or 0 to 300 PSI pressure gauge to the Overdrive Clutch Test Port.

Connect a 0 to 2068 Kpa or 0 to 300 PSI pressure gauge to the Governor Test Port.

Start the engine.

NOTE: Allow the transmission temperature to rise to normal operating temperature.
While observing both pressure gauges, select 4th Gear from Gov and 3-4 System Test.

NOTE: The Governor pressure should rise to above 137.8 Kpa or 20 PSI, shortly after the OD pressure should rise above 275.7 Kpa or 40 PSI.

Did the pressures act as described?

Yes >> Go To 8

No >> Go To 9

---

8. CHECK IF THE OIL PAN CONTAINS EXCESSIVE DEBRIS

Remove the transmission oil pan per the Service information.

Is the transmissin fluid burnt or does the transmissin oil pan contain excessive debris?

Yes >> Repair internal transmission as necessary. (Refer to 21 - TRANSMISSION/TRANSAXLE/AUTOMATIC - 48RE - REMOVAL)
Perform RE TRANSMISSION VERIFICATION TEST VER - 1 (DIESEL). (Refer to 8 - ELECTRICAL/ELECTRONIC CONTROL MODULES/TRANSMISSION CONTROL MODULE - DIAGNOSIS AND TESTING)

No >> Go To 10

---

9. CHECK THE 3-4 SHIFT SOLENOID

Turn the ignition off to the lock position.

Replace the 3-4 Solenoid per the Service information. (Refer to 21 - TRANSMISSION/TRANSAXLE/AUTOMATIC - 48RE/VALVE BODY - REMOVAL)

Connect a 0 to 2068 Kpa or 0 to 300 PSI pressure gauge to the Overdrive Clutch Test Port.

Connect a 0 to 2068 Kpa or 0 to 300 PSI pressure gauge to the Governor Test Port.

Start the engine.

NOTE: Allow the transmission temperature to rise to normal operating temperature.
While observing both pressure gauges, select 4th gear from the Governor 3-4 shift valve system test.

NOTE: The Governor pressure should rise above 137.8 Kpa or 20 PSI, shortly after the OD pressure should rise above 275.7 Kpa or 40 PSI.

Did the pressures act as described?

Yes >> Test Complete.

No >> Overhaul the transmission per the Service information. Carefully inspect the seals and clutches related to the OD Clutch. (Refer to 21 - TRANSMISSION/TRANSAXLE/AUTOMATIC - 48RE - REMOVAL)
Perform RE TRANSMISSION VERIFICATION TEST VER - 1 (DIESEL). (Refer to 21 - TRANSMISSION/TRANSAXLE/AUTOMATIC - 48RE - STANDARD PROCEDURE)

P1740-TCC O/D SOL PERFORMANCE (DIESEL) (CONTINUED)

10. TORQUE CONVERTER CLUTCH

Turn the ignition on.

With the scan tool, perform the Torque Converter Clutch test.

Did the engine stall?

Yes >> Go To 11

No >> Go To 13

---

11. GOVERNOR/3-4 SHIFT VALVE

Start the engine.

Perform the Governor and 3-4 Shift Valve System Test, select 4th gear.

Did the engine stall?

Yes >> Go To 12

No >> Go To 13

---

12. TCC SOLENOID

Replace the TCC Solenoid. (Refer to 21 - TRANSMISSION/TRANSAXLE/AUTOMATIC - 48RE/VALVE BODY - REMOVAL)

With the scan tool, perform the Governor and 3-4 Solenoid test, select 4th gear.

Did the engine stall?

Yes >> Repair internal transmission as necessary. Check for blocked passages. (Refer to 21 - TRANSMISSION/TRANSAXLE/AUTOMATIC - 48RE - REMOVAL)

Perform RE TRANSMISSION VERIFICATION TEST VER - 1 (DIESEL). (Refer to 21 - TRANSMISSION/TRANSAXLE/AUTOMATIC - 48RE - STANDARD PROCEDURE)

No >> Test Complete.

Perform RE TRANSMISSION VERIFICATION TEST VER - 1 (DIESEL). (Refer to 21 - TRANSMISSION/TRANSAXLE/AUTOMATIC - 48RE - STANDARD PROCEDURE)

---

13. SHAFT OR SEAL DAMAGE

Remove the Transmission Oil Pump per the Service information. (Refer to 21 - TRANSMISSION/TRANSAXLE/AUTOMATIC - 48RE/OIL PUMP - DISASSEMBLY)

Inspect the Reaction shaft, Input Shaft and Input seal.

Are any of the parts damaged or worn?

Yes >> Repair as necessary, also replace the Torque Converter.

Perform RE TRANSMISSION VERIFICATION TEST VER - 1 (DIESEL). (Refer to 21 - TRANSMISSION/TRANSAXLE/AUTOMATIC - 48RE - STANDARD PROCEDURE)

No >> Replace the Torque Converter. NOTE: Inspect the Reaction Shaft, Input Shaft and Input Seal. Replace as necessary if any of the parts are damaged or worn.

Perform RE TRANSMISSION VERIFICATION TEST VER - 1 (DIESEL). (Refer to 21 - TRANSMISSION/TRANSAXLE/AUTOMATIC - 48RE - STANDARD PROCEDURE)

P1740-TCC O/D SOL PERFORMANCE (DIESEL) (CONTINUED)

14. INTERMITTENT WIRING & CONNECTORS

The conditions necessary to set this DTC are not present at this time.

Use the Freeze Frame Data to help duplicate the conditions in which the DTC originally set. Pay particular attention to the DTC set conditions, such as, VSS, MAP, ECT, and Load

Using the schematics as a guide, visually inspect the related wiring harness. Look for any chafed, pierced, pinched, or partially broken wires.

Visually inspect the related wiring harness connectors. Look for broken, bent, pushed out, or corroded terminals.

Wiggle the wiring and connectors while checking for any possible open or shorted circuits.

Check for any Service Information Tune-ups or Technical Service Bulletins that may apply.

Were there any problems found?

Yes >> Repair as necessary.
Perform RE TRANSMISSION VERIFICATION TEST VER - 1 (DIESEL). (Refer to 21 - TRANSMISSION/ TRANSAXLE/AUTOMATIC - 48RE - STANDARD PROCEDURE)

No >> Test Complete.

P1749-TRANSMISSION THROTTLE VALVE POSITION SENSOR CIRCUIT LOW

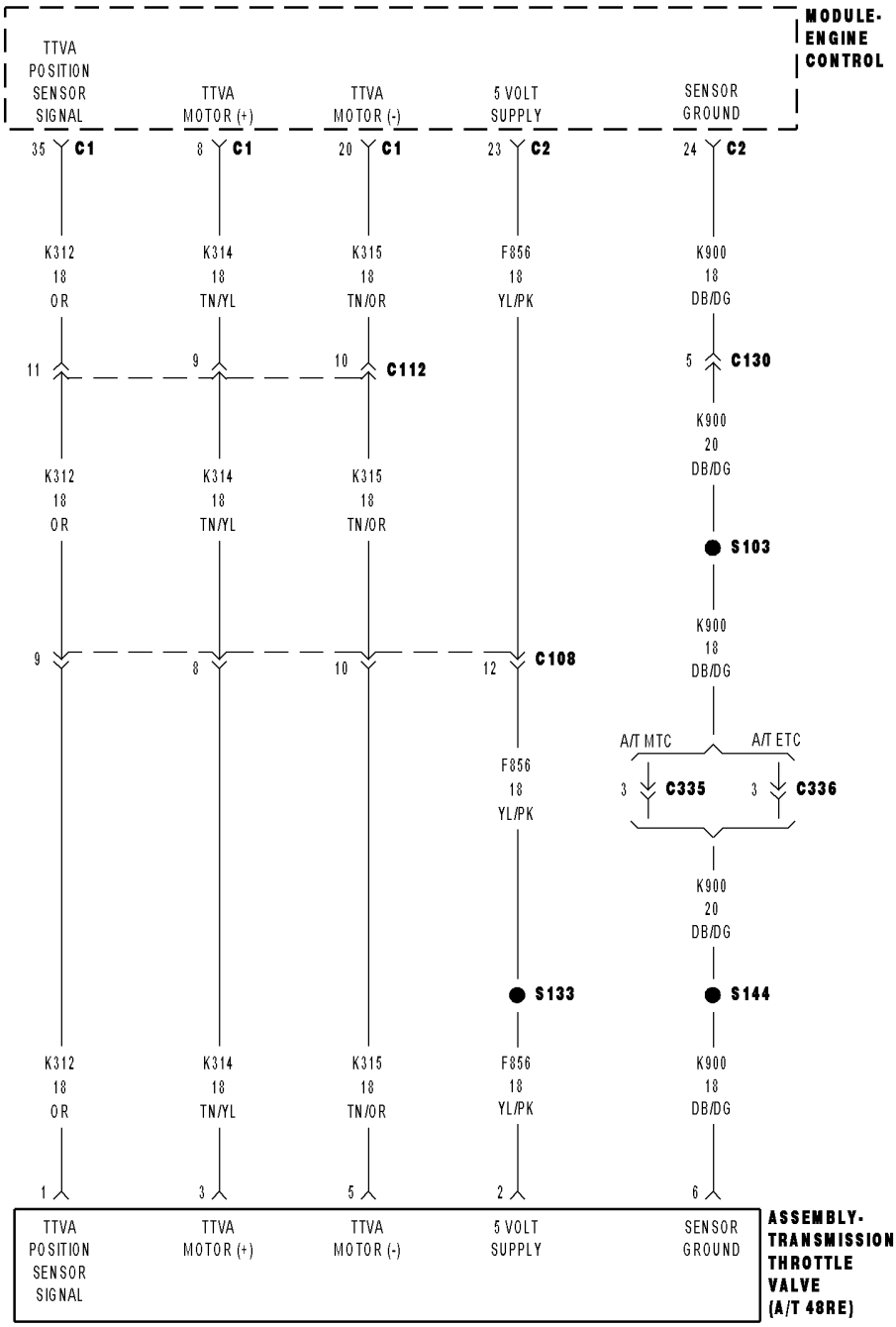

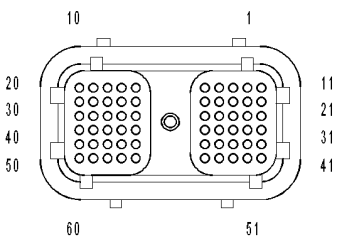

MODULE-ENGINE CONTROL C1

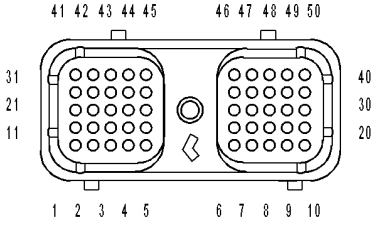

MODULE-ENGINE CONTROL C2

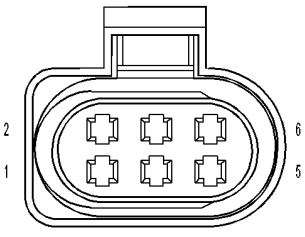

ASSEMBLY-TRANSMISSION THROTTLE VALVE (A/T 48RE)

81482a8c

P1749-TRANSMISSION THROTTLE VALVE POSITION SENSOR CIRCUIT LOW (CONTINUED)

For the Transmission circuit diagram (Refer to 21 - TRANSMISSION/TRANSAXLE/AUTOMATIC - 48RE - SCHEMATICS AND DIAGRAMS)

For a complete wiring diagram**Refer to Section 8W**

Theory of Operation

The transmission throttle valve cable has been replace by the transmission throttle valve actuator (TTVA). The TTVA consists of an electric DC motor, two potentiometers, and a gear drive system. The TTVA is mechanically connected to the transmission throttle valve in the valve body by the “D” shaped opening in the bottom of the TTVA shaft.

The Transmission Throttle Valve Actuator (TTVA) does not require any mechanical adjustments. All changes in throttle valve position are controlled by the Engine Control Module (ECM).

The TTVA does require an initialization period after the actuator has been removed or replaced. After the actuator has been removed or replaced, move the ignition to the ON position for thirty (30) seconds. This will allow the ECM sufficient time to perform the internal calibration procedures to learn the TTVA’s current “zero” position.

- **When Monitored:**
  Continuously with the ignition on.
- **Set Condition:**
  When the Engine Control Module (ECM) detects the monitored Transmission Throttle Valve Position Sensor voltage drops below a predetermined value.

Possible Causes
(K312) TTVA POSITION SENSOR SIGNAL CIRCUIT OPEN
(K312) TTVA POSITION SENSOR SIGNAL CIRCUIT SHORT TO GROUND
(K312) TTVA POSITION SENSOR SIGNAL CIRCUIT SHORT TO ANOTHER CIRCUIT
(F856) 5 VOLT SUPPLY CIRCUIT OPEN
(F856) 5 VOLT SUPPLY CIRCUIT SHORT TO GROUND
(F856) 5 VOLT SUPPLY CIRCUIT SHORT TO ANOTHER CIRCUIT
TRANSMISSION THROTTLE VALVE ACTUATOR
ENGINE CONTROL MODULE

Always perform the Pre-Diagnostic Troubleshooting procedure before proceeding. (Refer to 21 - TRANSMISSION/TRANSAXLE/AUTOMATIC - 48RE - STANDARD PROCEDURE)

P1749-TRANSMISSION THROTTLE VALVE POSITION SENSOR CIRCUIT LOW (CONTINUED)

Diagnostic Test

1. CHECK THE TTVA

Ignition on, engine not running.

With the scan tool, record and erase Engine DTCs.

Turn the ignition off to the lock position.

Disconnect the TTVA harness connector.

NOTE: Check connectors - Clean/repair as necessary.

Connect a jumper wire between the (K312) TTVA Position Sensor Signal circuit and the (F856) 5-volt Supply circuit in the TTVA harness connector.

Ignition on, engine not running.

With the scan tool, read Engine DTCs.

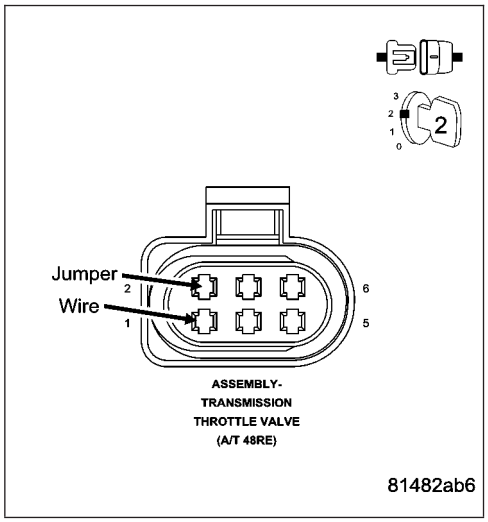

Did the DTC P1750-Transmission Throttle Valve Position Sensor Circuit High set?

Yes >> Replace the TTVA per the Service Information.

Perform RE TRANSMISSION VERIFICATION TEST VER - 1 (DIESEL). (Refer to 8 - ELECTRICAL/ELECTRONIC CONTROL MODULES/TRANSMISSION CONTROL MODULE - DIAGNOSIS AND TESTING)

No >> Go To 2

---

2. CHECK THE (K312) TTVA POSITION SENSOR SIGNAL CIRCUIT FOR AN OPEN

Turn the ignition off to the lock position.

Disconnect the ECM C1 and C2 harness connectors.

Measure the resistance of the (K312) TTVA Position Sensor Signal circuit between the ECM C1 harness connector and the TTVA harness connector.

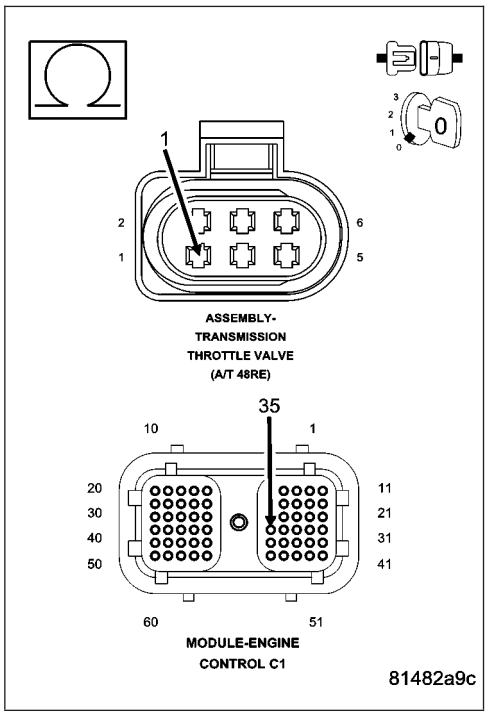

Is the resistance below 5.0 ohms?

Yes >> Go To 3

No >> Repair the (K312) TTVA Position Sensor Signal circuit for an open.

Perform RE TRANSMISSION VERIFICATION TEST VER - 1 (DIESEL). (Refer to 8 - ELECTRICAL/ELECTRONIC CONTROL MODULES/TRANSMISSION CONTROL MODULE - DIAGNOSIS AND TESTING)

P1749-TRANSMISSION THROTTLE VALVE POSITION SENSOR CIRCUIT LOW (CONTINUED)

3. CHECK THE (K312) TTVA POSITION SENSOR SIGNAL CIRCUIT FOR A SHORT TO GROUND

Measure the resistance between ground and the (K312) TTVA Position Sensor Signal circuit.

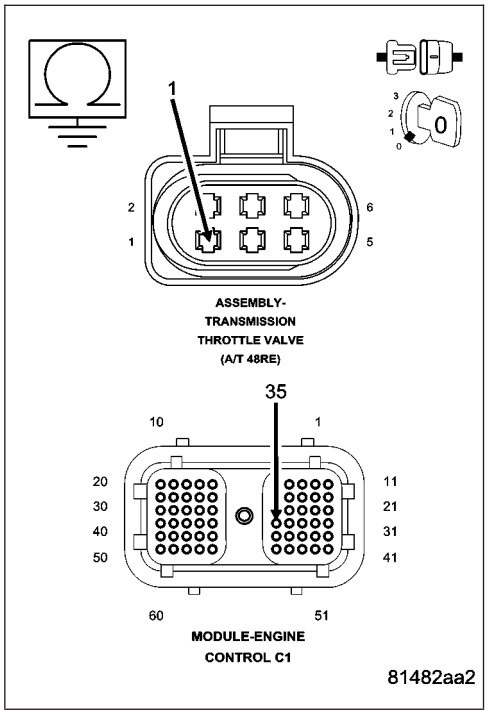

Is the resistance below 5.0 ohms?

Yes >> Repair the (K312) TTVA Position Sensor Signal circuit for a short to ground.

Perform RE TRANSMISSION VERIFICATION TEST VER - 1 (DIESEL). (Refer to 8 - ELECTRICAL/ELECTRONIC CONTROL MODULES/TRANSMISSION CONTROL MODULE - DIAGNOSIS AND TESTING)

No >> Go To 4

4. CHECK THE (K312) TTVA POSITION SENSOR SIGNAL CIRCUIT FOR A SHORT TO ANOTHER CIRCUIT

Measure the resistance between the (K312) TTVA Position Sensor Signal circuit and all other circuits in the ECM C1 and C2 harness connectors.

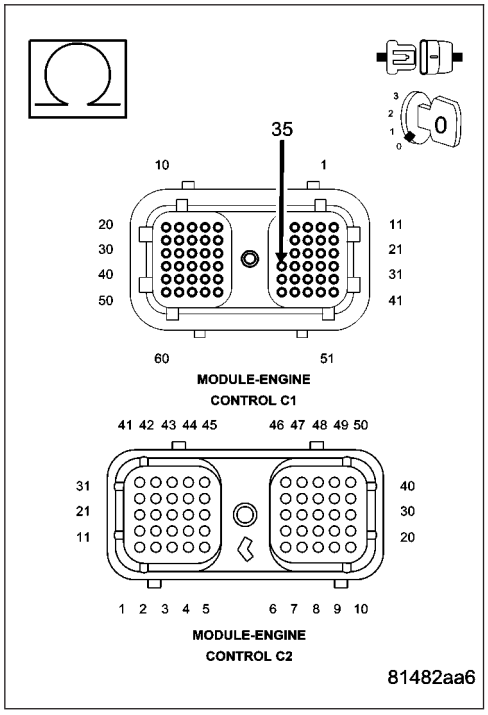

Is the resistance below 100 kohms between the (K312) TTVA Position Sensor Signal circuit and any other circuit(s) in the ECM C1 or C2 harness connectors.

Yes >> Repair the (K312) TTVA Position Sensor Signal circuit for a short to another circuit(s).

Perform RE TRANSMISSION VERIFICATION TEST VER - 1 (DIESEL). (Refer to 8 - ELECTRICAL/ELECTRONIC CONTROL MODULES/TRANSMISSION CONTROL MODULE - DIAGNOSIS AND TESTING)

No >> Go To 5

P1749-TRANSMISSION THROTTLE VALVE POSITION SENSOR CIRCUIT LOW (CONTINUED)

5. CHECK THE (F856) 5 VOLT SUPPLY CIRCUIT FOR AN OPEN

Measure the resistance of the (F856) 5-volt Supply circuit between the ECM C2 harness connector and the TTVA harness connector.

Is the resistance below 5.0 ohms?

Yes >> Go To 6

No >> Repair the (F856) 5-volt Supply circuit for an open.
Perform RE TRANSMISSION VERIFICATION TEST VER - 1 (DIESEL). (Refer to 8 - ELECTRICAL/ELECTRONIC CONTROL MODULES/TRANSMISSION CONTROL MODULE - DIAGNOSIS AND TESTING)

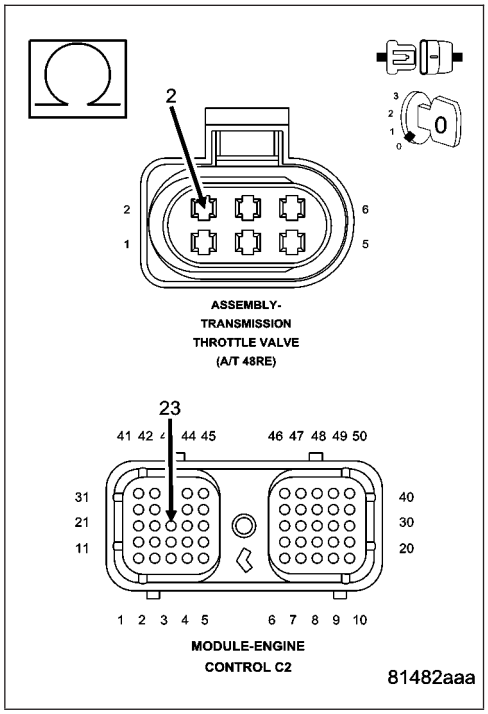

6. CHECK THE (F856) 5 VOLT SUPPLY CIRCUIT FOR A SHORT TO GROUND

Measure the resistance between ground and the (F856) 5-volt Supply circuit.

Is the resistance below 5.0 ohms?

Yes >> Repair the (F856) 5-volt Supply circuit for a short to ground.
Perform RE TRANSMISSION VERIFICATION TEST VER - 1 (DIESEL). (Refer to 8 - ELECTRICAL/ELECTRONIC CONTROL MODULES/TRANSMISSION CONTROL MODULE - DIAGNOSIS AND TESTING)

No >> Go To 7

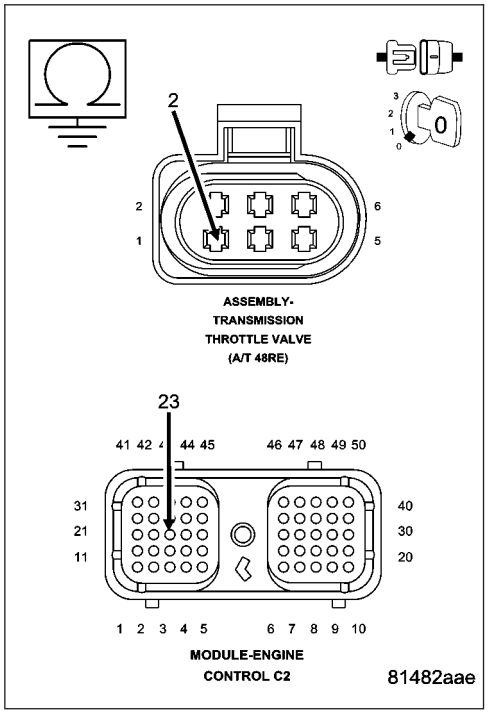

P1749-TRANSMISSION THROTTLE VALVE POSITION SENSOR CIRCUIT LOW (CONTINUED)

7. (F856) 5 VOLT SUPPLY CIRCUIT SHORT TO ANOTHER CIRCUIT

Measure the resistance between the (F856) 5-volt Supply circuit and all other circuits in the ECM C1 and C2 harness connectors.

Is the resistance below 100 kohms between the (F856) 5-volt Supply circuit and any other circuit(s) in the ECM C1 or C2 harness connectors.

Yes >> Repair the (F856) 5-volt Supply circuit for a short to another circuit(s).

Perform RE TRANSMISSION VERIFICATION TEST VER - 1 (DIESEL). (Refer to 8 - ELECTRICAL/ELECTRONIC CONTROL MODULES/TRANSMISSION CONTROL MODULE - DIAGNOSIS AND TESTING)

No >> Go To 8

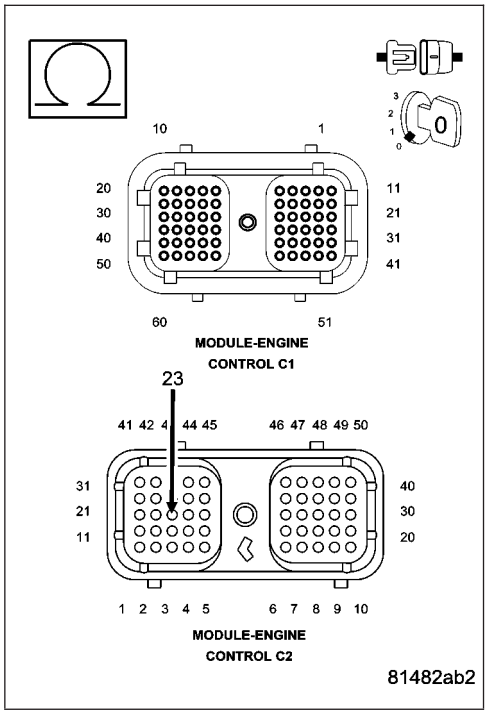

---

8. CHECK THE TTVA

Ignition on, engine not running.

With the scan tool, record and erase Engine DTCs.

Turn the ignition off to the lock position.

Disconnect the TTVA harness connector.

NOTE: Check connectors - Clean/repair as necessary.

Connect a jumper wire between the (K312) TTVA Position Sensor Signal circuit and the (F856) 5-volt Supply circuit in the TTVA harness connector.

Ignition on, engine not running.

With the scan tool, read Engine DTCs.

Did the DTC P1750-Transmission Throttle Valve Position Sensor Circuit High set?

Yes >> Go To 9

No >> Using the schematics as a guide, check the Engine Control Module (ECM) pins, terminals, and connectors for corrosion, damage, or terminal push out. Pay particular attention to all power and ground circuits. If no problems are found, replace and program the ECM per the Service Information. (Refer to 8 - ELECTRICAL/ELECTRONIC CONTROL MODULES/ENGINE CONTROL MODULE - REMOVAL)

Perform RE TRANSMISSION VERIFICATION TEST VER - 1 (DIESEL). (Refer to 8 - ELECTRICAL/ELECTRONIC CONTROL MODULES/TRANSMISSION CONTROL MODULE - DIAGNOSIS AND TESTING)

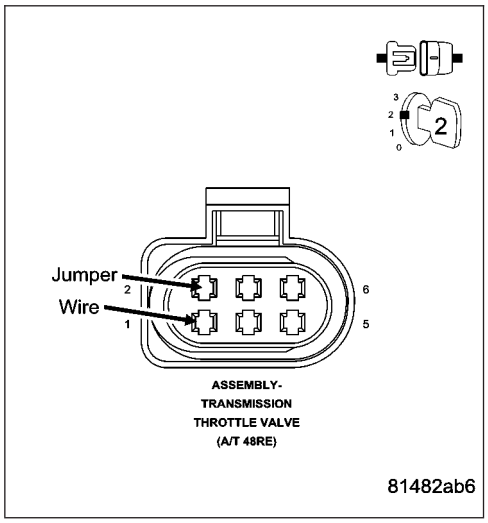

P1749-TRANSMISSION THROTTLE VALVE POSITION SENSOR CIRCUIT LOW (CONTINUED)

9. INTERMITTENT WIRING AND CONNECTORS

The conditions necessary set this DTC are not present at this time.

Use the Freeze Frame Data to help duplicate the conditions that set the DTC. Pay particular attention to the DTC set conditions, such as, VSS, MAP, ECT, and Load.

Visually inspect the related wiring harness. Look for any chafed, pierced, pinched, or partially broken wires.

Visually inspect the related wiring harness connectors. Look for broken, bent, pushed out, or corroded terminals.

Refer to any technical service bulletins that may apply.

Were there any problems found?

Yes >> Repair as necessary.
Perform RE TRANSMISSION VERIFICATION TEST VER - 1 (DIESEL). (Refer to 21 - TRANSMISSION/ TRANSAXLE/AUTOMATIC - 48RE - STANDARD PROCEDURE)

No >> Test Complete.

P1750-TRANSMISSION THROTTLE VALVE POSITION SENSOR CIRCUIT HIGH

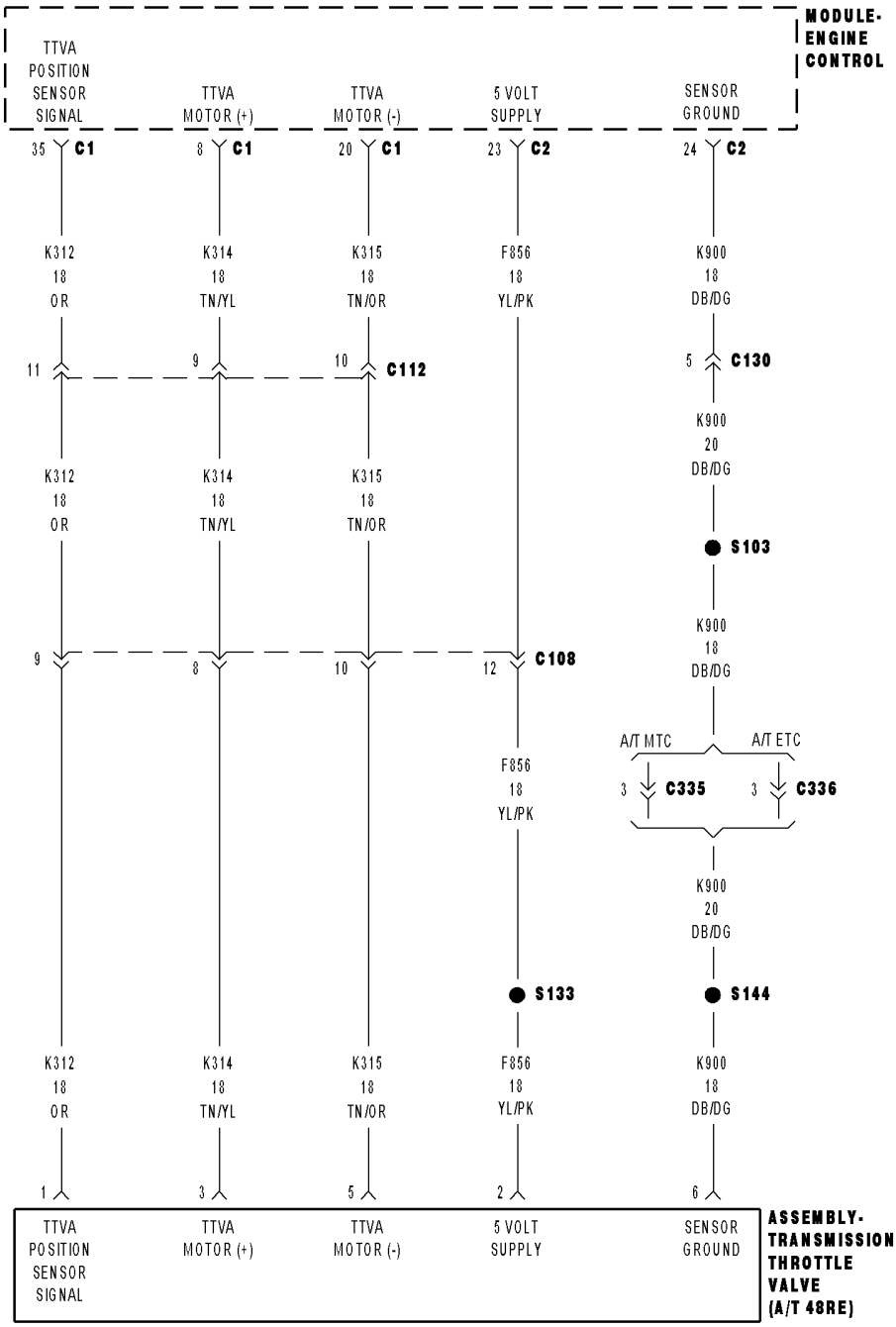

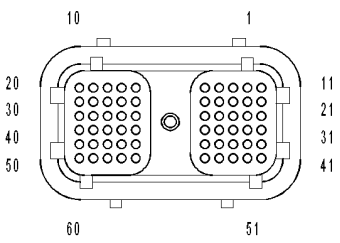

MODULE-ENGINE CONTROL C1

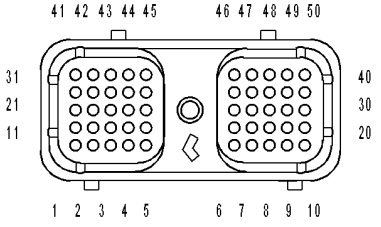

MODULE-ENGINE CONTROL C2

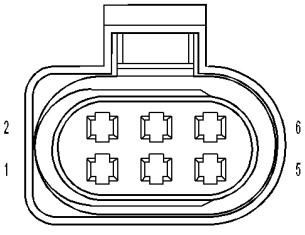

ASSEMBLY-TRANSMISSION THROTTLE VALVE (A/T 48RE)

81482a8c

P1750-TRANSMISSION THROTTLE VALVE POSITION SENSOR CIRCUIT HIGH (CONTINUED)

For the Transmission circuit diagram (Refer to 21 - TRANSMISSION/TRANSAXLE/AUTOMATIC - 48RE - SCHEMATICS AND DIAGRAMS)

For a complete wiring diagram**Refer to Section 8W**

Theory of Operation

The transmission throttle valve cable has been replace by the transmission throttle valve actuator (TTVA). The TTVA consists of an electric DC motor, two potentiometers, and a gear drive system. The TTVA is mechanically connected to the transmission throttle valve in the valve body by the “D” shaped opening in the bottom of the TTVA shaft.

The Transmission Throttle Valve Actuator (TTVA) does not require any mechanical adjustments. All changes in throttle valve position are controlled by the Engine Control Module (ECM).

The TTVA does require an initialization period after the actuator has been removed or replaced. After the actuator has been removed or replaced, move the ignition to the ON position for thirty (30) seconds. This will allow the ECM sufficient time to perform the internal calibration procedures to learn the TTVA’s current “zero” position.

- **When Monitored:**
  Continuously with the ignition on.
- **Set Condition:**
  When the Engine Control Module (ECM) detects the monitored Transmission Throttle Valve Position Sensor voltage rises above a predetermined value.

Possible Causes
(K312) TTVA POSITION SENSOR SIGNAL CIRCUIT SHORT TO VOLTAGE
(K312) TTVA POSITION SENSOR SIGNAL CIRCUIT SHORT TO ANOTHER CIRCUIT
(K900) SENSOR GROUND CIRCUIT OPEN
TRANSMISSION THROTTLE VALVE ACTUATOR
ENGINE CONTROL MODULE

Always perform the Pre-Diagnostic Troubleshooting procedure before proceeding. (Refer to 21 - TRANSMISSION/TRANSAXLE/AUTOMATIC - 48RE - STANDARD PROCEDURE)

Diagnostic Test

1. CHECK IF THE DTC IS CURRENT

Ignition on, engine not running.

With the scan tool, read Engine DTCs.

Record the Freeze Frame data for the reported DTC.

With the scan tool, erase DTCs.

Turn the ignition off to the lock position.

Using the Freeze Frame data recorded earlier, try to duplicate the conditions in which the DTC originally set.

NOTE: It may be necessary to road test the vehicle to duplicate the original set conditions.
With the scan tool, read Engine DTCs.

Did the DTC reset?

Yes >> Go To 2

No >> Go To 7

P1750-TRANSMISSION THROTTLE VALVE POSITION SENSOR CIRCUIT HIGH (CONTINUED)

2. CHECK THE TTVA

With the scan tool, record and erase Engine DTCs.
Turn the ignition off to the lock position.
Disconnect the TTVA harness connector.

NOTE: Check connectors - Clean/repair as necessary.
Ignition on, engine not running.
With the scan tool, read Engine DTCs.

Did the DTC Transmission Throttle Valve Position Sensor Circuit High set?

Yes >> Go To 4

No >> Go To 3

---

3. CHECK THE (K900) SENSOR GROUND CIRCUIT FOR AN OPEN

Ignition on, engine not running.
With the scan tool, record and erase Engine DTCs.
Turn the ignition off to the lock position.
Disconnect the TTVA harness connector.

NOTE: Check connectors - Clean/repair as necessary.
Connect a jumper wire between the (K900) Sensor Ground circuit and the (F856) 5-volt Supply circuit in the TTVA harness connector.
Ignition on, engine not running.
With the scan tool, read Engine DTCs.

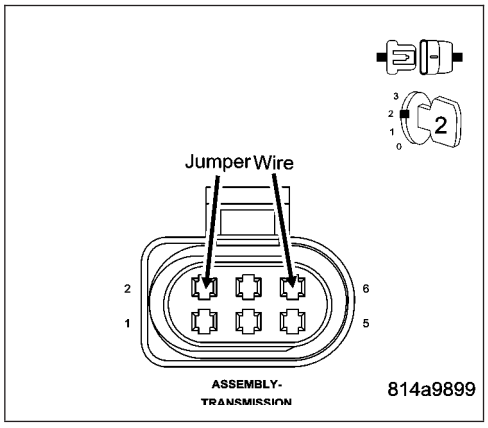

Did either P0642 or P0652 Sensor Supply Voltage DTC set?

Yes >> Replace the TTVA per the Service Information.
Perform RE TRANSMISSION VERIFICATION TEST VER - 1 (DIESEL). (Refer to 8 - ELECTRICAL/ELECTRONIC CONTROL MODULES/TRANSMISSION CONTROL MODULE - DIAGNOSIS AND TESTING)

No >> Repair the (K900) TTVA Sensor Ground circuit for an open.
Perform RE TRANSMISSION VERIFICATION TEST VER - 1 (DIESEL). (Refer to 8 - ELECTRICAL/ELECTRONIC CONTROL MODULES/TRANSMISSION CONTROL MODULE - DIAGNOSIS AND TESTING)

P1750-TRANSMISSION THROTTLE VALVE POSITION SENSOR CIRCUIT HIGH (CONTINUED)

4. CHECK THE (K312) TTVA POSITION SENSOR SIGNAL CIRCUIT FOR A SHORT TO VOLTAGE

Turn the ignition off to the lock position.
Disconnect the ECM C1 and C2 harness connectors.
Ignition on, engine not running.
Measure the voltage of the (K312) TTVA Position Sensor Signal circuit.

Is the voltage above 0.5 volts?

Yes >> Repair the (K312) TTVA Position Sensor Signal circuit for a short to voltage.
Perform RE TRANSMISSION VERIFICATION TEST VER - 1 (DIESEL). (Refer to 8 - ELECTRICAL/ELECTRONIC CONTROL MODULES/TRANSMISSION CONTROL MODULE - DIAGNOSIS AND TESTING)

No >> Go To 5

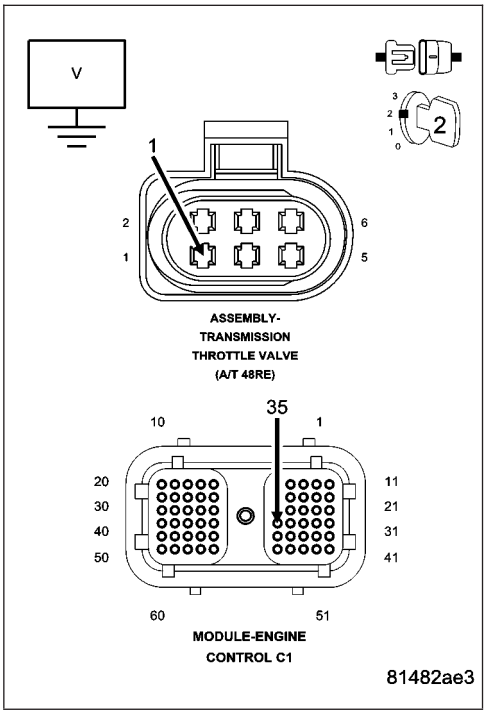

5. CHECK THE (K312) TTVA POSITION SENSOR SIGNAL CIRCUIT FOR A SHORT TO ANOTHER CIRCUIT

Measure the resistance between the (K312) TTVA Position Sensor Signal circuit and all other circuits in the ECM C1 and C2 harness connectors.

Is the resistance below 100 kohms between the (K312) TTVA Position Sensor Signal circuit and any other circuit(s) in the ECM C1 or C2 harness connectors.

Yes >> Repair the (K312) TTVA Position Sensor Signal circuit for a short to another circuit(s).
Perform RE TRANSMISSION VERIFICATION TEST VER - 1 (DIESEL). (Refer to 8 - ELECTRICAL/ELECTRONIC CONTROL MODULES/TRANSMISSION CONTROL MODULE - DIAGNOSIS AND TESTING)

No >> Go To 6

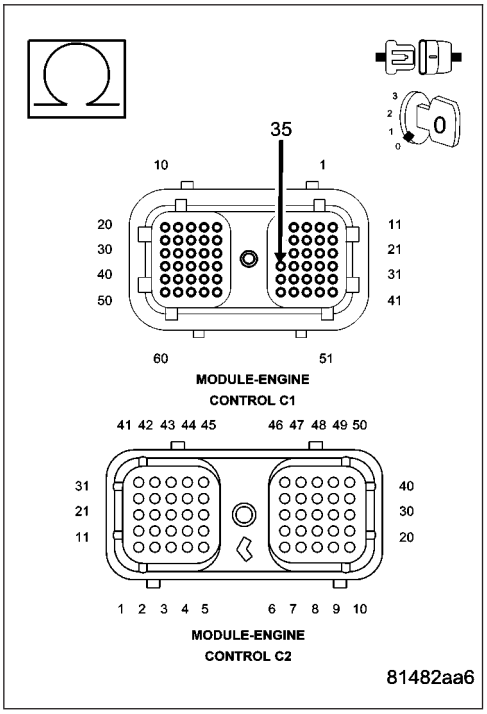

P1750-TRANSMISSION THROTTLE VALVE POSITION SENSOR CIRCUIT HIGH (CONTINUED)

6. CHECK THE ECM OPERATION

Turn the ignition off to the lock position.
Reconnect all previously disconnected connectors.
Ignition on, engine not running.
With the scan tool, record and erase Engine DTCs.
Turn the ignition off to the lock position.
Disconnect the TTVA harness connector.
Ignition on, engine not running.
With the scan tool, read Engine DTCs.

Did the DTC Transmission Throttle Valve Position Sensor Circuit High set?

Yes >> Using the schematics as a guide, check the Engine Control Module (ECM) pins, terminals, and connectors for corrosion, damage, or terminal push out. Pay particular attention to all power and ground circuits. If no problems are found, replace and program the ECM per the Service Information. (Refer to 8 - ELECTRICAL/ELECTRONIC CONTROL MODULES/ENGINE CONTROL MODULE - REMOVAL)
Perform RE TRANSMISSION VERIFICATION TEST VER - 1 (DIESEL). (Refer to 8 - ELECTRICAL/ELECTRONIC CONTROL MODULES/TRANSMISSION CONTROL MODULE - DIAGNOSIS AND TESTING)

No >> Go To 7

---

7. INTERMITTENT WIRING AND CONNECTORS

The conditions necessary set this DTC are not present at this time.
Use the Freeze Frame Data to help duplicate the conditions that set the DTC. Pay particular attention to the DTC set conditions, such as, VSS, MAP, ECT, and Load.
Visually inspect the related wiring harness. Look for any chafed, pierced, pinched, or partially broken wires.
Visually inspect the related wiring harness connectors. Look for broken, bent, pushed out, or corroded terminals.
Refer to any technical service bulletins that may apply.

Were there any problems found?

Yes >> Repair as necessary.
Perform RE TRANSMISSION VERIFICATION TEST VER - 1 (DIESEL). (Refer to 21 - TRANSMISSION/TRANSAXLE/AUTOMATIC - 48RE - STANDARD PROCEDURE)

No >> Test Complete.

P1751-TRANSMISSION THROTTLE VALVE POSITION MINIMUM RANGE PERFORMANCE

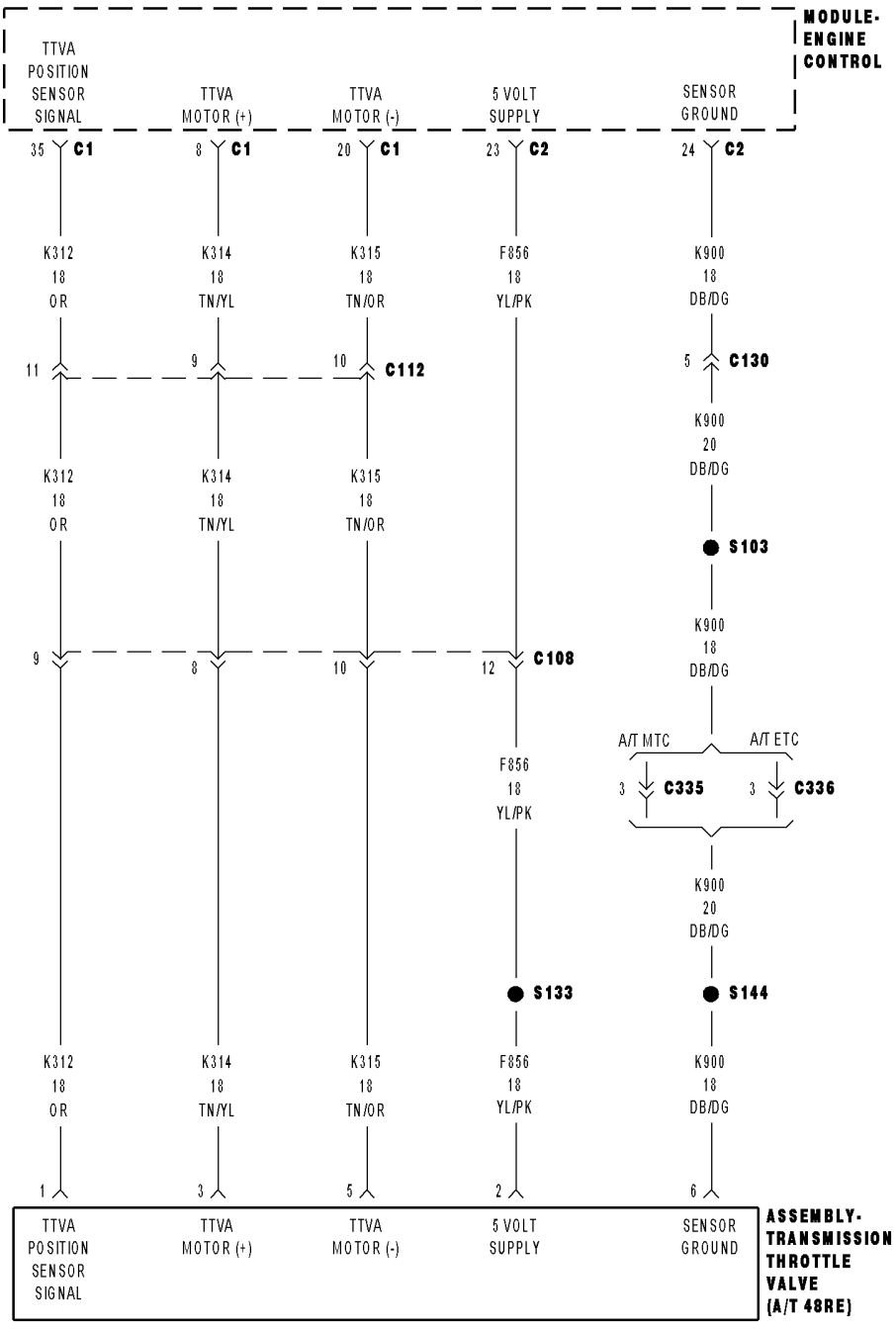

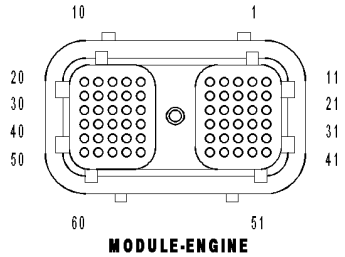

MODULE-ENGINE CONTROL C1

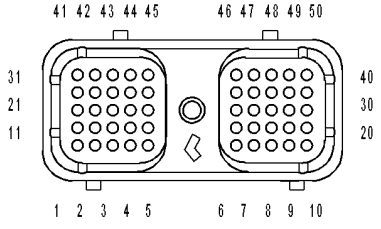

MODULE-ENGINE CONTROL C2

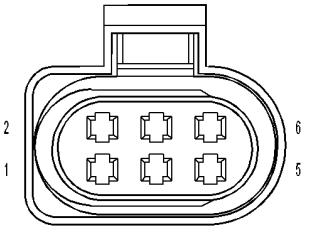

ASSEMBLY-TRANSMISSION THROTTLE VALVE (A/T 48RE)

81482a8c

P1751-TRANSMISSION THROTTLE VALVE POSITION MINIMUM RANGE PERFORMANCE (CONTINUED)

For the Transmission circuit diagram (Refer to 21 - TRANSMISSION/TRANSAXLE/AUTOMATIC - 48RE - SCHEMATICS AND DIAGRAMS)

For a complete wiring diagram**Refer to Section 8W**

Theory of Operation

The transmission throttle valve cable has been replace by the transmission throttle valve actuator (TTVA). The TTVA consists of an electric DC motor, two potentiometers, and a gear drive system. The TTVA is mechanically connected to the transmission throttle valve in the valve body by the “D” shaped opening in the bottom of the TTVA shaft.

The Transmission Throttle Valve Actuator (TTVA) does not require any mechanical adjustments. All changes in throttle valve position are controlled by the Engine Control Module (ECM).

The TTVA does require an initialization period after the actuator has been removed or replaced. After the actuator has been removed or replaced, move the ignition to the ON position for thirty (30) seconds. This will allow the ECM sufficient time to perform the internal calibration procedures to learn the TTVA’s current “zero” position.

- **When Monitored:**
  Ignition on and with or without engine running with transmission in the park or neutral position. Note: Not monitored when either the engine is cranking or while vehicle is moving.
- **Set Condition:**
  Each time the ignition is cycled to the on position, the ECM commands a TTVA internal calibration procedure (autozero) to determine the zero position. If the TTVA does not reach a calibrated minimum position in a predetermined amount of time, the DTC will set.

Possible Causes
TRANSMISSION THROTTLE VALVE ACTUATOR BINDING
TRANSMISSION THROTTLE VALVE COMPONENTS
TRANSMISSION THROTTLE VALVE ACTUATOR

Always perform the Pre-Diagnostic Troubleshooting procedure before proceeding. (Refer to 21 - TRANSMISSION/TRANSAXLE/AUTOMATIC - 48RE - STANDARD PROCEDURE)

Diagnostic Test

1. CHECK IF THE DTC IS CURRENT

Ignition on, engine not running.

With the scan tool, read Engine DTCs.

Record the Freeze Frame data for the reported DTC.

With the scan tool, erase DTCs.

Turn the ignition off to the lock position.

Using the Freeze Frame data recorded earlier, try to duplicate the conditions in which the DTC originally set.

NOTE: It may be necessary to road test the vehicle to duplicate the original set conditions.

With the scan tool, read Engine DTCs.

Did the DTC reset?

Yes >> Go To 2

No >> Go To 5

P1751-TRANSMISSION THROTTLE VALVE POSITION MINIMUM RANGE PERFORMANCE (CONTINUED)

2. CHECK TTVA FOR SIGNS OF DAMAGE

Turn the ignition off to the lock position.

Visually inspect the TTVA shaft for any signs of external damage or improperly mounted.

NOTE: It is not necessary to remove the TTVA to perform this procedure.

Is the TTVA damaged or improperly mounted?

Yes >> Repair as necessary.
Perform RE TRANSMISSION VERIFICATION TEST VER - 1 (DIESEL). (Refer to 8 - ELECTRICAL/ELECTRONIC CONTROL MODULES/TRANSMISSION CONTROL MODULE - DIAGNOSIS AND TESTING)

No >> Go To 3

---

3. CHECK THE TTVA POSITIONS WITH THE AUTO ZERO FEATURE

NOTE: Each time the ignition is cycled to the on position, the ECM commands a TTVA internal calibration procedure (autozero) to determine the zero position. Do not press on the accelerator pedal during this test.

With the scan tool, monitor the TTVA position during the autozero test.

Ignition on, engine not running.

Is the TTVA position between 3 and 26 degrees after completion of the autozero test?

Yes >> Go To 5

No >> Go To 4

---

4. CHECK THE TRANSMISSION THROTTLE VALVE

Turn the ignition off to the lock position.

Remove the TTVA from the transmission per the Service Information.

Properly support the TTVA and reconnect the TTVA wiring harness.

Like in the previous step, with the scan tool, monitor the TTVA position during the autozero test.

Ignition on, engine not running.

Is the TTVA position between 3 and 26 degrees after completion of the autozero test?

Yes >> Repair internal transmission as necessary. Refer to the Service Information for proper repair procedures for components related to the Transmission Throttle Valve.
Perform RE TRANSMISSION VERIFICATION TEST VER - 1 (DIESEL). (Refer to 8 - ELECTRICAL/ELECTRONIC CONTROL MODULES/TRANSMISSION CONTROL MODULE - DIAGNOSIS AND TESTING)

No >> Replace the TTVA per the Service Information.
Perform RE TRANSMISSION VERIFICATION TEST VER - 1 (DIESEL). (Refer to 8 - ELECTRICAL/ELECTRONIC CONTROL MODULES/TRANSMISSION CONTROL MODULE - DIAGNOSIS AND TESTING)

P1751-TRANSMISSION THROTTLE VALVE POSITION MINIMUM RANGE PERFORMANCE (CONTINUED)

5. INTERMITTENT WIRING AND CONNECTORS

The conditions necessary to set this DTC are not present at this time.

Using the schematics as a guide, visually inspect the related wiring harness. Look for any chafed, pierced, pinched, or partially broken wires.

Visually inspect the related wiring harness connectors. Look for broken, bent, pushed out, or corroded terminals.

Wiggle the wiring and connectors while checking for any possible open or shorted circuits.

Check for any Service Information Tune-ups or Technical Service Bulletins that may apply.

Were there any problems found?

Yes >> Repair as necessary.
Perform RE TRANSMISSION VERIFICATION TEST VER - 1 (DIESEL). (Refer to 8 - ELECTRICAL/ELECTRONIC CONTROL MODULES/TRANSMISSION CONTROL MODULE - DIAGNOSIS AND TESTING)

No >> Test Complete.

P1752-TRANSMISSION THROTTLE VALVE SPAN PERFORMANCE

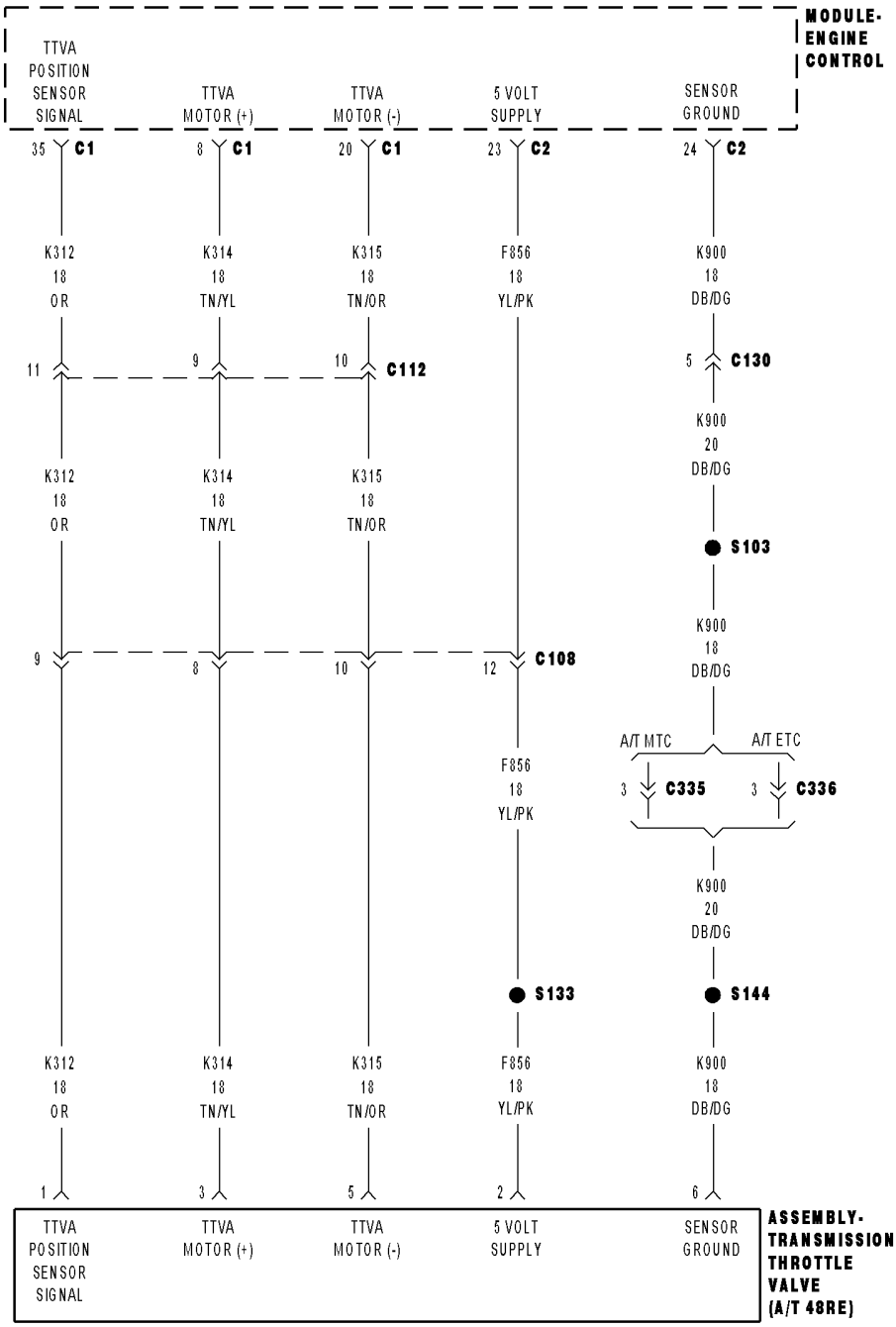

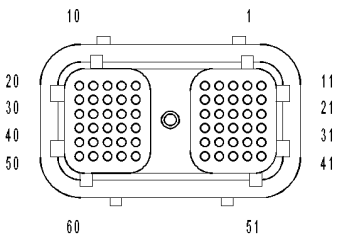

MODULE-ENGINE CONTROL C1

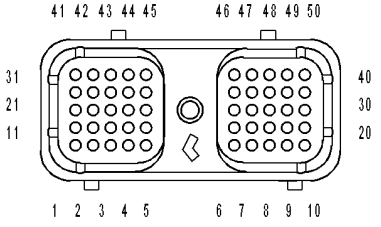

MODULE-ENGINE CONTROL C2

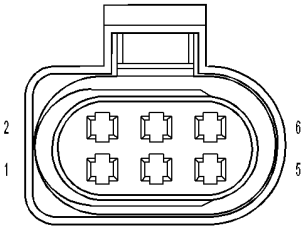

ASSEMBLY-TRANSMISSION THROTTLE VALVE (A/T 48RE)

81482a8c

P1752-TRANSMISSION THROTTLE VALVE SPAN PERFORMANCE (CONTINUED)

For the Transmission circuit diagram (Refer to 21 - TRANSMISSION/TRANSAXLE/AUTOMATIC - 48RE - SCHEMATICS AND DIAGRAMS)

For a complete wiring diagram**Refer to Section 8W**

Theory of Operation

The transmission throttle valve cable has been replace by the transmission throttle valve actuator (TTVA). The TTVA consists of an electric DC motor, two potentiometers, and a gear drive system. The TTVA is mechanically connected to the transmission throttle valve in the valve body by the “D” shaped opening in the bottom of the TTVA shaft.

The Transmission Throttle Valve Actuator (TTVA) does not require any mechanical adjustments. All changes in throttle valve position are controlled by the Engine Control Module (ECM).

The TTVA does require an initialization period after the actuator has been removed or replaced. After the actuator has been removed or replaced, move the ignition to the ON position for thirty (30) seconds. This will allow the ECM sufficient time to perform the internal calibration procedures to learn the TTVA’s current “zero” position.

- **When Monitored:**
  Ignition on and with or without engine running with transmission in the park or neutral position. Note: Not monitored when either the engine is cranking or while vehicle is moving.
- **Set Condition:**
  Each time the ignition is cycled to the on position, the ECM commands a TTVA internal calibration procedure (autozero) to determine the zero position. After completion of the autozero procedure, the TTVA is instructed to perform a span check to record the minimum and maximum span positions. This DTC will set if the minimum total span is not achieved.

Possible Causes
TRANSMISSION THROTTLE VALVE ACTUATOR BINDING
TRANSMISSION THROTTLE VALVE
INTERNAL TRANSMISSION

Always perform the Pre-Diagnostic Troubleshooting procedure before proceeding. (Refer to 21 - TRANSMISSION/TRANSAXLE/AUTOMATIC - 48RE - STANDARD PROCEDURE)

Diagnostic Test

1. CHECK IF THE DTC IS CURRENT

Ignition on, engine not running.

With the scan tool, read Engine DTCs.

Record the Freeze Frame data for the reported DTC.

With the scan tool, erase DTCs.

Turn the ignition off to the lock position.

Using the Freeze Frame data recorded earlier, try to duplicate the conditions in which the DTC originally set.

NOTE: It may be necessary to road test the vehicle to duplicate the original set conditions.
With the scan tool, read Engine DTCs.

Did the DTC reset?

Yes >> Go To 2

No >> Go To 5

P1752-TRANSMISSION THROTTLE VALVE SPAN PERFORMANCE (CONTINUED)

2. CHECK TTVA FOR SIGNS OF DAMAGE

Turn the ignition off to the lock position.

Visually inspect the TTVA shaft for any signs of external damage or improperly mounted.

NOTE: It is not necessary to remove the TTVA to perform this procedure.

Is the TTVA damaged or improperly mounted?

Yes >> Repair as necessary.
Perform RE TRANSMISSION VERIFICATION TEST VER - 1 (DIESEL). (Refer to 8 - ELECTRICAL/ELECTRONIC CONTROL MODULES/TRANSMISSION CONTROL MODULE - DIAGNOSIS AND TESTING)

No >> Go To 3

---

3. CHECK THE TTVA POSITIONS WITH THE AUTO ZERO FEATURE

NOTE: Each time the ignition is cycled to the on position, the ECM commands a TTVA internal calibration procedure (autozero) to determine the zero position.

With the scan tool, monitor the TTVA position during the autozero test.

Ignition on, engine not running.

After the autozero test is completed, record the position percentage value.

Press and hold the accelerator pedal to full throttle after completion of the autozero test and record.

After completion of the autozero test and recording the autozero value, press and hold the accelerator pedal to full throttle and record the autozero value on the scan tool.

Subtract the TTVA full throttle value from the value recorded after the autozero test.

Is the difference between the two values greater than or equal to 48 degrees?

Yes >> Go To 5

No >> Go To 4

P1752-TRANSMISSION THROTTLE VALVE SPAN PERFORMANCE (CONTINUED)

4. CHECK THE TRANSMISSION THROTTLE VALVE

Turn the ignition off to the lock position.

Remove the TTVA from the transmission per the Service Information.

Properly support the TTVA and reconnect the TTVA wiring harness.

Like in the previous step, with the scan tool, monitor the TTVA position during the autozero test.

Ignition on, engine not running.

After the autozero test is completed, record the position percentage value.

Press and hold the accelerator pedal to full throttle after completion of the autozero test and record.

After completion of the autozero test and recording the autozero value, press and hold the accelerator pedal to full throttle and record the autozero value on the scan tool.

Subtract the TTVA full throttle value from the value recorded after the autozero test.

Is the difference between the two values greater than or equal to 48 degrees?

Yes >> Repair internal transmission as necessary. Refer to the Service Information for proper repair procedures for components related to the Transmission Throttle Valve.

Perform RE TRANSMISSION VERIFICATION TEST VER - 1 (DIESEL). (Refer to 8 - ELECTRICAL/ELECTRONIC CONTROL MODULES/TRANSMISSION CONTROL MODULE - DIAGNOSIS AND TESTING)

No >> Replace the TTVA per the Service Information.

Perform RE TRANSMISSION VERIFICATION TEST VER - 1 (DIESEL). (Refer to 8 - ELECTRICAL/ELECTRONIC CONTROL MODULES/TRANSMISSION CONTROL MODULE - DIAGNOSIS AND TESTING)

---

5. INTERMITTENT WIRING AND CONNECTORS

The conditions necessary to set this DTC are not present at this time.

Using the schematics as a guide, visually inspect the related wiring harness. Look for any chafed, pierced, pinched, or partially broken wires.

Visually inspect the related wiring harness connectors. Look for broken, bent, pushed out, or corroded terminals.

Wiggle the wiring and connectors while checking for any possible open or shorted circuits.

Check for any Service Information Tune-ups or Technical Service Bulletins that may apply.

Were there any problems found?

Yes >> Repair as necessary.

Perform RE TRANSMISSION VERIFICATION TEST VER - 1 (DIESEL). (Refer to 8 - ELECTRICAL/ELECTRONIC CONTROL MODULES/TRANSMISSION CONTROL MODULE - DIAGNOSIS AND TESTING)

No >> Test Complete.

P1753-TRANSMISSION THROTTLE VALVE MECHANICAL PERFORMANCE

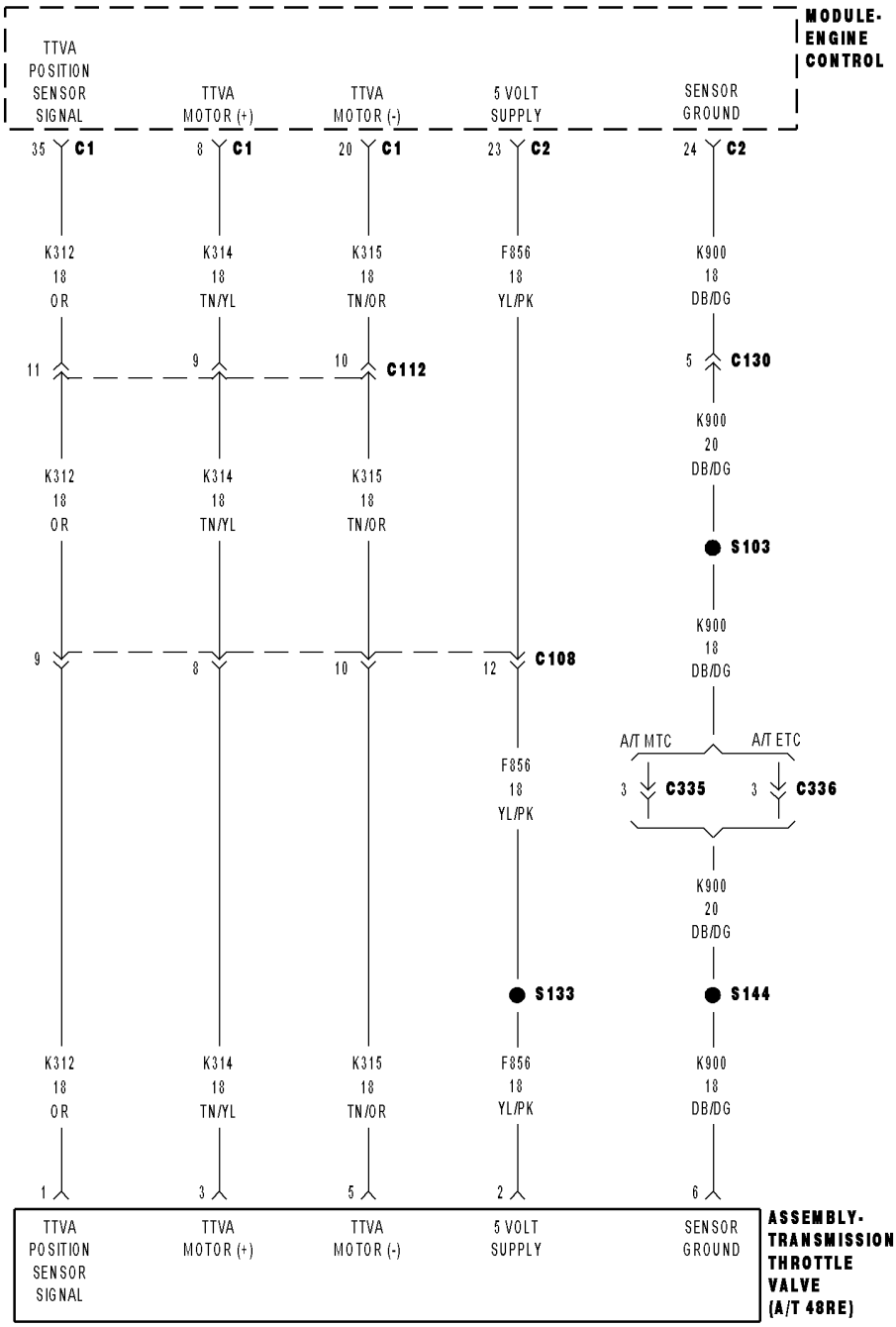

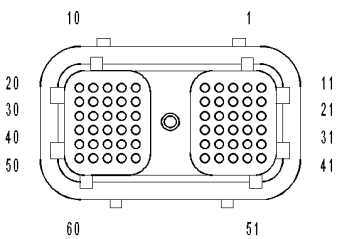

MODULE-ENGINE CONTROL C1

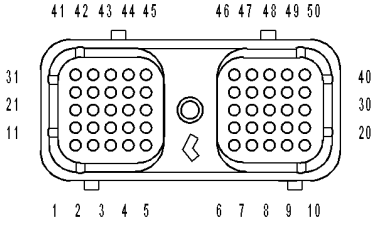

MODULE-ENGINE CONTROL C2

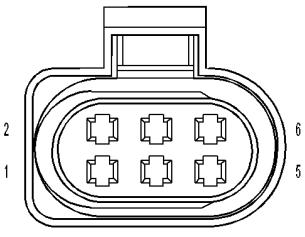

ASSEMBLY-TRANSMISSION THROTTLE VALVE (A/T 48RE)

81482a8c

P1753-TRANSMISSION THROTTLE VALVE MECHANICAL PERFORMANCE (CONTINUED)

For the Transmission circuit diagram (Refer to 21 - TRANSMISSION/TRANSAXLE/AUTOMATIC - 48RE - SCHEMATICS AND DIAGRAMS)

For a complete wiring diagram**Refer to Section 8W**

Theory of Operation

The transmission throttle valve cable has been replace by the transmission throttle valve actuator (TTVA). The TTVA consists of an electric DC motor, two potentiometers, and a gear drive system. The TTVA is mechanically connected to the transmission throttle valve in the valve body by the “D” shaped opening in the bottom of the TTVA shaft.

The Transmission Throttle Valve Actuator (TTVA) does not require any mechanical adjustments. All changes in throttle valve position are controlled by the Engine Control Module (ECM).

The TTVA does require an initialization period after the actuator has been removed or replaced. After the actuator has been removed or replaced, move the ignition to the ON position for thirty (30) seconds. This will allow the ECM sufficient time to perform the internal calibration procedures to learn the TTVA’s current “zero” position.

- **When Monitored:**
  Ignition on, engine running in a valid forward gear with a throttle opening greater than 50% and the transmission in overdrive.
- **Set Condition:**
  When the Governor pressure is below a minimum threshold when conditions indicate that the Governor pressure should be high. This DTC indicates that the TTVA is working properly electronically but mechanically the output shaft is not moving the Throttle Valve in the transmission.

Possible Causes
BROKEN OR STRIPPED LINKAGE BETWEEN THE TTVA OUTPUT SHAFT AND THE THROTTLE VALVE
TRANSMISSION THROTTLE VALVE ACTUATOR
TRANSMISSION THROTTLE VALVE COMPONENTS

Always perform the Pre-Diagnostic Troubleshooting procedure before proceeding. (Refer to 21 - TRANSMISSION/TRANSAXLE/AUTOMATIC - 48RE - STANDARD PROCEDURE)

Diagnostic Test

1. CHECK FOR GOVERNOR PRESSURE DTCS

Ignition on, engine not running.

With the scan tool, check Engine DTCs.

Are there any Governor Pressure related DTCs present?

Yes >> Refer to the Transmission category and perform the appropriate symptom(s). (Refer to 21 - TRANSMISSION/TRANSAXLE/AUTOMATIC - 48RE - DIAGNOSIS AND TESTING)

No >> Go To 2

P1753-TRANSMISSION THROTTLE VALVE MECHANICAL PERFORMANCE (CONTINUED)

2. CHECK TTVA FOR SIGNS OF DAMAGE

Turn the ignition off to the lock position.

Visually inspect the TTVA shaft for any signs of external damage or improperly mounted.

NOTE: It is not necessary to remove the TTVA to perform this procedure.

Is the TTVA damaged or improperly mounted?

Yes >> Repair as necessary.
Perform RE TRANSMISSION VERIFICATION TEST VER - 1 (DIESEL). (Refer to 8 - ELECTRICAL/ELECTRONIC CONTROL MODULES/TRANSMISSION CONTROL MODULE - DIAGNOSIS AND TESTING)

No >> Go To 3

---

3. CHECK IF TTVA SHAFT END IS DAMAGED

Turn the ignition off to the lock position.

Remove the TTVA from the transmission per the Service Information. (Refer to 21 - TRANSMISSION/TRANSAXLE/AUTOMATIC - 48RE/THROTTLE VALVE ACTUATOR - REMOVAL)

Inspect the end of the TTVA shaft for cracks or damage.

NOTE: The end of the TTVA should be keyed or ”D” shaped and fit tightly over the Throttle Valve shaft.

Is the end of the TTVA shaft undamaged and fit tightly over the Throttle Valve shaft?

Yes >> Go To 4

No >> Inspect the Throttle Valve shaft on the transmission for free movement. If the Throttle valve does not move freely, inspect internal transmission components related to the Throttle Valve and replace as necessary. Replace the TTVA in either case. Refer to the Service Information. (Refer to 21 - TRANSMISSION/TRANSAXLE/AUTOMATIC - 48RE/THROTTLE VALVE ACTUATOR - REMOVAL)
Perform RE TRANSMISSION VERIFICATION TEST VER - 1 (DIESEL). (Refer to 8 - ELECTRICAL/ELECTRONIC CONTROL MODULES/TRANSMISSION CONTROL MODULE - DIAGNOSIS AND TESTING)

P1753-TRANSMISSION THROTTLE VALVE MECHANICAL PERFORMANCE (CONTINUED)

4. CHECK THE TRANSMISSION THROTTLE VALVE ACTUATOR

Properly support the TTVA to where the end of the shaft can be observed and reconnect the TTVA wiring harness.

NOTE: Each time the ignition is cycled to the on position, the ECM commands a TTVA internal calibration procedure (autozero) to determine the zero position. Do not press on the accelerator pedal during this test.
Ignition on, engine not running.

Observe the output shaft of the TTVA during the autozero procedure.

After completion of the autozero procedure, while observing the TTVA shaft, press the accelerator pedal to full throttle.

Does the TTVA internal motor move the TTVA shaft?

Yes >> Inspect the Throttle Valve shaft on the transmission for free movement. If the Throttle valve does not move freely, inspect internal transmission components related to the Throttle Valve and repair or replace as necessary. (Refer to 21 - TRANSMISSION/TRANSAXLE/AUTOMATIC - 48RE/THROTTLE VALVE ACTUATOR - REMOVAL)

Perform RE TRANSMISSION VERIFICATION TEST VER - 1 (DIESEL). (Refer to 8 - ELECTRICAL/ELECTRONIC CONTROL MODULES/TRANSMISSION CONTROL MODULE - DIAGNOSIS AND TESTING)

No >> Replace the TTVA per the Service Information.

Perform RE TRANSMISSION VERIFICATION TEST VER - 1 (DIESEL). (Refer to 8 - ELECTRICAL/ELECTRONIC CONTROL MODULES/TRANSMISSION CONTROL MODULE - DIAGNOSIS AND TESTING)

---

5. INTERMITTENT WIRING AND CONNECTORS

The conditions necessary to set this DTC are not present at this time.

Using the schematics as a guide, visually inspect the related wiring harness. Look for any chafed, pierced, pinched, or partially broken wires.

Visually inspect the related wiring harness connectors. Look for broken, bent, pushed out, or corroded terminals.

Wiggle the wiring and connectors while checking for any possible open or shorted circuits.

Check for any Service Information Tune-ups or Technical Service Bulletins that may apply.

Were there any problems found?

Yes >> Repair as necessary.

Perform RE TRANSMISSION VERIFICATION TEST VER - 1 (DIESEL). (Refer to 8 - ELECTRICAL/ELECTRONIC CONTROL MODULES/TRANSMISSION CONTROL MODULE - DIAGNOSIS AND TESTING)

No >> Test Complete.

P1754-TRANSMISSION THROTTLE VALVE ACTUATOR STUCK

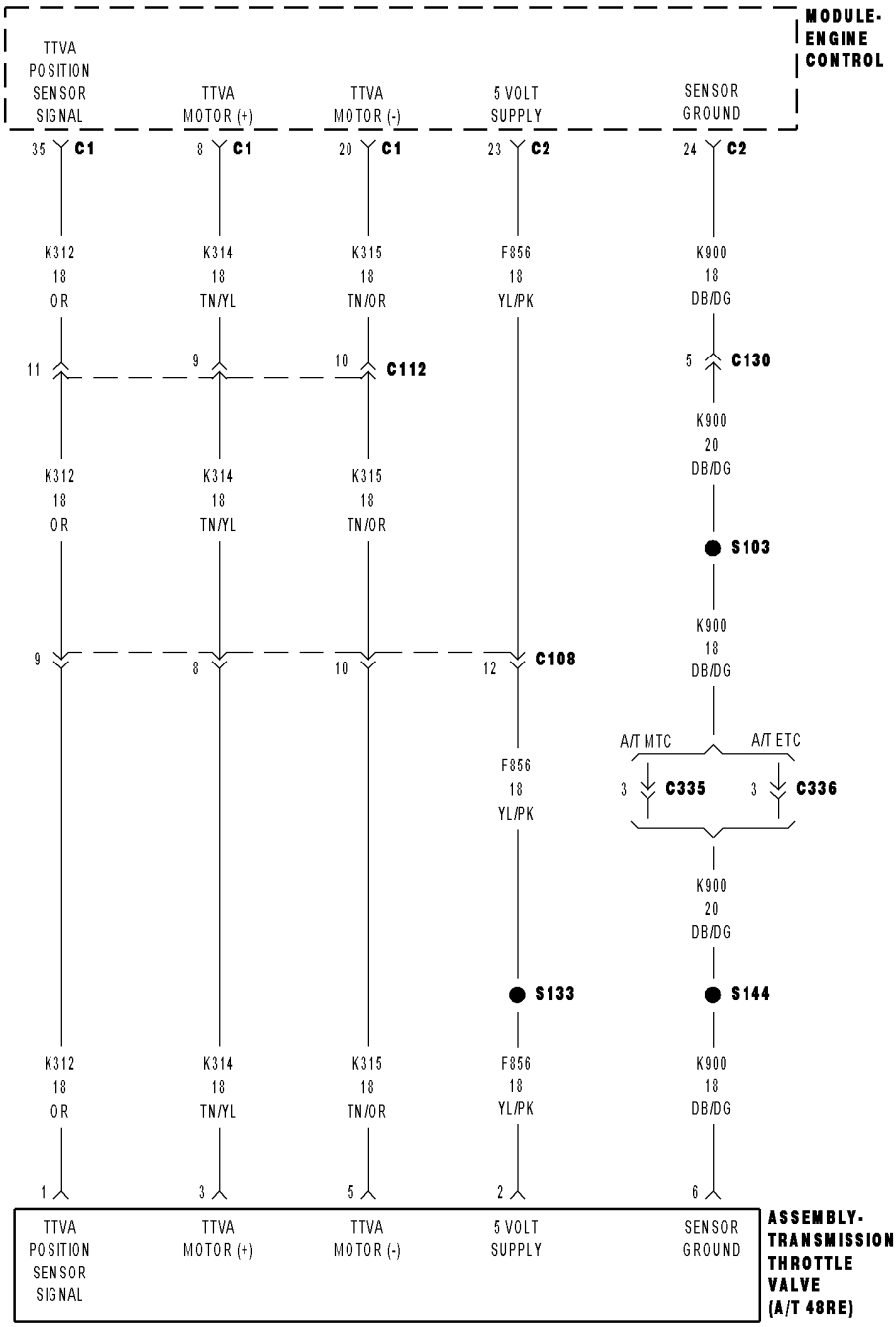

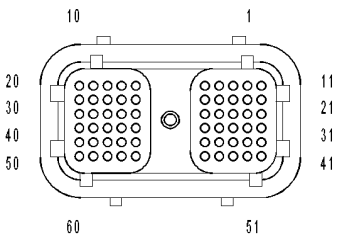

MODULE-ENGINE CONTROL C1

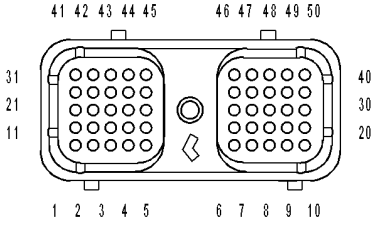

MODULE-ENGINE CONTROL C2

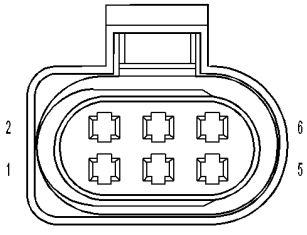

ASSEMBLY-TRANSMISSION THROTTLE VALVE (A/T 48RE)

81482a8c

P1754-TRANSMISSION THROTTLE VALVE ACTUATOR STUCK (CONTINUED)

For the Transmission circuit diagram (Refer to 21 - TRANSMISSION/TRANSAXLE/AUTOMATIC - 48RE - SCHEMATICS AND DIAGRAMS)

For a complete wiring diagram**Refer to Section 8W**

Theory of Operation

The transmission throttle valve cable has been replace by the transmission throttle valve actuator (TTVA). The TTVA consists of an electric DC motor, two potentiometers, and a gear drive system. The TTVA is mechanically connected to the transmission throttle valve in the valve body by the “D” shaped opening in the bottom of the TTVA shaft.

The Transmission Throttle Valve Actuator (TTVA) does not require any mechanical adjustments. All changes in throttle valve position are controlled by the Engine Control Module (ECM).

The TTVA does require an initialization period after the actuator has been removed or replaced. After the actuator has been removed or replaced, move the ignition to the ON position for thirty (30) seconds. This will allow the ECM sufficient time to perform the internal calibration procedures to learn the TTVA’s current “zero” position.

- **When Monitored:**
  Continuously with the ignition on.
- **Set Condition:**
  The monitored TTVA position sensor does not indicate a change in position when the TTVA is commanded to change the position.

Possible Causes
(F856) 5 VOLT SUPPLY CIRCUIT OPEN
(K314) TTVA MOTOR (+) CIRCUIT OPEN
(K315) TTVA MOTOR (-) CIRCUIT OPEN
(K314) TTVA MOTOR (+) CIRCUIT SHORT TO GROUND
(K315) TTVA MOTOR (-) CIRCUIT SHORT TO GROUND
(K314) TTVA MOTOR (+) CIRCUIT SHORT TO VOLTAGE
(K315) TTVA MOTOR (-) CIRCUIT SHORT TO VOLTAGE
(K314) TTVA MOTOR (+) CIRCUIT SHORT TO ANOTHER CIRCUIT
(K315) TTVA MOTOR (-) CIRCUIT SHORT TO ANOTHER CIRCUIT
TRANSMISSION THROTTLE VALVE COMPONENTS
TRANSMISSION THROTTLE VALVE ACTUATOR
ENGINE CONTROL MODULE

Always perform the Pre-Diagnostic Troubleshooting procedure before proceeding. (Refer to 21 - TRANSMISSION/TRANSAXLE/AUTOMATIC - 48RE - STANDARD PROCEDURE)

P1754-TRANSMISSION THROTTLE VALVE ACTUATOR STUCK (CONTINUED)

Diagnostic Test

1. CHECK IF THE DTC IS CURRENT

Ignition on, engine not running.
With the scan tool, read Engine DTCs.
Record the Freeze Frame data for the reported DTC.
With the scan tool, erase DTCs.
Turn the ignition off to the lock position.
Using the Freeze Frame data recorded earlier, try to duplicate the conditions in which the DTC originally set.

NOTE: It may be necessary to road test the vehicle to duplicate the original set conditions.
With the scan tool, read Engine DTCs.

Did the DTC reset?

Yes >> Go To 2

No >> Go To 16

---

2. CHECK THE TTVA POSITIONS WITH THE AUTO ZERO FEATURE

NOTE: Each time the ignition is cycled to the on position, the ECM commands a TTVA internal calibration procedure (autozero) to determine the zero position.
With the scan tool, monitor the TTVA position during the autozero test.
Ignition on, engine not running.
After the autozero test is completed, record the position percentage value.
Press and hold the accelerator pedal to full throttle after completion of the autozero test and record.
Subtract the TTVA full throttle value from the value recorded after the autozero test.

Is the difference between the two values greater than or equal to 48 degrees?

Yes >> Go To 16

No >> Go To 3

---

3. CHECK TTVA FOR SIGNS OF DAMAGE

Turn the ignition off to the lock position.
Visually inspect the TTVA shaft for any signs of external damage or improperly mounted.

NOTE: It is not necessary to remove the TTVA to perform this procedure.

Is the TTVA damaged or improperly mounted?

Yes >> Repair as necessary.
Perform RE TRANSMISSION VERIFICATION TEST VER - 1 (DIESEL). (Refer to 8 - ELECTRICAL/ELECTRONIC CONTROL MODULES/TRANSMISSION CONTROL MODULE - DIAGNOSIS AND TESTING)

No >> Go To 4

P1754-TRANSMISSION THROTTLE VALVE ACTUATOR STUCK (CONTINUED)

4. CHECK THE TTVA POSITIONS WITH THE TTVA REMOVED

Turn the ignition off to the lock position.

Remove the TTVA from the transmission per the Service Information. (Refer to 21 - TRANSMISSION/TRANSAXLE/AUTOMATIC - 48RE/THROTTLE VALVE ACTUATOR - REMOVAL)

NOTE: Check connectors - Clean/repair as necessary.

NOTE: Each time the ignition is cycled to the on position, the ECM commands a TTVA internal calibration procedure (autozero) to determine the zero position.

Properly support the TTVA and reconnect the TTVA wiring harness.

With the scan tool, monitor the TTVA position during the autozero test.

Ignition on, engine not running.

After the autozero test is completed, record the position percentage value.

After recording the position percentage value, press and hold the accelerator pedal to full throttle and note position percentage value.

Subtract the TTVA full throttle value from the value recorded after the autozero test.

Is the difference between the two values greater than or equal to 48 degrees?

Yes >> Repair internal transmission as necessary. Refer to the Service Information for proper repair procedures for components related to the Transmission Throttle Valve.

Perform RE TRANSMISSION VERIFICATION TEST VER - 1 (DIESEL). (Refer to 8 - ELECTRICAL/ELECTRONIC CONTROL MODULES/TRANSMISSION CONTROL MODULE - DIAGNOSIS AND TESTING)

No >> Go To 5

---

5. CHECK THE TTVA

Turn the ignition off to the lock position.

Disconnect the TTVA harness connector

Connect a 12-volt test light between the (K314) TTVA Motor (+) circuit and the (K315) TTVA Motor (-) circuit in the TTVA harness connector.

Monitor the test light in the following step.

NOTE: The test light should momentarily flash brightly, one time, immediately after the ignition is turned to the on position.

Ignition on, engine not running.

Did the test light illuminate brightly one time after turning the ignition to the on position?

Yes >> Go To 6

No >> Go To 7

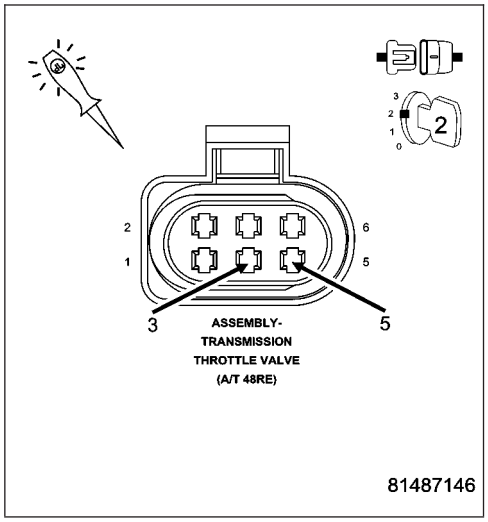

P1754-TRANSMISSION THROTTLE VALVE ACTUATOR STUCK (CONTINUED)

6. CHECK THE (K315) TTVA MOTOR (-) CIRCUIT FOR A SHORT TO GROUND

Measure the resistance between ground and the (K315) TTVA Motor (-) circuit.

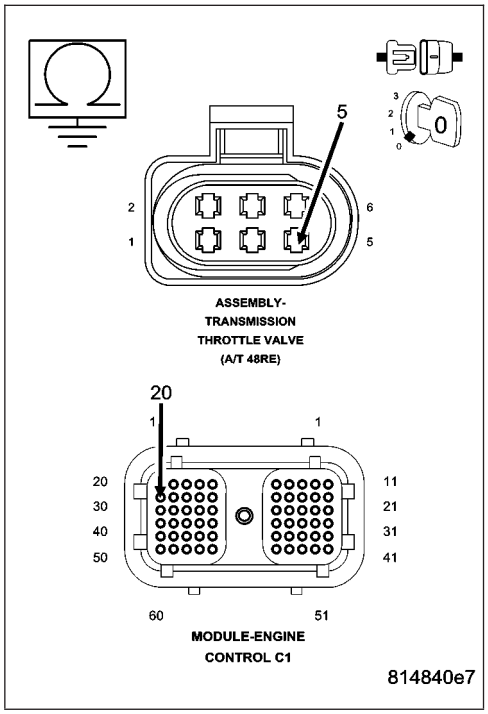

Is the resistance below 5.0 ohms?

Yes >> Repair the (K315) TTVA Motor (-) circuit for a short to ground.

Perform RE TRANSMISSION VERIFICATION TEST VER - 1 (DIESEL). (Refer to 8 - ELECTRICAL/ELECTRONIC CONTROL MODULES/TRANSMISSION CONTROL MODULE - DIAGNOSIS AND TESTING)

No >> Replace the TTVA per the Service Information (Refer to 21 - TRANSMISSION/TRANSAXLE/AUTOMATIC - 48RE/ THROTTLE VALVE ACTUATOR - REMOVAL)

Perform RE TRANSMISSION VERIFICATION TEST VER - 1 (DIESEL). (Refer to 8 - ELECTRICAL/ELECTRONIC CONTROL MODULES/TRANSMISSION CONTROL MODULE - DIAGNOSIS AND TESTING)

7. CHECK THE (F856) 5 VOLT SUPPLY CIRCUIT FOR AN OPEN

Turn the ignition off to the lock position.

Disconnect the ECM C1 and C2 harness connectors.

Measure the resistance of the (F856) 5-volt Supply circuit between the ECM C2 harness connector and the TTVA harness connector.

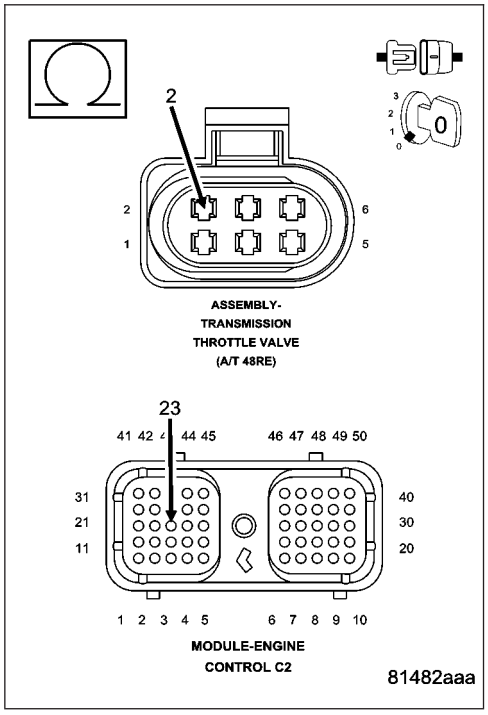

Is the resistance below 5.0 ohms?

Yes >> Go To 8

No >> Repair the (F856) 5-volt Supply circuit for an open.

Perform RE TRANSMISSION VERIFICATION TEST VER - 1 (DIESEL). (Refer to 8 - ELECTRICAL/ELECTRONIC CONTROL MODULES/TRANSMISSION CONTROL MODULE - DIAGNOSIS AND TESTING)

P1754-TRANSMISSION THROTTLE VALVE ACTUATOR STUCK (CONTINUED)

8. CHECK THE (K314) TTVA MOTOR (+) CIRCUIT FOR AN OPEN

Measure the resistance of the (K314) TTVA Motor (+) circuit between the ECM C1 harness connector and the TTVA harness connector.

Is the resistance below 5.0 ohms?

Yes >> Go To 9

No >> Repair the (K314) TTVA Motor (+) circuit for an open. Perform RE TRANSMISSION VERIFICATION TEST VER - 1 (DIESEL). (Refer to 8 - ELECTRICAL/ELECTRONIC CONTROL MODULES/TRANSMISSION CONTROL MODULE - DIAGNOSIS AND TESTING)

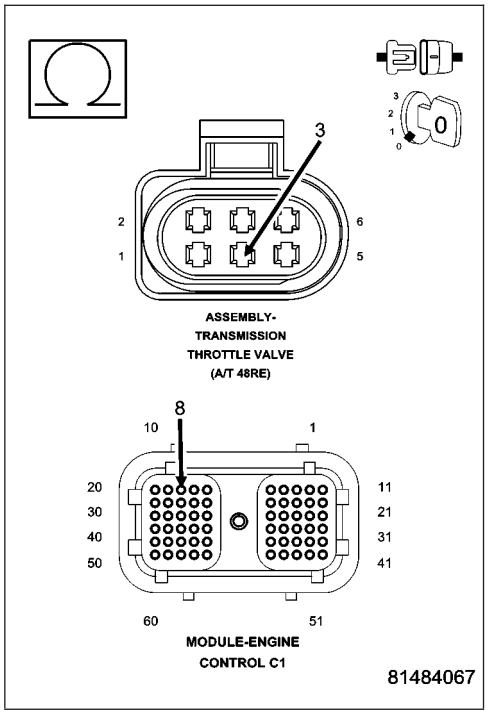

9. CHECK THE (K315) TTVA MOTOR (-) CIRCUIT FOR AN OPEN

Measure the resistance of the (K315) TTVA Motor (-) circuit between the ECM C1 harness connector and the TTVA harness connector.

Is the resistance below 5.0 ohms?

Yes >> Go To 10

No >> Repair the (K315) TTVA Motor (-) circuit for an open. Perform RE TRANSMISSION VERIFICATION TEST VER - 1 (DIESEL). (Refer to 8 - ELECTRICAL/ELECTRONIC CONTROL MODULES/TRANSMISSION CONTROL MODULE - DIAGNOSIS AND TESTING)

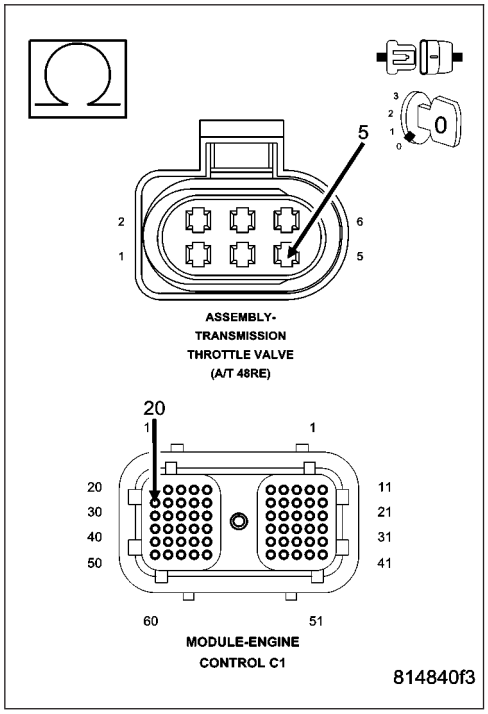

P1754-TRANSMISSION THROTTLE VALVE ACTUATOR STUCK (CONTINUED)

10. CHECK THE (K314) TTVA MOTOR (+) CIRCUIT FOR A SHORT TO GROUND

Measure the resistance between ground and the (K314) TTVA Motor (+) circuit.

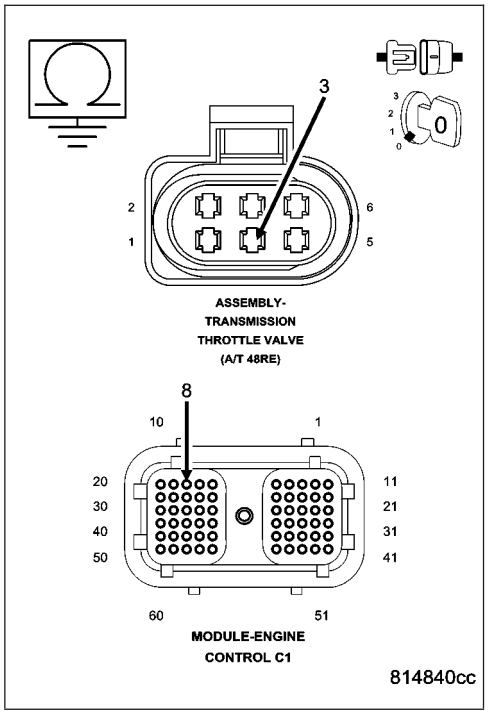

Is the resistance below 5.0 ohms?

Yes >> Repair the (K314) TTVA Motor (+) circuit for a short to ground.

Perform RE TRANSMISSION VERIFICATION TEST VER - 1 (DIESEL). (Refer to 8 - ELECTRICAL/ELECTRONIC CONTROL MODULES/TRANSMISSION CONTROL MODULE - DIAGNOSIS AND TESTING)

No >> Go To 11

11. CHECK THE (K314) TTVA MOTOR (+) CIRCUIT FOR A SHORT TO VOLTAGE

Ignition on, engine not running.

Measure the voltage of the (K314) TTVA Motor (+) circuit.

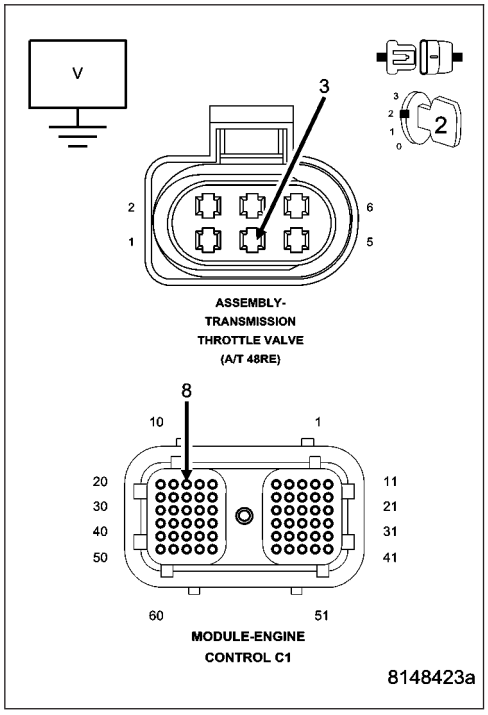

Is the voltage above 0.5 volts?

Yes >> Repair the (K314) TTVA Motor (+) circuit for a short to voltage.

Perform RE TRANSMISSION VERIFICATION TEST VER - 1 (DIESEL). (Refer to 8 - ELECTRICAL/ELECTRONIC CONTROL MODULES/TRANSMISSION CONTROL MODULE - DIAGNOSIS AND TESTING)

No >> Go To 12

P1754-TRANSMISSION THROTTLE VALVE ACTUATOR STUCK (CONTINUED)

12. CHECK THE (K315) TTVA MOTOR (-) CIRCUIT FOR A SHORT TO VOLTAGE

Measure the voltage of the (K315) TTVA Motor (-) circuit.

Is the voltage above 0.5 volts?

Yes >> Repair the (K315) TTVA Motor (-) circuit for a short to voltage.
Perform RE TRANSMISSION VERIFICATION TEST VER - 1 (DIESEL). (Refer to 8 - ELECTRICAL/ELECTRONIC CONTROL MODULES/TRANSMISSION CONTROL MODULE - DIAGNOSIS AND TESTING)

No >> Go To 13

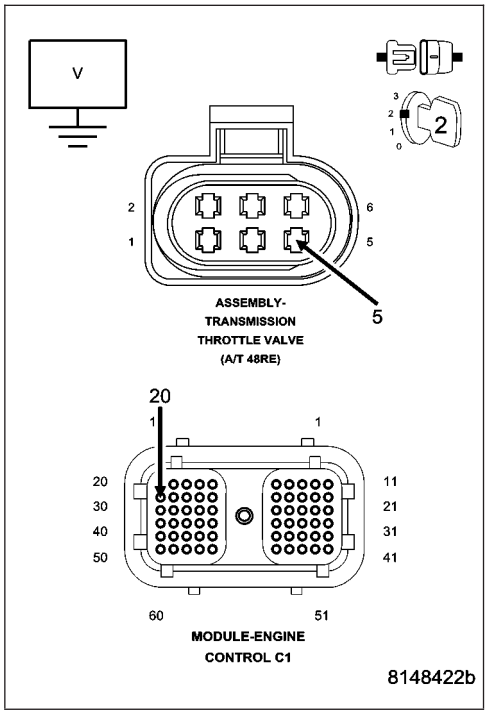

13. CHECK THE (K314) TTVA MOTOR (+) CIRCUIT FOR A SHORT TO ANOTHER CIRCUIT

Turn the ignition off to the lock position.

Measure the resistance between the (K314) TTVA Motor (+) circuit and every other circuit in the ECM C1 and C2 harness connectors

Is the resistance below 5.0 ohms between the (K314) TTVA Motor (+) circuit and any other circuit in the ECM C1 and C2 harness connectors?

Yes >> Repair the (K314) TTVA Motor (+) for a short to another circuit(s).
Perform RE TRANSMISSION VERIFICATION TEST VER - 1 (DIESEL). (Refer to 8 - ELECTRICAL/ELECTRONIC CONTROL MODULES/TRANSMISSION CONTROL MODULE - DIAGNOSIS AND TESTING)

No >> Go To 14

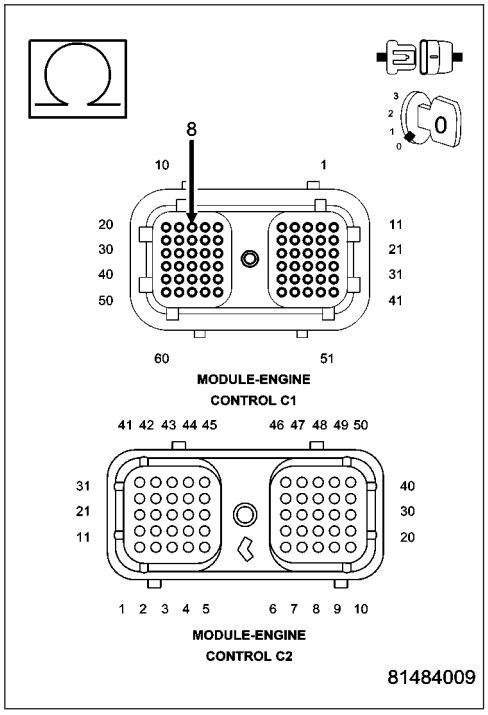

P1754-TRANSMISSION THROTTLE VALVE ACTUATOR STUCK (CONTINUED)

14. CHECK THE (K315) TTVA MOTOR (-) CIRCUIT FOR A SHORT TO ANOTHER CIRCUIT

Measure the resistance between the (K315) TTVA Motor (-) circuit and every other circuit in the ECM C1 and C2 harness connectors

Is the resistance below 5.0 ohms between the (K315) TTVA Motor (-) circuit and any other circuit in the ECM C1 and C2 harness connectors?

Yes >> Repair the (K315) TTVA Motor (-) for a short to another circuit(s).

Perform RE TRANSMISSION VERIFICATION TEST VER - 1 (DIESEL). (Refer to 8 - ELECTRICAL/ELECTRONIC CONTROL MODULES/TRANSMISSION CONTROL MODULE - DIAGNOSIS AND TESTING)

No >> Go To 15

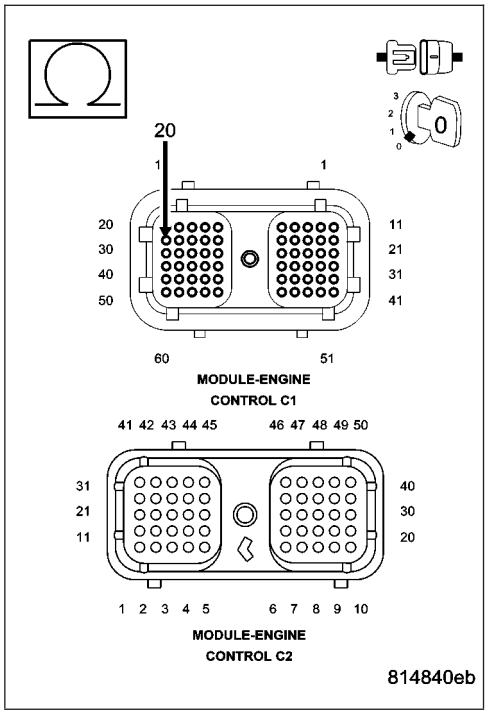

15. CHECK THE ECM OPERATION

Turn the ignition off to the lock position.

Reconnect all previously disconnected connectors.

Turn the ignition on for the period of 30 seconds to allow the ECM to reset.

Turn the ignition off to the lock position.

Disconnect the TTVA harness connector

Connect a 12-volt test light between the (K314) TTVA Motor (+) circuit and the (K315) TTVA Motor (-) circuit in the TTVA harness connector.

Monitor the test light in the following step.

NOTE: The test light should momentarily flash brightly, one time, immediately after the ignition is turned to the on position.

Ignition on, engine not running.

Did the test light illuminate brightly one time after turning the ignition to the on position?

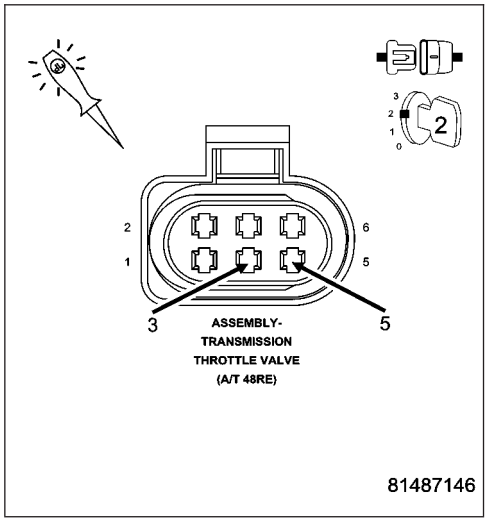

Yes >> Go To 16

No >> Using the schematics as a guide, check the Engine Control Module (ECM) pins, terminals, and connectors for corrosion, damage, or terminal push out. Pay particular attention to all power and ground circuits. If no problems are found, replace and program the ECM per the Service Information. (Refer to 8 - ELECTRICAL/ELECTRONIC CONTROL MODULES/ENGINE CONTROL MODULE - REMOVAL)

Perform RE TRANSMISSION VERIFICATION TEST VER - 1 (DIESEL). (Refer to 8 - ELECTRICAL/ELECTRONIC CONTROL MODULES/TRANSMISSION CONTROL MODULE - DIAGNOSIS AND TESTING)

P1754-TRANSMISSION THROTTLE VALVE ACTUATOR STUCK (CONTINUED)

16. INTERMITTENT WIRING AND CONNECTORS

The conditions necessary to set this DTC are not present at this time.

Use the Freeze Frame Data to help duplicate the conditions in which the DTC originally set. Pay particular attention to the DTC set conditions, such as, VSS, MAP, ECT, and Load

Using the schematics as a guide, visually inspect the related wiring harness. Look for any chafed, pierced, pinched, or partially broken wires.

Visually inspect the related wiring harness connectors. Look for broken, bent, pushed out, or corroded terminals.

Wiggle the wiring and connectors while checking for any possible open or shorted circuits.

Check for any Service Information Tune-ups or Technical Service Bulletins that may apply.

Were there any problems found?

Yes >> Repair as necessary.
Perform RE TRANSMISSION VERIFICATION TEST VER - 1 (DIESEL). (Refer to 8 - ELECTRICAL/ELECTRONIC CONTROL MODULES/TRANSMISSION CONTROL MODULE - DIAGNOSIS AND TESTING)

No >> Test Complete.

P1755-TRANSMISSION THROTTLE VALVE CONTROL CIRCUIT

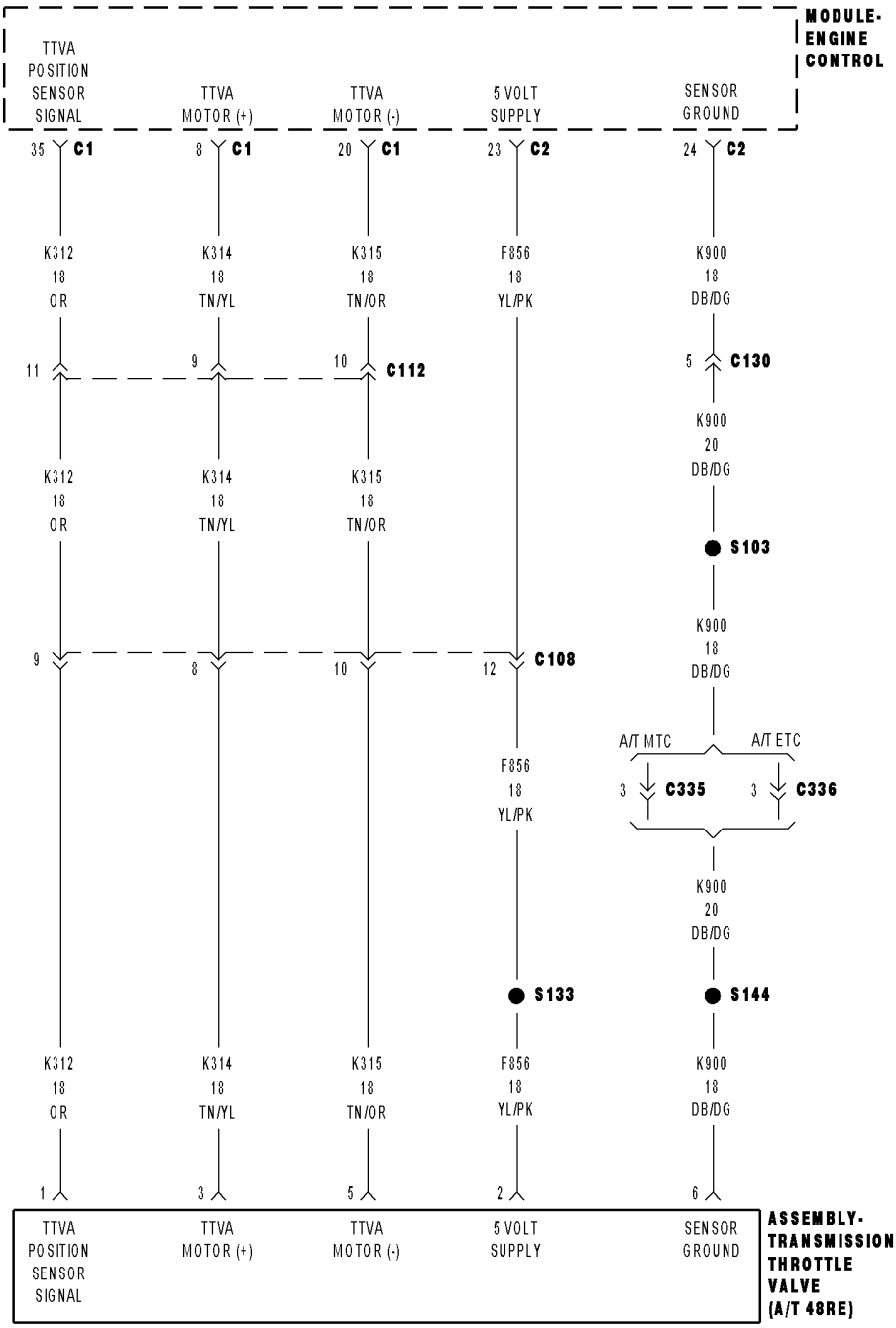

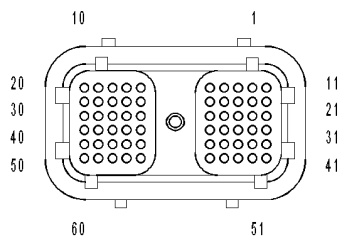

MODULE-ENGINE CONTROL C1

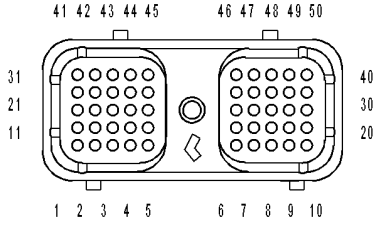

MODULE-ENGINE CONTROL C2

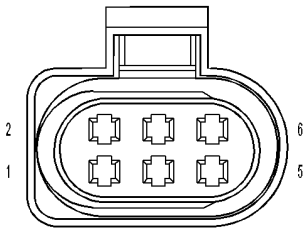

ASSEMBLY-TRANSMISSION THROTTLE VALVE (A/T 48RE)

81482a8c

P1755-TRANSMISSION THROTTLE VALVE CONTROL CIRCUIT (CONTINUED)

For the Transmission circuit diagram (Refer to 21 - TRANSMISSION/TRANSAXLE/AUTOMATIC - 48RE - SCHEMATICS AND DIAGRAMS)

For a complete wiring diagram**Refer to Section 8W**

Theory of Operation

The transmission throttle valve cable has been replace by the transmission throttle valve actuator (TTVA). The TTVA consists of an electric DC motor, two potentiometers, and a gear drive system. The TTVA is mechanically connected to the transmission throttle valve in the valve body by the “D” shaped opening in the bottom of the TTVA shaft.

The Transmission Throttle Valve Actuator (TTVA) does not require any mechanical adjustments. All changes in throttle valve position are controlled by the Engine Control Module (ECM).

The TTVA does require an initialization period after the actuator has been removed or replaced. After the actuator has been removed or replaced, move the ignition to the ON position for thirty (30) seconds. This will allow the ECM sufficient time to perform the internal calibration procedures to learn the TTVA’s current “zero” position.

- **When Monitored:**
  Continuously with the ignition on.
- **Set Condition:**
  The current detected on the TTVA circuit is greater than a threshold for a calibrated amount of time or the feedback to the controller does not match the intended state.

Possible Causes
(F856) 5 VOLT SUPPLY CIRCUIT OPEN
(K314) TTVA MOTOR (+) CIRCUIT OPEN
(K315) TTVA MOTOR (-) CIRCUIT OPEN
(K314) TTVA MOTOR (+) CIRCUIT SHORT TO GROUND
(K315) TTVA MOTOR (-) CIRCUIT SHORT TO GROUND
(K314) TTVA MOTOR (+) CIRCUIT SHORT TO VOLTAGE
(K315) TTVA MOTOR (-) CIRCUIT SHORT TO VOLTAGE
(K314) TTVA MOTOR (+) CIRCUIT SHORT TO ANOTHER CIRCUIT
(K315) TTVA MOTOR (-) CIRCUIT SHORT TO ANOTHER CIRCUIT
INTERNAL TRANSMISSION
TRANSMISSION THROTTLE VALVE ACTUATOR
ENGINE CONTROL MODULE

Always perform the Pre-Diagnostic Troubleshooting procedure before proceeding. (Refer to 21 - TRANSMISSION/TRANSAXLE/AUTOMATIC - 48RE - STANDARD PROCEDURE)

P1755-TRANSMISSION THROTTLE VALVE CONTROL CIRCUIT (CONTINUED)

Diagnostic Test

1. CHECK IF THE DTC IS CURRENT

Ignition on, engine not running.
With the scan tool, read Engine DTCs.
Record the Freeze Frame data for the reported DTC.
With the scan tool, erase DTCs.
Turn the ignition off to the lock position.
Using the Freeze Frame data recorded earlier, try to duplicate the conditions in which the DTC originally set.

NOTE: It may be necessary to road test the vehicle to duplicate the original set conditions.
With the scan tool, read Engine DTCs.

Did the DTC reset?

Yes >> Go To 2
No >> Go To 12

---

2. CHECK THE TTVA

Turn the ignition off to the lock position.
Disconnect the TTVA harness connector
Connect a 12-volt test light between the (K314) TTVA Motor (+) circuit and the (K315) TTVA Motor (-) circuit in the TTVA harness connector.
Monitor the test light in the following step.

NOTE: The test light should momentarily flash brightly, one time, immediately after the ignition is turned to the on position.
Ignition on, engine not running.

Did the test light illuminate brightly one time after turning the ignition to the on position?

Yes >> Go To 3
No >> Go To 4

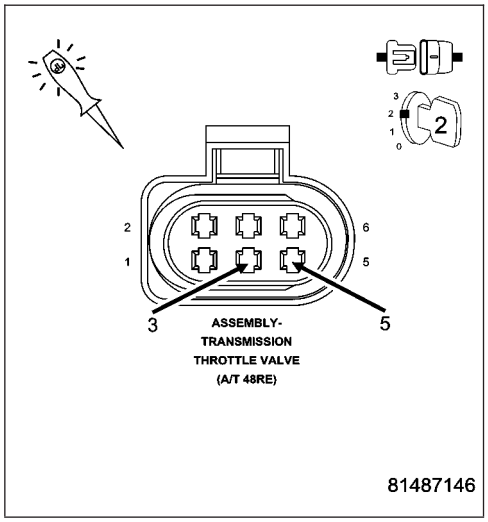

P1755-TRANSMISSION THROTTLE VALVE CONTROL CIRCUIT (CONTINUED)

3. CHECK THE (K315) TTVA MOTOR (-) CIRCUIT FOR A SHORT TO GROUND

Turn the ignition off to the lock position.

Disconnect the ECM C1 harness connector.

Measure the resistance between ground and the (K315) TTVA Motor (-) circuit.

Is the resistance below 5.0 ohms?

Yes >> Repair the (K315) TTVA Motor (-) circuit for a short to ground.

Perform RE TRANSMISSION VERIFICATION TEST VER - 1 (DIESEL). (Refer to 8 - ELECTRICAL/ELECTRONIC CONTROL MODULES/TRANSMISSION CONTROL MODULE - DIAGNOSIS AND TESTING)

No >> Check the Transmission Throttle Valve components for proper movement or sticking. If no problems are found replace the TTVA per the Service Information (Refer to 21 - TRANSMISSION/TRANSAXLE/AUTOMATIC - 48RE/ THROTTLE VALVE ACTUATOR - REMOVAL)

Perform RE TRANSMISSION VERIFICATION TEST VER - 1 (DIESEL). (Refer to 8 - ELECTRICAL/ELECTRONIC CONTROL MODULES/TRANSMISSION CONTROL MODULE - DIAGNOSIS AND TESTING)

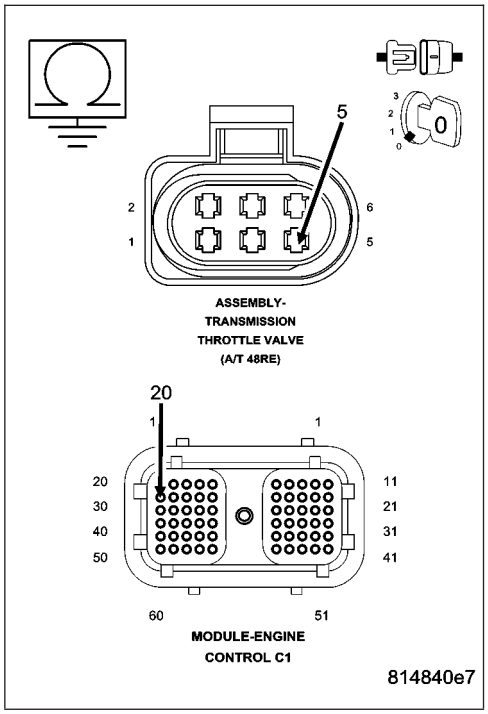

4. CHECK THE (K314) TTVA MOTOR (+) CIRCUIT FOR AN OPEN

Turn the ignition off to the lock position.

Disconnect the ECM C1 and C2 harness connectors.

Measure the resistance of the (K314) TTVA Motor (+) circuit between the ECM C1 harness connector and the TTVA harness connector.

Is the resistance below 5.0 ohms?

Yes >> Go To 5

No >> Repair the (K314) TTVA Motor (+) circuit for an open.

Perform RE TRANSMISSION VERIFICATION TEST VER - 1 (DIESEL). (Refer to 8 - ELECTRICAL/ELECTRONIC CONTROL MODULES/TRANSMISSION CONTROL MODULE - DIAGNOSIS AND TESTING)

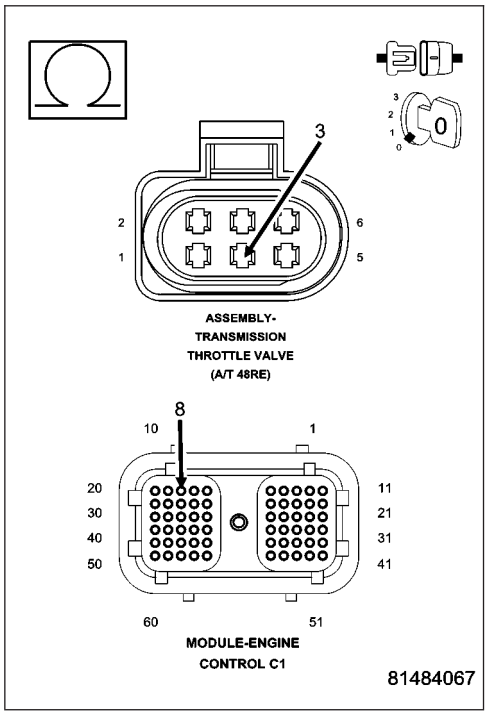

P1755-TRANSMISSION THROTTLE VALVE CONTROL CIRCUIT (CONTINUED)

5. CHECK THE (K315) TTVA MOTOR (-) CIRCUIT FOR AN OPEN

Measure the resistance of the (K315) TTVA Motor (-) circuit between the ECM C1 harness connector and the TTVA harness connector.

Is the resistance below 5.0 ohms?

Yes >> Go To 6

No >> Repair the (K315) TTVA Motor (-) circuit for an open.
Perform RE TRANSMISSION VERIFICATION TEST VER - 1 (DIESEL). (Refer to 8 - ELECTRICAL/ELECTRONIC CONTROL MODULES/TRANSMISSION CONTROL MODULE - DIAGNOSIS AND TESTING)

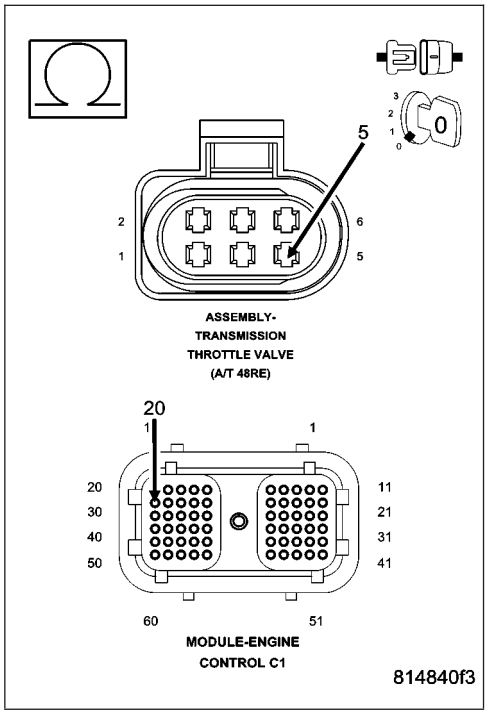

6. CHECK THE (K314) TTVA MOTOR (+) CIRCUIT FOR A SHORT TO GROUND

Measure the resistance between ground and the (K314) TTVA Motor (+) circuit.

Is the resistance below 5.0 ohms?

Yes >> Repair the (K314) TTVA Motor (+) circuit for a short to ground.
Perform RE TRANSMISSION VERIFICATION TEST VER - 1 (DIESEL). (Refer to 8 - ELECTRICAL/ELECTRONIC CONTROL MODULES/TRANSMISSION CONTROL MODULE - DIAGNOSIS AND TESTING)

No >> Go To 7

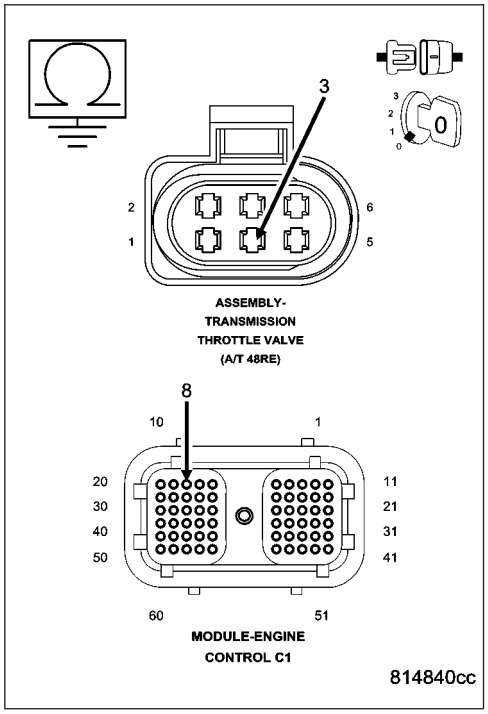

P1755-TRANSMISSION THROTTLE VALVE CONTROL CIRCUIT (CONTINUED)

7. CHECK THE (K314) TTVA MOTOR (+) CIRCUIT FOR A SHORT TO VOLTAGE

Ignition on, engine not running.

Measure the voltage of the (K314) TTVA Motor (+) circuit.

Is the voltage above 0.5 volts?

Yes >> Repair the (K314) TTVA Motor (+) circuit for a short to voltage.

Perform RE TRANSMISSION VERIFICATION TEST VER - 1 (DIESEL). (Refer to 8 - ELECTRICAL/ELECTRONIC CONTROL MODULES/TRANSMISSION CONTROL MODULE - DIAGNOSIS AND TESTING)

No >> Go To 8

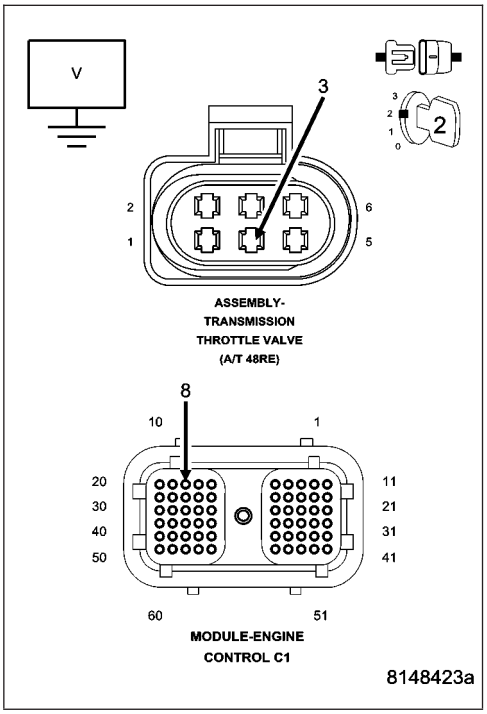

8. CHECK THE (K315) TTVA MOTOR (-) CIRCUIT FOR A SHORT TO VOLTAGE

Measure the voltage of the (K315) TTVA Motor (-) circuit.

Is the voltage above 0.5 volts?

Yes >> Repair the (K315) TTVA Motor (-) circuit for a short to voltage.

Perform RE TRANSMISSION VERIFICATION TEST VER - 1 (DIESEL). (Refer to 8 - ELECTRICAL/ELECTRONIC CONTROL MODULES/TRANSMISSION CONTROL MODULE - DIAGNOSIS AND TESTING)

No >> Go To 9

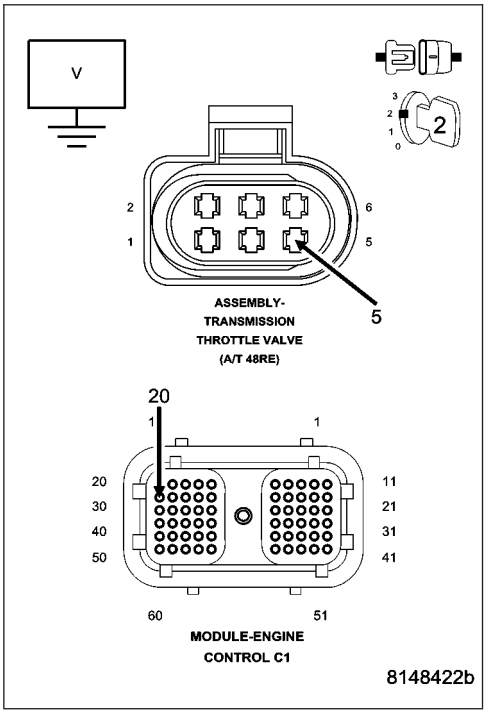

P1755-TRANSMISSION THROTTLE VALVE CONTROL CIRCUIT (CONTINUED)

9. CHECK THE (K314) TTVA MOTOR (+) CIRCUIT FOR A SHORT TO ANOTHER CIRCUIT

Turn the ignition off to the lock position.

Measure the resistance between the (K314) TTVA Motor (+) circuit and every other circuit in the ECM C1 and C2 harness connectors.

Is the resistance below 5.0 ohms between the (K314) TTVA Motor (+) circuit and any other circuit in the ECM C1 and C2 harness connectors?

Yes >> Repair the (K314) TTVA Motor (+) for a short to another circuit(s).

Perform RE TRANSMISSION VERIFICATION TEST VER - 1 (DIESEL). (Refer to 8 - ELECTRICAL/ELECTRONIC CONTROL MODULES/TRANSMISSION CONTROL MODULE - DIAGNOSIS AND TESTING)

No >> Go To 10

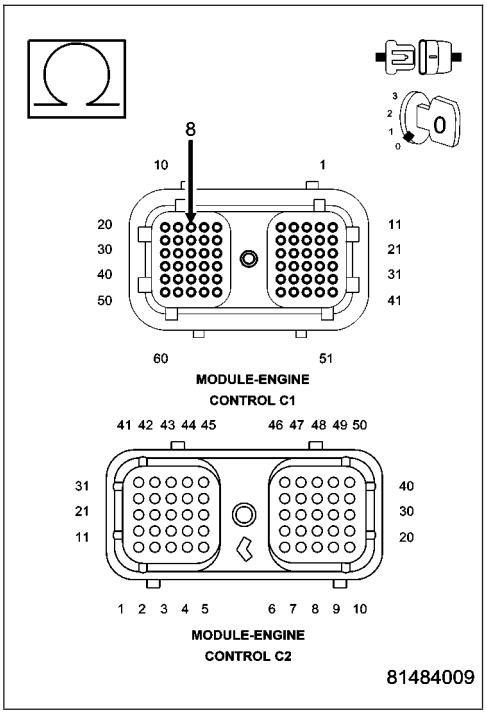

10. CHECK THE (K315) TTVA MOTOR (-) CIRCUIT FOR A SHORT TO ANOTHER CIRCUIT

Measure the resistance between the (K315) TTVA Motor (-) circuit and every other circuit in the ECM C1 and C2 harness connectors.

Is the resistance below 5.0 ohms between the (K315) TTVA Motor (-) circuit and any other circuit in the ECM C1 and C2 harness connectors?

Yes >> Repair the (K315) TTVA Motor (-) for a short to another circuit(s).

Perform RE TRANSMISSION VERIFICATION TEST VER - 1 (DIESEL). (Refer to 8 - ELECTRICAL/ELECTRONIC CONTROL MODULES/TRANSMISSION CONTROL MODULE - DIAGNOSIS AND TESTING)

No >> Go To 11

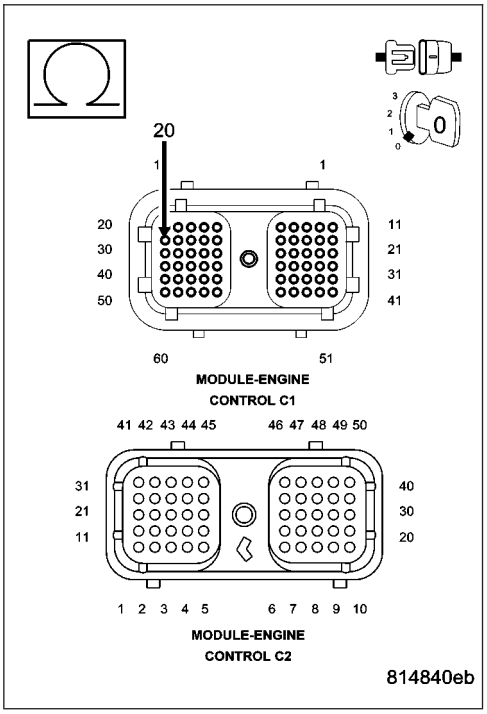

P1755-TRANSMISSION THROTTLE VALVE CONTROL CIRCUIT (CONTINUED)

11. CHECK THE ECM OPERATION

Turn the ignition off to the lock position.

Reconnect all previously disconnected connectors.

Turn the ignition on for the period of 30 seconds to allow the ECM to reset.

Turn the ignition off to the lock position.

Disconnect the TTVA harness connector.

Connect a 12-volt test light between the (K314) TTVA Motor (+) circuit and the (K315) TTVA Motor (-) circuit in the TTVA harness connector.

Monitor the test light in the following step.

NOTE: The test light should momentarily flash brightly, one time, immediately after the ignition is turned to the on position.
Ignition on, engine not running.

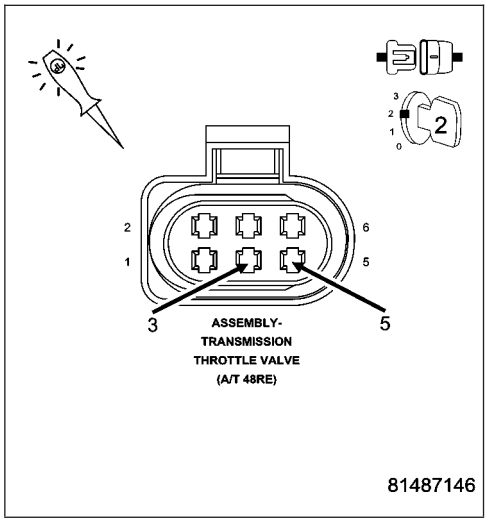

Did the test light illuminate brightly one time after turning the ignition to the on position?

Yes >> Go To 12

No >> Using the schematics as a guide, check the Engine Control Module (ECM) pins, terminals, and connectors for corrosion, damage, or terminal push out. Pay particular attention to all power and ground circuits. If no problems are found, replace and program the ECM per the Service Information. (Refer to 8 - ELECTRICAL/ELECTRONIC CONTROL MODULES/ENGINE CONTROL MODULE - REMOVAL)

Perform RE TRANSMISSION VERIFICATION TEST VER - 1 (DIESEL). (Refer to 8 - ELECTRICAL/ELECTRONIC CONTROL MODULES/TRANSMISSION CONTROL MODULE - DIAGNOSIS AND TESTING)

---

12. INTERMITTENT WIRING AND CONNECTORS

The conditions necessary to set this DTC are not present at this time.

Use the Freeze Frame Data to help duplicate the conditions in which the DTC originally set. Pay particular attention to the DTC set conditions, such as, VSS, MAP, ECT, and Load

Using the schematics as a guide, visually inspect the related wiring harness. Look for any chafed, pierced, pinched, or partially broken wires.

Visually inspect the related wiring harness connectors. Look for broken, bent, pushed out, or corroded terminals.

Wiggle the wiring and connectors while checking for any possible open or shorted circuits.

Check for any Service Information Tune-ups or Technical Service Bulletins that may apply.

Were there any problems found?

Yes >> Repair as necessary.

Perform RE TRANSMISSION VERIFICATION TEST VER - 1 (DIESEL). (Refer to 8 - ELECTRICAL/ELECTRONIC CONTROL MODULES/TRANSMISSION CONTROL MODULE - DIAGNOSIS AND TESTING)

No >> Test Complete.

P1756-GOV PRESS NOT EQUAL TO TARGET @ 35 - 40 PSI (DIESEL)

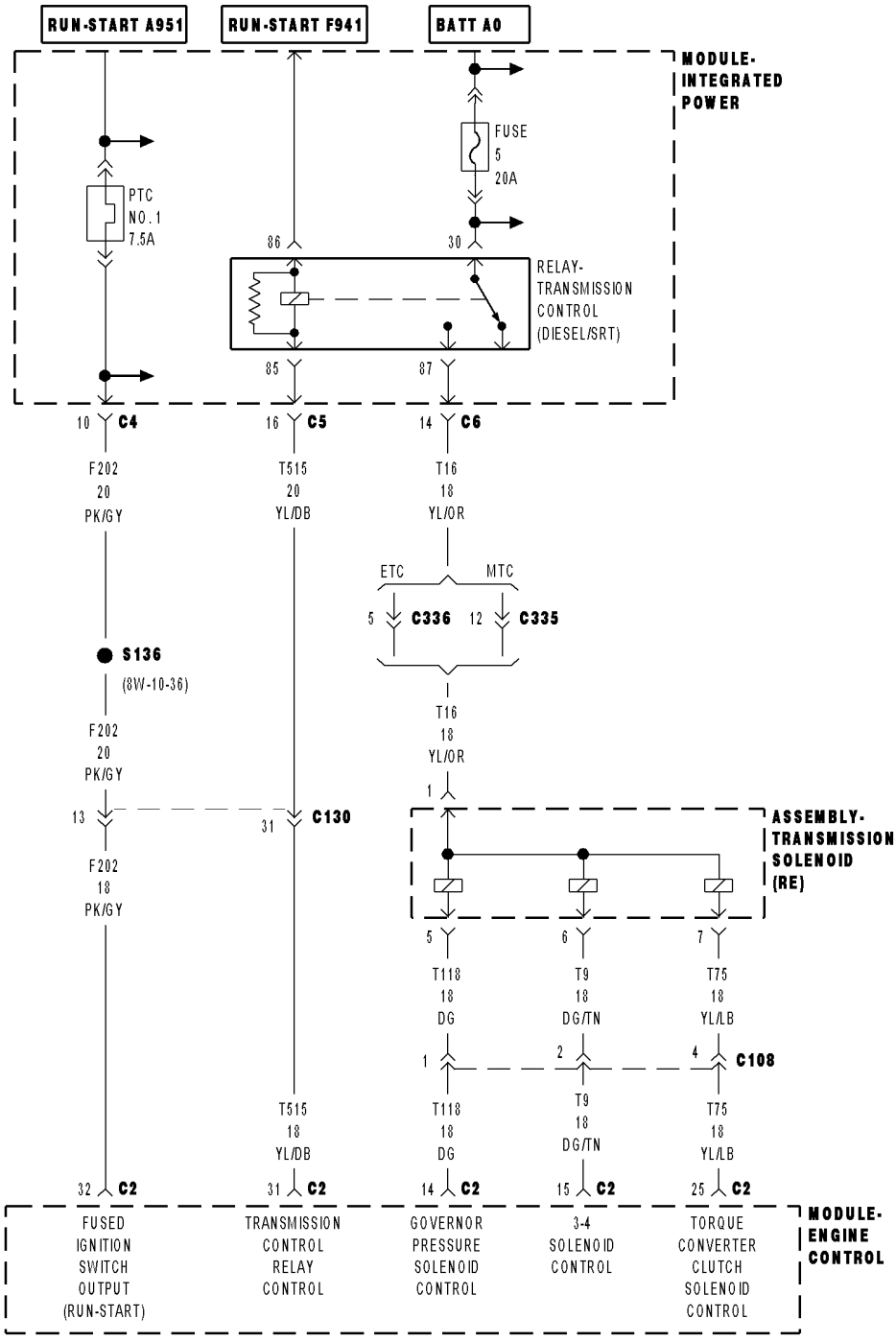

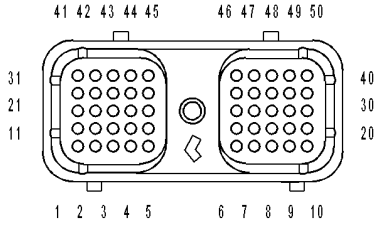

MODULE-ENGINE CONTROL C2

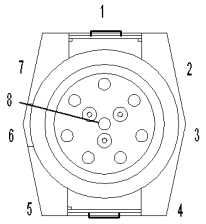

ASSEMBLY-TRANSMISSION SOLENOID (RE)

8142abf3

P1756-GOV PRESS NOT EQUAL TO TARGET @ 35 - 40 PSI (DIESEL) (CONTINUED)

For the Transmission circuit diagram (Refer to 21 - TRANSMISSION/TRANSAXLE/AUTOMATIC - 48RE - SCHEMATICS AND DIAGRAMS)

For a complete wiring diagram**Refer to Section 8W**

Theory of Operation

The Governor Pressure Control System is used to regulate the governor pressure which controls the shifts for first, second, and third gear. The Governor Pressure Control System test verifies that the requested pressure and the actual pressure are within a predetermined tolerance.

- **When Monitored:**
  While driving and the commanded governor pressure is equal to the pressure required for third gear.
- **Set Condition:**
  If the governor pressure sensor output is less than 407 kPa (60 psi) or greater than 621 kPa (80 psi) when the requested pressure is 407 - 621 kPa (60 - 80 psi) for 2.2 seconds. This DTC will set if there are two trips of five consecutive bad 2.2 second tests with the transmission oil temperature between 23.5 - 88° C (74 - 190° F).

Possible Causes
OTHER TRANSMISSION DTCS PRESENT
5-VOLT SUPPLY CIRCUIT OPEN - EXTERNAL
5-VOLT SUPPLY CIRCUIT OPEN - INTERNAL
GOVERNOR PRESSURE SENSOR
VALVE BODY
INTERNAL TRANSMISSION
ENGINE CONTROL MODULE
TRANSMISSION - INTERNAL DAMAGE

Always perform the Pre-Diagnostic Troubleshooting procedure before proceeding. (Refer to 21 - TRANSMISSION/TRANSAXLE/AUTOMATIC - 48RE - STANDARD PROCEDURE)

Diagnostic Test

1. CHECK IF OTHER TRANSMISSION DTCS ARE PRESENT

Ignition on, engine not running.

With the scan tool, read Engine DTCs.

Are any other transmission DTCs present?

Yes >> Refer to the Transmission category and perform the appropriate symptom(s). (Refer to 21 - TRANSMISSION/TRANSAXLE/AUTOMATIC - 48RE - DIAGNOSIS AND TESTING)

No >> Go To 2

P1756-GOV PRESS NOT EQUAL TO TARGET @ 35 - 40 PSI (DIESEL) (CONTINUED)

2. CHECK IF THE GOVERNOR PRESSURE IS ABOVE 3 PSI IN DRIVE

CAUTION: Apply the parking brake.
Start the engine and allow the transmission to reach normal operating temperature above 43° C (110° F).

CAUTION: Apply the brakes.
With the engine at idle, place the gear selector in Drive.
With the scan tool, read the Governor Pressure.

Is the Governor Pressure above 21 kPa (3 psi)?

Yes >> Go To 3

No >> Go To 4

---

3. CHECK IF THE GOVERNOR PRESSURE IS BELOW 3 PSI

Turn the ignition off to the lock position.
Install a pressure gauge at the Governor Pressure test port. (Refer to 21 - TRANSMISSION/TRANSAXLE/AUTOMATIC - 48RE - DIAGNOSIS AND TESTING)

NOTE: Use the appropriate pressure gauge for the pressure range measured.

CAUTION: Apply the parking brake.
Start the engine and allow the transmission to reach normal operating temperature above 43° C (110° F).

CAUTION: Apply the brakes.
With the engine at idle, place the gear selector in Drive.
Read the governor pressure on the pressure gauge.

Is the governor pressure on the pressure gauge below 21 kPa (3 psi) with the engine at idle and the gear selector in Drive?

Yes >> The Governor Pressure Solenoid is functioning properly. Go To 7

No >> Go To 10

---

4. GOVERNOR PRESSURE BETWEEN 40-55 WITH RELAY REMOVED

Place the gear selector in Park.
With the engine still running, remove the Transmission Control Relay.

WARNING: Do not wear loose clothing or jewelry when working on or near a running engine. Failure to follow these instructions can result in personal injury or death.

NOTE: Relay removal may set various DTCs. Disregard any DTC that may set due to relay removal.

CAUTION: Apply the brakes.
Place the gear selector in Drive and allow the engine to idle for 30 seconds.
With the scan tool, read the Actual Governor Pressure at idle.

Is the governor pressure on the scan tool between 276 - 379 kPa (40 - 55 psi)?

Yes >> Go To 5

No >> Go To 6

P1756-GOV PRESS NOT EQUAL TO TARGET @ 35 - 40 PSI (DIESEL) (CONTINUED)

5. GOVERNOR PRESSURE SOLENOID

Turn the ignition off to the lock position.

Replace the Governor Pressure Solenoid per the Service Information. (Refer to 21 - TRANSMISSION/TRANSAXLE/AUTOMATIC - 48RE/GOVERNOR PRESSURE SENSOR - REMOVAL)

Start the engine and allow the transmission to reach normal operating temperature above 43° C (110° F).

With the scan tool, monitor the target governor pressure and actual governor pressure.

Drive the vehicle at a constant speed 40 - 48 Km/h (25 - 30 MPH).

NOTE: The Actual Governor Pressure should be within 21 kPa (3 psi) of the Target Governor Pressure within 3 seconds.

Is the Actual Governor Pressure within 21 kPa (3 psi) of the Target Governor Pressure?

Yes >> Go To 13

No >> Repair internal transmission leak. Inspect all components pertaining to the Governor Pressure Sensor and the Governor Pressure Solenoid. (Refer to 21 - TRANSMISSION/TRANSAXLE/AUTOMATIC - 48RE/GOVERNOR PRESSURE SENSOR - REMOVAL)

Perform RE TRANSMISSION VERIFICATION TEST VER - 1 (DIESEL). (Refer to 21 - TRANSMISSION/TRANSAXLE/AUTOMATIC - 48RE - STANDARD PROCEDURE)

---

6. CHECK GAUGE PRESSURE 40-55 WITH RELAY OUT

Place the gear selector in Park.

With the engine still running, remove the Transmission Control Relay.

WARNING: Do not wear loose clothing or jewelry when working on or near a running engine. Failure to follow these instructions can result in personal injury or death.

NOTE: Relay removal may set various codes. Disregard any DTC that may set due to relay removal.

CAUTION: Apply the brakes.

Place the gear selector in Drive with the engine at idle.

Read the governor pressure on the pressure gauge.

Is the governor pressure on the pressure gauge read between 276 - 379 kPa (40 - 55 psi)?

Yes >> Go To 7

No >> Go To 10

P1756-GOV PRESS NOT EQUAL TO TARGET @ 35 - 40 PSI (DIESEL) (CONTINUED)

7. CHECK THE 5 VOLT SUPPLY CIRCUIT FOR AN OPEN - EXTERNAL

Turn the ignition off to the lock position.

Disconnect the Transmission Solenoid Assembly harness connector.

Disconnect the ECM harness connectors.

NOTE: Check connectors - Clean/repair as necessary

Measure the resistance of the 5-volt Supply circuit between the Transmission Solenoid Assembly harness connector and the ECM C2 harness connector.

Is the resistance below 5.0 ohms?

Yes >> Go To 8

No >> Repair the 5-volt Supply circuit for an open.

Perform RE TRANSMISSION VERIFICATION TEST VER - 1 (DIESEL). (Refer to 21 - TRANSMISSION/TRANSAXLE/ AUTOMATIC - 48RE - STANDARD PROCEDURE)

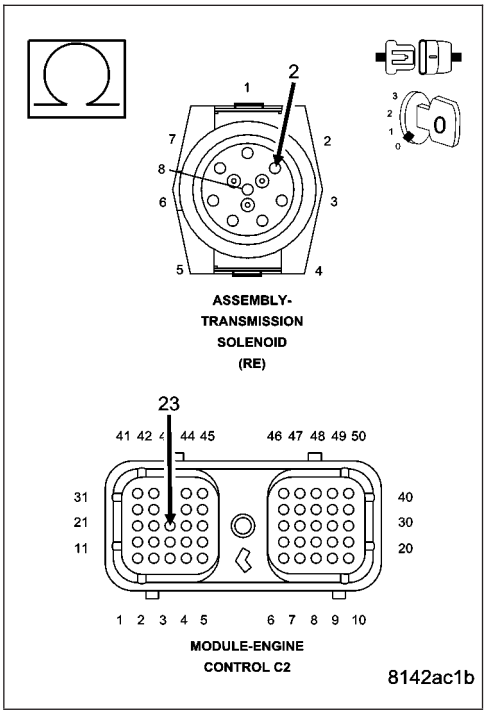

8. CHECK THE 5 VOLT SUPPLY CIRCUIT FOR AN OPEN - INTERNAL

Remove the transmission oil pan. (Refer to 21 - TRANSMISSION/ TRANSAXLE/AUTOMATIC - 48RE/FLUID - STANDARD PROCEDURE)

Reconnect the Transmission Solenoid Assembly harness connector.

Disconnect the Governor Pressure Sensor connector internal to the transmission.

Measure the resistance of the 5-volt Supply circuit between the ECM C2 harness connector and the Governor Pressure sensor connector internal to the transmission.

Is the resistance below 5.0 ohms?

Yes >> Go To 9

No >> Repair or replace the 5-volt Supply circuit for an open internal to the transmission.

Perform RE TRANSMISSION VERIFICATION TEST VER - 1 (DIESEL). (Refer to 21 - TRANSMISSION/TRANSAXLE/ AUTOMATIC - 48RE - STANDARD PROCEDURE)

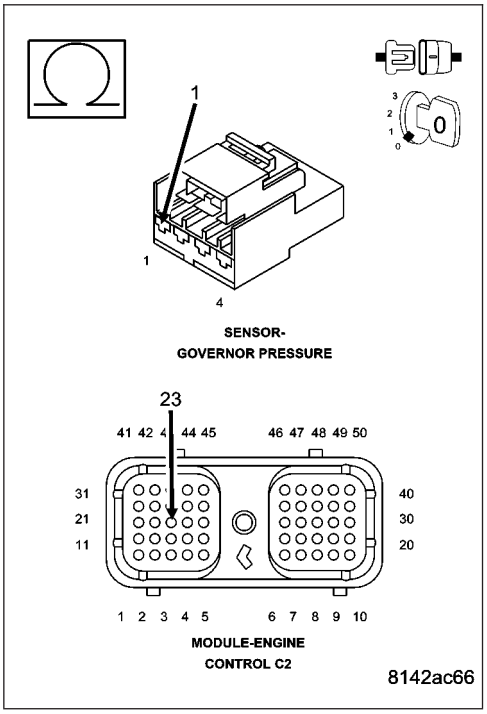

P1756-GOV PRESS NOT EQUAL TO TARGET @ 35 - 40 PSI (DIESEL) (CONTINUED)

9. GOVERNOR PRESSURE SENSOR

Reconnect the ECM harness connectors.

NOTE: The ECM harness connectors must not be disconnected during this test.

Ignition on, engine not running.

Measure the voltage of the 5-volt Supply circuit at the Governor Pressure Sensor connector internal to the transmission.

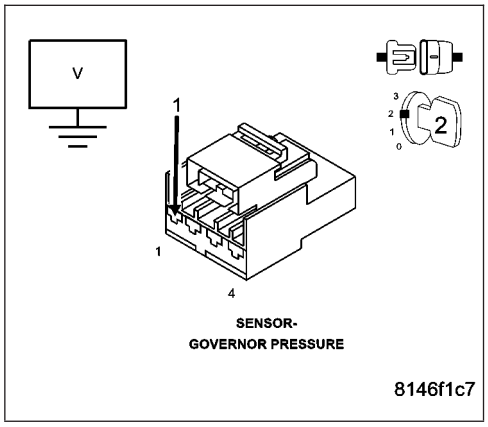

Is the voltage between 4.5 and 5.5 volts?

Yes >> Replace the Governor Pressure/Transmission Temperature Sensor per the Service Information. (Refer to 21 - TRANSMISSION/TRANSAXLE/AUTOMATIC - 48RE/GOVERNOR PRESSURE SENSOR - REMOVAL)

Perform RE TRANSMISSION VERIFICATION TEST VER - 1 (DIESEL). (Refer to 8 - ELECTRICAL/ELECTRONIC CONTROL MODULES/TRANSMISSION CONTROL MODULE - DIAGNOSIS AND TESTING)

No >> Using the schematics as a guide, check the Engine Control Module (ECM) pins, terminals, and connectors for corrosion, damage, or terminal push out. Pay particular attention to all power and ground circuits. If no problems are found, replace and program the ECM per the Service Information. (Refer to 8 - ELECTRICAL/ELECTRONIC CONTROL MODULES/ENGINE CONTROL MODULE - REMOVAL)

Perform RE TRANSMISSION VERIFICATION TEST VER - 1 (DIESEL). (Refer to 21 - TRANSMISSION/TRANSAXLE/AUTOMATIC - 48RE - STANDARD PROCEDURE)

---

10. TRANSMISSION - INTERNAL DAMAGE

Turn the ignition off to the lock position.

Remove the transmission oil pan per the Service Information. (Refer to 21 - TRANSMISSION/TRANSAXLE/AUTOMATIC - 48RE/FLUID - STANDARD PROCEDURE)

Inspect the transmission oil pan for burnt transmission fluid and/or excessive debris.

Is the transmission fluid burnt and/or contain excessive debris?

Yes >> Repair the internal transmission per the Service Information. (Refer to 21 - TRANSMISSION/TRANSAXLE/AUTOMATIC - 48RE - REMOVAL)

Perform RE TRANSMISSION VERIFICATION TEST VER - 1 (DIESEL). (Refer to 21 - TRANSMISSION/TRANSAXLE/AUTOMATIC - 48RE - STANDARD PROCEDURE)

No >> Go To 11

P1756-GOV PRESS NOT EQUAL TO TARGET @ 35 - 40 PSI (DIESEL) (CONTINUED)

11. CHECK THE VALVE BODY

Replace the Governor Pressure Solenoid per the Service Information. (Refer to 21 - TRANSMISSION/TRANSAXLE/AUTOMATIC - 48RE/GOVERNOR PRESSURE SENSOR - REMOVAL)

Install a pressure gauge at the governor pressure test port. (Refer to 21 - TRANSMISSION/TRANSAXLE/AUTOMATIC - 48RE - DIAGNOSIS AND TESTING)

Start the engine.

Warm the transmission to normal operating temperature.

CAUTION: Apply the brakes.

Place the gear selector in Drive and allow the engine to idle.

Read the governor pressure on the pressure gauge in Drive.

Is the governor pressure on the gauge below 21 kPa (3 psi)?

Yes >> Go To 12

No >> Repair or replace the Valve Body per the Service Information. (Refer to 21 - TRANSMISSION/TRANSAXLE/AUTOMATIC - 48RE/VALVE BODY - REMOVAL)

Perform RE TRANSMISSION VERIFICATION TEST VER - 1 (DIESEL). (Refer to 21 - TRANSMISSION/TRANSAXLE/AUTOMATIC - 48RE - STANDARD PROCEDURE)

---

12. VERIFY OPERATION - TEST DRIVE

Remove the pressure gauge from the transmission. (Refer to 21 - TRANSMISSION/TRANSAXLE/AUTOMATIC - 48RE - DIAGNOSIS AND TESTING)

Test drive the vehicle.

Be sure to drive the vehicle at a constant speed of 40-48 Km/h or 25-30 MPH during the drive cycle.

With the scan tool, read Engine DTCs.

Did the DTC reset?

Yes >> Using the schematics as a guide, check the Engine Control Module (ECM) pins, terminals, and connectors for corrosion, damage, or terminal push out. Pay particular attention to all power and ground circuits. If no problems are found, replace and program the ECM per the Service Information. (Refer to 8 - ELECTRICAL/ELECTRONIC CONTROL MODULES/ENGINE CONTROL MODULE - REMOVAL)

Perform RE TRANSMISSION VERIFICATION TEST VER - 1 (DIESEL). (Refer to 21 - TRANSMISSION/TRANSAXLE/AUTOMATIC - 48RE - STANDARD PROCEDURE)

No >> Test Complete.

Perform RE TRANSMISSION VERIFICATION TEST VER - 1 (DIESEL). (Refer to 21 - TRANSMISSION/TRANSAXLE/AUTOMATIC - 48RE - STANDARD PROCEDURE)

P1756-GOV PRESS NOT EQUAL TO TARGET @ 35 - 40 PSI (DIESEL) (CONTINUED)

13. INTERMITTENT WIRING AND CONNECTORS

The conditions necessary set this DTC are not present at this time.

Use the Freeze Frame Data to help duplicate the conditions that set the DTC. Pay particular attention to the DTC set conditions, such as, VSS, MAP, ECT, and Load.

Visually inspect the related wiring harness. Look for any chafed, pierced, pinched, or partially broken wires.

Visually inspect the related wiring harness connectors. Look for broken, bent, pushed out, or corroded terminals.

Check for any Service Information Tune-ups or Technical Service Bulletins that may apply.

Were there any problems found?

Yes >> Repair as necessary.
Perform RE TRANSMISSION VERIFICATION TEST VER - 1 (DIESEL). (Refer to 21 - TRANSMISSION/ TRANSAXLE/AUTOMATIC - 48RE - STANDARD PROCEDURE)

No >> Test Complete.

P1757-GOV PRESS ABOVE 3 PSI IN GEAR WITH 0 MPH (DIESEL)

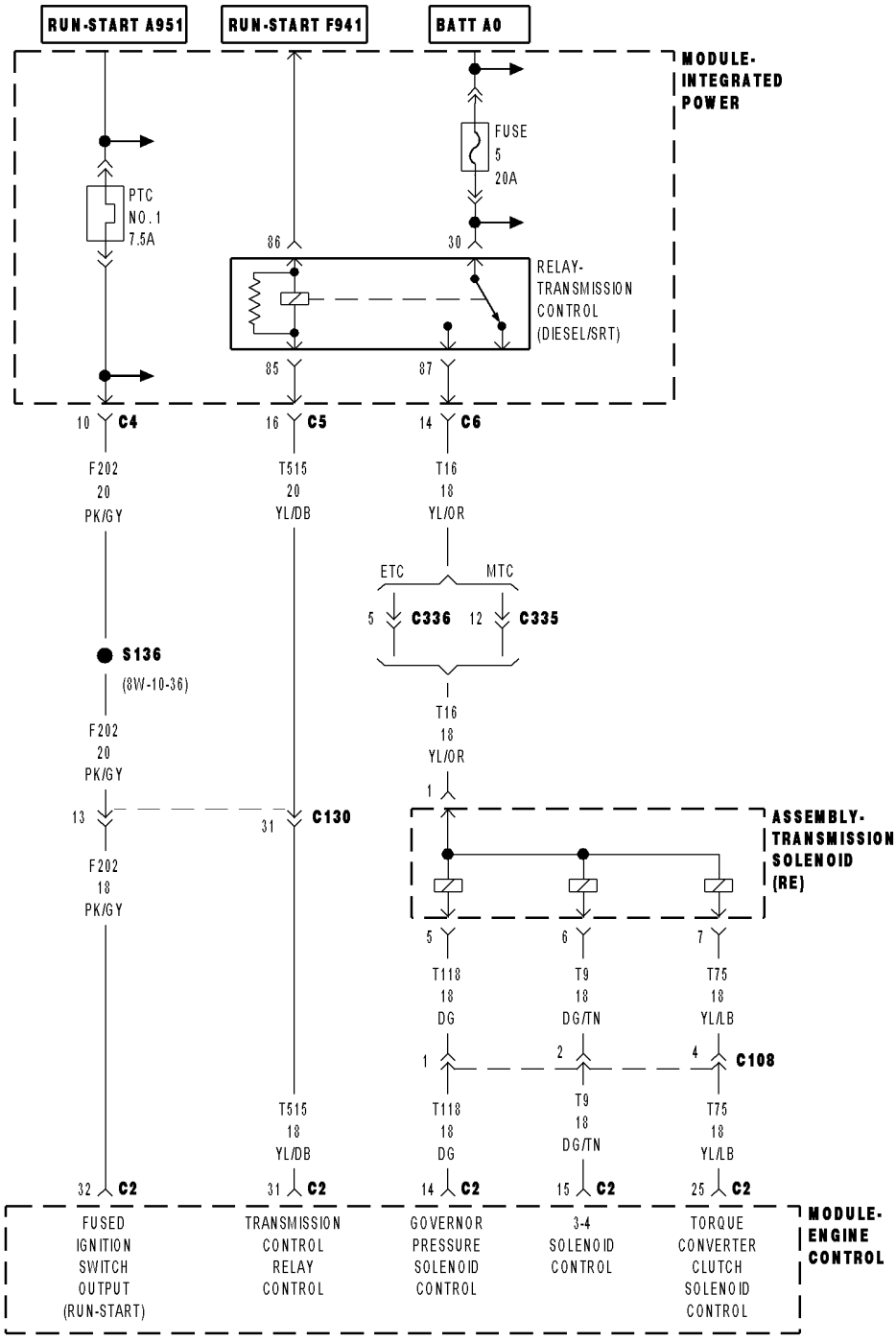

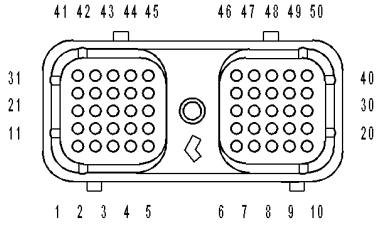

MODULE-ENGINE CONTROL C2

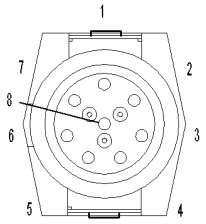

ASSEMBLY-TRANSMISSION SOLENOID (RE)

8142abf3

P1757-GOV PRESS ABOVE 3 PSI IN GEAR WITH 0 MPH (DIESEL) (CONTINUED)

For the Transmission circuit diagram (Refer to 21 - TRANSMISSION/TRANSAXLE/AUTOMATIC - 48RE - SCHEMATICS AND DIAGRAMS)

For a complete wiring diagram**Refer to Section 8W**

Theory of Operation

The Governor Pressure Control System is used to regulate the governor pressure which controls the shifts for first, second, and third gear. The Governor Pressure Control System test verifies that the requested pressure and the actual pressure are within a predetermined tolerance.

- **When Monitored:**
  While the engine is running and the gear selector is in the Drive position.
- **Set Condition:**
  This DTC will set if the monitored Governor Pressure is greater than 41.4 kPa (6 psi) for 5 seconds while the gear selector is in the Drive position with the road speed equal to zero - six times during a drive cycle. The transmission oil temperature must be between 23 - 88° C (73 - 190° F).

Possible Causes
OTHER TRANSMISSION DTC'S PRESENT
5 VOLT SUPPLY CIRCUIT OPEN
5 VOLT SUPPLY CIRCUIT OPEN INSIDE THE TRANSMISSION
TRANSMISSION OIL BURNT OR OIL PAN HAS EXCESSIVE DEBRIS - INTERNAL TRANSMISSION DAMAGE
GOVERNOR PRESSURE SENSOR
GOVERNOR PRESSURE SOLENOID
VALVE BODY
ENGINE CONTROL MODULE 5 VOLT SUPPLY
ENGINE CONTROL MODULE

Always perform the Pre-Diagnostic Troubleshooting procedure before proceeding. (Refer to 21 - TRANSMISSION/TRANSAXLE/AUTOMATIC - 48RE - STANDARD PROCEDURE)

Diagnostic Test

1. OTHER TRANSMISSION DTC'S PRESENT

Ignition on, engine not running.

With the scan tool, read Engine DTCs.

Are there any other Transmission DTCs present?

Yes >> Refer to the Transmission category and perform the appropriate symptom(s). (Refer to 21 - TRANSMISSION/TRANSAXLE/AUTOMATIC - 48RE - DIAGNOSIS AND TESTING)

No >> Go To 2

P1757-GOV PRESS ABOVE 3 PSI IN GEAR WITH 0 MPH (DIESEL) (CONTINUED)

2. CHECK IF THE DTC IS CURRENT

With the scan tool, read Engine DTCs.

Record the Freeze Frame data for the reported DTC.

With the scan tool, erase DTCs.

Turn the ignition off to the lock position.

Using the Freeze Frame data recorded earlier, try to duplicate the conditions in which the DTC originally set.

NOTE: It may be necessary to road test the vehicle to duplicate the original set conditions.

With the scan tool, read Engine DTCs.

Did the DTC reset?

Yes >> Go To 3

No >> Go To 11

---

3. CHECKING FOR GOVERNOR PRESSURE ABOVE 6 PSI

Start the engine.

CAUTION: Apply the parking brake.

Warm the transmission to a normal operating temperature above 43° C (110° F).

CAUTION: Firmly apply the brakes.

With the engine RPM at idle, place the gear selector in Drive.

With the scan tool, read the governor pressure.

Is the governor pressure above 41.4 kPa (6 psi)?

Yes >> Go To 4

No >> Go To 11

---

4. GOVERNOR PRESSURE MATCH GAUGE PRESSURE

Turn the ignition off to the lock position.

Install a 700 kPa (100 psi) pressure gauge to the Governor Pressure Test Port. (Refer to 21 - TRANSMISSION/TRANSAXLE/AUTOMATIC - 48RE - DIAGNOSIS AND TESTING)

Start the engine.

Warm the transmission to a normal operating temperature above 43° C (110° F).

CAUTION: Firmly apply the brakes.

With the engine RPM at idle, place the gear selector in Drive.

With the scan tool, read the governor pressure and compare the scan tool reading to the pressure gauge reading.

Does the scan tool Governor Pressure reading match the pressure gauge reading within 6.9 kPa (1 psi)?

Yes >> Go To 5

No >> Go To 8

P1757-GOV PRESS ABOVE 3 PSI IN GEAR WITH 0 MPH (DIESEL) (CONTINUED)

5. CHECK FOR BURNT TRANSMISSION FLUID AND/OR EXCESSIVE DEBRIS IN THE TRANSMISSION OIL PAN

Turn the ignition off to the lock position.

Remove the transmission oil pan per the Service Information and inspect for burnt transmission fluid and excessive debris. (Refer to 21 - TRANSMISSION/TRANSAXLE/AUTOMATIC - 48RE/FLUID - STANDARD PROCEDURE)

Is the transmission fluid burnt or does the transmission oil pan contain excessive debris?

Yes >> Repair internal transmission as necessary. (Refer to 21 - TRANSMISSION/TRANSAXLE/AUTOMATIC - 48RE - REMOVAL)

Perform RE TRANSMISSION VERIFICATION TEST VER - 1 (DIESEL). (Refer to 21 - TRANSMISSION/TRANSAXLE/AUTOMATIC - 48RE - STANDARD PROCEDURE)

No >> Go To 6

---

6. REPLACE THE GOVERNOR PRESSURE SOLENOID AND CHECK THE VALVE BODY

Replace the Governor Pressure Solenoid per with the Service Information. (Refer to 21 - TRANSMISSION/TRANSAXLE/AUTOMATIC - 48RE/GOVERNOR PRESSURE SENSOR - REMOVAL)

Start the engine.

Warm the transmission to a normal operating temperature above 43° C (110° F).

CAUTION: Firmly apply the brakes.

With the engine RPM at idle, place the gear selector in Drive.

Read the governor pressure on the pressure gauge.

Is the governor pressure on the pressure gauge above 41.4 kPa (6 psi) with the engine RPM at idle and the gear selector in Drive?

Yes >> Replace the Valve Body per the Service Information. (Refer to 21 - TRANSMISSION/TRANSAXLE/AUTOMATIC - 48RE/VALVE BODY - REMOVAL)

Perform RE TRANSMISSION VERIFICATION TEST VER - 1 (DIESEL). (Refer to 21 - TRANSMISSION/TRANSAXLE/AUTOMATIC - 48RE - STANDARD PROCEDURE)

No >> Go To 7

---

7. ENGINE CONTROL MODULE

Turn the ignition off to the lock position.

Remove pressure gauge from transmission.

Install the Transmission Oil Pan and refill the transmission fluid per the service information. (Refer to 21 - TRANSMISSION/TRANSAXLE/AUTOMATIC - 48RE/FLUID - STANDARD PROCEDURE)

With the scan tool, erase Engine DTCs.

Test drive the vehicle.

Be sure to stop the vehicle, with the vehicle in drive on six separate occurrences for at least 6 seconds each stop.

With the scan tool, read Engine DTCs.

Did the P1757 DTC reset?

Yes >> Using the schematics as a guide, check the Engine Control Module (ECM) pins, terminals, and connectors for corrosion, damage, or terminal push out. Pay particular attention to all power and ground circuits. If no problems are found, replace and program the ECM per the Service Information. (Refer to 8 - ELECTRICAL/ELECTRONIC CONTROL MODULES/ENGINE CONTROL MODULE - REMOVAL)

Perform RE TRANSMISSION VERIFICATION TEST VER - 1 (DIESEL). (Refer to 21 - TRANSMISSION/TRANSAXLE/AUTOMATIC - 48RE - STANDARD PROCEDURE)

No >> Go To 11

P1757-GOV PRESS ABOVE 3 PSI IN GEAR WITH 0 MPH (DIESEL) (CONTINUED)

8. CHECK THE 5 VOLT SUPPLY CIRCUIT FOR AN OPEN

Turn the ignition off to the lock position.

Disconnect the ECM harness connectors.

Disconnect the Transmission Solenoid Assembly harness connector.

NOTE: Check connectors - Clean/repair as necessary

Measure the resistance of the 5- volt Supply circuit between the Transmission Solenoid Assembly harness connector and the ECM harness connector.

Is the resistance below 5.0 ohms?

Yes >> Go To 9

No >> Repair the 5-volt Supply circuit for an open.

Perform RE TRANSMISSION VERIFICATION TEST VER - 1 (DIESEL). (Refer to 21 - TRANSMISSION/TRANSAXLE/ AUTOMATIC - 48RE - STANDARD PROCEDURE)

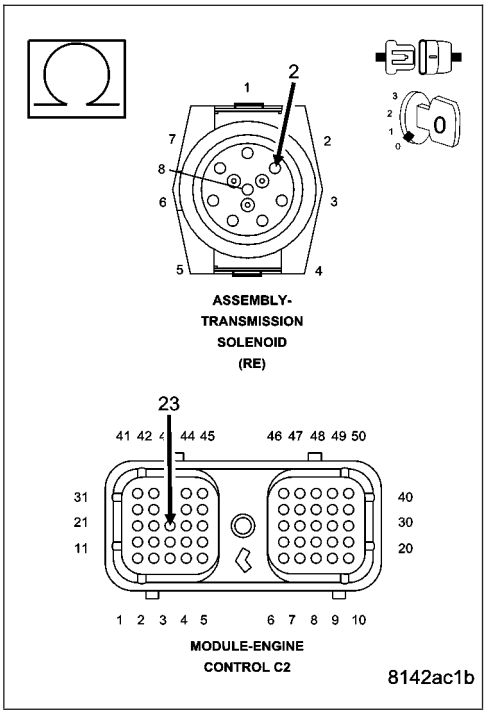

9. CHECK THE 5 VOLT SUPPLY CIRCUIT FOR AN OPEN INSIDE THE TRANSMISSION

Reconnect the Transmission Solenoid Assembly harness connector.

Remove the transmission oil pan per the Service Information. (Refer to 21 - TRANSMISSION/TRANSAXLE/AUTOMATIC - 48RE/FLUID - STANDARD PROCEDURE)

Disconnect the Governor Pressure Sensor connector internal to the transmission.

Measure the resistance of the 5-volt Supply circuit between the ECM C2 harness connector and the Transmission Solenoid Assembly connector internal to the transmission..

Is the resistance below 5.0 ohms?

Yes >> Go To 10

No >> Repair or replace the 5-volt Supply circuit for an open internal to the transmission.

Perform RE TRANSMISSION VERIFICATION TEST VER - 1 (DIESEL). (Refer to 21 - TRANSMISSION/TRANSAXLE/ AUTOMATIC - 48RE - STANDARD PROCEDURE)

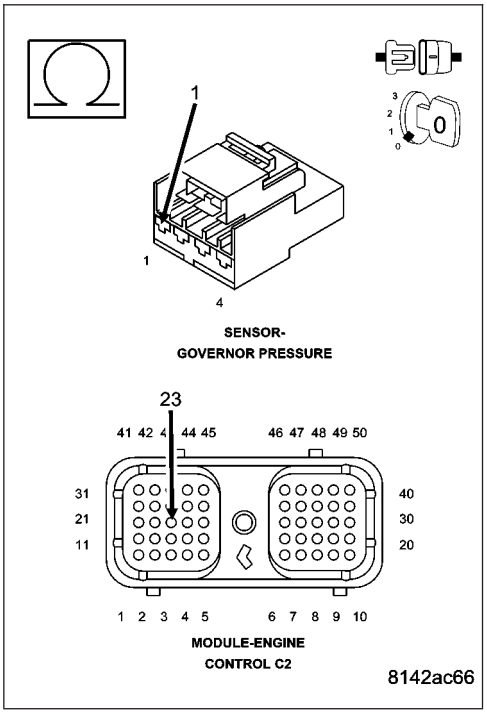

P1757-GOV PRESS ABOVE 3 PSI IN GEAR WITH 0 MPH (DIESEL) (CONTINUED)

10. CHECK THE ENGINE CONTROL MODULE - 5 VOLT SUPPLY

Reconnect the ECM harness connectors.

Ignition on, engine not running.

Measure the voltage of the 5-volt Supply circuit in the Governor Pressure Sensor connector internal to the transmission.

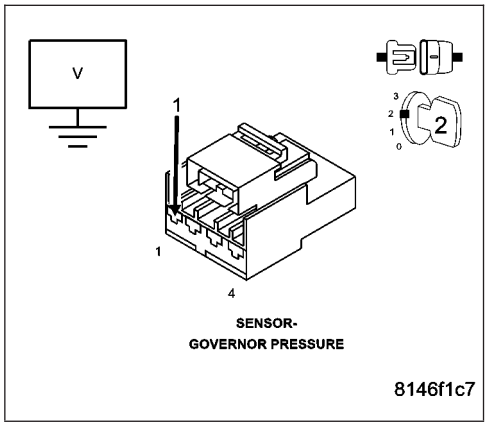

Is the voltage between 4.5 and 5.5 volts?

Yes >> Replace the Governor Pressure Sensor per the Service Information. (Refer to 21 - TRANSMISSION/TRANSAXLE/AUTOMATIC - 48RE/GOVERNOR PRESSURE SENSOR - REMOVAL)

Perform RE TRANSMISSION VERIFICATION TEST VER - 1 (DIESEL). (Refer to 21 - TRANSMISSION/TRANSAXLE/AUTOMATIC - 48RE - STANDARD PROCEDURE)

No >> Using the schematics as a guide, check the Engine Control Module (ECM) pins, terminals, and connectors for corrosion, damage, or terminal push out. Pay particular attention to all power and ground circuits. If no problems are found, replace and program the ECM per the Service Information. (Refer to 8 - ELECTRICAL/ELECTRONIC CONTROL MODULES/ENGINE CONTROL MODULE - REMOVAL)

Perform RE TRANSMISSION VERIFICATION TEST VER - 1 (DIESEL). (Refer to 8 - ELECTRICAL/ELECTRONIC CONTROL MODULES/TRANSMISSION CONTROL MODULE - DIAGNOSIS AND TESTING)

---

11. INTERMITTENT WIRING AND CONNECTORS

The conditions necessary to set this DTC are not present at this time.

Use the Freeze Frame Data to help duplicate the conditions in which the DTC originally set. Pay particular attention to the DTC set conditions, such as, VSS, MAP, ECT, and Load

Using the schematics as a guide, visually inspect the related wiring harness. Look for any chafed, pierced, pinched, or partially broken wires.

Visually inspect the related wiring harness connectors. Look for broken, bent, pushed out, or corroded terminals.

Wiggle the wiring and connectors while checking for any possible open or shorted circuits.

Check for any Service Information Tune-ups or Technical Service Bulletins that may apply.

Were there any problems found?

Yes >> Repair as necessary.

Perform RE TRANSMISSION VERIFICATION TEST VER - 1 (DIESEL). (Refer to 21 - TRANSMISSION/TRANSAXLE/AUTOMATIC - 48RE - STANDARD PROCEDURE)

No >> Test Complete.

P1762-GOV PRESS SENSOR OFFSET VOLTS TOO LOW OR HIGH (DIESEL)

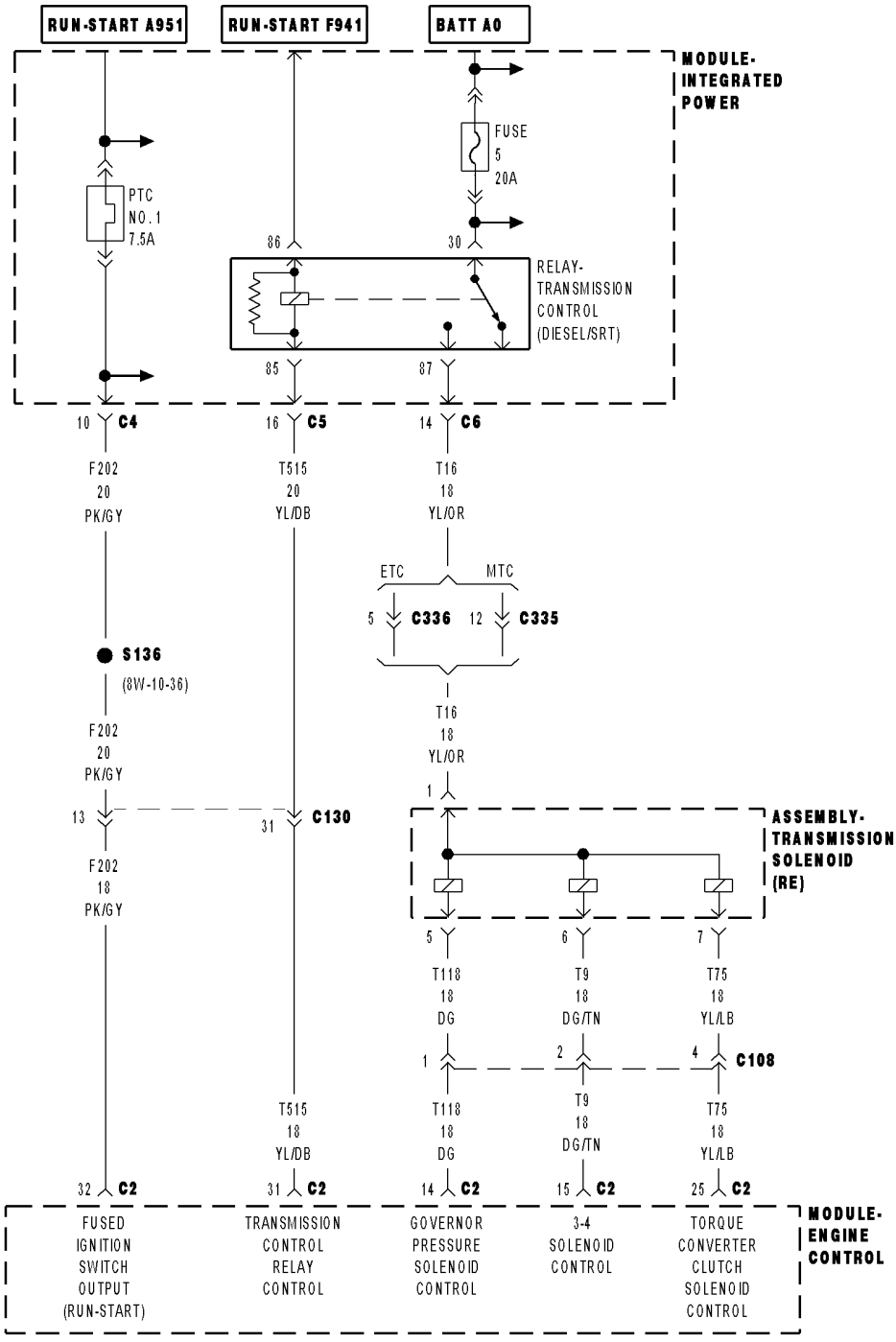

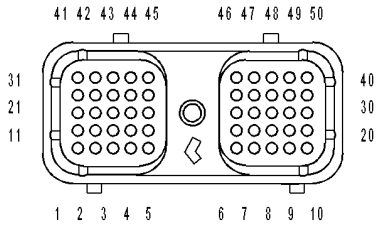

MODULE-ENGINE CONTROL C2

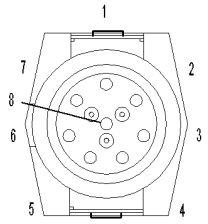

ASSEMBLY-TRANSMISSION SOLENOID (RE)

8142abf3

P1762-GOV PRESS SENSOR OFFSET VOLTS TOO LOW OR HIGH (DIESEL) (CONTINUED)

For the Transmission circuit diagram (Refer to 21 - TRANSMISSION/TRANSAXLE/AUTOMATIC - 48RE - SCHEMATICS AND DIAGRAMS)

For a complete wiring diagram**Refer to Section 8W**

Theory of Operation

The Governor Pressure Sensors output is used as a control input to the Governor Pressure Control System. The Governor Pressure Control System is used to regulate the governor pressure which controls the shifts for first, second, and third gear.

- **When Monitored:**
  While the engine is running and the vehicle gear selector is in park or neutral for more than 3.0 seconds with the throttle position less than 10%.
- **Set Condition:**
  Thsi DTC will set if the Governor Pressure is greater than 3 psi while the vehicle is in Park 3 times in a drive cycle.

Possible Causes
OTHER TRANSMISSION DTCS PRESENT
5 VOLT SUPPLY CIRCUIT OPEN - EXTERNAL
5 VOLT SUPPLY CIRCUIT OPEN - INTERNAL
GOVERNOR PRESSURE SENSOR
TRANSMISSION - INTERNAL DAMAGE
TRANSMISSION - INTERNAL LEAK
ENGINE CONTROL MODULE
INTERMITTENT WIRING AND CONNECTORS

Always perform the Pre-Diagnostic Troubleshooting procedure before proceeding. (Refer to 21 - TRANSMISSION/TRANSAXLE/AUTOMATIC - 48RE - STANDARD PROCEDURE)

Diagnostic Test

1. OTHER TRANSMISSION DTCS PRESENT

Ignition on, engine not running.

With the scan tool, read Engine DTCs.

Are any other transmission DTCs present?

Yes >> Refer to the Transmission category and perform the appropriate symptom(s). (Refer to 21 - TRANSMISSION/TRANSAXLE/AUTOMATIC - 48RE - DIAGNOSIS AND TESTING)

No >> Go To 2

---

2. CHECK IF THE GOVERNOR PRESSURE IS ABOVE 21 KPA (3 PSI) IN PARK

CAUTION: Apply the parking brake.

Start the engine and allow the engine to idle.

Warm the transmission to a normal operating temperature above 43° C (110° F).

With the scan tool in Sensors, read the Governor Pressure with the Transmission Shift selector in Park.

Is the Governor Pressure reading on the scan tool above 21 kPa or 3 psi?

Yes >> Go To 3

No >> Go To 10

P1762-GOV PRESS SENSOR OFFSET VOLTS TOO LOW OR HIGH (DIESEL) (CONTINUED)

3. COMPARE SCAN TOOL GOVERNOR PRESSURE READING TO PRESSURE GAUGE READING

Turn the ignition off to the lock position.

Connect a 700 kPa (100 psi) Pressure Gauge to the Governor Pressure test port. (Refer to 21 - TRANSMISSION/TRANSAXLE/AUTOMATIC - 48RE - DIAGNOSIS AND TESTING)

Start the engine and allow the engine to idle.

Warm the transmission to a normal operating temperature above 43° C (110° F).

With the scan tool, read the Governor Pressure and compare the scan tool Governor Pressure reading to the Pressure Gauge reading.

Does the scan tool Governor Pressure reading match the Pressure Gauge reading within 6.9 kPa (1 psi)?

Yes >> Go To 4

No >> Go To 7

---

4. TRANSMISSION - INTERNAL DAMAGE

Turn the ignition off to the lock position.

Remove the transmission oil pan per the Service Information. (Refer to 21 - TRANSMISSION/TRANSAXLE/AUTOMATIC - 48RE/FLUID - STANDARD PROCEDURE)

Inspect the transmission oil pan for burnt oil and/or excessive debris.

Does the transmission contain burnt oil and/or excessive debris?

Yes >> Repair internal transmission as necessary. (Refer to 21 - TRANSMISSION/TRANSAXLE/AUTOMATIC - 48RE - REMOVAL)

Perform RE TRANSMISSION VERIFICATION TEST VER - 1 (DIESEL). (Refer to 21 - TRANSMISSION/TRANSAXLE/AUTOMATIC - 48RE - STANDARD PROCEDURE)

No >> Go To 5

---

5. CHECK INTERNAL TRANSMISSION FOR A FLUID LEAK

Inspect the transmission for internal fluid leakage in the Valve Body or the Governor Pressure Solenoid. (Refer to 21 - TRANSMISSION/TRANSAXLE/AUTOMATIC - 48RE/VALVE BODY - REMOVAL)

Were there any problems found?

Yes >> Repair the internal transmission as necessary per the Service Information. (Refer to 21 - TRANSMISSION/TRANSAXLE/AUTOMATIC - 48RE/VALVE BODY - REMOVAL)

Perform RE TRANSMISSION VERIFICATION TEST VER - 1 (DIESEL). (Refer to 21 - TRANSMISSION/TRANSAXLE/AUTOMATIC - 48RE - STANDARD PROCEDURE)

No >> Go To 6

P1762-GOV PRESS SENSOR OFFSET VOLTS TOO LOW OR HIGH (DIESEL) (CONTINUED)

6. VERIFY OPERATION - TEST DRIVE

Remove the pressure gauge from the transmission.

Install the transmission oil pan and refill the transmission per the Service Information. (Refer to 21 - TRANSMISSION/TRANSAXLE/AUTOMATIC - 48RE/FLUID - STANDARD PROCEDURE)

With the scan tool, erase Engine DTCs.

Test drive the vehicle.

Be sure to stop the vehicle and move the gear selector into the park position for a minimum of 5 seconds at least three times during the drive cycle.

With the scan tool, read Engine DTCs.

Did the DTC reset?

Yes >> Using the schematics as a guide, check the Engine Control Module (ECM) pins, terminals, and connectors for corrosion, damage, or terminal push out. Pay particular attention to all power and ground circuits. If no problems are found, replace and program the ECM per the Service Information. (Refer to 8 - ELECTRICAL/ELECTRONIC CONTROL MODULES/ENGINE CONTROL MODULE - REMOVAL)

Perform RE TRANSMISSION VERIFICATION TEST VER - 1 (DIESEL). (Refer to 21 - TRANSMISSION/TRANSAXLE/AUTOMATIC - 48RE - STANDARD PROCEDURE)

No >> Go To 10

---

7. CHECK THE 5 VOLT SUPPLY CIRCUIT FOR AN OPEN

Turn the ignition off to the lock position.

Disconnect the ECM C2 harness connector.

Disconnect the Transmission Solenoid Assembly harness connector.

NOTE: Check connectors - Clean/repair as necessary

Measure the resistance of the 5-volt Supply circuit between the Transmission Solenoid Assembly harness connector and the ECM C2 harness connector.

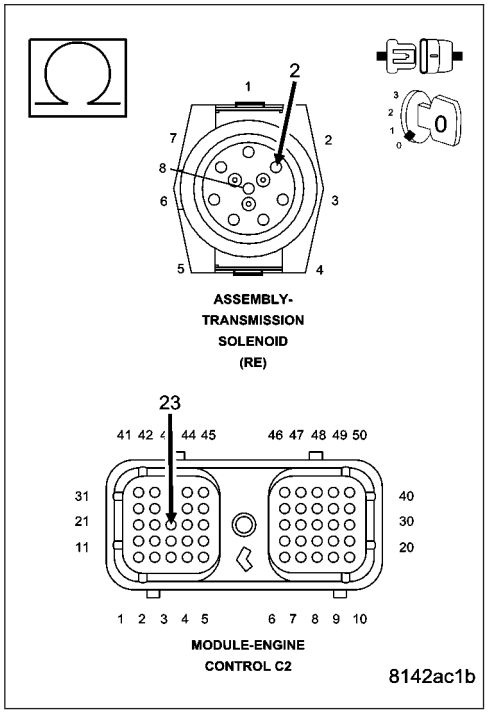

Is the resistance below 5.0 ohms?

Yes >> Go To 8

No >> Repair 5-volt Supply circuit for an open.

Perform RE TRANSMISSION VERIFICATION TEST VER - 1 (DIESEL). (Refer to 21 - TRANSMISSION/TRANSAXLE/AUTOMATIC - 48RE - STANDARD PROCEDURE)

P1762-GOV PRESS SENSOR OFFSET VOLTS TOO LOW OR HIGH (DIESEL) (CONTINUED)

8. CHECK THE 5 VOLT SUPPLY CIRCUIT FOR AN OPEN - INTERNAL

Reconnect the Transmission Solenoid Assembly harness connector.

Remove the Transmission Oil Pan per the Service Information. (Refer to 21 - TRANSMISSION/TRANSAXLE/AUTOMATIC - 48RE/FLUID - STANDARD PROCEDURE)

Disconnect the Governor Pressure Sensor harness connector internal to the transmission.

NOTE: Check connectors - Clean/repair as necessary

Measure the resistance of the 5-volt Supply circuit between the ECM C2 harness connector and the Governor Pressure Sensor connector internal to the transmission.

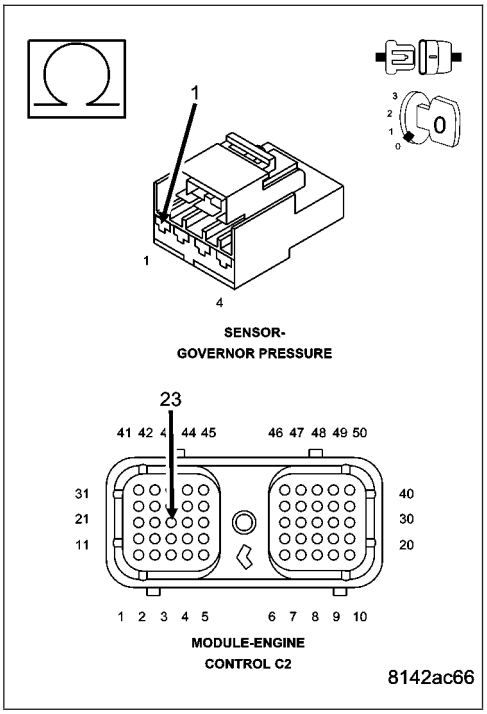

Is the resistance below 5.0 ohms?

Yes >> Go To 9

No >> Repair or replace the 5-volt Supply circuit for an open internal to the transmission.

Perform RE TRANSMISSION VERIFICATION TEST VER - 1 (DIESEL). (Refer to 21 - TRANSMISSION/TRANSAXLE/AUTOMATIC - 48RE - STANDARD PROCEDURE)

---

9. GOVERNOR PRESSURE SENSOR

Reconnect the ECM harness connectors.

NOTE: The ECM harness connectors must be connected during this test.

Ignition on, engine not running.

Measure the voltage of the 5-volt Supply circuit at the Governor Pressure Sensor connector internal to the transmission.

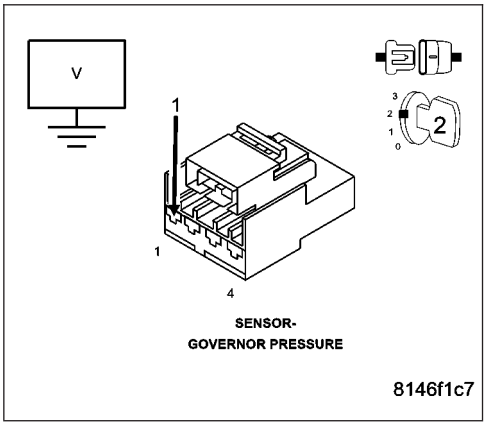

Is the voltage between 4.5 and 5.5 volts?

Yes >> Replace the Governor Pressure Sensor per the Service Information. (Refer to 21 - TRANSMISSION/TRANSAXLE/AUTOMATIC - 48RE/GOVERNOR PRESSURE SENSOR - REMOVAL)

Perform RE TRANSMISSION VERIFICATION TEST VER - 1 (DIESEL). (Refer to 21 - TRANSMISSION/TRANSAXLE/AUTOMATIC - 48RE - STANDARD PROCEDURE)

No >> Using the schematics as a guide, check the Engine Control Module (ECM) pins, terminals, and connectors for corrosion, damage, or terminal push out. Pay particular attention to all power and ground circuits. If no problems are found, replace and program the ECM per the Service Information. (Refer to 8 - ELECTRICAL/ELECTRONIC CONTROL MODULES/ENGINE CONTROL MODULE - REMOVAL)

Perform RE TRANSMISSION VERIFICATION TEST VER - 1 (DIESEL). (Refer to 8 - ELECTRICAL/ELECTRONIC CONTROL MODULES/TRANSMISSION CONTROL MODULE - DIAGNOSIS AND TESTING)

P1762-GOV PRESS SENSOR OFFSET VOLTS TOO LOW OR HIGH (DIESEL) (CONTINUED)

10. INTERMITTENT WIRING AND CONNECTORS

The conditions necessary to set this DTC are not present at this time.

Use the Freeze Frame Data to help duplicate the conditions in which the DTC originally set. Pay particular attention to the DTC set conditions, such as, VSS, MAP, ECT, and Load

Using the schematics as a guide, visually inspect the related wiring harness. Look for any chafed, pierced, pinched, or partially broken wires.

Visually inspect the related wiring harness connectors. Look for broken, bent, pushed out, or corroded terminals.

Wiggle the wiring and connectors while checking for any possible open or shorted circuits.

Check for any Service Information Tune-ups or Technical Service Bulletins that may apply.

Were there any problems found?

Yes >> Repair as necessary.
Perform RE TRANSMISSION VERIFICATION TEST VER - 1 (DIESEL). (Refer to 21 - TRANSMISSION/ TRANSAXLE/AUTOMATIC - 48RE - STANDARD PROCEDURE)

No >> Test Complete.

P2769-TRANSMISSION TCC CONTROL CIRCUIT LOW

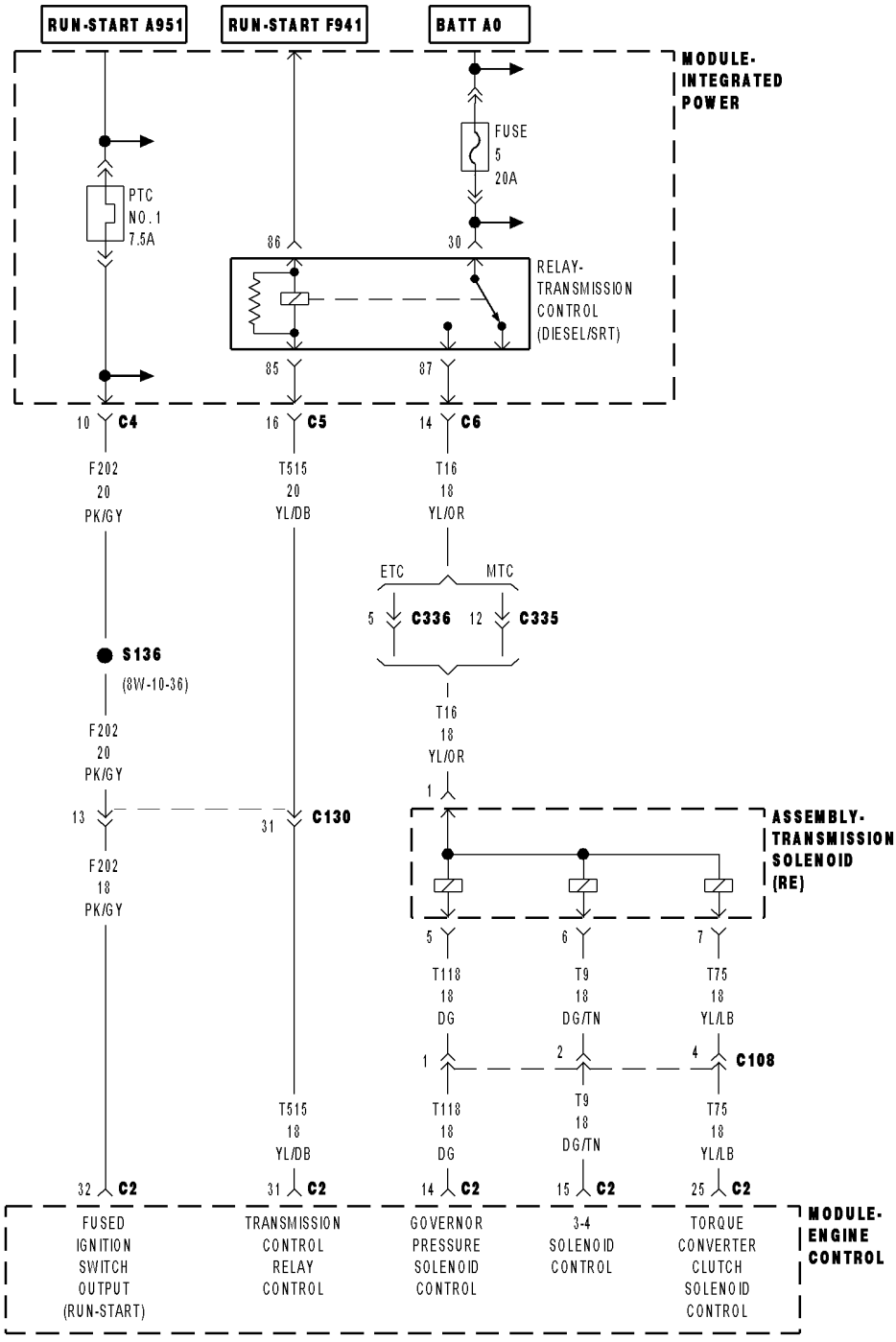

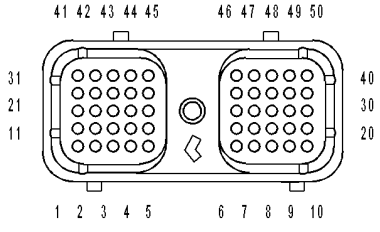

MODULE-ENGINE
CONTROL C2

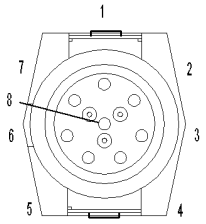

ASSEMBLY-
TRANSMISSION
SOLENOID
(RE)

8142abf3

P2769-TRANSMISSION TCC CONTROL CIRCUIT LOW (CONTINUED)

For the Transmission circuit diagram (Refer to 21 - TRANSMISSION/TRANSAXLE/AUTOMATIC - 48RE - SCHEMATICS AND DIAGRAMS)

For a complete wiring diagram**Refer to Section 8W**

Theory of Operation

The Torque Converter Clutch (TCC) solenoid is used to engage the TCC which improves fuel economy.

- **When Monitored:**
  Continuously with the ignition on.
- **Set Condition:**
  This DTC will set if the voltage detected by the ECM for the Torque Converter Clutch Solenoid Control circuit is different than the expected voltage. Note: To clear this DTC it is necessary to drive the vehicle at a sustained speed which would allow the TCC and/or Overdrive Clutch to operate.

Possible Causes
TRANSMISSION CONTROL RELAY DTCS PRESENT
(F941) FUSED IGNITION SWITCH OUTPUT CIRCUIT (RUN-START) OPEN
(T16) TRANSMISSION CONTROL RELAY OUTPUT CIRCUIT OPEN
(T16) TRANSMISSION CONTROL RELAY OUTPUT CIRCUIT SHORT TO GROUND
(T75) TCC SOLENOID CONTROL CIRCUIT SHORT TO GROUND
(T75) TCC SOLENOID CONTROL CIRCUIT SHORT TO OTHER CIRCUITS
TRANSMISSION CONTROL RELAY - POOR CONTACTS
TORQUE CONVERTER CLUTCH SOLENOID
ENGINE CONTROL MODULE

Always perform the Pre-Diagnostic Troubleshooting procedure before proceeding. (Refer to 21 - TRANSMISSION/TRANSAXLE/AUTOMATIC - 48RE - STANDARD PROCEDURE)

Diagnostic Test

1. CHECK IF THERE ANY TRANSMISSION CONTROL RELAY DTCS PRESENT

Ignition on, engine not running.

With the scan tool, read Engine DTCs.

Are there any Transmission Control Relay DTCs also present?

Yes >> Refer to the Transmission category and perform the appropriate symptom(s). (Refer to 21 - TRANSMISSION/TRANSAXLE/AUTOMATIC - 48RE - DIAGNOSIS AND TESTING)

No >> Go To 2

P2769-TRANSMISSION TCC CONTROL CIRCUIT LOW (CONTINUED)

2. CHECK IF THE DTC IS CURRENT

With the scan tool, read Engine DTCs.

Record the Freeze Frame data for the reported DTC.

With the scan tool, erase DTCs.

Turn the ignition off to the lock position.

Using the Freeze Frame data recorded earlier, try to duplicate the conditions in which the DTC originally set.

NOTE: It may be necessary to road test the vehicle to duplicate the original set conditions.

With the scan tool, read Engine DTCs.

Did the DTC reset?

Yes >> Go To 3

No >> Go To 11

---

3. CHECK THE (T16) TRANSMISSION CONTROL RELAY OUTPUT CIRCUIT

Turn the ignition off to the lock position.

Disconnect the Transmission Solenoid Assembly harness connector.

NOTE: Check connectors - Clean/repair as necessary.

Ignition on, engine not running.

With the scan tool, actuate the Transmission Control Relay.

Using a 12-volt test light connected to ground, check the (T16) Transmission Control Relay Output circuit in the Transmission Solenoid Assembly harness connector.

NOTE: The test light must illuminate brightly. Compare the brightness to that of a direct connection to the battery.

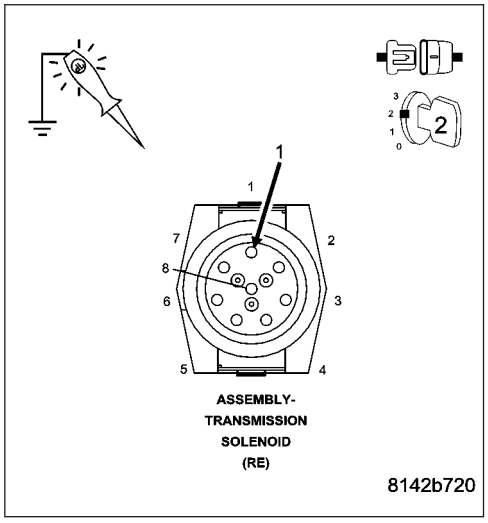

Does the test light cycle on and off and illuminate brightly?

Yes >> Go To 4

No >> Go To 8

P2769-TRANSMISSION TCC CONTROL CIRCUIT LOW (CONTINUED)

4. CHECK THE (T75) TORQUE CONVERTER CLUTCH SOLENOID CIRCUIT

Turn the ignition off to the lock position.

Disconnect the Transmission Solenoid Assembly harness connector.

Ignition on, engine not running.

With the scan tool, actuate the TCC Solenoid.

Using a 12-volt test light connected to 12-volts, check the (T75) TCC Solenoid Control circuit in the Transmission Solenoid Assembly harness connector.

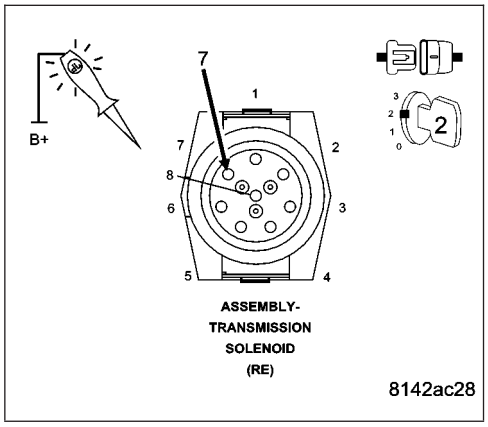

NOTE: The test light must illuminate brightly. Compare the brightness to that of a direct connection to the battery.

Does the test light cycle on and off and illuminate brightly?

Yes >> Check all internal wiring pertaining to the (T75) TCC Solenoid for an open, short, and bent or broken terminals. If no internal wiring problems are found, replace the Transmission Solenoid Assembly per the Service Information. (Refer to 21 - TRANSMISSION/TRANSAXLE/AUTOMATIC - 48RE/VALVE BODY - REMOVAL)
Perform RE TRANSMISSION VERIFICATION TEST VER - 1 (DIESEL). (Refer to 21 - TRANSMISSION/TRANSAXLE/AUTOMATIC - 48RE - STANDARD PROCEDURE)

No >> Go To 5

---

5. (T75) TCC SOLENOID CONTROL CIRCUIT SHORT TO GROUND

Turn the ignition off to the lock position.

Disconnect the ECM harness connectors.

Measure the resistance between ground and the (T75) TCC Solenoid Control circuit.

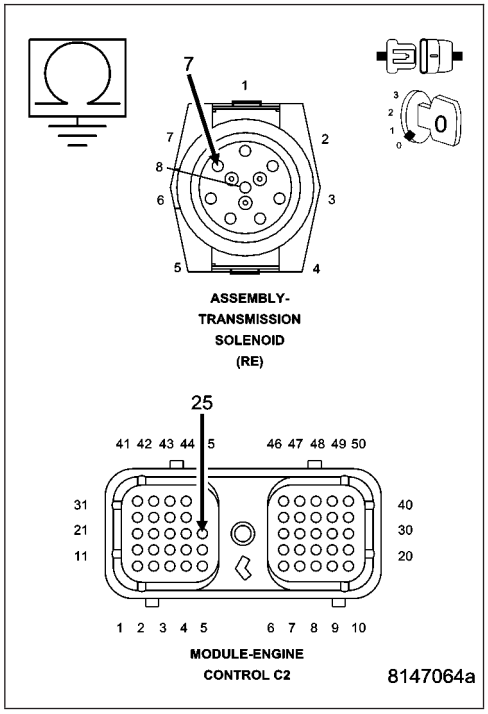

Is the resistance below 5.0 ohms?

Yes >> Repair the (T75) TCC Solenoid Control circuit for a short to ground.
Perform RE TRANSMISSION VERIFICATION TEST VER - 1 (DIESEL). (Refer to 21 - TRANSMISSION/TRANSAXLE/AUTOMATIC - 48RE - STANDARD PROCEDURE)

No >> Go To 6

P2769-TRANSMISSION TCC CONTROL CIRCUIT LOW (CONTINUED)

6. (T75) TCC SOLENOID CONTROL CIRCUIT OPEN

Measure the resistance of the (T75) TCC Solenoid Control circuit between the ECM C2 harness connector and the Transmission Solenoid Assembly harness connector.

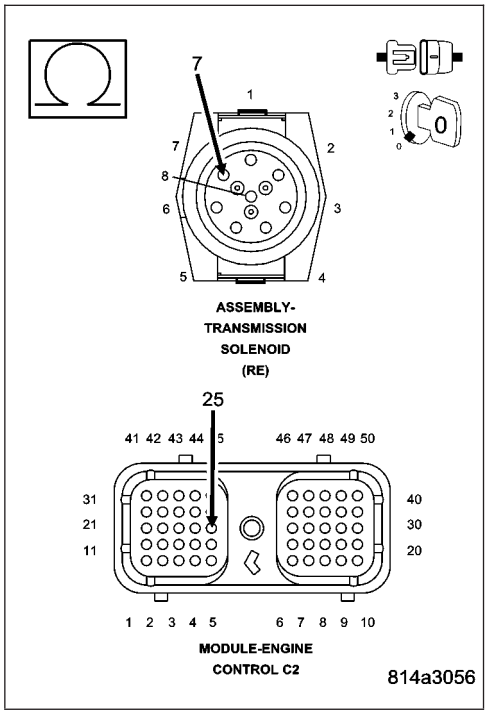

Is the resistance below 5.0 ohms?

Yes >> Repair the (T75) TCC Solenoid Control circuit for an open.
Perform RE TRANSMISSION VERIFICATION TEST VER - 1 (DIESEL). (Refer to 21 - TRANSMISSION/TRANSAXLE/ AUTOMATIC - 48RE - STANDARD PROCEDURE)

No >> Go To 7

7. (T75) TCC SOLENOID CONTROL CIRCUIT SHORT TO OTHER CIRCUITS

Measure the resistance between the (T75) TCC Solenoid Control circuit and all other circuits in the Transmission Solenoid Assembly harness connector.

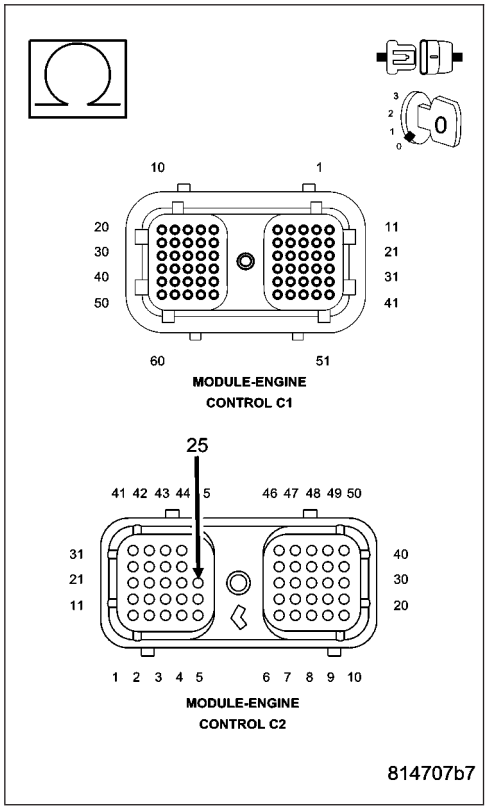

Is the resistance below 5.0 ohms between the (T75) TCC Solenoid Control circuit and any other circuit in the Transmission Solenoid Assembly harness connector?

Yes >> Repair the (T75) TCC Solenoid Control circuit for a short to another circuit(s).
Perform RE TRANSMISSION VERIFICATION TEST VER - 1 (DIESEL). (Refer to 21 - TRANSMISSION/TRANSAXLE/ AUTOMATIC - 48RE - STANDARD PROCEDURE)

No >> Using the schematics as a guide, check the Engine Control Module (ECM) pins, terminals, and connectors for corrosion, damage, or terminal push out. Pay particular attention to all power and ground circuits. If no problems are found, replace and program the ECM per the Service Information. (Refer to 8 - ELECTRICAL/ELECTRONIC CONTROL MODULES/ENGINE CONTROL MODULE - REMOVAL)
Perform RE TRANSMISSION VERIFICATION TEST VER - 1 (DIESEL). (Refer to 21 - TRANSMISSION/TRANSAXLE/ AUTOMATIC - 48RE - STANDARD PROCEDURE)

P2769-TRANSMISSION TCC CONTROL CIRCUIT LOW (CONTINUED)

8. (941) FUSED IGNITION SWITCH OUPUT (RUN-START) CIRCUIT OPEN

Turn the ignition off to the lock position.

Remove the Transmission Control Relay.

Ignition on, engine not running.

Using a 12-volt test light connected to ground, check the (F941) Fused Ignition Swich Output (Run-Start) circuit in the Transmission Control Relay connector.

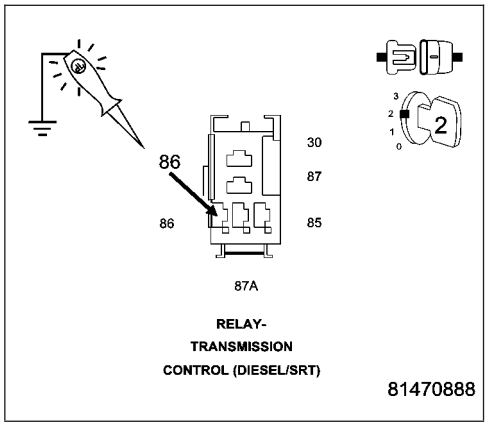

Does the test light illuminate brightly?

Yes >> Go To 9

No >> Repair the (F941) Fused Ignition Swich Output (Run-Start) circuit for an open.

Perform RE TRANSMISSION VERIFICATION TEST VER - 1 (DIESEL). (Refer to 21 - TRANSMISSION/TRANSAXLE/ AUTOMATIC - 48RE - STANDARD PROCEDURE)

---

9. (T16) TRANSMISSION CONTROL RELAY OUTPUT CIRCUIT OPEN

Connect a jumper wire between the Fused B(+) circuit and the Transmission Control Relay Output circuit in the Transmission Control Relay connector.

Using a 12-volt test light connected to ground, check the Fused Transmission Relay Control Output circuit in the Transmission Solenoid Assembly harness connector.

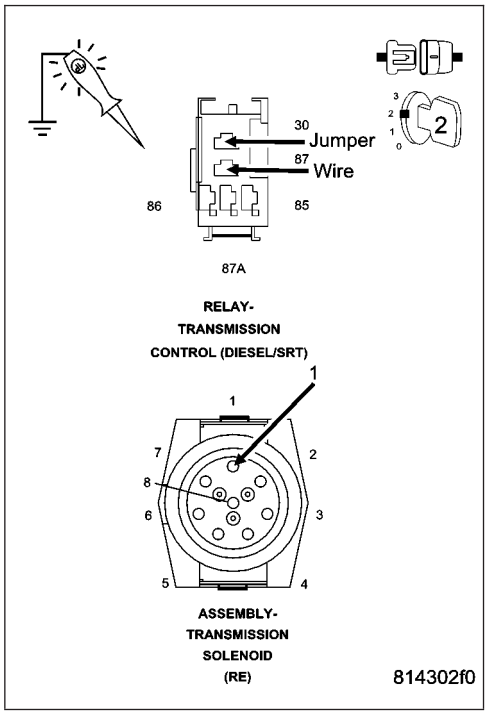

Does the test light illuminate brightly?

Yes >> Go To 10

No >> Repair the (T16) Transmission Control Relay Output circuit for an open. If the fuse is open make sure to check for a short to ground.

Perform RE TRANSMISSION VERIFICATION TEST VER - 1 (DIESEL). (Refer to 21 - TRANSMISSION/TRANSAXLE/ AUTOMATIC - 48RE - STANDARD PROCEDURE)

P2769-TRANSMISSION TCC CONTROL CIRCUIT LOW (CONTINUED)

10. (T16) TRANSMISSION CONTROL RELAY OUTPUT CIRCUIT SHORT TO GROUND

Turn the ignition off to the lock position.

Measure the resistance between ground and the (T16) Transmission Control Relay Output circuit in the Transmission Control Relay connector.

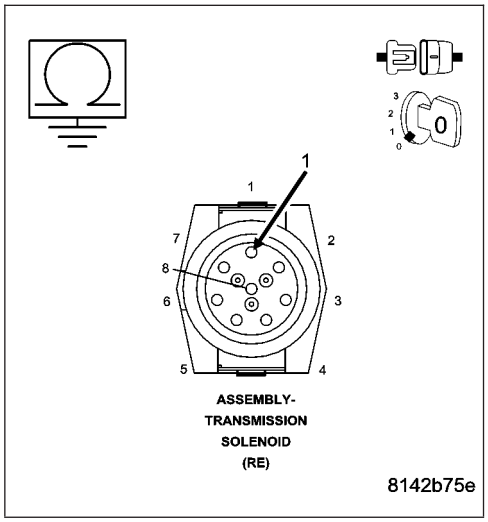

Is the resistance above 100k ohms?

Yes >> Replace the Transmission Control Relay.
Perform RE TRANSMISSION VERIFICATION TEST VER - 1 (DIESEL). (Refer to 8 - ELECTRICAL/ELECTRONIC CONTROL MODULES/TRANSMISSION CONTROL MODULE - DIAGNOSIS AND TESTING)

No >> Repair the (T16) Transmission Control Relay Output circuit for a short to ground.
Perform RE TRANSMISSION VERIFICATION TEST VER - 1 (DIESEL). (Refer to 21 - TRANSMISSION/TRANSAXLE/AUTOMATIC - 48RE - STANDARD PROCEDURE)

---

11. INTERMITTENT WIRING AND CONNECTORS

The conditions necessary set this DTC are not present at this time.

Use the Freeze Frame Data to help duplicate the conditions that set the DTC. Pay particular attention to the DTC set conditions, such as, VSS, MAP, ECT, and Load.

Visually inspect the related wiring harness. Look for any chafed, pierced, pinched, or partially broken wires.

Visually inspect the related wiring harness connectors. Look for broken, bent, pushed out, or corroded terminals.

Refer to any technical service bulletins that may apply.

Were there any problems found?

Yes >> Repair as necessary.
Perform RE TRANSMISSION VERIFICATION TEST VER - 1 (DIESEL). (Refer to 21 - TRANSMISSION/TRANSAXLE/AUTOMATIC - 48RE - STANDARD PROCEDURE)

No >> Test Complete.

P2770-TRANSMISSION TCC CONTROL CIRCUIT HIGH (DIESEL)

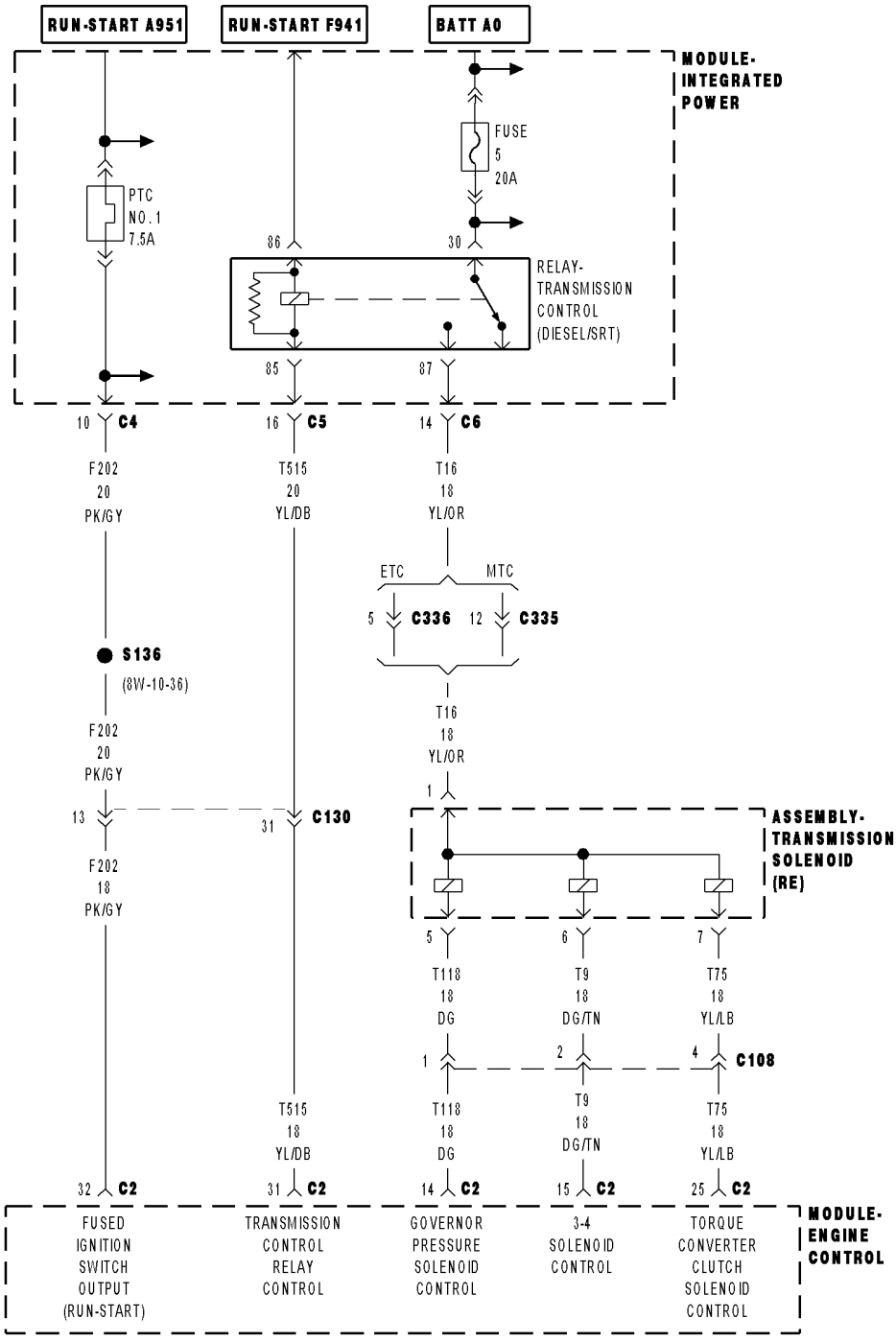

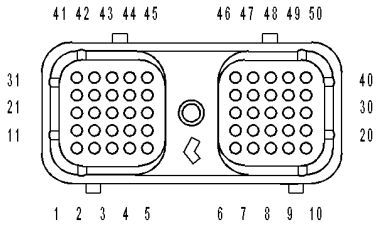

MODULE-ENGINE CONTROL C2

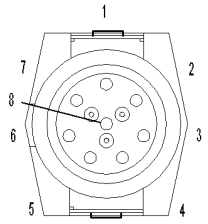

ASSEMBLY-TRANSMISSION SOLENOID (RE)

8142abf3

P2770-TRANSMISSION TCC CONTROL CIRCUIT HIGH (DIESEL) (CONTINUED)

For the Transmission circuit diagram (Refer to 21 - TRANSMISSION/TRANSAXLE/AUTOMATIC - 48RE - SCHEMATICS AND DIAGRAMS)

For a complete wiring diagram**Refer to Section 8W**

Theory of Operation

The Torque Converter Clutch (TCC) Solenoid is used to engage the TCC which improves fuel economy. The Overdrive Solenoid is used to engage the gear change from third to the Overdrive.

- **When Monitored:**
  Continuously with the ignition on.
- **Set Condition:**
  This DTC will set if the voltage detected on the Torque Converter Clutch Solenoid Control circuit at the ECM is different than the expected voltage. Note: To clear this DTC it is necessary to drive the vehicle at a sustained speed which would allow the TCC and/or Overdrive Clutch to operate

Possible Causes
TRANSMISSION CONTROL RELAY DTC PRESENT
(T75) TCC SOLENOID CONTROL CIRCUIT SHORT TO VOLTAGE
(T75) TCC SOLENOID CONTROL CIRCUIT SHORT TO ANOTHER CIRCUIT
TORQUE CONVERTER CLUTCH SOLENOID
ENGINE CONTROL MODULE

Always perform the Pre-Diagnostic Troubleshooting procedure before proceeding. (Refer to 21 - TRANSMISSION/TRANSAXLE/AUTOMATIC - 48RE - STANDARD PROCEDURE)

Diagnostic Test

1. CHECK FOR ANY TRANSMISSION CONTROL RELAY DTCS

Ignition on, engine not running.

With the scan tool, read Engine DTCs.

Are there any Transmission Control Relay DTCs present?

Yes >> Refer to the Transmission category and perform the appropriate symptom(s). (Refer to 21 - TRANSMISSION/TRANSAXLE/AUTOMATIC - 48RE - DIAGNOSIS AND TESTING)

No >> Go To 2

---

2. CHECK IF THE DTC IS CURRENT

With the scan tool, read Engine DTCs.

Record the Freeze Frame data for the reported DTC.

With the scan tool, erase DTCs.

Turn the ignition off to the lock position.

Using the Freeze Frame data recorded earlier, try to duplicate the conditions in which the DTC originally set.

NOTE: It may be necessary to road test the vehicle to duplicate the original set conditions.
With the scan tool, read Engine DTCs.

Did the DTC reset?

Yes >> Go To 3

No >> Go To 7

P2770-TRANSMISSION TCC CONTROL CIRCUIT HIGH (DIESEL) (CONTINUED)

3. CHECK THE (T75) TORQUE CONVERTER CLUTCH SOLENOID CONTROL CIRCUIT

Turn the ignition off to the lock position.

Disconnect the Transmission Solenoid Assembly harness connector.

NOTE: Check connectors - Clean/repair as necessary

Ignition on, engine not running.

With the scan tool, actuate the TCC Solenoid.

Using a 12-volt test light connected to 12-volts, check the (T75) TCC Solenoid Control circuit in the Transmission Solenoid Assembly harness connector.

NOTE: The test light must illuminate brightly. Compare the brightness to that of a direct connection to the battery.

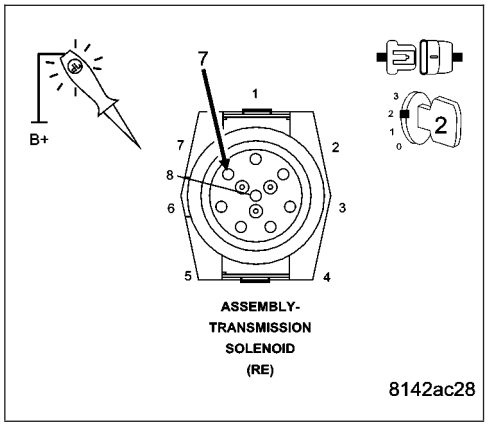

Does the test light cycle on and off and illuminate brightly?

Yes >> Check all internal wiring pertaining to the TCC Solenoid for an open, short, and bent or broken terminals. If no internal wiring problems are found, replace the Transmission Solenoid Assembly per the Service Information. (Refer to 21 - TRANSMISSION/TRANSAXLE/AUTOMATIC - 48RE/VALVE BODY - REMOVAL)

Perform RE TRANSMISSION VERIFICATION TEST VER - 1 (DIESEL). (Refer to 21 - TRANSMISSION/TRANSAXLE/AUTOMATIC - 48RE - STANDARD PROCEDURE)

No >> Go To 4

---

4. CHECK THE (T75) TCC SOLENOID CONTROL CIRCUIT FOR A SHORT TO VOLTAGE

Turn the ignition off to the lock position.

Disconnect the ECM harness connectors.

Ignition on, engine not running.

Measure the voltage of the (T75) TCC Solenoid Control circuit.

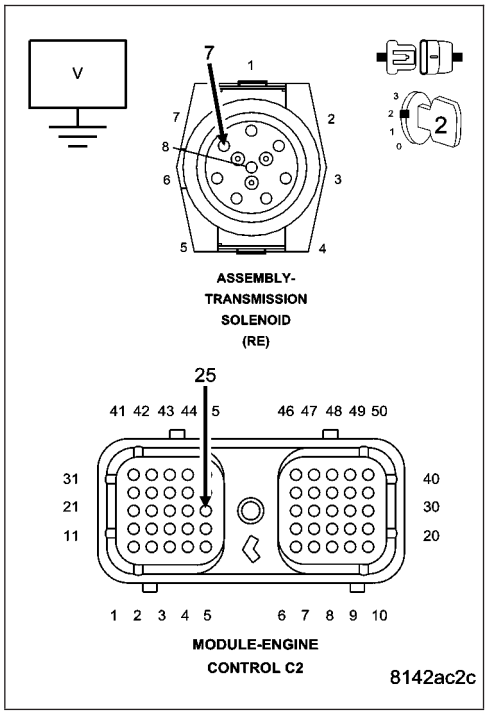

Is the voltage above 0.5 volts?

Yes >> Repair the (T75) TCC Solenoid Control circuit for a short to voltage.

Perform RE TRANSMISSION VERIFICATION TEST VER - 1 (DIESEL). (Refer to 21 - TRANSMISSION/TRANSAXLE/AUTOMATIC - 48RE - STANDARD PROCEDURE)

No >> Go To 5

P2770-TRANSMISSION TCC CONTROL CIRCUIT HIGH (DIESEL) (CONTINUED)

5. CHECK THE (T75) TCC SOLENOID CONTROL CIRCUIT FOR A SHORT TO ANOTHER CIRCUIT

Turn the ignition off to the lock position.

Remove the Transmission Control Relay.

Measure the resistance between the (T75) TCC Solenoid Control circuit and all other circuits in the Transmission Solenoid Assembly harness connector.

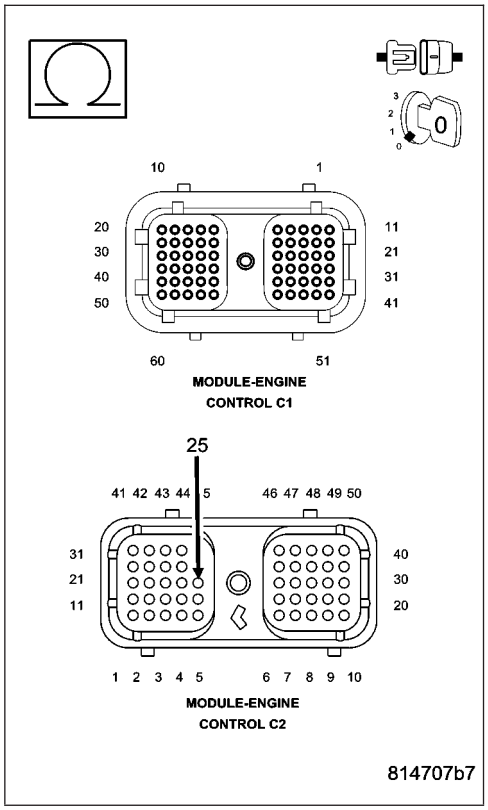

Is the resistance below 5.0 ohms between the (T75) TCC Solenoid Control circuit and any other circuit(s) in the Transmission Solenoid Assembly harness connector?

Yes >> Repair the (T75) TCC Solenoid Control circuit for a short to another circuit(s).

Perform RE TRANSMISSION VERIFICATION TEST VER - 1 (DIESEL). (Refer to 21 - TRANSMISSION/TRANSAXLE/AUTOMATIC - 48RE - STANDARD PROCEDURE)

No >> Go To 6

---

6. ENGINE CONTROL MODULE

Turn the ignition off to the lock position.

Reconnect the ECM harness connectors.

Turn the ignition on, engine not running.

With the scan tool, actuate the TCC Shift Solenoid.

Using a 12-volt test light connected to 12-volts, check the (T75) TCC Solenoid Control circuit in the Transmission Solenoid Assembly harness connector.

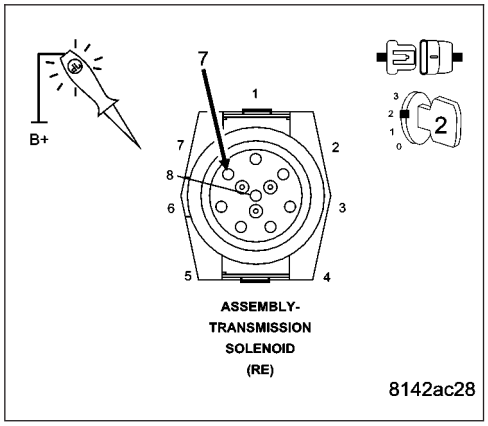

Does the Test Light cycle on and off and illuminate brightly?

Yes >> Go To 7

No >> Using the schematics as a guide, check the Engine Control Module (ECM) pins, terminals, and connectors for corrosion, damage, or terminal push out. Pay particular attention to all power and ground circuits. If no problems are found, replace and program the ECM per the Service Information. (Refer to 8 - ELECTRICAL/ELECTRONIC CONTROL MODULES/ENGINE CONTROL MODULE - REMOVAL)

Perform RE TRANSMISSION VERIFICATION TEST VER - 1 (DIESEL). (Refer to 21 - TRANSMISSION/TRANSAXLE/AUTOMATIC - 48RE - STANDARD PROCEDURE)

P2770-TRANSMISSION TCC CONTROL CIRCUIT HIGH (DIESEL) (CONTINUED)

7. INTERMITTENT WIRING AND CONNECTORS

The conditions necessary to set this DTC are not present at this time.

Use the Freeze Frame Data to help duplicate the conditions in which the DTC originally set. Pay particular attention to the DTC set conditions, such as, VSS, MAP, ECT, and Load

Using the schematics as a guide, visually inspect the related wiring harness. Look for any chafed, pierced, pinched, or partially broken wires.

Visually inspect the related wiring harness connectors. Look for broken, bent, pushed out, or corroded terminals.

Wiggle the wiring and connectors while checking for any possible open or shorted circuits.

Check for any Service Information Tune-ups or Technical Service Bulletins that may apply.

Were there any problems found?

Yes >> Repair as necessary.
Perform RE TRANSMISSION VERIFICATION TEST VER - 1 (DIESEL). (Refer to 21 - TRANSMISSION/ TRANSAXLE/AUTOMATIC - 48RE - STANDARD PROCEDURE)

No >> Test Complete.

*TOW /HAUL OVERDRIVE OFF SWITCH (DIESEL)

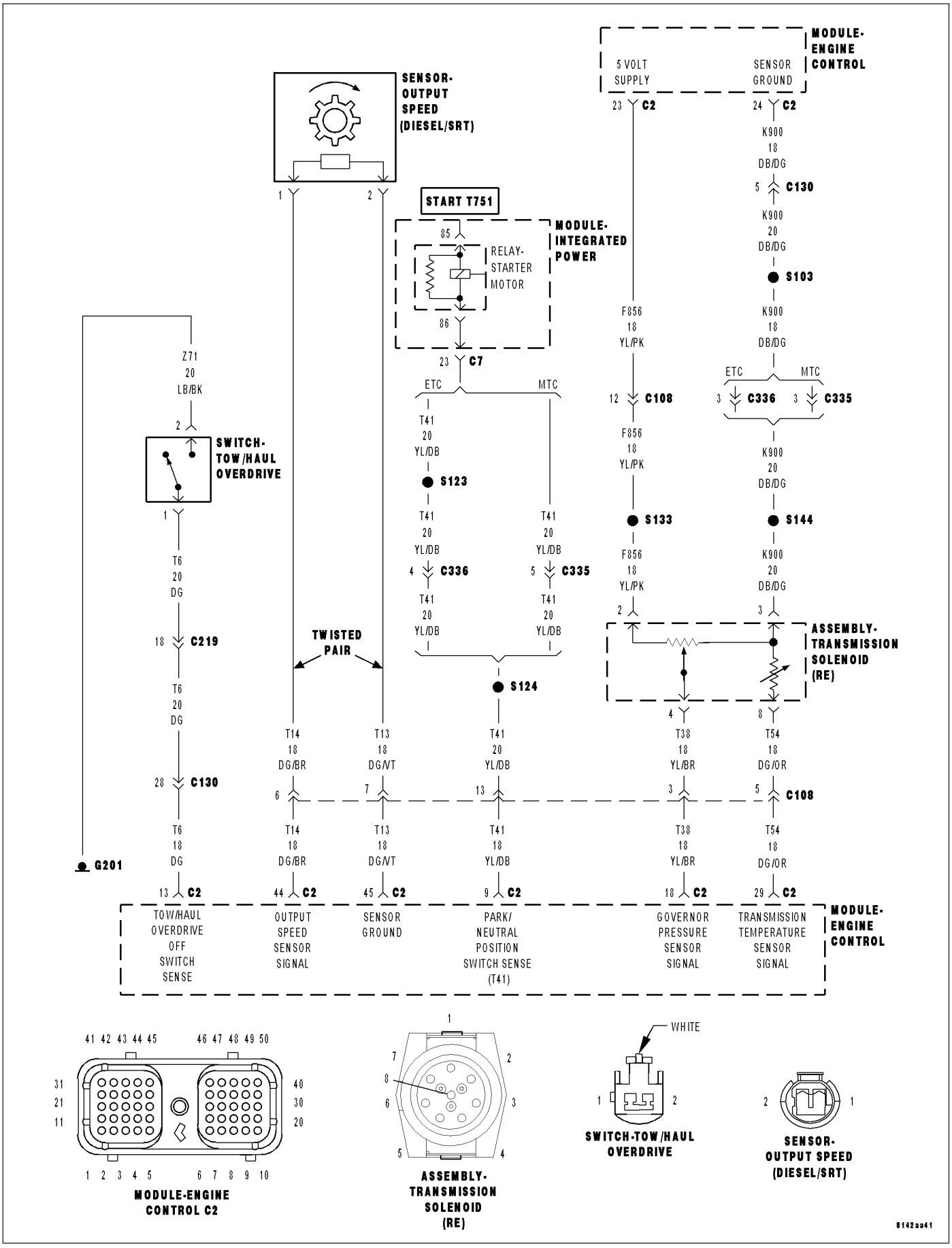

***TOW /HAUL OVERDRIVE OFF SWITCH (DIESEL) (CONTINUED)**

For the Transmission circuit diagram (Refer to 21 - TRANSMISSION/TRANSAXLE/AUTOMATIC - 48RE - SCHEMATICS AND DIAGRAMS)

For a complete wiring diagram**Refer to Section 8W**

Theory of Operation

The tow/haul overdrive OFF (control) switch is located in the shift lever arm. The switch is a momentary contact device that signals the ECM/PCM to toggle current status of the overdrive function. At ignition on, overdrive operation is allowed. Pressing the Tow/Haul Overdrive Off switch once causes the Tow/haul Overdrive OFF mode to be entered and the Tow/Haul lamp to be illuminated. Pressing the switch a second time causes normal overdrive operation to be restored and the Tow/haul lamp to be turned off. The Tow/haul Overdrive OFF mode defaults to ON after the ignition switch is cycled OFF and ON. The normal position for the control switch is the ON position. The switch must be in this position to energize the solenoid and allow a 3-4 upshift. The control switch indicator light illuminates only when the Tow/haul Overdrive Off switch is turned to the OFF position, or when illuminated by the transmission control module.

Possible Causes
TOW/HAUL OVERDRIVE OFF SWITCH SENSE CIRCUIT SHORT TO GROUND
TOW/HAUL OVERDRIVE OFF SWITCH
ENGINE CONTROL MODULE

Always perform the Pre-Diagnostic Troubleshooting procedure before proceeding. (Refer to 8 - ELECTRICAL/ELECTRONIC CONTROL MODULES/TRANSMISSION CONTROL MODULE - DIAGNOSIS AND TESTING)

Diagnostic Test

1. TOW/HAUL OVERDRIVE OFF SWITCH SENSE CIRCUIT SHORT TO GROUND

Turn the ignition off.

Disconnect the ECM C2 harness connector.

Disconnect the Tow/Haul Overdrive Off switch harness connector.

Measure the resistance between ground and the Tow/Haul Overdrive Off switch sense circuit in the ECM C2 harness connector.

Is the resistance below 5.0 ohms?

Yes >> Repair the Tow/Haul Overdrive Off switch sense circuit for a short to ground.

No >> Go To 2

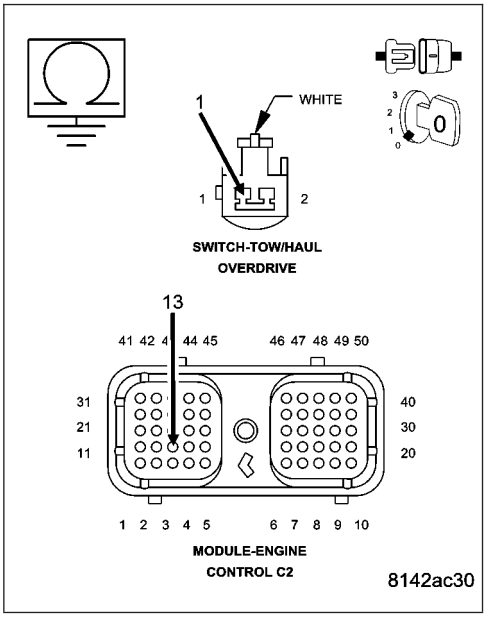

***TOW /HAUL OVERDRIVE OFF SWITCH (DIESEL) (CONTINUED)**

2. CHECK THE TOW/HAUL OVERDRIVE OFF SWITCH

Reconnect the Tow/Haul Overdrive Off switch harness connector.

Measure the resistance between ground and the O/D Tow/Haul Switch Sense circuit in the ECM C2 harness connector.

Press the Tow/Haul Overdrive Off switch button.

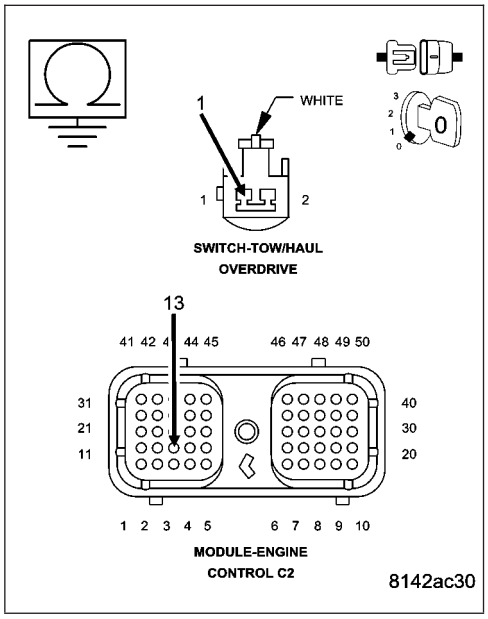

Does the resistance change from above 5.0 ohms to below 5.0 ohms while pressing the Tow/Haul Overdrive Off switch button?

Yes >> Using the schematics as a guide, check the Engine Control Module (ECM) pins, terminals, and connectors for corrosion, damage, or terminal push out. Pay particular attention to all power and ground circuits. If no problems are found, replace and program the ECM per the Service Information. (Refer to 8 - ELECTRICAL/ELECTRONIC CONTROL MODULES/ENGINE CONTROL MODULE - REMOVAL)

Perform RE TRANSMISSION VERIFICATION TEST VER - 1 (DIESEL). (Refer to 8 - ELECTRICAL/ELECTRONIC CONTROL MODULES/TRANSMISSION CONTROL MODULE - DIAGNOSIS AND TESTING)

No >> Replace the Tow/Haul Overdrive Off switch per the Service Information. (Refer to 21 - TRANSMISSION/TRANSAXLE/AUTOMATIC - 48RE/OVERDRIVE SWITCH - REMOVAL)

STANDARD PROCEDURE

PRE-DIAGNOSTIC CHECKOUT (DIESEL)

For a complete wiring diagram **Refer to Section 8W**

1. PRE-DIAGNOSTIC CHECKOUT

NOTE: Always perform diagnostics with a fully charged battery to avoid false symptoms.

NOTE: Low fluid level can be the cause of many transmission problems. If the fluid level is low locate and repair the leak then check and adjust the fluid level per the Service Information.

With the scan tool, read engine DTC's. Check and repair all engine DTCs prior to performing transmission symptom diagnostics.

Using the wiring diagram/schematic as a guide, inspect the wiring and connectors. Repair as necessary.

Verify the flash level of the Engine Control Module. Some problems are corrected by software upgrades.

Check for any Service Information Tune-ups or Technical Service Bulletins that may apply.

Did any of the above checks or procedures correct the symptom?

Yes >> Repair is complete.

Perform RE TRANSMISSION VERIFICATION TEST VER - 1 (DIESEL). (Refer to 8 - ELECTRICAL/ELECTRONIC CONTROL MODULES/TRANSMISSION CONTROL MODULE - DIAGNOSIS AND TESTING)

No >> Refer to the Transmission category and perform the appropriate symptom(s). (Refer to 21 - TRANSMISSION/TRANSAXLE/AUTOMATIC - 48RE - DIAGNOSIS AND TESTING)

PRE-DIAGNOSTIC CHECKOUT (DIESEL) (CONTINUED)

TRANSMISSION VERIFICATION TEST VER - 1 (DIESEL)

1.

1. Inspect the vehicle to ensure that all engine and transmission components are properly installed and connected. Reassemble and reconnect components as necessary.
2. If any existing diagnostic trouble codes have not been repaired, go to Symptom List and follow path specified.
3. Connect a scan tool to the data link connector.
4. Ensure the fuel tank has at least a quarter tank of fuel. Turn off all accessories.
5. Start and run the engine until the transmission temperature is above 43°C (110°F).
6. Check the transmission fluid level per the Service Information. Adjust if necessary.
7. Road test the vehicle. Make 15 to 20 1-2, 2-3 and 3-4 up shifts. Perform these shifts from a standing start to 72 km/h (45 MPH) with a constant throttle opening of 20-25%.
8. Below 40 km/h (25 MPH), make 5 to 8 wide open throttle kick downs to 1st gear. Allow at least 5 seconds each in 2nd and 3rd between each kick down.
9. For a specific DTC, drive the vehicle in accordance with the Symptom's When Monitored and Set Conditions to verify the repair.
10. If a DTC sets during the road test, return to the Symptom List and follow the path. If no DTC sets, the repair is complete.

Are there any DTCs or symptoms remaining?

Yes >> Repair is not complete, refer to appropriate symptom.

No >> Repair is complete.

SCHEMATICS AND DIAGRAMS

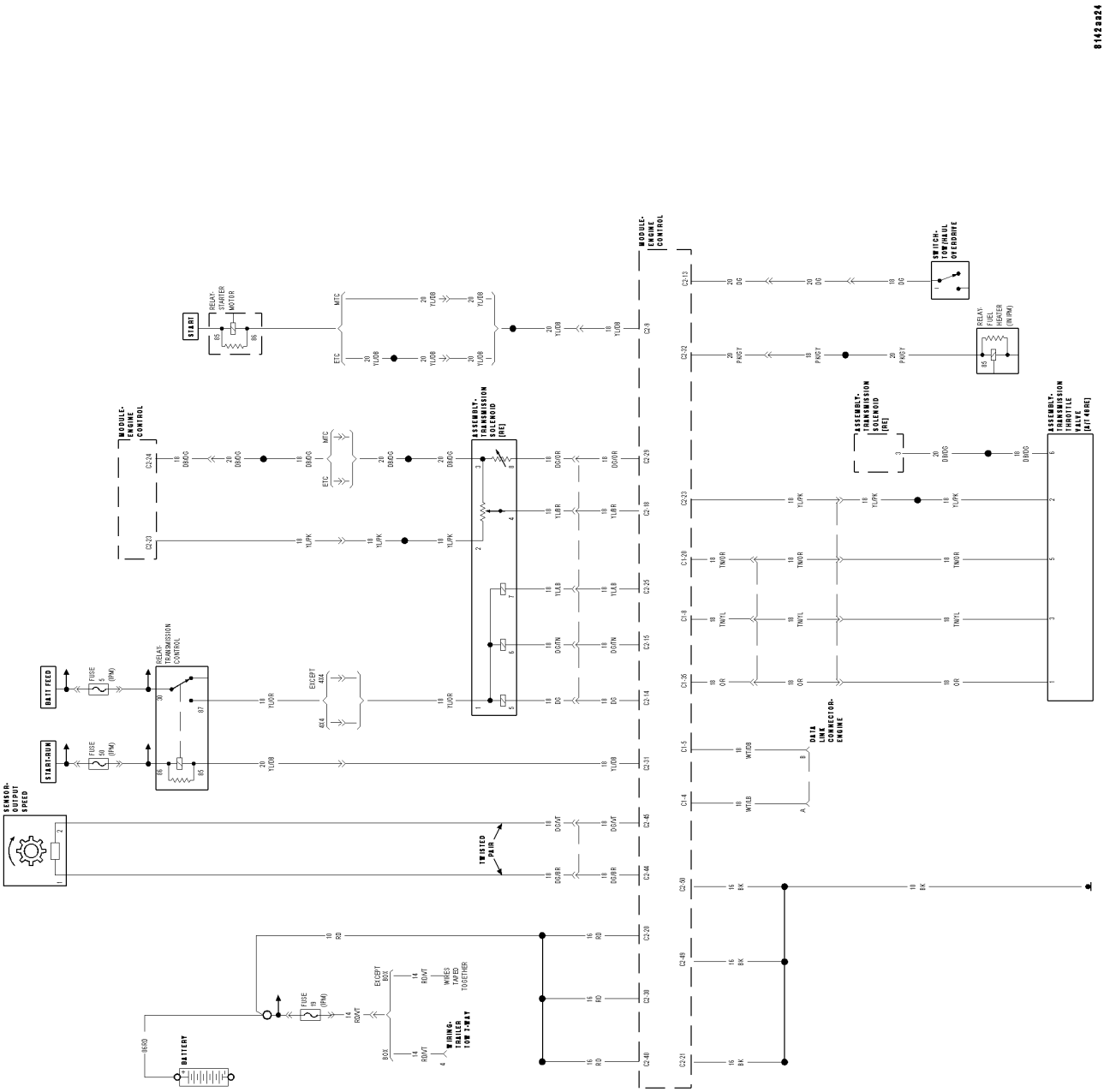

AUTOMATIC TRANSMISSION - 48RE - SERVICE INFORMATION

TABLE OF CONTENTS

page

AUTOMATIC TRANSMISSION - 48RE - SERVICE INFORMATION
DESCRIPTION 967
OPERATION 970
DIAGNOSIS AND TESTING
AUTOMATIC TRANSMISSION 976
PRELIMINARY 976
ROAD TESTING 976
HYDRAULIC PRESSURE TEST 977
AIR TESTING TRANSMISSION CLUTCH AND BAND OPERATION 980
CONVERTER HOUSING FLUID LEAK 981
DIAGNOSIS CHARTS 982
STANDARD PROCEDURE - ALUMINUM THREAD REPAIR 992
REMOVAL 992
DISASSEMBLY 997
CLEANING 1006
INSPECTION 1006
ASSEMBLY 1006
INSTALLATION 1018
SCHEMATICS AND DIAGRAMS
HYDRAULIC SCHEMATICS 1023
SPECIFICATIONS
TRANSMISSION 1036
SPECIAL TOOLS
RE TRANSMISSION 1039
ACCUMULATOR
DESCRIPTION 1041
OPERATION 1042
INSPECTION 1042
BANDS
DESCRIPTION 1043
OPERATION 1043
ADJUSTMENTS
ADJUSTMENT - BANDS 1044
SYSTEM-BRAKE TRANSMISSION SHIFT INTERLOCK
DESCRIPTION 1045
OPERATION 1045
DIAGNOSIS AND TESTING - BRAKE TRANSMISSION SHIFT INTERLOCK 1045
ADJUSTMENTS - BRAKE TRANSMISSION SHIFT INTERLOCK 1045
GOVERNOR-ELECTRONIC
DESCRIPTION 1046
OPERATION 1047
REMOVAL 1049
INSTALLATION 1050

page

SEAL-EXTENSION HOUSING
REMOVAL 1052
INSTALLATION 1052
FLUID AND FILTER
DIAGNOSIS AND TESTING
EFFECTS OF INCORRECT FLUID LEVEL . 1052
CAUSES OF BURNT FLUID 1052
FLUID CONTAMINATION 1052
STANDARD PROCEDURE
FLUID LEVEL CHECK 1053
FLUID AND FILTER REPLACEMENT 1054
TRANSMISSION FILL 1056
CLUTCH-FRONT
DESCRIPTION 1057
OPERATION 1057
DISASSEMBLY 1058
INSPECTION 1059
ASSEMBLY 1059
SERVO-FRONT
DESCRIPTION 1061
OPERATION 1061
DISASSEMBLY 1062
CLEANING 1062
INSPECTION 1063
ASSEMBLY 1063
CABLE-GEARSHIFT
DIAGNOSIS AND TESTING - GEARSHIFT CABLE 1063
REMOVAL 1064
INSTALLATION 1065
ADJUSTMENTS - GEARSHIFT CABLE 1066
PUMP-OIL
DESCRIPTION 1067
OPERATION 1067
DISASSEMBLY 1068
CLEANING 1069
INSPECTION 1069
ASSEMBLY 1071
BEARING-OUTPUT SHAFT FRONT
REMOVAL 1072
INSTALLATION 1072
BEARING-OUTPUT SHAFT REAR
REMOVAL 1073
INSTALLATION 1073
CLUTCH-OVERDRIVE
DESCRIPTION 1074
OPERATION 1074
UNIT-OVERDRIVE
REMOVAL 1075
DISASSEMBLY 1076

CLEANING 1086
INSPECTION 1086
ASSEMBLY 1087
INSTALLATION 1098
RETAINER-OVERRUNNING CLUTCH CAM/ OVERDRIVE PISTON
DESCRIPTION 1099
OPERATION 1099
DISASSEMBLY 1099
CLEANING 1100
INSPECTION 1100
ASSEMBLY 1100
SHAFT-PLANETARY GEARTRAIN/OUTPUT
DESCRIPTION 1103
OPERATION 1103
DISASSEMBLY 1104
INSPECTION 1107
ASSEMBLY 1107
CLUTCH-REAR
DESCRIPTION 1112
OPERATION 1113
DISASSEMBLY 1113
CLEANING 1114
INSPECTION 1114
ASSEMBLY 1115
SERVO-REAR
DESCRIPTION 1117
OPERATION 1117
DISASSEMBLY 1118
CLEANING 1118
ASSEMBLY 1118
MECHANISM-SHIFT
DESCRIPTION 1118
OPERATION 1119
SENSOR-SPEED
DESCRIPTION 1119
OPERATION 1119
ACTUATOR-THROTTLE VALVE
DESCRIPTION 1120
REMOVAL 1120
INSTALLATION 1121
ADJUSTMENTS
ADJUSTMENT 1122
CABLE-THROTTLE VALVE
DESCRIPTION 1123
ADJUSTMENTS - THROTTLE VALVE CABLE . 1124
CONVERTER-TORQUE
DESCRIPTION 1126
OPERATION 1130
REMOVAL 1131
INSTALLATION 1132
VALVE-TORQUE CONVERTER DRAINBACK
DESCRIPTION
GAS ENGINES 1132
DIESEL ENGINE 1132
OPERATION
GAS ENGINES 1132
DIESEL ENGINE 1132
STANDARD PROCEDURE
GAS ENGINES 1133
DIESEL ENGINE 1133
SWITCH-TOW/HAUL OVERDRIVE
DESCRIPTION 1133
OPERATION 1134
DIAGNOSIS AND TESTING - OVERDRIVE ELECTRICAL CONTROLS 1134
REMOVAL 1134
INSTALLATION 1135
SENSOR-TRANSMISSION RANGE
DESCRIPTION 1135
OPERATION 1136
DIAGNOSIS AND TESTING - TRANSMISSION RANGE SENSOR (TRS) 1137
REMOVAL 1138
INSTALLATION 1139
SENSOR-TRANSMISSION TEMPERATURE
DESCRIPTION 1140
OPERATION 1140
BODY-VALVE
DESCRIPTION 1141
OPERATION 1145
REMOVAL 1165
DISASSEMBLY 1167
CLEANING 1180
INSPECTION 1180
ASSEMBLY 1181
INSTALLATION 1193
ADJUSTMENTS - VALVE BODY 1194

AUTOMATIC TRANSMISSION - 48RE - SERVICE INFORMATION

DESCRIPTION

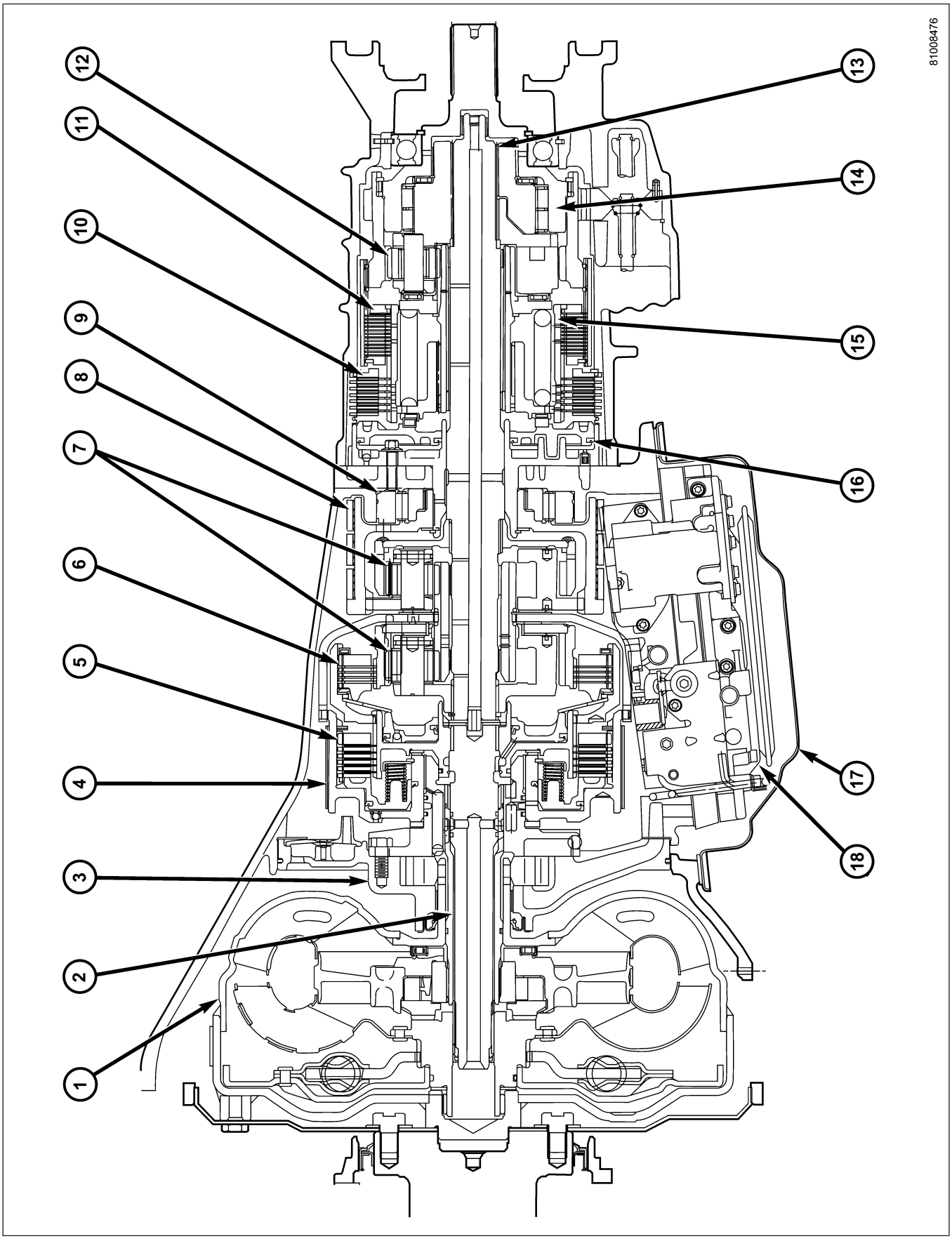

48RE Transmission

1 - TORQUE CONVERTER
2 - INPUT SHAFT
3 - OIL PUMP
4 - FRONT BAND
5 - FRONT CLUTCH
6 - REAR CLUTCH
7 - PLANETARIES
8 - REAR BAND
9 - OVERRUNNING CLUTCH
10 - OVERDRIVE CLUTCH
11 - DIRECT CLUTCH
12 - PLANETARY GEAR
13 - INTERMEDIATE SHAFT
14 - OVERDRIVE OVERRUNNING CLUTCH
15 - DIRECT CLUTCH SPRING
16 - OVERDRIVE PISTON RETAINER
17 - OIL PAN
18 - VALVE BODY

The 48RE is a four speed fully automatic transmissions with an electronic governor. The 48RE is equipped with a lock-up clutch in the torque converter. First through third gear ranges are provided by the clutches, bands, overrunning clutch, and planetary gear sets in the transmission. Fourth gear range is provided by the overdrive unit that contains an overdrive clutch, direct clutch, planetary gear set, and overrunning clutch.

The transmission contains a front, rear, and direct clutch which function as the input driving components. It also contains the kickdown (front) and the low/reverse (rear) bands which, along with the overrunning clutch and overdrive clutch, serve as the holding components. The driving and holding components combine to select the necessary planetary gear components, in the front, rear, or overdrive planetary gear set, transfer the engine power from the input shaft through to the output shaft.

The valve body is mounted to the lower side of the transmission and contains the valves to control pressure regulation, fluid flow control, and clutch/band application. The oil pump is mounted at the front of the transmission and is driven by the torque converter hub. The pump supplies the oil pressure necessary for clutch/band actuation and transmission lubrication.

IDENTIFICATION

Transmission identification numbers (1) are stamped on the left side of the case just above the oil pan gasket surface. Refer to this information when ordering replacement parts.

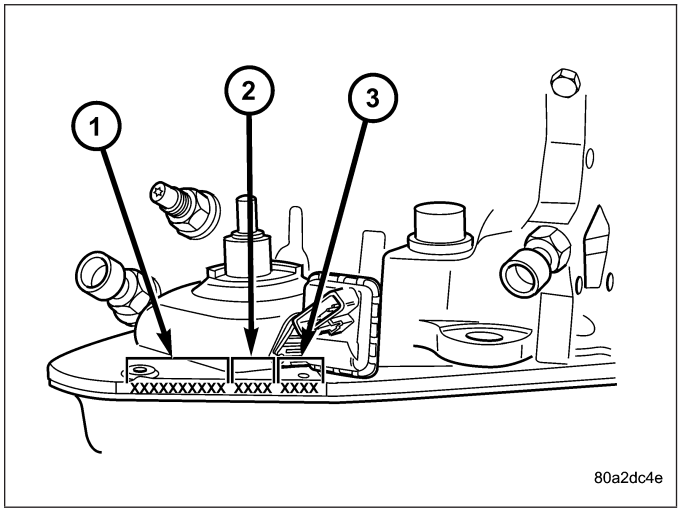

GEAR RATIOS

The 48RE gear ratios are:

1st	2.45:1
2nd	1.45:1
3rd	1.00:1
4th	0.69:1
Rev.	2.20:1

OPERATION

The application of each driving or holding component is controlled by the valve body based upon the manual lever position, throttle pressure, and governor pressure. The governor pressure is a variable pressure input to the valve body and is one of the signals that a shift is necessary. First through fourth gear are obtained by selectively applying and releasing the different clutches and bands. Engine power is thereby routed to the various planetary gear assemblies which combine with the overrunning clutch assemblies to generate the different gear ratios. The torque converter clutch is hydraulically applied and is released when fluid is vented from the hydraulic circuit by the torque converter control (TCC) solenoid on the valve body. The torque converter clutch is controlled by the Powertrain Control Module (PCM). The torque converter clutch engages in fourth gear, and in third gear under various conditions, such as when the O/D switch is OFF, when the vehicle is cruising on a level surface after the vehicle has warmed up. The torque converter clutch can also be engaged in the MANUAL SECOND gear position if high transmission temperatures are sensed by the PCM. The torque converter clutch will disengage momentarily when an increase in engine load is sensed by the PCM, such as when the vehicle begins to go uphill or the throttle pressure is increased. The torque converter clutch feature increases fuel economy and reduces the transmission fluid temperature.

Since the overdrive clutch is applied in fourth gear only and the direct clutch is applied in all ranges except fourth gear, the transmission operation for park, neutral, and first through third gear will be described first. Once these powerflows are described, the third to fourth shift sequence will be described.

PARK POWERFLOW

As the engine is running and the crankshaft is rotating, the flexplate and torque converter, which are also bolted to it, are all rotating in a clockwise direction as viewed from the front of the engine. The notched hub of the torque converter is connected to the oil pump's internal gear, supplying the transmission with oil pressure. As the converter turns, it turns the input shaft in a clockwise direction. As the input shaft is rotating, the front clutch hub-rear clutch retainer and all their associated parts are also rotating, all being directly connected to the input shaft. The power flow from the engine through the front clutch hub and rear clutch retainer stops at the rear clutch retainer. Therefore, no power flow to the output shaft occurs because no clutches are applied. The only mechanism in use at this time is the parking sprag (1), which locks the parking gear (2) on the output shaft (3) to the transmission case.

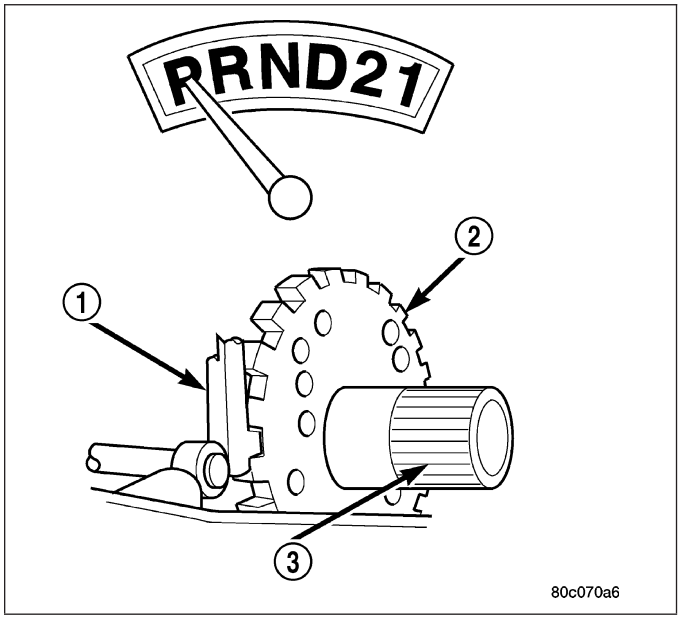

NEUTRAL POWERFLOW

With the gear selector in the NEUTRAL position, the power flow of the transmission is essentially the same as in the park position. The only operational difference is that the parking sprag (1) has been disengaged, unlocking the output shaft (3) from the transmission case and allowing it to move freely.

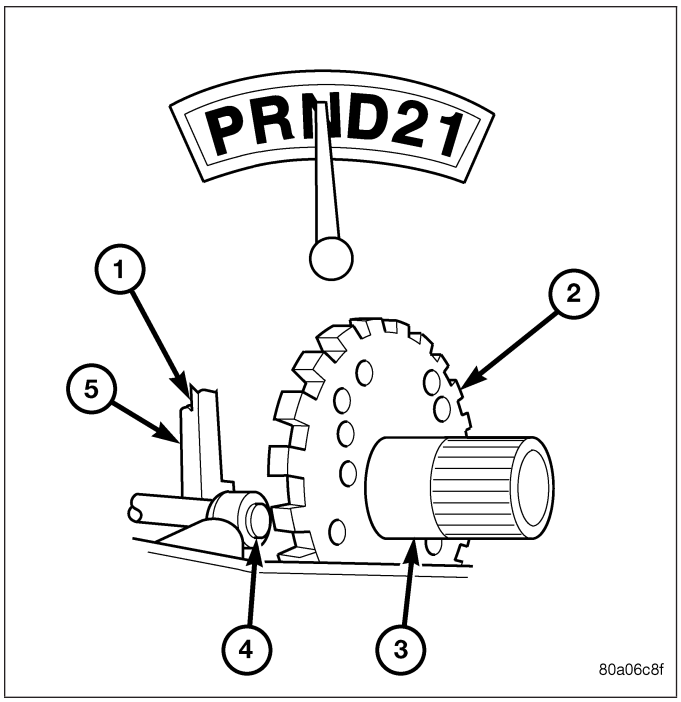

REVERSE POWERFLOW

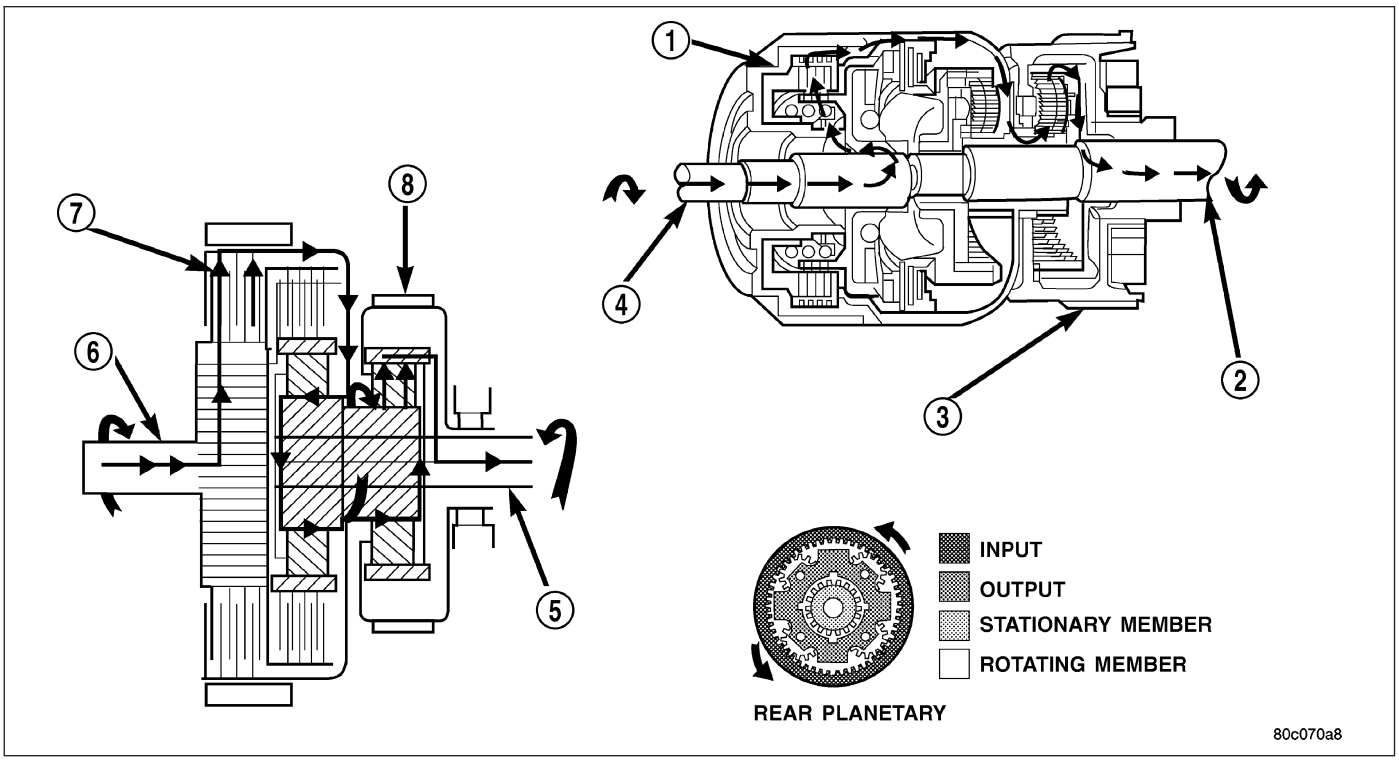

Reverse Powerflow

1 - FRONT CLUTCH ENGAGED
2 - OUTPUT SHAFT
3 - LOW/REVERSE BAND APPLIED
4 - INPUT SHAFT
5 - OUTPUT SHAFT
6 - INPUT SHAFT
7 - FRONT CLUTCH ENGAGED
8 - LOW/REVERSE BAND APPLIED

When the gear selector is moved into the REVERSE position, the front clutch (1, 7) and the rear band (3, 8) are applied. With the application of the front clutch, engine torque (4, 6) is applied to the sun gear, turning it in a clockwise direction. The clockwise rotation of the sun gear causes the rear planet pinions to rotate against engine rotation in a counterclockwise direction. The rear band is holding the low reverse drum, which is splined to the rear carrier. Since the rear carrier is being held, the torque from the planet pinions is transferred to the rear annulus gear, which is splined to the output shaft (2, 5). The output shaft in turn rotates with the annulus gear in a counterclockwise direction giving a reverse gear output. The entire transmission of torque is applied to the rear planetary gearset only. Although there is torque input to the front gearset through the sun gear, no other member of the gearset is being held. During the entire reverse stage of operation, the front planetary gears are in an idling condition.

FIRST GEAR POWERFLOW

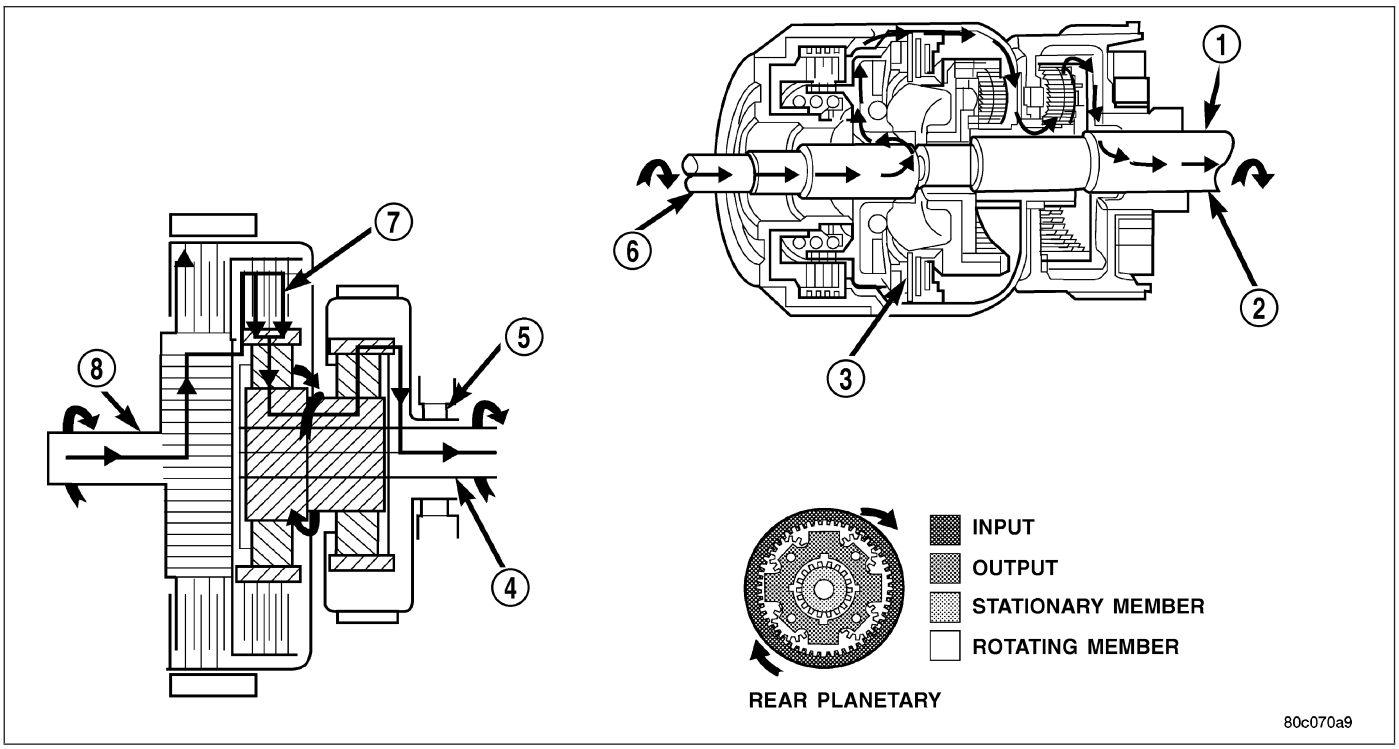

First Gear Powerflow

1 - OUTPUT SHAFT
2 - OVER-RUNNING CLUTCH HOLDING
3 - REAR CLUTCH APPLIED
4 - OUTPUT SHAFT
5 - OVER-RUNNING CLUTCH HOLDING
6 - INPUT SHAFT
7 - REAR CLUTCH APPLIED
8 - INPUT SHAFT

When the gearshift lever is moved into the DRIVE position the transmission goes into first gear. As soon as the transmission is shifted from PARK or NEUTRAL to DRIVE, the rear clutch applies (3, 7), applying the rear clutch pack to the front annulus gear. Engine torque (6, 8) is now applied to the front annulus gear turning it in a clockwise direction. With the front annulus gear turning in a clockwise direction, it causes the front planets to turn in a clockwise direction. The rotation of the front planets cause the sun to revolve in a counterclockwise direction. The sun gear now transfers its counterclockwise rotation to the rear planets which rotate back in a clockwise direction. With the rear annulus gear stationary, the rear planet rotation on the annulus gear causes the rear planet carrier to revolve in a counterclockwise direction. The rear planet carrier is splined into the low-reverse drum, and the low reverse drum is splined to the inner race of the over-running clutch (2, 5). With the over-running clutch locked, the planet carrier is held, and the resulting torque provided by the planet pinions is transferred to the rear annulus gear. The rear annulus gear is splined to the output shaft (1, 4) and rotated along with it (clockwise) in an underdrive gear reduction mode.

SECOND GEAR POWERFLOW

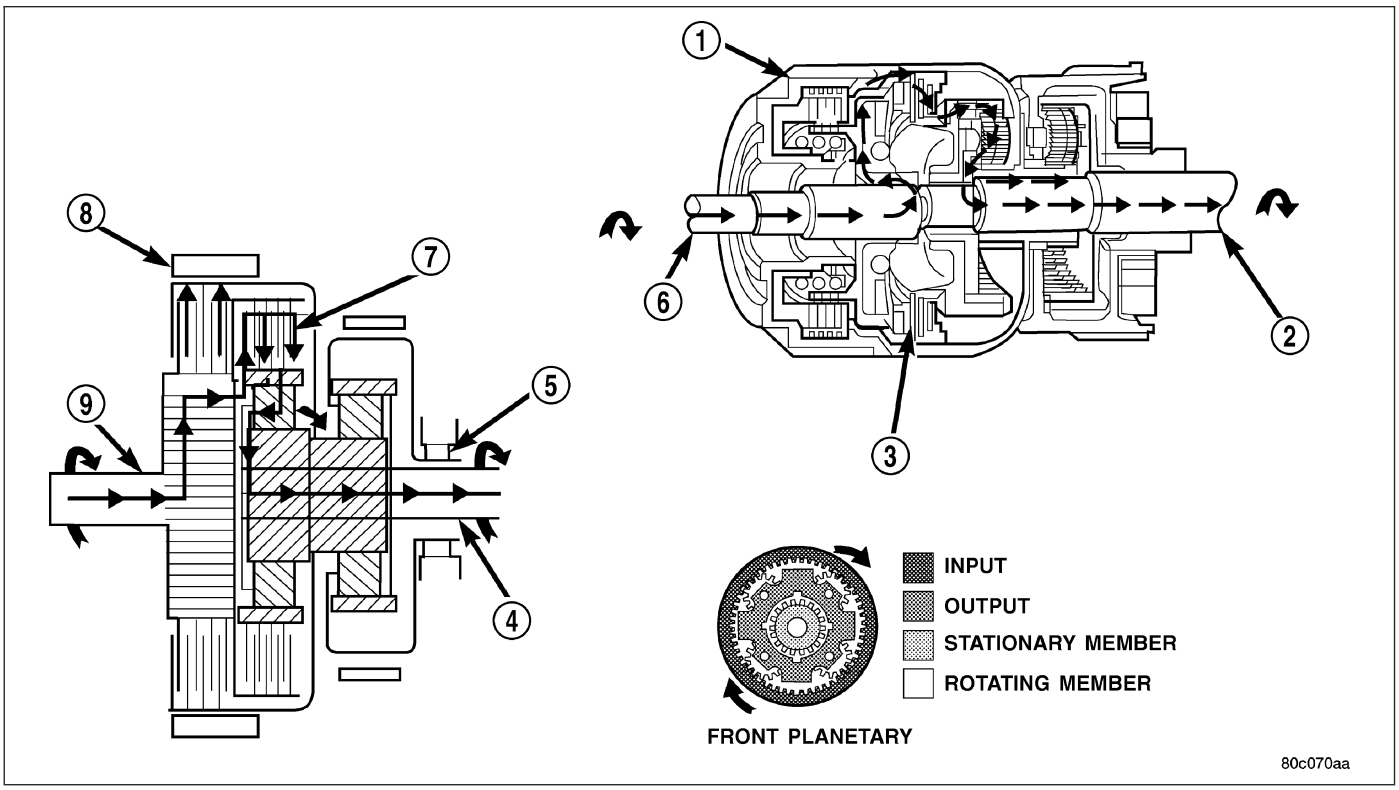

Second Gear Powerflow

1 - KICKDOWN BAND APPLIED
2 - OUTPUT SHAFT
3 - REAR CLUTCH ENGAGED
4 - OUTPUT SHAFT
5 - OVER-RUNNING CLUTCH FREE-WHEELING
6 - INPUT SHAFT
7 - REAR CLUTCH APPLIED
8 - KICKDOWN BAND APPLIED
9 - INPUT SHAFT

In DRIVE-SECOND, the same elements are applied as in MANUAL-SECOND. Therefore, the power flow will be the same, and both gears will be discussed as one in the same. In DRIVE-SECOND, the transmission has proceeded from first gear to its shift point, and is shifting from first gear to second. The second gear shift is obtained by keeping the rear clutch applied ((3, 7) and applying the front (kickdown) band (1, 8). The front band holds the front clutch retainer that is locked to the sun gear driving shell. With the rear clutch still applied, the input is still on the front annulus gear turning it clockwise at engine speed. Now that the front band is holding the sun gear stationary, the annulus rotation causes the front planets to rotate in a clockwise direction. The front carrier is then also made to rotate in a clockwise direction but at a reduced speed. This will transmit the torque to the output shaft (2, 4), which is directly connected to the front planet carrier. The rear planetary annulus gear will also be turning because it is directly splined to the output shaft. All power flow has occurred in the front planetary gear set during the drive-second stage of operation, and now the over-running clutch, in the rear of the transmission, is disengaged and freewheeling on its hub.

DIRECT DRIVE POWERFLOW

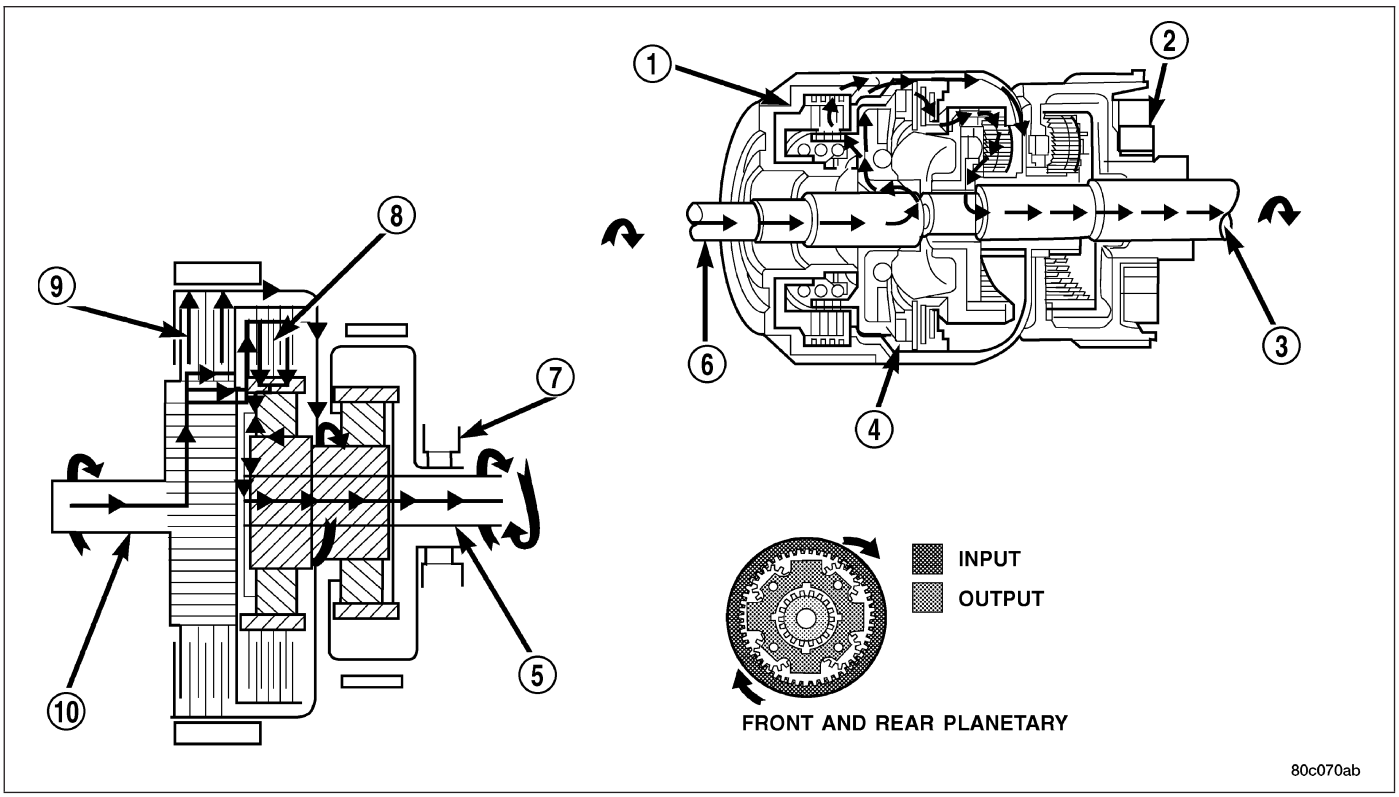

Direct Drive Powerflow

1 - FRONT CLUTCH APPLIED
2 - OVER-RUNNING CLUTCH FREE-WHEELING
3 - OUTPUT SHAFT
4 - REAR CLUTCH APPLIED
5 - OUTPUT SHAFT
6 - INPUT SHAFT
7 - OVER-RUNNING CLUTCH FREE-WHEELING
8 - REAR CLUTCH APPLIED
9 - FRONT CLUTCH APPLIED
10 - INPUT SHAFT

The vehicle has accelerated and reached the shift point for the 2-3 upshift into direct drive. When the shift takes place, the front band is released, and the front clutch is applied (1, 9). The rear clutch stays applied (4, 8) as it has been in all the forward gears. With the front clutch now applied, engine torque is now on the front clutch retainer, which is locked to the sun gear driving shell. This means that the sun gear is now turning in engine rotation (clockwise) and at engine speed. The rear clutch is still applied so engine torque (6, 10) is also still on the front annulus gear. If two members of the same planetary set are driven, direct drive results. Therefore, when two members are rotating at the same speed and in the same direction, it is the same as being locked up. The rear planetary set is also locked up, given the sun gear is still the input, and the rear annulus gear must turn with the output shaft (3, 5). Both gears are turning in the same direction and at the same speed. The front and rear planet pinions do not turn at all in direct drive. The only rotation is the input from the engine to the connected parts, which are acting as one common unit, to the output shaft.

FOURTH GEAR POWERFLOW

Fourth gear overdrive range is electronically controlled and hydraulically activated. Various sensor inputs are supplied to the powertrain control module to operate the overdrive solenoid on the valve body. The solenoid contains a check ball that opens and closes a vent port in the 3-4 shift valve feed passage. The overdrive solenoid (and check ball) are not energized in first, second, third, or reverse gear. The vent port remains open, diverting line pressure from the 2-3 shift valve away from the 3-4 shift valve. The Tow/Haul control switch must be in the ON position to transmit overdrive status to the PCM. A 3-4 upshift occurs only when the overdrive solenoid is energized by the PCM. The PCM energizes the overdrive solenoid during the 3-4 upshift. This causes the solenoid check ball to close the vent port allowing line pressure from the 2-3 shift valve to act directly on the 3-4 upshift valve. Line pressure on the 3-4 shift valve overcomes valve spring pressure moving the valve to the upshift position. This action exposes the feed passages to the 3-4 timing valve, 3-4 quick fill valve, 3-4 accumulator, and ultimately to the overdrive pis-

ton. Line pressure through the timing valve moves the overdrive piston into contact with the overdrive clutch. The direct clutch is disengaged before the overdrive clutch is engaged. The boost valve provides increased fluid apply pressure to the overdrive clutch during 3-4 upshifts, and when accelerating in fourth gear. The 3-4 accumulator cushions overdrive clutch engagement to smooth 3-4 upshifts. The accumulator is charged at the same time as apply pressure acts against the overdrive piston.

DIAGNOSIS AND TESTING

AUTOMATIC TRANSMISSION

Automatic transmission problems can be a result of poor engine performance, incorrect fluid level, incorrect linkage or cable adjustment, band or hydraulic control pressure adjustments, hydraulic system malfunctions or electrical/mechanical component malfunctions. Begin diagnosis by checking the easily accessible items such as: fluid level and condition, linkage adjustments and electrical connections. A road test will determine if further diagnosis is necessary.

PRELIMINARY

Two basic procedures are required. One procedure for vehicles that are drivable and an alternate procedure for disabled vehicles (will not back up or move forward).

VEHICLE IS DRIVEABLE

1. Check for transmission fault codes using DRB® scan tool.
2. Check fluid level and condition.
3. Adjust throttle and gearshift linkage if complaint was based on delayed, erratic, or harsh shifts.
4. Road test and note how transmission upshifts, downshifts, and engages.
5. Perform hydraulic pressure test if shift problems were noted during road test.
6. Perform air-pressure test to check clutch-band operation.

VEHICLE IS DISABLED

1. Check fluid level and condition.
2. Check for broken or disconnected gearshift or throttle linkage.
3. Check for cracked, leaking cooler lines, or loose or missing pressure-port plugs.
4. Raise and support vehicle on safety stands, start engine, shift transmission into gear, and note following:
   a. If propeller shaft turns but wheels do not, problem is with differential or axle shafts.
   b. If propeller shaft does not turn and transmission is noisy, stop engine. Remove oil pan, and check for debris. If pan is clear, remove transmission and check for damaged drive plate, converter, oil pump, or input shaft.
   c. If propeller shaft does not turn and transmission is not noisy, perform hydraulic-pressure test to determine if problem is hydraulic or mechanical.

ROAD TESTING

Before road testing, be sure the fluid level and control cable adjustments have been checked and adjusted if necessary. Verify that diagnostic trouble codes have been resolved.

Observe engine performance during the road test. A poorly tuned engine will not allow accurate analysis of transmission operation.

Operate the transmission in all gear ranges. Check for shift variations and engine flare which indicates slippage. Note if shifts are harsh, spongy, delayed, early, or if part throttle downshifts are sensitive.

Slippage indicated by engine flare, usually means clutch, band or overrunning clutch problems. If the condition is advanced, an overhaul will be necessary to restore normal operation.

A slipping clutch or band can often be determined by comparing which internal units are applied in the various gear ranges. The Clutch and Band Application chart provides a basis for analyzing road test results.

Clutch and Band Application Chart

SHIFT LEVER POSITION	TRANSMISSION CLUTCHES AND BANDS					OVERDRIVE CLUTCHES		
	FRONT CLUTCH	FRONT BAND	REAR CLUTCH	REAR BAND	OVER-RUNNING CLUTCH	OVER-DRIVE CLUTCH	DIRECT CLUTCH	OVER-RUNNING CLUTCH
Reverse	X			X			X	
Drive - First			X		X		X	X
Drive - Second		X	X				X	X
Drive - Third	X		X				X	X
Drive - Fourth	X		X			X		
Manual Second		X	X				X	X
Manual First			X	X	X		X	X

Note that the rear clutch is applied in all forward ranges (D, 2, 1). The transmission overrunning clutch is applied in first gear (D, 2 and 1 ranges) only. The rear band is applied in 1 and R range only.

Note that the overdrive clutch is applied only in fourth gear and the overdrive direct clutch and overrunning clutch are applied in all ranges except fourth gear.

For example: If slippage occurs in first gear in D and 2 range but not in 1 range, the transmission overrunning clutch is faulty. Similarly, if slippage occurs in any two forward gears, the rear clutch is slipping.

Applying the same method of analysis, note that the front and rear clutches are applied simultaneously only in D range third and fourth gear. If the transmission slips in third gear, either the front clutch or the rear clutch is slipping.

If the transmission slips in fourth gear but not in third gear, the overdrive clutch is slipping. By selecting another gear which does not use these clutches, the slipping unit can be determined. For example, if the transmission also slips in Reverse, the front clutch is slipping. If the transmission does not slip in Reverse, the rear clutch is slipping.

If slippage occurs during the 3-4 shift or only in fourth gear, the overdrive clutch is slipping. Similarly, if the direct clutch were to fail, the transmission would lose both reverse gear and overrun braking in 2 position (manual second gear).

If the transmission will not shift to fourth gear, the control switch, overdrive solenoid or related wiring may also be the problem cause.

This process of elimination can be used to identify a slipping unit and check operation. Proper use of the Clutch and Band Application Chart is the key.

Although road test analysis will help determine the slipping unit, the actual cause of a malfunction usually cannot be determined until hydraulic and air pressure tests are performed. Practically any condition can be caused by leaking hydraulic circuits or sticking valves.

Unless a malfunction is obvious, such as no drive in D range first gear, do not disassemble the transmission. Perform the hydraulic and air pressure tests to help determine the probable cause.

HYDRAULIC PRESSURE TEST

Hydraulic test pressures range from a low of one psi (6.895 kPa) governor pressure, to 300 psi (2068 kPa) at the rear servo pressure port in reverse.

An accurate tachometer and pressure test gauges are required. Test Gauge C-3292 has a 100 psi range and is used at the accumulator, governor, and front servo ports. Test Gauge C-3293-SP has a 300 psi range and is used at the rear servo and overdrive ports where pressures exceed 100 psi.

Pressure Test Port Locations

Test ports are located at both sides of the transmission case.

Line pressure is checked at the accumulator port (3) on the right side of the case. The front servo pressure port (4) is at the right side of the case just behind the filler tube opening.

The rear servo (1) and governor pressure (2) ports are at the right rear of the transmission case. The overdrive clutch pressure port (5) is at the left rear of the case.

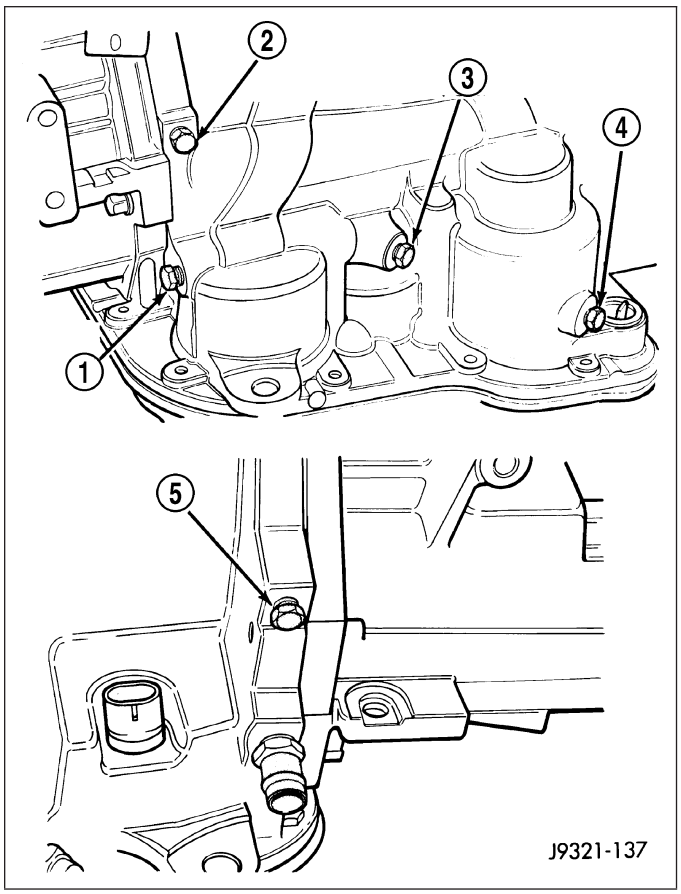

Test One - Transmission In Manual Low

This test checks pump output, pressure regulation, and condition of the rear clutch and servo circuit. Both test gauges are required for this test.

1. Connect tachometer to engine. Position tachometer so it can be observed from driver seat if helper will be operating engine. Raise vehicle on hoist that will allow rear wheels to rotate freely.
2. Connect 100 psi Gauge C-3292 to accumulator port. Then connect 300 psi Gauge C-3293-SP to rear servo port.
3. Disconnect throttle and gearshift cables from levers on transmission valve body manual shaft.
4. Have helper start and run engine at 1000 rpm.
5. Move transmission shift lever fully forward into 1 range.
6. Gradually move transmission throttle lever from full forward to full rearward position and note pressures on both gauges:
   - Line pressure at accumulator port should be 54-60 psi (372-414 kPa) with throttle lever forward and gradually increase to 90-96 psi (621-662 kPa) as throttle lever is moved rearward.
   - Rear servo pressure should be same as line pressure within 3 psi (20.68 kPa).

Test Two - Transmission In 2 Range

This test checks pump output, line pressure and pressure regulation. Use 100 psi Test Gauge C-3292 for this test.

1. Leave vehicle in place on hoist and leave Test Gauge C-3292 connected to accumulator port.
2. Have helper start and run engine at 1000 rpm.
3. Move transmission shift lever one detent rearward from full forward position. This is 2 range.
4. Move transmission throttle lever from full forward to full rearward position and read pressure on gauge.

5. Line pressure should be 54-60 psi (372-414 kPa) with throttle lever forward and gradually increase to 90-96 psi (621-662 kPa) as lever is moved rearward.

Test Three - Transmission In D Range Third Gear

This test checks pressure regulation and condition of the clutch circuits. Both test gauges are required for this test.

1. Turn OD switch off.
2. Leave vehicle on hoist and leave Gauge C-3292 in place at accumulator port.
3. Move Gauge C-3293-SP over to front servo port for this test.
4. Have helper start and run engine at 1600 rpm for this test.
5. Move transmission shift lever two detents rearward from full forward position. This is D range.
6. Read pressures on both gauges as transmission throttle lever is gradually moved from full forward to full rearward position:
   - Line pressure at accumulator in D range third gear, should be 54-60 psi (372-414 kPa) with throttle lever forward and increase as lever is moved rearward.
   - Front servo pressure in D range third gear, should be within 3 psi (21 kPa) of line pressure up to kickdown point.

Test Four - Transmission In Reverse

This test checks pump output, pressure regulation and the front clutch and rear servo circuits. Use 300 psi Test Gauge C-3293-SP for this test.

1. Leave vehicle on hoist and leave gauge C-3292 in place at accumulator port.
2. Move 300 psi Gauge C-3293-SP back to rear servo port.
3. Have helper start and run engine at 1600 rpm for test.
4. Move transmission shift lever four detents rearward from full forward position. This is Reverse range.
5. Move transmission throttle lever fully forward then fully rearward and note reading at Gauge C-3293-SP.
6. Pressure should be 145 - 175 psi (1000-1207 kPa) with throttle lever forward and increase to 230 - 280 psi (1586-1931 kPa) as lever is gradually moved rearward.

Test Five - Governor Pressure

This test checks governor operation by measuring governor pressure response to changes in vehicle speed. It is usually not necessary to check governor operation unless shift speeds are incorrect or if the transmission will not downshift. The test should be performed on the road or on a hoist that will allow the rear wheels to rotate freely.

1. Move 100 psi Test Gauge C-3292 to governor pressure port.
2. Move transmission shift lever two detents rearward from full forward position. This is D range.
3. Have helper start and run engine at curb idle speed. Then firmly apply service brakes so wheels will not rotate.
4. Note governor pressure:
   - Governor pressure should be no more than 20.6 kPa (3 psi) at curb idle speed and wheels not rotating.
   - If pressure exceeds 20.6 kPa (3 psi), a fault exists in governor pressure control system.
5. Release brakes, slowly increase engine speed, and observe speedometer and pressure test gauge (do not exceed 30 mph on speedometer). Governor pressure should increase in proportion to vehicle speed. Or approximately 6.89 kPa (1 psi) for every 1 mph.
6. Governor pressure rise should be smooth and drop back to no more than 20.6 kPa (3 psi), after engine returns to curb idle and brakes are applied to prevent wheels from rotating.
7. Compare results of pressure test with analysis chart.

Test Six - Transmission In Overdrive Fourth Gear

This test checks line pressure at the overdrive clutch in fourth gear range. Use 300 psi Test Gauge C-3293-SP for this test. The test should be performed on the road or on a chassis dyno.

1. Remove tachometer; it is not needed for this test.
2. Move 300 psi Gauge to overdrive clutch pressure test port. Then remove other gauge and reinstall test port plug.
3. Lower vehicle.

4. Turn OD switch on.
5. Secure test gauge so it can be viewed from drivers seat.
6. Start engine and shift into D range.
7. Increase vehicle speed gradually until 3-4 shift occurs and note gauge pressure.
8. Pressure should be 524-565 kPa (76-82 psi) with closed throttle and increase to 690-896 kPa (100-130 psi) at 1/2 to 3/4 throttle. Note that pressure can increase to around 965 kPa (140 psi) at full throttle.
9. Return to shop or move vehicle off chassis dyno.

PRESSURE TEST ANALYSIS CHART

TEST CONDITION	INDICATION
Line pressure OK during any one test	Pump and regulator valve OK
Line pressure OK in R but low in D, 2, 1	Leakage in rear clutch area (seal rings, clutch seals)
Pressure low in D Fourth Gear Range	Overdrive clutch piston seal, or check ball problem
Pressure OK in 1, 2 but low in D3 and R	Leakage in front clutch area
Pressure OK in 2 but low in R and 1	Leakage in rear servo
Front servo pressure in 2	Leakage in servo; broken servo ring or cracked servo piston
Pressure low in all positions	Clogged filter, stuck regulator valve, worn or faulty pump, low oil level
Governor pressure too high at idle speed	Governor pressure solenoid valve system fault. Refer to diagnostic book.
Governor pressure low at all mph figures	Faulty governor pressure solenoid, transmission control module, or governor pressure sensor
Lubrication pressure low at all throttle positions	Clogged fluid cooler or lines, seal rings leaking, worn pump bushings, pump, clutch retainer, or clogged filter.
Line pressure high	Output shaft plugged, sticky regulator valve
Line pressure low	Sticky regulator valve, clogged filter, worn pump

AIR TESTING TRANSMISSION CLUTCH AND BAND OPERATION

Air-pressure testing can be used to check transmission front/rear clutch and band operation. The test can be conducted with the transmission either in the vehicle or on the work bench, as a final check, after overhaul.

Air-pressure testing requires that the oil pan and valve body be removed from the transmission. The servo and clutch apply passages are shown.

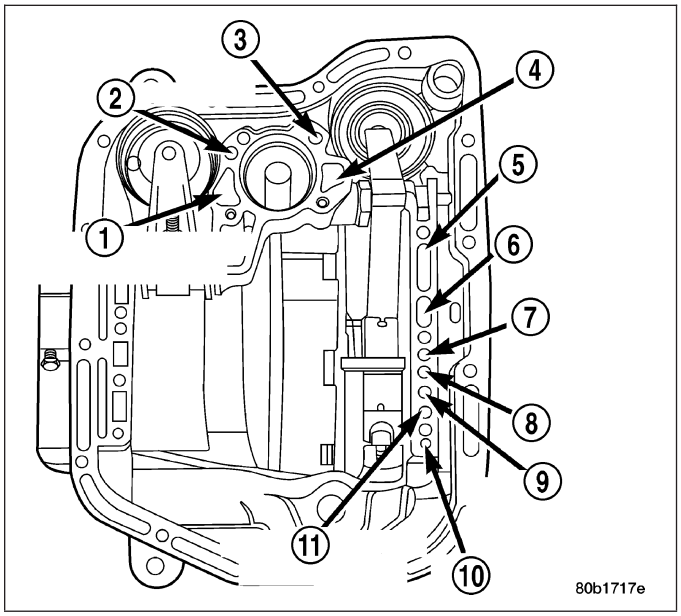

Front Clutch Air Test

Place one or two fingers on the clutch housing and apply air pressure through front clutch apply passage. Piston movement can be felt and a soft thump heard as the clutch applies.

Rear Clutch Air Test

Place one or two fingers on the clutch housing and apply air pressure through rear clutch apply passage. Piston movement can be felt and a soft thump heard as the clutch applies.

Front Servo Air Test

Apply air pressure to the front servo apply passage. The servo rod should extend and cause the band to tighten around the drum. Spring pressure should release the servo when air pressure is removed.

Rear Servo Air Test

Apply air pressure to the rear servo apply passage. The servo rod should extend and cause the band to tighten around the drum. Spring pressure should release the servo when air pressure is removed.

CONVERTER HOUSING FLUID LEAK

When diagnosing converter housing fluid leaks, two items must be established before repair.

1. Verify that a leak condition actually exists.
2. Determined the true source of the leak.

Some suspected converter housing fluid leaks may not be leaks at all. They may only be the result of residual fluid in the converter housing, or excess fluid spilled during factory fill or fill after repair. Converter housing leaks have several potential sources. Through careful observation, a leak source can be identified before removing the transmission for repair. Pump seal leaks tend to move along the drive hub and onto the rear of the converter. Pump body leaks follow the same path as a seal leak. Pump vent or pump attaching bolt leaks are generally deposited on the inside of the converter housing and not on the converter itself. Pump o-ring or gasket leaks usually travel down the inside of the converter housing. Front band lever pin plug leaks are generally deposited on the housing and not on the converter.

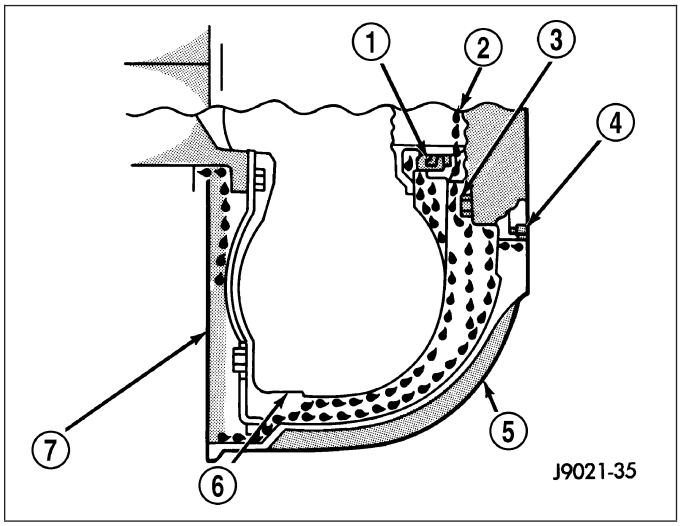

1 - PUMP SEAL
2 - PUMP VENT
3 - PUMP BOLT
4 - PUMP GASKET
5 - CONVERTER HOUSING
6 - CONVERTER
7 - REAR MAIN SEAL LEAK

TORQUE CONVERTER LEAK POINTS

Possible sources of converter leaks are:

- Leaks at the weld joint around the outside diameter weld.
- Leaks at the converter hub weld.

CONVERTER HOUSING AREA LEAK CORRECTION

1. Remove converter.
2. Tighten front band adjusting screw until band is tight around front clutch retainer. This prevents front/rear clutches from coming out when oil pump is removed.
3. Remove oil pump and remove pump seal. Inspect pump housing drainback and vent holes for obstructions. Clear holes with solvent and wire.

4. Inspect pump bushing and converter hub. If bushing is scored, replace it. If converter hub is scored, either polish it with crocus cloth or replace converter.
5. Install new pump seal, O-ring, and gasket. Replace oil pump if cracked, porous or damaged in any way. Be sure to loosen the front band before installing the oil pump, damage to the oil pump seal may occur if the band is still tightened to the front clutch retainer.
6. Loosen kickdown lever pin access plug three turns. Apply Loctite™ 592, or Permatex® No. 2 to plug threads and tighten plug to 17 N·m (150 in. lbs.) torque.
7. Adjust front band.
8. Lubricate pump seal and converter hub with transmission fluid or petroleum jelly and install converter.
9. Install transmission and converter housing dust shield.
10. Lower vehicle.

DIAGNOSIS CHARTS

The diagnosis charts provide additional reference when diagnosing a transmission fault. The charts provide general information on a variety of transmission, overdrive unit and converter clutch fault conditions.

The hydraulic flow charts in the Schematics and Diagrams section of this group, outline fluid flow and hydraulic circuitry. Circuit operation is provided for PARK, NEUTRAL, FIRST, SECOND, THIRD, FOURTH, MANUAL FIRST, MANUAL SECOND, and REVERSE gear ranges. Normal working pressures are also supplied for each of the gear ranges.

Diagnosis Charts

CONDITION	POSSIBLE CAUSES	CORRECTION
HARSH ENGAGEMENT (FROM NEUTRAL TO DRIVE OR REVERSE)	1. Fluid Level Low.	1. Add Fluid
	2. Throttle Linkage Mis-adjusted. V-10 Only	2. Adjust linkage - setting may be too long.
	3. Mount and Driveline Bolts Loose.	3. Check engine mount, transmission mount, propeller shaft, rear spring to body bolts, rear control arms, crossmember and axle bolt torque. Tighten loose bolts and replace missing bolts.
	4. U-Joint Worn/Broken.	4. Remove propeller shaft and replace U-Joint.
	5. Axle Backlash Incorrect.	5. Check per Service Manual. Correct as needed.
	6. Hydraulic Pressure Incorrect.	6. Check pressure. Remove, overhaul or adjust valve body as needed.
	7. Band Mis-adjusted.	7. Adjust rear band.
	8. Valve Body Check Balls Missing.	8. Inspect valve body for proper check ball installation.
	9. Axle Pinion Flange Loose.	9. Replace nut and check pinion threads before installing new nut. Replace pinion gear if threads are damaged.
	10. Clutch, band or planetary component damaged.	10. Remove, disassemble and repair transmission as necessary.
	11. Converter Clutch Faulty.	11. Replace converter and flush cooler and line before installing new converter.

CONDITION	POSSIBLE CAUSES	CORRECTION
DELAYED ENGAGEMENT (FROM NEUTRAL TO DRIVE OR REVERSE)	1. Fluid Level Low.	1. Correct level and check for leaks.
	2. Filter Clogged.	2. Change filter.
	3. Gearshift Linkage Mis-adjusted.	3. Adjust linkage and repair linkage if worn or damaged.
	4. Torque Converter Drain Back (Oil drains from torque converter into transmission sump).	4. If vehicle moves normally after 5 seconds after shifting into gear, no repair is necessary. If longer, inspect pump bushing for wear. Replace pump house.
	5. Rear Band Mis-adjusted.	5. Adjust band.
	6. Valve Body Filter Plugged.	6. Replace fluid and filter. If oil pan and old fluid were full of clutch disc material and/or metal particles, overhaul will be necessary.
	7. Oil Pump Gears Worn/Damaged.	7. Remove transmission and replace oil pump.
	8. Governor Circuit and Solenoid Valve Electrical Fault.	8. Test with DRB® scan tool and repair as required.
	9. Hydraulic Pressure Incorrect.	9. Perform pressure test, remove transmission and repair as needed.
	10. Reaction Shaft Seal Rings Worn/Broken.	10. Remove transmission, remove oil pump and replace seal rings.
	11. Rear Clutch/Input Shaft, Rear Clutch Seal Rings Damaged.	11. Remove and disassemble transmission and repair as necessary.
	12. Regulator Valve Stuck.	12. Clean.
	13. Cooler Plugged.	13. Transfer case failure can plug cooler.
NO DRIVE RANGE (REVERSE OK)	1. Fluid Level Low.	1. Add fluid and check for leaks if drive is restored.
	2. Gearshift Linkage/Cable Loose/ Misadjusted.	2. Repair or replace linkage components.
	3. Rear Clutch Burnt.	3. Remove and disassemble transmission and rear clutch and seals. Repair/replace worn or damaged parts as needed.
	4. Valve Body Malfunction.	4. Remove and disassemble valve body. Replace assembly if any valves or bores are damaged.
	5. Transmission Overrunning Clutch Broken.	5. Remove and disassemble transmission. Replace overrunning clutch.
	6. Input Shaft Seal Rings Worn/ Damaged.	6. Remove and disassemble transmission. Replace seal rings and any other worn or damaged parts.
	7. Front Planetary Failed Broken.	7. Remove and repair.

CONDITION	POSSIBLE CAUSES	CORRECTION
NO DRIVE OR REVERSE (VEHICLE WILL NOT MOVE)	1. Fluid Level Low.	1. Add fluid and check for leaks if drive is restored.
	2. Gearshift Linkage/Cable Loose/ Misadjusted.	2. Inspect, adjust and reassemble linkage as needed. Replace worn/damaged parts.
	3. U-Joint/Axle/Transfer Case Broken.	3. Perform preliminary inspection procedure for vehicle that will not move. Refer to procedure in diagnosis section.
	4. Filter Plugged.	4. Remove and disassemble transmission. Repair or replace failed components as needed. Replace filter. If filter and fluid contained clutch material or metal particles, an overhaul may be necessary. Perform lube flow test. Flush oil. Replace cooler as necessary.
	5. Oil Pump Damaged.	5. Perform pressure test to confirm low pressure. Replace pump body assembly if necessary.
	6. Valve Body Malfunctioned.	6. Check and inspect valve body. Replace valve body (as assembly) if any valve or bore is damaged. Clean and reassemble correctly if all parts are in good condition.
	7. Transmission Internal Component Damaged.	7. Remove and disassemble transmission. Repair or replace failed components as needed.
	8. Park Sprag not Releasing - Check Stall Speed, Worn/Damaged/Stuck.	8. Remove, disassemble, repair.
	9. Torque Converter Damage.	9. Inspect and replace as required.
SHIFTS DELAYED OR ERRATIC (SHIFTS ALSO HARSH AT TIMES)	1. Fluid Level Low/High.	1. Correct fluid level and check for leaks if low.
	2. Fluid Filter Clogged.	2. Replace filter. If filter and fluid contained clutch material or metal particles, an overhaul may be necessary. Perform lube flow test.
	3. Throttle Linkage Mis-adjusted. V-10 Only	3. Adjust linkage as described in service section.
	4. Throttle Linkage Binding. V-10 Only	4. Check cable for binding. Check for return to closed throttle at transmission.
	5. Gearshift Linkage/Cable Mis-adjusted.	5. Adjust linkage/cable as described in service section.
	6. Clutch or Servo Failure.	6. Remove valve body and air test clutch, and band servo operation. Disassemble and repair transmission as needed.
	7. Governor Circuit Electrical Fault.	7. Test using DRB® scan tool and repair as required.
	8. Front Band Mis-adjusted.	8. Adjust band.
	9. Pump Suction Passage Leak.	9. Check for excessive foam on dipstick after normal driving. Check for loose pump bolts, defective gasket. Replace pump assembly if needed.

CONDITION	POSSIBLE CAUSES	CORRECTION
NO REVERSE (D RANGES OK)	1. Gearshift Linkage/Cable Mis-adjusted/Damaged.	1. Repair or replace linkage parts as needed.
	2. Park Sprag Sticking.	2. Replace overdrive annulus gear.
	3. Rear Band Mis-adjusted/Worn.	3. Adjust band; replace.
	4. Valve Body Malfunction.	4. Remove and service valve body. Replace valve body if any valves or valve bores are worn or damaged.
	5. Rear Servo Malfunction.	5. Remove and disassemble transmission. Replace worn/damaged servo parts as necessary.
	6. Direct Clutch in Overdrive Worn.	6. Disassemble overdrive. Replace worn or damaged parts.
	7. Front Clutch Burnt.	7. Remove and disassemble transmission. Replace worn, damaged clutch parts as required.
HAS FIRST/REVERSE ONLY (NO 1-2 OR 2-3 UPSHIFT)	1. Governor Circuit Electrical Fault.	1. Test using DRB® scan tool and repair as required.
	2. Valve Body Malfunction.	2. Repair stuck 1-2 shift valve or governor plug.
	3. Front Servo/Kickdown Band Damaged/Burned.	3. Repair/replace.
MOVES IN 2ND OR 3RD GEAR, ABRUPTLY DOWNSHIFTS TO LOW	1. Valve Body Malfunction.	1. Remove, clean and inspect. Look for stuck 1-2 valve or governor plug.
NO LOW GEAR (MOVES IN 2ND OR 3RD GEAR ONLY)	1. Governor Circuit Electrical Fault.	1. Test with DRB® scan tool and repair as required.
	2. Valve Body Malfunction.	2. Remove, clean and inspect. Look for sticking 1-2 shift valve, 2-3 shift valve, governor plug or broken springs.
	3. Front Servo Piston Cocked in Bore.	3. Inspect servo and repair as required.
	4. Front Band Linkage Malfunction	4. Inspect linkage and look for bind in linkage.

CONDITION	POSSIBLE CAUSES	CORRECTION
NO KICKDOWN OR NORMAL DOWNSHIFT	1. Throttle Linkage Mis-adjusted. V-10 Only	1. Adjust linkage.
	2. Accelerator Pedal Travel Restricted.	2. Verify floor mat is not under pedal, repair worn accelerator cable or bent brackets.
	3. Valve Body Hydraulic Pressures Too High or Too Low Due to Valve Body Malfunction or Incorrect Hydraulic Control Pressure Adjustments.	3. Perform hydraulic pressure tests to determine cause and repair as required. Correct valve body pressure adjustments as required.
	4. Governor Circuit Electrical Fault.	4. Test with DRB® scan tool and repair as required.
	5. Valve Body Malfunction.	5. Perform hydraulic pressure tests to determine cause and repair as required. Correct valve body pressure adjustments as required.
	6. TPS Malfunction.	6. Replace sensor, check with DRB® scan tool.
	7. PCM Malfunction.	7. Check with DRB® scan tool and replace if required.
	8. Valve Body Malfunction.	8. Repair sticking 1-2, 2-3 shift valves, governor plugs, 3-4 solenoid, 3-4 shift valve, 3-4 timing valve.
STUCK IN LOW GEAR (WILL NOT UPSHIFT)	1. Throttle Linkage Mis-adjusted/Stuck. V-10 Only	1. Adjust linkage and repair linkage if worn or damaged. Check for binding cable or missing return spring.
	2. Gearshift Linkage Mis-adjusted.	2. Adjust linkage and repair linkage if worn or damaged.
	3. Governor Component Electrical Fault.	3. Check operating pressures and test with DRB® scan tool, repair faulty component.
	4. Front Band Out of Adjustment.	4. Adjust Band.
	5. Clutch or Servo Malfunction.	5. Air pressure check operation of clutches and bands. Repair faulty component.
CREEPS IN NEUTRAL	1. Gearshift Linkage Mis-adjusted.	1. Adjust linkage.
	2. Rear Clutch Dragging/Warped.	2. Disassemble and repair.
	3. Valve Body Malfunction.	3. Perform hydraulic pressure test to determine cause and repair as required.
BUZZING NOISE	1. Fluid Level Low	1. Add fluid and check for leaks.
	2. Shift Cable Mis-assembled.	2. Route cable away from engine and bell housing.
	3. Valve Body Mis-assembled.	3. Remove, disassemble, inspect valve body. Reassemble correctly if necessary. Replace assembly if valves or springs are damaged. Check for loose bolts or screws.
	4. Pump Passages Leaking.	4. Check pump for porous casting, scores on mating surfaces and excess rotor clearance. Repair as required. Loose pump bolts.
	5. Cooling System Cooler Plugged.	5. Flow check cooler circuit. Repair as needed.
	6. Overrunning Clutch Damaged.	6. Replace clutch.

CONDITION	POSSIBLE CAUSES	CORRECTION
SLIPS IN REVERSE ONLY	1. Fluid Level Low.	1. Add fluid and check for leaks.
	2. Gearshift Linkage Mis-adjusted.	2. Adjust linkage.
	3. Rear Band Mis-adjusted.	3. Adjust band.
	4. Rear Band Worn.	4. Replace as required.
	5. Overdrive Direct Clutch Worn.	5. Disassemble overdrive. Repair as needed.
	6. Hydraulic Pressure Too Low.	6. Perform hydraulic pressure tests to determine cause.
	7. Rear Servo Leaking.	7. Air pressure check clutch-servo operation and repair as required.
	8. Band Linkage Binding.	8. Inspect and repair as required.
SLIPS IN FORWARD DRIVE RANGES	1. Fluid Level Low.	1. Add fluid and check for leaks.
	2. Fluid Foaming.	2. Check for high oil level, bad pump gasket or seals, dirt between pump halves and loose pump bolts. Replace pump if necessary.
	3. Throttle Linkage Mis-adjusted. V-10 Only	3. Adjust linkage.
	4. Gearshift Linkage Mis-adjusted.	4. Adjust linkage.
	5. Rear Clutch Worn.	5. Inspect and replace as needed.
	6. Low Hydraulic Pressure Due to Worn Pump, Incorrect Control Pressure Adjustments, Valve Body Warpage or Malfunction, Sticking, Leaking Seal Rings, Clutch Seals Leaking, Servo Leaks, Clogged Filter or Cooler Lines.	6. Perform hydraulic and air pressure tests to determine cause.
	7. Rear Clutch Malfunction, Leaking Seals or Worn Plates.	7. Air pressure check clutch-servo operation and repair as required.
	8. Overrunning Clutch Worn, Not Holding (Slips in 1 Only).	8. Replace Clutch.
SLIPS IN LOW GEAR ″D″ ONLY, BUT NOT IN MANUAL 1 POSITION	Overrunning Clutch Faulty.	Replace overrunning clutch.
GROWLING, GRATING OR SCRAPING NOISES	1. Drive Plate Broken.	1. Replace.
	2. Torque Converter Bolts Hitting Dust Shield.	2. Dust shield bent. Replace or repair.
	3. Planetary Gear Set Broken/Seized.	3. Check for debris in oil pan and repair as required.
	4. Overrunning Clutch Worn/Broken.	4. Inspect and check for debris in oil pan. Repair as required.
	5. Oil Pump Components Scored/ Binding.	5. Remove, inspect and repair as required.
	6. Output Shaft Bearing or Bushing Damaged.	6. Remove, inspect and repair as required.
	7. Clutch Operation Faulty.	7. Perform air pressure check and repair as required.
	8. Front and Rear Bands Mis-adjusted.	8. Adjust bands.

CONDITION	POSSIBLE CAUSES	CORRECTION
DRAGS OR LOCKS UP	1. Fluid Level Low.	1. Check and adjust level.
	2. Clutch Dragging/Failed	2. Air pressure check clutch operation and repair as required.
	3. Front or Rear Band Mis-adjusted.	3. Adjust bands.
	4. Case Leaks Internally.	4. Check for leakage between passages in case.
	5. Servo Band or Linkage Malfunction.	5. Air pressure check servo operation and repair as required.
	6. Overrunning Clutch Worn.	6. Remove and inspect clutch. Repair as required.
	7. Planetary Gears Broken.	7. Remove, inspect and repair as required (look for debris in oil pan).
	8. Converter Clutch Dragging.	8. Check for plugged cooler. Perform flow check. Inspect pump for excessive side clearance. Replace pump as required.
NO 4-3 DOWNSHIFT	1. Circuit Wiring and/or Connectors Shorted.	1. Test wiring and connectors with test lamp and volt/ohmmeter. Repair wiring as necessary. Replace connectors and/or harnesses as required.
	2. PCM Malfunction.	2. Check PCM operation with DRB® scan tool. Replace PCM only if faulty.
	3. TPS Malfunction	3. Check TPS with DRB® scan tool at PCM.
	4. Lockup Solenoid Not Venting.	4. Remove valve body and replace solenoid assembly if plugged or shorted.
	5. Overdrive Solenoid Not Venting.	5. Remove valve body and replace solenoid if plugged or shorted.
	6. Valve Body Valve Sticking.	6. Repair stuck 3-4 shift valve or lockup timing valve.
NO 4-3 DOWNSHIFT WHEN CONTROL SWITCH IS TURNED OFF	1. Control Switch Open/Shorted.	1. Test and replace switch if faulty.
	2. Overdrive Solenoid Connector Shorted.	2. Test solenoids and replace if seized or shorted.
	3. PCM Malfunction.	3. Test with DRB® scan tool. Replace PCM if faulty.
	4. Valve Body Stuck Valves.	4. Repair stuck 3-4, lockup or lockup timing valve.
CLUNK NOISE FROM DRIVELINE ON CLOSED THROTTLE 4-3 DOWNSHIFT	1. Transmission Fluid Low.	1. Add Fluid.
	2. Throttle Cable Mis-adjusted. V-10 Only	2. Adjust cable.
	3. Overdrive Clutch Select Spacer Wrong Spacer.	3. Replace overdrive piston thrust plate spacer.

CONDITION	POSSIBLE CAUSES	CORRECTION
3-4 UPSHIFT OCCURS IMMEDIATELY AFTER 2-3 SHIFT	1. Overdrive Solenoid Connector or Wiring Shorted.	1. Test connector and wiring for loose connections, shorts or ground and repair as needed.
	2. TPS Malfunction.	2. Test TPS and replace as necessary. Check with DRB® scan tool.
	3. PCM Malfunction.	3. Test PCM with DRB® scan tool and replace controller if faulty.
	4. Overdrive Solenoid Malfunction.	4. Replace solenoid.
	5. Valve Body Malfunction.	5. Remove, disassemble, clean and inspect valve body components. Make sure all valves and plugs slide freely in bores. Polish valves with crocus cloth if needed.
WHINE/NOISE RELATED TO ENGINE SPEED	1. Fluid Level Low.	1. Add fluid and check for leaks.
	2. Shift Cable Incorrect Routing.	2. Check shift cable for correct routing. Should not touch engine or bell housing.
NO 3-4 UPSHIFT	1. O/D Switch In OFF Position.	1. Turn control switch to ON position.
	2. Overdrive Circuit Fuse Blown.	2. Replace fuse. Determine why fuse failed and repair as necessary (i.e., shorts or grounds in circuit).
	3. O/D Switch Wire Shorted/Open Cut.	3. Check wires/connections with 12V test lamp and voltmeter. Repair damaged or loose wire/connection as necessary.
	4. Distance or Coolant Sensor Malfunction.	4. Check with DRB® scan tool and repair or replace as necessary.
	5. TPS Malfunction.	5. Check with DRB® scan tool and replace if necessary.
	6. Neutral Sense to PCM Wire Shorted/Cut.	6. Test switch/sensor as described in service section and replace if necessary. Engine no start.
	7. PCM Malfunction.	7. Check with DRB® scan tool and replace if necessary.
	8. Overdrive Solenoid Shorted/Open.	8. Replace solenoid if shorted or open and repair loose or damaged wires (DRB® scan tool).
	9. Solenoid Feed Orifice in Valve Body Blocked.	9. Remove, disassemble, and clean valve body thoroughly. Check feed orifice.
	10. Overdrive Clutch Failed.	10. Disassemble overdrive and repair as needed.
	11. Hydraulic Pressure Low.	11. Pressure test transmission to determine cause.
	12. Valve Body Valve Stuck.	12. Repair stuck 3-4 shift valve, 3-4 timing valve.
	13. O/D Piston Incorrect Spacer.	13. Remove unit, check end play and install correct spacer.
	14. Overdrive Piston Seal Failure.	14. Replace both seals.
	15. O/D Check Valve/Orifice Failed.	15. Check for free movement and secure assembly (in piston retainer). Check ball bleed orifice.

CONDITION	POSSIBLE CAUSES	CORRECTION
SLIPS IN OVERDRIVE FOURTH GEAR	1. Fluid Level Low.	1. Add fluid and check for leaks.
	2. Overdrive Clutch Pack Worn.	2. Remove overdrive unit and rebuild clutch pack.
	3. Overdrive Piston Retainer Bleed Orifice Blown Out.	3. Disassemble transmission, remove retainer and replace orifice.
	4. Overdrive Piston or Seal Malfunction.	4. Remove overdrive unit. Replace seals if worn. Replace piston if damaged. If piston retainer is damaged, remove and disassemble the transmission.
	5. 3-4 Shift Valve, Timing Valve or Accumulator Malfunction.	5. Remove and overhaul valve body. Replace accumulator seals. Make sure all valves operate freely in bores and do not bind or stick. Make sure valve body screws are correctly tightened and separator plates are properly positioned.
	6. Overdrive Unit Thrust Bearing Failure.	6. Disassemble overdrive unit and replace thrust bearing (NO. 1 thrust bearing is between overdrive piston and clutch hub; NO. 2 thrust bearing is between the planetary gear and the direct clutch spring plate; NO. 3 thrust bearing is between overrunning clutch hub and output shaft).
	7. O/D Check Valve/Bleed Orifice Failure.	7. Check for function/secure orifice insert in O/D piston retainer.
DELAYED 3-4 UPSHIFT (SLOW TO ENGAGE)	1. Fluid Level Low.	1. Add fluid and check for leaks.
	2. Throttle Valve Cable Mis-adjusted. V-10 Only	2. Adjust throttle valve cable.
	3. Overdrive Clutch Pack Worn/Burnt.	3. Remove unit and rebuild clutch pack.
	4. TPS Faulty.	4. Test with DRB® scan tool and replace as necessary
	5. Overdrive Clutch Bleed Orifice Plugged.	5. Disassemble transmission and replace orifice.
	6. Overdrive Solenoid or Wiring Shorted/Open.	6. Test solenoid and check wiring for loose/corroded connections or shorts/grounds. Replace solenoid if faulty and repair wiring if necessary.
	7. Overdrive Excess Clearance.	7. Remove unit. Measure end play and select proper spacer.
	8. O/D Check Valve Missing or Stuck.	8. Check for presence of check valve. Repair or replace as required.
TORQUE CONVERTER LOCKS UP IN SECOND AND/OR THIRD GEAR	Lockup Solenoid, Relay or Wiring Shorted/Open.	Test solenoid, relay and wiring for continuity, shorts or grounds. Replace solenoid and relay if faulty. Repair wiring and connectors as necessary.
HARSH 1-2, 2-3, 3-4 OR 3-2 SHIFTS	Lockup Solenoid Malfunction.	Remove valve body and replace solenoid assembly.

CONDITION	POSSIBLE CAUSES	CORRECTION
NO START IN PARK OR NEUTRAL	1. Gearshift Linkage/Cable Mis-adjusted.	1. Adjust linkage/cable.
	2. Neutral Sense Wire Open/Cut.	2. Check continuity with test lamp. Repair as required.
	3. Park/Neutral Switch, or Transmission Range Sensor Faulty.	3. Refer to service section for test and replacement procedure.
	4. Park/Neutral Switch, or Transmission Range Sensor Connection Faulty.	4. Connectors spread open. Repair.
	5. Valve Body Manual Lever Assembly Bent/Worn/Broken.	5. Inspect lever assembly and replace if damaged.
NO REVERSE (OR SLIPS IN REVERSE)	1. Direct Clutch Pack (front clutch) Worn.	1. Disassemble unit and rebuild clutch pack.
	2. Rear Band Mis-adjusted.	2. Adjust band.
	3. Front Clutch Malfunctioned/Burned.	3. Air-pressure test clutch operation. Remove and rebuild if necessary.
	4. Overdrive Thrust Bearing Failure.	4. Disassemble geartrain and replace bearings.
	5. Direct Clutch Spring Collapsed/ Broken.	5. Remove and disassemble unit. Check clutch position and replace spring.
OIL LEAKS.	1. Fluid Lines and Fittings Loose/ Leaks/Damaged.	1. Tighten fittings. If leaks persist, replace fittings and lines if necessary.
	2. Fill Tube (where tube enters case) Leaks/Damaged.	2. Replace tube seal. Inspect tube for cracks in fill tube.
	3. Pressure Port Plug Loose Loose/Damaged.	3. Tighten to correct torque. Replace plug or reseal if leak persists.
	4. Pan Gasket Leaks.	4. Tighten pan screws (150 in. lbs.). If leaks persist, replace gasket.
	5. Valve Body Manual Lever Shaft Seal Leaks/Worn.	5. Replace shaft seal.
	6. Rear Bearing Access Plate Leaks.	6. Replace gasket. Tighten screws.
	7. Gasket Damaged or Bolts are Loose.	7. Replace bolts or gasket or tighten both.
	8. Adapter/Extension Gasket Damaged Leaks/Damaged.	8. Replace gasket.
	9. Park/Neutral Switch, or Transmission Range Sensor Leaks/ Damaged.	9. Replace switch and gasket.
	10. Converter Housing Area Leaks.	10. Check for leaks at seal caused by worn seal or burr on converter hub (cutting seal), worn bushing, missing oil return, oil in front pump housing or hole plugged. Check for leaks past O-ring seal on pump or past pump-to-case bolts; pump housing porous, oil coming out vent due to overfill or leak past front band shaft access plug.
	11. Pump Seal Leaks/Worn/Damaged.	11. Replace seal.
	12. Torque Converter Weld Leak/ Cracked Hub.	12. Replace converter.
	13. Case Porosity Leaks.	13. Replace case.

CONDITION	POSSIBLE CAUSES	CORRECTION
NOISY OPERATION IN FOURTH GEAR ONLY	1. Overdrive Clutch Discs, Plates or Snap Rings Damaged.	1. Remove unit and rebuild clutch pack.
	2. Overdrive Piston or Planetary Thrust Bearing Damaged.	2. Remove and disassemble unit. Replace either thrust bearing if damaged.
	3. Output Shaft Bearings Scored/ Damaged.	3. Remove and disassemble unit. Replace either bearing if damaged.
	4. Planetary Gears Worn/Chipped.	4. Remove and overhaul overdrive unit.
	5. Overdrive Unit Overrunning Clutch Rollers Worn/Scored.	5. Remove and overhaul overdrive unit.

STANDARD PROCEDURE - ALUMINUM THREAD REPAIR

Damaged or worn threads in the aluminum transmission case and valve body can be repaired by the use of Heli-Coils™, or equivalent. This repair consists of drilling out the worn-out damaged threads. Then tap the hole with a special Heli-Coil™ tap, or equivalent, and installing a Heli-Coil™ insert, or equivalent, into the hole. This brings the hole back to its original thread size.

Heli-Coil™, or equivalent, tools and inserts are readily available from most automotive parts suppliers.

REMOVAL

NOTE: The overdrive unit can be removed and serviced separately. It is not necessary to remove the entire transmission assembly to perform overdrive unit repairs.

1. Disconnect battery negative cable.
2. Raise vehicle.
3. Remove the transfer case skid plate (2), if equipped.

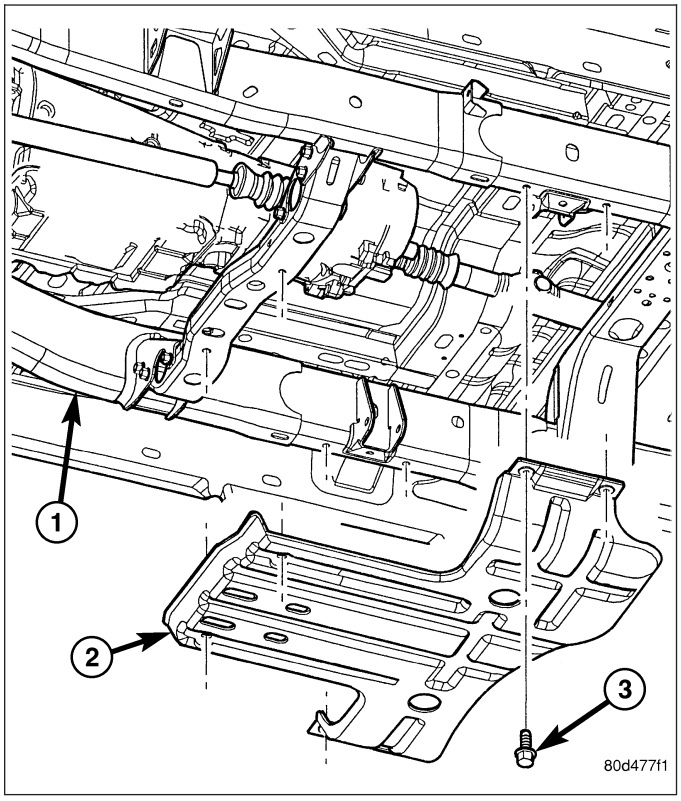

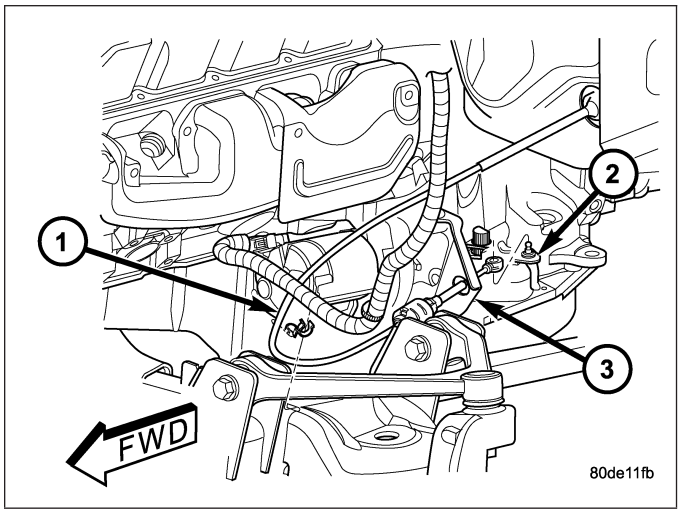

4. Disconnect and lower or remove any necessary exhaust components.
5. Remove engine-to-transmission struts.
6. Remove starter motor. (Refer to 8 - ELECTRICAL/ STARTING/STARTER MOTOR - REMOVAL)
7. Disconnect and remove the crankshaft position sensor. (Refer to 14 - FUEL SYSTEM/FUEL INJECTION/CRANKSHAFT POSITION SENSOR - REMOVAL) Retain the sensor attaching bolts.
8. If transmission is being removed for overhaul, remove transmission oil pan, drain fluid and reinstall pan.
9. Remove torque converter access cover.
10. Rotate crankshaft in clockwise direction until converter bolts are accessible. Then remove bolts one at a time. Rotate crankshaft with socket wrench on dampener bolt.
11. Mark propeller shaft and axle yokes for assembly alignment. Then disconnect and remove propeller shaft. On 4 x 4 models, remove both propeller shafts. (Refer to 3 - DIFFERENTIAL & DRIVELINE/PROPELLER SHAFT/ PROPELLER SHAFT - REMOVAL)
12. Disconnect wires from the transmission range sensor and transmission solenoid connector.
13. Disconnect gearshift cable (1) from the transmission manual lever (2).
14. For vehicles with gas engines, disconnect throttle valve cable from transmission bracket and throttle valve lever.

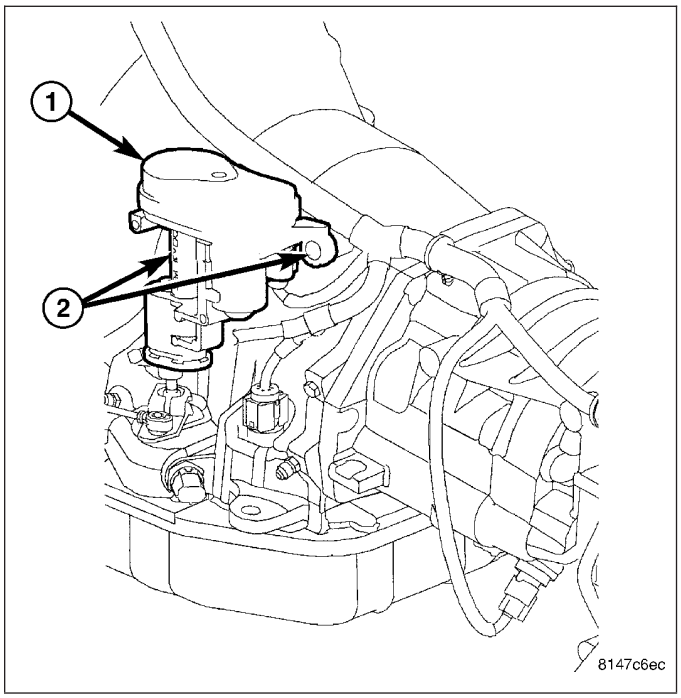

15. For vehicles with a diesel engine, remove the bolts (2) holding the transmission throttle valve actuator (TTVA) (1) to the transmission case.
16. Allow the TTVA (1) to rotate clockwise away from the transmission.

17. Remove the wiring connector (2) from the TTVA (1).
18. Lift the TTVA (1) straight upward and off the throttle valve shaft (3).

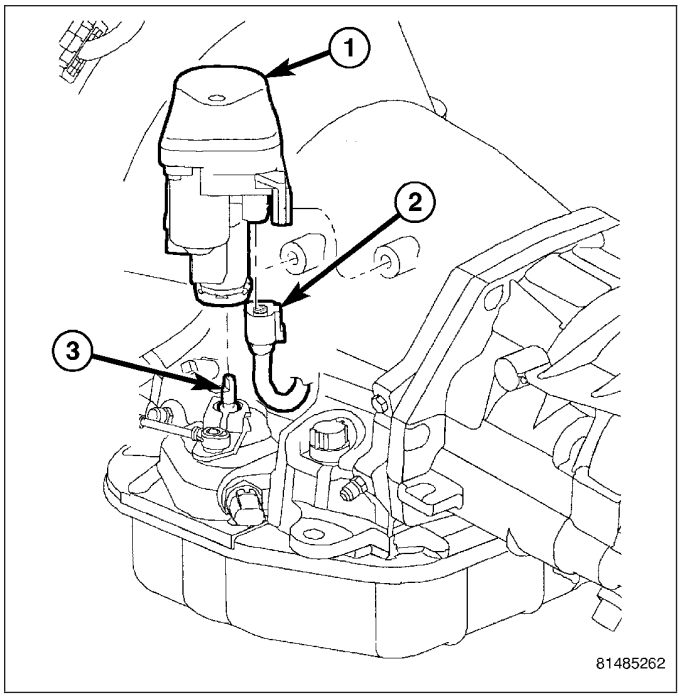

19. On 4X4 models, disconnect shift rod from transfer case shift lever.
20. Support rear of engine with safety stand or jack.
21. Raise transmission slightly with service jack to relieve load on crossmember and supports.
22. Remove the nuts (3) securing rear support (1) to the transmission crossmember.
23. Remove the bolts(2) holding the rear support (1) to the transmission (5) remove the rear support.

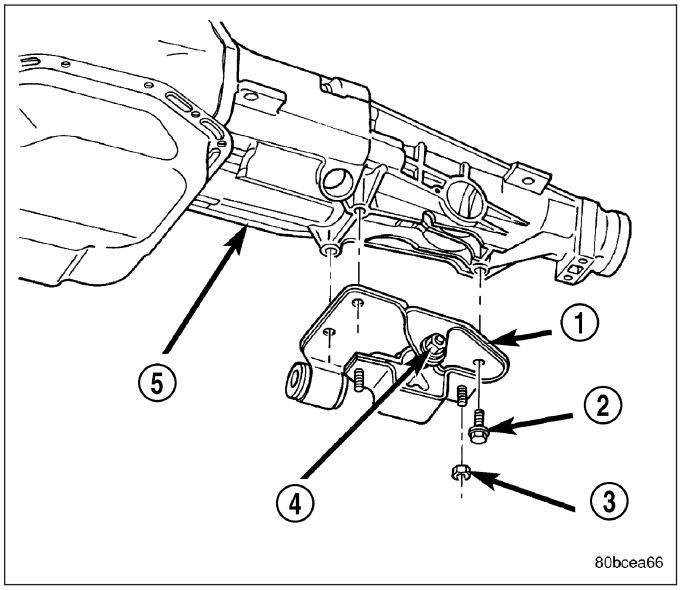

24. Remove bolts attaching crossmember to frame and remove crossmember.
25. On 4X4 models, remove transfer case. (Refer to 21 - TRANSMISSION AND TRANSFER CASE/ TRANSFER CASE - REMOVAL)
26. Remove fill tube (7) bracket bolts and pull tube out of transmission. Retain fill tube seal (6). On 4X4 models, it will also be necessary to remove bolt attaching transfer case vent tube to converter housing.

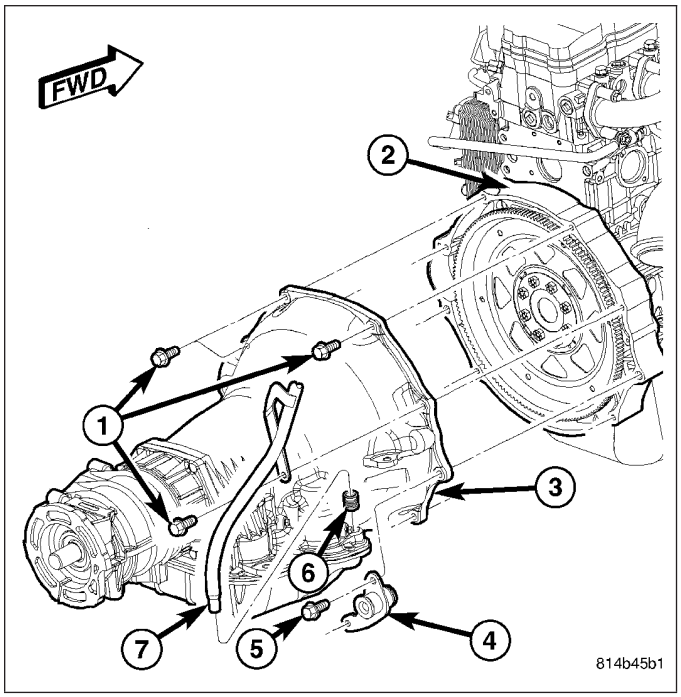

27. Disconnect fluid cooler lines (6, 7) at transmission (5), diesel engines.

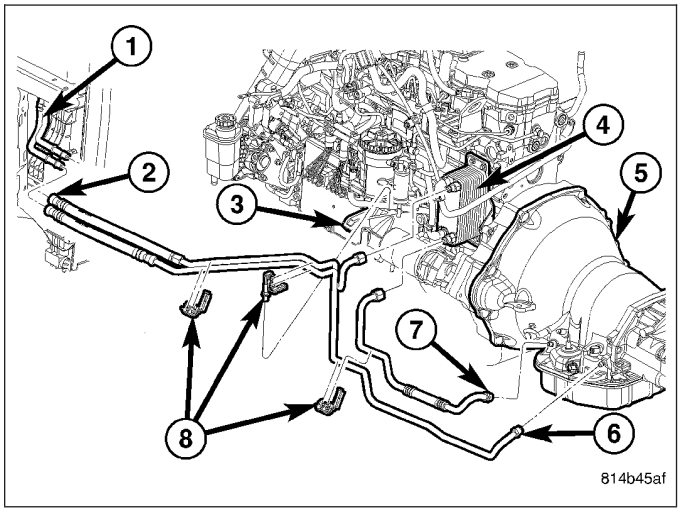

28. Disconnect fluid cooler lines (4, 5) at transmission (3), gas engines.

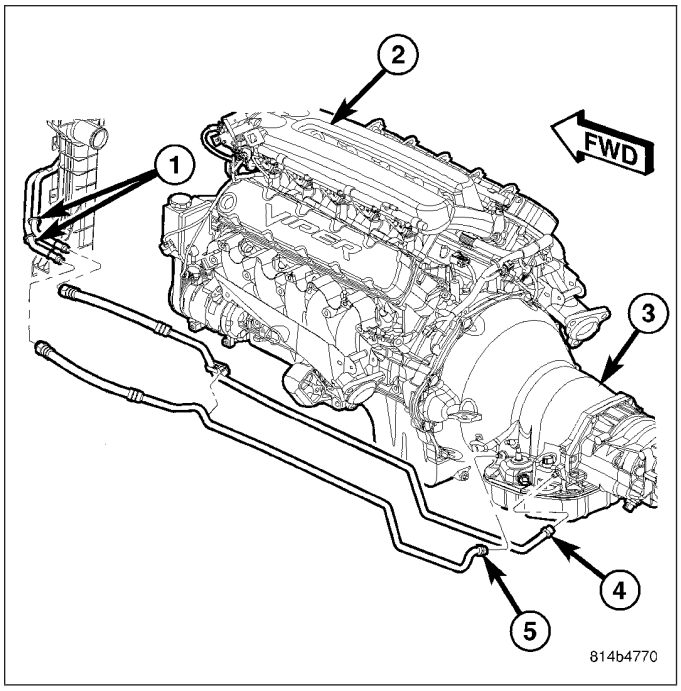

29. Remove all bolts (1) holding the transmission (3) to the engine adapter (2), diesel engines.
30. Carefully work transmission and torque converter assembly rearward off engine block dowels.
31. Lower transmission and remove assembly from under the vehicle.
32. To remove torque converter, remove C-clamp from edge of bell housing and carefully slide torque converter out of the transmission.

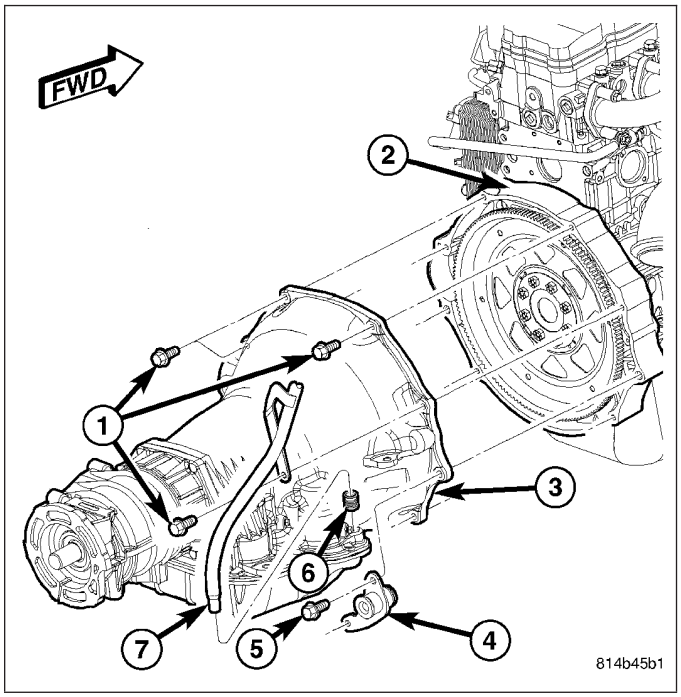

33. Remove all bolts (1) holding the transmission (3) to the engine adapter (2), gas engines.
34. Carefully work transmission and torque converter assembly rearward off engine block dowels.
35. Lower transmission and remove assembly from under the vehicle.
36. To remove torque converter, remove C-clamp from edge of bell housing and carefully slide torque converter out of the transmission.

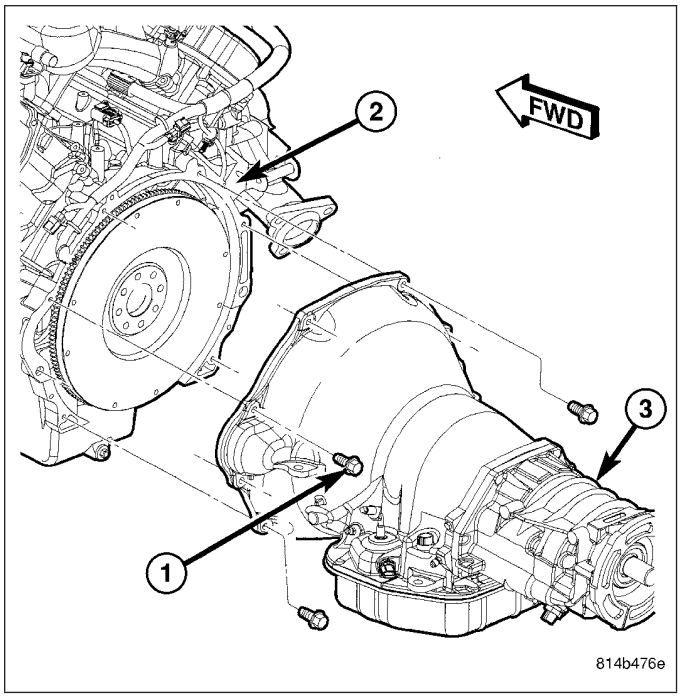

DISASSEMBLY

1. Clean exterior of transmission with suitable solvent or pressure washer.
2. Place transmission in vertical position.
3. Measure the input shaft end play as follows.
   a. Attach Adapter 8266-5 (2) to Handle 8266-8 (1).
   b. Attach dial indicator C-3339 (3) to Handle 8266-8 (1).
   c. Install the assembled tool onto the input shaft of the transmission and tighten the retaining screw on Adapter 8266-5 to secure it to the input shaft.
   d. Position the dial indicator plunger against a flat spot on the oil pump and zero the dial indicator.
   e. Move input shaft in and out and record reading. Record the maximum travel for assembly reference

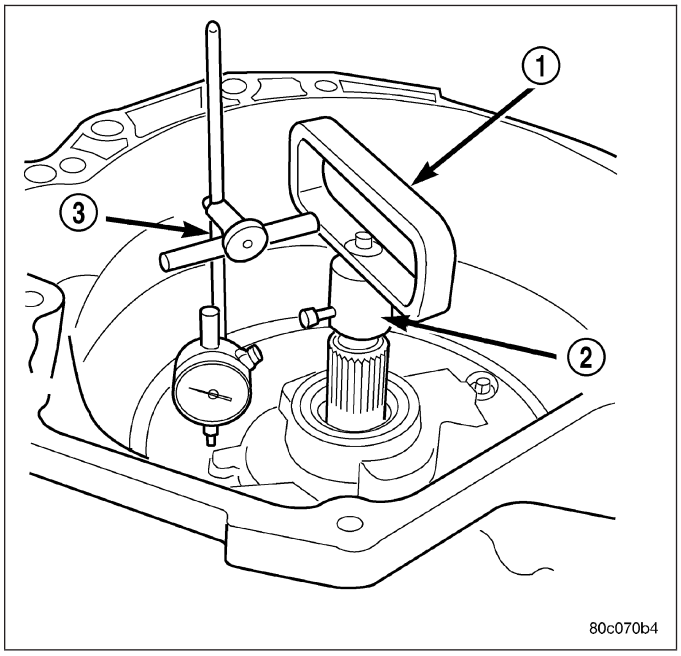

4. Remove the overdrive unit from the main transmission case. If overdrive unit is not to be serviced, install Alignment Shaft 6227-2 into the overdrive unit to prevent misalignment of the overdrive clutches during service of main transmission components.
5. Remove throttle and shift levers from valve body manual shaft and throttle lever shaft.
6. Remove transmission oil pan and gasket.
7. Remove filter (1) from valve body (2). Keep filter screws separate from other valve body screws. Filter screws are longer and should be kept with filter.

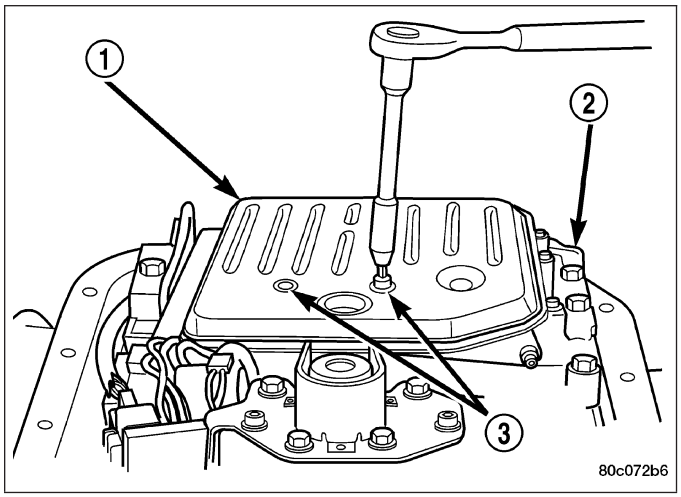

8. Remove the transmission range sensor. (Refer to 21 - TRANSMISSION/AUTOMATIC - 48RE/ TRANSMISSION RANGE SENSOR - REMOVAL)
9. Remove hex head bolts (1, 2) attaching valve body to transmission case. A total of 10 bolts are used. Note different bolt lengths for assembly reference.

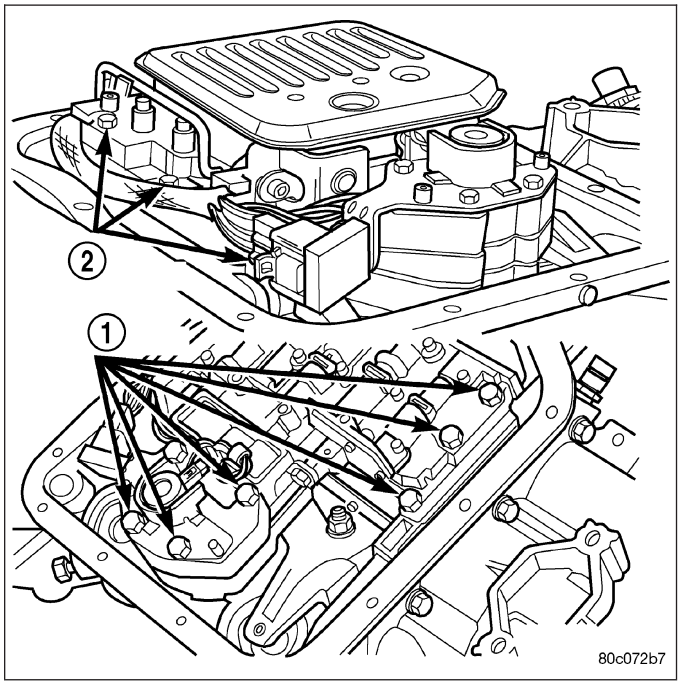

10. Remove valve body assembly (2). Push valve body harness connector out of case. Then work park rod (3) and valve body out of case.

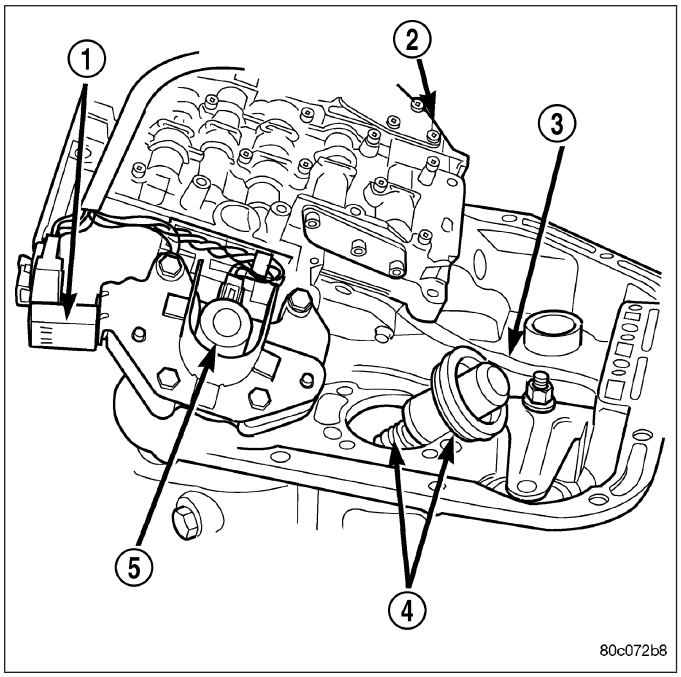

11. Remove accumulator outer spring (2)(diesel engines only), piston (1), and inner spring (3)(V-10 engine only). Note position of piston and springs for assembly reference. Remove and discard piston seals if worn or cut.

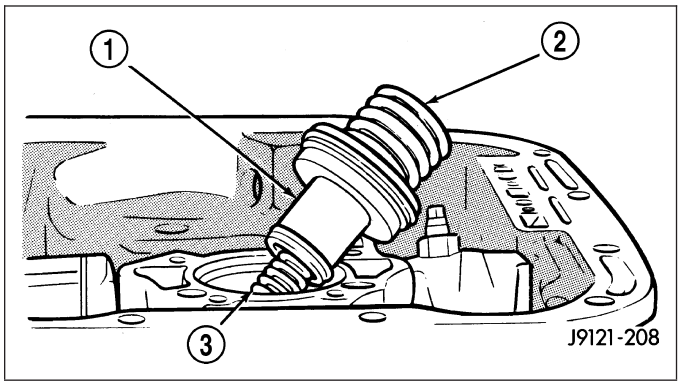

12. Remove pump oil seal with suitable pry tool or slide-hammer mounted screw.
13. Remove front band lever pin access plug (1). Use square end of 1/4 in. drive extension (2) to remove plug as shown.

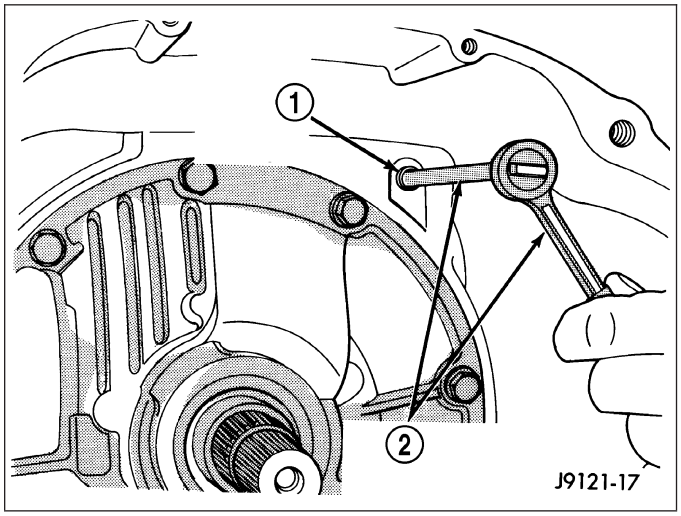

14. Begin removal of the oil pump and reaction shaft support assembly by tightening the front band adjusting screw (2) until band is tight around front clutch retainer. This will prevent retainer from coming out with pump and possibly damaging clutch or pump components.

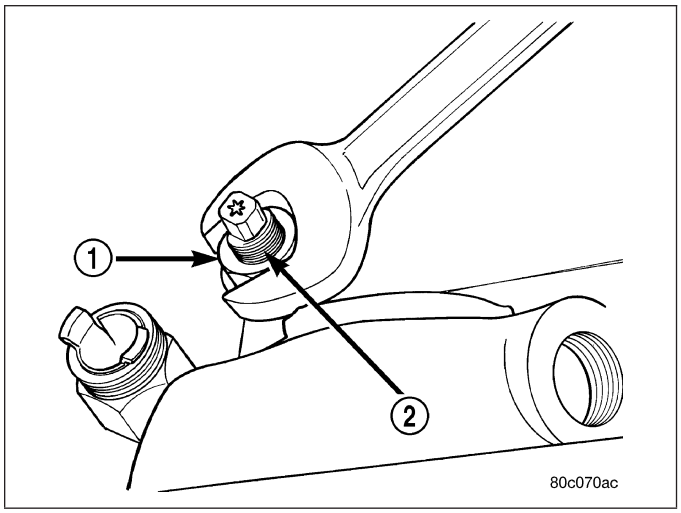

15. Remove oil pump bolts.
16. Thread Slide Hammer Tools C-3752 (2) into threaded holes in flange of oil pump housing (1).

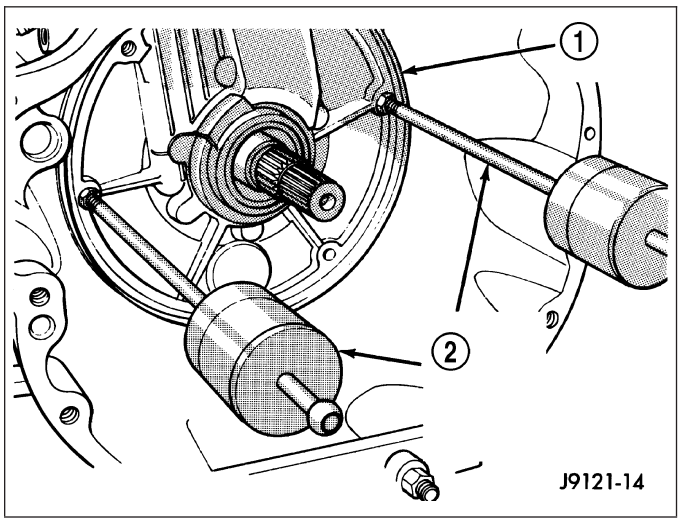

17. Remove oil pump and reaction shaft (1) support by bumping slide hammers outward alternately to pull pump from case.

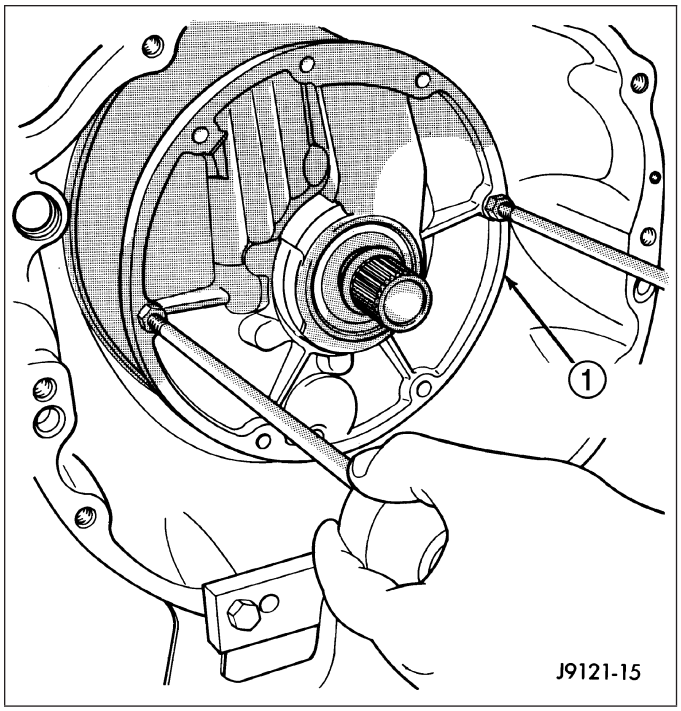

18. Remove oil pump gasket (1). Note gasket position in case for assembly reference.

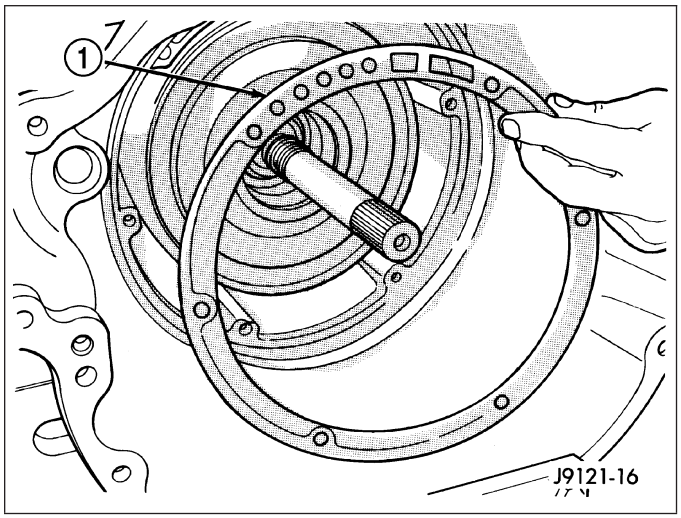

19. Loosen front band adjusting screw until band is completely loose.
20. Remove front band strut (2) and anchor (3).

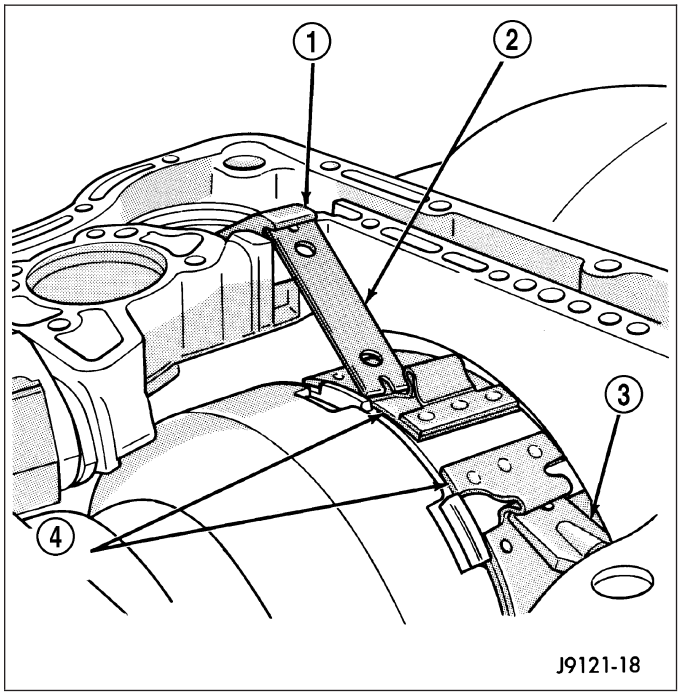

21. Squeeze front band (1) together slightly and slide band over front clutch retainer (2) and out of case.

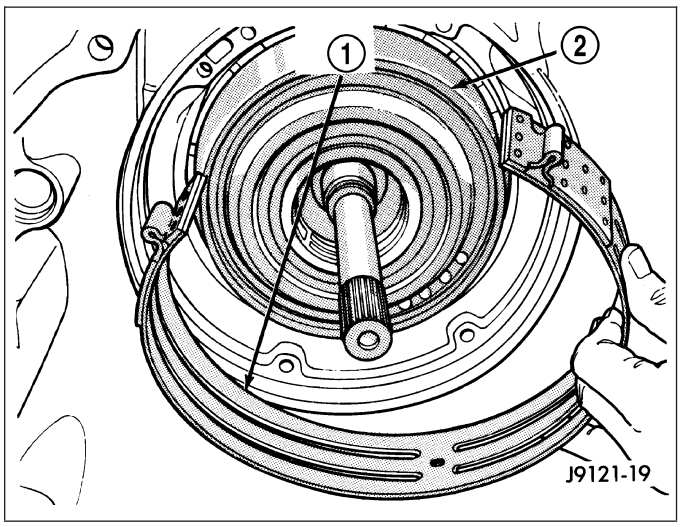

22. Remove front and rear clutch assemblies (1) as a unit.

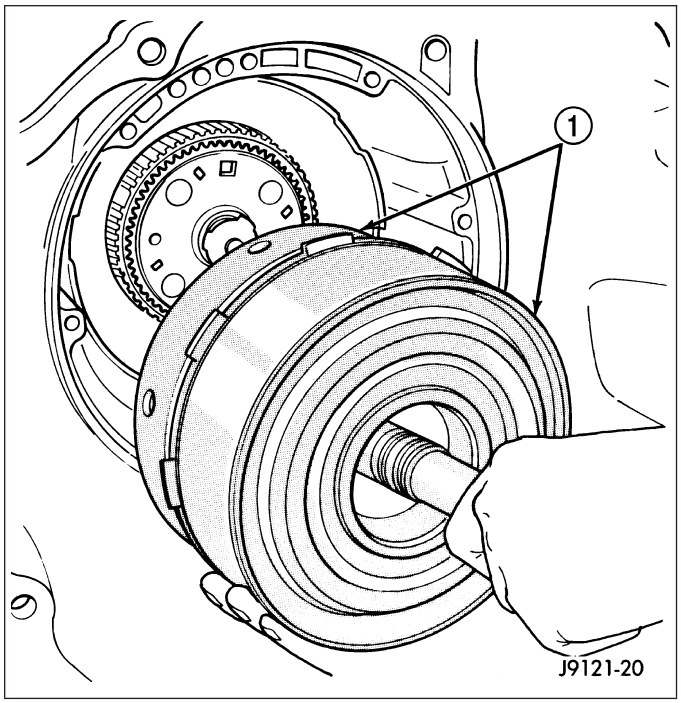

23. Remove front band reaction pin and lever (1). Start pin through lever and out of case bore with drift or punch. Then use pencil magnet to withdraw pin completely (2).

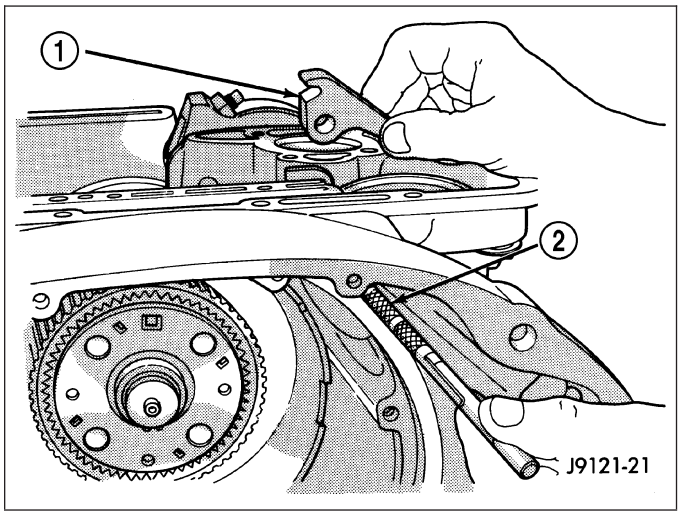

24. Remove intermediate shaft thrust washer (1). Triangular shaped washer will either be on shaft pilot hub (2) or in rear clutch retainer.

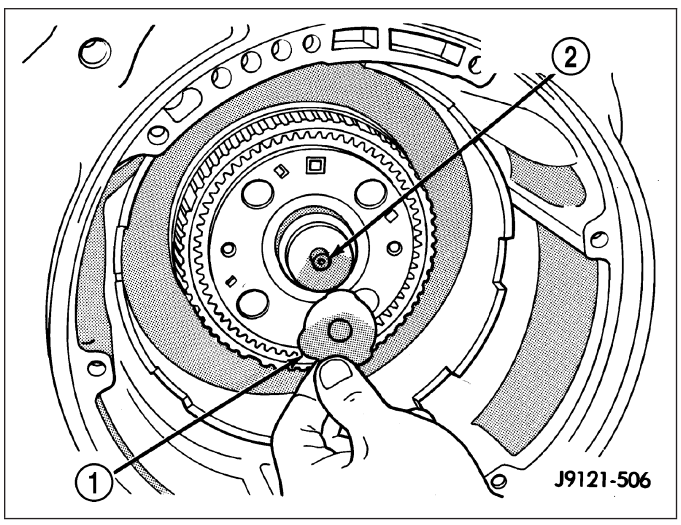

25. Remove thrust plate (1) from intermediate shaft hub (2).

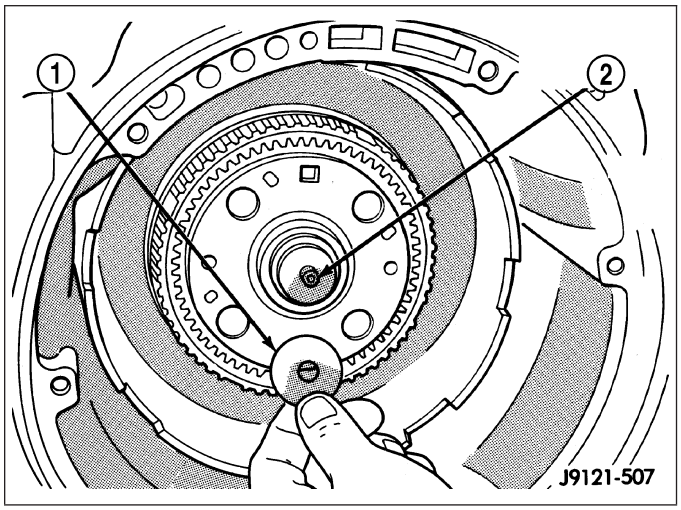

26. Remove intermediate shaft-planetary geartrain assembly (1).

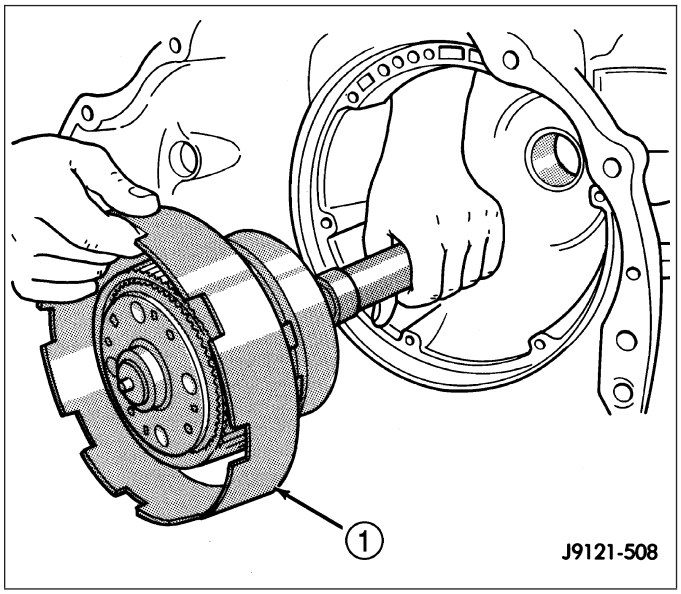

27. Loosen rear band locknut and loosen adjusting screw 3-4 turns.

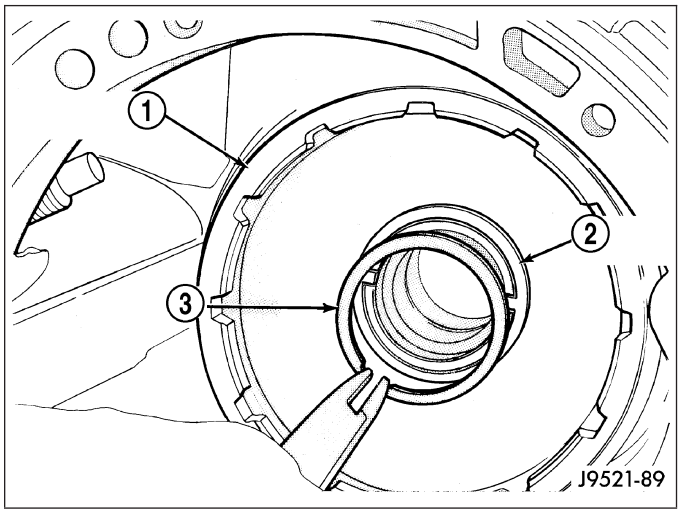

28. Remove snap-ring (3) that retains low-reverse drum (1) on overdrive piston retainer hub.

29. Slide low-reverse drum (1) and thrust washer (3) off piston retainer hub and out of rear band.

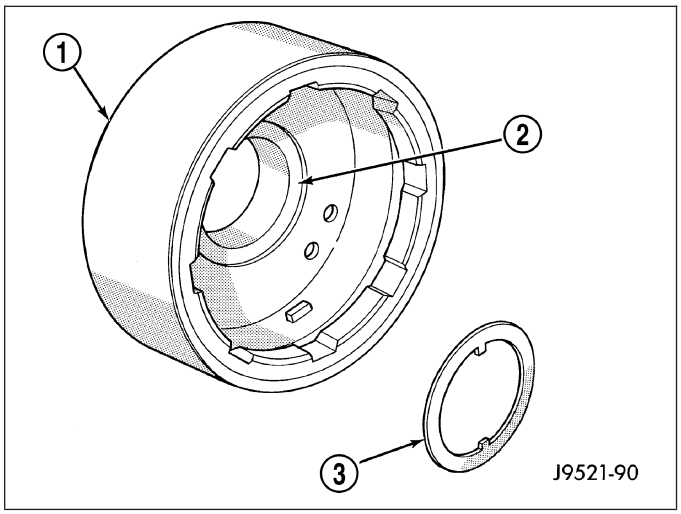

30. Note that overrunning clutch race (1) will remain on splines of low-reverse drum after removal. **The race is a permanent press fit on the hub splines. Do not attempt to remove the race.**

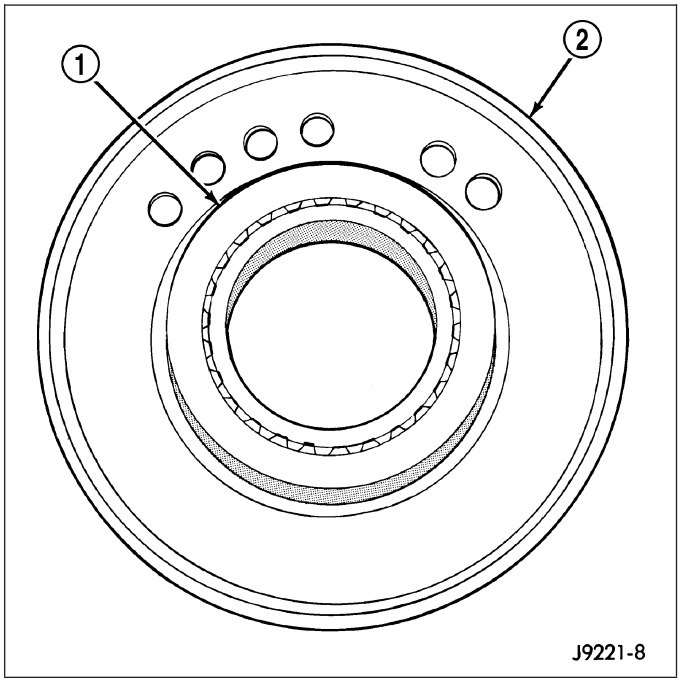

31. Remove overrunning clutch assembly (2). Assembly can be removed without displacing rollers and springs if care is exercised. Note position of rollers and springs for assembly reference.

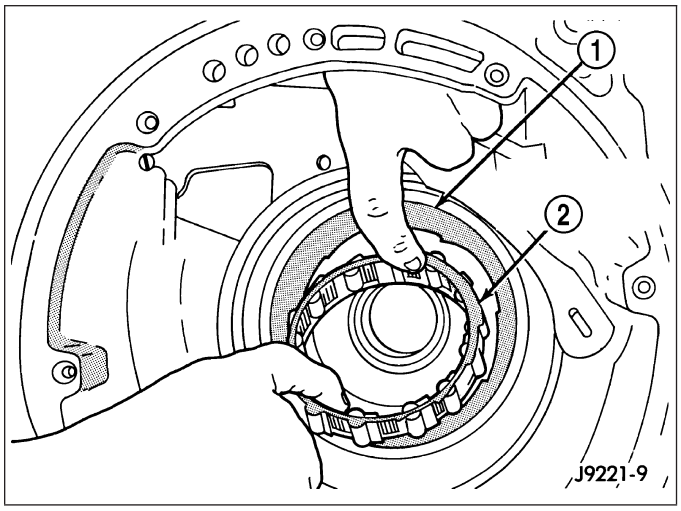

32. Remove rear band adjusting lever and reaction pin.
33. Remove rear band.
34. Compress front servo rod guide (2) with large C-clamp (1) and Tool C-4470 (4), or Compressor Tool C-3422-B. Compress guide only enough to permit snap-ring removal (about 1/8 in.).

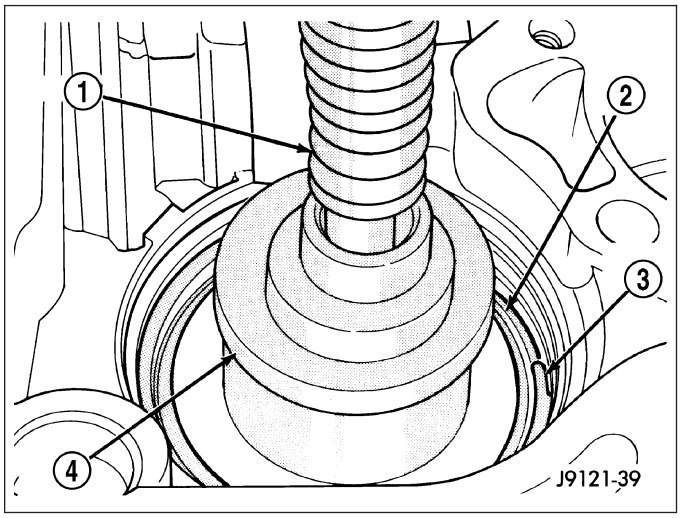

35. Remove servo piston snap-ring (4). Unseat one end of ring. Then carefully work removal tool around back of ring until free of ring groove. **Exercise caution when removing snap-ring. Servo bore can be scratched or nicked if care is not exercised.**
36. Remove tools and remove rear servo retainer (3), spring and piston assembly.

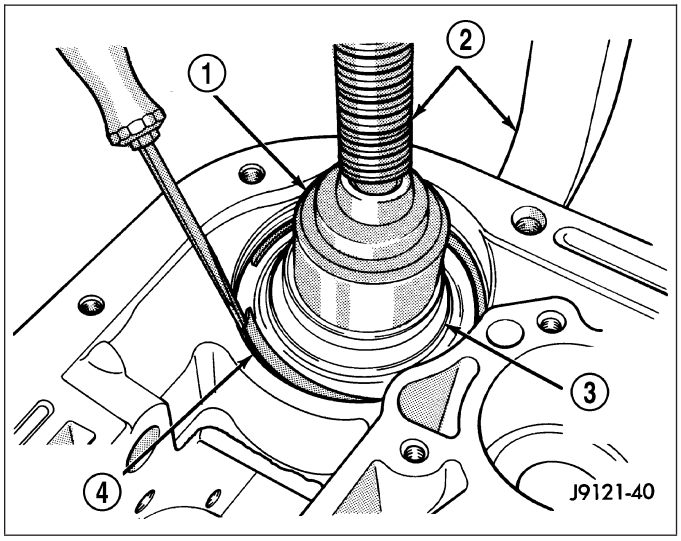

CLEANING

Clean the case in a solvent tank. Flush the case bores and fluid passages thoroughly with solvent. Dry the case and all fluid passages with compressed air. Be sure all solvent is removed from the case and that all fluid passages are clear.

NOTE: Do not use shop towels or rags to dry the case (or any other transmission component) unless they are made from lint-free materials. Lint will stick to case surfaces and transmission components and circulate throughout the transmission after assembly. A sufficient quantity of lint can block fluid passages and interfere with valve body operation.

Lubricate transmission parts with Mopar® ATF +4, Automatic Transmission fluid, during overhaul and assembly. Use petroleum jelly to prelubricate seals, O-rings, and thrust washers. Petroleum jelly can also be used to hold parts in place during reassembly.

INSPECTION

Inspect the case for cracks, porous spots, worn bores, or damaged threads. Damaged threads can be repaired with Helicoil thread inserts. However, the case will have to be replaced if it exhibits any type of damage or wear.

Lubricate the front band adjusting screw threads with petroleum jelly and thread the screw part-way into the case. Be sure the screw turns freely.

Inspect the transmission bushings during overhaul. Bushing condition is important as worn, scored bushings contribute to low pressures, clutch slip and accelerated wear of other components. However, do not replace bushings as a matter of course. Replace bushings only when they are actually worn, or scored.

The use of crocus cloth is permissible where necessary, providing it is used carefully. When used on shafts, or valves, use extreme care to avoid rounding off sharp edges. Sharp edges are vital as they prevent foreign matter from getting between the valve and valve bore.

Do not reuse oil seals, gaskets, seal rings, or O-rings during overhaul. Replace these parts as a matter of course. Also do not reuse snap rings or E-clips that are bent or distorted. Replace these parts as well.

ASSEMBLY

Do not allow dirt, grease, or foreign material to enter the case or transmission components during assembly. Keep the transmission case and components clean. Also make sure the tools and workbench area used for reassembly operations are equally clean.

Shop towels used for wiping off tools and your hands must be made from **lint free** materials. Lint will stick to transmission parts and could interfere with valve operation or even restrict fluid passages.

Lubricate transmission clutch and gear components with Mopar® ATF +4 during reassembly. Soak clutch discs in transmission fluid before installation.

Use petroleum jelly on piston seals and o-rings to ease installation. Petroleum jelly can also be used to lubricate and hold thrust washers and plates in position during assembly.

Do not use chassis grease, bearing grease, white grease, or similar lubricants on any part. These types of lubricants can eventually block or restrict fluid passages and valve operation. Use petroleum jelly only.

Do not force parts into place. The transmission components and sub-assemblies are easily installed by hand when properly aligned. If a part seems difficult to install, it is either misaligned or incorrectly assembled. Verify that thrust washers, thrust plates and seal rings are correctly positioned.

The planetary geartrain, front/rear clutch assemblies and oil pump are all much easier to install when the transmission case is upright. Either tilt the case upward with wood blocks, or cut a hole in the bench large enough for the intermediate shaft and rear support. Then lower the shaft and support into the hole and support the rear of the case directly on the bench.

FRONT/REAR SERVO

1. Lubricate rear servo piston seal with ATF +4. Lubricate servo bore in case with ATF +4.
2. Install rear servo piston (1) in case. Position piston at slight angle to bore and insert piston with twisting motion.

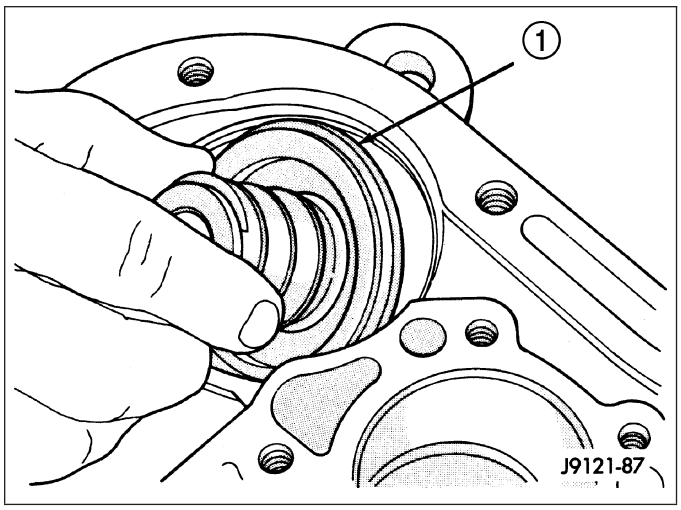

3. Install rear servo spring (1) and retainer (3) in case bore. Be sure spring (1) is seated on piston (2).

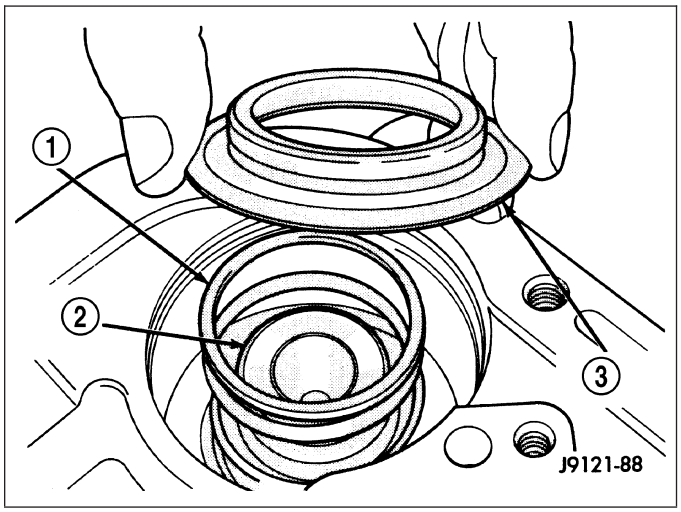

4. Compress rear servo piston with C-clamp (2) or Valve Spring Compressor C-3422-B and install servo piston snap-ring (4).

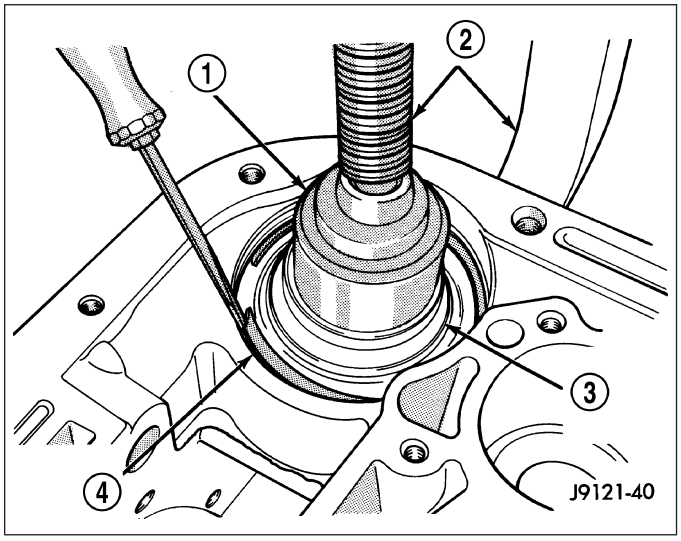

5. Lubricate front servo piston (2) components and servo bore in case with transmission fluid.
6. Install front servo piston (2) in bore. Carefully “run” small, suitable tool (1) around piston ring to press it back into groove and ease installation. Rotate piston into bore at same time. Rock piston slightly to ease piston ring past snap-ring groove and into bore.

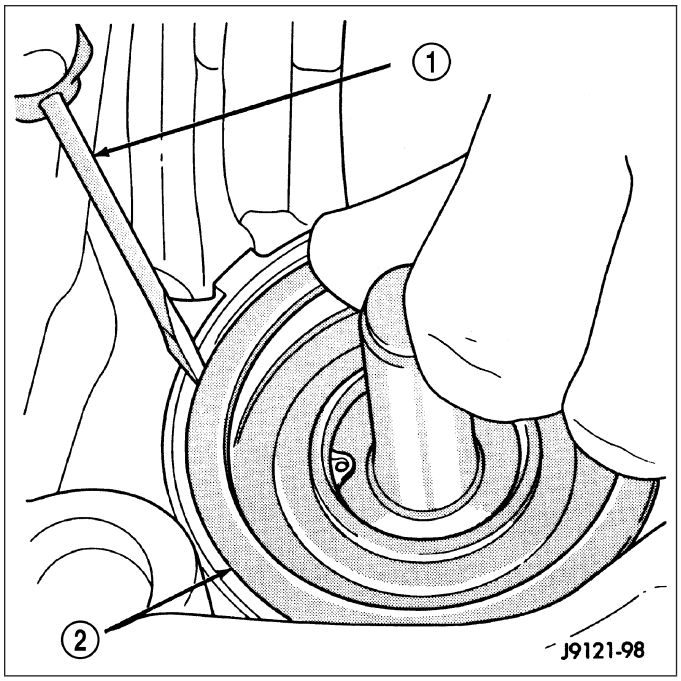

7. Bottom front servo piston in bore and install servo spring.
8. Install front servo piston rod (2) guide as follows:
   a. Place Tool SP-5560 (or similar size tool) (5) on guide and position C-clamp on tool and case.
   b. Slowly compress rod guide while simultaneously easing seal ring into bore with suitable tool.
9. Install rod guide snap-ring (4).

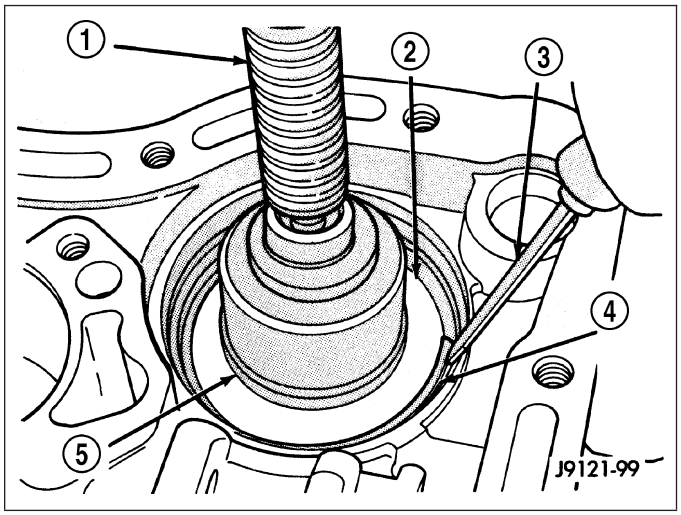

OVERRUNNING CLUTCH, REAR BAND, AND LOW-REVERSE DRUM

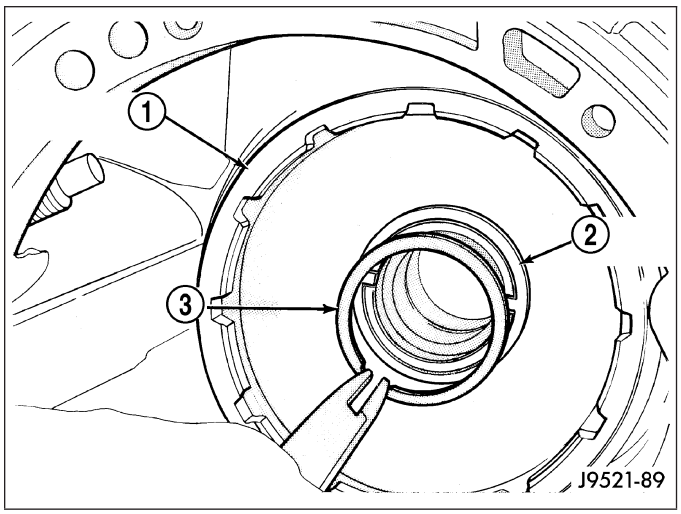

1. Install overrunning clutch components if not yet installed.
2. Position rear band reaction pin and band in case. Be sure that the twin lugs on the band are seated against the reaction pin.
3. Install low-reverse drum. Slide drum through rear band, onto piston retainer hub and into engagement with overrunning clutch and race.
4. Install thrust washer in low-reverse drum spotface (2). Use petroleum jelly to hold washer in place.
5. Install snap-ring (3) that secures low-reverse drum to piston retainer hub.
6. Insert the rear band pivot pin part way into the case.
7. Install rear band adjusting lever and pivot pin. Be sure lever and the single lug on the band are aligned and engaged before seating band pivot pin in case.

PLANETARY GEARTRAIN, FRONT/REAR CLUTCH, AND FRONT BAND

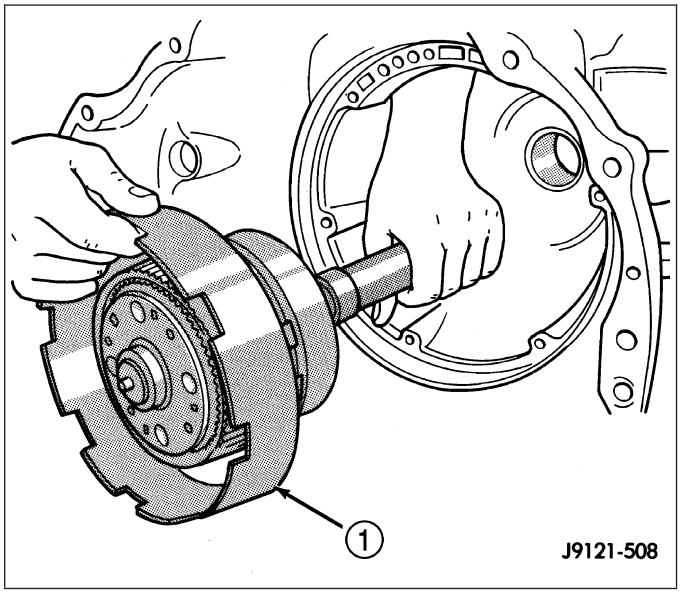

1. Remove Alignment Shaft 6227-2, if installed previously.
2. Install assembled intermediate shaft and planetary geartrain (1). **Support shaft carefully during installation. Do not allow shaft bearing/bushing surfaces to become nicked or scratched.**

3. Lubricate intermediate shaft thrust plate (1) with petroleum jelly and install plate on shaft pilot hub (2).

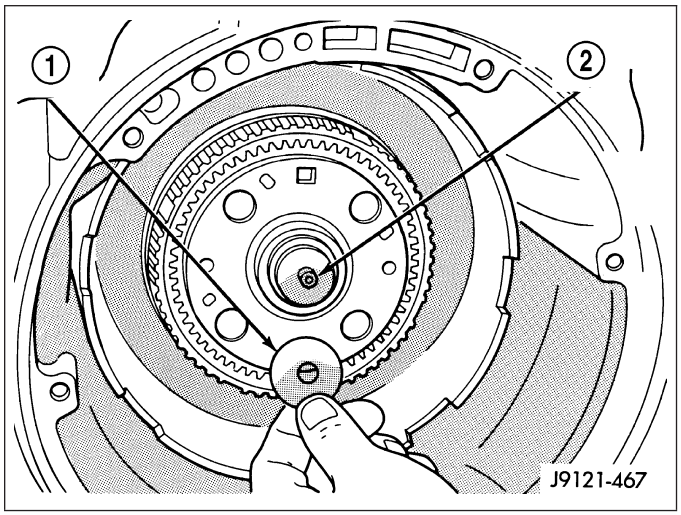

4. Check input shaft front seal rings (1), fiber thrust washer (4), and rear seal ring (3). Be sure the ends of rear seal ring are hooked together and diagonal cut ends of front seal rings are firmly seated against each other as shown. Lubricate seal rings with petroleum jelly after checking them.

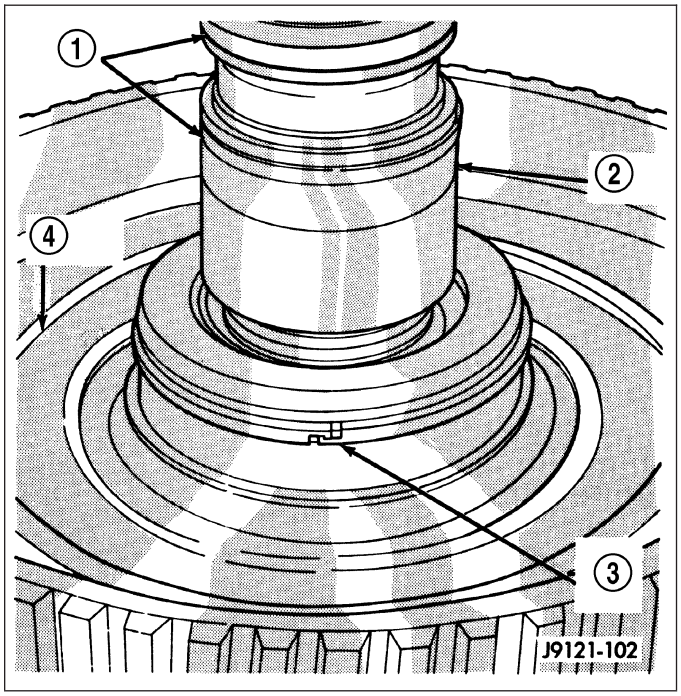

5. Assemble front (1) and rear (2) clutches. Align lugs on front clutch discs. Mount front clutch on rear clutch. Turn front clutch retainer back and forth until front clutch discs are fully seated on rear clutch splined hub.

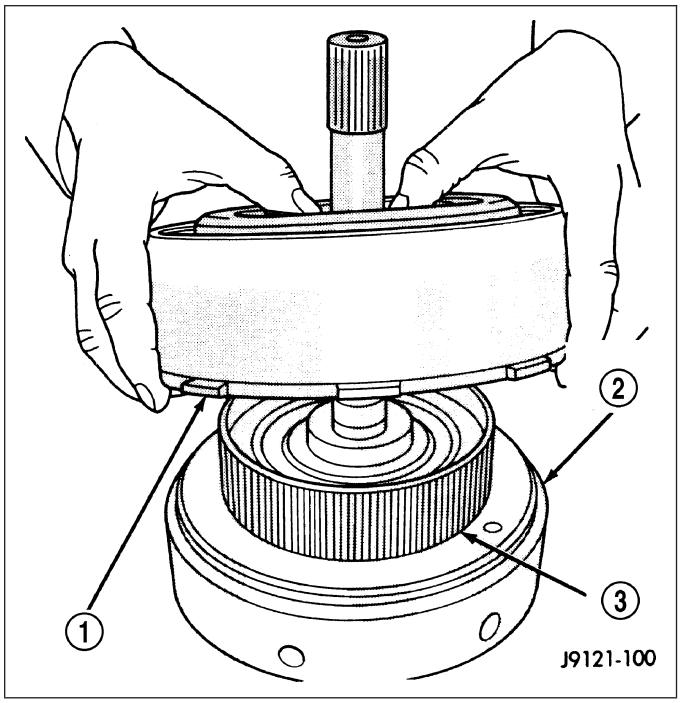

6. Install intermediate shaft thrust washer (3) in hub of rear clutch retainer (2). Use petroleum jelly to hold washer in place. Position washer so grooves are facing outward. **Washer only fits one way in clutch retainer hub.**

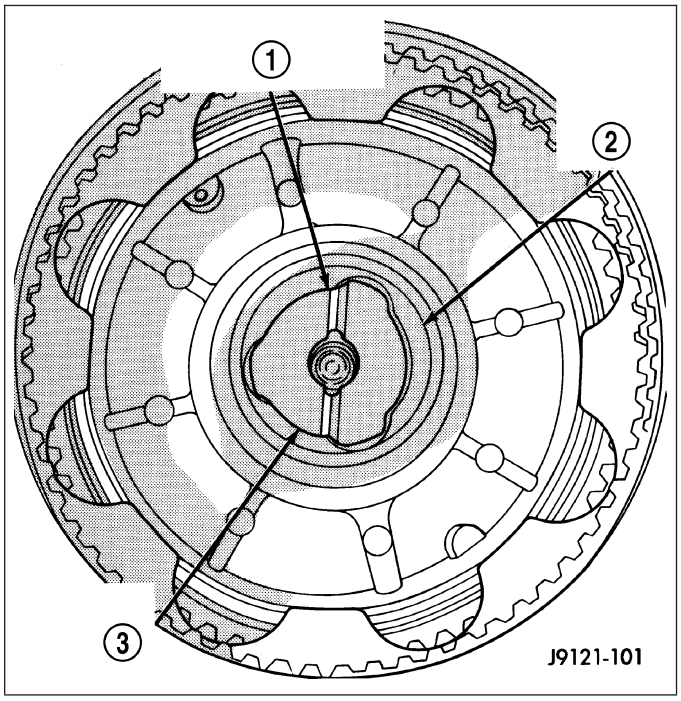

7. Place transmission case in upright position, or place blocks under front end of transmission repair stand to tilt case rearward. This makes it easier to install front/rear clutch assembly (1).
8. Align discs in rear clutch. Then install and engage assembly (1) in front planetary and driving shell. Turn clutch retainers back and forth until both clutches are seated.

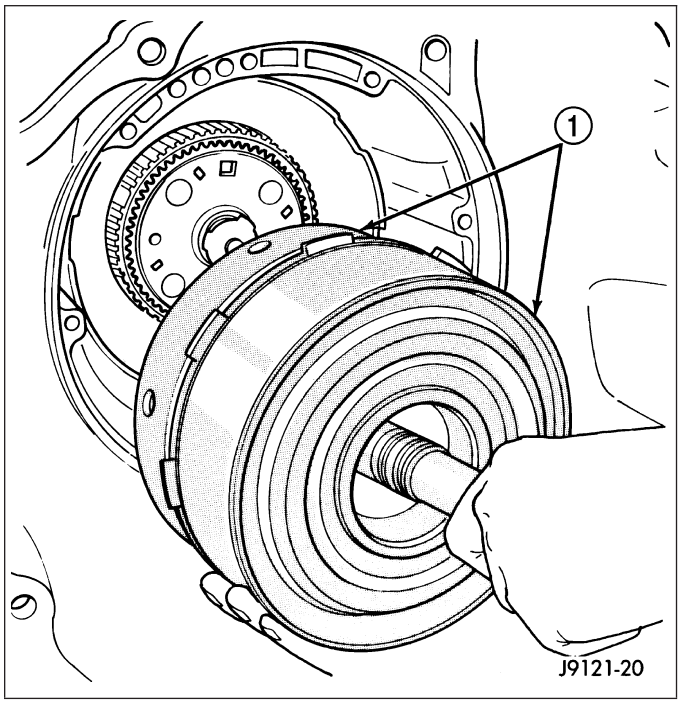

9. Position front band lever (1) in case and over servo rod guide. Then install front band lever pin in case and slide it through lever.
10. Coat threads of front band pin access plug with sealer and install it in case. Tighten plug to 17 N·m (13 ft. lbs.) torque.
11. Slide front band over front clutch retainer and install front band strut (2) and anchor (3).
12. Tighten front band adjusting screw until band is tight on clutch retainer. This will hold clutches in place while oil pump is being installed. **Verify that front/rear clutch assembly is still properly seated before tightening band.**

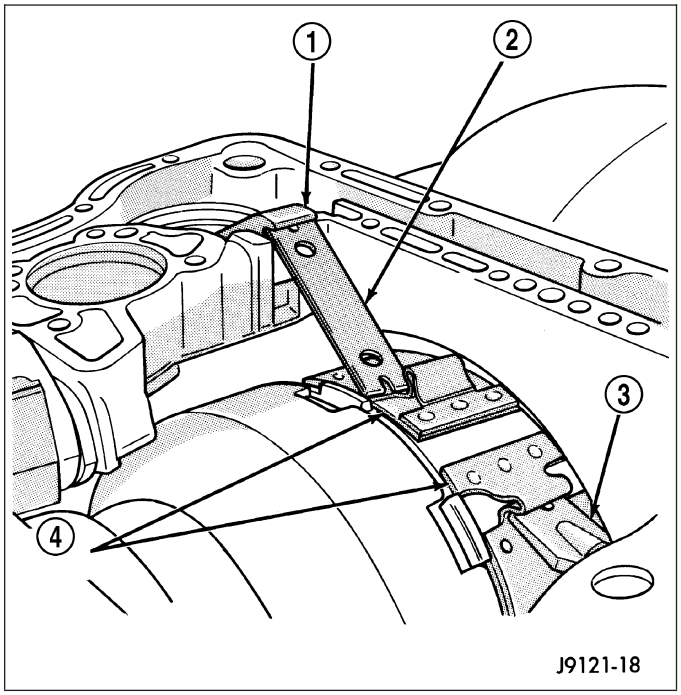

OIL PUMP

1. Install oil pump Pilot Studs C-3288-B (2) in case.
2. Install new oil pump gasket (1) on pilot studs and seat it in case. Be sure gasket is properly aligned with fluid passages in case.

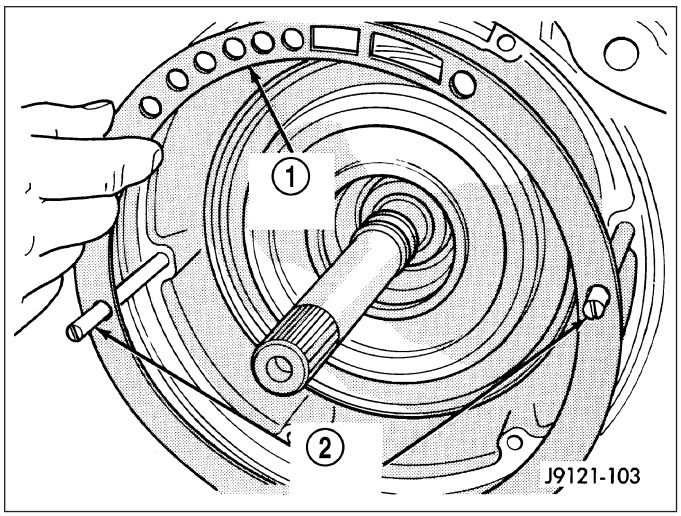

3. Coat the reaction shaft thrust washer (1) with petroleum jelly to hold it in place. Then install washer over reaction shaft hub and seat it on pump.

CAUTION: The thrust washer bore (I.D.), is chamfered (2) on one side. Make sure the chamfered side is installed so it faces the pump.

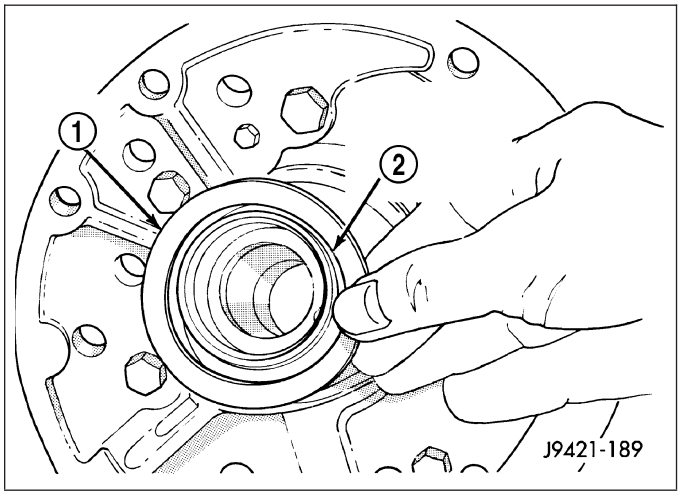

4. Check seal rings (1) on reaction shaft support. Be sure rings are hooked together correctly. Also be sure fiber thrust washer (3) is in position . Use extra petroleum jelly to hold washer in place if necessary.

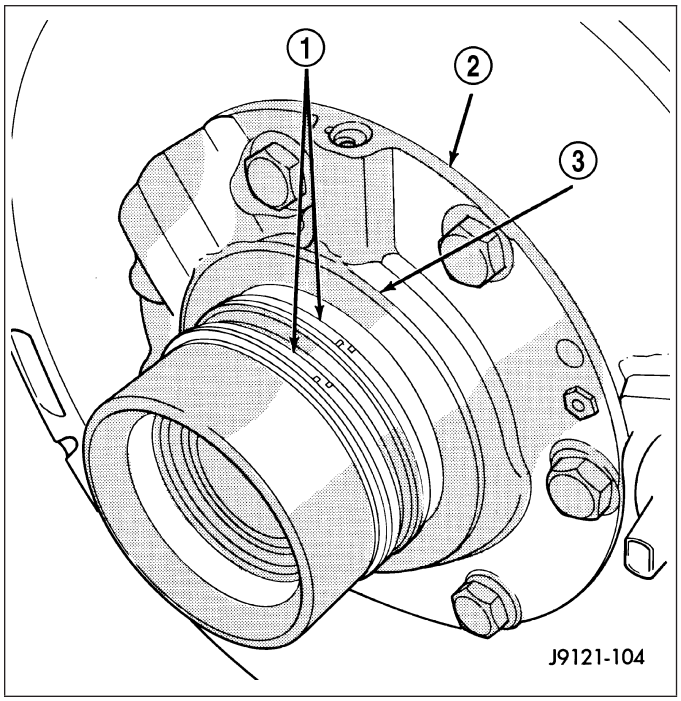

5. Check the torque converter hub seal ring on the reaction shaft for damage. Also check that the seal ring rotates freely in the reaction shaft groove. Replace the seal if necessary.
6. Lubricate oil pump seals with petroleum Mopar® ATF +4.
7. Mount oil pump on pilot studs and slide pump into case opening (1). **Work pump into case by hand. Do not use a mallet or similar tools to seat pump.**
8. Remove pilot studs (2) and install oil pump bolts. Tighten pump bolts alternately and evenly to fully seat pump in case. Then final-tighten pump bolts to 20 N·m (15 ft. lbs.) torque.
9. Verify correct installation. Rotate input and intermediate shafts and check for bind. If bind exists, components are either mis-assembled, or not seated. Disassemble and correct as necessary before proceeding.

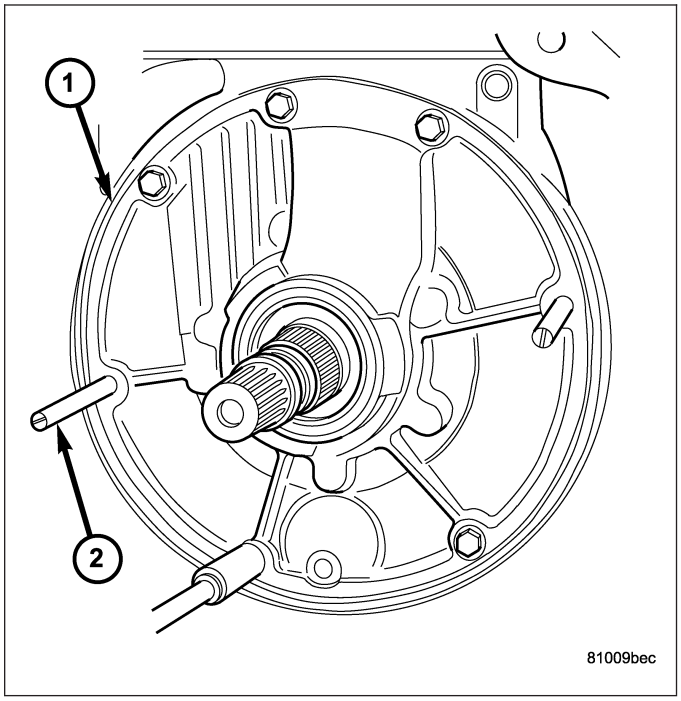

INPUT SHAFT END PLAY CHECK

NOTE: Overdrive unit must be installed in order to correctly measure the input shaft end-play.

1. Measure input shaft end play.

NOTE: If end play is incorrect, transmission is incorrectly assembled, or reaction shaft thrust washer is incorrect. The reaction shaft thrust washer is selective.

a. Attach Adapter 8266-5 (2) to Handle 8266-8 (1).

b. Attach dial indicator C-3339 (3) to Handle 8266-8 (1).

c. Install the assembled tool onto the input shaft of the transmission and tighten the retaining screw on Adapter 8266-5 to secure it to the input shaft.

d. Position the dial indicator plunger against a flat spot on the oil pump and zero the dial indicator.

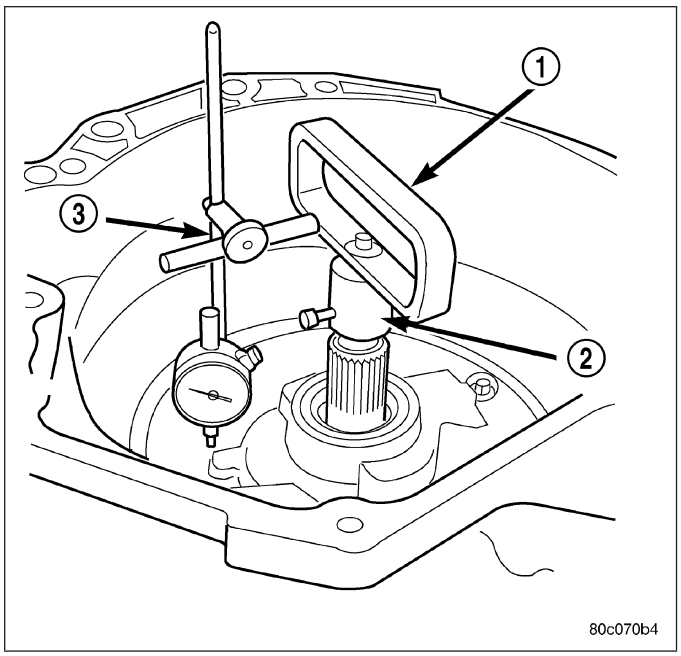

e. Move input shaft in and out and record reading. End play should be 0.86 - 2.13 mm (0.034 - 0.084 in.). Adjust as necessary.

ACCUMULATOR, VALVE BODY, OIL PAN, AND TORQUE CONVERTER

1. Install accumulator inner spring (3)(V-10 engine only), piston (1), and outer spring (2)(diesel engine only).

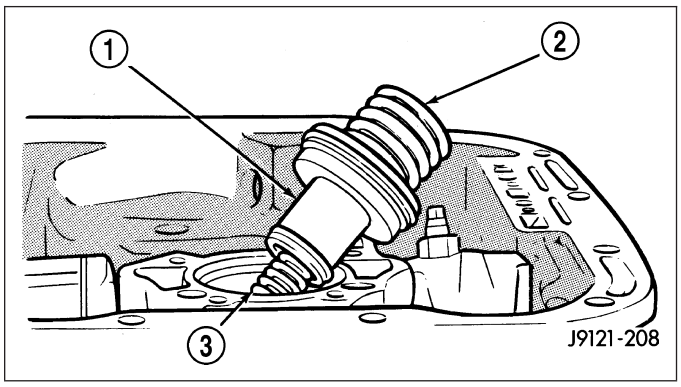

2. Verify that the transmission range sensor has **not** been installed in case. Valve body can not be installed if sensor is in position.
3. Install new valve body manual shaft seal (2) in case. Lubricate seal lip and manual shaft with petroleum jelly. Start seal over shaft and into case. Seat seal with 15/16 inch, deep well socket (1).

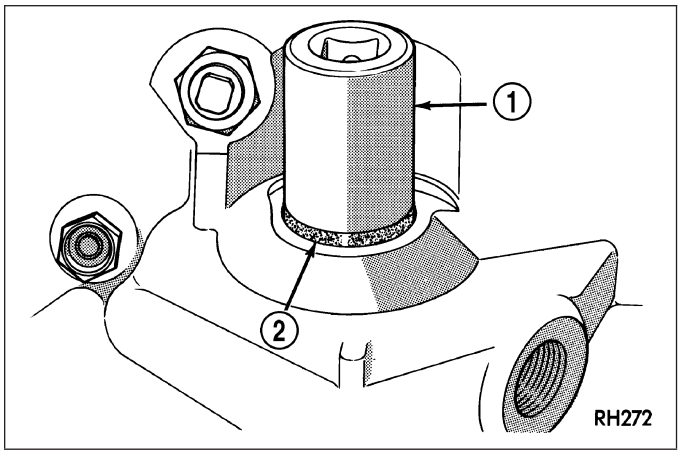

4. Install valve body as follows:
   a. Start park rod into park pawl. If rod will not slide past park pawl, pawl is engaged in park gear. Rotate overdrive output shaft with suitable size 12 point socket; this will free pawl and allow rod to engage.
   b. Align and seat valve body on case. Be sure manual lever shaft and overdrive connector are fully seated in case.
   c. Install and start all valve body attaching bolts by hand. Then tighten bolts evenly, in a diagonal pattern to 12 N·m (105 in. lbs.) torque. **Do not overtighten valve body bolts. This could result in distortion and cross leakage after installation.**.

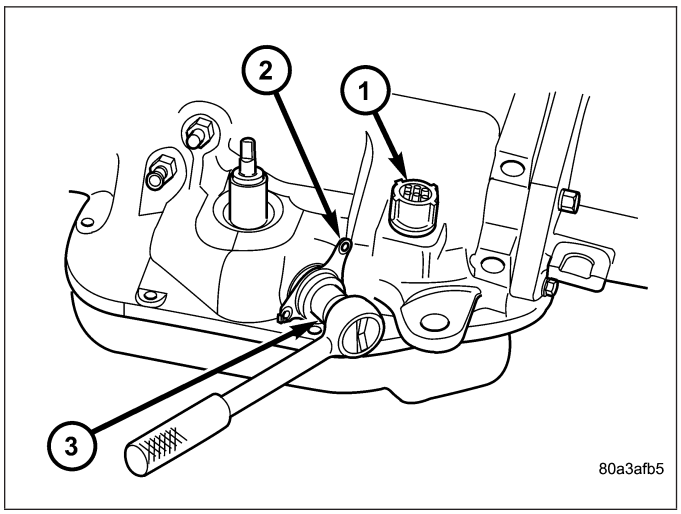

5. Install new filter on valve body. Tighten filter screws to 4 N·m (35 in. lbs.).

CAUTION: If the condition of the transmission before the overhaul procedure caused excessive metallic or fiber contamination in the fluid, replace the torque converter. Fluid contamination and transmission failure can result if not done.

6. Move the transmission manual shaft lever to the manual LOW position.
7. Install the TRS mounting bracket into the transmission case. Using Adapter 8581 (3), tighten the mounting bracket (2) to 34 N·m (300 in.lbs.).

8. Install the TRS into the mounting bracket with the wiring connector facing the front of the transmission.
9. Install the two screws to hold the TRS to the mounting bracket. Tighten the screws to 5 N·m (45 in.lbs.).

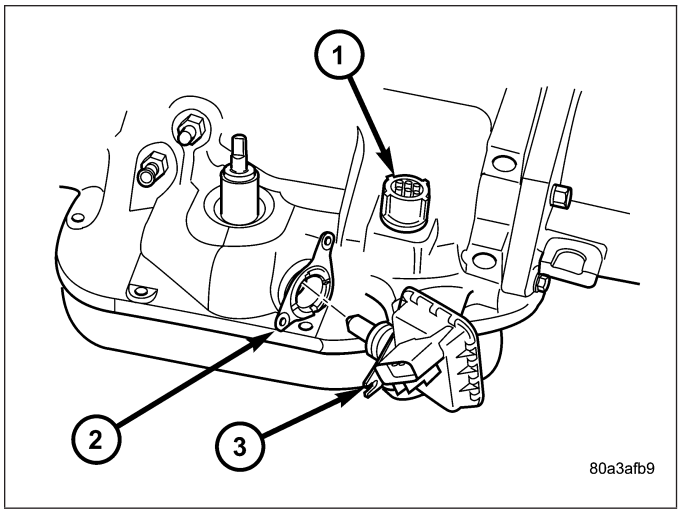

10. Verify proper sensor operation.
11. Move the transmission manual shaft lever to the PARK position.
12. Install torque converter. Use C-clamp or metal strap to hold converter in place for installation.

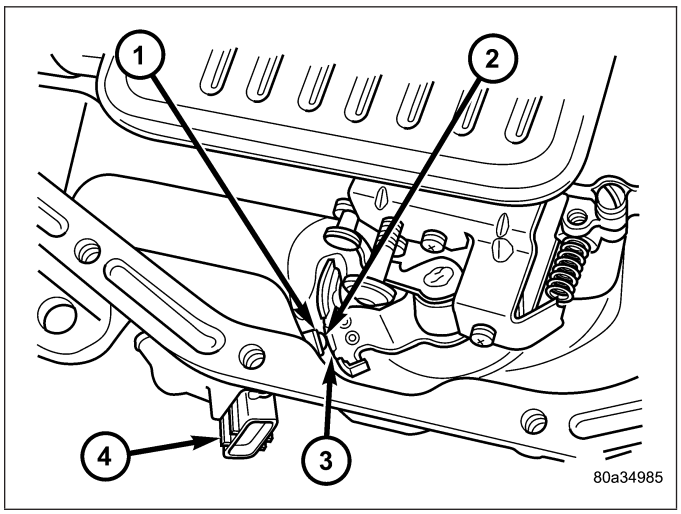

1 - NEUTRAL CONTACT
2 - MANUAL LEVER AND SENSOR PLUNGER IN REVERSE POSITION
3 - PARK CONTACT
4 - TRANSMISSION RANGE SENSOR

BAND ADJUSTMENT AND FINAL

1. Adjust front and rear bands as follows:
   a. Loosen locknut on each band adjusting screw 4-5 turns.
   b. Tighten both adjusting screws to 8 N·m (72 in. lbs.).
   c. Back off front band adjusting screw 1-3/4 turns, for diesel vehicles, or 1-1/2 turns for V-10 vehicles.
   d. Back off rear band adjusting screw 3 turns.
   e. Hold each adjusting screw in position and tighten locknut to 34 N·m (25 ft. lbs.) torque.
2. Install magnet in oil pan. Magnet seats on small protrusion at corner of pan.
3. Position new oil pan gasket on case and install oil pan. Tighten pan bolts to 13.6 N·m (125 in. lbs.).
4. Install throttle valve and shift selector levers on valve body manual lever shaft.
5. Apply small quantity of dielectric grease to terminal pins of solenoid case connector and neutral switch.
6. Fill transmission with recommended fluid.

INSTALLATION

1. Check torque converter hub inner and outer diameters and hub drive notches for sharp edges burrs, scratches, or nicks. Polish the hub and notches with 320/400 grit paper and crocus cloth if necessary. The hub must be smooth to avoid damaging pump seal at installation.
2. Lubricate pocket in the rear oil pump seal lip with transmission fluid.
3. Lubricate converter pilot hub of the crankshaft with a light coating of Mopar® High Temp Grease.
4. Align and install converter in oil pump.
5. Carefully insert converter in oil pump. Then rotate converter back and forth until fully seated in pump gears.
6. Check converter seating with steel scale (1) and straightedge (2). Surface of converter lugs should be 19mm (0.75 in.) to rear of straightedge when converter is fully seated.
7. Temporarily secure converter with C-clamp.

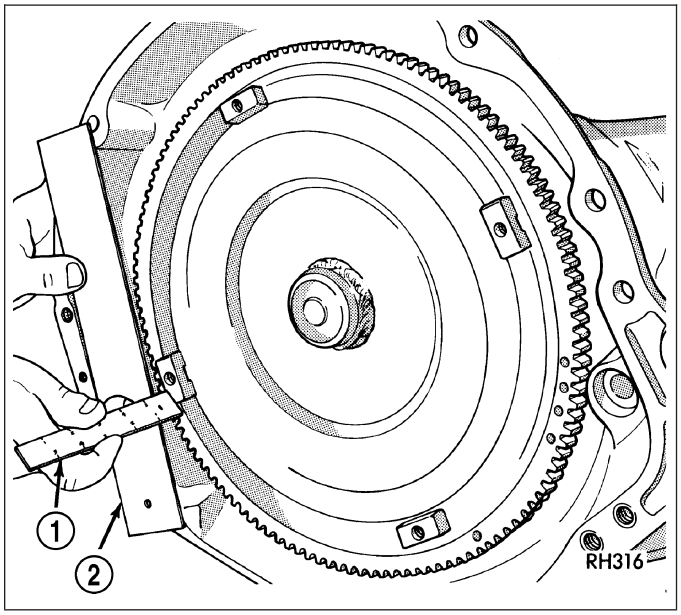

8. For vehicles equipped with a diesel engine;
   a. Position transmission on jack and secure it with chains.
   b. Check condition of converter driveplate. Replace the plate if cracked, distorted or damaged. **Also be sure transmission dowel pins are seated in engine block and protrude far enough to hold transmission in alignment.**
   c. Raise transmission and align converter with drive plate and converter housing with engine block.
   d. Move transmission forward. Then raise, lower or tilt transmission to align converter housing with engine block dowels.
   e. Carefully work transmission forward and over engine block dowels until converter hub is seated in crankshaft.
   f. Install bolts (5) attaching transmission (3) to engine adapter (2).

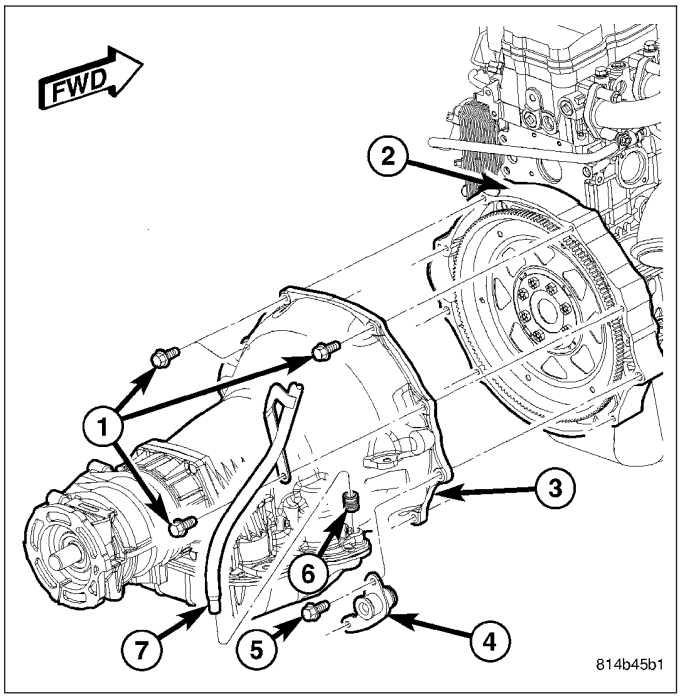

9. For vehicles equipped with a gas engine;
   a. Position transmission on jack and secure it with chains.
   b. Check condition of converter driveplate. Replace the plate if cracked, distorted or damaged. **Also be sure transmission dowel pins are seated in engine block and protrude far enough to hold transmission in alignment.**
   c. Raise transmission and align converter with drive plate and converter housing with engine block.
   d. Move transmission forward. Then raise, lower or tilt transmission to align converter housing with engine block dowels.
   e. Carefully work transmission forward and over engine block dowels until converter hub is seated in crankshaft.
   f. Install bolts (1) attaching transmission (3) to engine (2).

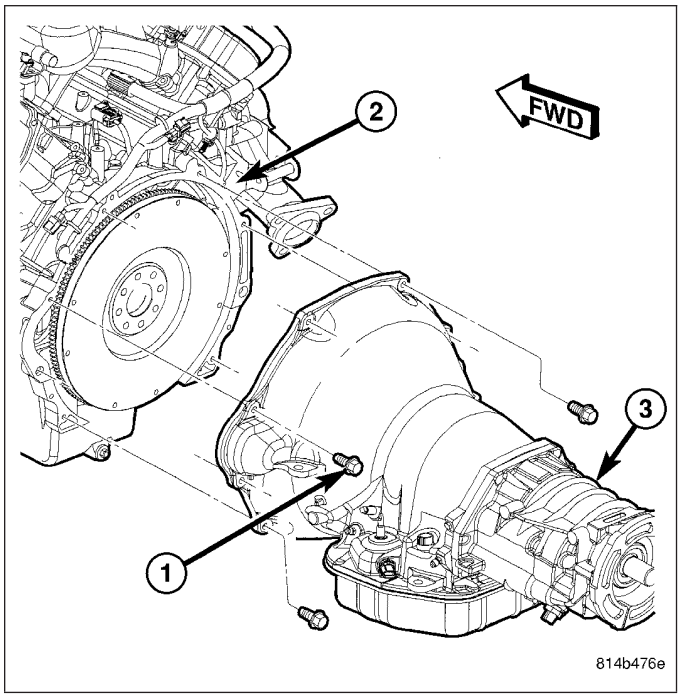

10. Install rear support.
11. Install the rear transmission crossmember.
12. Lower transmission onto crossmember and install bolts attaching transmission mount to crossmember.
13. Remove engine support fixture.
14. Install the transfer case, if equipped. (Refer to 21 - TRANSMISSION AND TRANSFER CASE/ TRANSFER CASE - INSTALLATION)
15. Install crankshaft position sensor. (Refer to 14 - FUEL SYSTEM/FUEL INJECTION/CRANKSHAFT POSITION SENSOR - INSTALLATION)
16. Connect gearshift cable (1) and throttle cable (gas engines only) to transmission.

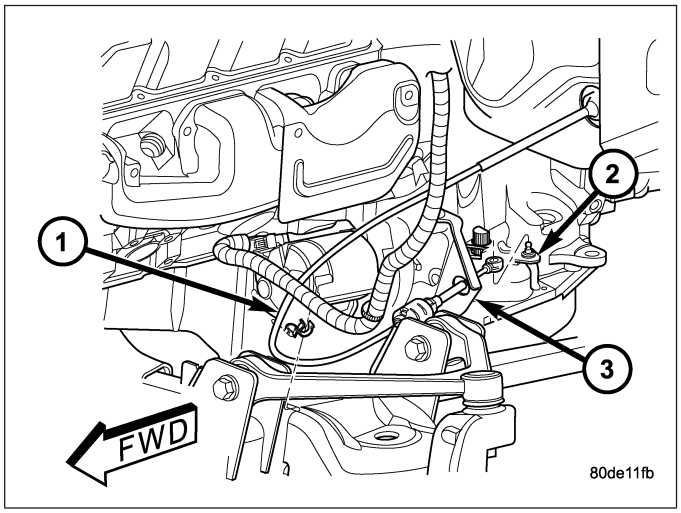

17. For vehicles equipped with a diesel engine, position the transmission throttle valve actuator (TTVA) (1) over the throttle valve shaft (3).
18. Align the D-shaped opening in the bottom of the TTVA to the throttle valve shaft and install the TTVA onto the shaft.
19. Install the wiring connector (2) to the TTVA (1).

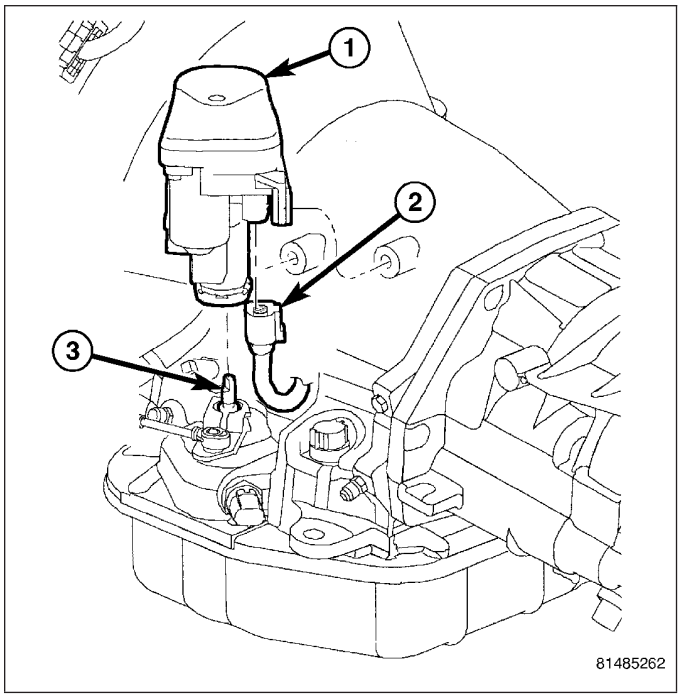

20. Rotate the TTVA (1) to the transmission case and install the bolts (2) to hold the TTVA to the transmission.
21. Tighten the bolts to 8.5 N·m (75 in.lbs.).
22. Initialize the TTVA (Refer to 21 - TRANSMISSION/AUTOMATIC - 48RE/THROTTLE VALVE ACTUATOR - ADJUSTMENTS).

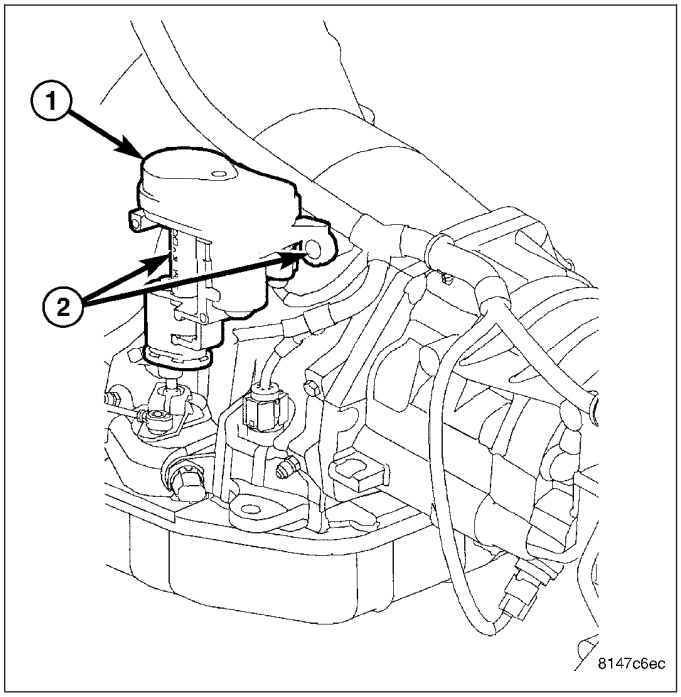

23. Connect cooler lines (6, 7) to transmission (5), diesel engine.

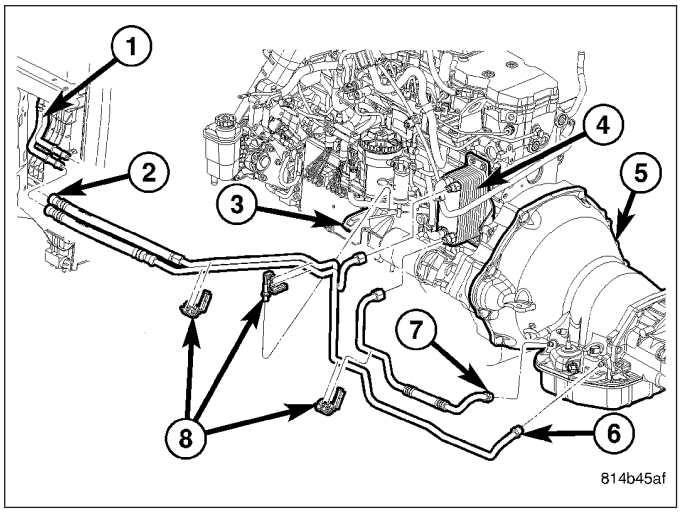

24. Connect cooler lines (4, 5) to transmission (3), gas engine.

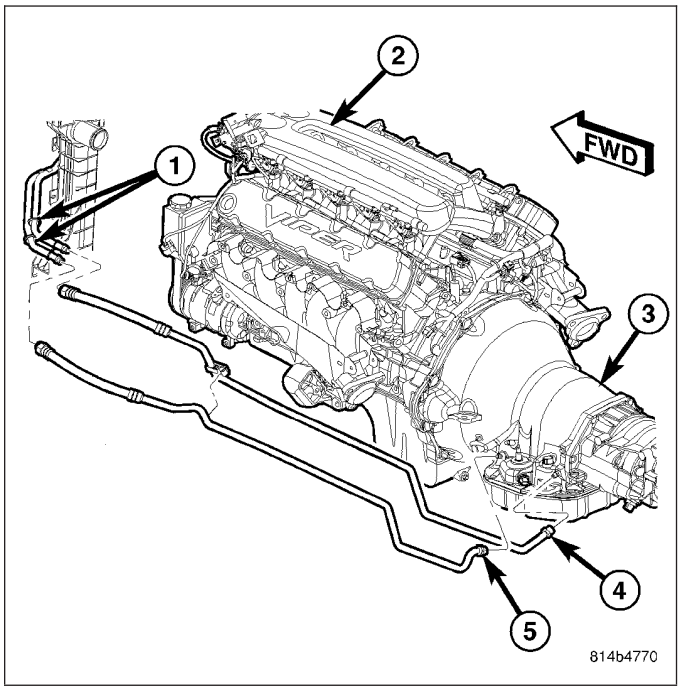

25. Connect wires to the transmission range sensor and transmission solenoid connector. Be sure the transmission harnesses are properly routed.

CAUTION: It is essential that correct length bolts be used to attach the converter to the driveplate. Bolts that are too long will damage the clutch surface inside the converter.

26. Install torque converter-to-driveplate bolts.
27. Install converter housing access cover.
28. Install starter motor and cooler line bracket. (Refer to 8 - ELECTRICAL/STARTING/STARTER MOTOR - INSTALLATION)
29. Install transmission fill tube (7). Install new seal (6) on tube before installation.
30. Install any exhaust components previously removed.
31. Align and connect propeller shaft. (Refer to 3 - DIFFERENTIAL & DRIVELINE/PROPELLER SHAFT/PROPELLER SHAFT - INSTALLATION)

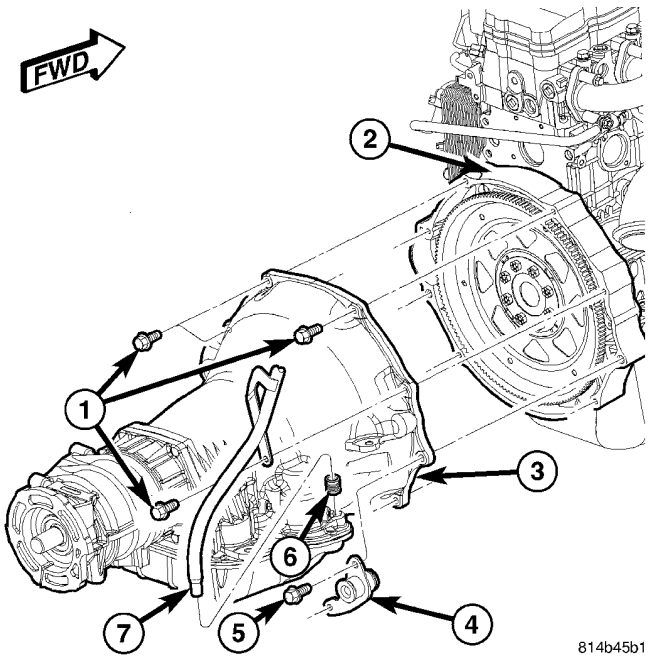

32. Adjust gearshift cable and throttle valve cable, if necessary.
33. Install the transfer case skid plate, if equipped.
34. Lower vehicle.
35. Fill transmission with Mopar® ATF +4, Automatic Transmission fluid.

SCHEMATICS AND DIAGRAMS

HYDRAULIC SCHEMATICS

80fd0c6b

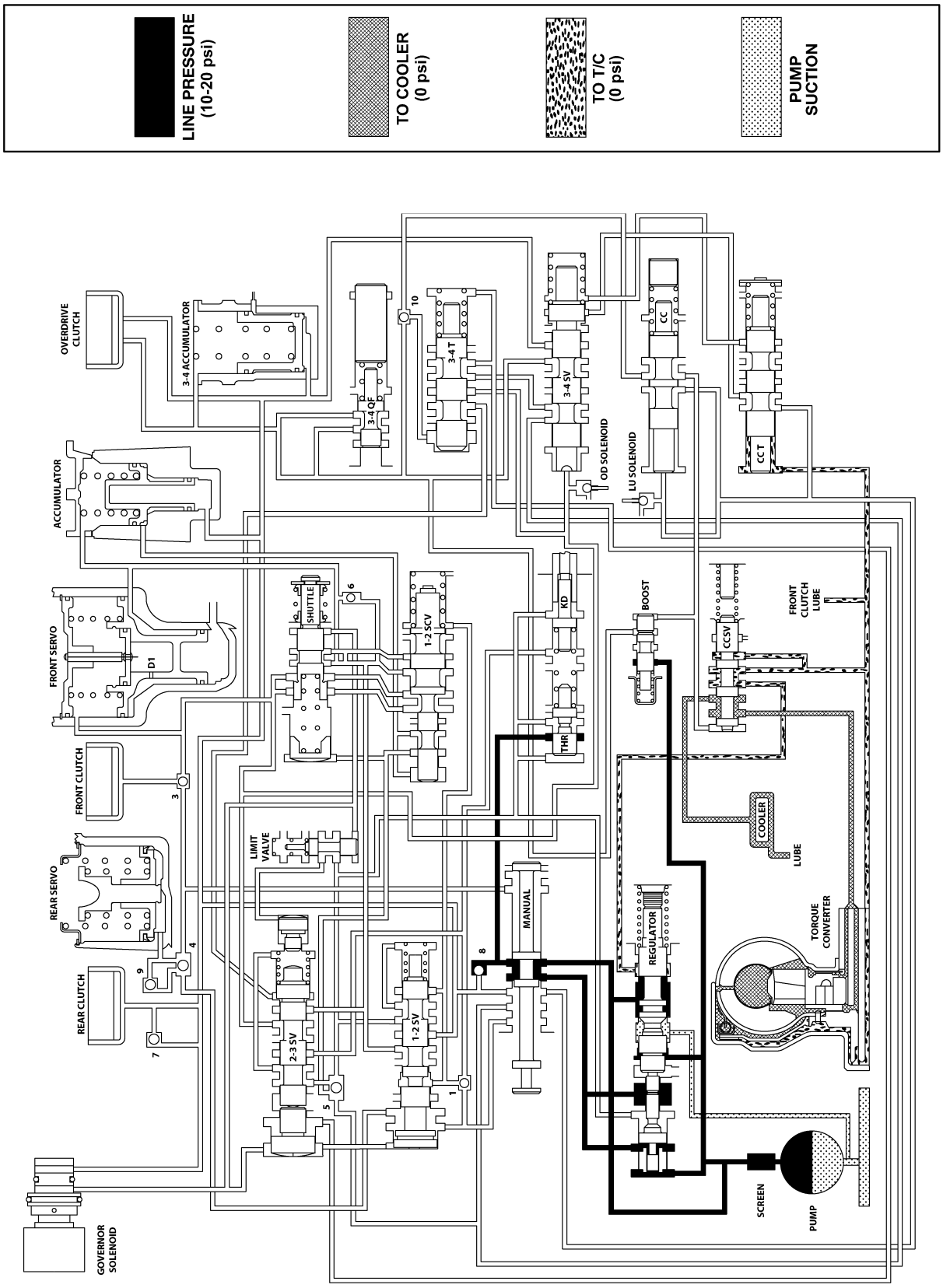

HYDRAULIC FLOW IN PARK

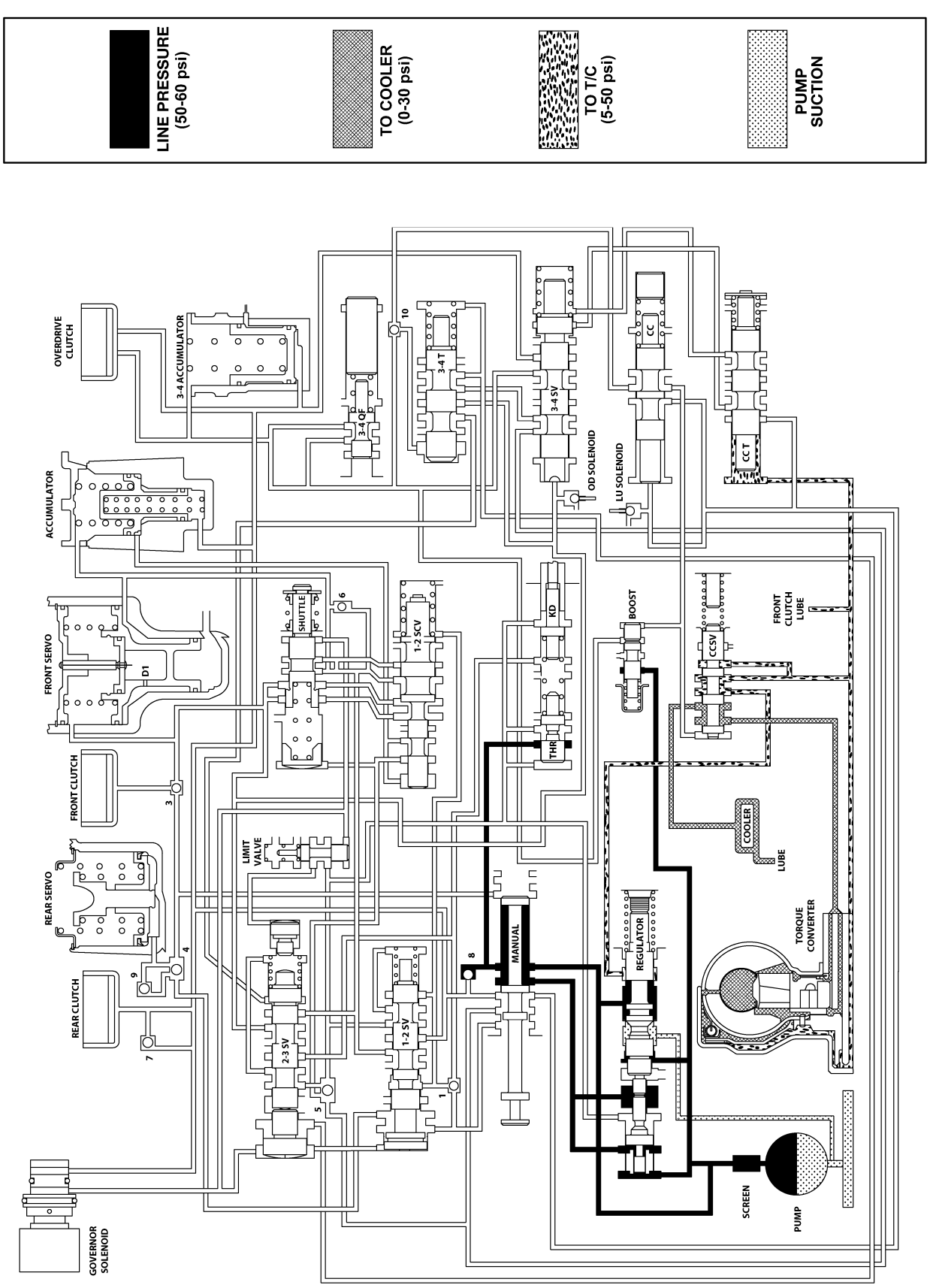

HYDRAULIC FLOW IN NEUTRAL

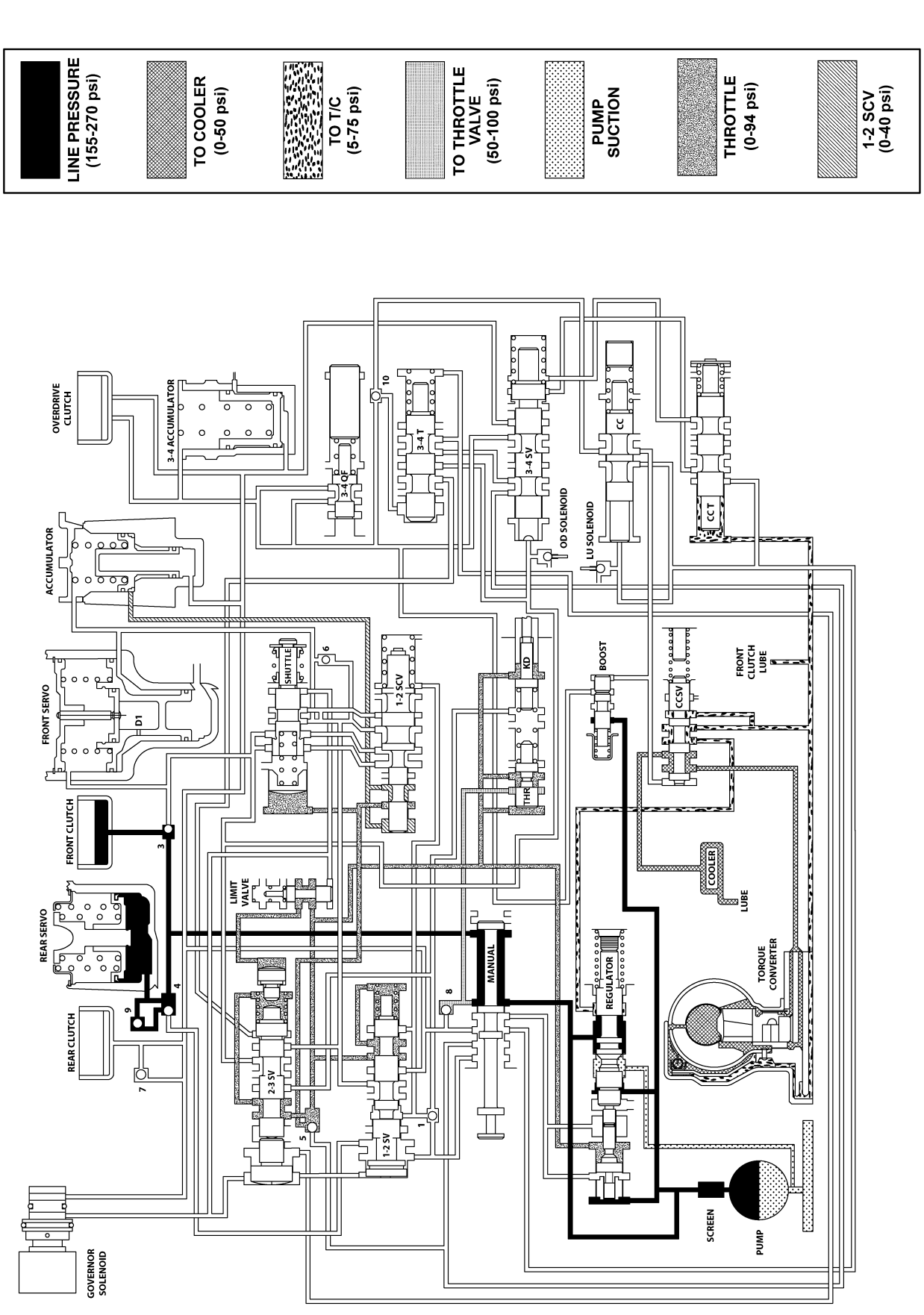

HYDRAULIC FLOW IN REVERSE

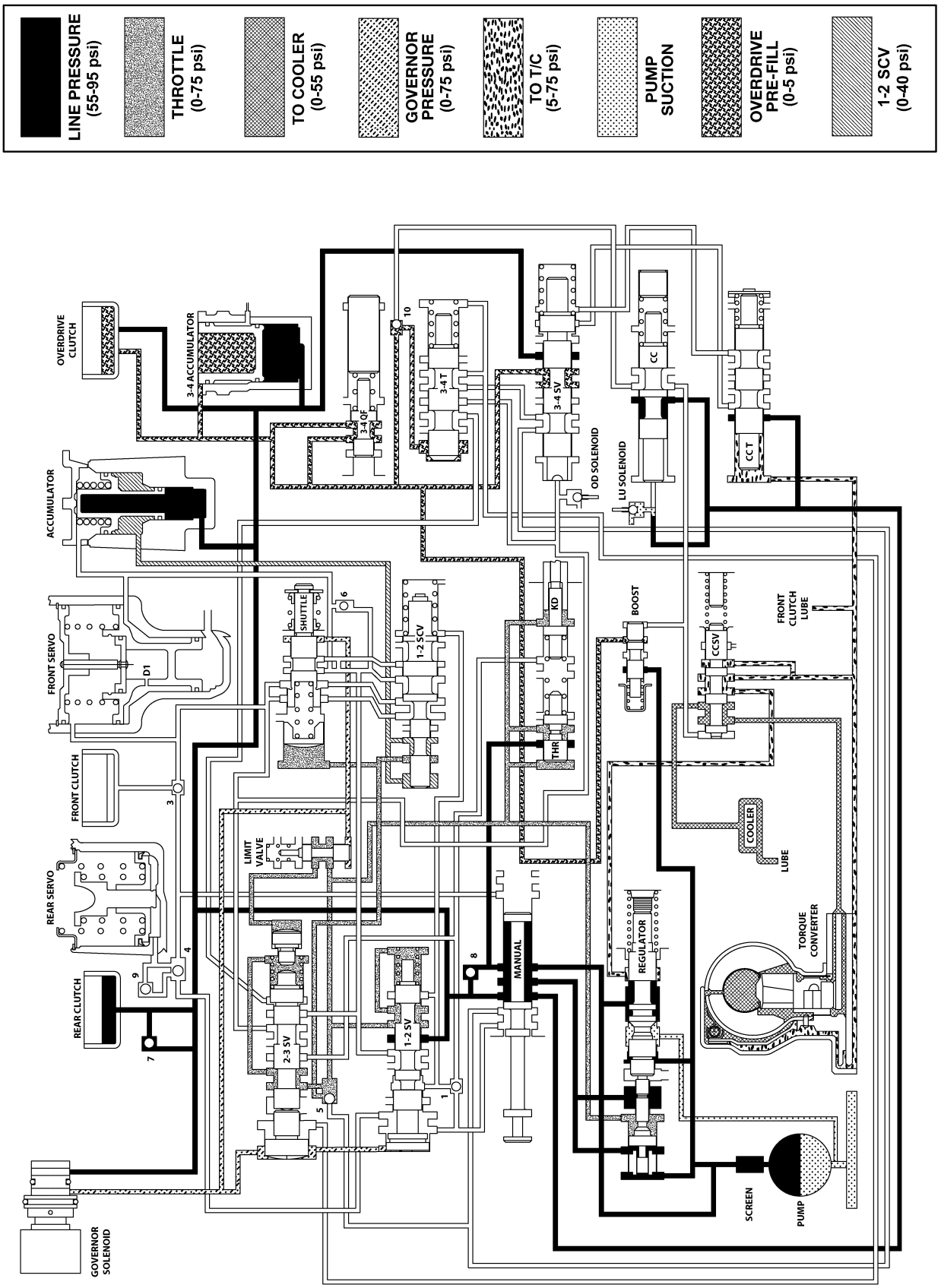

HYDRAULIC FLOW IN DRIVE FIRST GEAR

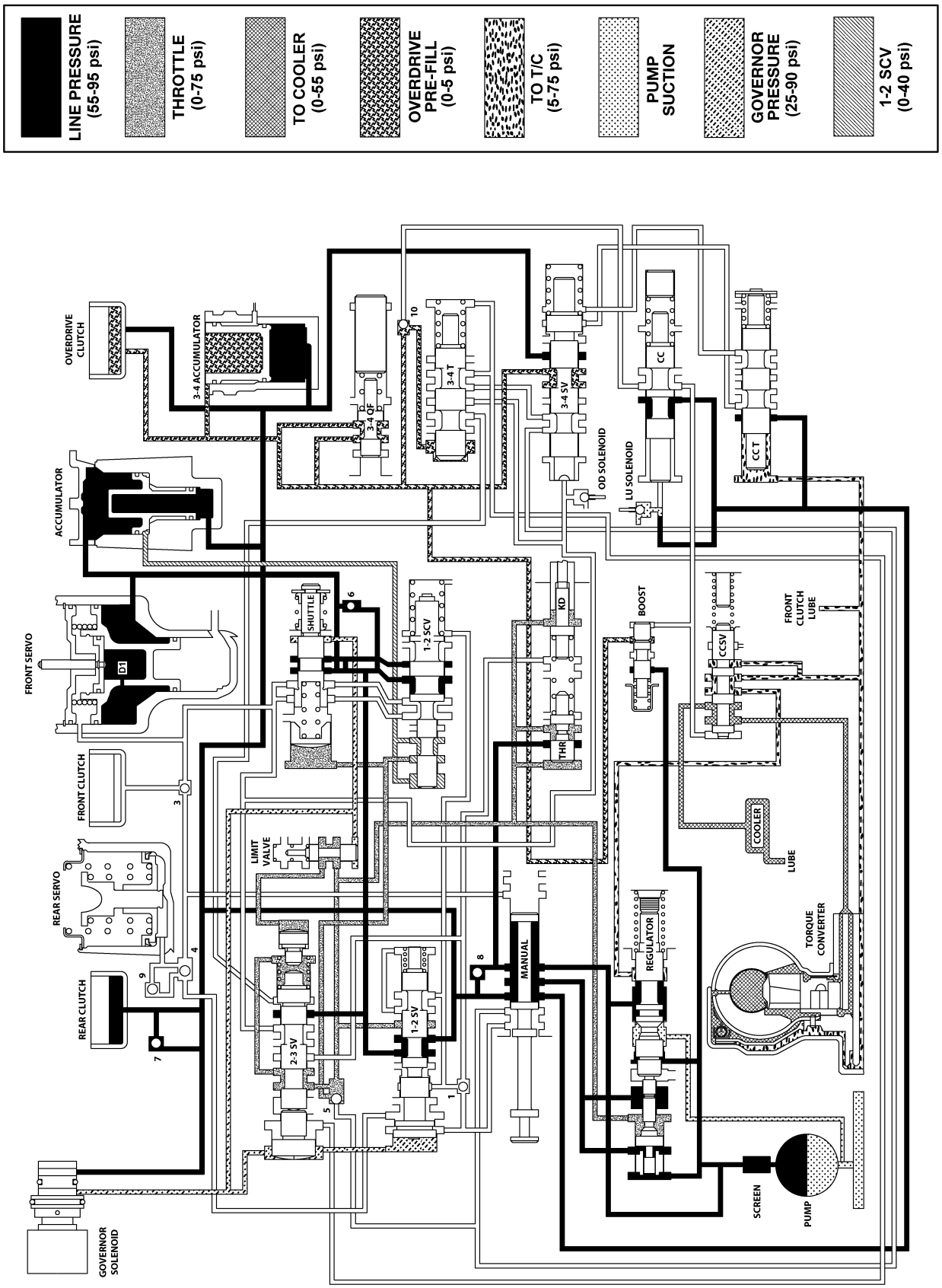

HYDRAULIC FLOW IN DRIVE SECOND GEAR (CONVERTER CLUTCH NOT APPLIED)

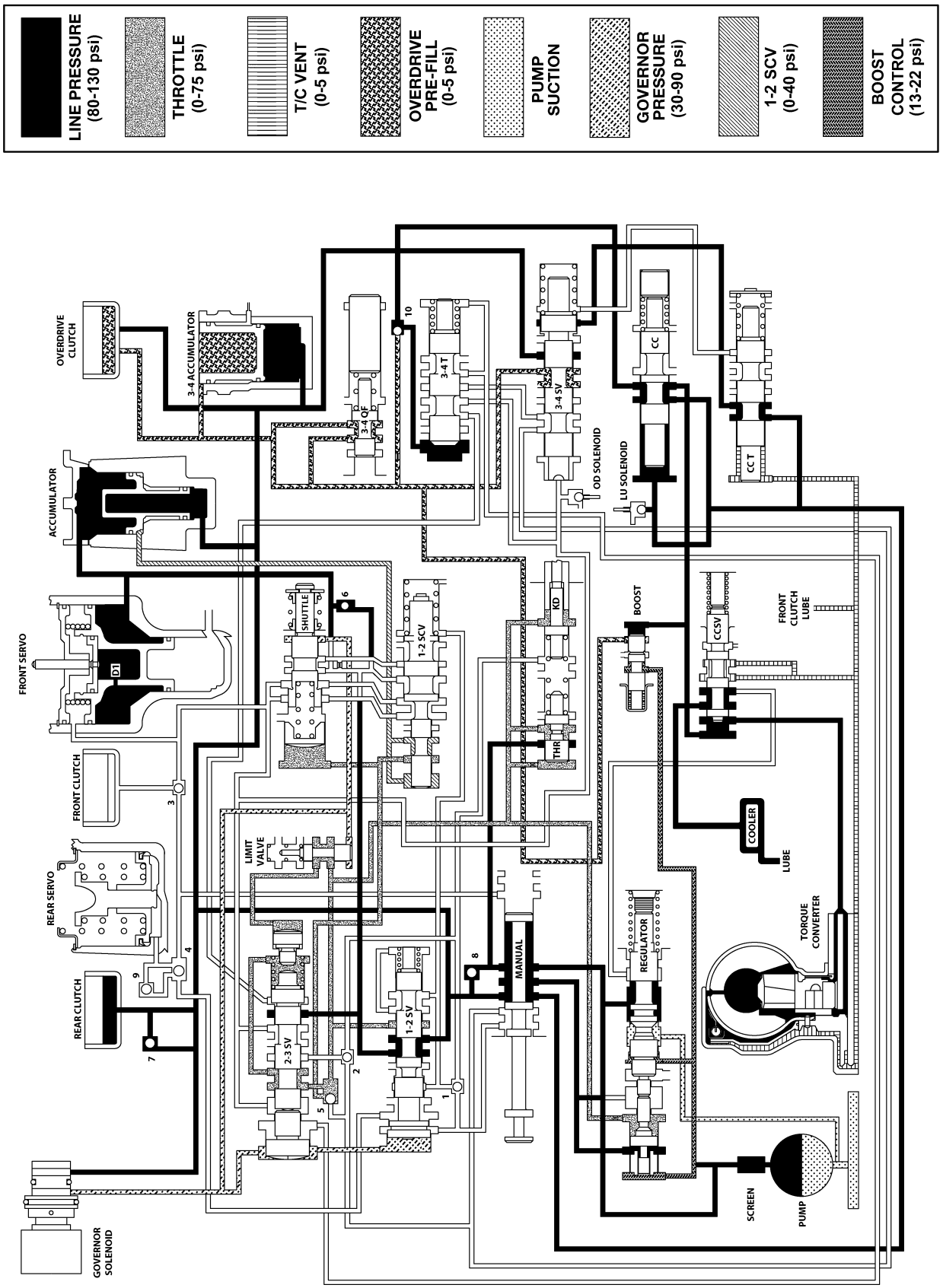

HYDRAULIC FLOW IN DRIVE SECOND GEAR (CONVERTER CLUTCH APPLIED)

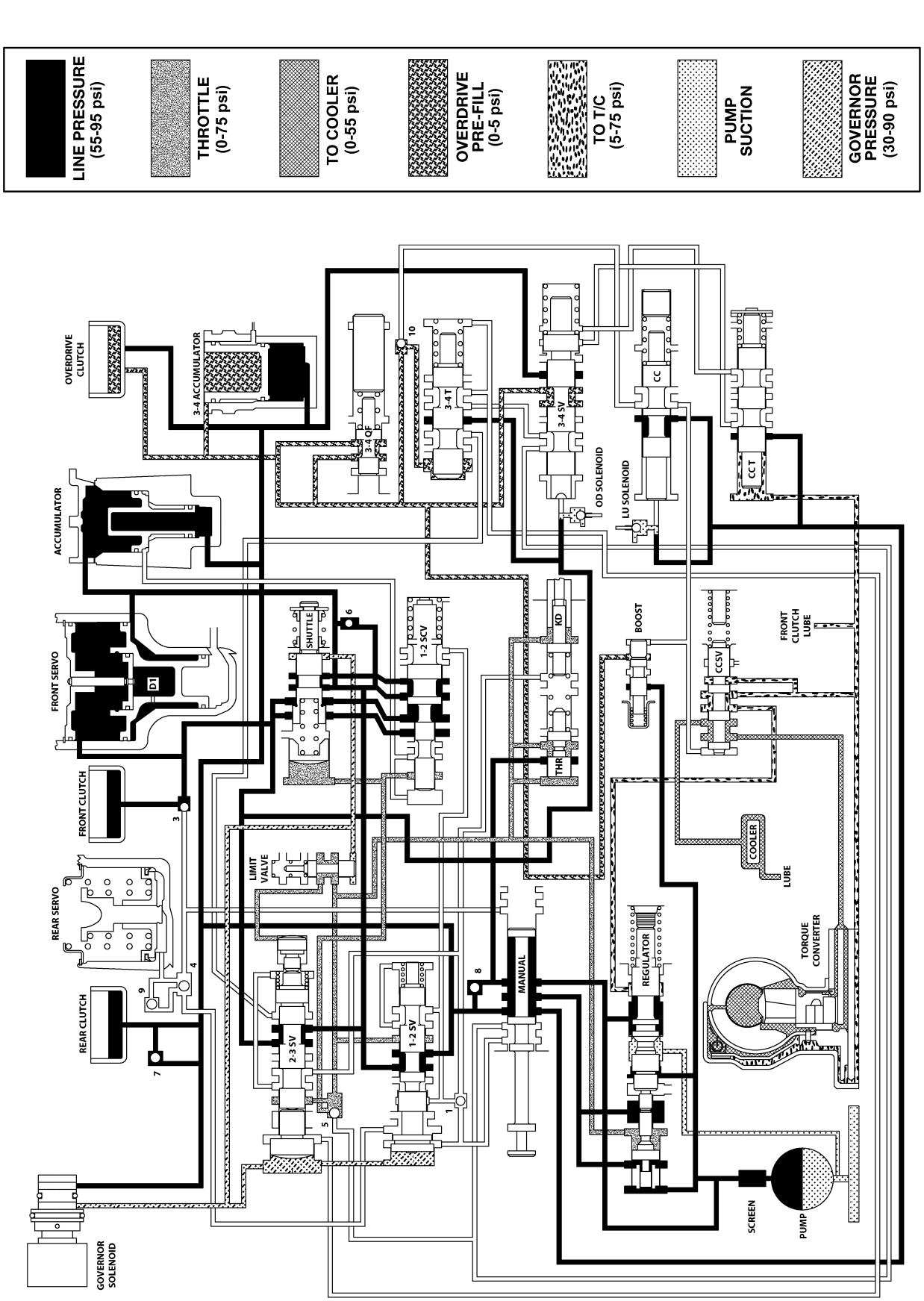

HYDRAULIC FLOW IN DRIVE THIRD GEAR (CONVERTER CLUTCH NOT APPLIED)

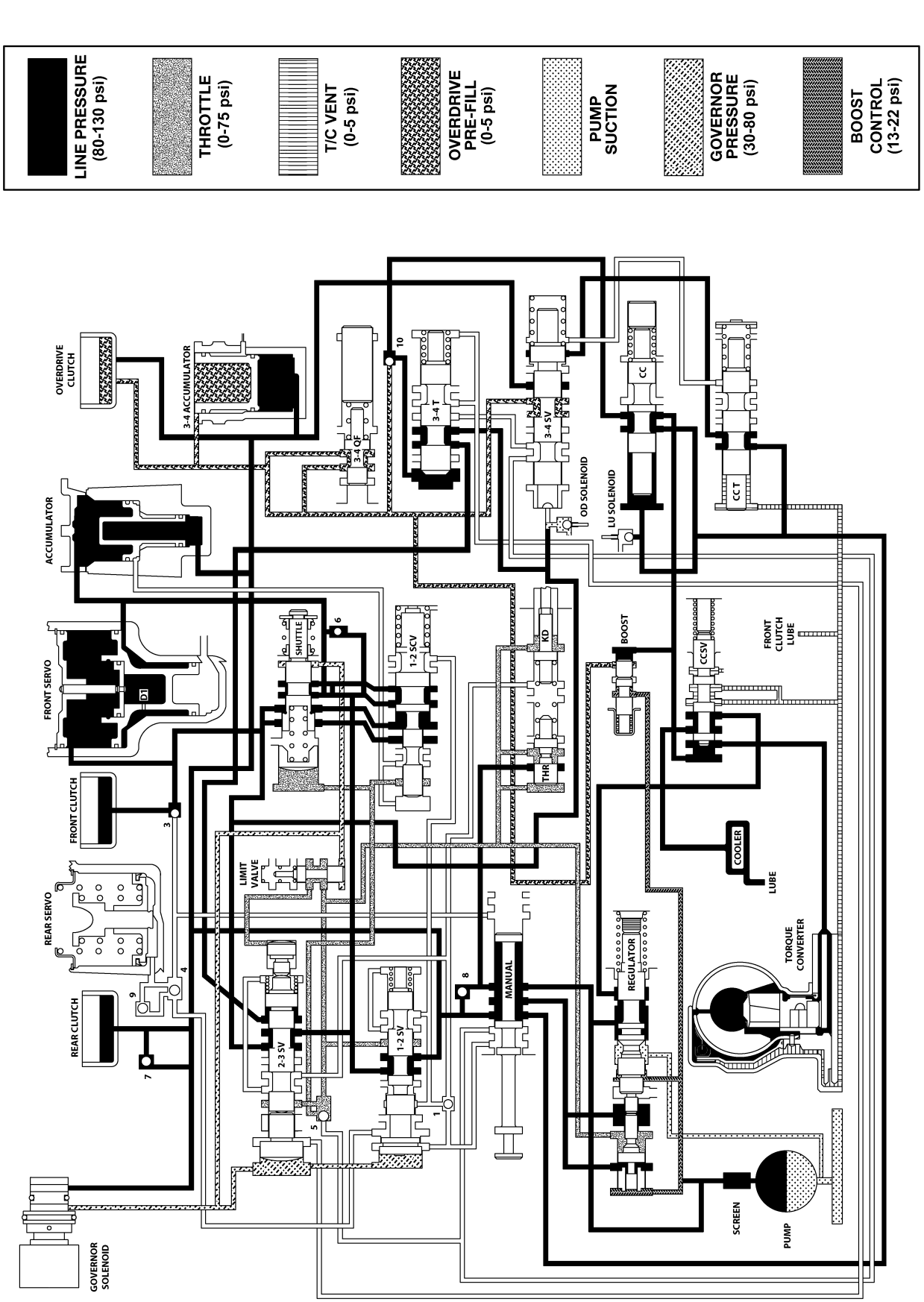

HYDRAULIC FLOW IN DRIVE THIRD GEAR (CONVERTER CLUTCH APPLIED)

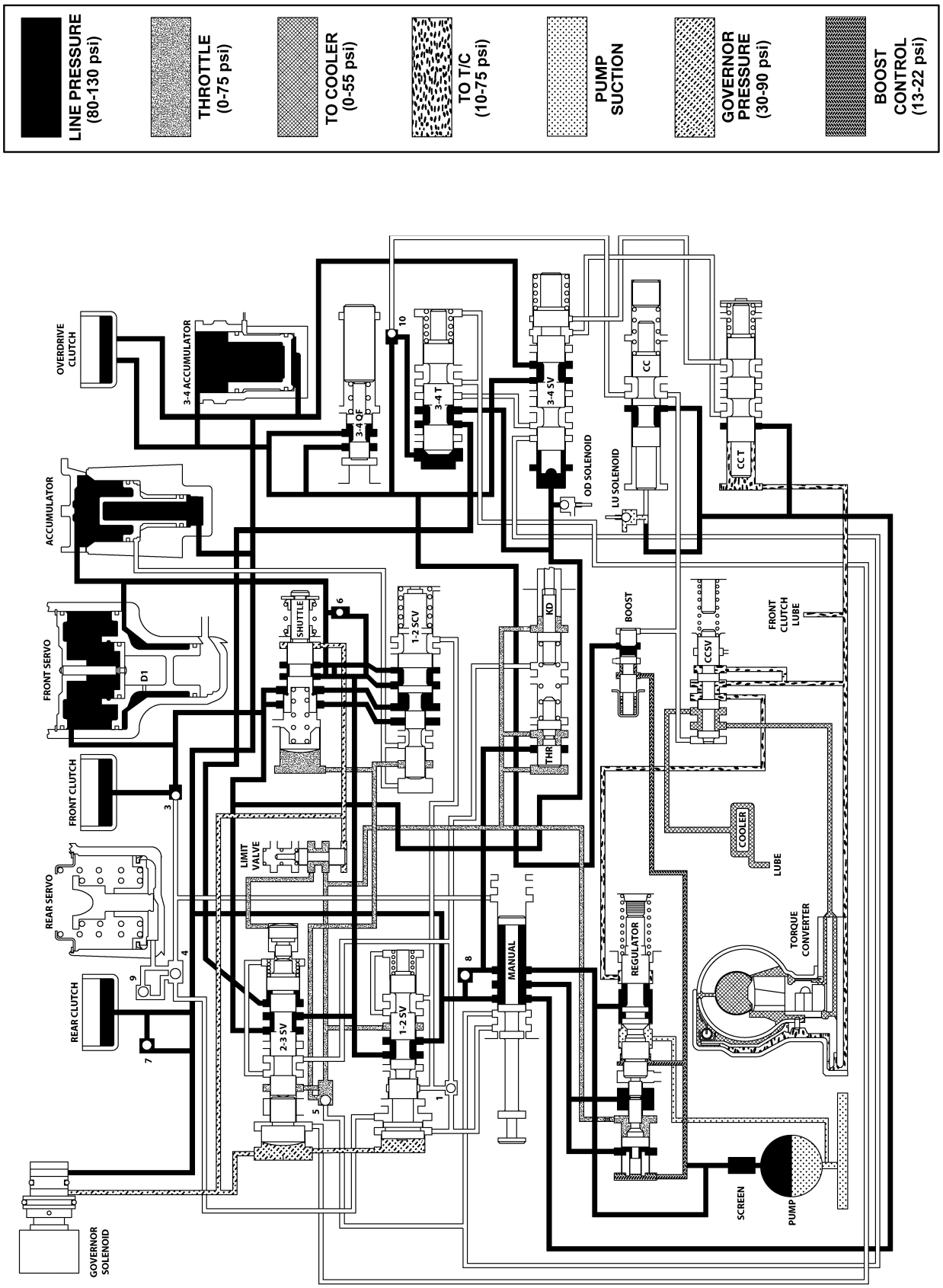

HYDRAULIC FLOW IN DRIVE FOURTH GEAR (CONVERTER CLUTCH NOT APPLIED)

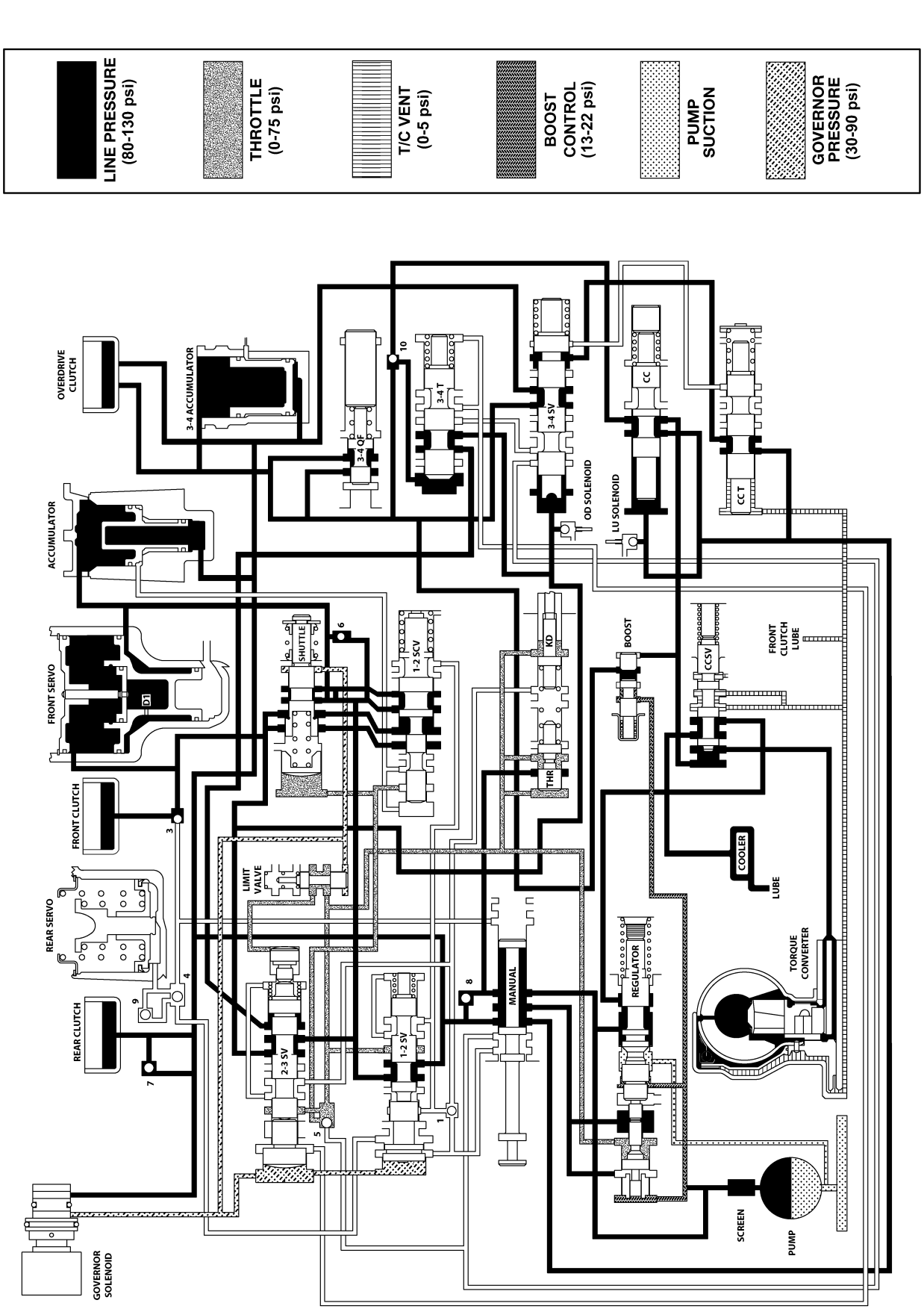

HYDRAULIC FLOW IN DRIVE FOURTH GEAR (CONVERTER CLUTCH APPLIED)

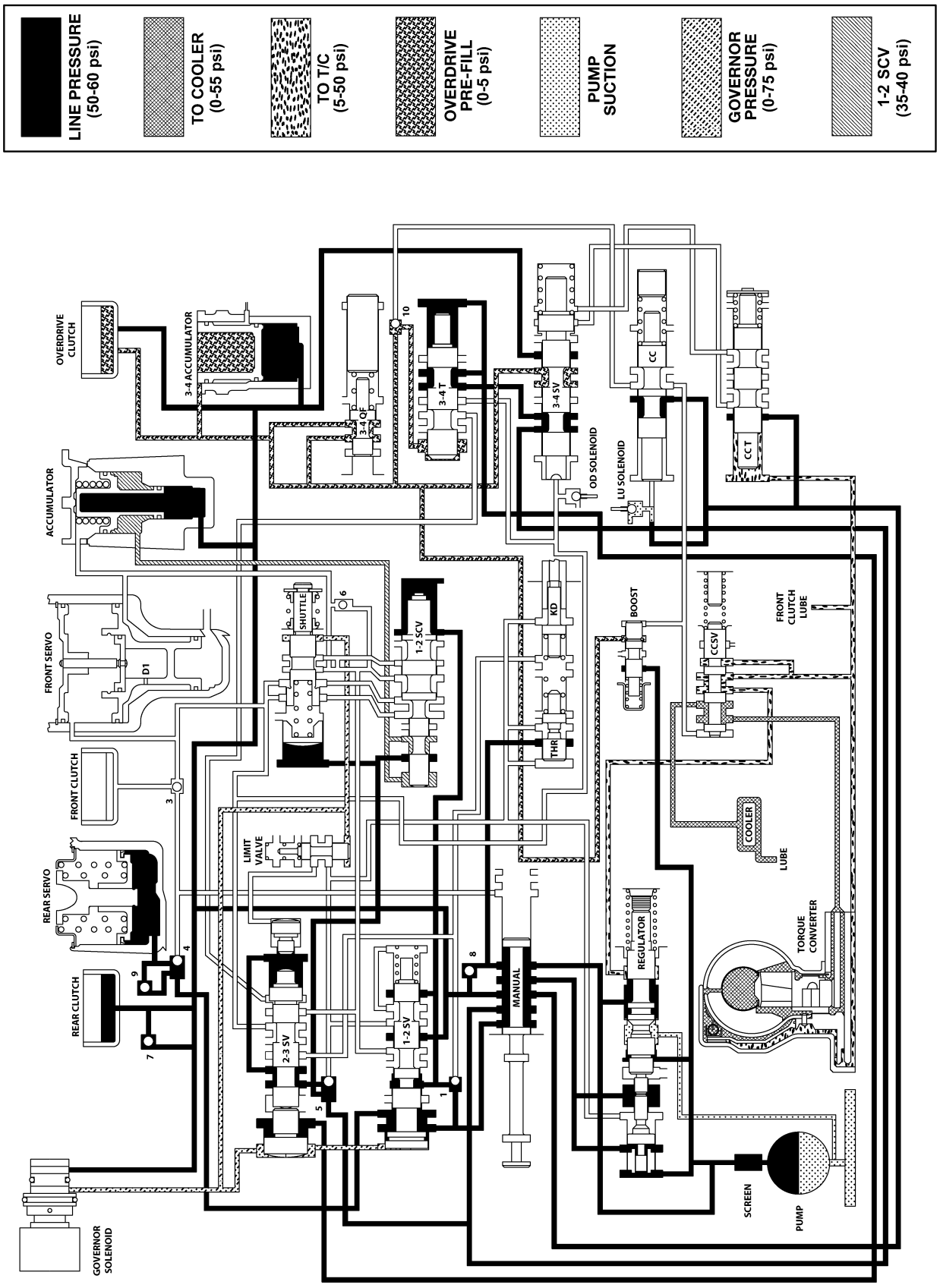

HYDRAULIC FLOW IN MANUAL LOW (1)

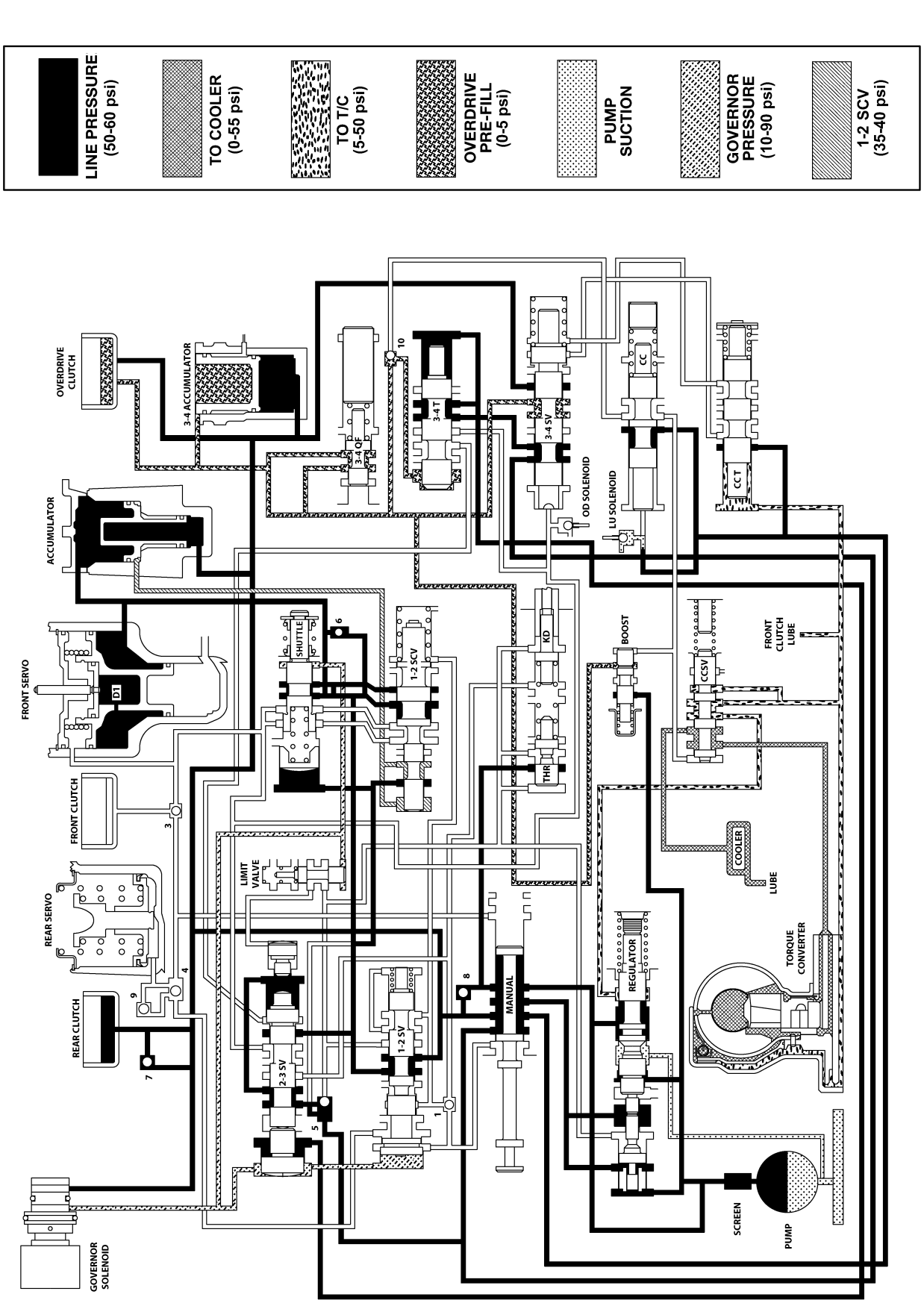

HYDRAULIC FLOW IN MANUAL SECOND (2)

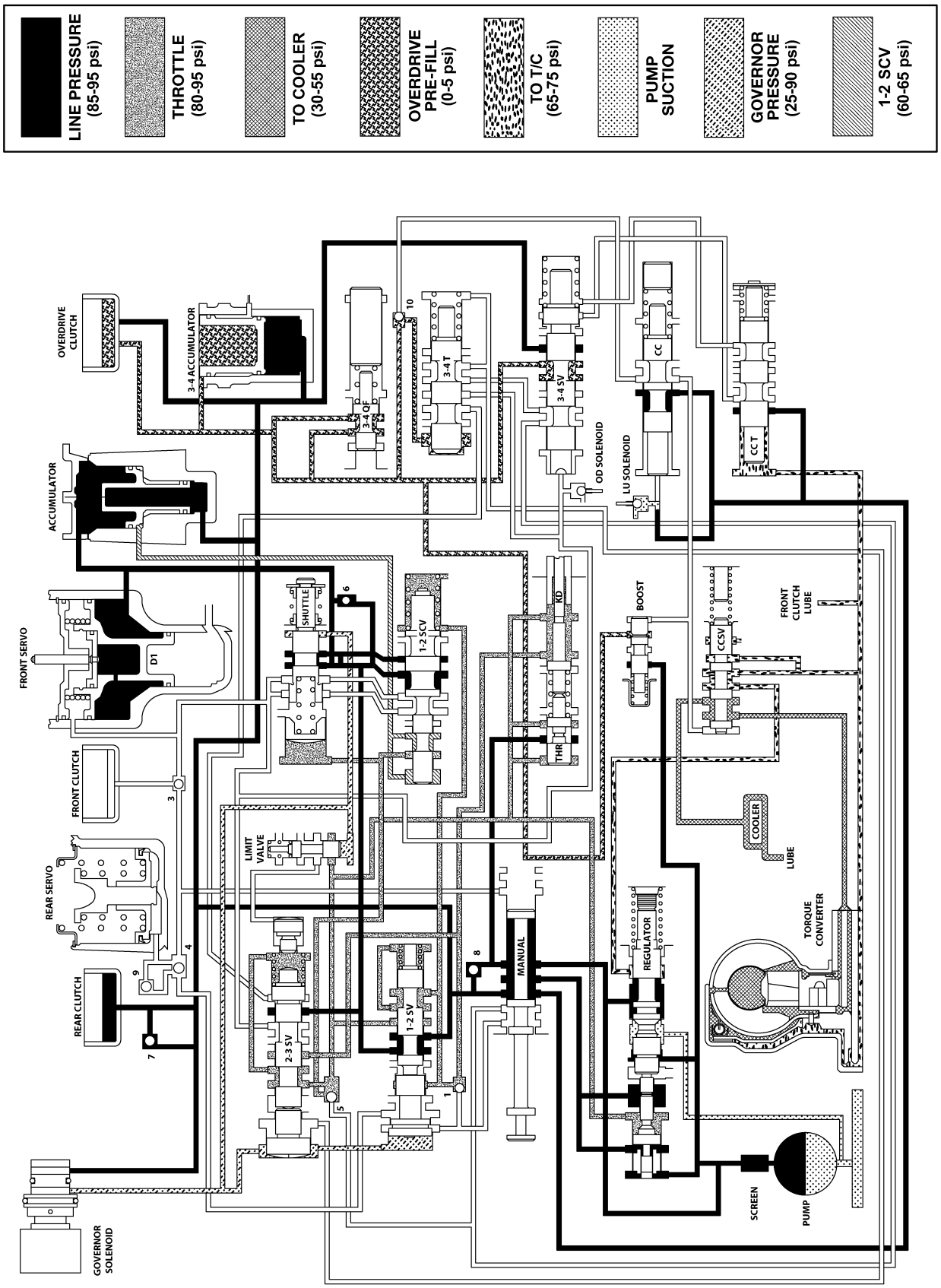

80fd0c8c

HYDRAULIC FLOW DURING FULL THROTTLE 3-2 DOWNSHIFT (PASSING GEAR)

SPECIFICATIONS

TRANSMISSION

GENERAL

Component	Metric	Inch
Planetary end play	0.150-1.22 mm	0.006-0.048 in.
Input shaft end play	0.86-2.13 mm	0.034-0.084 in.
Clutch pack clearance/Front.	2.5-4.09 mm	0.098-0.161 in.
Clutch pack clearance/Rear.	0.635-0.914 mm	0.025-0.036 in.
Front clutch	5 discs	
Rear clutch	4 discs	
Overdrive clutch	5(STD Diesel or V-10) OR 6(Diesel HO) discs	
Direct clutch	10 discs	
Band adjustment from 72 in. lbs. Front band - Diesel Vehicles Front band - V-10 vehicles Rear band	 Back off 1 3/4 turns Back off 1 1/2 turns Back off 3 turns	
Recommended fluid	Mopar® ATF +4	

GEAR RATIOS

1ST GEAR	2.45:1
2ND GEAR	1.45:1
3RD GEAR	1.0:1
4TH GEAR	0.69:1
REVERSE	2.20:1

THRUST WASHER/SPACER/SNAP-RING DIMENSIONS

Component	Metric	Inch
Front clutch thrust washer (reaction shaft support hub)	1.55 mm 2.15 mm 2.59 mm	0.061 in. 0.084 in. 0.102 in.
Rear clutch thrust washer (clutch retainer)	1.55 mm	0.061 in.
Intermediate shaft thrust plate (shaft hub pilot)	1.5-1.6 mm	0.060-0.063 in.
Output shaft thrust washer (rear clutch hub)	1.3-1.4 mm 1.75-1.8 mm 2.1-2.2 mm	0.052-0.054 in. 0.068-0.070 in. 0.083-0.085 in.
Rear clutch pack snap-ring	1.5-1.6 mm 1.9-1.95 mm	0.060-0.062 in. 0.074-0.076 in.
Planetary geartrain snap-ring (at front of output shaft)	1.4-1.5 mm 1.6-1.7 mm	0.055-0.059 in. 0.062-0.066 in.
Overdrive piston thrust plate	Thrust plate and spacer are select fit. Refer to size charts and selection procedures in Overdrive Unit D&A procedures	
Intermediate shaft spacer		

PRESSURE TEST

Overdrive clutch	Fourth gear only	Pressure should be 524-565 kPa (76-82 psi) with closed throttle and increase to 965 kPa (140 psi) at 1/2 to 3/4 throttle.
Line pressure (at accumulator)	Closed throttle	372-414 kPa (54-60 psi).
Front servo	Third or Fourth gear only	No more than 21 kPa (3 psi) lower than line pressure.
Rear servo	1 range R range	No more than 21 kPa (3 psi) lower than line pressure. 1103 kPa (160 psi) at idle, builds to 1862 kPa (270 psi) at 1600 rpm.
Governor	D range closed throttle	Pressure should respond smoothly to changes in mph and return to 0-7 kPa (0-1.5 psi) when stopped with transmission in D, 1, 2. Pressure above 7 kPa (1.5 psi) at stand still will prevent transmission from downshifting.

TORQUE SPECIFICATIONS

DESCRIPTION	N·m	Ft. Lbs.	In. Lbs.
Fitting, cooler line at trans	18	13	-
Bolt, torque convertor	47	35	-
Bolt, clevis bracket to crossmember	47	35	-
Bolt, clevis bracket to rear support	68	50	-
Bolt, driveplate to crankshaft	75	55	-
Bolt, Transmission Throttle Valve Actuator	8.5	-	75
Plug, front band reaction	17	13	-
Locknut, front band adj.	34	25	-
Bolt, fluid pan	13.6	-	120
Screws, fluid filter	4	-	35
Bolt, oil pump	20	15	-
Bolt, overrunning clutch cam	17	13	-
Bolt, O/D to trans.	34	25	-
Bolt, O/D piston retainer	17	13	-
Plug, pressure test port	14	10	-
Bolt, reaction shaft support	20	15	-
Locknut, rear band	41	30	-
Bolt, valve body to case	12	-	100
Sensor, trans speed	27	20	-
Screw, solenoid wiring connector	4	-	35
Screw, solenoid to transfer plate	4	-	35
Bracket, transmission range sensor mounting	34	25	-
Screw, transmision range sensor to mounting bracket	5	-	45

SPECIAL TOOLS

RE TRANSMISSION

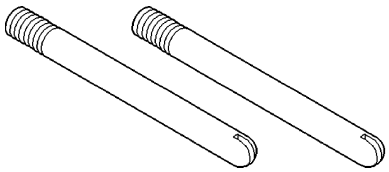

Pilot Studs C-3288-B

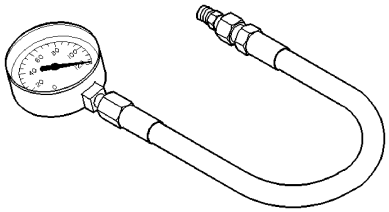

Oil Pressure Gauge - C-3292

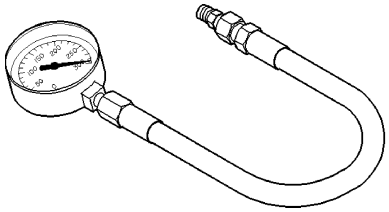

Pressure Gauge - C-3293SP

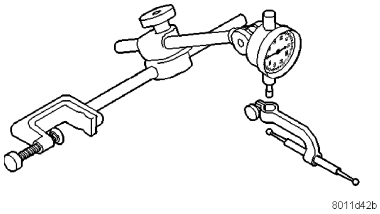

Dial Indicator C-3339

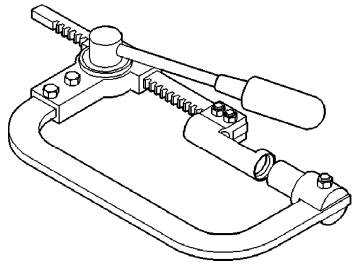

Valve Spring Compressor C-3422-B

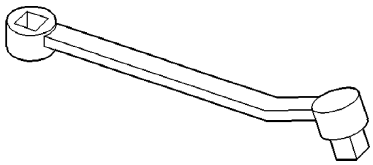

Adapter, Band Adjuster - C-3705

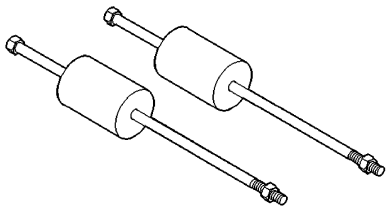

Puller/Slide Hammer, C-3752

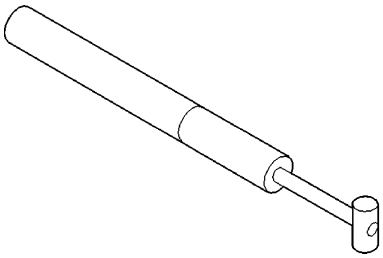

Gauge, Throttle Setting - C-3763

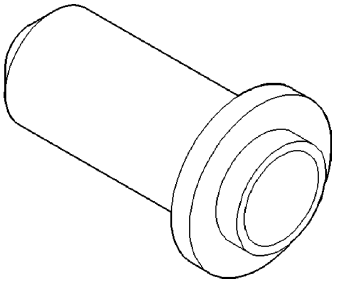

Installer C-3860-A

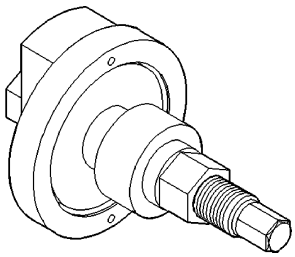

Spring Compressor - C-3863-A

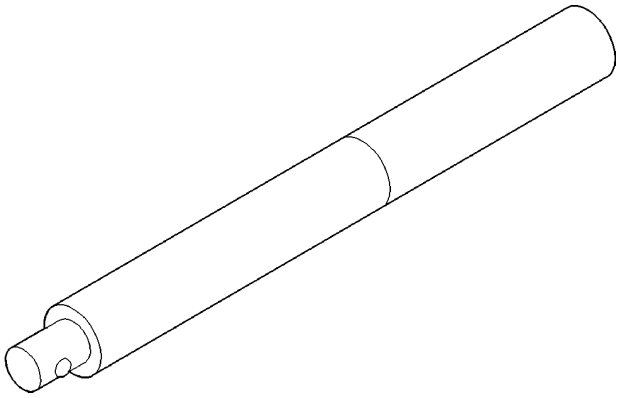

Handle C-4171

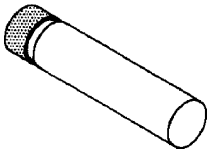

Gauge - 6312

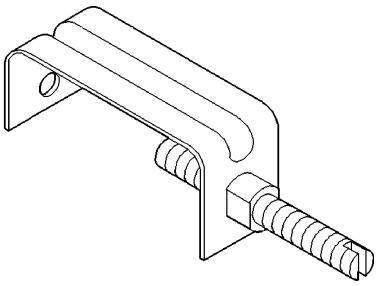

Retainer - 6583

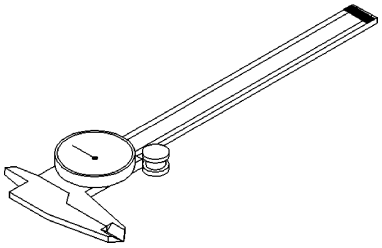

Dial Caliper - C-4962

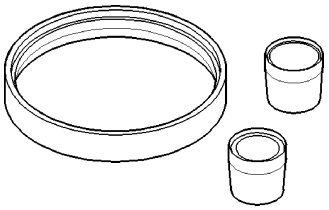

Installer - 8114

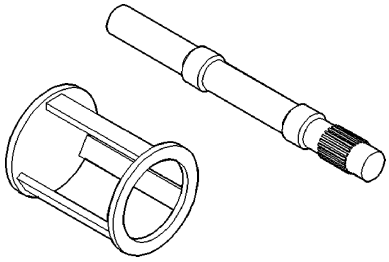

Spring Compressor and Alignment Shaft - 6227

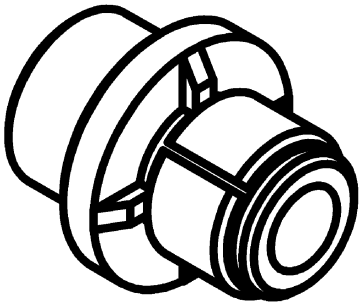

Socket, TRS Mounting Bracket - 8581

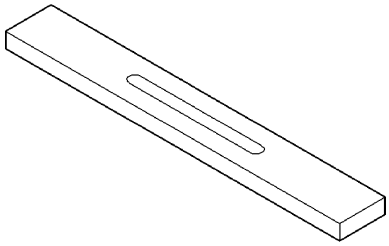

Gauge Bar - 6311

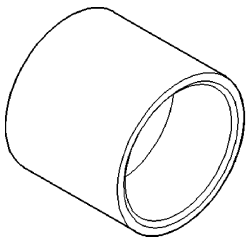

Installer, Seal - 9037

ACCUMULATOR

DESCRIPTION

The accumulator (1) is a hydraulic device that has the sole purpose of cushioning the application of a band or clutch. The accumulator consists of a dual-land piston (1) and a spring (2) located in a bore in the transmission case.

Diesel version shown.

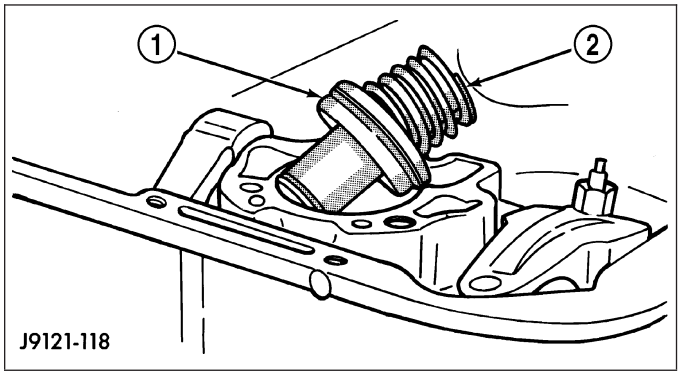

The 3-4 (1) accumulator is located in a housing (2) attached to the side of the valve body.

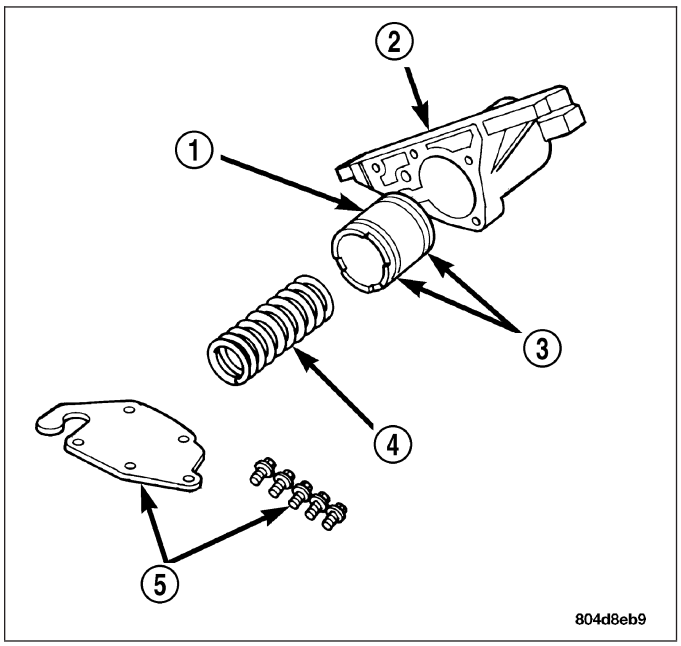

OPERATION

Both the accumulator and the 3-4 accumulator function the same. Line pressure (1) is directed to the small end of the piston when the transmission is placed into a DRIVE position, bottoming it against the accumulator plate.

Diesel version shown.

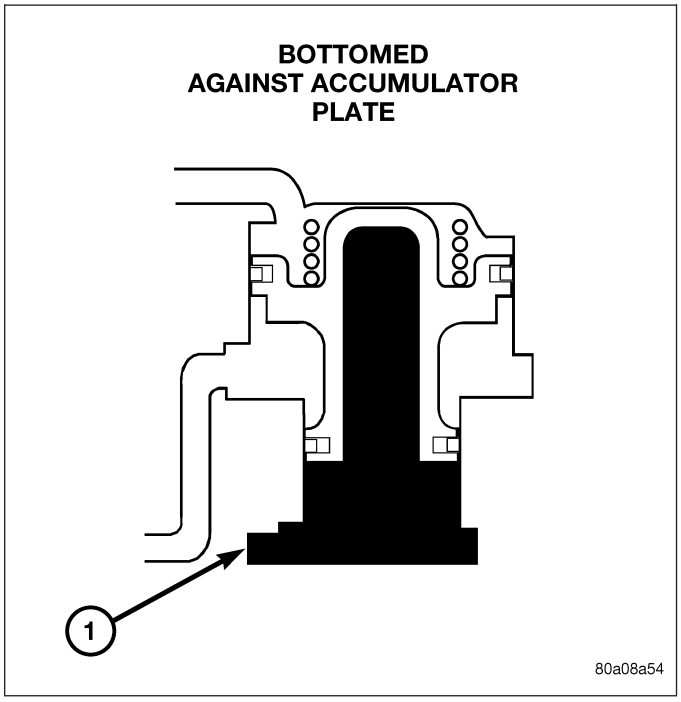

When the 1-2 upshift occurs, line pressure (2) is directed to the large end of the piston and then to the kickdown servo. As the line pressure reaches the accumulator, the combination of spring pressure and line pressure forces the piston away from the accumulator plate. This causes a balanced pressure situation, which results in a cushioned band application. After the kickdown servo has become immovable, line pressure will finish pushing the accumulator up into its bore (1). When the large end of the accumulator piston is seated in its bore, the band or clutch is fully applied.

NOTE: The accumulator is shown in the inverted position for illustrative purposes.

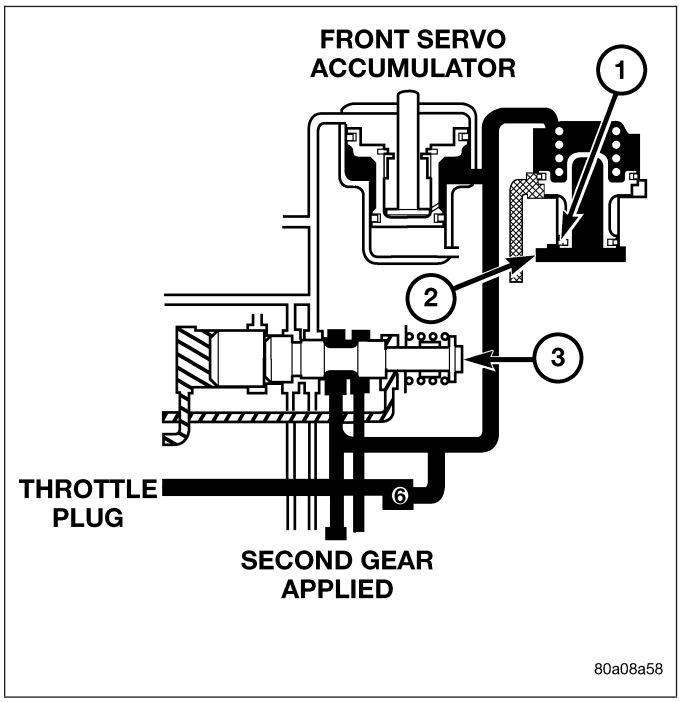

INSPECTION

Inspect the accumulator piston and seal rings. Replace the seal rings if worn or cut. Replace the piston if chipped or cracked.

Check condition of the accumulator inner and outer springs. Replace the springs if the coils are cracked, distorted or collapsed.

BANDS

DESCRIPTION

KICKDOWN (FRONT) BAND

The kickdown, or “front”, band (1) holds the common sun gear of the planetary gear sets. The front (kickdown) band is made of steel, and faced on its inner circumference with a friction-type lining. One end of the band is anchored to the transmission case, and the other is acted on with a pushing force by a servo piston. The front band is a single-wrap design (the band does not completely encompass/wrap the drum that it holds).

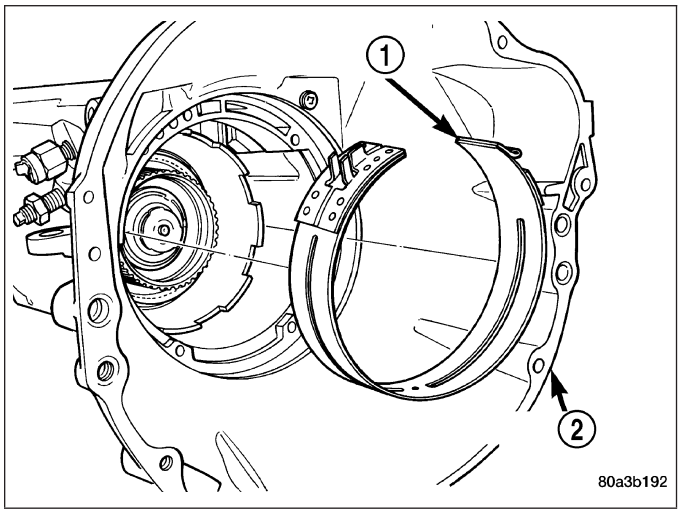

LOW/REVERSE (REAR) BAND

The low/reverse band, or “rear”, band (4) is similar in appearance and operation to the front band. The rear band is slightly different in that it does not use a link bar, but is acted directly on by the apply lever. This is referred to as a double-wrap band design (the drum is completely encompassed/wrapped by the band). The double-wrap band provides a greater holding power in comparison to the single-wrap design.

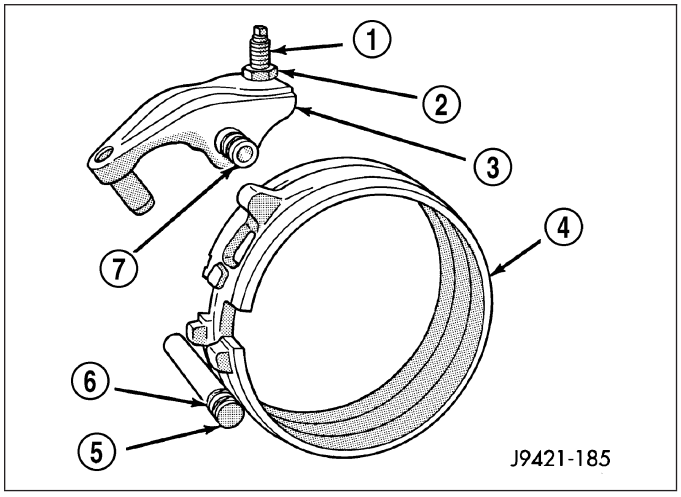

OPERATION

KICKDOWN (FRONT) BAND

The kickdown band holds the common sun gear of the planetary gear sets by applying and holding the front clutch retainer, which is splined to the sun gear driving shell, and in turn splined directly to the sun gear. The application of the band by the servo is typically done by an apply lever and link bar.

LOW/REVERSE (REAR) BAND

The rear band holds the rear planet carrier stationary by being mounted around and applied to the low/reverse drum.

ADJUSTMENTS

ADJUSTMENT - BANDS

FRONT BAND

The front (kickdown) band adjusting screw (2) is located on the left side of the transmission case above the manual valve and throttle valve levers.

1. Raise vehicle.
2. Loosen band adjusting screw locknut. Then back locknut (1) off 3-5 turns. Be sure adjusting screw turns freely in case. Apply lubricant to screw threads if necessary.
3. Tighten band adjusting screw to 8 N·m (72 in. lbs.) torque with an appropriate Torx™ socket.

CAUTION: If Adapter C-3705 is needed to reach the adjusting screw, tighten the screw to only 5 N·m (47-50 in. lbs.) torque.

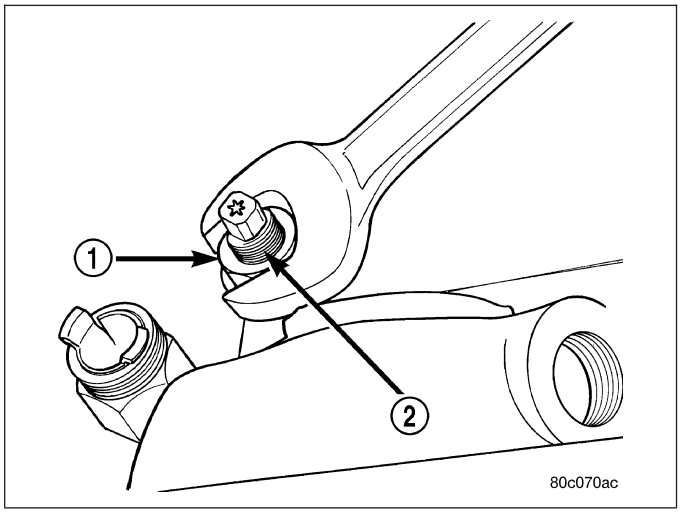

4. Back off front band adjusting screw 1-3/4 turns, for diesel vehicles, or 1-1/2 turns, for V-10 vehicles.
5. Hold adjuster screw in position and tighten locknut to 41 N·m (30 ft. lbs.) torque.
6. Lower vehicle.

REAR BAND

The transmission oil pan must be removed for access to the rear band adjusting screw (1).

1. Raise vehicle.
2. Remove transmission oil pan and drain fluid.
3. Loosen band adjusting screw locknut 5-6 turns. Be sure adjusting screw turns freely in lever.
4. Tighten adjusting screw to 8 N·m (72 in. lbs.) torque.
5. Back off adjusting screw 3 turns.
6. Hold adjusting screw in place and tighten locknut to 34 N·m (25 ft. lbs.) torque.
7. Position new gasket on oil pan and install pan on transmission. Tighten pan bolts to 17 N·m (13 ft. lbs.) torque.

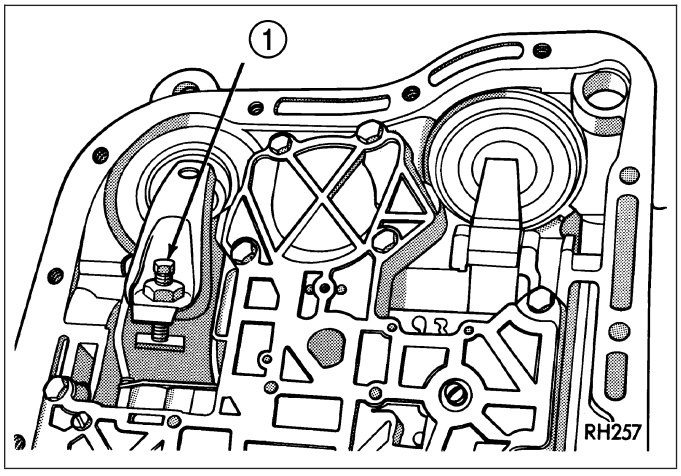

8. Lower vehicle and refill transmission with Mopar® ATF +4, Automatic Transmission fluid.

SYSTEM-BRAKE TRANSMISSION SHIFT INTERLOCK

DESCRIPTION

The Brake Transmission Shifter Interlock (BTSI), is a solenoid operated system. It consists of a solenoid permanently mounted on the gearshift cable.

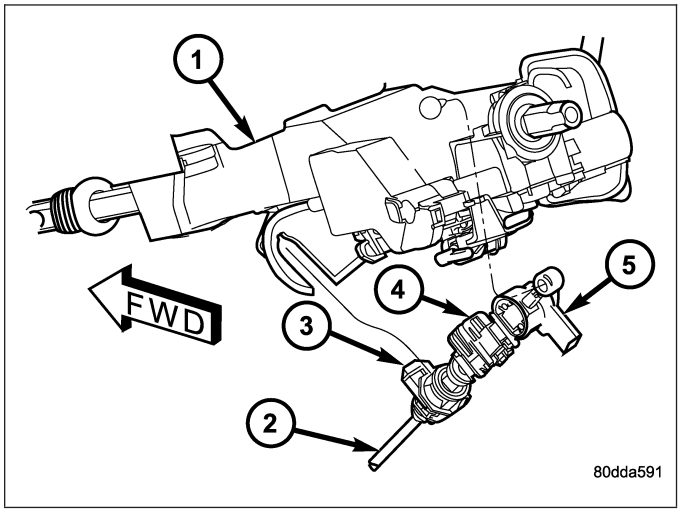

OPERATION

The system locks the shifter into the PARK position. The interlock system is engaged whenever the ignition switch is in the LOCK or ACCESSORY position. An additional electrically activated feature will prevent shifting out of the PARK position unless the brake pedal is depressed approximately one-half an inch. A magnetic holding device in line with the park lock cable is energized when the ignition is in the RUN position. When the key is in the RUN position and the brake pedal is depressed, the shifter is unlocked and will move into any position. The interlock system also prevents the ignition switch from being turned to the LOCK or ACCESSORY position, unless the shifter is fully locked into the PARK position.

DIAGNOSIS AND TESTING - BRAKE TRANSMISSION SHIFT INTERLOCK

1. Verify that the key can only be removed in the PARK position.
2. When the shift lever is in PARK And the shift handle pushbutton is in the “OUT” position, the ignition key cylinder should rotate freely from OFF to LOCK. When the shifter is in any other gear or neutral position, the ignition key cylinder should not rotate to the LOCK position.
3. Shifting out of PARK should not be possible when the ignition key cylinder is in the OFF position.
4. Shifting out of PARK should not be possible while applying normal pushbutton force and ignition key cylinder is in the RUN or START positions unless the foot brake pedal is depressed approximately 1/2 inch (12mm).
5. Shifting out of PARK should not be possible when the ignition key cylinder is in the ACCESSORY or LOCK positions.
6. Shifting between any gears, NEUTRAL or into PARK may be done without depressing foot brake pedal with ignition switch in RUN or START positions.

ADJUSTMENTS - BRAKE TRANSMISSION SHIFT INTERLOCK

Correct cable adjustment is important to proper interlock operation. The gearshift cable must be correctly adjusted in order to shift out of PARK.

ADJUSTMENT PROCEDURE

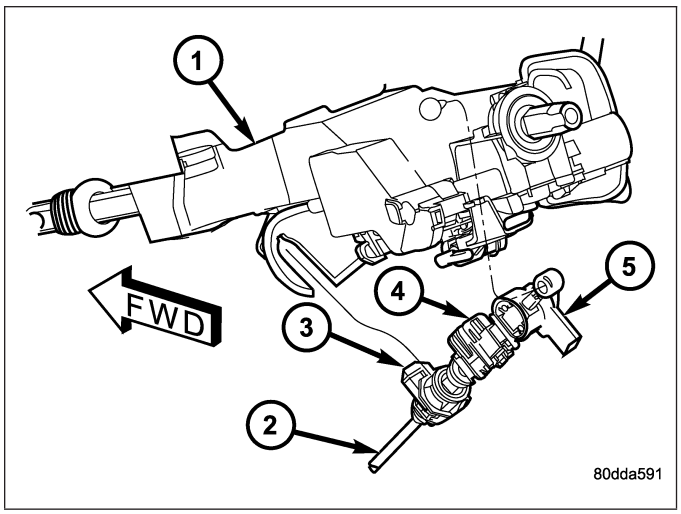

1. Remove the steering column trim as necessary for access to the brake transmission shift interlock.
2. Shift the transmission into the PARK position.
3. Pull upward on both the BTSI lock tab (4) and the gearshift cable lock tab (3).
4. Verify that the shift lever is in the PARK position.
5. Verify positive engagement of the transmission park lock by attempting to rotate the propeller shaft. The shaft will not rotate when the park lock is engaged.
6. Turn ignition switch to LOCK position. **Be sure ignition key cylinder is in the LOCK position. Cable will not adjust correctly in any other position.**
7. Ensure that the cable is free to self-adjust by pushing cable rearward and releasing.
8. Push the gearshift cable lock tab (3) down until it snaps in place.
9. Locate the BTSI alignment hole in the bottom of the BTSI mechanism between the BTSI lock tab and the BTSI connector.
10. Move the BTSI assembly up or down on the gearshift cable until an appropriate size drill bit can be inserted into the alignment hole and through the assembly.
11. Push the BTSI lock tab (4) down until it snaps into place and remove the drill bit.
12. Install any steering column trim previously removed.

BTSI FUNCTION CHECK

1. Verify removal of ignition key allowed in PARK position only.
2. When the shift lever is in PARK, the ignition key cylinder should rotate freely from off to lock. When the shifter is in any other position, the ignition key should not rotate from off to lock.
3. Shifting out of PARK should be possible when the ignition key cylinder is in the off position.
4. Shifting out of PARK should not be possible while applying normal force, and ignition key cylinder is in the run or start positions, unless the foot brake pedal is depressed approximately 1/2 inch (12mm).
5. Shifting out of PARK should not be possible when the ignition key cylinder is in the accessory or lock position.
6. Shifting between any gear and NEUTRAL, or PARK, may be done without depressing foot brake with ignition switch in run or start positions.
7. Engine starts must be possible with shifter lever in PARK or NEUTRAL positions only. Engine starts must not be possible in any position other than PARK or NEUTRAL.
8. With shifter lever in the:
   - PARK position - Apply upward force on the shift arm and remove pressure. Engine starts must be possible.
   - PARK position - Apply downward force on the shift arm and remove pressure. Engine starts must be possible.
   - NEUTRAL position - Normal position. Engine starts must be possible.
   - NEUTRAL position - Engine running and brakes applied, apply upward force on the shift arm. Transmission shall not be able to shift from neutral to reverse.

GOVERNOR-ELECTRONIC

DESCRIPTION

Governor pressure is controlled electronically. Components used for governor pressure control include:

- Governor body
- Valve body transfer plate

- Governor pressure solenoid valve
- Governor pressure sensor
- Fluid temperature thermistor
- Throttle position sensor (TPS)
- Transmission speed sensor
- Powertrain control module (PCM)

GOVERNOR PRESSURE SOLENOID VALVE

The solenoid valve (2) is a duty-cycle solenoid which regulates the governor pressure needed for upshifts and downshifts. It is an electro-hydraulic device located in the governor body on the valve body transfer plate.

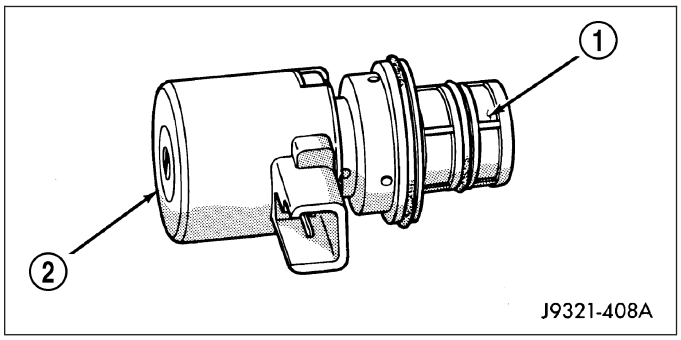

GOVERNOR BODY, TRANSFER PLATE, AND PRESSURE SENSOR

The governor pressure sensor (2) measures output pressure of the governor pressure solenoid valve.

The transfer plate is designed to supply transmission line pressure to the governor pressure solenoid valve and to return governor pressure.

The governor pressure solenoid valve is mounted in the governor body (1). The body is bolted to the lower side of the transfer plate.

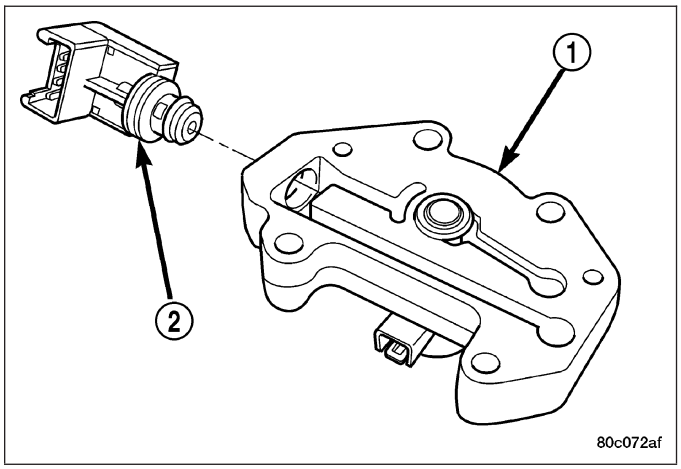

GOVERNOR PRESSURE CURVES

There are four governor pressure curves programmed into the transmission control module. The different curves allow the control module to adjust governor pressure for varying conditions. One curve is used for operation when fluid temperature is at, or below, –1°C (30°F). A second curve is used when fluid temperature is at, or above, 10°C (50°F) during normal city or highway driving. A third curve is used during wide-open throttle operation. The fourth curve is used when driving with the transfer case in low range.

OPERATION

Compensation is required for performance variations of two of the input devices. Though the slope of the transfer functions is tightly controlled, offset may vary due to various environmental factors or manufacturing tolerances.

The pressure transducer is affected by barometric pressure as well as temperature. Calibration of the zero pressure offset is required to compensate for shifting output due to these factors.

Normal calibration will be performed when sump temperature is above 50 degrees F, or in the absence of sump temperature data, after the first 10 minutes of vehicle operation. Calibration of the pressure transducer offset occurs each time the output shaft speed falls below 200 RPM. Calibration shall be repeated each 3 seconds the output

shaft speed is below 200 RPM. A 0.5 second pulse of 95% duty cycle is applied to the governor pressure solenoid valve and the transducer output is read during this pulse. Averaging of the transducer signal is necessary to reject electrical noise.

Under cold conditions (below 50 degrees F sump), the governor pressure solenoid valve response may be too slow to guarantee 0 psi during the 0.5 second calibration pulse. Calibration pulses are continued during this period, however the transducer output valves are discarded. Transducer offset must be read at key-on, under conditions which promote a stable reading. This value is retained and becomes the offset during the ″cold″ period of operation.

GOVERNOR PRESSURE SOLENOID VALVE

The inlet side of the solenoid valve is exposed to normal transmission line pressure. The outlet side of the valve leads to the valve body governor circuit.

The solenoid valve regulates line pressure to produce governor pressure. The average current supplied to the solenoid controls governor pressure. One amp current produces zero kPa/psi governor pressure. Zero amps sets the maximum governor pressure.

The powertrain control module (PCM) turns on the trans control relay which supplies electrical power to the solenoid valve. Operating voltage is 12 volts (DC). The PCM controls the ground side of the solenoid using the governor pressure solenoid control circuit.

GOVERNOR PRESSURE SENSOR

The sensor output signal provides the necessary feedback to the PCM. This feedback is needed to adequately control governor pressure.

GOVERNOR BODY AND TRANSFER PLATE

The transfer plate channels line pressure to the solenoid valve through the governor body. It also channels governor pressure from the solenoid valve to the governor circuit. It is the solenoid valve that develops the necessary governor pressure.

GOVERNOR PRESSURE CURVES

LOW TRANSMISSION FLUID TEMPERATURE

When the transmission fluid is cold the conventional governor can delay shifts, resulting in higher than normal shift speeds and harsh shifts. The electronically controlled low temperature governor pressure curve is higher than normal to make the transmission shift at normal speeds and sooner. The PCM uses a temperature sensor in the transmission oil sump to determine when low temperature governor pressure is needed.

NORMAL OPERATION

Normal operation is refined through the increased computing power of the PCM and through access to data on engine operating conditions provided by the PCM that were not available with the previous stand-alone electronic module. This facilitated the development of a load adaptive shift strategy - the ability to alter the shift schedule in response to vehicle load condition. One manifestation of this capability is grade ″hunting″ prevention - the ability of the transmission logic to delay an upshift on a grade if the engine does not have sufficient power to maintain speed in the higher gear. The 3-2 downshift and the potential for hunting between gears occurs with a heavily loaded vehicle or on steep grades. When hunting occurs, it is very objectionable because shifts are frequent and accompanied by large changes in noise and acceleration.

WIDE OPEN THROTTLE OPERATION

In wide-open throttle (WOT) mode, adaptive memory in the PCM assures that up-shifts occur at the preprogrammed optimum speed. WOT operation is determined from the throttle position sensor, which is also a part of the emission control system. The initial setting for the WOT upshift is below the optimum engine speed. As WOT shifts are repeated, the PCM learns the time required to complete the shifts by comparing the engine speed when the shifts occur to the optimum speed. After each shift, the PCM adjusts the shift point until the optimum speed is reached. The PCM also considers vehicle loading, grade and engine performance changes due to high altitude in determining when to make WOT shifts. It does this by measuring vehicle and engine acceleration and then factoring in the shift time.

TRANSFER CASE LOW RANGE OPERATION

On four-wheel drive vehicles operating in low range, the engine can accelerate to its peak more rapidly than in Normal range, resulting in delayed shifts and undesirable engine ″flare.″ The low range governor pressure curve is also higher than normal to initiate upshifts sooner. The PCM compares electronic vehicle speed signal used by the speedometer to the transmission output shaft speed signal to determine when the transfer case is in low range.

REMOVAL

1. Hoist and support vehicle on safety stands.
2. Remove transmission fluid pan and filter.
3. Disengage wire connectors from pressure sensor (1) and solenoid (2).

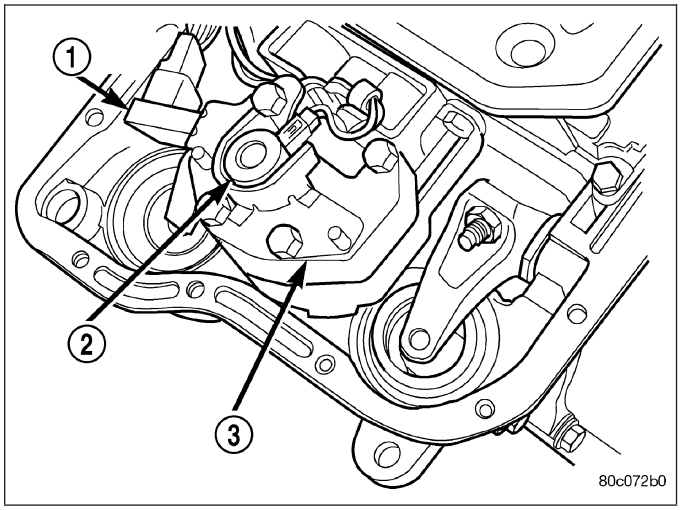

4. Remove screws holding pressure solenoid retainer (1) to governor body (2).
5. Separate solenoid retainer from governor.

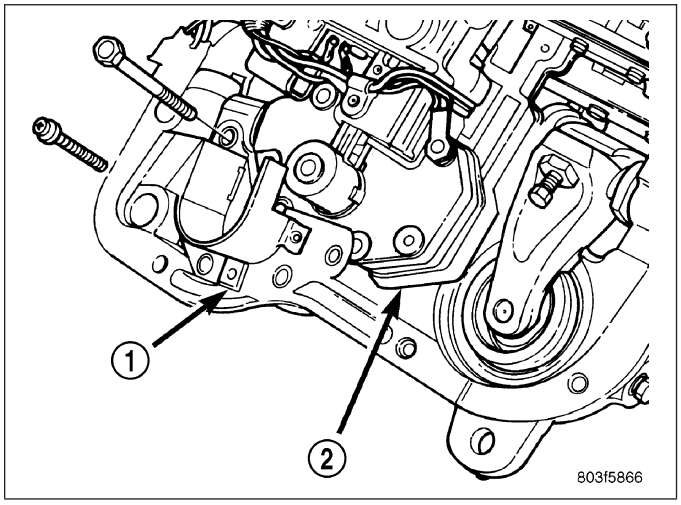

6. Pull solenoid (1) from governor body (3).
7. Pull pressure sensor from governor body.
8. Remove bolts holding governor body to valve body.

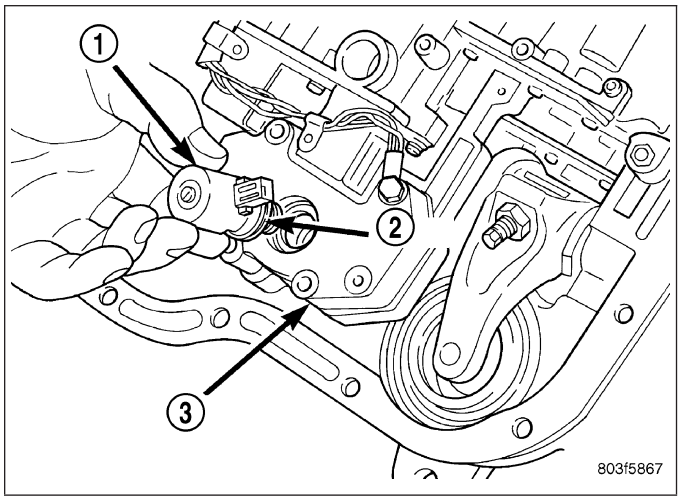

9. Separate governor body (1) from valve body.
10. Remove governor body gasket.

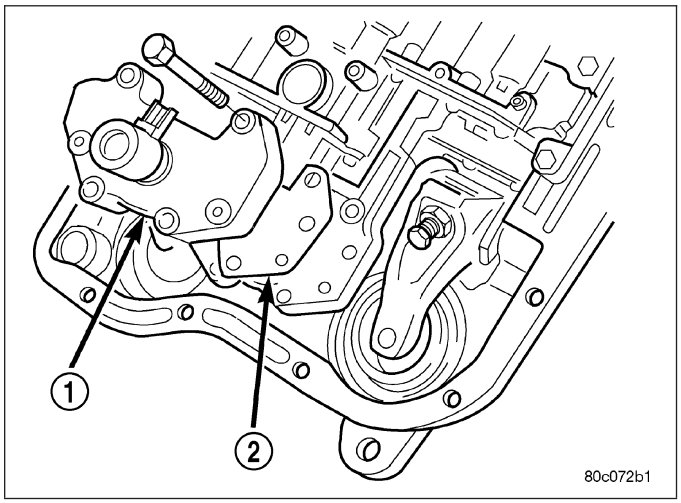

INSTALLATION

Before installing the pressure sensor and solenoid in the governor body, replace o-ring seals, clean the gasket surfaces and replace gasket.

1. Place gasket (2) in position on back of governor body (1).
2. Place governor body in position on valve body.
3. Install bolts to hold governor body to valve body.

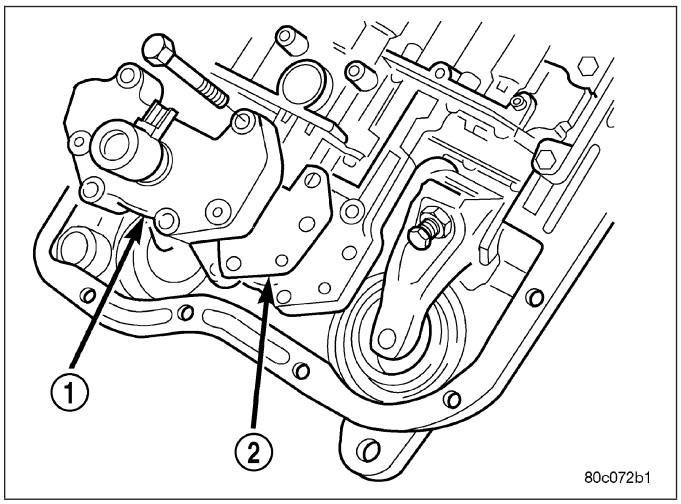

4. Lubricate o-ring on pressure sensor with transmission fluid.
5. Align pressure sensor to bore in governor body.
6. Push pressure sensor into governor body.
7. Lubricate o-ring (2), on pressure solenoid (1), with transmission fluid.
8. Align pressure solenoid (1) to bore in governor body (3).
9. Push solenoid into governor body.

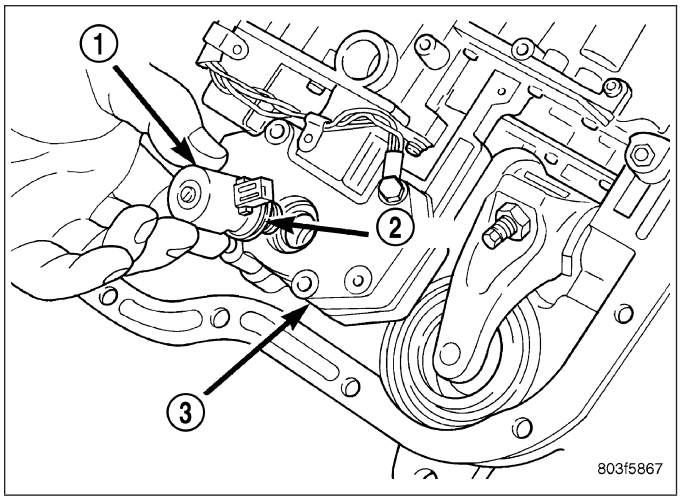

10. Place solenoid retainer (1) in position on governor (2).
11. Install screws to hold pressure solenoid retainer to governor body.

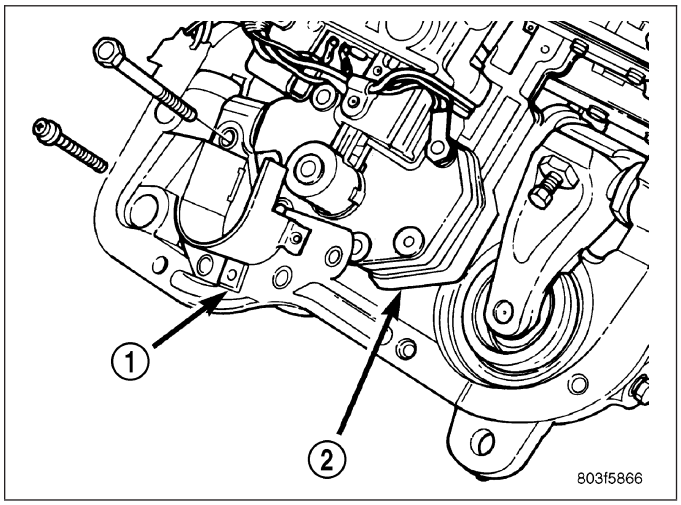

12. Engage wire connectors into pressure sensor (1) and solenoid (2).
13. Install transmission fluid pan and (new) filter.
14. Lower vehicle and road test to verify repair.

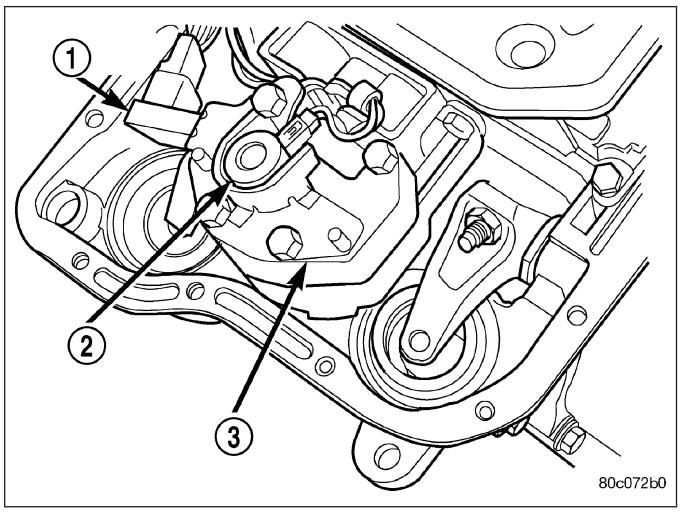

SEAL-EXTENSION HOUSING

REMOVAL

1. Raise vehicle.
2. Mark propeller shaft and axle yoke for alignment reference.
3. Disconnect and remove propeller shaft.
4. Remove old seal with a screw mounted in a slide hammer.

INSTALLATION

1. Place seal in position on overdrive housing.
2. Drive seal into overdrive housing with Seal Installer 9037 (1) and Handle C-4171.
3. Carefully guide propeller shaft slip yoke into housing and onto output shaft splines. Align marks made at removal and connect propeller shaft to rear axle pinion yoke.

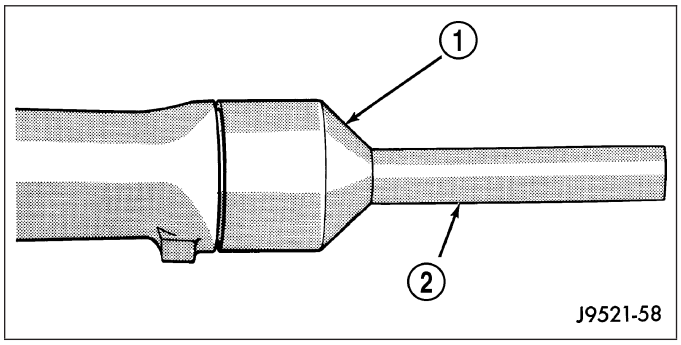

FLUID AND FILTER

DIAGNOSIS AND TESTING

EFFECTS OF INCORRECT FLUID LEVEL

A low fluid level allows the pump to take in air along with the fluid. Air in the fluid will cause fluid pressures to be low and develop slower than normal. If the transmission is overfilled, the gears churn the fluid into foam. This aerates the fluid and causing the same conditions occurring with a low level. In either case, air bubbles cause fluid overheating, oxidation, and varnish buildup which interferes with valve and clutch operation. Foaming also causes fluid expansion which can result in fluid overflow from the transmission vent or fill tube. Fluid overflow can easily be mistaken for a leak if inspection is not careful.

CAUSES OF BURNT FLUID

Burnt, discolored fluid is a result of overheating which has two primary causes.

1. A result of restricted fluid flow through the main and/or auxiliary cooler. This condition is usually the result of a faulty or improperly installed drainback valve, a damaged oil cooler, or severe restrictions in the coolers and lines caused by debris or kinked lines.
2. Heavy duty operation with a vehicle not properly equipped for this type of operation. Trailer towing or similar high load operation will overheat the transmission fluid if the vehicle is improperly equipped. Such vehicles should have an auxiliary transmission fluid cooler, a heavy duty cooling system, and the engine/axle ratio combination needed to handle heavy loads.

FLUID CONTAMINATION

Transmission fluid contamination is generally a result of:

- adding incorrect fluid
- failure to clean dipstick and fill tube when checking level
- engine coolant entering the fluid
- internal failure that generates debris
- overheat that generates sludge (fluid breakdown)
- failure to replace contaminated converter after repair

The use of non-recommended fluids can result in transmission failure. The usual results are erratic shifts, slippage, abnormal wear and eventual failure due to fluid breakdown and sludge formation. Avoid this condition by using recommended fluids only.

The dipstick cap and fill tube should be wiped clean before checking fluid level. Dirt, grease and other foreign material on the cap and tube could fall into the tube if not removed beforehand. Take the time to wipe the cap and tube clean before withdrawing the dipstick.

Engine coolant in the transmission fluid is generally caused by a cooler malfunction. The only remedy is to replace the radiator as the cooler in the radiator is not a serviceable part. If coolant has circulated through the transmission, an overhaul is necessary.

The torque converter should also be replaced whenever a failure generates sludge and debris. This is necessary because normal converter flushing procedures will not remove all contaminants.

STANDARD PROCEDURE

FLUID LEVEL CHECK

Low fluid level can cause a variety of conditions because it allows the pump to take in air along with the fluid. As in any hydraulic system, air bubbles make the fluid spongy, therefore, pressures will be low and build up slowly.

Improper filling can also raise the fluid level too high. When the transmssion has too much fluid, the geartrain churns up foam and cause the same conditions which occur with a low fluid level.

In either case, air bubbles can cause overheating and/or fluid oxidation, and varnishing. This can interfere with normal valve, clutch, and accumulator operation. Foaming can also result in fluid escaping from the transmission vent where it may be mistaken for a leak.

After the fluid has been checked, seat the dipstick fully to seal out water and dirt.

The transmission has a dipstick to check oil level. It is located on the right side of the engine. Be sure to wipe all dirt from dipstick handle before removing.

Fluid level is checked with the engine running at curb idle speed, the transmission in NEUTRAL and the transmission fluid at normal operating temperature. **The engine should be running at idle speed for at least one minute, with the vehicle on level ground.**

The transmission fluid level can be checked two ways.

PROCEDURE ONE

1. Transmission fluid must be at normal operating temperature for accurate fluid level check. Drive vehicle if necessary to bring fluid temperature up to normal hot operating temperature of 82°C (180°F).
2. Position vehicle on level surface.
3. Start and run engine at curb idle speed.
4. Apply parking brakes.
5. Shift transmission momentarily into all gear ranges. Then shift transmission back to NEUTRAL.

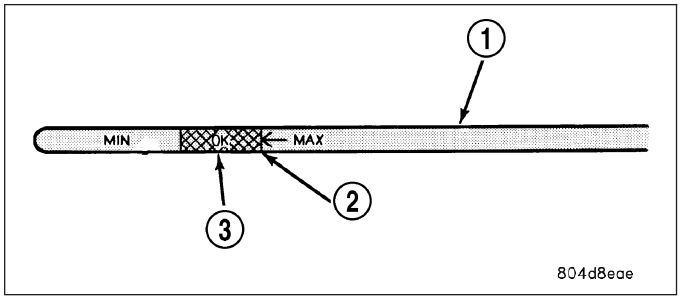

6. Clean top of filler tube and dipstick to keep dirt from entering tube.
7. Remove dipstick (1) and check fluid level as follows:
   a. Correct acceptable level is in crosshatch area.
   b. Correct maximum level is to MAX arrow mark.
   c. Incorrect level is at or below MIN line.
   d. If fluid is low, add only enough Mopar® ATF +4 to restore correct level. Do not overfill.

PROCEDURE TWO

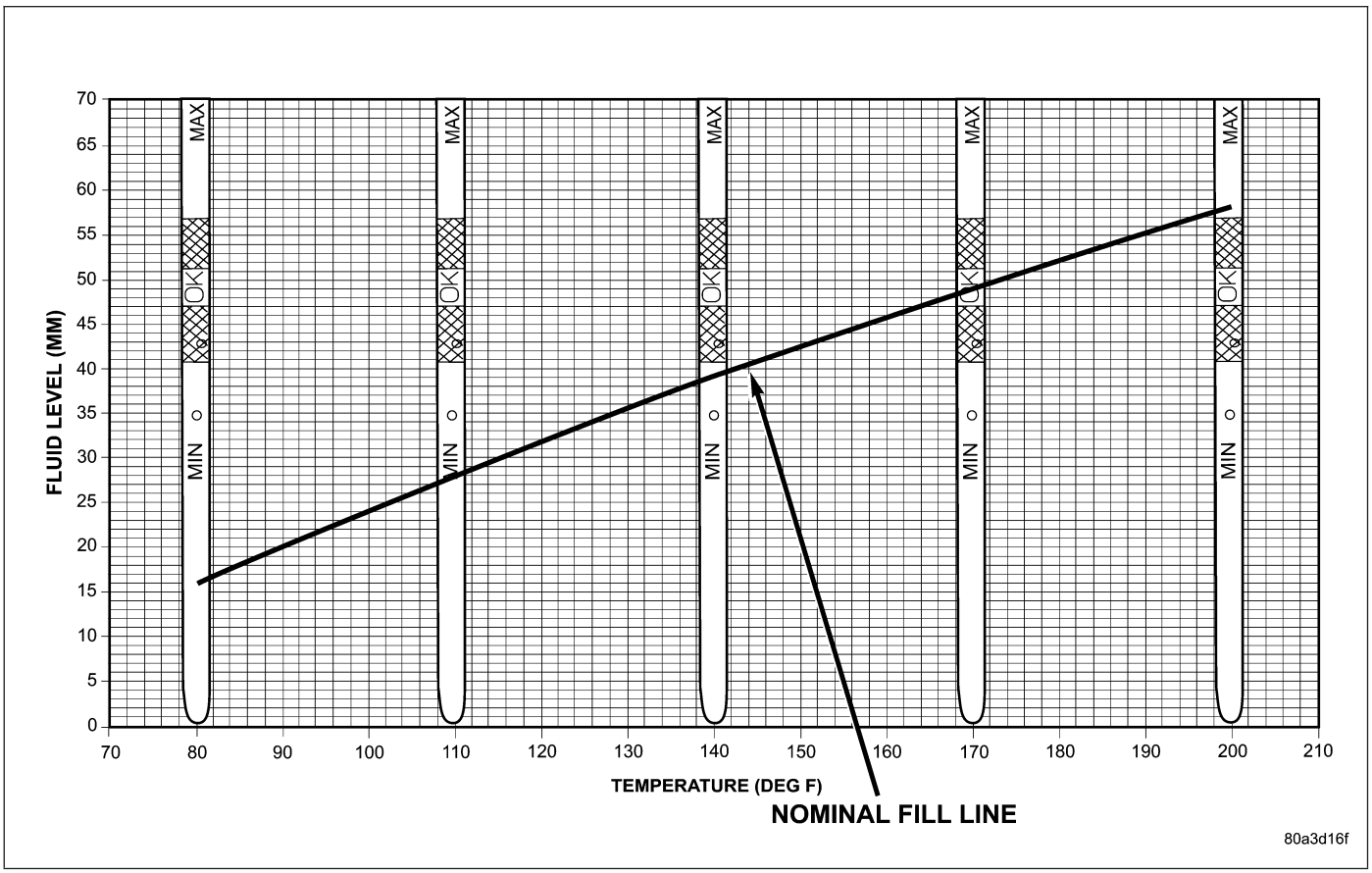

1. Start engine and apply parking brake.
2. Shift the transmission into DRIVE for approximately 2 seconds.
3. Shift the transmission into REVERSE for approximately 2 seconds.
4. Shift the transmission into PARK.
5. Hook up DRB® scan tool and select engine.
6. Select sensors.
7. Read the transmission temperature value.
8. Compare the fluid temperature value with the chart.
9. Adjust transmission fluid level shown on the dipstick according to the chart.

NOTE: After adding any fluid to the transmission, wait a minimum of 2 minutes for the oil to fully drain from the fill tube into the transmission before rechecking the fluid level.

10. Check transmission for leaks.

FLUID AND FILTER REPLACEMENT

For proper service intervals (Refer to LUBRICATION & MAINTENANCE/MAINTENANCE SCHEDULES - DESCRIPTION). The service fluid fill after a filter change is approximately 3.8 liters (4.0 quarts).

REMOVAL

1. Hoist and support vehicle on safety stands.
2. Place a large diameter shallow drain pan beneath the transmission pan (3).
3. Remove bolts holding front and sides of pan to transmission (1).
4. Loosen bolts holding rear of pan to transmission.
5. Slowly separate front of pan and reusable gasket (2) away from transmission allowing the fluid to drain into drain pan.
6. Hold up pan and remove remaining bolt holding pan to transmission.
7. While holding pan level, lower pan and gasket away from transmission.
8. Pour remaining fluid in pan into drain pan.

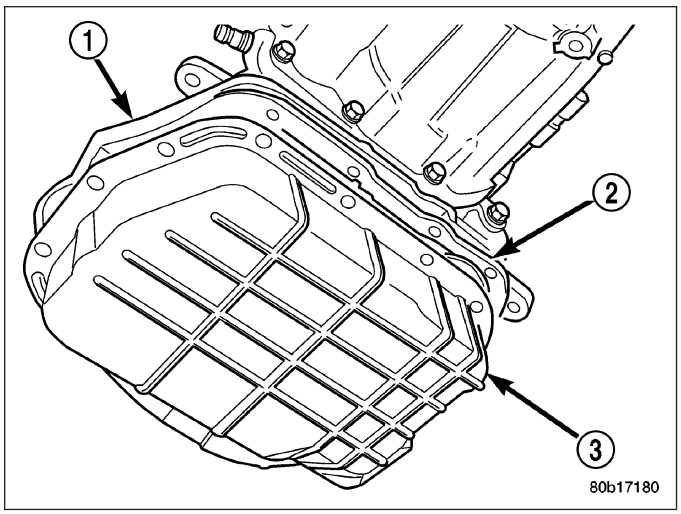

9. Remove screws holding filter (2) to valve body.
10. Separate filter from valve body and pour fluid in filter into drain pan.
11. Dispose of used trans fluid and filter properly.

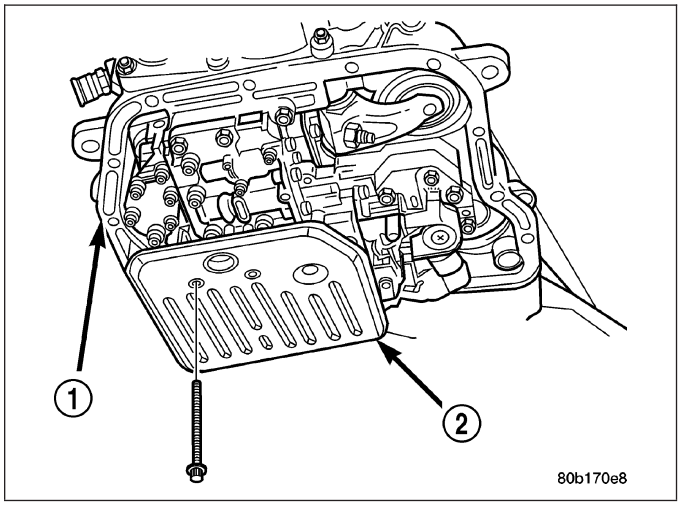

INSTALLATION

1. Position a new transmission oil filter (2) onto the valve body.

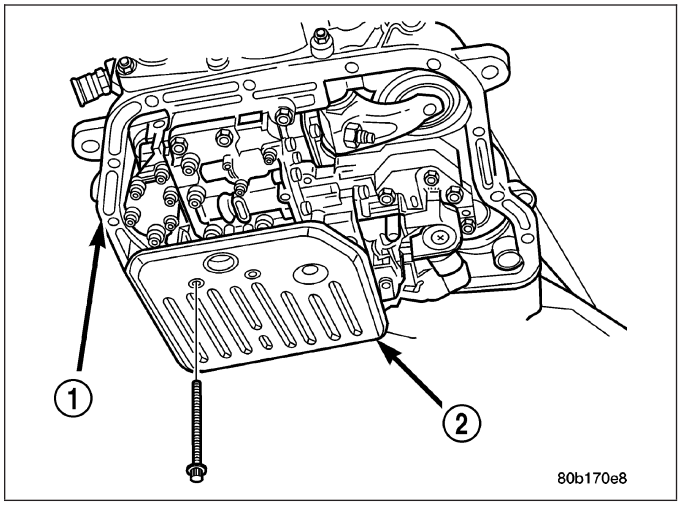

2. Install the screws to hold the filter to the valve body. Tighten the screws to 4 N·m (35 in.lbs.).

3. Clean the gasket surfaces of the transmission oil pan (3) and transmission pan rail.

NOTE: The transmission pan oil gasket(2) is reusable. Inspect the sealing surfaces of the gasket. If the sealing ribs on both surfaces appear to be in good condition, clean the gasket of any foreign material and reinstall.

4. Position the oil pan gasket (2) onto the oil pan (3).
5. Position the oil pan and gasket onto the transmission and install several bolts to hold the pan and gasket to the transmission.
6. Install the remainder of the oil pan bolts. Tighten the bolts to 13.6 N·m (125 in.lbs.).
7. Lower vehicle and fill transmission. (Refer to 21 - TRANSMISSION/AUTOMATIC/FLUID - STANDARD PROCEDURE)

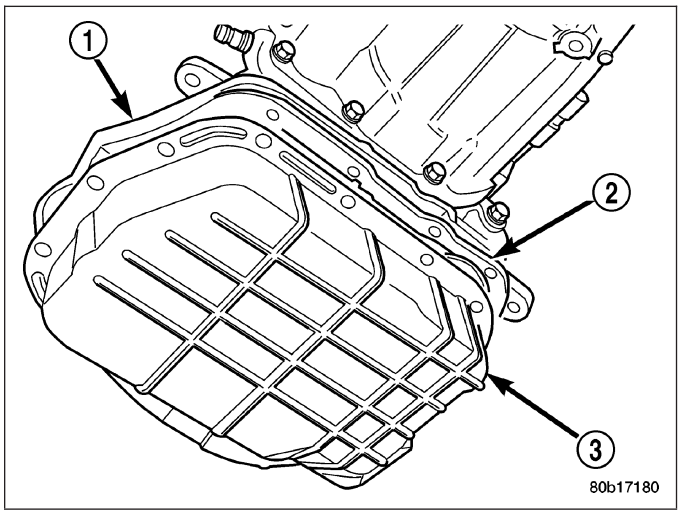

TRANSMISSION FILL

To avoid overfilling transmission after a fluid change or overhaul, perform the following procedure:

1. Remove dipstick and insert clean funnel in transmission fill tube.
2. Add following initial quantity of Mopar® ATF +4 to transmission:
   a. If only fluid and filter were changed, add **3 pints (1-1/2 quarts)** of ATF +4 to transmission.
   b. If transmission was completely overhauled, torque converter was replaced or drained, and cooler was flushed, add **12 pints (6 quarts)** of ATF +4 to transmission.
3. Apply parking brakes.
4. Start and run engine at normal curb idle speed.
5. Apply service brakes, shift transmission through all gear ranges then back to NEUTRAL, set parking brake, and leave engine running at curb idle speed.
6. Remove funnel, insert dipstick and check fluid level. If level is low, **add fluid to bring level to MIN mark on dipstick.** Check to see if the oil level is equal on both sides of the dipstick. If one side is noticably higher than the other, the dipstick has picked up some oil from the dipstick tube. Allow the oil to drain down the dipstick tube and re-check.
7. Drive vehicle until transmission fluid is at normal operating temperature.
8. With the engine running at curb idle speed, the gear selector in NEUTRAL, and the parking brake applied, check the transmission fluid level.

CAUTION: Do not overfill transmission, fluid foaming and shifting problems can result.

9. Add fluid to bring level up to MAX arrow mark.

When fluid level is correct, shut engine off, release park brake, remove funnel, and install dipstick in fill tube.

CLUTCH-FRONT

DESCRIPTION

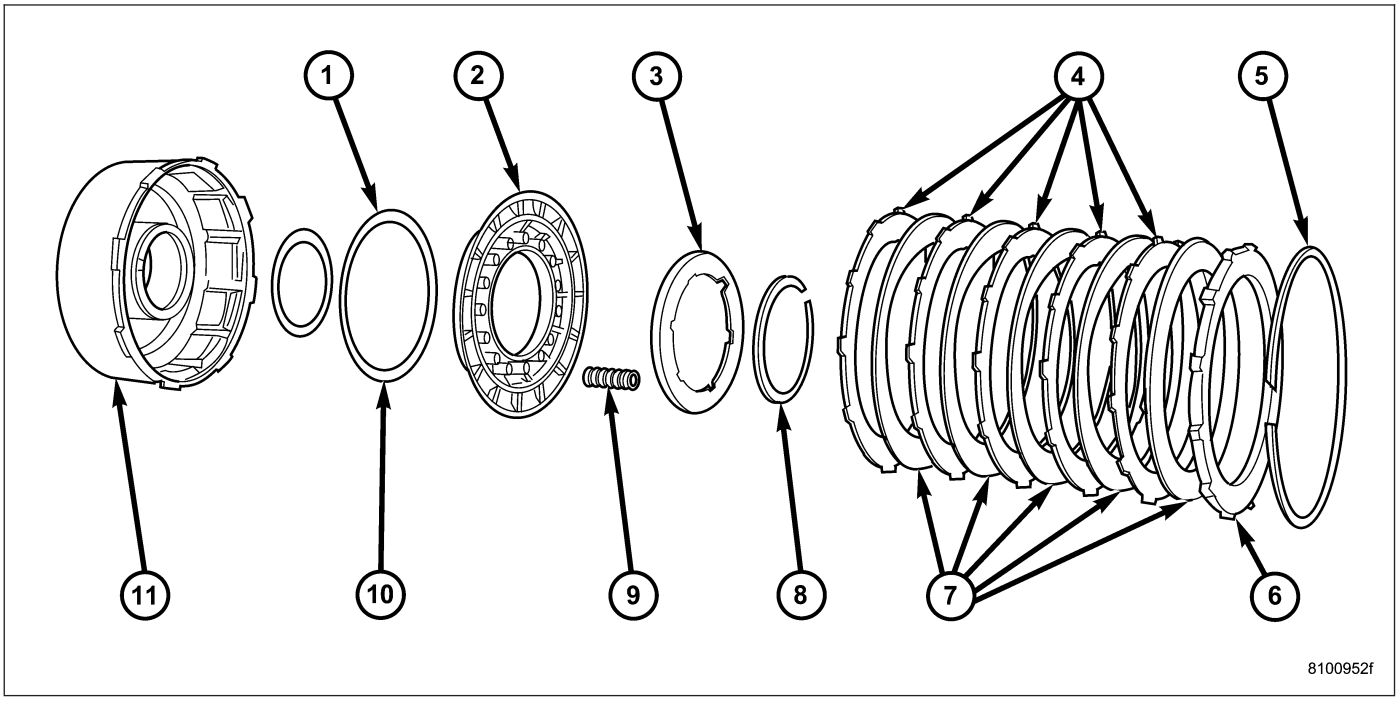

48RE Front Clutch Components

1 - INNER PISTON SEAL
2 - CLUTCH PISTON
3 - CLUTCH PISTON SPRING RETAINER
4 - CLUTCH PLATES
5 - CLUTCH PACK SNAP-RING (WAVED)
6 - REACTION PLATE
7 - CLUTCH DISCS
8 - RETAINER SNAP-RING
9 - CLUTCH PISTON SPRINGS
10 - OUTER PISTON SEAL
11 - FRONT CLUTCH RETAINER

The front clutch assembly is composed of the front clutch retainer (11), pressure plate, clutch plates (4), driving discs (7), piston (2), piston return spring (9), return spring retainer (3), and snap-rings (5, 8). The front clutch is the forward-most component in the transmission geartrain and is directly behind the oil pump and is considered a driving component.

OPERATION

To apply the clutch, pressure is applied between the clutch retainer and piston. The fluid pressure is provided by the oil pump, transferred through the control valves and passageways, and enters the clutch through the hub of the reaction shaft support. With pressure applied between the clutch retainer and piston, the piston moves away from the clutch retainer and compresses the clutch pack. This action applies the clutch pack, allowing torque to flow through the input shaft into the driving discs, and into the clutch plates and pressure plate that are lugged to the clutch retainer. The waved snap-ring is used to cushion the application of the clutch pack.

When pressure is released from the piston, the spring returns the piston to its fully released position and disengages the clutch. The release spring also helps to cushion the application of the clutch assembly. When the clutch is in the process of being released by the release spring, fluid flows through a vent and one-way ball-check-valve located in the clutch retainer. The check-valve is needed to eliminate the possibility of plate drag caused by centrifugal force acting on the residual fluid trapped in the clutch piston retainer.

DISASSEMBLY

1. Remove the waved snap-ring, reaction plate, clutch plates, and clutch discs.
2. Compress clutch piston retainer and piston springs with Compressor Tool C-3863-A (1).
3. Remove retainer snap-ring and remove compressor tool.

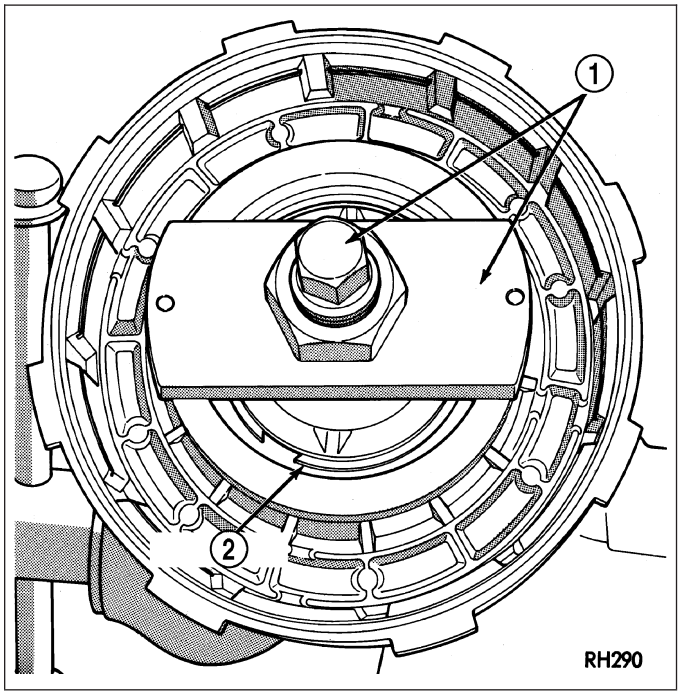

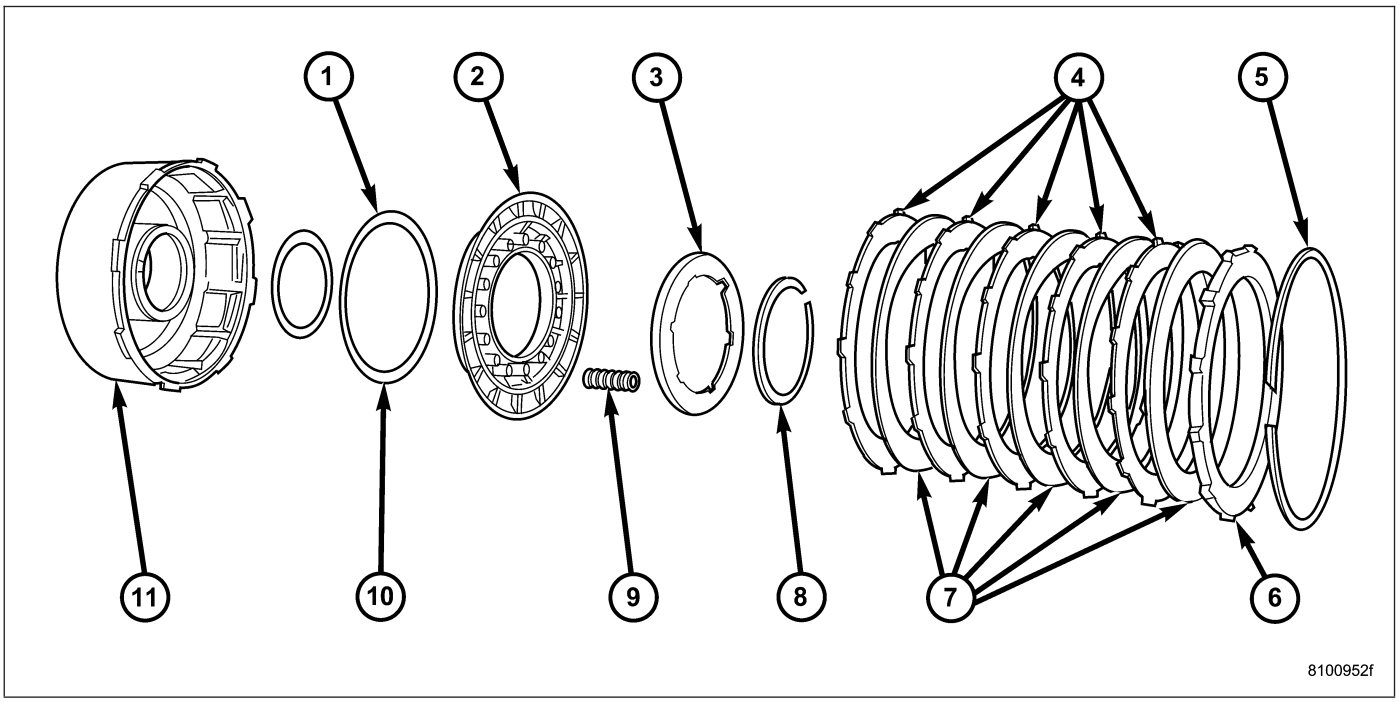

48RE Front Clutch Components

1 - INNER PISTON SEAL
2 - CLUTCH PISTON
3 - CLUTCH PISTON SPRING RETAINER
4 - CLUTCH PLATES
5 - CLUTCH PACK SNAP-RING (WAVED)
6 - REACTION PLATE
7 - CLUTCH DISCS
8 - RETAINER SNAP-RING
9 - CLUTCH PISTON SPRINGS
10 - OUTER PISTON SEAL
11 - FRONT CLUTCH RETAINER

4. Remove clutch piston springs (9). Note position and number of piston springs for assembly reference.
5. Remove clutch piston (2) from retainer (11) with a twisting motion.

6. Remove and discard clutch piston inner (1) and outer seals (10).

INSPECTION

Inspect the front clutch components. Replace the clutch discs if warped, worn, scored, burned or charred, the lugs are damaged, or if the facing is flaking off. Replace the steel plates and reaction plate if heavily scored, warped, or broken. Be sure the driving lugs on the discs and plate are also in good condition. The lugs must not be bent, cracked or damaged in any way.

Replace the piston springs and spring retainer if either are distorted, warped or broken.

Check the lug grooves in the clutch piston retainer. The steel plates should slide freely in the slots. Replace the piston retainer if the grooves are worn or damaged. Also check action of the check ball in the piston retainer. The ball must move freely and not stick.

Replace the retainer bushing if worn, scored, or there is any doubt about bushing condition.

Inspect the piston and retainer seal surfaces for nicks or scratches. Minor scratches can be removed with crocus cloth. However, replace the piston and/or retainer if the seal surfaces are seriously scored.

Check the clutch piston check ball. The ball should be securely in place. Replace the piston if the ball is missing, or seized in place.

ASSEMBLY

NOTE: The 48RE transmission uses five plates and discs for the front clutch.

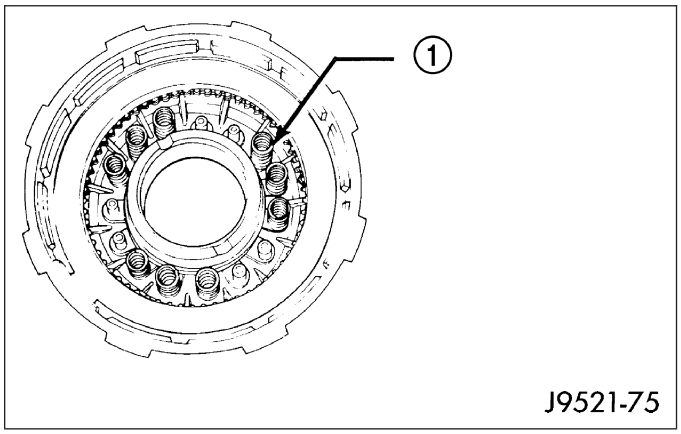

1. Soak clutch discs in transmission fluid.
2. Install new inner piston seal onto the outer diameter of the clutch retainer inner hub.
3. Install new outer seal onto the clutch piston. Be sure seal lips of both seals face the interior of the retainer.
4. Lubricate new inner and outer piston seals with petroleum jelly.
5. Install clutch piston in retainer. Use twisting motion to seat piston in bottom of retainer. A thin strip of plastic (about 0.015 - 0.020 in. thick), can be used to guide seals into place if necessary.

CAUTION: Never push the clutch piston straight in. This will fold the seals over causing leakage and clutch slip. In addition, never use any type of metal tool to help ease the piston seals into place. Metal tools will cut, shave, or score the seals.

6. Install and position nine clutch piston springs (1).

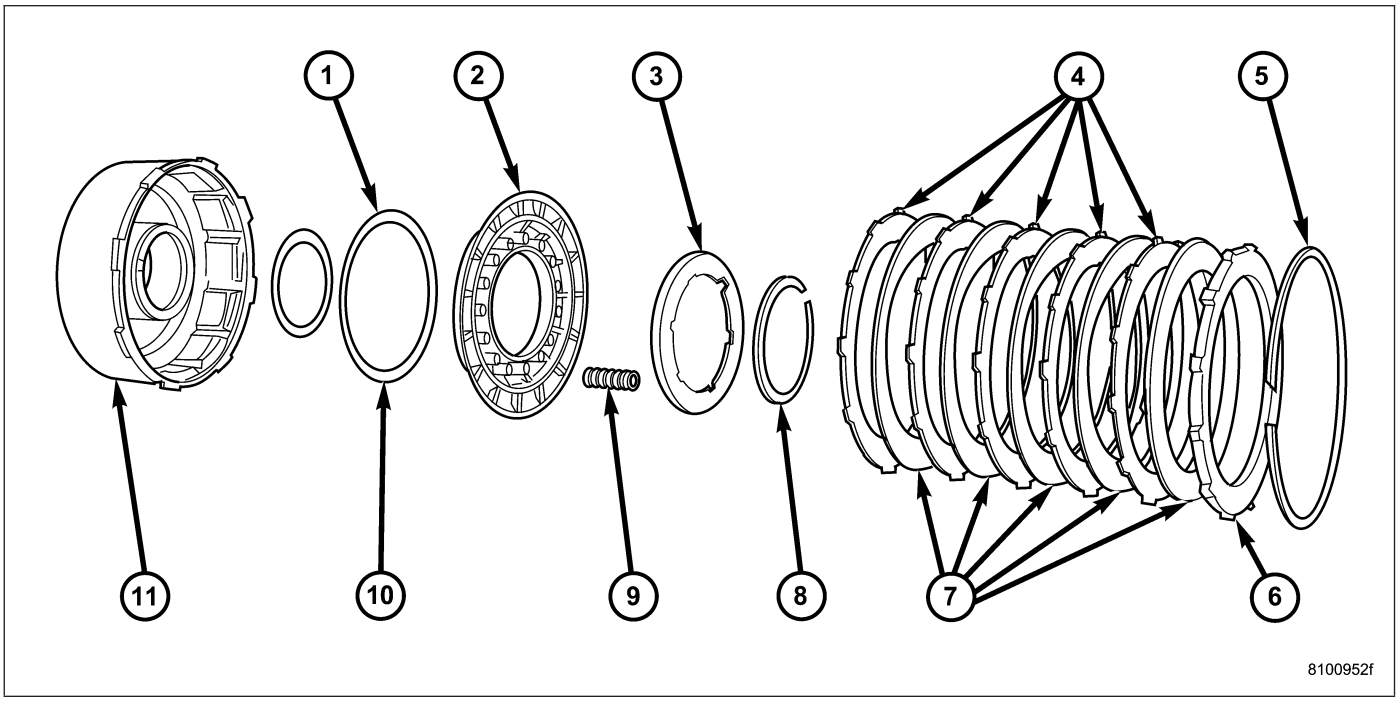

48RE Front Clutch Components

1 - INNER PISTON SEAL
2 - CLUTCH PISTON
3 - CLUTCH PISTON SPRING RETAINER
4 - CLUTCH PLATES
5 - CLUTCH PACK SNAP-RING (WAVED)
6 - REACTION PLATE
7 - CLUTCH DISCS
8 - RETAINER SNAP-RING
9 - CLUTCH PISTON SPRINGS
10 - OUTER PISTON SEAL
11 - FRONT CLUTCH RETAINER

7. Install spring retainer (3) on top of piston springs (9).
8. Compress spring retainer and piston springs with Tool C-3863-A.
9. Install spring retainer snap-ring (8) and remove compressor tool.
10. Install clutch plates and discs (4, 7). Five clutch discs, five steel plates and one reaction plate are required.
11. Install reaction plate (6) followed by waved snap-ring (5).

12. Check clutch pack clearance with feeler gauge (3). Clearance between waved spring and pressure plate should 2.5-4.09 mm (0.098-0.161 in.). If clearance is incorrect, clutch plates, clutch discs, snap-ring, or pressure plate may have to be changed.

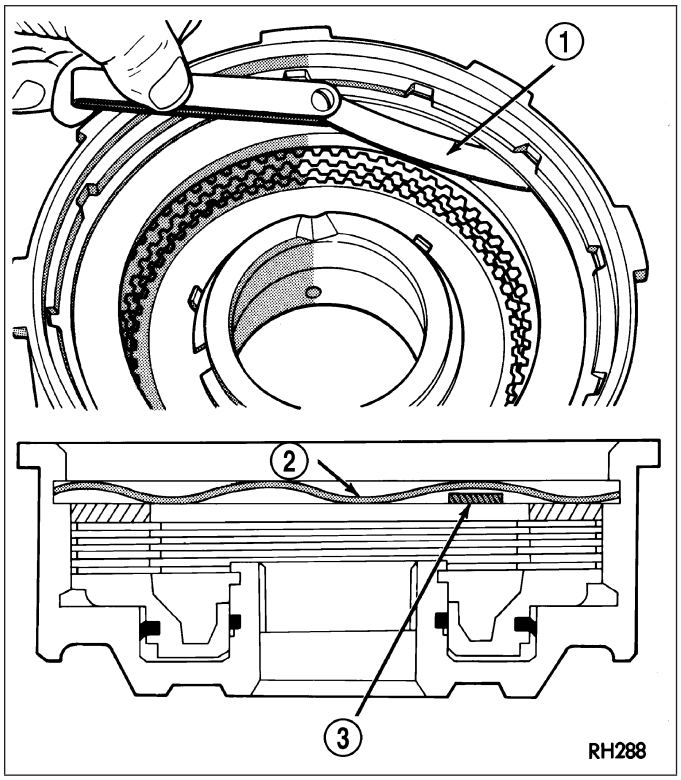

SERVO-FRONT

DESCRIPTION

The kickdown servo consists of a two-land piston (3) with an inner piston (2), a piston rod (7) and guide, and a return spring (4). The dual-land piston uses seal rings on its outer diameters and an O-ring for the inner piston.

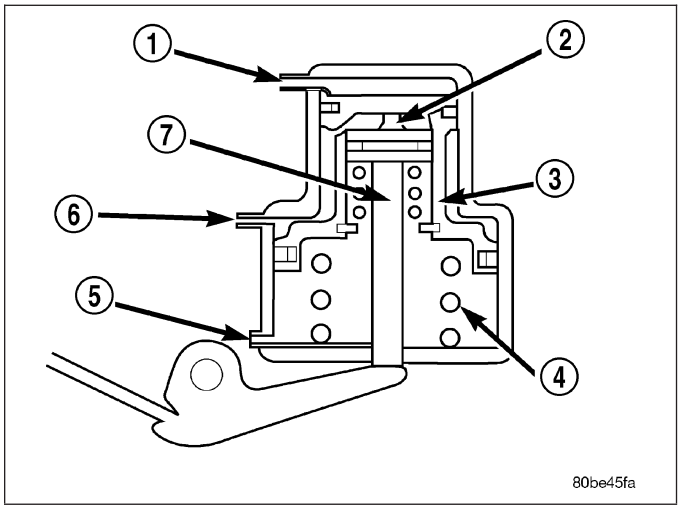

OPERATION

The application of the piston is accomplished by applying pressure between the two lands of the piston. The pressure acts against the larger lower land to push the piston downward, allowing the piston rod to extend though its guide against the apply lever. Release of the servo at the 2-3 upshift is accomplished by a combination of spring and line pressure, acting on the bottom of the larger land of the piston. The small piston is used to cushion the application of the band by bleeding oil through a small orifice in the larger piston, diesel engine only. The release timing of the kickdown servo is very important to obtain a smooth but firm shift. The release has to be very quick, just as the front clutch application is taking place. Otherwise, engine runaway or a shift hesitation will occur. To accomplish this, the band retains its holding capacity until the front clutch is applied, giving a small amount of overlap between them.

DISASSEMBLY

1. Remove seal ring (6) from rod guide (5).
2. Remove small snap-ring (7) from servo piston rod (11). Then remove piston rod (11), spring (10), and washer (9) from piston (2).
3. Remove and discard servo component O-ring (3) and seal rings (1, 6).

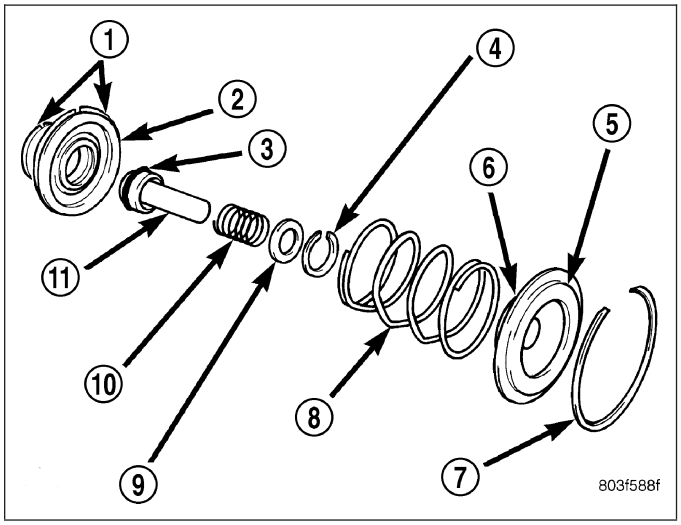

1 - PISTON RINGS
2 - SERVO PISTON
3 - O-RING
4 - SNAP-RING
5 - PISTON ROD GUIDE
6 - SEAL RING
7 - SNAP-RING
8 - SERVO SPRING
9 - WASHER
10 - SPRING
11 - PISTON ROD

CLEANING

Clean the servo piston components with solvent and dry them with compressed air.

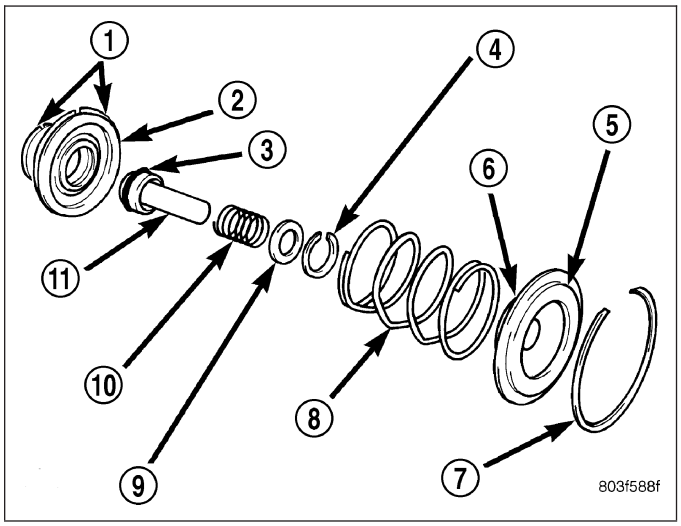

1 - PISTON RINGS
2 - SERVO PISTON
3 - O-RING
4 - SNAP-RING
5 - PISTON ROD GUIDE
6 - SEAL RING
7 - SNAP-RING
8 - SERVO SPRING
9 - WASHER
10 - SPRING
11 - PISTON ROD

INSPECTION

Inspect the servo components (1-11). Replace the springs if collapsed, distorted or broken. Replace the guide, rod and piston if cracked, bent, or worn. Discard the servo snap-ring if distorted or warped.

Check the servo piston bore for wear. If the bore is severely scored, or damaged, it will be necessary to replace the case.

Replace any servo component if doubt exists about condition. Do not reuse suspect parts.

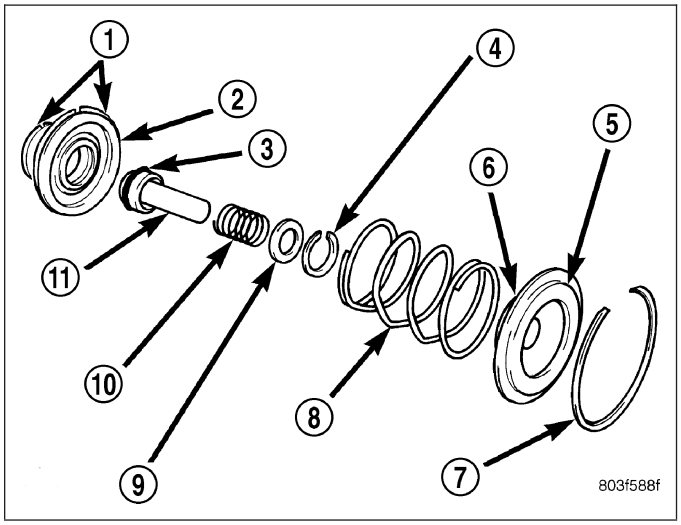

ASSEMBLY

Clean and inspect front servo components.

1. Lubricate new o-ring (3) and seal rings (1, 6) with petroleum jelly and install them on piston (2), guide (5), and rod (11).
2. Install rod in piston. Install spring (8) and washer (9) on rod. Compress spring (8) and install snap-ring (7).

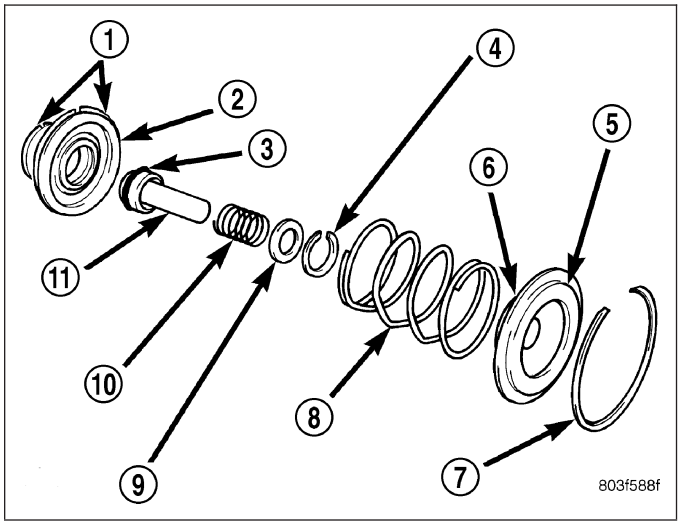

CABLE-GEARSHIFT

DIAGNOSIS AND TESTING - GEARSHIFT CABLE

1. Engine starts must be possible with shift lever in PARK or NEUTRAL positions only. Engine starts must not be possible in any other gear position.
2. With the shift lever in the:
   a. PARK position - Apply upward force on the shift arm and remove pressure. Engine starts must be possible.
   b. PARK position - Apply downward force on the shift arm and remove pressure. Engine starts must be possible.
   c. NEUTRAL position - Normal position. Engine starts must be possible.
   d. NEUTRAL position - Engine running and brakes applied, apply upward force on the shift arm. Transmission shall not be able to shift from neutral to reverse.

REMOVAL

1. Shift transmission into PARK.
2. Raise vehicle.
3. Disengage cable (1) eyelet at transmission manual shift lever (3) and pull cable adjuster out of mounting bracket.

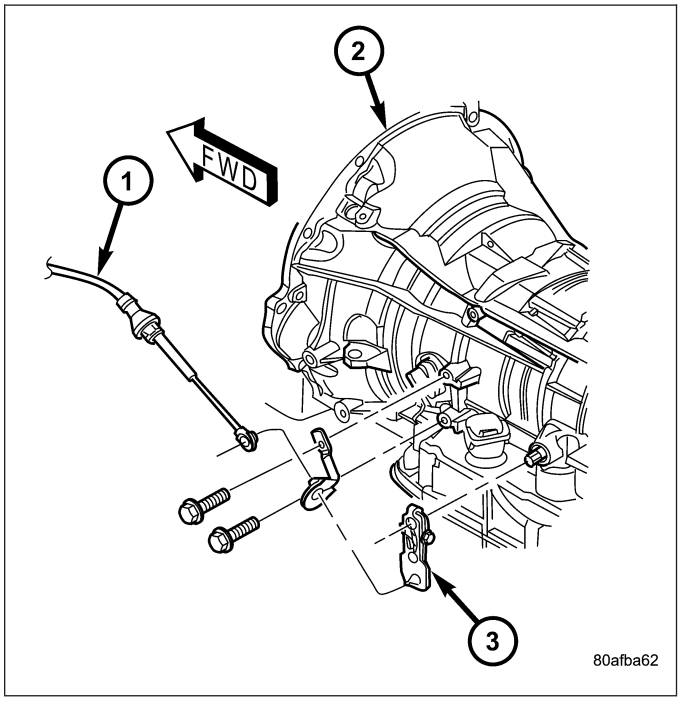

4. Lower the vehicle.
5. Remove the dash panel insulation pad as necessary to access the gearshift cable grommet (2).
6. Remove grommet (2) from the dash panel.

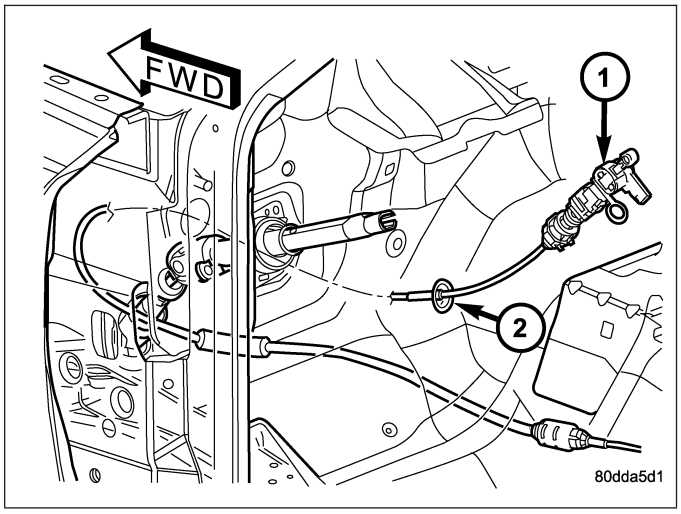

7. Remove any steering column (1) trim necessary to access the gearshift cable (2) and BTSI mechanism.
8. Disconnect the BTSI wiring connector (5).
9. Disconnect cable at lower column bracket and shift lever pin and pull the cable through the dash panel opening into the vehicle.
10. Remove gearshift cable (2) from vehicle.

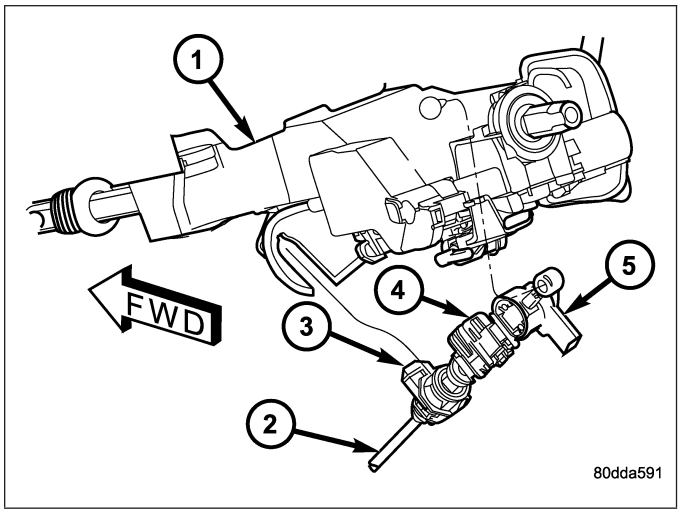

INSTALLATION

1. Route the transmission end of the gearshift cable (1) through the opening in the dash panel.
2. Seat the cable grommet (2) into the dash panel opening.

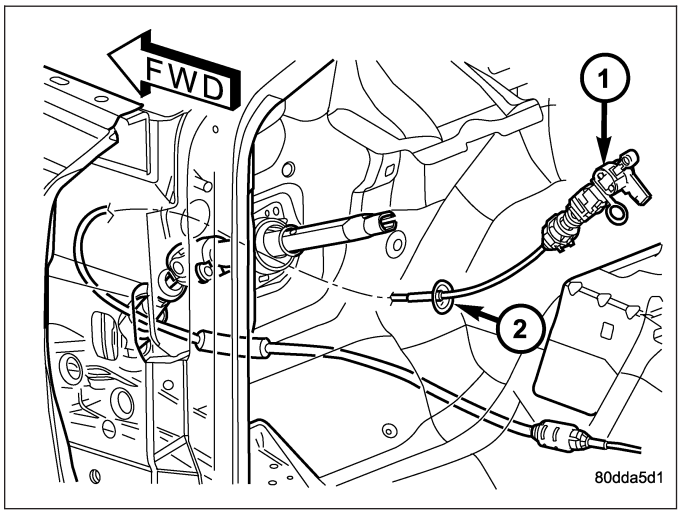

3. Snap the cable into the steering column (1) bracket so the retaining ears are engaged and snap the cable eyelet onto the shift lever ball stud.
4. Raise the vehicle.
5. Place the transmission manual shift lever in the “PARK” detent (rearmost) position and rotate prop shaft to ensure transmission is in PARK.
6. Route the gearshift cable through the transmission mounting bracket and secure the cable by snapping the cable retaining ears into the transmission bracket and snapping the cable eyelet on the manual shift lever ball stud.
7. Lower vehicle.
8. Lock the shift cable adjustment by pressing the cable adjuster lock tab (3) downward until it snaps into place.

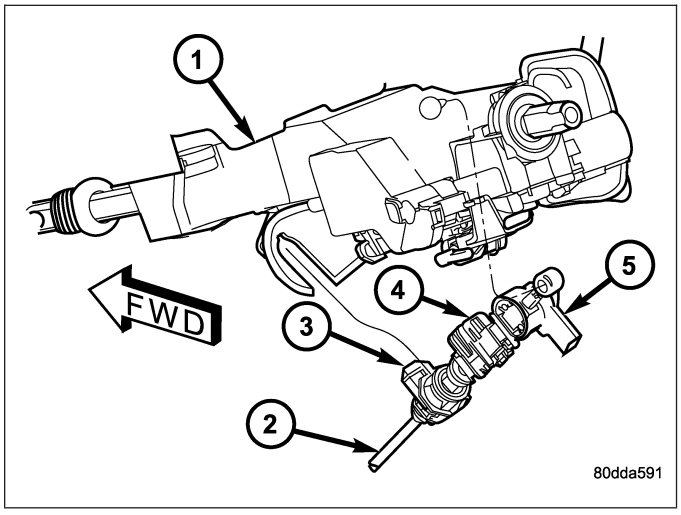

9. Check for proper operation of the transmission range sensor.

10. Adjust the gearshift cable (Refer to 21 - TRANSMISSION/AUTOMATIC/GEAR SHIFT CABLE - ADJUSTMENTS) and BTSI mechanism (Refer to 21 - TRANSMISSION/AUTOMATIC/BRAKE TRANSMISSION SHIFT INTERLOCK SYSTEM - ADJUSTMENTS) as necessary.

ADJUSTMENTS - GEARSHIFT CABLE

Check adjustment by starting the engine in PARK and NEUTRAL. Adjustment is CORRECT if the engine starts only in these positions. Adjustment is INCORRECT if the engine starts in one but not both positions. If the engine starts in any position other than PARK or NEUTRAL, or if the engine will not start at all, the transmission range sensor may be faulty.

Gearshift Adjustment Procedure

1. Shift transmission into PARK.
2. Release cable adjuster lock tab (3) (underneath the steering column) to unlock cable.
3. Raise vehicle.
4. Disengage the cable eyelet from the transmission manual shift lever.
5. Verify transmission shift lever is in PARK detent by moving lever fully rearward. Last rearward detent is PARK position.
6. Verify positive engagement of transmission park lock by attempting to rotate propeller shaft. Shaft will not rotate when park lock is engaged.
7. Snap the cable eyelet onto the transmission manual shift lever.
8. Lower vehicle.

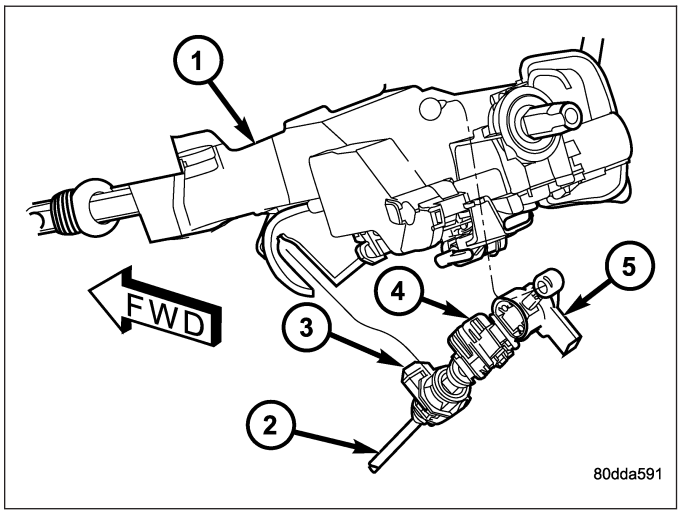

9. Lock shift cable by pressing cable adjuster lock tab (3) downward until it snaps into place.
10. Check engine starting. Engine should start only in PARK and NEUTRAL.

PUMP-OIL

DESCRIPTION

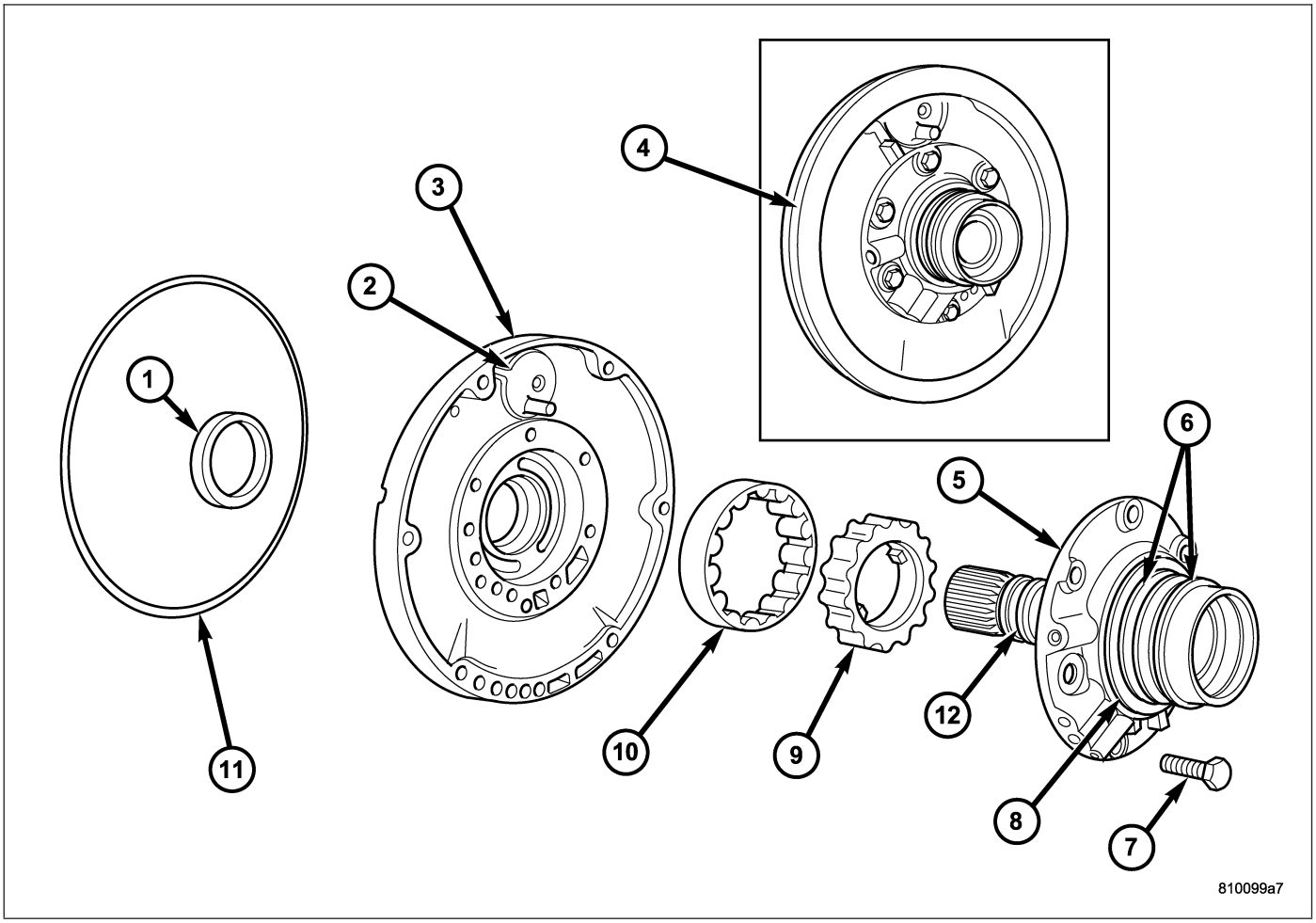

Oil Pump Assembly

1 - OIL SEAL
2 - VENT BAFFLE
3 - OIL PUMP BODY
4 - GASKET
5 - REACTION SHAFT SUPPORT
6 - SEAL RINGS
7 - BOLTS (6)
8 - #1 THRUST WASHER (SELECTIVE)
9 - INNER GEAR
10 - OUTER GEAR
11 - "O" RING
12 - TORQUE CONVERTER SEAL RING

The oil pump is located in the pump housing inside the bell housing of the transmission case. The oil pump consists of an inner gear (9), outer gear (10), a housing (3), and a reaction shaft support (5).

OPERATION

As the torque converter rotates, the converter hub rotates the inner and outer gears. As the gears rotate, the clearance between the gear teeth increases in the crescent area, and creates a suction at the inlet side of the pump. This suction draws fluid through the pump inlet from the oil pan. As the clearance between the gear teeth in the crescent area decreases, it forces pressurized fluid into the pump outlet and to the valve body.

DISASSEMBLY

1. Mark position of support (2) in oil pump body (1) for assembly alignment reference. Use scriber or paint to make alignment marks.
2. Place pump body on two wood blocks.
3. Remove reaction shaft support bolts and separate support (2) from pump body (1).

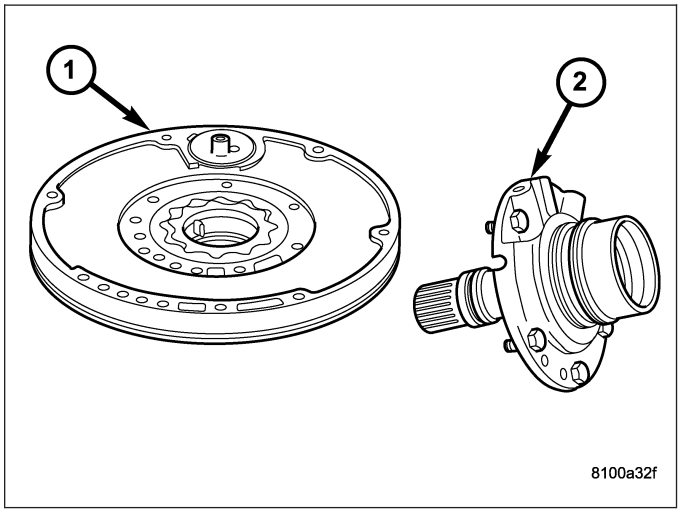

4. Remove pump inner (3) and outer gears (4).

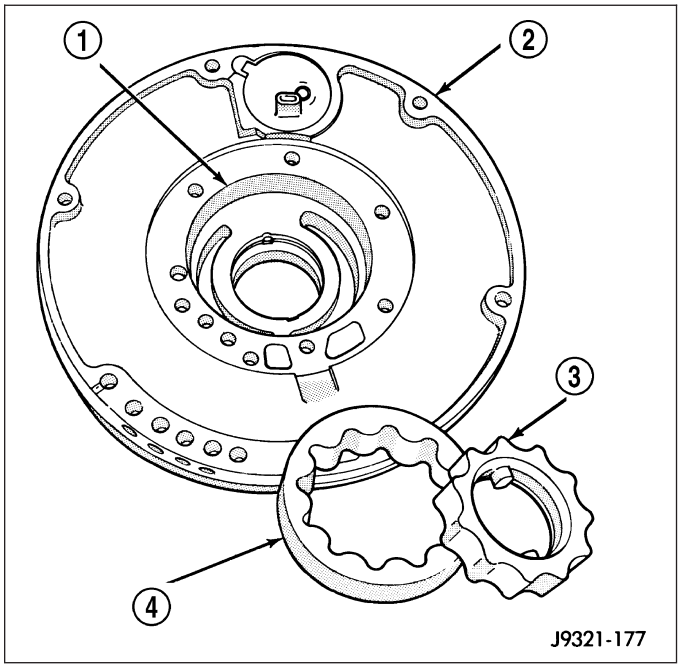

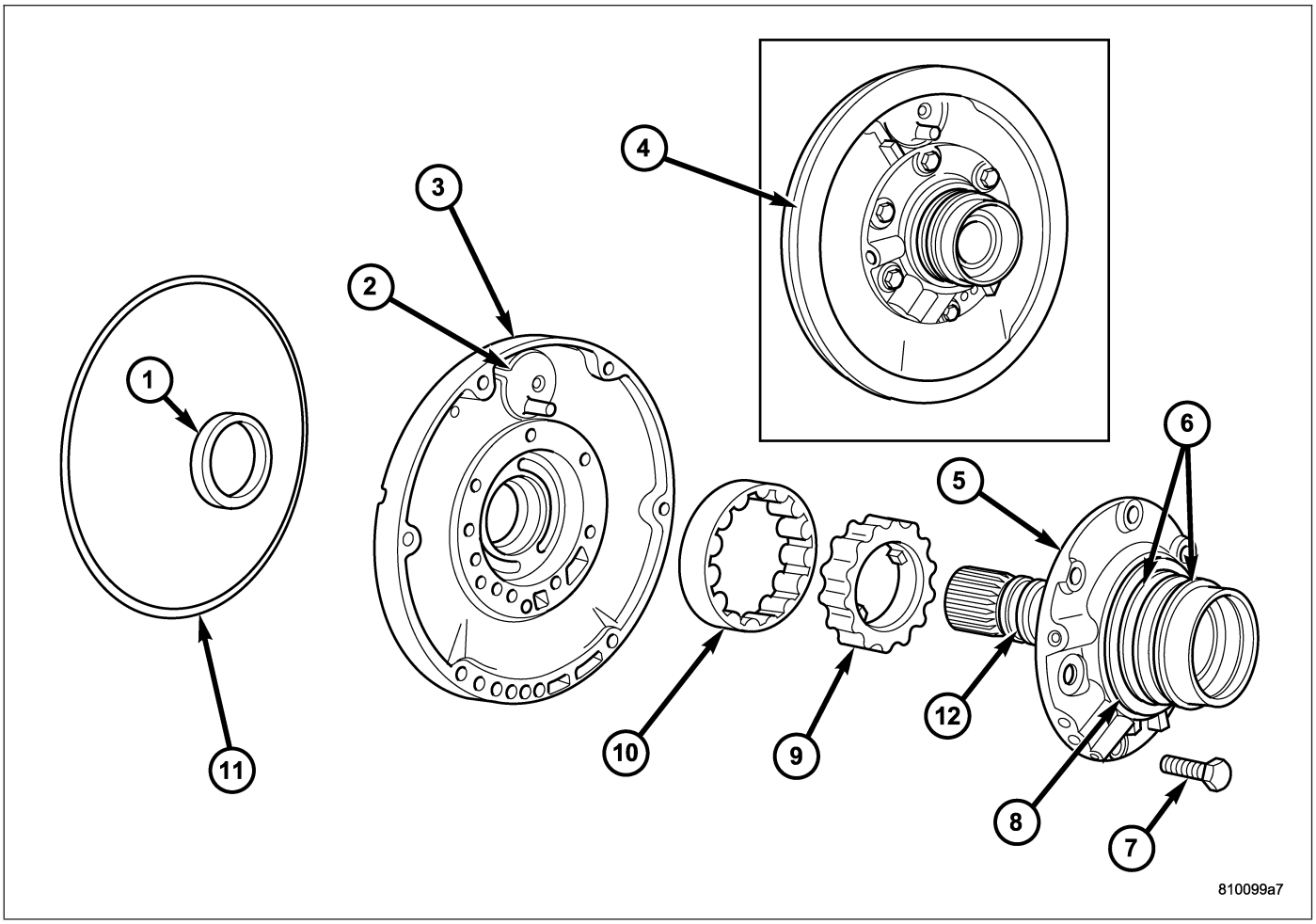

Oil Pump Assembly

1 - OIL SEAL
2 - VENT BAFFLE
3 - OIL PUMP BODY
4 - GASKET
5 - REACTION SHAFT SUPPORT
6 - SEAL RINGS
7 - BOLTS (6)
8 - #1 THRUST WASHER (SELECTIVE)
9 - INNER GEAR
10 - OUTER GEAR
11 - "O" RING
12 - TORQUE CONVERTER SEAL RING

5. Remove o-ring seal (11) from pump body. Discard seal after removal.
6. Remove oil pump seal (1). Discard seal after removal.

CLEANING

Clean pump and support components with solvent and dry them with compressed air.

INSPECTION

Check condition of the seal rings and thrust washer on the reaction shaft support. The seal rings do not need to be replaced unless cracked, broken, or severely worn.

Inspect the pump and support components. Replace the pump or support if the seal ring grooves or machined surfaces are worn, scored, pitted, or damaged. Replace the pump gears if pitted, worn chipped, or damaged.

Inspect the pump bushing. Then check the reaction shaft support bushing. Replace either bushing only if heavily worn, scored or damaged. It is not necessary to replace the bushings unless they are actually damaged.

Clearance between outer gear and reaction shaft housing should be 0.010 to 0.063 mm (0.0004 to 0.0025 in.). Clearance between inner gear and reaction shaft housing should be 0.010 to 0.063 mm (0.0004 to 0.0025 in.). Both clearances can be measured at the same time by installing the gears in the pump body and measure pump component clearances as follows:

1. Position an appropriate piece of Plastigage™ across both gears.
2. Align the plastigage to a flat area on the reaction shaft housing.
3. Install the reaction shaft to the pump housing.
4. Separate the reaction shaft housing from the pump housing and measure the Plastigage™ following the instructions supplied with it.

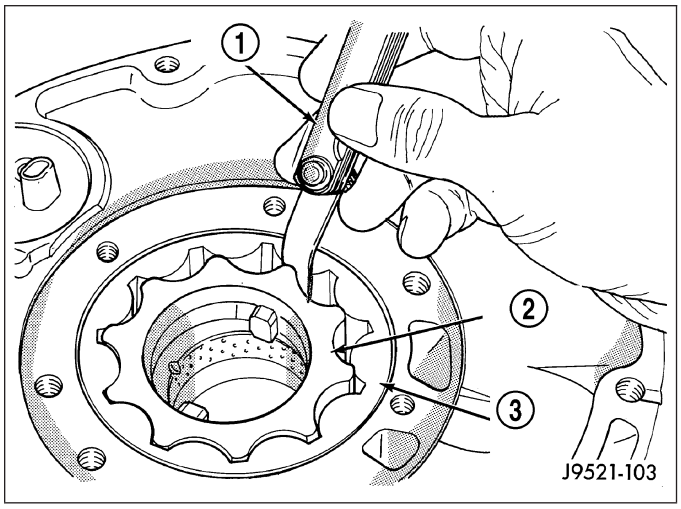

Clearance between inner gear tooth (2) and outer gear (3) should be 0.051 to 0.19 mm (0.002 to 0.0075 in.). Measure clearance with an appropriate feeler gauge (1).

Clearance between outer gear and pump housing should be 0.10 to 0.229 mm (0.004 to 0.009 in.). Measure clearance with an appropriate feeler gauge.

ASSEMBLY

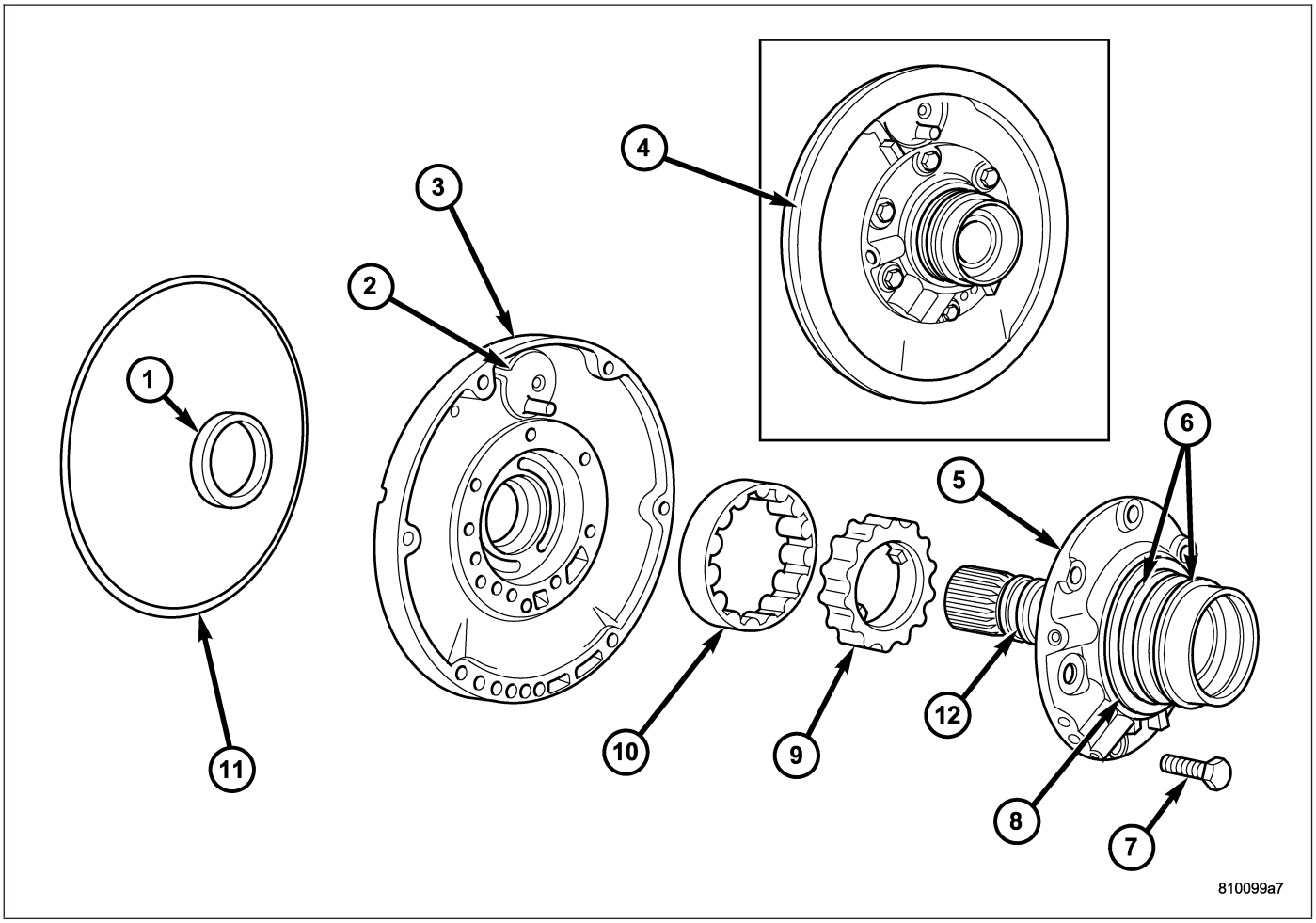

Oil Pump Assembly

1 - OIL SEAL	7 - BOLTS (6)
2 - VENT BAFFLE	8 - #1 THRUST WASHER (SELECTIVE)
3 - OIL PUMP BODY	9 - INNER GEAR
4 - GASKET	10 - OUTER GEAR
5 - REACTION SHAFT SUPPORT	11 - “O” RING
6 - SEAL RINGS	12 - TORQUE CONVERTER SEAL RING

1. Lubricate pump gears (9, 10) with transmission fluid and install them in pump body (3).
2. Install thrust washer (8) on reaction shaft (5) support hub. Lubricate washer with petroleum jelly or transmission fluid before installation.
3. If reaction shaft seal rings (6) are being replaced, install new seal rings on support hub. Lubricate seal rings with transmission fluid or petroleum jelly after installation. Squeeze each ring until ring ends are securely hooked together.

CAUTION: The reaction shaft support seal rings will break if overspread, or twisted. If new rings are being installed, spread them only enough for installation. Also be very sure the ring ends are securely hooked together after installation. Otherwise, the rings will either prevent pump installation, or break during installation.

4. Align and install reaction shaft support (5) on pump body (3).
5. Install bolts (7) attaching reaction shaft support to pump. Tighten bolts to 20 N·m (175 in. lbs.) torque.

6. Install new o-ring (11) on pump body. Lubricate oil seal and o-ring with petroleum jelly.

7. Install new pump seal (3) with Installer Tool C-3860-A (1). Use hammer or mallet to tap seal into place.

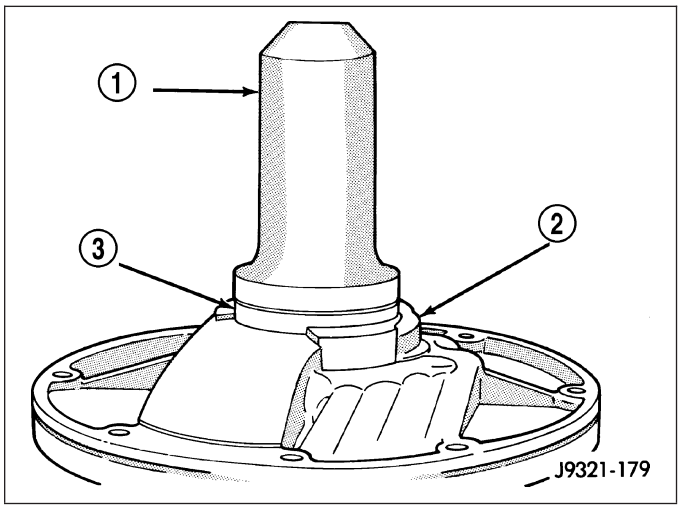

BEARING-OUTPUT SHAFT FRONT

REMOVAL

1. Remove overdrive unit from the vehicle.
2. Remove overdrive geartrain (5) from housing.
3. Remove snap-ring (2) holding output shaft front bearing (1) to overdrive geartrain (5).
4. Pull bearing (1) from output shaft (3).

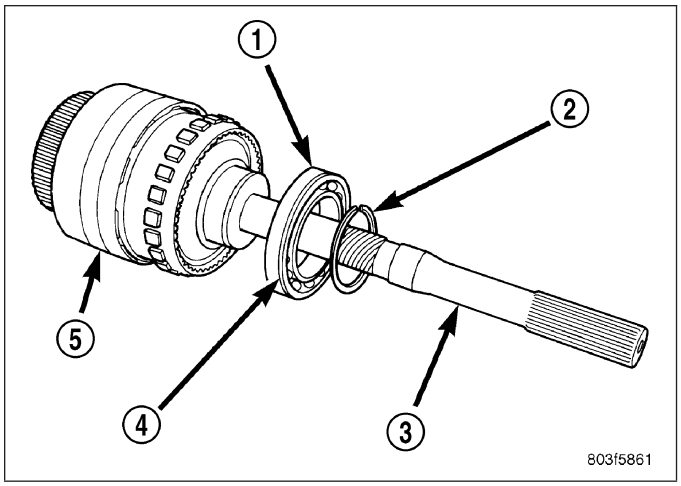

INSTALLATION

1. Place replacement bearing (1) in position on geartrain (5) with locating retainer groove toward the rear.
2. Push bearing (1) onto output shaft (3) until the snap-ring groove is visible.
3. Install snap-ring (2) to hold bearing onto output shaft (3).
4. Install overdrive geartrain (5) into housing.
5. Install overdrive unit in vehicle.

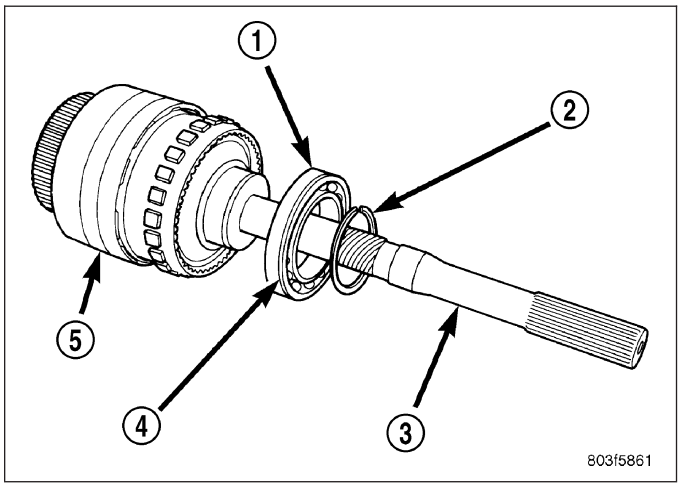

BEARING-OUTPUT SHAFT REAR

REMOVAL

1. Remove overdrive unit from the vehicle. (Refer to 21 - TRANSMISSION/AUTOMATIC/OVERDRIVE - REMOVAL)
2. Remove overdrive geartrain from housing.
3. Remove snap-ring (3) holding output shaft rear bearing (1) into overdrive housing (2).
4. Using a suitable driver inserted through the rear end of housing, drive bearing from housing.

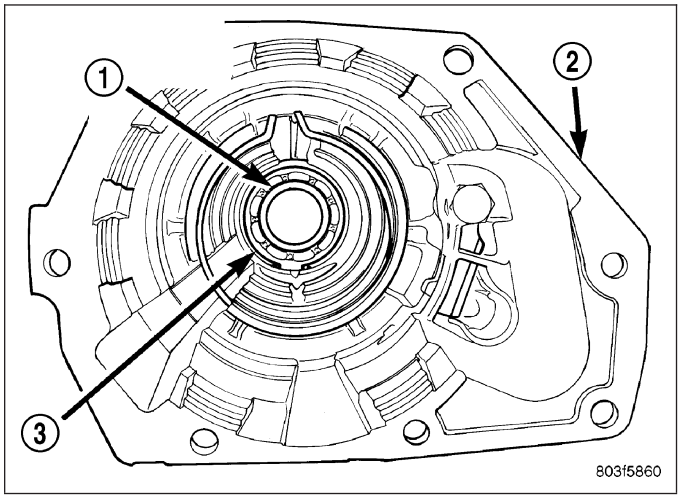

INSTALLATION

1. Place replacement bearing (1) in position in housing (2).
2. Using a suitable driver, drive bearing (1) into housing (2) until the snap-ring groove is visible.
3. Install snap-ring (3) to hold bearing into housing.
4. Install overdrive geartrain into housing.
5. Install overdrive unit in vehicle.

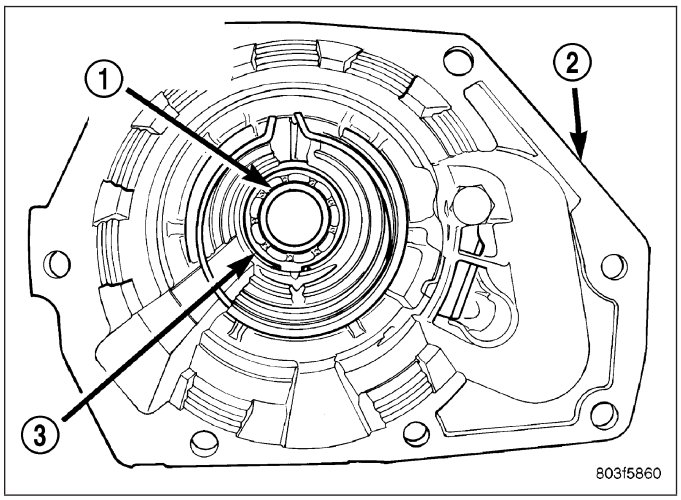

CLUTCH-OVERDRIVE

DESCRIPTION

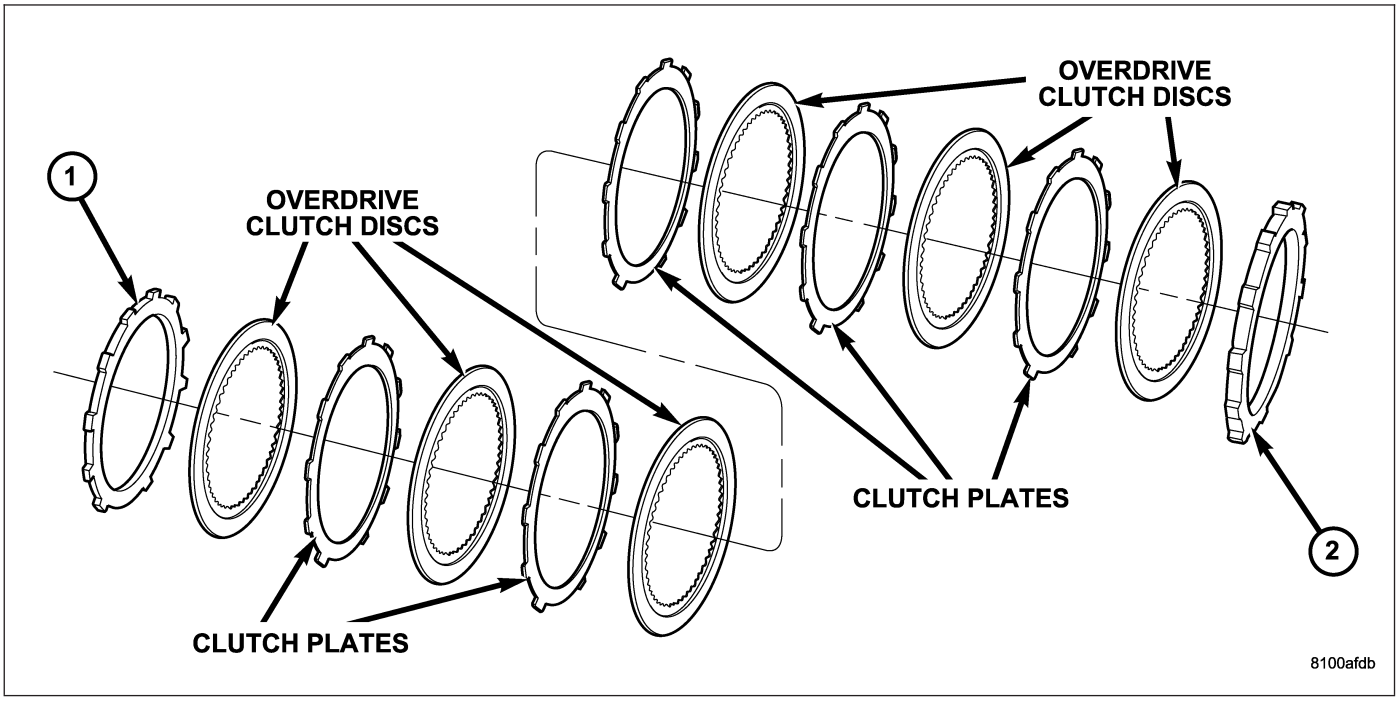

Overdrive Clutch

1 - REACTION PLATE
2 - PRESSURE PLATE

The overdrive clutch is composed of the pressure plate (2), clutch plates, holding discs, overdrive piston retainer, piston, piston spacer, and snap-rings. The overdrive clutch is the forwardmost component in the transmission overdrive unit and is considered a holding component. The overdrive piston retainer, piston, and piston spacer are located on the rear of the main transmission case.

NOTE: The number of discs and plates may vary with each engine and vehicle combination.

OPERATION

To apply the clutch, pressure is applied between the piston retainer and piston. The fluid pressure is provided by the oil pump, transferred through the control valves and passageways, and enters the clutch through passages at the lower rear portion of the valve body area. With pressure applied between the piston retainer and piston, the piston moves away from the piston retainer and compresses the clutch pack. This action applies the clutch pack, allowing torque to flow through the intermediate shaft into the overdrive planetary gear set. The overdrive clutch discs are attached to the overdrive clutch hub while the overdrive clutch plates, reaction plate, and pressure plate are lugged to the overdrive housing. This allows the intermediate shaft to transfer the engine torque to the planetary gear and overrunning clutch. This drives the planetary gear inside the annulus, which is attached to the overdrive clutch drum and output shaft, creating the desired gear ratio. The waved snap-ring is used to cushion the application of the clutch pack for the 5 disc version of the overdrive clutch. The 6 disc overdrive clutch does not use a waved snap-ring.

UNIT-OVERDRIVE

REMOVAL

1. Shift transmission into PARK.
2. Raise vehicle.
3. Remove transfer case, if equipped.
4. Mark propeller shaft universal joint(s) and axle pinion yoke, or the companion flange and flange yoke, for alignment reference at installation, if necessary.
5. Disconnect and remove the rear propeller shaft, if necessary. (Refer to 3 - DIFFERENTIAL & DRIVELINE/PROPELLER SHAFT/PROPELLER SHAFT - REMOVAL)
6. Remove transmission oil pan, remove gasket, drain oil and reinstall pan.
7. If overdrive unit had malfunctioned, or if fluid is contaminated, remove entire transmission. If diagnosis indicated overdrive problems only, remove just the overdrive unit.
8. Support transmission with transmission jack.
9. Remove bolts (2) attaching overdrive unit (1) to transmission.

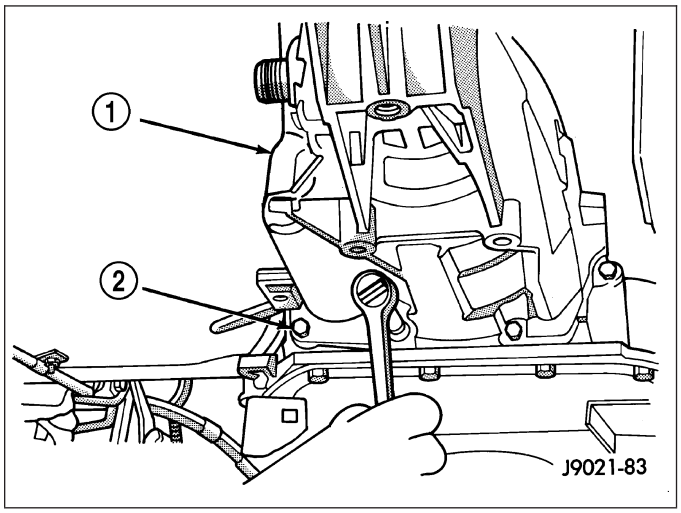

CAUTION: Support the overdrive unit with a jack before moving it rearward. This is necessary to prevent damaging the intermediate shaft. Do not allow the shaft to support the entire weight of the overdrive unit.

10. Carefully work overdrive unit off intermediate shaft. Do not tilt unit during removal. Keep it as level as possible.
11. If overdrive unit does not require service, immediately insert Alignment Tool 6227-2 in splines of planetary gear and overrunning clutch to prevent splines from rotating out of alignment. If misalignment occurs, overdrive unit will have to be disassembled in order to realign splines.
12. Remove and retain overdrive piston thrust bearing. Bearing may remain on piston or in clutch hub during removal.
13. Position drain pan on workbench.
14. Place overdrive unit over drain pan. Tilt unit to drain residual fluid from case.
15. Examine fluid for clutch material or metal fragments. If fluid contains these items, overhaul will be necessary.
16. If overdrive unit does not require any service, leave alignment tool in position. Tool will prevent accidental misalignment of planetary gear and overrunning clutch splines.

DISASSEMBLY

1. Remove transmission speed sensor (2) and o-ring seal (3) from overdrive case.

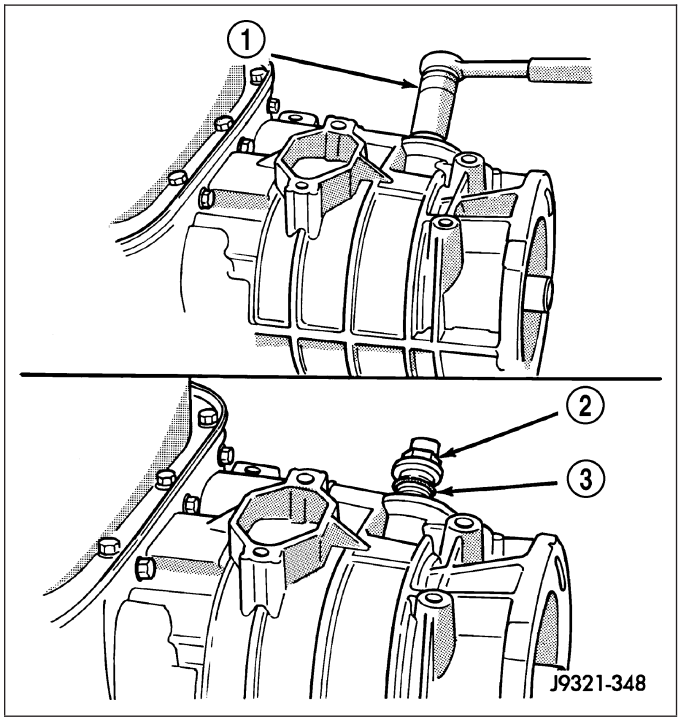

2. Remove overdrive piston thrust bearing (1).

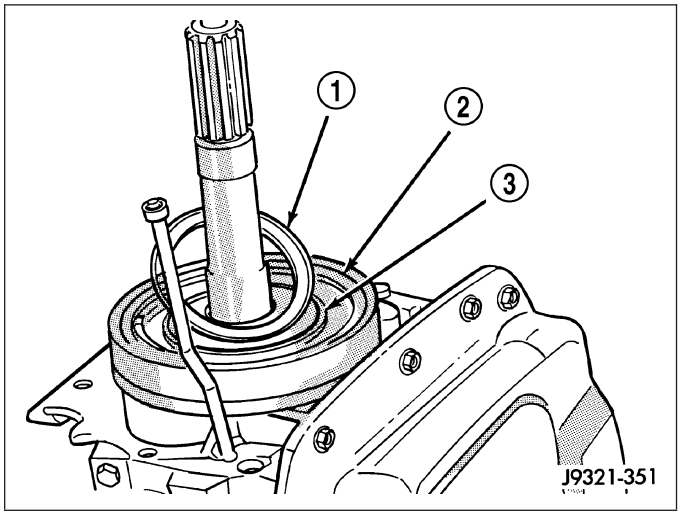

OVERDRIVE PISTON

1. Remove overdrive piston thrust plate (2). Retain thrust plate. It is a select fit part and may possibly be reused.

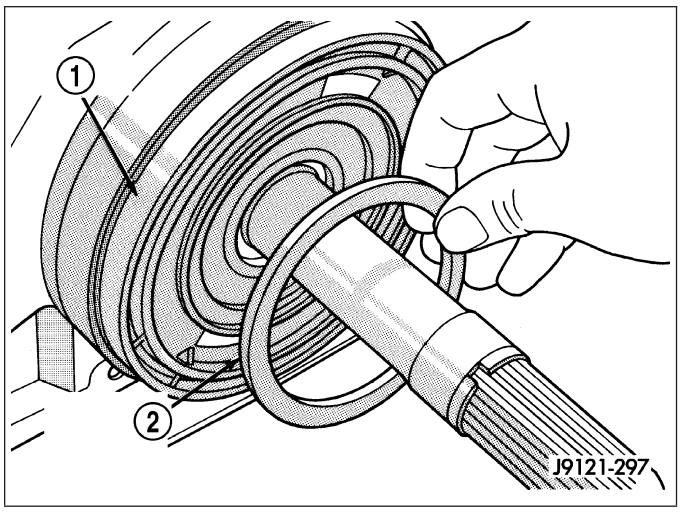

2. Remove intermediate shaft spacer (2). Retain spacer. It is a select fit part and may possibly be reused.

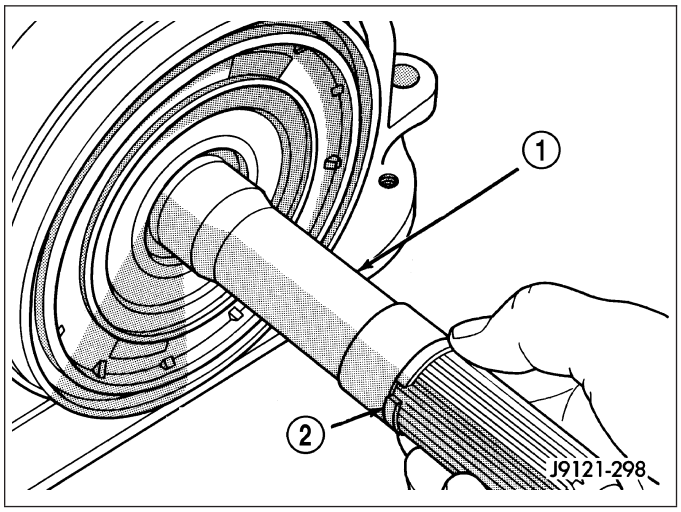

3. Remove overdrive piston (2) from retainer (1).

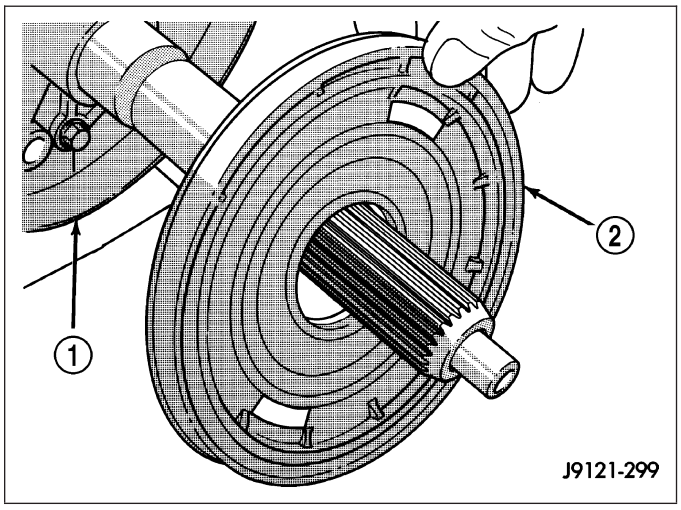

OVERDRIVE CLUTCH PACK

1. Remove overdrive clutch pack wire retaining ring (1).

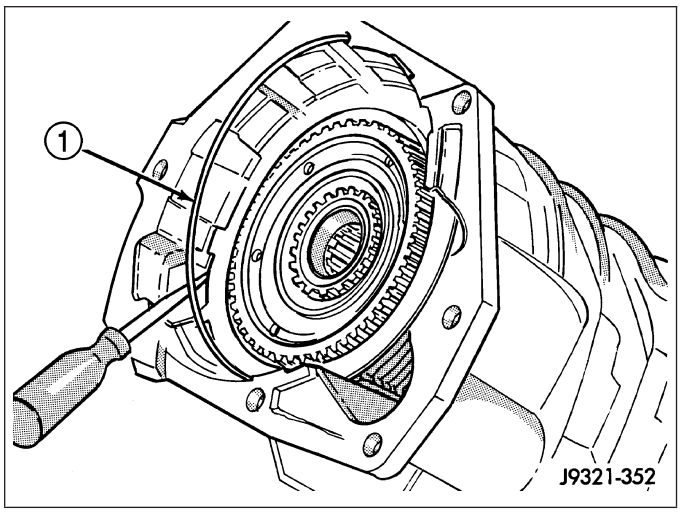

2. Remove overdrive clutch pack (1).

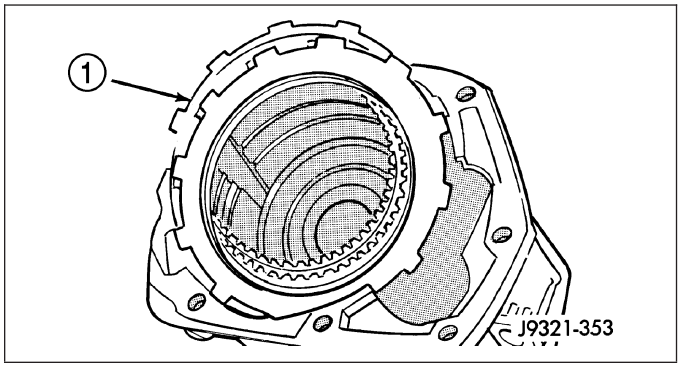

3. Note position of clutch pack components for assembly reference (1-4).

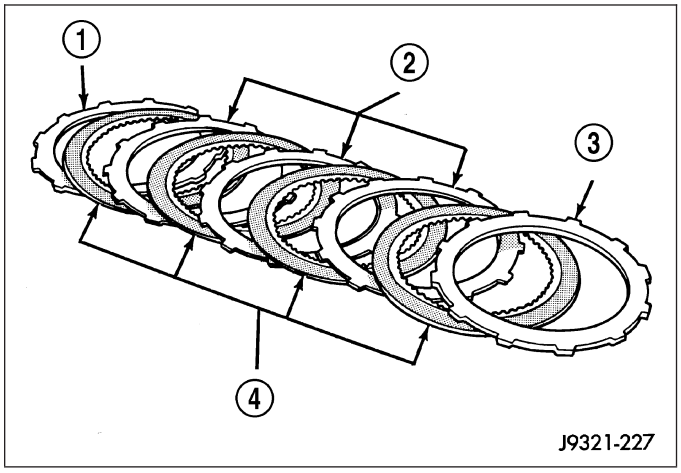

OVERDRIVE GEARTRAIN

1. Remove overdrive clutch wave spring (1), 5 disc clutch only.

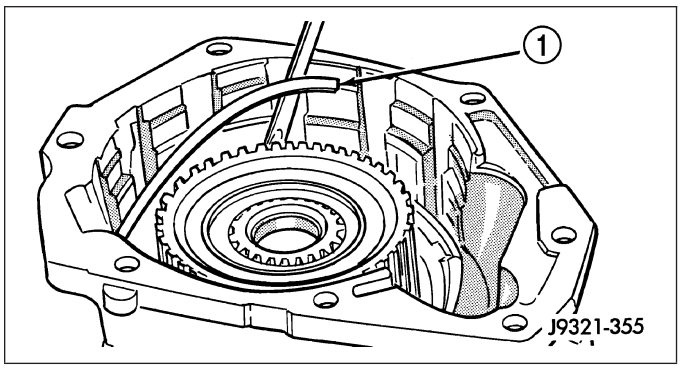

2. Remove overdrive clutch reaction snap-ring (1). Note that snap-ring is located in same groove as wave spring.

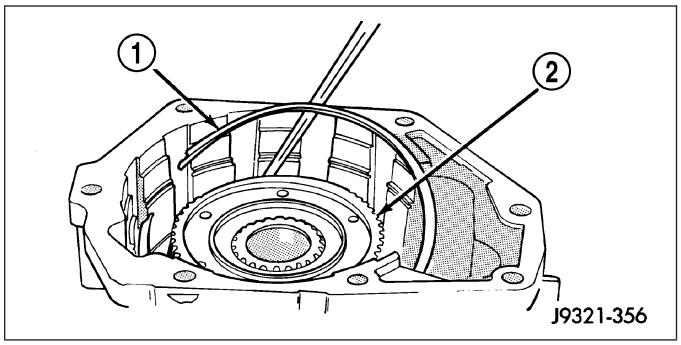

3. Remove Torx™ head screws (1) attach access cover and gasket to overdrive case.

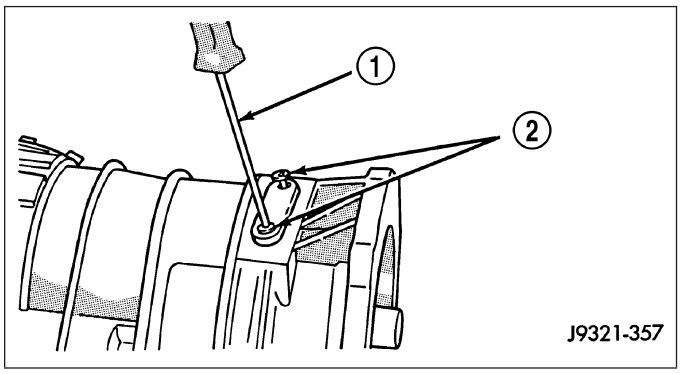

4. Remove access cover and gasket (1).

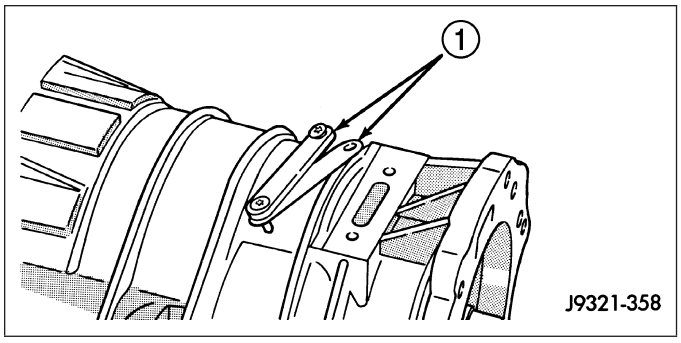

5. Expand output shaft bearing snap-ring (1) with expanding-type snap-ring pliers. Then push output shaft forward to release shaft bearing from locating ring.

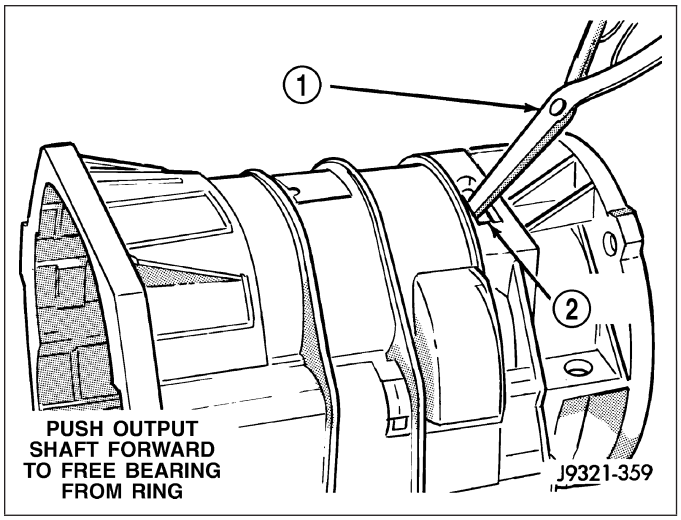

6. Lift gear case (2) up and off geartrain assembly (1).

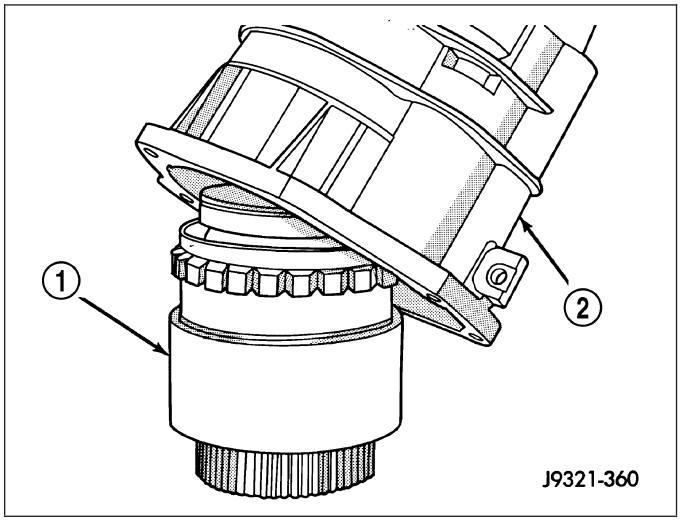

7. Remove snap-ring (3) that retains rear bearing (2) on output shaft (1).
8. Remove rear bearing from output shaft.

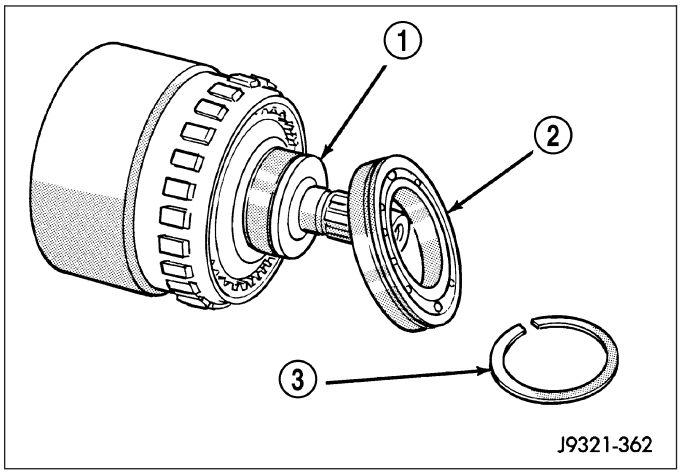

DIRECT CLUTCH, HUB AND SPRING

WARNING: THE NEXT STEP IN DISASSEMBLY INVOLVES COMPRESSING THE DIRECT CLUTCH SPRING. IT IS EXTREMELY IMPORTANT THAT PROPER EQUIPMENT BE USED TO COMPRESS THE SPRING AS SPRING FORCE IS APPROXIMATELY 830 POUNDS. USE SPRING COMPRESSOR TOOL 6227-1 AND A HYDRAULIC SHOP PRESS WITH A MINIMUM RAM TRAVEL OF 5-6 INCHES. THE PRESS MUST ALSO HAVE A BED THAT CAN BE ADJUSTED UP OR DOWN AS REQUIRED. RELEASE CLUTCH SPRING TENSION SLOWLY AND COMPLETELY TO AVOID PERSONAL INJURY.

1. Mount geartrain assembly in shop press (1, 5).
2. Position Compressor Tool 6227-1 (6) on clutch hub (3). Support output shaft flange with steel press plates (4) as shown and center assembly under press ram (1).

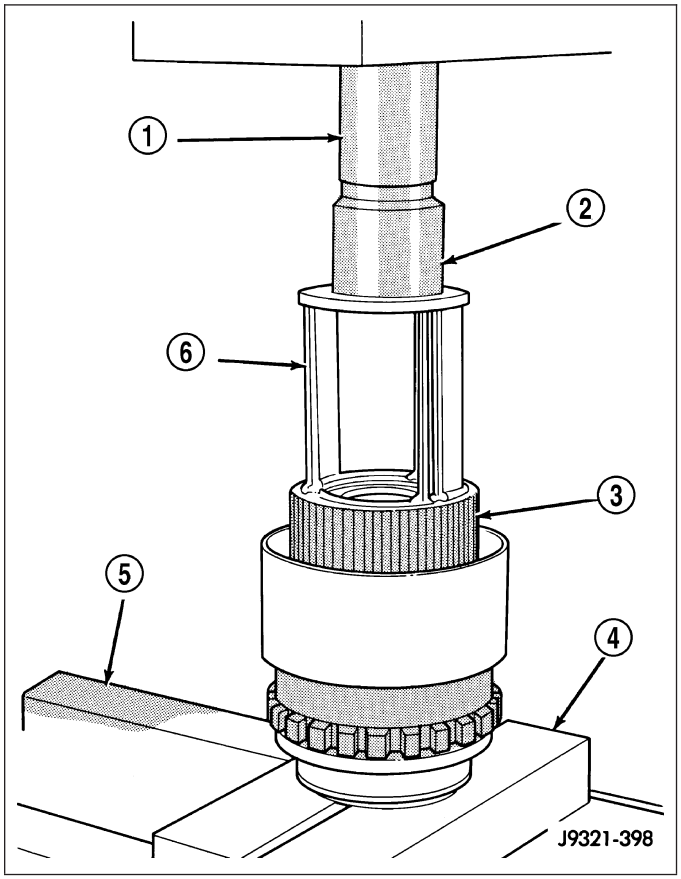

3. Apply press pressure slowly. Compress hub and spring far enough to expose clutch hub retaining ring (3) and relieve spring pressure on clutch pack snap-ring.
4. Remove direct clutch pack snap-ring (3).

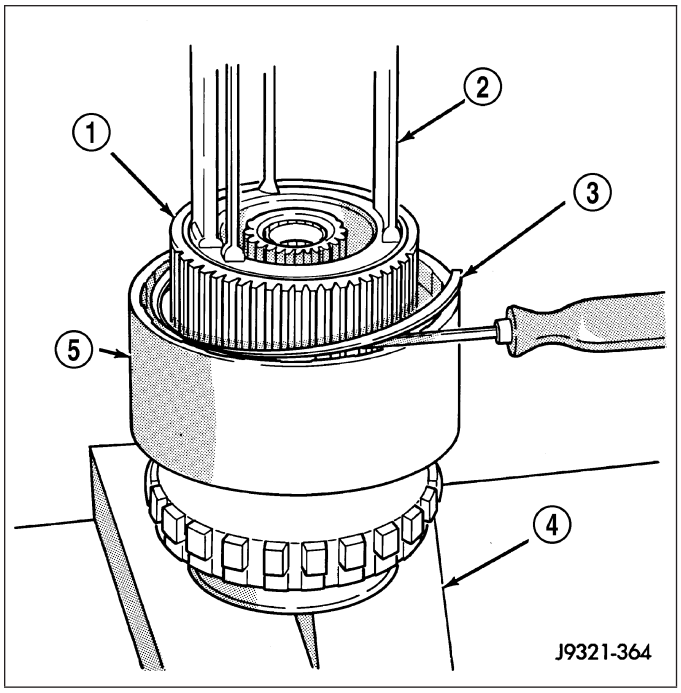

5. Remove direct clutch hub retaining ring (2).

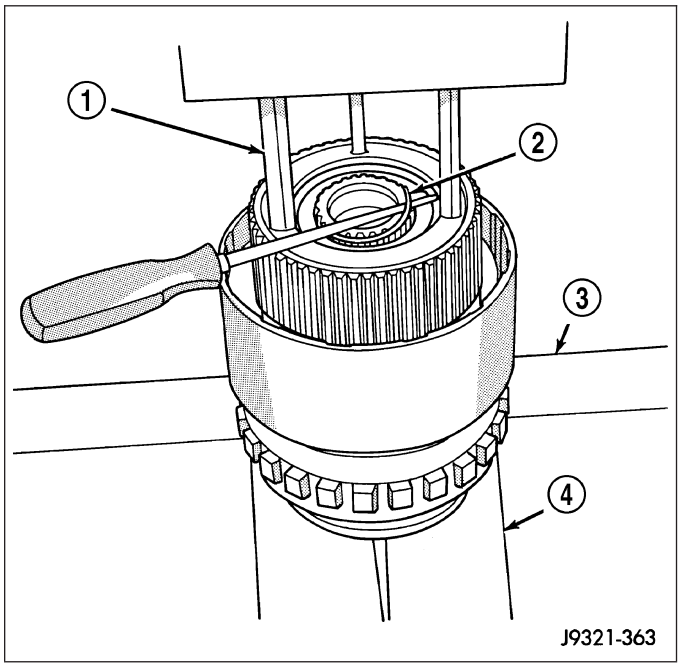

6. Release press load slowly and completely.
7. Remove Special Tool 6227-1 (1). Then remove clutch pack (3) from hub (2). Note the orientation of the clutch discs. The clutch pack consists of 10 double-sided friction discs and they must be installed in the same orientation as they were removed.

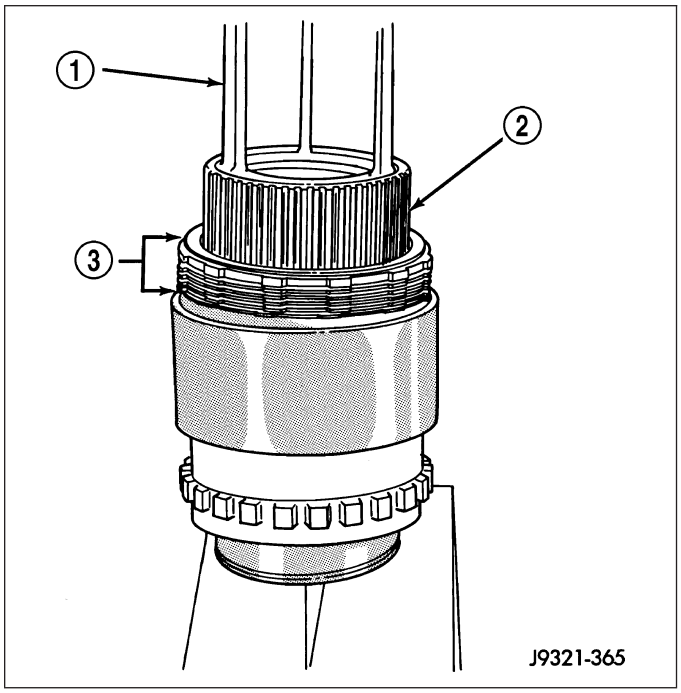

GEARTRAIN

1. Remove direct clutch hub (2) and spring (1).

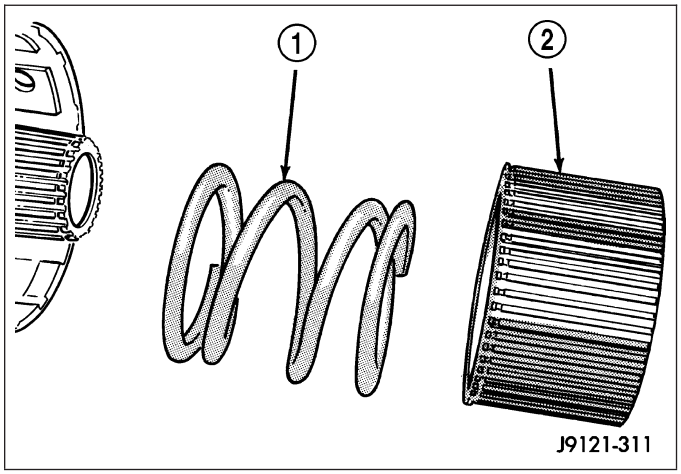

2. Remove sun gear (5) and spring plate (3). Then remove planetary thrust bearing (2) and planetary gear (1).

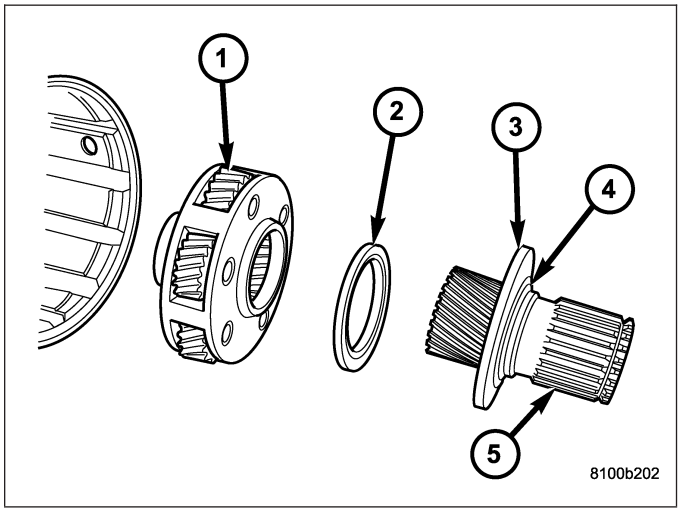

3. Remove overrunning clutch assembly (1) with expanding type snap-ring pliers. Insert pliers into clutch hub. Expand pliers to grip hub splines and remove clutch with counterclockwise, twisting motion.

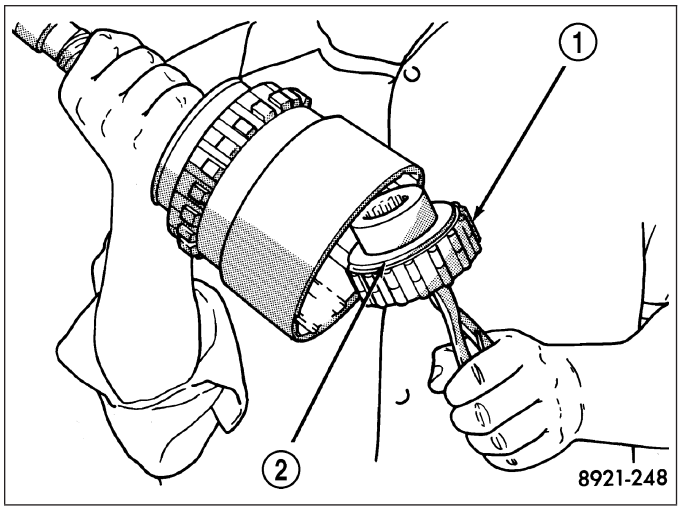

4. Remove thrust bearing from overrunning clutch hub.
5. Remove overrunning clutch from hub.
6. Mark position of annulus gear and direct clutch drum (1) for assembly alignment reference. Use small center punch (3) or scriber to make alignment marks.

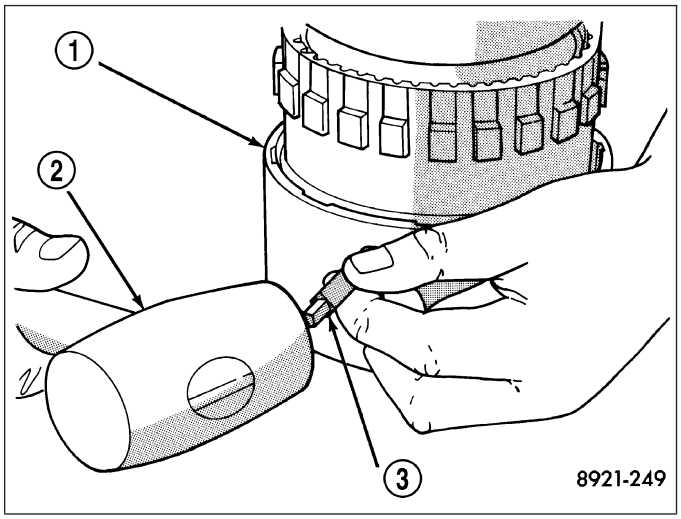

7. Remove direct clutch drum (2) rear retaining ring (1).

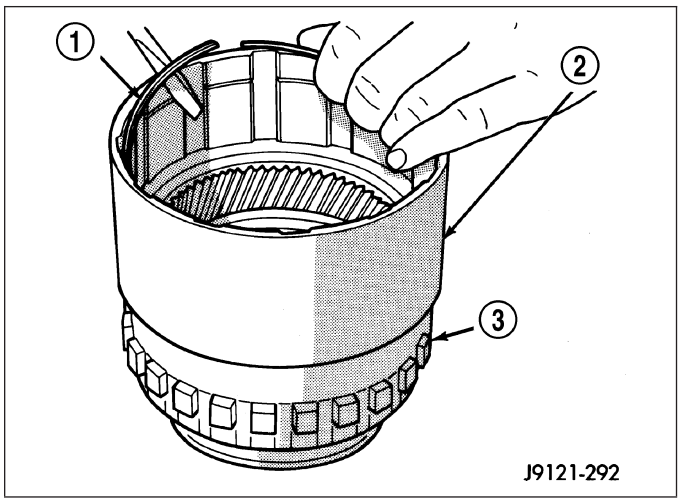

8. Remove direct clutch drum outer retaining ring (1).

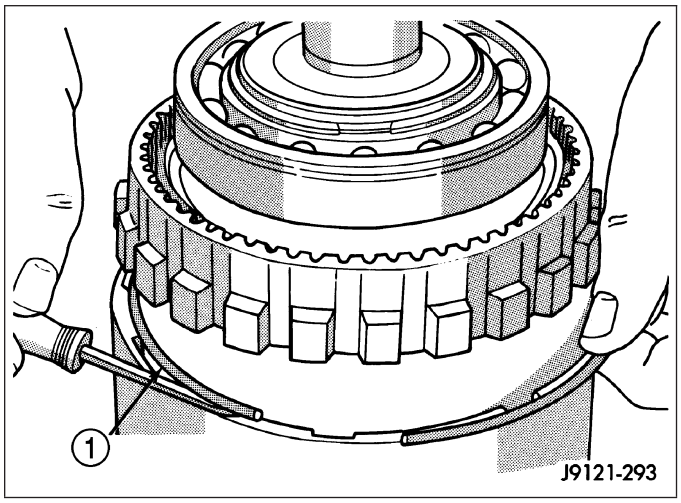

9. Mark annulus gear and output shaft (1) for assembly alignment reference. Use punch (3) or scriber to mark gear and shaft.

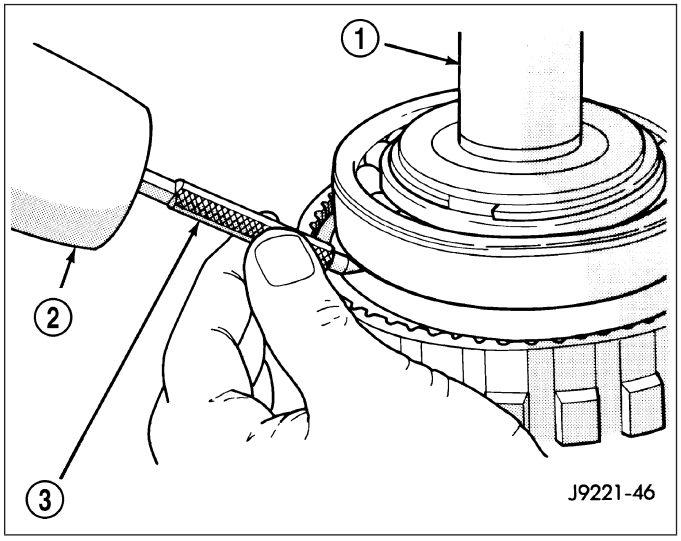

10. Remove snap-ring (3) that secures annulus gear (2) on output shaft (1). Use two screwdrivers to unseat and work snap-ring out of groove as shown.

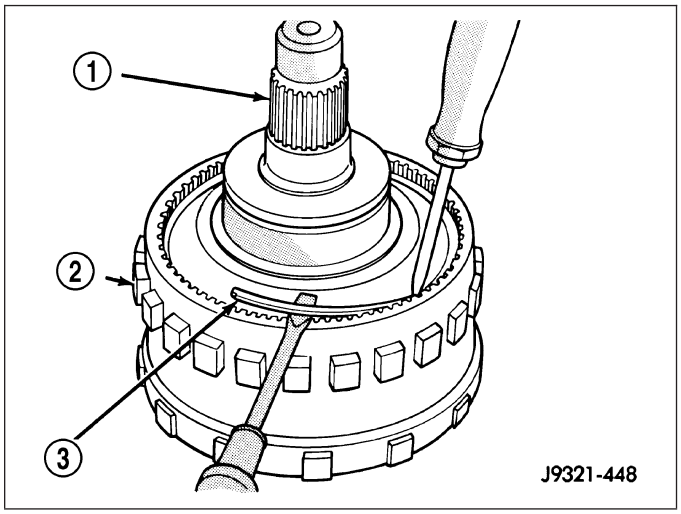

11. Remove annulus gear (2) from output shaft (1). Use rawhide or plastic mallet to tap gear off shaft.

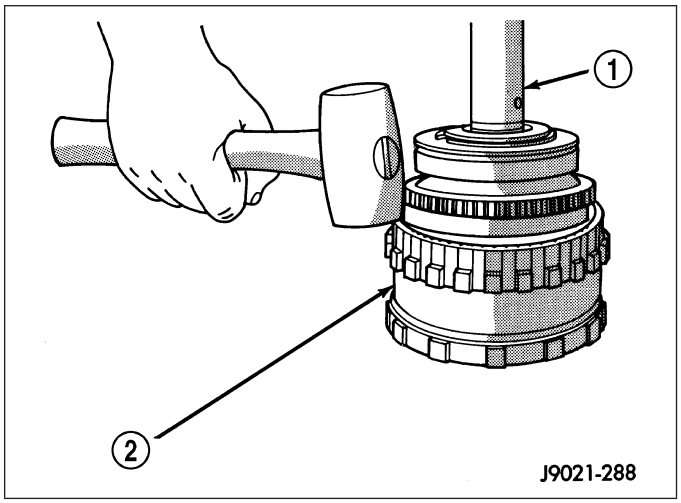

GEAR CASE AND PARK LOCK

1. Remove locating ring from gear case.
2. Remove park pawl shaft retaining bolt and remove shaft, pawl and spring.
3. Remove reaction plug snap-ring and remove reaction plug.
4. Remove output shaft seal.

CLEANING

Clean the geartrain and case components with solvent. Dry all parts except the bearings with compressed air. Allow bearings to air dry.

Do not use shop towels for wiping parts dry unless the towels are made from a lint-free material. A sufficient quantity of lint (from shop towels, cloths, rags, etc.) could plug the transmission filter and fluid passages.

Discard the old case gasket and seals. Do not attempt to salvage these parts. They are not reusable. Replace any of the overdrive unit snap-rings if distorted or damaged.

Minor nicks or scratches on components can be smoothed with crocus cloth. However, do not attempt to reduce severe scoring on any components with abrasive materials. Replace severely scored components; do not try to salvage them.

INSPECTION

Check condition of the park lock components and the overdrive case.

Check the bushings in the overdrive case. Replace the bushings if severely scored or worn. Also replace the case seal if loose, distorted, or damaged.

Examine the overdrive and direct clutch discs and plates. Replace the discs if the facing is worn, severely scored, or burned and flaking off. Replace the clutch plates if worn, heavily scored, or cracked. Check the lugs on the clutch plates for wear. The plates should slide freely in the drum. Replace the plates or drum if binding occurs.

Check condition of the annulus gear, direct clutch hub, clutch drum and clutch spring. Replace the gear, hub and drum if worn or damaged. Replace the spring if collapsed, distorted, or cracked.

Be sure the splines and lugs on the gear, drum and hub are in good condition. The clutch plates and discs should slide freely in these components.

Inspect the thrust bearings and spring plate. Replace the plate if worn or scored. Replace the bearings if rough, noisy, brinnelled, or worn.

Inspect the planetary gear assembly and the sun gear and bushings. If either the sun gear or the bushings are damaged, replace the gear and bushings as an assembly. The gear and bushings are not serviced separately.

The planetary carrier and pinions must be in good condition. Also be sure the pinion pins are secure and in good condition. Replace the carrier if worn or damaged.

Inspect the overrunning clutch and race. The race surface should be smooth and free of scores. Replace the overrunning clutch assembly or the race if either assembly is worn or damaged in any way.

Replace the shaft pilot bushing and inner bushing if damaged. Replace either shaft bearing if rough or noisy. Replace the bearing snap-rings if distorted or cracked.

Check the machined surfaces on the output shaft. These surfaces should clean and smooth. Very minor nicks or scratches can be smoothed with crocus cloth. Replace the shaft if worn, scored or damaged in any way.

Inspect the output shaft bushings. The small bushing is the intermediate shaft pilot bushing. The large bushing is the overrunning clutch hub bushing. Replace either bushing if scored, pitted, cracked, or worn.

ASSEMBLY

GEARTRAIN AND DIRECT CLUTCH

1. Soak direct clutch and overdrive clutch discs in Mopar® ATF +4, Automatic Transmission fluid. Allow discs to soak for 10-20 minutes.
2. Install annulus gear (3) on output shaft, if removed. Then install annulus gear retaining snap-ring (1).

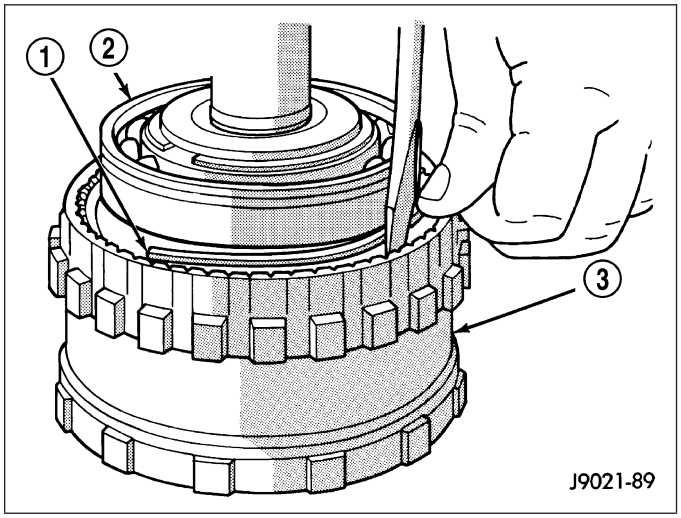

3. Align and install clutch drum (3) on annulus gear (1). Be sure drum is engaged in annulus gear lugs.
4. Install clutch drum outer retaining ring (2).

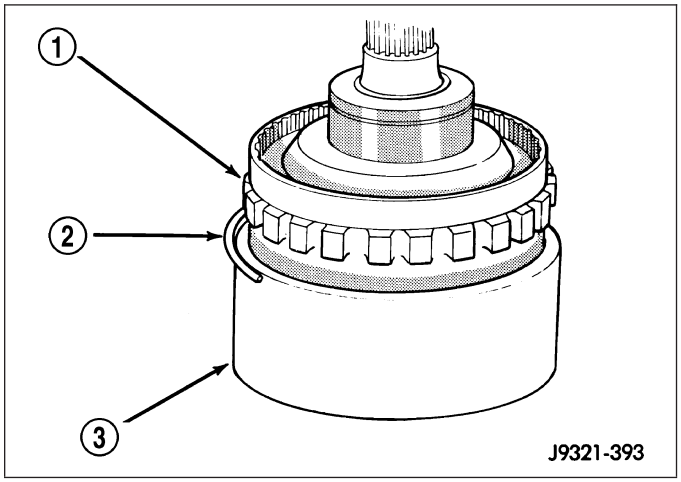

5. Slide clutch drum (3) forward and install inner retaining ring (2).

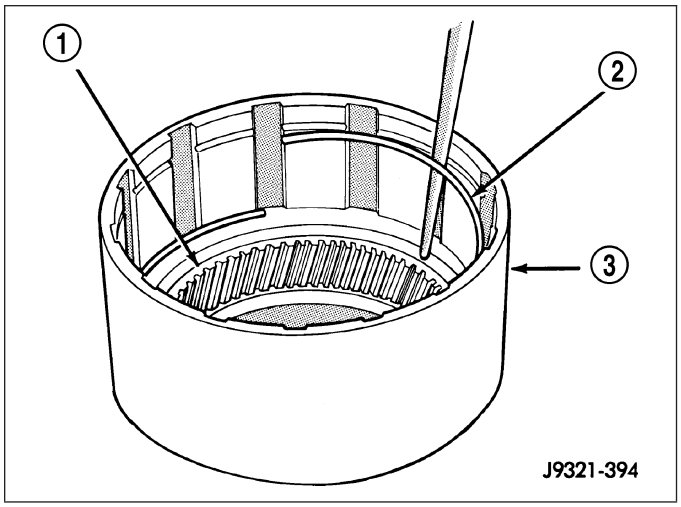

6. Install rear bearing (1) and snap-ring (2) on output shaft. Be sure locating ring groove in bearing is toward rear.

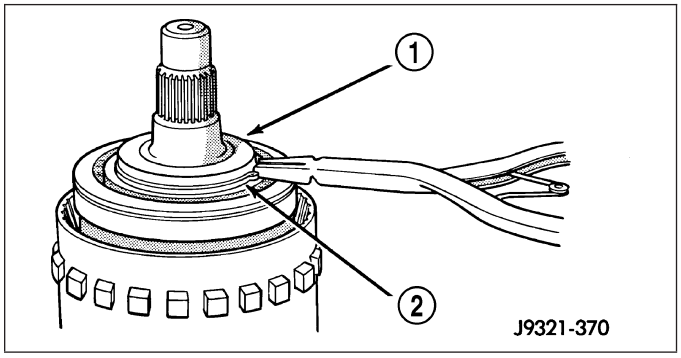

7. Install overrunning clutch (2) on hub (1). Note that clutch only fits one way. Shoulder on clutch should seat in small recess at edge of hub.
8. Install thrust bearing on overrunning clutch hub. Use generous amount of petroleum jelly to hold bearing in place for installation. Bearing fits one way only. Be sure bearing is seated squarely against hub. Reinstall bearing if it does not seat squarely.

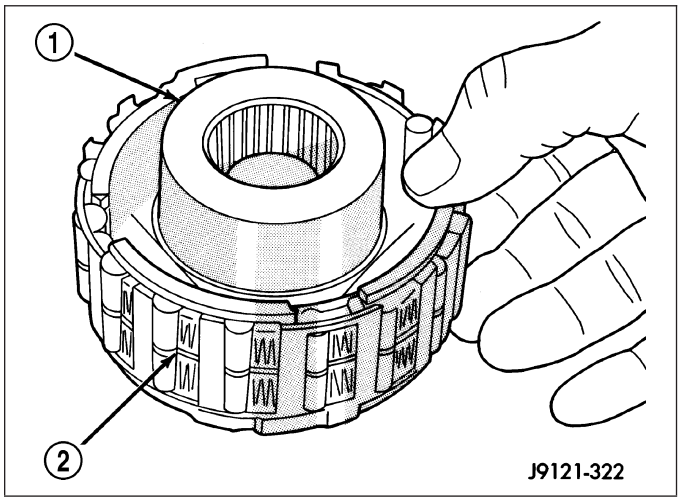

9. Install overrunning clutch (2) in output shaft (6). Insert snap-ring pliers in hub splines. Expand pliers to grip hub. Then install assembly with counter-clockwise, twisting motion.

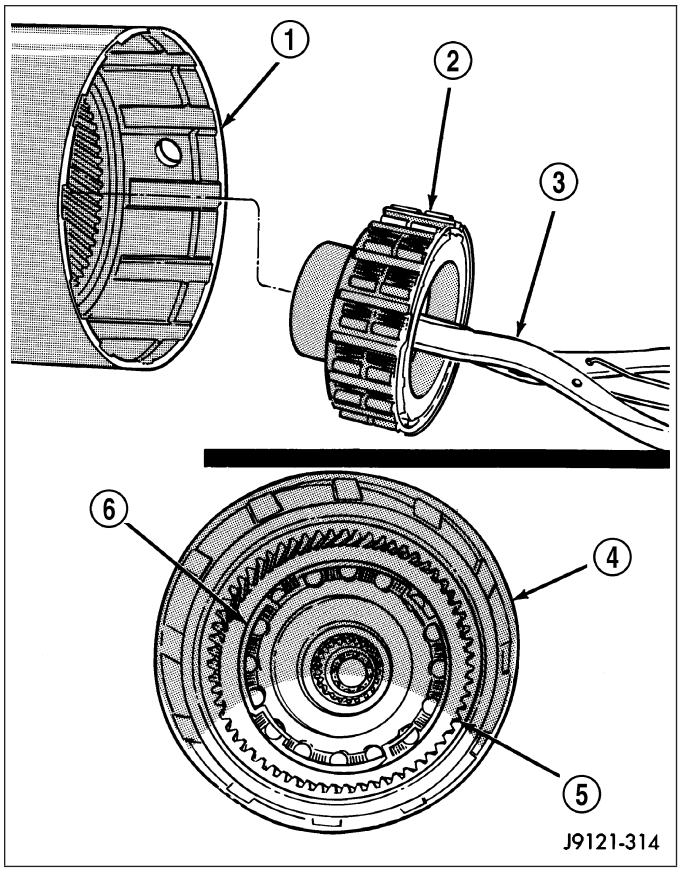

10. Install planetary gear (1) in annulus gear (2). Be sure planetary pinions are fully seated in annulus gear before proceeding.

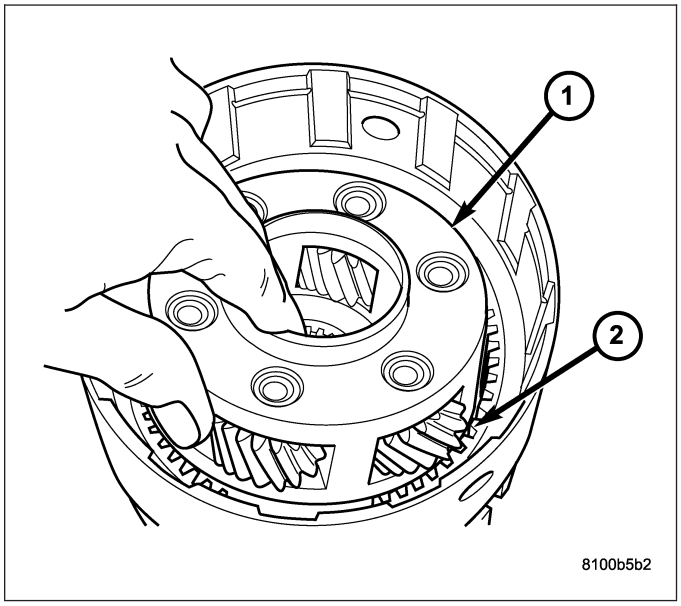

11. Coat planetary thrust bearing (2) and bearing contact surface of spring plate with generous amount of petroleum jelly. This will help hold bearing in place during installation.
12. Install planetary thrust bearing (2) on sun gear (3). Slide bearing onto gear and seat it against spring plate as shown. Bearing fits one way only. If it does not seat squarely against spring plate, remove and reposition bearing.

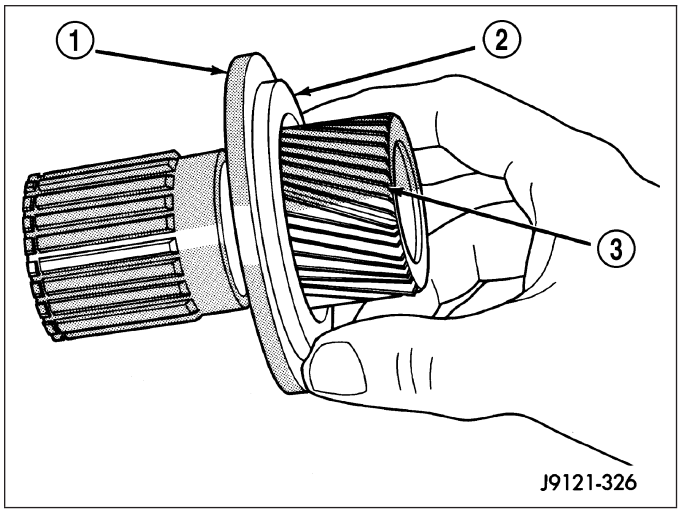

13. Install assembled sun gear, spring plate, and thrust bearing (1). Be sure sun gear and thrust bearing are fully seated before proceeding.

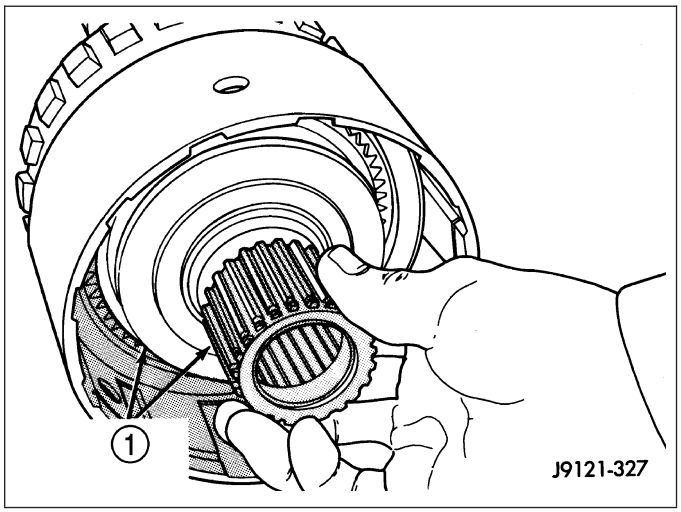

14. Mount assembled output shaft, annulus gear, and clutch drum in shop press (3). Direct clutch spring, hub and clutch pack are easier to install with assembly mounted in press.
15. Align splines in hubs of planetary gear and overrunning clutch with Alignment tool 6227-2 (1). Insert tool through sun gear and into splines of both hubs. Be sure alignment tool is fully seated before proceeding.

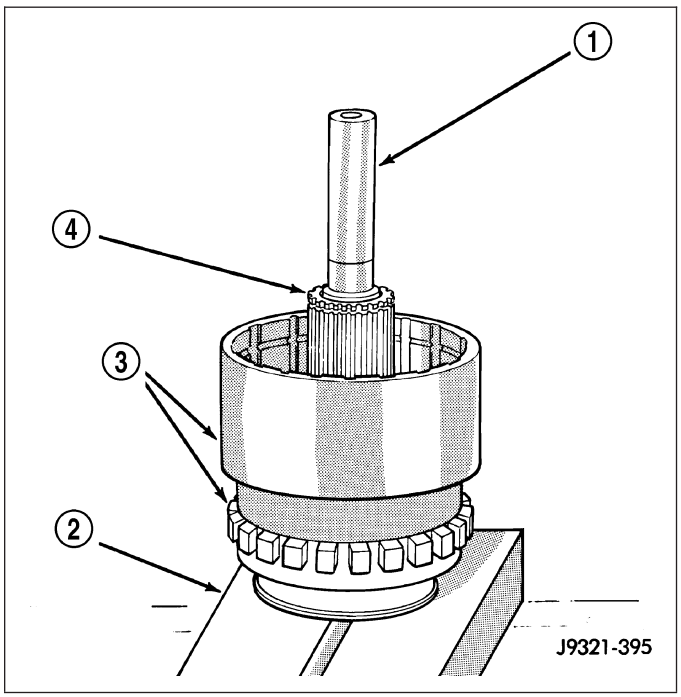

16. Install direct clutch spring (2). Be sure spring is properly seated on spring plate (4).

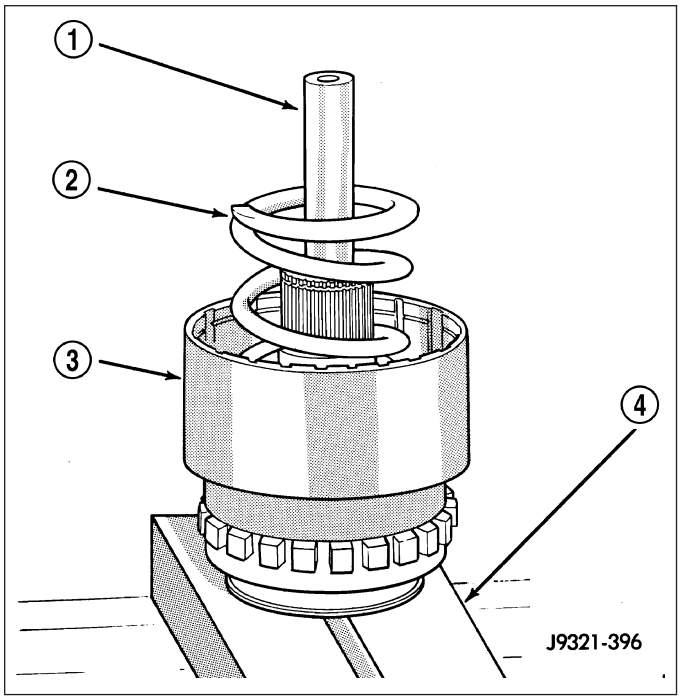

NOTE: The direct clutch in a 48RE transmission uses 10 double-sided clutch discs.

17. Assemble and install direct clutch pack on hub as follows:
    a. Install direct clutch reaction plate (2) on clutch hub first. Note that one side of reaction plate is counterbored (1). Be sure this side faces rearward. Splines at rear of hub (3) are raised slightly. Counterbore in plate fits over raised splines. Plate should be flush with this end of hub (3).
    b. Install first friction disc with internal splines, followed by a steel seperator disc with external lugs. Continue alternating internal and external discs until all discs have been installed.

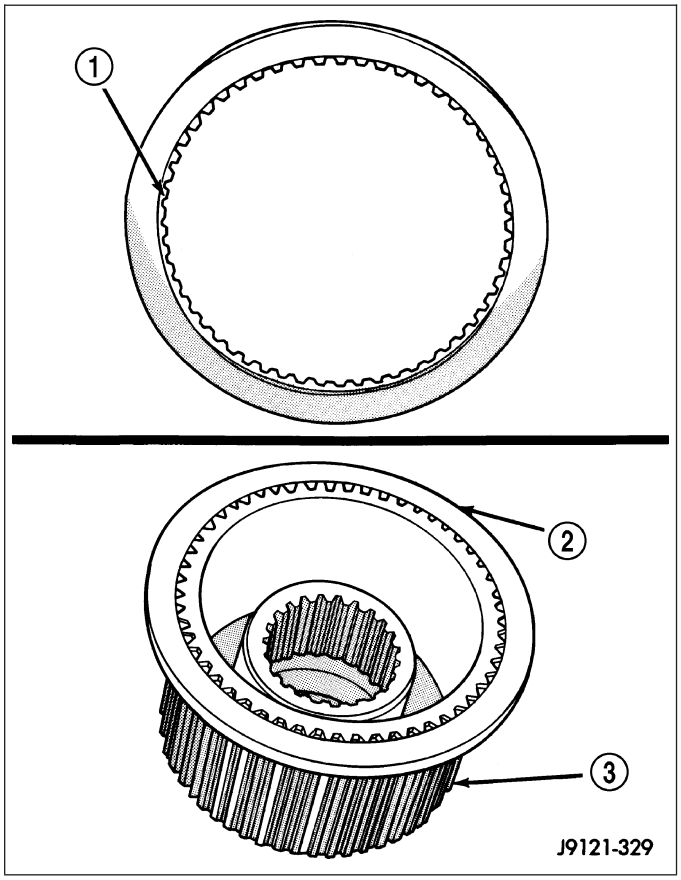

18. Install pressure plate (1). This is last clutch pack (2)item to be installed. Be sure plate is installed with shoulder side facing upward (3).

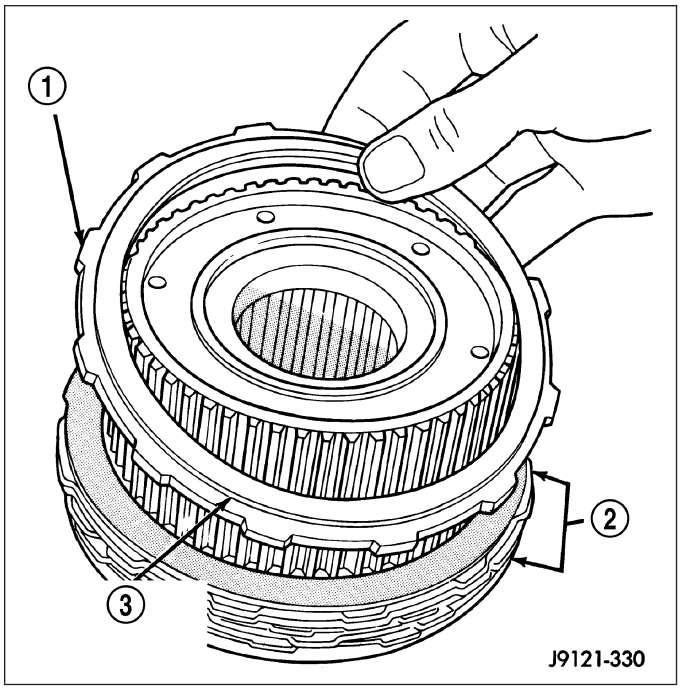

19. Install clutch hub (1) and clutch pack (2) on direct clutch spring. Be sure hub is started on sun gear splines before proceeding.

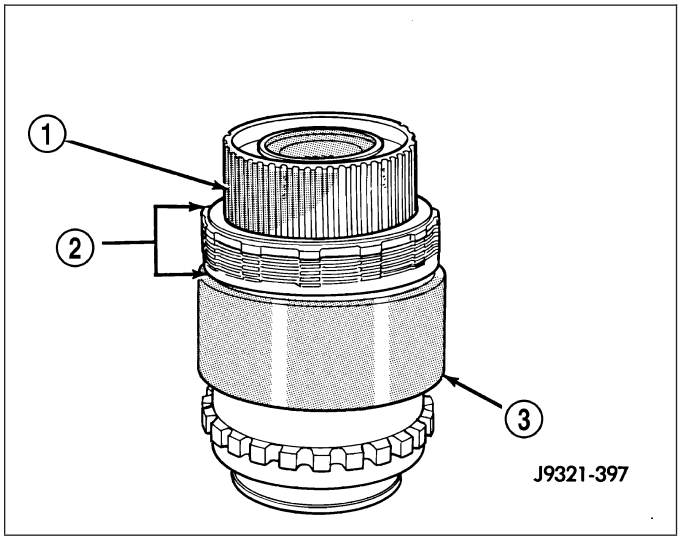

WARNING: THE NEXT STEP IN GEARTRAIN ASSEMBLY INVOLVES COMPRESSING THE DIRECT CLUTCH HUB AND SPRING. IT IS EXTREMELY IMPORTANT THAT PROPER EQUIPMENT BE USED TO COMPRESS THE SPRING AS SPRING FORCE IS APPROXIMATELY 830 POUNDS. USE COMPRESSOR TOOL C-6227-1 AND A HYDRAULIC-TYPE SHOP PRESS WITH A MINIMUM RAM TRAVEL OF 6 INCHES. THE PRESS MUST ALSO HAVE A BED THAT CAN BE ADJUSTED UP OR DOWN AS REQUIRED. RELEASE CLUTCH SPRING TENSION SLOWLY AND COMPLETELY TO AVOID PERSONAL INJURY.

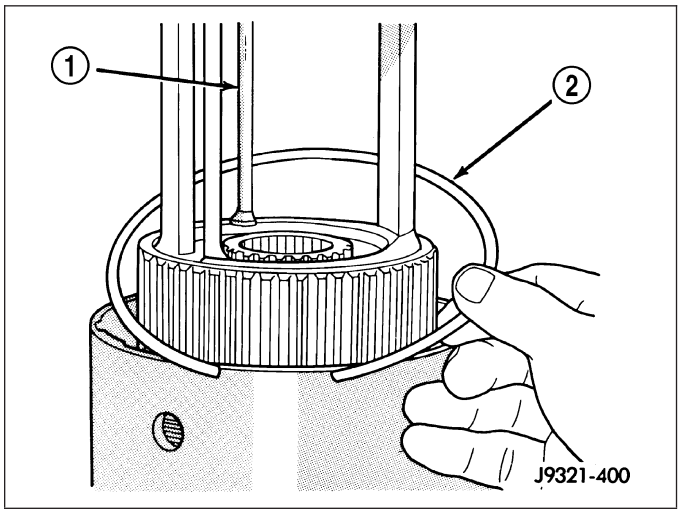

20. Position Compressor Tool 6227-1 (1) on clutch hub.
21. Compress clutch hub and spring just enough to place tension on hub and hold it in place.
22. Slowly compress clutch hub and spring. Compress spring and hub only enough to expose ring grooves for clutch pack snap-ring and clutch hub retaining ring.
23. Realign clutch pack on hub and seat clutch discs and plates in clutch drum.
24. Install direct clutch pack snap-ring (2). **Be very sure snap-ring is fully seated in clutch drum ring groove.**
25. Install clutch hub retaining ring (2). Be very sure retaining ring is fully seated in sun gear ring groove.
26. Slowly release press ram, remove compressor tools and remove geartrain assembly.

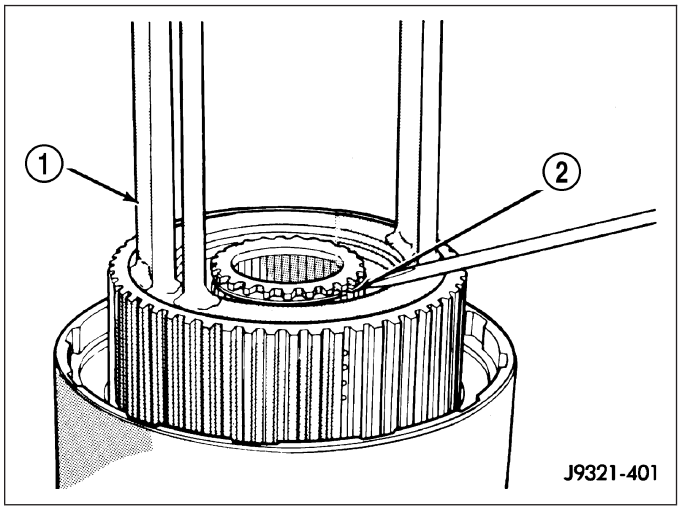

GEAR CASE

1. Position park pawl and spring in case and install park pawl shaft. Verify that end of spring with 90° bend is hooked to pawl and straight end of spring is seated against case.
2. Install pawl shaft retaining bolt. Tighten bolt to 27 N·m (20 ft. lbs.) torque.
3. Install park lock reaction plug (3). Note that plug has locating pin (2) at rear. Be sure pin is seated in hole in case before installing snap-ring (1).

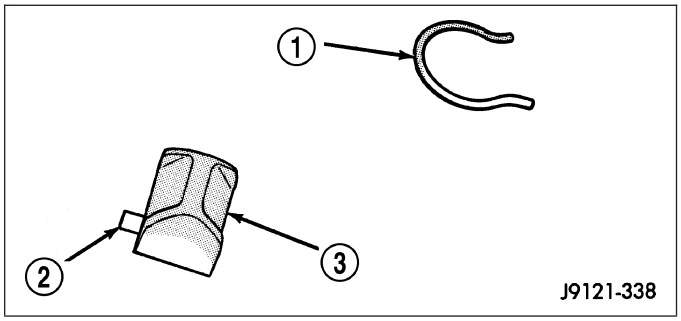

4. Install reaction plug snap-ring (1). Compress snap-ring only enough for installation; do not distort it.

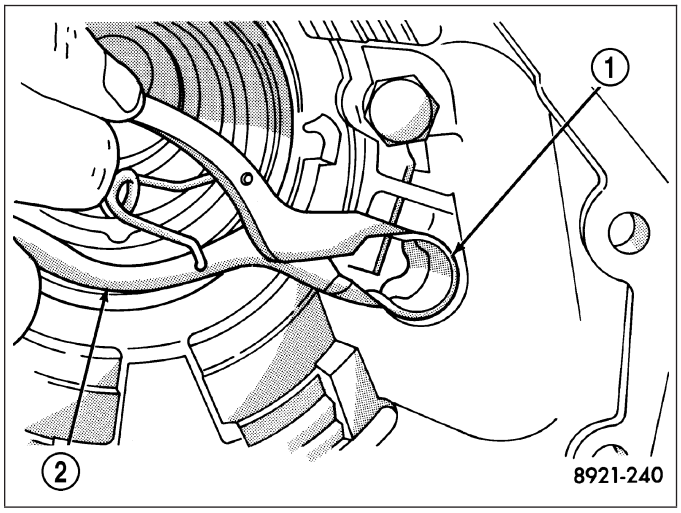

5. Verify that tab ends of rear bearing locating ring (2) extend into access hole (1) in gear case.

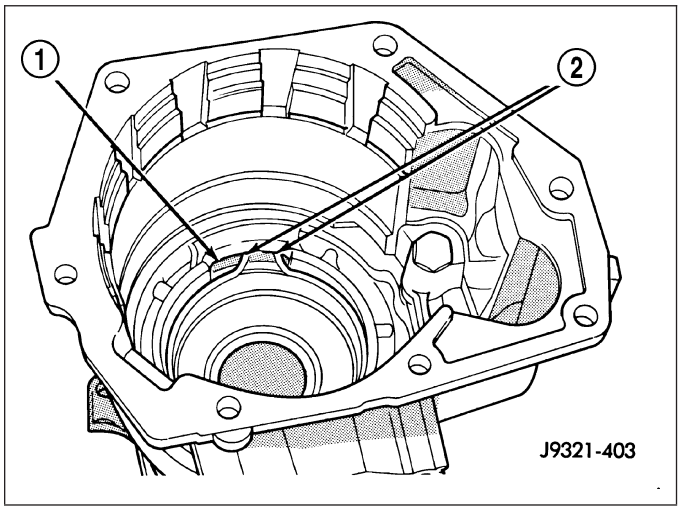

6. Support geartrain on Tool 6227-1. Be sure tool is securely seated in clutch hub.
7. Install overdrive gear case (2) on geartrain (1).

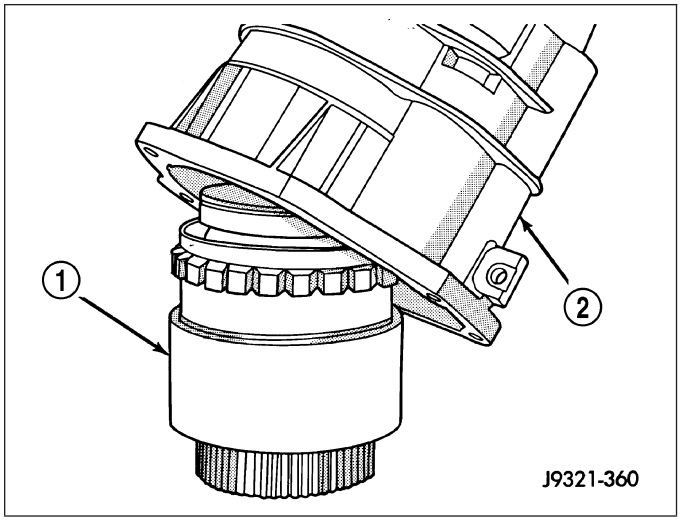

8. Expand front bearing locating ring with snap-ring pliers (1). Then slide case downward until locating ring locks in bearing groove and release snap-ring.

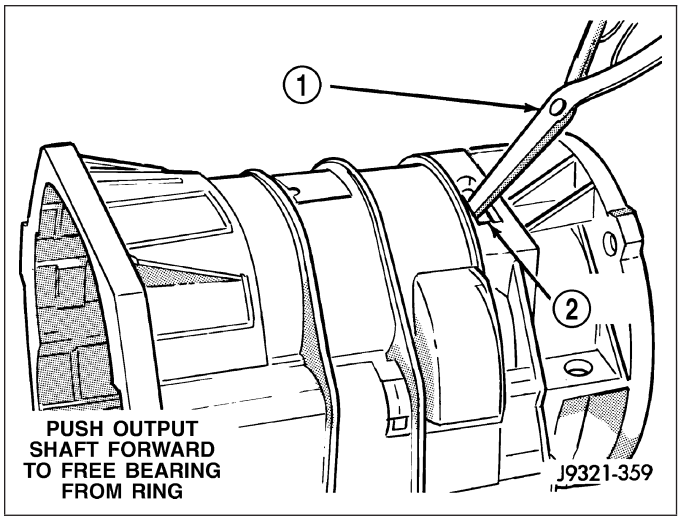

9. Install locating ring access cover, gasket and screws (2) in overdrive unit case.

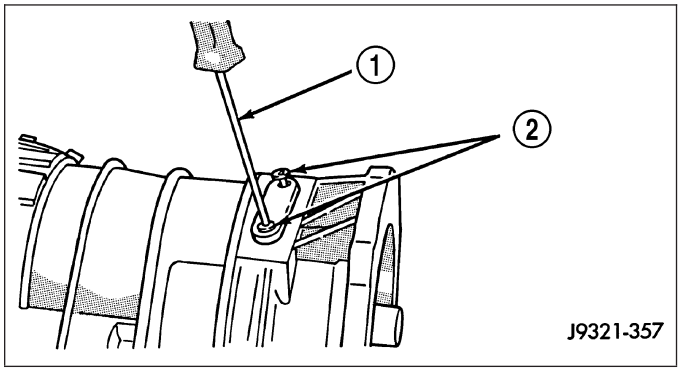

OVERDRIVE CLUTCH

NOTE: The overdrive clutch in a 48RE transmission uses 5 or 6 clutch discs depending on the application.

1. Install overdrive clutch reaction ring (1) first. Reaction ring is flat with notched ends.

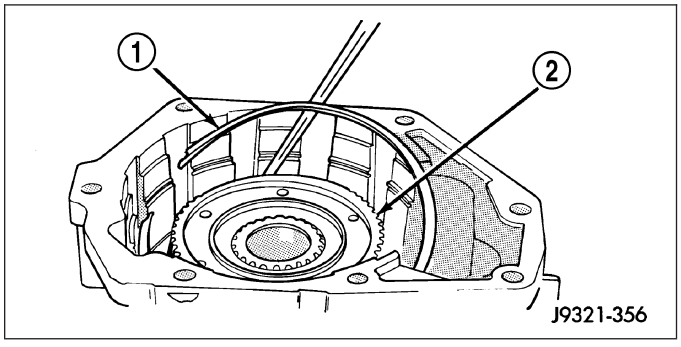

2. For 5 disc overdrive clutch versions, install wave spring (1) on top of reaction ring. Reaction ring and wave ring both fit in same ring groove. Use screwdriver to seat each ring securely in groove. Also ensure that the ends of the two rings are offset from each other.
3. Assemble overdrive clutch pack.
4. Install overdrive clutch reaction plate first.

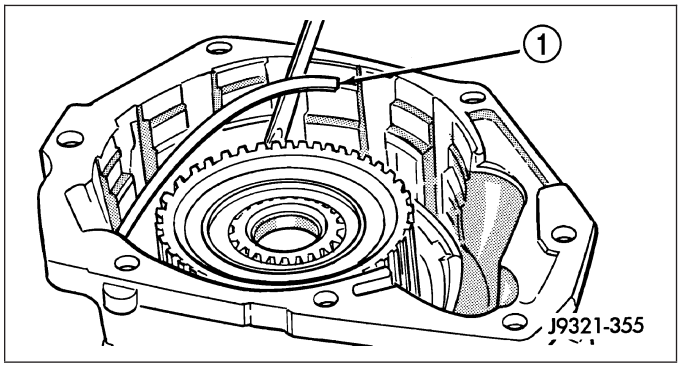

5. Install first clutch disc followed by first clutch plate. Then install remaining clutch discs and plates in same order.
6. Install clutch pack pressure plate.

7. Install clutch pack wire-type retaining ring (1).

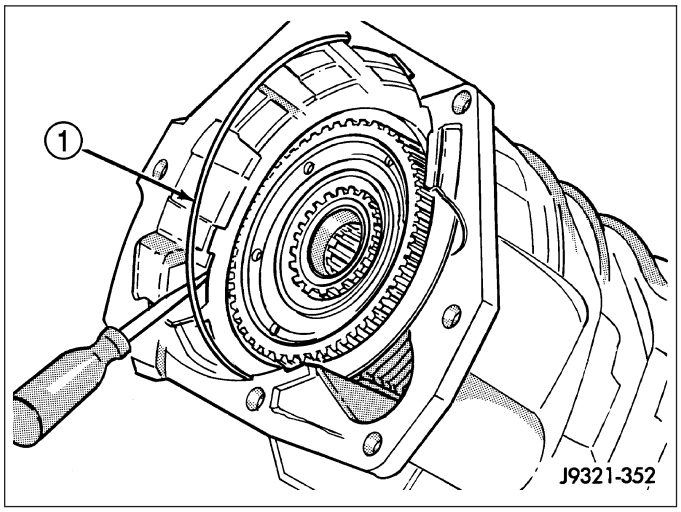

INTERMEDIATE SHAFT SPACER SELECTION

1. Place overdrive unit in vertical position. Mount it on blocks, or in workbench with appropriate size mounting hole cut into it. Be sure unit is facing upward for access to direct clutch hub. Also be sure output shaft is not loaded and internal components are moved rearward for accurate measurement.
2. Determine correct thickness intermediate shaft spacer as follows:
   a. Insert Special Tool 6312 (1) through sun gear, planetary gear and into pilot bushing in output shaft. Be sure tool bottoms against planetary shoulder.
   b. Position Gauge Tool 6311 (2) across face of overdrive case. Then position Dial Caliper over gauge tool.

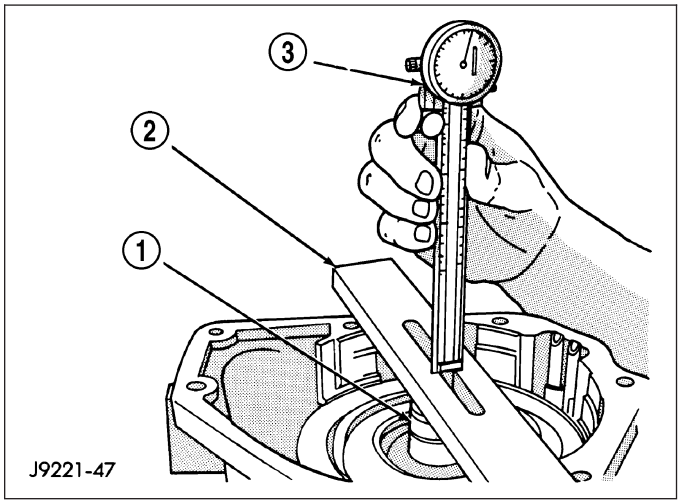

   c. Extend sliding scale of dial caliper downward through gauge tool slot until scale contacts end of Gauge Alignment Tool 6312 (1). Lock scale in place. Remove dial caliper tool and note distance measured.

3. Select proper thickness end play spacer from spacer chart based on distance measured.
4. Remove Gauge Alignment Tool 6312.

End Play Measurement (Inches)	Spacer Thickness (Inches)
.7336 - .7505	.158 - .159
.7506 - .7675	.175 - .176
.7676 - .7855	.193 - .194
.7856 - .8011	.211 - .212

J9121-341

OD THRUST PLATE SELECTION

1. Place overdrive unit in vertical position. Mount it on blocks, or in workbench with appropriate size mounting hole cut into it. Be sure unit is facing upward for access to direct clutch hub. Also be sure output shaft is not loaded and internal components are moved rearward for accurate measurement.
2. Determine correct thickness overdrive piston thrust plate as follows:
   a. Position Gauge Tool 6311 (1) across face of overdrive case. Then position Dial Caliper over gauge tool.
   b. Measure distance to clutch hub thrust bearing seat (2) at four points 90° apart. Then average measurements by adding them and dividing by 4.

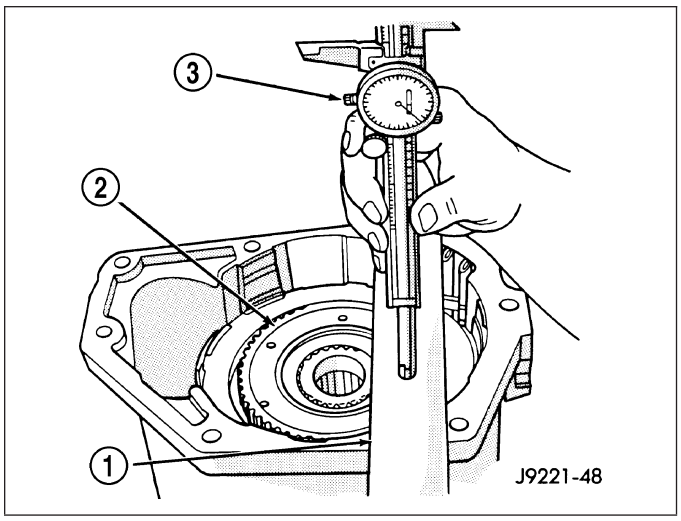

3. Select and install required thrust plate from information in thrust plate chart.
4. Leave Alignment Tool 6227-2 in place. Tool will keep planetary and clutch hub splines in alignment until overdrive unit is ready for installation on transmission.
5. Transmission speed sensor can be installed at this time if desired. However, it is recommended that sensor not be installed until after overdrive unit is secured to transmission.

End Play Measurement (Inches)	Spacer Thickness (Inches)
1.7500 - 1.7649	.108 - .110
1.7650 - 1.7799	.123 - .125
1.7800 - 1.7949	.138 - .140
1.7950 - 1.8099	.153 - .155
1.8100 - 1.8249	.168 - .170
1.8250 - 1.8399	.183 - .185
1.8400 - 1.8549	.198 - .200
1.8550 - 1.8699	.213 - .215
1.8700 - 1.8849	.228 - .230
1.8850 - 1.8999	.243 - .245

J9121-342

OVERDRIVE PISTON

1. Install new seals on overdrive piston.
2. Stand transmission case upright on bellhousing.
3. Position Guide Ring 8114-1 on outer edge of overdrive piston retainer.
4. Position Seal Guide 8114-3 on inner edge of overdrive piston retainer.
5. Install overdrive piston in overdrive piston retainer by:
   a. Aligning locating lugs on overdrive piston to the two mating holes in retainer.
   b. Lubricate overdrive piston seals with Mopar® ATF+4.
   c. Install piston over Seal Guide 8114-3 and inside Guide Ring 8114-1.
   d. Push overdrive piston into position in retainer.
   e. Verify that the locating lugs entered the lug bores in the retainer.
6. Install intermediate shaft spacer on intermediate shaft.
7. Install overdrive piston thrust plate on overdrive piston.
8. Install overdrive piston thrust bearing on overdrive piston.
9. Install transmission speed sensor and o-ring seal in overdrive case.

INSTALLATION

1. Be sure overdrive unit Alignment Tool 6227-2 is fully seated before moving unit. If tool is not seated and gear splines rotate out of alignment, overdrive unit will have to be disassembled in order to realign splines.
2. If overdrive piston retainer was not removed during service and original case gasket is no longer reusable, prepare new gasket by trimming it.
3. Cut out old case gasket (1) around piston retainer with razor knife (2).
4. Use old gasket as template and trim new gasket to fit.
5. Position new gasket over piston retainer and on transmission case. Use petroleum jelly to hold gasket in place if necessary. Do not use any type of sealer to secure gasket. Use petroleum jelly only.

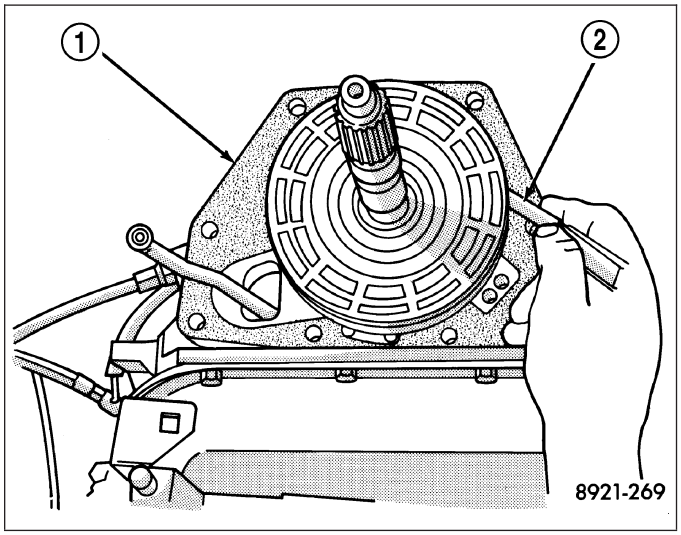

6. Install selective spacer (1) on intermediate shaft (3), if removed. Spacer goes in groove just rearward of shaft rear splines.

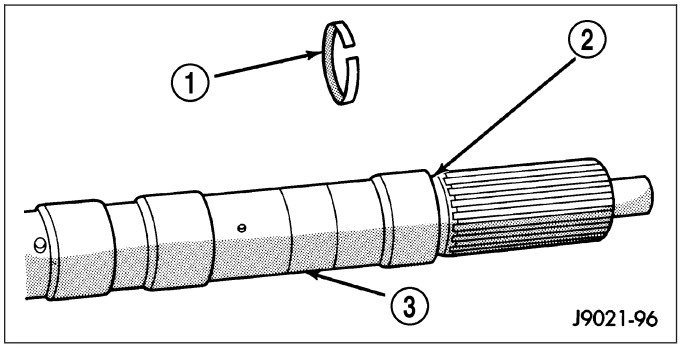

7. Install thrust bearing in overdrive unit sliding hub. Use petroleum jelly to hold bearing in position.

CAUTION: Be sure the shoulder on the inside diameter of the bearing is facing forward.

8. Verify that splines in overdrive planetary gear and overrunning clutch hub are aligned with Alignment Tool 6227-2. Overdrive unit cannot be installed if splines are not aligned. If splines have rotated out of alignment, unit will have to be disassembled to realign splines.
9. Carefully slide Alignment Tool 6227-2 out of overdrive planetary gear and overrunning clutch splines.
10. Raise overdrive unit and carefully slide it straight onto intermediate shaft. Insert park rod into park lock reaction plug at same time. Avoid tilting overdrive during installation as this could cause planetary gear and overrunning clutch splines to rotate out of alignment. If this occurs, it will be necessary to remove and disassemble overdrive unit to realign splines.
11. Work overdrive unit forward on intermediate shaft until seated against transmission case.
12. Install bolts attaching overdrive unit to transmission unit. Tighten bolts in diagonal pattern to 34 N·m (25 ft-lbs).
13. Connect the transmission speed sensor and overdrive wiring connectors.
14. Install the transfer case, if equipped. (Refer to 21 - TRANSMISSION/TRANSAXLE/TRANSFER CASE - INSTALLATION)
15. Align and install rear propeller shaft, if necessary. (Refer to 3 - DIFFERENTIAL & DRIVELINE/PROPELLER SHAFT/PROPELLER SHAFT - INSTALLATION)

RETAINER-OVERRUNNING CLUTCH CAM/OVERDRIVE PISTON

DESCRIPTION

The overrunning clutch consists of an inner race (5), an outer race (or cam) (1), rollers (2) and springs (3), and the spring retainer (4). The number of rollers and springs depends on what transmission and which overrunning clutch is being dealt with.

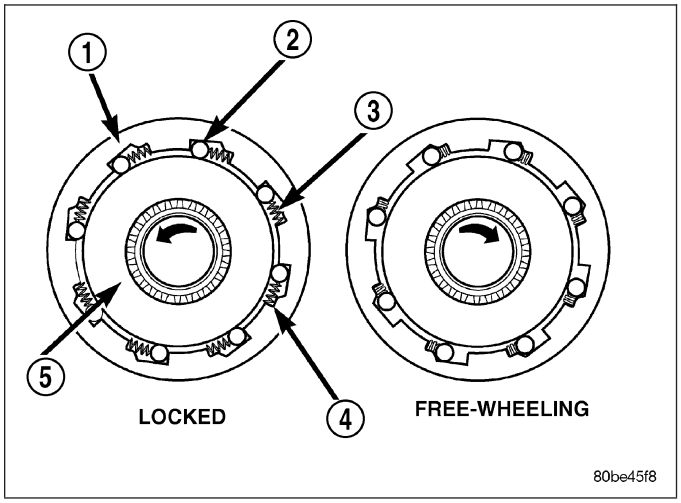

OPERATION

As the inner race is rotated in a clockwise direction (as viewed from the front of the transmission), the race causes the rollers to roll toward the springs, causing them to compress against their retainer. The compression of the springs increases the clearance between the rollers and cam. This increased clearance between the rollers and cam results in a freewheeling condition. When the inner race attempts to rotate counterclockwise, the action causes the rollers to roll in the same direction as the race, aided by the pushing of the springs. As the rollers try to move in the same direction as the inner race, they are wedged between the inner and outer races due to the design of the cam. In this condition, the clutch is locked and acts as one unit.

DISASSEMBLY

1. Remove the overdrive piston (1).
2. Remove the overdrive piston retainer bolts.
3. Remove overdrive piston retainer (4).
4. Remove case gasket.

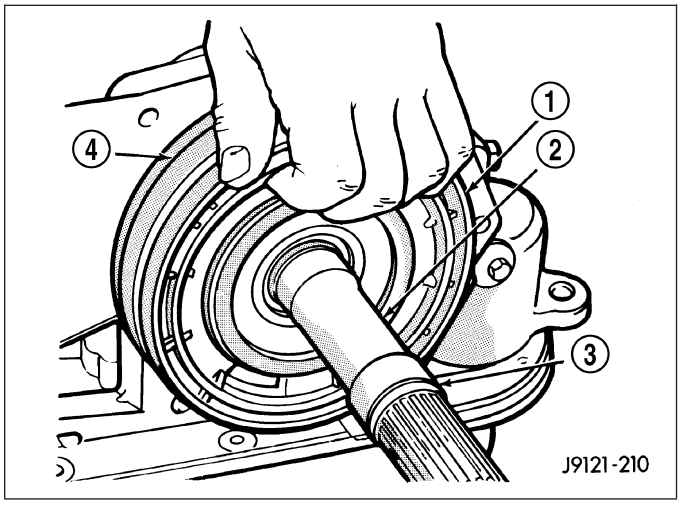

5. Tap old cam out of case with pin punch (1). Insert punch through bolt holes (2) at rear of case. Alternate position of punch to avoid cocking cam during removal.
6. Clean clutch cam bore and case. Be sure to remove all chips/shavings generated during cam removal.

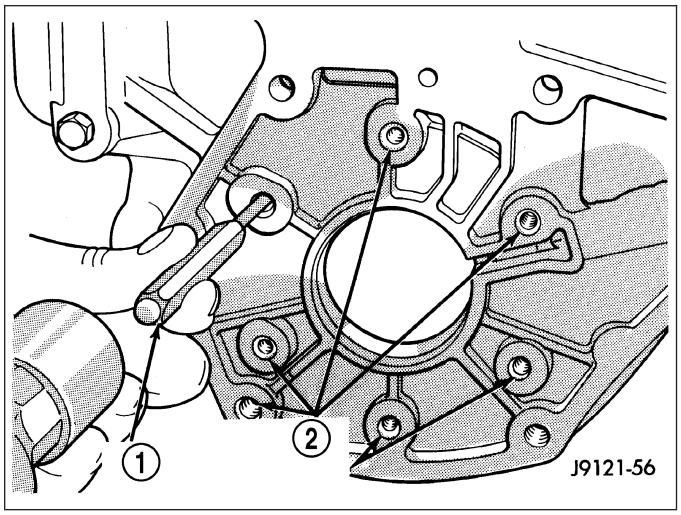

CLEANING

Clean the overrunning clutch assembly, clutch cam, low-reverse drum, and overdrive piston retainer in solvent. Dry them with compressed air after cleaning.

INSPECTION

Inspect condition of each clutch part after cleaning. Replace the overrunning clutch roller and spring assembly if any rollers or springs are worn or damaged, or if the roller cage is distorted, or damaged. Replace the cam if worn, cracked or damaged.

Replace the low-reverse drum if the clutch race, roller surface or inside diameter is scored, worn or damaged. **Do not remove the clutch race from the low-reverse drum under any circumstances. Replace the drum and race as an assembly if either component is damaged.**

Examine the overdrive piston retainer carefully for wear, cracks, scoring or other damage. Be sure the retainer hub is a snug fit in the case and drum. Replace the retainer if worn or damaged.

ASSEMBLY

1. Temporarily install overdrive piston retainer in case. Use 3-4 bolts to secure retainer.
2. Align and start new clutch cam (2) in the transmission case. Be sure serrations on cam and in case (1) are aligned. Then tap cam into case just enough to hold it in place.
3. Verify that cam is correctly positioned before proceeding any further. Narrow ends of cam ramps should be to left when cam is viewed from front end of case.

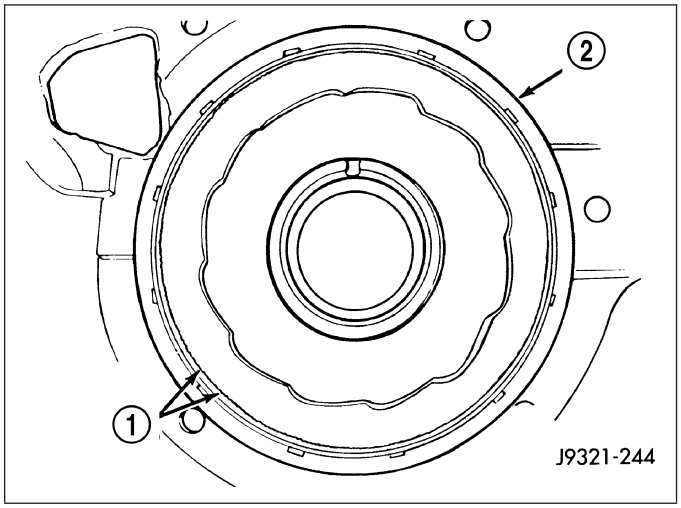

4. Insert Adapter Tool SP-5124 (2) from Installer/Remover C-3863-A into piston retainer (1).

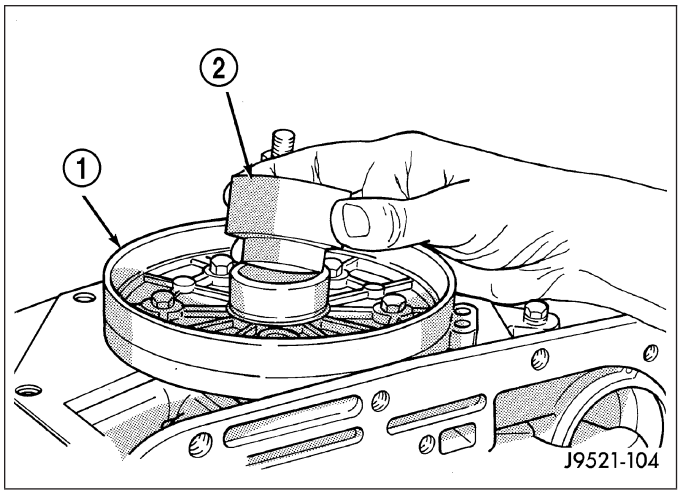

5. Assemble Puller Bolt SP-3701 (1) and Press Plate SP-3583-A (2).

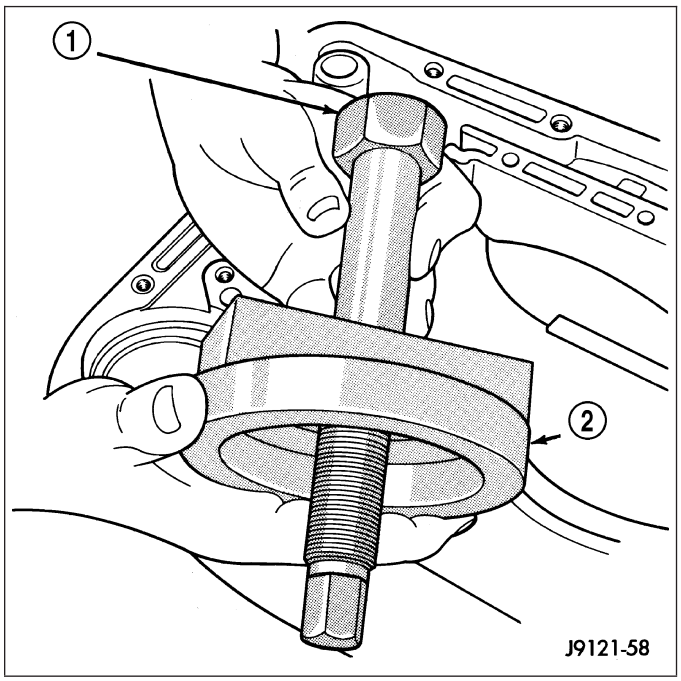

6. Install assembled puller plate and bolt (1). Insert bolt through cam, case and adapter tool. Be sure plate is seated squarely on cam (2).

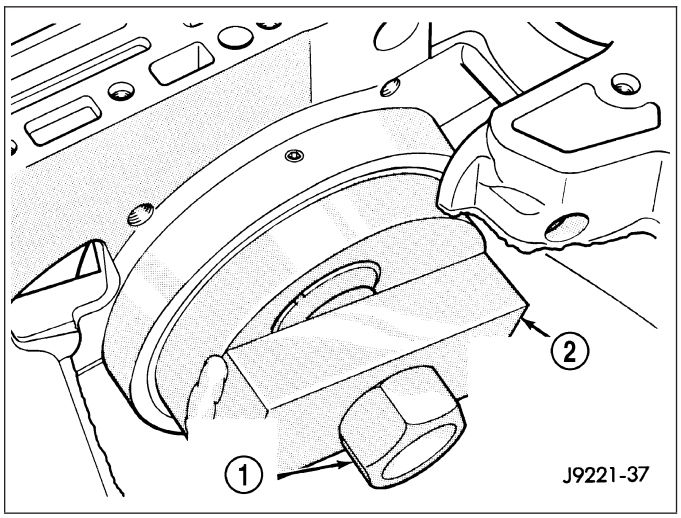

7. Hold puller plate and bolt in place and install puller nut SP-3701 (4) on puller bolt.
8. Tighten puller nut (2) to press clutch cam into case. Be sure cam is pressed into case evenly and does not become cocked.
9. Remove clutch cam installer tools.

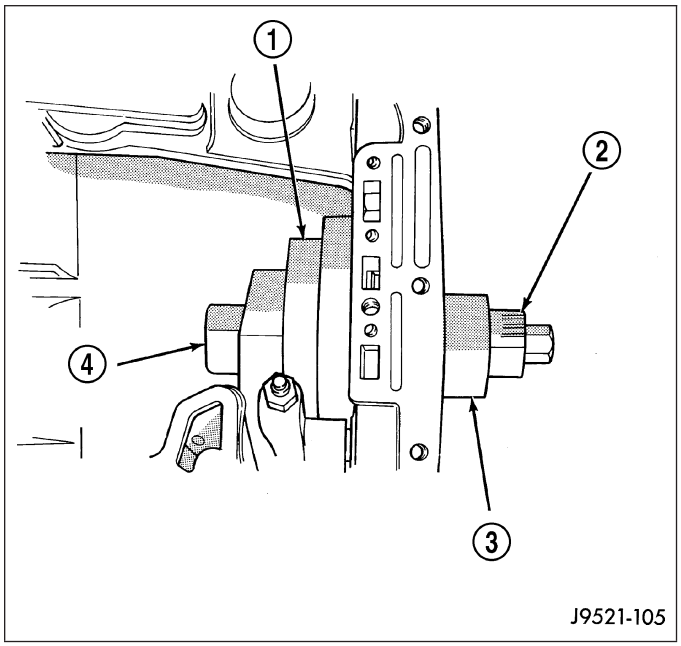

10. Stake case in 14 places around clutch cam to help secure cam in case. Use blunt punch or chisel to stake case.
11. Remove piston retainer from case. Cover retainer with plastic sheeting, or paper to keep it dust free.
12. Clean case and cam thoroughly. Be sure any chips/shavings generated during cam installation are removed from case.
13. Install new gasket (1) at rear of transmission case. Use petroleum jelly to hold gasket in place. Be sure to align governor feed holes in gasket with feed passages in case (2). Also install gasket before overdrive piston retainer. Center hole in gasket is smaller than retainer and cannot be installed over retainer.

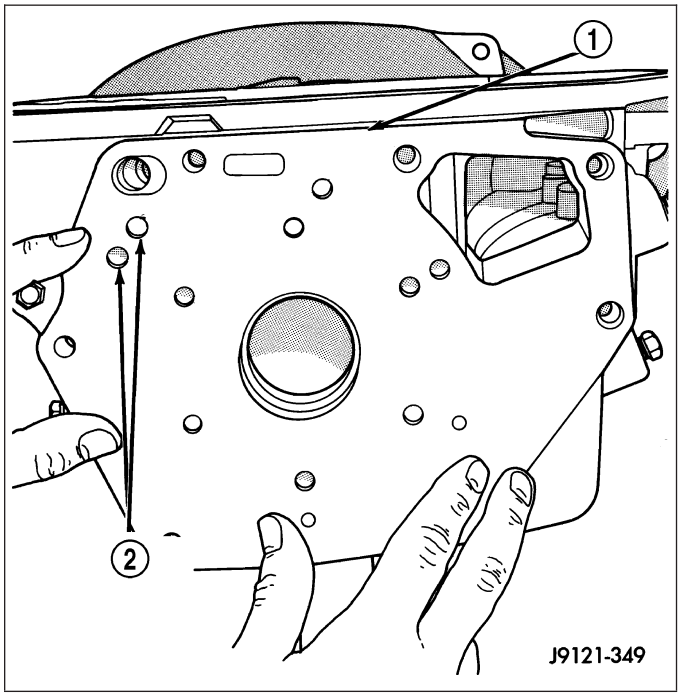

14. Position overdrive piston retainer (1) on transmission case and align bolt holes in retainer (1), gasket (2), and case. Then install and tighten retainer bolts (3)to 17 N·m (13 ft. lbs.) torque.
15. Install new seals on overdrive piston.
16. Stand transmission case upright on bellhousing.
17. Position Guide Ring 8114-1 on outer edge of overdrive piston retainer.
18. Position Seal Guide 8114-3 on inner edge of overdrive piston retainer.
19. Install overdrive piston in overdrive piston retainer by: aligning locating lugs on overdrive piston to the two mating holes in retainer.
    a. Aligning locating lugs on overdrive piston to the two mating holes in retainer.
    b. Lubricate overdrive piston seals with Mopar® Door Ease, or equivalent.
    c. Install piston over Seal Guide 8114-3 and inside Guide Ring 8114-1.
    d. Push overdrive piston into position in retainer.
    e. Verify that the locating lugs entered the lug bores in the retainer.

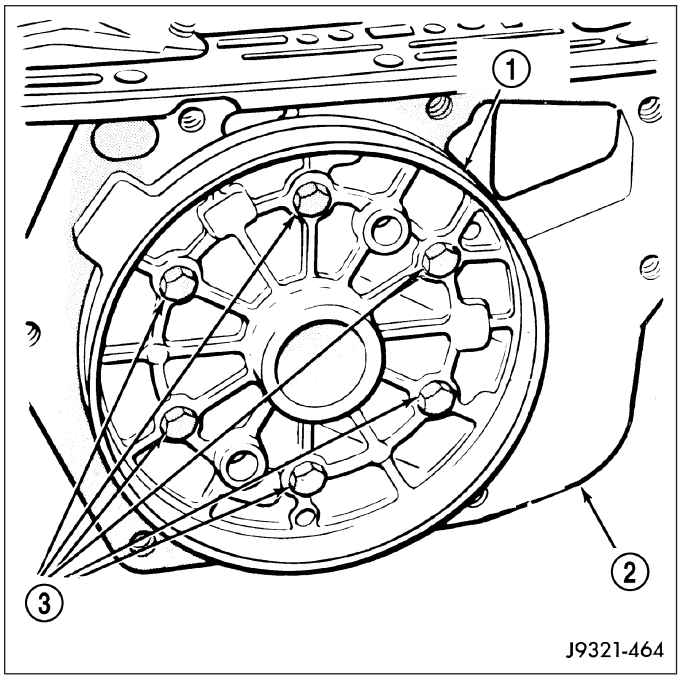

SHAFT-PLANETARY GEARTRAIN/OUTPUT

DESCRIPTION

The planetary gearsets are designated as the front, rear, and overdrive planetary gear assemblies and located in such order. A simple planetary gearset consists of three main members:

- The sun gear (2) which is at the center of the system.
- The planet carrier (3) with planet pinion gears (4) which are free to rotate on their own shafts and are in mesh with the sun gear.
- The annulus gear (1), which rotates around and is in mesh with the planet pinion gears.

NOTE: The number of pinion gears does not affect the gear ratio, only the duty rating.

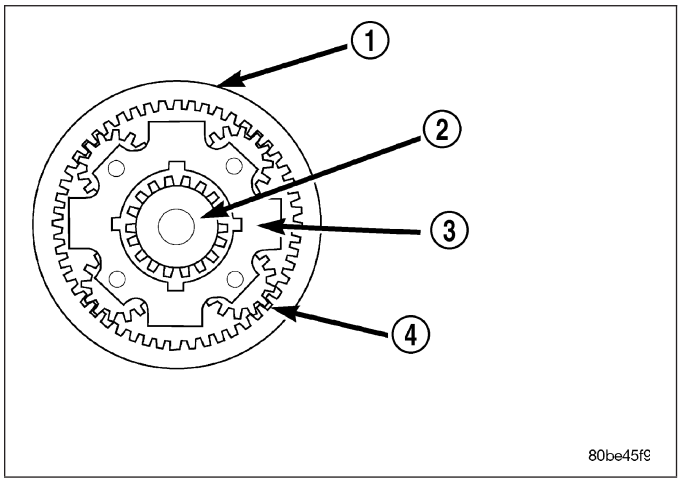

OPERATION

With any given planetary gearset, several conditions must be met for power to be able to flow:

- One member must be held.
- Another member must be driven or used as an input.
- The third member may be used as an output for power flow.
- For direct drive to occur, two gear members in the front planetary gearset must be driven.

NOTE: Gear ratios are dependent on the number of teeth on the annulus and sun gears.

DISASSEMBLY

1. Remove planetary snap-ring (1) from intermediate shaft. Discard snap-ring as it is not reusable.

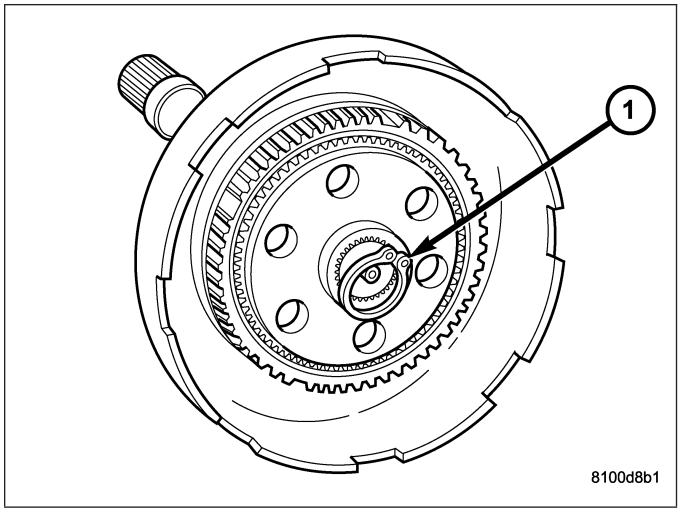

2. Remove front planetary gear (3) and front annulus gear (2) as assembly.

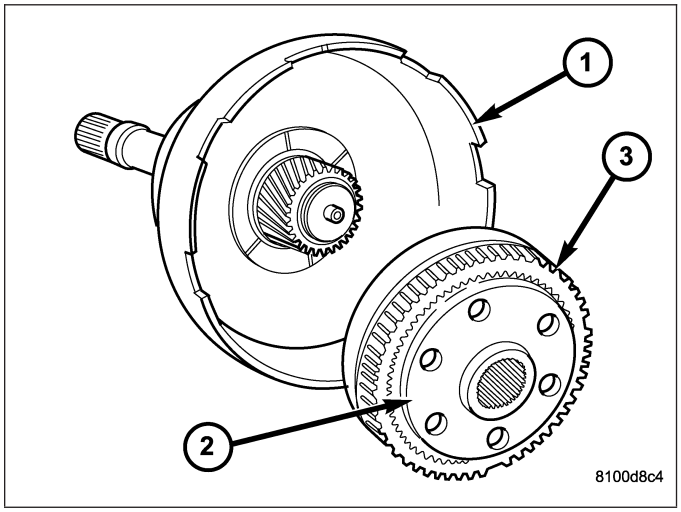

3. Remove front planetary gear (1) and thrust washer (2) from front annulus gear (3). Note thrust washer position for assembly reference.

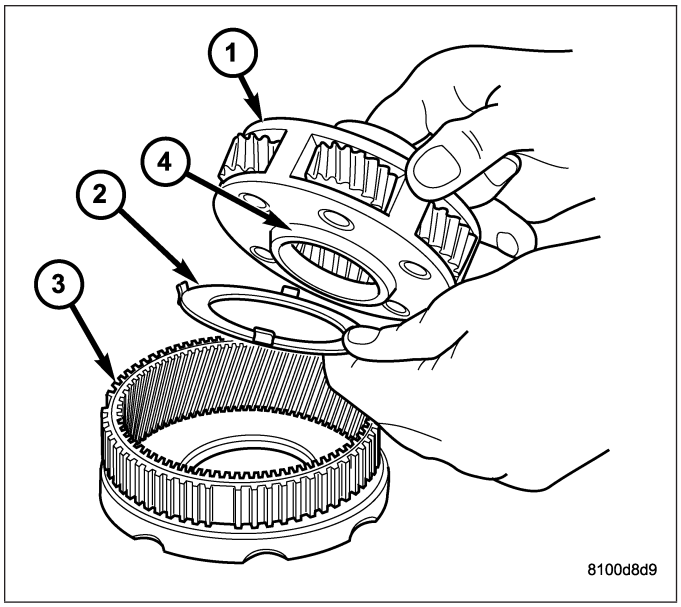

4. Remove tabbed thrust washer (2) from driving shell (1). Note washer position for assembly reference.

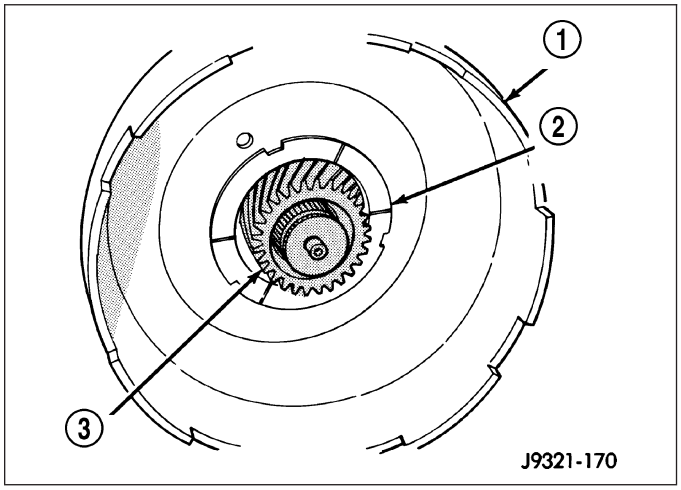

5. Remove sun gear (3) and driving shell (2) as assembly.

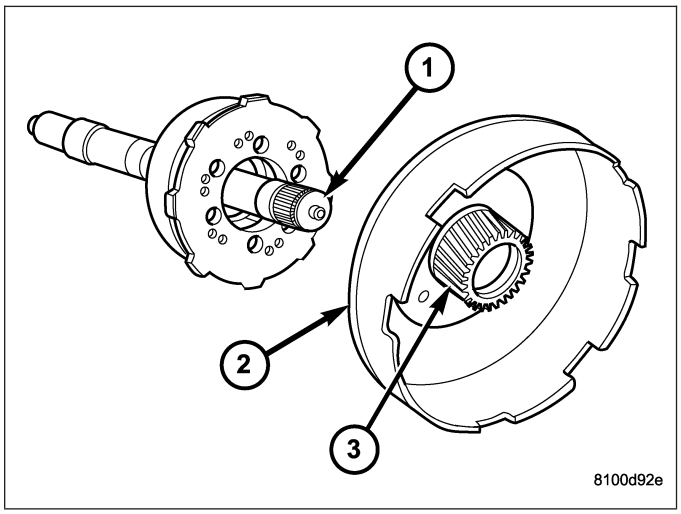

6. Remove tabbed thrust washer (2) from rear planetary sun gear (1). Note washer position on gear for assembly reference.

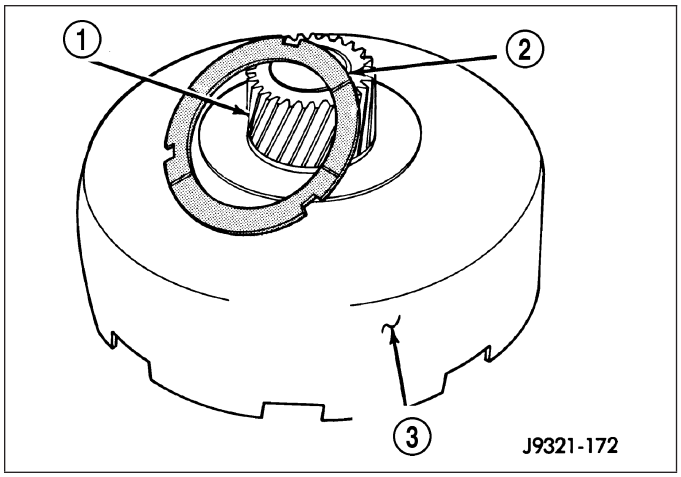

7. Remove rear planetary gear (3) and rear annulus gear (2) from intermediate shaft (1).

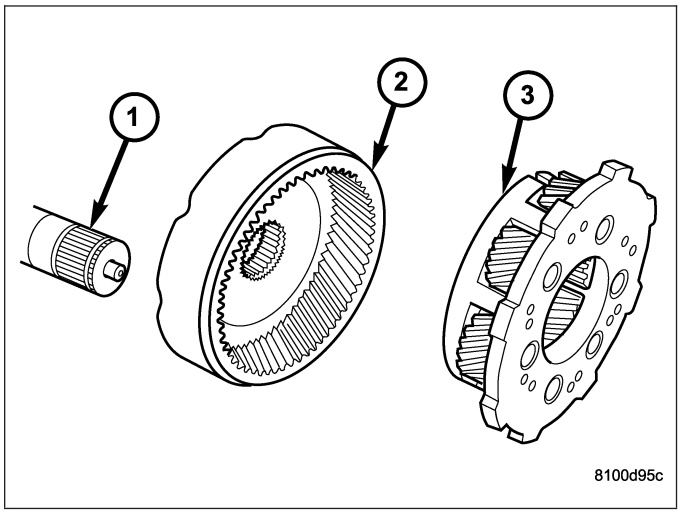

8. Remove thrust washer (2) from rear planetary annulus gear (1).

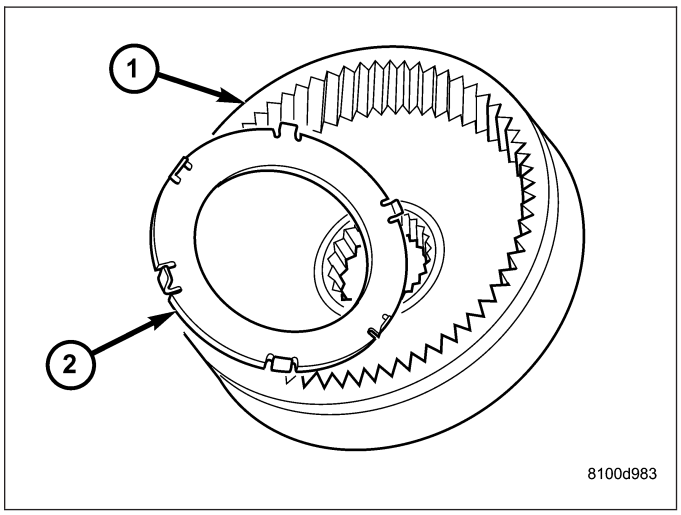

INSPECTION

Inspect the planetary gear sets and annulus gears. The planetary pinions, shafts, washers, and retaining pins are serviceable. However, if a pinion carrier is damaged, the entire planetary gear set must be replaced as an assembly.

Replace the annulus gears if the teeth are chipped, broken, or worn, or the gear is cracked. Replace the planetary thrust plates and the tabbed thrust washers if cracked, scored or worn.

Inspect the machined surfaces of the intermediate shaft. Be sure the oil passages are open and clear. Replace the shaft if scored, pitted, or damaged.

Inspect the sun gear and driving shell. If either component is worn or damaged, remove the sun gear rear retaining ring and separate the sun gear and thrust plate from the driving shell. Then replace the necessary component.

Replace the sun gear as an assembly if the gear teeth are chipped or worn. Also replace the gear as an assembly if the bushings are scored or worn. The sun gear bushings are not serviceable. Replace the thrust plate if worn, or severely scored. Replace the driving shell if distorted, cracked, or damaged in any way.

Replace all snap-rings during geartrain assembly. Reusing snap-rings is not recommended.

ASSEMBLY

1. Lubricate sun gear (2) and planetary gears with transmission fluid during assembly. Use petroleum jelly to lubricate intermediate shaft bushing surfaces, thrust washers and thrust plates (3) and to hold these parts in place during assembly.
2. Install front snap-ring on sun gear (2) and install gear in driving shell. Then install thrust plate (3) over sun gear and against rear side of driving shell (1). Install rear snap-ring (4) to secure sun gear and thrust plate in driving shell. Note that the large ID chamfer on the sun gear goes forward.

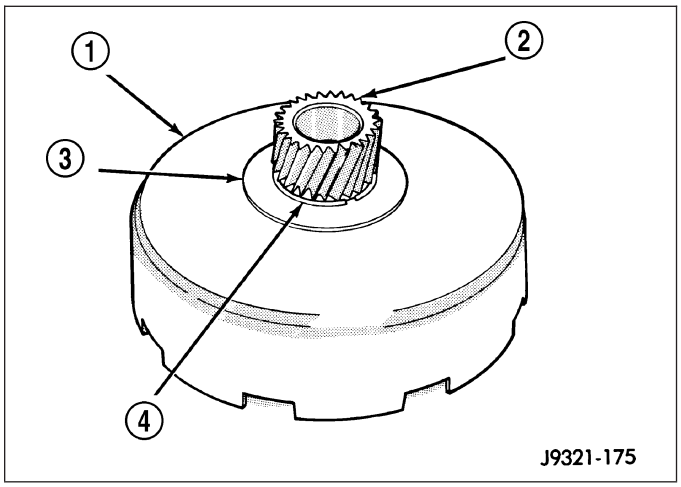

3. Install rear annulus gear (1) on intermediate shaft (2).

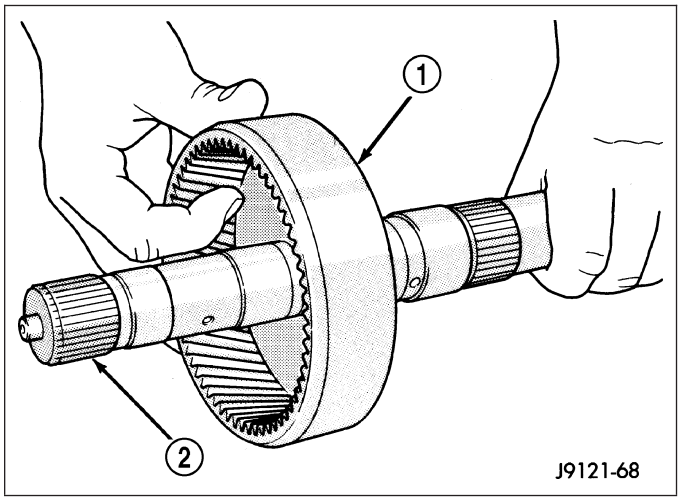

4. Install thrust washer (2) to rear planetary annulus gear (1) using petroleum jelly. Be sure washer is seated against corner witht teh tabs completely in the locating holes.

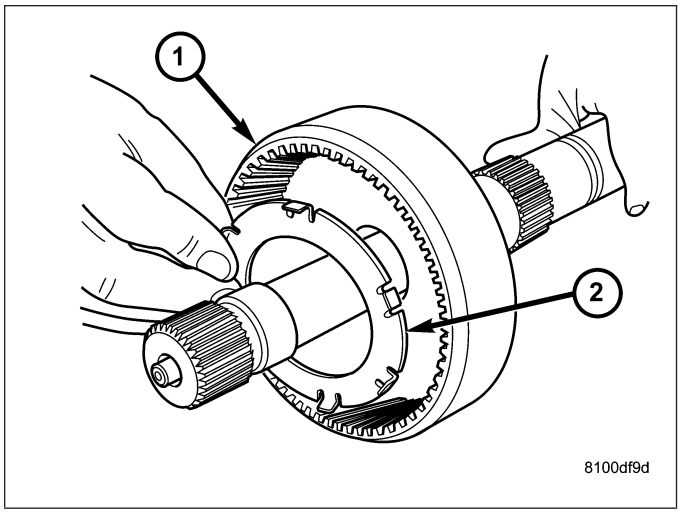

5. Install rear planetary gear (2) in rear annulus gear (1). Be sure planetary carrier is seated against annulus gear.

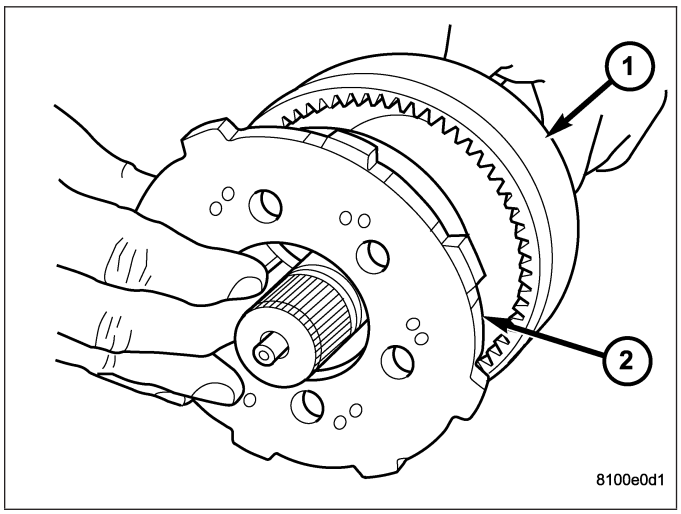

6. Install tabbed thrust washer (2) on front face of rear planetary gear (1). Seat washer tabs in matching slots in face of gear carrier. Use extra petroleum jelly to hold washer in place if desired.

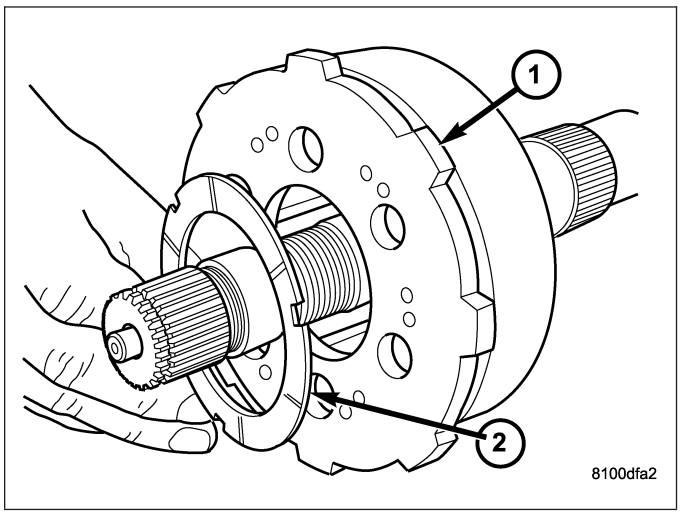

7. Lubricate sun gear bushings with petroleum jelly or transmission fluid.
8. Install sun gear (5) and driving shell (2) on intermediate shaft (1). Seat shell against rear planetary gear. Verify that thrust washer on planetary gear was not displaced during installation.

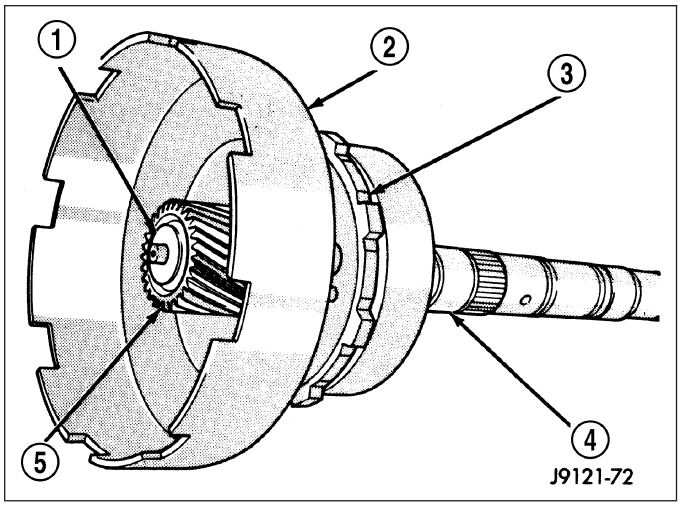

9. Install tabbed thrust washer (3) in driving shell (2), be sure washer tabs are seated in tab slots of driving shell. Use extra petroleum jelly to hold washer in place if desired.

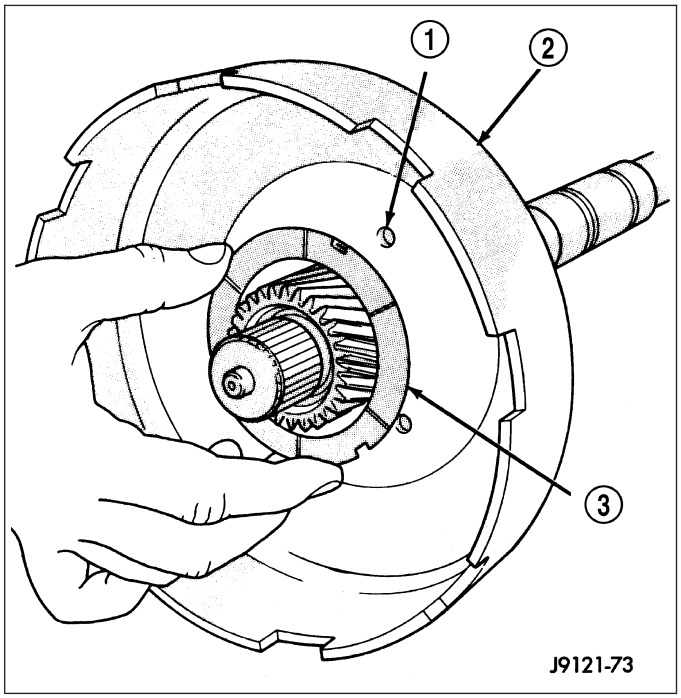

10. Install tabbed thrust washer (1) on front planetary gear (2). Seat washer tabs in matching slots in face of gear carrier. Use extra petroleum jelly to hold washer in place if desired.
11. Install the torlon bushing onto the front planetary carrier hub.

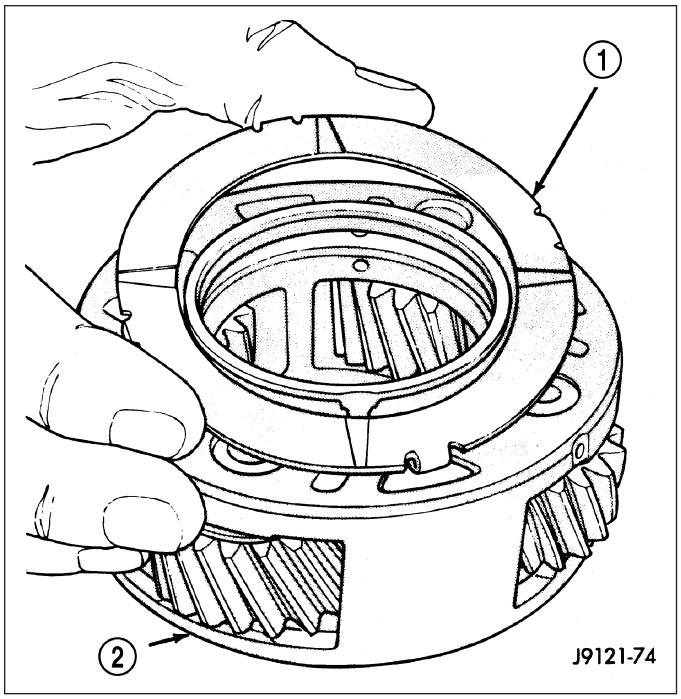

12. Install front annulus gear (1) over and onto front planetary gear (2). Be sure gears are fully meshed and seated.

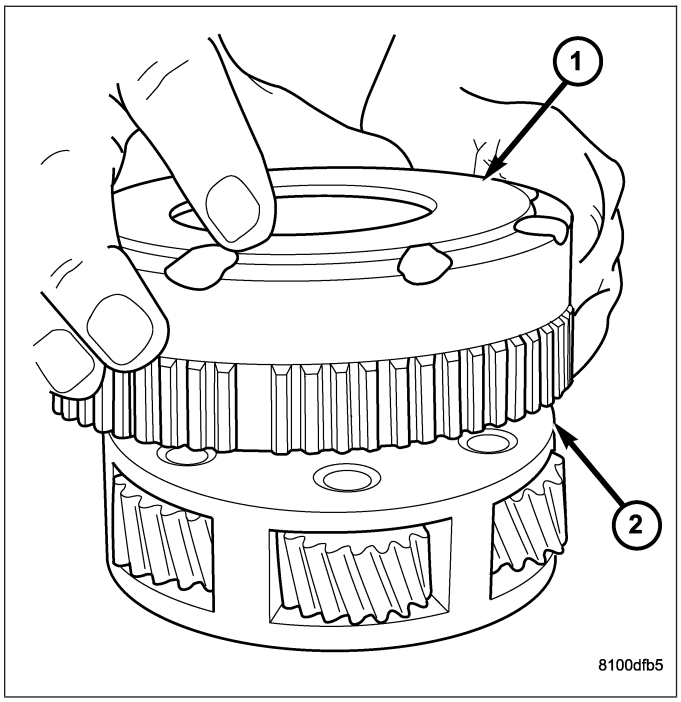

13. Install front planetary and annulus gear assembly (2). Hold gears together and slide them onto shaft. Be sure planetary pinions are seated on sun gear and that planetary carrier is seated on intermediate shaft.

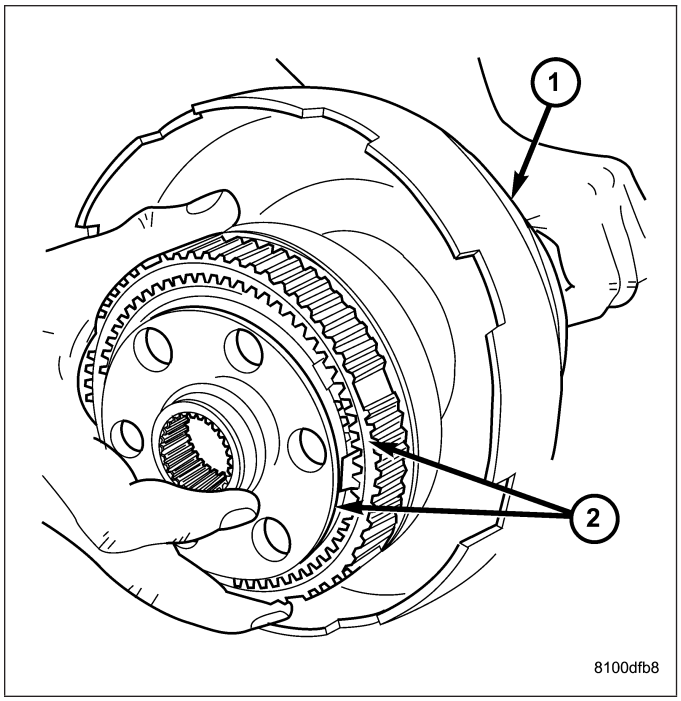

14. Place geartrain in upright position. Rotate gears to be sure all components are seated and properly assembled. Snap-ring groove at forward end of intermediate shaft will be completely exposed when components are assembled correctly.
15. Install new planetary snap-ring (2) in groove at end of intermediate shaft.

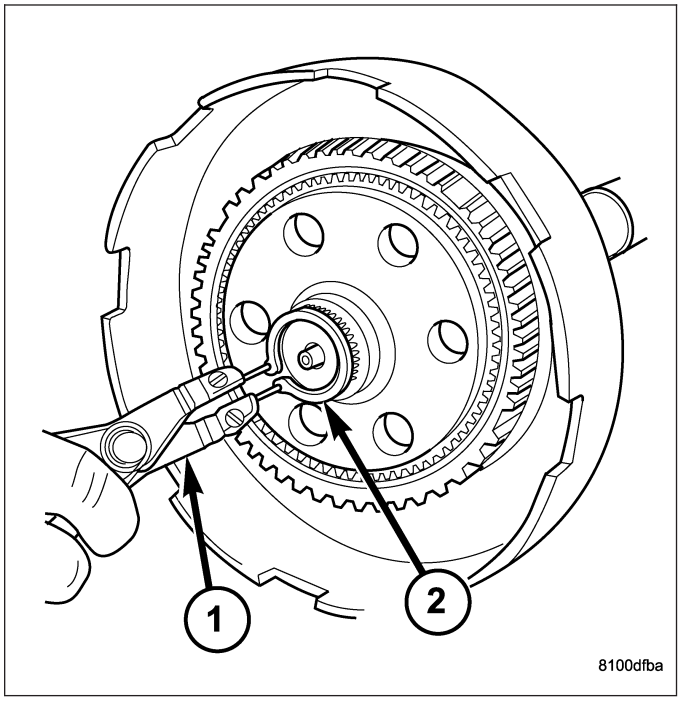

16. Turn planetary geartrain over. Position wood block under front end of intermediate shaft and support geartrain on shaft. Be sure all geartrain parts have moved forward against planetary snap-ring. This is important for accurate end play check.
17. Check planetary geartrain end play with feeler gauge (3). Insert gauge between rear annulus gear (2) and shoulder on intermediate shaft (1) as shown. End play should be 0.15 to 1.22 mm (0.006 to 0.048 in.).
18. If end play is incorrect, install thinner/thicker planetary snap-ring as needed.

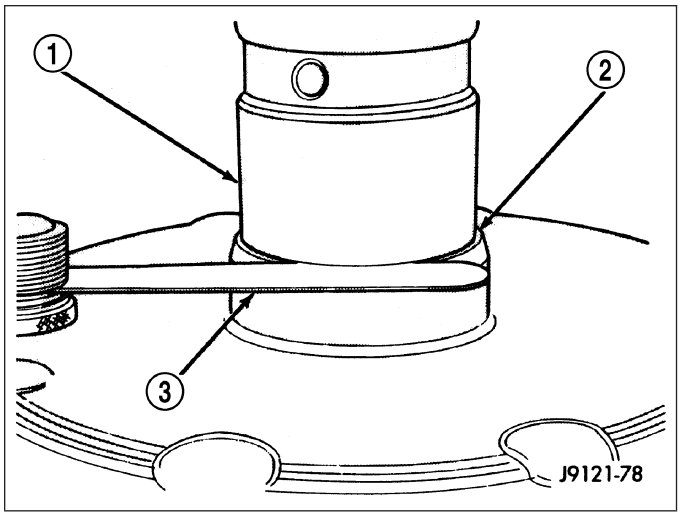

CLUTCH-REAR

DESCRIPTION

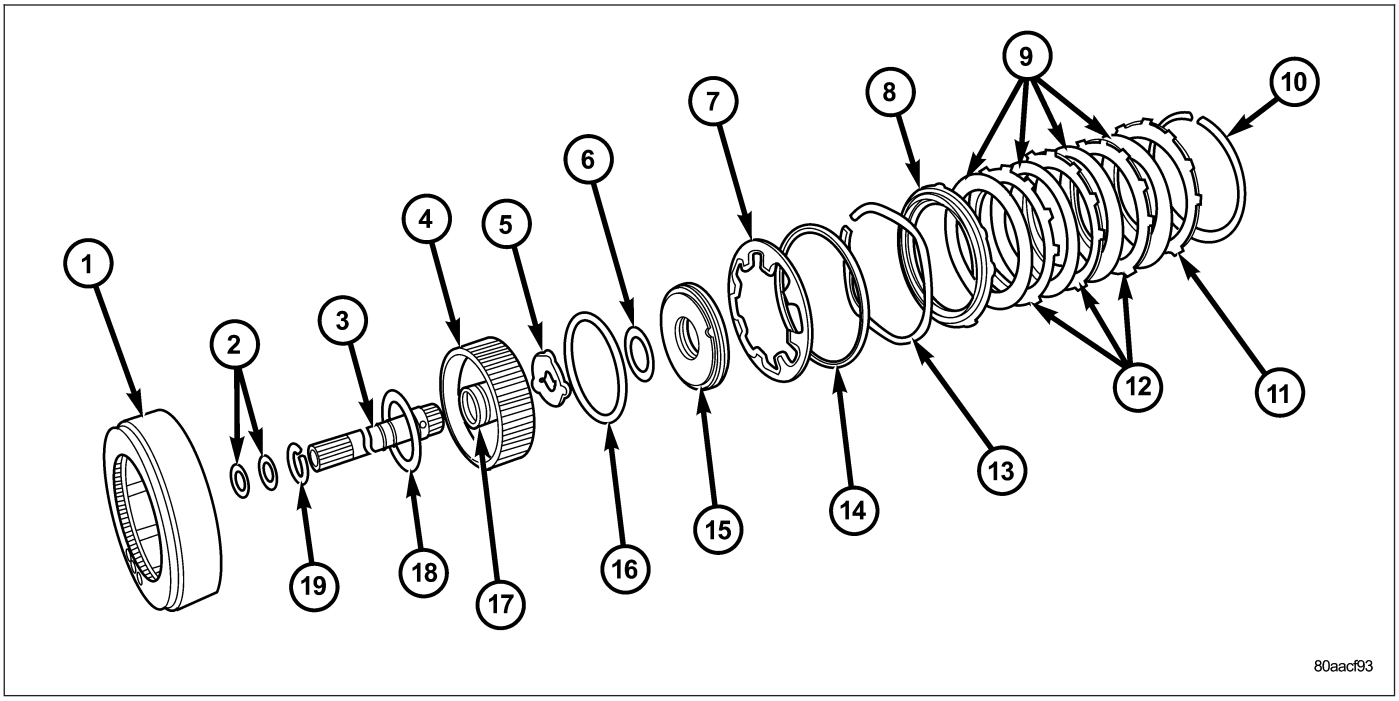

Rear Clutch Components

1 - REAR CLUTCH RETAINER
2 - TORLON™ SEAL RINGS
3 - INPUT SHAFT
4 - PISTON RETAINER
5 - OUTPUT SHAFT THRUST WASHER
6 - INNER PISTON SEAL
7 - PISTON SPRING
8 - PRESSURE PLATE
9 - CLUTCH DISCS
10 - SNAP-RING (SELECTIVE)
11 - REACTION PLATE
12 - CLUTCH PLATES
13 - WAVE SPRING
14 - SPACER RING
15 - PISTON
16 - OUTER PISTON SEAL
17 - REAR SEAL RING
18 - FIBER THRUST WASHER
19 - RETAINING RING

The rear clutch assembly is composed of the rear clutch retainer (1), pressure plate (8), clutch plates (12), driving discs (9), piston (15), Belleville spring (7), and snap-rings (10). The Belleville spring acts as a lever to multiply the force applied on to it by the apply piston. The increased apply force on the rear clutch pack, in comparison to the

front clutch pack, is needed to hold against the greater torque load imposed onto the rear pack. The rear clutch is directly behind the front clutch and is considered a driving component.

NOTE: The number of discs and plates may vary with each engine and vehicle combination.

OPERATION

To apply the clutch, pressure is applied between the clutch retainer and piston. The fluid pressure is provided by the oil pump, transferred through the control valves and passageways, and enters the clutch through the hub of the reaction shaft support. With pressure applied between the clutch retainer and piston, the piston moves away from the clutch retainer and compresses the clutch pack. This action applies the clutch pack, allowing torque to flow through the input shaft into the driving discs, and into the clutch plates and pressure plate that are lugged to the clutch retainer. The waved spring is used to cushion the application of the clutch pack. The snap-ring is selective and used to adjust clutch pack clearance.

When pressure is released from the piston, the spring returns the piston to its fully released position and disengages the clutch. The release spring also helps to cushion the application of the clutch assembly. When the clutch is in the process of being released by the release spring, fluid flows through a vent and one-way ball-check-valve located in the piston. The check-valve is needed to eliminate the possibility of plate drag caused by centrifugal force acting on the residual fluid trapped in the clutch piston retainer.

DISASSEMBLY

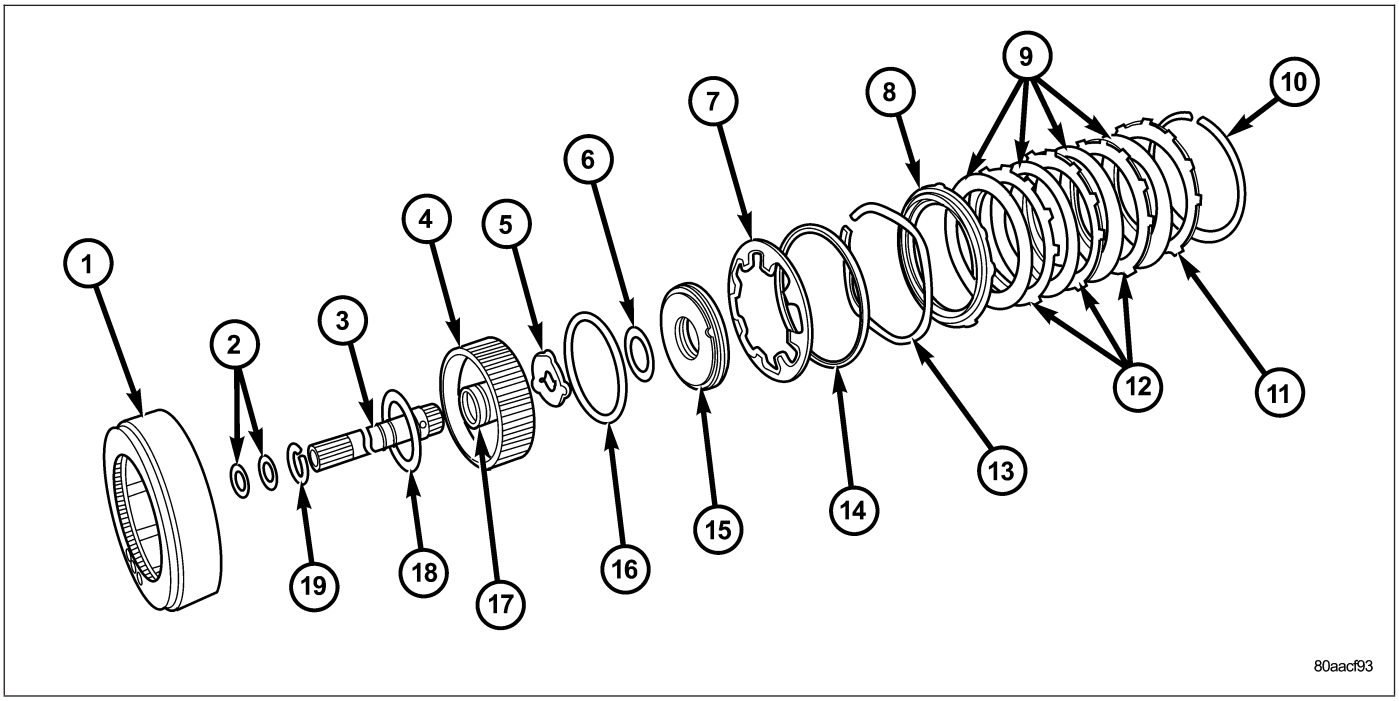

Rear Clutch Components

1 - REAR CLUTCH RETAINER
2 - TORLON™ SEAL RINGS
3 - INPUT SHAFT
4 - PISTON RETAINER
5 - OUTPUT SHAFT THRUST WASHER
6 - INNER PISTON SEAL
7 - PISTON SPRING
8 - PRESSURE PLATE
9 - CLUTCH DISCS
10 - SNAP-RING (SELECTIVE)
11 - REACTION PLATE
12 - CLUTCH PLATES
13 - WAVE SPRING
14 - SPACER RING
15 - PISTON
16 - OUTER PISTON SEAL
17 - REAR SEAL RING
18 - FIBER THRUST WASHER
19 - RETAINING RING

1. Remove fiber thrust washer (18) from forward side of clutch retainer (1).
2. Remove input shaft front and rear seal rings (2).
3. Remove selective clutch pack snap-ring (10).

4. Remove the reaction plate (11), clutch discs (9), steel plates (12), pressure plate (8), wave spring (13), spacer ring (14), and piston spring (7).
5. Remove clutch piston (15) with rotating motion.
6. Remove and discard piston seals (6, 16).
7. Remove input shaft retaining ring (19). It may be necessary to press the input shaft in slightly to relieve tension on the retaining ring
8. Press input shaft out of retainer with shop press and suitable size press tool. Use a suitably sized press tool to support the retainer as close to the input shaft as possible.

CLEANING

Clean the clutch components with solvent and dry them with compressed air. Do not use rags or shop towels to dry any of the clutch parts. Lint from such materials will adhere to component surfaces and could restrict or block fluid passages after assembly.

INSPECTION

Replace the clutch discs if warped, worn, scored, burned/charred, the lugs are damaged, or if the facing is flaking off. Replace the top and bottom pressure plates if scored, warped, or cracked. Be sure the driving lugs on the pressure and clutch plates are also in good condition. The lugs must not be bent, cracked or damaged in any way.

Replace the piston spring and wave spring if either part is distorted, warped or broken.

Check the lug grooves in the clutch retainer. The clutch and pressure plates should slide freely in the slots. Replace the retainer if the grooves are worn or damaged. Also check action of the check balls in the retainer and piston. Each check ball must move freely and not stick.

Replace the retainer bushing if worn, scored, or doubt exists about bushing condition.

Inspect the piston and retainer seal surfaces for nicks or scratches. Minor scratches can be removed with crocus cloth. However, replace the piston and/or retainer if the seal surfaces are seriously scored.

Check condition of the fiber thrust washer and metal output shaft thrust washer. Replace either washer if worn or damaged.

Check condition of the seal rings on the input shaft and clutch retainer hub. Replace the seal rings only if worn, distorted, or damaged. The input shaft front seal ring is teflon with chamfered ends. The rear ring is metal with interlocking ends.

Check the input shaft for wear, or damage. Replace the shaft if worn, scored or damaged in any way.

ASSEMBLY

1. Soak clutch discs in transmission fluid while assembling other clutch parts.
2. Install new seal rings on clutch retainer hub and input shaft if necessary.
   a. Be sure clutch hub seal ring is fully seated in groove and is not twisted.
3. Lubricate splined end of input shaft and clutch retainer with transmission fluid. Then partially press input shaft (1) into retainer (2). Use a suitably sized press tool to support retainer as close to input shaft as possible.
4. Install input shaft retaining ring.
5. Press the input shaft the remainder of the way into the clutch retainer.

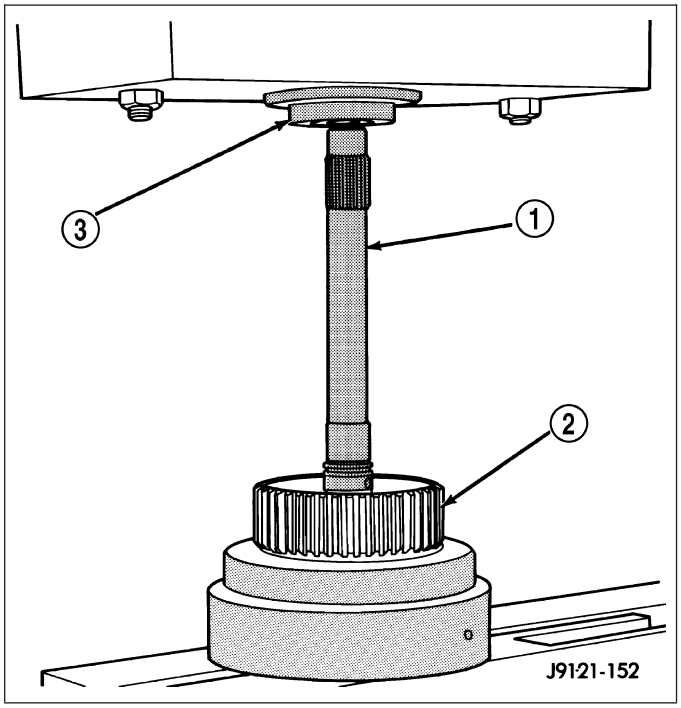

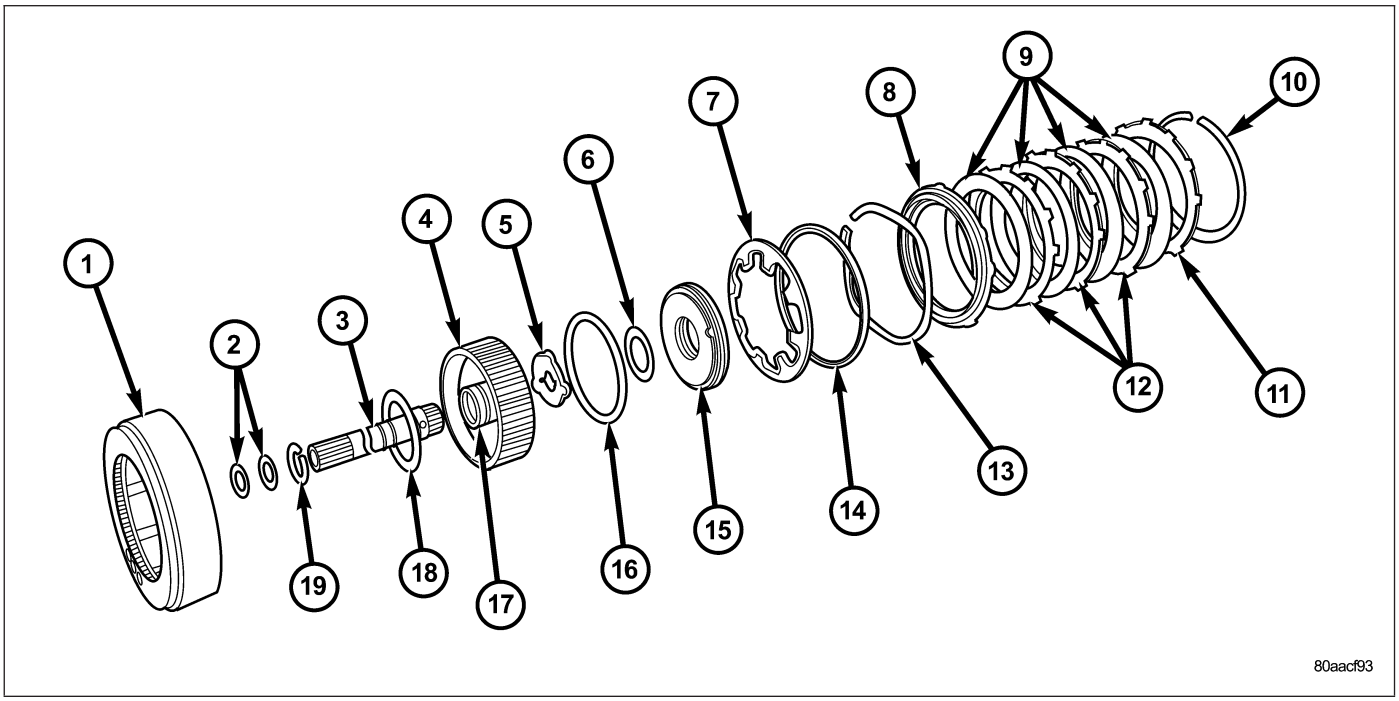

Rear Clutch Components

1 - REAR CLUTCH RETAINER
2 - TORLON™ SEAL RINGS
3 - INPUT SHAFT
4 - PISTON RETAINER
5 - OUTPUT SHAFT THRUST WASHER
6 - INNER PISTON SEAL
7 - PISTON SPRING
8 - PRESSURE PLATE
9 - CLUTCH DISCS
10 - SNAP-RING (SELECTIVE)
11 - REACTION PLATE
12 - CLUTCH PLATES
13 - WAVE SPRING
14 - SPACER RING
15 - PISTON
16 - OUTER PISTON SEAL
17 - REAR SEAL RING
18 - FIBER THRUST WASHER
19 - RETAINING RING

6. Install new seals (6, 16) on clutch piston (15). Be sure lip of each seal faces interior of clutch retainer.
7. Lubricate lip of piston seals with generous quantity of Mopar® Door Ease. Then lubricate retainer (1) hub and bore with light coat of transmission fluid.
8. Install clutch piston (15) in retainer (1). Use twisting motion to seat piston in bottom of retainer. A thin strip of plastic (about 0.020″ thick), can be used to guide seals into place if necessary.

CAUTION: Never push the clutch piston straight in. This will fold the seals over causing leakage and clutch slip. In addition, never use any type of metal tool to help ease the piston seals into place. Metal tools will cut, shave, or score the seals.

9. Install piston spring (7) in retainer (1) and on top of piston (15). Concave side of spring faces downward (toward piston).
10. Install the spacer ring (14) and wave spring (13) into the retainer. Be sure spring is completely seated in retainer groove.
11. Install pressure plate (8). Ridged side of plate faces downward (toward piston) and flat side toward clutch pack.
12. Install first clutch disc (9) in retainer on top of pressure plate. Then install a clutch plate (12) followed by a clutch disc until entire clutch pack is installed (4 discs and 3 plates are required) .
13. Install the reaction plate (11).
14. Install selective snap-ring (10). Be sure snap-ring is fully seated in retainer groove.

15. Using a suitable gauge bar (6) and dial indicator (1), measure clutch pack clearance.
    a. Position gauge bar across the clutch drum (5) with the dial indicator pointer on the pressure plate (2).
    b. Using two small screw drivers, lift the pressure plate and release it.
    c. Zero the dial indicator.
    d. Lift the pressure plate until it contacts the snap-ring and record the dial indicator reading.

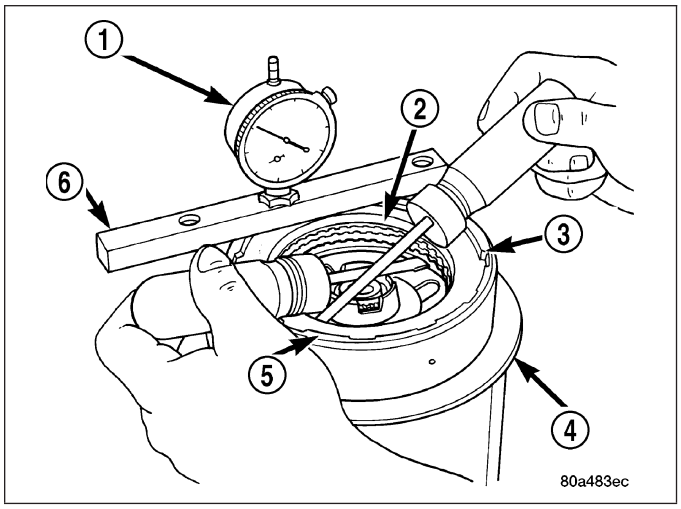

Clearance should be 0.635 - 0.914 mm (0.025 - 0.036 in.). If clearance is incorrect, steel plates, discs, selective snap ring and pressure plates may have to be changed.

The selective snap ring thicknesses are:

- 0.107 - 0.109 in.
- 0.098 - 0.100 in.
- 0.095 - 0.097 in.
- 0.083 - 0.085 in.
- 0.076 - 0.078 in.
- 0.071 - 0.073 in.
- 0.060 - 0.062 in.

16. Coat rear clutch thrust washer (2) with petroleum jelly and install washer over input shaft and into clutch retainer (1). Use enough petroleum jelly to hold washer in place.

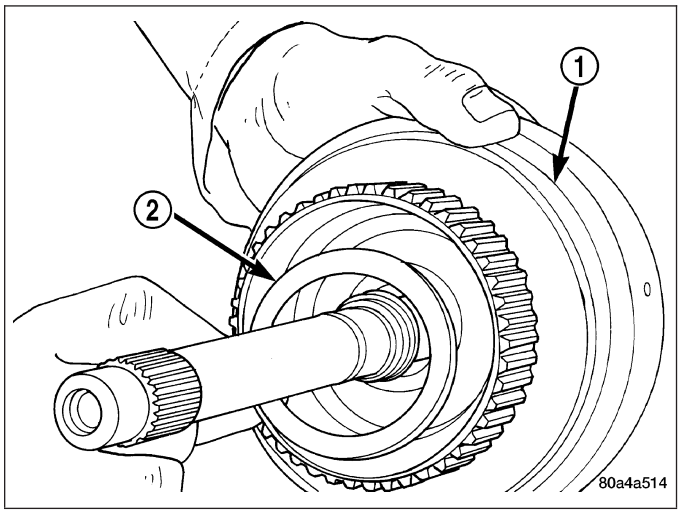

SERVO-REAR

DESCRIPTION

The rear (low/reverse) servo consists of a single stage or diameter piston and a spring loaded plug. The spring is used to cushion the application of the rear (low/reverse) band.

OPERATION

While in the de-energized state (no pressure applied), the piston is held up in its bore by the piston spring. The plug is held down in its bore, in the piston, by the plug spring. When pressure is applied to the top of the piston, the plug is forced down in its bore, taking up any clearance. As the piston moves, it causes the plug spring to compress, and the piston moves down over the plug. The piston continues to move down until it hits the shoulder of the plug and

fully applies the band. The period of time from the initial application, until the piston is against the shoulder of the plug, represents a reduced shocking of the band that cushions the shift.

DISASSEMBLY

1. Remove small snap-ring (1) and remove plug (3) and spring (7) from servo piston (8).
2. Remove and discard servo piston seal ring (2).

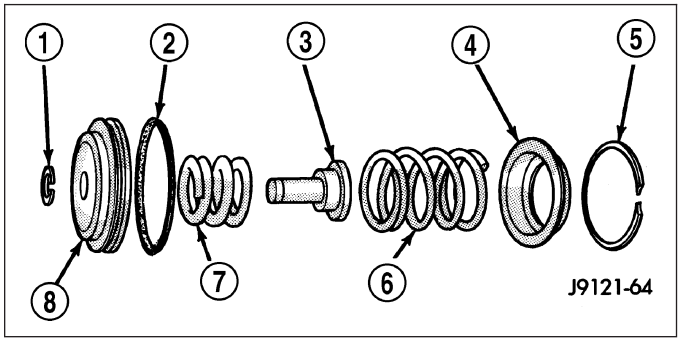

CLEANING

Remove and discard the servo piston seal ring (2). Then clean the servo components with solvent and dry with compressed air. Replace either spring (6, 7) if collapsed, distorted or broken. Replace the plug (3) and piston (8) if cracked, bent, or worn. Discard the servo snap-rings (1, 5) and use new ones at assembly.

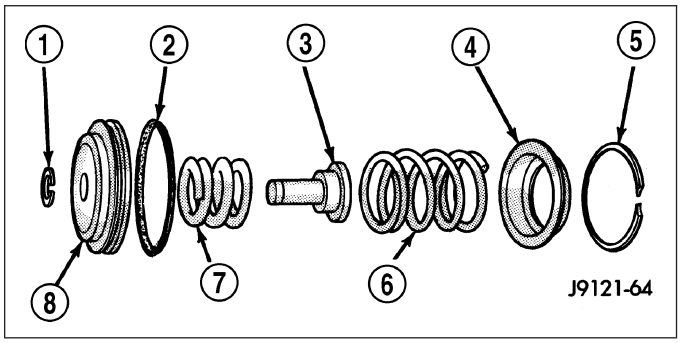

ASSEMBLY

1. Lubricate piston (8) and guide seals (2) with petroleum jelly. Lubricate other servo parts with Mopar® ATF +4, Automatic Transmission fluid.
2. Install new seal ring (2) on servo piston.
3. Assemble piston (8), plug (3), spring (6, 7), and new snap-ring (1).
4. Lubricate piston seal lip with petroleum jelly.

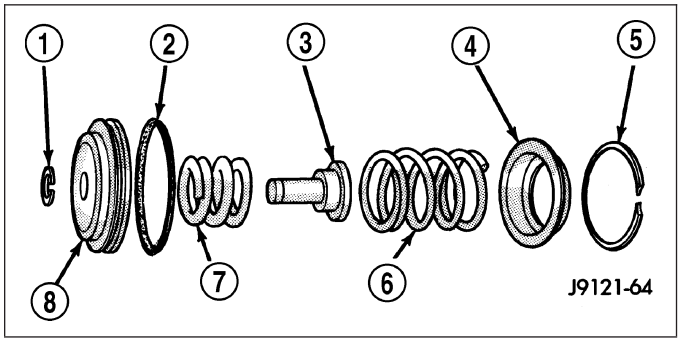

MECHANISM-SHIFT

DESCRIPTION

The gear shift mechanism provides six shift positions which are:

- PARK (P)
- REVERSE (R)
- NEUTRAL (N)
- DRIVE (D)
- Manual SECOND (2)
- Manual LOW (1)

OPERATION

Manual LOW (1) range provides first gear only. Overrun braking is also provided in this range. Manual SECOND (2) range provides first and second gear only.

DRIVE range provides first, second, third, and overdrive fourth gear ranges. The shift into overdrive fourth gear range occurs only after the transmission has completed the shift into D third gear range. No further movement of the shift mechanism is required to complete the 3-4 shift.

The fourth gear upshift occurs automatically when the overdrive selector switch is in the ON position. No upshift to fourth gear will occur if any of the following are true:

- The transmission fluid temperature is below 10° C (50° F) or above 121° C (250° F).
- The shift to third is not yet complete.
- Vehicle speed is too low for the 3-4 shift to occur.
- Battery temperature is below -5° C (23° F).

SENSOR-SPEED

DESCRIPTION

The speed sensor (1) is located in the overdrive gear case. The sensor is positioned over the park gear and monitors transmission output shaft rotating speed.

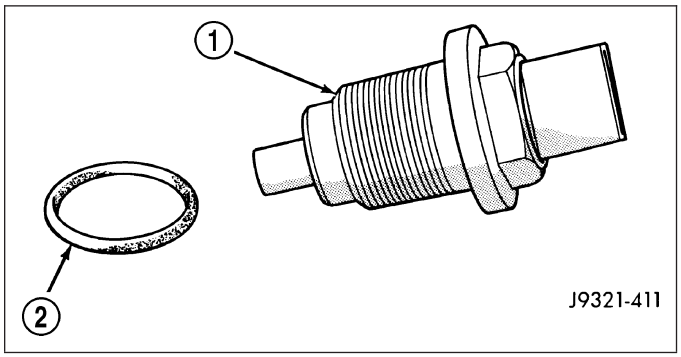

OPERATION

Speed sensor signals are triggered by the park gear lugs as they rotate past the sensor pickup face. Input signals from the sensor are sent to the transmission control module for processing. Signals from this sensor are shared with the powertrain control module.

ACTUATOR-THROTTLE VALVE

DESCRIPTION

On vehicles equipped with a Cummins diesel engine, the transmission throttle valve cable has been replace by the transmission throttle valve actuator (TTVA). The TTVA consists of an electric DC motor, two potentiometers, and a gear drive system. The TTVA is mechanically connected to the transmission throttle valve in the valve body by the “D” shaped opening in the bottom of the TTVA shaft. Changes in the TTVA position are therefore transferred to the throttle valve and cause changes in the transmission throttle pressure.

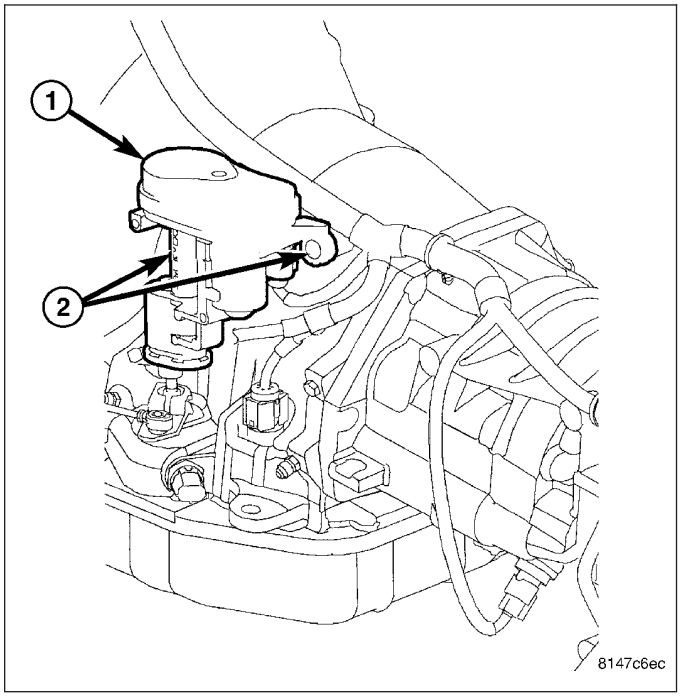

REMOVAL

1. Remove the bolts (2) holding the transmission throttle valve actuator (TTVA) (1) to the transmission case.
2. Allow the TTVA (1) to rotate clockwise away from the transmission.

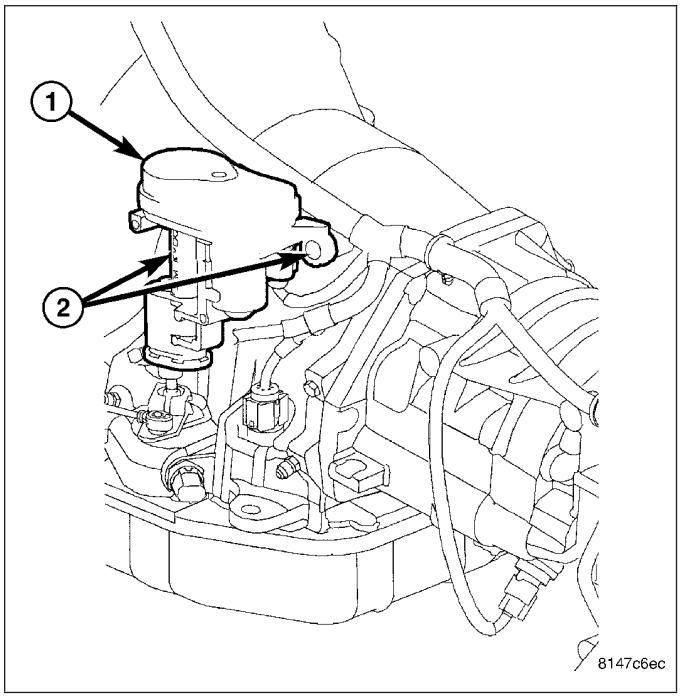

3. Remove the wiring connector (2) from the TTVA (1).
4. Lift the TTVA (1) straight upward and off the throttle valve shaft (3).

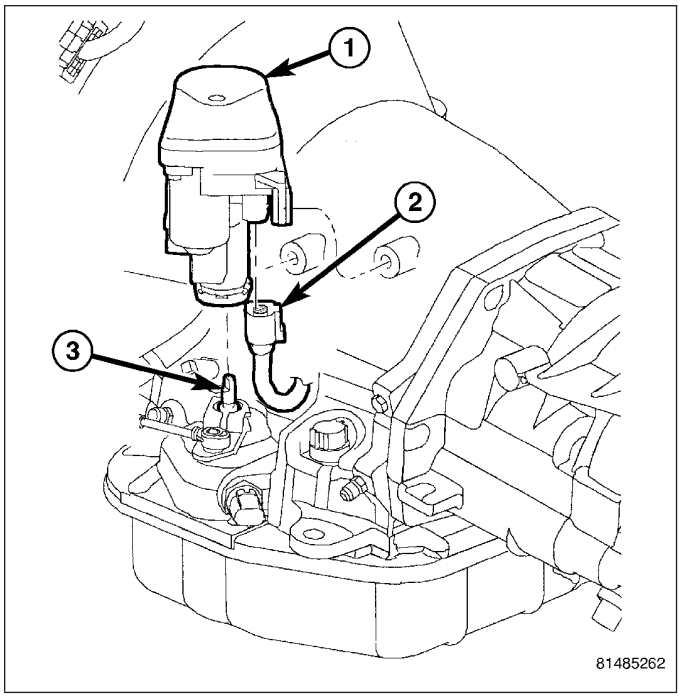

INSTALLATION

1. Position the transmission throttle valve actuator (TTVA) (1) over the throttle valve shaft (3).
2. Align the D-shaped opening in the bottom of the TTVA to the throttle valve shaft and install the TTVA onto the shaft.
3. Install the wiring connector (2) to the TTVA (1).

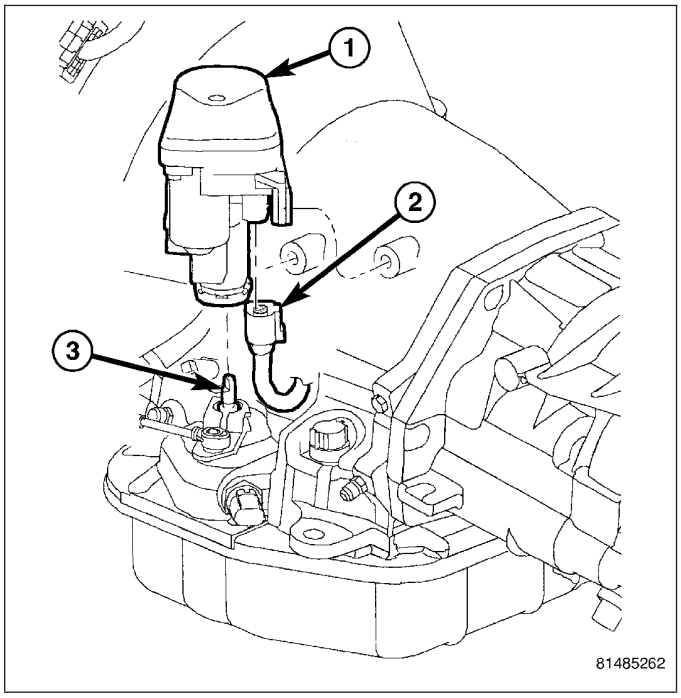

4. Rotate the TTVA (1) to the transmission case and install the bolts (2) to hold the TTVA to the transmission.
5. Tighten the bolts to 8.5 N·m (75 in.lbs.).
6. Initialize the TTVA (Refer to 21 - TRANSMISSION/ AUTOMATIC - 48RE/THROTTLE VALVE ACTUATOR - ADJUSTMENTS).

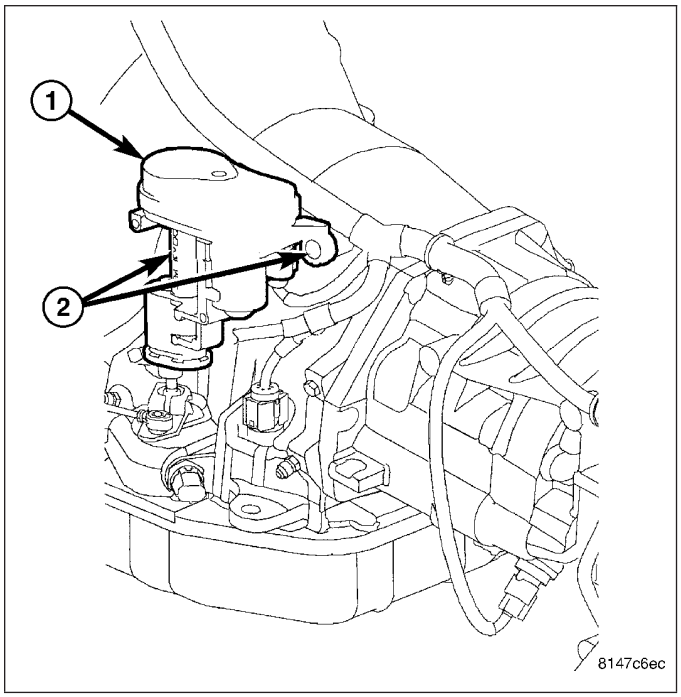

ADJUSTMENTS

ADJUSTMENT

The Transmission Throttle Valve Actuator (TTVA) does not require any mechanical adjustments. All changes in throttle valve position are controlled by the Engine Control Module (ECM).

The TTVA does require an initialization period after the actuator has been removed or replaced. After the actuator has been removed or replaced, move the iginition to the ON position for thirty (30) seconds. This will allow the ECM sufficient time to perform the internal calibration procedures to learn the TTVA's current "zero" position. Once this is done, check the ECM for diagnostic trouble codes (DTCs). If no DTCs are set relating to the TTVA, the TTVA is fully calibrated and ready for use.

CABLE-THROTTLE VALVE

DESCRIPTION

Transmission throttle valve cable (1) adjustment is extremely important to proper operation. This adjustment positions the throttle valve, which controls shift speed, quality, and part-throttle downshift sensitivity.

If cable setting is too loose, early shifts and slippage between shifts may occur. If the setting is too tight, shifts may be delayed and part throttle downshifts may be very sensitive.

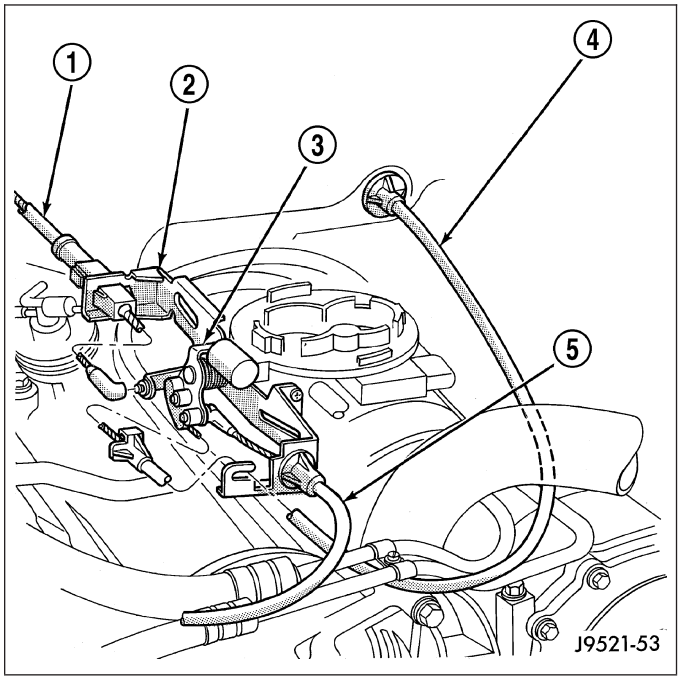

The transmission throttle valve is operated by a cam on the throttle lever. The throttle lever is operated by an adjustable cable (3). The cable is attached to an arm mounted on the throttle lever shaft. A retaining clip (2) at the engine-end of the cable is removed to provide for cable adjustment. The retaining clip is then installed back onto the throttle valve cable to lock in the adjustment.

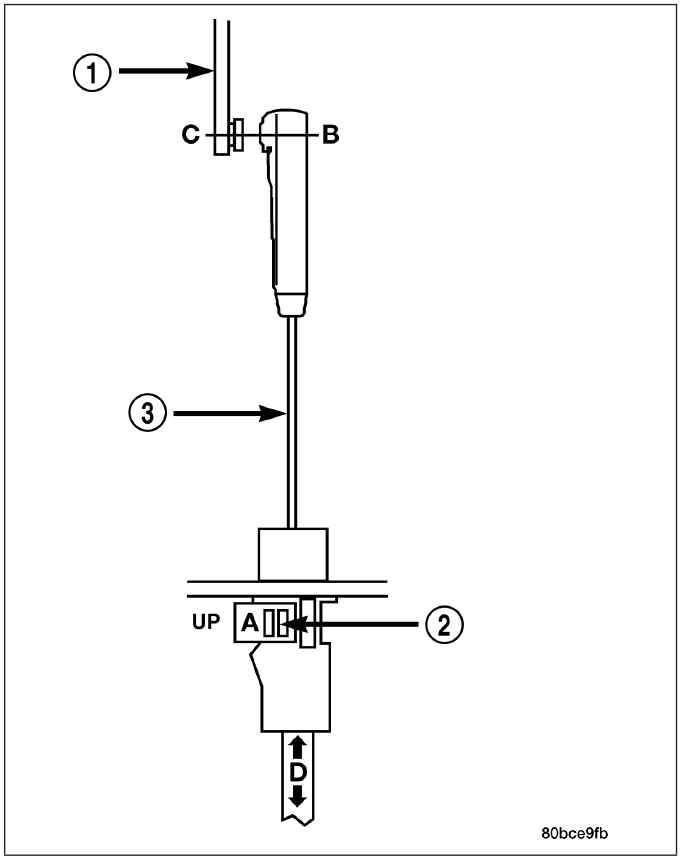

ADJUSTMENTS - THROTTLE VALVE CABLE

A correctly adjusted throttle valve cable (1) will cause the throttle lever on the transmission to move simultaneously with the throttle body lever (3) from the idle position. Proper adjustment will allow simultaneous movement without causing the transmission throttle lever to either move ahead of, or lag behind the lever on the throttle body.

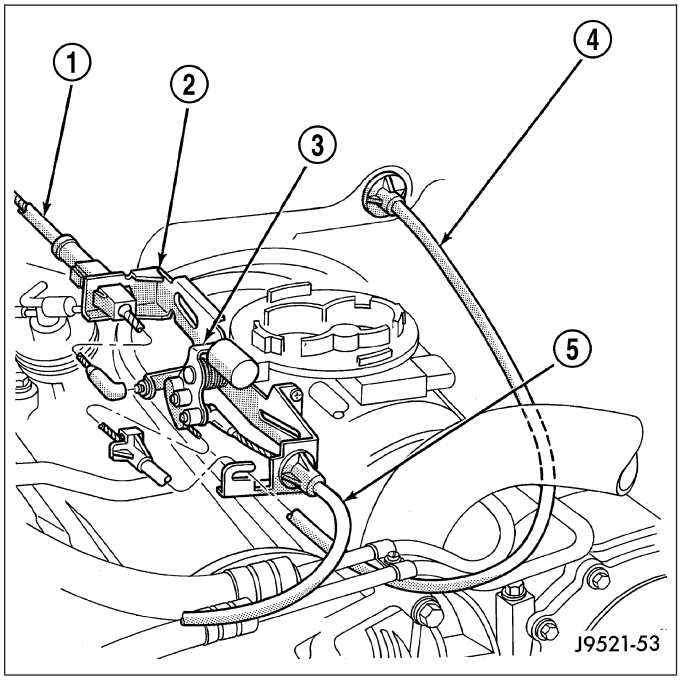

ADJUSTMENT VERIFICATION

1. Turn ignition key to OFF position.
2. Remove air cleaner.
3. Verify that lever on throttle body is at curb idle position. Then verify that the transmission throttle lever is also at idle (fully forward) position.

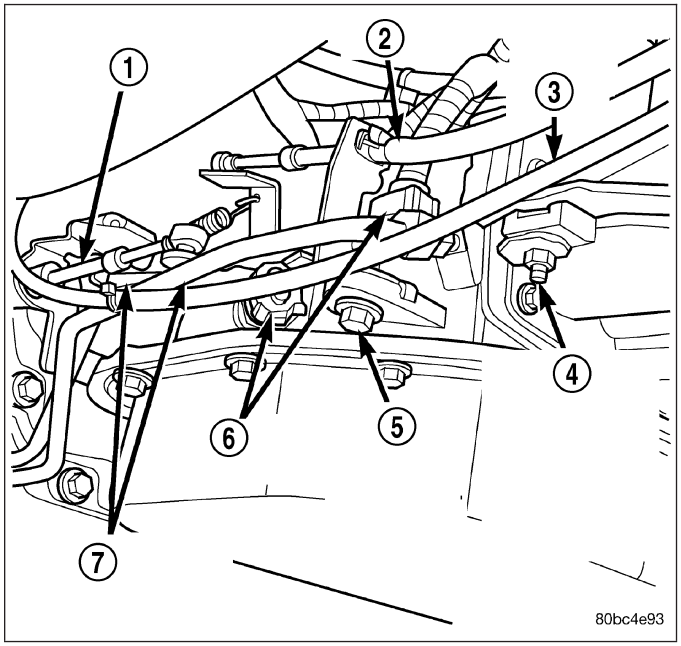

4. Slide cable off attachment stud on throttle body lever.
5. Compare position (B) of cable end to attachment stud on throttle body lever:
   - Cable end and attachment stud should be aligned (or centered on one another) to within 1 mm (0.039 in.) in either direction (B).
   - If cable end and attachment stud are misaligned (off center), cable will have to be adjusted as described in Throttle Valve Cable Adjustment procedure.
6. Reconnect cable end to attachment stud. Then with aid of a helper, observe movement of transmission throttle lever and lever on throttle body.
   - If both levers move simultaneously from idle to half-throttle and back to idle position, adjustment is correct.
   - If transmission throttle lever moves ahead of, or lags behind throttle body lever, cable adjustment will be necessary. Or, if throttle body lever prevents transmission lever from returning to closed position, cable adjustment will be necessary.

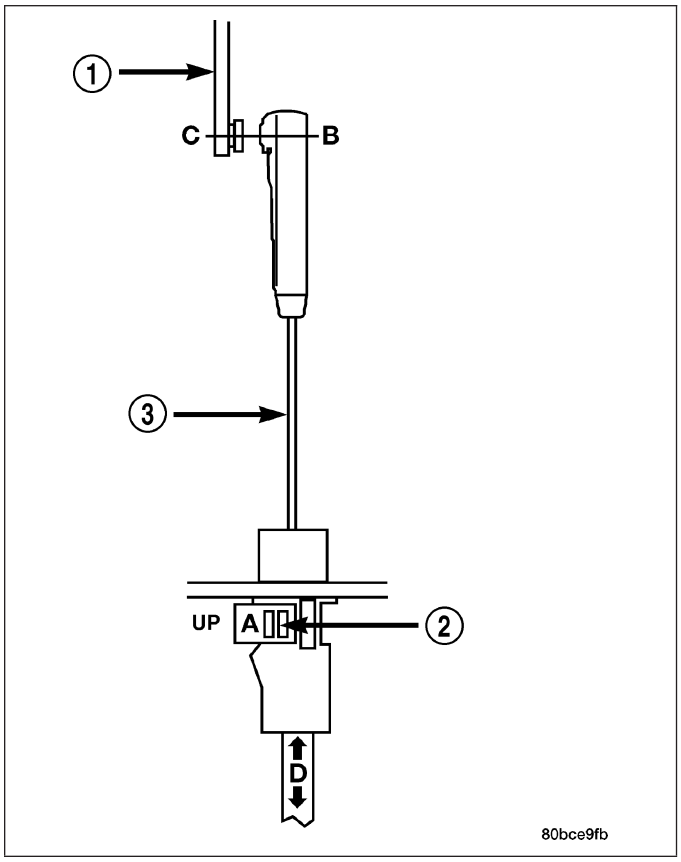

ADJUSTMENT PROCEDURE

1. Turn ignition switch to OFF position.
2. Remove air cleaner if necessary.
3. Disconnect cable end (3) from attachment stud on throttle lever (1). **Carefully slide cable off stud. Do not pry or pull cable off.**
4. Verify that transmission throttle lever is in fully closed position. Then be sure lever on throttle body is at curb idle position.
5. Pry the T.V. cable lock (A) into the UP position. This will unlock the cable and allow for readjustment.
6. Apply just enough tension on the T.V. cable (B) to remove any slack in the cable.**Pulling too tight will cause the T.V. lever on the transmission to move out of its idle position, which will result in an incorrect T.V. cable adjustment.** Slide the sheath of the T.V. cable (D) back and forth until the centerlines of the T.V. cable end (B) and the throttle bell crank lever (C) are aligned within one millimeter (1mm).
7. While holding the T.V. cable in the set position push the T.V. cable lock (A) into the down position. This will lock the present T.V. cable adjustment.

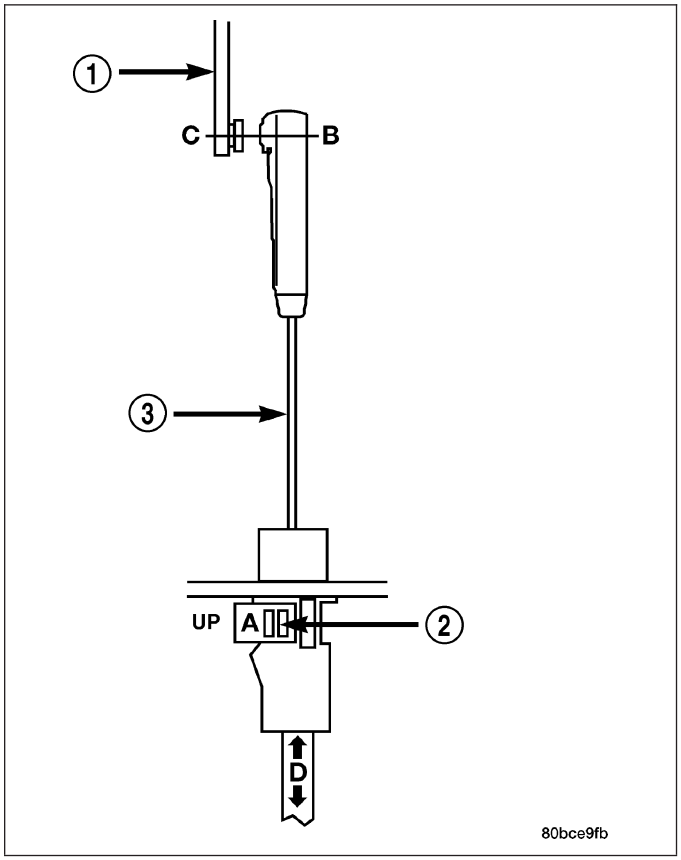

NOTE: Be sure that as the cable is pulled forward and centered on the throttle lever stud, the cable housing moves smoothly with the cable. Due to the angle at which the cable housing enters the spring housing, the cable housing may bind slightly and create an incorrect adjustment.

8. Reconnect the T.V. cable (B) to the throttle bellcrank lever (C).
9. Check cable adjustment. Verify transmission throttle lever and lever on throttle body move simultaneously.

CONVERTER-TORQUE

DESCRIPTION

The torque converter is a hydraulic device that couples the engine crankshaft to the transmission. The torque converter consists of an outer shell with an internal turbine (1), a stator (4), an overrunning clutch, an impeller (2), and an electronically applied converter clutch (6). The converter clutch provides reduced engine speed and greater fuel economy when engaged. Clutch engagement also provides reduced transmission fluid temperatures. The torque converter hub drives the transmission oil (fluid) pump.

The torque converter is a sealed, welded unit that is not repairable and is serviced as an assembly.

CAUTION: The torque converter must be replaced if a transmission failure resulted in large amounts of metal or fiber contamination in the fluid.

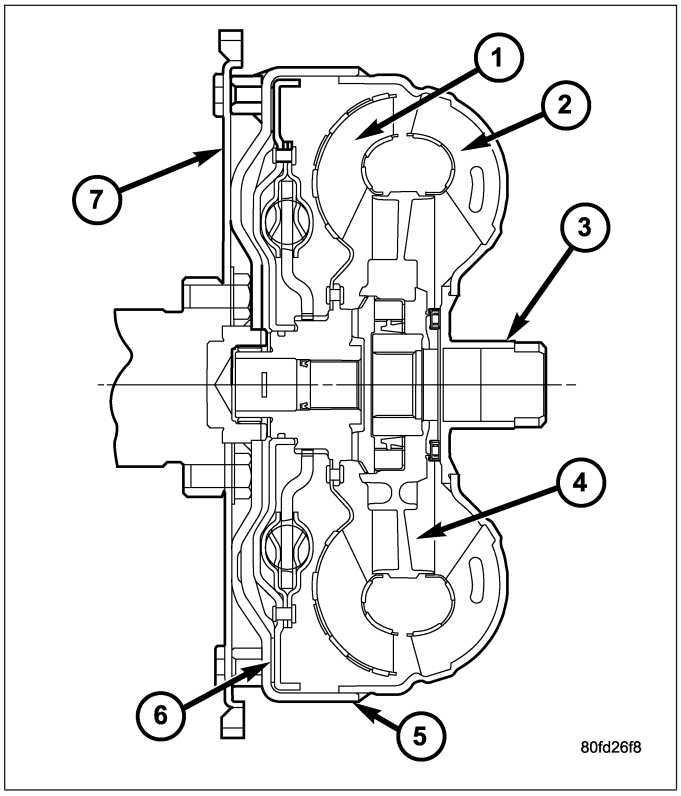

IMPELLER

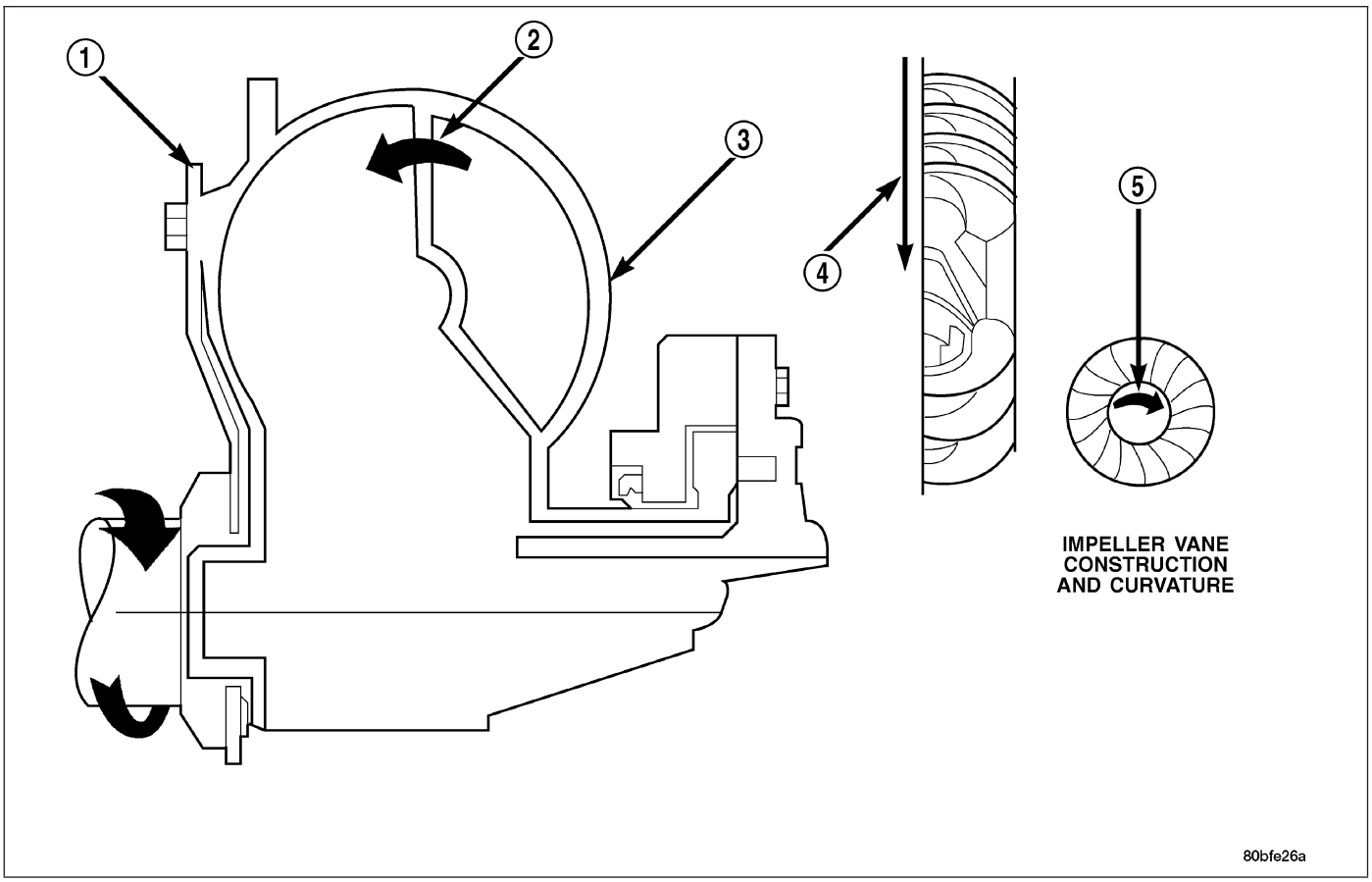

Impeller

1 - ENGINE FLEXPLATE
2 - OIL FLOW FROM IMPELLER SECTION INTO TURBINE SECTION
3 - IMPELLER VANES AND COVER ARE INTEGRAL
4 - ENGINE ROTATION
5 - ENGINE ROTATION

The impeller is an integral part of the converter housing. The impeller consists of curved blades placed radially along the inside of the housing on the transmission side of the converter. As the converter housing is rotated by the engine, so is the impeller, because they are one and the same and are the driving members of the system.

TURBINE

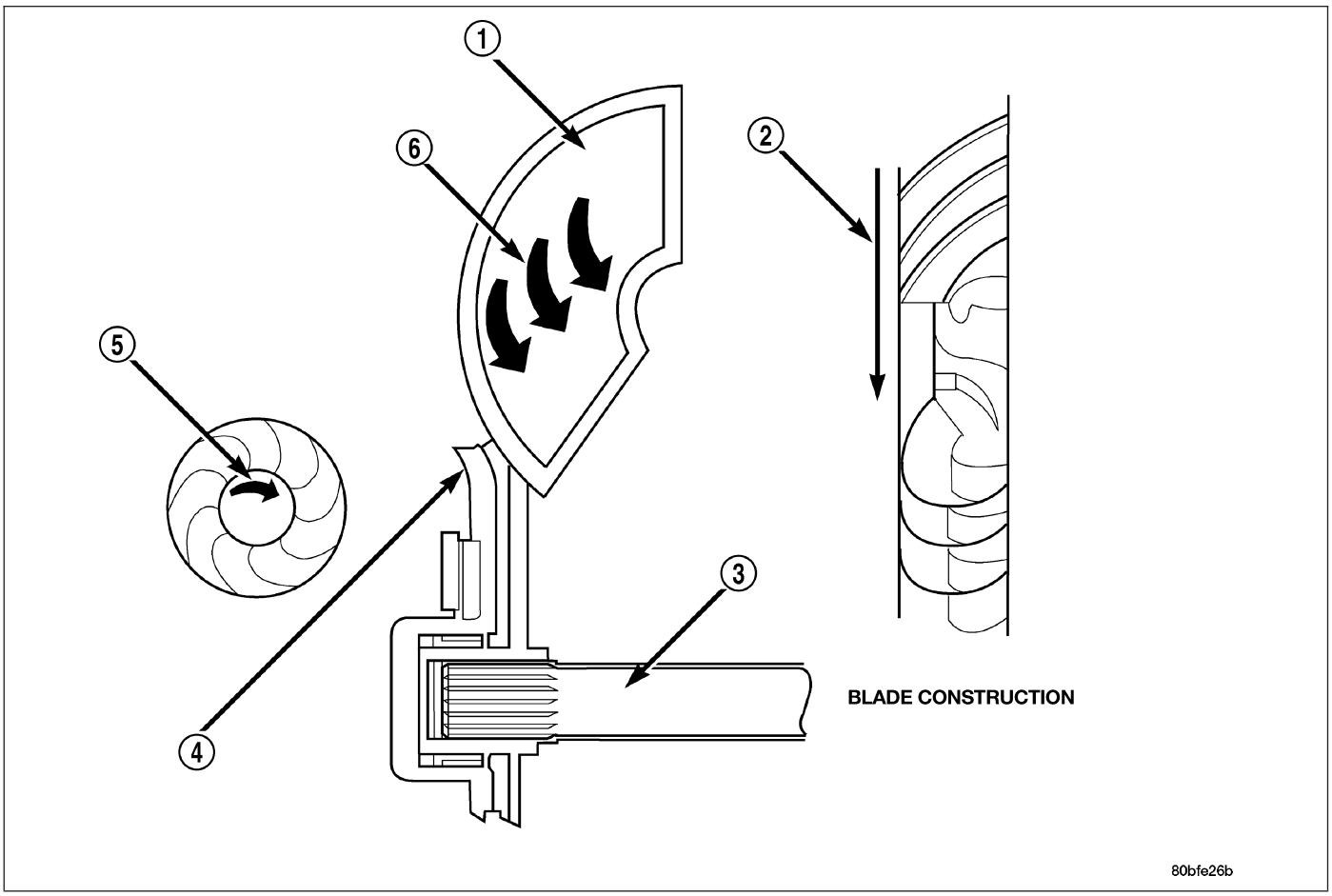

Turbine

1 - TURBINE VANE
2 - ENGINE ROTATION
3 - INPUT SHAFT
4 - PORTION OF TORQUE CONVERTER COVER
5 - ENGINE ROTATION
6 - OIL FLOW WITHIN TURBINE SECTION

The turbine is the output, or driven, member of the converter. The turbine is mounted within the housing opposite the impeller, but is not attached to the housing. The input shaft is inserted through the center of the impeller and splined into the turbine. The design of the turbine is similar to the impeller, except the blades of the turbine are curved in the opposite direction.

STATOR

The stator assembly is mounted on a stationary shaft which is an integral part of the oil pump. The stator contains an over-running clutch (1-4), which allows the stator to rotate only in a clockwise direction. When the stator is locked against the over-running clutch, the torque multiplication feature of the torque converter is operational.

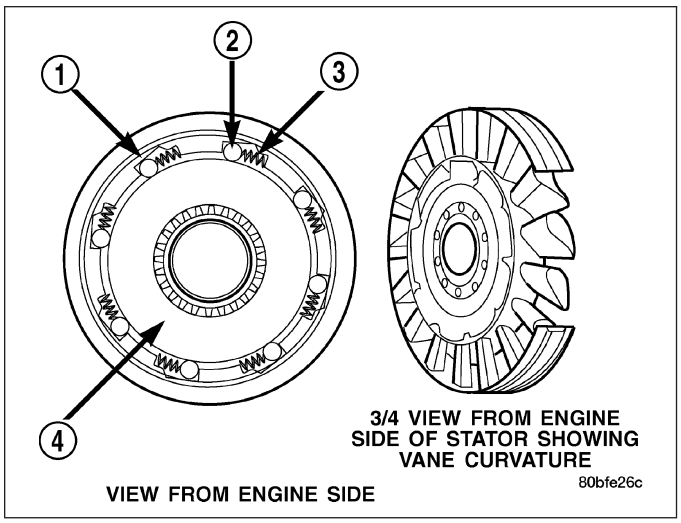

The stator (1) is located between the impeller (2) and turbine (4) within the torque converter case.

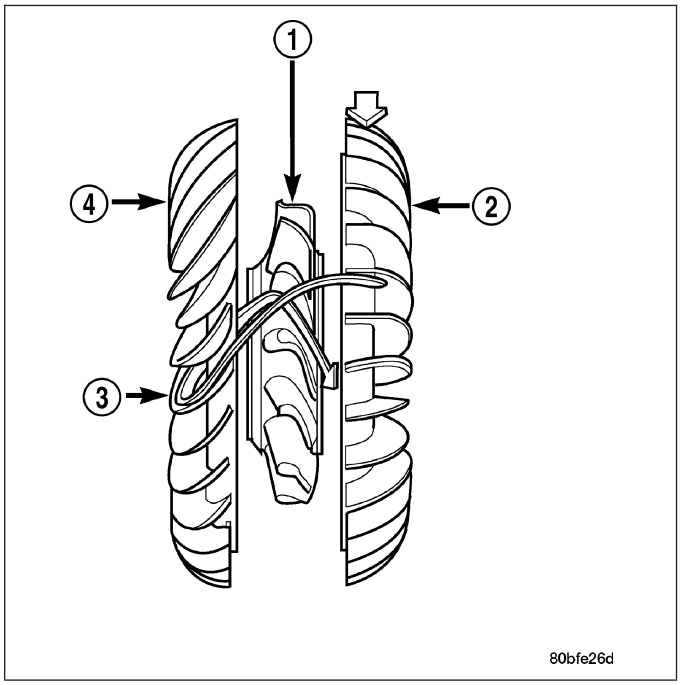

TORQUE CONVERTER CLUTCH (TCC)

The TCC was installed to improve the efficiency of the torque converter that is lost to the slippage of the fluid coupling. Although the fluid coupling provides smooth, shock-free power transfer, it is natural for all fluid couplings to slip. If the impeller and turbine were mechanically locked together, a zero slippage condition could be obtained. A hydraulic piston (6) was added to the turbine (5), and a friction material (7) was added to the inside of the front cover (1) to provide this mechanical lock-up.

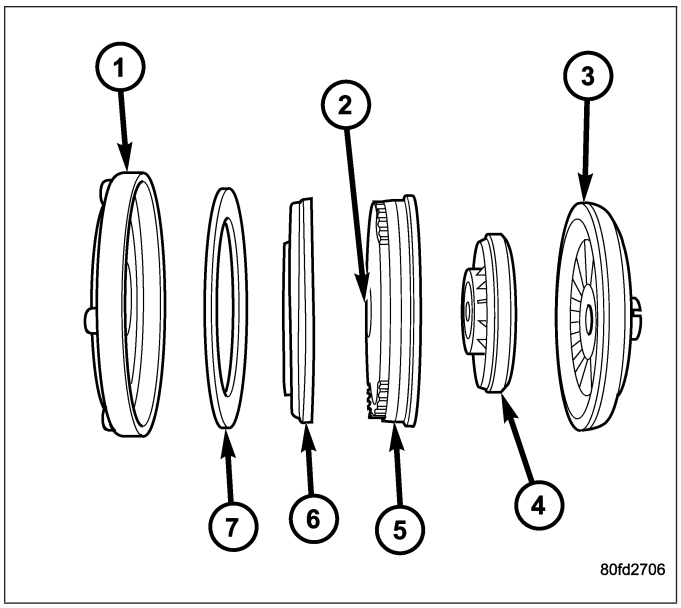

OPERATION

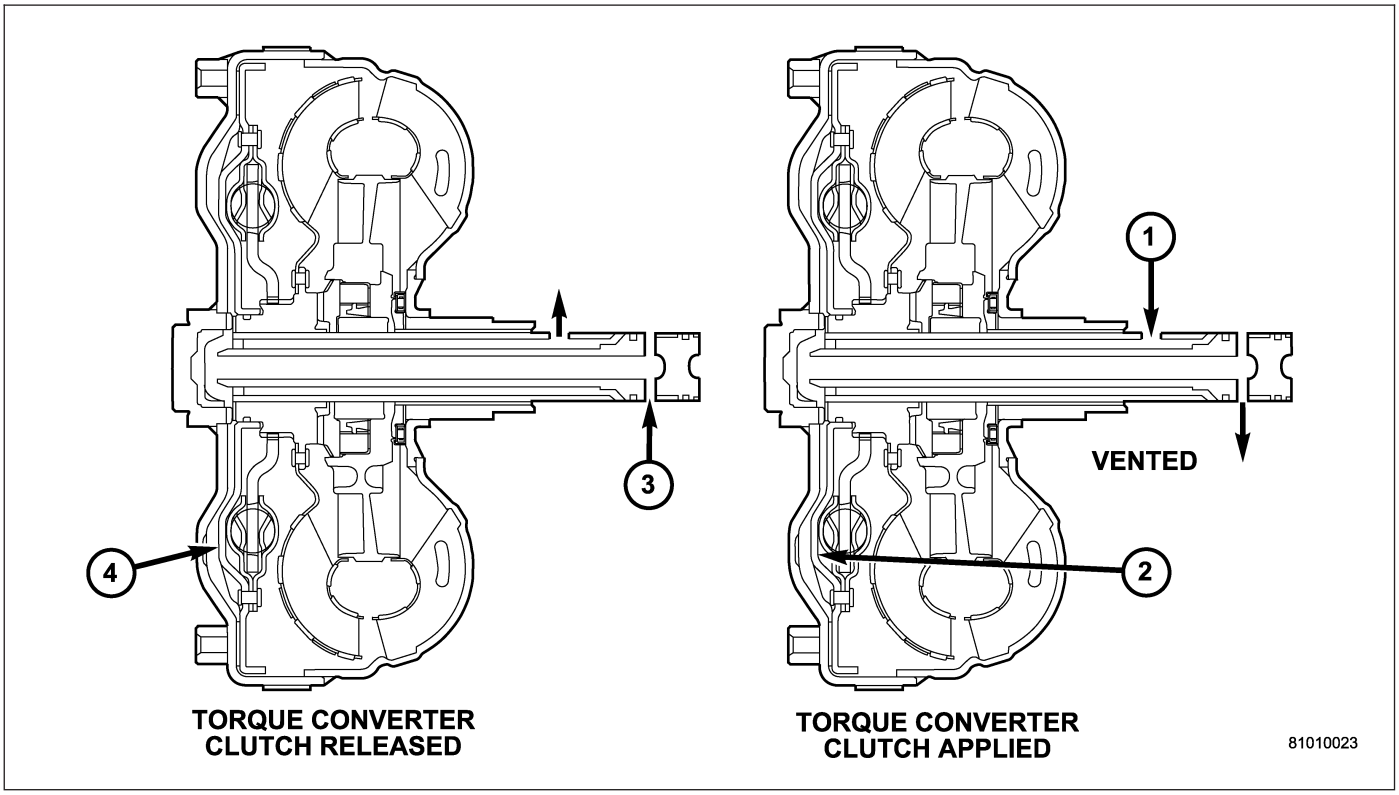

Torque Converter Fluid Operation

1 - APPLY PRESSURE
2 - THE PISTON MOVES SLIGHTLY FORWARD
3 - RELEASE PRESSURE
4 - THE PISTON MOVES SLIGHTLY REARWARD

The converter impeller (driving member), which is integral to the converter housing and bolted to the engine drive plate, rotates at engine speed. The converter turbine (driven member), which reacts from fluid pressure generated by the impeller, rotates and turns the transmission input shaft.

TURBINE

As the fluid that was put into motion by the impeller blades strikes the blades of the turbine, some of the energy and rotational force is transferred into the turbine and the input shaft. This causes both of them (turbine and input shaft) to rotate in a clockwise direction following the impeller. As the fluid is leaving the trailing edges of the turbine's blades it continues in a "hindering" direction back toward the impeller. If the fluid is not redirected before it strikes the impeller, it will strike the impeller in a direction that would tend to slow it down.

STATOR

Torque multiplication is achieved by locking the stator's over-running clutch to its shaft. Under stall conditions the turbine is stationary and the oil leaving the turbine blades strikes the face of the stator blades and tries to rotate them in a counterclockwise direction. When this happens the overrunning clutch of the stator locks and holds the stator from rotating. With the stator locked, the oil strikes the stator blades (1) and is redirected into a "helping" direction before it enters the impeller. This circulation of oil from impeller to turbine, turbine to stator, and stator to impeller, can produce a maximum torque multiplication of about 1.75:1. As the turbine begins to match the speed of the impeller, the fluid that was hitting the stator in such as way as to cause it to lock-up is no longer doing so. In this condition of operation, the stator begins to free wheel and the converter acts as a fluid coupling.

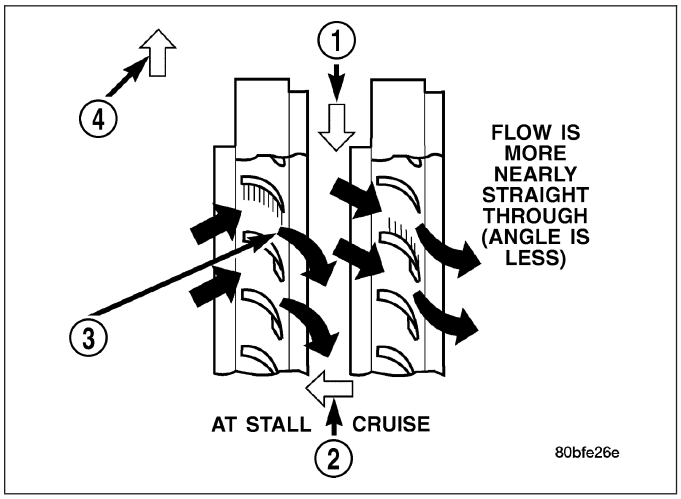

Stator Operation

1 - DIRECTION STATOR WILL FREE WHEEL DUE TO OIL PUSHING ON BACKSIDE OF VANES
2 - FRONT OF ENGINE
3 - INCREASED ANGLE AS OIL STRIKES VANES
4 - DIRECTION STATOR IS LOCKED UP DUE TO OIL PUSHING AGAINST STATOR VANES

TORQUE CONVERTER CLUTCH (TCC)

The torque converter clutch is hydraulically applied or released when fluid is feed or vented from the hydraulic circuit by the torque converter control (TCC) solenoid on the valve body. The torque converter clutch is controlled by the Powertrain Control Module (PCM). The torque converter clutch engages in FOURTH gear, and in THIRD gear under various conditions, such as when the O/D switch is OFF, or when the vehicle is cruising on a level surface after the vehicle has warmed up. The torque converter clutch can also be engaged in the MANUAL SECOND gear position if high transmission temperatures are sensed by the PCM. The torque converter clutch may disengage momentarily when an increase in engine load is sensed by the PCM, such as when the vehicle begins to go uphill or the throttle pressure is increased.

REMOVAL

1. Remove transmission and torque converter from vehicle. (Refer to 21 - TRANSMISSION/AUTOMATIC - 45RFE/545RFE - REMOVAL)
2. Place a suitable drain pan under the converter housing end of the transmission.

CAUTION: Verify that transmission is secure on the lifting device or work surface, the center of gravity of the transmission will shift when the torque converter is removed creating an unstable condition. The torque converter is a heavy unit. Use caution when separating the torque converter from the transmission.

3. Pull the torque converter forward until the center hub clears the oil pump seal.
4. Separate the torque converter from the transmission.

INSTALLATION

Check converter hub and drive notches for sharp edges, burrs, scratches, or nicks. Polish the hub and notches with 320/400 grit paper or crocus cloth if necessary. The hub must be smooth to avoid damaging the pump seal at installation.

1. Lubricate oil pump seal lip with transmission fluid.
2. Place torque converter in position on transmission.

CAUTION: Do not damage oil pump seal or bushing while inserting torque converter into the front of the transmission.

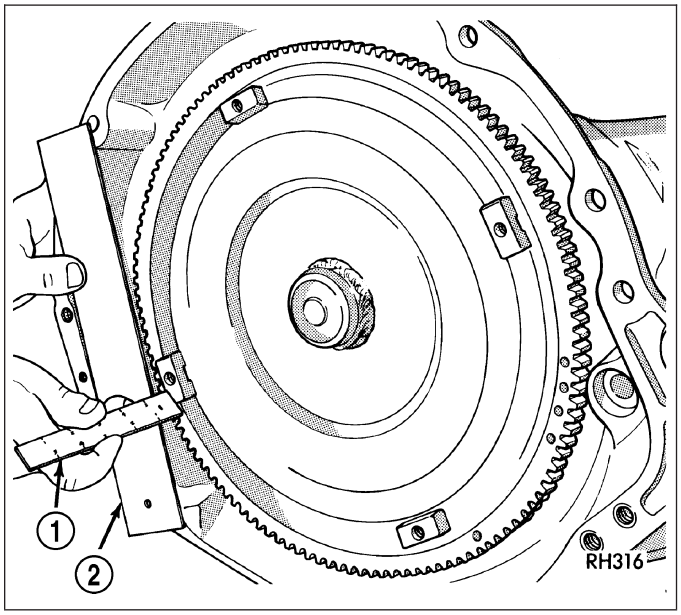

3. Align torque converter to oil pump seal opening.
4. Insert torque converter hub into oil pump.
5. While pushing torque converter inward, rotate converter until converter is fully seated in the oil pump gears.
6. Check converter seating with a scale (1) and straightedge (2). Surface of converter lugs should be 19mm (0.75 in.) to the rear of the straightedge when converter is fully seated.
7. If necessary, temporarily secure converter with C-clamp attached to the converter housing.
8. Install the transmission in the vehicle.
9. Fill the transmission with the recommended fluid.

VALVE-TORQUE CONVERTER DRAINBACK

DESCRIPTION

GAS ENGINES

The drainback valve is located in the transmission cooler outlet (pressure) line.

DIESEL ENGINE

The converter drainback check valve is located in the in the TOC pressure - supply line, between the engine mounted TOC and the air to oil TOC.

OPERATION

GAS ENGINES

The valve prevents fluid from draining from the converter into the cooler and lines when the vehicle is shut down for lengthy periods. Production valves have a hose nipple at one end, while the opposite end is threaded for a flare fitting. All valves have an arrow (or similar mark) to indicate direction of flow through the valve.

DIESEL ENGINE

The valve prevents fluid from draining from the converter into the cooler and lines when the vehicle is shut down for lengthy periods. Production valves have pipe thread on one end, while the opposite end is threaded for a flare fitting, and are threaded into the oil cooler mounted on the side of the engine. All valves have an arrow (or similar mark) to indicate direction of flow through the valve.

STANDARD PROCEDURE

GAS ENGINES

The converter drainback check valve is located in the cooler outlet (pressure) line near the radiator tank. The valve prevents fluid drainback when the vehicle is parked for lengthy periods. The valve check ball is spring loaded and has an opening pressure of approximately 2 psi.

The valve is serviced as an assembly; it is not repairable. Do not clean the valve if restricted, or contaminated by sludge, or debris. If the valve fails, or if a transmission malfunction occurs that generates significant amounts of sludge and/or clutch particles and metal shavings, the valve must be replaced.

If the valve is restricted, installed backwards, or in the wrong line, it will cause an transmission overheating condition and possible transmission failure.

CAUTION: The drainback valve is a one-way flow device. It must be properly oriented in terms of flow direction for the cooler to function properly. The valve must be installed in the pressure line. Otherwise flow will be blocked and would cause an transmission overheating condition and eventual transmission failure.

DIESEL ENGINE

The converter drainback check valve is located in the in the TOC pressure - supply line, between the engine mounted transmission oil cooler and the air to oil transmission oil cooler. The valve prevents fluid drainback when the vehicle is parked for lengthy periods. The valve check ball is spring loaded and has an opening pressure of approximately 2 psi.

The valve is serviced as an assembly; it is not repairable. Do not clean the valve if restricted, or contaminated by sludge, or debris. If the valve fails, or if a transmission malfunction occurs that generates significant amounts of sludge and/or clutch particles and metal shavings, the valve must be replaced.

If the valve is restricted, installed backwards, or in the wrong line, it will cause an transmission overheating condition and possible transmission failure.

CAUTION: The drainback valve is a one-way flow device. It must be properly oriented in terms of flow direction for the cooler to function properly. The valve must be installed in the pressure line. Otherwise flow will be blocked and would cause an transmissionn overheating condition and eventual transmission failure.

SWITCH-TOW/HAUL OVERDRIVE

DESCRIPTION

The tow/haul overdrive OFF (control) switch is located in the shift lever arm. The switch is a momentary contact device that signals the PCM to toggle current status of the overdrive function.

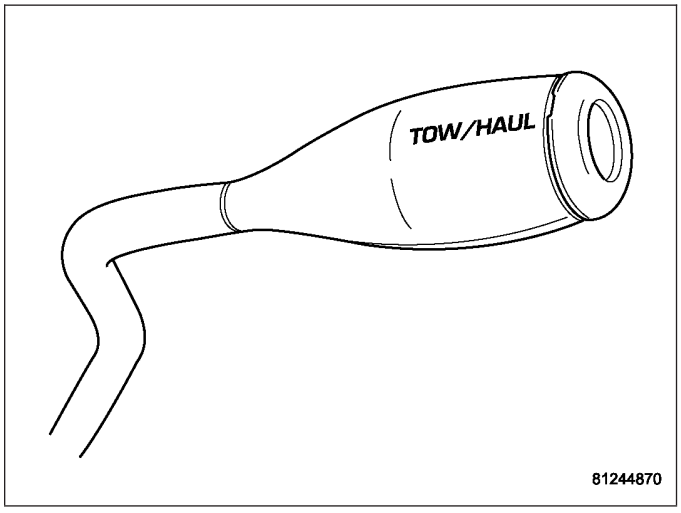

OPERATION

At key-on, overdrive operation is allowed. Pressing the switch once causes the tow/haul overdrive OFF mode to be entered and the Tow/Haul lamp to be illuminated. Pressing the switch a second time causes normal overdrive operation to be restored and the tow/haul lamp to be turned off. The tow/haul overdrive OFF mode defaults to ON after the ignition switch is cycled OFF and ON. The normal position for the control switch is the ON position. The switch must be in this position to energize the solenoid and allow a 3-4 upshift. The control switch indicator light illuminates only when the tow/haul overdrive switch is turned to the OFF position, or when illuminated by the transmission control module.

DIAGNOSIS AND TESTING - OVERDRIVE ELECTRICAL CONTROLS

The tow/haul overdrive off switch, valve body solenoid, case connectors and related wiring can all be tested with a 12 volt test lamp or a volt/ohmmeter. Check continuity of each component when diagnosis indicates this is necessary.

Switch and solenoid continuity should be checked whenever the transmission fails to shift into fourth gear range.

REMOVAL

1. Using a plastic trim tool, remove the tow/haul overdrive off switch retainer (2) from the shift lever (1).

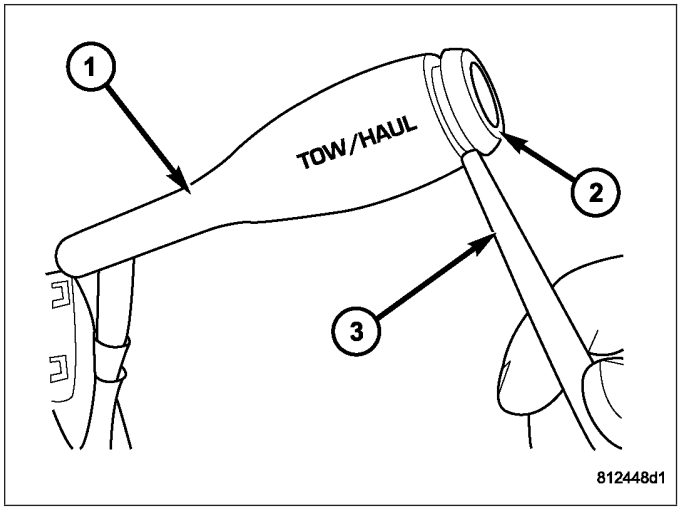

2. Pull the switch (2) outwards to release it from the connector in the lever (1)

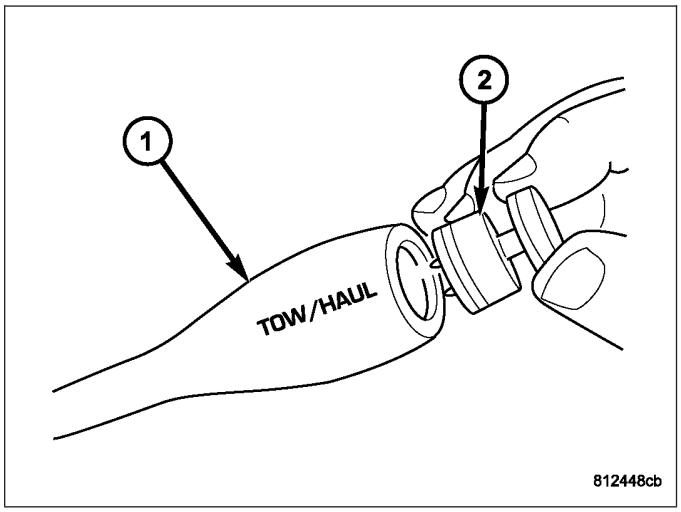

INSTALLATION

NOTE: There is enough slack in the wire to pull out the connector from the lever.

1. Pull the connector (2) out of the lever (1) just enough to grasp it.

CAUTION: Be careful not to bend the pins on the tow/haul overdrive off switch. Use care when installing the switch, as it is not indexed, and can be accidentally installed incorrectly.

2. Install the tow/haul overdrive off switch (3) into the connector (2)
3. Push the tow/haul overdrive off switch (3) and wiring into the shift lever (1).
4. Install the tow/haul overdrive off switch retainer onto the shift lever.

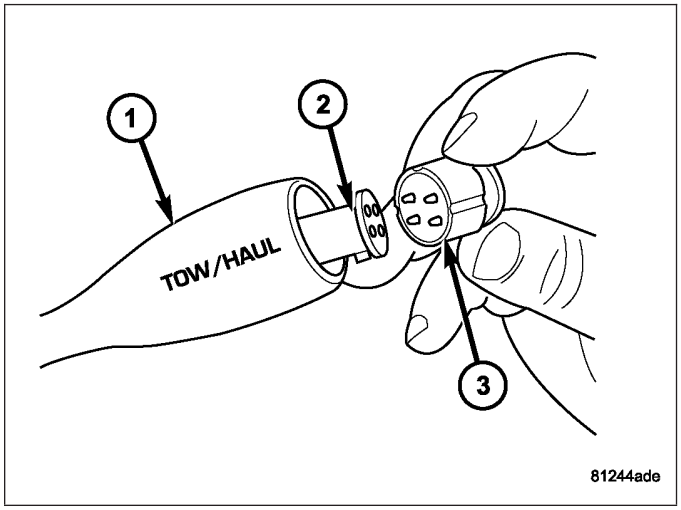

SENSOR-TRANSMISSION RANGE

DESCRIPTION

The Transmission Range Sensor (TRS) has 3 primary functions:

- Provide a PARK/NEUTRAL start signal to the engine controller and the starter relay.
- Turn the Back-up lamps on when the transmission is in REVERSE and the engine (ignition) is on.
- Provide a transmission range signal to the instrument cluster.

The sensor is mounted in the transmission housing near the valve body, just above the pan rail. It's in the same position as the Park/Neutral switch on other transmissions. The TRS contacts a cammed surface on the manual valve lever. The cammed surface translates the rotational motion of the manual lever into the linear motion of the sensor. The cammed surface on the manual lever is comprised of two parts controlling the TRS signal: The insulator portion contacts the switch poppet when the manual lever is not in PARK or NEUTRAL. The manual lever itself contacts the poppet when the lever is in PARK or NEUTRAL; providing a ground for the signal from the starter relay and the appropriate engine controller.

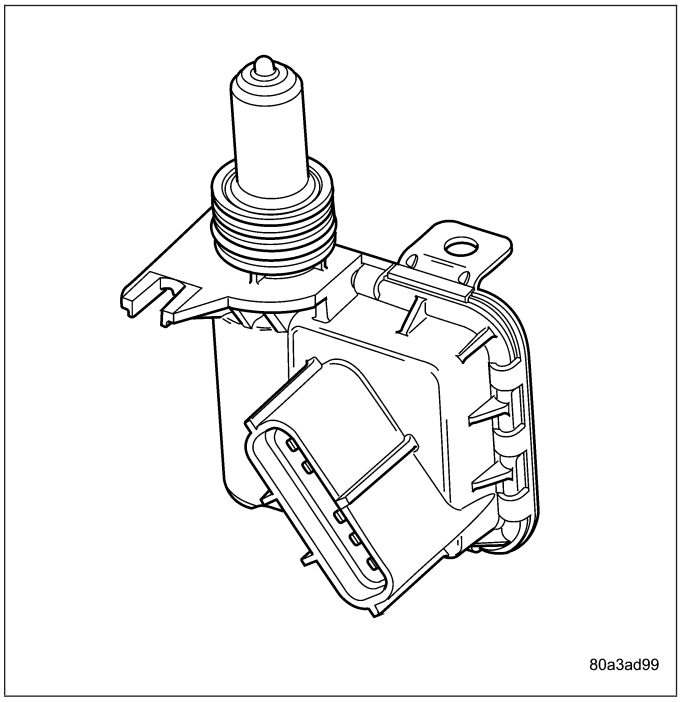

OPERATION

As the switch moves through its linear motion contacts slide across a circuit board which changes the resistance between the range sensing pins of the switch. A power supply on the instrument cluster provides a regulated voltage signal to the switch. The return signal is decoded by the cluster, which then controls the PRNDL display to correspond with the correct transmission range. A bus message of transmission range is also sent by the cluster. In REVERSE range a second contact set closes the circuit providing power to the reverse lamps.

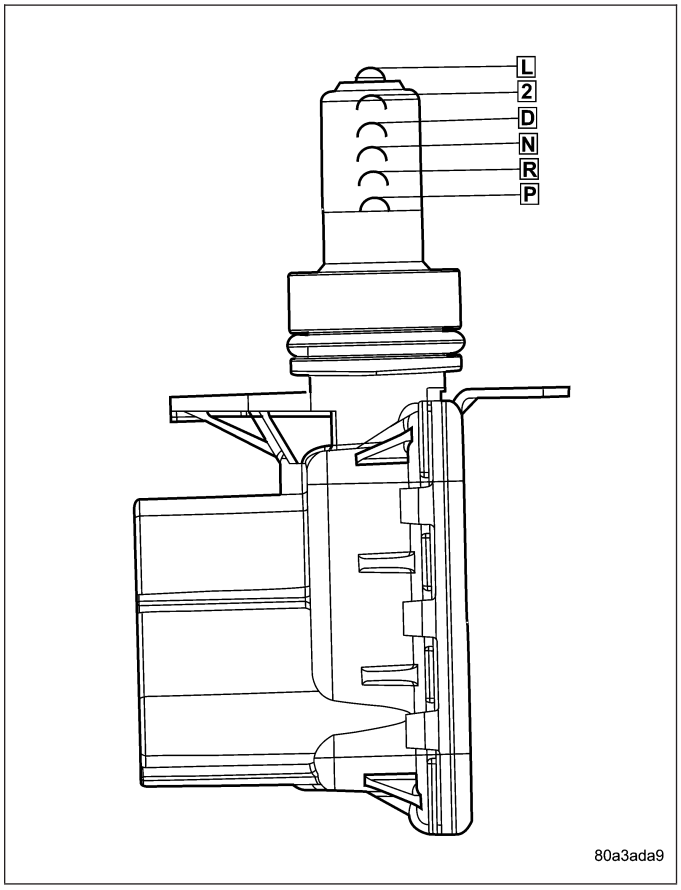

Indicated Gear Position			Transmission Status	Column Shifter Position
Mechanical State	Electronic Display (Ignition Unlocked)	Electronic Display (Ignition On)		
P	P	P	Vehicle is in PARK with the pawl engaged.	In the PARK gate.
	R		The PARK pawl is disengaged and the vehicle is free to roll, but REVERSE is not engaged.	Between the PARK and REVERSE gates.
R	R	R	The transmission is hydraulically in REVERSE.	In the REVERSE gate.
	N		The transmission is transitioning between REVERSE and NEUTRAL.	Between the REVERSE and NEUTRAL gates.
N	N	N	The vehicle is in NEUTRAL.	In the NEUTRAL gate.

Indicated Gear Position			Transmission Status	Column Shifter Position
Mechanical State	Electronic Display (Ignition Unlocked)	Electronic Display (Ignition On)		
	N		The transmission is transitioning between NEUTRAL and DRIVE, but is not in DRIVE.	Between the NEUTRAL and DRIVE gates.
D	D	D	The transmission is hydraulically in DRIVE.	In the DRIVE gate,
2	2	2	The transmission is hydraulically in Manual SECOND.	In the SECOND gate.
1	1	1	The transmission is hydraulically in Manual FIRST.	In the FIRST gate.

DIAGNOSIS AND TESTING - TRANSMISSION RANGE SENSOR (TRS)

NOTE: For all circuit identification in the following steps, Refer to the appropriate Wiring Information.

1. Raise vehicle on suitable hoist.
2. Disconnect the vehicle's shift cable from the manual lever.
3. With the manual lever in the PARK position (the PARK position is with the manual lever moved to the full rearward position), measure the resistance between the Park/Neutral Position Sense pin of the TRS and the transmission case. The resistance should be less than 5 ohms.
4. With the manual lever in the NEUTRAL position (the NEUTRAL position is with the manual lever moved two detents forward of the full rearward position), measure the resistance between the Park/Neutral Position Sense pin of the TRS and the transmission case. The resistance should be less than 5 ohms.
5. If the resistance is greater than 5 ohms in either of the previous steps, check for a dirty contact between the tip of the TRS rod and the valve body manual lever. If the contact is OK, replace the TRS.
6. With the manual lever in the REVERSE position (the REVERSE position is with the manual lever moved one detent forward of the full rearward position), measure the resistance between the Fused Ignition Switch Output and the Back-up Lamp feed pins of the TRS. The resistance should be less than 5 ohms. If the resistance is greater than 5 ohms, replace the TRS.
7. With the manual lever in the PARK position (the PARK position is with the manual lever moved to the full rearward position), measure the resistance between the Transmission Range Sensor MUX and the Transmission Range Sensor 5V Supply pins of the TRS. The resistance should be 522.2 ohms. If the resistance is not correct, replace the TRS.
8. With the manual lever in the REVERSE position (the REVERSE position is with the manual lever moved one detent forward of the full rearward position), measure the resistance between the Transmission Range Sensor MUX and the Transmission Range Sensor 5V Supply pins of the TRS. The resistance should be 206.2 ohms. If the resistance is not correct, replace the TRS.
9. With the manual lever in the NEUTRAL position (the NEUTRAL position is with the manual lever moved two detents forward of the full rearward position), measure the resistance between the Transmission Range Sensor MUX and the Transmission Range Sensor 5V Supply pins of the TRS. The resistance should be 108.6 ohms. If the resistance is not correct, replace the TRS.
10. With the manual lever in the DRIVE position (the DRIVE position is with the manual lever moved three detents forward of the full rearward position), measure the resistance between the Transmission Range Sensor MUX and the Transmission Range Sensor 5V Supply pins of the TRS. The resistance should be 59.9 ohms. If the resistance is not correct, replace the TRS.
11. With the manual lever in the SECOND position (the SECOND position is with the manual lever moved one detent rearward of the full forward position), measure the resistance between the Transmission Range Sensor

MUX and the Back-up Lamp feed pins of the TRS. The resistance should be 31.9 ohms. If the resistance is not correct, replace the TRS.

12. With the manual lever in the LOW position (the LOW position is with the manual lever moved to the full forward position), measure the resistance between the Transmission Range Sensor MUX and the Back-up Lamp feed pins of the TRS. The resistance should be 13.7 ohms. If the resistance is not correct, replace the TRS.

REMOVAL

1. Raise vehicle and position drain pan under the transmission range sensor (TRS).
2. Move the transmission manual lever to the manual LOW position. The manual LOW position is with the manual lever in the forward-most detent.
3. Disengage the wiring connector from the TRS.
4. Remove the two screws holding the TRS to the TRS mounting bracket.
5. Remove the TRS (3) from the TRS mounting bracket by pulling it straight out of the bracket.

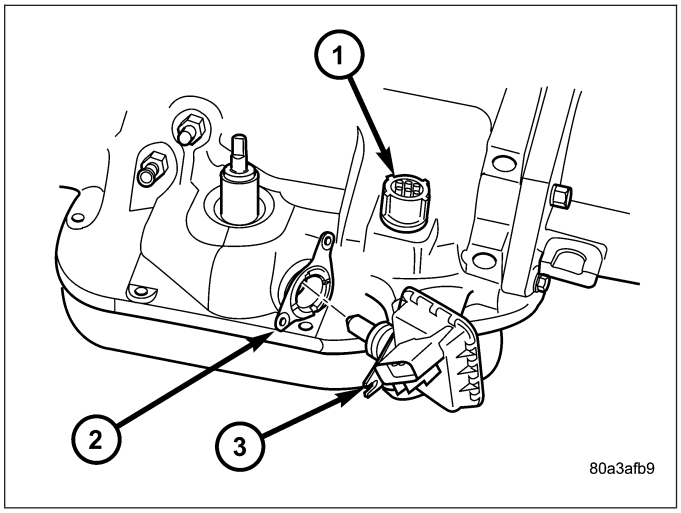

6. If necessary, loosen the TRS mounting bracket (2) in the transmission case using Adapter 8581 (3).

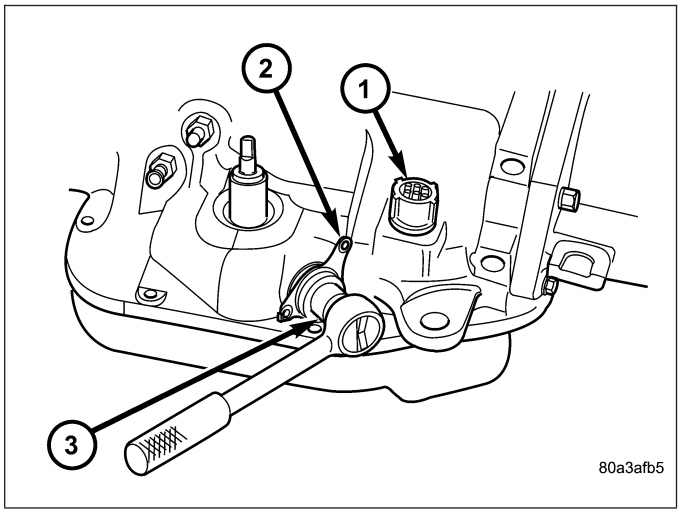

7. If necessary, remove the TRS mounting bracket (2) from the transmission case.

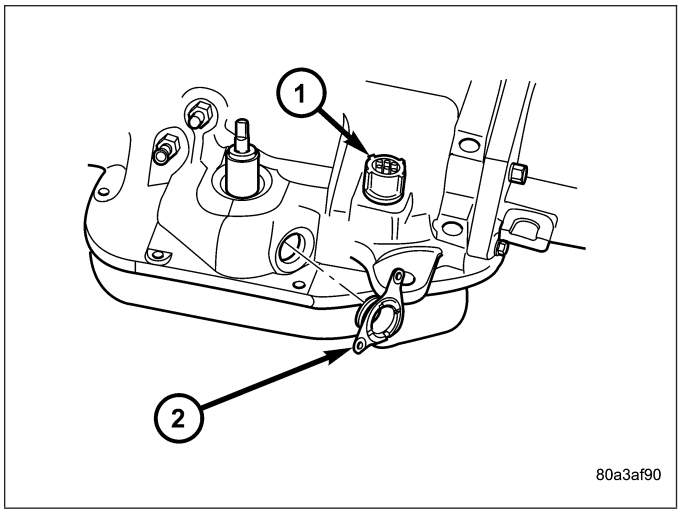

INSTALLATION

1. Move the transmission manual shaft lever to the manual LOW position.
2. If necessary, install the TRS mounting bracket (2) into the transmission case. Using Adapter 8581 (3), tighten the mounting bracket to 34 N·m (300 in.lbs.).

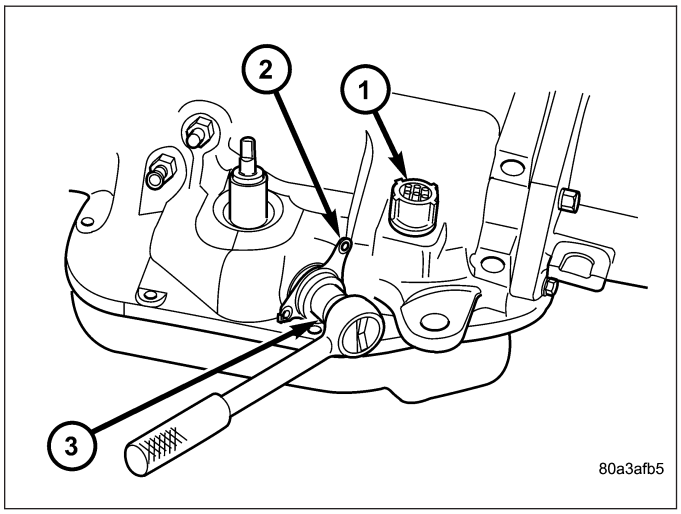

3. Install the TRS (3) into the mounting bracket (2) with the wiring connector facing the front of the transmission.

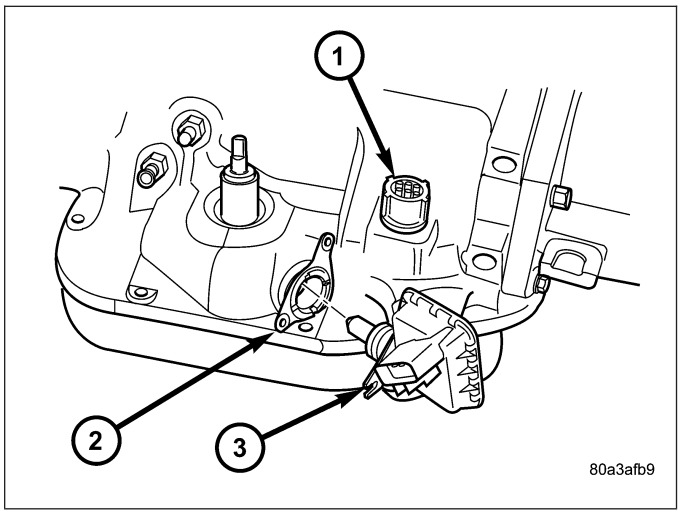

4. Install the two screws to hold the TRS to the mounting bracket. Tighten the screws to 5 N·m (45 in.lbs.).
5. Verify proper sensor operation (1-4).
6. Move the transmission manual shaft lever to the PARK position.
7. Connect TRS wiring connector to the TRS and lower vehicle.
8. Refill the transmission fluid to the correct level.

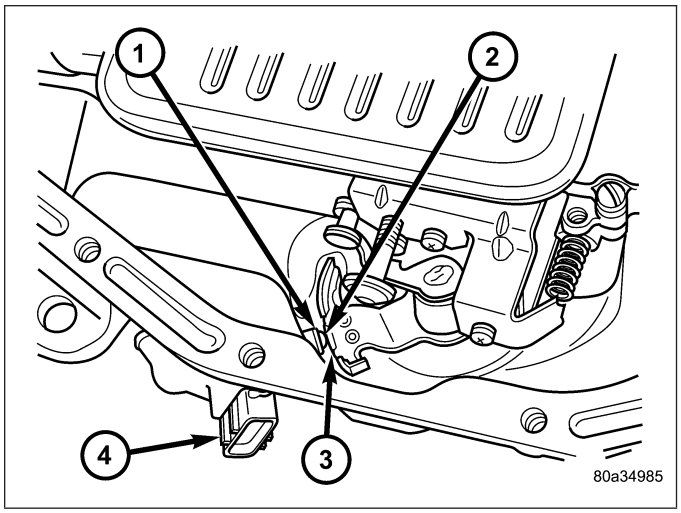

1 - NEUTRAL CONTACT
2 - MANUAL LEVER AND SENSOR PLUNGER IN REVERSE POSITION
3 - PARK CONTACT
4 - TRANSMISSION RANGE SENSOR

SENSOR-TRANSMISSION TEMPERATURE

DESCRIPTION

Transmission fluid temperature readings are supplied to the transmission control module by the thermistor. The temperature readings are used to control engagement of the fourth gear overdrive clutch, the converter clutch, and governor pressure. Normal resistance value for the thermistor at room temperature is approximately 2000 ohms.

The thermistor is part of the governor pressure sensor assembly (2) and is immersed in transmission fluid at all times.

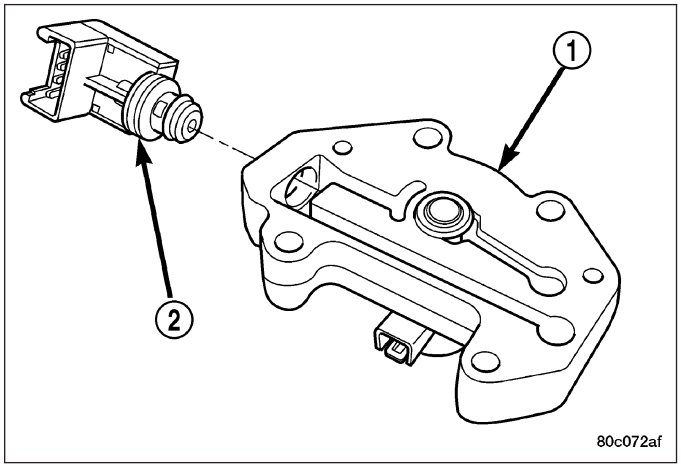

OPERATION

The PCM prevents engagement of the converter clutch and overdrive clutch, when fluid temperature is below approximately 10°C (50°F).

If fluid temperature exceeds 126°C (260°F), the PCM causes a 4-3 downshift and engage the converter clutch. Engagement is according to the third gear converter clutch engagement schedule.

The Tow/Haul lamp in the instrument panel illuminates when the shift back to third occurs. The transmission will not allow fourth gear operation until fluid temperature decreases to approximately 110°C (230°F).

BODY-VALVE

DESCRIPTION

The valve body consists of a cast aluminum valve body, a separator plate, and transfer plate. The valve body contains valves and check balls that control fluid delivery to the torque converter clutch, bands, and frictional clutches. The valve body contains the following components.

By adjusting the spring pressure acting on the regulator valve, transmission line pressure can be adjusted.

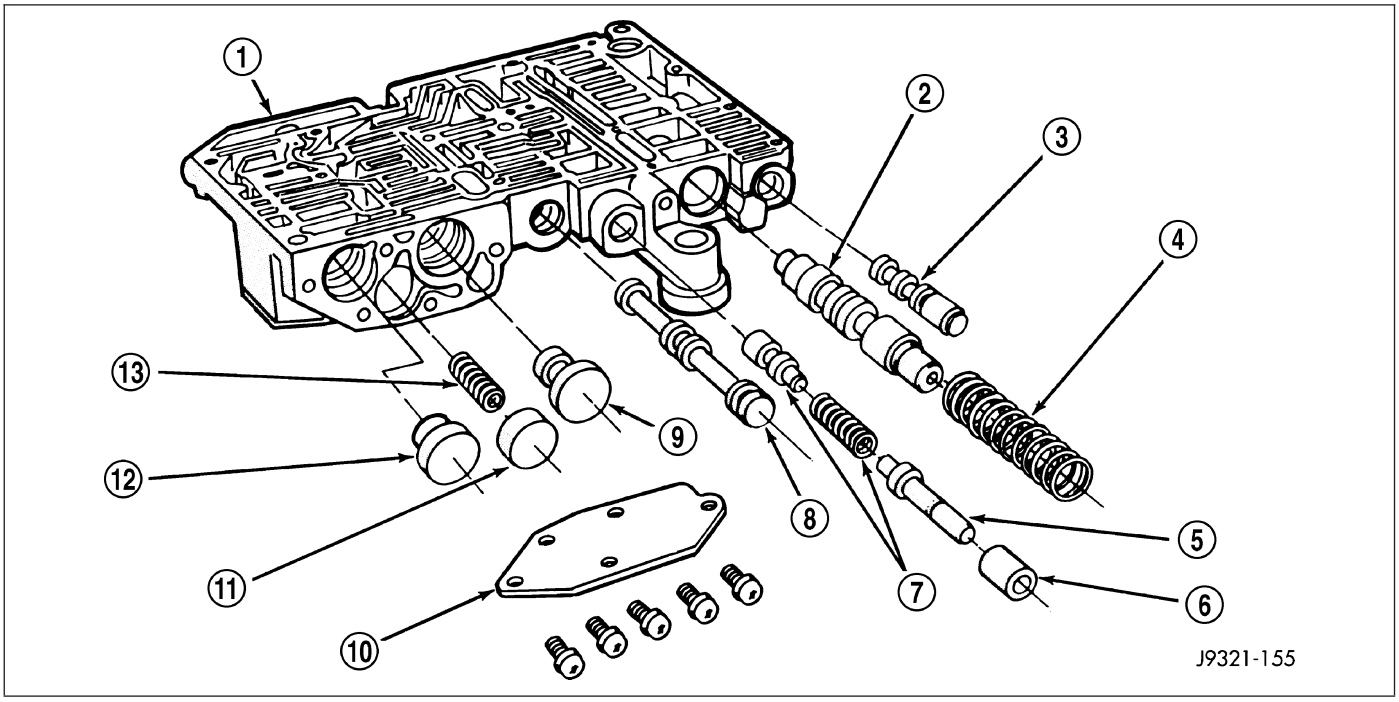

Upper Housing Control Valve Locations

1 - UPPER HOUSING
2 - REGULATOR VALVE
3 - SWITCH VALVE
4 - REGULATOR VALVE SPRING
5 - KICKDOWN VALVE
6 - KICKDOWN DETENT
7 - THROTTLE VALVE AND SPRING
8 - MANUAL VALVE
9 - 1-2 GOVERNOR PLUG
10 - GOVERNOR PLUG COVER
11 - THROTTLE PLUG
12 - 2-3 GOVERNOR PLUG
13 - SHUTTLE VALVE PRIMARY SPRING

- Regulator valve (2)
- Switch valve (3)
- Regulator valve spring (4)
- Kickdown valve (5)
- Kickdown detent (6)
- Throttle valve and spring (7)
- Manual valve (8)
- 1-2 Governor plug (9)
- Throttle pressure plug (11)
- 2-3 Governor plug (12)
- Shuttle valve primary spring (13)

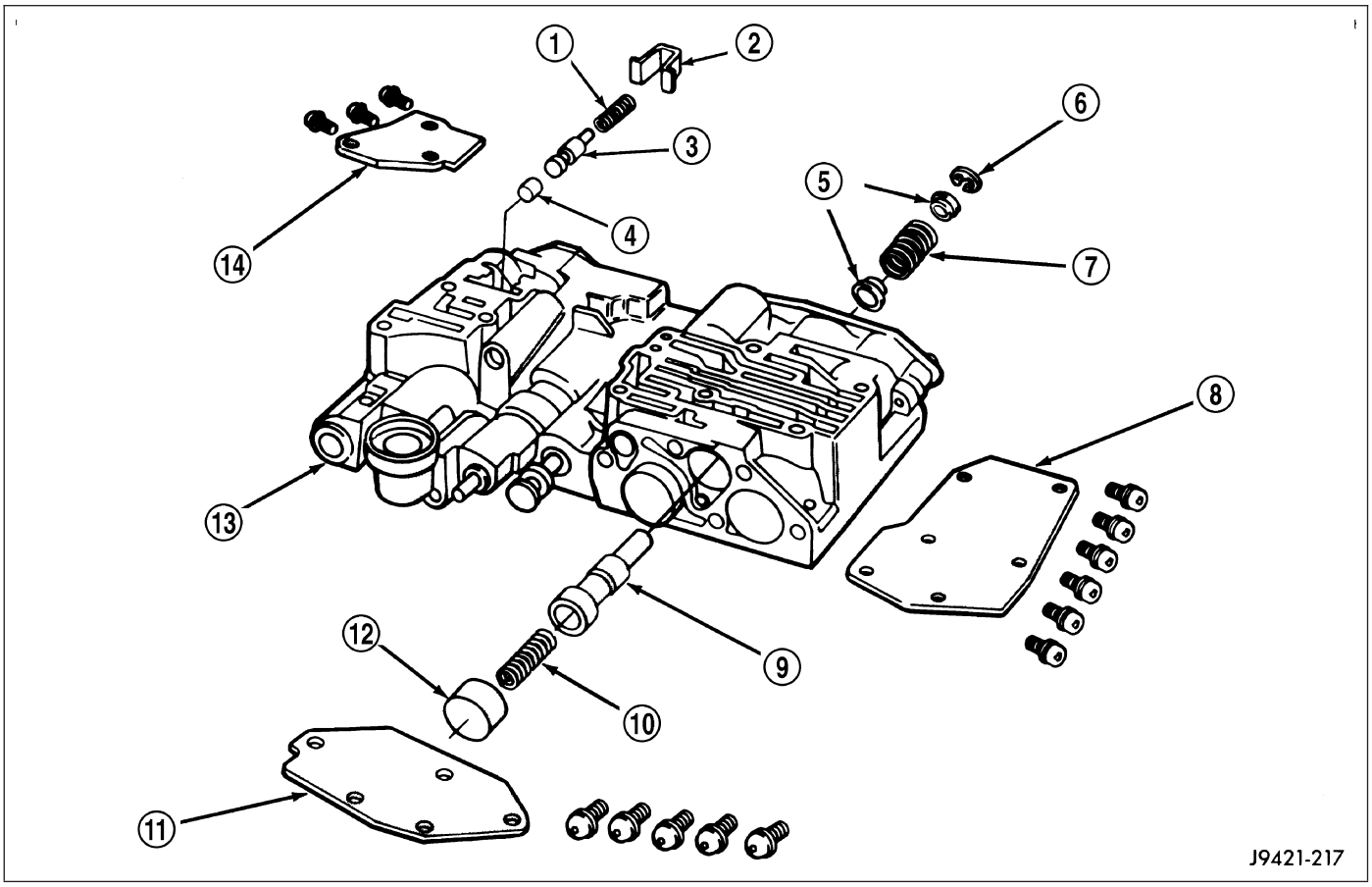

Shuttle and Boost Valve Locations

1 - SPRING
2 - RETAINER
3 - BOOST VALVE
4 - BOOST VALVE PLUG
5 - SPRING GUIDES
6 - E-CLIP
7 - SHUTTLE VALVE SECONDARY SPRING
8 - SHUTTLE VALVE COVER
9 - SHUTTLE VALVE
10 - SHUTTLE VALVE PRIMARY SPRING
11 - GOVERNOR PLUG COVER
12 - THROTTLE PLUG
13 - UPPER HOUSING
14 - BOOST VALVE COVER

- Boost Valve (3)
- Boost valve plug (4)
- Shuttle valve (9)
- Shuttle valve throttle plug (12)

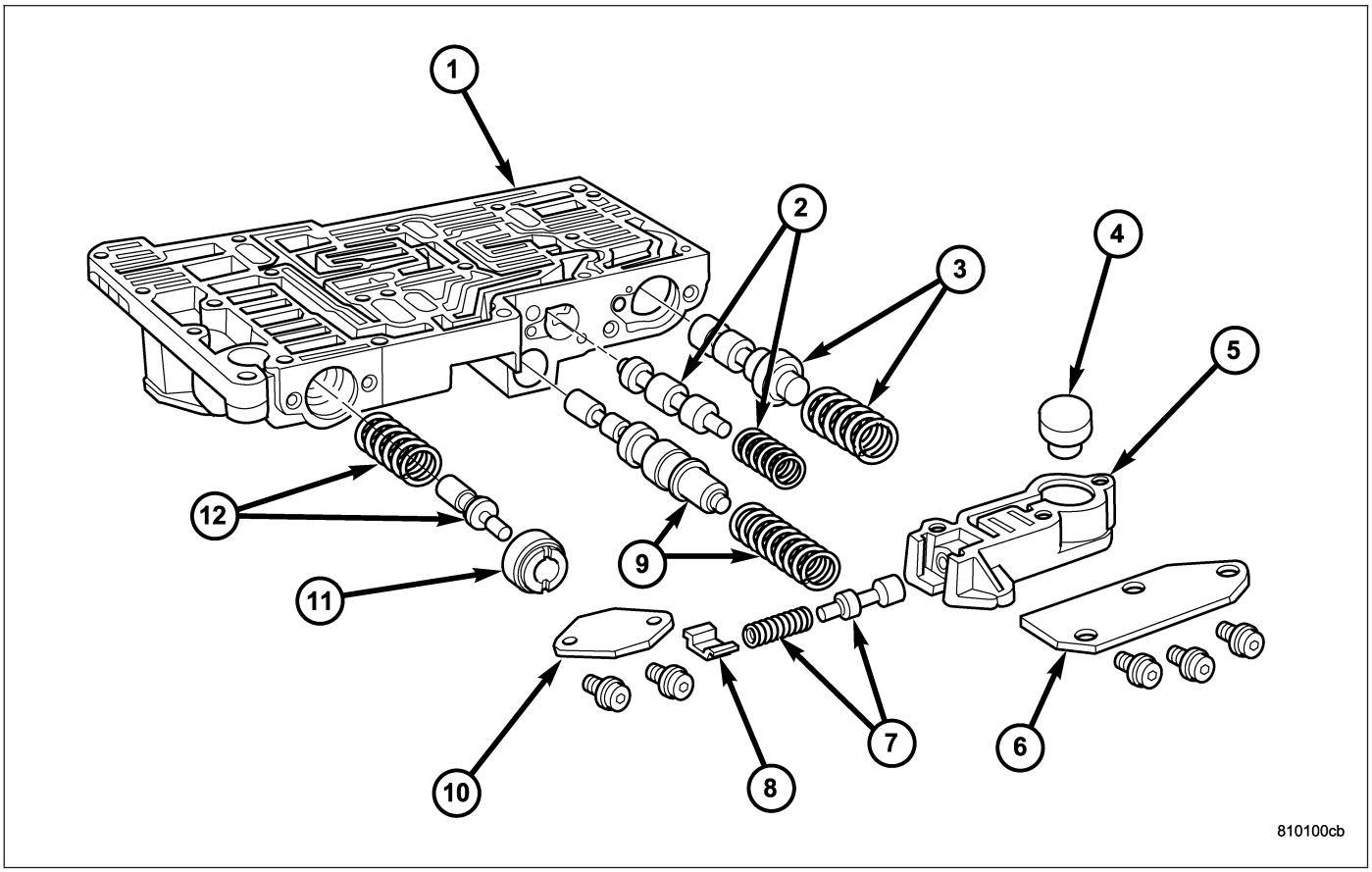

Upper Housing Shift Valve and Pressure Plug Locations

1 - UPPER HOUSING
2 - 1-2 SHIFT VALVE AND SPRING
3 - 2-3 SHIFT VALVE AND SPRING
4 - 2-3 THROTTLE PLUG
5 - LIMIT VALVE HOUSING
6 - LIMIT VALVE COVER
7 - LIMIT VALVE AND SPRING
8 - RETAINER
9 - 1-2 SHIFT CONTROL VALVE AND SPRING
10 - PRESSURE PLUG COVER
11 - PLUG SLEEVE
12 - THROTTLE PRESSURE SPRING AND PLUG

- 1-2 shift valve (2)
- 1-2 control valve
- 2-3 shift valve
- 2-3 throttle plug
- Throttle pressure plug
- Limit valve and spring

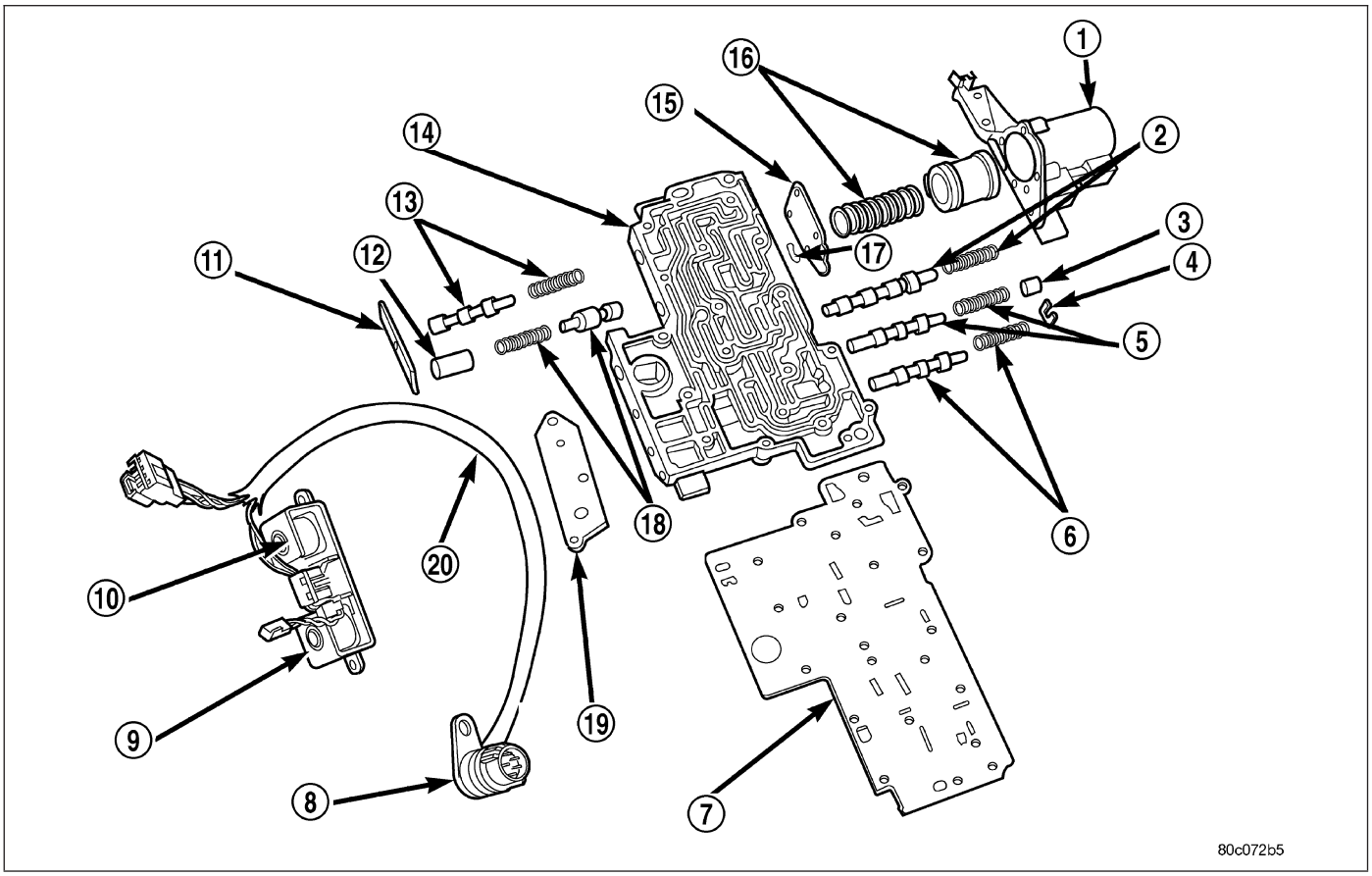

Lower Housing Shift Valves and Springs

1 - 3-4 ACCUMULATOR HOUSING
2 - 3-4 SHIFT VALVE AND SPRING
3 - PLUG
4 - SPRING RETAINER
5 - CONVERTER CLUTCH VALVE AND SPRING
6 - CONVERTER CLUTCH TIMING VALVE AND SPRING
7 - OVERDRIVE SEPARATOR PLATE
8 - CASE CONNECTOR
9 - CONVERTER CLUTCH SOLENOID
10 - OVERDRIVE SOLENOID
11 - TIMING VALVE COVER
12 - PLUG
13 - 3-4 TIMING VALVE AND SPRING
14 - LOWER HOUSING
15 - ACCUMULATOR END PLATE
16 - 3-4 ACCUMULATOR PISTON AND SPRING
17 - E-CLIP
18 - 3-4 QUICK FILL SPRING AND VALVE
19 - SOLENOID GASKET
20 - HARNESS

- 3-4 shift valve
- 3-4 timing valve
- 3-4 quick fill valve
- 3-4 accumulator
- Converter clutch lock-up valve
- Converter clutch lock-up timing Valve

OPERATION

NOTE: Refer to the Hydraulic Schematics for a visual aid in determining valve location, operation and design.

CHECK BALLS

CHECK BALL NUMBER	DESCRIPTION
1	Allows either the manual valve to put line pressure on the 1-2 governor plug or the KD Valve to put WOT line pressure on the 1-2 governor plug.
3	Allows either the Reverse circuit or the 3rd gear circuit to pressurize the front clutch.
4	Allows either the Manual Low circuit from the Manual Valve or the Reverse from the Manual Valve circuit to pressurize the rear servo.
5	Directs line pressure to the spring end of the 2-3 shift valve in either Manual Low or Manual 2nd, forcing the downshift to 2nd gear regardless of governor pressure.
6	Provides a by-pass around the front servo orifice so that the servo can release quickly.
7	Provides a by-pass around the rear clutch orifice so that the clutch can release quickly.
8	Directs reverse line pressure through an orifice to the throttle valve eliminating the extra leakage and insuring that Reverse line pressure pressure will be sufficient.
9	Provides a by-pass around the rear servo orifice so that the servo can release quickly.
10	Allows the lockup clutch to used at WOT in 3rd gear by putting line pressure from the 3-4 Timing Valve on the interlock area of the 2-3 shift valve, thereby preventing a 3rd gear Lock-up to 2nd gear kickdown.

REGULATOR VALVE

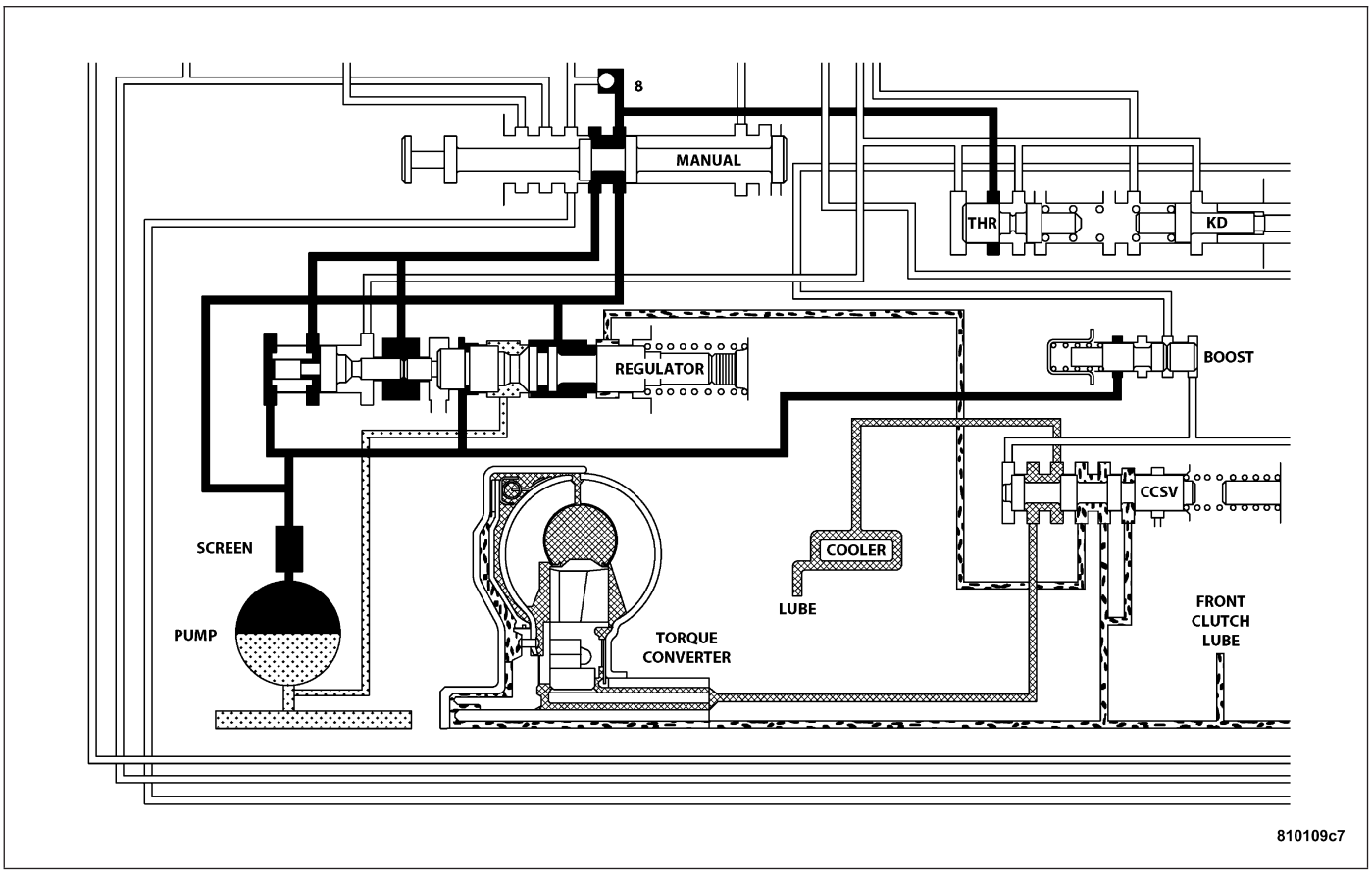

Regulator Valve in Park Position

The pressure regulator valve is needed to control the hydraulic pressure within the system and reduce the amount of heat produced in the fluid. The pressure regulator valve is located in the valve body near the manual valve. The pressure regulator valve train controls the maximum pressure in the lines by metering the dumping of fluid back into the sump. Regulated pressure is referred to as “line pressure.”

The regulator valve has a spring on one end that pushes the valve to the left. This closes a dump (vent) that is used to lower pressure. The closing of the dump will cause the oil pressure to increase. Oil pressure on the opposite end of the valve pushes the valve to the right, opening the dump and lowering oil pressure. The result is spring pressure working against oil pressure to maintain the oil at specific pressures. With the engine running, fluid flows from the pump to the pressure regulator valve, manual valve, and the interconnected circuits. As fluid is sent through passages to the regulator valve, the pressure pushes the valve to the right against the large spring. It is also sent to the reaction areas on the left side of the throttle pressure plug and the line pressure plug. With the gear selector in the PARK position, fluid recirculates through the regulator and manual valves back to the sump.

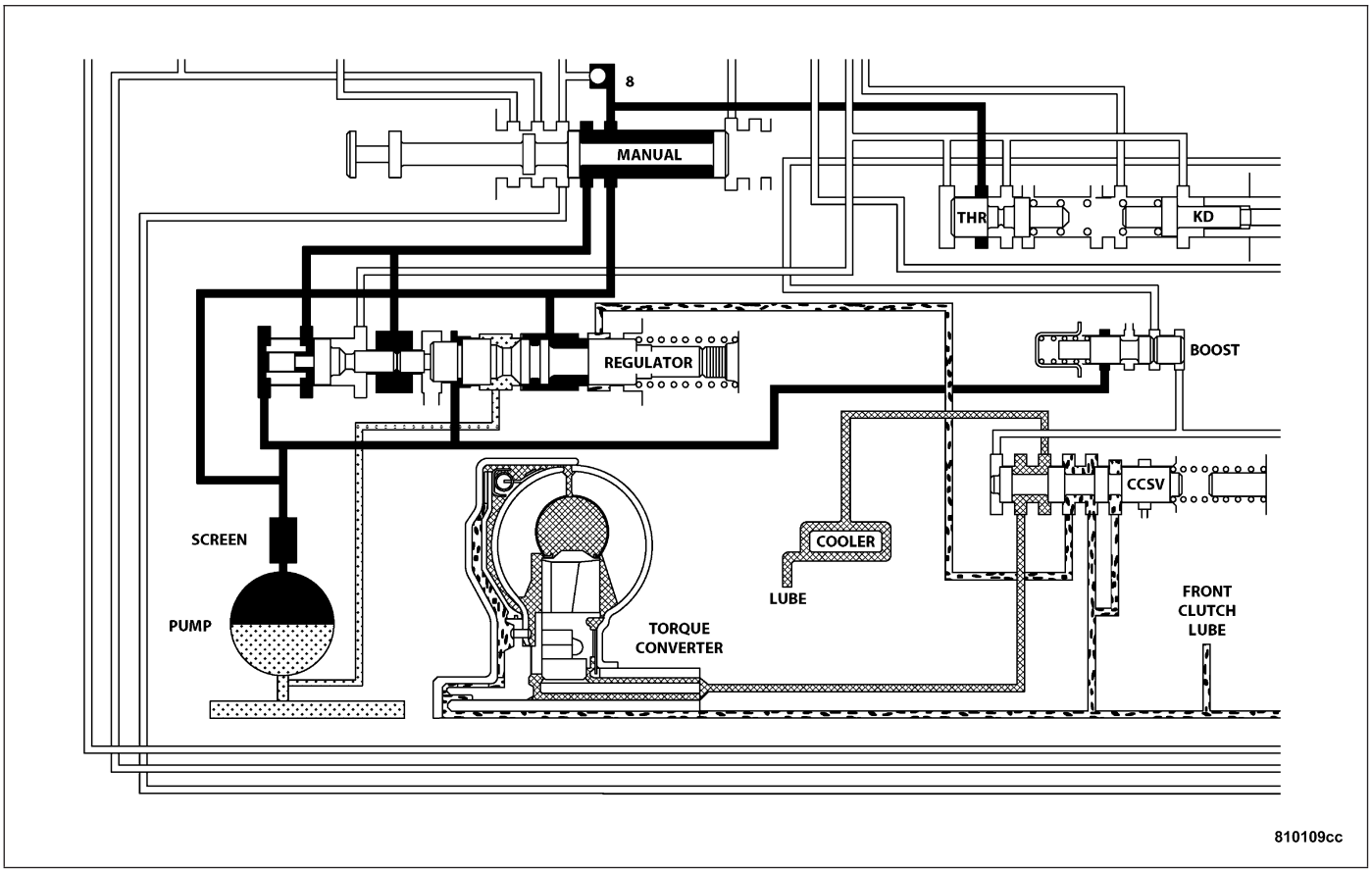

Regulator Valve in Neutral Position

Meanwhile, the torque converter is filled slowly. In all other gear positions , fluid flows between two right side lands to the switch valve and torque converter. At low pump speeds, the flow is controlled by the pressure valve groove to reduce pressure to the torque converter. After the torque converter and switch valve fill with fluid, the switch valve becomes the controlling metering device for torque converter pressure. The regulator valve then begins to control the line pressure for the other transmission circuits. The balance of the fluid pressure pushing the valve to the right and the spring pressure pushing to the left determines the size of the metering passage at land #2 (land #1 being at the far right of the valve in the diagram). As fluid leaks past the land, it moves into a groove connected to the filter or sump. As the land meters the fluid to the sump, it causes the pressure to reduce and the spring decreases the size of the metering passage. When the size of the metering passage is reduced, the pressure rises again and the size of the land is increased again. Pressure is regulated by this constant balance of hydraulic and spring pressure.

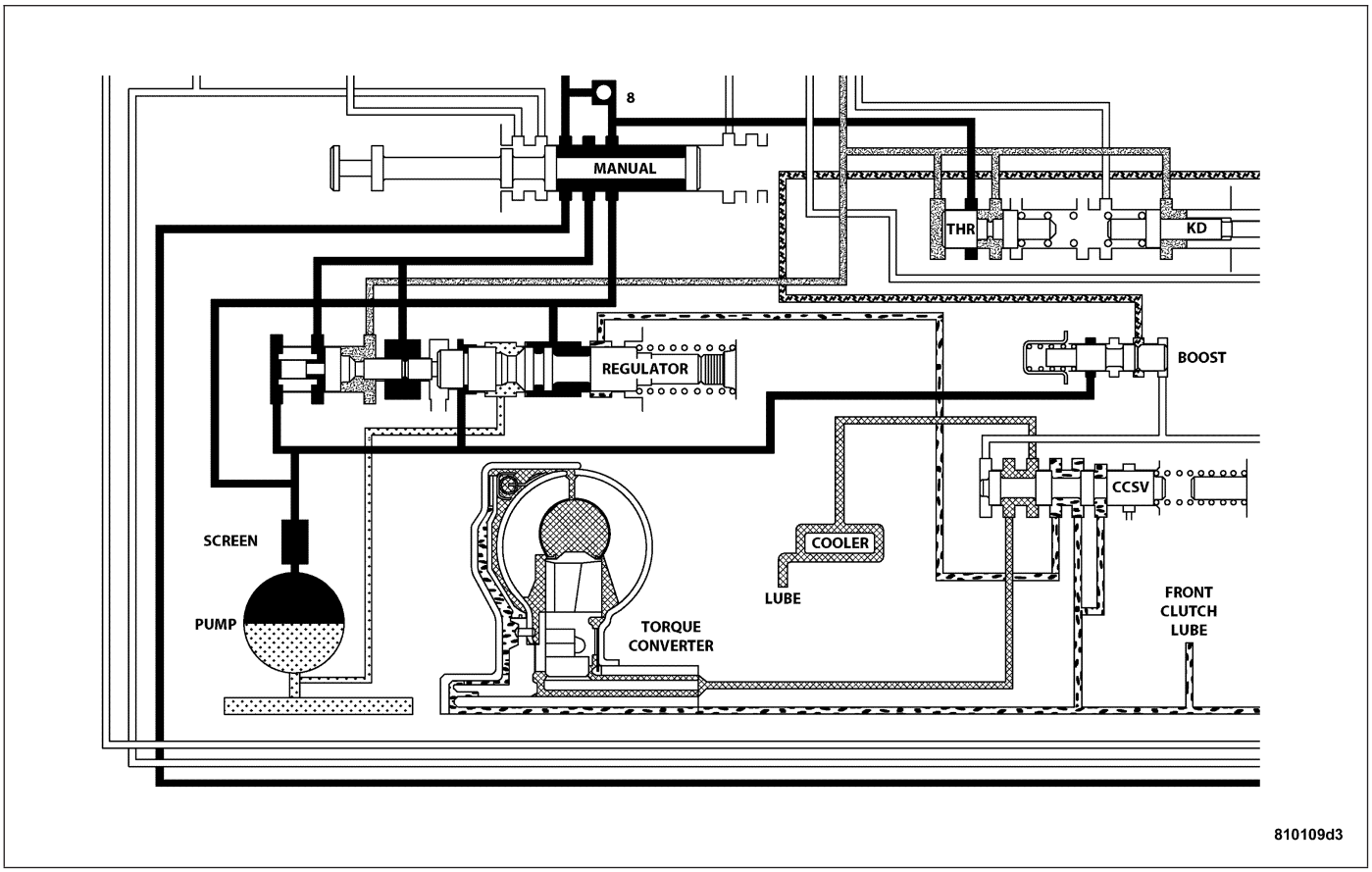

Regulator Valve in Drive Position

The metering at land #2 establishes the line pressure throughout the transmission. It is varied according to changes in throttle position and the transmission's internal condition within a range of 57-94 psi (except in REVERSE).

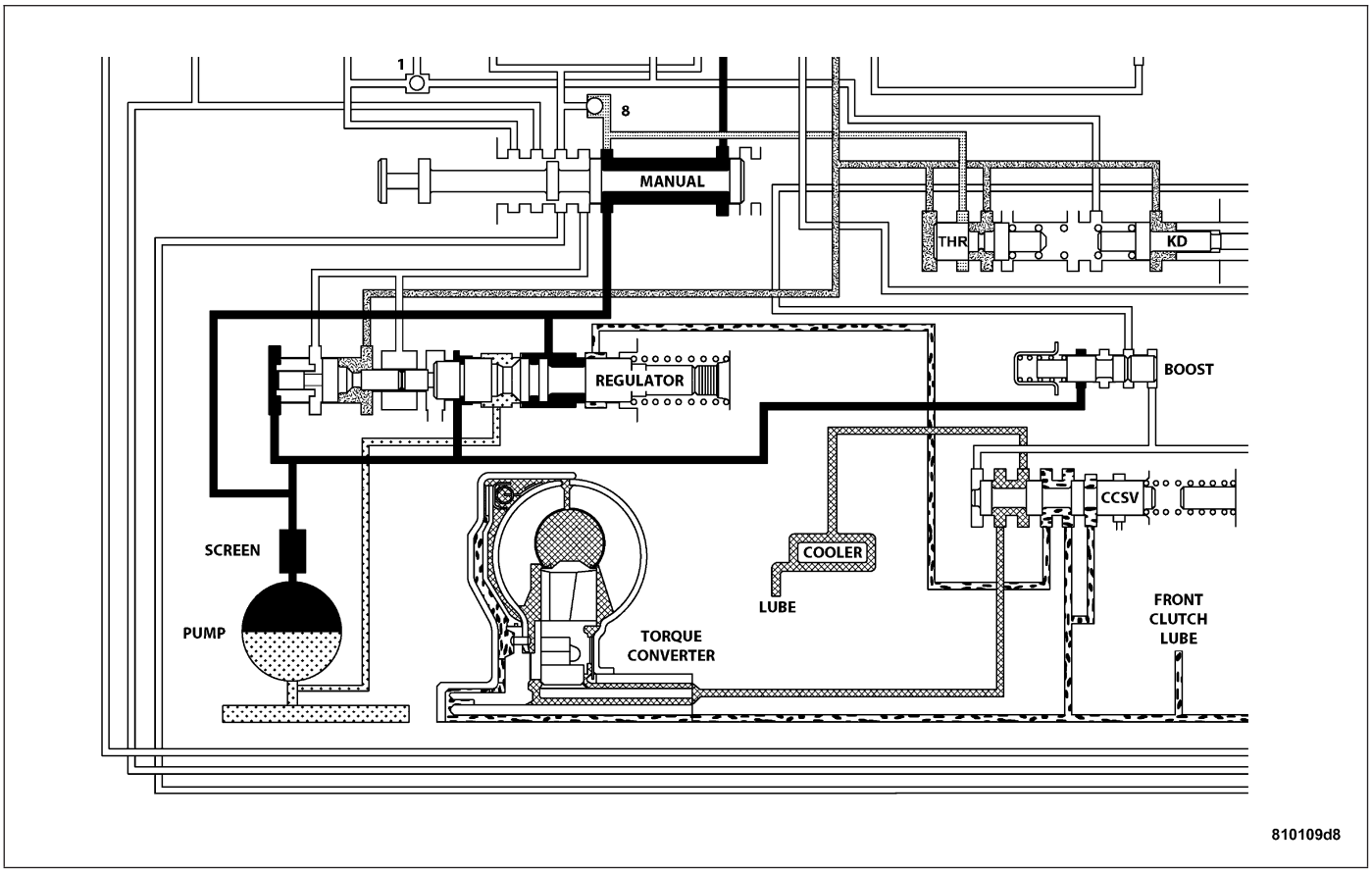

Regulator Valve in Reverse Position

The regulated line pressure in REVERSE is held at much higher pressures than in the other gear positions: 145-280 psi. The higher pressure for REVERSE is achieved by the manual valve blocking the supply of line pressure to the reaction area left of land #4. With this pressure blocked, there is less area for pressure to act on to balance the force of the spring on the right. This allows line pressure to push the valve train to the right, reducing the amount of fluid returned to the pump's inlet, increasing line pressure.

KICKDOWN VALVE

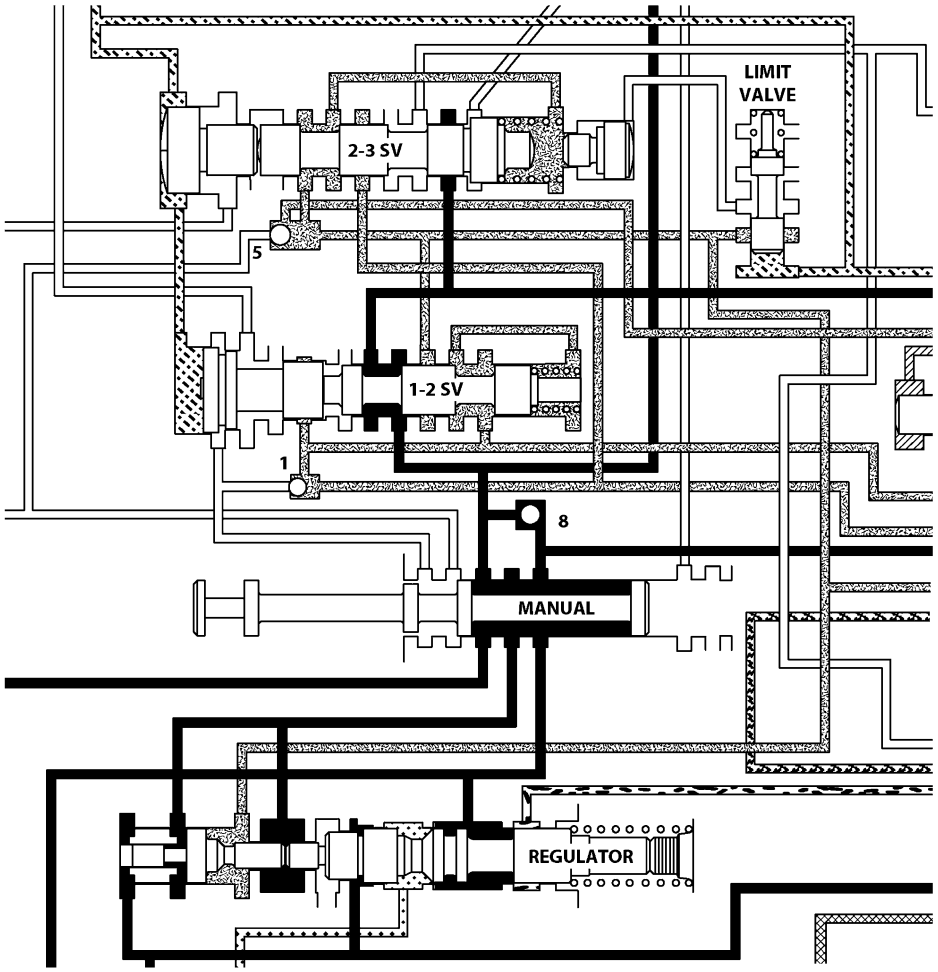

Kickdown Valve - Wide Open Throttle

When the throttle valve is as far over to the left as it can go, the maximum line pressure possible will enter the throttle pressure circuit. In this case, throttle pressure will equal line pressure. With the kickdown valve pushed into the bore as far as it will go, fluid initially flows through the annular groove of the 2-3 shift valve (which will be in the direct drive position to the right).

After passing the annular groove, the fluid is routed to the spring end of the 2-3 shift valve. Fluid pressure reacting on the area of land #1 overcomes governor pressure, downshifting the 2-3 shift valve into the kickdown, or second gear stage of operation. The valve is held in the kickdown position by throttle pressure routed from a seated check ball (#2). Again, if vehicle speed is low enough, throttle pressure will also push the 1-2 shift valve left to seat its governor plug, and downshift to drive breakaway.

KICKDOWN LIMIT VALVE

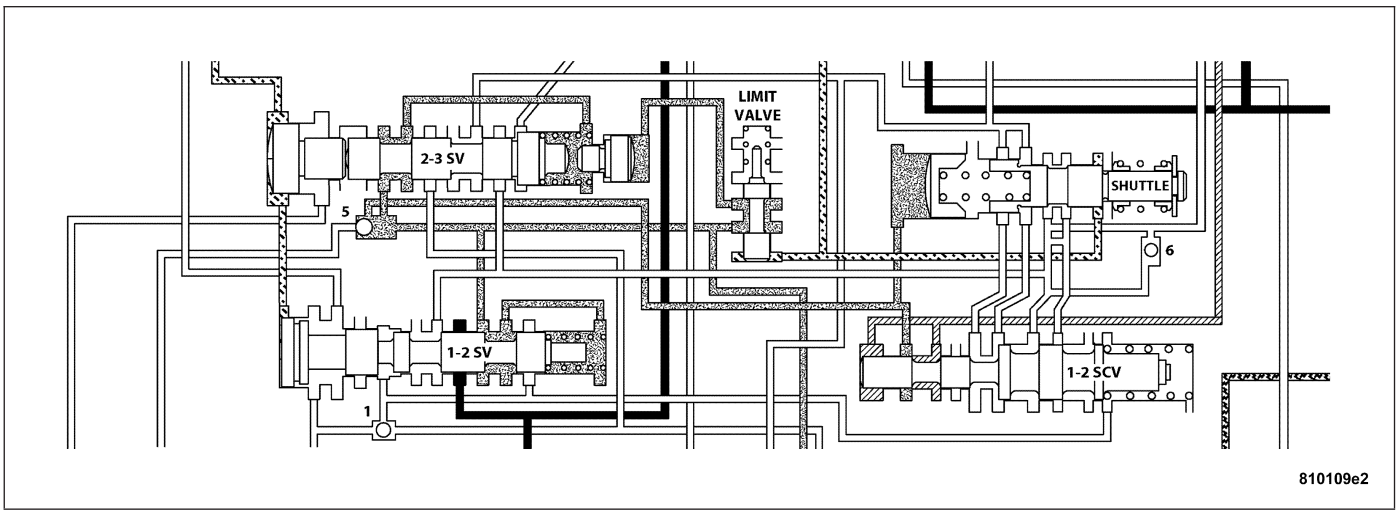

Kickdown Limit Valve - Low Speeds

The purpose of the limit valve is to prevent a 3-2 downshift at higher speeds when a part-throttle downshift is not desirable. At these higher speeds only a full throttle 3-2 downshift will occur. At low road speeds the limit valve does not come into play and does not affect the downshifts.

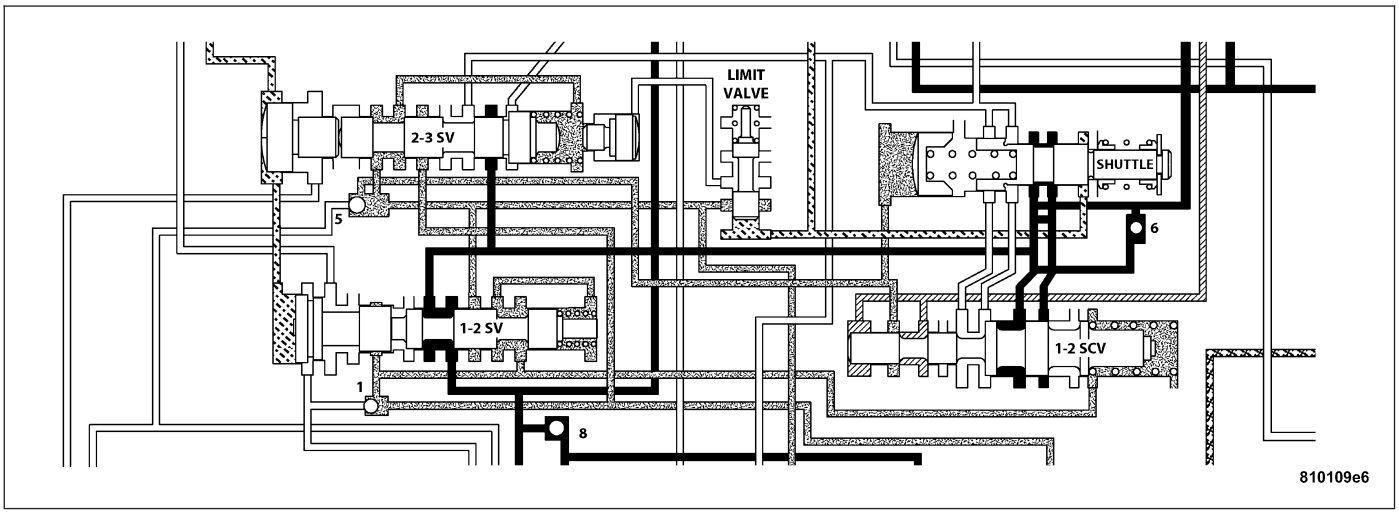

Kickdown Limit Valve - High Speeds

As the vehicle's speed increases , the governor pressure also increases. The increased governor pressure acts on the reaction area of the bottom land of the limit valve overcoming the spring force trying to push the valve toward the bottom of its bore. This pushes the valve upward against the spring and bottoms the valve against the top of the housing. With the valve bottomed against the housing, the throttle pressure supplied to the valve will be closed off by the bottom land of the limit valve. When the supply of throttle pressure has been shut off, the 3-2 part throttle downshift plug becomes inoperative, because no pressure is acting on its reaction area.

1-2 SHIFT VALVE

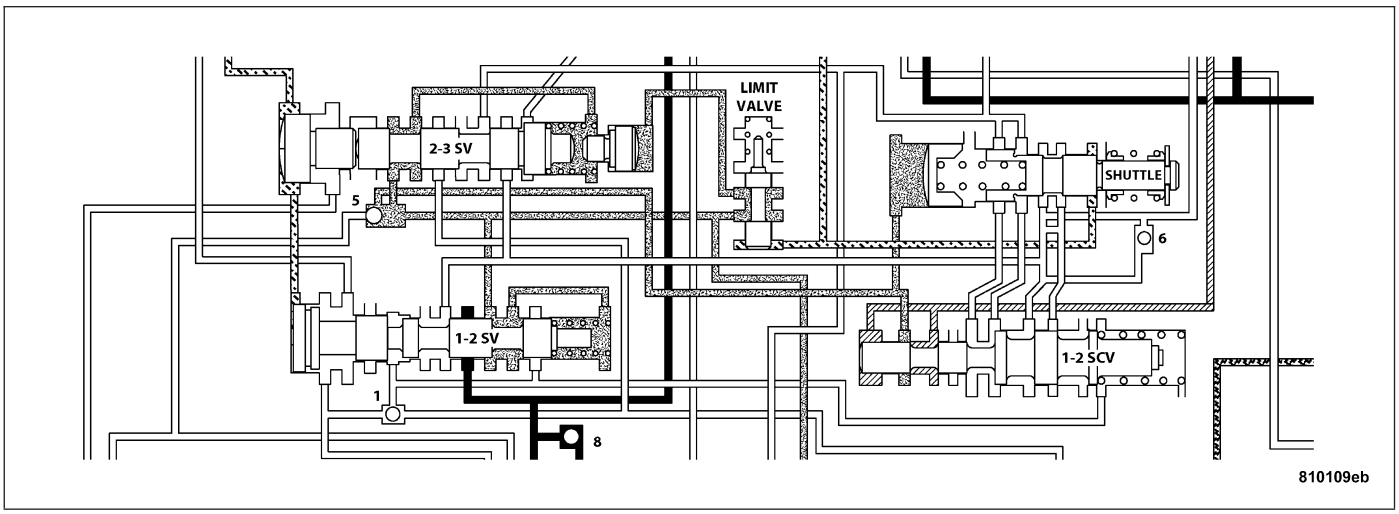

1-2 Shift Valve - Before Shift

The 1-2 shift valve assembly , or mechanism, consists of: the 1-2 shift valve, governor plug, and a spring on the end of the valve. After the manual valve has been placed into a forward gear range, line pressure is directed to the 1-2 shift valve. As the throttle is depressed, throttle pressure is applied to the right side of the 1-2 shift valve assembly. With throttle pressure applied to the right side of the valve, there is now both spring pressure and throttle pressure acting on the valve, holding it against the governor plug. As the vehicle begins to move and build speed, governor pressure is created and is applied to the left of the valve at the governor plug.

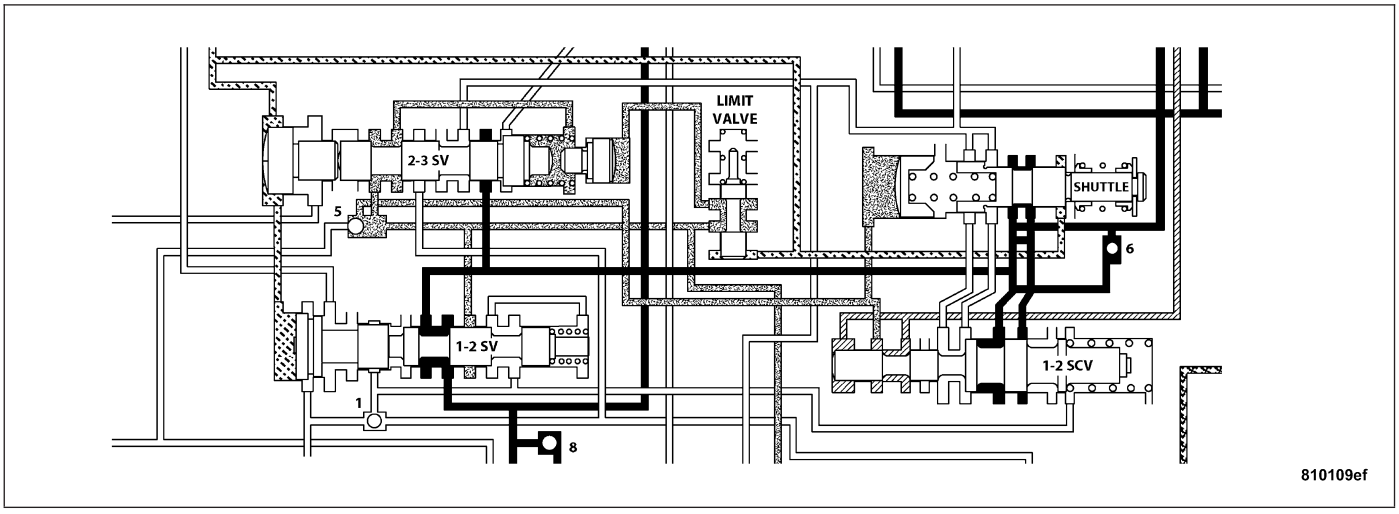

1-2 Shift Valve - After Shift

When governor pressure builds to a point where it can overcome the combined force of the spring and throttle pressure on the other side of the valve, the valve will begin to move over to the right. As the valve moves to the right, the middle land of the valve will close off the circuit supplying the throttle pressure to the right side of the valve. When the throttle pressure is closed off, the valve will move even farther to the right, allowing line pressure to enter another circuit and energize the front servo, applying the front band.

The governor plug serves a dual purpose:

- It allows the shift valves to move either left or right, allowing both upshifts and downshifts.
- When in a manual selection position, it will be hydraulically “blocked” into position so no upshift can occur.

The physical blocking of the upshift while in the manual “1” position is accomplished by the directing of line pressure between both lands of the governor plug. The line pressure reacts against the larger land of the plug, pushing the

plug back against the end plate overcoming governor pressure. With the combination of the line pressure and spring pressure, the valve cannot move, preventing any upshift.

1-2 SHIFT CONTROL VALVE

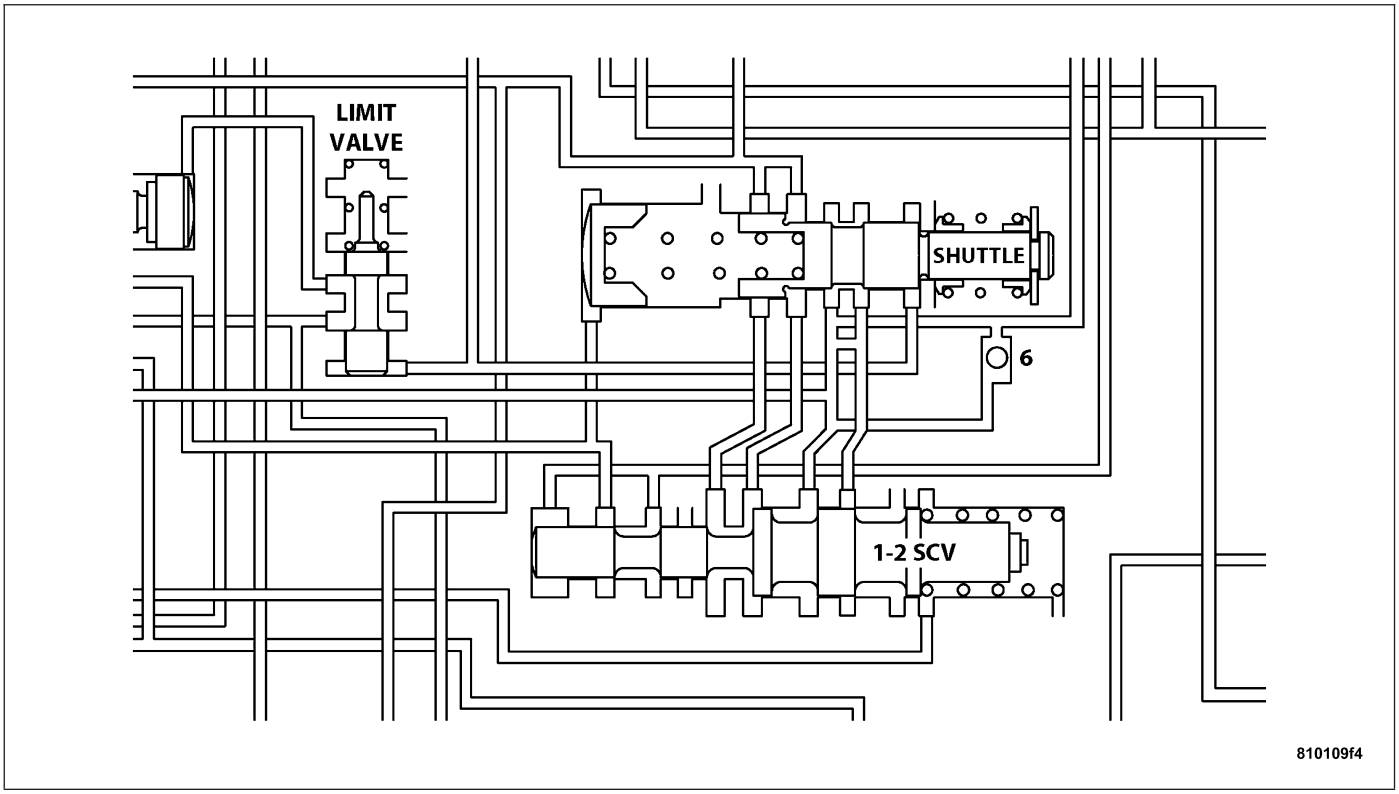

1-2 Shift Control Valve

It contains a valve with four lands and a spring. It is used as both a “relay” and “balanced” valve.

The valve has two specific operations :

- Aid in quality of the 1-2 upshift.
- Aid in the quality and timing of the 3-2 kickdown ranges.

When the manual valve is set to the DRIVE position and the transmission is in the first or second gear range, 1-2 shift control or “modulated throttle pressure” is supplied to the middle of the accumulator piston by the 1-2 shift control valve. During the 1-2 upshift, this pressure is used to control the kickdown servo apply pressure that is needed to apply the kickdown and accumulator pistons. Thus, the 1-2 shift point is “cushioned” and the quality is improved. During a WOT kickdown, kickdown pressure is applied between the kickdown valve and the 1-2 shift control valve. This additional pressure is directed to the 1-2 shift control’s spring cavity, adding to the spring load on the valve. The result of this increased “modulated” throttle pressure is a firmer WOT upshift.

2-3 SHIFT VALVE

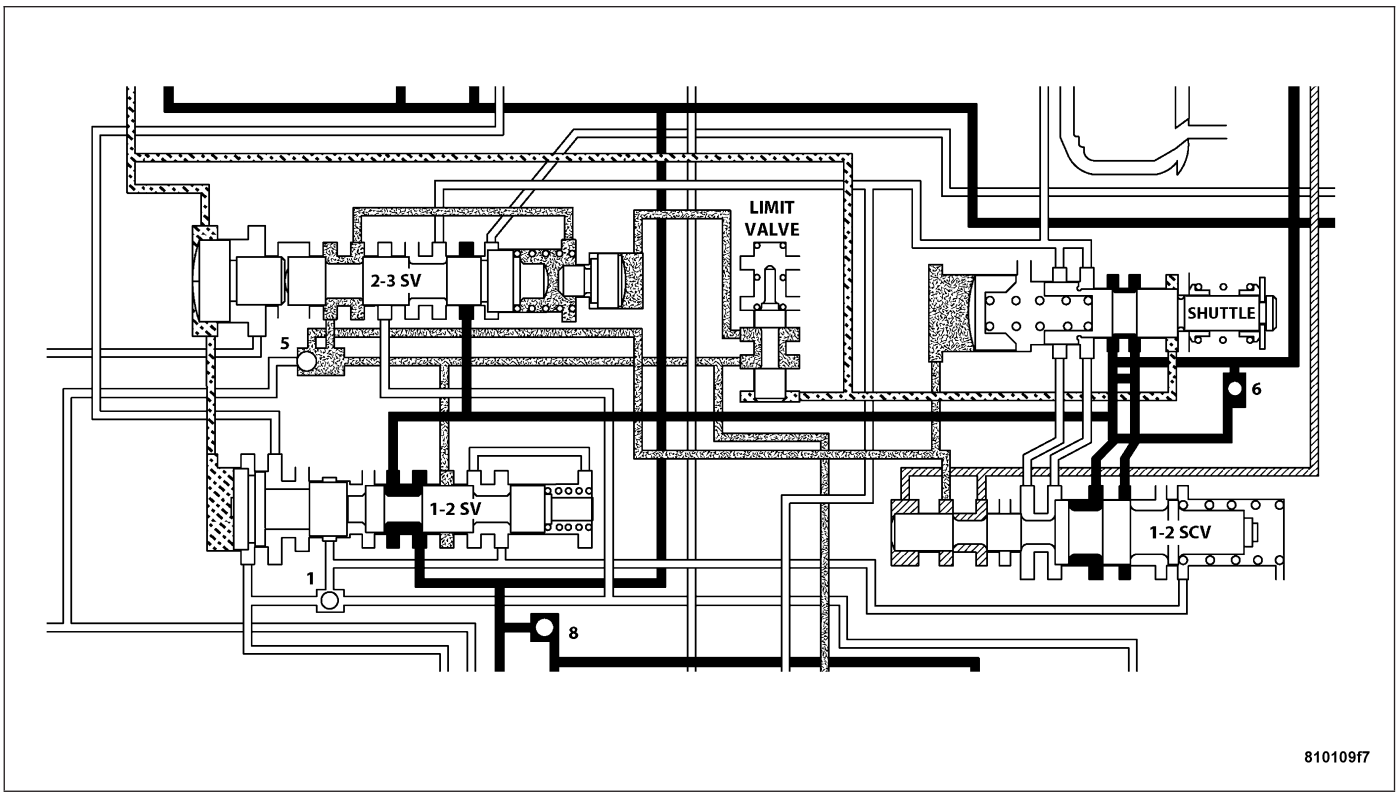

2-3 Shift Valve - Before Shift

The 2-3 shift valve mechanism consists of the 2-3 shift valve, governor plug and spring, and a throttle plug. After the 1-2 shift valve has completed its operation and applied the front band, line pressure is directed to the 2-3 shift valve through the connecting passages from the 1-2 shift valve. The line pressure will then dead–end at land #2 until the 2-3 valve is ready to make its shift. Now that the vehicle is in motion and under acceleration, there is throttle pressure being applied to the spring side of the valve and between lands #3 and #4.

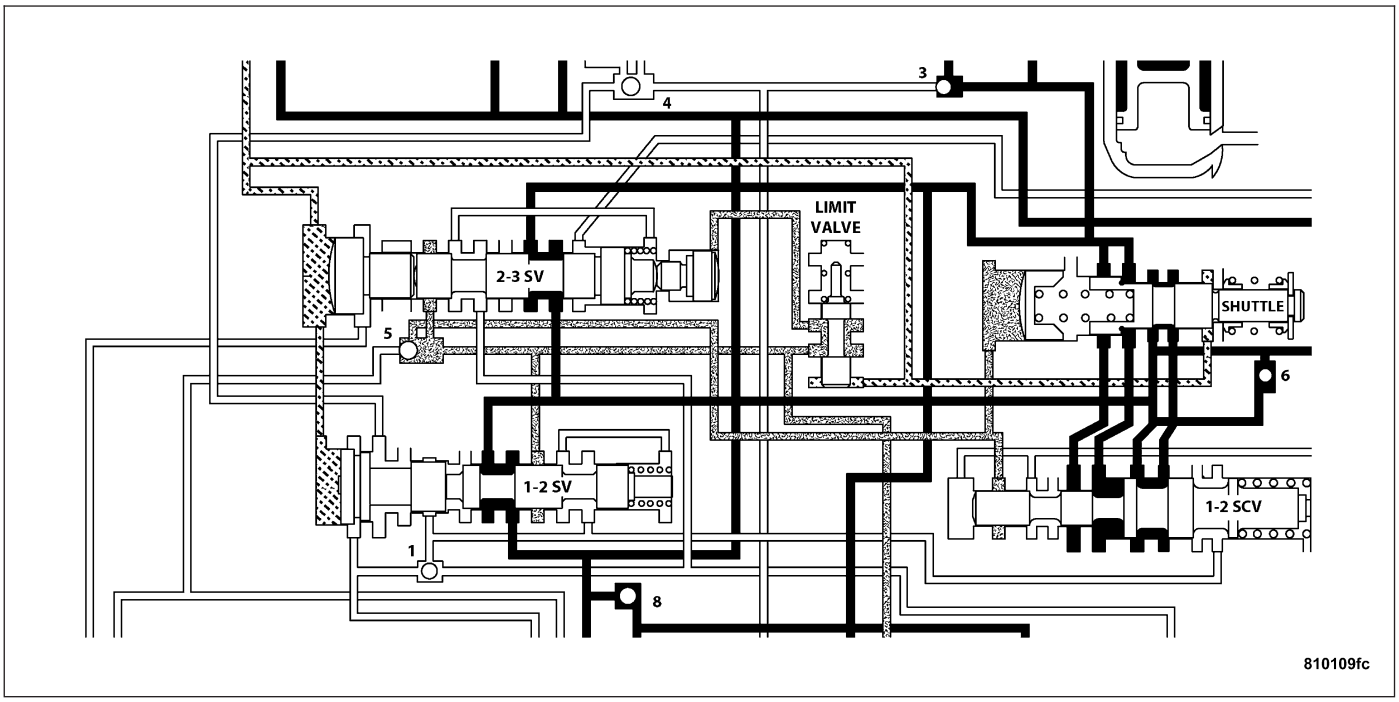

2-3 Shift Valve - After Shift

As vehicle speed increases, governor pressure increases proportionately, until it becomes great enough to overcome the combined throttle and spring pressure on the right side of the valve. Since the throttle pressure end of the 2-3 shift valve is larger in diameter than the 1-2 shift valve, the 2-3 shift will always happen at a greater speed than the 1-2 shift. When this happens, the governor plug is forced against the shift valve moving it to the right. The shift valve causes land #4 to close the passage supplying throttle pressure to the 2-3 shift valve. Without throttle pressure present in the circuit now, the governor plug will push the valve over far enough to bottom the valve in its bore. This allows land #2 to direct line pressure to the front clutch.

After the shift , line pressure is directed to the release side of the kickdown servo. This releases the front band and applies the front clutch, shifting into third gear or direct drive. The rear clutch remains applied, as it has been in the other gears. During a manual “1” or manual “2” gear selection, line pressure is sent between the two lands of the 2-3 governor plug. This line pressure at the governor plug locks the shift valve into the second gear position, preventing an upshift into direct drive. The theory for the blocking of the valve is the same as that of the 1-2 shift valve.

If the manual “2” or manual “1” gear position is selected from the drive position, the PCM will control the timing of the downshift by targeting for a high governor pressure. When a safe vehicle speed is reached, the PCM will switch to its normal control governor curve and the downshift will occur.

3-4 SHIFT VALVE

The PCM energizes the overdrive solenoid during the 3-4 upshift. This causes the solenoid check ball to close the vent port allowing line pressure from the 2-3 shift valve to act directly on the 3-4 upshift valve.

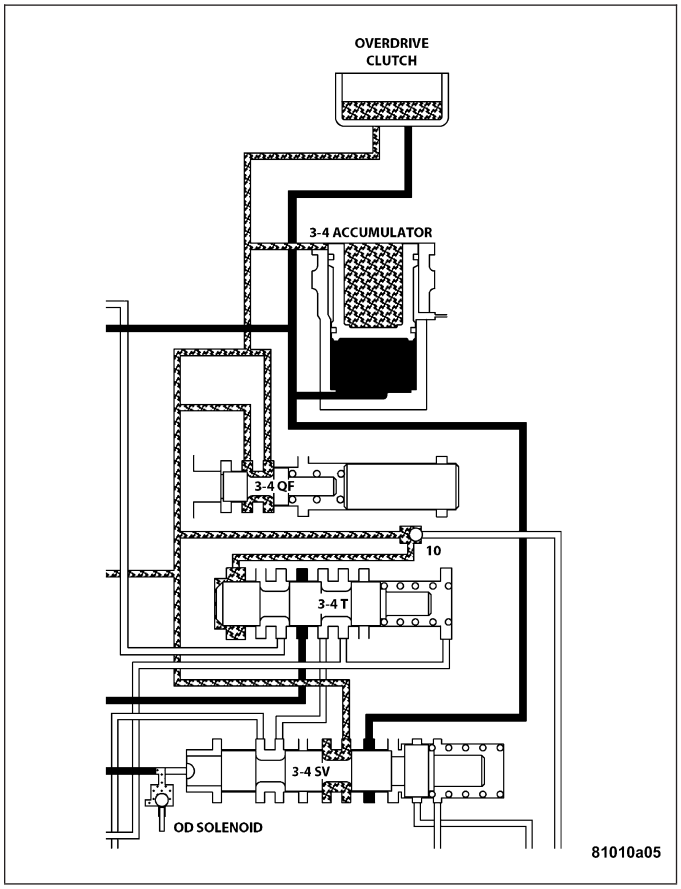

3-4 Shift Valve Before Shift

Line pressure on the 3-4 shift valve overcomes valve spring pressure moving the valve to the upshift position. This action exposes the feed passages to the 3-4 timing valve, 3-4 quick fill valve, 3-4 accumulator, and ultimately to the overdrive piston.

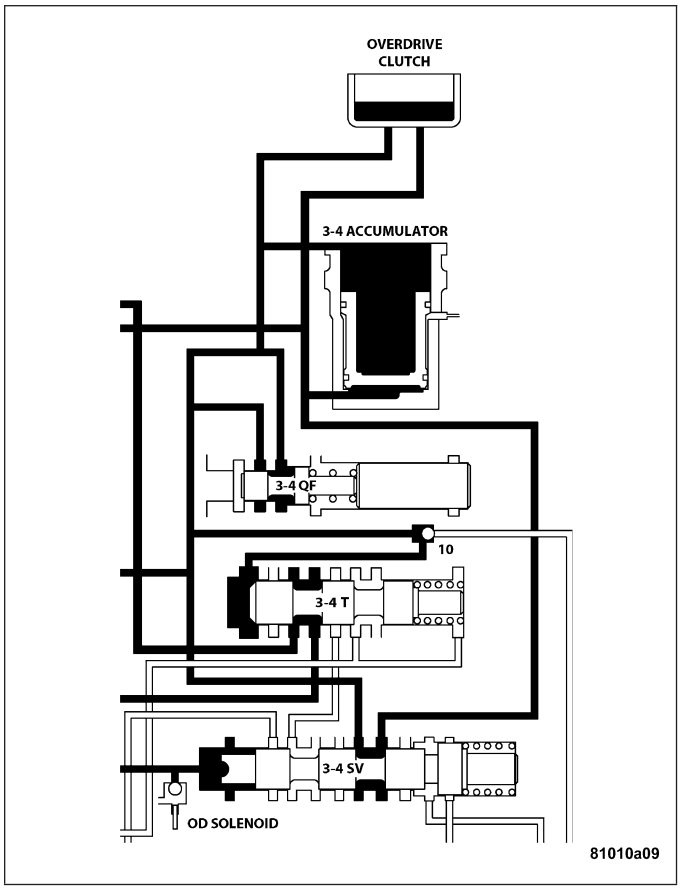

3-4 Shift Valve After Shift

3-4 TIMING VALVE

The 3-4 timing valve is moved by line pressure coming through the 3-4 shift valve or the converter clutch valve.

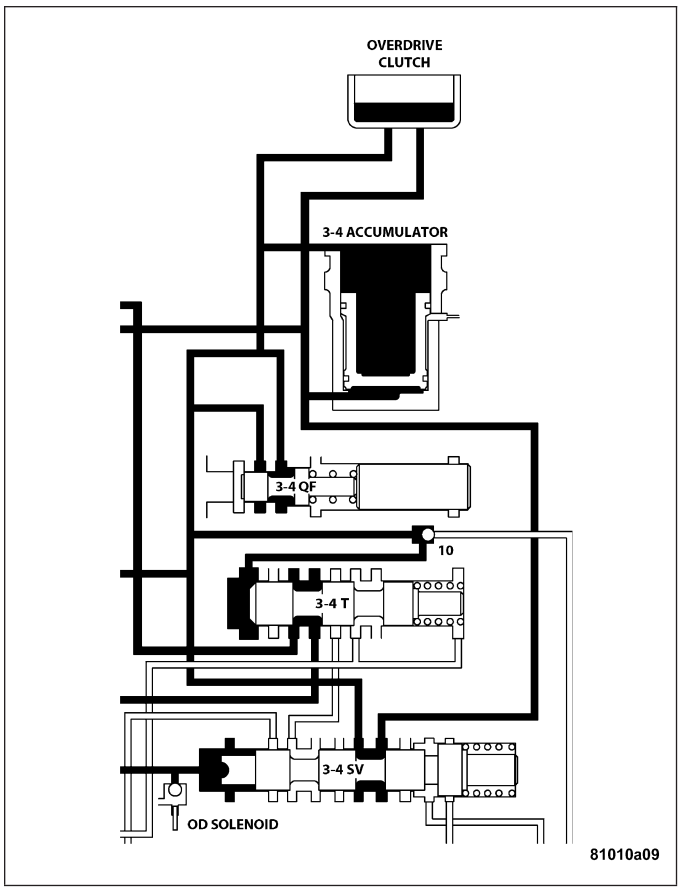

3-4 Shift Valve After Shift

After the shift, the timing valve holds the 2-3 shift valve in an upshift position. The purpose is to prevent the 2-3 valve from downshifting while either the overdrive clutch or converter clutch is applied.

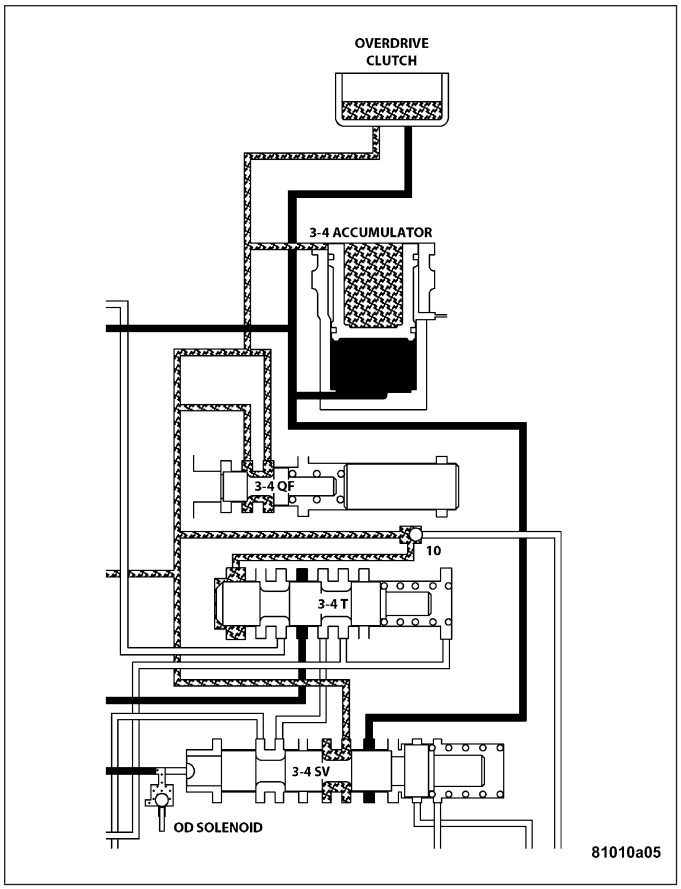

3-4 Shift Valve Before Shift

3-4 QUICK FILL VALVE

The 3-4 quick fill valve provides faster engagement of the overdrive clutch during 3-4 upshifts. The valve temporarily bypasses the clutch piston feed orifice at the start of a 3-4 upshift.

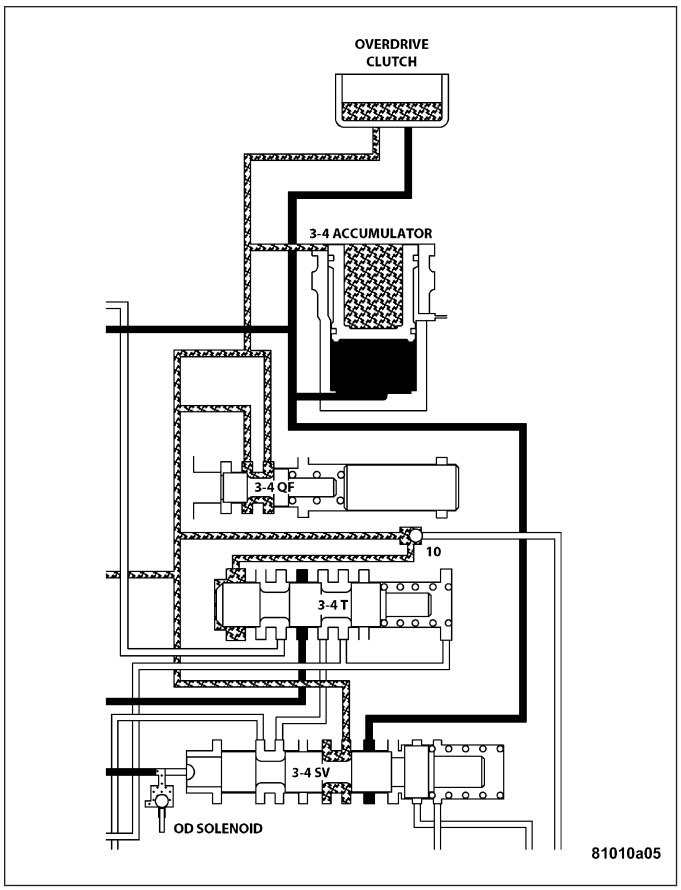

3-4 Shift Valve Before Shift

This exposes a larger passage into the piston retainer resulting in a much faster clutch fill and apply sequence. The quick fill valve does not bypass the regular clutch feed orifice throughout the 3-4 upshift. Instead, once a predetermined pressure develops within the clutch, the valve closes the bypass. Clutch fill is then completed through the regular feed orifice.

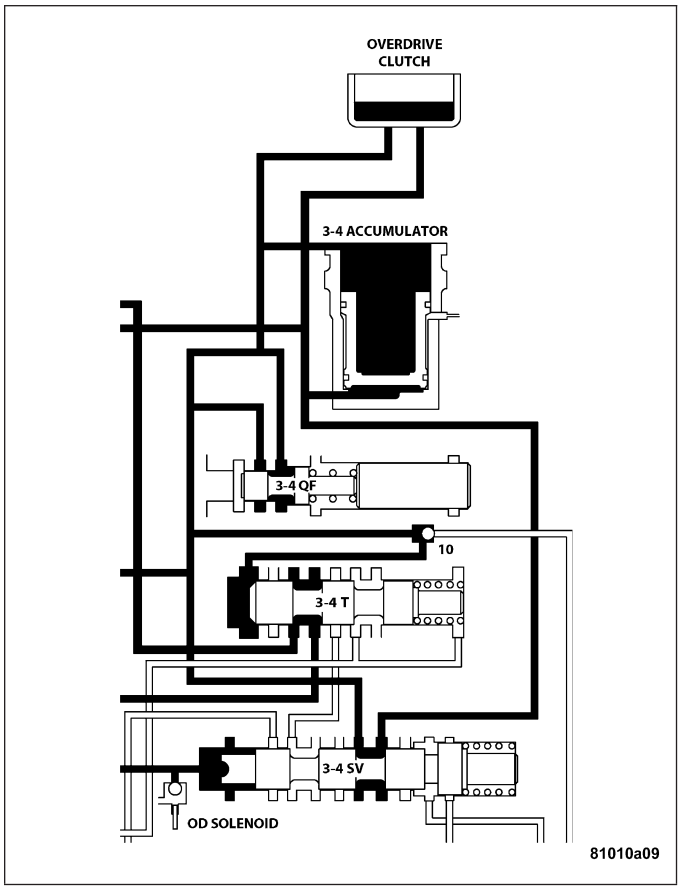

3-4 Shift Valve After Shift

THROTTLE VALVE

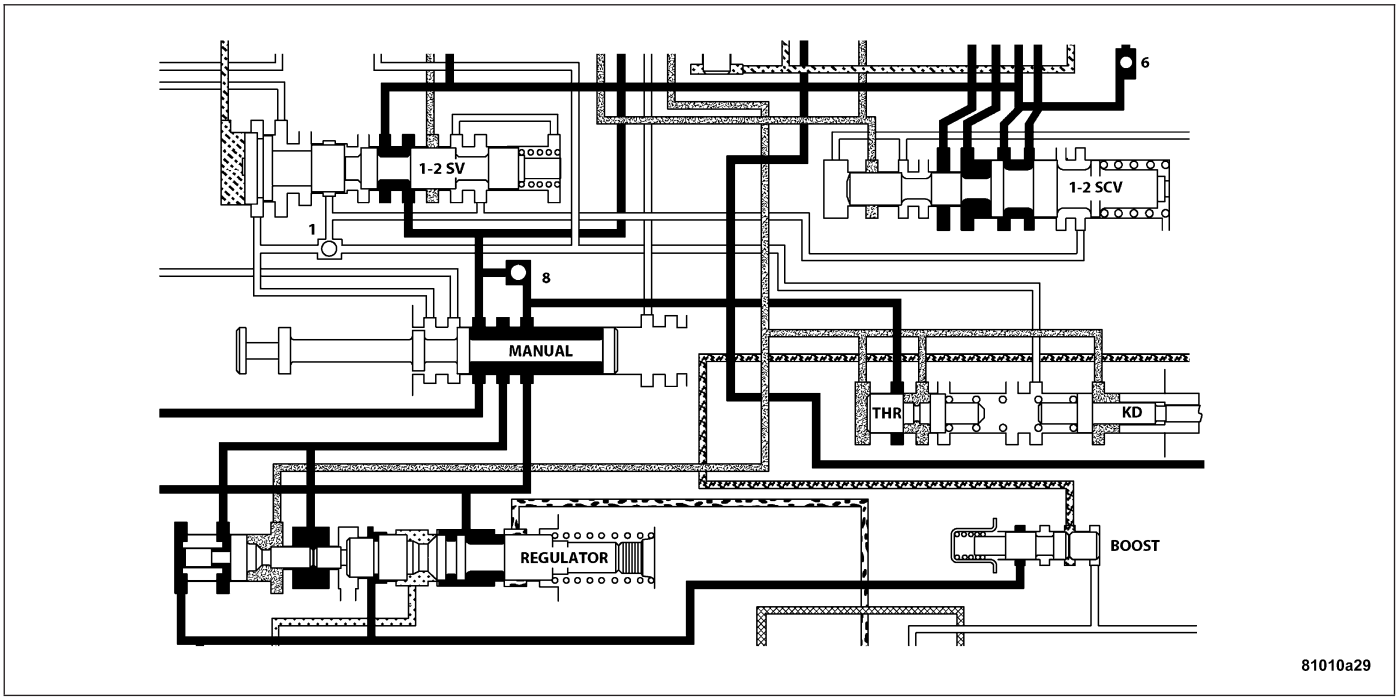

Throttle Valve

In all gear positions the throttle valve is being supplied with line pressure. The throttle valve meters and reduces the line pressure that now becomes throttle pressure. The throttle valve is moved by a spring and the kickdown valve,

which is mechanically connected to the throttle. The larger the throttle opening, the higher the throttle pressure (to a maximum of line pressure). The smaller the throttle opening, the lower the throttle pressure (to a minimum of zero at idle). As engine speed increases, the increase in pump speed increases pump output. The increase in pressure and volume must be regulated to maintain the balance within the transmission. To do this, throttle pressure is routed to the reaction area on the right side of the throttle pressure plug (in the regulator valve).

The higher engine speed and line pressure would open the vent too far and reduce line pressure too much. Throttle pressure, which increases with engine speed (throttle opening), is used to oppose the movement of the pressure valve to help control the metering passage at the vent. The throttle pressure is combined with spring pressure to reduce the force of the throttle pressure plug on the pressure valve. The larger spring at the right closes the regulator valve passage and maintains or increases line pressure. The increased line pressure works against the reaction area of the line pressure plug and the reaction area left of land #3 simultaneously moves the regulator valve train to the right and controls the metering passage.

The kickdown valve, along with the throttle valve, serve to delay upshifts until the correct vehicle speed has been reached. It also controls downshifts upon driver demand, or increased engine load. If these valves were not in place, the shift points would be at the same speed for all throttle positions. The kickdown valve is actuated by a cam connected to the throttle. This is accomplished through either a linkage or a cable. The cam forces the kickdown valve toward the throttle valve compressing the spring between them and moving the throttle valve. As the throttle valve land starts to uncover its port, line pressure is “metered” out into the circuits and viewed as throttle pressure. This increased throttle pressure is metered out into the circuits it is applied to: the 1-2 and 2-3 shift valves. When the throttle pressure is high enough, a 3-2 downshift will occur. If the vehicle speed is low enough, a 2-1 downshift will occur.

SWITCH VALVE

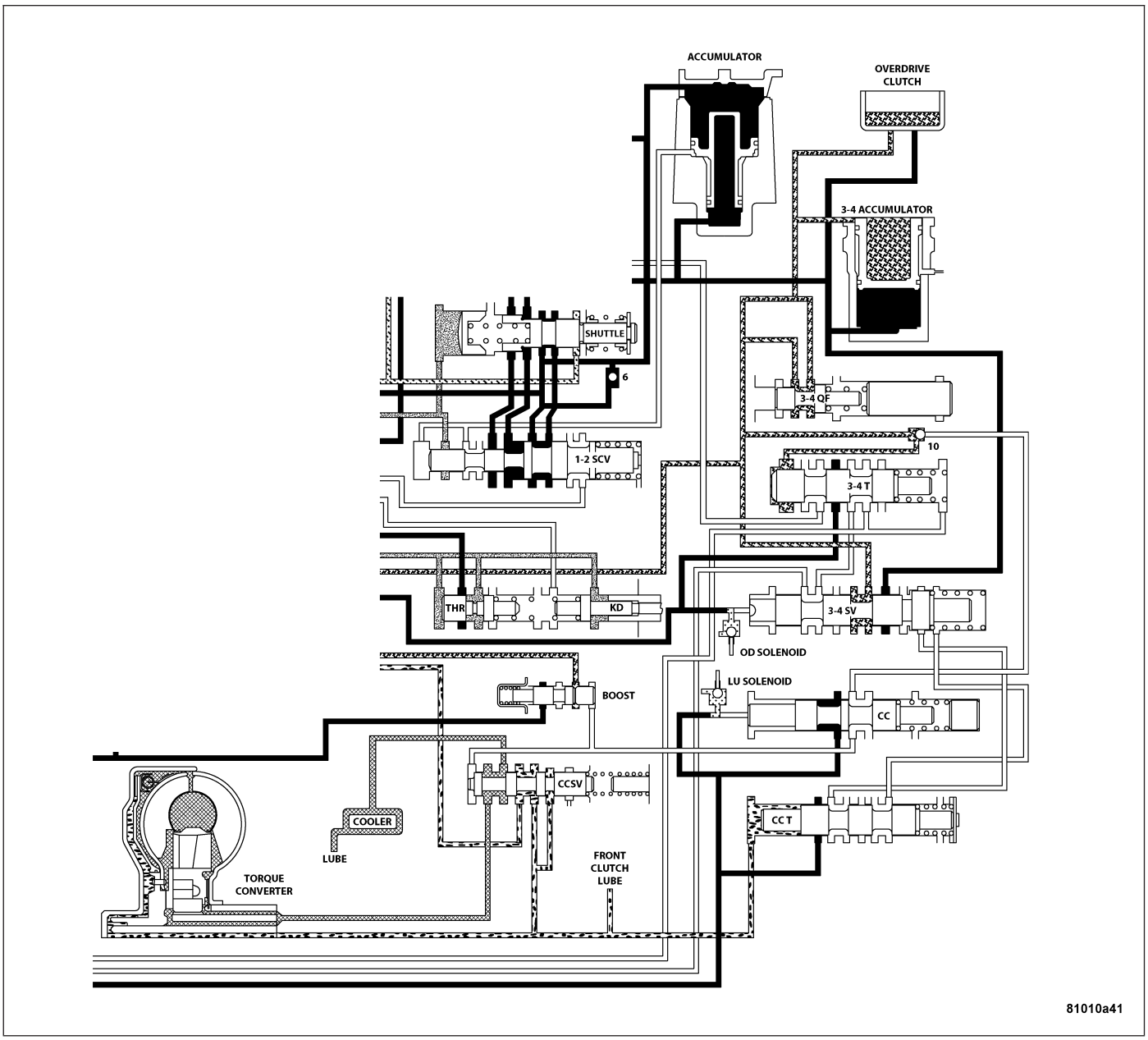

Switch Valve - Torque Converter Unlocked

When the transmission is in Drive Second before the TCC application occurs, the pressure regulator valve is supplying torque converter pressure to the switch valve. The switch valve directs this pressure through the transmission input shaft, into the converter, through the converter, back out between the input shaft and the reaction shaft, and back up to the switch valve. From the switch valve, the fluid pressure is directed to the transmission cooler, and lubrication pressure returns from the cooler to lubricate different portions of the transmission.

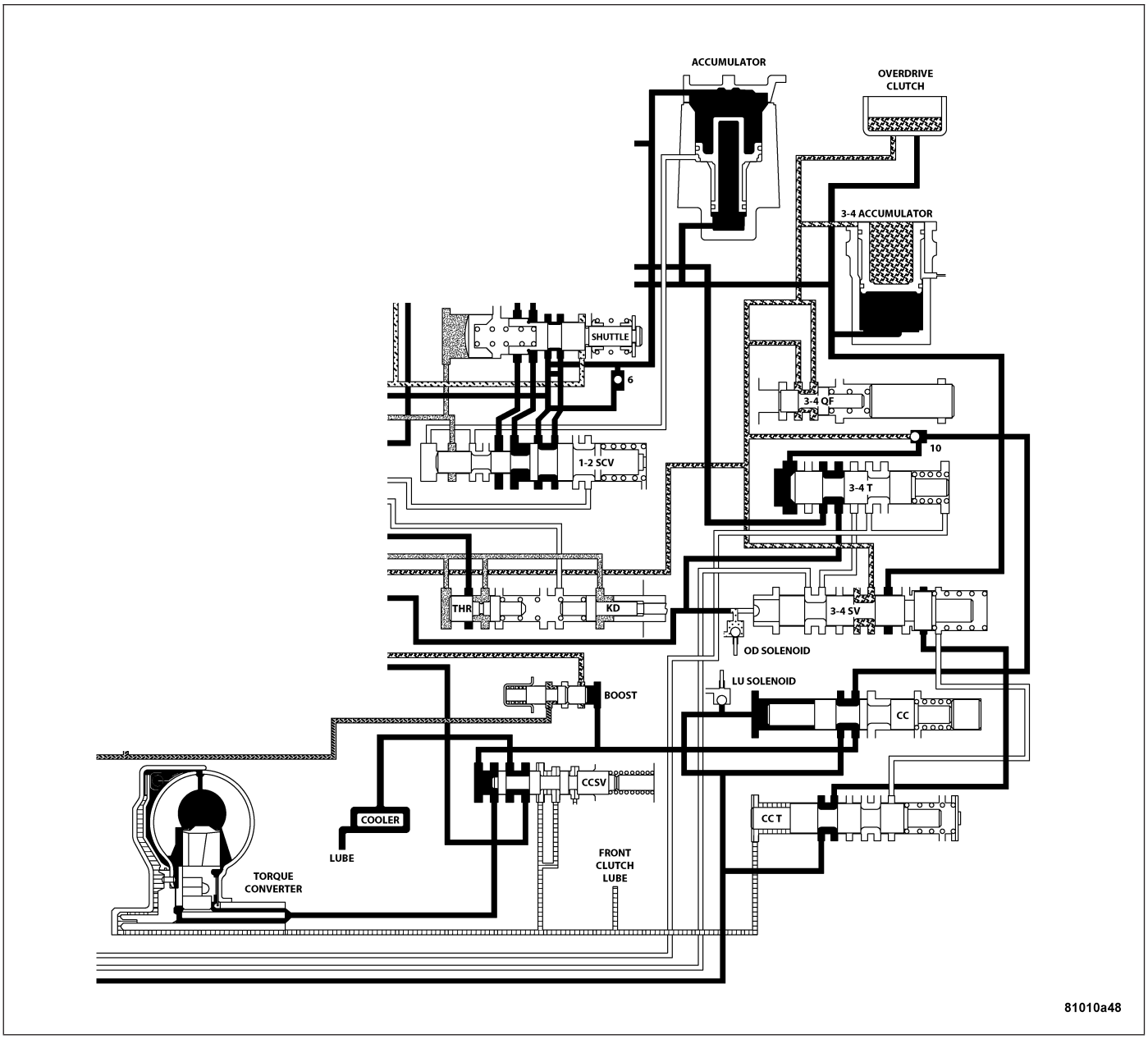

Switch Valve - Torque Converter Locked

MANUAL VALVE

The manual valve is a relay valve. The purpose of the manual valve is to direct fluid to the correct circuit needed for a specific gear or driving range. The manual valve, as the name implies, is manually operated by the driver with a lever located on the side of the valve body. The valve is connected mechanically by either a cable or linkage to the gearshift mechanism. The valve is held in each of its positions by a spring-loaded roller or ball that engages the “roostercomb” of the manual valve lever.

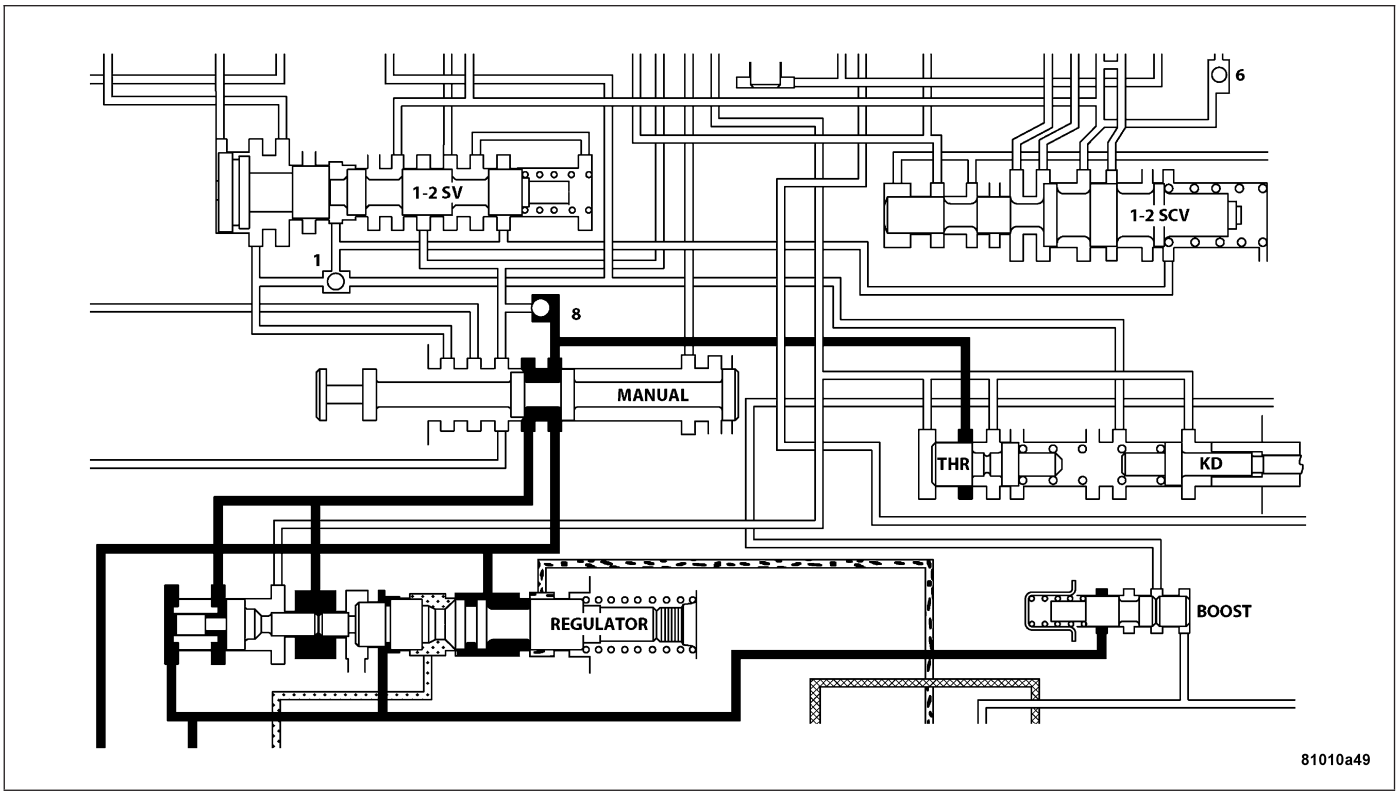

Manual Valve

Once the TCC control valve has moved to the right, line pressure is directed to the tip of the switch valve, forcing the valve to the right. The switch valve now vents oil from the front of the piston in the torque converter, and supplies line pressure to the (rear) apply side of the torque converter piston. This pressure differential causes the piston to apply against the friction material, cutting off any further flow of line pressure oil. After the switch valve is shuttled right allowing line pressure to engage the TCC, torque converter pressure is directed past the switch valve into the transmission cooler and lubrication circuits.

CONVERTER CLUTCH LOCK-UP VALVE

The torque converter clutch (TCC) lock-up valve controls the back (ON) side of the torque converter clutch. When the PCM energizes the TCC solenoid to engage the converter clutch piston, pressure is applied to the TCC lock-up valve which moves to the right and applies pressure to the torque converter clutch.

CONVERTER CLUTCH LOCK-UP TIMING VALVE

The torque converter clutch (TCC) lock-up timing valve is there to block any 4-3 downshift until the TCC is completely unlocked and the clutch is disengaged.

SHUTTLE VALVE

The assembly is contained in a bore in the valve body above the shift valves. When the manual valve is positioned in the Drive range, throttle pressure acts on the throttle plug of the shuttle valve to move it against a spring, increasing the spring force on the shuttle valve. During a part or full throttle 1-2 upshift, the throttle plug is bottomed by throttle pressure, holding the shuttle valve to the right against governor pressure, and opening a by–pass circuit. The shuttle valve controls the quality of the kickdown shift by restricting the rate of fluid discharge from the front clutch and servo release circuits. During a 3-2 kickdown, fluid discharges through the shuttle by-pass circuit. When the shuttle valve closes the by-pass circuit, fluid discharge is restricted and controlled for the application of the front band. During a 2-3 “lift foot” upshift, the shuttle valve by-passes the restriction to allow full fluid flow through the by-pass groove for a faster release of the band.

BOOST VALVE

The boost valve provides increased fluid apply pressure to the overdrive clutch during 3-4 upshifts, and when accelerating in fourth gear.

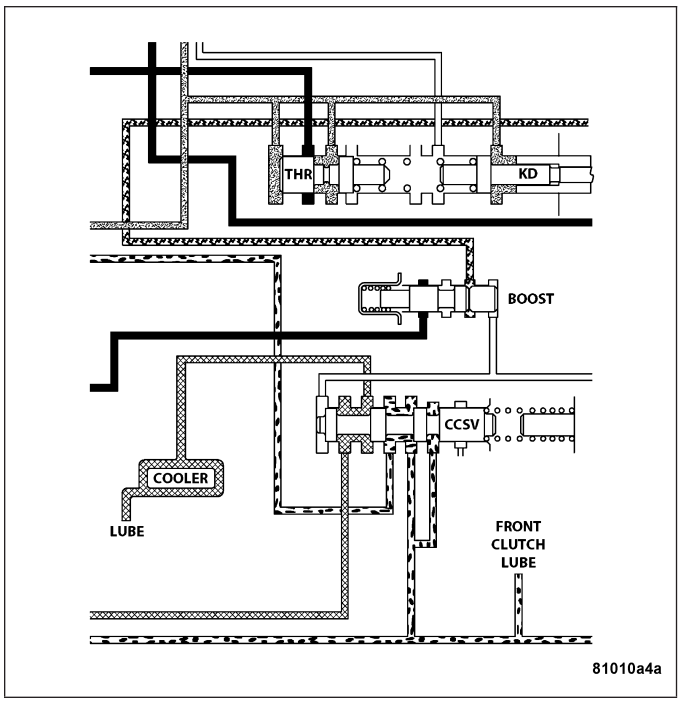

Boost Valve Before Lock-up

The boost valve also serves to increase line pressure during torque converter lock-up.

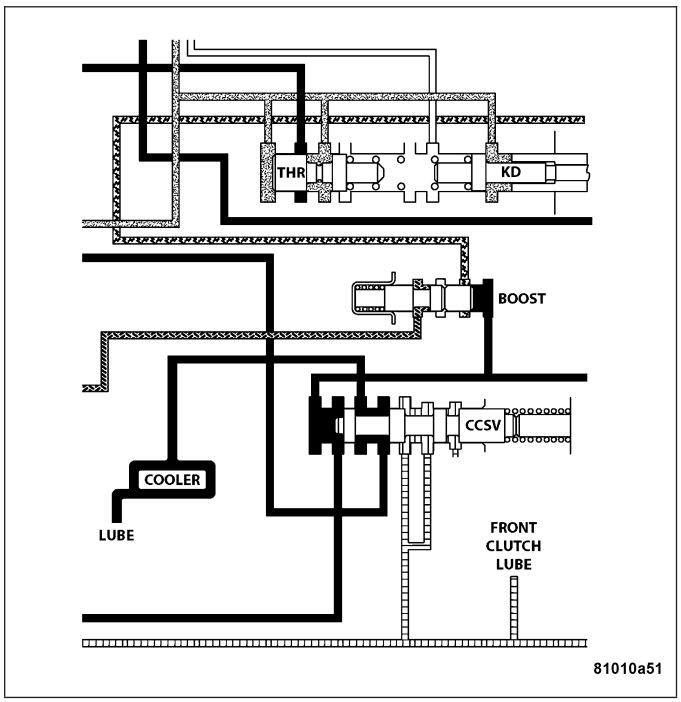

Boost Valve After Lock-up

REMOVAL

The valve body can be removed for service without having to remove the transmission assembly.

The valve body can be disassembled for cleaning and inspection of the individual components.

The only replaceable valve body components are:

- Manual lever.

- Manual lever washer, seal, E-clip, and shaft seal.
- Manual lever detent ball.
- Throttle lever.
- Fluid filter.
- Pressure adjusting screw bracket.
- Governor pressure solenoid.
- Governor pressure sensor (includes transmission temperature thermistor).
- Converter clutch/overdrive solenoid assembly and harness.
- Governor housing gasket.
- Solenoid case connector O-rings.

1. Shift transmission into NEUTRAL.
2. Raise vehicle.
3. Remove gearshift and throttle levers from shaft of valve body manual lever.
4. Disconnect wires at solenoid case connector (1).
5. Remove the transmission range sensor (2) (Refer to 21 - TRANSMISSION/AUTOMATIC/TRANSMISSION RANGE SENSOR - REMOVAL).

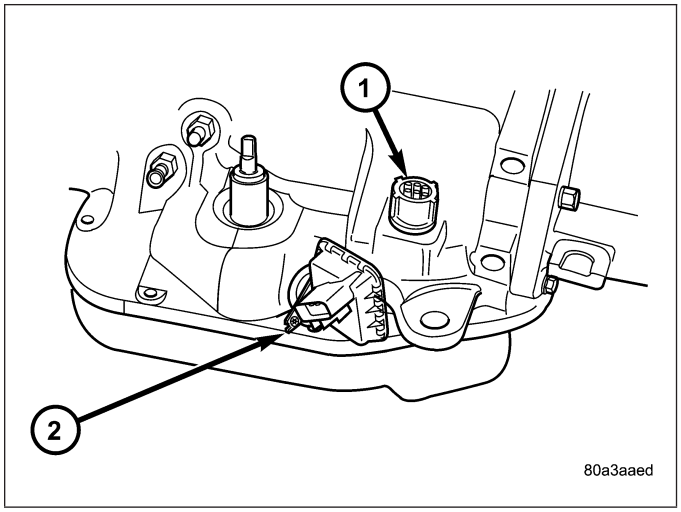

6. Position drain pan under transmission oil pan.
7. Remove transmission oil pan and gasket.
8. Remove fluid filter from valve body.
9. Remove bolts attaching valve body to transmission case.
10. Lower valve body enough to remove accumulator piston and springs.
11. Work manual lever shaft and electrical connector out of transmission case.
12. Lower valve body (1), rotate valve body away from case, pull park rod (3) out of sprag, and remove valve body.

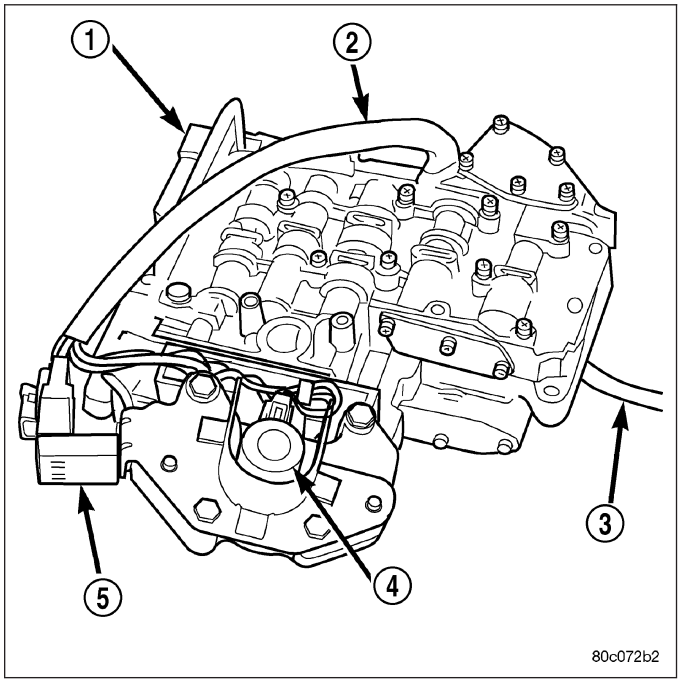

DISASSEMBLY

CAUTION: Do not clamp any valve body component in a vise. This practice can damage the component resulting in unsatisfactory operation after assembly and installation. Do not use pliers to remove any of the valves, plugs or springs and do not force any of the components out or into place. The valves and valve body housings will be damaged if force is used. Tag or mark the valve body springs for reference as they are removed. Do not allow them to become intermixed.

1. Disconnect wires from governor pressure sensor and solenoid.
2. Remove screws attaching governor body and retainer plate to transfer plate.
3. Remove retainer plate, governor body and gasket from transfer plate.
4. Remove governor pressure sensor from governor body.
5. Remove governor pressure solenoid by pulling it straight out of bore in governor body. Remove and discard solenoid O-rings if worn, cut, or torn.
6. Remove small shoulder bolt that secures solenoid harness case connector (1) to 3-4 accumulator housing (2). Retain shoulder bolt. Either tape it to harness or thread it back into accumulator housing after connector removal.

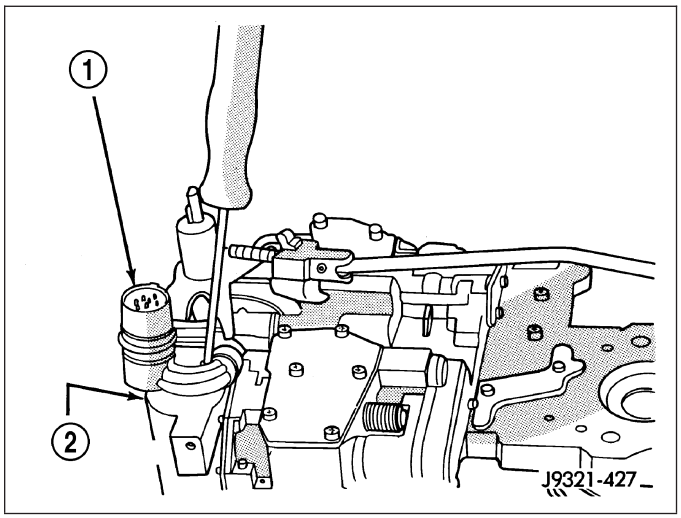

7. Unhook overdrive/converter solenoid harness (1) from 3-4 accumulator cover plate (2)
.

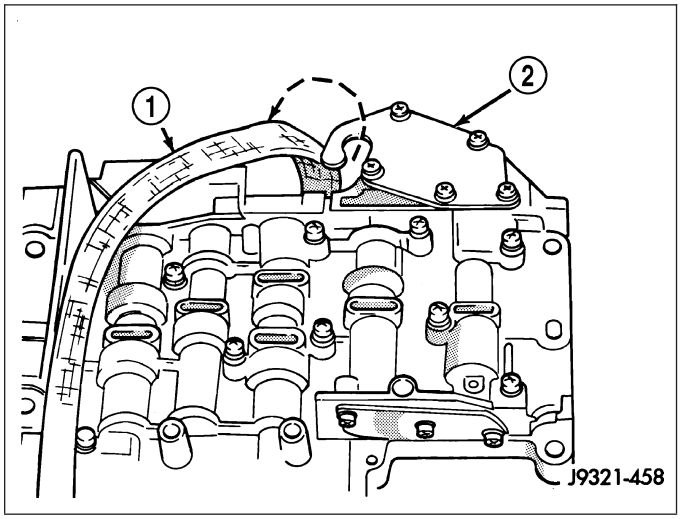

8. Turn valve body over and remove screws that attach overdrive/converter solenoid assembly (1) to valve body.

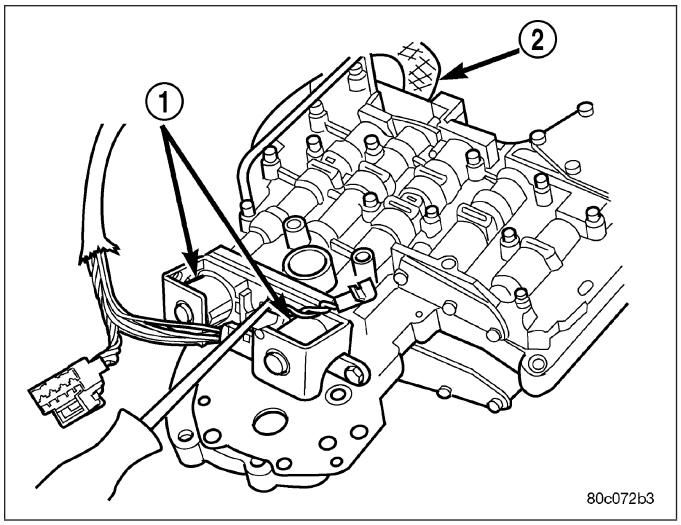

9. Remove solenoid and harness (6) assembly from valve body.

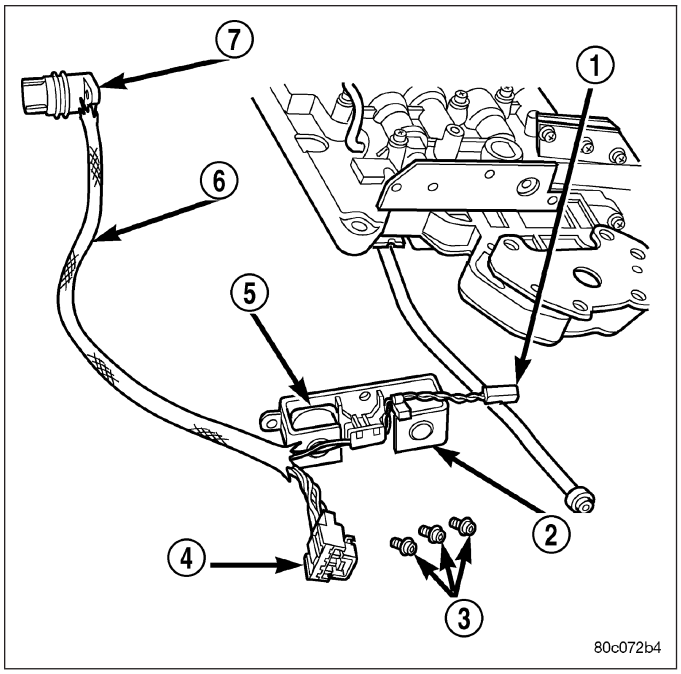

10. Remove boost valve cover (1).

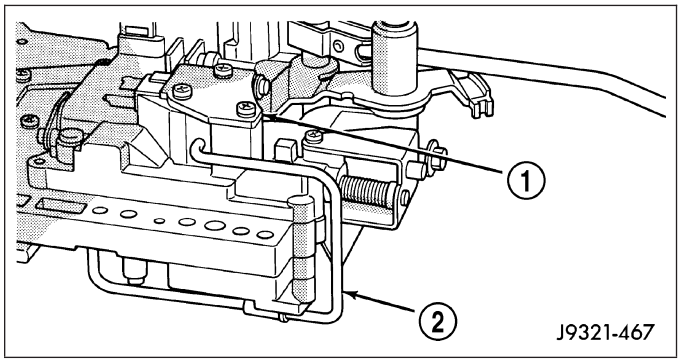

11. Remove boost valve retainer (1), valve spring (6),and boost valve (5).

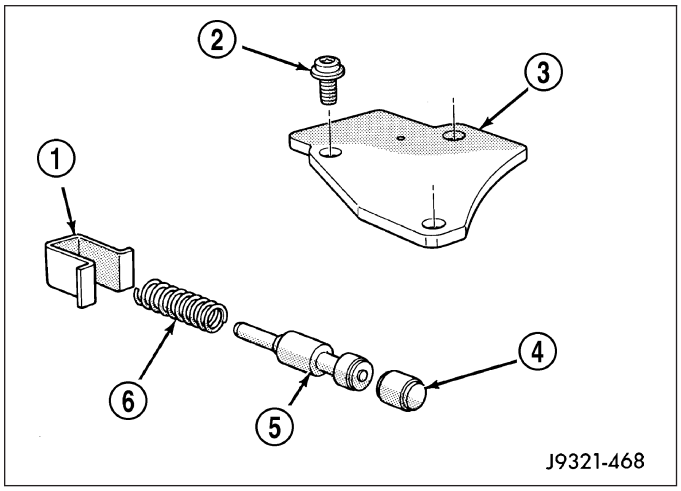

12. Secure detent ball and spring with Retainer Tool 6583 (1).

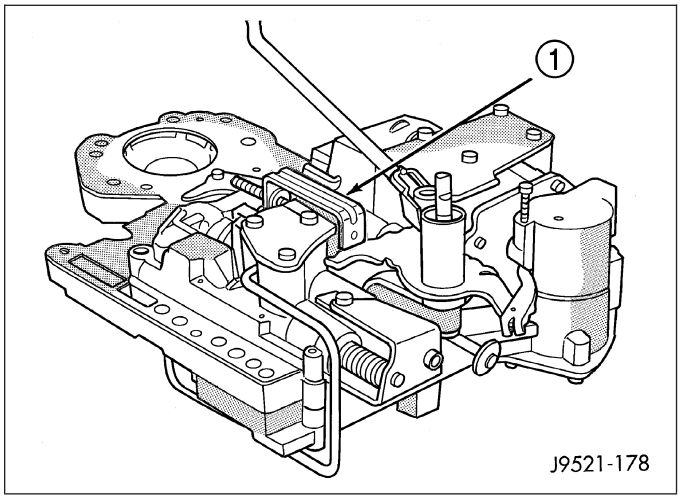

13. Remove park rod E-clip (2) and separate rod (3) from manual lever (1).

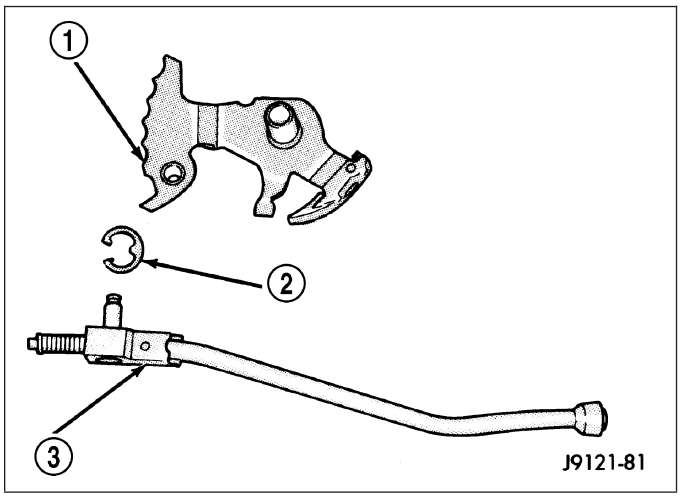

14. Remove E-clip and washer (2) that retains throttle lever shaft (1) in manual shaft (3).

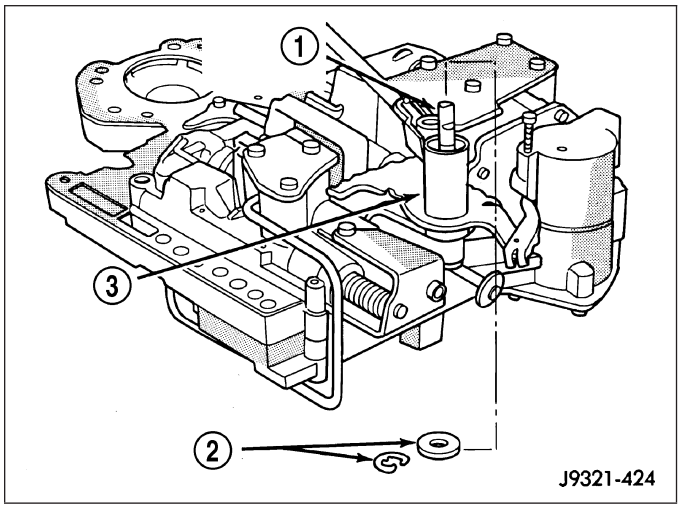

15. Remove manual lever (2) and throttle lever (3). Rotate and lift manual lever off valve body and throttle lever shaft. Then slide throttle lever out of valve body.

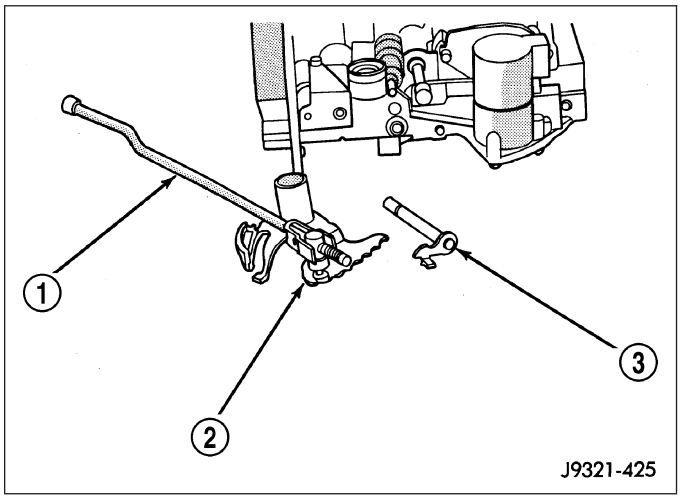

16. Position pencil magnet (4) next to detent housing to catch detent ball and spring. Then carefully remove Retainer Tool 6583 and remove detent ball (3) and spring (2).

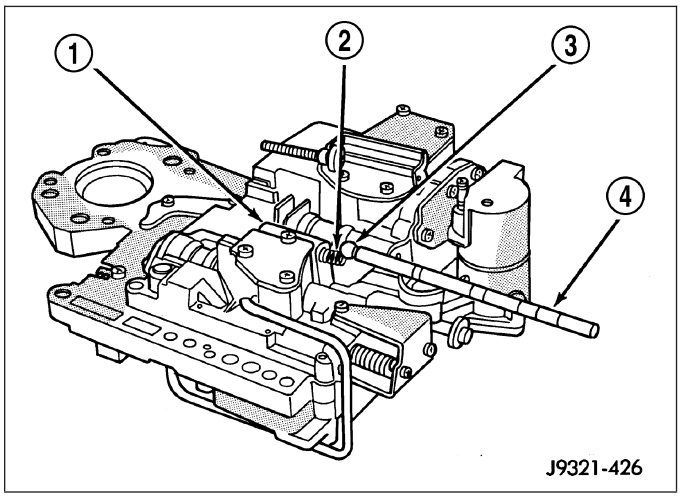

17. Remove screws (2) attaching pressure adjusting screw bracket (3) to valve body and transfer plate. Hold bracket (5) firmly against spring tension while removing last screw (5).

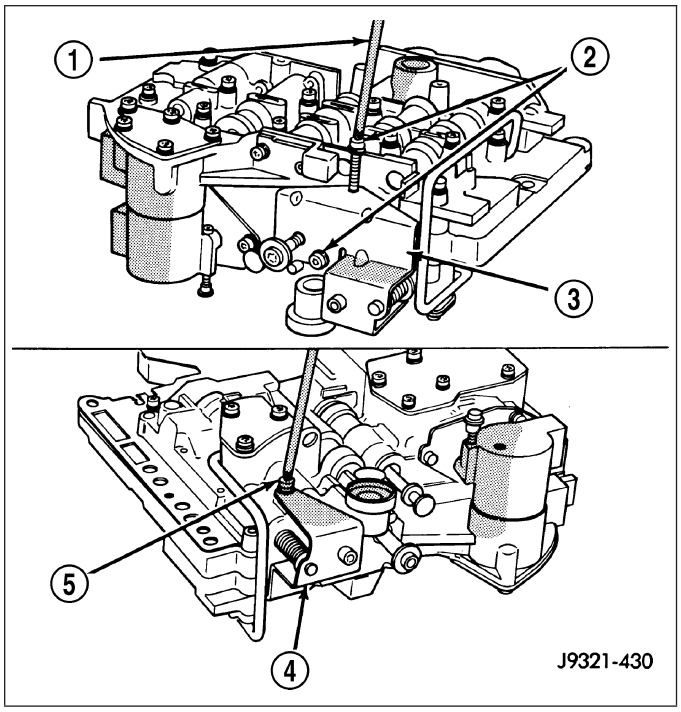

18. Remove adjusting screw bracket (4), line pressure adjusting screw (2), pressure regulator valve spring (5), and switch valve spring (1). Do not remove throttle pressure adjusting screw from bracket and do not disturb setting of either adjusting screw during removal.

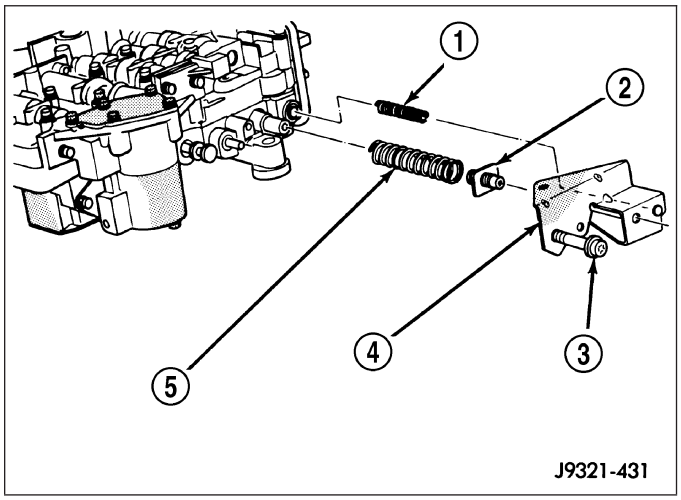

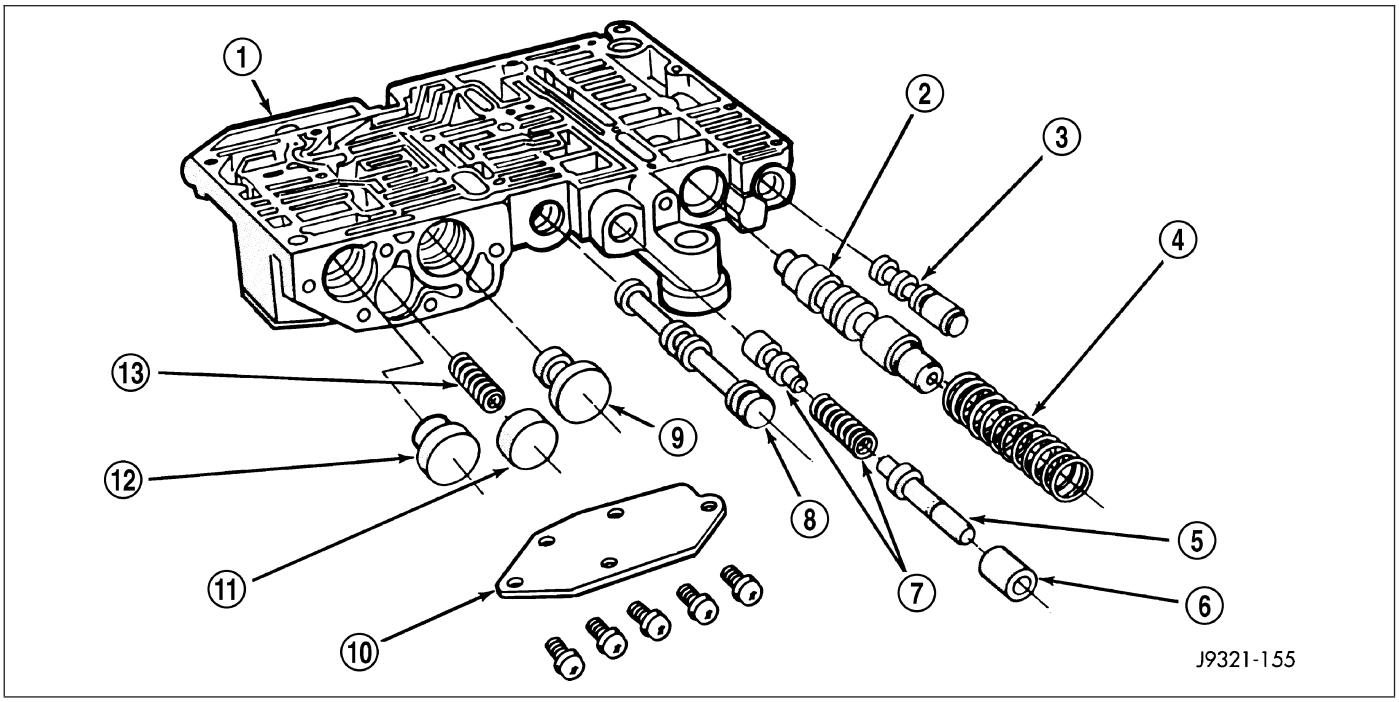

Upper Housing Control Valve Locations

1 - UPPER HOUSING
2 - REGULATOR VALVE
3 - SWITCH VALVE
4 - REGULATOR VALVE SPRING
5 - KICKDOWN VALVE
6 - KICKDOWN DETENT
7 - THROTTLE VALVE AND SPRING
8 - MANUAL VALVE
9 - 1-2 GOVERNOR PLUG
10 - GOVERNOR PLUG COVER
11 - THROTTLE PLUG
12 - 2-3 GOVERNOR PLUG
13 - SHUTTLE VALVE PRIMARY SPRING

19. Turn upper housing (1) over and remove switch valve (3), regulator valve (2) and spring (4), and manual valve (8).
20. Remove kickdown detent (6), kickdown valve (5), and throttle valve and spring (7).

21. Loosen left-side 3-4 accumulator housing (3) attaching screw (1) about 2-3 threads. Then remove center and right-side housing attaching screws (2).

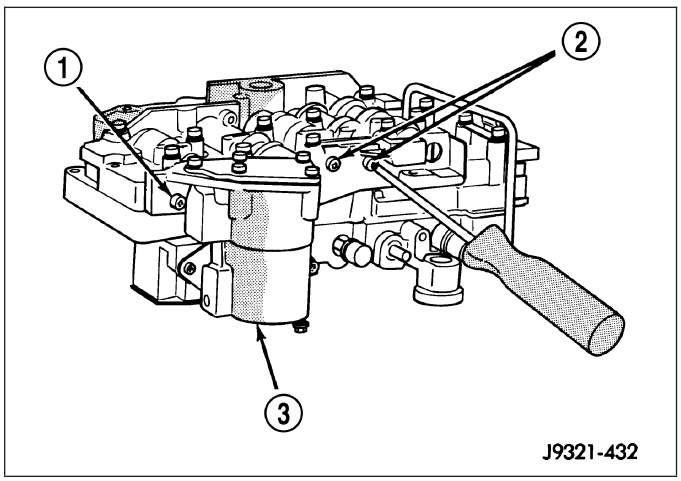

22. Carefully rotate 3-4 accumulator housing upward and remove 3-4 shift valve spring and converter clutch valve plug and spring.

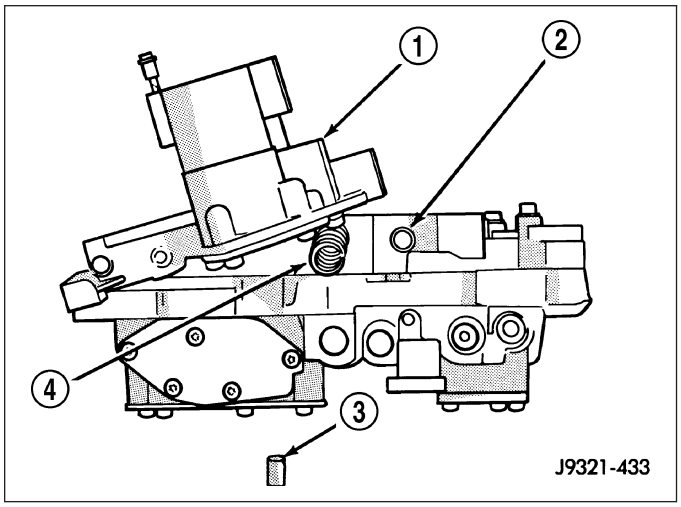

23. Remove left-side screw and remove 3-4 accumulator housing (3) from valve body.

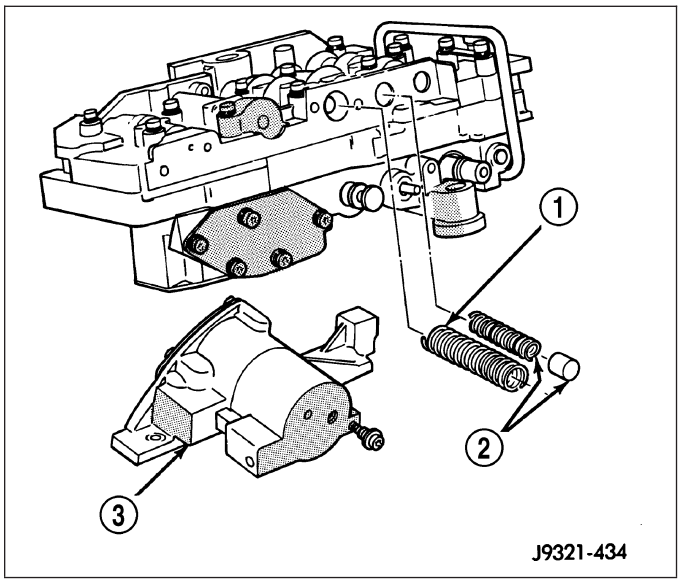

24. Bend back tabs on boost valve tube brace (2).

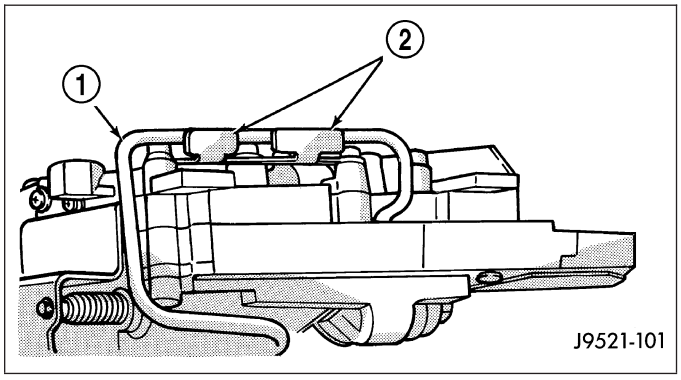

25. Remove boost valve connecting tube (1). Disengage tube from upper housing port first. Then rock opposite end of tube back and forth to work it out of lower housing.

CAUTION: Do not use tools to loosen or pry the connecting tube out of the valve body housings. Loosen and remove the tube by hand only.

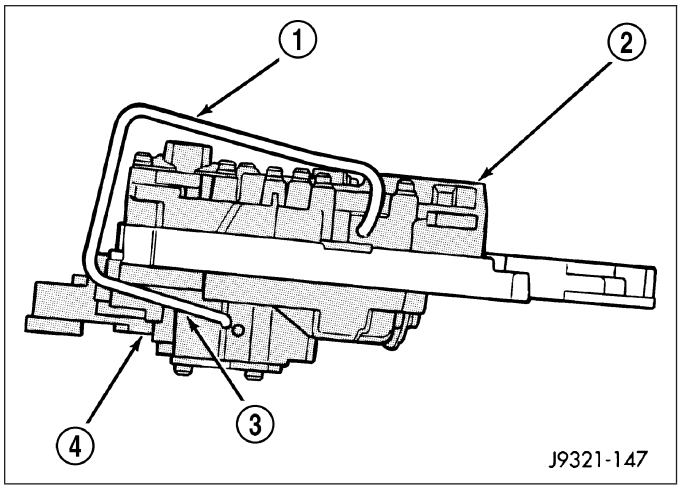

26. Turn valve body over so lower housing (1) is facing upward. In this position, the two check balls in upper housing will remain in place and not fall out when lower housing and separator plate are removed.
27. Remove screws attaching valve body lower housing (1) to upper housing and transfer plate (3). Note position of boost valve tube brace for assembly reference.
28. Remove lower housing and overdrive separator plate (2) from transfer plate (3).

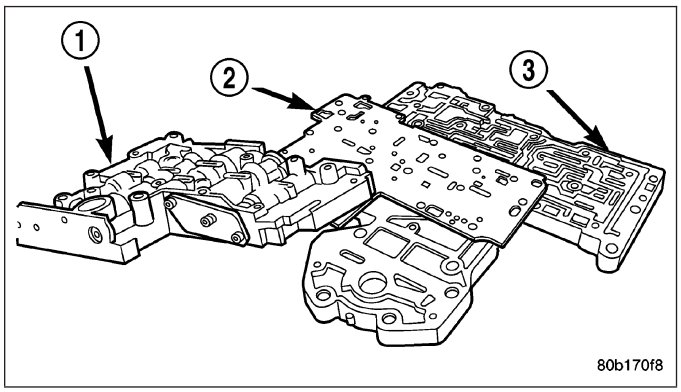

29. Remove the Number 10 check ball (1) from the transfer plate. The check ball is approximately 4.8 mm (3/16 in.) in diameter.

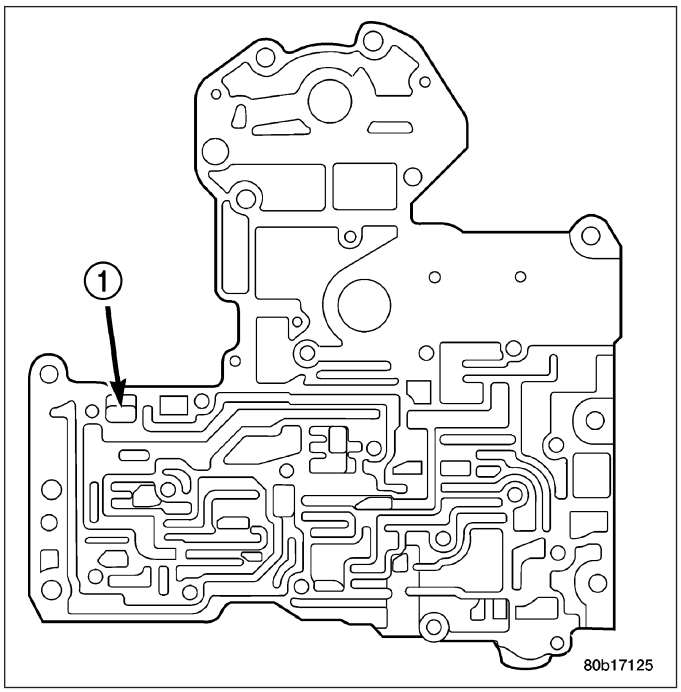

30. Remove transfer plate (2) from upper housing (1).

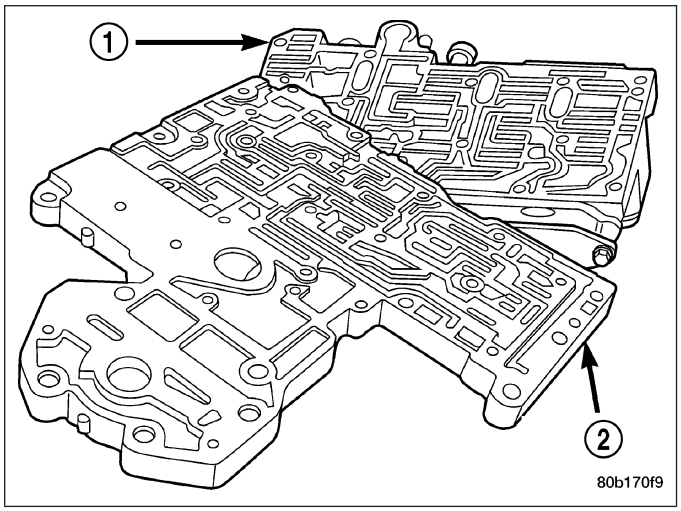

31. Turn transfer plate (1) over so upper housing separator plate (2) is facing upward.
32. Remove upper housing separator plate (2) from transfer plate (1). Note position of filter screen (3) in separator plate for assembly reference.

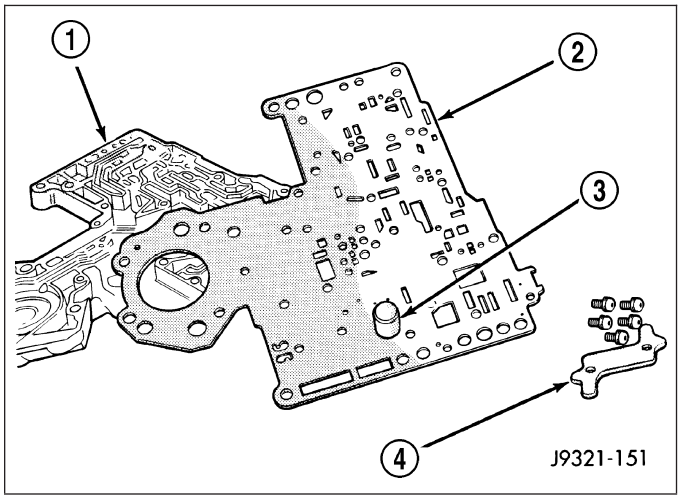

33. Remove rear clutch (1) and rear servo check balls (2) from transfer plate (3). Note check ball location for assembly reference.

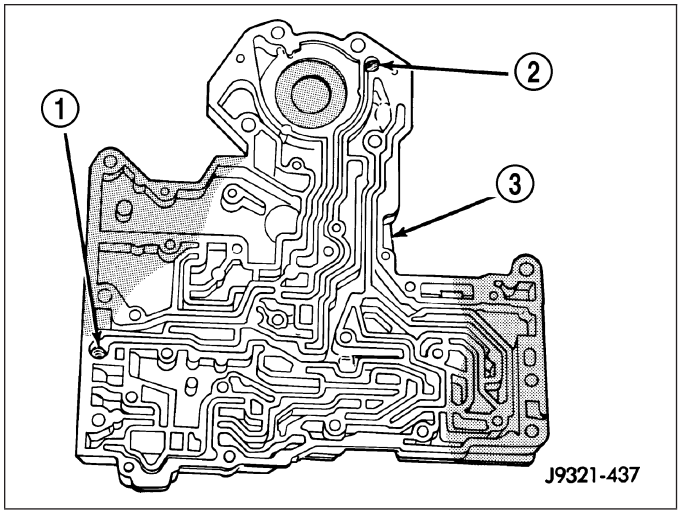

VALVE BODY UPPER HOUSING

1. Note location of check balls (1, 2) in valve body upper housing. Then remove the one large diameter (2) and the five smaller diameter (1) check balls.

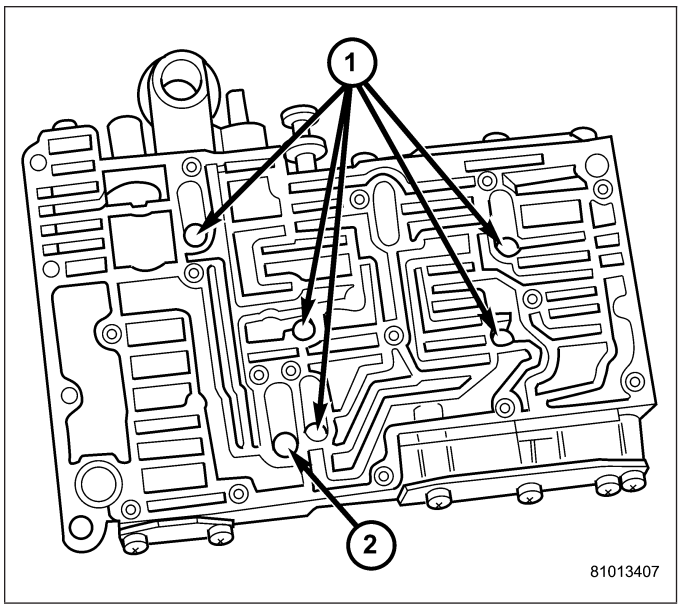

2. Remove E-clip (1) that secures shuttle valve secondary spring (2) on valve stem (3).

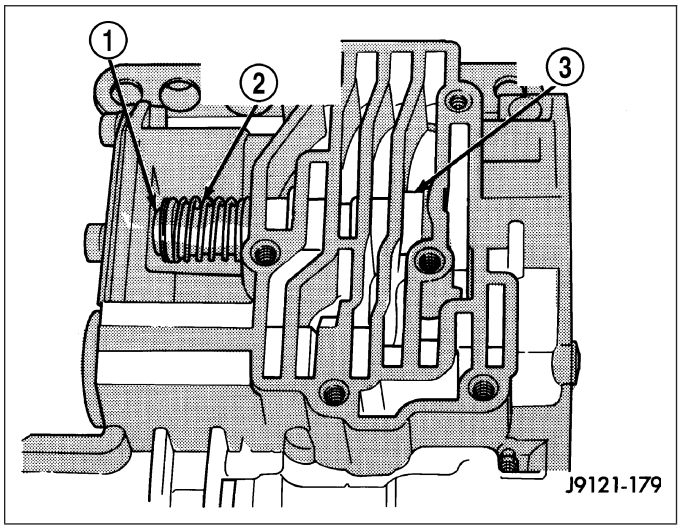

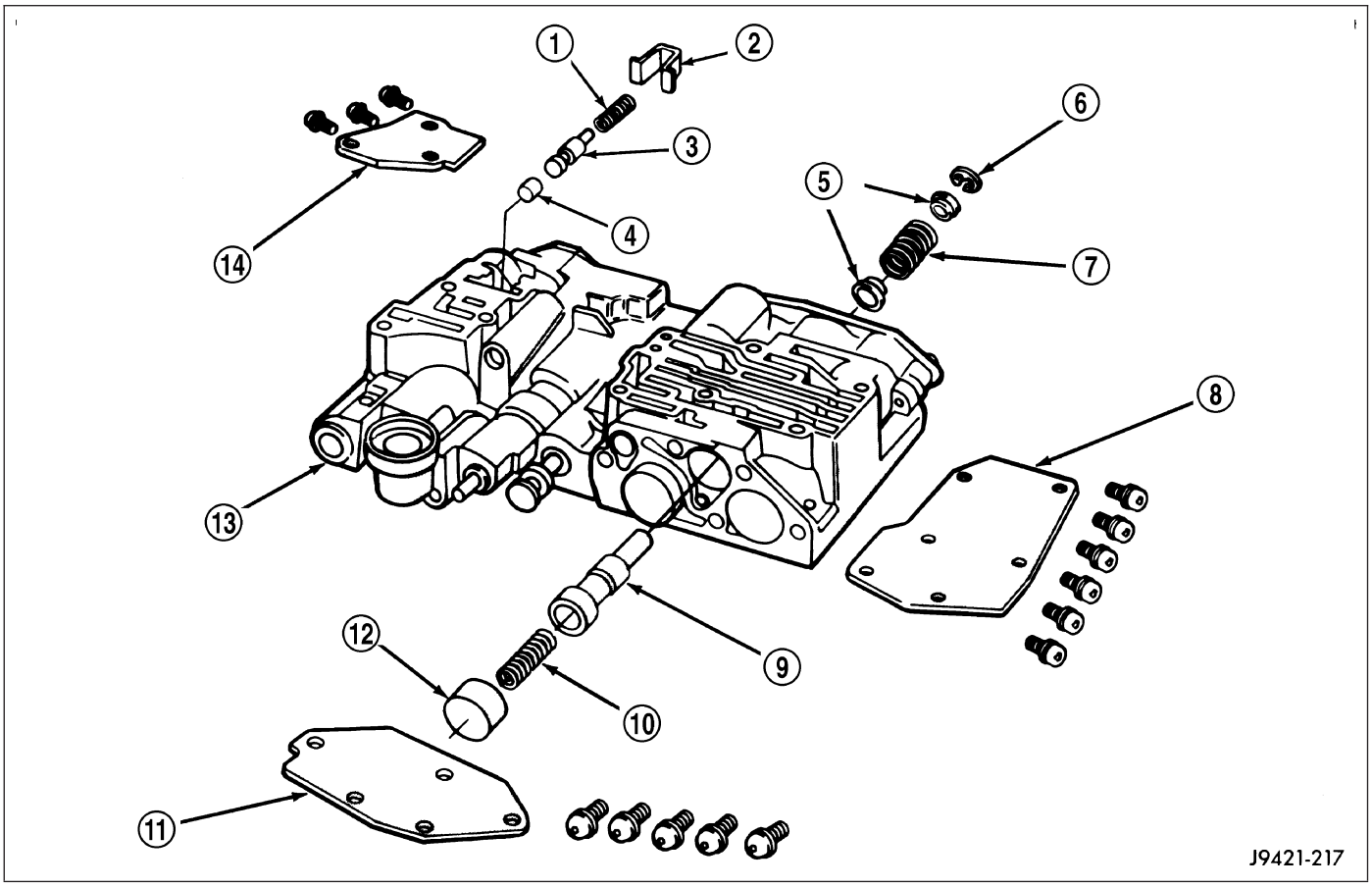

Shuttle and Boost Valve Location

1 - SPRING
2 - RETAINER
3 - BOOST VALVE
4 - BOOST VALVE PLUG
5 - SPRING GUIDES
6 - E-CLIP
7 - SHUTTLE VALVE SECONDARY SPRING
8 - SHUTTLE VALVE COVER
9 - SHUTTLE VALVE
10 - SHUTTLE VALVE PRIMARY SPRING
11 - GOVERNOR PLUG COVER
12 - THROTTLE PLUG
13 - UPPER HOUSING
14 - BOOST VALVE COVER

3. Remove governor plug and shuttle valve covers (8).
4. Remove throttle plug (12), primary spring (10), shuttle valve (9), secondary spring (7), and spring guides (5).
5. Remove boost valve retainer, spring and valve if not previously removed.

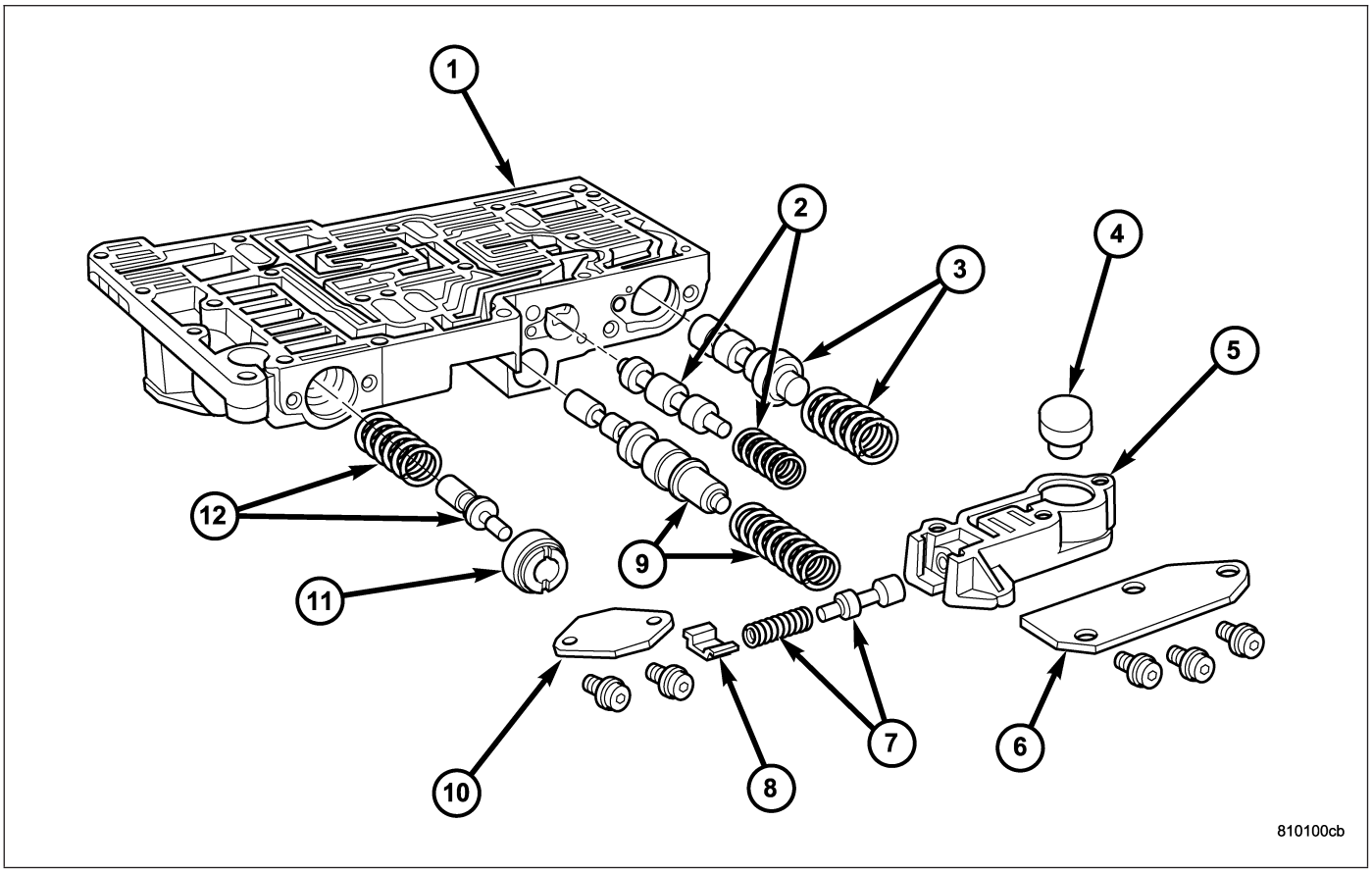

Upper Housing Shift Valve and Pressure Plug Locations

1 - UPPER HOUSING
2 - 1-2 SHIFT VALVE AND SPRING
3 - 2-3 SHIFT VALVE AND SPRING
4 - 2-3 THROTTLE PLUG
5 - LIMIT VALVE HOUSING
6 - LIMIT VALVE COVER
7 - LIMIT VALVE AND SPRING
8 - RETAINER
9 - 1-2 SHIFT CONTROL VALVE AND SPRING
10 - PRESSURE PLUG COVER
11 - PLUG SLEEVE
12 - THROTTLE PRESSURE SPRING AND PLUG

6. Remove throttle plug and 1-2 and 2-3 governor plugs.
7. Turn upper housing (1) around and remove limit valve (6) and shift valve covers.
8. Remove limit valve housing (5). Then remove retainer, spring, limit valve (7), and 2-3 throttle plug (4) from limit valve housing (5).
9. Remove 1-2 shift control valve and spring (9).
10. Remove 1-2 shift valve and spring (2).
11. Remove 2-3 shift valve and spring (3) from valve body.
12. Remove pressure plug cover (10).
13. Remove throttle pressure plug and spring (12).

VALVE BODY LOWER HOUSING

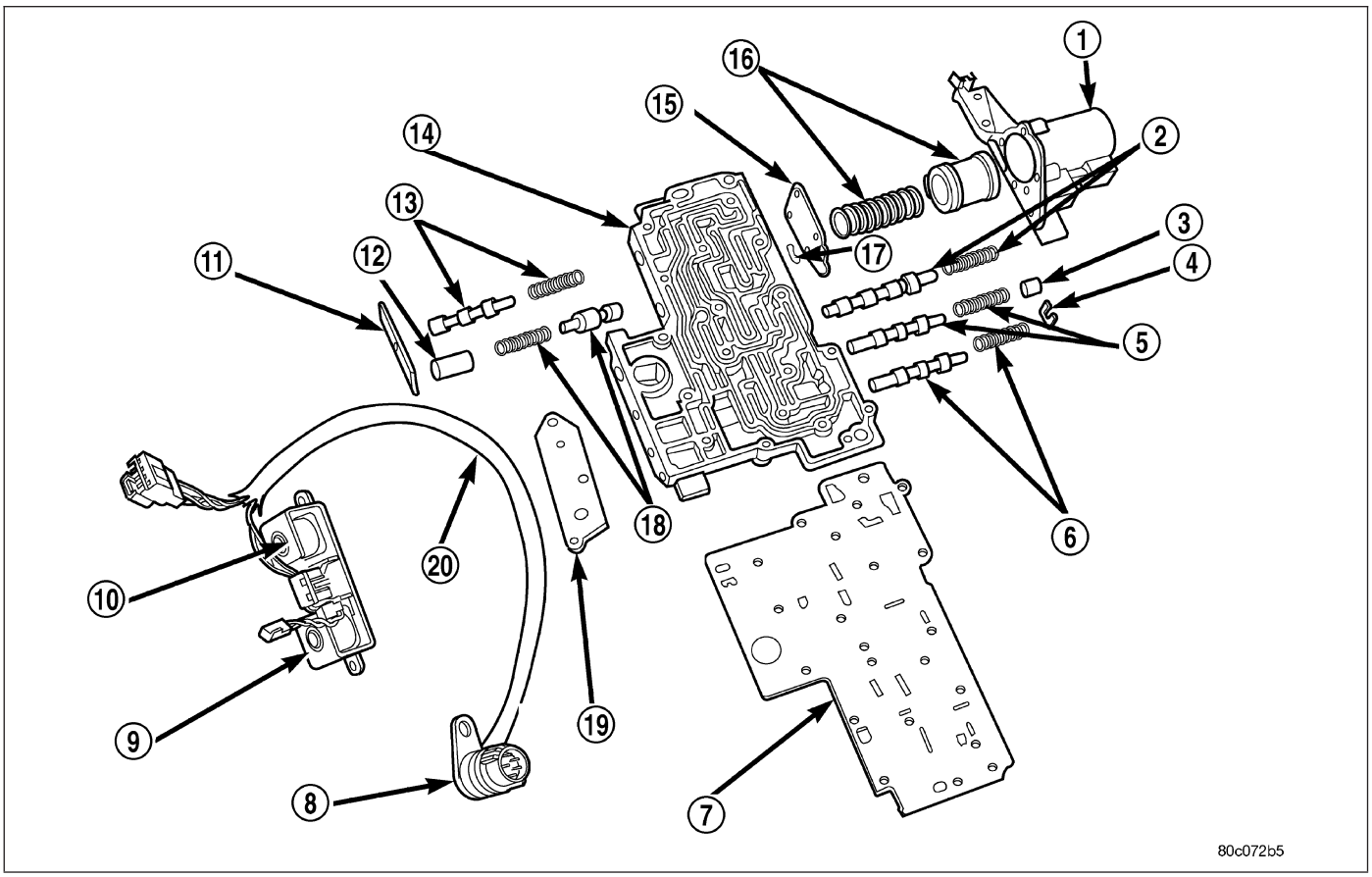

Lower Housing Shift Valves and Springs

1 - 3-4 ACCUMULATOR HOUSING
2 - 3-4 SHIFT VALVE AND SPRING
3 - PLUG
4 - SPRING RETAINER
5 - CONVERTER CLUTCH VALVE AND SPRING
6 - CONVERTER CLUTCH TIMING VALVE AND SPRING
7 - OVERDRIVE SEPARATOR PLATE
8 - CASE CONNECTOR
9 - CONVERTER CLUTCH SOLENOID
10 - OVERDRIVE SOLENOID
11 - TIMING VALVE COVER
12 - PLUG
13 - 3-4 TIMING VALVE AND SPRING
14 - LOWER HOUSING
15 - ACCUMULATOR END PLATE
16 - 3-4 ACCUMULATOR PISTON AND SPRING
17 - E-CLIP
18 - 3-4 QUICK FILL SPRING AND VALVE
19 - SOLENOID GASKET
20 - HARNESS

3-4 ACCUMULATOR HOUSING

1. Remove end plate from housing.
2. Remove piston spring.
3. Remove piston. Remove and discard piston seals.

4. Remove timing valve cover.
5. Remove 3-4 timing valve and spring.
6. Remove 3-4 quick fill valve, spring and plug.
7. Remove 3-4 shift valve and spring.
8. Remove converter clutch valve, spring and plug.
9. Remove converter clutch timing valve, retainer and valve spring.

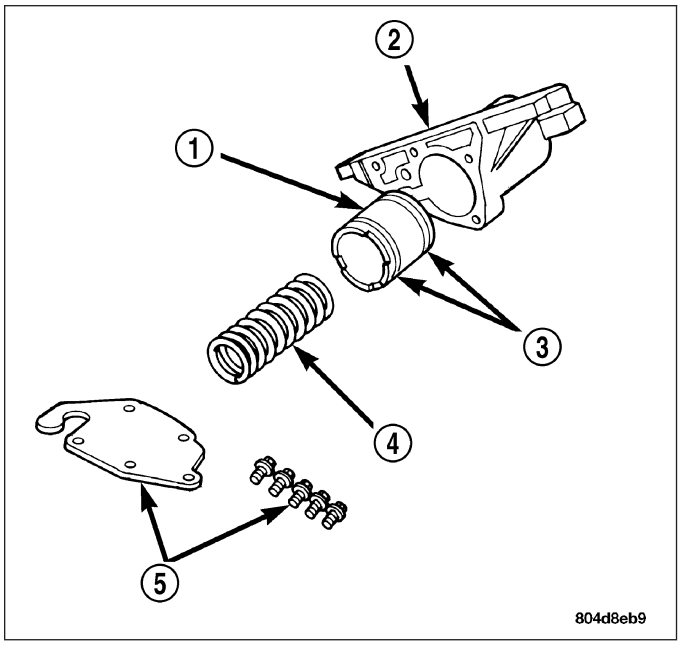

CLEANING

Clean the valve housings, valves, plugs, springs, and separator plates with a standard parts cleaning solution only. Do not use gasoline, kerosene, or any type of caustic solution.

Do not immerse any of the electrical components in cleaning solution. Clean the governor solenoid and sensor and the dual solenoid and harness assembly by wiping them off with dry shop towels only.

Dry all except the electrical parts with compressed air. Make sure all passages are clean and free from obstructions. **Do not use rags or shop towels to dry or wipe off valve body components. Lint from these materials can stick to valve body parts, interfere with valve operation, and clog filters and fluid passages.**

Wipe the governor pressure sensor and solenoid valve with dry, lint free shop towels only. The O-rings on the sensor and solenoid valve are the only serviceable components. Be sure the vent ports in the solenoid valve are open and not blocked by dirt or debris. Replace the valve and/or sensor only when DRB scan tool diagnosis indicates this is necessary. Or, if either part has sustained physical damage (dented, deformed, broken, etc.).

CAUTION: Do not turn the small screw at the end of the solenoid valve for any reason. Turning the screw in either direction will ruin solenoid calibration and result in solenoid failure. In addition, the filter on the solenoid valve is NOT serviceable. Do not try to remove the filter as this will damage the valve housing.

INSPECTION

Inspect the throttle and manual valve levers and shafts. Do not attempt to straighten a bent shaft or correct a loose lever. Replace these components if worn, bent, loose or damaged in any way.

Inspect all of the valve body mating surfaces for scratches, nicks, burrs, or distortion. Use a straightedge to check surface flatness. Minor scratches may be removed with crocus cloth using only very light pressure.

Minor distortion of a valve body mating surface may be corrected by smoothing the surface with a sheet of crocus cloth. Position the crocus cloth on a surface plate, sheet of plate glass or equally flat surface. If distortion is severe or any surfaces are heavily scored, the valve body will have to be replaced.

CAUTION: Many of the valves and plugs, such as the throttle valve, shuttle valve plug, 1-2 shift valve and 1-2 governor plug, are made of coated aluminum. Aluminum components are identified by the dark color of the special coating applied to the surface (or by testing with a magnet). Do not sand aluminum valves or plugs under any circumstances. This practice could damage the special coating causing the valves/plugs to stick and bind.

Inspect the valves and plugs for scratches, burrs, nicks, or scores. Minor surface scratches on steel valves and plugs can be removed with crocus cloth but **do not round off the edges of the valve or plug lands.**Maintaining sharpness of these edges is vitally important. The edges prevent foreign matter from lodging between the valves and plugs and the bore.

Inspect all the valve and plug bores in the valve body. Use a penlight to view the bore interiors. Replace the valve body if any bores are distorted or scored. Inspect all of the valve body springs. The springs must be free of distortion, warpage or broken coils.

Check the two separator plates for distortion or damage of any kind. Inspect the upper housing, lower housing, 3-4 accumulator housing, and transfer plate carefully. Be sure all fluid passages are clean and clear. Check condition of the upper housing and transfer plate check balls as well. The check balls and ball seats must not be worn or damaged.

Trial fit each valve and plug in its bore to check freedom of operation. When clean and dry, the valves and plugs should drop freely into the bores.

Valve body bores do not change dimensionally with use. If the valve body functioned correctly when new, it will continue to operate properly after cleaning and inspection. It should not be necessary to replace a valve body assembly unless it is damaged in handling.

The only serviceable valve body components are listed below. The remaining valve body components are serviced only as part of a complete valve body assembly. Serviceable parts are:

- dual solenoid and harness assembly
- solenoid gasket
- solenoid case connector O-rings and shoulder bolt
- switch valve and spring
- pressure adjusting screw and bracket assembly
- throttle lever
- manual lever and shaft seal
- throttle lever shaft seal, washer, and E-clip
- fluid filter and screws
- detent ball and spring
- valve body screws
- governor pressure solenoid
- governor pressure sensor and retaining clip
- park lock rod and E-clip

ASSEMBLY

CAUTION: Do not force valves or plugs into place during reassembly. If the valve body bores, valves and plugs are free of distortion or burrs, the valve body components should all slide into place easily. In addition, do not overtighten the transfer plate and valve body screws during reassembly. Overtightening can distort the housings resulting in valve sticking, cross leakage and unsatisfactory operation. Tighten valve body screws to recommended torque only.

LOWER HOUSING

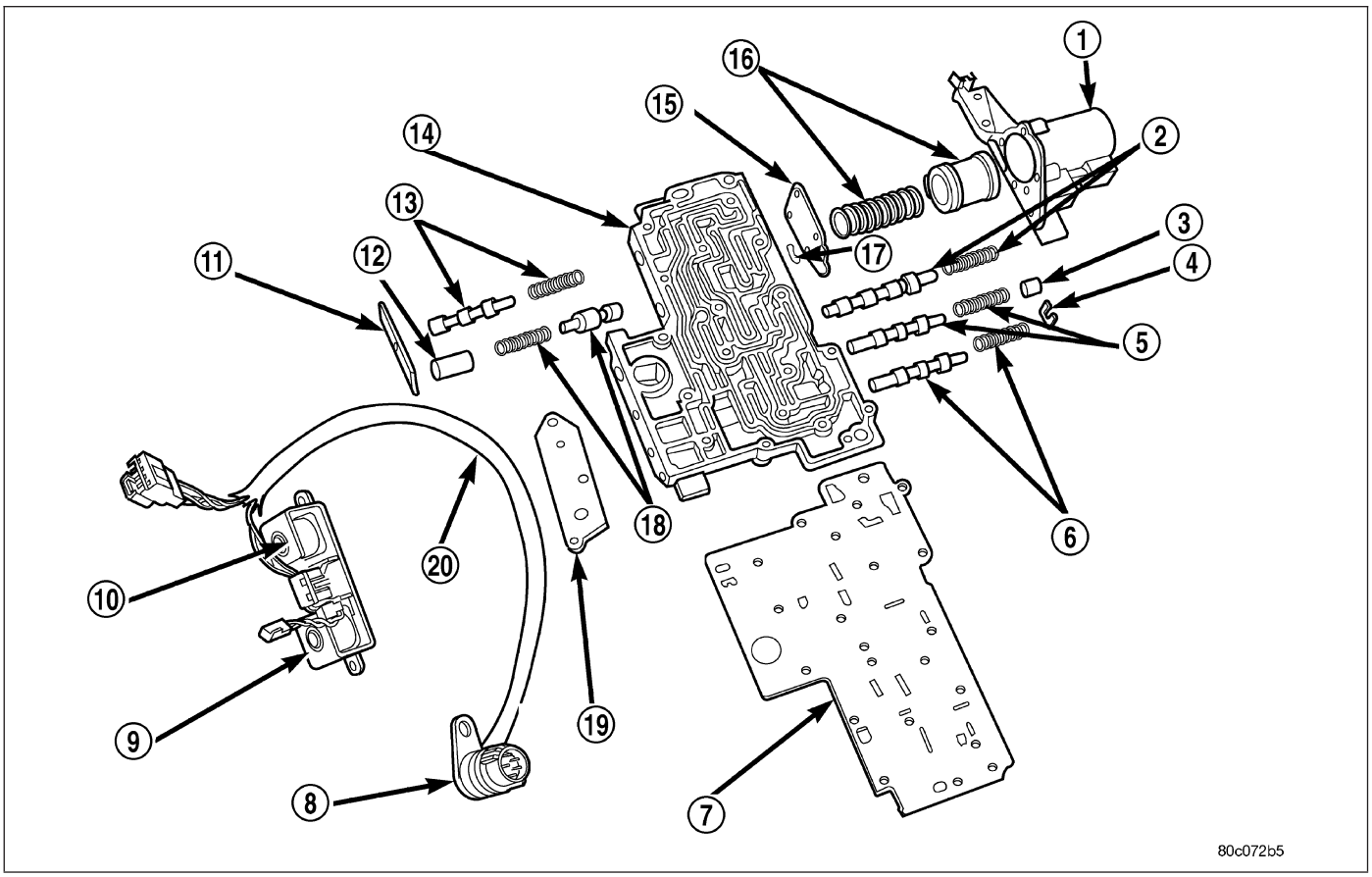

Lower Housing Shift Valves and Springs

1 - 3-4 ACCUMULATOR HOUSING
2 - 3-4 SHIFT VALVE AND SPRING
3 - PLUG
4 - SPRING RETAINER
5 - CONVERTER CLUTCH VALVE AND SPRING
6 - CONVERTER CLUTCH TIMING VALVE AND SPRING
7 - OVERDRIVE SEPARATOR PLATE
8 - CASE CONNECTOR
9 - CONVERTER CLUTCH SOLENOID
10 - OVERDRIVE SOLENOID
11 - TIMING VALVE COVER
12 - PLUG
13 - 3-4 TIMING VALVE AND SPRING
14 - LOWER HOUSING
15 - ACCUMULATOR END PLATE
16 - 3-4 ACCUMULATOR PISTON AND SPRING
17 - E-CLIP
18 - 3-4 QUICK FILL SPRING AND VALVE
19 - SOLENOID GASKET
20 - HARNESS

1. Lubricate valves, springs, and the housing valve and plug bores with clean transmission fluid.
2. Install 3-4 timing valve spring and valve (13) in lower housing.
3. Install 3-4 quick fill valve (18) in lower housing.
4. Install 3-4 quick fill valve spring (18) and plug (12) in housing.
5. Install timing valve end plate (11). Tighten end plate screws to 4 N·m (35 in. lbs.) torque.

3-4 ACCUMULATOR

1. Lubricate accumulator piston, seals and housing piston bore with clean transmission fluid.
2. Install new seal rings (3) on accumulator piston.
3. Install piston (1) and spring (4) in housing.
4. Install end plate on housing (5).

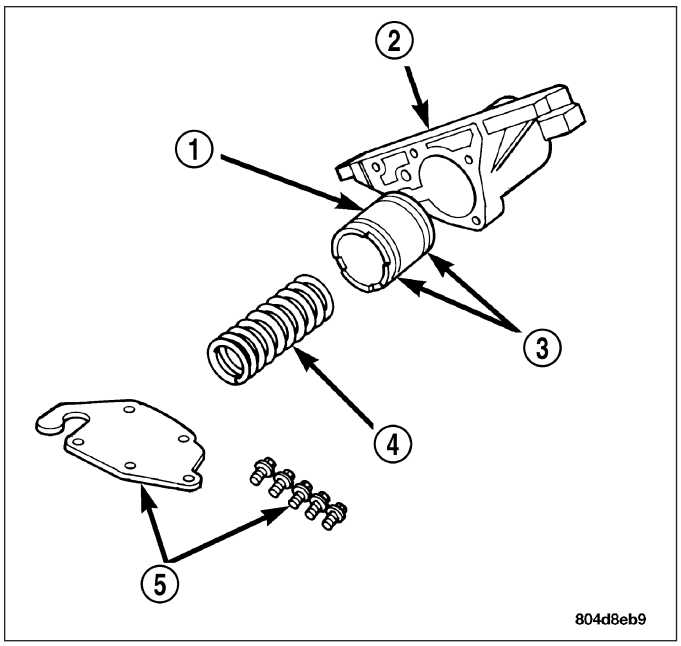

TRANSFER PLATE

1. Install rear clutch (1) and rear servo (2) check balls in transfer plate (3).

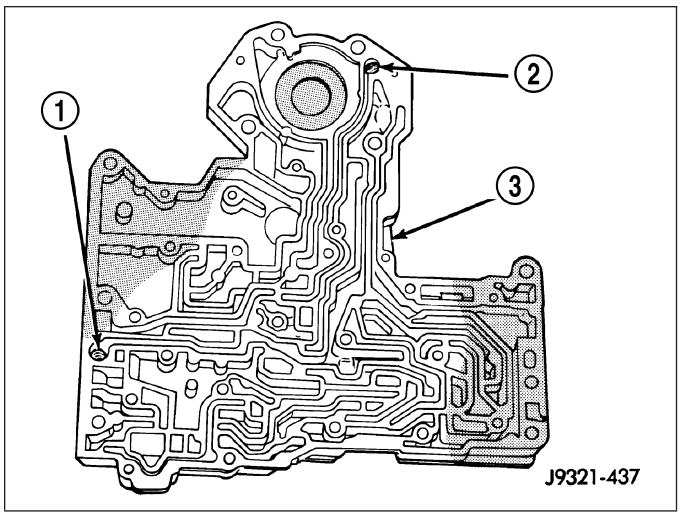

2. Install filter screen (2) in upper housing separator plate (1).

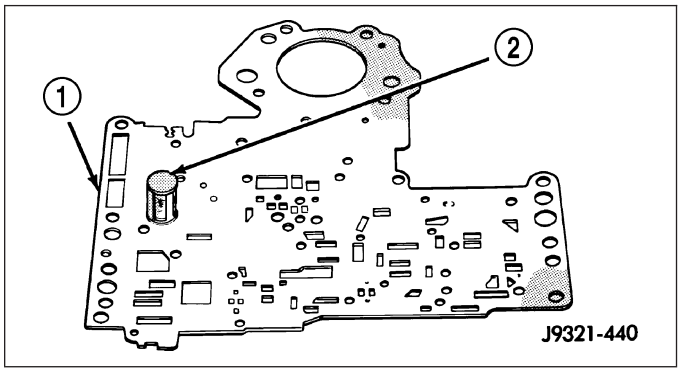

3. Align and position upper housing separator plate (3) on transfer plate (2).
4. Install brace plate (1). Tighten brace attaching screws to 4 N·m (35 in. lbs.) torque.
5. Install remaining separator plate attaching screws. Tighten screws to 4 N·m (35 in. lbs.) torque.

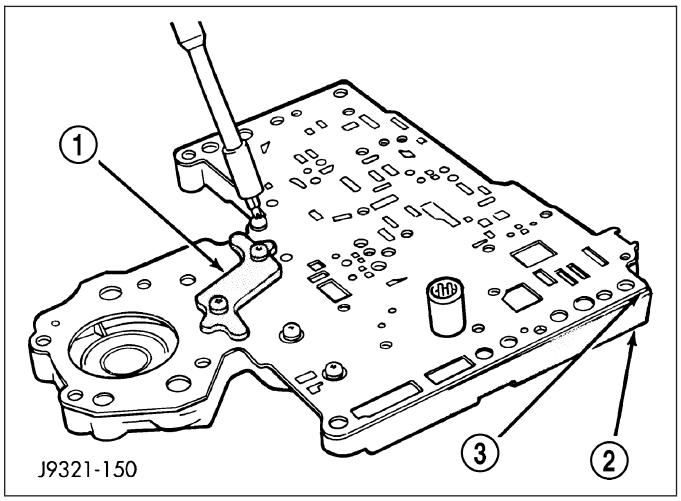

UPPER AND LOWER HOUSING

1. Position upper housing so internal passages and check ball seats are facing upward. Then install check balls in housing (1, 2). Seven check balls are used. The single large check ball (2) is approximately 8.7 mm (11/32 in.) diameter. The single small check ball is approximately 4.8 mm (3/16 in.) in diameter. The remaining 5 check balls are approximately 6.3 mm (1/4 in.) in diameter.

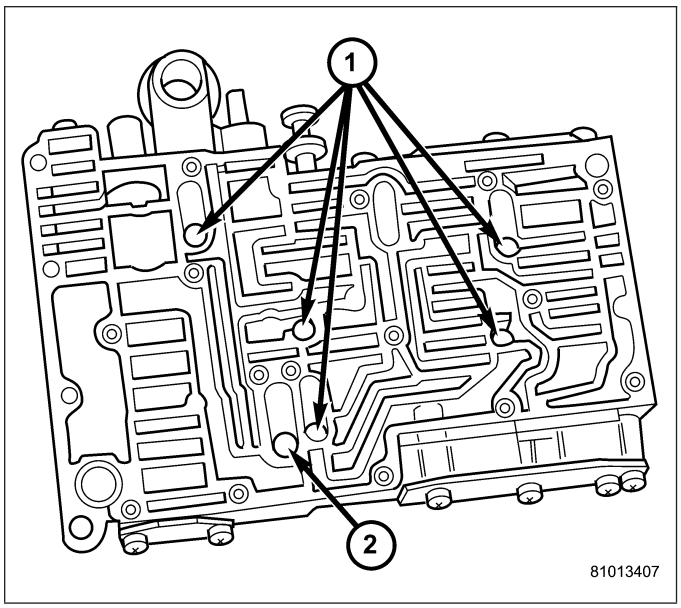

2. Position assembled transfer plate and upper housing separator plate (2) on upper housing. Be sure filter screen (1) is seated in proper housing recess.

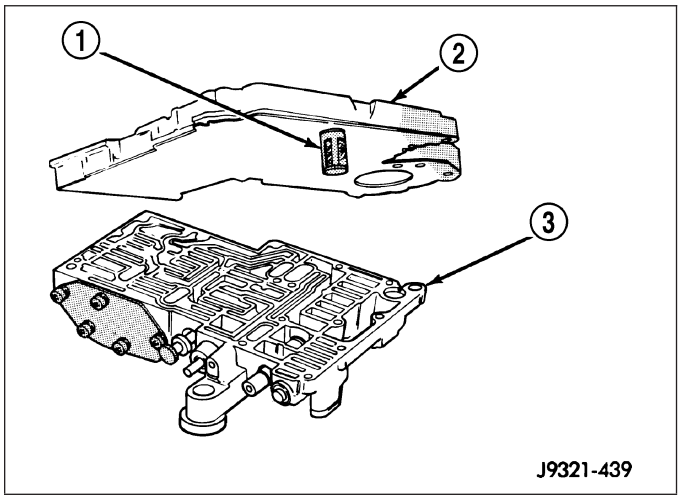

3. Install the Number 10 check ball (1) into the transfer plate. The check ball is approximately 4.8 mm (3/16 in.) in diameter.

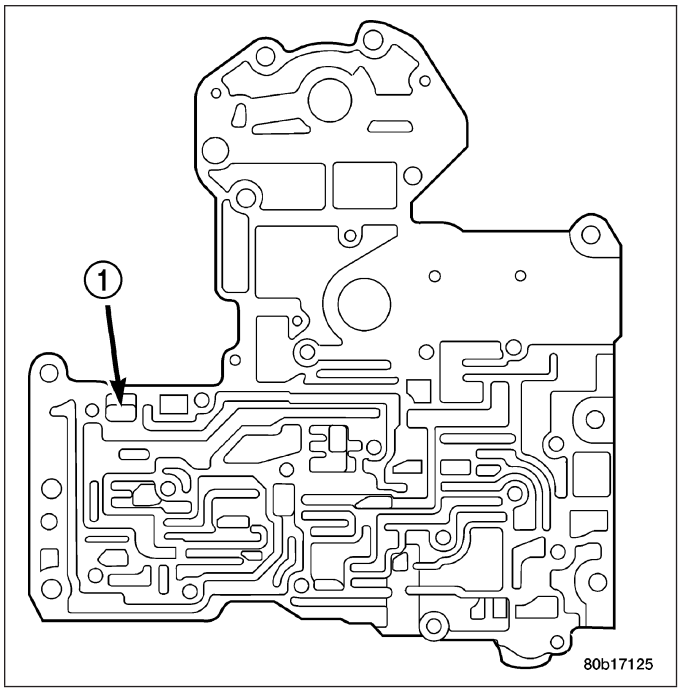

4. Position lower housing separator plate (3) on transfer plate (2).

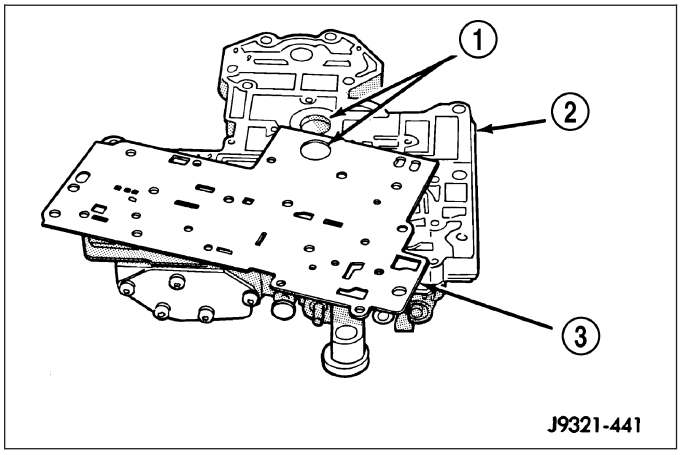

5. Install lower housing (2) on assembled transfer plate (4) and upper housing (3).
6. Install and start all valve body screws by hand except for the screws to hold the boost valve tube brace. Save those screws for later installation. Then tighten screws evenly to 4 N·m (35 in. lbs.) torque. Start at center and work out to sides when tightening screws (1).

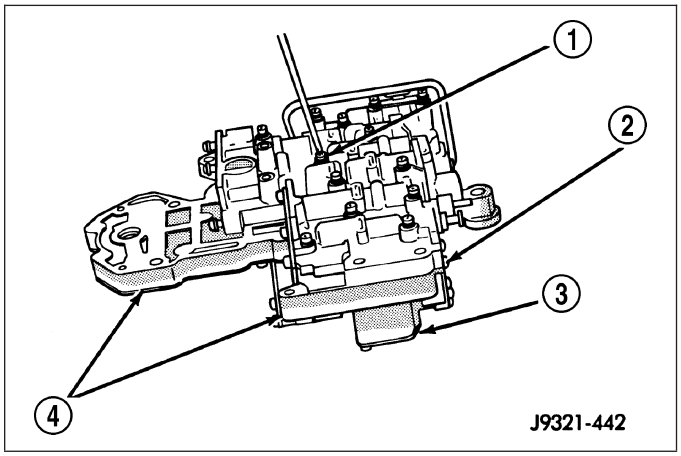

UPPER HOUSING VALVE AND PLUG

Refer to the following graphics , and to perform the following steps.

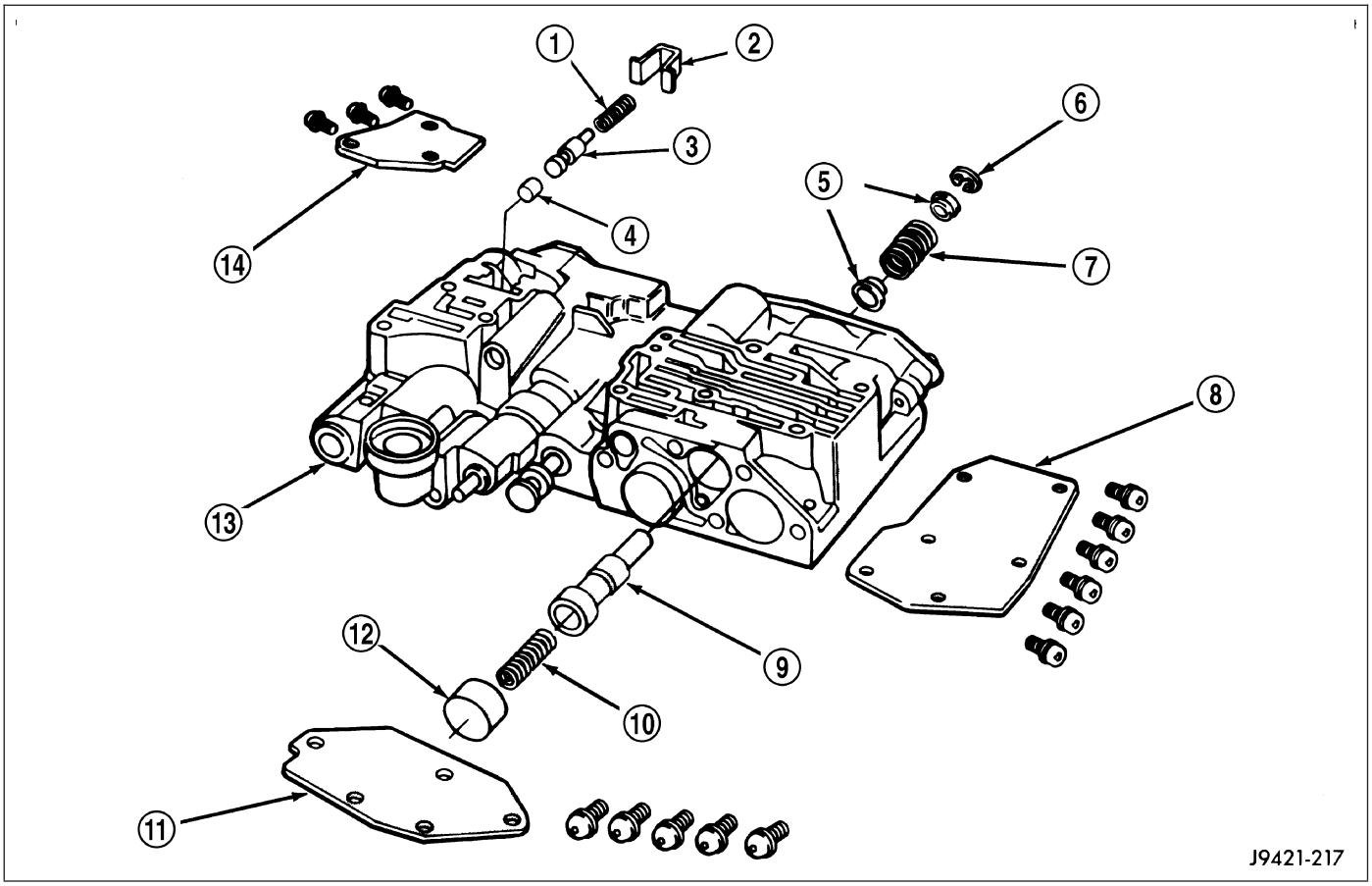

1. Lubricate valves, plugs, springs with clean transmission fluid.
2. Install the boost valve plug (4), boost valve (3), spring (1), and retainer (2) into the housing.
3. Install the boost valve cover (14). Tighten cover plate screws to 4 N·m (35 in. lbs.) torque.
4. Install shuttle valve as follows:
   a. Insert plastic guides (5) in shuttle valve secondary spring (7) and install spring on end of shuttle valve (9).
   b. Install shuttle valve (9) into housing.
   c. Hold shuttle valve in place.
   d. Compress secondary spring (7) and install E-clip (6) in groove at end of shuttle valve.
   e. Verify that spring and E-clip are properly seated before proceeding.
5. Install shuttle valve cover plate (8). Tighten cover plate screws to 4 N·m (35 in. lbs.) torque.

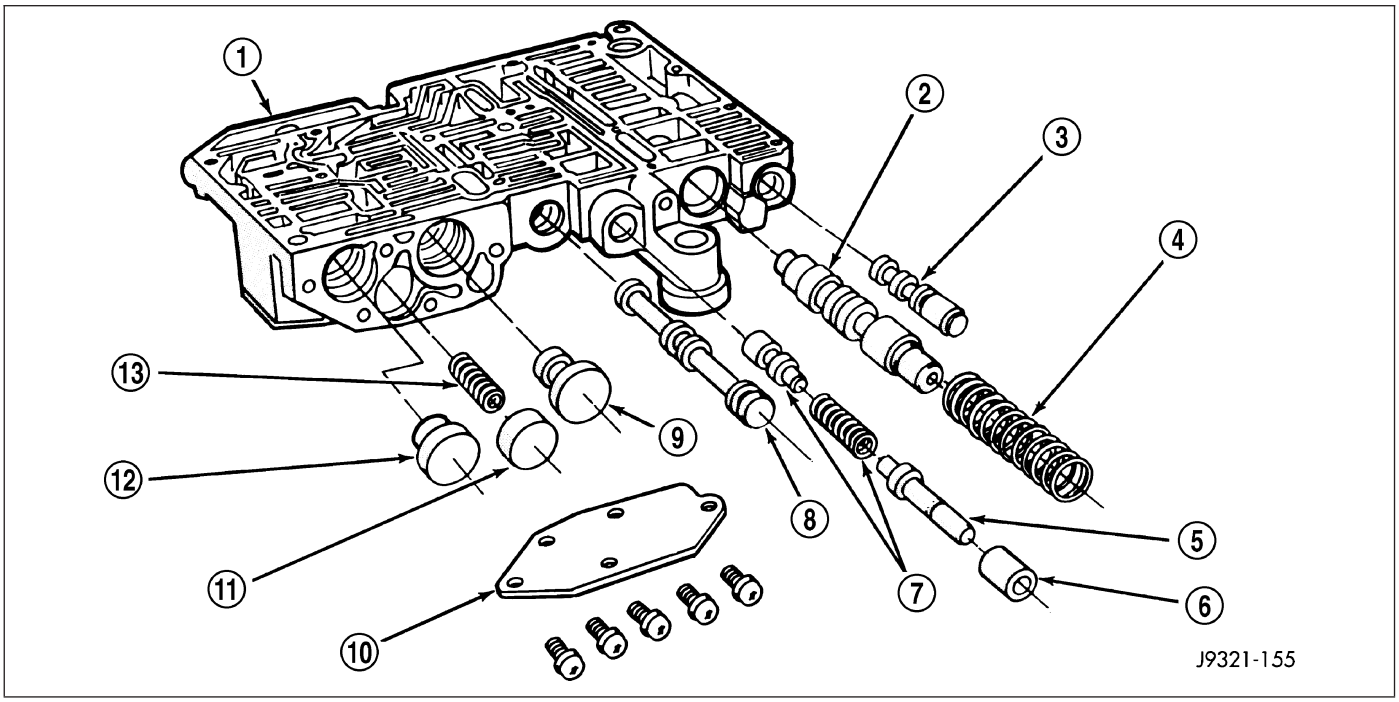

6. Install 1-2 (9) and 2-3 (12) valve governor plugs in valve body.
7. Install shuttle valve primary spring (13) and throttle plug (11).
8. Align and install governor plug cover (11). Tighten cover screws to 4 N·m (35 in. lbs.) torque.
9. Install the switch valve (3).
10. Install the throttle valve and spring (7), kickdown (5), and kickdown detent (6).
11. Install the manual valve (8).
12. Assemble regulator valve (2) and spring (4). Insert assembly in upper housing.

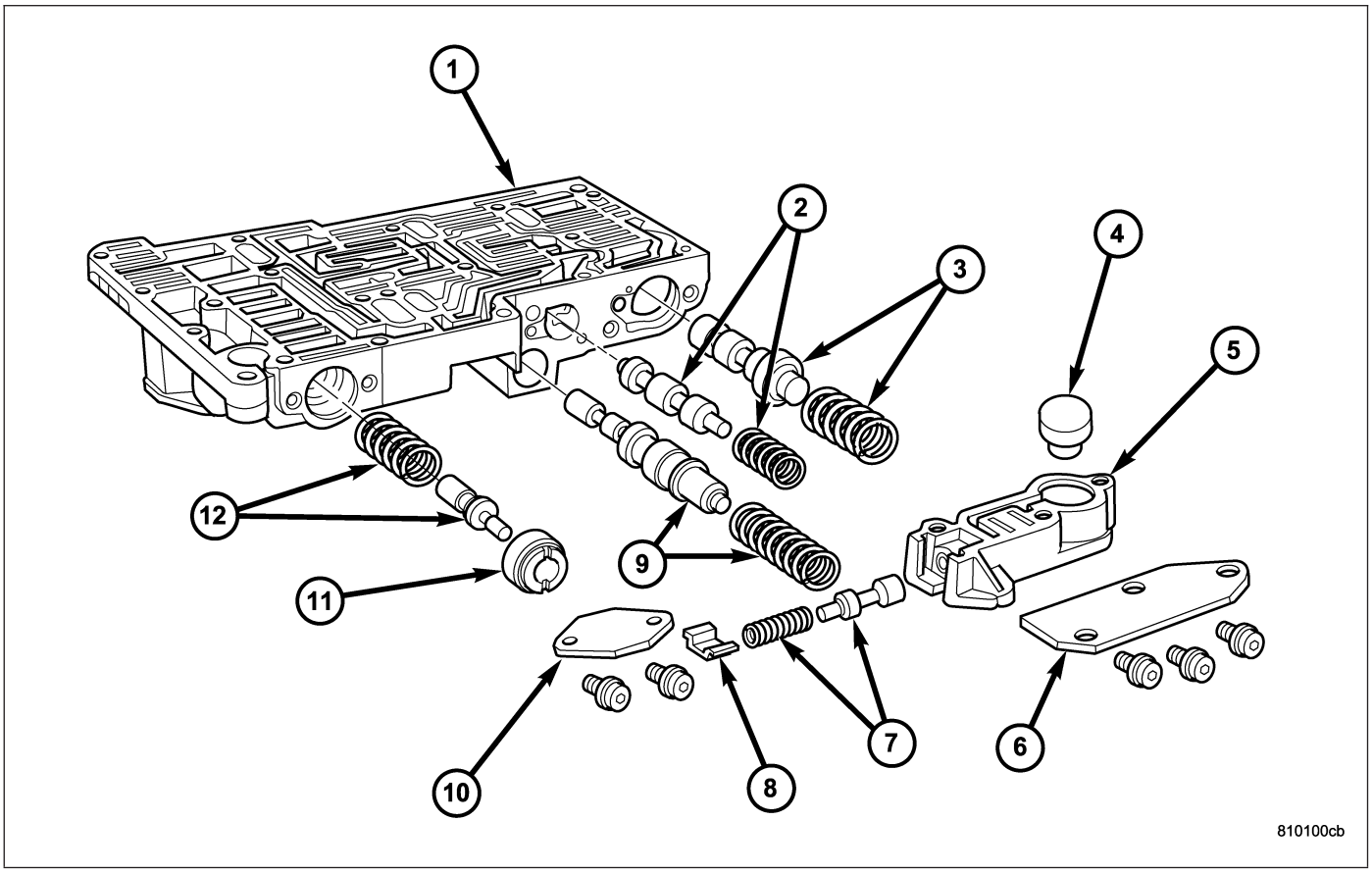

Upper Housing Shift Valve and Pressure Plug Locations

1 - UPPER HOUSING
2 - 1-2 SHIFT VALVE AND SPRING
3 - 2-3 SHIFT VALVE AND SPRING
4 - 2-3 THROTTLE PLUG
5 - LIMIT VALVE HOUSING
6 - LIMIT VALVE COVER
7 - LIMIT VALVE AND SPRING
8 - RETAINER
9 - 1-2 SHIFT CONTROL VALVE AND SPRING
10 - PRESSURE PLUG COVER
11 - PLUG SLEEVE
12 - THROTTLE PRESSURE SPRING AND PLUG

13. Install 1-2 (2) and 2-3 (3) shift valves and springs.
14. Install 1-2 shift control valve and spring (9).
15. Install retainer (8), limit valve and spring (7), and 2-3 throttle plug (4) into the limit valve housing (5).
16. Install the throttle pressure spring and plug (12) and plug sleeve (11).
17. Install pressure plug cover (10) and cover plate (6). Tighten screws to 4 N·m (35 in. lbs.).
18. Install limit valve housing (5) and cover plate (6). Tighten screws to 4 N·m (35 in. lbs.).

BOOST VALVE TUBE AND BRACE

1. Position valve body assembly so lower housing (2) is facing upward.
2. Lubricate tube ends and housing ports with transmission fluid or petroleum jelly.
3. Start tube in lower housing port first. Then swing tube downward and work opposite end of tube into upper housing port.
4. Insert and seat each end of tube in housings.

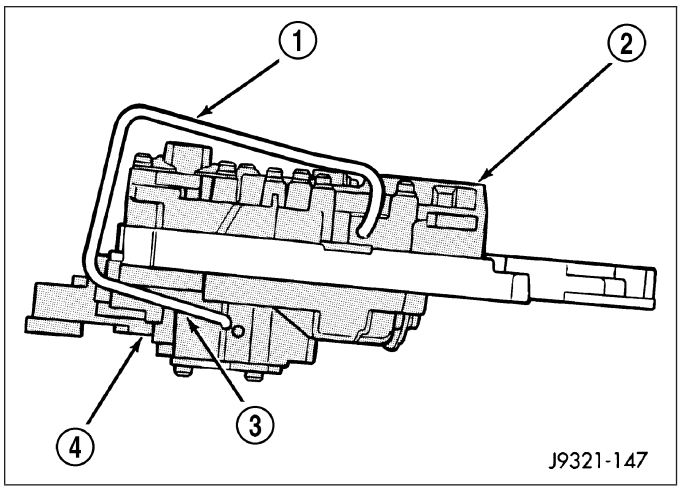

5. Slide tube brace (2) under tube and into alignment with valve body screw holes.
6. Install and finger tighten three screws that secure tube brace to valve body housings.

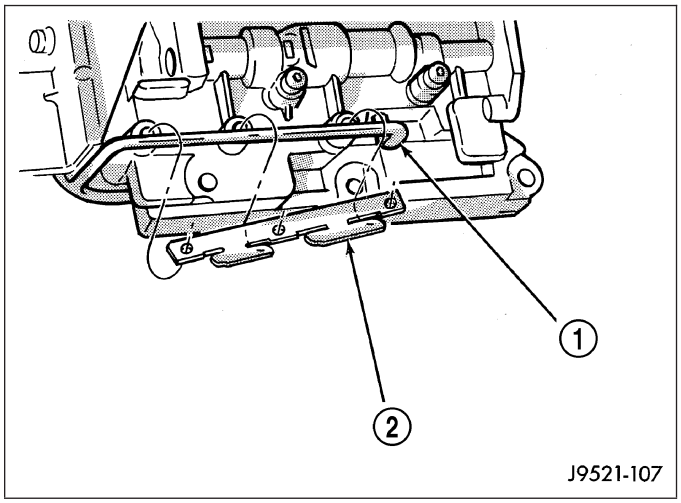

7. Bend tube brace tabs up and against tube to hold it in position.
8. Tighten all valve body housing screws to 4 N·m (35 in. lbs.) torque after tube and brace are installed. Tighten screws in diagonal pattern starting at center and working outward.

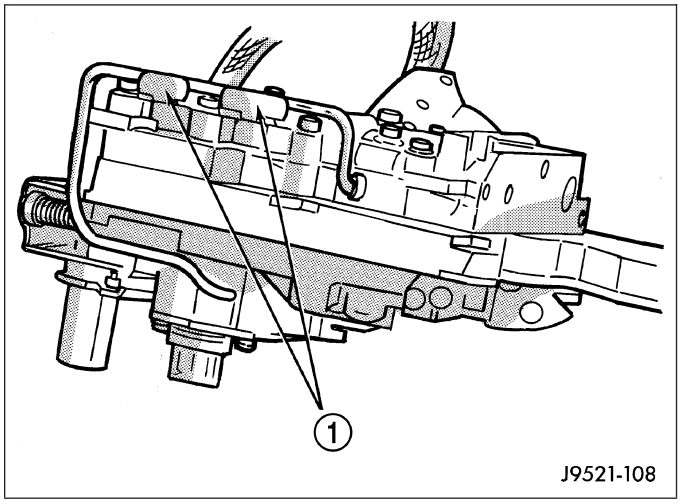

3-4 ACCUMULATOR

1. Position converter clutch valve (4) and 3-4 shift valve (3) springs in housing.
2. Loosely attach accumulator housing (2) with right-side screw (1). Install only one screw at this time as accumulator must be free to pivot upward for ease of installation.
3. Install 3-4 shift valve and spring (3).

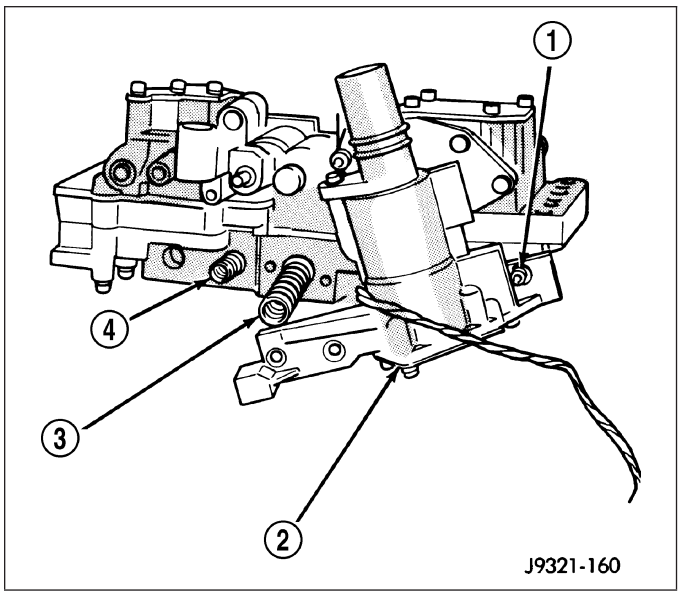

4. Position plug (2) on end of converter clutch valve spring. Then compress and hold springs and plug in place with fingers of one hand.
5. Swing accumulator housing upward over valve springs and plug.
6. Hold accumulator housing firmly in place and install remaining two attaching screws. Be sure springs and clutch valve plug are properly seated. Tighten screws to 4 N·m (35 in. lbs.).

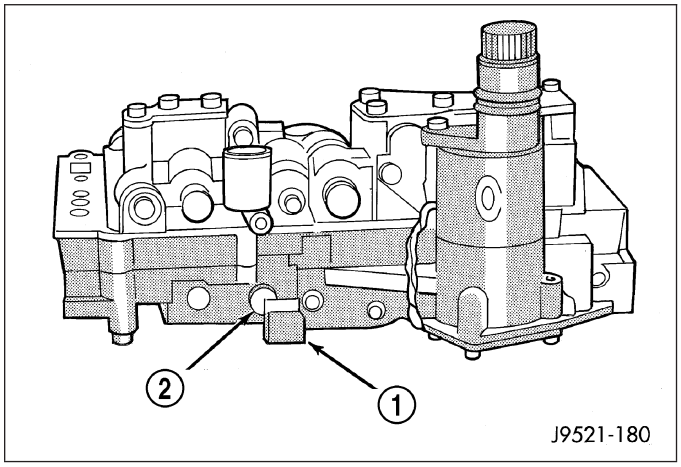

VALVE BODY FINAL

1. Insert manual lever detent spring in upper housing.
2. Position detent ball on end of spring. Then hold detent ball and spring in detent housing with Retainer Tool 6583 (1).

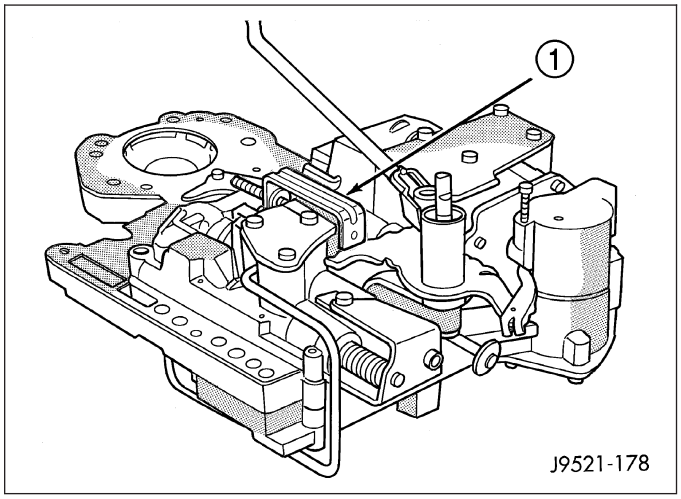

3. Install throttle lever (1) in upper housing. Then install manual lever (2) over throttle lever and start manual lever into housing.
4. Align manual lever with detent ball and manual valve (3). Hold throttle lever upward. Then press down on manual lever until fully seated. Remove detent ball retainer tool after lever is seated.
5. Then install manual lever seal, washer and E-clip.
6. Verify that throttle lever is aligned with end of kick-down valve (4) stem and that manual lever arm is engaged in manual valve.

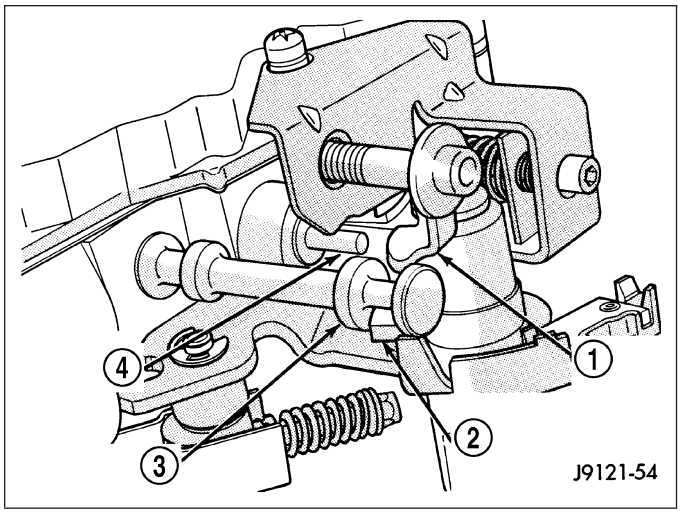

7. Lubricate solenoid case connector (1) O-rings and shaft of manual lever with light coat of petroleum jelly.
8. Attach solenoid case connector to 3-4 accumulator with shoulder-type screw. Connector has small locating tang that fits in dimple at top of accumulator housing (2). Seat tang in dimple before tightening connector screw.
9. Install solenoid assembly and gasket. Tighten solenoid attaching screws to 8 N·m (72 in. lbs.) torque.

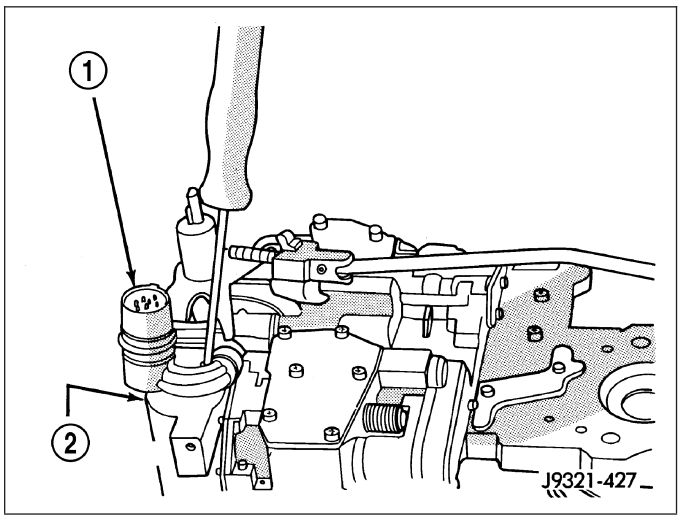

10. Verify that solenoid wire harness is properly routed. Solenoid harness must be clear of manual lever and park rod and not be pinched between accumulator housing and cover.
11. Position line pressure adjusting screw in adjusting screw bracket.
12. Install switch valve spring on tang at end of adjusting screw bracket.
13. Position adjusting screw bracket on valve body. Align valve springs and press bracket into place. Install short, upper bracket screws first and long bottom screw last. Verify that valve springs and bracket are properly aligned. Then tighten all three bracket screws to 4 N·m (35 in. lbs.) torque.
14. Perform Line Pressure and Throttle Pressure adjustments. (Refer to 21 - TRANSMISSION/ TRANSAXLE/AUTOMATIC/VALVE BODY - ADJUSTMENTS)

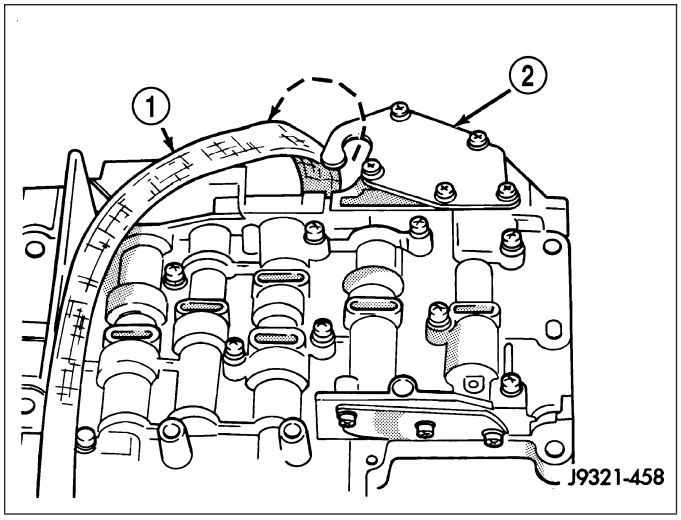

GOVERNOR BODY, SENSOR AND SOLENOID

1. Turn valve body assembly over so accumulator side of transfer plate is facing down.
2. Install new O-rings on governor pressure solenoid and sensor.
3. Lubricate solenoid and sensor O-rings with clean transmission fluid.
4. Install governor pressure sensor in governor body.
5. Install governor pressure solenoid in governor body. Push solenoid in until it snaps into place in body.
6. Position governor body gasket on transfer plate.
7. Install retainer plate on governor body and around solenoid. Be sure solenoid connector is positioned in retainer cutout.
8. Align screw holes in governor body and transfer plate. Then install and tighten governor body screws to 4 N·m (35 in. lbs.) torque.
9. Connect harness wires to governor pressure solenoid and governor pressure sensor.
10. Install fluid filter and pan.
11. Lower vehicle.
12. Fill transmission with recommended fluid and road test vehicle to verify repair.

INSTALLATION

1. Check condition of O-ring seals (1) on valve body harness connector (2). Replace seals on connector body if cut or worn.

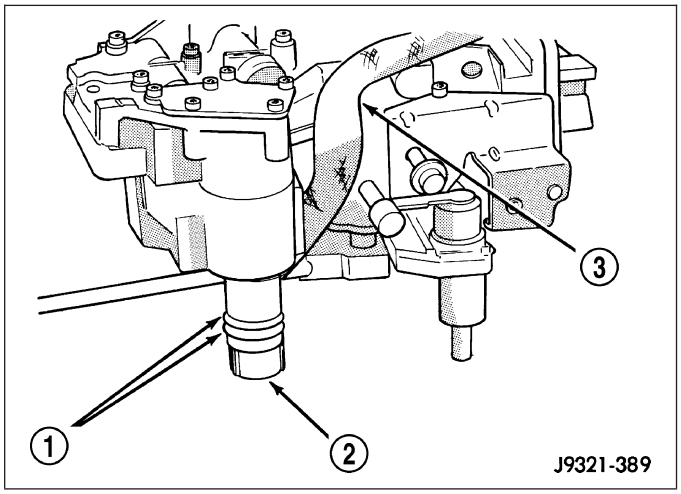

2. Check condition of manual lever shaft seal (2) in transmission case. Replace seal if lip is cut or worn. Install new seal with 15/16 deep well socket (1).

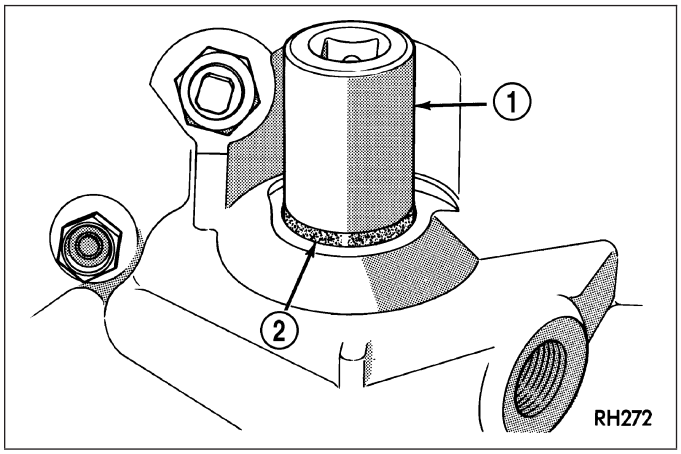

3. Check condition of seals on accumulator piston. Install new piston seals, if necessary.
4. Place valve body manual lever in low (1 position) so ball on park lock rod will be easier to install in sprag.

5. Lubricate shaft of manual lever with petroleum jelly. This will ease inserting shaft through seal in case.
6. Lubricate seal rings on valve body harness connector with petroleum jelly.
7. Position valve body in case and work end of park lock rod into and through pawl sprag. Turn propeller shaft to align sprag and park lock teeth if necessary. The rod will click as it enters pawl. Move rod to check engagement.

CAUTION: It is possible for the park rod to displace into a cavity just above the pawl sprag during installation. Make sure the rod is actually engaged in the pawl and has not displaced into this cavity.

8. Install accumulator spring and piston into case. Then swing valve body over piston and outer spring to hold it in place.
9. Align accumulator piston and outer spring, manual lever shaft and electrical connector in case.
10. Then seat valve body in case and install one or two bolts to hold valve body in place.
11. Tighten valve body bolts alternately and evenly to 11 N·m (100 in. lbs.) torque.
12. Install new fluid filter on valve body. Tighten filter screws to 4 N·m (35 in. lbs.) torque.
13. Install throttle and gearshift levers on valve body manual lever shaft.
14. Check and adjust front and rear bands if necessary.
15. Install the transmission range sensor (Refer to 21 - TRANSMISSION/AUTOMATIC/TRANSMISSION RANGE SENSOR - INSTALLATION).
16. Connect solenoid case connector wires.
17. Install oil pan and new gasket. Tighten pan bolts to 13.6 N·m (125 in. lbs.) torque.
18. Lower vehicle and fill transmission with Mopar® ATF +4, Automatic Transmission fluid.
19. Check and adjust gearshift and throttle valve cables, if necessary.

ADJUSTMENTS - VALVE BODY

CONTROL PRESSURE ADJUSTMENTS

There are two control pressure adjustments on the valve body;

- Line Pressure
- Throttle Pressure

Line and throttle pressures are interdependent because each affects shift quality and timing. As a result, both adjustments must be performed properly and in the correct sequence. Adjust line pressure first and throttle pressure last.

LINE PRESSURE ADJUSTMENT

1. Measure distance (2) from the valve body to the inner edge of the adjusting screw with an accurate steel scale. Distance should be 33.4 mm (1-5/16 in.). If adjustment is required, turn the adjusting screw in, or out, to obtain required distance setting.

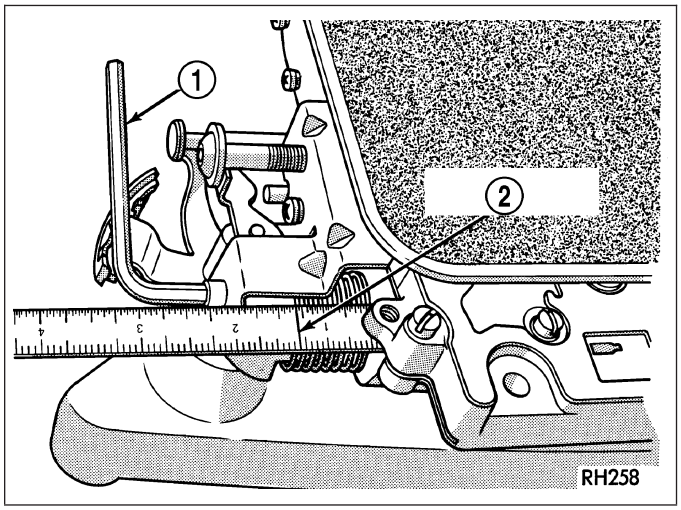

NOTE: The 33.4 mm (1-5/16 in.) setting is an approximate setting. Manufacturing tolerances may make it necessary to vary from this dimension to obtain desired pressure.

One complete turn of the adjusting screw changes line pressure approximately 1-2/3 psi (9 kPa).

Turning the adjusting screw counterclockwise increases pressure while turning the screw clockwise decreases pressure.

THROTTLE PRESSURE ADJUSTMENT

1. Insert Gauge Tool C-3763 between the throttle lever cam and the kickdown valve stem (2).
2. Push the gauge tool inward to compress the kickdown valve against the spring and bottom the throttle valve.
3. Maintain pressure against kickdown valve spring. Turn throttle lever stop screw until the screw head touches throttle lever tang and the throttle lever cam touches gauge tool.

NOTE: The kickdown valve spring must be fully compressed and the kickdown valve completely bottomed to obtain correct adjustment.

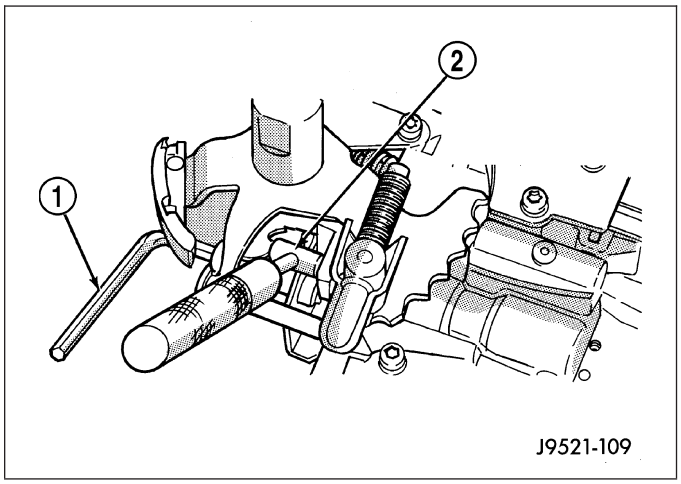

TRANSFER CASE - ELECTRICAL DIAGNOSTICS (ETC)

TABLE OF CONTENTS

page

TRANSFER CASE - ELECTRICAL DIAGNOSTICS (ETC)
DIAGNOSIS AND TESTING
TRANSFER CASE VERIFICATION TEST VER 1 1197
12 VOLT OVER VOLTAGE 1198
12 VOLT UNDER VOLTAGE 1200
2WD/AWD INDICATOR OPEN 1204
2WD/AWD INDICATOR SHORTED 1208
4WD HI INDICATOR OPEN 1212
4WD HI INDICATOR SHORT TO GROUND . 1216
4WD LO INDICATOR OPEN 1220
4WD LO INDICATOR SHORT TO GROUND 1224
5 VOLT OVER VOLTAGE 1228
5 VOLT UNDER VOLTAGE 1234
INTERNAL ERROR 1240
MISSING BRAKE INPUT 1241
MISSING ENGINE RPM INPUT 1244

page

MISSING IGNITION MESSAGE 1247
MISSING LAMP DIMMING MESSAGE 1250
MISSING SPEED DIFFERENCE MESSAGE 1253
MISSING TRANSFER CASE TYPE 1256
MISSING TRANSMISSION POSITION INPUT 1259
MISSING TRANSMISSION TYPE 1262
MISSING VEHICLE SPEED INPUT 1265
NEUTRAL INDICATOR OPEN 1268
NEUTRAL INDICATOR SHORT TO GROUND 1273
SELECTOR SWITCH/TRANSFER CASE—MISMATCH 1278
TRANSFER CASE MODE SENSOR ERROR 1284
TRANSFER CASE SELECTOR SWITCH ERROR 1290

TRANSFER CASE - ELECTRICAL DIAGNOSTICS (ETC)

DIAGNOSIS AND TESTING

TRANSFER CASE VERIFICATION TEST VER 1

Diagnostic Test

1. TRANSFER CASE VERIFICATION TEST— VER 1

Disconnect all jumper wires and reconnect all previously disconnected components and connectors.

With the scan tool, clear all DTCs.

Make sure that all accessories are turned off and that the battery is fully charged.

Using the appropriate Service Information as a guide, test drive the vehicle in each Transfer Case range and verify proper operation in each range.

With the scan tool, read DTCs in the Transfer Case Control Module.

Are there any DTCs present?

Yes >> Return to the symptom list and perform the appropriate diagnostic test.

No >> Repair is complete.

12 VOLT OVER VOLTAGE

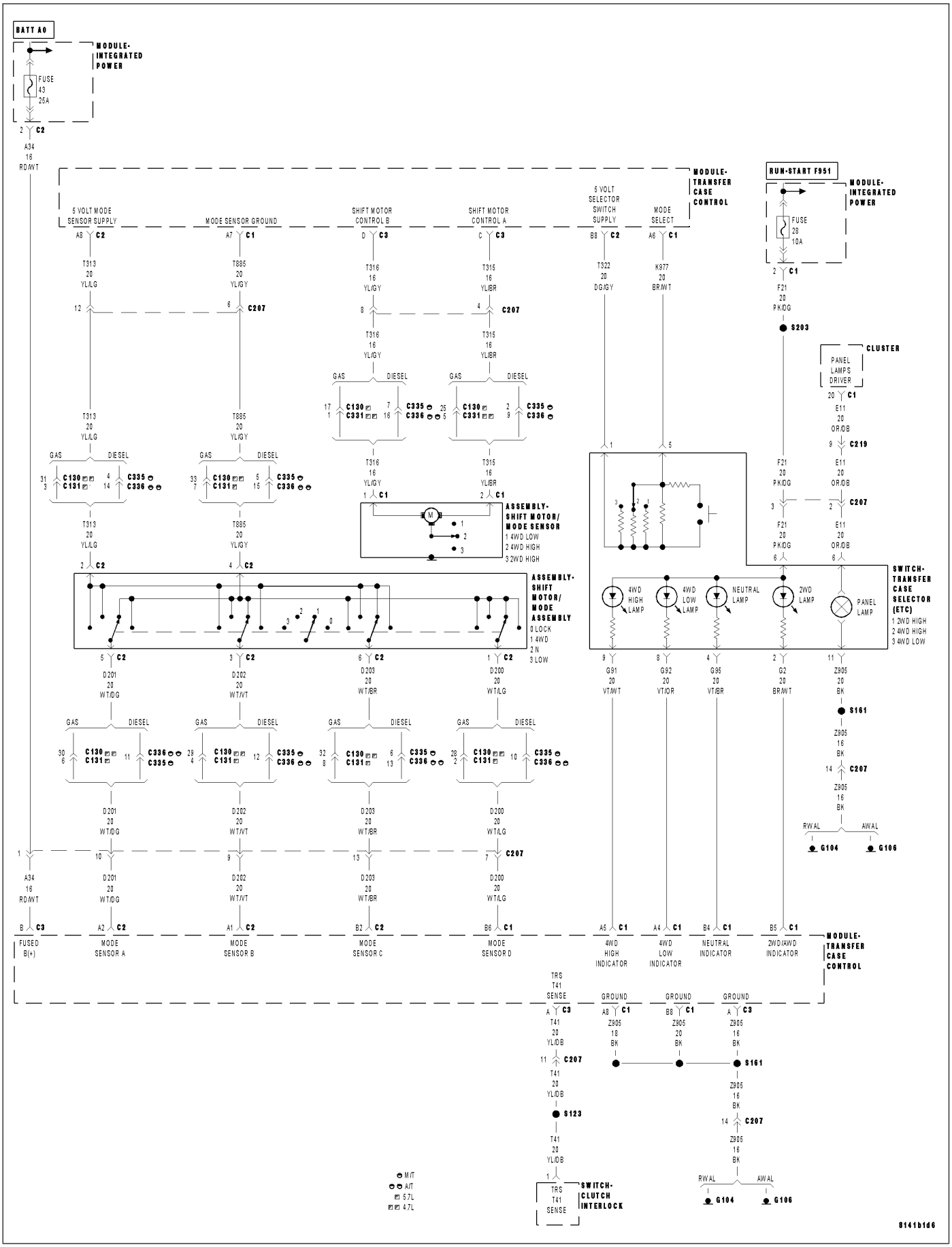

12 VOLT OVER VOLTAGE (CONTINUED)

For a complete wiring diagram **Refer to Section 8W**.

- **When Monitored:**
  Continuously with the ignition on.
- **Set Condition:**
  The Transfer Case Control Module detects the Fused B+ voltage rises above 16.0 volts for 2 seconds.

Possible Causes
CHARGING SYSTEM DTCS PRESENT
TRANSFER CASE CONTROL MODULE

1. CHARGING SYSTEM DTCS PRESENT

With the DRBIII®, read Engine DTCs.

Are there any Charging System related DTCs present?

Yes >> Refer to the symptom list and perform the appropriate diagnostic procedure(s) as necessary.
Perform TRANSFER CASE VERIFICATION TEST. (Refer to 21 - TRANSMISSION/TRANSAXLE/ TRANSFER CASE - DIAGNOSIS AND TESTING)

No >> Go To 2

---

2. TRANSFER CASE CONTROL MODULE

Using the schematics as a guide, inspect the wiring and connectors. Pay particular attention to all power and ground circuits. Repair as necessary.

If there are no Charging System related DTCs or other possible causes remaining, view repair.

Repair

Replace the Transfer Case Control Module.
Perform TRANSFER CASE VERIFICATION TEST. (Refer to 21 - TRANSMISSION/TRANSAXLE/ TRANSFER CASE - DIAGNOSIS AND TESTING)

---

12 VOLT UNDER VOLTAGE

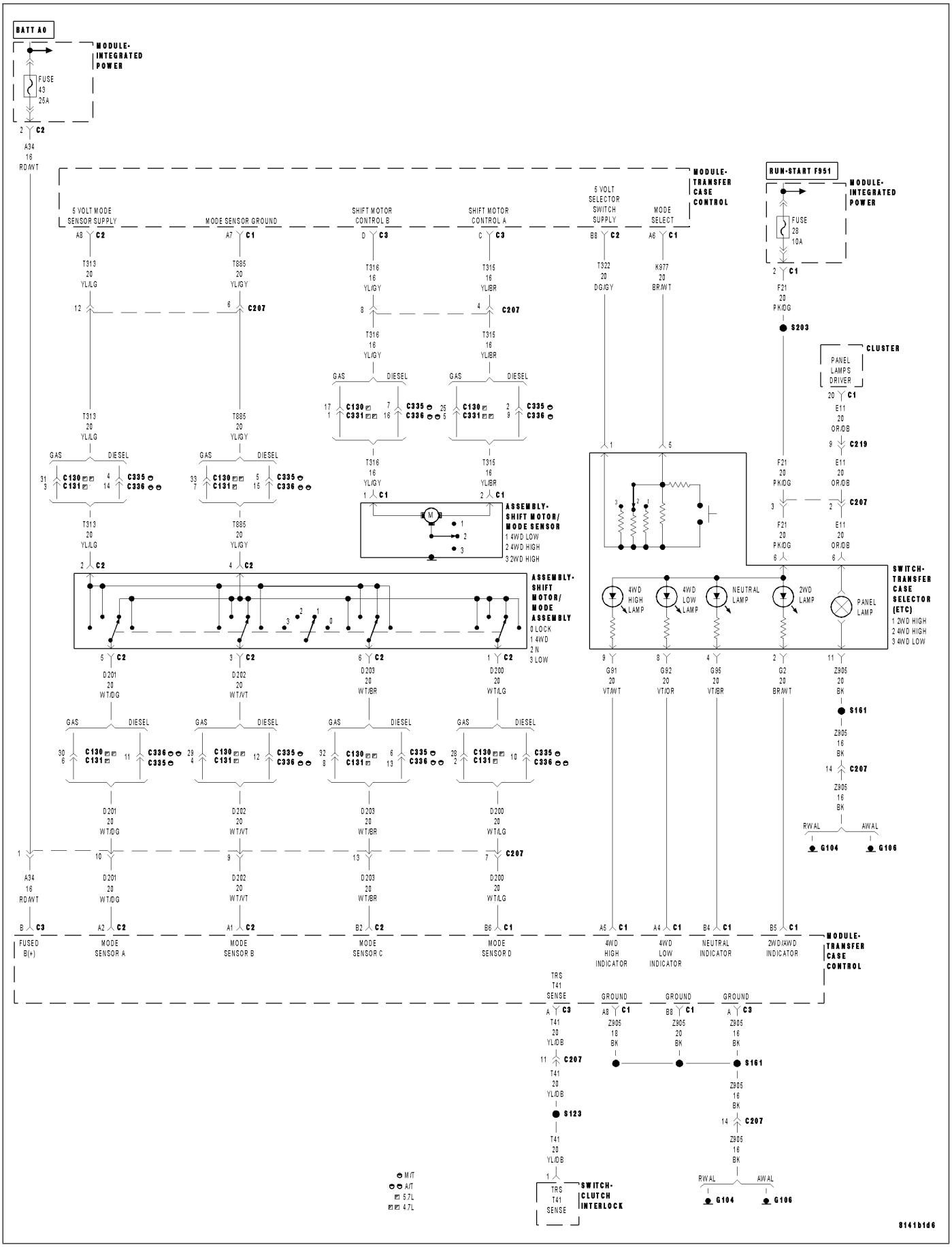

12 VOLT UNDER VOLTAGE (CONTINUED)

For a complete wiring diagram **Refer to Section 8W**.

- **When Monitored:**
  Continuously with the ignition on.
- **Set Condition:**
  The Transfer Case Control Module detects the Fused B+ voltage drops below 9.0 volts for 2 seconds.

Possible Causes
INTERMITTENT 12 VOLT UNDER VOLTAGE
CHARGING SYSTEM DTCS PRESENT
(A34) FUSED B+ CIRCUIT SHORT TO GROUND
(A34) FUSED B+ CIRCUIT OPEN
TRANSFER CASE CONTROL MODULE

1. CHARGING SYSTEM DTCS PRESENT

With the DRBIII®, read Engine DTCs.

Are there any Charging System related DTCs present?

Yes >> Refer to the symptom list and perform the appropriate diagnostic procedure(s) as necessary. Perform TRANSFER CASE VERIFICATION TEST. (Refer to 21 - TRANSMISSION/TRANSAXLE/ TRANSFER CASE - DIAGNOSIS AND TESTING)

No >> Go To 2

---

2. 12 VOLT UNDER VOLTAGE PRESENT

With the DRBIII®, read Transfer Case DTCs. Record all DTC information.
With the DRBIII®, erase Transfer Case DTCs.
Start the engine and cycle the Transfer Case Selector Switch through all positions.
With the DRBIII®, read Transfer Case DTCs.

Does the DRBIII® display 12 VOLT UNDER VOLTAGE?

Yes >> Go To 3

No >> Go To 6

---

12 VOLT UNDER VOLTAGE (CONTINUED)

3. (A34) FUSED B+ CIRCUIT SHORT TO GROUND

Turn the ignition off to the lock position.

Disconnect the Transfer Case Control Module C3 harness connector.

NOTE: Check connectors - Clean/repair as necessary.

Measure the resistance between ground and the Fused B+ circuit.

Is the resistance below 5.0 ohms?

Yes >> Repair the (A34) FUSED B+ CIRCUIT for a short to ground.

Perform TRANSFER CASE VERIFICATION TEST. (Refer to 21 - TRANSMISSION/TRANSAXLE/TRANSFER CASE - DIAGNOSIS AND TESTING)

No >> Go To 4

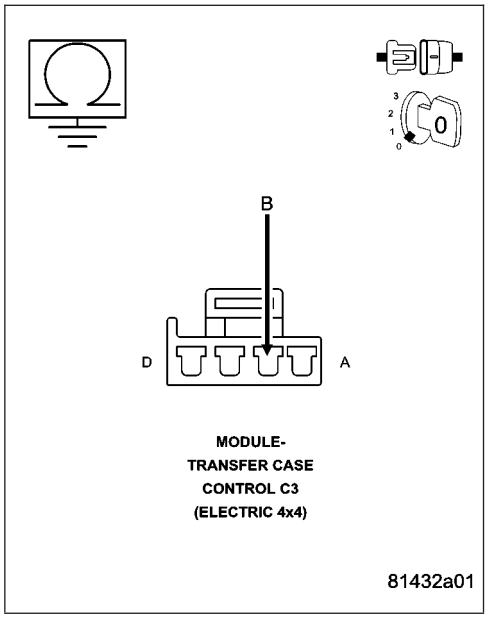

4. (A34) FUSED B+ CIRCUIT OPEN

Ignition on, engine not running.

Using a 12-volt test light connected to ground, check the (A34) FUSED B+ CIRCUIT at the Transfer Case Control Module C3 harness connector.

NOTE: The test light must illuminate brightly. Compare the brightness to that of a direct connection to the battery.

Does the test light illuminate brightly?

Yes >> Go To 5

No >> Repair the (A34) FUSED B+ CIRCUIT for an open circuit or high resistance. If the fuse is open, check the circuit for a short to ground.

Perform TRANSFER CASE VERIFICATION TEST. (Refer to 21 - TRANSMISSION/TRANSAXLE/TRANSFER CASE - DIAGNOSIS AND TESTING)

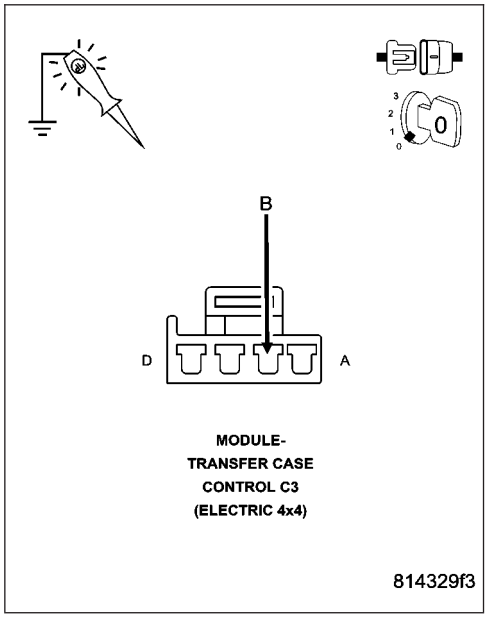

12 VOLT UNDER VOLTAGE (CONTINUED)

5. TRANSFER CASE CONTROL MODULE

Using the wiring diagram as a guide, inspect the wiring and connectors relative to this DTC. Inspect all power and ground circuits. Repair as necessary.

If there are no Charging System related DTCs or other possible causes remaining, view repair.

Repair

Replace the Transfer Case Control Module.

Perform TRANSFER CASE VERIFICATION TEST. (Refer to 21 - TRANSMISSION/TRANSAXLE/ TRANSFER CASE - DIAGNOSIS AND TESTING)

---

6. INTERMITTENT WIRING AND CONNECTORS

The conditions necessary to set this DTC are not present at this time.

Using the schematics as a guide, inspect the wiring and connectors specific to this circuit.

Wiggle test the wiring harness and connectors while checking for shorted and open circuits.

Using the DRBIII®, monitor the data related to this circuit while performing the wiggle test. Look for the data to change or for the DTC to reset.

Were there any problems found?

Yes >> Repair as necessary.

Perform TRANSFER CASE VERIFICATION TEST. (Refer to 21 - TRANSMISSION/TRANSAXLE/ TRANSFER CASE - DIAGNOSIS AND TESTING)

No >> Test Complete.

2WD/AWD INDICATOR OPEN

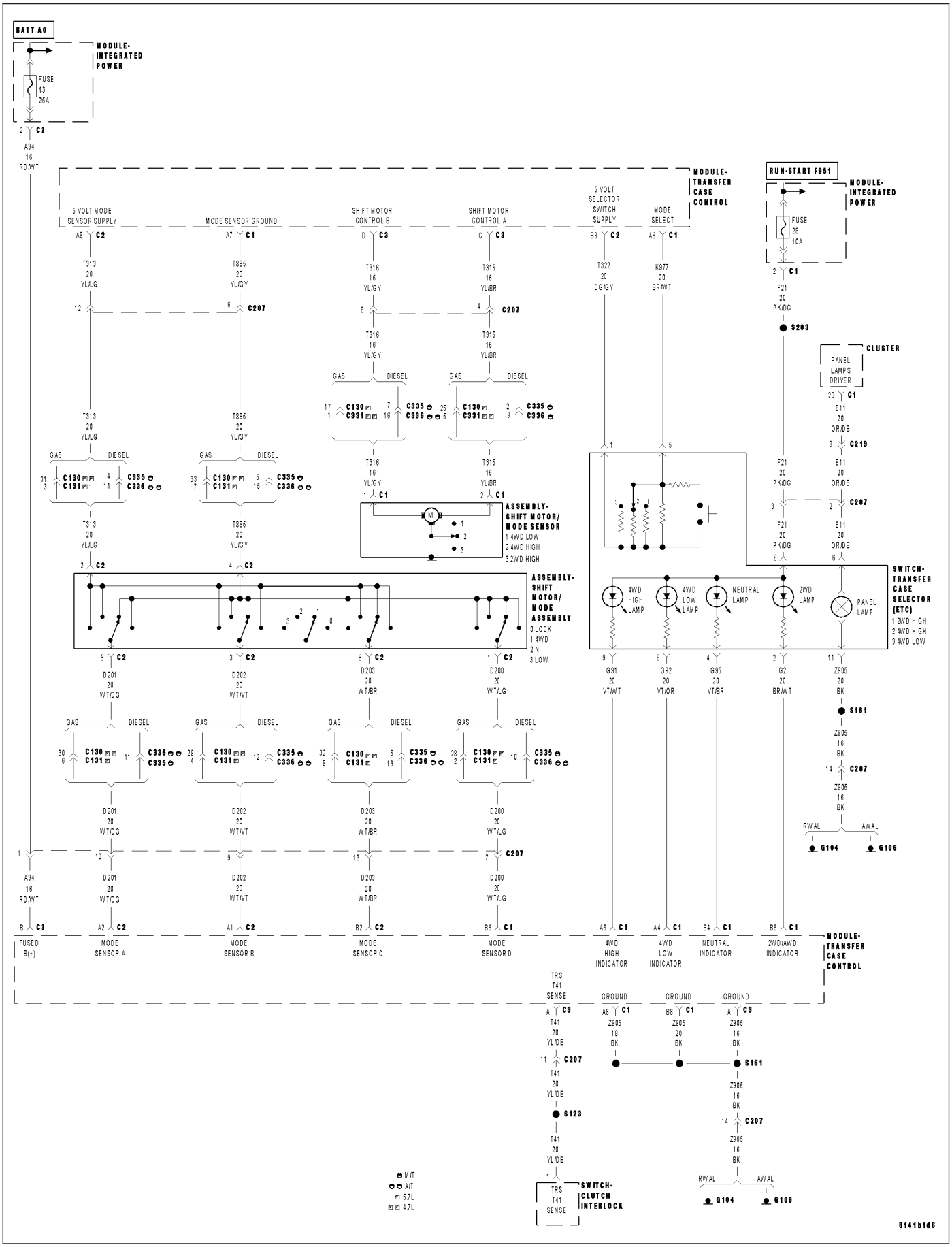

2WD/AWD INDICATOR OPEN (CONTINUED)

For a complete wiring diagram **Refer to Section 8W**.

- **When Monitored:**
  Continuously with the ignition on.
- **Set Condition:**
  The Transfer Case Control Module detects an open circuit or high voltage on the (G2) 2WD/AWD Indicator circuit.

Possible Causes
INTERMITTENT 2WD/AWD INDICATOR OPEN
(G2) 2WD/AWD INDICATOR CIRCUIT OPEN
(G2) 2WD/AWD INDICATOR CIRCUIT SHORT TO VOLTAGE
(F21) FUSED IGNITION SWITCH OUTPUT CIRCUIT OPEN
TRANSFER CASE SELECTOR SWITCH
TRANSFER CASE CONTROL MODULE

1. 2WD/AWD INDICATOR OPEN DTC IS PRESENT

With the DRBIII®, read Transfer Case DTCs. Record all DTC information.
With the DRBIII®, erase Transfer Case DTCs.
Start the engine and move the Transfer Case Selector Switch to each position.
With the DRBIII®, read Transfer Case DTCs.

Does the DRBIII® display 2WD/AWD INDICATOR OPEN?

Yes >> Go To 2

No >> Go To 7

2. (G2) 2WD/AWD INDICATOR CIRCUIT OPEN

Turn the ignition off to the lock position.
Disconnect the Transfer Case Control Module C1 harness connector.
Disconnect the Transfer Case Selector Switch harness connector.

NOTE: Note: Check connectors - Clean/repair as necessary.
Measure the resistance of the (G2) 2WD/AWD Indicator circuit from the Transfer Case Control Module C1 harness connector to the Transfer Case Selector Switch harness connector.

Is the resistance above 5.0 ohms?

Yes >> Repair the (G2) 2WD/AWD Indicator circuit for an open. Perform TRANSFER CASE VERIFICATION TEST. (Refer to 21 - TRANSMISSION/TRANSAXLE/TRANSFER CASE - DIAGNOSIS AND TESTING)

No >> Go To 3

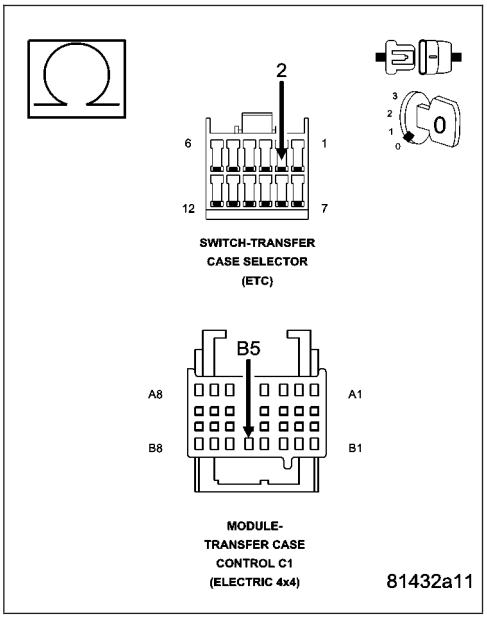

2WD/AWD INDICATOR OPEN (CONTINUED)

3. (G2) 2WD/AWD INDICATOR CIRCUIT SHORT TO VOLTAGE

Ignition on, engine not running.

Measure the voltage of the (G2) 2WD/AWD Indicator circuit.

Is the voltage above 0.5 volt?

Yes >> Repair the (G2) 2WD/AWD Indicator circuit for a short to voltage.

Perform TRANSFER CASE VERIFICATION TEST. (Refer to 21 - TRANSMISSION/TRANSAXLE/TRANSFER CASE - DIAGNOSIS AND TESTING)

No >> Go To 4

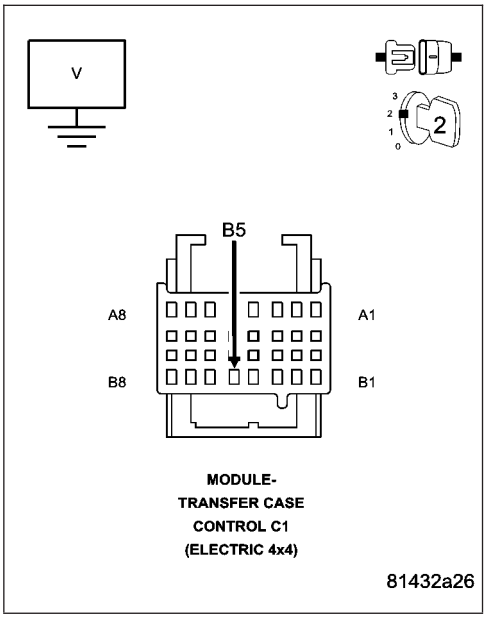

4. (F21) FUSED IGNITION SWITCH OUTPUT CIRCUIT OPEN

Using a 12-volt test light connected to ground, check the (F21) Fused Ignition Switch Output Circuit.

NOTE: The test light must illuminate brightly. Compare the brightness to that of a direct connection to the battery.

Does the test light illuminate brightly?

Yes >> Go To 5

No >> Repair the (F21) Fused Ignition Switch Output Circuit for an open circuit or for high resistance. If the fuse is open make sure to check for a short to ground and repair as necessary.

Perform TRANSFER CASE VERIFICATION TEST. (Refer to 21 - TRANSMISSION/TRANSAXLE/TRANSFER CASE - DIAGNOSIS AND TESTING)

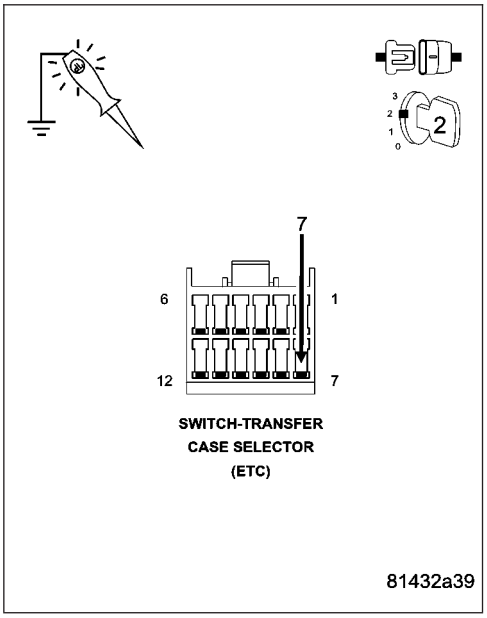

2WD/AWD INDICATOR OPEN (CONTINUED)

5. TRANSFER CASE SELECTOR SWITCH

Turn the ignition off to the lock position.

Connect the Transfer Case Control Module C1 harness connector.

Ignition on, engine not running.

With the DRBIII®, actuate the 2WD LED.

With a 12–volt test light connected to B+, check the (G2) 2WD/AWD Indicator circuit in the Transfer Case Selector Switch harness connector.

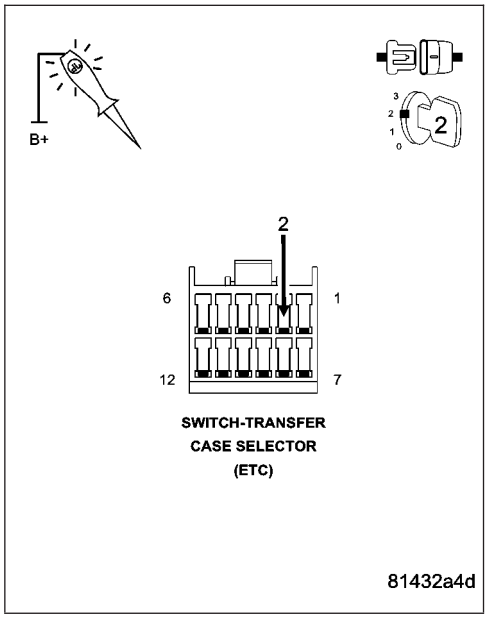

Does the test light illuminate when the circuit is actuated?

Yes >> Replace the Transfer Case Selector Switch in accordance with the Service Information.
Perform TRANSFER CASE VERIFICATION TEST. (Refer to 21 - TRANSMISSION/TRANSAXLE/TRANSFER CASE - DIAGNOSIS AND TESTING)

No >> Go To 6

6. TRANSFER CASE CONTROL MODULE

Using the wiring diagram as a guide, inspect the wiring and connectors relative to this DTC. Inspect all power and ground circuits. Repair as necessary.

If there are no Charging System related DTCs or other possible causes remaining, view repair.

Repair

Replace the Transfer Case Control Module in accordance with the Service Information.
Perform TRANSFER CASE VERIFICATION TEST. (Refer to 21 - TRANSMISSION/TRANSAXLE/TRANSFER CASE - DIAGNOSIS AND TESTING)

7. INTERMITTENT WIRING AND CONNECTORS

The conditions necessary to set this DTC are not present at this time.

Using the schematics as a guide, inspect the wiring and connectors specific to this circuit.

Wiggle test the wiring harness and connectors while checking for shorted and open circuits.

Using the DRBIII®, monitor the data related to this circuit while performing the wiggle test. Look for the data to change or for the DTC to reset.

Were there any problems found?

Yes >> Repair as necessary.
Perform TRANSFER CASE VERIFICATION TEST. (Refer to 21 - TRANSMISSION/TRANSAXLE/TRANSFER CASE - DIAGNOSIS AND TESTING)

No >> Test Complete.

2WD/AWD INDICATOR SHORTED

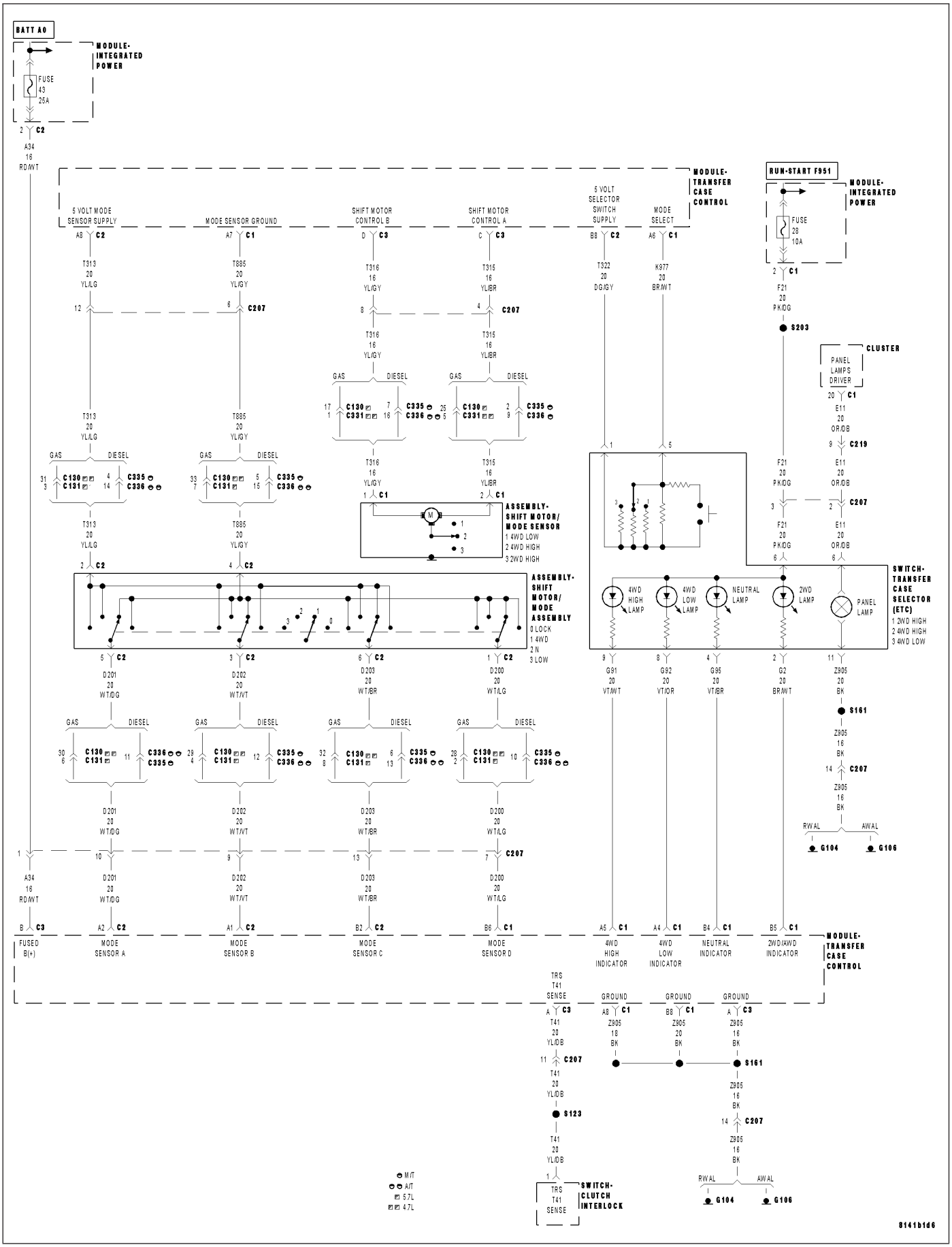

2WD/AWD INDICATOR SHORTED (CONTINUED)

For a complete wiring diagram **Refer to Section 8W**.

- **When Monitored:**
  Continuously with the ignition on.
- **Set Condition:**
  The Transfer Case Control Module detects a short to ground on the (G2) 2WD/AWD Indicator circuit.

Possible Causes
INTERMITTENT 2WD/AWD INDICATOR SHORTED
(G2) 2WD/AWD INDICATOR CIRCUIT OPEN
(G2) 2WD/AWD INDICATOR CIRCUIT SHORT TO GROUND
(G2) 2WD/AWD INDICATOR CIRCUIT SHORT TO VOLTAGE
TRANSFER CASE SELECTOR SWITCH
TRANSFER CASE CONTROL MODULE

1. 2WD/AWD INDICATOR SHORTED DTC IS PRESENT

With the DRBIII®, read Transfer Case DTCs. Record all DTC information.
With the DRBIII®, erase Transfer Case DTCs.
Start the engine and move the Transfer Case Selector Switch to each position.
With the DRBIII®, read Transfer Case DTCs.

Does the DRBIII® display 2WD/AWD INDICATOR SHORTED?

Yes >> Go To 2

No >> Go To 7

2. (G2) 2WD/AWD INDICATOR CIRCUIT OPEN

Turn the ignition off to the lock position.
Disconnect the Transfer Case Control Module C1 harness connector.
Disconnect the Transfer Case Selector Switch harness connector.

NOTE: Note: Check connectors - Clean/repair as necessary.
Measure the resistance of the (G2) 2WD/AWD Indicator circuit from the Transfer Case Control Module C1 harness connector to the Transfer Case Selector Switch harness connector.

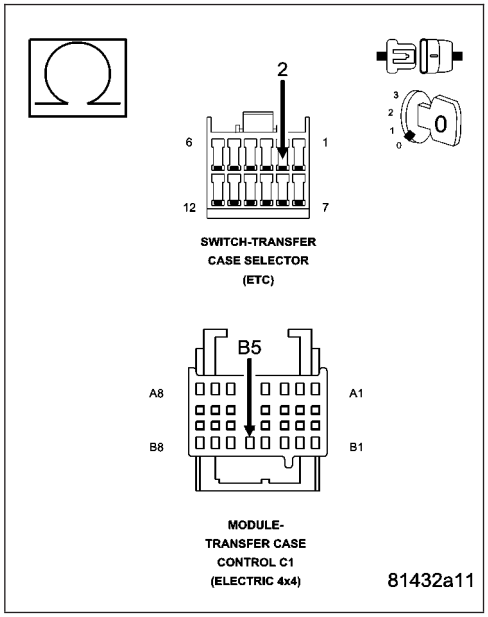

Is the resistance above 5.0 ohms?

Yes >> Repair the (G2) 2WD/AWD Indicator circuit for an open. Perform TRANSFER CASE VERIFICATION TEST. (Refer to 21 - TRANSMISSION/TRANSAXLE/TRANSFER CASE - DIAGNOSIS AND TESTING)

No >> Go To 3

2WD/AWD INDICATOR SHORTED (CONTINUED)

3. (G2) 2WD/AWD INDICATOR CIRCUIT SHORT TO GROUND

Measure the resistance between ground and the (G2) 2WD/AWD Indicator circuit.

Is the resistance below 5.0 ohms?

Yes >> Repair the (G2) 2WD/AWD Indicator circuit for a short to ground.
Perform TRANSFER CASE VERIFICATION TEST. (Refer to 21 - TRANSMISSION/TRANSAXLE/TRANSFER CASE - DIAGNOSIS AND TESTING)

No >> Go To 4

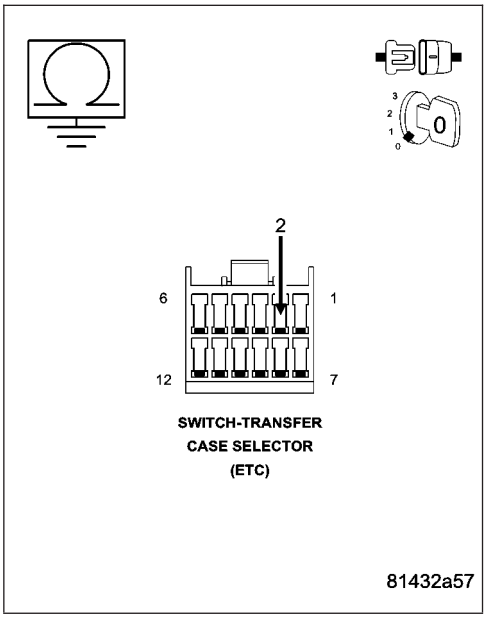

4. (G2) 2WD/AWD INDICATOR CIRCUIT SHORT TO VOLTAGE

Ignition on, engine not running.
Measure the voltage of the (G2) 2WD/AWD Indicator circuit.

Is the voltage above 0.5 volt?

Yes >> Repair the (G2) 2WD/AWD Indicator circuit for a short to voltage.
Perform TRANSFER CASE VERIFICATION TEST. (Refer to 21 - TRANSMISSION/TRANSAXLE/TRANSFER CASE - DIAGNOSIS AND TESTING)

No >> Go To 5

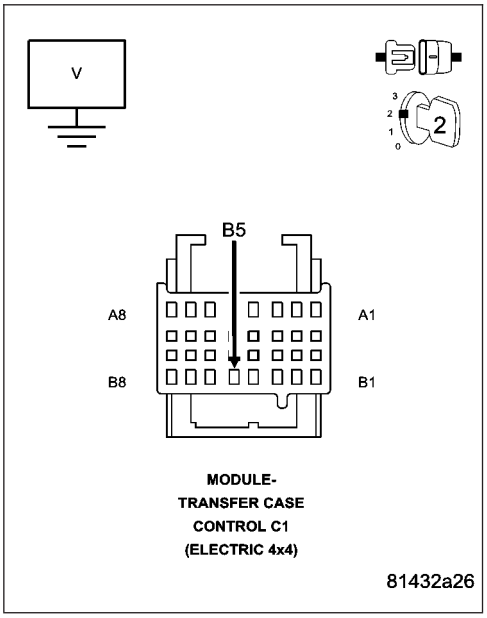

2WD/AWD INDICATOR SHORTED (CONTINUED)

5. TRANSFER CASE SELECTOR SWITCH

Turn the ignition off to the lock position.

Connect the Transfer Case Control Module C1 harness connector.

Ignition on, engine not running.

With a 12–volt test light connected to B+, check the (G2) 2WD/AWD Indicator circuit in the Transfer Case Selector Switch harness connector.

NOTE: The test light should not be illuminated.

With the DRBIII®, actuate the 2WD LED.

With a 12–volt test light connected to B+, check the (G2) 2WD/AWD Indicator circuit in the Transfer Case Selector Switch harness connector.

NOTE: The test light should be illuminated during the actuation.

Does the test light illuminate when the circuit is actuated and remain off otherwise?

Yes >> Replace the Transfer Case Selector Switch in accordance with the Service Information.
Perform TRANSFER CASE VERIFICATION TEST. (Refer to 21 - TRANSMISSION/TRANSAXLE/TRANSFER CASE - DIAGNOSIS AND TESTING)

No >> Go To 6

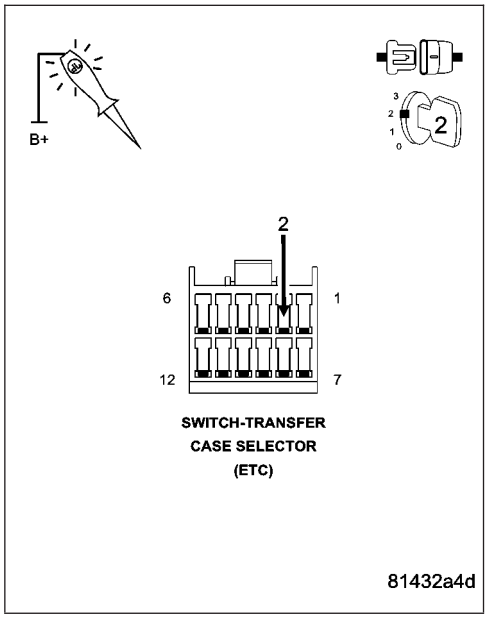

---

6. TRANSFER CASE CONTROL MODULE

Using the wiring diagram as a guide, inspect the wiring and connectors relative to this DTC. Inspect all power and ground circuits. Repair as necessary.

If there are no Charging System related DTCs or other possible causes remaining, view repair.

Repair

Replace the Transfer Case Control Module in accordance with the Service Information.
Perform TRANSFER CASE VERIFICATION TEST. (Refer to 21 - TRANSMISSION/TRANSAXLE/TRANSFER CASE - DIAGNOSIS AND TESTING)

---

7. INTERMITTENT WIRING AND CONNECTORS

The conditions necessary to set this DTC are not present at this time.

Using the schematics as a guide, inspect the wiring and connectors specific to this circuit.

Wiggle test the wiring harness and connectors while checking for shorted and open circuits.

Using the DRBIII®, monitor the data related to this circuit while performing the wiggle test. Look for the data to change or for the DTC to reset.

Were there any problems found?

Yes >> Repair as necessary.
Perform TRANSFER CASE VERIFICATION TEST. (Refer to 21 - TRANSMISSION/TRANSAXLE/TRANSFER CASE - DIAGNOSIS AND TESTING)

No >> Test Complete.

4WD HI INDICATOR OPEN

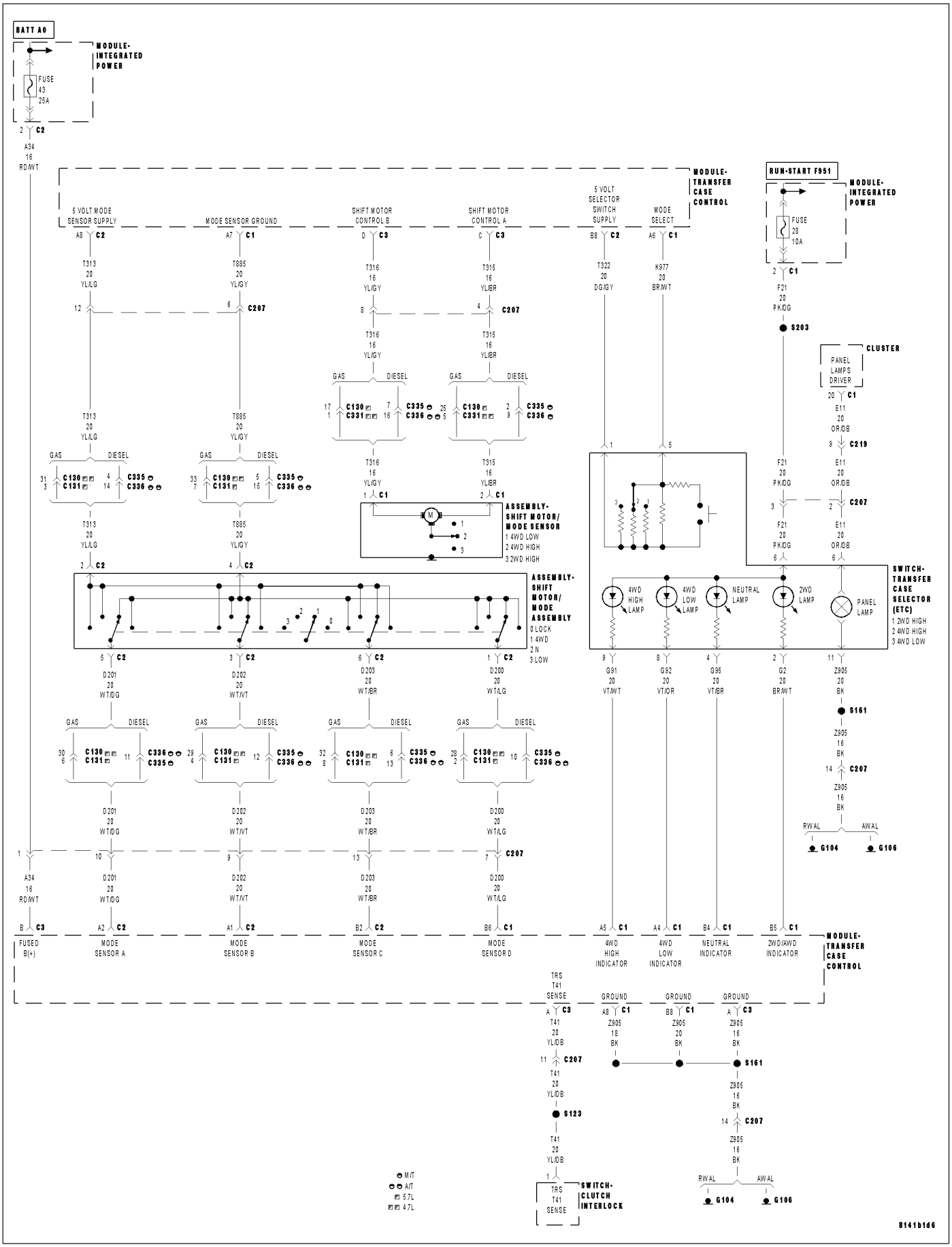

4WD HI INDICATOR OPEN (CONTINUED)

For a complete wiring diagram **Refer to Section 8W**.

- **When Monitored:**
  Continuously with the ignition on.
- **Set Condition:**
  The Transfer Case Control Module detects an open circuit or high voltage on the (G91) 4WD High Indicator circuit.

Possible Causes
INTERMITTENT 4WD HI INDICATOR OPEN
(G91) 4WD HIGH INDICATOR CIRCUIT OPEN
(G91) 4WD HIGH INDICATOR CIRCUIT SHORT TO VOLTAGE
(F21) FUSED IGNITION SWITCH OUTPUT CIRCUIT OPEN
TRANSFER CASE SELECTOR SWITCH
TRANSFER CASE CONTROL MODULE

1. 4WD HI INDICATOR OPEN DTC IS PRESENT

With the DRBIII®, read Transfer Case DTCs. Record all DTC information.
With the DRBIII®, erase Transfer Case DTCs.
Start the engine and move the Transfer Case Selector Switch to each position.
With the DRBIII®, read Transfer Case DTCs.

Does the DRBIII® display 4WD HI INDICATOR OPEN?

Yes >> Go To 2

No >> Go To 7

2. (G91) 4WD HIGH INDICATOR CIRCUIT OPEN

Turn the ignition off to the lock position.
Disconnect the Transfer Case Control Module C1 harness connector.
Disconnect the Transfer Case Selector Switch harness connector.

NOTE: Note: Check connectors - Clean/repair as necessary.
Measure the resistance of the (G91) 4WD High Indicator circuit from the Transfer Case Control Module C1 harness connector to the Transfer Case Selector Switch harness connector.

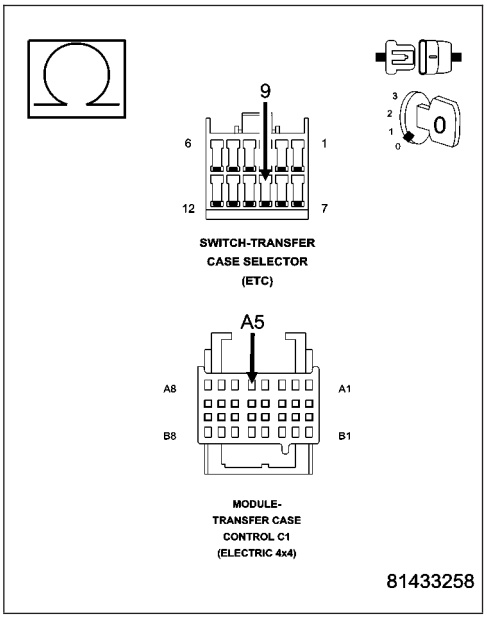

Is the resistance above 5.0 ohms?

Yes >> Repair the (G91) 4WD High Indicator circuit for an open. Perform TRANSFER CASE VERIFICATION TEST. (Refer to 21 - TRANSMISSION/TRANSAXLE/TRANSFER CASE - DIAGNOSIS AND TESTING)

No >> Go To 3

4WD HI INDICATOR OPEN (CONTINUED)

3. (G91) 4WD HIGH INDICATOR CIRCUIT SHORT TO VOLTAGE

Ignition on, engine not running.

Measure the voltage of the (G91) 4WD High Indicator circuit.

Is the voltage above 0.5 volt?

Yes >> Repair the (G91) 4WD High Indicator circuit for a short to voltage.

Perform TRANSFER CASE VERIFICATION TEST. (Refer to 21 - TRANSMISSION/TRANSAXLE/TRANSFER CASE - DIAGNOSIS AND TESTING)

No >> Go To 4

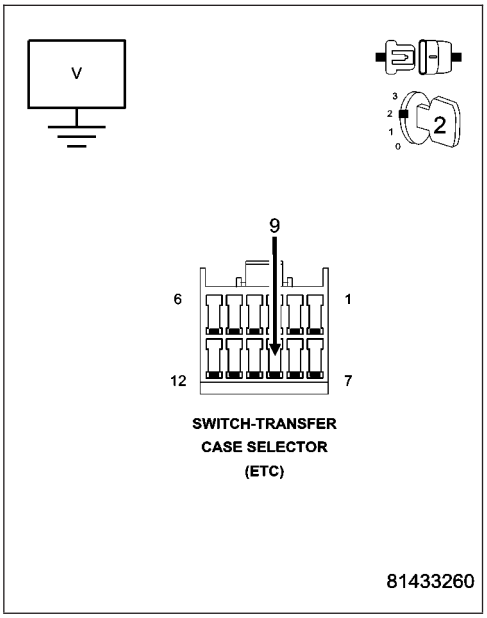

4. (F21) FUSED IGNITION SWITCH OUTPUT CIRCUIT OPEN

Using a 12-volt test light connected to ground, check the (F21) Fused Ignition Switch Output circuit.

NOTE: The test light must illuminate brightly. Compare the brightness to that of a direct connection to the battery.

Does the test light illuminate brightly?

Yes >> Go To 5

No >> Repair the (F21) Fused Ignition Switch Output circuit for an open circuit or for high resistance. If the fuse is open make sure to check for a short to ground and repair as necessary.

Perform TRANSFER CASE VERIFICATION TEST. (Refer to 21 - TRANSMISSION/TRANSAXLE/TRANSFER CASE - DIAGNOSIS AND TESTING)

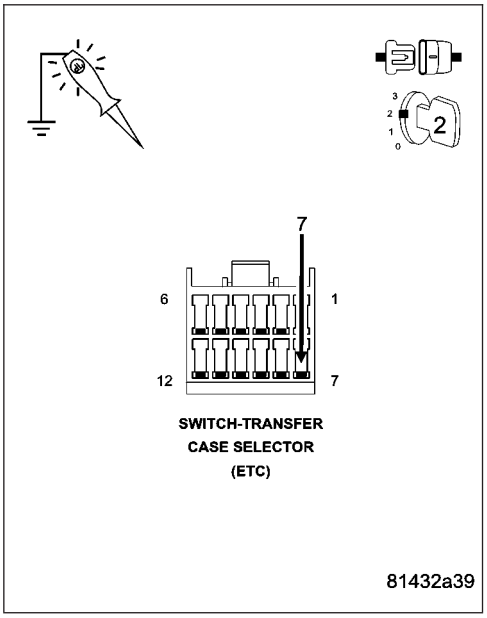

4WD HI INDICATOR OPEN (CONTINUED)

5. TRANSFER CASE SELECTOR SWITCH

Turn the ignition off to the lock position.

Connect the Transfer Case Control Module C1 harness connector.

Ignition on, engine not running.

With the DRBIII®, actuate the 4HI LED.

With a 12–volt test light connected to B+, check the (G91) 4WD High Indicator circuit in the Transfer Case Selector Switch harness connector.

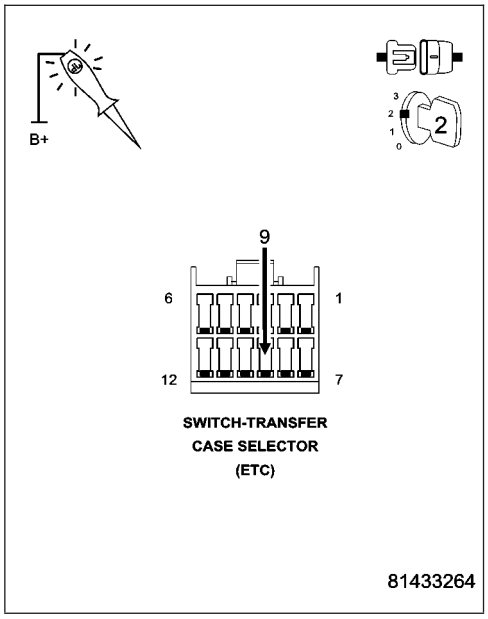

Does the test light illuminate when the circuit is actuated?

Yes >> Replace the Transfer Case Selector Switch in accordance with the Service Information.

Perform TRANSFER CASE VERIFICATION TEST. (Refer to 21 - TRANSMISSION/TRANSAXLE/TRANSFER CASE - DIAGNOSIS AND TESTING)

No >> Go To 6

6. TRANSFER CASE CONTROL MODULE

Using the wiring diagram as a guide, inspect the wiring and connectors relative to this DTC. Inspect all power and ground circuits. Repair as necessary.

If there are no other possible causes remaining, view repair.

Repair

Replace the Transfer Case Control Module in accordance with the Service Information.

Perform TRANSFER CASE VERIFICATION TEST. (Refer to 21 - TRANSMISSION/TRANSAXLE/TRANSFER CASE - DIAGNOSIS AND TESTING)

7. INTERMITTENT WIRING AND CONNECTORS

The conditions necessary to set this DTC are not present at this time.

Using the schematics as a guide, inspect the wiring and connectors specific to this circuit.

Wiggle test the wiring harness and connectors while checking for shorted and open circuits.

Using the DRBIII®, monitor the data related to this circuit while performing the wiggle test. Look for the data to change or for the DTC to reset.

Were there any problems found?

Yes >> Repair as necessary.

Perform TRANSFER CASE VERIFICATION TEST. (Refer to 21 - TRANSMISSION/TRANSAXLE/TRANSFER CASE - DIAGNOSIS AND TESTING)

No >> Test Complete.

4WD HI INDICATOR SHORT TO GROUND

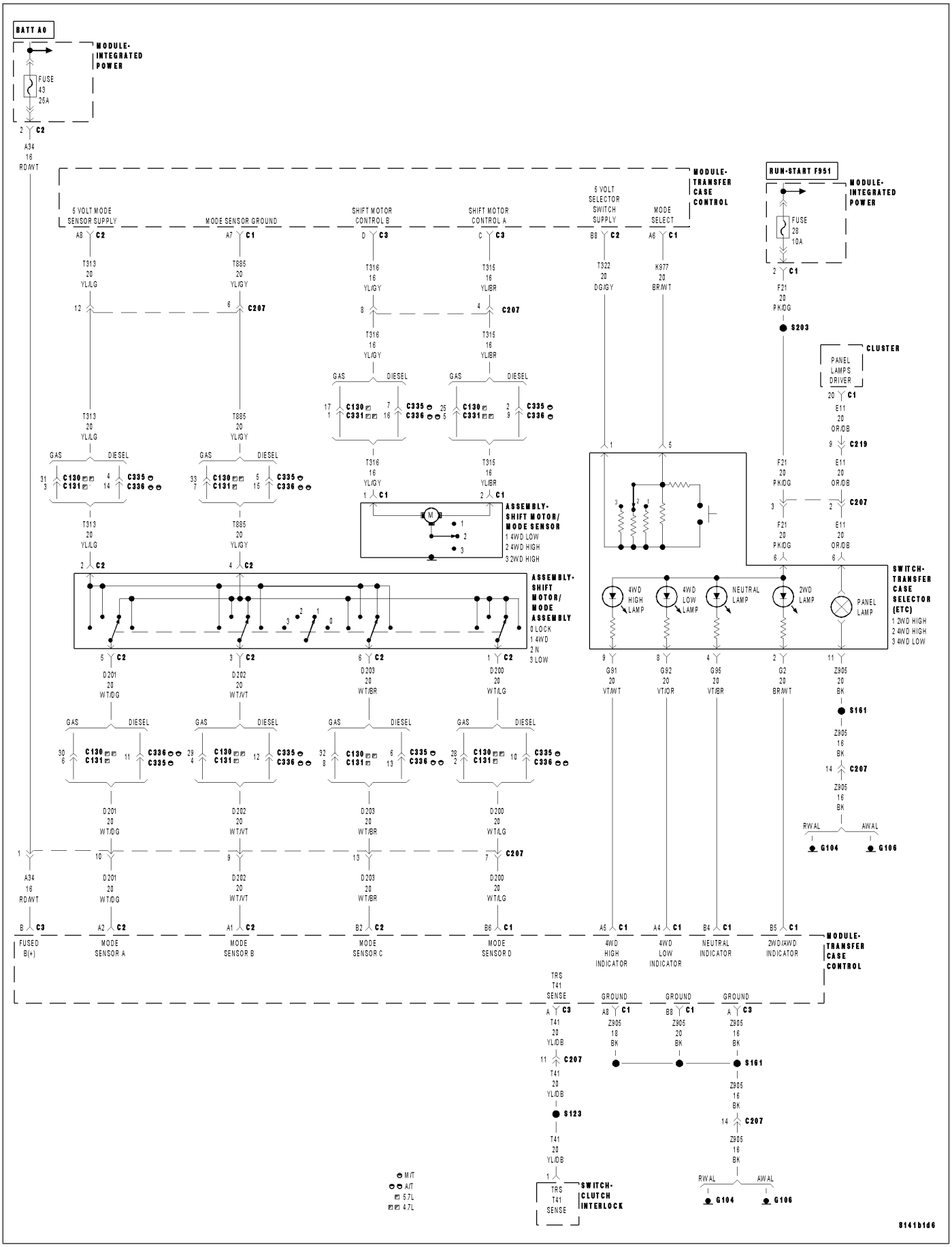

4WD HI INDICATOR SHORT TO GROUND (CONTINUED)

For a complete wiring diagram **Refer to Section 8W**.

- **When Monitored:**
  Continuously with the ignition on.
- **Set Condition:**
  The Transfer Case Control Module detects a short to ground on the (G91) 4WD High Indicator circuit.

Possible Causes
INTERMITTENT 4WD HI INDICATOR SHORT TO GROUND
(G91) 4WD HIGH INDICATOR CIRCUIT OPEN
(G91) 4WD HIGH INDICATOR CIRCUIT SHORT TO GROUND
(G91) 4WD HIGH INDICATOR CIRCUIT SHORT TO VOLTAGE
TRANSFER CASE SELECTOR SWITCH
TRANSFER CASE CONTROL MODULE

1. 4WD HI INDICATOR SHORT TO GROUND DTC IS PRESENT

With the DRBIII®, read Transfer Case DTCs. Record all DTC information.
With the DRBIII®, erase Transfer Case DTCs.
Start the engine and move the Transfer Case Selector Switch to each position.
With the DRBIII®, read Transfer Case DTCs.

Does the DRBIII® display 4WD HI INDICATOR SHORT TO GROUND?

Yes >> Go To 2

No >> Go To 7

---

2. (G91) 4WD HIGH INDICATOR CIRCUIT OPEN

Turn the ignition off to the lock position.
Disconnect the Transfer Case Control Module C1 harness connector.
Disconnect the Transfer Case Selector Switch harness connector.

NOTE: Note: Check connectors - Clean/repair as necessary.
Measure the resistance of the (G91) 4WD High Indicator circuit from the Transfer Case Control Module C1 harness connector to the Transfer Case Selector Switch harness connector.

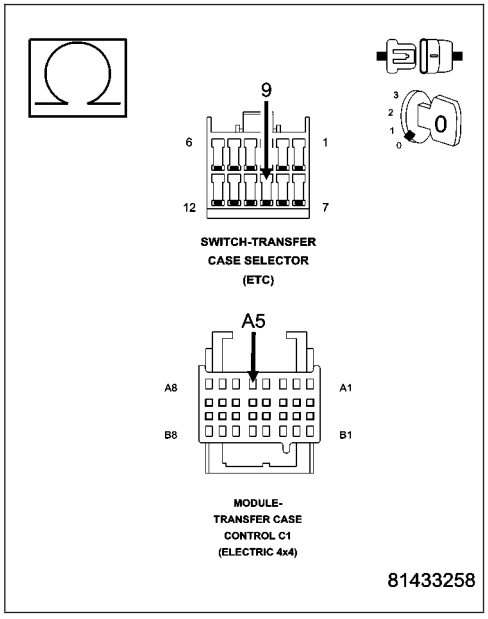

Is the resistance above 5.0 ohms?

Yes >> Repair the (G91) 4WD High Indicator circuit for an open. Perform TRANSFER CASE VERIFICATION TEST. (Refer to 21 - TRANSMISSION/TRANSAXLE/TRANSFER CASE - DIAGNOSIS AND TESTING)

No >> Go To 3

4WD HI INDICATOR SHORT TO GROUND (CONTINUED)

3. (G91) 4WD HIGH INDICATOR CIRCUIT SHORT TO GROUND

Measure the resistance between ground and the (G91) 4WD High Indicator circuit.

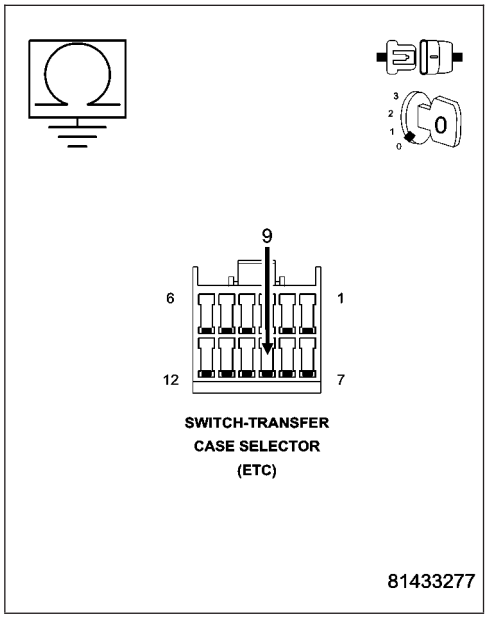

Is the resistance below 5.0 ohms?

Yes >> Repair the (G91) 4WD High Indicator circuit for a short to ground.

Perform TRANSFER CASE VERIFICATION TEST. (Refer to 21 - TRANSMISSION/TRANSAXLE/TRANSFER CASE - DIAGNOSIS AND TESTING)

No >> Go To 4

4. (G91) 4WD HIGH INDICATOR CIRCUIT SHORT TO VOLTAGE

Ignition on, engine not running.

Measure the voltage of the (G91) 4WD High Indicator circuit.

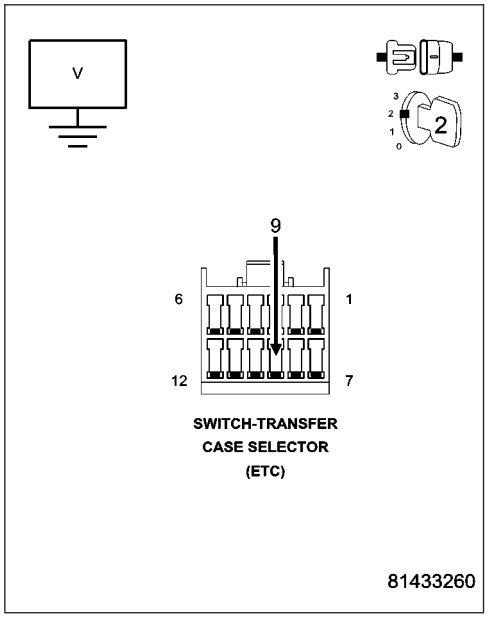

Is the voltage above 0.5 volt?

Yes >> Repair the (G91) 4WD High Indicator circuit for a short to voltage.

Perform TRANSFER CASE VERIFICATION TEST. (Refer to 21 - TRANSMISSION/TRANSAXLE/TRANSFER CASE - DIAGNOSIS AND TESTING)

No >> Go To 5

4WD HI INDICATOR SHORT TO GROUND (CONTINUED)

5. TRANSFER CASE SELECTOR SWITCH

Turn the ignition off to the lock position.

Connect the Transfer Case Control Module C1 harness connector.

Ignition on, engine not running.

With a 12–volt test light connected to B+, check the (G91) 4WD High Indicator circuit in the Transfer Case Selector Switch harness connector.

NOTE: The test light should not be illuminated.

With the DRBIII®, actuate the 4HI LED.

With a 12–volt test light connected to B+, check the (G91) 4WD High Indicator circuit in the Transfer Case Selector Switch harness connector.

NOTE: The test light should be illuminated during the actuation.

Does the test light illuminate when the circuit is actuated and remain off otherwise?

Yes >> Replace the Transfer Case Selector Switch in accordance with the Service Information.
Perform TRANSFER CASE VERIFICATION TEST. (Refer to 21 - TRANSMISSION/TRANSAXLE/TRANSFER CASE - DIAGNOSIS AND TESTING)

No >> Go To 6

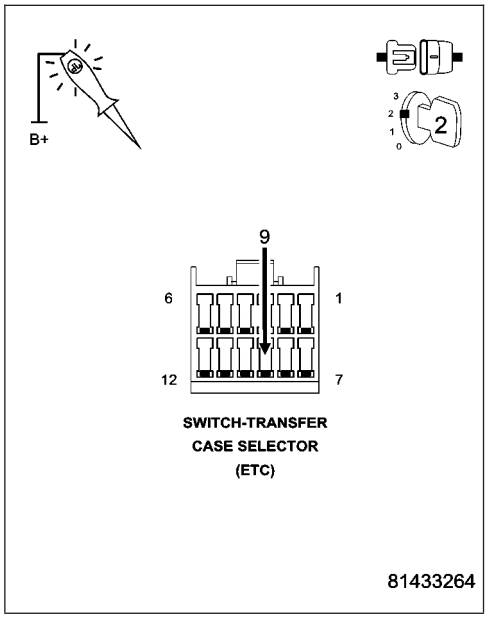

6. TRANSFER CASE CONTROL MODULE

Using the wiring diagram as a guide, inspect the wiring and connectors relative to this DTC. Inspect all power and ground circuits. Repair as necessary.

If there are no Charging System related DTCs or other possible causes remaining, view repair.

Repair

Replace the Transfer Case Control Module in accordance with the Service Information.
Perform TRANSFER CASE VERIFICATION TEST. (Refer to 21 - TRANSMISSION/TRANSAXLE/TRANSFER CASE - DIAGNOSIS AND TESTING)

7. INTERMITTENT WIRING AND CONNECTORS

The conditions necessary to set this DTC are not present at this time.

Using the schematics as a guide, inspect the wiring and connectors specific to this circuit.

Wiggle test the wiring harness and connectors while checking for shorted and open circuits.

Using the DRBIII®, monitor the data related to this circuit while performing the wiggle test. Look for the data to change or for the DTC to reset.

Were there any problems found?

Yes >> Repair as necessary.
Perform TRANSFER CASE VERIFICATION TEST. (Refer to 21 - TRANSMISSION/TRANSAXLE/TRANSFER CASE - DIAGNOSIS AND TESTING)

No >> Test Complete.

4WD LO INDICATOR OPEN

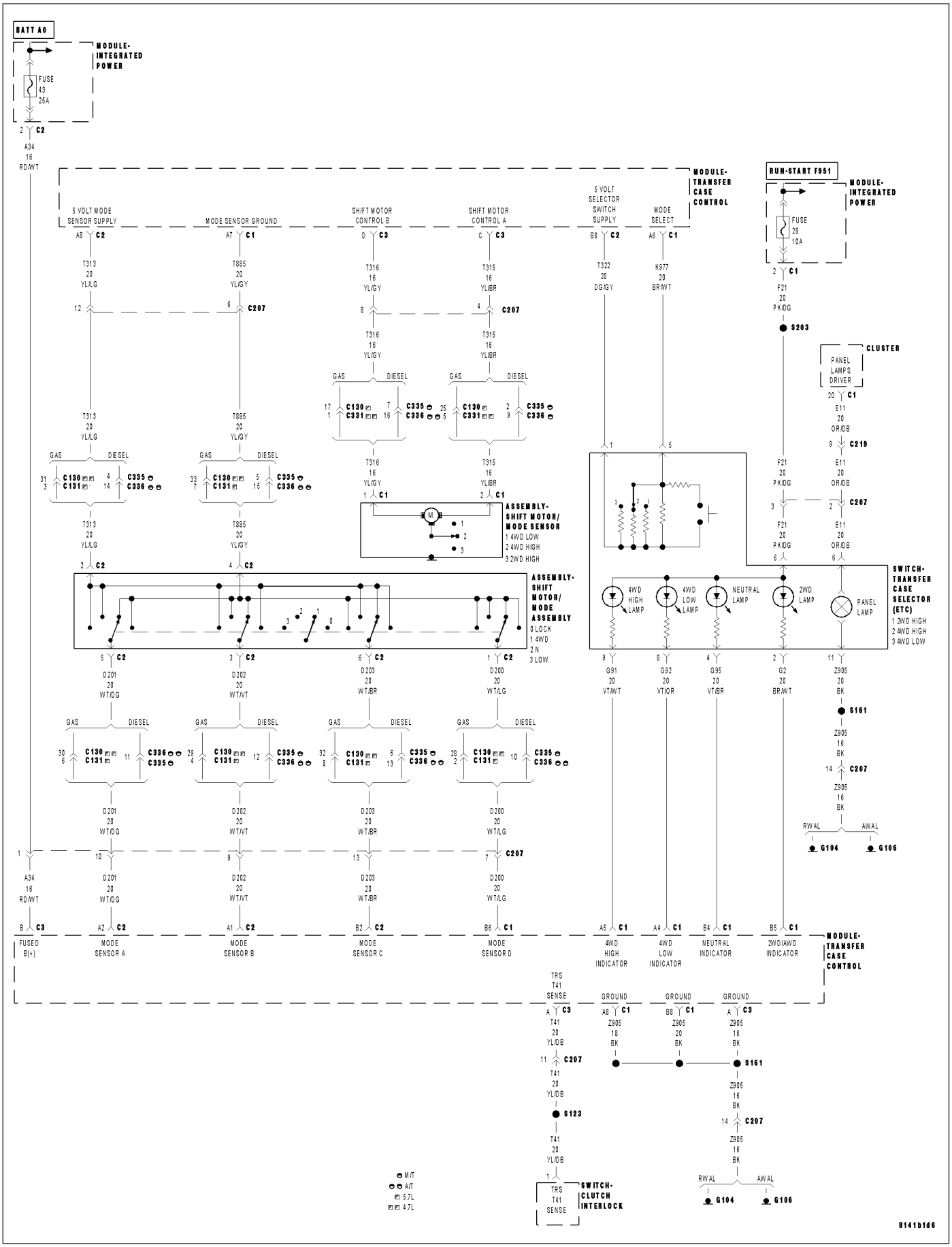

4WD LO INDICATOR OPEN (CONTINUED)

For a complete wiring diagram **Refer to Section 8W**.

- **When Monitored:**
  Continuously with the ignition on.
- **Set Condition:**
  The Transfer Case Control Module detects an open circuit or high voltage on the 4WD Low Indicator circuit.

Possible Causes
INTERMITTENT 4WD LO INDICATOR OPEN
(G92) 4WD LOW INDICATOR CIRCUIT OPEN
(G92) 4WD LOW INDICATOR CIRCUIT SHORT TO VOLTAGE
(F21) FUSED IGNITION SWITCH OUTPUT CIRCUIT OPEN
TRANSFER CASE SELECTOR SWITCH
TRANSFER CASE CONTROL MODULE

1. 4WD LO INDICATOR OPEN DTC IS PRESENT

With the DRBIII®, read Transfer Case DTCs. Record all DTC information.
With the DRBIII®, erase Transfer Case DTCs.
Start the engine and move the Transfer Case Selector Switch to each position.
With the DRBIII®, read Transfer Case DTCs.

Does the DRBIII® display 4WD LO INDICATOR OPEN?

Yes >> Go To 2

No >> Go To 7

---

2. (G92) 4WD LOW INDICATOR CIRCUIT OPEN

Turn the ignition off to the lock position.
Disconnect the Transfer Case Control Module C1 harness connector.
Disconnect the Transfer Case Selector Switch harness connector.

NOTE: Note: Check connectors - Clean/repair as necessary.
Measure the resistance of the (G92) 4WD Low Indicator circuit from the Transfer Case Control Module C1 harness connector to the Transfer Case Selector Switch harness connector.

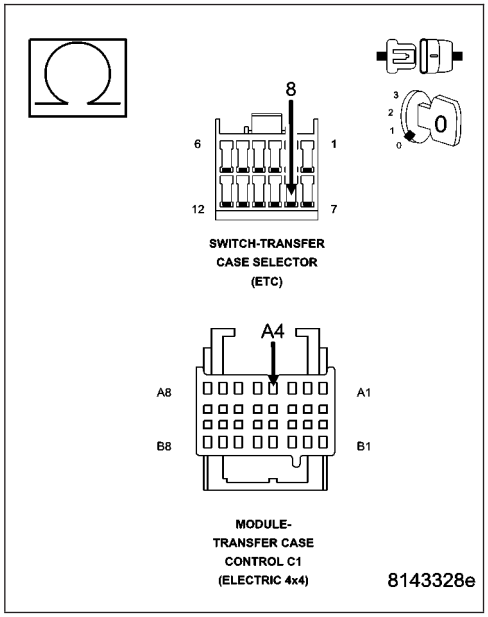

Is the resistance above 5.0 ohms?

Yes >> Repair the (G92) 4WD Low Indicator circuit for an open. Perform TRANSFER CASE VERIFICATION TEST. (Refer to 21 - TRANSMISSION/TRANSAXLE/TRANSFER CASE - DIAGNOSIS AND TESTING)

No >> Go To 3

4WD LO INDICATOR OPEN (CONTINUED)

3. (G92) 4WD LOW INDICATOR CIRCUIT SHORT TO VOLTAGE

Ignition on, engine not running.

Measure the voltage of the (G92) 4WD Low Indicator circuit.

Is the voltage above 0.5 volt?

Yes >> Repair the (G92) 4WD Low Indicator circuit for a short to voltage.

Perform TRANSFER CASE VERIFICATION TEST. (Refer to 21 - TRANSMISSION/TRANSAXLE/TRANSFER CASE - DIAGNOSIS AND TESTING)

No >> Go To 4

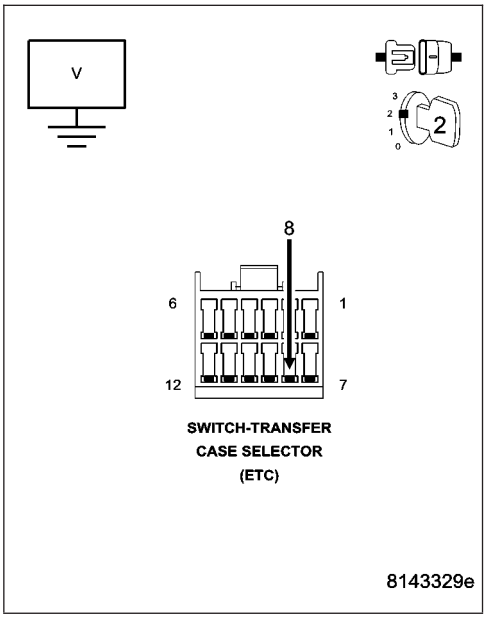

4. (F21) FUSED IGNITION SWITCH OUTPUT CIRCUIT OPEN

Using a 12-volt test light connected to ground, check the (F21) Fused Ignition Switch Output circuit.

NOTE: The test light must illuminate brightly. Compare the brightness to that of a direct connection to the battery.

Does the test light illuminate brightly?

Yes >> Go To 5

No >> Repair the (F21) Fused Ignition Switch Output circuit for an open circuit or for high resistance. If the fuse is open make sure to check for a short to ground and repair as necessary. (Refer to 21 - TRANSMISSION/TRANSAXLE/TRANSFER CASE - DIAGNOSIS AND TESTING)

Perform TRANSFER CASE VERIFICATION TEST.

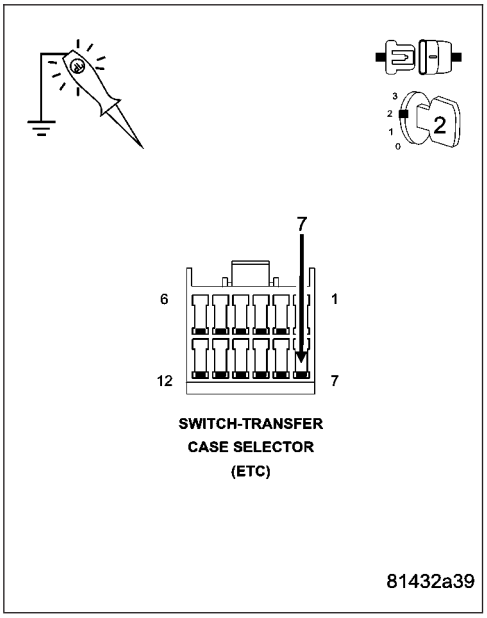

4WD LO INDICATOR OPEN (CONTINUED)

5. TRANSFER CASE SELECTOR SWITCH

Turn the ignition off to the lock position.

Connect the Transfer Case Control Module C1 harness connector.

Ignition on, engine not running.

With the DRBIII®, actuate the 4LO LED.

With a 12–volt test light connected to B+, check the 4WD Low Indicator circuit in the Transfer Case Selector Switch harness connector.

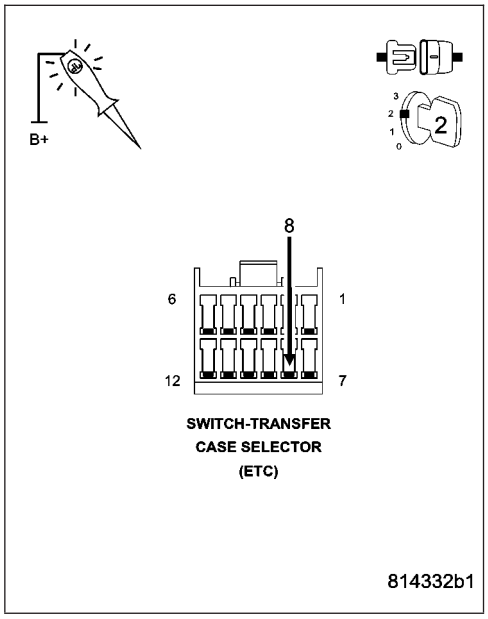

Does the test light illuminate when the circuit is actuated?

Yes >> Replace the Transfer Case Selector Switch in accordance with the Service Information.

Perform TRANSFER CASE VERIFICATION TEST. (Refer to 21 - TRANSMISSION/TRANSAXLE/TRANSFER CASE - DIAGNOSIS AND TESTING)

No >> Go To 6

6. TRANSFER CASE CONTROL MODULE

Using the wiring diagram as a guide, inspect the wiring and connectors relative to this DTC. Inspect all power and ground circuits. Repair as necessary.

If there are no other possible causes remaining, view repair.

Repair

Replace the Transfer Case Control Module in accordance with the Service Information.

Perform TRANSFER CASE VERIFICATION TEST. (Refer to 21 - TRANSMISSION/TRANSAXLE/TRANSFER CASE - DIAGNOSIS AND TESTING)

7. INTERMITTENT WIRING AND CONNECTORS

The conditions necessary to set this DTC are not present at this time.

Using the schematics as a guide, inspect the wiring and connectors specific to this circuit.

Wiggle test the wiring harness and connectors while checking for shorted and open circuits.

Using the DRBIII®, monitor the data related to this circuit while performing the wiggle test. Look for the data to change or for the DTC to reset.

Were there any problems found?

Yes >> Repair as necessary.

Perform TRANSFER CASE VERIFICATION TEST. (Refer to 21 - TRANSMISSION/TRANSAXLE/TRANSFER CASE - DIAGNOSIS AND TESTING)

No >> Test Complete.

4WD LO INDICATOR SHORT TO GROUND

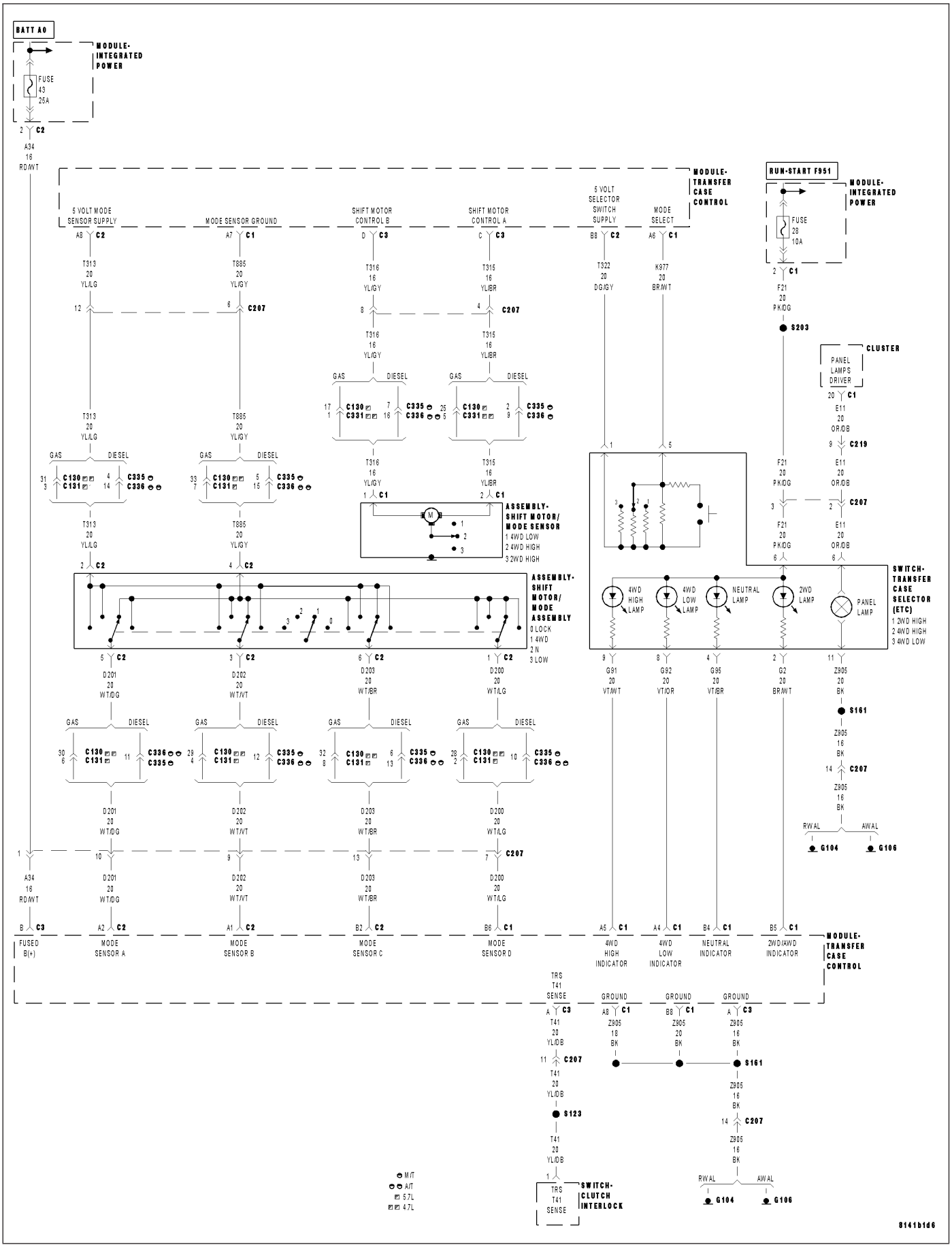

4WD LO INDICATOR SHORT TO GROUND (CONTINUED)

For a complete wiring diagram **Refer to Section 8W**.

- **When Monitored:**
  Continuously with the ignition on.
- **Set Condition:**
  The Transfer Case Control Module detects a short to ground on the (G92) 4WD Low Indicator circuit.

Possible Causes
INTERMITTENT 4WD LO INDICATOR SHORT TO GROUND
(G92) 4WD LO INDICATOR CIRCUIT OPEN
(G92) 4WD LO INDICATOR CIRCUIT SHORT TO GROUND
(G92) 4WD LO INDICATOR CIRCUIT SHORT TO VOLTAGE
TRANSFER CASE SELECTOR SWITCH
TRANSFER CASE CONTROL MODULE

1. 4WD LO INDICATOR SHORT TO GROUND DTC IS PRESENT

With the DRBIII®, read Transfer Case DTCs. Record all DTC information.
With the DRBIII®, erase Transfer Case DTCs.
Start the engine and move the Transfer Case Selector Switch to each position.
With the DRBIII®, read Transfer Case DTCs.

Does the DRBIII® display 4WD LO INDICATOR SHORT TO GROUND?

Yes >> Go To 2

No >> Go To 7

---

2. (G92) 4WD LO INDICATOR CIRCUIT OPEN

Turn the ignition off to the lock position.
Disconnect the Transfer Case Control Module C1 harness connector.
Disconnect the Transfer Case Selector Switch harness connector.

NOTE: Note: Check connectors - Clean/repair as necessary.
Measure the resistance of the (G92) 4WD Low Indicator circuit from the Transfer Case Control Module C1 harness connector to the Transfer Case Selector Switch harness connector.

Is the resistance above 5.0 ohms?

Yes >> Repair the (G92) 4WD Low Indicator circuit for an open. Perform TRANSFER CASE VERIFICATION TEST. (Refer to 21 - TRANSMISSION/TRANSAXLE/TRANSFER CASE - DIAGNOSIS AND TESTING)

No >> Go To 3

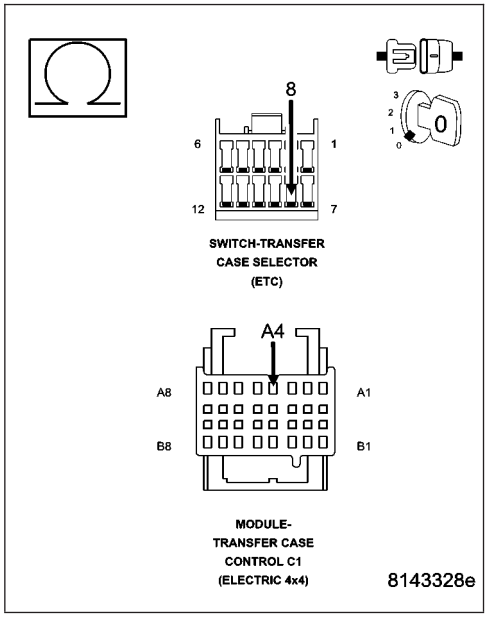

4WD LO INDICATOR SHORT TO GROUND (CONTINUED)

3. (G92) 4WD LO INDICATOR CIRCUIT SHORT TO GROUND

Measure the resistance between ground and the (G92) 4WD Low Indicator circuit.

Is the resistance below 5.0 ohms?

Yes >> Repair the (G92) 4WD Low Indicator circuit for a short to ground.
Perform TRANSFER CASE VERIFICATION TEST. (Refer to 21 - TRANSMISSION/TRANSAXLE/TRANSFER CASE - DIAGNOSIS AND TESTING)

No >> Go To 4

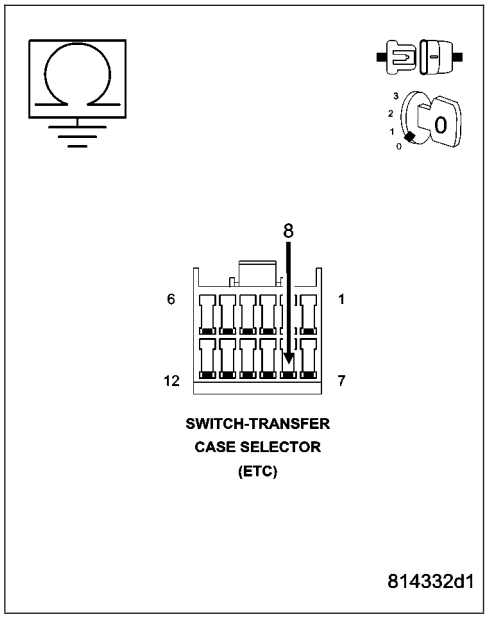

4. (G92) 4WD LO INDICATOR CIRCUIT SHORT TO VOLTAGE

Ignition on, engine not running.
Measure the voltage of the (G92) 4WD Low Indicator circuit.

Is the voltage above 0.5 volt?

Yes >> Repair the (G92) 4WD Low Indicator circuit for a short to voltage.
Perform TRANSFER CASE VERIFICATION TEST. (Refer to 21 - TRANSMISSION/TRANSAXLE/TRANSFER CASE - DIAGNOSIS AND TESTING)

No >> Go To 5

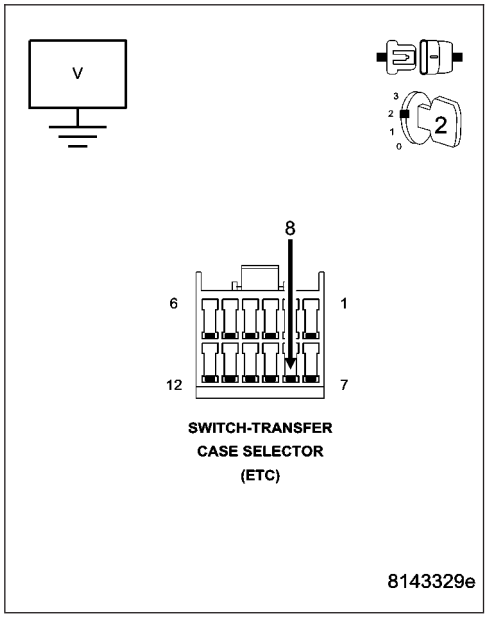

4WD LO INDICATOR SHORT TO GROUND (CONTINUED)

5. TRANSFER CASE SELECTOR SWITCH

Turn the ignition off to the lock position.

Connect the Transfer Case Control Module C1 harness connector.

Ignition on, engine not running.

With a 12–volt test light connected to B+, check the (G92) 4WD Low Indicator circuit in the Transfer Case Selector Switch harness connector.

NOTE: The test light should not be illuminated.

With the DRBIII®, actuate the 4LO LED.

With a 12–volt test light connected to B+, check the (G92) 4WD Low Indicator circuit in the Transfer Case Selector Switch harness connector.

NOTE: The test light should be illuminated during the actuation.

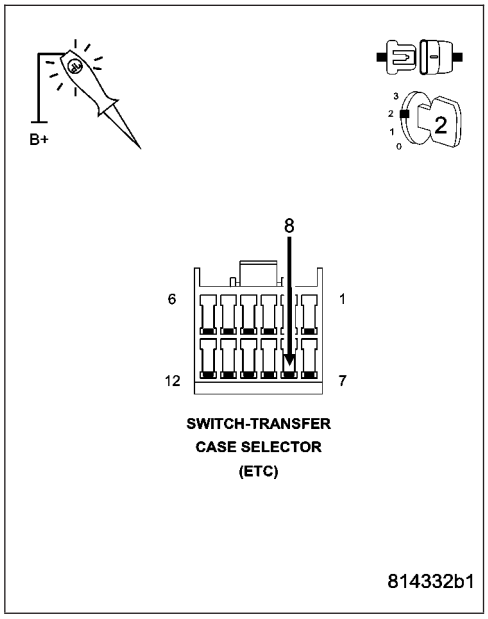

Does the test light illuminate when the circuit is actuated and remain off otherwise?

Yes >> Replace the Transfer Case Selector Switch in accordance with the Service Information.

No >> Go To 6

Perform TRANSFER CASE VERIFICATION TEST. (Refer to 21 - TRANSMISSION/TRANSAXLE/ TRANSFER CASE - DIAGNOSIS AND TESTING)

---

6. TRANSFER CASE CONTROL MODULE

Using the wiring diagram as a guide, inspect the wiring and connectors relative to this DTC. Inspect all power and ground circuits. Repair as necessary.

If there are no Charging System related DTCs or other possible causes remaining, view repair.

Repair

Replace the Transfer Case Control Module in accordance with the Service Information.

Perform TRANSFER CASE VERIFICATION TEST. (Refer to 21 - TRANSMISSION/TRANSAXLE/ TRANSFER CASE - DIAGNOSIS AND TESTING)

---

7. INTERMITTENT WIRING AND CONNECTORS

The conditions necessary to set this DTC are not present at this time.

Using the schematics as a guide, inspect the wiring and connectors specific to this circuit.

Wiggle test the wiring harness and connectors while checking for shorted and open circuits.

Using the DRBIII®, monitor the data related to this circuit while performing the wiggle test. Look for the data to change or for the DTC to reset.

Were there any problems found?

Yes >> Repair as necessary.

Perform TRANSFER CASE VERIFICATION TEST. (Refer to 21 - TRANSMISSION/TRANSAXLE/ TRANSFER CASE - DIAGNOSIS AND TESTING)

No >> Test Complete.

---

5 VOLT OVER VOLTAGE

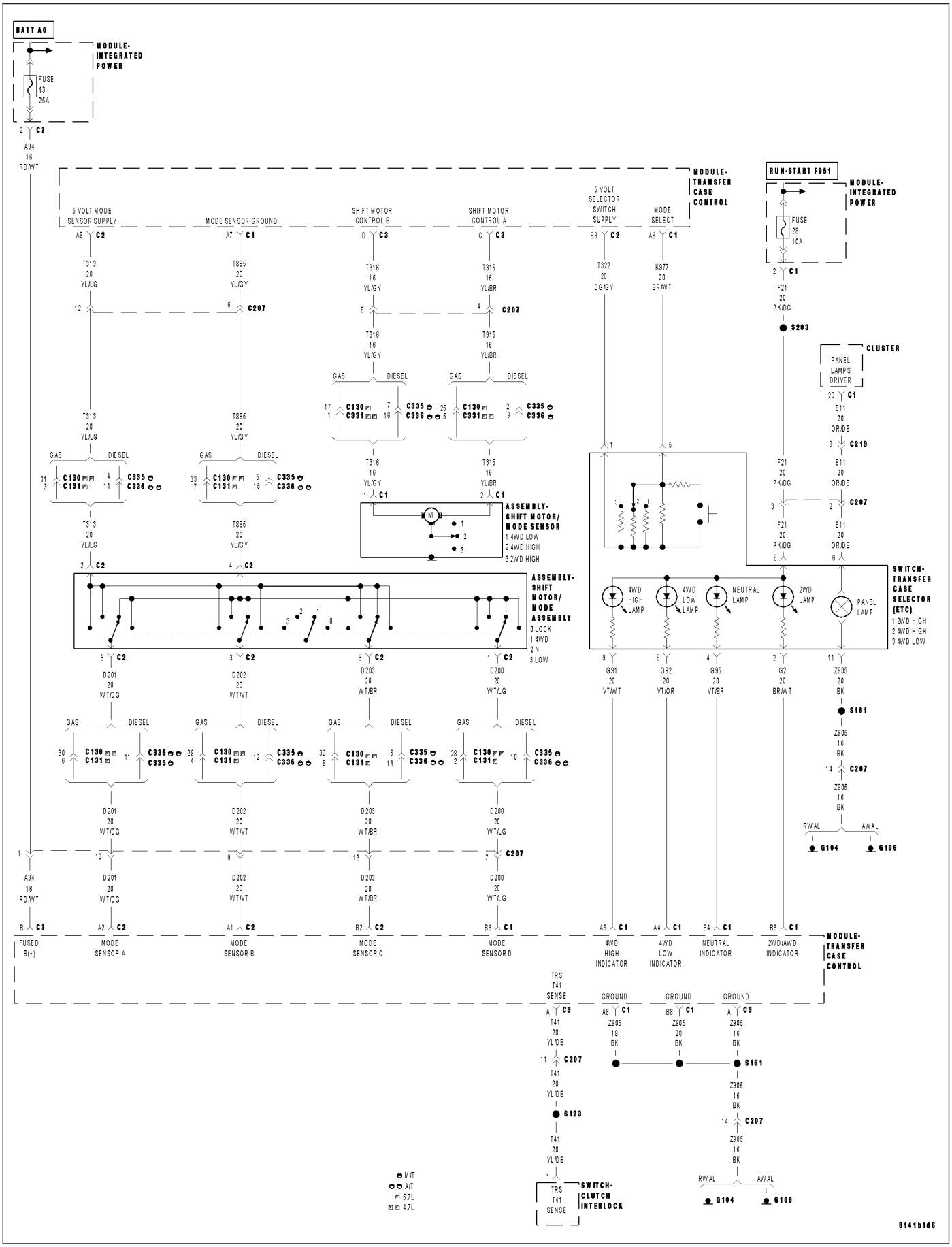

5 VOLT OVER VOLTAGE (CONTINUED)

For a complete wiring diagram **Refer to Section 8W**.

- **When Monitored:**
  Continuously with the ignition on.
- **Set Condition:**
  The Transfer Case Control Module detects that the 5 Volt Supply circuit voltage goes above 6.0 volts for 2 seconds.

Possible Causes
INTERMITTENT 5 VOLT OVER VOLTAGE
CHARGING SYSTEM DTCS PRESENT
5 VOLT SUPPLY CIRCUIT(S) SHORTED TO VOLTAGE
(T322) 5 VOLT SELECTOR SWITCH SUPPLY CIRCUIT SHORTED TO (T315) SHIFT MOTOR CONTROL A CIRCUIT
(T322) 5 VOLT SELECTOR SWITCH SUPPLY CIRCUIT SHORTED TO (T316) SHIFT MOTOR CONTROL B CIRCUIT
(T313) 5 VOLT MODE SENSOR SUPPLY CIRCUIT SHORTED TO (T315) SHIFT MOTOR CONTROL A CIRCUIT
(T313) 5 VOLT MODE SENSOR SUPPLY CIRCUIT SHORTED TO (T316) SHIFT MOTOR CONTROL B CIRCUIT
TRANSFER CASE CONTROL MODULE

1. CHARGING SYSTEM DTCS PRESENT

With the DRBIII®, read Engine DTCs.

Are there any Charging System related DTCs present?

Yes >> Refer to the symptom list and perform the appropriate diagnostic procedure(s) as necessary.

No >> Go To 2

---

2. 5 VOLT OVER VOLTAGE DTC PRESENT

With the DRBIII®, read Transfer Case DTCs. Record all DTC information.
With the DRBIII®, erase Transfer Case DTCs.
Start the engine and cycle the Transfer Case Selector Switch through all positions.
With the DRBIII®, read Transfer Case DTCs.

Does the DRBIII® display 5 VOLT OVER VOLTAGE?

Yes >> Go To 3

No >> Go To 9

---

5 VOLT OVER VOLTAGE (CONTINUED)

3. 5 VOLT SUPPLY CIRCUIT SHORTED TO VOLTAGE

Turn the ignition off to the lock position.

Disconnect the Shift Motor/Mode Sensor C2 harness connector.

Disconnect the Transfer Case Selector Switch harness connector.

Disconnect the Transfer Case Control Module C2 harness connector.

NOTE: Check connectors - Clean/repair as necessary.

Turn the ignition on.

Measure the voltage of the (T322) 5 Volt Selector Switch Supply circuit in the Transfer Case Selector Switch harness connector.

Measure the voltage of the (T313) 5 Volt Mode Sensor Supply circuit in the Shift Motor/Mode Sensor C2 harness connector.

Is there any voltage present in the 5 Volt Supply circuit at either connector?

Yes >> Repair the 5 Volt Supply circuit(s) for a short to voltage.
Perform TRANSFER CASE VERIFICATION TEST. (Refer to 21 - TRANSMISSION/TRANSAXLE/TRANSFER CASE - DIAGNOSIS AND TESTING)

No >> Go To 4

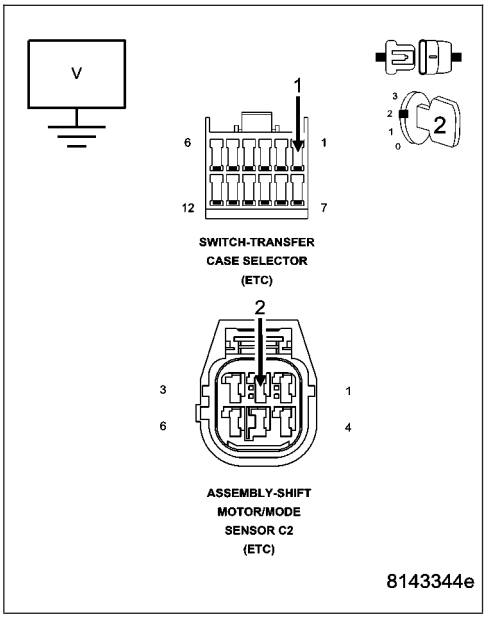

4. (T322) 5 VOLT SELECTOR SWITCH SUPPLY CIRCUIT SHORTED TO (T315) SHIFT MOTOR CONTROL A CIRCUIT

Turn the ignition off to the lock position.

Disconnect the Shift Motor/Mode Sensor C1 harness connector.

NOTE: Check connectors - Clean/repair as necessary.

Measure the resistance between the (T322) 5 Volt Selector Switch Supply circuit in the Transfer Case Selector Switch harness connector and the (T315) Shift Motor Control A circuit in the Shift Motor/Mode Sensor C1 harness connector.

Is the resistance below 5.0 ohms between the 5 Volt Supply circuit and the Shift Motor Control circuit?

Yes >> Repair the 5 Volt Supply circuit for short to the Shift Motor Control circuit.
Perform TRANSFER CASE VERIFICATION TEST. (Refer to 21 - TRANSMISSION/TRANSAXLE/TRANSFER CASE - DIAGNOSIS AND TESTING)

No >> Go To 5

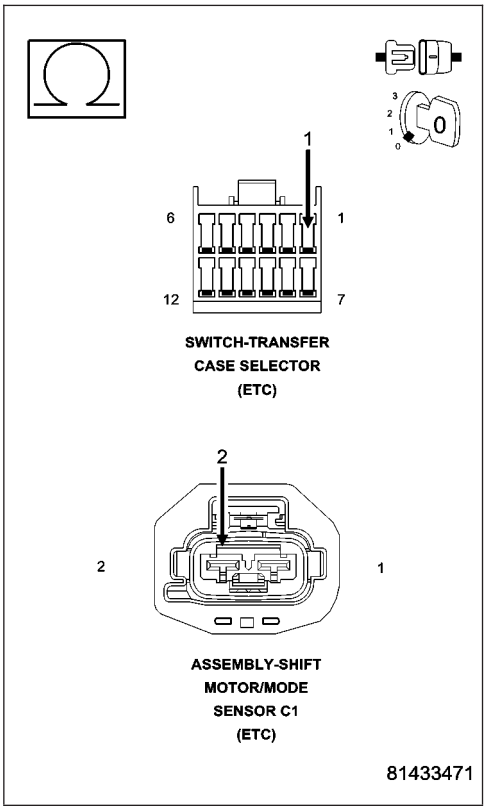

5 VOLT OVER VOLTAGE (CONTINUED)

5. (T322) 5 VOLT SELECTOR SWITCH SUPPLY CIRCUIT SHORTED TO (T316) SHIFT MOTOR CONTROL B CIRCUIT

Measure the resistance between the (T322) 5 Volt Selector Switch Supply circuit in the Transfer Case Selector Switch harness connector and the (T316) Shift Motor Control B circuit in the Shift Motor/Mode Sensor C1 harness connector.

Is the resistance below 5.0 ohms between the 5 Volt Supply circuit and the Shift Motor Control circuit?

Yes >> Repair the 5 Volt Supply circuit for short to the Shift Motor Control circuit.

Perform TRANSFER CASE VERIFICATION TEST. (Refer to 21 - TRANSMISSION/TRANSAXLE/TRANSFER CASE - DIAGNOSIS AND TESTING)

No >> Go To 6

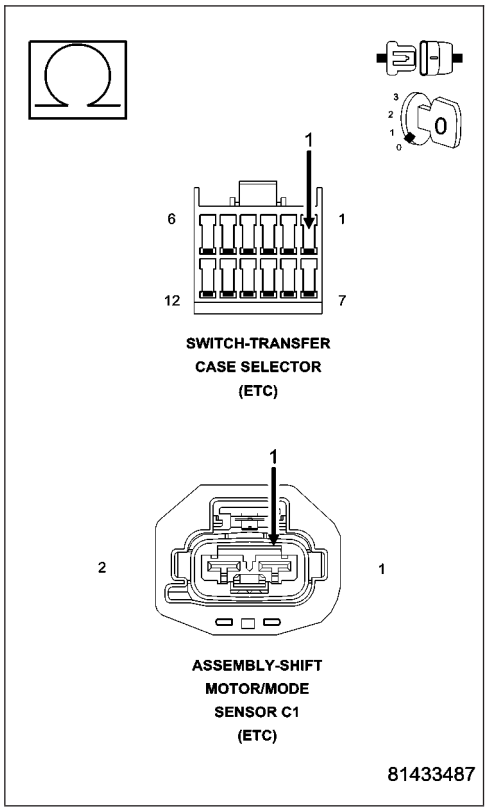

5 VOLT OVER VOLTAGE (CONTINUED)

6. (T313) 5 VOLT MODE SENSOR SUPPLY CIRCUIT SHORTED TO (T315) SHIFT MOTOR CONTROL A CIRCUIT

Measure the resistance between the (T313) 5 Volt Mode Sensor Supply circuit in the Motor/Mode Sensor C2 harness connector and the (T315) Shift Motor Control A circuit in the Shift Motor/Mode Sensor C1 harness connector.

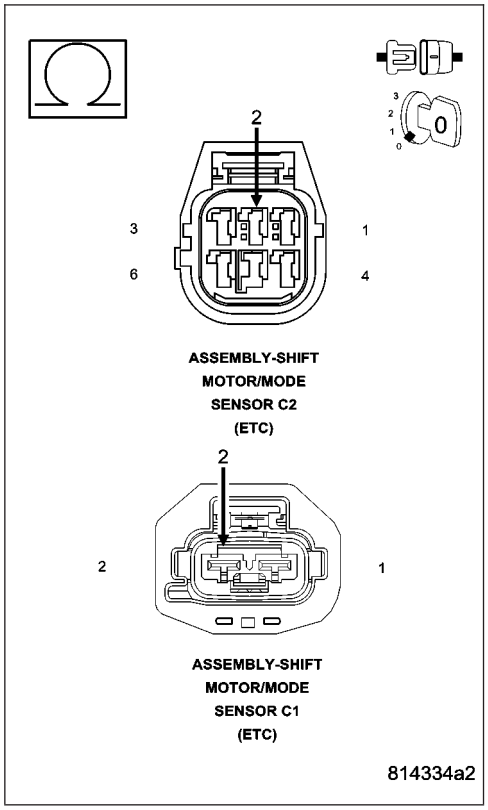

Is the resistance below 5.0 ohms between the 5 Volt Supply circuit and the Shift Motor Control circuit?

Yes >> Repair the 5 Volt Supply circuit for short to the Shift Motor Control circuit.

Perform TRANSFER CASE VERIFICATION TEST. (Refer to 21 - TRANSMISSION/TRANSAXLE/TRANSFER CASE - DIAGNOSIS AND TESTING)

No >> Go To 7

5 VOLT OVER VOLTAGE (CONTINUED)

7. (T313) 5 VOLT MODE SENSOR SUPPLY CIRCUIT SHORTED TO (T316) SHIFT MOTOR CONTROL B CIRCUIT

Measure the resistance between the (T313) 5 Volt Mode Sensor Supply circuit in the Motor/Mode Sensor C2 harness connector and the (T316) Shift Motor Control B circuit in the Shift Motor/Mode Sensor C1 harness connector.

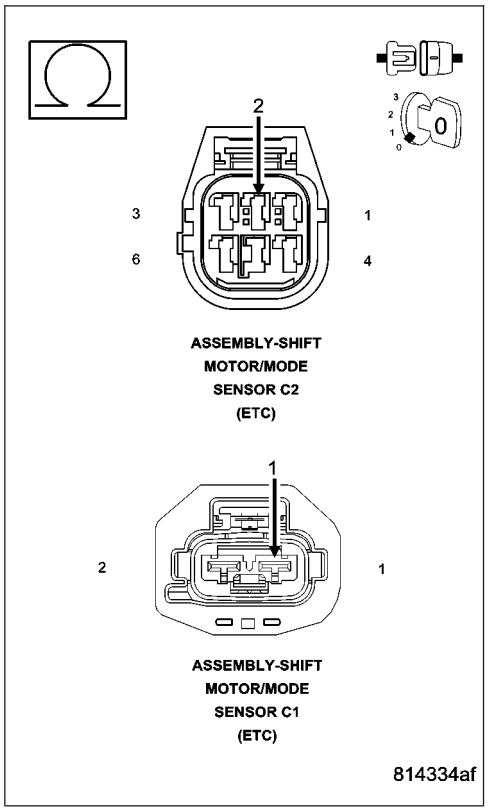

Is the resistance below 5.0 ohms between the 5 Volt Supply circuit and the Shift Motor Control circuit?

Yes >> Repair the 5 Volt Supply circuit for short to the Shift Motor Control circuit.
Perform TRANSFER CASE VERIFICATION TEST. (Refer to 21 - TRANSMISSION/TRANSAXLE/TRANSFER CASE - DIAGNOSIS AND TESTING)

No >> Go To 8

---

8. TRANSFER CASE CONTROL MODULE

Using the wiring diagram as a guide, inspect the wiring and connectors relative to this DTC. Inspect all power and ground circuits. Repair as necessary.

If there are no Charging System related DTCs or other possible causes remaining, view repair.

Repair

Replace the Transfer Case Control Module.
Perform TRANSFER CASE VERIFICATION TEST. (Refer to 21 - TRANSMISSION/TRANSAXLE/TRANSFER CASE - DIAGNOSIS AND TESTING)

---

9. INTERMITTENT WIRING AND CONNECTORS

The conditions necessary to set this DTC are not present at this time.

Using the schematics as a guide, inspect the wiring and connectors specific to this circuit.

Wiggle test the wiring harness and connectors while checking for shorted and open circuits.

Using the DRBIII®, monitor the data related to this circuit while performing the wiggle test. Look for the data to change or for the DTC to reset.

Were there any problems found?

Yes >> Repair as necessary.
Perform TRANSFER CASE VERIFICATION TEST. (Refer to 21 - TRANSMISSION/TRANSAXLE/TRANSFER CASE - DIAGNOSIS AND TESTING)

No >> Test Complete.

---

5 VOLT UNDER VOLTAGE

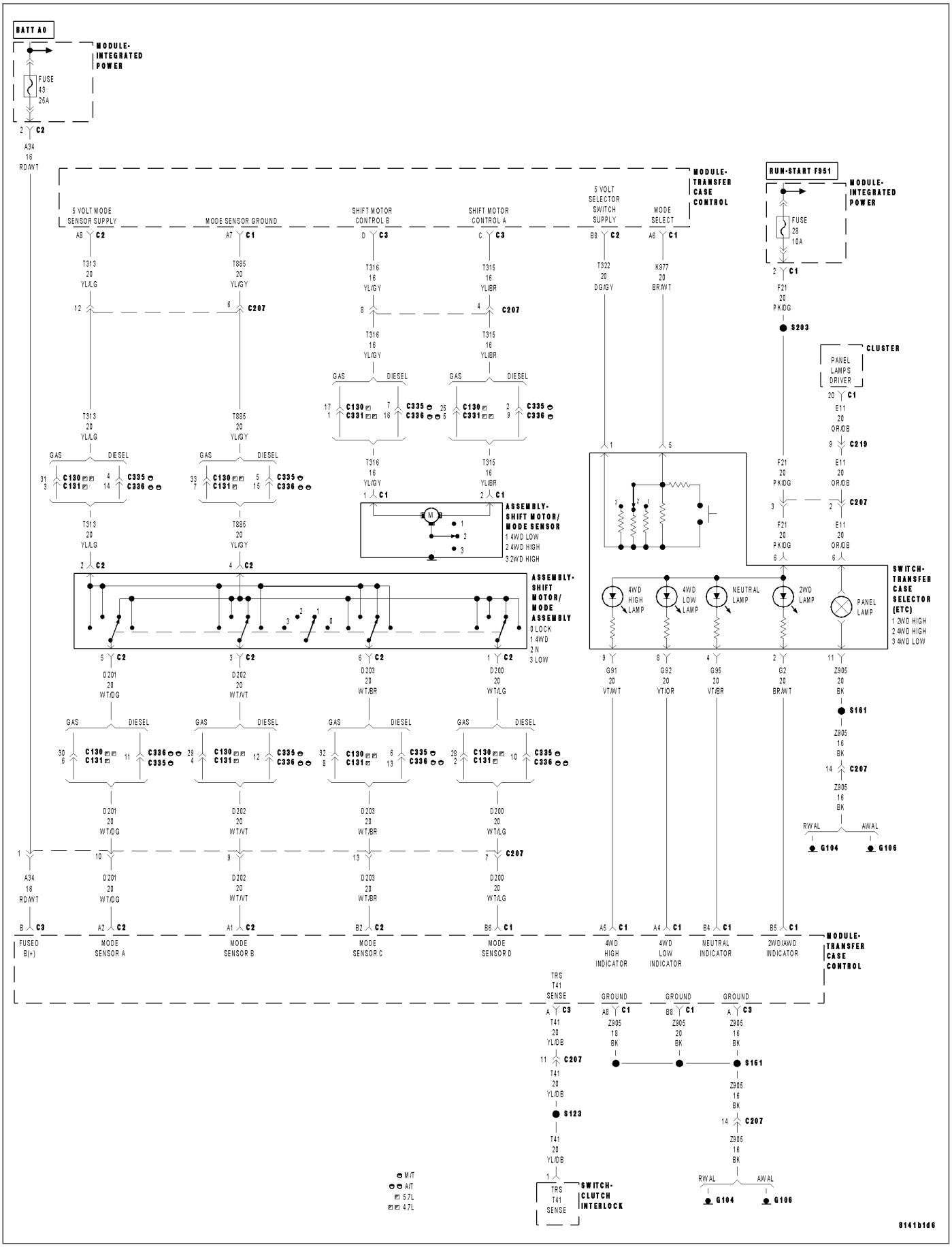

5 VOLT UNDER VOLTAGE (CONTINUED)

For a complete wiring diagram **Refer to Section 8W**.

- **When Monitored:**
  Continuously with the ignition on.
- **Set Condition:**
  The Transfer Case Control Module detects the 5 Volt Supply circuit voltage drops below 4.0 volts for 2 seconds.

Possible Causes
INTERMITTENT 5 VOLT UNDER VOLTAGE
(T322) 5 VOLT SELECTOR SWITCH SUPPLY CIRCUIT OPEN OR HIGH RESISTANCE
(T322) 5 VOLT SELECTOR SWITCH SUPPLY CIRCUIT SHORT TO GROUND
(T313) 5 VOLT MODE SENSOR SUPPLY CIRCUIT OPEN OR HIGH RESISTANCE
(T313) 5 VOLT MODE SENSOR SUPPLY CIRCUIT SHORT TO GROUND
TRANSFER CASE SELECTOR SWITCH
SHIFT MOTOR/MODE SENSOR ASSEMBLY
TRANSFER CASE CONTROL MODULE

1. 5 VOLT UNDER VOLTAGE DTC PRESENT

With the DRBIII®, read Transfer Case DTCs. Record all DTC information.
With the DRBIII®, erase Transfer Case DTCs.
Start the engine and cycle the Transfer Case Selector Switch through all positions.
With the DRBIII®, read Transfer Case DTCs.

Does the DRBIII® display 5 VOLT UNDER VOLTAGE?

Yes >> Go To 2
No >> Go To 11

2. (T313) 5 VOLT MODE SENSOR SUPPLY CIRCUIT VOLTAGE BELOW 4.0 VOLTS

Ignition on, engine not running.
Measure the voltage of the (T313) 5 Volt Mode Sensor Supply circuit by backprobing the Shift Motor/Mode Sensor harness connector.

Is the voltage below 4.0 volts?

Yes >> Go To 3
No >> Go To 6

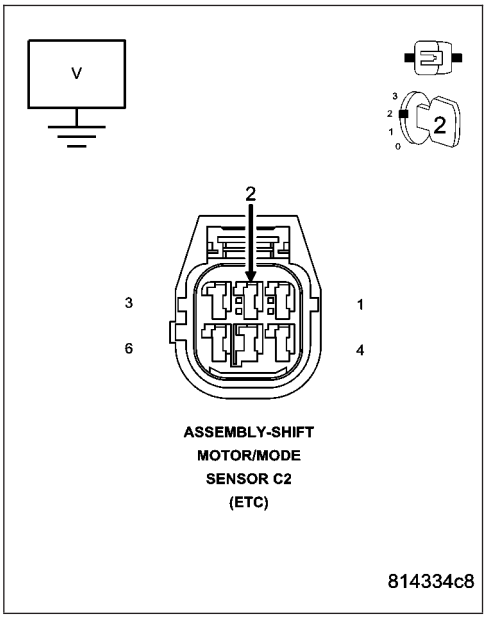

5 VOLT UNDER VOLTAGE (CONTINUED)

3. SHIFT MOTOR/MODE SENSOR ASSEMBLY

Turn the ignition off to the lock position.
Disconnect the Shift Motor/Mode Sensor C2 harness connector.
Turn the ignition on.
Measure the voltage of the (T313) 5 Volt Mode Sensor Supply circuit.

Is the voltage above 4.0 volts?

Yes >> Replace the Shift Motor/Mode Sensor assembly in accordance with the Service Information.
Perform TRANSFER CASE VERIFICATION TEST. (Refer to 21 - TRANSMISSION/TRANSAXLE/TRANSFER CASE - DIAGNOSIS AND TESTING)

No >> Go To 4

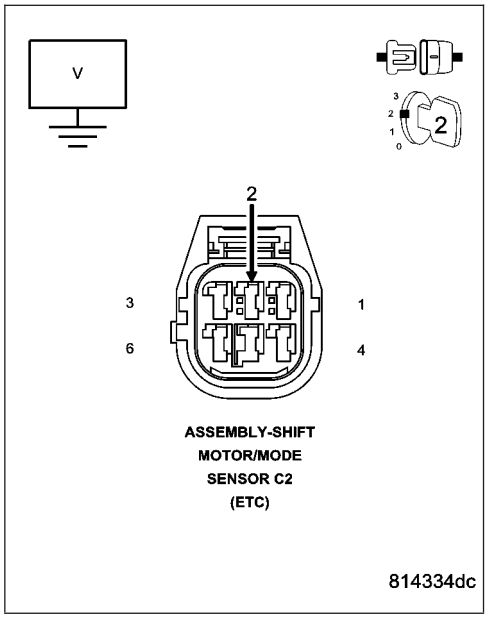

4. (T313) 5 VOLT MODE SENSOR SUPPLY CIRCUIT OPEN OR HIGH RESISTANCE

Turn the ignition off to the lock position.
Disconnect the Transfer Case Control Module C2 harness connector.
Measure the resistance of the (T313) 5 Volt Mode Sensor Supply circuit between the Shift Motor/Mode Sensor harness connector and the Transfer Case Control Module C2 harness connector.

Is the resistance above 5.0 ohms?

Yes >> Repair the (T313) 5 Volt Mode Sensor Supply circuit for an open or high resistance.
Perform TRANSFER CASE VERIFICATION TEST. (Refer to 21 - TRANSMISSION/TRANSAXLE/TRANSFER CASE - DIAGNOSIS AND TESTING)

No >> Go To 5

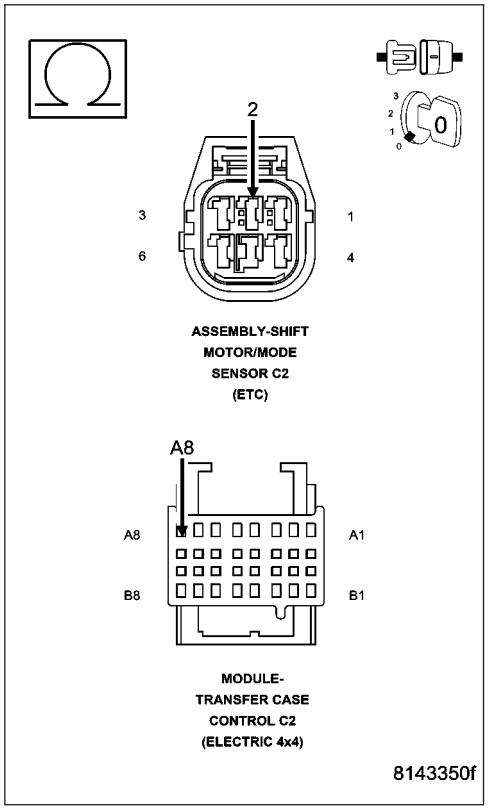

5 VOLT UNDER VOLTAGE (CONTINUED)

5. (T313) 5 VOLT MODE SENSOR SUPPLY CIRCUIT SHORT TO GROUND

Measure the resistance between the (T313) 5 Volt Mode Sensor Supply circuit and ground.

Is the resistance below 5.0 ohms?

Yes >> Repair the (T313) 5 Volt Mode Sensor Supply circuit for a short to ground.
Perform TRANSFER CASE VERIFICATION TEST. (Refer to 21 - TRANSMISSION/TRANSAXLE/TRANSFER CASE - DIAGNOSIS AND TESTING)

No >> Go To 10

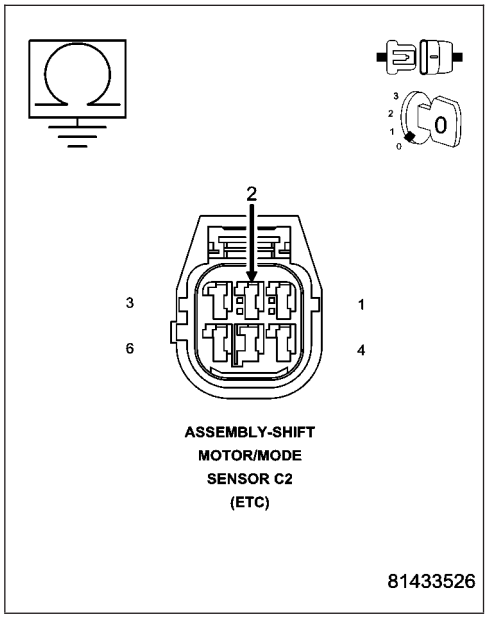

6. (T322) 5 VOLT SELECTOR SWITCH SUPPLY CIRCUIT VOLTAGE BELOW 4.0 VOLTS

Measure the voltage of the (T322) 5 Volt Selector Switch Supply circuit by backprobing the Transfer Case Selector Switch harness connector.

Is the voltage below 4.0 volts?

Yes >> Go To 7

No >> Go To 10

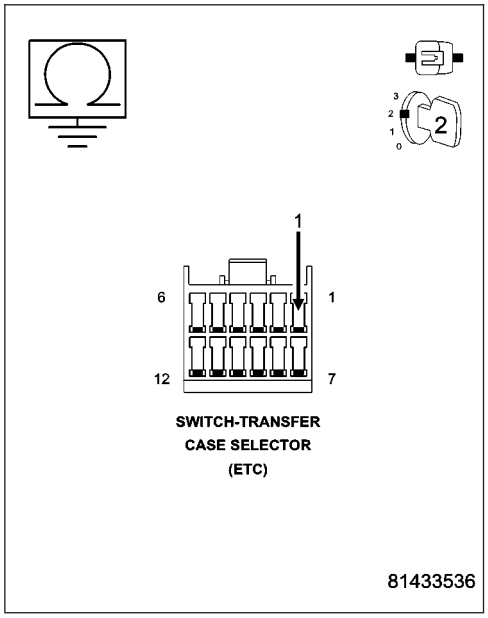

5 VOLT UNDER VOLTAGE (CONTINUED)

7. TRANSFER CASE SELECTOR SWITCH

Turn the ignition off to the lock position.

Disconnect the Transfer Case Selector Switch harness connector.

Turn the ignition on.

Measure the voltage of the (T322) 5 Volt Selector Switch Supply circuit.

Is the voltage above 4.0 volts?

Yes >> Replace the Transfer Case Selector Switch in accordance with the Service Information.
Perform TRANSFER CASE VERIFICATION TEST. (Refer to 21 - TRANSMISSION/TRANSAXLE/TRANSFER CASE - DIAGNOSIS AND TESTING)

No >> Go To 8

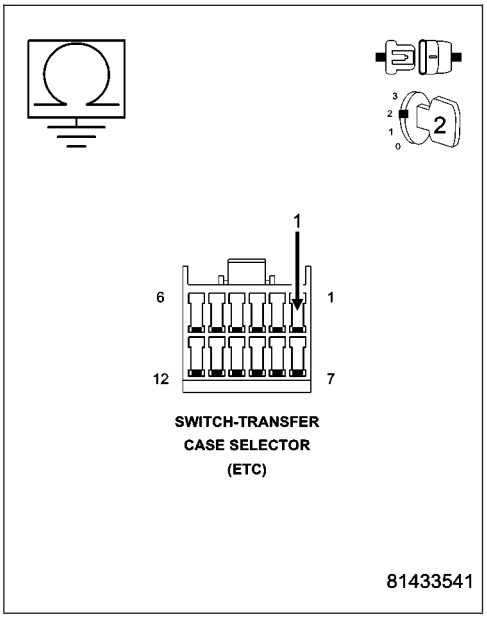

8. (T322) 5 VOLT SELECTOR SWITCH SUPPLY CIRCUIT OPEN OR HIGH RESISTANCE

Turn the ignition off to the lock position.

Disconnect the Transfer Case Control Module C2 harness connector.

Measure the resistance of the (T322) 5 Volt Selector Switch Supply circuit between the Transfer Case Selector Switch harness connector and the Transfer Case Control Module C2 harness connector.

Is the resistance above 5.0 ohms?

Yes >> Repair the (T322) 5 Volt Selector Switch Supply circuit for an open or high resistance.
Perform TRANSFER CASE VERIFICATION TEST. (Refer to 21 - TRANSMISSION/TRANSAXLE/TRANSFER CASE - DIAGNOSIS AND TESTING)

No >> Go To 9

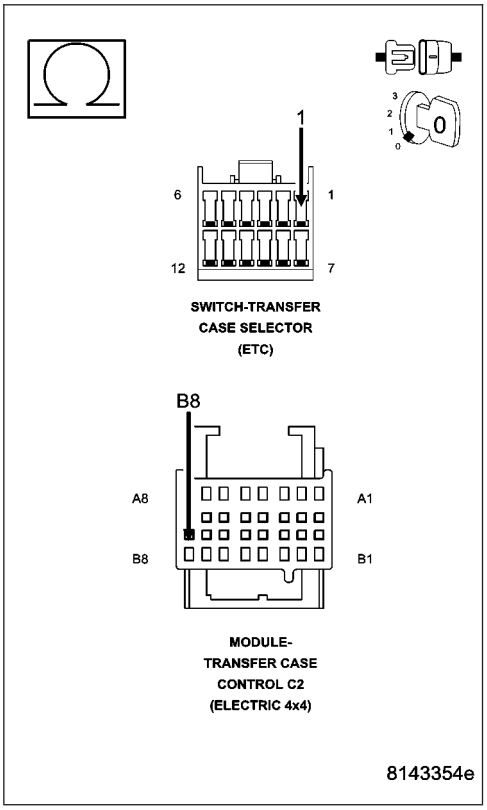

5 VOLT UNDER VOLTAGE (CONTINUED)

9. (T322) 5 VOLT SELECTOR SWITCH SUPPLY CIRCUIT SHORT TO GROUND

Measure the resistance between the (T322) 5 Volt Selector Switch Supply circuit and ground.

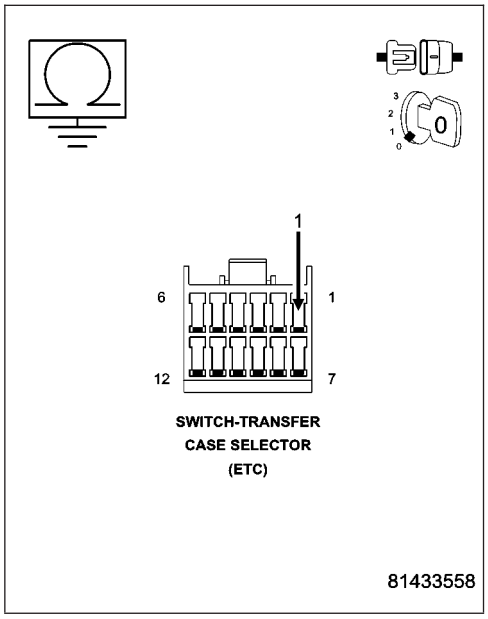

Is the resistance below 5.0 ohms?

Yes >> Repair the (T322) 5 Volt Selector Switch Supply circuit for a short to ground.
Perform TRANSFER CASE VERIFICATION TEST. (Refer to 21 - TRANSMISSION/TRANSAXLE/TRANSFER CASE - DIAGNOSIS AND TESTING)

No >> Go To 10

---

10. TRANSFER CASE CONTROL MODULE

Using the wiring diagram as a guide, inspect the wiring and connectors relative to this DTC. Inspect all power and ground circuits. Repair as necessary.

If there are no other possible causes remaining, view repair.

Repair

Replace the Transfer Case Control Module.
Perform TRANSFER CASE VERIFICATION TEST. (Refer to 21 - TRANSMISSION/TRANSAXLE/TRANSFER CASE - DIAGNOSIS AND TESTING)

---

11. INTERMITTENT WIRING AND CONNECTORS

The conditions necessary to set this DTC are not present at this time.

Using the schematics as a guide, inspect the wiring and connectors specific to this circuit.

Wiggle test the wiring harness and connectors while checking for shorted and open circuits.

Using the DRBIII®, monitor the data related to this circuit while performing the wiggle test. Look for the data to change or for the DTC to reset.

Were there any problems found?

Yes >> Repair as necessary.
Perform TRANSFER CASE VERIFICATION TEST. (Refer to 21 - TRANSMISSION/TRANSAXLE/TRANSFER CASE - DIAGNOSIS AND TESTING)

No >> Test Complete.

INTERNAL ERROR

For a complete wiring diagram **Refer to Section 8W**.

- **When Monitored:**
  Continuously with the ignition on.
- **Set Condition:**
  An internal error has been detected in the Transfer Case Control Module.

Possible Causes
TRANSFER CASE CONTROL MODULE

1. TRANSFER CASE CONTROL MODULE

The Transfer Case Control Module is reporting an internal error.

View repair.

Repair

Replace the Transfer Case Control Module.

Perform TRANSFER CASE VERIFICATION TEST. (Refer to 21 - TRANSMISSION/TRANSAXLE/ TRANSFER CASE - DIAGNOSIS AND TESTING)

MISSING BRAKE INPUT

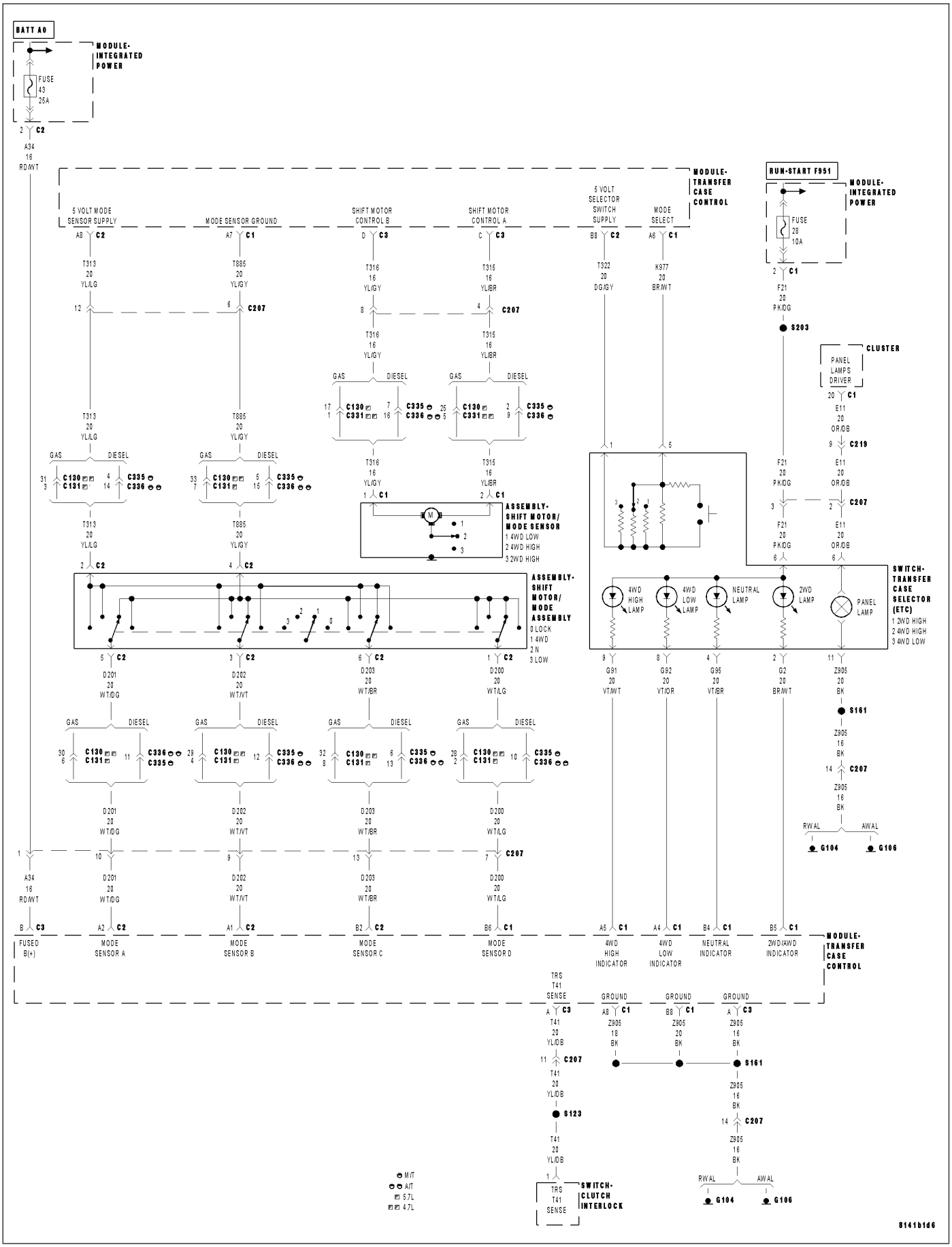

MISSING BRAKE INPUT (CONTINUED)

For a complete wiring diagram **Refer to Section 8W**.

- **When Monitored:**
  Continuously with the ignition on.
- **Set Condition:**
  The Transfer Case Control Module receives no Brake status bus message for 5 seconds.

Possible Causes
PCM COMMUNICATION DTC PRESENT
INTERMITTENT MISSING BRAKE INPUT DTC
TRANSFER CASE CONTROL MODULE

1. COMMUNICATION DTC PRESENT IN PCM

Ignition on, engine not running.
With the DRBIII® under Engine, read DTCs.

Are there any Communication DTCs present in the PCM?

Yes >> Refer to the Communication category and perform the appropriate diagnostic procedure. Perform TRANSFER CASE VERIFICATION TEST.

No >> Go To 2

---

2. MISSING BRAKE INPUT DTC PRESENT

With the DRBIII®, read Transfer Case DTCs. Record all DTC information.
With the DRBIII®, erase Transfer Case DTCs.
Start the engine and allow it to idle for at least 10 seconds.
With the DRBIII®, read Transfer Case DTCs.

Does the DRBIII® display MISSING BRAKE INPUT?

Yes >> Go To 3

No >> Go To 4

---

3. TRANSFER CASE CONTROL MODULE

Using the wiring diagram as a guide, inspect the wiring and connectors relative to this DTC. Inspect all power and ground circuits. Repair as necessary.

If there are no Communication DTCs present or other possible causes remaining, view repair.

Repair

Replace the Transfer Case Control Module.

Perform TRANSFER CASE VERIFICATION TEST. (Refer to 21 - TRANSMISSION/TRANSAXLE/ TRANSFER CASE - DIAGNOSIS AND TESTING)

MISSING BRAKE INPUT (CONTINUED)

4. INTERMITTENT WIRING AND CONNECTORS

The conditions necessary to set this DTC are not present at this time.

Using the schematics as a guide, inspect the wiring and connectors specific to this circuit.

Wiggle test the wiring harness and connectors while checking for shorted and open circuits.

Using the DRBIII®, monitor the data related to this circuit while performing the wiggle test. Look for the data to change or for the DTC to reset.

Were there any problems found?

Yes >> Repair as necessary.
Perform TRANSFER CASE VERIFICATION TEST. (Refer to 21 - TRANSMISSION/TRANSAXLE/ TRANSFER CASE - DIAGNOSIS AND TESTING)

No >> Test Complete.

MISSING ENGINE RPM INPUT

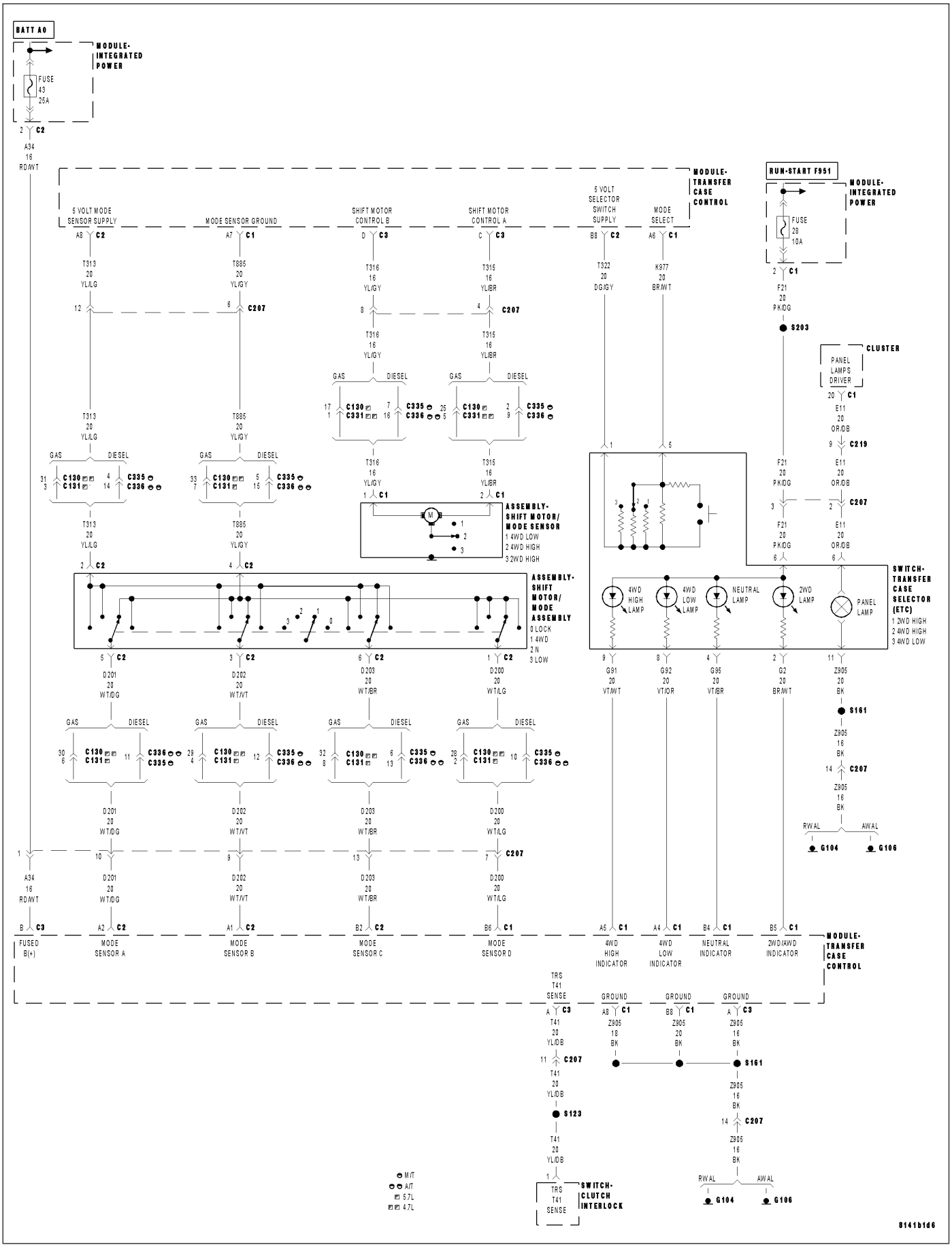

MISSING ENGINE RPM INPUT (CONTINUED)

For a complete wiring diagram **Refer to Section 8W**.

- **When Monitored:**
  Continuously with the ignition on.
- **Set Condition:**
  The Transfer Case Control Module receives no Engine RPM bus message for 5 seconds.

Possible Causes
PCM COMMUNICATION DTC PRESENT
INTERMITTENT MISSING ENGINE RPM INPUT DTC
TRANSFER CASE CONTROL MODULE

1. COMMUNICATION DTC PRESENT IN PCM

Ignition on, engine not running.
With the DRBIII® under Engine, read DTCs.

Are there any Communication DTCs present in the PCM?

Yes >> Refer to the Communication category and perform the appropriate diagnostic procedure.
Perform TRANSFER CASE VERIFICATION TEST.

No >> Go To 2

2. MISSING ENGINE RPM INPUT DTC PRESENT

With the DRBIII®, read Transfer Case DTCs. Record all DTC information.
With the DRBIII®, erase Transfer Case DTCs.
Start the engine and allow it to idle for at least 10 seconds.
With the DRBIII®, read Transfer Case DTCs.

Does the DRBIII® display MISSING ENGINE RPM INPUT?

Yes >> Go To 3

No >> Go To 4

3. TRANSFER CASE CONTROL MODULE

Using the wiring diagram as a guide, inspect the wiring and connectors relative to this DTC. Inspect all power and ground circuits. Repair as necessary.

If there are no Communication DTCs present or other possible causes remaining, view repair.

Repair

Replace the Transfer Case Control Module.

Perform TRANSFER CASE VERIFICATION TEST. (Refer to 21 - TRANSMISSION/TRANSAXLE/ TRANSFER CASE - DIAGNOSIS AND TESTING)

MISSING ENGINE RPM INPUT (CONTINUED)

4. INTERMITTENT WIRING AND CONNECTORS

The conditions necessary to set this DTC are not present at this time.

Using the schematics as a guide, inspect the wiring and connectors specific to this circuit.

Wiggle test the wiring harness and connectors while checking for shorted and open circuits.

Using the DRBIII®, monitor the data related to this circuit while performing the wiggle test. Look for the data to change or for the DTC to reset.

Were there any problems found?

Yes >> Repair as necessary.
Perform TRANSFER CASE VERIFICATION TEST. (Refer to 21 - TRANSMISSION/TRANSAXLE/ TRANSFER CASE - DIAGNOSIS AND TESTING)

No >> Test Complete.

MISSING IGNITION MESSAGE

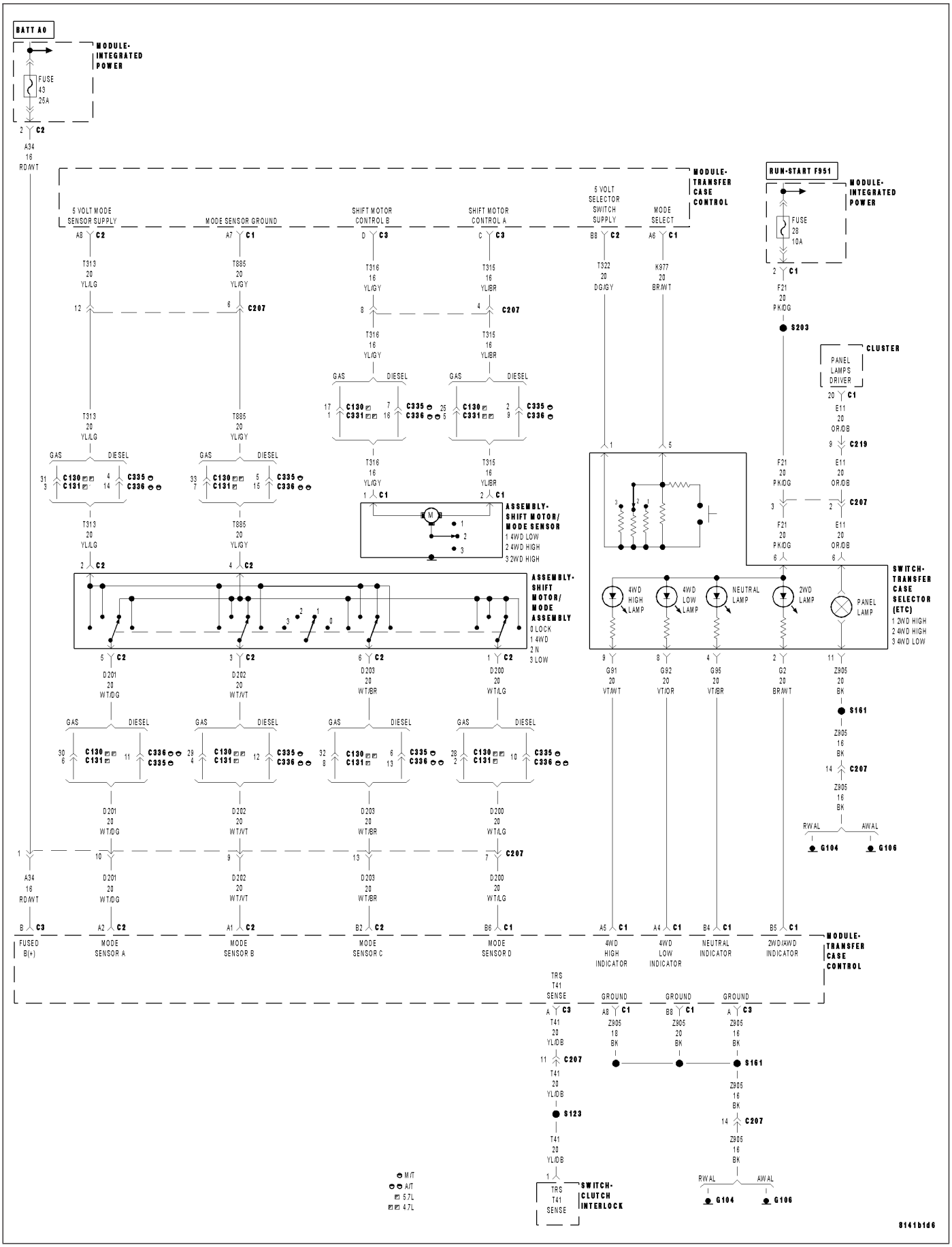

MISSING IGNITION MESSAGE (CONTINUED)

For a complete wiring diagram **Refer to Section 8W**.

- **When Monitored:**
  Continuously with the ignition on.
- **Set Condition:**
  The Transfer Case Control Module receives no Ignition status bus message for 5 seconds.

Possible Causes
CLUSTER COMMUNICATION DTC PRESENT
INTERMITTENT MISSING IGNITION MESSAGE DTC
TRANSFER CASE CONTROL MODULE

1. COMMUNICATION DTC PRESENT IN CLUSTER

Ignition on, engine not running.
With the DRBIII® under Cluster, read DTCs.

Are there any Communication DTCs present in the Cluster?

Yes >> Refer to the Communication category and perform the appropriate diagnostic procedure. Perform TRANSFER CASE VERIFICATION TEST.

No >> Go To 2

---

2. MISSING IGNITION MESSAGE DTC PRESENT

With the DRBIII®, read Transfer Case DTCs. Record all DTC information.
With the DRBIII®, erase Transfer Case DTCs.
Start the engine and allow it to idle for at least 10 seconds.
With the DRBIII®, read Transfer Case DTCs.

Does the DRBIII® display MISSING IGNITION MESSAGE?

Yes >> Go To 3

No >> Go To 4

---

3. TRANSFER CASE CONTROL MODULE

Using the wiring diagram as a guide, inspect the wiring and connectors relative to this DTC. Inspect all power and ground circuits. Repair as necessary.

If there are no Communication DTCs present or other possible causes remaining, view repair.

Repair

Replace the Transfer Case Control Module.

Perform TRANSFER CASE VERIFICATION TEST. (Refer to 21 - TRANSMISSION/TRANSAXLE/ TRANSFER CASE - DIAGNOSIS AND TESTING)

MISSING IGNITION MESSAGE (CONTINUED)

4. INTERMITTENT WIRING AND CONNECTORS

The conditions necessary to set this DTC are not present at this time.

Using the schematics as a guide, inspect the wiring and connectors specific to this circuit.

Wiggle test the wiring harness and connectors while checking for shorted and open circuits.

Using the DRBIII®, monitor the data related to this circuit while performing the wiggle test. Look for the data to change or for the DTC to reset.

Were there any problems found?

Yes >> Repair as necessary.
Perform TRANSFER CASE VERIFICATION TEST. (Refer to 21 - TRANSMISSION/TRANSAXLE/ TRANSFER CASE - DIAGNOSIS AND TESTING)

No >> Test Complete.

MISSING LAMP DIMMING MESSAGE

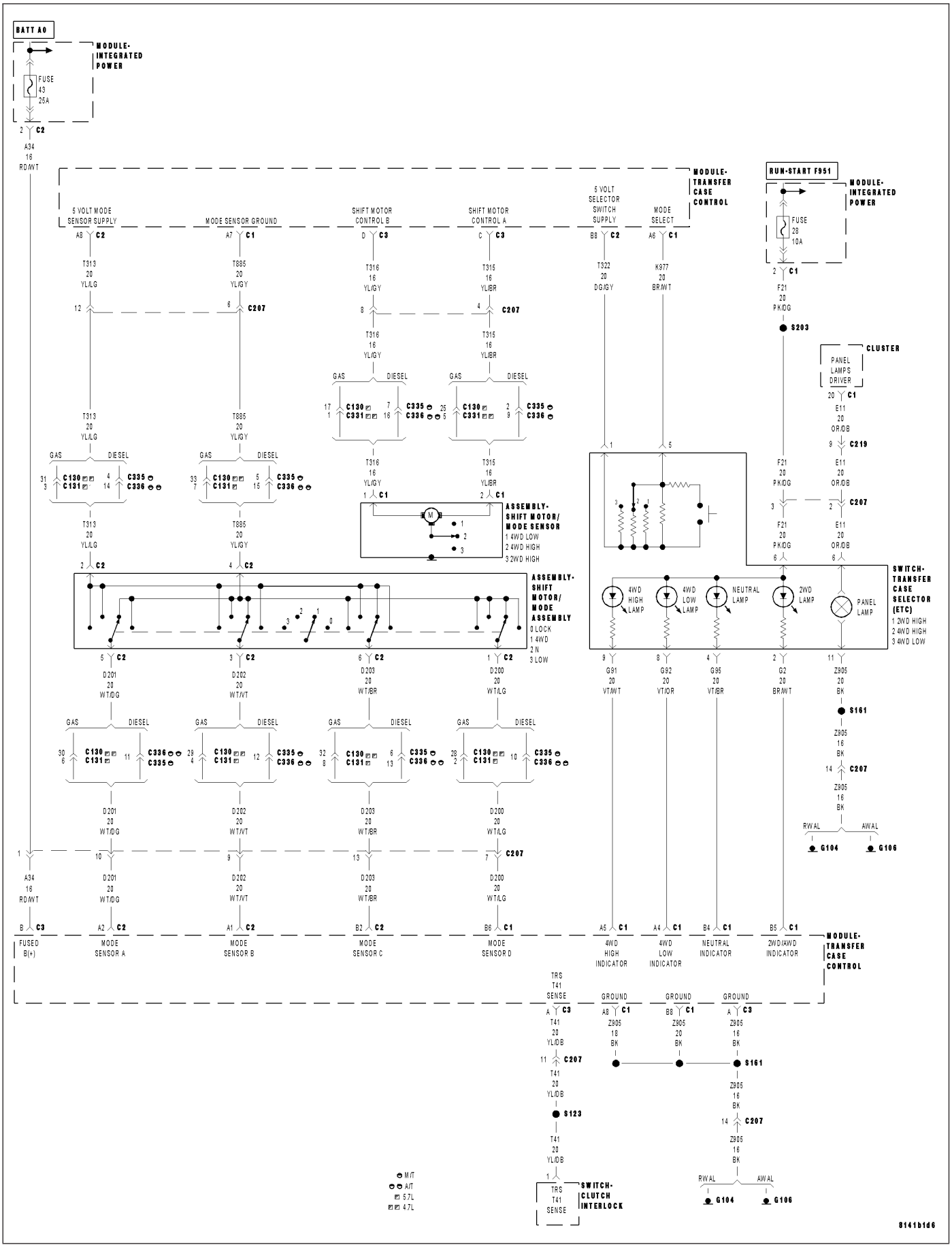

MISSING LAMP DIMMING MESSAGE (CONTINUED)

For a complete wiring diagram **Refer to Section 8W**.

- **When Monitored:**
  Continuously with the ignition on.
- **Set Condition:**
  The Transfer Case Control Module receives no Lamp Dimming bus message for 5 seconds. If this DTC sets, the lamps will illuminate at daytime brightness.

Possible Causes
CLUSTER COMMUNICATION DTC PRESENT
INTERMITTENT MISSING LAMP DIMMING MESSAGE DTC
TRANSFER CASE CONTROL MODULE

1. COMMUNICATION DTC PRESENT IN CLUSTER

Ignition on, engine not running.
With the DRBIII® under Cluster, read DTCs.

Are there any Communication DTCs present in the Cluster?

Yes >> Refer to the Communication category and perform the appropriate diagnostic procedure. Perform TRANSFER CASE VERIFICATION TEST.

No >> Go To 2

---

2. MISSING LAMP DIMMING MESSAGE DTC PRESENT

With the DRBIII®, read Transfer Case DTCs. Record all DTC information.
With the DRBIII®, erase Transfer Case DTCs.
Start the engine and allow it to idle for at least 10 seconds.
With the DRBIII®, read Transfer Case DTCs.

Does the DRBIII® display MISSING LAMP DIMMING MESSAGE?

Yes >> Go To 3

No >> Go To 4

---

3. TRANSFER CASE CONTROL MODULE

Using the wiring diagram as a guide, inspect the wiring and connectors relative to this DTC. Inspect all power and ground circuits. Repair as necessary.

If there are no Communication DTCs present or other possible causes remaining, view repair.

Repair

Replace the Transfer Case Control Module.

Perform TRANSFER CASE VERIFICATION TEST. (Refer to 21 - TRANSMISSION/TRANSAXLE/ TRANSFER CASE - DIAGNOSIS AND TESTING)

MISSING LAMP DIMMING MESSAGE (CONTINUED)

4. INTERMITTENT WIRING AND CONNECTORS

The conditions necessary to set this DTC are not present at this time.

Using the schematics as a guide, inspect the wiring and connectors specific to this circuit.

Wiggle test the wiring harness and connectors while checking for shorted and open circuits.

Using the DRBIII®, monitor the data related to this circuit while performing the wiggle test. Look for the data to change or for the DTC to reset.

Were there any problems found?

Yes >> Repair as necessary.
Perform TRANSFER CASE VERIFICATION TEST. (Refer to 21 - TRANSMISSION/TRANSAXLE/ TRANSFER CASE - DIAGNOSIS AND TESTING)

No >> Test Complete.

MISSING SPEED DIFFERENCE MESSAGE

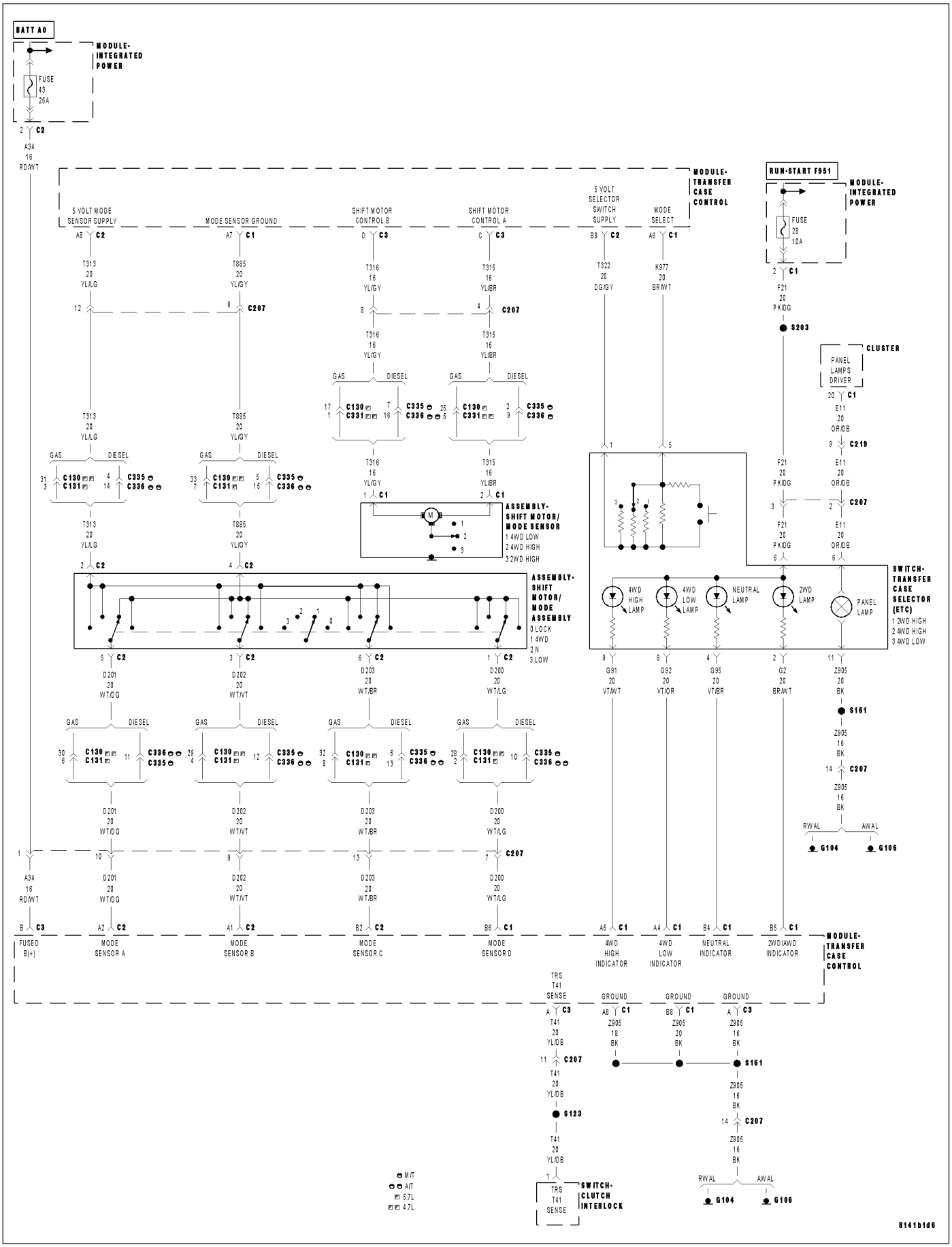

MISSING SPEED DIFFERENCE MESSAGE (CONTINUED)

For a complete wiring diagram **Refer to Section 8W**.

- **When Monitored:**
  When the Transfer Case Control Module receives a request to shift while vehicle speed is greater than 0 m.p.h.
- **Set Condition:**
  The Transfer Case Control Module receives no ABS bus message for 5 seconds.

Possible Causes
COMMUNICATION DTCS PRESENT
ABS DTCS PRESENT
INTERMITTENT MISSING SPEED DIFFERENCE MESSAGE DTC
TRANSFER CASE CONTROL MODULE

1. COMMUNICATION DTCS PRESENT

Ignition on, engine not running.
With the DRBIII®, read DTCs in all modules.

Are there any Communication DTCs present?

Yes >> Refer to the Communication category and perform the appropriate diagnostic procedure.
Perform TRANSFER CASE VERIFICATION TEST.

No >> Go To 2

---

2. ABS DTCS PRESENT

With the DRBIII®, read ABS DTCs.

Are there any DTCs present in the ABS module?

Yes >> Perform the appropriate diagnostic procedure.
Perform TRANSFER CASE VERIFICATION TEST. (Refer to 21 - TRANSMISSION/TRANSAXLE/ TRANSFER CASE - DIAGNOSIS AND TESTING)

No >> Go To 3

---

3. MISSING SPEED DIFFERENCE MESSAGE DTC PRESENT

With the DRBIII®, read Transfer Case DTCs. Record all DTC information.
With the DRBIII®, erase Transfer Case DTCs.
Start the engine and allow it to idle for at least 10 seconds.
Move the Transfer Case Mode Selector Switch to each position.
With the DRBIII®, read Transfer Case DTCs.

Does the DRBIII® display MISSING SPEED DIFFERENCE MESSAGE?

Yes >> Go To 4

No >> Go To 5

MISSING SPEED DIFFERENCE MESSAGE (CONTINUED)

4. TRANSFER CASE CONTROL MODULE

Using the wiring diagram as a guide, inspect the wiring and connectors relative to this DTC. Inspect all power and ground circuits. Repair as necessary.

If there are no Communication DTCs present or other possible causes remaining, view repair.

Repair

Replace the Transfer Case Control Module.

Perform TRANSFER CASE VERIFICATION TEST. (Refer to 21 - TRANSMISSION/TRANSAXLE/ TRANSFER CASE - DIAGNOSIS AND TESTING)

---

5. INTERMITTENT WIRING AND CONNECTORS

The conditions necessary to set this DTC are not present at this time.

Using the schematics as a guide, inspect the wiring and connectors specific to this circuit.

Wiggle test the wiring harness and connectors while checking for shorted and open circuits.

Using the DRBIII®, monitor the data related to this circuit while performing the wiggle test. Look for the data to change or for the DTC to reset.

Were there any problems found?

Yes >> Repair as necessary.

Perform TRANSFER CASE VERIFICATION TEST. (Refer to 21 - TRANSMISSION/TRANSAXLE/ TRANSFER CASE - DIAGNOSIS AND TESTING)

No >> Test Complete.

MISSING TRANSFER CASE TYPE

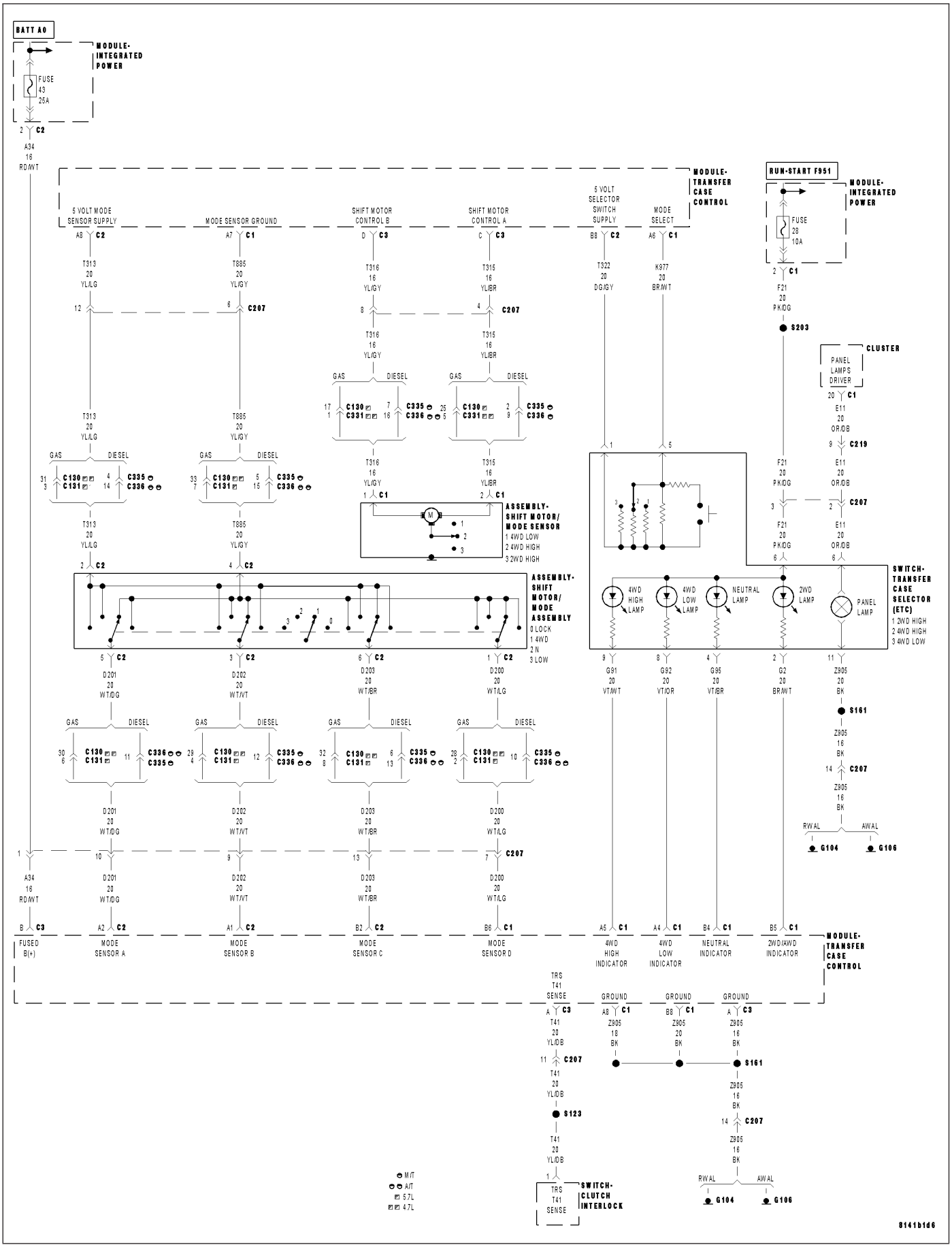

MISSING TRANSFER CASE TYPE (CONTINUED)

For a complete wiring diagram **Refer to Section 8W**.

- **When Monitored:**
  Continuously with the ignition on.
- **Set Condition:**
  The Transfer Case Control Module receives no bus message identifying the transfer case type for 5 seconds.

Possible Causes
PCM COMMUNICATION DTC PRESENT
INTERMITTENT MISSING TRANSFER CASE TYPE DTC
TRANSFER CASE CONTROL MODULE

1. COMMUNICATION DTC PRESENT IN PCM

Ignition on, engine not running.
With the DRBIII® under Engine, read DTCs.

Are there any Communication DTCs present in the PCM?

Yes >> Refer to the Communication category and perform the appropriate diagnostic procedure.
Perform TRANSFER CASE VERIFICATION TEST. (Refer to 21 - TRANSMISSION/TRANSAXLE/ TRANSFER CASE - DIAGNOSIS AND TESTING)

No >> Go To 2

---

2. MISSING TRANSFER CASE TYPE DTC PRESENT

With the DRBIII®, read Transfer Case DTCs. Record all DTC information.
With the DRBIII®, erase Transfer Case DTCs.
Start the engine and allow it to idle for at least 10 seconds.
With the DRBIII®, read Transfer Case DTCs.

Does the DRBIII® display MISSING TRANSFER CASE TYPE?

Yes >> Go To 3

No >> Go To 4

---

3. TRANSFER CASE CONTROL MODULE

Using the wiring diagram as a guide, inspect the wiring and connectors relative to this DTC. Inspect all power and ground circuits. Repair as necessary.

If there are no Communication DTCs present or other possible causes remaining, view repair.

Repair

Replace the Transfer Case Control Module.
Perform TRANSFER CASE VERIFICATION TEST. (Refer to 21 - TRANSMISSION/TRANSAXLE/ TRANSFER CASE - DIAGNOSIS AND TESTING)

MISSING TRANSFER CASE TYPE (CONTINUED)

4. INTERMITTENT WIRING AND CONNECTORS

The conditions necessary to set this DTC are not present at this time.

Using the schematics as a guide, inspect the wiring and connectors specific to this circuit.

Wiggle test the wiring harness and connectors while checking for shorted and open circuits.

Using the DRBIII®, monitor the data related to this circuit while performing the wiggle test. Look for the data to change or for the DTC to reset.

Were there any problems found?

Yes >> Repair as necessary.
Perform TRANSFER CASE VERIFICATION TEST. (Refer to 21 - TRANSMISSION/TRANSAXLE/ TRANSFER CASE - DIAGNOSIS AND TESTING)

No >> Test Complete.

MISSING TRANSMISSION POSITION INPUT

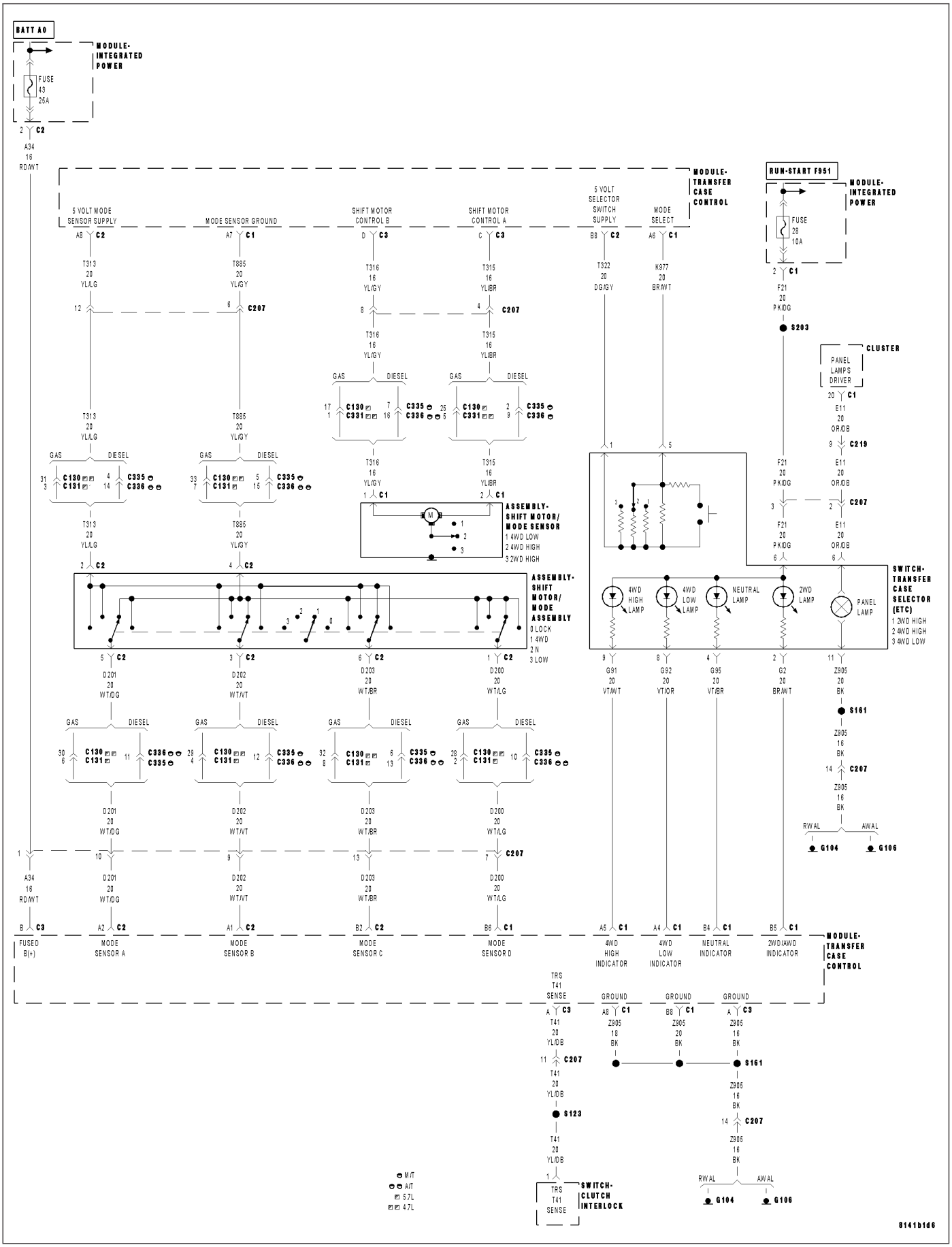

MISSING TRANSMISSION POSITION INPUT (CONTINUED)

For a complete wiring diagram **Refer to Section 8W**.

- **When Monitored:**
  Continuously with the ignition on.
- **Set Condition:**
  The Transfer Case Control Module receives no Transmission Position bus message for 5 seconds.

Possible Causes
COMMUNICATION DTC PRESENT
CLUSTER DTC PRESENT
TRANSMISSION DTC PRESENT
INTERMITTENT MISSING TRANSMISSION POSITION INPUT DTC
TRANSFER CASE CONTROL MODULE

1. COMMUNICATION DTCS PRESENT

Ignition on, engine not running.
With the DRBIII®, read Engine DTCs.

Are there any Communication DTCs present?

Yes >> Refer to the Communication category and perform the appropriate diagnostic procedure.
Perform TRANSFER CASE VERIFICATION TEST. (Refer to 21 - TRANSMISSION/TRANSAXLE/ TRANSFER CASE - DIAGNOSIS AND TESTING)

No >> Go To 2

---

2. CLUSTER DTCS PRESENT

With the DRBIII®, read Cluster DTCs.

Are there any DTCs present in the Instrument Cluster?

Yes >> Perform the appropriate diagnostic procedure.
Perform TRANSFER CASE VERIFICATION TEST. (Refer to 21 - TRANSMISSION/TRANSAXLE/ TRANSFER CASE - DIAGNOSIS AND TESTING)

No >> Go To 3

---

3. TRANSMISSION DTCS PRESENT

With the DRBIII®, read Transmission DTCs.

Are there any DTCs present in the Transmission module?

Yes >> Perform the appropriate diagnostic procedure.
Perform TRANSFER CASE VERIFICATION TEST. (Refer to 21 - TRANSMISSION/TRANSAXLE/ TRANSFER CASE - DIAGNOSIS AND TESTING)

No >> Go To 4

MISSING TRANSMISSION POSITION INPUT (CONTINUED)

4. MISSING TRANSMISSION POSITION INPUT DTC PRESENT

With the DRBIII®, read Transfer Case DTCs. Record all DTC information.
With the DRBIII®, erase Transfer Case DTCs.
Start the engine and allow it to idle for at least 10 seconds.
Move the Transfer Case Mode Selector Switch to each position.
With the DRBIII®, read Transfer Case DTCs.

Does the DRBIII® display MISSING TRANSMISSION POSITION INPUT?

Yes >> Go To 5

No >> Go To 6

---

5. TRANSFER CASE CONTROL MODULE

Using the wiring diagram as a guide, inspect the wiring and connectors relative to this DTC. Inspect all power and ground circuits. Repair as necessary.

If there are no Communication DTCs present or other possible causes remaining, view repair.

Repair

Replace the Transfer Case Control Module.
Perform TRANSFER CASE VERIFICATION TEST. (Refer to 21 - TRANSMISSION/TRANSAXLE/ TRANSFER CASE - DIAGNOSIS AND TESTING)

---

6. INTERMITTENT WIRING AND CONNECTORS

The conditions necessary to set this DTC are not present at this time.
Using the schematics as a guide, inspect the wiring and connectors specific to this circuit.
Wiggle test the wiring harness and connectors while checking for shorted and open circuits.
Using the DRBIII®, monitor the data related to this circuit while performing the wiggle test. Look for the data to change or for the DTC to reset.

Were there any problems found?

Yes >> Repair as necessary.
Perform TRANSFER CASE VERIFICATION TEST. (Refer to 21 - TRANSMISSION/TRANSAXLE/ TRANSFER CASE - DIAGNOSIS AND TESTING)

No >> Test Complete.

MISSING TRANSMISSION TYPE

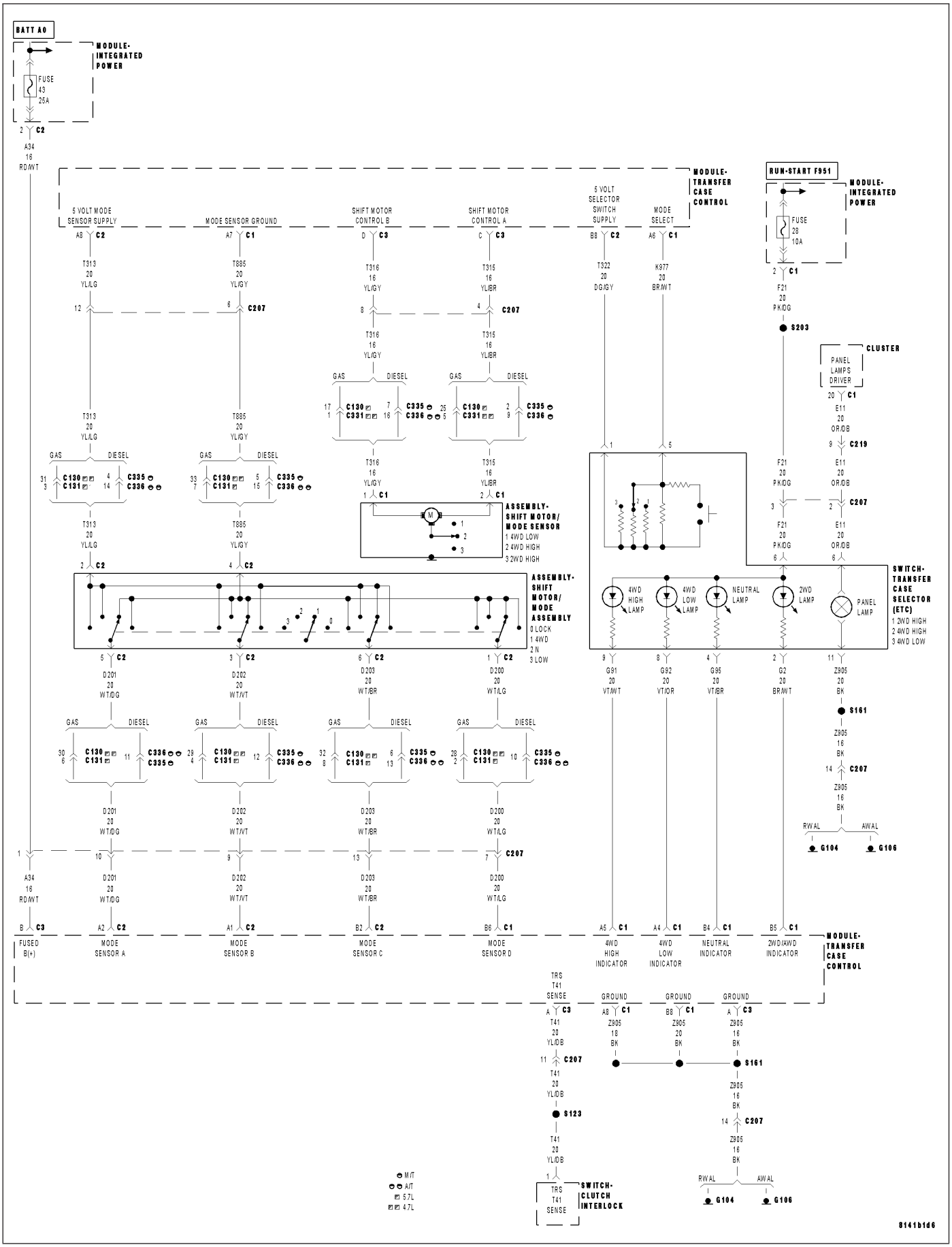

MISSING TRANSMISSION TYPE (CONTINUED)

For a complete wiring diagram **Refer to Section 8W**.

- **When Monitored:**
  Continuously with the ignition on.
- **Set Condition:**
  The Transfer Case Control Module receives no ABS bus message for 5 seconds.

Possible Causes
COMMUNICATION DTCS PRESENT
INTERMITTENT MISSING TRANSMISSION TYPE DTC
TRANSFER CASE CONTROL MODULE

1. COMMUNICATION DTCS PRESENT

Ignition on, engine not running.
With the DRBIII®, read DTCs in all modules.

Are there any Communication DTCs present?

Yes >> Refer to the Communication category and perform the appropriate diagnostic procedure.
Perform TRANSFER CASE VERIFICATION TEST. (Refer to 21 - TRANSMISSION/TRANSAXLE/ TRANSFER CASE - DIAGNOSIS AND TESTING)

No >> Go To 2

---

2. MISSING TRANSMISSION TYPE DTC PRESENT

With the DRBIII®, read Transfer Case DTCs. Record all DTC information.
With the DRBIII®, erase Transfer Case DTCs.
Start the engine and allow it to idle for at least 10 seconds.
Move the Transfer Case Mode Selector Switch to each position.
With the DRBIII®, read Transfer Case DTCs.

Does the DRBIII® display MISSING TRANSMISSION TYPE?

Yes >> Go To 3

No >> Go To 4

---

3. TRANSFER CASE CONTROL MODULE

Using the wiring diagram as a guide, inspect the wiring and connectors relative to this DTC. Inspect all power and ground circuits. Repair as necessary.

If there are no Communication DTCs present or other possible causes remaining, view repair.

Repair

Replace the Transfer Case Control Module.
Perform TRANSFER CASE VERIFICATION TEST. (Refer to 21 - TRANSMISSION/TRANSAXLE/ TRANSFER CASE - DIAGNOSIS AND TESTING)

MISSING TRANSMISSION TYPE (CONTINUED)

4. INTERMITTENT WIRING AND CONNECTORS

The conditions necessary to set this DTC are not present at this time.

Using the schematics as a guide, inspect the wiring and connectors specific to this circuit.

Wiggle test the wiring harness and connectors while checking for shorted and open circuits.

Using the DRBIII®, monitor the data related to this circuit while performing the wiggle test. Look for the data to change or for the DTC to reset.

Were there any problems found?

Yes >> Repair as necessary.
Perform TRANSFER CASE VERIFICATION TEST. (Refer to 21 - TRANSMISSION/TRANSAXLE/ TRANSFER CASE - DIAGNOSIS AND TESTING)

No >> Test Complete.

MISSING VEHICLE SPEED INPUT

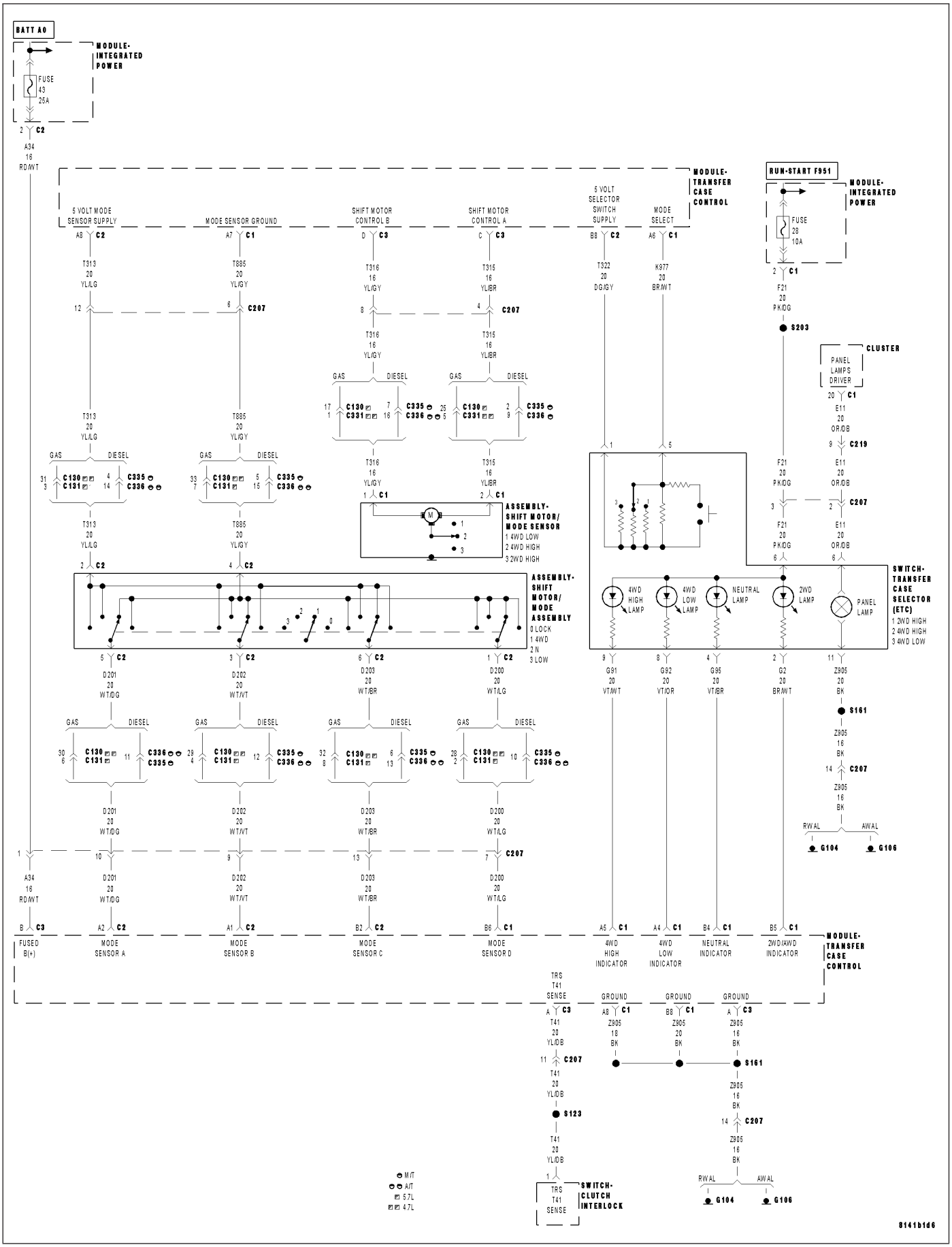

MISSING VEHICLE SPEED INPUT (CONTINUED)

For a complete wiring diagram **Refer to Section 8W**.

- **When Monitored:**
  Continuously with the ignition on.
- **Set Condition:**
  The Transfer Case Control Module receives no Vehicle Speed bus message for 5 seconds.

Possible Causes
VERIFY CLUSTER CALIBRATION POINTS
PCM COMMUNICATION DTCS PRESENT
INTERMITTENT MISSING VEHICLE SPEED INPUT DTC
TRANSFER CASE CONTROL MODULE

1. VERIFY CLUSTER CALIBRATION POINTS

Ignition on, engine not running.

With the DRBIII® under System Tests, select CLUSTER CALIBRATION POINTS, and perform the test for the Speedometer.

Verify the Speedometer calibration at each of the test points.

Does the Speedometer respond correctly at each of the calibration points?

Yes >> Go To 2

No >> Replace the Instrument Cluster in accordance with the Service Information.
Perform TRANSFER CASE VERIFICATION TEST. (Refer to 21 - TRANSMISSION/TRANSAXLE/ TRANSFER CASE - DIAGNOSIS AND TESTING)

---

2. PCM COMMUNICATION DTCS PRESENT

With the DRBIII®, read PCM DTCs.

Are there any Communication DTCs present?

Yes >> Refer to the Communication category and perform the appropriate diagnostic procedure.
Perform TRANSFER CASE VERIFICATION TEST. (Refer to 21 - TRANSMISSION/TRANSAXLE/ TRANSFER CASE - DIAGNOSIS AND TESTING)

No >> Go To 3

---

3. MISSING VEHICLE SPEED INPUT DTC PRESENT

With the DRBIII®, read Transfer Case DTCs. Record all DTC information.

With the DRBIII®, erase Transfer Case DTCs.

Start the engine and allow it to idle for at least 10 seconds.

Move the Transfer Case Mode Selector Switch to each position.

With the DRBIII®, read Transfer Case DTCs.

Does the DRBIII® display MISSING VEHICLE SPEED INPUT?

Yes >> Go To 4

No >> Go To 5

MISSING VEHICLE SPEED INPUT (CONTINUED)

4. TRANSFER CASE CONTROL MODULE

Using the wiring diagram as a guide, inspect the wiring and connectors relative to this DTC. Inspect all power and ground circuits. Repair as necessary.

If there are no Communication DTCs present or other possible causes remaining, view repair.

Repair

Replace the Transfer Case Control Module.

Perform TRANSFER CASE VERIFICATION TEST. (Refer to 21 - TRANSMISSION/TRANSAXLE/ TRANSFER CASE - DIAGNOSIS AND TESTING)

---

5. INTERMITTENT WIRING AND CONNECTORS

The conditions necessary to set this DTC are not present at this time.

Using the schematics as a guide, inspect the wiring and connectors specific to this circuit.

Wiggle test the wiring harness and connectors while checking for shorted and open circuits.

Using the DRBIII®, monitor the data related to this circuit while performing the wiggle test. Look for the data to change or for the DTC to reset.

Were there any problems found?

Yes >> Repair as necessary.

Perform TRANSFER CASE VERIFICATION TEST. (Refer to 21 - TRANSMISSION/TRANSAXLE/ TRANSFER CASE - DIAGNOSIS AND TESTING)

No >> Test Complete.

NEUTRAL INDICATOR OPEN

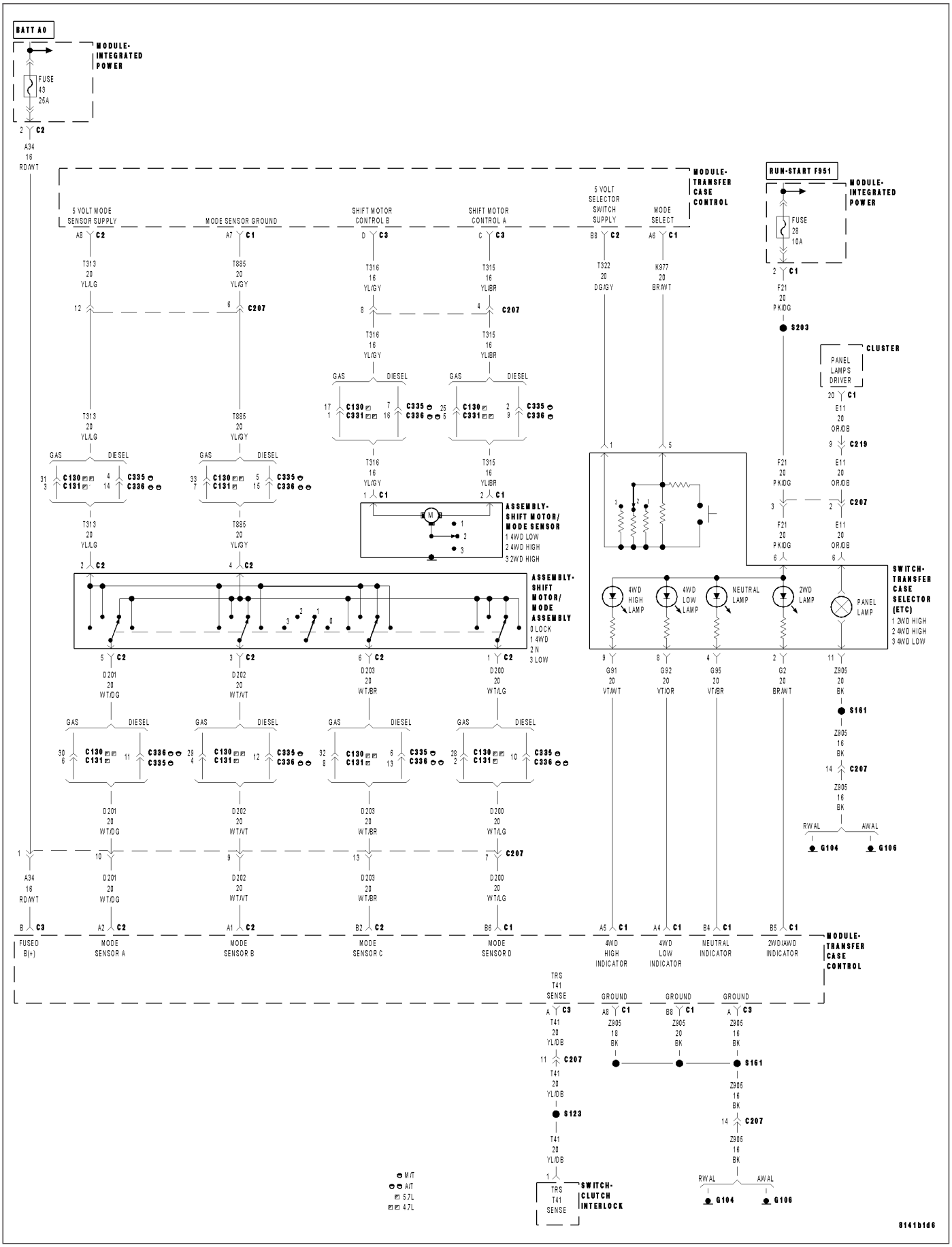

NEUTRAL INDICATOR OPEN (CONTINUED)

For a complete wiring diagram **Refer to Section 8W**.

- **When Monitored:**
  Continuously with the ignition on.
- **Set Condition:**
  The Transfer Case Control Module detects an open circuit or high voltage on the (G95) Neutral Indicator circuit.

Possible Causes
INTERMITTENT NEUTRAL INDICATOR OPEN
(G95) NEUTRAL INDICATOR CIRCUIT OPEN
(G95) NEUTRAL INDICATOR CIRCUIT SHORT TO VOLTAGE
(F21) FUSED IGNITION SWITCH OUTPUT CIRCUIT OPEN
TRANSFER CASE SELECTOR SWITCH
TRANSFER CASE CONTROL MODULE

1. NEUTRAL INDICATOR OPEN DTC IS PRESENT

With the DRBIII®, read Transfer Case DTCs. Record all DTC information.
With the DRBIII®, erase Transfer Case DTCs.
Start the engine and move the Transfer Case Selector Switch to each position.
With the DRBIII®, read Transfer Case DTCs.

Does the DRBIII® display NEUTRAL INDICATOR OPEN?

Yes >> Go To 2
No >> Go To 7

NEUTRAL INDICATOR OPEN (CONTINUED)

2. (G95) NEUTRAL INDICATOR CIRCUIT OPEN

Turn the ignition off to the lock position.

Disconnect the Transfer Case Control Module C1 harness connector.

Disconnect the Transfer Case Selector Switch harness connector.

NOTE: Note: Check connectors - Clean/repair as necessary.

Measure the resistance of the (G95) Neutral Indicator circuit from the Transfer Case Control Module C1 harness connector to the Transfer Case Selector Switch harness connector.

Is the resistance above 5.0 ohms?

Yes >> Repair the (G95) Neutral Indicator circuit for an open.
Perform TRANSFER CASE VERIFICATION TEST. (Refer to 21 - TRANSMISSION/TRANSAXLE/TRANSFER CASE - DIAGNOSIS AND TESTING)

No >> Go To 3

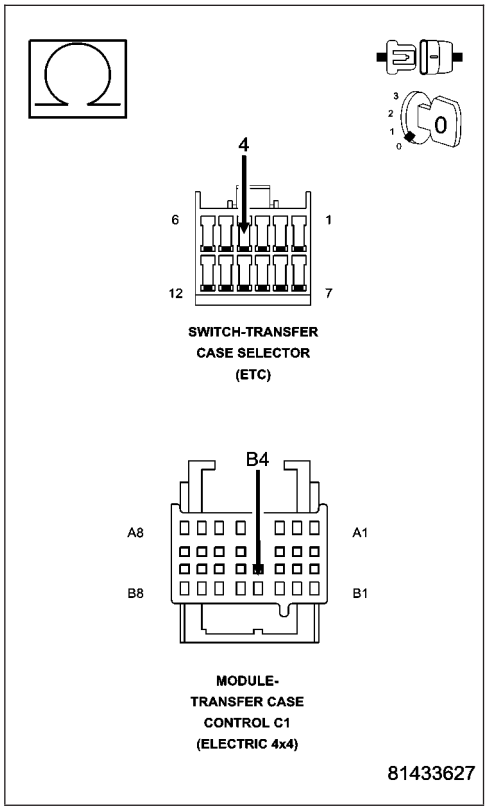

3. (G95) NEUTRAL INDICATOR CIRCUIT SHORT TO VOLTAGE

Ignition on, engine not running.

Measure the voltage of the (G95) Neutral Indicator circuit.

Is the voltage above 0.5 volt?

Yes >> Repair the (G95) Neutral Indicator circuit for a short to voltage.
Perform TRANSFER CASE VERIFICATION TEST. (Refer to 21 - TRANSMISSION/TRANSAXLE/TRANSFER CASE - DIAGNOSIS AND TESTING)

No >> Go To 4

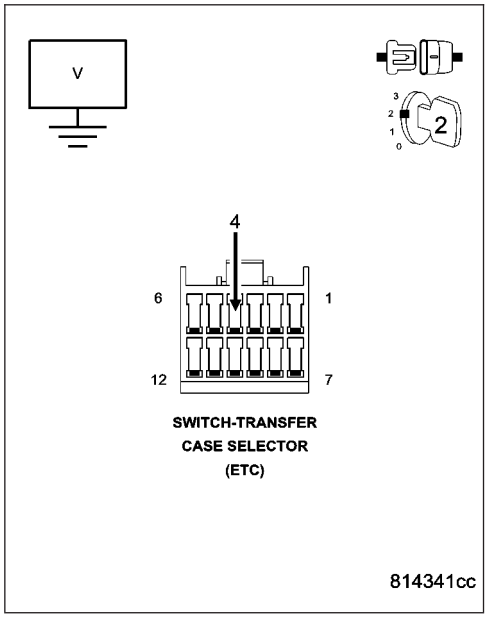

NEUTRAL INDICATOR OPEN (CONTINUED)

4. (F21) FUSED IGNITION SWITCH OUTPUT CIRCUIT OPEN

Using a 12-volt test light connected to ground, check the (F21) Fused Ignition Switch Output circuit.

NOTE: The test light must illuminate brightly. Compare the brightness to that of a direct connection to the battery.

Does the test light illuminate brightly?

Yes >> Go To 5

No >> Repair the (F21) Fused Ignition Switch Output circuit for an open circuit or for high resistance. If the fuse is open make sure to check for a short to ground and repair as necessary.

Perform TRANSFER CASE VERIFICATION TEST. (Refer to 21 - TRANSMISSION/TRANSAXLE/TRANSFER CASE - DIAGNOSIS AND TESTING)

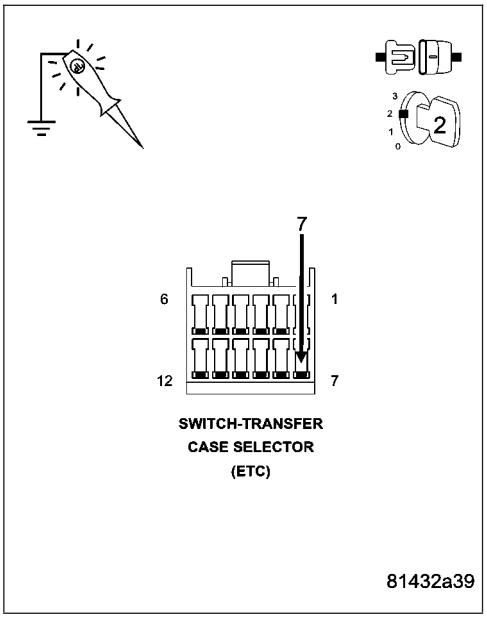

5. TRANSFER CASE SELECTOR SWITCH

Turn the ignition off to the lock position.

Connect the Transfer Case Control Module C1 harness connector.

Ignition on, engine not running.

With the DRBIII®, actuate the Neutral LED.

With a 12–volt test light connected to B+, check the (G95) Neutral Indicator circuit in the Transfer Case Selector Switch harness connector.

Does the test light illuminate when the circuit is actuated?

Yes >> Replace the Transfer Case Selector Switch in accordance with the Service Information.

Perform TRANSFER CASE VERIFICATION TEST. (Refer to 21 - TRANSMISSION/TRANSAXLE/TRANSFER CASE - DIAGNOSIS AND TESTING)

No >> Go To 6

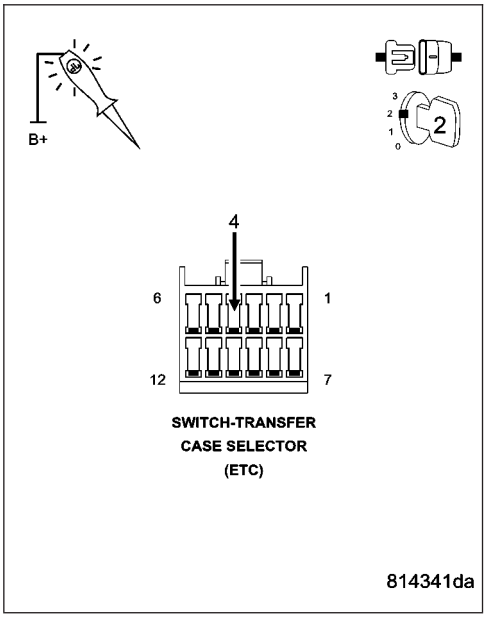

NEUTRAL INDICATOR OPEN (CONTINUED)

6. TRANSFER CASE CONTROL MODULE

Using the wiring diagram as a guide, inspect the wiring and connectors relative to this DTC. Inspect all power and ground circuits. Repair as necessary.

If there are no other possible causes remaining, view repair.

Repair

Replace the Transfer Case Control Module in accordance with the Service Information.

Perform TRANSFER CASE VERIFICATION TEST. (Refer to 21 - TRANSMISSION/TRANSAXLE/ TRANSFER CASE - DIAGNOSIS AND TESTING)

---

7. INTERMITTENT WIRING AND CONNECTORS

The conditions necessary to set this DTC are not present at this time.

Using the schematics as a guide, inspect the wiring and connectors specific to this circuit.

Wiggle test the wiring harness and connectors while checking for shorted and open circuits.

Using the DRBIII®, monitor the data related to this circuit while performing the wiggle test. Look for the data to change or for the DTC to reset.

Were there any problems found?

Yes >> Repair as necessary.

Perform TRANSFER CASE VERIFICATION TEST. (Refer to 21 - TRANSMISSION/TRANSAXLE/ TRANSFER CASE - DIAGNOSIS AND TESTING)

No >> Test Complete.

NEUTRAL INDICATOR SHORT TO GROUND

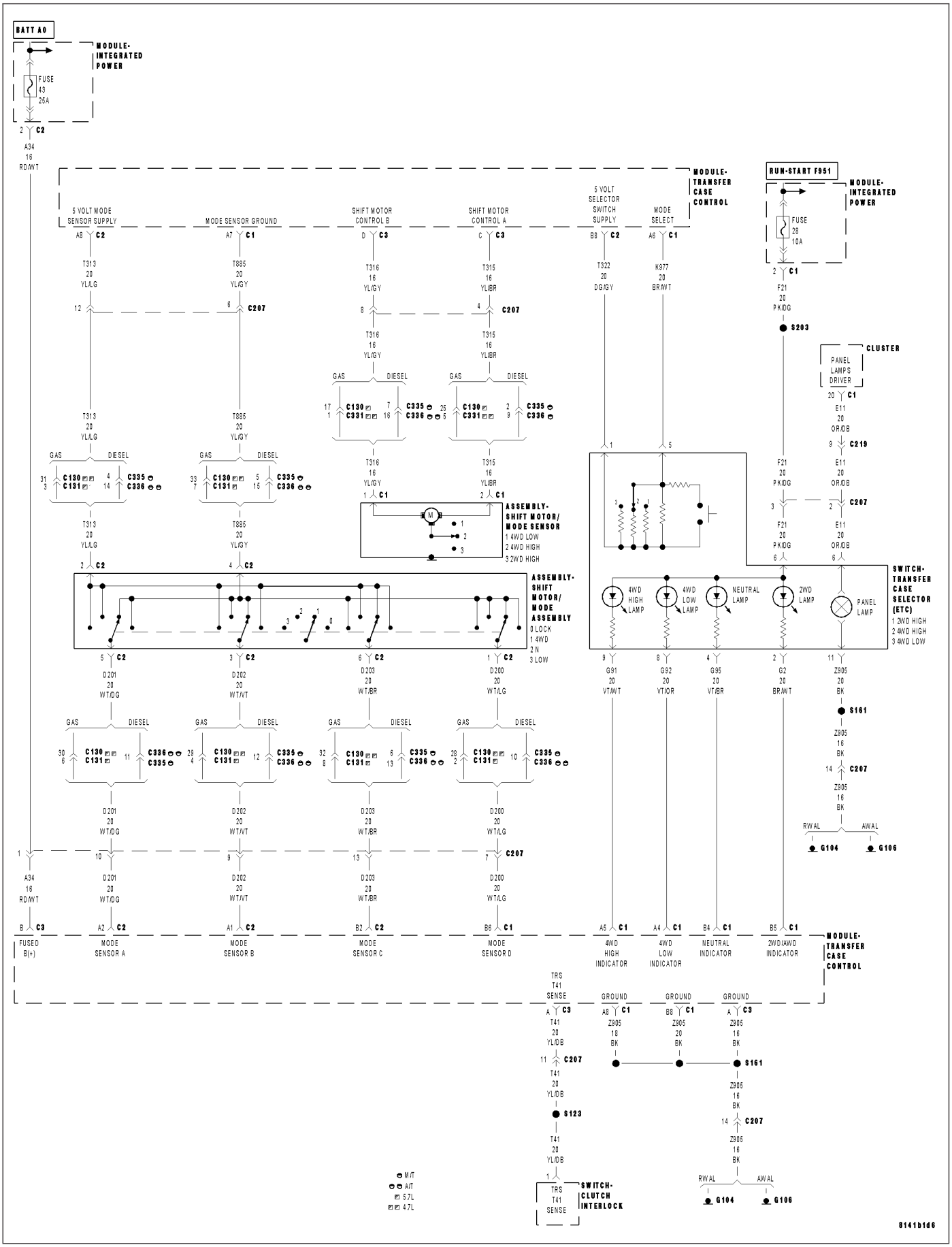

NEUTRAL INDICATOR SHORT TO GROUND (CONTINUED)

For a complete wiring diagram **Refer to Section 8W**.

- **When Monitored:**
  Continuously with the ignition on.
- **Set Condition:**
  The Transfer Case Control Module detects a short to ground on the (G95) Neutral Indicator circuit.

Possible Causes
INTERMITTENT NEUTRAL INDICATOR SHORT TO GROUND
(G95) NEUTRAL INDICATOR CIRCUIT OPEN
(G95) NEUTRAL INDICATOR CIRCUIT SHORT TO GROUND
(G95) NEUTRAL INDICATOR CIRCUIT SHORT TO VOLTAGE
TRANSFER CASE SELECTOR SWITCH
TRANSFER CASE CONTROL MODULE

1. NEUTRAL INDICATOR SHORT TO GROUND DTC IS PRESENT

With the DRBIII®, read Transfer Case DTCs. Record all DTC information.
With the DRBIII®, erase Transfer Case DTCs.
Start the engine and move the Transfer Case Selector Switch to each position.
With the DRBIII®, read Transfer Case DTCs.

Does the DRBIII® display NEUTRAL INDICATOR SHORT TO GROUND?

Yes >> Go To 2
No >> Go To 7

NEUTRAL INDICATOR SHORT TO GROUND (CONTINUED)

2. (G95) NEUTRAL INDICATOR CIRCUIT OPEN

Turn the ignition off to the lock position.

Disconnect the Transfer Case Control Module C1 harness connector.

Disconnect the Transfer Case Selector Switch harness connector.

NOTE: Note: Check connectors - Clean/repair as necessary.

Measure the resistance of the (G95) Neutral Indicator circuit from the Transfer Case Control Module C1 harness connector to the Transfer Case Selector Switch harness connector.

Is the resistance above 5.0 ohms?

Yes >> Repair the (G95) Neutral Indicator circuit for an open.
Perform TRANSFER CASE VERIFICATION TEST. (Refer to 21 - TRANSMISSION/TRANSAXLE/TRANSFER CASE - DIAGNOSIS AND TESTING)

No >> Go To 3

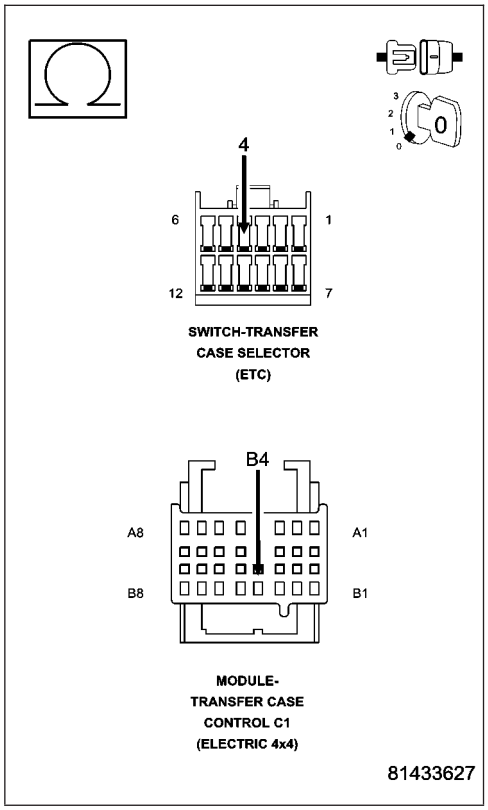

3. (G95) NEUTRAL INDICATOR CIRCUIT SHORT TO GROUND

Measure the resistance between ground and the (G95) Neutral Indicator circuit.

Is the resistance below 5.0 ohms?

Yes >> Repair the (G95) Neutral Indicator circuit for a short to ground.
Perform TRANSFER CASE VERIFICATION TEST. (Refer to 21 - TRANSMISSION/TRANSAXLE/TRANSFER CASE - DIAGNOSIS AND TESTING)

No >> Go To 4

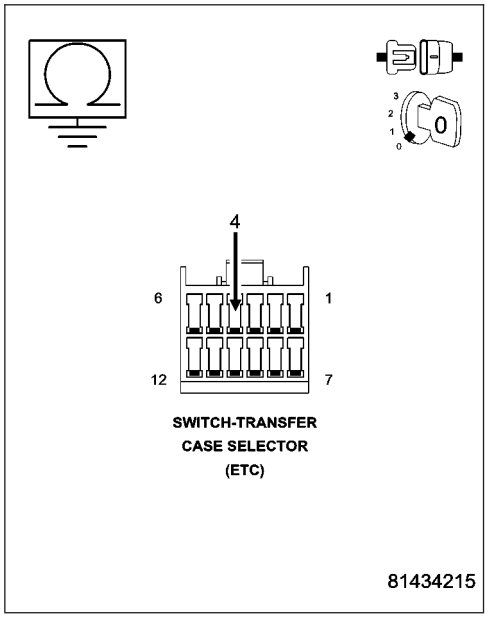

NEUTRAL INDICATOR SHORT TO GROUND (CONTINUED)

4. (G95) NEUTRAL INDICATOR CIRCUIT SHORT TO VOLTAGE

Ignition on, engine not running.

Measure the voltage of the (G95) Neutral Indicator circuit.

Is the voltage above 0.5 volt?

Yes >> Repair the (G95) Neutral Indicator circuit for a short to voltage.

Perform TRANSFER CASE VERIFICATION TEST. (Refer to 21 - TRANSMISSION/TRANSAXLE/TRANSFER CASE - DIAGNOSIS AND TESTING)

No >> Go To 5

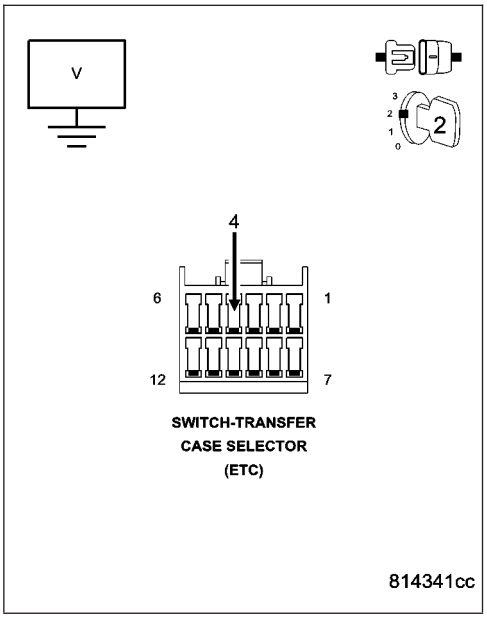

5. TRANSFER CASE SELECTOR SWITCH

Turn the ignition off to the lock position.

Connect the Transfer Case Control Module C1 harness connector.

Ignition on, engine not running.

With the DRBIII® under Inputs/Outputs, monitor the Neutral Lamp state.

Connect a jumper wire between (G95) Neutral Indicator circuit in the Transfer Case Control Module harness connector and ground.

Does the Neutral Lamp state change from Off with the jumper wire removed to On with the jumper wire in place?

Yes >> Replace the Transfer Case Selector Switch in accordance with the Service Information.

No >> Go To 6

Perform TRANSFER CASE VERIFICATION TEST. (Refer to 21 - TRANSMISSION/TRANSAXLE/TRANSFER CASE - DIAGNOSIS AND TESTING)

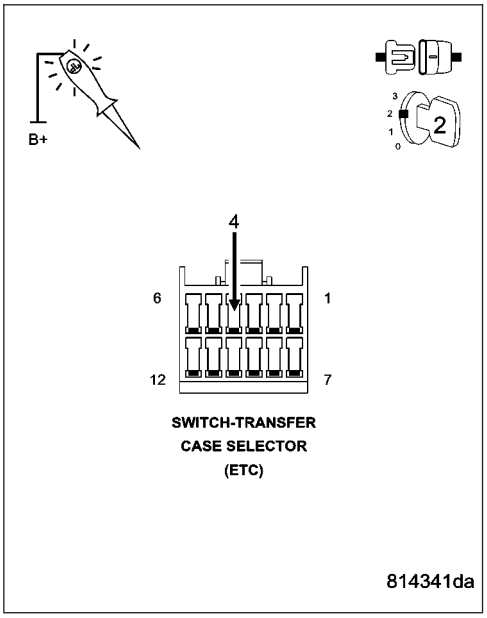

NEUTRAL INDICATOR SHORT TO GROUND (CONTINUED)

6. TRANSFER CASE CONTROL MODULE

Using the wiring diagram as a guide, inspect the wiring and connectors relative to this DTC. Inspect all power and ground circuits. Repair as necessary.

If there are no Charging System related DTCs or other possible causes remaining, view repair.

Repair

Replace the Transfer Case Control Module in accordance with the Service Information.

Perform TRANSFER CASE VERIFICATION TEST. (Refer to 21 - TRANSMISSION/TRANSAXLE/ TRANSFER CASE - DIAGNOSIS AND TESTING)

---

7. INTERMITTENT WIRING AND CONNECTORS

The conditions necessary to set this DTC are not present at this time.

Using the schematics as a guide, inspect the wiring and connectors specific to this circuit.

Wiggle test the wiring harness and connectors while checking for shorted and open circuits.

Using the DRBIII®, monitor the data related to this circuit while performing the wiggle test. Look for the data to change or for the DTC to reset.

Were there any problems found?

Yes >> Repair as necessary.

Perform TRANSFER CASE VERIFICATION TEST. (Refer to 21 - TRANSMISSION/TRANSAXLE/ TRANSFER CASE - DIAGNOSIS AND TESTING)

No >> Test Complete.

SELECTOR SWITCH/TRANSFER CASE—MISMATCH

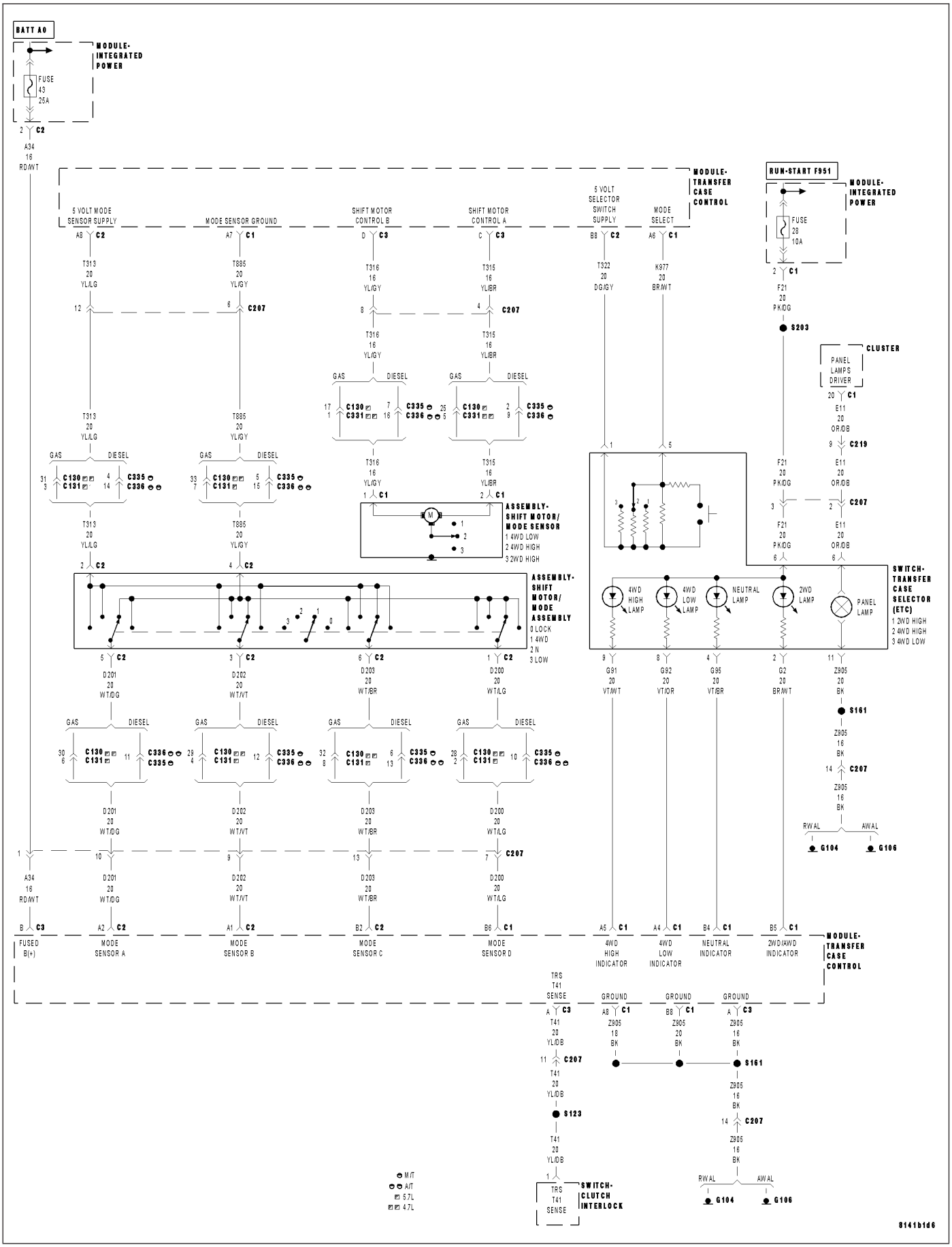

SELECTOR SWITCH/TRANSFER CASE—MISMATCH (CONTINUED)

For a complete wiring diagram **Refer to Section 8W**.

- **When Monitored:**
  With the ignition on and the engine running.
- **Set Condition:**
  When the 2WD/AWD position is selected, the Transfer Case Control Module performs a diagnostic routine to verify that the correct Transfer Case Selector Switch is in place.

Possible Causes
INTERMITTENT SELECTOR SWITCH/TRANSFER CASE - MISMATCH
CHARGING SYSTEM DTCS PRESENT
VERIFY MODULE TYPE 233/2WD
VERIFY MODULE TYPE 244/AWD
VERIFY SELECTOR SWITCH 233/2WD
VERIFY SELECTOR SWITCH 244/AWD
(T322) 5 VOLT SELECTOR SWITCH SUPPLY CIRCUIT OPEN
(K977) MODE SELECT CIRCUIT OPEN
TRANSFER CASE SELECTOR SWITCH 233/2WD
TRANSFER CASE SELECTOR SWITCH 244/AWD
TRANSFER CASE CONTROL MODULE

1. CHARGING SYSTEM DTCS PRESENT

With the DRBIII®, read Engine DTCs.

Are there any Charging System related DTCs present?

Yes >> Refer to the symptom list and perform the appropriate diagnostic procedure(s) as necessary.
Perform TRANSFER CASE VERIFICATION TEST. (Refer to 21 - TRANSMISSION/TRANSAXLE/ TRANSFER CASE - DIAGNOSIS AND TESTING)

No >> Go To 2

---

2. SELECTOR SWITCH/TRANSFER CASE — MISMATCH DTC PRESENT

With the DRBIII®, read Transfer Case DTCs. Record all DTC information.

NOTE: If there are any other Transfer Case Control Module DTCs present, perform the applicable diagnostic procedures before continuing with this test.

With the DRBIII®, erase Transfer Case DTCs.

Start the engine and cycle the Transfer Case Selector Switch through all positions.

With the DRBIII®, read Transfer Case DTCs.

Does the DRBIII® display SELECTOR SWITCH/TRANSFER CASE — MISMATCH?

Yes >> Go To 3

No >> Go To 13

SELECTOR SWITCH/TRANSFER CASE—MISMATCH (CONTINUED)

3. VERIFY TRANSFER CASE TYPE

Identify the Transfer Case type using the Transfer Case Identification Tag.

Select the Transfer Case type as indicated by the Identification Tag:

233/2WD
Go To 4

244/AWD
Go To 7

---

4. VERIFY MODULE TYPE 233/2WD

Identify the Transfer Case type using the DRBIII®.
Compare the Transfer Case type as identified by both the Identification Tag and the DRBIII®.

Do both identify the Transfer Case as 233/2WD?

Yes >> Go To 5

No >> Reprogram the Transfer Case Control Module as type 233/2WD in accordance with the Service Information.
Perform TRANSFER CASE VERIFICATION TEST. (Refer to 21 - TRANSMISSION/TRANSAXLE/ TRANSFER CASE - DIAGNOSIS AND TESTING)

---

5. VERIFY SELECTOR SWITCH TYPE 233/2WD

Visually identify the Transfer Case Selector Switch type.

Does the Selector Switch display 2WD/4HI/4LO?

Yes >> Go To 6

No >> Replace the Transfer Case Selector Switch type 233/2WD in accordance with the Service Information.
Perform TRANSFER CASE VERIFICATION TEST. (Refer to 21 - TRANSMISSION/TRANSAXLE/ TRANSFER CASE - DIAGNOSIS AND TESTING)

---

6. TRANSFER CASE SELECTOR SWITCH 233/2WD

Turn the ignition off to the lock position.
Disconnect the Transfer Case Selector Switch harness connector.

NOTE: Check connectors - Clean/repair as necessary.
Measure the resistance between the (K977) Mode Select circuit and the (T322) 5 Volt Selector Switch Supply circuit in the Transfer Case Selector Switch.

Is the resistance between 5200 and 5950 ohms?

Yes >> Go To 10

No >> Replace the 233/2WD Transfer Case Selector Switch in accordance with the Service Information.
Perform TRANSFER CASE VERIFICATION TEST. (Refer to 21 - TRANSMISSION/TRANSAXLE/ TRANSFER CASE - DIAGNOSIS AND TESTING)

SELECTOR SWITCH/TRANSFER CASE—MISMATCH (CONTINUED)

7. VERIFY MODULE TYPE 244/AWD

Identify the Transfer Case type using the DRBIII®.

Compare the Transfer Case type as identified by both the Identification Tag and the DRBIII®.

Do both identify the Transfer Case as 244/AWD?

Yes >> Go To 8

No >> Reprogram the Transfer Case Control Module as type 244/AWD in accordance with the Service Information.
Perform TRANSFER CASE VERIFICATION TEST. (Refer to 21 - TRANSMISSION/TRANSAXLE/ TRANSFER CASE - DIAGNOSIS AND TESTING)

---

8. VERIFY SELECTOR SWITCH TYPE 244/AWD

Visually identify the Transfer Case Selector Switch type.

Does the Selector Switch display AWD/4HI/4LO?

Yes >> Go To 9

No >> Replace the Transfer Case Selector Switch type 244/AWD in accordance with the Service Information.
Perform TRANSFER CASE VERIFICATION TEST. (Refer to 21 - TRANSMISSION/TRANSAXLE/ TRANSFER CASE - DIAGNOSIS AND TESTING)

---

9. TRANSFER CASE SELECTOR SWITCH 244/AWD

Turn the ignition off to the lock position.

Disconnect the Transfer Case Selector Switch harness connector.

NOTE: Check connectors - Clean/repair as necessary.

Measure the resistance between the (K977) Mode Select circuit and the (T322) 5 Volt Selector Switch Supply circuit in the Transfer Case Selector Switch.

Is the resistance between 3050 and 3600 ohms?

Yes >> Go To 10

No >> Replace the 244/AWD Transfer Case Selector Switch in accordance with the Service Information.
Perform TRANSFER CASE VERIFICATION TEST. (Refer to 21 - TRANSMISSION/TRANSAXLE/ TRANSFER CASE - DIAGNOSIS AND TESTING)

SELECTOR SWITCH/TRANSFER CASE—MISMATCH (CONTINUED)

10. (T322) 5 VOLT SELECTOR SWITCH SUPPLY CIRCUIT OPEN

Turn the ignition off to the lock position.

Disconnect the Transfer Case Control Module C2 harness connector.

NOTE: Check connectors - Clean/repair as necessary.

Ignition on, engine not running.

Measure the resistance of the (T322) 5 Volt Selector Switch Supply circuit from the Transfer Case Selector Switch harness connector to the Transfer Case Control Module C2 harness connector.

Is the resistance below 5.0 ohms?

Yes >> Go To 11

No >> Repair the (T322) 5 Volt Selector Switch Supply circuit for an open circuit or high resistance.

Perform TRANSFER CASE VERIFICATION TEST. (Refer to 21 - TRANSMISSION/TRANSAXLE/TRANSFER CASE - DIAGNOSIS AND TESTING)

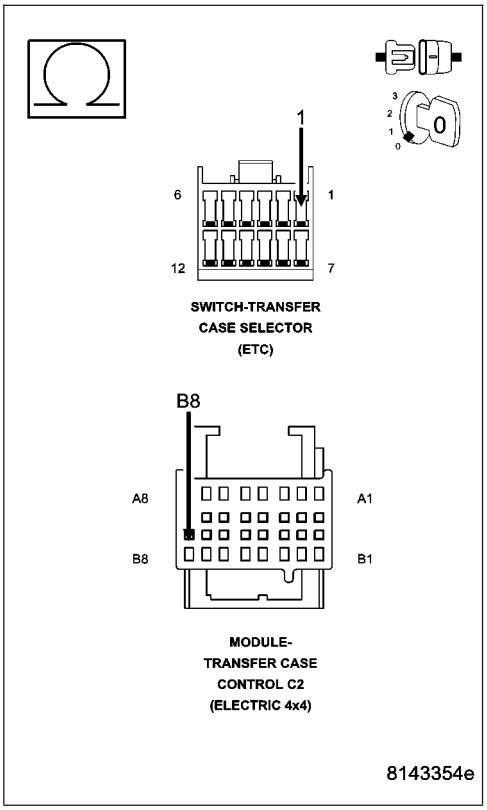

11. (K977) MODE SELECT CIRCUIT OPEN

Disconnect the Transfer Case Control Module C1 harness connector.

NOTE: Check connectors - Clean/repair as necessary.

Measure the resistance of the (K977) Mode Select circuit from the Transfer Case Selector Switch harness connector to the Transfer Case Control Module C1 harness connector.

Is the resistance below 5.0 ohms?

Yes >> Go To 12

No >> Repair the (K977) Mode Select circuit for an open circuit or high resistance.

Perform TRANSFER CASE VERIFICATION TEST. (Refer to 21 - TRANSMISSION/TRANSAXLE/TRANSFER CASE - DIAGNOSIS AND TESTING)

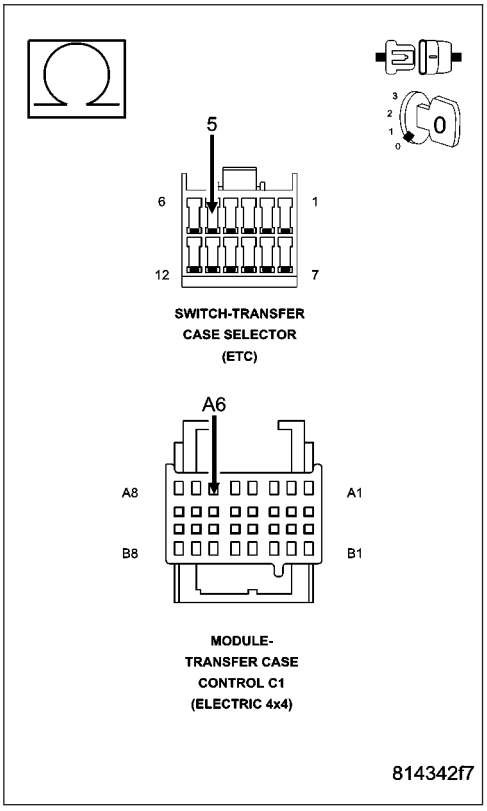

SELECTOR SWITCH/TRANSFER CASE—MISMATCH (CONTINUED)

12. TRANSFER CASE CONTROL MODULE

Using the wiring diagram as a guide, inspect the wiring and connectors relative to this DTC. Inspect all power and ground circuits. Repair as necessary.

If there are no Charging System related DTCs or other possible causes remaining, view repair.

Repair

Replace the Transfer Case Control Module.

Perform TRANSFER CASE VERIFICATION TEST. (Refer to 21 - TRANSMISSION/TRANSAXLE/ TRANSFER CASE - DIAGNOSIS AND TESTING)

---

13. INTERMITTENT WIRING AND CONNECTORS

The conditions necessary to set this DTC are not present at this time.

Using the schematics as a guide, inspect the wiring and connectors specific to this circuit.

Wiggle test the wiring harness and connectors while checking for shorted and open circuits.

Using the DRBIII®, monitor the data related to this circuit while performing the wiggle test. Look for the data to change or for the DTC to reset.

Were there any problems found?

Yes >> Repair as necessary.

Perform TRANSFER CASE VERIFICATION TEST. (Refer to 21 - TRANSMISSION/TRANSAXLE/ TRANSFER CASE - DIAGNOSIS AND TESTING)

No >> Test Complete.

TRANSFER CASE MODE SENSOR ERROR

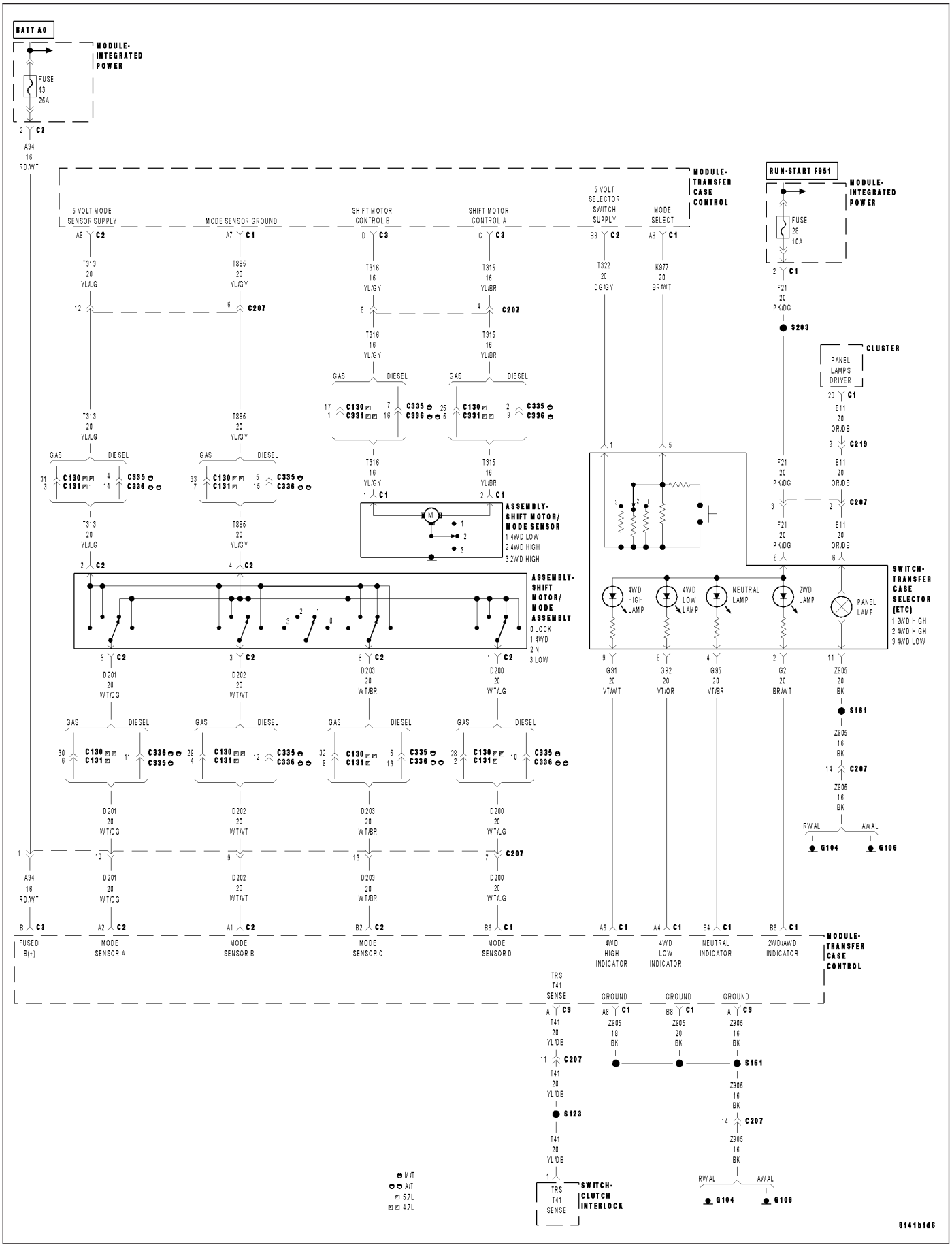

TRANSFER CASE MODE SENSOR ERROR (CONTINUED)

For a complete wiring diagram **Refer to Section 8W**.

- **When Monitored:**
  Continuously with the ignition on.
- **Set Condition:**
  Whenever the Transfer Case Control Module detects any of the following errors:
  1. An invalid Mode Sensor position.
  2. The Mode Sensor has an incorrect transition during a shift, then attempts and fails twice and defaults to a 4WD Hi position.
  3. The Mode Sensor has four failed transitions during an ignition cycle.

Possible Causes
INTERMITTENT TRANSFER CASE MODE SENSOR ERROR
MODE SENSOR CIRCUIT OPEN
MODE SENSOR CIRCUIT SHORT TO GROUND
MODE SENSOR CIRCUIT SHORT TO VOLTAGE
(T885) MODE SENSOR GROUND CIRCUIT OPEN
(T313) 5 VOLT MODE SENSOR SUPPLY CIRCUIT OPEN
TRANSFER CASE MODE SENSOR
TRANSFER CASE CONTROL MODULE

1. TRANSFER CASE MODE SENSOR ERROR DTC IS PRESENT

With the DRBIII®, read Transfer Case DTCs. Record all DTC information.
With the DRBIII®, erase Transfer Case DTCs.
Start the engine and move the Transfer Case Selector Switch to each position.
With the DRBIII®, read Transfer Case DTCs.

Does the DRBIII® display TRANSFER CASE MODE SENSOR ERROR?

Yes >> Go To 2
No >> Go To 9

TRANSFER CASE MODE SENSOR ERROR (CONTINUED)

2. MODE SENSOR CIRCUIT OPEN

Turn the ignition off to the lock position.

Disconnect the Transfer Case Control Module C1 and C2 harness connectors.

Disconnect the Shift Motor/Mode Sensor C2 harness connector.

NOTE: Note: Check connectors - Clean/repair as necessary.

A. Measure the resistance of the (D201) Mode Sensor A circuit from the Transfer Case Control Module C1 harness connector to the Shift Motor/Mode Sensor C2 harness connector.

B. Measure the resistance of the (D202) Mode Sensor B circuit from the Transfer Case Control Module C1 harness connector to the Shift Motor/Mode Sensor C2 harness connector.

C. Measure the resistance of the (D203) Mode Sensor C circuit from the Transfer Case Control Module C1 harness connector to the Shift Motor/Mode Sensor C2 harness connector.

D. Measure the resistance of the (D200) Mode Sensor D circuit from the Transfer Case Control Module C2 harness connector to the Shift Motor/Mode Sensor C2 harness connector.

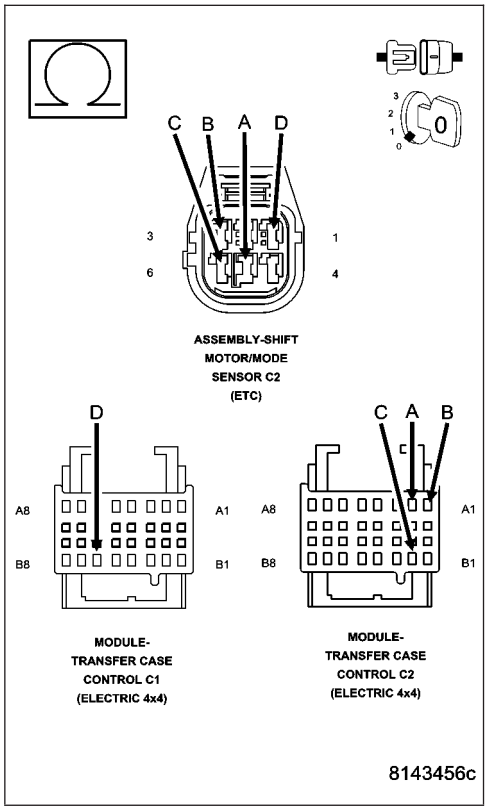

Is the resistance above 5.0 ohms for any of the circuits?

Yes >> Repair the open Mode Sensor circuit.
Perform TRANSFER CASE VERIFICATION TEST. (Refer to 21 - TRANSMISSION/TRANSAXLE/TRANSFER CASE - DIAGNOSIS AND TESTING)

No >> Go To 3

3. MODE SENSOR CIRCUIT SHORT TO GROUND

A. Measure the resistance between ground and the (D201) Mode Sensor A circuit.

B. Measure the resistance between ground and the (D202) Mode Sensor B circuit.

C. Measure the resistance between ground and the (D203) Mode Sensor C circuit.

D. Measure the resistance between ground and the (D200) Mode Sensor D circuit.

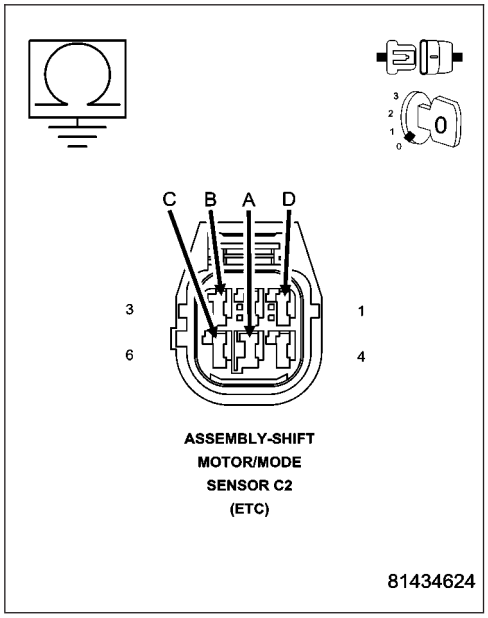

Is the resistance below 5.0 ohms between any of the Mode sensor circuits and ground?

Yes >> Repair the Mode Sensor circuit for a short to ground.
Perform TRANSFER CASE VERIFICATION TEST. (Refer to 21 - TRANSMISSION/TRANSAXLE/TRANSFER CASE - DIAGNOSIS AND TESTING)

No >> Go To 4

TRANSFER CASE MODE SENSOR ERROR (CONTINUED)

4. MODE SENSOR CIRCUIT SHORT TO VOLTAGE

Ignition on, engine not running.

A. Measure the voltage of the (D201) Mode Sensor A circuit.
B. Measure the voltage of the (D202) Mode Sensor B circuit.
C. Measure the voltage of the (D203)Mode Sensor C circuit.
D. Measure the voltage of the (D200) Mode Sensor D circuit.

Is there voltage present on any of the Mode Sensor circuits?

Yes >> Repair the Mode Sensor circuit for a short to voltage.
Perform TRANSFER CASE VERIFICATION TEST. (Refer to 21 - TRANSMISSION/TRANSAXLE/TRANSFER CASE - DIAGNOSIS AND TESTING)

No >> Go To 5

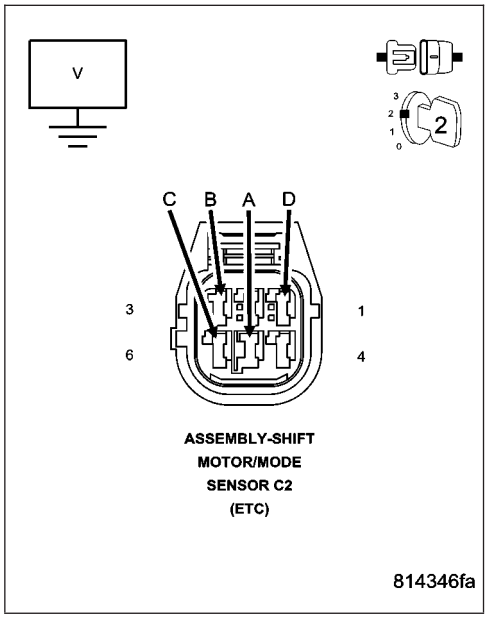

5. (T885) MODE SENSOR GROUND CIRCUIT OPEN

Turn the ignition off to the lock position.

Measure the resistance of the (T885) Mode Sensor Ground circuit from the Transfer Case Control Module C1 harness connector to the Shift Motor/Mode Sensor C2 harness connector.

Is the resistance above 5.0 ohms?

Yes >> Repair the (T885) Mode Ground Sensor circuit for an open.
Perform TRANSFER CASE VERIFICATION TEST. (Refer to 21 - TRANSMISSION/TRANSAXLE/TRANSFER CASE - DIAGNOSIS AND TESTING)

No >> Go To 6

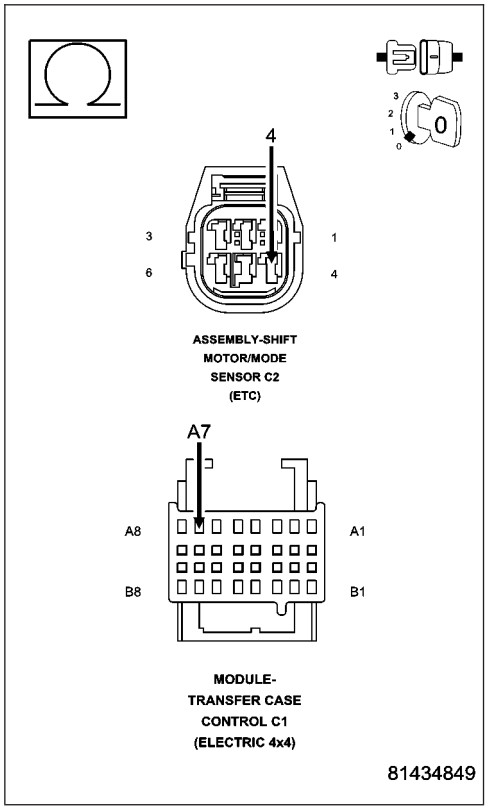

TRANSFER CASE MODE SENSOR ERROR (CONTINUED)

6. (T313) 5 VOLT MODE SENSOR SUPPLY CIRCUIT OPEN

Measure the resistance of the (T313) 5 Volt Mode Sensor Supply circuit from the Transfer Case Control Module harness C2 connector to the Shift Motor/Mode Sensor C2 harness connector.

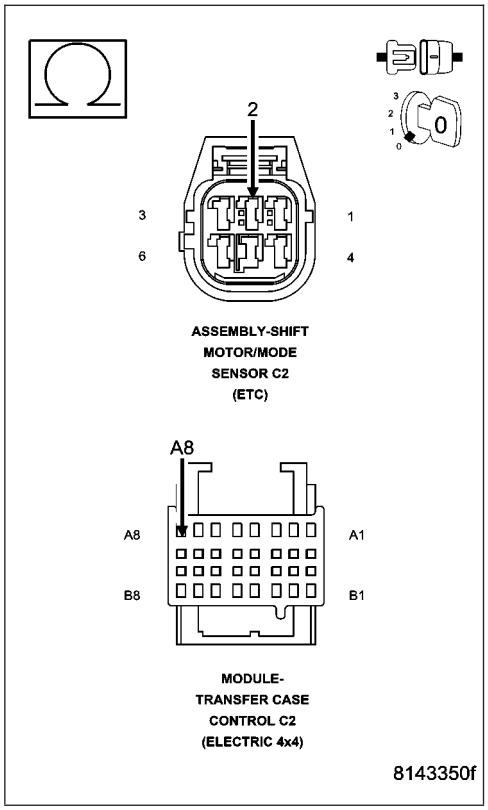

Is the resistance above 5.0 ohms?

Yes >> Repair the (T313) 5 Volt Mode Sensor 'Supply circuit for an open.
Perform TRANSFER CASE VERIFICATION TEST. (Refer to 21 - TRANSMISSION/TRANSAXLE/TRANSFER CASE - DIAGNOSIS AND TESTING)

No >> Go To 7

---

7. SHIFT MOTOR/MODE SENSOR

Replace the Shift Motor/Mode Sensor in accordance with the Service Information.
With the DRBIII®, erase Transfer Case DTCs.
Start the engine and move the Transfer Case Selector Switch to each position.
With the DRBIII®, read Transfer Case DTCs.

Does the DRBIII® display TRANSFER CASE MODE SENSOR ERROR?

Yes >> Go To 8

No >> Test Complete.
Perform TRANSFER CASE VERIFICATION TEST. (Refer to 21 - TRANSMISSION/TRANSAXLE/TRANSFER CASE - DIAGNOSIS AND TESTING)

---

8. TRANSFER CASE CONTROL MODULE

Using the wiring diagram as a guide, inspect the wiring and connectors relative to this DTC. Inspect all power and ground circuits. Repair as necessary.

If there are no other possible causes remaining, view repair.

Repair

Replace the Transfer Case Control Module in accordance with the Service Information.
Perform TRANSFER CASE VERIFICATION TEST. (Refer to 21 - TRANSMISSION/TRANSAXLE/TRANSFER CASE - DIAGNOSIS AND TESTING)

TRANSFER CASE MODE SENSOR ERROR (CONTINUED)

9. INTERMITTENT WIRING AND CONNECTORS

The conditions necessary to set this DTC are not present at this time.

Using the schematics as a guide, inspect the wiring and connectors specific to this circuit.

Wiggle test the wiring harness and connectors while checking for shorted and open circuits.

Using the DRBIII®, monitor the data related to this circuit while performing the wiggle test. Look for the data to change or for the DTC to reset.

Were there any problems found?

Yes >> Repair as necessary.
Perform TRANSFER CASE VERIFICATION TEST. (Refer to 21 - TRANSMISSION/TRANSAXLE/ TRANSFER CASE - DIAGNOSIS AND TESTING)

No >> Test Complete.

TRANSFER CASE SELECTOR SWITCH ERROR

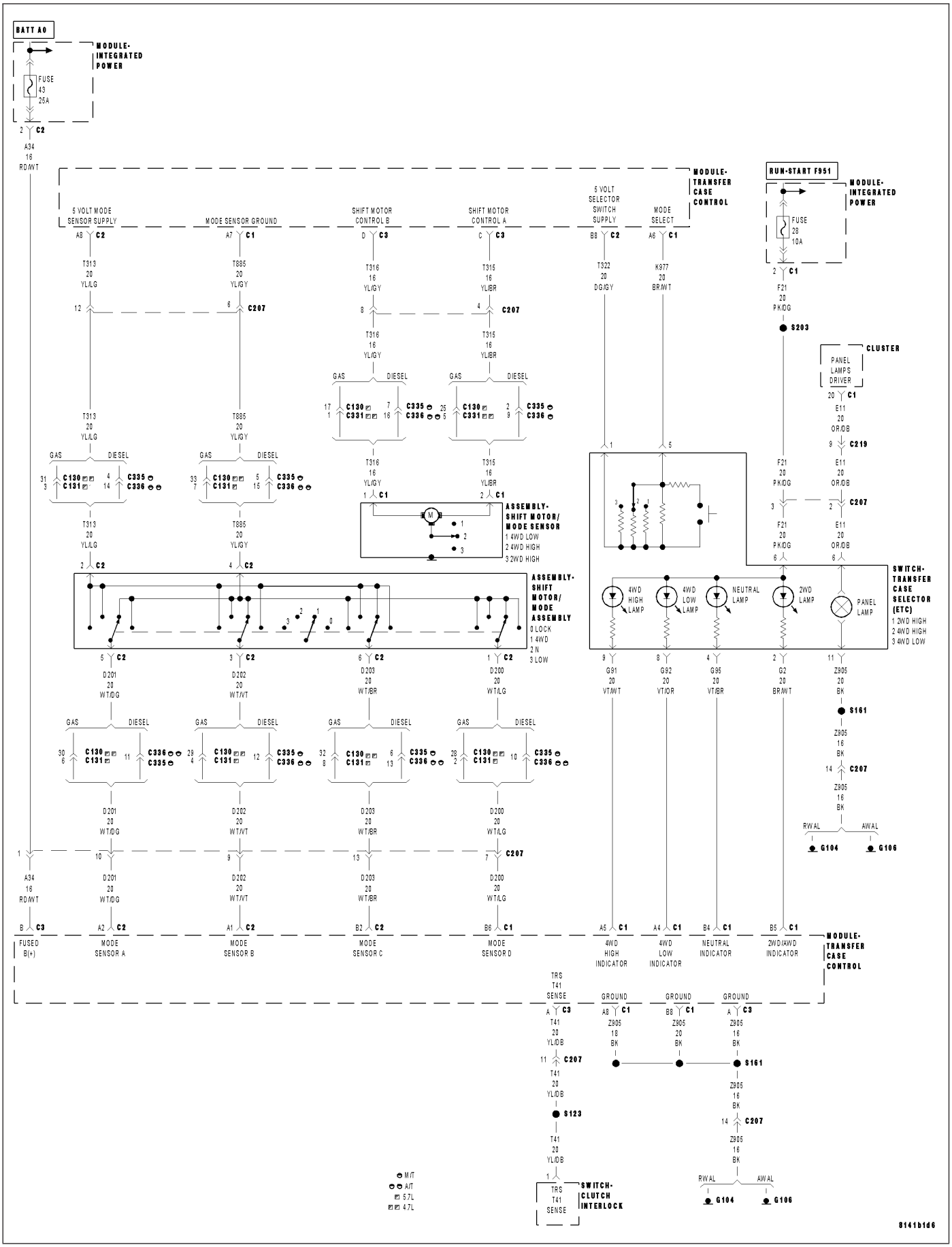

TRANSFER CASE SELECTOR SWITCH ERROR (CONTINUED)

For a complete wiring diagram **Refer to Section 8W**.

- **When Monitored:**
  Continuously with the ignition on.
- **Set Condition:**
  Whenever the Transfer Case Control Module detects any of the following errors:
  1. Selector Switch input of less than 250 ohms or more than 14.5k ohms.
  2. Selector Switch input voltage less than .25 volts or greater than 5.0 volts.

Possible Causes
INTERMITTENT TRANSFER CASE SELECTOR SWITCH ERROR
(K977) MODE SELECT CIRCUIT OPEN
(K977) MODE SELECT CIRCUIT SHORT TO GROUND
(K977) MODE SELECT CIRCUIT SHORT TO VOLTAGE
(T322) 5 VOLT SELECTOR SWITCH SUPPLY CIRCUIT OPEN
TRANSFER CASE SELECTOR SWITCH
TRANSFER CASE CONTROL MODULE

1. TRANSFER CASE SELECTOR SWITCH ERROR DTC IS PRESENT

With the DRBIII®, read Transfer Case DTCs. Record all DTC information.
With the DRBIII®, erase Transfer Case DTCs.
Start the engine and move the Transfer Case Select Switch to each position.
With the DRBIII®, read Transfer Case DTCs.

Does the DRBIII® display TRANSFER CASE SELECTOR SWITCH ERROR?

Yes >> Go To 2

No >> Go To 8

TRANSFER CASE SELECTOR SWITCH ERROR (CONTINUED)

2. (K977) MODE SELECT CIRCUIT OPEN

Turn the ignition off to the lock position.

Disconnect the Transfer Case Control Module C1 harness connector.

Disconnect the Transfer Case Selector Switch harness connector.

NOTE: Note: Check connectors - Clean/repair as necessary.

Measure the resistance of the (K977) Mode Select circuit from the Transfer Case Control Module harness connector to the Transfer Case Selector Switch harness connector.

Is the resistance above 5.0 ohms?

Yes >> Repair the (K977) Mode Select circuit for an open.
Perform TRANSFER CASE VERIFICATION TEST. (Refer to 21 - TRANSMISSION/TRANSAXLE/TRANSFER CASE - DIAGNOSIS AND TESTING)

No >> Go To 3

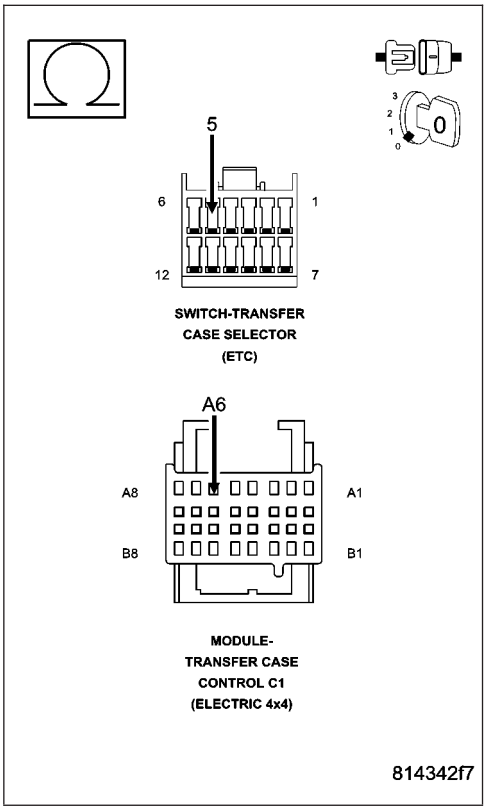

3. (K977) MODE SELECT CIRCUIT SHORT TO GROUND

Measure the resistance between ground and the (K977) Mode Select circuit.

Is the resistance below 5.0 ohms?

Yes >> Repair the (K977) Mode Select circuit for a short to ground.
Perform TRANSFER CASE VERIFICATION TEST. (Refer to 21 - TRANSMISSION/TRANSAXLE/TRANSFER CASE - DIAGNOSIS AND TESTING)

No >> Go To 4

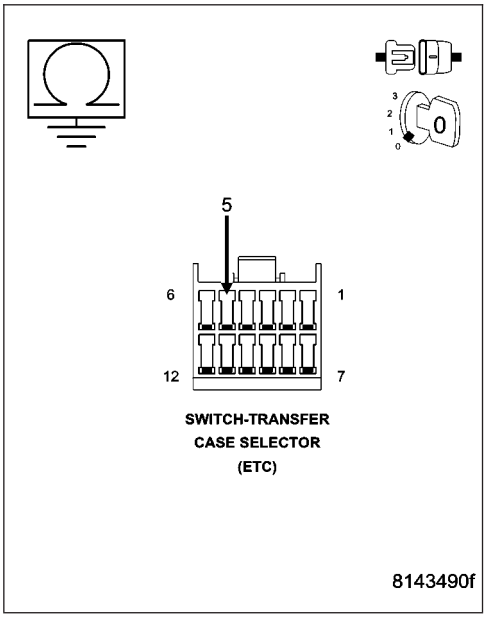

TRANSFER CASE SELECTOR SWITCH ERROR (CONTINUED)

4. (K977) MODE SELECT CIRCUIT SHORT TO VOLTAGE

Ignition on, engine not running.

Measure the voltage of the (K977) Mode Select circuit.

Is the voltage above 0.5 volt?

Yes >> Repair the (K977) Mode Select circuit for a short to voltage.

Perform TRANSFER CASE VERIFICATION TEST. (Refer to 21 - TRANSMISSION/TRANSAXLE/TRANSFER CASE - DIAGNOSIS AND TESTING)

No >> Go To 5

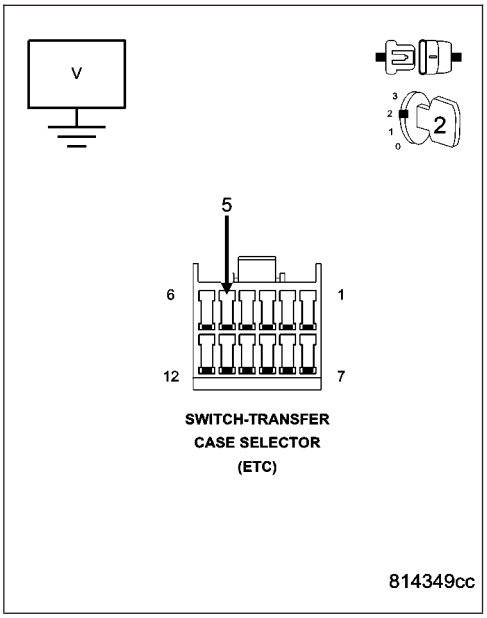

5. (T322) 5 VOLT SELECTOR SWITCH SUPPLY CIRCUIT OPEN

Turn the ignition off to the lock position.

Disconnect the Transfer Case Control Module C2 harness connector.

Measure the resistance of the (T322) 5 Volt Selector Switch Supply circuit from the Transfer Case Control Module C2 harness connector to the Transfer Case Selector Switch harness connector.

Is the resistance above 5.0 ohms?

Yes >> Repair the (T322) 5 Volt Selector Switch Supply circuit for an open.

Perform TRANSFER CASE VERIFICATION TEST. (Refer to 21 - TRANSMISSION/TRANSAXLE/TRANSFER CASE - DIAGNOSIS AND TESTING)

No >> Go To 6

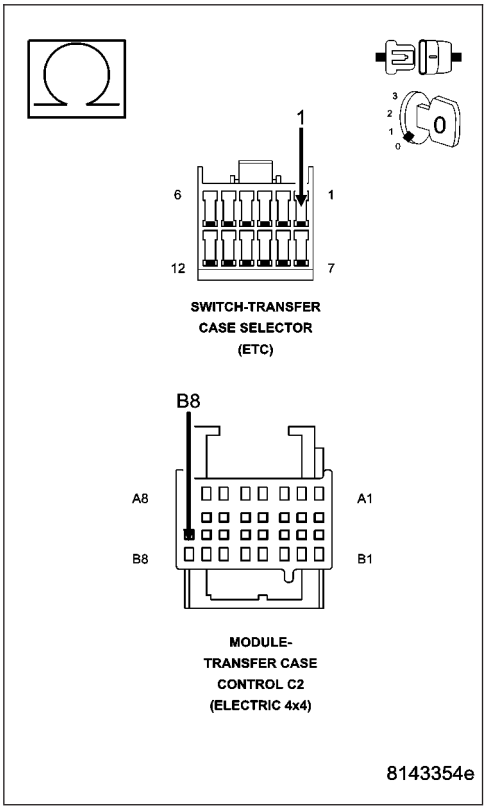

TRANSFER CASE SELECTOR SWITCH ERROR (CONTINUED)

6. TRANSFER CASE SELECTOR SWITCH

Connect the Transfer Case Select Switch harness connector.

Measure the resistance between the (T322) 5 Volt Selector Switch Supply circuit in the Transfer Case Control Module C2 harness connector and the (K977) Mode Select circuit in the Transfer Case Control Module C1 harness connector.

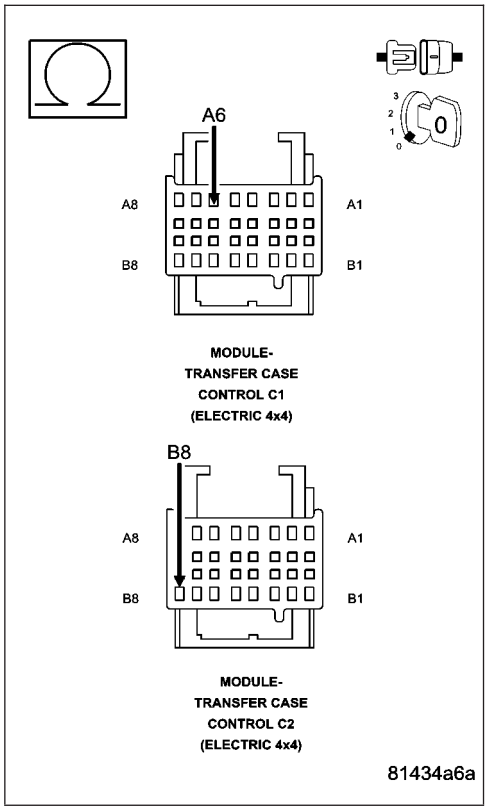

Is the resistance between 200 ohms and 15.5k ohms in all Selector Switch ranges?

Yes >> Go To 7

No >> Replace the Transfer Case Selector Switch in accordance with the Service Information.

Perform TRANSFER CASE VERIFICATION TEST. (Refer to 21 - TRANSMISSION/TRANSAXLE/TRANSFER CASE - DIAGNOSIS AND TESTING)

---

7. TRANSFER CASE CONTROL MODULE

Using the wiring diagram as a guide, inspect the wiring and connectors relative to this DTC. Inspect all power and ground circuits. Repair as necessary.

If there are no other possible causes remaining, view repair.

Repair

Replace the Transfer Case Control Module in accordance with the Service Information.

Perform TRANSFER CASE VERIFICATION TEST. (Refer to 21 - TRANSMISSION/TRANSAXLE/TRANSFER CASE - DIAGNOSIS AND TESTING)

---

8. INTERMITTENT WIRING AND CONNECTORS

The conditions necessary to set this DTC are not present at this time.

Using the schematics as a guide, inspect the wiring and connectors specific to this circuit.

Wiggle test the wiring harness and connectors while checking for shorted and open circuits.

Using the DRBIII®, monitor the data related to this circuit while performing the wiggle test. Look for the data to change or for the DTC to reset.

Were there any problems found?

Yes >> Repair as necessary.

Perform TRANSFER CASE VERIFICATION TEST. (Refer to 21 - TRANSMISSION/TRANSAXLE/TRANSFER CASE - DIAGNOSIS AND TESTING)

No >> Test Complete.

TRANSFER CASE - ELECTRICAL DIAGNOSTICS (POWER WAGON)

TABLE OF CONTENTS

page

TRANSFER CASE - ELECTRICAL DIAGNOSTICS (POWER WAGON)
DIAGNOSIS AND TESTING
C1400-TRANSFER CASE RANGE SELECT SWITCH PERFORMANCE 1296
C1401-TRANSFER CASE RANGE SELECT SWITCH CIRCUIT LOW 1301
C1402-TRANSFER CASE RANGE SELECT SWITCH CIRCUIT HIGH 1306
C2100–BATTERY VOLTAGE LOW (FDCM) . 1310
C2101–BATTERY VOLTAGE HIGH (FDCM) . 1312

page

C211B—IGNITION RUN/START INPUT CIRCUIT PERFORMANCE (FDCM) 1314
C2122–T-CASE/DIFFERENTIAL SWITCH SUPPLY VOLTAGE CIRCUIT LOW 1317
C2123–T-CASE/DIFFERENTIAL SWITCH SUPPLY VOLTAGE CIRCUIT HIGH 1322
C2201-FDCM ECU INTERNAL (FDCM) 1326
U0100-LOST COMMUNICATION WITH ECM/PCM (FDCM) 1327
U0155-LOST COMMUNICATION WITH CLUSTER/CCN (FDCM) 1329

TRANSFER CASE - ELECTRICAL DIAGNOSTICS (POWER WAGON)

DIAGNOSIS AND TESTING

C1400-TRANSFER CASE RANGE SELECT SWITCH PERFORMANCE

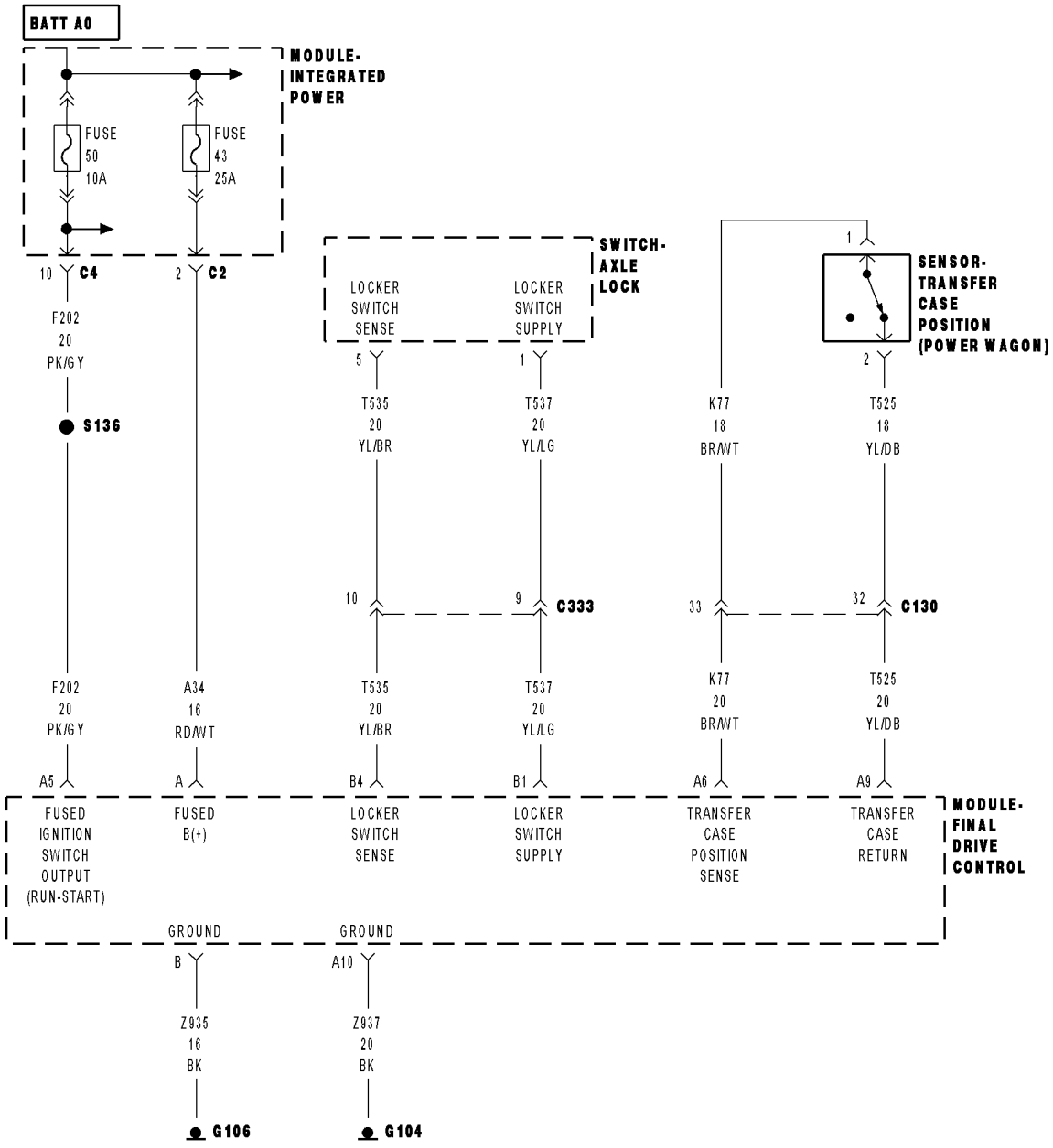

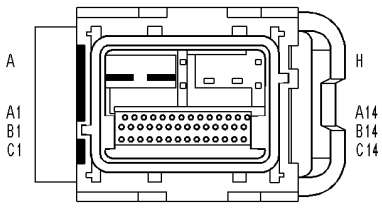

MODULE-
FINAL
DRIVE
CONTROL
(5.7L HD)

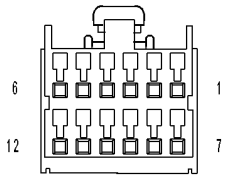

SWITCH-
AXLE
LOCK

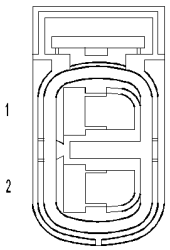

SENSOR-
TRANSFER
CASE
POSITION
(POWER WAGON)

814584b2

C1400-TRANSFER CASE RANGE SELECT SWITCH PERFORMANCE (CONTINUED)
For a complete wiring diagram **Refer to Section 8W**

- **When Monitored:**
  With the ignition on and no system undervoltage or overvoltage condition present.
- **Set Condition:**
  The Final Drive Control Module is not receiving a valid voltage for any switch position.

Possible Causes
INTERMITTENT TRANSFER CASE RANGE SELECT SWITCH PERFORMANCE
(K77) TRANSFER CASE POSITION SENSE CIRCUIT OPEN
(K77) TRANSFER CASE POSITION SENSE CIRCUIT SHORTED TO GROUND
(T525) TRANSFER CASE RETURN CIRCUIT OPEN
(T525) TRANSFER CASE RETURN CIRCUIT SHORT TO GROUND
TRANSFER CASE POSITION SENSOR
FINAL DRIVE CONTROL MODULE

Diagnostic Test

1. DTC IS ACTIVE

Ignition on, engine not running.

NOTE: Repair any system undervoltage or overvoltage DTCs that are set in this module before proceeding.
With the scan tool, select View DTCs in the Final Drive Control Module.

Is the status Active for this DTC?

Yes >> Go To 2

No >> Go To 9

---

2. (K77) TRANSFER CASE POSITION SENSE CIRCUIT VOLTAGE

Turn the ignition off.
Disconnect the Transfer Case Position Sensor harness connector.
Turn the ignition on.
Measure the voltage of the (K77) Transfer Case Position Sense circuit.

Is the voltage between 4.7 and 5.2 volts?

Yes >> Go To 5

No >> Go To 3

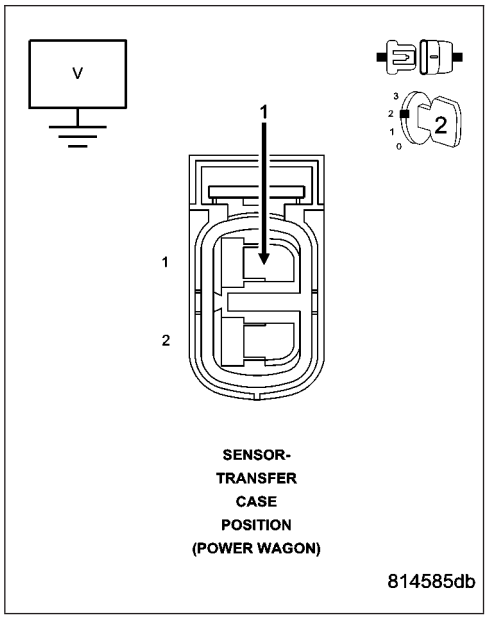

C1400-TRANSFER CASE RANGE SELECT SWITCH PERFORMANCE (CONTINUED)

3. (K77) TRANSFER CASE POSITION SENSE CIRCUIT OPEN

Turn the ignition off.

Disconnect the Final Drive Control Module harness connector.

Measure the resistance of the (K77) Transfer Case Position Sense circuit.

Is the resistance greater than 5.0 ohms?

Yes >> Repair the (K77) Transfer Case Position Sense circuit for an open.

Perform the FDCM VERIFICATION TEST. (Refer to 3 - DIFFERENTIAL & DRIVELINE - DIAGNOSIS AND TESTING)

No >> Go To 4

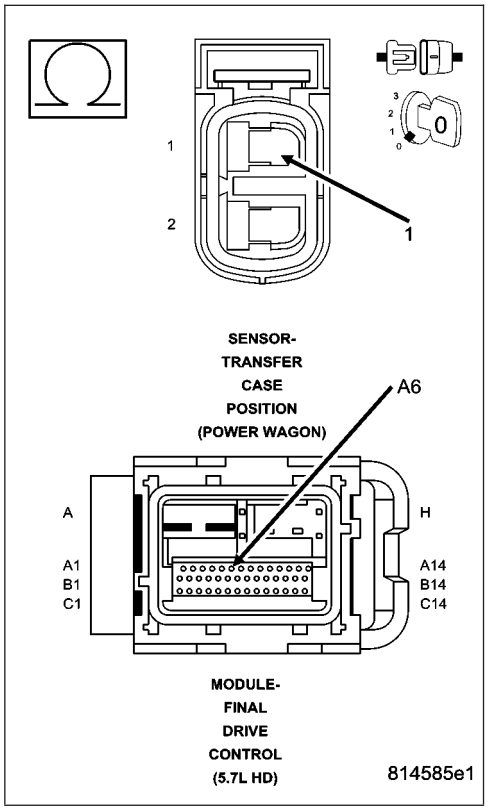

4. (K77) TRANSFER CASE POSITION SENSE CIRCUIT SHORTED TO GROUND

Measure the resistance between the (K77) Transfer Case Position Sense circuit and ground.

Is the resistance less than 5.0 ohms?

Yes >> Repair the (K77) Transfer Case Position Sense circuit for a short to ground. (Refer to 3 - DIFFERENTIAL & DRIVELINE - DIAGNOSIS AND TESTING)

Perform the FDCM VERIFICATION TEST.

No >> Go To 8

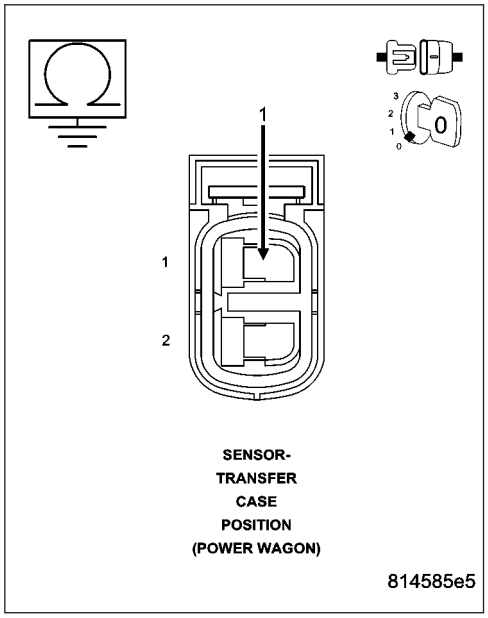

C1400-TRANSFER CASE RANGE SELECT SWITCH PERFORMANCE (CONTINUED)

5. TRANSFER CASE POSITION SENSOR

Ignition on, engine not running.

With the scan tool in Data Display, read the 4wd Range Switch Voltage with the Transfer Case Position Sensor harness connector disconnected.

The switch voltage should be approximately 0 volts.

Turn the ignition off.

Connect a jumper wire between the (K77) Transfer Case Position Sense circuit and the (T525) Transfer Case Return circuit in the Transfer Case Position Sensor harness connector.

Ignition on, engine not running.

With the scan tool in Data Display, read the 4wd Range Switch Voltage.

The switch voltage should be approximately 5 volts.

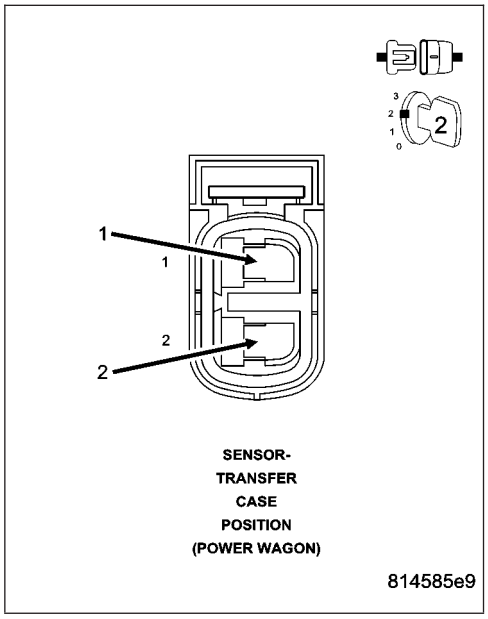

Does the voltage display as described?

Yes >> Replace the Transfer Case Position Sensor.
Perform the FDCM VERIFICATION TEST. (Refer to 3 - DIFFERENTIAL & DRIVELINE - DIAGNOSIS AND TESTING)

No >> Go To 6

---

6. (T525) TRANSFER CASE RETURN CIRCUIT OPEN

Turn the ignition off.

Disconnect the Final Drive Control Module harness connector.

Measure the resistance of the (T525) Transfer Case Return circuit between the Transfer Case Position Sensor harness connector and the Final Drive Control Module harness connector.

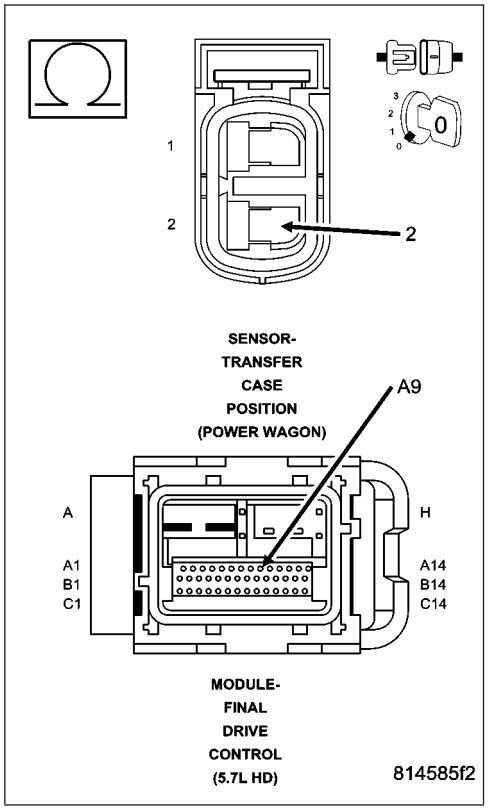

Is the resistance above 5.0 ohms?

Yes >> Repair the (T525) Transfer Case Return circuit for an open.
Perform the FDCM VERIFICATION TEST. (Refer to 3 - DIFFERENTIAL & DRIVELINE - DIAGNOSIS AND TESTING)

No >> Go To 7

C1400-TRANSFER CASE RANGE SELECT SWITCH PERFORMANCE (CONTINUED)

7. (T525) TRANSFER CASE RETURN CIRCUIT SHORT TO GROUND

Measure the resistance between the (T525) Transfer Case Return circuit and ground.

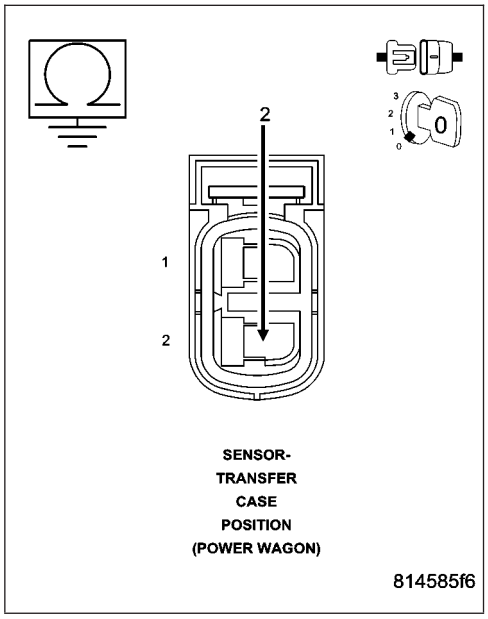

Is the resistance less than 5.0 ohms?

Yes >> Repair the (T525) Transfer Case Return circuit for a short to ground.
Perform the FDCM VERIFICATION TEST. (Refer to 3 - DIFFERENTIAL & DRIVELINE - DIAGNOSIS AND TESTING)

No >> Go To 8

---

8. FINAL DRIVE CONTROL MODULE

View repair.

Repair

Replace the Final Drive Control Module in accordance with the Service Information.
Perform the FDCM VERIFICATION TEST (Refer to 3 - DIFFERENTIAL & DRIVELINE - DIAGNOSIS AND TESTING)

---

9. INTERMITTENT TRANSFER CASE RANGE SELECT SWITCH PERFORMANCE

The conditions necessary to set this DTC are not present at this time.
Using the wiring diagram/schematic as a guide, inspect the wiring and connectors.
While monitoring the scan tool data relative to this circuit, wiggle test the wiring and connectors.
Look for the data to change or for the DTC to reset during the wiggle test.
While monitoring the scan tool data relative to this circuit, move the selector switch to each position several times. Look for the data to change other than as expected or for the DTC to reset.

Were any problems found?

Yes >> Repair as necessary.
Perform the FDCM VERIFICATION TEST. (Refer to 3 - DIFFERENTIAL & DRIVELINE - DIAGNOSIS AND TESTING)

No >> Test complete.

C1401-TRANSFER CASE RANGE SELECT SWITCH CIRCUIT LOW

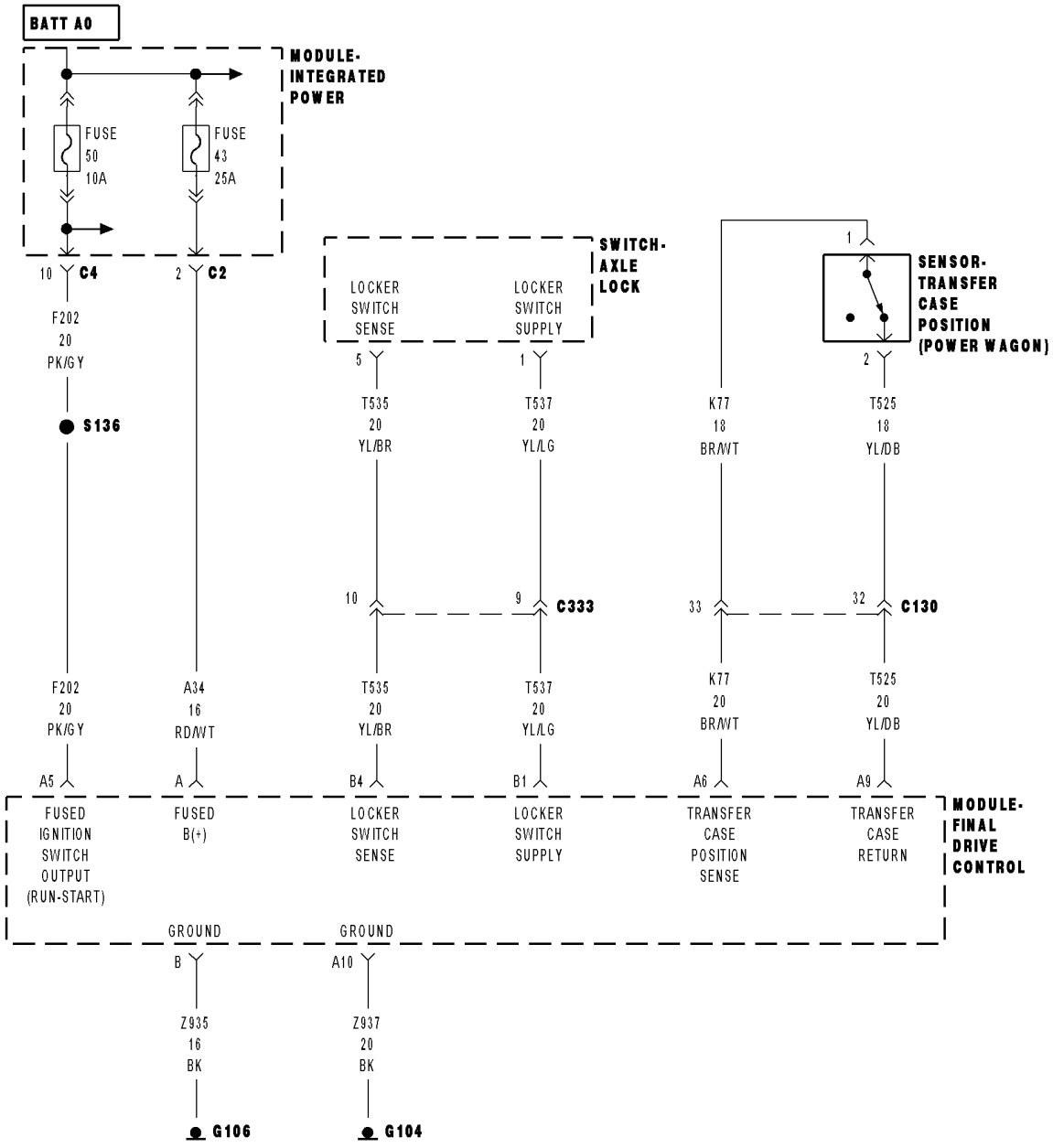

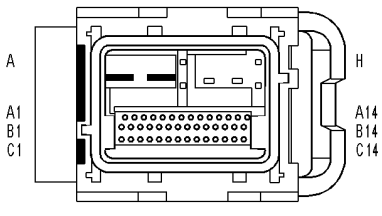

MODULE-
FINAL
DRIVE
CONTROL
(5.7L HD)

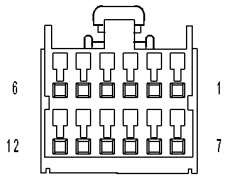

SWITCH-
AXLE
LOCK

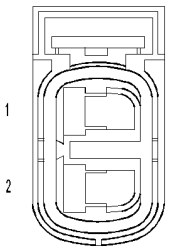

SENSOR-
TRANSFER
CASE
POSITION
(POWER WAGON)

814584b2

C1401-TRANSFER CASE RANGE SELECT SWITCH CIRCUIT LOW (CONTINUED)

For a complete wiring diagram **Refer to Section 8W**

- **When Monitored:**
  With the ignition on and no system undervoltage or overvoltage or supply voltage low conditions present.
- **Set Condition:**
  The sensed voltage is below a specified value for a calibrated amount of time.

Possible Causes
INTERMITTENT TRANSFER CASE RANGE SELECT SWITCH CIRCUIT LOW
(K77) TRANSFER CASE POSITION SENSE CIRCUIT SHORTED TO GROUND
(K77) TRANSFER CASE POSITION SENSE CIRCUIT OPEN
(T525) TRANSFER CASE RETURN CIRCUIT SHORT TO GROUND
(T525) TRANSFER CASE RETURN CIRCUIT OPEN
TRANSFER CASE POSITION SENSOR
FINAL DRIVE CONTROL MODULE

Diagnostic Test

1. 4WD RANGE SWITCH VOLTAGE LESS THAN 0.2 VOLTS

Ignition on, engine not running.

NOTE: Repair any system undervoltage or overvoltage DTCs that are set in this module before proceeding.
With the scan tool under Data Display, read the 4WD Range Switch Voltage.

Is the voltage less than 0.2 volts?

Yes >> Go To 2

No >> Go To 9

---

2. TRANSFER CASE POSITION SENSOR

Turn the ignition off.

Disconnect the Transfer Case Position Sensor harness connector.

Connect a jumper wire between the (K77) Transfer Case Position Sense circuit and the (T525) Transfer Case Return circuit in the Transfer Case Position Sensor harness connector.

Ignition on, engine not running.

With the scan tool under Data Display, read the 4WD Range Switch Voltage.

The switch voltage should be approximately 5.0 volts.

Does the voltage display as described?

Yes >> Replace the Transfer Case Position Sensor.
Perform the FDCM VERIFICATION TEST. (Refer to 3 - DIFFERENTIAL & DRIVELINE - DIAGNOSIS AND TESTING)

No >> Go To 3

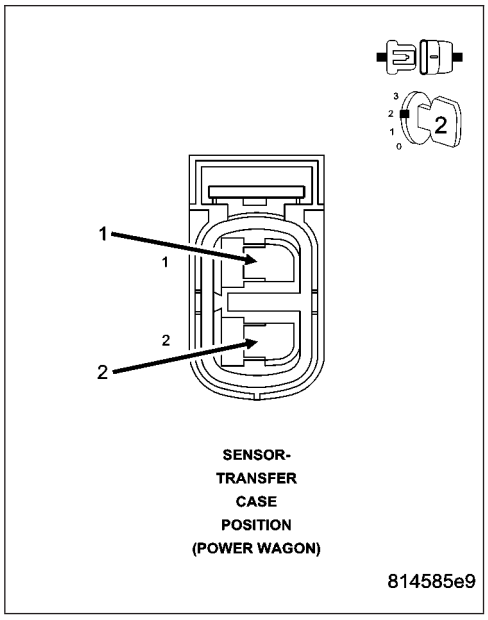

SENSOR-TRANSFER CASE POSITION (POWER WAGON)

814585e9

C1401-TRANSFER CASE RANGE SELECT SWITCH CIRCUIT LOW (CONTINUED)

3. (K77) TRANSFER CASE POSITION SENSE CIRCUIT VOLTAGE

Turn the ignition on.

Measure the voltage of the (K77) Transfer Case Position Sense circuit. The voltage should be approximately 5.0 volts.

Does the voltage display as described?

Yes >> Go To 6

No >> Go To 4

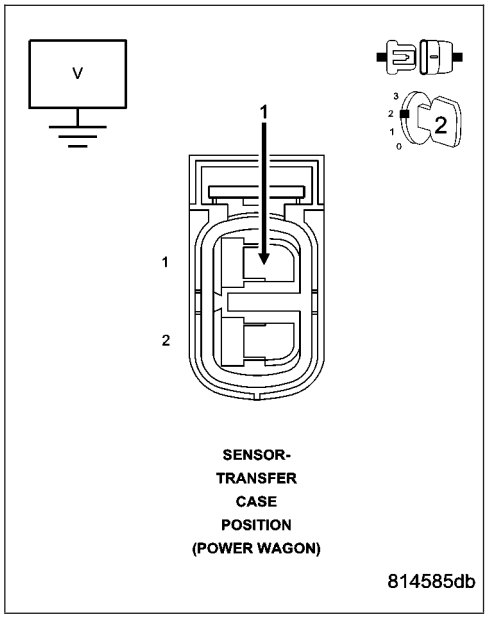

4. (K77) TRANSFER CASE POSITION SENSE CIRCUIT SHORTED TO GROUND

Turn the ignition off.

Disconnect the Final Drive Control Module harness connector.

Measure the resistance between the (K77) Transfer Case Position Sense circuit and ground.

Is the resistance less than 5.0 ohms?

Yes >> Repair the (K77) Transfer Case Position Sense circuit for a short to ground.

Perform the FDCM VERIFICATION TEST. (Refer to 3 - DIFFERENTIAL & DRIVELINE - DIAGNOSIS AND TESTING)

No >> Go To 5

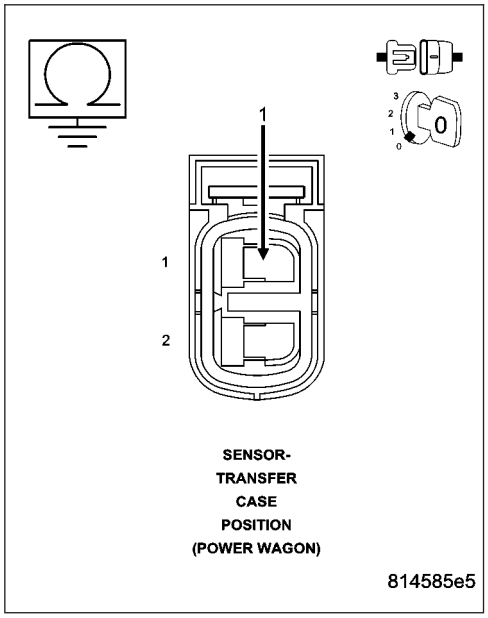

C1401-TRANSFER CASE RANGE SELECT SWITCH CIRCUIT LOW (CONTINUED)

5. (K77) TRANSFER CASE POSITION SENSE CIRCUIT OPEN

Measure the resistance of the (K77) Transfer Case Position Sense circuit between the Transfer Case Position Sensor harness connector and the Final Drive Control Module harness connector.

Is the resistance greater than 5.0 ohms?

Yes >> Repair the (K77) Transfer Case Position Sense circuit for an open.
Perform the FDCM VERIFICATION TEST. (Refer to 3 - DIFFERENTIAL & DRIVELINE - DIAGNOSIS AND TESTING)

No >> Go To 8

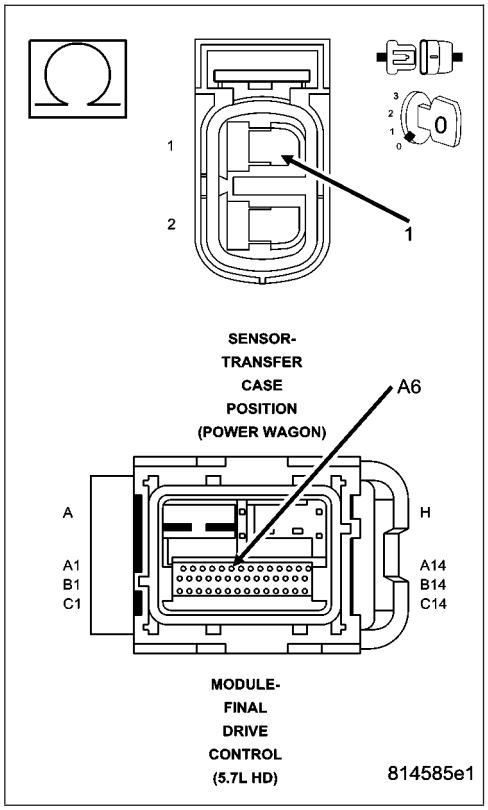

6. (T525) TRANSFER CASE RETURN CIRCUIT SHORT TO GROUND

Turn the ignition off.

Disconnect the Final Drive Control Module harness connector.

Measure the resistance between the (T525) Transfer Case Return circuit and ground.

Is the resistance less than 5.0 ohms?

Yes >> Repair the (T525) Transfer Case Return circuit for a short to ground.
Perform the FDCM VERIFICATION TEST. (Refer to 3 - DIFFERENTIAL & DRIVELINE - DIAGNOSIS AND TESTING)

No >> Go To 7

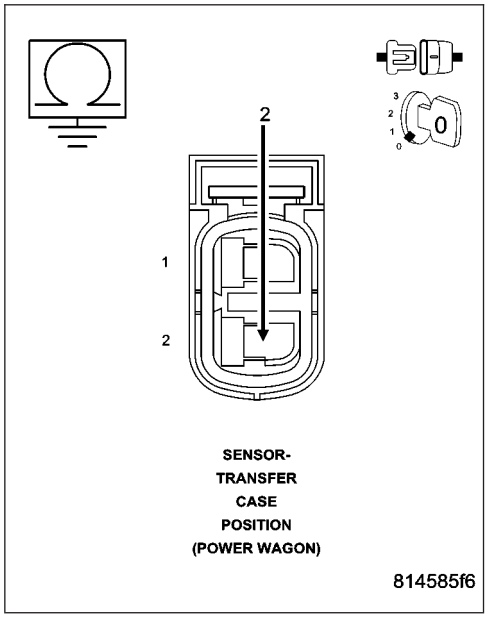

C1401-TRANSFER CASE RANGE SELECT SWITCH CIRCUIT LOW (CONTINUED)

7. (T525) TRANSFER CASE RETURN CIRCUIT OPEN

Measure the resistance of the (T525) Transfer Case Return circuit between the Transfer Case Position Sensor harness connector and the Final Drive Control Module harness connector.

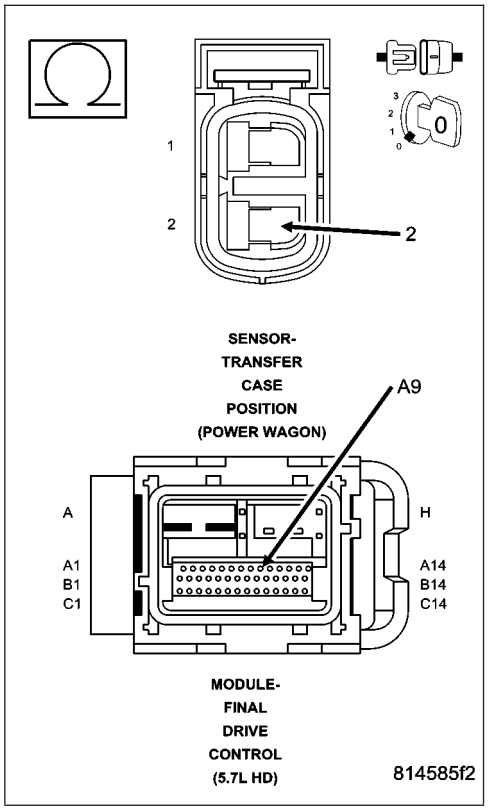

Is the resistance above 5.0 ohms?

Yes >> Repair the (T525) Transfer Case Return circuit for an open.
Perform the FDCM VERIFICATION TEST. (Refer to 3 - DIFFERENTIAL & DRIVELINE - DIAGNOSIS AND TESTING)

No >> Go To 8

---

8. FINAL DRIVE CONTROL MODULE

View repair.

Repair

Replace the Final Drive Control Module in accordance with the Service Information.
Perform the FDCM VERIFICATION TEST. (Refer to 3 - DIFFERENTIAL & DRIVELINE - DIAGNOSIS AND TESTING)

---

9. INTERMITTENT WIRING AND CONNECTORS

The conditions necessary to set this DTC are not present at this time.
Using the wiring diagram/schematic as a guide, inspect the wiring and connectors.
While monitoring the scan tool data relative to this circuit, wiggle test the wiring and connectors.
Look for the data to change or for the DTC to reset during the wiggle test.
While monitoring the scan tool data relative to this circuit, move the selector switch to each position several times. Look for the data to change other than as expected or for the DTC to reset.

Were any problems found?

Yes >> Repair as necessary.
Perform the FDCM VERIFICATION TEST. (Refer to 3 - DIFFERENTIAL & DRIVELINE - DIAGNOSIS AND TESTING)

No >> Test complete.

C1402-TRANSFER CASE RANGE SELECT SWITCH CIRCUIT HIGH

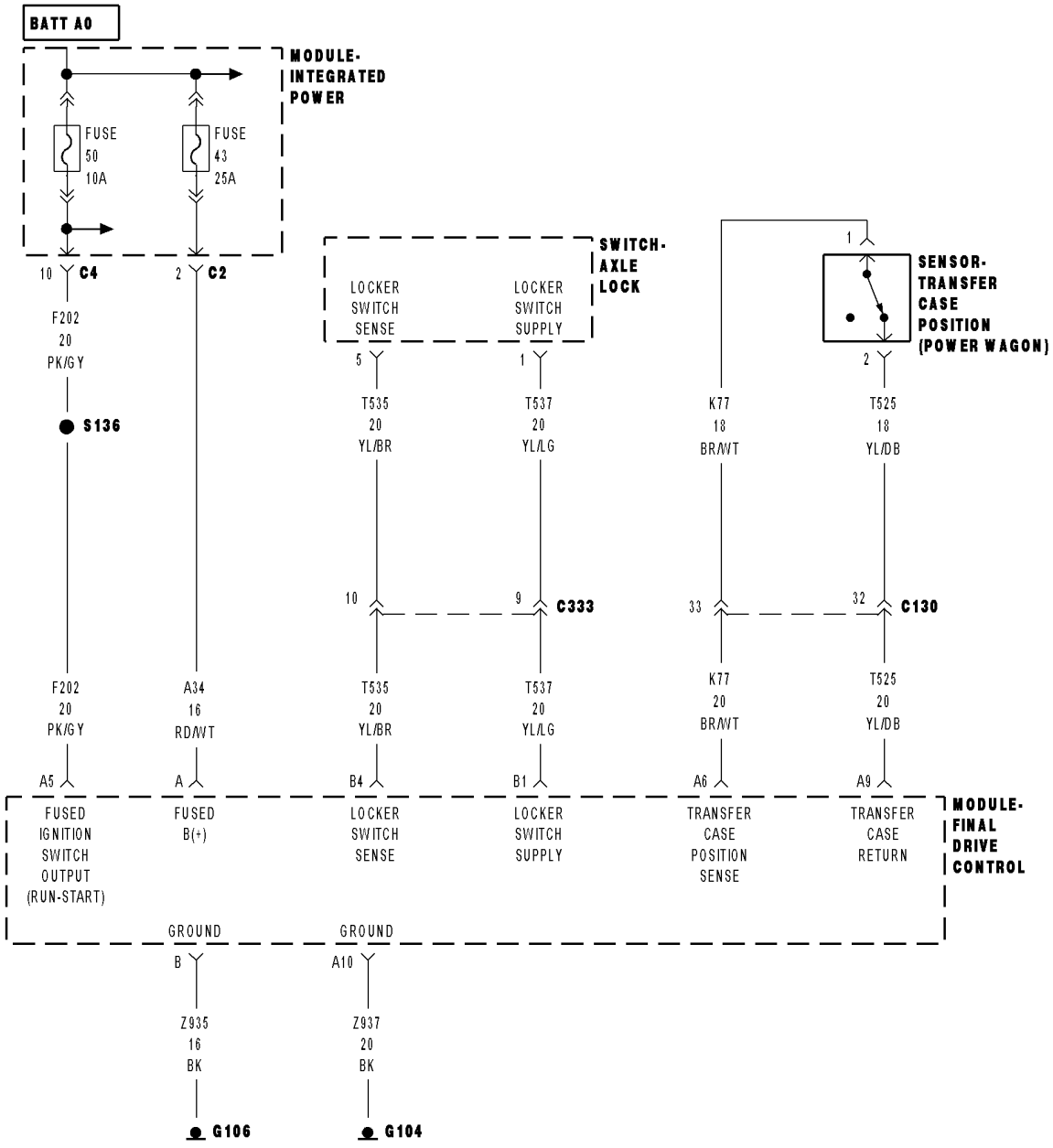

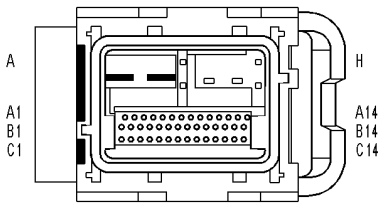

MODULE-
FINAL
DRIVE
CONTROL
(5.7L HD)

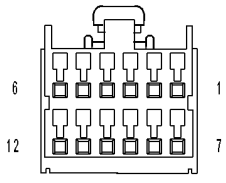

SWITCH-
AXLE
LOCK

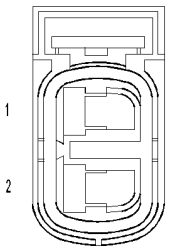

SENSOR-
TRANSFER
CASE
POSITION
(POWER WAGON)

814584b2

C1402-TRANSFER CASE RANGE SELECT SWITCH CIRCUIT HIGH (CONTINUED)
For a complete wiring diagram **Refer to Section 8W**

- **When Monitored:**
  With the ignition on and no system undervoltage or overvoltage condition present.
- **Set Condition:**
  The sensed voltage is greater than a specified voltage for a calibrated amount of time.

Possible Causes
INTERMITTENT TRANSFER CASE RANGE SELECTOR SWITCH CIRCUIT HIGH
(K77) TRANSFER CASE POSITION SENSE CIRCUIT SHORTED TO VOLTAGE
(T525) TRANSFER CASE RETURN CIRCUIT SHORTED TO VOLTAGE
TRANSFER CASE POSITION SENSOR
FINAL DRIVE CONTROL MODULE

Diagnostic Test

1. 4WD RANGE SWITCH VOLTAGE ABOVE 4.5 VOLTS

Ignition on, engine not running.

NOTE: Repair any system undervoltage or overvoltage DTCs that are set in this module before proceeding.
With the scan tool under Data Display, read the 4WD Range Switch voltage.

Is the volage above 4.5 volts?

Yes >> Go To 2

No >> Go to 6

---

2. TRANSFER CASE POSITION SENSOR

Turn the ignition off.
Disconnect the Transfer Case Position Sensor harness connector.
Ignition on, engine not running.
With the scan tool under Data Display, read the 4WD Range Switch voltage.

Is the voltage equal to 0 volts?

Yes >> Replace the Transfer Case Position Sensor.
Perform the FDCM VERIFICATION TEST. (Refer to 3 - DIFFERENTIAL & DRIVELINE - DIAGNOSIS AND TESTING)

No >> Go to 3

C1402-TRANSFER CASE RANGE SELECT SWITCH CIRCUIT HIGH (CONTINUED)

3. (K77) TRANSFER CASE POSITION SENSE CIRCUIT SHORTED TO VOLTAGE

Turn the ignition on.

Measure the voltage of the (K77) Transfer Case Position Sense circuit.

Is the voltage above 5.5 volts?

Yes >> Repair the (K77) Transfer Case Position Sense circuit for a short to voltage.

Perform the FDCM VERIFICATION TEST. (Refer to 3 - DIFFERENTIAL & DRIVELINE - DIAGNOSIS AND TESTING)

No >> Go to 4

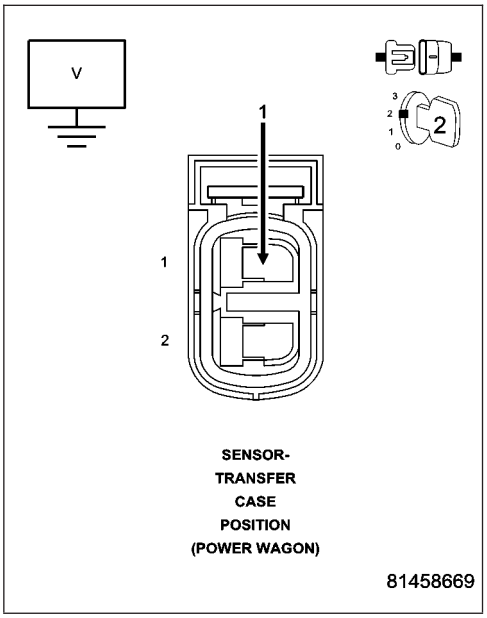

4. (T525) TRANSFER CASE RETURN CIRCUIT SHORTED TO VOLTAGE

Turn the ignition off.

Disconnect the Final Drive Control Module harness connector.

Turn the ignition on.

Measure the voltage of the (T525) Transfer Case Return circuit.

Is there any voltage present?

Yes >> Repair the (T525) Transfer Case Return circuit for a short to voltage.

Perform the FDCM VERIFICATION TEST. (Refer to 3 - DIFFERENTIAL & DRIVELINE - DIAGNOSIS AND TESTING)

No >> Go to 5

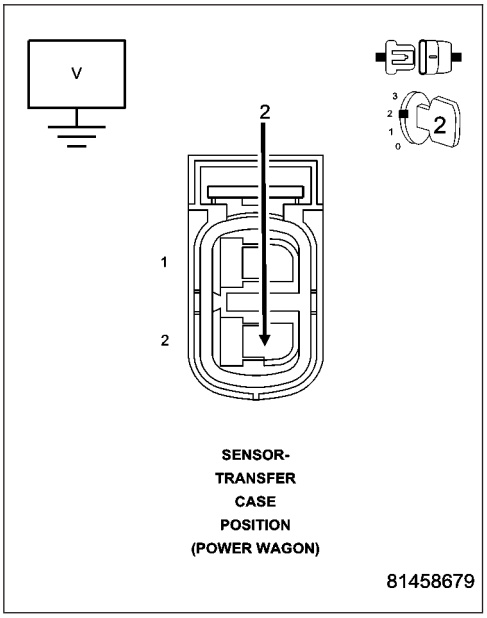

5. FINAL DRIVE CONTROL MODULE

Repair

Replace the Final Drive Control Module in accordance with the Service Information.

Perform the FDCM VERIFICATION TEST.

C1402-TRANSFER CASE RANGE SELECT SWITCH CIRCUIT HIGH (CONTINUED)

6. INTERMITTENT WIRING AND CONNECTORS

The conditions necessary to set this DTC are not present at this time.
Using the wiring diagram/schematic as a guide, inspect the wiring and connectors.
While monitoring the scan tool data relative to this circuit, wiggle test the wiring and connectors.
Look for the data to change or for the DTC to reset during the wiggle test.
While monitoring the scan tool data relative to this circuit, move the selector switch to each position several times.
Look for the data to change other than as expected or for the DTC to reset.

Were any problems found?

Yes >> Repair as necessary.
Perform the FDCM VERIFICATION TEST. (Refer to 3 - DIFFERENTIAL & DRIVELINE - DIAGNOSIS AND TESTING)

No >> Test complete.

C2100–BATTERY VOLTAGE LOW (FDCM)

For a complete wiring diagram **Refer to Section 8W**

- **When Monitored:**
  Continuously.
- **Set Condition:**
  The Final Drive Control Module detects that system voltage is below 9.0 volts for 60 seconds.

Possible Causes
INTERMITTENT BATTERY VOLTAGE LOW
CHARGING SYSTEM DTCS PRESENT
FINAL DRIVE CONTROL MODULE POWER CIRCUITS OPEN OR HIGH RESISTANCE
FINAL DRIVE CONTROL MODULE

Diagnostic Test

1. CHARGING SYSTEM DTCS PRESENT

Ignition on.

With the scan tool, select View DTCs in the Powertrain Control Module.

Are there any Charging System or related voltage DTCs present?

Yes >> Refer to the symptom list and perform any Charging System DTC diagnostic procedures before continuing with this test.

No >> Go to 2

---

2. DTC IS ACTIVE

With the scan tool, select View DTCs in the Final Drive Control Module.

Is the status Active for this DTC?

Yes >> Go to 3

No >> Go to 5

C2100–BATTERY VOLTAGE LOW (FDCM) (CONTINUED)

3. (A34) FUSED B+ CIRCUIT OPEN OR HIGH RESISTANCE

Turn the ignition off.

Disconnect the Final Drive Control Module harness connector.

Turn the ignition on.

With a 12–volt test light connected to ground, check the (A34) Fused B+ circuit in the Final Drive Control Module harness connector.

NOTE: The test light must illuminate brightly. Compare the brightness to that of a direct connection to the battery.

Does the test light illuminate brightly?

Yes >> Go to 4

No >> Repair the (A34) Fused B+ circuit for an open circuit or high resistance.

Perform the FDCM VERIFICATION TEST. (Refer to 3 - DIFFERENTIAL & DRIVELINE - DIAGNOSIS AND TESTING)

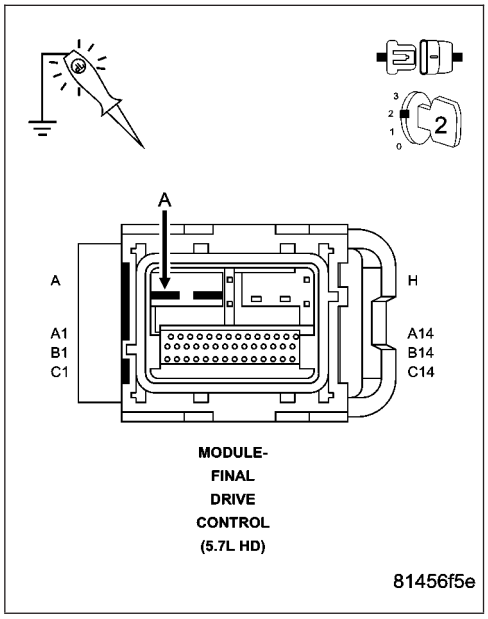

---

4. FINAL DRIVE CONTROL MODULE

View repair.

Repair

Replace the Final Drive Control Module in accordance with the Service information.

Perform the FDCM VERIFICATION TEST. (Refer to 3 - DIFFERENTIAL & DRIVELINE - DIAGNOSIS AND TESTING)

---

5. INTERMITTENT WIRING AND CONNECTORS

The conditions necessary to set this DTC are not present at this time.

Using the wiring diagram/schematic as a guide, inspect the wiring and connectors.

While monitoring the scan tool data relative to this circuit, wiggle test the wiring and connectors.

Look for the data to change or for the DTC to reset during the wiggle test.

Were any problems found?

Yes >> Repair as necessary.

Perform the FDCM VERIFICATION TEST. (Refer to 3 - DIFFERENTIAL & DRIVELINE - DIAGNOSIS AND TESTING)

No >> Test complete.

C2101–BATTERY VOLTAGE HIGH (FDCM)

For a complete wiring diagram **Refer to Section 8W**

- **When Monitored:**
  Continuously.
- **Set Condition:**
  The Final Drive Control Module detects that system voltage is above 16.0 volts for 10 seconds with engine RPM greater than 350.

Possible Causes
INTERMITTENT BATTERY VOLTAGE HIGH
CHARGING SYSTEM DTCS PRESENT
FINAL DRIVE CONTROL MODULE GROUND CIRCUITS OPEN OR HIGH RESISTANCE
FINAL DRIVE CONTROL MODULE

Diagnostic Test

1. CHARGING SYSTEM DTCS PRESENT

Ignition on.
With the scan tool, select View DTCs in the Powertrain Control Module.

Are there any Charging System or related voltage DTCs present?

Yes >> Refer to the symptom list and perform any Charging System DTC diagnostic procedures before continuing with this test.

No >> Go to 2

---

2. DTC IS ACTIVE

With the scan tool, select View DTCs in the Final Drive Control Module.

Is the status Active for this DTC?

Yes >> Go to 3

No >> Go to 5

C2101–BATTERY VOLTAGE HIGH (FDCM) (CONTINUED)

3. FINAL DRIVE CONTROL MODULE GROUND CIRCUITS OPEN OR HIGH RESISTANCE

Turn the ignition off.

Disconnect the Final Drive Control Module harness connector.

Turn the ignition on.

With a 12–volt test light connected to B+, check the Ground circuits in the Final Drive Control Module harness connector.

NOTE: The test light must illuminate brightly. Compare the brightness to that of a direct connection to the battery.

Does the test light illuminate brightly for each of the Ground circuits?

Yes >> Go to 4

No >> Repair the Ground circuit(s) for an open circuit or high resistance.

Perform the FDCM VERIFICATION TEST. (Refer to 3 - DIFFERENTIAL & DRIVELINE - DIAGNOSIS AND TESTING)

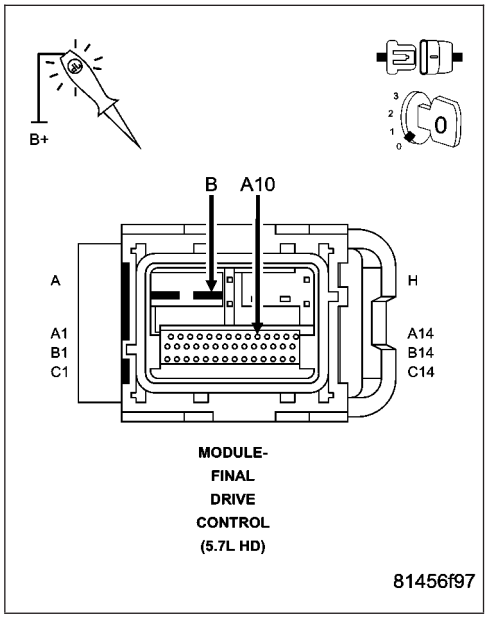

4. FINAL DRIVE CONTROL MODULE

View repair.

Repair

Replace the Final Drive Control Module in accordance with the Service information.

Perform the FDCM VERIFICATION TEST. (Refer to 3 - DIFFERENTIAL & DRIVELINE - DIAGNOSIS AND TESTING)

5. INTERMITTENT WIRING AND CONNECTORS

The conditions necessary to set this DTC are not present at this time.

Using the wiring diagram/schematic as a guide, inspect the wiring and connectors.

While monitoring the scan tool data relative to this circuit, wiggle test the wiring and connectors.

Look for the data to change or for the DTC to reset during the wiggle test.

Were any problems found?

Yes >> Repair as necessary.

Perform the FDCM VERIFICATION TEST. (Refer to 3 - DIFFERENTIAL & DRIVELINE - DIAGNOSIS AND TESTING)

No >> Test complete.

C211B—IGNITION RUN/START INPUT CIRCUIT PERFORMANCE (FDCM)

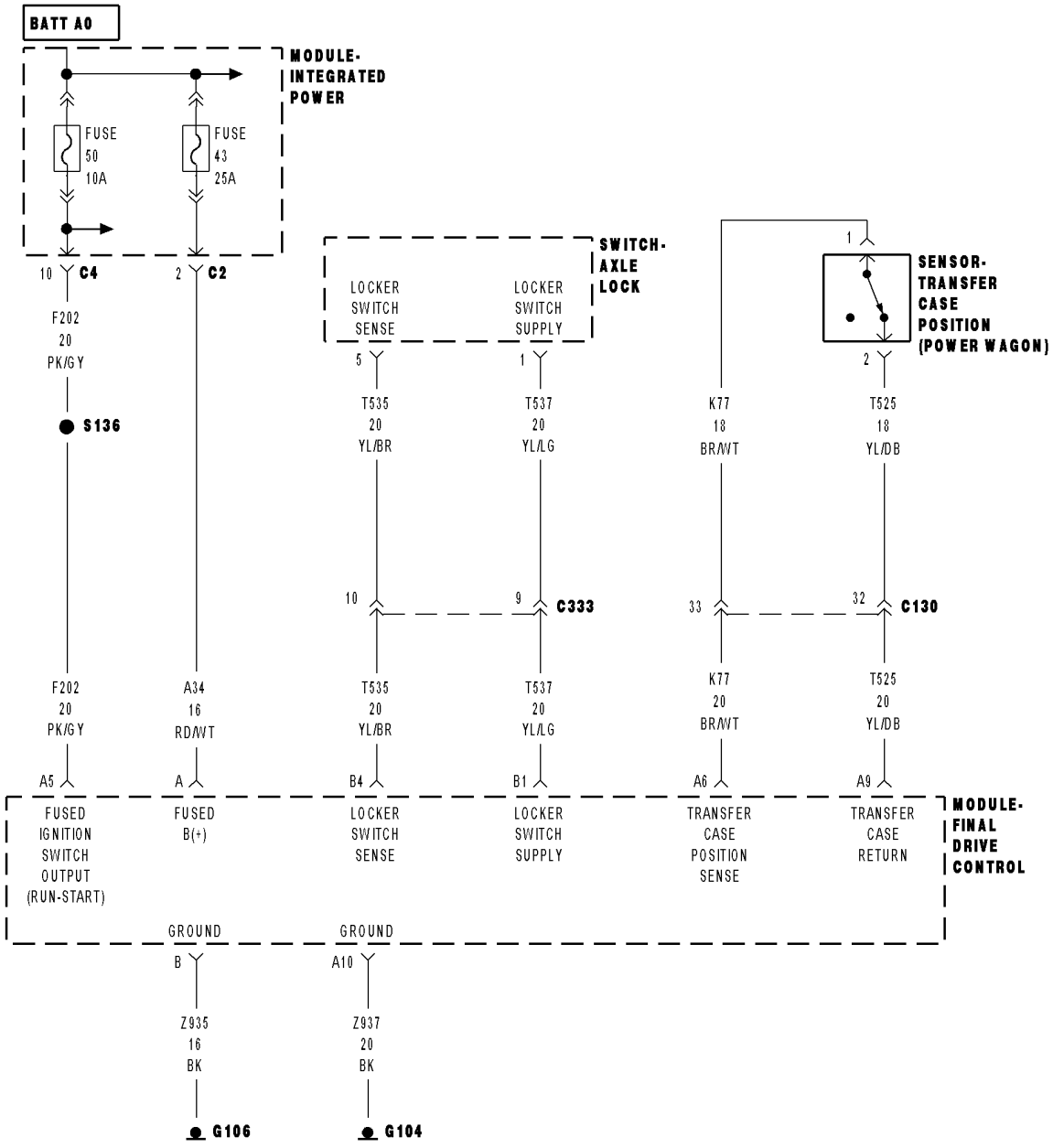

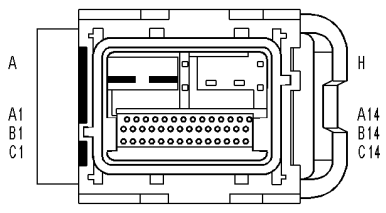

MODULE-
FINAL
DRIVE
CONTROL
(5.7L HD)

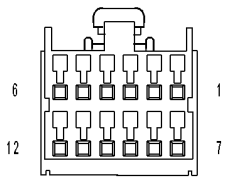

SWITCH-
AXLE
LOCK

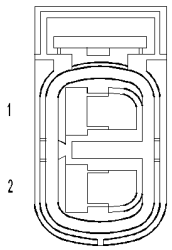

SENSOR-
TRANSFER
CASE
POSITION
(POWER WAGON)

814584b2

C211B—IGNITION RUN/START INPUT CIRCUIT PERFORMANCE (FDCM) (CONTINUED)
For a complete wiring diagram **Refer to Section 8W**

- **When Monitored:**
  Continuously.
- **Set Condition:**
  The Final Drive Control Module detects erratic voltage on the (F202) Fused Ignition Switch Output (Run-Start) circuit.

Possible Causes
INTERMITTENT IGNITION RUN/START INPUT CIRCUIT PERFORMANCE DTC
CHARGING SYSTEM DTCS PRESENT
(F202) FUSED IGNITION SWITCH OUTPUT (RUN-START) CIRCUIT OPEN OR HIGH RESISTANCE
FINAL DRIVE CONTROL MODULE

Diagnostic Test

1. CHARGING SYSTEM DTCS PRESENT

Ignition on.
With the scan tool, select View DTCs in the Powertrain Control Module.

Are there any Charging System or related voltage DTCs present?

Yes >> Refer to the symptom list and perform any Charging System DTC diagnostic procedures before continuing with this test.

No >> Go to 2

---

2. DTC IS ACTIVE

With the scan tool, select View DTCs in the Final Drive Control Module.

Is the status Active for this DTC?

Yes >> Go to 3

No >> Go to 5

C211B—IGNITION RUN/START INPUT CIRCUIT PERFORMANCE (FDCM) (CONTINUED)

3. (F202) FUSED IGNITION SWITCH OUTPUT (RUN-START) CIRCUIT OPEN OR HIGH RESISTANCE

Turn the ignition off.

Disconnect the Final Drive Control Module harness connector.

Turn the ignition on.

With a 12–volt test light connected to ground, check the (F202) Fused Ignition Switch Output (Run-Start) circuit in the Final Drive Control Module harness connector.

NOTE: The test light must illuminate brightly. Compare the brightness to that of a direct connection to the battery.

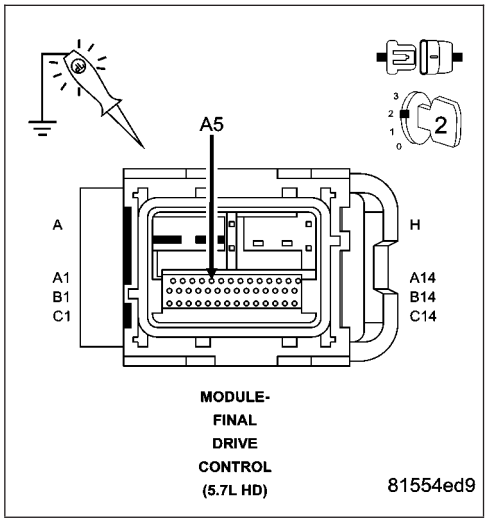

Does the test light illuminate brightly?

Yes >> Go to 4

No >> Repair the (F202) Fused Ignition Switch Output (Run-Start) circuit for an open circuit or high resistance.

Perform the FDCM VERIFICATION TEST. (Refer to 3 - DIFFERENTIAL & DRIVELINE - DIAGNOSIS AND TESTING)

---

4. FINAL DRIVE CONTROL MODULE

View repair.

Repair

Replace the Final Drive Control Module in accordance with the Service information.

Perform the FDCM VERIFICATION TEST. (Refer to 3 - DIFFERENTIAL & DRIVELINE - DIAGNOSIS AND TESTING)

---

5. INTERMITTENT WIRING AND CONNECTORS

The conditions necessary to set this DTC are not present at this time.

Using the wiring diagram/schematic as a guide, inspect the wiring and connectors.

While monitoring the scan tool data relative to this circuit, wiggle test the wiring and connectors.

Look for the data to change or for the DTC to reset during the wiggle test.

Were any problems found?

Yes >> Repair as necessary.

Perform the FDCM VERIFICATION TEST. (Refer to 3 - DIFFERENTIAL & DRIVELINE - DIAGNOSIS AND TESTING)

No >> Test complete.

C2122–T-CASE/DIFFERENTIAL SWITCH SUPPLY VOLTAGE CIRCUIT LOW

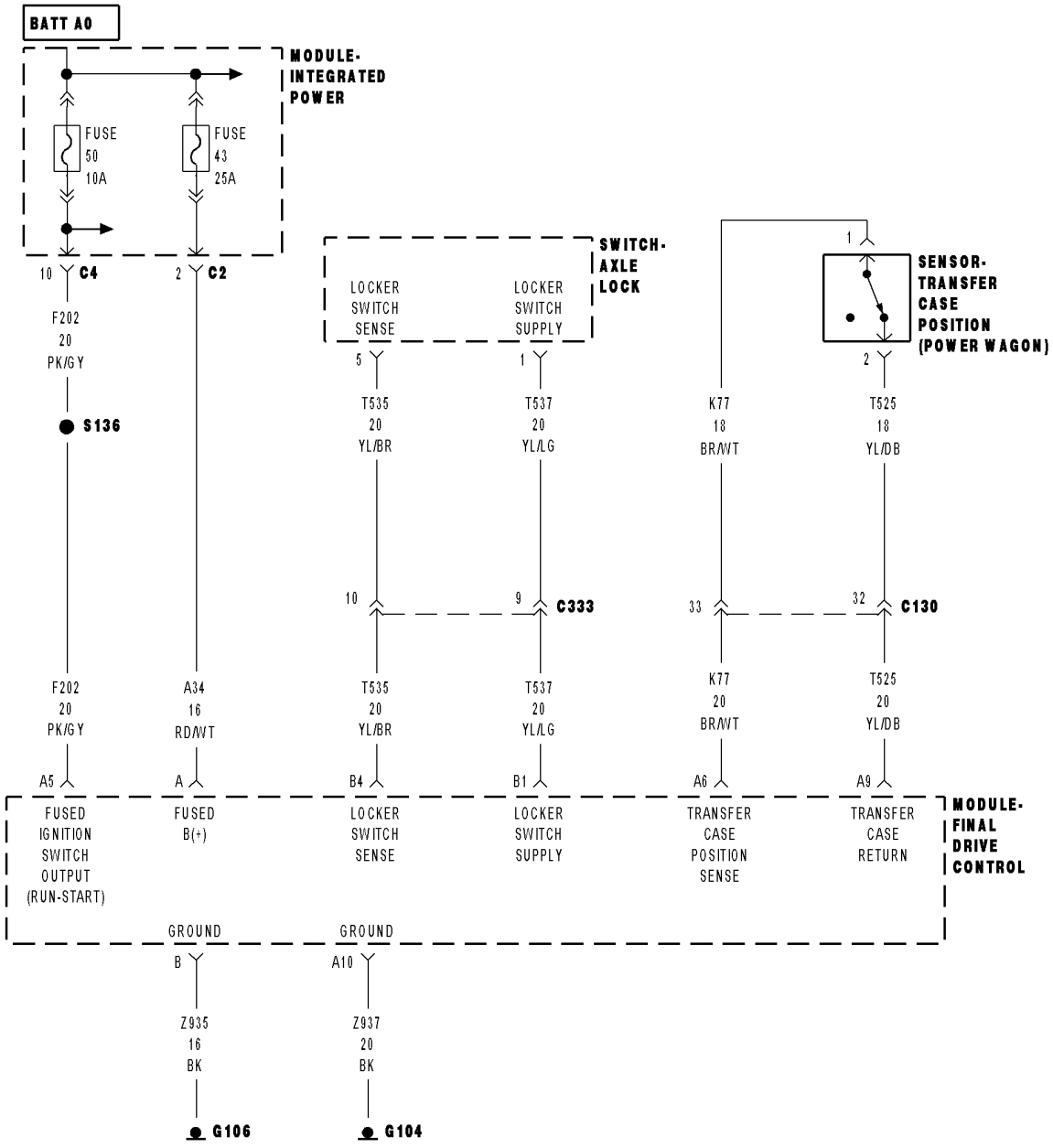

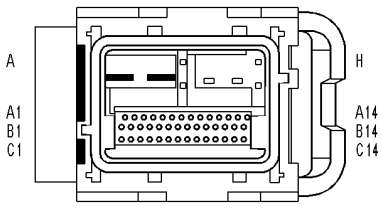

MODULE-
FINAL
DRIVE
CONTROL
(5.7L HD)

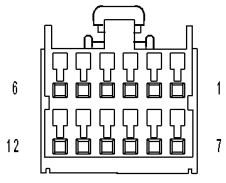

SWITCH-
AXLE
LOCK

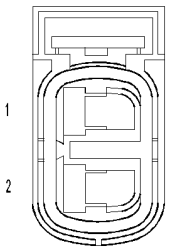

SENSOR-
TRANSFER
CASE
POSITION
(POWER WAGON)

814584b2

C2122–T-CASE/DIFFERENTIAL SWITCH SUPPLY VOLTAGE CIRCUIT LOW (CONTINUED)

For a complete wiring diagram **Refer to Section 8W**

- **When Monitored:**
  With the ignition on and no system undervoltage or overvoltage condition present.
- **Set Condition:**
  The Final Drive Control Module detects that the Drivetrain Sensor Supply voltage is below 4.75 volts for 300 mS.

Possible Causes
INTERMITTENT T-CASE/DIFFERENTIAL SWITCH SUPPLY VOLTAGE CIRCUIT LOW
(K77) TRANSFER CASE POSITION SENSE CIRCUIT SHORT TO GROUND
(T537) LOCKER SWITCH SUPPLY CIRCUIT SHORT TO GROUND
TRANSFER CASE SELECTOR SWIITCH
AXLE LOCK SWITCH
FINAL DRIVE CONTROL MODULE

Diagnostic Test

1. TRANSFER CASE POSITION SENSE VOLTAGE EQUAL TO 0 VOLTS

Turn the ignition on.

Measure the voltage of the Transfer Case Position Sense circuit by backprobing the Transfer Case Position Sensor harness connector.

Is the voltage equal to 0 volts?

Yes >> Go to 2

No >> Go to 7

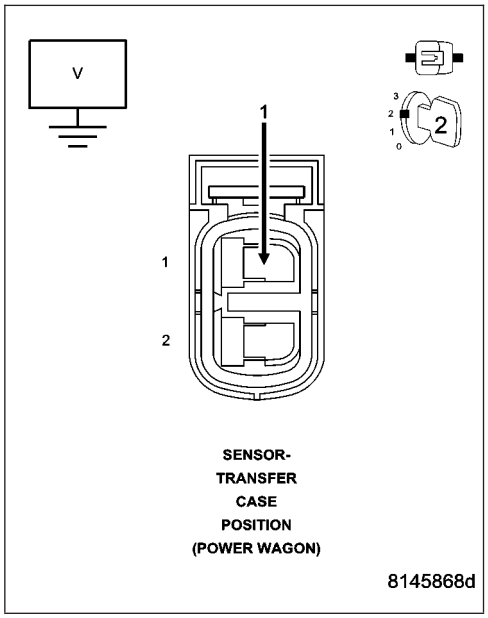

C2122–T-CASE/DIFFERENTIAL SWITCH SUPPLY VOLTAGE CIRCUIT LOW (CONTINUED)

2. TRANSFER CASE POSITION SENSOR

Turn the ignition off.

Disconnect the Transfer Case Position Sensor harness connector.

Turn the ignition on.

Measure the voltage of the (K77) Transfer Case Position Sense circuit at the Transfer Case Position Sensor harness connector.

Is the voltage above 4.75 volts?

Yes >> Replace the Transfer Case Position Sensor in accordance with the Service Information.

Perform the FDCM VERIFICATION TEST. (Refer to 3 - DIFFERENTIAL & DRIVELINE - DIAGNOSIS AND TESTING)

No >> Go to 3

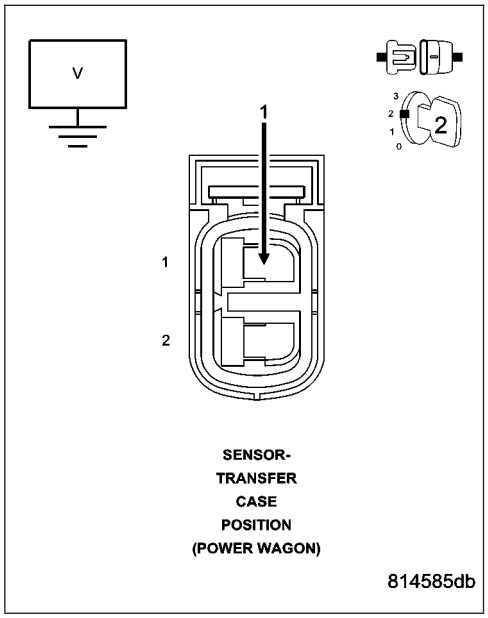

3. AXLE LOCK SWITCH

Turn the ignition off.

Disconnect the Axle Lock Switch harness connector.

Turn the ignition on.

Measure the voltage of the (T537) Locker Switch Supply circuit at the Axle Lock Switch harness connector.

Is the voltage above 4.75 volts?

Yes >> Replace the Axle Lock Switch in accordance with the Service Information.

Perform the FDCM VERIFICATION TEST. (Refer to 3 - DIFFERENTIAL & DRIVELINE - DIAGNOSIS AND TESTING)

No >> Go to 4

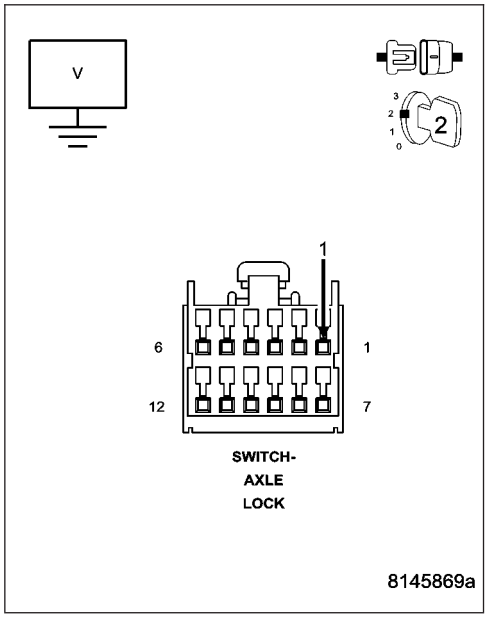

C2122–T-CASE/DIFFERENTIAL SWITCH SUPPLY VOLTAGE CIRCUIT LOW (CONTINUED)

4. (K77) TRANSFER CASE POSITION SENSE CIRCUIT SHORT TO GROUND

Turn the ignition off.

Disconnect the Final Drive Control Module harness connector.

Measure the resistance between the (K77) Transfer Case Position Sense circuit at the Transfer Case Position Sensor harness connector and ground.

Is the resistance below 5.0 ohms?

Yes >> Repair the (K77) Transfer Case Position Sense circuit for a short to ground.

Perform the FDCM VERIFICATION TEST. (Refer to 3 - DIFFERENTIAL & DRIVELINE - DIAGNOSIS AND TESTING)

No >> Go to 5

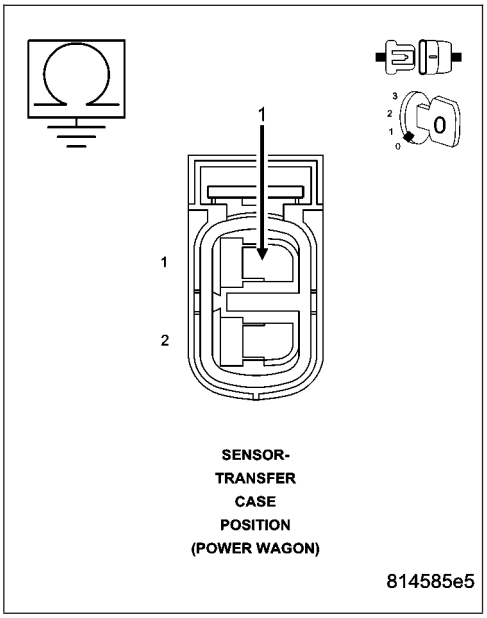

5. (T537) LOCKER SWITCH SUPPLY CIRCUIT SHORT TO GROUND

Measure the resistance between the (T537) Locker Switch Supply circuit at the Axle Lock Switch harness connector and ground.

Is the resistance below 5.0 ohms?

Yes >> Repair the (T537) Locker Switch Supply circuit for a short to ground.

Perform the FDCM VERIFICATION TEST. (Refer to 3 - DIFFERENTIAL & DRIVELINE - DIAGNOSIS AND TESTING)

No >> Go to 6

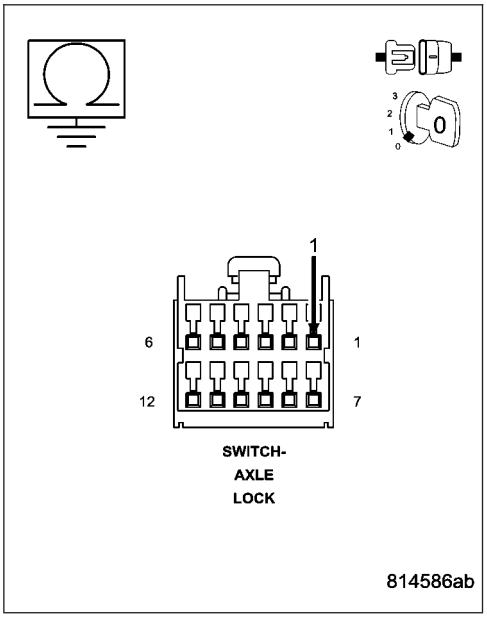

6. FINAL DRIVE CONTROL MODULE

View repair.

Repair

Replace the Final Drive Control Module in accordance with the Service information.

Perform the FDCM VERIFICATION TEST. (Refer to 3 - DIFFERENTIAL & DRIVELINE - DIAGNOSIS AND TESTING)

C2122–T-CASE/DIFFERENTIAL SWITCH SUPPLY VOLTAGE CIRCUIT LOW (CONTINUED)

7. INTERMITTENT WIRING AND CONNECTORS

The conditions necessary to set this DTC are not present at this time.
Using the wiring diagram/schematic as a guide, inspect the wiring and connectors.
While monitoring the scan tool data relative to this circuit, wiggle test the wiring and connectors.
Look for the data to change or for the DTC to reset during the wiggle test.

Were any problems found?

Yes >> Repair as necessary.
Perform the FDCM VERIFICATION TEST. (Refer to 3 - DIFFERENTIAL & DRIVELINE - DIAGNOSIS AND TESTING)

No >> Test complete.

C2123–T-CASE/DIFFERENTIAL SWITCH SUPPLY VOLTAGE CIRCUIT HIGH

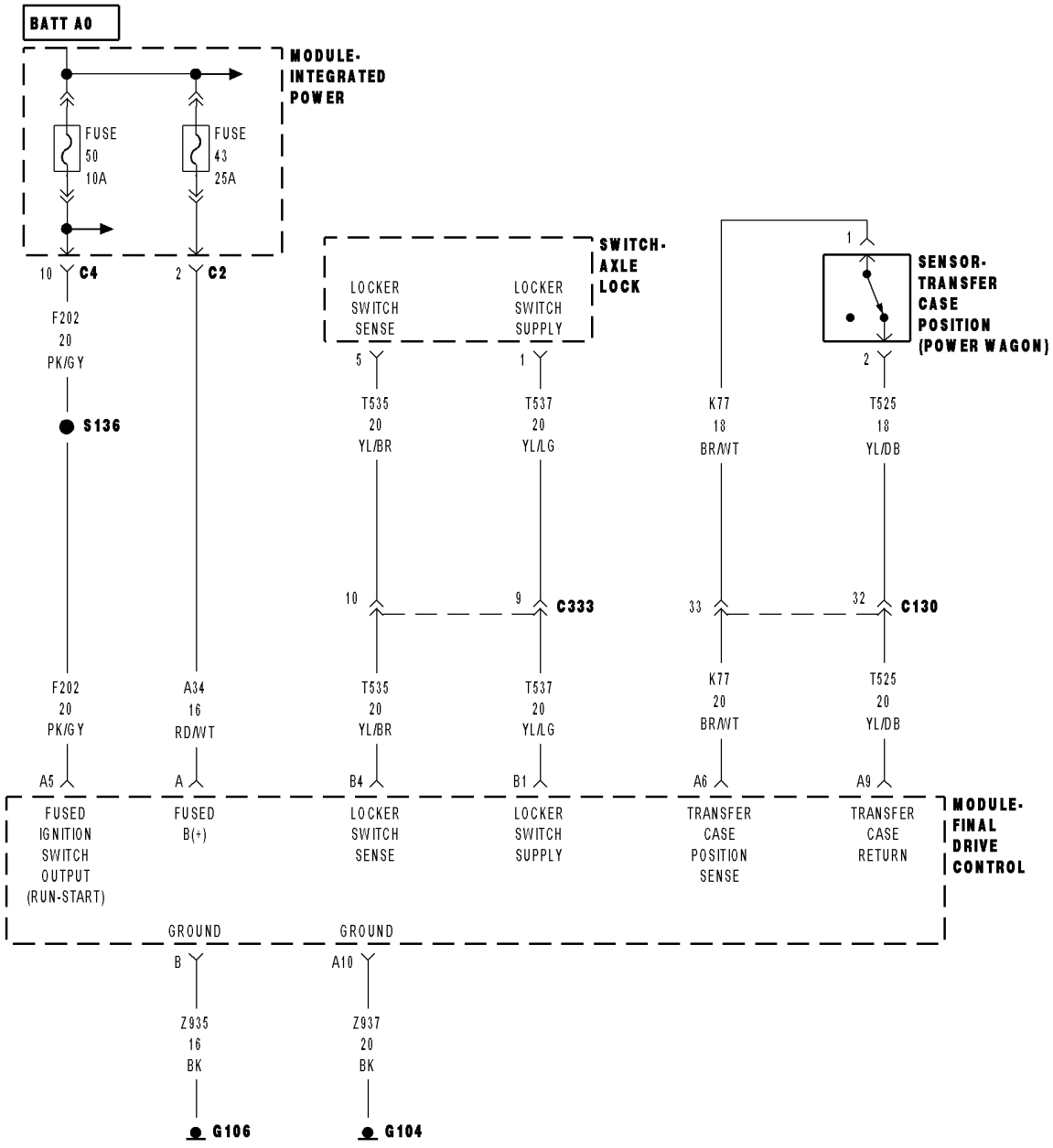

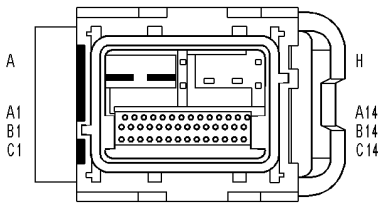

MODULE-
FINAL
DRIVE
CONTROL
(5.7L HD)

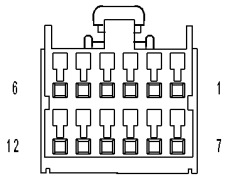

SWITCH-
AXLE
LOCK

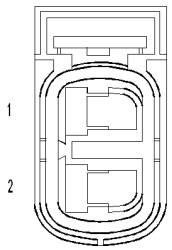

SENSOR-
TRANSFER
CASE
POSITION
(POWER WAGON)

814584b2

C2123–T-CASE/DIFFERENTIAL SWITCH SUPPLY VOLTAGE CIRCUIT HIGH (CONTINUED)

For a complete wiring diagram **Refer to Section 8W**

- **When Monitored:**
  With the ignition on and no system undervoltage or overvoltage condition present.
- **Set Condition:**
  The Final Drive Control Module detects that the Locker Switch Supply voltage and the Transfer Case Position Sense voltage are greater than 5.0 volts for 10 seconds.

Possible Causes
INTERMITTENT T-CASE/DIFFERENTIAL SWITCH SUPPLY VOLTAGE CIRCUIT HIGH
(K77) TRANSFER CASE POSITION SENSE CIRCUIT SHORT TO VOLTAGE
(K537) LOCKER SWITCH SUPPLY CIRCUIT SHORT TO VOLTAGE
FINAL DRIVE CONTROL MODULE

Diagnostic Test

1. (K77) TRANSFER CASE POSITION SENSE VOLTAGE GREATER THAN 5.0 VOLTS

Turn the ignition on.

Measure the voltage of the (K77) Transfer Case Position Sense circuit by backprobing the Transfer Case Position Sensor harness connector.

Is the voltage greater than 5.0 volts?

Yes >> Go to 2

No >> Go to 5

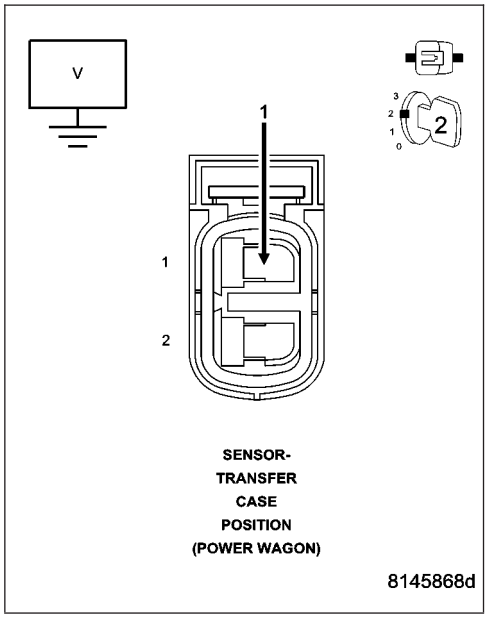

C2123–T-CASE/DIFFERENTIAL SWITCH SUPPLY VOLTAGE CIRCUIT HIGH (CONTINUED)

2. (K77) TRANSFER CASE POSITION SENSE CIRCUIT SHORT TO VOLTAGE

Turn the ignition off.

Disconnect the Transfer Case Position Sensor harness connector.

Disconnect the Final Drive Control Module harness connector.

Measure the voltage of the (K77) Transfer Case Position Sense circuit at the Transfer Case Position Sensor harness connector.

Is there any voltage present?

Yes >> Repair the (K77) Transfer Case Position Sense circuit for a short to voltage.

Perform the FDCM VERIFICATION TEST. (Refer to 3 - DIFFERENTIAL & DRIVELINE - DIAGNOSIS AND TESTING)

No >> Go to 3

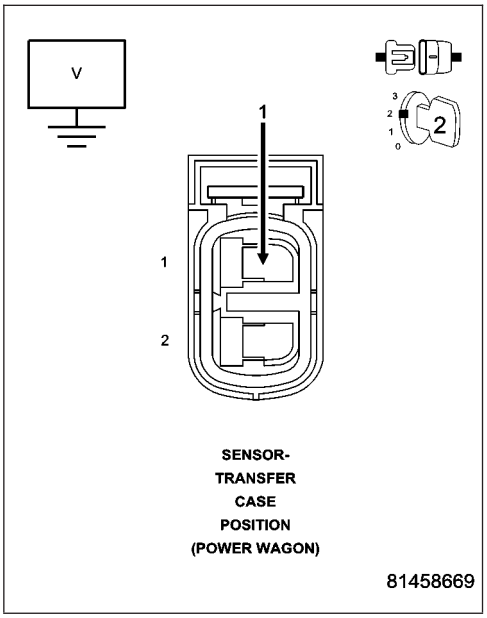

3. (K537) LOCKER SWITCH SUPPLY CIRCUIT SHORT TO VOLTAGE

Turn the ignition off.

Disconnect the Axle Lock Switch harness connector.

Turn the ignition on.

Measure the voltage of the (T537) Locker Switch Supply circuit at the Axle Lock Switch harness connector.

Is there any voltage present?

Yes >> Repair the (K537) Locker Switch Supply circuit for a short to voltage.

Perform the FDCM VERIFICATION TEST. (Refer to 3 - DIFFERENTIAL & DRIVELINE - DIAGNOSIS AND TESTING)

No >> Go to 4

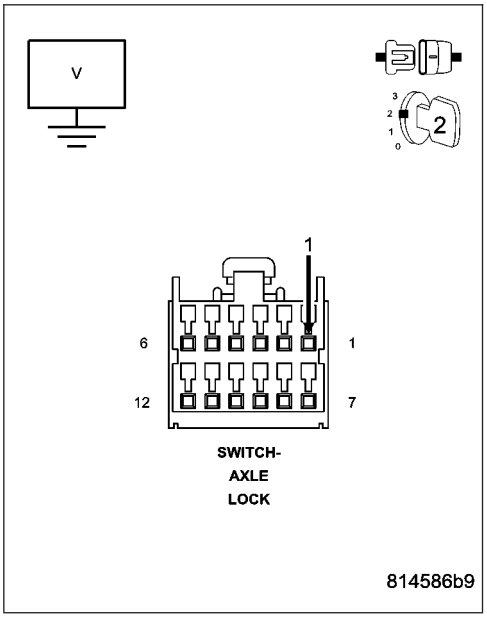

4. FINAL DRIVE CONTROL MODULE

View repair.

Repair

Replace the Final Drive Control Module in accordance with the Service information.

Perform the FDCM VERIFICATION TEST. (Refer to 3 - DIFFERENTIAL & DRIVELINE - DIAGNOSIS AND TESTING)

C2123–T-CASE/DIFFERENTIAL SWITCH SUPPLY VOLTAGE CIRCUIT HIGH (CONTINUED)

5. INTERMITTENT WIRING AND CONNECTORS

The conditions necessary to set this DTC are not present at this time.
Using the wiring diagram/schematic as a guide, inspect the wiring and connectors.
While monitoring the scan tool data relative to this circuit, wiggle test the wiring and connectors.
Look for the data to change or for the DTC to reset during the wiggle test.

Were any problems found?

Yes >> Repair as necessary.
Perform the FDCM VERIFICATION TEST. (Refer to 3 - DIFFERENTIAL & DRIVELINE - DIAGNOSIS AND TESTING)

No >> Test complete.

C2201-FDCM ECU INTERNAL (FDCM)

For a complete wiring diagram **Refer to Section 8W**

- **When Monitored:**
  With the ignition on.
- **Set Condition:**
  The Final Drive Control Module has detected a failure internal to the controller.

Possible Causes
FINAL DRIVE CONTROL MODULE

1. FINAL DRIVE CONTROL MODULE

The Final Drive Control Module has detected an internal failure.

View repair

Repair

Replace the Final Drive Control Module in accordance with the Service Information.

Perform the FDCM VERIFICATION TEST. (Refer to 3 - DIFFERENTIAL & DRIVELINE - DIAGNOSIS AND TESTING)

U0100-LOST COMMUNICATION WITH ECM/PCM (FDCM)

For a complete wiring diagram **Refer to Section 8W**.

- **When Monitored:**
  - With the ignition on
  - Battery voltage between 10 and 16 volts
  - IOD fuse installed
  - FCM is configured correctly
- **Set Condition:**
  Bus messages not received from the ECM/PCM for approximately 2 to 5 seconds.

Possible Causes
CAN B OR CAN C BUS CIRCUITS OPEN OR SHORTED
DTCS RELATED TO BATTERY VOLTAGE, IGNITION, OR VIN MESSAGES
FCM NOT CONFIGURED CORRECTLY
ECM/PCM POWER AND GROUND
ECM/PCM
MODULE THAT SET THIS DTC

Diagnostic Test

1. VERIFY DTC IS ACTIVE

NOTE: Ensure the IOD fuse is installed and battery voltage is between 10 and 16 volts before proceeding.
With the scan tool, read active DTCs.

Is this DTC active?

Yes >> Go To 2

No >> Refer to the Stored Lost Communication test procedure. Refer to the table of contents in this section.

---

2. CHECK FOR ANY OF THE FOLLOWING ACTIVE DTCS

With the scan tool, read all active DTCs from all modules.

NOTE: Check for FCM configuration, CAN B or C hardware electrical, VIN Missing/Mismatch, battery or ignition related DTCs.

Does the scan tool display any active DTCs to the conditions listed above?

Yes >> Diagnose and repair the DTC. Refer to the Index for a complete list of the symptoms.

No >> Go To 3

---

3. VERIFY THAT THE ECM/PCM IS ACTIVE ON THE BUS

Turn the ignition on.
With the scan tool, select Network Diagnostics.
Verify that the ECM/PCM is active on the bus.

Is the ECM/PCM active on the bus?

Yes >> Go To 4

No >> Refer to the No Response test procedure. Refer to the table of contents in this section.

U0100-LOST COMMUNICATION WITH ECM/PCM (FDCM) (CONTINUED)

4. CHECK FOR ADDITIONAL COMMUNICATION RELATED DTCS

With the scan tool, select Network Diagnostics.

Is there more than one module with active DTCs "Logged Against" the ECM/PCM?

Yes >> Replace/update the ECM/PCM in accordance with the service information. Perform the appropriate VERIFICATION TEST.

No >> Replace/update the module that set this DTC in accordance with the service information. Perform the appropriate VERIFICATION TEST.

U0155-LOST COMMUNICATION WITH CLUSTER/CCN (FDCM)

For a complete wiring diagram **Refer to Section 8W**.

- **When Monitored:**
  - With the ignition on
  - Battery voltage between 10 and 16 volts
  - IOD fuse installed
  - FCM is configured correctly
- **Set Condition:**
  Bus messages not received from the Cluster/CCN for approximately 2 to 5 seconds.

Possible Causes
CAN B BUS CIRCUITS OPEN OR SHORTED
DTCS RELATED TO BATTERY VOLTAGE, IGNITION, OR VIN MESSAGES
FCM NOT CONFIGURED CORRECTLY
CLUSTER/CCN POWER AND GROUND
CLUSTER/CCN
MODULE THAT SET THE DTC

Diagnostic Test

1. VERIFY DTC IS ACTIVE

NOTE: Ensure the IOD fuse is installed and battery voltage is between 10 and 16 volts before proceeding.
With the scan tool, read active DTCs.

Is this DTC active?

Yes >> Go To 2

No >> Refer to the Stored Lost Communication test procedure. Refer to the table of contents in this section.

---

2. CHECK FOR ANY OF THE FOLLOWING ACTIVE DTCS

With the scan tool, read active DTCs from all modules.

NOTE: Check for FCM configuration, CAN B or C hardware electrical, VIN Missing/Mismatch, battery or ignition related DTCs.

Does the scan tool display any active DTCs to the conditions listed above?

Yes >> Diagnose and repair the DTC. Refer to the Index for a complete list of the symptoms.

No >> Go To 3

---

3. VERIFY THAT THE CCN IS ACTIVE ON THE BUS

Turn the ignition on.
With the scan tool, select Network Diagnostics.
Verify that the CCN is active on the bus.

Is the CCN active on the bus?

Yes >> Go To 4

No >> Refer to the No Response test procedure. Refer to the table of contents in this section.

U0155-LOST COMMUNICATION WITH CLUSTER/CCN (FDCM) (CONTINUED)

4. CHECK FOR ADDITIONAL COMMUNICATION RELATED DTCS

With the scan tool, select Network Diagnostics.

Is there more than one module with active DTCs "Logged Against" the CCN?

Yes >> Replace/update the Cluster (CCN) in accordance with the service information. Perform BODY VERIFICATION TEST – VER 1.

No >> Replace/update the module that set this DTC in accordance with the service information. Perform the appropriate VERIFICATION TEST.

TRANSFER CASE - NV241 GENII - SERVICE INFORMATION

TABLE OF CONTENTS

page

TRANSFER CASE - NV241 GENII - SERVICE INFORMATION
DESCRIPTION 1331
OPERATION 1332
DIAGNOSIS AND TESTING - TRANSFER CASE - NV241 GENII 1332
REMOVAL 1334
DISASSEMBLY 1334
CLEANING 1346
INSPECTION 1347
ASSEMBLY 1349
INSTALLATION 1363
SPECIFICATIONS
TRANSFER CASE - NV241 GENII 1364
SPECIAL TOOLS
TRANSFER CASE - NV241/NV243 1365

page

SEAL-EXTENSION HOUSING
REMOVAL 1367
INSTALLATION 1367
FLUID
STANDARD PROCEDURE - FLUID DRAIN AND REFILL 1367
FRONT OUTPUT SHAFT SEAL
REMOVAL 1368
INSTALLATION 1369
LEVER-SHIFT
REMOVAL 1370
INSTALLATION 1371
ADJUSTMENTS
ADJUSTMENT - SHIFT LEVER 1372

TRANSFER CASE - NV241 GENII - SERVICE INFORMATION

DESCRIPTION

The NV241 GENII transfer case (1) is a part-time transfer case with a low-range gear system. It provides three operating ranges plus a NEUTRAL position. The low range position provides a gear reduction ratio of 2.72:1 for increased low speed torque capability.

The gear cases and extension are all of aluminum. Drive sprockets and an interconnecting drive chain are used to transmit engine torque to the front/rear propeller shafts. The mainshaft, input gear and front output shaft are supported by ball and needle bearings.

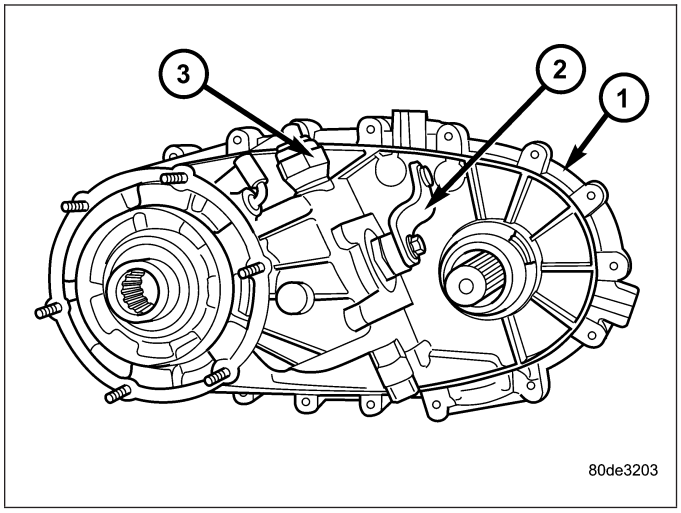

IDENTIFICATION

An identification tag (2) is attached to the rear case of every transfer case. The tag provides the transfer case model number, assembly number, serial number, and low range ratio.

The transfer case serial number also represents the date of build.

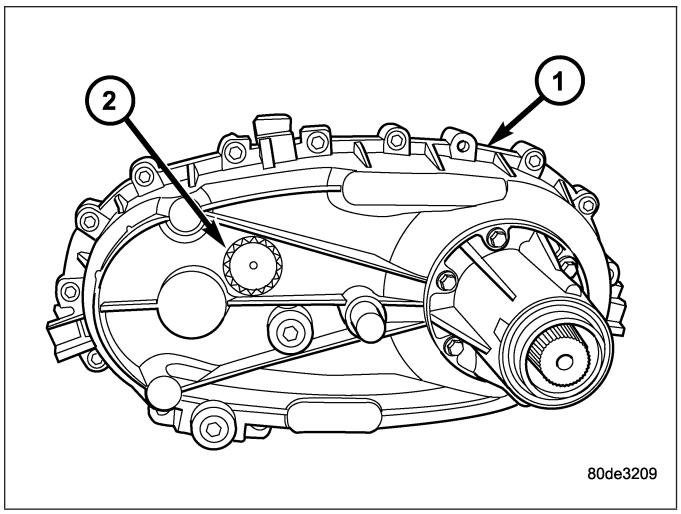

OPERATION

OPERATING RANGE

Transfer case operating ranges are:

- 2H (2-wheel drive)
- 4H (4-wheel drive)
- 4LO (4-wheel drive low range

The 2H range is for use on any road surface at any time.

The 4H and 4LO ranges are for off road use only. They are not for use on hard surface roads. The only exception being when the road surface is covered by ice and snow.

The low range reduction gear system is operative in 4LO range only. This range is for extra pulling power in off road situations. Low range reduction ratio is 2.72:1.

SHIFT MECHANISM

The transfer case is operated by an adjustable floor mounted shift linkage. The transfer case shift lever is directly attached to the shift sector. The sector operates the range and mode forks within the transfer case.

A straight line shift pattern is used with a NEUTRAL detent. Lever range positions are imprinted in the shift knob.

SHIFTING

The transfer case can be shifted between the 2H and 4H operating ranges while the vehicle is in motion. The vehicle must have the transmission placed in NEUTRAL, or the clutch depressed in the case of a manual transmission, and be moving less than 2-3 MPH when shifting into and out of the 4L operating range.

DIAGNOSIS AND TESTING - TRANSFER CASE - NV241 GENII

Before beginning repair on a suspected transfer case malfunction, check all other driveline components beforehand.

The actual cause of a problem may be related to such items as: front hubs, axles, propeller shafts, wheels and tires, transmission, or clutch instead. If all other driveline components are in good condition and operating properly, refer to the Diagnosis Chart for further information.

DIAGNOSIS CHART

Condition	Possible Cause	Correction
Transfer Case difficult to shift or will not shift into desired range.	1) Vehicle speed too great to permit shifting.	1) Stop vehicle and shift into desired range. Or, reduce speed to below 3-4 km/h (2-3 mph) before attempting the shift.
	2) If vehicle was operated for an extended period in 4H on a dry paved surface, the driveline torque load may be causing a bind.	2) Stop vehicle and shift the transmission into neutral. Shift the transfer case to 2H and operate vehicle in 2H on dry paved surfaces.
	3) Transfer case external shift linkage binding.	3) Lubricate, repair, or replace linkage bushings, or tighten loose components as necessary.
	4) Insufficient or incorrect lubricant.	4) Drain and refill to edge of fill hole with Mopar® ATF +4, Automatic Transmission fluid.
	5) Internal components binding, worn, or damaged.	5) Disassemble the transfer case and replace worn or damaged components as necessary.
Transfer Case noisy in all operating ranges.	1) Insufficient or incorrect lubricant.	1) Drain and refill to edge of fill hole with Mopar® ATF +4, Automatic Transmission fluid.
Noisy in, or jumps out of, four wheel drive low range.	1) Transfer case not completely engaged in 4L position.	1) With the transmission in NEUTRAL, or the clutch depressed in the case of a manual transmission and the vehicle moving under 3-4 km/h (2-3 mph), shift the transfer case to NEUTRAL and then shift into the 4L position.
	2) Shift linkage out of adjustment.	2) Adjust linkage.
	3) Shift linkage loose or binding.	3) Tighten, lubricate, or repair linkage as necessary.
	4) Range fork damaged, inserts worn, or fork is binding on the shift rail.	4) Disassemble unit and repair as necessary.
	5) Low range gear worn or damaged.	5) Disassemble unit and repair as necessary.
Lubricant leaking from output shaft seal or vent.	1) Transfer case overfilled.	1) Drain lubricant to the correct level.
	2) Vent closed or restricted.	2) Clear or replace vent as necessary.
	3) Output shaft seals damaged or installed incorrectly.	3) Replace seal as necessary. Check to ensure that another component, the propeller shaft slip yoke for example, is not causing damage to seal.
Abnormal tire wear.	1) Extended operation on hard, dry surfaces in the 4H position.	1) Operate vehicle in the 2H position on hard, dry surfaces.

REMOVAL

1. Raise and support vehicle.
2. Remove skid plate, if equipped. (Refer to 13 - FRAMES & BUMPERS/FRAME/TRANSFER CASE SKID PLATE - REMOVAL)
3. Position drain oil container under transfer case.
4. Remove transfer case drain plug and drain lubricant into container.
5. Disconnect vent hose and transfer case position sensor connector.
6. Disconnect shift rod from grommet in transfer case shift lever, or from floor shift arm whichever provides easy access. Use channel lock style pliers to press rod out of lever grommet.
7. Support transmission with jack stand.
8. Mark front and rear propeller shafts for assembly reference.
9. Remove front and rear propeller shafts. (Refer to 3 - DIFFERENTIAL & DRIVELINE/PROPELLER SHAFT/PROPELLER SHAFT - REMOVAL)
10. Support transfer case with suitable jack. Secure transfer case to jack with safety chains.
11. Remove nuts attaching transfer case to transmission.
12. Move transfer case assembly rearward until free of transmission output shaft.
13. Lower jack and move transfer case from under vehicle.

DISASSEMBLY

Position transfer case in a shallow drain pan. Remove drain plug and drain any remaining lubricant remaining in case.

SHIFT LEVER AND FRONT OUTPUT SHAFT SEAL

1. Shift transfer case into NEUTRAL.
2. Remove nut that retains the shift lever (1) to sector shaft. Then remove shift lever from shaft.

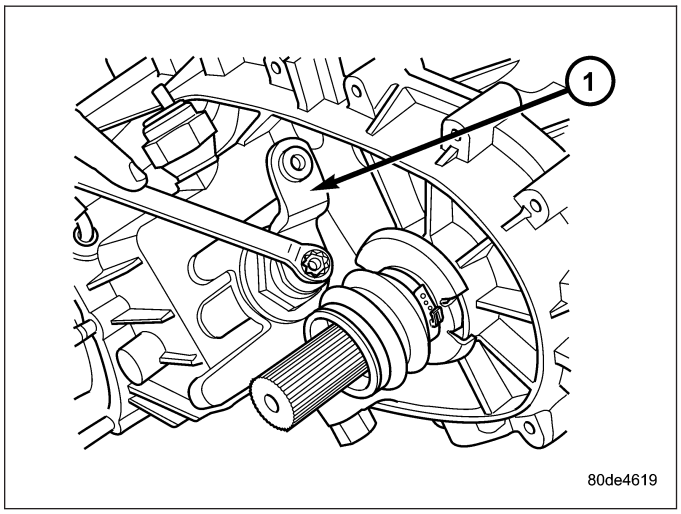

3. Remove the front propeller shaft seal boot (1) retaining clamp (2).

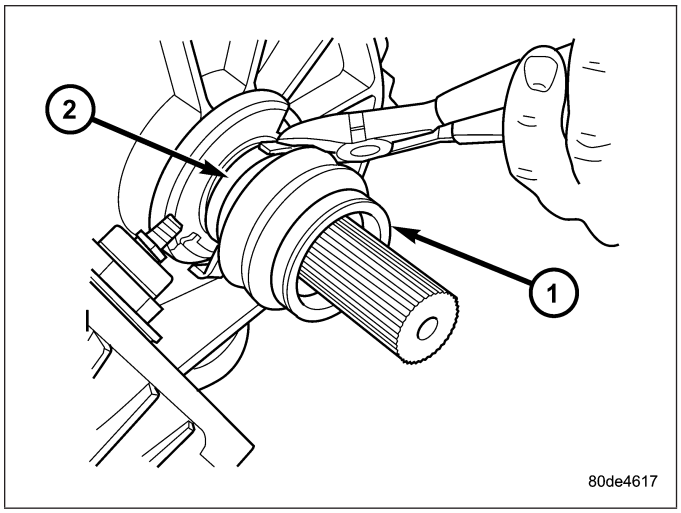

4. Remove the front propeller shaft seal boot (1).

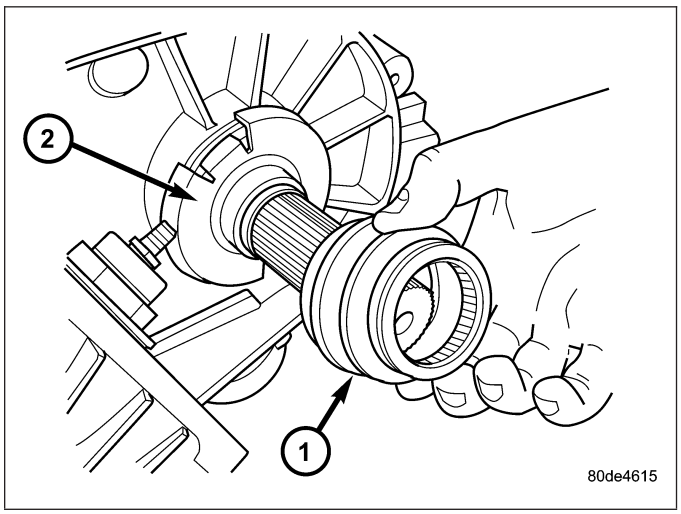

5. Remove the front output shaft seal slinger (1) by bending (2) the slinger ears away from the transfer case.

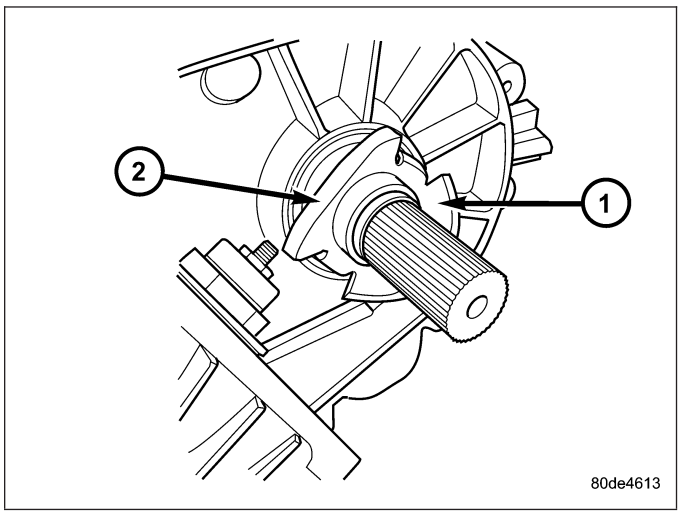

6. Using a suitable pry tool (2), remove the slinger (1) from the output shaft using care not to damage the shaft.
7. Using a screw and a slide hammer, remove the front output shaft seal.

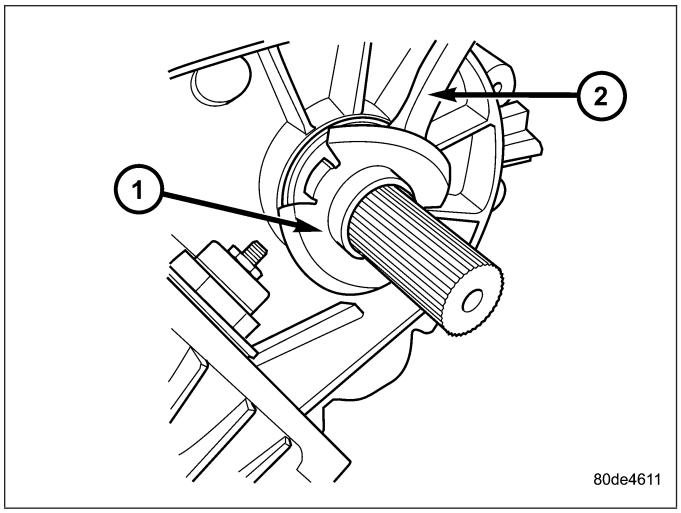

REAR EXTENSION

1. Remove rear extension (1) bolts.

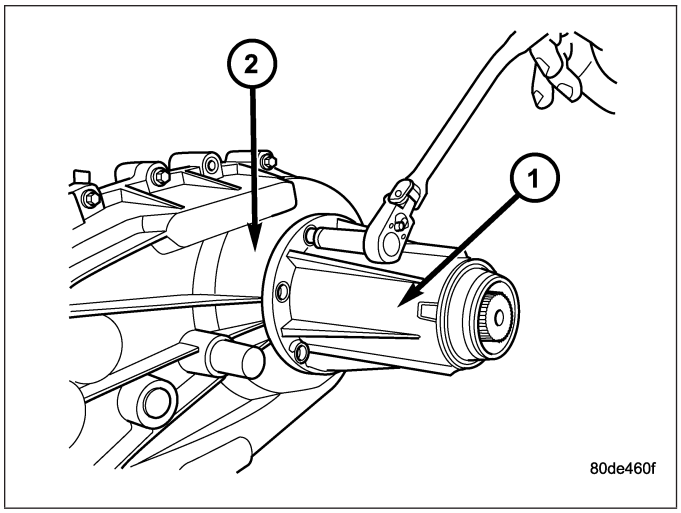

2. Remove rear extension housing (1). Tap extension once or twice with a plastic mallet to break sealer bead and loosen it.

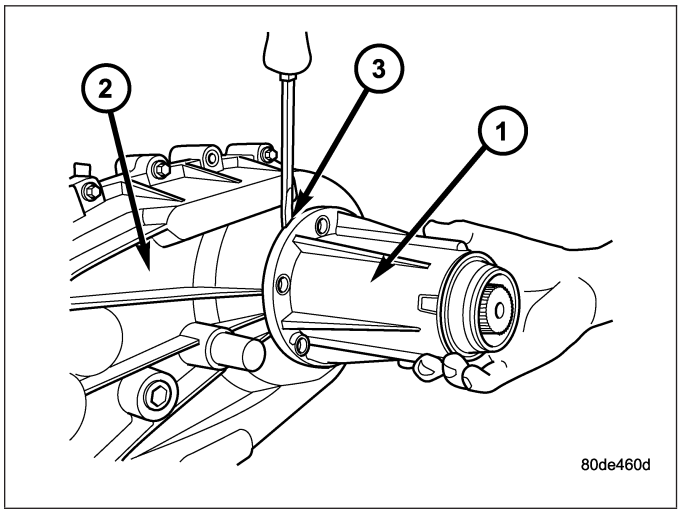

3. Remove output bearing (2) retaining ring (3) with heavy duty snap-ring pliers.

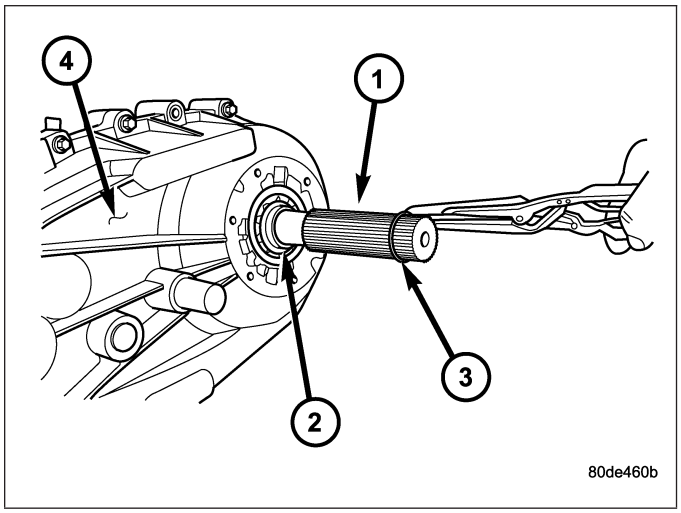

OIL PUMP AND REAR CASE

1. Remove rear case(1)-to-front case (2) bolts (3).

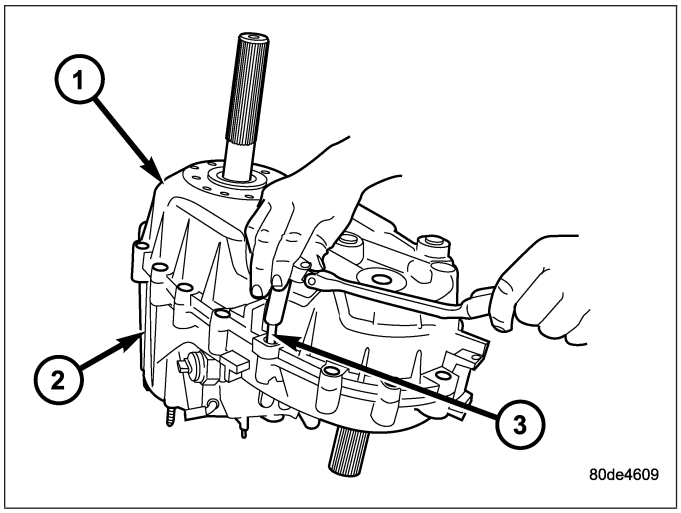

2. Loosen rear case (1) with pry tool to break sealer bead. Insert tool in slot (3) at each end of case.

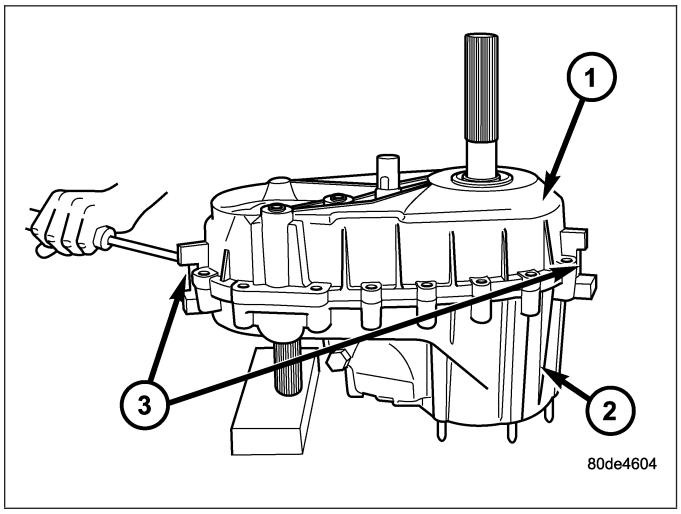

3. Unseat rear case (1) from alignment dowels.
4. Remove rear case and oil pump assembly from front case.

CAUTION: Do not remove the bolts holding the oil pump cover to the rear case half. The oil pump cover is aligned to the rear output shaft bearing inner race and will become mis-aligned if the bolts are loosened. If the transfer case failure has generated any debris which may have become trapped in the oil pump, the rear case and oil pump assembly MUST be replaced.

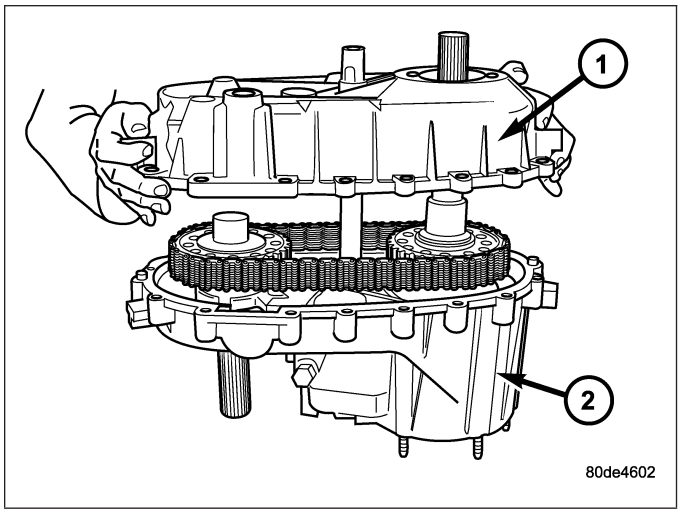

FRONT OUTPUT SHAFT AND DRIVE CHAIN

1. Remove shift rail (1) cup (3) and spring (2).

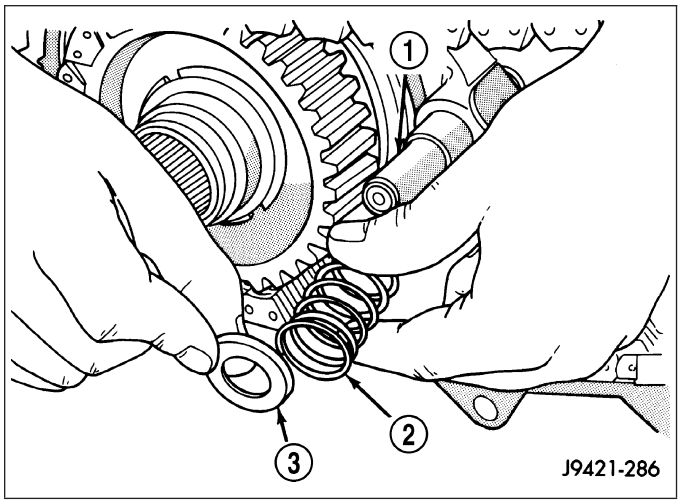

2. Remove front sprocket (1) retaining ring (2).

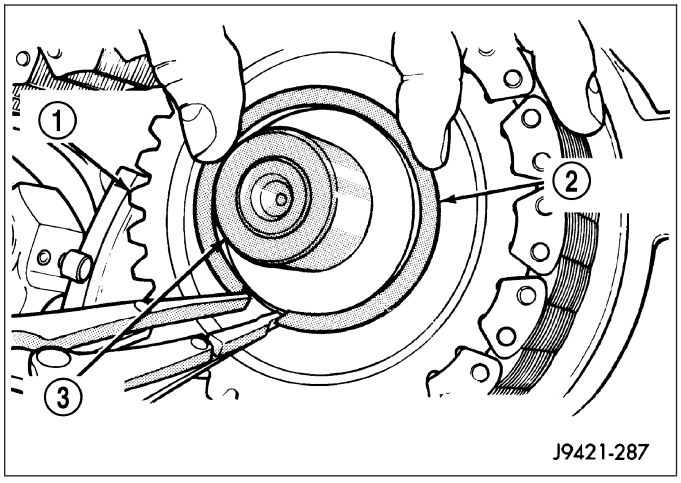

3. Pull mainshaft (3), front sprocket (1) and chain outward about 25.4 mm (1-inch) simultaneously.
4. Remove chain from mainshaft drive sprocket and remove front sprocket and chain as assembly.

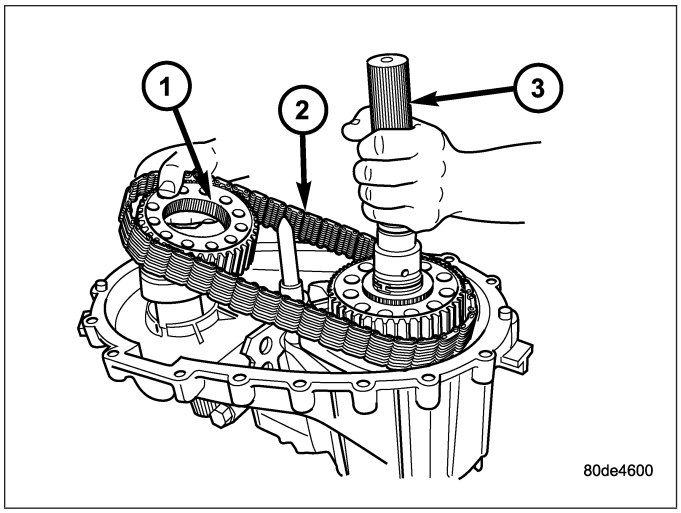

SHIFT FORKS AND MAINSHAFT

1. Remove the transfer case position switch (2).

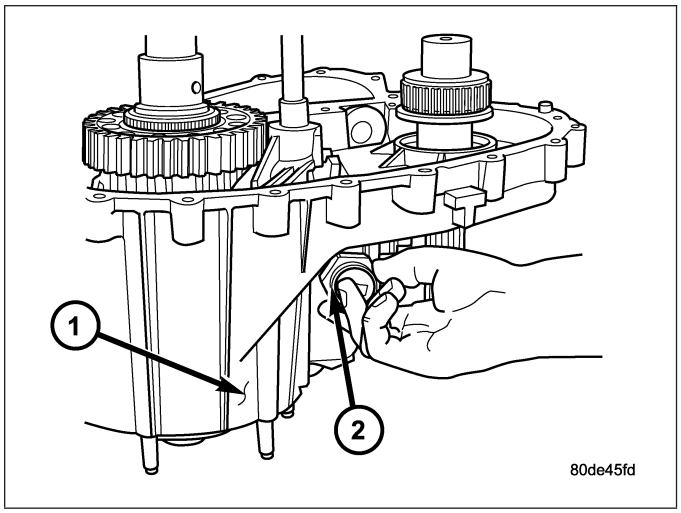

2. Loosen detent plug (2).
3. Remove detent plug (2), spring (3), and plunger (4). Note that the plug has an O-ring seal. Remove and discard this seal.

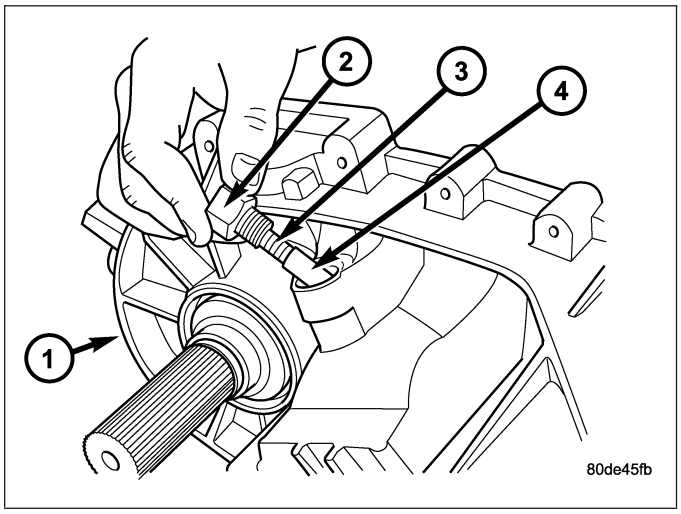

4. Remove the front output shaft (1) snap-ring (2).

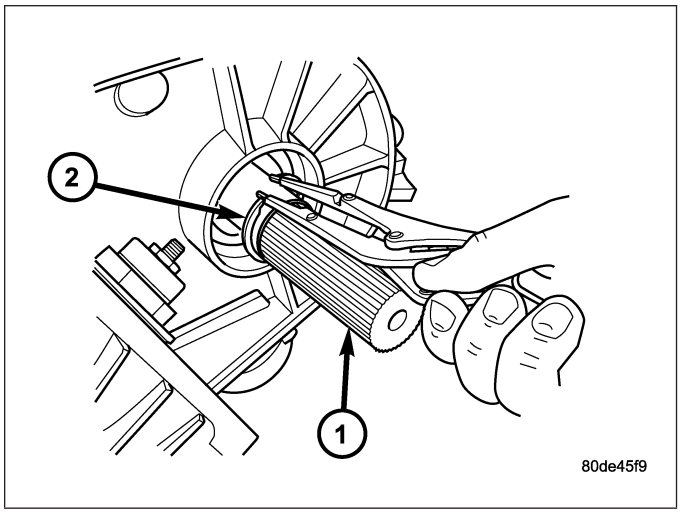

5. Remove front output shaft (2) from bearing in the front case (1).

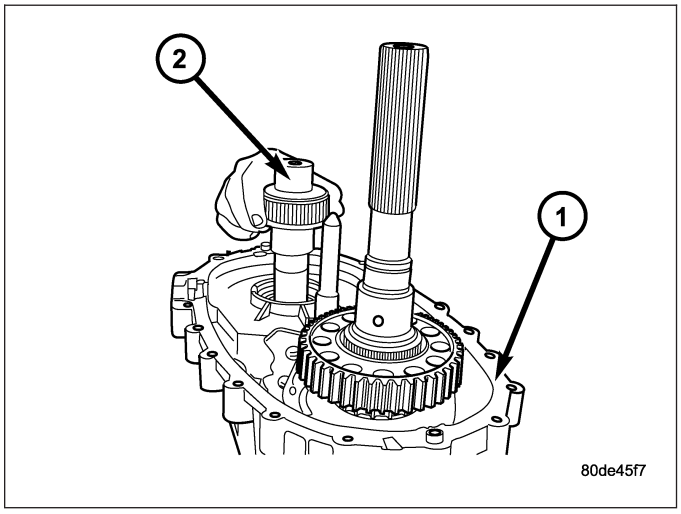

6. Pull mainshaft assembly (2) out of input gear, mode sleeve, and front case (1).

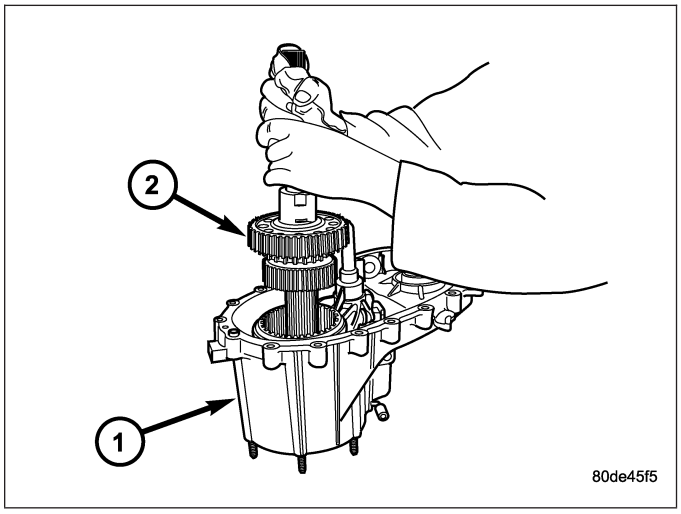

7. Remove mode fork (1), mode sleeve (3), and shift rail (2) as assembly. Note which way the sleeve fits in the fork (long side of sleeve goes to front).

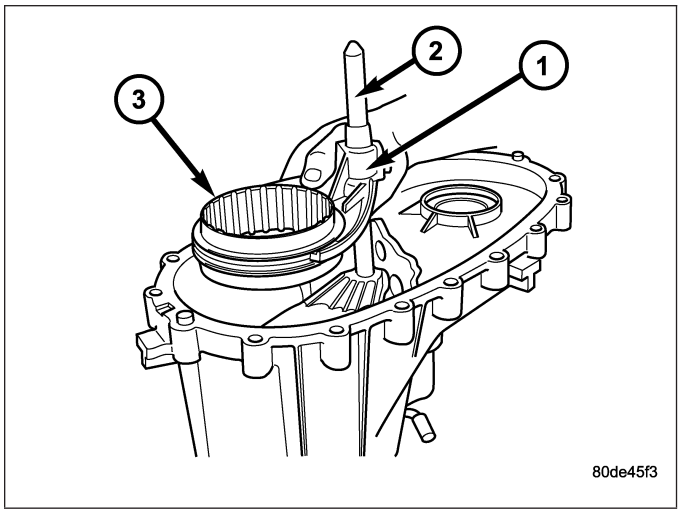

8. Remove range fork retaining ring.
9. Remove range fork (2) and hub (1) as an assembly. Note fork position for installation reference.

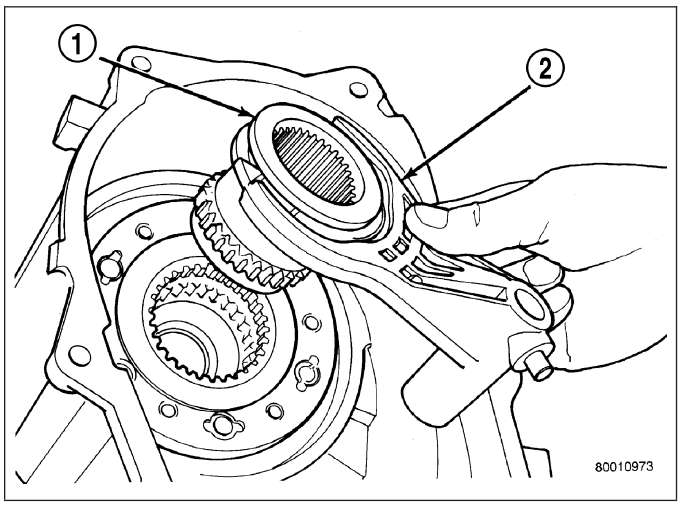

10. Remove the shift sector support (1).

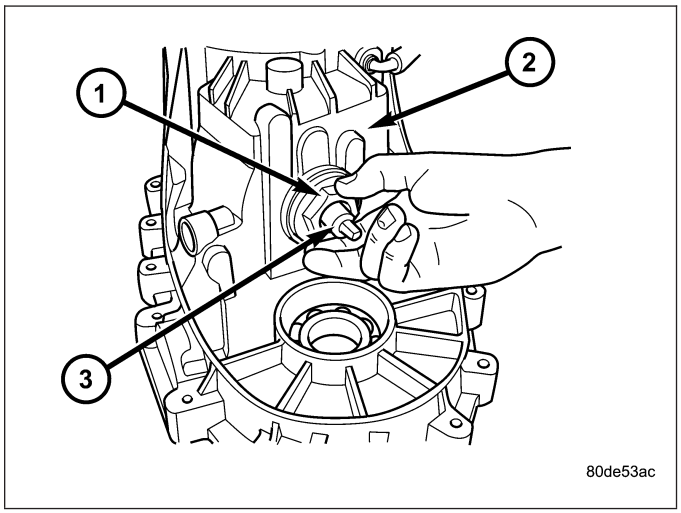

11. Remove shift sector (1).

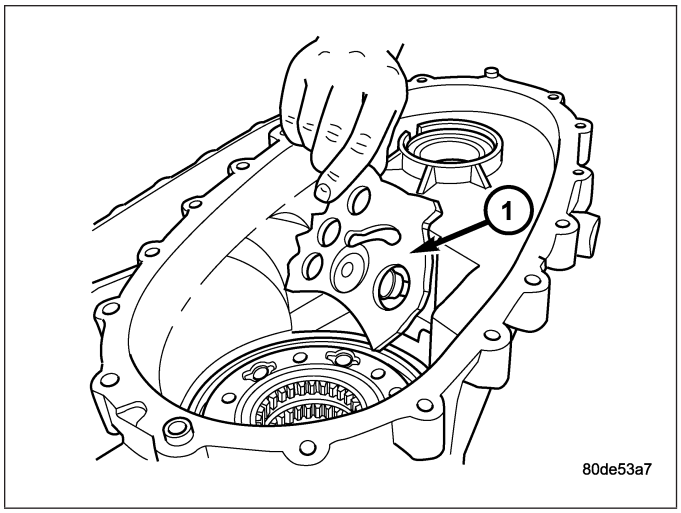

MAINSHAFT

1. Remove the drive sprocket retaining ring (2) from the output shaft (1).

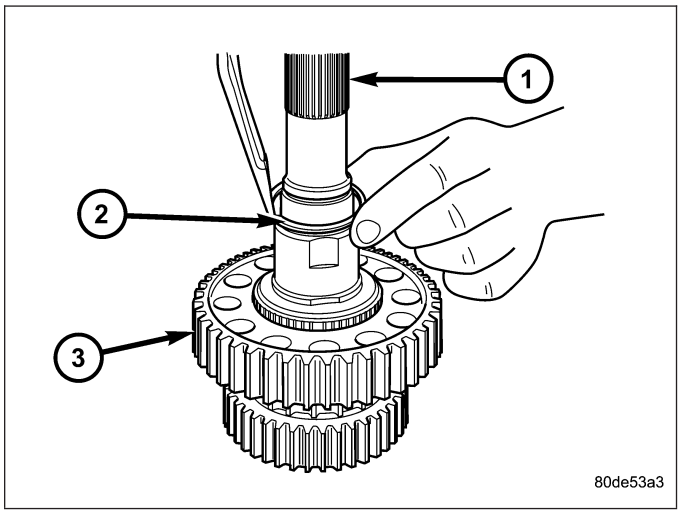

2. Remove the drive sprocket (3) thrust washer (2) from the output shaft (1).

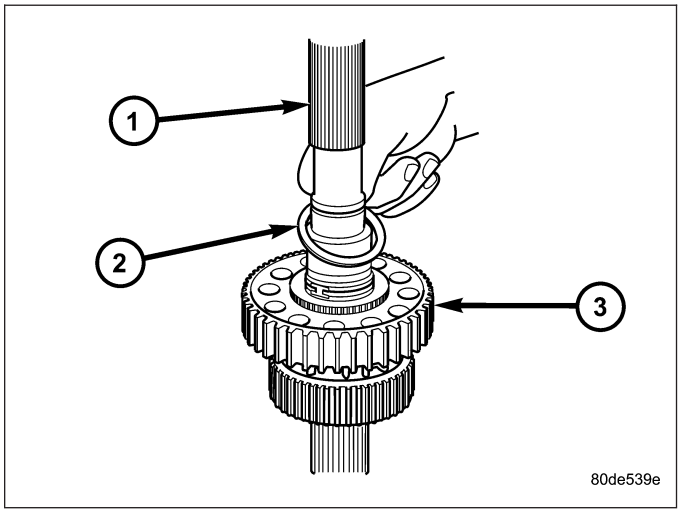

3. Remove drive sprocket (2) from the output shaft (1).

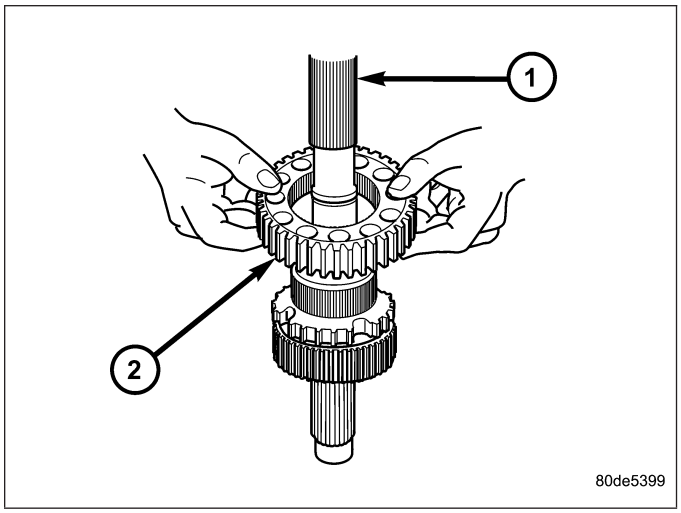

4. Remove the clutch gear (2) from the output shaft (1).

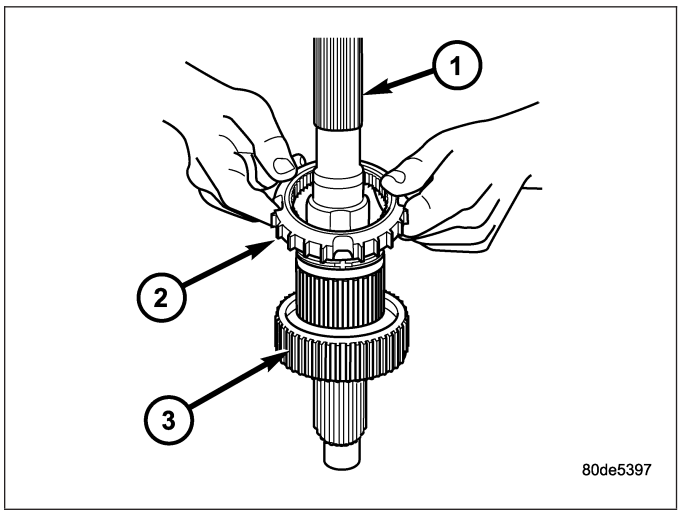

Remove the sprocket hub (2) from the output shaft (1).

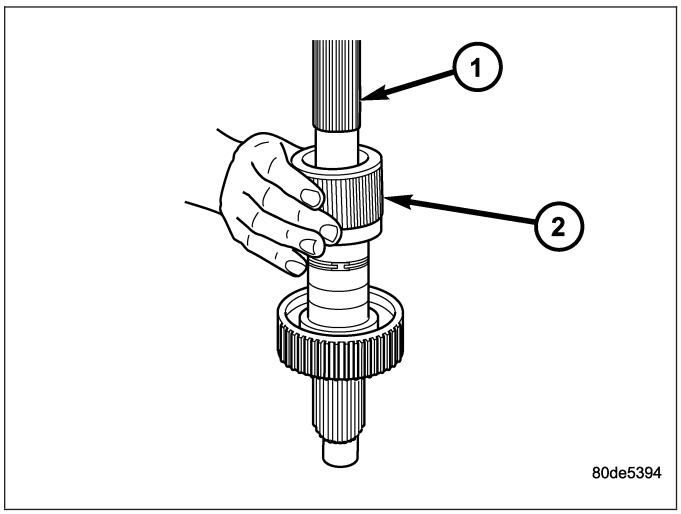

5. Remove the mode hub (3) retaining ring (2) from the output shaft (1).

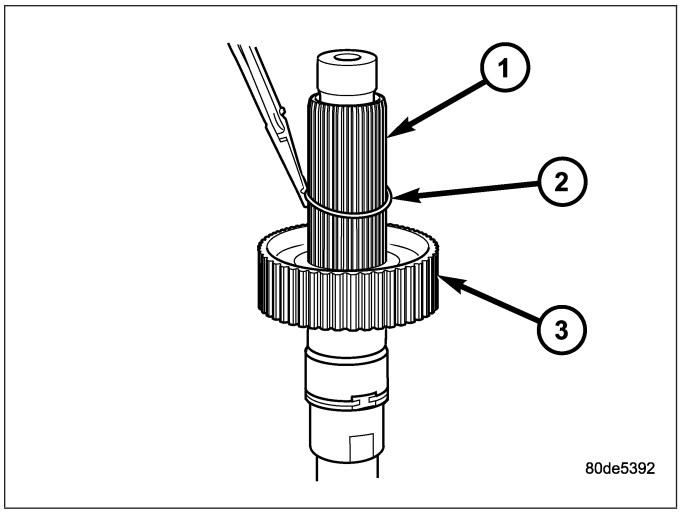

6. Remove the mode hub (2) from the output shaft (1).

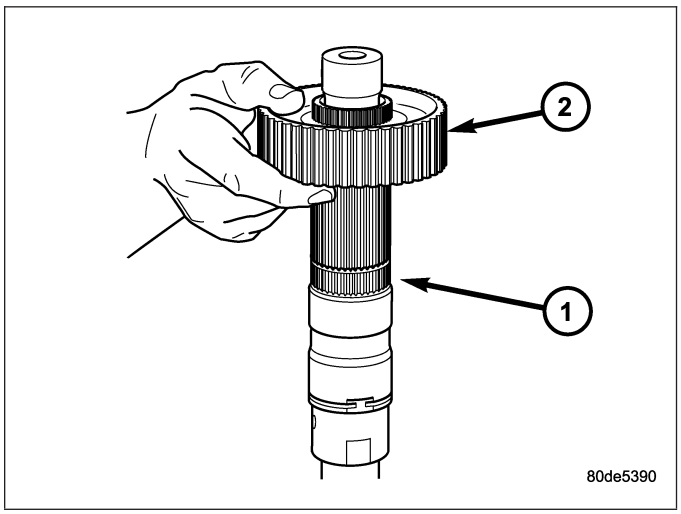

INPUT AND PLANETARY GEAR

1. Remove input gear seal with suitable screw and slide hammer.
2. Remove input gear (1) retaining ring (2) with heavy duty snap-ring pliers.

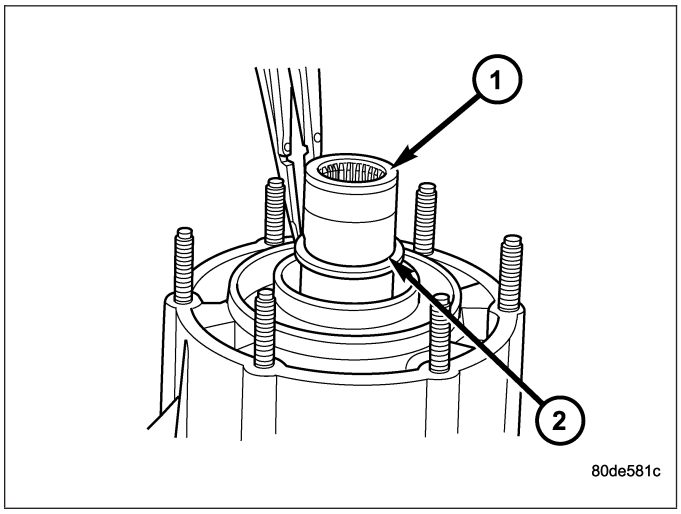

3. Place front case in horizontal position. Then remove input gear and low range gear as an assembly (2). Tap gear out of bearing with plastic mallet, if necessary.

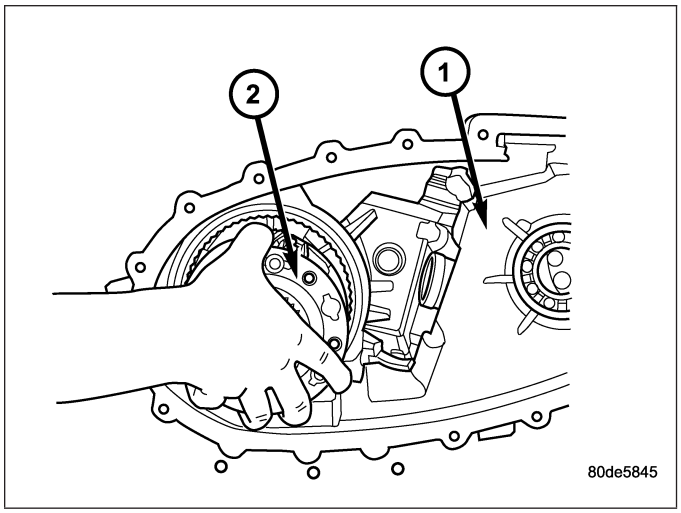

INPUT AND PLANETARY GEAR

1. Remove snap-ring (1) that retains input gear in low range gear.

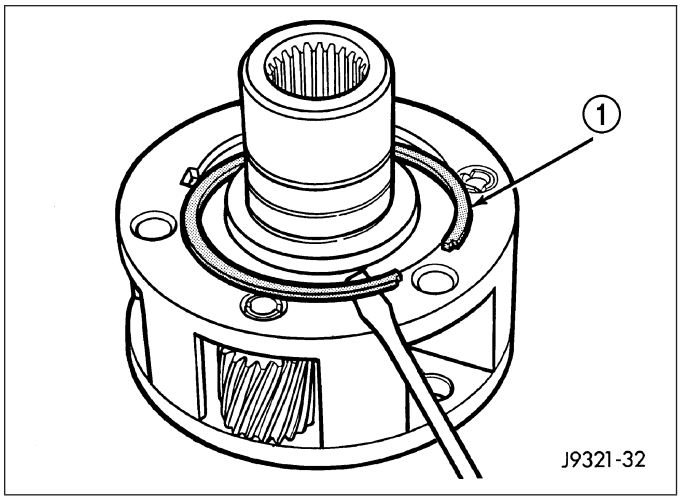

2. Remove retainer (3).

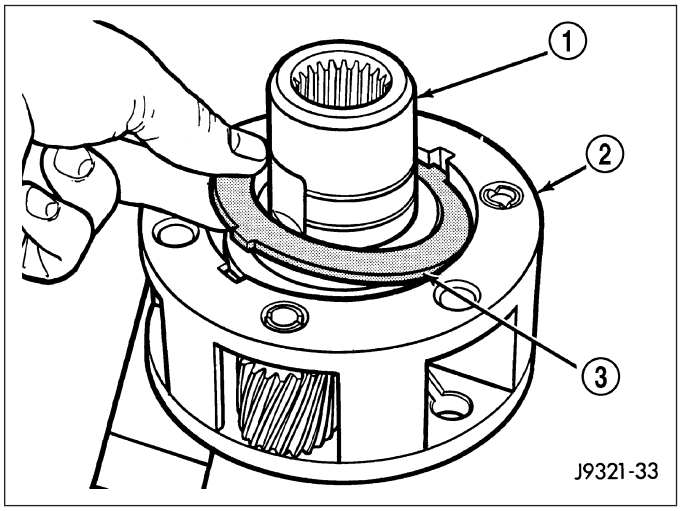

3. Remove front tabbed thrust washer (1).

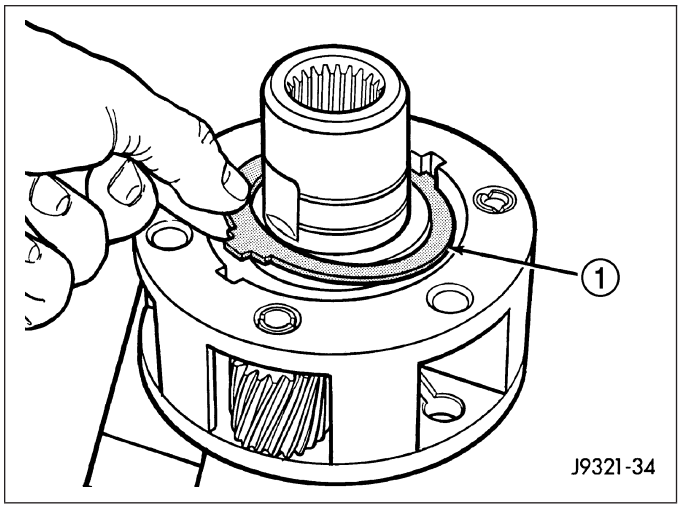

4. Remove input gear (1).

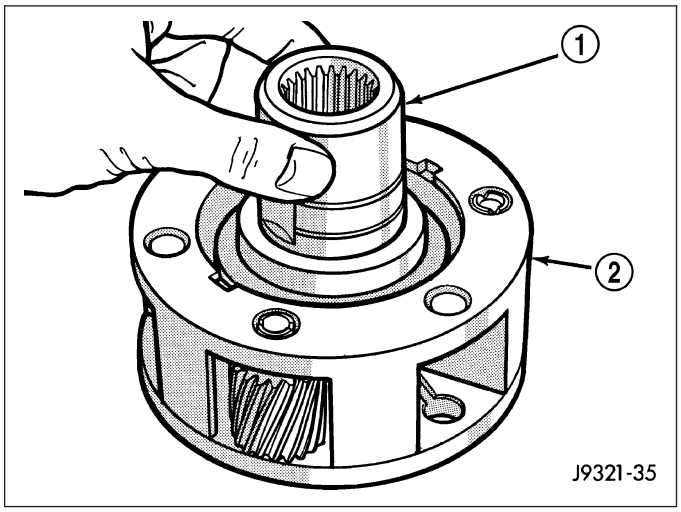

5. Remove rear tabbed thrust washer (2) from low range gear (1).

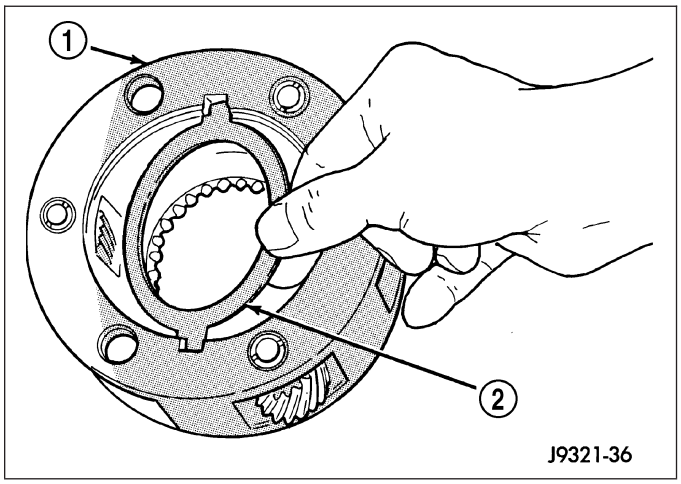

CLEANING

Clean the transfer case parts with a standard parts cleaning solvent. Remove all traces of sealer from the cases and retainers with a scraper and 3M™ all purpose cleaner. Use compressed air to remove solvent residue from oil feed passages in the case halves, retainers, gears, and shafts.

INSPECTION

MAINSHAFT/SPROCKET/HUB

Inspect the splines on the hub and shaft and the teeth on the sprocket. Minor nicks and scratches can be smoothed with an oilstone, however, replace any part that is damaged.

Check the contact surfaces in the sprocket bore and on the mainshaft. Minor nicks and scratches can be smoothed with 320-400 grit emery cloth but do not try to salvage the shaft if nicks or wear is severe.

INPUT GEAR AND PLANETARY CARRIER

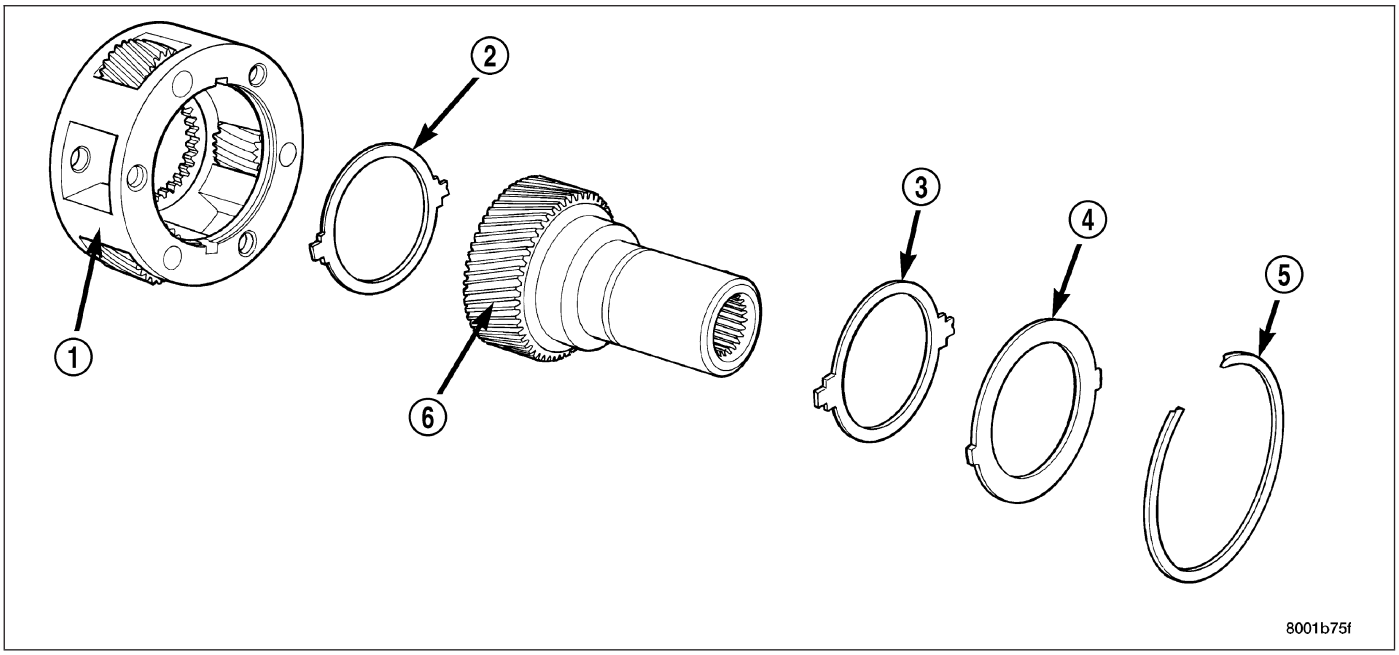

Input Gear And Carrier Components

1 - PLANETARY CARRIER
2 - REAR THRUST WASHER
3 - FRONT THRUST WASHER
4 - CARRIER LOCK RING
5 - CARRIER LOCK RETAINING RING
6 - INPUT GEAR

Check the teeth on the gear (6). Minor nicks can be dressed off with an oilstone but replace the gear if any teeth are broken, cracked, or chipped. The bearing surface on the gear can be smoothed with 300-400 grit emery cloth if necessary.

Examine the carrier body (1) and pinion gears for wear or damage. The carrier will have to be replaced as an assembly if the body, pinion pins, or pinion gears are damaged.

Check the lock ring (4) and both thrust washers (2, 3) for wear or cracks. Replace them if necessary. Also replace the lock retaining ring (5) if bent, distorted, or broken.

SHIFT FORKS/HUBS/SLEEVES

Check condition of the shift forks and mode fork shift rail (2). Minor nicks on the shift rail can be smoothed with 320-400 grit emery cloth.

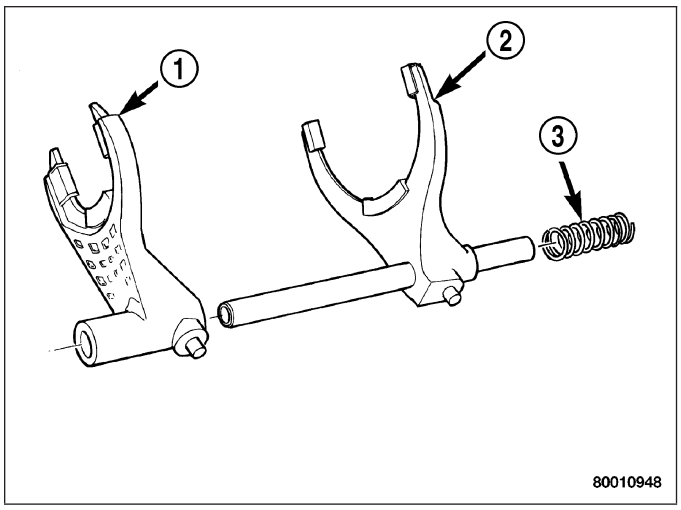

Inspect the shift fork wear pads (3, 4). The mode fork pads are serviceable and can be replaced if necessary. The range fork pads are not serviceable. The fork must be replaced as an assembly if the pads are worn or damaged.

Check both of the sleeves for wear or damage, especially on the interior teeth. Replace the sleeves if wear or damage is evident.

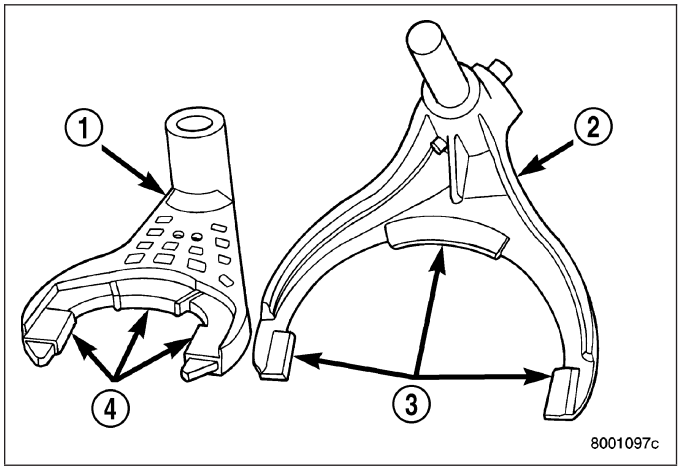

REAR RETAINER COMPONENTS

Inspect the retainer components. Replace the bearing if rough or noisy. Check the retainer for cracks or wear in the bearing bore.

Inspect the retaining rings and washers. Replace any part if distorted, bent, or broken. Reuse is not recommended.

Inspect rear extension bushing. Replace if worn or scored.

DRIVE CHAIN

Examine the drive chain and shaft bearings. replace the chain if stretched, distorted, or if any of the links bind. Replace the bearings if rough, or noisy.

LOW RANGE ANNULUS GEAR

Inspect annulus gear (2) condition carefully. The gear is only serviced as part of the front case. If the gear is damaged, it will be necessary to replace the gear and front case as an assembly. Do not attempt to remove the gear.

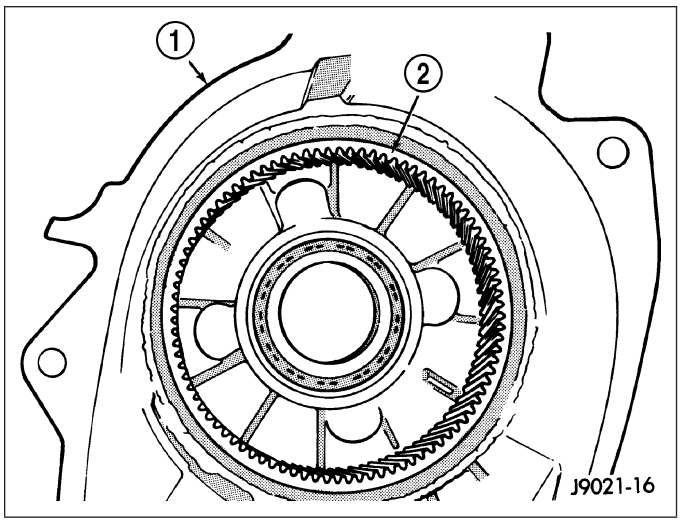

FRONT CASE AND REAR CASE

Inspect the cases for wear and damage.

Check case condition. If leaks were a problem, look for gouges and severe scoring of case sealing surfaces. Also make sure the front case mounting studs are in good condition.

Check the front case mounting studs and vent tube. The tube can be secured with Loctite™ 271 or 680 if loose. The stud threads can be cleaned up with a die if necessary. Also check condition of the fill/drain plug threads in the rear case. The threads can be repaired with a thread chaser or tap if necessary. Or the threads can be repaired with Helicoil™ stainless steel inserts if required.

OIL PUMP/OIL PICKUP

Examine the oil pump pickup parts. Replace the pump if any part appears to be worn or damaged. Do not disassemble the pump as individual parts are not available. The pump is only available as a complete assembly. The pickup screen, hose, and tube are the only serviceable parts and are available separately.

ASSEMBLY

BEARINGS AND SEALS

1. Remove the input shaft bearing (1) from the front case (2) with suitable snap-ring pliers.
2. Transfer the retaining ring to the new bearing if necessary and install the bearing into the front case.

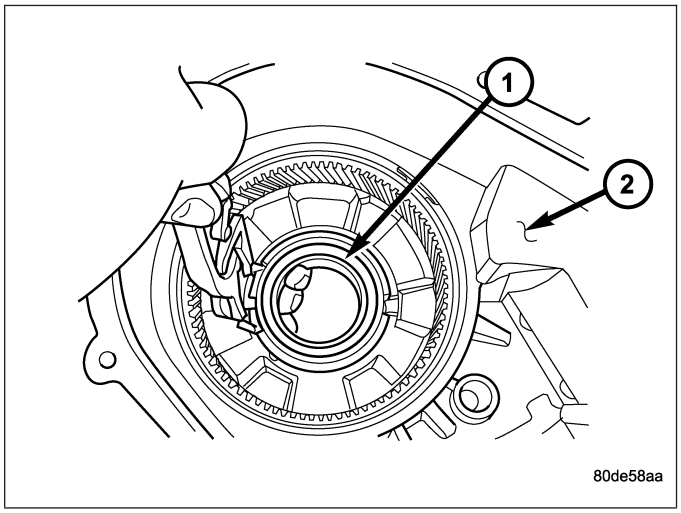

3. Using Installer 6436 (2) and Handle C-4171 (3), remove front output shaft bearing.
4. Start front output shaft bearing in case. Then seat bearing with Handle C-4171 and Installer 6953.
5. Install front output shaft bearing retaining ring.

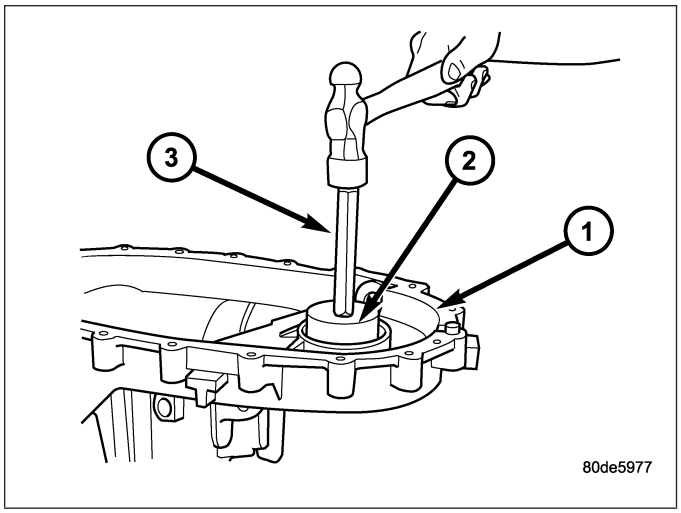

6. Remove input gear pilot bearing by inserting a suitably sized drift (1) into the splined end of the input gear (2) and driving the bearing out with the drift and a hammer.
7. Install new pilot bearing with Remover/Installer 8684.

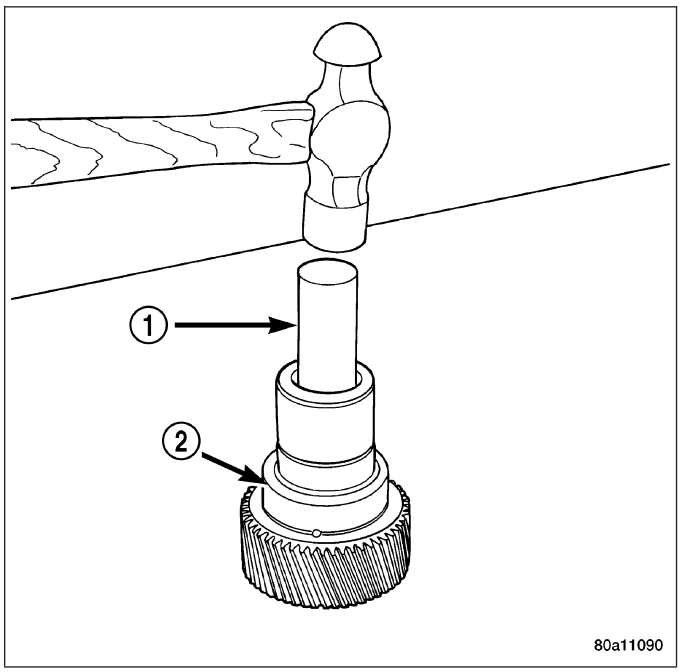

8. Remove the front output shaft rear bearing with the screw and jaws from Remover L-4454 (2) and Cup 8148 (3).

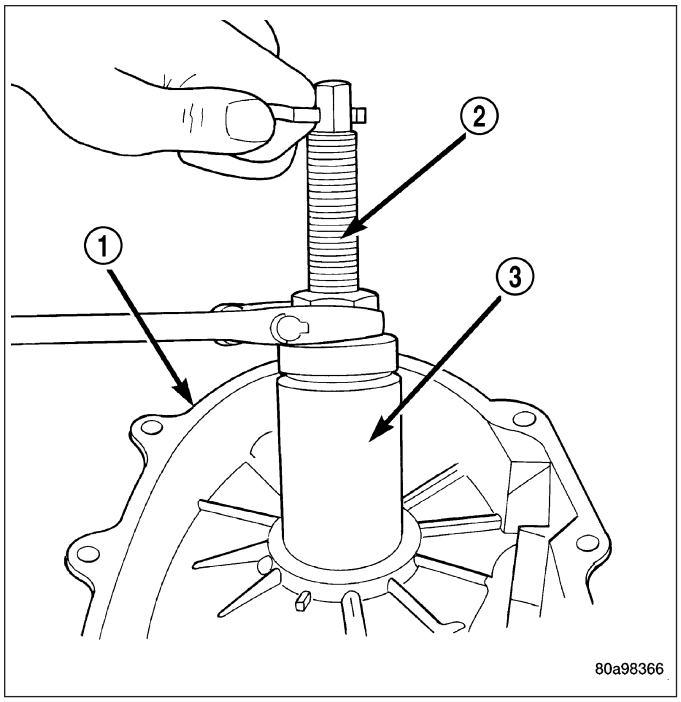

9. Install new bearing with Tool Handle C-4171 (1) and Installer 5066 (3).

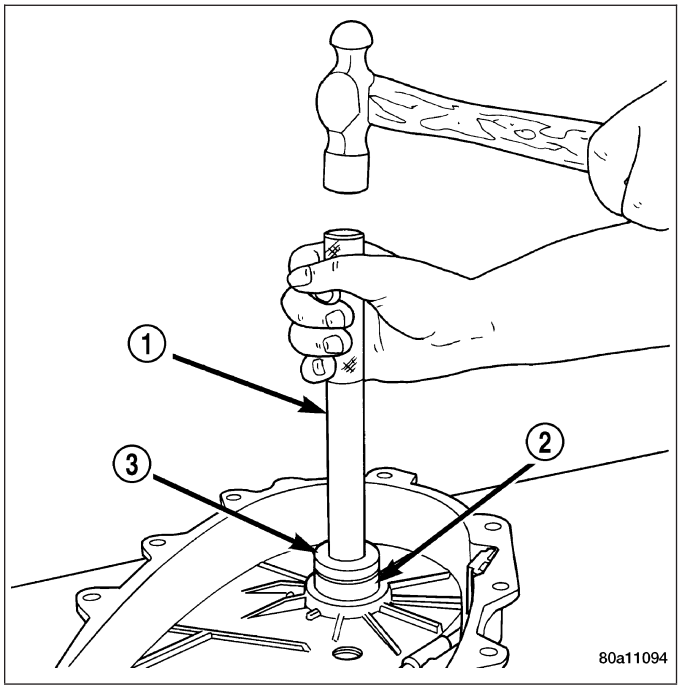

10. The bearing bore is chamfered (1) at the top. Install the bearing so it is flush with the lower edge of this chamfer.

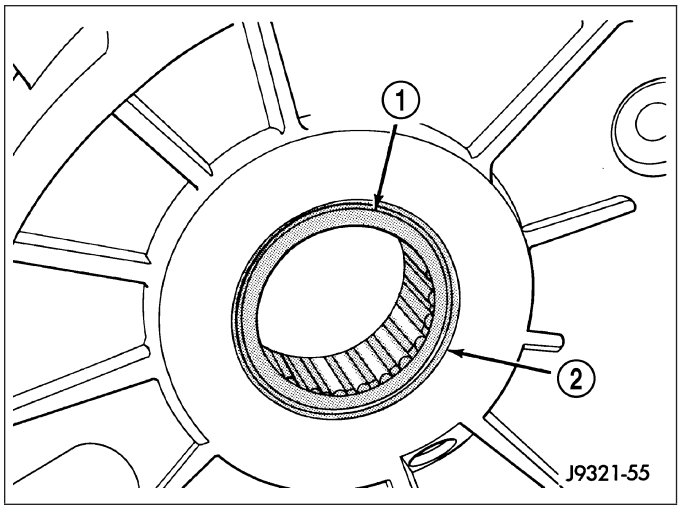

11. Remove the rear output shaft bearing from the rear case using Remover/Installer 8684 (2) and Handle C-4171 (3).

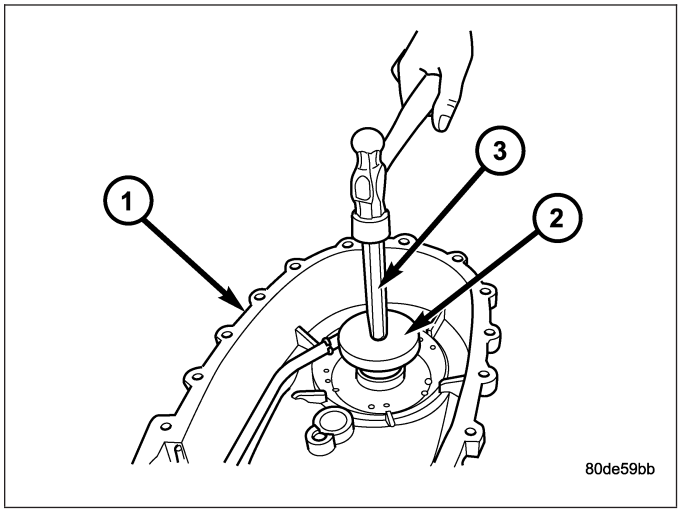

12. Install the rear output shaft bearing into the rear case (1) using Remover/Installer 6953 (2) and Handle C-4171 (3).

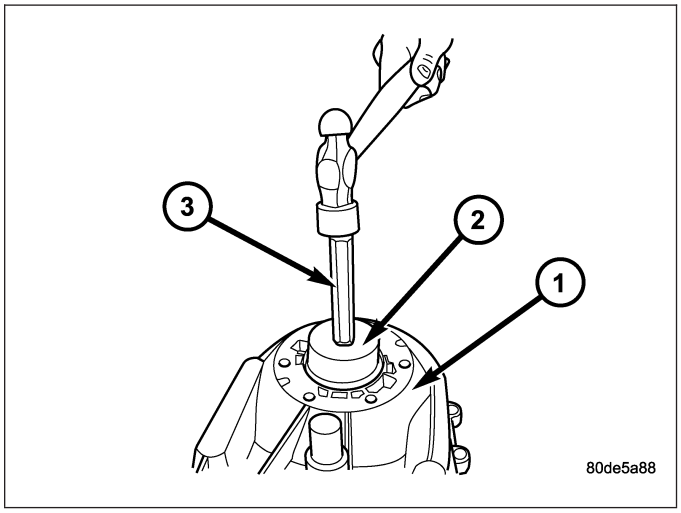

INPUT AND PLANETARY GEAR

1. Lubricate gears (3, 4) and thrust washers (5) with recommended transmission fluid.
2. Install first thrust washer (5) in low range gear (3). Be sure washer tabs are properly aligned in gear notches.
3. Install input gear (3) in low range gear (4). Be sure input gear is fully seated.
4. Install remaining thrust washer (5) in low range gear (4) and on top of input gear (3). Be sure washer tabs are properly aligned in gear notches.
5. Install retainer (2) on input gear and install snap-ring (1).

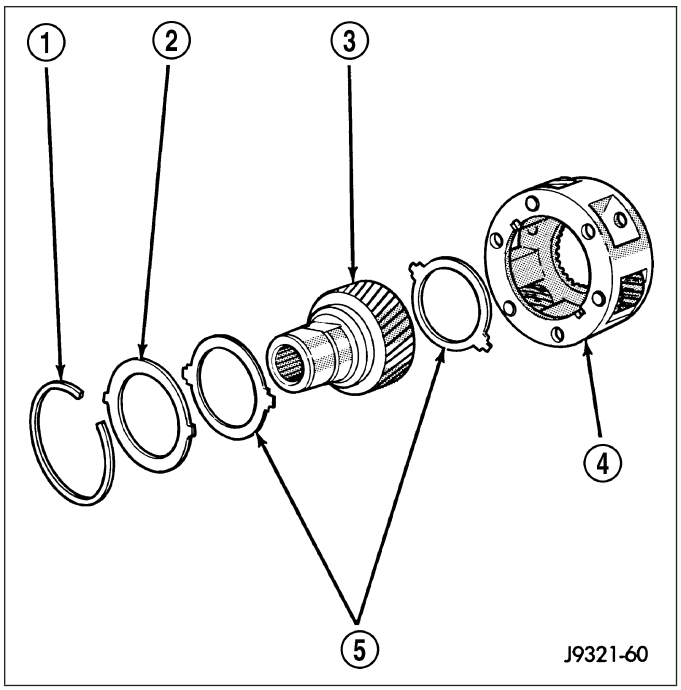

6. Align and install low range/input gear assembly (2) in front case (1). Be sure low range gear pinions are engaged in annulus gear and that input gear shaft is fully seated in front bearing.

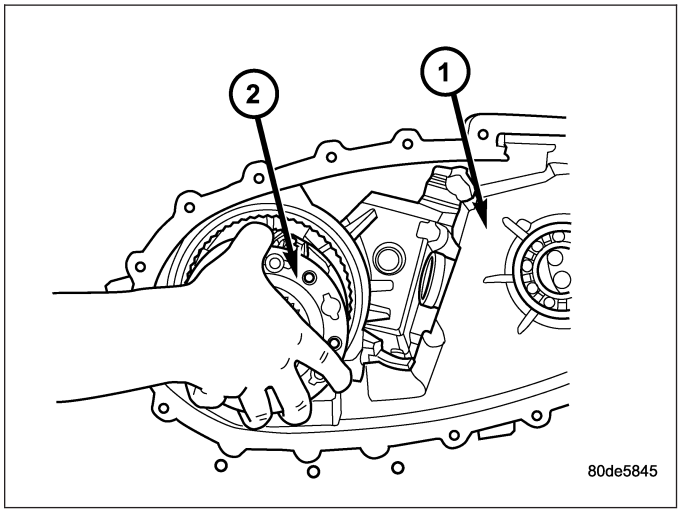

7. Install snap-ring (2) to hold input/low range gear (1) into front bearing.
8. Install a new input gear seal using Installer 8841 and Handle C-4171.

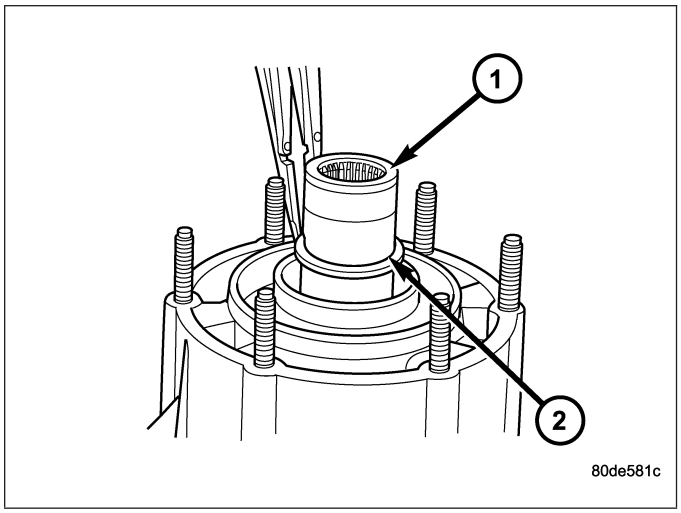

SHIFT FORKS AND MAINSHAFT

1. Lubricate mainshaft splines with recommended transmission fluid.
2. Install the mode hub (1) onto the output shaft.

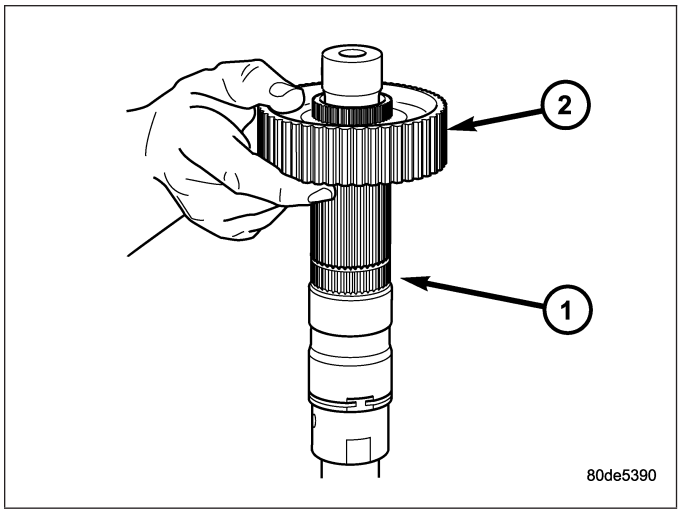

3. Install the mode hub retaining ring (2) onto the output shaft (1).

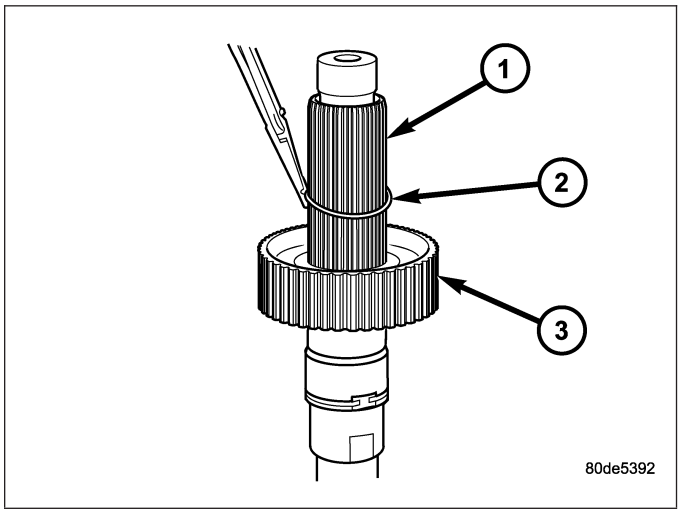

4. Install the sprocket hub (2) onto the output shaft (1).

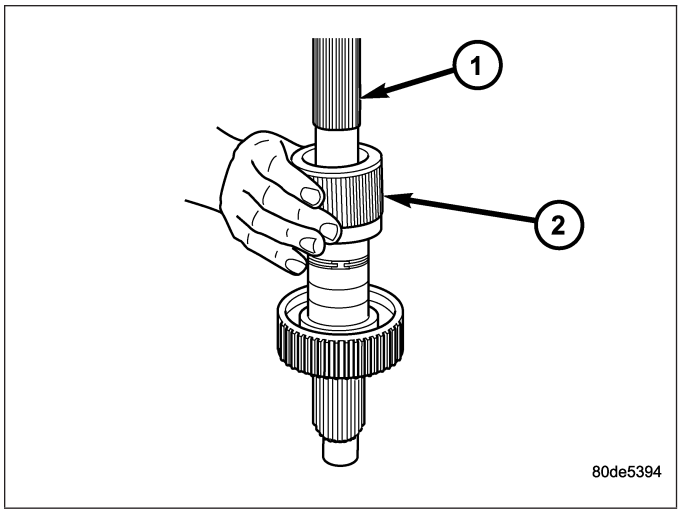

5. Install the clutch gear (2) onto the output shaft (1).

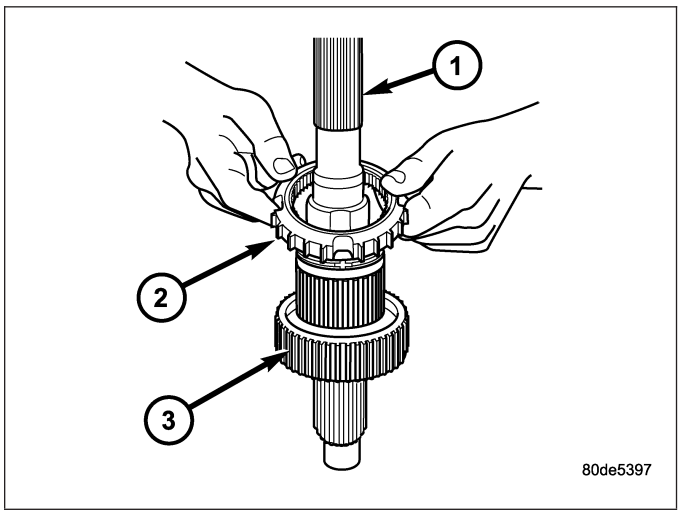

6. Install the drive sprocket (2) onto the output shaft (1).

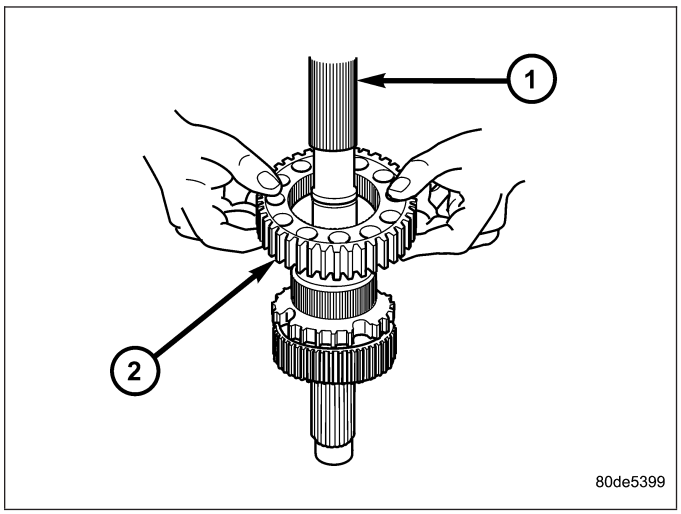

7. Install the drive sprocket (3) thrust washer (2) onto the output shaft (1).

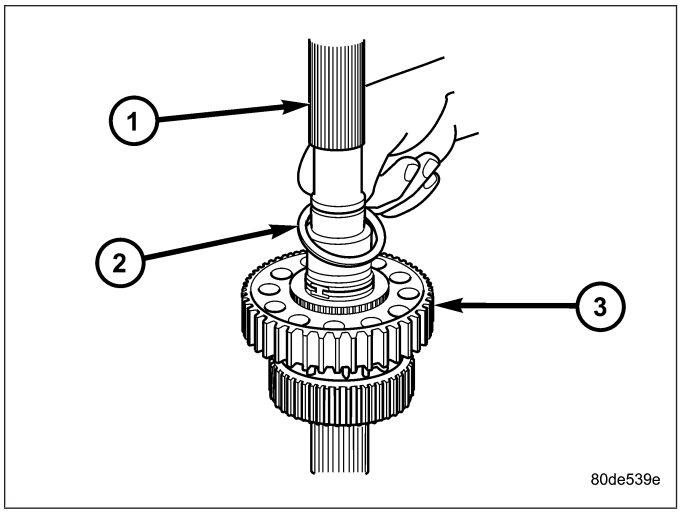

8. Install the drive sprocket retaining ring (2) onto the output shaft (1).

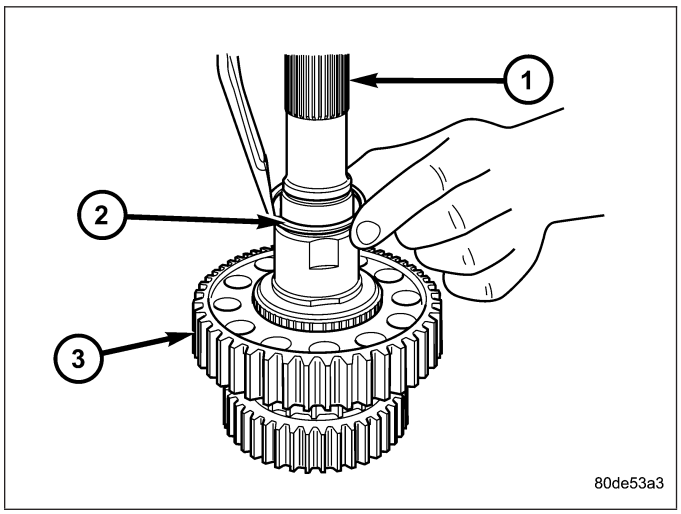

9. Lubricate sector shaft with transmission fluid and install shift sector (1) in case. Position slot in sector so it will be aligned with shift fork pin when shift forks are installed.

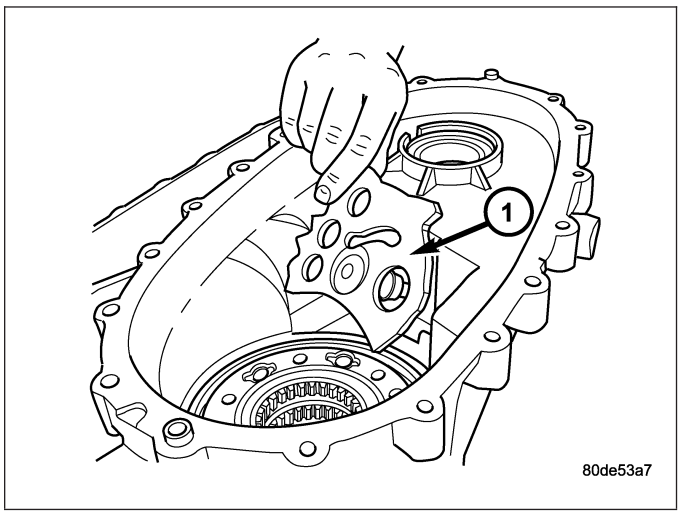

10. Install the shift sector support (1). Tighten the sector support to 27-42 N·m (20-30 ft.lbs.).

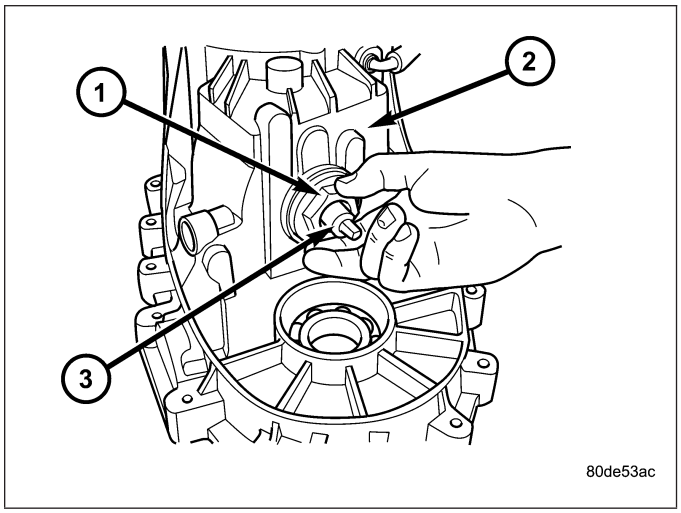

11. Assemble and install range fork (2) and hub (1). Be sure hub is properly seated in low range gear and engaged to the input gear.
12. Align and insert range fork pin in shift sector slot.
13. Install the range fork retaining ring.

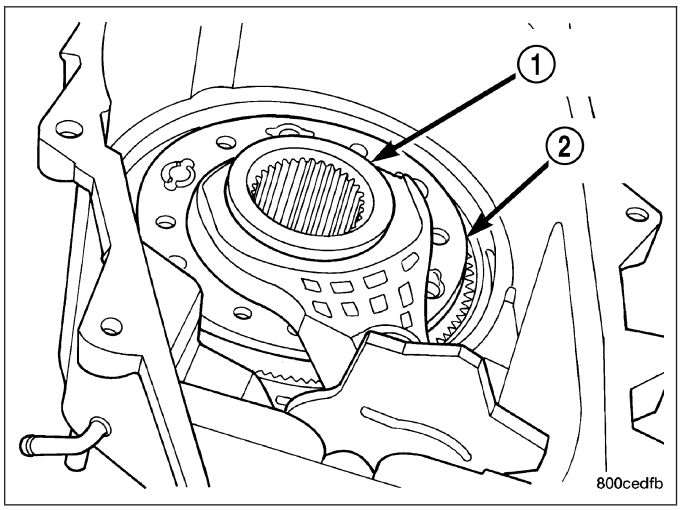

14. Install mode fork (1) and shift rail (2) onto the mode sleeve (3).
15. Install the mode fork, sleeve, and shift rail into the transfer case.

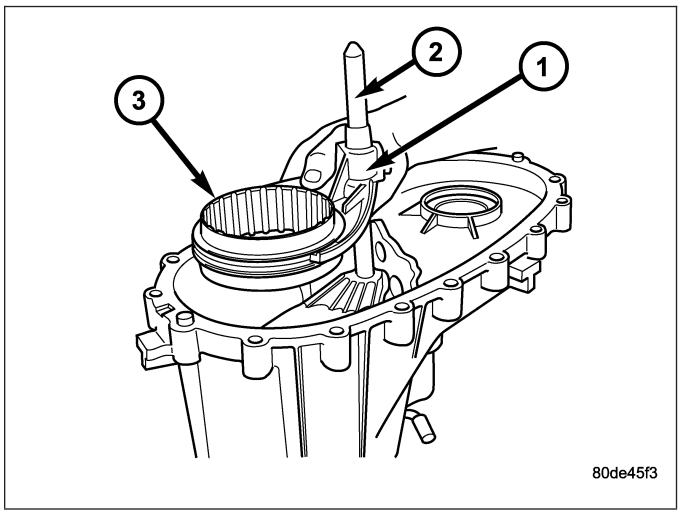

16. Install mainshaft (2) into the transfer case (1). Guide mainshaft through the mode and range sleeves and into the input gear.

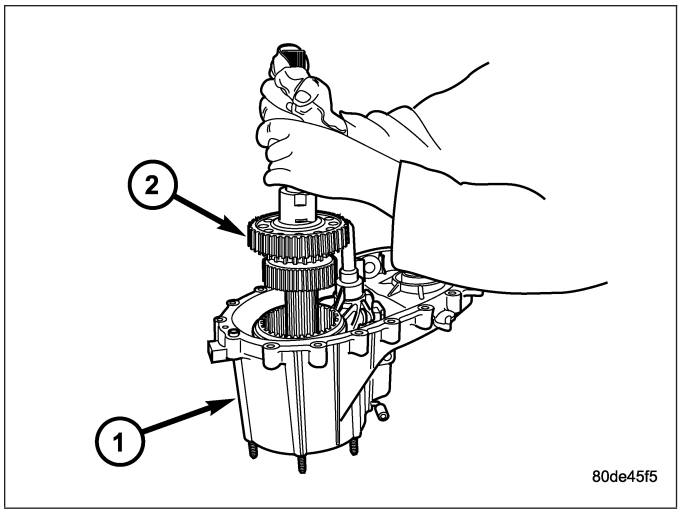

17. Install the transfer case position sensor or switch (2). Tighten the sensor or switch to 20-34 N·m (16-25 ft. lbs.) torque.

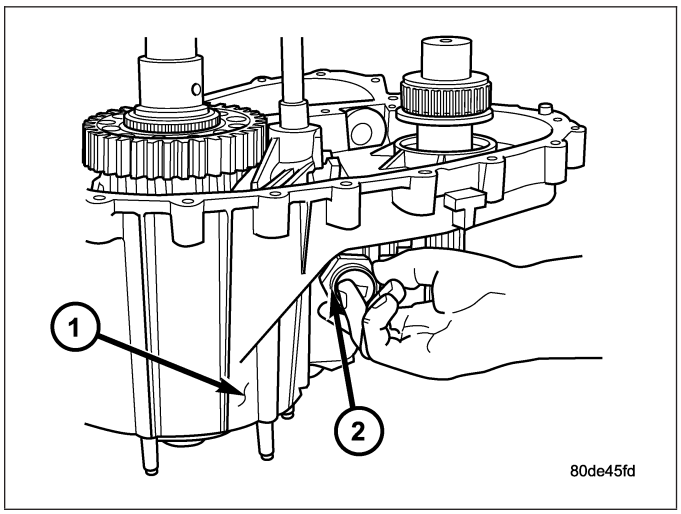

18. Install range lever (1) on sector shaft.
19. Install washer and nut on sector shaft to secure shift lever. Apply 1-2 drops Mopar® Lock N' Seal, or equivalent, to nut threads before installation. Then tighten nut to 27-34 N·m (20-25 ft. lbs.) torque.

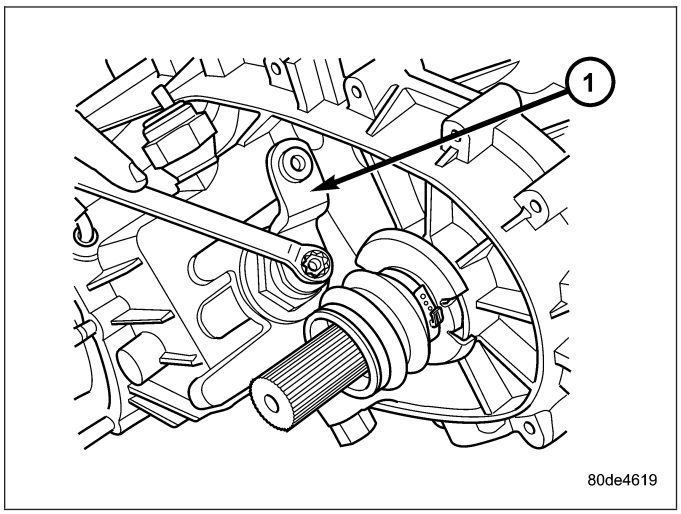

20. Install new o-ring on detent plug (2).

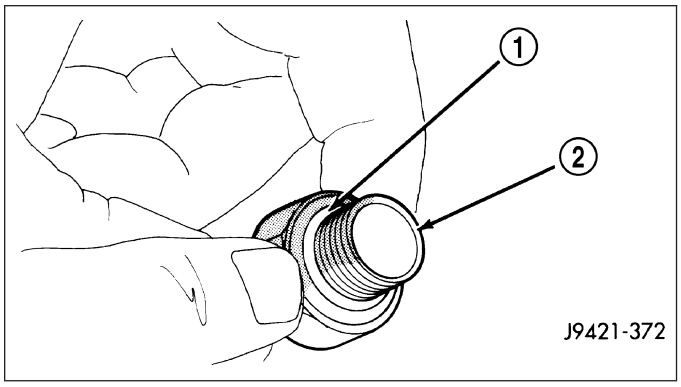

21. Install detent plunger (4), spring (3), and plug (2). Tighten the plug to 16-25 N·m (12-18 ft. lbs.).

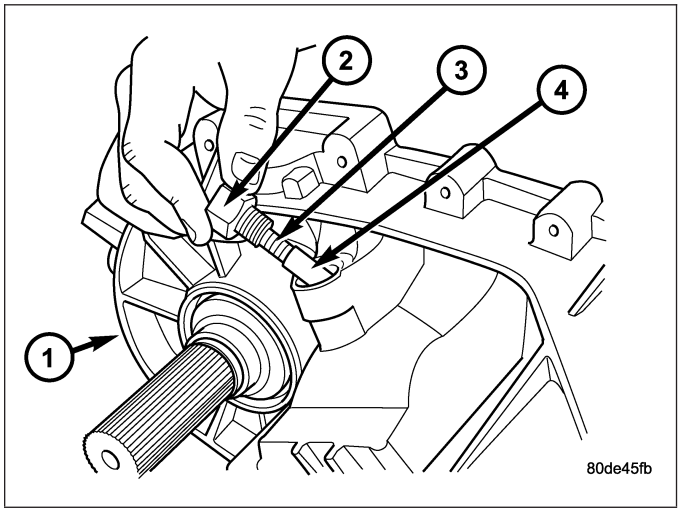

FRONT OUTPUT SHAFT AND DRIVE CHAIN

1. Install the front output shaft (2) into the front output shaft bearing.

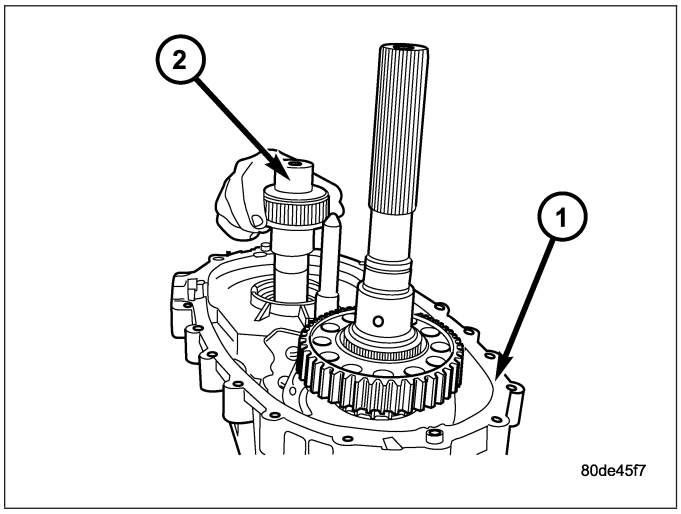

2. Install the front output shaft retaining ring (2) onto the output shaft.
3. Install the new front output shaft seal with Installer MB991168A.

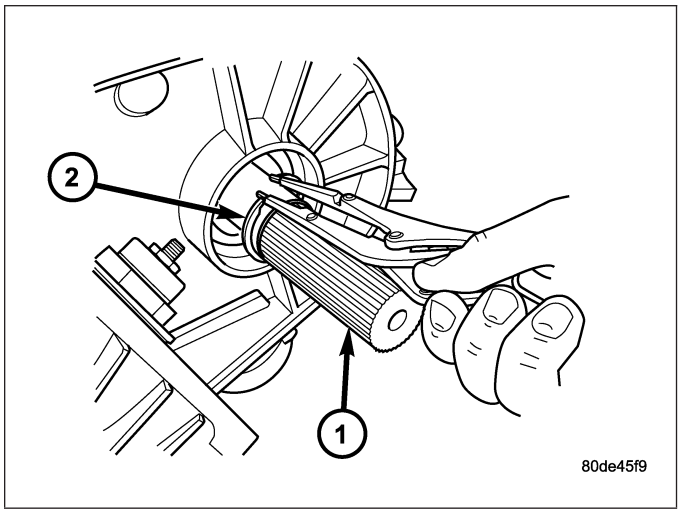

4. Insert front sprocket in drive chain.
5. Install drive chain (2) around mainshaft sprocket (1). Then position front sprocket over front shaft.
6. Raise mainshaft about 2.54 cm (one inch) and seat front sprocket on front output shaft.

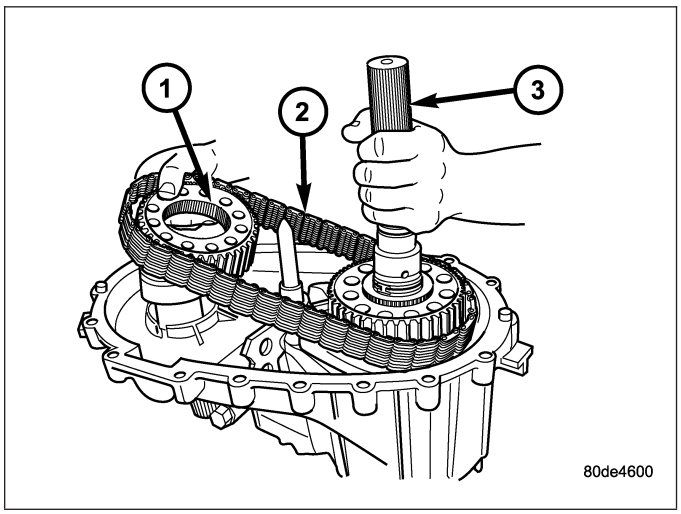

7. If mainshaft and mode sleeve were unseated during chain installation, align and reseat mainshaft in input gear and hub.
8. Install front sprocket (1) retaining ring (2).

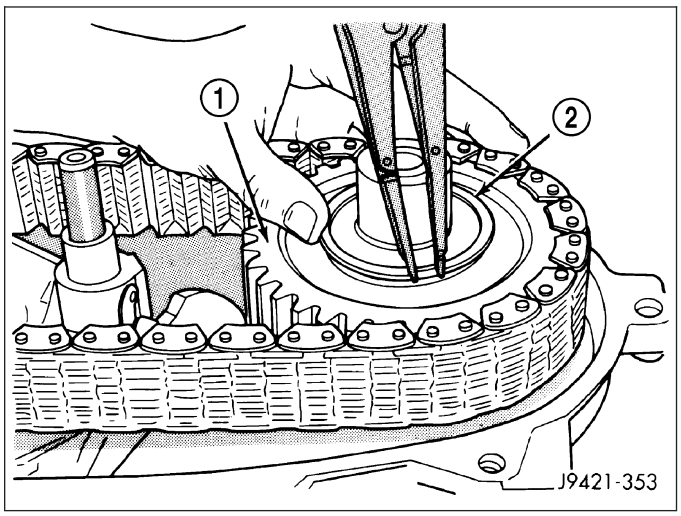

9. Install spring (2) and cup (1) on shift rail.

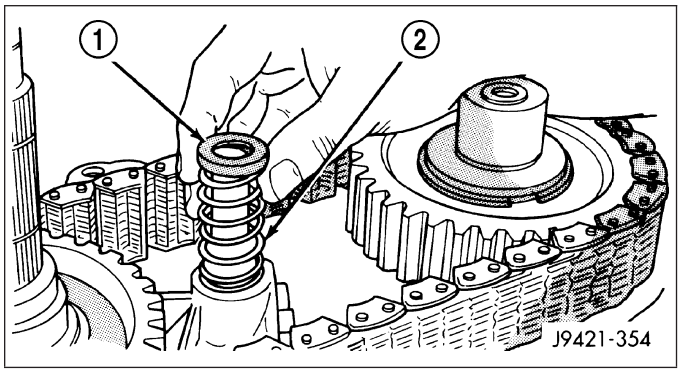

10. Insert magnet (1) in front case pocket (2).

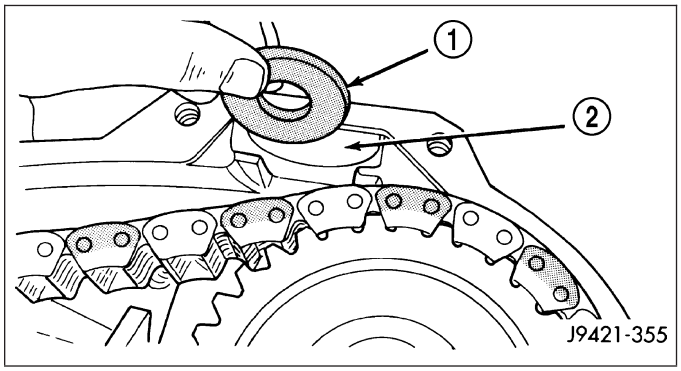

OIL PUMP AND REAR CASE

CAUTION: Do not remove the bolts holding the oil pump cover to the rear case half. The oil pump cover is aligned to the rear output shaft inner bearing race and will become mis-aligned if the bolts are loosened. If the transfer case failure has generated any debris which may have become trapped in the oil pump. the rear case and oil pump assembly MUST be replaced.

1. Apply bead of Mopar® Gasket Maker, or equivalent, to mating surface of front case. Keep sealer bead width to maximum of 3/16 inch. Do not use excessive amount of sealer as excess will be displaced into case interior.
2. Align oil pump with mainshaft and align shift rail with bore in rear case. Then install rear case (1) and oil pump assembly.

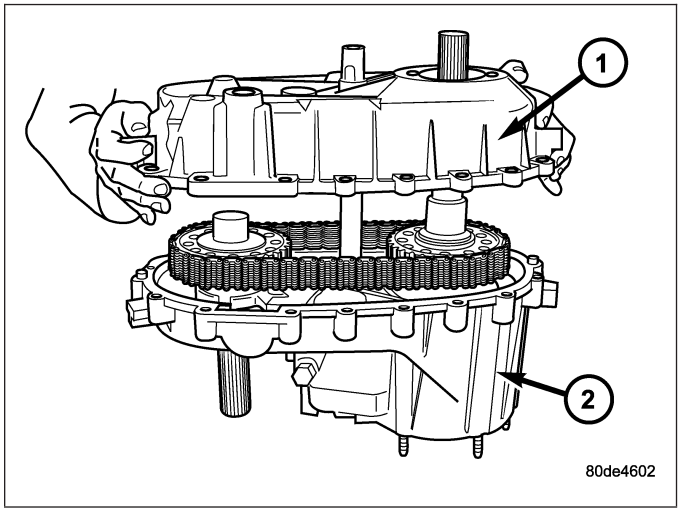

3. Install 4-5 rear case(1)-to front case (2) bolts to hold rear case in position. Tighten bolts snug but not to specified torque at this time.

CAUTION: Verify that shift rail, and case alignment dowels are seated before installing any bolts. Case could be cracked if shaft rail or dowels are misaligned.

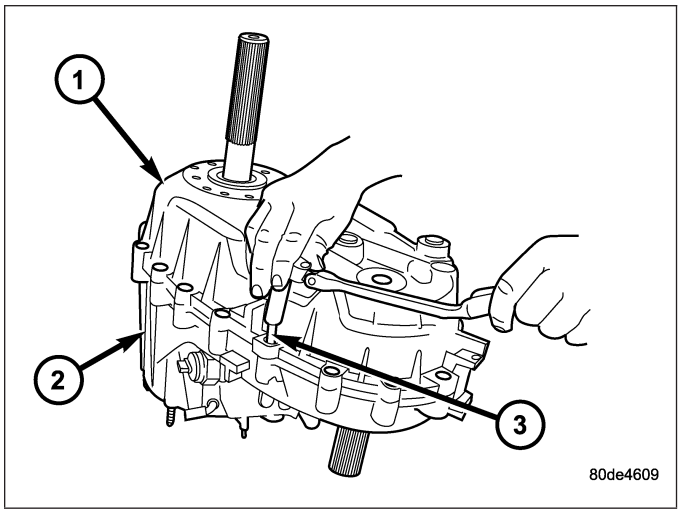

4. Apply Loctite™ 242 to remainder of rear case-to-front case bolt threads and install bolts. Tighten bolts to 20-27 N·m (15-24 ft. lbs.),
5. Install rear output bearing (2) snap-ring (3) to output shaft.

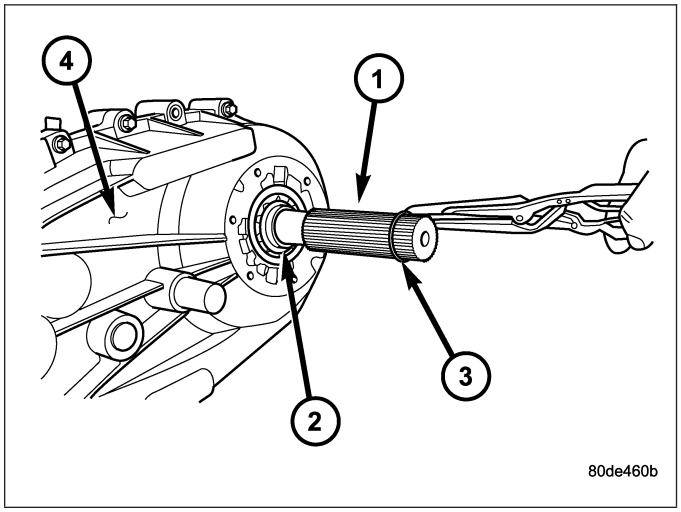

SEAL BOOT

1. Install the front output shaft seal slinger with Installer 8840. Install the slinger onto the shaft until the tool contacts the rear of the output shaft.
2. Install a new seal boot clamp onto the seal boot.
3. Install the seal boot and clamp onto the slinger hub and tighten the clamp with Crimp Tool C-4975-A.

REAR EXTENSION

1. Install new seal in rear extension housing seal with Installer D-163 and Handle C-4171..
2. Apply bead of Mopar® Gasket Maker, or equivalent, to mating surface of rear extension housing. Keep sealer bead width to maximum of 3/16 inch. Do not use excessive amount of sealer as excess could be displaced into output bearing.
3. Align and install rear extension housing (1) on retainer.
4. Apply Mopar® Silicone Sealer to threads of rear extension housing bolts. Then install and tighten bolts to 16-24 N·m (12-18 ft. lbs.) torque.

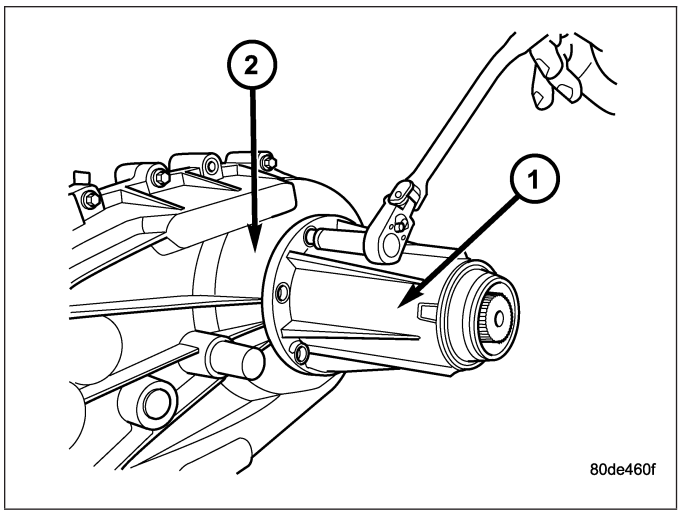

INSTALLATION

1. Align and seat transfer case on transmission. Be sure transfer case input gear splines are aligned with transmission output shaft. Align splines by rotating transfer case rear output shaft yoke if necessary. Do not install any transfer case attaching nuts until the transfer case is completely seated against the transmission.
2. Install and tighten transfer case attaching nuts. Tighten nuts to 30-41 N·m (20-30 ft.lbs.).
3. Remove jack stand from under transmission.
4. Align and connect propeller shafts. (Refer to 3 - DIFFERENTIAL & DRIVELINE/PROPELLER SHAFT/PROPELLER SHAFT - INSTALLATION)
5. Connect vent hose and transfer case position sensor connector.
6. Connect shift rod to transfer case lever or floor shift arm. Use channel lock style pliers to press rod back into lever grommet.
7. Adjust shift linkage, if necessary.
8. Fill transfer case with recommended transmission fluid and install fill plug.
9. Install skid plate, if equipped. (Refer to 13 - FRAMES & BUMPERS/FRAME/TRANSFER CASE SKID PLATE - INSTALLATION)
10. Lower vehicle

SPECIFICATIONS

TRANSFER CASE - NV241 GENII

TORQUE SPECIFICATIONS

DESCRIPTION	N-m	Ft. Lbs.	In. Lbs.
Plug, Detent	16-24	12-18	-
Plug, Drain/Fill	20-34	15-25	-
Bolt, Extension Housing	16-24	12-18	-
Bolt, Case Half	20-27	15-24	-
Screw, Oil Pump	12-16	8-12	-
Nut, Range Lever	27-34	20-25	-
Sector Support	27-42	20-30	-
Nuts, Mounting	30-41	20-30	-
Position Sensor	20-34	16-25	-

SPECIAL TOOLS

TRANSFER CASE - NV241/NV243

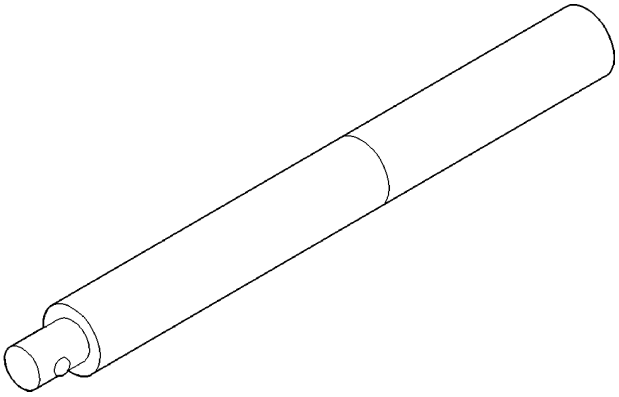

Handle, Universal - C-4171

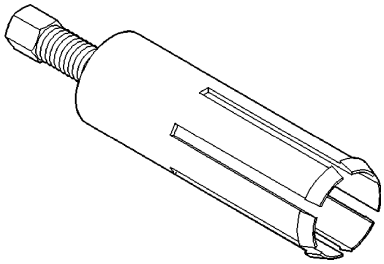

Remover, Bushing - 6957

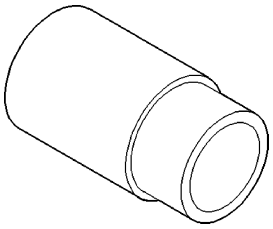

Installer, Bushing - 8157

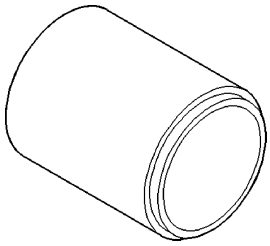

Installer, Seal - 6888

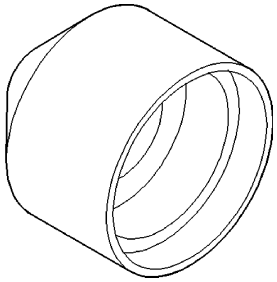

Installer, Seal - D-163

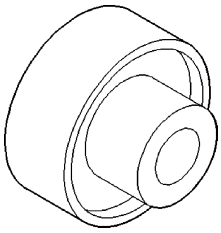

Installer, Bearing - 6953

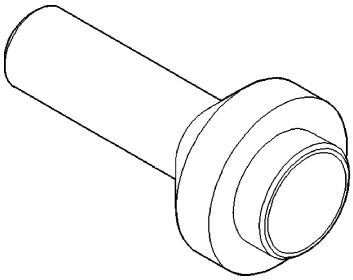

Installer, Seal - 7884

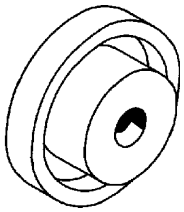

Installer, Seal - C-4210

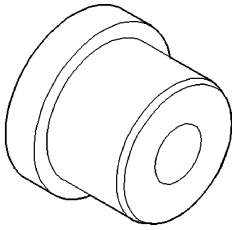

Installer, Bushing - 5066

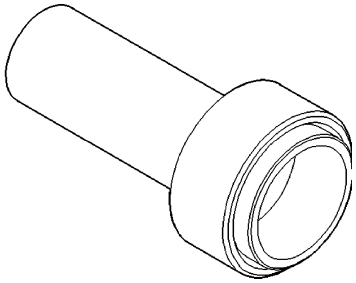

Installer, Pump Housing Seal - 7888

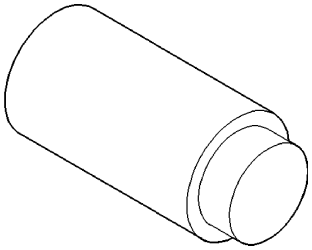

Plug, Extension - C-293-3

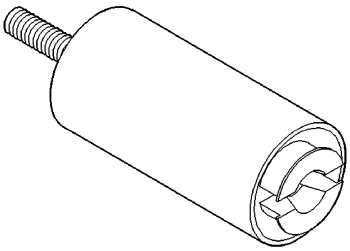

Remover - L-4454

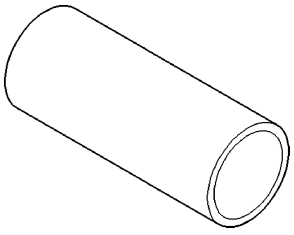

Cup - 8148

SEAL-EXTENSION HOUSING

REMOVAL

1. Raise and support vehicle.
2. Remove rear propeller shaft. (Refer to 3 - DIFFERENTIAL & DRIVELINE/PROPELLER SHAFT/PROPELLER SHAFT - REMOVAL)
3. Using a suitable pry tool or slide-hammer mounted screw, remove the extension housing seal.

INSTALLATION

1. Clean fluid residue from sealing surface and inspect for defects.
2. Using Installer D-163 (2) and Handle C-4171 (1), install seal in extension housing.
3. Install propeller shaft. (Refer to 3 - DIFFERENTIAL & DRIVELINE/PROPELLER SHAFT/PROPELLER SHAFT - INSTALLATION)
4. Verify proper transfer case fluid level.
5. Lower vehicle.

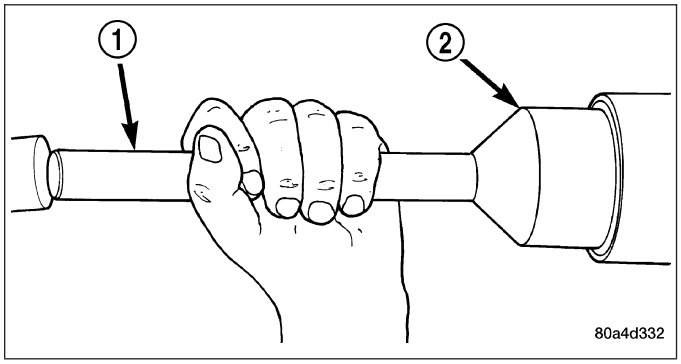

FLUID

STANDARD PROCEDURE - FLUID DRAIN AND REFILL

The fill (2) and drain (3) plugs are both in the rear case.

1. Raise vehicle.
2. Position drain pan under transfer case.

NOTE: It may be necessary to remove the exhaust y-pipe at the exhaust manifold to properly access the fill and drain plugs. Lowering the exhaust will allow the plugs to be accessed for torquing during installation. (Refer to 11 - EXHAUST SYSTEM/EXHAUST PIPE - REMOVAL)

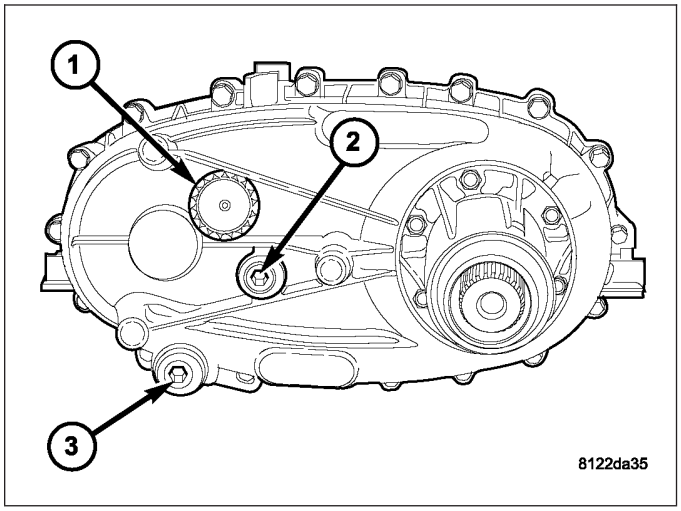

3. Remove drain and fill plugs and drain lubricant completely.
4. Install drain plug. Tighten plug to 20-34 N·m (15-25 ft. lbs.).
5. Remove drain pan.
6. Fill transfer case to bottom edge of fill plug opening with Mopar® ATF +4, Automatic Transmission fluid.
7. Install and tighten fill plug to 20-34 N·m (15-25 ft. lbs.).
8. Install the exhaust y-pipe to the exhaust manifold, if removed. (Refer to 11 - EXHAUST SYSTEM/EXHAUST PIPE - INSTALLATION)
9. Wipe any excess fluid that may have spilled onto the exhaust.
10. Lower vehicle.

FRONT OUTPUT SHAFT SEAL

REMOVAL

1. Remove the front propeller shaft (Refer to 3 - DIFFERENTIAL & DRIVELINE/PROPELLER SHAFT/PROPELLER SHAFT - REMOVAL).
2. Remove the front propeller shaft seal boot (1) retaining clamp (2).

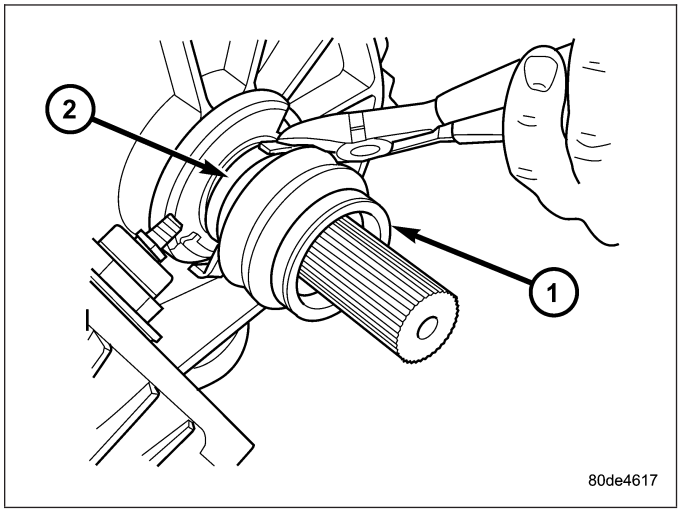

3. Remove the front propeller shaft seal boot (1).

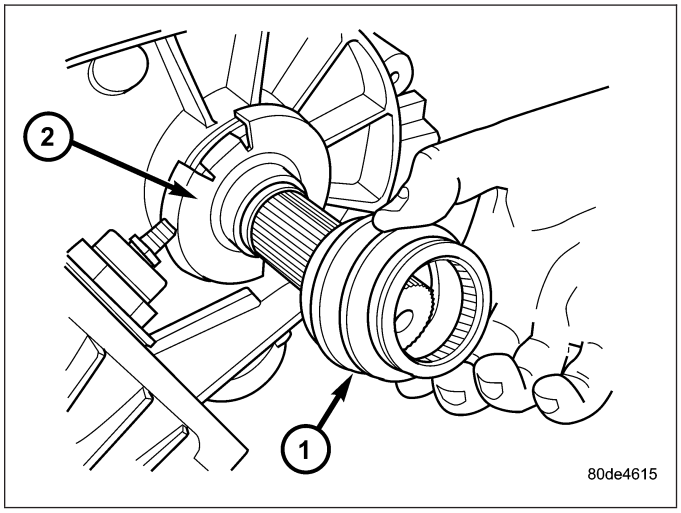

4. Remove the front output shaft seal slinger (1) by bending (2) the slinger ears away from the transfer case.

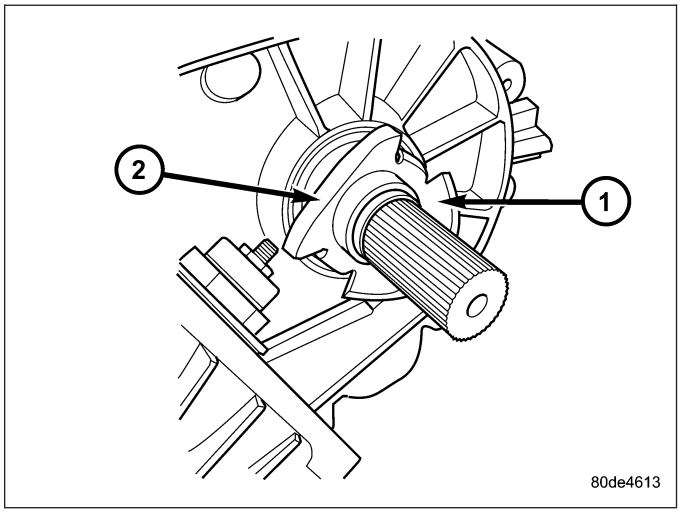

5. Using a suitable pry tool (2), remove the slinger (1) from the output shaft using care not to damage the shaft.
6. Using a screw and a slide hammer, remove the front output shaft seal.

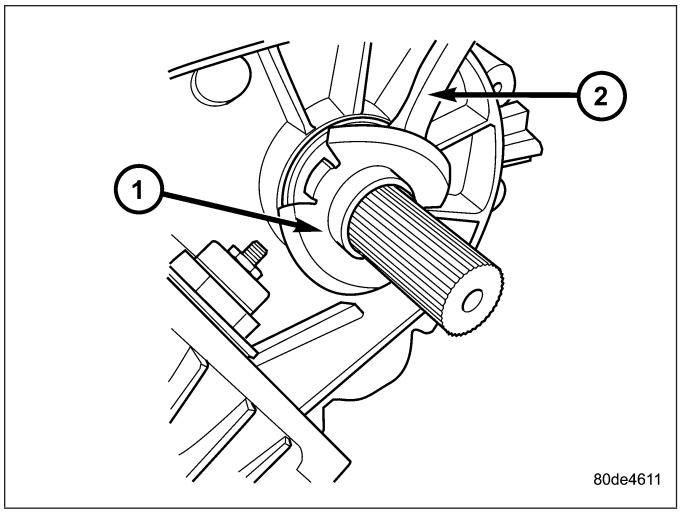

INSTALLATION

1. Install the new front output shaft seal with Installer MB991168A.
2. Install the front output shaft seal slinger with Installer 8840. Install the slinger onto the shaft until the tool contacts the rear of the output shaft.
3. Install a new seal boot clamp onto the seal boot.
4. Install the seal boot and clamp onto the slinger hub and tighten the clamp with Crimp Tool C-4975-A.
5. Install front propeller shaft (Refer to 3 - DIFFERENTIAL & DRIVELINE/PROPELLER SHAFT/PROPELLER SHAFT - INSTALLATION).

LEVER-SHIFT

REMOVAL

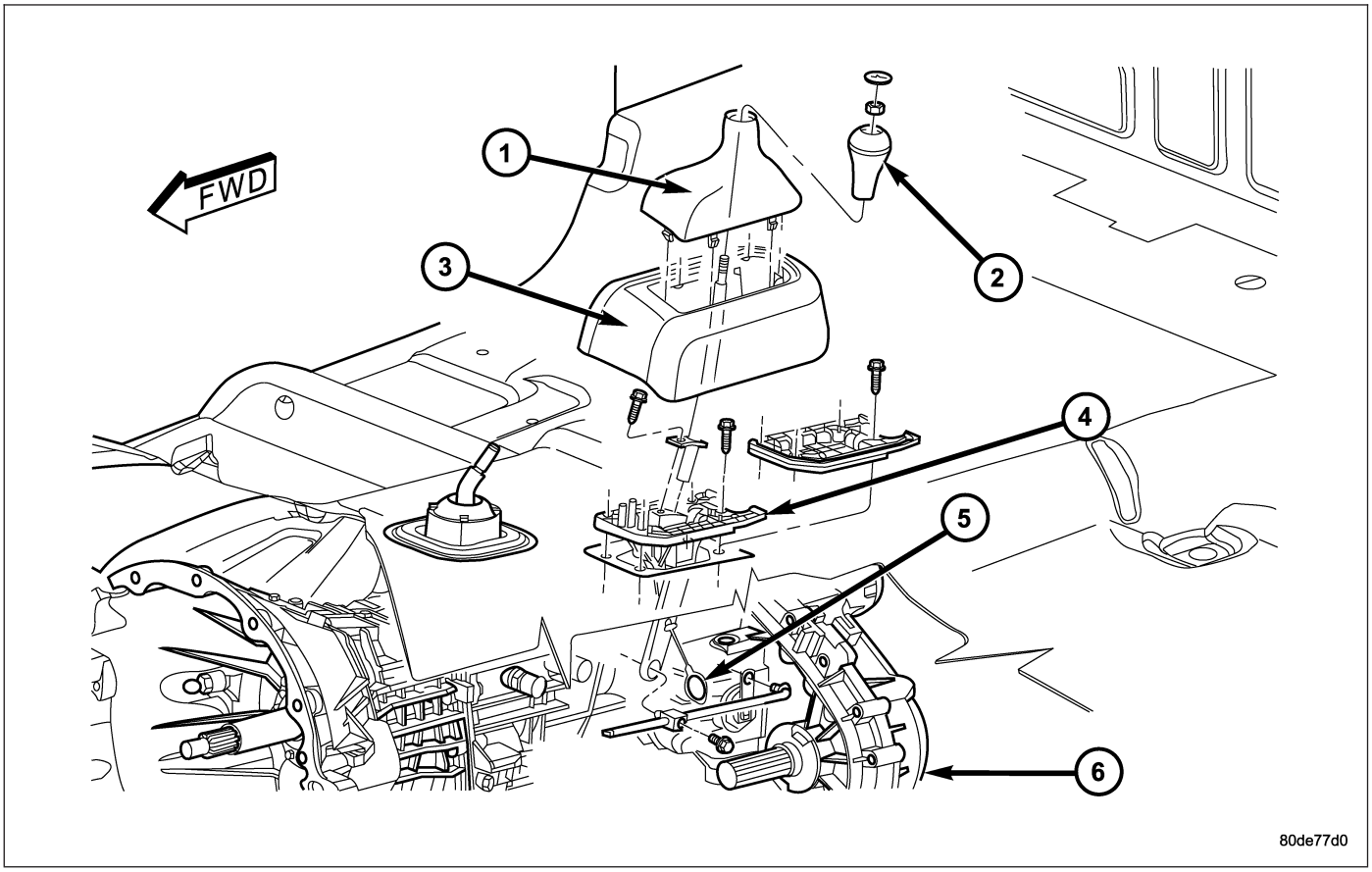

Transfer Case Shifter

1 - SHIFTER BOOT
2 - SHIFTER KNOB
3 - SHIFTER CONSOLE
4 - SHIFTER MECHANISM
5 - ALIGNMENT PIN
6 - TRANSFER CASE

1. Shift transfer case into 2H.
2. Raise and support the vehicle.
3. Loosen adjusting trunnion lock bolt and slide shift rod out of trunnion. If rod lacks enough travel to come out of trunnion, push trunnion out of shift lever.
4. Lower vehicle.
5. Remove transfer case shifter knob cap.
6. Remove nut holding shifter knob (2) to shift lever.
7. Remove shifter knob.
8. Remove the shift boot from the shifter console.
9. Remove the bolts securing the shifter mechanism to the floor pan.
10. Separate shift lever mechanism from the vehicle.

INSTALLATION

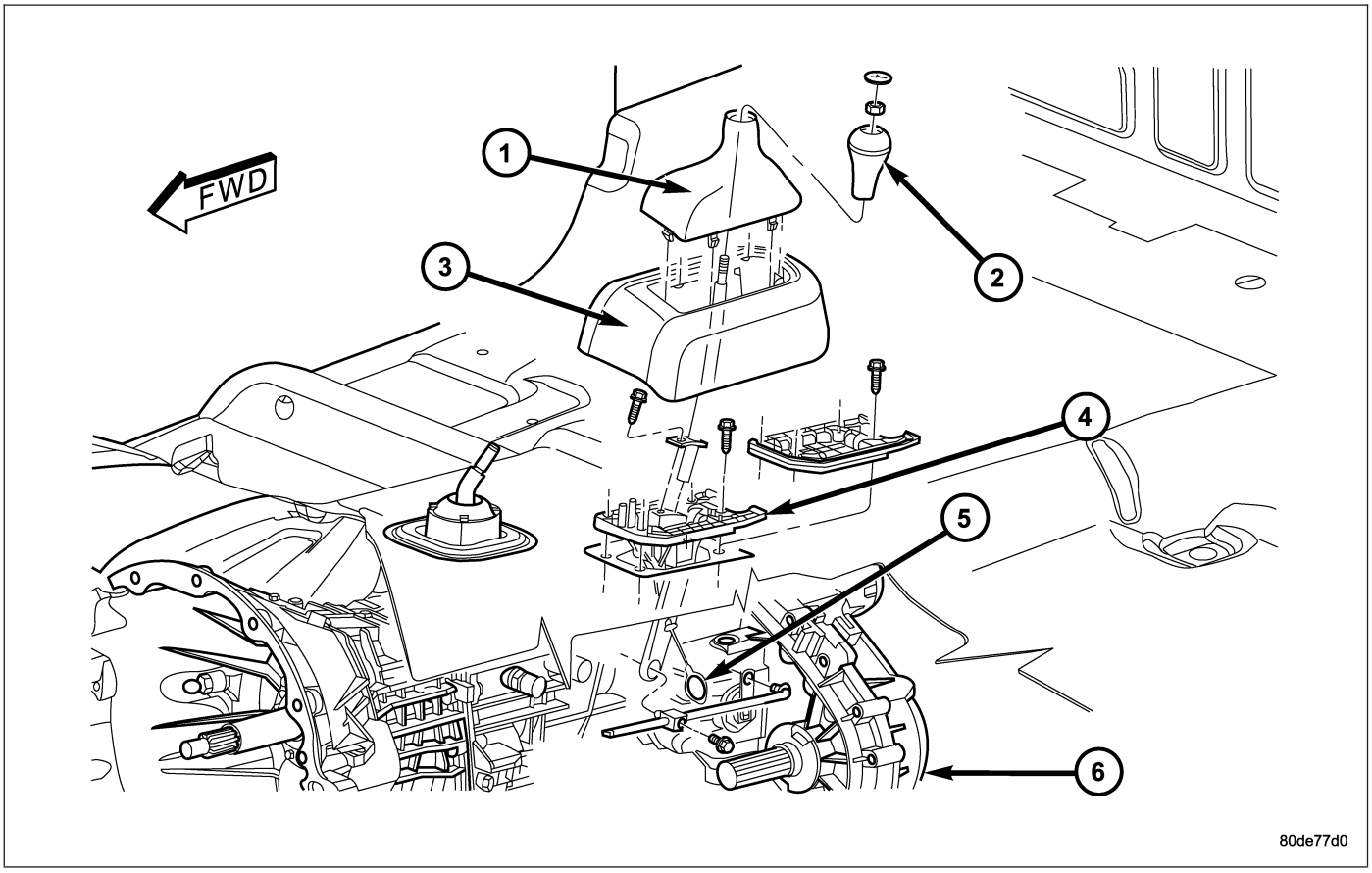

Transfer Case Shifter

1 - SHIFTER BOOT	4 - SHIFTER MECHANISM
2 - SHIFTER KNOB	5 - ALIGNMENT PIN
3 - SHIFTER CONSOLE	6 - TRANSFER CASE

1. If the shifter mechanism does not have a adjustment locating pin installed, align the adjustment channel on the shifter assembly to the locating hole in the lower shift lever and install an appropriately sized pin to retain the position.
2. Position shift lever in vehicle.
3. Install the bolts to hold the shifter mechanism (4) to the floor pan.
4. Raise vehicle.
5. Verify that the transfer case is still in the 2H position. The 2H detent position on the transfer case shift arm is the second position from full forward.
6. Install trunnion to shift lever, if necessary.
7. Install shift rod to trunnion, if necessary.
8. Tighten the shift rod lock bolt to 10 N·m (90 in.lbs.).
9. Remove the shifter adjustment locating pin from the adjustment channel and the locating hole.
10. Lower vehicle.
11. Install the transfer case shifter console.
12. Install the shifter boot and the shifter knob onto the shifter lever.
13. Install nut to hold shifter knob to shift lever.
14. Install shifter knob cap.
15. Verify transfer case operation.

ADJUSTMENTS

ADJUSTMENT - SHIFT LEVER

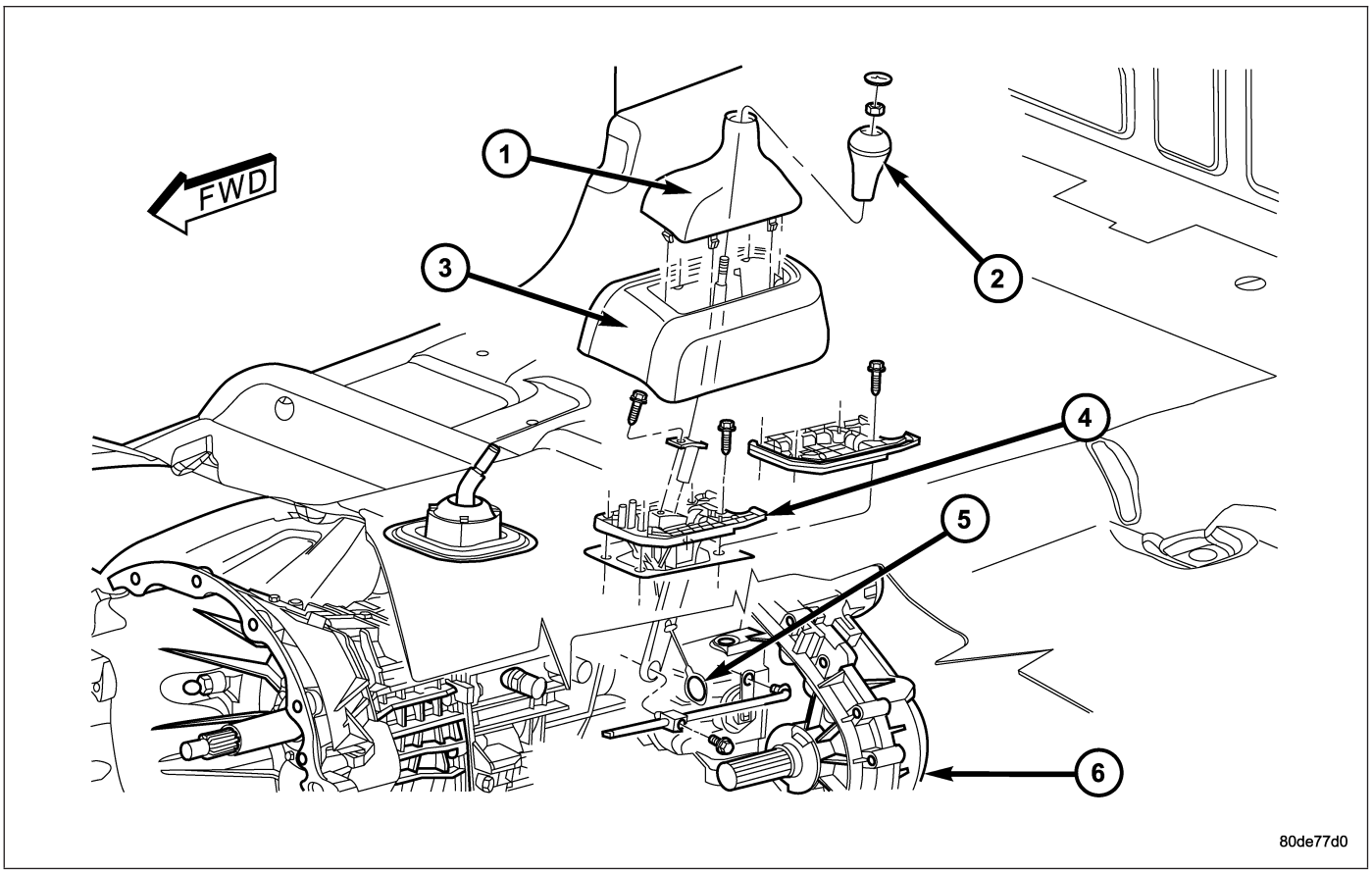

Transfer Case Shifter

1 - SHIFTER BOOT
2 - SHIFTER KNOB
3 - SHIFTER CONSOLE
4 - SHIFTER MECHANISM
5 - ALIGNMENT PIN
6 - TRANSFER CASE

1. Move shift lever into 2H position.
2. Raise vehicle.
3. Loosen shift rod lock bolt at trunnion.
4. Check shift rod fit in trunnion. Be sure rod does not bind in trunnion. Lubricate the shift rod and trunnion if necessary.
5. Verify that transfer case shift lever is in 2H detent position. The 2H detent position on the transfer case shift arm is the second position from full forward.
6. Align the adjustment locating hole on the lower shifter lever with the adjustment channel on the shifter bracket assembly.
7. Insert an appropriately sized pin through into the adjustment channel and through the locating hole to hold the shifter in the correct position.
8. Tighten shift rod lock bolt to 10 N·m (90 in. lbs.) torque.
9. Remove the locating pin from the adjustment channel and locating hole.
10. Check shift linkage operation. Be sure transfer case shifts into and operates properly in all ranges.

TRANSFER CASE - NV271 - SERVICE INFORMATION

TABLE OF CONTENTS

page

TRANSFER CASE - NV271 - SERVICE INFORMATION
DESCRIPTION 1373
OPERATION 1374
DIAGNOSIS AND TESTING - TRANSFER CASE - NV271 1374
REMOVAL 1376
DISASSEMBLY 1376
CLEANING 1392
INSPECTION 1392
ASSEMBLY 1395
INSTALLATION 1415
SPECIFICATIONS
TRANSFER CASE - NV271 1416
SPECIAL TOOLS
TRANSFER CASE NV271/NV273 1417
BOOT-EXTENSION HOUSING SEAL AND DUST
REMOVAL 1419
INSTALLATION 1419
FLUID
STANDARD PROCEDURE - FLUID DRAIN AND REFILL 1420
SEAL-FRONT OUTPUT SHAFT
REMOVAL 1420
INSTALLATION 1421
SENSOR-POSITION
DESCRIPTION 1421
OPERATION 1421
REMOVAL 1422
INSTALLATION 1422
LEVER-SHIFT
REMOVAL 1423
INSTALLATION 1424
ADJUSTMENTS
ADJUSTMENT - SHIFT LEVER 1425

TRANSFER CASE - NV271 - SERVICE INFORMATION

DESCRIPTION

The NV271 transfer case (1) is a part-time transfer case with a low-range gear system. It provides three operating ranges plus a NEUTRAL position. The low range position provides a gear reduction ratio of 2.72:1 for increased low speed torque capability.

The gear cases and extension are all of aluminum. Drive sprockets and an interconnecting drive chain are used to transmit engine torque to the front/rear propeller shafts. The mainshaft, input gear and front output shaft are supported by ball and needle bearings.

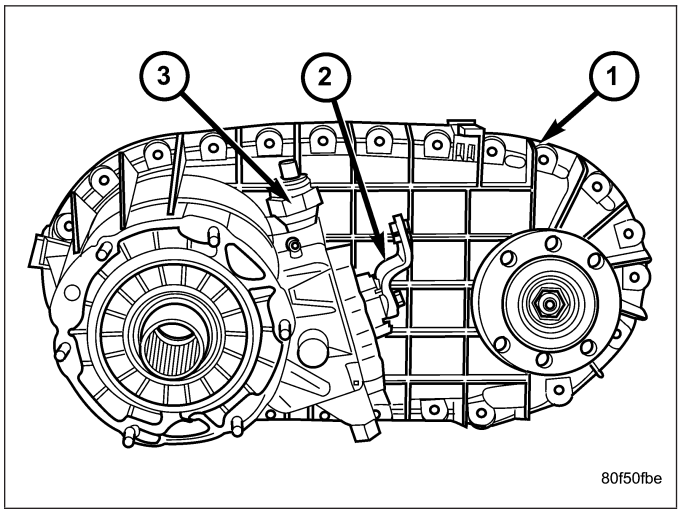

IDENTIFICATION

An identification tag (2) is attached to the rear case of every transfer case. The tag provides the transfer case model number, assembly number, serial number, and low range ratio.

The transfer case serial number also represents the date of build.

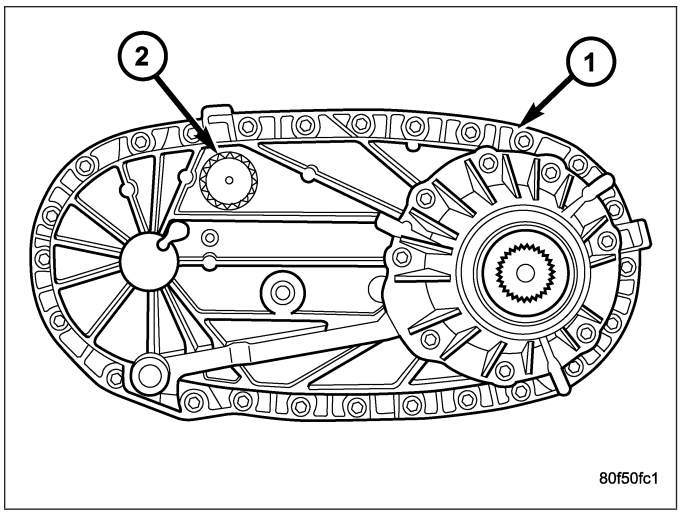

OPERATION

OPERATING RANGE

Transfer case operating ranges are:

- 2H (2-wheel drive)
- 4H (4-wheel drive)
- 4LO (4-wheel drive low range

The 2H range is for use on any road surface at any time.

The 4H and 4LO ranges are for off road use only. They are not for use on hard surface roads. The only exception being when the road surface is covered by ice and snow.

The low range reduction gear system is operative in 4LO range only. This range is for extra pulling power in off road situations. Low range reduction ratio is 2.72:1.

SHIFT MECHANISM

The transfer case is operated by an adjustable floor mounted shift linkage. The transfer case shift lever is directly attached to the shift sector. The sector operates the range and mode forks within the transfer case.

A straight line shift pattern is used with a NEUTRAL detent. Lever range positions are imprinted in the shift knob.

SHIFTING

The transfer case can be shifted between the 2H and 4H operating ranges while the vehicle is in motion. The vehicle must have the transmission placed in NEUTRAL, or the clutch depressed in the case of a manual transmission, and be moving less than 2-3 MPH when shifting into and out of the 4L operating range.

DIAGNOSIS AND TESTING - TRANSFER CASE - NV271

Before beginning repair on a suspected transfer case malfunction, check all other driveline components beforehand.

The actual cause of a problem may be related to such items as: front hubs, axles, propeller shafts, wheels and tires, transmission, or clutch instead. If all other driveline components are in good condition and operating properly, refer to the Diagnosis Chart for further information.

DIAGNOSIS CHART

Condition	Possible Cause	Correction
Transfer Case difficult to shift or will not shift into desired range.	1) Vehicle speed too great to permit shifting.	1) Stop vehicle and shift into desired range. Or, reduce speed to below 3-4 km/h (2-3 mph) before attempting the shift.
	2) If vehicle was operated for an extended period in 4H on a dry paved surface, the driveline torque load may be causing a bind.	2) Stop vehicle and shift the transmission into neutral. Shift the transfer case to 2H and operate vehicle in 2H on dry paved surfaces.
	3) Transfer case external shift linkage binding.	3) Lubricate, repair, or replace linkage bushings, or tighten loose components as necessary.
	4) Insufficient or incorrect lubricant.	4) Drain and refill to edge of fill hole with Mopar® ATF +4, Automatic Transmission fluid.
	5) Internal components binding, worn, or damaged.	5) Disassemble the transfer case and replace worn or damaged components as necessary.
Transfer Case noisy in all operating ranges.	1) Insufficient or incorrect lubricant.	1) Drain and refill to edge of fill hole with Mopar® ATF +4, Automatic Transmission fluid.
Noisy in, or jumps out of, four wheel drive low range.	1) Transfer case not completely engaged in 4L position.	1) With the transmission in NEUTRAL, or the clutch depressed in the case of a manual transmission and the vehicle moving under 3-4 km/h (2-3 mph), shift the transfer case to NEUTRAL and then shift into the 4L position.
	2) Shift linkage out of adjustment.	2) Adjust linkage.
	3) Shift linkage loose or binding.	3) Tighten, lubricate, or repair linkage as necessary.
	4) Range fork damaged, inserts worn, or fork is binding on the shift rail.	4) Disassemble unit and repair as necessary.
	5) Low range gear worn or damaged.	5) Disassemble unit and repair as necessary.
Lubricant leaking from output shaft seal or vent.	1) Transfer case overfilled.	1) Drain lubricant to the correct level.
	2) Vent closed or restricted.	2) Clear or replace vent as necessary.
	3) Output shaft seals damaged or installed incorrectly.	3) Replace seal as necessary. Check to ensure that another component, the propeller shaft slip yoke for example, is not causing damage to seal.
Abnormal tire wear.	1) Extended operation on hard, dry surfaces in the 4H position.	1) Operate vehicle in the 2H position on hard, dry surfaces.

REMOVAL

1. Raise and support vehicle.
2. Remove skid plate, if equipped. (Refer to 13 - FRAMES & BUMPERS/FRAME/TRANSFER CASE SKID PLATE - REMOVAL)
3. Position drain oil container under transfer case.
4. Remove transfer case drain plug and drain lubricant into container.
5. Disconnect vent hose and transfer case position sensor connector.
6. Disconnect shift rod from grommet in transfer case shift lever, or from floor shift arm whichever provides easy access. Use channel lock style pliers to press rod out of lever grommet.
7. Support transmission with jack stand.
8. Mark front and rear propeller shafts for assembly reference.
9. Remove front and rear propeller shafts. (Refer to 3 - DIFFERENTIAL & DRIVELINE/PROPELLER SHAFT/PROPELLER SHAFT - REMOVAL)
10. Support transfer case with suitable jack. Secure transfer case to jack with safety chains.
11. Remove nuts attaching transfer case to transmission.
12. Move transfer case assembly rearward until free of transmission output shaft.
13. Lower jack and move transfer case from under vehicle.

DISASSEMBLY

Position transfer case in a shallow drain pan. Remove drain plug and drain any remaining lubricant remaining in case.

COMPANION FLANGE AND EXTENSION HOUSING

1. Install two bolts 180° apart into the front output shaft companion flange.
2. Place holder (1) over the bolts (2) and against the companion flange.
3. Remove and discard the front companion flange nut.
4. Remove the companion flange from the front output shaft. It may be necessary to use Flange puller 8992 to remove the companion flange.

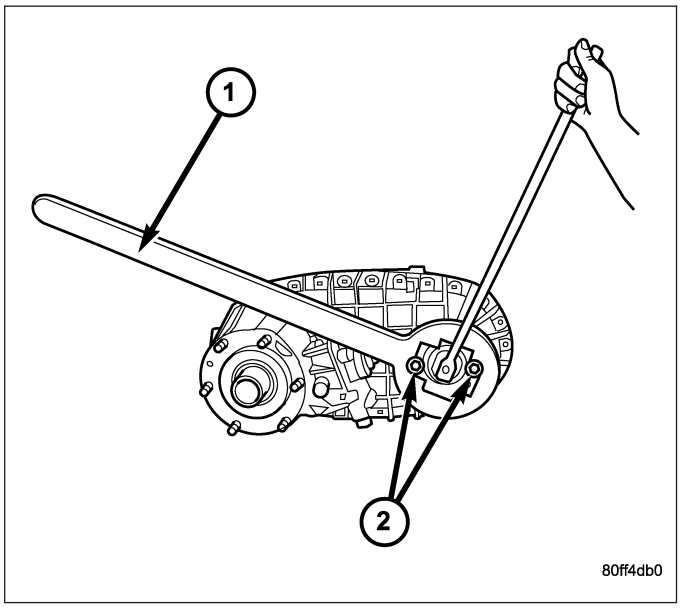

5. Use a suitable chisel or pry tool to remove the rear extension housing (1) dust boot (2).
6. Use a suitable chisel or pry tool to remove the rear extension housing seal.

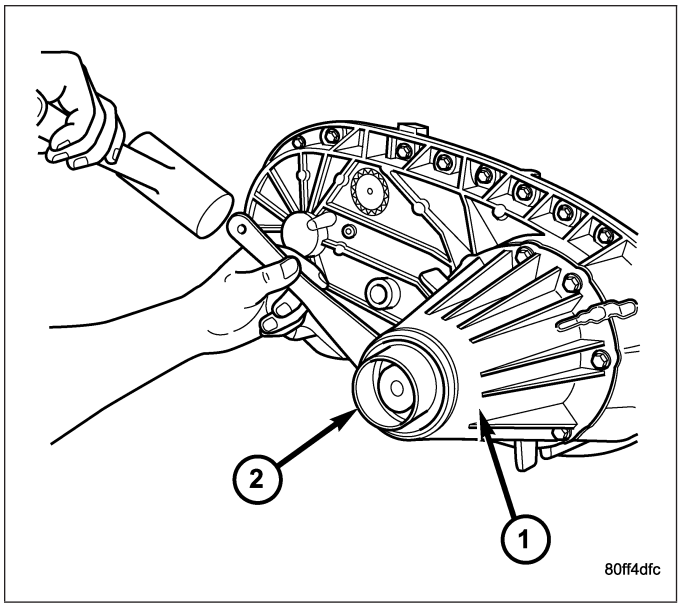

7. Remove rear extension (1) bolts (2).

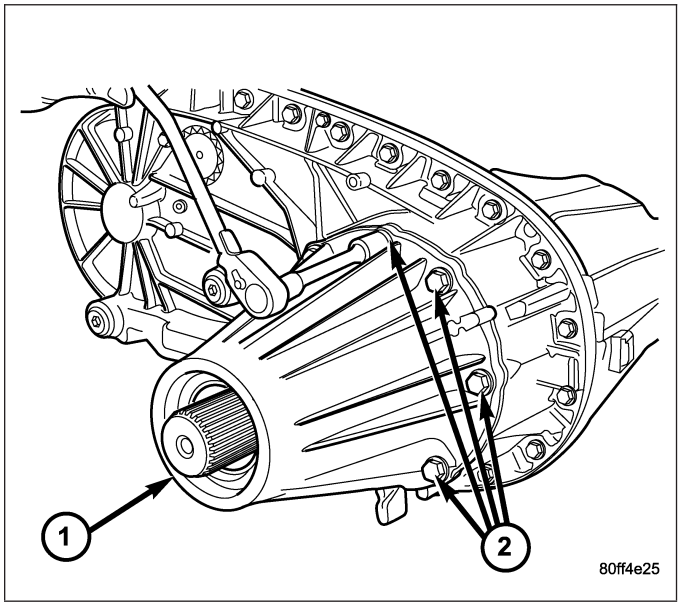

8. Remove rear extension housing (2) from the rear case half. Tap extension once or twice with a plastic mallet to break sealer bead and loosen it.

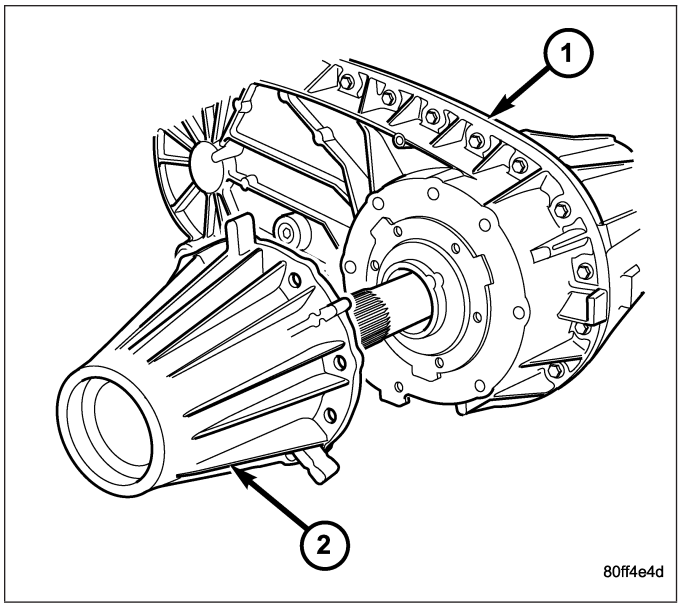

OIL PUMP AND REAR CASE

1. Disengage the oil pump pick-up tube (2) from the oil pump (1).

NOTE: The oil pump pick-up tube seals to the oil pump with an o-ring. Verify that the o-ring was removed with the tube and is in good condition. Replace the o-ring if necessary.

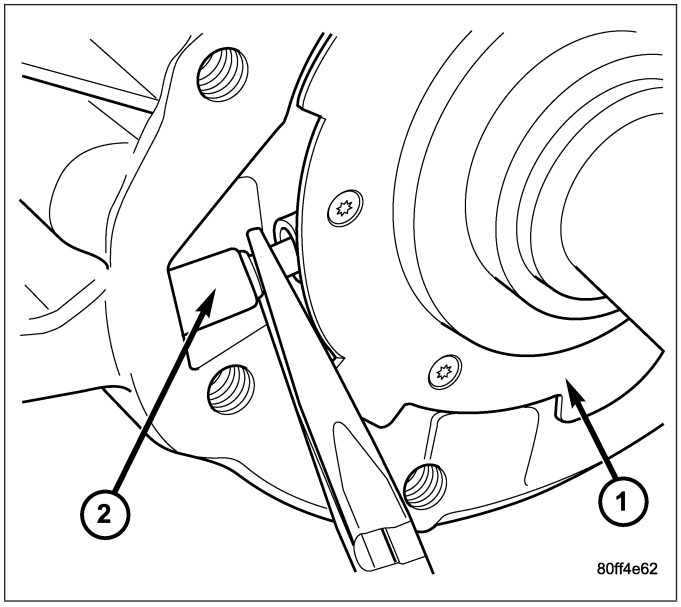

2. Remove the oil pump (3) from the rear output shaft (2).

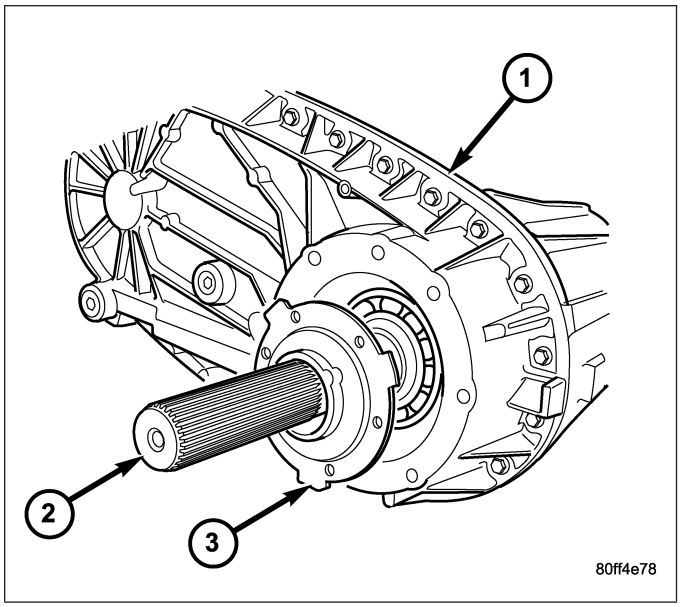

3. Remove rear case (2)-to-front case (1) bolts (3).

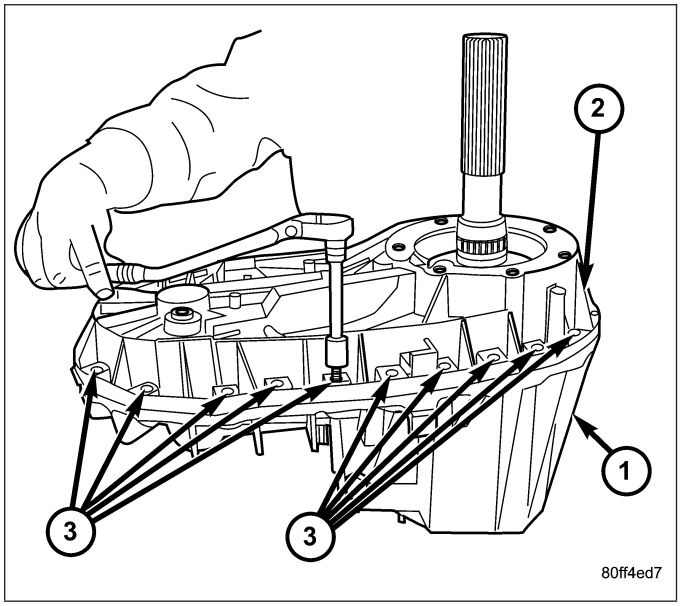

4. Remove the rear output shaft bearing inner snap-ring (3) from the output shaft (1) using suitable snap-ring pliers.

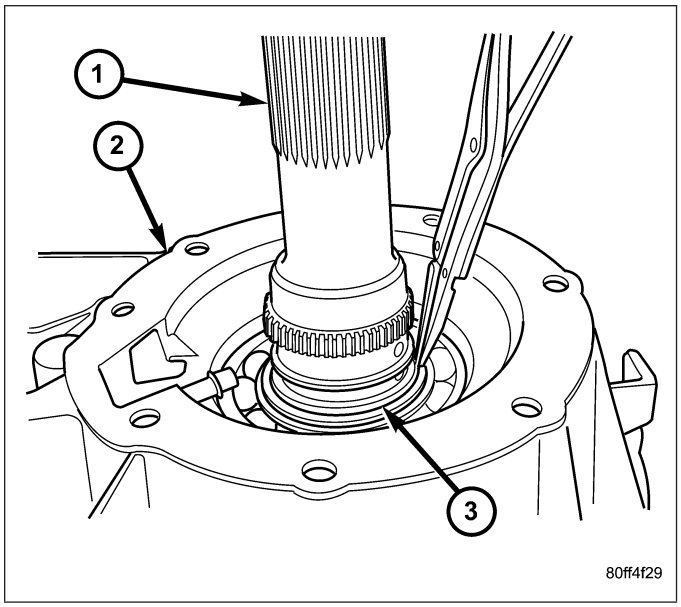

5. Remove the rear output shaft bearing inner snap-ring (3) from the output shaft (1).

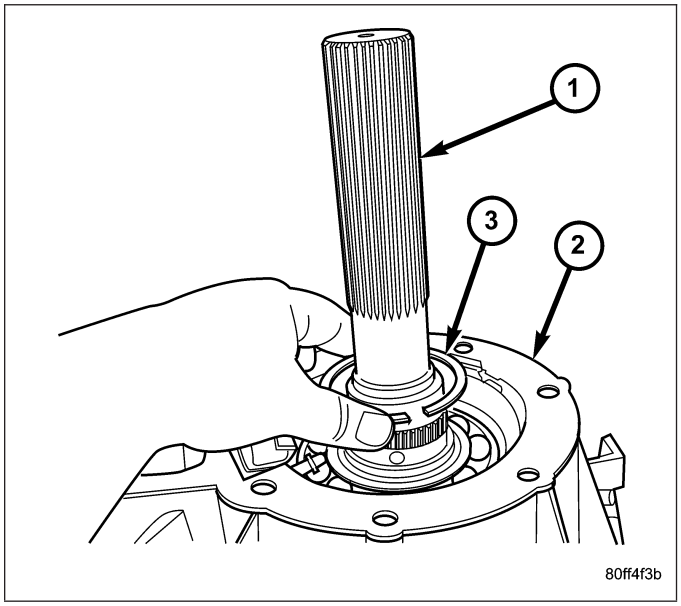

6. Loosen rear case (2) with pry tool to break sealer bead. Insert tool at each end of case.

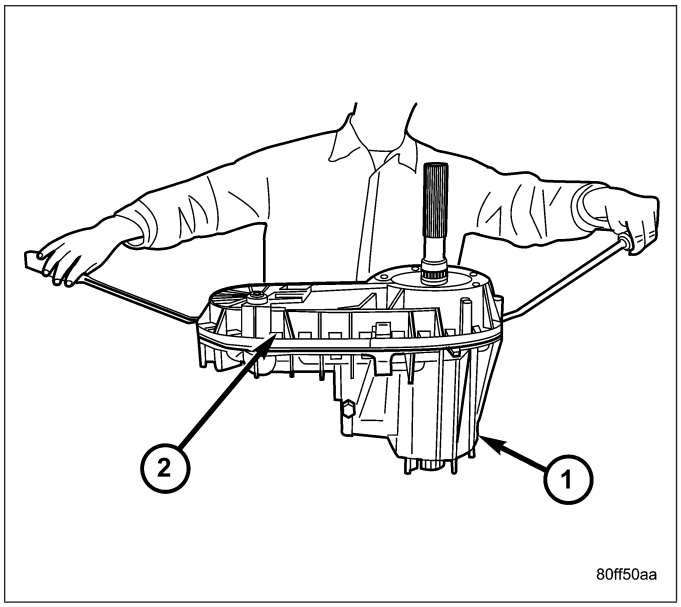

7. Unseat rear case from alignment dowels.
8. Remove the rear case (2) from the front case (1).

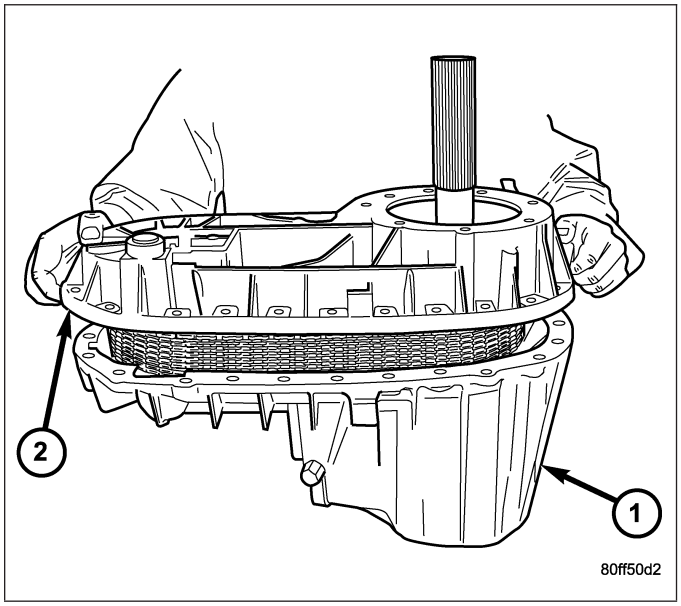

FRONT OUTPUT SHAFT AND DRIVE CHAIN

1. Remove the oil pick-up tube (3) and screen (2) from the front case half (1).

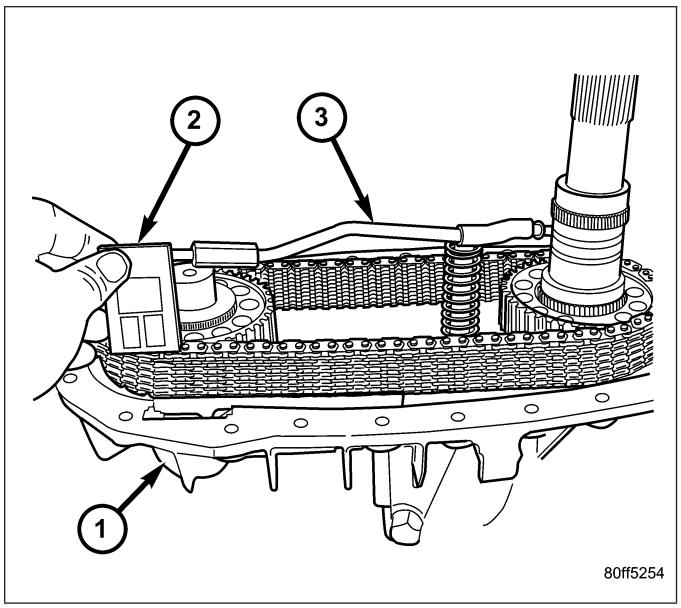

2. Remove the shift rail spring (2) from the shift rail (1).

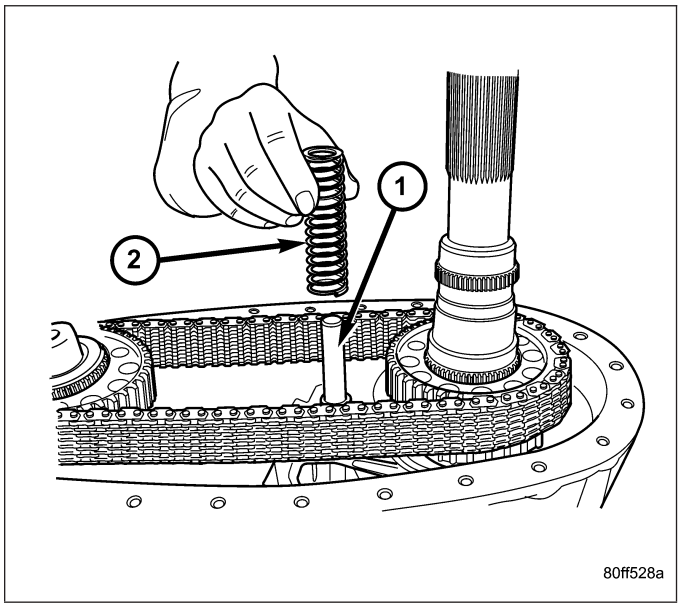

3. Remove the front output shaft (1) drive sprocket (2) retaining ring (3).

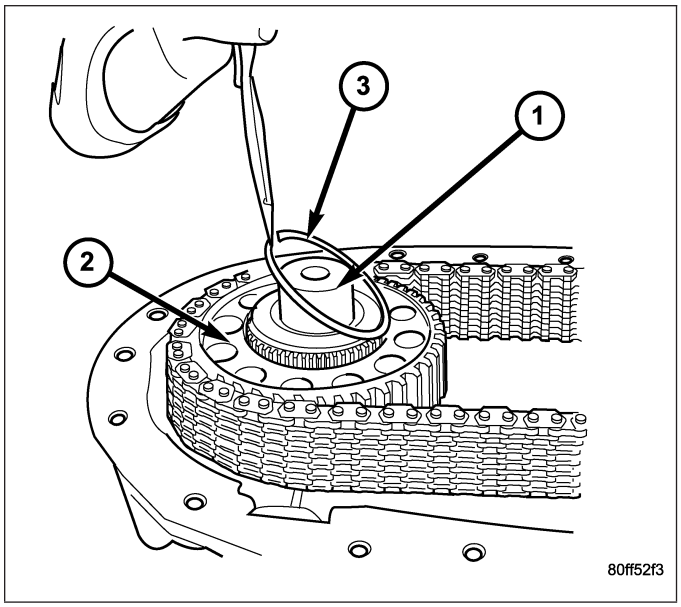

4. Remove the rear output shaft (1) drive sprocket (2) retaining ring (3).

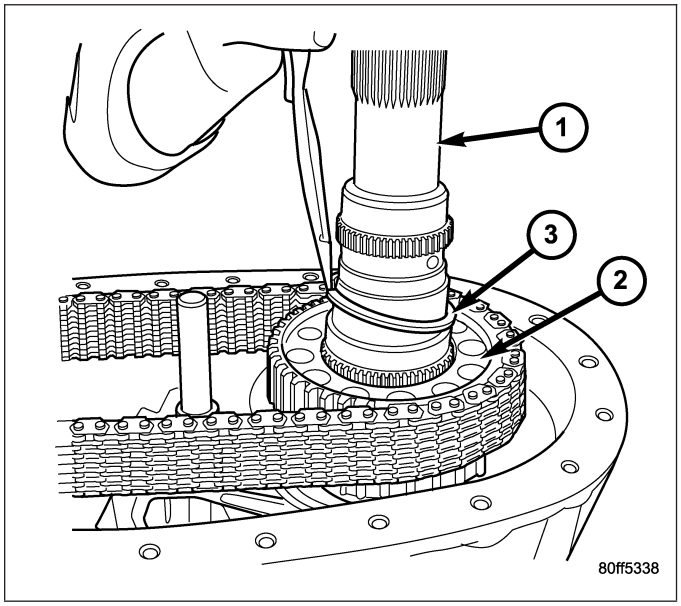

5. Pull front sprocket (3), rear sprocket, and chain (2) upward until clear of the front and rear output shaft sprocket splines.
6. Remove chain and sprockets as an assembly.

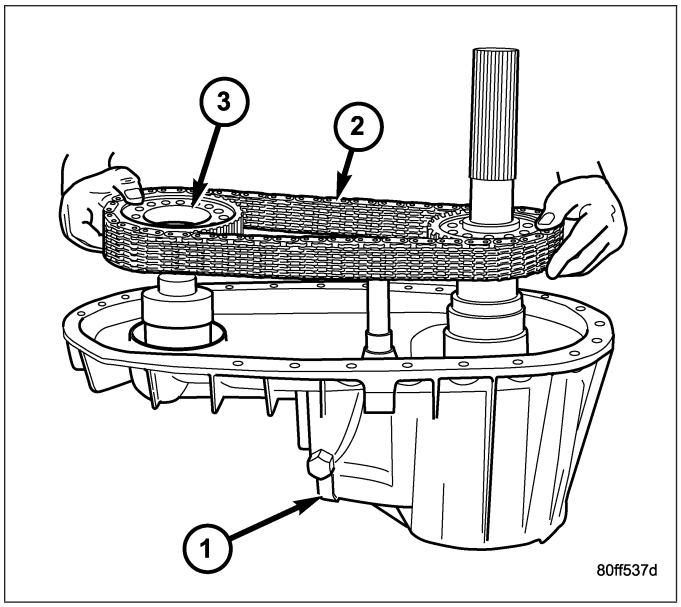

SHIFT FORKS AND MAINSHAFT

1. Shift transfer case into NEUTRAL.
2. Remove nut that retains the shift lever to sector shaft. Then remove shift lever (3) and spacer from the shaft.
3. Remove the sector support (2) with Socket 9033.

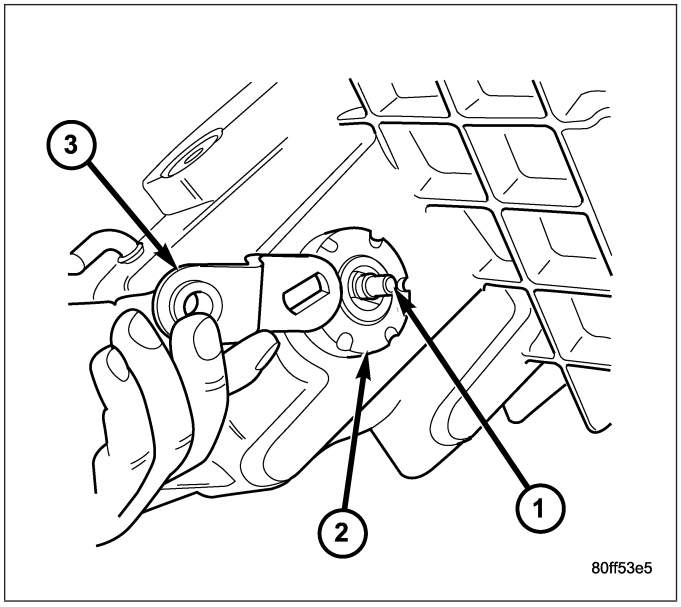

4. Remove the transfer case position sensor or switch (2) from the front case half (1).

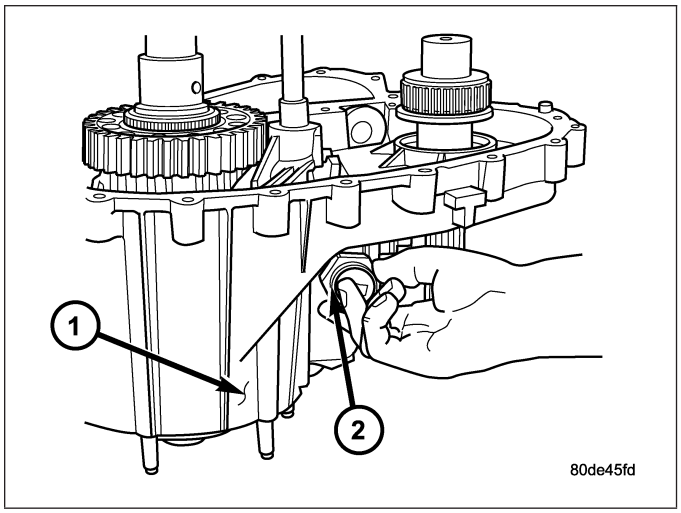

5. Loosen detent plug (2).

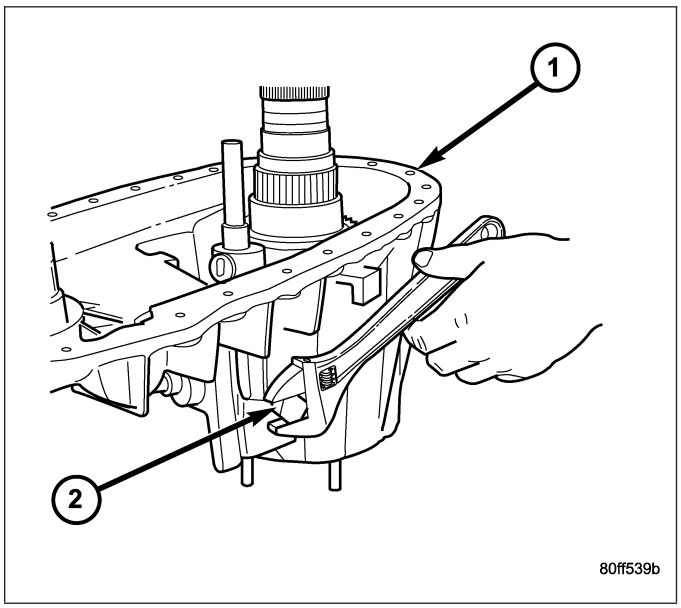

6. Remove detent plug (2), spring (3), and plunger (4). Note that the plug has an O-ring seal. Remove and discard this seal.

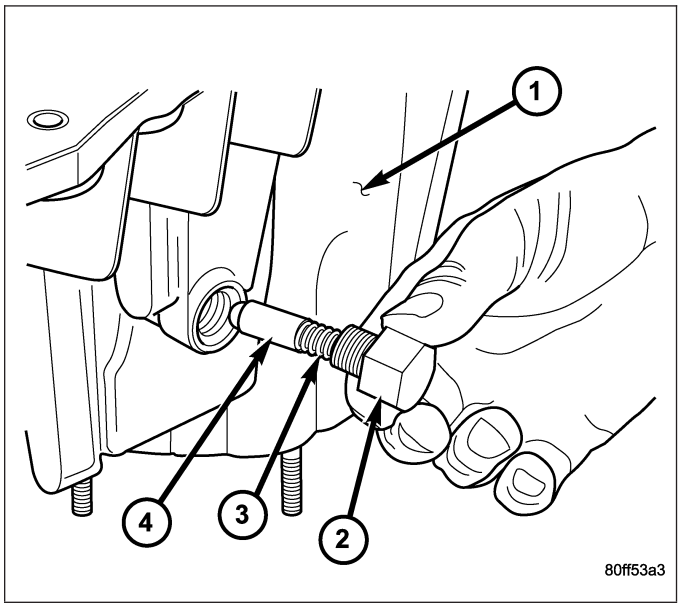

7. Using a screw mounted in a slide hammer, remove the front output shaft seal.
8. Remove the front output shaft snap-ring (2).

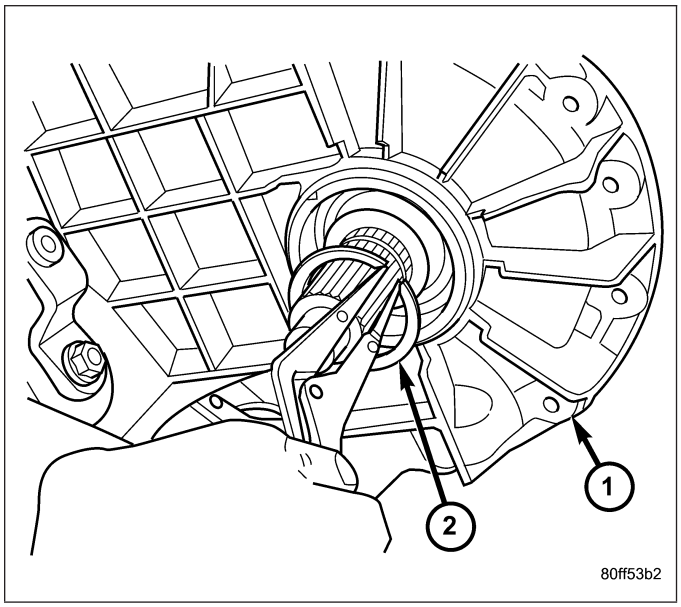

9. Remove front output shaft (2) from bearing in the front case (1).

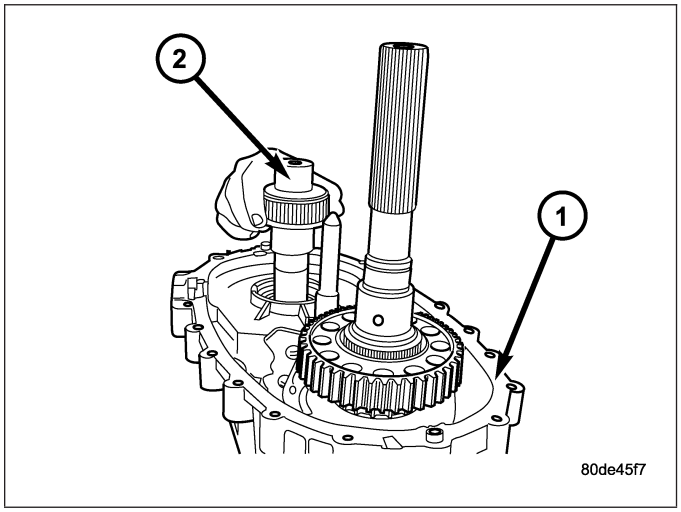

10. Pull mainshaft assembly (2) out of input gear, mode sleeve, and case.

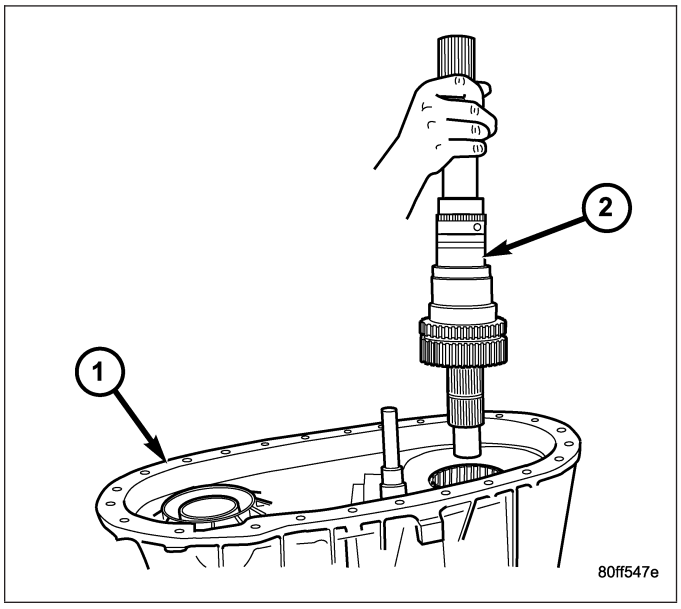

11. Remove mode fork (2), mode sleeve (3), and shift rail (1) as assembly. Note which way the sleeve fits in the fork (long side of sleeve goes to front or the points on the sleeve teeth go to the rear of case).

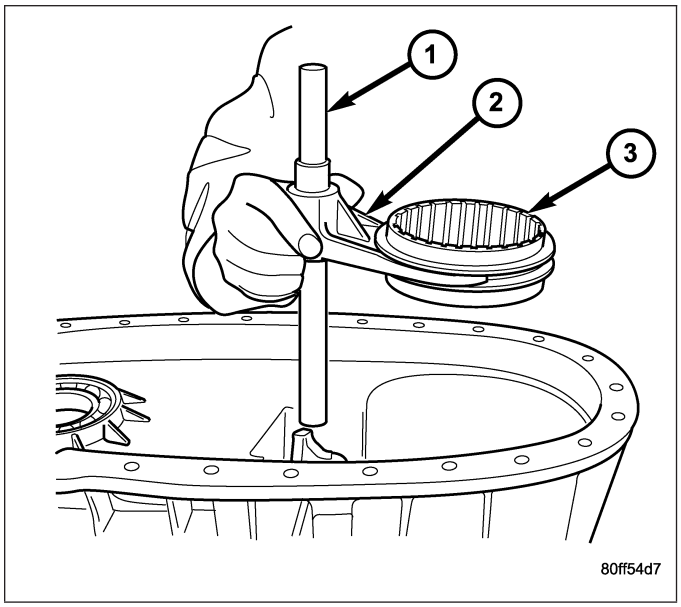

12. Remove range fork (2) and hub (1) as an assembly. Note fork position for installation reference.

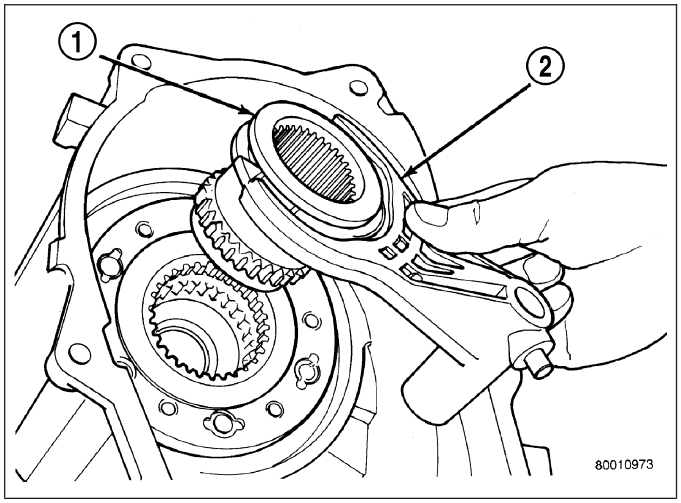

13. Remove shift sector (1).

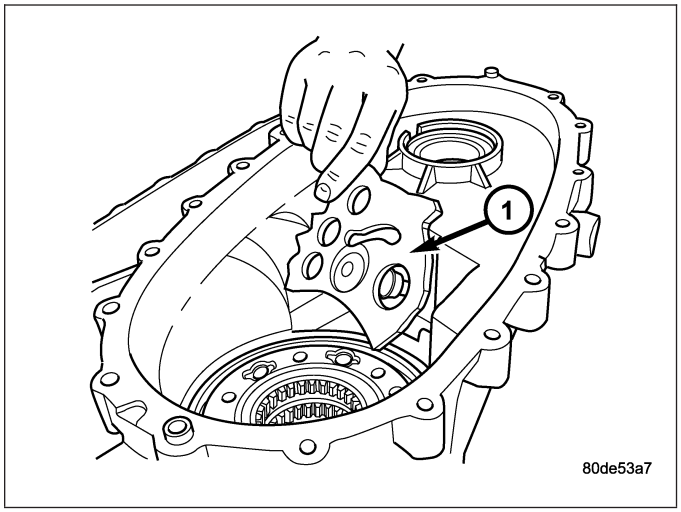

MAINSHAFT

1. Remove the clutch gear (2) from the output shaft (1).

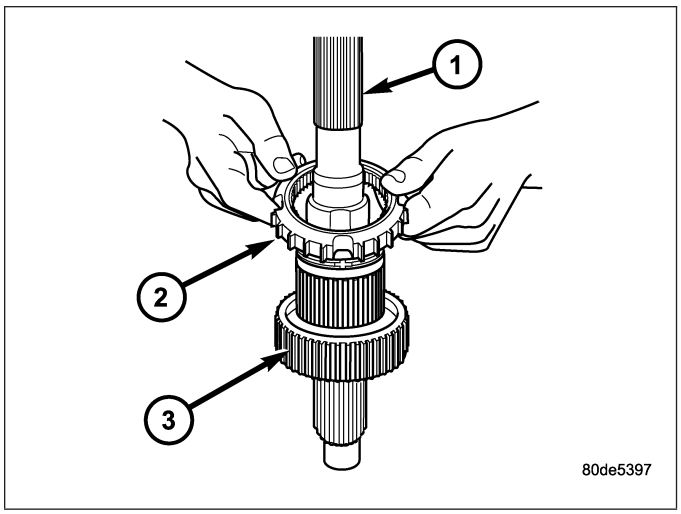

2. Remove the mode hub retaining ring (3) from the mainshaft (1).

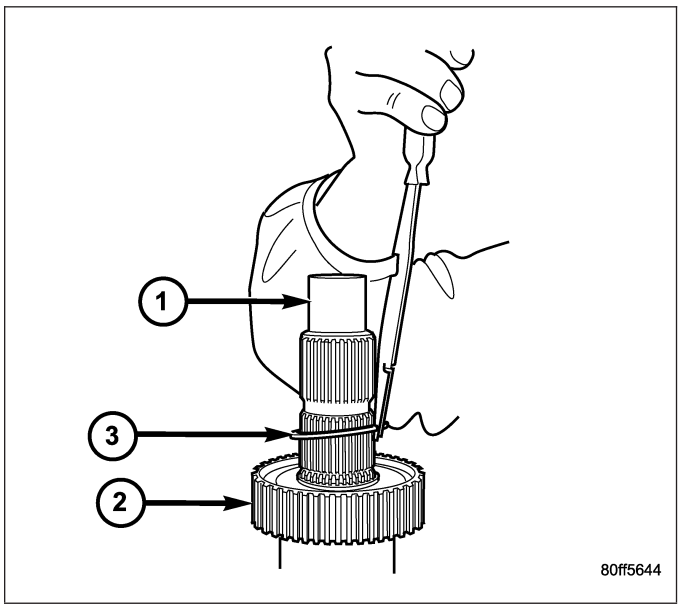

3. Remove the mode hub (2) from the mainshaft (1).

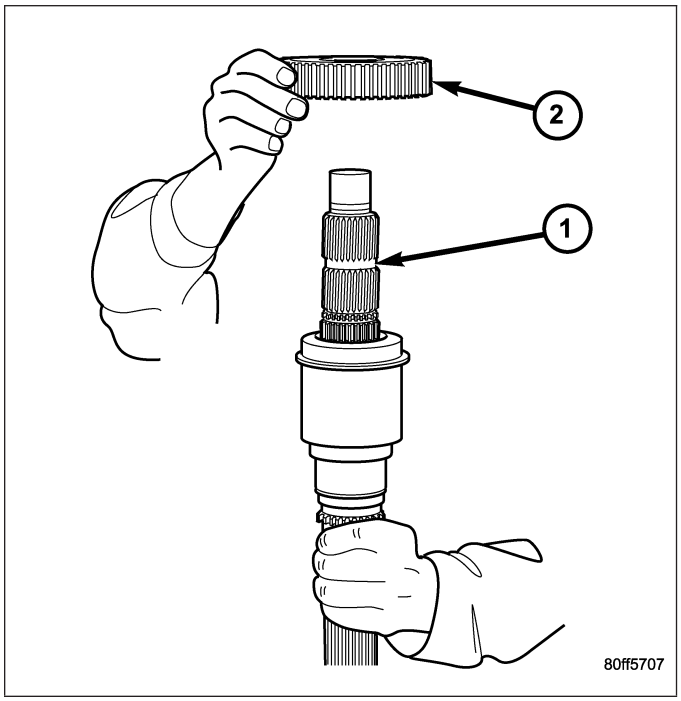

4. Remove the drive sprocket drive hub (2) from the mainshaft.

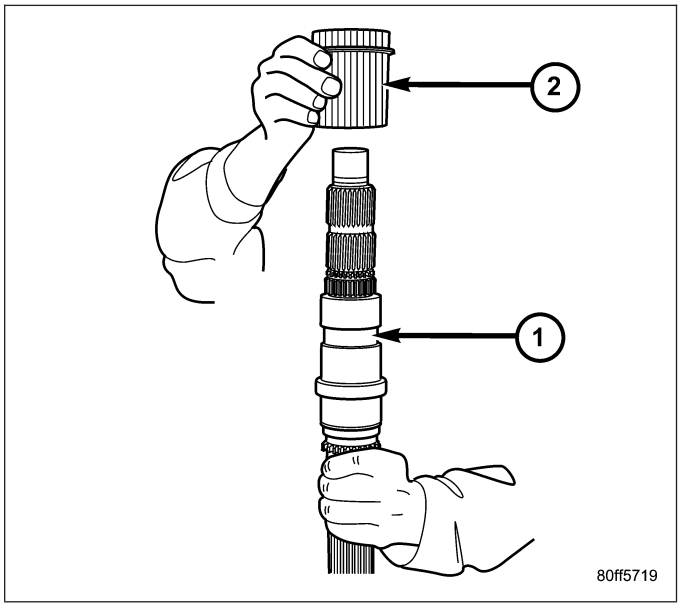

INPUT AND PLANETARY GEAR

1. Remove input gear seal with suitable screw and slide hammer.
2. Remove input gear retaining ring (2) with heavy duty snap-ring pliers.

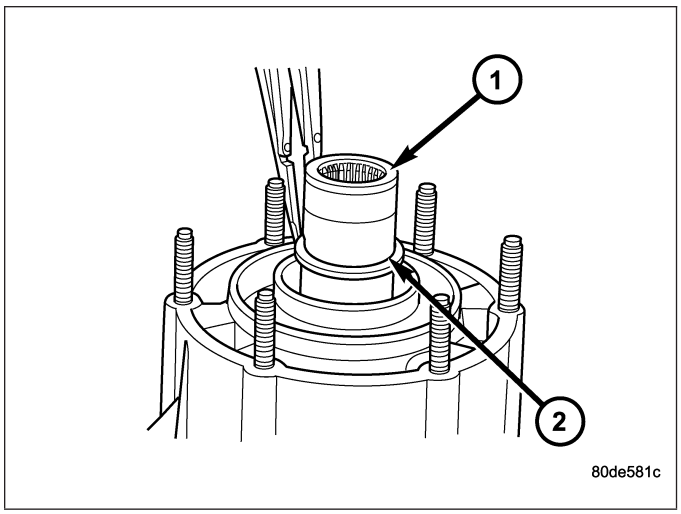

3. Place front case in horizontal position. Then remove input gear and low range gear as an assembly (2). Tap gear out of bearing with plastic mallet, if necessary.

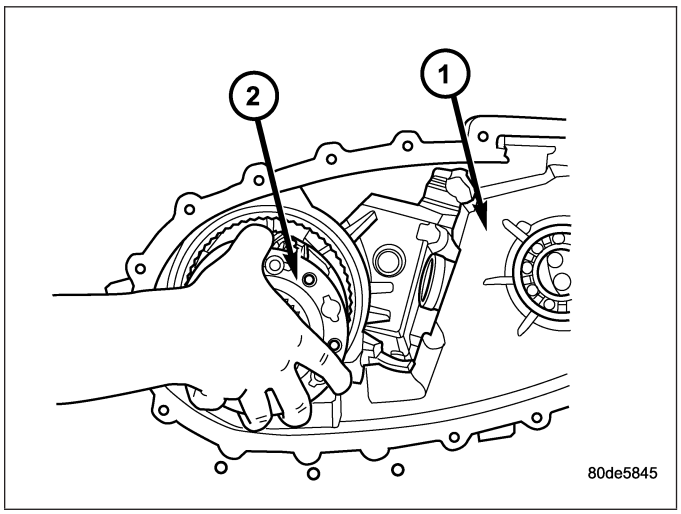

4. Remove snap-ring (2) that retains input gear in the low range gear (1).

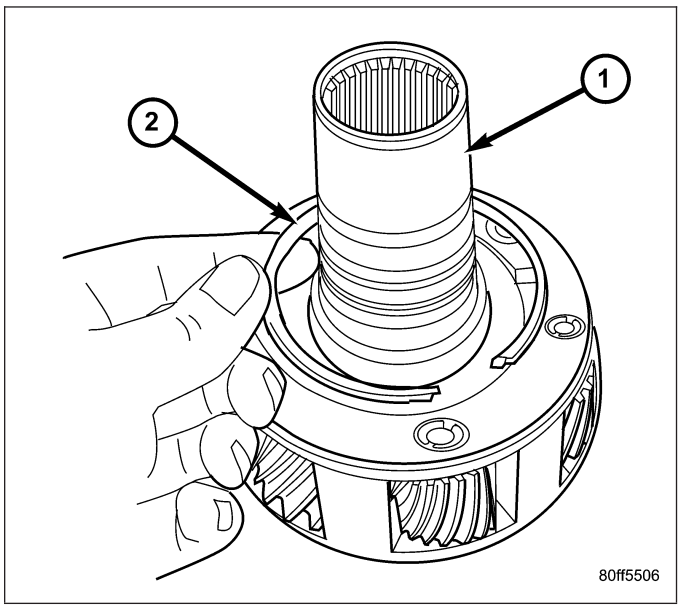

5. Remove retainer (2).

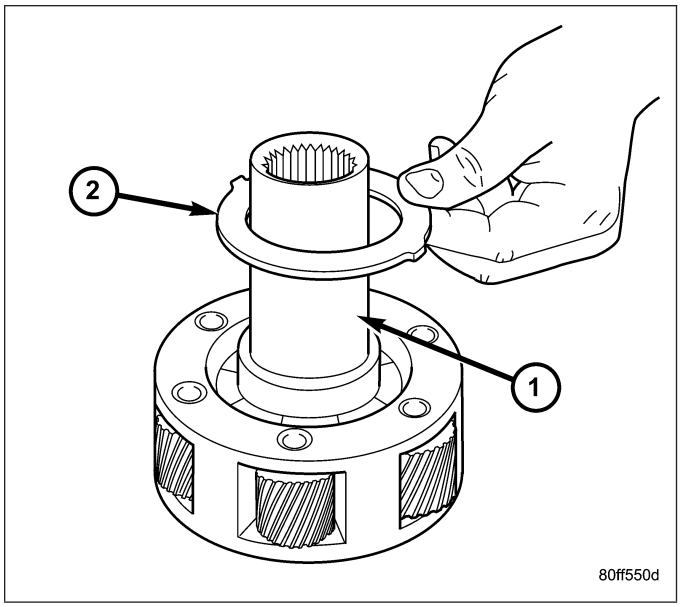

6. Remove front thrust plate (2) from the input gear (1).

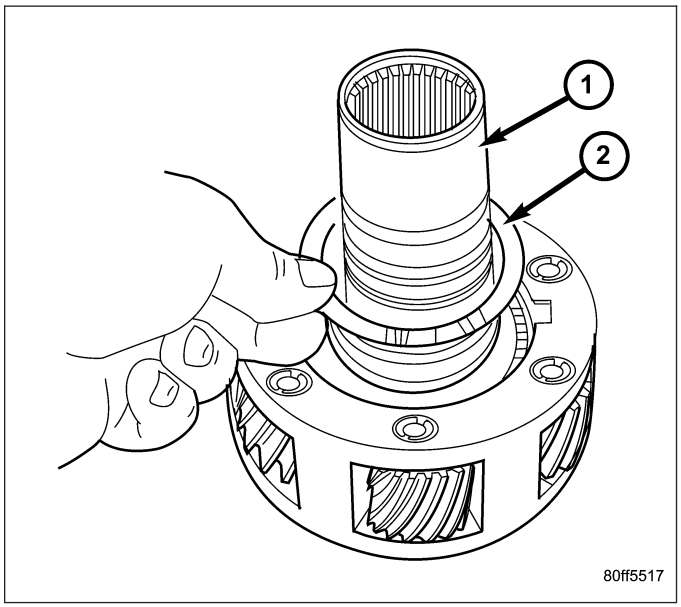

7. Remove input gear (1) from the low range planetary (2).

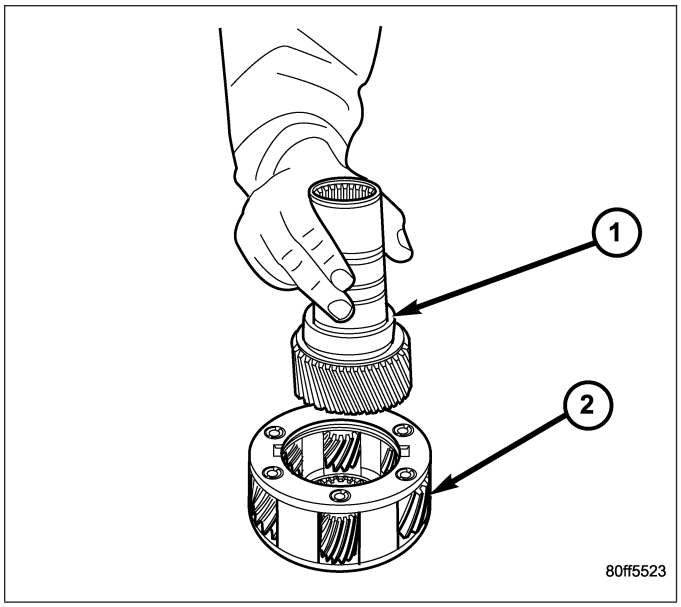

8. Remove bottom tabbed thrust washer (2) from low range planetary (1).

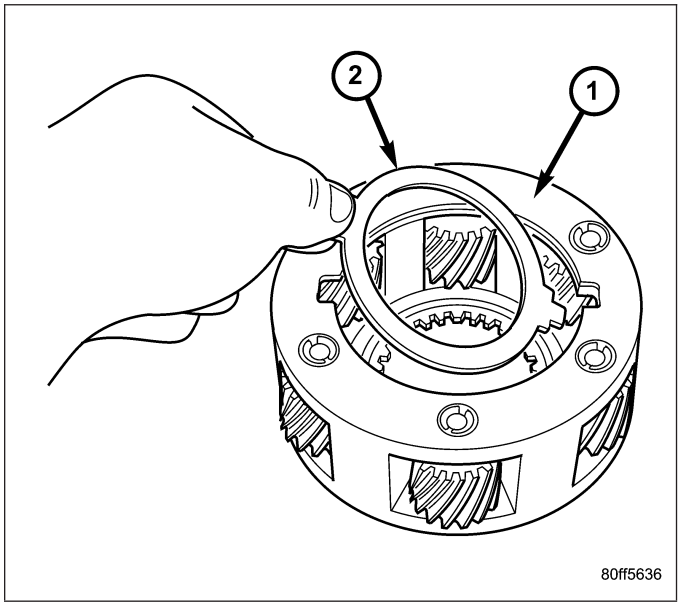

CLEANING

Clean the transfer case parts with a standard parts cleaning solvent. Remove all traces of sealer from the cases and retainers with a scraper and 3M™ all purpose cleaner. Use compressed air to remove solvent residue from oil feed passages in the case halves, retainers, gears, and shafts.

INSPECTION

MAINSHAFT/SPROCKET/HUB

Inspect the splines on the hub and shaft and the teeth on the sprocket. Minor nicks and scratches can be smoothed with an oilstone, however, replace any part that is damaged.

Check the contact surfaces in the sprocket bore and on the mainshaft. Minor nicks and scratches can be smoothed with 320-400 grit emery cloth but do not try to salvage the shaft if nicks or wear is severe.

INPUT GEAR AND PLANETARY CARRIER

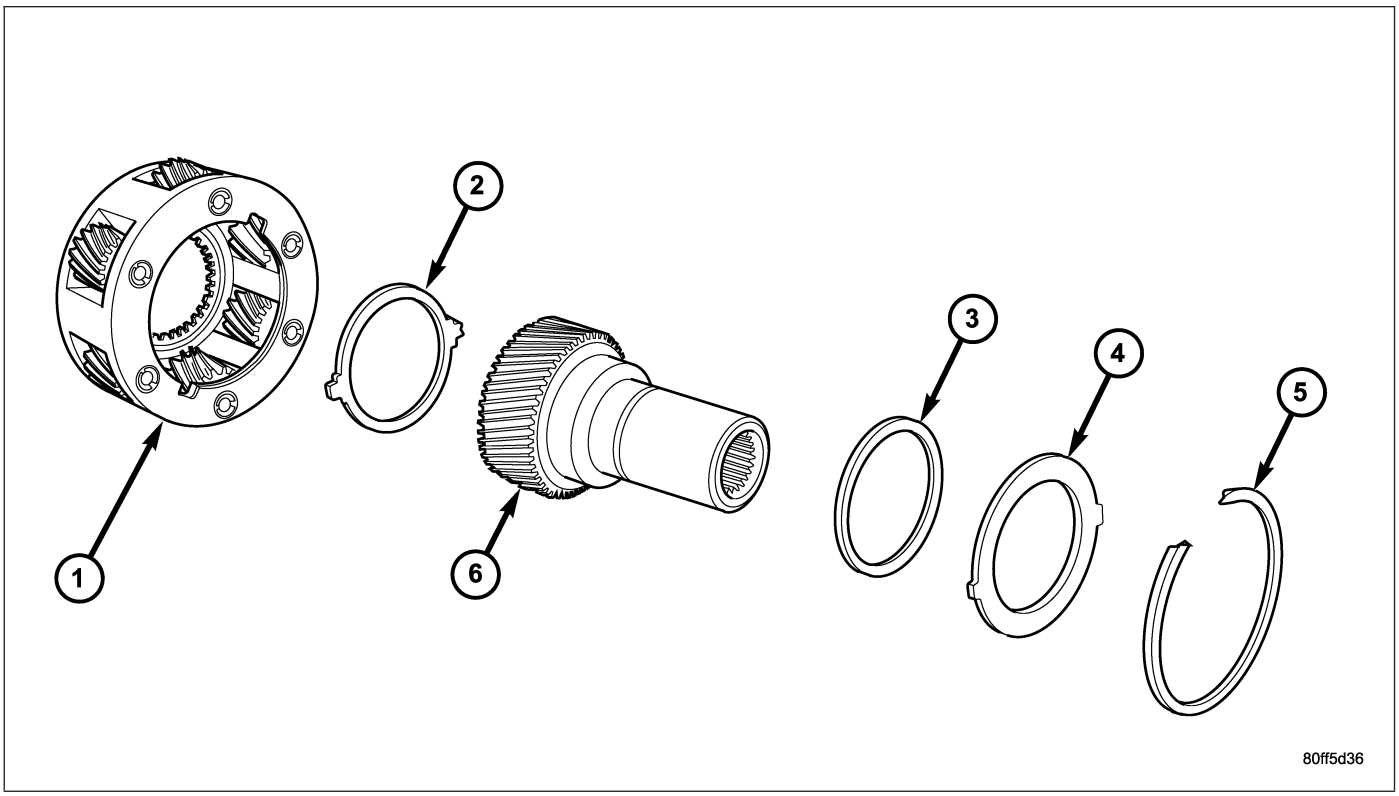

Input Gear And Carrier Components

1 - PLANETARY CARRIER
2 - REAR THRUST WASHER
3 - FRONT THRUST WASHER
4 - CARRIER LOCK RING
5 - CARRIER LOCK RETAINING RING
6 - INPUT GEAR

Check the teeth on the gear (6). Minor nicks can be dressed off with an oilstone but replace the gear if any teeth are broken, cracked, or chipped. The bearing surface on the gear can be smoothed with 300-400 grit emery cloth if necessary.

Examine the carrier body and pinion gears for wear or damage. Check the pinion gear thrust washers on the pinon pins for damage. The carrier will have to be replaced as an assembly if the body, pinion pins, or pinion gears are damaged.

Check the lock ring and both thrust washers for wear or cracks. Replace them if necessary. Also replace the lock retaining ring if bent, distorted, or broken.

SHIFT FORKS/HUBS/SLEEVES

Check condition of the shift forks and mode fork shift rail (2). Minor nicks on the shift rail can be smoothed with 320-400 grit emery cloth.

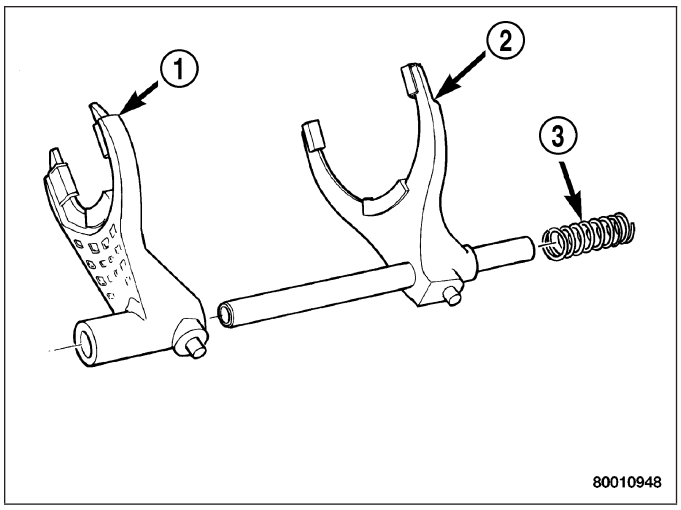

Inspect the shift fork wear pads (3). The mode and range fork pads are serviceable and can be replaced if necessary.

Check both of the sleeves for wear or damage, especially on the interior teeth. Replace the sleeves if wear or damage is evident.

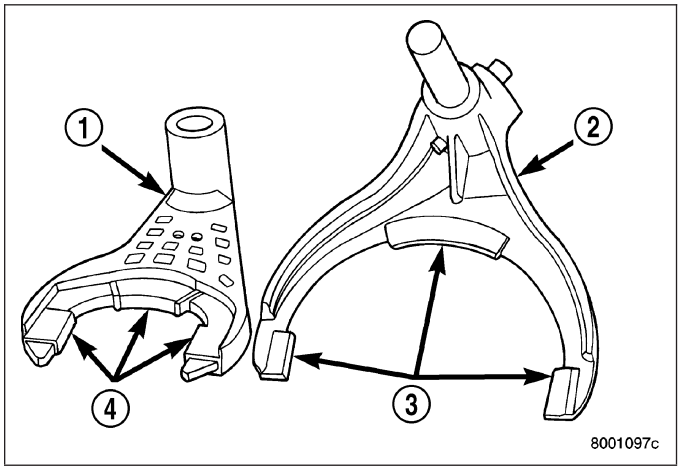

DRIVE CHAIN

Examine the drive chain and shaft bearings. replace the chain if stretched, distorted, or if any of the links bind. Replace the bearings if rough, or noisy.

LOW RANGE ANNULUS GEAR

Inspect annulus gear (2) condition carefully. The gear is only serviced as part of the front case (1). If the gear is damaged, it will be necessary to replace the gear and front case as an assembly. Do not attempt to remove the gear (2)

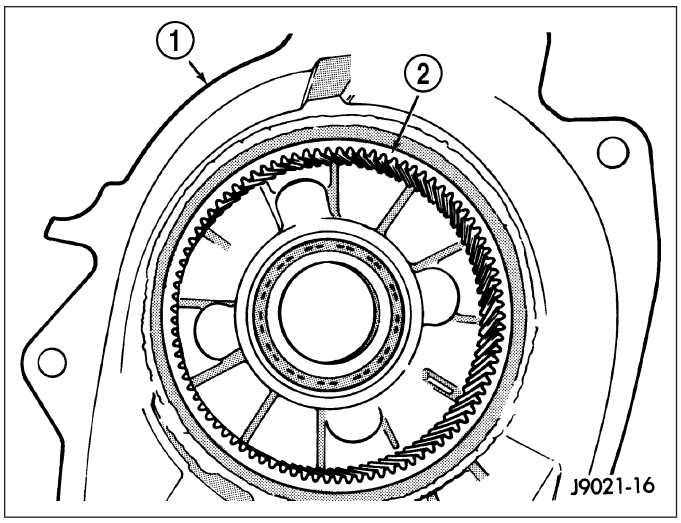

FRONT CASE AND REAR CASE

Inspect the cases for wear and damage.

Check case condition. If leaks were a problem, look for gouges and severe scoring of case sealing surfaces. Also make sure the front case mounting studs are in good condition.

Check the front case mounting studs and vent tube. The tube can be secured with Loctite™ 271 or 680 if loose. The stud threads can be cleaned up with a die if necessary. Also check condition of the fill/drain plug threads in the rear case. The threads can be repaired with a thread chaser or tap if necessary. Or the threads can be repaired with Helicoil™ stainless steel inserts if required.

OIL PUMP/OIL PICKUP

Examine the oil pump pickup parts. Replace the pump if any part appears to be worn or damaged. Do not disassemble the pump as individual parts are not available. The pump is only available as a complete assembly. The pickup screen, hose, and tube are the only serviceable parts and are available separately.

ASSEMBLY

BEARINGS AND SEALS

1. Remove the input shaft bearing snap-ring from the front case half with suitable snap-ring pliers.

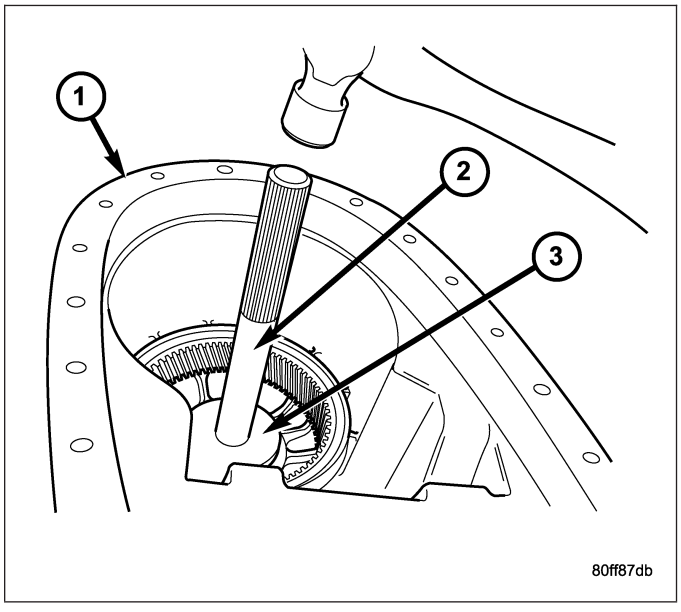

2. Remove the input shaft bearing from the front case half with Installer 6953 (3) and Handle C-4171 (2).

3. Install the input shaft bearing into the front case half with Installer 8151 (3) inverted on Handle C-4171 (2).
4. Install the input shaft bearing snap-ring into the front case half with suitable snap-ring pliers.

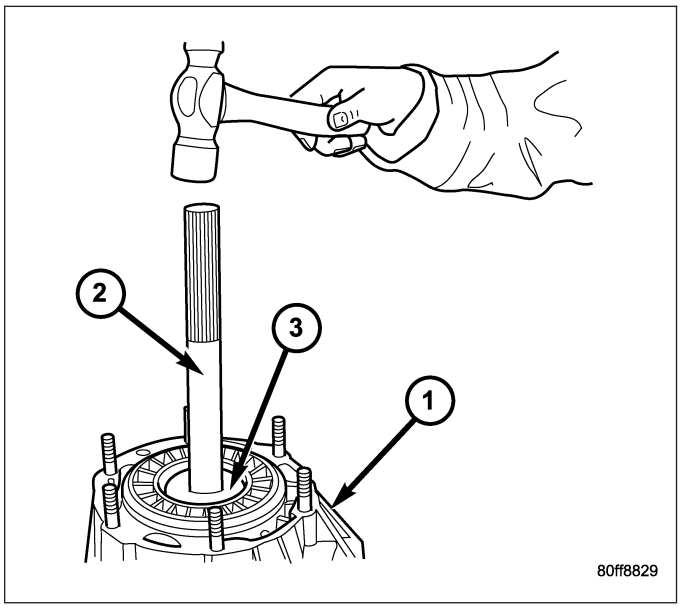

5. Remove the front output shaft front bearing snap-ring from the front case half.
6. Using Installer 6953 (3) and Handle C-4171 (2), remove the front output shaft front bearing.

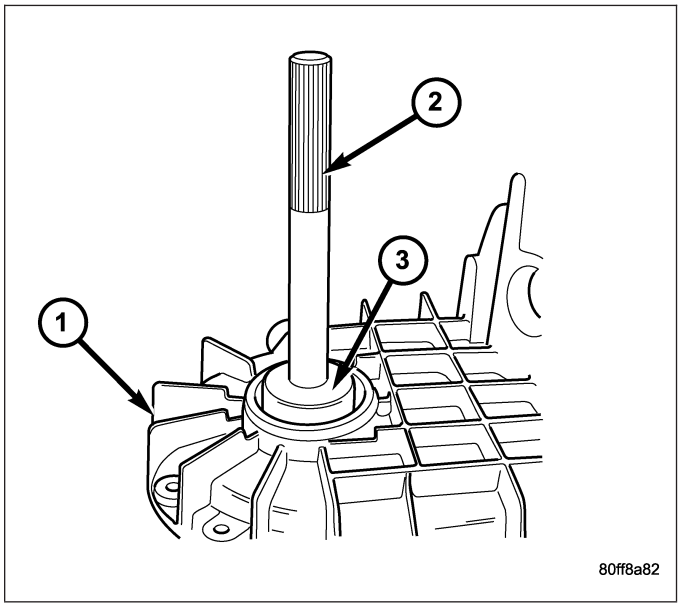

7. Start front output shaft front bearing in front case (1). Then seat bearing with Installer 8891 2).
8. Install front output shaft bearing retaining ring.

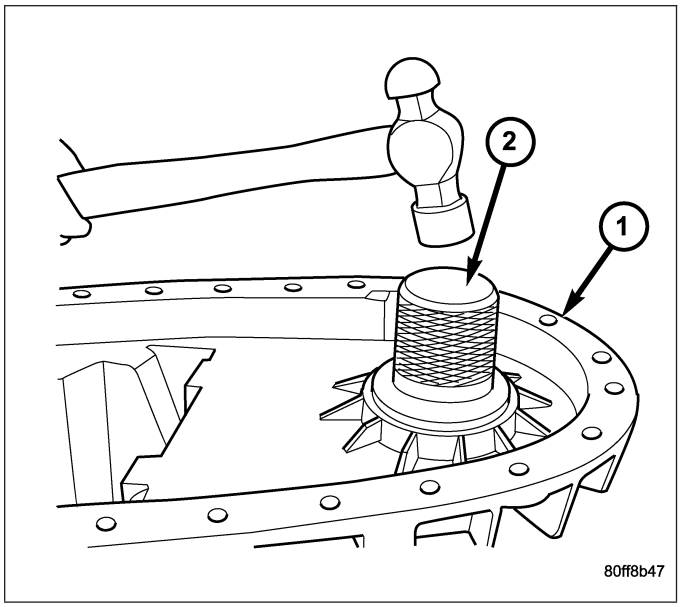

9. Remove input gear pilot bearing by inserting a suitably sized drift into the splined end of the input gear (2) and driving the bearing out with the drift (1) and a hammer.
10. Install new pilot bearing with Installer 9035.

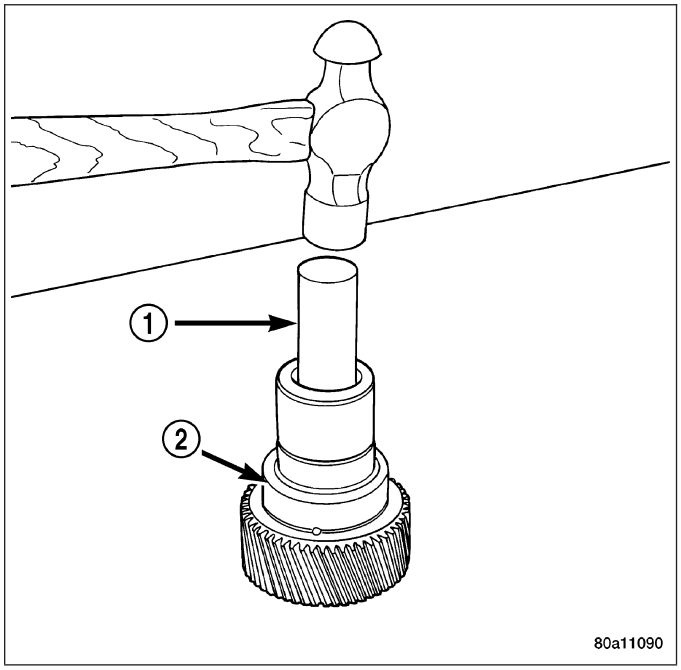

11. Remove the front output shaft rear bearing with the screw and jaws from Remover L-4454 (2) and Cup 8148 (3).

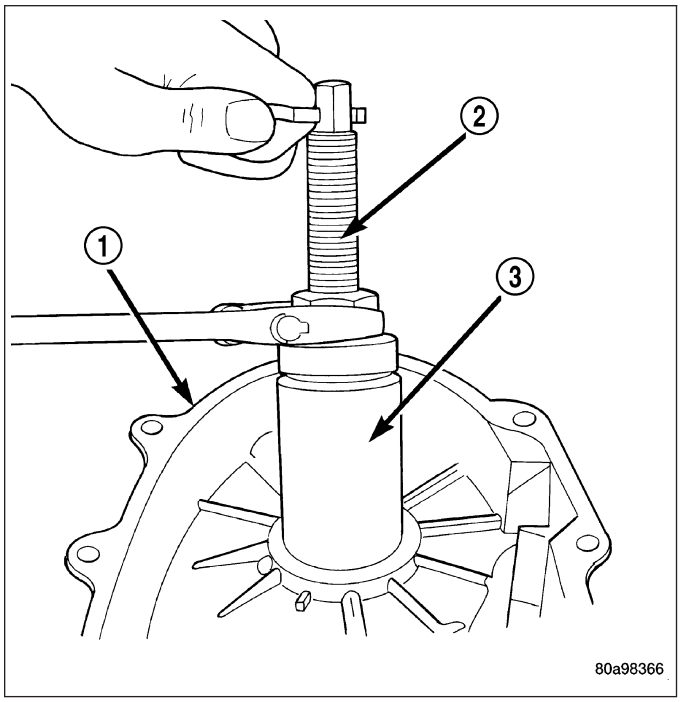

12. Install new bearing with Tool Handle C-4171 (2) and Installer 8128 (3).

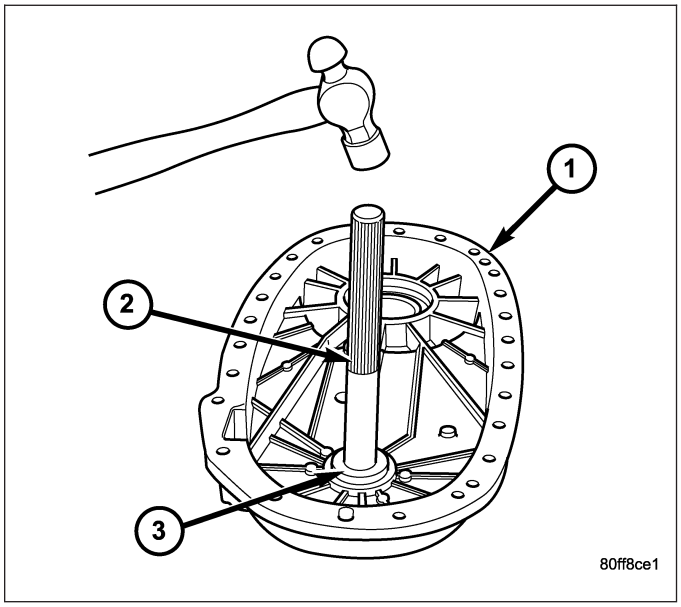

13. The bearing bore is chamfered at the top. Install the bearing (1) so it is flush with the lower edge of this chamfer (2).

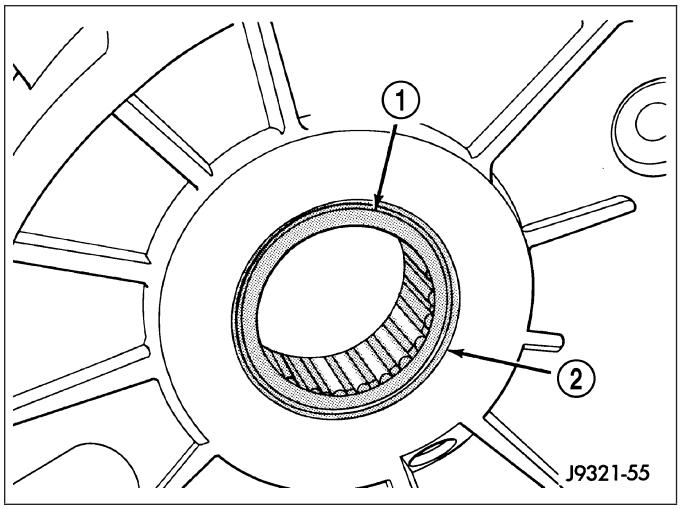

14. Remove seal from oil pump with suitable pry tool.
15. Install new seal in oil pump (3) with Installer 7888 (2).

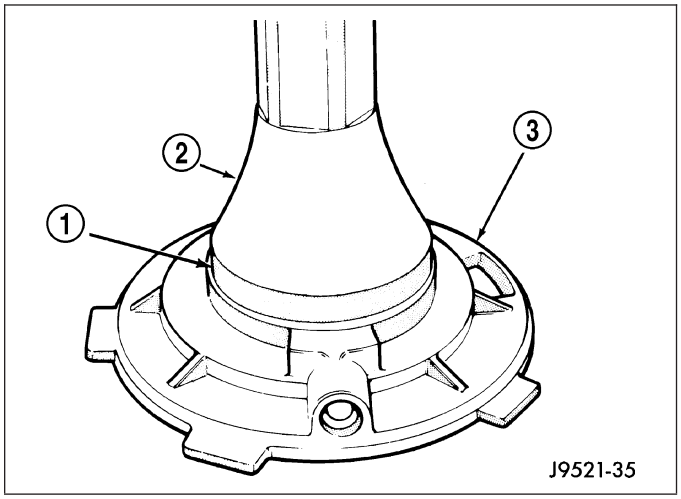

16. Remove the rear output shaft bearing snap-ring (3) from the rear case half (1).

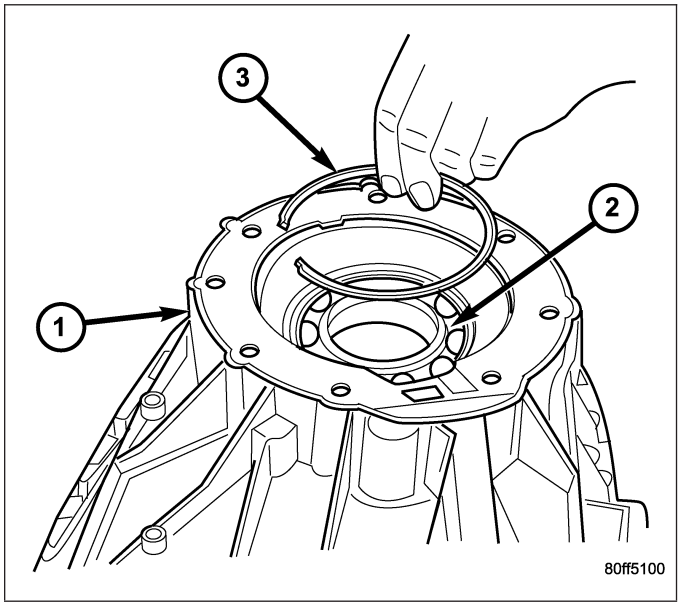

17. Remove the rear output shaft bearing from the rear case (1) using Installer 7888 (2).

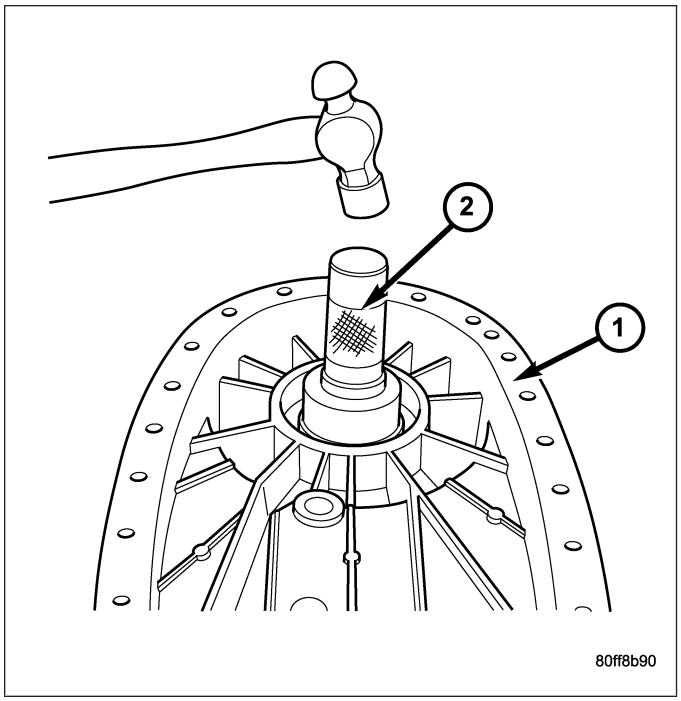

18. Install the rear output shaft bearing into the rear case (1) using Installer 8152 (3) and Handle C-4171 (2).
19. Install the rear output shaft bearing snap-ring into the rear case half.

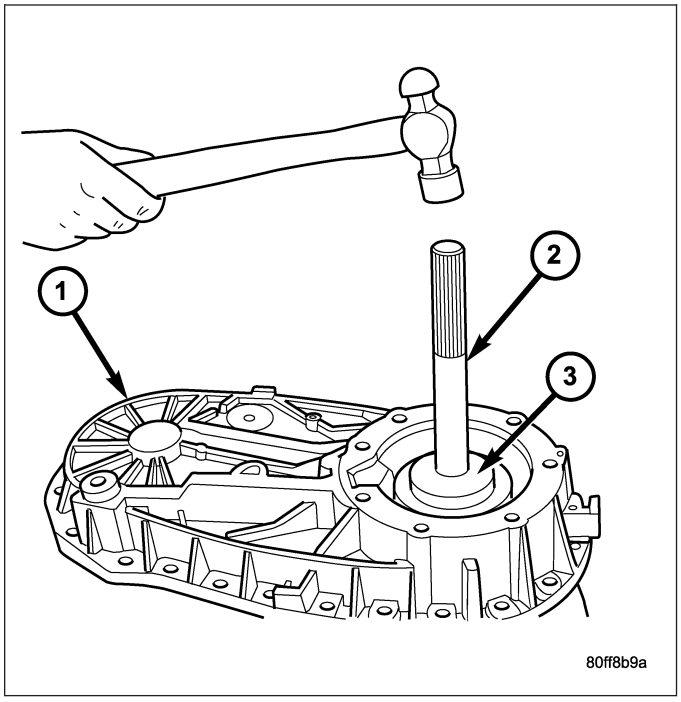

INPUT AND PLANETARY GEAR

1. Lubricate gears and thrust washers with recommended transmission fluid.
2. Install bottom thrust washer (2) in low range gear planetary (1). Be sure washer tabs are properly aligned in gear notches.

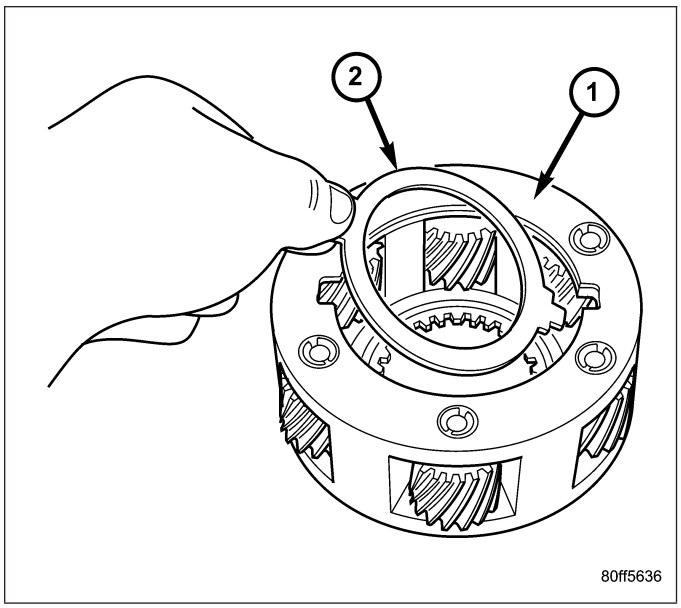

3. Install input gear (1) in low range gear (2). Be sure input gear is fully seated.

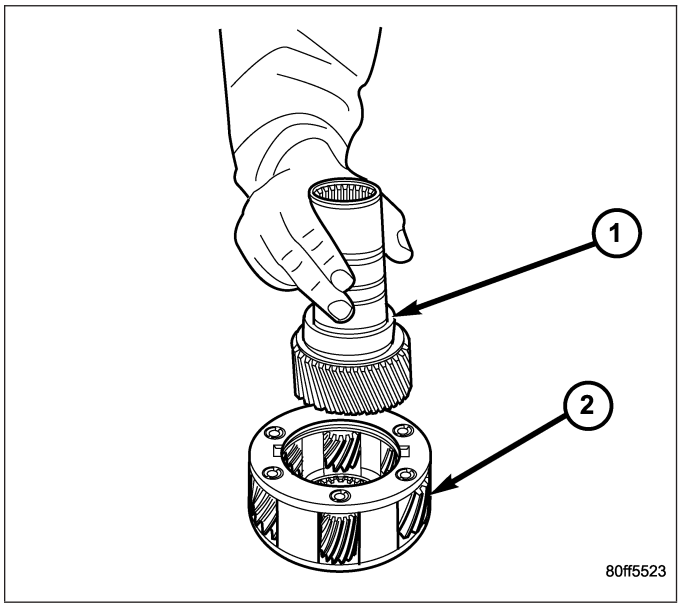

4. Install remaining thrust washer (2) in low range gear and on top of input gear (1).

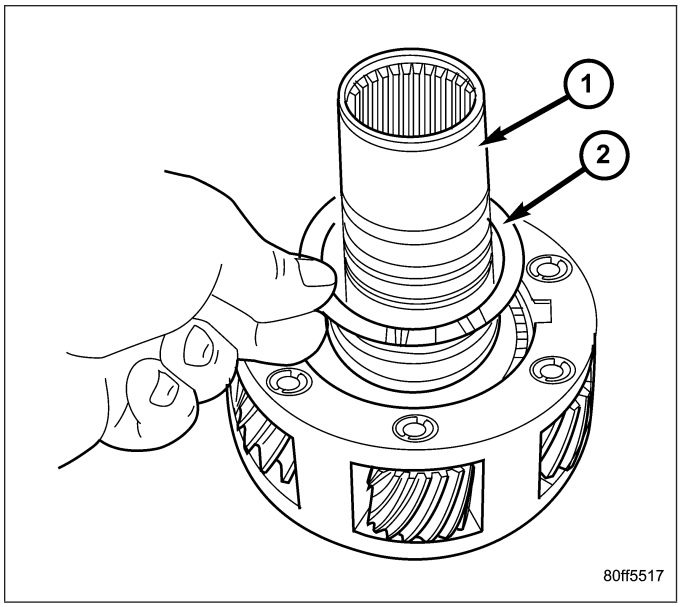

5. Install retainer (2) on input gear (1).

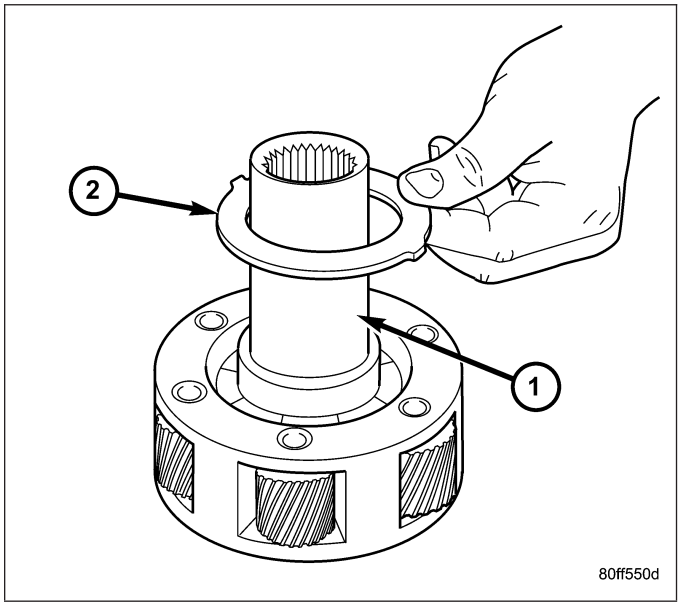

6. iinstall snap-ring (2).

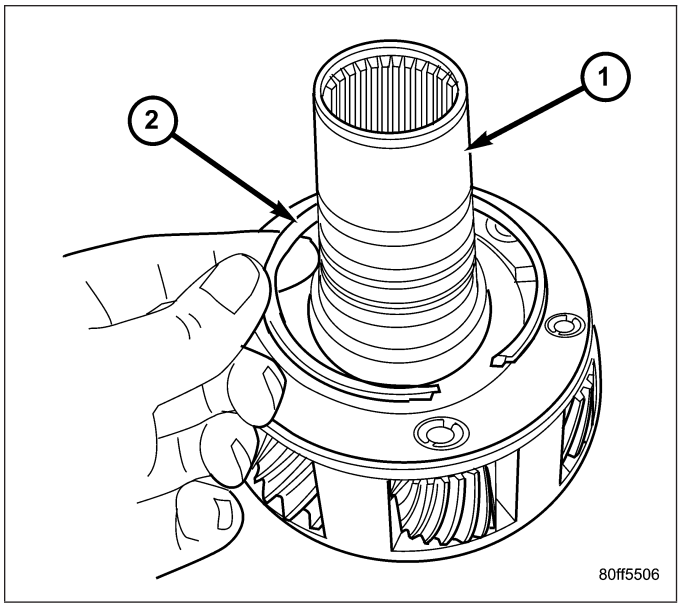

7. Align and install low range/input gear assembly (2) in front case (1). Be sure low range gear pinions are engaged in annulus gear and that input gear shaft is fully seated in front bearing.

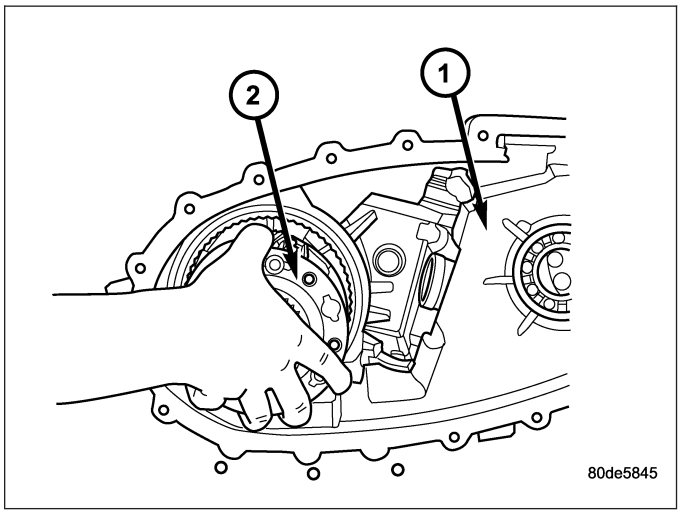

8. Install snap-ring (2) to hold input/low range gear(1) into front bearing.
9. Install a new input gear oil seal with Installer 9036 and Handle C-4171.

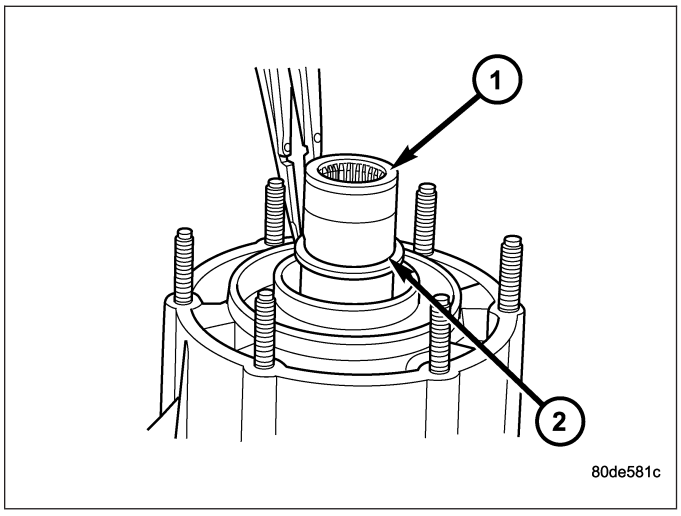

SHIFT FORKS AND MAINSHAFT

1. Lubricate mainshaft splines with recommended transmission fluid.
2. Coat the interior of the drive sprocket hub with ATF+4 and install the drive sprocket drive hub (2) onto the mainshaft (1).

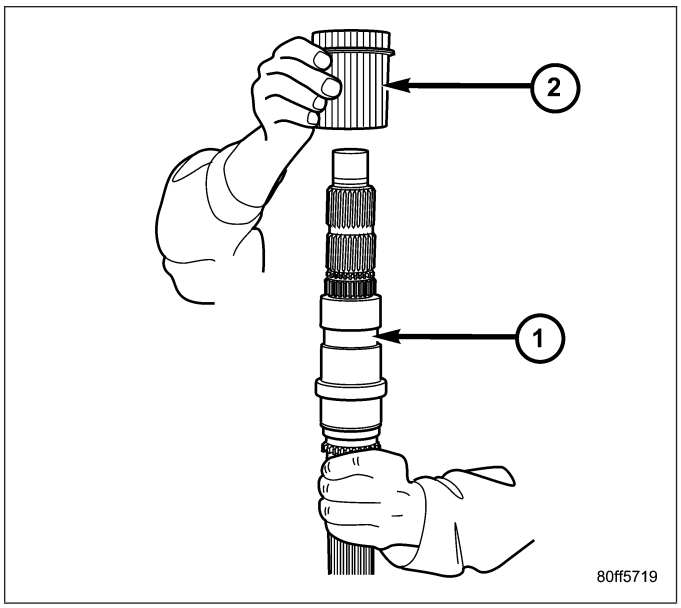

3. Install the mode hub (2) onto the mainshaft (1).

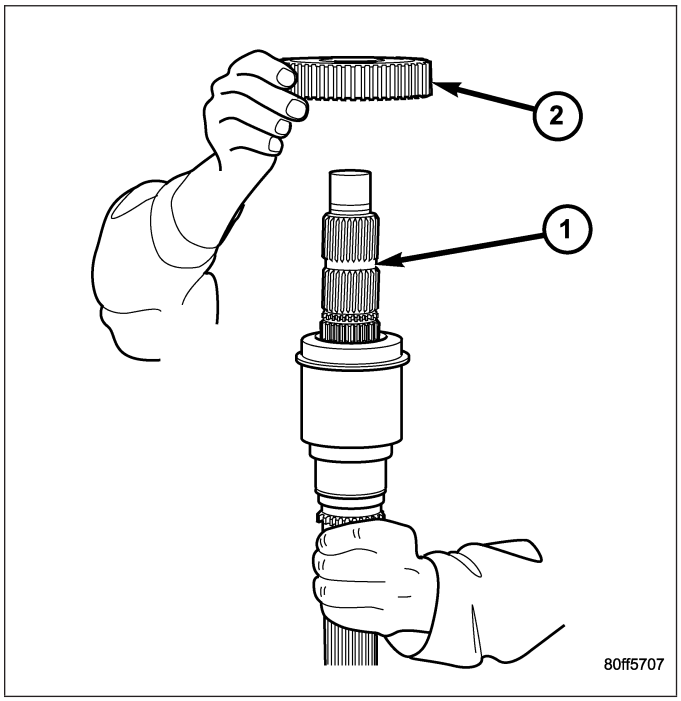

4. Install the mode hub retaining ring (3) onto the mainshaft (1).

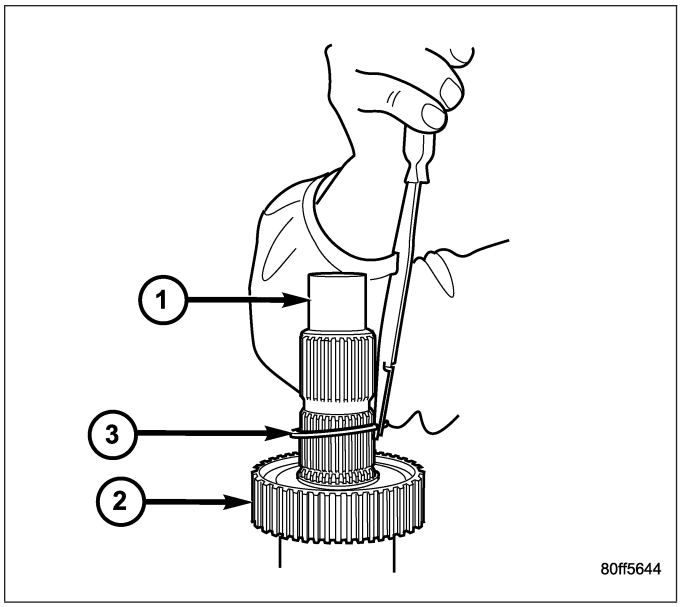

5. Install the clutch gear (2) onto the output shaft (1). Verify that the pointed ends of the clutch gear teeth are pointing to the front of the mainshaft.

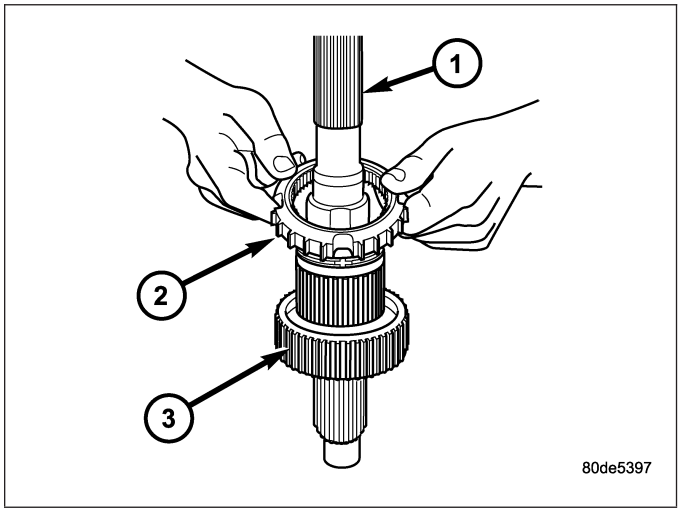

6. Lubricate sector shaft with transmission fluid and install shift sector (1) in case. Position slot in sector so it will be aligned with shift fork pin when shift forks are installed.
7. Apply Loctite™ 242, or equivalent, to the threads of the sector support to replentish the factory applied patch. Install the shift sector support. Tighten the sector support with Socket 9033 to 27-34 N·m (20-25 ft.lbs.).

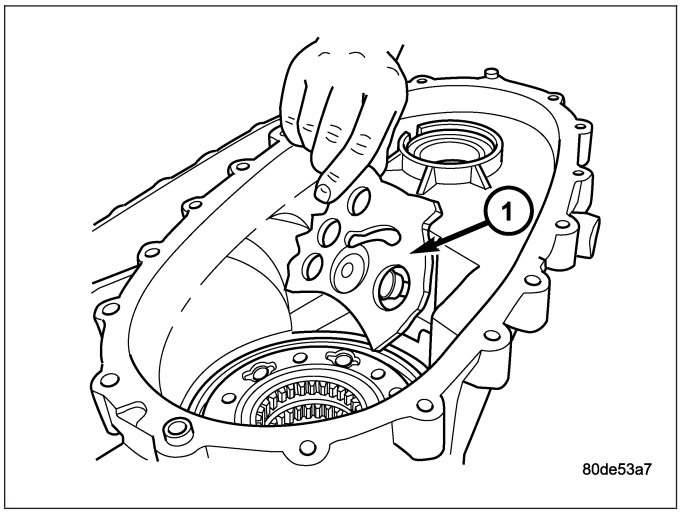

8. Assemble and install range fork (2) and hub (1). Be sure hub is properly seated in low range gear and engaged to the input gear.
9. Align and insert range fork pin in shift sector slot.

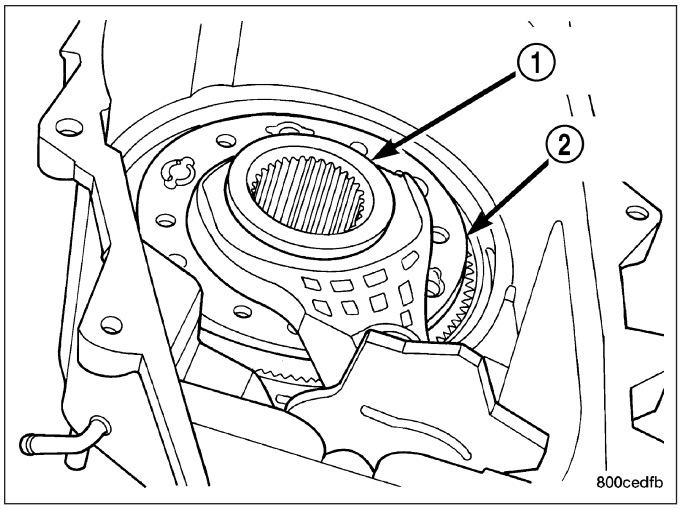

10. Install mode fork (2) and shift rail (1) onto the mode sleeve.
11. Install the mode fork (2), sleeve (3), and shift rail (1) into the transfer case.

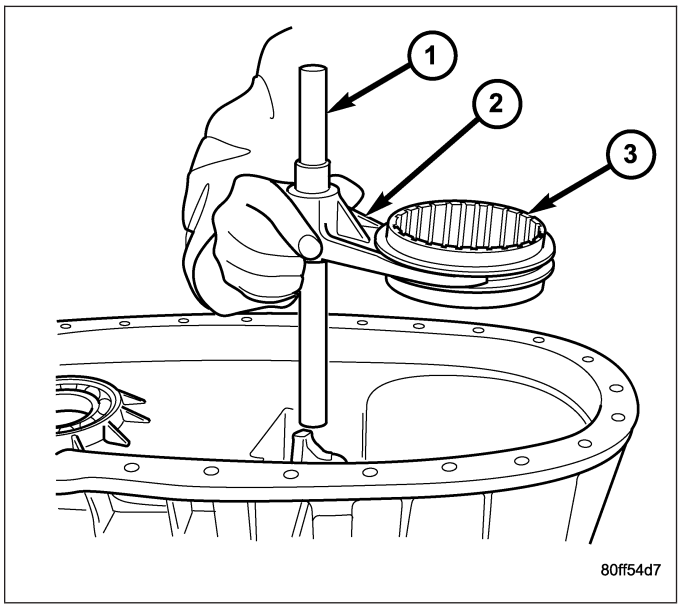

12. Install mainshaft (2) into the transfer case (1). Guide mainshaft through the mode and range sleeves and into the input gear.

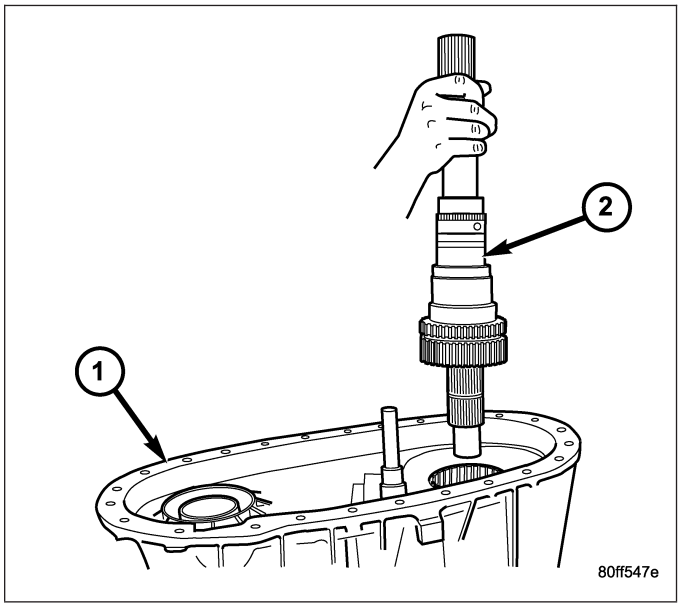

13. Install the transfer case position sensor or switch (2). Tighten the sensor or switch to 20-34 N·m (15-25 ft. lbs.) torque.

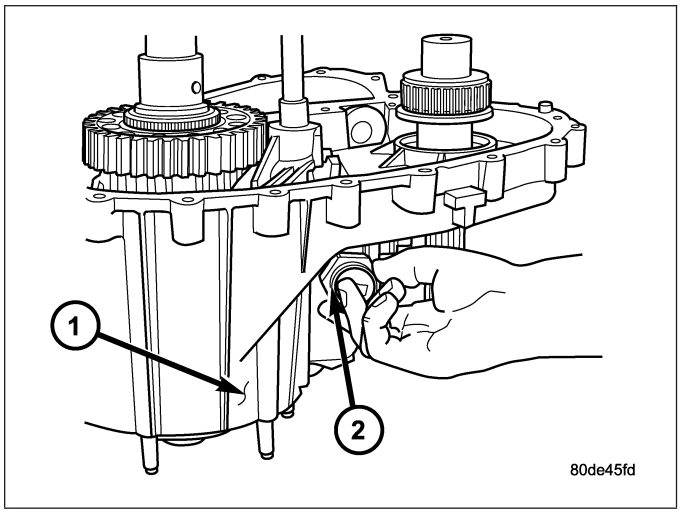

14. Install manual shift lever (3)and spacer onto sector shaft (1).
15. Install washer and nut on sector shaft to secure shift lever. Apply 1-2 drops Mopar® Lock N' Seal, or equivalent, to nut threads before installation. Then tighten nut to 27-34 N·m (20-25 ft. lbs.) torque.

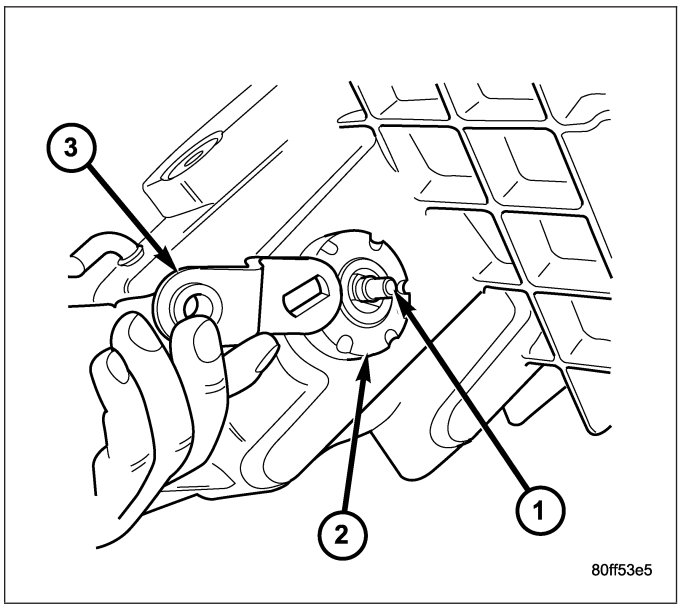

16. Install new o-ring (1) on detent plug (2).

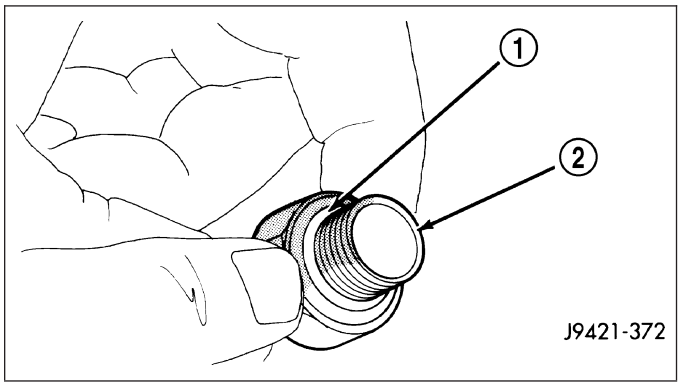

17. Install detent plunger (4), spring (3), and plug (2). Tighten the plug to 16-25 N·m (12-18 ft. lbs.).

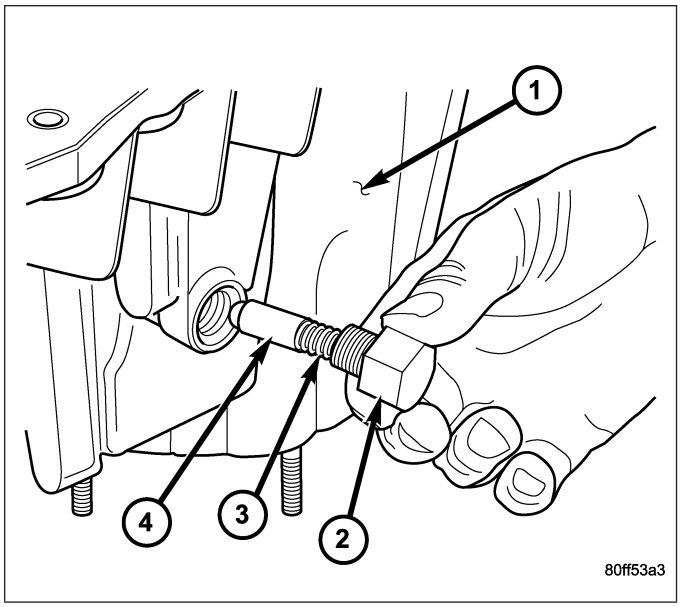

FRONT OUTPUT SHAFT AND DRIVE CHAIN

1. Install the front output shaft (2) into the front output shaft front bearing.

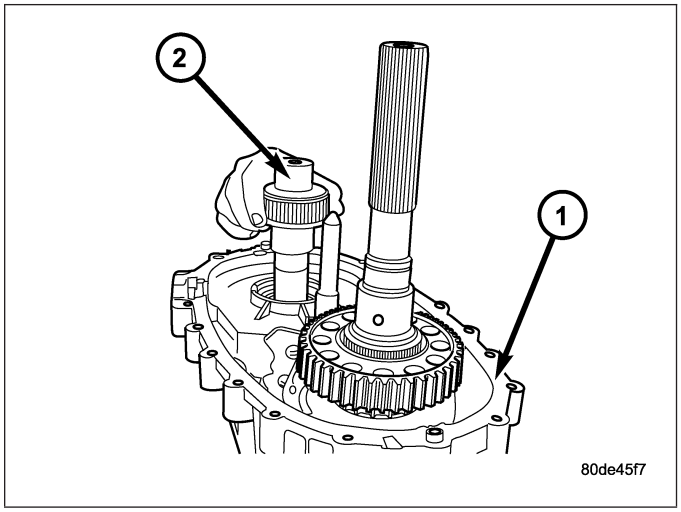

2. Install the front output shaft bearing inner snap-ring (2) onto the output shaft.
3. Install the new front output shaft seal with Installer MB991168A

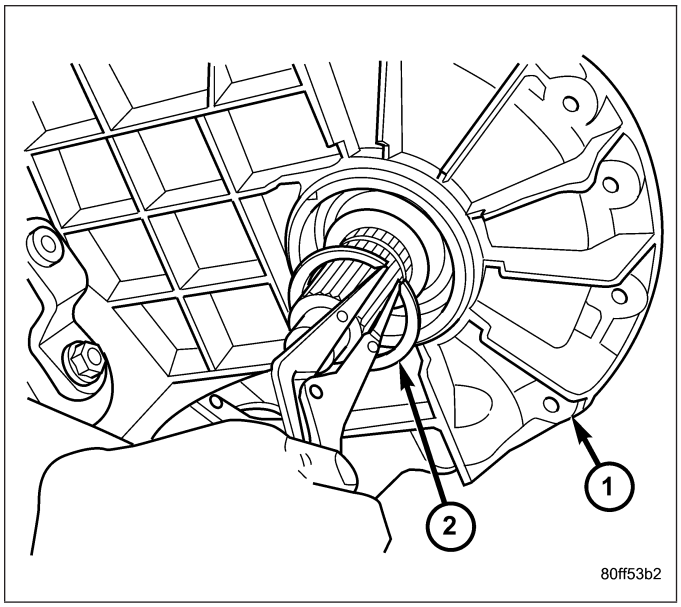

4. Insert front drive sprocket in drive chain.
5. Install drive chain around rear drive sprocket.
6. Position rear drive sprocket (3) over the output shaft and lower the sprocket and chain assembly until the front sprocket is positioned over the front output shaft.
7. Align the splines in the sprockets to the splines on the output shafts and install the sprockets onto the output shafts.

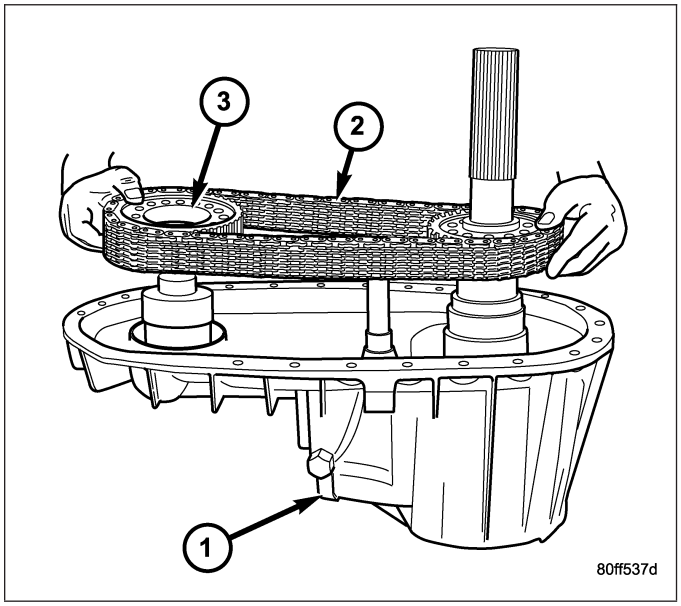

8. Install front sprocket retaining ring (3).

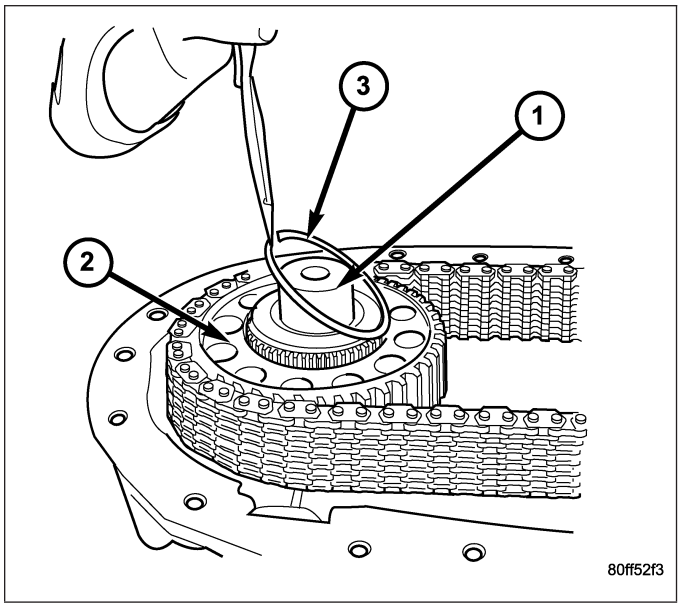

9. Install rear sprocket retaining ring (3).

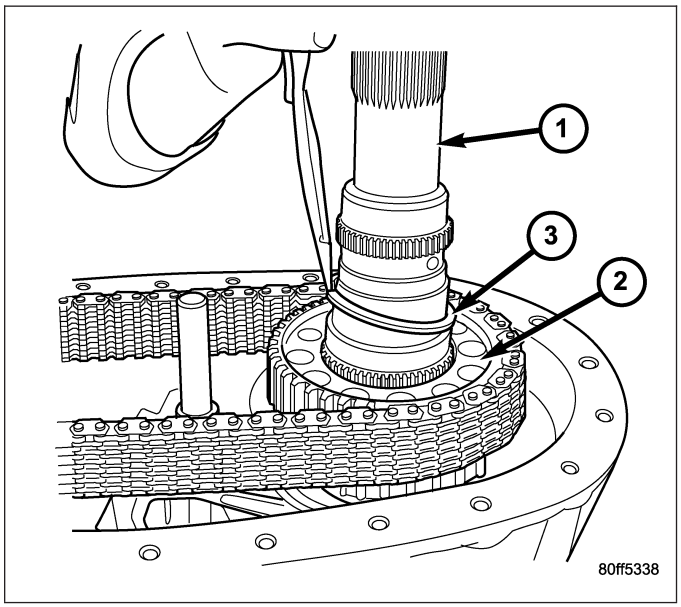

10. Install spring (2) onto shift rail (1).

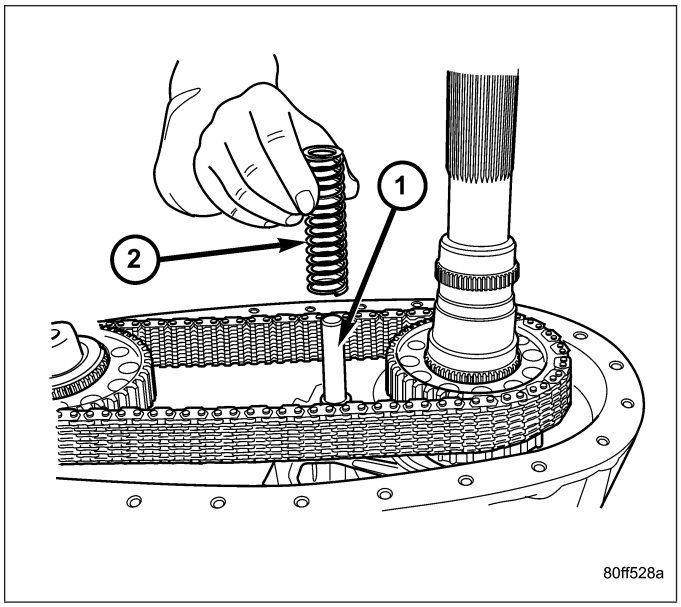

11. Insert magnet (1) in front case pocket (2).

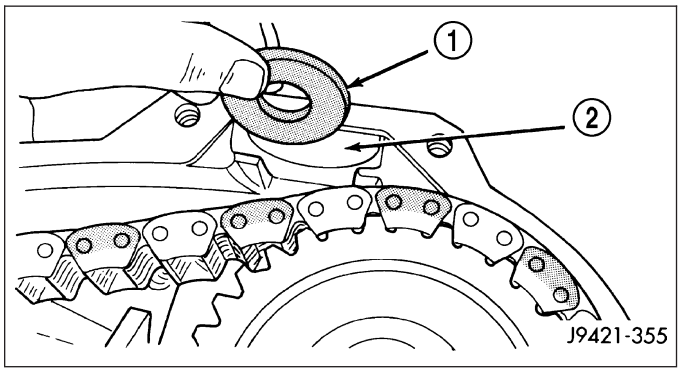

REAR CASE

1. Install the oil pick-up tube and screen into the rear case half.
2. Apply bead of Mopar® Gasket Maker, or equivalent, to mating surface of front case. Keep sealer bead width to maximum of 3/16 inch. Do not use excessive amount of sealer as excess will be displaced into case interior.
3. Align mainshaft with he rear output shaft bearing and align shift rail with bore in rear case. Then install rear case (2). Verify that the case alignment dowels correctly seat into their mating recesses.

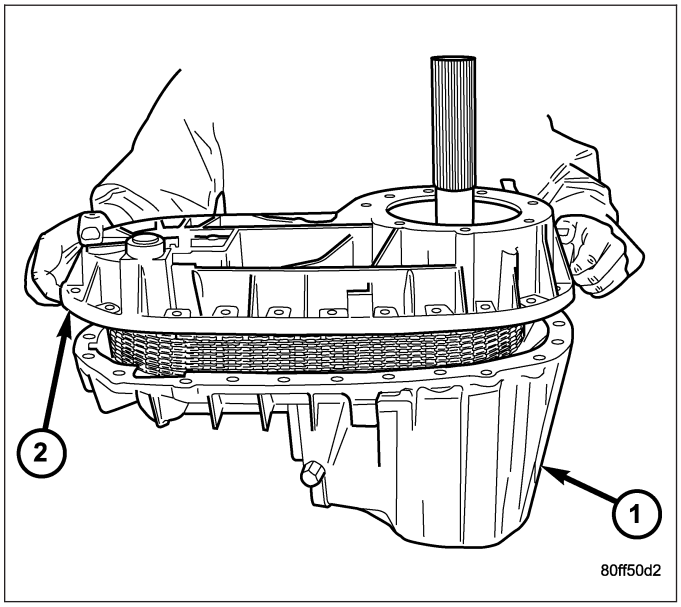

4. Install 4-5 rear case (2) -to- front case (1) bolts (3) to hold rear case in position. Tighten bolts snug but not to specified torque at this time.

CAUTION: Verify that shift rail, and case alignment dowels are seated before installing any bolts. Case could be cracked if shaft rail or dowels are misaligned.

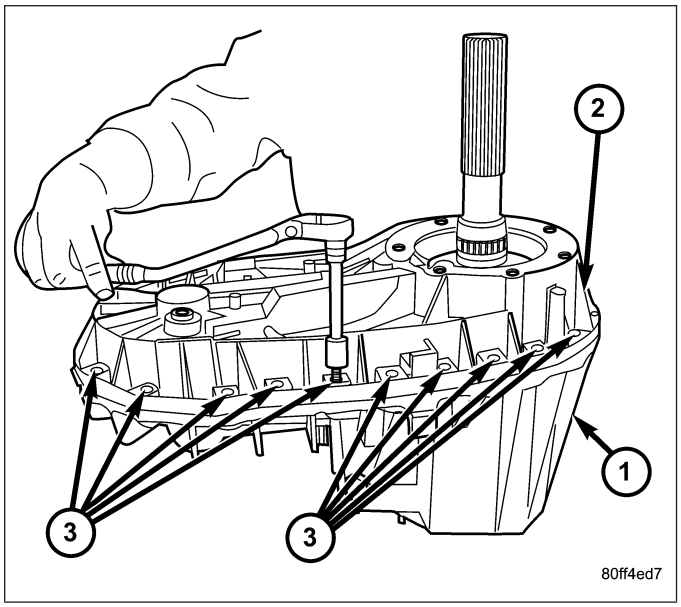

5. Tighten bolts to 27-34 N·m (20-25 ft. lbs.),
6. Install rear output bearing inner snap-ring (3) to output shaft (1).

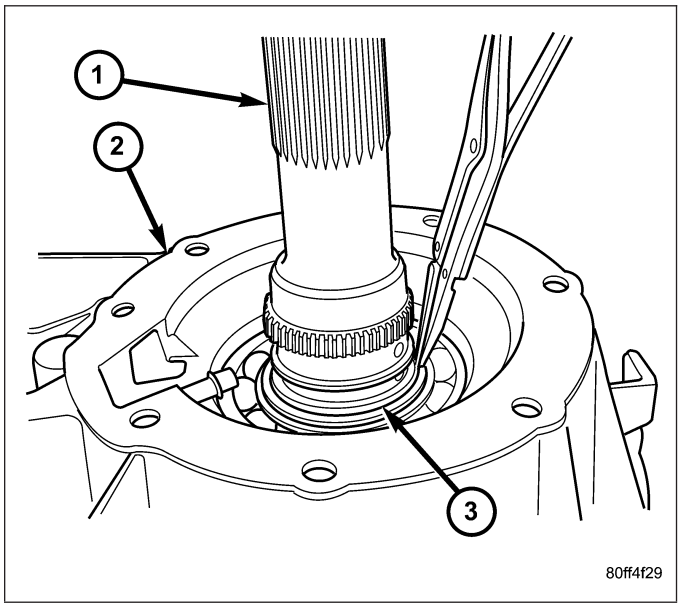

OIL PUMP AND REAR EXTENSION

1. Install the oil pump (3) onto the output shaft (2).

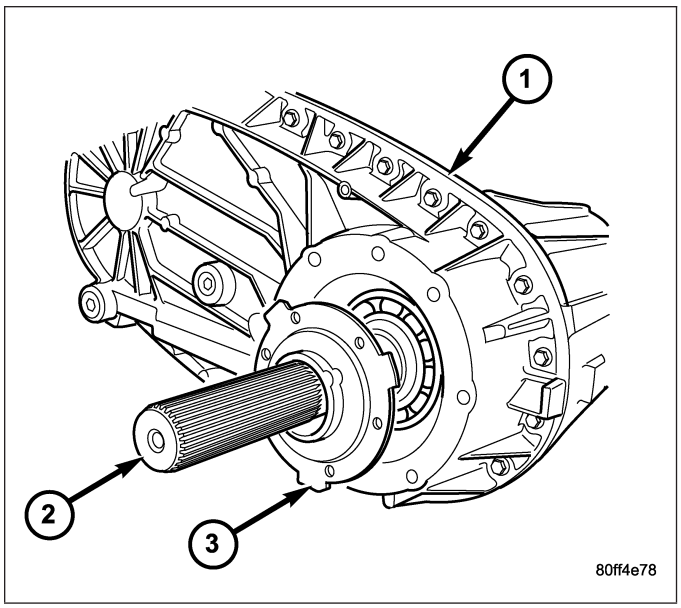

2. Engage the oil pump pick-up tube (2) into the oil pump (1). Verify that the pick-up tube o-ring is on the tube and is correctly installed to the oil pump.

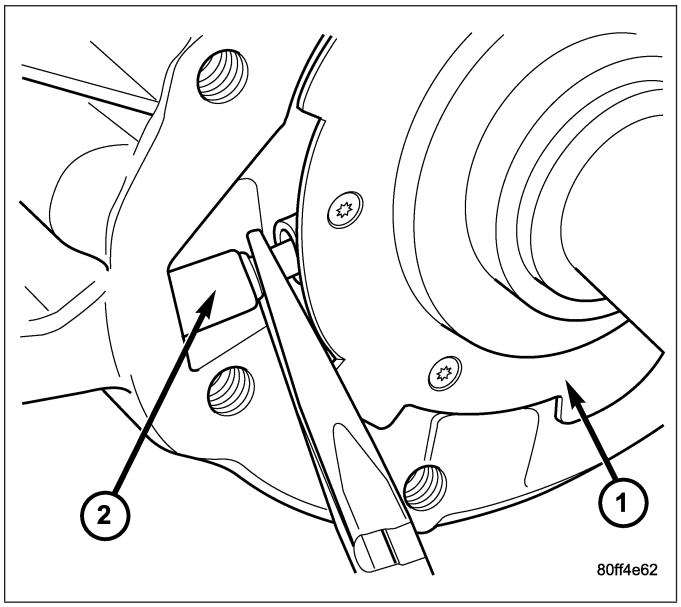

3. Apply bead of Mopar® Gasket Maker, or equivalent, to mating surface of rear extension housing. Keep sealer bead width to maximum of 3/16 inch. Do not use excessive amount of sealer as excess could be displaced into output bearing.
4. Install extension housing (2) onto the rear case half (1).

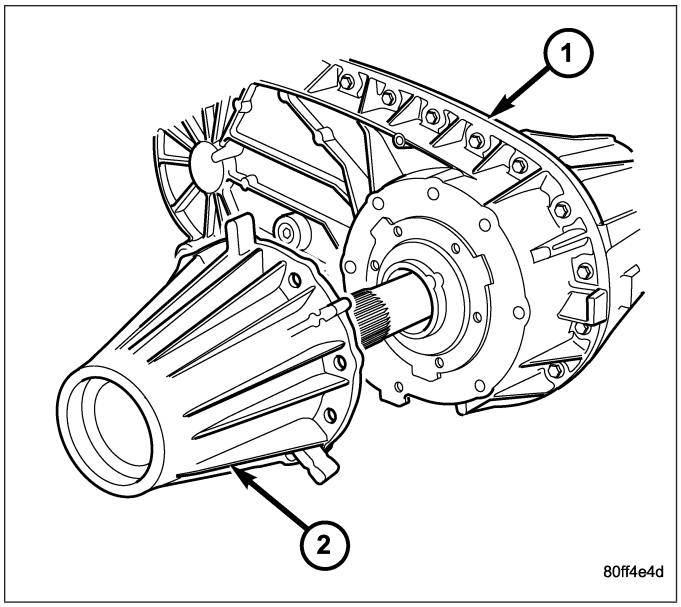

5. Install rear extension bolts (2). Tighten the bolts to 27-34 N·m (20-25 ft.lbs.).

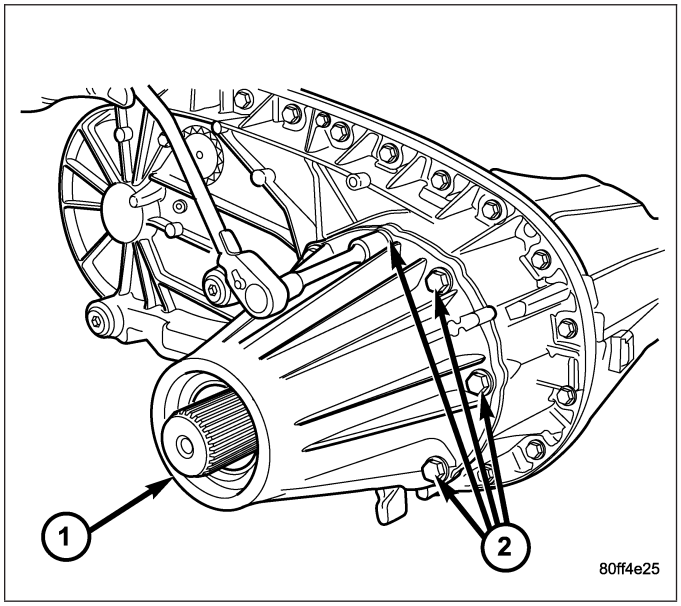

6. Install the extension housing boot and seal assembly with Installer 9037 (3) and Handle C-4171 (2).

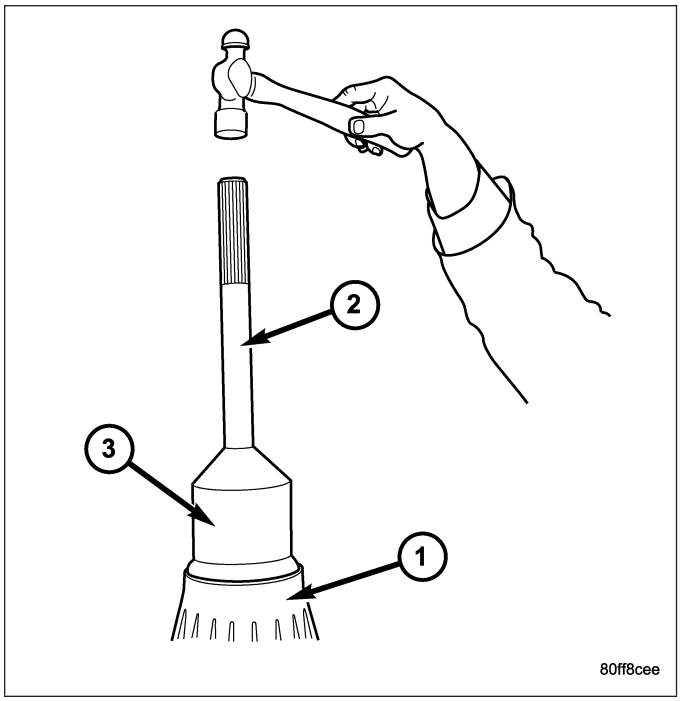

7. Install the front companion flange onto the front output shaft.
8. Install two bolts 180° apart into the front output shaft companion flange.
9. Place holder (1) over the bolts (2) and against the companion flange.
10. Install a new front companion flange nut. Tighten the companion flange nut to 176-271 N·m (130-200 ft.lbs.).

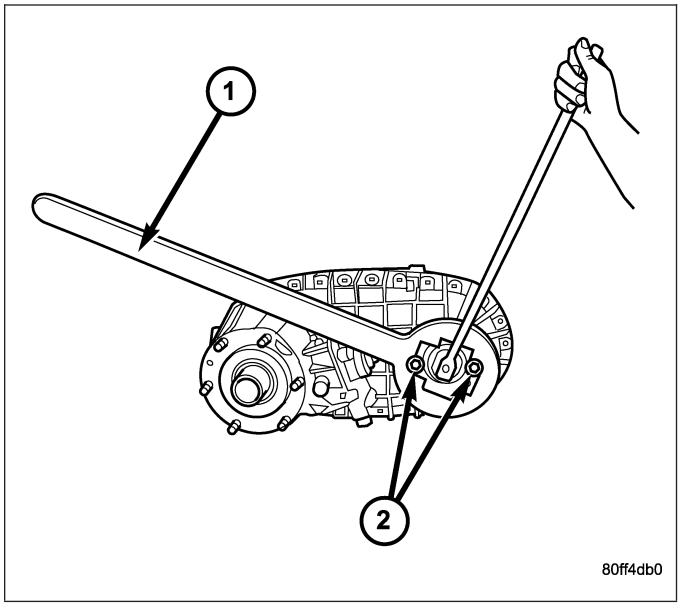

INSTALLATION

1. Align and seat transfer case on transmission. Be sure transfer case input gear splines are aligned with transmission output shaft. Align splines by rotating transfer case rear output shaft yoke if necessary. Do not install any transfer case attaching nuts until the transfer case is completely seated against the transmission.
2. Install and tighten transfer case attaching nuts. Tighten nuts to 30-41 N·m (20-30 ft.lbs.).
3. Remove jack stand from under transmission.
4. Align and connect propeller shafts. (Refer to 3 - DIFFERENTIAL & DRIVELINE/PROPELLER SHAFT/PROPELLER SHAFT - INSTALLATION)
5. Connect vent hose and transfer case position sensor connector.
6. Connect shift rod to transfer case lever or floor shift arm. Use channel lock style pliers to press rod back into lever grommet.
7. Adjust shift linkage, if necessary.

8. Fill transfer case with recommended transmission fluid and install fill plug.
9. Install skid plate, if equipped. (Refer to 13 - FRAMES & BUMPERS/FRAME/TRANSFER CASE SKID PLATE - INSTALLATION)
10. Lower vehicle

SPECIFICATIONS

TRANSFER CASE - NV271

TORQUE SPECIFICATIONS

DESCRIPTION	N-m	Ft. Lbs.	In. Lbs.
Plug, Detent	16-25	12-18	-
Plug, Drain/Fill	20-34	15-25	-
Bolt, Extension Housing	27-34	20-25	-
Bolt, Case Half	27-34	20-25	-
Nut, Range Lever	27-34	20-25	-
Sector Support	27-34	20-25	-
Nuts, Mounting	30-41	20-30	-
Position Sensor	20-34	15-25	-
Nut, Companion Flange	176-271	130-200	-

SPECIAL TOOLS

TRANSFER CASE NV271/NV273

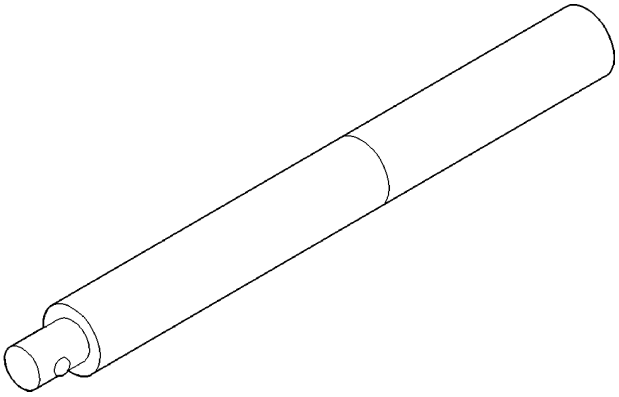

Handle, Universal - C-4171

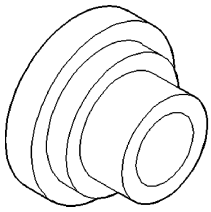

Installer, Bearing - 8128

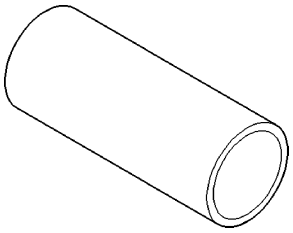

Cup - 8148

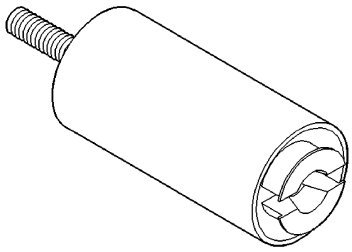

Remover - L-4454

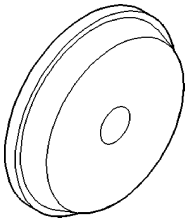

Installer - 8151

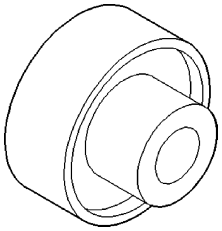

Installer, Bearing - 6953

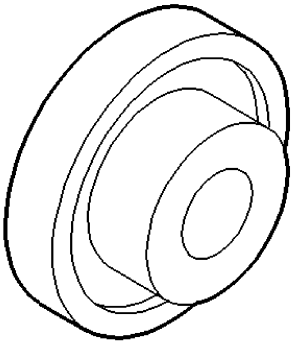

Installer - 8152

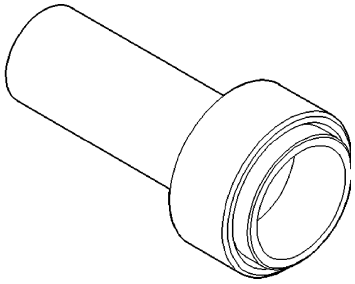

Installer, Pump Housing Seal - 7888

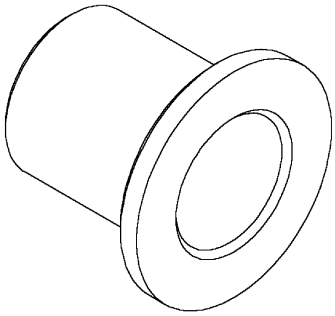

Installer - 8891

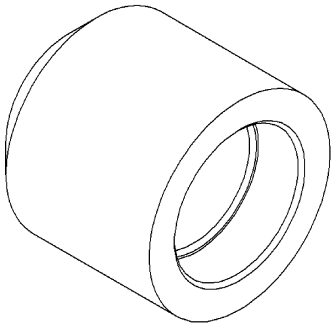

Installer, Seal - 9036

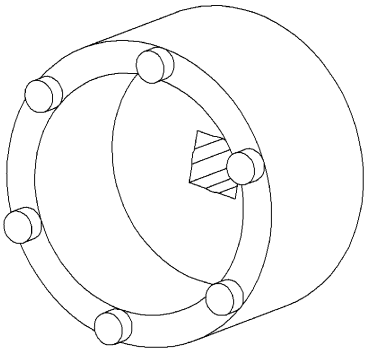

Socket - 9033

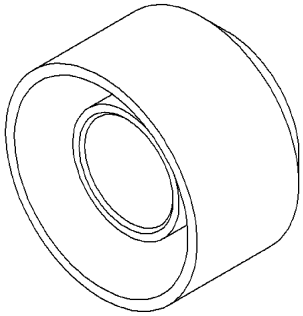

Installer, Seal - 9037

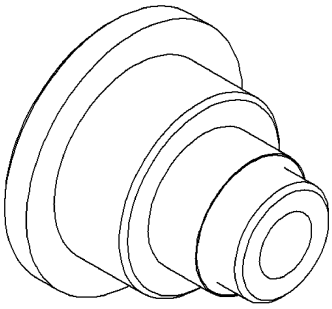

Installer, Bearing - 9035

BOOT-EXTENSION HOUSING SEAL AND DUST

REMOVAL

1. Raise and support vehicle.
2. Remove rear propeller shaft. (Refer to 3 - DIFFERENTIAL & DRIVELINE/PROPELLER SHAFT/PROPELLER SHAFT - REMOVAL)
3. Use a suitable chisel or pry tool to remove the rear extension housing dust boot (2).
4. Use a suitable chisel or pry tool to remove the rear extension housing seal.

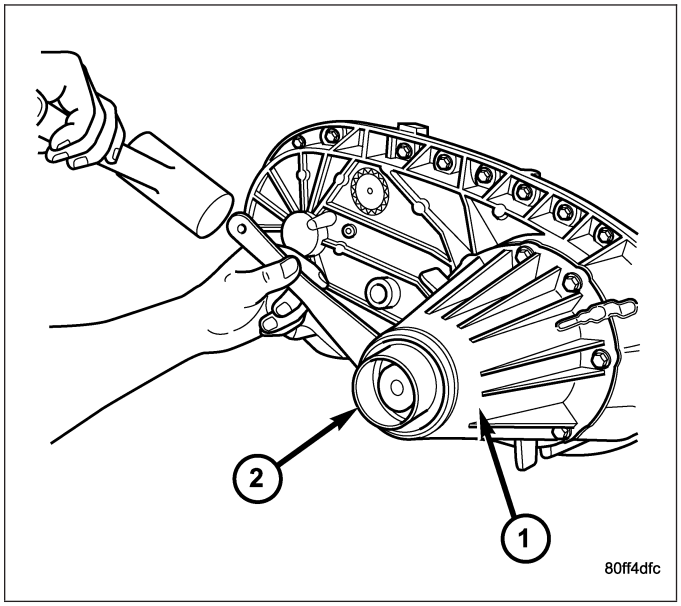

INSTALLATION

1. Clean fluid residue from sealing surface and inspect for defects.
2. Install the extension housing dust boot and seal assembly with Installer 9037 (3) and Handle C-4171 (2).
3. Install propeller shaft. (Refer to 3 - DIFFERENTIAL & DRIVELINE/PROPELLER SHAFT/PROPELLER SHAFT - INSTALLATION)
4. Verify proper transfer case fluid level.
5. Lower vehicle.

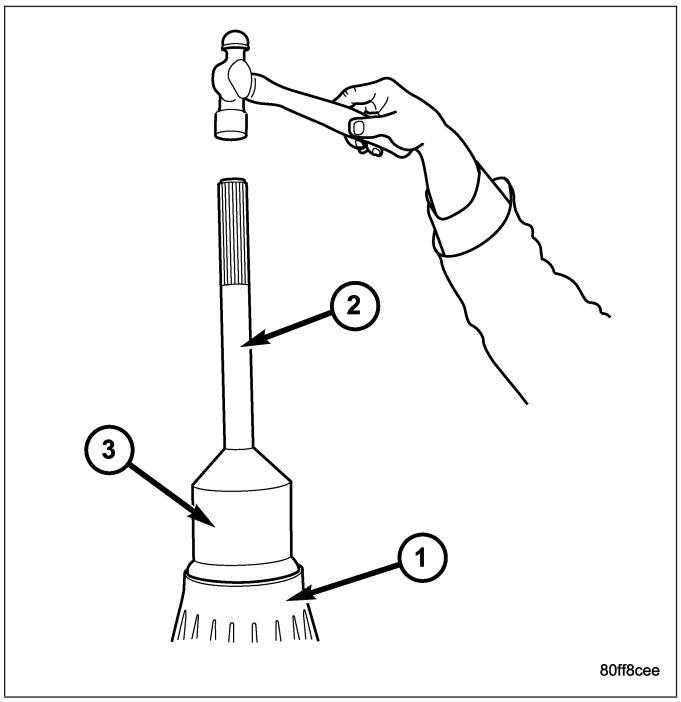

FLUID

STANDARD PROCEDURE - FLUID DRAIN AND REFILL

The fill (1) and drain (2) plugs are both in the rear case.

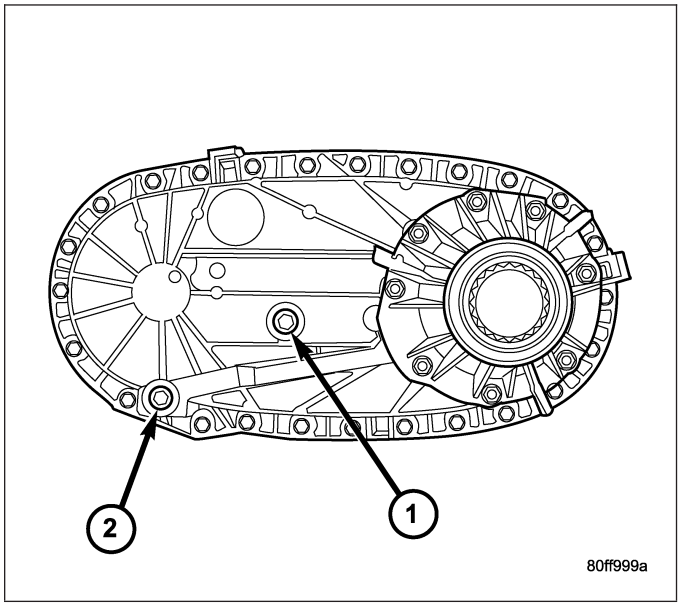

1. Raise vehicle.
2. Position drain pan under transfer case.

NOTE: It may be necessary to remove the exhaust y-pipe at the exhaust manifold to properly access the fill and drain plugs. Lowering the exhaust will allow the plugs to be accessed for torquing during installation. (Refer to 11 - EXHAUST SYSTEM/EXHAUST PIPE - REMOVAL)

3. Remove drain and fill plugs and drain lubricant completely.
4. Install drain plug. Tighten plug to 41-54 N·m (30-40 ft. lbs.).
5. Remove drain pan.
6. Fill transfer case to bottom edge of fill plug opening with Mopar® ATF +4, Automatic Transmission fluid.
7. Install and tighten fill plug to 41-54 N·m (30-40 ft. lbs.).
8. Install the exhaust y-pipe to the exhaust manifold, if removed. (Refer to 11 - EXHAUST SYSTEM/EXHAUST PIPE - INSTALLATION)
9. Wipe any excess fluid that may have spilled onto the exhaust.
10. Lower vehicle.

SEAL-FRONT OUTPUT SHAFT

REMOVAL

1. Remove the front propeller shaft (Refer to 3 - DIFFERENTIAL & DRIVELINE/PROPELLER SHAFT/PROPELLER SHAFT - REMOVAL).
2. Install two bolts 180° apart into the front output shaft companion flange.
3. Place Holder 6719 (1) over the bolts (2) and against the companion flange.
4. Remove and discard the front companion flange nut.
5. Remove the companion flange from the front output shaft. It may be necessary to use Flange puller 8992 to remove the companion flange.
6. Using a screw and a slide hammer, remove the front output shaft seal.

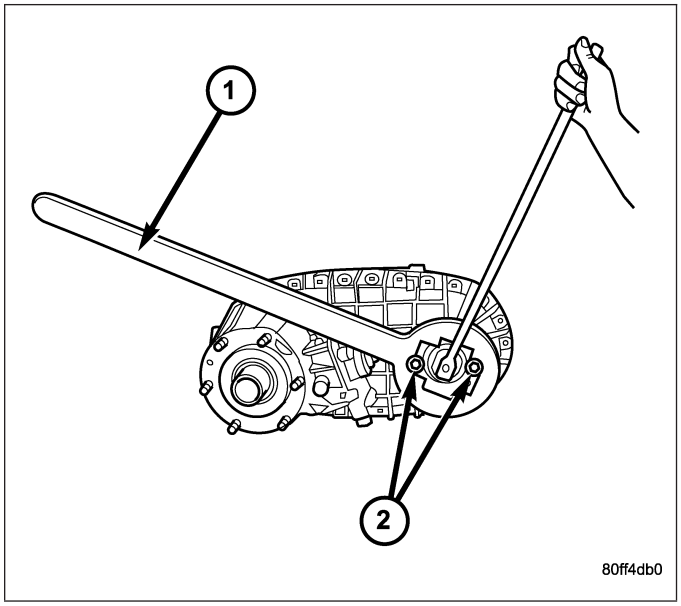

INSTALLATION

1. Install the new front output shaft seal with Installer MB991168A.
2. Install the front companion flange onto the front output shaft.
3. Install two bolts 180° apart into the front output shaft companion flange.
4. Place Holder 6719 (1) over the bolts (2) and against the companion flange.
5. Install a new front companion flange nut. Tighten the companion flange nut to 258-312 N·m (190-230 ft.lbs.).
6. Install front propeller shaft (Refer to 3 - DIFFERENTIAL & DRIVELINE/PROPELLER SHAFT/PROPELLER SHAFT - INSTALLATION).

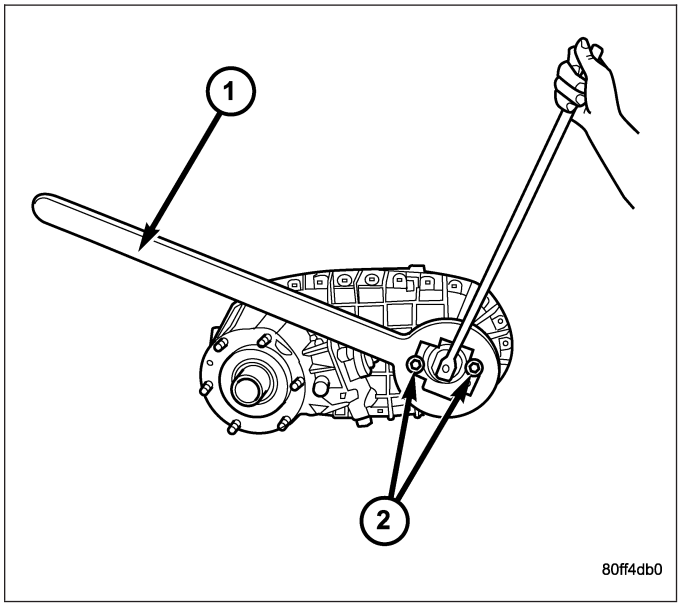

SENSOR-POSITION

DESCRIPTION

The transfer case position sensor is an electronic device whose output can be interpreted to indicate the transfer case's current operating mode. The sensor consists of a five position, resistive multiplexed circuit which returns a specific resistance value to the Powertrain Control Module (PCM) for each transfer case operating mode. The sensor is located on the top of the transfer case, just left of the transfer case centerline and rides against the sector plate roostercomb. The PCM supplies 5VDC (+/- 0.5V) to the sensor and monitors the return voltage to determine the sector plate, and therefore the transfer case, position.

OPERATION

Operating Mode Versus Resistance

SENSOR POSITION	OPERATING MODE	SENSOR RESISTANCE (ohms)
1	2H	1172-1195
2	4H	677-691
3	NEUTRAL	406-415
4	4L	208-213
5	NOT USED	60-61

During normal vehicle operation, the Powertrain Control Module (PCM) monitors the transfer case position sensor return voltage to determine the operating mode of the transfer case. Refer to the Operating Mode Versus Resistance table for the correct resistance for each position.

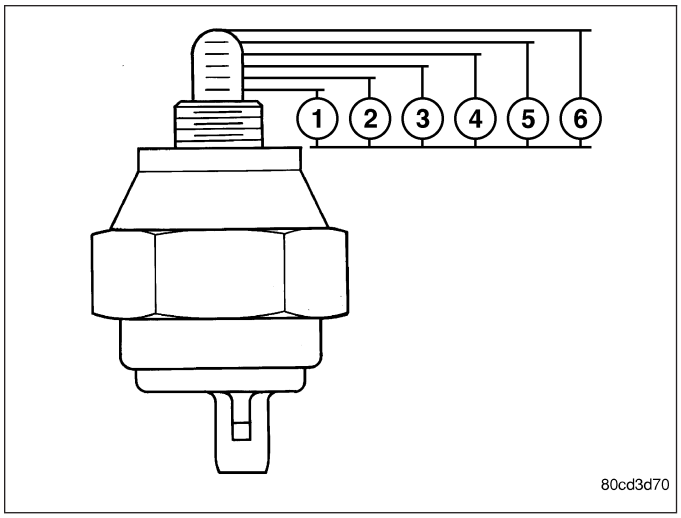

Position Sensor Linear Movement

1 - POSITION 1 - 10mm ±0.5mm
2 - POSITION 2 - 12mm ±0.5mm
3 - POSITION 3 - 14mm ±0.5mm
4 - POSITION 4 - 16mm ±0.5mm
5 - POSITION 5 - 18mm ±0.5mm
6 - POSITION 6 - 20mm±0.5mm - FULL EXTENSION

REMOVAL

1. Raise and support the vehicle.
2. Disengage the transfer case position sensor connector from the position sensor.
3. Remove the position sensor from the transfer case.

INSTALLATION

1. Inspect the o-ring seal on the transfer case position sensor. Replace the o-ring if necessary.
2. Install the transfer case position sensor into the transfer case. Torque the sensor to 20-34 N·m (15-25 ft.lbs.).
3. Engage the transfer case position sensor connector to the position sensor.
4. Lower vehicle.
5. Verify proper sensor operation.

LEVER-SHIFT

REMOVAL

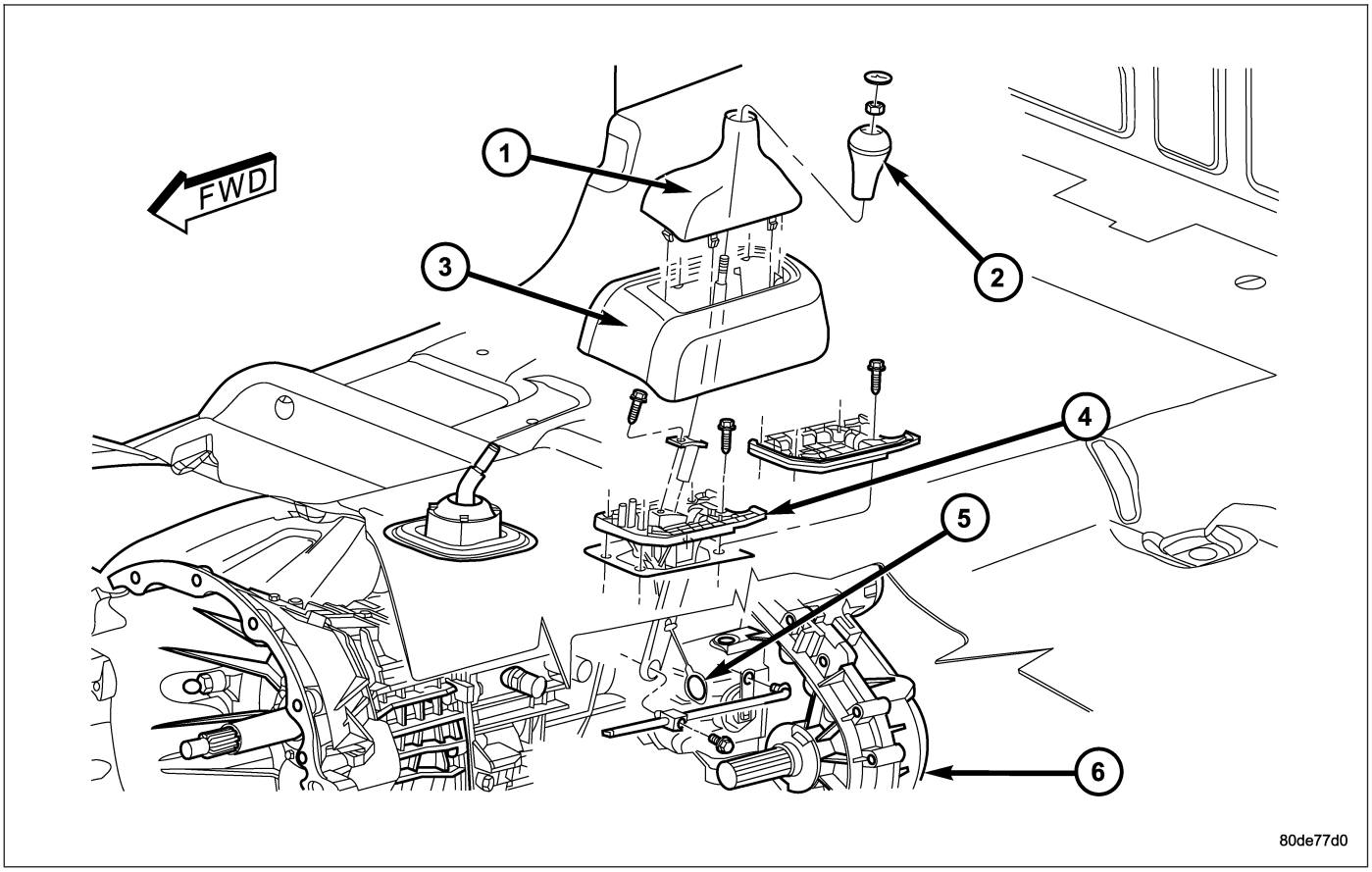

Transfer Case Shifter

1 - SHIFTER BOOT
2 - SHIFTER KNOB
3 - SHIFTER CONSOLE
4 - SHIFTER MECHANISM
5 - ALIGNMENT PIN
6 - TRANSFER CASE

1. Shift transfer case into 2H.
2. Raise and support the vehicle.
3. Loosen adjusting trunnion lock bolt and slide shift rod out of trunnion. If rod lacks enough travel to come out of trunnion, push trunnion out of shift lever.
4. Lower vehicle.
5. Remove transfer case shifter knob cap.
6. Remove nut holding shifter knob (2) to shift lever.
7. Remove shifter knob.
8. Remove the shift boot from the shifter console.
9. Remove the bolts securing the shifter mechanism to the floor pan.
10. Separate shift lever mechanism from the vehicle.

INSTALLATION

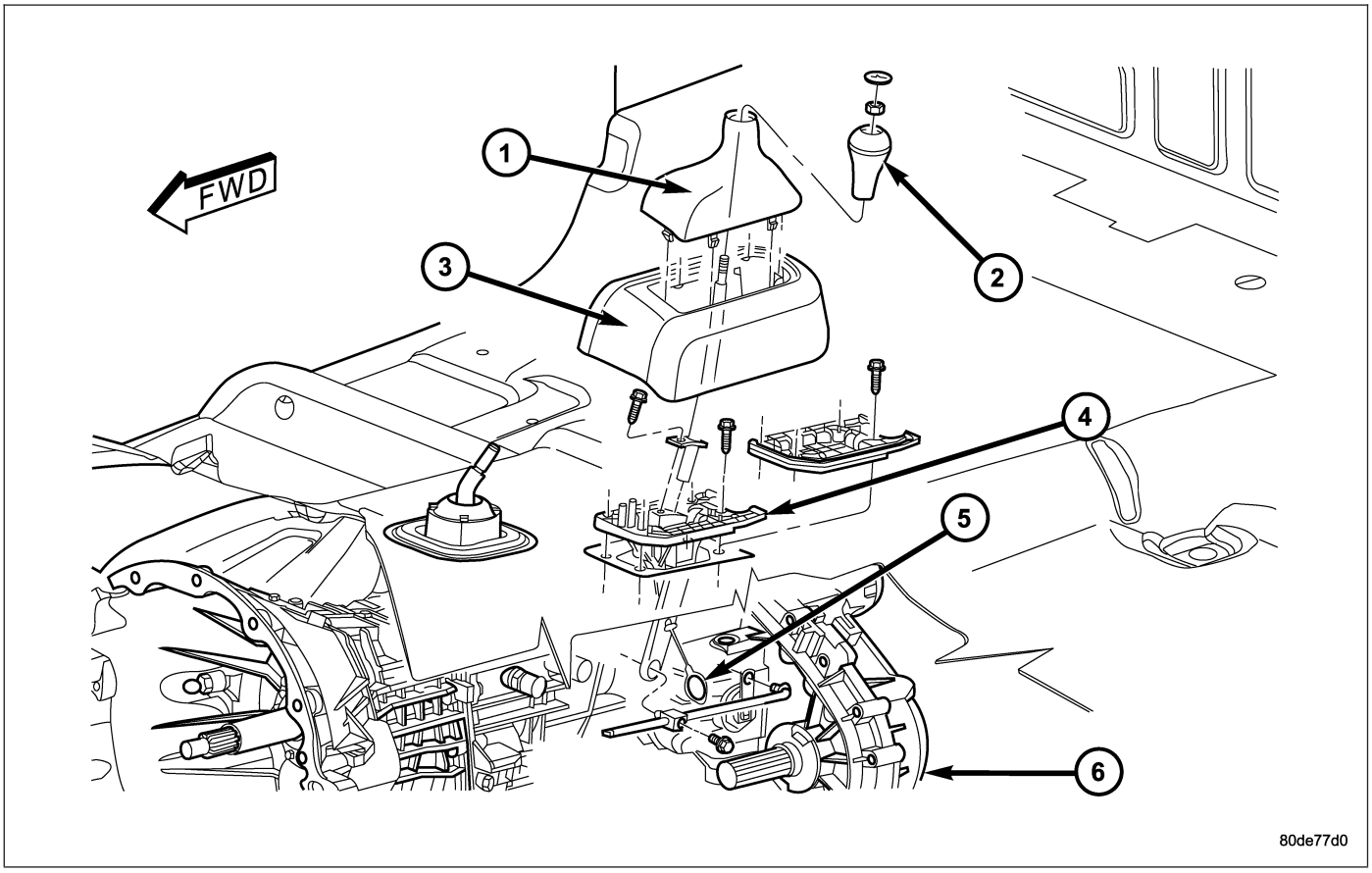

Transfer Case Shifter

1 - SHIFTER BOOT	4 - SHIFTER MECHANISM
2 - SHIFTER KNOB	5 - ALIGNMENT PIN
3 - SHIFTER CONSOLE	6 - TRANSFER CASE

1. If the shifter mechanism does not have a adjustment locating pin installed, align the adjustment channel on the shifter assembly to the locating hole in the lower shift lever and install an appropriately sized pin to retain the position.
2. Position shift lever in vehicle.
3. Install the bolts to hold the shifter mechanism (4) to the floor pan.
4. Raise vehicle.
5. Verify that the transfer case is still in the 2H position. The 2H detent position on the transfer case shift arm is the second position from full forward.
6. Install trunnion to shift lever, if necessary.
7. Install shift rod to trunnion, if necessary.
8. Tighten the shift rod lock bolt to 10 N·m (90 in.lbs.).
9. Remove the shifter adjustment locating pin from the adjustment channel and the locating hole.
10. Lower vehicle.
11. Install the transfer case shifter console.
12. Install the shifter boot and the shifter knob onto the shifter lever.
13. Install nut to hold shifter knob to shift lever.
14. Install shifter knob cap.
15. Verify transfer case operation.

ADJUSTMENTS

ADJUSTMENT - SHIFT LEVER

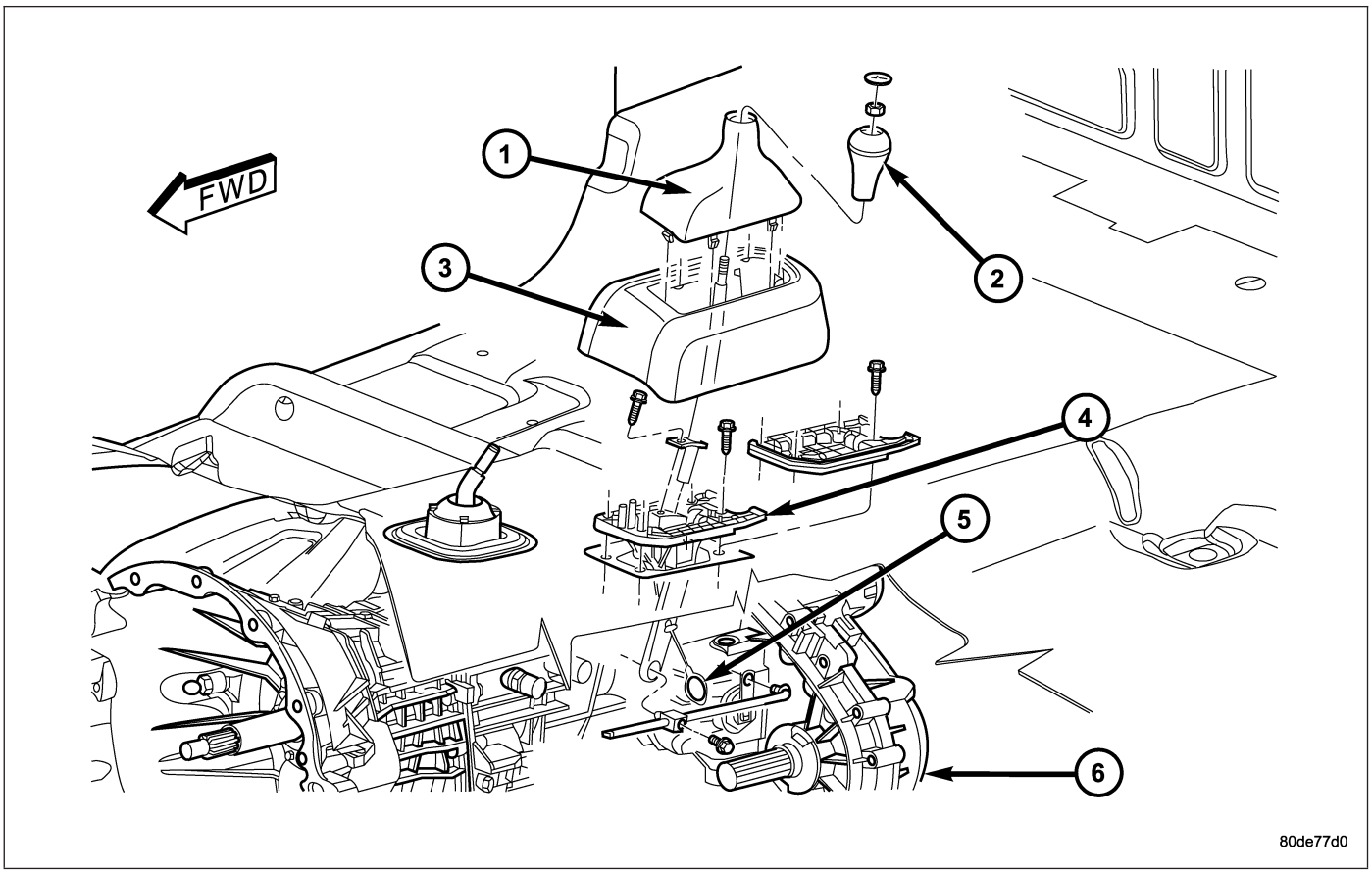

Transfer Case Shifter

1 - SHIFTER BOOT
2 - SHIFTER KNOB
3 - SHIFTER CONSOLE
4 - SHIFTER MECHANISM
5 - ALIGNMENT PIN
6 - TRANSFER CASE

1. Move shift lever into 2H position.
2. Raise vehicle.
3. Loosen shift rod lock bolt at trunnion.
4. Check shift rod fit in trunnion. Be sure rod does not bind in trunnion. Lubricate the shift rod and trunnion if necessary.
5. Verify that transfer case shift lever is in 2H detent position. The 2H detent position on the transfer case shift arm is the second position from full forward.
6. Align the adjustment locating hole on the lower shifter lever with the adjustment channel on the shifter bracket assembly.
7. Insert an appropriately sized pin through into the adjustment channel and through the locating hole to hold the shifter in the correct position.
8. Tighten shift rod lock bolt to 10 N·m (90 in. lbs.) torque.
9. Remove the locating pin from the adjustment channel and locating hole.
10. Check shift linkage operation. Be sure transfer case shifts into and operates properly in all ranges.

TRANSFER CASE - NV243 - SERVICE INFORMATION

TABLE OF CONTENTS

page

TRANSFER CASE - NV243 - SERVICE INFORMATION
DESCRIPTION 1426
OPERATION 1427
DIAGNOSIS AND TESTING - TRANSFER CASE - NV243 1427
REMOVAL 1428
DISASSEMBLY 1428
CLEANING 1440
INSPECTION 1441
ASSEMBLY 1443
INSTALLATION 1456
SPECIFICATIONS TRANSFER CASE - NV243 1456
SPECIAL TOOLS TRANSFER CASE - NV243 1457
SEAL-EXTENSION HOUSING
REMOVAL 1459
INSTALLATION 1459
FLUID
STANDARD PROCEDURE - FLUID DRAIN AND REFILL 1459
SEAL-FRONT OUTPUT SHAFT
REMOVAL 1460
INSTALLATION 1461
SENSOR-MODE
DESCRIPTION 1461
OPERATION 1462
SWITCH-SELECTOR
DESCRIPTION 1463
OPERATION 1463
ASSEMBLY-SHIFT MOTOR/MODE SENSOR
DESCRIPTION 1464
OPERATION 1464
REMOVAL 1465
INSTALLATION 1465

TRANSFER CASE - NV243 - SERVICE INFORMATION

DESCRIPTION

The NV243 is an electronically controlled part-time transfer case with a low range gear reduction system. The NV243 has three operating ranges plus a NEUTRAL position. The low range system provides a gear reduction ratio for increased low speed torque capability.

The geartrain is mounted in two aluminum case halves attached with bolts. The mainshaft front and rear bearings are mounted in aluminum retainer housings bolted to the case halves.

OPERATING RANGES

Transfer case operating ranges are:

- 2WD (2-wheel drive)
- 4HI (4-wheel drive)
- 4LO (4-wheel drive low range)
- NEUTRAL

The 2WD range is for use on any road surface at any time.

The 4HI and 4LO ranges are for off road use only. They are not for use on hard surface roads. The only exception being when the road surface is wet or slippery or covered by ice and snow.

The low range reduction gear system is operative in 4LO range only. This range is for extra pulling power in off road situations. Low range reduction ratio is 2.72:1.

SHIFT MECHANISM

Operating ranges are selected with a dash mounted shift selector switch. The shift selector switch provides a input to the Transfer Case Control Module (TCCM) to indicate the driver's desire to change operating ranges. The TCCM uses this input, along with input from the transfer case mounted mode sensor and information from the vehicle's bus, to determine if a shift is permitted. If the TCCM decides the shift is permitted, the TCCM controls the shift motor, mounted to the exterior of the transfer case, to perform the shift.

IDENTIFICATION

A circular ID tag (1) is attached to the rear case of each transfer case. The ID tag provides the transfer case model number, assembly number, serial number, and low range ratio.

The transfer case serial number also represents the date of build.

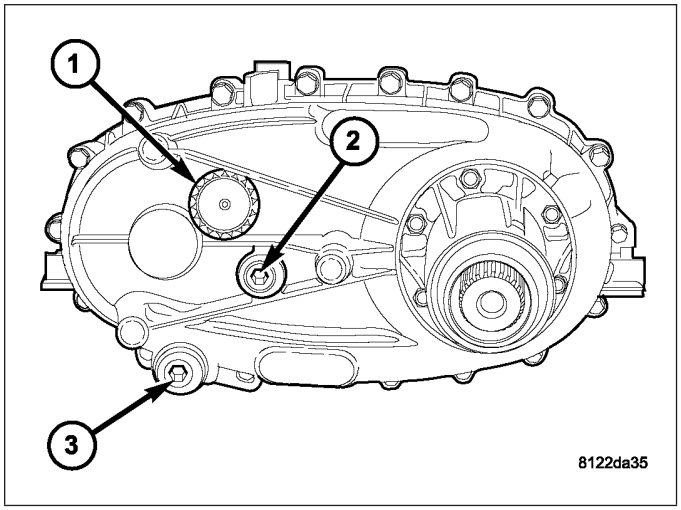

OPERATION

The input gear is splined to the transmission output shaft. The input gear drives the mainshaft through the planetary assembly and range sleeve. The front output shaft is operated by a drive chain that connects the shaft to a drive sprocket on the mainshaft. The drive sprocket is engaged/disengaged by the mode fork, which operates the mode sleeve and hub. The sleeve and hub are not equipped with a synchronizer mechanism for shifting.

DIAGNOSIS AND TESTING - TRANSFER CASE - NV243

DIAGNOSIS CHART

Condition	Possible Cause	Correction
Transfer case difficult to shift or will not shift into desired range.	1) Transfer case electronically controlled shift system malfunction.	1) Verify proper operation per the appropriate diagnostic manual.
	2) If vehicle was operated for an extended period in 4HI mode on dry surface, driveline torque load may cause difficulty.	2) Drive the vehicle in a straight line and momentarily release the accelerator. The transfer case can then be shifted to the desired mode.
	3) Insufficient or incorrect lubricant.	3) Drain and refill transfer case with the correct quantity of Mopar® ATF +4, Automatic Transmission Fluid.
	4) Internal transfer case components binding, worn, or damaged.	4) Repair or replace components as necessary.
Transfer case noisy in all drive modes.	1) Insufficient or incorrect lubricant.	1) Drain and refill transfer case with the correct quantity of Mopar® ATF +4, type 9602, Automatic Transmission Fluid.
	2) Internal transfer case components binding, worn, or damaged.	2) Repair or replace components as necessary.

Condition	Possible Cause	Correction
Transfer case noisy while in, or jumps out of, 4LO mode.	1) Transfer case not completely engaged in 4LO position.	1) While rolling 2-3 MPH and the transmission in NEUTRAL, or clutch depressed on vehicles equipped with a manual transmission, shift transfer case to the 2WD or 4HI position, and then back into the 4LO position.
	2) Range fork damaged, inserts worn, or fork is binding on the shift rail.	2) Repair or replace components as necessary.
	3) Low range gear worn or damaged.	3) Repair or replace components as necessary.
Lubricant leaking from transfer case seals or vent.	1) Transfer case overfilled.	1) Drain lubricant to the correct level.
	2) Transfer case vent closed or restricted.	2) Clean or replace vent as necessary.
	3) Transfer case seals damaged or installed incorrectly.	3) Replace suspect seal.
Abnormal tire wear.	1) Extended operation in 4HI mode on dry surfaces,	1) Operate vehicle in 2WD mode on dry surfaces.

REMOVAL

1. Shift transfer case into 2WD.
2. Raise vehicle.
3. Drain transfer case lubricant.
4. Mark front and rear propeller shafts for alignment reference.
5. Support transmission with jack stand.
6. Remove the transfer case skid plate, if equipped.
7. Disconnect front and rear propeller shafts at transfer case.
8. Disconnect transfer case shift motor and mode sensor wire connectors (3).
9. Disconnect transfer case vent hose.
10. Support transfer case with transmission jack.
11. Secure transfer case to jack with chains.
12. Remove nuts attaching transfer case (2) to transmission (1).
13. Pull transfer case and jack rearward to disengage transfer case.
14. Remove transfer case from under vehicle.

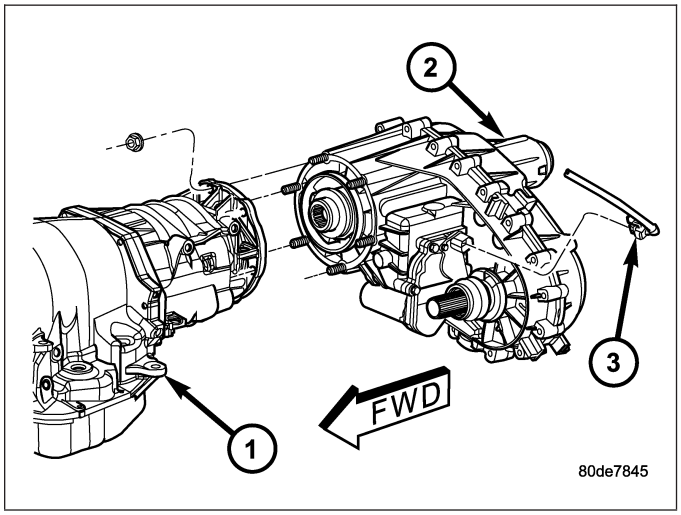

DISASSEMBLY

Position transfer case in a shallow drain pan. Remove drain plug and drain any remaining lubricant remaining in case.

SHIFT MOTOR ASSEMBLY AND FRONT OUTPUT SHAFT SEAL

1. Remove the bolts (3) which hold the shift motor and mode sensor assembly (2) to the transfer case (1).

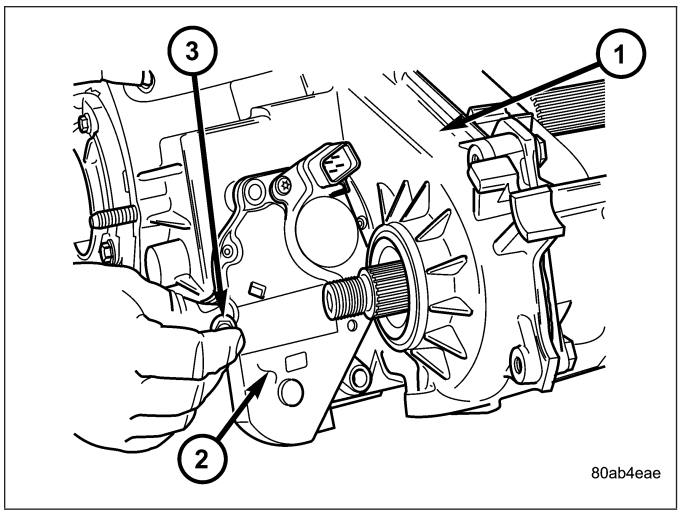

2. Remove the shift motor and mode sensor assembly from the transfer case.
3. Remove the front propeller shaft seal boot (1) retaining clamp (2).

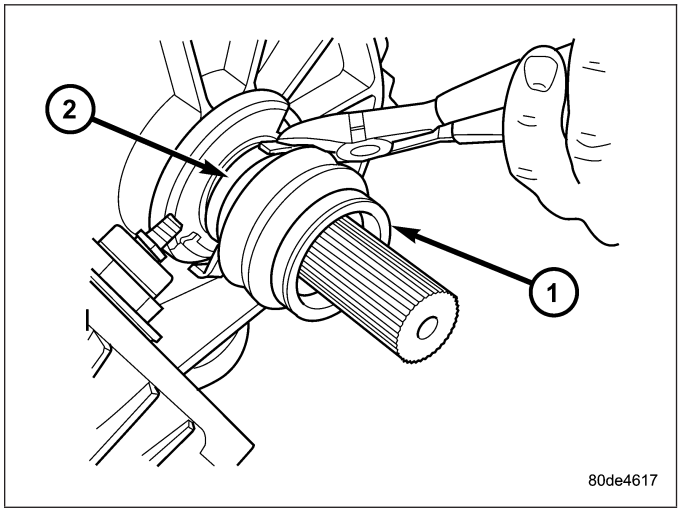

4. Remove the front propeller shaft seal boot (1).

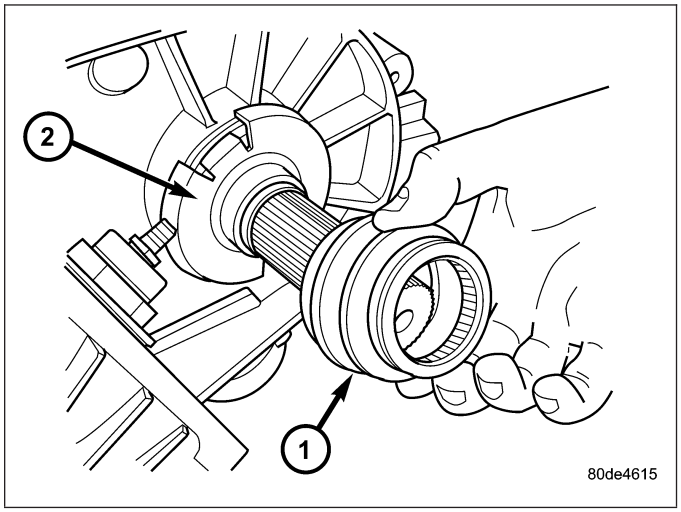

5. Remove the front output shaft seal slinger (1) by bending (2) the slinger ears away from the transfer case.

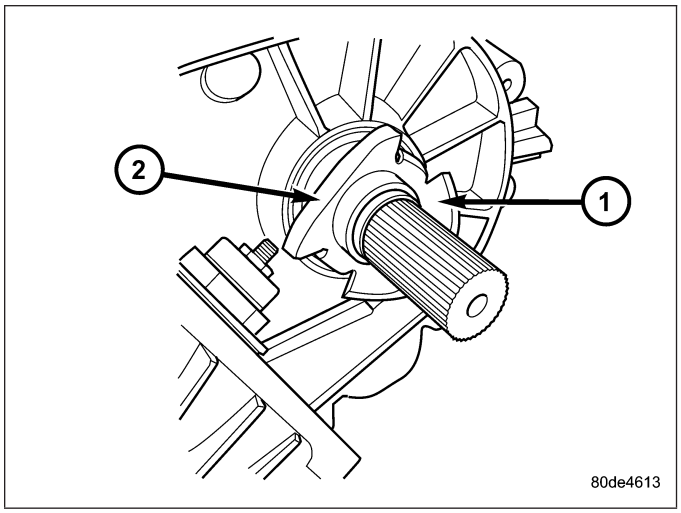

6. Using a suitable pry tool (2), remove the slinger (1) from the output shaft using care not to damage the shaft.
7. Using a screw and a slide hammer, remove the front output shaft seal.

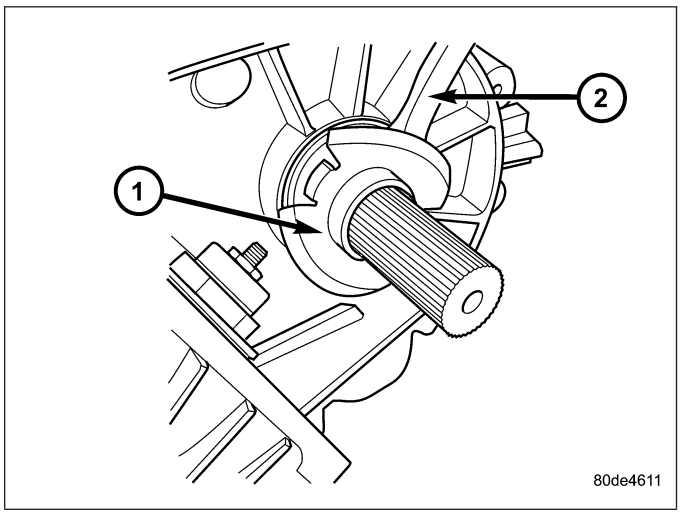

REAR EXTENSION

1. Remove rear extension bolts (1).

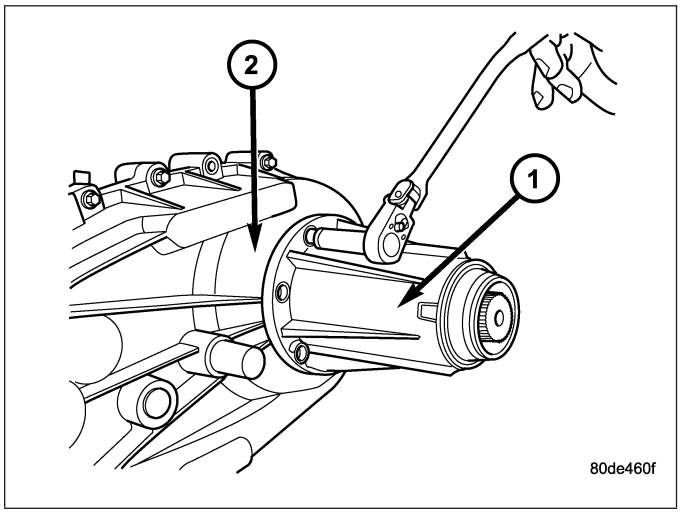

2. Remove rear extension housing (1). Tap extension once or twice with a plastic mallet to break sealer bead and loosen it.

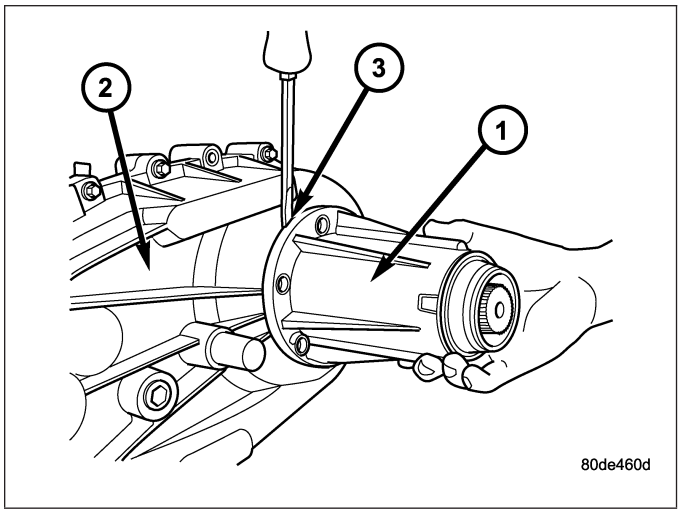

3. Remove output bearing (2) retaining ring (3) with heavy duty snap-ring pliers.

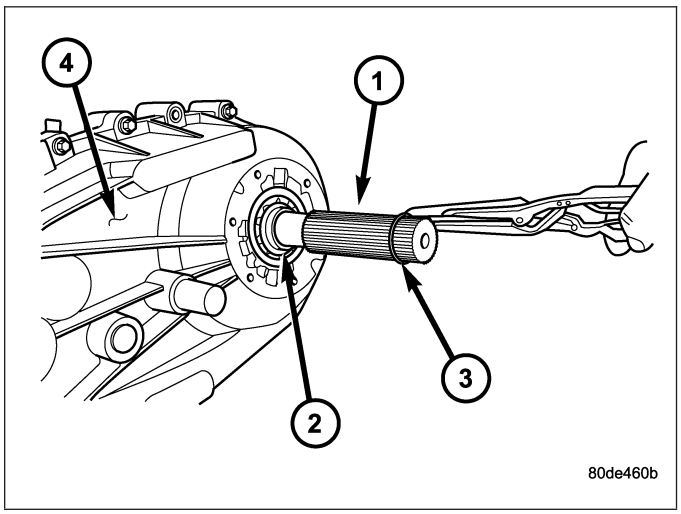

OIL PUMP AND REAR CASE

1. Remove rear case (1)-to-front case (2) bolts (3).

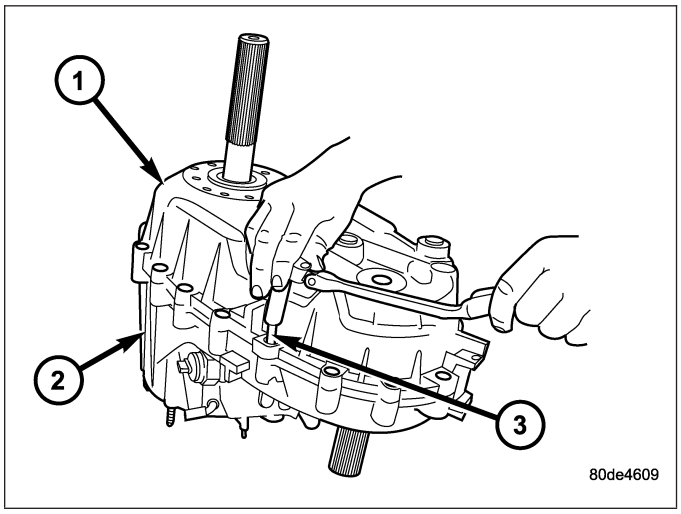

2. Loosen rear case (1) with pry tool to break sealer bead. Insert tool in slot (3) at each end of case.

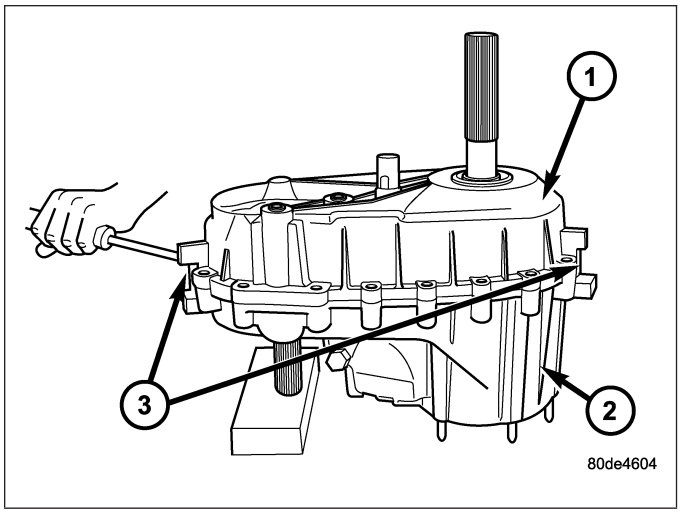

3. Unseat rear case from alignment dowels.
4. Remove rear case (1) and oil pump assembly from front case (2).

CAUTION: Do not remove the bolts holding the oil pump cover to the rear case half. The oil pump cover is aligned to the rear output shaft inner bearing race and will become mis-aligned if the bolts are loosened. If the transfer case failure has generated any debris which may have become trapped in the oil pump. the rear case and oil pump assembly MUST be replaced.

5. Remove the oil pump pickup tube.

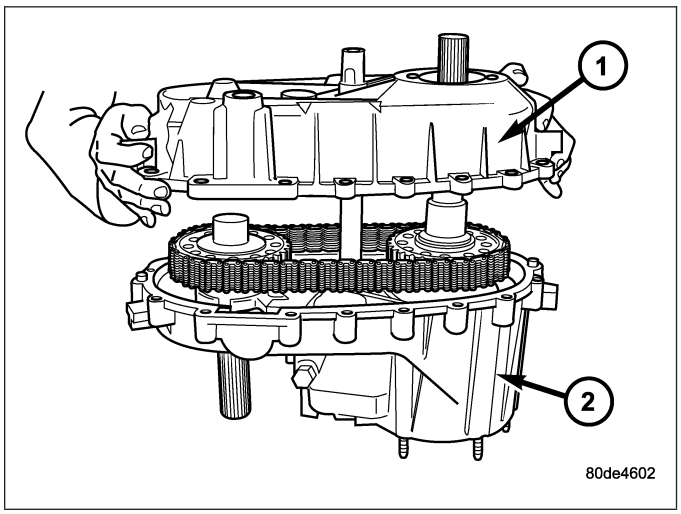

FRONT OUTPUT SHAFT AND DRIVE CHAIN

1. Remove shift rail cup (3) and spring (2).

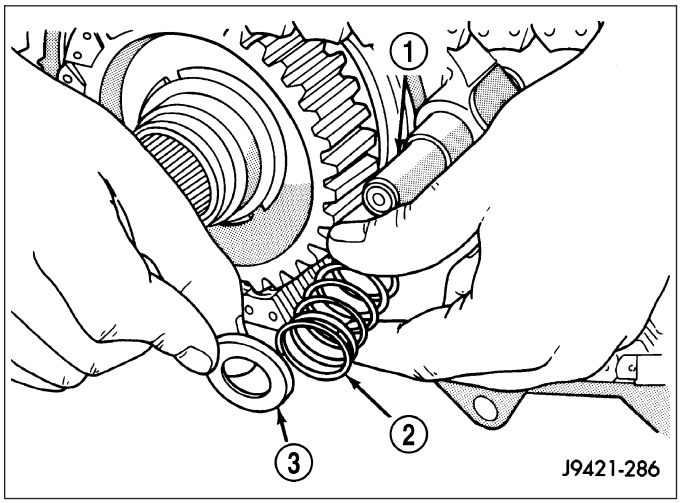

2. Remove front sprocket (1) retaining ring (2).

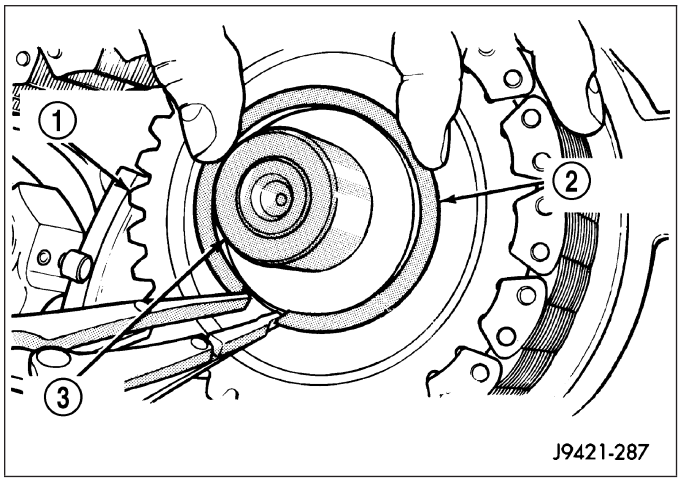

3. Pull mainshaft (3), front sprocket (1), and chain (2) outward about 25.4 mm (1-inch) simultaneously.
4. Remove chain from mainshaft drive sprocket and remove front sprocket and chain as assembly.

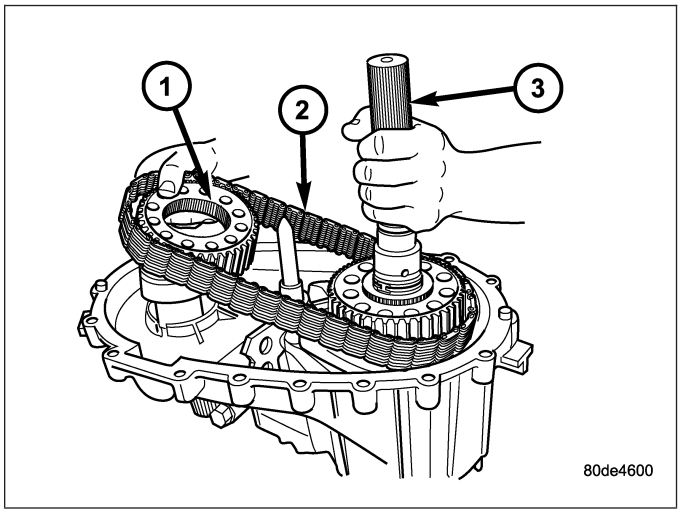

SHIFT FORKS AND MAINSHAFT

1. Loosen detent plug (2).
2. Remove detent plug (2), spring (3), and plunger (4). Note that the plug has an O-ring seal. Remove and discard this seal.

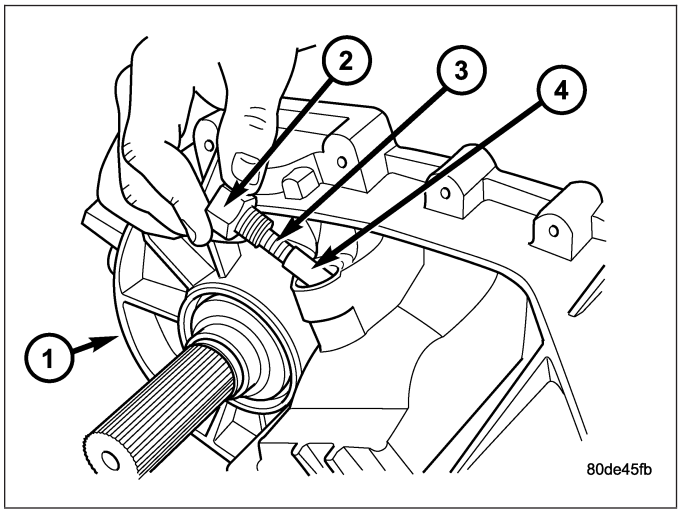

3. Remove the front output shaft (1) snap-ring (2).

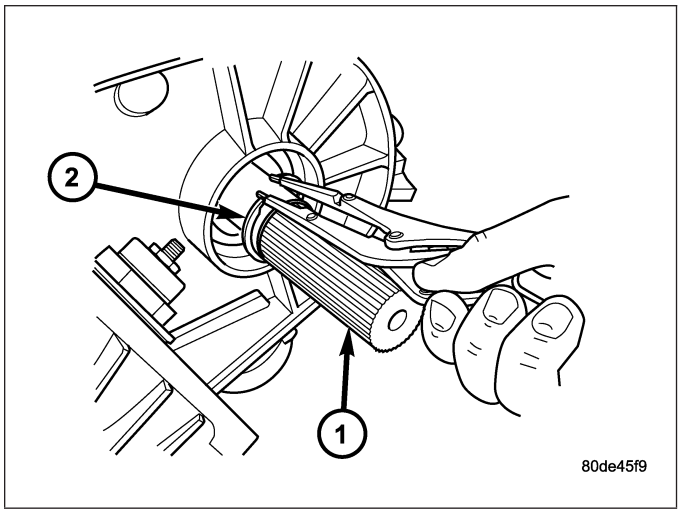

4. Remove front output shaft (2) from bearing in the front case (1).

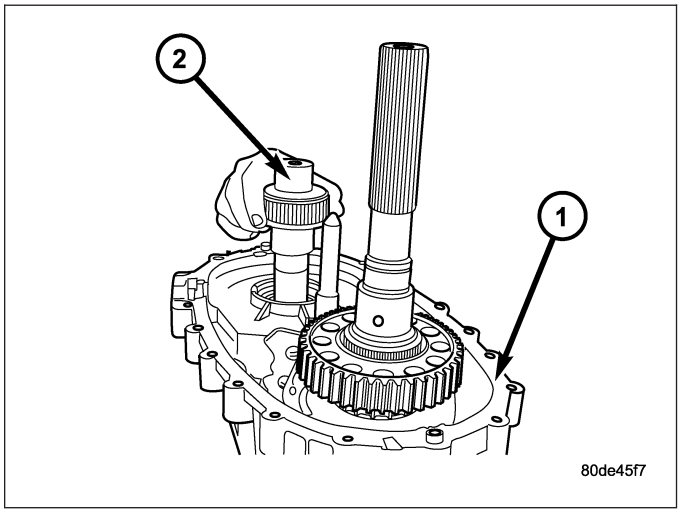

5. Pull mainshaft assembly (2) out of input gear, mode sleeve, and front case (1).

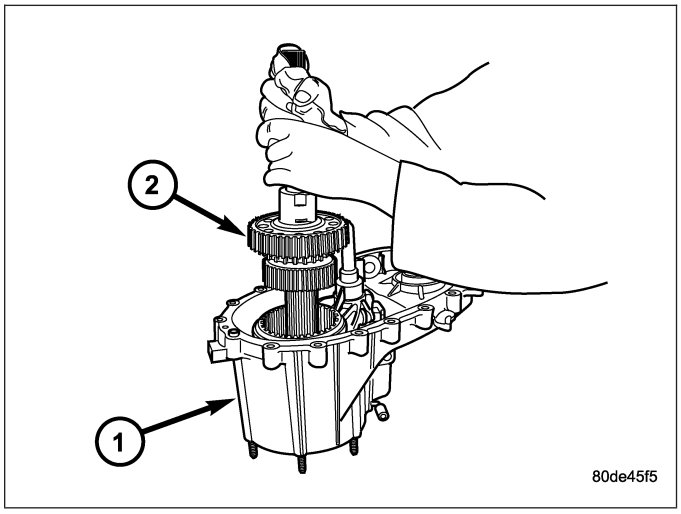

6. Remove mode fork (2), mode sleeve (1), and shift rail as assembly. Note which way the sleeve fits in the fork (long side of sleeve goes to front).

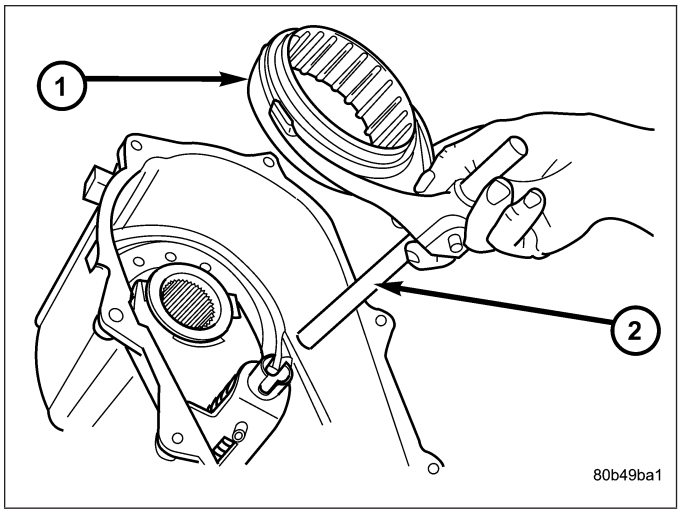

7. Remove range fork retaining ring.
8. Remove range fork (2) and hub (1) as an assembly. Note fork position for installation reference.

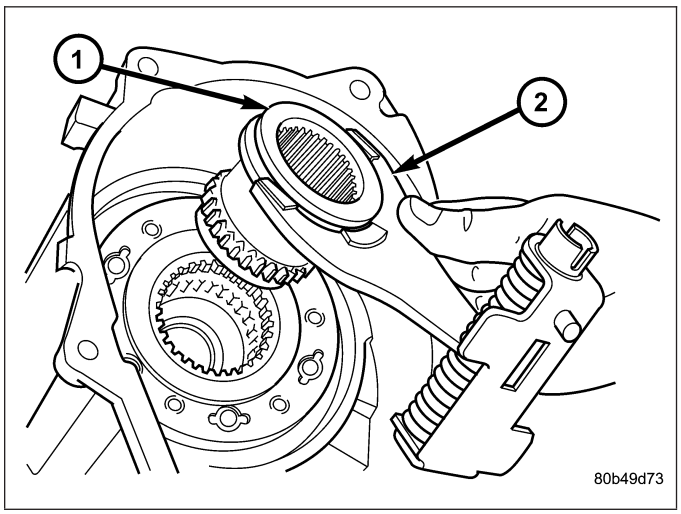

9. Remove shift sector (1).

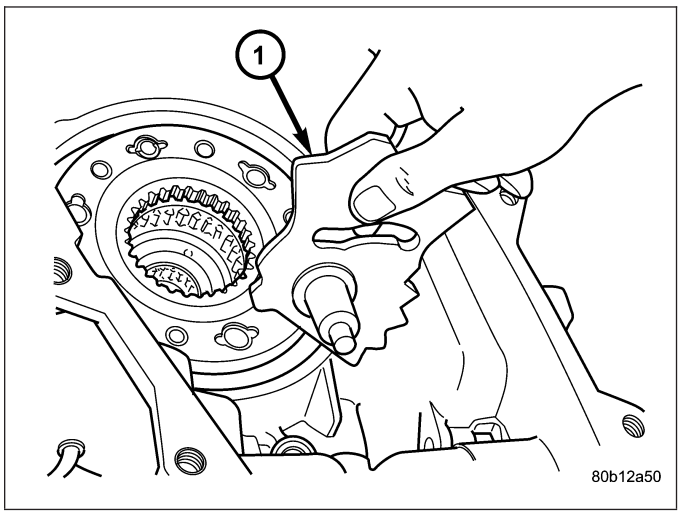

10. Remove the shift sector o-ring (2) from the front housing (1).

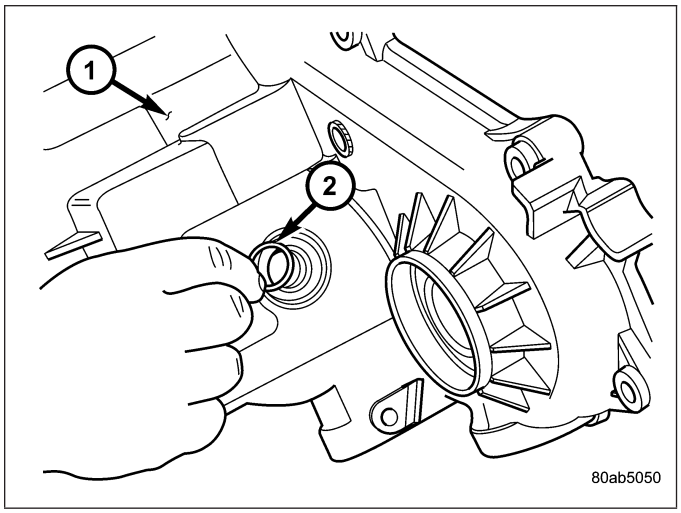

MAINSHAFT

1. Remove the drive sprocket (3) retaining ring (2) from the output shaft (1).

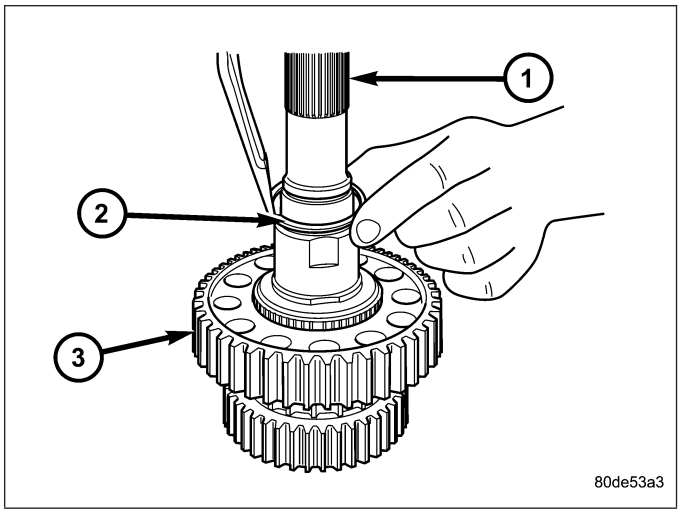

2. Remove the drive sprocket (3) thrust washer (2) from the output shaft (1).

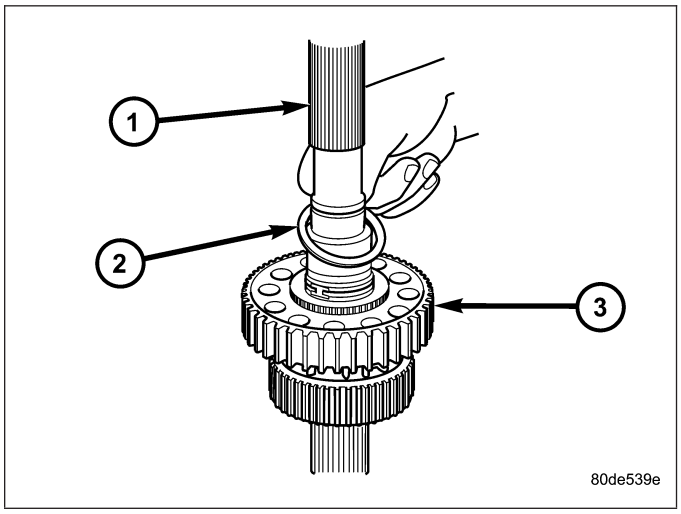

3. Remove drive sprocket (2) from the output shaft (1).

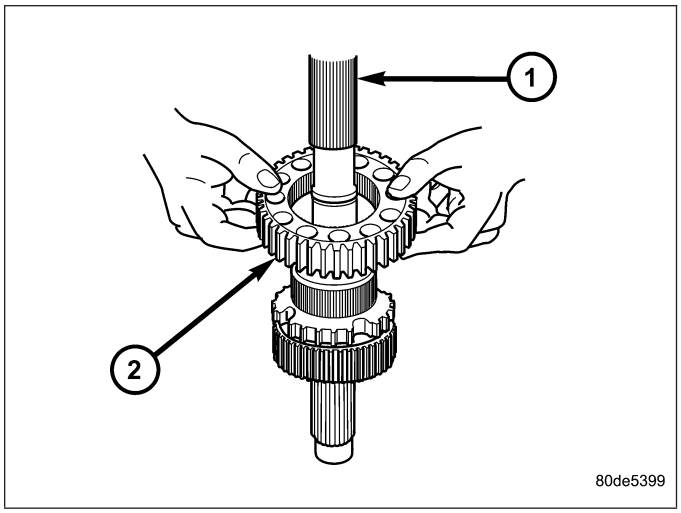

4. Remove the clutch gear (2) from the output shaft (1).

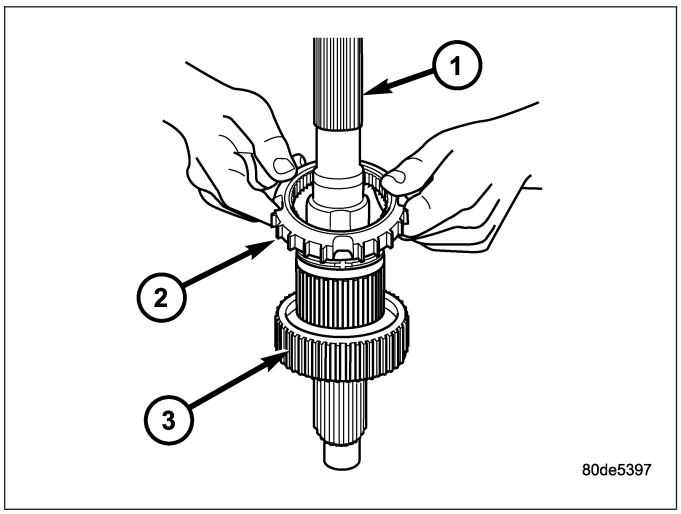

5. Remove the sprocket hub (2) from the output shaft (1).

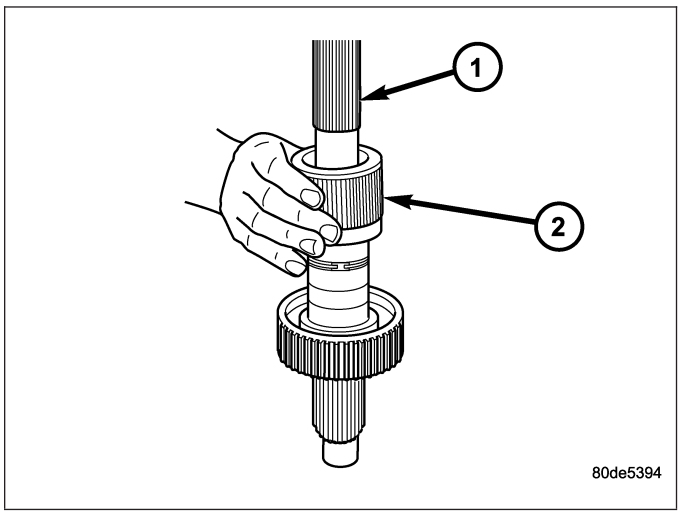

6. Remove the mode hub retaining ring (2) from the output shaft (1).

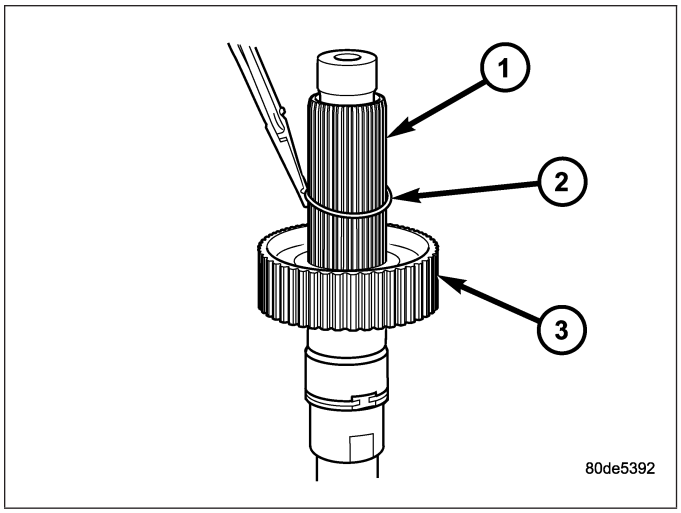

7. Remove the mode hub (2) from the output shaft (1).

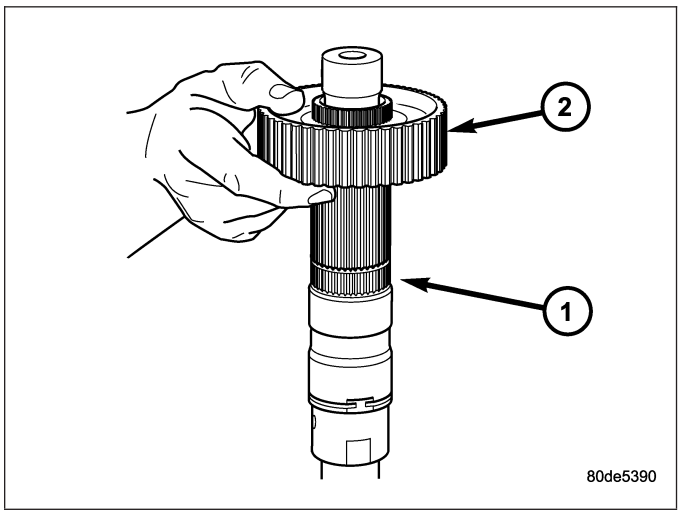

INPUT AND PLANETARY GEAR

1. Remove input gear seal with suitable screw and slide hammer.
2. Remove input gear (1) retaining ring (2) with heavy duty snap-ring pliers.

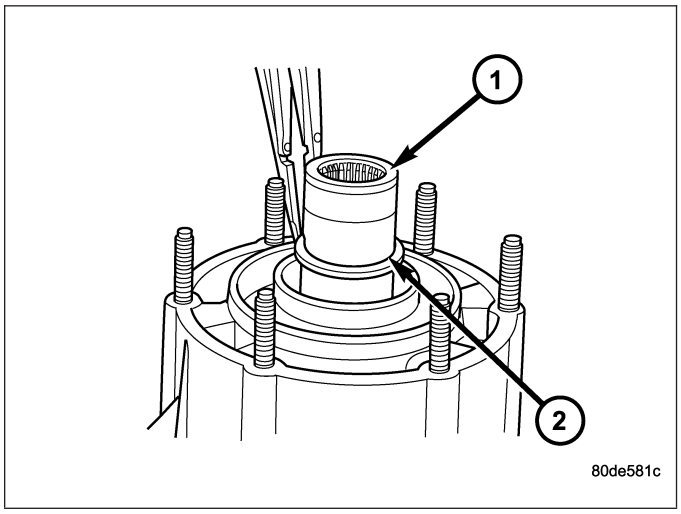

3. Place front case in horizontal position. Then remove input gear and low range gear as an assembly (2). Tap gear out of bearing with plastic mallet, if necessary.

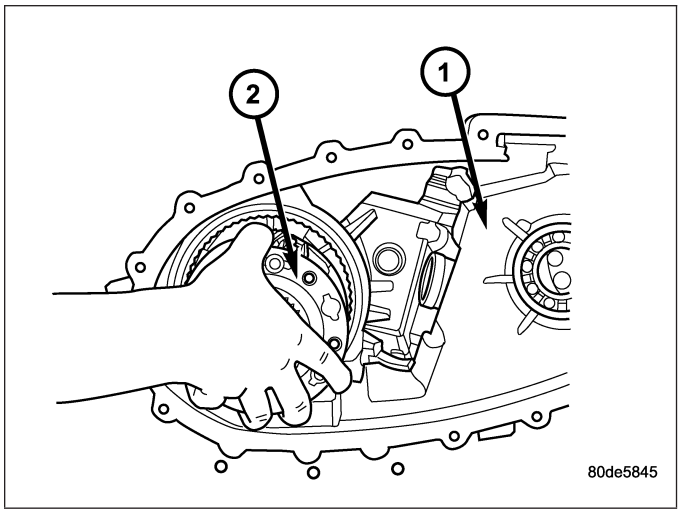

INPUT AND PLANETARY GEAR

1. Remove snap-ring (1) that retains input gear in low range gear.

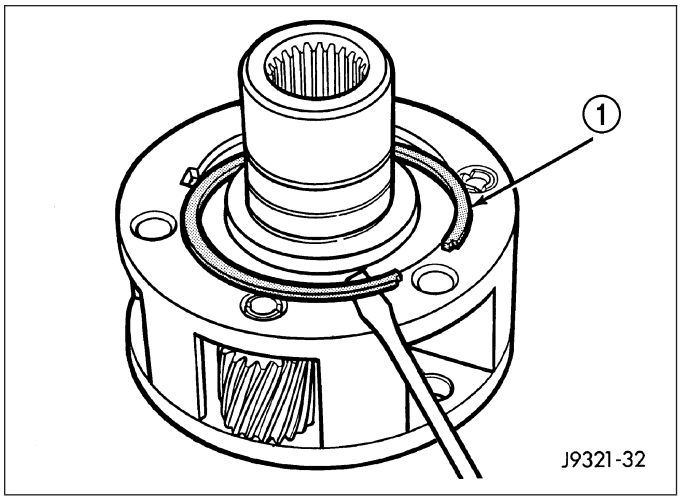

2. Remove retainer (3).

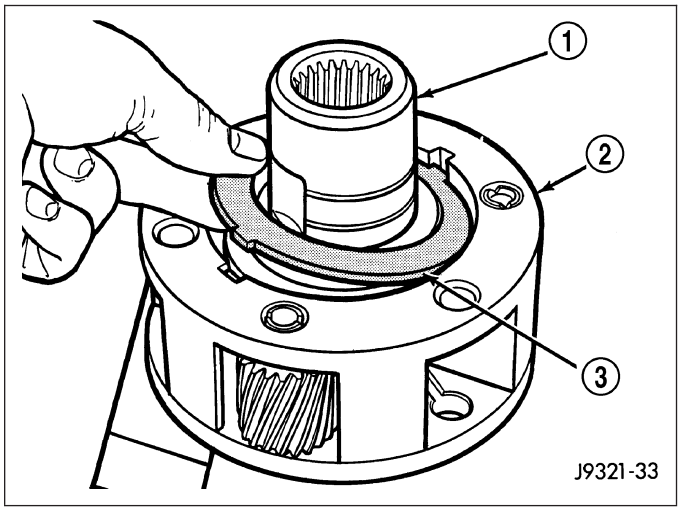

3. Remove front tabbed thrust washer (1).

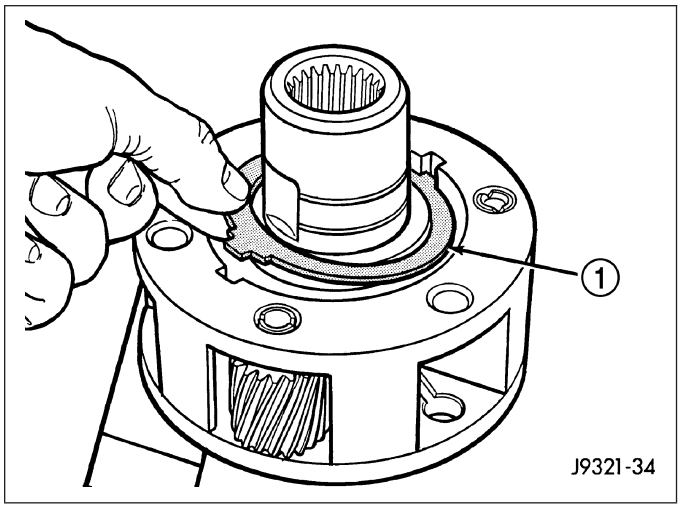

4. Remove input gear (1).

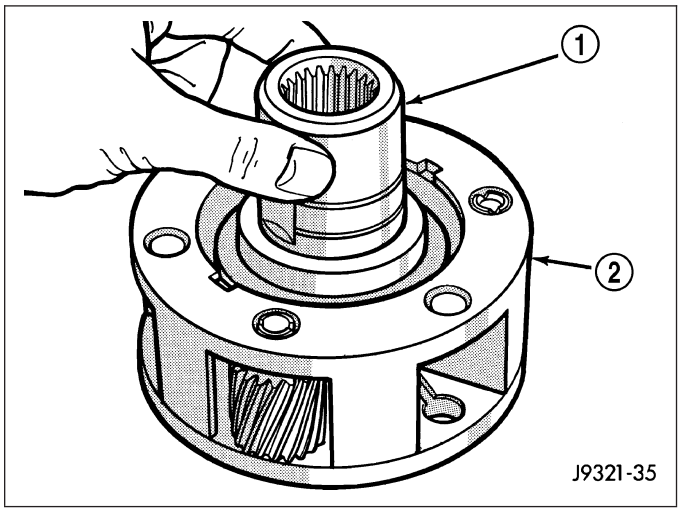

5. Remove rear tabbed thrust washer (2) from low range gear (1).

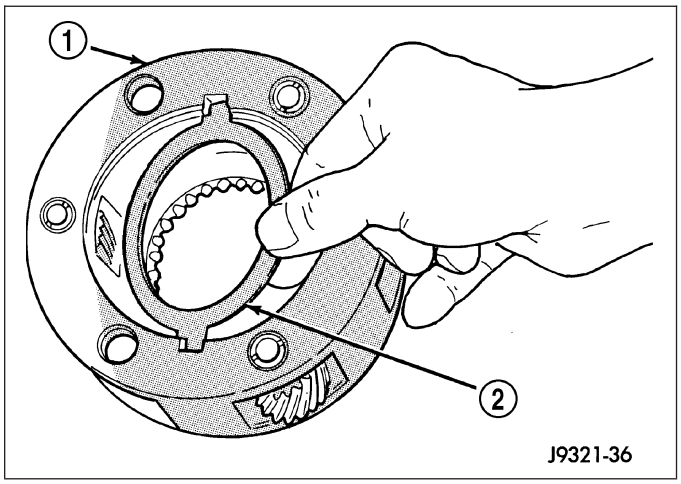

CLEANING

Clean the transfer case parts with a standard parts cleaning solvent. Remove all traces of sealer from the cases and retainers with a scraper and 3M™ all purpose cleaner. Use compressed air to remove solvent residue from oil feed passages in the case halves, retainers, gears, and shafts.

INSPECTION

MAINSHAFT/SPROCKET/HUB INSPECTION

Inspect the splines on the hub and shaft and the teeth on the sprocket. Minor nicks and scratches can be smoothed with an oilstone. However, replace any part that is damaged.

Check the contact surfaces in the sprocket bore and on the mainshaft. Minor nicks and scratches can be smoothed with 320-400 grit emery cloth but do not try to salvage the shaft if nicks or wear is severe.

INPUT GEAR AND PLANETARY CARRIER

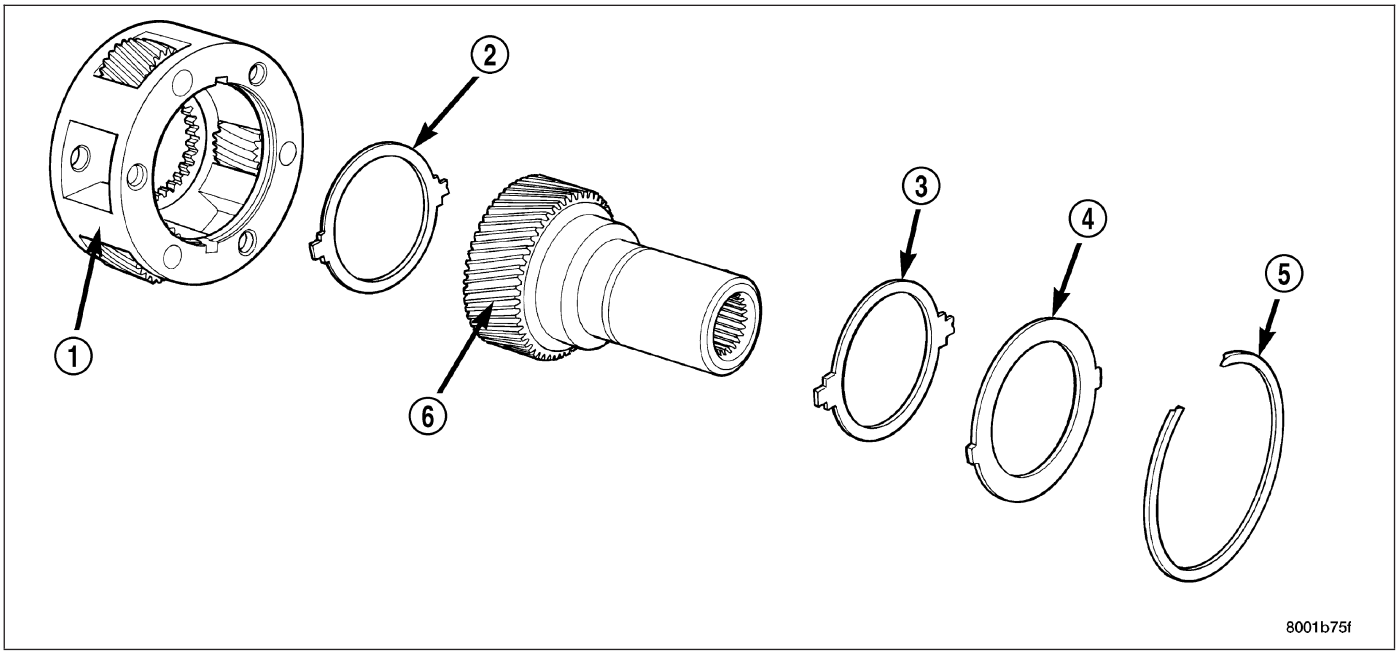

Input Gear and Carrier Components

1 - PLANETARY CARRIER
2 - REAR THRUST WASHER
3 - FRONT THRUST WASHER
4 - CARRIER LOCK RING
5 - CARRIER LOCK RETAINING RING
6 - INPUT GEAR

Check the teeth on the gear (6). Minor nicks can be dressed off with an oilstone but replace the gear if any teeth are broken, cracked, or chipped. The bearing surface on the gear can be smoothed with 300-400 grit emery cloth if necessary.

Examine the carrier body (1) and pinion gears for wear or damage. The carrier will have to be replaced as an assembly if the body, pinion pins, or pinion gears are damaged.

Check the lock ring (4) and both thrust washers (2, 3) for wear or cracks. Replace them if necessary. Also replace the lock retaining ring if bent, distorted, or broken.

SHIFT FORKS/HUBS/SLEEVES

Check condition of the shift forks and mode fork shift rail (2). Minor nicks on the shift rail can be smoothed with 320-400 grit emery cloth.

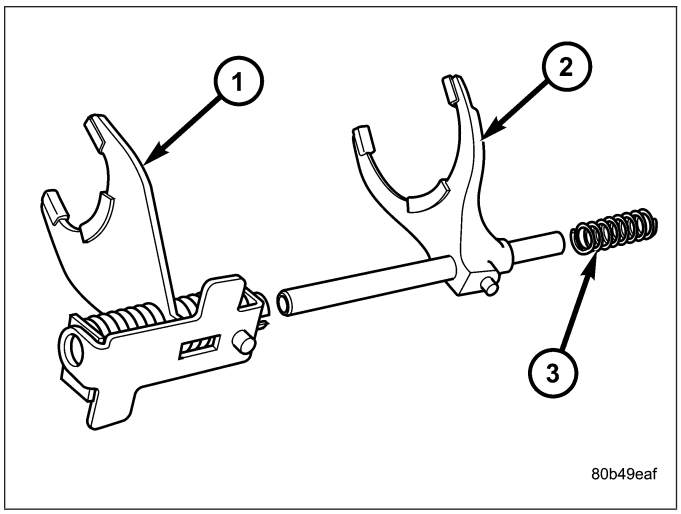

Inspect the shift fork wear pads (3, 4). The mode (2) and range (1) fork pads are serviceable and can be replaced if necessary.

Check both of the sleeves for wear or damage, especially on the interior teeth. Replace the sleeves if wear or damage is evident.

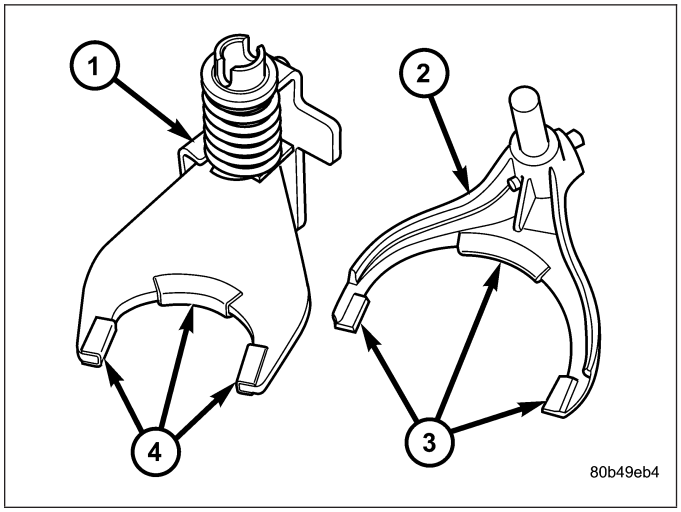

REAR EXTENSION HOUSING

Inspect the extension housing seal and bushing. Replace both components if either show any sign of wear or damage.

FRONT OUTPUT SHAFT AND DRIVE CHAIN

Inspect the shaft threads, sprocket teeth, and bearing surfaces. Minor nicks on the teeth can be smoothed with an oilstone. Use 320-400 grit emery to smooth minor scratches on the shaft bearing surfaces. Rough threads on the shaft can be chased if necessary. Replace the shaft if the threads are damaged, bearing surfaces are scored, or if any sprocket teeth are cracked or broken.

Examine the drive chain and shaft bearings. Replace the chain and both sprockets if the chain is stretched, distorted, or if any of the links bind. Replace the bearings if rough, or noisy.

LOW RANGE ANNULUS GEAR

Inspect annulus gear (2) condition carefully. The gear is only serviced as part of the front case (1). If the gear is damaged, it will be necessary to replace the gear and front case as an assembly. Do not attempt to remove the gear.

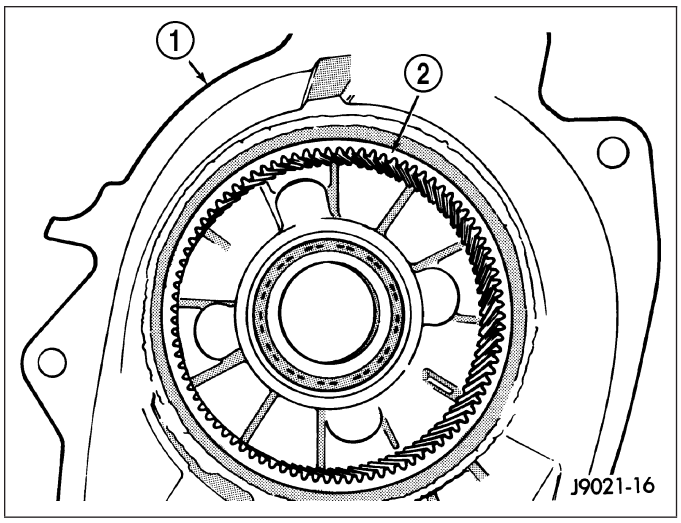

FRONT AND REAR CASES

Inspect the cases for wear and damage.

Check case condition. If leaks were a problem, look for gouges and severe scoring of case sealing surfaces. Also make sure the front case mounting studs are in good condition.

Check the front case mounting studs and vent tube. The tube can be secured with Loctite™ 271 or 680 if loose. The stud threads can be cleaned up with a die if necessary. Also check condition of the fill/drain plug threads in the rear case. The threads can be repaired with a thread chaser or tap if necessary. Or the threads can be repaired with Helicoil® stainless steel inserts if required.

OIL PUMP/OIL PICKUP

Examine the oil pump pickup parts. Replace the pump if any part appears to be worn or damaged. Do not disassemble the pump as individual parts are not available. The pump is only available as a complete assembly. The pickup screen, hose, and tube are the only serviceable parts and are available separately.

ASSEMBLY

BEARINGS AND SEALS

1. Remove the input shaft bearing (1) from the front case (2) with suitable snap-ring pliers.
2. Transfer the retaining ring to the new bearing if necessary and install the bearing into the front case.

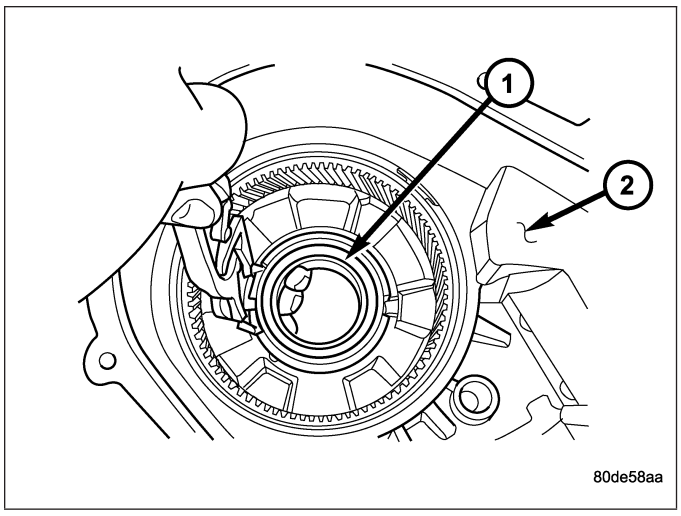

3. Using Installer 6436 (2) and Handle C-4171 (3), remove front output shaft bearing.
4. Start front output shaft bearing in case. Then seat bearing with Handle C-4171 and Installer 6953.
5. Install front output shaft bearing retaining ring.

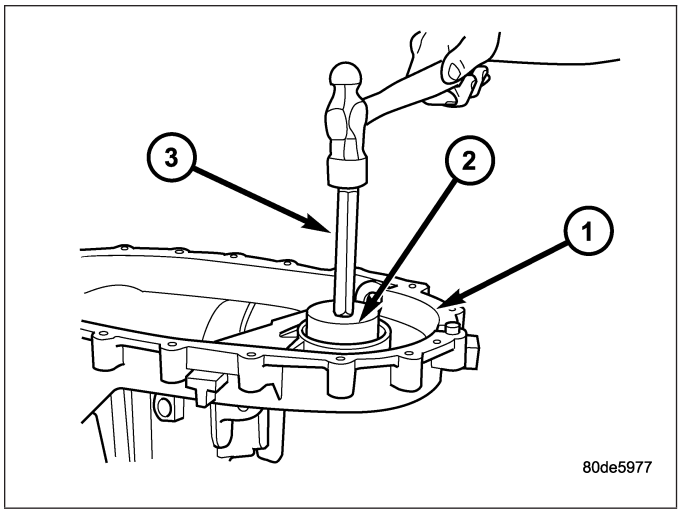

6. Remove input gear (2) pilot bearing by inserting a suitably sized drift (1) into the splined end of the input gear and driving the bearing out with the drift and a hammer.
7. Install new pilot bearing with Remover/Installer 8684.

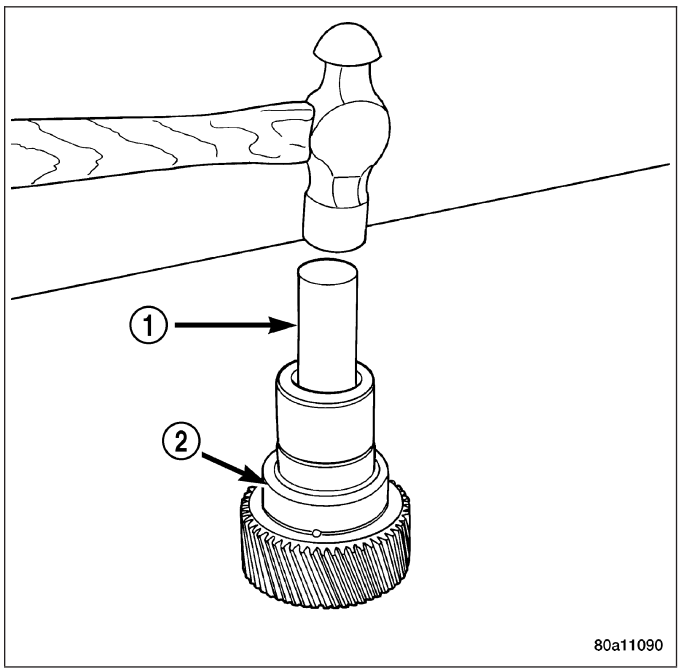

8. Remove the front output shaft rear bearing with the screw and jaws from Remover L-4454 (2) and Cup 8148 (3).

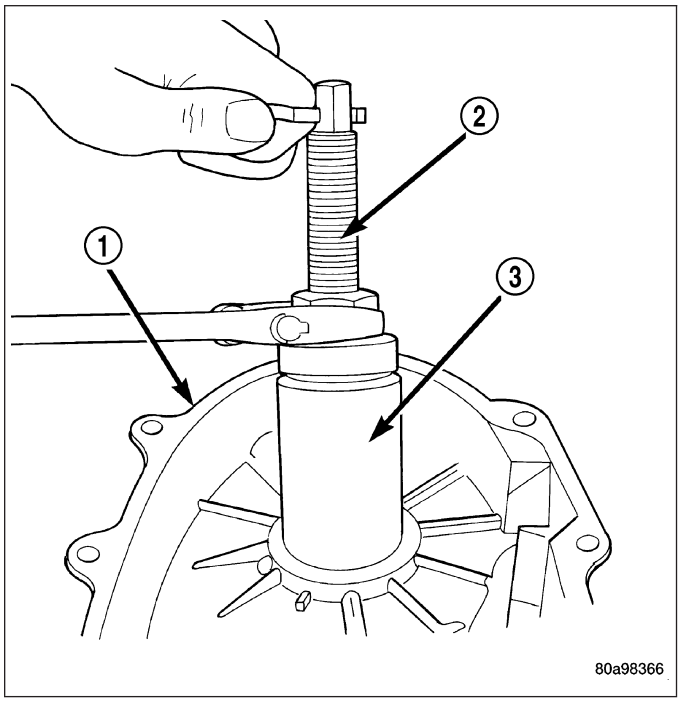

9. Install new bearing with Tool Handle C-4171 and Installer 5066.

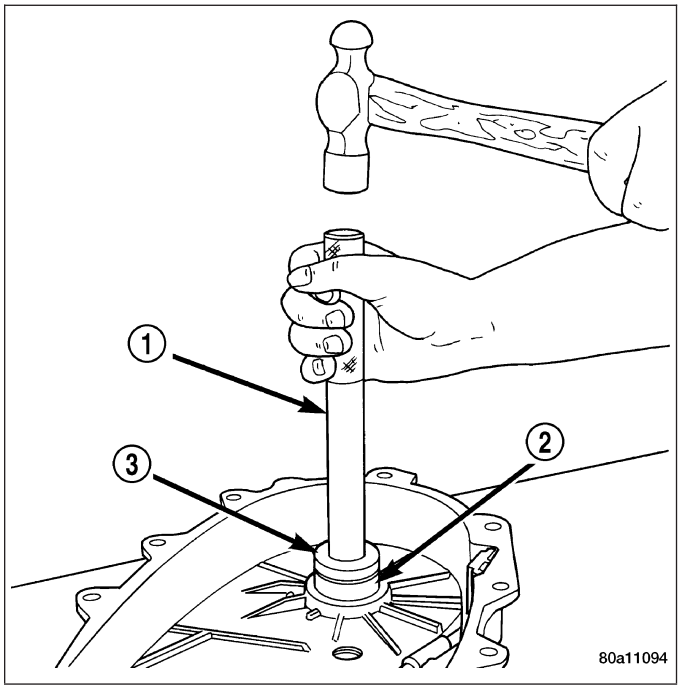

10. The bearing bore is chamfered at the top. Install the bearing (1) so it is flush with the lower edge of this chamfer (2).

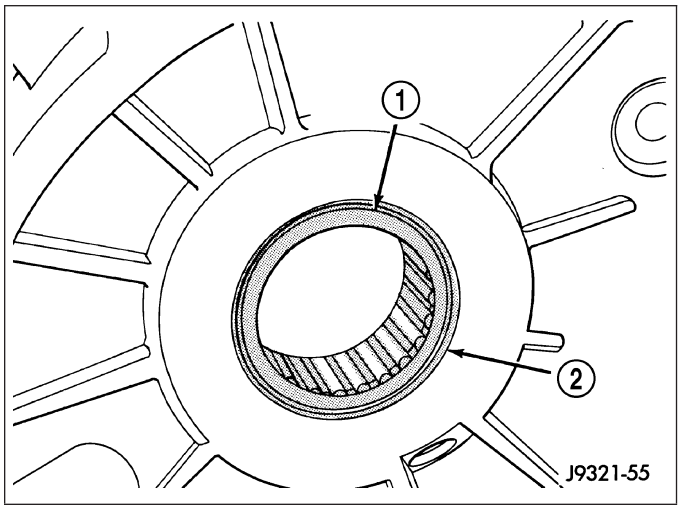

11. Remove the rear output shaft bearing from the rear case (1) using Remover/Installer 8684 (2)and Handle C-4171 (3).

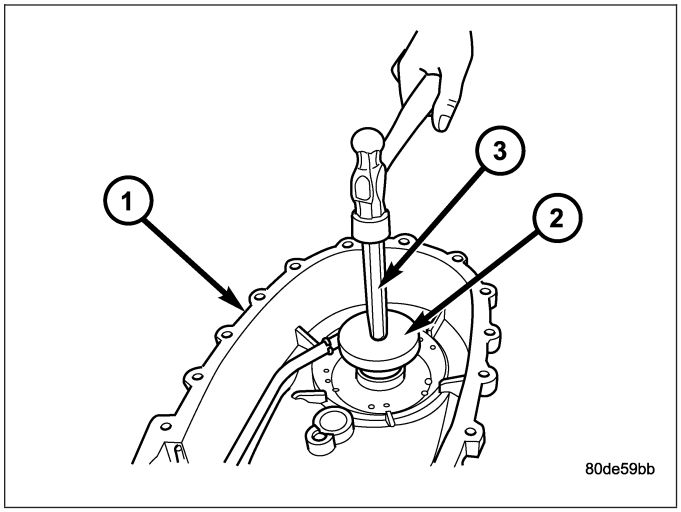

12. Install the rear output shaft bearing into the rear case (1) using Remover/Installer 6953 (2) and Handle C-4171 (3).

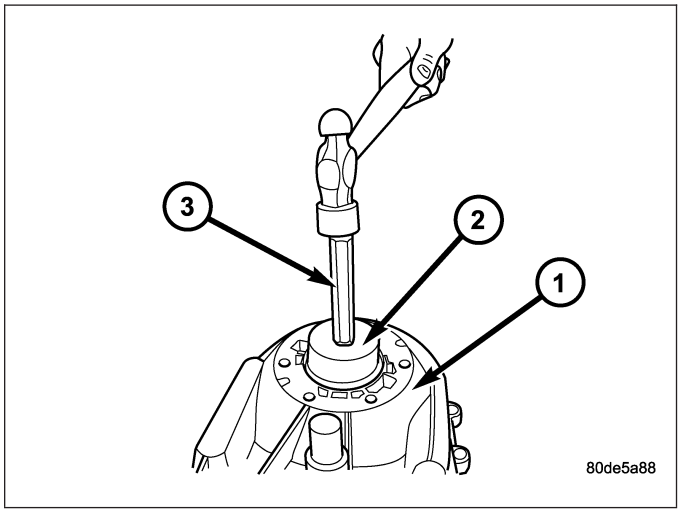

INPUT AND PLANETARY GEAR

1. Lubricate gears (4) and thrust washers (5) with recommended transmission fluid.
2. Install first thrust washer in low range gear (5). Be sure washer tabs are properly aligned in gear notches.
3. Install input gear (3) in low range gear (4). Be sure input gear is fully seated.
4. Install remaining thrust washer (5) in low range gear (4) and on top of input gear (3). Be sure washer tabs are properly aligned in gear notches.
5. Install retainer (2) on input gear and install snap-ring (1).

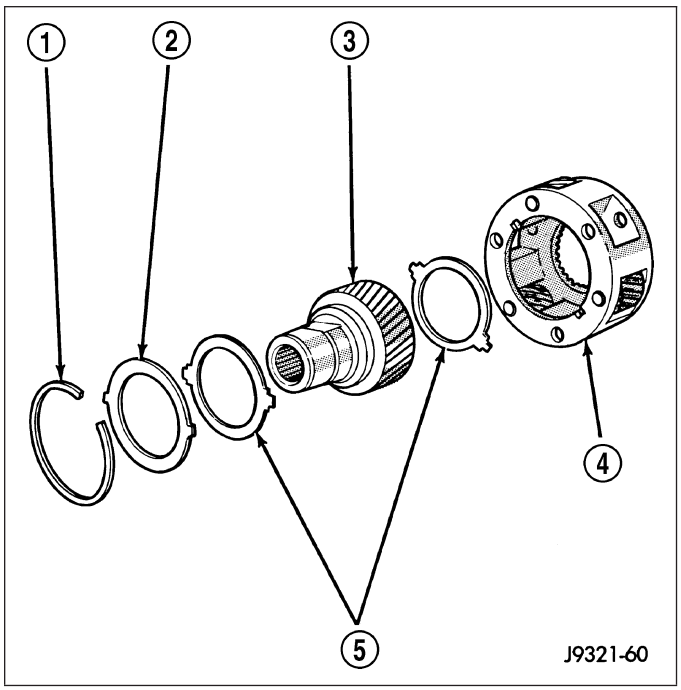

6. Align and install low range/input gear assembly (2) in front case (1). Be sure low range gear pinions are engaged in annulus gear and that input gear shaft is fully seated in front bearing.

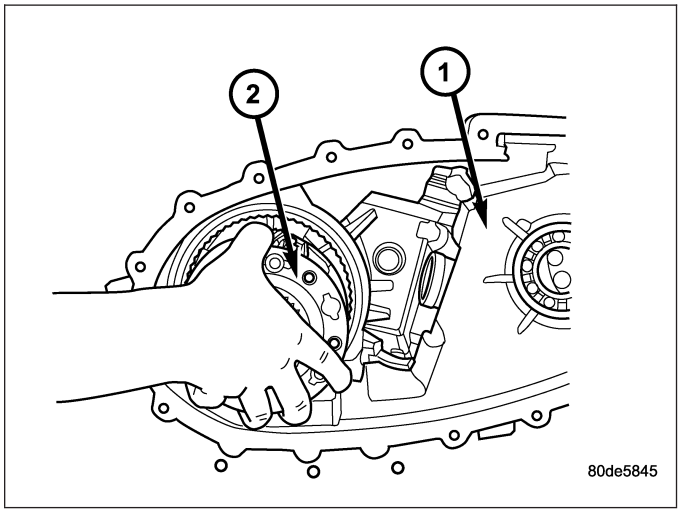

7. Install snap-ring (2) to hold input/low range gear (1) into front bearing.
8. Install a new input gear seal using Installer 8841 and Handle C-4171.

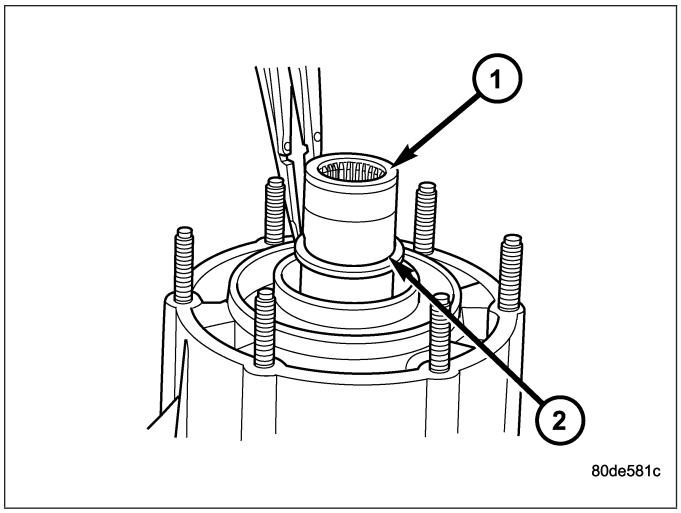

SHIFT FORKS AND MAINSHAFT

1. Lubricate mainshaft splines with recommended transmission fluid.
2. Install the mode hub (2) onto the output shaft (1).

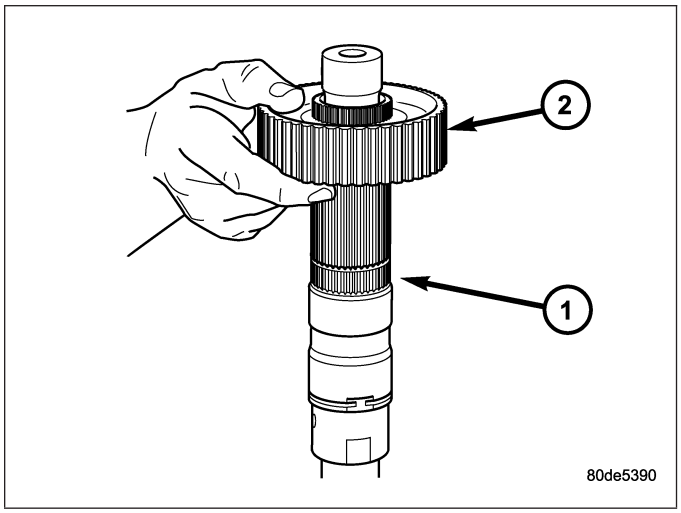

3. Install the mode hub retaining ring (2) onto the output shaft (1).

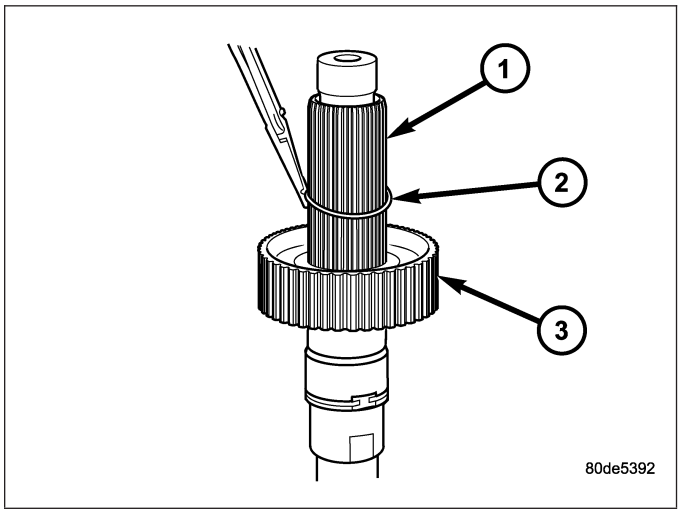

4. Install the sprocket hub (2) onto the output shaft (1).

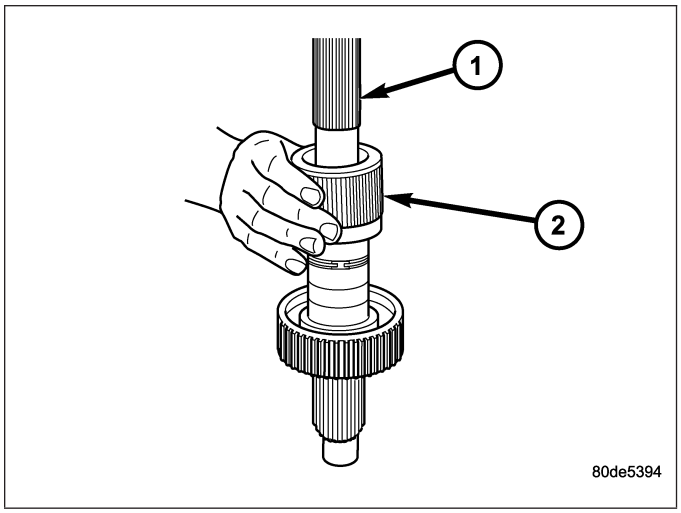

5. Install the clutch gear (2) onto the output shaft (1).

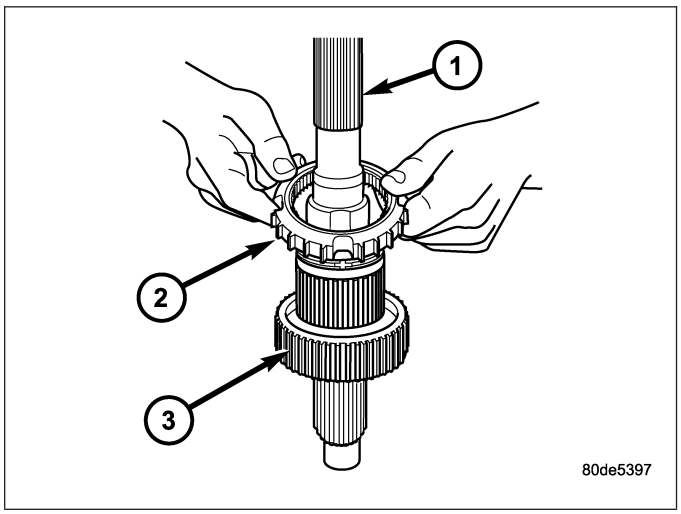

6. Install the drive sprocket (2) onto the output shaft (1).

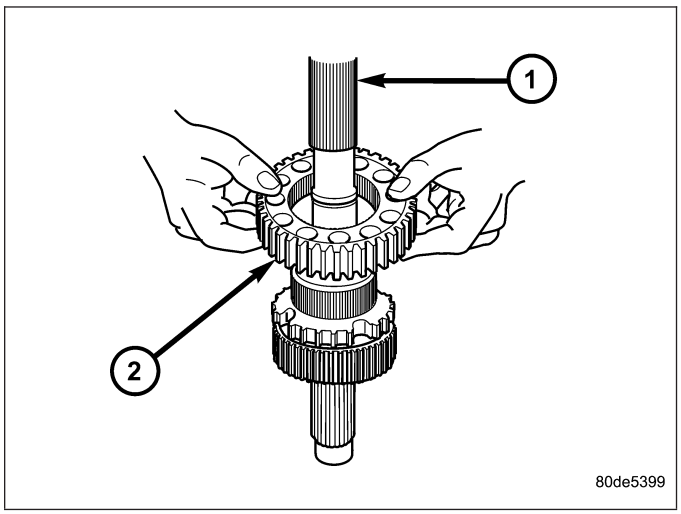

7. Install the drive sprocket (3) thrust washer (2) onto the output shaft (1).

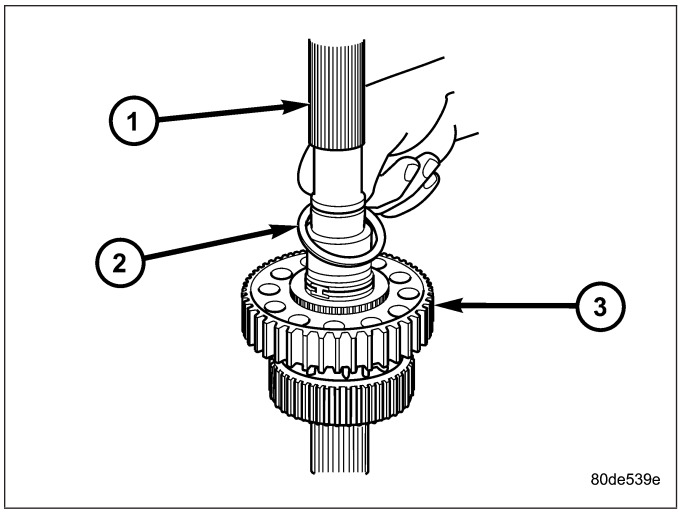

8. Install the drive sprocket (2) retaining ring (2) onto the output shaft (1).

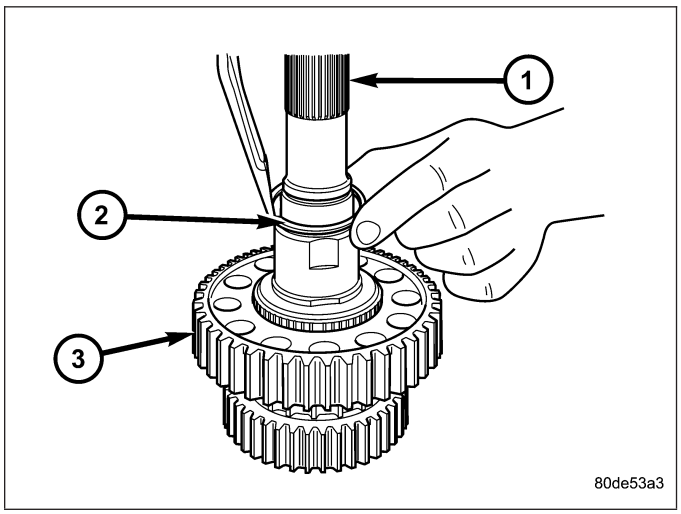

9. Lubricate sector shaft (1) with transmission fluid and install shift sector in case. Position slot in sector so it will be aligned with shift fork pin when shift forks are installed.

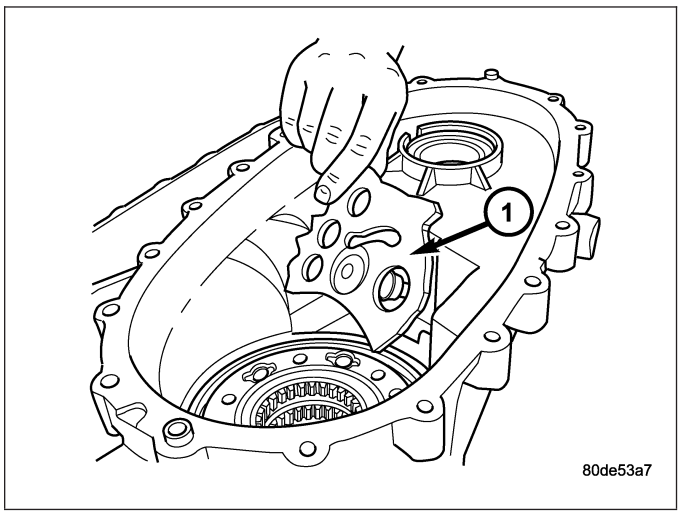

10. Install the shift sector o-ring.
11. Assemble and install range fork (2)and hub (1). Be sure hub is properly seated in low range gear and engaged to the input gear.
12. Align and insert range fork pin in shift sector slot.
13. Install the range fork retaining ring.

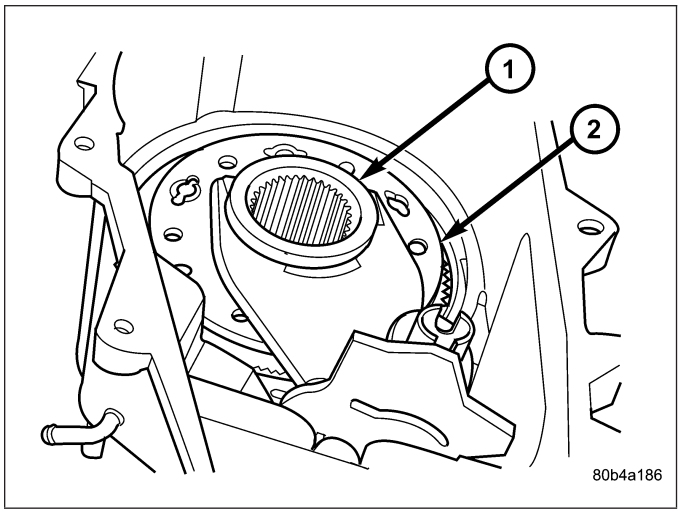

14. Install mode fork and shift rail onto the mode sleeve.
15. Install the mode fork (2), sleeve (1), and shift rail (2) into the transfer case.

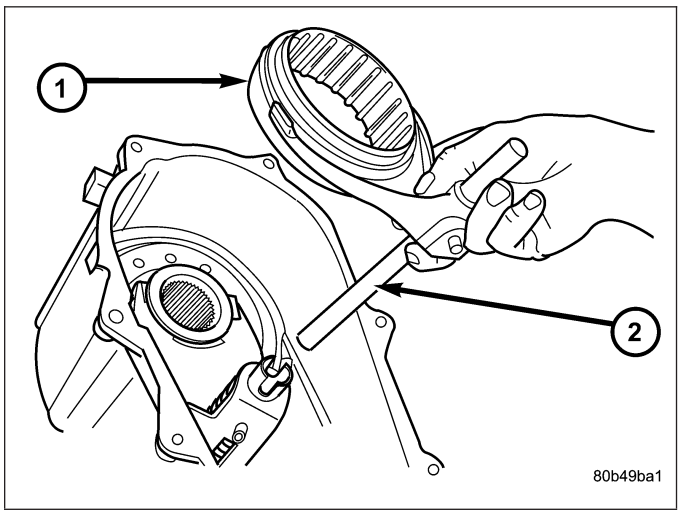

16. Install mainshaft (2) into the transfer case front housing (1). Guide mainshaft through the mode and range sleeves and into the input gear.

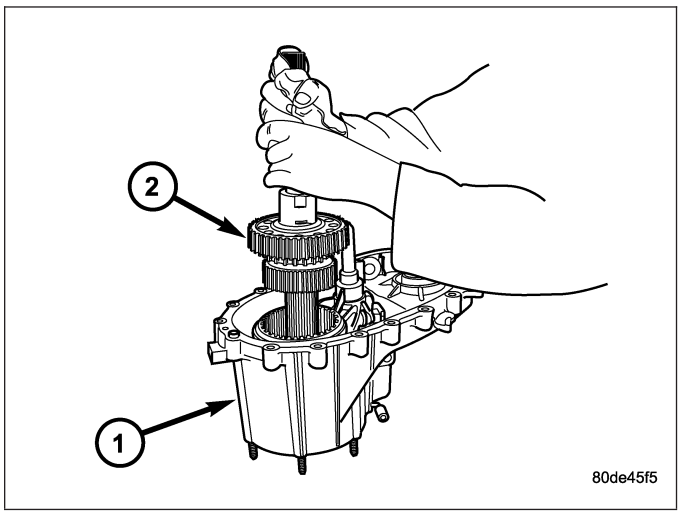

17. Install new o-ring (1) on detent plug (2).

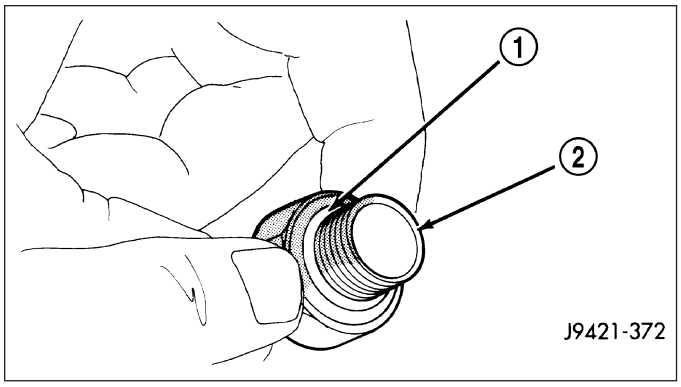

18. Install detent plunger (4), spring (3), and plug (2). Tighten the plug to 16-25 N·m (12-18 ft. lbs.).

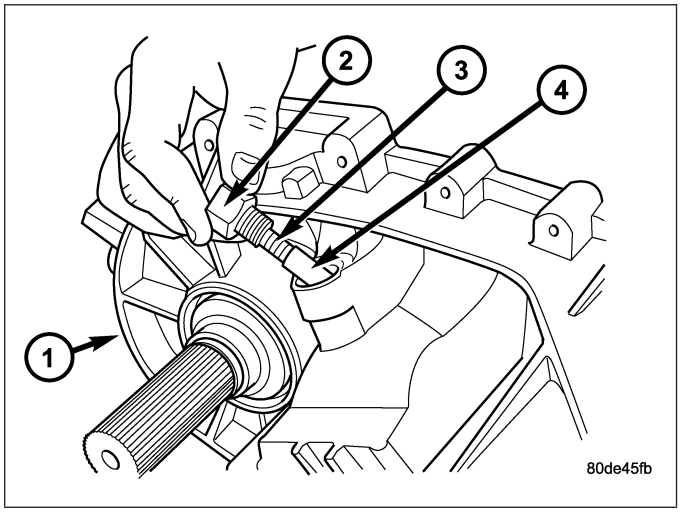

FRONT OUTPUT SHAFT AND DRIVE CHAIN

1. Install the front output shaft (2) into the front output shaft bearing.

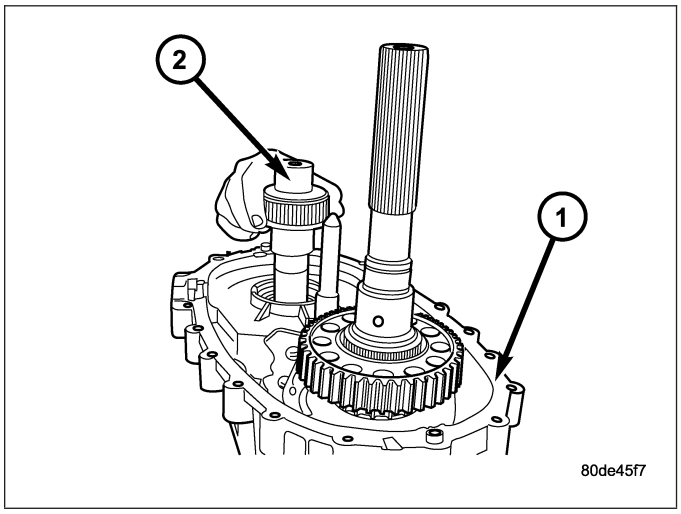

2. Install the front output shaft retaining ring (2) onto the output shaft (1).
3. Install the new front output shaft seal with Installer MB991168A.

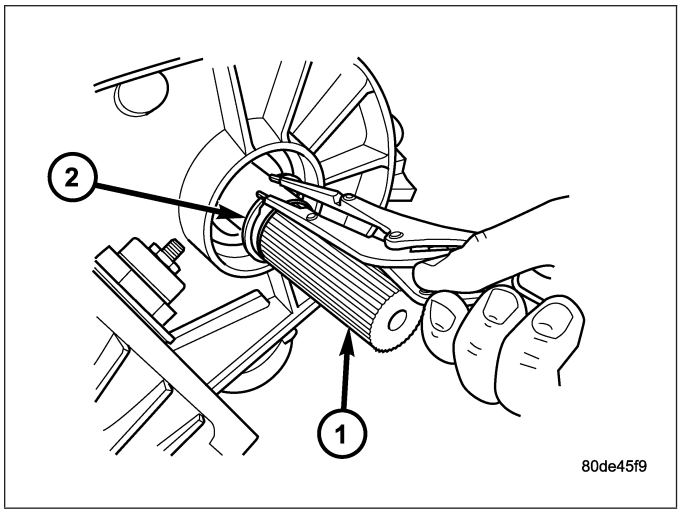

4. Insert front sprocket (1) in drive chain (2).
5. Install drive chain (2) around mainshaft sprocket. Then position front sprocket over front shaft.
6. Raise mainshaft about 2.54 cm (one inch) and seat front sprocket on front output shaft.

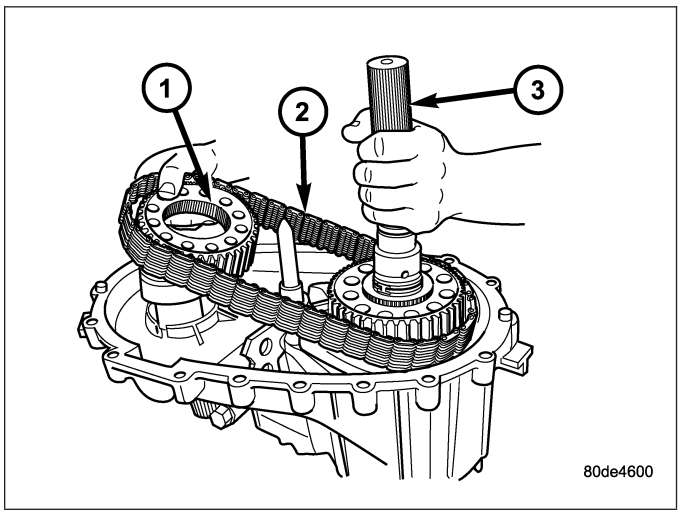

7. If mainshaft and mode sleeve were unseated during chain installation, align and reseat mainshaft in input gear and hub.
8. Install front sprocket (1) retaining ring (2).

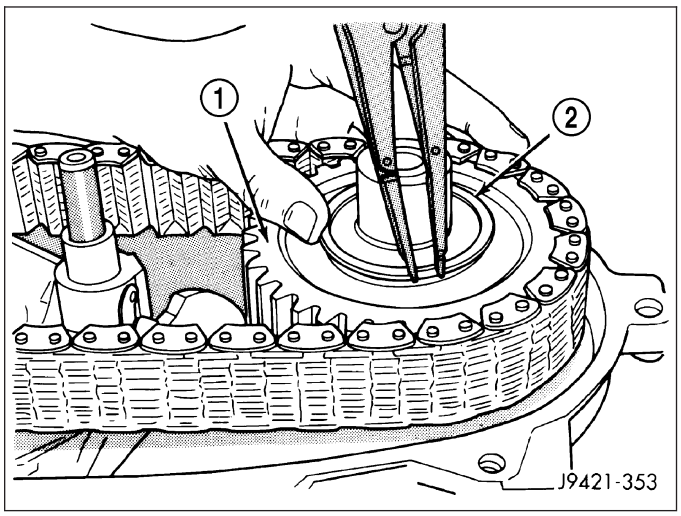

9. Install spring (2) and cup (1) on shift rail.

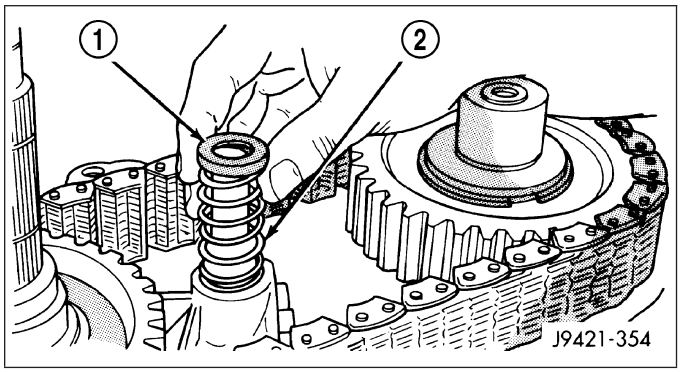

10. Insert magnet (1) in front case pocket (2).

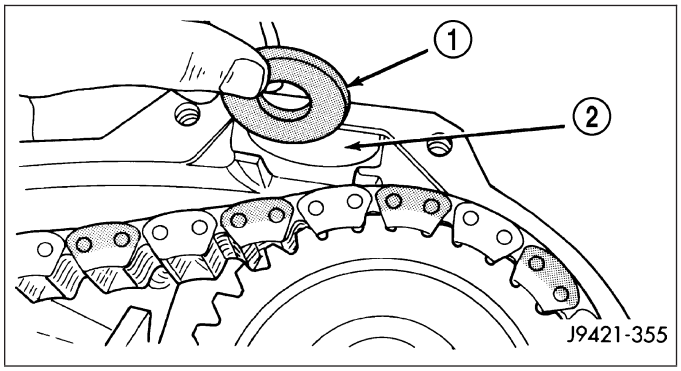

OIL PUMP AND REAR CASE

Lubricate the oil pump components with transmission fluid before installation. Prime the oil pickup tube by pouring a little oil into the tube before installation.

CAUTION: Do not remove the bolts holding the oil pump cover to the rear case half. The oil pump cover is aligned to the rear output shaft inner bearing race and will become mis-aligned if the bolts are loosened. If the transfer case failure has generated any debris which may have become trapped in the oil pump. the rear case and oil pump assembly MUST be replaced.

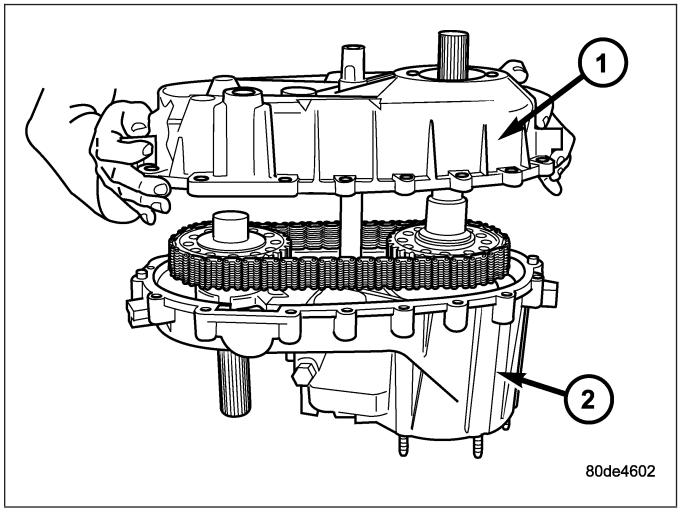

1. Install new o-ring in pickup tube inlet of oil pump.
2. Insert oil pickup tube into the oil pump.
3. Apply bead of Mopar® Gasket Maker, or equivalent, to mating surface of front case. Keep sealer bead width to maximum of 3/16 inch. Do not use excessive amount of sealer as excess will be displaced into case interior.
4. Align oil pump with mainshaft and align shift rail with bore in rear case. Then install rear case (1) and oil pump assembly onto the front case (2).

5. Install 4-5 rear case (1)-to front case (2) bolts (3) to hold rear case in position. Tighten bolts snug but not to specified torque at this time.

CAUTION: Verify that shift rail, and case alignment dowels are seated before installing any bolts. Case could be cracked if shaft rail or dowels are misaligned.

6. Apply Loctite™ 242 to remainder of rear case-to-front case bolt threads and install bolts. Tighten bolts to 20-27 N·m (15-24 ft. lbs.).

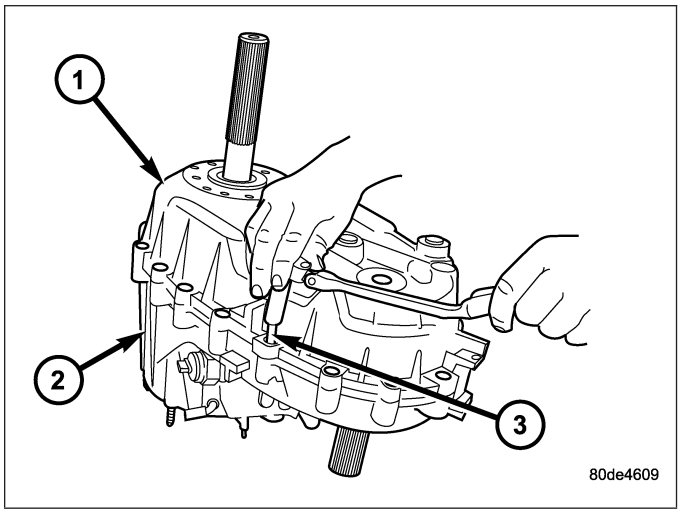

7. Install rear output bearing (2) snap-ring (3) to output shaft (1).

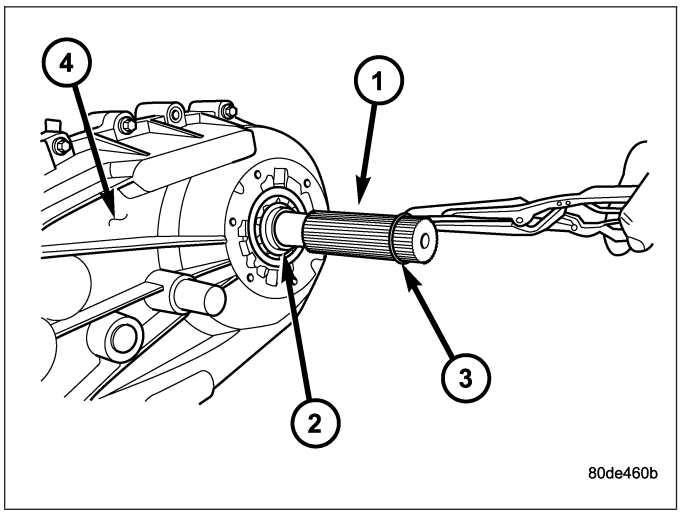

SEAL BOOT AND SHIFT MOTOR ASSEMBLY

1. Install the front output shaft seal slinger with Installer 8840. Install the slinger onto the shaft until the tool contacts the rear of the output shaft.
2. Install a new seal boot clamp onto the seal boot.
3. Install the seal boot and clamp onto the slinger hub and tighten the clamp with Crimp Tool C-4975-A.
4. Position the shift motor and mode sensor assembly onto the transfer case.
5. Install the bolts to hold the shift motor and mode sensor assembly to the transfer case. Tighten the bolts to 16-25 N·m (12-18 ft. lbs.).

REAR EXTENSION

1. Install new seal in rear extension housing seal with Installer D-163 and Handle C-4171..
2. Apply bead of Mopar® Gasket Maker, or equivalent, to mating surface of rear extension housing. Keep sealer bead width to maximum of 3/16 inch. Do not use excessive amount of sealer as excess could be displaced into output bearing.
3. Align and install rear extension (1) on the transfer case (2).
4. Apply Mopar® Silicone Sealer to threads of rear extension housing bolts. Then install and tighten bolts to 16-24 N·m (12-18 ft. lbs.) torque.

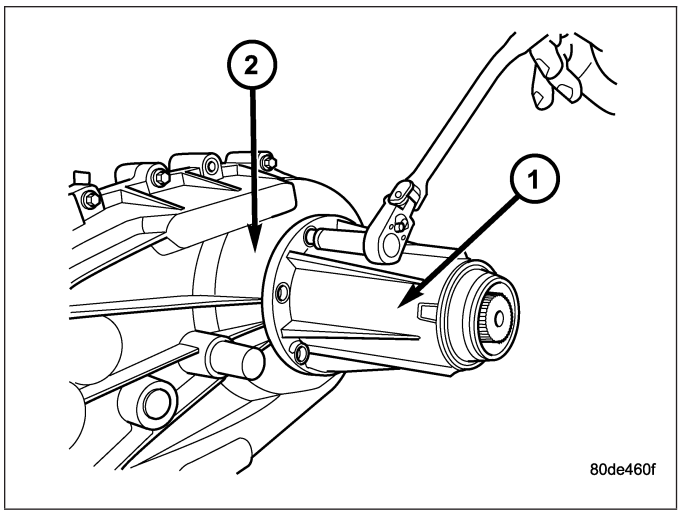

INSTALLATION

1. Mount transfer case on a transmission jack.
2. Secure transfer case to jack with chains.
3. Position transfer case under vehicle.
4. Align transfer case and transmission shafts and install transfer case onto the transmission.
5. Install and tighten transfer case attaching nuts to 27-34 N·m (20-25 ft. lbs.) torque.
6. Connect the vent hose.
7. Connect the shift motor and mode sensor wiring connectors. Secure wire harness to clips on transfer case.
8. Align and connect the propeller shafts. (Refer to 3 - DIFFERENTIAL & DRIVELINE/PROPELLER SHAFT/FRONT PROPELLER SHAFT - INSTALLATION) (Refer to 3 - DIFFERENTIAL & DRIVELINE/PROPELLER SHAFT/REAR PROPELLER SHAFT - INSTALLATION)
9. Fill transfer case with correct fluid. (Refer to 21 - TRANSMISSION/TRANSFER CASE/FLUID - STANDARD PROCEDURE)
10. Install skid plate, if equipped.
11. Remove transmission jack and support stand.
12. Lower vehicle and verify transfer case shift operation.

SPECIFICATIONS

TRANSFER CASE - NV243

TORQUE SPECIFICATIONS

DESCRIPTION	N-m	Ft. Lbs.	In. Lbs.
Plug, Detent	16-24	12-18	-
Plug, Drain/Fill	20-34	15-25	-
Bolt, Extension Housing	16-24	12-18	-
Bolt, Case Half	20-27	15-24	-
Screw, Oil Pump	12-16	8-12	-
Nuts, Mounting	30-41	20-30	-
Bolts, Shift Motor and Mode Sensor Assembly	16-24	12-18	-

SPECIAL TOOLS

TRANSFER CASE - NV243

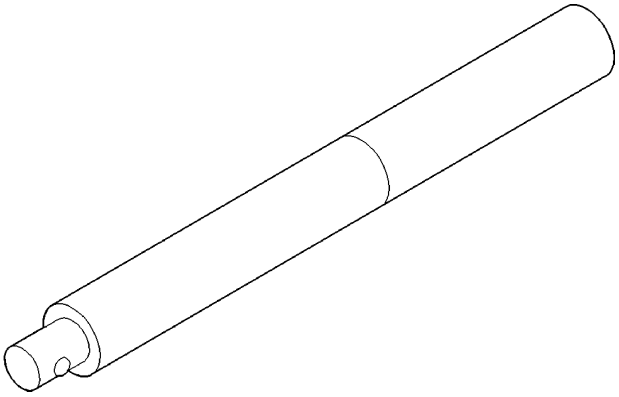

Handle - C-4171

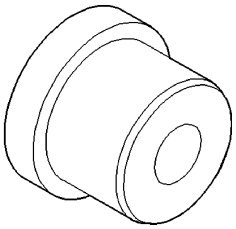

Installer, Bushing - 5066

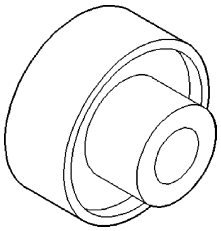

Installer, Bearing - 6953

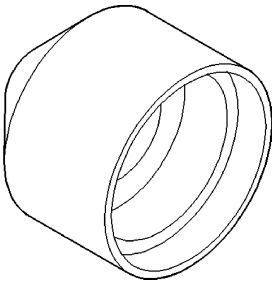

Installer, Seal - D-163

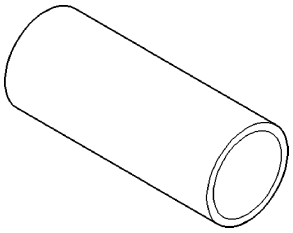

Cup - 8148

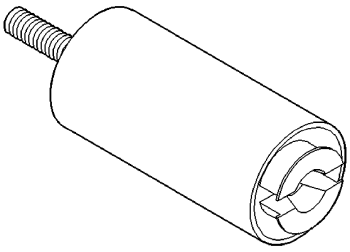

Tool Set - L-4518

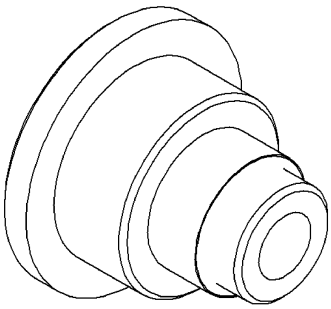

Installer, Bearing - 8684

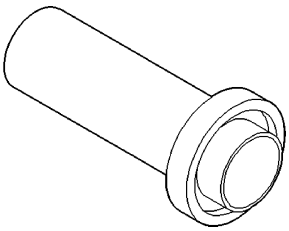

Installer, Seal - MB991168A

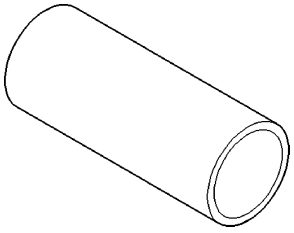

Installer - 8840

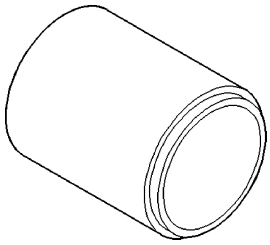

Installer, Seal - 8841

SEAL-EXTENSION HOUSING

REMOVAL

1. Raise and support vehicle.
2. Remove rear propeller shaft. (Refer to 3 - DIFFERENTIAL & DRIVELINE/PROPELLER SHAFT/PROPELLER SHAFT - REMOVAL)
3. Using a suitable pry tool or slide-hammer mounted screw, remove the extension housing seal.

INSTALLATION

1. Clean fluid residue from sealing surface and inspect for defects.
2. Using Installer D-163 (2) and Handle C-4171 (1), install seal in extension housing.
3. Install propeller shaft. (Refer to 3 - DIFFERENTIAL & DRIVELINE/PROPELLER SHAFT/PROPELLER SHAFT - INSTALLATION)
4. Verify proper transfer case fluid level.
5. Lower vehicle.

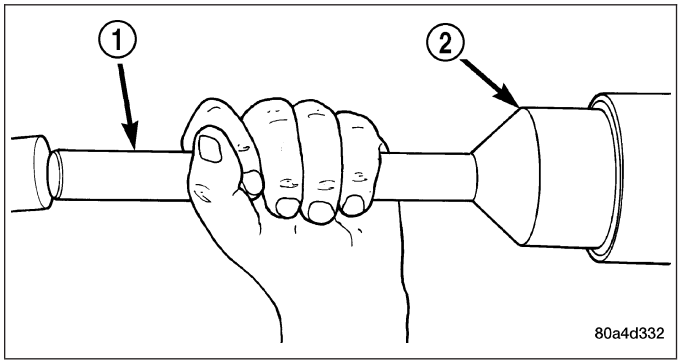

FLUID

STANDARD PROCEDURE - FLUID DRAIN AND REFILL

The fill (2) and drain (3) plugs are both in the rear case.

1. Raise vehicle.
2. Position drain pan under transfer case.

NOTE: It may be necessary to remove the exhaust y-pipe at the exhaust manifold to properly access the fill and drain plugs. Lowering the exhaust will allow the plugs to be accessed for torquing during installation. (Refer to 11 - EXHAUST SYSTEM/EXHAUST PIPE - REMOVAL)

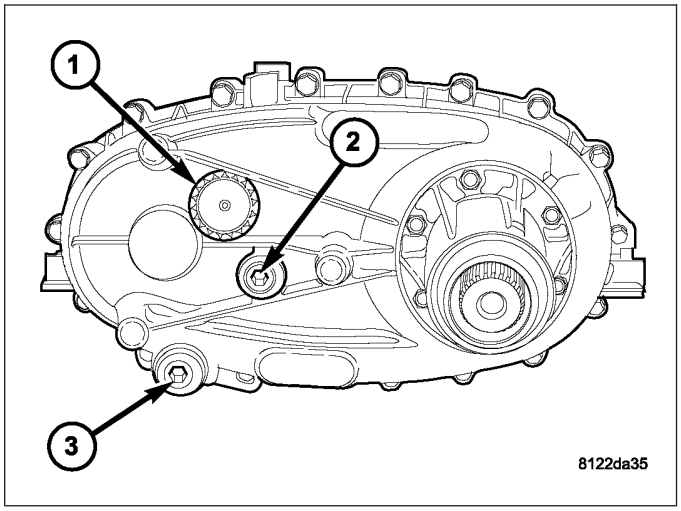

3. Remove drain and fill plugs and drain lubricant completely.
4. Install drain plug. Tighten plug to 20-34 N·m (15-25 ft. lbs.).
5. Remove drain pan.
6. Fill transfer case to bottom edge of fill plug opening with Mopar® ATF +4, Automatic Transmission fluid.
7. Install and tighten fill plug to 20-34 N·m (15-25 ft. lbs.).
8. Install the exhaust y-pipe to the exhaust manifold, if removed. (Refer to 11 - EXHAUST SYSTEM/EXHAUST PIPE - INSTALLATION)
9. Wipe any excess fluid that may have spilled onto the exhaust.
10. Lower vehicle.

SEAL-FRONT OUTPUT SHAFT

REMOVAL

1. Remove the front propeller shaft (Refer to 3 - DIFFERENTIAL & DRIVELINE/PROPELLER SHAFT/PROPELLER SHAFT - REMOVAL).
2. Remove the front propeller shaft seal boot (1) retaining clamp (2).

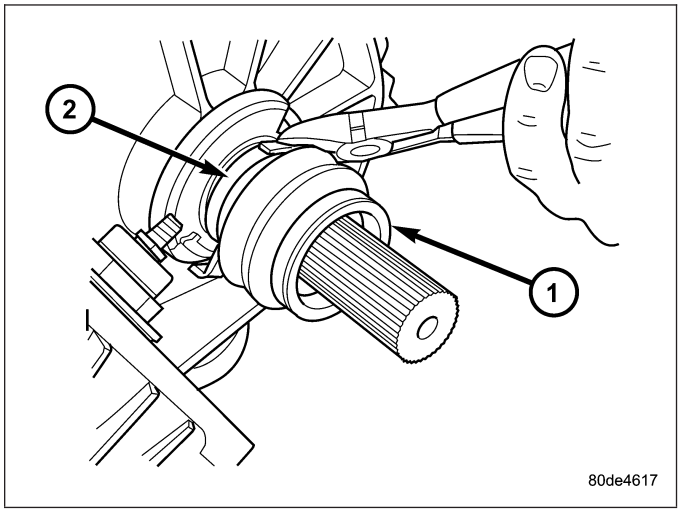

3. Remove the front propeller shaft seal boot (1).

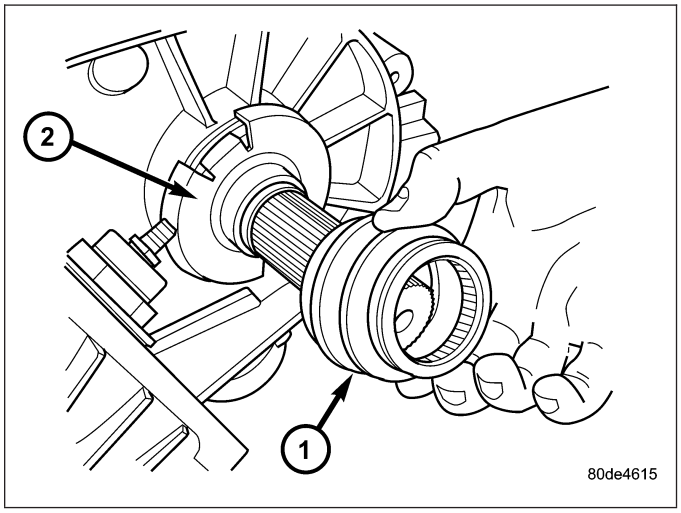

4. Remove the front output shaft seal slinger (1) by bending (2) the slinger ears away from the transfer case.

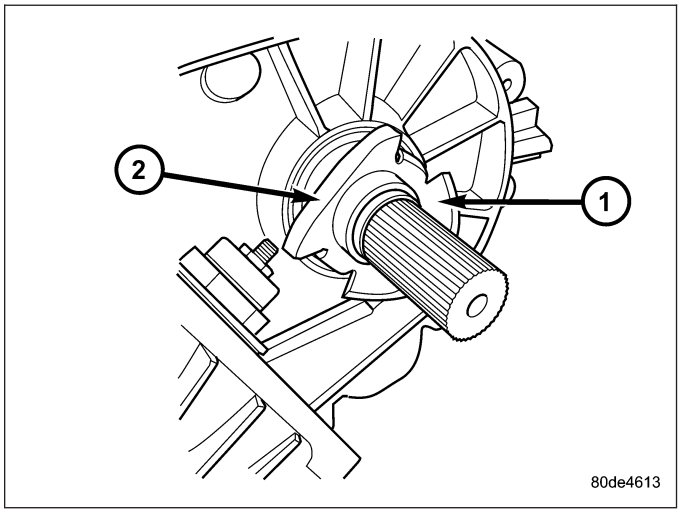

5. Using a suitable pry tool (2), remove the slinger (1) from the output shaft using care not to damage the shaft.
6. Using a screw and a slide hammer, remove the front output shaft seal.

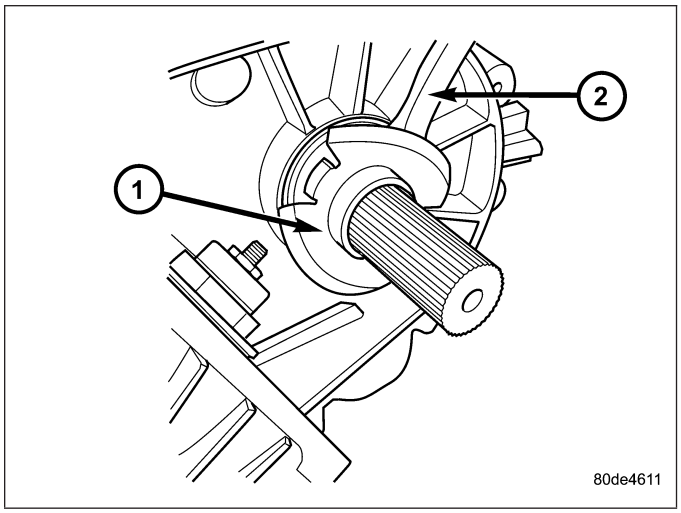

INSTALLATION

1. Install the new front output shaft seal with Installer MB991168A.
2. Install the front output shaft seal slinger with Installer 8840. Install the slinger onto the shaft until the tool contacts the rear of the output shaft.
3. Install a new seal boot clamp onto the seal boot.
4. Install the seal boot and clamp onto the slinger hub and tighten the clamp with Crimp Tool C-4975-A.
5. Install front propeller shaft (Refer to 3 - DIFFERENTIAL & DRIVELINE/PROPELLER SHAFT/PROPELLER SHAFT - INSTALLATION).

SENSOR-MODE

DESCRIPTION

The transfer case mode sensor (1) is an electronic device whose output can be interpreted to indicate the shift motor shaft's rotary position. The sensor consists of a magnetic ring and four Hall Effect Transistors to create a 4 channel digital device (non-contacting) whose output converts the motor shaft position into a coded signal. The TCCM must supply 5VDC (+/- 0.5v) to the sensor and monitor the shift motor position. The four channels are denoted A, B, C, and D. The sensor is mechanically linked to the shaft of the cam which causes the transfer case shifting. The mode sensor draws less than 53 mA.

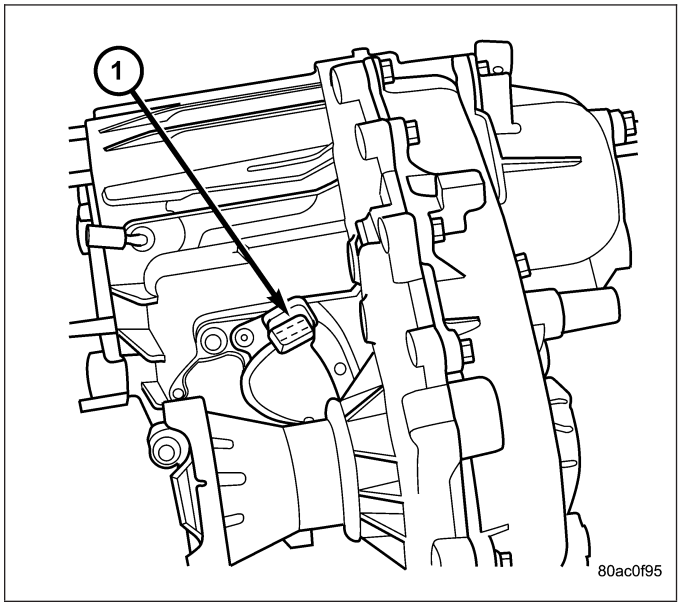

OPERATION

During normal vehicle operation, the Transfer Case Control Module (TCCM) monitors the mode sensor outputs at least every 250 (+/-50) milliseconds when the shift motor is stationary and 400 microseconds when the shift motor is active. A mode sensor signal between 3.8 Volts and 0.8 Volts is considered to be undefined.

Refer to SECTOR ANGLES vs. TRANSFER CASE POSITION for the relative angles of the transfer case shift sector versus the interpreted transfer case gear operating mode. Refer to MODE SENSOR CHANNEL STATES for the sensor codes returned to the TCCM for each transfer case mode sensor position. The various between gears positions can also be referred as the transfer case's coarse position. These coarse positions come into play during shift attempts.

SECTOR ANGLES vs. TRANSFER CASE POSITION

Shaft Angle (Degrees)	Transfer Case Position
+40	4LO
+20	N
0	2WD/AWD
-20	4HI

MODE SENSOR CHANNEL STATES

Transfer Case Angle (degrees)	Sensor Channel A	Sensor Channel B	Sensor Channel C	Sensor Channel D
Between Gears	H	H	L	H
+40 (4LO)	H	H	L	L
Between Gears	H	H	L	H
Between Gears	H	L	L	H
+20 (NEUTRAL)	H	L	L	L
Between Gears	H	L	L	H
Between Gears	H	L	H	H
0 (2WD/AWD)	H	L	H	L
Between Gears	H	L	H	H
Between Gears	L	L	H	H
-20 (4HI)	L	L	H	L
Between Gears	L	L	H	H
Between Gears	L	H	H	H

SWITCH-SELECTOR

DESCRIPTION

The selector switch assembly (1) is mounted in the left side of the vehicle's Instrument Panel (IP) and consists of a rotary knob connected to a resistive network for the mode and range shift selections. Also located in this assembly is a recessed, normally open momentary switch for making shifts into and out of transfer case NEUTRAL. A pen, or similar instrument, is used to make a NEUTRAL shift selection, thus reducing the likelihood of an inadvertent shift request.

The selector switch also contains four light emitting diode's (LED's) to indicate the transfer case position and whether a shift is in progress.

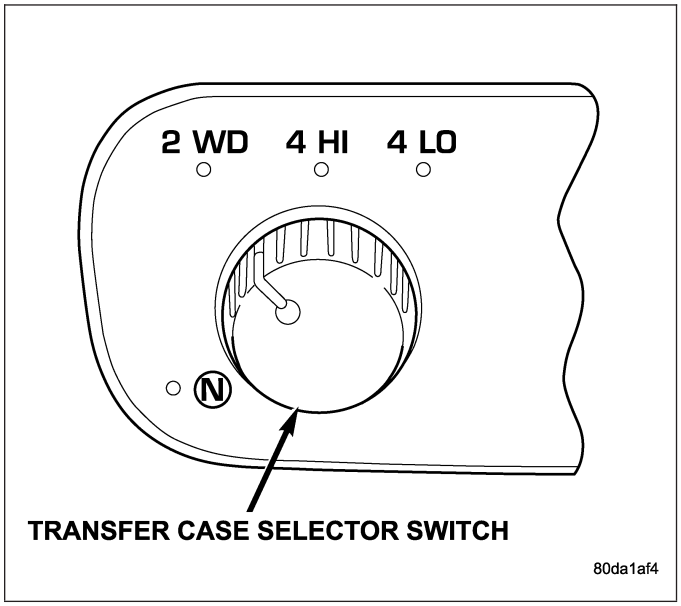

OPERATION

As the position of the selector switch varies, the resistance between the Mode Sensor supply voltage pin and the Mode Sensor output will vary. Hardware, software, and calibrations within the Transfer Case Control Module (TCCM) are provided that interpret the selector switch resistance as given in the table below: SELECTOR SWITCH INTERPRETATION

SELECTOR SWITCH INTERPRETATION

Step	Resistance Range (ohms)	Required Interpretation
A	<200	Shorted
B	400-700	NEUTRAL
C	1050-1450	4LO
D	1850-2300	4HI
E	3050-5950	2WD (Default)
F	9.5-12.5K	In between positions
G	>15.5K	Open

For resistances between the ranges B-E shown for each valid position (T-Case NEUTRAL, 4LO, 4HI, 2WD), the TCCM may interpret the resistance as:

- either of the neighboring valid positions.
- as an invalid fault position.

For resistances between the ranges E and F shown for 2WD and in-between positions, the TCCM may interpret the resistance as:

- the 2WD position.
- an invalid fault position.
- a valid in-between position.

For resistances between the ranges F and G shown for in-between positions and fault condition (open), the TCCM may interpret the resistance as:

- a valid in-between position.
- an invalid fault position.

For resistances between the ranges A and B shown for the fault condition (short) and , T-Case NEUTRAL, the TCCM may interpret the resistance as:

- the T-Case NEUTRAL position.
- an invalid fault position.

The LED's in the selector assembly are illuminated/flashed in the following manner to indicate a particular condition or state.

- A solidly illuminated LED indicates a successfully completed shift and the current operating mode of the transfer case. While a shift has been requested but not yet completed, the LED for the desired transfer case position is flashed.
- A flashing operating mode LED for the desired gear indicates that a shift to that position has been requested, but all of the driver controllable conditions have not been met. This is in an attempt to notify the driver that the transmission needs to be put into NEUTRAL, the vehicle speed is too great, or some other condition outlined (other than a diagnostic failure that would prevent this shift) elsewhere (Refer to 8 - ELECTRICAL/ELECTRONIC CONTROL MODULES/TRANSFER CASE CONTROL MODULE - OPERATION) is not met. Note that this flashing will continue indefinitely until the conditions are eventually met, or the selector switch position is changed, or if diagnostic routines no longer allow the requested shift.
- If the driver attempts to make a shift into transfer case NEUTRAL, and any of the driver controllable conditions are not met, the request will be ignored until all of the conditions are met or until the NEUTRAL select button is released. Additionally the neutral lamp will flash, or begin to flash while the button is depressed and operator controllable conditions are not being met. All of the LED's except the Neutral will flash if any of the operator controllable conditions for shifting are not met while the Neutral button is depressed. This ″toggle″ type of feature is necessary because the TCCM would interpret another request immediately after the shift into transfer case NEUTRAL has completed.
- No LED's illuminated indicate a fault in the transfer case control system.

ASSEMBLY-SHIFT MOTOR/MODE SENSOR

DESCRIPTION

The shift motor (1) consists of a permanent magnet D.C. motor with gear reduction to convert a high speed-low torque device into a low speed-high torque device. The output of the device is coupled to a shaft which internally moves the mode and range forks that change the transfer case operating ranges. The motor is rated at 25 amps maximum at 72° F with 10 volts at the motor leads.

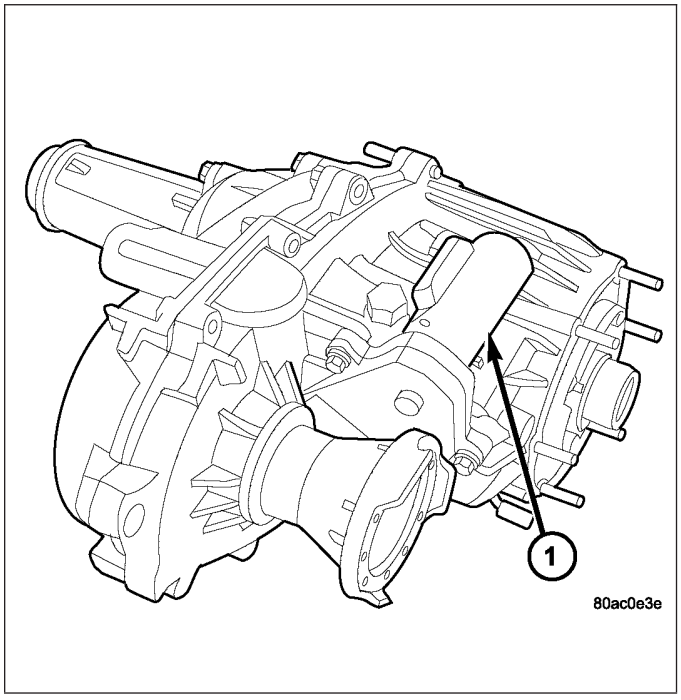

OPERATION

The transfer case shift motor responds to the Transfer Case Control Module (TCCM) commands to move the transfer case shift sector bi-directionally, as required, to obtain the transfer case operating mode indicated by the instrument panel mounted selector switch.

REMOVAL

NOTE: New shift motor assemblies are shipped in the 2WD/AWD position. If a new shift motor assembly will be installed, it will be necessary to shift the transfer case to the 2WD/AWD position prior to motor removal.

1. Raise the vehicle on a suitable hoist.
2. Disengage the wiring connectors from the shift motor and mode sensor.
3. Remove the bolts holding the shift motor and mode sensor assembly onto the transfer case.
4. Separate the shift motor and mode sensor assembly from the transfer case.

INSTALLATION

1. Verify that the shift sector o-ring is clean and properly positioned over the shift sector and against the transfer case.

NOTE: Verify that the shift motor position and sector shaft orientation are aligned. It may be necessary to manually shift the transfer case if the shift motor and sector shaft are not aligned.

2. Position the shift motor and mode sensor assembly onto the transfer case.
3. Install the bolts to hold the assembly onto the transfer case. Tighten the bolts to 16-24 N·m (12-18 ft.lbs.).

CAUTION: If the original shift motor and mode sensor assembly bolts are reused, be sure to use Mopar® Lock & Seal or Loctite™ 242 to replenish the lock patch material originally found on the bolts

4. Engage the wiring connectors to the shift motor and mode sensor.
5. Refill the transfer case as necessary.
6. Lower vehicle and verify transfer case operation.

TRANSFER CASE - NV244 GENII - SERVICE INFORMATION

TABLE OF CONTENTS

page

TRANSFER CASE - NV244 GENII - SERVICE INFORMATION
DESCRIPTION 1466
OPERATION 1467
DIAGNOSIS AND TESTING
TRANSFER CASE - NV244 1467
REMOVAL 1468
DISASSEMBLY 1468
CLEANING 1480
INSPECTION 1481
ASSEMBLY 1483
INSTALLATION 1496
SPECIFICATIONS
TRANSFER CASE - NV244 GENII 1497
SPECIAL TOOLS
TRANSFER CASE - NV244 GENII 1498
SEAL-EXTENSION HOUSING
REMOVAL 1499
INSTALLATION 1499
FLUID
STANDARD PROCEDURE - FLUID DRAIN AND REFILL 1499
SEAL-FRONT OUTPUT SHAFT
REMOVAL 1500
INSTALLATION 1501
SENSOR-MODE
DESCRIPTION 1501
OPERATION 1501
SWITCH-TRANSFER CASE SELECTOR
DESCRIPTION 1502
OPERATION 1502
ASSEMBLY-SHIFT MOTOR/MODE SENSOR
DESCRIPTION 1504
OPERATION 1504
REMOVAL 1504
INSTALLATION 1504

TRANSFER CASE - NV244 GENII - SERVICE INFORMATION

DESCRIPTION

The NV244 GENII is an electronically controlled full and part-time transfer case with no two wheel drive operation.

A differential in the transfer case is used to control torque transfer to the front and rear axles. A low range gear reduction system provides increased low speed torque capability for off road operation. The low range provides a 2.72:1 reduction ratio.

The geartrain is mounted in two aluminum case halves attached with bolts. The mainshaft front and rear bearings are mounted in aluminum retainer housings bolted to the case halves.

OPERATING RANGES

NV244 GENII operating ranges are:

- AWD(All-Wheel Drive)
- 4LOCK (Part-time)
- 4LO
- NEUTRAL

The AWD mode can be used at any time and on any road surface.

The 4LOCK (Part-time) and 4LO ranges are for off road use only. The only time these ranges can be used is when the road surface is covered with snow, ice, or other loose slippery material.

SHIFT MECHANISM

Operating ranges are selected with a dash mounted shift selector switch. The shift selector switch provides a input to the Transfer Case Control Module (TCCM) to indicate the driver's desire to change operating ranges. The TCCM uses this input, along with the input from the transfer case mounted mode sensor and information from the vehicle's bus, to determine if a shift is permitted. If the TCCM decides the shift is permitted, the TCCM controls the shift motor, mounted to the exterior of the transfer case, to perform the shift.

IDENTIFICATION

A circular ID (1) tag is attached to the rear case of each transfer case. The ID tag provides the transfer case model number, assembly number, serial number, and low range ratio.

The transfer case serial number also represents the date of build.

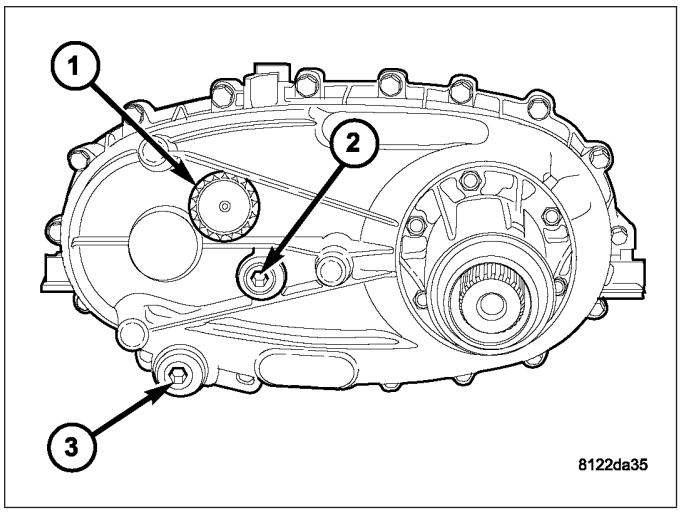

OPERATION

The input gear is splined to the transmission output shaft. The input gear drives the mainshaft through the planetary assembly and range sleeve. The front output shaft is operated by a drive chain that connects the shaft to a drive sprocket on the mainshaft. The drive sprocket is splined to a differential assembly. Depending on the position of the mode fork and sleeve, the front output shaft is driven directly by the mainshaft or through the differential. The mode fork operates the mode sleeve and hub. The sleeve and hub are not equipped with a synchronizer mechanism for shifting.

DIAGNOSIS AND TESTING

TRANSFER CASE - NV244

DIAGNOSIS CHART

CONDITION	POSSIBLE CAUSE	CORRECTION
Transfer case difficult to shift or will not shift into desired range.	1) Transfer case electronically controlled shift system malfunction.	1) Verify proper operation per the appropriate diagnostic manual.
	2) Insufficient or incorrect lubricant.	2) Drain and refill transfer case with the correct quantity of Mopar® ATF +4, Automatic Transmission Fluid.
	3) Internal transfer case components binding, worn, or damaged.	3) Repair or replace components as necessary.
Transfer case noisy in all drive modes.	1) Insufficient or incorrect lubricant.	1) Drain and refill transfer case with the correct quantity of Mopar® ATF +4, Automatic Transmission Fluid.
	2) Internal transfer case components binding, worn, or damaged.	2) Repair or replace components as necessary.

CONDITION	POSSIBLE CAUSE	CORRECTION
Transfer case noisy while in, or jumps out of, 4LO.	1) Transfer case not completely engaged in 4LO position.	1) While rolling 2-3 MPH and the transmission in NEUTRAL, or the clutch depressed on vehicles equipped with a manual transmission, shift the transfer case to the AWD or 4LOCK position, and then back into the 4LO position.
	2) Range fork damaged, inserts worn, or fork is binding on the shift rail.	2) Repair or replace components as necessary.
	3) Low range gear worn or damaged.	3) Repair or replace components as necessary.
Lubricant leaking from transfer case seals or vent.	1) Transfer case overfilled.	1) Drain lubricant to the correct level.
	2) Transfer case vent closed or restricted.	2) Clean or replace vent as necessary.
	3) Transfer case seals damaged or installed incorrectly.	3) Replace suspect seal.
Transfer case will not shift through 4LOCK (Part-time) range.	1) Incomplete shift due to drivetrain torque load.	1) Drive in a straight line and momentarily release the accelerator pedal to complete the shift.
	2) Incorrect tire pressure.	2) Correct tire pressure as necessary.
	3) Excessive tire wear.	3) Correct tire condition as necessary.
	4) Excessive vehicle loading.	4) Correct as necessary.

REMOVAL

1. Shift transfer case into AWD.
2. Raise vehicle.
3. Drain transfer case lubricant.
4. Mark front and rear propeller shafts for alignment reference.
5. Support transmission with jack stand.
6. Remove the transfer case skid plate, if equipped.
7. Disconnect front and rear propeller shafts at transfer case.
8. Disconnect transfer case shift motor and mode sensor wire connectors (3).
9. Disconnect transfer case vent hose.
10. Support transfer case with transmission jack.
11. Secure transfer case to jack with chains.
12. Remove nuts attaching transfer case to transmission (1).
13. Pull transfer case and jack rearward to disengage transfer case.
14. Remove transfer case from under vehicle.

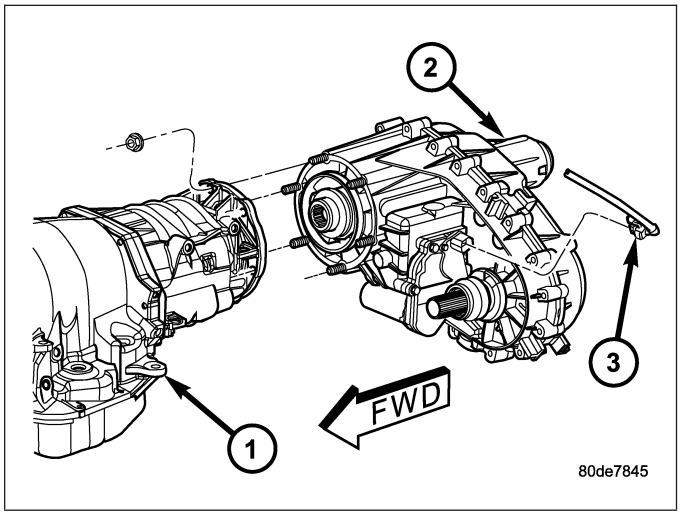

DISASSEMBLY

Position transfer case in a shallow drain pan. Remove drain plug and drain any remaining lubricant remaining in case.

SHIFT MOTOR ASSEMBLY AND FRONT OUTPUT SHAFT SEAL

1. Remove the bolts (3) which hold the shift motor and mode sensor assembly (2) to the transfer case (1).
2. Remove the shift motor and mode sensor assembly from the transfer case.

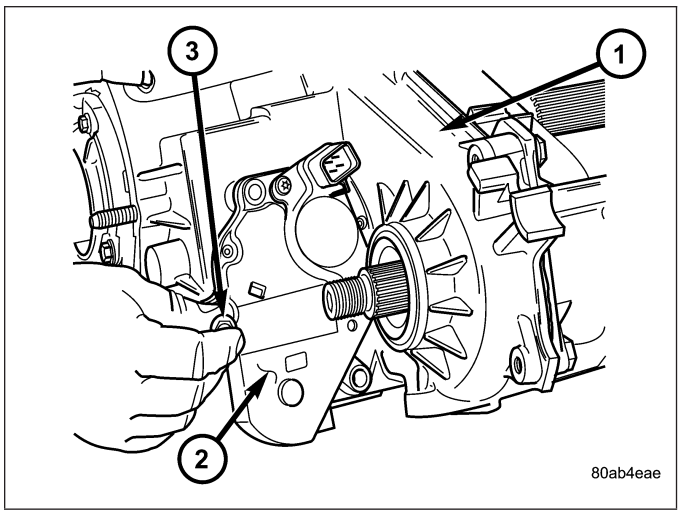

3. Remove the front propeller shaft seal boot (1) retaining clamp (2).

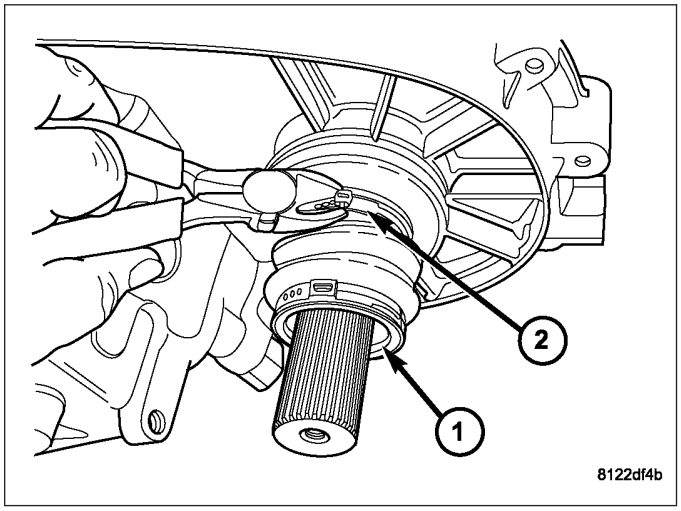

4. Remove the front propeller shaft seal boot (1).

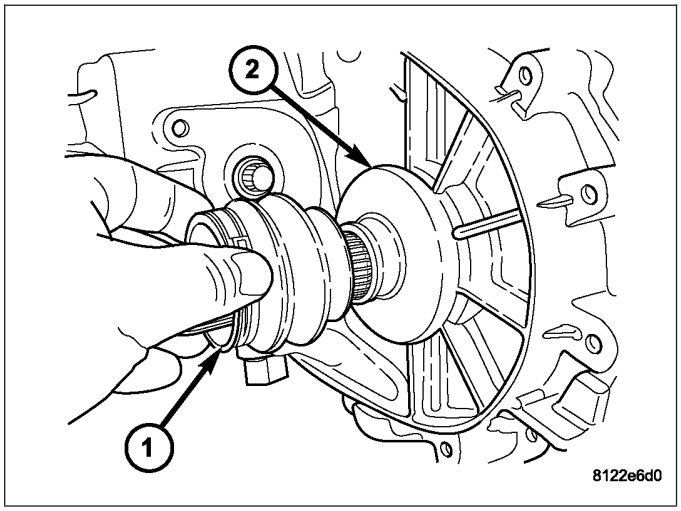

5. Remove the front output shaft seal slinger (1) by bending (2) the slinger away from the transfer case.
6. Using a suitable pry tool, remove the slinger from the output shaft using care not to damage the shaft.
7. Using a screw and a slide hammer, remove the front output shaft seal.

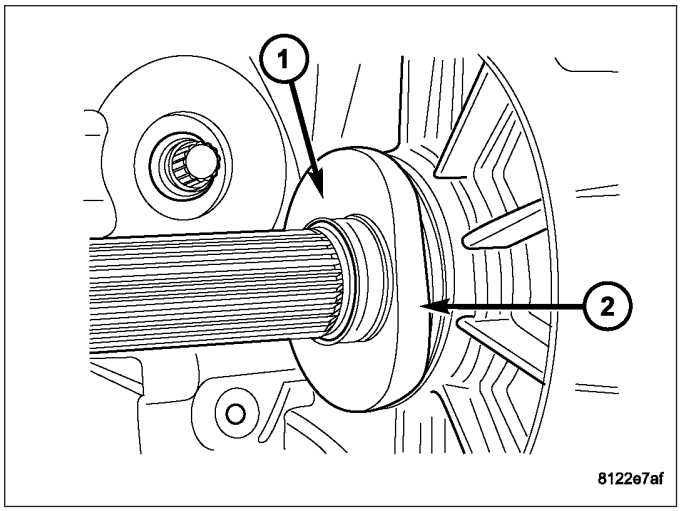

REAR EXTENSION

1. Remove rear extension housing (1) bolts.

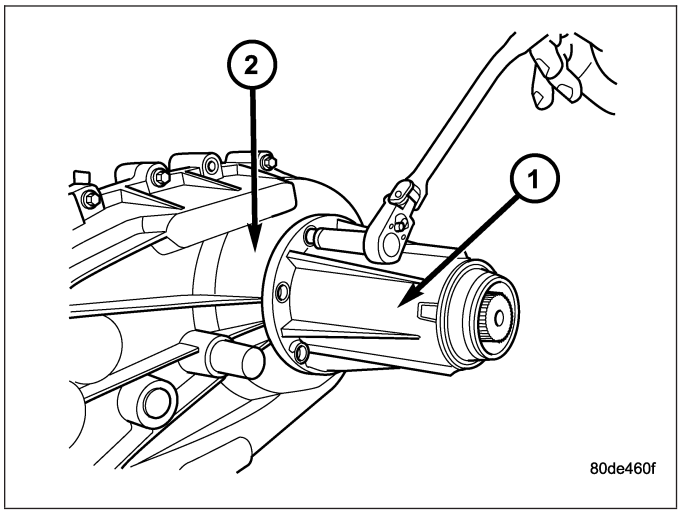

2. Remove rear extension housing (1). Tap extension once or twice with a plastic mallet to break sealer bead and loosen it.

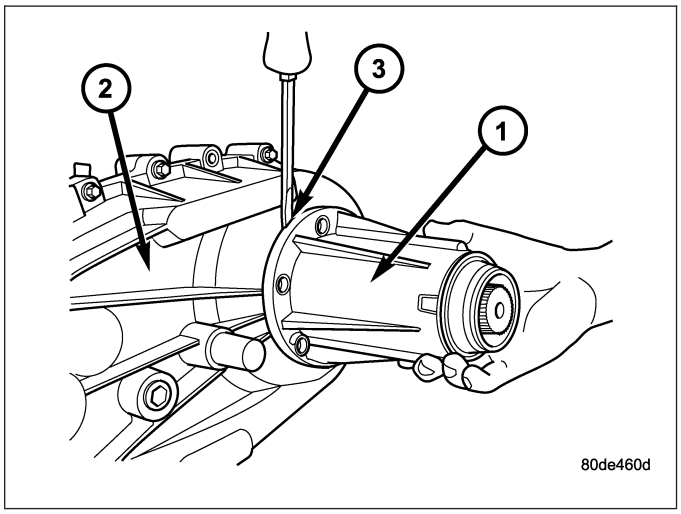

3. Remove output shaft bearing (2) retaining ring (3) with heavy duty snap-ring pliers.

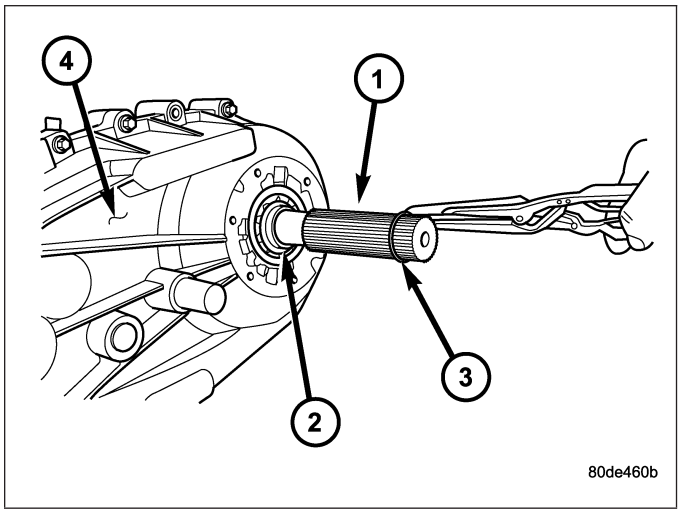

OIL PUMP AND REAR CASE

1. Remove rear case (1) -to-front case (2) bolts (3).

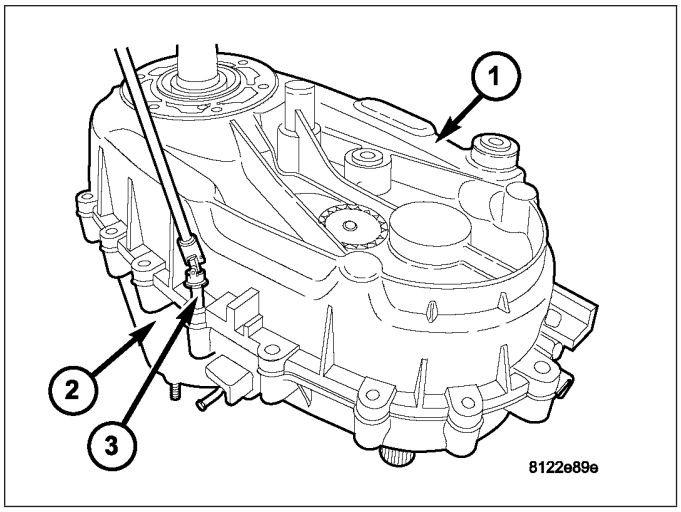

2. Loosen rear case (1) with pry tool to break sealer bead. Insert tool in slot (3) at each end of case.
3. Unseat rear case from alignment dowels.

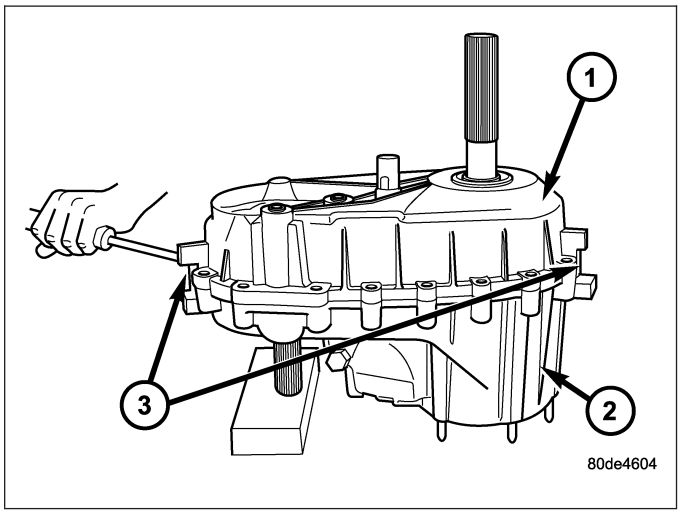

CAUTION: Do not remove the bolts holding the oil pump cover to the rear case half. The oil pump cover is aligned to the rear output shaft inner bearing race and will become mis-aligned if the bolts are loosened. If the transfer case failure has generated any debris which may have become trapped in the oil pump. the rear case and oil pump assembly MUST be replaced.

4. Remove rear case (1) and oil pump assembly from front case (2).
5. Remove the oil pump pickup tube.

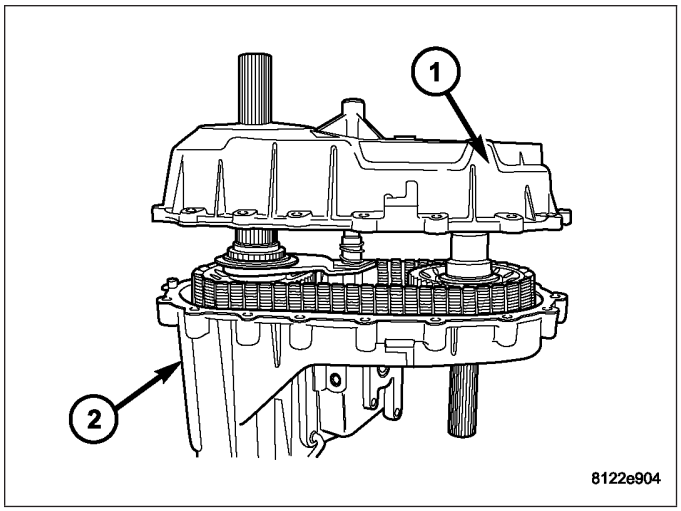

FRONT OUTPUT SHAFT AND DRIVE CHAIN

1. Remove shift rail (1) spring (2).

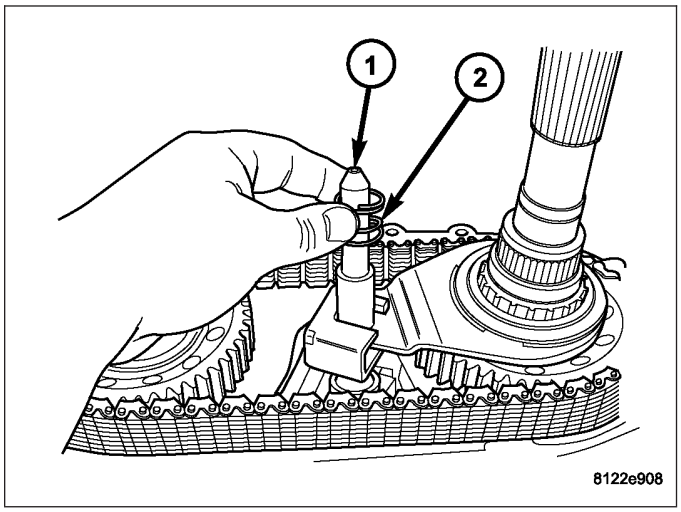

2. Remove front sprocket (1) retaining ring (2).

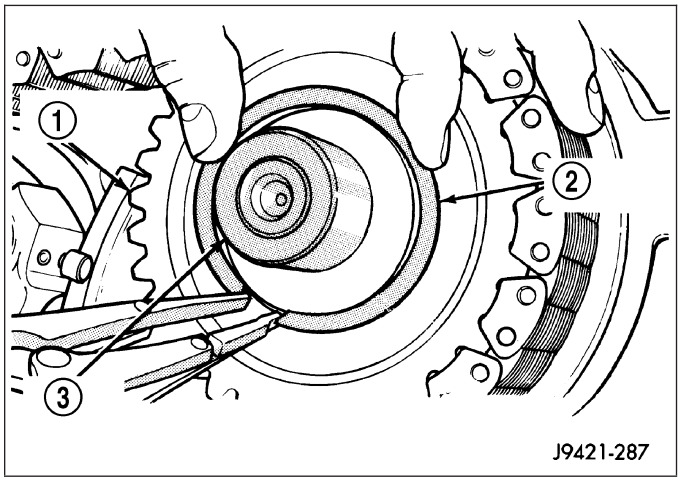

3. Remove the mode fork (2) and sleeve (3) from the shift rail (1) and mainshaft.

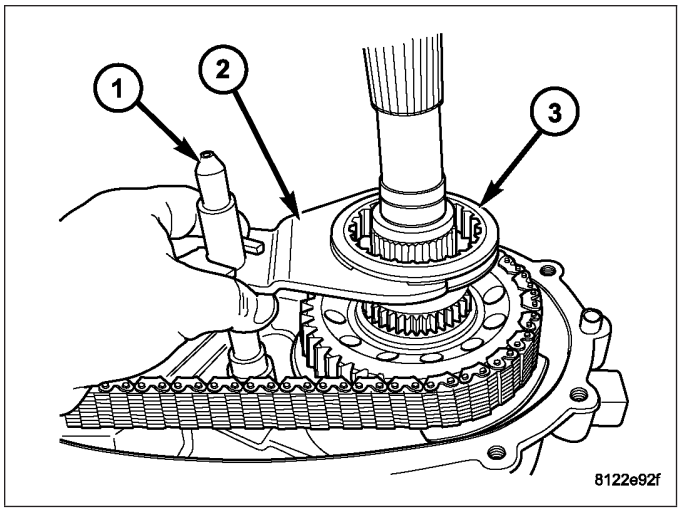

4. Remove the rear output shaft retaining ring (2) from the output shaft (1).

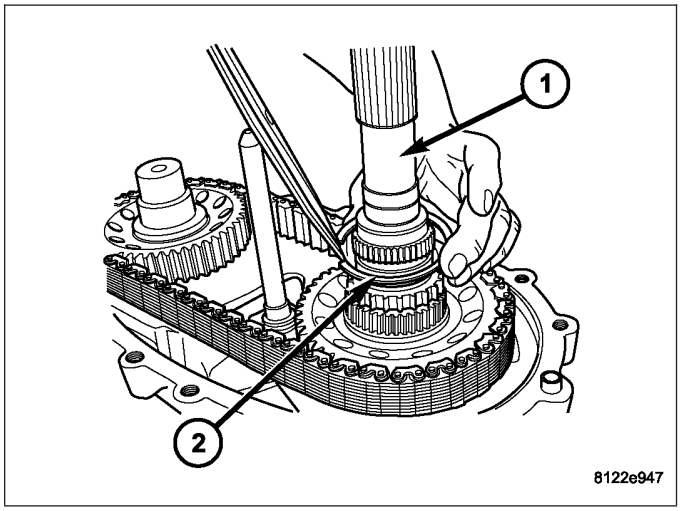

5. Pull front sprocket (1), rear sprocket (3), and chain (2) outward simultaneously.
6. Remove front sprocket, rear sprocket, and chain as an assembly.

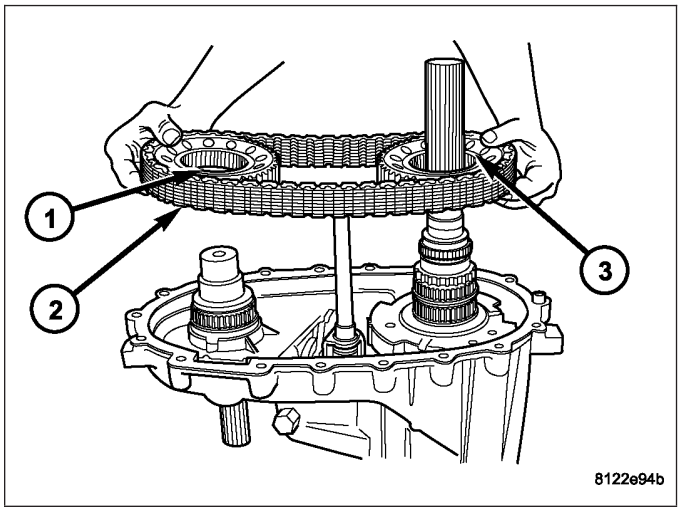

SHIFT FORKS AND MAINSHAFT

1. Loosen detent plug (2).
2. Remove detent plug (2), spring (3), and plunger (4). Note that the plug has an O-ring seal. Remove and discard this seal.

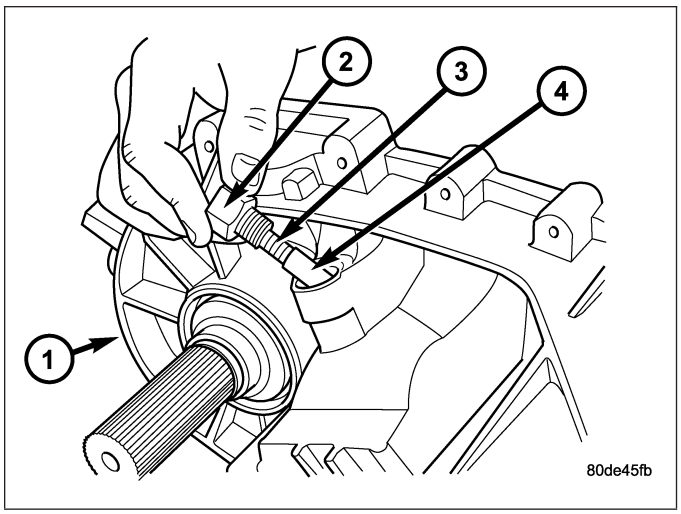

3. Remove the front output shaft (1)snap-ring (2).
4. Remove front output shaft from bearing in case.

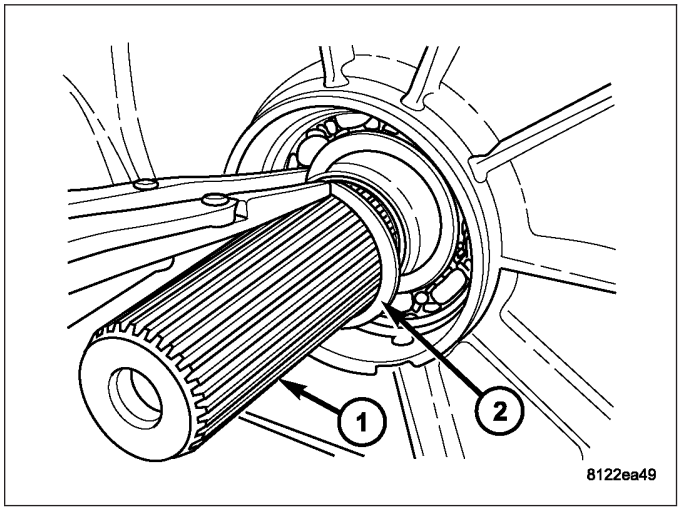

5. Remove the mainshaft and differential assembly (2) from the input gear and transfer case (1).

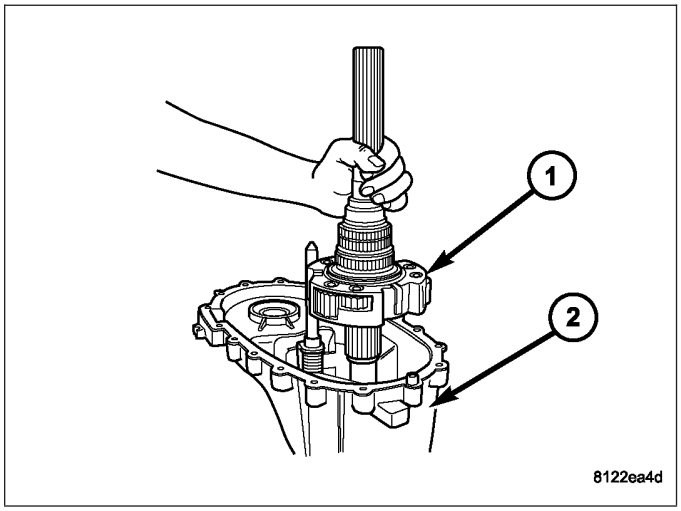

6. Remove the shift rail (1) from the range fork assembly (2) and the front case.

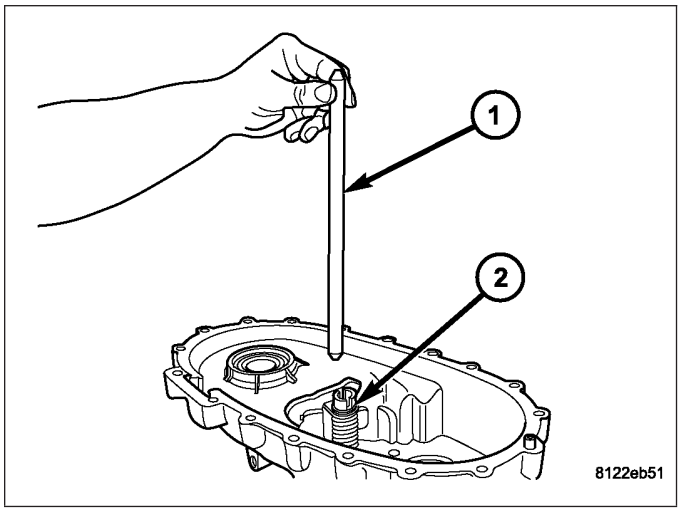

7. Remove range fork (2) and hub (1) as an assembly. Note fork position for installation reference.

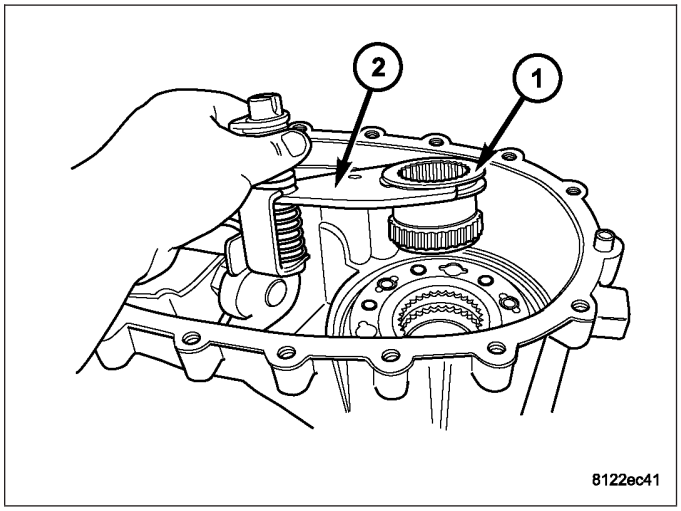

8. Remove shift sector (1).

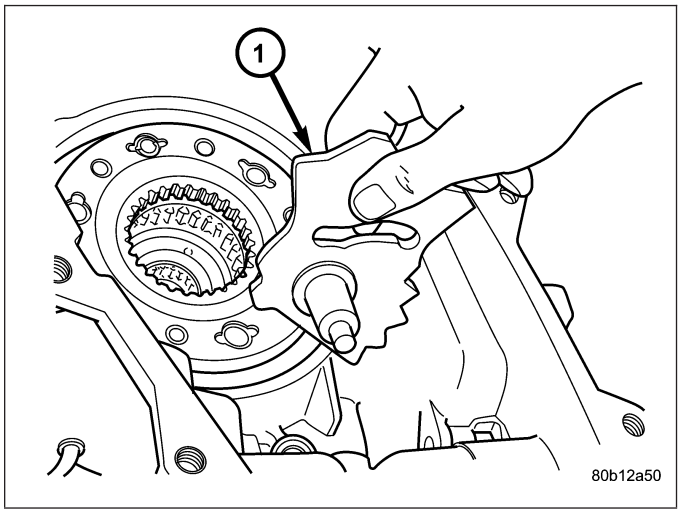

9. Remove the shift sector o-ring (2).

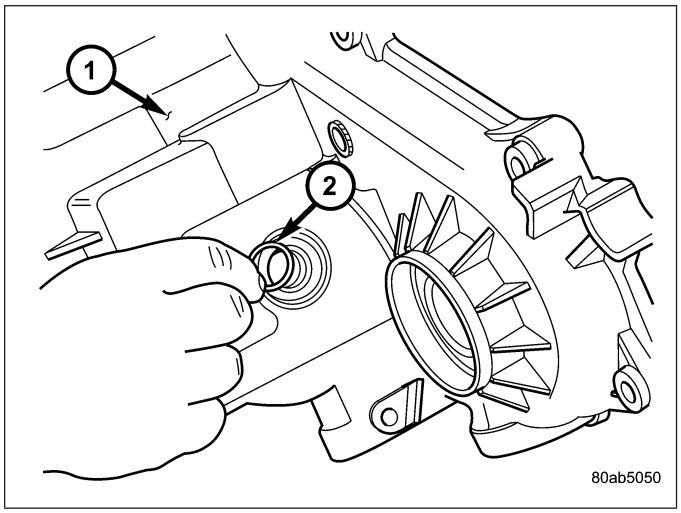

MAINSHAFT

1. Remove intermediate clutch shaft (2) snap-ring (1).

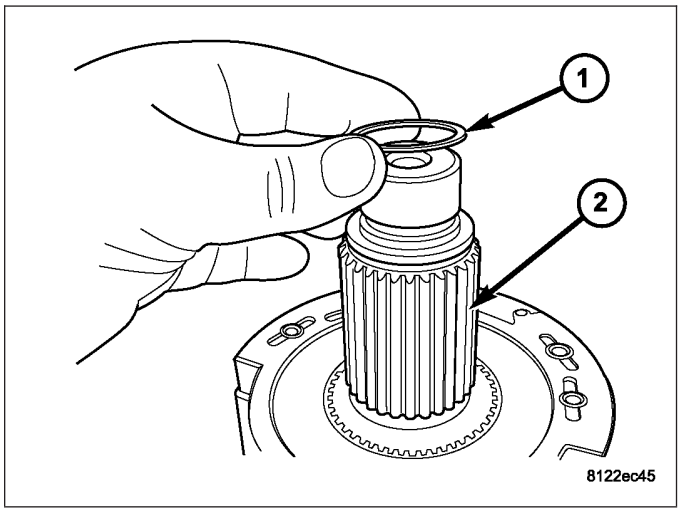

2. Remove the intermediate clutch shaft thrust ring (1).

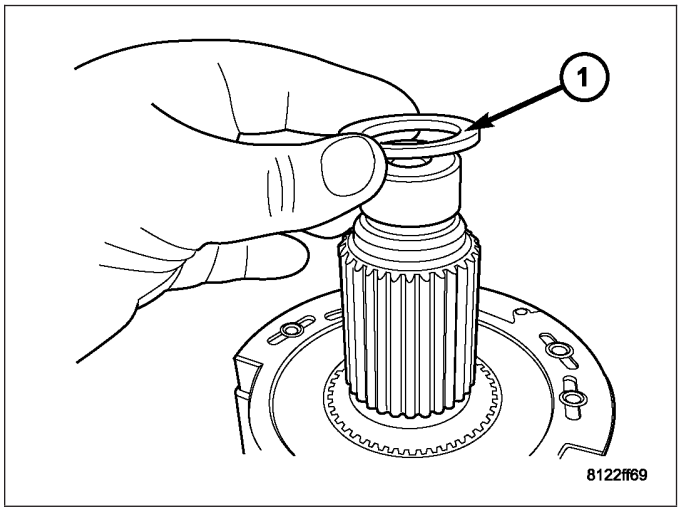

3. Remove the intermediate clutch shaft (1).

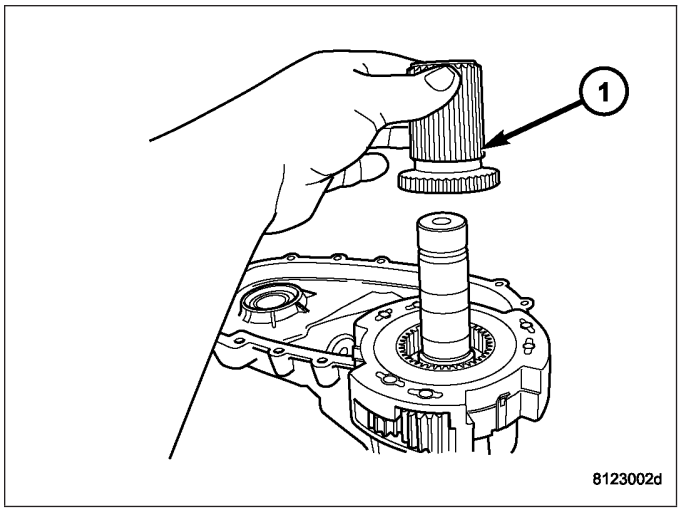

4. Remove the differential snap-ring (1).

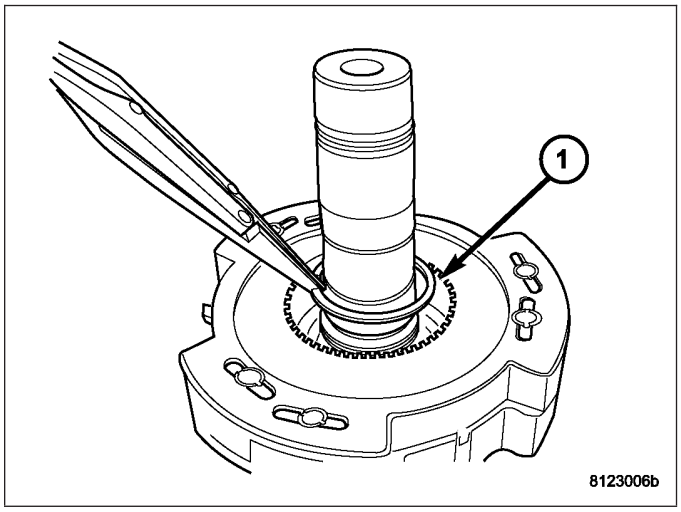

5. Remove the differential assembly (1) from the mainshaft (2).

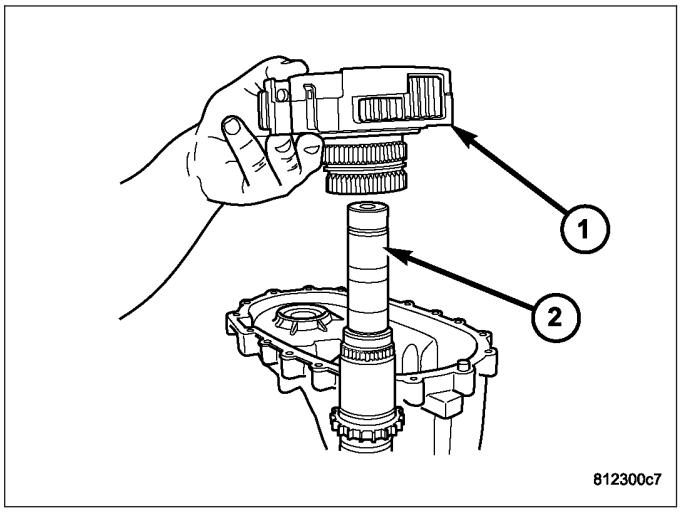

6. Remove the mode hub (2) and mode hub retainer from the differential assembly (1).

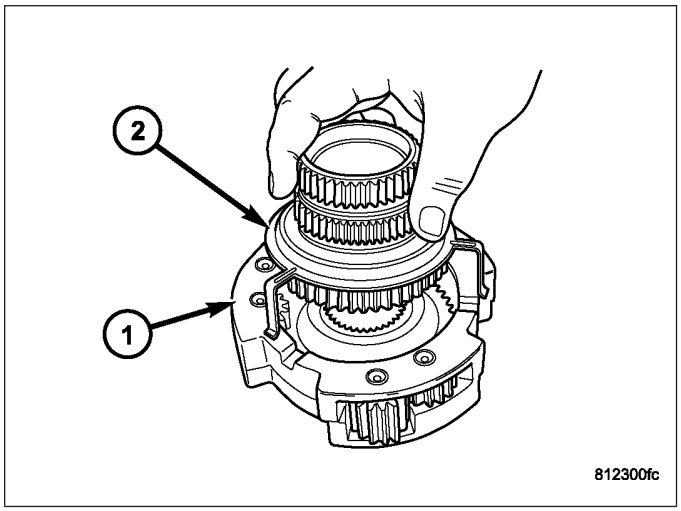

7. Remove the mode hub retainer (1) from the mode hub (2).

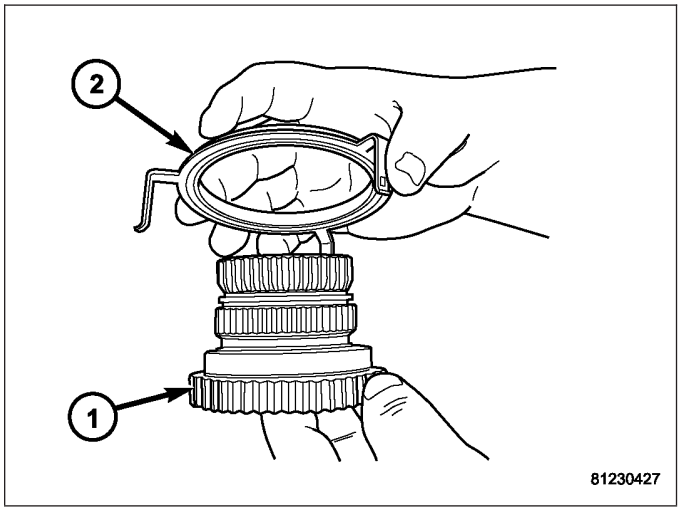

INPUT AND PLANETARY GEAR

1. Remove input gear seal with suitable screw and slide hammer.
2. Remove input gear retaining ring (2) with heavy duty snap-ring pliers.

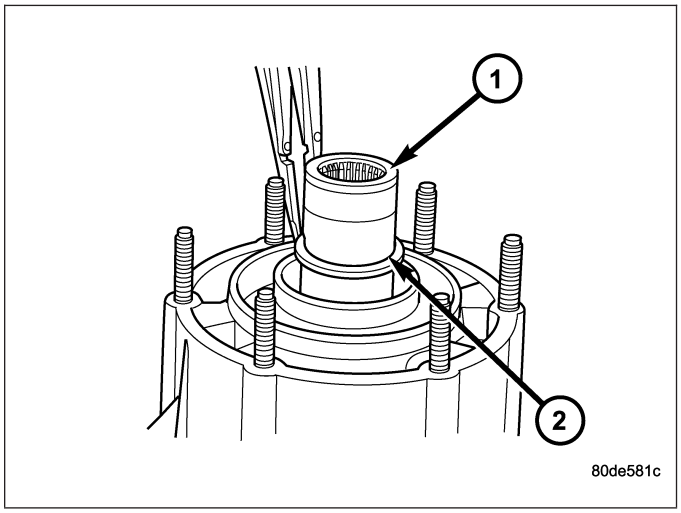

3. Place front case in horizontal position. Then remove input gear and low range gear as an assembly (2). Tap gear out of bearing with plastic mallet, if necessary.

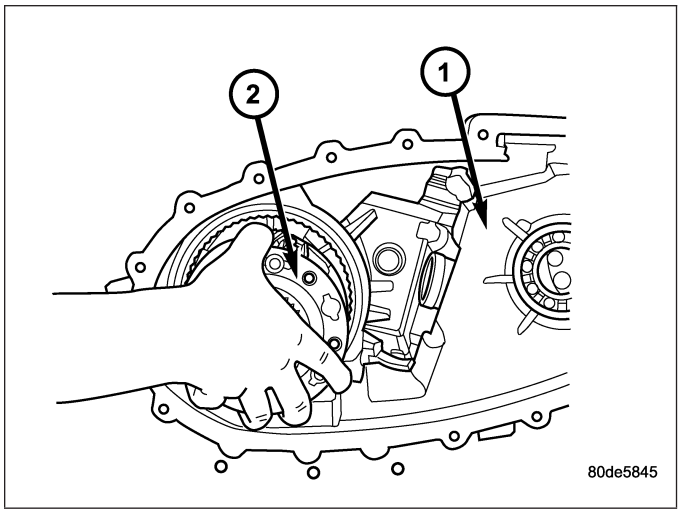

INPUT AND PLANETARY GEAR

1. Remove snap-ring (1) that retains input gear in low range gear.

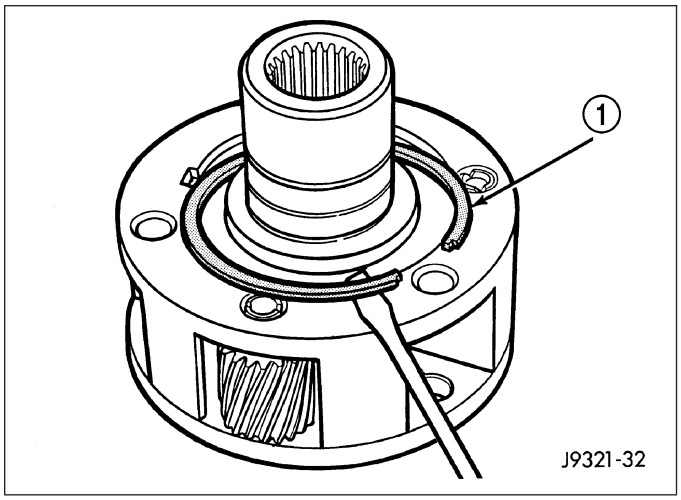

2. Remove retainer (3).

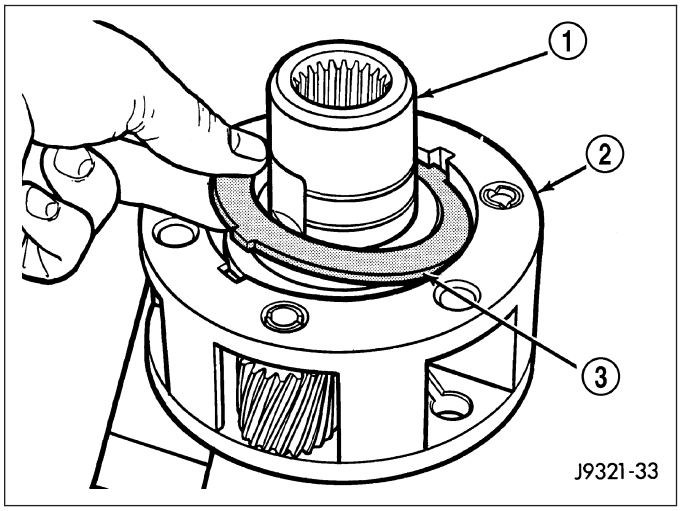

3. Remove front tabbed thrust washer (1).

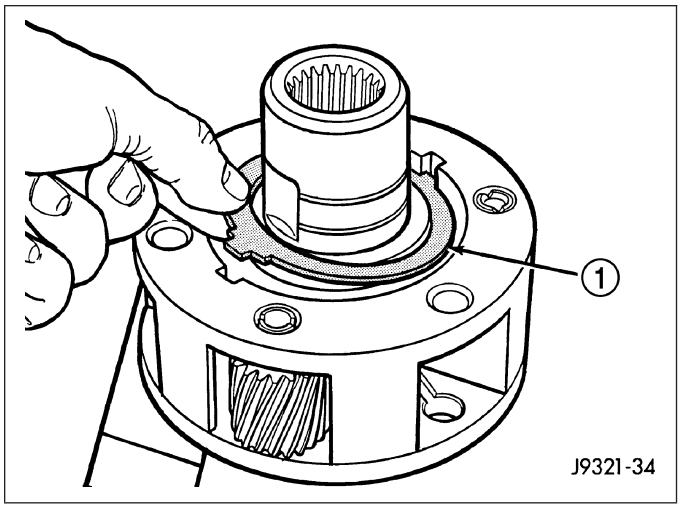

4. Remove input gear (1).

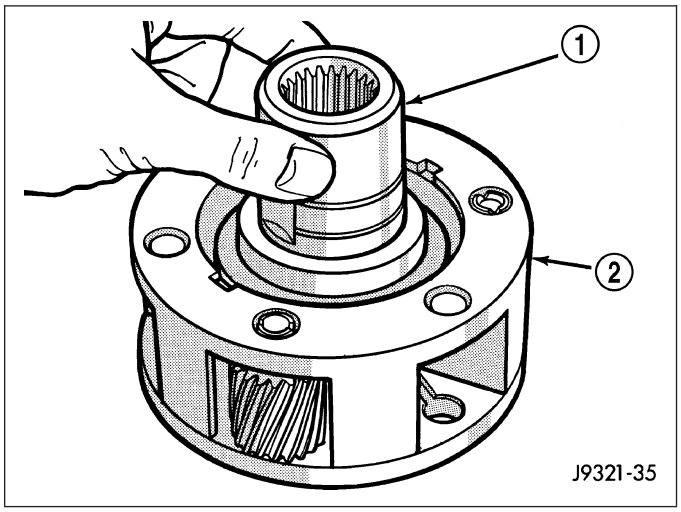

5. Remove rear tabbed thrust washer (2) from low range gear (1).

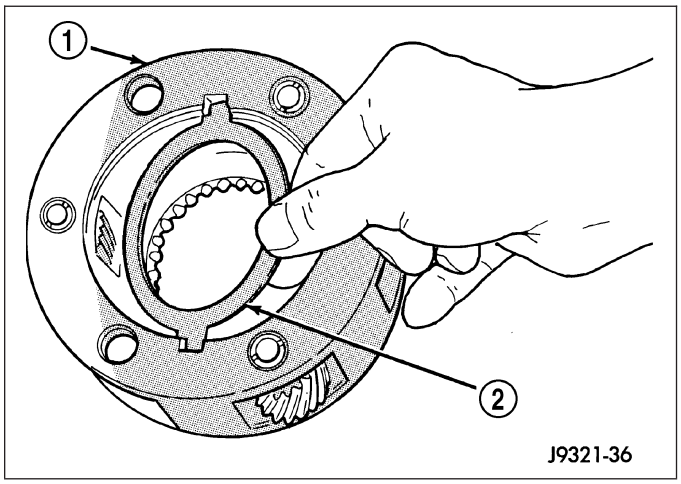

CLEANING

Clean the transfer case parts with a standard parts cleaning solvent. Remove all traces of sealer from the cases and retainers with a scraper and 3M™ all purpose cleaner. Use compressed air to remove solvent residue from oil feed passages in the case halves, retainers, gears, and shafts.

INSPECTION

MAINSHAFT/SPROCKET/HUB INSPECTION

Inspect the splines on the hub and shaft and the teeth on the sprocket. Minor nicks and scratches can be smoothed with an oilstone. However, replace any part that is damaged.

Check the contact surfaces in the sprocket bore and on the mainshaft. Minor nicks and scratches can be smoothed with 320-400 grit emery cloth but do not try to salvage the shaft if nicks or wear is severe.

INPUT GEAR AND PLANETARY CARRIER

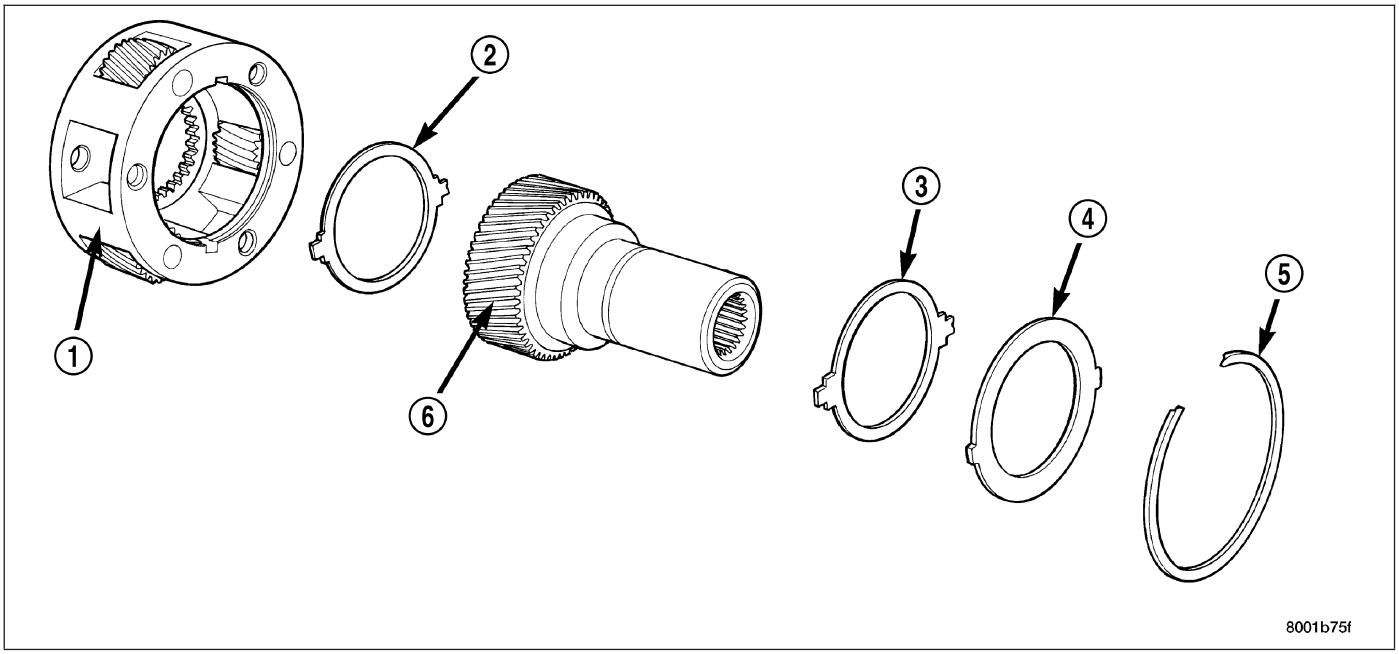

Input Gear and Carrier Components

1 - PLANETARY CARRIER	4 - CARRIER LOCK RING
2 - REAR THRUST WASHER	5 - CARRIER LOCK RETAINING RING
3 - FRONT THRUST WASHER	6 - INPUT GEAR

Check the teeth on the gear. Minor nicks can be dressed off with an oilstone but replace the gear if any teeth are broken, cracked, or chipped. The bearing surface on the gear can be smoothed with 300-400 grit emery cloth if necessary.

Examine the carrier body and pinion gears for wear or damage. The carrier will have to be replaced as an assembly if the body, pinion pins, or pinion gears are damaged.

Check the lock ring and both thrust washers for wear or cracks. Replace them if necessary. Also replace the lock retaining ring if bent, distorted, or broken.

SHIFT FORKS/HUBS/SLEEVES

Check condition of the shift forks and mode fork shift rail. Minor nicks on the shift rail can be smoothed with 320-400 grit emery cloth.

Inspect the shift fork wear pads (3, 4). The mode (2) and range (1) fork pads are serviceable and can be replaced if necessary.

Check both of the sleeves for wear or damage, especially on the interior teeth. Replace the sleeves if wear or damage is evident.

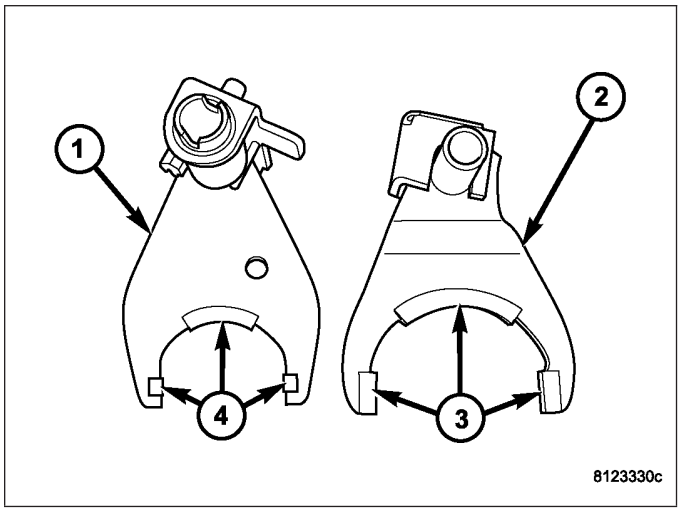

REAR EXTENSION HOUSING

Inspect the extension housing seal and bushing. Replace both components if either show any sign of wear or damage.

FRONT OUTPUT SHAFT AND DRIVE CHAIN

Inspect the shaft splines and bearing surfaces. Minor nicks on the splines can be smoothed with an oilstone. Use 320-400 grit emery to smooth minor scratches on the shaft bearing surfaces. Replace the shaft if the bearing surfaces are scored or if any of the splines are cracked or broken.

Examine the drive chain and shaft bearings. Replace the chain and both sprockets if the chain is stretched, distorted, or if any of the links bind. Replace the bearings if rough, or noisy.

LOW RANGE ANNULUS GEAR

Inspect annulus gear (2) condition carefully. The gear is only serviced as part of the front case (1). If the gear is damaged, it will be necessary to replace the gear and front case as an assembly. Do not attempt to remove the gear.

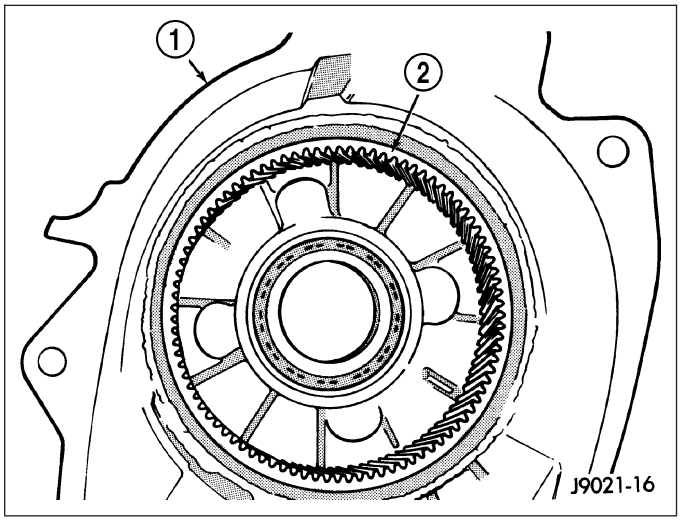

FRONT AND REAR CASES

Inspect the cases for wear and damage.

Check case condition. If leaks were a problem, look for gouges and severe scoring of case sealing surfaces. Also make sure the front case mounting studs are in good condition.

Check the front case mounting studs and vent tube. The tube can be secured with Loctite™ 271 or 680 if loose. The stud threads can be cleaned up with a die if necessary. Also check condition of the fill/drain plug threads in the

rear case. The threads can be repaired with a thread chaser or tap if necessary. Or the threads can be repaired with Helicoil® stainless steel inserts if required.

OIL PUMP/OIL PICKUP

Examine the oil pump pickup parts. Replace the pump if any part appears to be worn or damaged. Do not disassemble the pump as individual parts are not available. The pump is only available as a complete assembly. The pickup screen, hose, and tube are the only serviceable parts and are available separately.

ASSEMBLY

BEARINGS AND SEALS

1. Remove the input shaft bearing (1) from the front case (2) with suitable snap-ring pliers.
2. Transfer the retaining ring to the new bearing if necessary and install the bearing into the front case.

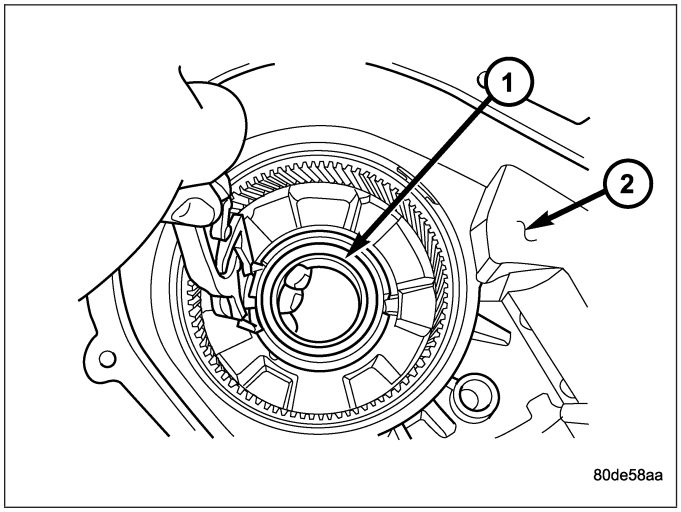

3. Remove the front output shaft bearing retaining ring from inside the front case half.
4. Using Installer 6436 and Handle C-4171, remove front output shaft bearing.
5. Start front output shaft bearing in case. Then seat bearing with Handle C-4171 (3) and Installer 6953 (2).
6. Install front output shaft bearing retaining ring.

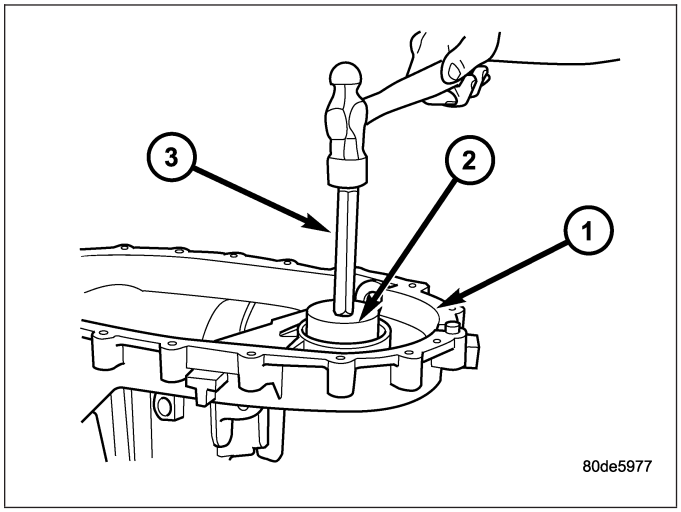

7. Remove the front output shaft rear bearing with the screw and jaws from Remover L-4454 (2) and Cup 8148 (3).

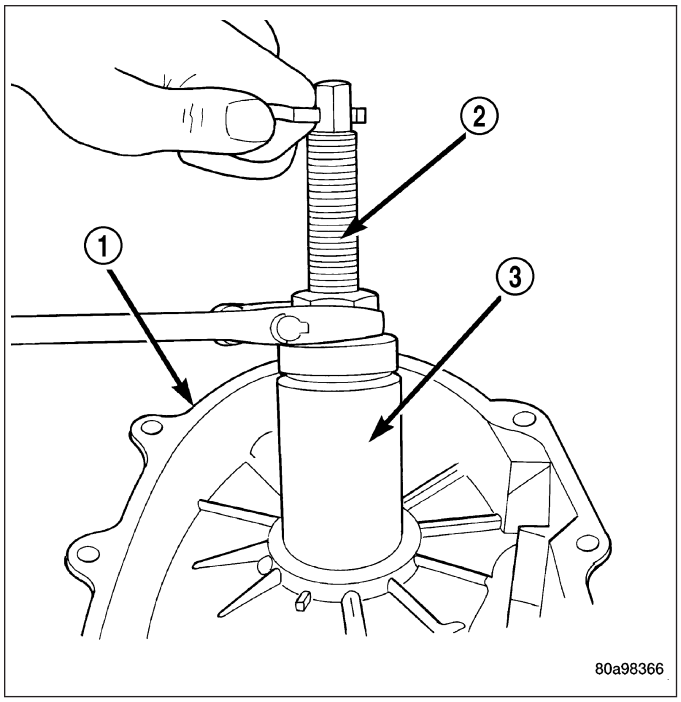

8. Install new bearing with Tool Handle C-4171 (1) and Installer 5066 (3).

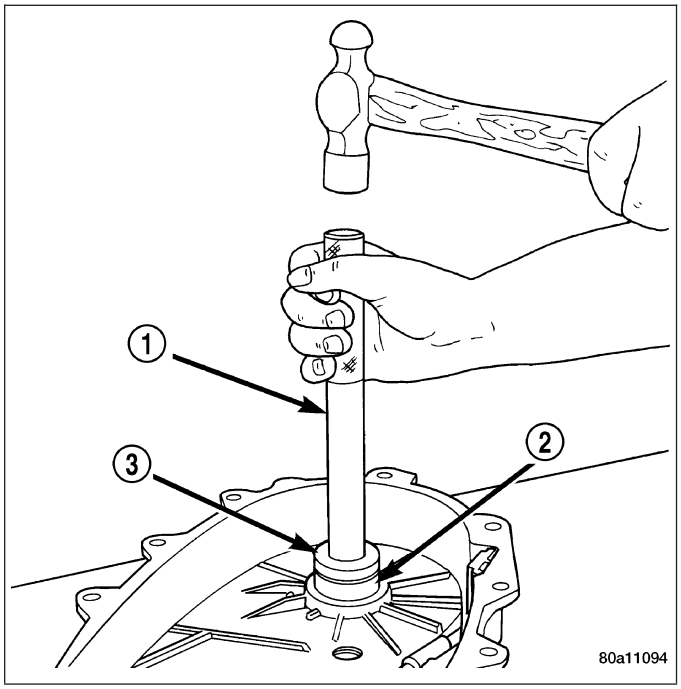

9. Remove the rear output shaft bearing from the rear case using Installer 5065 (2) and Handle C-4171 (1).

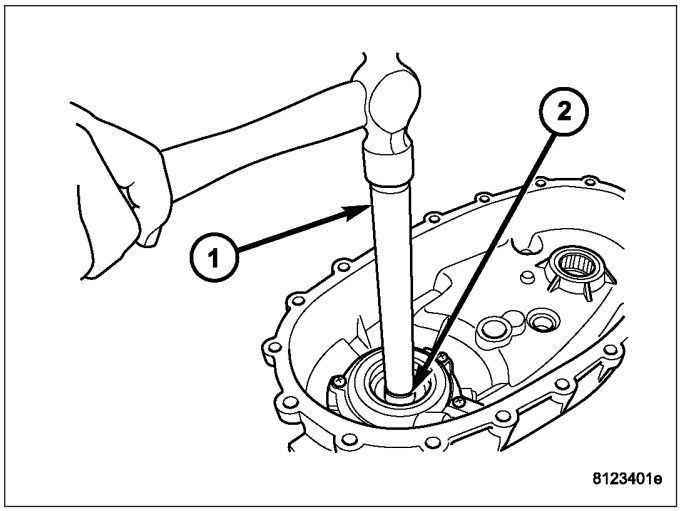

10. Install the rear output shaft bearing into the rear case using Remover/Installer 6953 (2) and Handle C-4171 (3).

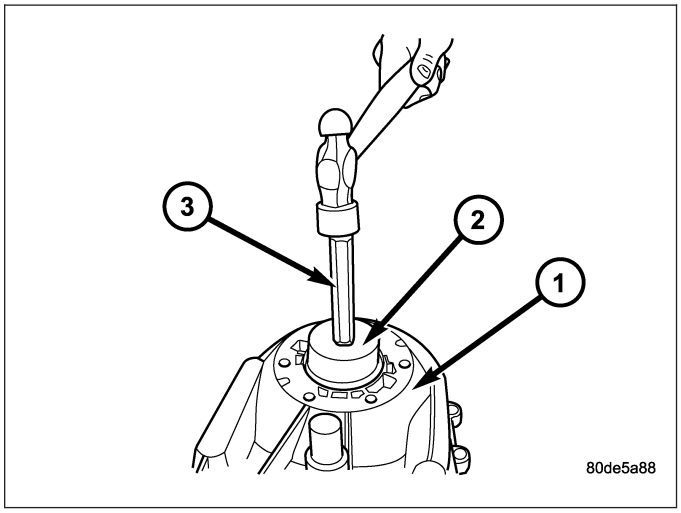

INPUT AND PLANETARY GEAR

1. Lubricate gears and thrust washers (5) with recommended transmission fluid.
2. Install first thrust washer in low range gear (4). Be sure washer tabs are properly aligned in gear notches.
3. Install input gear (3) in low range gear (4). Be sure input gear is fully seated.
4. Install remaining thrust washer (5) in low range gear (4) and on top of input gear (3). Be sure washer tabs are properly aligned in gear notches.
5. Install retainer (2) on input gear and install snap-ring (1).

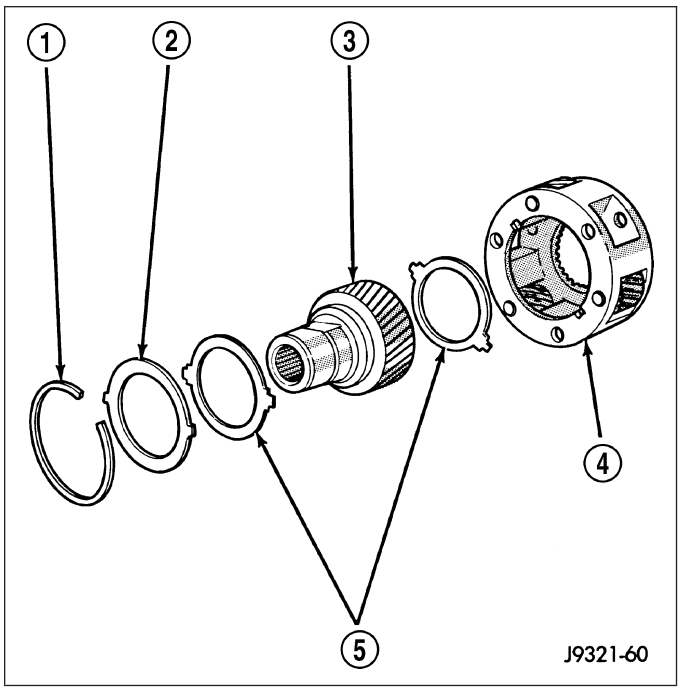

6. Align and install low range/input gear assembly (2) in front case (1). Be sure low range gear pinions are engaged in annulus gear and that input gear shaft is fully seated in front bearing.

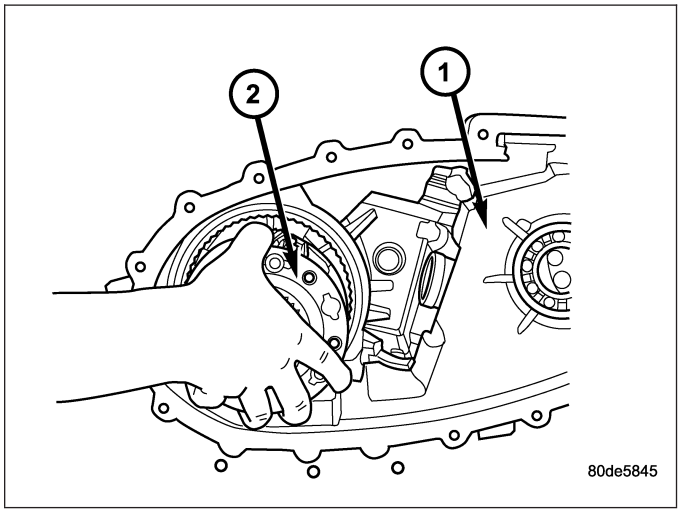

7. Install snap-ring (2) to hold input/low range gear (1) into front bearing.
8. Install a new input gear seal using Installer 8841 and Handle C-4171.

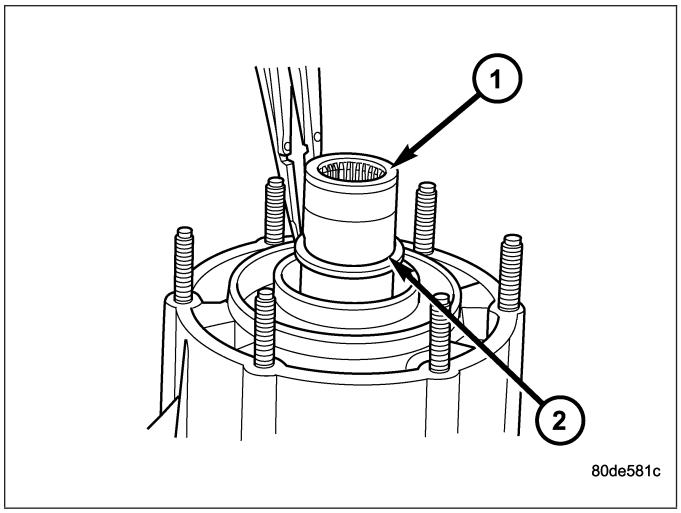

SHIFT FORKS AND MAINSHAFT

1. Lubricate mainshaft splines with recommended transmission fluid.

NOTE: Replace the mode hub retainer if the legs were distorted during removal.

2. Install the mode hub retainer (1) onto the mode hub (2).

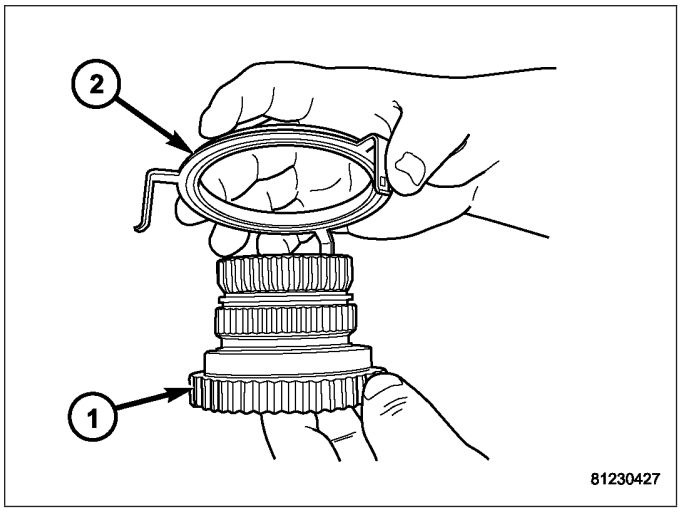

3. Install the mode hub (2) and mode hub retainer onto the differential assembly (1). Make sure the retainer is fully seated onto the differential.

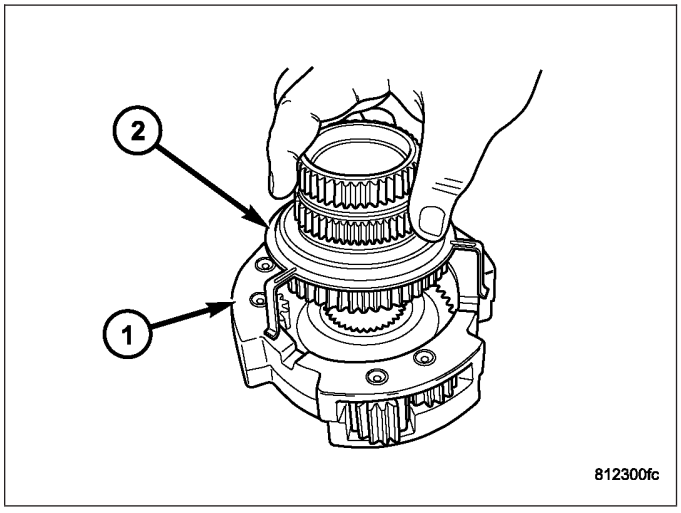

4. Install the differential assembly (1) onto the mainshaft (2).

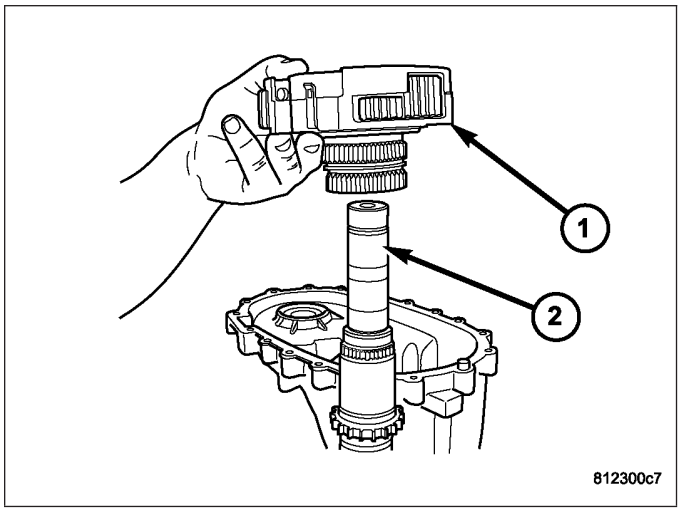

5. Install the differential snap-ring (1).

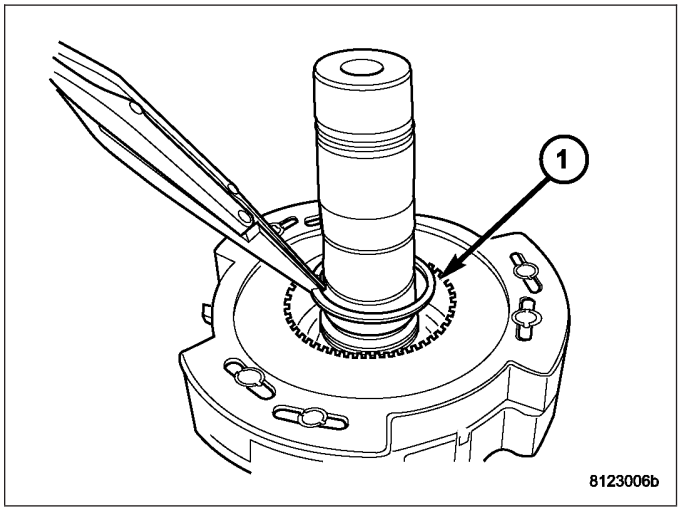

6. Install the intermediate clutch shaft (1).

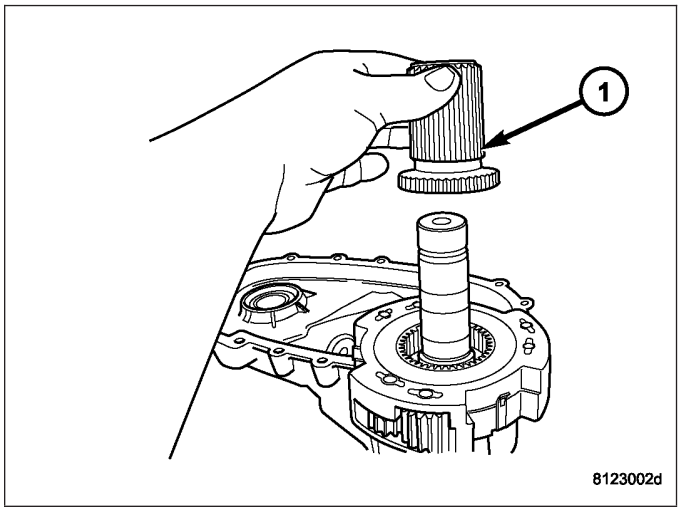

7. Install the clutch shaft thrust ring (1).

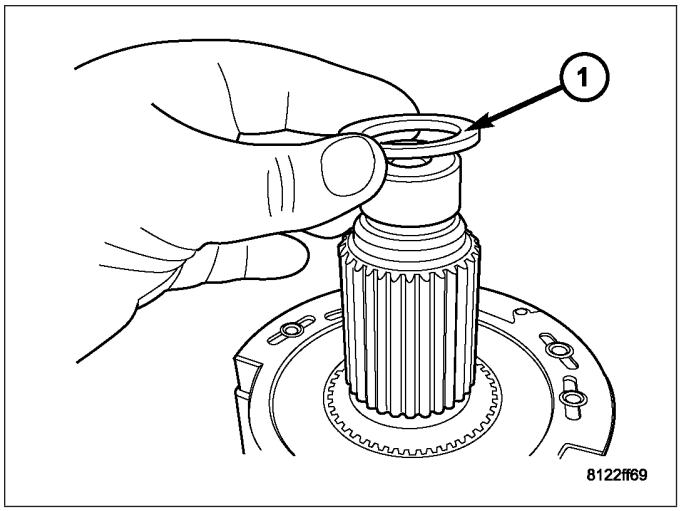

8. Install clutch shaft (2) snap-ring (1).

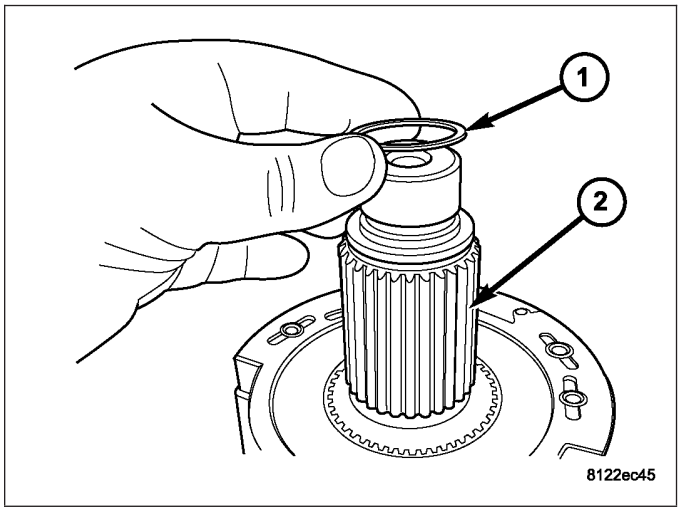

9. Lubricate sector shaft with transmission fluid and install shift sector (1) in case. Position slot in sector so it will be aligned with shift fork pin when shift forks are installed.
10. Install the shift sector o-ring.

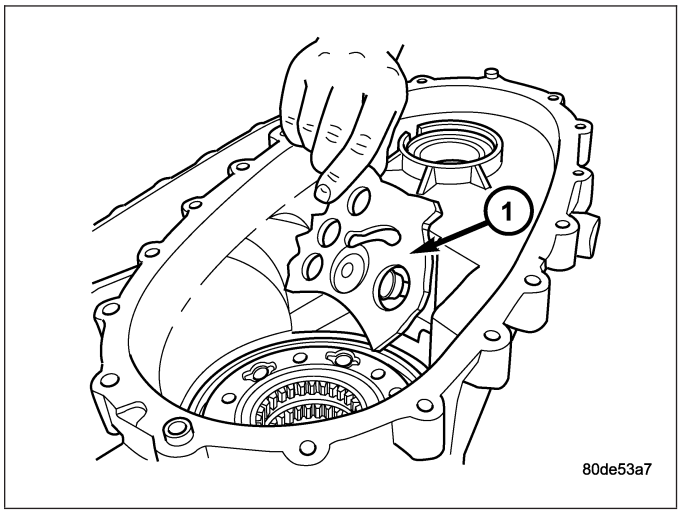

11. Assemble and install range fork (2) and hub (1). Be sure hub is properly seated in low range gear and engaged to the input gear.
12. Align and insert range fork pin in shift sector slot.

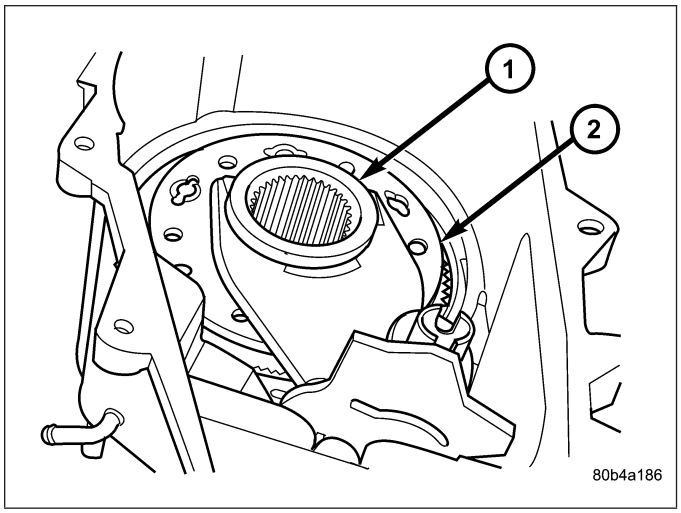

13. Install the shift rail (1) into the range fork assembly (2) and the front case.

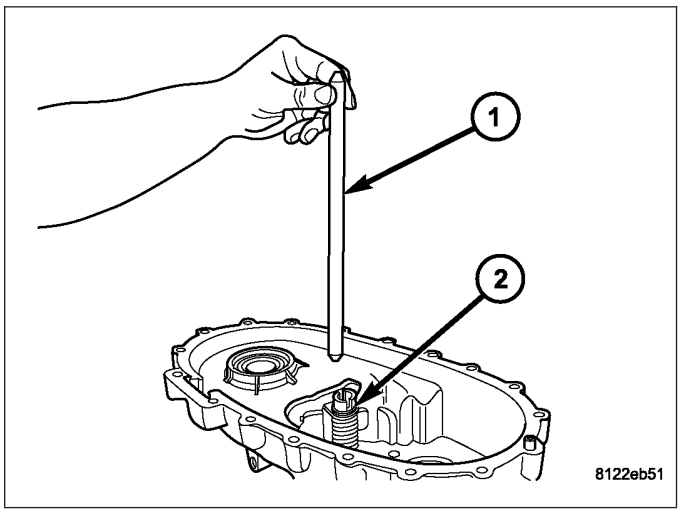

14. Install the mainshaft and differential assembly (2) into the input gear and transfer case (1).

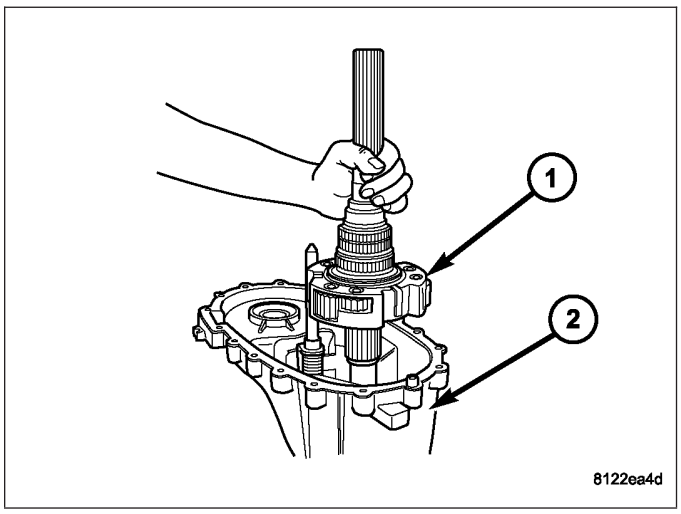

FRONT OUTPUT SHAFT AND DRIVE CHAIN

1. Install the front output shaft into the front output shaft bearing.
2. Install the front output shaft snap-ring (2) onto the output shaft (1).
3. Install the new front output shaft seal with Installer MB991168A

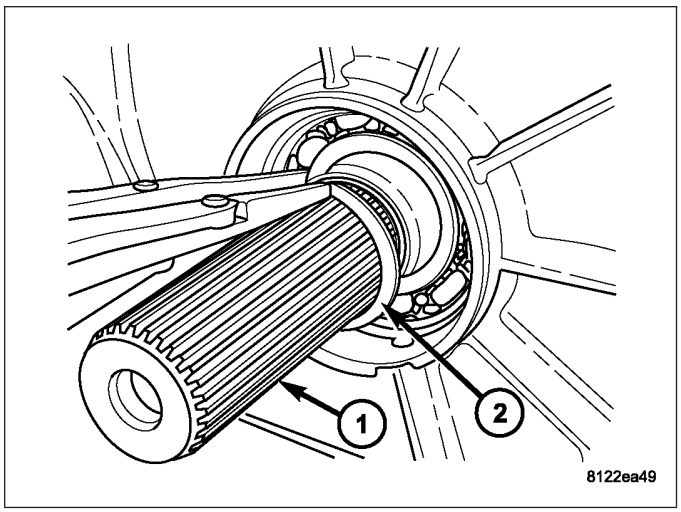

4. Install new o-ring (1) on detent plug (2).

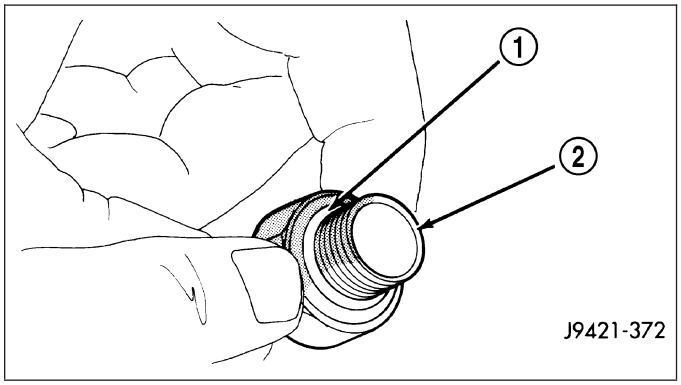

NOTE: Shift the transfer case to the same range/ mode position it was in when the shift motor was removed prior to installing the shift detent components.

5. Install detent plunger (4), spring (3), and plug (2). Tighten the plug to 16-25 N·m (12-18 ft. lbs.).

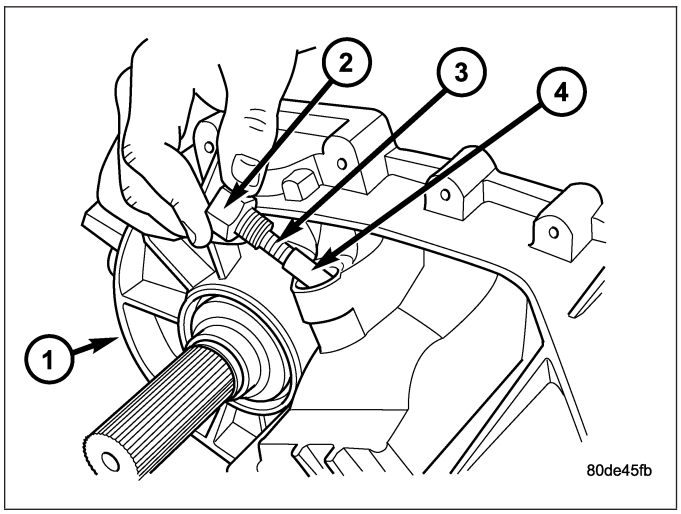

6. Install the new front output shaft seal slinger (1) with Installer 8840 (2). Install the slinger onto the shaft until the tool contacts the front of the output shaft.

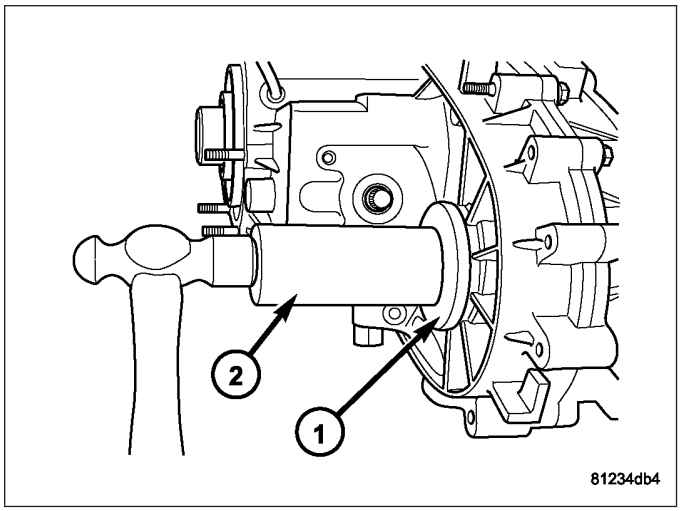

7. Install the front sprocket (1), rear sprocket (3), and chain (2) as an assembly.
8. Lower the front sprocket, rear sprocket, and chain over the front and rear output shafts simultaneously until fully seated on both splines.

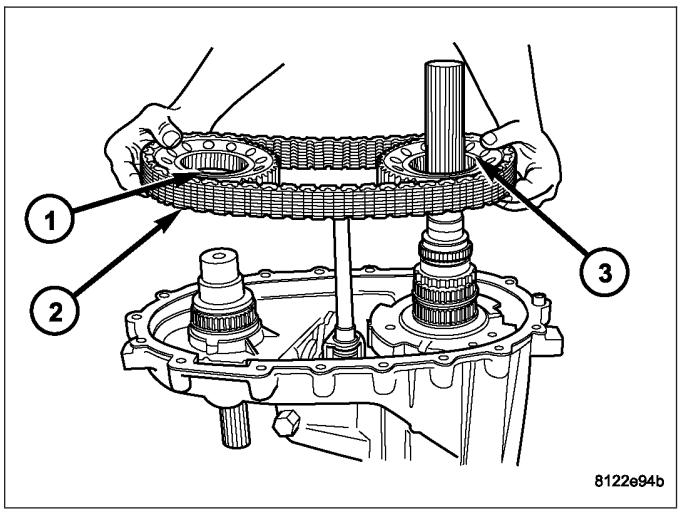

9. Install the rear output shaft retaining ring (2) onto the output shaft (1).

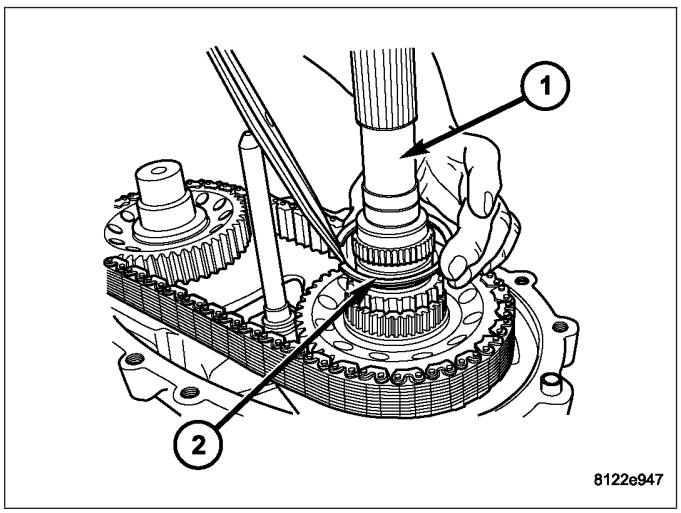

10. Install the front sprocket (1) retaining ring (2).

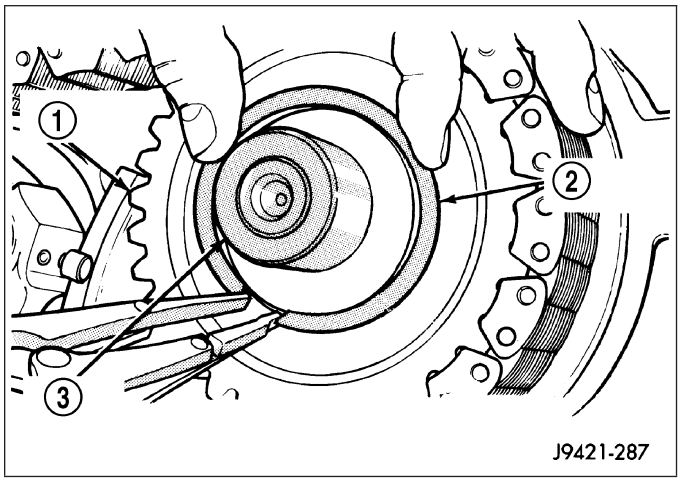

11. Inspect mode fork assembly (1). Replace pads if necessary. Also check springs and slider bracket. Replace worn or damaged components.

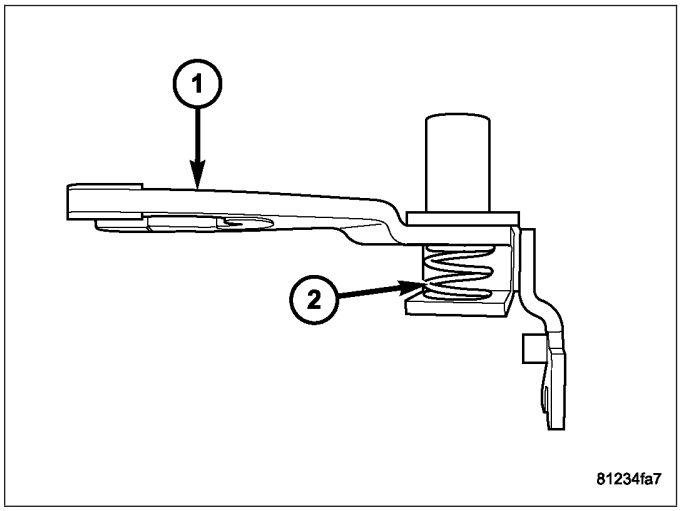

12. Install the mode fork (2) and sleeve (3) over the shift rail (1) and mainshaft.

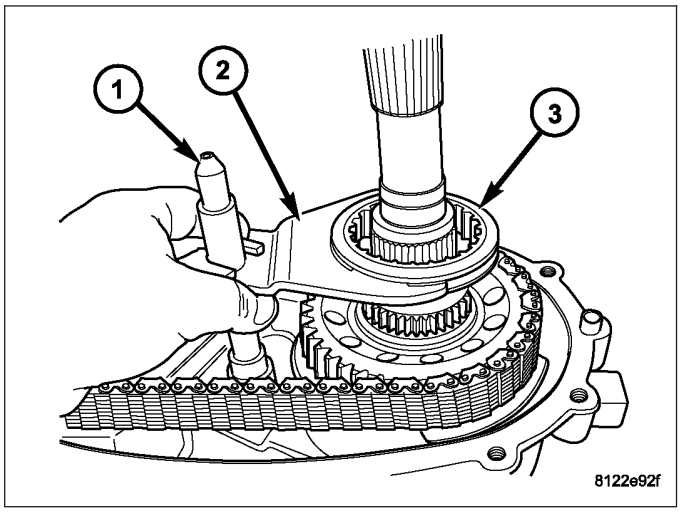

13. Install spring (2) onto the shift rail (1).

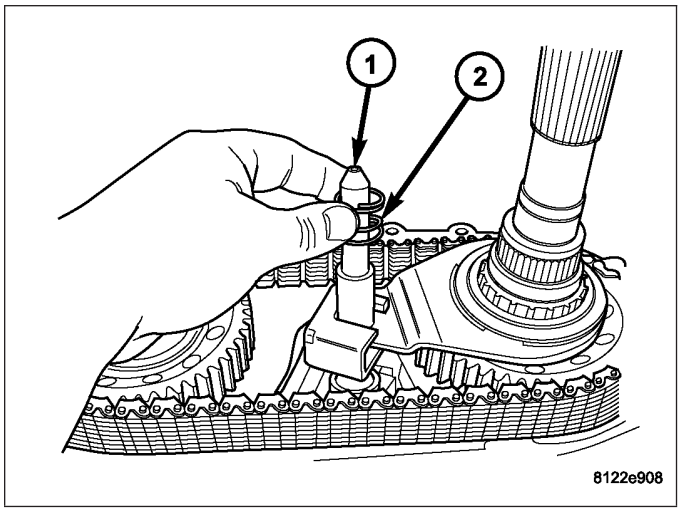

14. Insert magnet (1) in front case pocket (2).

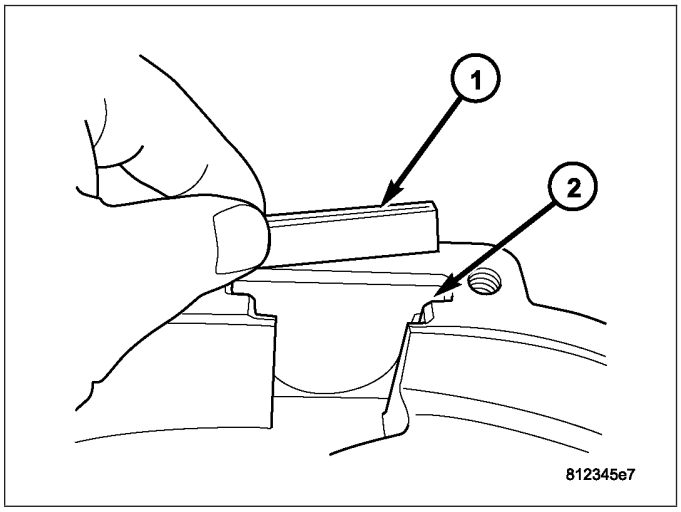

OIL PUMP AND REAR CASE

Lubricate the oil pump components with transmission fluid before installation. Prime the oil pickup tube by pouring a little oil into the tube before installation.

CAUTION: Do not remove the bolts holding the oil pump cover to the rear case half. The oil pump cover is aligned to the rear output shaft inner bearing race and will become mis-aligned if the bolts are loosened. If the transfer case failure has generated any debris which may have become trapped in the oil pump. the rear case and oil pump assembly MUST be replaced.

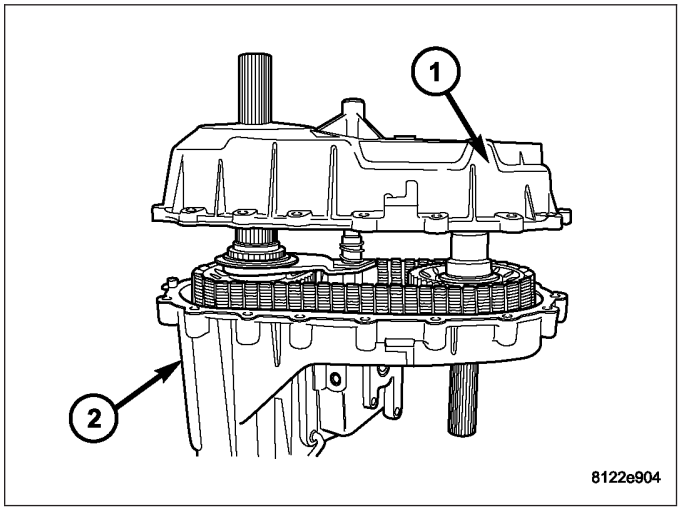

1. Install new o-ring in pickup tube inlet of oil pump, if necessary.
2. Insert oil pickup tube into the oil pump.
3. Apply bead of Mopar® Gasket Maker, or equivalent, to mating surface of front case. Keep sealer bead width to maximum of 3/16 inch. Do not use excessive amount of sealer as excess will be displaced into case interior.

4. Align oil pump with mainshaft and align shift rail with bore in rear case. Then install rear case and oil pump assembly (1).

5. Install rear output bearing snap-ring (3) to output shaft (1).

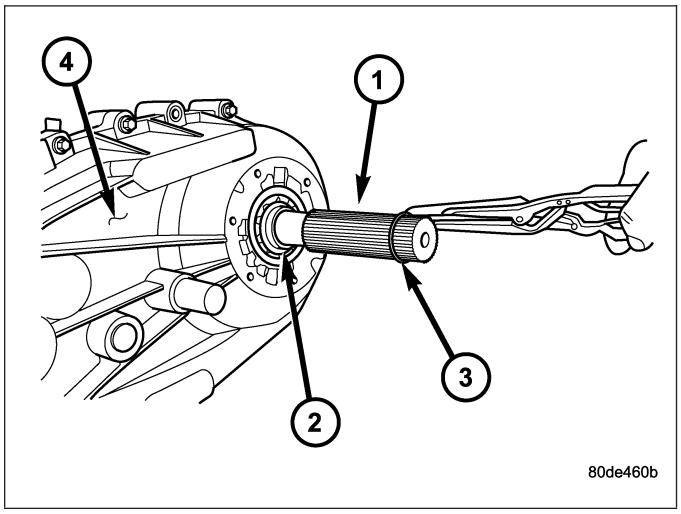

6. Install 4-5 rear case-to front case bolts (3) to hold rear case (1) in position. Tighten bolts snug but not to specified torque at this time.

CAUTION: Verify that shift rail, and case alignment dowels are seated before installing any bolts. Case could be cracked if shaft rail or dowels are misaligned.

7. Apply Mopar® Lock 'n Seal Adhesive to remainder of rear case-to-front case bolt threads and install bolts. Tighten bolts to 25-28 N·m (18-21 ft. lbs.),

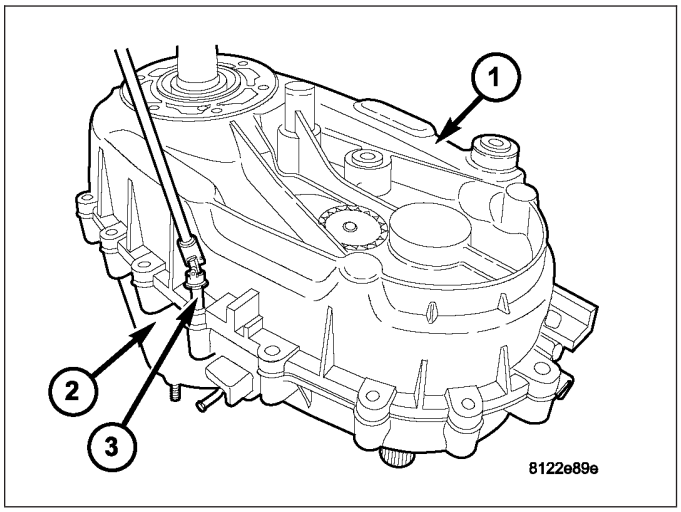

SEAL BOOT AND SHIFT MOTOR ASSEMBLY

1. Install a new seal boot clamp onto the seal boot.
2. Install the seal boot (2) and clamp onto the slinger (2) hub and tighten the clamp with Crimp Tool C-4975-A.

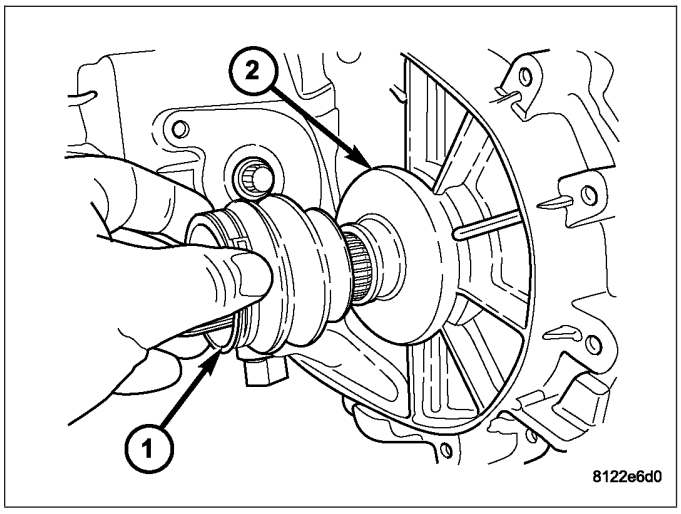

3. Position the shift motor and mode sensor assembly onto the transfer case.
4. Install the bolts (3) to hold the shift motor and mode sensor assembly (2) to the transfer case (1). Tighten the bolts to 16-25 N·m (12-18 ft. lbs.).

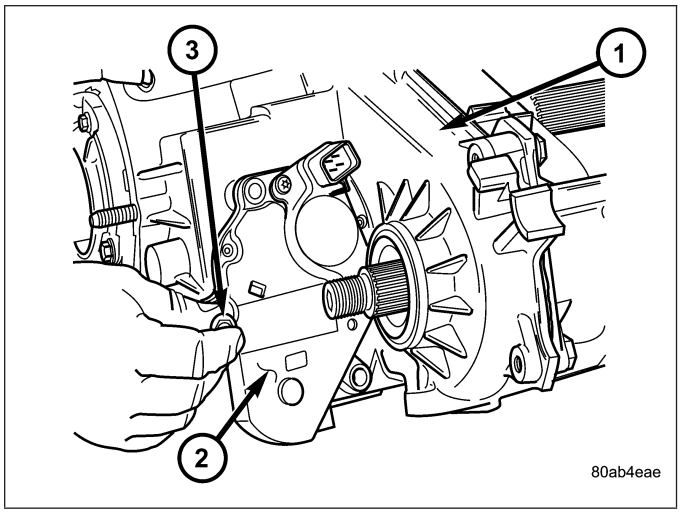

REAR EXTENSION

1. Install new seal in rear extension housing seal with Installer D-163 and Handle C-4171. Verify that the weep hole in the rubber is oriented downward.
2. Apply bead of Mopar® Gasket Maker, or equivalent, to mating surface of rear extension housing. Keep sealer bead width to maximum of 3/16 inch. Do not use excessive amount of sealer as excess could be displaced into output bearing.
3. Align and install rear extension (1) on the transfer case (2).
4. Apply Mopar® Silicone Sealer to threads of rear extension housing bolts. Then install and tighten bolts to 16-24 N·m (12-18 ft. lbs.) torque.

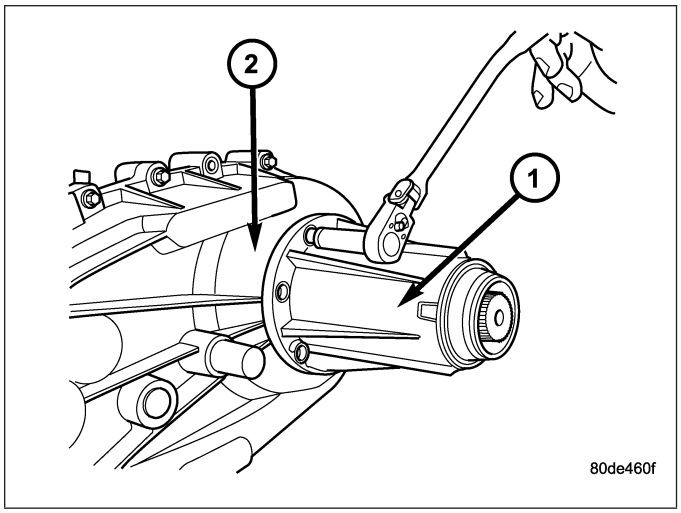

INSTALLATION

1. Mount transfer case on a transmission jack.
2. Secure transfer case to jack with chains.
3. Position transfer case under vehicle.
4. Align transfer case and transmission shafts and install transfer case onto the transmission.
5. Install and tighten transfer case attaching nuts to 27-34 N·m (20-25 ft. lbs.) torque.
6. Connect the vent hose.
7. Connect the shift motor and mode sensor wiring connectors. Secure wire harness to clips on transfer case.
8. Align and connect the propeller shafts. (Refer to 3 - DIFFERENTIAL & DRIVELINE/PROPELLER SHAFT/FRONT PROPELLER SHAFT - INSTALLATION) (Refer to 3 - DIFFERENTIAL & DRIVELINE/PROPELLER SHAFT/REAR PROPELLER SHAFT - INSTALLATION)
9. Fill transfer case with correct fluid. (Refer to 21 - TRANSMISSION/TRANSFER CASE/FLUID - STANDARD PROCEDURE)
10. Install skid plate, if equipped.
11. Remove transmission jack and support stand.

12. Lower vehicle and verify transfer case shift operation.

SPECIFICATIONS

TRANSFER CASE - NV244 GENII

TORQUE SPECIFICATIONS

DESCRIPTION	N-m	Ft. Lbs.	In. Lbs.
Plug, Detent	16-24	12-18	-
Plug, Drain/Fill	20-34	15-25	-
Bolt, Extension Housing	16-24	12-18	-
Bolt, Case Half	25-28	18-21	-
Screw, Oil Pump	14-19	10-14	-
Nuts, Mounting	30-41	20-30	-
Bolts, Shift Motor and Mode Sensor Assembly	16-24	12-18	-

SPECIAL TOOLS

TRANSFER CASE - NV244 GENII

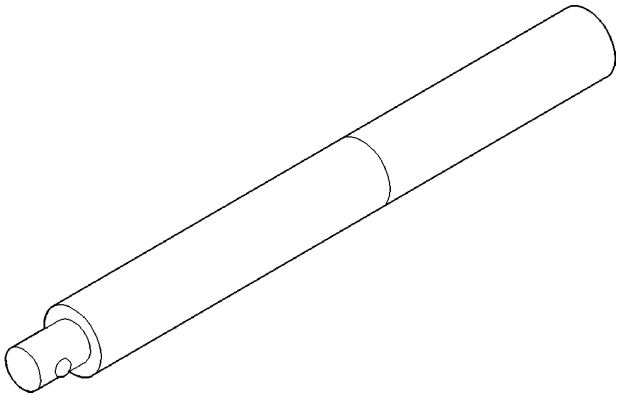

Handle, Universal - C-4171

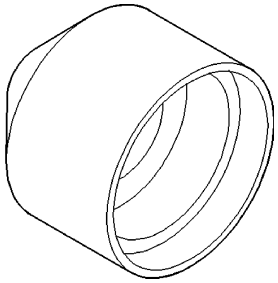

Installer, Seal - D-163

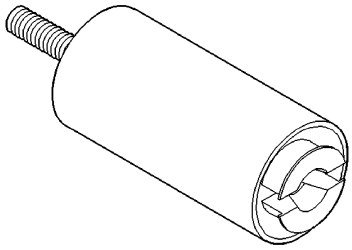

Remover - L-4454

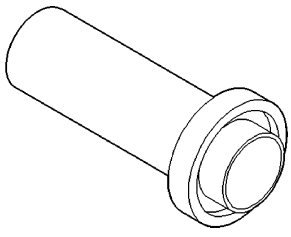

Installer, Seal - MB991168A

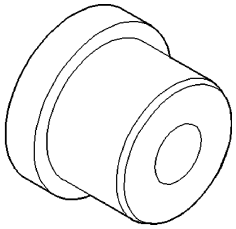

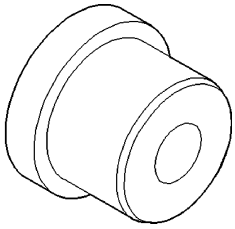

Installer, Bushing - 5066

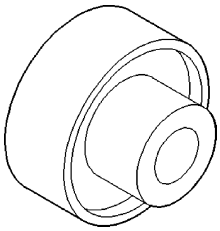

Installer, Bearing - 6953

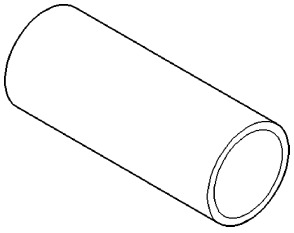

Cup - 8148

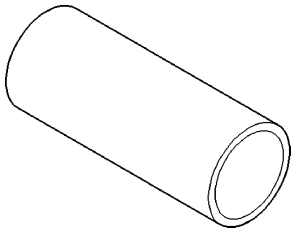

Installer - 8840

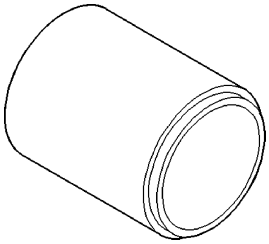

Installer, Seal - 8841

SEAL-EXTENSION HOUSING

REMOVAL

1. Raise and support vehicle.
2. Remove rear propeller shaft. (Refer to 3 - DIFFERENTIAL & DRIVELINE/PROPELLER SHAFT/PROPELLER SHAFT - REMOVAL)
3. Using a suitable pry tool or slide-hammer mounted screw, remove the extension housing seal.

INSTALLATION

1. Clean fluid residue from sealing surface and inspect for defects.
2. Using Installer D-163 (2) and Handle C-4171 (1), install seal in extension housing.
3. Install propeller shaft. (Refer to 3 - DIFFERENTIAL & DRIVELINE/PROPELLER SHAFT/PROPELLER SHAFT - INSTALLATION)
4. Verify proper transfer case fluid level.
5. Lower vehicle.

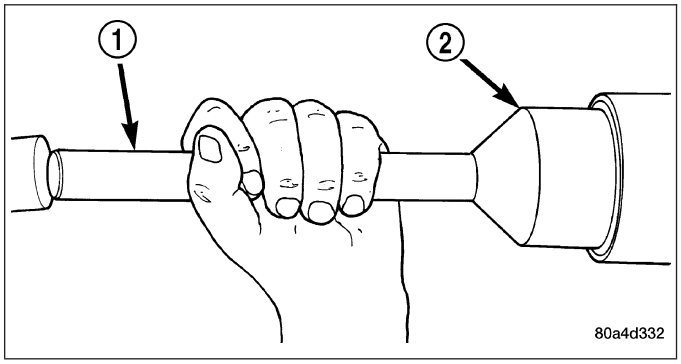

FLUID

STANDARD PROCEDURE - FLUID DRAIN AND REFILL

NOTE: The fill (2) and drain (3) plugs are both in the rear case.

1. Raise vehicle.
2. Position drain pan under transfer case.

NOTE: It may be necessary to remove the exhaust y-pipe at the exhaust manifold to properly access the fill and drain plugs. Lowering the exhaust will allow the plugs to be accessed for torquing during installation. (Refer to 11 - EXHAUST SYSTEM/EXHAUST PIPE - REMOVAL)

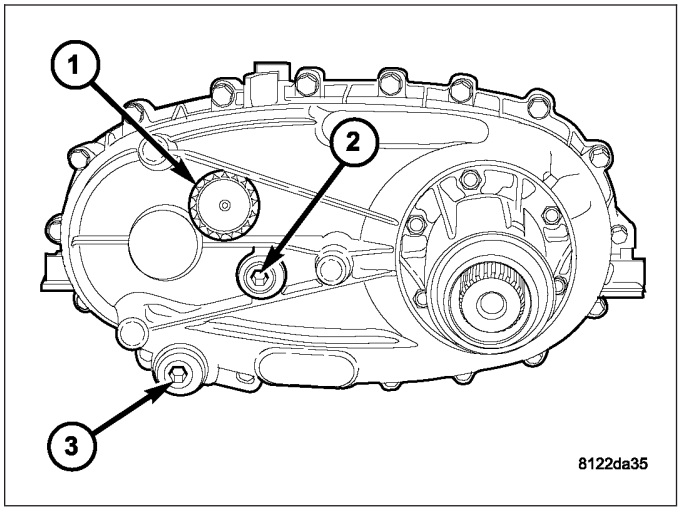

3. Remove drain (3) and fill (2) plugs and drain lubricant completely.
4. Install drain plug (3). Tighten plug to 20-34 N·m (15-25 ft. lbs.).
5. Remove drain pan.
6. Fill transfer case to bottom edge of fill plug opening with Mopar® ATF +4, Automatic Transmission fluid.
7. Install and tighten fill plug (2) to 20-34 N·m (15-25 ft. lbs.).
8. Install the exhaust y-pipe to the exhaust manifold, if removed. (Refer to 11 - EXHAUST SYSTEM/EXHAUST PIPE - INSTALLATION)
9. Wipe any excess fluid that may have spilled onto the exhaust.
10. Lower vehicle.

SEAL-FRONT OUTPUT SHAFT

REMOVAL

1. Remove the front propeller shaft (Refer to 3 - DIFFERENTIAL & DRIVELINE/PROPELLER SHAFT/PROPELLER SHAFT - REMOVAL).
2. Remove the front propeller shaft seal boot retaining clamp (2).

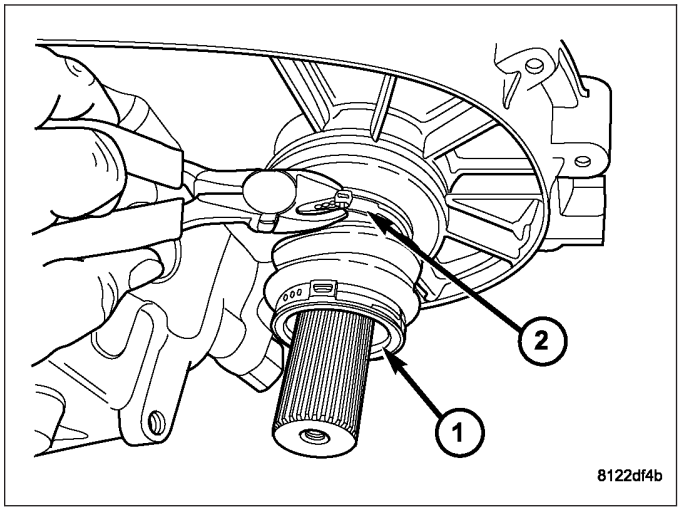

3. Remove the front propeller shaft seal boot (1) from the front output shaft seal slinger.

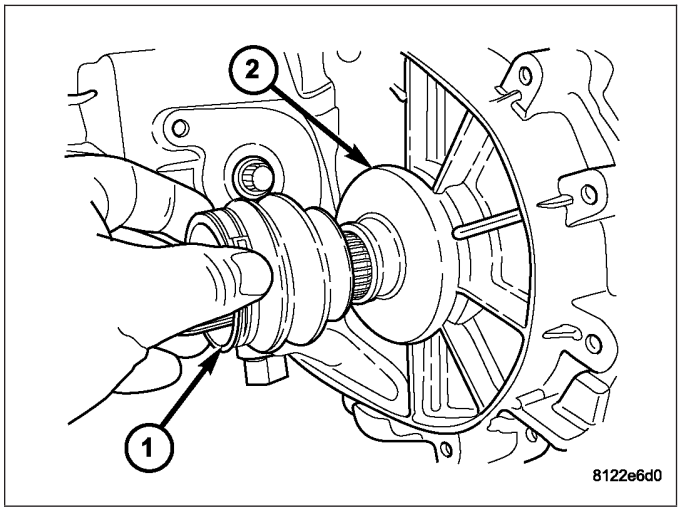

4. Remove the front output shaft seal slinger (1) by bending the slinger away (2) from the transfer case.
5. Using a suitable pry tool, remove the slinger from the output shaft using care not to damage the shaft.
6. Using a screw and a slide hammer, remove the front output shaft seal.

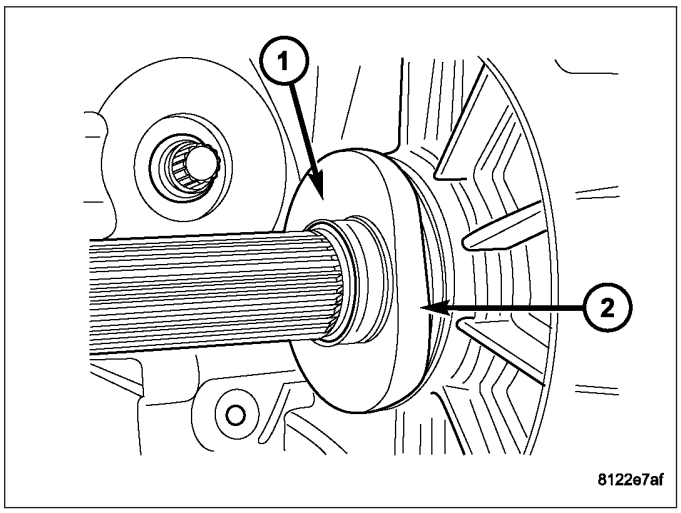

INSTALLATION

1. Install the new front output shaft seal with Installer MB991168A.
2. Install the front output shaft seal slinger with Installer 8840. Install the slinger onto the shaft until the tool contacts the rear of the output shaft.
3. Install a new seal boot clamp onto the seal boot.
4. Install the seal boot and clamp onto the slinger hub and tighten the clamp with Crimp Tool C-4975-A.
5. Install front propeller shaft (Refer to 3 - DIFFERENTIAL & DRIVELINE/PROPELLER SHAFT/PROPELLER SHAFT - INSTALLATION).

SENSOR-MODE

DESCRIPTION

The transfer case mode sensor is an electronic device whose output can be interpreted to indicate the shift motor shaft's rotary position. The sensor consists of a magnetic ring and four Hall Effect Transistors to create a 4 channel digital device (non-contacting) whose output converts the motor shaft position into a coded signal. The TCCM must supply 5VDC (+/- 0.5v) to the sensor and monitor the shift motor position. The four channels are denoted A, B, C, and D. The sensor is mechanically linked to the shaft of the cam which causes the transfer case shifting. The mode sensor draws less than 53 mA.

OPERATION

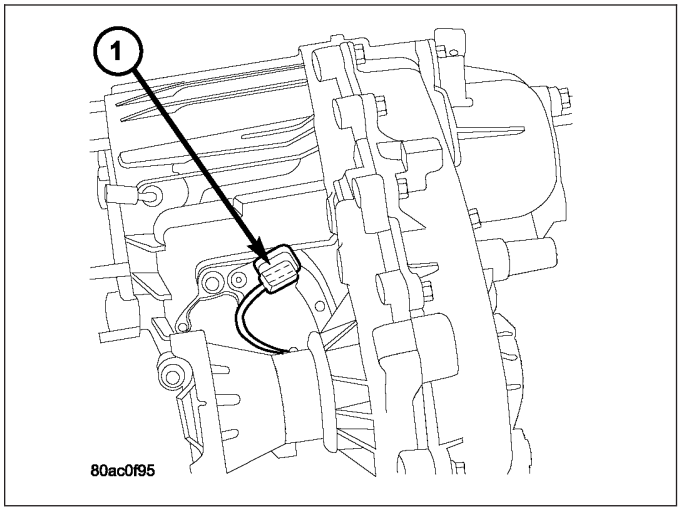

During normal vehicle operation, the Transfer Case Control Module (TCCM) monitors the mode sensor outputs at least every 250 (+/-50) milliseconds when the shift motor is stationary and 400 microseconds when the shift motor is active. A mode sensor signal between 3.8 Volts and 0.8 Volts is considered to be undefined.

Refer to SECTOR ANGLES vs. TRANSFER CASE POSITION for the relative angles of the transfer case shift sector versus the interpreted transfer case gear operating mode. Refer to MODE SENSOR CHANNEL STATES for the sensor codes returned to the TCCM for each transfer case mode sensor position. The various between gears positions can also be referred as the transfer case's coarse position. These coarse positions come into play during shift attempts.

SECTOR ANGLES vs. TRANSFER CASE POSITION

Shaft Angle (Degrees)	Transfer Case Position
+40	4LO
+20	N
0	2WD/AWD
-20	4HI

MODE SENSOR CHANNEL STATES

Transfer Case Angle (degrees)	Sensor Channel A	Sensor Channel B	Sensor Channel C	Sensor Channel D
Between Gears	H	H	L	H
+40 (4LO)	H	H	L	L
Between Gears	H	H	L	H
Between Gears	H	L	L	H
+20 (NEUTRAL)	H	L	L	L
Between Gears	H	L	L	H
Between Gears	H	L	H	H
0 (2WD/AWD)	H	L	H	L
Between Gears	H	L	H	H
Between Gears	L	L	H	H
-20 (4HI)	L	L	H	L
Between Gears	L	L	H	H
Between Gears	L	H	H	H

SWITCH-TRANSFER CASE SELECTOR

DESCRIPTION

The selector switch assembly is mounted in the left side of the vehicle's Instrument Panel (IP) and consists of a rotary knob connected to a resistive network for the mode and range shift selections. Also located in this assembly is a recessed, normally open momentary switch for making shifts into and out of transfer case NEUTRAL. A pen, or similar instrument, is used to make a NEUTRAL shift selection, thus reducing the likelihood of an inadvertent shift request.

The selector switch also contains light emitting diode's (LED's) to indicate the transfer case position and whether a shift is in progress.

OPERATION

As the position of the selector switch varies, the resistance between the Mode Sensor supply voltage pin and the Mode Sensor output will vary. Hardware, software, and calibrations within the Transfer Case Control Module (TCCM) are provided that interpret the selector switch resistance as given in the table below: SELECTOR SWITCH INTERPRETATION

SELECTOR SWITCH INTERPRETATION

Step	Resistance Range (ohms)	Required Interpretation
A	<200	Shorted
B	400-700	NEUTRAL
C	1050-1450	4LO
D	1850-2300	4H
E	3050-5950	AWD (Default)
F	9.5-12.5K	In between positions
G	>15.5K	Open

For resistances between the ranges B-E shown for each valid position (T-Case NEUTRAL, 4LO, 4HI, AWD), the TCCM may interpret the resistance as:

- either of the neighboring valid positions.
- as an invalid fault position.

For resistances between the ranges E and F shown for AWD and in-between positions, the TCCM may interpret the resistance as:

- the AWD position.
- an invalid fault position.
- a valid in-between position.

For resistances between the ranges F and G shown for in-between positions and fault condition (open), the TCCM may interpret the resistance as:

- a valid in-between position.
- an invalid fault position.

For resistances between the ranges A and B shown for the fault condition (short) and , T-Case NEUTRAL, the TCCM may interpret the resistance as:

- the T-Case NEUTRAL position.
- an invalid fault position.

The LED's in the selector assembly are illuminated/flashed in the following manner to indicate a particular condition or state.

- A solidly illuminated LED indicates a successfully completed shift and the current operating mode of the transfer case. While a shift has been requested but not yet completed, the LED for the desired transfer case position is flashed.
- A flashing operating mode LED for the desired gear indicates that a shift to that position has been requested, but all of the driver controllable conditions have not been met. This is in an attempt to notify the driver that the transmission needs to be put into NEUTRAL, the vehicle speed is too great, or some other condition outlined (other than a diagnostic failure that would prevent this shift) elsewhere (Refer to 8 - ELECTRICAL/ELECTRONIC CONTROL MODULES/TRANSFER CASE CONTROL MODULE - OPERATION) is not met. Note that this flashing will continue indefinitely until the conditions are eventually met, or the selector switch position is changed, or if diagnostic routines no longer allow the requested shift.
- If the driver attempts to make a shift into transfer case NEUTRAL, and any of the driver controllable conditions are not met, the request will be ignored until all of the conditions are met or until the NEUTRAL select button is released. Additionally the neutral lamp will flash, or begin to flash while the button is depressed and operator controllable conditions are not being met. All of the LED's except the Neutral will flash if any of the operator controllable conditions for shifting are not met while the Neutral button is depressed. This ″toggle″ type of feature is necessary because the TCCM would interpret another request immediately after the shift into transfer case NEUTRAL has completed.
- No LED's illuminated indicate a fault in the transfer case control system.

ASSEMBLY-SHIFT MOTOR/MODE SENSOR

DESCRIPTION

The shift motor (1) consists of a permanent magnet D.C. motor with gear reduction to convert a high speed-low torque device into a low speed-high torque device. The output of the device is coupled to a shaft which internally moves the mode and range forks that change the transfer case operating ranges. The motor is rated at 25 amps maximum at 72° F with 10 volts at the motor leads.

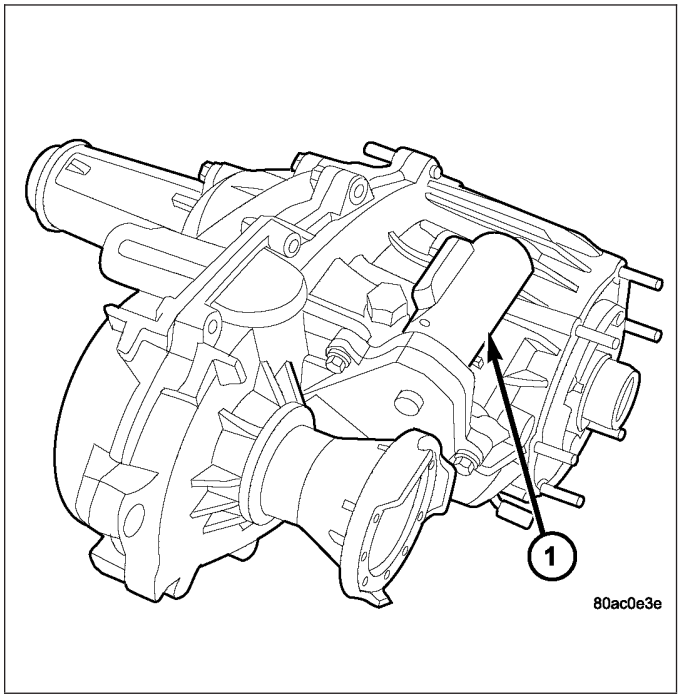

OPERATION

The transfer case shift motor responds to the Transfer Case Control Module (TCCM) commands to move the transfer case shift sector bi-directionally, as required, to obtain the transfer case operating mode indicated by the instrument panel mounted selector switch.

REMOVAL

NOTE: New shift motor assemblies are shipped in the 2WD/AWD position. If a new shift motor assembly will be installed, it will be necessary to shift the transfer case to the 2WD/AWD position prior to motor removal.

1. Raise the vehicle on a suitable hoist.
2. Disengage the wiring connectors from the shift motor and mode sensor.
3. Remove the bolts holding the shift motor and mode sensor assembly onto the transfer case.
4. Separate the shift motor and mode sensor assembly from the transfer case.

INSTALLATION

1. Verify that the shift sector o-ring is clean and properly positioned over the shift sector and against the transfer case.

NOTE: Verify that the shift motor position and sector shaft orientation are aligned. It may be necessary to manually shift the transfer case if the shift motor and sector shaft are not aligned.

2. Position the shift motor and mode sensor assembly onto the transfer case.
3. Install the bolts to hold the assembly onto the transfer case. Tighten the bolts to 16-24 N·m (12-18 ft.lbs.).

CAUTION: If the original shift motor and mode sensor assembly bolts are reused, be sure to use Mopar® Lock & Seal or Loctite™ 242 to replenish the lock patch material originally found on the bolts

4. Engage the wiring connectors to the shift motor and mode sensor.
5. Refill the transfer case as necessary.
6. Lower vehicle and verify transfer case operation.

TRANSFER CASE - NV273 - SERVICE INFORMATION

TABLE OF CONTENTS

page

TRANSFER CASE - NV273 - SERVICE INFORMATION
DESCRIPTION 1505
OPERATION 1506
DIAGNOSIS AND TESTING - TRANSFER CASE - NV273 1506
REMOVAL 1507
DISASSEMBLY 1507
CLEANING 1524
INSPECTION 1524
ASSEMBLY 1528
INSTALLATION 1548
SPECIFICATIONS
TRANSFER CASE - NV273 1549
SPECIAL TOOLS
TRANSFER CASE NV271/NV273 1550
BOOT-EXTENSION HOUSING SEAL AND DUST
REMOVAL 1552
INSTALLATION 1552
FLUID
STANDARD PROCEDURE - FLUID DRAIN AND REFILL 1553
SEAL-FRONT OUTPUT SHAFT
REMOVAL 1553
INSTALLATION 1554
SENSOR-MODE
DESCRIPTION 1554
OPERATION 1554
SWITCH-SELECTOR
DESCRIPTION 1555
OPERATION 1556
MOTOR-SHIFT
DESCRIPTION 1557
OPERATION 1557
REMOVAL 1557
INSTALLATION 1557

TRANSFER CASE - NV273 - SERVICE INFORMATION

DESCRIPTION

The NV273 is an electronically controlled part-time transfer case with a low range gear reduction system. The NV273 has three operating ranges plus a NEUTRAL position. The low range system provides a gear reduction ratio for increased low speed torque capability.

The geartrain is mounted in two aluminum case halves attached with bolts. The mainshaft front and rear bearings are mounted in aluminum case halves.

OPERATING RANGES

Transfer case operating ranges are:

- 2WD (2-wheel drive)
- 4HI (4-wheel drive)
- 4LO (4-wheel drive low range)
- NEUTRAL

The 2WD range is for use on any road surface at any time.

The 4HI and 4LO ranges are for off road use only. They are not for use on hard surface roads. The only exception being when the road surface is wet or slippery or covered by ice and snow.

The low range reduction gear system is operative in 4LO range only. This range is for extra pulling power in off road situations. Low range reduction ratio is 2.72:1.

SHIFT MECHANISM

Operating ranges are selected with a dash mounted shift selector switch. The shift selector switch provides a input to the Transfer Case Control Module (TCCM) to indicate the driver's desire to change operating ranges. The TCCM uses this input, along with input from the transfer case mounted mode sensor and information from the vehicle's bus, to determine if a shift is permitted. If the TCCM decides the shift is permitted, the TCCM controls the shift motor, mounted to the exterior of the transfer case, to perform the shift.

IDENTIFICATION

A circular ID tag (2)is attached to the rear case of each transfer case. The ID tag provides the transfer case model number, assembly number, serial number, and low range ratio.

The transfer case serial number also represents the date of build.

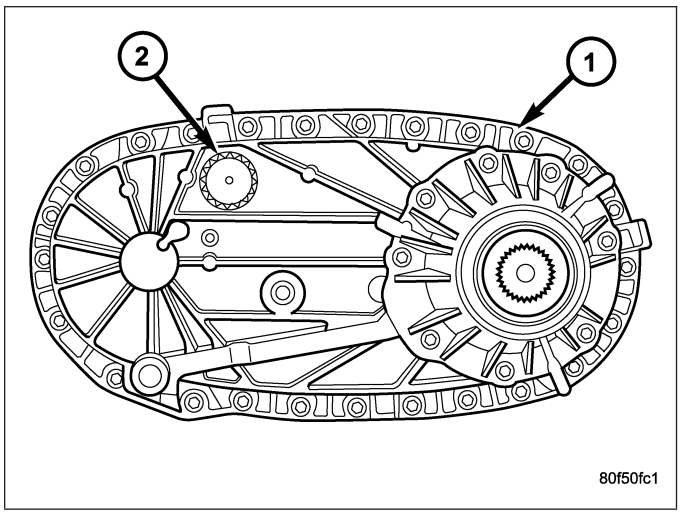

OPERATION

The input gear is splined to the transmission output shaft. The input gear drives the mainshaft through the planetary assembly and range sleeve. The front output shaft is operated by a drive chain that connects the shaft to a drive sprocket on the mainshaft. The drive sprocket is engaged/disengaged by the mode fork, which operates the mode sleeve and hub. The sleeve and hub are not equipped with a synchronizer mechanism for shifting.

DIAGNOSIS AND TESTING - TRANSFER CASE - NV273

DIAGNOSIS CHART

Condition	Possible Cause	Correction
Transfer case difficult to shift or will not shift into desired range.	1) Transfer case electronically controlled shift system malfunction.	1) Verify proper operation per the appropriate diagnostic manual.
	2) If vehicle was operated for an extended period in 4HI mode on dry surface, driveline torque load may cause difficulty.	2) Drive the vehicle in a straight line and momentarily release the accelerator. The transfer case can then be shifted to the desired mode.
	3) Insufficient or incorrect lubricant.	3) Drain and refill transfer case with the correct quantity of Mopar® ATF +4, Automatic Transmission Fluid.
	4) Internal transfer case components binding, worn, or damaged.	4) Repair or replace components as necessary.
Transfer case noisy in all drive modes.	1) Insufficient or incorrect lubricant.	1) Drain and refill transfer case with the correct quantity of Mopar® ATF +4, type 9602, Automatic Transmission Fluid.
	2) Internal transfer case components binding, worn, or damaged.	2) Repair or replace components as necessary.

Condition	Possible Cause	Correction
Transfer case noisy while in, or jumps out of, 4LO mode.	1) Transfer case not completely engaged in 4LO position.	1) While rolling 2-3 MPH and the transmission in NEUTRAL, or clutch depressed on vehicles equipped with a manual transmission, shift transfer case to the 2WD or 4HI position, and then back into the 4LO position.
	2) Range fork damaged, inserts worn, or fork is binding on the shift rail.	2) Repair or replace components as necessary.
	3) Low range gear worn or damaged.	3) Repair or replace components as necessary.
Lubricant leaking from transfer case seals or vent.	1) Transfer case overfilled.	1) Drain lubricant to the correct level.
	2) Transfer case vent closed or restricted.	2) Clean or replace vent as necessary.
	3) Transfer case seals damaged or installed incorrectly.	3) Replace suspect seal.
Abnormal tire wear.	1) Extended operation in 4HI mode on dry surfaces,	1) Operate vehicle in 2WD mode on dry surfaces.

REMOVAL

1. Shift transfer case into 2WD.
2. Raise vehicle.
3. Drain transfer case lubricant.
4. Mark front and rear propeller shafts for alignment reference.
5. Support transmission with jack stand.
6. Remove the transfer case skid plate, if equipped.
7. Disconnect front and rear propeller shafts at transfer case.
8. Disconnect transfer case shift motor and mode sensor wire connectors (3).
9. Disconnect transfer case vent hose.
10. Support transfer case with transmission jack.
11. Secure transfer case to jack with chains.
12. Remove nuts attaching transfer case (2) to transmission (1).
13. Pull transfer case and jack rearward to disengage transfer case.
14. Remove transfer case from under vehicle.

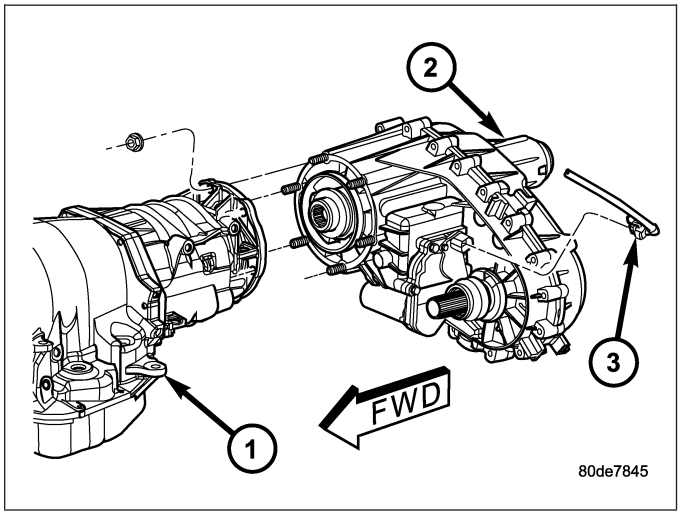

DISASSEMBLY

Position transfer case in a shallow drain pan. Remove drain plug and drain any remaining lubricant remaining in case.

COMPANION FLANGE AND EXTENSION HOUSING

1. Install two bolts 180° apart into the front output shaft companion flange.
2. Place holder (1) over the bolts (2) and against the companion flange.
3. Remove and discard the front companion flange nut.
4. Remove the companion flange from the front output shaft. It may be necessary to use Flange puller 8992 to remove the companion flange.

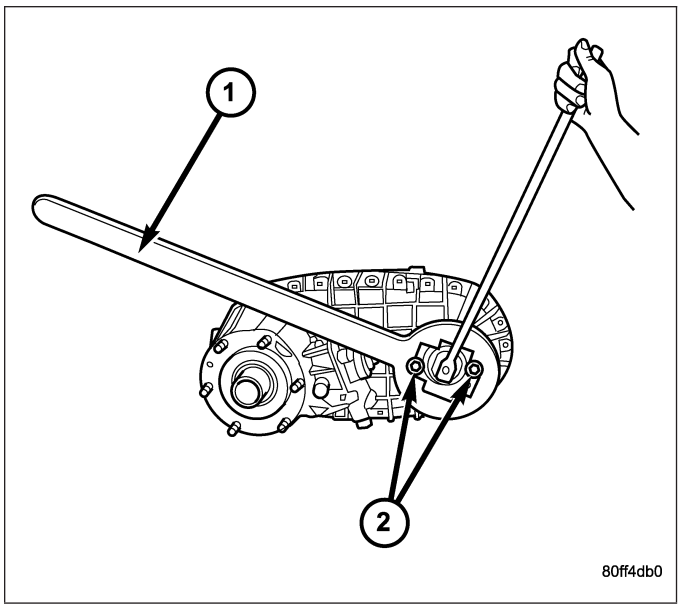

5. Use a suitable chisel or pry tool to remove the rear extension housing (1) dust boot (2).
6. Use a suitable chisel or pry tool to remove the rear extension housing seal.

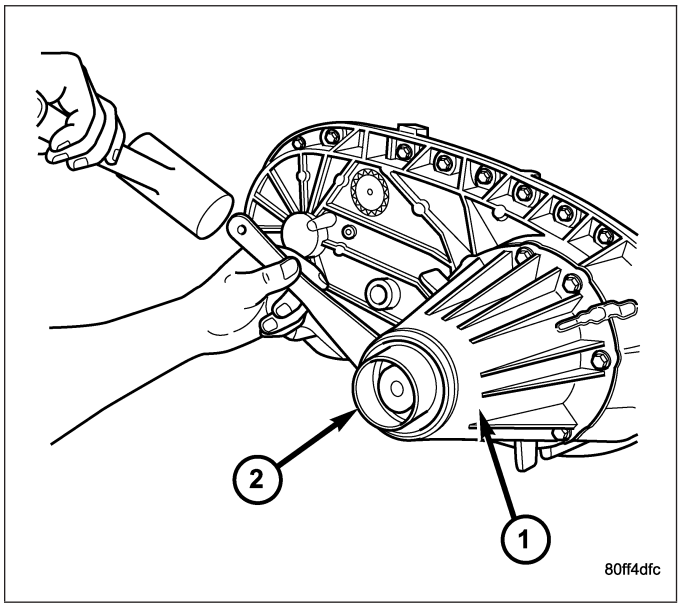

7. Remove rear extension (1) bolts (2).

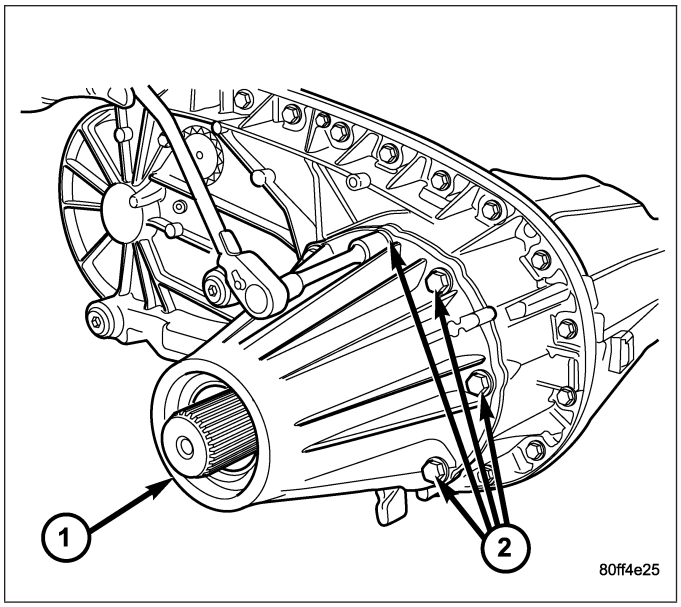

8. Remove rear extension housing (2). Tap extension once or twice with a plastic mallet to break sealer bead and loosen it.

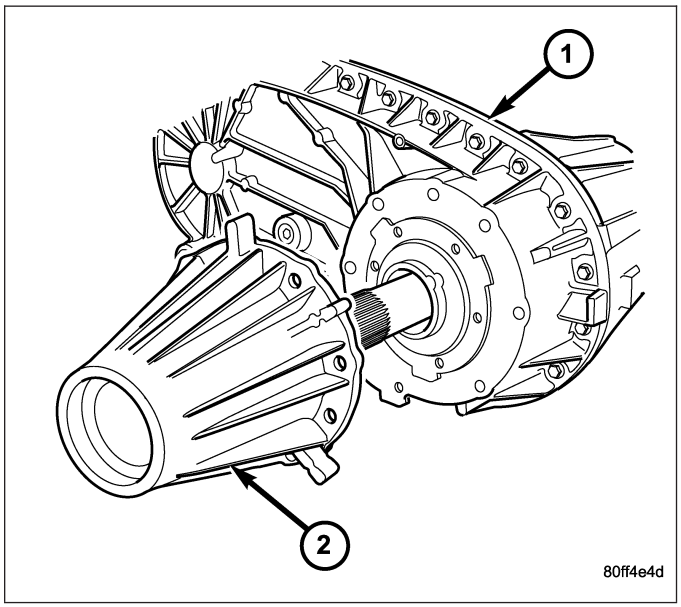

OIL PUMP AND REAR CASE

1. Disengage the oil pump pick-up tube (2) from the oil pump (1).

NOTE: The oil pump pick-up tube seals to the oil pump with an o-ring. Verify that the o-ring was removed with the tube and is in good condition. Replace the o-ring if necessary.

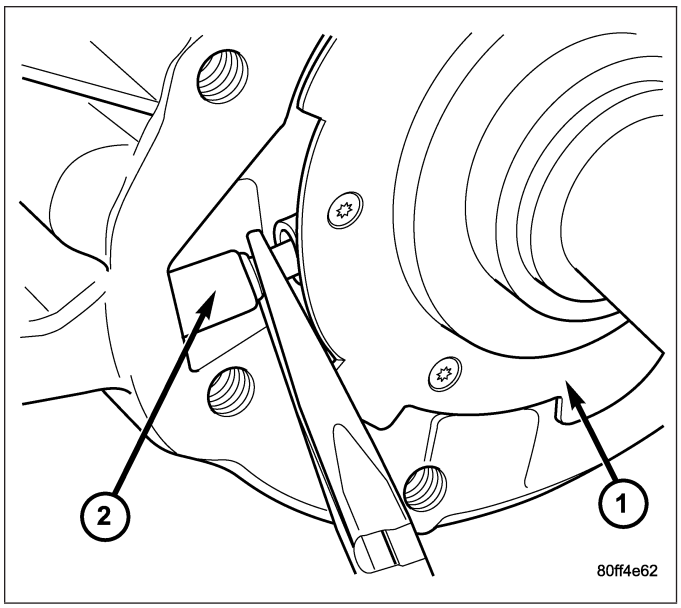

2. Remove the oil pump (3).

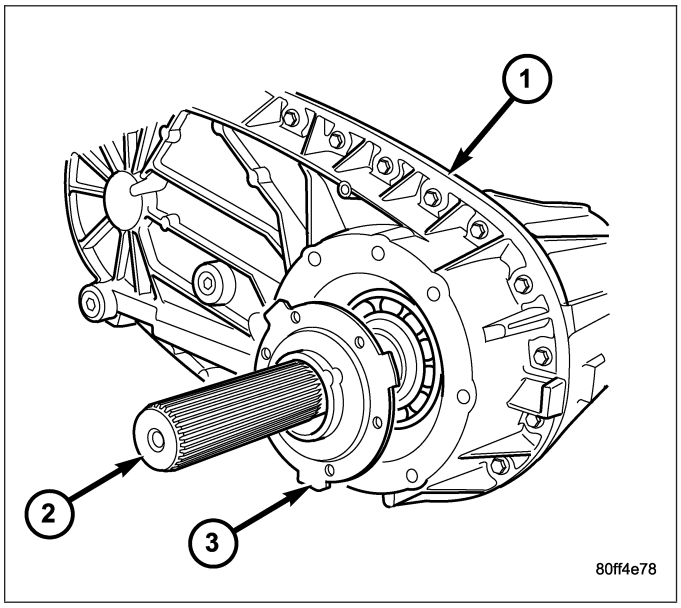

3. Remove rear case (2) -to-front case (1) bolts (3).

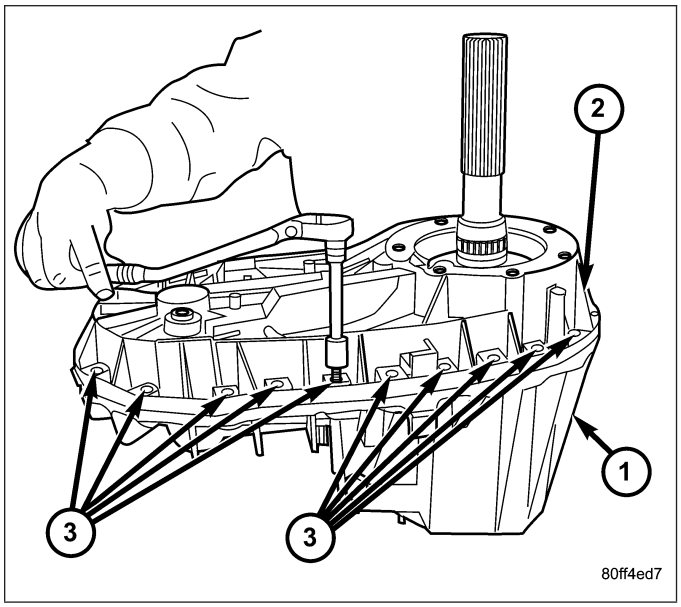

4. Remove the rear output shaft bearing inner snap-ring (3) from the output shaft (1) using suitable snap-ring pliers.

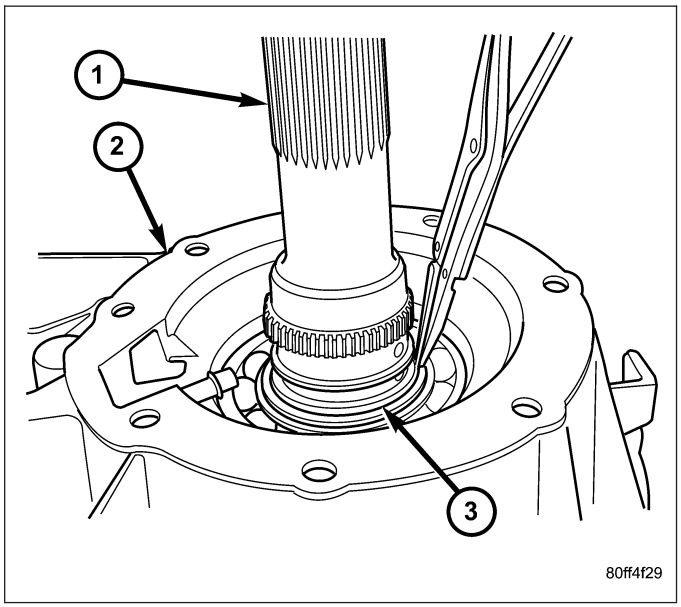

5. Remove the rear output shaft bearing inner snap-ring (3) from the output shaft (1).

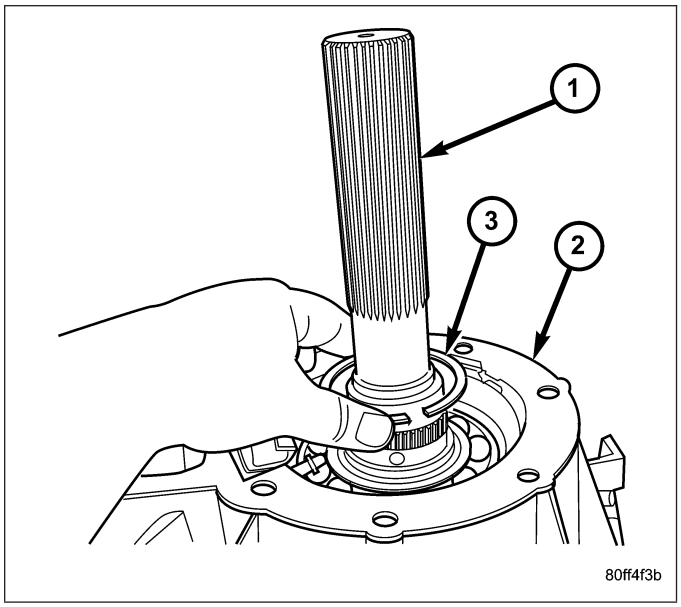

6. Loosen rear case (2) from front case (1) with pry tool to break sealer bead. Insert tool at each end of case.

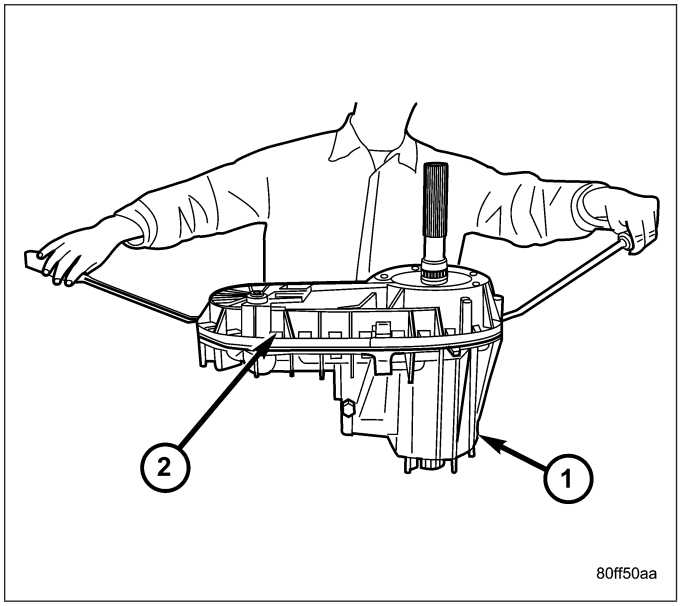

7. Unseat rear case from alignment dowels.
8. Remove the rear case (2) from the front case (1).

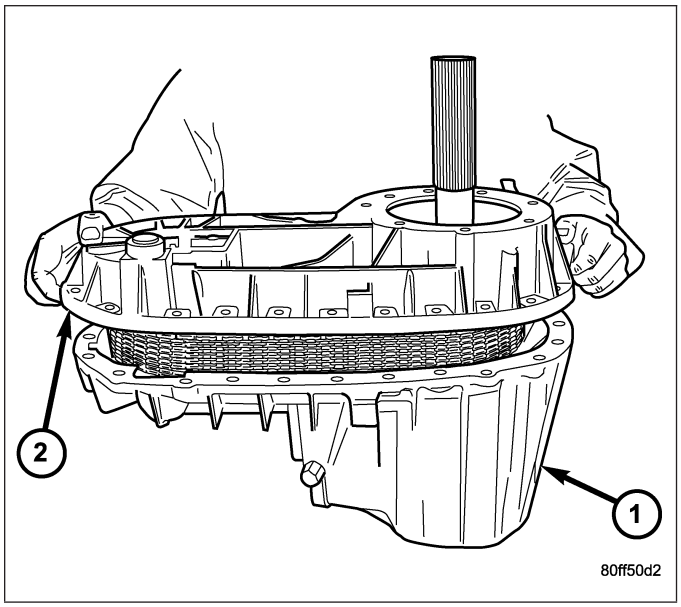

FRONT OUTPUT SHAFT AND DRIVE CHAIN

1. Remove the oil pick-up tube (3) and screen from the front case half (1).

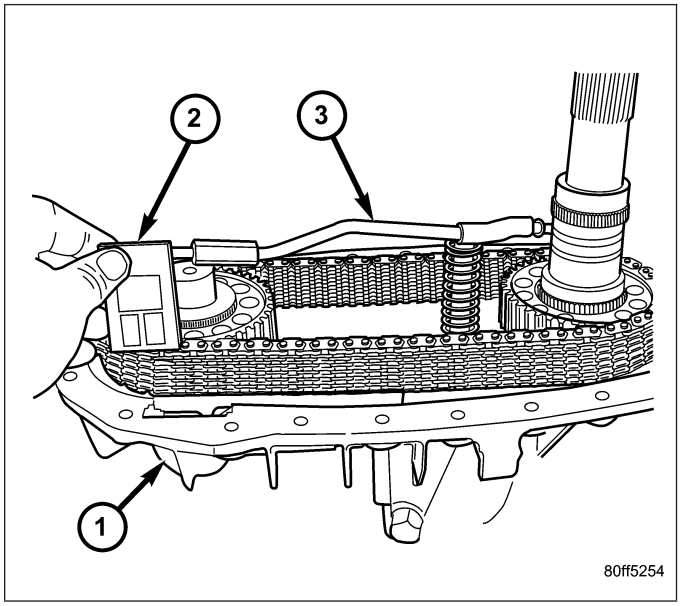

2. Remove the front output shaft (1) drive sprocket (2) retaining ring (3).

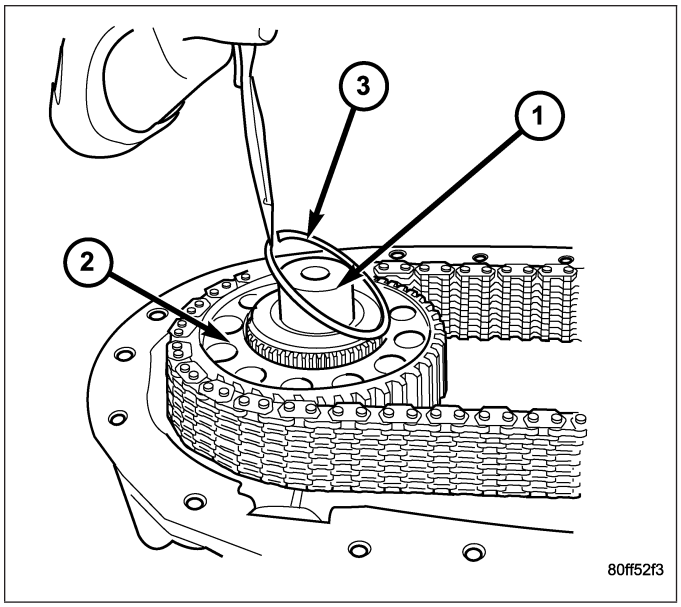

3. Remove the rear output shaft (1) drive sprocket (2) retaining ring (3).

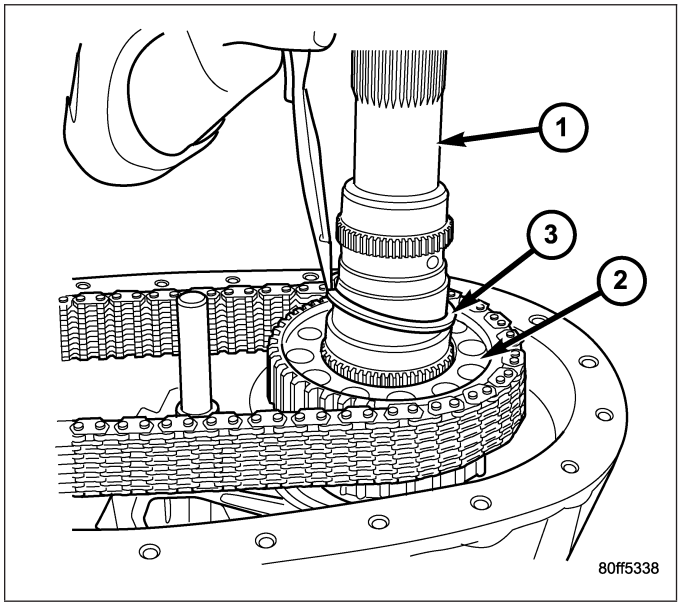

4. Pull front sprocket (3), rear sprocket, and chain (2) upward until clear of the front and rear output shaft sprocket splines.
5. Remove chain and sprockets as an assembly.

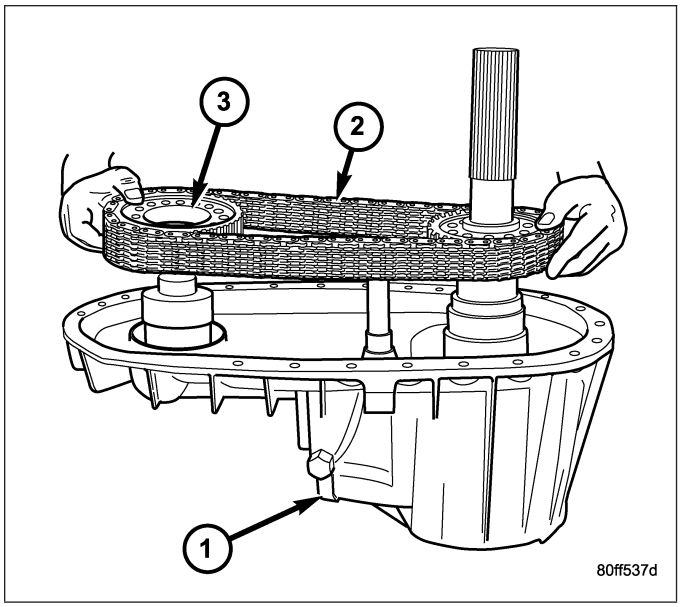

SHIFT FORKS AND MAINSHAFT

1. Remove the bolts (3) that hold the shift motor assembly (2) to the transfer case (1).

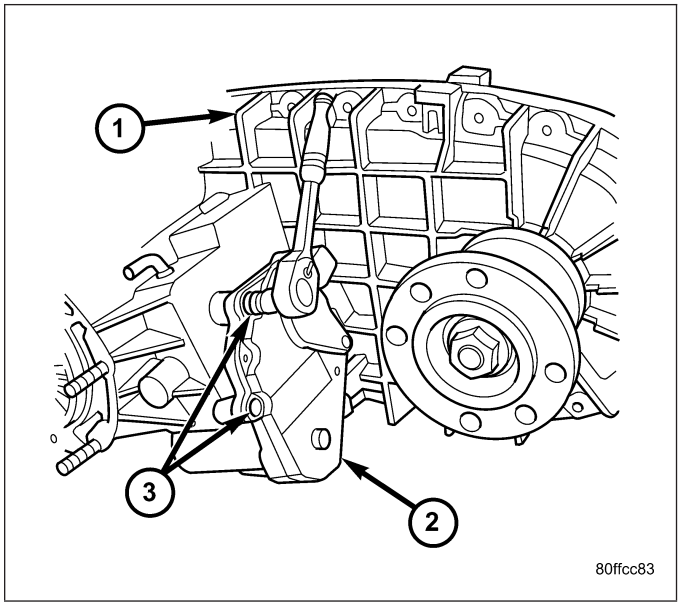

2. Remove the shift motor assembly (2) from the transfer case (1).

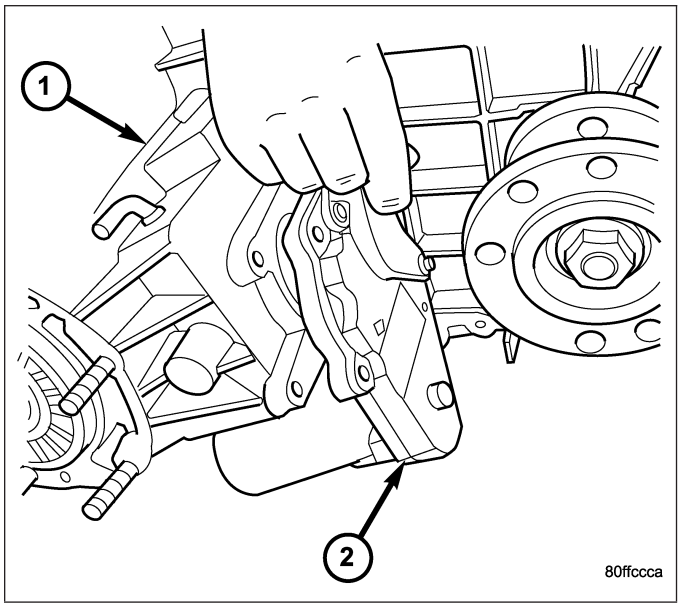

3. Remove the sector support with Socket 9033.
4. Loosen detent plug (2).

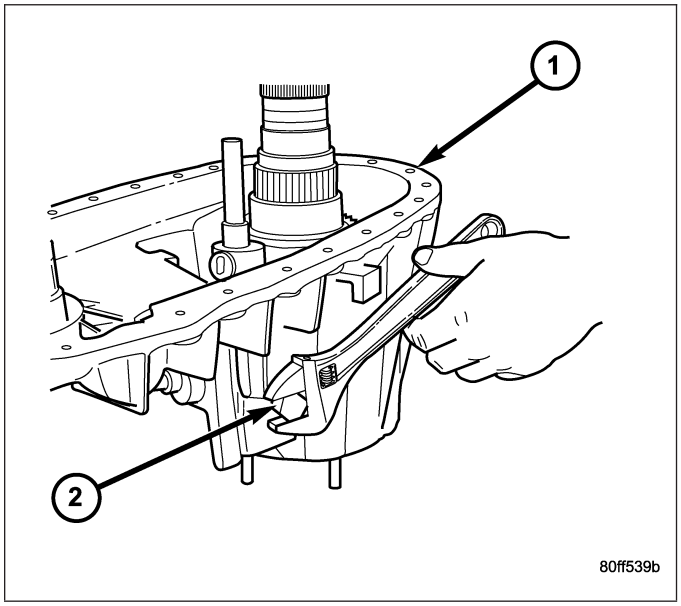

5. Remove detent plug (2), spring (3), and plunger (4). Note that the plug has an O-ring seal. Remove and discard this seal.

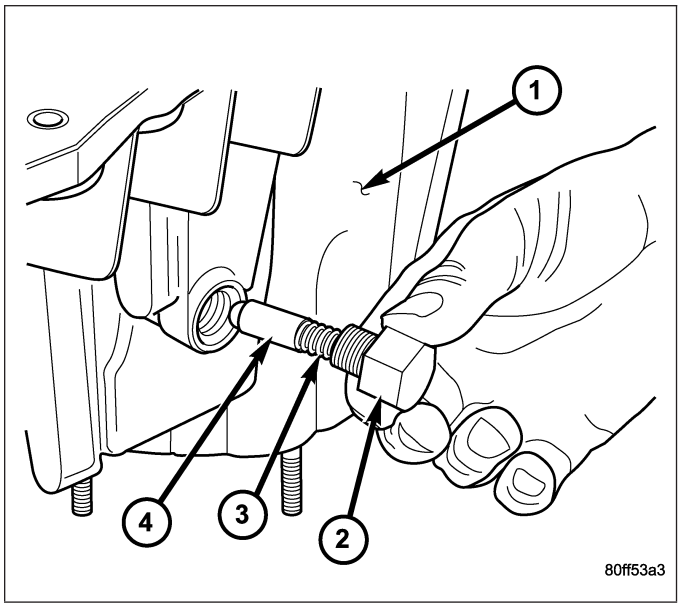

6. Using a screw mounted in a slide hammer, remove the front output shaft seal.

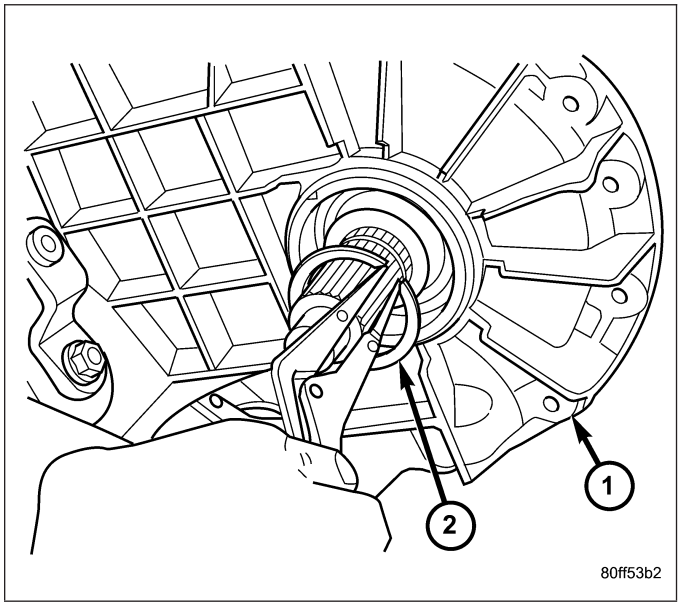

7. Remove the front output shaft snap-ring (2).

8. Remove front output shaft (2) from bearing in front case (1).

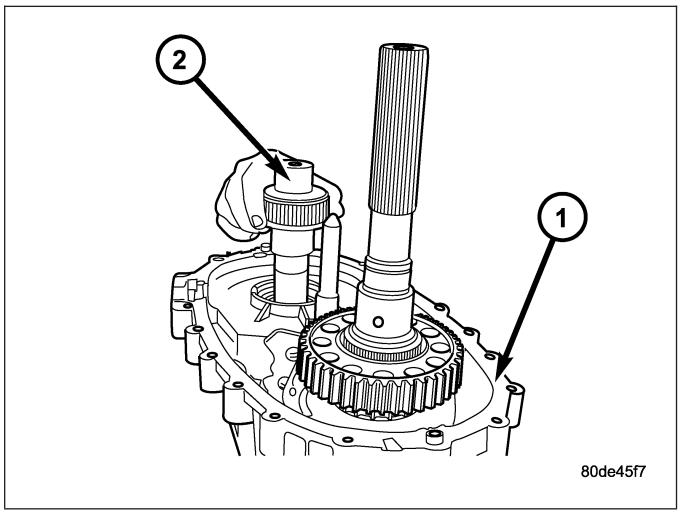

9. Pull mainshaft assembly (2) out of input gear, mode sleeve, and front case (1).

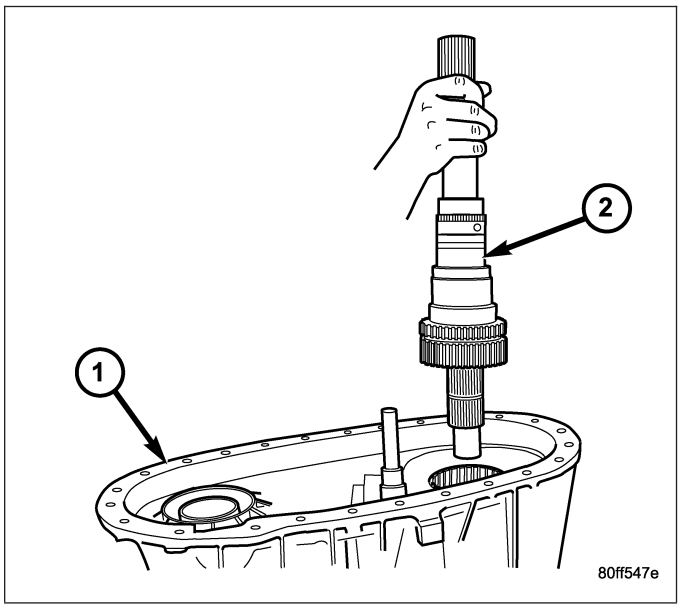

10. Remove mode fork (2), mode sleeve (1), and shift rail (2) as assembly. Note which way the sleeve fits in the fork (long side of sleeve goes to front or the points on the sleeve teeth go to the rear of case).

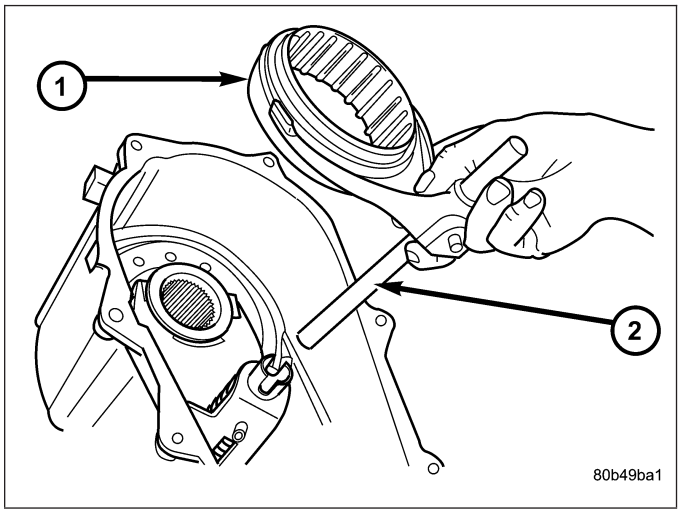

11. Remove range fork (2) and hub (1) as an assembly. Note fork position for installation reference.

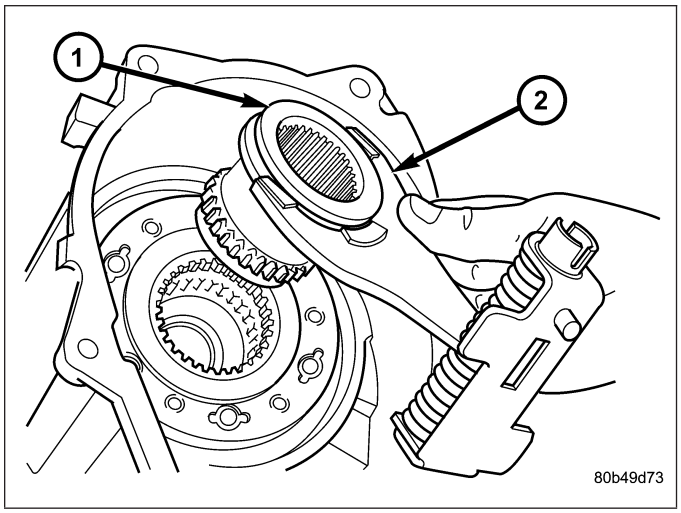

12. Remove the shift sector (1).

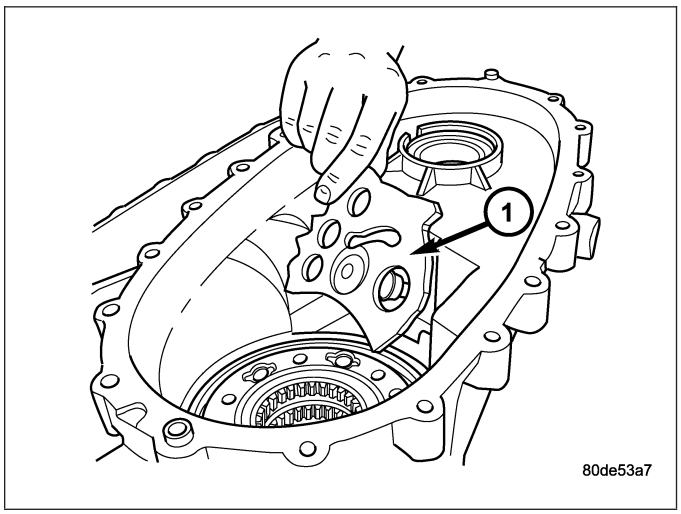

MAINSHAFT

1. Remove the clutch gear (2) from the output shaft (1).

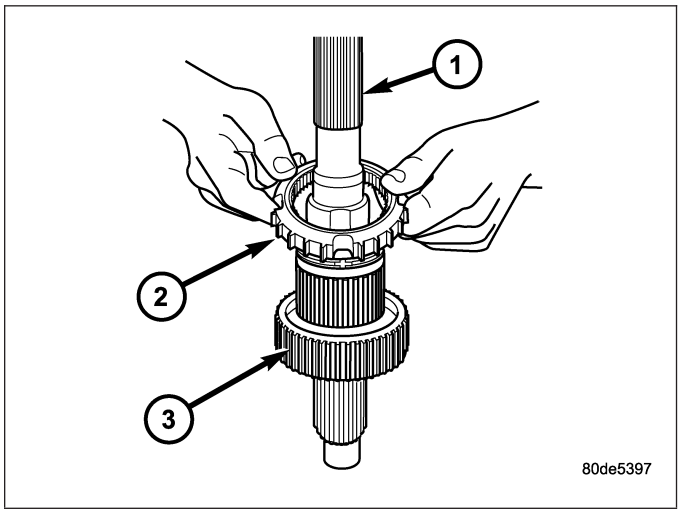

2. Remove the mode hub (2) retaining ring (3) from the mainshaft (1).

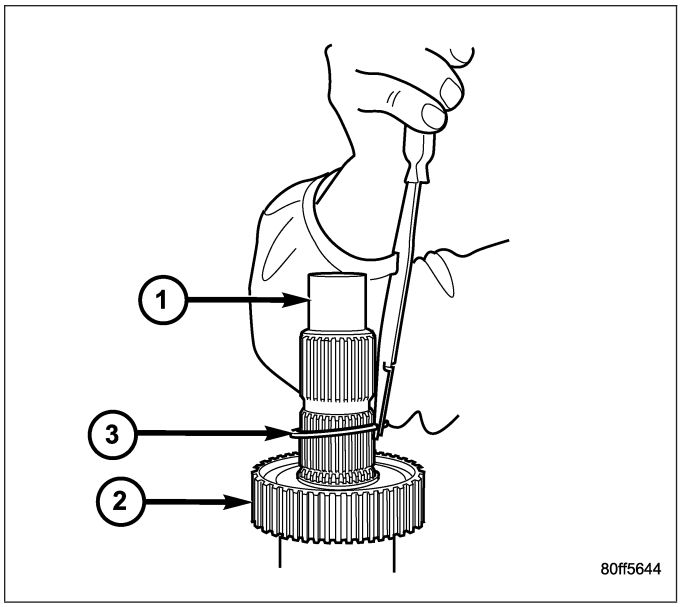

3. Remove the mode hub (2) from the mainshaft (1).

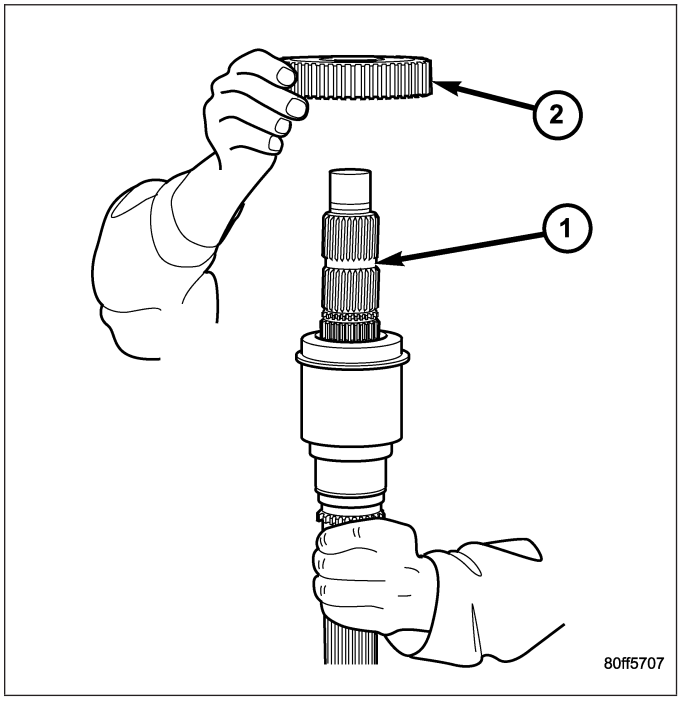

4. Remove the drive sprocket drive hub (2) from the mainshaft (1).

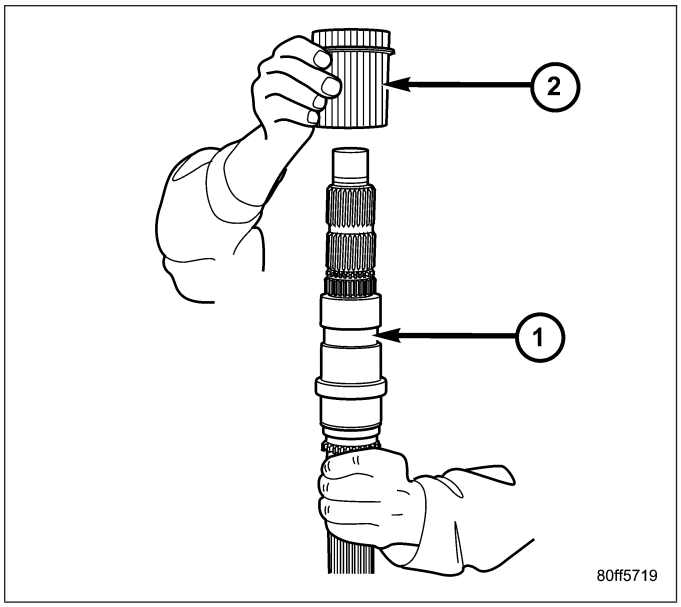

INPUT AND PLANETARY GEAR

1. Remove input gear seal with suitable screw and slide hammer.
2. Remove input gear (1) retaining ring (2) with heavy duty snap-ring pliers.

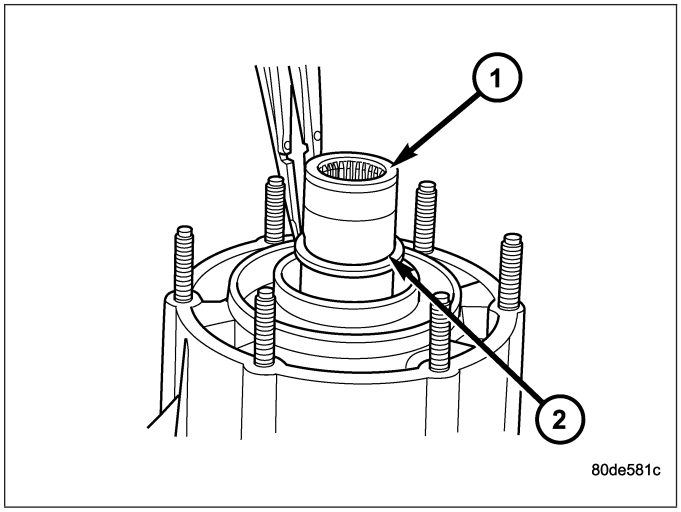

3. Place front case in horizontal position. Then remove input gear and low range gear as an assembly (2). Tap gear out of bearing with plastic mallet, if necessary.

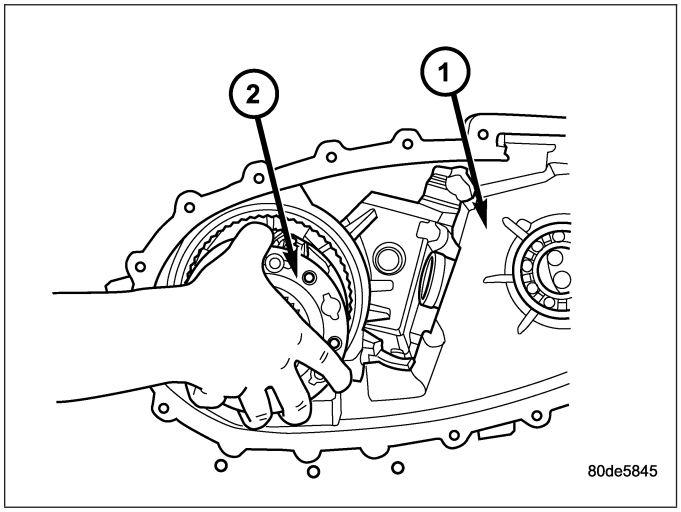

4. Remove snap-ring (2) that retains input gear (1) in the low range gear.

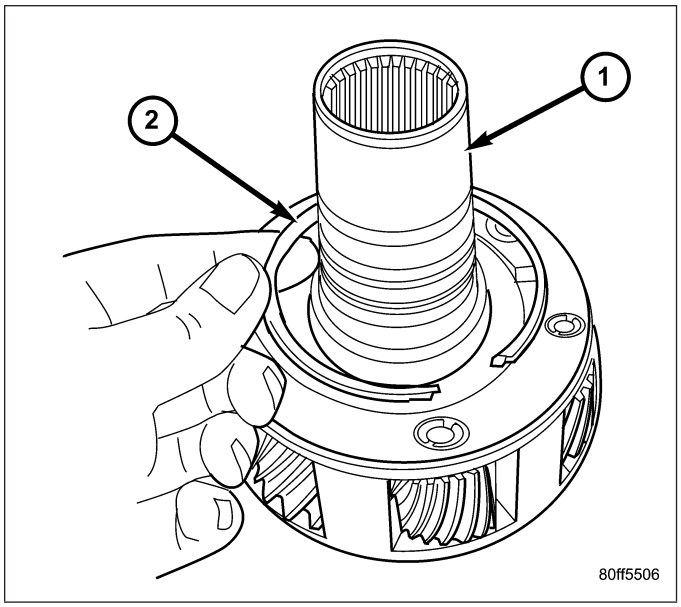

5. Remove retainer (2).

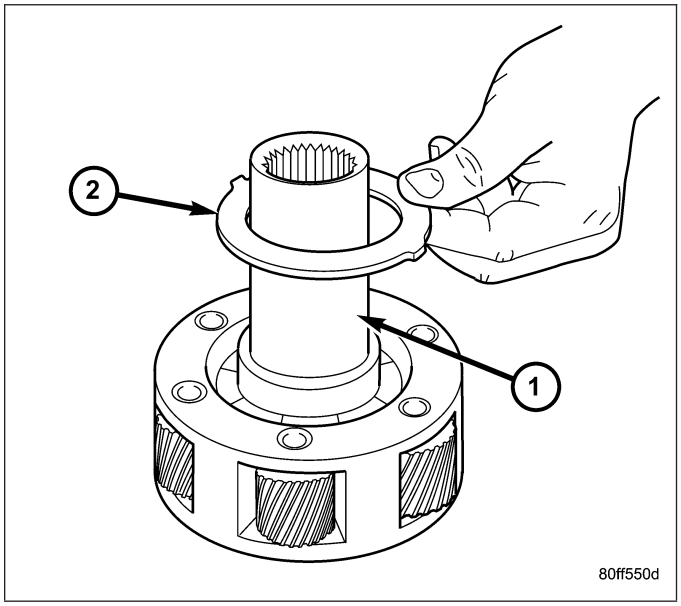

6. Remove front thrust plate (2).

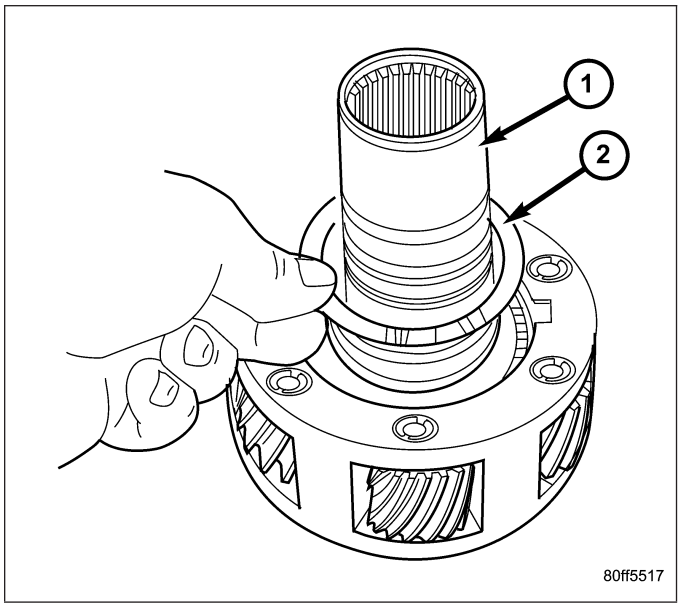

7. Remove input gear (1).

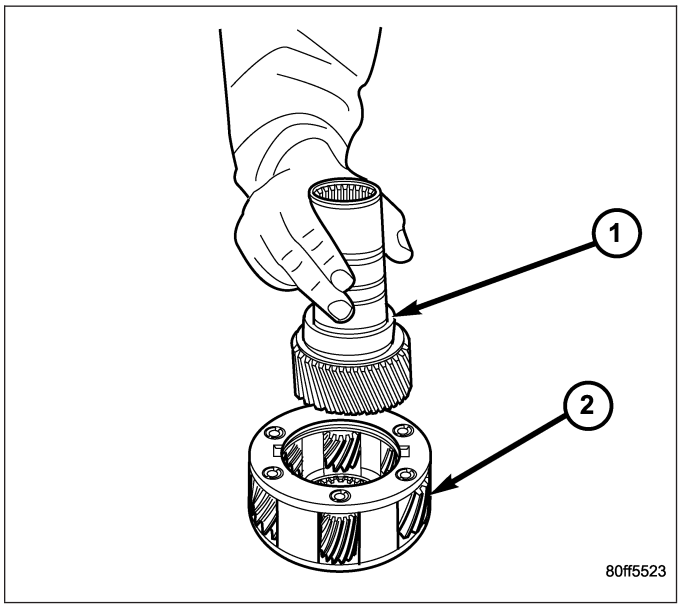

8. Remove bottom tabbed thrust washer (2) from low range planetary (1).

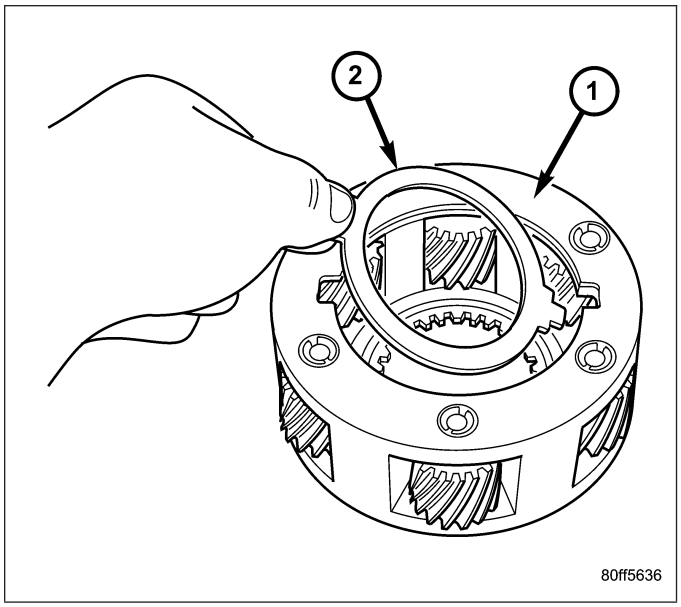

CLEANING

Clean the transfer case parts with a standard parts cleaning solvent. Remove all traces of sealer from the cases and retainers with a scraper and 3M™ all purpose cleaner. Use compressed air to remove solvent residue from oil feed passages in the case halves, retainers, gears, and shafts.

INSPECTION

MAINSHAFT/SPROCKET/HUB INSPECTION

Inspect the splines on the hub and shaft and the teeth on the sprocket. Minor nicks and scratches can be smoothed with an oilstone. However, replace any part that is damaged.

Check the contact surfaces in the sprocket bore and on the mainshaft. Minor nicks and scratches can be smoothed with 320-400 grit emery cloth but do not try to salvage the shaft if nicks or wear is severe.

INPUT GEAR AND PLANETARY CARRIER

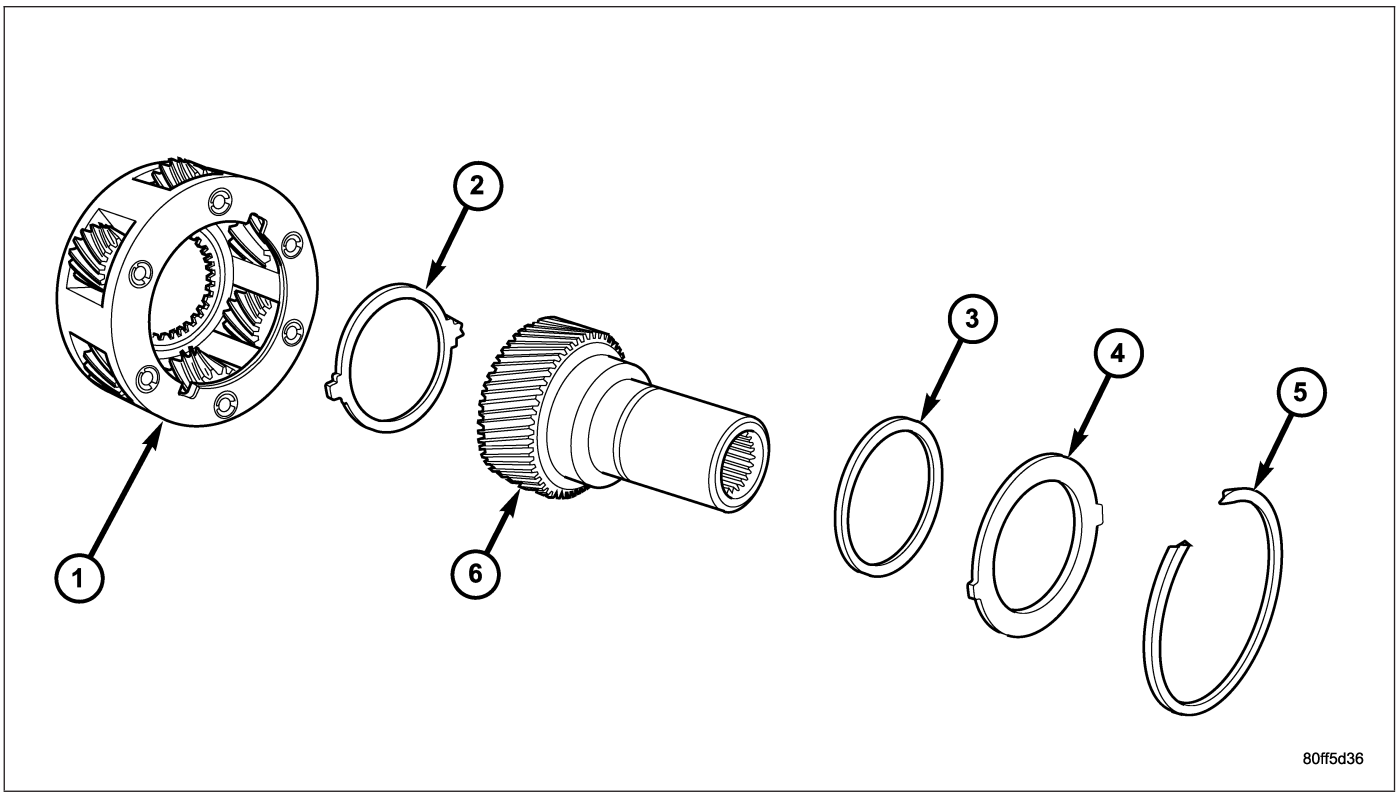

Input Gear And Carrier Components

1 - PLANETARY CARRIER
2 - REAR THRUST WASHER
3 - FRONT THRUST WASHER
4 - CARRIER LOCK RING
5 - CARRIER LOCK RETAINING RING
6 - INPUT GEAR

Check the teeth on the gear (6). Minor nicks can be dressed off with an oilstone but replace the gear if any teeth are broken, cracked, or chipped. The bearing surface on the gear can be smoothed with 300-400 grit emery cloth if necessary.

Examine the carrier body (1) and pinion gears for wear or damage. Check the pinion gear thrust washers on the pinon pins for damage. The carrier will have to be replaced as an assembly if the body, pinion pins, or pinion gears are damaged.

Check the lock ring (4) and both thrust washers (2, 3) for wear or cracks. Replace them if necessary. Also replace the lock retaining ring if bent, distorted, or broken.

SHIFT FORKS/HUBS/SLEEVES

Check condition of the shift forks (1) and mode fork shift rail (2). Minor nicks on the shift rail can be smoothed with 320-400 grit emery cloth.

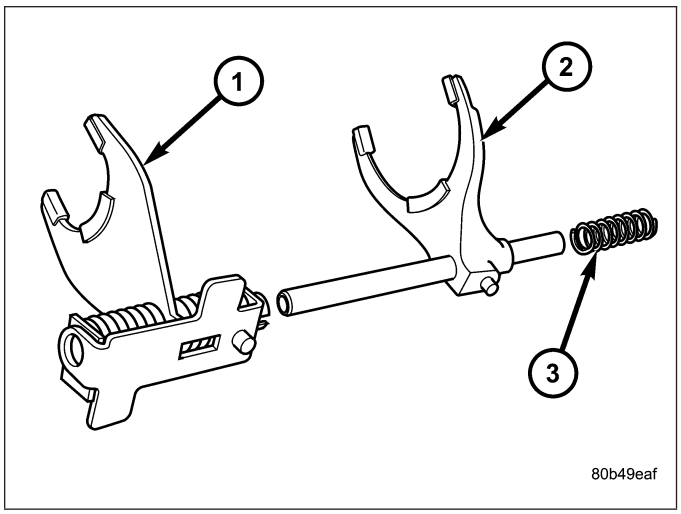

Inspect the shift fork wear pads (3, 4). The mode (2) and range fork (1) pads are serviceable and can be replaced if necessary.

Check both of the sleeves for wear or damage, especially on the interior teeth. Replace the sleeves if wear or damage is evident.

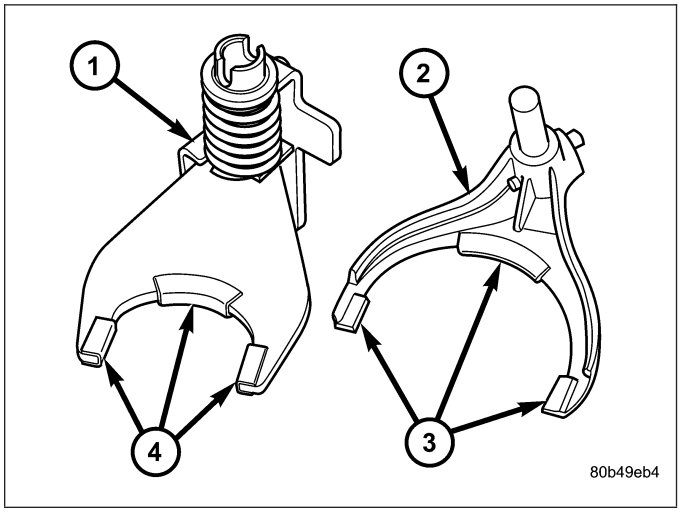

REAR EXTENSION HOUSING

Inspect the extension housing seal and bushing. Replace both components if either show any sign of wear or damage.

FRONT OUTPUT SHAFT AND DRIVE CHAIN

Inspect the shaft threads, sprocket teeth, and bearing surfaces. Minor nicks on the teeth can be smoothed with an oilstone. Use 320-400 grit emery to smooth minor scratches on the shaft bearing surfaces. Rough threads on the shaft can be chased if necessary. Replace the shaft if the threads are damaged, bearing surfaces are scored, or if any sprocket teeth are cracked or broken.

Examine the drive chain and shaft bearings. Replace the chain and both sprockets if the chain is stretched, distorted, or if any of the links bind. Replace the bearings if rough, or noisy.

LOW RANGE ANNULUS GEAR

Inspect annulus gear (2) condition carefully. The gear is only serviced as part of the front case (1). If the gear is damaged, it will be necessary to replace the gear and front case as an assembly. Do not attempt to remove the gear.

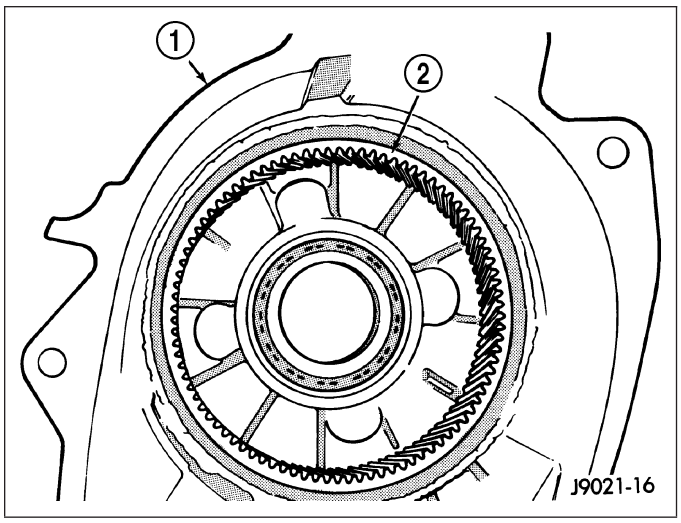

FRONT AND REAR CASES

Inspect the cases for wear and damage.

Check case condition. If leaks were a problem, look for gouges and severe scoring of case sealing surfaces. Also make sure the front case mounting studs are in good condition.

Check the front case mounting studs and vent tube. The tube can be secured with Loctite™ 271 or 680 if loose. The stud threads can be cleaned up with a die if necessary. Also check condition of the fill/drain plug threads in the rear case. The threads can be repaired with a thread chaser or tap if necessary. Or the threads can be repaired with Helicoil® stainless steel inserts if required.

OIL PUMP/OIL PICKUP

Examine the oil pump pickup parts. Replace the pump if any part appears to be worn or damaged. Do not disassemble the pump as individual parts are not available. The pump is only available as a complete assembly. The pickup screen, hose, and tube are the only serviceable parts and are available separately.

ASSEMBLY

BEARINGS AND SEALS

1. Remove the input shaft bearing snap-ring from the front case half with suitable snap-ring pliers.
2. Remove the input shaft bearing from the front case half with Installer 6953 (3) and Handle C-4171 (2).

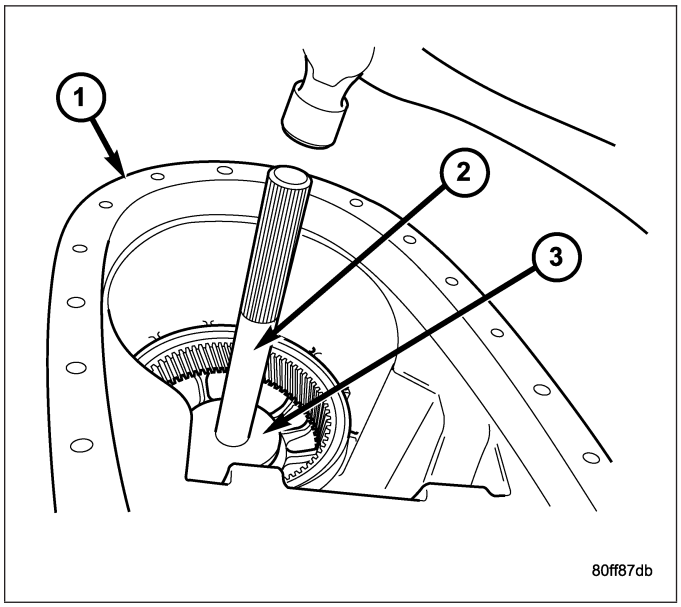

3. Install the input shaft bearing into the front case half with Installer 8151 (3) inverted on Handle C-4171 (2).
4. Install the input shaft bearing snap-ring into the front case half with suitable snap-ring pliers.

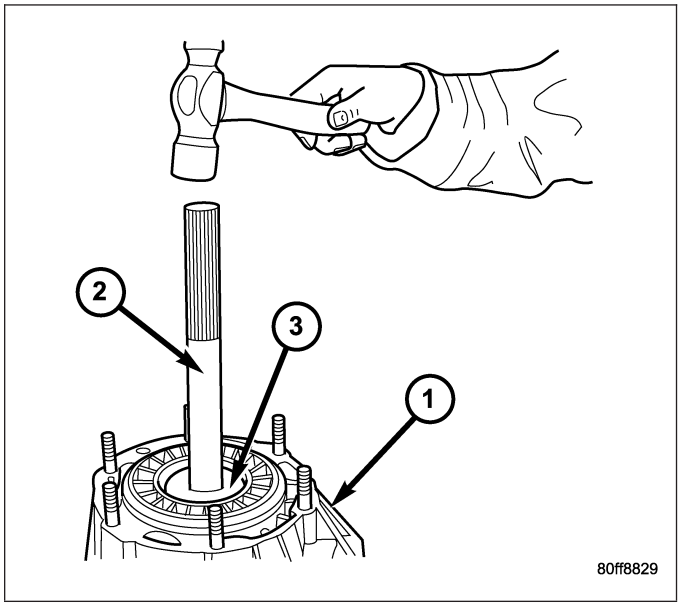

5. Remove the front output shaft front bearing snap-ring from the front case half.
6. Using Installer 6953 (3) and Handle C-4171 (2), remove the front output shaft front bearing.

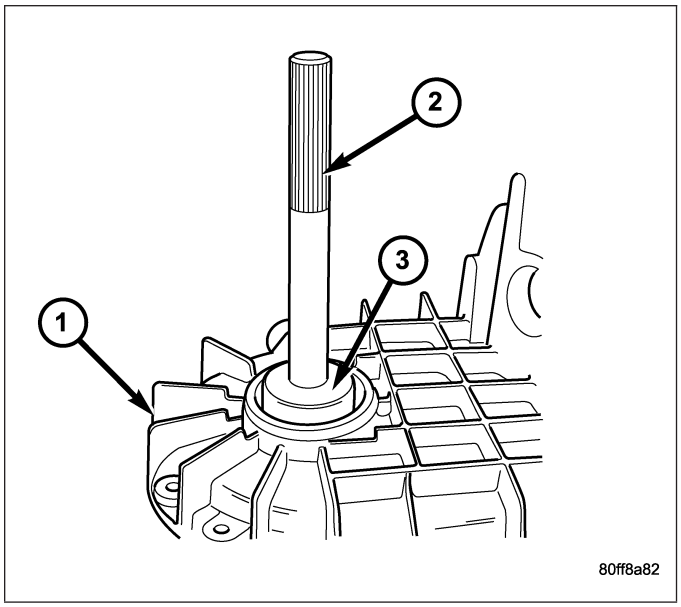

7. Start front output shaft front bearing in case. Then seat bearing with Installer 8891 (2).
8. Install front output shaft bearing retaining ring.

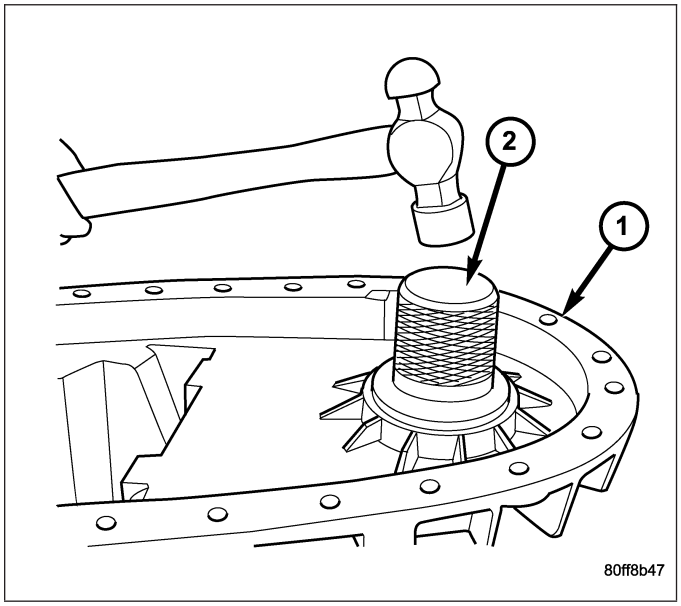

9. Remove input gear pilot bearing by inserting a suitably sized drift (1) into the splined end of the input gear (2) and driving the bearing out with the drift and a hammer.
10. Install new pilot bearing with Installer 9035.

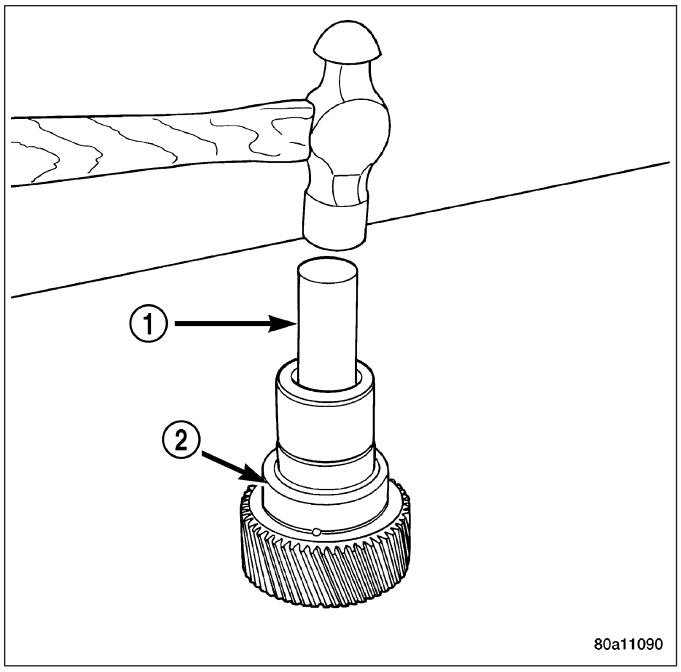

11. Remove the front output shaft rear bearing with the screw and jaws from Remover L-4454 (2) and Cup 8148 (3).

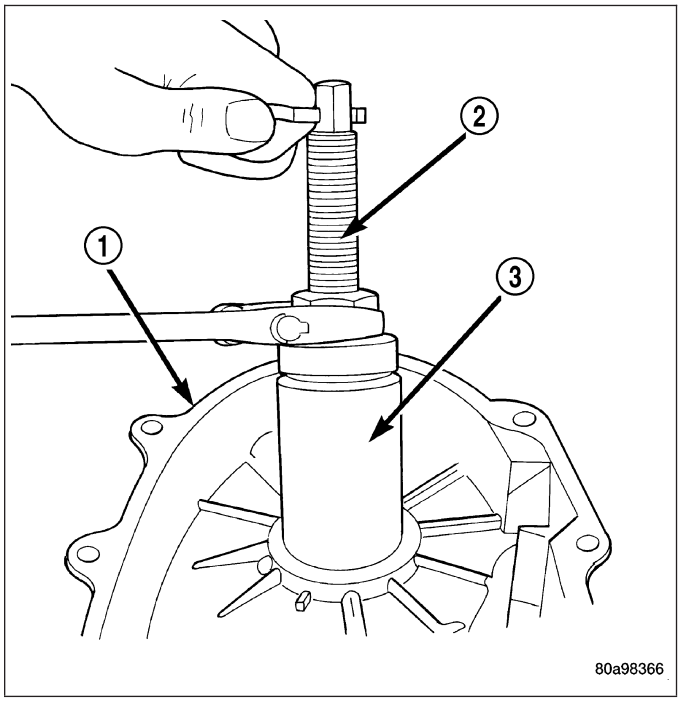

12. Install new bearing with Tool Handle C-4171 (2) and Installer 8128 (3).

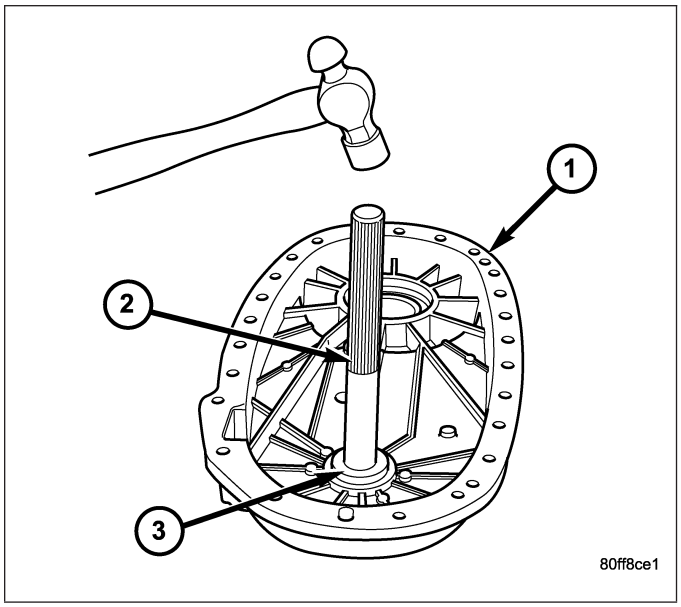

13. The bearing bore is chamfered at the top. Install the bearing so it is flush (1) with the lower edge of this chamfer (2).

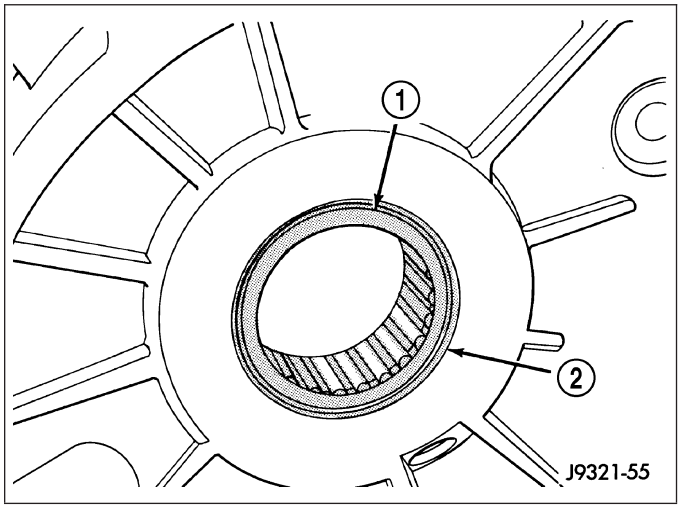

14. Remove seal from oil pump with suitable pry tool.
15. Install new seal in oil pump with Installer 7888 (2).

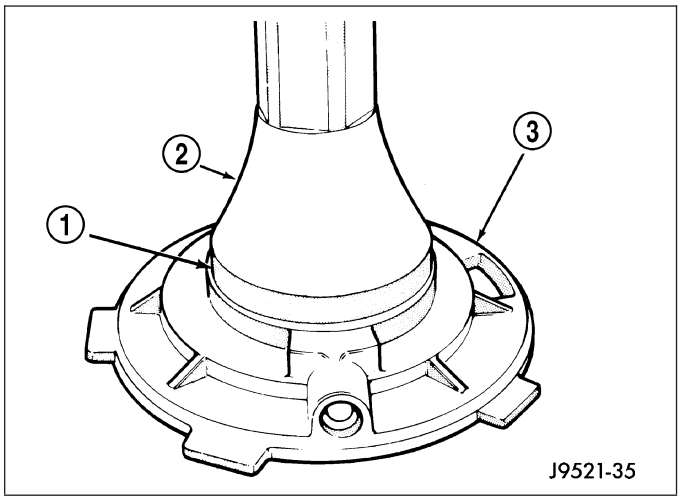

16. Remove the rear output shaft bearing (2) snap-ring (3) from the rear case half (1).

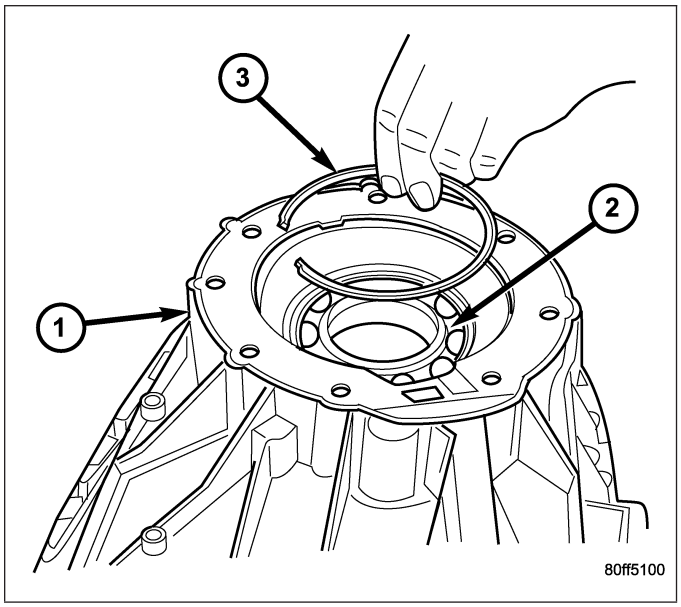

17. Remove the rear output shaft bearing from the rear case (1) using Installer 7888 (2).

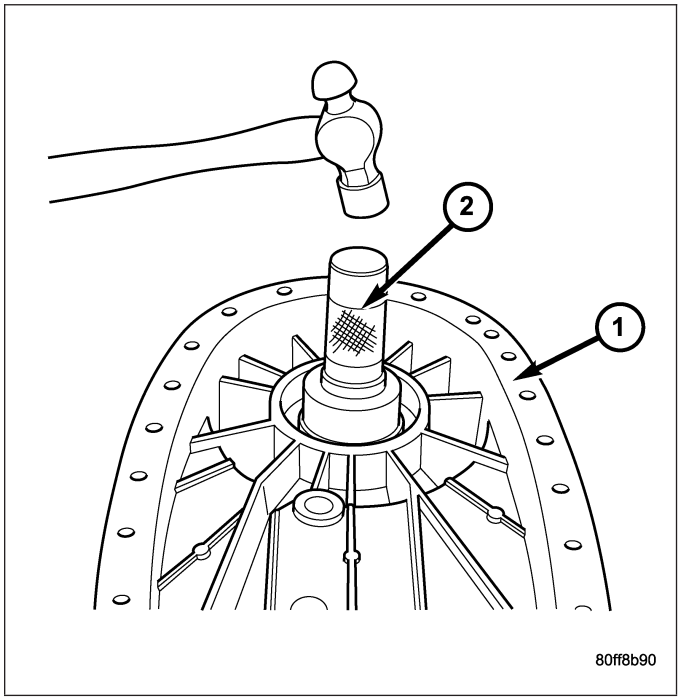

18. Install the rear output shaft bearing into the rear case (1) using Installer 8152 (3) and Handle C-4171 (2).
19. Install the rear output shaft bearing snap-ring into the rear case half.

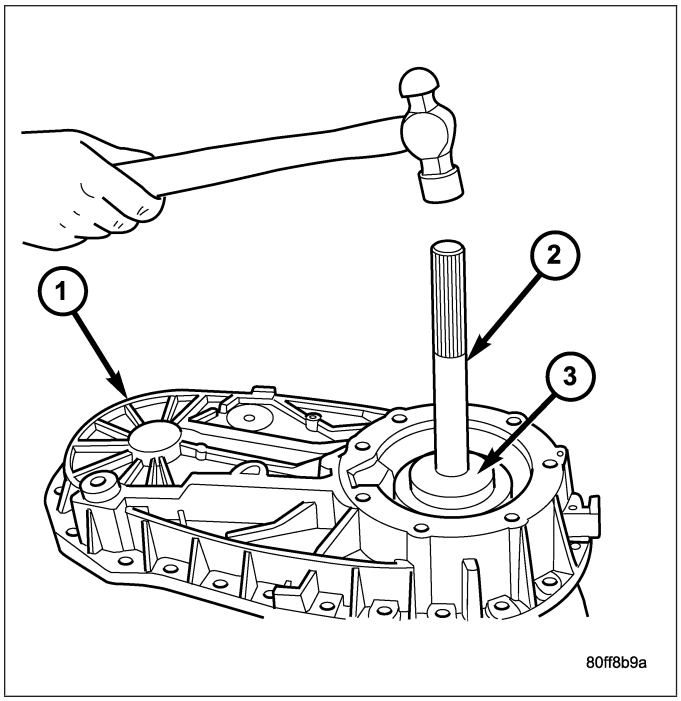

INPUT AND PLANETARY GEAR

1. Lubricate gears and thrust washers with recommended transmission fluid.
2. Install bottom thrust washer (2) in low range gear planetary (1). Be sure washer tabs are properly aligned in gear notches.

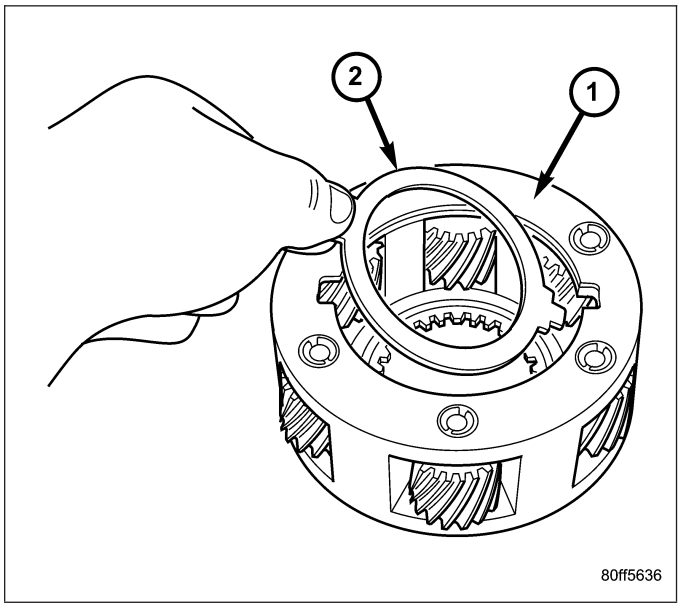

3. Install input gear (1) in low range gear (2). Be sure input gear is fully seated.

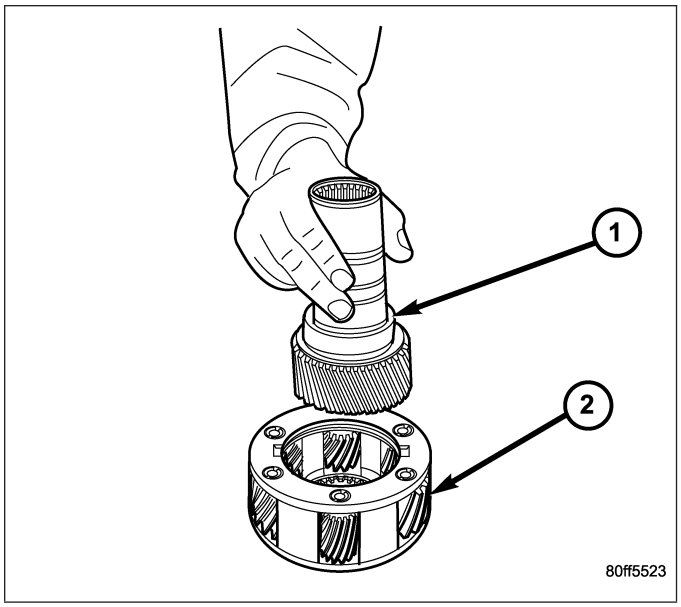

4. Install remaining thrust washer (2) in low range gear and on top of input gear (1).

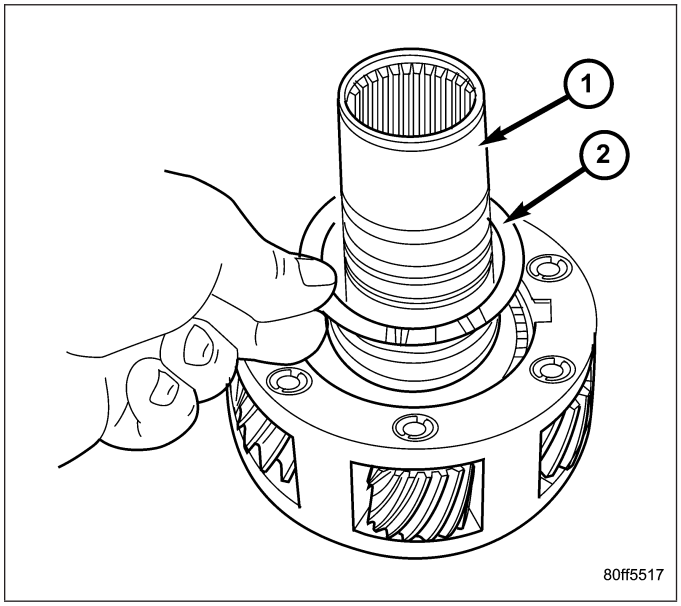

5. Install retainer (2) on input gear (1).

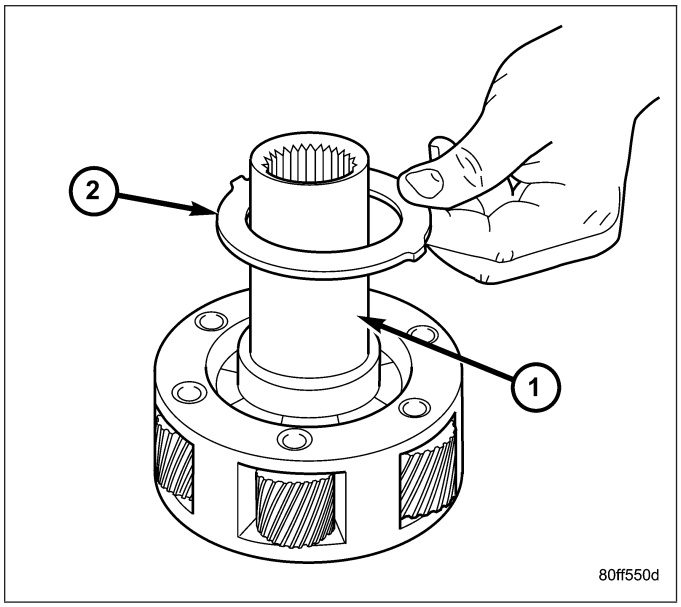

6. Install snap-ring (2).

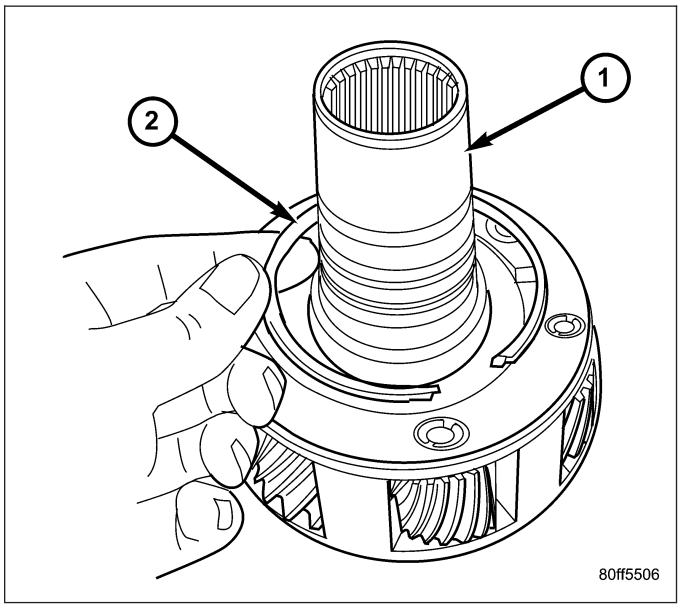

7. Align and install low range/input gear assembly (2) in front case (1). Be sure low range gear pinions are engaged in annulus gear and that input gear shaft is fully seated in front bearing.

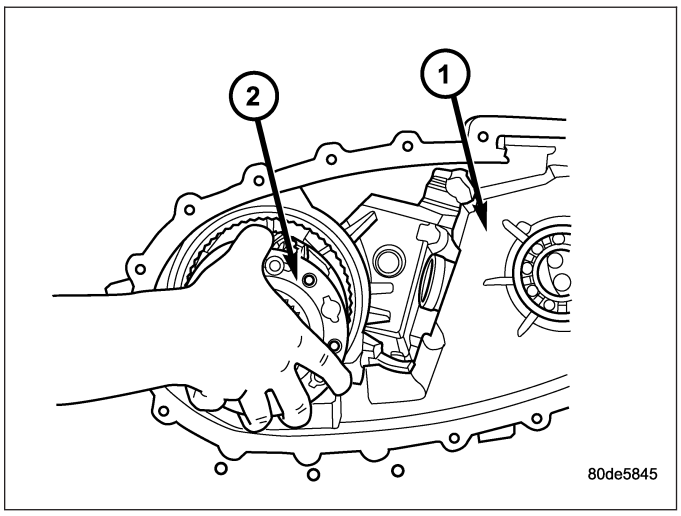

8. Install snap-ring (2) to hold input/low range gear (1) into front bearing.
9. Install a new input gear oil seal with Installer 9036 and Handle C-4171.

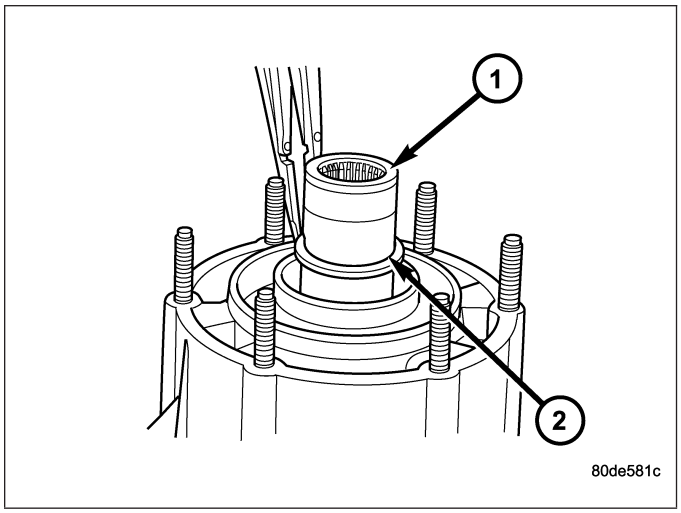

SHIFT FORKS AND MAINSHAFT

1. Lubricate mainshaft splines with recommended transmission fluid.
2. Coat the interior of the drive sprocket hub with ATF+4 and install the drive sprocket drive hub (2) onto the mainshaft (1).

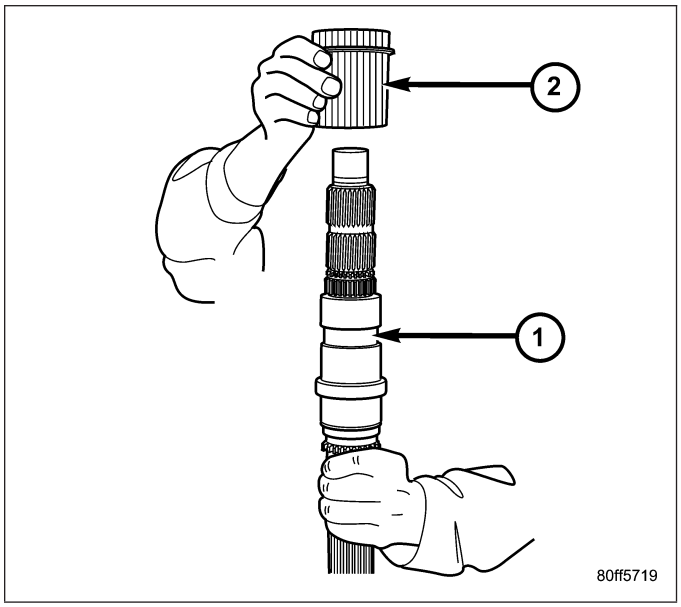

3. Install the mode hub (2) onto the mainshaft (1).

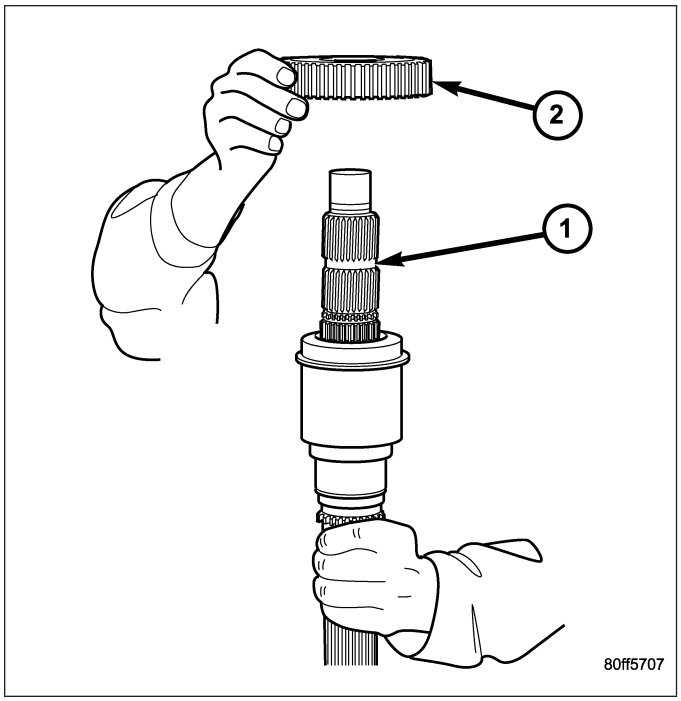

4. Install the mode hub (2) retaining ring (3) onto the mainshaft (1).

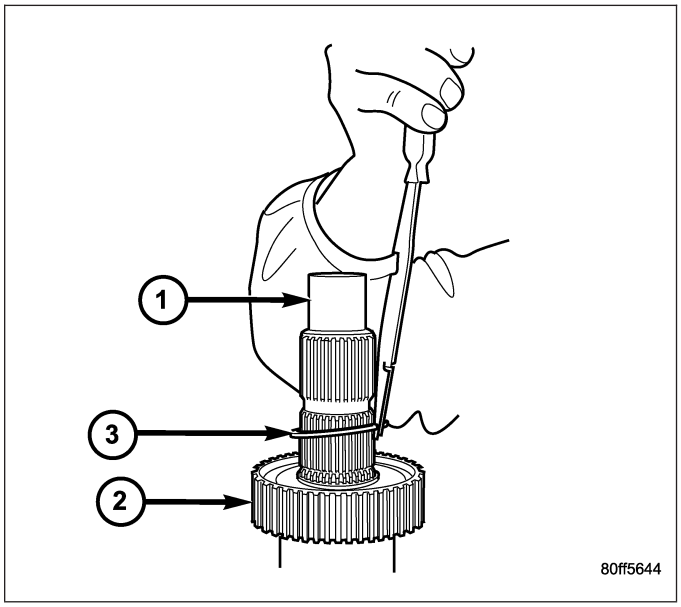

5. Install the clutch gear (2) onto the output shaft (1). Verify that the pointed ends of the clutch gear teeth are pointing to the front of the mainshaft.

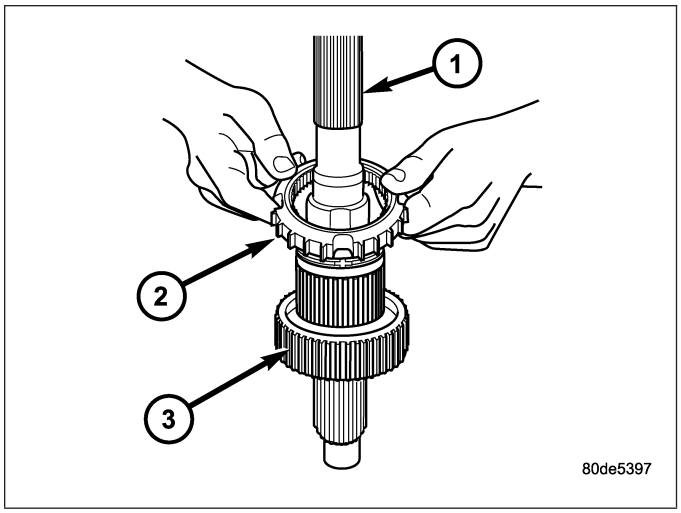

6. Lubricate sector shaft with transmission fluid and install shift sector (1) in case. Position slot in sector so it will be aligned with shift fork pin when shift forks are installed.
7. Apply Loctite™ 242, or equivalent, to the threads of the sector support to replentish the factory applied patch. Install the shift sector support. Tighten the sector support with Socket 9033 to 27-34 N·m (20-25 ft.lbs.).

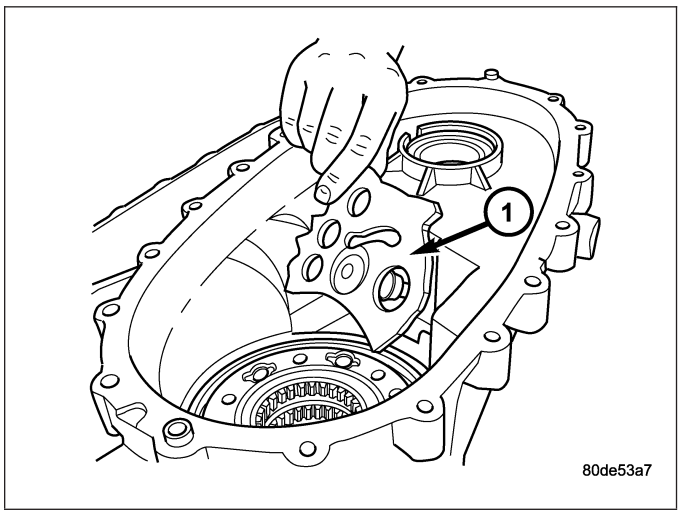

8. Assemble and install range fork (2) and hub (1). Be sure hub is properly seated in low range gear and engaged to the input gear.
9. Align and insert range fork pin in shift sector slot.

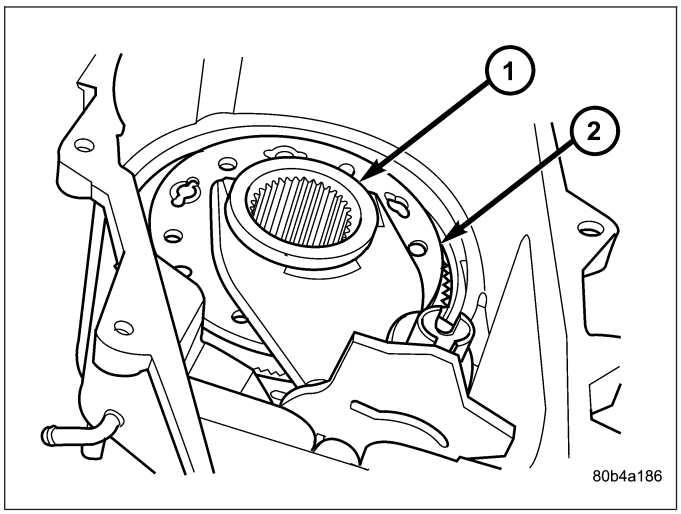

10. Install mode fork and shift rail onto the mode sleeve.
11. Install the mode fork (2), sleeve (1), and shift rail (2) into the transfer case.

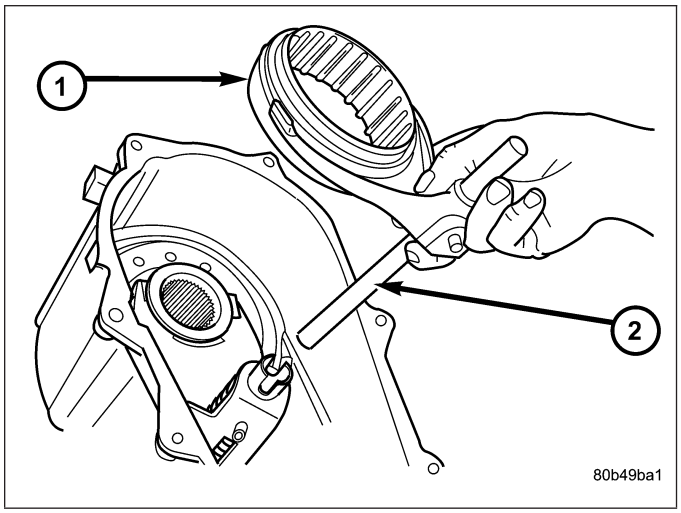

12. Install new o-ring (1) on detent plug (2).

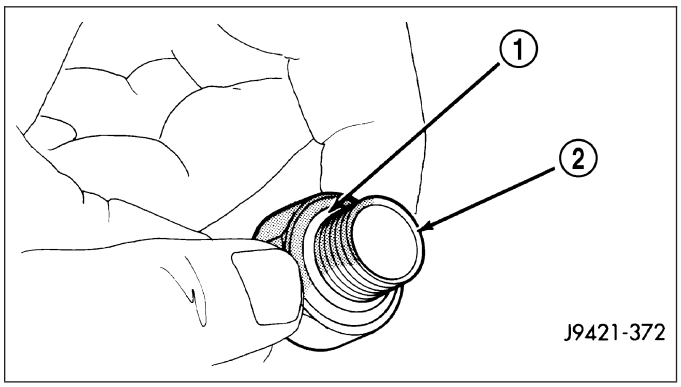

13. Install detent plunger (4), spring (3), and plug (2). Tighten the plug to 16-25 N·m (12-18 ft. lbs.).

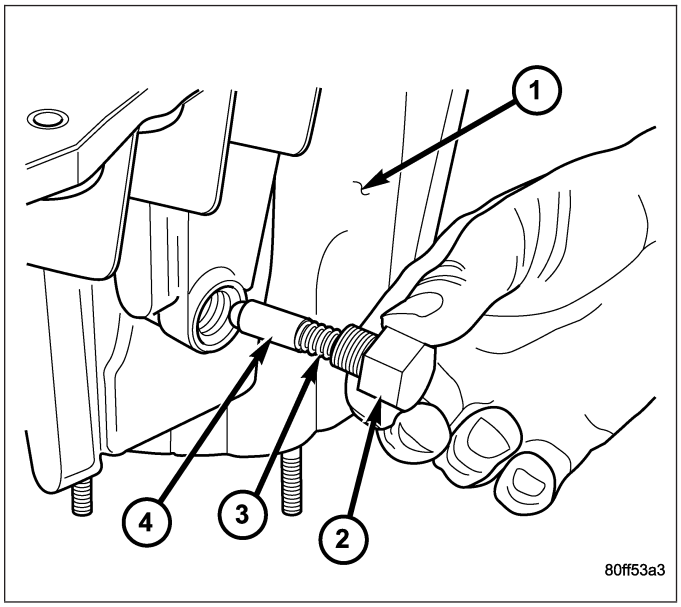

14. Position the shift motor and mode sensor assembly (2) onto the transfer case (1).

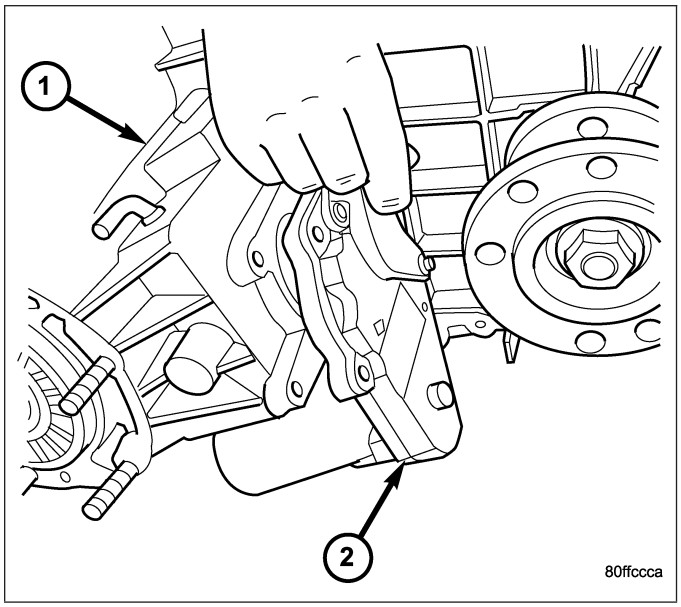

15. Install the bolts (3) to hold the shift motor and mode sensor assembly (2) to the transfer case (1). Tighten the bolts to 16-25 N·m (12-18 ft. lbs.).

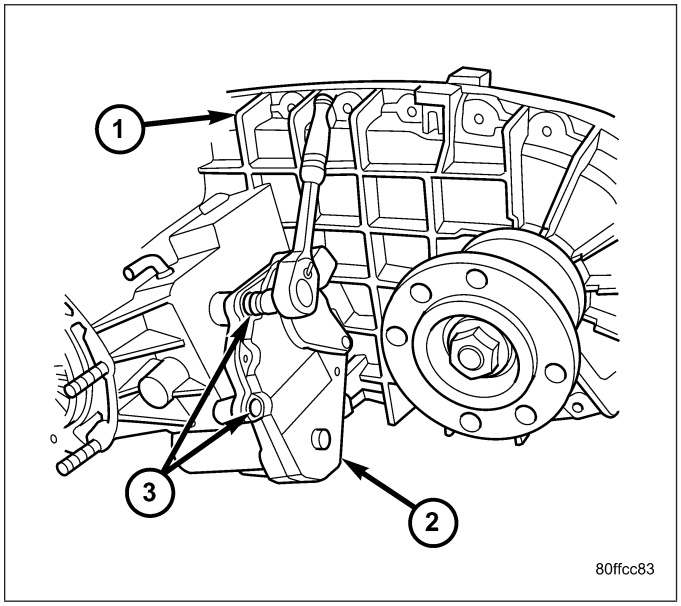

16. Install mainshaft (2)into the transfer case (1). Guide mainshaft through the mode and range sleeves and into the input gear.

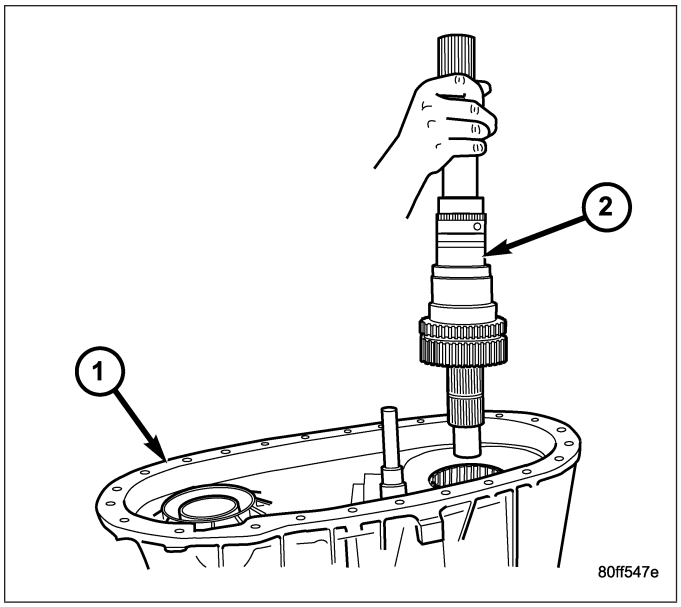

FRONT OUTPUT SHAFT AND DRIVE CHAIN

1. Install the front output shaft (2) into the front output shaft front bearing.

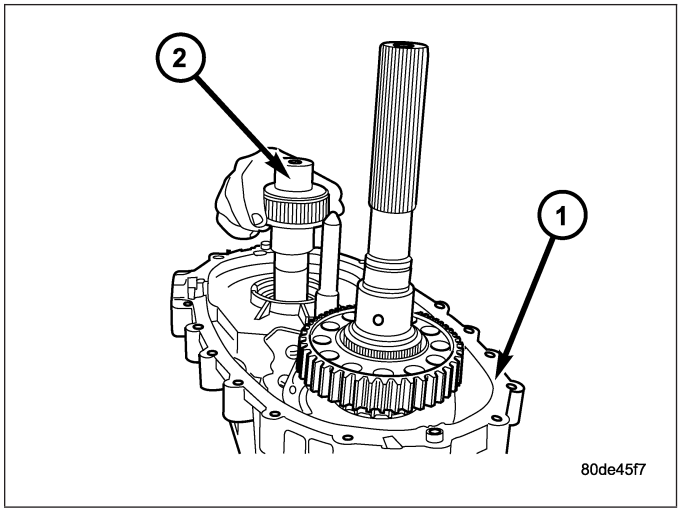

2. Install the front output shaft bearing inner snap-ring (2) onto the output shaft.
3. Install the new front output shaft seal with Installer MB991168A.

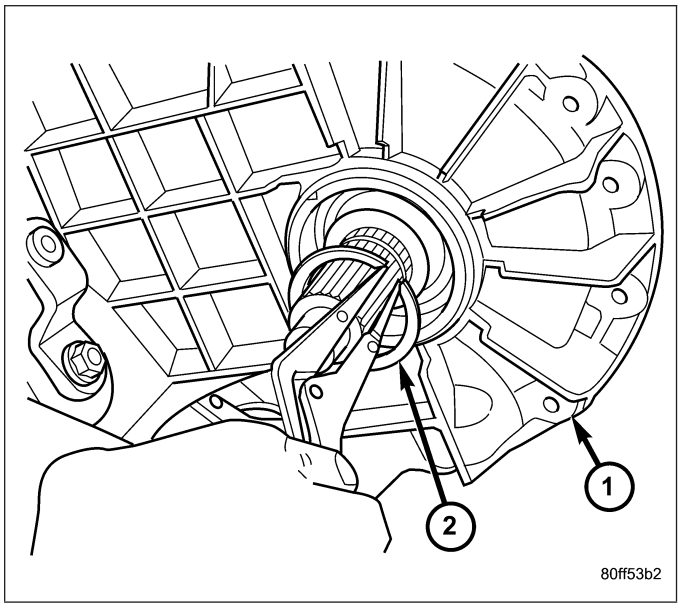

4. Insert front drive sprocket (3) in drive chain (2).
5. Install drive chain around rear drive sprocket.
6. Position rear drive sprocket over the output shaft and lower the sprocket and chain assembly until the front sprocket is positioned over the front output shaft.
7. Align the splines in the sprockets to the splines on the output shafts and install the sprockets onto the output shafts.

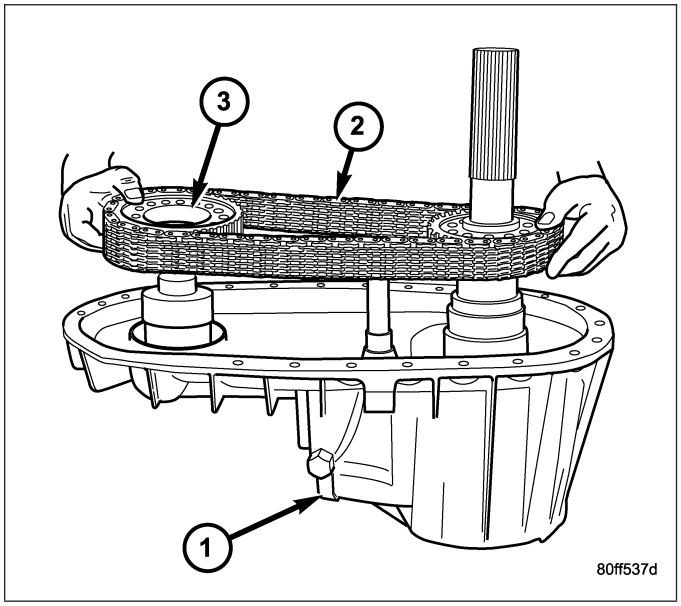

8. Install front sprocket (2) retaining ring (3).

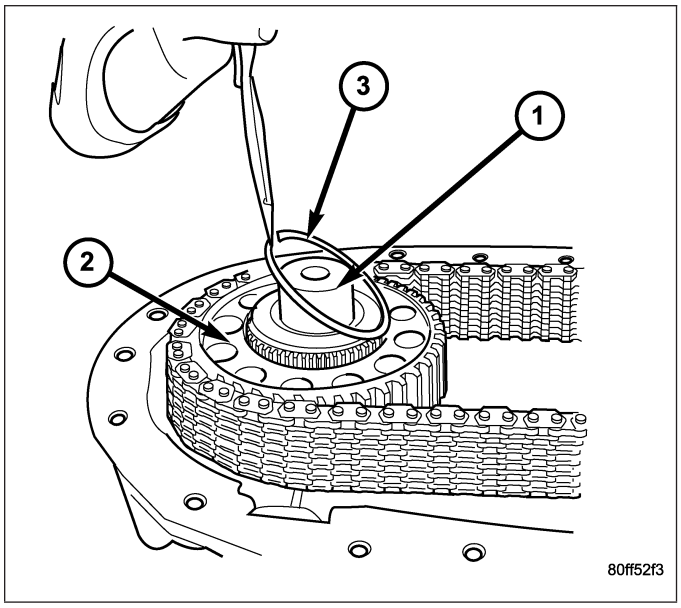

9. Install rear sprocket (2) retaining ring (3).

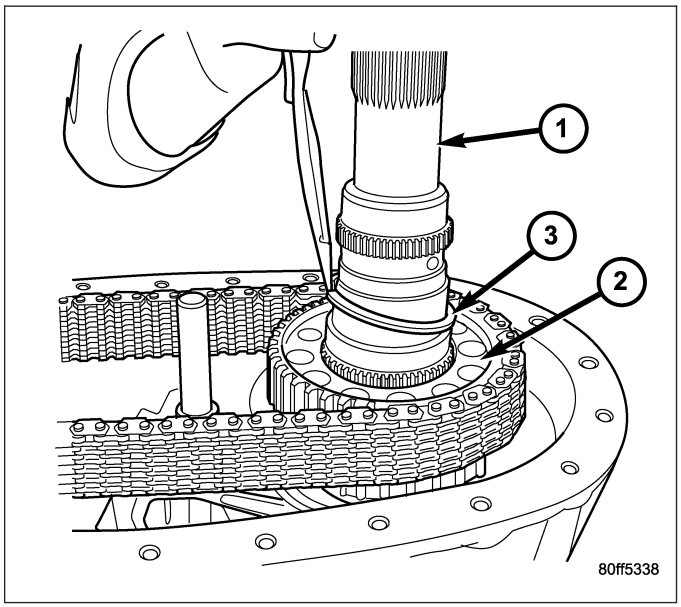

10. Insert magnet (1) in front case pocket (2).

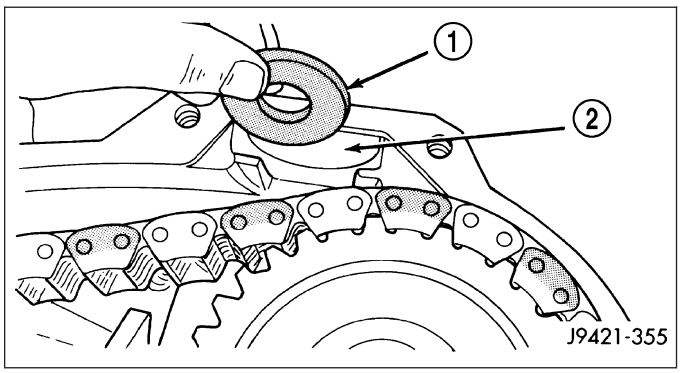

REAR CASE

1. Install the oil pick-up tube and screen into the rear case half.
2. Apply bead of Mopar® Gasket Maker, or equivalent, to mating surface of front case. Keep sealer bead width to maximum of 3/16 inch. Do not use excessive amount of sealer as excess will be displaced into case interior.
3. Align mainshaft with the rear output shaft bearing and align shift rail with bore in rear case. Then install rear case (2). Verify that the case alignment dowels correctly seat into their mating recesses.

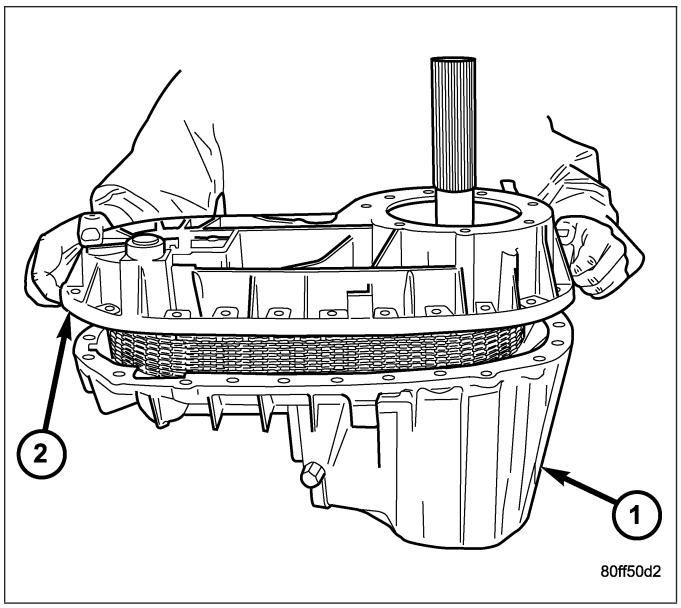

4. Install 4-5 rear case (2) to front case (1)bolts (3) to hold rear case in position. Tighten bolts snug but not to specified torque at this time.

CAUTION: Verify that shift rail, and case alignment dowels are seated before installing any bolts. Case could be cracked if shaft rail or dowels are misaligned.

5. Tighten bolts to 27-34 N·m (20-25 ft. lbs.).

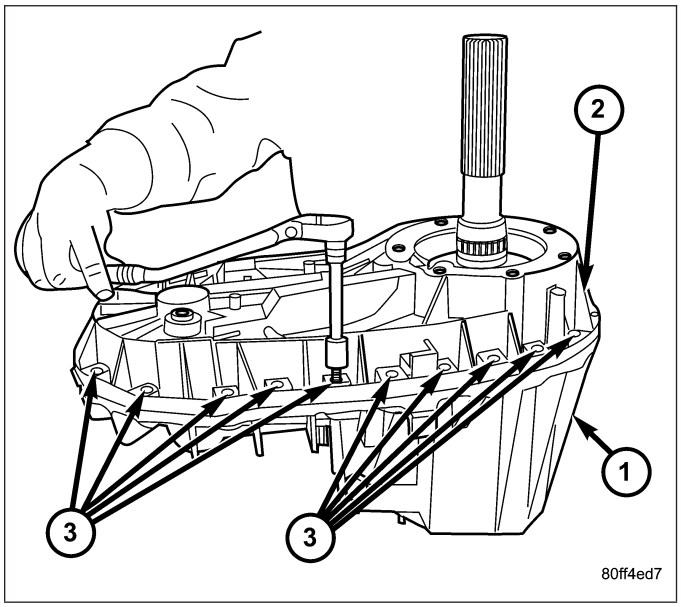

6. Install rear output bearing inner snap-ring (3) to output shaft (1).

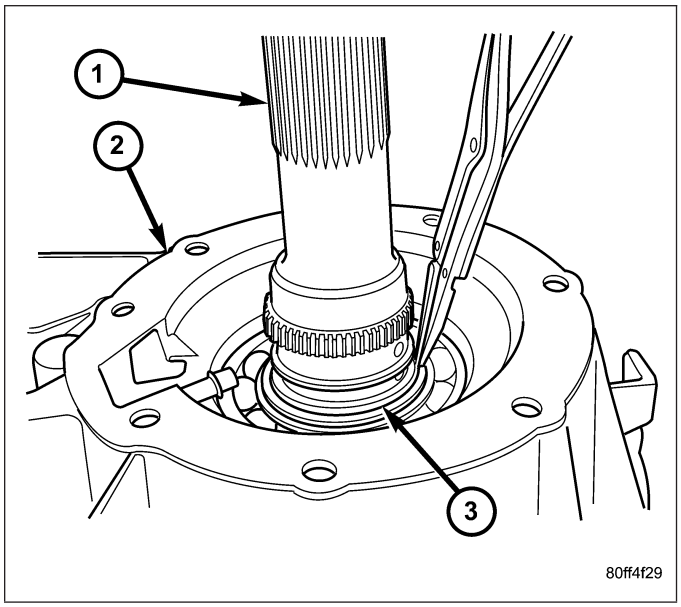

OIL PUMP AND REAR EXTENSION

1. Install the oil pump (3) onto the output shaft (2).

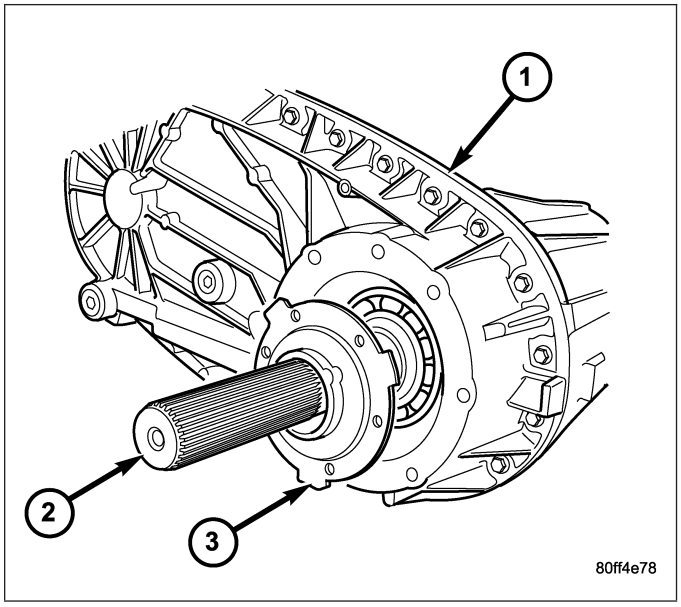

2. Engage the oil pump pick-up tube (2) into the oil pump (1). Verify that the pick-up tube o-ring is on the tube and is correctly installed to the oil pump.

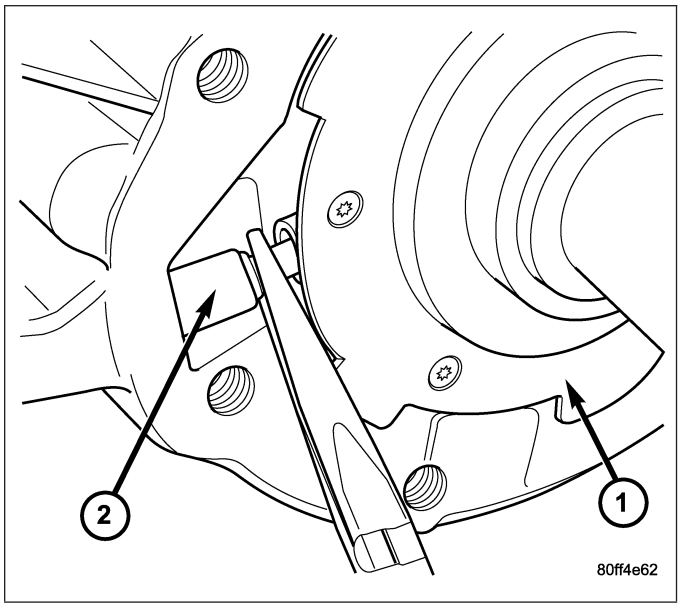

3. Apply bead of Mopar® Gasket Maker, or equivalent, to mating surface of rear extension housing. Keep sealer bead width to maximum of 3/16 inch. Do not use excessive amount of sealer as excess could be displaced into output bearing.
4. Install extension housing (2) onto the rear case half (1).

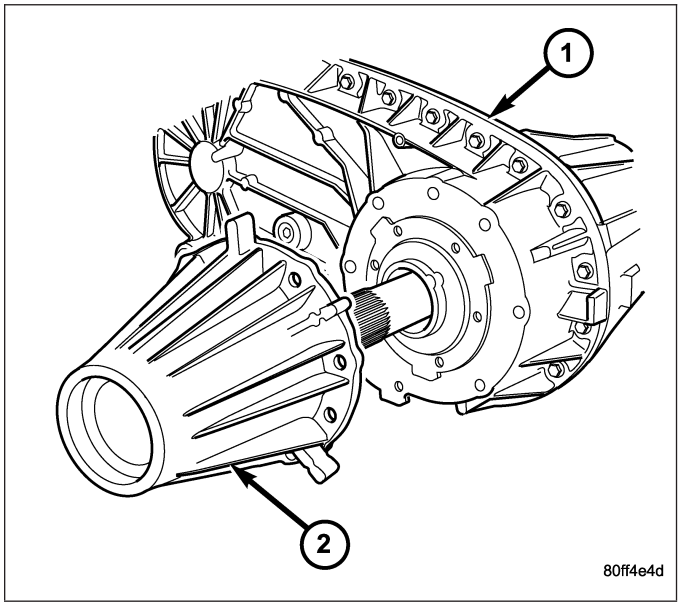

5. Install rear extension bolts (2). Tighten the bolts to 27-34 N·m (20-25 ft.lbs.).

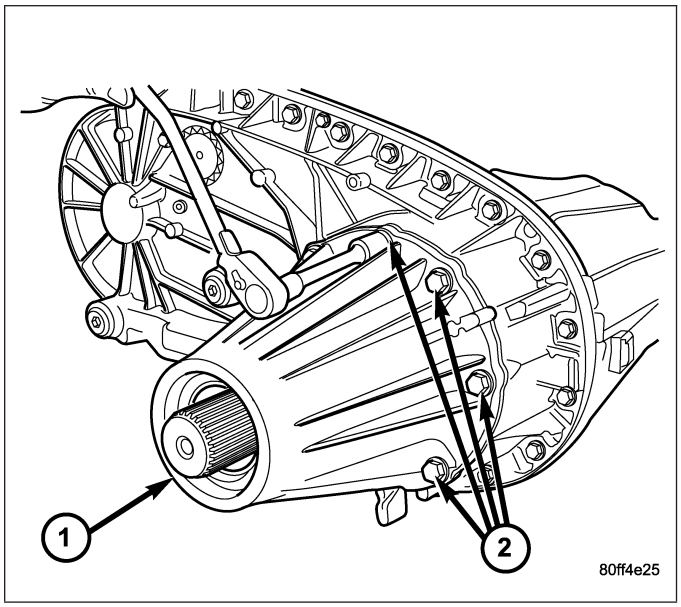

6. Install the extension housing dust boot and seal assembly with Installer 9037 (3) and Handle C-4171 (2).

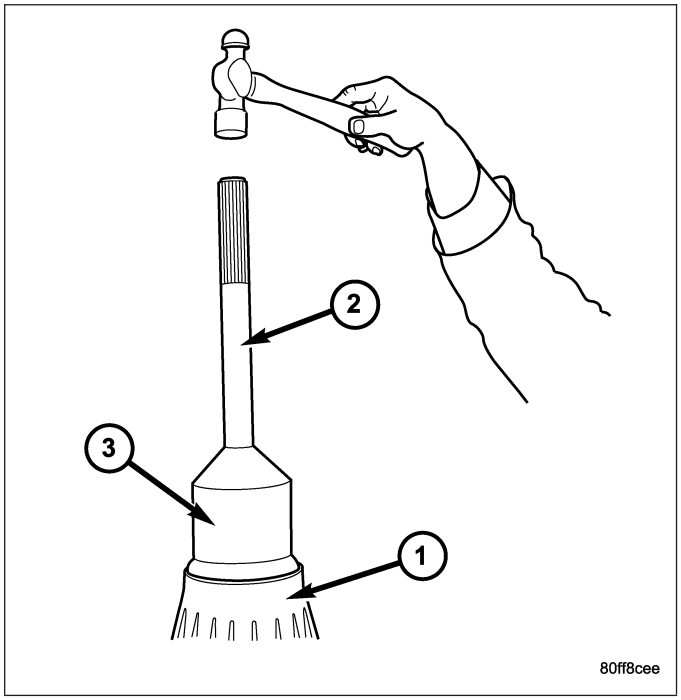

7. Install the front companion flange onto the front output shaft.
8. Install two bolts 180° apart into the front output shaft companion flange.
9. Place holder (1) over the bolts (2) and against the companion flange.
10. Install a new front companion flange nut. Tighten the companion flange nut to 176-271 N·m (130-200 ft.lbs.).

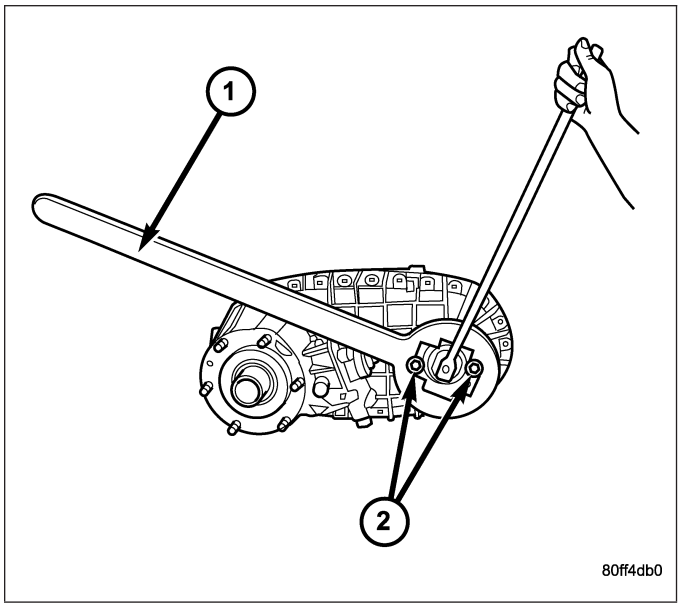

INSTALLATION

1. Mount transfer case on a transmission jack.
2. Secure transfer case to jack with chains.
3. Position transfer case under vehicle.
4. Align transfer case and transmission shafts and install transfer case onto the transmission.
5. Install and tighten transfer case attaching nuts to 27-34 N·m (20-25 ft. lbs.) torque.
6. Connect the vent hose.
7. Connect the shift motor and mode sensor wiring connectors. Secure wire harness to clips on transfer case.
8. Align and connect the propeller shafts. (Refer to 3 - DIFFERENTIAL & DRIVELINE/PROPELLER SHAFT/FRONT PROPELLER SHAFT - INSTALLATION) (Refer to 3 - DIFFERENTIAL & DRIVELINE/PROPELLER SHAFT/REAR PROPELLER SHAFT - INSTALLATION)
9. Fill transfer case with correct fluid. (Refer to 21 - TRANSMISSION/TRANSFER CASE/FLUID - STANDARD PROCEDURE)
10. Install skid plate, if equipped.
11. Remove transmission jack and support stand.
12. Lower vehicle and verify transfer case shift operation.

SPECIFICATIONS

TRANSFER CASE - NV273

TORQUE SPECIFICATIONS

DESCRIPTION	N-m	Ft. Lbs.	In. Lbs.
Plug, Detent	16-24	12-18	-
Plug, Drain/Fill	20-34	15-25	-
Bolt, Extension Housing	27-34	20-25	-
Bolt, Case Half	27-34	20-25	-
Support, Sector	27-34	20-25	-
Nuts, Mounting	30-41	20-30	-
Bolts, Shift Motor and Mode Sensor Assembly	16-25	12-18	-
Nut, Companion Flange	176-271	130-200	-

SPECIAL TOOLS

TRANSFER CASE NV271/NV273

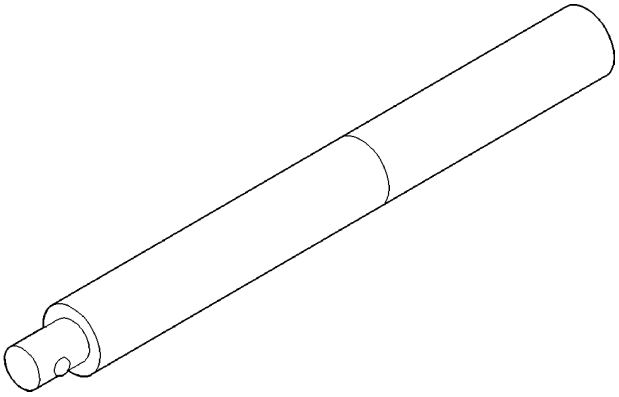

Handle, Universal - C-4171

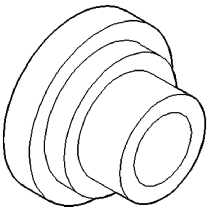

Installer, Bearing - 8128

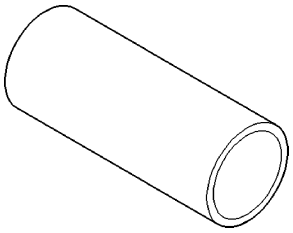

Cup - 8148

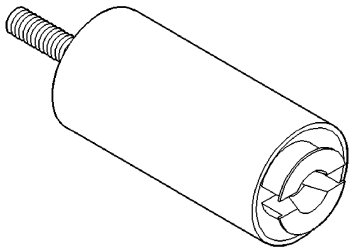

Remover - L-4454

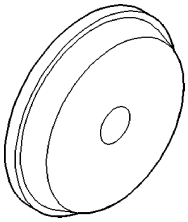

Installer - 8151

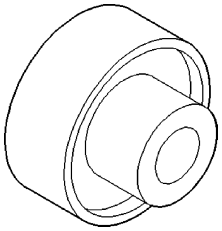

Installer, Bearing - 6953

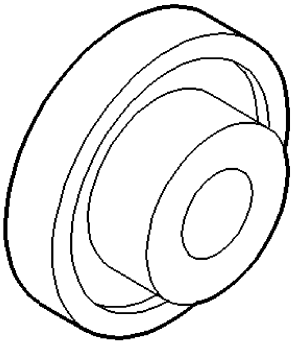

Installer - 8152

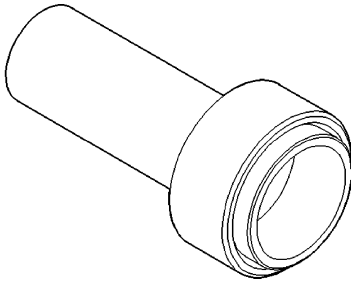

Installer, Pump Housing Seal - 7888

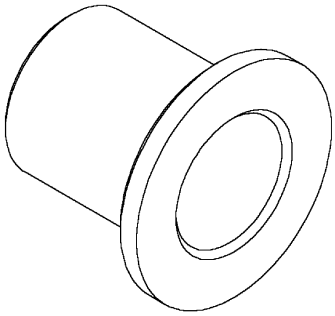

Installer - 8891

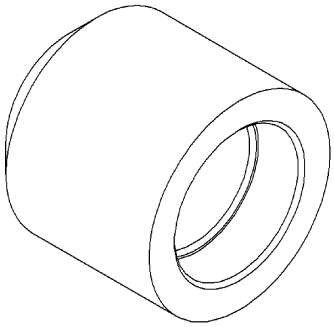

Installer, Seal - 9036

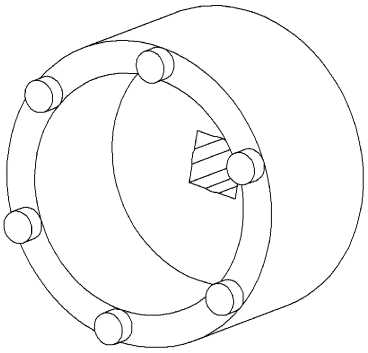

Socket - 9033

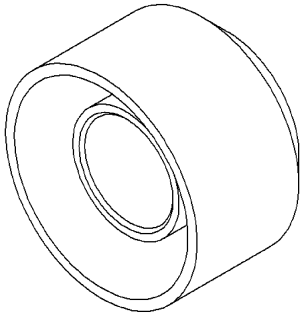

Installer, Seal - 9037

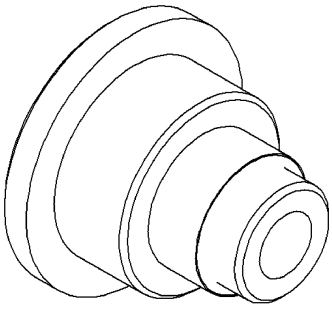

Installer, Bearing - 9035

BOOT-EXTENSION HOUSING SEAL AND DUST

REMOVAL

1. Raise and support vehicle.
2. Remove rear propeller shaft. (Refer to 3 - DIFFERENTIAL & DRIVELINE/PROPELLER SHAFT/PROPELLER SHAFT - REMOVAL)
3. Use a suitable chisel or pry tool to remove the rear extension housing dust boot (2).
4. Use a suitable chisel or pry tool to remove the rear extension housing seal.

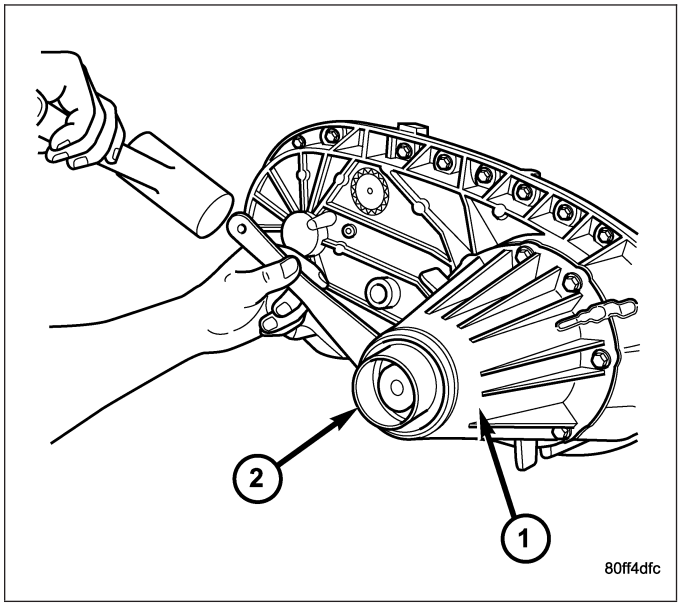

INSTALLATION

1. Clean fluid residue from sealing surface and inspect for defects.
2. Install the extension housing dust boot and seal assembly with Installer 9037 (3) and Handle C-4171 (2).
3. Install propeller shaft. (Refer to 3 - DIFFERENTIAL & DRIVELINE/PROPELLER SHAFT/PROPELLER SHAFT - INSTALLATION)
4. Verify proper transfer case fluid level.
5. Lower vehicle.

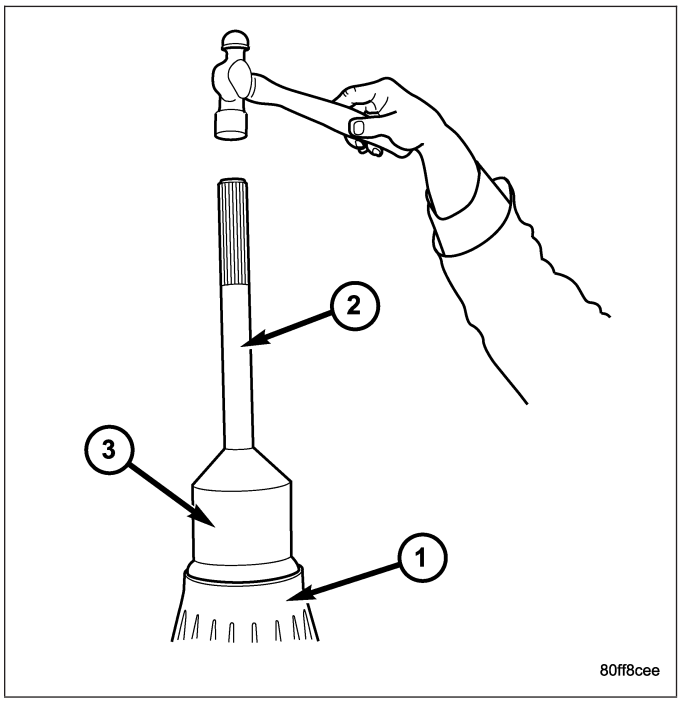

FLUID

STANDARD PROCEDURE - FLUID DRAIN AND REFILL

The fill (1) and drain (2) plugs are both in the rear case.

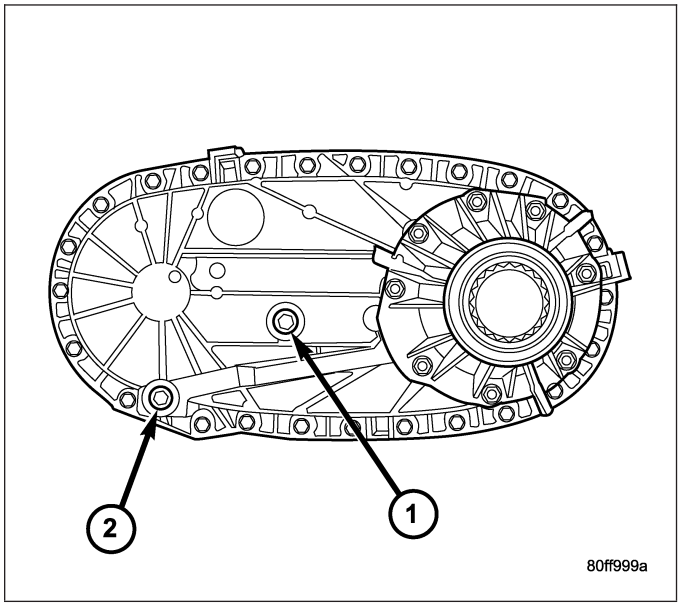

1. Raise vehicle.
2. Position drain pan under transfer case.

NOTE: It may be necessary to remove the exhaust y-pipe at the exhaust manifold to properly access the fill and drain plugs. Lowering the exhaust will allow the plugs to be accessed for torquing during installation. (Refer to 11 - EXHAUST SYSTEM/EXHAUST PIPE - REMOVAL)

3. Remove drain and fill plugs and drain lubricant completely.
4. Install drain plug. Tighten plug to 41-54 N·m (30-40 ft. lbs.).
5. Remove drain pan.
6. Fill transfer case to bottom edge of fill plug opening with Mopar® ATF +4, Automatic Transmission fluid.
7. Install and tighten fill plug to 41-54 N·m (30-40 ft. lbs.).
8. Install the exhaust y-pipe to the exhaust manifold, if removed. (Refer to 11 - EXHAUST SYSTEM/EXHAUST PIPE - INSTALLATION)
9. Wipe any excess fluid that may have spilled onto the exhaust.
10. Lower vehicle.

SEAL-FRONT OUTPUT SHAFT

REMOVAL

1. Remove the front propeller shaft (Refer to 3 - DIFFERENTIAL & DRIVELINE/PROPELLER SHAFT/PROPELLER SHAFT - REMOVAL).
2. Install two bolts 180° apart into the front output shaft companion flange.
3. Place Holder 6719 (1) over the bolts (2) and against the companion flange.
4. Remove and discard the front companion flange nut.
5. Remove the companion flange from the front output shaft. It may be necessary to use Flange puller 8992 to remove the companion flange.
6. Using a screw and a slide hammer, remove the front output shaft seal.

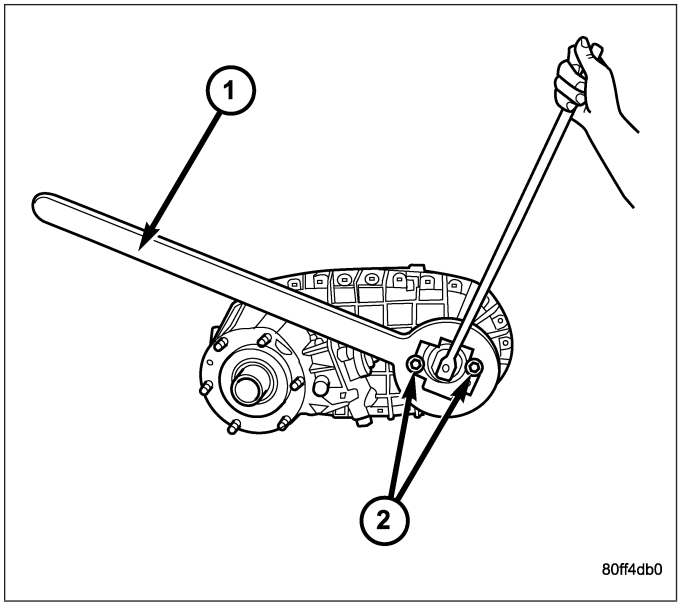

INSTALLATION

1. Install the new front output shaft seal with Installer MB991168A.
2. Install the front companion flange onto the front output shaft.
3. Install two bolts 180° apart into the front output shaft companion flange.
4. Place Holder 6719 (1) over the bolts (2) and against the companion flange.
5. Install a new front companion flange nut. Tighten the companion flange nut to 258-312 N·m (190-230 ft.lbs.).
6. Install front propeller shaft (Refer to 3 - DIFFERENTIAL & DRIVELINE/PROPELLER SHAFT/PROPELLER SHAFT - INSTALLATION).

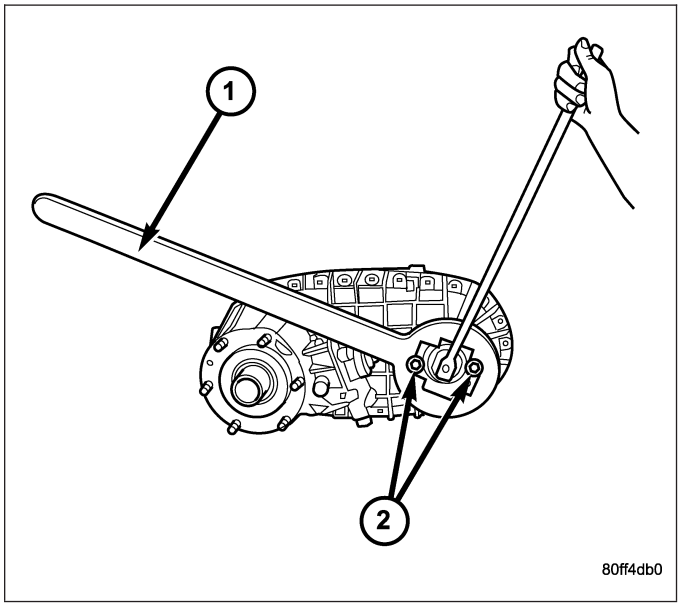

SENSOR-MODE

DESCRIPTION

The transfer case mode sensor (1) is an electronic device whose output can be interpreted to indicate the shift motor shaft's rotary position. The sensor consists of a magnetic ring and four Hall Effect Transistors to create a 4 channel digital device (non-contacting) whose output converts the motor shaft position into a coded signal. The TCCM must supply 5VDC (+/- 0.5v) to the sensor and monitor the shift motor position. The four channels are denoted A, B, C, and D. The sensor is mechanically linked to the shaft of the cam which causes the transfer case shifting. The mode sensor draws less than 53 mA.

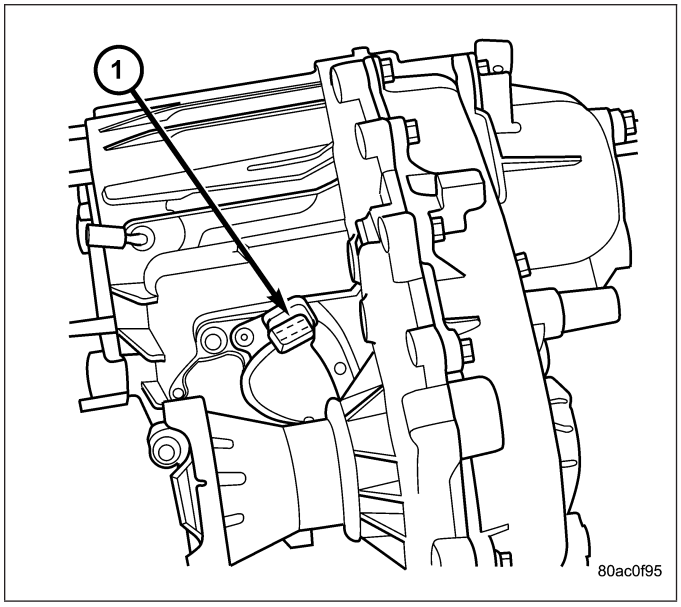

OPERATION

During normal vehicle operation, the Transfer Case Control Module (TCCM) monitors the mode sensor outputs at least every 250 (+/-50) milliseconds when the shift motor is stationary and 400 microseconds when the shift motor is active. A mode sensor signal between 3.8 Volts and 0.8 Volts is considered to be undefined.

Refer to SECTOR ANGLES vs. TRANSFER CASE POSITION for the relative angles of the transfer case shift sector versus the interpreted transfer case gear operating mode. Refer to MODE SENSOR CHANNEL STATES for the sensor codes returned to the TCCM for each transfer case mode sensor position. The various between gears positions can also be referred as the transfer case's coarse position. These coarse positions come into play during shift attempts.

SECTOR ANGLES vs. TRANSFER CASE POSITION

Shaft Angle (Degrees)	Transfer Case Position
+40	4LO
+20	N
0	2WD/AWD
-20	4HI

MODE SENSOR CHANNEL STATES

Transfer Case Angle (degrees)	Sensor Channel A	Sensor Channel B	Sensor Channel C	Sensor Channel D
Between Gears	H	H	L	H
+40 (4LO)	H	H	L	L
Between Gears	H	H	L	H
Between Gears	H	L	L	H
+20 (NEUTRAL)	H	L	L	L
Between Gears	H	L	L	H
Between Gears	H	L	H	H
0 (2WD/AWD)	H	L	H	L
Between Gears	H	L	H	H
Between Gears	L	L	H	H
-20 (4HI)	L	L	H	L
Between Gears	L	L	H	H
Between Gears	L	H	H	H

SWITCH-SELECTOR

DESCRIPTION

The selector switch assembly (1) is mounted in the left side of the vehicle's Instrument Panel (IP) and consists of a rotary knob connected to a resistive network for the mode and range shift selections. Also located in this assembly is a recessed, normally open momentary switch for making shifts into and out of transfer case NEUTRAL. A pen, or similar instrument, is used to make a NEUTRAL shift selection, thus reducing the likelihood of an inadvertent shift request.

The selector switch also contains four light emitting diode's (LED's) to indicate the transfer case position and whether a shift is in progress.

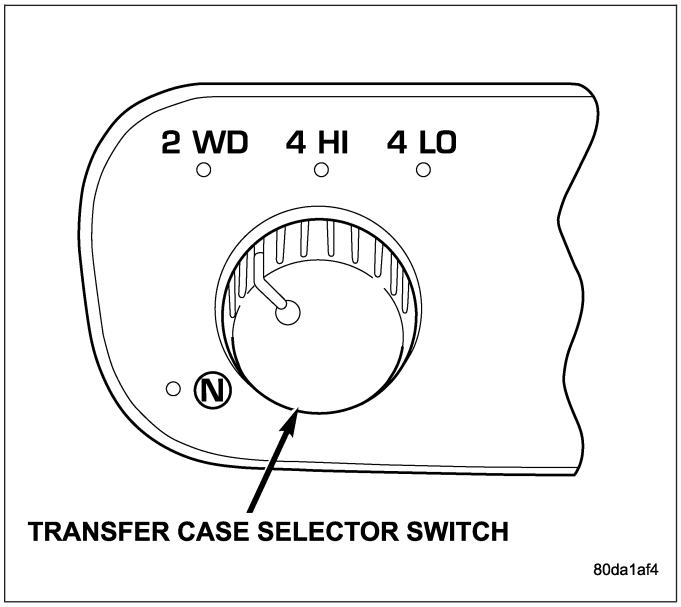

OPERATION

As the position of the selector switch varies, the resistance between the Mode Sensor supply voltage pin and the Mode Sensor output will vary. Hardware, software, and calibrations within the Transfer Case Control Module (TCCM) are provided that interpret the selector switch resistance as given in the table below: SELECTOR SWITCH INTERPRETATION

SELECTOR SWITCH INTERPRETATION

Step	Resistance Range (ohms)	Required Interpretation
A	<200	Shorted
B	400-700	NEUTRAL
C	1050-1450	4LO
D	1850-2300	4HI
E	3050-5950	2WD (Default)
F	9.5-12.5K	In between positions
G	>15.5K	Open

For resistances between the ranges B-E shown for each valid position (T-Case NEUTRAL, 4LO, 4HI, 2WD), the TCCM may interpret the resistance as:

- either of the neighboring valid positions.
- as an invalid fault position.

For resistances between the ranges E and F shown for 2WD and in-between positions, the TCCM may interpret the resistance as:

- the 2WD position.
- an invalid fault position.
- a valid in-between position.

For resistances between the ranges F and G shown for in-between positions and fault condition (open), the TCCM may interpret the resistance as:

- a valid in-between position.
- an invalid fault position.

For resistances between the ranges A and B shown for the fault condition (short) and , T-Case NEUTRAL, the TCCM may interpret the resistance as:

- the T-Case NEUTRAL position.
- an invalid fault position.

The LED's in the selector assembly are illuminated/flashed in the following manner to indicate a particular condition or state.

- A solidly illuminated LED indicates a successfully completed shift and the current operating mode of the transfer case. While a shift has been requested but not yet completed, the LED for the desired transfer case position is flashed.
- A flashing operating mode LED for the desired gear indicates that a shift to that position has been requested, but all of the driver controllable conditions have not been met. This is in an attempt to notify the driver that the transmission needs to be put into NEUTRAL, the vehicle speed is too great, or some other condition outlined (other than a diagnostic failure that would prevent this shift) elsewhere (Refer to 8 - ELECTRICAL/ELECTRONIC CONTROL MODULES/TRANSFER CASE CONTROL MODULE - OPERATION) is not met. Note that this flashing will continue indefinitely until the conditions are eventually met, or the selector switch position is changed, or if diagnostic routines no longer allow the requested shift.
- If the driver attempts to make a shift into transfer case NEUTRAL, and any of the driver controllable conditions are not met, the request will be ignored until all of the conditions are met or until the NEUTRAL select button is released. Additionally the neutral lamp will flash, or begin to flash while the button is depressed and operator controllable conditions are not being met. All of the LED's except the Neutral will flash if any of the operator controllable conditions for shifting are not met while the Neutral button is depressed. This ″toggle″ type of feature is necessary because the TCCM would interpret another request immediately after the shift into transfer case NEUTRAL has completed.
- No LED's illuminated indicate a fault in the transfer case control system.

MOTOR-SHIFT

DESCRIPTION

The shift motor (1) consists of a permanent magnet D.C. motor with gear reduction to convert a high speed-low torque device into a low speed-high torque device. The output of the device is coupled to a shaft which internally moves the mode and range forks that change the transfer case operating ranges. The motor is rated at 25 amps maximum at 72° F with 10 volts at the motor leads.

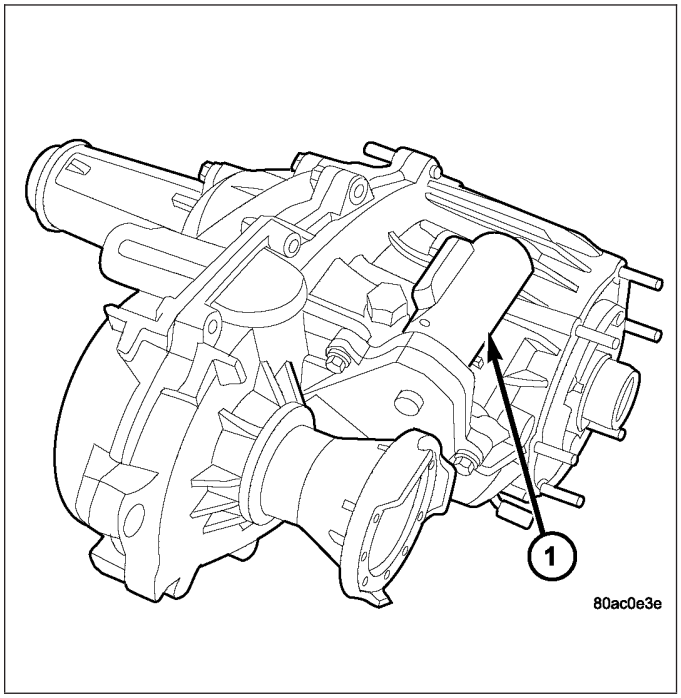

OPERATION

The transfer case shift motor responds to the Transfer Case Control Module (TCCM) commands to move the transfer case shift sector bi-directionally, as required, to obtain the transfer case operating mode indicated by the instrument panel mounted selector switch.

REMOVAL

NOTE: New shift motor assemblies are shipped in the 2WD/AWD position. If a new shift motor assembly will be installed, it will be necessary to shift the transfer case to the 2WD/AWD position prior to motor removal.

1. Raise the vehicle on a suitable hoist.
2. Disengage the wiring connectors from the shift motor and mode sensor.
3. Remove the bolts holding the shift motor and mode sensor assembly onto the transfer case.
4. Separate the shift motor and mode sensor assembly from the transfer case.

INSTALLATION

1. Verify that the shift sector o-ring is clean and properly positioned over the shift sector and against the transfer case.

NOTE: Verify that the shift motor position and sector shaft orientation are aligned. It may be necessary to manually shift the transfer case if the shift motor and sector shaft are not aligned.

2. Position the shift motor and mode sensor assembly onto the transfer case.
3. Install the bolts to hold the assembly onto the transfer case. Tighten the bolts to 16-24 N·m (12-18 ft.lbs.).

CAUTION: If the original shift motor and mode sensor assembly bolts are reused, be sure to use Mopar® Lock & Seal or Loctite™ 242 to replenish the lock patch material originally found on the bolts

4. Engage the wiring connectors to the shift motor and mode sensor.
5. Refill the transfer case as necessary.
6. Lower vehicle and verify transfer case operation.

TIRES/WHEELS

TABLE OF CONTENTS

page

TIRES/WHEELS
DIAGNOSIS AND TESTING
TIRE AND WHEEL RUNOUT 2
STANDARD PROCEDURE
MATCH MOUNTING 4
TIRE AND WHEEL BALANCE 5
TIRE ROTATION 6
TIRES
DESCRIPTION
TIRES 7
SPARE / TEMPORARY TIRE 8
RADIAL – PLY TIRES 8
TIRE PRESSURE FOR HIGH SPEEDS 8
REPLACEMENT TIRES 8
TIRE INFLATION PRESSURES 9
DIAGNOSIS AND TESTING
PRESSURE GAUGES 9
TIRE NOISE OR VIBRATION 9
TREAD WEAR INDICATORS 10
TIRE WEAR PATTERNS 10
TIRE/VEHICLE LEAD 10
STANDARD PROCEDURE
TIRE REPAIR AREA 12
CLEANING
TIRES 12
SPECIFICATIONS
TIRE REVOLUTIONS PER MILE 12

page

WHEELS
DESCRIPTION
DESCRIPTION 13
WHEEL DESIGN 14
DIAGNOSIS AND TESTING
WHEEL INSPECTION 15
STANDARD PROCEDURE
WHEEL REPLACEMENT 15
DUAL REAR WHEEL INSTALLATION 17
SPECIFICATIONS
TORQUE CHART 18
STUDS
REMOVAL 18
INSTALLATION 19
WHEEL COVER
REMOVAL 19
INSTALLATION
REAR 19
FRONT 20
SPARE TIRE
DESCRIPTION
SPARE / TEMPORARY TIRE 20
FULL SIZE, SPARE WHEEL WITH MATCHING TIRE 20

TIRES/WHEELS

DIAGNOSIS AND TESTING

TIRE AND WHEEL RUNOUT

Radial runout is the difference between the high and low points on the tire or wheel.

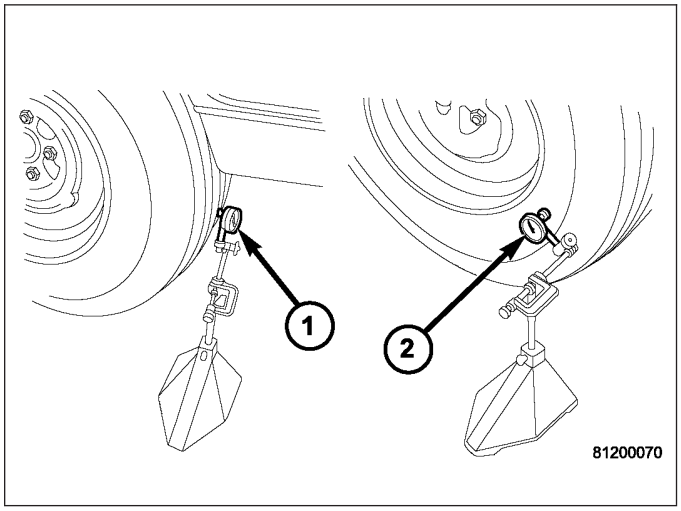

Lateral runout is the **wobble** of the tire or wheel.

Lateral runout of more than 2.0 mm (.080 inch) measured near the shoulder of the tire may cause the vehicle to shake.

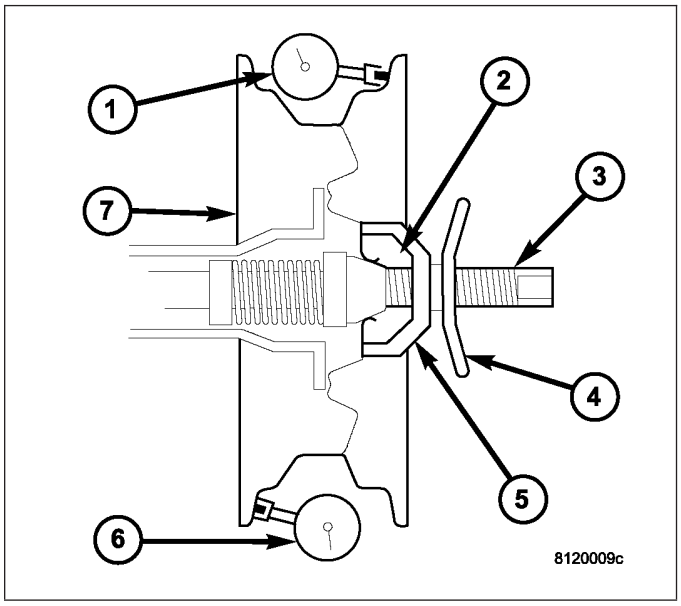

Radial runout of more than 1.5 mm (.060 inch) measured at the center line of the tread may cause the vehicle to shake.

Sometimes radial runout can be reduced. Relocate the wheel and tire assembly on the mounting studs (See Method 1). If this does not reduce runout to an acceptable level, the tire can be rotated on the wheel. (See Method 2).

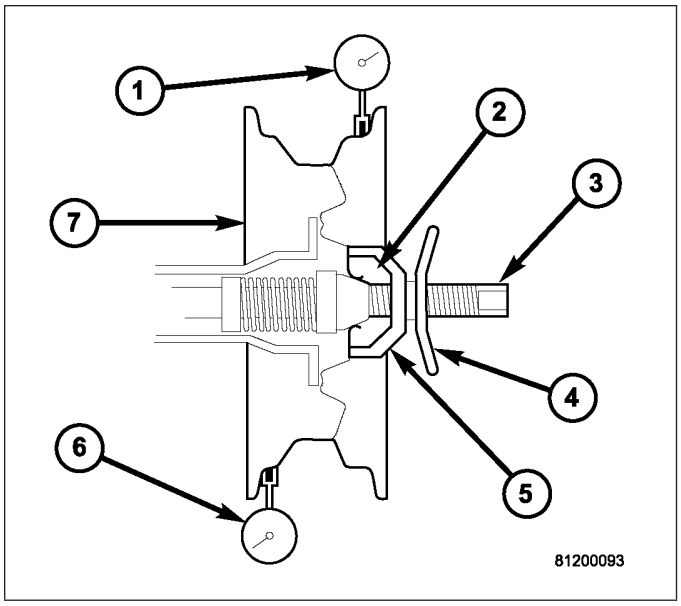

METHOD 1 (RELOCATE WHEEL ON HUB)

1. Drive vehicle a short distance to eliminate tire flat spotting from a parked position.
2. Check wheel bearings and adjust if adjustable or replace if necessary.
3. Check the wheel mounting surface.
4. Relocate wheel on the mounting, two studs over from the original position.
5. Tighten wheel nuts until all are properly torqued, to eliminate brake distortion.
6. Check radial runout. If still excessive, mark tire sidewall, wheel, and stud at point of maximum runout and proceed to Method 2.

METHOD 2 (RELOCATE TIRE ON WHEEL)

NOTE: Rotating the tire on wheel is particularly effective when there is runout in both tire and wheel.

1. Remove tire from wheel and mount wheel on service dynamic balance machine.
2. Check the wheel radial runout.

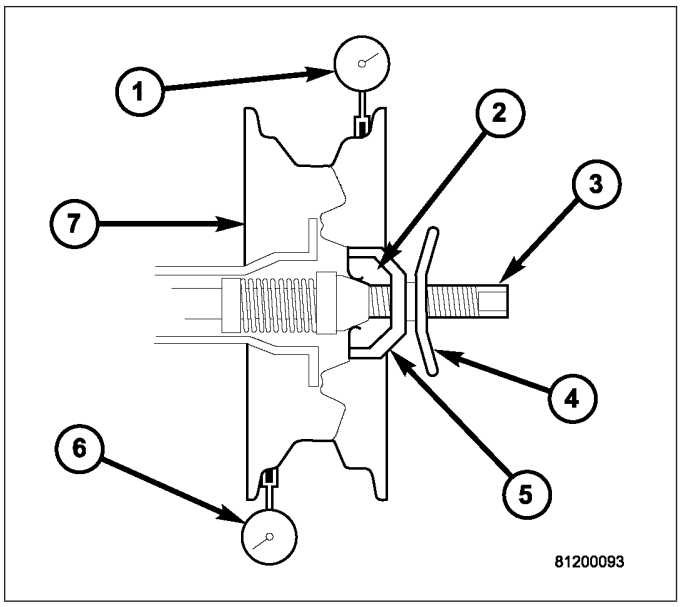

3. Check the wheel lateral runout.
   - STEEL WHEELS: Radial runout 0.031 in., Lateral runout 0.031 in. (maximum)
   - ALUMINUM WHEELS: Radial runout 0.02 in., Lateral runout 0.025 in. (maximum)
4. If point of greatest wheel lateral runout is near original chalk mark, remount tire 180 degrees. Recheck runout.

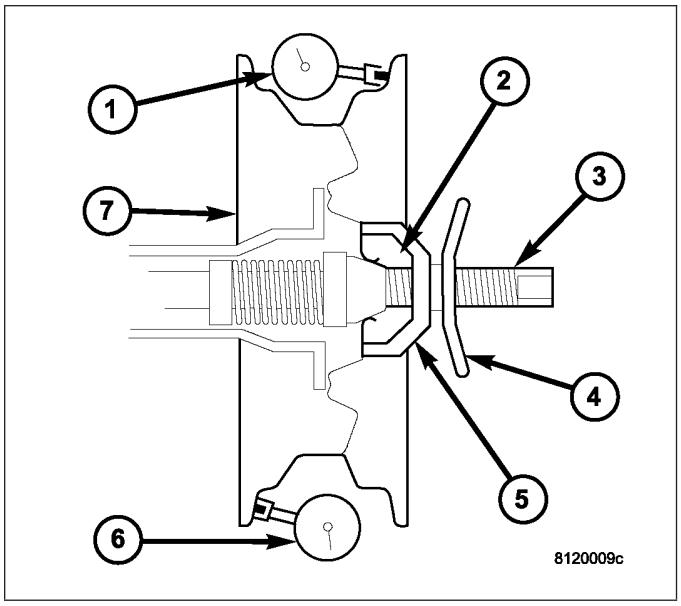

STANDARD PROCEDURE

MATCH MOUNTING

Wheels and tires are match mounted at the factory. This means that the high spot of the tire is matched to the low spot on the wheel rim. Each are marked with a bright colored temporary label on the outboard surface for alignment. The wheel is also marked permanently on the inside of the rim in the tire well. This permanent mark may be a paint dot or line, a permanent label or a stamped impression such as an X. An optional location mark is a small spherical indentation on the vertical face of the outboard flange on some non styled base steel wheels. The tire must be removed to locate the permanent mark on the inside of the wheel.

Before dismounting a tire from its wheel, a reference mark should be placed on the tire at the valve stem location. This reference will ensure that it is remounted in the original position on the wheel.

1. Remove the tire and wheel assembly from the vehicle and mount on a service dynamic balance machine.
2. Measure the total runout on the center of the tire tread rib (3) with a dial indicator. Record the indicator reading. Mark the tire to indicate the high spot (2). Place a mark on the tire at the valve stem (4) location (1).

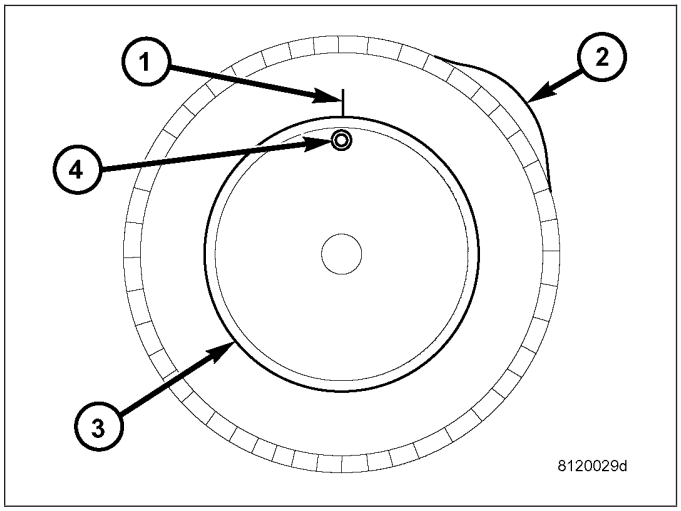

3. Break down the tire and remount it 180 degrees on the rim (1)(2).
4. Measure the total indicator runout again. Mark the tire to indicate the high spot.

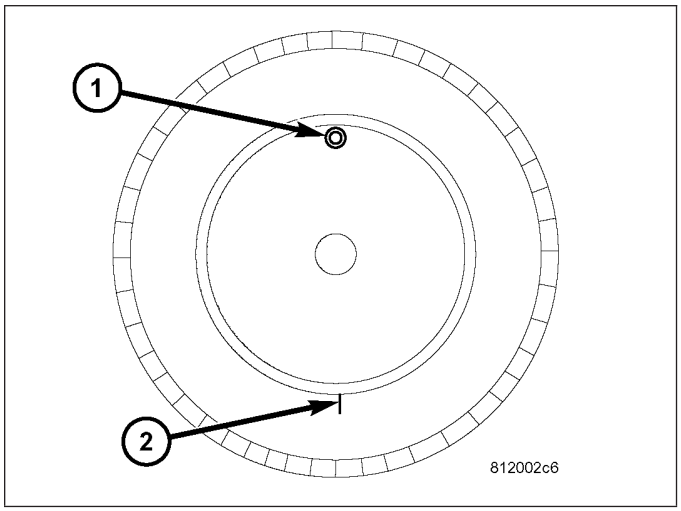

5. If runout is still excessive, the following procedures must be done.
   - If the high spot is within 101.6 mm (4.0 in.) of the first spot and is still excessive, replace the tire.
   - If the high spot is within 101.6 mm (4.0 in.) of the first spot on the wheel, the wheel may be out of specifications. Refer to Wheel and Tire Runout.
   - If the high spot is NOT within 101.6 mm (4.0 in.) of either high spot, draw an arrow on the tread from second high spot (1) to first (2). Break down the tire and remount it 90 degrees on rim in that direction. This procedure will normally reduce the runout to an acceptable amount, if not replace the rim.

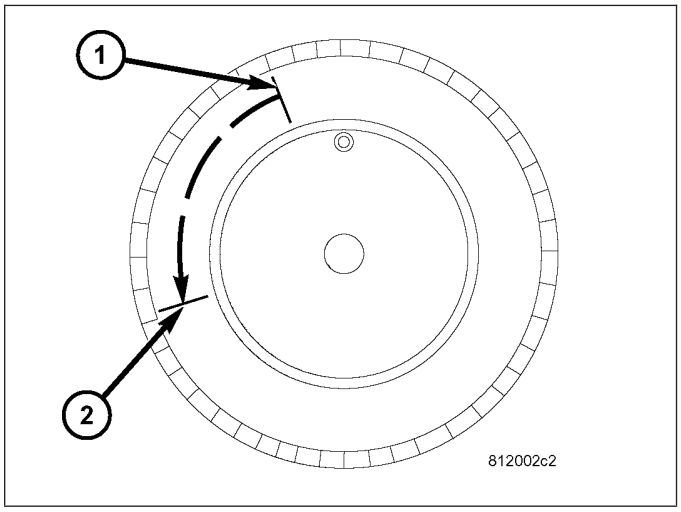

TIRE AND WHEEL BALANCE

It is recommended that a two plane service dynamic balancer be used when a tire and wheel assembly require balancing. Refer to balancer operation instructions for proper cone mounting procedures. Typically use front cone mounting method for steel wheels. For aluminum wheel use back cone mounting method without cone spring.

NOTE: Static should be used only when a two plane balancer is not available.

NOTE: Cast aluminum and forged aluminum wheels require coated balance weights and special alignment equipment.

Wheel balancing can be accomplished with either on or off vehicle equipment. When using on-vehicle balancing equipment, remove the opposite wheel/tire. Off-vehicle balancing is recommended.

For static balancing, find the location of the heavy spot (1) causing the imbalance (5). Counter balance wheel directly opposite the heavy spot. Determine weight required to counter balance the area of imbalance (4). Place half of this weight on the **inner** rim flange (3) and the other half on the **outer** rim flange (3).

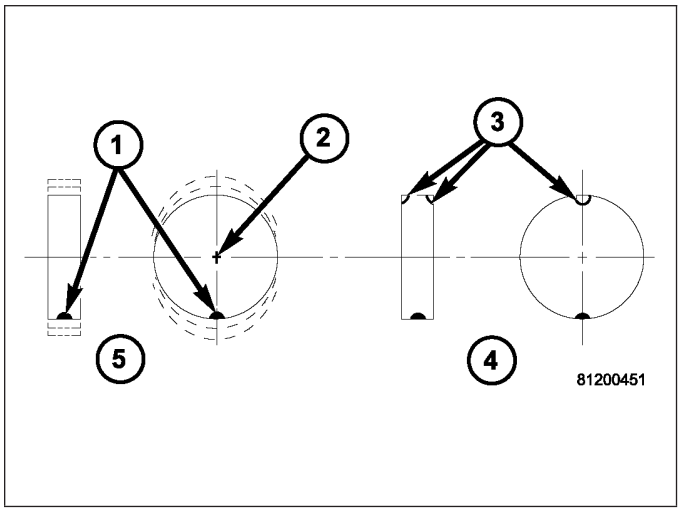

For dynamic balancing (3), the balancing equipment is designed to locate the amount of weight to be applied to both the inner and outer rim flange (2).

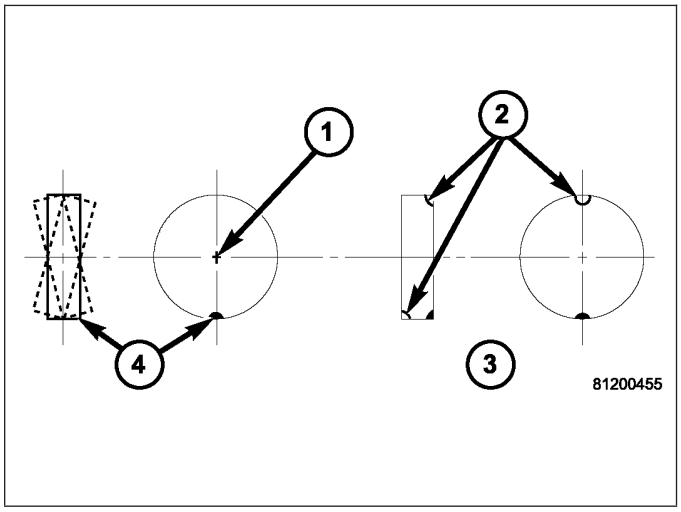

TIRE ROTATION

Tires on the front and rear axles operate at different loads and perform different steering, driving, and braking functions. For these reasons, the tires wear at unequal rates. They may also develop irregular wear patterns. These effects can be reduced by rotating the tires according to the maintenance schedule in the Owners Manual. This will improve tread life, traction and maintain a smooth quiet ride.

The recommended method of tire rotation for single rear wheel is. Other methods can be used, but may not provide the same tire longevity benefits.

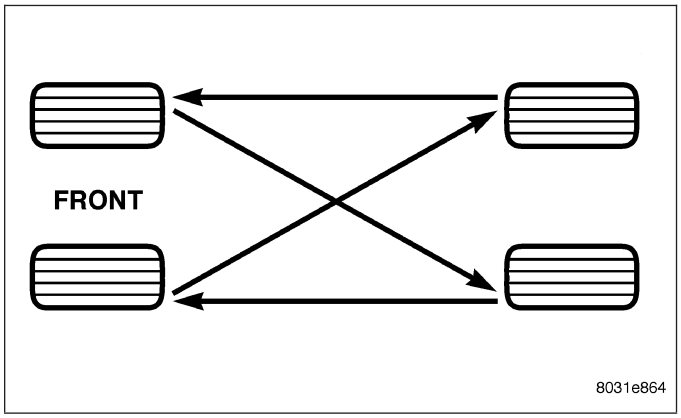

CAUTION: 3500 Dual rear tires have a new tire rotation pattern. This is to accommodate the outlined white letter (OWL) tires. When replacing a flat, the spare tire may have to be remounted on the rim or installed at a different location to maintain the correct placement of the outlined white letter (OWL) tires.

The recommended method of tire rotation for dual rear wheel is. Other methods can be used, but may not provide the same tire longevity benefits.

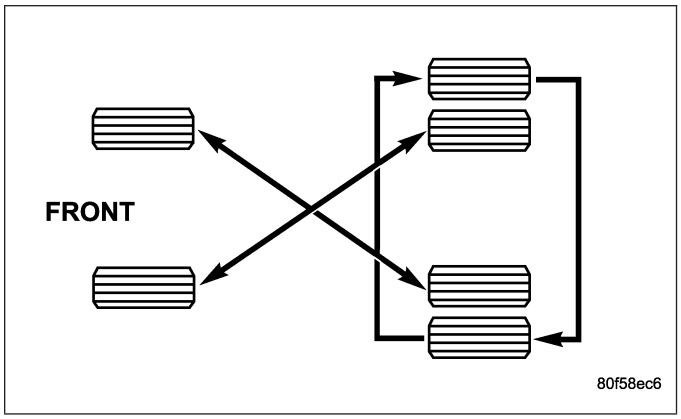

TIRES

DESCRIPTION

TIRES

Tires are designed and engineered for each specific vehicle. They provide the best overall performance for normal operation. The ride and handling characteristics match the vehicle's requirements. With proper care they will give excellent reliability, traction, skid resistance, and tread life.

Driving habits have more effect on tire life than any other factor. Careful drivers will obtain in most cases, much greater mileage than severe use or careless drivers. A few of the driving habits which will shorten the life of any tire are:

- Rapid acceleration
- Severe brake applications
- High speed driving
- Excessive speeds on turns
- Striking curbs and other obstacles

Radial-ply tires are more prone to irregular tread wear. It is important to follow the tire rotation interval (Refer to 22 - TIRES/WHEELS - STANDARD PROCEDURE). This will help to achieve a greater tread life.

TIRE IDENTIFICATION

Tire type, size, aspect ratio and speed rating are encoded in the letters and numbers imprinted on the side wall of the tire. Refer to the chart to decipher the tire identification code.

Performance tires have a speed rating letter after the aspect ratio number. The speed rating is not always printed on the tire sidewall. These ratings are:

- **Q** up to 100 mph
- **S** up to 112 mph
- **T** up to 118 mph
- **U** up to 124 mph
- **H** up to 130 mph
- **V** up to 149 mph
- **Z** more than 149 mph (consult the tire manufacturer for the specific speed rating)

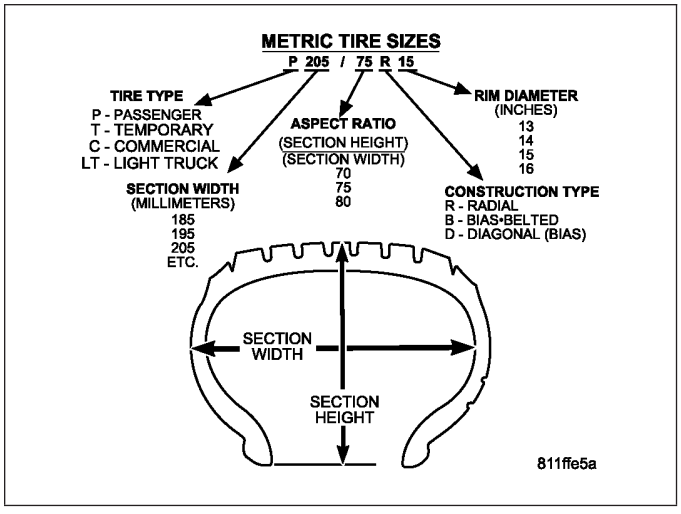

An All Season type tire will have either **M + S, M & S or M–S** (indicating mud and snow traction) imprinted on the side wall.

TIRE CHAINS

Tire snow chains may be used on **certain** models. Refer to the Owner's Manual for more information.

SPARE / TEMPORARY TIRE

The temporary spare tire is designed for emergency use only. The original tire should be repaired or replaced at the first opportunity, then reinstalled. Do not exceed speeds of 50 M.P.H. when using the temporary spare tire. Refer to Owner's Manual for complete details.

RADIAL – PLY TIRES

Radial-ply tires improve handling, tread life and ride quality, and decrease rolling resistance.

Radial-ply tires must always be used in sets of four. Under no circumstances should they be used on the front only. They may be mixed with temporary spare tires when necessary. A maximum speed of 50 MPH is recommended while a temporary spare is in use.

Radial-ply tires have the same load-carrying capacity as other types of tires of the same size. They also use the same recommended inflation pressures.

The use of oversized tires, either in the front or rear of the vehicle, can cause vehicle drive train failure. This could also cause inaccurate wheel speed signals when the vehicle is equipped with Anti-Lock Brakes.

The use of tires from different manufactures on the same vehicle is NOT recommended. The proper tire pressure should be maintained on all four tires.

TIRE PRESSURE FOR HIGH SPEEDS

For proper tire pressure specification refer to the Owners Manual.

REPLACEMENT TIRES

The original equipment tires provide a proper balance of many characteristics such as:

- Ride
- Noise
- Handling
- Durability
- Tread life
- Traction
- Rolling resistance
- Speed capability

It is recommended that tires equivalent to the original equipment tires be used when replacement is needed.

Failure to use equivalent replacement tires may adversely affect the safety and handling of the vehicle.

The use of oversize tires may cause interference with vehicle components. Under extremes of suspension and steering travel, interference with vehicle components may cause tire damage.

WARNING: FAILURE TO EQUIP THE VEHICLE WITH TIRES HAVING ADEQUATE SPEED CAPABILITY CAN RESULT IN SUDDEN TIRE FAILURE.

TIRE INFLATION PRESSURES

WARNING: OVER OR UNDER INFLATED TIRES CAN AFFECT VEHICLE HANDLING AND TREAD WEAR. THIS MAY CAUSE THE TIRE TO FAIL SUDDENLY, RESULTING IN LOSS OF VEHICLE CONTROL.

Under inflation will cause rapid shoulder wear (1), tire flexing, and possible tire failure.

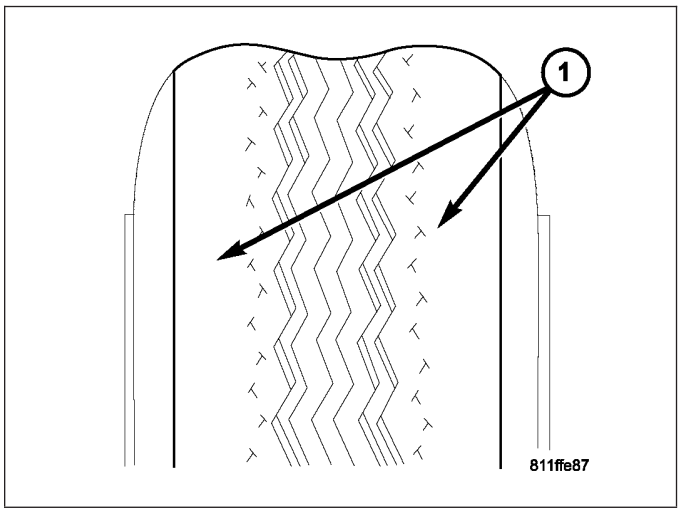

Over inflation will cause rapid center wear (1) reduction in the tire's ability to cushion shocks.

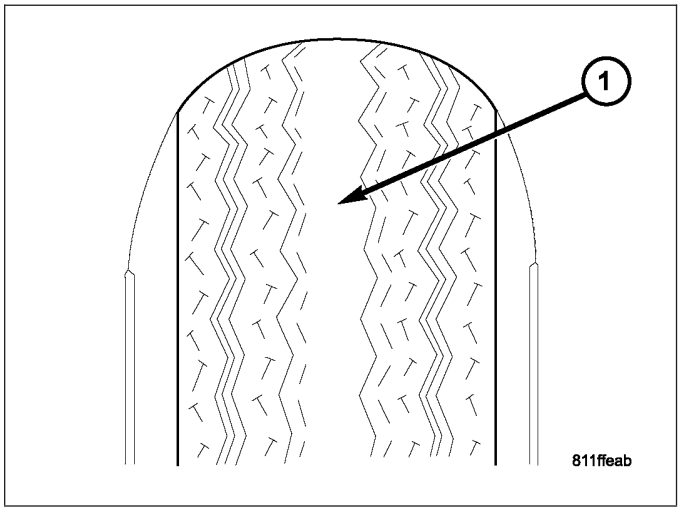

Improper inflation can cause:

- Uneven wear patterns
- Reduced tread life
- Reduced fuel economy
- Unsatisfactory ride
- Vehicle drift

For proper tire pressure specification refer to the vehicles Owners Manual.

DIAGNOSIS AND TESTING

PRESSURE GAUGES

A quality air pressure gauge is recommended to check tire pressure. After checking the air pressure, replace valve cap finger tight.

TIRE NOISE OR VIBRATION

Radial-ply tires are sensitive to force impulses caused by improper mounting, vibration, wheel defects, or possibly tire imbalance.

To find out if tires are causing the noise or vibration, drive the vehicle over a smooth road at varying speeds. Note the noise level during acceleration and deceleration. The engine, differential and exhaust noises will change as speed varies, while the tire noise will usually remain constant.

TREAD WEAR INDICATORS

Tread wear indicators (3) are molded into the bottom of the tread grooves. When tread depth is 1.6 mm (1/16 in.), the tread wear indicators (3) will appear as a 13 mm (1/2 in.) band.

Tire replacement is necessary when indicators appear in two or more grooves or if localized balding occurs.

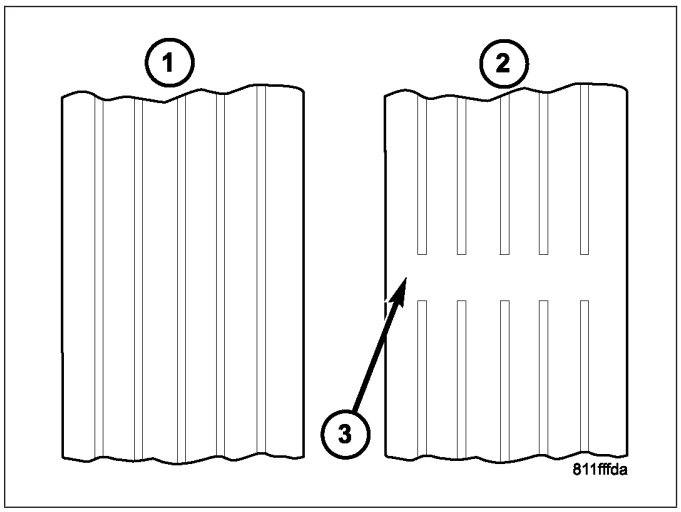

TIRE WEAR PATTERNS

CONDITION	RAPID WEAR AT SHOULDERS	RAPID WEAR AT CENTER	CRACKED TREADS	WEAR ON ONE SIDE	FEATHERED EDGE	BALD SPOTS	SCALLOPED WEAR
EFFECT	1. 2.						
CAUSE	UNDER-INFLATION OR LACK OF ROTATION	OVER-INFLATION OR LACK OF ROTATION	UNDER-INFLATION OR EXCESSIVE SPEED*	EXCESSIVE CAMBER	INCORRECT TOE	UNBALANCED WHEEL OR TIRE DEFECT*	LACK OF ROTATION OF TIRES OR WORN OR OUT-OF-ALIGNMENT SUSPENSION.
CORRECTION	ADJUST PRESSURE TO SPECIFICATIONS WHEN TIRES ARE COOL ROTATE TIRES			ADJUST CAMBER TO SPECIFICATIONS	ADJUST TOE-IN TO SPECIFICATIONS	DYNAMIC OR STATIC BALANCE WHEELS	ROTATE TIRES AND INSPECT SUSPENSION SEE GROUP 2

* HAVE TIRE INSPECTED FOR FUTURE USE.

812014d7

Under inflation will cause wear on the shoulders of tire. Over inflation will cause wear at the center of tire.

Excessive camber causes the tire to run at an angle to the road. One side of tread is then worn more than the other.

Excessive toe-in or toe-out causes wear on the tread edges and a feathered effect across the tread.

TIRE/VEHICLE LEAD

Use the following Vehicle Lead Diagnosis And Correction Chart to diagnose and correct a vehicle lead or drift problem.

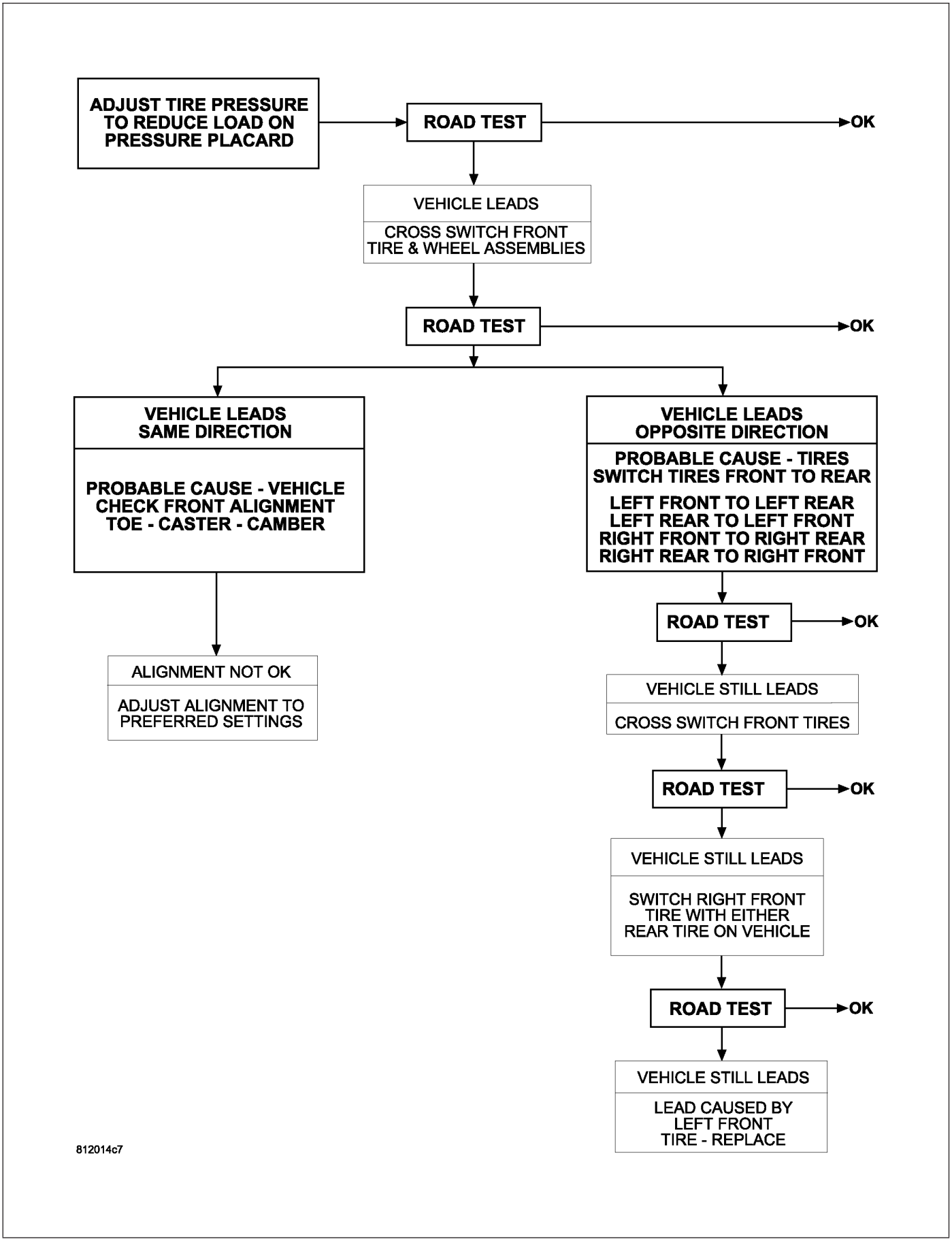
ADJUST TIRE PRESSURE TO REDUCE LOAD ON PRESSURE PLACARD
ROAD TEST
OK
VEHICLE LEADS
CROSS SWITCH FRONT TIRE & WHEEL ASSEMBLIES
ROAD TEST
OK
VEHICLE LEADS SAME DIRECTION
PROBABLE CAUSE - VEHICLE CHECK FRONT ALIGNMENT TOE - CASTER - CAMBER
ALIGNMENT NOT OK
ADJUST ALIGNMENT TO PREFERRED SETTINGS
VEHICLE LEADS OPPOSITE DIRECTION
PROBABLE CAUSE - TIRES SWITCH TIRES FRONT TO REAR
LEFT FRONT TO LEFT REAR
LEFT REAR TO LEFT FRONT
RIGHT FRONT TO RIGHT REAR
RIGHT REAR TO RIGHT FRONT
ROAD TEST
OK
VEHICLE STILL LEADS
CROSS SWITCH FRONT TIRES
ROAD TEST
OK
VEHICLE STILL LEADS
SWITCH RIGHT FRONT TIRE WITH EITHER REAR TIRE ON VEHICLE
ROAD TEST
OK
VEHICLE STILL LEADS
LEAD CAUSED BY LEFT FRONT TIRE - REPLACE
812014c7

STANDARD PROCEDURE

TIRE REPAIR AREA

For proper repairing, a radial tire must be removed from the wheel. Repairs should only be made if the defect, or puncture, is in the tread area (1). The tire should be replaced if the puncture is located in the sidewall.

Deflate tire completely before removing the tire from the wheel. Use lubrication such as a mild soap solution when dismounting or mounting tire. Use tools free of burrs or sharp edges which could damage the tire or wheel rim.

Before mounting tire on wheel, make sure all rust is removed from the rim bead and repaint if necessary.

Install wheel on vehicle, and tighten to proper torque specification.

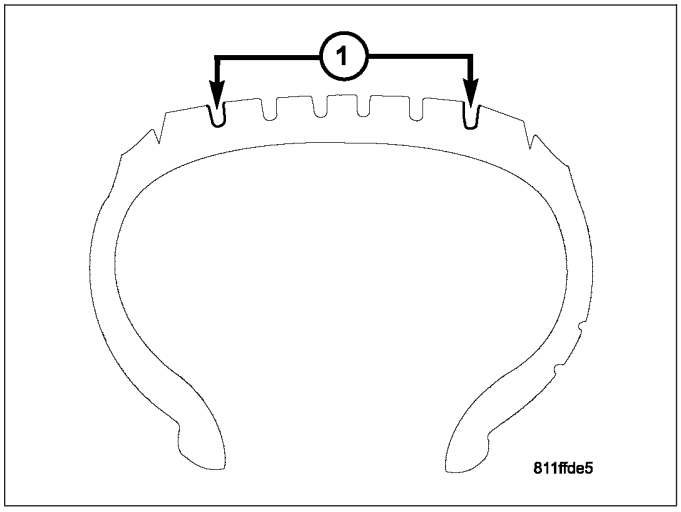

CLEANING

TIRES

Remove the protective coating on the tires before delivery of a vehicle. This coating may cause deterioration of the tires.

To remove the protective coating, apply warm water and let it soak for a few minutes. Afterwards, scrub the coating away with a soft bristle brush. Steam cleaning may also be used to remove the coating.

NOTE: DO NOT use gasoline, mineral oil, oil-based solvent or a wire brush for cleaning.

SPECIFICATIONS

TIRE REVOLUTIONS PER MILE

TIRE SIZE	SUPPLIER	REVOLUTIONS PER MILE
P245/70R17 WRANGLER SRA	GOODYEAR®	685
LT245/70R17 LTX A/S	MICHELIN®	675
LT265/70R17E LTX A/S	MICHELIN®	657
LT245/70R17 RUGGED TRAIL T/A	BF GOODRICH®	684
LT265/70R17E RUGGED TRAIL T/A	BF GOODRICH®	658
LT285/70R17D ALL TERRAIN T/A	BF GOODRICH®	632
P265/70R17 WRANGLER SR/A	GOODYEAR®	657
P265/70R17 WRANGLER GS/A	GOODYEAR®	661
LT275/70R17E WRANGLER AT/S	GOODYEAR®	649

TIRE SIZE	SUPPLIER	REVOLUTIONS PER MILE
LT275/70R17E TTL	GOODYEAR®	649
P275/55R20 EAGLE LS	GOODYEAR®	655
P275/60R20 WRANGLER HP	GOODYEAR®	636
LT235/80R17E WRANGLER SRA	GOODYEAR®	649
LT235/80R17E WRANGLER GSA	GOODYEAR®	649
LT235/80R17E AMERITRAC	GENERAL®	649
LT235/80R17E AMERITRAC TR	GENERAL®	648
305/40ZR22 SCORPION ZERO STANDARD CAB SRT-10 USES A 3 SEASON TIRE	PIRELLI®	654
305/40ZR22 SCORPION ZERO QUAD CAB SRT-10 IDENTIFIED WITH A ″QC″ AT THE END OF THE DOT CODE IS A 4 SEASON TIRE	PIRELLI®	654

WHEELS

DESCRIPTION

DESCRIPTION

Original equipment wheels are designed for the specified Maximum Vehicle Capacity.

All models use steel or aluminum drop center wheels.

Aluminum wheels require special balance weights and alignment equipment.

1. On vehicles equipped with dual rear wheels, The rim is an eight stud hole pattern wheel. The wheels have a flat mounting surface (1).

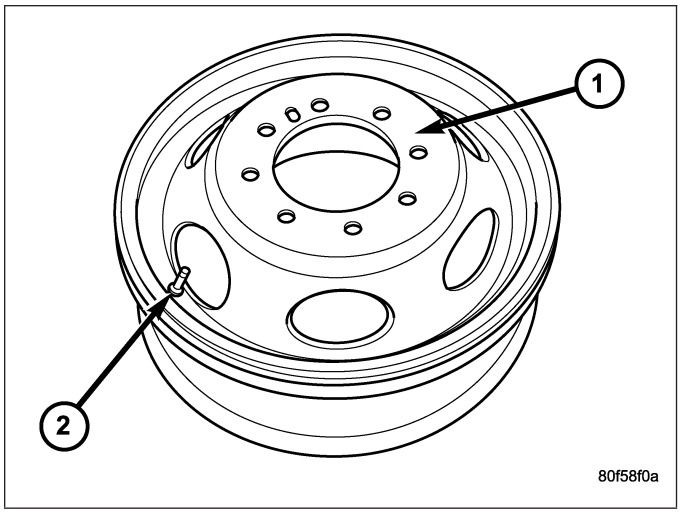

2. The slots (1) in the wheel must be aligned to provide access to the valve stem.

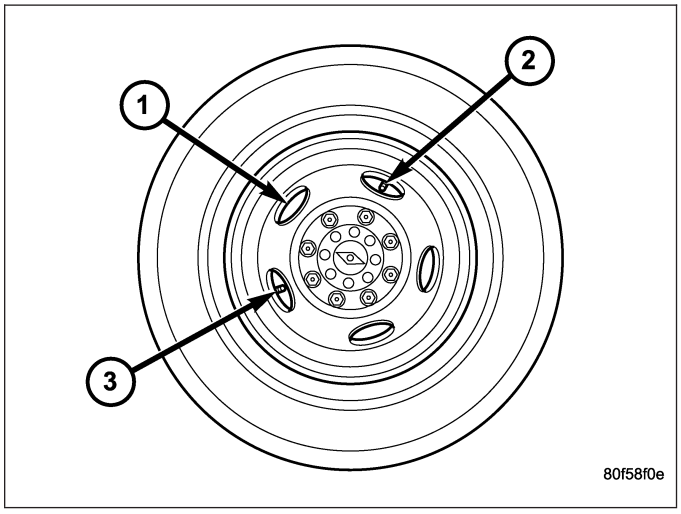

WHEEL DESIGN

The rim size is on the vehicle safety certification label located on the drivers door shut face. The size of the rim is determined by the drivetrain package. Original equipment wheels/rims are designed for operation up to the specified maximum vehicle capacity.

All models use stamped steel, cast aluminum or forged aluminum wheels. Every wheel has raised sections between the rim flanges (1) and rim drop well (3) called safety humps.

Initial inflation of the tire forces the bead over these raised sections. In case of rapid loss of air pressure, the raised sections help hold the tire on the wheel.

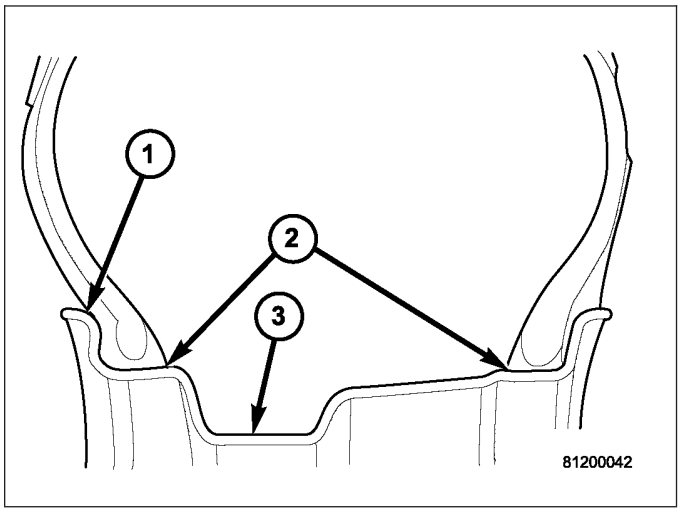

The wheel studs and nuts are designed for specific applications. All aluminum and some steel wheels have wheel stud nuts with an enlarged nose. This enlarged nose is necessary to ensure proper retention of the wheels. Do not use replacement studs or nuts with a different design or lesser quality.

DIAGNOSIS AND TESTING

WHEEL INSPECTION

Inspect wheels for:

- Excessive run out
- Dents or cracks
- Damaged wheel lug nut holes
- Air Leaks from any area or surface of the rim

NOTE: Do not attempt to repair a wheel by hammering, heating or welding.

If a wheel is damaged an original equipment replacement wheel should be used. When obtaining replacement wheels, they should be equivalent in load carrying capacity. The diameter, width, offset, pilot hole and bolt circle of the wheel should be the same as the original wheel.

WARNING: FAILURE TO USE EQUIVALENT REPLACEMENT WHEELS MAY ADVERSELY AFFECT THE SAFETY AND HANDLING OF THE VEHICLE. USED WHEELS ARE NOT RECOMMENDED. THE SERVICE HISTORY OF THE WHEEL MAY HAVE INCLUDED SEVERE TREATMENT OR VERY HIGH MILEAGE. THE RIM COULD FAIL WITHOUT WARNING.

STANDARD PROCEDURE

WHEEL REPLACEMENT

The wheel studs and nuts are designed for specific applications. They must be replaced with equivalent parts. Do not use replacement parts of lesser quality or a substitute design. All aluminum and some steel wheels have wheel stud nuts which feature an enlarged nose. This enlarged nose is necessary to ensure proper retention of the aluminum wheels.

NOTE: Do not use chrome plated lug nuts with chrome plated wheels.

NOTE: All wheel nuts should then be tightened just snug. Gradually tighten them in sequence to the proper torque specification.

NOTE: Never use oil or grease on studs or nuts.

Before installing the wheel, be sure to remove any build up of corrosion on the wheel mounting surfaces. Ensure wheels are installed with good metal-to-metal contact. Improper installation could cause loosening of wheel nuts. This could affect the safety and handling of your vehicle.

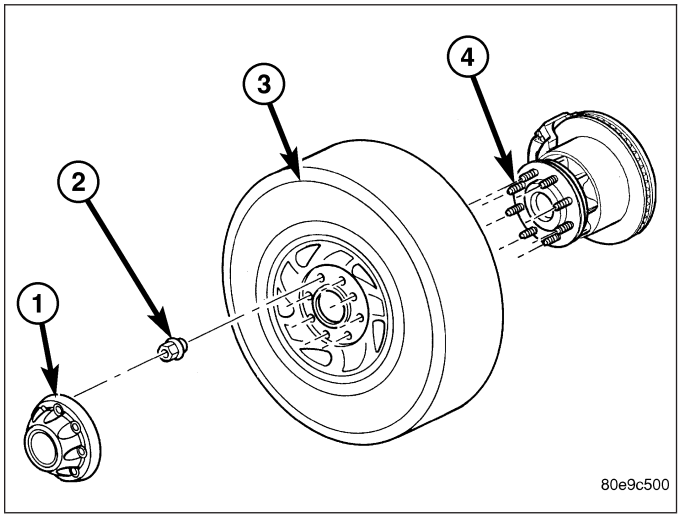

To install the wheel (3), first position it properly on the mounting surface.

8–lug.

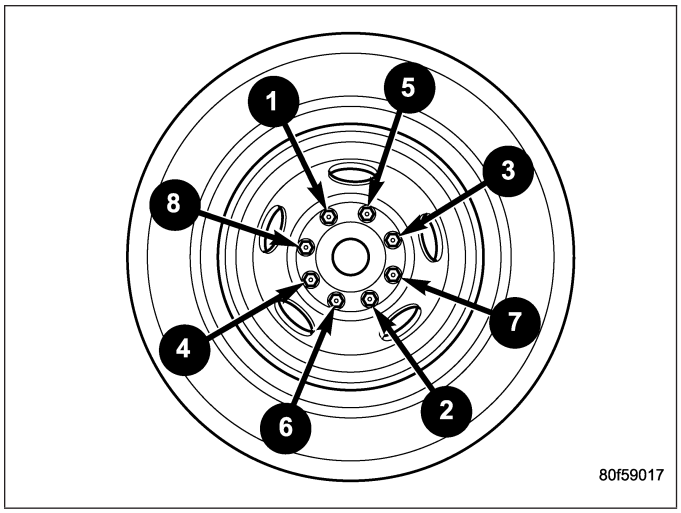

(SRT-10).

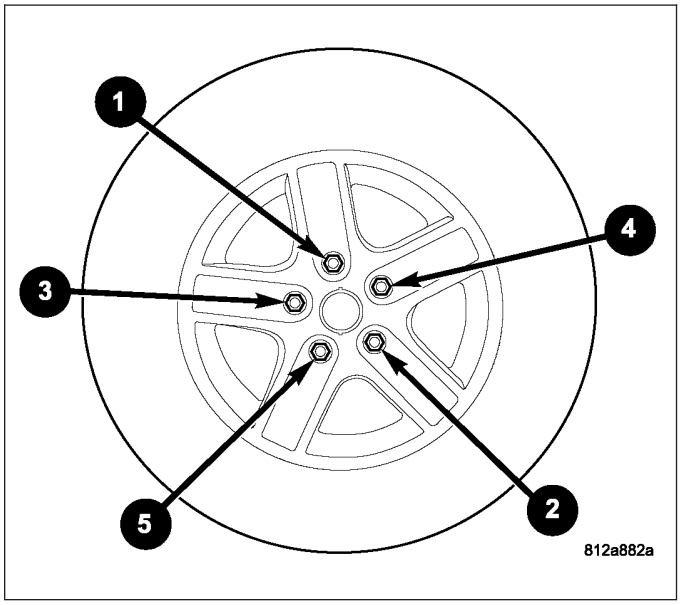

6– bolt pattern.

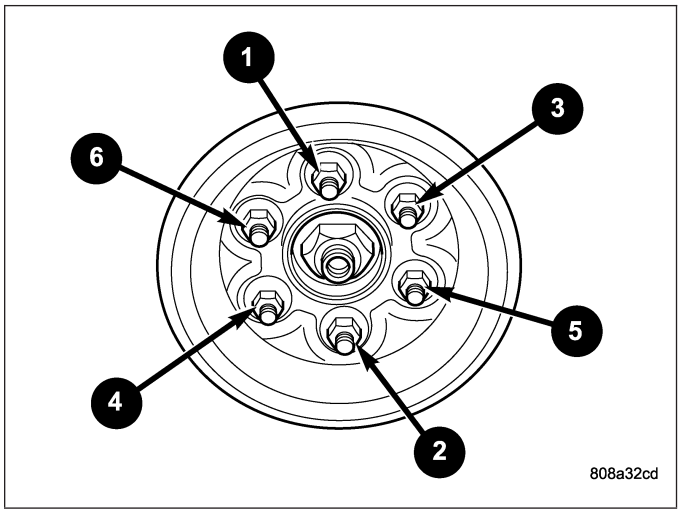

Wheels must be replaced if they have:

- Excessive runout
- Bent or dented
- Leak air through welds
- Have damaged bolt holes

Wheel repairs employing hammering, heating, or welding are not allowed.

Original equipment wheels are available through your dealer. Replacement wheels from any other source should be equivalent in:

- Load carrying capacity
- Diameter
- Width
- Offset
- Mounting configuration

Failure to use equivalent replacement wheels may affect the safety and handling of your vehicle. Replacement with **used** wheels is not recommended. Their service history may have included severe treatment.

DUAL REAR WHEEL INSTALLATION

Dual rear wheels use a special heavy duty lug nut wrench. It is recommended to remove and install dual rear wheels only when the proper wrench is available. The wrench is also use to remove wheel center caps for more information refer to Owner's Manual.

The tires on both wheels must be completely raised off the ground when tightening the lug nuts. This will ensure correct wheel centering and maximum wheel clamping.

A two piece flat face lug nut with right-hand threads is used for retaining the wheels on the hubs.

The dual rear wheel lug nuts should be tightened according to the following procedure:

NOTE: Do not use more then two drops of oil on the nut/washer (1), since the center caps attach in this area.

- Place two drops of oil to the interface of the nut/ washer (1) before installing on the wheel stud.

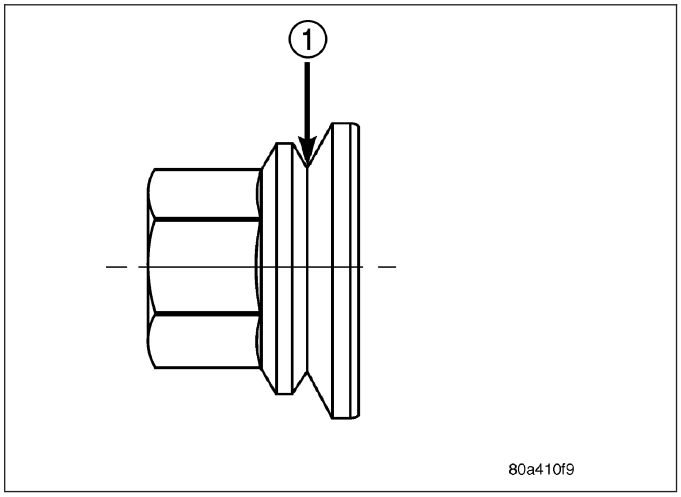

- Tighten the wheel lug nuts in the numbered sequential pattern until they are snug tight. Then tighten lug nut to specified torque following same number sequence, (Refer to 22 - TIRES/WHEELS/WHEELS - SPECIFICATIONS).
- Tighten lug nuts in same numbered sequence a second time to the specified torque. This will ensure that the wheels are thoroughly mated.
- Check lug nut specified torque after 100 miles (160 kilometers). Also after 500 miles (800 kilometers) of vehicle operation.

NOTE: Wheel lug nuts should be tightened to specified torque at every maintenance interval thereafter.

SPECIFICATIONS

TORQUE CHART

TORQUE SPECIFICATIONS

DESCRIPTION	N·m	Ft. Lbs.	In. Lbs.
1500 Series Lug Nut 9/16 X 18 with 60° Cone LD	129	95	—
2500 Series Lug Nut 9/16 X 18 with 60° Cone HD SRW	197	145	—
3500 Series Lug Nut 9/16 X 18 with Flat Washer HD DRW	210	155	—

STUDS

REMOVAL

1. Raise and support the vehicle.
2. Remove the wheel and tire assembly.
3. Remove the brake caliper, caliper adapter and rotor, (Refer to 5 - BRAKES/HYDRAULIC/MECHANICAL/ROTORS - REMOVAL).
4. Remove the wheel speed sensor from the hub.
5. Press the stud from the hub using special tool C-4150A (1).

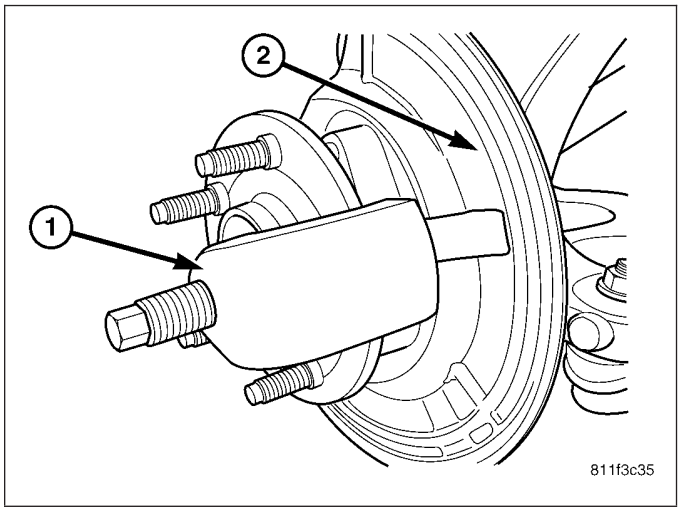

6. Remove the stud (2) from the hub (1) through the backing plate access hole (3).

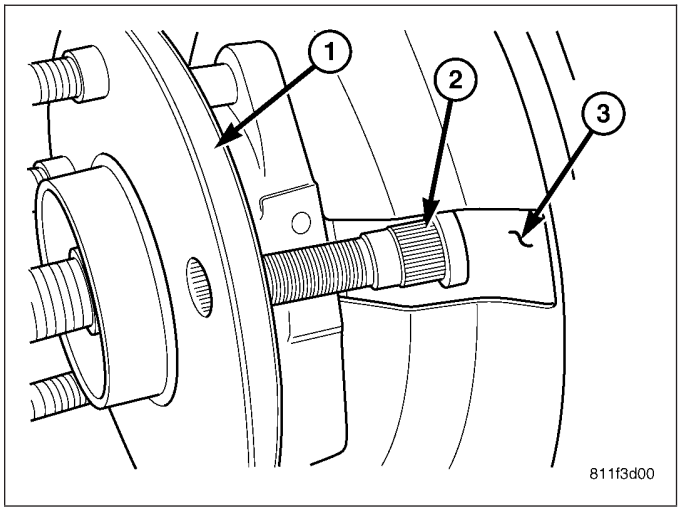

INSTALLATION

1. Install the new stud (2) into the hub flange (1).
2. Install three proper sized washers onto the stud, then install lug nut with the flat side of the nut against the washers.
3. Tighten the lug nut until the stud is pulled into the hub flange. Verify that the stud is properly seated into the flange.
4. Remove the lug nut and washers.
5. Install the brake rotor, caliper adapter, and caliper, (Refer to 5 - BRAKES/HYDRAULIC/MECHANICAL/ ROTORS - INSTALLATION).

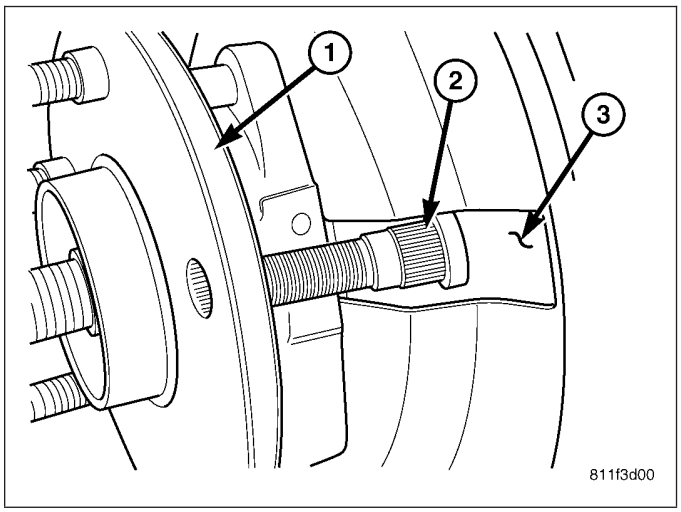

6. Install the wheel speed sensor.
7. Install the wheel and tire assembly, use new lug nut on the stud or studs that were replaced.
8. Remove the support and lower the vehicle.

WHEEL COVER

REMOVAL

NOTE: The hub caps must be removed before raising the vehicle off the ground.

NOTE: You must use the flat end of the hub/cap remover/installer combination tool to pry off the wheel skins. Insert the flat tip completely and using a back and forth motion, loosen the wheel skin. repeat this procedure around the tire until the wheel skin pops off.

1. On 2500/3500 single rear wheel (SRW) models, insert a hub/cap remover/installer combination tool using the blade on the end of the tool to pry the cap off in a back and forth motion.
2. On 3500 models with dual rear wheels (DRW), you must first remove the hub caps. The hub/cap remover/installer combination tool must be inserted in the pry off notch of the rear hub caps.
3. Position the hub/cap remover/installer combination tool and pull out on the tool firmly. The cap should come off.
4. The wheel skins can now be removed from the wheel.
5. On 3500 models front hub caps use the hub/cap remover/installer combination tool to pry off the cap in a back and forth motion. The wheel skins can now be removed.

INSTALLATION

REAR

1. Install one 1 1/2 in. valve stem extension on each rear inner wheel.

NOTE: A 3/8 in. drive 10mm deep wheel socket with a 10 in. or greater extension can be used to remove the existing valve stem cap and install the extension.

2. Install one 1 in. valve stem extension on each outer wheel.
3. Align the cooling windows of the wheel skin with the cooling windows of the wheel. Seat one side of the wheel skin's retainer onto the wheel. Using a rubber mallet, strike thew wheel skin on the outer circumference. Strike at several locations around the circumference until the skin is fully seated.

NOTE: The wheel skin and the hub cap are fully seated when there is a consistent gap between the skin/cap and the wheel.

4. Tug on the hub/cap wheel skin to ensure that they are properly installed.

FRONT

1. Align the valve stem with the notch in the wheel skin.
2. Seat on side of the wheel skin's wire retainer on to the wheel.
3. Using a rubber mallet, strike the opposite side of the wheel skin until the skin is properly seated.

NOTE: The wheel skin and the hub cap are fully seated when there is a consistant gap between the skin/ cap and the wheel.

4. Tug on the hub cap/wheel skin to ensure that they are properly installed.

SPARE TIRE

DESCRIPTION

SPARE / TEMPORARY TIRE

The temporary spare tire is designed for emergency use only. The original tire should be repaired or replaced at the first opportunity, then reinstalled. Do not exceed speeds of 50 M.P.H. when using the temporary spare tire. Refer to Owner's Manual for complete details.

FULL SIZE, SPARE WHEEL WITH MATCHING TIRE

The spare is a full usage wheel with a matching tire, It can be used within the (posted legal) speed limits or distance limitations as of the rest of the vehicles four tires. Refer to Owner's Manual for complete details.

BODY

TABLE OF CONTENTS

page

BODY
WARNING
SAFETY PRECAUTIONS AND WARNINGS . . . 1
DIAGNOSIS AND TESTING
WATER LEAKS 1
WIND NOISE 3
STANDARD PROCEDURE
BODY LUBRICATION 3
HEAT STAKING 3
BUZZ, SQUEAK & RATTLE 4
PLASTIC BODY PANEL REPAIR 5
SPECIFICATIONS - TORQUE 13
SPECIAL TOOLS
BODY 16

page

TAILGATE 17
DOOR - FRONT 26
DOORS - REAR 52
EXTERIOR 79
HOOD 112
INSTRUMENT PANEL 122
INTERIOR 148
PAINT 178
SEATS 181
STATIONARY GLASS 203
SUNROOF - SERVICE INFORMATION 213
WEATHERSTRIP/SEALS 238
BODY STRUCTURE 257

BODY

WARNING

SAFETY PRECAUTIONS AND WARNINGS

WARNING: Use an osha approved breathing filter when spraying paint or solvents in a confined area. Personal injury can result.

- **Avoid prolonged skin contact with petroleum or alcohol – based cleaning solvents. Personal injury can result.**
- **Do not stand under a hoisted vehicle that is not properly supported on safety stands. Personal injury can result.**

CAUTION: When holes must be drilled or punched in an inner body panel, verify depth of space to the outer body panel, electrical wiring, or other components. Damage to vehicle can result.

- **Do not weld exterior panels unless combustible material on the interior of vehicle is removed from the repair area. Fire or hazardous conditions, can result.**
- **Always have a fire extinguisher ready for use when welding.**
- **Disconnect the negative (-) cable clamp from the battery when servicing electrical components that are live when the ignition is OFF. Damage to electrical system can result.**
- **Do not use abrasive chemicals or compounds on painted surfaces. Damage to finish can result.**
- **Do not use harsh alkaline based cleaning solvents on painted or upholstered surfaces. Damage to finish or color can result.**
- **Do not hammer or pound on plastic trim panel when servicing interior trim. Plastic panels can break.**

DIAGNOSIS AND TESTING

WATER LEAKS

Water leaks can be caused by poor sealing, improper body component alignment, body seam porosity, missing plugs, or blocked drain holes. Centrifugal and gravitational force can cause water to drip from a location away from the actual leak point, making leak detection difficult. All body sealing points should be water tight in normal wet-driving conditions. Water flowing downward from the front of the vehicle should not enter the passenger or luggage

compartment. Moving sealing surfaces will not always seal water tight under all conditions. At times, side glass or door seals will allow water to enter the passenger compartment during high pressure washing or hard driving rain (severe) conditions. Overcompensating on door or glass adjustments to stop a water leak that occurs under severe conditions can cause premature seal wear and excessive closing or latching effort. After completing a repair, water test vehicle to verify leak has stopped before returning vehicle to use.

VISUAL INSPECTION BEFORE WATER LEAK TESTS

Verify that floor and body plugs are in place, body drains are clear, and body components are properly aligned and sealed. If component alignment or sealing is necessary, refer to the appropriate section of this group for proper procedures.

WATER LEAK TESTS

WARNING: DO NOT USE ELECTRIC SHOP LIGHTS OR TOOLS IN WATER TEST AREA. PERSONAL INJURY CAN RESULT.

When the conditions causing a water leak have been determined, simulate the conditions as closely as possible.

- If a leak occurs with the vehicle parked in a steady light rain, flood the leak area with an open-ended garden hose.
- If a leak occurs while driving at highway speeds in a steady rain, test the leak area with a reasonable velocity stream or fan spray of water. Direct the spray in a direction comparable to actual conditions.
- If a leak occurs when the vehicle is parked on an incline, hoist the end or side of the vehicle to simulate this condition. This method can be used when the leak occurs when the vehicle accelerates, stops or turns. If the leak occurs on acceleration, hoist the front of the vehicle. If the leak occurs when braking, hoist the back of the vehicle. If the leak occurs on left turns, hoist the left side of the vehicle. If the leak occurs on right turns, hoist the right side of the vehicle. For hoisting recommendations (Refer to LUBRICATION & MAINTENANCE/HOISTING - STANDARD PROCEDURE).

WATER LEAK DETECTION

To detect a water leak point-of-entry, do a water test and watch for water tracks or droplets forming on the inside of the vehicle. If necessary, remove interior trim covers or panels to gain visual access to the leak area. If the hose cannot be positioned without being held, have someone help do the water test.

Some water leaks must be tested for a considerable length of time to become apparent. When a leak appears, find the highest point of the water track or drop. The highest point usually will show the point of entry. After leak point has been found, repair the leak and water test to verify that the leak has stopped.

Locating the entry point of water that is leaking into a cavity between panels can be difficult. The trapped water may splash or run from the cavity, often at a distance from the entry point. Most water leaks of this type become apparent after accelerating, stopping, turning, or when on an incline.

MIRROR INSPECTION METHOD

When a leak point area is visually obstructed, use a suitable mirror to gain visual access. A mirror can also be used to deflect light to a limited-access area to assist in locating a leak point.

BRIGHT LIGHT LEAK TEST METHOD

Some water leaks in the luggage compartment can be detected without water testing. Position the vehicle in a brightly lit area. From inside the darkened luggage compartment inspect around seals and body seams. If necessary, have a helper direct a drop light over the suspected leak areas around the luggage compartment. If light is visible through a normally sealed location, water could enter through the opening.

PRESSURIZED LEAK TEST METHOD

When a water leak into the passenger compartment cannot be detected by water testing, pressurize the passenger compartment and soap test exterior of the vehicle. To pressurize the passenger compartment, close all doors and windows, start engine, and set heater control to high blower in HEAT position. If engine can not be started, connect a charger to the battery to ensure adequate voltage to the blower. With interior pressurized, apply dish detergent solution to suspected leak area on the exterior of the vehicle. Apply detergent solution with spray device or soft

bristle brush. If soap bubbles occur at a body seam, joint, seal or gasket, the leak entry point could be at that location.

WIND NOISE

Wind noise is the result of most air leaks. Air leaks can be caused by poor sealing, improper body component alignment, body seam porosity, or missing plugs in the engine compartment or door hinge pillar areas. All body sealing points should be airtight in normal driving conditions. Moving sealing surfaces will not always seal airtight under all conditions. At times, side glass or door seals will allow wind noise to be noticed in the passenger compartment during high cross winds. Over compensating on door or glass adjustments to stop wind noise that occurs under severe conditions can cause premature seal wear and excessive closing or latching effort. After a repair procedure has been performed, test vehicle to verify noise has stopped before returning vehicle to use.

VISUAL INSPECTION BEFORE TESTS

Verify that floor and body plugs are in place and body components are aligned and sealed. If component alignment or sealing is necessary, refer to the appropriate section of this group for proper procedures.

ROAD TESTING WIND NOISE

1. Drive the vehicle to verify the general location of the wind noise.
2. Apply 50 mm (2 in.) masking tape in 150 mm (6 in.) lengths along weatherstrips, weld seams or moldings. After each length is applied, drive the vehicle. If noise goes away after a piece of tape is applied, remove tape, locate, and repair defect.

POSSIBLE CAUSE OF WIND NOISE

- Moldings standing away from body surface can catch wind and whistle.
- Gaps in sealed areas behind overhanging body flanges can cause wind-rushing sounds.
- Misaligned movable components.
- Missing or improperly installed plugs in pillars.
- Weld burn through holes.

STANDARD PROCEDURE

BODY LUBRICATION

All mechanisms and linkages should be lubricated when necessary. This will maintain ease of operation and provide protection against rust and excessive wear. The weatherstrip seals should be lubricated to prolong their life as well as to improve door sealing.

All applicable exterior and interior vehicle operating mechanisms should be inspected and cleaned. Pivot/sliding contact areas on the mechanisms should then be lubricated.

1. When necessary, lubricate the operating mechanisms with the specified lubricants.
2. Apply silicone lubricant to a cloth and wipe it on door seals to avoid over-spray that can soil passenger's clothing.
3. Before applying lubricant, the component should be wiped clean. After lubrication, any excess lubricant should be removed.
4. The hood latch, latch release mechanism, latch striker, and safety latch should be lubricated periodically.
5. The door lock cylinders should be lubricated twice each year (preferably autumn and spring).
   - Spray a small amount of lock cylinder lubricant directly into the lock cylinder.
   - Apply a small amount to the key and insert it into the lock cylinder.
   - Rotate it to the locked position and then back to the unlocked position several times.
   - Remove the key. Wipe the lubricant from it with a clean cloth to avoid soiling of clothing.

HEAT STAKING

1. Remove trim panel.
2. Bend or move the trim panel components at the heat staked joints. Observe the heat staked locations and/or component seams for looseness.

3. Heat stake the components.
   a. If the heat staked or component seam location is loose, hold the two components tightly together and using a soldering gun with a flat tip, melt the material securing the components together. Do not over heat the affected area, damage to the exterior of the trim panel may occur.
   b. If the heat staked material is broken or missing, use a hot glue gun to apply new material to the area to be repaired. The panels that are being heat staked must be held together while the applying the glue. Once the new material is in place, it may be necessary to use a soldering gun to melt the newly applied material. Do not over heat the affected area, damage to the exterior of the trim panel may occur.
4. Allow the repaired area to cool and verify the repair.
5. Install trim panel.

BUZZ, SQUEAK & RATTLE

Buzz, Squeak & Rattles (BSR) may be caused by any one or more of the following and may be corrected as indicated:

- Loose fasteners should be tightened to specifications.
- Damaged or missing clips should be replaced.
- Damaged trim panels should be replaced.
- Incorrectly installed trim panels should be reinstalled properly.

Many BSR complaints such as loose trim, can be serviced using the Mopar® Parts BSR Noise Reduction Kit. This kit contains various tapes including foam, flock and anti-squeak used to eliminate noises caused by metal, plastic and vinyl components. Long life lubricants and greases can also be used on a variety of components. Refer to the Buzz, Squeak & Rattle Kit table for material contents and usage.

Buzz, Squeak & Rattle Kit

ITEM	FEATURES	APPLICATIONS	SERVICE TEMP
Itch And Squeak Tape	An abrasion resistant material thin enough to conform to most irregular surfaces. Stops most itches and squeaks.	Between metal and metal, metal and plastic, metal and vinyl, vinyl and plastic. Interior. Examples: Trim panels and bezels.	-40° to 225° Fahrenheit (-40° to 107° Celsius)
Black Nylon Flock	Nylon Flock with an aggressive acrylic adhesive. Provides for cushioning and compression fit, also isolates components. Water-resistant.	Between metal and metal, metal and plastic, vinyl and plastic. Examples: Pull cups, bezels, clips, ducts, top cover to glass, cowl panel.	-40° to 180° Fahrenheit (-40° to 82° Celsius)
High Density Urethane Foam	Tear resistant, highly resilient and durable.	Between metal and metal, metal and plastic. Water-resistant. Examples: I/P, heavy metal rattles, isolating brackets.	-40° to 180° Fahrenheit (-40° to 82° Celsius)
Open Cell Foam Tape	Soft foam conforms to irregular surfaces.	Wire harness and connector wrap. Examples: Seals, gasket, wiring, heat ducts.	-40° to 180° Fahrenheit (-40° to 82° Celsius)
Closed Cell Low Density Foam Tape	Soft, conformable. Water-resistant.	Wherever bulk is needed. Prevents closing flutters and rattles when applied to door watershield. Examples: Door, I/P.	-40° to 180° Fahrenheit (-40° to 82° Celsius)

ITEM	FEATURES	APPLICATIONS	SERVICE TEMP
NYE® Grease 880	Long life.	Suspensions. Examples: Strut busings, sway bars.	-40° to 390° Fahrenheit (-40° to 200° Celsius)
Krytox® Oil	Long life. Will not dry out or harm plastics or rubber.	When access is not possible, oil will migrate to condition. Vinyl, rubber, plastic, metal. Examples: Convertible top bushings, pull cups trim panel inserts.	-30° to 400° Fahrenheit (-34° to 205° Celsius)
Krytox® Grease	Long life. Will not dry out or harm plastics or rubber.	Vinyl, rubber, plastic, metal, glass. Examples: Weather-strips, backlite and windshield moldings.	-30° to 400° Fahrenheit (-34° to 205° Celsius)

PLASTIC BODY PANEL REPAIR

There are many different types of plastics used in today's automotive environment. We group plastics in three different categories: Rigid, Semi-Rigid, and Flexible. Any of these plastics may require the use of an adhesion promoter for repair. These types of plastic are used extensively on DaimlerChrysler Motors vehicles. Always follow repair material manufacturer's plastic identification and repair procedures.

Rigid Plastics:

Examples of rigid plastic use: Fascias, Hoods, Doors, and other Body Panels, which include SMC, ABS, and Polycarbonates.

Semi-Rigid Plastics:

Examples of semi-rigid plastic use: Interior Panels, Under Hood Panels, and other Body Trim Panels.

Flexible Plastics:

Examples of flexible plastic use: Fascias, Body Moldings, and upper and lower Fascia Covers.

Repair Procedure:

The repair procedure for all three categories of plastics is basically the same. The one difference is the material used for the repair. The materials must be specific for each substrate, rigid repair material for rigid plastic repair, semi-rigid repair material for semi-rigid plastic repair and flexible repair material for flexible plastic repair.

Adhesion Promoter/Surface Modifier:

Adhesion Promoters/Surface Modifiers are required for certain plastics. All three categories may have plastics that require the use of adhesion promoter/surface modifiers. Always follow repair material manufacturer's plastic identification and repair procedures.

SAFETY PRECAUTION AND WARNINGS

WARNING:

- **Eye protection should be used when servicing components. Personal injury can result.**
- **Use an OSHA approved breathing mask when mixing epoxy, grinding, and spraying paint or solvents in a confined area. Personal injury can result.**
- **Avoid prolonged skin contact with resin, petroleum, or alcohol based solvents. Personal injury can result.**
- **Do not venture under a hoisted vehicle that is not properly supported on safety stands. Personal injury can result.**

NOTE:
- **When holes must be drilled or cut in body panels, verify locations of internal body components and electrical wiring. Damage to vehicle can result.**
- **Do not use abrasive chemicals or compounds on undamaged painted surfaces around repair areas. Damage to finish can result.**

RIGID, SEMI-RIGID, AND FLEXIBLE PLASTIC PARTS TYPES

CODE	FAMILY NAME	COMMON TRADE NAME	TYPICAL APPLICATION
ASA	ACRYLONITRILE STYRENE ACRYLITE	LURAN S	CONSOLES, GRILLES
ABS	ACRYLONITRILE BUTADIENE STYRENE	TERLURAN	″A″ PILLARS, CONSOLES, GRILLES
ABS/PC	ABS/PC ALLOY	PULSE, PROLOY, BAYBLEND	DOORS, INSTRUMENT PANELS
ABS/PVC	ABS/PV ALLOY	PROLOY, PULSE, LUSTRAN, CYCLOVIN	DOOR PANELS, GRILLES, TRIM
BMC	BULK MOLDING COMPOUND	BMC	FENDER EXTENSIONS
EMA	EHTYLENE METHYL ACRYLATE/IONOMER	SURLYN, EMA, IONOMER	BUMPER GUARDS, PADS
METTON	METTON	METTON	GRILLES, KICK PANELS, RUNNING BOARDS
MPPO	MODIFIED POLYPHENYLENE OXIDE	MPPO	SPOILER ASSEMBLY
PA	POLYAMID	ZYTEL, VYDYNE, PA, MINLON	FENDERS, QUARTER PANELS
PET	THERMOPLASTIC POLYESTER	RYNITE	TRIM
PBT/PPO	PBT/PPO ALLOY	GERMAX	CLADDINGS
PBTP	POLYBUTYLENE THEREPTHALATE	PBT, PBTP, POCAN, VALOX	WHEEL COVERS, FENDERS, GRILLES
PBTP/EEBC	POLYBUTYLENE THEREPTHALATE/EEBC ALLOY	BEXLOY, ″M″, PBTP/EEBC	FASCIAS, ROCKER PANEL, MOLDINGS
PC	POLYCARBONATE	LEXAN, MERLON, CALIBRE, MAKROLON PC	TAIL LIGHT LENSES, IP TRIM, VALANCE PANELS
PC/ABS	PC/ABS ALLOY	GERMAX, BAY BLENDS, PULSE	DOORS, INSTRUMENT PANELS
PPO	POLYPHENYLENE OXIDE	AZDEL, HOSTALEN, MARLEX, PRFAX, NORYL, GTX, PPO	INTERIOR TRIM, DOOR PANELS, SPLASH SHIELDS, STEERING COLUMN SHROUD
PPO/PA	POLYPHENYLENE/ POLYAMID	PPO/PA, GTX 910	FENDERS, QUARTER PANELS
PR/FV	FIBERGLASS REINFORCED PLASTIC	FIBERGLASS, FV, PR/FV	BODY PANELS
PS	POLYSTYRENE	LUSTREX, STYRON, PS	DOOR PANELS, DASH PANELS
RTM	RESIN TRANSFER MOLDING COMPOUND	RTM	BODY PANELS

CODE	FAMILY NAME	COMMON TRADE NAME	TYPICAL APPLICATION
SMC	SHEET MOLDED COMPOUND	SMC	BODY PANELS
TMC	TRANSFER MOLDING COMPOUND	TMC	GRILLES
UP	UNSATURATED POLYESTER (THERMOSETTING)	SMC, BMC, TMC, ZMC, IMC, XSMC, UP	GRILLE OPENING PANEL, LIFTGATES, FLARESIDE FENDERS, FENDER EXTENSIONS
EEBC	ETHER/ESTER BLOCKED CO-POLYMER	EEBC	BUMPERS
EEBC/PBTP	EEBC/POLYBUTYLENE TEREPTHALATE	EEBC, PBTP, BEXLOY	BUMPER, ROCKER PANELS
EMPP	ETHYLENE MODIFIED POLYPROPYLENE	EMPP	BUMPER COVERS
EPDM	ETHYLENE/ PROPROPYLENE DIENE MONOMER	EPDM, NORDEL, VISTALON	BUMPERS
EPM	ETHYLENE/ PROPROPYLENE CO-POLYMER	EPM	FENDERS
MPU	FOAM POLYURETHANE	MPU	SPOILERS
PE	POLYETHYLENE	ALATHON, DYLAN, LUPOLEN, MARLEX	-
PP	POLYPROPYLENE (BLENDS)	NORYL, AZDEL, MARLOX, DYLON, PRAVEX	INNER FENDER, SPOILERS, KICK PANELS
PP/EPDM	PP/EPDM ALLOY	PP/EPDM	SPOILERS, GRILLES
PUR	POLYURETHANE	COLONELS, PUR, PU	FASCIAS, BUMPERS
PUR/PC	PUR/PC ALLOY	TEXIN	BUMPERS
PVC	POLYVINYL CHLORIDE	APEX, GEON, VINYLITE	BODY MOLDINGS, WIRE INSULATION, STEERING WHEELS
RIM	REACTION INJECTED MOLDED POLYURETHANE	RIM, BAYFLEX	FRONT FASCIAS, MODULAR WINDOWS
RRIM	REINFORCED REACTION INJECTED MOLDED	PUR, RRIM	FASCIAS, BODY PANELS, BODY TRIMS
TPE	THERMO POLYETHYLENE	TPE, HYTREL, BEXLOY-V	FASCIAS, BUMPERS, CLADDINGS
TPO	THERMOPOLYOLEFIN	POLYTROPE, RENFLEX, SANTOPRENE, VISAFLEX, ETA, APEX, TPO, SHIELDS, CLADDINGS	BUMPERS, END CAPS, TELCAR, RUBBER, STRIPS, SIGHT, INTERIOR B POST
TPP	THERMO-POLYPROPYLENE	TPP	BUMPERS
TPU	THERMOPOLYURETHANE, POLYESTER	TPU, HYTREL, TEXIN, ESTANE	BUMPERS, BODY SIDE, MOLDINGS, FENDERS, FASCIAS

PANEL SECTIONING

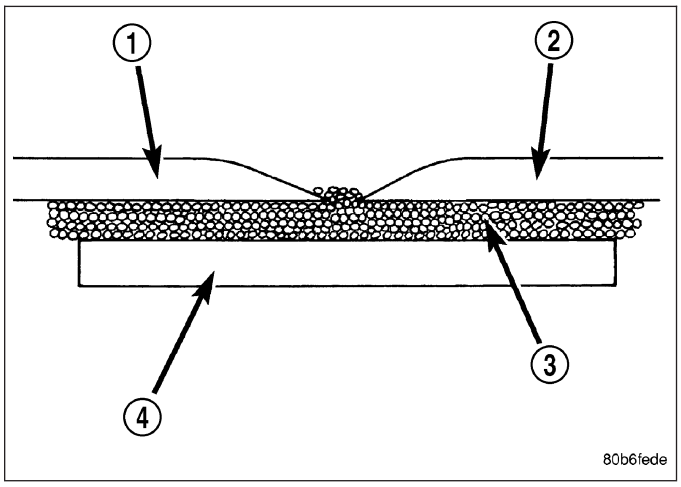

If it is required to section a large panel for a plastic repair, it will be necessary to reinforce the panel. To bond two plastic panels together, a reinforcement must overlap both panels. The panels must be “V’d” at a 20 degree angle. The area to be reinforced should be washed, then sanded. Be sure to wipe off any excess soap and water when finished. Lightly sand or abrade the plastic with an abrasive pad or sandpaper. Blow off any dust with compressed air or wipe with a clean dry rag.

When bonding plastic panels, Follow repair material manufacturers recommendations. Be sure that enough adhesive has been applied to allow squeeze out and to fill the full bond line. Once the pieces have been brought together, do not move them until the adhesive is cured. The assembly can be held together with clamps, rivets, etc. A faster cure can be obtained by heating with a heat lamp or heat gun. After the parts have been bonded and have had time to cure, rough sand the seam and apply the final adhesive filler to the area being repaired. Smooth the filler with a spreader, wooden tongue depressor, or squeegee. For fine texturing, a small amount of water can be applied to the filler surface while smoothing. The cured filler can be sanded as necessary and, as a final step, cleanup can be done with soapy water. Wipe the surface clean with a dry cloth allowing time for the panel to dry before moving on with the repair.

PANEL REINFORCEMENT

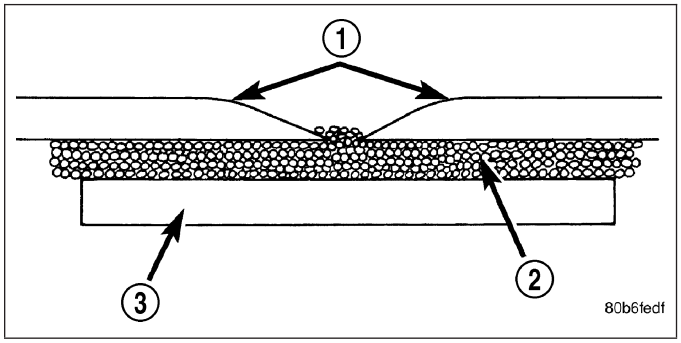

Structural repair procedures for rigid panels with large cracks and holes will require a reinforcement backing. Reinforcements can be made with several applications of glass cloth saturated with structural adhesive. Semi-rigid or flexible repair materials should be used for semi-rigid or flexible backing reinforcement and. Open meshed fiberglass dry wall tape can be used to form a reinforcement. The dry wall tape allows the resin to penetrate through and make a good bond between the panel and the adhesive. Structurally, the more dry wall tape used, the stronger the repair.

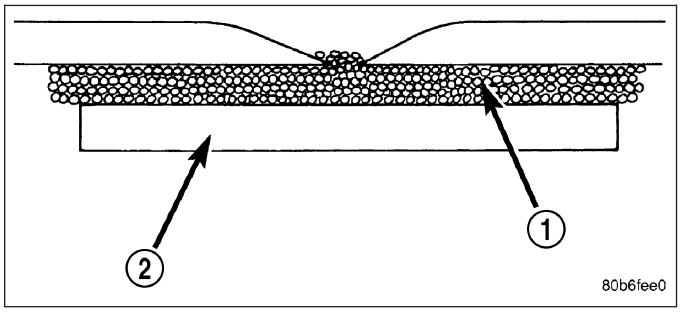

Another kind of repair that can be done to repair large cracks and holes is to use a scrap piece of similar plastic and bond with structural adhesive. The reinforcement should cover the entire break and should have a generous amount of overlap on either side of the cracked or broken area.

When repairing plastic, the damaged area is first “V’d” out, or beveled. Large bonding areas are desirable when repairing plastic because small repairs are less likely to hold permanently. Beveling the area around a crack at a 20 degree angle will increase the bonding surface for a repair. It is recommended that sharp edges be avoided because the joint may show through after the panel is refinished.

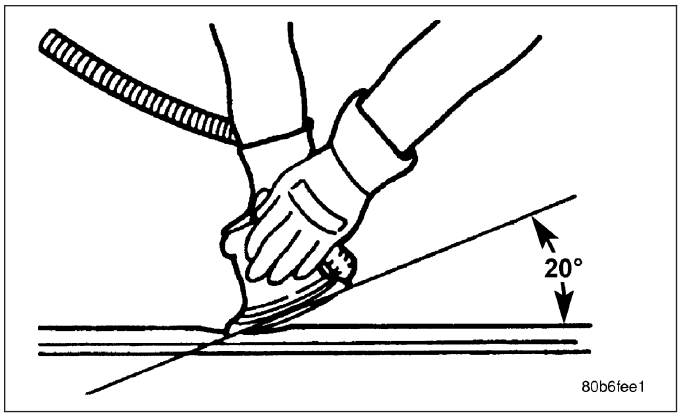

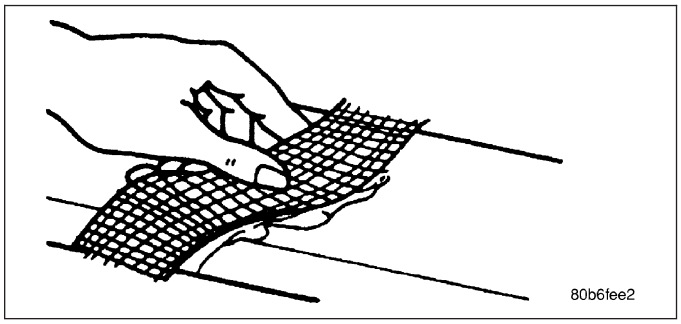

- Panel repair for both flexible and rigid panels are basically the same. The primary difference between flexible panel repair and rigid panel repair is in the adhesive materials used.
- The technician should first decide what needs to be done when working on any type of body panel. One should determine if it is possible to return the damage part to its original strength and appearance without exceeding the value of the replacement part.
- When plastic repairs are required, it is recommended that the part be left on the vehicle when every possible. That will save time, and the panel will remain stationary during the repair. Misalignment can cause stress in the repair areas and can result in future failure.

VISUAL INSPECTION

Composite materials can mask the severity of an accident. Adhesive bond lines, interior structure of the doors, and steel structures need to be inspected carefully to get a true damage assessment. Close inspection may require partial removal of interior trim or inner panels.

Identify the type of repair: Puncture or Crack - Damage that has penetrated completely through the panel. Damage is confined to one general area; a panel section is not required. However, a backer panel, open fiberglass tape, or matted material must be bonded from behind.

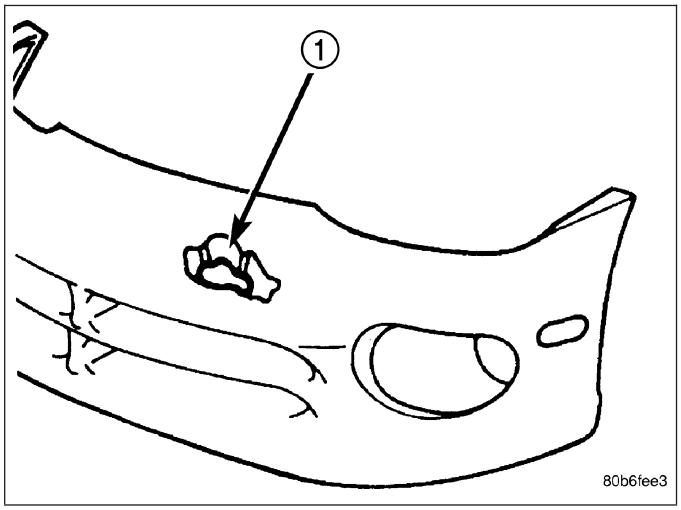

PANEL SURFACE PREPARATION

If a body panel has been punctured, cracked, or crushed, the damaged area must be removed from the panel to achieve a successful repair. All spider web cracks leading away from a damaged area must be stopped or removed. To stop a running crack in a panel, drill a 6 mm (0.250 in.) hole at the end of the crack farthest away from the damage. If spider web cracks can not be stopped, the panel would require replacement. The surfaces around the damaged area should be stripped of paint and freed from wax and oil. Scuff surfaces around repair area with 360 grit wet/dry sandpaper, or equivalent, to assure adhesion of repair materials.

PATCHING PANELS

An panel that has extensive puncture type damage can be repaired by cutting out the damaged material. Use a suitable reciprocating saw or cut off wheel to remove the section of the panel that is damaged. The piece cut out can be used as a template to shape the new patch. It is not necessary to have access to the back of the panel to install a patch. Bevel edges of cutout at 20 degrees to expose a larger bonding area on the outer side. This will allow for an increased reinforcement areas.

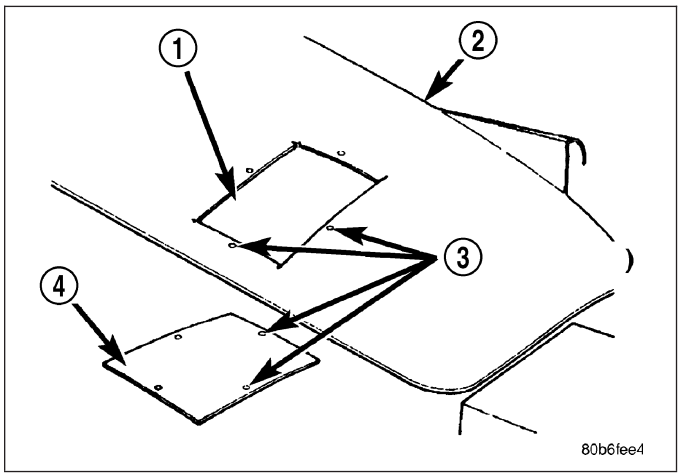

PANEL PATCH FABRICATIONS

A patch can be fabricated from any rigid fiberglass panel that has comparable contour with the repair area. Lift gates and fenders can be used to supply patch material. If existing material is not available or compatible, a patch can be constructed with adhesive and reinforcement mesh (dry wall tape). Perform the following operation if required:

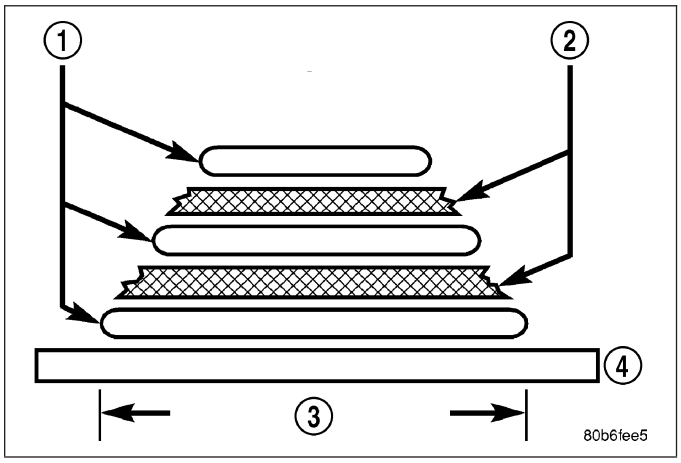

1. Cover waxed paper or plastic with adhesive backed nylon mesh (dry wall tape) larger than the patch required.
2. Tape waxed paper or plastic sheet with mesh to a surface that has a compatible contour to the repair area.
3. Apply a liberal coat of adhesive over the reinforcement mesh. If necessary apply a second or third coat of adhesive and mesh after first coat has cured. The thickness of the patch should be the same as the repair area.
4. After patch has cured, peel waxed paper or plastic from the back of the patch.
5. If desired, a thin film coat of adhesive can be applied to the back of the patch to cover mesh for added strength.

PANEL PATCH INSTALLATION

1. Make a paper or cardboard pattern the size and shape of the cutout hole in the panel.
2. Trim 3 mm (0.125 in.) from edges of pattern so patch will have a gap between connecting surfaces.
3. Using the pattern as a guide, cut the patch to size.
4. Cut scrap pieces of patch material into 50 mm (2 in.) squares to use as patch supports to sustain the patch in the cutout.
5. Drill 4 mm (0.160 in.) holes 13 mm (0.5 in.) in from edge of cutout hole.
6. Drill 4 mm (0.160 in.) holes 13 mm (0.5 in.) away from edge of patch across from holes drilled around cutout.
7. Drill 3 mm (0.125 in.) holes in the support squares 13 mm (0.5 in.) from the edge in the center of one side.

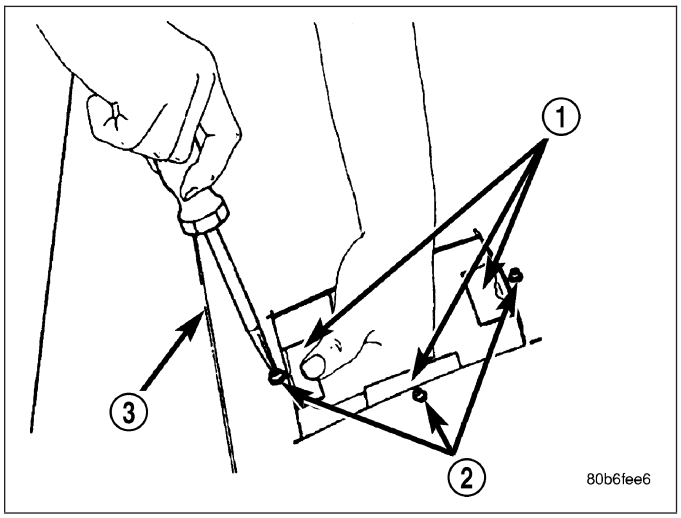

8. Scuff the backside of the body panel around the cutout hole with a scuff pad or sandpaper.
9. Mix enough adhesive to cover one side of all support squares.
10. Apply adhesive to cover one side of all support squares.
11. Using number 8 sheet metal screws, secure support squares to back side of body panel with adhesive sandwiched between the panel and squares.
12. Position patch in cutout against support squares and adjust patch until the gap is equal along all sides.
13. Drill 3 mm (0.125 in.) holes in the support squares through the pre-drilled holes in the patch.

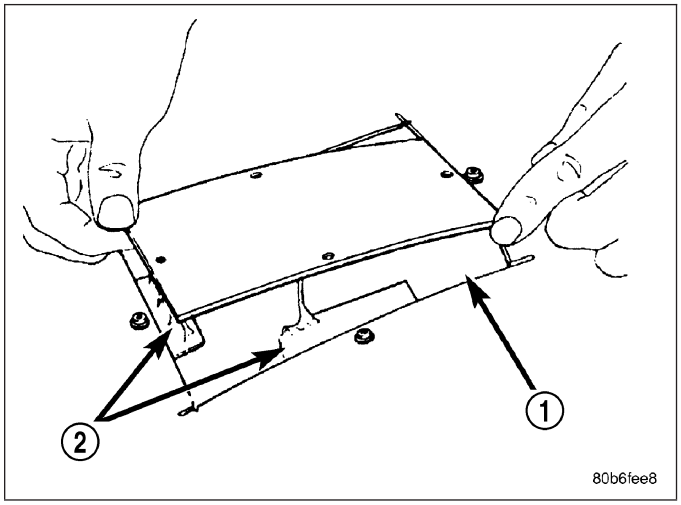

14. Apply a coat of adhesive to the exposed ends of the support squares.

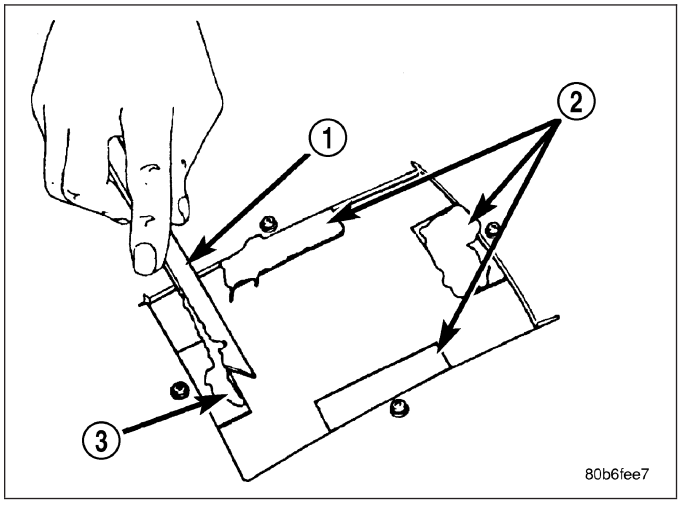

15. Install screws to hold the patch to support squares. Tighten screws until patch surface is flush with panel surface.
16. Allow adhesive to cure, and remove all screws.

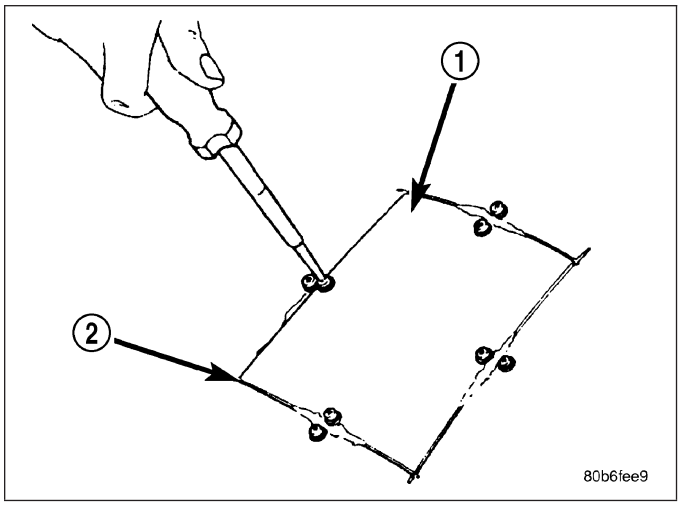

17. Using a 125 mm (5 in.) 24 grit disc grinder, grind a 50 mm (2 in.) to 75 mm (3 in.) wide and 2 mm (0.080 in.) deep path across the gaps around the patch. With compressed air, blow dust from around patch.

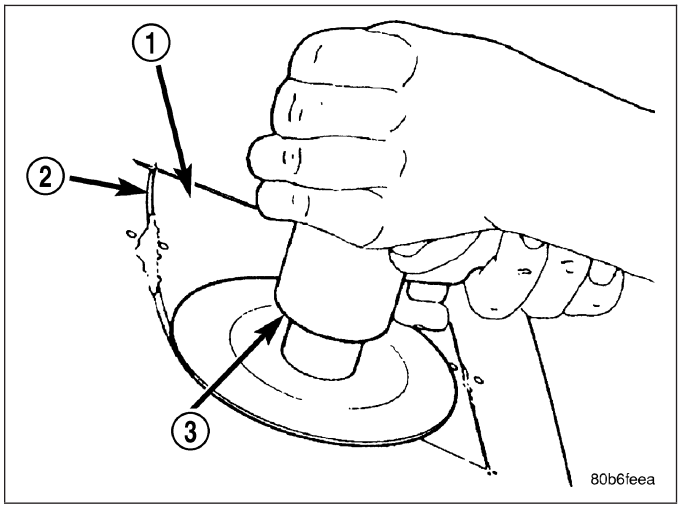

18. Apply adhesive backed nylon mesh (dry wall tape) over gaps around patch.
19. Mix enough adhesive to cover the entire patch area.

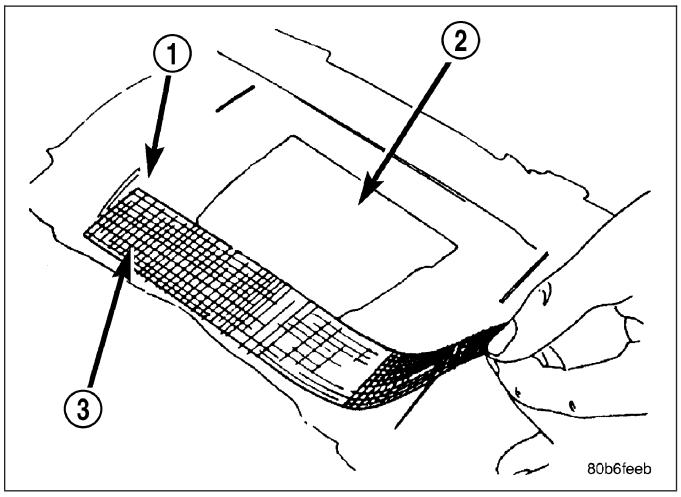

20. Apply adhesive over the mesh around patch, and smooth epoxy with a wide spreader to reduce finish grinding. Use two to three layers of mesh and adhesive to create a stronger repair.

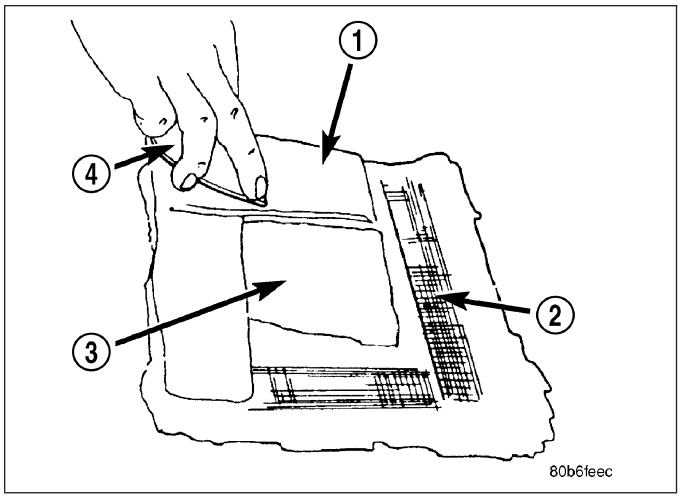

PATCHED PANEL SURFACING

After patch panel is installed, the patch area can be finished using the same methods as finishing other types of body panels. If mesh material is exposed in the patched area, grind surface down, and apply a coat of high quality rigid plastic body filler. Prime, block sand, and paint as required.

SPECIFICATIONS - TORQUE

Torque specifications

Description	N·m	Ft. Lbs.	In. Lbs.
A-pillar trim/grab handle bolts	6	—	55
Body Isolator/cab bolts	81	60	—
Cargo box bolts	108	80	—
Cargo box tie down/cleat bolts	34	25	—
Center seat assembly nuts*	25	18	—
Center seat cushion/hinge bolts*	20	15	—
Center seat back hinge to storage bin bolts*	25	18	—
Center seat back free pivot hinge bolt*	25	18	—
Center seat back inertia hinge pivot bolt*	10	—	89
Center seat inertia hinge to seat back bolts*	25	18	—
Fender bolts - front lower	9	—	80
Fender bolts - lower inside	17	13	—
Fender to hinge support bolts	11	8	—
Fender to upper fender rail bolts	9	—	80
Footmans loop bolts	12	9	—
Front center seat nuts*	25	18	—
Front door glass lift plate nuts	10	—	89
Front door hinge to a-pillar nuts	28	21	—
Front door hinge to door nuts/bolts	28	21	—
Front door inside handle bolt	9	—	80
Front door latch adjustment screw	3	—	30
Front door latch assembly bolts	10	—	89
Front door latch striker bolts	28	21	—

Description	N·m	Ft. Lbs.	In. Lbs.
Front door latch striker bolts	28	21	—
Front door regulator bolts	10	—	89
Front door regulator stabilizer nuts	10	—	89
Front door remote handle actuator nuts	10	—	89
Front door run channel screws	10	—	89
Front seat assembly front bolts*	28	30	—
Front seat assembly rear bolts*	40	30	—
Front seat track nuts*	25	18	—
Fuel fill door bolts	9	—	80
Hood hinge to fender rail bolts	20	15	—
Hood latch bolts	11	8	—
Hood latch striker/safety catch bolts	11	8	—
Hood hinge to hood nuts	23	17	—
Instrument panel center bracket bolts	12	9	—
Instrument panel column support bolts	14	10	—
Instrument panel side mounting bolts	12	9	—
Instrument panel top bolts	12	9	—
Load floor nuts	25	18	—
Load floor/rear seat bolts	40	30	—
Lower seat belt anchor bolt - quad cab	40	30	—
Overhead/b-pillar grab handle bolts	6	—	55
Radiator and condenser to radiator crossmember bolts	8	—	75
Radiator upper crossmember bolts	28	21	—
Rear door glass lift plate nuts	10	—	89
Rear door glass run channels	10	—	89
Rear door hinge to b-pillar bolts	28	21	—
Rear door hinge to door bolts/nuts	28	21	—
Rear door inside handle bolt	9	—	80
Rear door latch adjustment screw	3	—	30
Rear door latch bolts	10	—	89
Rear door latch striker bolts	28	21	—
Rear door regulator bolts	10	—	89
Rear door regulator stabilizer nuts	10	—	89
Rear door remote handle actuator nuts	10	—	89
Rear fender bottom screws	7	—	60
Rear fender nuts	7	—	60
Rear fender support bracket bolts	11	8	—
Rear seat assembly bolts*	40	30	—
Rear seat back hinge bolts*	25	18	—
Rear seat cushion hinge bolts*	32	24	—
Rear shoulder belt anchor bolts	40	30	—
Rear view mirror set screw	1	—	15
Shifter knob nut	27	20	—
Side view mirror nuts	7	—	60

Description	N·m	Ft. Lbs.	In. Lbs.
Tailgate check cable bolt	23	17	—
Tailgate hinge/pivot screws	34	25	—
Tailgate latch bolts	23	17	—
Tailgate latch striker	34	25	—
Tailgate release handle nuts	7	—	60

NOTE: *Seat fasteners should be discarded and replaced with new fasteners during assembly.

SPECIAL TOOLS

BODY

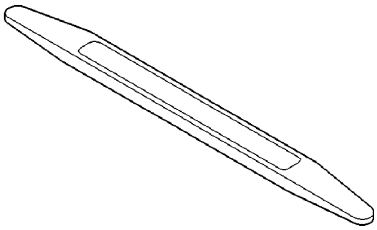

Trim Stick C-4755

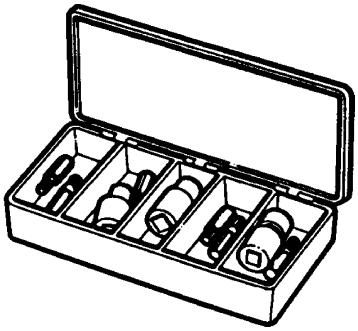

TORX BIT SET C-4794-B

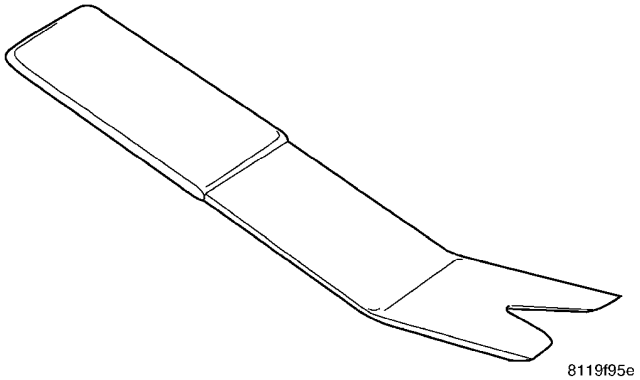

REMOVER, MOLDINGS C-4829-A

TAILGATE

TABLE OF CONTENTS

page

CABLE-CHECK
REMOVAL 17
INSTALLATION 18
COVER
REMOVAL 19
INSTALLATION 19
HINGE
REMOVAL 20
INSTALLATION 20
LATCH
REMOVAL 21
INSTALLATION 21
LATCH STRIKER
REMOVAL 22
INSTALLATION 23
RELEASE HANDLE
REMOVAL 23
INSTALLATION 24
TAILGATE
REMOVAL 24
INSTALLATION 25

CABLE-CHECK

REMOVAL

1. Open the tailgate and locate the tailgate check cable (3) on the left and right of the cargo box below the tailgate striker (1) as necessary.
2. Pry the cable lock tab(s) (4) outward using a screwdriver or flat bladed tool (2) and remove the tailgate check cable(s) from the cargo box.

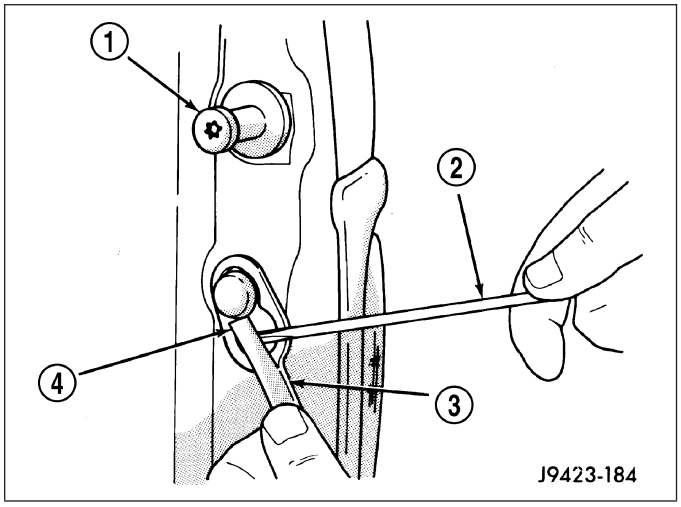

3. Remove the bolt (1) that secures the tailgate check cable (2) to the left and right side of the tailgate (3) as necessary.
4. Remove the tailgate check cable(s) from the tailgate.

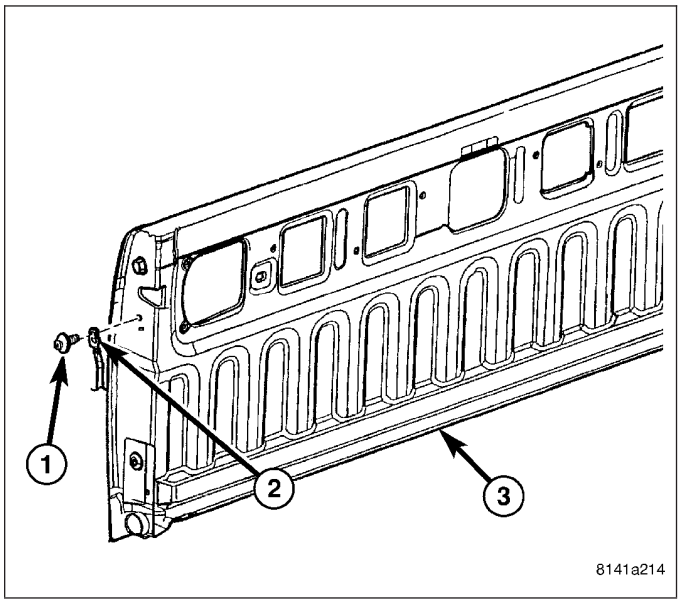

INSTALLATION

1. Position the tailgate check cable (2) onto the left and right side of the tailgate (3) as necessary.
2. Install the bolt (1) that secures the small end of the tailgate check cable(s) to the tailgate. Tighten the bolt(s) to 23 N·m (17 ft. lbs.).

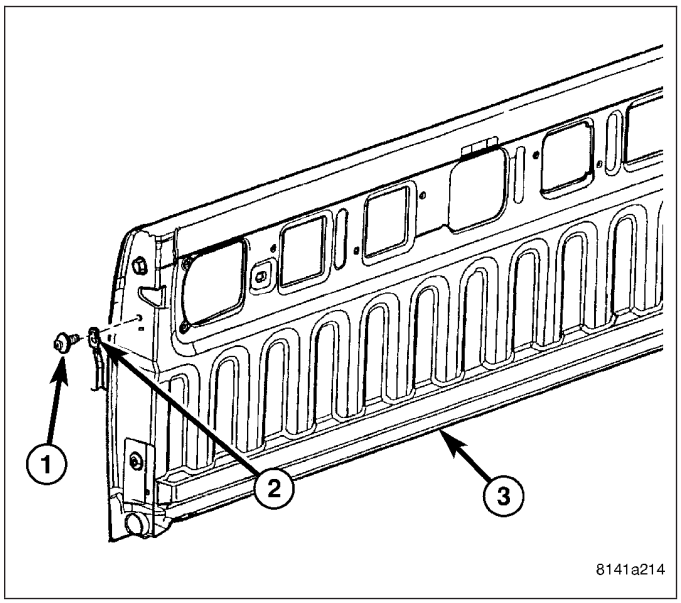

3. Position the tailgate check cable (3) to the left and right side of the cargo box below the tailgate striker (3) as necessary.
4. Install the large end of the tailgate check cable(s) onto the cargo box. Make sure that the cable lock tab(s) (4) fully engage.

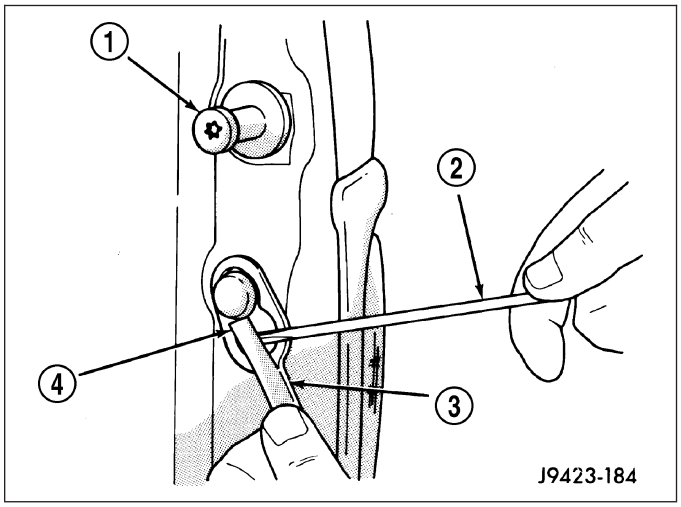

COVER

REMOVAL

1. Open the tailgate (1) and remove the tailgate liner, if equipped.
2. Remove the ten bolts (2) that secure the tailgate cover (3) to the inside of the tailgate and remove the cover.

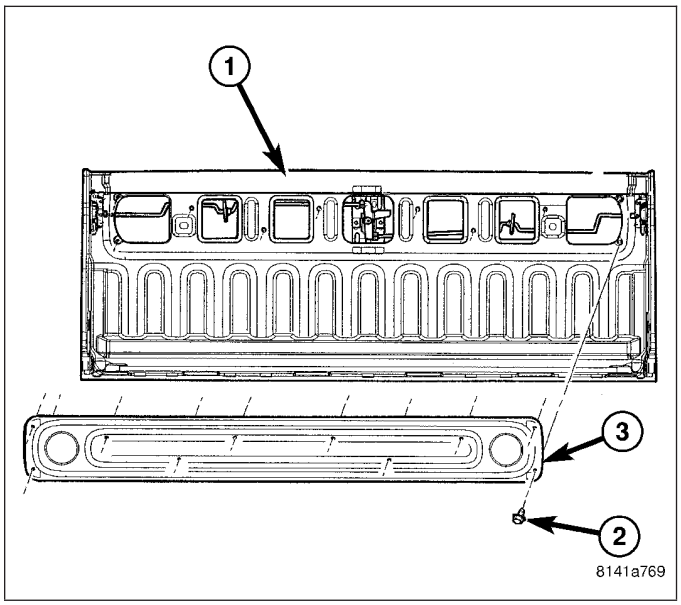

INSTALLATION

1. Position the tailgate cover (3) onto the inside of the tailgate (1).
2. Install the ten bolts (2) that secure the tailgate cover to the tailgate. Tighten the bolts securely.
3. If equipped, install the tailgate liner onto the tailgate.

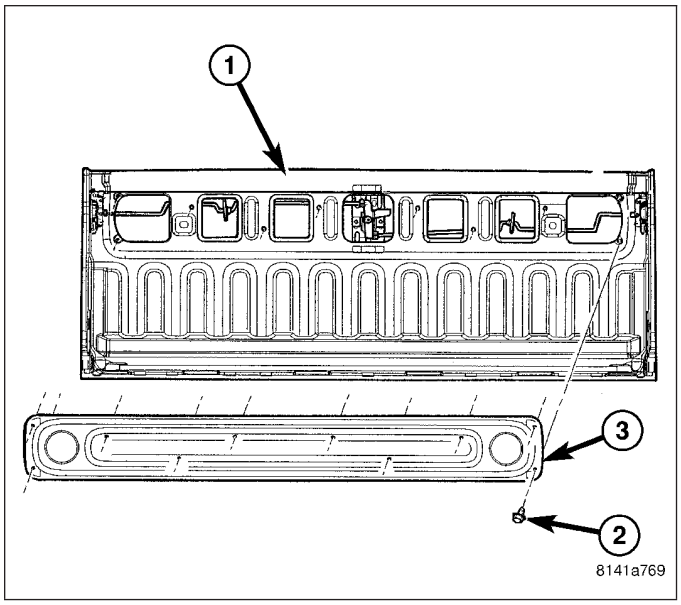

HINGE

REMOVAL

1. Remove the tailgate (Refer to 23 - BODY/TAILGATE/TAILGATE - REMOVAL).
2. If required, remove the bushing (3) from each tailgate hinge (1).
3. Remove the two bolts (4) that secure each tailgate hinge (1) to the cargo box (2) and remove the hinge(s) as necessary.

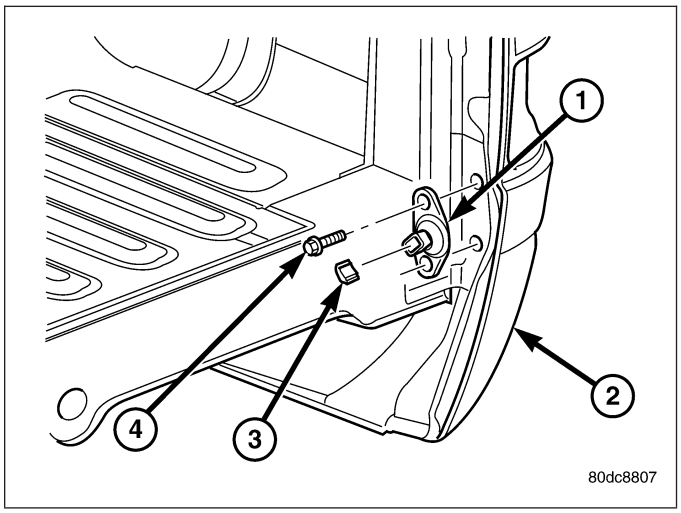

INSTALLATION

1. Position the tailgate hinge(s) onto the cargo box (2) as necessary.
2. Install the two bolts (4) that secure each tailgate hinge to the cargo box. Tighten the bolts to 34 N·m (25 ft. lbs.).
3. If removed, install the bushing (3) onto each tailgate hinge.
4. Install the tailgate (Refer to 23 - BODY/TAILGATE/TAILGATE - INSTALLATION).

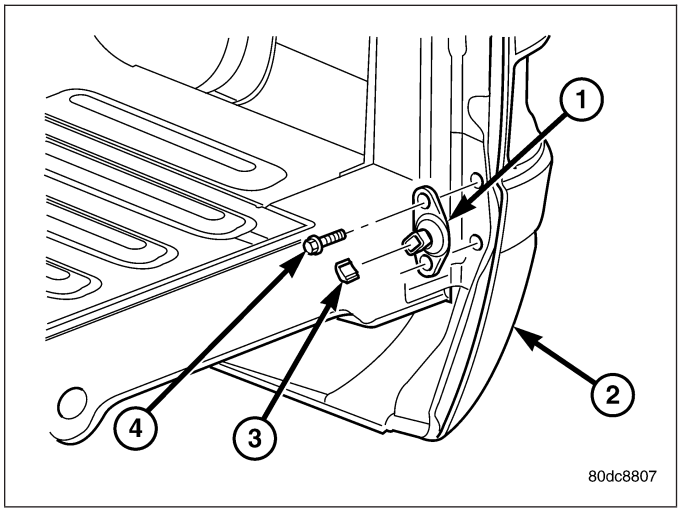

LATCH

REMOVAL

1. Open the tailgate and remove the tailgate liner, if equipped.
2. Remove the ten bolts (5) that secure the tailgate cover (4) to the inside of the tailgate and remove the cover.
3. Using a grease pencil or equivalent, mark the actuator rod (3) at the control (2) for the latch (1) being serviced.
4. Disconnect the actuator rod from the control.

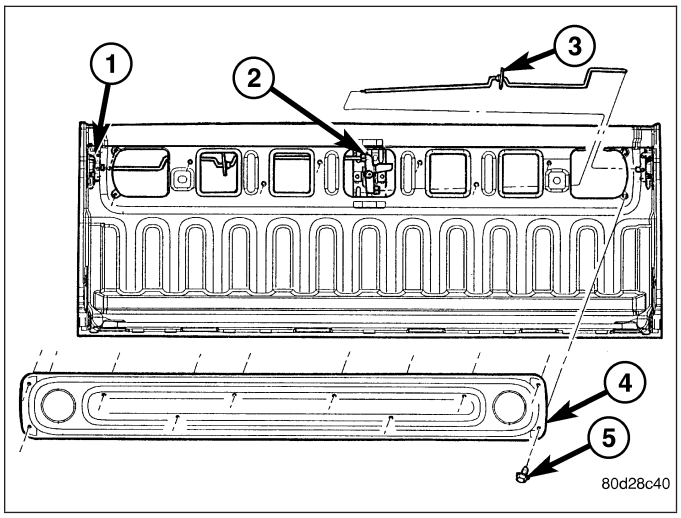

5. Remove the two bolts (7 and 8) that secure the latch (5) to the tailgate (4) and position the tailgate check cable (6) out of the way.
6. Remove the latch and actuator rod from the tailgate as an assembly.
7. If required, remove the actuator rod from the latch.

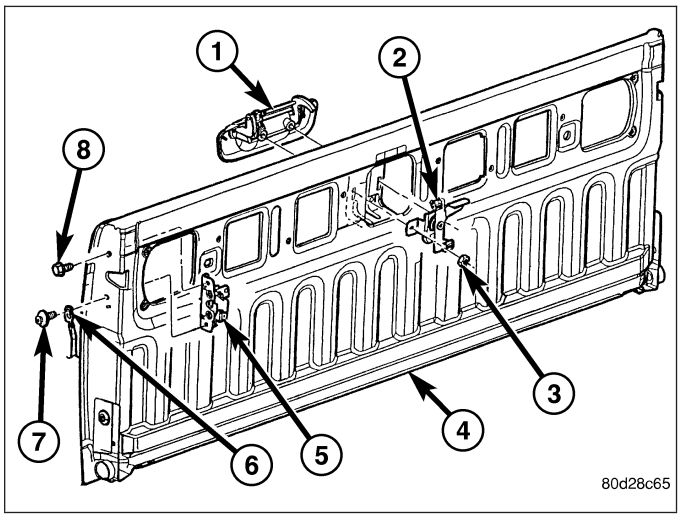

INSTALLATION

1. If removed, install the actuator rod onto the latch (5) being serviced.
2. Install the latch and actuator rod into the tailgate (4) as an assembly.
3. Position the tailgate check cable (6) onto the tailgate and install the two bolts (7 and 8) that secure the latch and the check cable to the tailgate. Tighten the bolts to 23 N·m (17 ft. lbs.).

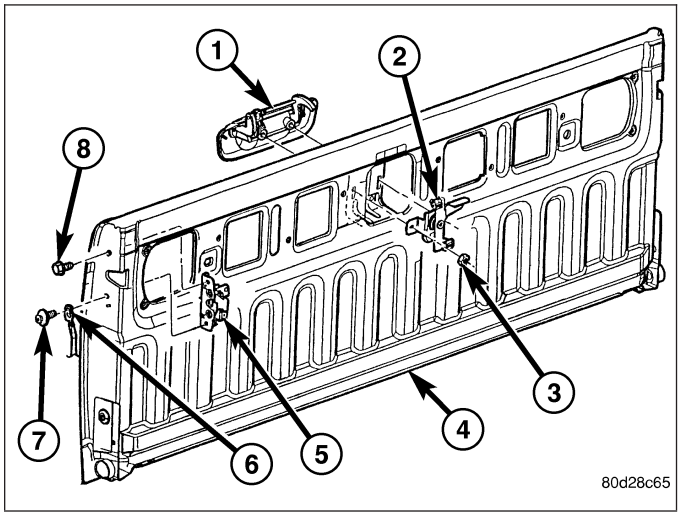

4. Locate the actuator rod (3) to the control (2) using the reference mark made during the removal procedure and connect the rod to the control.
5. Position the tailgate cover (4) onto the inside of the tailgate.
6. Install the ten bolts (5) that secure the tailgate cover to the tailgate. Tighten the bolts securely.
7. If equipped, install the tailgate liner onto the tailgate.

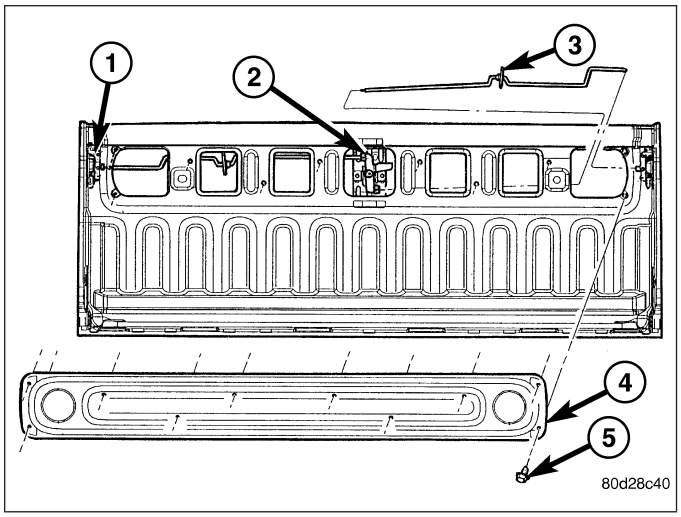

LATCH STRIKER

REMOVAL

1. Open the tailgate and using a grease pencil or equivalent, mark the location of the tailgate striker (1) being serviced.
2. Remove the striker from the cargo box (2).

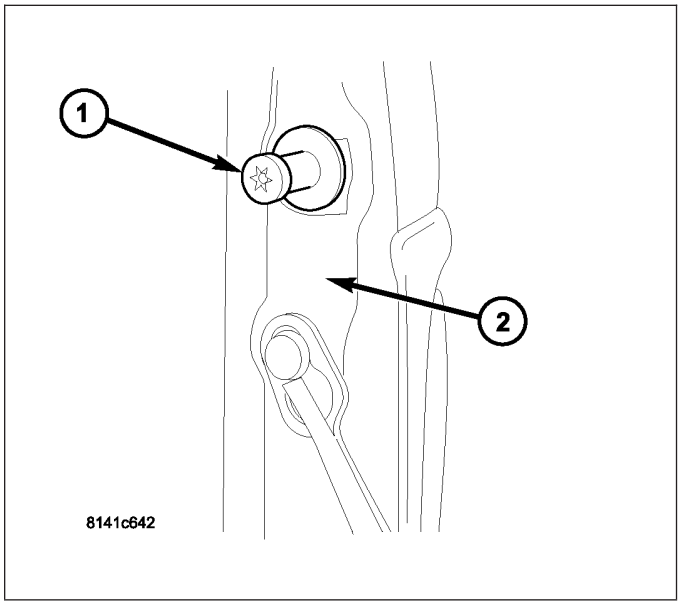

INSTALLATION

1. Position the striker (1) onto the cargo box (2) using the reference mark made during the removal procedure.
2. Tighten the striker to 34 N·m (25 ft. lbs.).

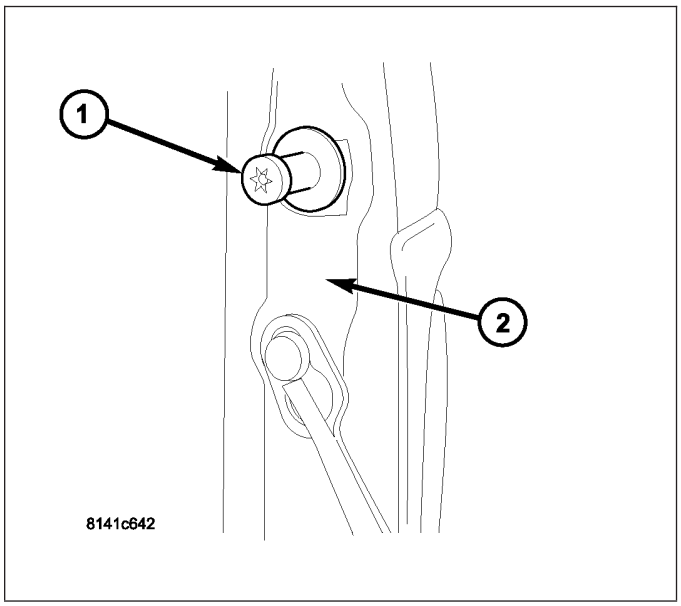

RELEASE HANDLE

REMOVAL

1. Open the tailgate and remove the tailgate liner, if equipped.
2. Remove the ten bolts (5) that secure the tailgate cover (4) to the inside of the tailgate and remove the cover.
3. Using a grease pencil or equivalent, mark the location of the actuator rods (3) at the control (2).
4. Disconnect the actuator rods from the control.

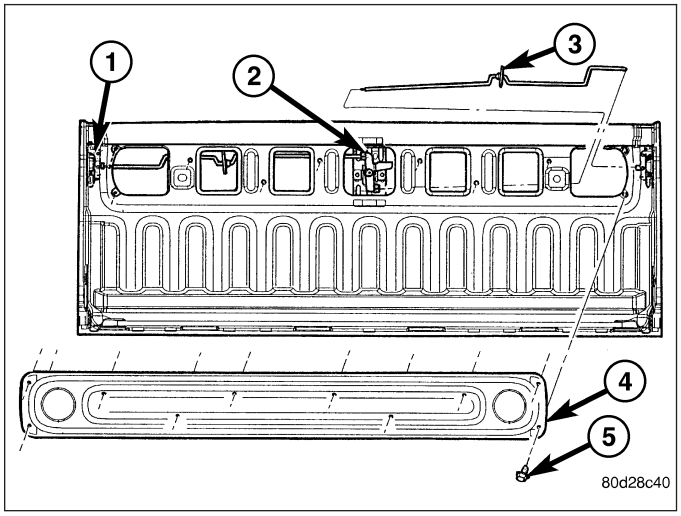

5. Remove the two nuts (3) that secure the release handle (1) and the control (2) to the tailgate (4).
6. Remove the control and the release handle from the tailgate.

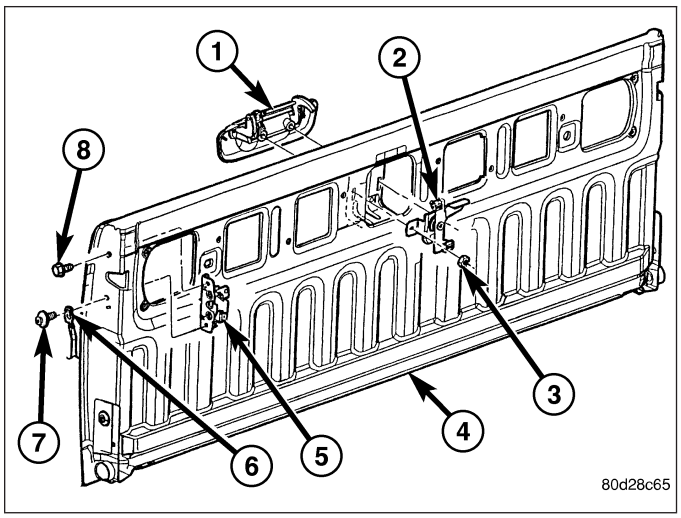

INSTALLATION

1. Position the release handle and the control onto the tailgate.
2. Install the two nuts that secure the release handle and control to the tailgate. Tighten the nuts to 7 N·m (60 in. lbs.).

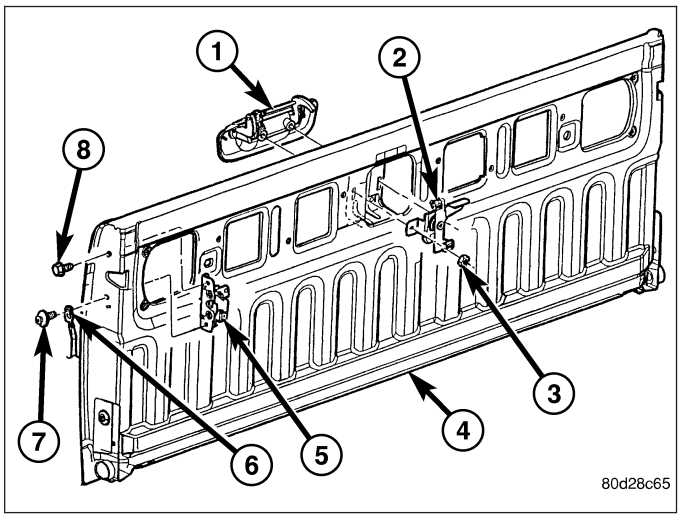

3. Locate the actuator rods (3) to the control (2) using the reference marks made during the removal procedure and connect the rods to the control.
4. Position the tailgate cover (4) onto the inside of the tailgate.
5. Install the ten bolts (5) that secure the tailgate cover to the tailgate. Tighten the bolts securely.
6. If equipped, install the tailgate liner onto the tailgate.

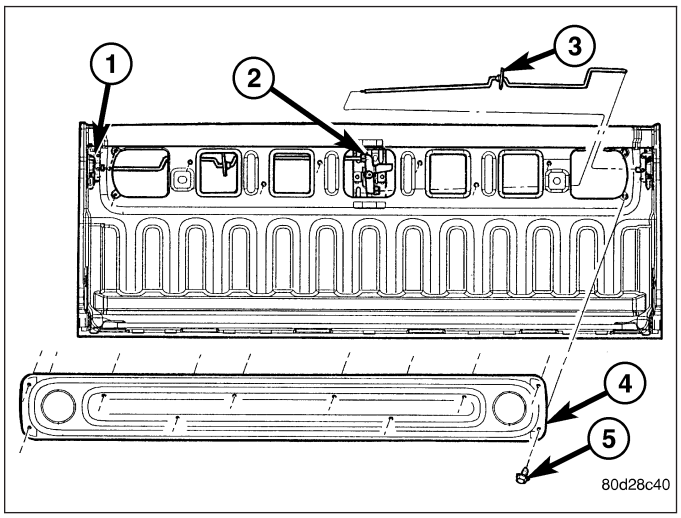

TAILGATE

REMOVAL

1. Open the tailgate (4).
2. Disconnect the tailgate check cables (3) from the cable bolts (2) locate below each tailgate striker (1) (Refer to 23 - BODY/TAILGATE/CHECK CABLE - REMOVAL).
3. Partially close the tailgate so that the notch in the right side tailgate pivot aligns with the flats on the right side tailgate hinge.
4. Lift the tailgate upward and disconnect the tailgate pivot from the right side tailgate hinge.
5. Carefully slide the tailgate to the right and disconnect it from the left side tailgate hinge and remove the tailgate.
6. If required, remove the bushing (5) from each tailgate hinge.

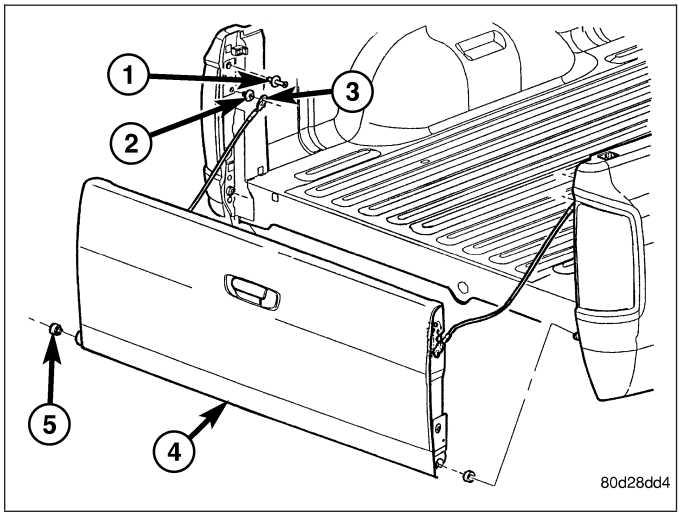

INSTALLATION

1. If removed, install the bushing (5) onto each tailgate hinge.
2. Position the tailgate (4) onto the left side tailgate hinge.
3. Partially close the tailgate so that the notch in the right side tailgate pivot aligns with the flats on the right side tailgate hinge.
4. Lower the tailgate onto the right side tailgate hinge.
5. Connect the tailgate check cables (3) to the cable bolts (2) located below each tailgate striker (1) (Refer to 23 - BODY/TAILGATE/CHECK CABLE - INSTALLATION).

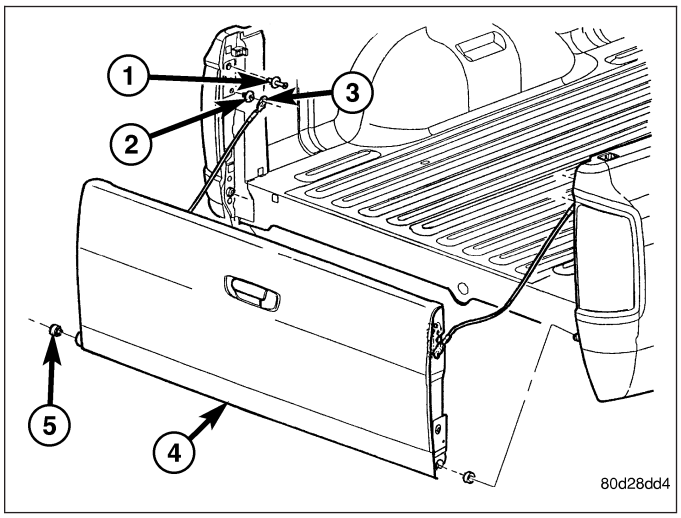

DOOR - FRONT

TABLE OF CONTENTS

page

DOOR
REMOVAL 26
INSTALLATION 27
ADJUSTMENTS 27
DOOR GLASS
REMOVAL 31
INSTALLATION 32
EXTERIOR HANDLE
REMOVAL 33
INSTALLATION 33
GLASS RUN CHANNEL
REMOVAL
FRONT-ALL MODELS 34
REAR-QUAD CAB 34
REAR-STANDARD CAB 35
INSTALLATION
FRONT-ALL MODELS 35
REAR-QUAD CAB 36
REAR-STANDARD CAB 36
HINGE
REMOVAL 37
INSTALLATION 37
INTERIOR HANDLE ACTUATOR
REMOVAL 38
INSTALLATION 38
LATCH
REMOVAL 39

page

INSTALLATION 40
ADJUSTMENTS 41
LATCH STRIKER
REMOVAL 41
INSTALLATION 42
ADJUSTMENTS 42
LOCK CYLINDER
REMOVAL 43
INSTALLATION 43
TRIM PANEL
REMOVAL 44
INSTALLATION 45
WATERDAM
REMOVAL 46
INSTALLATION 46
WINDOW REGULATOR - POWER
REMOVAL 47
INSTALLATION 48
WINDOW REGULATOR - MANUAL
REMOVAL 49
INSTALLATION 50
SIDE VIEW MIRROR FLAG
REMOVAL 51
INSTALLATION 51

DOOR

REMOVAL

1. Disconnect and isolate the negative battery cable.
2. Disconnect the door wire harness connector (5) from the body wire harness (7).
3. Using a grease pencil or equivalent, mark the location of the door hinges (2 and 6) on the door (4).

NOTE: The epoxy bonded washers do not need to be separated from the hinges. If the washers are removed, the door may need to be re-adjusted.

4. Support the door with a suitable lifting device and remove the two nuts (1) and two bolts (8) that secure the door to the hinges.
5. Carefully remove the door from the hinges.
6. If required, remove the two studs (3) from the door.

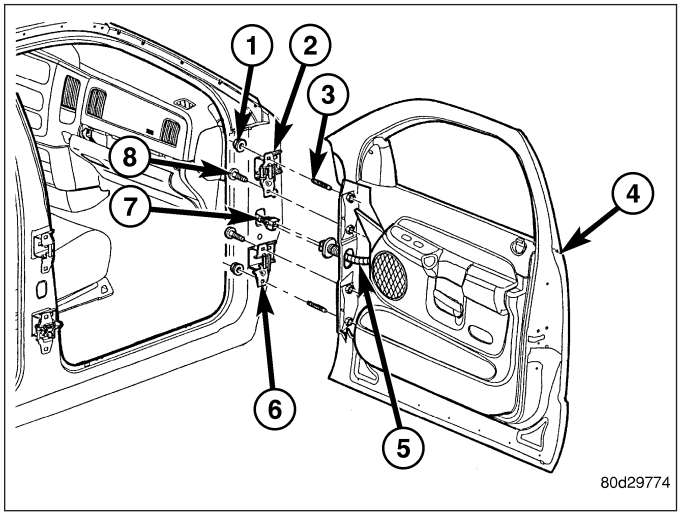

INSTALLATION

1. If removed, install the two studs (3) into the door (4).
2. Carefully position the door onto the hinges (2 and 6) and support the door with a suitable lifting device.

NOTE: If the epoxy bonded washers are separated from the hinges, the door may need to be adjusted.

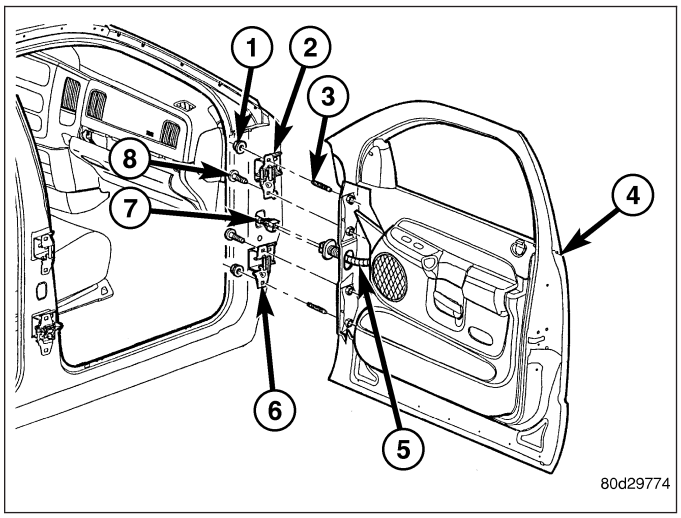

3. If removed, install the epoxy bonded washers.
4. Loosely install the two nuts (1) and the two bolts (8) that secure the door to the hinges.
5. Align the door to the hinges using the reference marks made during the removal procedure and tighten the nuts and bolts to 28 N·m (21 ft. lbs.).
6. Connect the door wire harness (5) to the body wire harness (7).
7. Reconnect the negative battery cable.
8. If necessary, adjust the door (Refer to 23 - BODY/DOOR-FRONT - ADJUSTMENTS).

ADJUSTMENTS

NOTE: For quad cab vehicles, it is recommended that you adjust the rear door before adjusting the front door. (Refer to 23 - BODY/DOORS - REAR/DOOR - ADJUSTMENTS)

- **Door adjustment measurements should be taken from stationary or welded body panels like the roof, rocker or quarter panels.**
- **During adjustment procedures, it is recommended that all the hinge fasteners be loosened except for the upper most fasteners. Adjustments can be made using the upper bolts to hold the door with final torque of the fasteners occurring after correct door positioning is achieved.**
- **A suitable body sealant should be used when removing or moving the hinges.**

FORE/AFT

NOTE: Fore/aft (lateral) door adjustment is done by loosening the hinge to the hinge pillar fasteners one hinge at a time and moving the door to the correct position.

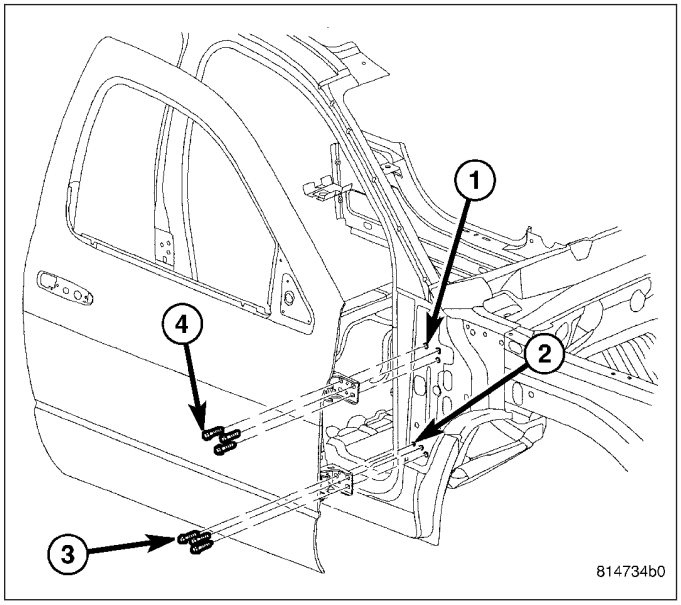

1. Support the door with a suitable lifting device.
2. Loosen the upper (4) and lower (3) hinge to hinge pillar fasteners. (Refer to 23 - BODY/DOOR - FRONT/HINGE - REMOVAL)
3. Adjust the door to the correct position. (Refer to 23 - BODY/BODY STRUCTURE/GAP AND FLUSH - SPECIFICATIONS)
4. Tighten the upper hinge bolt (1) to hinge pillar to 28 N·m (21 ft. lbs.).
5. Tighten the lower hinge bolt (2) to hinge pillar to 28 N·m (21 ft. lbs.).
6. Tighten the remaining hinge to hinge pillar bolts (3) and (4) to 28 N·m (21 ft. lbs.).

UP/DOWN

NOTE: Up/down door adjustment is done by loosening either the hinge to the hinge pillar fasteners or the hinge to door fasteners and moving the door to the correct position.

NOTE: When adjustment of the door requires the loosening of the door to hinge fasteners, it will be necessary to separate the epoxy bonded washers with a chisel or other suitable tool.

NOTE: When the up/down adjustments are done correctly, the top of the door is positioned over flush to the roof. (Refer to 23 - BODY/BODY STRUCTURE/GAP AND FLUSH - SPECIFICATIONS)

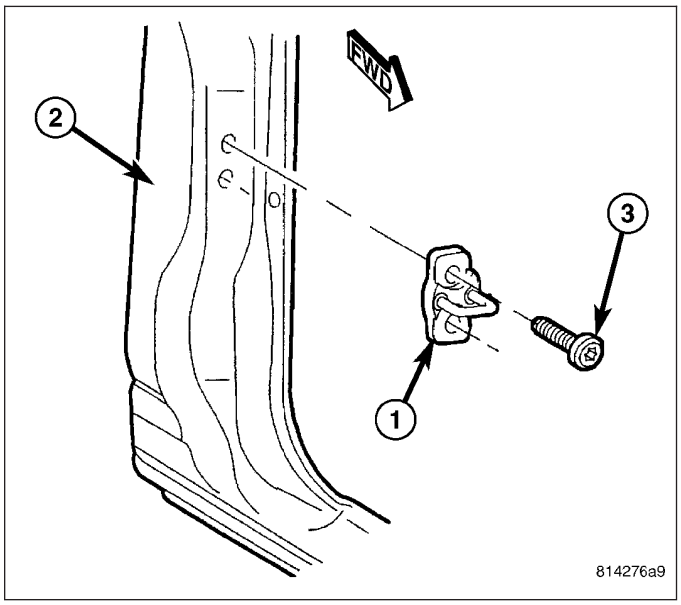

1. Support the door with a suitable lifting device.
2. Loosen the latch striker bolts (3). (Refer to 23 - BODY/DOOR - FRONT/LATCH STRIKER - REMOVAL)
3. If necessary, Loosen the hinge to door fasteners (1) and (8). (Refer to 23 - BODY/DOOR - FRONT/ DOOR - REMOVAL)

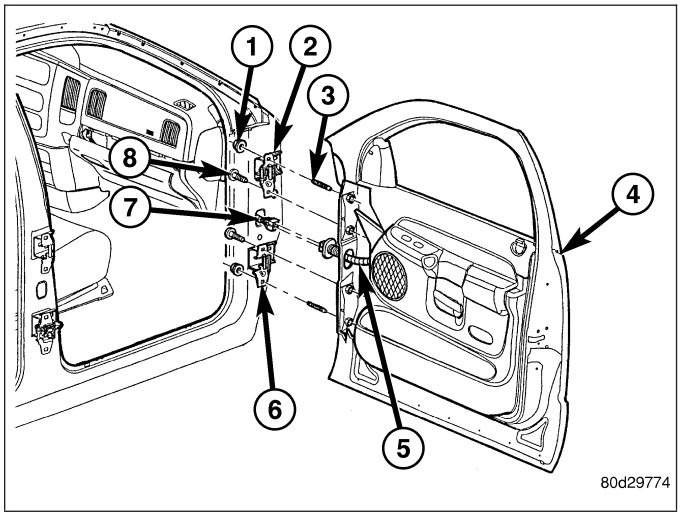

4. If necessary, loosen the hinge to hinge pillar fasteners (3) and (4). (Refer to 23 - BODY/DOOR - FRONT/HINGE - REMOVAL)

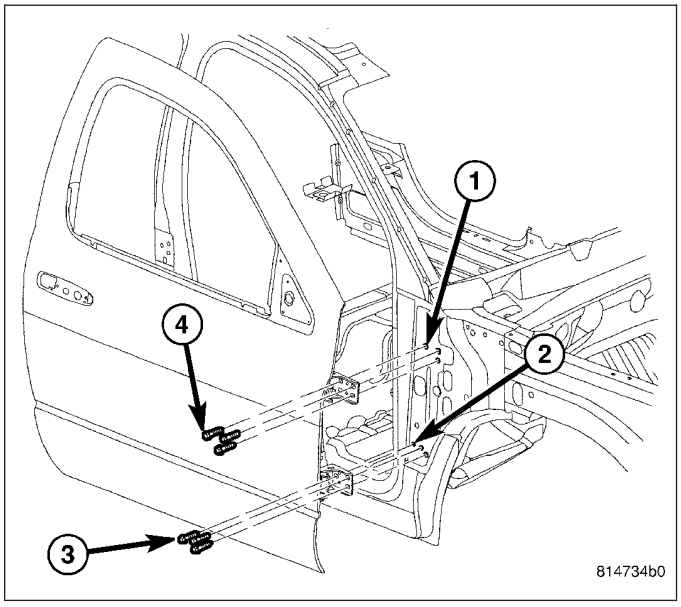

5. Adjust the door to the correct position. (Refer to 23 - BODY/BODY STRUCTURE/GAP AND FLUSH - SPECIFICATIONS)
6. Tighten the door to hinges fasteners to 28 N·m (21 ft. lbs.).

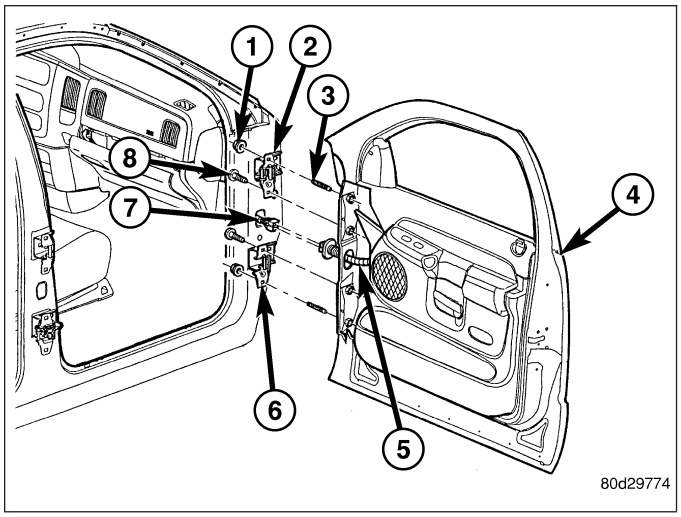

7. Tighten the upper hinge bolt (1) to hinge pillar to 28 N·m (21 ft. lbs.).
8. Tighten the lower hinge bolt (2) to hinge pillar to 28 N·m (21 ft. lbs.).
9. Tighten the remaining hinge to hinge pillar bolts (3) and (4) to 28 N·m (21 ft. lbs.).

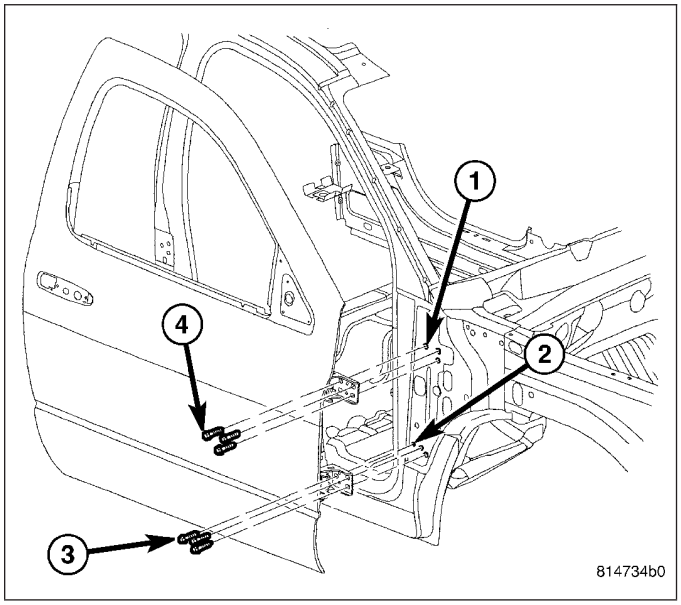

10. Tighten the latch striker bolts. (Refer to 23 - BODY/DOOR - FRONT/LATCH STRIKER - INSTALLATION)

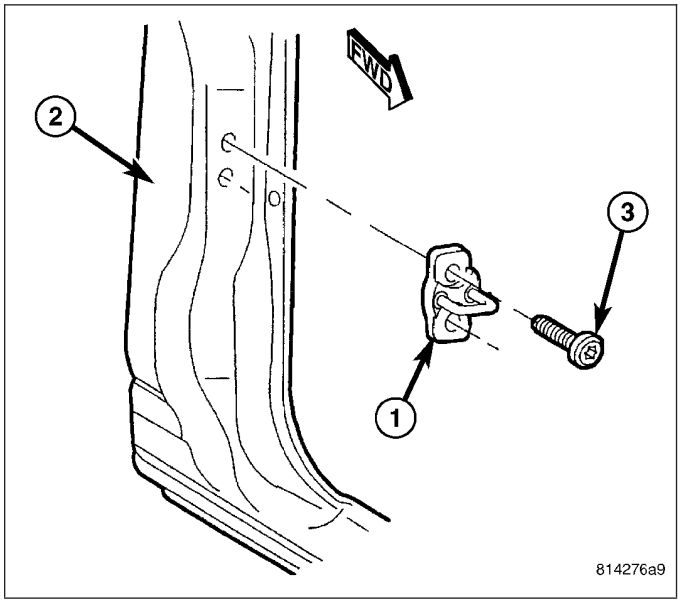

IN/OUT

NOTE: In/out door adjustment is done by loosening the hinge to door fasteners one hinge at a time and moving the door to the correct position.

NOTE: When adjustment of the door requires the loosening of the door to hinge fasteners, it will be necessary to separate the epoxy bonded washers with a chisel or other suitable tool.

1. Support the door with a suitable lifting device.
2. Loosen the latch striker bolts (3). (Refer to 23 - BODY/DOOR - FRONT/LATCH STRIKER - REMOVAL)

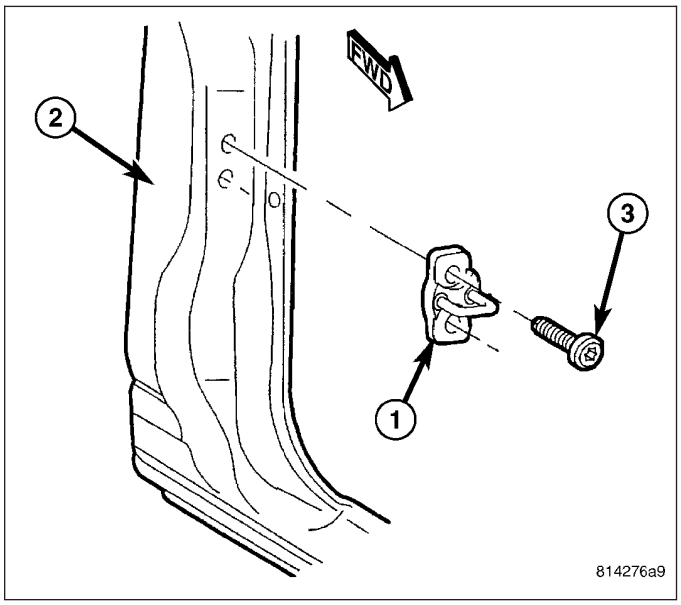

3. Loosen the hinge to door fasteners. (Refer to 23 - BODY/DOOR - FRONT/DOOR - REMOVAL)
4. Adjust the door to the correct position. (Refer to 23 - BODY/BODY STRUCTURE/GAP AND FLUSH - SPECIFICATIONS)
5. Tighten the door to hinges fasteners to 28 N·m (21 ft. lbs.).

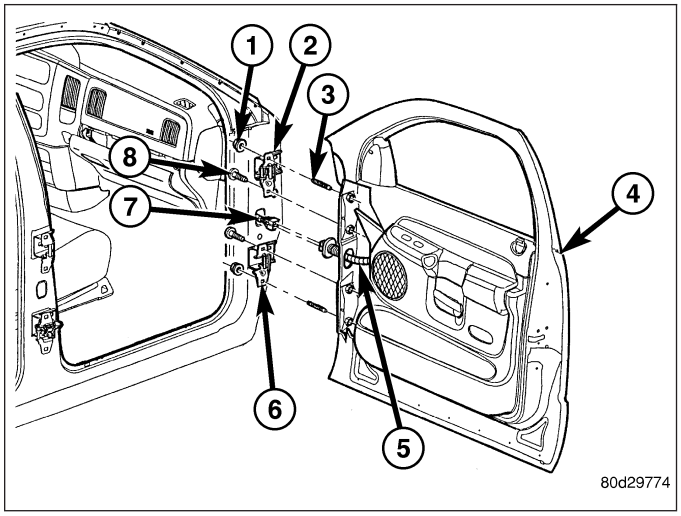

6. Tighten the latch striker bolts (3). (Refer to 23 - BODY/DOOR - FRONT/LATCH STRIKER - INSTALLATION)

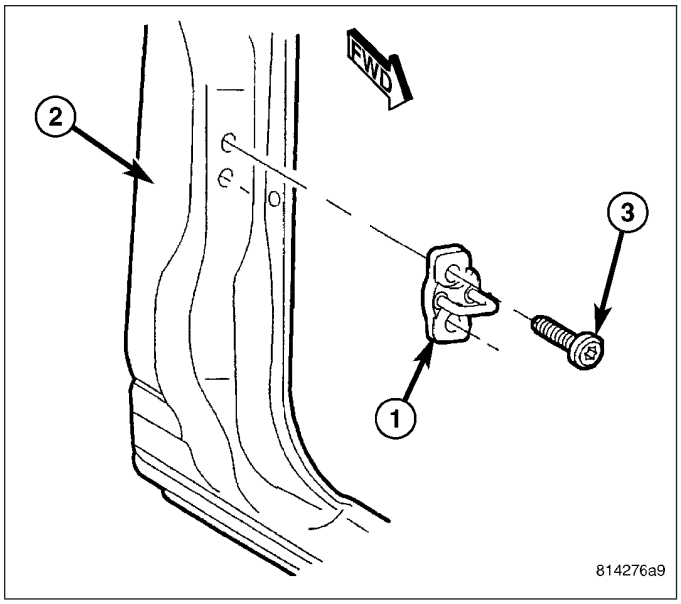

DOOR GLASS

REMOVAL

1. Remove the inner belt molding (Refer to 23 - BODY/WEATHERSTRIP/SEALS/FRONT DOOR INNER BELT WEATHERSTRIP - REMOVAL).
2. Remove the waterdam (Refer to 23 - BODY/DOOR - FRONT/WATERDAM - REMOVAL).
3. Reinstall the manual window crank or reconnect the electric window switch to the door wire harness (depending on application) and raise the door glass to the position shown.
4. Remove the two nuts (1) that secure the door glass to the window regulator (2) through the two sight windows (3 and 4) and disengage the door glass from the regulator.

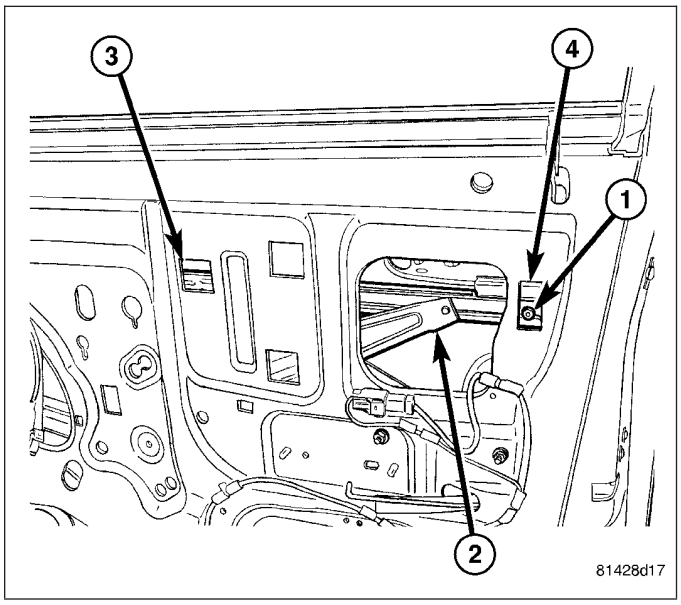

5. Remove the two bolts (2 and 3) that secure the front glass run channel (1) to the door (5) and remove the run channel through the door panel opening (4).
6. Disengage the door glass from the window regulator and lower the glass into the door.
7. Carefully rotate the door glass within the door and remove the glass from the window opening.

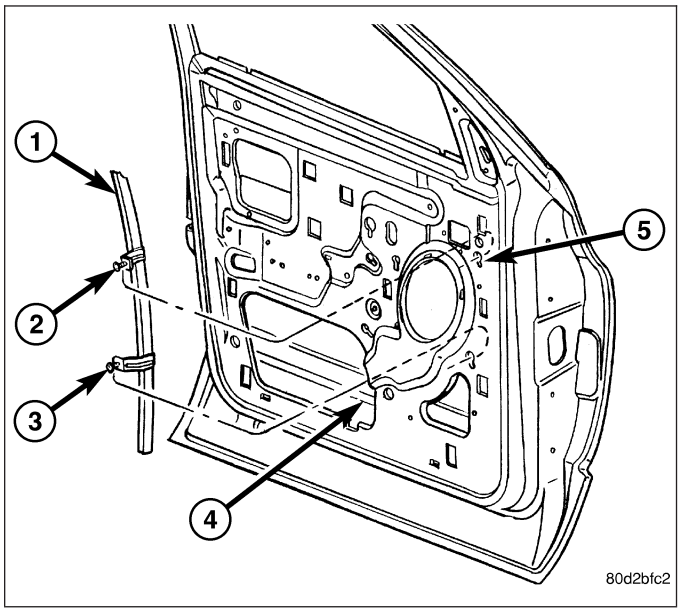

INSTALLATION

1. Carefully lower the door glass into the door (5) through the window opening.
2. Rotate the door glass into position and engage it to the window regulator.
3. Position the front glass run channel (1) into the door through the door panel opening (4).
4. Engage the two bolts (2 and 3) that secure the front glass run channel to the door. Tighten the bolts to 10 N·m (89 in. lbs.).

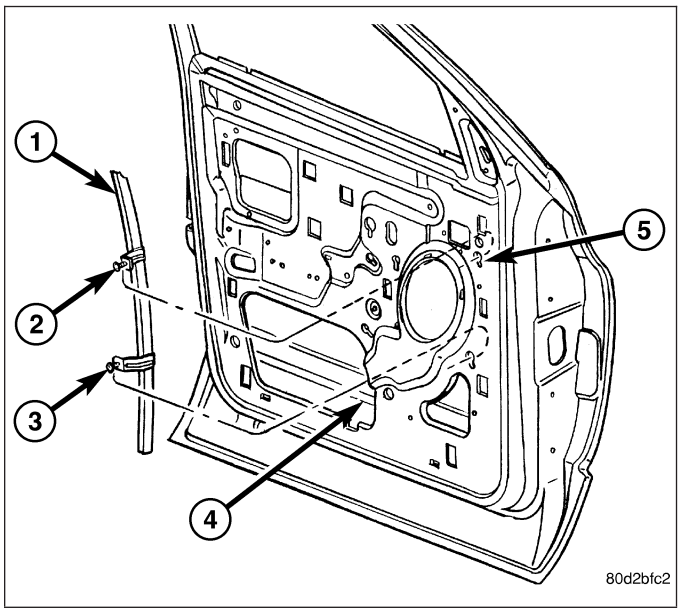

5. Install the two nuts (1) that secure the door glass to the window regulator (2) through the two sight windows (3 and 4). Tighten the nuts to 10 N·m (89 in. lbs.).
6. Lower the door glass into the door and remove the manual window crank or disconnect the electric window switch from the door wire harness (depending on application).
7. Install the waterdam (Refer to 23 - BODY/DOOR - FRONT/WATERDAM - INSTALLATION).
8. Install the inner belt molding (Refer to 23 - BODY/ WEATHERSTRIP/SEALS/FRONT DOOR INNER BELT WEATHERSTRIP - INSTALLATION).

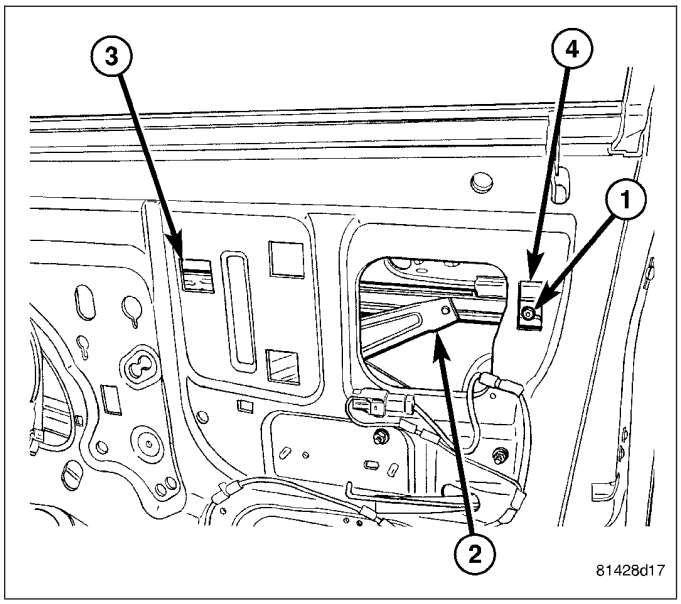

EXTERIOR HANDLE

REMOVAL

1. Disconnect and isolate the negative battery cable.
2. Remove the door glass (Refer to 23 - BODY/DOOR - FRONT/DOOR GLASS - REMOVAL).
3. If equipped, disconnect the exterior handle wire lead (7) from the door wire harness connector (3).
4. Disconnect the actuator rods (6 and 8) for the door latch (5) from the exterior handle (1).
5. Remove the two nuts (2) that secure the exterior handle to the door (4) and remove the handle.

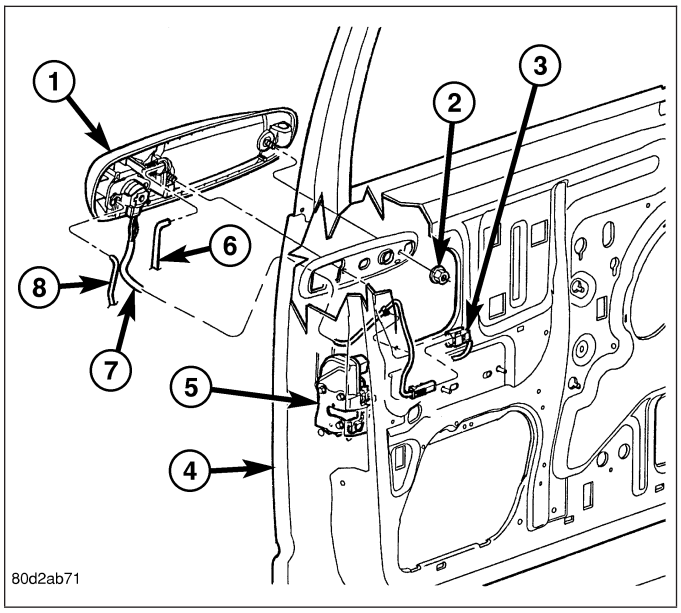

INSTALLATION

1. Position the exterior handle (1) into the door (4).
2. Install the two nuts (2) that secure the exterior handle to the door. Tighten the nuts to 10 N·m (89 in. lbs.).
3. Connect the actuator rods (6 and 8) for the door latch (5) to the exterior handle.
4. If equipped, connect the exterior handle wire lead (7) to the door wire harness connector (3).
5. Install the door glass (Refer to 23 - BODY/DOOR - FRONT/DOOR GLASS - INSTALLATION).
6. Reconnect the negative battery cable.

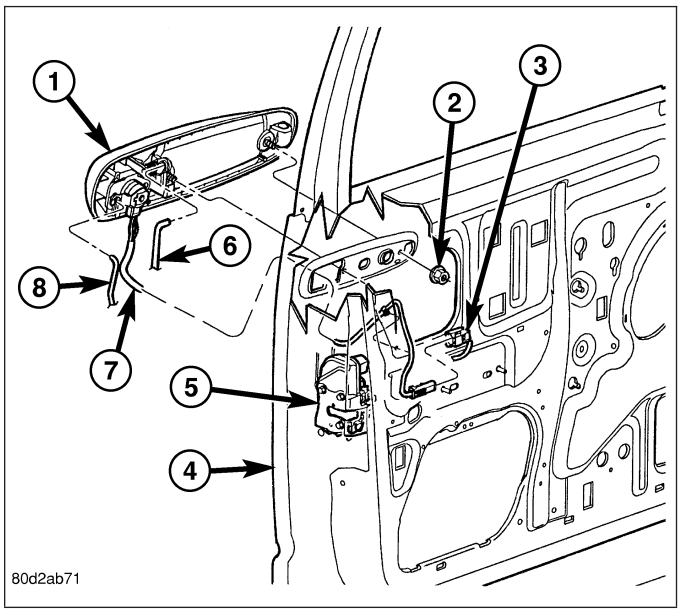

GLASS RUN CHANNEL

REMOVAL

FRONT-ALL MODELS

1. Raise the window glass to the full up position and remove the window regulator (Refer to 23 - BODY/ DOOR - FRONT/WINDOW REGULATOR - REMOVAL).
2. Loosen the two bolts (2 and 3) that secure the front glass run channel (1) to the door (5).
3. Slide the front glass run channel upward and disengage it from the door.
4. Remove the front glass run channel from the door through the door panel opening (4).
5. If required, remove the weatherstrip from the front glass run channel.

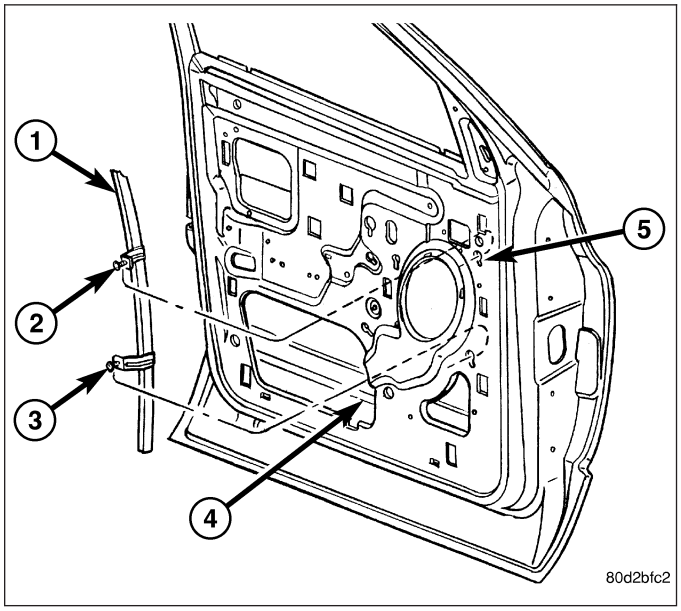

REAR-QUAD CAB

1. Raise the window glass to the full up position and remove the window regulator (Refer to 23 - BODY/ DOOR - FRONT/WINDOW REGULATOR - REMOVAL).
2. Remove the lower bolt (1) that secures the rear glass run channel (3) to the door.
3. Loosen the upper bolt (4) that secures the rear glass run channel to the door.
4. Slide the rear glass run channel upward and disengage the upper screw from the door.
5. Remove the rear glass run channel from the door through the door panel opening (2).
6. If required, remove the weatherstrip from the rear glass run channel.

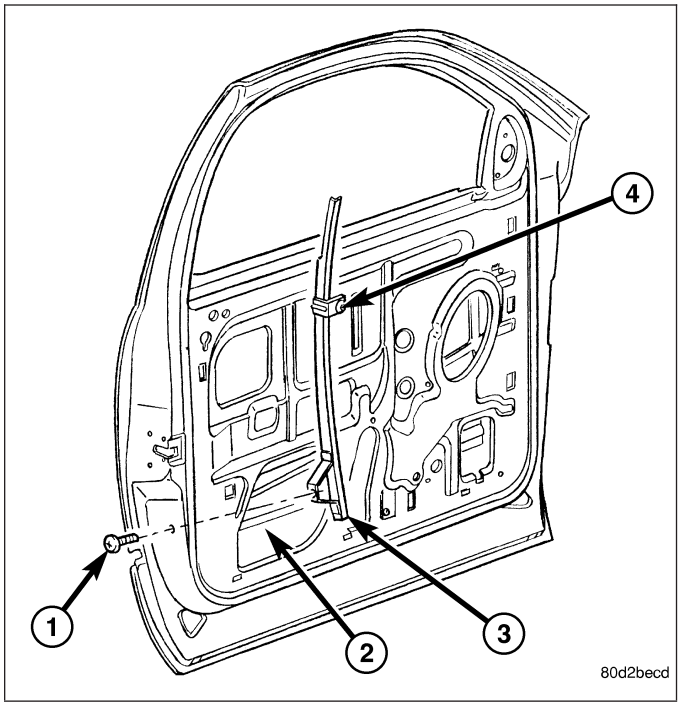

REAR-STANDARD CAB

1. Raise the window glass to the full up position and remove the window regulator (Refer to 23 - BODY/DOOR - FRONT/WINDOW REGULATOR - REMOVAL).
2. Remove the two bolts (1) that secure the rear glass run channel (2) to the door.
3. Remove the rear glass run channel from the door through the door panel opening (3).
4. If required, remove the weatherstrip from the rear glass run channel.

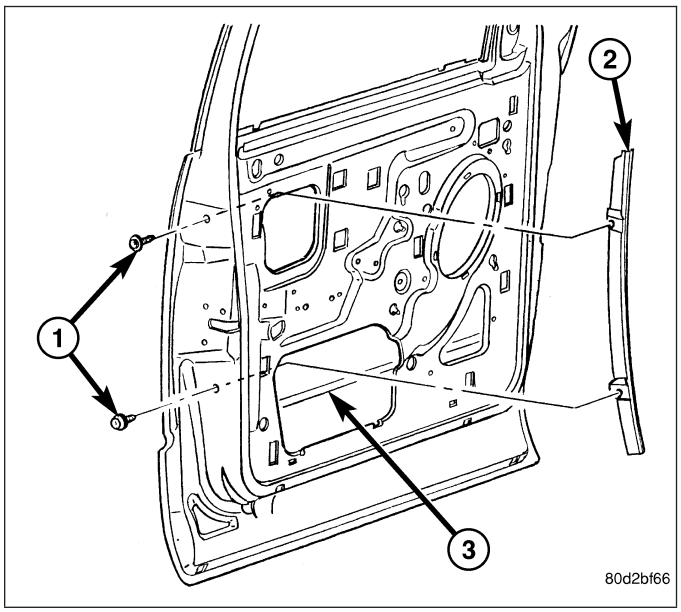

INSTALLATION

FRONT-ALL MODELS

1. If removed, install the weatherstrip onto the front glass run channel (1).
2. Position the front glass run channel into the door (5) through the door panel opening (4).
3. Engage the two bolts (2 and 3) that secure the front glass run channel to the door. Tighten the bolts to 10 N·m (89 in. lbs.).
4. Install the window regulator and verify correct window operation (Refer to 23 - BODY/DOOR - FRONT/WINDOW REGULATOR - INSTALLATION).

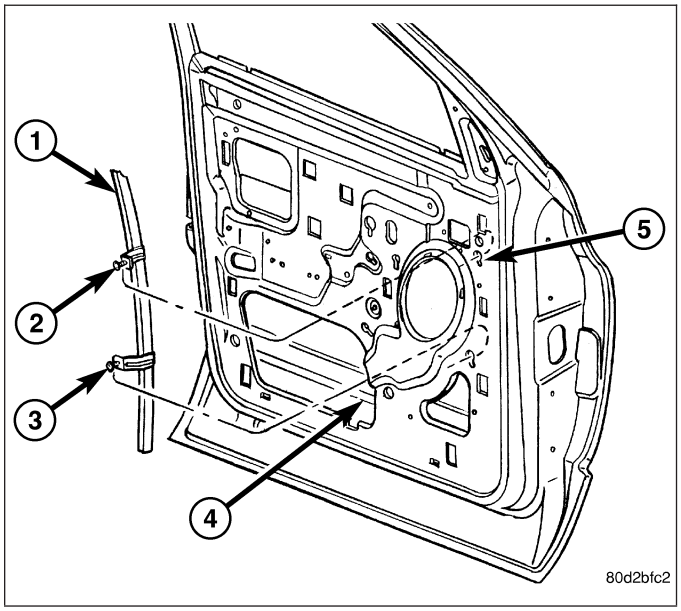

REAR-QUAD CAB

1. If removed, install the weatherstrip onto the rear glass run channel (3).
2. Position the rear glass run channel into the door through the door panel opening (2).
3. Engage the upper bolt (4) that secures the rear glass run channel to the door.
4. Install the lower bolt (1) that secures the rear glass run channel to the door. Tighten both the upper and lower bolts to 10 N·m (89 in. lbs.).
5. Install the window regulator and verify correct window operation (Refer to 23 - BODY/DOOR - FRONT/WINDOW REGULATOR - INSTALLATION).

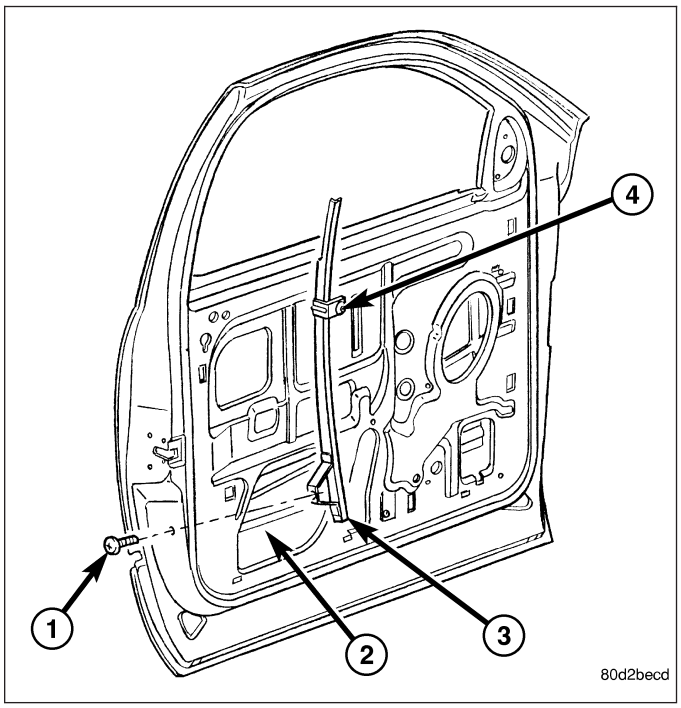

REAR-STANDARD CAB

1. If removed, install the weatherstrip onto the rear glass run channel (2).
2. Position the rear glass run channel into the door through the door panel opening (3).
3. Install the two bolts (1) that secure the rear glass run channel to the door. Tighten the bolts to 10 N·m (89 in. lbs.).
4. Install the window regulator and verify correct window operation (Refer to 23 - BODY/DOOR - FRONT/WINDOW REGULATOR - INSTALLATION).

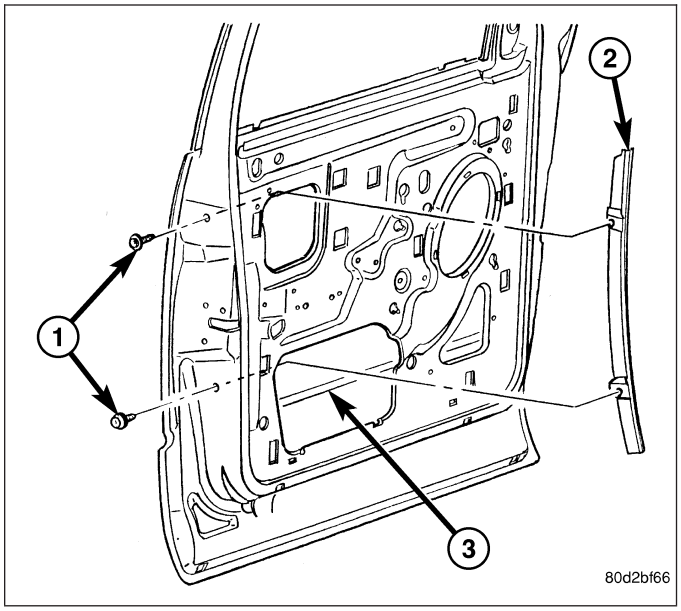

HINGE

REMOVAL

1. Remove the door. (Refer to 23 - BODY/DOOR - FRONT/DOOR - REMOVAL)
2. Using a grease pencil or equivalent, mark the hinge location and remove the bolts (3) and (4).

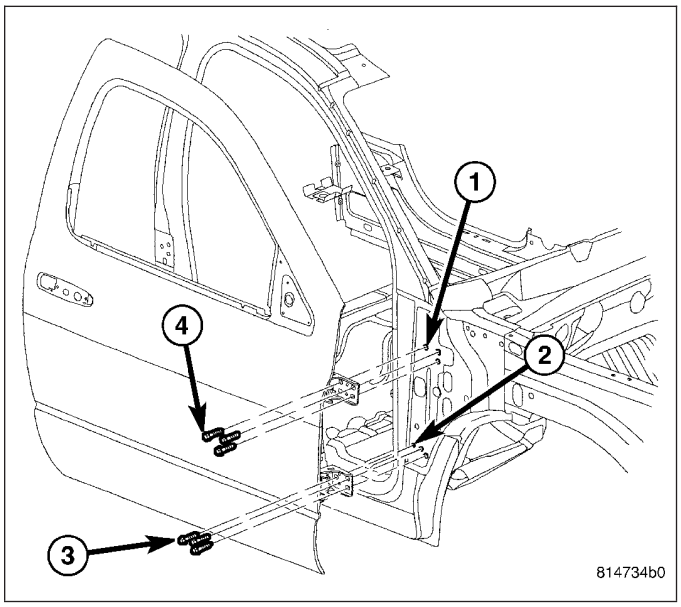

INSTALLATION

NOTE: A suitable body sealant should be used when removing or moving the hinges.

1. Install the hinges and bolts.
2. Tighten the upper hinge bolt (1) to hinge pillar to 28 N·m (21 ft. lbs.).
3. Tighten the lower hinge bolt (2) to hinge pillar to 28 N·m (21 ft. lbs.).
4. Tighten the remaining hinge to hinge pillar bolts (3) and (4) to 28 N·m (21 ft. lbs.).
5. Install the door. (Refer to 23 - BODY/DOOR - FRONT/DOOR - INSTALLATION)

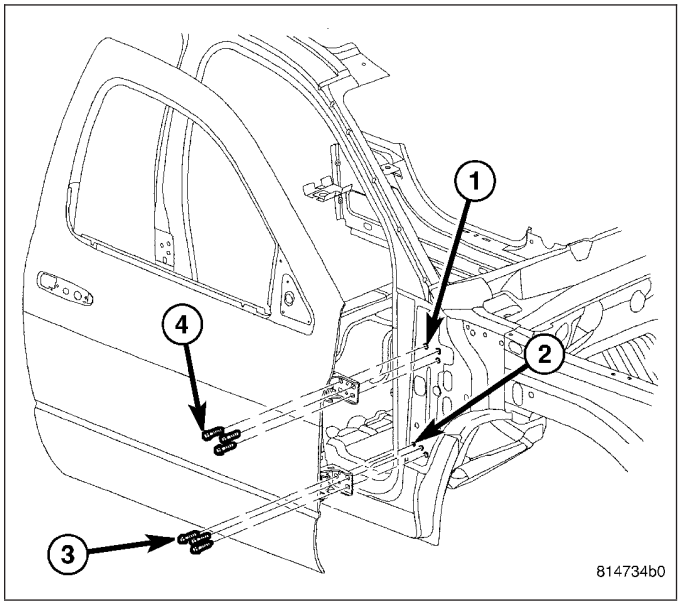

INTERIOR HANDLE ACTUATOR

REMOVAL

1. Remove the door trim panel (Refer to 23 - BODY/DOOR - FRONT/TRIM PANEL - REMOVAL).
2. Position the waterdam out of the way and disconnect the actuator rod (3) from interior door handle actuator (5) and the door latch (2), if necessary.
3. Remove the two nuts (4) that secure the interior door handle actuator to the door (1) and remove the actuator.

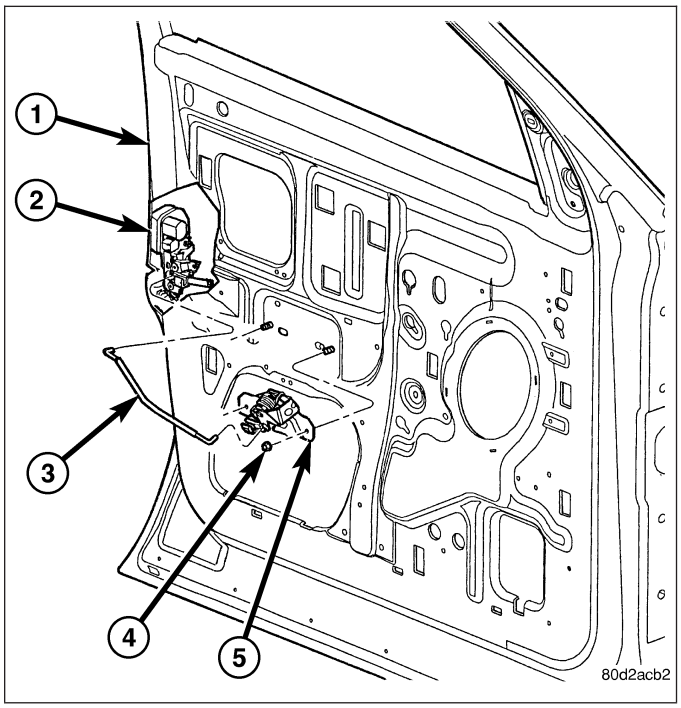

INSTALLATION

1. Position the interior door handle actuator (5) onto the door (1).
2. Install the two nuts (4) that secure the interior door handle actuator to the door. Tighten the nuts to 10 N·m (89 in. lbs.).
3. Connect the actuator rod (3) to the interior door handle actuator and the door latch (2), if removed.
4. Reposition the waterdam and install the door trim panel (Refer to 23 - BODY/DOOR - FRONT/TRIM PANEL - INSTALLATION).

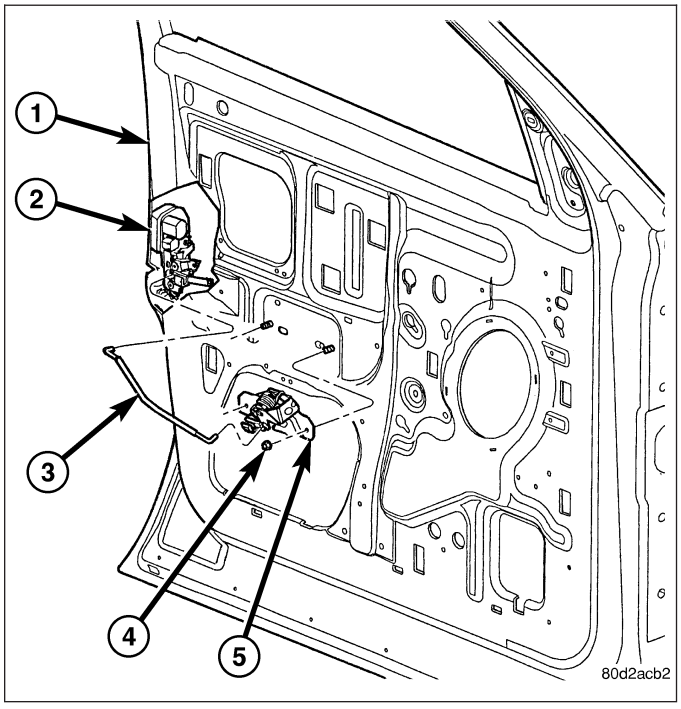

LATCH

REMOVAL

1. Raise the window to the full up position and remove the door trim panel (Refer to 23 - BODY/ DOOR - FRONT/TRIM PANEL - REMOVAL).
2. Position the waterdam out of the way and disconnect the actuator rod (3) from the door latch (2) and the interior door handle actuator (5) and remove the rod.

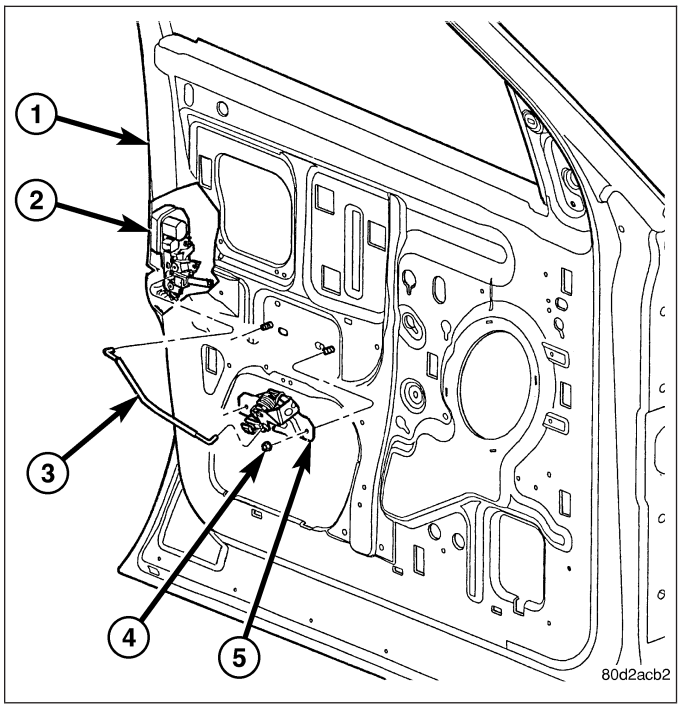

3. Disconnect the door wire harness connector (2) from the door latch (3).
4. Remove the three bolts (4) that secure the door latch to the door (1) and remove the latch.

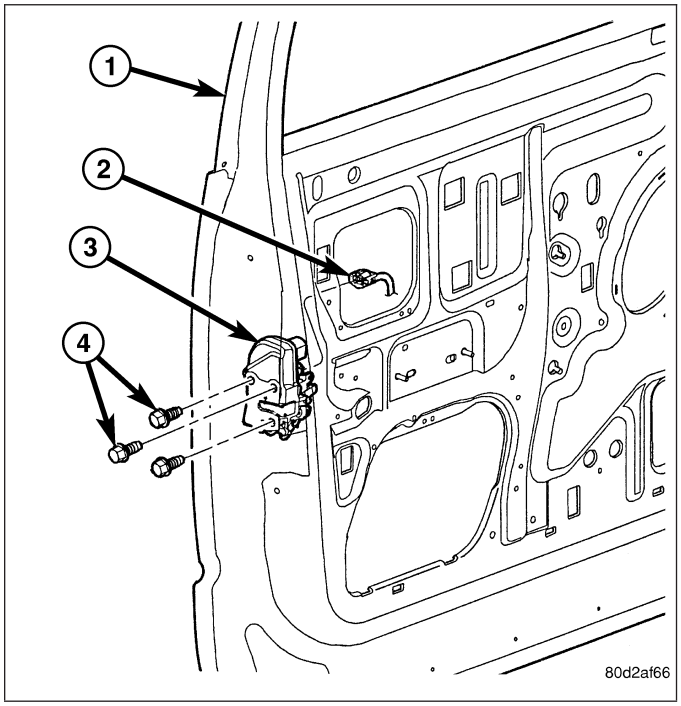

INSTALLATION

1. Position the door latch (3) into the door (1).
2. Install the three bolts (4) that secure the door latch to the door. Tighten the bolts to 10 N·m (89 in. lbs.).
3. Connect the door wire harness connector (2) to the door latch.

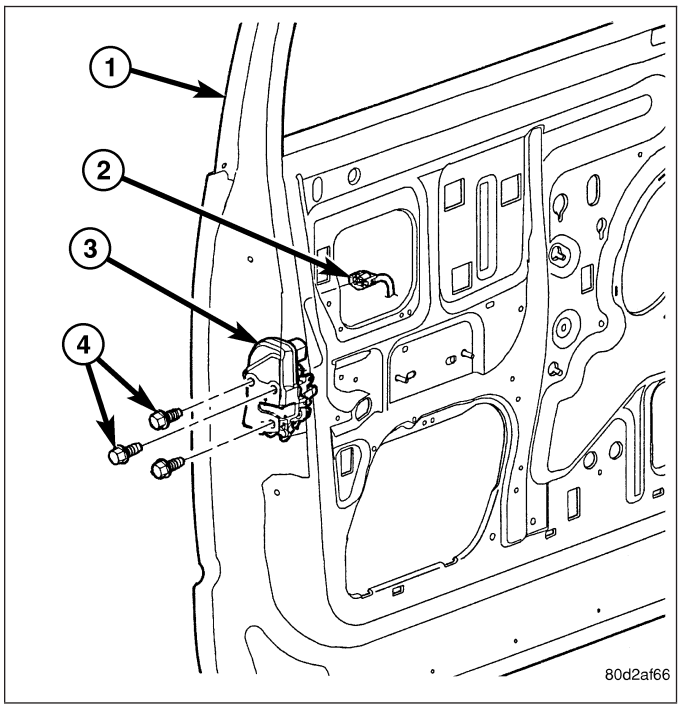

4. Connect the actuator rod (3) to the door latch (2) and the interior door handle actuator (5).
5. Reposition the waterdam to the door (1) and install the door trim panel (Refer to 23 - BODY/DOOR - FRONT/TRIM PANEL - INSTALLATION).
6. If necessary, adjust the latch (Refer to 23 - BODY/DOOR - FRONT/LATCH - ADJUSTMENTS).

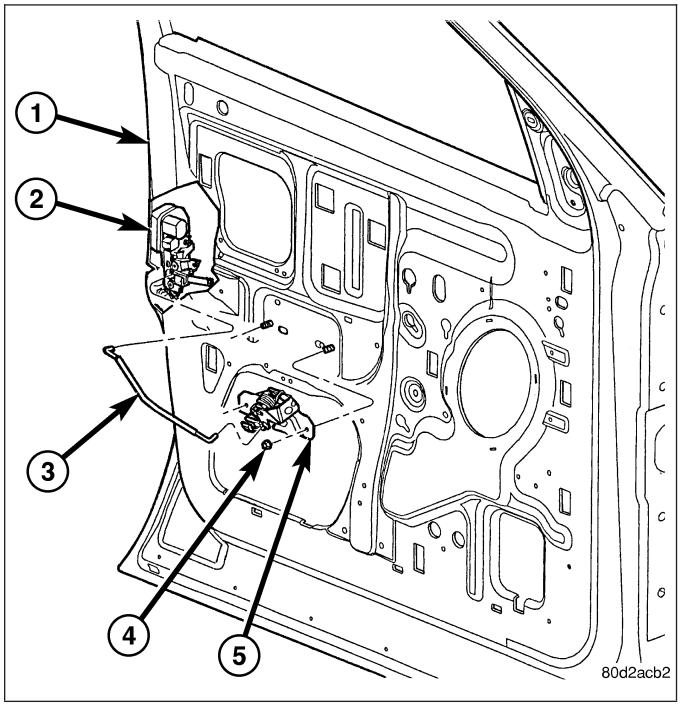

ADJUSTMENTS

1. Locate the access hole in the door to adjust the door latch (1) and remove the mylar tape (2).
2. Loosen the adjustment screw (3).
3. Operate the door handles several times to reduce any possible linkage binding and tighten the adjustment screw to 3 N·m (30 in. lbs.).
4. Operate the door handles again to verify proper operation and reinstall the mylar tape.

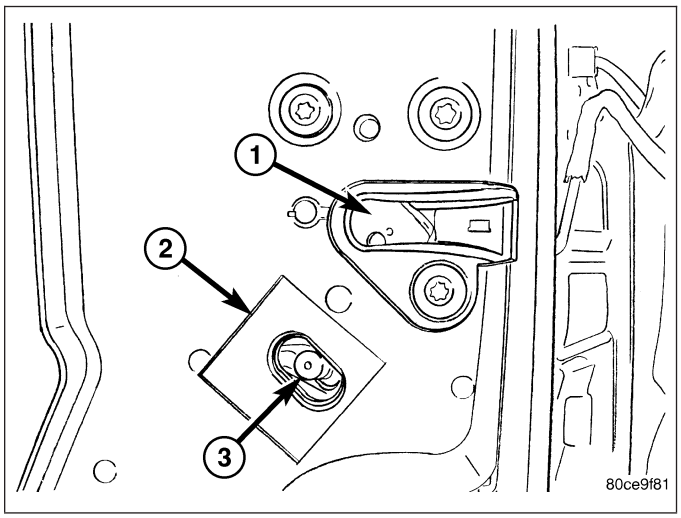

LATCH STRIKER

REMOVAL

1. Using a grease pencil or equivalent, mark the location of the door latch striker (1) on the B-pillar (2).
2. Remove the two bolts (3) that secure the door latch striker to the B-pillar and remove the striker.

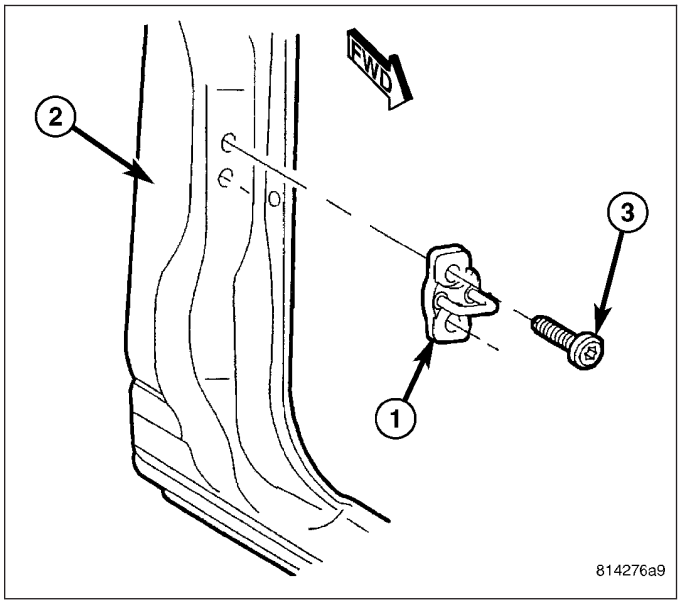

INSTALLATION

1. Position the door latch striker (1) onto the B-pillar (2) and loosely install the two bolts (3).
2. Align the door latch striker to the B-pillar using the reference marks made during the removal procedure and tighten the bolts to 28 N·m (21 ft. lbs.).
3. If necessary, adjust the door latch striker (Refer to 23 - BODY/DOOR - FRONT/LATCH STRIKER - ADJUSTMENTS).

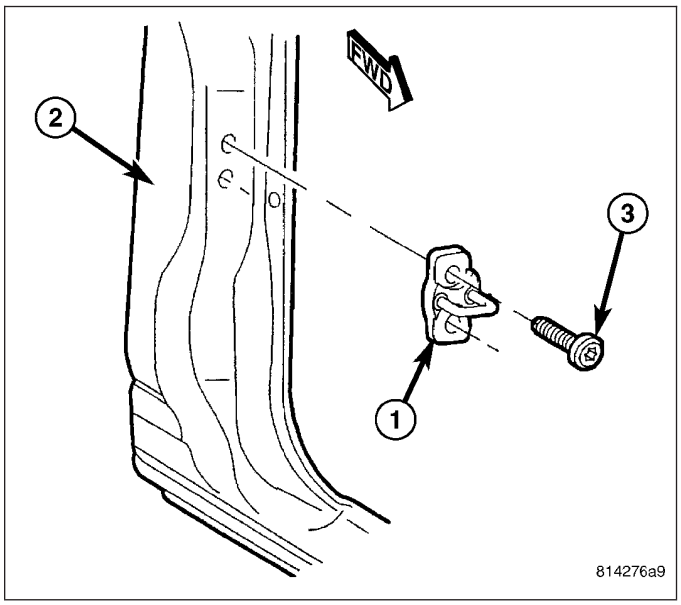

ADJUSTMENTS

1. Using a grease pencil or equivalent, mark the location of the door latch striker (1) on the B-pillar (2) to aid in adjustment.
2. Loosen the two bolts (3) that secure the door latch striker to the B-pillar.
3. To adjust the rear gap and flush measurement, change the position of the door latch striker and then tighten the two bolts to 28 N·m (21 ft. lbs.) (Refer to 23 - BODY/BODY STRUCTURE/GAP AND FLUSH - SPECIFICATIONS).
4. Verify correct door and latch position.

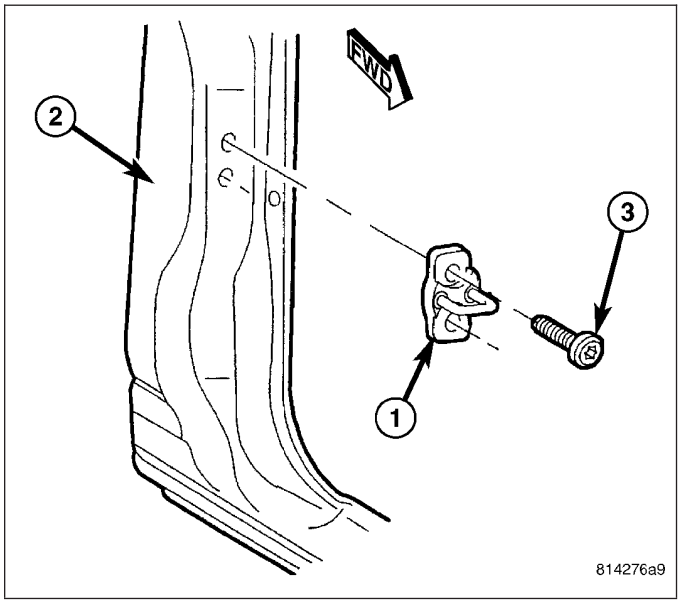

LOCK CYLINDER

REMOVAL

1. Remove the exterior door handle (1) (Refer to 23 - BODY/DOOR - FRONT/EXTERIOR HANDLE - REMOVAL).
2. Remove the clip (3) that secures the lock cylinder lever (5) and the electric lock switch (4), if equipped, to the door lock cylinder (6).
3. Remove the screw (2) that secures the door lock cylinder to the exterior handle and remove the lock cylinder.

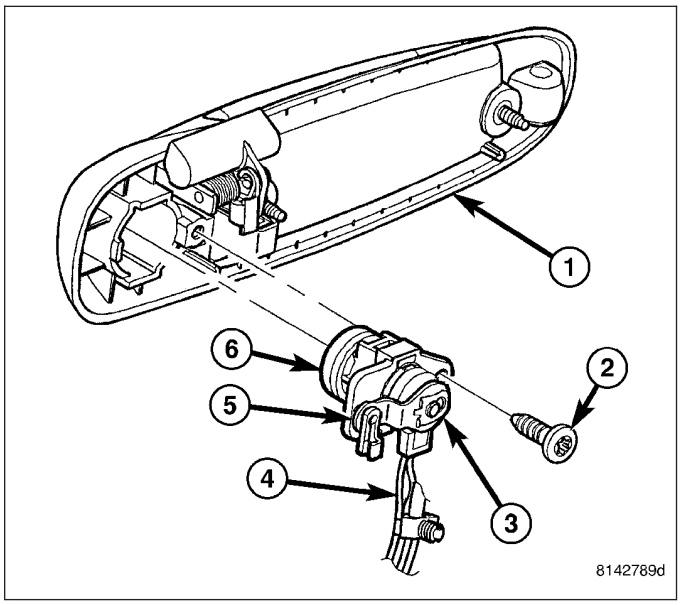

INSTALLATION

1. Position the door lock cylinder (6) into the exterior door handle (1).
2. Install the screw (2) that secures the door lock cylinder to the exterior door handle. Tighten the screw securely.
3. Install the electric lock switch (4), if equipped, and the lock cylinder lever (5) to the door lock cylinder.
4. Install the clip (3) that secures the lock cylinder lever and the electric lock switch, if equipped, to the door lock cylinder.
5. Install the exterior door handle (Refer to 23 - BODY/DOOR - FRONT/EXTERIOR HANDLE - INSTALLATION).

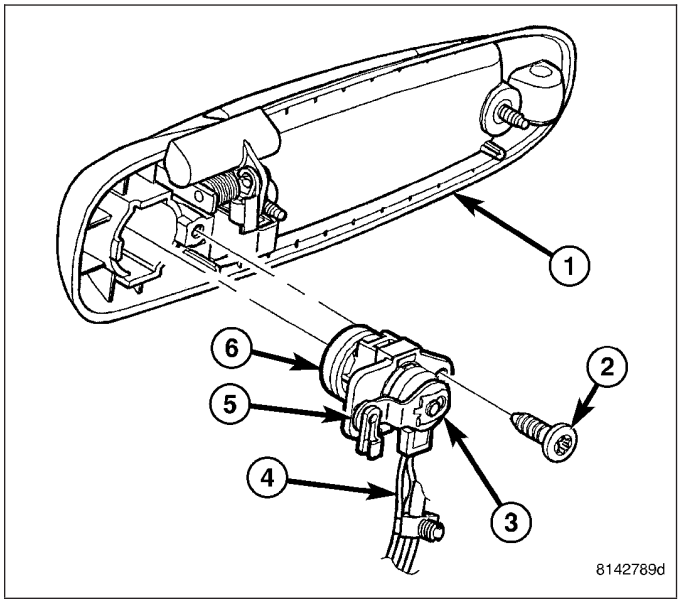

TRIM PANEL

REMOVAL

1. Remove the screw (1) that secures the interior door handle (2) to the interior door handle actuator (3).
2. Remove the interior door handle from the interior door handle actuator.

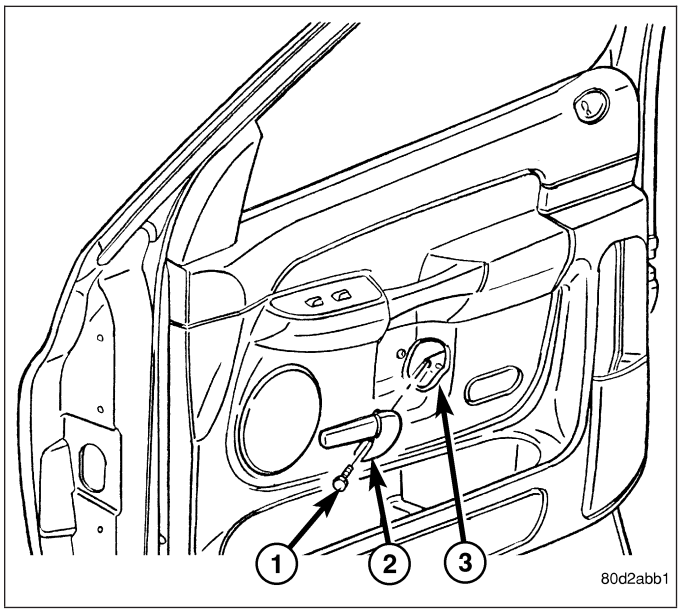

3. If equipped, remove the manual window crank (1) using a window crank removal tool (2).

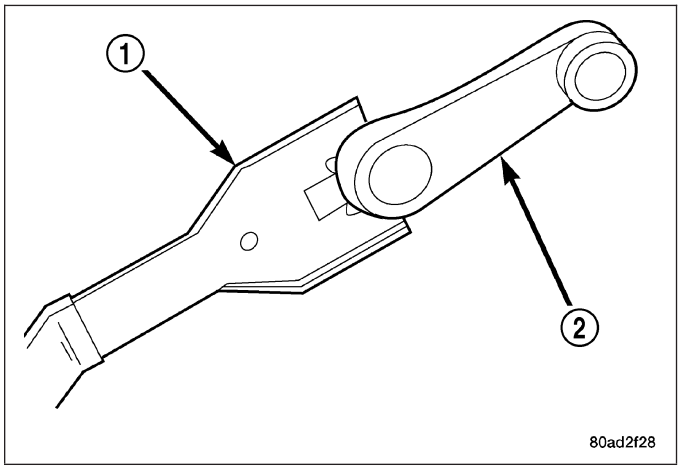

4. Remove the two screws (2) that secure the door trim panel (3) to the two screw inserts (1).
5. Remove the two screws (4) that secure the door trim panel to the bottom of the door.

CAUTION: The door trim panel is attached to the door by molded plastic retaining clips that are integral to the door trim panel. Do not pull the door trim panel directly off of the door or damage to the trim panel and/or the power switch assembly will occur.

6. Lift the door trim panel straight upward to disconnect the molded plastic retaining clips (5) from the door.

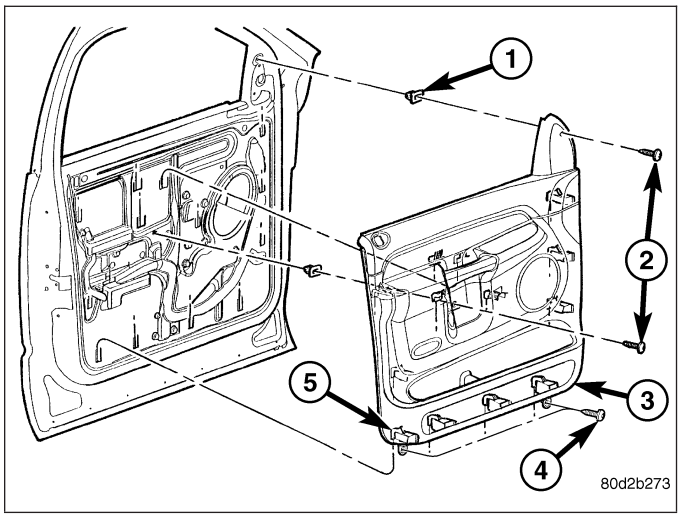

7. If equipped, disconnect the door wire harness from the power door switch assembly and remove the door trim panel.

INSTALLATION

1. If equipped, connect the door wire harness to the power door switch assembly.

CAUTION: The door trim panel is attached to the door by molded plastic retaining clips that are integral to the door trim panel. Do not force the door trim panel onto the door or damage to the trim panel and/or the power switch assembly will occur.

2. Position the door trim panel (3) and align the molded plastic retaining clips (5) to the door.
3. Push the door trim panel straight downward until all of the retaining clips are fully engaged to the door.
4. Install the two screws (2) that secure the door trim panel to the two screw inserts (1).
5. Install the two screws (4) that secure the door trim panel to the bottom of the door.
6. if equipped, install the manual window crank.

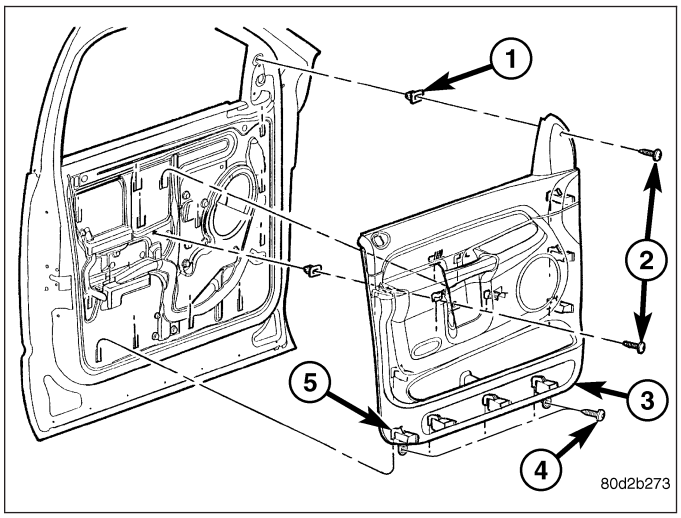

7. Position the interior door handle (2) onto the interior door handle actuator (3).
8. Install the screw (1) that secures the interior door handle to the interior door handle actuator. Tighten the screw securely.

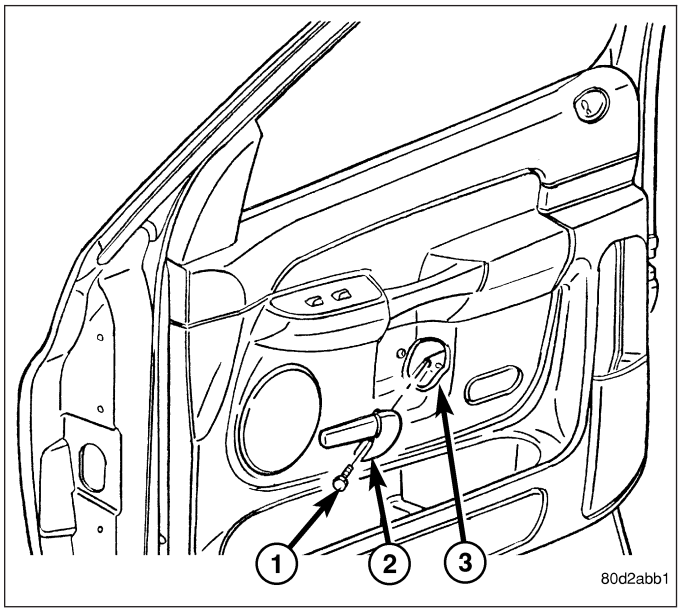

WATERDAM

REMOVAL

1. Remove the interior door handle actuator (Refer to 23 - BODY/DOOR - FRONT/INTERIOR HANDLE ACTUATOR - REMOVAL).
2. Remove the speaker (Refer to 8 - ELECTRICAL/ AUDIO/SPEAKER - REMOVAL).

CAUTION: Do not allow the waterdam adhesive to become contaminated with dirt or other foreign substances. If the waterdam becomes contaminated or damaged, replace it.

3. Carefully remove the waterdam (1) from around the perimeter of the door (2).
4. Separate the waterdam from the interior handle actuator rod and the door wire harness (if equipped) and remove the waterdam.

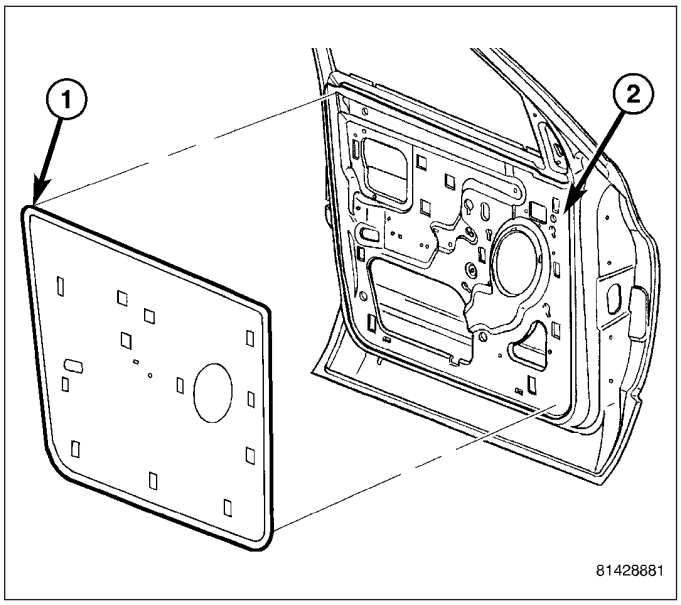

INSTALLATION

CAUTION: Do not allow the waterdam or adhesive to become contaminated with dirt or other foreign substances. If the waterdam becomes contaminated or damaged, replace it.

NOTE: Be sure that the waterdam is fully sealed around the perimeter of the door.

1. Position the interior handle actuator rod and the wire harness (if equipped) through the holes in the waterdam (1) and install the waterdam to the door (2).
2. Install the speaker (Refer to 8 - ELECTRICAL/AUDIO/SPEAKER - INSTALLATION)
3. Install the interior door handle actuator (Refer to 23 - BODY/DOOR - FRONT/INTERIOR HANDLE ACTUATOR - INSTALLATION).

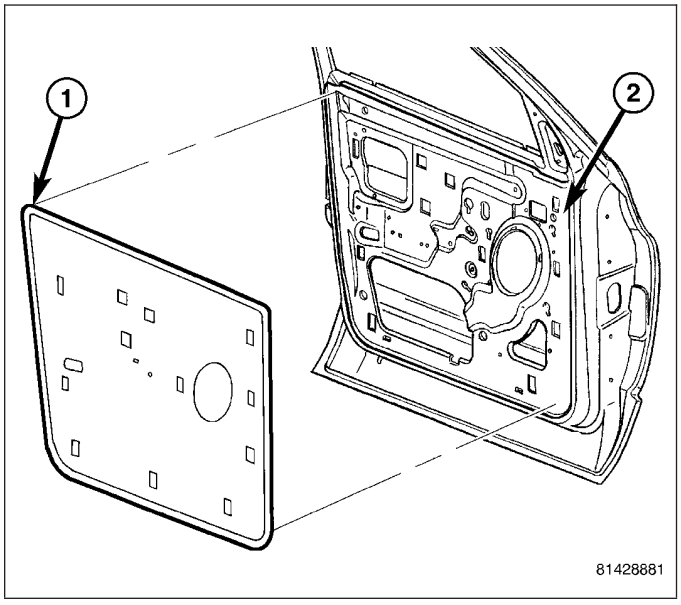

WINDOW REGULATOR - POWER

REMOVAL

1. Remove the inner belt molding (Refer to 23 - BODY/WEATHERSTRIP/SEALS/FRONT DOOR INNER BELT WEATHERSTRIP - REMOVAL).
2. Remove the waterdam (Refer to 23 - BODY/DOOR - FRONT/WATERDAM - REMOVAL).
3. Remove the electric window switch from the door trim panel and connect it to the door wire harness (Refer to 8 - ELECTRICAL/POWER WINDOWS/ POWER WINDOW SWITCH - REMOVAL).
4. Raise the door glass to the position shown.
5. Remove the two nuts (1) that secure the door glass to the window regulator (2) through the two sight windows (3 and 4) and disengage the door glass from the regulator.
6. Position the door glass to the full up position and secure the glass using a wooden wedge or an equivalent.

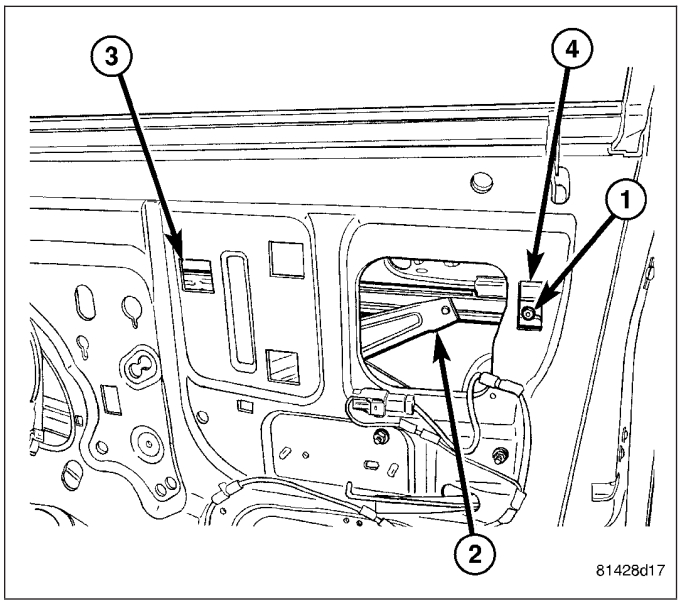

7. Lower the window regulator (4) and remove the two nuts (3) that secure the regulator stabilizer (1) to the door (2).
8. Remove the bolt (5) that secures the window regulator to the door and loosen the other two regulator bolts (7).
9. Slide the window regulator upward and disengage the two regulator bolts from the door.
10. Remove the window regulator through the opening in the door and disconnect the door wire harness (6).

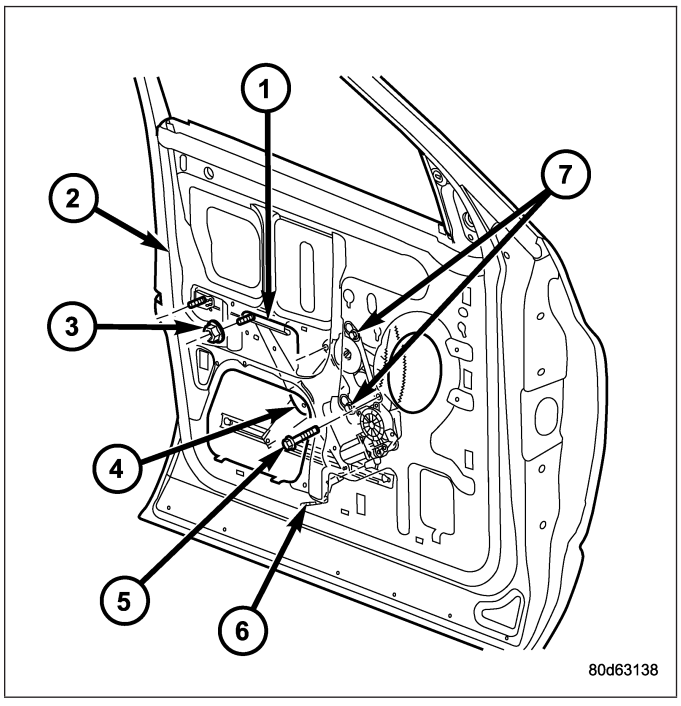

INSTALLATION

1. Connect the door wire harness (6) to the window regulator (4) and install the regulator through the opening in the door (2).
2. Engage the two regulator bolts (7) to the door.
3. Install the bolt (5) that secure the window regulator to the door and tighten all three regulator bolts to 10 N·m (89 in. lbs.).
4. Position the regulator stabilizer (1) into the door and install the two nuts (3). Tighten the nuts to 10 N·m (89 in. lbs.).

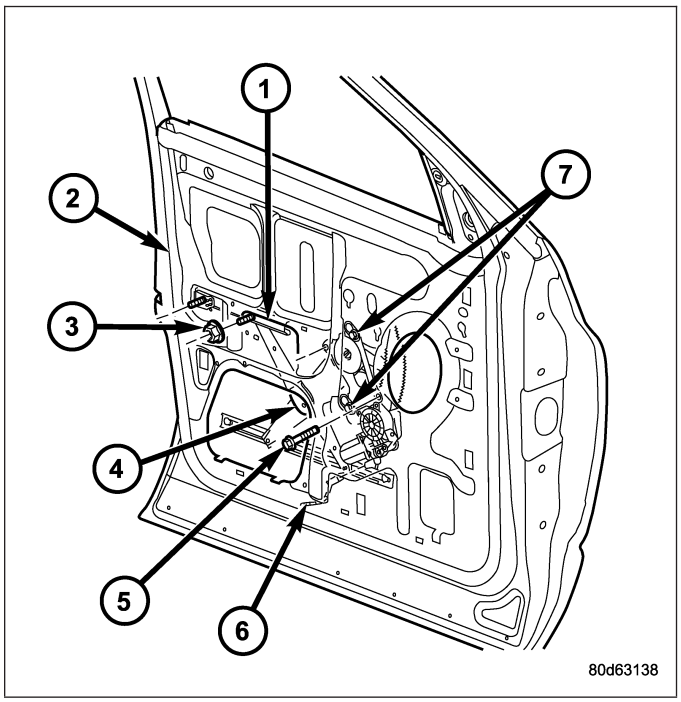

5. Raise the window regulator (2) to the position shown.
6. Support the window glass and remove the wooden wedge or equivalent.
7. Position the window glass to the window regulator and install the two nuts (1) thought the two sight windows (3 and 4). Tighten the nuts to 10 N·m (89 in. lbs.).
8. Disconnect the electric window switch from the door wire harness and reinstall the switch onto the door trim panel (Refer to 8 - ELECTRICAL/POWER WINDOWS/POWER WINDOW SWITCH - INSTALLATION).
9. Install the waterdam (Refer to 23 - BODY/DOOR - FRONT/WATERDAM - INSTALLATION).
10. Install the inner belt molding (Refer to 23 - BODY/WEATHERSTRIP/SEALS/FRONT DOOR INNER BELT WEATHERSTRIP - INSTALLATION).

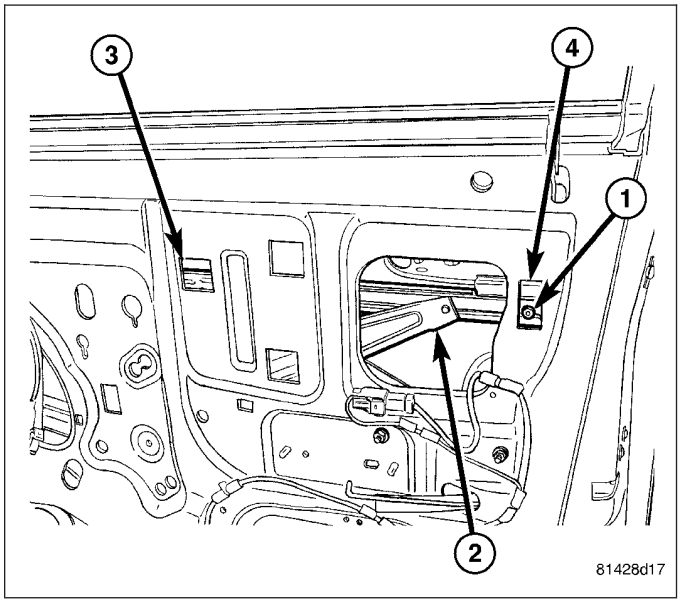

WINDOW REGULATOR - MANUAL

REMOVAL

1. Remove the inner belt molding (Refer to 23 - BODY/WEATHERSTRIP/SEALS/FRONT DOOR INNER BELT WEATHERSTRIP - REMOVAL).
2. Remove the waterdam (Refer to 23 - BODY/DOOR - FRONT/WATERDAM - REMOVAL).
3. Reinstall the manual window crank and raise the door glass to the position shown.
4. Remove the two nuts (1) that secure the door glass to the window regulator (2) through the two sight windows (3 and 4) and disengage the door glass from the regulator.
5. Position the door glass to the full up position and secure the glass using a wooden wedge or an equivalent.

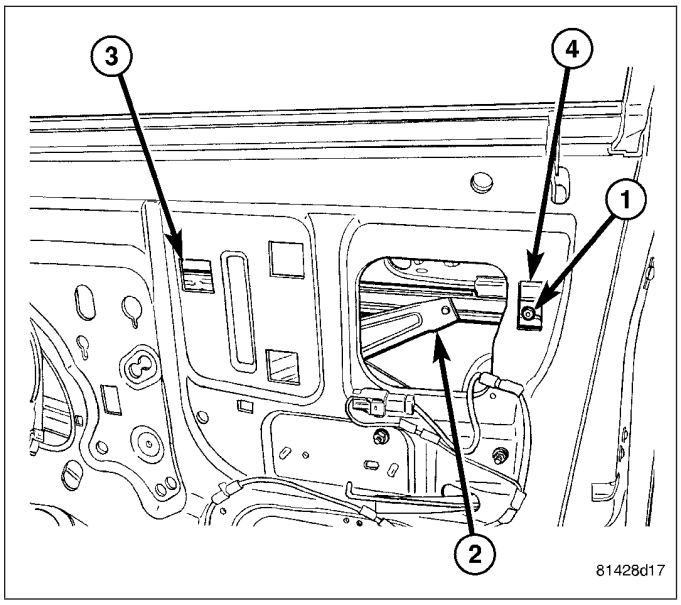

6. Lower the window regulator (4) and remove the two nuts (3) that secure the regulator stabilizer (1) to the door (2).
7. Remove the two bolts (5) that secure the window regulator to the door and loosen the other two regulator bolts (6).
8. Slide the window regulator upward and disengage the two regulator bolts from the door.
9. Remove the window regulator through the opening in the door.

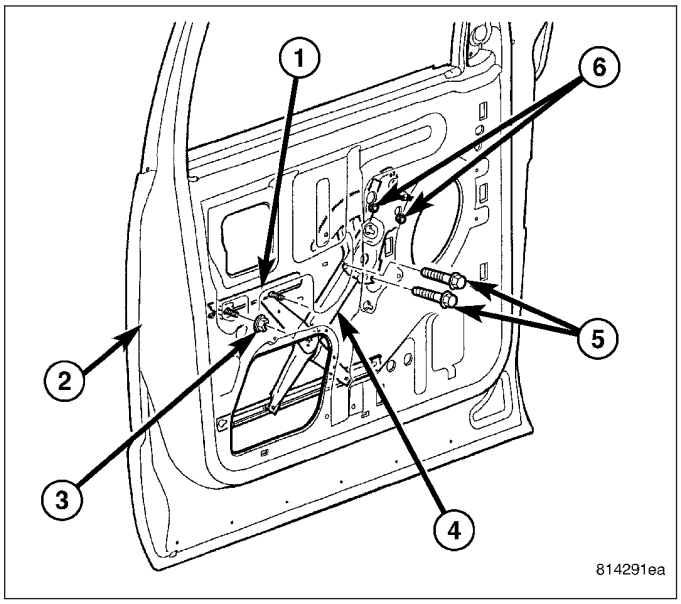

INSTALLATION

1. Install the window regulator (4) through the opening in the door (2).
2. Engage the two regulator bolts (6) to the door.
3. Install the two bolt (5) that secure the window regulator to the door and tighten all four regulator bolts to 10 N·m (89 in. lbs.).
4. Position the regulator stabilizer (1) into the door and install the two nuts (3). Tighten the nuts to 10 N·m (89 in. lbs.).

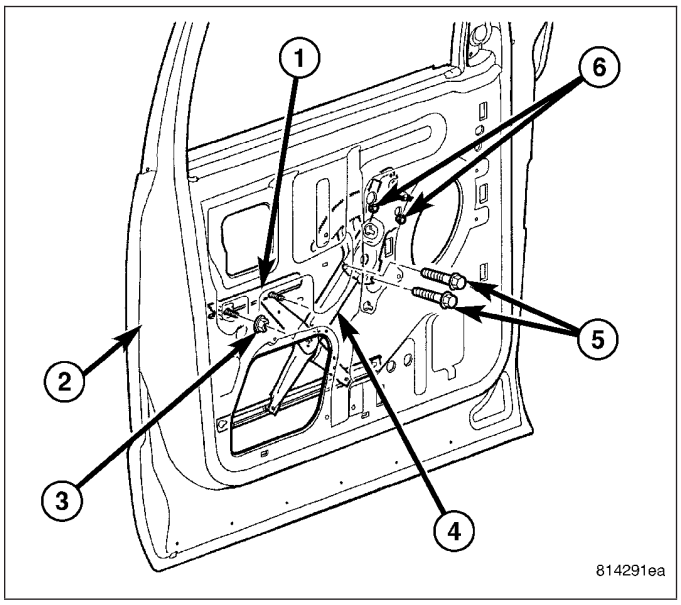

5. Raise the window regulator (2) to the position shown and remove the manual window crank.
6. Support the window glass and remove the wooden wedge or equivalent.
7. Position the window glass to the window regulator and install the two nuts (1) thought the two sight windows (3 and 4). Tighten the nuts to 10 N·m (89 in. lbs.).
8. Install the waterdam (Refer to 23 - BODY/DOOR - FRONT/WATERDAM - INSTALLATION).
9. Install the inner belt molding (Refer to 23 - BODY/ WEATHERSTRIP/SEALS/FRONT DOOR INNER BELT WEATHERSTRIP - INSTALLATION).

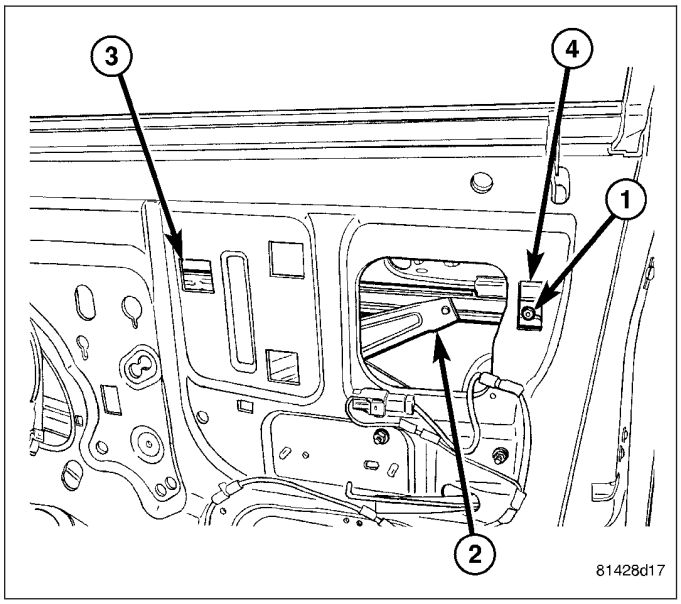

SIDE VIEW MIRROR FLAG

REMOVAL

1. Remove the door trim panel (4) (Refer to 23 - BODY/DOOR - FRONT/TRIM PANEL - REMOVAL).

CAUTION: Do not use a drill to remove the heat stakes. The remaining portions of the heat stake studs are needed for installation purposes. Failure to follow this caution may require door trim panel replacement.

2. Remove the heat stakes (3) using a razor knife or equivalent.
3. Release the tabs (2) and remove the mirror flag (1) from the door trim panel.

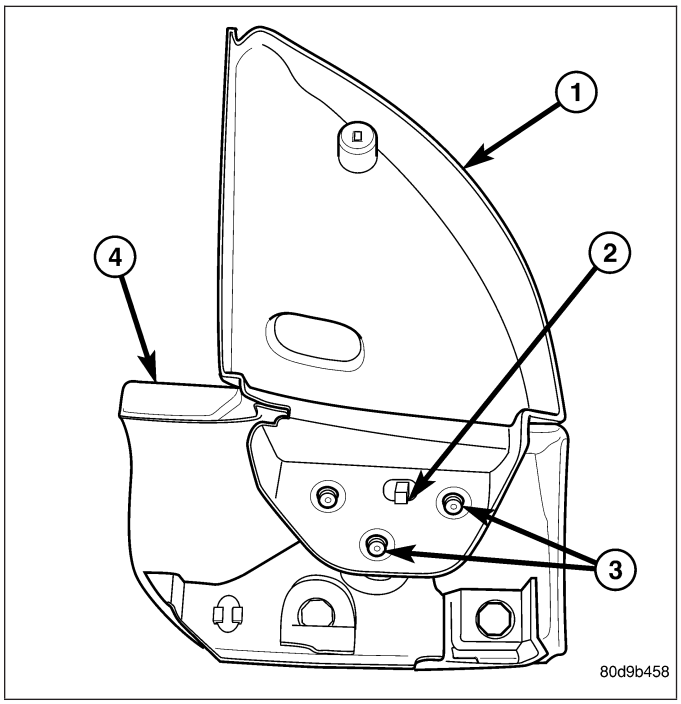

INSTALLATION

NOTE: Clean any excess heat stake material off of the heat stake studs to aid in mirror flag installation.

1. Install the mirror flag (1) over the tabs (2) and install the screws (3) into the heat stake studs.
2. Install the door trim panel (4) (Refer to 23 - BODY/DOOR - FRONT/TRIM PANEL - INSTALLATION)

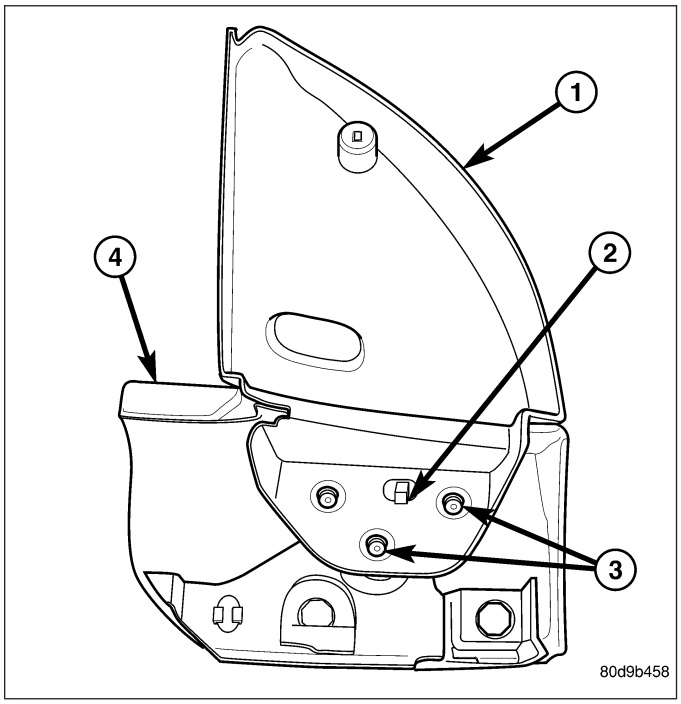

DOORS - REAR

TABLE OF CONTENTS

page

DOOR
REMOVAL 52
INSTALLATION 53
ADJUSTMENTS 53
DOOR GLASS
REMOVAL 58
INSTALLATION 59
EXTERIOR HANDLE
REMOVAL 60
INSTALLATION 61
GLASS RUN CHANNEL
REMOVAL
FRONT 61
REAR 62
INSTALLATION
FRONT 62
REAR 63
HINGE
REMOVAL 63
INSTALLATION 66
INTERIOR HANDLE ACTUATOR
REMOVAL 68
INSTALLATION 68
LATCH
REMOVAL 69
INSTALLATION 70
ADJUSTMENTS 71
LATCH STRIKER
REMOVAL 71
INSTALLATION 72
ADJUSTMENTS 72
TRIM PANEL
REMOVAL 73
INSTALLATION 74
WATERDAM
REMOVAL 74
INSTALLATION 75
WINDOW REGULATOR - POWER
REMOVAL 75
INSTALLATION 76
WINDOW REGULATOR - MANUAL
REMOVAL 77
INSTALLATION 78

DOOR

REMOVAL

1. Disconnect and isolate the negative battery cable.
2. Disconnect the door wire harness connector (5) from the body wire harness (8).
3. Using a grease pencil or equivalent, mark the location of the door hinges (2 and 7) on the door (4).

NOTE: The epoxy bonded washers do not need to be separated from the hinges. If the washers are removed, the door may need to be re-adjusted.

4. Support the door with a suitable lifting device and remove the two nuts (1) and two bolts (9) that secure the door to the hinges.
5. Carefully remove the door from the hinges.
6. If required, remove the two studs (3 and 6) from the door.

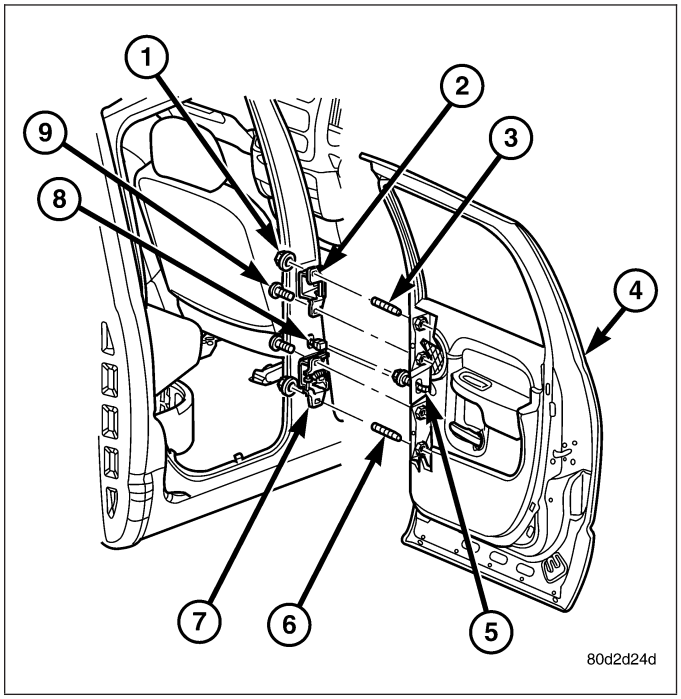

INSTALLATION

1. If removed, install the two studs (3 and 6) into the door (4).
2. Carefully position the door onto the hinges (2 and 7) and support the door with a suitable lifting device.

NOTE: If the epoxy bonded washers are separated from the hinges, the door may need to be adjusted.

3. If removed, install the epoxy bonded washers.
4. Loosely install the two nuts (1) and the two bolts (9) that secure the door to the hinges.
5. Align the door to the hinges using the reference marks made during the removal procedure and tighten the nuts and bolts to 28 N·m (21 ft. lbs.).
6. Connect the door wire harness (5) to the body wire harness (8).
7. Reconnect the negative battery cable.
8. If necessary, adjust the door (Refer to 23 - BODY/DOORS - REAR/DOOR - ADJUSTMENTS).

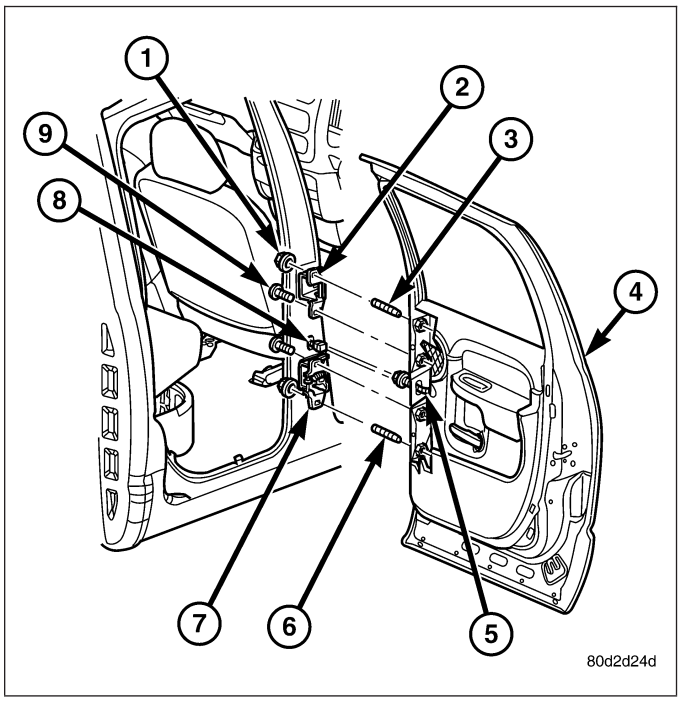

ADJUSTMENTS

NOTE: For quad cab vehicles, it is recommended that you adjust the rear door before adjusting the front door.

- **Door adjustment measurements should be taken from stationary or welded body panels like the roof, rocker or quarter panels.**
- **During adjustment procedures, it is recommended that all the hinge fasteners be loosened except for the upper most fasteners. Adjustments can be made using the upper fasteners to hold the door with final torque of the fasteners occurring after correct door positioning is achieved.**

FORE/AFT

NOTE: Fore/aft (lateral) door adjustment is done by loosening the hinge to the hinge pillar fasteners one hinge at a time and moving the door to the correct position.

1. Support the door with a suitable lifting device.
2. Loosen the hinge to hinge pillar fasteners (5) and (6). (Refer to 23 - BODY/DOORS - REAR/HINGE - REMOVAL)
3. Adjust the door to the correct position. (Refer to 23 - BODY/BODY STRUCTURE/GAP AND FLUSH - SPECIFICATIONS)
4. Tighten the upper hinge bolt (2) to 28 N·m (21 ft. lbs.).
5. Tighten the upper hinge bolt (1) to 28 N·m (21 ft. lbs.).
6. Tighten the upper hinge bolt (3) to 28 N·m (21 ft. lbs.).
7. Tighten the lower hinge bolt (4) to 28 N·m (21 ft. lbs.).

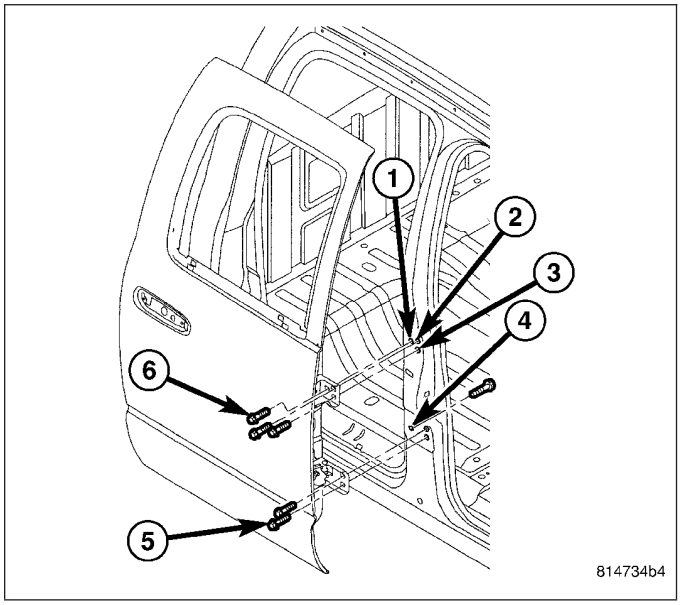

8. Tighten the remaining hinge pillar fasteners to 28 N·m (21 ft. lbs.). (Refer to 23 - BODY/DOORS - REAR/HINGE - INSTALLATION)

NOTE: Use a suitable body sealer on the hinge to body mating surfaces.

UP/DOWN

NOTE: Up/down door adjustment is done by loosening either the hinge to the hinge pillar fasteners or the hinge to door fasteners and moving the door to the correct position.

NOTE: When adjustment of the door requires the loosening of the door to hinge fasteners, it will be necessary to separate the epoxy bonded washers with a chisel or other suitable tool.

NOTE: When the up/down adjustments are done correctly, the top of the door is positioned over flush to the roof. (Refer to 23 - BODY/BODY STRUCTURE/GAP AND FLUSH - SPECIFICATIONS)

1. Support the door with a suitable lifting device.
2. Remove the latch striker (1). (Refer to 23 - BODY/DOORS - REAR/LATCH STRIKER - REMOVAL)
3. If necessary, loosen the hinge to hinge pillar fasteners (Refer to 23 - BODY/DOORS - REAR/HINGE - REMOVAL)

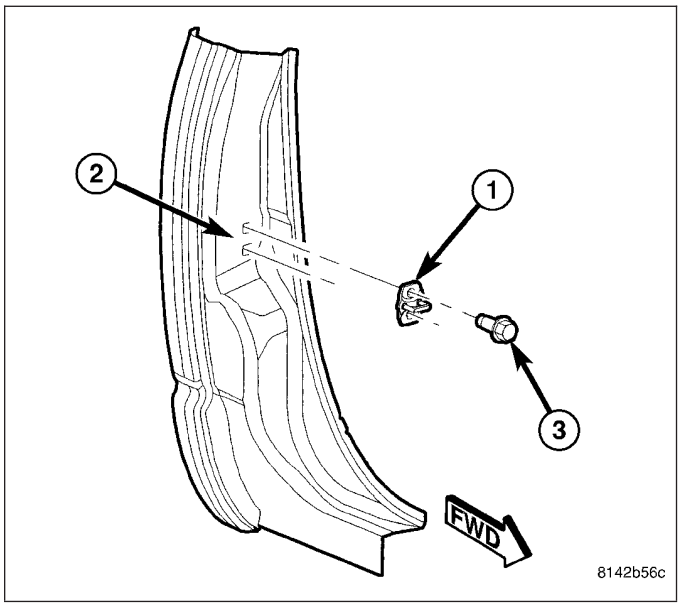

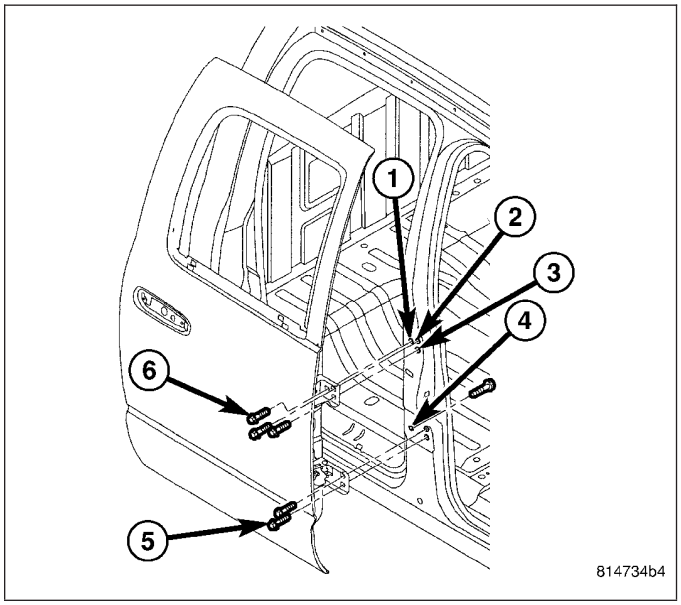

4. If necessary, loosen the hinge to door fasteners. (Refer to 23 - BODY/DOORS - REAR/DOOR - REMOVAL)
5. Adjust the door to the correct position. (Refer to 23 - BODY/BODY STRUCTURE/GAP AND FLUSH - SPECIFICATIONS)

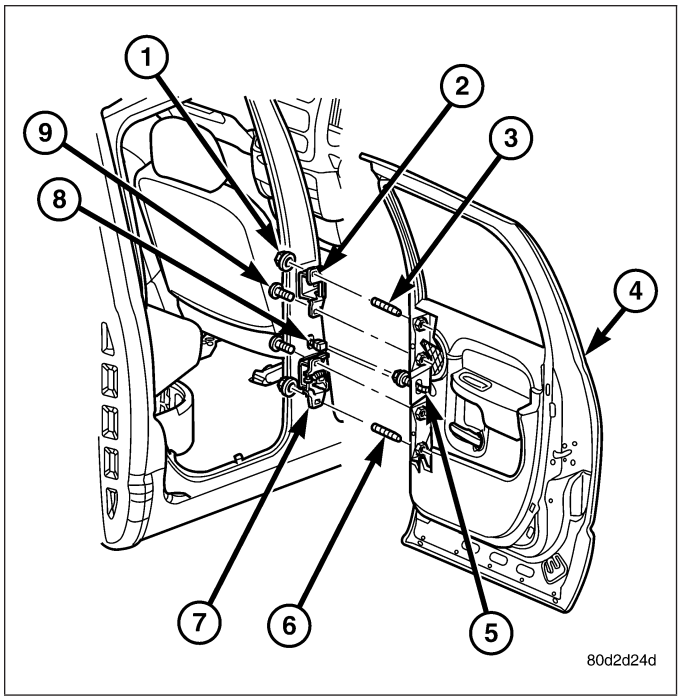

6. If necessary, tighten the hinge to pillar bolts.
   a. Tighten the upper hinge bolt (2) to 28 N·m (21 ft. lbs.).
   b. Tighten the upper hinge bolt (1) to 28 N·m (21 ft. lbs.).
   c. Tighten the upper hinge bolt (3) to 28 N·m (21 ft. lbs.).
   d. Tighten the lower hinge bolt (4) to 28 N·m (21 ft. lbs.).
   e. Tighten the remaining hinge pillar fasteners to 28 N·m (21 ft. lbs.). (Refer to 23 - BODY/DOORS - REAR/HINGE - INSTALLATION)

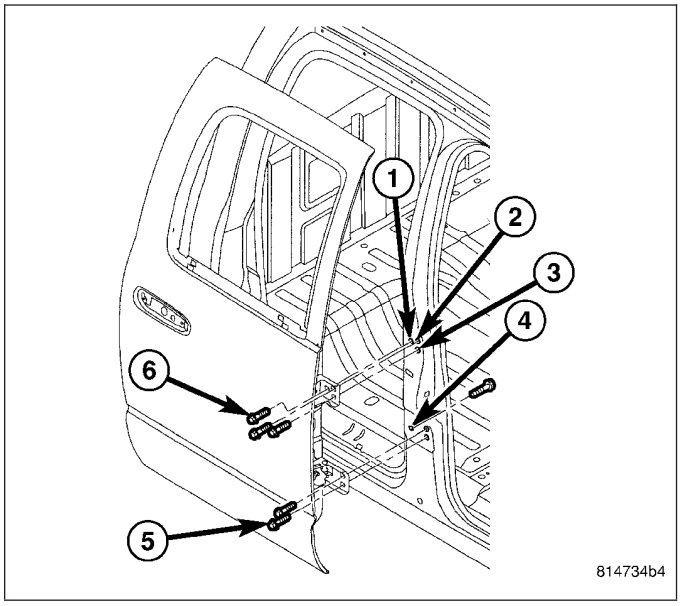

7. Tighten the door to hinge fasteners and (9) to 28 N·m (21 ft. lbs.). (Refer to 23 - BODY/DOORS - REAR/HINGE - INSTALLATION)

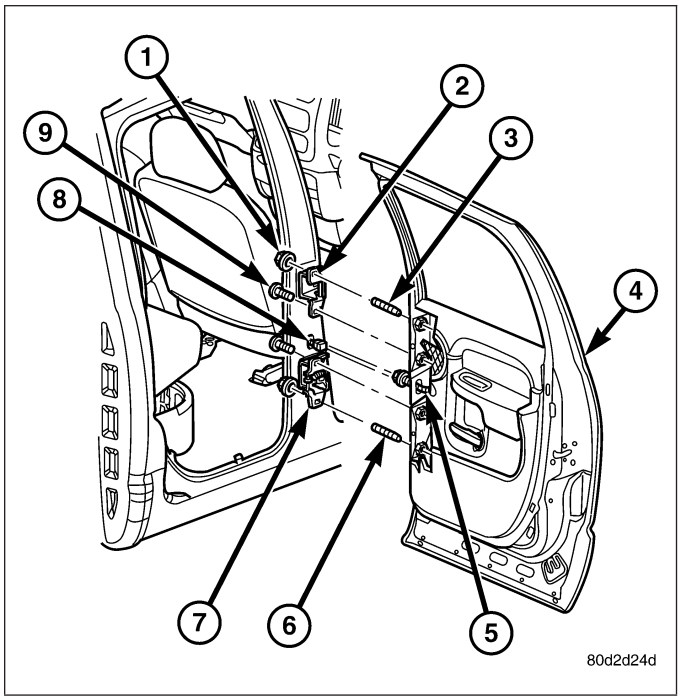

8. Install the latch striker. (Refer to 23 - BODY/DOORS - REAR/LATCH STRIKER - INSTALLATION)

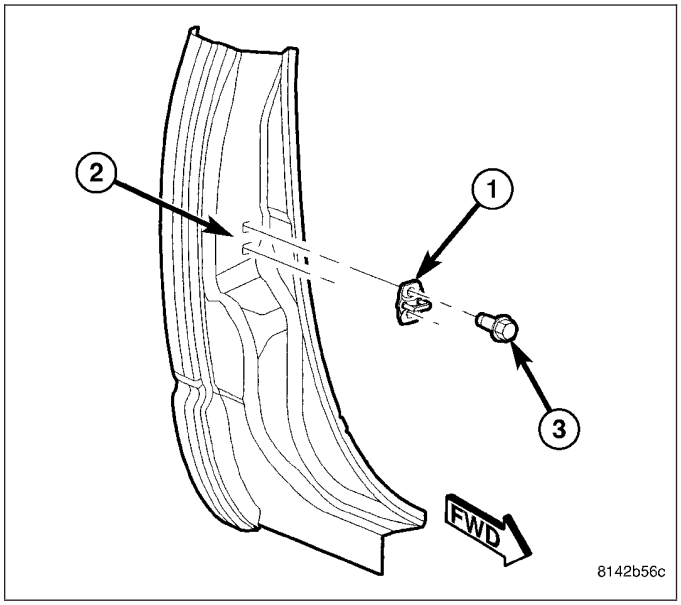

IN/OUT

NOTE: In/out door adjustment is done by loosening the hinge to door fasteners one hinge at a time and moving the door to the correct position.

NOTE: When adjustment of the door requires the loosening of the door to hinge fasteners, it will be necessary to separate the epoxy bonded washers with a chisel or other suitable tool.

1. Support the door with a suitable lifting device.
2. Remove the latch striker. (Refer to 23 - BODY/DOORS - REAR/LATCH STRIKER - REMOVAL)

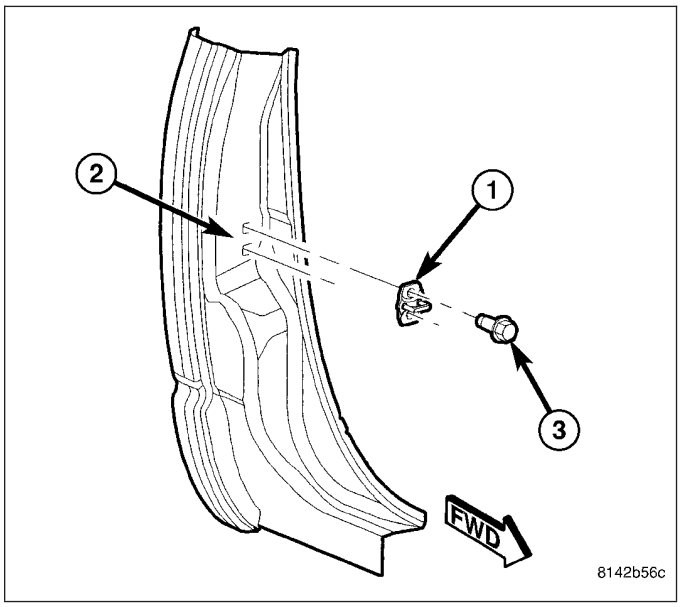

3. Loosen the hinge to door fasteners (1) and (9). (Refer to 23 - BODY/DOORS - REAR/DOOR - REMOVAL)
4. Adjust the front of the door to the correct position. (Refer to 23 - BODY/BODY STRUCTURE/GAP AND FLUSH - SPECIFICATIONS)
5. Tighten the door to hinges fasteners to 28 N·m (21 ft. lbs.).

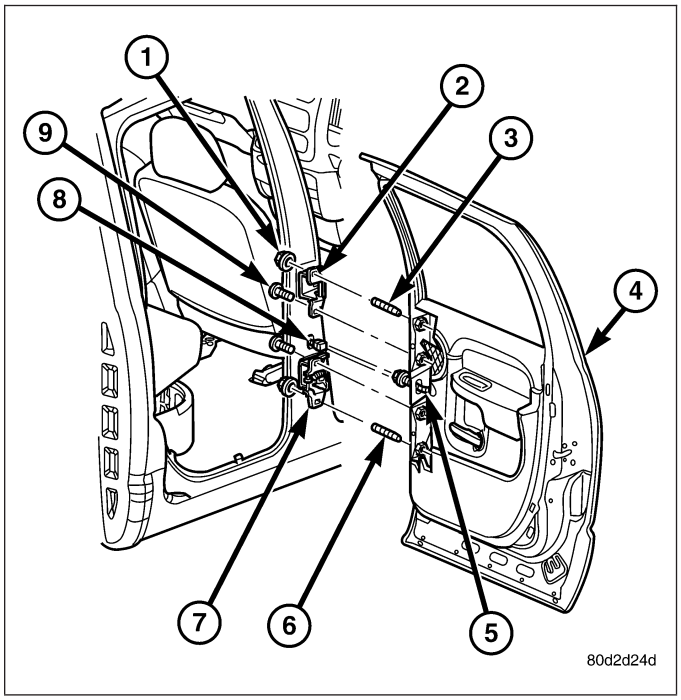

6. Install the latch striker. (Refer to 23 - BODY/ DOORS - REAR/LATCH STRIKER - INSTALLATION)

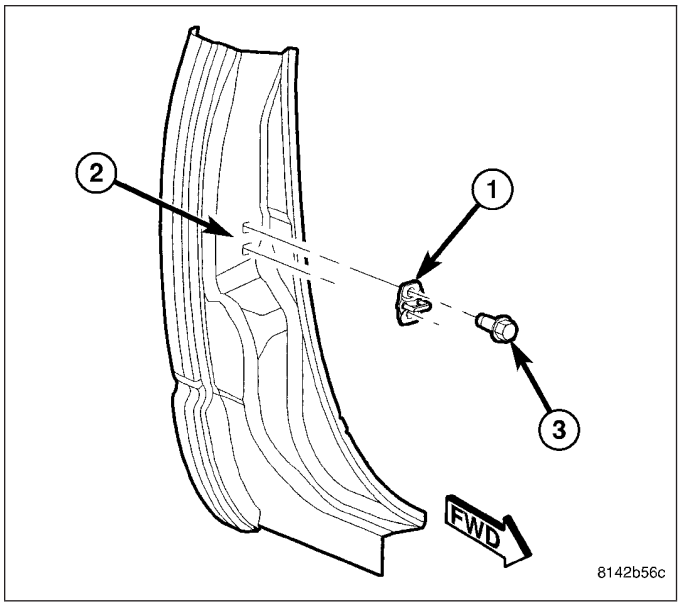

DOOR GLASS

REMOVAL

1. Remove the inner belt molding (Refer to 23 - BODY/WEATHERSTRIP/SEALS/REAR DOOR INNER BELT MOLDING - REMOVAL).
2. Remove the waterdam (Refer to 23 - BODY/ DOORS - REAR/WATERDAM - REMOVAL).
3. Install the manual window crank or reconnect the electric window switch to the door wire harness (depending on application) and raise the door glass to the position shown.
4. Remove the two nuts (1) that secure the door glass (2) to the window regulator (3) through the speaker opening (4) and the sight window (5) and disengage the door glass from the regulator.

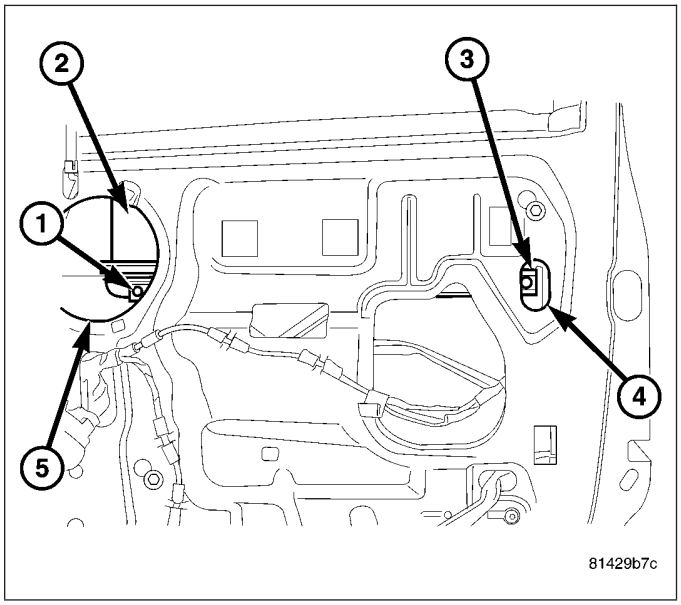

5. Remove the two bolts (1) that secure the front glass run channel (2) to the door and remove the run channel through the door panel opening.
6. Disengage the door glass from the window regulator and lower the glass into the door.
7. Carefully rotate the door glass within the door and remove the glass from the window opening.

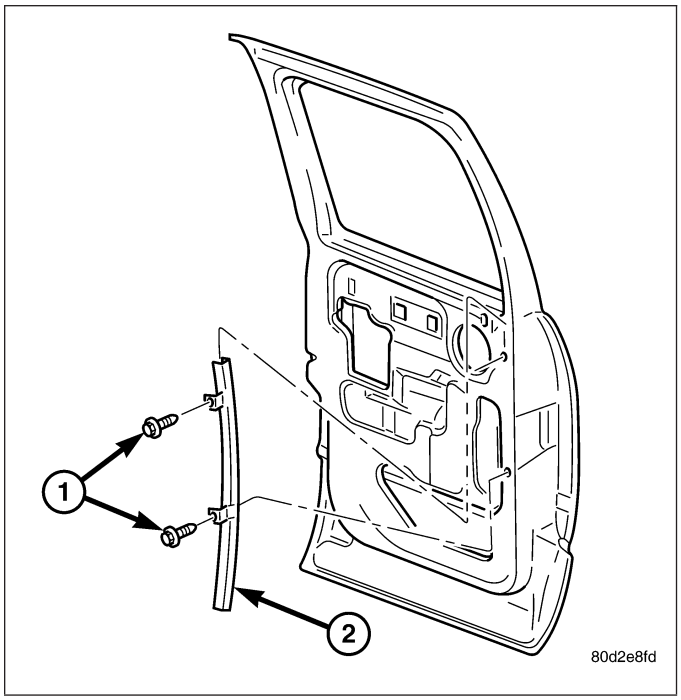

INSTALLATION

1. Carefully lower the door glass into the door through the window opening.
2. Rotate the door glass into position and engage it to the window regulator.
3. Position the front glass run channel (1) into the door through the door panel opening.
4. Install the two bolts (1) that secure the front glass run channel to the door. Tighten the bolts to 10 N·m (89 in. lbs.).

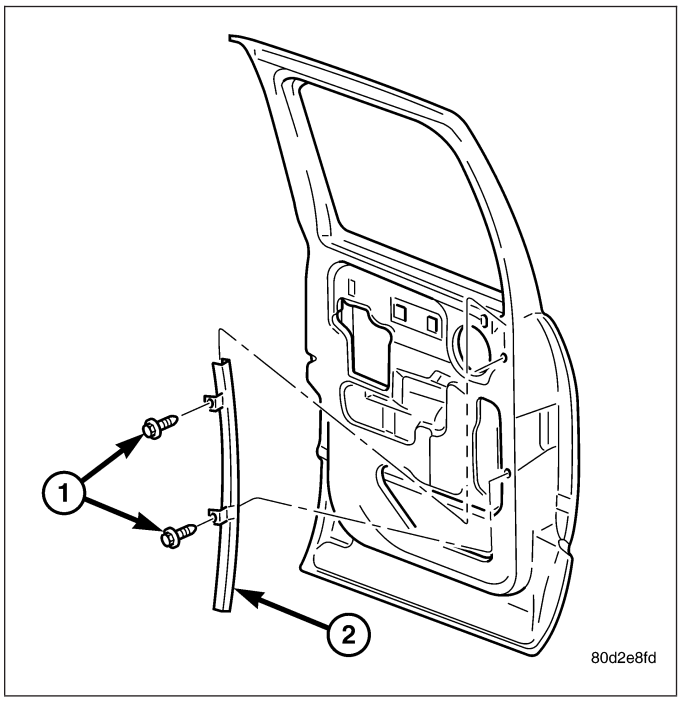

5. Install the two nuts (1) that secure the door glass (2) to the window regulator (3) through the sight window (4) and the speaker opening (5). Tighten the nuts to 10 N·m (89 in. lbs.).
6. Lower the door glass into the door and remove the manual window crank or disconnect the electric window switch from the door wire harness (depending on application).
7. Install the waterdam (Refer to 23 - BODY/DOORS - REAR/WATERDAM - INSTALLATION).
8. Install the inner belt molding (Refer to 23 - BODY/WEATHERSTRIP/SEALS/REAR DOOR INNER BELT MOLDING - INSTALLATION).

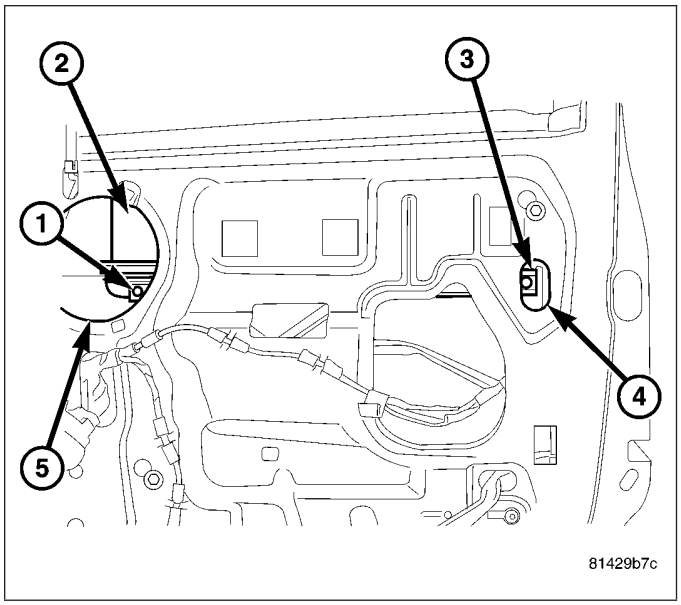

EXTERIOR HANDLE

REMOVAL

1. Remove the front glass run channel (Refer to 23 - BODY/DOORS - REAR/GLASS RUN CHANNEL - REMOVAL).
2. Disconnect the actuator rod (1) from the exterior door handle (2).
3. Remove the two nuts (3) that secure the exterior door handle to the door and remove the handle.

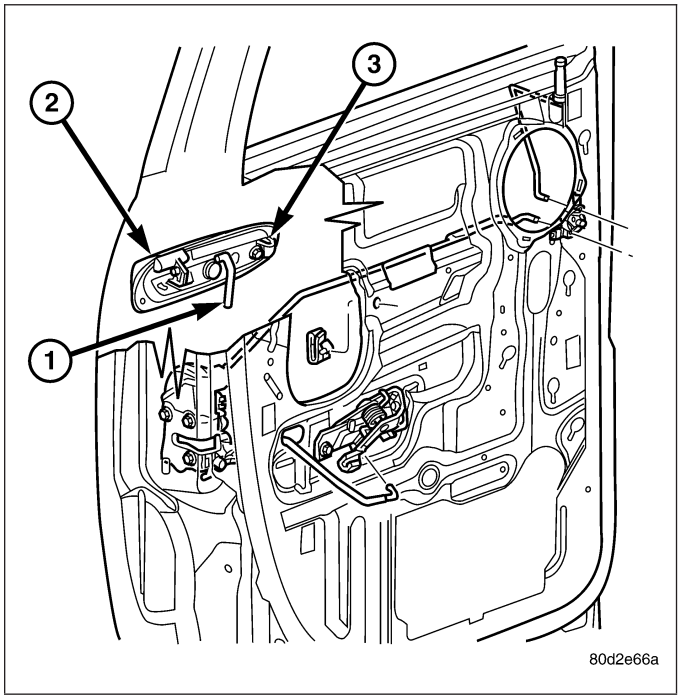

INSTALLATION

1. Position the exterior handle (2) into the door.
2. Install the two nuts (3) that secure the exterior handle to the door. Tighten the nuts to 10 N·m (89 in. lbs.).
3. Connect the actuator rod (1) to the exterior handle.
4. Install the front glass run channel (Refer to 23 - BODY/DOORS - REAR/GLASS RUN CHANNEL - INSTALLATION).

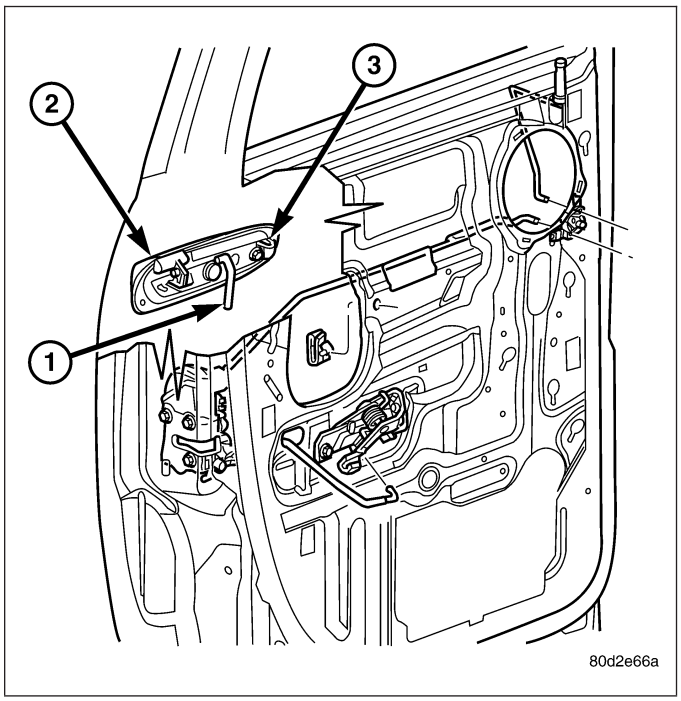

GLASS RUN CHANNEL

REMOVAL

FRONT

1. Raise the window glass to the full up position and remove the window regulator (Refer to 23 - BODY/DOORS - REAR/WINDOW REGULATOR - REMOVAL).
2. Remove the two bolts (1) that secure the front glass run channel (2) to the door and remove the run channel through the door panel opening.
3. If required, remove the weatherstrip from the front glass run channel.

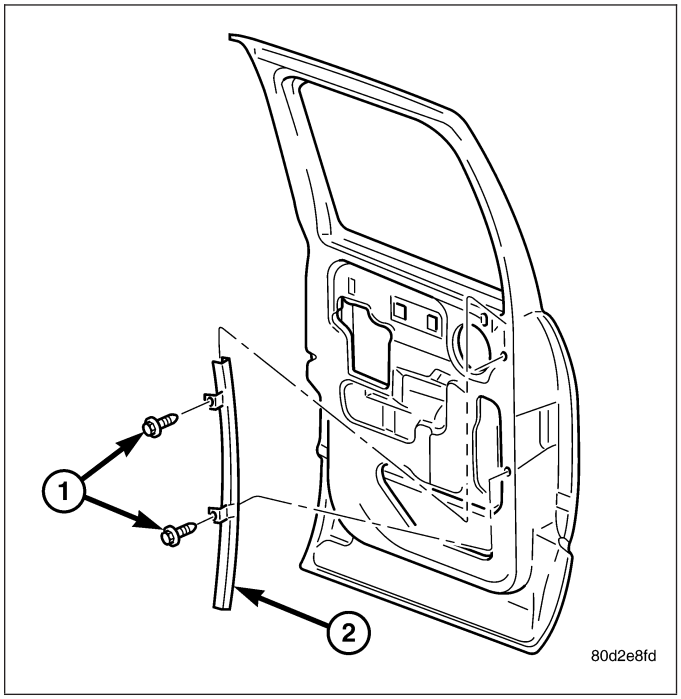

REAR

1. Raise the window glass to the full up position and remove the window regulator (Refer to 23 - BODY/ DOORS - REAR/WINDOW REGULATOR - REMOVAL).
2. Remove the two bolts (2) that secure the rear glass run channel (1) to the door and remove the run channel through the door panel opening.
3. If required, remove the weatherstrip from the rear glass run channel.

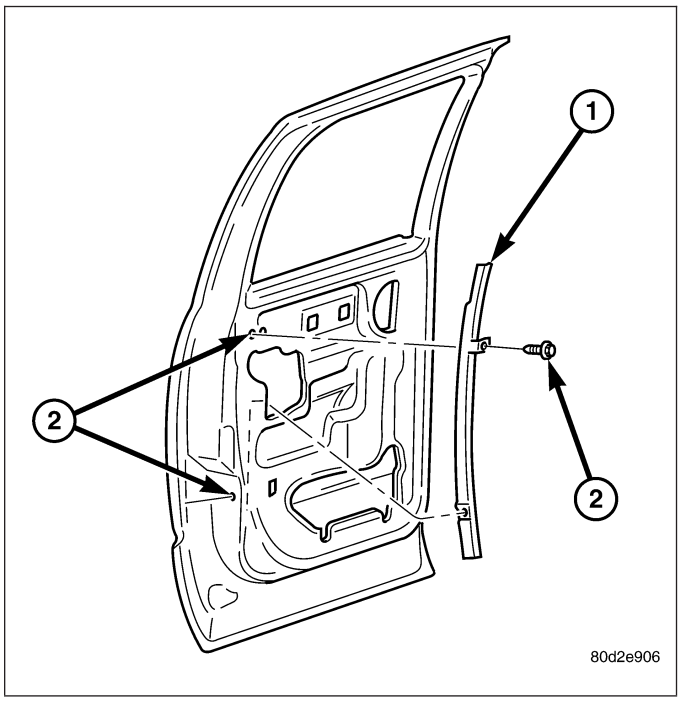

INSTALLATION

FRONT

1. If removed, install the weatherstrip onto the front glass run channel (2).
2. Position the front glass run channel into the door through the door panel opening.
3. Install the two bolts (1) that secure the front glass run channel to the door. Tighten the bolts to 10 N·m (89 in. lbs.).
4. Install the window regulator and verify correct window operation (Refer to 23 - BODY/DOORS - REAR/WINDOW REGULATOR - INSTALLATION).

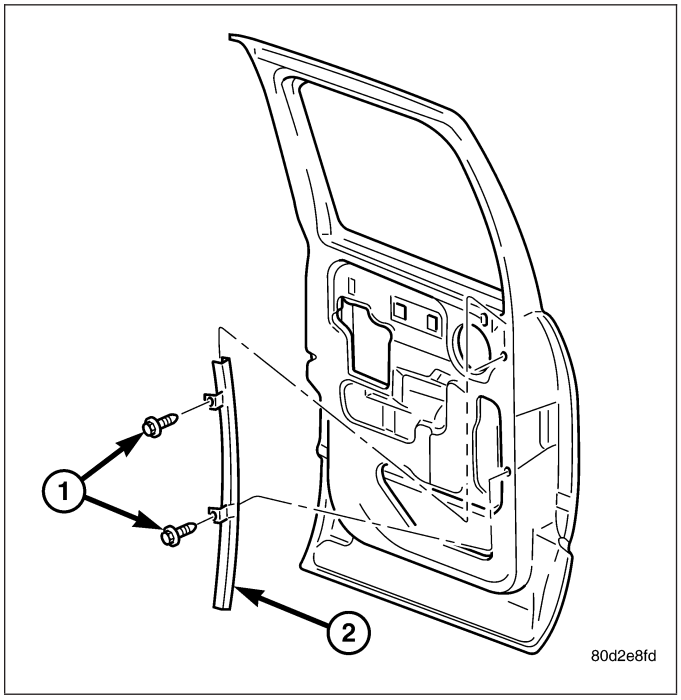

REAR

1. If removed, install the weatherstrip onto the rear glass run channel (1).
2. Position the rear glass run channel into the door through the door panel opening.
3. Install the two bolts (2) that secure the rear glass run channel to the door. Tighten the bolts to 10 N·m (89 in. lbs.).
4. Install the window regulator and verify correct window operation (Refer to 23 - BODY/DOORS - REAR/WINDOW REGULATOR - INSTALLATION).

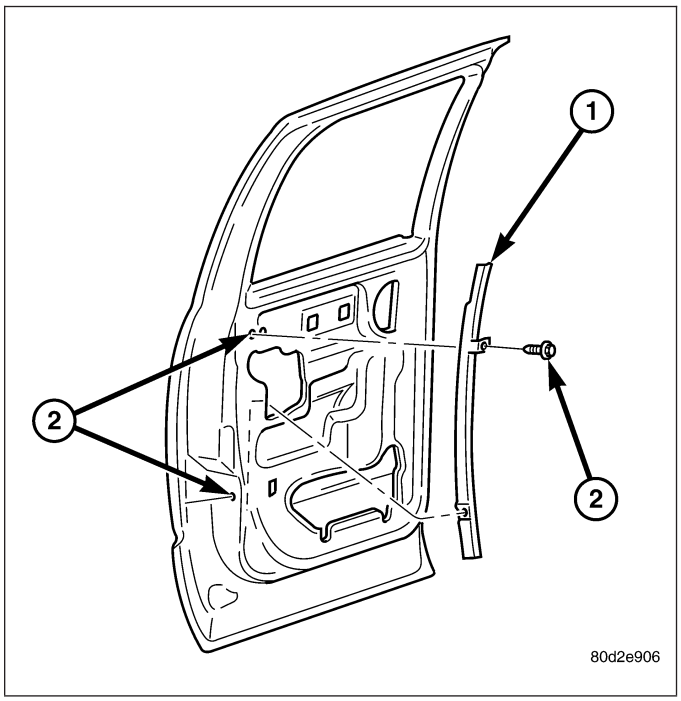

HINGE

REMOVAL

NOTE: It is not necessary to remove the door to replace the hinges if they are replaced one at a time.

NOTE: The epoxy coated washers should not be removed from the hinge. If the washers are removed the door may have to be re-adjusted.

1. Open the front door

UPPER HINGE

1. Using a grease pencil or equivalent, mark the position of the hinge (2) on the door and b-pillar.
2. Remove the nut (1) and bolt (9) attaching the hinge (2) to the door.

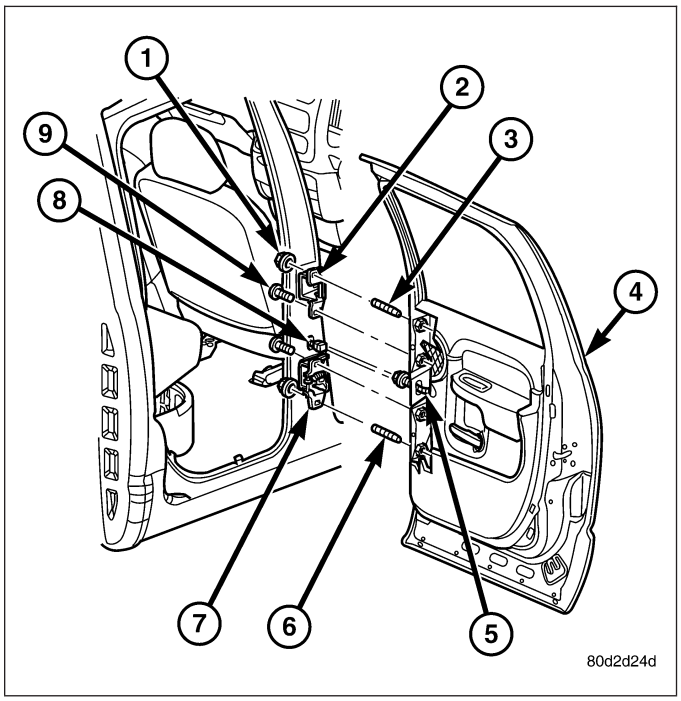

3. Remove the three bolts (6) attaching the hinge to the b-pillar and remove the hinge.

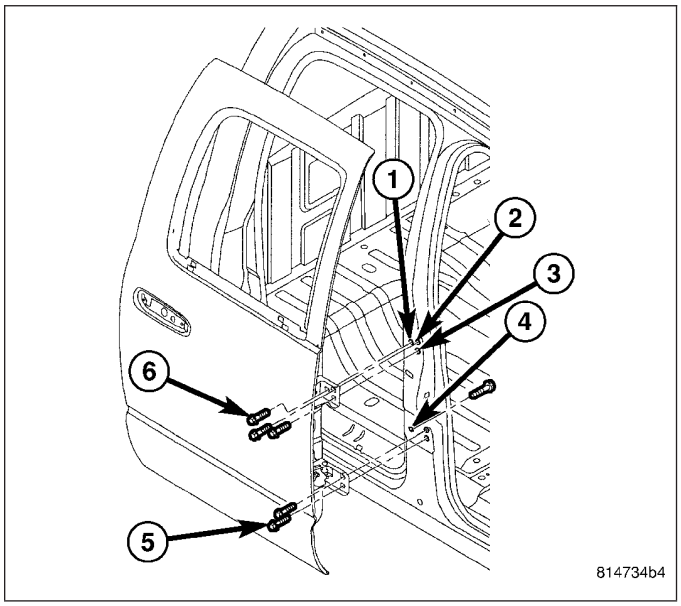

LOWER HINGE

1. Using a grease pencil or equivalent, mark the position of the hinge on the door and b-pillar.
2. Remove the lower b-pillar trim. (Refer to 23 - BODY/INTERIOR/B-PILLAR LOWER TRIM - REMOVAL)
3. Remove the nut (1) and bolt (9) attaching the hinge to the door.

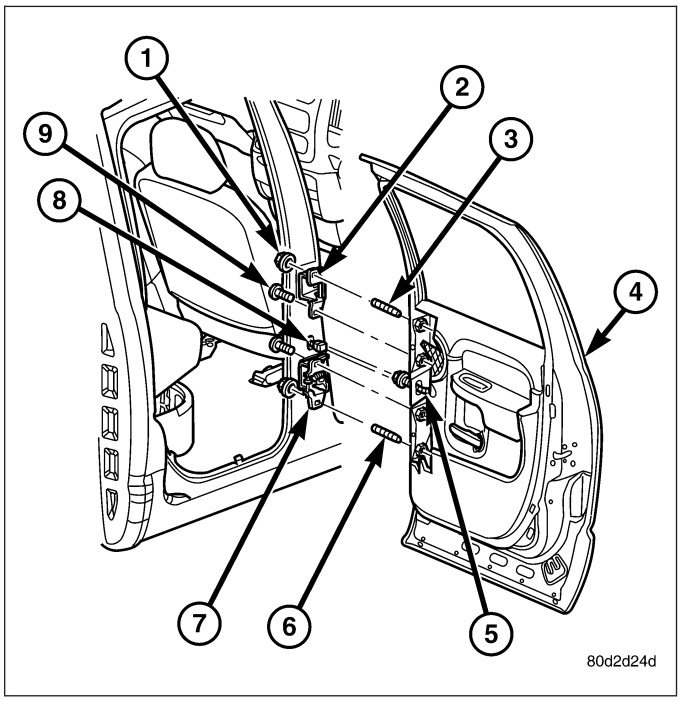

4. Remove the two bolts (5) attaching the hinge to the b-pillar.
5. From the inside of the vehicle remove the remaining bolt (4) attaching the hinge to the b-pillar and remove the hinge.

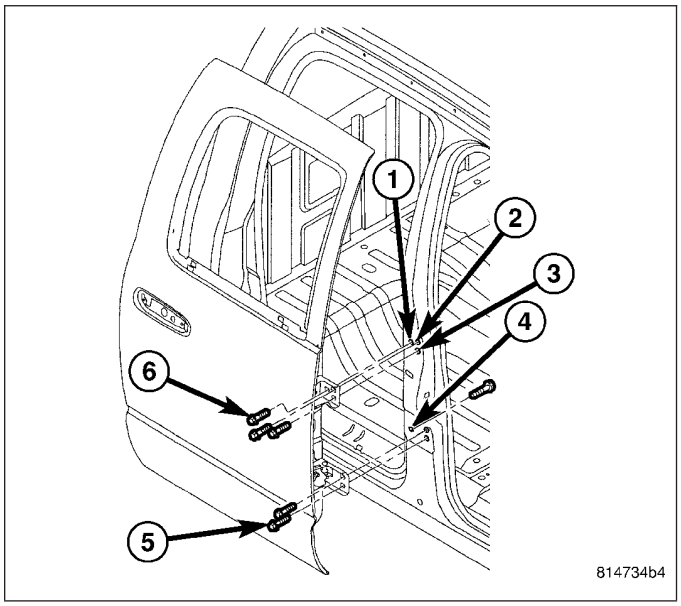

INSTALLATION

UPPER HINGE

1. Install the hinge to door washers, if there were removed previously, nut (1) and bolt (9) and tighten to 28 N·m (21 ft. lbs.).

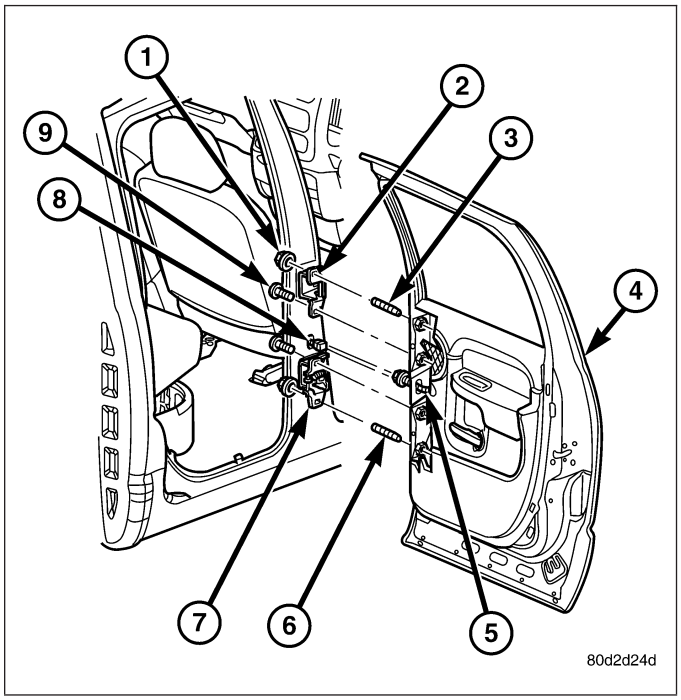

2. Tighten the upper hinge bolt (2) to 28 N·m (21 ft. lbs.).
3. Tighten the upper hinge bolt (1) to 28 N·m (21 ft. lbs.).
4. Tighten the upper hinge bolt (3) to 28 N·m (21 ft. lbs.).
5. Adjust the door if needed. (Refer to 23 - BODY/ DOORS - REAR/DOOR - ADJUSTMENTS)

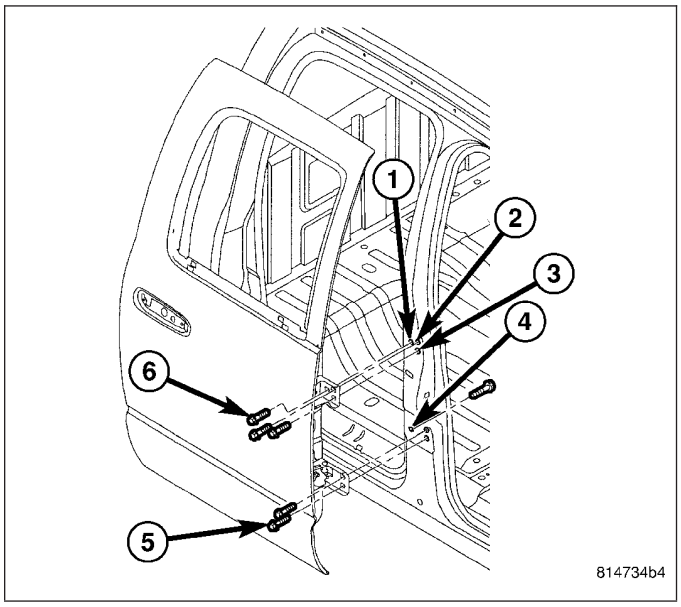

LOWER HINGE

1. Install the hinge and install the b-pillar bolts.
2. Tighten the upper hinge bolt (2) to 28 N·m (21 ft. lbs.).
3. Tighten the upper hinge bolt (1) to 28 N·m (21 ft. lbs.).
4. Tighten the upper hinge bolt (3) to 28 N·m (21 ft. lbs.).

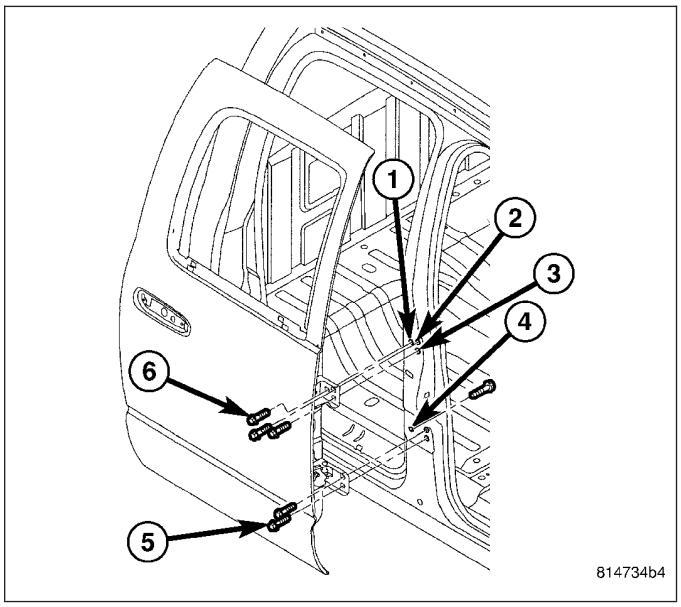

5. Install the hinge to door washers, if there were removed previously, nut and bolt and tighten to 28 N·m (21 ft. lbs.).
6. Adjust the door if needed. (Refer to 23 - BODY/ DOORS - REAR/DOOR - ADJUSTMENTS)
7. Install the lower b-pillar trim. (Refer to 23 - BODY/ INTERIOR/B-PILLAR LOWER TRIM - INSTALLATION)

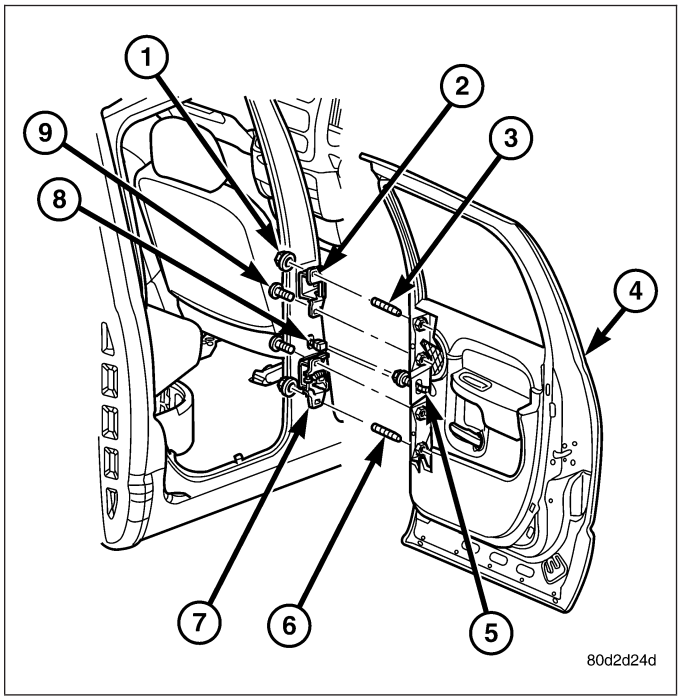

INTERIOR HANDLE ACTUATOR

REMOVAL

1. Remove the door trim panel (Refer to 23 - BODY/DOORS - REAR/TRIM PANEL - REMOVAL).
2. Position the waterdam out of the way and disconnect the actuator rod (2) from interior door handle actuator (3).
3. Remove the two bolts (1) that secure the interior door handle actuator to the door and remove the actuator.

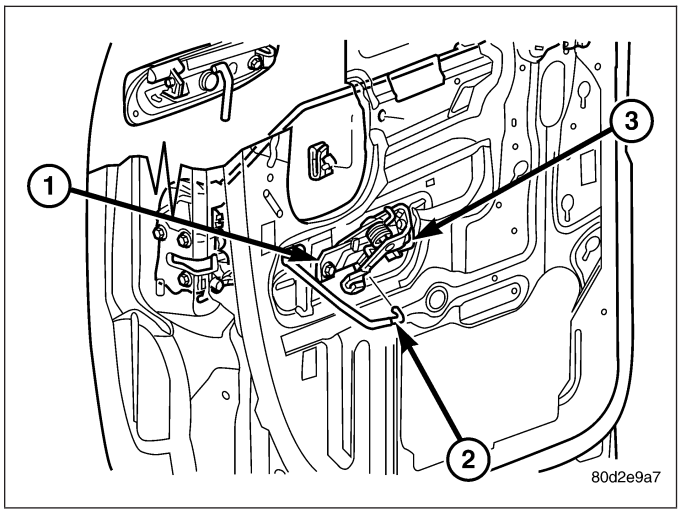

INSTALLATION

1. Position the interior door handle actuator (3) onto the door.
2. Install the two bolts (1) that secure the interior door handle actuator to the door. Tighten the bolts to 10 N·m (89 in. lbs.).
3. Connect the actuator rod (2) to the interior door handle actuator.
4. Reposition the waterdam and install the door trim panel (Refer to 23 - BODY/DOORS - REAR/TRIM PANEL - INSTALLATION).

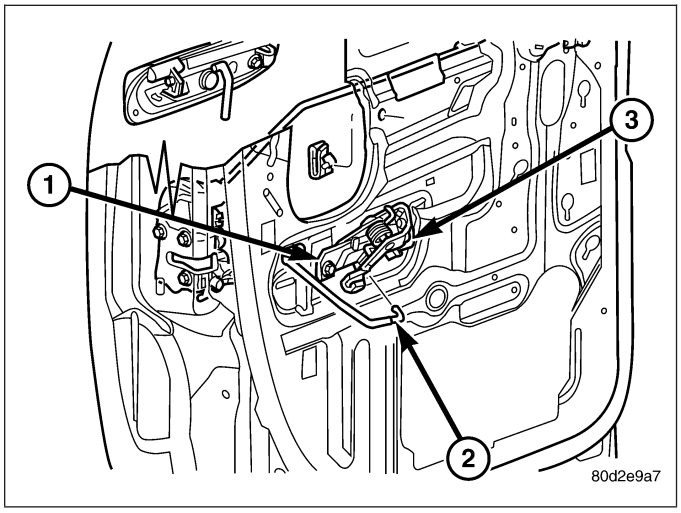

LATCH

REMOVAL

1. Raise the window to the full up position and remove the door trim panel (Refer to 23 - BODY/ DOORS - REAR/TRIM PANEL - REMOVAL).
2. Position the waterdam out of the way and disconnect the actuator rod (1) from the interior door handle actuator (2) and the door latch (5) and remove the rod.
3. Disconnect the two actuator rods (3 and 4) from the door latch.

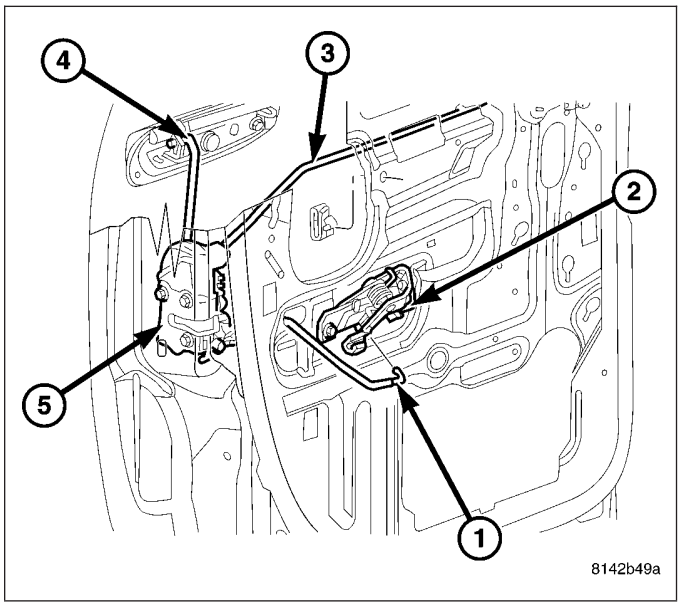

4. Disconnect the door wire harness connector (2) from the door latch (3).
5. Remove the three bolts (4) that secure the door latch to the door (1) and remove the latch.

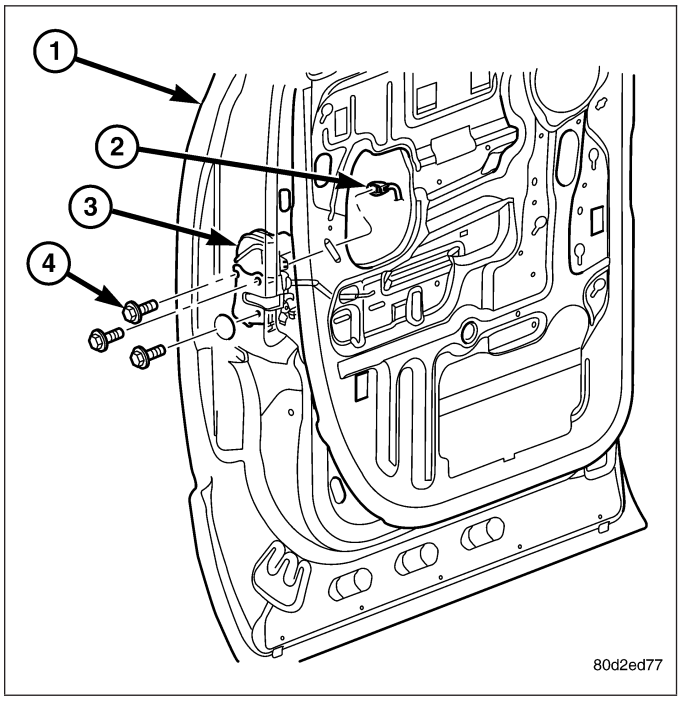

INSTALLATION

1. Position the door latch (3) into the door (1).
2. Install the three bolts (4) that secure the door latch to the door. Tighten the bolts to 10 N·m (89 in. lbs.).
3. Connect the door wire harness connector (2) to the door latch.

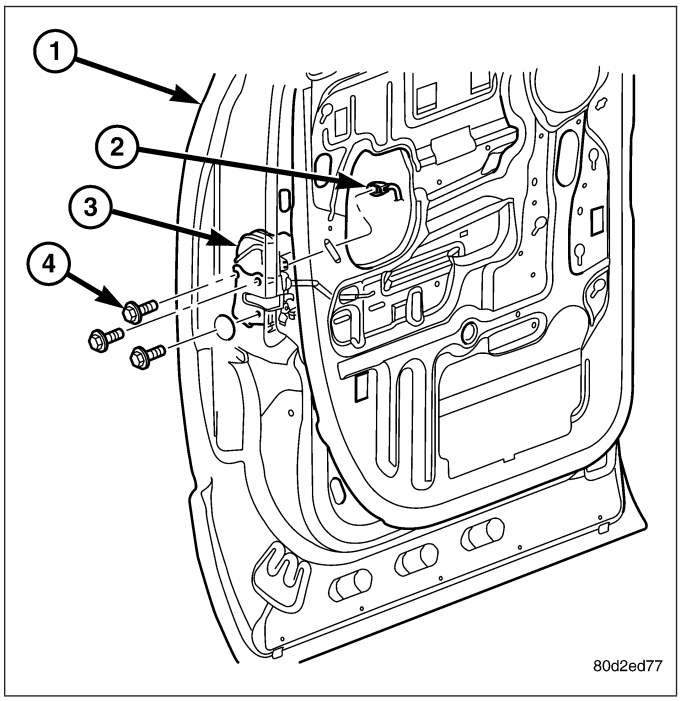

4. Connect the two actuator rods (3 and 4) to the door latch (5)
5. Connect the actuator rod (1) to the door latch and the interior door handle actuator (2).
6. Reposition the waterdam to the door and install the door trim panel (Refer to 23 - BODY/DOORS - REAR/TRIM PANEL - INSTALLATION).
7. If necessary, adjust the latch (Refer to 23 - BODY/DOORS - REAR/LATCH - ADJUSTMENTS).

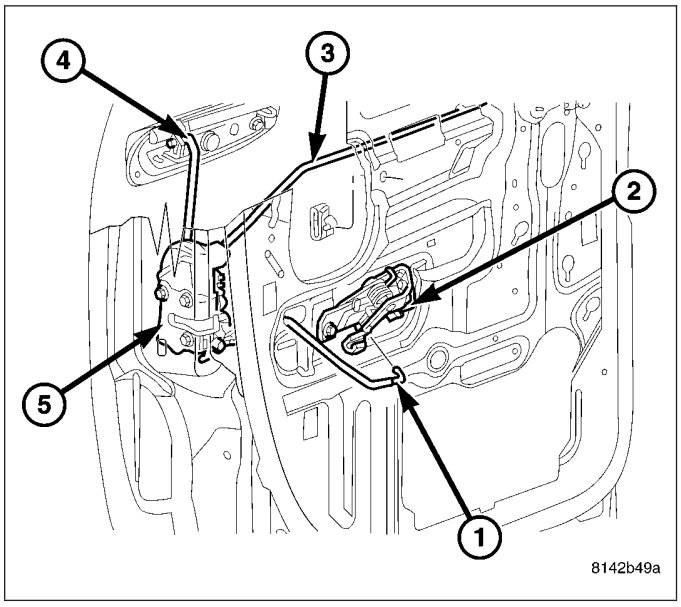

ADJUSTMENTS

1. Locate the access hole in the door to adjust the door latch (1) and remove the mylar tape (2).
2. Loosen the adjustment screw (3).
3. Operate the door handles several times to reduce any possible linkage binding and tighten the adjustment screw to 3 N·m (30 in. lbs.).
4. Operate the door handles again to verify proper operation and reinstall the mylar tape.

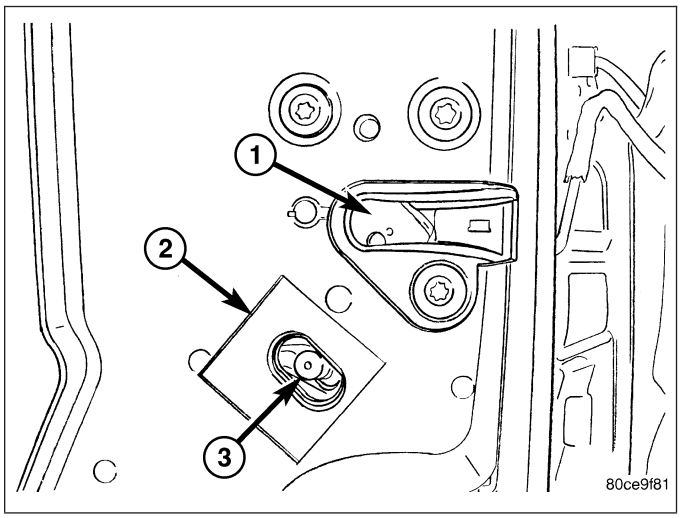

LATCH STRIKER

REMOVAL

1. Using a grease pencil or equivalent, mark the location of the door latch striker (1) on the C-pillar (2).
2. Remove the two bolts (3) that secure the door latch striker to the C-pillar and remove the striker.

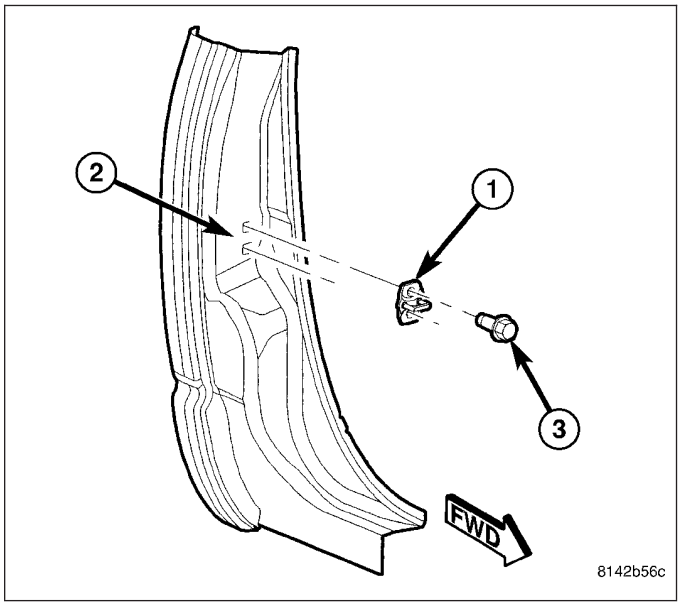

INSTALLATION

1. Position the door latch striker (1) onto the C-pillar (2) and loosely install the two bolts (3).
2. Align the door latch striker to the C-pillar using the reference marks made during the removal procedure and tighten the bolts to 28 N·m (21 ft. lbs.).
3. If necessary, adjust the door latch striker (Refer to 23 - BODY/DOORS - REAR/LATCH STRIKER - ADJUSTMENTS).

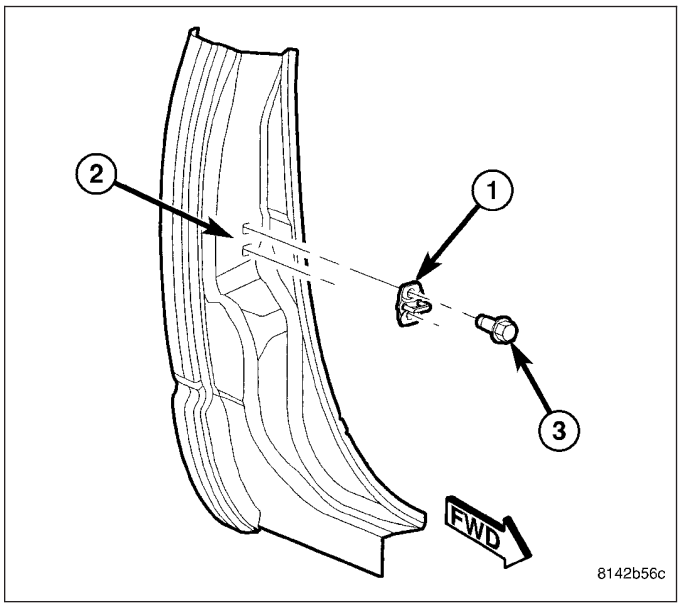

ADJUSTMENTS

1. Using a grease pencil or equivalent, mark the location of the door latch striker (1) on the C-pillar (2) to aid in adjustment.
2. Loosen the two bolts (3) that secure the door latch striker to the C-pillar.
3. To adjust the rear gap and flush measurement, change the position of the door latch striker and then tighten the two bolts to 28 N·m (21 ft. lbs.) (Refer to 23 - BODY/BODY STRUCTURE/GAP AND FLUSH - SPECIFICATIONS).
4. Verify correct door and latch position.

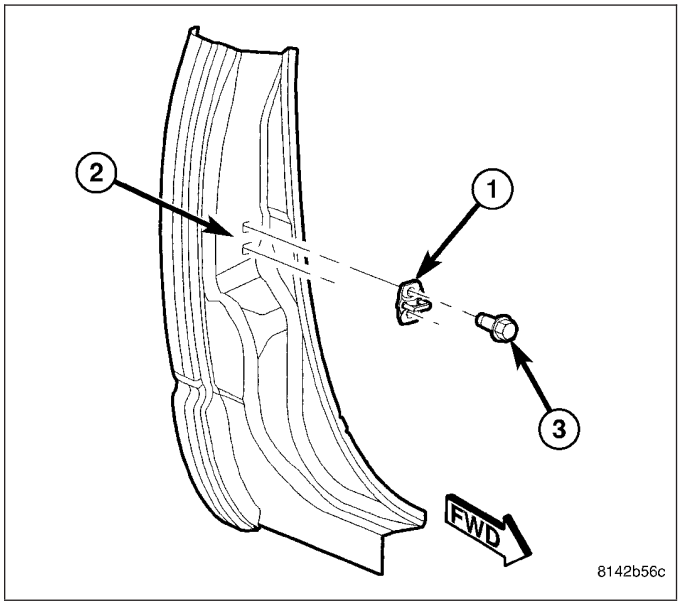

TRIM PANEL

REMOVAL

1. Remove the screw (3) that secures the interior door handle (2) to the interior door handle actuator (1).
2. Remove the interior door handle from the interior door handle actuator.

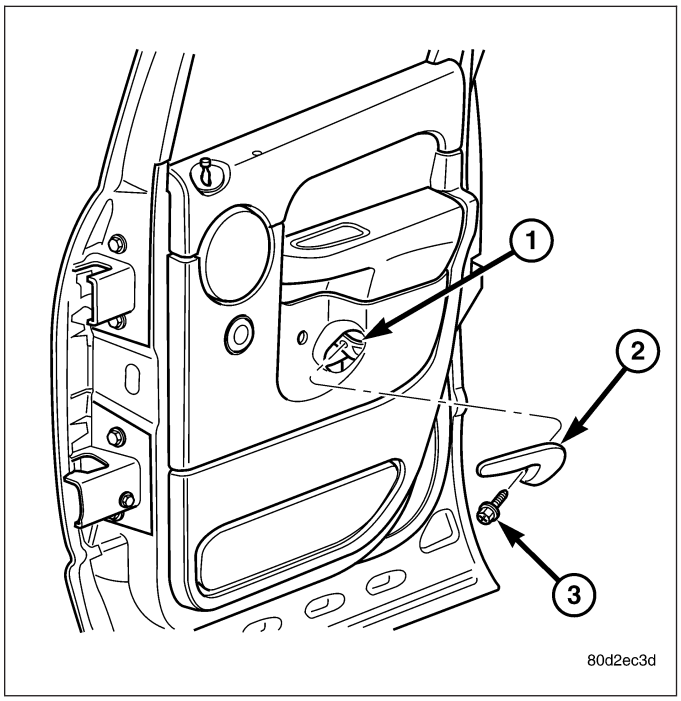

3. If equipped, remove the manual window crank (1) using a window crank removal tool (2).

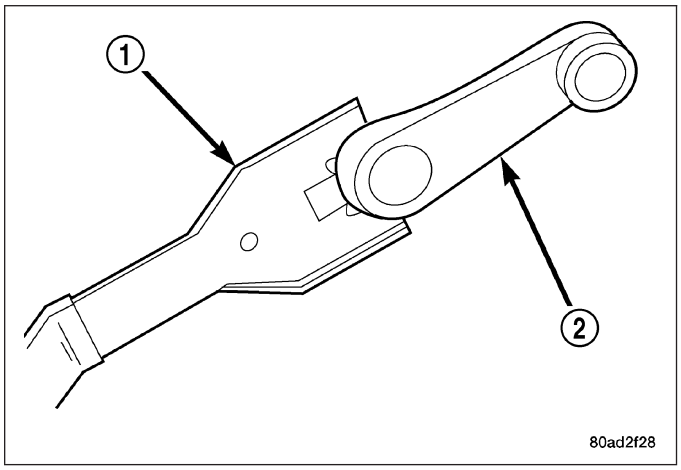

4. Remove the screw (4) that secures the door trim panel (5) to the screw insert located in the center of the door (1).

CAUTION: The door trim panel is attached to the door by molded plastic retaining clips that are integral to the door trim panel. Do not pull the door trim panel directly off of the door or damage to the trim panel and/or the power switch assembly will occur.

5. Lift the door trim panel straight upward to disconnect the molded plastic retaining clips (3) from the door.
6. If equipped, disconnect the door wire harness (2) from the power door switch assembly and remove the door trim panel.

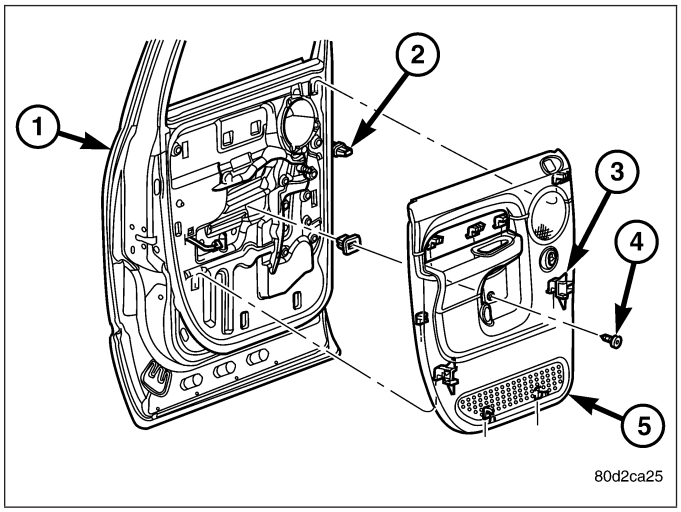

INSTALLATION

1. If equipped, connect the door wire harness (2) to the power door switch assembly.

CAUTION: The door trim panel is attached to the door by molded plastic retaining clips that are integral to the door trim panel. Do not force the door trim panel onto the door or damage to the trim panel and/or the power switch assembly will occur.

2. Position the door trim panel (5) and align the molded plastic retaining clips (3) to the door (1).
3. Push the door trim panel straight downward until all of the retaining clips are fully engaged to the door.
4. Install the screw (4) that secures the door trim panel to the screw insert located in the center of the door.
5. if equipped, install the manual window crank.

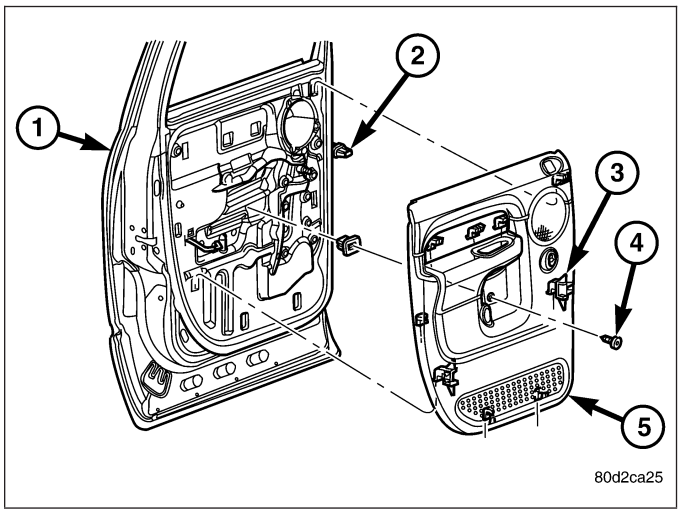

WATERDAM

REMOVAL

1. Remove the interior door handle actuator (Refer to 23 - BODY/DOORS - REAR/INTERIOR HANDLE ACTUATOR - REMOVAL).
2. Remove the speaker (Refer to 8 - ELECTRICAL/ AUDIO/SPEAKER - REMOVAL).

CAUTION: Do not allow the waterdam adhesive to become contaminated with dirt or other foreign substances. If the waterdam becomes contaminated or damaged, replace it.

3. Carefully remove the waterdam (1) from around the perimeter of the rear door (2).
4. Separate the waterdam from the interior handle actuator rod and the door wire harness (if equipped) and remove the waterdam.

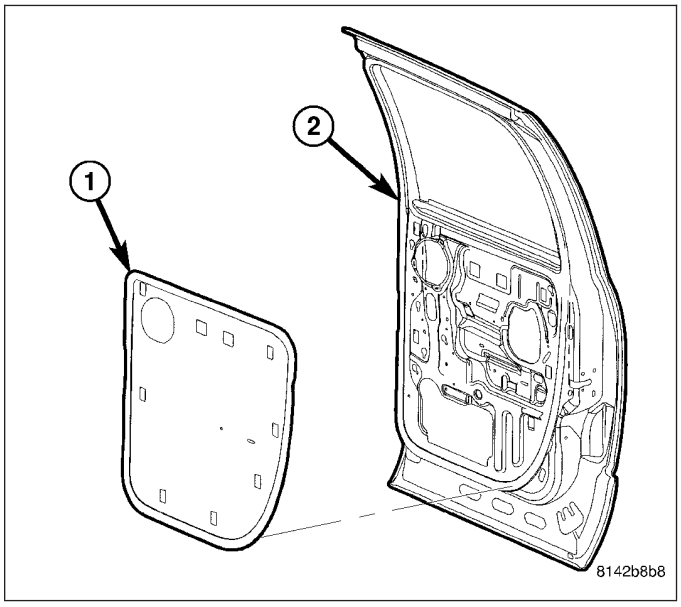

INSTALLATION

CAUTION: Do not allow the waterdam or adhesive to become contaminated with dirt or other foreign substances. If the waterdam becomes contaminated or damaged, replace it.

NOTE: Be sure that the waterdam is fully sealed around the perimeter of the door.

1. Position the interior handle actuator rod and the wire harness (if equipped) through the holes in the waterdam (1) and install the waterdam to the door (2).
2. Install the speaker (Refer to 8 - ELECTRICAL/AUDIO/SPEAKER - INSTALLATION)
3. Install the interior door handle actuator (Refer to 23 - BODY/DOORS - REAR/INSIDE HANDLE ACTUATOR - INSTALLATION).

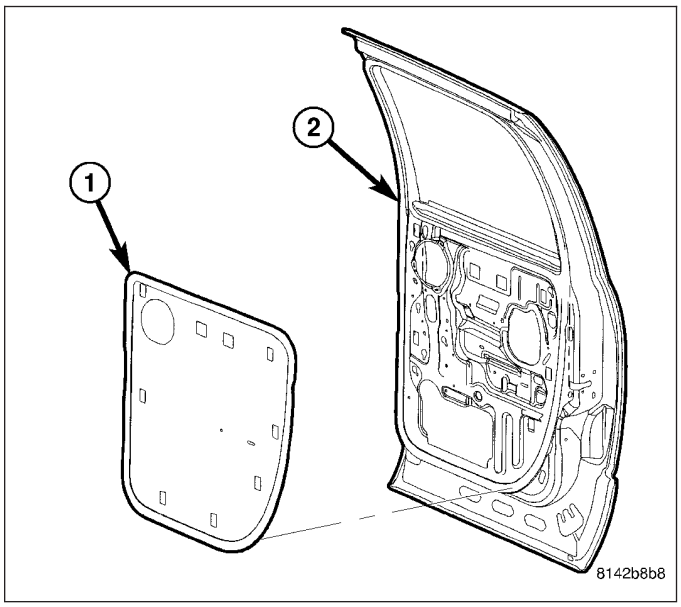

WINDOW REGULATOR - POWER

REMOVAL

1. Remove the inner belt molding (Refer to 23 - BODY/WEATHERSTRIP/SEALS/REAR DOOR INNER BELT MOLDING - REMOVAL).
2. Remove the waterdam (Refer to 23 - BODY/DOORS - REAR/WATERDAM - REMOVAL).
3. Remove the electric window switch from the door trim panel and connect it to the door wire harness (Refer to 8 - ELECTRICAL/POWER WINDOWS/POWER WINDOW SWITCH - REMOVAL).
4. Raise the door glass to the position shown.
5. Remove the two nuts (1) that secure the door glass (2) to the window regulator (3) through the speaker opening (4) and the sight window (5) and disengage the door glass from the regulator.
6. Position the door glass to the full up position and secure the glass using a wooden wedge or an equivalent.

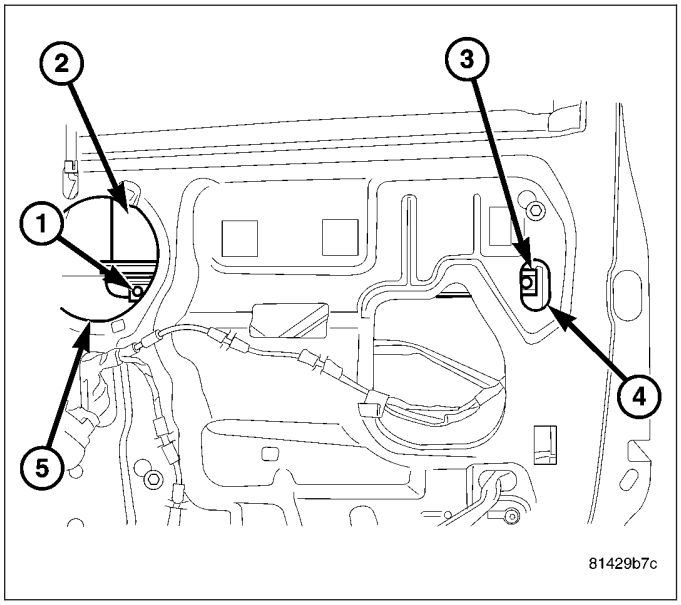

7. Lower the window regulator (2) and remove the two nuts that secure the regulator stabilizer to the door.
8. Remove the lower bolt (1) that secures the window regulator to the door and loosen the other two regulator bolts.
9. Slide the window regulator upward and disengage the two regulator bolts from the door.
10. Remove the window regulator through the opening in the door and disconnect the door wire harness (3).

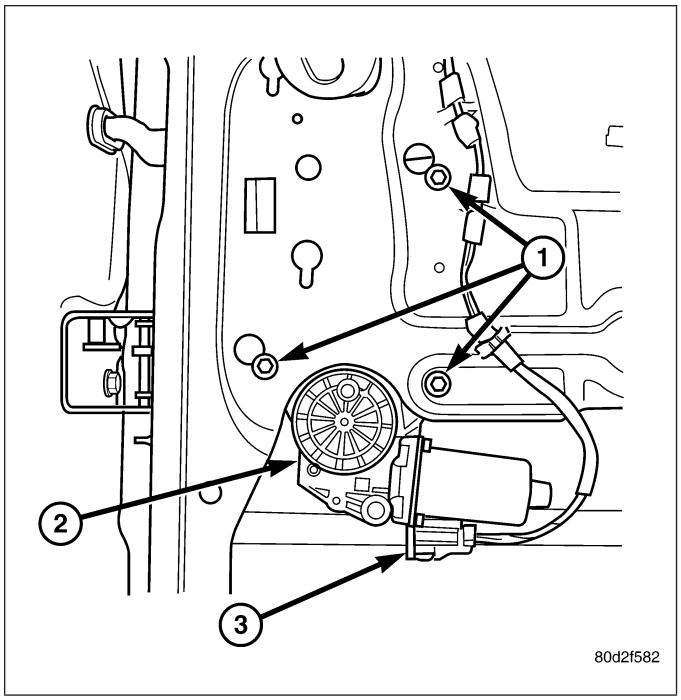

INSTALLATION

1. Connect the door wire harness (3) to the window regulator (2) and install the regulator through the opening in the door.
2. Engage the two upper regulator bolts (1) to the door.
3. Install the lower regulator bolt that secures the window regulator to the door and tighten all three regulator bolts to 10 N·m (89 in. lbs.).
4. Position the regulator stabilizer into the door and install the two nuts. Tighten the nuts to 10 N·m (89 in. lbs.).

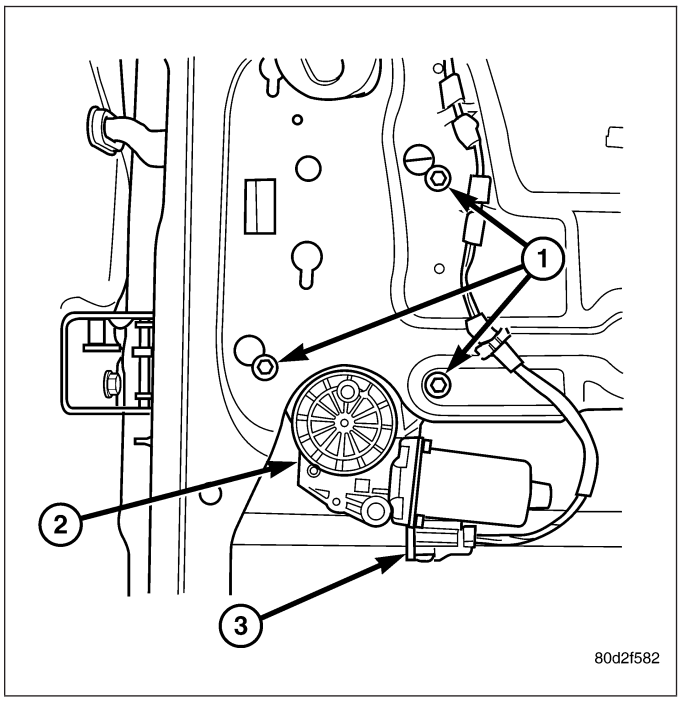

5. Raise the window regulator (3) to the position shown.
6. Support the door glass (2) and remove the wooden wedge or equivalent.
7. Position the door glass to the window regulator and install the two nuts (1) that secure the door glass to the window regulator (3) through the sight window (4) and the speaker opening (5). Tighten the nuts to 10 N·m (89 in. lbs.).
8. Disconnect the electric window switch from the door wire harness and reinstall the switch onto the door trim panel (Refer to 8 - ELECTRICAL/POWER WINDOWS/POWER WINDOW SWITCH - INSTALLATION).
9. Install the waterdam (Refer to 23 - BODY/DOORS - REAR/WATERDAM - INSTALLATION).
10. Install the inner belt molding (Refer to 23 - BODY/WEATHERSTRIP/SEALS/REAR DOOR INNER BELT MOLDING - INSTALLATION).

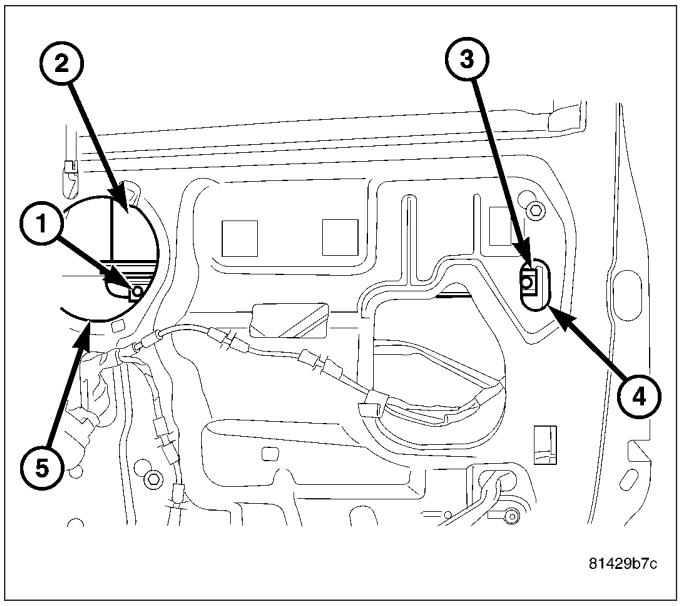

WINDOW REGULATOR - MANUAL

REMOVAL

1. Remove the inner belt molding (Refer to 23 - BODY/WEATHERSTRIP/SEALS/REAR DOOR INNER BELT MOLDING - REMOVAL).
2. Remove the waterdam (Refer to 23 - BODY/DOORS - REAR/WATERDAM - REMOVAL).
3. Reinstall the manual window crank and raise the door glass to the position shown.
4. Remove the two nuts (1) that secure the door glass (2) to the window regulator (3) through the speaker opening (4) and the sight window (5) and disengage the door glass from the regulator.
5. Position the door glass to the full up position and secure the glass using a wooden wedge or an equivalent.

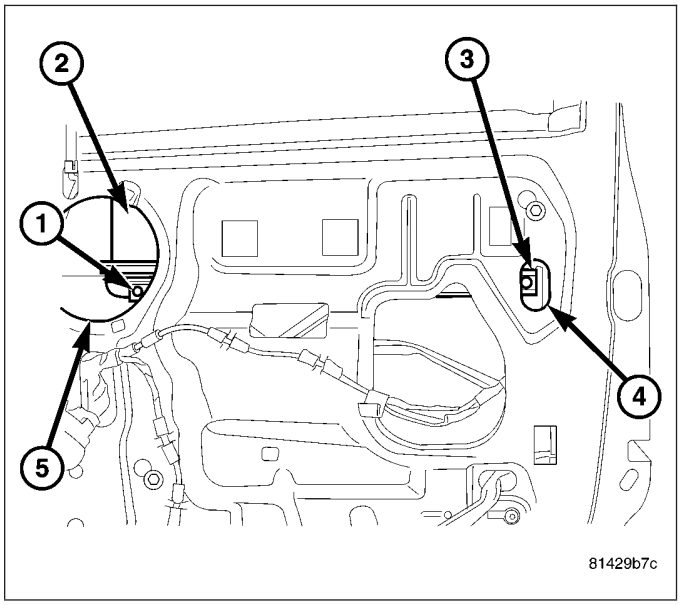

6. Lower the window regulator (5) and remove the two nuts (3) that secure the regulator stabilizer (4) to the door (1).
7. Remove the two bolts (2) that secure the window regulator to the door and loosen the other two regulator bolts (6).
8. Slide the window regulator upward and disengage the two regulator bolts from the door.
9. Remove the window regulator through the opening in the door.

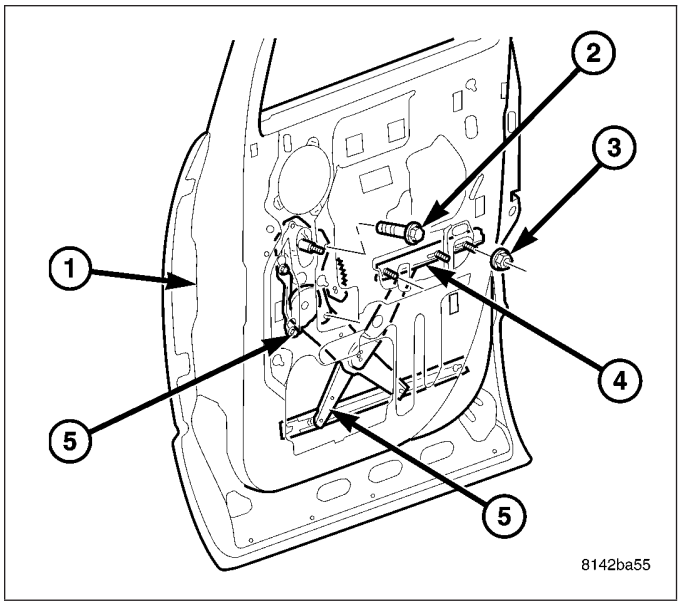

INSTALLATION

1. Install the window regulator (5) through the opening in the door (1).
2. Engage the two regulator bolts (6) to the door.
3. Install the two bolts (2) that secure the window regulator to the door and tighten all four regulator bolts to 10 N·m (89 in. lbs.).
4. Position the regulator stabilizer (4) onto the door and install the two nuts (3). Tighten the nuts to 10 N·m (89 in. lbs.).

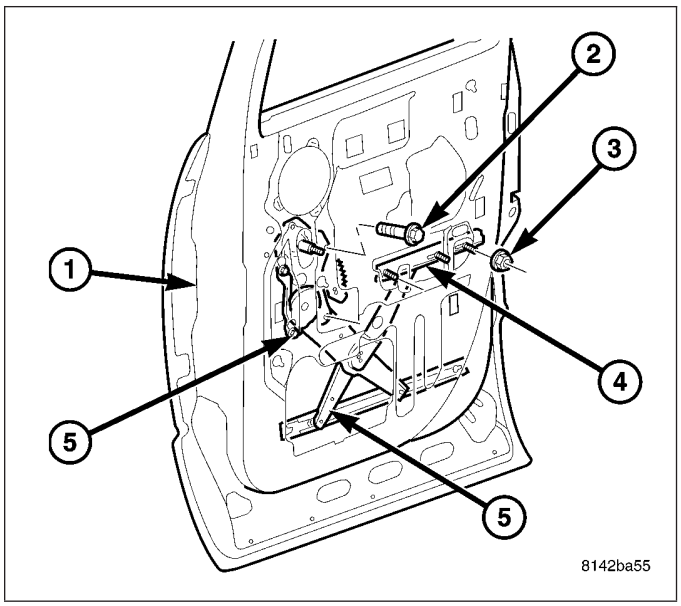

5. Raise the window regulator (3) to the position shown and remove the manual window crank.
6. Support the door glass (2) and remove the wooden wedge or equivalent.
7. Position the door glass to the window regulator and install the two nuts (1) that secure the door glass to the window regulator through the sight window (4) and the speaker opening (5). Tighten the nuts to 10 N·m (89 in. lbs.).
8. Install the waterdam (Refer to 23 - BODY/DOORS - REAR/WATERDAM - INSTALLATION).
9. Install the inner belt molding (Refer to 23 - BODY/WEATHERSTRIP/SEALS/REAR DOOR INNER BELT MOLDING - INSTALLATION).

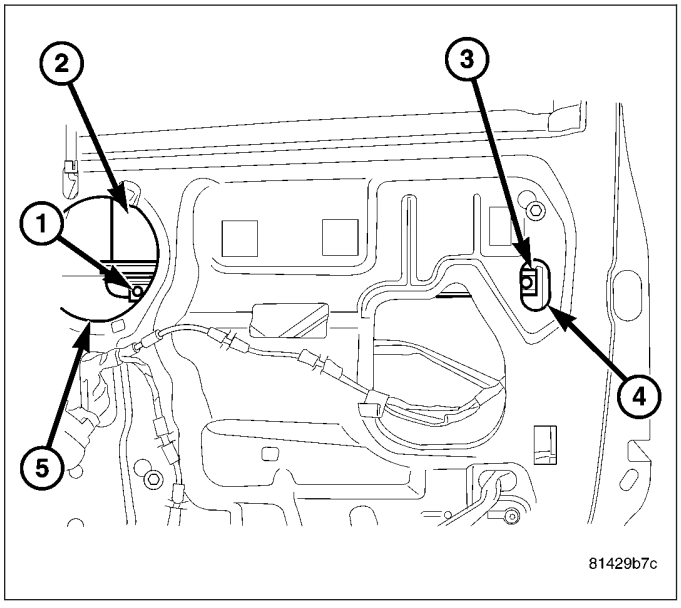

EXTERIOR

TABLE OF CONTENTS

page

BODY ISOLATORS
REMOVAL 80
INSTALLATION 80
BODY SIDE MOLDINGS
REMOVAL 81
INSTALLATION 81
CARGO BOX
REMOVAL 82
INSTALLATION 83
CARGO BOX - TIE DOWN
REMOVAL 84
INSTALLATION 84
COWL GRILLE
REMOVAL 85
INSTALLATION 85
EXTERIOR NAME PLATES
REMOVAL 86
INSTALLATION 87
FRONT FENDER
REMOVAL 88
INSTALLATION 88
FUEL FILL DOOR
REMOVAL 89
INSTALLATION 89
GRILLE
REMOVAL 90
INSTALLATION 90
GRILLE FRAME
REMOVAL 91
INSTALLATION 91
REAR FENDER-QUAD CAB MODELS
REMOVAL 92
INSTALLATION 93
SIDE VIEW MIRROR
REMOVAL 95
INSTALLATION 96
SIDE VIEW MIRROR GLASS
REMOVAL 96
INSTALLATION 98
UPPER RADIATOR CROSSMEMBER
REMOVAL 99
INSTALLATION 100
FRONT WHEELHOUSE SPLASH SHIELD
REMOVAL 100
INSTALLATION 101
REAR WHEELHOUSE SPLASH SHIELD
REMOVAL 101
INSTALLATION 102
BELLY PAN-SRT-10
REMOVAL 102
INSTALLATION 103
CLADDING-BODY SIDE - BOX - SRT-10
REMOVAL 103
INSTALLATION 104
CLADDING-BODY SIDE - CAB - SRT-10
REMOVAL 106
INSTALLATION 106
CLADDING-BODY SIDE - DOOR - SRT-10
REMOVAL 107
INSTALLATION 108
CLADDING-BODY SIDE - FENDER SRT-10
REMOVAL 109
INSTALLATION 109
SPOILER - SRT-10
REMOVAL
WITHOUT CARGO BOX COVER 110
WITH CARGO BOX COVER 110
INSTALLATION
WITHOUT CARGO BOX COVER 111
WITH CARGO BOX COVER 111

BODY ISOLATORS

REMOVAL

NOTE: Quad Cab model shown in the illustration. Body isolators for Regular cab models are similar.

1. Loosen all cab to frame mounting bolts (5) (six Regular cab, eight Quad Cab).
2. Remove the mounting bolts and rebound cushions (3) as necessary.

NOTE: If servicing the rear isolators (2), remove the reinforcement plates (6) and the washers (4).

3. Using a floor jack and wooden block under the cab sill (1), lift the body to gain access to the isolators and remove the isolators as necessary.

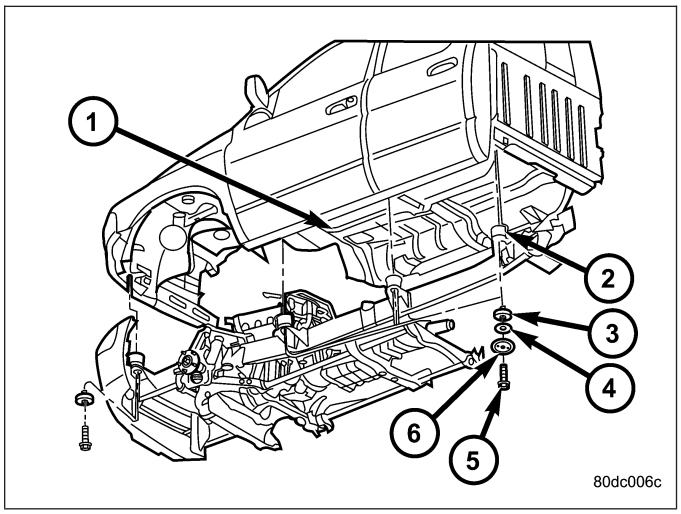

INSTALLATION

NOTE: Quad Cab model shown in the illustration. Body isolators for Regular cab models are similar.

1. Position the isolators (2) under the cab as necessary.

CAUTION: If servicing the rear isolators, install the reinforcement plates (6) and the washers (4).

2. Lower the cab onto the isolators and install the mounting bolts (5) and rebound cushions (3) as necessary (six Regular cab, eight Quad Cab).
3. Tighten the mounting bolts to 81 N·m (60 ft. lbs.).

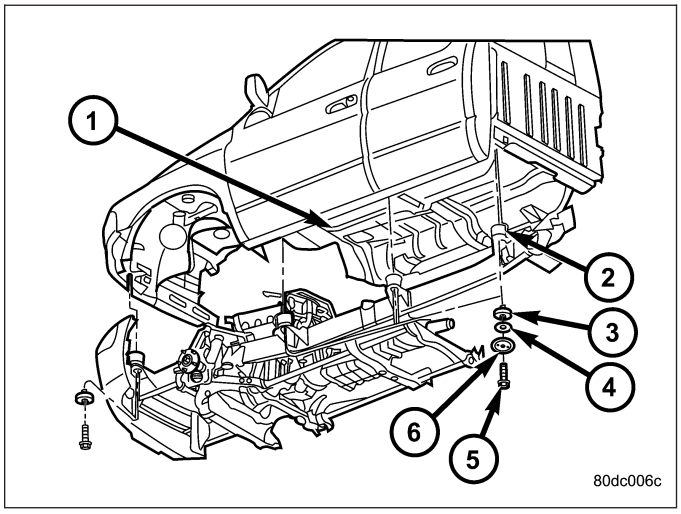

BODY SIDE MOLDINGS

REMOVAL

NOTE: Quad Cab model shown in the illustration. Body side moldings for Regular cab models are similar.

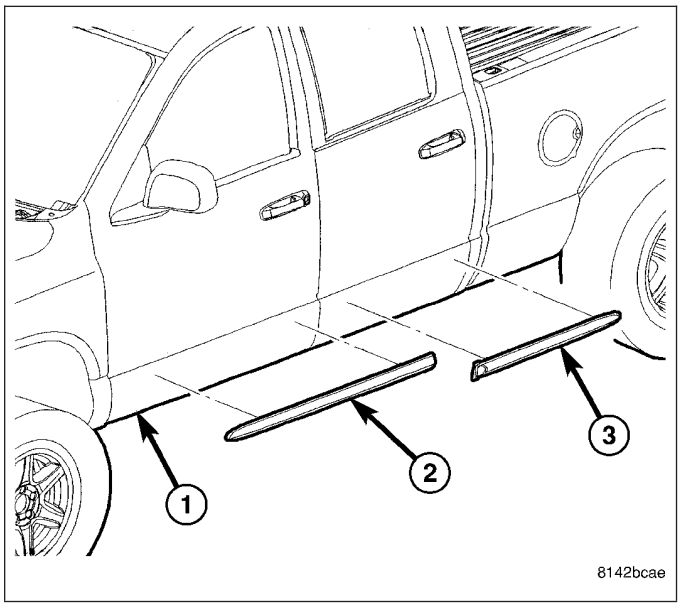

1. As a guide for installation, apply a length of masking tape on the rocker panels (1), parallel to the top edge and, to one end of the body side molding (2 and 3) being removed

CAUTION: Do not exceed 52° C (120° F) when heating the moldings or rocker panels. Failure to follow this caution may result in damage to the moldings and/or the vehicle paint finish.

2. If the temperature is below 21° C (70° F), warm the body side moldings with a heat lamp or heat gun.

NOTE: The body side moldings are attached to the cab with adhesive tape.

3. Using a trim stick C-4755 or equivalent, carefully remove the moldings from the rocker panels, as necessary.

INSTALLATION

NOTE: Quad Cab model shown in the illustration. Body side moldings for Regular cab models are similar.

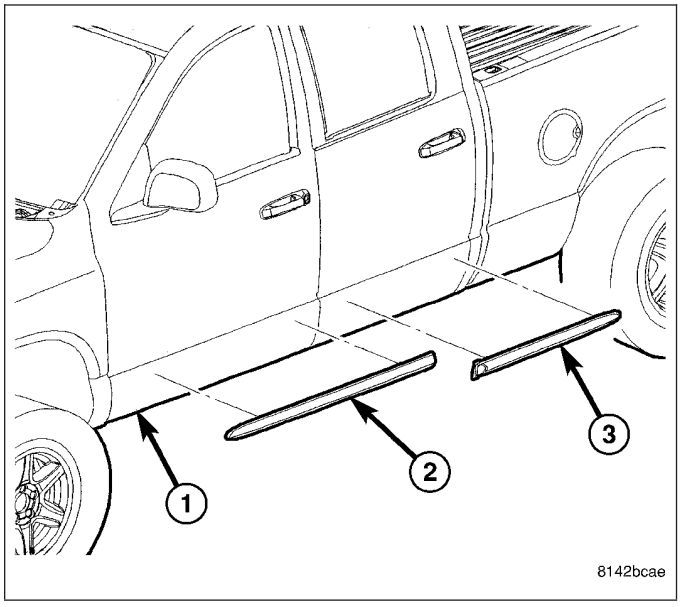

1. Thoroughly clean all residue from the molding attachment areas of the rocker panels (1).
2. Wipe the attachment areas with a clean, lint-free cloth, moistened with a 50% solution of water and alcohol and then wipe dry the areas immediately with a dry, lint-free cloth.

CAUTION: Do not exceed 52° C (120° F) when heating the moldings or rocker panels. Failure to follow this caution may result in damage to the moldings and/or the vehicle paint finish.

NOTE: If ambient temperatures are below 21° C (70° F), warm the body side molding and rocker panel with a heat lamp or gun to assure proper adhesion.

3. Remove the protective covering from the back of the body side molding (2 and 3) and position the molding onto the rocker panel using the previously installed guide tape.

NOTE: To ensure proper molding adhesion, apply consistent and uniform pressure of approximately 40 p.s.i. over the entire surface of each body side molding.

4. Install the body side molding onto the rocker panel.

CARGO BOX

REMOVAL

NOTE: Long cargo box shown in illustration. Short cargo box similar.

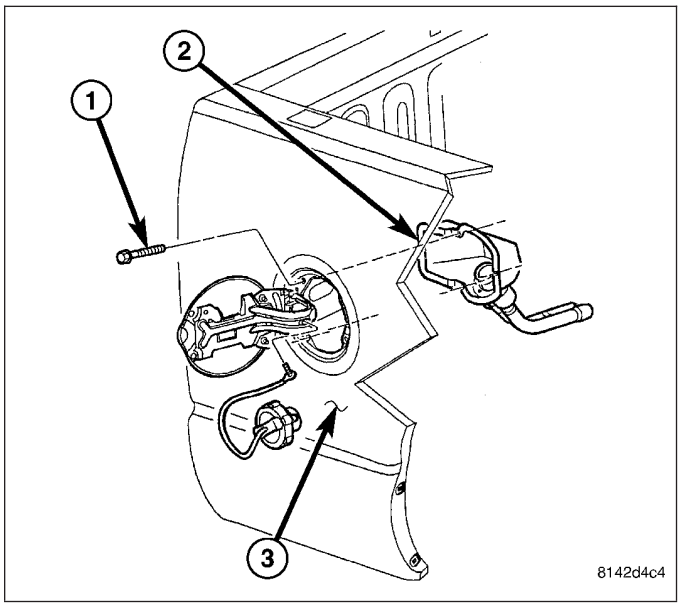

1. Remove the screws (1) that secure the fuel filler (2) to the cargo box (3).
2. Remove the fuel filler from the cargo box and position it out of the way.
3. If necessary, remove the fuel filler door from the cargo box (Refer to 23 - BODY/EXTERIOR/FUEL FILL DOOR - REMOVAL).

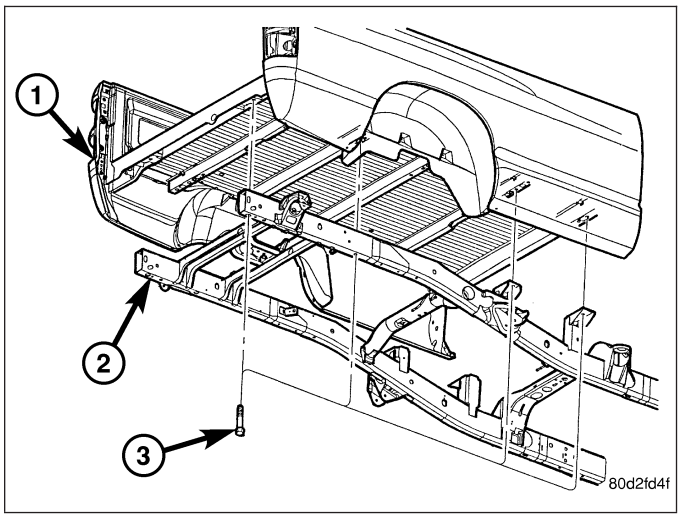

4. Disconnect the tail lamp wire harness from the underbody wire harness (Refer to 8 - ELECTRICAL/CONNECTOR/GROUND/SPLICE LOCATION - DESCRIPTION).
5. If necessary, remove the tail lamp units and wire harness from the cargo box (Refer to 8 - ELECTRICAL/LAMPS/LIGHTING - EXTERIOR/TAIL LAMP UNIT - REMOVAL).
6. If necessary, remove the tailgate (Refer to 23 - BODY/TAILGATE/TAILGATE - REMOVAL).
7. If necessary, remove the rear bumper (Refer to 13 - FRAME & BUMPERS/BUMPERS/REAR BUMPER - REMOVAL).
8. Remove the bolts (3) that secure the cargo box (1) to the frame (2) (six short box, eight long box) and remove the cargo box.

INSTALLATION

NOTE: Long cargo box shown in illustration. Short cargo box similar.

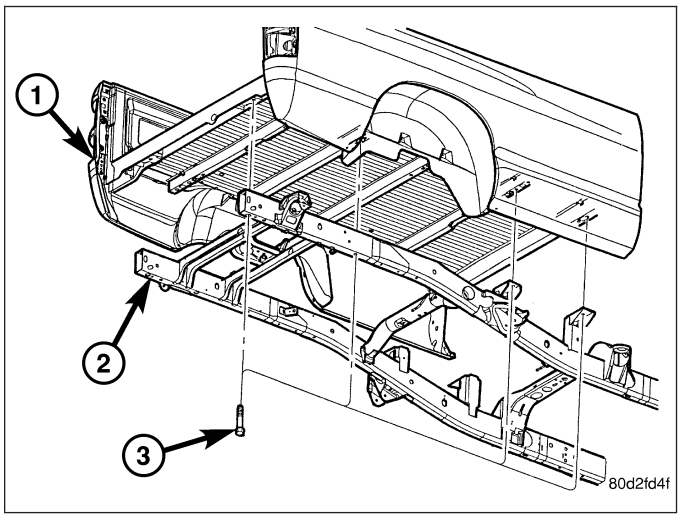

1. Position the cargo box (1) onto the frame (2) and loosely install the bolts (3) (six short box, eight long box).
2. Align the cargo box to the cab and tighten the bolts to 108 N·m (80 ft. lbs.).
3. If removed, install tail lamp units and wire harness onto the cargo box (Refer to 8 - ELECTRICAL/ LAMPS/LIGHTING - EXTERIOR/TAIL LAMP UNIT - INSTALLATION).
4. Connect the tail lamp wire harness to the underbody wire harness (Refer to 8 - ELECTRICAL/ CONNECTOR/GROUND/SPLICE LOCATION - DESCRIPTION).
5. If removed, install the tailgate (Refer to 23 - BODY/TAILGATE/TAILGATE - INSTALLATION).
6. If removed, install the rear bumper (Refer to 13 - FRAME & BUMPERS/BUMPERS/REAR BUMPER - INSTALLATION).

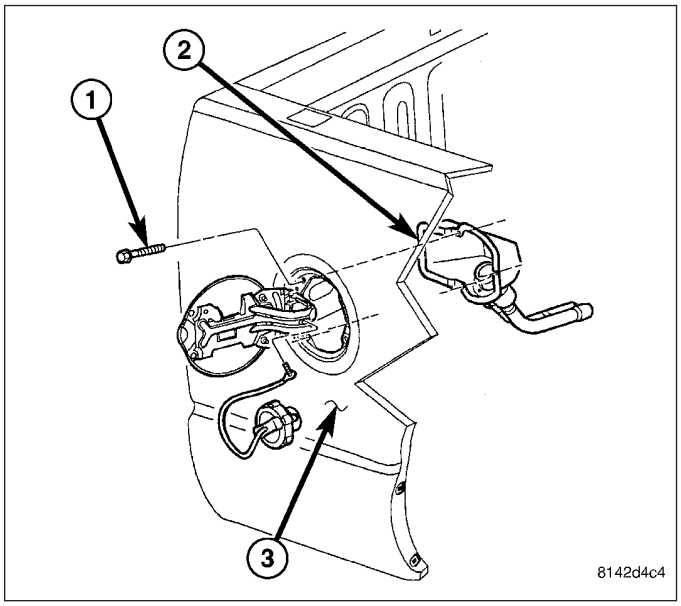

7. If removed, install the fuel filler door (Refer to 23 - BODY/EXTERIOR/FUEL FILL DOOR - INSTALLATION).
8. Position the fuel filler (2) to the cargo box (3).
9. Install the screws (1) that secure the fuel filler to the cargo box. Tighten the screws to 2.2 N·m 20 in. lbs.).

CARGO BOX - TIE DOWN

REMOVAL

1. Remove the two bolts (1) that secure each cargo box tie down (2) to the cargo bed and remove the cleats as necessary.

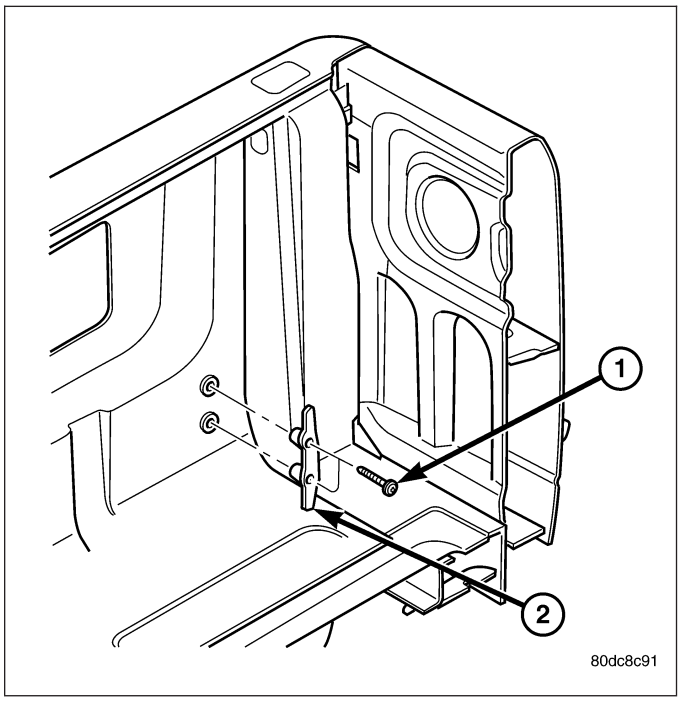

INSTALLATION

1. Position the cargo box tie downs (2) to the cargo box as necessary.
2. Install the two bolts (1) that secure each cargo box tie down to the cargo box. Tighten the bolts to 34 N·m (25 ft. lbs.).

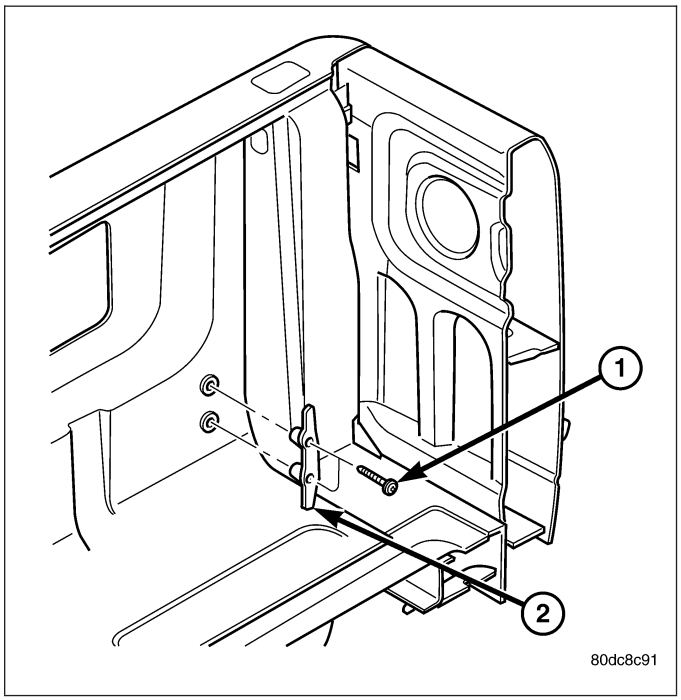

COWL GRILLE

REMOVAL

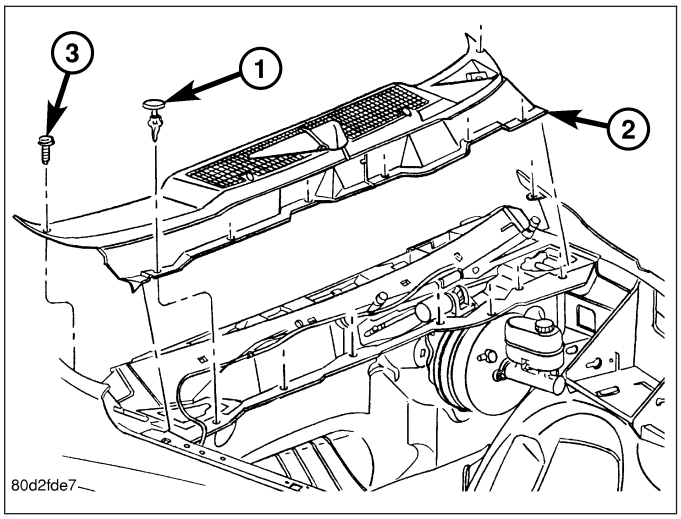

1. Remove the wiper arms (Refer to 8 - ELECTRICAL/WIPERS/WASHERS/WIPER ARMS - REMOVAL).
2. Disconnect the cowl plenum washer hose from the washer supply hose at the molded plastic in-line fitting (Refer to 8 - ELECTRICAL/WIPERS/WASHERS/WASHER HOSES/TUBES - DESCRIPTION).
3. Remove the cowl weather seal from the front of the dash panel and the cowl grille (2).
4. Remove the six push pin fasteners (1) that secure the front of the cowl grille to the dash panel.
5. Remove the two screws (3) that secure the rear corners of the cowl grille to the dash panel and remove the grille.
6. If necessary, remove the washer nozzles and the cowl plenum washer hose from the cowl grille (Refer to 8 - ELECTRICAL/WIPERS/WASHERS/WASHER NOZZLE - REMOVAL).

INSTALLATION

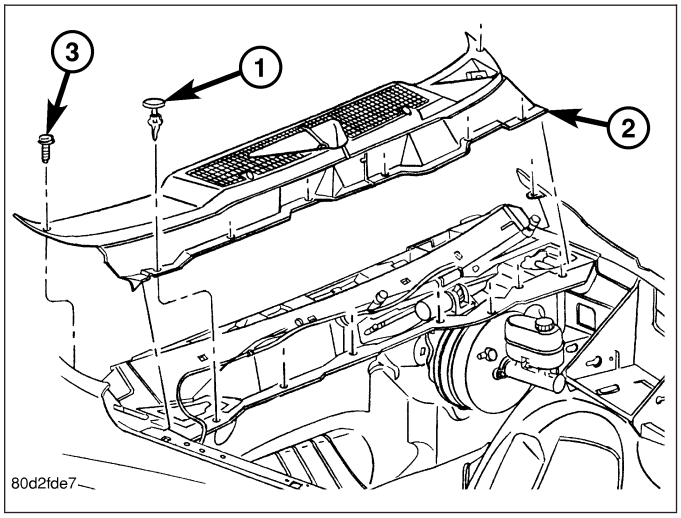

1. If removed, install the washer nozzles and the cowl plenum washer hose onto the cowl grille (2) (Refer to 8 - ELECTRICAL/WIPERS/WASHERS/WASHER NOZZLE - INSTALLATION).
2. Position the cowl grille onto the dash panel.
3. Install the two screws (3) and the six push-pin fasteners (1) that secure the cowl grille to the dash panel.
4. Install the cowl weather seal onto the front of the dash panel and the cowl grille.
5. Connect the cowl plenum washer hose to the washer supply hose at the molded plastic in-line fitting (Refer to 8 - ELECTRICAL/WIPERS/WASHERS/WASHER HOSES/TUBES - DESCRIPTION).
6. Install the wiper arms (Refer to 8 - ELECTRICAL/WIPERS/WASHERS/WIPER ARMS - INSTALLATION).

EXTERIOR NAME PLATES

REMOVAL

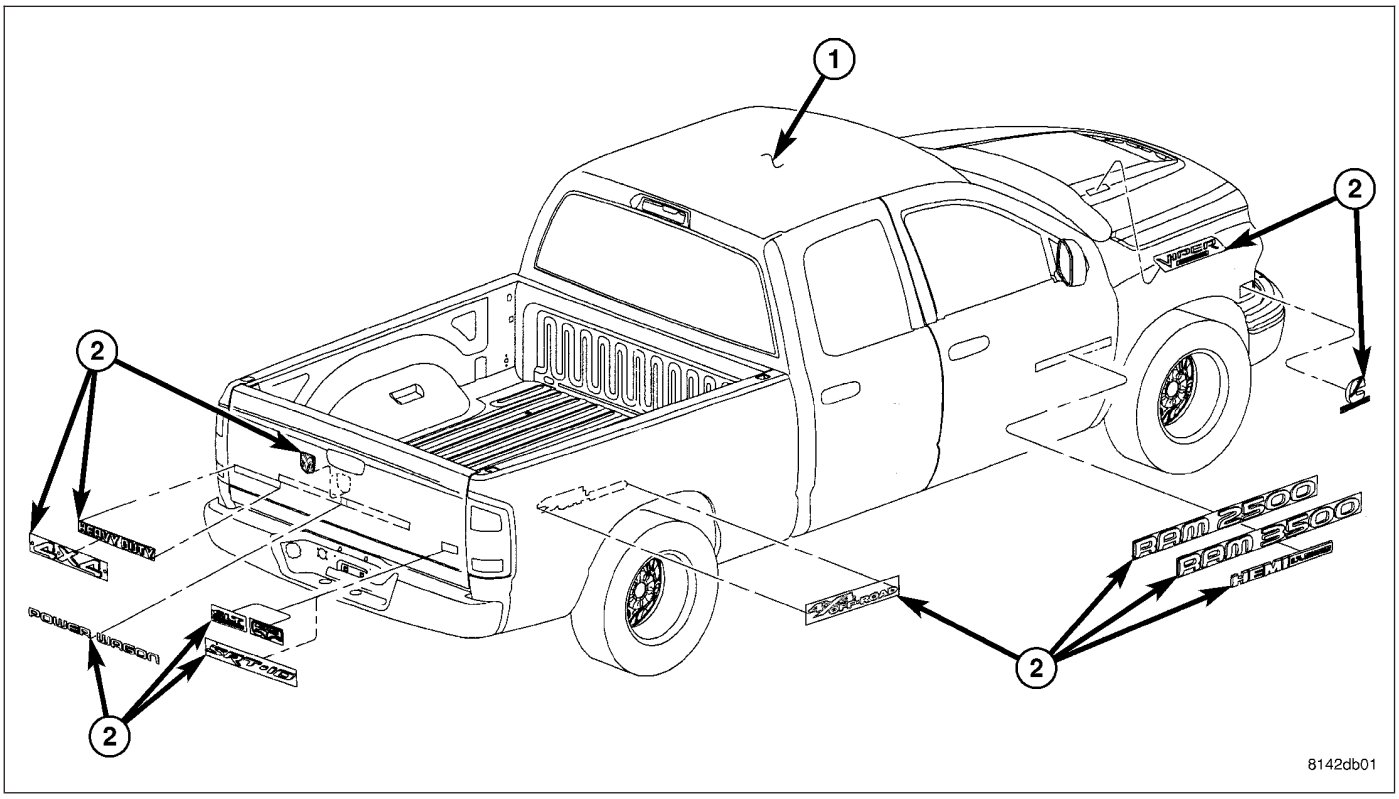

NOTE: Quad Cab model shown in the illustration. Exterior name plates and decals for Regular cab models are similar. Exterior name plate and decal usage vary by model.

1. As a guide for installation, apply a length of masking tape on the body (1), parallel to the top edge and, to one end of the name plate or decal (2) being removed.

CAUTION: Do not exceed 52° C (120° F) when heating name plates, decals or body panels. Failure to follow this caution may result in damage to the name plates, decals and/or the vehicle paint finish.

2. If the temperature is below 21° C (70° F), warm the name plate or decal with a heat lamp or heat gun.

NOTE: The exterior name plates are attached to the body with adhesive tape.

3. Using a trim stick C-4755 or equivalent, carefully remove the name plate or decal from the body panel, as necessary.

INSTALLATION

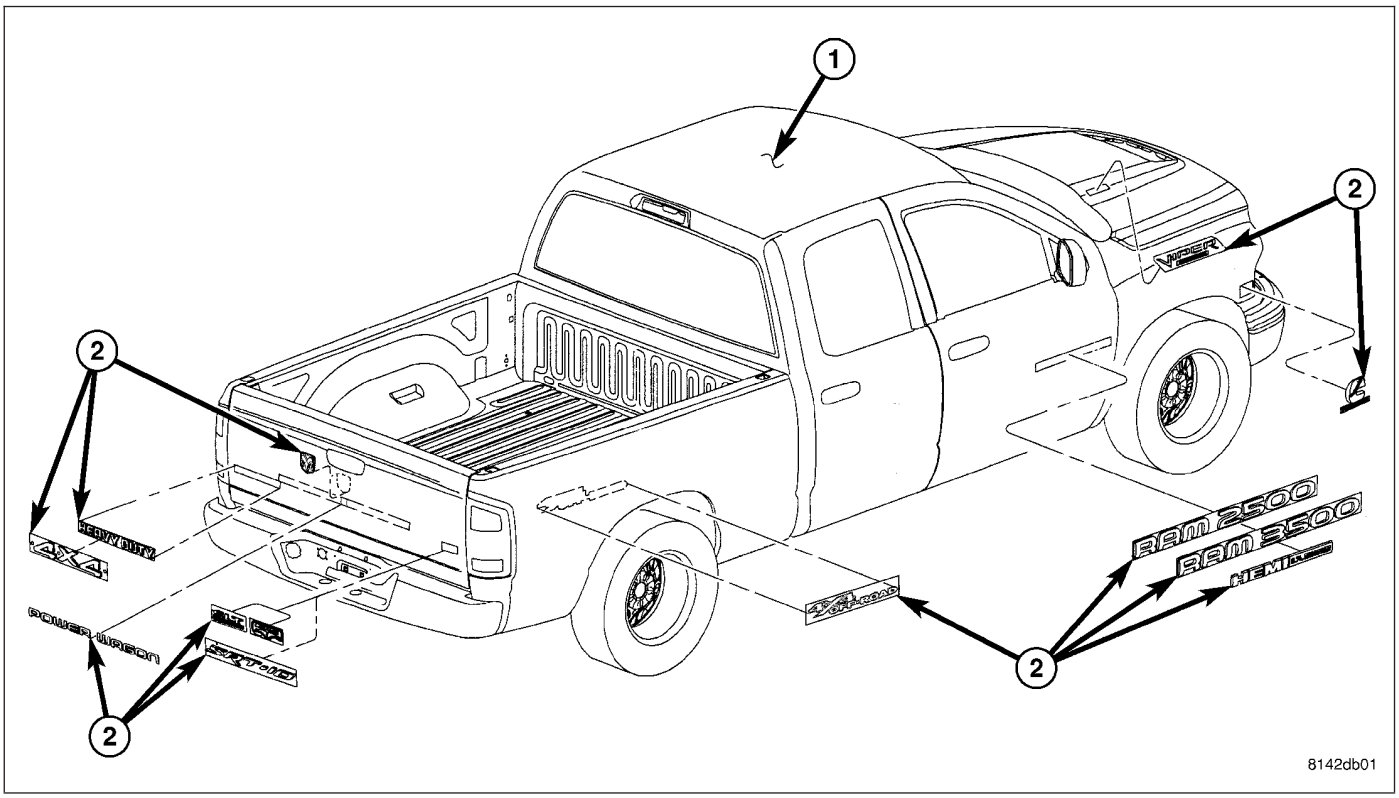

NOTE: Quad Cab model shown in the illustration. Exterior name plates and decals for Regular cab models are similar. Exterior name plate and decal usage vary by model.

1. Thoroughly clean all residue from the name plate or decal attachment areas of the body (1).
2. Wipe the attachment areas with a clean, lint-free cloth, moistened with a 50% solution of water and alcohol and then wipe dry the areas immediately with a dry, lint-free cloth.

CAUTION: Do not exceed 52° C (120° F) when heating name plates, decals or body panels. Failure to follow this caution may result in damage to the name plates, decals and/or the vehicle paint finish.

NOTE: If ambient temperatures are below 21° C (70° F), warm the name plate or decal and body panel with a heat lamp or gun to assure proper adhesion.

3. Remove the protective covering from the back of name plate or decal (2) and position the name plate or decal onto the body using the previously installed guide tape.

NOTE: To ensure proper name plate or decal adhesion, apply consistent and uniform pressure of approximately 40 p.s.i. over the entire surface of each name plate or decal.

4. Install the name plate or decal onto the body.

FRONT FENDER

REMOVAL

1. Remove the radio antenna (Refer to 8 - ELECTRICAL/AUDIO/ANTENNA BODY & CABLE - REMOVAL).
2. Remove the battery tray (depending on fender being serviced) (Refer to 8 - ELECTRICAL/BATTERY SYSTEM/TRAY - REMOVAL).
3. Remove the cowl grille (Refer to 23 - BODY/EXTERIOR/COWL GRILLE - REMOVAL).
4. Remove the headlamp unit (Refer to 8 - ELECTRICAL/LAMPS/LIGHTING - EXTERIOR/HEADLAMP UNIT - REMOVAL).
5. Remove the wheelhouse splash shield (Refer to 23 - BODY/EXTERIOR/FRONT WHEELHOUSE SPLASH SHIELD - REMOVAL).
6. Remove the bolts (1, 2, 3, 5 and 6) that secure the front fender (7) to body.
7. Carefully remove the front fender from the body and remove the plastic inserts (4), if required.

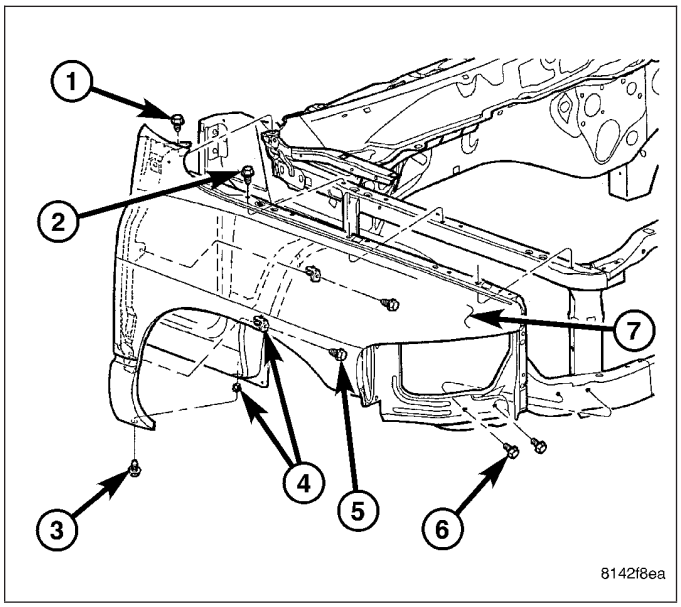

INSTALLATION

1. If required, install new plastic inserts (4) into the front fender (7).
2. Position the front fender onto the body and loosely install all fender retaining bolts.
3. Align the front fender and add shims, if required (Refer to 23 - BODY/BODY STRUCTURE/GAP AND FLUSH - SPECIFICATIONS).
4. Tighten the bolts (2 and 6) to 9 N·m (80 in. lbs.).
5. Tighten the bolts (1, 3 and 5) to 17 N·m (13 ft. lbs.).
6. Install the wheelhouse splash shield (Refer to 23 - BODY/EXTERIOR/FRONT WHEELHOUSE SPLASH SHIELD - INSTALLATION).
7. Install the headlamp unit (Refer to 8 - ELECTRICAL/LAMPS/LIGHTING - EXTERIOR/HEADLAMP UNIT - INSTALLATION).
8. Install the cowl grille (Refer to 23 - BODY/EXTERIOR/COWL GRILLE - INSTALLATION).

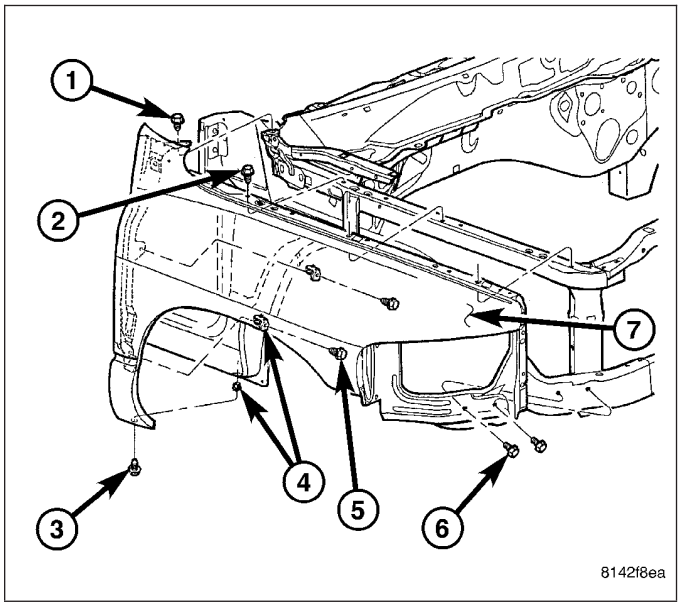

9. Install the battery tray, if required (Refer to 8 - ELECTRICAL/BATTERY SYSTEM/TRAY - INSTALLATION).
10. Install the antenna (Refer to 8 - ELECTRICAL/AUDIO/ANTENNA BODY & CABLE - INSTALLATION).

FUEL FILL DOOR

REMOVAL

1. Open the fuel filler door (1).
2. Remove the two bolts (2) that secure the fuel filler door to the cargo box and remove the door.

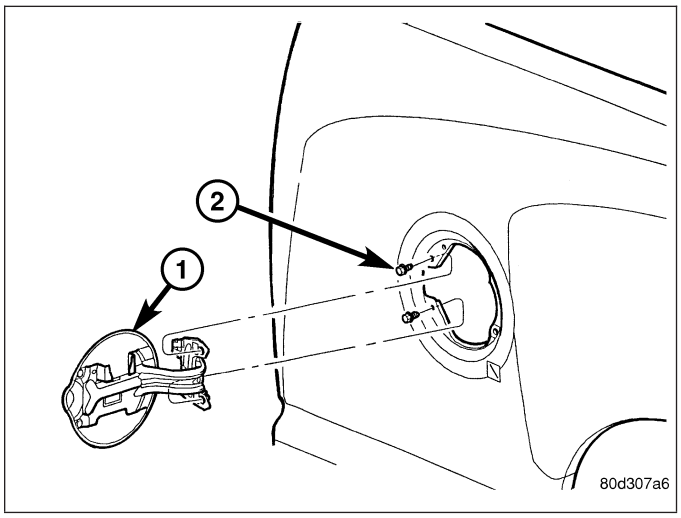

INSTALLATION

1. Position and align the fuel filler door (1) to the cargo box.
2. Install the two bolts (2) that secure the fuel filler door to the cargo box. Tighten the bolts to 9 N·m (80 in. lbs.).

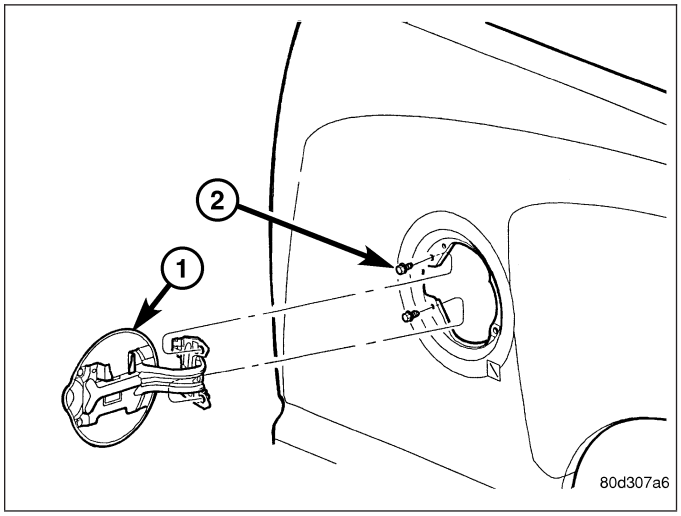

GRILLE

REMOVAL

1. Open the hood (2) and remove the six screws (5) that secure the grille (3) to the grille frame (4).
2. Remove the six nuts (1) that secure the grille to the hood and remove the grille.
3. If required, remove the grille frame from the hood (Refer to 23 - BODY/EXTERIOR/GRILLE FRAME - REMOVAL).

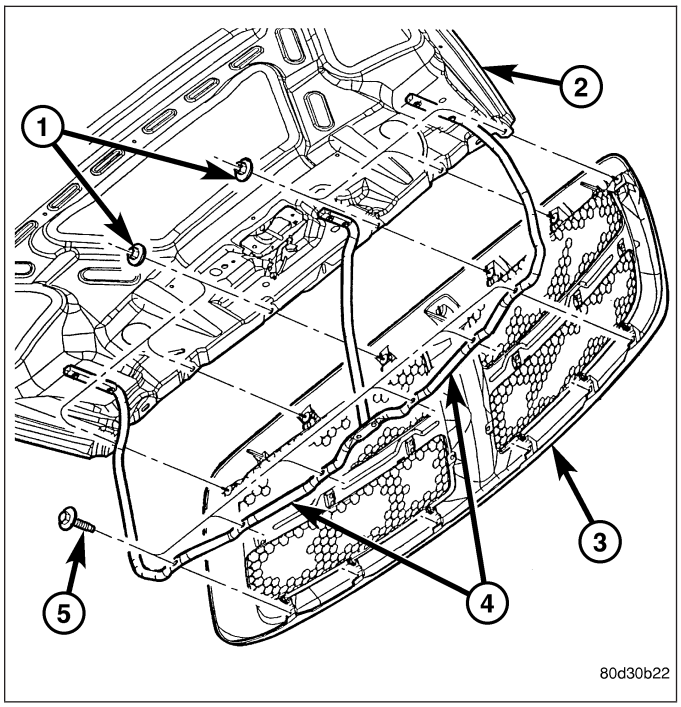

INSTALLATION

1. If removed, install the grille frame (4) (Refer to 23 - BODY/EXTERIOR/GRILLE FRAME - INSTALLATION).
2. Position and align the grille (3) onto the hood (2)
3. Install the six nuts (1) that secure the grille to the hood. Tighten the nuts to 5 N·m (44 in. lbs.).
4. Install the six screws (5) that secure the grille to the grille frame. Tighten the screws to 2.2 N·m (20 in. lbs.).

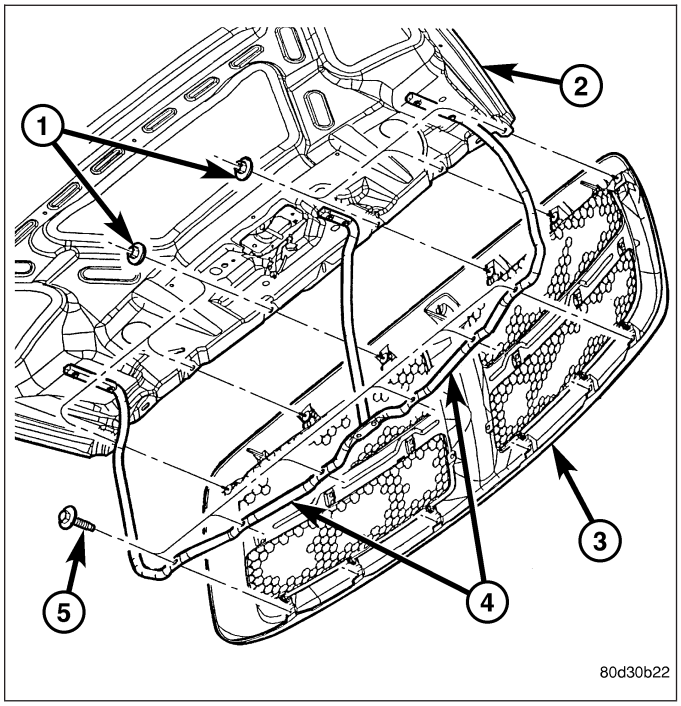

GRILLE FRAME

REMOVAL

1. Remove the grille (Refer to 23 - BODY/EXTERIOR/ GRILLE - REMOVAL).
2. Remove the six screws (3) that secure the grille frame (2) to the hood (1) and remove the frame.

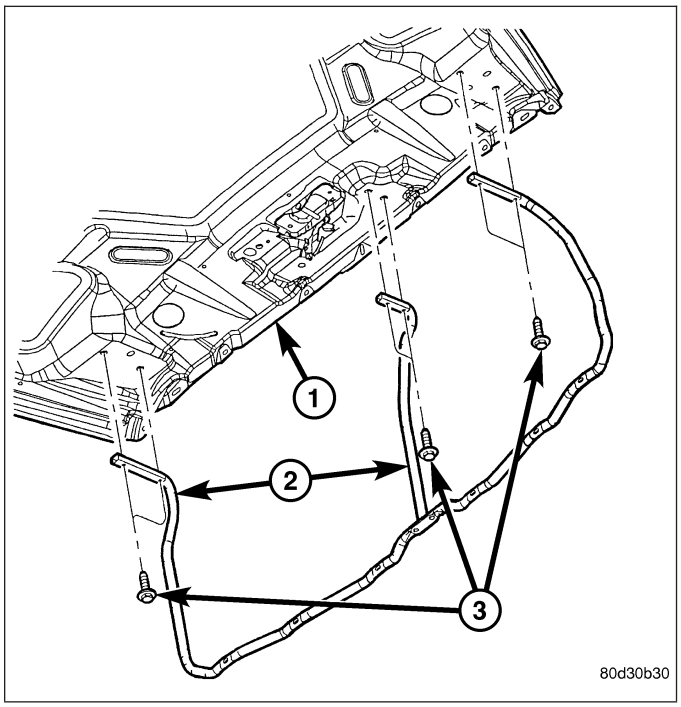

INSTALLATION

1. Position the grille frame (2) onto the hood (1).
2. Install the six screws (3) that secure the grille frame to the hood. Tighten the screws to 5 N·m (44 in. lbs.).
3. Install the grille (Refer to 23 - BODY/EXTERIOR/ GRILLE - INSTALLATION).

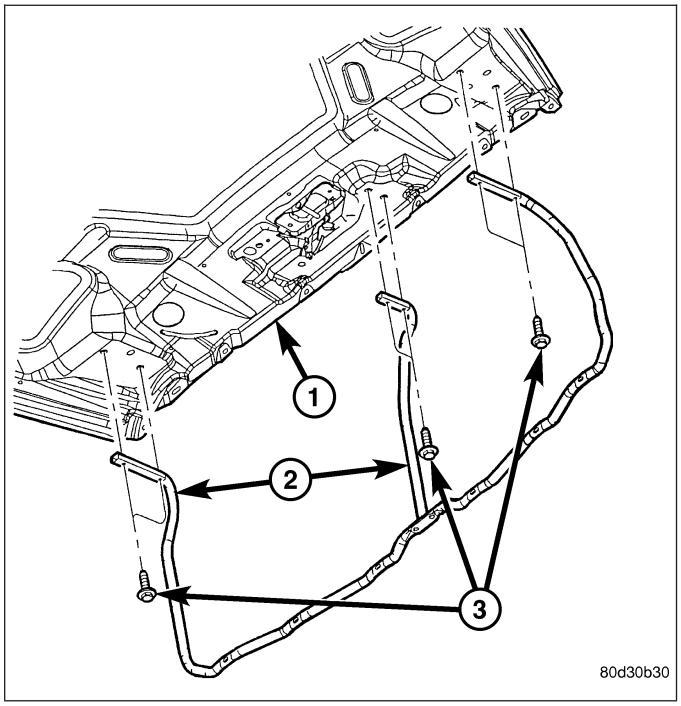

REAR FENDER-QUAD CAB MODELS

REMOVAL

1. Disconnect and isolate the negative battery cable.
2. Remove the tail lamp unit (Refer to 8 - ELECTRICAL/LAMPS/LIGHTING - EXTERIOR/TAIL LAMP UNIT - REMOVAL).
3. Remove the rear wheelhouse splash shield (Refer to 23 - BODY/EXTERIOR/REAR WHEELHOUSE SPLASH SHIELD - REMOVAL).
4. Remove the two marker lamp units from the rear fender (Refer to 8 - ELECTRICAL/LAMPS/LIGHTING - EXTERIOR/MARKER LAMP UNIT - REMOVAL).
5. Remove the two nuts (2) that secure the rear fender to the cargo box near the tail lamp opening (1).

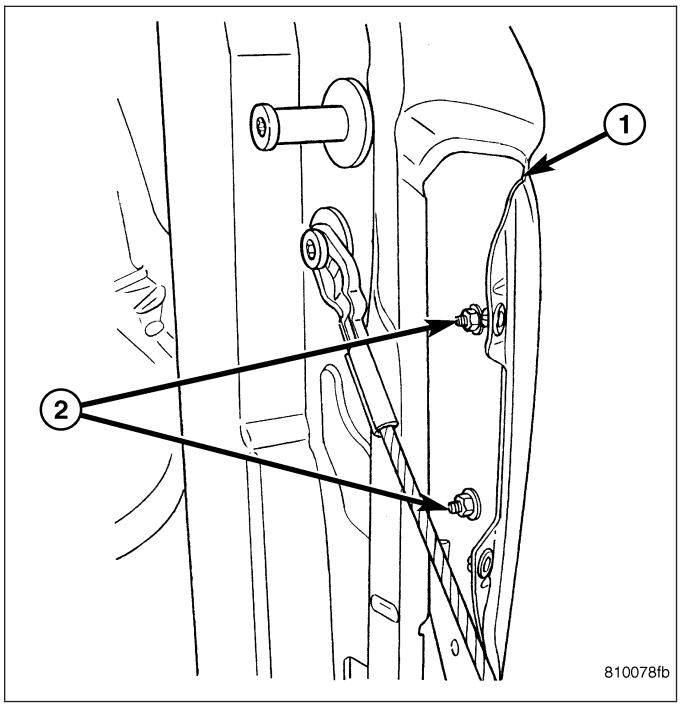

6. Raise and support the vehicle.
7. Remove the two nuts (1) that secure the rear fender to the rear of the cargo box inner panel (2).
8. Remove the four bolts that secure the bottom edges of the rear fender to the cargo box.

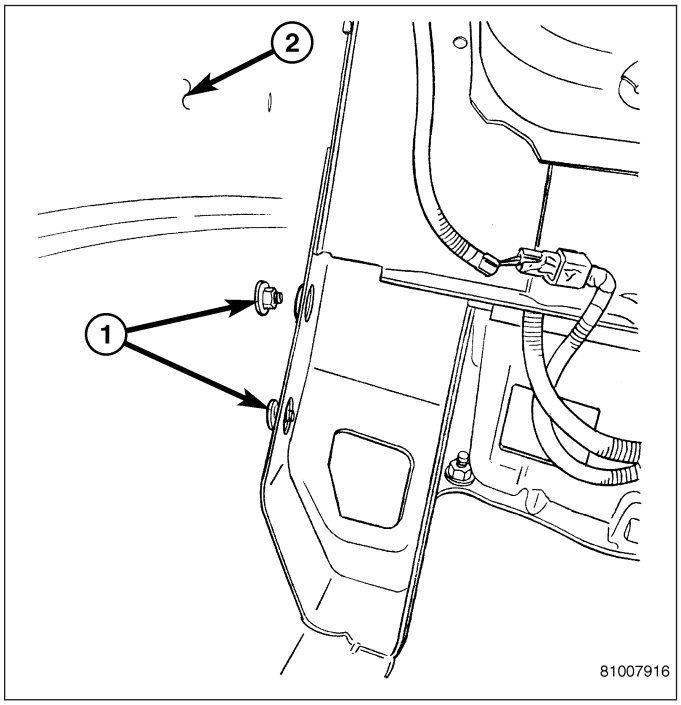

9. Remove the four nuts (2) secure the front of the rear fender to the cargo box inner panel (1)

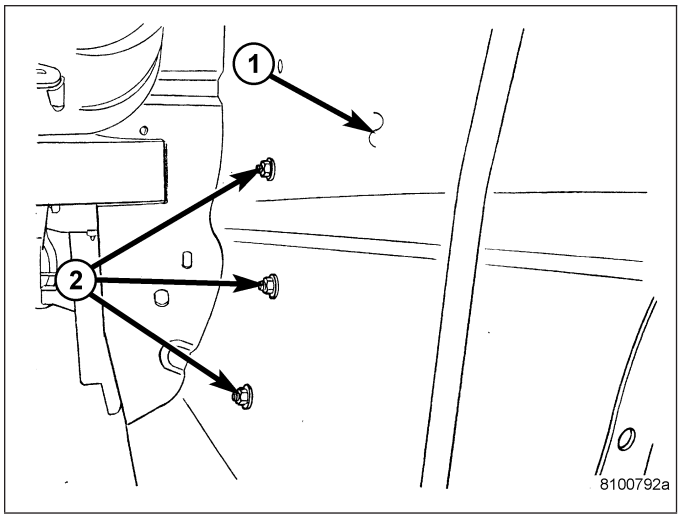

10. Loosen the three bolts (3) on each of the two fender support brackets (1) located on the cargo box outer panel (2).

CAUTION: Prior to removing the rear fenders, mask off the surrounding cargo box areas to avoid damage to the cargo box painted surfaces.

11. Lift the rear fender straight up and off of the two support brackets and remove the fender.

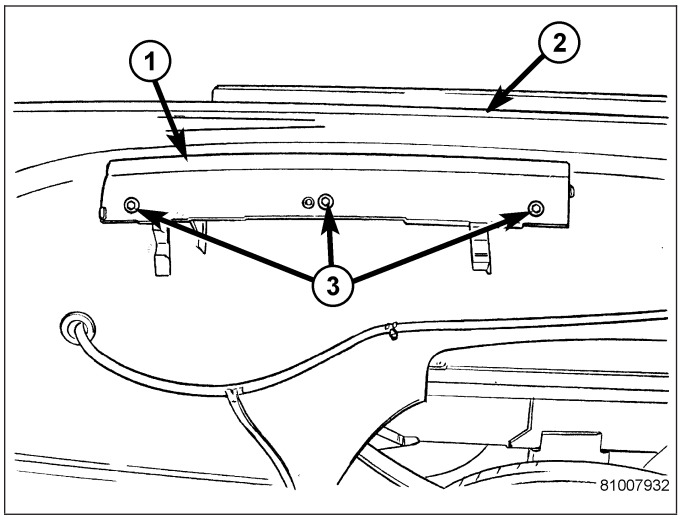

INSTALLATION

CAUTION: Prior to installing the rear fenders, mask off the surrounding areas to avoid damage to the cargo box painted surfaces.

1. Carefully position the rear fender onto the three bolts (3) on each of the two support brackets (1) located on the cargo box outer panel (2).

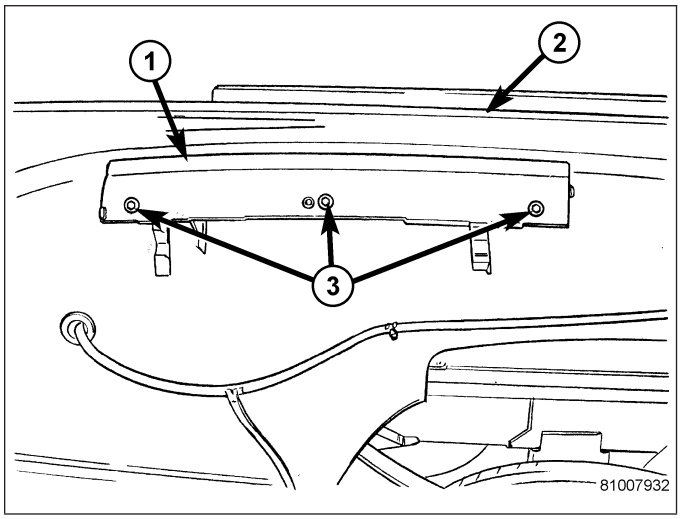

2. Install the four nuts (2) that secure the front of the rear fender to the cargo box inner panel (1). Tighten the nuts to 7 N·m (60 in. lbs.).

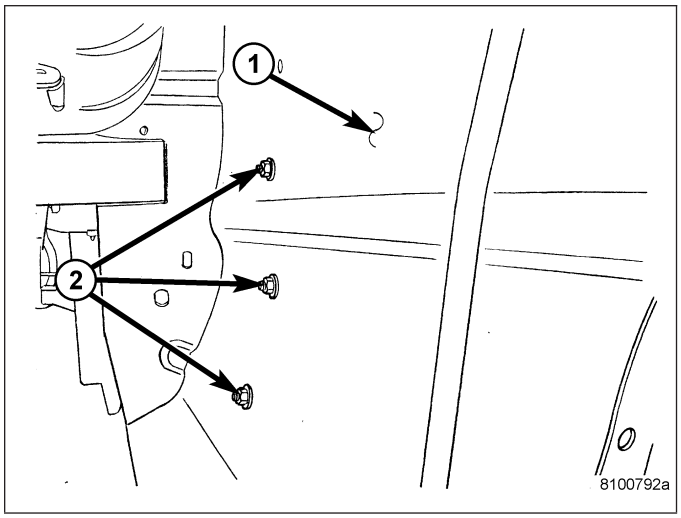

3. Install the two nuts (1) that secure the rear fender to the rear of the cargo box inner panel (2). Tighten the nuts to 7 N·m (60 in. lbs.).
4. Install the four bolts that secure the bottom edges of the rear fender to the cargo box. Tighten the bolts to 7 N·m (60 in. lbs.).
5. Tighten the three bolts on each of the two support brackets to 11 N·m (8 ft. lbs.).

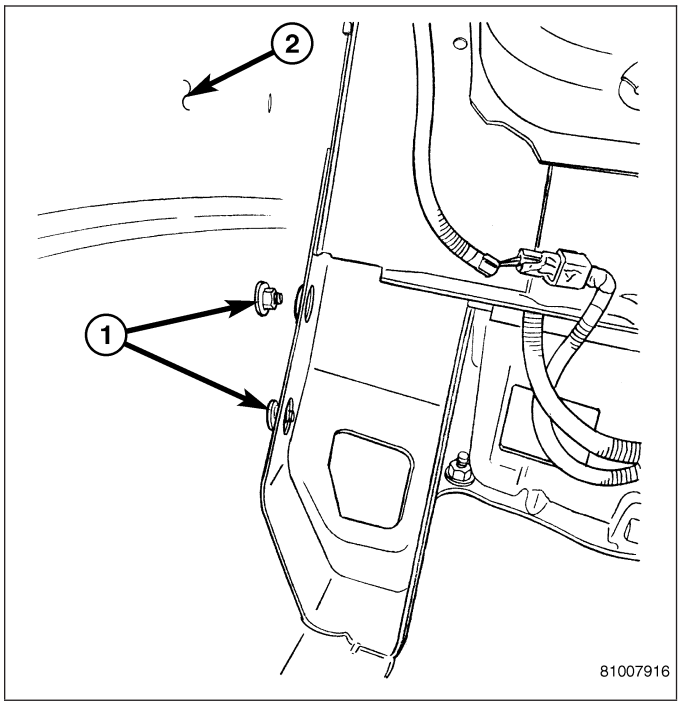

6. Lower the vehicle.
7. Install the two nuts (2) that secure the rear fender to the cargo box near the tail lamp opening (1). Tighten the nuts to 7 N·m (60 in. lbs.).
8. Install the two marker lamp units onto the rear fender (Refer to 8 - ELECTRICAL/LAMPS/LIGHTING - EXTERIOR/MARKER LAMP UNIT - INSTALLATION).
9. Install the rear wheelhouse splash shield (Refer to 23 - BODY/EXTERIOR/REAR WHEELHOUSE SPLASH SHIELD - INSTALLATION).
10. Install the tail lamp unit (Refer to 8 - ELECTRICAL/LAMPS/LIGHTING - EXTERIOR/TAIL LAMP UNIT - INSTALLATION).
11. Reconnect the negative battery cable.

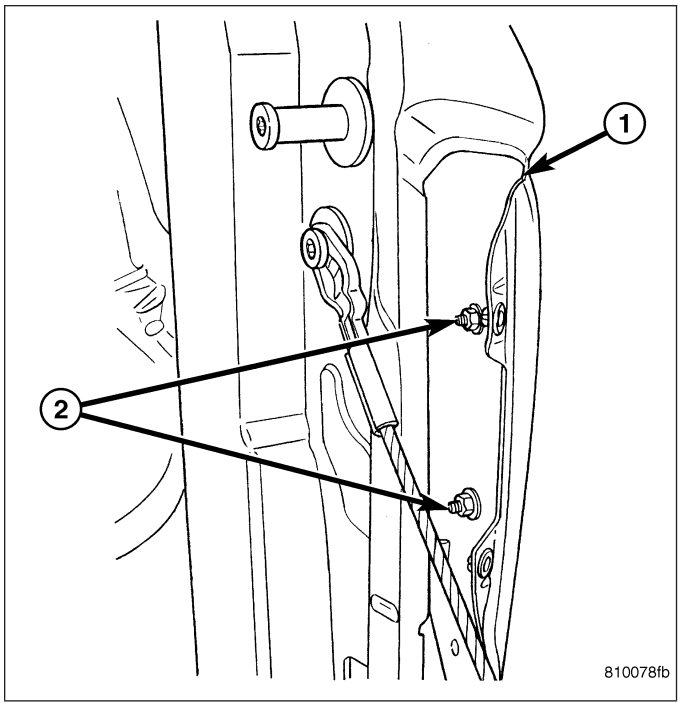

SIDE VIEW MIRROR

REMOVAL

1. Remove the door trim panel (Refer to 23 - BODY/DOOR - FRONT/TRIM PANEL - REMOVAL).
2. Disconnect the wire harness connector (3) from the mirror (1).
3. Remove the three nuts (2) that secure the mirror to the door and carefully remove the mirror.

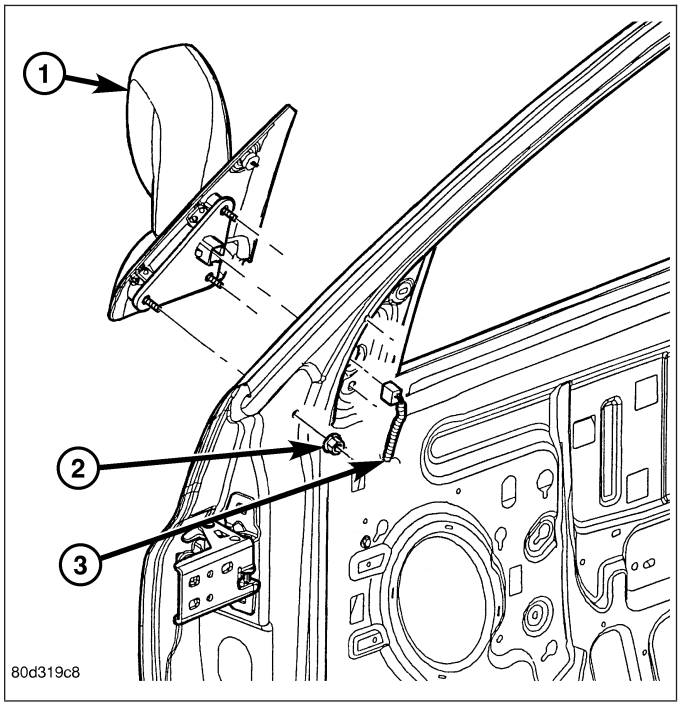

INSTALLATION

1. Position the mirror (1) onto the door.
2. Install the three nuts (2) that secure the mirror to the door. Tighten the nuts to 7 N·m (60 in. lbs.).
3. Connect the wire harness connector (3) to the mirror.
4. Install the door trim panel (Refer to 23 - BODY/DOOR - FRONT/TRIM PANEL - INSTALLATION).

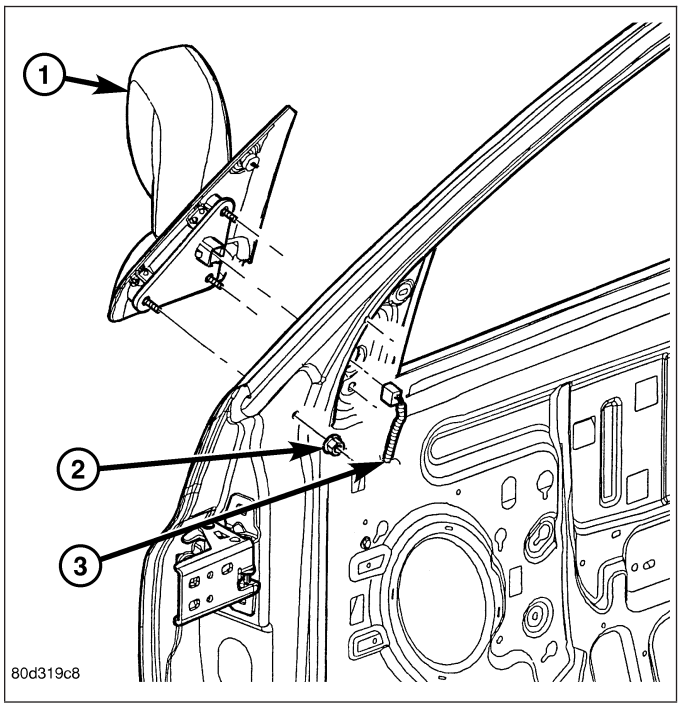

SIDE VIEW MIRROR GLASS

REMOVAL

STANDARD MIRROR

WARNING: Always wear eye and hand protection when servicing the mirror assembly. Failure to observe this warning may result in personal injury from broken glass.

1. Position the glass (3) in the mirror (2) as shown to access the two outboard mirror housing retainer clips (1).

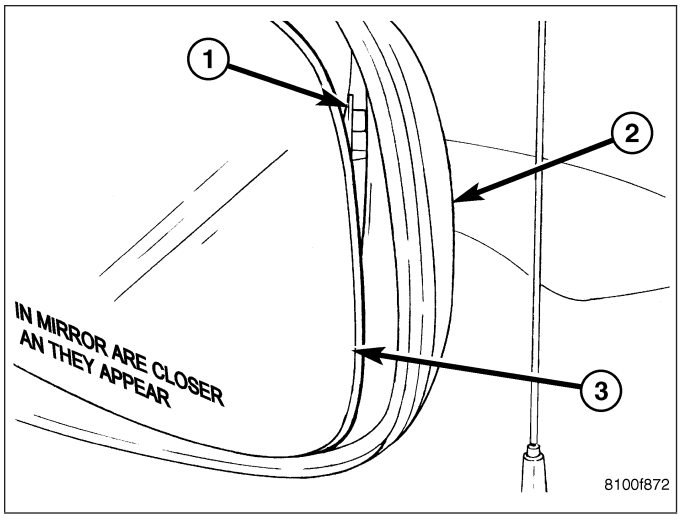

2. Disengage the three mirror housing retainer clips (2) (start with the two outboard clips) and remove the cover.

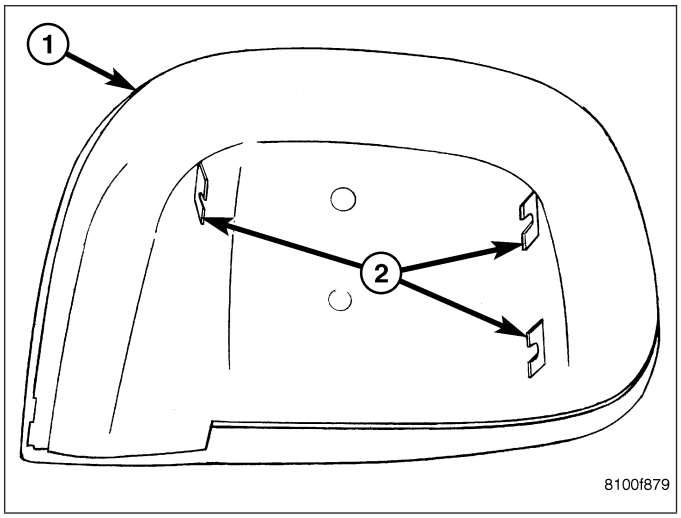

3. Disengage the lower glass retainer clip (2) from the mirror motor.
4. Slide the mirror glass (1) upward from the mirror motor and remove the glass from the motor.

NOTE: When disconnecting the wire harness connectors from the heated mirror glass terminals, note the location of each connector and its respective terminal for installation reference.

5. If equipped with heated mirrors, disconnect the wire harness connectors from the mirror glass.

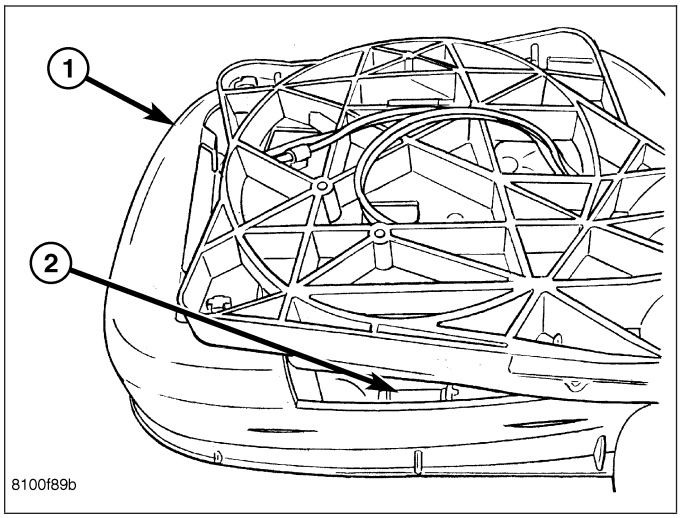

TOW PACKAGE MIRROR

1. Position the glass (3) in the mirror (1) as shown to access the inboard mirror glass retainer clip (2).

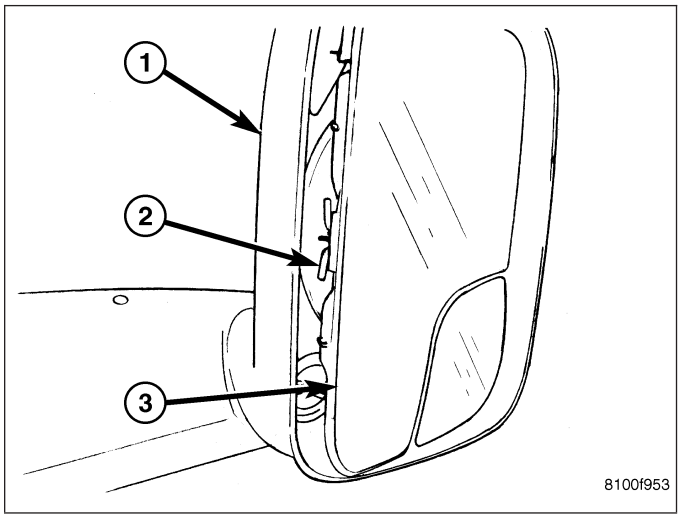

2. Disengage the retainer clip (3) and separate the mirror glass (2) from the mirror motor.

NOTE: When disconnecting the wire harness connectors from the heated mirror glass terminals, note the location of each connector and its respective terminal for installation reference.

3. If equipped with heated mirrors, disconnect the wire harness connectors (1) from the mirror glass.

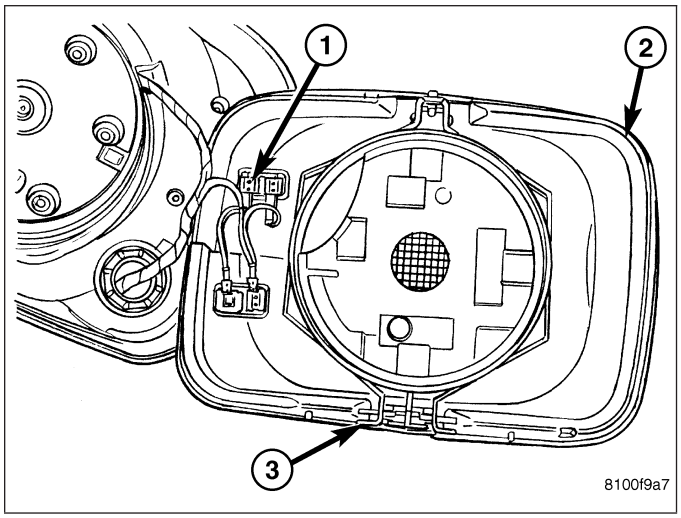

INSTALLATION

STANDARD MIRROR

NOTE: Connect each heated mirror glass electrical connector to its respective mirror terminal as noted during the Removal procedure, if equipped.

1. If equipped, connect the wire harness connectors to the heated glass mirror terminals (3).
2. Position the mirror glass (1) so that the four alignment holes (4) are over the four feet of the mirror motor.

NOTE: Pressure must be applied equally over the center portion of the mirror glass to engage the retainer clip fully.

3. Engage the upper retainer clip (2) to the top of the mirror motor and slide the mirror glass downward until the lower retainer clip is fully engaged.

4. Position the mirror housing (1) onto the mirror and fully engage the three retainer clips (2).

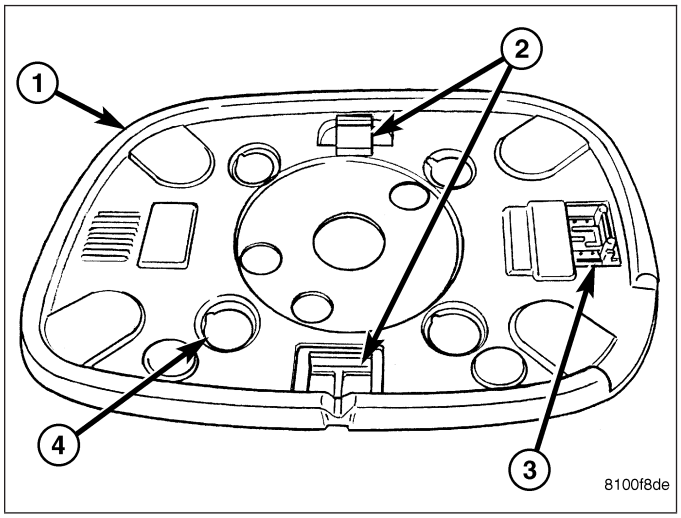

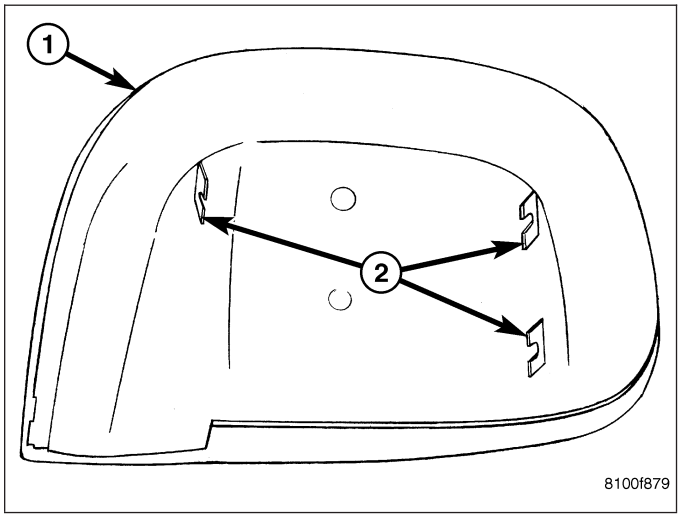

TOW PACKAGE MIRROR

NOTE: Connect each heated mirror glass electrical connector to its respective mirror terminal as noted during the Removal procedure, if equipped.

1. If equipped, connect the wire harness connectors to the heated glass mirror terminals (1).

NOTE: Pressure must be applied equally over the center portion of the mirror glass to engage the retainer clip fully.

2. Install the mirror glass (2) onto the mirror motor and fully engage the retainer clip (3).

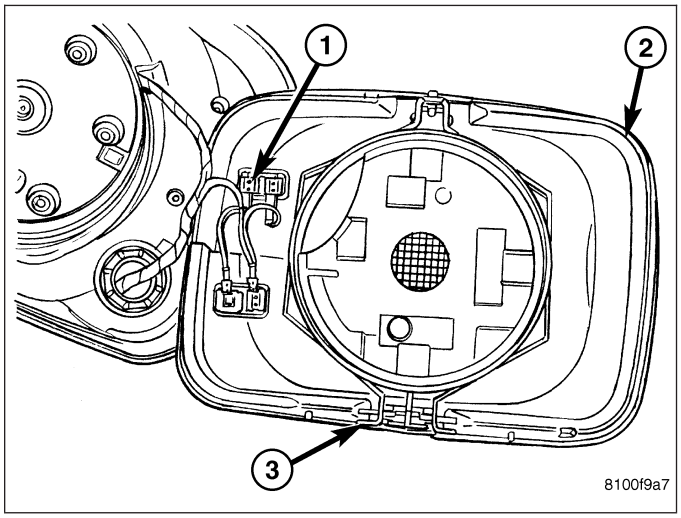

UPPER RADIATOR CROSSMEMBER

REMOVAL

1. Remove the hood latch from the upper radiator crossmember (3) and position the latch out of the way (Refer to 23 - BODY/HOOD/LATCH - REMOVAL).
2. Remove the bolts (1 and 2) that secure the A/C condenser and the radiator to the upper radiator crossmember.

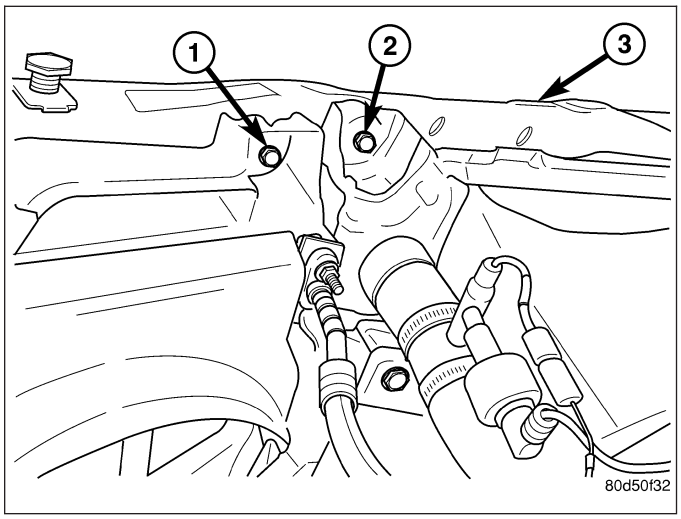

3. Remove the four bolts (1 and 3) that secure the upper radiator crossmember (2) to the fender rails and remove the crossmember.

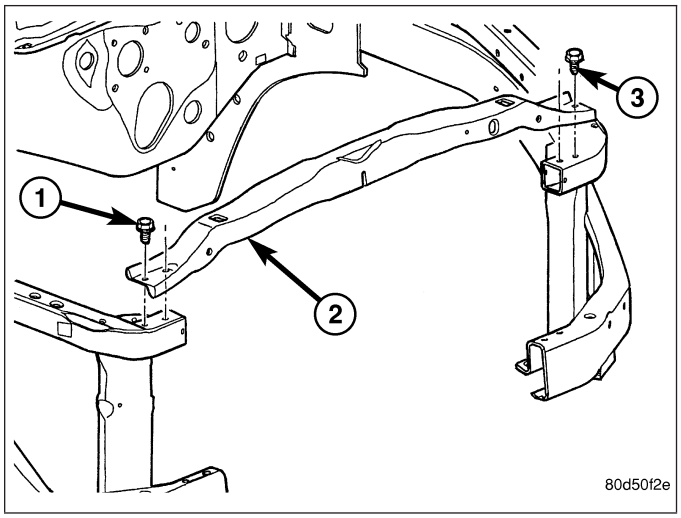

INSTALLATION

1. Position and align the upper radiator crossmember (2) to the fender rails.
2. Install the four bolts (1 and 3) that secure the upper radiator crossmember to the fender rails. Tighten the bolts to 28 N·m (21 ft. lbs.).

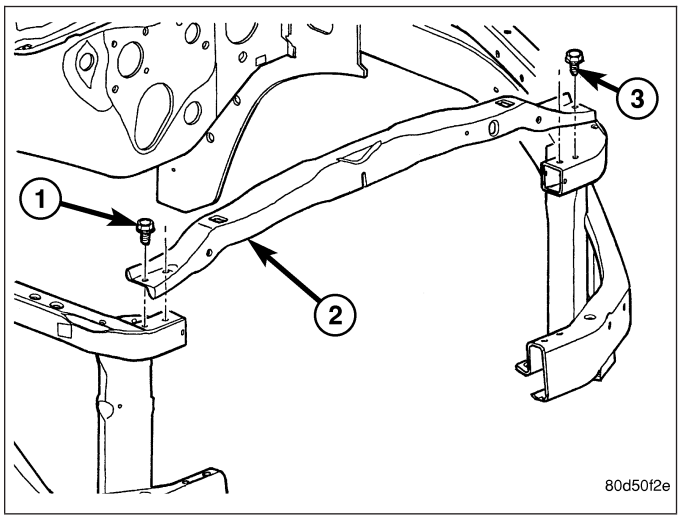

3. Install the bolts (1 and 2) that secure the A/C condenser and the radiator to the upper radiator crossmember (3). Tighten the bolts to 8 N·m (75 in. lbs.).
4. Install the hood latch (Refer to 23 - BODY/HOOD/ LATCH - INSTALLATION).

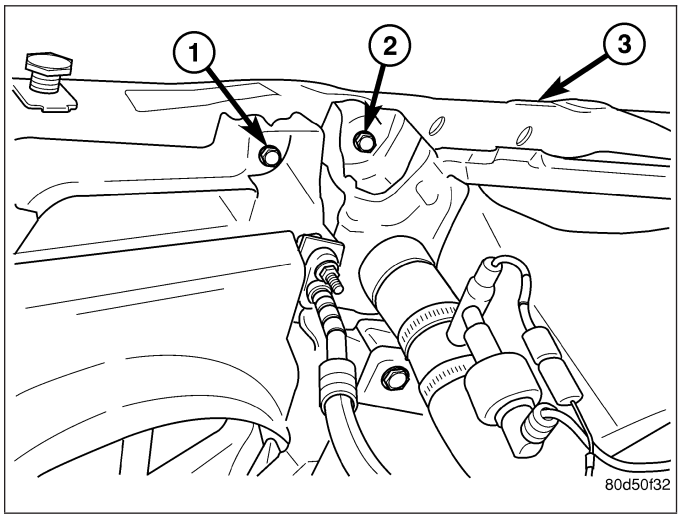

FRONT WHEELHOUSE SPLASH SHIELD

REMOVAL

1. Open the hood and disengage any wiring or component retaining clips from the front splash shield (4) (depending on application and shield being serviced).
2. Raise and support the vehicle.
3. Remove the eight screws (3) that secure the front splash shield to the fender rail (1) and the front fender (2).
4. Disconnect the front splash shield from the support bracket located on the front bumper and remove the splash shield.

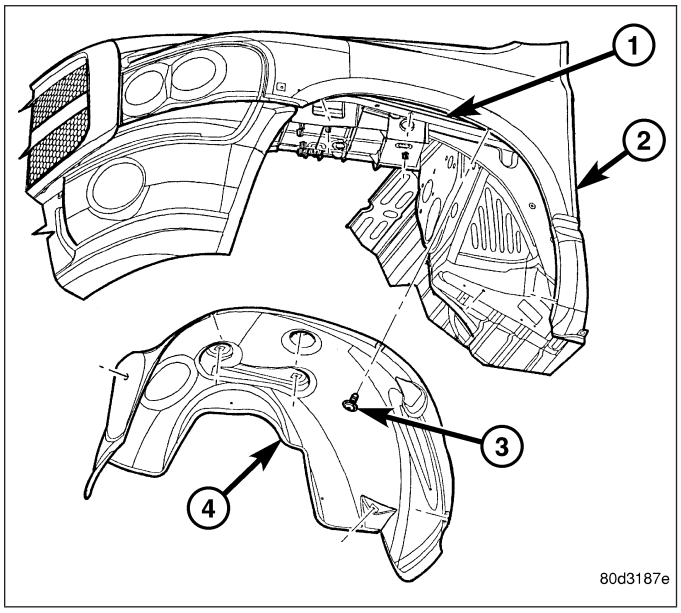

INSTALLATION

1. Install the front edge of the front splash shield (4) into the support bracket located on the front bumper.
2. Position the front splash shield onto the fender rail (1) and the front fender (2).
3. Install the eight screws (3) that secure the front splash shield to the fender rail and the front fender. Tighten the screws to 5 N·m (44 in. lbs.).
4. Lower the vehicle and engage any wiring or component retaining clips to the front splash shield (depending on application and shield being serviced).

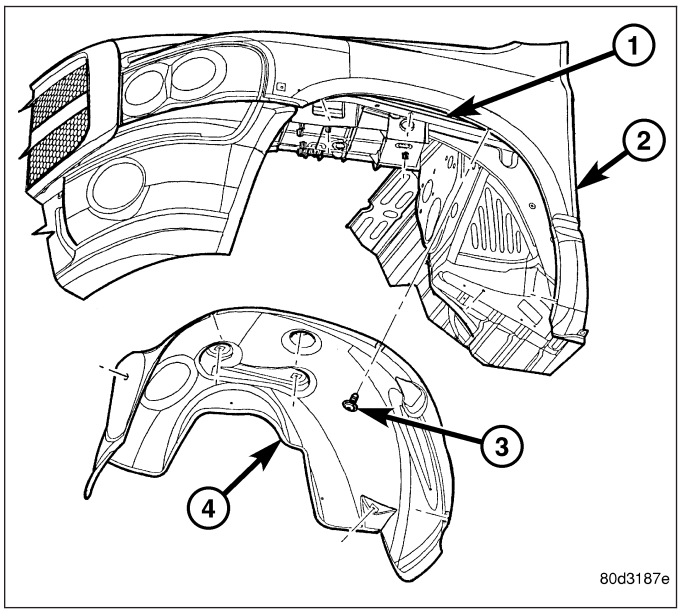

REAR WHEELHOUSE SPLASH SHIELD

REMOVAL

1. Raise and support the vehicle.
2. Remove the three screws (2) that secure the rear splash shield (3) to the cargo box (1) and remove the splash shield.

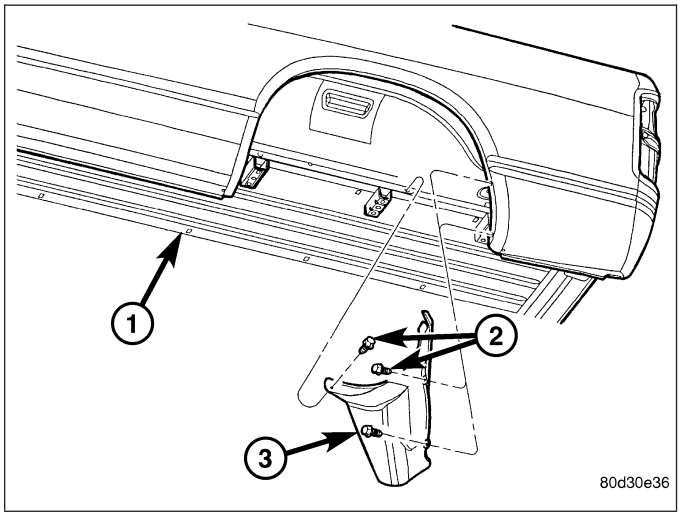

INSTALLATION

1. Position the rear splash shield (3) onto the cargo box (1).
2. Install the three screws (2) that secure the rear splash shield to the cargo box. Tighten the screws to 5 N·m (44 in. lbs.).
3. Lower the vehicle.

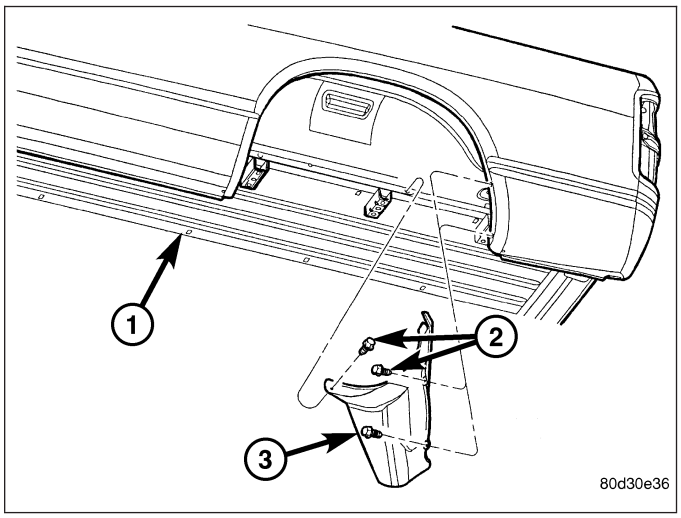

BELLY PAN-SRT-10

REMOVAL

1. Remove the fifteen screws (1) that secure the belly pan to the front bumper (2) and the vehicle underbody.
2. Remove the belly pan from under the front of the vehicle.

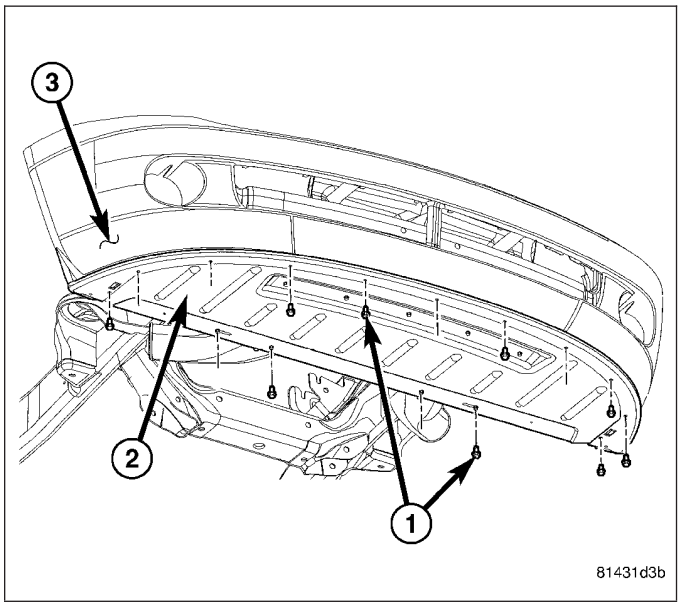

INSTALLATION

1. Position the belly pan (2) under the front of the vehicle.
2. Install the fifteen screws (1) that secure the belly pan to the front bumper (3) and the vehicle underbody. Tighten the screws securely.

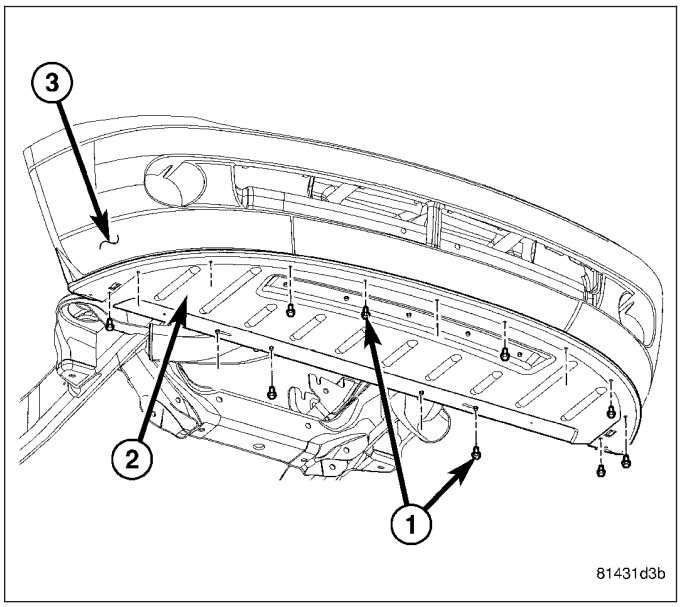

CLADDING-BODY SIDE - BOX - SRT-10

REMOVAL

1. As a guide for installation, apply a length of masking tape on the cargo box (2), parallel to the top edge of the body side cladding (1)
   .

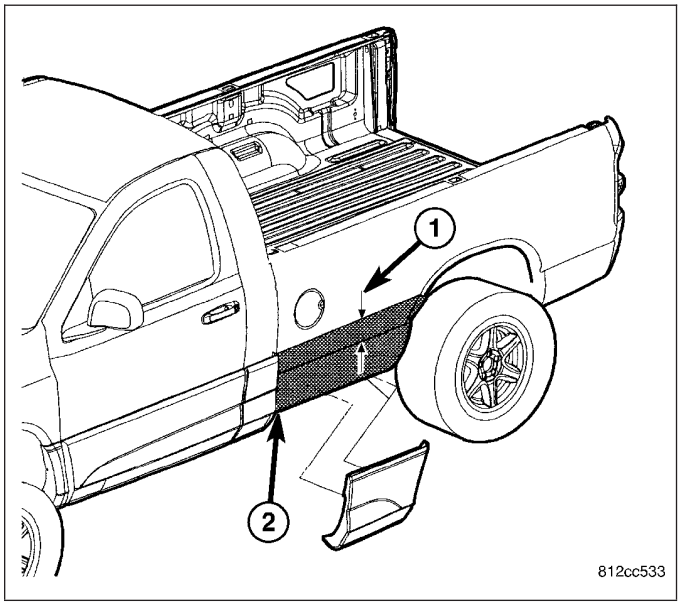

2. Remove the three screws (1, 2 and 3) that secure the body side cladding to the rear of the cargo box.

CAUTION: Do not exceed 52° C (120° F) when heating the cladding or body panels. Failure to follow this caution may result in damage to the cladding and/or the vehicle paint finish.

3. If the temperature is below 21° C (70° F), warm the body side cladding with a heat lamp or heat gun.

NOTE: The body side cladding is attached to the cargo box with adhesive tape and w-type retainers. If required, apply 3M™ General Purpose Adhesive Cleaner or equivalent onto the cladding area to help loosen the adhesive tape.

4. Using a trim stick C-4755 or equivalent, disengage the w-clip retainers and remove and discard the cladding.

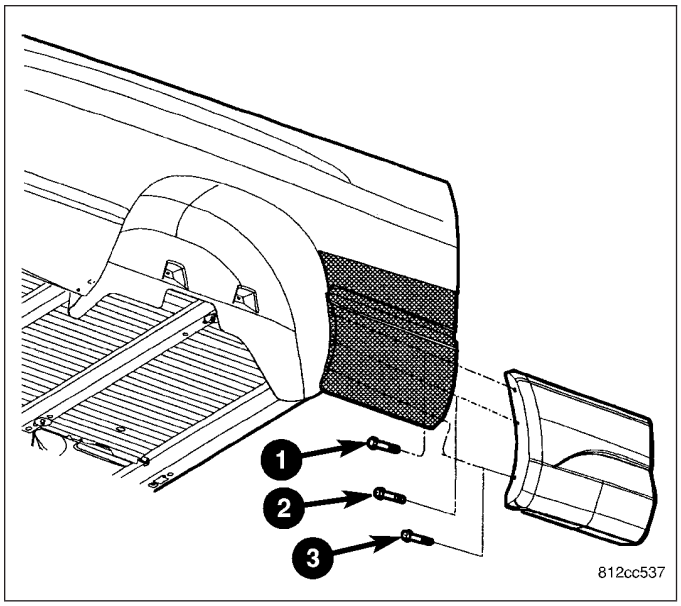

INSTALLATION

1. Using 3M™ General Purpose Adhesive Cleaner or equivalent, remove any adhesive tape residue from the cargo box.

NOTE: Install new cladding within 20 minutes of body panel cleaning.

2. Wipe the attachment areas (2) with a clean, lint-free cloth, moistened with a 50% solution of water and alcohol, starting 120 mm (4.75 in.) above the character line (1) and then wipe dry the areas immediately with a dry, lint-free cloth.

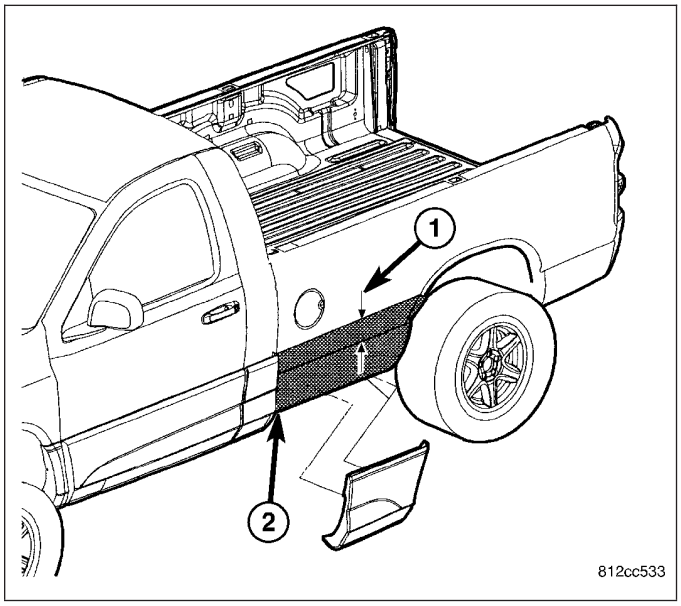

CAUTION: Do not exceed 52° C (120° F) when heating the cladding or body panels. Failure to follow this caution may result in damage to the cladding and/or the vehicle paint finish.

NOTE: If ambient temperatures are below 21° C (70° F), warm the body side cladding and body panel with a heat lamp or gun to assure proper adhesion.

3. Remove the protective covering from the adhesive tape (3) on the back of the body side cladding (1) and position the cladding onto the cargo box using the previously installed guide tape.

NOTE: To ensure proper cladding adhesion, apply consistent and uniform pressure of approximately 40 p.s.i. over the entire surface of the cladding.

4. Install the body side cladding onto the cab. Fully seat the w-clip retainers (2).

5. Install the three screws that secure the body side cladding to the rear of the cargo box in the sequence shown. Tighten the screws to 5 N·m (44 in. lbs.).

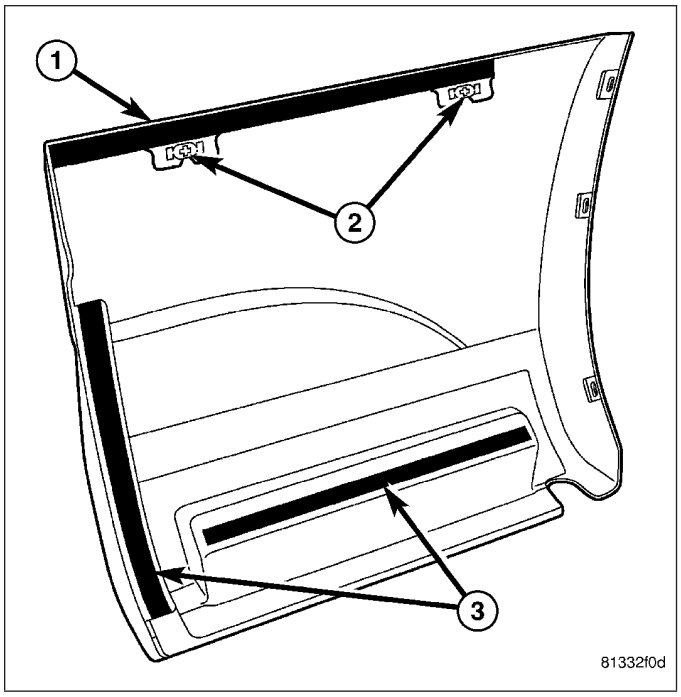

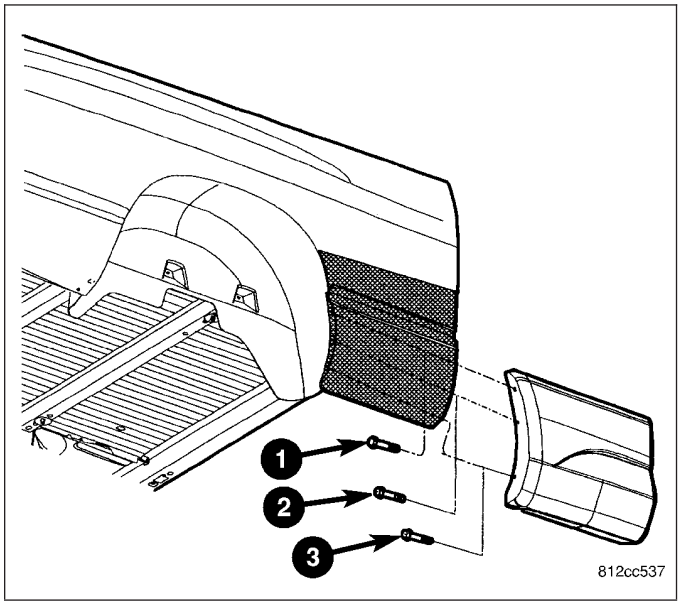

CLADDING-BODY SIDE - CAB - SRT-10

REMOVAL

1. As a guide for installation, apply a length of masking tape on the cab (2), parallel to the top edge of the body side cladding (1).

CAUTION: Do not exceed 52° C (120° F) when heating the cladding or body panels. Failure to follow this caution may result in damage to the cladding and/or the vehicle paint finish.

2. If the temperature is below 21° C (70° F), warm the body side cladding with a heat lamp or heat gun.

NOTE: The body side cladding is attached to the cab with adhesive tape. If required, apply 3M™ General Purpose Adhesive Cleaner or equivalent onto the cladding area to help loosen the adhesive tape.

3. Using a trim stick C-4755 or equivalent, remove and discard the cladding.

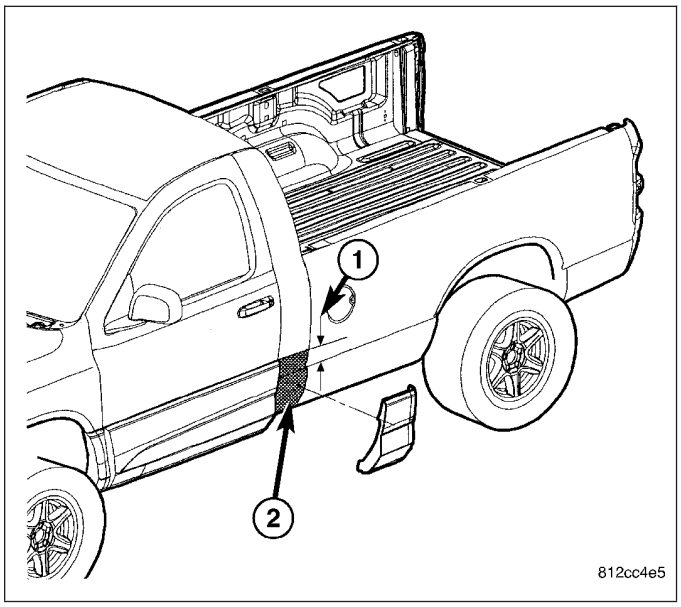

INSTALLATION

1. Using 3M™ General Purpose Adhesive Cleaner or equivalent, remove any adhesive tape residue from the cab.

NOTE: Install new cladding within 20 minutes of body panel cleaning.

2. Wipe the attachment area (2) with a clean, lint-free cloth, moistened with a 50% solution of water and alcohol, starting 120 mm (4.75 in.) above the character line (1) and then wipe dry the area immediately with a dry, lint-free cloth.

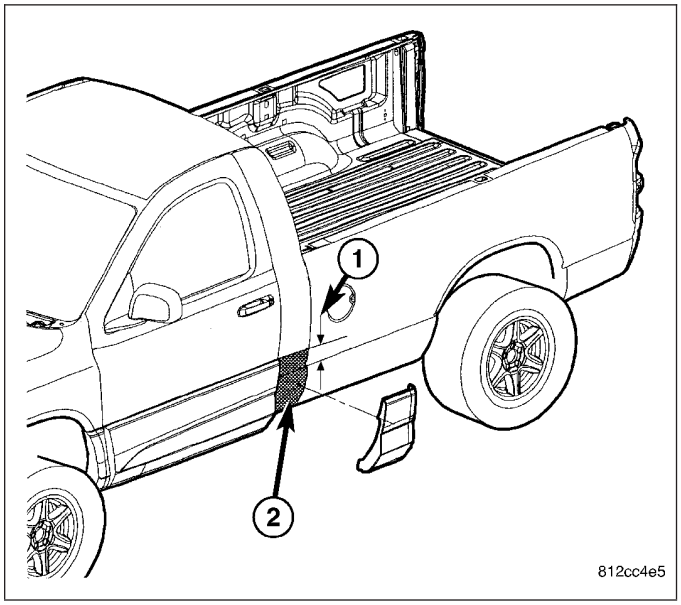

CAUTION: Do not exceed 52° C (120° F) when heating the cladding or body panels. Failure to follow this caution may result in damage to the cladding and/or the vehicle paint finish.

NOTE: If ambient temperatures are below 21° C (70° F), warm the body side cladding and body panel with a heat lamp or gun to assure proper adhesion.

3. Remove the protective covering from the adhesive tape on the back of the body side cladding (1) and position the cladding onto the cab using the previously installed guide tape.

NOTE: To ensure proper cladding adhesion, apply consistent and uniform pressure of approximately 40 p.s.i. over the entire surface of the cladding.

4. Install the body side cladding onto the cab.

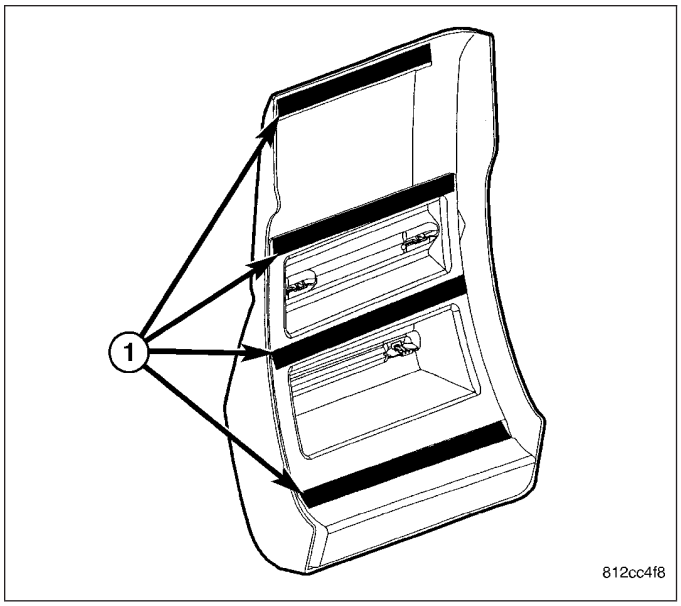

CLADDING-BODY SIDE - DOOR - SRT-10

REMOVAL

1. As a guide for installation, apply a length of masking tape on the door (2), parallel to the top edge of the body side cladding (1).

CAUTION: Do not exceed 52° C (120° F) when heating the cladding or body panels. Failure to follow this caution may result in damage to the cladding and/or the vehicle paint finish.

2. If the temperature is below 21° C (70° F), warm the body side cladding with a heat lamp or heat gun.

NOTE: The body side cladding is attached to the door panel with adhesive tape and push-pin type retainers. If required, apply 3M™ General Purpose Adhesive Cleaner or equivalent onto the cladding area to help loosen the adhesive tape.

3. Using a trim stick C-4755 or equivalent, disengage the push-pin retainers and remove and discard the cladding.

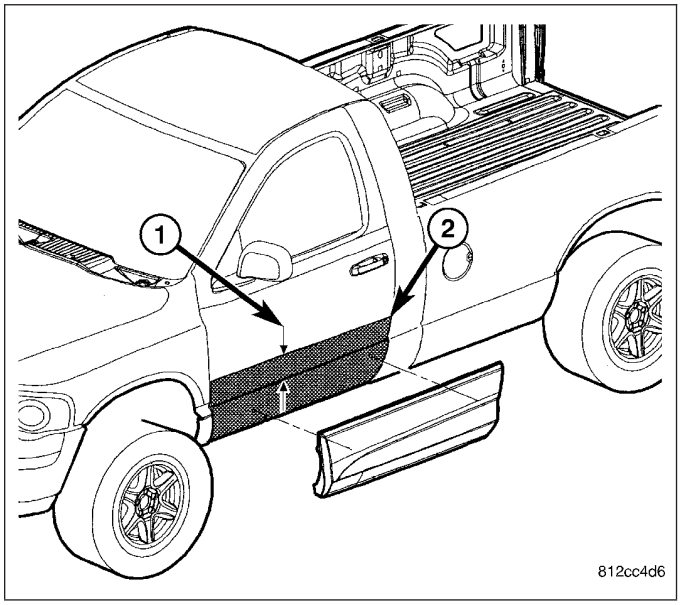

INSTALLATION

1. Using 3M™ General Purpose Adhesive Cleaner or equivalent, remove any adhesive tape residue from the door panel.

NOTE: Install new cladding within 20 minutes of body panel cleaning.

2. Wipe the attachment area (2) with a clean, lint-free cloth, moistened with a 50% solution of water and alcohol, starting 120 mm (4.75 in.) above the character line (1) and then wipe dry the area immediately with a dry, lint-free cloth.

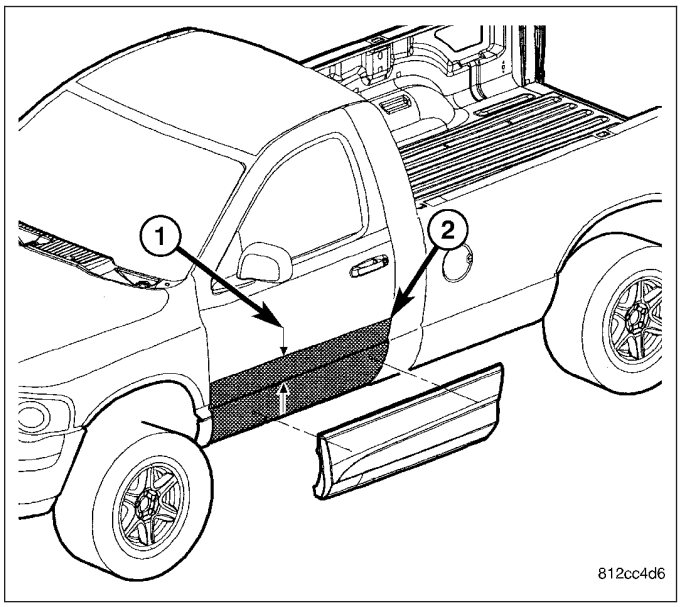

CAUTION: Do not exceed 52° C (120° F) when heating the cladding or body panels. Failure to follow this caution may result in damage to the cladding and/or the vehicle paint finish.

NOTE: If ambient temperatures are below 21° C (70° F), warm the body side cladding and body panel with a heat lamp or gun to assure proper adhesion.

3. Remove the protective covering from the adhesive tape on the back of the body side cladding (2) and position the cladding onto the door panel using the previously installed guide tape.

NOTE: To ensure proper cladding adhesion, apply consistent and uniform pressure of approximately 40 p.s.i. over the entire surface of the cladding.

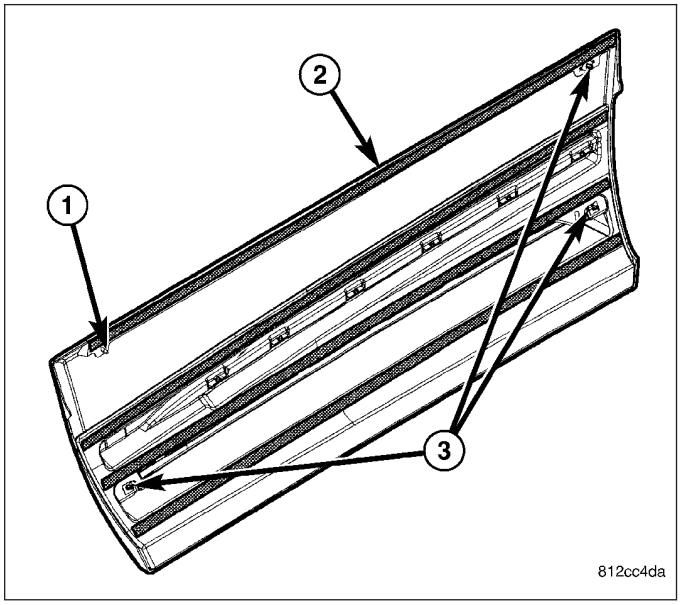

4. Install the body side cladding onto the door panel using the locating pin (1). Fully engage the push-pin retainers (3).

CLADDING-BODY SIDE - FENDER SRT-10

REMOVAL

1. As a guide for installation, apply a length of masking tape on the body panel, parallel to the top edge and, to one end of the body side cladding (1).
2. Remove the two screws (3) that secure the body side cladding to the front fender (2).

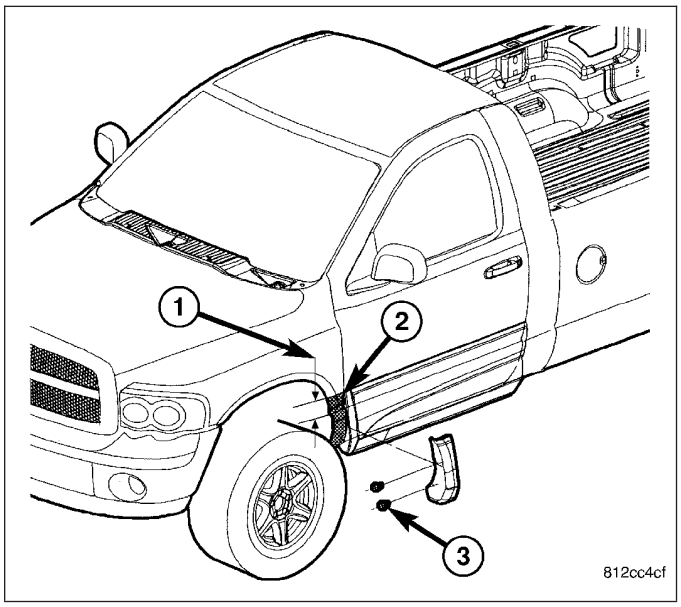

CAUTION: Do not exceed 52° C (120° F) when heating the cladding or body panels. Failure to follow this caution may result in damage to the cladding and/or the vehicle paint finish.

3. If the temperature is below 21° C (70° F), warm the body side cladding with a heat lamp or heat gun.

NOTE: The body side cladding is attached to the body panel with adhesive tape. If required, apply 3M™ General Purpose Adhesive Cleaner or equivalent onto the cladding area to help loosen the adhesive tape.

4. Using a trim stick C-4755 or equivalent, remove and discard the cladding.

INSTALLATION

1. Using 3M™ General Purpose Adhesive Cleaner or equivalent, remove any adhesive tape residue from the front fender.

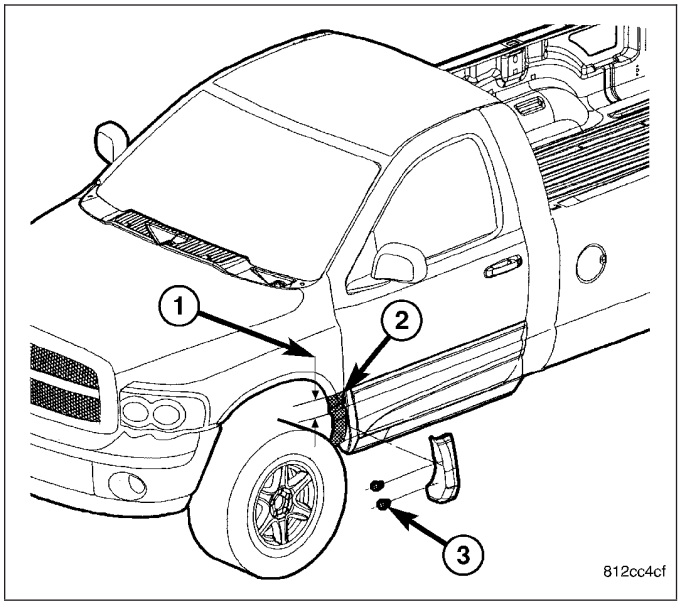

NOTE: Install new cladding within 20 minutes of body panel cleaning.

2. Wipe the attachment area (2) with a clean, lint-free cloth, moistened with a 50% solution of water and alcohol, starting 120 mm (4.75 in.) above the character line (1) and then wipe dry the area immediately with a dry, lint-free cloth.

CAUTION: Do not exceed 52° C (120° F) when heating the cladding or body panels. Failure to follow this caution may result in damage to the cladding and/or the vehicle paint finish.

NOTE: If ambient temperatures are below 21° C (70° F), warm the body side cladding and body panel with a heat lamp or gun to assure proper adhesion.

3. Remove the protective covering from the back of the body side cladding and position the cladding onto the front fender using the previously installed guide tape.

NOTE: To ensure proper cladding adhesion, apply consistent and uniform pressure of approximately 40 p.s.i. over the entire surface of the cladding.

4. Install the body side cladding onto the front fender.

5. Install the two screws (3) that secure the body side cladding to the front fender. Tighten the screws to 5 N·m (44 in. lbs.).

SPOILER - SRT-10

REMOVAL

WITHOUT CARGO BOX COVER

1. Remove the two bolts (2) that secure the spoiler to the rear of the cargo box.
2. Slide the spoiler rearward to disengage the two studs (1) and remove the spoiler.
3. If required, remove the two nuts that secure the two studs to the rear of the cargo box and remove the studs.

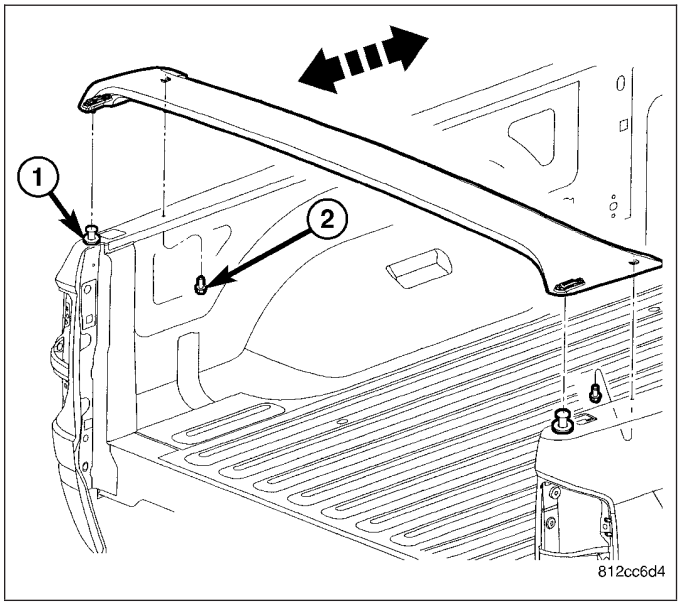

WITH CARGO BOX COVER

1. Remove the five nuts (1) that secure the spoiler (2) to the cargo box cover (3).
2. Remove the spoiler from the cargo box cover .

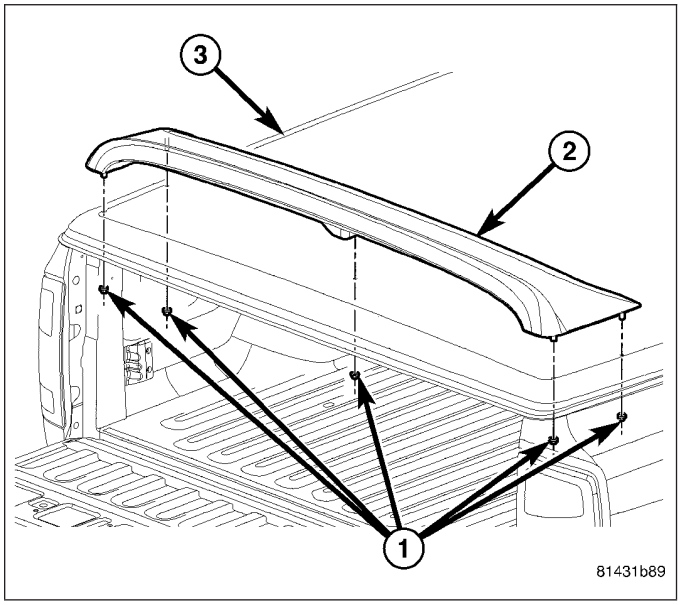

INSTALLATION

WITHOUT CARGO BOX COVER

1. If removed, position the two studs (1) onto the rear of the cargo box and install the retaining nuts. Tighten the nuts to 9 N·m (80 in. lbs.).
2. Position the spoiler over the two studs and slide the spoiler forward until the studs fully engage.
3. Install the two bolts (2) that secure the spoiler to the rear of the cargo box. Tighten the bolts to 6 N·m (50 in. lbs.).

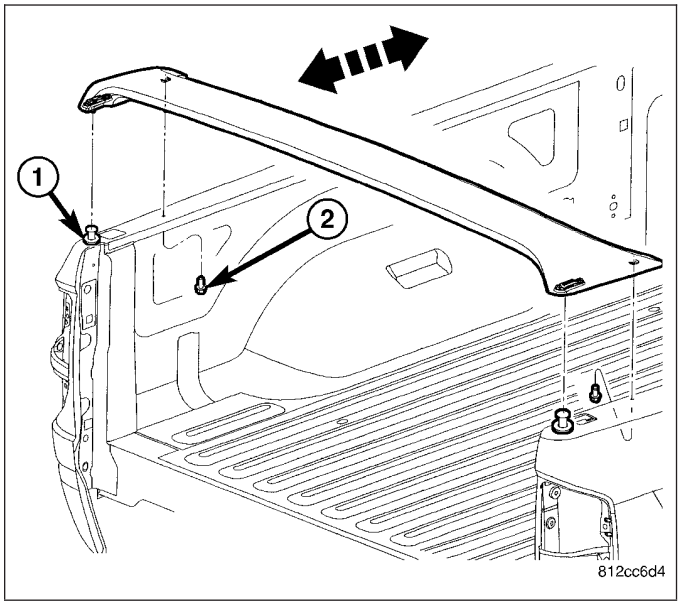

WITH CARGO BOX COVER

1. Position the spoiler (2) onto the rear of the cargo box cover (3).
2. Install the five nuts (1) that secure the spoiler to the cargo box cover. Tighten the nuts to 9 N·m (80 in. lbs.).

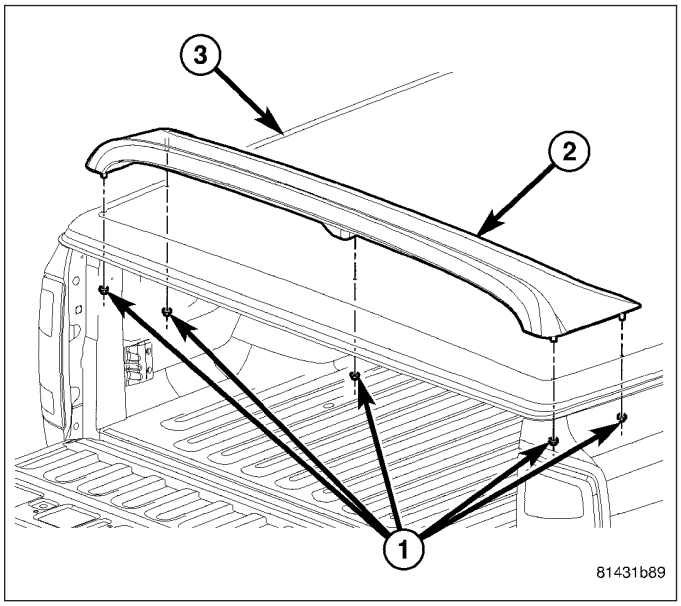

HOOD

TABLE OF CONTENTS

page

BEZEL-HOOD SRT-10
REMOVAL 112
INSTALLATION 113
HINGE
REMOVAL 114
INSTALLATION 115
HOOD
REMOVAL 116
INSTALLATION 116
LATCH
REMOVAL 117
INSTALLATION 117

page

LATCH RELEASE CABLE/HANDLE ASSEMBLY
REMOVAL
REMOVAL 118
INSTALLATION 118
LATCH STRIKER / SECONDARY CATCH
REMOVAL 119
INSTALLATION 119
SUPPORT CYLINDER
REMOVAL 120
INSTALLATION 121

BEZEL-HOOD SRT-10

REMOVAL

NOTE: If the hood scoop bezel is removed for any reason, it should be replaced.

1. Remove the four nuts that secure the hood scoop bezel to the hood.

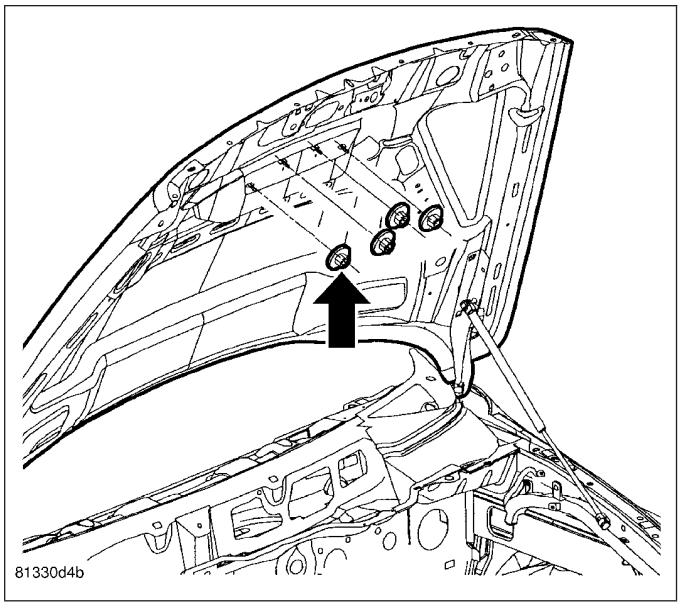

2. Using a trim stick C-4755 or equivalent, disengage the upper retaining clips (2) for the hood scoop bezel (3) from the hood scoop (1).

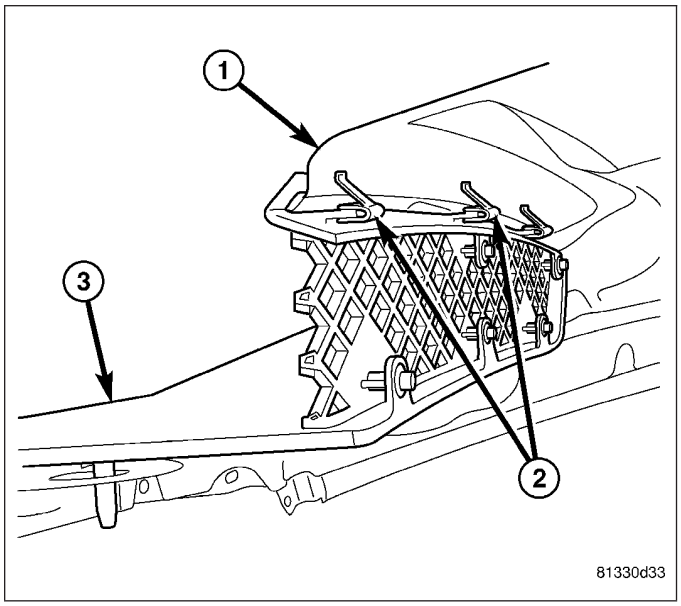

3. Rotate the front of the hood scoop bezel upward, toward the rear of the hood to separate the upper retaining clips from the hood scoop.

CAUTION: If the upper retaining clips come off of the bezel during removal, DO NOT open the hood. This will help prevent the retaining clips from becoming lost inside the hood.

NOTE: If required, use a magnet to remove any retaining clips that may have fallen off of the hood scoop bezel during removal.

4. Remove the hood scoop bezel from the hood.

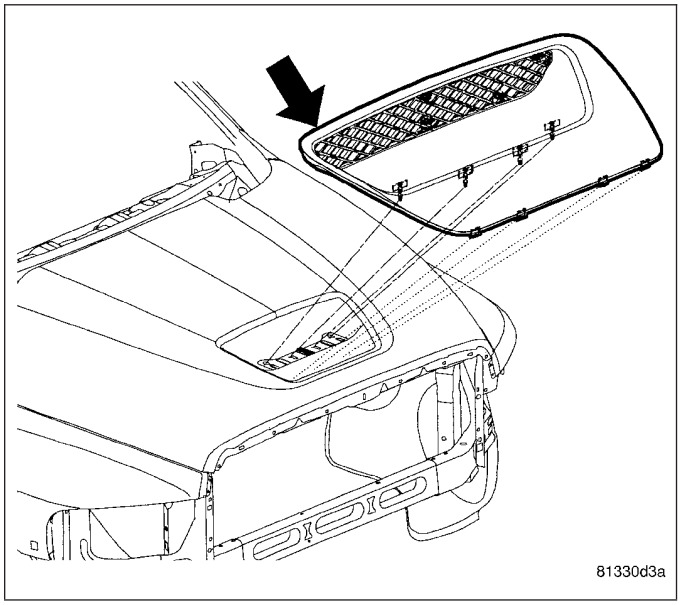

INSTALLATION

NOTE: If the hood scoop bezel is removed for any reason, it should be replaced.

1. Position the hood scoop bezel (3) into the hood scoop (1) and rotate it forward and downward to engage the upper retaining clips (2) to the hood scoop as shown.

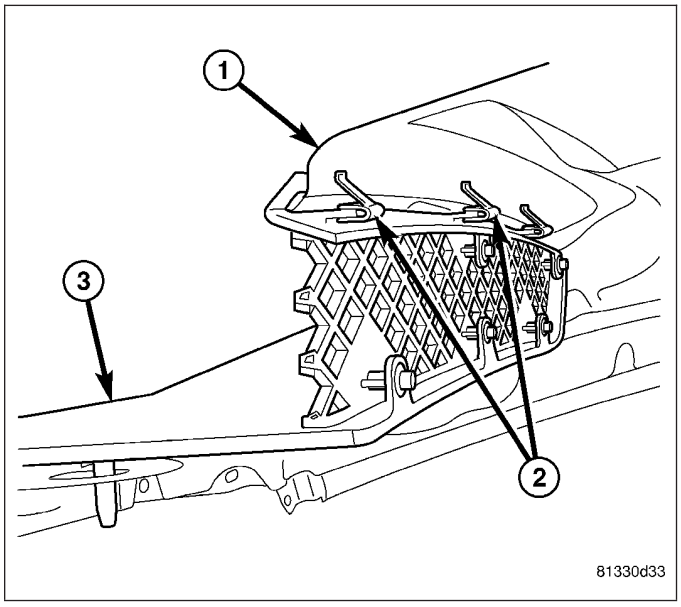

2. Install the four nuts that secure the hood scoop bezel to the hood. Tighten the nuts securely.

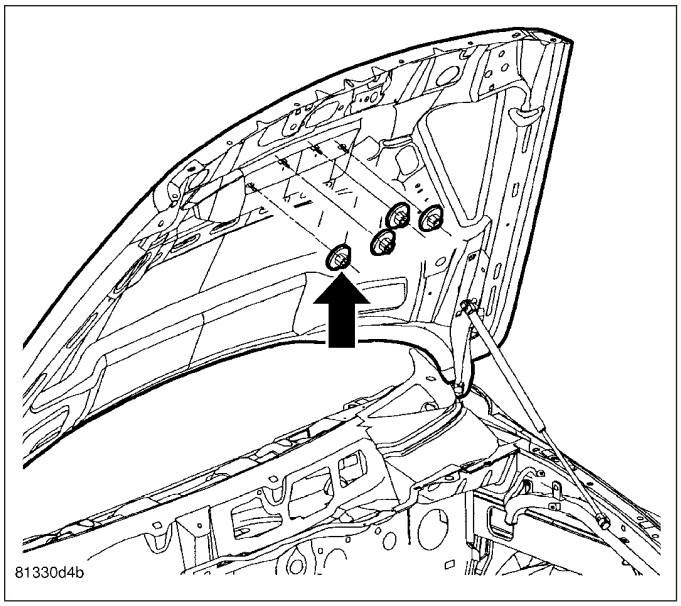

HINGE

REMOVAL

NOTE: It is not necessary to remove the hood to replace the hood hinges. Hood hinges can be replaced one at a time.

1. Remove the cowl grille (Refer to 23 - BODY/EXTERIOR/COWL GRILLE - REMOVAL).
2. Using a grease pencil or equivalent, mark the position of the hood hinge (3) on the hood for the hinge being serviced.
3. Support the hood and disconnect the support cylinder from the hood (Refer to 23 - BODY/HOOD/ SUPPORT CYLINDER - REMOVAL).
4. Remove the two nuts that secure the hood to the hood hinge.
5. Remove the bolt (2) that secures the front fender (1) to the hood hinge.

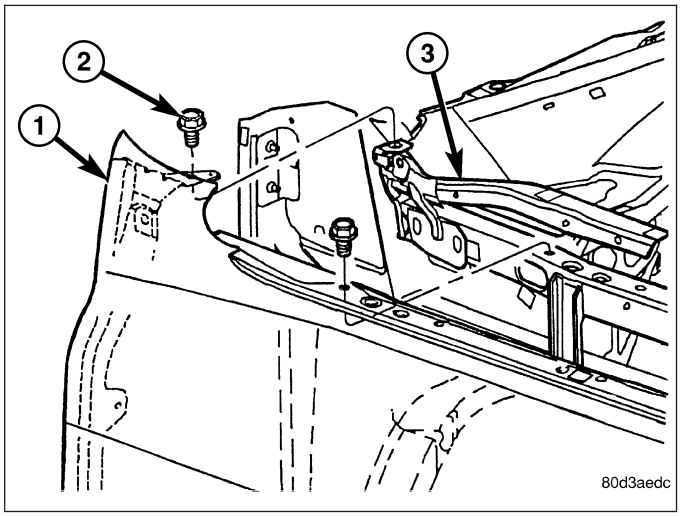

6. Remove the wheelhouse splash shield (Refer to 23 - BODY/EXTERIOR/FRONT WHEELHOUSE SPLASH SHIELD - REMOVAL).
7. Remove the bolts (3) that secure the hood hinge (2) to the fender rail (1).
8. Slide the hood hinge forward and remove the hinge.

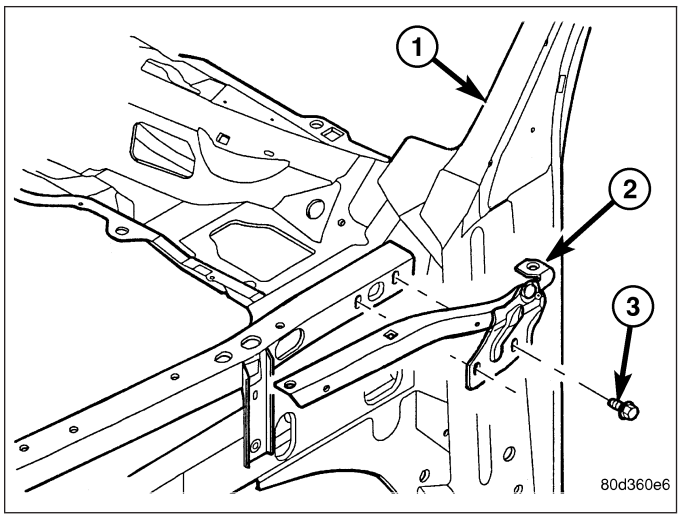

INSTALLATION

NOTE: It is not necessary to remove the hood to replace the hood hinges. Hood hinges can be replaced one at a time.

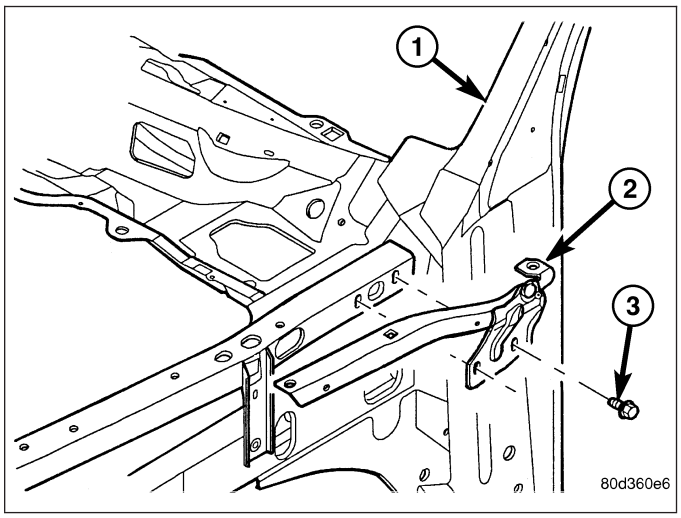

1. Position the hood hinge (2) onto the fender rail (1) and slide it rearward to its installed location.
2. Install the bolts (3) that secure the hood hinge to the fender rail. Tighten the bolts to 20 N·m (15 ft. lbs.).

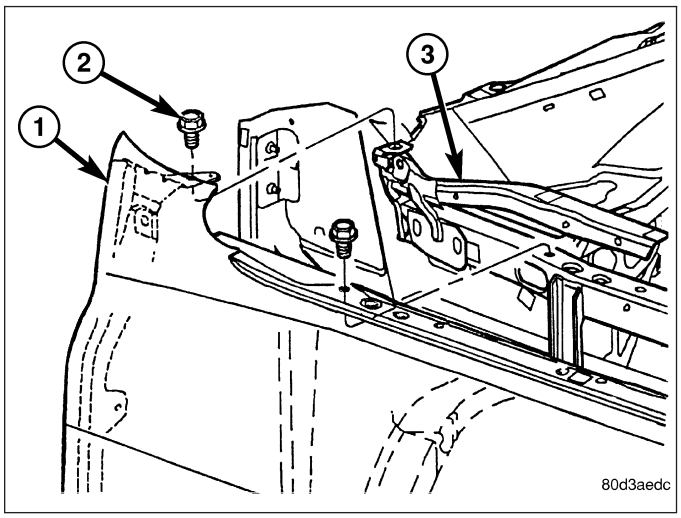

3. Install the bolt (2) that secures the front fender (1) to the hood hinge (3). Tighten the bolt to 17 N·m (13 ft. lbs.).
4. Loosely install the two nuts that secure the hood to the hood hinge.
5. Align the hood to the hood hinge using the reference marks made during the Removal procedure and tighten the nuts to 23 N·m (17 ft. lbs.).
6. Install the support cylinder (Refer to 23 - BODY/HOOD/SUPPORT CYLINDER - INSTALLATION).
7. If required, adjust the hood to the correct position (Refer to 23 - BODY/BODY STRUCTURE/GAP AND FLUSH - SPECIFICATIONS).
8. Install the wheelhouse splash shield (Refer to 23 - BODY/EXTERIOR/FRONT WHEELHOUSE SPLASH SHIELD - INSTALLATION).
9. Install the cowl grille (Refer to 23 - BODY/EXTERIOR/COWL GRILLE - INSTALLATION).

HOOD

REMOVAL

1. Disconnect and isolate the negative battery cable.
2. Remove the underhood lamp unit and the ambient temperature sensor from the hood (1) (Refer to 8 - ELECTRICAL/LAMPS/LIGHTING - EXTERIOR/UNDERHOOD LAMP UNIT - REMOVAL) and (Refer to 8 - ELECTRICAL/OVERHEAD CONSOLE/SENSOR-AMBIENT TEMPERATURE - REMOVAL).
3. If required, remove the grille and the grille frame from the hood (Refer to 23 - BODY/EXTERIOR/GRILLE - REMOVAL) and (Refer to 23 - BODY/EXTERIOR/GRILLE FRAME - REMOVAL).
4. Using a grease pencil or equivalent, mark the position of the hood hinges (2) on the hood.
5. Support the hood and disconnect the support cylinders from the hood (Refer to 23 - BODY/HOOD/SUPPORT CYLINDER - REMOVAL).
6. Remove the two nuts (3) that secure the hood to each hood hinge and remove the hood.

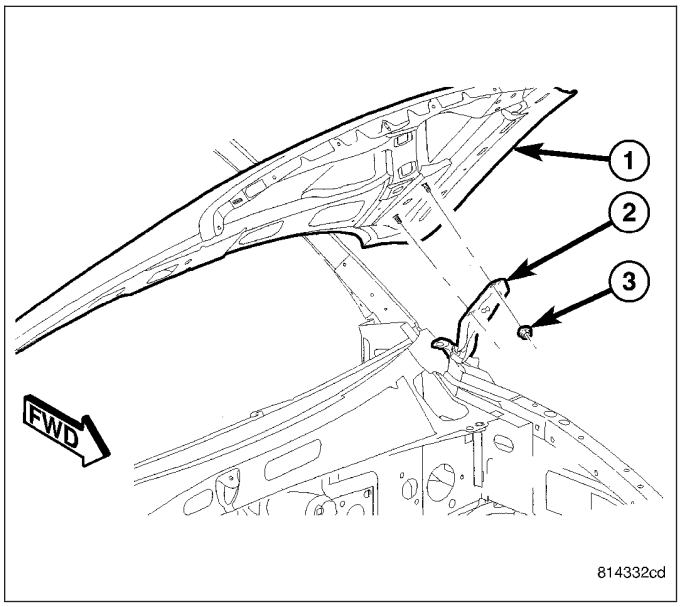

INSTALLATION

1. Position the hood (1) onto the hood hinges (2) and loosely install the two nuts (3) that secure the hood to each hood hinge.
2. Align the hood to the hood hinges using the reference marks made during the Removal procedure and tighten the nuts to 23 N·m (17 ft. lbs.).
3. Install the support cylinders to the hood (Refer to 23 - BODY/HOOD/SUPPORT CYLINDER - INSTALLATION).
4. If removed, install the grille frame and the grille to the hood (Refer to 23 - BODY/EXTERIOR/GRILLE FRAME - INSTALLATION) and (Refer to 23 - BODY/EXTERIOR/GRILLE - INSTALLATION).
5. Install the underhood lamp unit and the ambient temperature sensor to the hood (Refer to 8 - ELECTRICAL/LAMPS/LIGHTING - EXTERIOR/UNDERHOOD LAMP UNIT - INSTALLATION) and (Refer to 8 - ELECTRICAL/OVERHEAD CONSOLE/SENSOR-AMBIENT TEMPERATURE - INSTALLATION).
6. Reconnect the negative battery cable.
7. If required, adjust the hood to the correct position (Refer to 23 - BODY/BODY STRUCTURE/GAP AND FLUSH - SPECIFICATIONS).

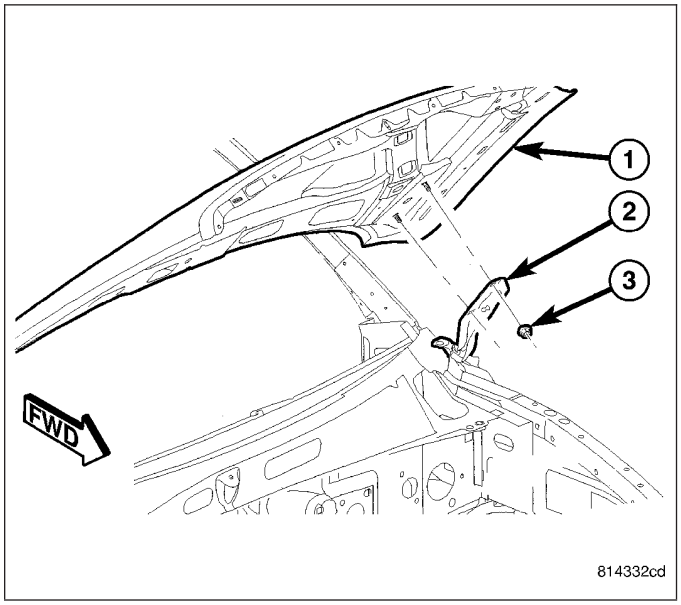

LATCH

REMOVAL

1. Using a grease pencil or equivalent, mark the position of the hood latch (1) on the upper radiator crossmember.
2. Remove the two bolts (3) that secure the hood latch to the upper radiator crossmember.
3. Disconnect the hood latch cable (2) from the hood latch and remove the latch.

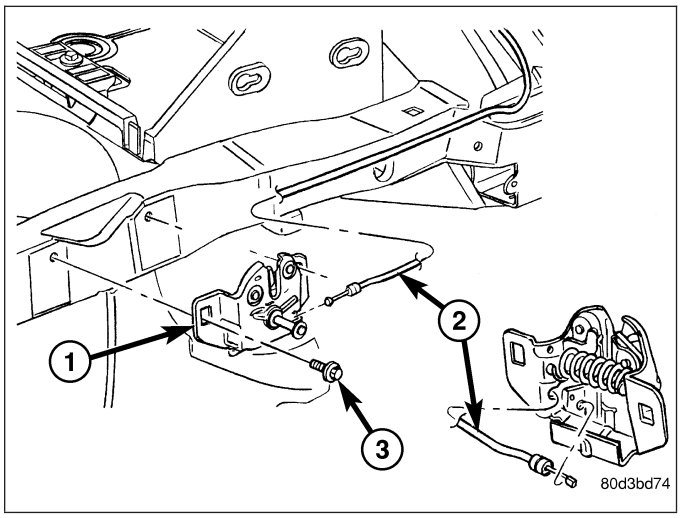

INSTALLATION

1. Connect the hood latch cable (2) to the hood latch (1).
2. Position the hood latch to the upper radiator crossmember and loosely install the two bolts (1) that secure the latch to the crossmember.
3. Align the hood latch to the upper radiator crossmember using the reference marks made during the Removal procedure and tighten the bolts to 11 N·m (8 ft. lbs.).
4. If required, adjust the hood to the correct position (Refer to 23 - BODY/BODY STRUCTURE/GAP AND FLUSH - SPECIFICATIONS).

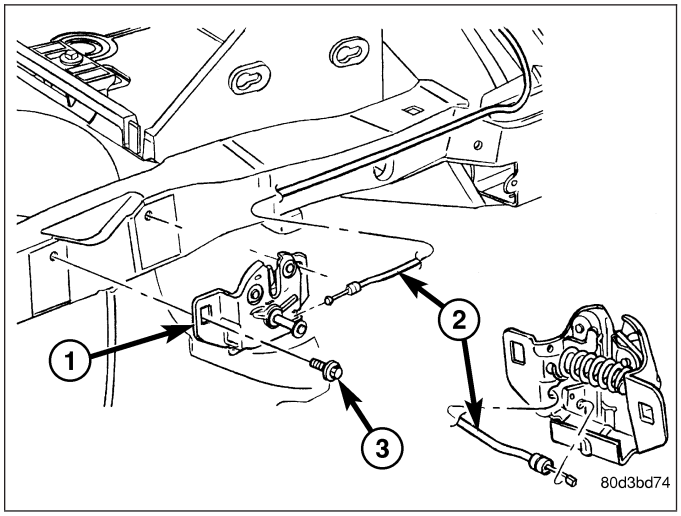

LATCH RELEASE CABLE/HANDLE ASSEMBLY

REMOVAL

REMOVAL

1. Remove the hood latch (Refer to 23 - BODY/HOOD/LATCH - REMOVAL).
2. Remove the battery tray from the left side of the engine compartment (Refer to 8 - ELECTRICAL/BATTERY SYSTEM/TRAY - REMOVAL).
3. Remove the three hood release cable retainers from the upper radiator crossmember and the left fender rail.
4. From inside the vehicle, remove the two bolts (1) that secure the hood release handle (2) to the instrument panel bracket (3).
5. Remove the grommet (4) from the cowl panel and remove the hood release cable and handle assembly.

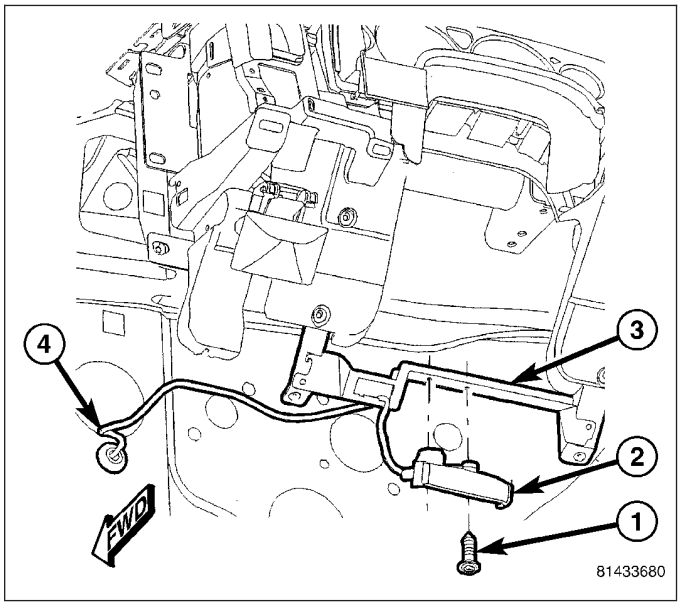

INSTALLATION

1. Route the hood release cable through the cowl panel and install the grommet (4).
2. Position the hood release handle (2) onto the instrument panel bracket (3).
3. Install the two bolts (1) that secure the hood release handle to the instrument panel bracket. Tighten the bolts to 9 N·m (80 in. lbs.).
4. Route the hood release cable along the left fender rail and the upper radiator crossmember and install the three hood release cable retainers.
5. Install the battery tray to the left side of the engine compartment (Refer to 8 - ELECTRICAL/BATTERY SYSTEM/TRAY - INSTALLATION).
6. Install the hood latch (Refer to 23 - BODY/HOOD/LATCH - INSTALLATION).

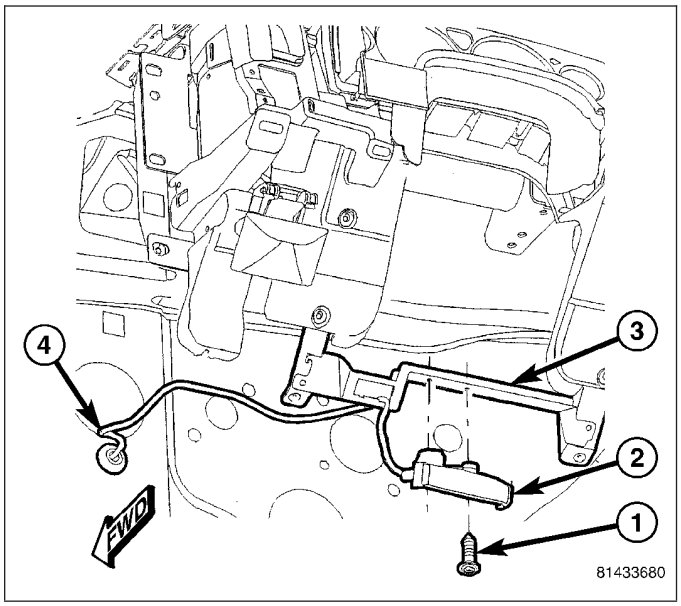

LATCH STRIKER / SECONDARY CATCH

REMOVAL

1. Disconnect the release handle (4) from the secondary hood latch and striker assembly (2) and remove the handle from the grille frame (5).
2. Remove the two bolts (3) that secure the secondary hood latch and striker assembly to the hood and remove the assembly.

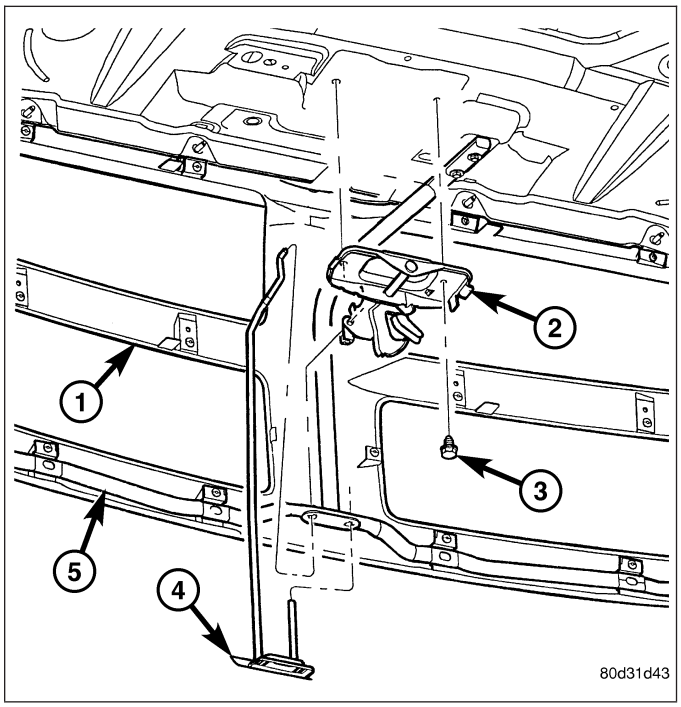

INSTALLATION

1. Position the secondary hood latch and striker assembly (2) to the hood.
2. Install the two bolts (3) that secure the secondary hood latch and striker assembly to the hood. Tighten the bolts to 11 N·m (8 ft. lbs.).
3. Install the release handle (4) through the grille frame (5) and connect it to the secondary hood latch.
4. If required, adjust the hood to the correct position (Refer to 23 - BODY/BODY STRUCTURE/GAP AND FLUSH - SPECIFICATIONS).

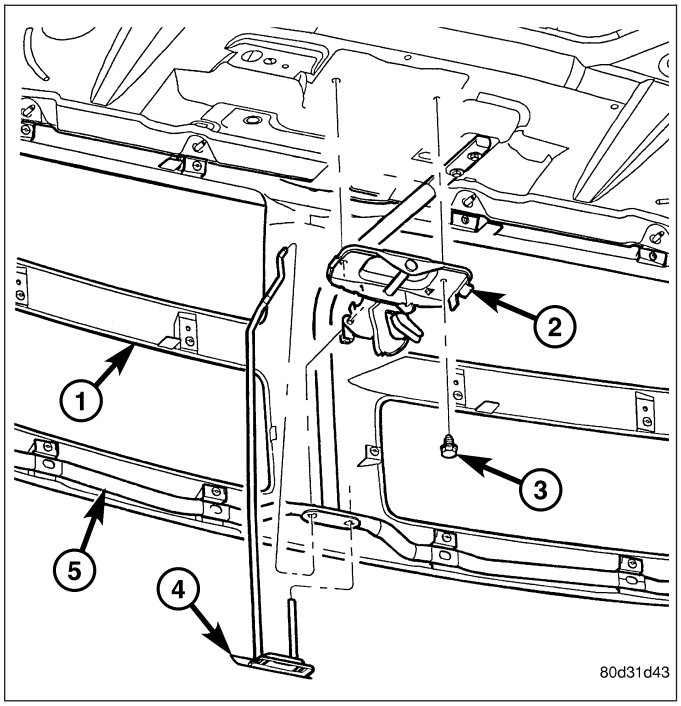

SUPPORT CYLINDER

REMOVAL

NOTE: The hood support cylinders can be replaced one at a time.

1. Open and support the hood.

CAUTION: Do not pull on the hood support cylinders at the middle of the support cylinder during removal. Failure to follow this caution can result in damage to the hood support cylinders.

2. Using a small flat bladed tool, or equivalent (3), release the retaining clip (2) at each end of the support cylinder while carefully pulling the ball socket (1) away from the ball stud (4).

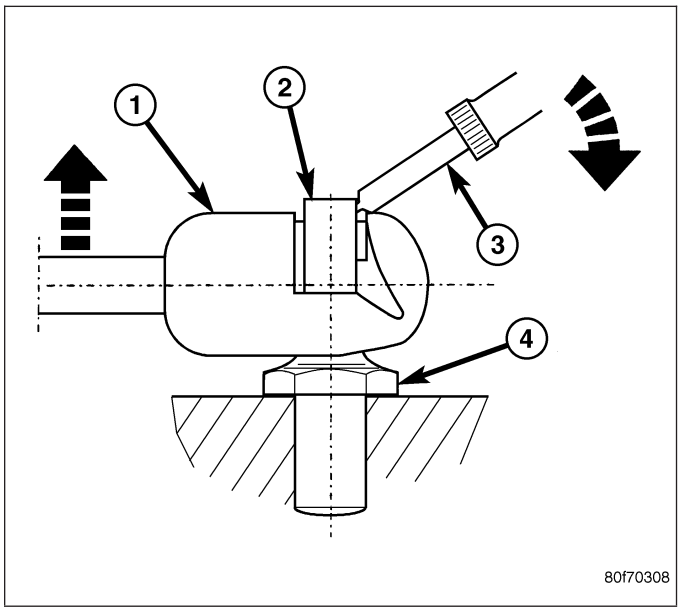

NOTE: Lift the clips (1) only enough to release the ball studs (3).

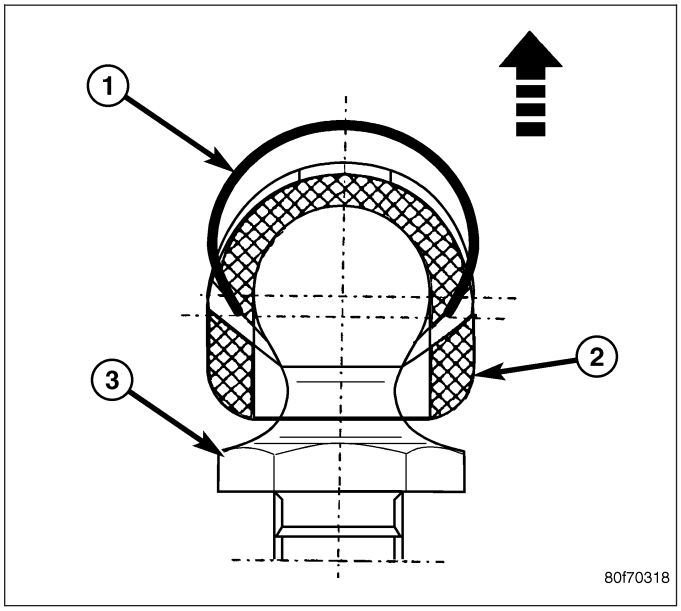

3. Disconnect the hood support cylinder (5) from the hood (1) and the fender rail (3).
4. If required, remove the upper ball stud (2) from hood and the lower ball stud (4) from the fender rail.

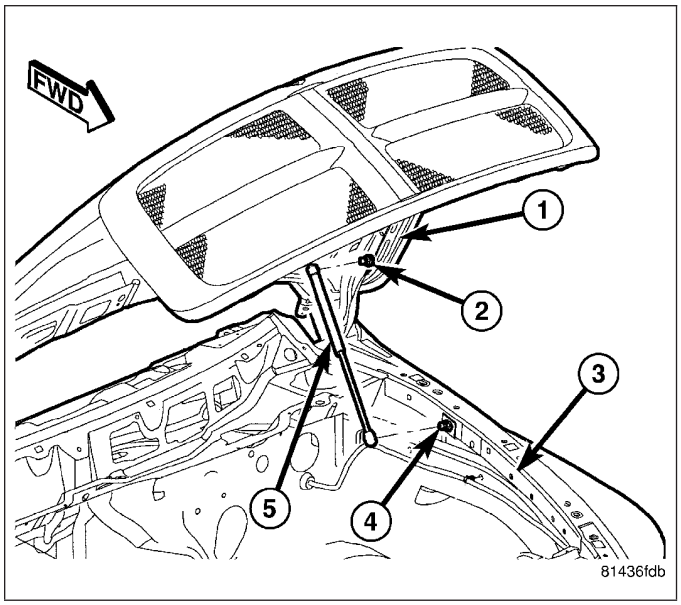

INSTALLATION

1. If removed, install the upper ball stud (2) onto the hood (1) and the lower ball stud (4) onto the fender rail (3). Install the ball studs securely.

CAUTION: Do not push on the hood support cylinders at the middle of the support cylinder during installation. Failure to follow this caution can result in damage to the hood support cylinders.

NOTE: Install the hood support cylinders with the cylinder end connected to the hood as shown.

NOTE: If required, only release each retaining clip enough to install the ball socket onto the ball stud.

2. Install the hood support cylinder (5) over the upper and lower ball studs and fully engage the retaining clips.

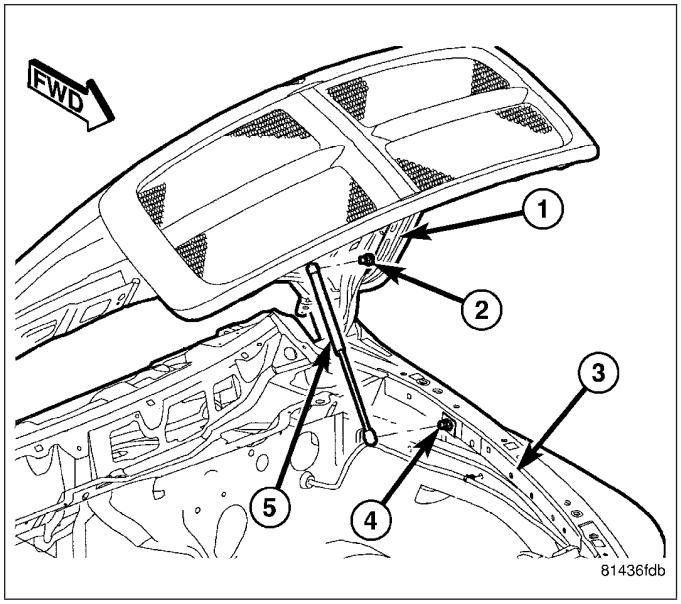

INSTRUMENT PANEL

TABLE OF CONTENTS

page

ASH RECEIVER
REMOVAL 122
INSTALLATION 123
CLUSTER BEZEL
REMOVAL 123
INSTALLATION 124
CUP HOLDER
REMOVAL 124
INSTALLATION 127
GLOVE BOX
REMOVAL 128
INSTALLATION 128
GLOVE BOX LATCH
REMOVAL 129
INSTALLATION 130
INSTRUMENT PANEL ASSEMBLY
REMOVAL 130
INSTALLATION 135
INSTRUMENT PANEL CENTER BEZEL
REMOVAL 138
INSTALLATION 139
INSTRUMENT PANEL DRIVER SIDE BEZEL
REMOVAL 139

page

INSTALLATION 140
INSTRUMENT PANEL LOWER SURROUND
REMOVAL 140
INSTALLATION 141
INSTRUMENT PANEL HEADLAMP SWITCH BEZEL
REMOVAL 141
INSTALLATION 142
INSTRUMENT PANEL TOP COVER
REMOVAL 142
INSTALLATION 143
STEERING COLUMN OPENING COVER
REMOVAL 143
INSTALLATION 144
STEERING COLUMN OPENING SUPPORT BRACKET
REMOVAL 144
INSTALLATION 145
STORAGE BIN
REMOVAL 146
INSTALLATION 147

ASH RECEIVER

REMOVAL

1. Open the ash receiver (3) and apply force in a downward motion to disengage the locking tabs (1) from the instrument panel (2).
2. Roll the ash receiver further downward and remove it from the instrument panel.

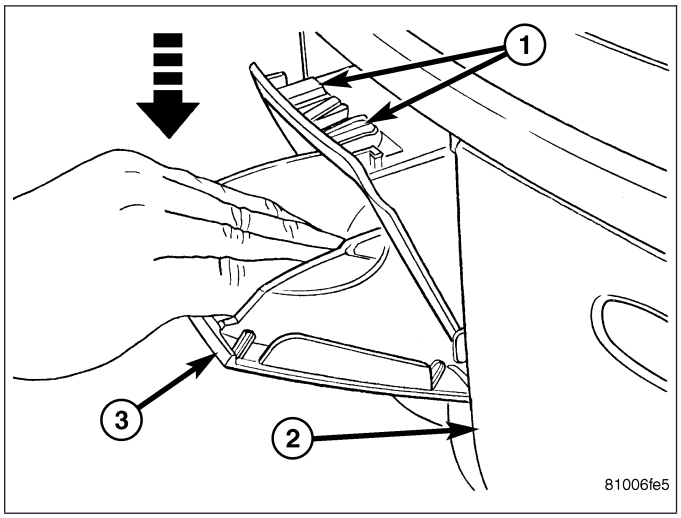

INSTALLATION

1. Position the bottom of the ash receiver (3) into the opening of the instrument panel (2).
2. Pivot the ash receiver upward and fully seat the retaining clips (1) into the instrument panel.

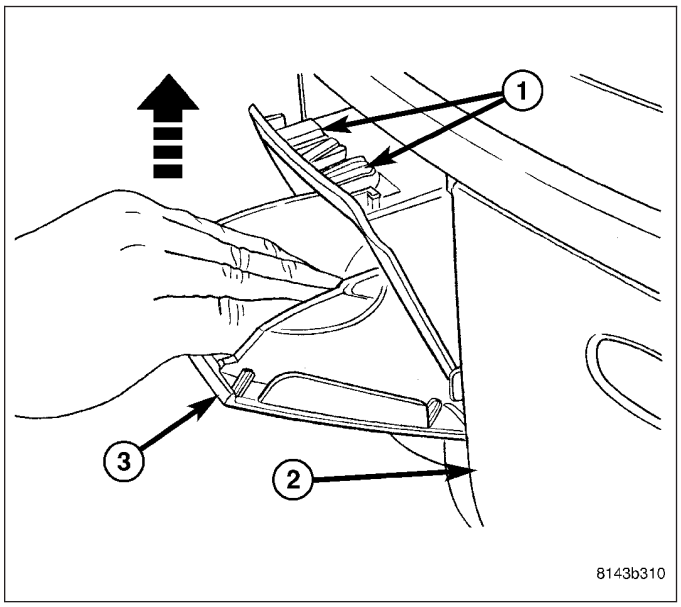

CLUSTER BEZEL

REMOVAL

WARNING: On vehicles equipped with airbags, disable the airbag system before attempting any steering wheel, steering column, seat belt tensioner, or instrument panel component diagnosis or service. Disconnect and isolate the battery negative (ground) cable, then wait two minutes for the airbag system capacitor to discharge before performing further diagnosis or service. This is the only sure way to disable the airbag system. Failure to take the proper precautions could result in accidental airbag deployment and possible personal injury or death.

1. Disconnect and isolate the negative battery cable.
2. Remove the headlamp switch bezel (Refer to 23 - BODY/INSTRUMENT PANEL/INSTRUMENT PANEL SWITCH BEZEL - REMOVAL).
3. Remove the instrument panel center bezel (Refer to 23 - BODY/INSTRUMENT PANEL/INSTRUMENT PANEL CENTER BEZEL - REMOVAL).
4. Remove the two screws (2) that secure the top of the instrument cluster bezel (3) to the instrument panel (1).
5. Using a trim stick C-4755 or equivalent, disengage the two retainer clips (4) that secure the bottom of the instrument cluster bezel to the instrument panel.
6. Carefully disengage the instrument cluster bezel from the instrument panel opening and remove the bezel.

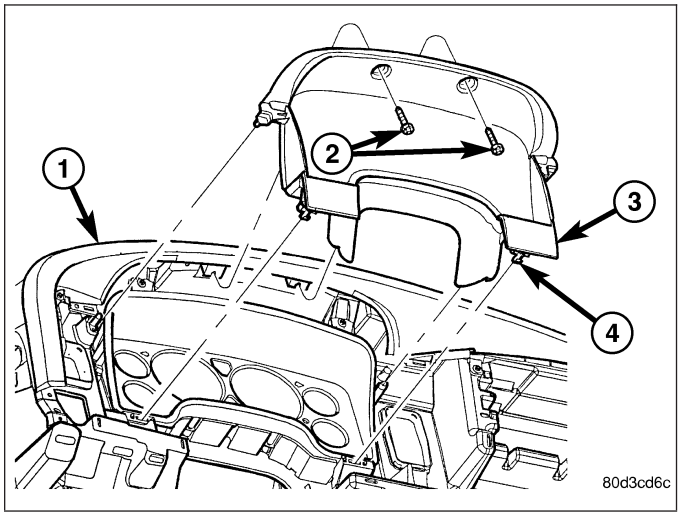

INSTALLATION

1. Position the instrument cluster bezel (3) into the opening of the instrument panel (1). Make sure to align the bosses over the posts located on the left and right side of the instrument cluster opening.
2. Install the instrument cluster bezel onto the instrument panel and fully engage the two retainer clips (4) to the instrument panel.
3. Install the two screws (2) that secure the instrument cluster bezel to the instrument pane. Tighten the screws to 2 N·m (17 in. lbs.).
4. Install the center bezel (Refer to 23 - BODY/INSTRUMENT PANEL/INSTRUMENT PANEL CENTER BEZEL - INSTALLATION).
5. Install the headlamp switch bezel (Refer to 23 - BODY/INSTRUMENT PANEL/INSTRUMENT PANEL SWITCH BEZEL - INSTALLATION).
6. Reconnect the negative battery cable.

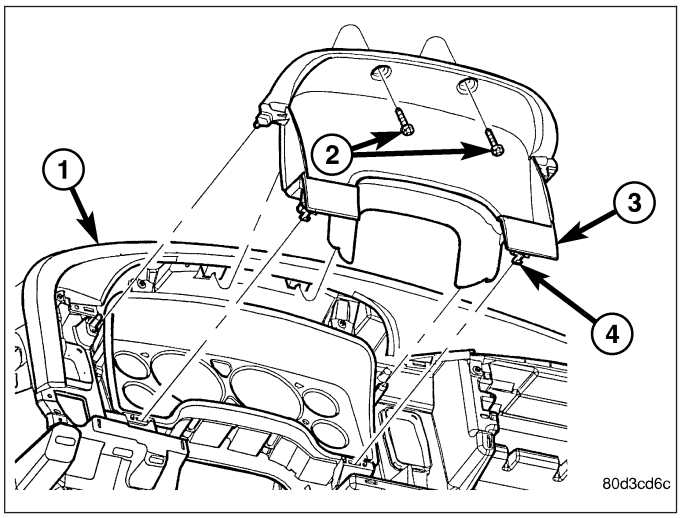

CUP HOLDER

REMOVAL

WARNING: On vehicles equipped with airbags, disable the airbag system before attempting any steering wheel, steering column, seat belt tensioner, or instrument panel component diagnosis or service. Disconnect and isolate the battery negative (ground) cable, then wait two minutes for the airbag system capacitor to discharge before performing further diagnosis or service. This is the only sure way to disable the airbag system. Failure to take the proper precautions could result in accidental airbag deployment and possible personal injury or death.

NOTE: A storage bin replaces the cup holder in the instrument panel when the vehicle is equipped with a floor console.

NOTE: If the cup holder is binding or sticking, (refer to - Cup Holder Binds or Sticks Repair Procedure) before replacing the cup holder.

1. Remove the center bezel (Refer to 23 - BODY/INSTRUMENT PANEL/INSTRUMENT PANEL CENTER BEZEL - REMOVAL).
2. Remove the airbag control module cover (Refer to 8 - ELECTRICAL/RESTRAINTS/COVER-AIRBAG CONTROL MODULE - REMOVAL).
3. Remove the four screws (1) that secure the cup holder (2) to the instrument panel.

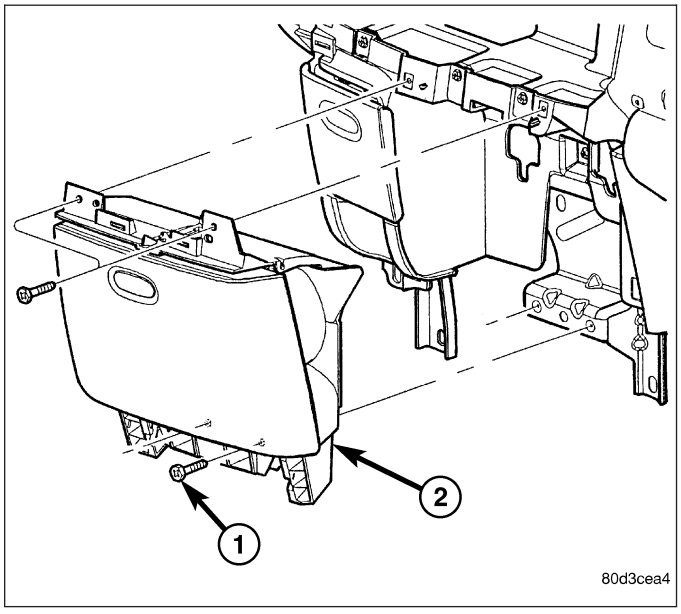

4. Open the cup holder (2) and remove the two screws (1) that secure the cup holder to the instrument panel.
5. Remove the cup holder from the vehicle.

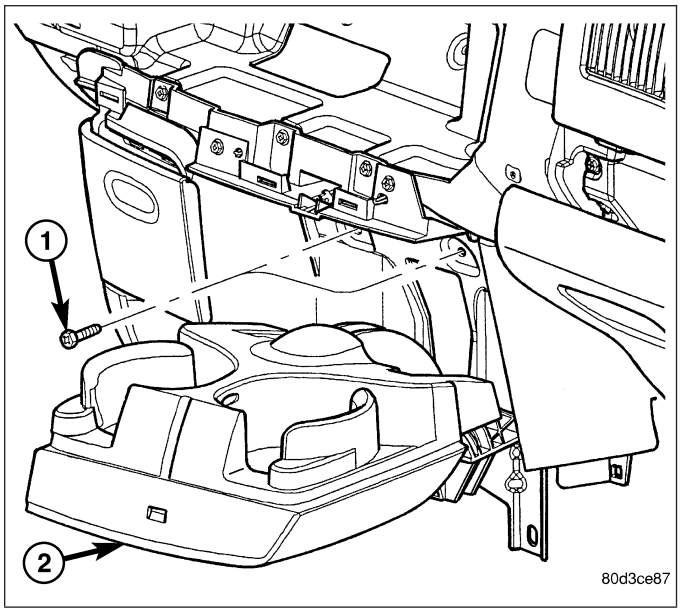

Cup Holder Binds or Sticks Repair Procedure

1. Using a trim stick C-4755 or equivalent, gently pry on each side of the Airbag Control Module (ACM) cover located under the cup holder and remove the ACM cover.
2. Operated the cup holder with the ACM cover removed. If the cup holder now operates freely, there is an interference between the ACM cover and bottom of the cup holder. If the cup holder binds with the ACM cover removed, proceed to Step 6.
3. Install the ACM cover and inspect the area where the cup holder and the ACM cover come together (3). There must be a gap between the ACM cover and the bottom of the cup holder. If the ACM cover is in contact with cup holder, try realigning the cover by pushing the bottom of the cover towards the front. if this provides a gap and the cup holder now operates freely, the repair is complete. If the gap cannot be achieved by adjusting the ACM cover proceed to the next step.

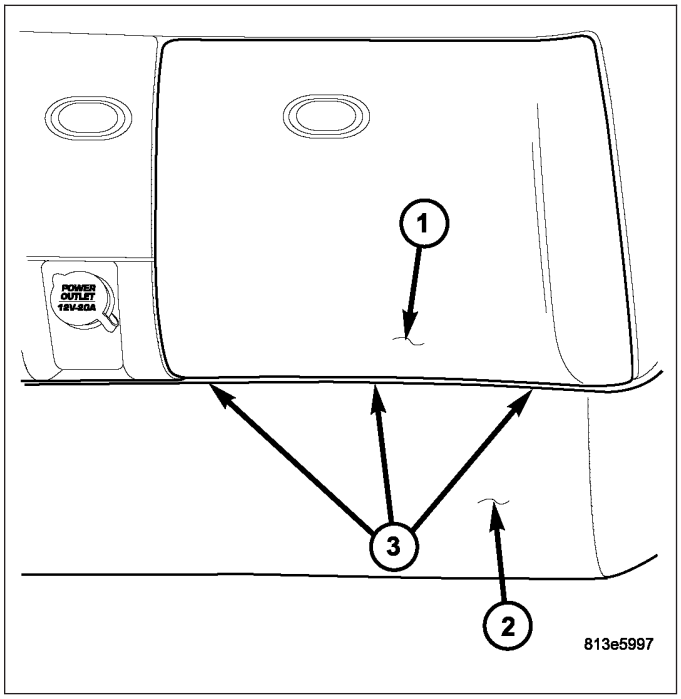

4. The ACM wire harness (1) runs rearward along the left side of the tunnel under the carpet. Rub your hand along the carpet in the area of the bottom of the ACM cover and feel for the harness. If the harness can be felt, it may be pushing the ACM cover upward and into the cup holder. If this is happening it may be necessary to reroute the harness or remove carpet padding from the area.
5. Roll the carpet back and make sure that there are no plastic retainers in the area that could cause the interference. If a retainer is present remove it. Make sure that the harness is not sitting on a raised portion of the floor. If it is, reroute the harness to a lower area on the floor. Remove the any carpet padding from the area where the harness contacts the carpet to gain additional clearance. This should provide the clearance needed. and complete the repair.

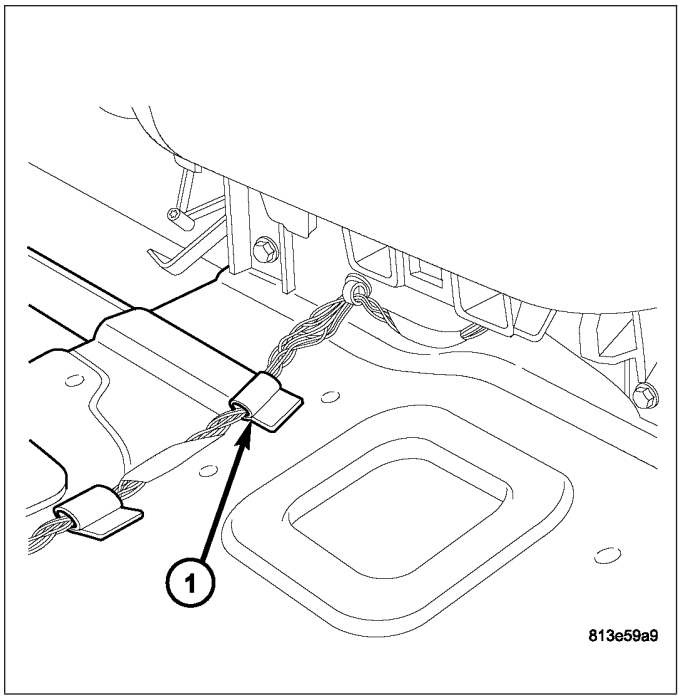

6. Remove the cup holder.
7. Operate the cup holder out of the vehicle. If the cup holder still binds it must be replaced. If it operates freely, inspect the metal bracket (1) where the cup holder fasteners attach as shown. If the bracket is bent, it could cause the cup holder to twist or distort when the screws are installed. Straighten the bracket and install the cup holder. If the cup holder operates freely the repair is complete. if the cup holder still binds, it must be replaced.

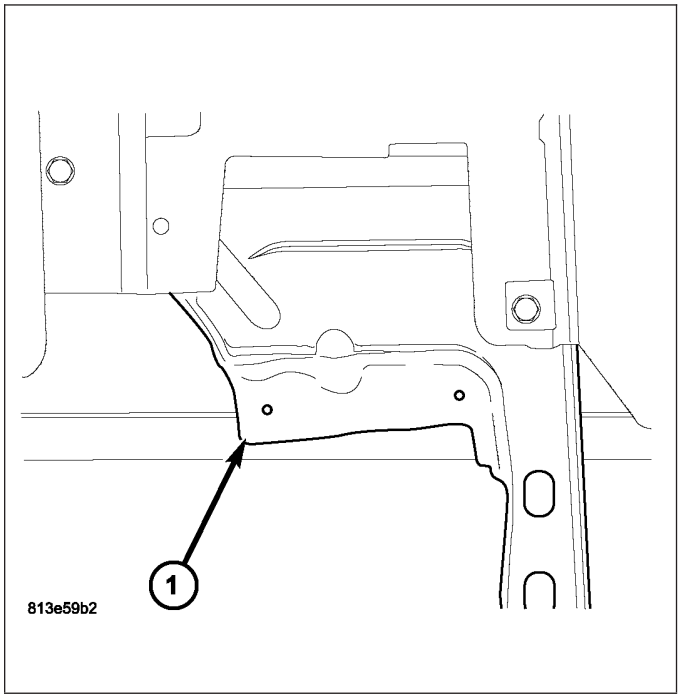

INSTALLATION

NOTE: A storage bin replaces the cup holder in the instrument panel when the vehicle is equipped with a floor console.

1. Position the cup holder (2) into the instrument panel.
2. Install the four screws (1) that secure the cup holder to the instrument panel. Tighten the screws to 2.2 N·m (20 in. lbs.).

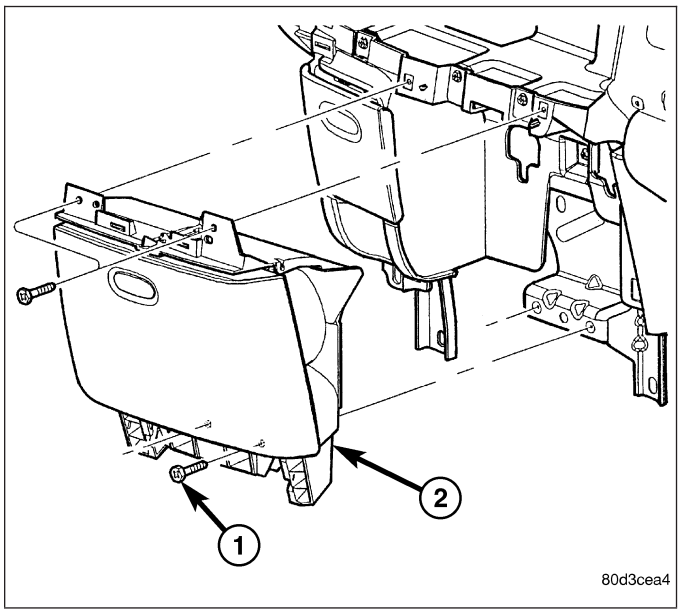

3. Open the cup holder (1) and install the two screws (2) that secure the cup holder to the instrument panel. Tighten the screws to 2.2 N·m (20 in. lbs.).
4. Install the center bezel (Refer to 23 - BODY/INSTRUMENT PANEL/INSTRUMENT PANEL CENTER BEZEL - INSTALLATION).
5. Install the airbag control module cover (Refer to 8 - ELECTRICAL/RESTRAINTS/COVER-AIRBAG CONTROL MODULE - INSTALLATION).

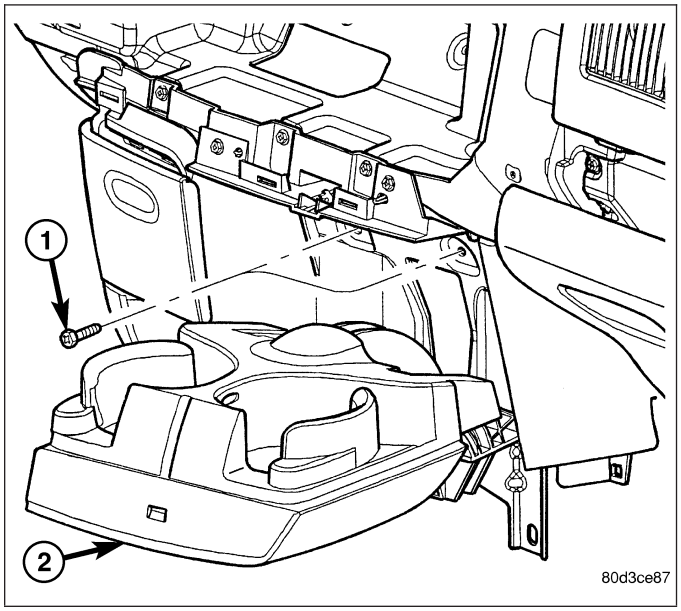

GLOVE BOX

REMOVAL

1. Open the glove box (1).
2. Release the two glove box stops (2) and lower the glove box downward past the stops.
3. Disengage the glove box hinges from the instrument panel and remove the glove box.

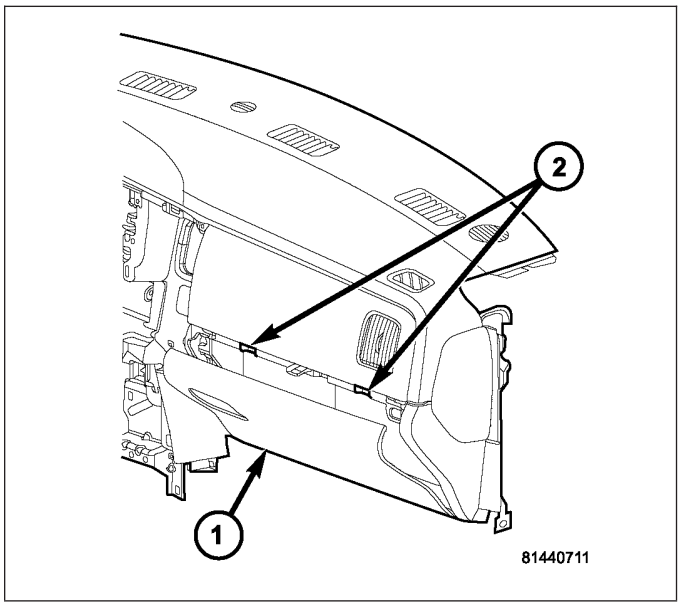

INSTALLATION

1. Engage the hinges of the glove box (1) to the instrument panel.
2. Press downward on the back edge of the glove box bin and raise the glove box past the two stops (2).
3. Close the glove box.

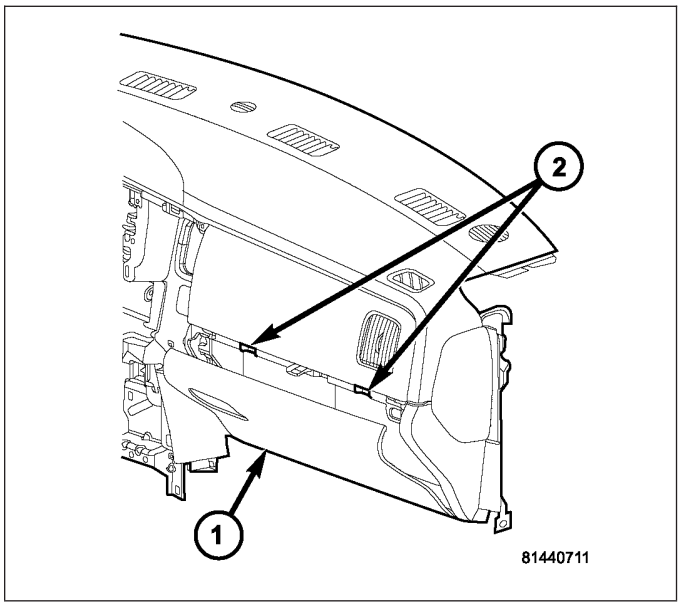

GLOVE BOX LATCH

REMOVAL

1. Remove the glove box and place it on a workbench (Refer to 23 - BODY/INSTRUMENT PANEL/ GLOVE BOX - REMOVAL).
2. Remove the 15 screws (1) that secure the glove box bin (2) and the inner glove box door panel (3) to the outer glove box door panel (4).
3. Remove the glove box bin and the inner glove box door panel from the outer glove box door panel.

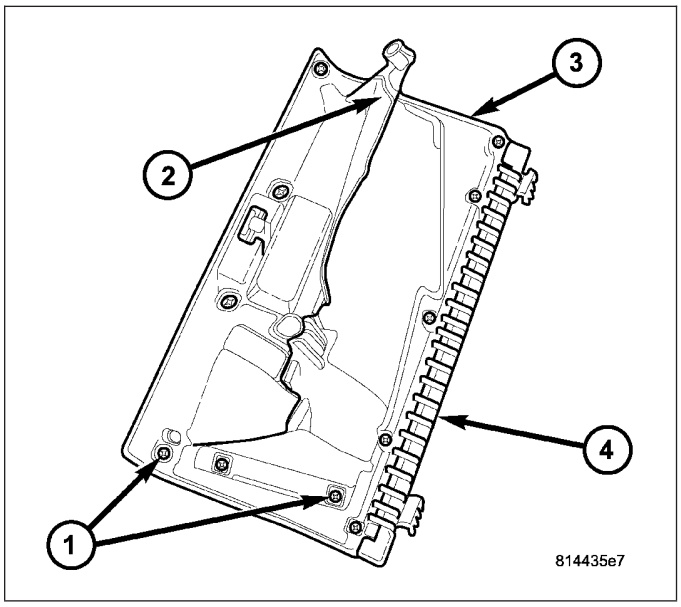

4. Remove the two screws (1) that secure the glove box latch (2) to the outer glove box door panel (3) and remove the latch.

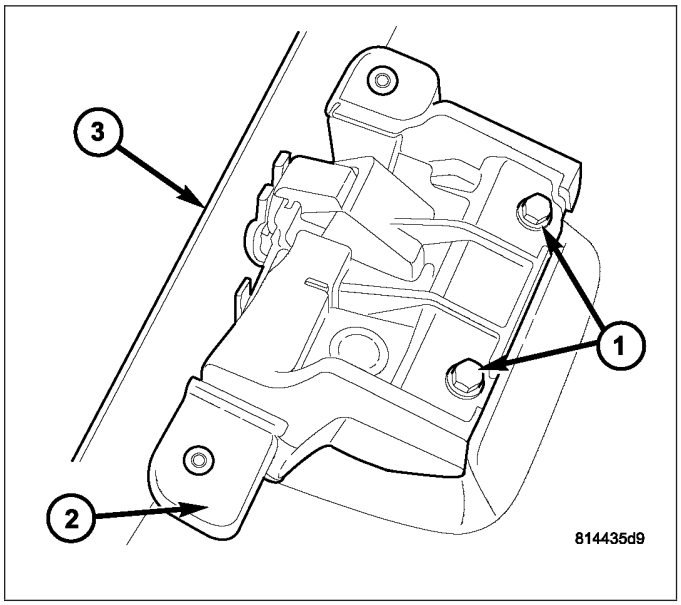

INSTALLATION

1. Position the glove box latch (2) into the outer glove box door panel (3).
2. Install the two screws (1) that secure the glove box latch to the outer glove box door panel. Tighten the screws to 2 N·m (17 in. lbs.).

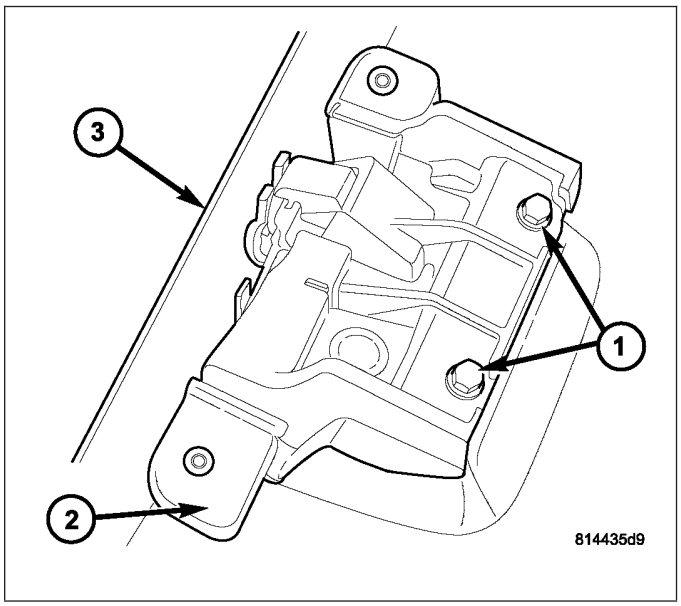

3. Position the inner glove box door panel (3) and the glove box bin (2) onto the outer glove box door panel (4).
4. Install the fifteen screws (1) that secure the inner glove box door panel and the glove box bin to the outer glove box door panel. Tighten the screws to 2 N·m (17 in. lbs.).
5. Install the glove box (Refer to 23 - BODY/INSTRUMENT PANEL/GLOVE BOX - INSTALLATION).

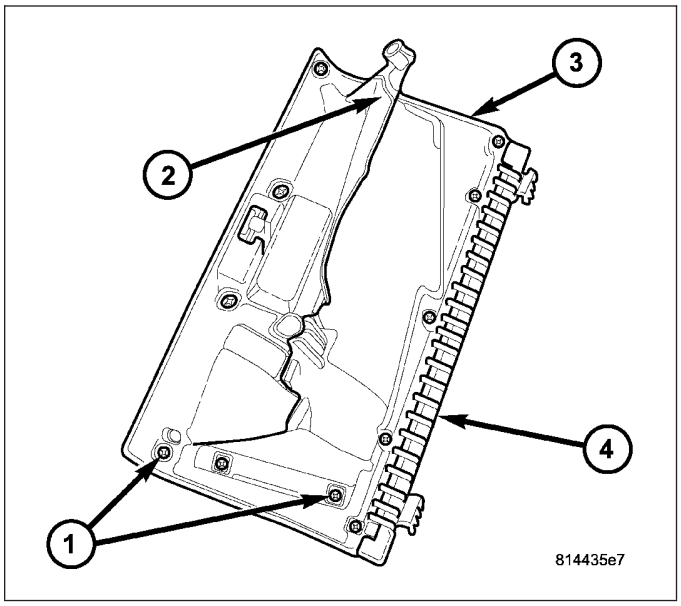

INSTRUMENT PANEL ASSEMBLY

REMOVAL

WARNING: On vehicles equipped with airbags, disable the airbag system before attempting any steering wheel, steering column, seat belt tensioner, or instrument panel component diagnosis or service. Disconnect and isolate the battery negative (ground) cable, then wait two minutes for the airbag system capacitor to discharge before performing further diagnosis or service. This is the only sure way to disable the airbag system. Failure to take the proper precautions could result in accidental airbag deployment and possible personal injury or death.

1. Disconnect and isolate the negative battery cable.
2. Remove the left a-pillar trim (Refer to 23 - BODY/INTERIOR/A-PILLAR TRIM/GRAB HANDLE - REMOVAL).
3. Remove the instrument panel top cover (Refer to 23 - BODY/INSTRUMENT PANEL/INSTRUMENT PANEL TOP COVER - REMOVAL).
4. Disconnect the headliner wire harness connector located at the a-pillar.
5. Using a trim stick C-4755 or equivalent, from the notch on the bottom, remove the left instrument panel side cover.
6. Remove the left cowl trim panel (Refer to 23 - BODY/INTERIOR/COWL TRIM - REMOVAL).
7. Remove the steering column (Refer to 19 - STEERING/COLUMN - REMOVAL).
8. Remove the two bolts (3) that secure the steering column support bracket (2) to the instrument panel (1).

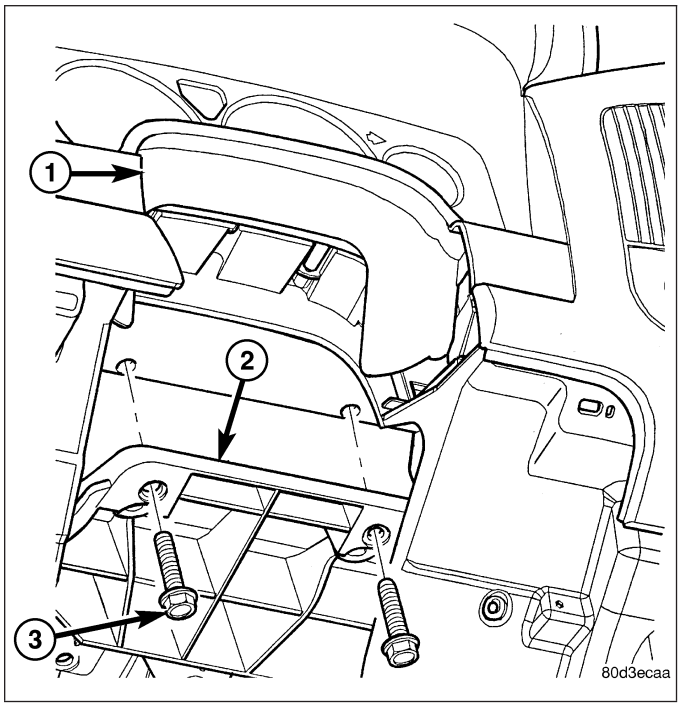

9. Remove the park brake release handle actuator rod (Refer to 5 - BRAKES/PARKING BRAKE/RELEASE - REMOVAL).
10. Disconnect the instrument panel wire harness connector (2) located above the brake pedal from the bulkhead wire harness connector (1).

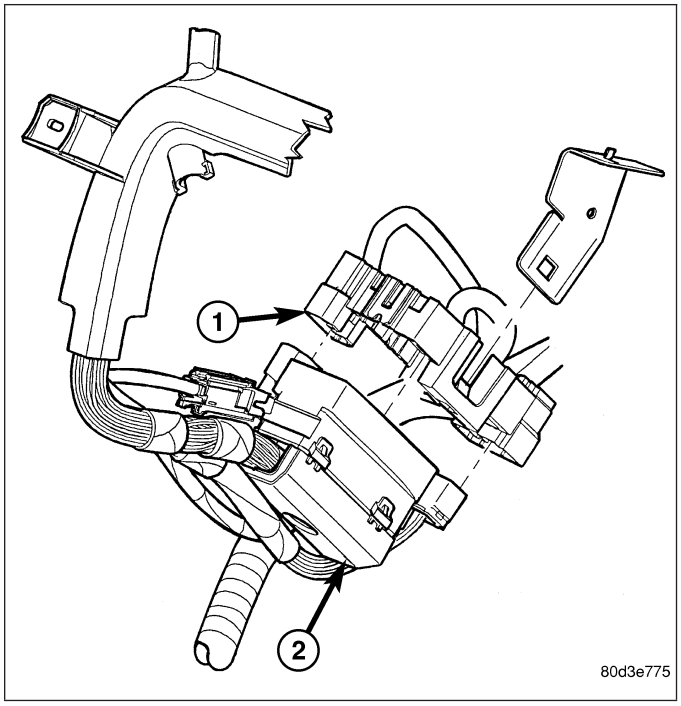

11. Remove the instrument panel drivers side bezel (Refer to 23 - BODY/INSTRUMENT PANEL/INSTRUMENT PANEL DRIVERS SIDE BEZEL - REMOVAL).
12. Remove the three bolts (3) that secure the left side of the instrument panel (2) to the dash panel (1).

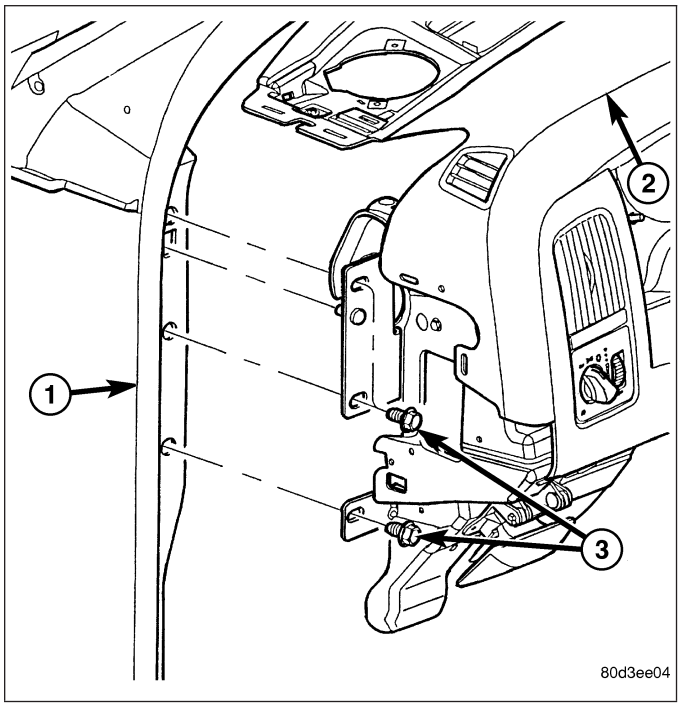

13. Remove the floor console, if equipped (Refer to 23 - BODY/INTERIOR/FLOOR CONSOLE - REMOVAL).
14. Remove the air bag control module cover, if equipped (Refer to 8 - ELECTRICAL/RESTRAINTS/AIRBAG CONTROL MODULE - REMOVAL).
15. Disconnect the air bag control module electrical connector (Refer to 8 - ELECTRICAL/RESTRAINTS/AIRBAG CONTROL MODULE - REMOVAL).
16. Remove the two bolts (2) that secure the instrument panel (1) to the center of the floor panel.

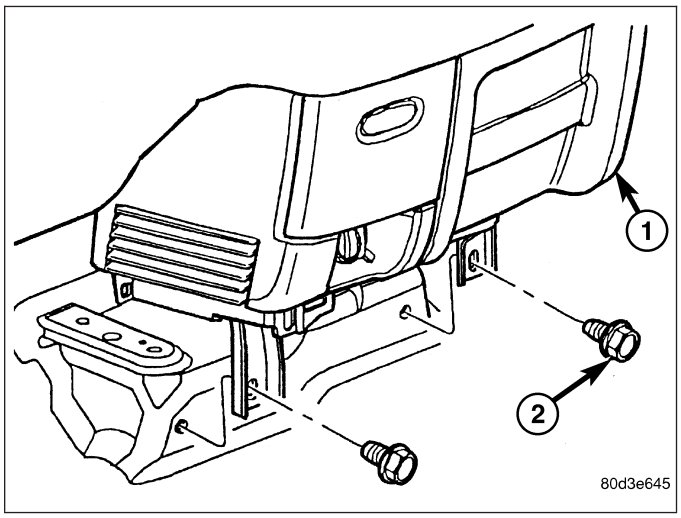

17. Remove the right cowl trim cover (Refer to 23 - BODY/INTERIOR/COWL TRIM - REMOVAL).
18. Disconnect the two instrument panel wire harness connectors from the two body wire harness connectors (1) located on the right side of the cowl panel (2).

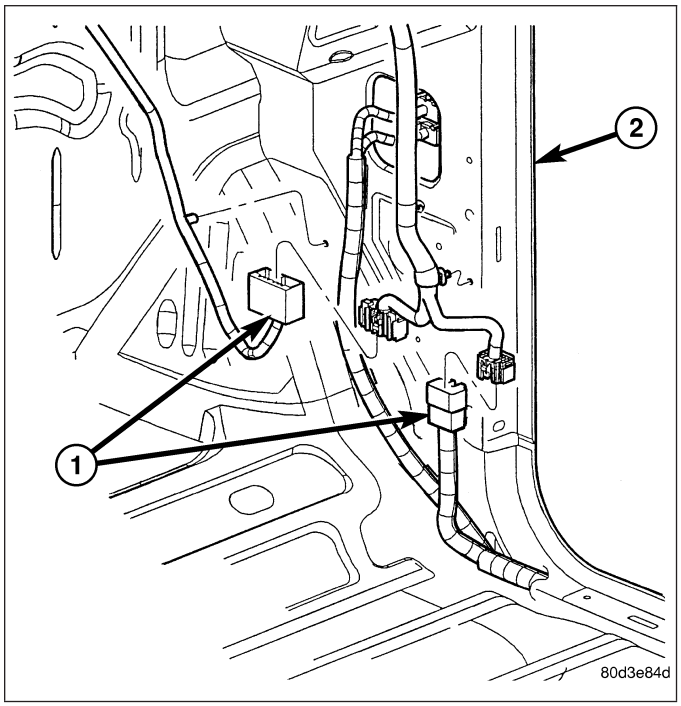

19. Disconnect the antenna coaxial cable connector (1) from the radio coaxial cable connector (2) located on the right side of the cowl panel.

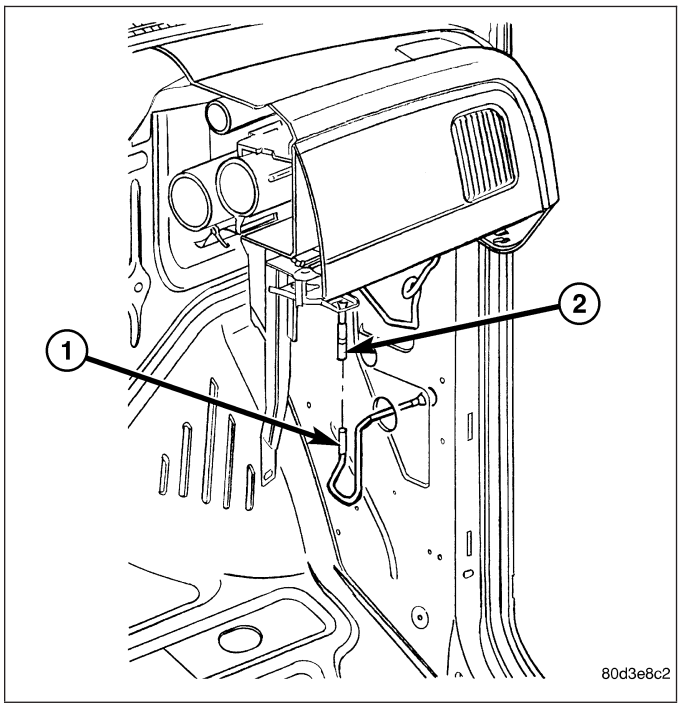

20. Remove the one bolt (2) that secures the instrument panel (3) to the HVAC housing (1) below the glove box opening (4).

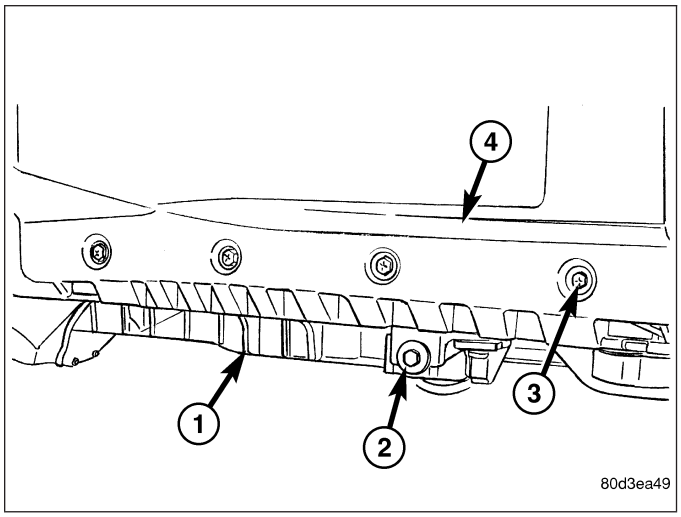

21. Using a trim stick C-4755 or equivalent, from the notch on the bottom, remove the right instrument panel side cover (4) from the instrument panel (1).
22. Remove the right a-pillar trim (Refer to 23 - BODY/INTERIOR/A-PILLAR TRIM/GRAB HANDLE - REMOVAL).
23. Remove the three bolts (5) that secure the right side instrument panel bracket (2) to the dash panel (3).

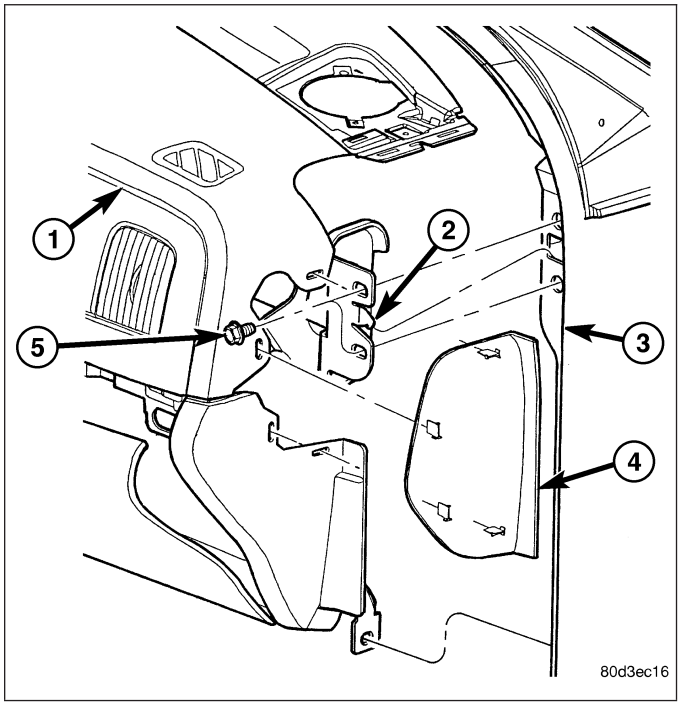

24. Remove the four screws (2) that secure the instrument panel (5) to the top of the cowl panel (1).
25. Remove the two bolts (4) that secure the instrument panel to the top of the cowl panel.
26. With the help of an assistant, lift the instrument panel up and off of the cowl panel and remove the instrument panel from the vehicle.
27. If required, remove the four plastic screws inserts (4) from the top of the cowl panel.

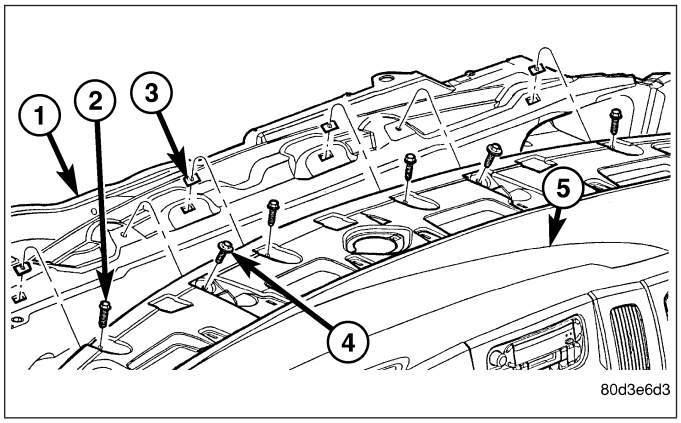

INSTALLATION

1. If removed, install the four plastic screw inserts (4) into the top of the cowl panel (1).
2. With the help of an assistant, position the instrument panel (6) into the vehicle and install the right side guide pin and the left side guide hook to the sides of the cowl panel.
3. Install the two bolts (4) that secure the instrument panel to the top of the cowl panel. Tighten the bolts to 12 N·m (9 ft. lbs.).
4. Install the four screws (2) that secure the instrument panel to the top of the cowl panel. Tighten the screws to 2.2 N·m (20 in. lbs.).

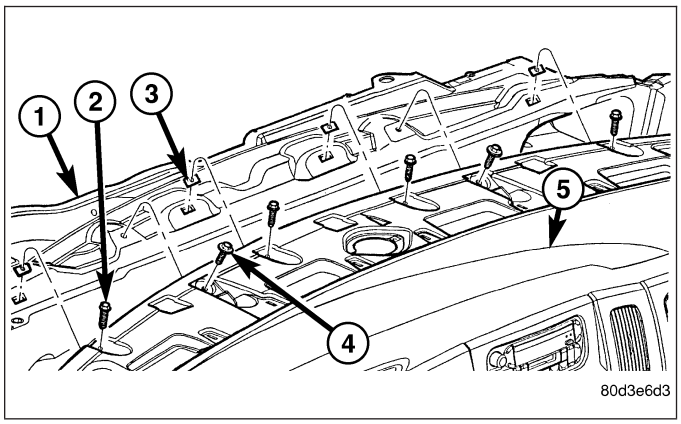

5. Install the three bolts (5) that secure the right side instrument panel bracket (2) to the cowl panel (3). Tighten the bolts to 12 N·m (9 ft. lbs.).
6. Install the right a-pillar trim (Refer to 23 - BODY/ INTERIOR/A-PILLAR TRIM - INSTALLATION).
7. Install the right instrument panel side cover (4).

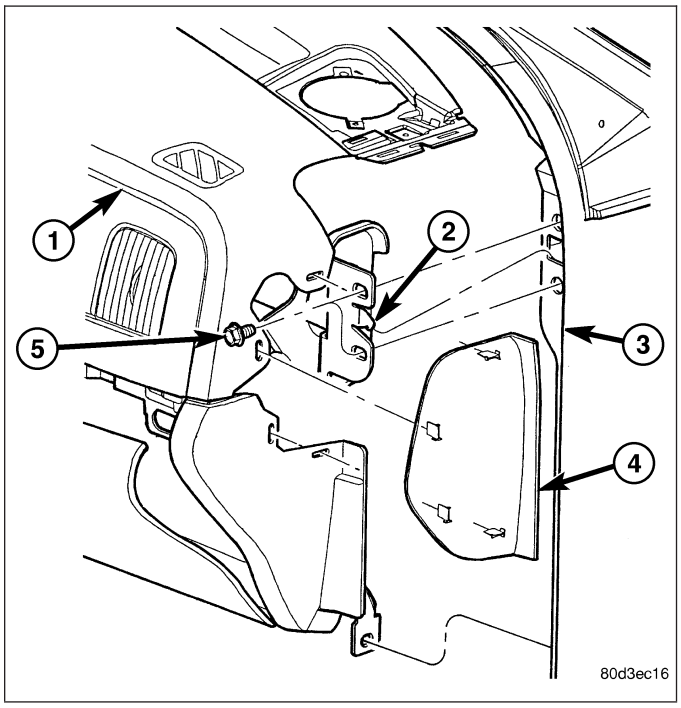

8. Install the one bolt (2) that secures the instrument panel (3) to the HVAC housing (1) below the glove box opening (4). Tighten the bolt securely.

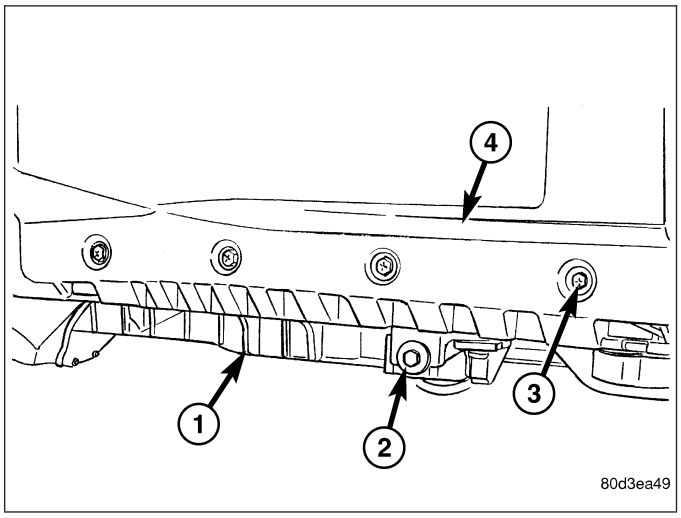

9. Connect the radio coaxial cable connector (2) to the antenna coaxial cable connector (1) located on the right side of the cowl panel.

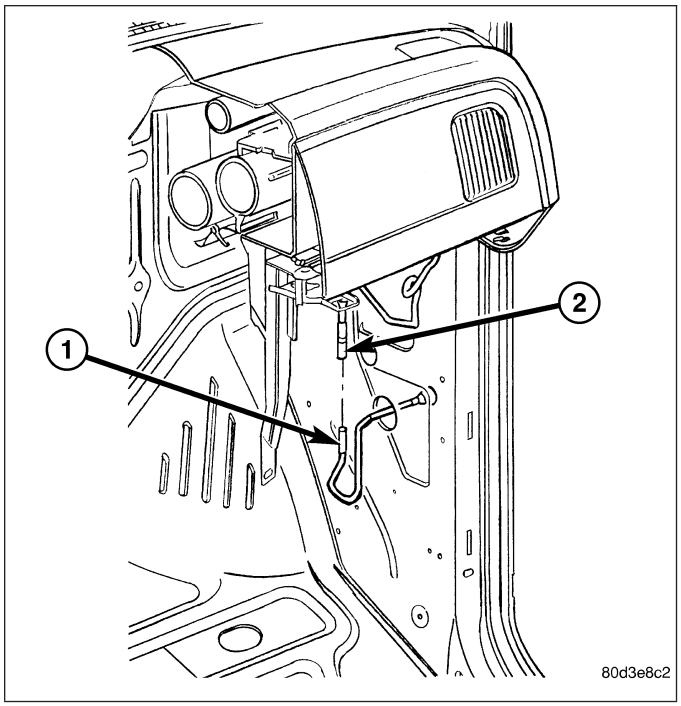

10. Connect the two instrument panel wire harness connectors to the two body wire harness connectors (1) located on the right side of the cowl panel (2).
11. Install the right cowl trim panel (Refer to 23 - BODY/INTERIOR/COWL TRIM - INSTALLATION).

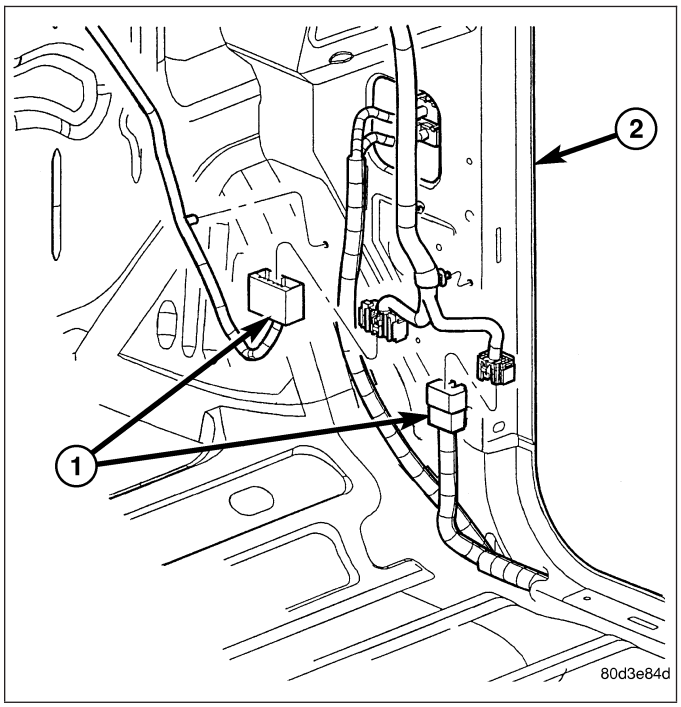

12. Install the two bolts (2) that secure the instrument panel (1) to the center of the floor panel. Tighten the bolts to 12 N·m (9 ft. lbs.).
13. Connect the air bag control module electrical connector (Refer to 8 - ELECTRICAL/RESTRAINTS/ AIRBAG CONTROL MODULE - INSTALLATION).
14. Install the air bag control module cover, if equipped (Refer to 8 - ELECTRICAL/RESTRAINTS/AIRBAG CONTROL MODULE - INSTALLATION).
15. Install the floor console, if equipped (Refer to 23 - BODY/INTERIOR/FLOOR CONSOLE - INSTALLATION).

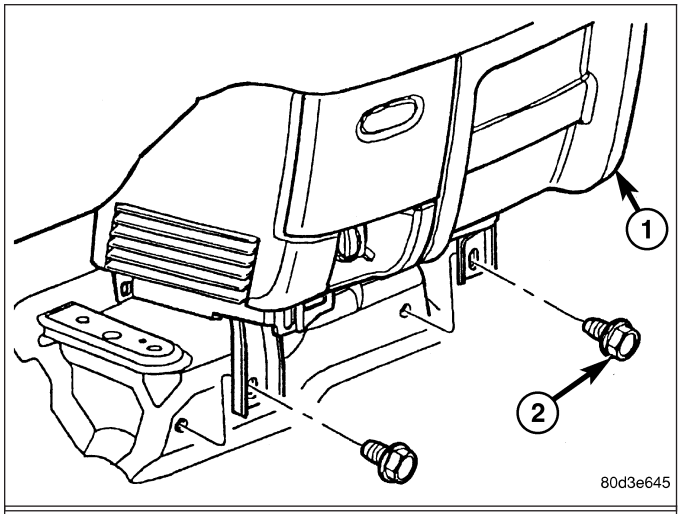

16. Install the three bolts (3) that secure the left side of the instrument panel (2) to the dash panel (1). Tighten the bolts to 12 N·m (9 ft. lbs.).
17. Install the instrument panel drivers side bezel (Refer to 23 - BODY/INSTRUMENT PANEL/INSTRUMENT PANEL DRIVERS SIDE BEZEL - INSTALLATION).
18. Install the left cowl trim panel (Refer to 23 - BODY/INTERIOR/COWL TRIM - INSTALLATION).

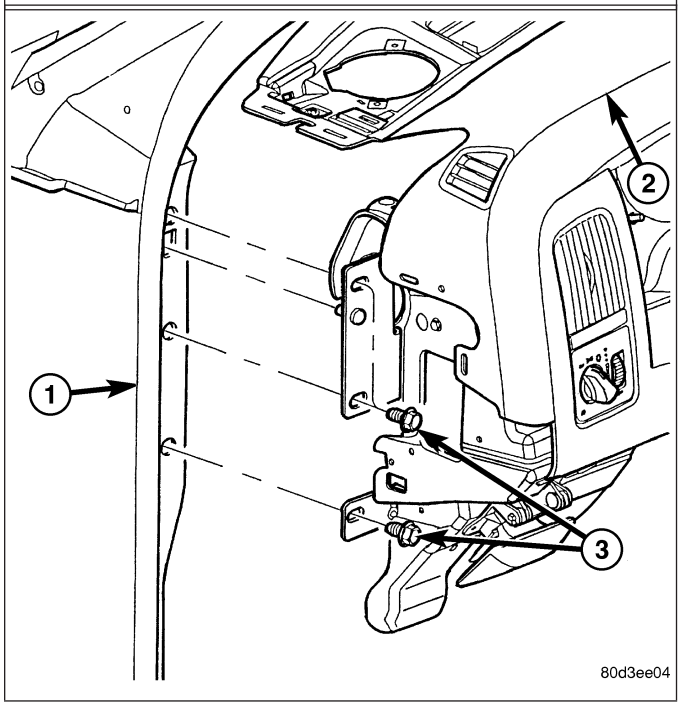

19. Connect the instrument panel wire harness connector (2) located above the brake pedal to the bulkhead wire harness connector (1).
20. Install the park brake release handle actuator rod (Refer to 5 - BRAKES/PARKING BRAKE/RELEASE - INSTALLATION).

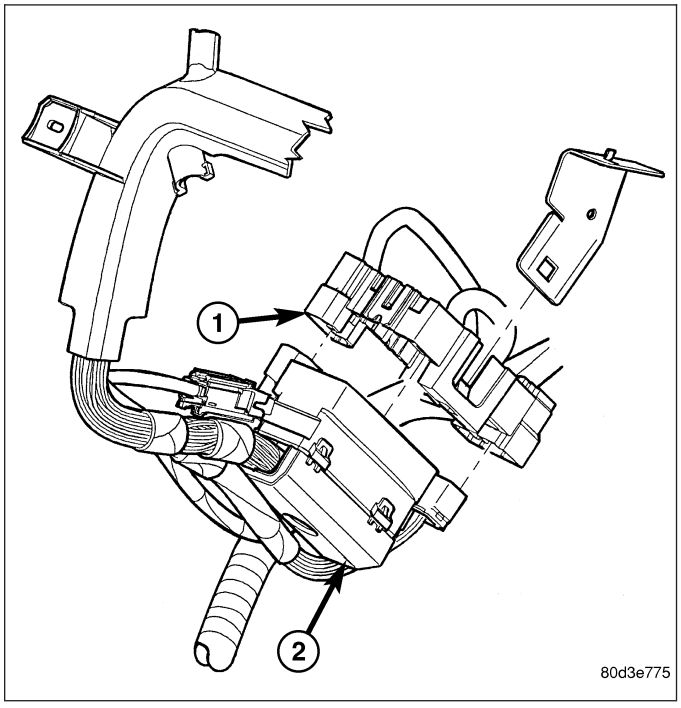

21. Install the two bolts (3) that secure the steering column support bracket (2) to the instrument panel (1). Tighten the bolts to 14 N·m (10 ft. lbs.).
22. Install the steering column (Refer to 19 - STEERING/COLUMN - INSTALLATION).
23. Install the left cowl trim cover (Refer to 23 - BODY/INTERIOR/COWL TRIM - INSTALLATION).
24. Install the left instrument panel side cover.
25. Connect the headliner wire harness connector located at the a-pillar.
26. Install the instrument panel top cover (Refer to 23 - BODY/INSTRUMENT PANEL/INSTRUMENT PANEL TOP COVER - INSTALLATION).
27. Install the left a-pillar trim (Refer to 23 - BODY/INTERIOR/A-PILLAR TRIM - INSTALLATION).
28. Reconnect the negative battery cable.

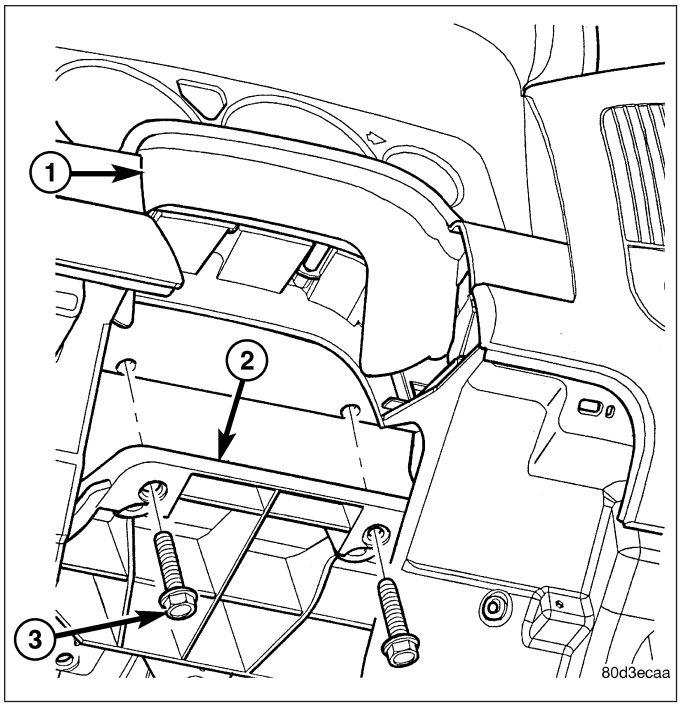

INSTRUMENT PANEL CENTER BEZEL

REMOVAL

WARNING: On vehicles equipped with airbags, disable the airbag system before attempting any steering wheel, steering column, seat belt tensioner, or instrument panel component diagnosis or service. Disconnect and isolate the battery negative (ground) cable, then wait two minutes for the airbag system capacitor to discharge before performing further diagnosis or service. This is the only sure way to disable the airbag system. Failure to take the proper precautions could result in accidental airbag deployment and possible personal injury or death.

1. Disconnect and isolate the negative battery cable.
2. Remove the steering column opening cover (Refer to 23 - BODY/INSTRUMENT PANEL/STEERING COLUMN OPENING COVER - REMOVAL).

CAUTION: When servicing the instrument center bezel, use tape or another suitable material to protect the cup holder and ash receiver from cosmetic damage.

3. Open the ashtray and the cup holder.
4. Remove the screw (3) that secures the instrument panel center bezel (2) to the instrument panel (1).
5. Using a trim stick C-4755 or equivalent, disengage the retainer clips that secure the instrument panel center bezel to the instrument panel.

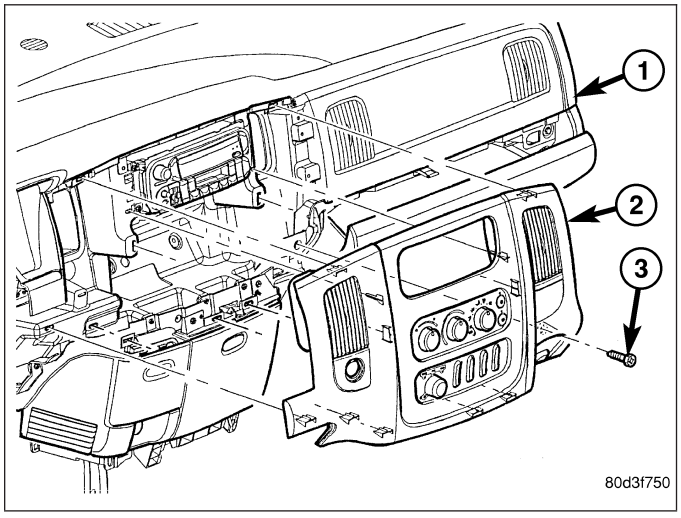

6. Disconnect the wire harness connectors and remove the center bezel from the vehicle.

INSTALLATION

1. Position the instrument panel center bezel (2) near the instrument panel (1) and connect the wire harness connectors.
2. Install the instrument panel center bezel onto the instrument panel and fully engage the retainer clips.
3. Install the screw (3) that secures the instrument panel center bezel to the instrument panel. Tighten the screw to 2 N·m (17 in. lbs.).
4. Install the steering column opening cover (Refer to 23 - BODY/INSTRUMENT PANEL/STEERING COLUMN OPENING COVER - INSTALLATION).
5. Reconnect the negative battery cable.

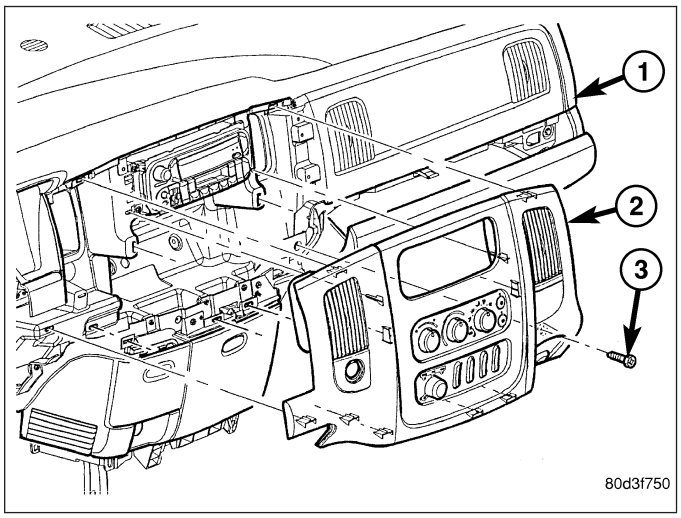

INSTRUMENT PANEL DRIVER SIDE BEZEL

REMOVAL

WARNING: On vehicles equipped with airbags, disable the airbag system before attempting any steering wheel, steering column, seat belt tensioner, or instrument panel component diagnosis or service. Disconnect and isolate the battery negative (ground) cable, then wait two minutes for the airbag system capacitor to discharge before performing further diagnosis or service. This is the only sure way to disable the airbag system. Failure to take the proper precautions could result in accidental airbag deployment and possible personal injury or death.

1. Disconnect and isolate the negative battery cable.
2. Using a trim stick C-4755 or equivalent, from the notch on the bottom, remove the left instrument panel side cover.
3. Remove the left cowl trim panel (Refer to 23 - BODY/INTERIOR/COWL TRIM - REMOVAL).
4. Remove the two screws (1) that secure the lower driver side instrument panel bezel (4) to the instrument panel.
5. Using a trim stick C-4755 or equivalent, disengage the retaining clips that secure the top of the lower driver side instrument panel bezel to the instrument panel.
6. Tilt the top of the lower driver side instrument panel bezel downward and, If equipped, disconnect the wire harness connector (3) from the adjustable pedal switch (2).
7. Remove the lower driver side instrument panel bezel from the lower retaining hooks and remove the bezel.

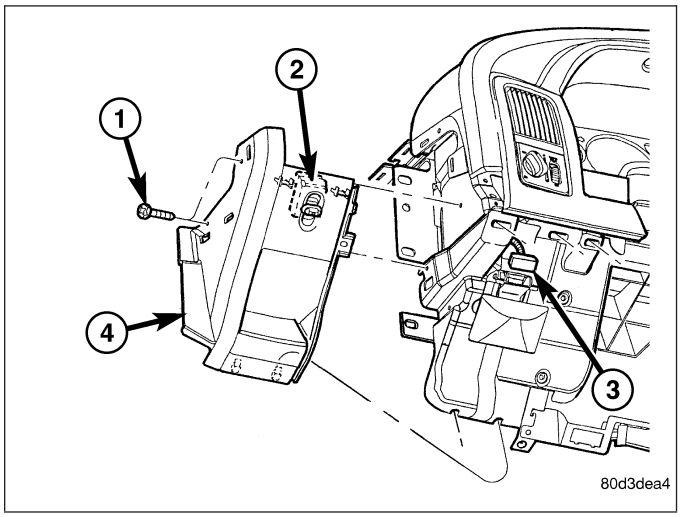

INSTALLATION

1. Position the lower driver side instrument panel bezel onto the lower retaining hoods located on the instrument panel.
2. If equipped, connect the wire harness connector (3) to the adjustable pedal switch (2).
3. Tilt the top of the lower driver side instrument panel bezel upward and fully engage the bezel retaining clips to the instrument panel.
4. Install the two screws (1) that secure the lower driver side instrument panel bezel to the instrument panel. Tighten the screws to 2 N·m (17 in. lbs.).
5. Install the left side cowl trim panel (Refer to 23 - BODY/INTERIOR/COWL TRIM - INSTALLATION).
6. Install the left instrument panel side cover.
7. Reconnect the negative battery cable.

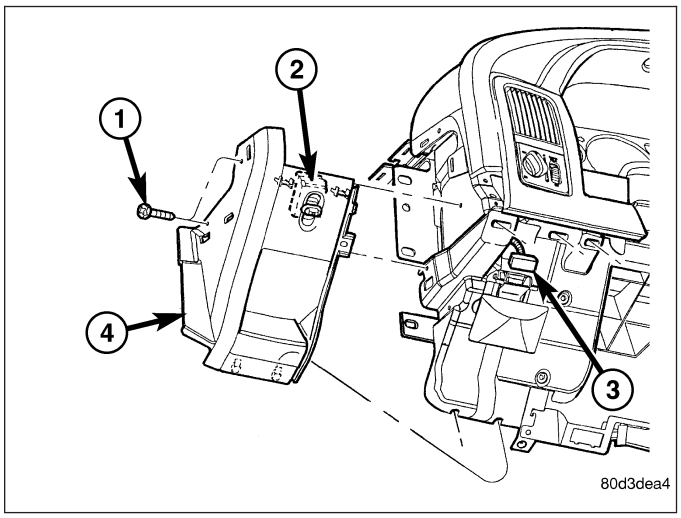

INSTRUMENT PANEL LOWER SURROUND

REMOVAL

WARNING: On vehicles equipped with airbags, disable the airbag system before attempting any steering wheel, steering column, seat belt tensioner, or instrument panel component diagnosis or service. Disconnect and isolate the battery negative (ground) cable, then wait two minutes for the airbag system capacitor to discharge before performing further diagnosis or service. This is the only sure way to disable the airbag system. Failure to take the proper precautions could result in accidental airbag deployment and possible personal injury or death.

1. Disconnect and isolate the negative battery cable.
2. Using a trim stick C-4755 or equivalent, from the notch on the bottom, remove the right instrument panel side cover.
3. Remove the right side cowl trim panel (Refer to 23 - BODY/INTERIOR/COWL TRIM - REMOVAL).
4. Remove the glove box (Refer to 23 - BODY/INSTRUMENT PANEL/GLOVE BOX - REMOVAL).
5. Remove the cup holder or storage bin (depending on application) (Refer to 23 - BODY/INSTRUMENT PANEL/CUP HOLDER - REMOVAL) or (Refer to 23 - BODY/INSTRUMENT PANEL/STORAGE BIN - REMOVAL).
6. Remove the ash receiver (Refer to 23 - BODY/INSTRUMENT PANEL/ASH RECEIVER - REMOVAL).
7. Remove the steering column opening cover (Refer to 23 - BODY/INSTRUMENT PANEL/STEERING COLUMN OPENING COVER - REMOVAL).

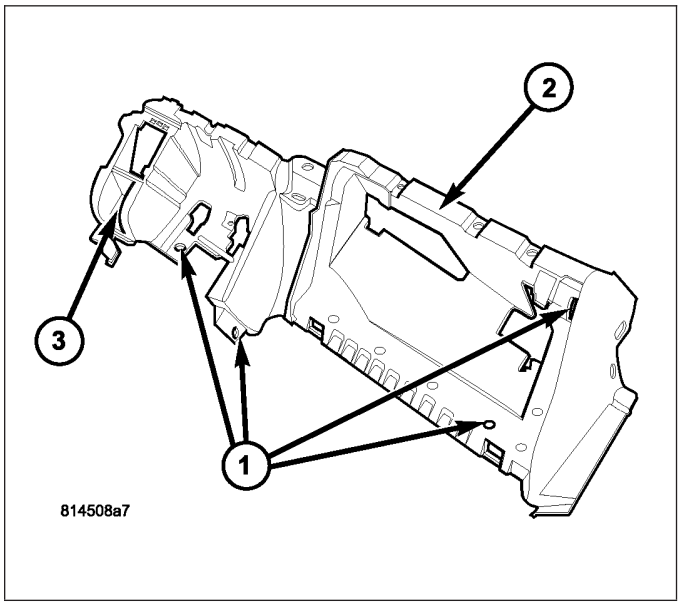

8. Remove the twenty one screws (1) that secure the instrument panel lower surround (2) to the instrument panel and support.
9. Disconnect the wire harness connector for the 12V power outlet (3) and remove the instrument panel lower surround.

INSTALLATION

1. Position the instrument panel lower surround (2) to the instrument panel and connect the wire harness connector for the 12V power outlet (3).
2. Install the instrument panel lower surround onto the instrument panel and install the twenty one screws (1). Tighten the screws to 2.2 N·m (20 in. lbs.).
3. Install the steering column opening cover (Refer to 23 - BODY/INSTRUMENT PANEL/STEERING COLUMN OPENING COVER - INSTALLATION).
4. Install the ash receiver (Refer to 23 - BODY/INSTRUMENT PANEL/ASH RECEIVER - INSTALLATION).
5. Install the cup holder or storage bin (depending on application) (Refer to 23 - BODY/INSTRUMENT PANEL/CUP HOLDER - INSTALLATION) or (Refer to 23 - BODY/INSTRUMENT PANEL/STORAGE BIN - INSTALLATION).
6. Install the glove box (Refer to 23 - BODY/INSTRUMENT PANEL/GLOVE BOX - INSTALLATION).
7. Install the right side cowl trim panel (Refer to 23 - BODY/INTERIOR/COWL TRIM - INSTALLATION).
8. Install the right instrument panel side cover.
9. Reconnect the negative battery cable.

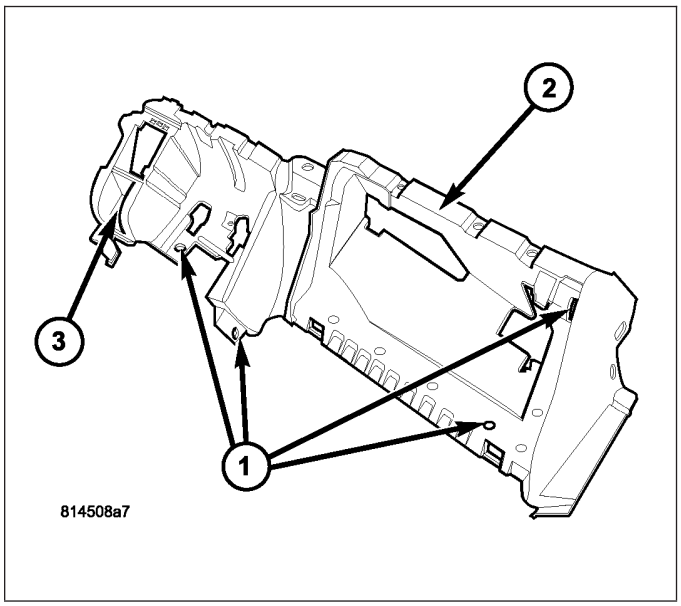

INSTRUMENT PANEL HEADLAMP SWITCH BEZEL

REMOVAL

WARNING: On vehicles equipped with airbags, disable the airbag system before attempting any steering wheel, steering column, seat belt tensioner, or instrument panel component diagnosis or service. Disconnect and isolate the battery negative (ground) cable, then wait two minutes for the airbag system capacitor to discharge before performing further diagnosis or service. This is the only sure way to disable the airbag system. Failure to take the proper precautions could result in accidental airbag deployment and possible personal injury or death.

1. Disconnect and isolate the negative battery cable.
2. Using a trim stick C-4755 or equivalent, disengage the top retainer clips on the steering column opening cover and the lower drivers side bezel.
3. Using a trim stick C-4755 or equivalent, disengage the retainer clips that secure the headlamp switch bezel (1) to the instrument panel (2).
4. Disconnect the wire harness connector (3) from the headlamp switch (4) and remove the switch bezel.

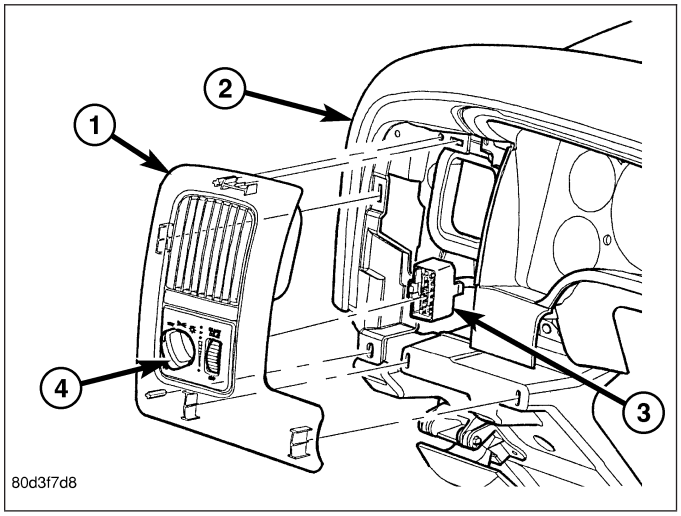

INSTALLATION

1. Position the headlamp switch bezel (1) to the instrument panel (2).
2. Connect the wire harness connector (3) to the headlamp switch (4).
3. Install the switch bezel onto the instrument panel and fully engage the retainer clips.
4. fully engage the retainer clips on the steering column opening cover and the lower drivers side bezel.
5. Reconnect the negative battery cable.

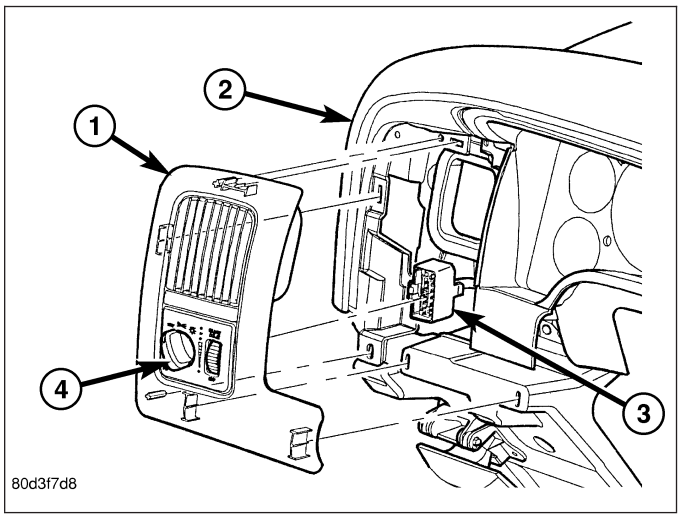

INSTRUMENT PANEL TOP COVER

REMOVAL

1. Using a trim stick C-4755 or equivalent, disengage the eight retainer clips (1) that secure the rear of the instrument panel top cover (2) to the top of the instrument panel (3).
2. Pull the instrument panel top cover rearward to release the five retainer clips (4) that secure the front of the instrument panel top cover to the top of the instrument panel and remove the cover.

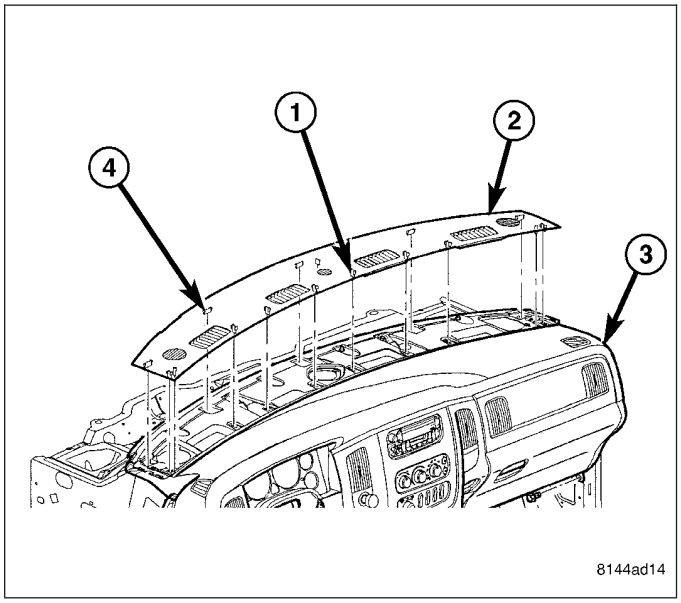

INSTALLATION

1. Position the instrument panel top cover (2) to the top of the instrument panel (3) and engage the five retainer clips (4) that secure the cover to the instrument panel.
2. Engage the eight retainer clips (1) that secure the instrument panel top cover to the top of the instrument panel by firmly pushing down on the top cover at each retainer clip location.

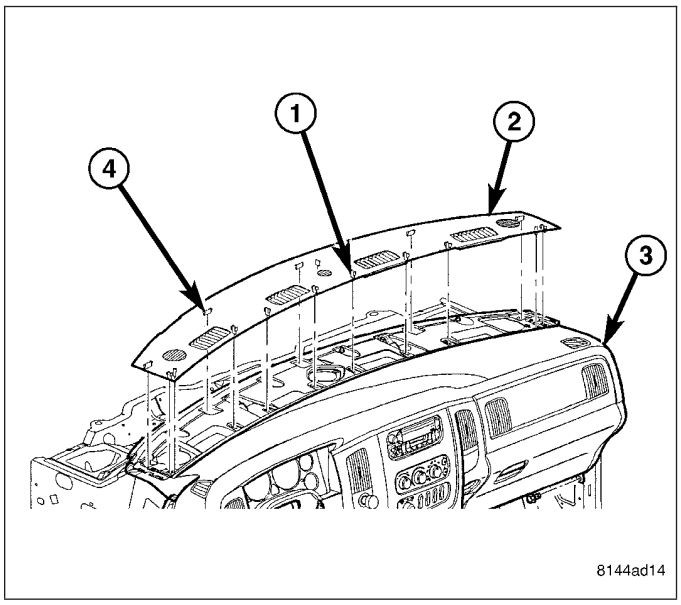

STEERING COLUMN OPENING COVER

REMOVAL

1. Remove the two screws (1) that secure the bottom of the steering column opening cover (2) to the instrument panel.
2. Using a trim stick C-4755 or equivalent, release the two retainer clips that secure the top of the steering column opening cover to the instrument panel and remove the cover.

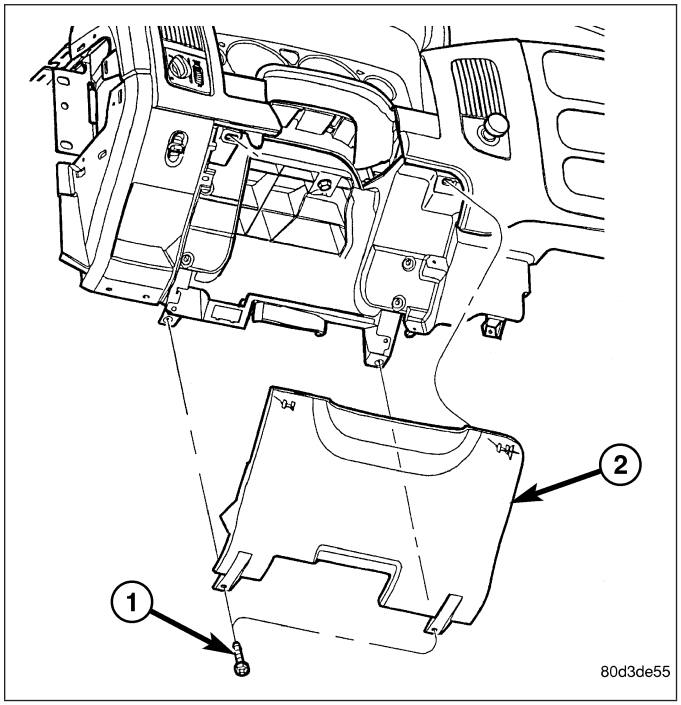

INSTALLATION

1. Position the steering column opening cover (2) to the instrument panel and fully engage the two upper retainer clips to the instrument panel.
2. Install the two screws (1) that secure the steering column opening cover to the instrument panel. Tighten the screws to 2.2 N·m (20 in. lbs.).

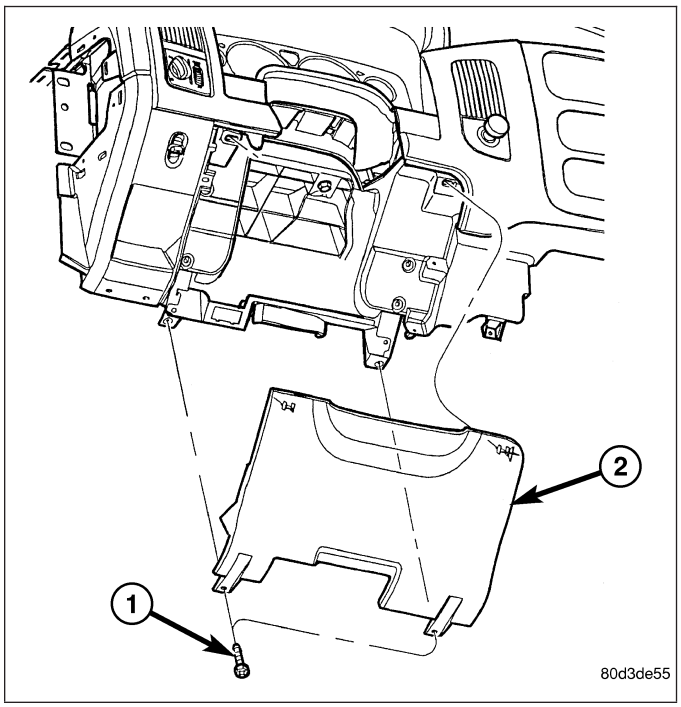

STEERING COLUMN OPENING SUPPORT BRACKET

REMOVAL

1. Remove the steering column opening cover from the instrument panel (1) (Refer to 23 - BODY/INSTRUMENT PANEL/STEERING COLUMN OPENING COVER - REMOVAL).
2. Remove the hood release handle from the steering column opening support bracket (2) (Refer to 23 - BODY/HOOD/LATCH RELEASE CABLE - REMOVAL).
3. Disengage the retaining tabs that secure the data link connector (3) to the steering column opening support bracket and remove the data link connector from the bracket.

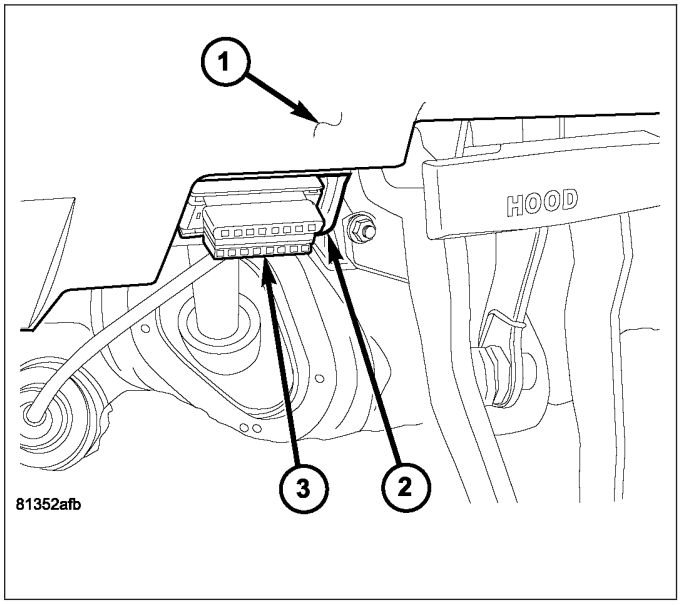

4. Remove the two screws (4) that secure the steering column opening support bracket (3) to the instrument panel (2).
5. Slide the steering column opening support bracket upward to disengage the two locating tabs (1) and remove the bracket.

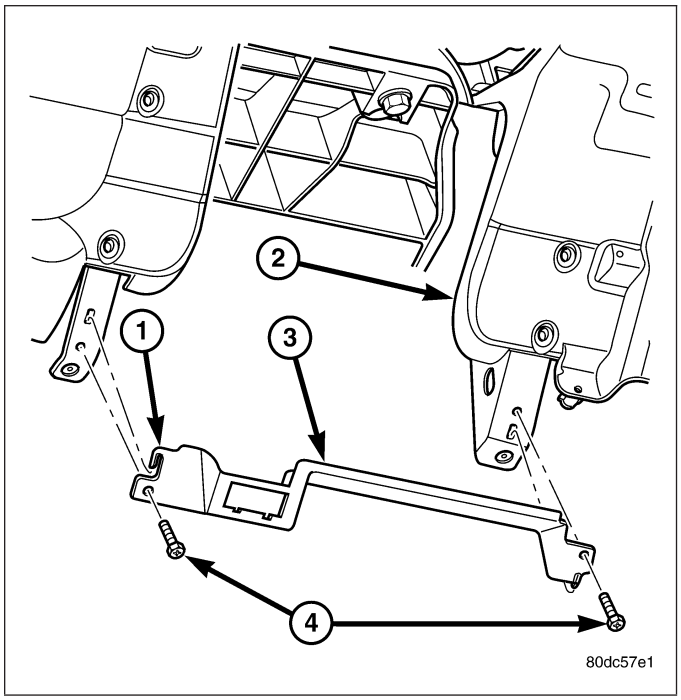

INSTALLATION

1. Position the steering column opening bracket (3) onto the instrument panel (2) and engage to the two locating tabs (1).
2. Install the two screws (4) that secure the steering column opening bracket to the instrument panel. Tighten the screws to 2.2 N·m (20 in. lbs.).

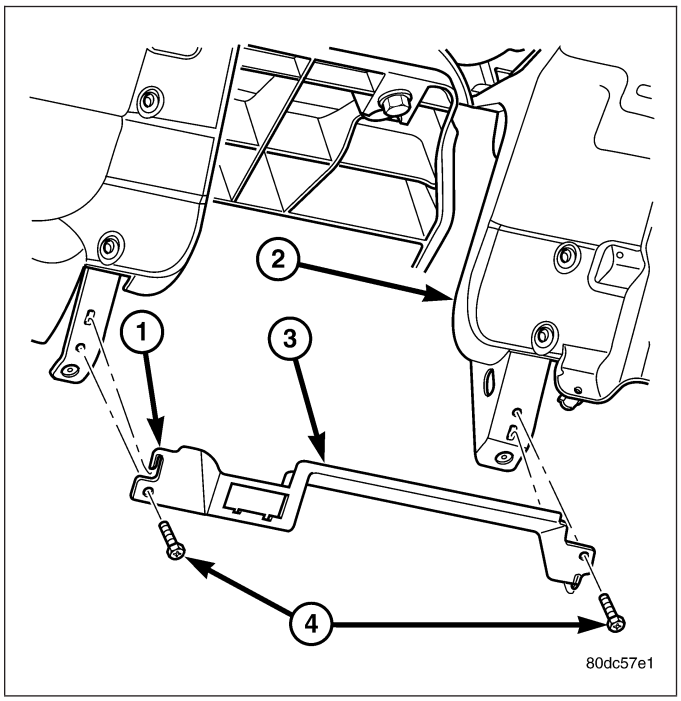

3. Position the data link connector (3) into the opening in the steering column opening bracket (2) and fully engage the retaining tabs that secure the connector to the bracket.
4. Install the hood release handle (Refer to 23 - BODY/HOOD/LATCH RELEASE CABLE - INSTALLATION).
5. Install the steering column opening cover onto the instrument panel (1) (Refer to 23 - BODY/INSTRUMENT PANEL/STEERING COLUMN OPENING COVER - INSTALLATION).

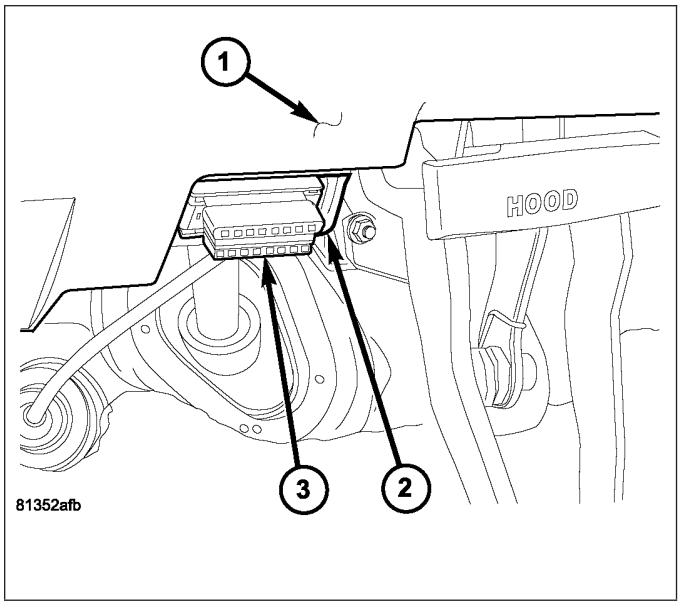

STORAGE BIN

REMOVAL

WARNING: On vehicles equipped with airbags, disable the airbag system before attempting any steering wheel, steering column, seat belt tensioner, or instrument panel component diagnosis or service. Disconnect and isolate the battery negative (ground) cable, then wait two minutes for the airbag system capacitor to discharge before performing further diagnosis or service. This is the only sure way to disable the airbag system. Failure to take the proper precautions could result in accidental airbag deployment and possible personal injury or death.

NOTE: A storage bin replaces the cup holder in the instrument panel when the vehicle is equipped with a floor console.

1. Remove the instrument panel center bezel (Refer to 23 - BODY/INSTRUMENT PANEL/INSTRUMENT PANEL CENTER BEZEL - REMOVAL).
2. Remove the floor console (Refer to 23 - BODY/INTERIOR/FLOOR CONSOLE - REMOVAL).
3. Remove the four screws (1) that secure the storage bin (2) to the instrument panel and remove the bin.

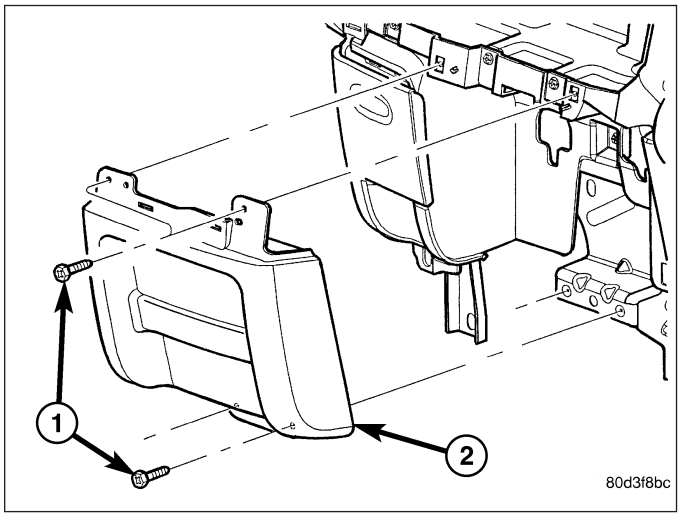

INSTALLATION

NOTE: A storage bin replaces the cup holder in the instrument panel when the vehicle is equipped with a floor console.

1. Position the storage bin (2) into the instrument panel.
2. Install the four screws (1) that secure the storage bin to the instrument panel. Tighten the screws to 2.2 N·m (20 in. lbs.).
3. Install the floor console (Refer to 23 - BODY/INTERIOR/FLOOR CONSOLE - INSTALLATION).
4. Install the instrument panel center bezel (Refer to 23 - BODY/INSTRUMENT PANEL/INSTRUMENT PANEL CENTER BEZEL - INSTALLATION).

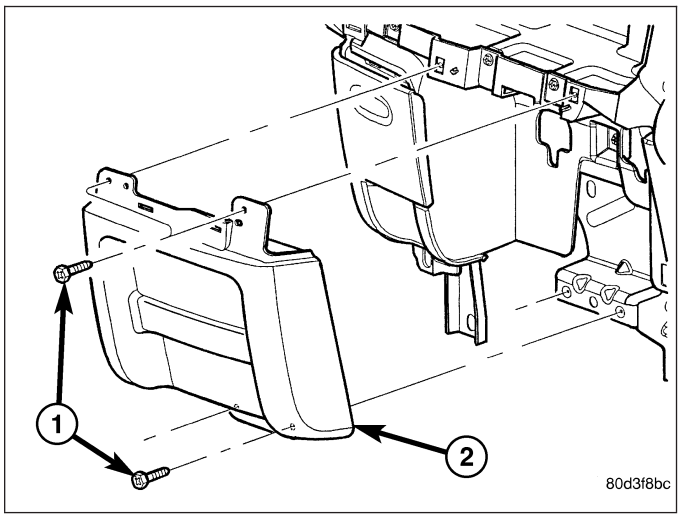

INTERIOR

TABLE OF CONTENTS

page

INTERIOR
CAUTION 148
4WD FLOOR SHIFT BOOT
REMOVAL 149
INSTALLATION 149
A-PILLAR TRIM/GRAB HANDLE
REMOVAL 150
INSTALLATION 151
B-PILLAR GRAB HANDLE
REMOVAL 151
INSTALLATION 152
B-PILLAR LOWER TRIM
REMOVAL 152
INSTALLATION 153
B-PILLAR UPPER TRIM
REMOVAL 154
INSTALLATION 156
C-PILLAR LOWER TRIM
REMOVAL 157
INSTALLATION 158
C-PILLAR UPPER TRIM
REMOVAL 158
INSTALLATION 159
CARPETS AND FLOOR MATS
REMOVAL 159
INSTALLATION 161
COAT HOOK
REMOVAL 162
INSTALLATION 163
COWL TRIM
REMOVAL 163
INSTALLATION 164
FLOOR CONSOLE
REMOVAL 164

page

INSTALLATION 165
HEADLINER
REMOVAL 166
INSTALLATION 167
LOAD FLOOR
REMOVAL 167
INSTALLATION 168
LOAD FLOOR SUPPORT CYLINDER
REMOVAL 169
INSTALLATION 170
REAR CAB BACK PANEL TRIM
REMOVAL 170
INSTALLATION 172
REAR DOOR SILL TRIM COVER
REMOVAL 173
INSTALLATION 173
REAR VIEW MIRROR
REMOVAL 173
INSTALLATION
INSTALLATION 174
REAR VIEW MIRROR MOUNTING BRACKET 174
SUN VISOR
REMOVAL 175
INSTALLATION 175
SUN VISOR SUPPORT
REMOVAL 176
INSTALLATION 176
BODY VENT
REMOVAL 177
INSTALLATION 177

INTERIOR

CAUTION

CAUTION:: Do not attempt to remove interior trim panels or moldings without first removing the necessary adjacent trim panels or moldings. To avoid damaging the trim panels, ensure that all the fasteners are removed or disengaged before attempting to remove interior trim panels or moldings. Trim panels are somewhat flexible but can be damaged if handled improperly.

4WD FLOOR SHIFT BOOT

REMOVAL

1. Using a small flat-bladed tool, remove the insert (2) from the top of the shift knob (1).
2. Remove the nut (3) that secures the shift knob to the gear shift lever.

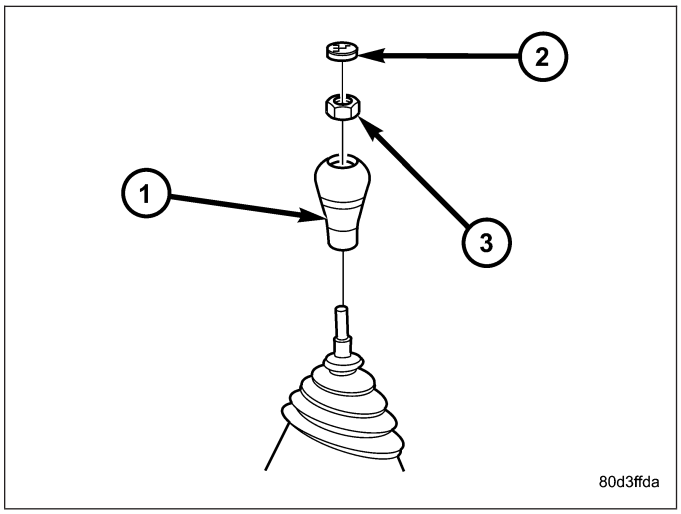

3. Remove the gear shift knob (2).
4. Using a trim stick C-4755 or equivalent, disengage the retaining tabs that secure the gear shift boot (3) to the floor console (1) and remove the boot.

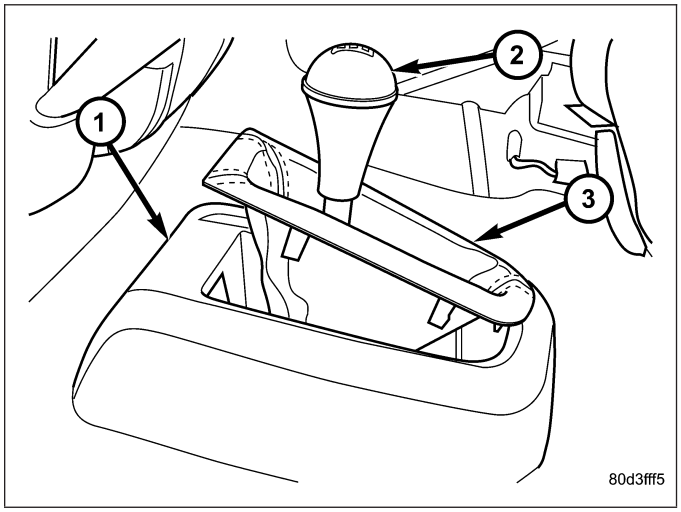

INSTALLATION

1. Position the gear shift boot (3) over the gear shift lever.
2. Engage the retaining tabs that secure the gear shift boot to the floor console (1).
3. Install the shift knob (2) over the gear shift lever.

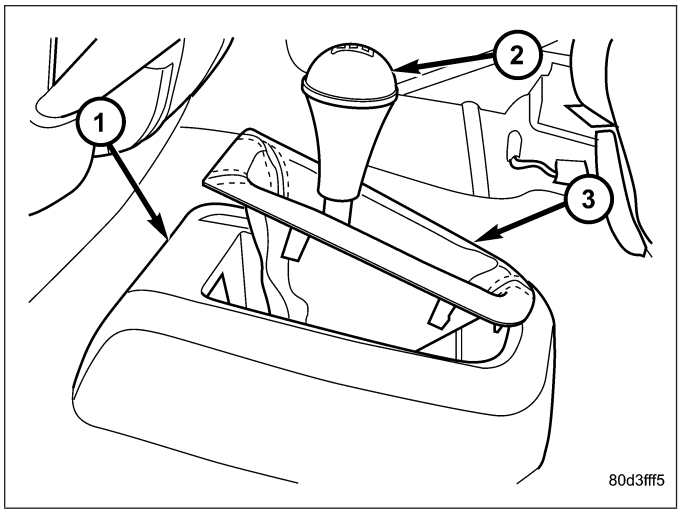

4. Install the nut (3) that secures the shift knob (1) to the gear shift lever. Tighten the nut to 27 N·m (20 ft. lbs.).
5. Install the insert (2) into the top of the shift knob.

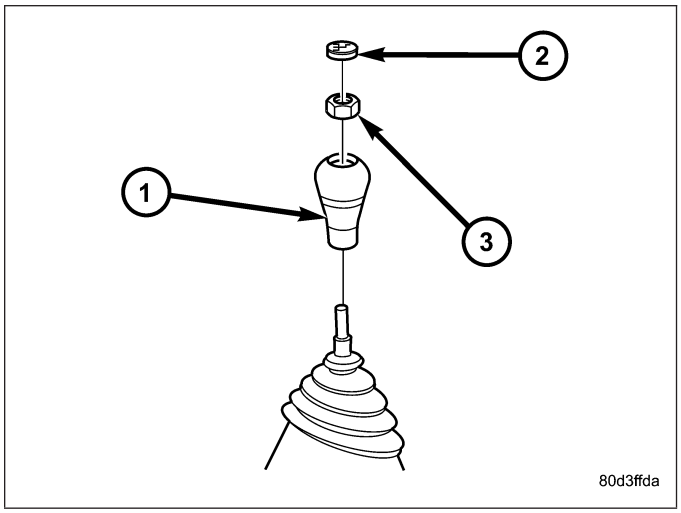

A-PILLAR TRIM/GRAB HANDLE

REMOVAL

1. Using a small flat-bladed tool, carefully open the two fastener covers (3) located in the a-pillar trim panel (2).
2. Remove the two bolts (4) that secure the a-pillar trim panel to the a-pillar (1) and remove the trim panel.

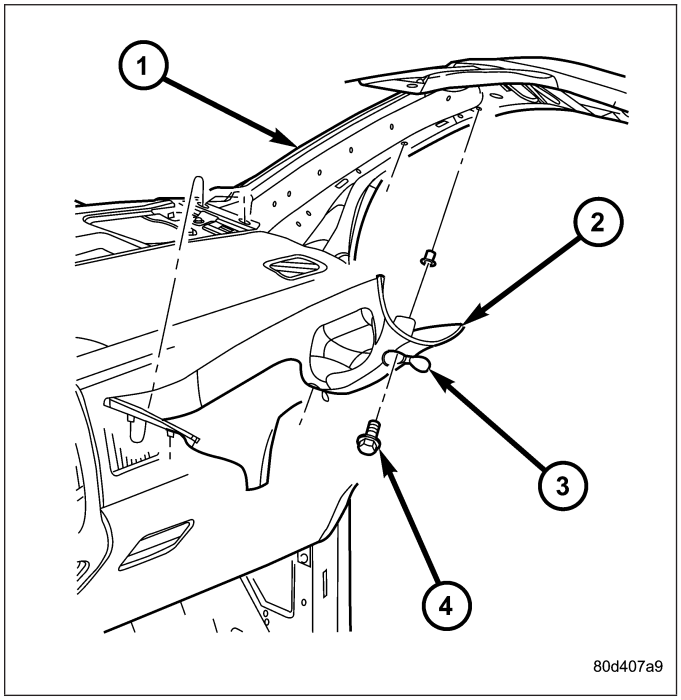

INSTALLATION

1. Position the locating tab of the A-pillar trim panel (2) into the slot located in the top of the instrument panel.
2. Install the A-pillar trim panel onto the A-pillar (1) and install the two bolts (4). Tighten the bolts to 6 N·m (55 in. lbs.).
3. Close the two fastener covers (3) located in the A-pillar trim panel.

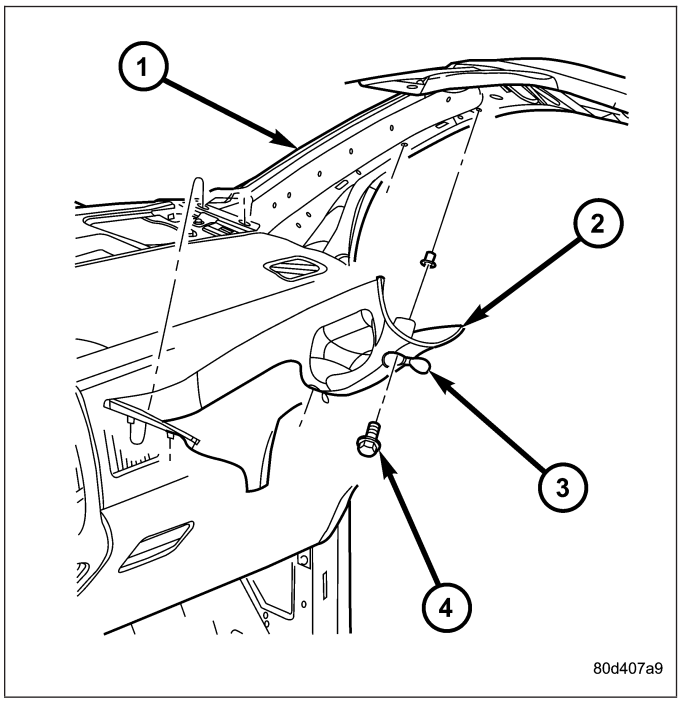

B-PILLAR GRAB HANDLE

REMOVAL

1. Using a small flat-bladed tool, carefully open the two fastener covers (2) located on the grab handle (1).
2. Remove the two bolts (3) that secure the grab handle to the B-pillar and remove the grab handle.

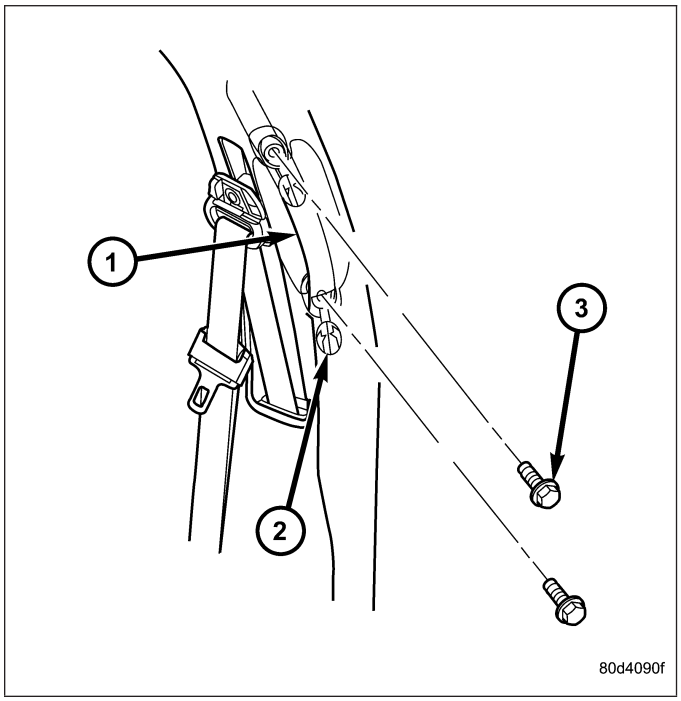

INSTALLATION

1. Install the grab handle (1) onto the B-pillar and install the two bolts (3). Tighten the bolts to 6 N·m (55 in. lbs.).
2. Close the two fastener covers (2) located on the grab handle.

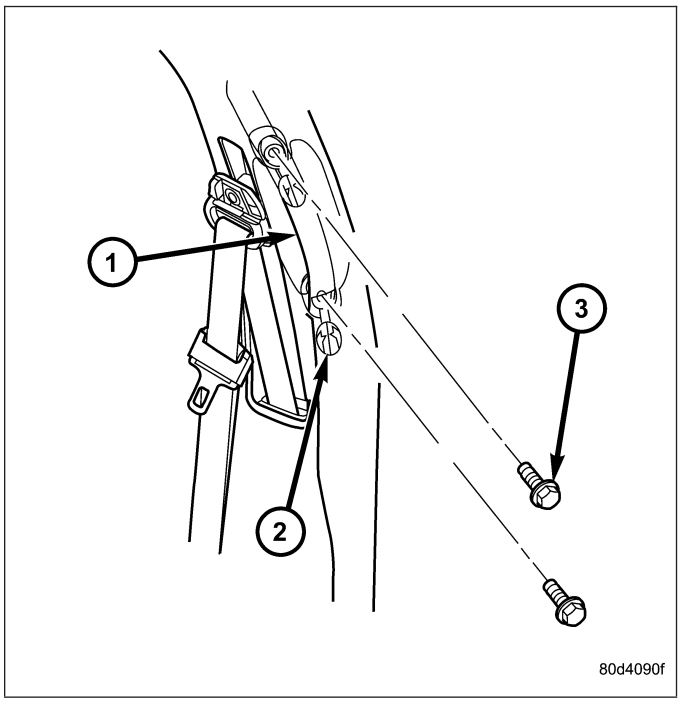

B-PILLAR LOWER TRIM

REMOVAL

REGULAR CAB

1. Remove the cowl trim panel (Refer to 23 - BODY/INTERIOR/COWL TRIM - REMOVAL).
2. Remove the upper B-pillar trim panel (Refer to 23 - BODY/INTERIOR/B-PILLAR UPPER TRIM - REMOVAL).
3. Remove the bolt (2) that secures the seat belt (1) to the bottom of the B-pillar (4) and position the seat belt out of the way.
4. Using a trim stick C-4755 or equivalent, disengage the retaining tabs that secure the lower B-pillar trim panel (3) to the B-pillar.
5. Remove the seat belt from the lower B-pillar trim panel through the slot provided and remove the trim panel.

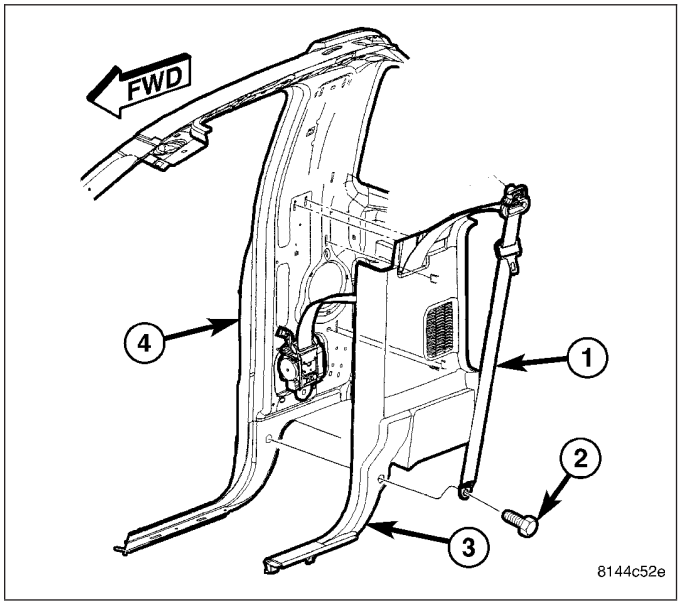

QUAD CAB

1. Remove the cowl trim panel (Refer to 23 - BODY/INTERIOR/COWL TRIM - REMOVAL).
2. Remove the rear door sill trim cover (Refer to 23 - BODY/INTERIOR/REAR DOOR SILL TRIM COVER - REMOVAL).
3. Remove the upper B-pillar trim panel (Refer to 23 - BODY/INTERIOR/B-PILLAR UPPER TRIM - REMOVAL).
4. Using a trim stick C-4755 or equivalent, disengage the retaining tabs that secure the lower B-pillar trim panel (1) to the B-pillar (2).
5. Remove the seat belt (3) from the lower B-pillar trim panel through the slot provided and remove the trim panel.

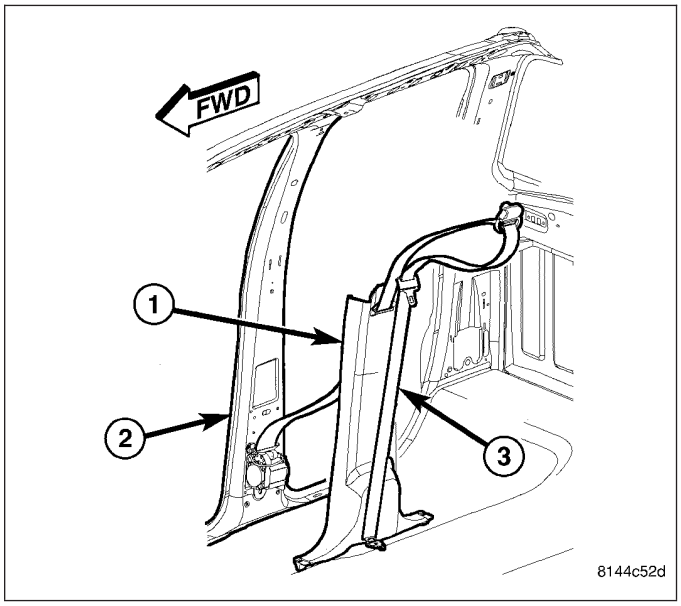

INSTALLATION

REGULAR CAB

1. Route the seat belt (1) through the slot in the lower B-pillar trim panel (3) and position the trim panel to the B-pillar (4).
2. Engage the retaining tabs that secure the lower B-pillar trim panel to the B-pillar.
3. Install the bolt (2) that secures the seat belt to the bottom of the B-pillar. Tighten the bolt to 40 N·m (29 ft. lbs.).
4. Install the upper B-pillar trim panel (Refer to 23 - BODY/INTERIOR/B-PILLAR UPPER TRIM - INSTALLATION).
5. Install the cowl trim panel (Refer to 23 - BODY/INTERIOR/COWL TRIM - INSTALLATION).

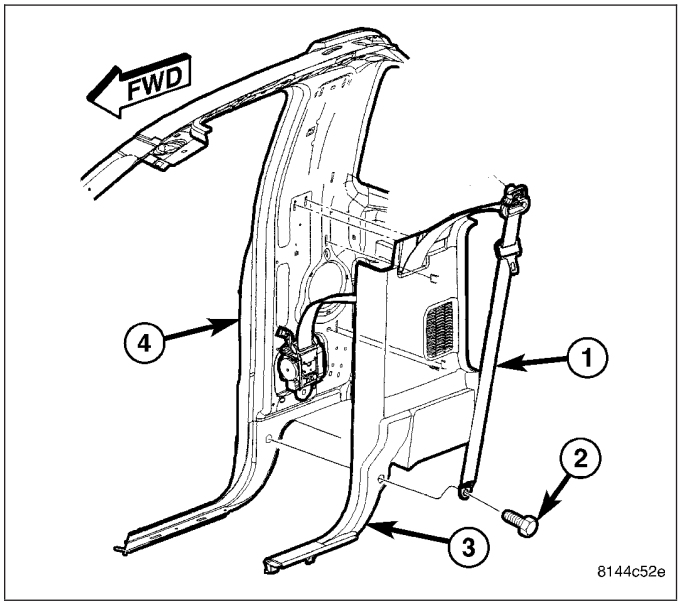

QUAD CAB

1. Route the seat belt (3) through the slot in the lower B-pillar trim panel (1) and position the trim panel to the B-pillar (2).
2. Engage the retaining tabs that secure the lower B-pillar trim panel to the B-pillar.
3. Install the upper B-pillar trim panel (Refer to 23 - BODY/INTERIOR/B-PILLAR UPPER TRIM - INSTALLATION).
4. Install the rear door sill trim cover (Refer to 23 - BODY/INTERIOR/DOOR SILL TRIM COVER - INSTALLATION).
5. Install the cowl trim panel (Refer to 23 - BODY/INTERIOR/COWL TRIM - INSTALLATION).

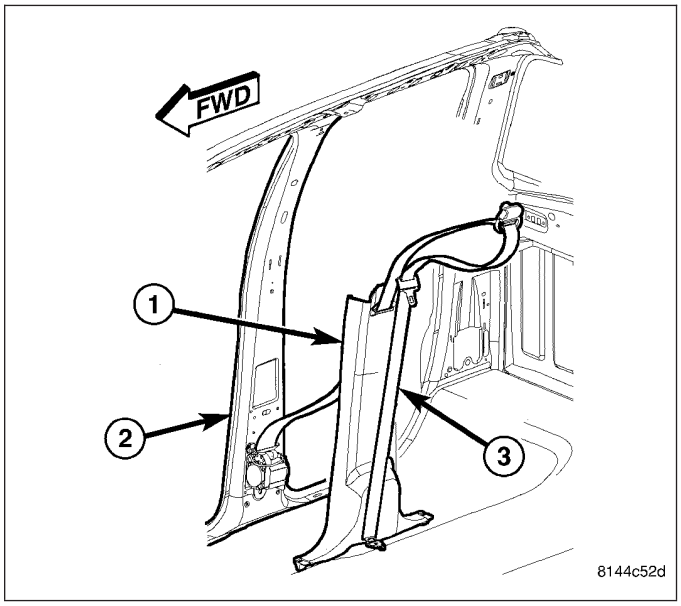

B-PILLAR UPPER TRIM

REMOVAL

REGULAR CAB

1. Remove the cap (1) and then the bolt (2) that secures the seat belt (3) to the top of the B-pillar (4) and position the seat belt out of the way.
2. Using a trim stick C-4755 or equivalent, disengage the retaining tabs that secure the upper B-pillar trim panel (5) to the B-pillar and remove the trim panel.

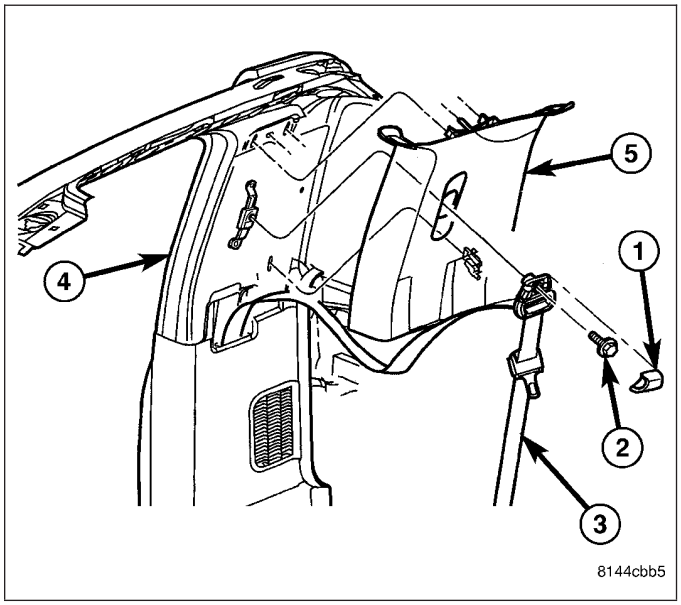

QUAD CAB

1. Using a small flat-bladed tool, carefully open the two fastener covers (2) located on the grab handle (1).
2. Remove the two bolts (3) that secure the grab handle to the B-pillar and remove the grab handle.

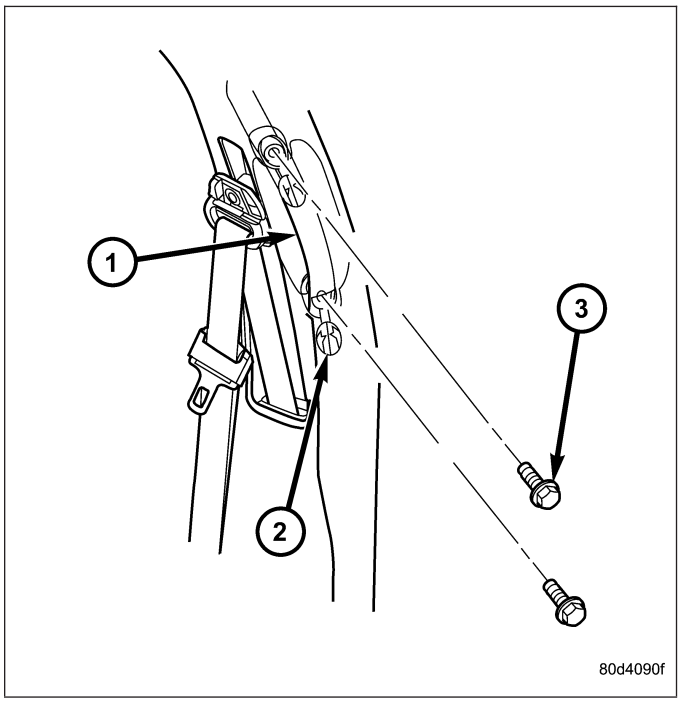

3. Remove the cap (1) and the bolt (2) that secures the seat belt (3) to the top of the B-pillar (4) and position the seat belt out of the way.
4. Using a trim stick C-4755 or equivalent, disengage the retaining tabs that secure the upper B-pillar trim panel (5) to the B-pillar and remove the trim panel.

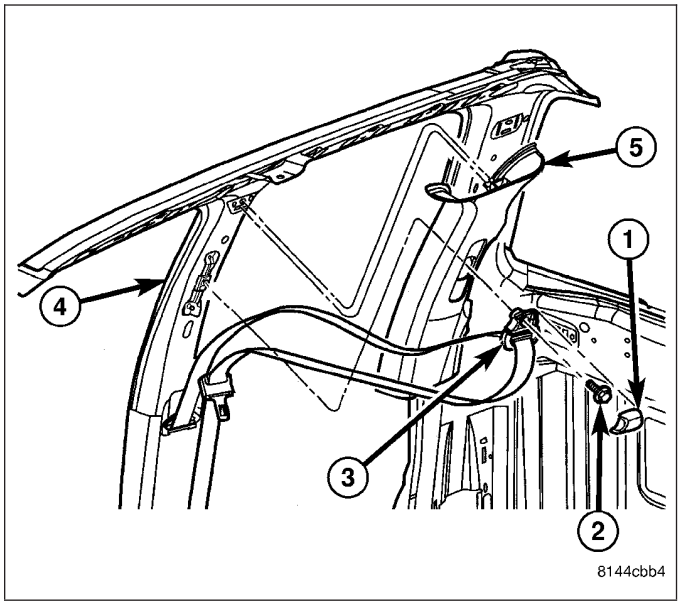

INSTALLATION

REGULAR CAB

1. Position the upper B-pillar trim panel (5) to the B-pillar (4).
2. Engage the retaining tabs that secure the upper B-pillar trim panel to the B-pillar.
3. Install the bolt (2) that secures the seat belt (3) to the top of the B-pillar. Tighten the bolt to 40 N·m (29 ft. lbs.).
4. Install the cap (1) onto the seat belt.

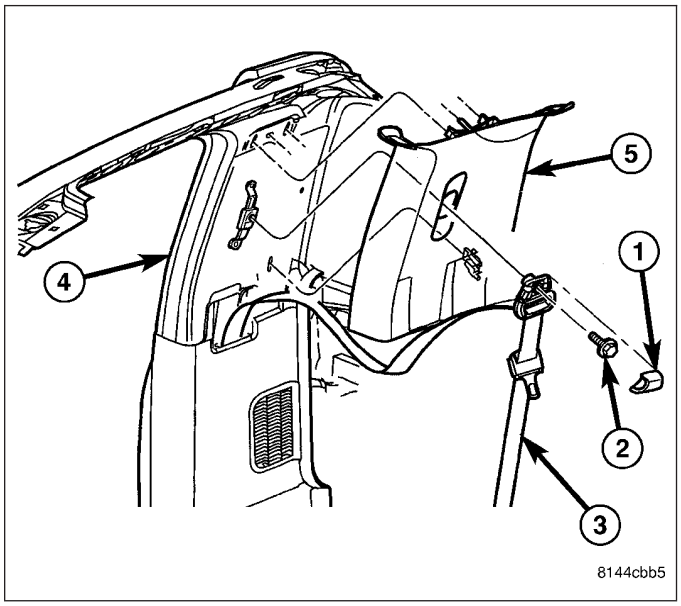

QUAD CAB

1. Position the upper B-pillar trim panel (5) to the B-pillar (4).
2. Engage the retaining tabs that secure the upper B-pillar trim panel to the B-pillar.
3. Install the bolt (2) that secures the seat belt (3) to the top of the B-pillar. Tighten the bolt to 40 N·m (29 ft. lbs.).
4. Install the cap (1) onto the seat belt.

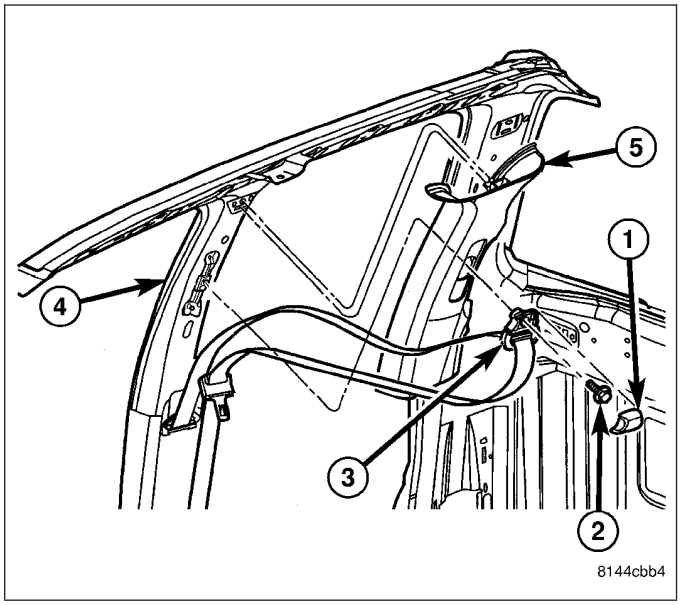

5. Install the grab handle (1) onto the B-pillar and install the two bolts (3). Tighten the bolts to 6 N·m (55 in. lbs.).
6. Close the two fastener covers (2) located on the grab handle.

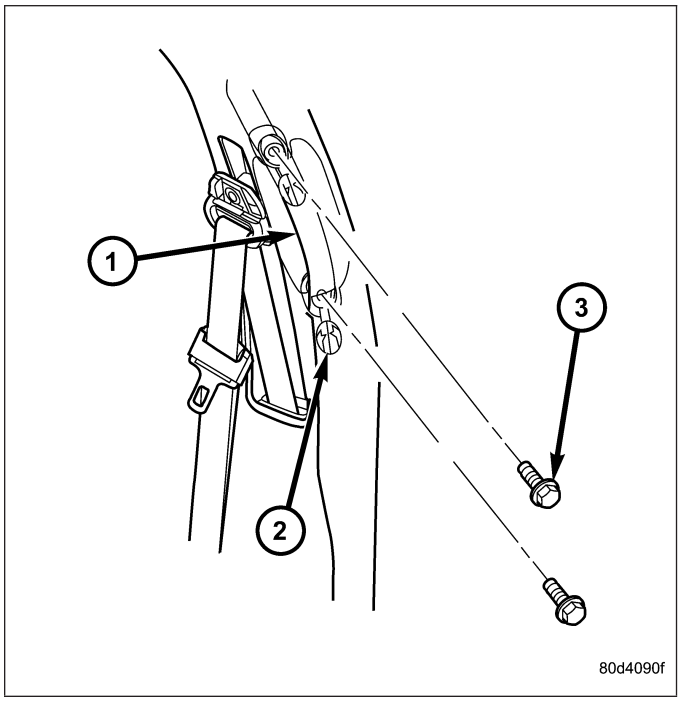

C-PILLAR LOWER TRIM

REMOVAL

1. Remove the upper C-pillar trim panel (Refer to 23 - BODY/INTERIOR/C-PILLAR TRIM - REMOVAL).
2. Remove the bolt (3) that secures the seat belt (2) to the bottom of the C-pillar (4) and position the seat belt out of the way.
3. Using a trim stick C-4755 or equivalent, disengage the retaining tabs that secure the lower C-pillar trim panel (1) to the C-pillar.
4. Remove the seat belt from the lower C-pillar trim panel through the slot provided and remove the trim panel.

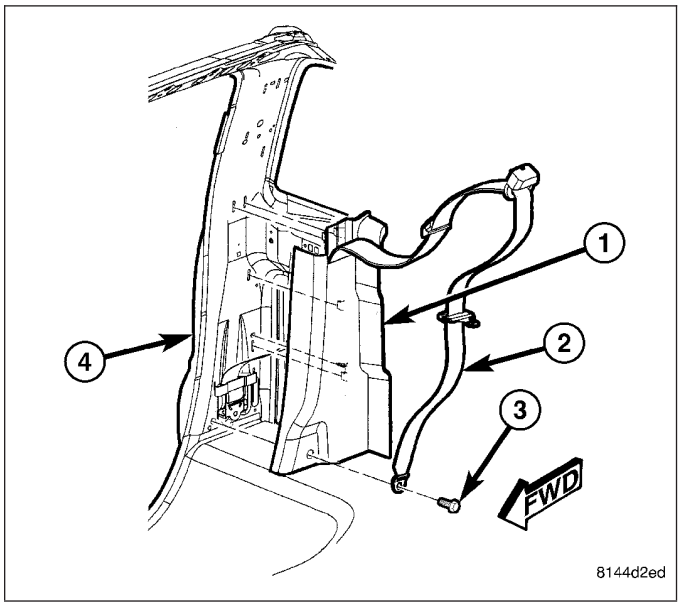

INSTALLATION

1. Route the seat belt (2) through the slot in the lower C-pillar trim panel (1) and position the trim panel to the C-pillar (4).
2. Engage the retaining tabs that secure the lower C-pillar trim panel to the C-pillar.
3. Install the bolt (3) that secures the seat belt to the bottom of the C-pillar. Tighten the bolt to 40 N·m (29 ft. lbs.).
4. Install the upper C-pillar trim panel (Refer to 23 - BODY/INTERIOR/C-PILLAR UPPER TRIM - INSTALLATION).

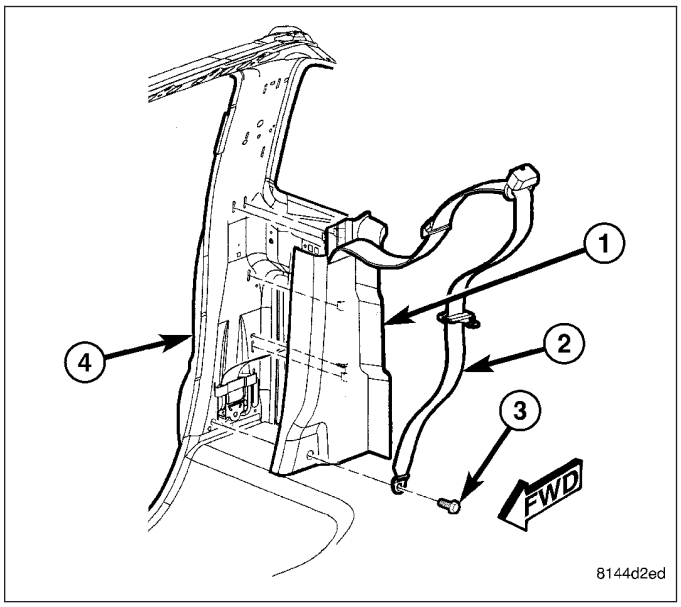

C-PILLAR UPPER TRIM

REMOVAL

1. Remove the cap (1) and then the bolt (2) that secures the seat belt (3) to the top of the C-pillar (4) and position the seat belt out of the way.
2. Using a trim stick C-4755 or equivalent, disengage the retaining tabs that secure the upper C-pillar trim panel (5) to the C-pillar and remove the trim panel.

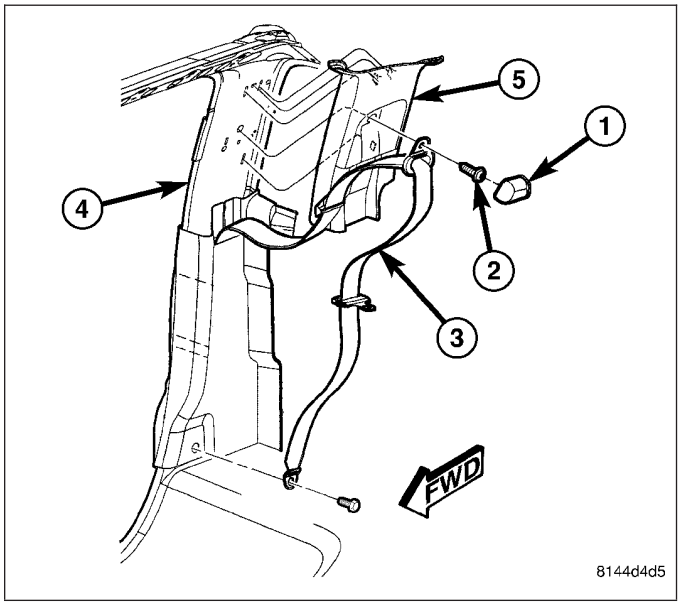

INSTALLATION

1. Position the upper C-pillar trim panel (5) to the C-pillar (4).
2. Engage the retaining tabs that secure the upper C-pillar trim panel to the C-pillar.
3. Install the bolt (2) that secures the seat belt (3) to the top of the C-pillar. Tighten the bolt to 40 N·m (29 ft. lbs.).
4. Install the cap (1) onto the seat belt.

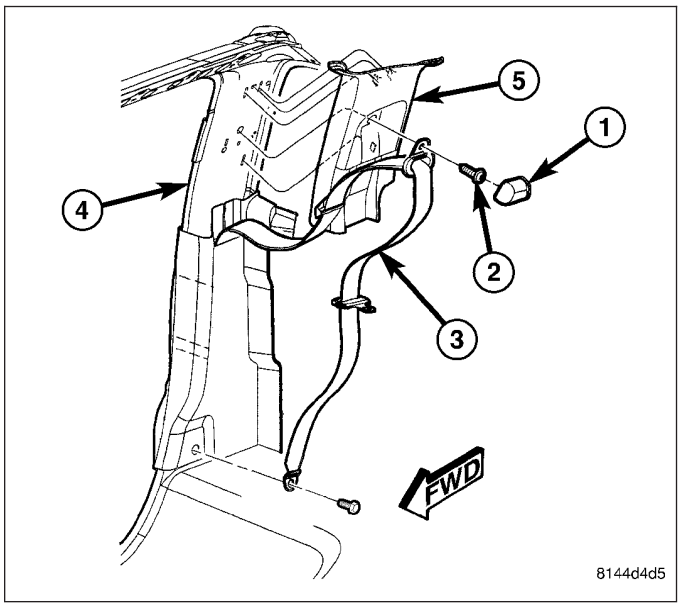

CARPETS AND FLOOR MATS

REMOVAL

NOTE: Carpet for Quad Cab model shown. Regular cab similar.

1. Remove the front seats (Refer to 23 - BODY/ SEATS/SEAT - FRONT - REMOVAL).
2. If equipped, remove the floor console (Refer to 23 - BODY/INTERIOR/FLOOR CONSOLE - REMOVAL).
3. If equipped, remove the three bolts (1) that secure the rear storage compartment (2) to the floor panel (3) and remove the storage compartment from the rear trim panel (4).

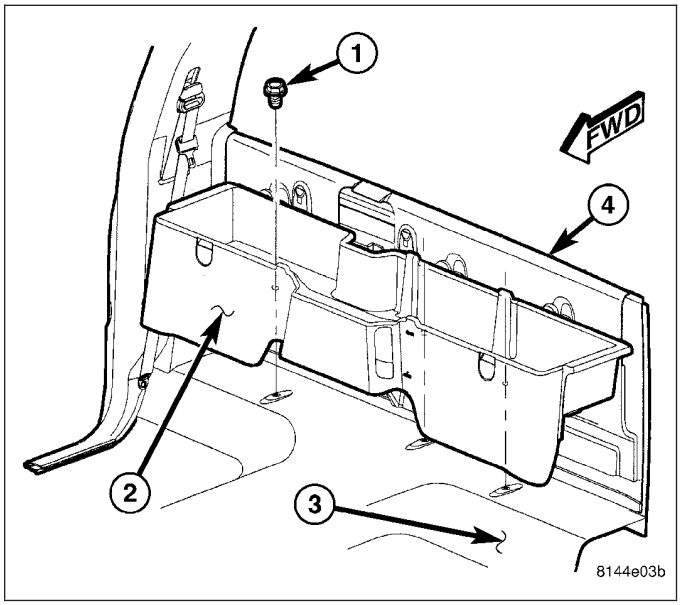

4. On Quad Cab models, remove the rear seats (1) (Refer to 23 - BODY/SEATS/SEAT - REAR - REMOVAL).
5. On Quad Cab models, remove the rear cup holder (2) using a trim stick C-4755 or equivalent.

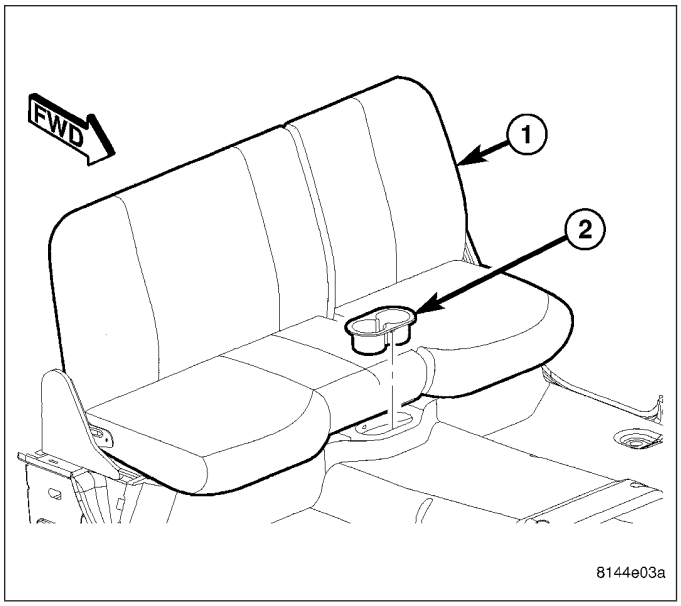

6. Remove the lower B-pillar trim panels (Refer to 23 - BODY/INTERIOR/B-PILLAR LOWER TRIM - REMOVAL).
7. On Quad Cab models, remove the bolt that secures the lower seat belt anchor to the floor panel near the B-pillars (Refer to 8 - ELECTRICAL/ RESTRAINTS/SEAT BELT & RETRACTOR - REMOVAL).
8. Remove the retaining screw (1) that secures the jack assembly (2) to the floor panel (3) and remove the jack assembly.
9. Remove the two bolts (4) that secure the jack assembly to the floor panel.

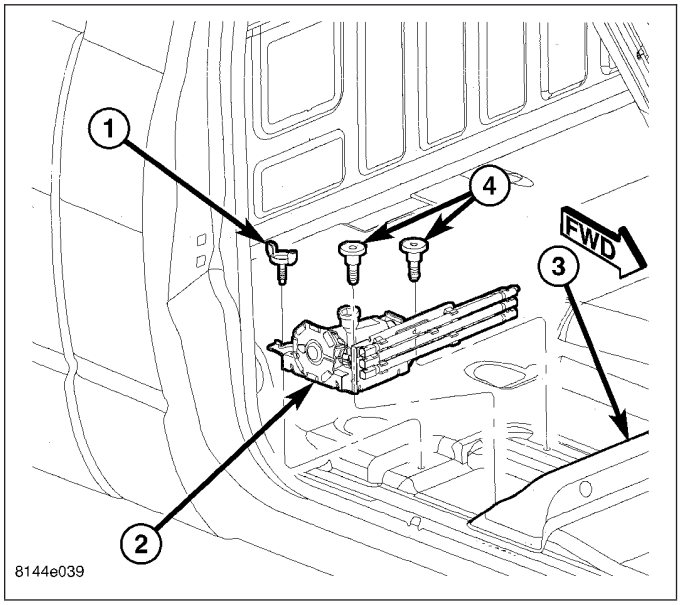

10. On Quad Cab models, remove the eleven push-pin fasteners (1) that secure the rear of the carpet (2) to the floor panel (3).
11. Remove the carpet from the vehicle.

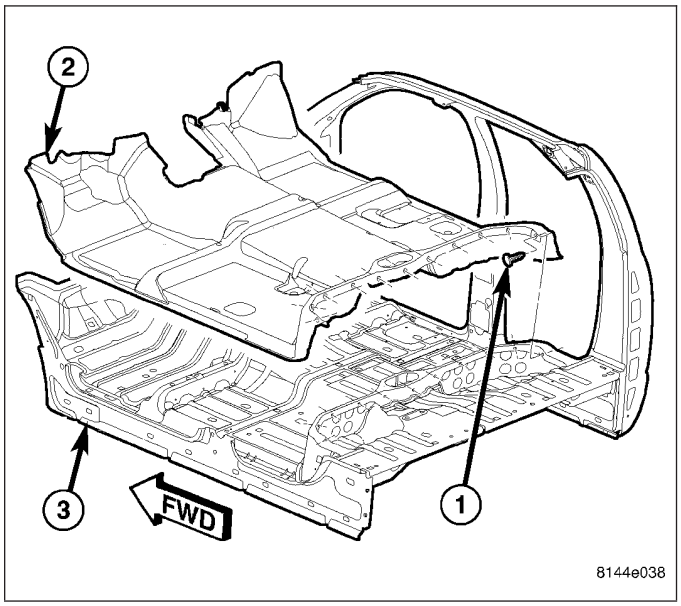

INSTALLATION

NOTE: Carpet for Quad Cab model shown. Regular cab similar.

1. Position the carpet (2) into the vehicle.
2. On Quad Cab models, install the eleven push-pin fasteners (1) that secure the carpet to the floor panel (3).

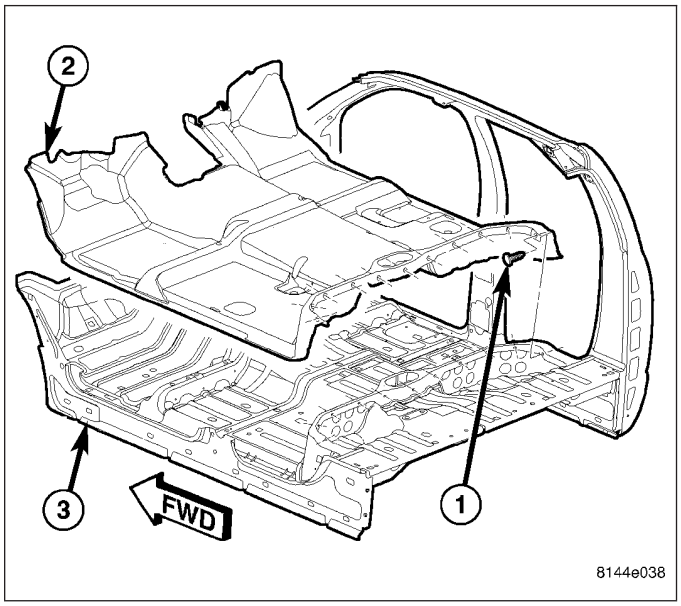

3. Install the two bolts (4) that secure the jack assembly (2) to the floor panel (3).
4. Position the jack assembly onto the two bolts and install the retaining screw (1). Tighten the screw securely.
5. On Quad Cab models, install the bolt that secures the lower seat belt anchors the floor panel near the B-pillars (Refer to 8 - ELECTRICAL/RESTRAINTS/ SEAT BELT & RETRACTOR - INSTALLATION). Tighten the bolt to 40 N·m (29 ft. lbs.).
6. Install the lower B-pillar trim panels (Refer to 23 - BODY/INTERIOR/B-PILLAR LOWER TRIM - INSTALLATION).

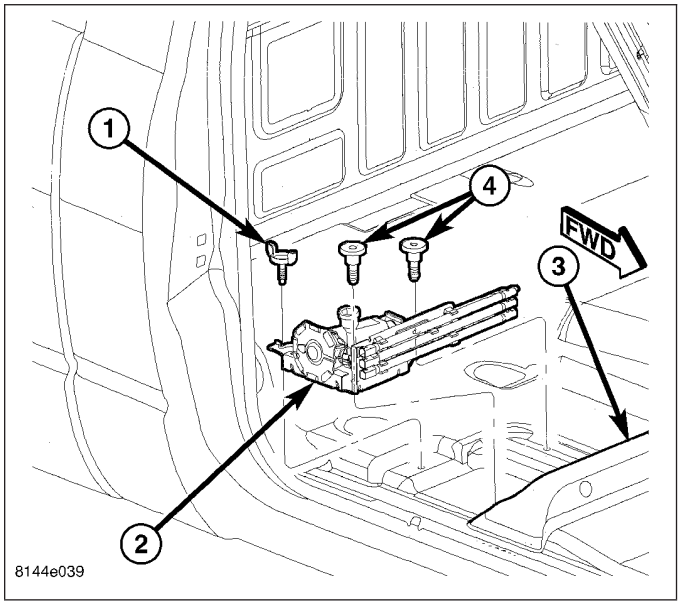

7. On Quad Cab models, install the rear seat (1) (Refer to 23 - BODY/SEATS/SEAT - INSTALLATION).
8. On Quad Cab models, install the rear cup holder (2).

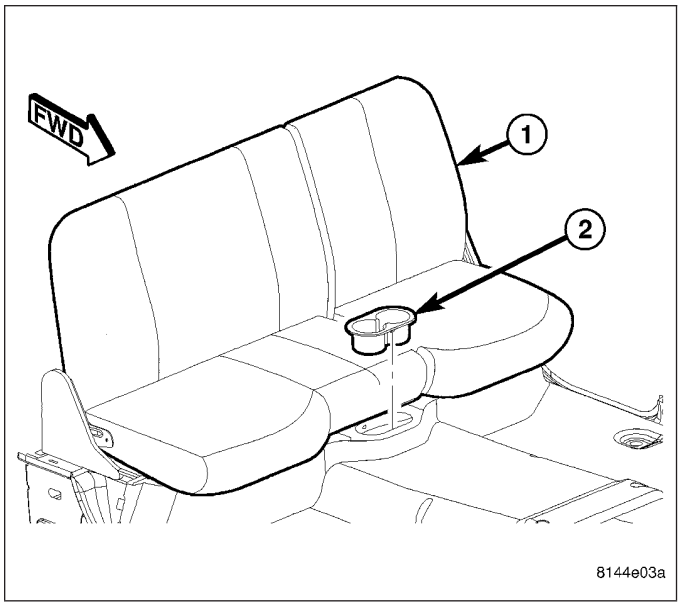

9. If equipped, position the rear storage compartment (2) onto the rear cab trim panel (4) and install the three bolts (1). Tighten the bolts to 6 N·m (55 in. lbs.).
10. If equipped, install the floor console (Refer to 23 - BODY/INTERIOR/FLOOR CONSOLE - INSTALLATION).
11. Install the front seats (Refer to 23 - BODY/SEATS/SEAT - FRONT - INSTALLATION).

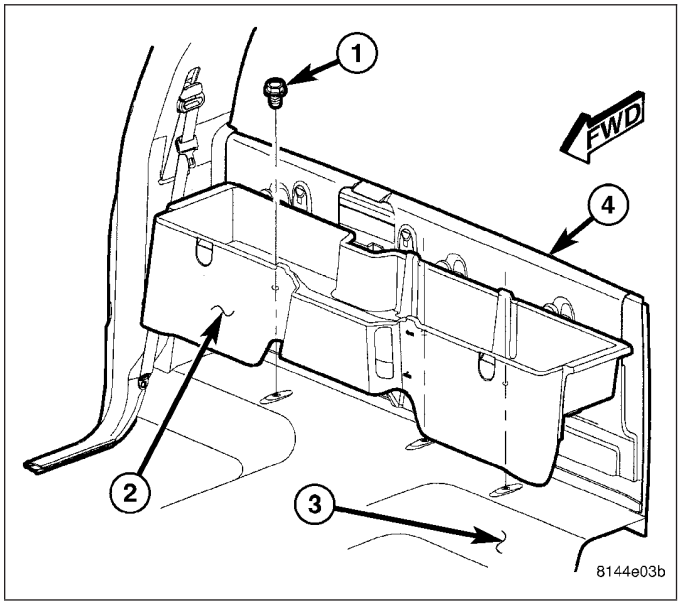

COAT HOOK

REMOVAL

1. Using a trim stick C-4755 or equivalent, disengage the release clip (2) as shown and remove the coat hook (1) from the headliner (3)

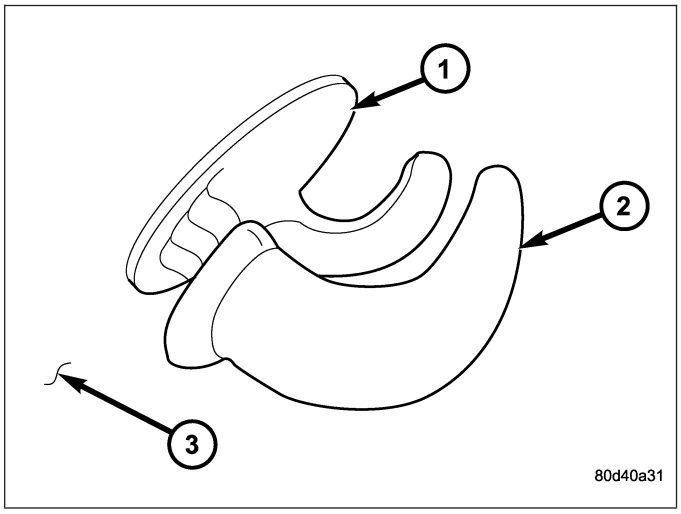

INSTALLATION

1. Position the coat hook (1) through the headliner (3) and fully seat the base of the support to the roof panel.
2. Engage the release clip (2).

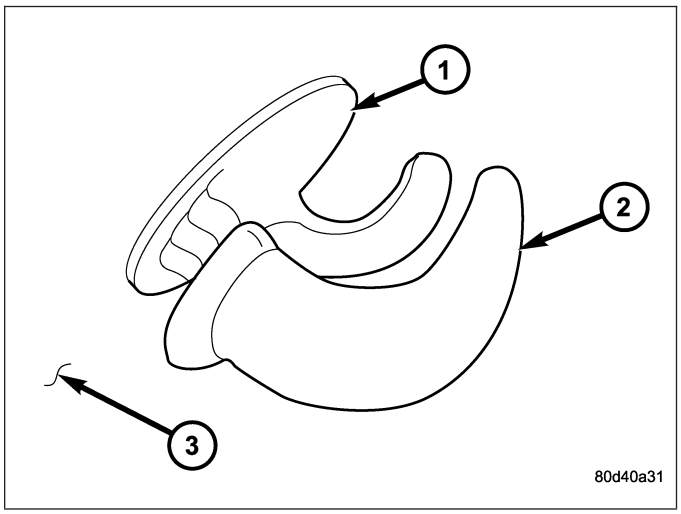

COWL TRIM

REMOVAL

1. Using a trim stick C-4755 or equivalent, disengage the retaining tabs of the cowl trim panel (1) from the retainer clips (2) in the door sill (3).
2. Pull the cowl trim panel rearward and remove it from the vehicle.

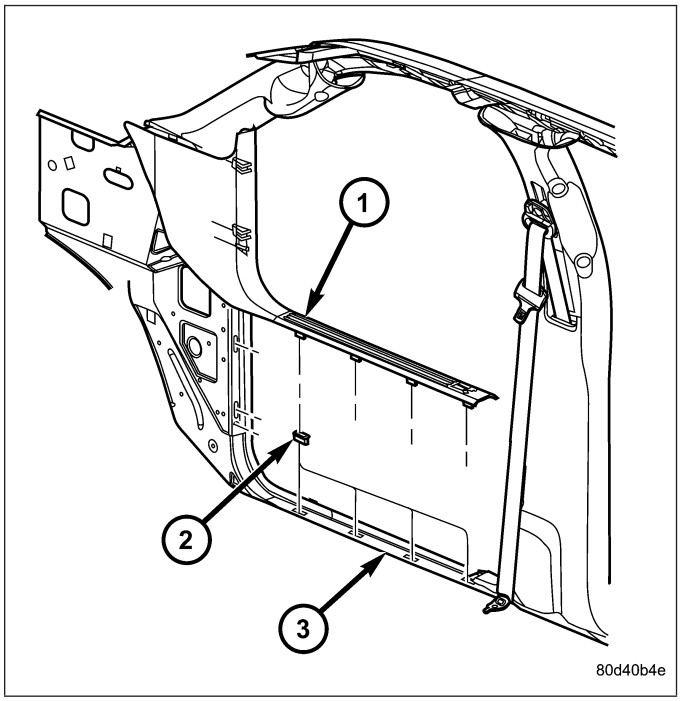

INSTALLATION

1. Position the cowl trim panel (1) onto the door sill (2).
2. Push the cowl trim panel forward and then engage the retaining tabs that secure the sill trim panel to the rear door sill.

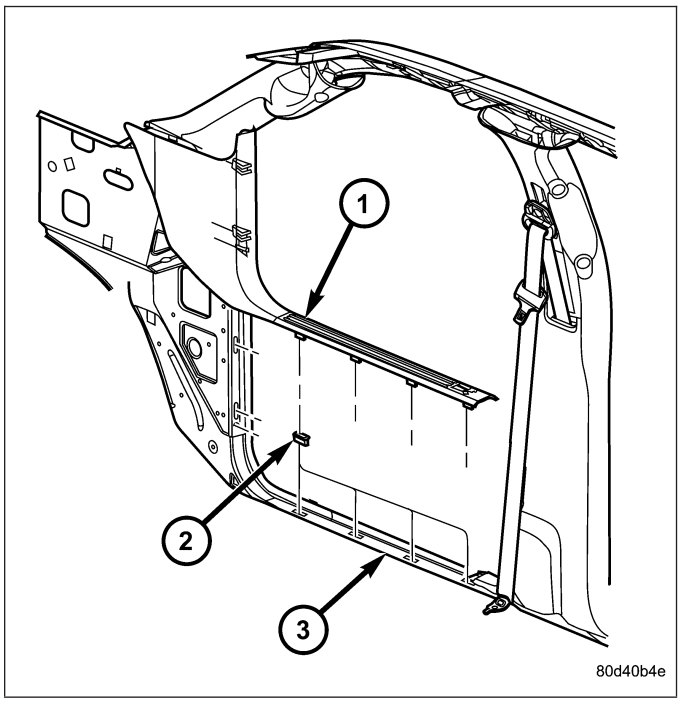

FLOOR CONSOLE

REMOVAL

1. If equipped, remove the 4WD gear shift boot (Refer to 23 - BODY/INTERIOR/4WD FLOOR SHIFT BOOT - REMOVAL).
2. If equipped with a manual transmission, remove the transmission gear shift lever extension.
3. Using a trim stick C-4755 or equivalent, disengage the retaining tabs that secure the manual transmission gear shift boot or storage bin (2) (depending on application) to the floor console (4) and remove the boot or storage bin.
4. Remove the three inserts (1 and 3) from the floor console.

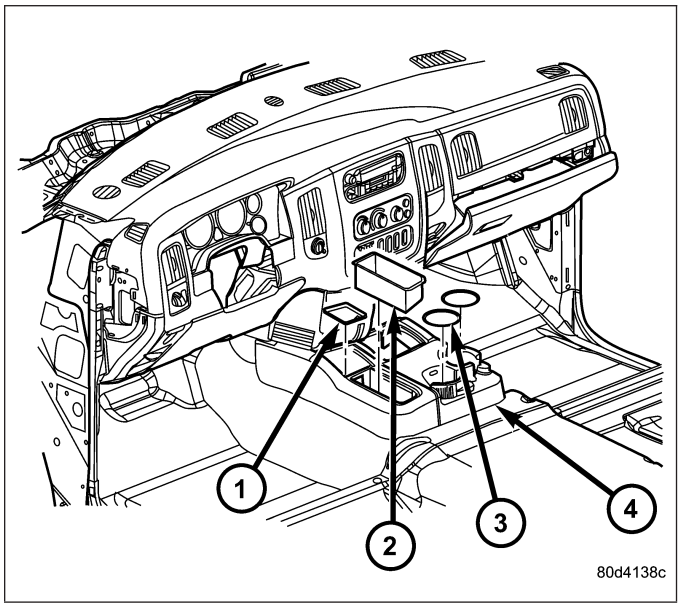

5. Remove the three bolts (3) that secure the floor console (2) to the floor panel.
6. Lift up the rear of the floor console to clear the gear shift lever (4), if equipped.
7. Slide the floor console rearward and remove it from the instrument panel (1).

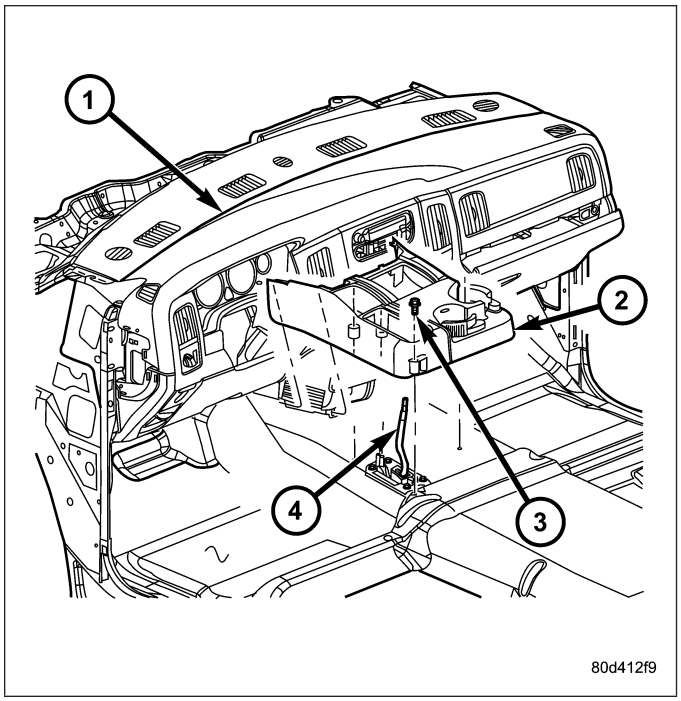

INSTALLATION

1. Position the front of the floor console (2) under the instrument panel (1).
2. Lower the back of the floor console over the gear shift lever (4) (if equipped) and install the three screws (3). Tighten the screws to 6 N·m (55 in. lbs.).

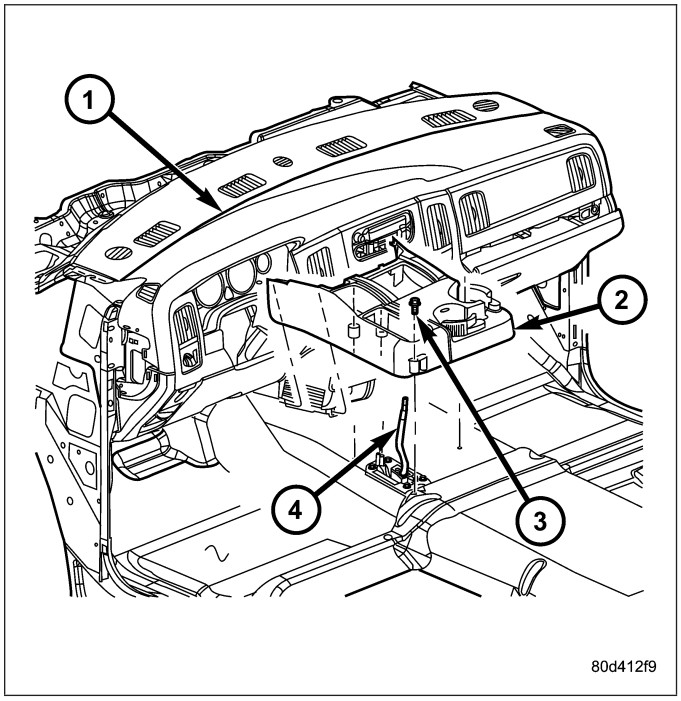

3. Install the three inserts (1 and 3) into the floor console (4).
4. Position the manual transmission gear shift boot or storage bin (2) (depending on application) onto the floor console and engage the retaining tabs.
5. If equipped with a manual transmission, install the transmission gear shift lever extension.
6. If equipped, install the 4WD gear shift boot (Refer to 23 - BODY/INTERIOR/4WD FLOOR SHIFT BOOT - INSTALLATION).

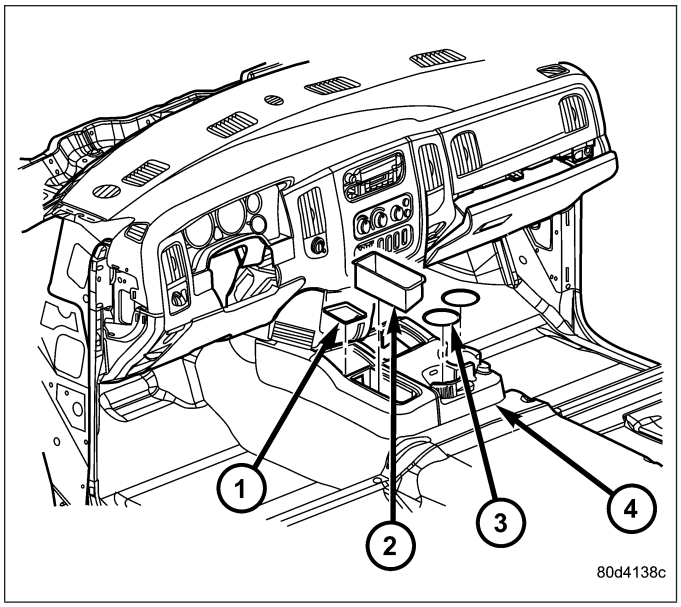

HEADLINER

REMOVAL

NOTE: Headliner for Quad Cab model shown. Regular cab similar.

1. Remove the A-pillar trim panels (Refer to 23 - BODY/INTERIOR/A-PILLAR TRIM - REMOVAL).
2. Remove the upper B-pillar trim panels (Refer to 23 - BODY/INTERIOR/B-PILLAR UPPER TRIM - REMOVAL).
3. On Quad Cab models, remove the upper C-pillar trim panels (Refer to 23 - BODY/INTERIOR/C-PILLAR TRIM - REMOVAL).
4. Disconnect the wire harness connector (1) located at the left A-pillar from the headliner wire harness (2).
5. Disconnect the headliner wire harness connector (3) from the inside rear view mirror.
6. Remove the overhead console (Refer to 8 - ELECTRICAL/OVERHEAD CONSOLE - REMOVAL).

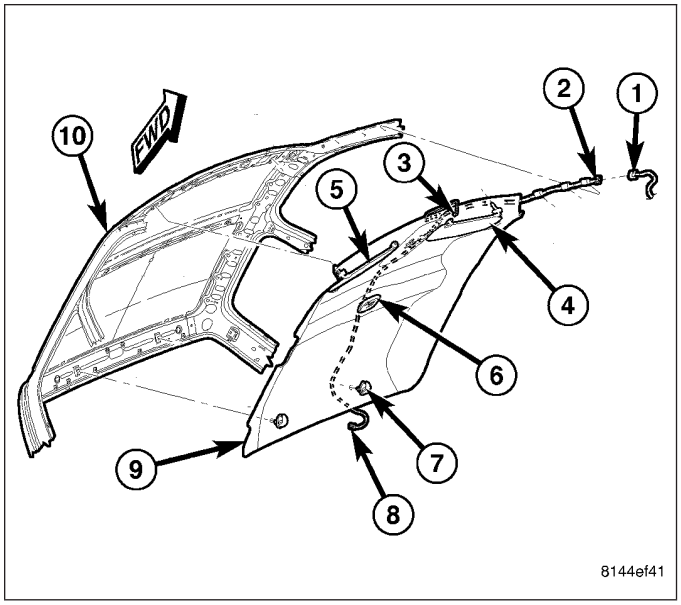

7. Remove the sun visors (4) (Refer to 23 - BODY/INTERIOR/SUN VISOR - REMOVAL).
8. Remove the sun visor supports (5) (Refer to 23 - BODY/INTERIOR/SUN VISOR SUPPORT - REMOVAL).
9. Remove the dome lamp (6) (Refer to 8 - ELECTRICAL/LAMPS/LIGHTING - INTERIOR/DOME LAMP - REMOVAL).
10. Remove the two coat hooks (7) (Refer to 23 - BODY/INTERIOR/COAT HOOK - REMOVAL).
11. Lower the rear of the headliner (9) downward from the roof panel (9) and disconnect the headliner wire harness connector (8) from the center high mounted stop lamp.
12. Lower the front of the headliner downward and remove the headliner through the passenger door opening.

INSTALLATION

NOTE: Headliner for Quad Cab model shown. Regular cab similar.

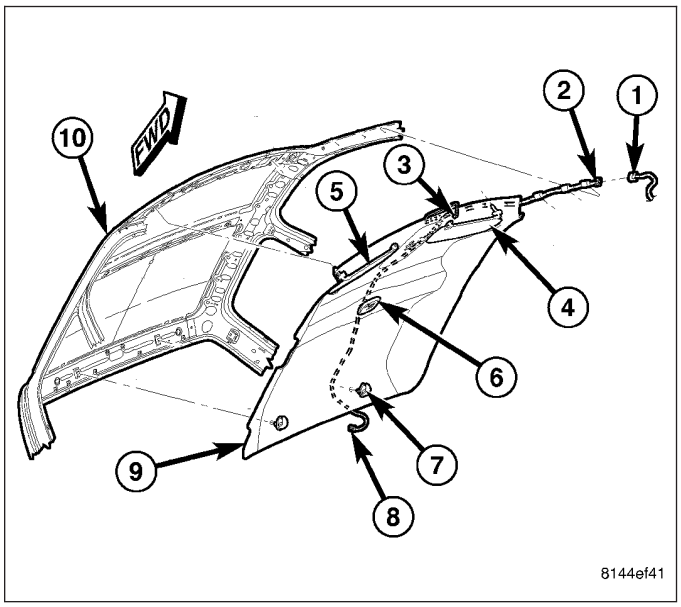

1. Position the headliner (9) into the vehicle through the passenger door opening.
2. Connect the headliner wire harness connector (8) to the center high mounted stop lamp.
3. Raise the rear of the headliner upward and install the two coat hooks (7) (Refer to 23 - BODY/INTERIOR/COAT HOOK - INSTALLATION).
4. Raise the front of the headliner upward and install the sun visor supports (5) (Refer to 23 - BODY/INTERIOR/SUN VISOR SUPPORT - INSTALLATION).
5. Install the sun visors (4) (Refer to 23 - BODY/INTERIOR/SUN VISOR - INSTALLATION).
6. Install the dome lamp (6) (Refer to 8 - ELECTRICAL/LAMPS/LIGHTING - INTERIOR/DOME LAMP - INSTALLATION).
7. Install the overhead console (Refer to 8 - ELECTRICAL/OVERHEAD CONSOLE - INSTALLATION).
8. Connect the headliner wire harness connector (3) to the inside rear view mirror
9. Connect the headliner wire harness (2) to the wire harness connector (1) located at the left A-pillar.
10. On Quad Cab models, install the upper C-pillar trim panel (Refer to 23 - BODY/INTERIOR/C-PILLAR TRIM - INSTALLATION).
11. Install the upper B-pillar trim panels (Refer to 23 - BODY/INTERIOR/B-PILLAR UPPER TRIM - INSTALLATION).
12. Install the upper A-pillar trim panels. (Refer to 23 - BODY/INTERIOR/A-PILLAR TRIM - INSTALLATION).

LOAD FLOOR

REMOVAL

1. Move the rear seat cushion (1) to the up position.
2. Remove the two nuts (2) that secure the rear of the load floor (3) to the floor panel.

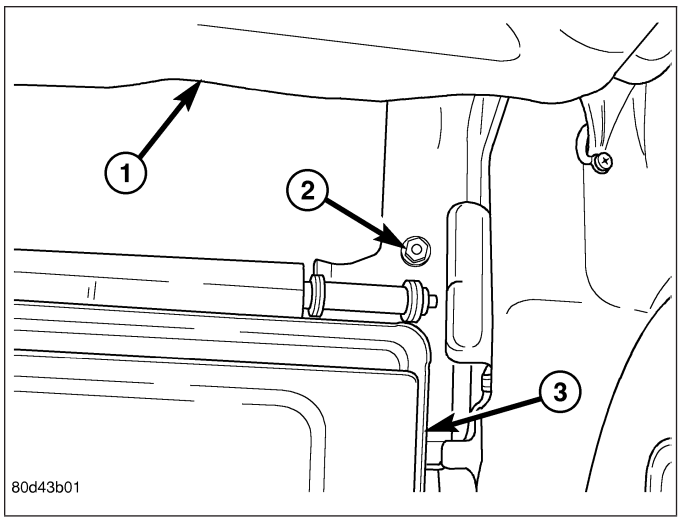

3. Move the load floor (2) to the up position.
4. Remove the two bolts (3) that secure the load floor to the floor panel (1) and remove the load floor.
5. If required, remove the support cylinder (4) (Refer to 23 - BODY/INTERIOR/LOAD FLOOR SUPPORT CYLINDER - REMOVAL).

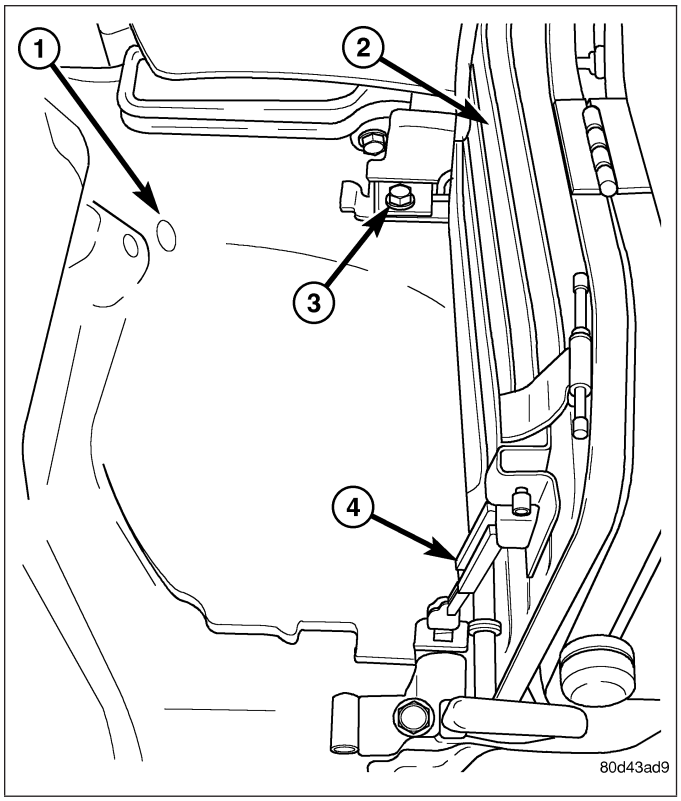

INSTALLATION

1. If removed, install the load floor support cylinder (4) (Refer to 23 - BODY/INTERIOR/LOAD FLOOR SUPPORT CYLINDER - INSTALLATION).
2. Position the load floor (2) into the vehicle and install the two bolts (3) that secure it to the floor panel (1). Tighten the bolts to 40 N·m (29 ft. lbs.).

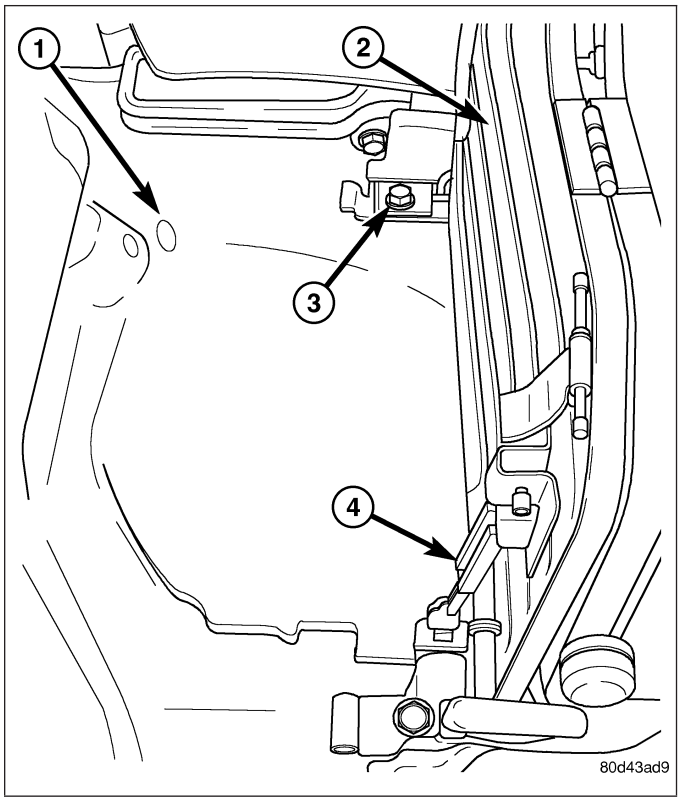

3. Move the load floor (3) to the down position and install the two nuts (2) that secure the load floor to the floor panel. Tighten the nuts to 25 N·m (18 ft. lbs.).
4. Move the rear seat cushion (1) to the down position.

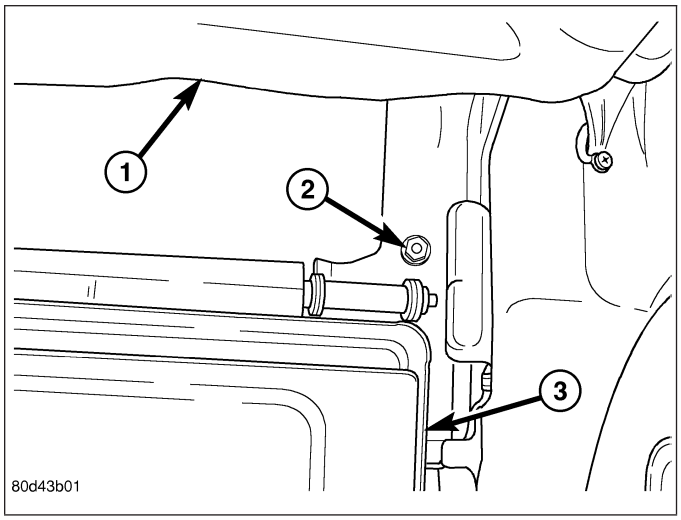

LOAD FLOOR SUPPORT CYLINDER

REMOVAL

1. Open the load floor (2).
2. Remove the snap clips and retaining pins (1).
3. Remove the support cylinder (3).

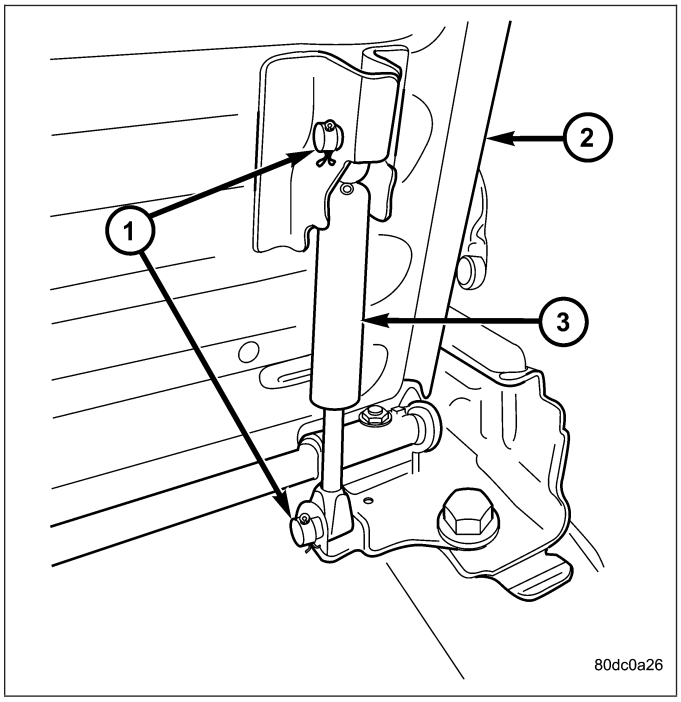

INSTALLATION

NOTE: Install the support cylinder with the cylinder end connected at the top as shown.

1. Position the load floor support cylinder (3) onto the load floor (2).
2. Install the retaining pins and snap clips (1).

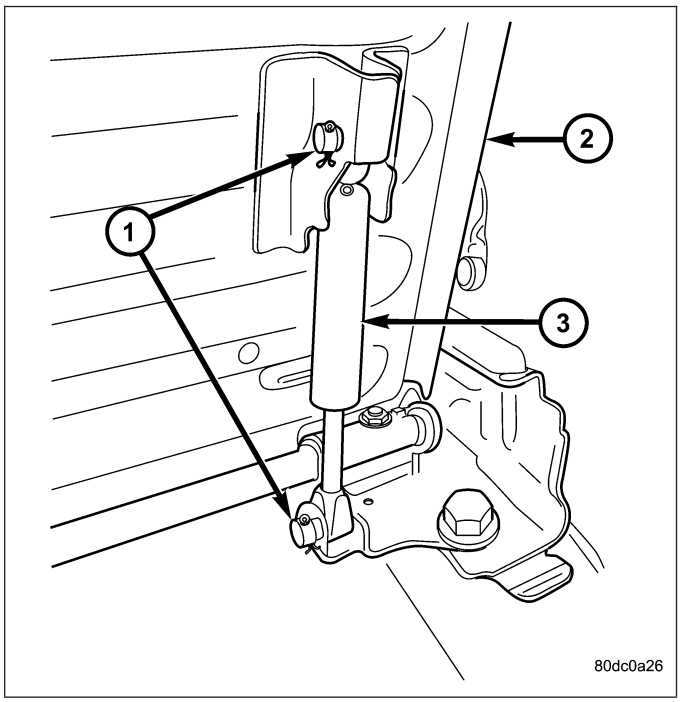

REAR CAB BACK PANEL TRIM

REMOVAL

1. If equipped, remove the three bolts (1) that secure the rear storage compartment (2) to the floor panel (3) and remove the storage compartment from the rear cab trim panel (4).

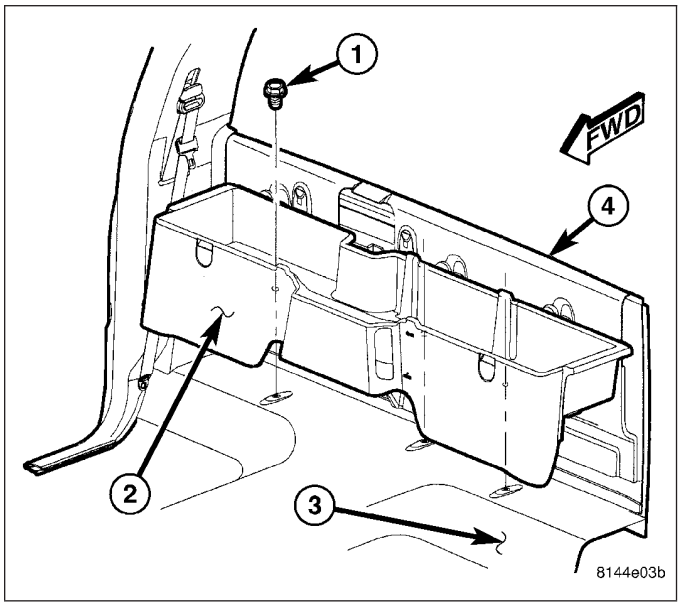

2. If equipped, using a trim stick C-4755 or equivalent, disengage the latch (4) for the utility hook cover (3) and open the cover to gain access to the screw (1) that secures the utility hook (2) to the rear cab back panel.

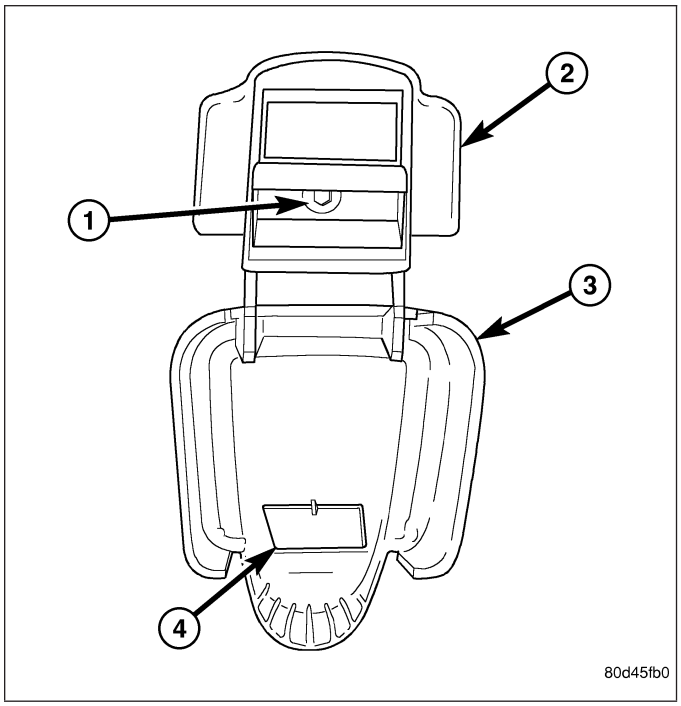

3. On Regular cab models, remove the lower B-pillar trim panels (Refer to 23 - BODY/INTERIOR/B-PILLAR LOWER TRIM - REMOVAL).
4. On Regular cab models, remove the utility hook (3) or the storage bin latch (4) (depending on application) from the rear cab trim panel (1) and remove the trim panel.

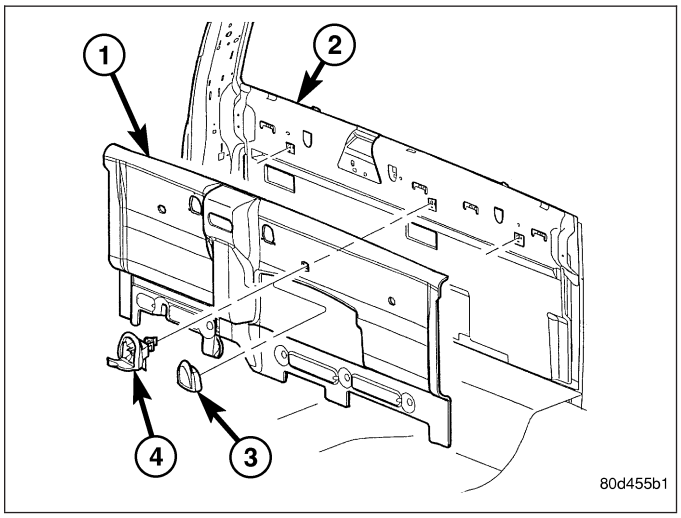

5. On Quad Cab models, remove the child seat tether straps from the rear cab back panel (2) (Refer to 8 - ELECTRICAL/RESTRAINTS/CHILD TETHER - REMOVAL).
6. On Quad Cab models, remove the center seat belt trim bezel (Refer to 8 - ELECTRICAL/RESTRAINTS/SEAT BELT & RETRACTOR - REMOVAL).
7. On Quad Cab models, remove the lower C-pillar trim panels (Refer to 23 - BODY/INTERIOR/C-PILLAR TRIM - REMOVAL).
8. On Quad Cab models, remove the two push-pin fasteners (1 and 4) that secure the rear cab trim panel (3) to the rear cab back panel and remove the trim panel.

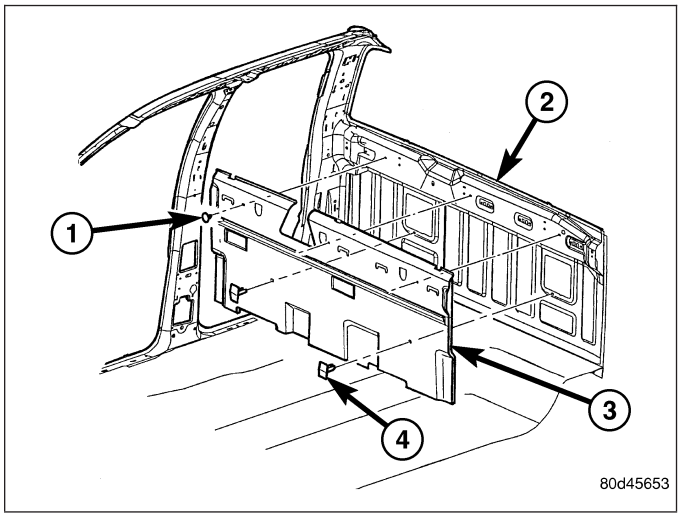

INSTALLATION

1. On Quad Cab models, position the rear cab trim panel (3) onto the rear cab back panel (2) and install the two push-pin fasteners (1 and 4).
2. On Quad Cab models, install the lower C-pillar trim panels (Refer to 23 - BODY/INTERIOR/C-PILLAR TRIM - INSTALLATION).
3. On Quad Cab models, install the center seat belt trim bezel (Refer to 8 - ELECTRICAL/RESTRAINTS/SEAT BELT & RETRACTOR - INSTALLATION.
4. On Quad Cab models, install the child seat tether straps (Refer to 8 - ELECTRICAL/RESTRAINTS/CHILD TETHER - INSTALLATION).

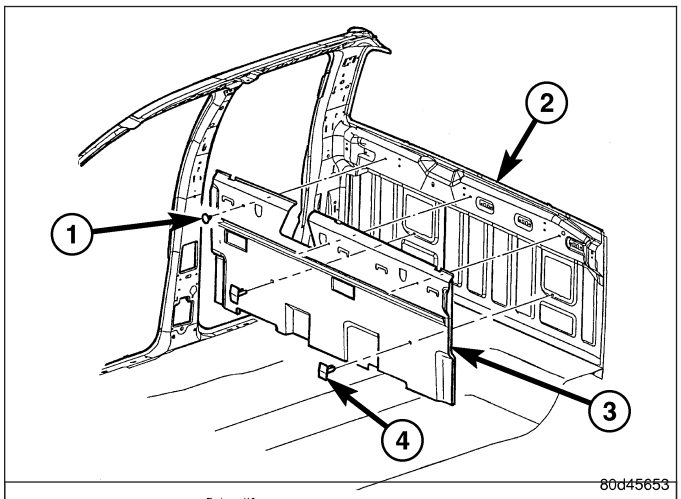

5. On Regular cab models, position the rear cab trim panel (1) onto the rear cab back panel (2) and install the utility hook (3) or the storage bin latch (4) (depending on application).
6. On Regular cab models, install the lower B-pillar trim panels (Refer to 23 - BODY/INTERIOR/B-PILLAR LOWER TRIM - INSTALLATION).

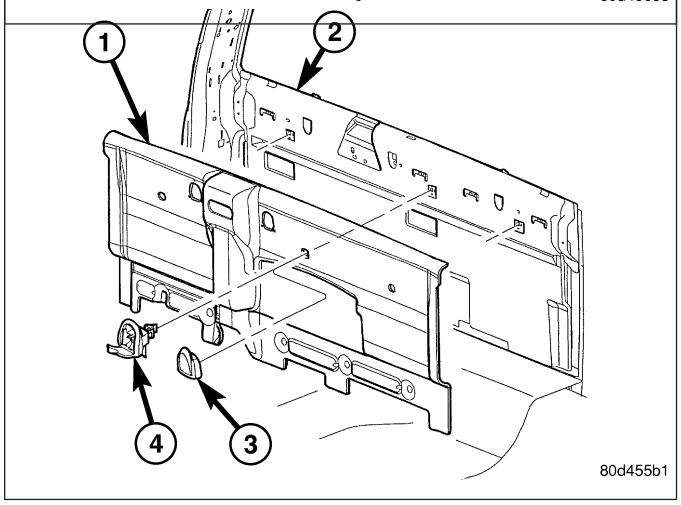

7. If equipped, position the rear storage compartment (2) onto the rear cab trim panel (4) and install the three bolts (1). Tighten the bolts to 6 N·m (55 in. lbs.).

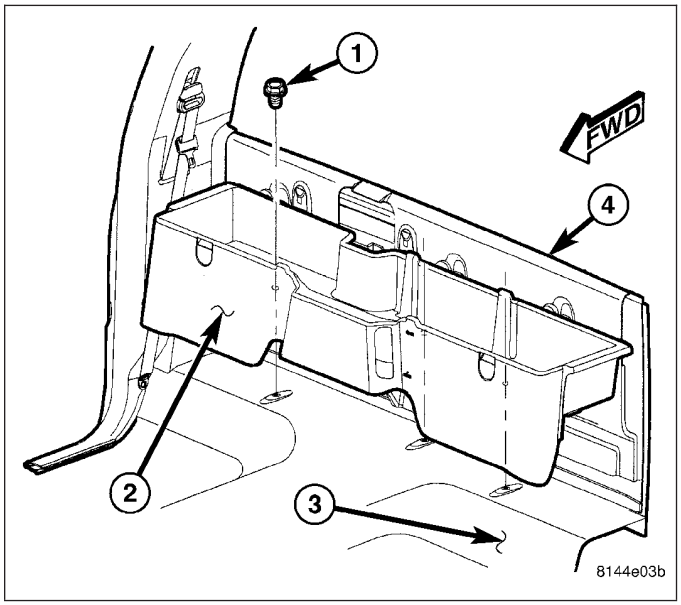

REAR DOOR SILL TRIM COVER

REMOVAL

1. Using a trim stick C-4755 or equivalent, disengage the retaining tabs of the sill trim panel (1) from the retainer clips in the rear door sill (2) and remove the trim panel.

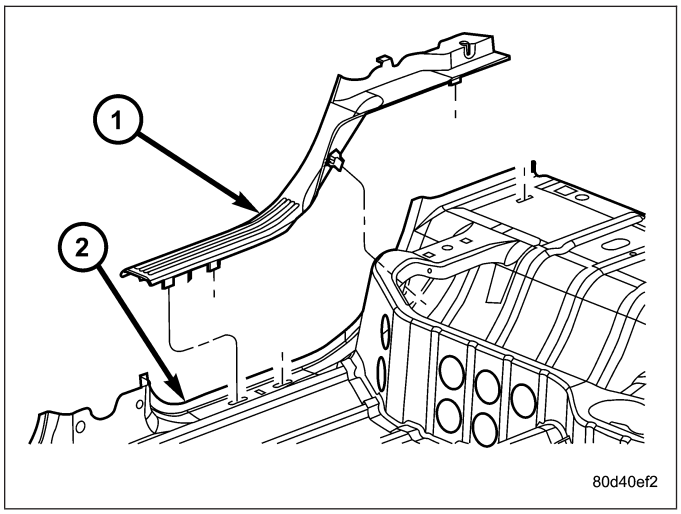

INSTALLATION

1. Position the sill trim panel (1) onto the rear door sill (2).
2. Engage the retaining tabs that secure the sill trim panel to the rear door sill.

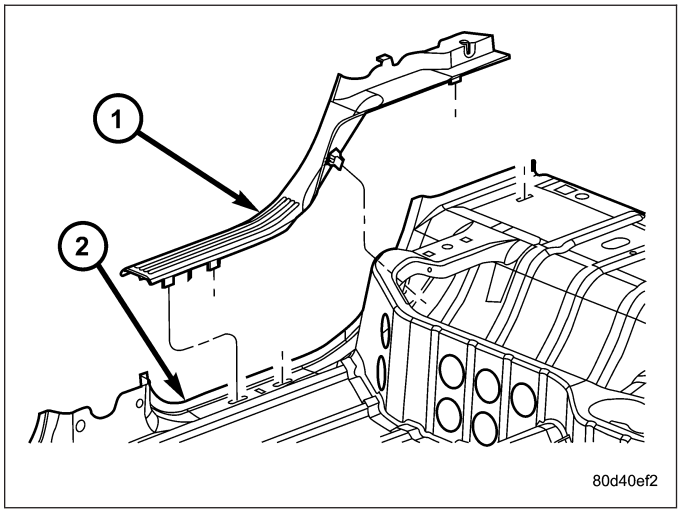

REAR VIEW MIRROR

REMOVAL

1. If equipped, disconnect the wire harness connector (1) from the rear view mirror (3).
2. Loosen the set screw (2) that secures the rear view mirror to the mounting bracket (4).
3. Slide the base of the rear view mirror upward and remove the mirror from the mounting bracket.
4. If required, remove the mirror mounting bracket from the windshield (5).

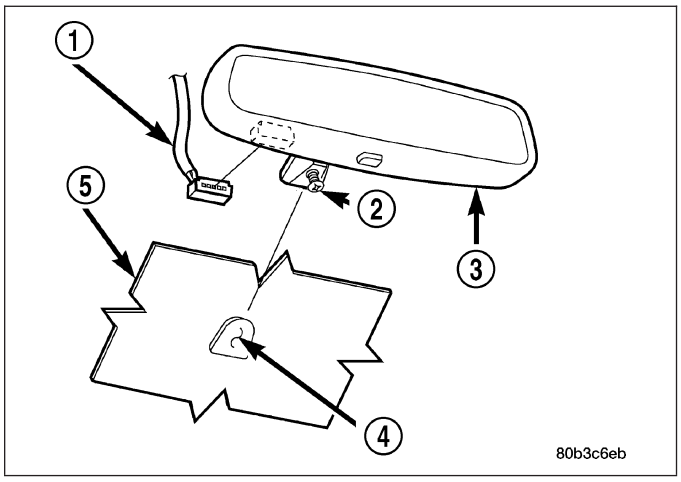

INSTALLATION

INSTALLATION

1. If required, install the mounting bracket (4) to the windshield (5) (Refer to 23 - BODY/INTERIOR/ REAR VIEW MIRROR - REAR VIEW MIRROR MOUNTING BRACKET - INSTALLATION).
2. Position the base of the rear view mirror (3) onto the mounting bracket and slide the mirror downward until it is fully engaged on the mounting bracket.
3. Tighten the set screw (2) that secures the rear view mirror to the mounting bracket to 1 N·m (15 in. lbs.).
4. If equipped, connect the wire harness connector (1) to the rear view mirror.

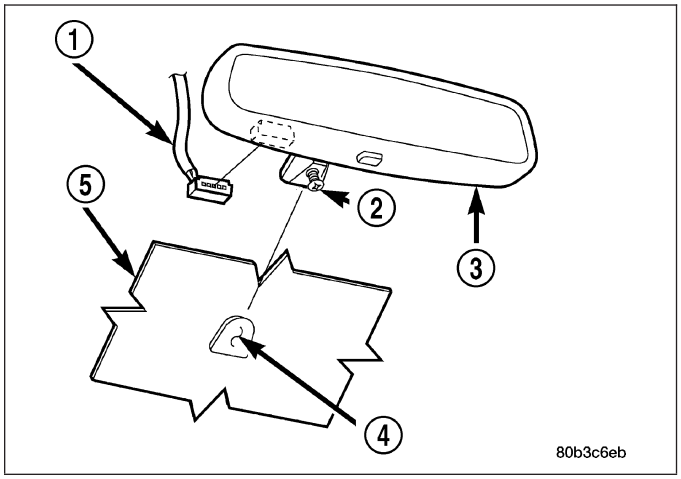

REAR VIEW MIRROR MOUNTING BRACKET

1. Mark the position for the mirror mounting bracket (4) on the outside of the windshield glass (5) with a wax pencil.
2. Clean the bracket contact area on the glass. Use a mild powdered cleanser on a cloth saturated with isopropyl (rubbing) alcohol. Finally, clean the glass with a paper towel dampened with alcohol.
3. Sand the surface on the mounting bracket with a fine grit sandpaper. Wipe the mounting bracket surface clean with a paper towel.
4. Apply accelerator to the surface on the mounting bracket according to the following instructions:
   a. Crush the vial to saturate the felt applicator.
   b. Remove the paper sleeve.
   c. Apply accelerator to the contact surface on the mounting bracket.
   d. Allow the accelerator to dry for five minutes.
   e. Do not touch the bracket contact surface after the accelerator has been applied.
5. Apply adhesive accelerator to the bracket contact surface on the windshield glass. Allow the accelerator to dry for one minute. Do not touch the glass contact surface after the accelerator has been applied.
6. Install the mounting bracket according to the following instructions:
   a. Apply one drop of adhesive at the center of the bracket contact-surface on the windshield glass.
   b. Apply an even coat of adhesive to the contact surface on the mounting bracket.
   c. Align the mounting bracket with the marked position on the windshield glass.
   d. Press and hold the mounting bracket in place for at least one minute.

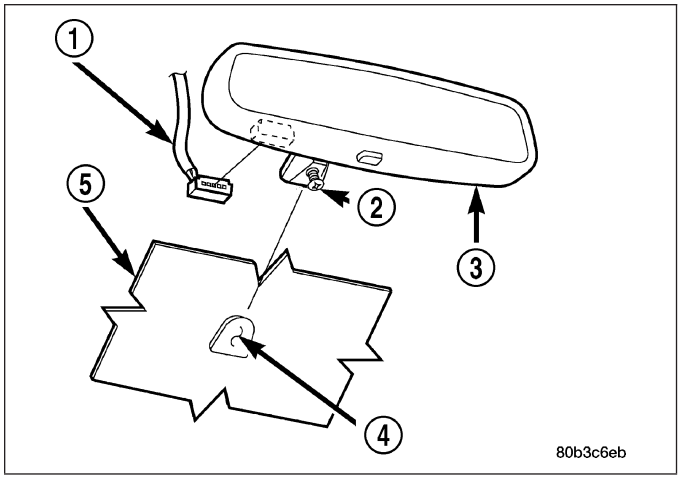

NOTE: Verify that the mirror mounting bracket is correctly aligned, because the adhesive will cure rapidly.

7. Allow the adhesive to cure for 8-10 minutes. Remove any excess adhesive with an alcohol-dampened cloth.
8. Allow the adhesive to cure for an additional 8-10 minutes before installing the rear view mirror (3) (Refer to 23 - BODY/INTERIOR/REAR VIEW MIRROR - INSTALLATION).

SUN VISOR

REMOVAL

1. Remove the three screws (1) that secure each sun visor (2) to the roof panel and remove the visor from the headliner (3).
2. If equipped, disconnect the wire harness connector for the illuminated vanity mirror (4).

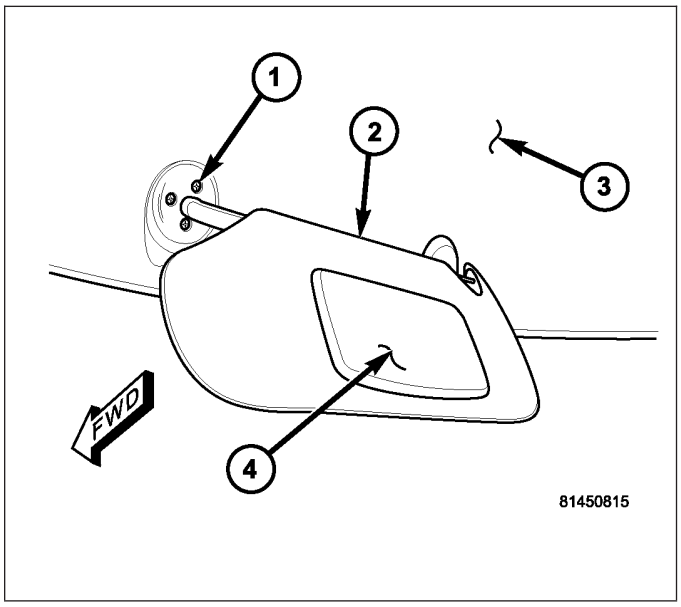

INSTALLATION

1. If equipped, connect the wire harness connector for the illuminated vanity mirror (4).
2. Position the sun visor (2) onto the headliner (3).
3. Install the three screws (1) that secure each sun visor to the roof panel. Tighten the screws to 2.2 N·m (20 in. lbs.).

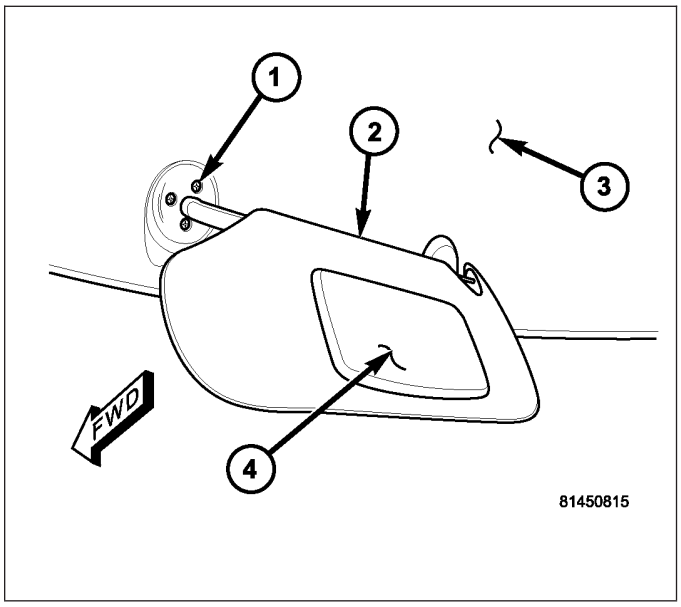

SUN VISOR SUPPORT

REMOVAL

1. Using a trim stick C-4755 or equivalent, disengage the release clip (3) as shown and remove the sun visor support (1) from the headliner (2)

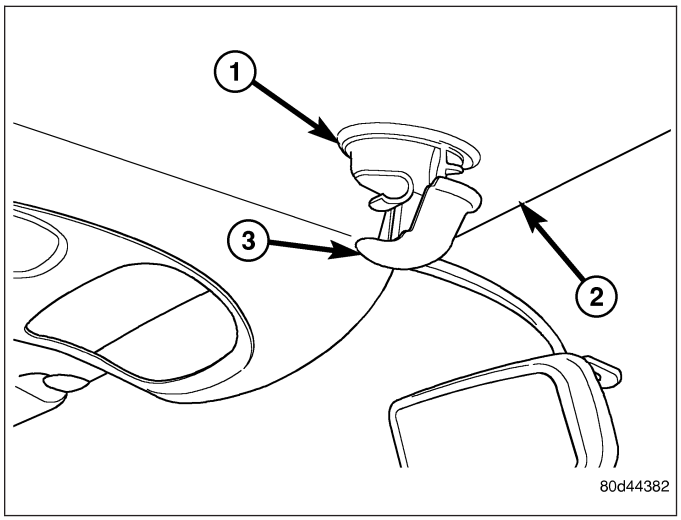

INSTALLATION

1. Position the sun visor support (1) through the headliner (2) and fully seat the base of the support to the roof panel.
2. Engage the release clip (3).

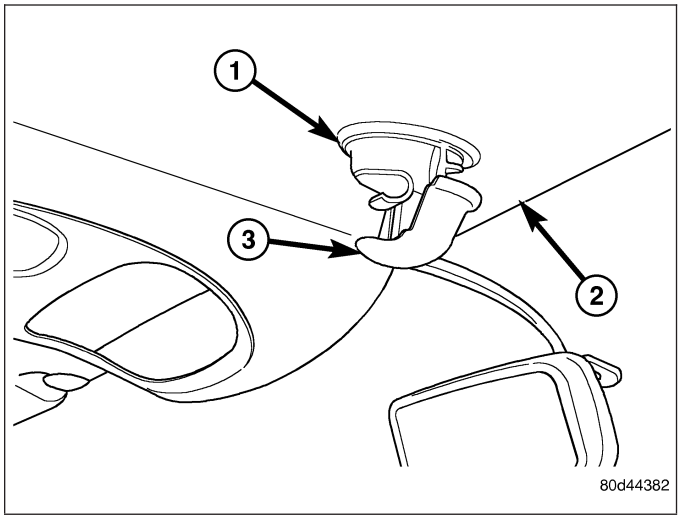

BODY VENT

REMOVAL

1. Remove the rear cab trim panel (Refer to 23 - BODY/INTERIOR/REAR CAB BACK PANEL TRIM - REMOVAL)
2. Disengage the retaining tabs (1) that secure the body vent (3) to the cab back panel (2).
3. Remove the vent through the opening in the cab back panel.

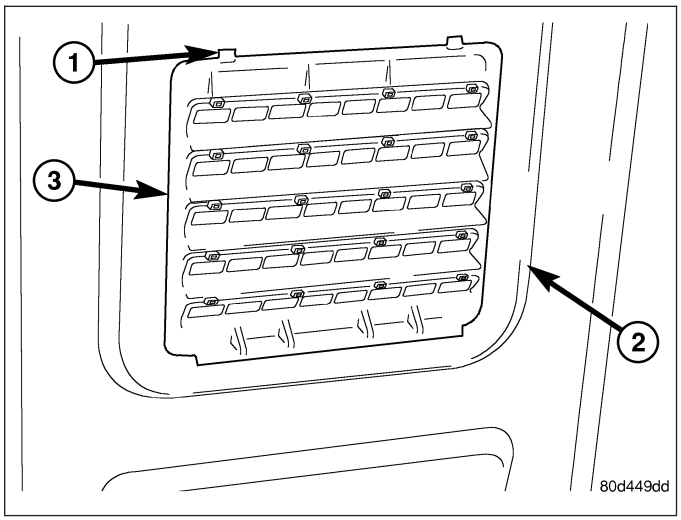

INSTALLATION

1. Position the body vent (3 into the opening of the cab back panel (2).
2. Install the body vent into the cab back panel and fully engage the retaining tabs (1).
3. Install the rear cab trim panel (Refer to 23 - BODY/INTERIOR/REAR CAB BACK PANEL TRIM - INSTALLATION).

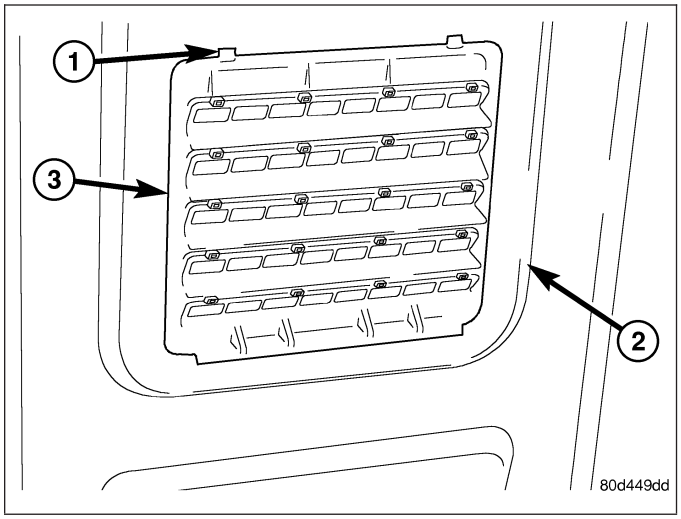

PAINT

TABLE OF CONTENTS

page

PAINT
SPECIFICATIONS
PAINT CODES 178
PAINT CODE
DESCRIPTION 179
BASECOAT/CLEARCOAT FINISH
DESCRIPTION 179

page

PAINT TOUCH-UP
DESCRIPTION 179
STANDARD PROCEDURE
PAINT TOUCH-UP 179
FINESSE SANDING/BUFFING AND POLISHING
DESCRIPTION 180

PAINT

SPECIFICATIONS

PAINT CODES

CAUTION: Due to possible late model change of paint colors, always check each vehicle for its paint code(s) (Refer to VEHICLE DATA/VEHICLE INFORMATION/VEHICLE CERTIFICATION LABEL - DESCRIPTION) or (Refer to VEHICLE DATA/VEHICLE INFORMATION/BODY CODE PLATE - DESCRIPTION) and (Refer to 23 - BODY/PAINT/PAINT CODE - DESCRIPTION).

EXTERIOR COLORS

EXTERIOR COLOR	DAIMLERCHRYSLER CODE
Deep Molten Red Pearlcoat	BR8
Flame Red Clearcoat	PR4
Light Almond Pearl Metallic Clearcoat	ZKJ
Wildwood Green Pearlcoat	CGJ
Atlantic Blue Pearlcoat	ZBJ
Patriot Blue Pearlcoat	WBT/WB7
Mineral Gray Metallic Clearcoat	CDM
Bright Silver Metallic Clearcoat	WSB/WS2
Black Clearcoat	DX8
Bright White Clearcoat	GW7

INTERIOR COLORS

INTERIOR COLOR	DAIMLERCHRYSLER CODE
Taupe	L5
Dark Slate Gray	DV

PAINT CODE

DESCRIPTION

Exterior vehicle body color(s) are identified on the Vehicle Certification Label (Refer to VEHICLE DATA/VEHICLE INFORMATION/VEHICLE CERTIFICATION LABEL - DESCRIPTION) or the Body Code Plate (Refer to VEHICLE DATA/VEHICLE INFORMATION/BODY CODE PLATE - DESCRIPTION).

The first digit of the paint code listed on the vehicle indicates the sequence of application, i.e.: P = primary coat, Q = secondary coat. The color names provided in the Paint and Trim Code Description chart are the same color names used on most repair product containers (Refer to 23 - BODY/PAINT - SPECIFICATIONS).

BASECOAT/CLEARCOAT FINISH

DESCRIPTION

The original equipment paint finish is a multi step process that involves cleaning, applying electro de-position (E-coat), anti-chip primer, basecoat, and clearcoat steps.

CAUTION: Do not use abrasive chemicals, abrasive compounds or harsh alkaline based cleaning solvents on the painted surfaces of a vehicle. Failure to follow this caution can result in damage to vehicle finish.

On most vehicles a two-part paint application (basecoat/clearcoat) is used. Color paint that is applied to primer is called basecoat. A clear coat paint is then applied to protect the basecoat from ultraviolet light and to provide a durable high-gloss finish.

PAINT TOUCH-UP

DESCRIPTION

If the painted metal surface of a vehicle becomes scratched or chipped, it should be touched-up as soon as possible to avoid corrosion.

WARNING: Use an OSHA approved respirator and safety glasses when spraying paint or solvents in a confined area. Failure to follow this warning may result in possible personal injury or death.

When repairing painted metal surfaces, for best results, use MOPAR® Scratch Filler/Primer, Touch-Up Paints and Clear Top Coat (Refer to VEHICLE DATA/VEHICLE INFORMATION/BODY CODE PLATE - DESCRIPTION) for Body Code Plate information.

STANDARD PROCEDURE

PAINT TOUCH-UP

1. Scrape any loose paint and corrosion from inside the scratch or chip.

WARNING: Avoid prolonged skin contact with petroleum or alcohol–based cleaning solvents. Failure to follow this warning can result in possible personal injury or death.

2. Clean affected area with MOPAR® Tar/Road Oil Remover or equivalent, and allow to dry.
3. Fill the inside of the scratch or chip with a coat of filler/primer. Do not overlap primer onto good surface finish. The applicator brush should be wet enough to puddle-fill the scratch or chip without running. Do not stroke brush applicator on body surface. Allow the filler/primer to dry hard.
4. Cover the filler/primer with color touch-up paint. Do not overlap touch-up color onto the original color coat around the scratch or chip. Butt the new color to the original color, if possible. Do not stroke applicator brush on body surface. Allow touch-up paint to dry hard.
5. On vehicles without clearcoat, the touch-up color can be lightly finesse sanded (1500 grit) and polished with rubbing compound.

6. On vehicles with clearcoat, apply clear top coat to touch-up paint with the same technique as described in Step 4. Allow clear top coat to dry hard. If desired, the clearcoat can be lightly finesse sanded (1500 grit) and polished with rubbing compound.

FINESSE SANDING/BUFFING AND POLISHING

DESCRIPTION

CAUTION: Do not remove more than 0.5 mils of clearcoat finish when sanding, hand buffing or polishing. Basecoat paint must retain clearcoat for durability.

CAUTION: If the finish has been finesse sanded in the past, it cannot be repeated. Failure to follow this caution can result in damage to vehicle finish.

NOTE: Finesse sanding should only be performed by a trained automotive paint technician.

Minor acid etching, orange peel, or smudging in a clearcoat or single-stage finish can be reduced with light finesse sanding, hand buffing and polishing. Use a Paint Thickness Gauge #PR-ETG-2X or equivalent to determine clearcoat or single-stage paint thickness before and after the repair.

SEATS

TABLE OF CONTENTS

page

CENTER SEAT
REMOVAL 182
INSTALLATION 183
CENTER ARMREST / SEAT BACK
REMOVAL 184
INSTALLATION 184
CENTER SEAT BACK INERTIA HINGE COVER
REMOVAL 185
INSTALLATION 186
CENTER SEAT BACK HINGE
REMOVAL 187
INSTALLATION 189
CENTER SEAT BACK LID
REMOVAL 190
INSTALLATION 190
CENTER SEAT CUSHION
REMOVAL 190
INSTALLATION 191
CENTER SEAT CUSHION COVER
REMOVAL 191
INSTALLATION 191
UNDER SEAT STORAGE BIN LID
REMOVAL 191
INSTALLATION 192
UNDER SEAT STORAGE BIN
REMOVAL 192
INSTALLATION 192
UNDER SEAT STORAGE BIN COVERING
REMOVAL 192
INSTALLATION 192
UNDER SEAT STORAGE BIN LATCH
REMOVAL 192
INSTALLATION 193
HEADREST
REMOVAL 193
INSTALLATION 193
HEADREST SLEEVE
REMOVAL 193
INSTALLATION 193
SEAT - FRONT
REMOVAL 193
INSTALLATION 194
LUMBAR SUPPORT HANDLE/BEZEL
REMOVAL 195
INSTALLATION 196
SEAT BACK CUSHION / COVER - FRONT
REMOVAL 197
INSTALLATION 197
SEAT CUSHION / COVER - FRONT
REMOVAL 197
INSTALLATION 197
SEAT TRACK
REMOVAL 197
INSTALLATION 197
SEAT - REAR
REMOVAL 198
INSTALLATION 199
SEAT BACK - REAR
REMOVAL 200
INSTALLATION 200
SEAT BACK CUSHION / COVER - REAR
REMOVAL 200
INSTALLATION 200
SEAT CUSHION / COVER - REAR
REMOVAL 201
INSTALLATION 201
SEAT CUSHION FRAME - REAR
REMOVAL 201
INSTALLATION 201
SEAT BACK REAR - FOOTMANS LOOP BRACKETS
REMOVAL 202
INSTALLATION 202

CENTER SEAT

REMOVAL

NOTE: Do not reuse the seat fasteners, always replace with new ones.

1. Remove and discard the front bolts (4).
2. Position the seats forward, remove the rear bolts (2) and discard.
3. Disconnect the 12v power supply electrical connector (3 - if equipped).

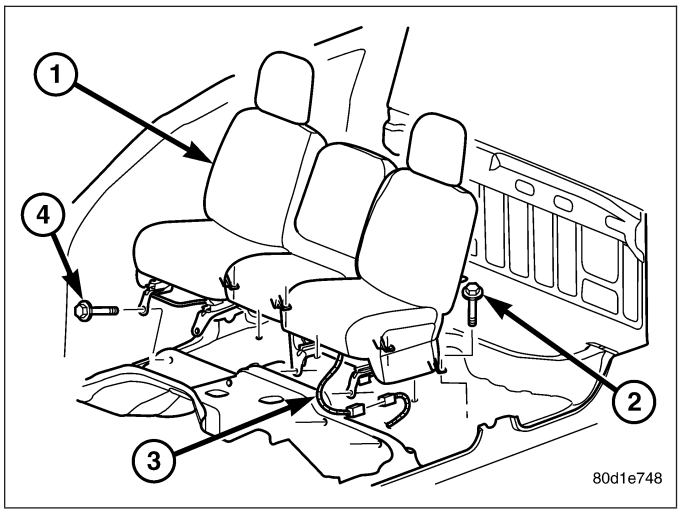

4. Fold the seat backs forward and roll the seat assembly (1) back in the vehicle.
5. Remove the nuts (2 and 4) attaching the center seat (1) to the drivers seat and the passenger seat and discard.

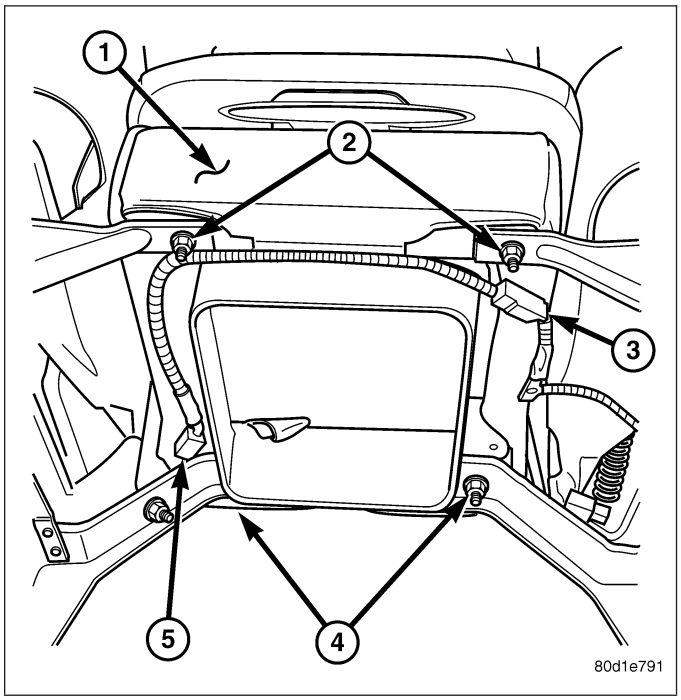

6. Remove the nuts (4) attaching the center seat (2) to the drivers seat (3) and the passenger seat in the rear of the seat and discard.
7. Disconnect the electrical connector (1 - if equipped).
8. Roll the seat assembly forward and remove the center seat portion.

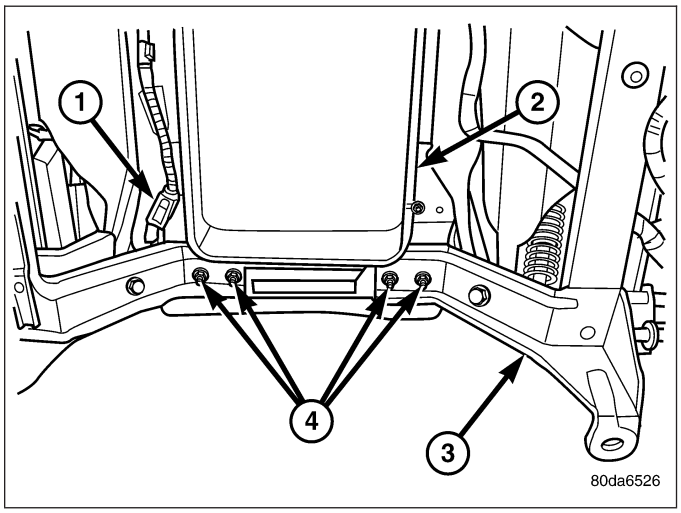

INSTALLATION

NOTE: Do not reuse the seat fasteners, always replace with new ones.

1. Install the center seat (2) and roll the seat assembly back in the vehicle.
2. Install new nuts (4) attaching the center seat to the drivers (3) and passenger seat.
3. Connect the electrical connector (1 - if equipped).
4. Tighten the nuts (4) to 25 N·m (18 ft. lbs.).

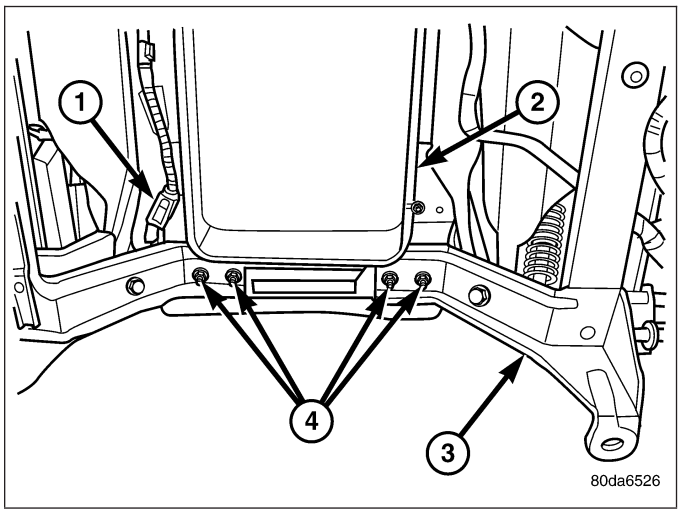

5. Install new nuts (2 and 4) attaching the center seat to the drivers (3) and passenger seat.
6. Tighten the nuts (4) to 25 N·m (18 ft. lbs.).
7. Connect the electrical connector (3 and 5 - if equipped).

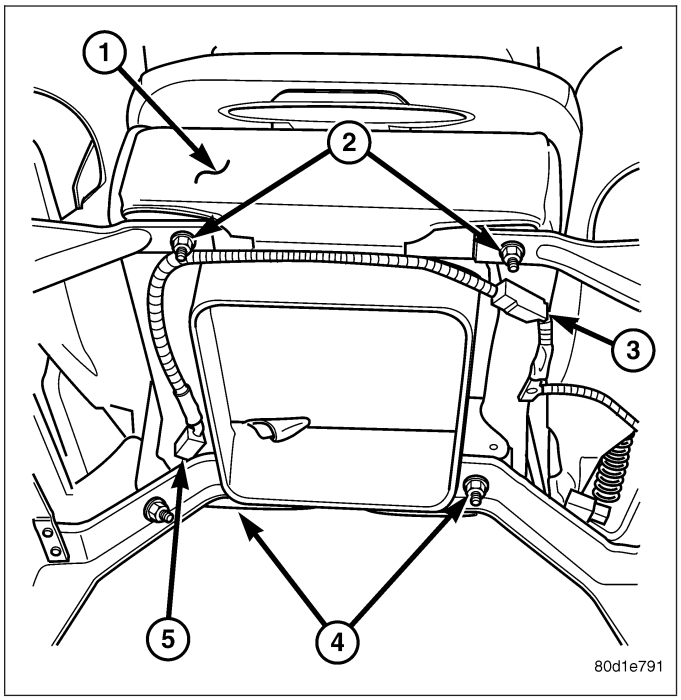

8. Roll the seat assembly forward and install new rear bolts (2).
9. Connect the 12v power supply electrical connector (3 - if equipped).
10. Tighten the rear bolts to 40 N·m (30 ft. lbs.).
11. Fold the seat backs up and slide the seats to the rear.
12. Install new front bolts (4) and tighten to 28 N·m (21 ft. lbs.).

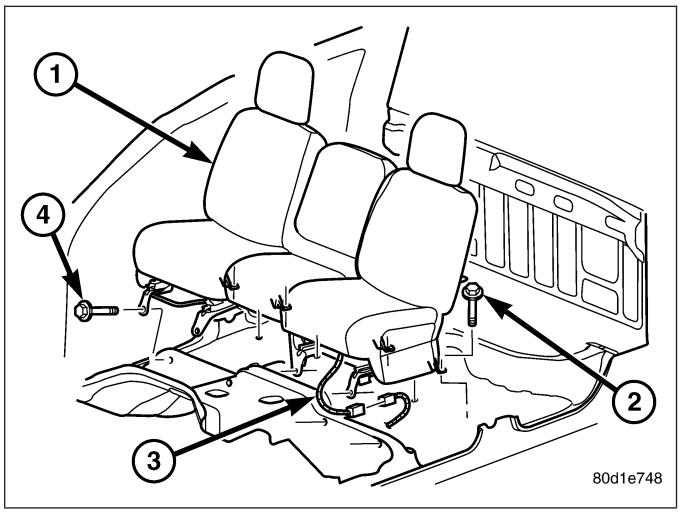

CENTER ARMREST / SEAT BACK

REMOVAL

NOTE: Do not reuse the seat fasteners, always replace with new ones.

1. Remove the center seat (Refer to 23 - BODY/SEATS/SEAT - CENTER - REMOVAL).
2. Disconnect the storage bin/cushion cover j-straps and position aside.
3. Remove and discard the hinge bolts (2) and separate the seat back from the storage bin/cushion (1).

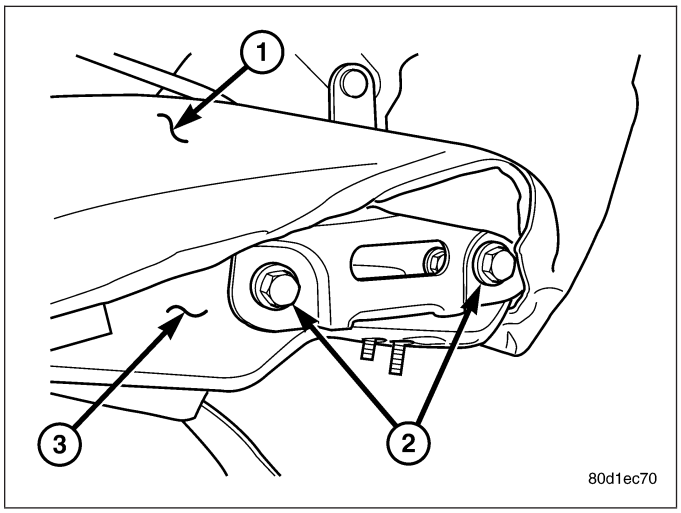

INSTALLATION

NOTE: Do not reuse the seat fasteners, always replace with new ones.

1. Install the seat back onto the storage bin/cushion (1) and install new hinge bolts (2).
2. Tighten the hinge to storage bin/cushion bolts (2) to 25 N·m (18 ft. lbs.).
3. Connect the storage bin/cushion cover j-straps.
4. Install the center seat (Refer to 23 - BODY/SEATS/SEAT - CENTER - INSTALLATION).

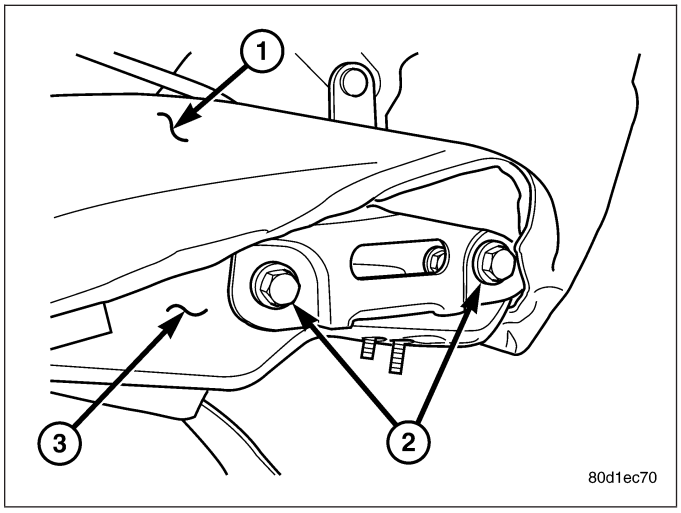

CENTER SEAT BACK INERTIA HINGE COVER

REMOVAL

NOTE: Free pivot hinge cover is removed with the free pivot hinge (Refer to 23 - BODY/SEATS/CENTER SEAT BACK HINGE - REMOVAL).

1. For the inertia hinge cover disconnect the zip strip (1).
2. Position aside the storage bin/cushion cover (4).
3. Remove the pivot bolt (5).

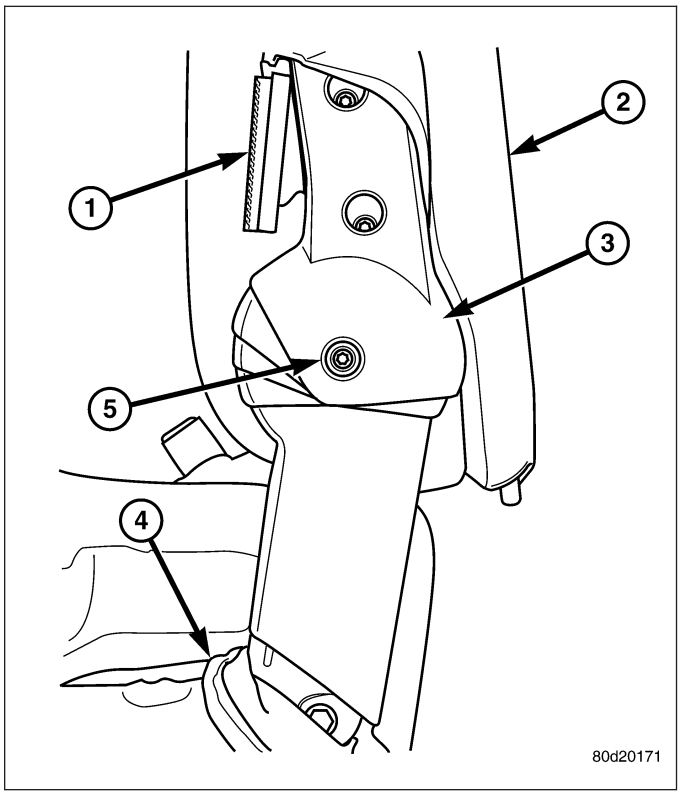

4. Open the hinge cover at the bottom and remove the hinge cover (1).

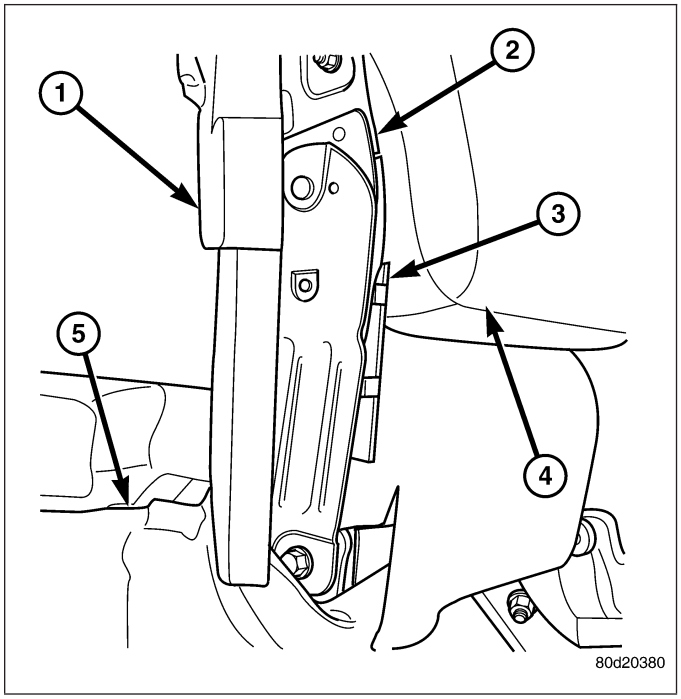

INSTALLATION

NOTE: Free pivot hinge cover is installed with the free pivot hinge (Refer to 23 - BODY/SEATS/CENTER SEAT BACK HINGE - INSTALLATION).

1. Position the hinge cover (1) over the hinge (2) and close over the lock tabs (3).

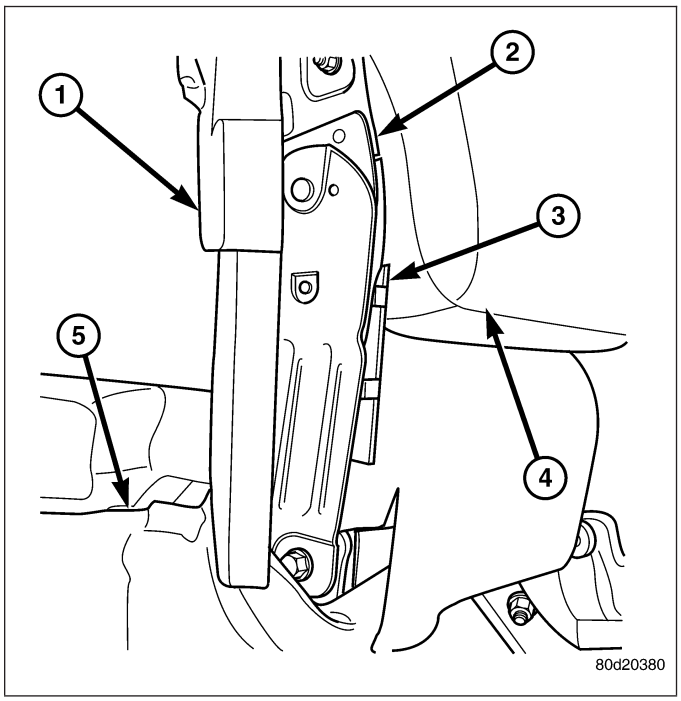

2. Install the pivot bolt (5) and tighten to 10 N·m (89 in. lbs.).
3. Reposition the storage bin/cushion cover (4).
4. Connect the zip strip (1).

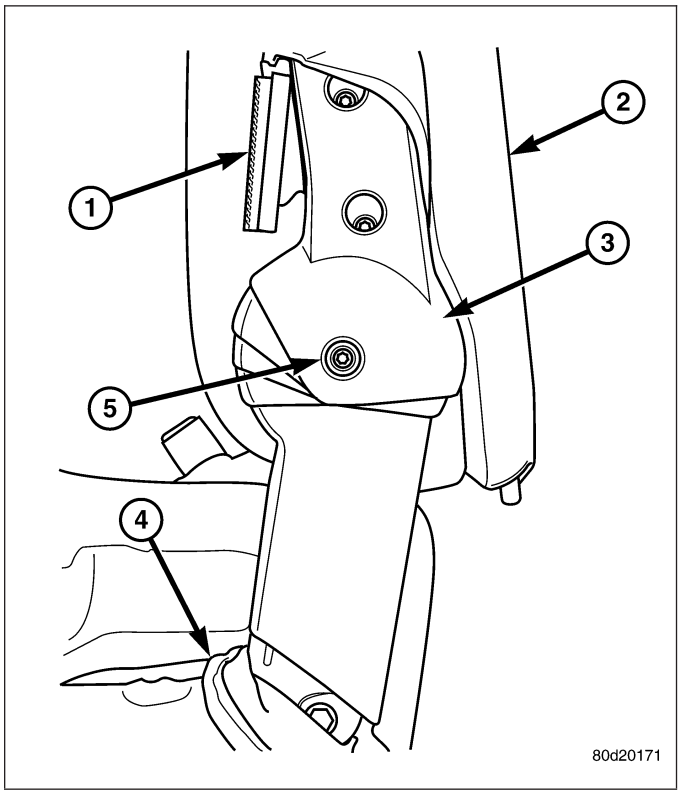

CENTER SEAT BACK HINGE

REMOVAL

FREE PIVOT/HINGE COVER

NOTE: Do not reuse the seat fasteners, always replace with new ones.

1. Remove the seat back (Refer to 23 - BODY/ SEATS/CENTER ARMREST/SEAT BACK - REMOVAL).
2. Disconnect the storage bin/cushion cover j-strap and position aside.
3. Remove and discard the pivot bolt (1).

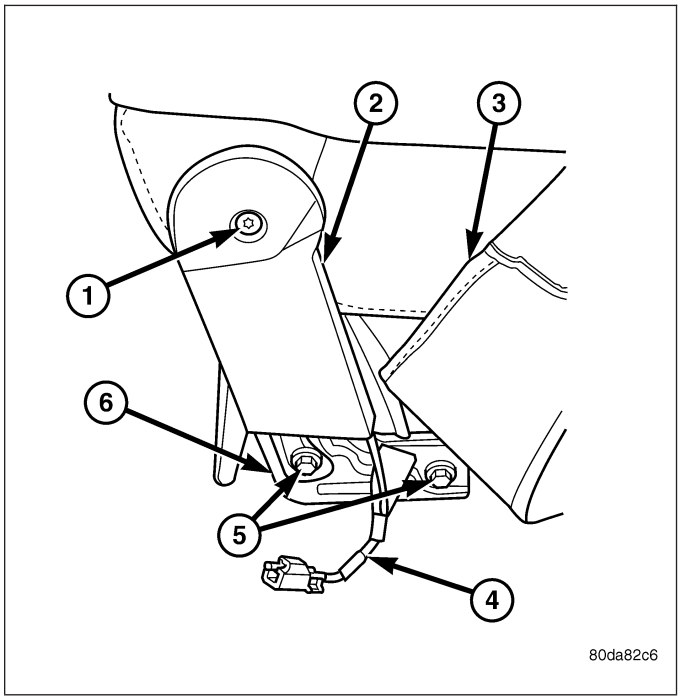

4. Remove the hinge spacer (2).

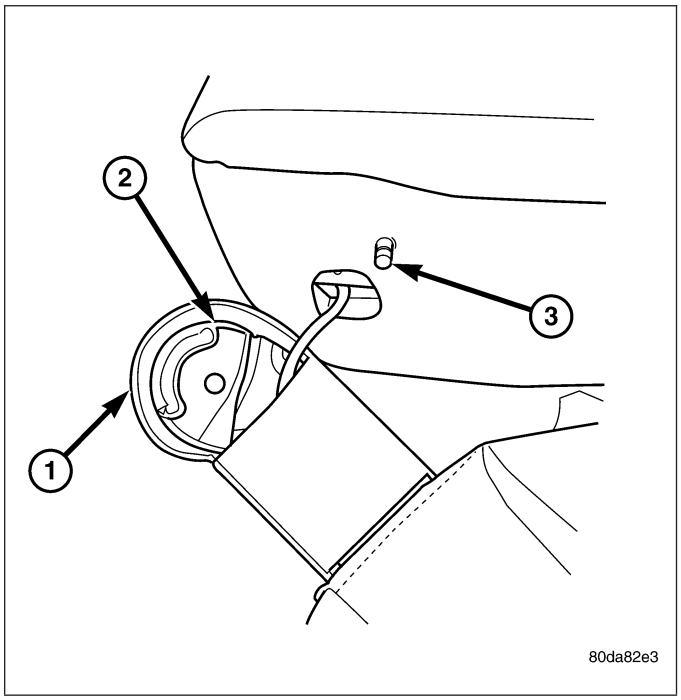

5. Open the hinge cover flap (1) and remove the wire harness (5 - if equipped).
6. Remove the cover (3) from the hinge (4).

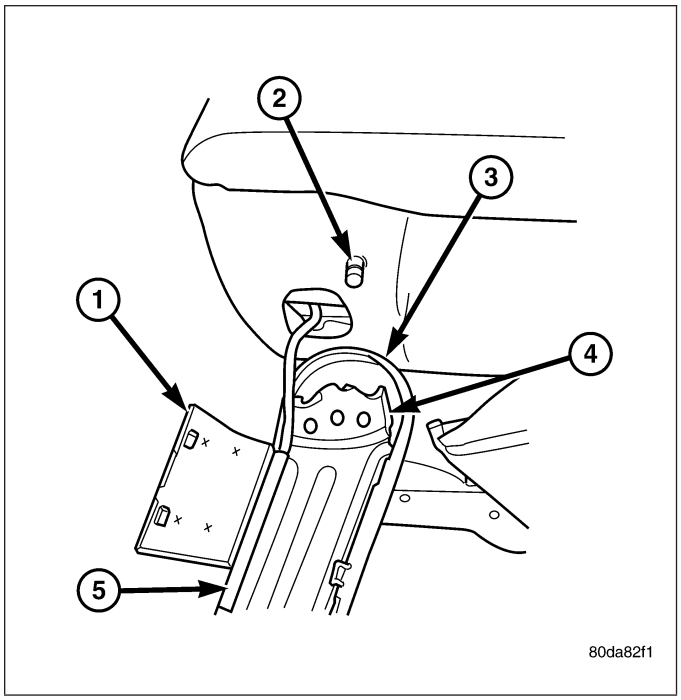

INERTIA HINGE

NOTE: Do not reuse the seat fasteners, always replace with new ones.

1. Remove the seat back (Refer to 23 - BODY/SEATS/CENTER ARMREST/SEAT BACK - REMOVAL).
2. Remove the seat back inertia hinge cover (Refer to 23 - BODY/SEATS/CENTER SEAT BACK INERTIA HINGE COVER - REMOVAL).
3. Remove and discard the inertia hinge bolts (1) and remove the hinge (3).

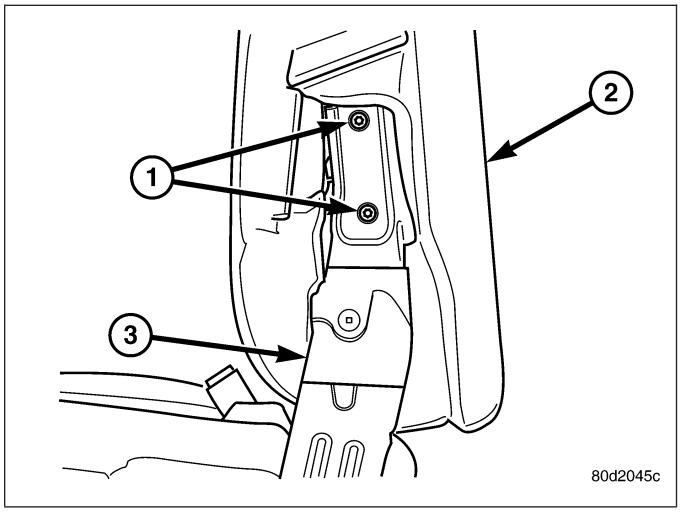

INSTALLATION

FREE PIVOT HINGE/COVER

NOTE: Do not reuse the seat fasteners, always replace with new ones.

1. Position the pivot hinge cover (3) over the pivot hinge (4) and install the 12v power supply harness (5 - if equipped) into the channel.

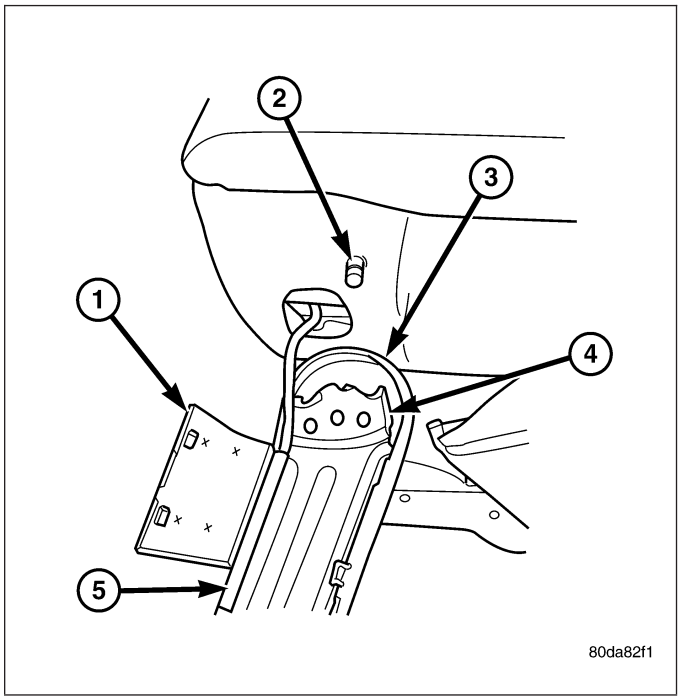

2. Close the hinge cover (1) flat and position the spacer (2) into place.
3. Align the stop pin (3) with the spacer (2) and hinge (1) and install the assembly onto the seat back.

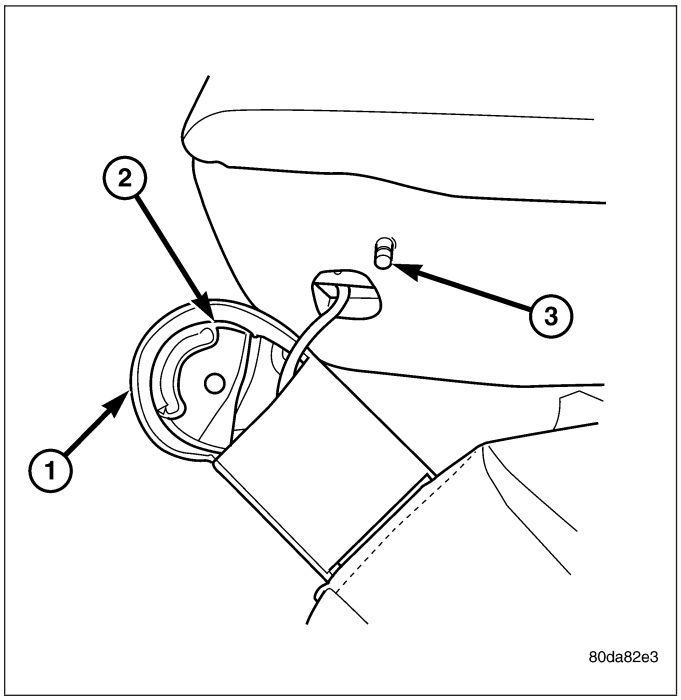

4. Install a new pivot bolt (1) and tighten to 25 N·m (18 ft. lbs.).
5. Install the center seat back (Refer to 23 - BODY/SEATS/CENTER ARMREST/SEAT BACK - INSTALLATION).

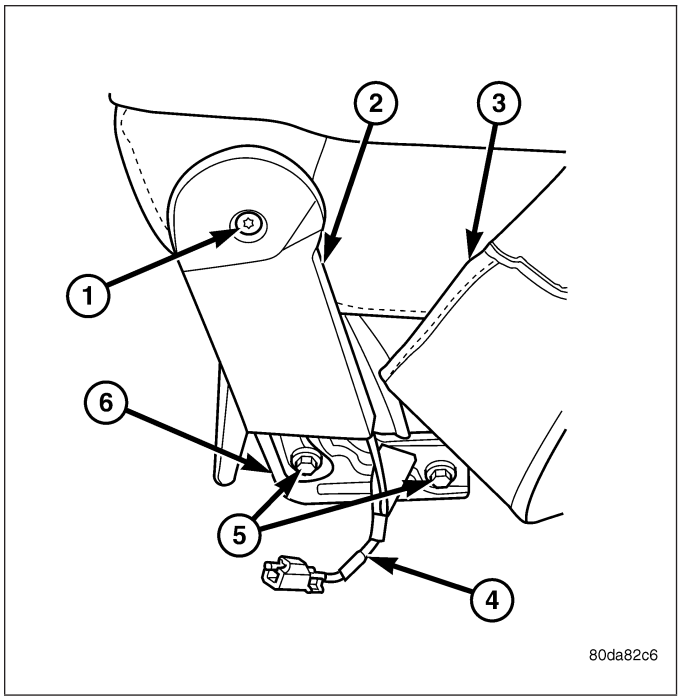

INERTIA HINGE

NOTE: Do not reuse the seat fasteners, always replace with new ones.

1. Install the inertia hinge (3) onto the center seat back (2) and install new bolts (1).
2. Tighten the bolts (1) to 25 N·m (18 ft. lbs.).
3. Install the seat back inertia hinge covers (Refer to 23 - BODY/SEATS/CENTER SEAT BACK INERTIA HINGE COVER - INSTALLATION).
4. Install the center seat back (Refer to 23 - BODY/SEATS/CENTER ARMREST/SEAT BACK - INSTALLATION).

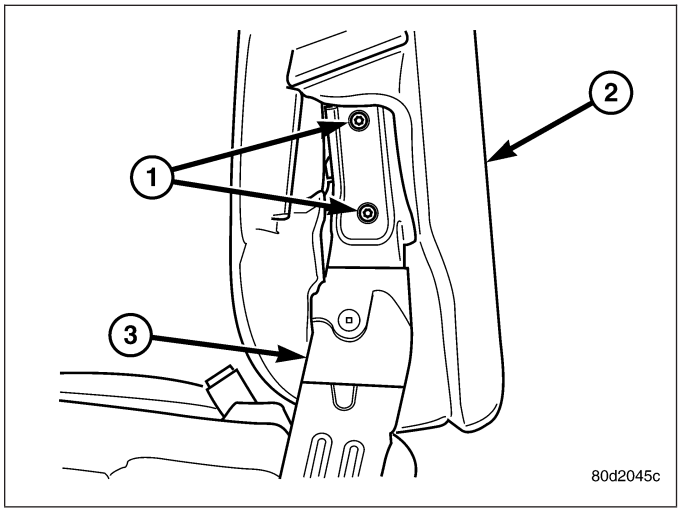

CENTER SEAT BACK LID

REMOVAL

1. Open the center armrest/seat back.
2. Remove the four screws attaching the hinge to the storage bin/cushion and remove the lid.

INSTALLATION

1. Position the center seat back lid onto the storage bin/cushion and install the screws.

CENTER SEAT CUSHION

REMOVAL

1. Remove the center seat. (Refer to 23 - BODY/SEATS/CENTER SEAT - REMOVAL)

2. Remove the center armrest/seat back. (Refer to 23 - BODY/SEATS/CENTER ARMREST / SEAT BACK - REMOVAL)

INSTALLATION

1. Install the center armrest/seat back. (Refer to 23 - BODY/SEATS/CENTER ARMREST / SEAT BACK - INSTALLATION)
2. Install the center seat. (Refer to 23 - BODY/SEATS/CENTER SEAT - INSTALLATION)

CENTER SEAT CUSHION COVER

REMOVAL

1. Remove the center seat cushion or underseat storage bin lid. (Refer to 23 - BODY/SEATS/CENTER SEAT CUSHION/UNDERSEAT STORAGE BIN LID - REMOVAL)
2. Disconnect the zip strips and remove the cover from the cushion.

INSTALLATION

1. Install the cover over the center seat cushion and connect the zip strips.
2. Install the center seat cushion or under seat storage bin lid. (Refer to 23 - BODY/SEATS/CENTER SEAT CUSHION/UNDER SEAT STORAGE BIN LID - INSTALLATION)

UNDER SEAT STORAGE BIN LID

REMOVAL

NOTE: Do not reuse the seat fasteners, always replace with new ones.

1. Open the center seat cushion/storage bin.
2. Position the seat cushion cover aside, remove the hinge bolts (2) and discard.
3. Remove the seat cushion (4).

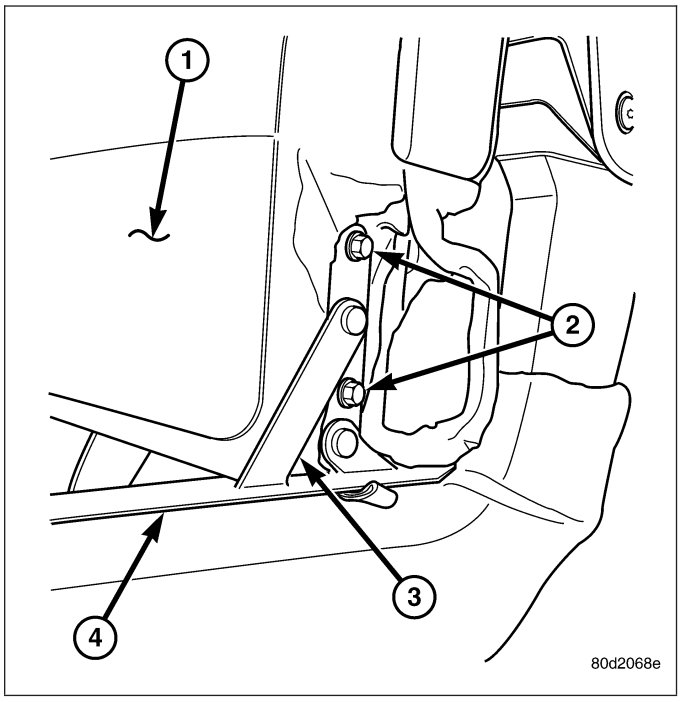

INSTALLATION

NOTE: Do not reuse the seat fasteners, always replace with new ones.

1. Position the center seat cushion (4) on the hinges (3) and install new bolts (2).
2. Tighten the bolts (2) to 20 N·m (15 ft. lbs.).
3. Position the cushion cover back over the hinges.

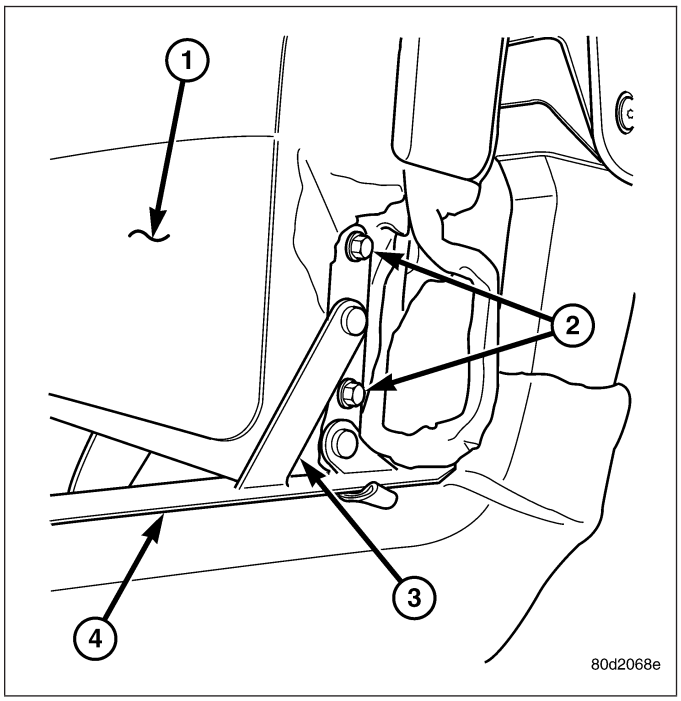

UNDER SEAT STORAGE BIN

REMOVAL

1. Remove the amplifier, if equipped. (Refer to 8 - ELECTRICAL/AUDIO/AMPLIFIER - REMOVAL)
2. Remove the center seat cushion. (Refer to 23 - BODY/SEATS/CENTER SEAT CUSHION - REMOVAL)
3. Remove the six screws and remove the bin.

INSTALLATION

1. Install the bin over the seat cushion hinges and install the six screws.
2. Install the center seat cushion. (Refer to 23 - BODY/SEATS/CENTER SEAT CUSHION - INSTALLATION)
3. Install the amplifier, if equipped. (Refer to 8 - ELECTRICAL/AUDIO/AMPLIFIER - INSTALLATION)

UNDER SEAT STORAGE BIN COVERING

REMOVAL

1. Remove the under seat storage bin. (Refer to 23 - BODY/SEATS/UNDER SEAT STORAGE BIN - REMOVAL)
2. Disconnect the j-straps and remove the cover.

INSTALLATION

1. Install the storage bin cover and connect the j-straps.
2. Install the under seat storage bin. (Refer to 23 - BODY/SEATS/UNDER SEAT STORAGE BIN - INSTALLATION)

UNDER SEAT STORAGE BIN LATCH

REMOVAL

1. Open the under seat storage bin.
2. Remove the two screws and remove the latch assembly.

INSTALLATION

1. Install the latch assembly and install the screws.

HEADREST

REMOVAL

1. Raise the headrest.
2. Press the headrest release button and remove the headrest.

INSTALLATION

1. Position the headrest.
2. Press the release button and install the headrest.

HEADREST SLEEVE

REMOVAL

1. Remove the headrest. (Refer to 23 - BODY/SEATS/HEADREST - REMOVAL)
2. Grasp the sleeves and pull up and out of the seat back to remove.

INSTALLATION

1. Position each headrest sleeve into correct seat back hole and press into place fully.
2. Install the headrest. (Refer to 23 - BODY/SEATS/HEADREST - INSTALLATION)

SEAT - FRONT

REMOVAL

NOTE: Do not reuse the seat fasteners, always replace with new ones.

1. Remove and discard the front bolts (4).
2. Position the seats (1) forward, remove the rear bolts (2) and discard.
3. Disconnect the 12v power supply electrical connector (5 - if equipped).

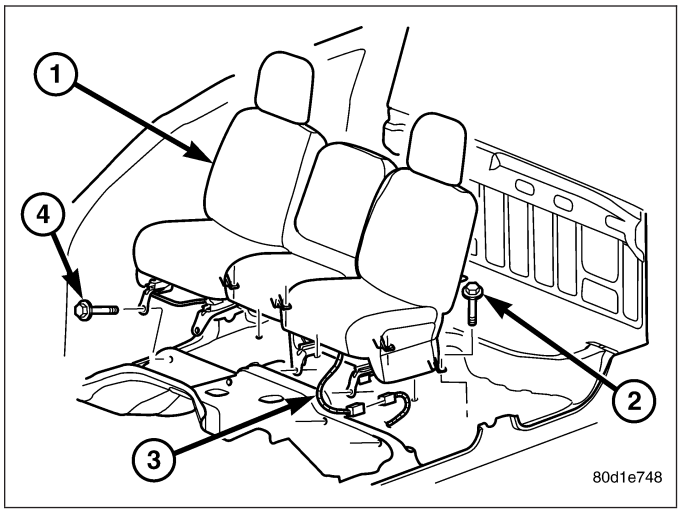

4. Fold the seat backs forward and roll the seat assembly back in the vehicle.
5. Remove and discard the nuts (2 and 4) on either the driver or passenger side.

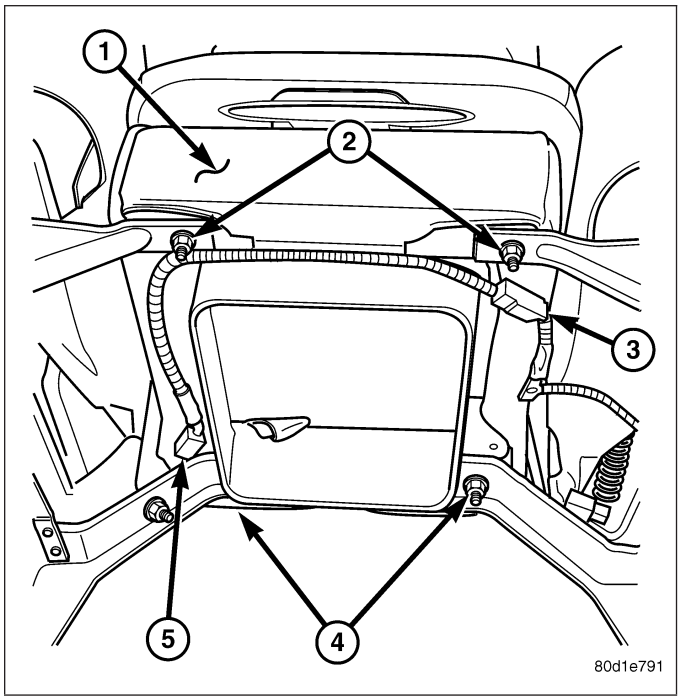

6. Separate the seat assembly by removing and discarding the nuts (4) on either the drivers or passengers seat.
7. Remove each section of the seat assembly from the vehicle.

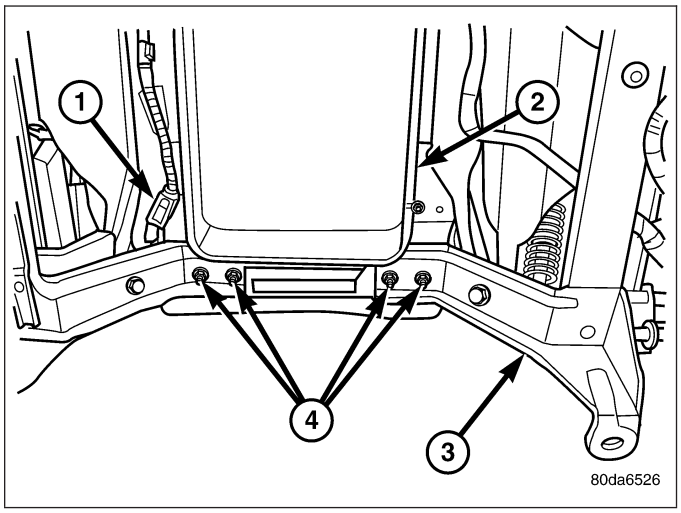

INSTALLATION

NOTE: Do not reuse the seat fasteners, always replace with new ones.

1. Position each seat section into the vehicle and tip back.
2. Install the nuts (4) attaching the center seat section (2) to the other seat, and tighten to 25 N·m (18 ft. lbs.).

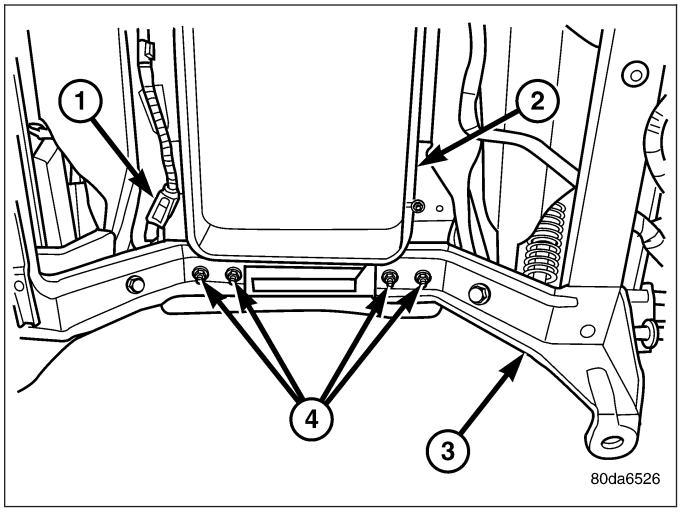

3. Install the nuts (2 and 4) attaching the center seat section to the other seat, and tighten to 25 N·m (18 ft. lbs.).

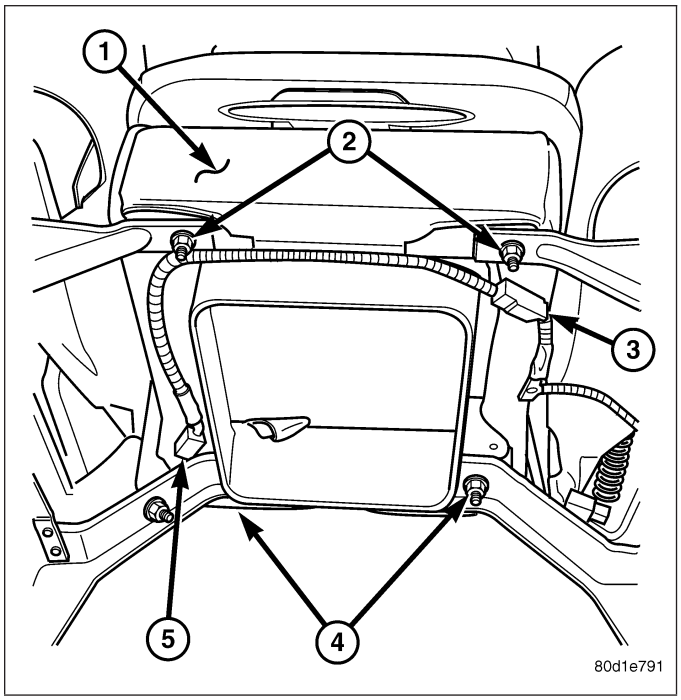

4. Roll the seat assembly forward and install new rear bolts (2). Tighten the bolts (2) to 40 N·m (30 ft. lbs.).
5. Connect the 12v power supply electrical connector (3 - if equipped).
6. Fold the seat backs up and slide the seats (1) to the rear.
7. Install new front bolts (4) and tighten to 28 N·m (21 ft. lbs.).

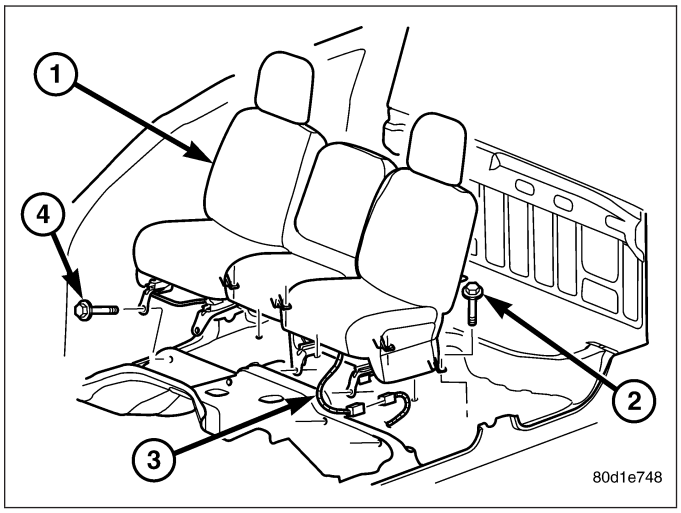

LUMBAR SUPPORT HANDLE/BEZEL

REMOVAL

CAUTION: Care must be taken not to damage the handle or bezel surface when removing.

1. Using a trim stick (special tool #C-4755) or equivalent, pry the manual lumbar knob out of the bezel surround.

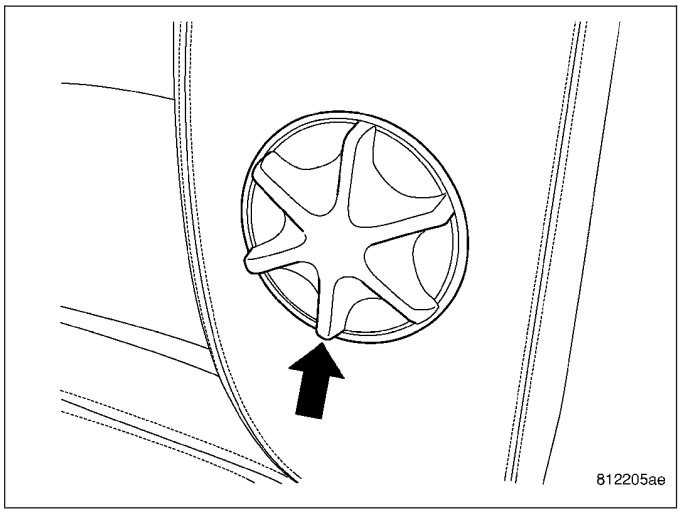

2. Remove the bezel retaining screws (2) and remove the bezel (3).

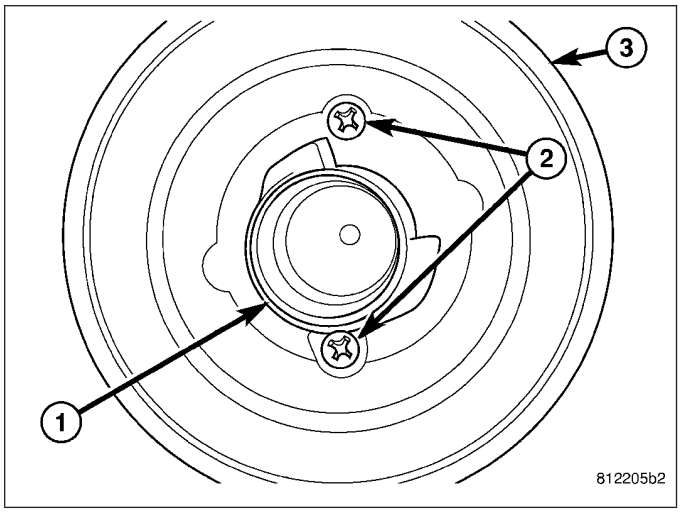

INSTALLATION

1. Align the bezel (3) to the seat back and install the screws (2).

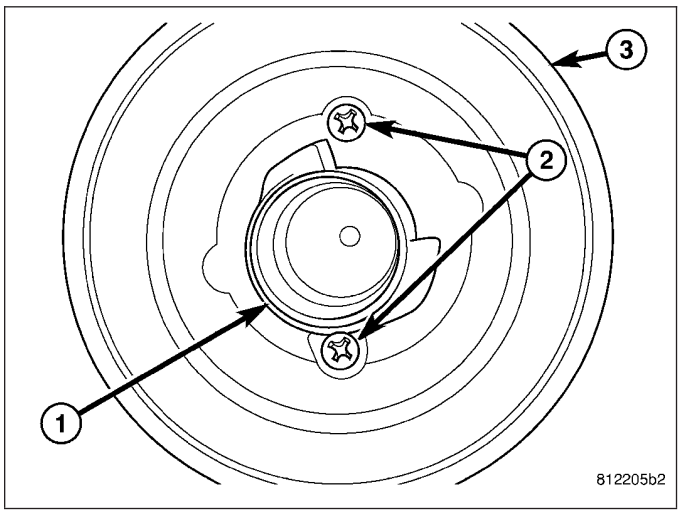

2. Snap the manual lumbar knob onto the shaft of the drive mechanism into the bezel surround.

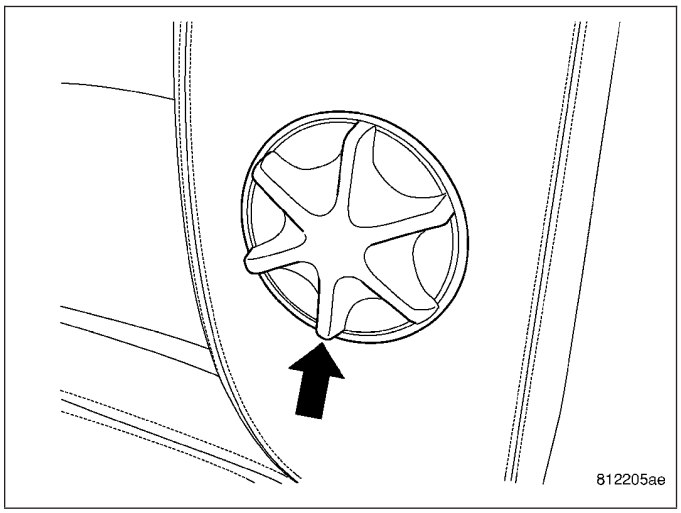

SEAT BACK CUSHION / COVER - FRONT

REMOVAL

1. Remove the front seat (Refer to 23 - BODY/SEATS/SEAT - FRONT - REMOVAL).
2. Remove the lumbar handle and bezel (if equipped) (Refer to 23 - BODY/SEATS/LUMBAR SUPPORT HANDLE/BEZEL - REMOVAL).
3. Remove the headrest sleeves (Refer to 23 - BODY/SEATS/HEADREST SLEEVE - REMOVAL).
4. Unzip the zip strip at the lower end of the seat back and remove the seat back cover and cushion.

INSTALLATION

1. Install the seat back cushion and cover onto the seat frame assembly.
2. Connect the zip strip at the bottom of the seat back.
3. Install the headrest sleeves. (Refer to 23 - BODY/SEATS/HEADREST SLEEVE - INSTALLATION)
4. Install the lumbar bezel and handle, if equipped. (Refer to 23 - BODY/SEATS/LUMBAR SUPPORT HANDLE/BEZEL - INSTALLATION)
5. Install the seat. (Refer to 23 - BODY/SEATS/SEAT - FRONT - INSTALLATION)

SEAT CUSHION / COVER - FRONT

REMOVAL

1. Remove the front seat. (Refer to 23 - BODY/SEATS/SEAT - FRONT - REMOVAL)
2. Remove the screw and remove the recliner handle.
3. Remove the two screws and remove the power seat controls, if equipped, and disconnect the electrical connector.
4. Remove the seat track. (Refer to 23 - BODY/SEATS/SEAT TRACK - REMOVAL)
5. Disconnect the j-straps and remove the seat cushion and cover.

INSTALLATION

1. Position the seat cushion and cover onto the frame assembly and connect the j-straps.
2. Install the seat track. (Refer to 23 - BODY/SEATS/SEAT TRACK - INSTALLATION)
3. Connect the power seat control switch electrical connector, if equipped.
4. Install the power seat control switch and install the two screws, if equipped.
5. Install the recliner handle and install the screw.
6. Install the front seat. (Refer to 23 - BODY/SEATS/SEAT - FRONT - INSTALLATION)

SEAT TRACK

REMOVAL

1. Remove the front seat. (Refer to 23 - BODY/SEATS/SEAT - FRONT - REMOVAL)
2. Disconnect the heated seat electrical connectors, if equipped.
3. Remove the four nuts attaching the seat track to the seat and remove the track.

INSTALLATION

1. Position the seat track onto the seat and install the four nuts.
2. Tighten the four nuts to 25 N·m (18 ft. lbs.).
3. Connect the heated seat electrical connectors, if equipped.
4. Install the seat. (Refer to 23 - BODY/SEATS/SEAT - FRONT - INSTALLATION)

SEAT - REAR

REMOVAL

1. Remove the load floor (Refer to 23 - BODY/INTERIOR/LOAD FLOOR - REMOVAL).
2. Fold the rear seat cushions up and remove the rear bolts (1, 3, and 5).

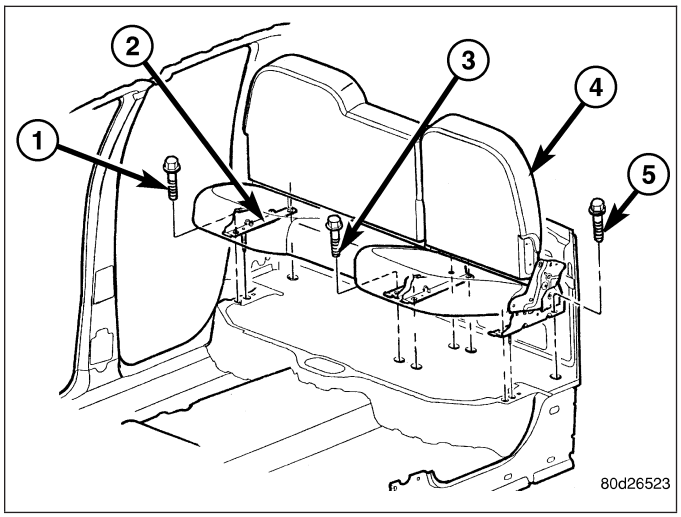

3. Lift each seat assembly up and disengage the seat back frame hooks (1 and 3) from the footmans loops (2 and 4) bolted to the rear cab back.
4. Remove the seats from the vehicle.

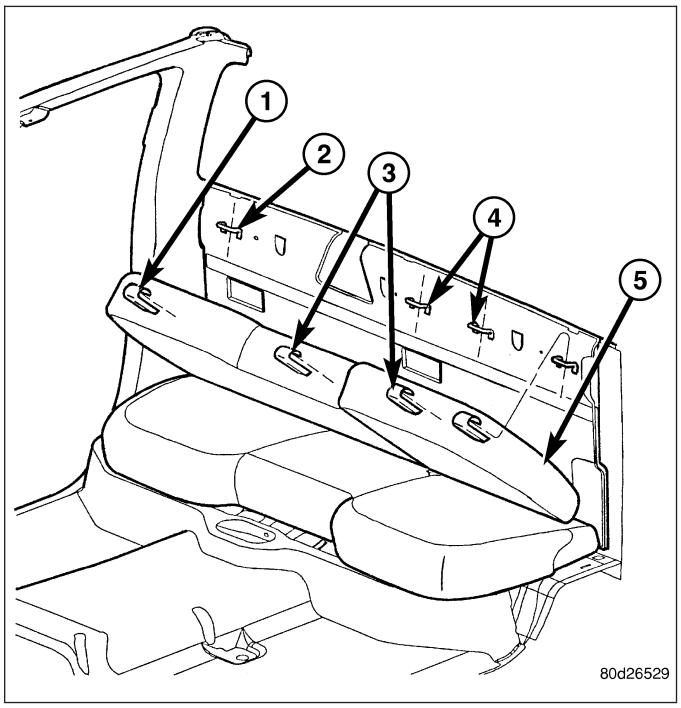

INSTALLATION

1. Install the seats into the vehicle and engage the seat back frame hooks (1 and 3) with the footmans loops (2 and 4) in the cab back panel.

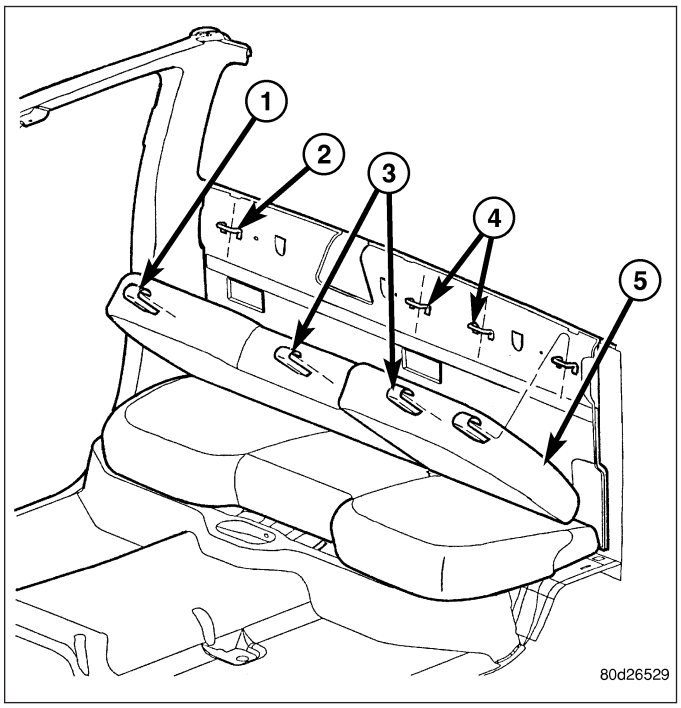

2. Install the rear seat bolts (1, 3, and 5) and tighten to 40 N·m (30 ft. lbs.).
3. Install the load floor (Refer to 23 - BODY/INTERIOR/LOAD FLOOR - INSTALLATION).

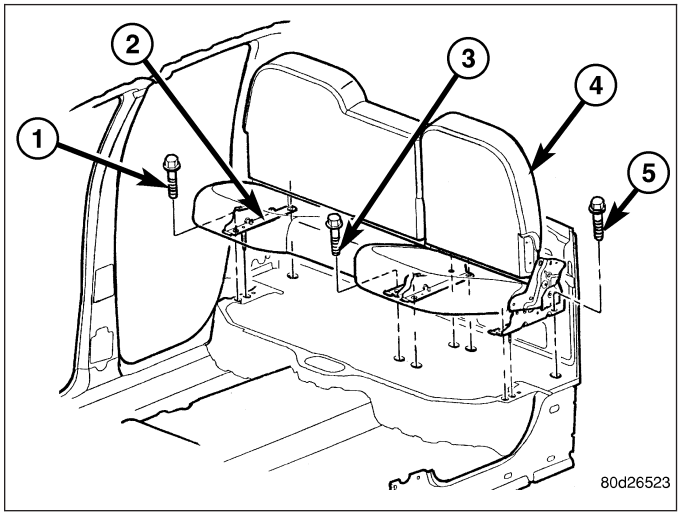

SEAT BACK - REAR

REMOVAL

1. Remove the rear seat (Refer to 23 - BODY/SEATS/SEAT - REAR - REMOVAL).
2. Remove the seat back bolts (1) and remove the seat back (4).

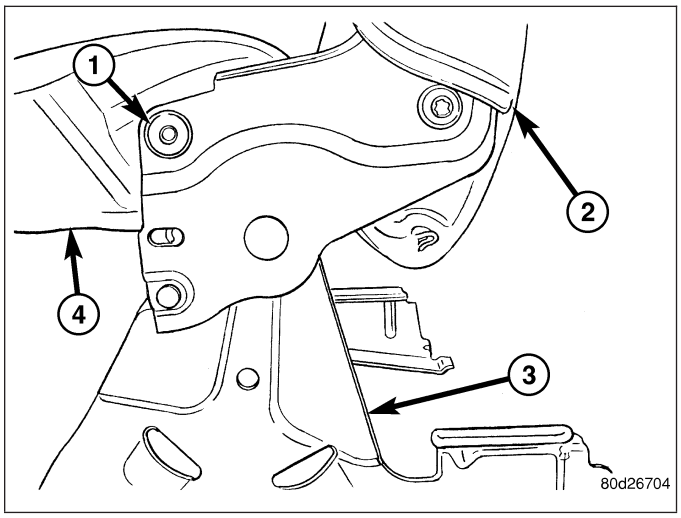

INSTALLATION

1. Install the seat back (4) and install the bolts (1).
2. Tighten the bolts (1) to 25 N·m (18 ft. lbs.).
3. Install the rear seat (Refer to 23 - BODY/SEATS/SEAT - REAR - INSTALLATION).

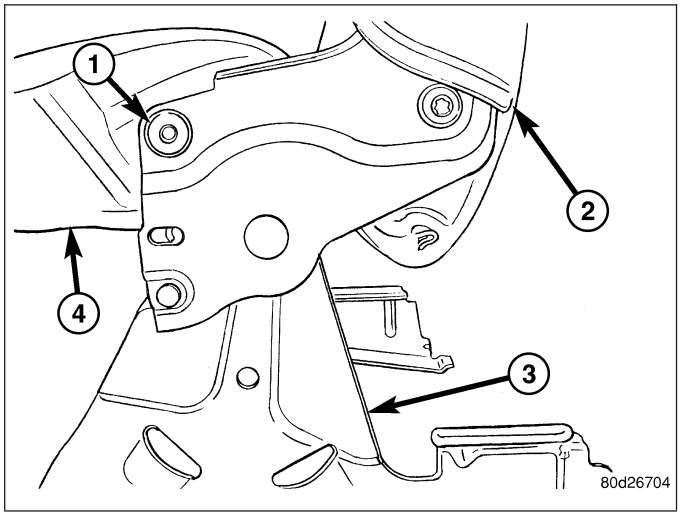

SEAT BACK CUSHION / COVER - REAR

REMOVAL

1. Remove the rear seat back. (Refer to 23 - BODY/SEATS/SEAT BACK - REAR - REMOVAL)
2. Remove the headrest sleeves. (Refer to 23 - BODY/SEATS/HEADREST SLEEVE - REMOVAL)
3. Unzip the zip strip at the bottom of the seat back and remove the cover.

INSTALLATION

1. Install the seat back cover and connect the zip strip.
2. Install the headrest sleeves. (Refer to 23 - BODY/SEATS/HEADREST SLEEVE - INSTALLATION)
3. Install the seat back. (Refer to 23 - BODY/SEATS/SEAT BACK - REAR - INSTALLATION)

SEAT CUSHION / COVER - REAR

REMOVAL

1. Remove the rear seat. (Refer to 23 - BODY/SEATS/SEAT - REAR - REMOVAL)
2. Separate the zip strip at the rear of the seat cushion and remove the cushion and cover.

INSTALLATION

1. Install the seat cushion and cover over the cushion frame assembly and connect the zip strip.
2. Install the seat. (Refer to 23 - BODY/SEATS/SEAT - REAR - INSTALLATION)

SEAT CUSHION FRAME - REAR

REMOVAL

1. Remove the seat cushion/cover (Refer to 23 - BODY/SEATS/SEAT CUSHION/COVER - REAR - REMOVAL).
2. Remove the bolts (3) and remove the seat cushion frame (2).

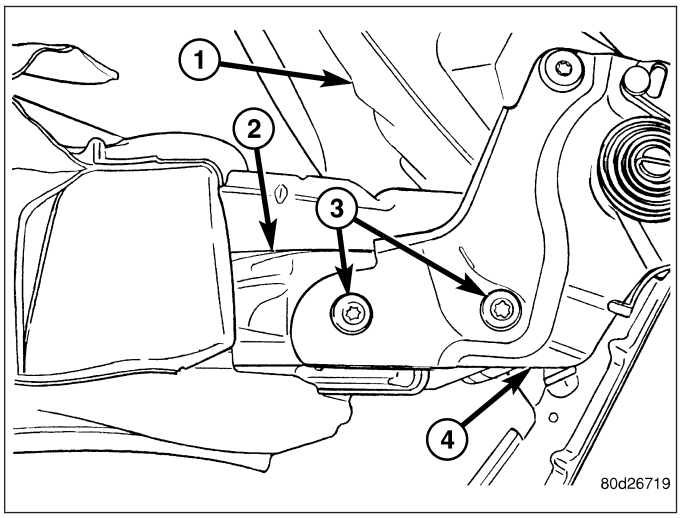

INSTALLATION

1. Install the seat cushion frame (2) onto the rear seat cushion hinges (4).
2. Install the bolts (3) and tighten to 32 N·m (24 ft. lbs.).
3. Install the seat cushion/cover (Refer to 23 - BODY/SEATS/SEAT CUSHION / COVER - REAR - INSTALLATION).

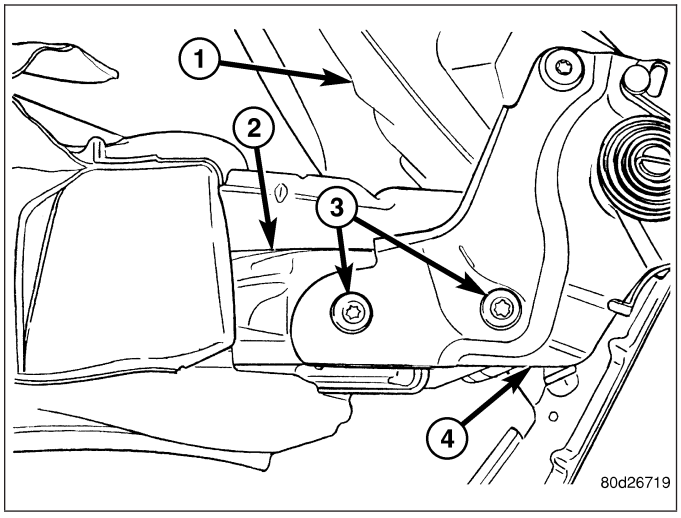

SEAT BACK REAR - FOOTMANS LOOP BRACKETS

REMOVAL

1. Remove the rear seat (Refer to 23 - BODY/SEATS/SEAT - REAR - REMOVAL).
2. Remove bolts (2) and remove the loop (1).

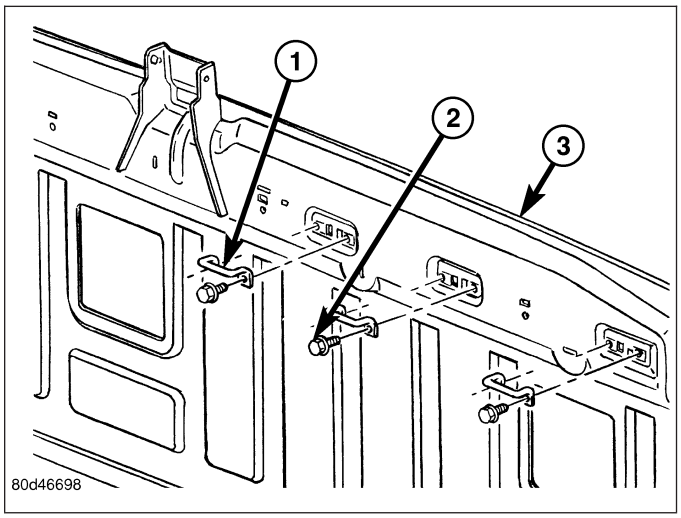

INSTALLATION

1. Install the loop (1) and install the bolts (2).
2. Tighten the bolts (2) to 12 N·m (9 ft. lbs.).
3. Install the seat (Refer to 23 - BODY/SEATS/SEAT - REAR - INSTALLATION).

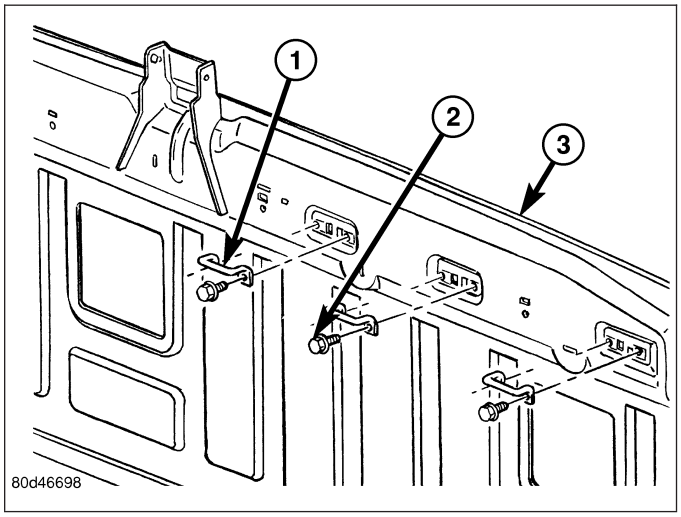

STATIONARY GLASS

TABLE OF CONTENTS

page

BACKLITE
REMOVAL 203
INSTALLATION 204
BACKLITE VENT GLASS
REMOVAL 206
INSTALLATION 206

page

WINDSHIELD
WARNING
WINDSHIELD SAFETY PRECAUTIONS 207
REMOVAL 207
INSTALLATION 209

BACKLITE

REMOVAL

CAUTION: It is difficult to salvage the backlite during the removal operation. The backlite is part of the structural support for the roof. The urethane bonding used to secure the glass to the fence is difficult to cut or clean from any surface. Since the molding is set in urethane, it is unlikely it would be salvaged. Before removing the backlite, check the availability from the parts supplier.

NOTE: The backlite is attached to the window frame with urethane adhesive. The urethane adhesive is applied cold and seals the surface area between the window opening and the glass. The primer adheres the urethane adhesive to the backlite.

1. Roll down door glass.
2. Remove headliner (9) (Refer to 23 - BODY/INTERIOR/HEADLINER - REMOVAL).

3. On standard cab models remove the upper b-pillar trim (5) (Refer to 23 - BODY/INTERIOR/B-PILLAR UPPER TRIM - REMOVAL).

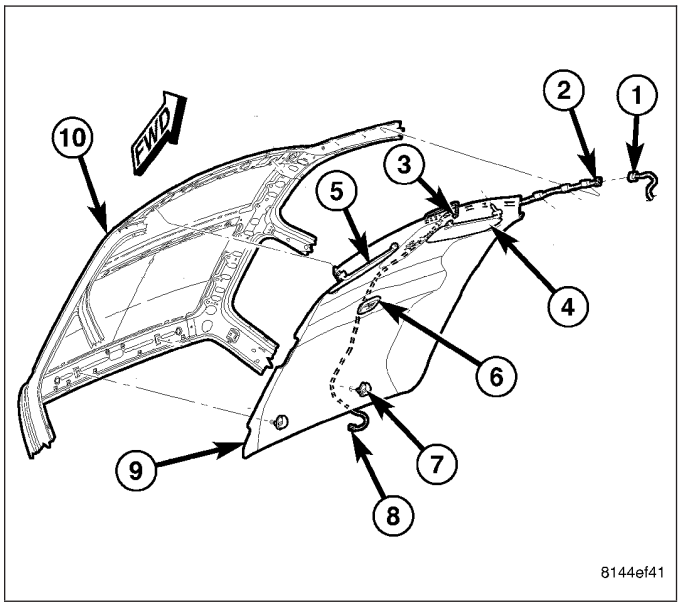

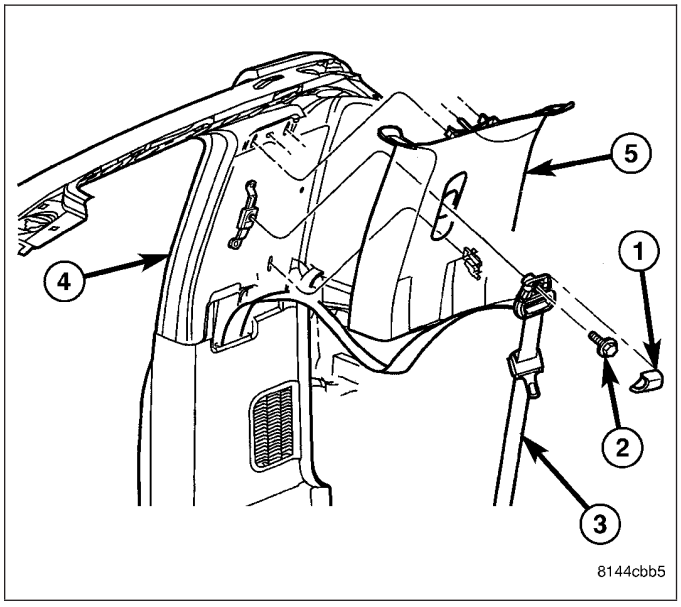

4. On quad cab models remove the upper c-pillar trim (5) (Refer to 23 - BODY/INTERIOR/C-PILLAR UPPER TRIM - REMOVAL).

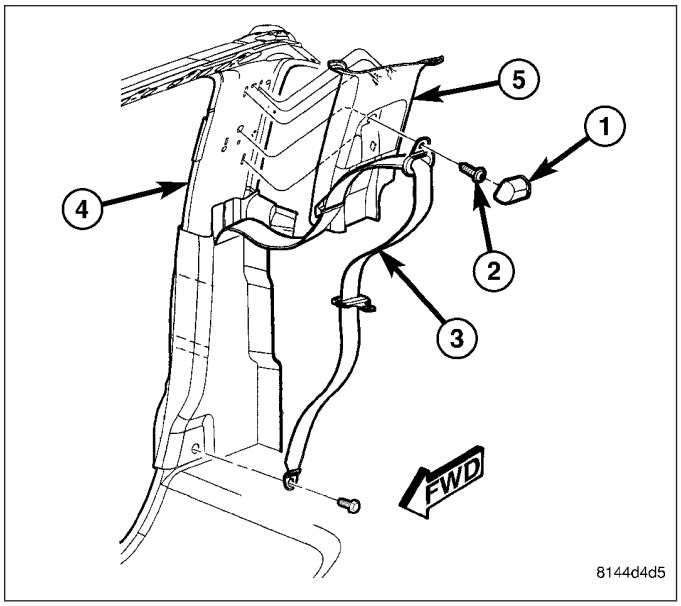

5. Bend backlite retaining tab (2) inward against glass.
6. Disconnect the rear window defogger electrical connector (if equipped).
7. Using a suitable pneumatic knife from inside the vehicle, cut urethane holding backlite frame to opening fence.
8. Separate glass (1) from vehicle.

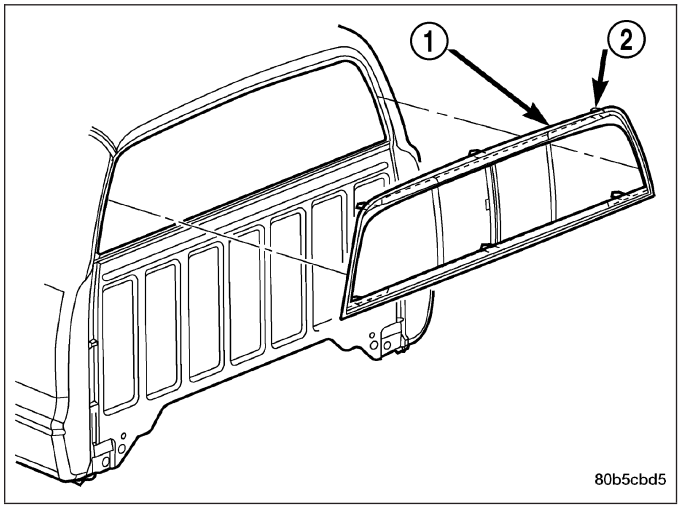

INSTALLATION

1. Clean urethane adhesive from around backlite opening fence.
2. If necessary, apply black-out primer to outer edge of replacement backlite frame (1).
3. If black-out primer was pre-applied on backlite, clean bonding surface with Isopropyl alcohol and clean lint free cloth. Allow 3 minutes for drying time.
4. Apply black-out primer to backlite opening fence.
5. Apply a 13 mm (0.5 in.) bead of urethane (4) around the perimeter of the window frame bonding surface (1).

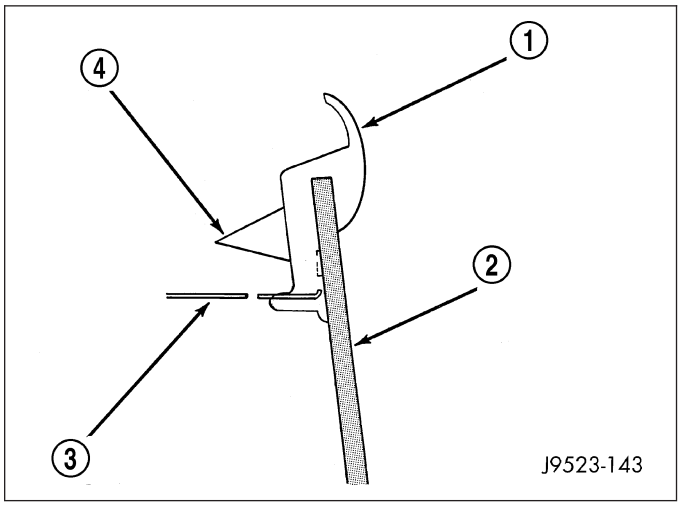

6. Set glass (1) on lower fence and move glass forward into opening.
7. Firmly push glass (1) against rear window glass opening fence.
8. Bend tabs around edges of backlite opening fence to retain glass.
9. Clean excess urethane from exterior with MOPAR®, Super Clean or equivalent.
10. Allow urethane to cure at least 24 hours (full cure is 72 hours).
11. Water test to verify repair before returning vehicle to service.
12. Connect the rear window defogger electrical connector, if equipped.

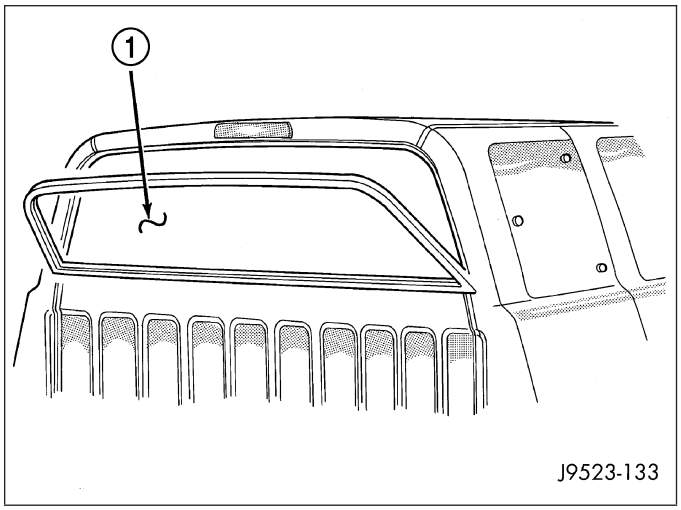

13. On standard cab models, install the upper b-pillar trim (5) (Refer to 23 - BODY/INTERIOR/B-PILLAR UPPER TRIM - INSTALLATION).

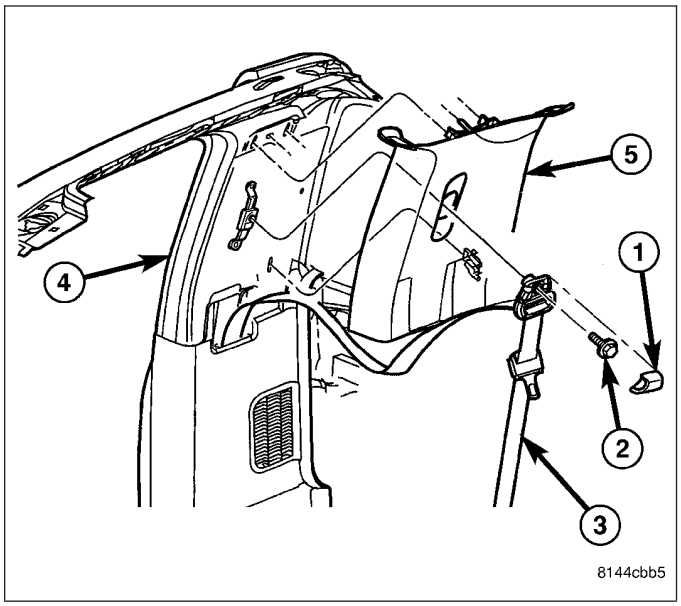

14. On quad cab models, install the upper c-pillar trim (5) (Refer to 23 - BODY/INTERIOR/C-PILLAR UPPER TRIM - INSTALLATION).

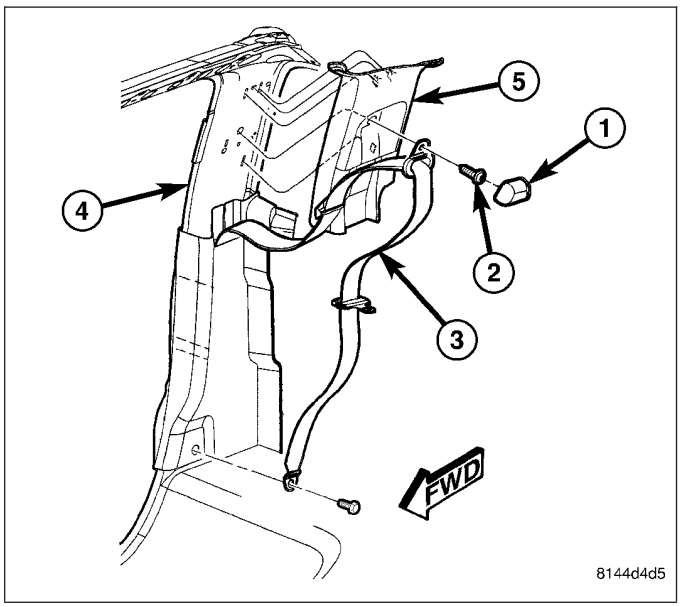

15. Install the headliner (9) (Refer to 23 - BODY/INTERIOR/HEADLINER - INSTALLATION).

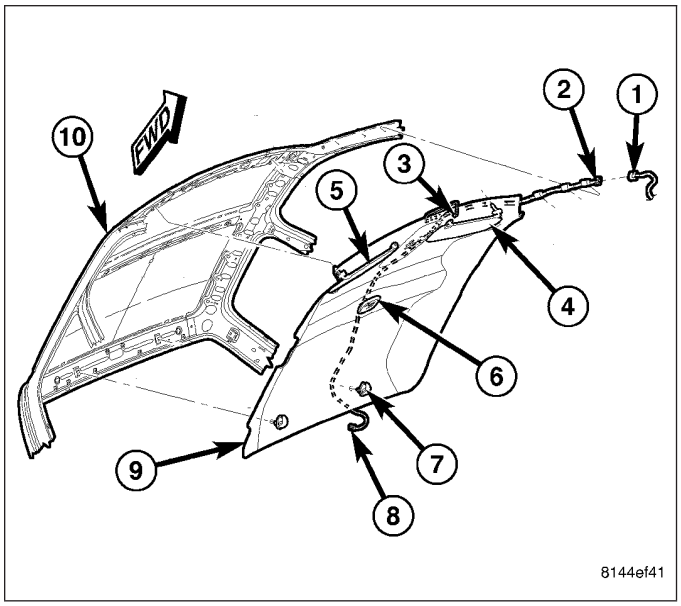

BACKLITE VENT GLASS

REMOVAL

1. Slide the upper run channel (1) out of the window frame (2).
2. Slide the vent glass (3) upward to remove from the lower window frame (2).
3. Lower the glass (3) out of the upper window frame (2) and remove.

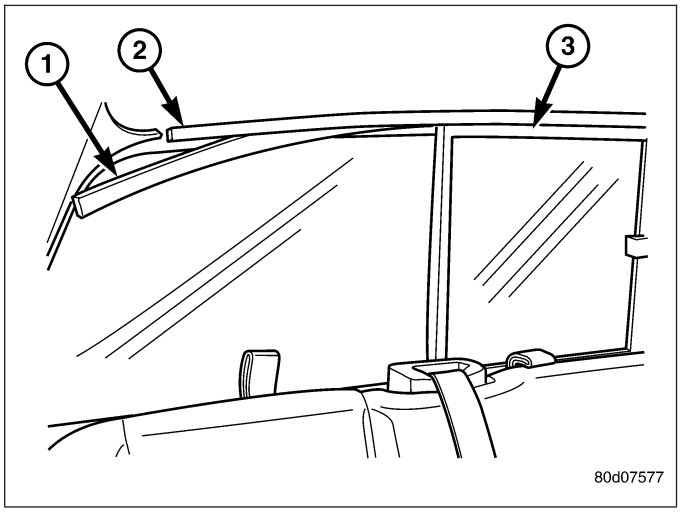

INSTALLATION

1. Slide the vent glass (3) upper edge into window frame (2) and insert the lower edge into the lower molding.
2. Position the upper run channel (1) into the window frame (2) and slide it into place.
3. Verify vent glass (3) operation.

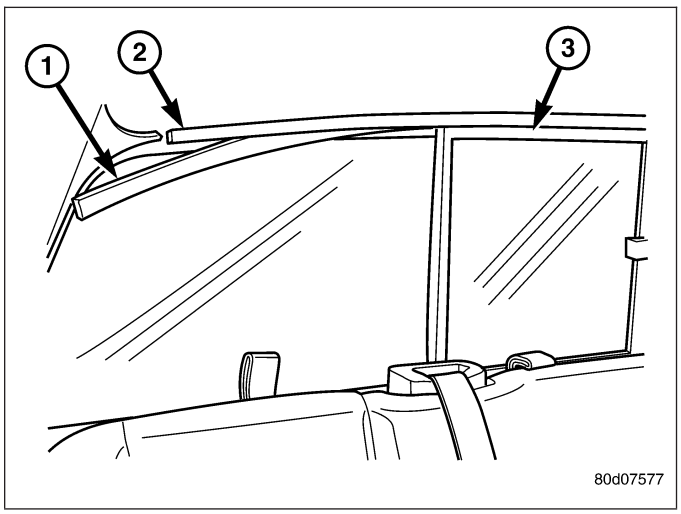

WINDSHIELD

WARNING

WINDSHIELD SAFETY PRECAUTIONS

Do not operate the vehicle within 24 hours of windshield installation. It takes at least 24 hours for urethane adhesive to cure. If it is not cured, the windshield may not perform properly in an accident.

- **Urethane adhesives are applied as a system. Use glass cleaner, glass prep solvent, glass primer, PVC (vinyl) primer and pinch weld (fence) primer provided by the adhesive manufacturer. If not, structural integrity could be compromised.**
- **DaimlerChrysler does not recommend glass adhesive by brand. Technicians should review product labels and technical data sheets, and use only adhesives that their manufactures warranty and will restore a vehicle to the requirements of fmvss 212. Technicians should also insure that primers and cleaners are compatible with the particular adhesive used.**
- **Be sure to refer to the urethane manufacturer's directions for curing time specifications and do not use adhesive after its expiration date.**
- **Vapors that are emitted from the urethane adhesive or primer could cause personal injury or death. Use them in a well-ventilated area.**
- **Skin contact with urethane adhesive should be avoided. Personal injury or death may result.**
- **Always wear eye and hand protection when working with glass.**

Protect all painted and trimmed surfaces from coming in contact with urethane or primers.

Be careful not to damage painted surfaces when removing moldings or cutting urethane around windshield.

REMOVAL

1. Remove inside rear view mirror (3) (Refer to 23 - BODY/INTERIOR/REAR VIEW MIRROR - REMOVAL).

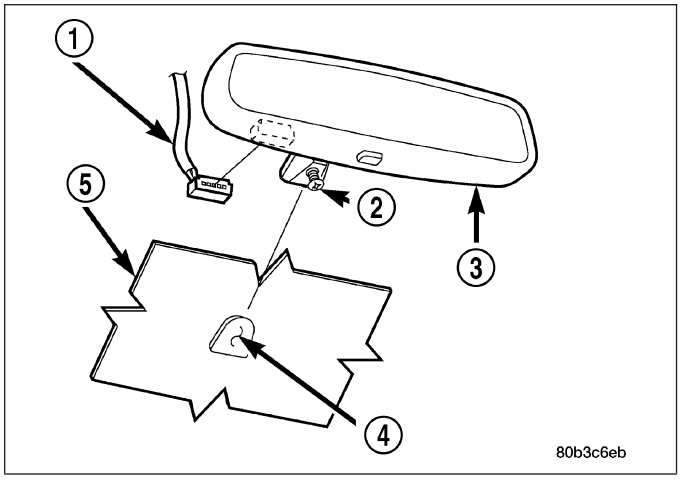

2. Remove cowl grill (2) (Refer to 23 - BODY/EXTERIOR/COWL GRILLE - REMOVAL).

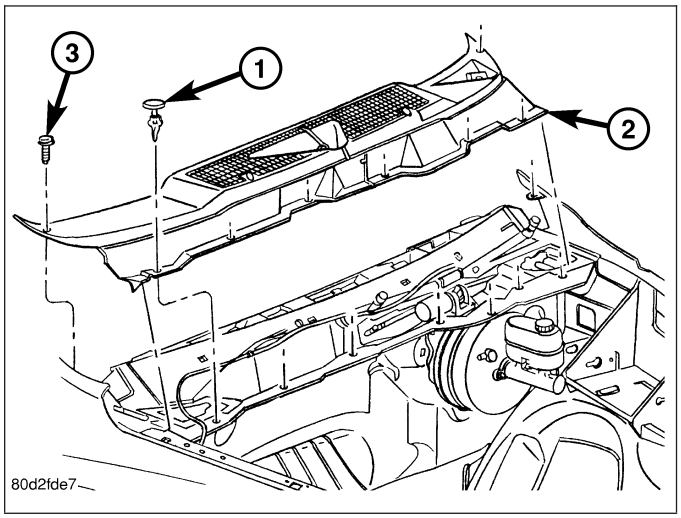

3. Remove the a-pillar weatherstrip retainer (1) (Refer to 23 - BODY/WEATHERSTRIP/SEALS/A-PILLAR WEATHERSTRIP RETAINER - REMOVAL).

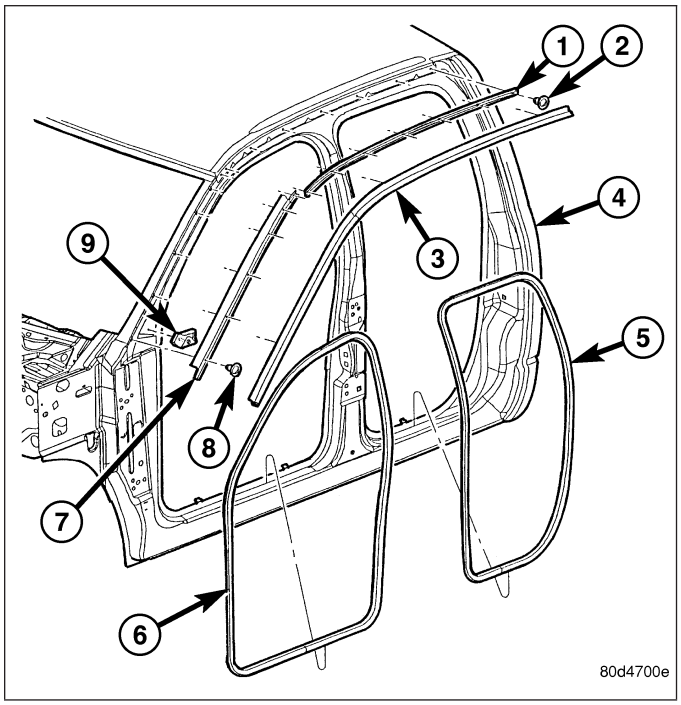

4. Remove the a-pillar trim panels (2) (Refer to 23 - BODY/INTERIOR/A-PILLAR TRIM - REMOVAL).

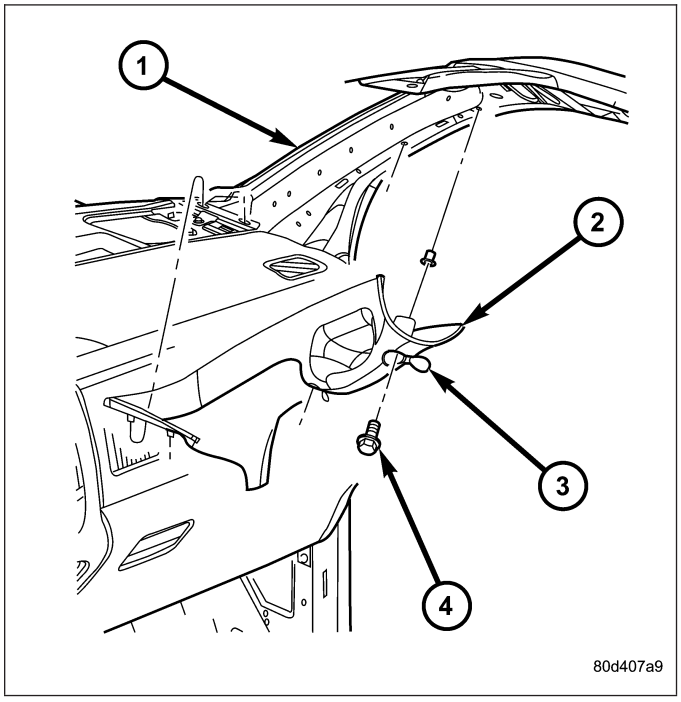

5. Remove the headliner (9) and from the inside of the vehicle, cut the upper urethane bonding from around windshield upper edge using a suitable sharp cold knife (C-4849). A pneumatic cutting device can be used but is not recommended (Refer to 23 - BODY/INTERIOR/HEADLINER - REMOVAL).
6. From the outside of the vehicle, cut urethane bonding from the remaining sides of the windshield using a suitable sharp cold knife (C-4849). A pneumatic cutting device can be used but is not recommended.
7. Separate windshield from vehicle.

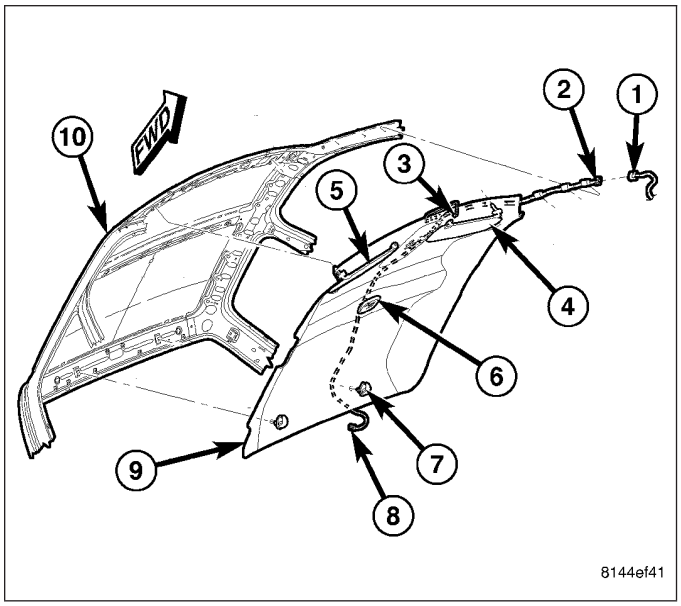

INSTALLATION

WARNING: Allow the urethane at least 24 hours to cure before returning the vehicle to use.

CAUTION: Roll down the left and right front door glass and open the rear glass slider (if available) before installing windshield. This is to avoid pressurizing the passenger compartment if a door is slammed before the urethane is cured. The potential for water leaks can result.

The windshield fence should be cleaned of most of its old urethane bonding material. A small amount of old urethane, approximately 1-2 mm in height, should remain on the fence. Do not grind off or completely remove all old urethane from the fence, the paint finish and bonding strength will be adversely affected.

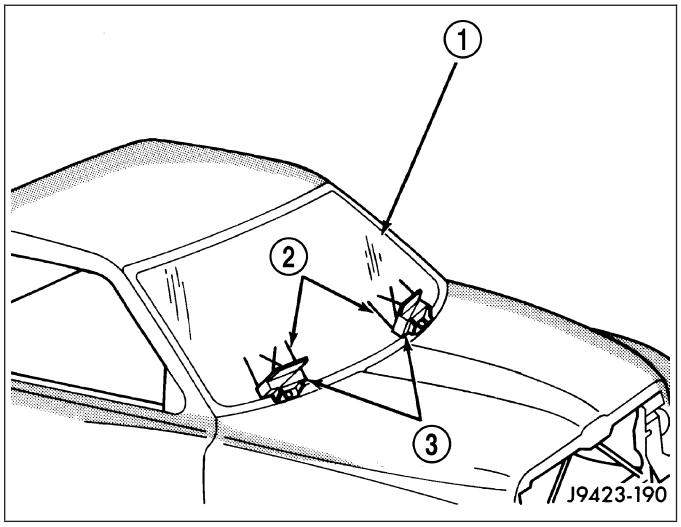

1. Place replacement windshield (1) into windshield opening and position glass in the center of the opening against the support spacers (3). Mark the outside surface of the glass at the support spacers (3) with a grease pencil or pieces of masking tape and ink pen to use as a reference (2) for installation. Remove replacement windshield from windshield opening.
2. Position the windshield (1) inside up on a suitable work surface with two padded, wood 10 cm by 10 cm by 50 cm (4 in. by 4 in. by 20 in.) blocks (3), placed parallel 75 cm (2.5 ft.) apart.
3. Clean inside of windshield with MOPAR® Glass Cleaner and lint-free cloth.
4. Apply clear glass primer 25 mm (1 in.) wide around perimeter of windshield and wipe with a new clean and dry lint- free cloth.
5. Apply black-out primer onto the glass using the windshield molding as a guide. The primer should be 15 mm (5/8 in.) wide on the top and sides of the glass and 25 mm (1 in.) on the bottom of windshield. Allow at least three minutes drying time.

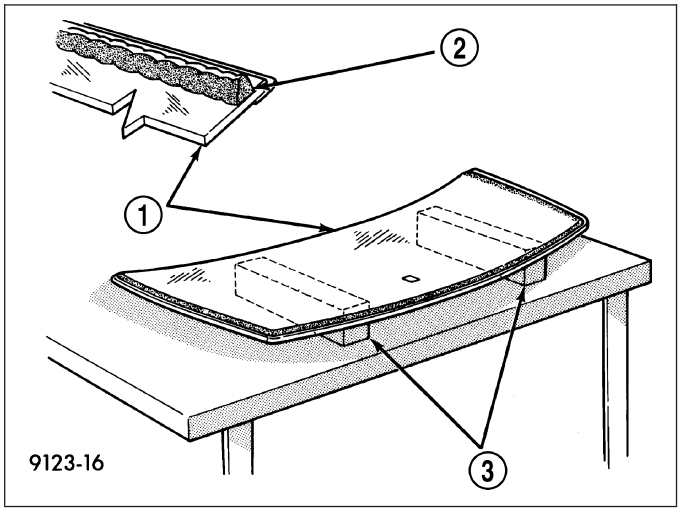

6. Locate **NEW** support spacers (3) on support brackets and adjust to lowest height.

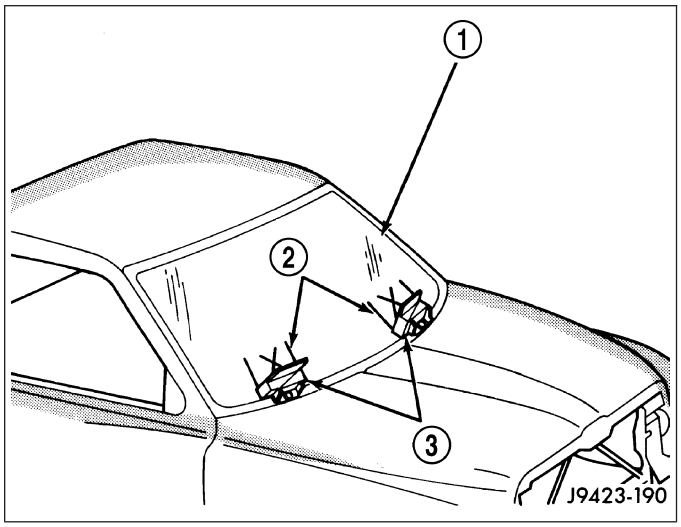

7. Position seven new foam spacers (4 and 3) on the inside surface of the windshield, flush with the lower and side edges.
8. Position three new foam spacers (1) on the inside surface of the windshield, at a minimum distance of 3 mm (0.12 in.) from the top edge of the windshield.

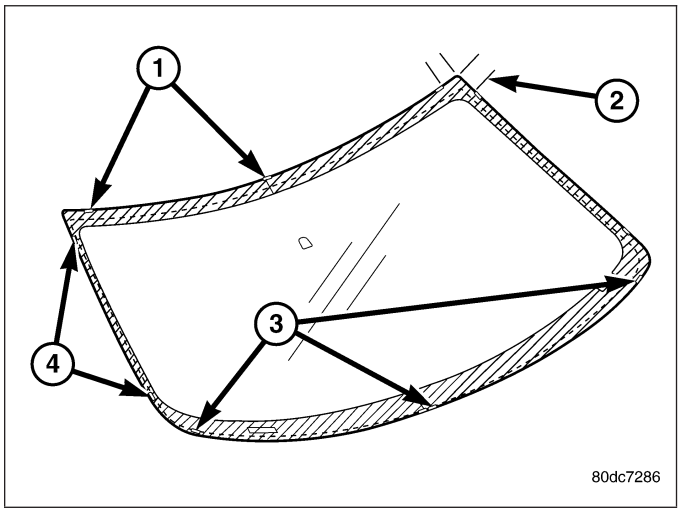

9. The urethane bead should be shaped in a triangular cross-section, this can be achieved by notching the tip of the applicator.

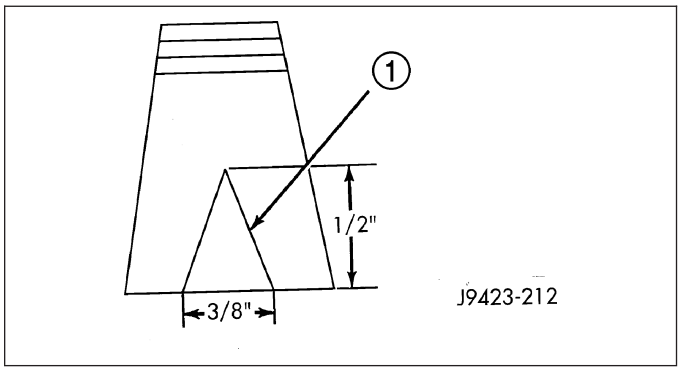

10. Apply a 13 mm (1/2 in.) high and 10 mm (3/8 in.) wide bead of urethane around the perimeter of windshield (2). At the top, apply the bead 7 mm (1/4 in.) inboard from the glass edge. On the other three sides apply the bead 14 mm (0.55 in.) inboard from the glass edge.

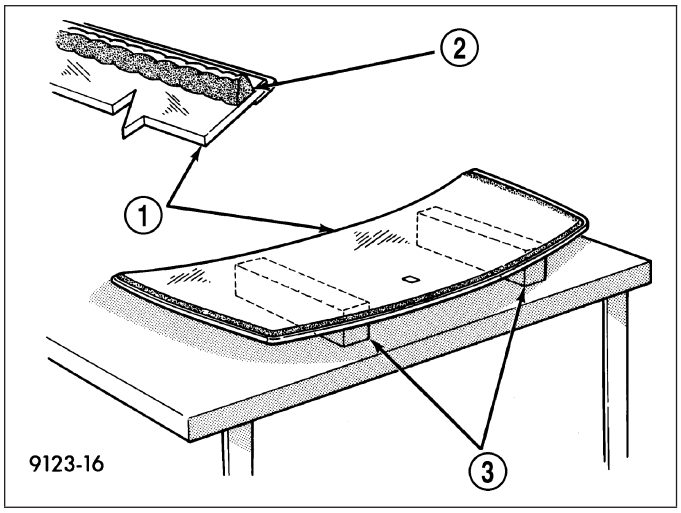

11. Install the a-pillar trim (2) (Refer to 23 - BODY/INTERIOR/A-PILLAR TRIM - INSTALLATION).

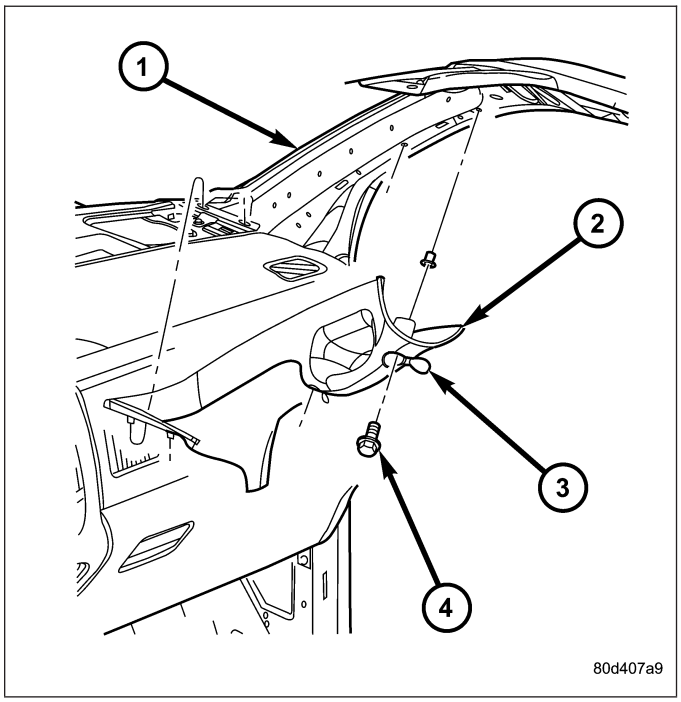

12. With the aid of a helper, position the windshield (2) over the windshield opening. Align the reference marks at the bottom of the windshield to the support spacers (3).
13. Slowly lower windshield glass (2) to the fence opening guiding the lower corners into proper position. Beginning at the bottom and continuing to the top, push glass (2) onto fence along the A-Pillars. Push windshield (2) inward to the fence at the bottom corners.
14. Push windshield (2) upward, setting the windshield to roof gap to 1.5 mm (0.06 in.) to 3 mm (0.12 in.) and ratchet up the adjustable support brackets.
15. Using clean water, lightly mist the support spacers (3).

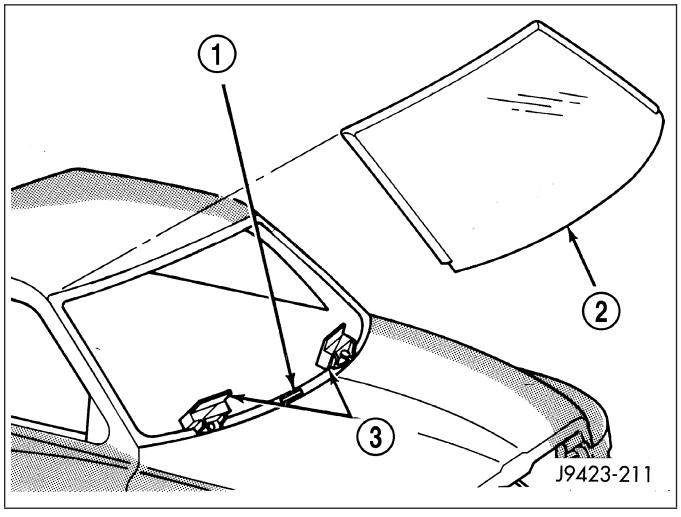

16. Clean excess urethane from exterior with MOPAR® Super Clean or equivalent.

17. Install cowl grill (2) (Refer to 23 - BODY/EXTERIOR/COWL GRILLE - INSTALLATION).

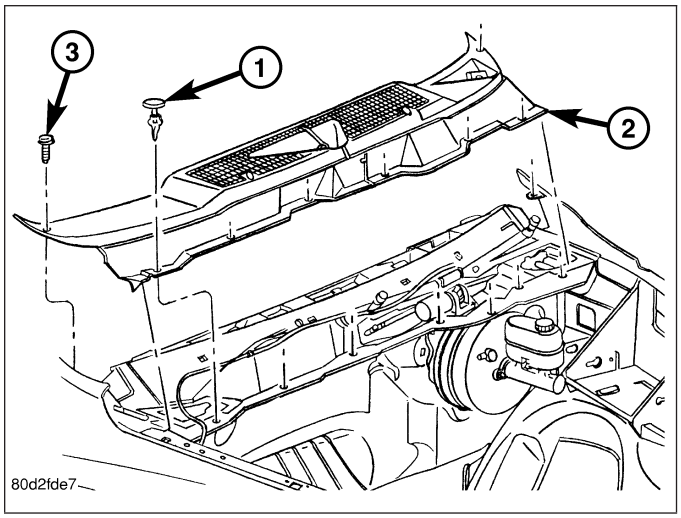

18. Install rear view mirror support bracket (4) (Refer to 23 - BODY/INTERIOR/REAR VIEW MIRROR - INSTALLATION).
19. Install rear view mirror (3) (Refer to 23 - BODY/INTERIOR/REAR VIEW MIRROR - INSTALLATION).

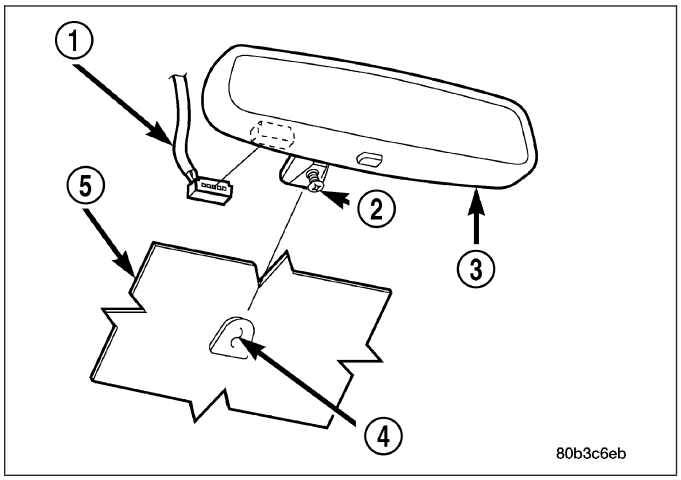

20. Install the a-pillar weatherstrip retainer (1) (Refer to 23 - BODY/WEATHERSTRIP/SEALS/A-PILLAR WEATHERSTRIP RETAINER - INSTALLATION)
21. After urethane has cured, remove tape strips and water test windshield to verify repair.

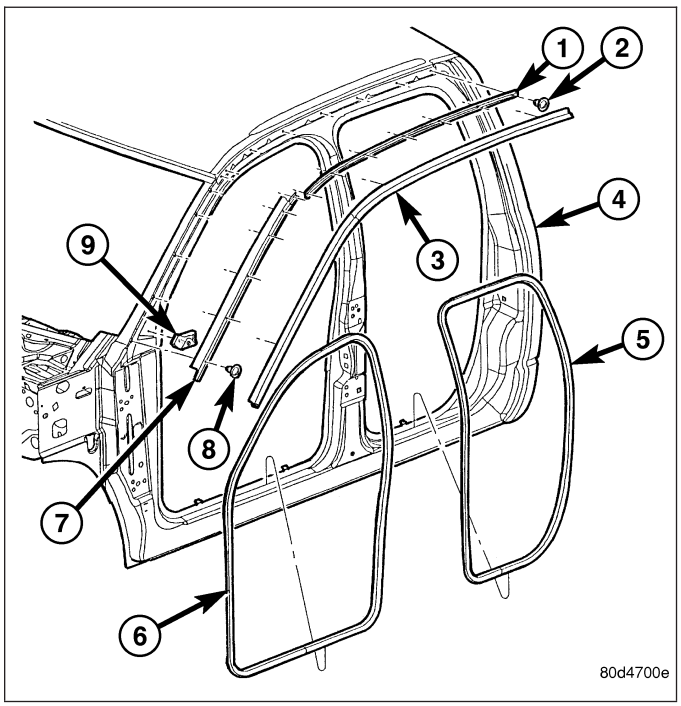

SUNROOF - SERVICE INFORMATION

TABLE OF CONTENTS

page

SUNROOF - SERVICE INFORMATION
DESCRIPTION 214
OPERATION 215
DIAGNOSIS AND TESTING
POWER TOP - SUNROOF 216
SUNROOF 216
ASSEMBLY-MODULE
REMOVAL 219
INSTALLATION 221
CHANNEL-DRAIN
REMOVAL 222
INSTALLATION 223
COVER-GUIDE MECHANISM
REMOVAL 224
INSTALLATION 225
DEFLECTOR-WIND
REMOVAL 225
INSTALLATION 226
GLASS
REMOVAL 227
INSTALLATION 228
ADJUSTMENTS
ADJUSTMENT 229
GUIDE-SUNROOF GLASS
REMOVAL 230
INSTALLATION 231
HOSE-DRAIN
REMOVAL 233
INSTALLATION 234
MOTOR
DESCRIPTION 234
SUNSHADE
REMOVAL 235
INSTALLATION 236
SWITCH-SUNROOF
DESCRIPTION 236
TRIM RING
REMOVAL 237
INSTALLATION 237

SUNROOF - SERVICE INFORMATION

DESCRIPTION

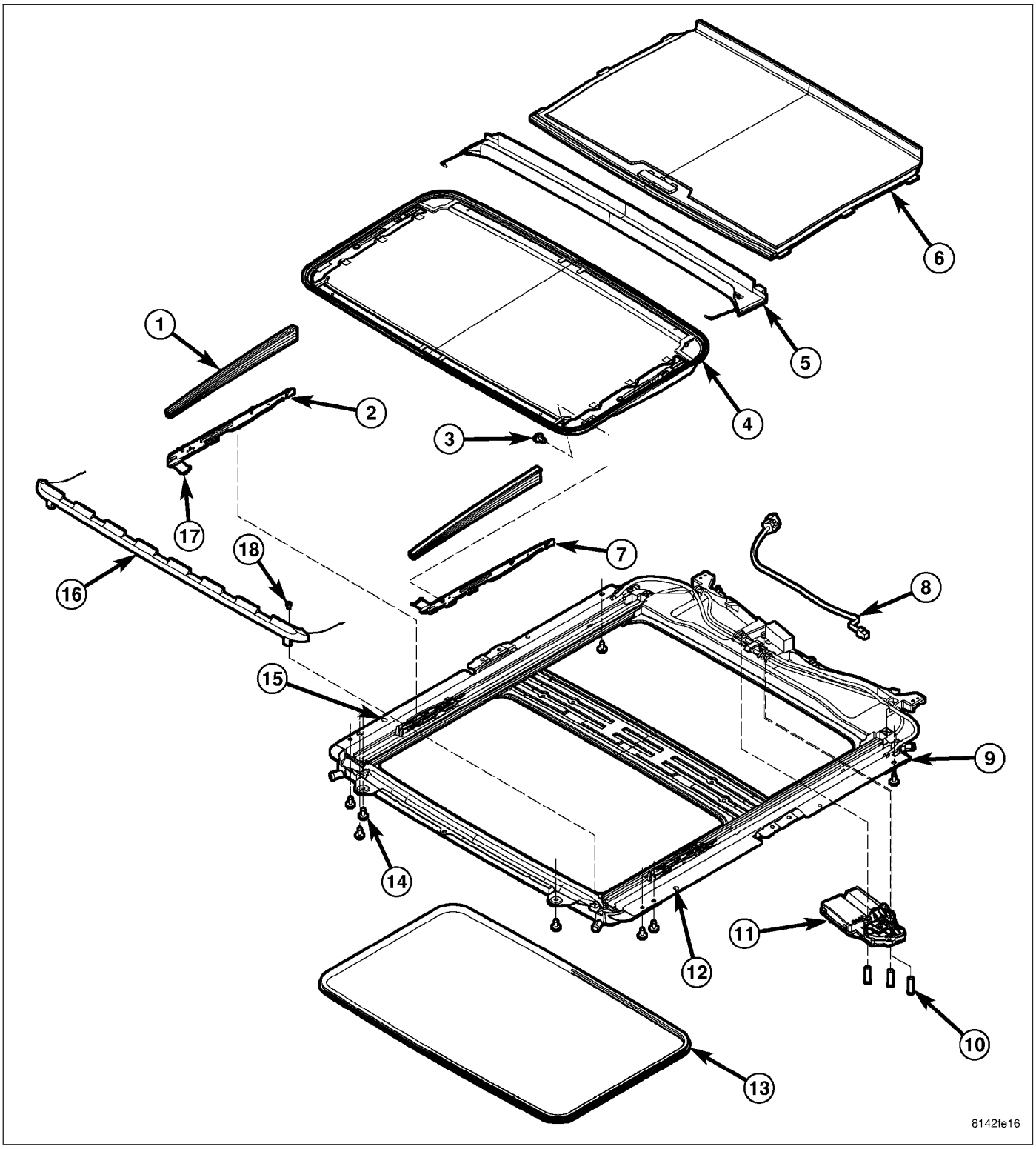

EXPLODED VIEW

Parts List

1 - MECHANISM COVERS (2)	10 - MOTOR FASTENERS (3)
2 - RIGHT HAND GLASS GUIDE	11 - SUNROOF MOTOR/MODULE ASSEMBLY
3 - GLASS FASTENERS (4)	12 - ALIGNMENT HOLE
4 - GLASS ASSEMBLY	13 - TRIM RING
5 - DRAIN CHANNEL	14 - ASSEMBLY FASTENERS (8)
6 - SUNSHADE	15 - ALIGNMENT HOLE
7 - LEFT SUNROOF GLASS GUIDE	16 - WIND DEFLECTOR
8 - WIRE HARNESS	17 - GLASS GUIDE FOOT
9 - SUNROOF ASSEMBLY	18 - WIND DEFLECTOR STRAP SCREWS (2)

The power sunroof system allows the sunroof to be opened, closed or placed in the vent position electrically by actuating a switch in the overhead console. The sunroof system receives battery feed through a fuse in the Power Distribution Center (PDC). The sunroof will operate normally with the key in any position while the Accessory Delay system is active.

The sunroof glass panel tilts upward at the rear for ventilation and slides rearward under the roof when open. The panel seals flush with the roof in the closed position to eliminate wind noise. The sunroof includes a manual-sliding sunshade to cover the deep-tinted glass panel.

In addition to the standard power sunroof operation, this vehicle offers several additional features. There is an express (one-touch) opening and closing feature as well as Excessive Force Limitation (EFL). The EFL function detects obstacles trapped between the glass and the vehicle roof during a closing motion. Upon sensing an obstacle the EFL function will reverse direction of the glass to allow removal of the obstacle.

The main components of the power sunroof system are:

- The motor/module assembly
- The power sunroof glass and frame assembly
- The power sunroof switch
- The manual-sliding sunshade

OPERATION

This vehicle has a vent, tilt and slide power sunroof system with express (one-touch) open and closing feature. The sunroof system receives constant battery feed through a fuse in the Power Distribution Center (PDC). The sunroof will operate normally with the key in any position while the Accessory Delay system is active. If the sunroof is moving when the key is turned to the START position (crank engine), all motions stop until the key is released, then the previously requested sunroof motion will resume. The sunroof will also complete a requested motion if the Accessory Delay system goes inactive while the motion is in progress.

A combination push-button and rocker switch module mounted in the overhead console controls sunroof operation. The sunroof switch is a rocker design with a push button in the center of the two halves of the rocker. Pressing the rocker towards the front of the car commands the sunroof closed. Pressing the rocker towards the rear of the car commands the sunroof open. Pressing the center push button commands the sunroof up into the vent position (Rear of sunroof glass raises above the vehicle roof with glass still covering the sunroof opening). All switch commands operate with the glass starting in any position. (Refer to 8 - ELECTRICAL/POWER TOP/SWITCH - OPERATION) for additional information.

An electronic control system, integral to the motor/module assembly, provides the express open and close functions. Pressing the ″open″ or ″close″ end of the rocker switch moves the sunroof glass panel to the full open or full closed position, respectively. During express closing, anytime an obstacle is detected in the way of the glass, the motor will stop and reverse travel to avoid pinching an occupant’s finger, ice in the track, etc. This function is called Excessive Force Limitation (EFL). There are two methods of overriding the EFL function.

1. When three EFL events occur without the glass being allowed to fully close, the next close attempt will only move while the close switch is continuously actuated. This allows the sunroof to be forced closed if multiple close attempts fail.

2. If the sunroof close switch is continuously actuated during an EFL event, through the reversal, and during a two second wait time, then continuing to hold the close switch will cause the roof to move towards close with the EFL protection disabled. This allows the sunroof to be forced closed if it is known that a reversal will occur.

While in EFL override, the closing motion will cease if the sunroof switch is released at any time.

The motor/module is programmed to learn the speed required to drive the panel based on position and recalibrates itself as needed. If the sunroof becomes uncalibrated, it will only respond to the vent switch. If the vent switch is pressed, the glass will move toward vent; if the switch is released, all motion stops. In the event that the sunroof system becomes uncalibrated perform the sunroof position calibration procedure, (Refer to 8 - ELECTRICAL/ POWER TOP/MOTOR - STANDARD PROCEDURE -SUNROOF POSITION CALIBRATION).

DIAGNOSIS AND TESTING

POWER TOP - SUNROOF

Any diagnosis of the power sunroof system should begin with the use of a scan tool and the proper Diagnostic Procedures Information. The scan tool can provide confirmation that the Controller Area Network (CAN) Data Bus is functional, that all of the electronic modules are sending and receiving the proper messages on the CAN Data Bus, and that the power sunroof motor is being sent the proper hard wired output by the sunroof switch.

For complete circuit diagrams, refer to the appropriate wiring information. The wiring information includes wiring diagrams, proper wire and connector repair procedures, details of wire harness routing and retention, connector pin-out information and location views for the various wire harness connectors, splices and grounds.

Refer to the appropriate diagnostic information.

SUNROOF

Refer to SUNROOF DIAGNOSIS CHART for possible causes. Before beginning sunroof diagnostics verify that all other power accessories are in proper operating condition. If not, a common electrical problem may exist. Refer to Wiring Diagrams, in this publication for circuit, splice and component descriptions. Check the condition of the circuit protection (20 amp circuit breaker in the Junction Block). Inspect all wiring connector pins for proper engagement and continuity. Check for battery voltage at the power sunroof controller, refer to Wiring Diagrams, for circuit information. If battery voltage of more than 10 volts is detected at the controller, proceed with the following tests (the controller will not operate at less than 10 volts).

Before beginning diagnosis for wind noise or water leaks, verify that the problem was not caused by releasing the control switch before the sunroof was fully closed. The sunroof module has a water-management system. If however, the sunroof glass is in a partial closed position, high pressure water may be forced beyond the water management system boundaries and onto the headlining.

Every time the sunroof module loses power it must be initialized. This is done by connecting power to the sunroof and moving the sunroof toward the closed position. When initialization occurs a slight “kick” in the sunroof module will be seen and heard. This is the indication that the sunroof module is initialized

SUNROOF DIAGNOSIS CHART

SYMPTOM	POSSIBLE CAUSE
Sunroof motor inoperative.	Faulty control switch. Faulty circuit ground between sunroof module, control switch, and body harness. Faulty power circuit between sunroof module, control switch, and body harness. Faulty sunroof drive motor. Faulty sunroof module.
Audible whine when switch is depressed, sunroof does not operate.	Faulty sunroof drive motor. Binding cable.
Audible clicking or ratcheting when switch is pressed, sunroof does not operate.	Broken or worn drive cable. Worn drive motor gear. Mechanisms not synchronized.
Sunroof vents and opens, but does not close.	Broken or disengaged trough guide Binding cable. Faulty circuit. Faulty control switch. Faulty sunroof module. Faulty drive motor.
Sunroof vents, but does not open.	Binding cable or mechanism. Faulty circuit. Faulty switch. Faulty sunroof module.
Sunroof does not vent	Binding cable or mechanism. Faulty circuit. Faulty control switch. Faulty sunroof module.
Sunroof water leak.	Drain tubes clogged or kinked or disconnected from the sunroof. Glass panel improperly adjusted. Faulty glass panel seal.
Gurgling sound from sunroof	Low spot in drain hose routing, allowing water to stand.
Wind noise from sunroof.	Glass panel compression to the roof opening not consistent. Wind deflector not deploying properly. Glass not installed or adjusted properly. Faulty glass panel seal.

SYMPTOM	POSSIBLE CAUSE
Buzz, Squeak, Rattles from sunroof	Loose or broken attaching hardware. No lubrication in track. Worn or broken mechanism. Cables bunched or kinked.
Sunshade will not function or does not operate smoothly	Sunshade feet are broken. Sunshade feet are in the wrong track. Track obstructions or interference. Trim lace incorrectly installed in track.
Glass movement not consistent or glass does not operate smoothly	Glass and Track timing. Glass and Track alignment. Cables and Guide alignment.
Broken or jammed guide mechanism	Mechanism cover was not installed correctly.

WATER DRAINAGE AND WIND NOISE DIAGNOSIS

The sliding glass panel is designed to seal water entry with a snug fit between the roof and the seal. The fit can be checked by inserting a business card or equivalent, between the roof and the seal. The piece of paper should have some resistance when pulled out when the glass panel is in the closed position. The sunroof housing will drain off a minimum amount of water. Excessive wind noise could result if the gap clearances are exceeded. The sunroof glass panel may need to be adjusted. (Refer to 23 - BODY/SUNROOF/GLASS PANEL - ADJUSTMENTS)

Adequate drainage is provided by a drain trough in the sunroof housing which encircles the sliding glass panel and leads to drain hoses. If a wet headliner or other water leak complaints are encountered, before performing any adjustments, first ensure that the drainage system is not plugged or disconnected. Use a pint container to pour water into the sunroof housing drain trough. If water flow is restricted, use compressed air to blow out any material plugging the drain system. Retest system again.

To further check for a disconnected drain hose:

NOTE: Care must be taken not to fold or kink the headliner upon removal.

1. Lower headliner as necessary to gain access to sunroof housing drain tubes. (Refer to 23 - BODY/INTERIOR/HEADLINER - REMOVAL)
2. Repair as necessary.

ASSEMBLY-MODULE

REMOVAL

WARNING: The Excessive Force Limitation (EFL) feature must be calibrated any time a sunroof motor/module is replaced with a new component. Failure to perform this procedure could result in vehicle damage and/or personal injury. (Refer to 8 - ELECTRICAL/POWER TOP/MOTOR - STANDARD PROCEDURE - EXCESSIVE FORCE LIMITATION (EFL) CALIBRATION) for the appropriate procedure.

1. Move glass panel to the fully closed position.
2. Disconnect and isolate the battery negative cable.
3. Remove headliner (Refer to 23 - BODY/INTERIOR/HEADLINER - REMOVAL).
4. Disconnect the sunroof wire harness electrical connector.

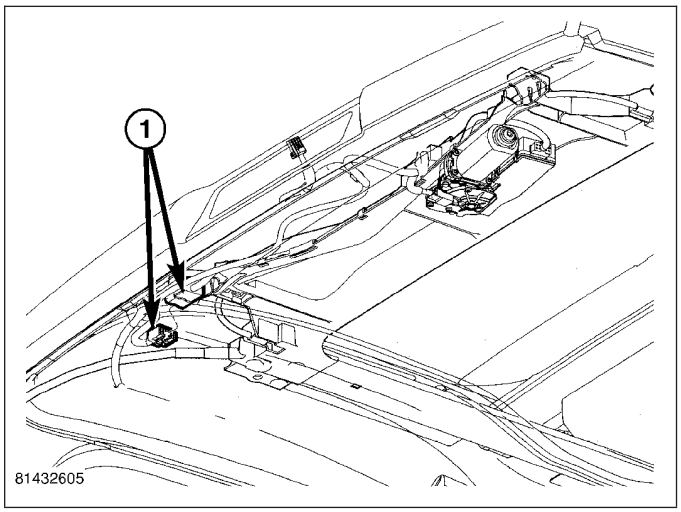

5. Disconnect the four drain tubes (1) from sunroof housing.

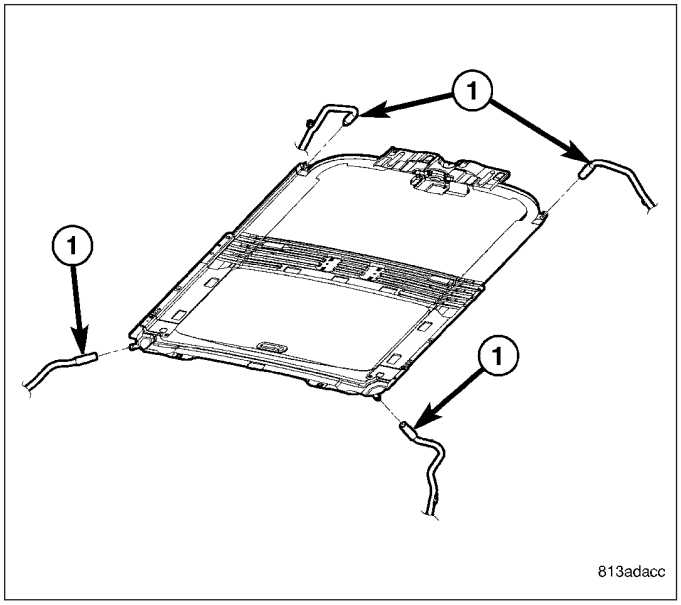

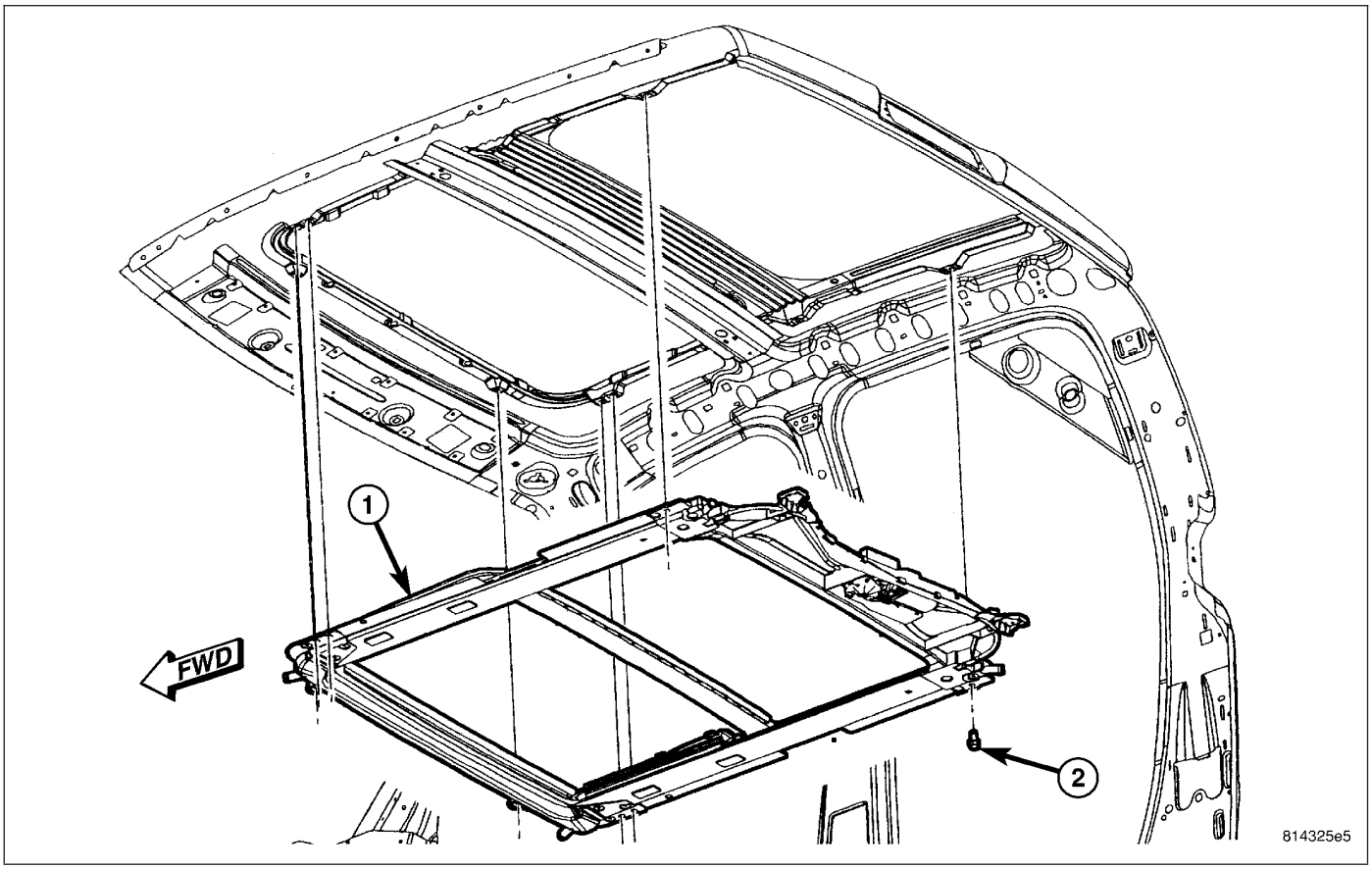

6. With the aid of a helper, support the sunroof and remove the eight fasteners (2) attaching sunroof assembly (1) to roof panel.
7. Remove the sunroof (1) from vehicle.

INSTALLATION

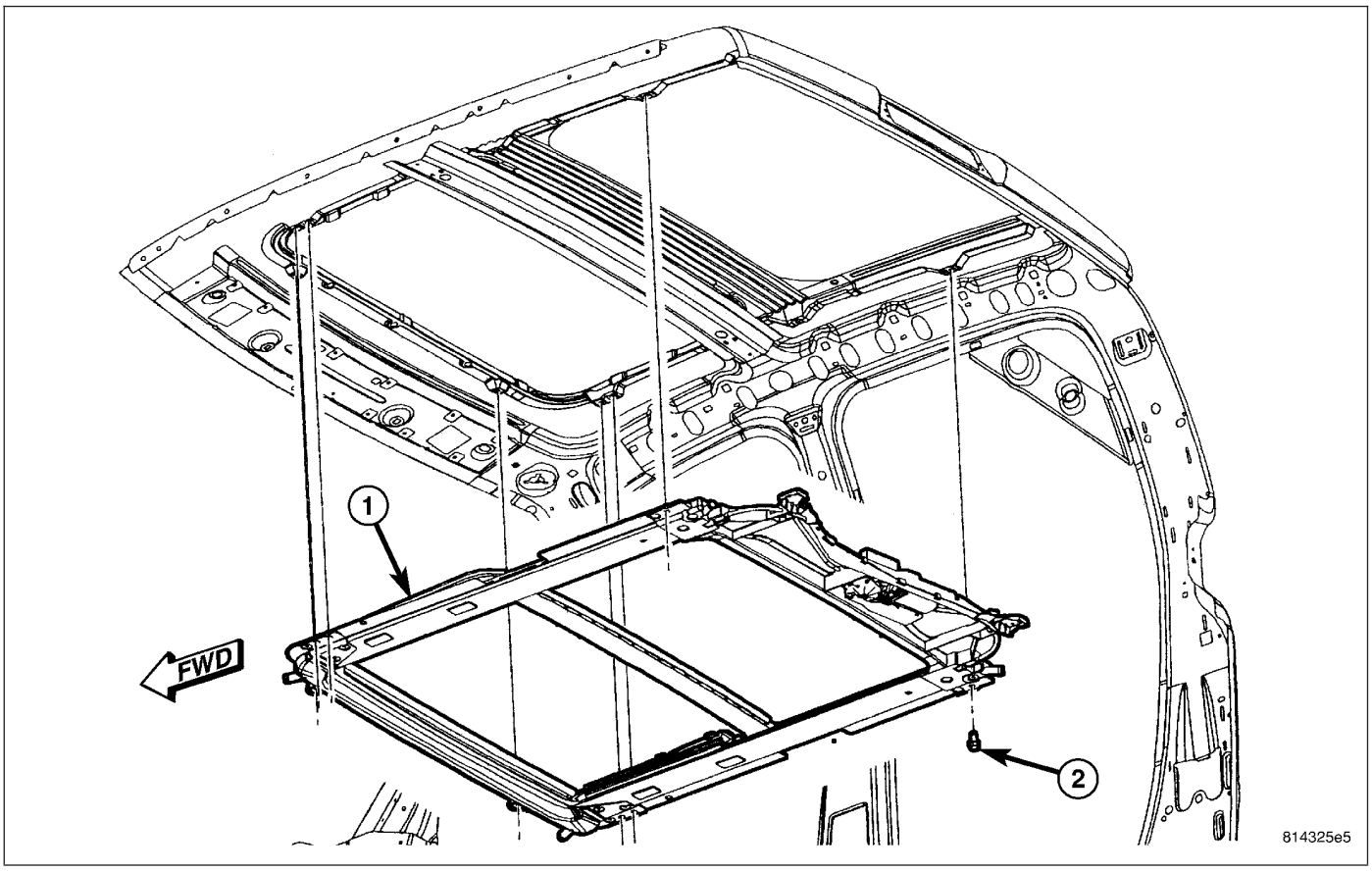

WARNING: The Excessive Force Limitation (EFL) feature must be calibrated any time a sunroof motor/module is replaced with a new component. Failure to perform this procedure could result in vehicle damage and/or personal injury. (Refer to 8 - ELECTRICAL/POWER TOP/MOTOR - STANDARD PROCEDURE - EXCESSIVE FORCE LIMITATION (EFL) CALIBRATION) for the appropriate procedure.

1. Verify that glass panel is loose and slightly retracted.
2. Raise sunroof module assembly (1) and guide it carefully into position.
3. Hand start the eight screws (2).
4. Position special tool # 9582 pins through the locating holes and confirm the module assembly is properly aligned.
5. Tighten the attaching screws (2) to 9 N·m (80 in. lbs.) and remove the special tool.
6. Connect the electrical connector (1).

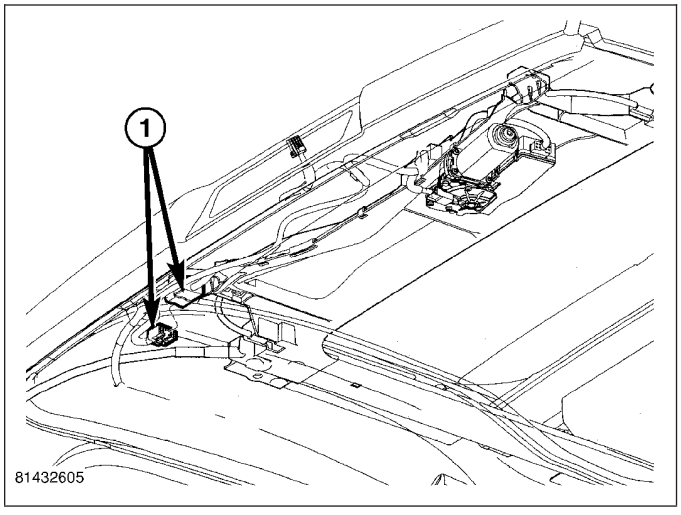

7. Connect the drain tubes to the sunroof (1).
8. Adjust the sunroof glass. (Refer to 23 - BODY/ SUNROOF/GLASS PANEL - ADJUSTMENTS)
9. Connect battery negative cable.
10. Install the vehicle headliner, (Refer to 23 - BODY/ INTERIOR/HEADLINER - INSTALLATION).
11. Perform the sunroof position calibration, (Refer to 8 - ELECTRICAL/POWER TOP/MOTOR - STANDARD PROCEDURE - SUNROOF POSITION CALIBRATION).
12. Perform the Excessive Force Limitation (EFL) calibration, (Refer to 8 - ELECTRICAL/POWER TOP/ MOTOR - STANDARD PROCEDURE - EXCESSIVE FORCE LIMITATION (EFL) CALIBRATION).
13. Verify proper operation of the power sunroof system.

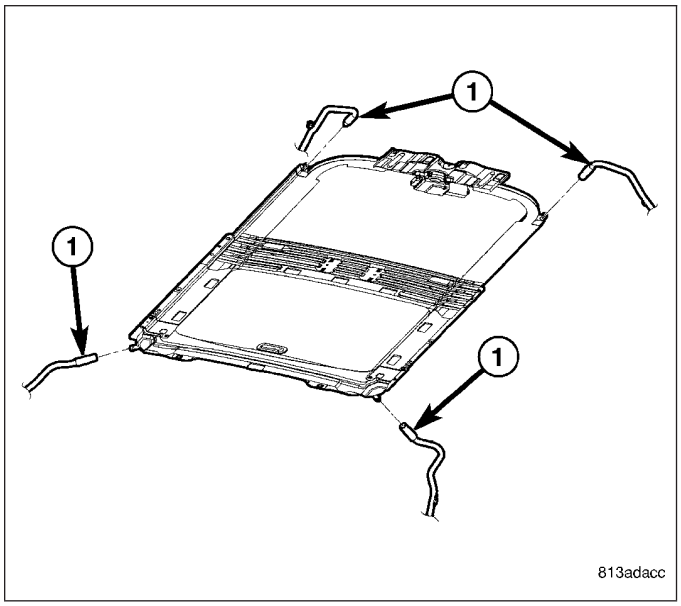

CHANNEL-DRAIN

REMOVAL

1. Remove glass panel (2). (Refer to 23 - BODY/ SUNROOF/GLASS PANEL - REMOVAL)
2. Separate the drain channel arms (2) from the guide mechanisms (1) one at a time.

CAUTION: Do not pry the channel arms apart at the same time or you could break the drain channel.

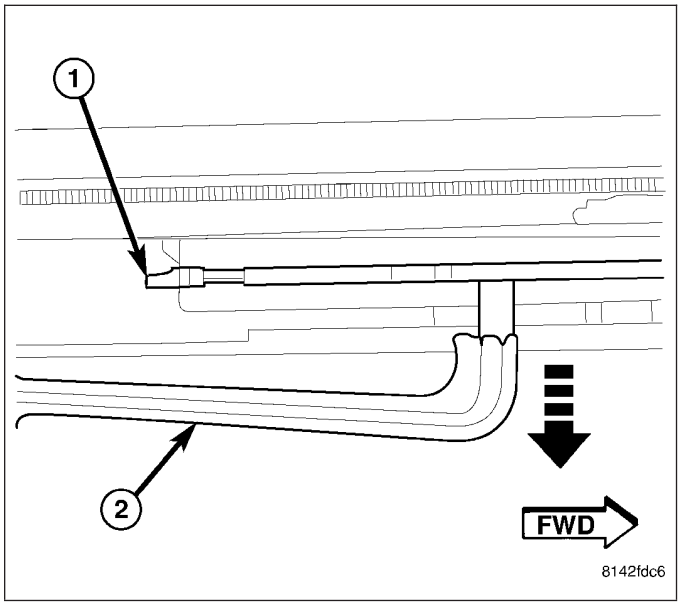

3. Carefully slide the drain channel (1) forward to the notches (2) in the frame and remove from the vehicle.

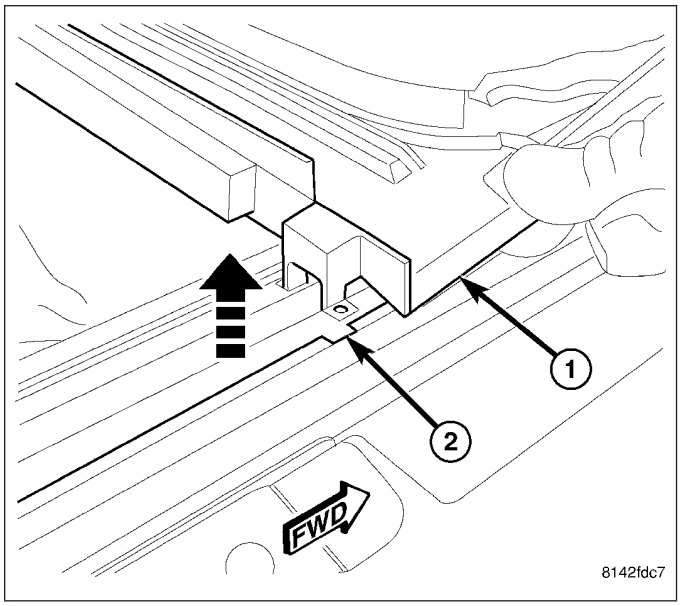

INSTALLATION

1. Carefully position the drain channel (1) into the notches (2) in the frame and slide rearward.

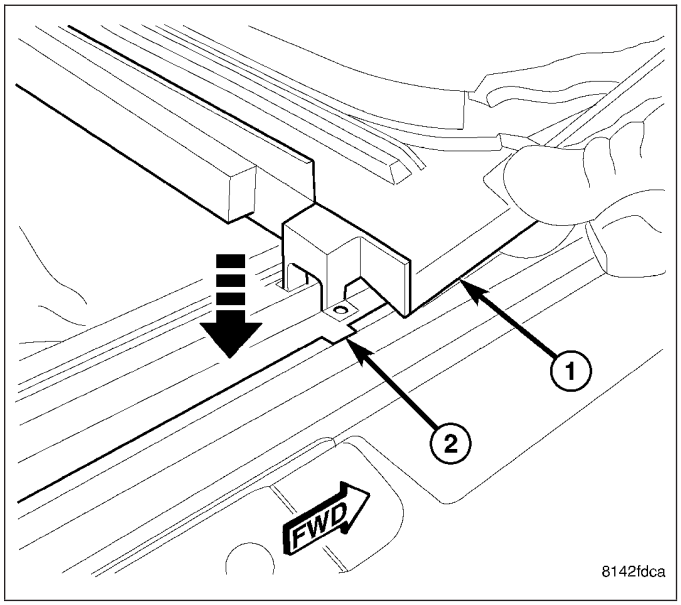

2. Install the drain channel arms (2) into the mechanism (1) holes one at a time with the reinforcements on the inside of mechanism arms.

CAUTION: Do not pry the channel arms apart at the same time or you could break the drain channel.

3. Install the sunroof glass. (Refer to 23 - BODY/ SUNROOF/GLASS PANEL - INSTALLATION)

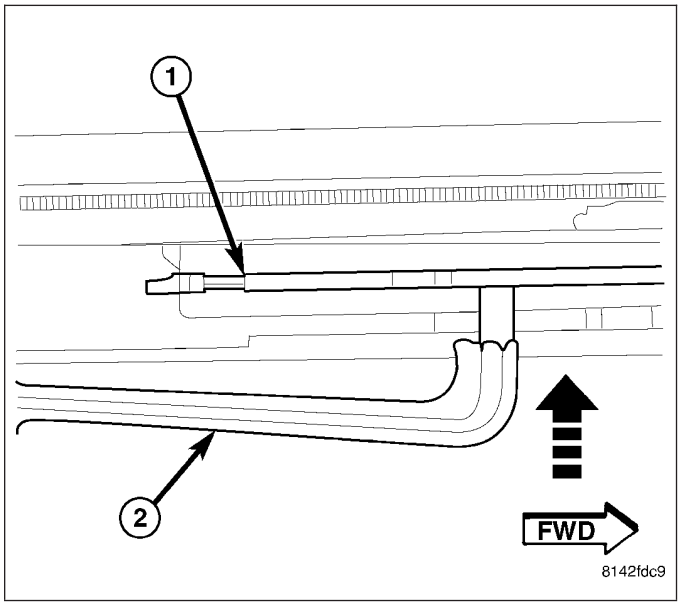

COVER-GUIDE MECHANISM

REMOVAL

1. Move the glass panel to the full closed position.
2. Slide sunshade rearward to the open position.
3. Separate the mechanism covers (2) from the tabs (1) on the glass panel.

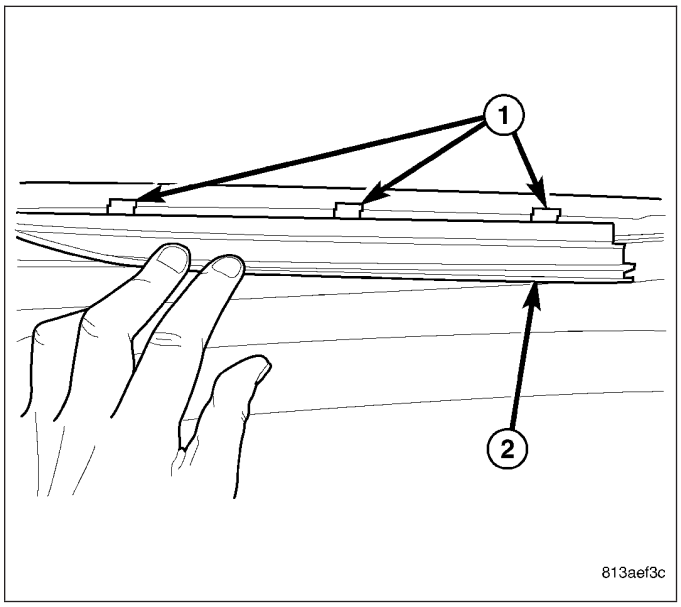

4. Hold both mechanism covers down and open the sunroof fully.
5. Slide the mechanism covers (1) out the front of the guide in the frame (2).

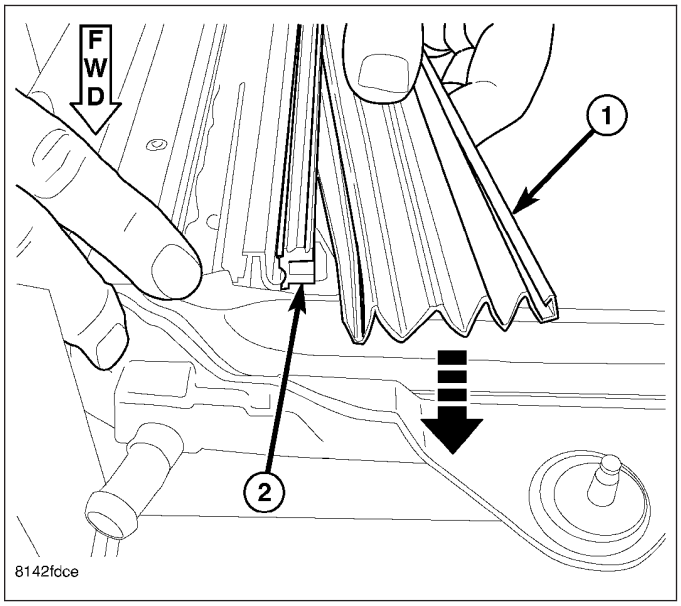

INSTALLATION

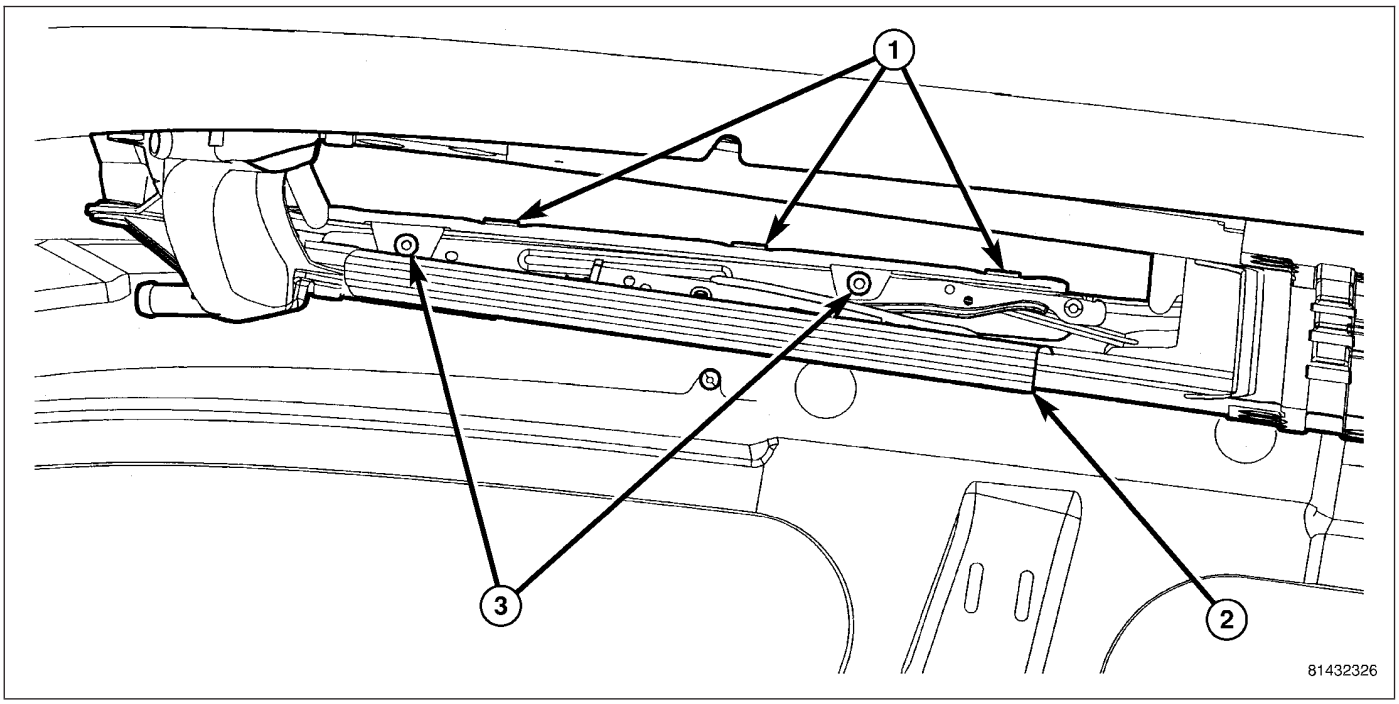

1. With the sunroof in the open position, snap the mechanism cover (2) into the lower guide channel.
2. Hold down each cover and close the sunroof.
3. Snap the upper portion of the cover (2) into the retaining clips (1) on the glass panel between the locating features.

DEFLECTOR-WIND

REMOVAL

1. Open the sunroof fully.
2. Remove the strap screws (2) from the beam area release the strap (3).

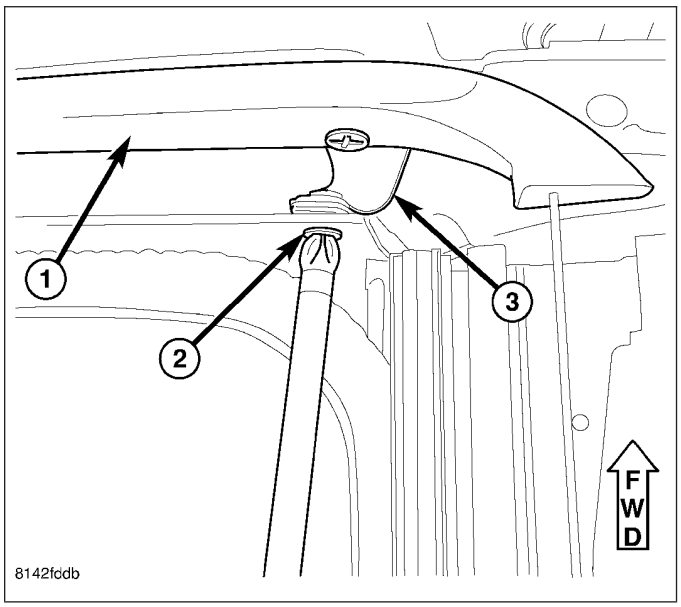

3. Rotate the deflector up and remove springs (2) from the holes in the frame (1).

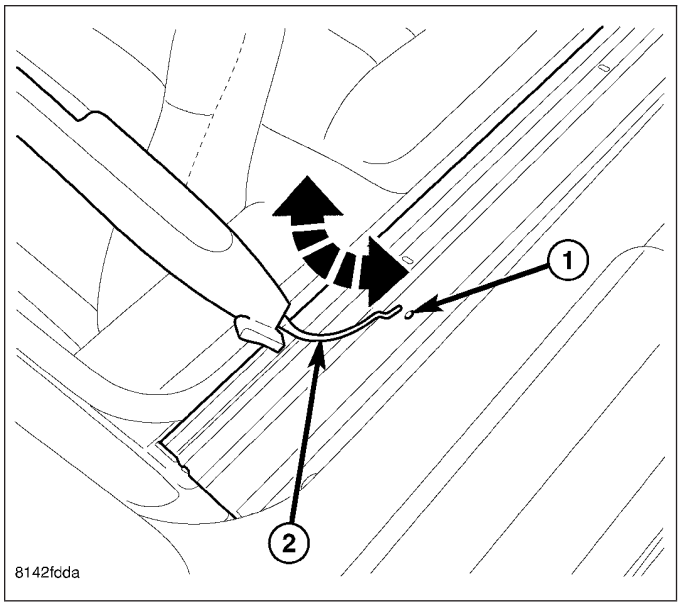

INSTALLATION

1. Position the deflector spring arms (2) into the holes of the frame (1).

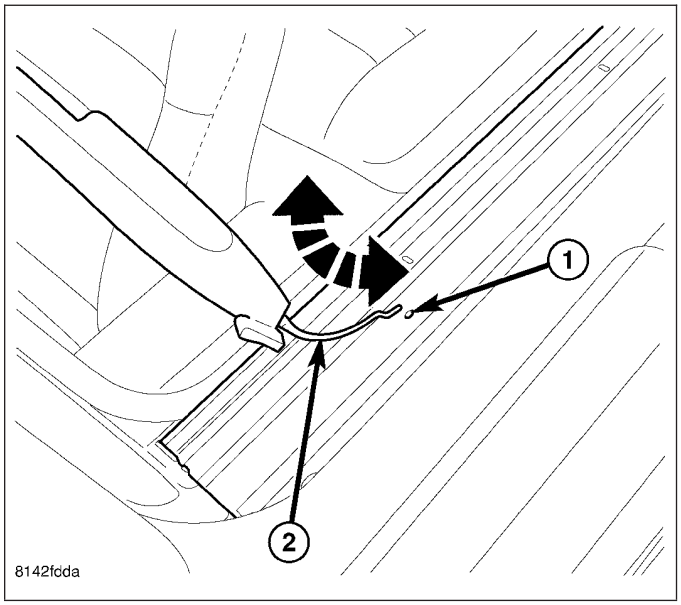

2. Rotate the deflector down, attach the straps (3) and install the strap screws (2) into the front beam.
3. Verify sunroof operation and alignment.

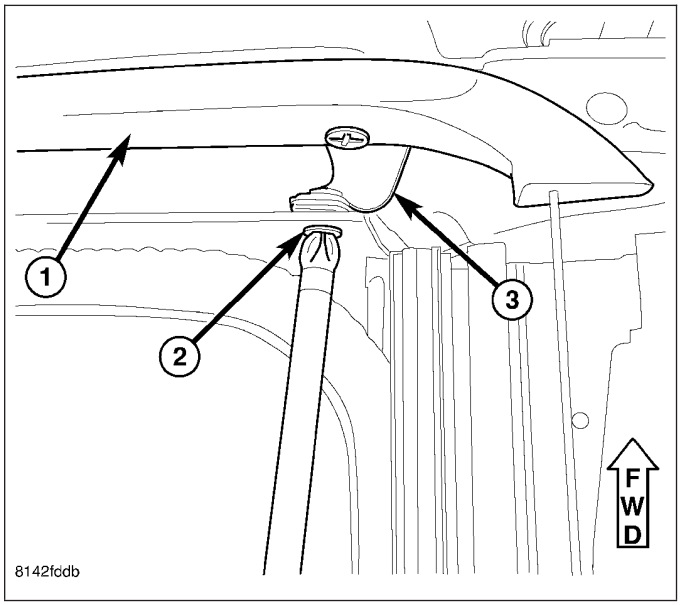

GLASS

REMOVAL

1. Move the glass panel (2) to the full closed position.
2. Slide sunshade rearward to the open position.
3. Separate the mechanism covers (2) from the tabs (1) on the glass panel.

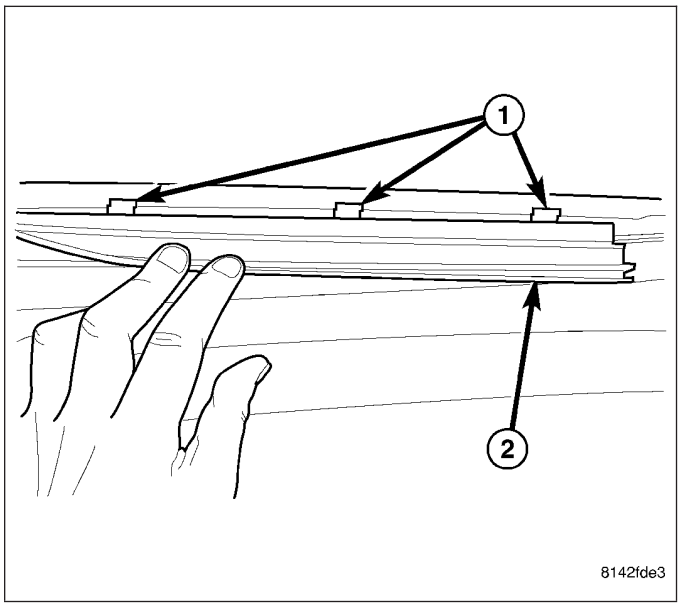

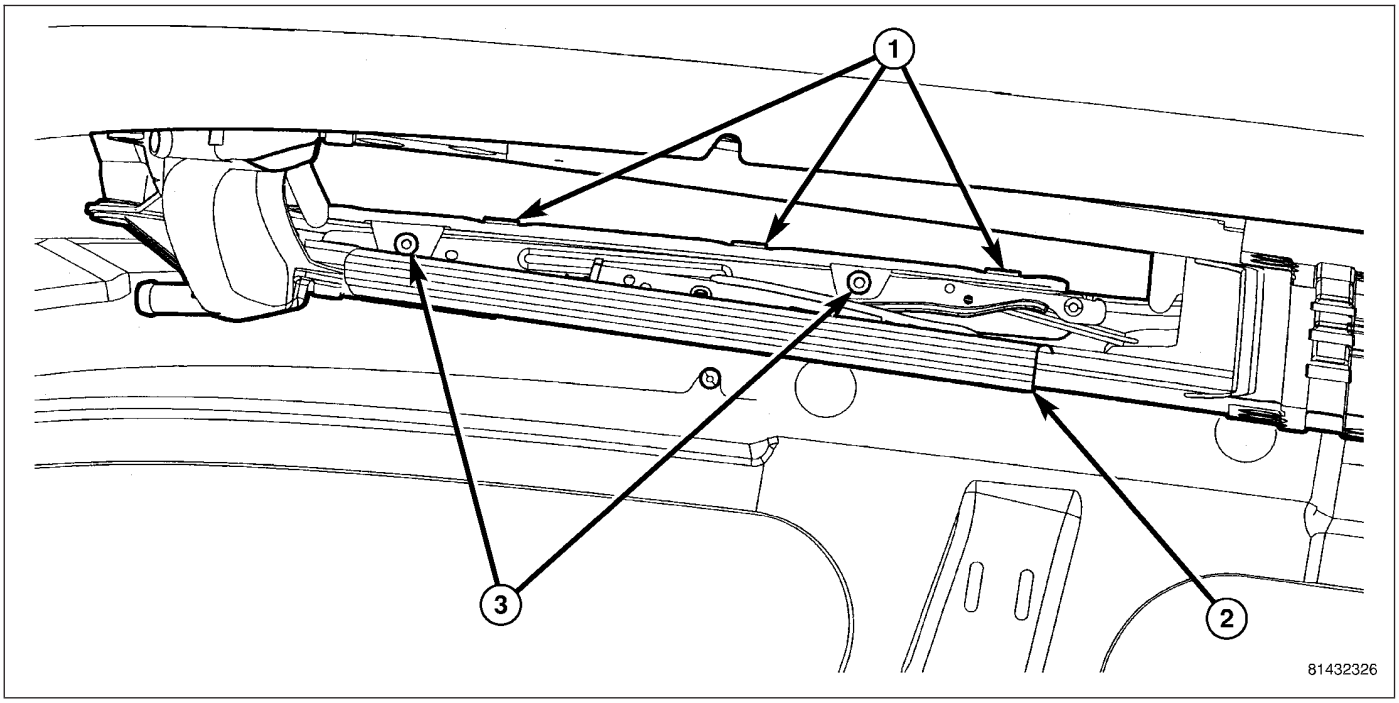

4. Remove the glass panel screws (3).
5. Lift off glass panel and remove from vehicle.

INSTALLATION

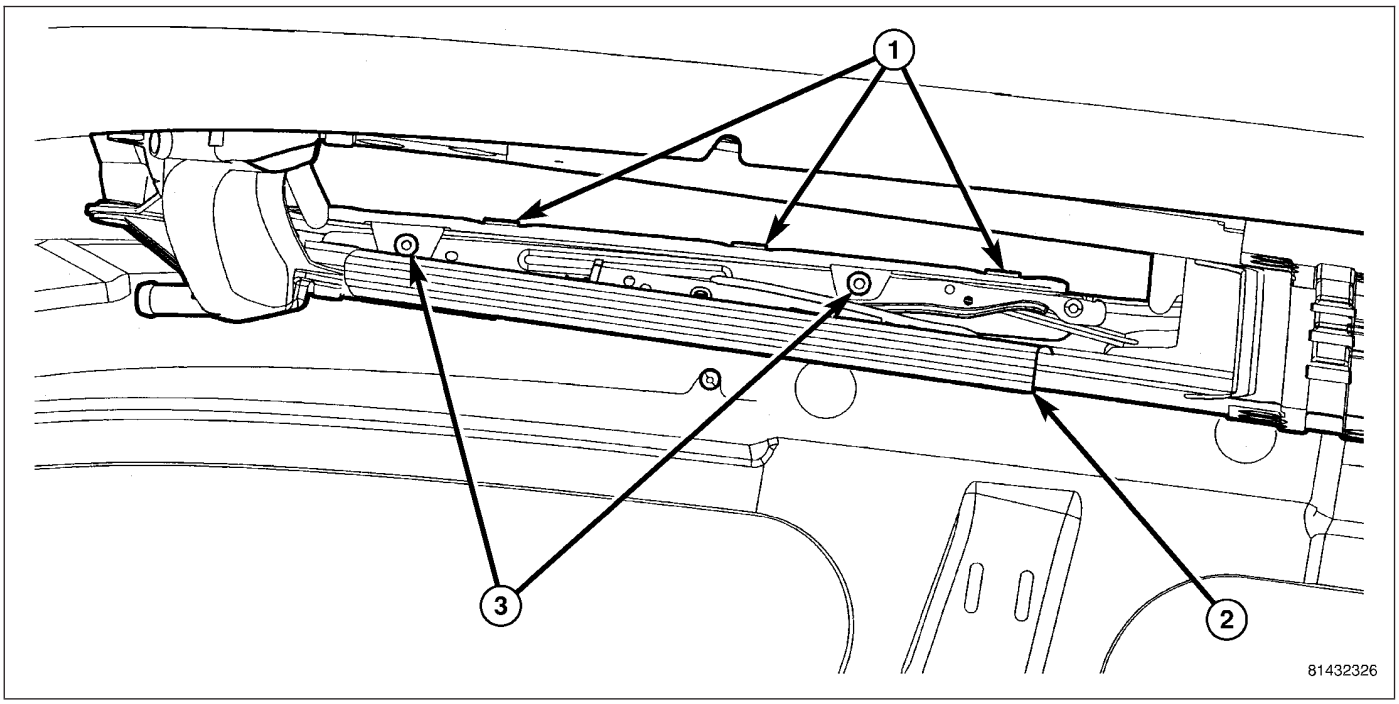

1. Position glass panel on to mechanism lift arms.

CAUTION: Verify that the retaining tabs are located on the INSIDE of the guide mechanism arms.

2. Start the attaching screws (3).
3. Connect a 12v power supply and verify that the sunroof is in the closed position.
4. Adjust sunroof glass to fit flush with roof line (Refer to 23 - BODY/SUNROOF/GLASS PANEL - ADJUSTMENTS).
5. Tighten the screws (3) to 3.5 N·m (30 in. lbs.).
6. Position the mechanism covers (2) over the glass tabs (1) between the locating features and seat fully.
7. Verify sunroof operation and alignment.

ADJUSTMENTS

ADJUSTMENT

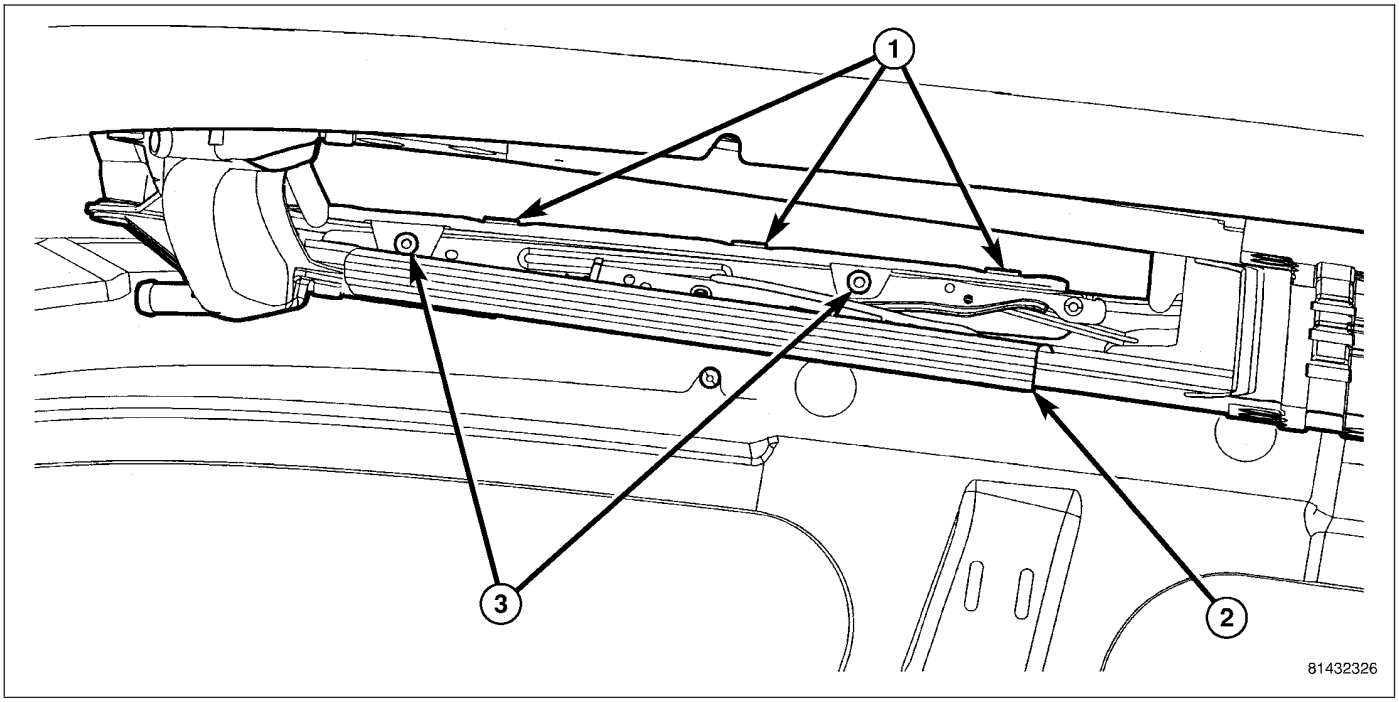

1. Move the sunshade rearward to the open position.
2. Separate the mechanism covers (2) from the tabs (1) on the glass panel.
3. Verify the sunroof glass panel is in the fully closed position.
4. Loosen the forward attaching screws (3) on each side enough to permit the front of the glass to adjust up or down.
5. Adjust the front surface of the sunroof glass panel 0.00 mm to 2 mm (0.00 in. to 0.08 in.) **below** the top surface of the roof.
6. Tighten the front glass panel attaching screws to 3.5 N·m (30 in. lbs.).
7. Loosen the rear screws (3) on each side enough to make the rear adjustment.
8. Adjust the rear surface of the sunroof glass panel 0.00 mm to 2 mm (0.03 in. to 0.08 in.) **above** the top surface of the roof.
9. Tighten the rear glass panel attaching screws to 3.5 N·m (30 in. lbs.).
10. Check for proper fit. If not OK, repeat glass panel adjustment.
11. Position the mechanism covers (2) over the glass tabs (1) between the locating features and seat fully.
12. Verify sunroof operation and alignment.

GUIDE-SUNROOF GLASS

REMOVAL

1. Place the sunroof in the vent position.
2. Remove the sunroof assembly. (Refer to 23 - BODY/SUNROOF/ASSEMBLY-MODULE - REMOVAL)
3. Remove the motor. (Refer to 8 - ELECTRICAL/ POWER TOP - SUNROOF SERVICE INFO/MOTOR/MODULE-SUNROOF - REMOVAL)
4. Remove the glass. (Refer to 23 - BODY/SUNROOF/GLASS - REMOVAL)
5. Remove the wind deflector. (Refer to 23 - BODY/ SUNROOF/DEFLECTOR-WIND - REMOVAL)
6. Separate the drain channel arms (2) from the guide mechanisms (1) one at a time.

CAUTION: Do not pry the channel arms apart at the same time or you could break the drain channel.

7. Slide the drain channel rearward out of the way.

8. Remove the hard stop screw from the frame.

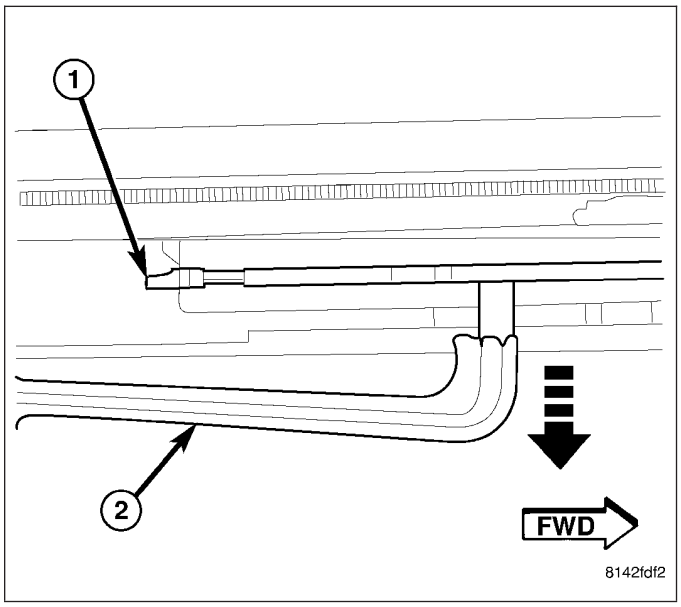

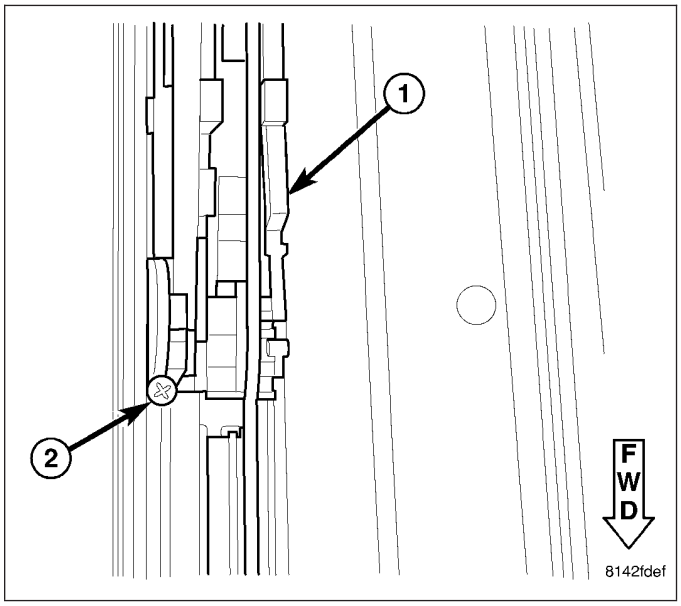

9. push the drive cable and guide plate forward past the hard stop screw location until the glass guide comes loose.

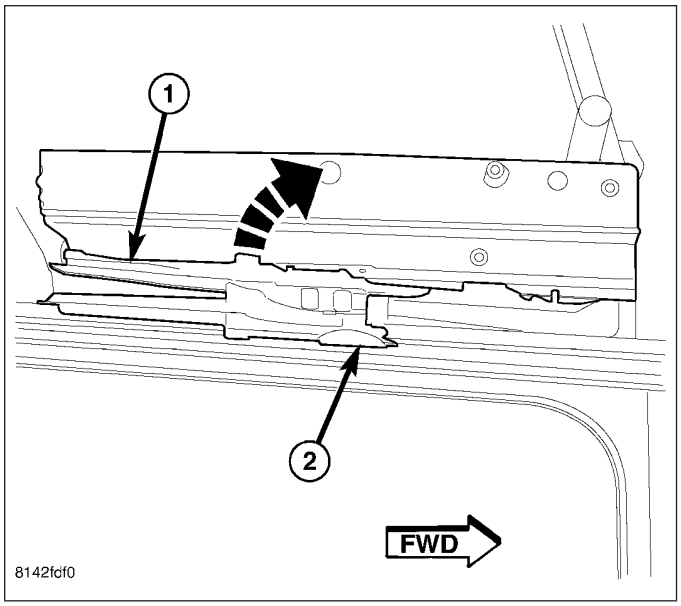

10. Rotate the guide (1) up and out of the front beam (3) and release the front foot (2) from the channel guide.

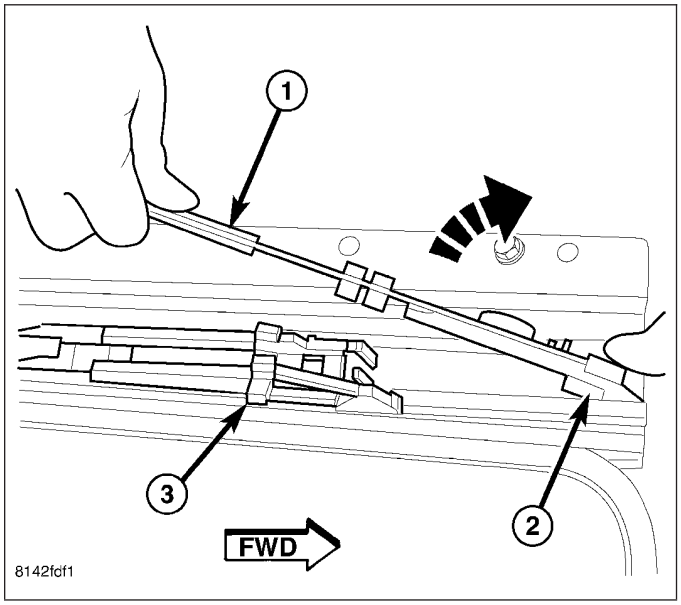

INSTALLATION

1. With the drive cable plate aligned insert the front foot (2) into the guide channel and engage the feet with the front beam (3).

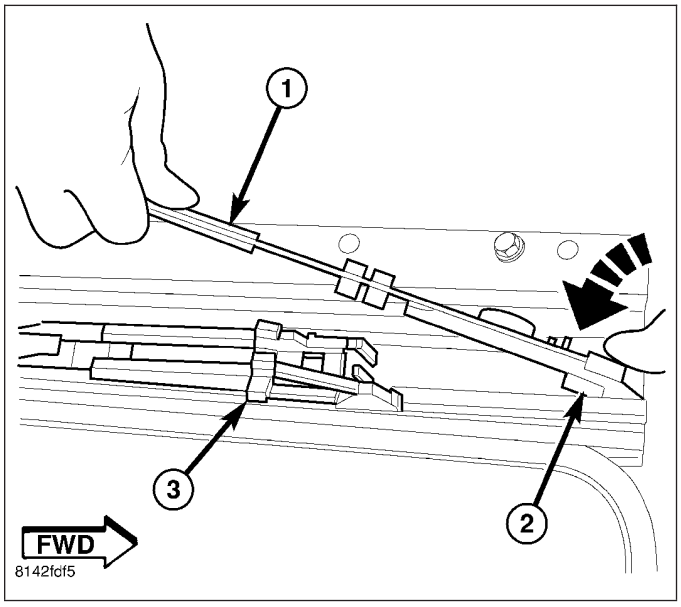

2. Rotate the guide plate (1) inboard until the feet of the guide are engaged into the front beam (2).

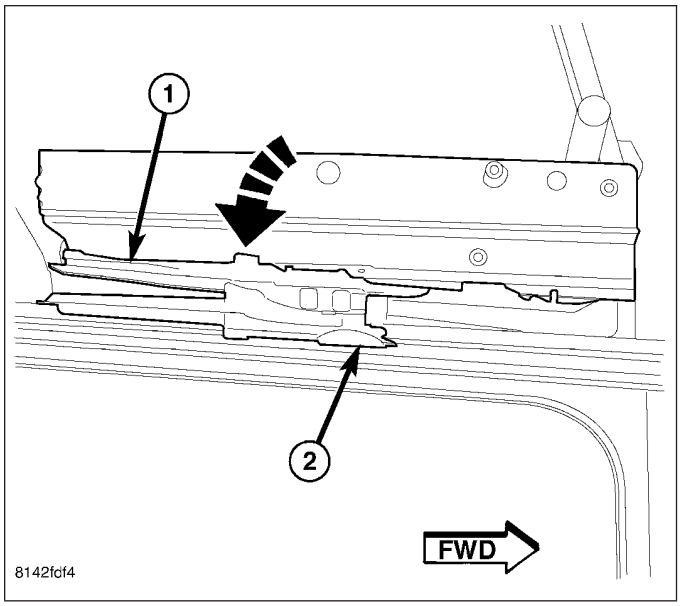

3. Push the guide assembly (1) and drive cable rearward past the hard stop location.
4. Install the hard stop screw (2) and push the drive cable and guide assembly (1) up against the hard stop screw (2).
5. Verify that the opposite guide assembly is also positioned up against the hard stop screw.
6. Install the wind deflector as necessary. (Refer to 23 - BODY/SUNROOF/DEFLECTOR-WIND - INSTALLATION)
7. Install the motor as necessary. (Refer to 8 - ELECTRICAL/POWER TOP - SUNROOF SERVICE INFO/MOTOR/MODULE-SUNROOF - INSTALLATION)

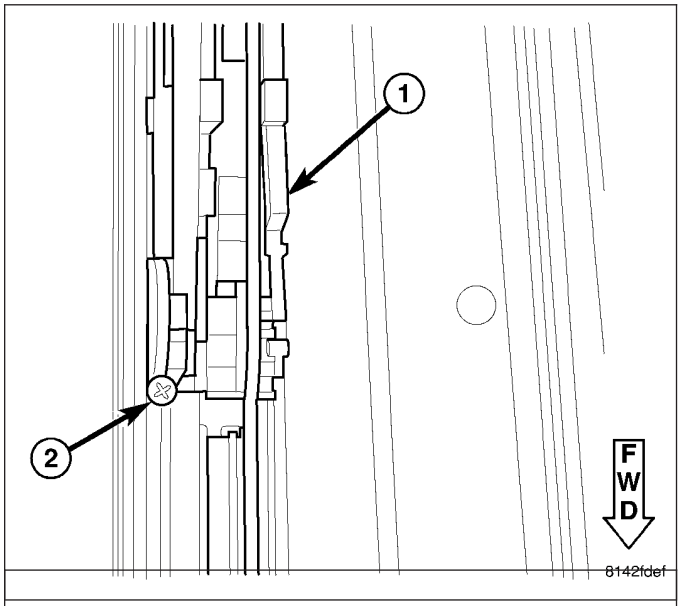

8. Install the drain channel arms (2) into the mechanism (1) holes one at a time with the reinforcements on the inside of mechanism arms.

CAUTION: Do not pry the channel arms apart at the same time or you could break the drain channel.

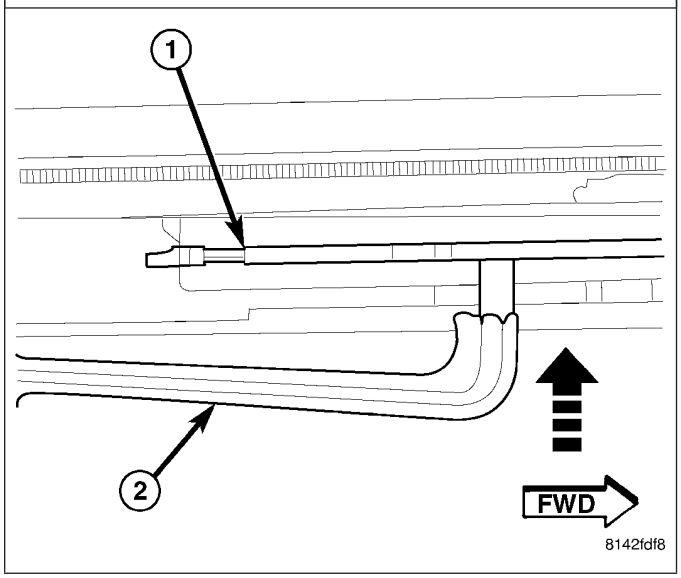

9. Install the sunroof assembly into the vehicle. (Refer to 23 - BODY/SUNROOF/ASSEMBLY-MODULE - INSTALLATION)
10. Perform the sunroof position calibration, (Refer to 8 - ELECTRICAL/POWER TOP/MOTOR - STANDARD PROCEDURE - SUNROOF POSITION CALIBRATION).
11. Perform the Excessive Force Limitation (EFL) calibration, (Refer to 8 - ELECTRICAL/POWER TOP/MOTOR - STANDARD PROCEDURE - EXCESSIVE FORCE LIMITATION (EFL) CALIBRATION).
12. Install the glass as necessary. (Refer to 23 - BODY/SUNROOF/GLASS - INSTALLATION)

13. Adjust sunroof glass to fit flush with roof line (Refer to 23 - BODY/SUNROOF/GLASS PANEL - ADJUSTMENTS).
14. Verify proper operation of the power sunroof system.

HOSE-DRAIN

REMOVAL

FRONT HOSES

1. Remove headliner (Refer to 23 - BODY/INTERIOR/HEADLINER - REMOVAL).
2. Disconnect the drain hose from the sunroof housing (1).
3. Separate the lower tube from the grommet in the body (3).
4. Drain any liquid from hose connection, if necessary.
5. Release the clips (2) and remove the tube.

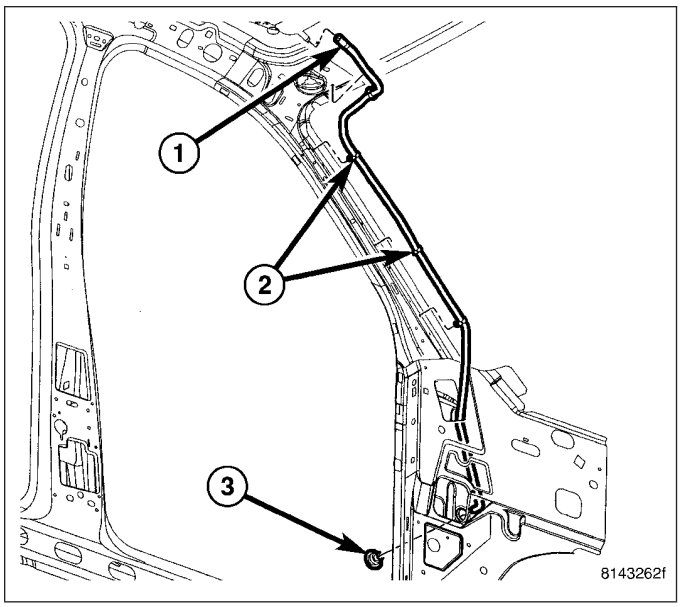

REAR HOUSING HOSE

1. Remove headliner (Refer to 23 - BODY/INTERIOR/HEADLINER - REMOVAL).
2. Disconnect the drain hose from the sunroof housing (1).* Front tube shown, rear tube similar.
3. Drain any liquid from hose connection, if necessary.
4. Release the push pin fasteners (2) and separate the lower tube from the grommet in the body (3).

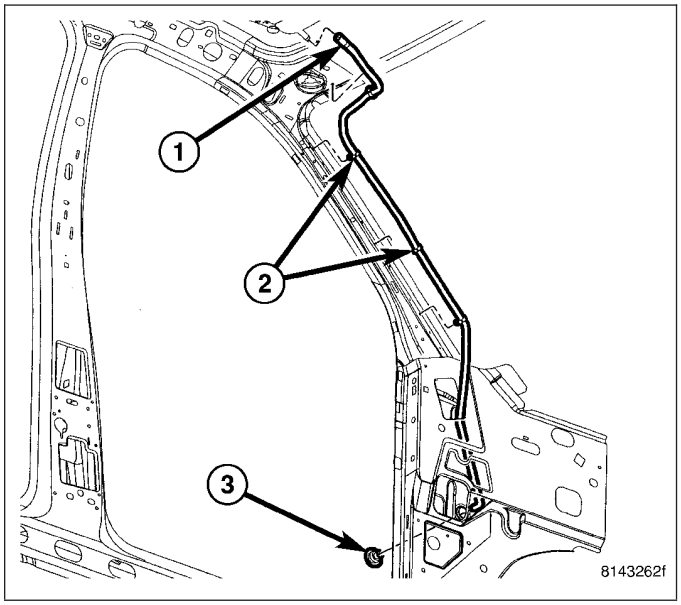

INSTALLATION

FRONT HOSES

1. Position the lower portion through the grommet in the body (3).
2. Connect the new drain tube to the sunroof housing (1) and test drainage.
3. Position the tube support clips (2) and seat fully.
4. Install headliner (Refer to 23 - BODY/INTERIOR/HEADLINER - INSTALLATION).

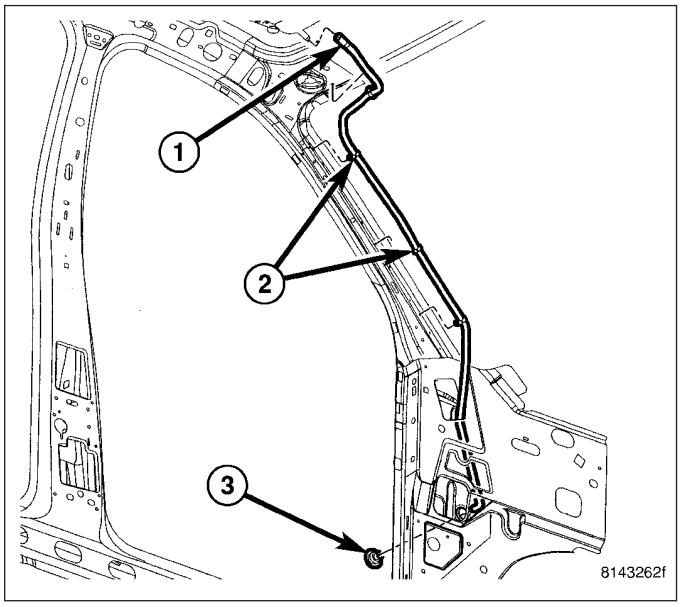

REAR HOUSING HOSE

1. Install the rear tube and seat the push pin fasteners (2) fully. * Front tube shown, rear similar.
2. Position the lower portion through the grommet in the body (3).
3. Connect the new drain tube to the sunroof housing (1) and test drainage.
4. Install headliner (Refer to 23 - BODY/INTERIOR/HEADLINER - INSTALLATION).

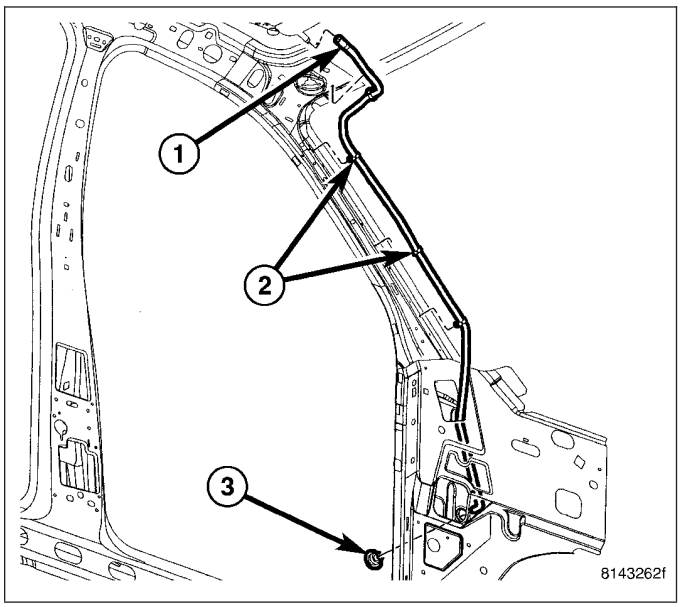

MOTOR

DESCRIPTION

For service information refer to (Refer to 8 - ELECTRICAL/POWER TOP/MOTOR - DIAGNOSIS AND TESTING).

SUNSHADE

REMOVAL

1. Remove the drain channel. (Refer to 23 - BODY/ SUNROOF/CHANNEL-DRAIN - REMOVAL)
2. Push up the front center of the sunshade (1) to pop out the front two feet.

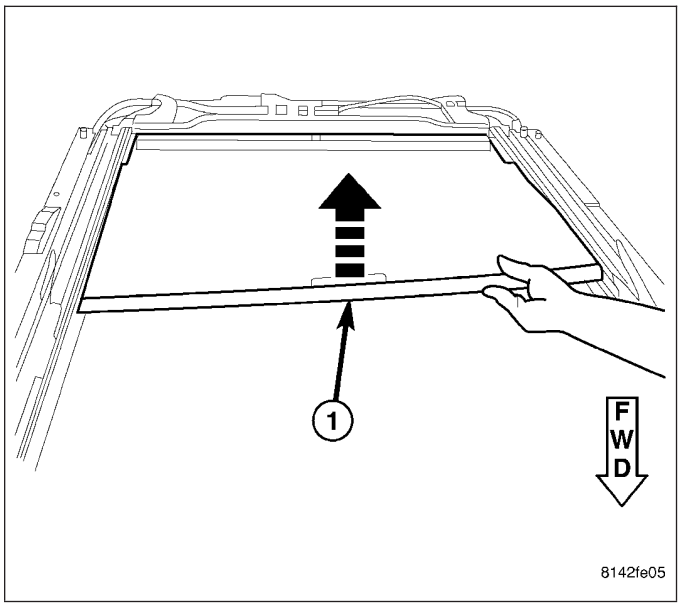

3. Rotate the sunshade (2) so that the other feet (1) are removed from the guide track.

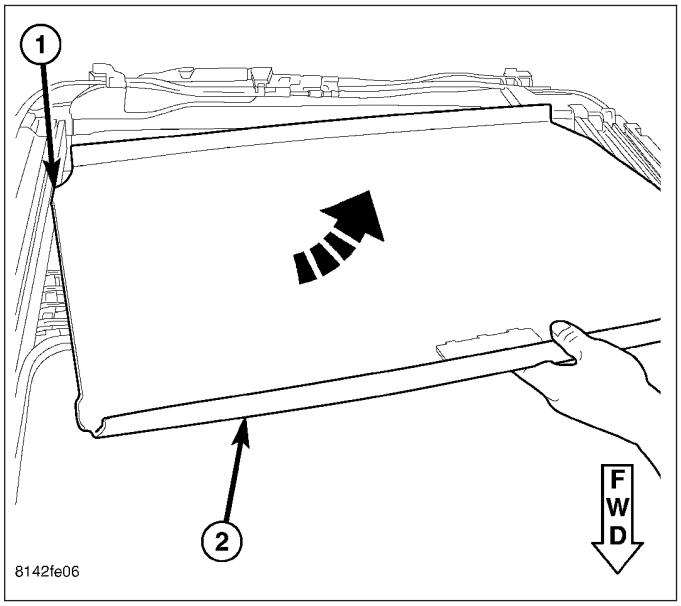

INSTALLATION

1. Verify the sunshade track is free of obstructions like the trim lace/ring.
2. Start with sunshade (2) at an angle with one foot (1) in the track.
3. Rotate the sunshade so the other rear foot is in the track as well as the 2 other feet (3) on the same side as the first foot.

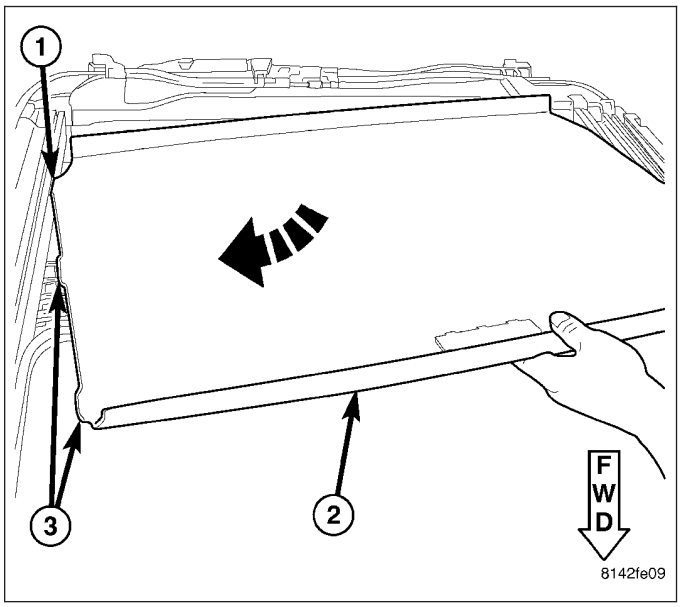

4. To insert the remaining two feet (2) apply force to the middle front of sunshade (3) and guide them into the track.
5. Check that all the feet are in the right track and verify sunshade operation.
6. Install the drain channel. (Refer to 23 - BODY/ SUNROOF/CHANNEL-DRAIN - INSTALLATION)

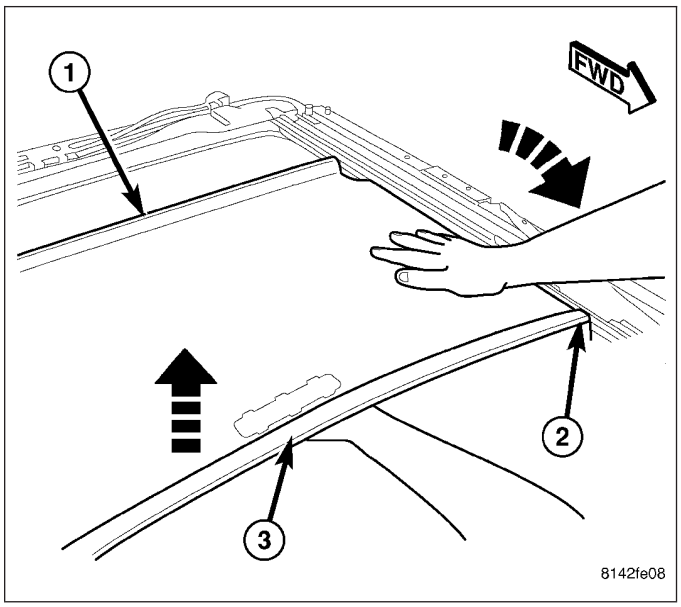

SWITCH-SUNROOF

DESCRIPTION

For service information refer to (Refer to 8 - ELECTRICAL/POWER TOP/SWITCH - DIAGNOSIS AND TESTING).

TRIM RING

REMOVAL

1. Remove the headliner. (Refer to 23 - BODY/INTERIOR/HEADLINER - REMOVAL)
2. Remove the 12 nuts (1) and roll the trim ring off the headliner off the retaining flanges (2).

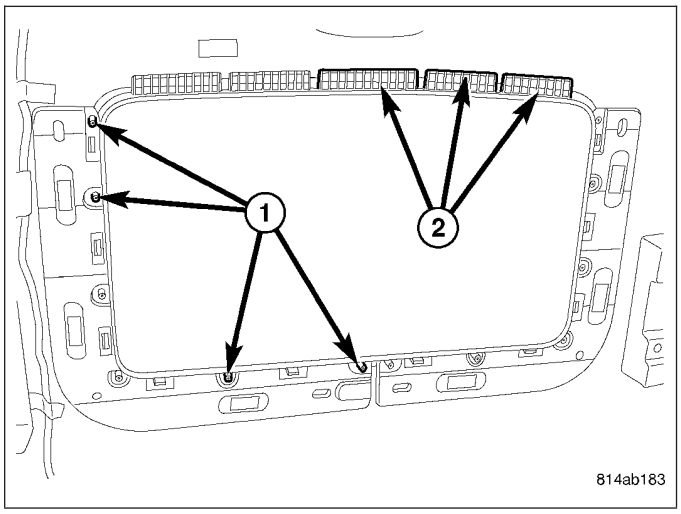

INSTALLATION

1. Position trim ring support flanges (2) over the headliner and seat the trim ring fully.
2. Install the 12 nuts (1) onto the support studs.

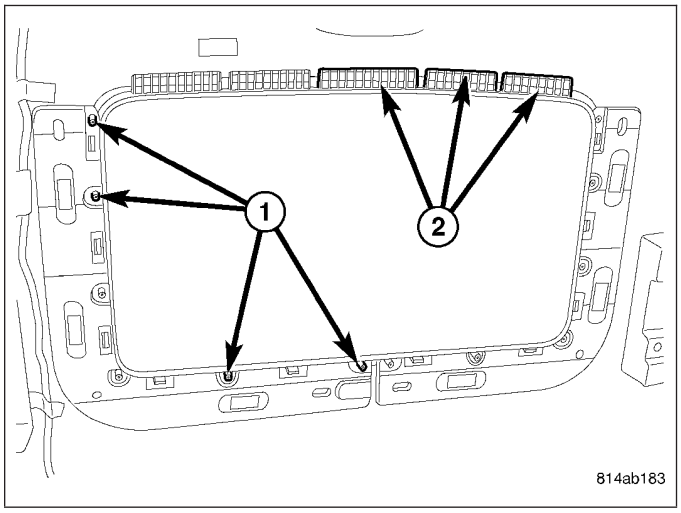

WEATHERSTRIP/SEALS

TABLE OF CONTENTS

page

A-PILLAR WEATHERSTRIP RETAINER
REMOVAL 238
INSTALLATION 239
DRIP RAIL WEATHERSTRIP
REMOVAL 239
INSTALLATION 240
DOOR OPENING SEAL
REMOVAL 240
INSTALLATION 244
DRIP RAIL WEATHERSTRIP RETAINER
REMOVAL 247
INSTALLATION 248
FRONT DOOR GLASS RUN WEATHERSTRIP
REMOVAL 248
INSTALLATION 249

page

FRONT DOOR OUTER BELT MOLDING
REMOVAL 250
INSTALLATION 251
FRONT DOOR INNER BELT MOLDING
REMOVAL 251
INSTALLATION 252
REAR DOOR GLASS RUN WEATHERSTRIP
REMOVAL 253
INSTALLATION 253
REAR DOOR OUTER BELT MOLDING
REMOVAL 254
INSTALLATION 254
REAR DOOR INNER BELT MOLDING
REMOVAL 255
INSTALLATION 255

A-PILLAR WEATHERSTRIP RETAINER

REMOVAL

1. Remove the drip rail weatherstrip retainer (1) (Refer to 23 - BODY/WEATHERSTRIP/SEALS/ DRIP RAIL WEATHERSTRIP - REMOVAL).
2. Remove the five screws (8) and remove the A-pillar weatherstrip retainer (7).

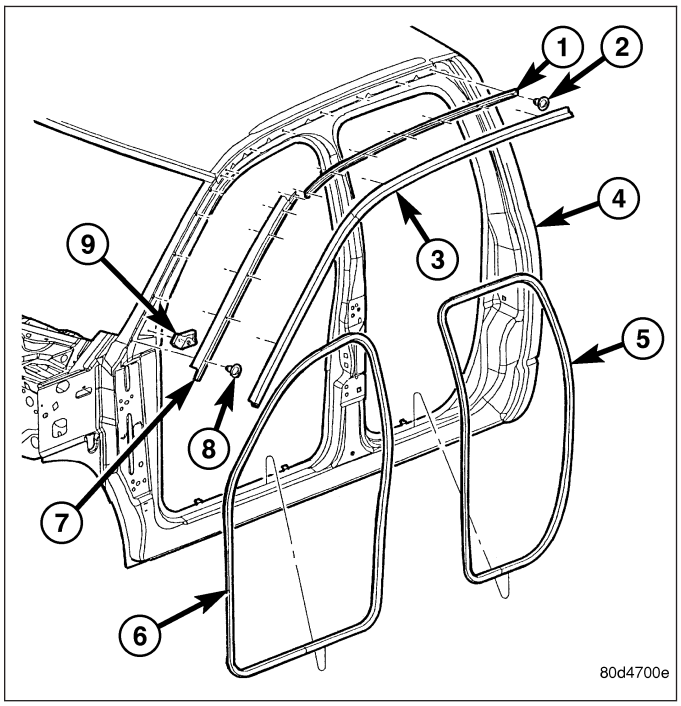

INSTALLATION

1. Install the A-pillar weatherstrip retainer (7) and install the screws (8).
2. Install the drip rail weatherstrip retainer (1) (Refer to 23 - BODY/WEATHERSTRIP/SEALS/DRIP RAIL WEATHERSTRIP - INSTALLATION).

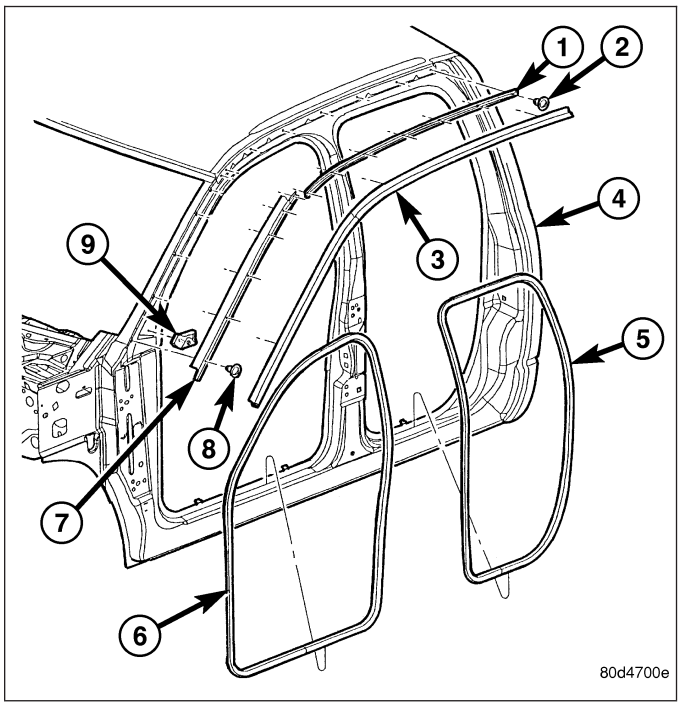

DRIP RAIL WEATHERSTRIP

REMOVAL

1. Open the doors and separate the weatherstrip (3) from the drip rail and a-pillar retainers (1 and 7).

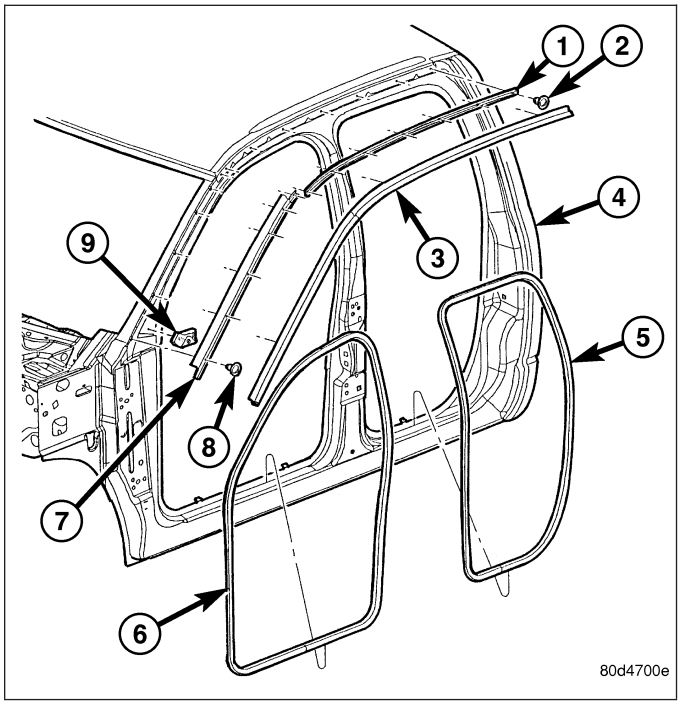

INSTALLATION

1. Position the weatherstrip (3) onto the drip rail and a-pillar retainers (1 and 7) and seat fully.

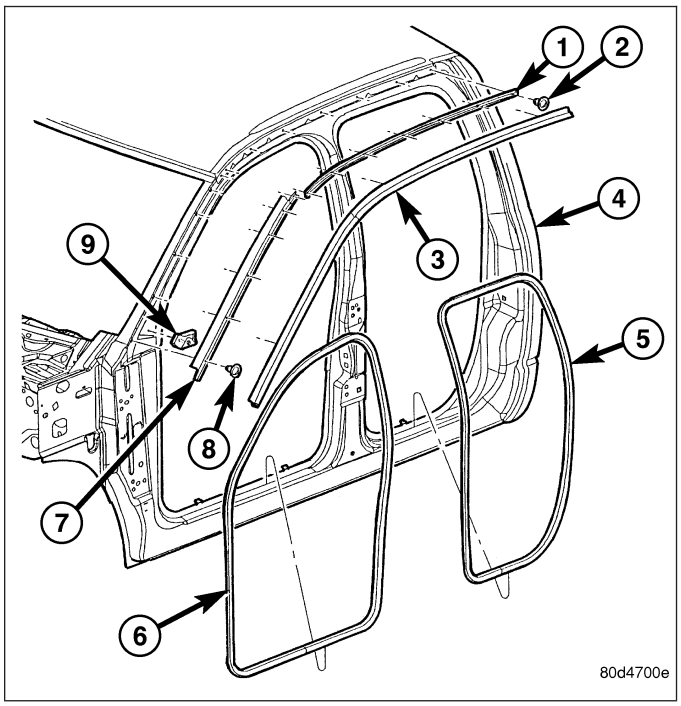

DOOR OPENING SEAL

REMOVAL

FRONT DOOR SEAL

1. Remove the cowl trim panel (1) (Refer to 23 - BODY/INTERIOR/COWL TRIM - REMOVAL).

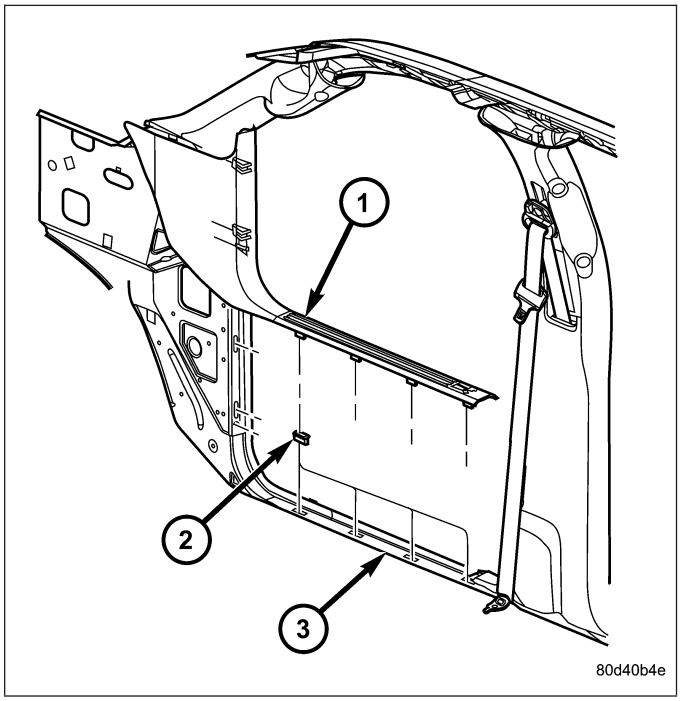

2. If vehicle is a **Standard Cab**, remove the lower b-pillar trim panel (3) (Refer to 23 - BODY/INTERIOR/B-PILLAR LOWER TRIM - REMOVAL).

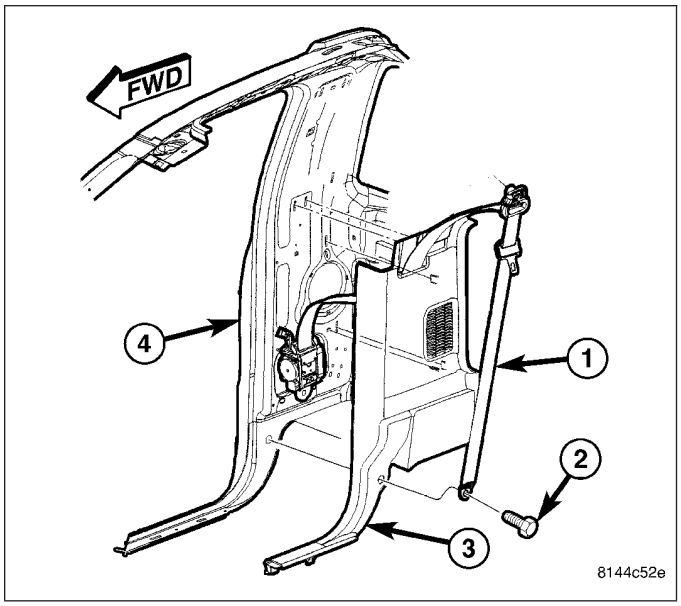

3. If vehicle is a **Quad Cab**, remove the lower b-pillar trim panel (1) (Refer to 23 - BODY/INTERIOR/B-PILLAR LOWER TRIM - REMOVAL).

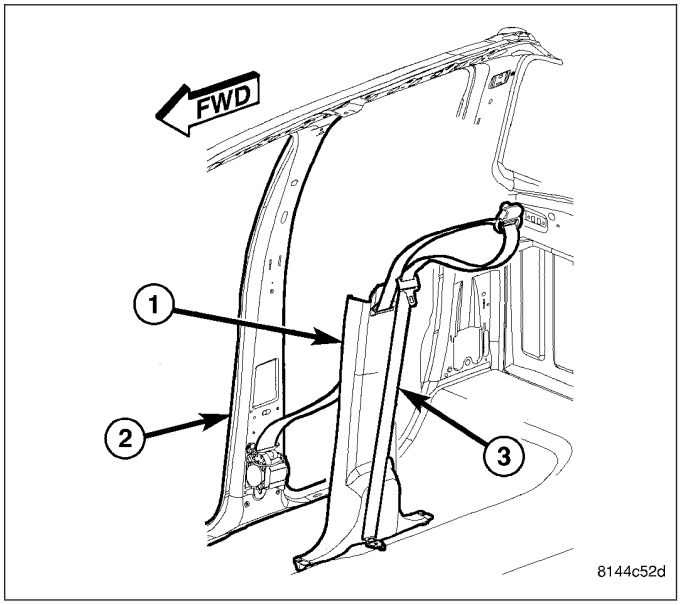

4. Separate the front door opening seal (6) from the door opening flange.

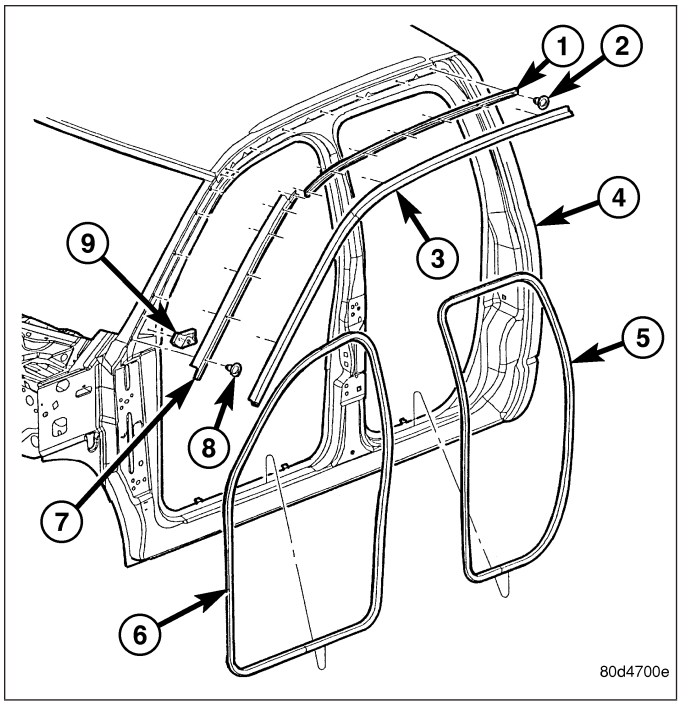

REAR DOOR SEAL

1. Remove the lower b-pillar trim panel (1) (Refer to 23 - BODY/INTERIOR/B-PILLAR LOWER TRIM - REMOVAL).

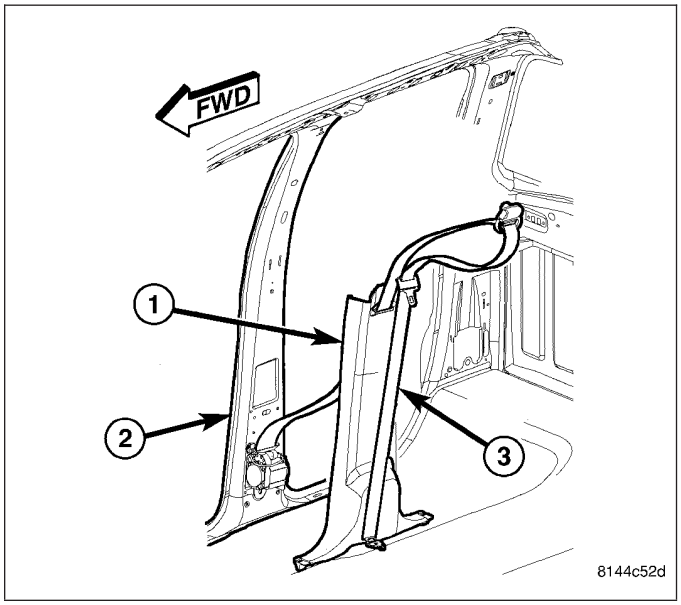

2. Remove the lower c-pillar trim (1) (Refer to 23 - BODY/INTERIOR/C-PILLAR TRIM - REMOVAL).

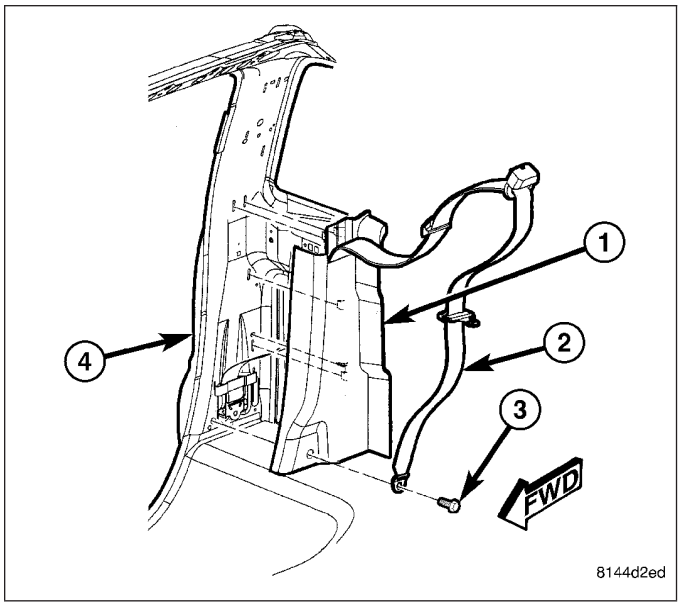

3. Separate the rear door opening seal (5) from the door opening flange.

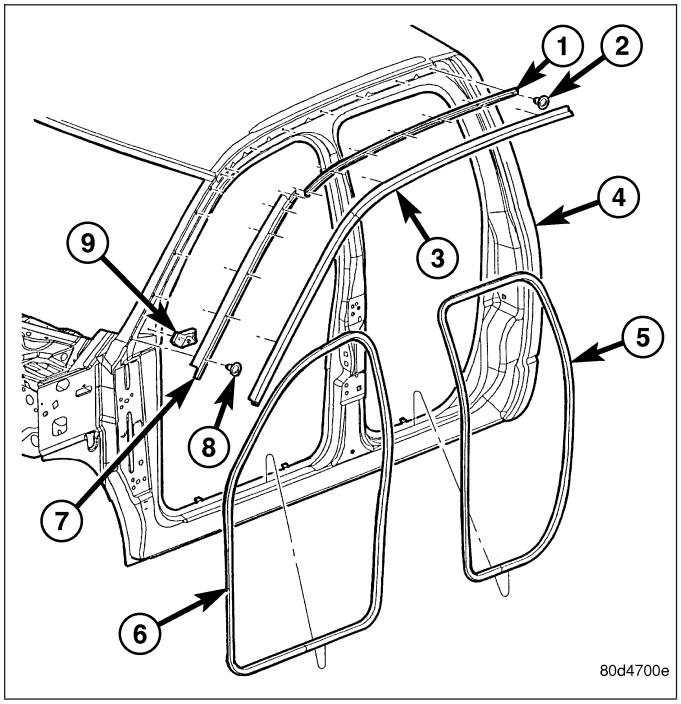

INSTALLATION

FRONT DOOR SEAL

1. Position the front door seal (6) to the bottom of the door opening, with bulb facing outboard, starting the installation at the center of the lower flange. Press the seal onto the sill flange and work around the perimeter of the door opening until fully seated. Work in one direction, smoothing the seal to avoid puckers or wrinkles.

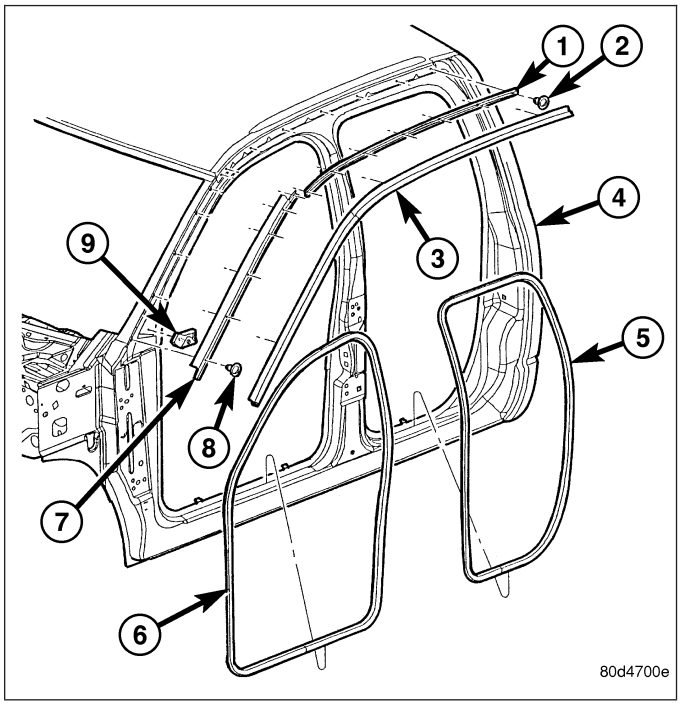

2. If vehicle is a **Standard Cab**, install the lower b-pillar trim (3) (Refer to 23 - BODY/INTERIOR/B-PILLAR LOWER TRIM - INSTALLATION).

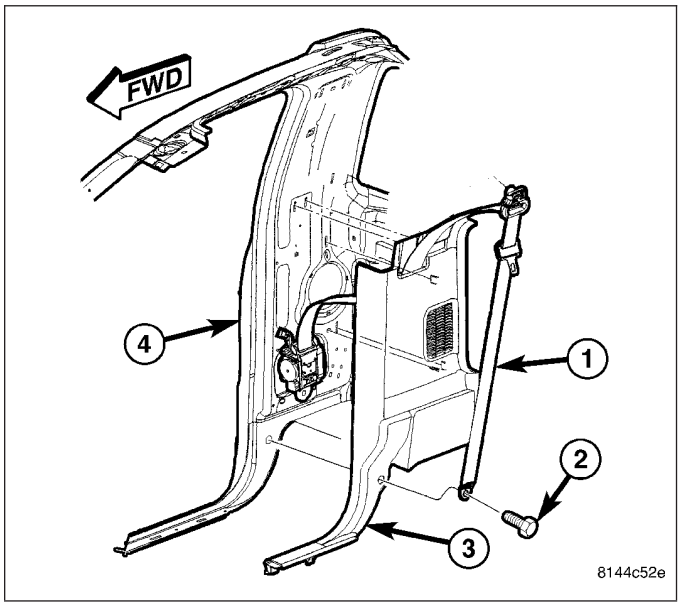

3. If vehicle is a **Quad Cab**, install the lower b-pillar trim (1) (Refer to 23 - BODY/INTERIOR/B-PILLAR LOWER TRIM - INSTALLATION).

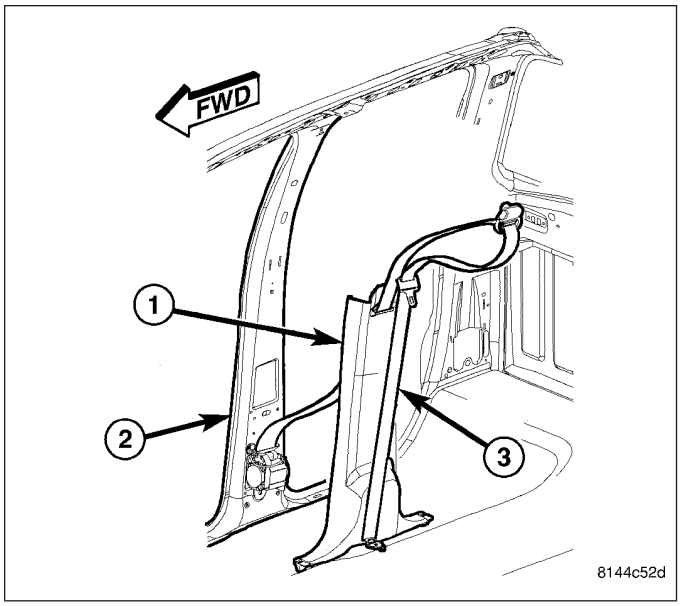

4. Install the cowl trim panel (1) (Refer to 23 - BODY/ INTERIOR/COWL TRIM - INSTALLATION)

NOTE: When installing a new weatherstrip on the front door opening, remove the tear strip starting at the splice and moving around the front of the door to the back of the opening.

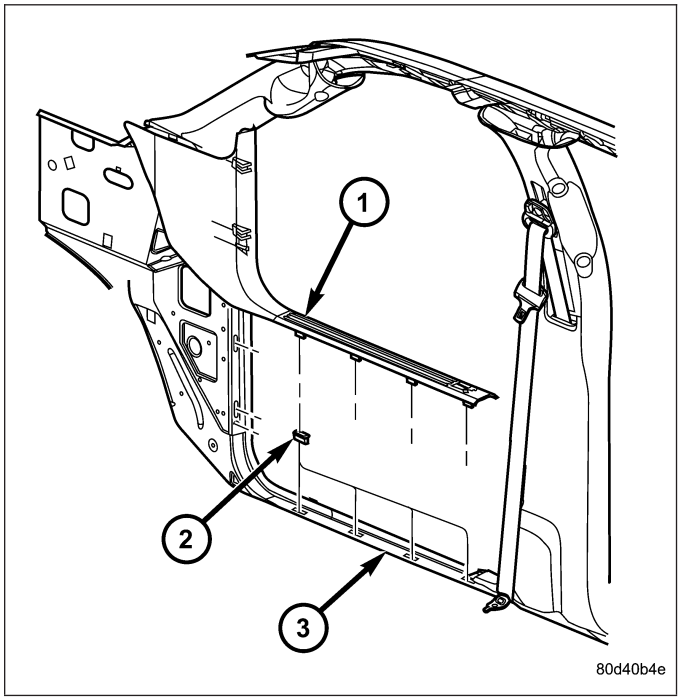

REAR DOOR SEAL

1. Position the rear door seal to the bottom of the door opening, with bulb facing outboard, starting the installation at the center of the lower flange. Press the seal onto the sill flange and work around the perimeter of the door opening until fully seated. Work in one direction, smoothing the seal to avoid puckers or wrinkles.

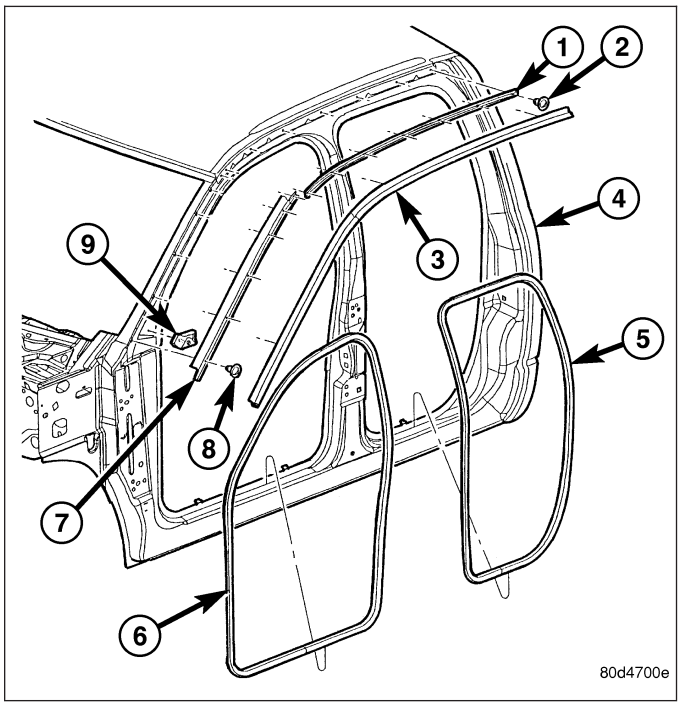

2. Install the lower c-pillar trim (1) (Refer to 23 - BODY/INTERIOR/C-PILLAR TRIM - INSTALLATION).

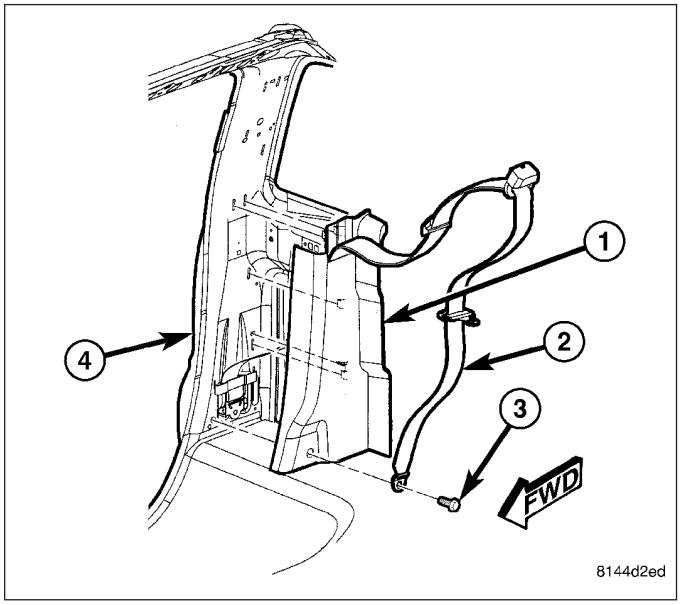

3. Install the lower b-pillar trim (1) (Refer to 23 - BODY/INTERIOR/B-PILLAR LOWER TRIM - INSTALLATION).

NOTE: When installing a new weatherstrip on the rear door opening, remove the tear strip starting at the splice and moving around the back of the door to the front of the opening.

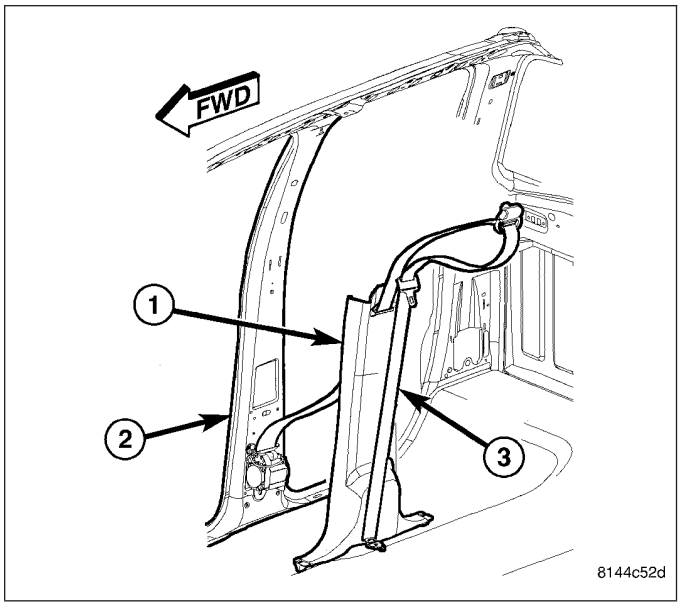

DRIP RAIL WEATHERSTRIP RETAINER

REMOVAL

1. Separate the drip rail weatherstrip (3) from the weatherstrip retainer (1).
2. Remove the seven screws (2) and remove the retainer (1).

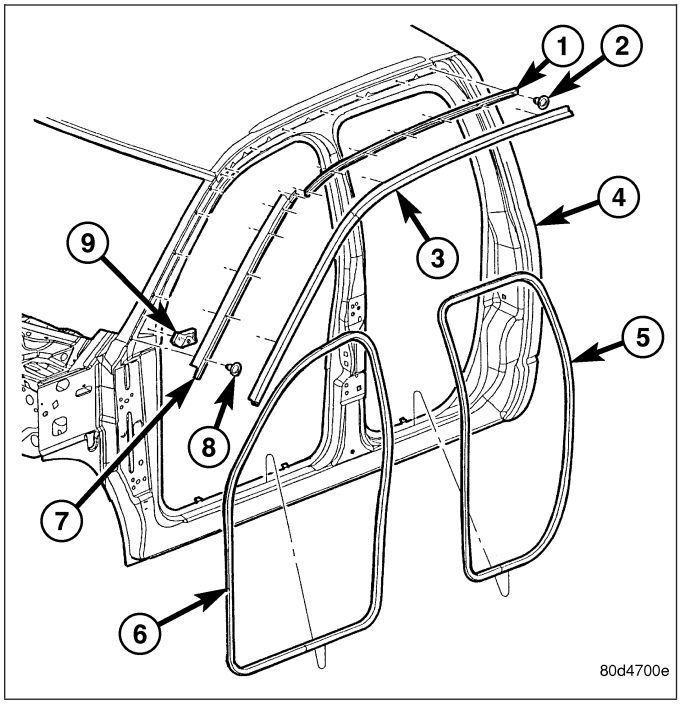

INSTALLATION

1. Install the weatherstrip retainer (1) and install the seven screws (2).
2. Position the weatherstrip (3) over the retainer flange and seat fully.

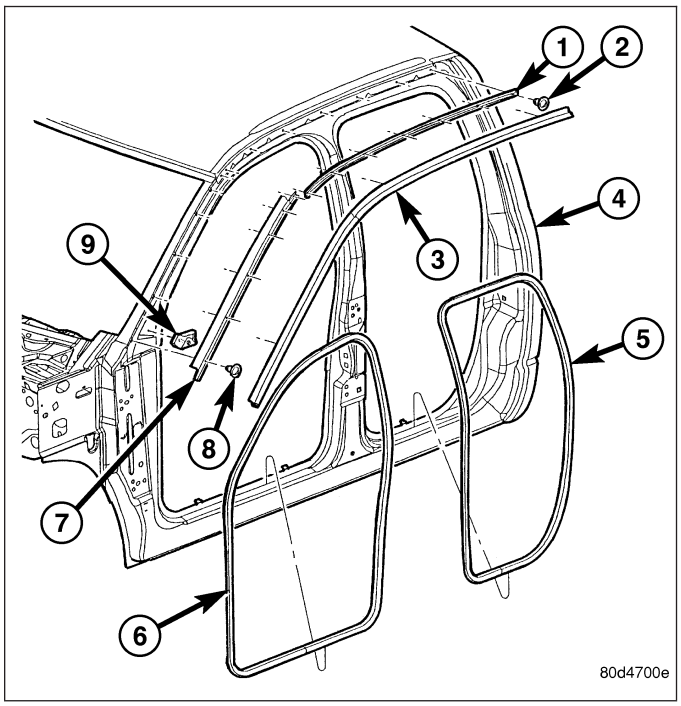

FRONT DOOR GLASS RUN WEATHERSTRIP

REMOVAL

1. Remove the door glass (Refer to 23 - BODY/ DOOR - FRONT/DOOR GLASS - REMOVAL).

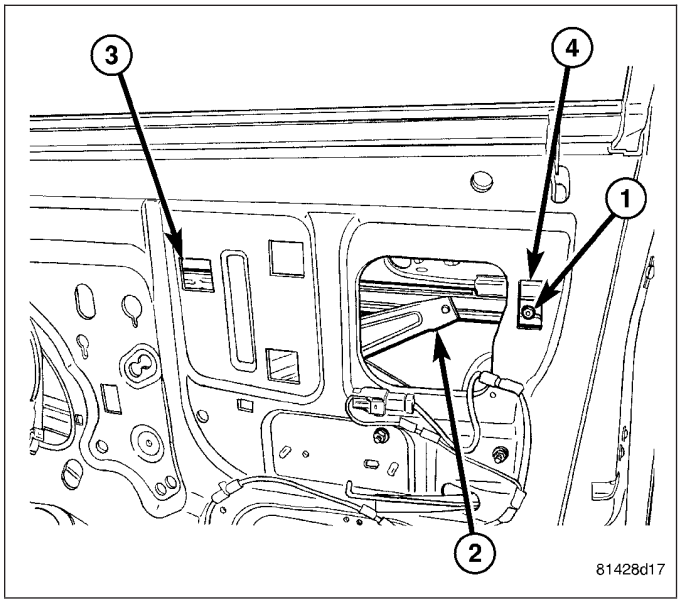

2. Separate the front door glass run weatherstrip (2) out of the door frame (5) and remove through the window opening.

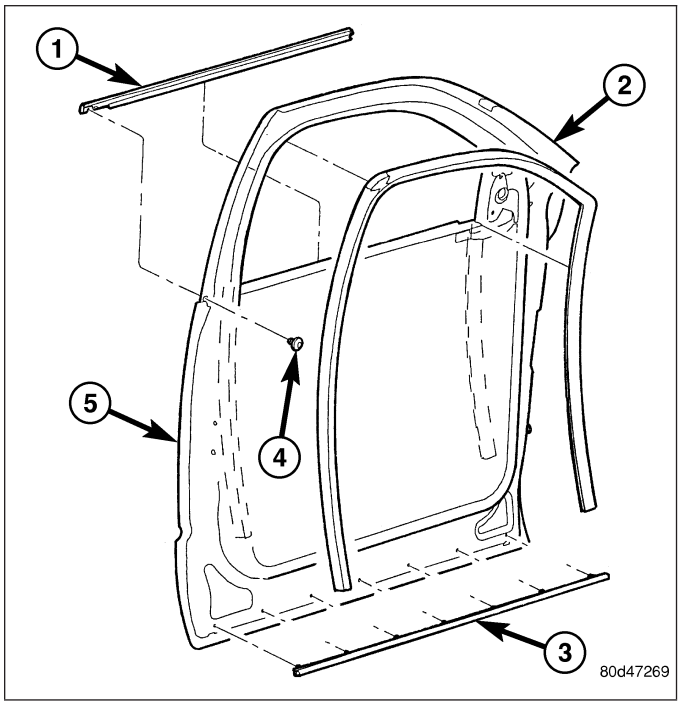

INSTALLATION

NOTE: A mixture of soap and water may be used to aid installation of the weatherstrip into the corners.

1. Position the front door glass run weatherstrip (2) into the door (5) through the window opening.
2. Position the weatherstrip into the upper corners and seat firmly.
3. From back to front, seat the weatherstrip between the corners and then down the sides firmly.

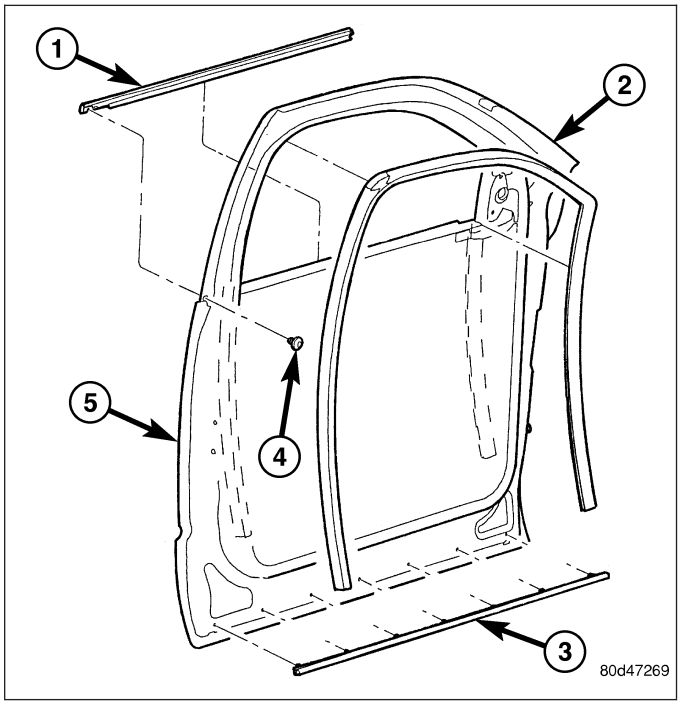

4. Install the door glass (Refer to 23 - BODY/DOOR - FRONT/DOOR GLASS - INSTALLATION).

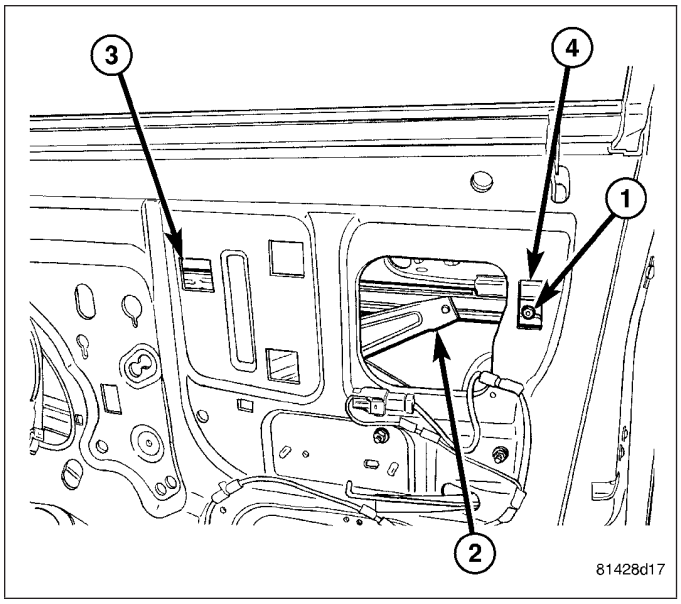

FRONT DOOR OUTER BELT MOLDING

REMOVAL

1. Remove the screw (4) and separate the belt molding (1) from the door (5) flange from the back to the front.

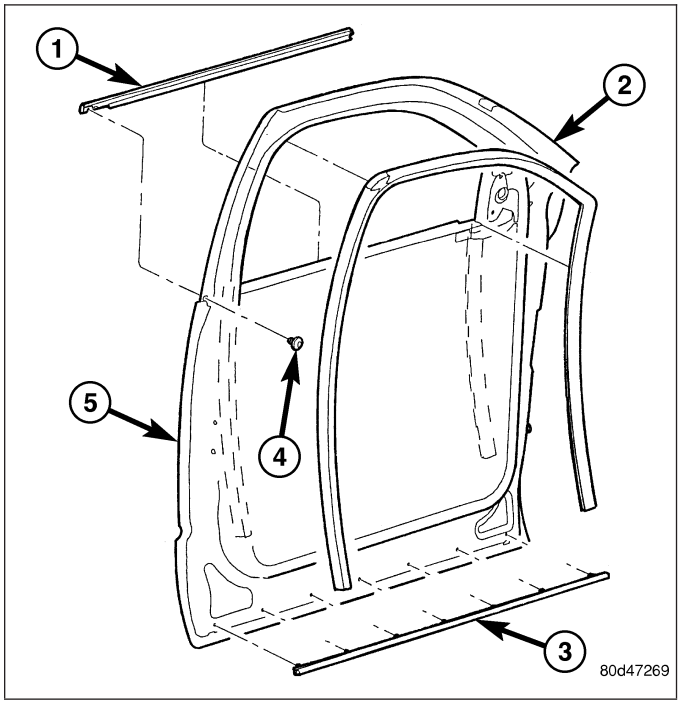

INSTALLATION

1. Position the belt molding (1) onto the door (5) flange and seat fully.
2. Install the screw (4).

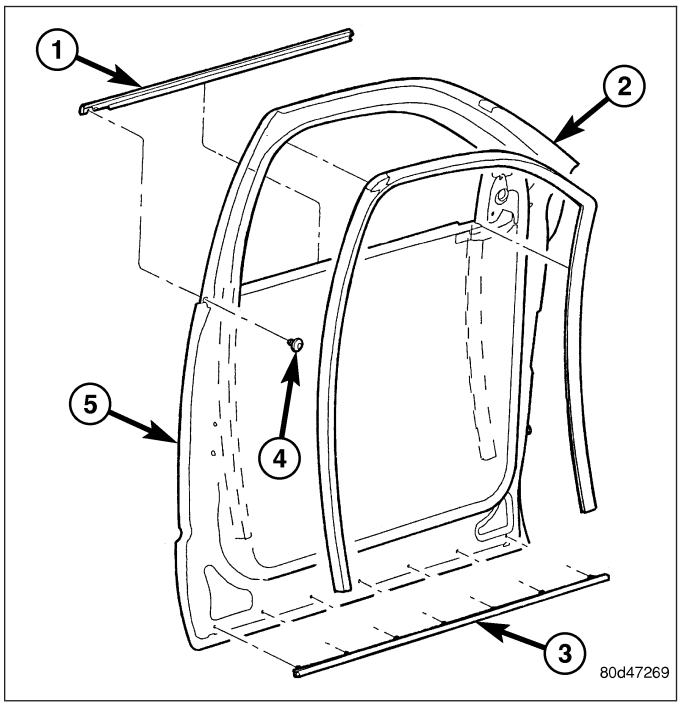

FRONT DOOR INNER BELT MOLDING

REMOVAL

1. Remove the door trim panel (3) (Refer to 23 - BODY/DOOR - FRONT/TRIM PANEL - REMOVAL)

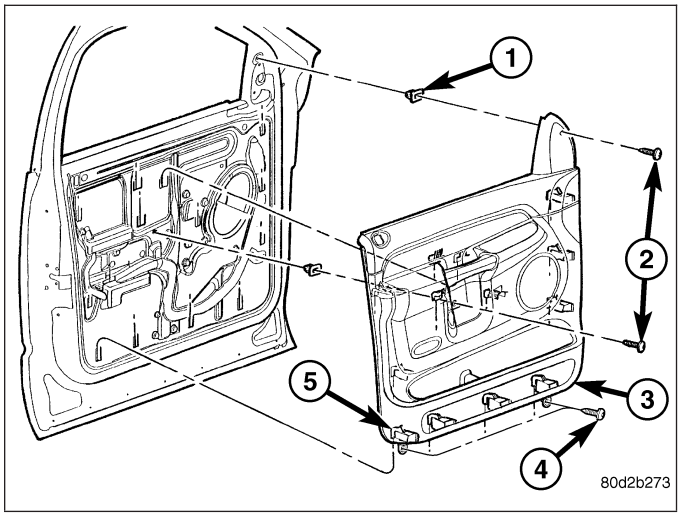

2. Separate the belt molding (1) from the door (3) mounting flange from the back to the front.

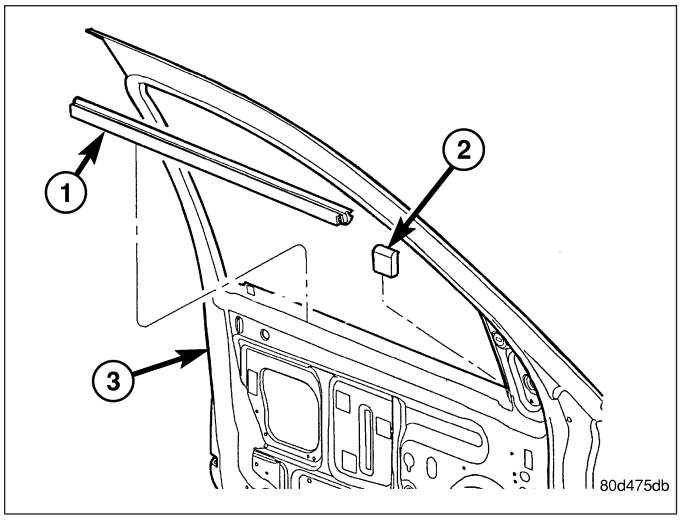

INSTALLATION

1. Position the belt molding (1) and seat onto the door (3) mounting flange fully.

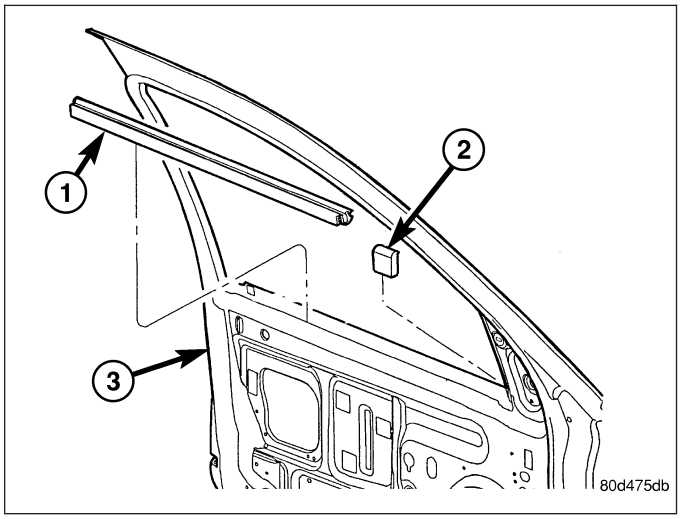

2. Install the door trim panel (3) (Refer to 23 - BODY/ DOOR - FRONT/TRIM PANEL - INSTALLATION).

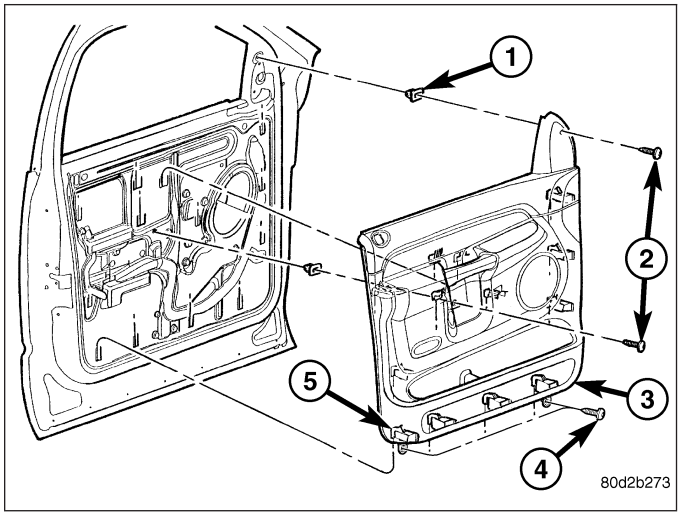

REAR DOOR GLASS RUN WEATHERSTRIP

REMOVAL

1. Lower the glass.
2. Separate the rear door glass run weatherstrip (5) out of the door frame (2) and remove through the window opening.

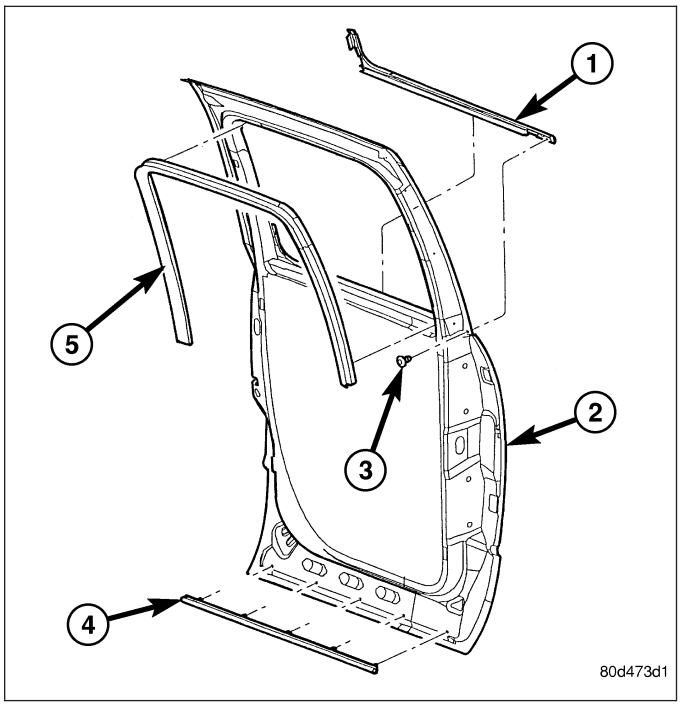

INSTALLATION

NOTE: A mixture of soap and water may be used to aid installation of the weatherstrip into the corners.

1. Position the rear door glass run weatherstrip (5) into the door (2) through the window opening.
2. Position the weatherstrip (5) into the upper corners and seat firmly.
3. From back to front, seat the weatherstrip (5) between the corners and then down the sides firmly.

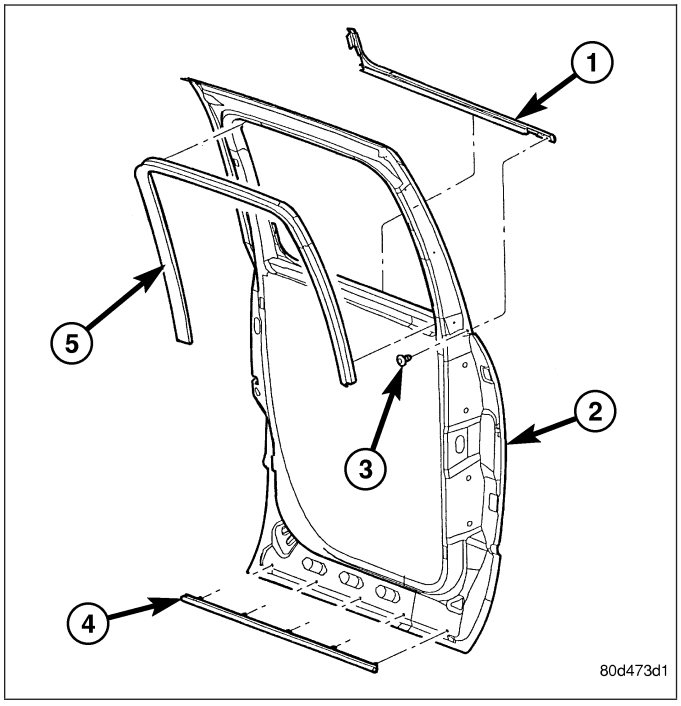

REAR DOOR OUTER BELT MOLDING

REMOVAL

1. Remove the screw (3) and separate the belt molding (1) from the door (2) flange from the back to the front.

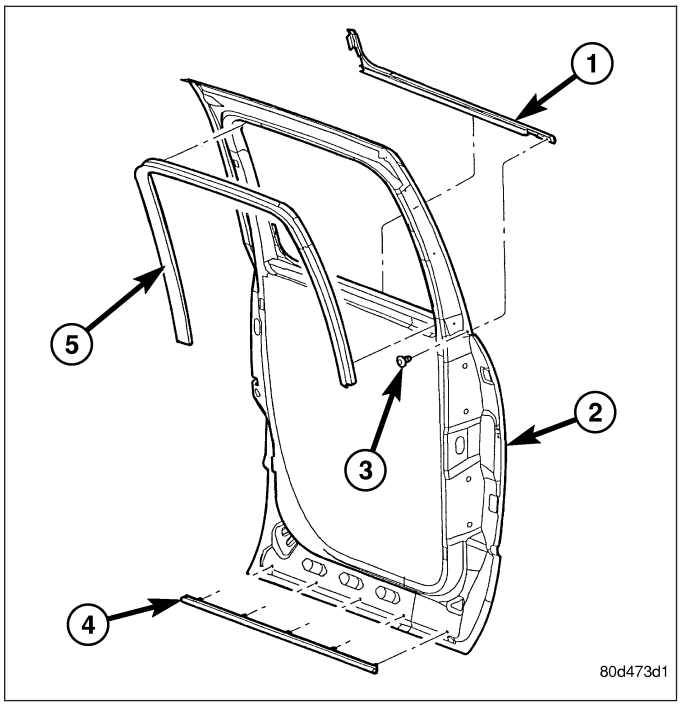

INSTALLATION

1. Position the belt molding (1) onto the door (2) flange and seat fully.
2. Install the screw (3).

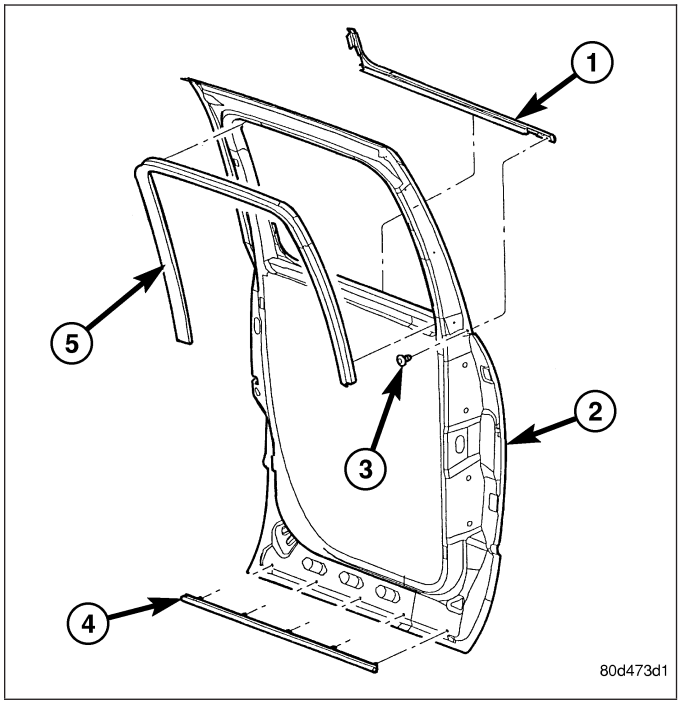

REAR DOOR INNER BELT MOLDING

REMOVAL

1. Remove the door trim panel (5) (Refer to 23 - BODY/DOORS - REAR/TRIM PANEL - REMOVAL).

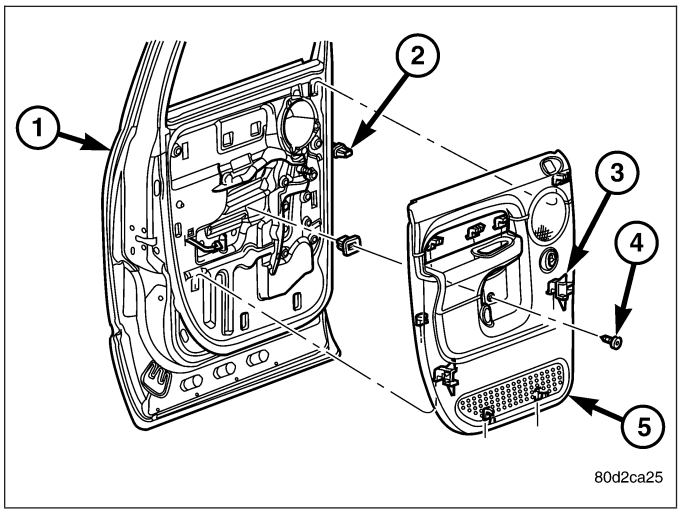

2. Separate the belt molding (2) from the rear door mounting flange from the back to the front.

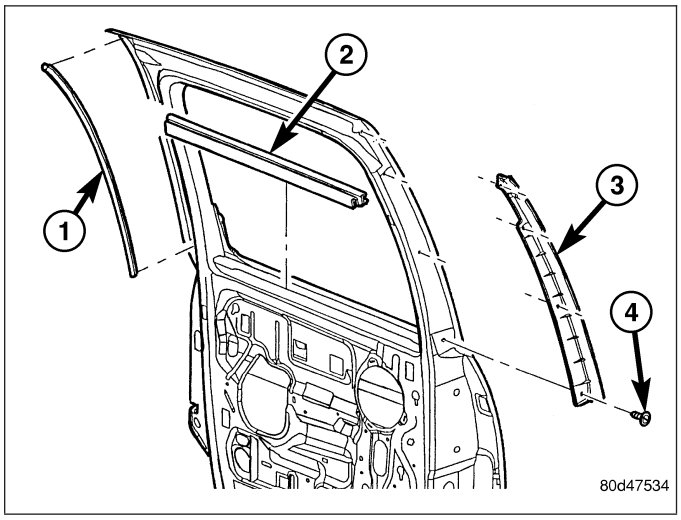

INSTALLATION

1. Position the belt molding (2) and seat onto the rear door mounting flange fully.

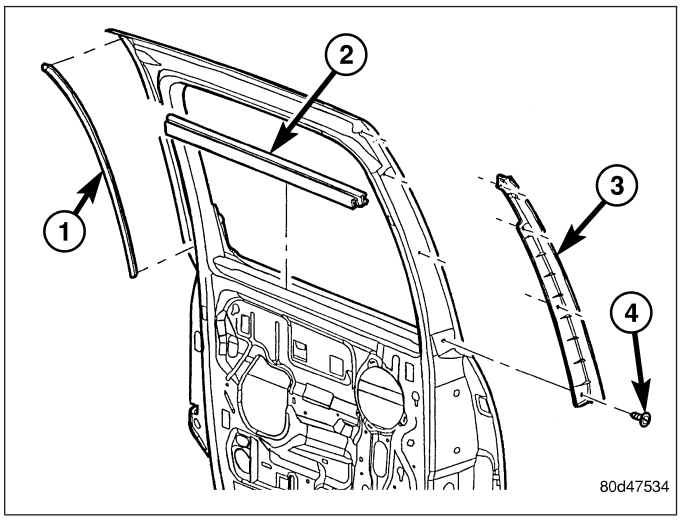

2. Install the door trim panel (5) (Refer to 23 - BODY/ DOORS - REAR/TRIM PANEL - INSTALLATION).

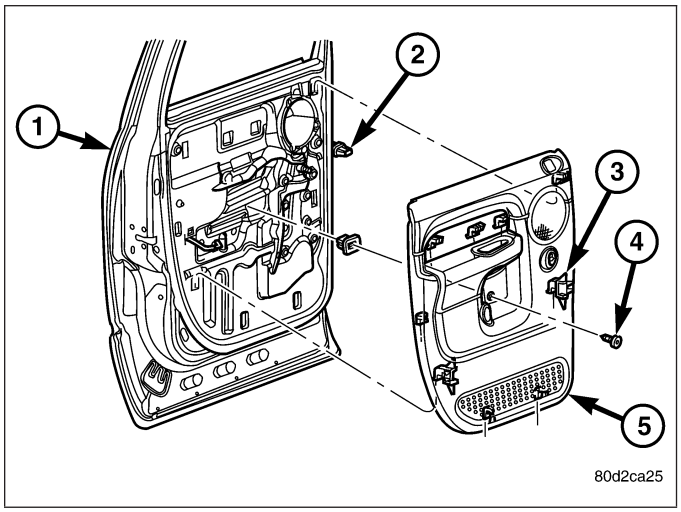

BODY STRUCTURE

TABLE OF CONTENTS

page

GAP AND FLUSH
SPECIFICATIONS 257
OPENING DIMENSIONS
SPECIFICATIONS 261
SEALER LOCATIONS
SPECIFICATIONS 264

page

STRUCTURAL ADHESIVE LOCATIONS
SPECIFICATIONS 274
WELD LOCATIONS
SPECIFICATIONS 282

GAP AND FLUSH

SPECIFICATIONS

GAP & FLUSH DIMENSIONS INDEX

DESCRIPTION	FIGURE
STANDARD CAB	1
QUAD CAB	2
PICKUP BOX	3

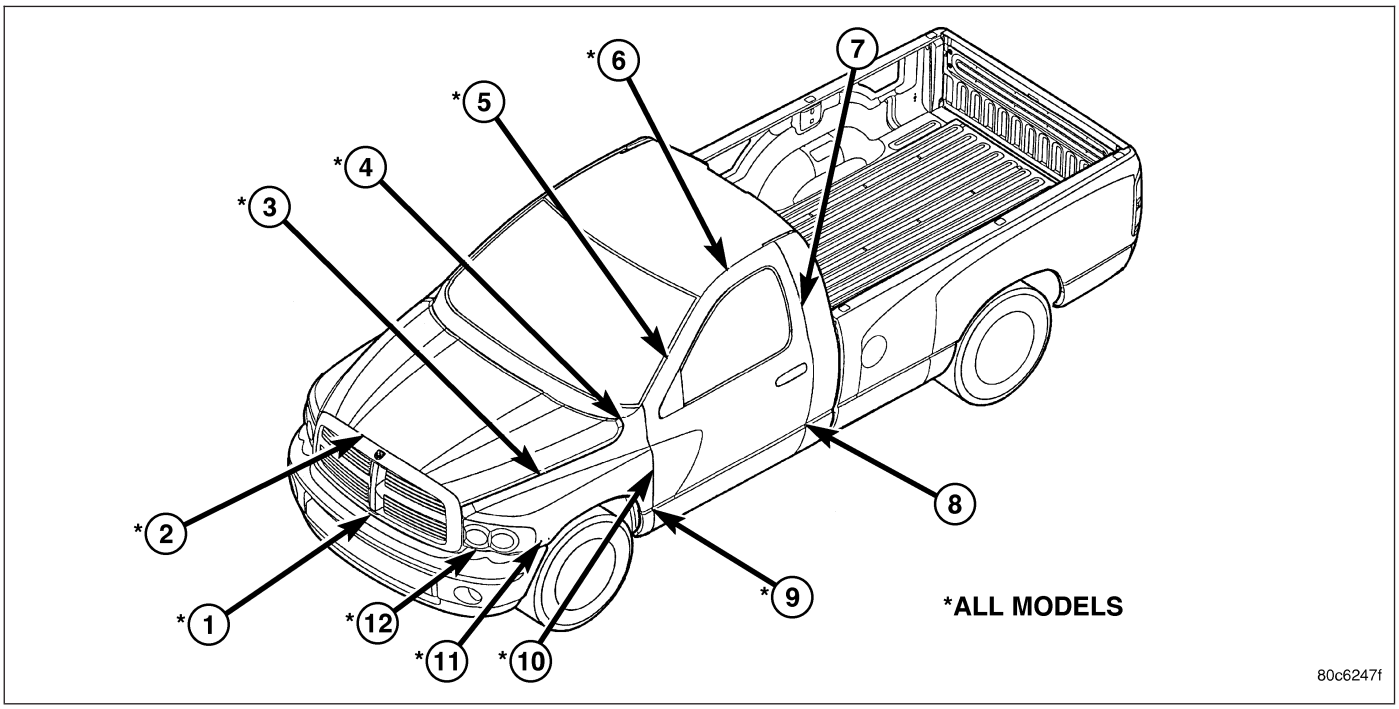

Fig. 1 GAP & FLUSH - STANDARD CAB

NOTE: All measurements are in mm. O/F = Over Flush. U/F = Under Flush.			
DIMENSION	DESCRIPTION	GAP	FLUSH
*1	Bumper to grille	19.0 ± 3.0	—
*2	Hood to grille	1.5 ± 1.0 Parallel within 2.0	U/F 0.75 ± 1.75
*3	Fender to hood	6.0 ± 2.0 Parallel within 1.0	U/F 3.2 ± 1.5 (Underflush from front of hood to start of hockey stick area only)
*4	Fender to hood (Up/Down surface only)	6.0 ± 1.5 Parallel within 1.0	0.0 ± 1.5
*5	Front door to windshield	—	O/F 20.5 ± 1.5 (Base of windshield) O/F 9.0 ± 1.5 (Top of windshield)
*6	Roof to front door	—	U/F 6.0 ± 1.5 Parallel within 1.5
7	Quarter to front door	5.0 ± 1.5 Parallel within 1.0	0.0 ± 1.5
8	Front door to quarter character line alignment	—	Up/Down 0.0 ± 1.5
*9	Front door to fender character line alignment	—	Up/Down 0.0 ± 1.5
*10	Front door to fender	5.0 ± 1.5 Parallel within 1.0	0.0 ± 1.5
*11	Bumper to fender	19.0 ± 3.0 Parallel within 3.0	O/F 5.0 ± 5.0 (SLT) O/F 14.0 ± 5.0 (SPORT)
*12	Bumper to headlamp	19.0 ± 4.0	—
* ALL MODELS			

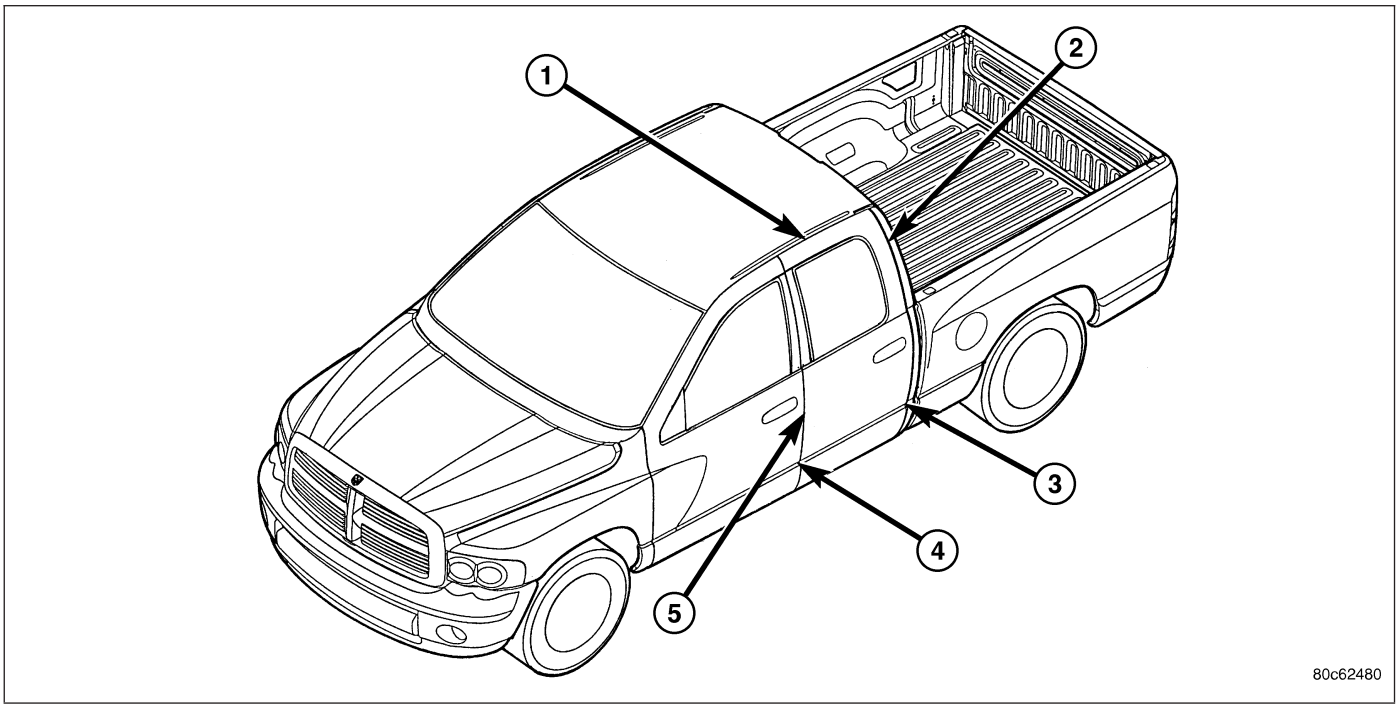

Fig. 2 GAP & FLUSH - QUAD CAB

NOTE: All measurements are in mm. O/F = Over Flush. U/F = Under Flush.			
DIMENSION	DESCRIPTION	GAP	FLUSH
1	Roof to rear door	—	U/F 6.0 ± 1.5 Parallel within 1.5
2	Quarter to rear door	5.0 ± 1.5 Parallel within 2.0	0.0 ± 1.5
3	Rear door to quarter character line alignment	—	Up/Down 0.0 ± 1.5
4	Rear door to front door character line alignment	—	Up/Down 0.0 ± 1.5
5	Rear door to front door	5.0 ± 1.5 Parallel within 2.0	0.0 ± 1.5

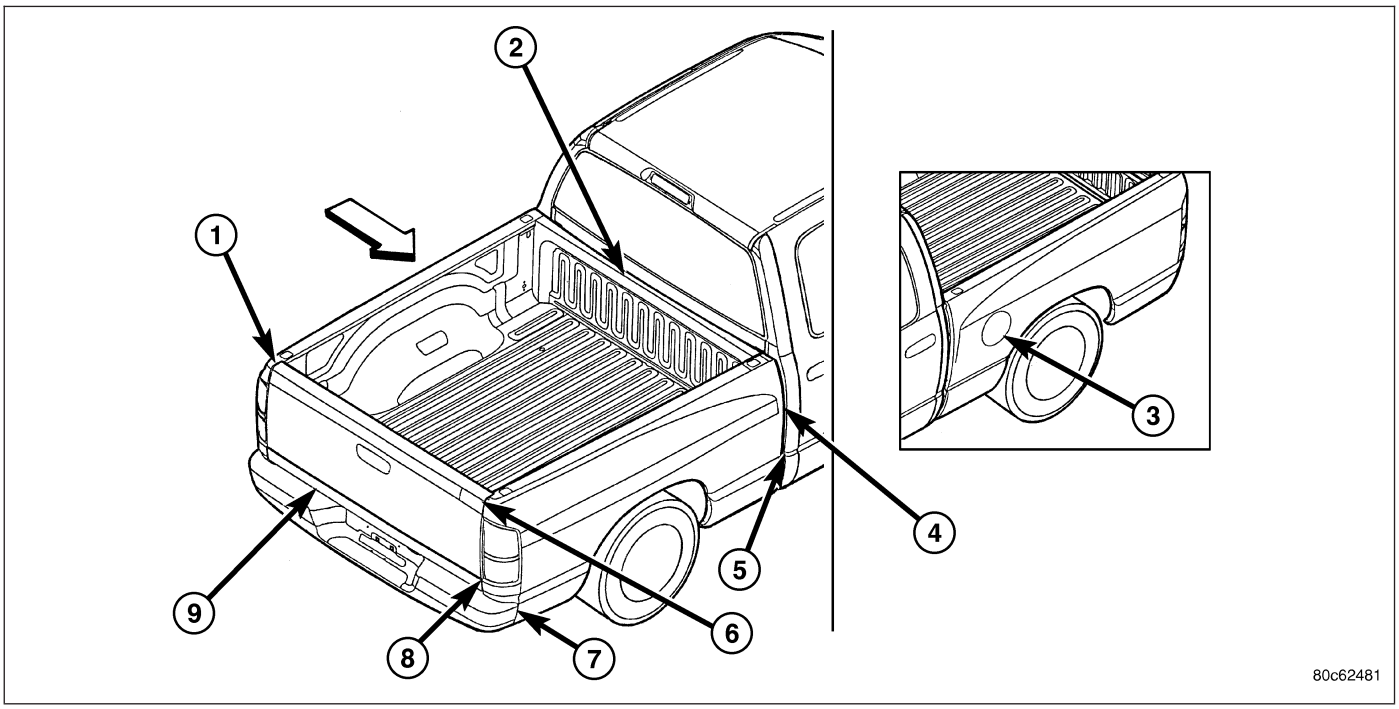

Fig. 3 GAP & FLUSH - PICKUP BOX

NOTE:
All measurements are in mm. O/F = Over Flush. U/F = Under Flush.

DIMENSION	DESCRIPTION	GAP	FLUSH
1	Tailgate to outer box (Up/Down surface only)	—	0.0 ± 1.5 Parallel within 1.0
2	Cab Back to box front	31.0 ± 5.0 Parallel within 3.0	—
3	Fuel door to outer box	5.0 ± 1.5 Parallel within 1.0	0.0 ± 1.5
4	Cab to box side	31.0 ± 5.0 Parallel within 3.0	4.0 ± 2.5 (Standard Cab) O/F 5.0 ± 2.5 (Quad Cab)
5	Cab to box character line alignment	—	Up/Down 0.0 ± 3.0
6	Tailgate to outer box	5.0 ± 2.0 Parallel within 1.0	U/F 1.5 ± 1.5
7	Bumper to outer box	24.75 ± 5.0 (F/A) 23.75 ± 5.0 (C/C) Parallel within 5.0	—
8	Tailgate to outer box character line adjustment	—	Up/Down 0.0 ± 1.5
9	Bumper to tailgate	30.25 ± 3.0 Parallel within 4.0	—

OPENING DIMENSIONS

SPECIFICATIONS

BODY OPENING DIMENSIONS INDEX

DESCRIPTION	FIGURE
WINDSHIELD OPENING	4
DOOR OPENING - STANDARD CAB	5
DOOR OPENINGS - QUAD CAB	6
REAR WINDOW OPENING	7
ENGINE COMPARTMENT/FRONT STRUCTURE	8

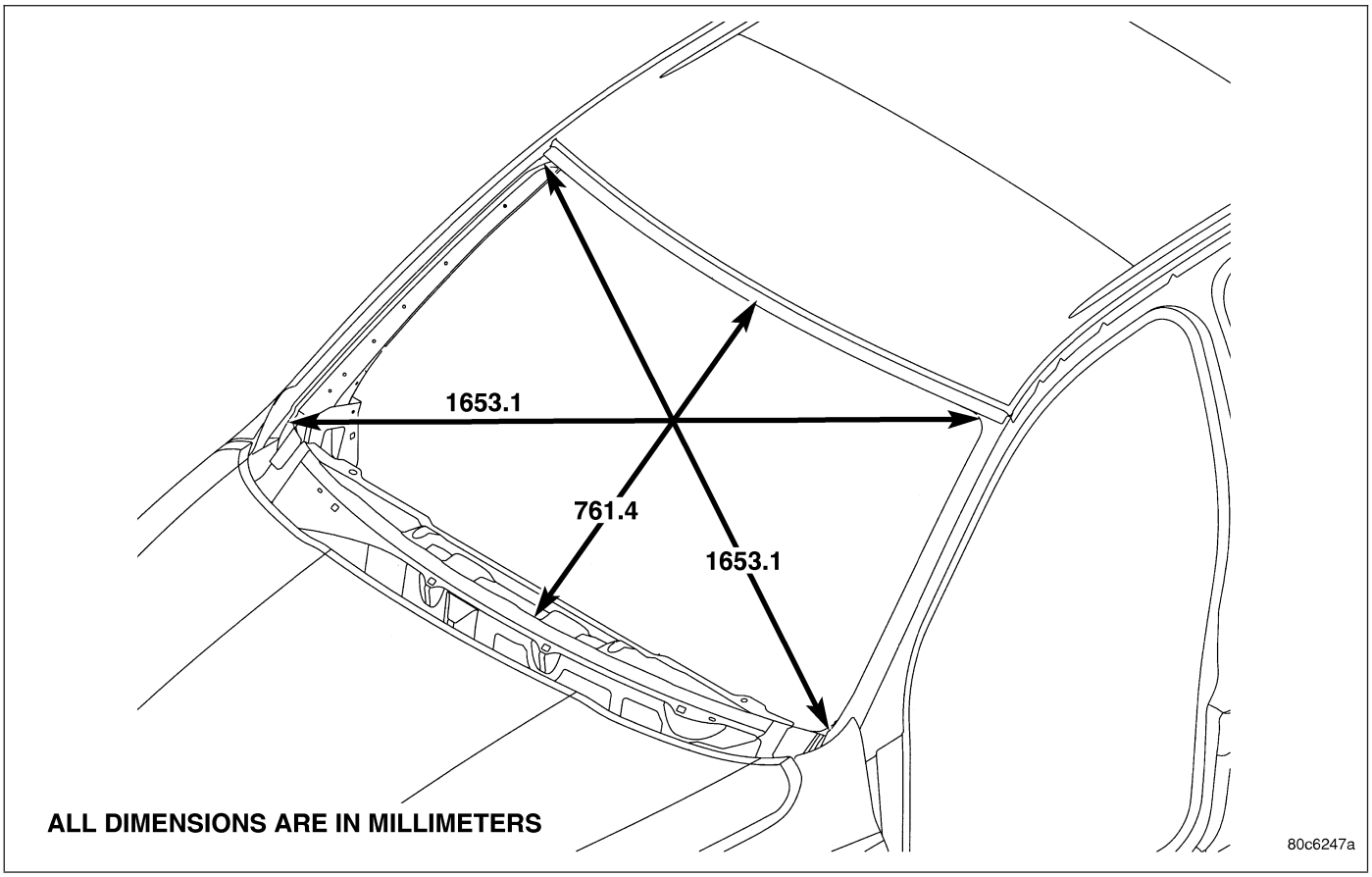

Fig. 4 WINDSHIELD OPENING

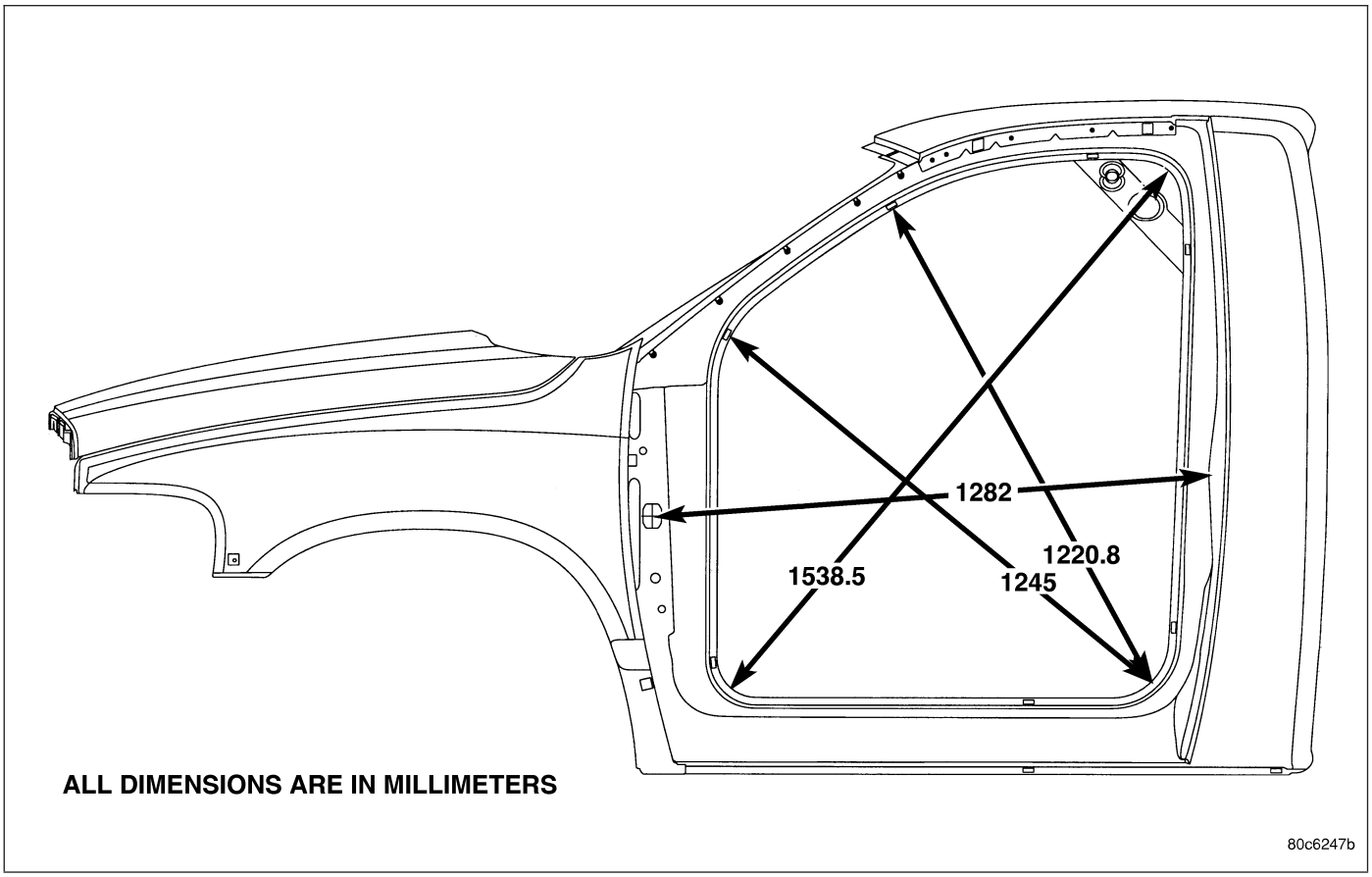

Fig. 5 DOOR OPENING - STANDARD CAB

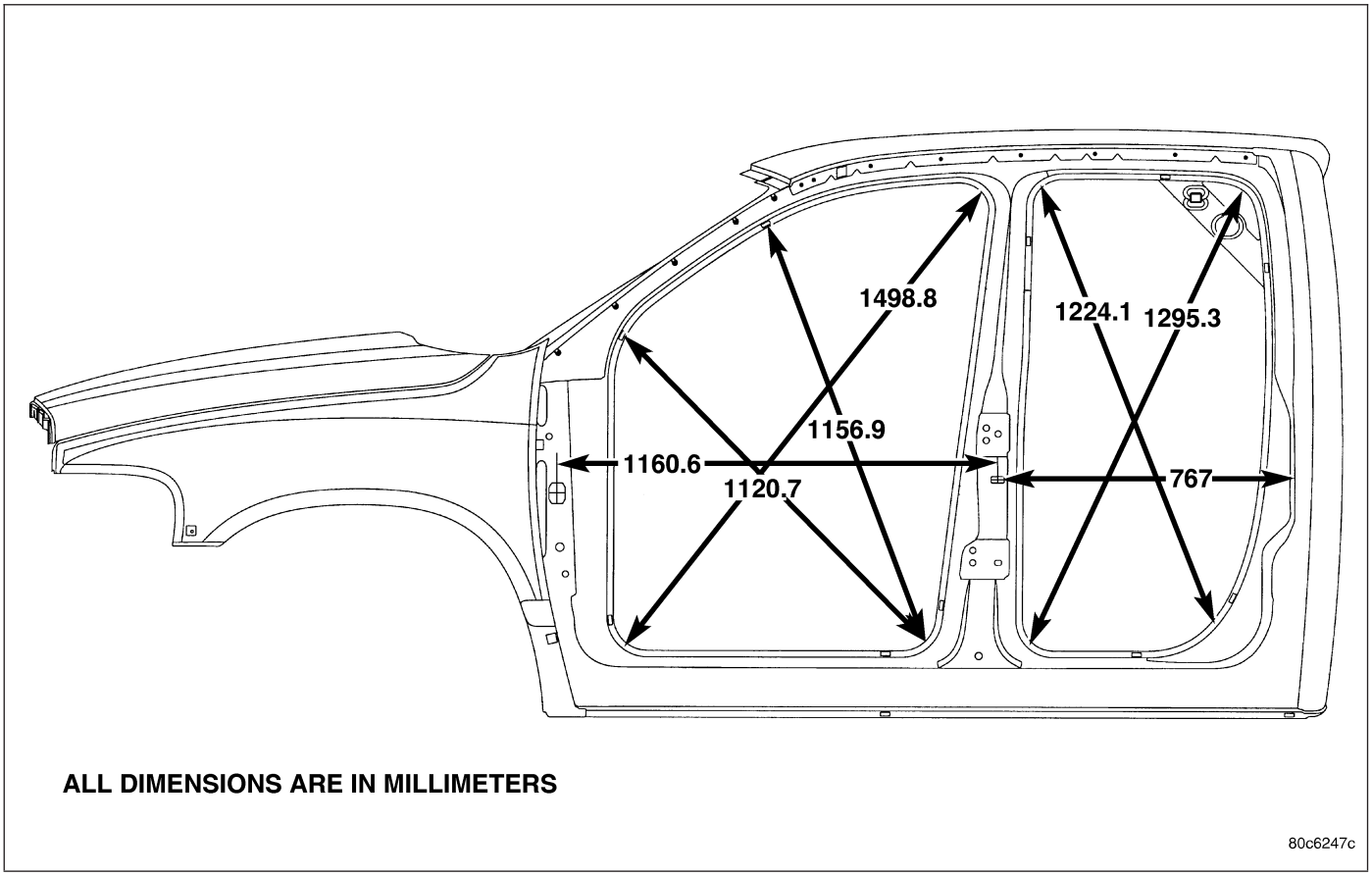

Fig. 6 DOOR OPENINGS - QUAD CAB

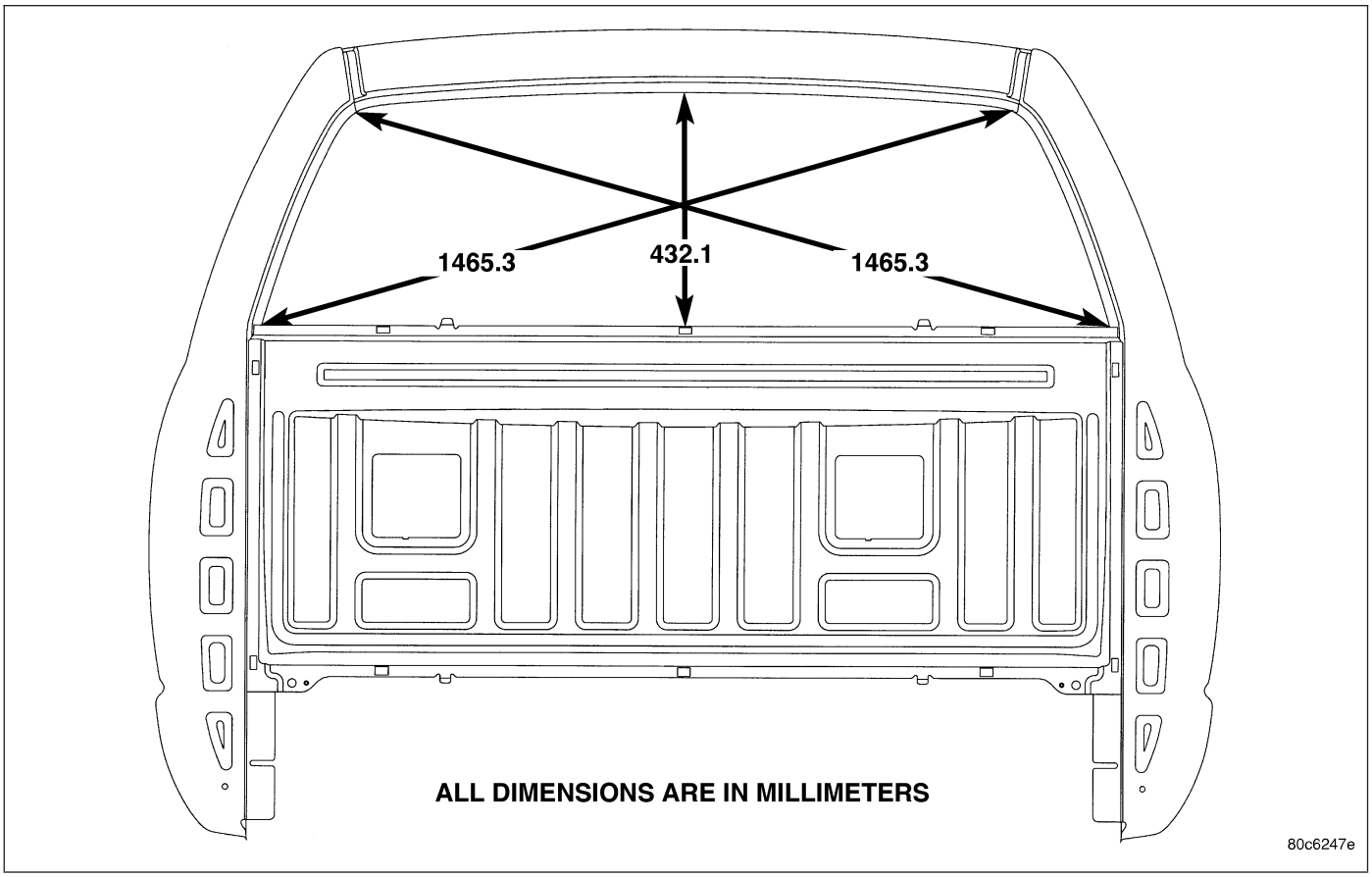

Fig. 7 REAR WINDOW OPENING

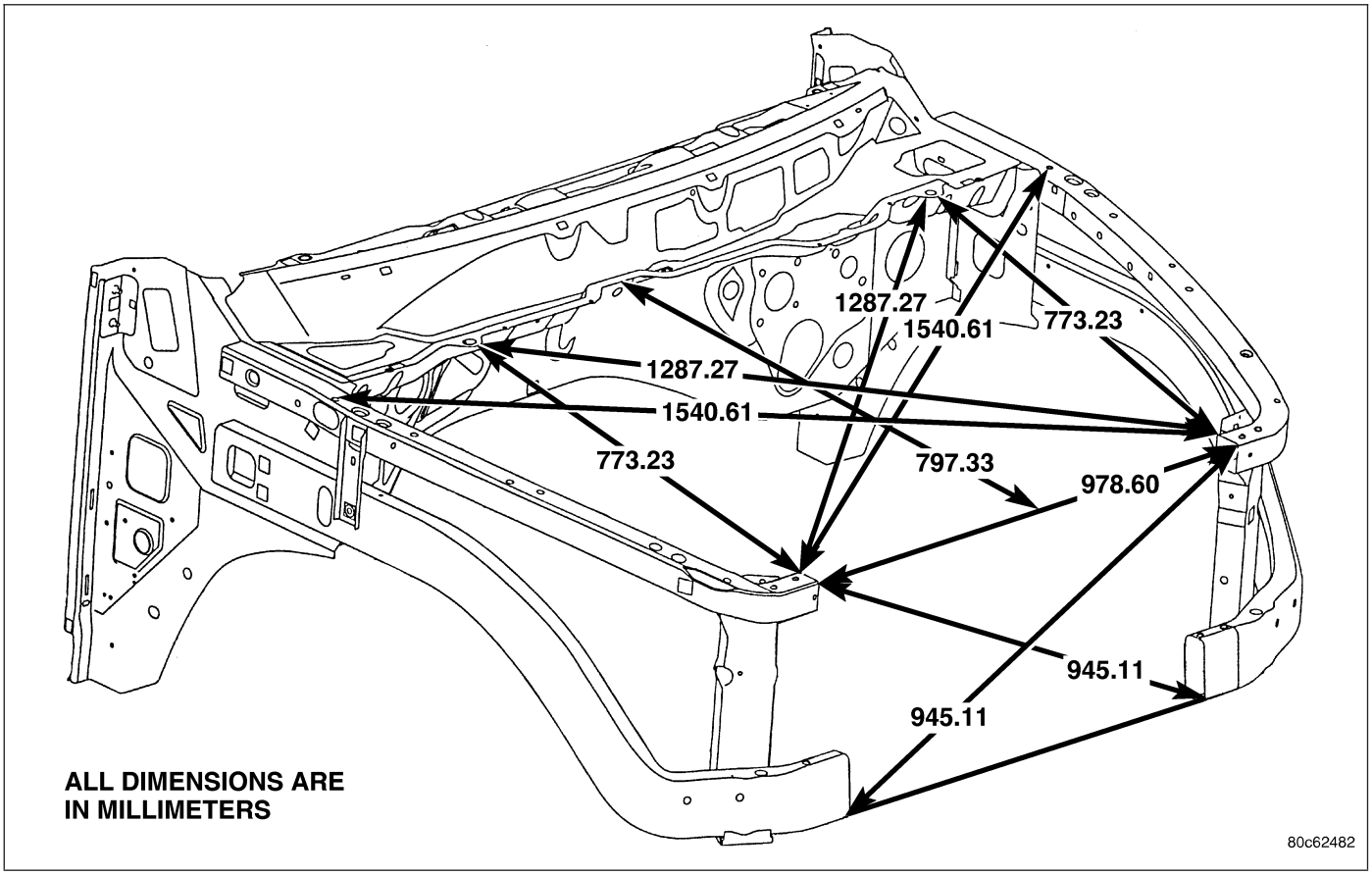

Fig. 8 ENGINE COMPARTMENT/FRONT STRUCTURE

SEALER LOCATIONS

SPECIFICATIONS

INDEX

DESCRIPTION	FIGURE
LOWER WINDSHIELD PILLAR, LOWER PLENUM AND COWL BAR	9
DASH PANEL, LOWER PLENUM AND COWL SIDE PANEL	10
LOWER DASH PANEL, LOWER COWL SIDE AND FLOOR PAN SUPPORT	11
ROOF PANEL, OUTER BODY SIDE APERTURE AND BACKLITE	12
CAB BACK, BODY SIDE APERTURE - REAR AND BACKLITE LOWER CORNER	13
LOWER DASH PANEL AND FLOOR PAN	14
FLOOR PAN AND BODY SIDE APERTURE	15
FRONT FLOOR PAN AND REAR PAN	16
FLOOR PAN TO CAB BACK	17
PICKUP BOX	18

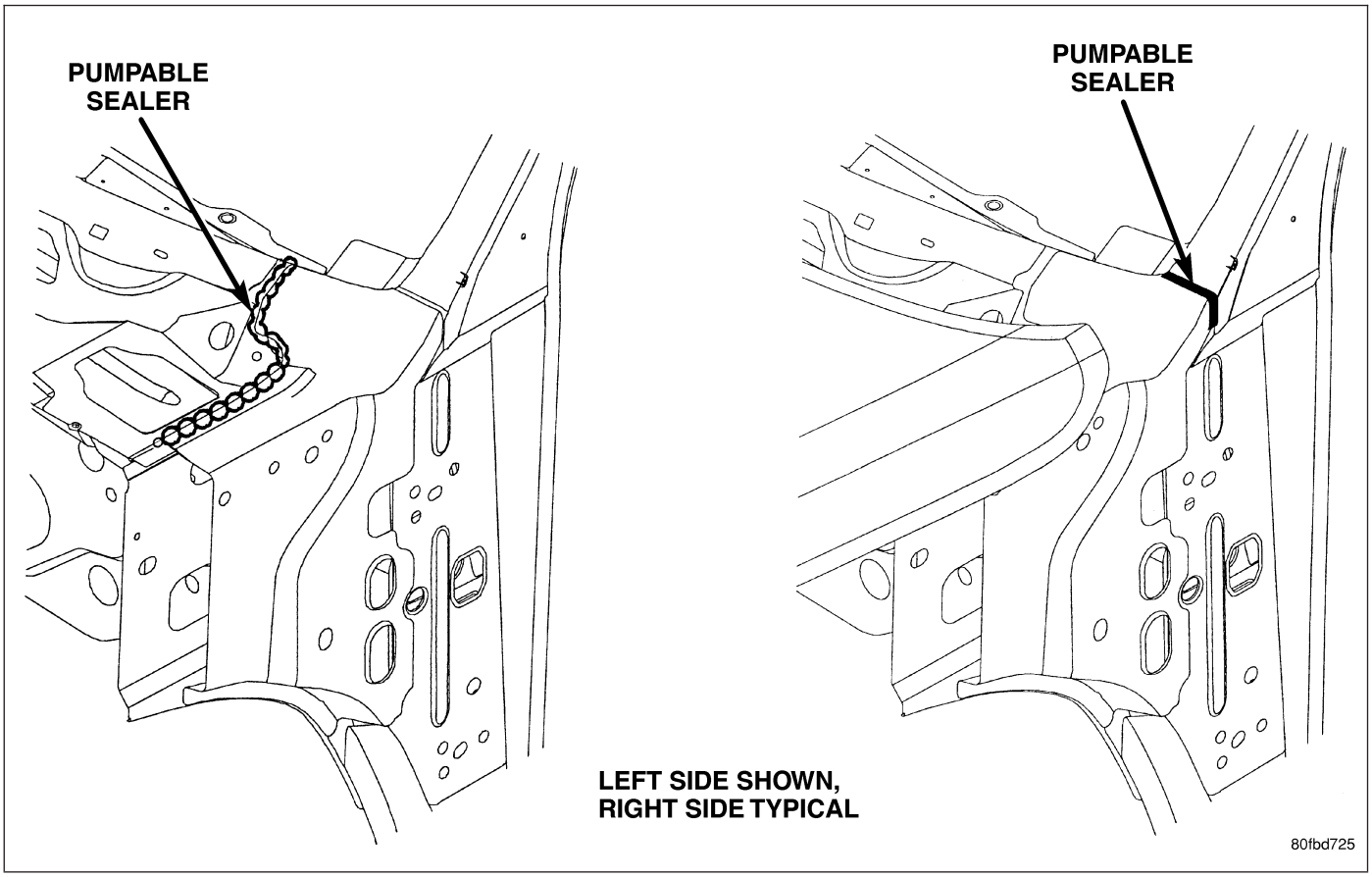

Fig. 9 LOWER WINDSHIELD PILLAR

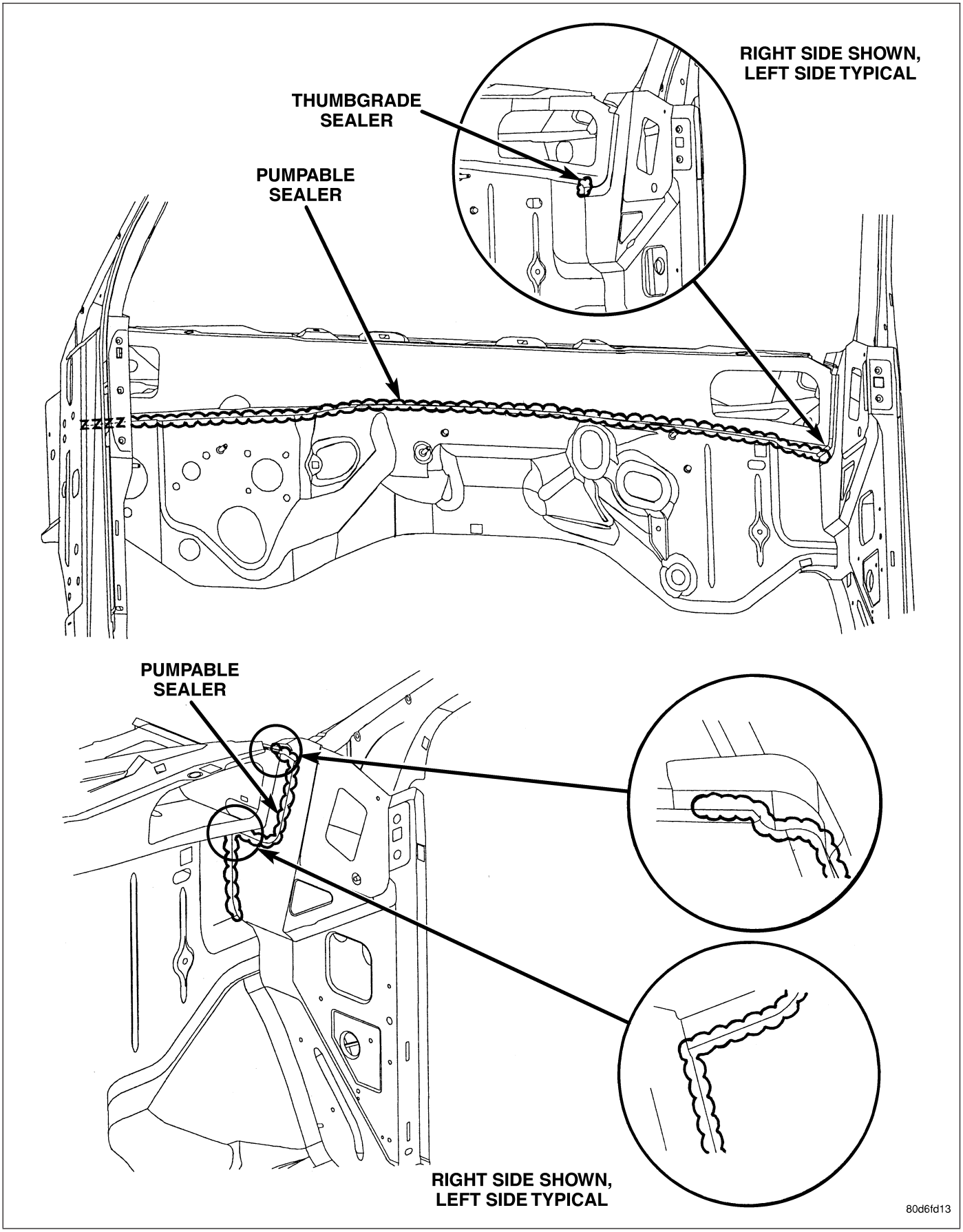

Fig. 10 DASH PANEL

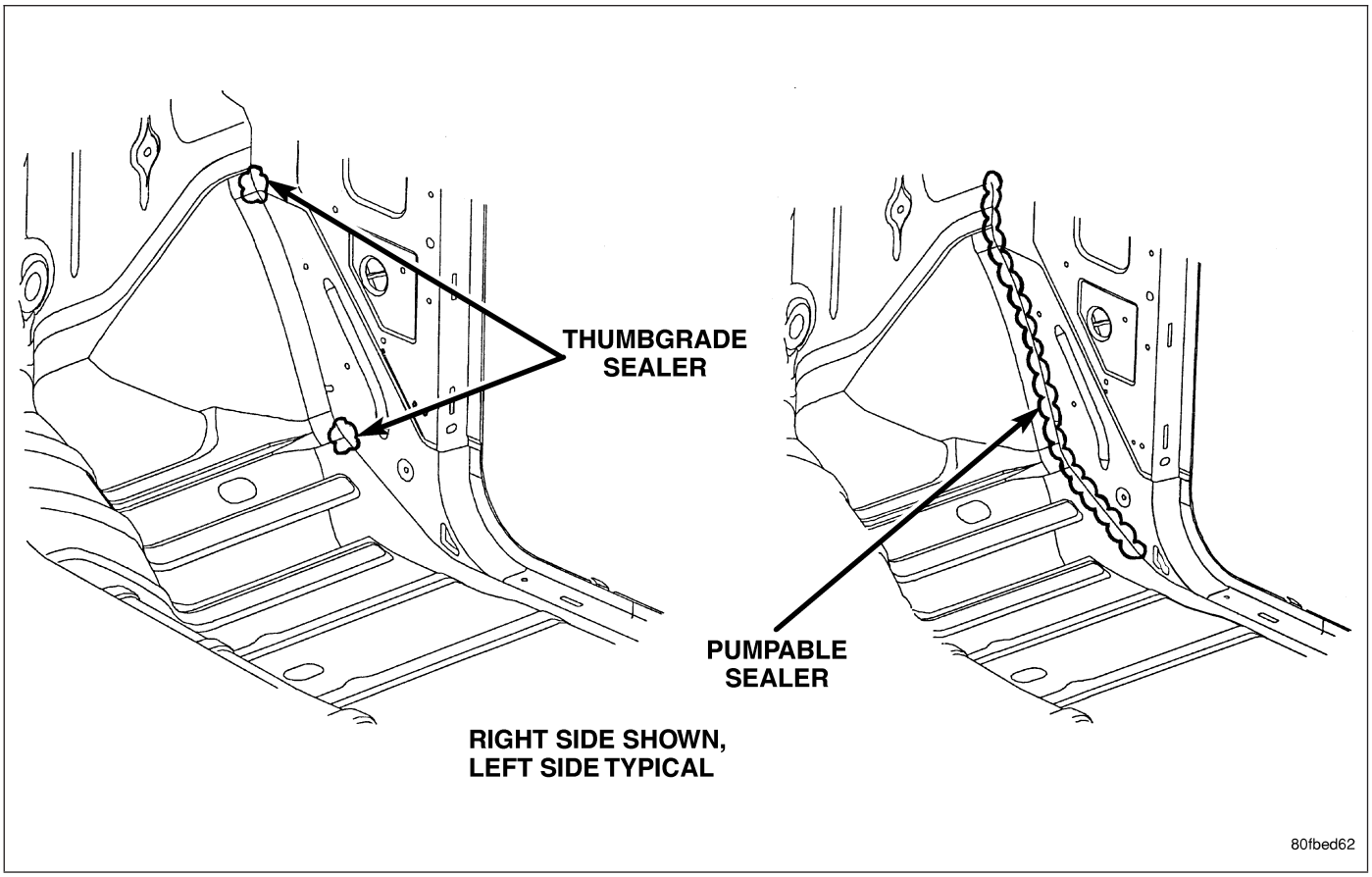

Fig. 11 LOWER DASH PANEL

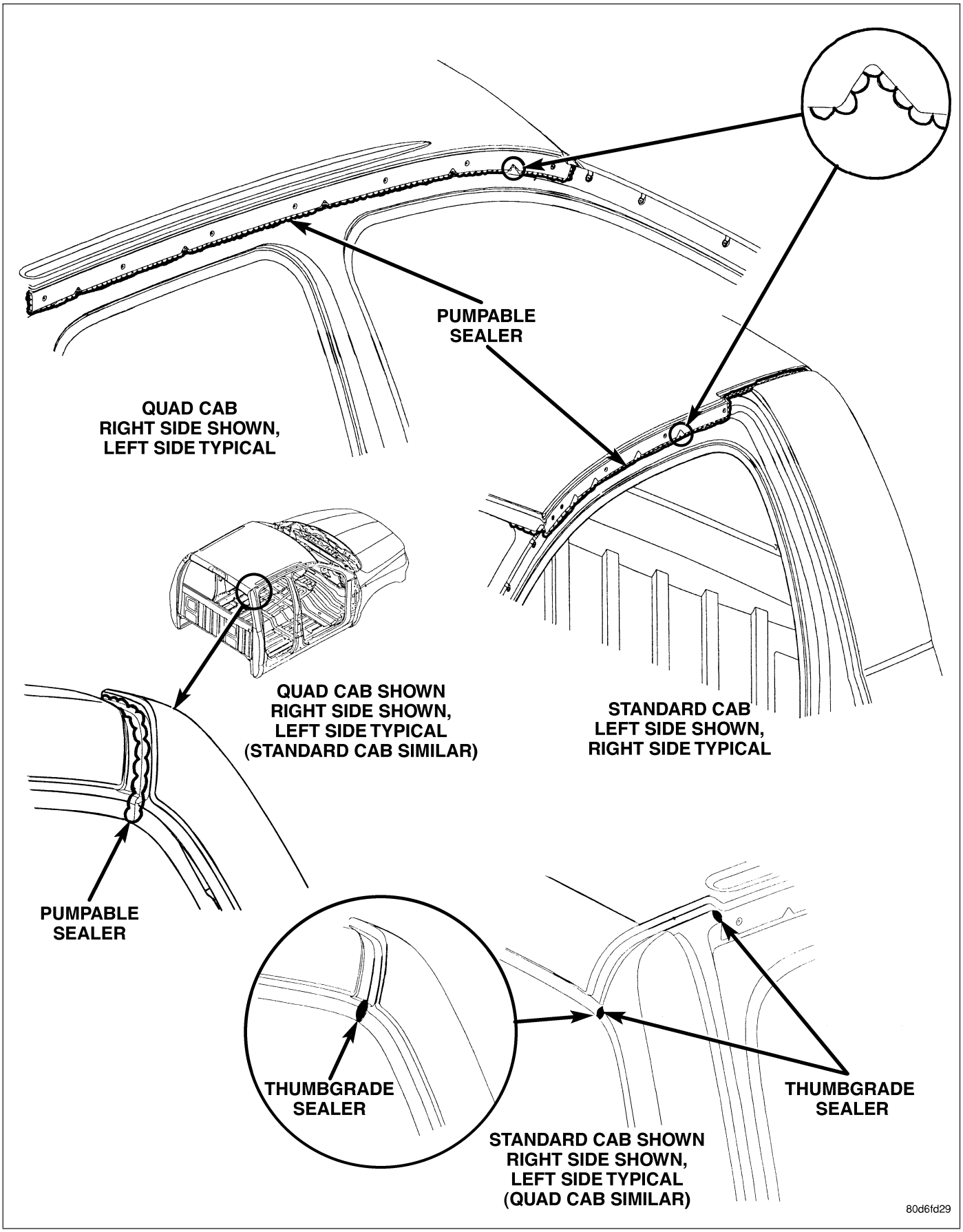

Fig. 12 ROOF PANEL

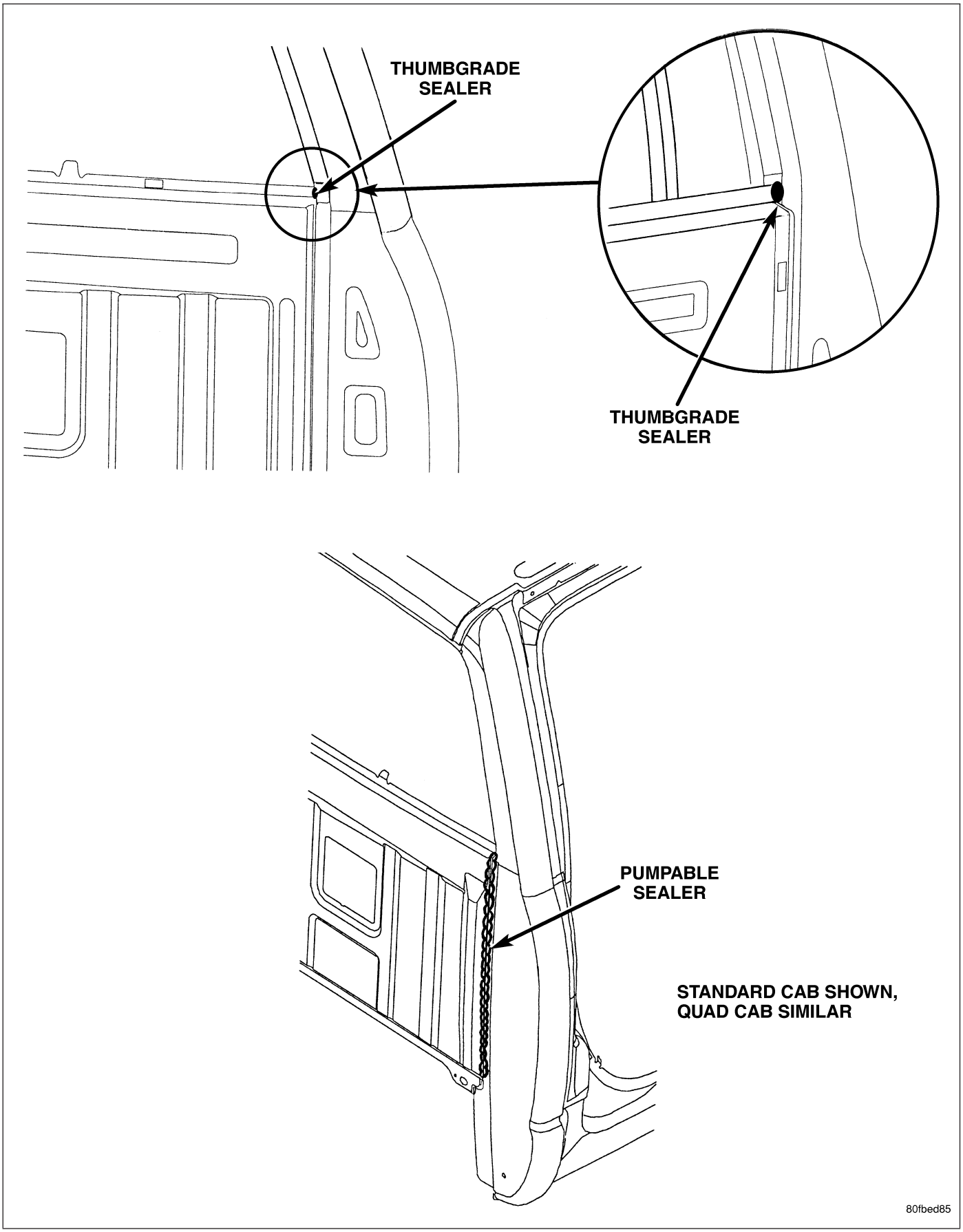

Fig. 13 CAB BACK PANEL

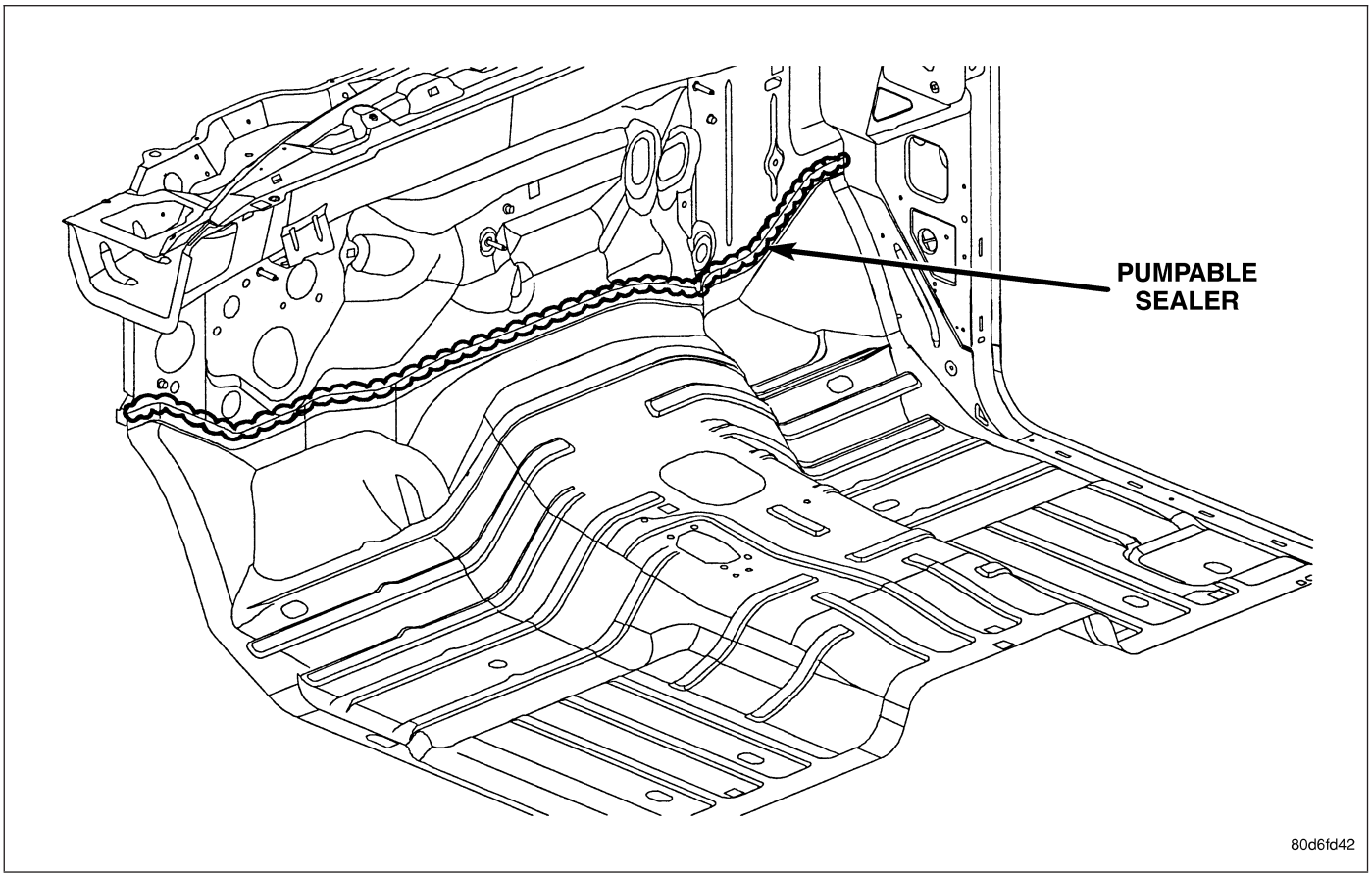

Fig. 14 LOWER DASH PANEL

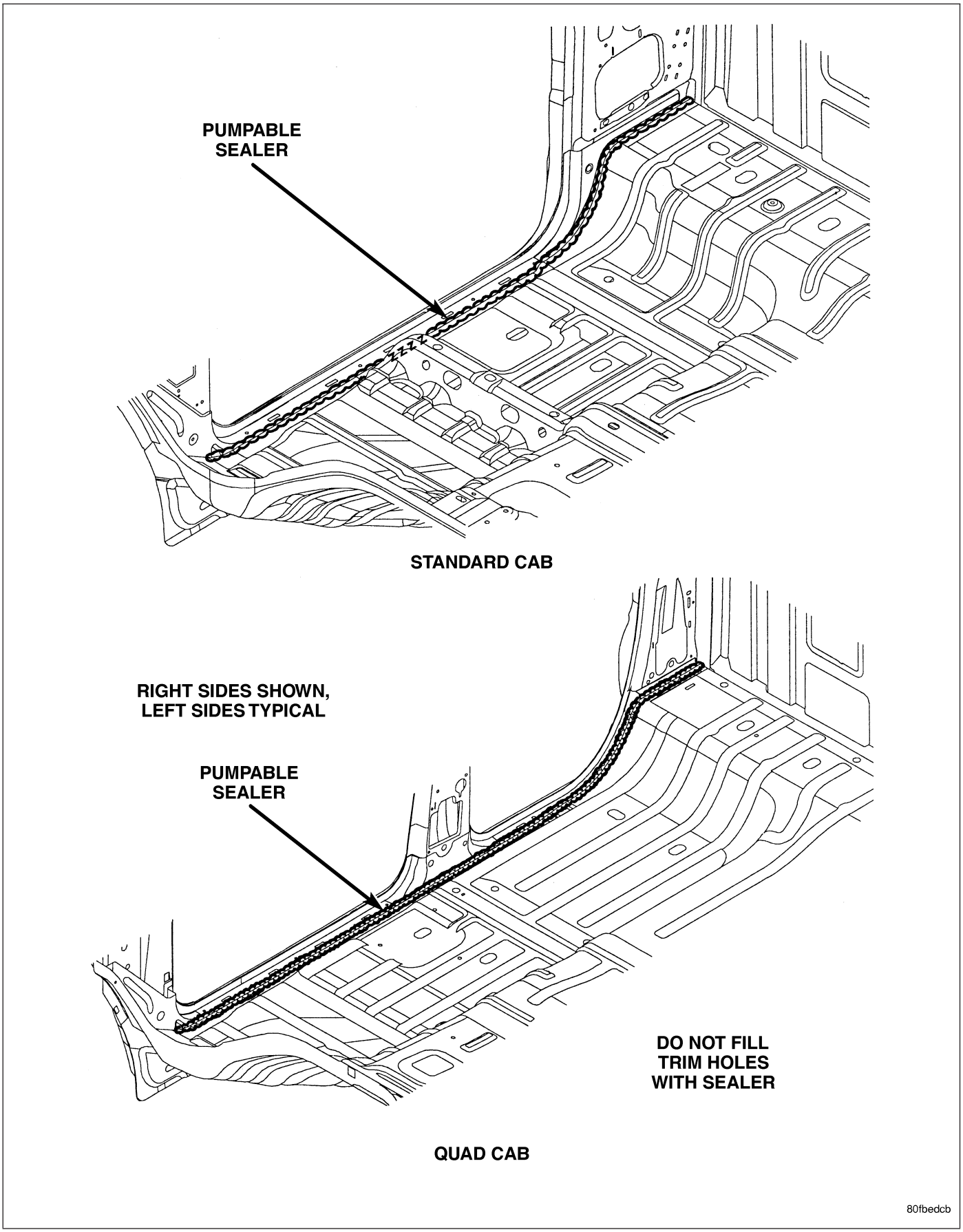

Fig. 15 FLOOR PAN

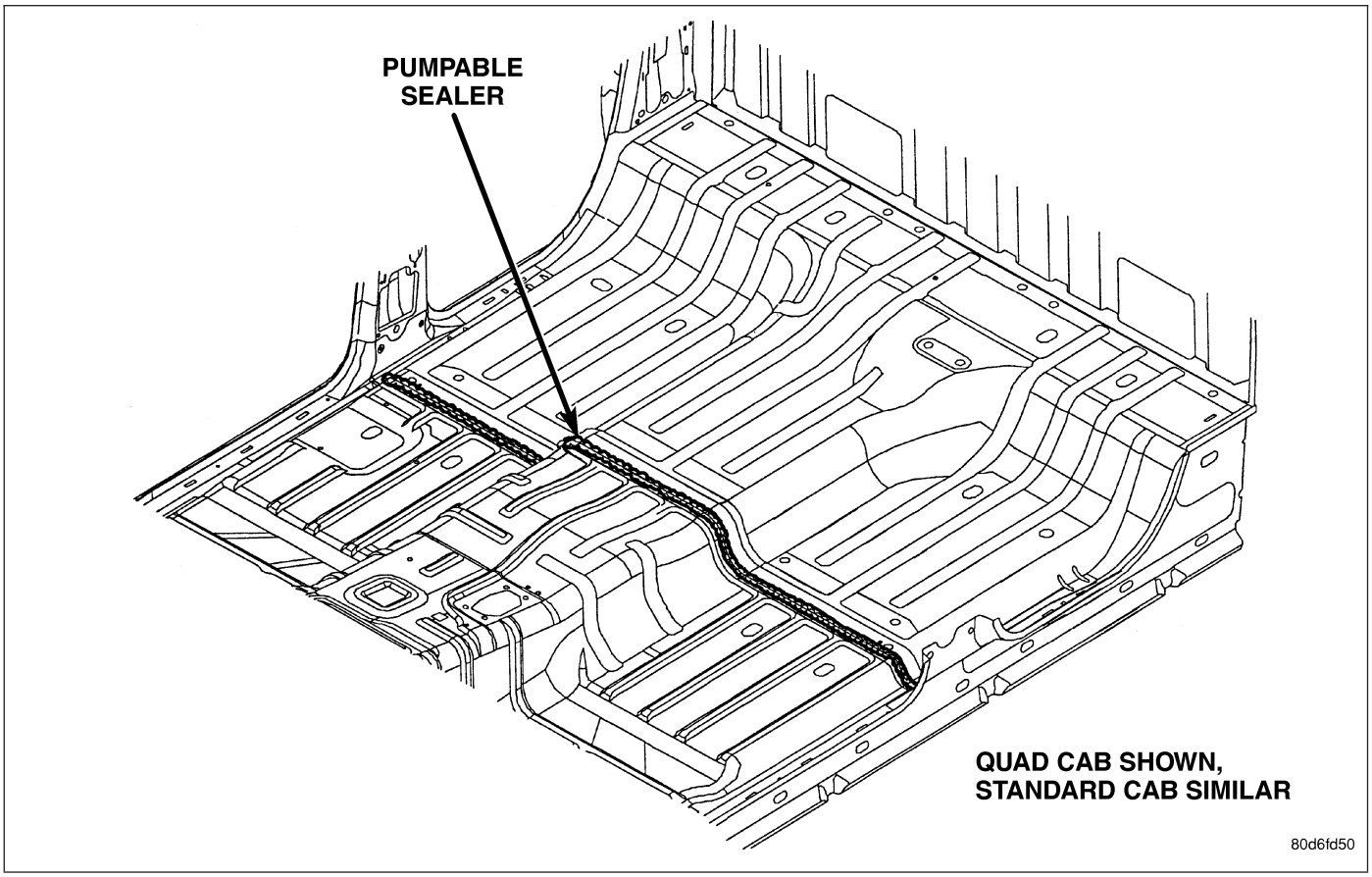

Fig. 16 FRONT FLOOR PAN

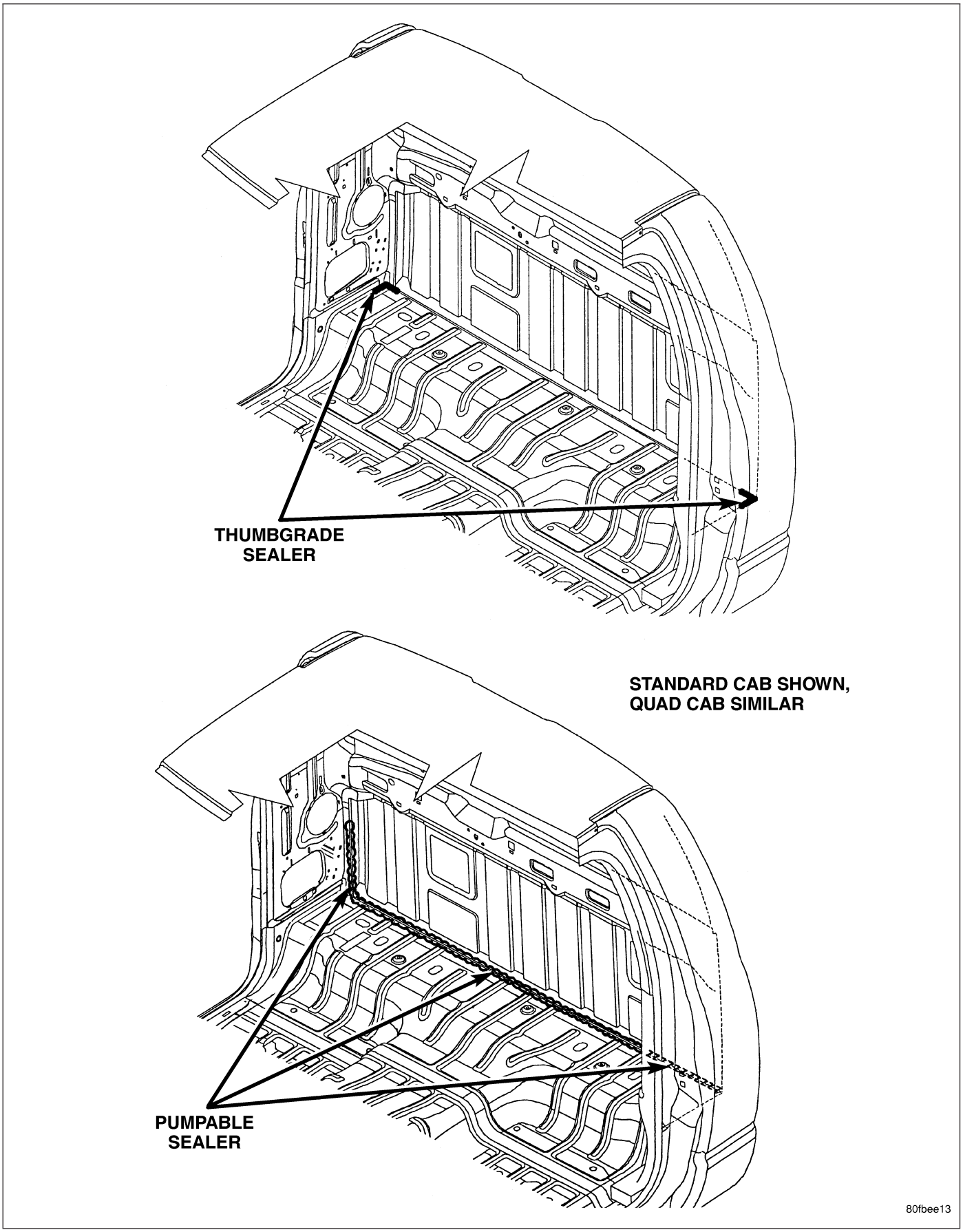

Fig. 17 FLOOR PAN

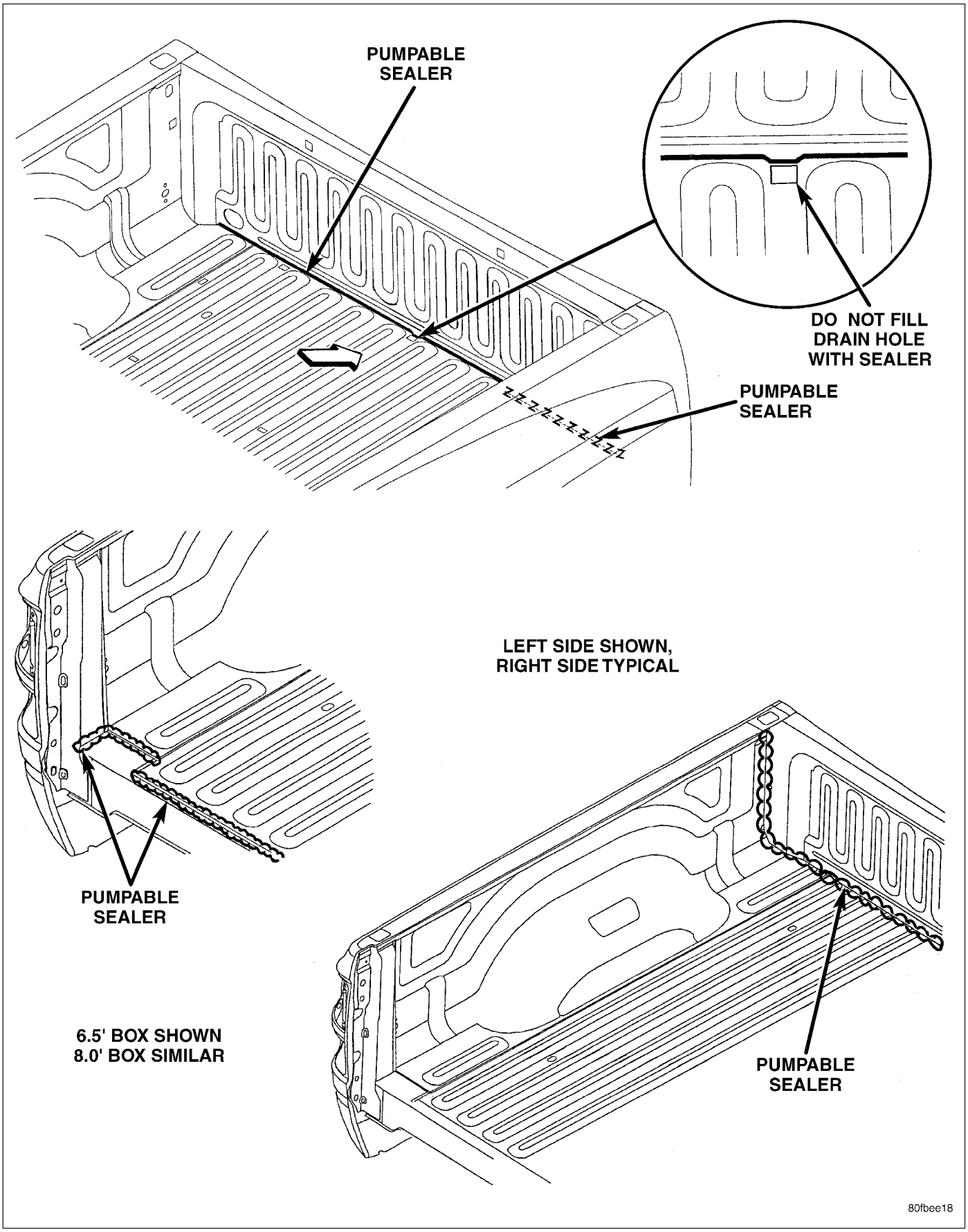

Fig. 18 PICKUP BOX

STRUCTURAL ADHESIVE LOCATIONS

SPECIFICATIONS

INDEX

DESCRIPTION	FIGURE
FLOOR PAN AND SEAT MOUNTING FRONT CROSSMEMBER	19
FRONT FENDER	20
FLOOR PAN	21
INNER WHEELHOUSE TO INNER BOX SIDE PANEL	22
INNER BOX SIDE PANEL TO OUTER BOX SIDE PANEL	23
INNER WHEELHOUSE, CROSSMEMBERS AND CROSSMEMBER END SUPPORT BRACKET TO INNER BOX SIDE PANEL	24
INNER BOX SIDE PANEL TO OUTER BOX SIDE PANEL	25
INNER DOOR PANEL TO OUTER DOOR PANEL - FRONT DOOR (QUAD CAB)	26
INNER DOOR PANEL TO OUTER DOOR PANEL - FRONT DOOR (STANDARD CAB)	27
INNER DOOR PANEL TO OUTER DOOR PANEL - REAR DOOR (QUAD CAB)	28
SILL RAIL - STD CAB	29
SILL RAIL - QUAD CAB	30

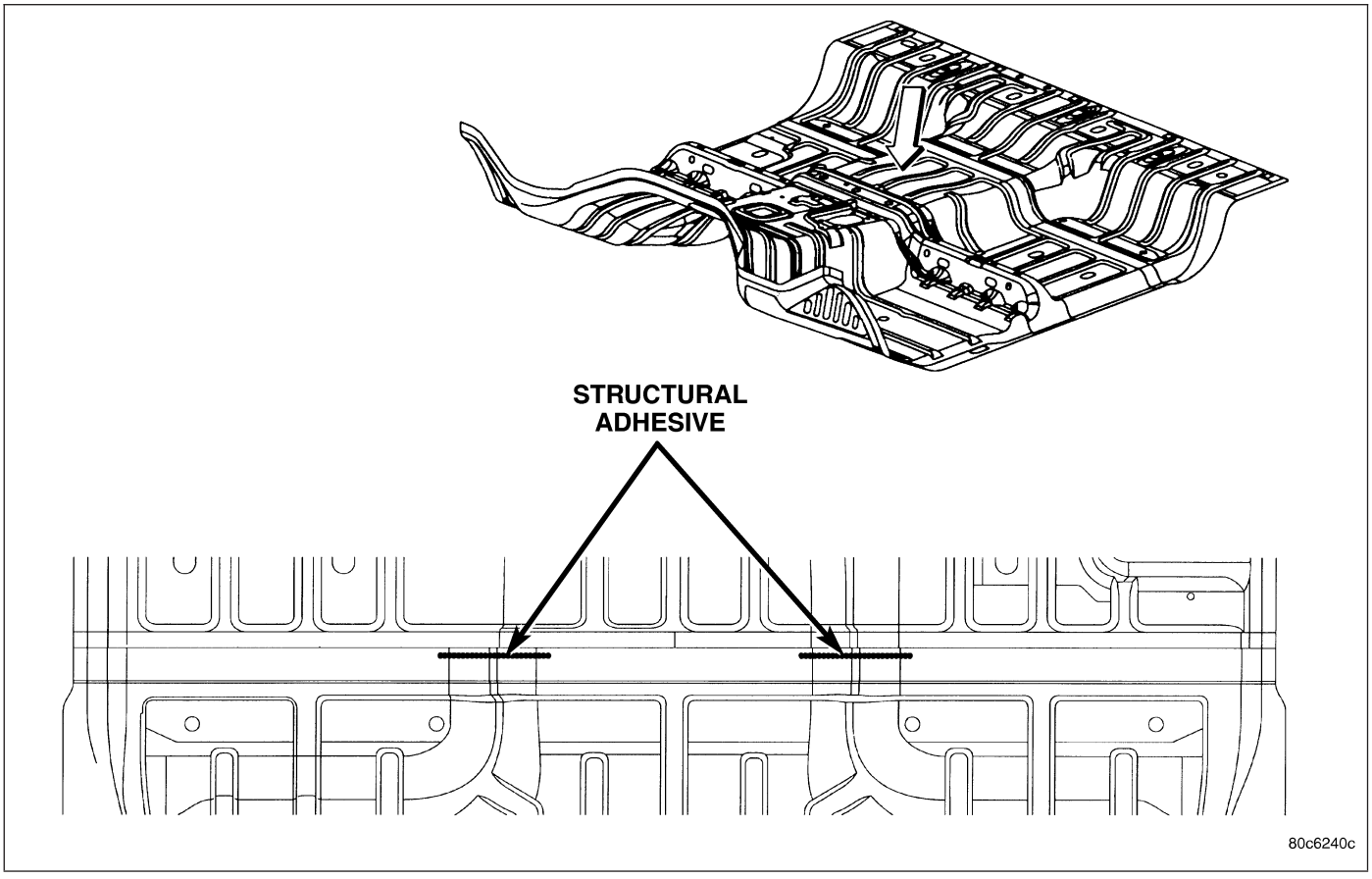

Fig. 19 FLOOR PAN

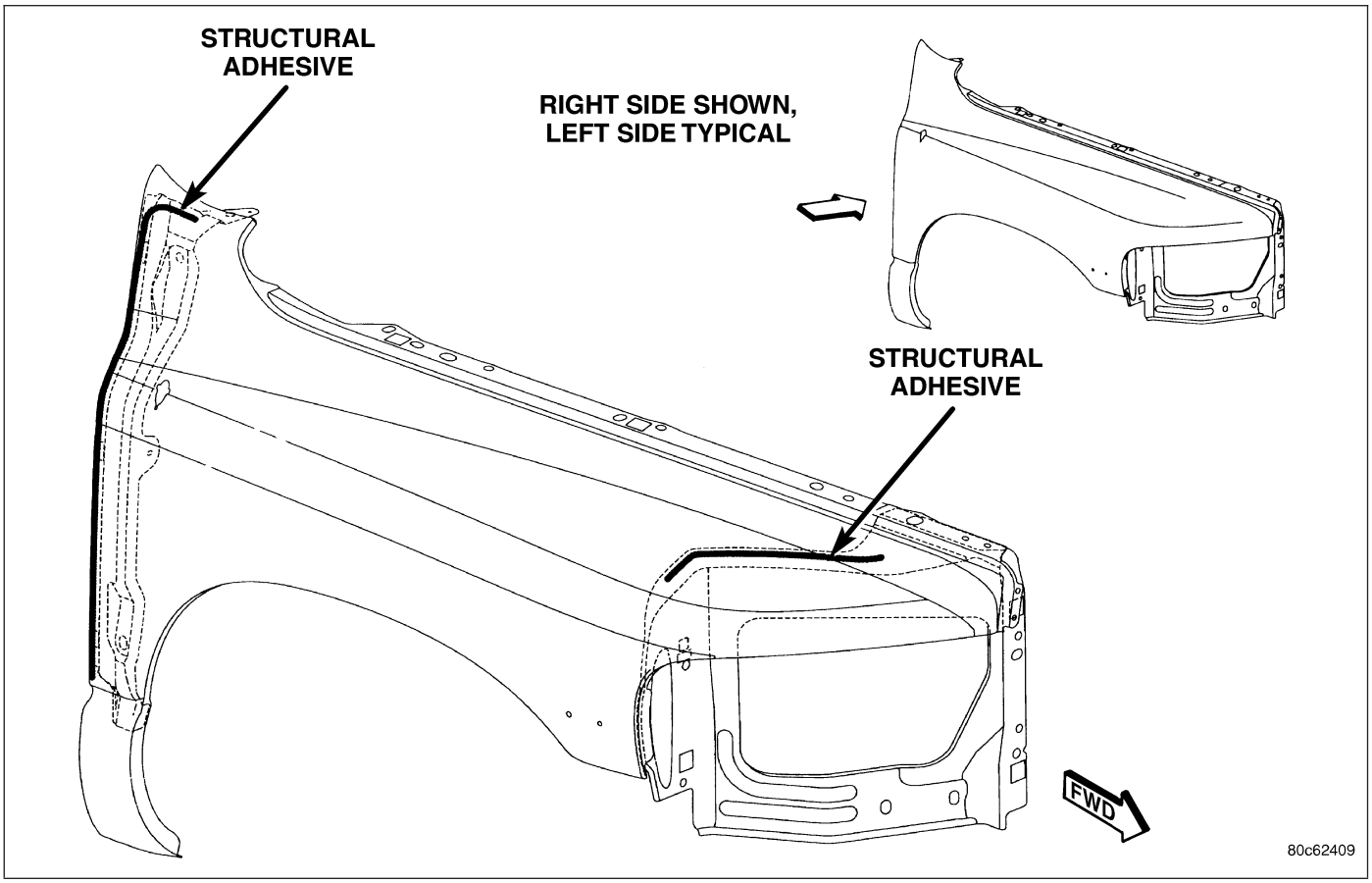

Fig. 20 FRONT FENDER

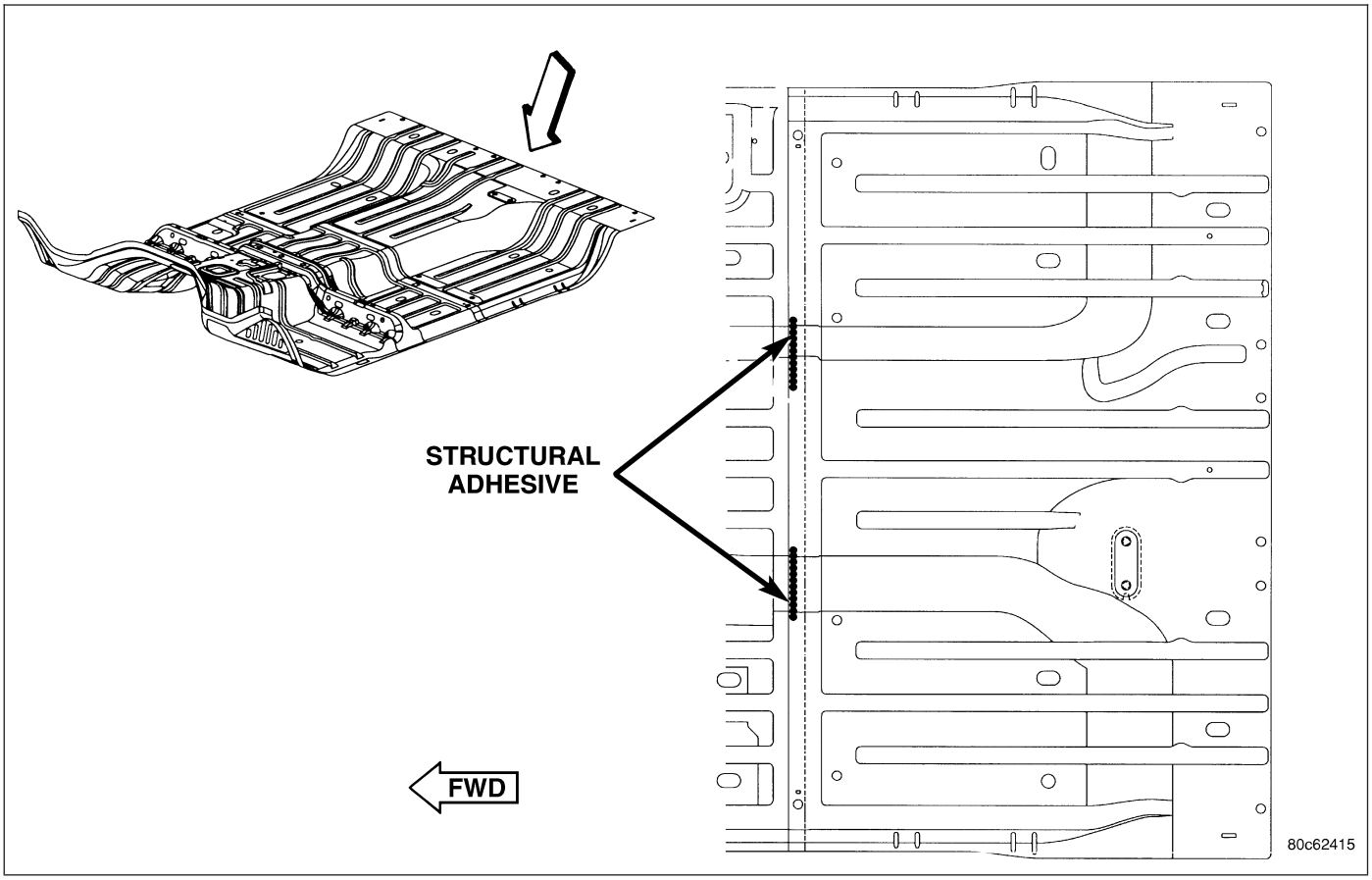

Fig. 21 FLOOR PAN

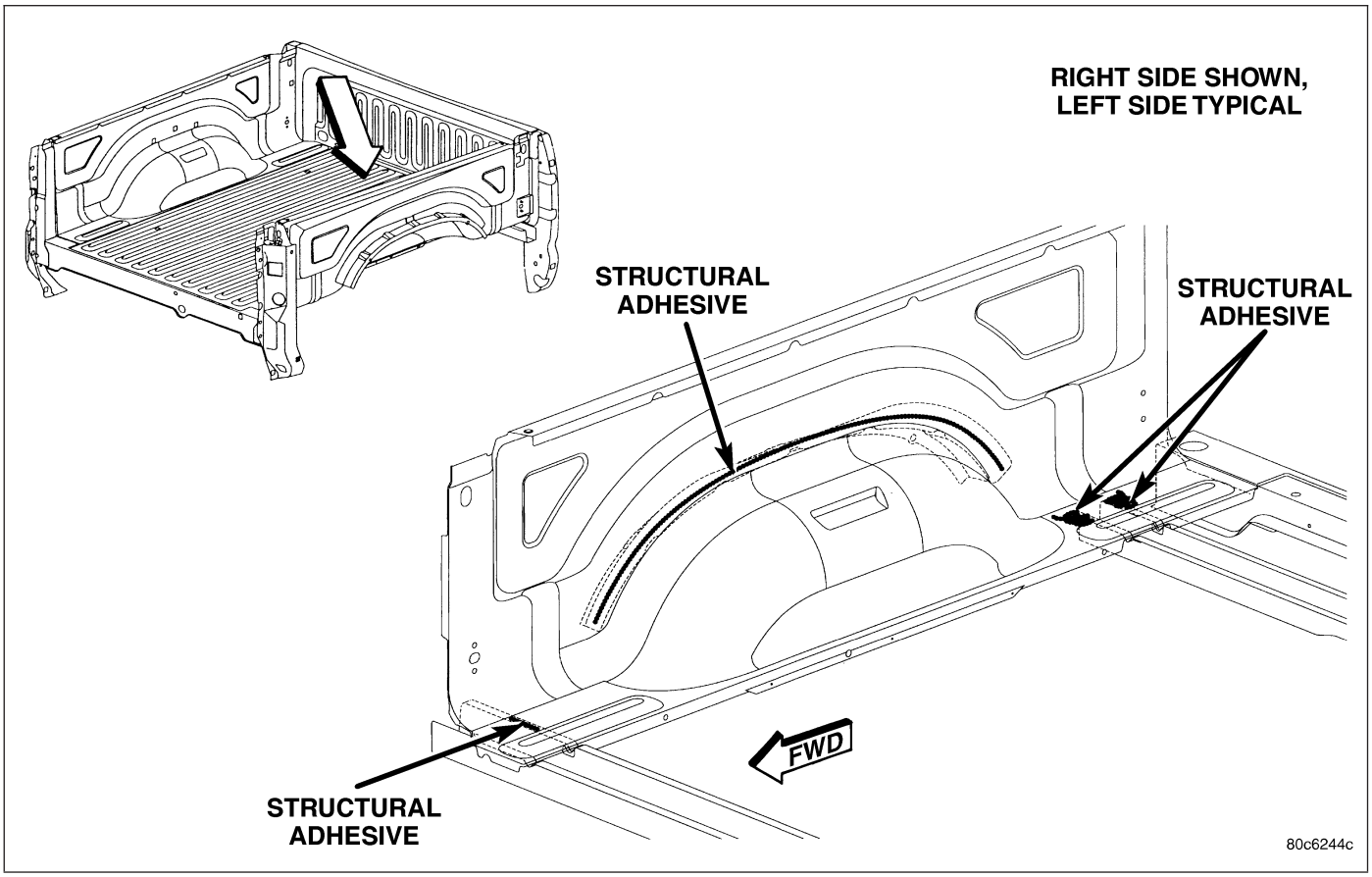

Fig. 22 INNER WHEELHOUSE

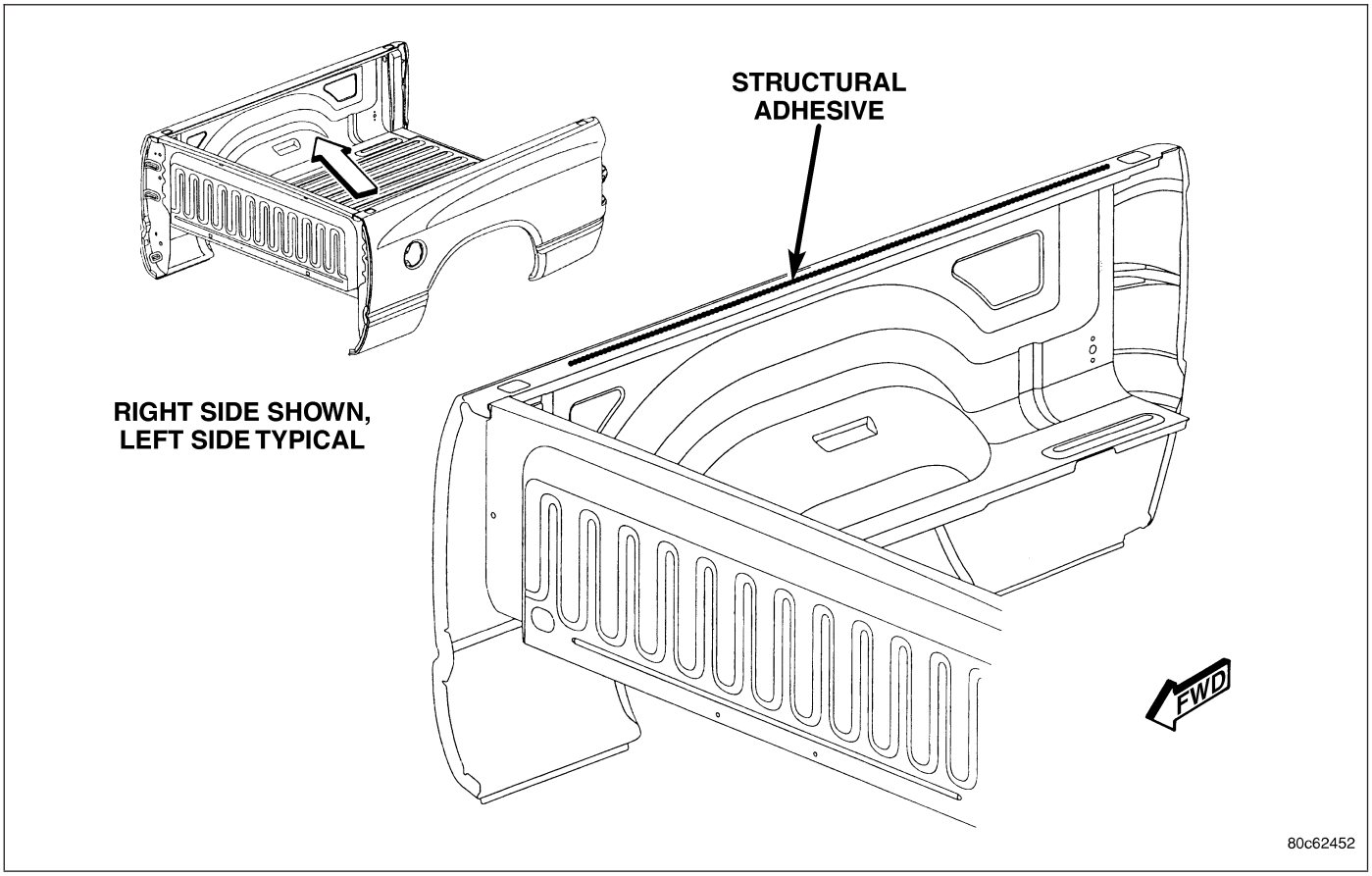

Fig. 23 INNER BOX SIDE PANEL

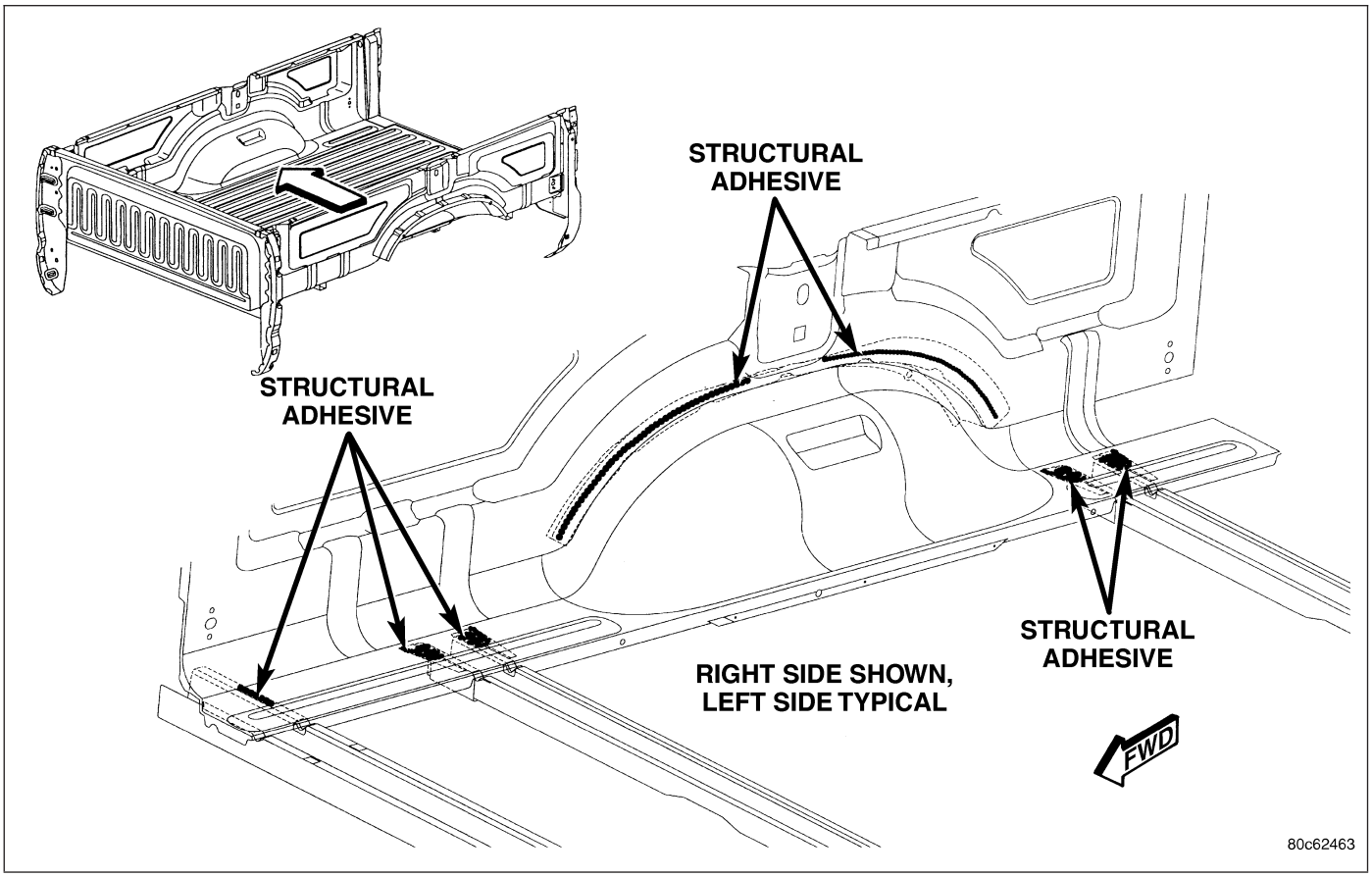

Fig. 24 INNER WHEELHOUSE

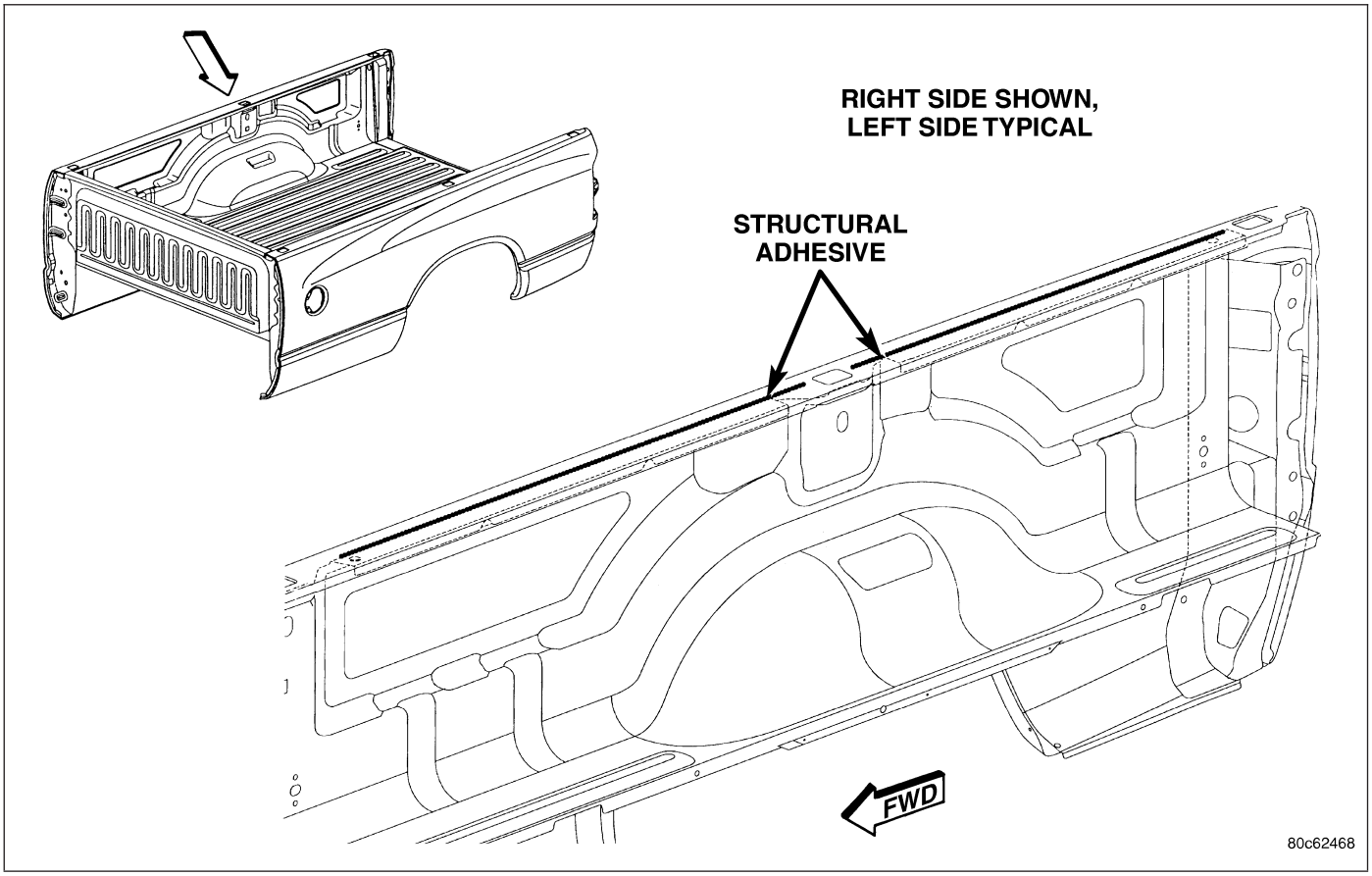

Fig. 25 INNER BOX SIDE PANEL

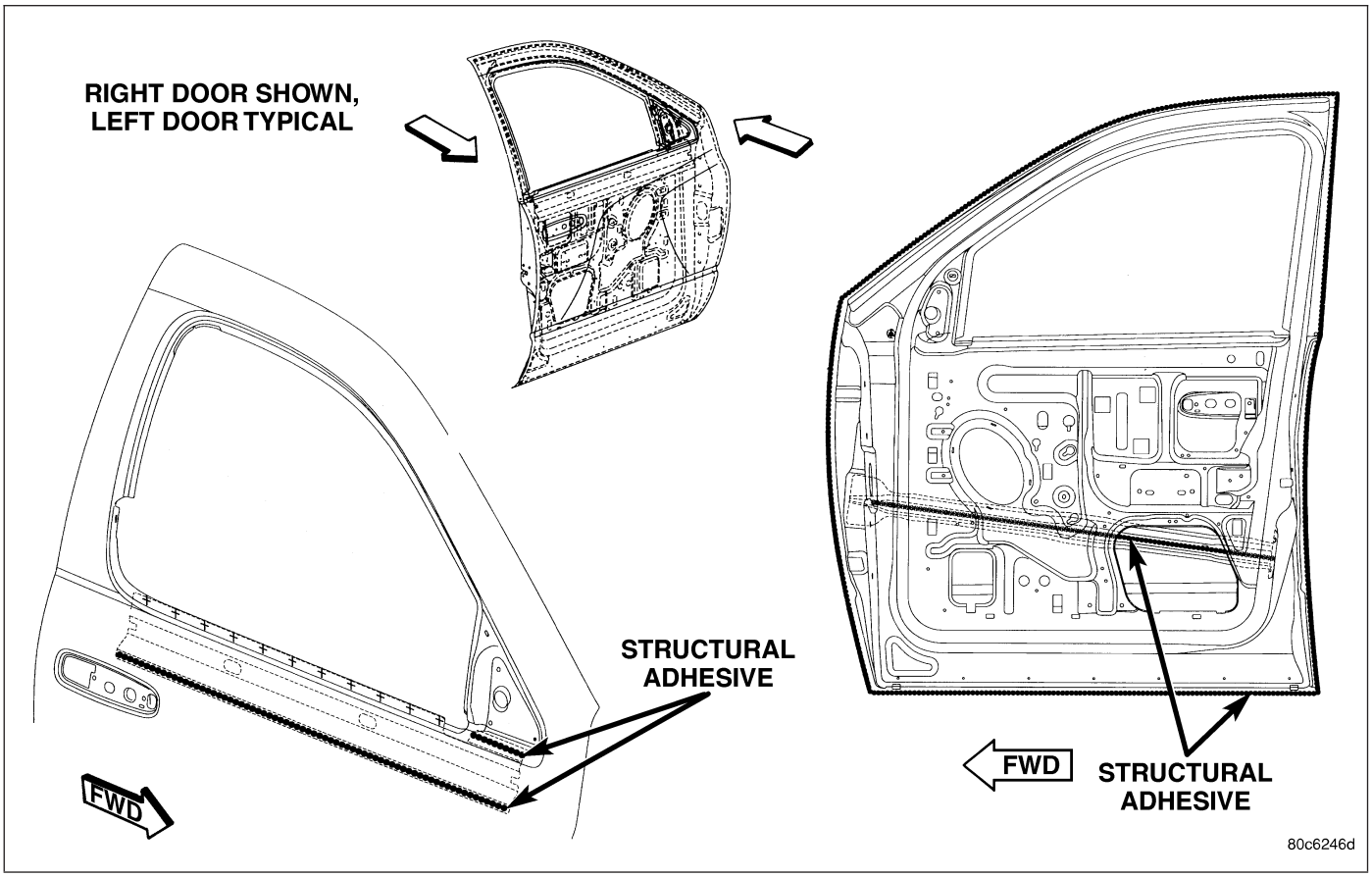

Fig. 26 INNER DOOR PANEL

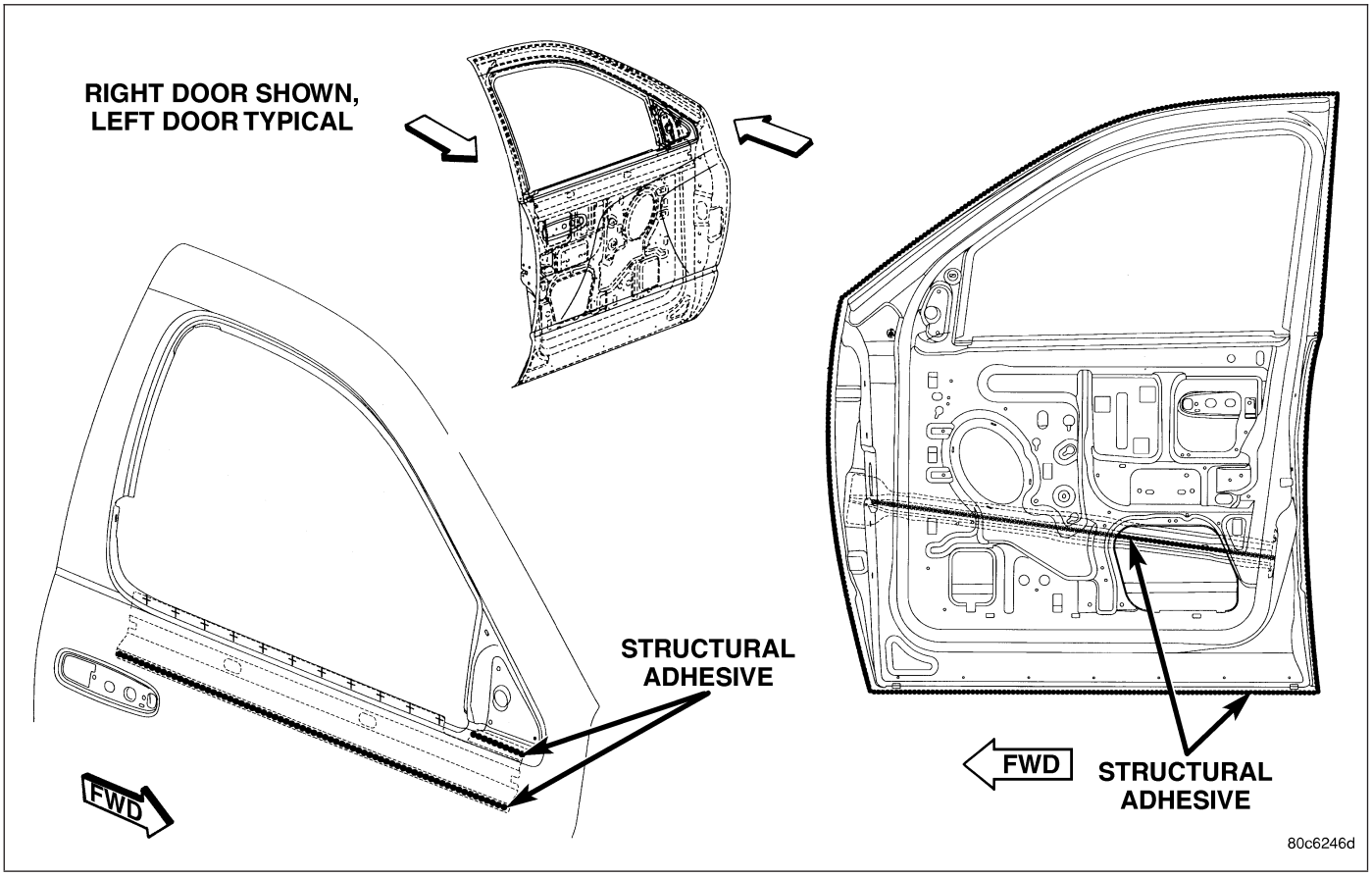

Fig. 27 INNER DOOR PANEL

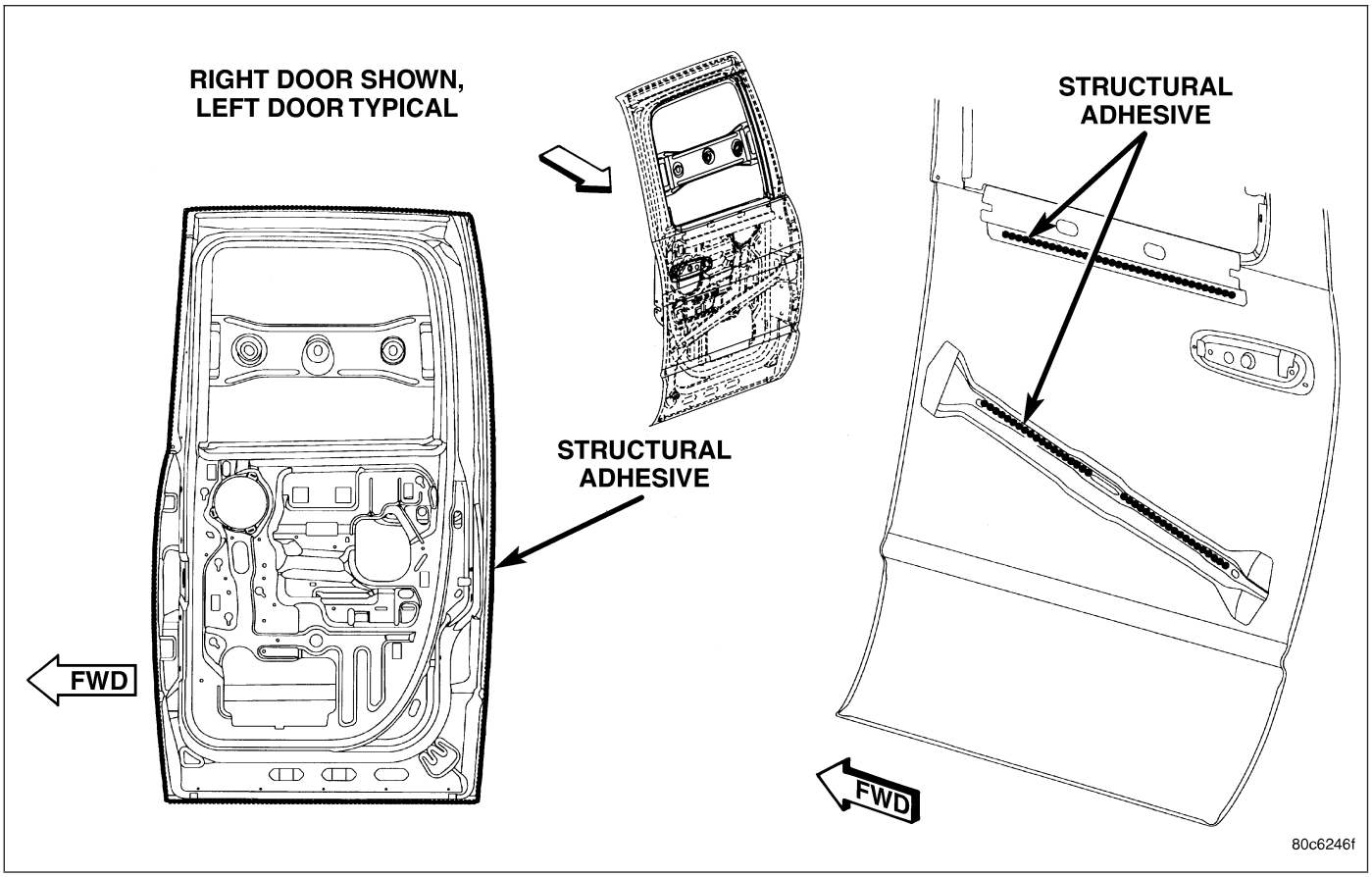

Fig. 28 REAR DOOR INNER PANEL

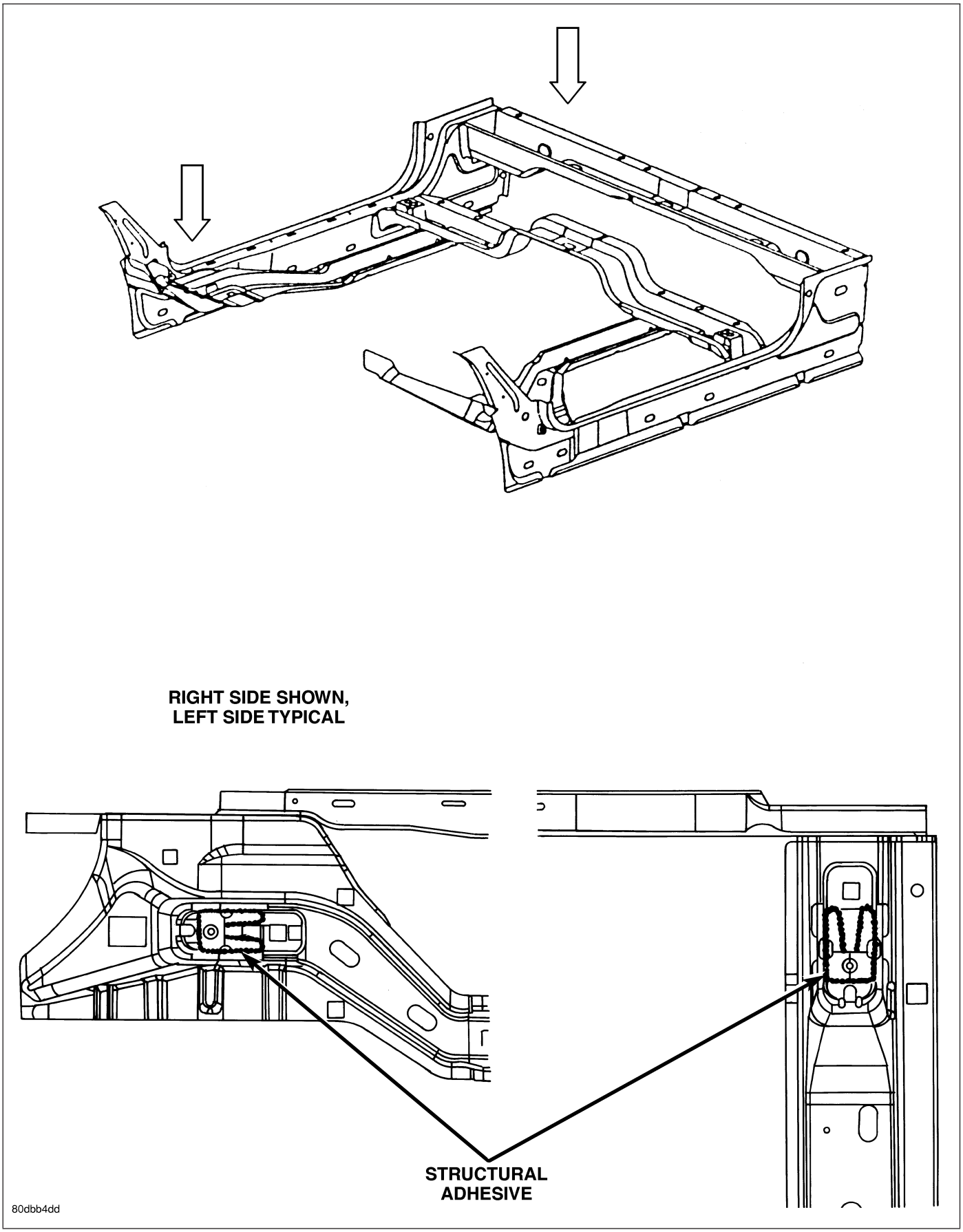

Fig. 29 SILL RAIL - STD CAB

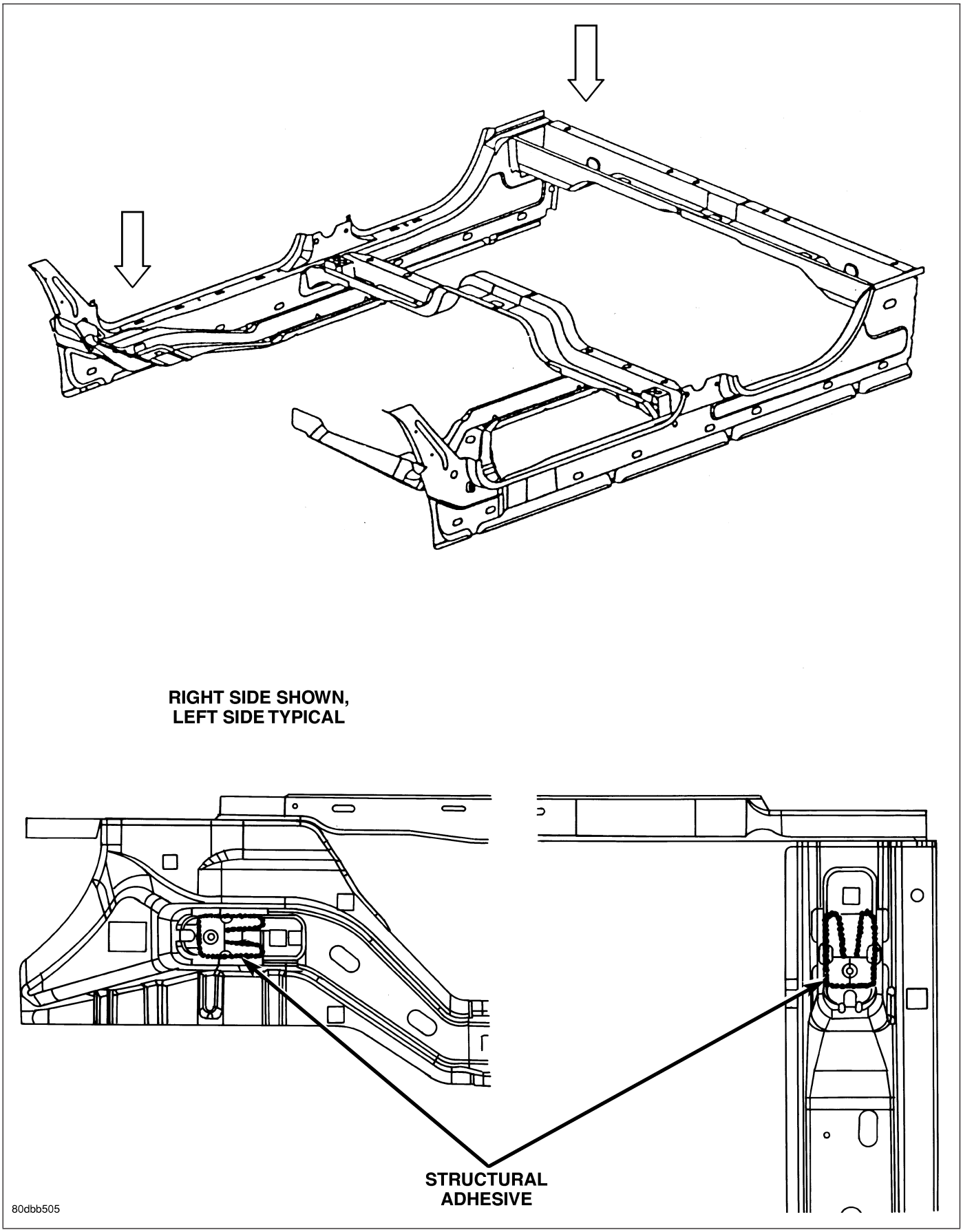

Fig. 30 SILL RAIL - QUAD CAB

WELD LOCATIONS

SPECIFICATIONS

INDEX

DESCRIPTION	FIGURE
FENDER BRACE, CLOSURE TUBE AND FRAME MOUNTING BRACKET TO FRONT FENDER SUPPORT, FRONT FENDER AND RADIATOR TUBE	31
STEERING COLUMN SUPPORT, CONNECTOR WIRING BRACKET AND WELD NUTS TO LOWER PLENUM PANEL	32
WIPER ATTACHING WELD NUTS AND VACUUM RESERVOIR ATTACHING STUDS TO COWL PAR PANEL	33
DASH PANEL TO FRONT FLOOR PAN	34
DASH PANEL TO LOWER PLENUM PANEL	35
LOWER PLENUM PANEL TO COWL BACK PANEL	36
FRONT FENDER AND RADIATOR TUBE DASH PANEL, INSTRUMENT PANEL MOUNTING BRACKET, AND WELD NUTS TO COWL SIDE PANEL - LEFT SIDE	37
DASH PANEL, LOWER PLENUM PANEL AND COWL PANEL BAR TO COWL SIDE PANEL - LEFT SIDE	38
FRONT FENDER AND RADIATOR TUBE DASH PANEL, INSTRUMENT PANEL MOUNTING BRACKET AND WELD NUTS TO COWL SIDE PANEL - RIGHT SIDE	39
DASH PANEL, LOWER PLENUM PANEL AND COWL PANEL BAR TO COWL SIDE PANEL - RIGHT SIDE	40
REINFORCEMENT AND HEADLAMP MOUNTING PANEL TO OUTER FENDER PANEL	41
SEAT MOUNTING FRONT BRACKETS TO SEAT MOUNTING FRONT CROSSMEMBER TO FRONT FLOOR PAN	42
AIR BAG MODULE BRACKET SHIFTER MOUNTING PLATE AND REAR FLOOR PANE TO FRONT FLOOR PAN	43
RIGHT TO LEFT REAR FLOOR CROSSMEMBER AND RIGHT TO LEFT SEAT MOUNTING CROSSMEMBER	44
REAR FLOOR CROSSMEMBER, SEAT MOUNTING CROSSMEMBER AND UNDERBODY SUPPORT TO FLOOR SILL	45
SEAT MOUNTING FRONT CROSSMEMBER TO FRONT FLOOR PAN TO UNDERBODY SUPPORT	46
FRONT SEAT MOUNTING CROSSMEMBERS TO FRONT SEAT MOUNTING BRACKET TO FRONT FLOOR PAN	47
REAR FLOOR CROSSMEMBERS TO REAR FLOOR PAN	48
FLOOR SILL TO FRONT SEAT MOUNTING CROSSMEMBER, FRONT AND REAR FLOOR PAN	49
AIR BAG MODULE BRACKET, SHIFTER MOUNTING PLATE AND FRONT SEAT MOUNTING CROSSMEMBER TO FRONT FLOOR PAN	50
REAR SEAT MIDDLE MOUNTING PLATE TO REAR FLOOR PAN TO FRONT FLOOR PAN	51
REAR FLOOR CROSSMEMBER, SEAT MOUNTING CROSSMEMBER AND UNDERBODY SUPPORT TO FLOOR SILL	52
LEFT REAR CROSSMEMBER TO RIGHT REAR CROSSMEMBER TO REAR FLOOR PAN	53
STORAGE BIN TO RIGHT AND LEFT REAR FLOOR CROSSMEMBER TO REAR FLOOR PAN	54

DESCRIPTION	FIGURE
RIGHT REAR FRONT SEAT MOUNTING CROSSMEMBER TO LEFT REAR FRONT SEAT MOUNTING CROSSMEMBER TO REAR FLOOR PAN	55
FRONT SEAT MOUNTING FRONT CROSSMEMBER AND STORAGE BIN TO FLOOR SILL TO FRONT AND REAR FLOOR PAN	56
FRONT SEAT MOUNTING FRONT CROSSMEMBER TO UNDERBODY SUPPORT TO FRONT FLOOR PAN	57
A-PILLAR REINFORCEMENT TO INNER BODY SIDE APERTURE TO OUTER BODY SIDE APERTURE	58
A-PILLAR REINFORCEMENT TO FRONT APERTURE EXTENSION TO INNER BODY SIDE APERTURE TO OUTER BODY SIDE APERTURE	59
INNER BODY SIDE APERTURE TO OUTER BODY SIDE APERTURE	60
SHOULDER BELT REINFORCEMENT TO INNER BODY SIDE APERTURE TO OUTER BODY SIDE APERTURE	61
FRONT PILLAR TAPPING PLATES TO INNER BODY SIDE APERTURE TO OUTER BODY SIDE APERTURE	62
INNER BODY SIDE APERTURE TO OUTER BODY SIDE APERTURE	63
C-PILLAR BAFFLE AND OUTER BODY SIDE APERTURE TO INNER BODY SIDE APERTURE	64
A-PILLER REINFORCEMENT TO INNER BODY SIDE APERTURE TO OUTER BODY SIDE APERTURE	65
FRONT EXTENSION PLATE TO INNER BODY SIDE APERTURE TO OUTER BODY SIDE APERTURE TO A-PILLAR REINFORCEMENT	66
OUTER BODY SIDE APERTURE TO INNER BODY SIDE APERTURE	67
B-PILLAR REINFORCEMENT TO INNER BODY SIDE APERTURE TO OUTER BODY SIDE APERTURE	68
UPPER B-PILLAR TAPPING PLATE AND LOWER B-PILLAR TAPPING PLATE TO OUTER BODY SIDE APERTURE	69
UPPER A-PILLAR TAPPING PLATE AND LOWER A-PILLAR TAPPING PLATE TO INNER BODY SIDE APERTURE	70
SEAT BELT MOUNTING PLATES AND REINFORCEMENTS TO INNER BODY SIDE APERTURE	71
OUTER BODY SIDE APERTURE TO INNER BODY SIDE APERTURE	72
C-PILLAR REINFORCEMENTS AND SHOULDER BELT MOUNTING REINFORCEMENT TO INNER BODY SIDE APERTURE TO OUTER BODY SIDE APERTURE	73
SEAT BELT RETRACTOR PLATE TO FLOOR SILL TO INNER BODY SIDE APERTURE TO OUTER BODY SIDE APERTURE	74
FLOOR SILL TO INNER BODY SIDE APERTURE TO OUTER BODY SIDE APERTURE	75
BACK REINFORCEMENT AND CAB BACK PANEL TO REAR FLOOR CROSSMEMBER AND INNER BODY SIDE APERTURE TO OUTER BODY SIDE APERTURE	76
CAB BACK REINFORCEMENT TO CAB BACK PANEL (CHILD TETHERS)	77
COWL SIDE PANEL TO INNER BODY SIDE APERTURE TO OUTER BODY SIDE APERTURE	78
OUTER ROOF PANEL TO OUTER BODY SIDE APERTURE	79
ROOF HEADER TO OUTER ROOF PANEL TO A-PILLAR REINFORCEMENT TO INNER BODY SIDE APERTURE TO OUTER BODY SIDE APERTURE	80
REAR ROOF HEADER TO OUTER ROOF PANEL TO INNER BODY SIDE APERTURE TO OUTER BODY SIDE APERTURE	81
OUTER BODY SIDE APERTURE TO CAB BACK PANEL TO FLOOR SILL, INNER BODY SIDE APERTURE TO FLOOR SILL	82

DESCRIPTION	FIGURE
OUTER BODY SIDE APERTURE TO INNER BODY SIDE APERTURE TO FLOOR SILL	83
REAR FLOOR CROSSMEMBER AND CAB BACK REINFORCEMENT TO CAB BACK PANEL TO INNER BODY SIDE APERTURE	84
CAB BACK REINFORCEMENT TO CAB BACK PANEL	85
CENTER SHOULDER BELT REINFORCEMENT AND TAPPING PLATES TO CAB BACK REINFORCEMENT	86
A-PILLAR REINFORCEMENT TO COWL SIDE PANEL TO OUTER BODY SIDE APERTURE/APERTURE EXTENSION TO COWL SIDE PANEL	87
B-PILLAR REINFORCEMENT TO OUTER ROOF PANEL TO OUTER BODY SIDE APERTURE	88
FRONT ROOF HEADER TO OUTER ROOF PANEL/ROOF BOW TO INNER BODY SIDE APERTURE/FRONT ROOF HEADER TO A-PILLAR REINFORCEMENT	89
INNER BODY SIDE APERTURE TO REAR ROOF HEADER AND OUTER BODY SIDE APERTURE TO OUTER ROOF PANEL	90
FRONT CROSSMEMBER, WHEELHOUSE CROSSMEMBER AND BRACKET SUPPORT CROSSMEMBER TO BOX FLOOR PAN	91
LONG CROSSMEMBER AND FLOOR BOX CROSS SILL TO BOX FLOOR PAN	92
TAPPING PLATES AND SUPPORT BRACKETS TO REAR CROSS BOX SILL, FRONT WHEELHOUSE, LONG AND BRACKET SUPPORT CROSSMEMBERS	93
STAKE POCKET REINFORCEMENTS AND TIE DOWN REINFORCEMENTS TO INNER BOX SIDE PANEL	94
OUTER BOX SIDE REINFORCEMENT BRACES NUT PLATES TO OUTER BOX SIDE PANEL MOUNTING	95
OUTER WHEELHOUSE TO OUTER BOX SIDE PANEL	96
WELD NUT STRIKER CAGE NUT, OUTER BOX SIDE PANEL AND NUT PLATE TO BOX SIDE TAILGATE REINFORCEMENT	97
FRONT BOX PANEL TO FRONT INNER STAKE POCKET REINFORCEMENT TO FRONT BOX SIDE PANEL	98
FRONT CROSSMEMBER TO FRONT BOX SIDE PANEL AND BOX FLOOR PANEL TO BOX FRONT PANEL	99
BOX FLOOR PANEL AND INNER WHEELHOUSE PANEL TO INNER BOX SIDE PANEL	100
FRONT CROSSMEMBER AND END SUPPORT BRACKET TO LONG CROSSMEMBER TO INNER BOX SIDE PANEL/STAKE POCKET REINFORCEMENT AND BOX FLOOR SILL TO OUTER TAILGATE PILLAR TO INNER TAILGATE PILLAR	101
STAKE POCKET REINFORCEMENT AND BOX FLOOR SILL CROSSMEMBER TO INNER TAILGATE PILLAR	102
INNER TAILGATE PILLAR PANEL TO INNER BOX SIDE PANEL TO TIE DOWN MOUNTING REINFORCEMENT	103
BOX FLOOR SILL CROSSMEMBER TO INNER BOX SIDE PANEL	104
INNER TAILGATE PILLAR TO TAILGATE BOX SIDE REINFORCEMENT TO OUTER TAILGATE PILLAR	105
BOX SIDE PANEL AND OUTER TAILGATE PILLAR TO OUTER BOX SIDE PANEL	106
FRONT BOX PANEL TO OUTER BOX SIDE PANEL	107
INNER BOX SIDE PANEL AND INNER TAILGATE PILLAR TO OUTER BOX SIDE PANEL	108
OUTER WHEELHOUSE PANEL TO INNER WHEELHOUSE PANEL	109
FRONT CROSSMEMBER, LONG CROSSMEMBER, AND WHEELHOUSE CROSSMEMBER TO FLOOR PAN	110
WHEELHOUSE CROSSMEMBER, LONG CROSSMEMBER AND REAR CROSS BOX SILL TO BOX FLOOR PAN	111

DESCRIPTION	FIGURE
FRONT AND CENTER STAKE POCKET REINFORCEMENTS AND TIE DOWN MOUNTING REINFORCEMENT TO INNER BOX SIDE PANEL	112
OUTER FRONT AND CENTER STAKE POCKET REINFORCEMENT AND OUTER TIE DOWN MOUNTING REINFORCEMENT TO INNER BOX SIDE PANEL	113
OUTER WHEELHOUSE AND OUTER BRACE MOUNTING REINFORCEMENT TO OUTER BOX SIDE PANEL	114
TAILGATE BOX SIDE PIVOT REINFORCEMENT TO OUTER BOX SIDE PANEL	115
FRONT BOX SIDE PANEL TO FRONT CROSSMEMBER TO INNER BOX SIDE PANEL	116
FRONT BOX SIDE PANEL TO BOX FRONT PANEL TO INNER BOX SIDE PANEL/ FRONT STAKE POCKET REINFORCEMENT TO FRONT BOX SIDE PANEL TO BOX FRONT PANEL	117
BOX FRONT PANEL TO BOX FLOOR PANEL	118
BOX FLOOR PANEL TO INNER BOX SIDE PANEL	119
LONG CROSSMEMBERS TO CROSSMEMBER END SUPPORT BRACKETS TO INNER BOX SIDE PANEL	120
INNER WHEELHOUSE PANEL TO INNER BOX SIDE PANEL	121
TAILGATE PILLAR OUTER PANEL TO TAILGATE PILLAR INNER PANEL TO INNER BOX SIDE PANEL	122
REAR SILL CROSS BOX TO TAILGATE PILLAR OUTER PANEL AND INNER BOX SIDE PANEL	123
OUTER BOX SIDE PANEL TO BOX FRONT PANEL AND BOX FRONT SIDE PANEL	124
STAKE POCKET REINFORCEMENTS TO INNER BOX SIDE PANEL TO OUTER BOX SIDE PANEL	125
TAILGATE PIVOT REINFORCEMENT AND INNER TAILGATE PILLAR TO INNER BOX SIDE PANEL TO OUTER BOX SIDE PANEL	126
INNER WHEELHOUSE TO OUTER WHEELHOUSE/TAILGATE PIVOT REINFORCEMENT TO OUTER TAILGATE PILLAR TO INNER TAILGATE PILLAR	127
OUTER TAILGATE PILLAR TO OUTER BOX SIDE PANEL	128
INNER DOOR PANEL TO OUTER DOOR PANEL - FRONT DOOR (QUAD CAB)	129
INNER DOOR PANEL TO OUTER DOOR PANEL - FRONT DOOR (STANDARD CAB)	130
INNER DOOR PANEL TO OUTER DOOR PANEL - REAR DOOR (QUAD CAB)	131

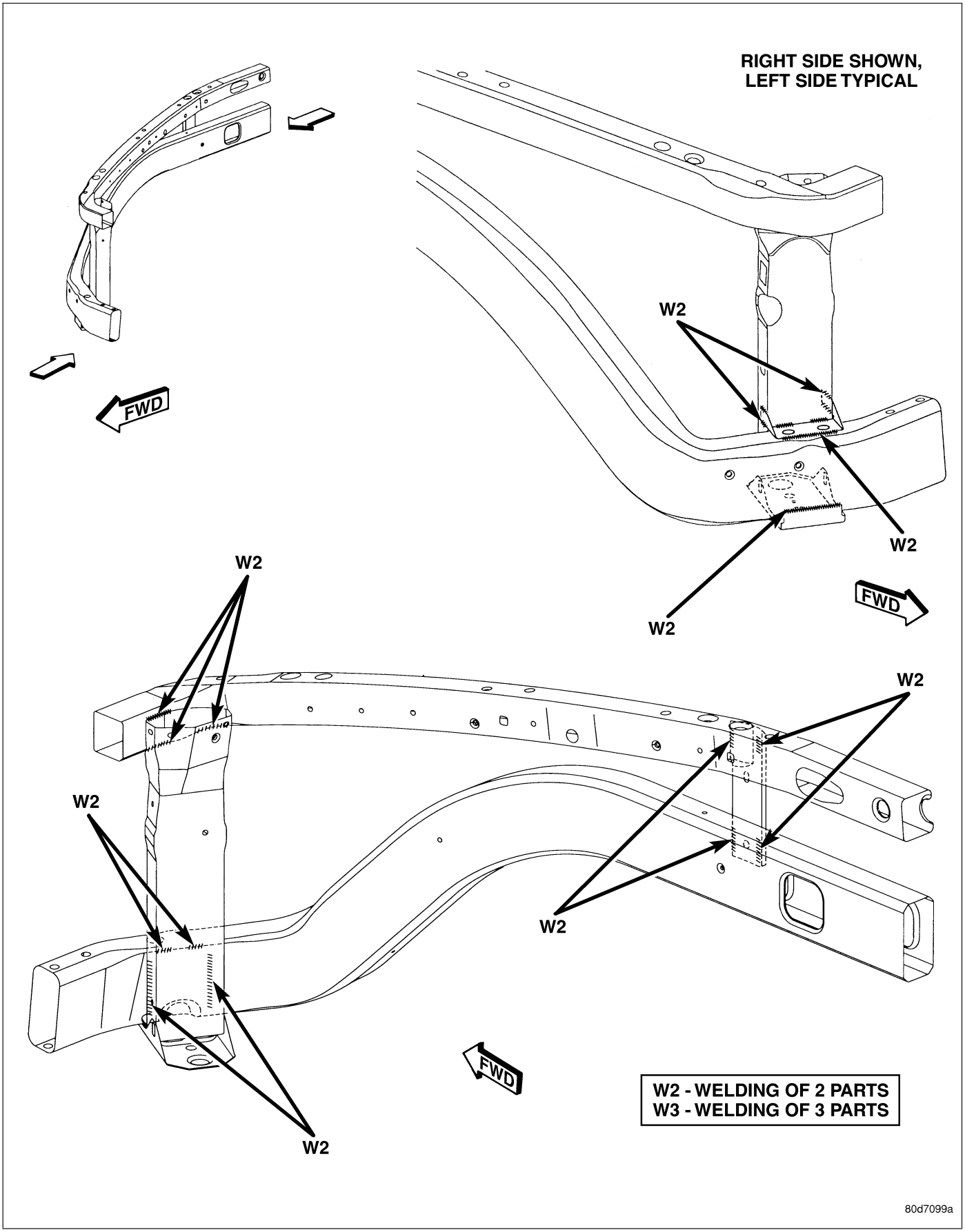

Fig. 31 FENDER BRACE

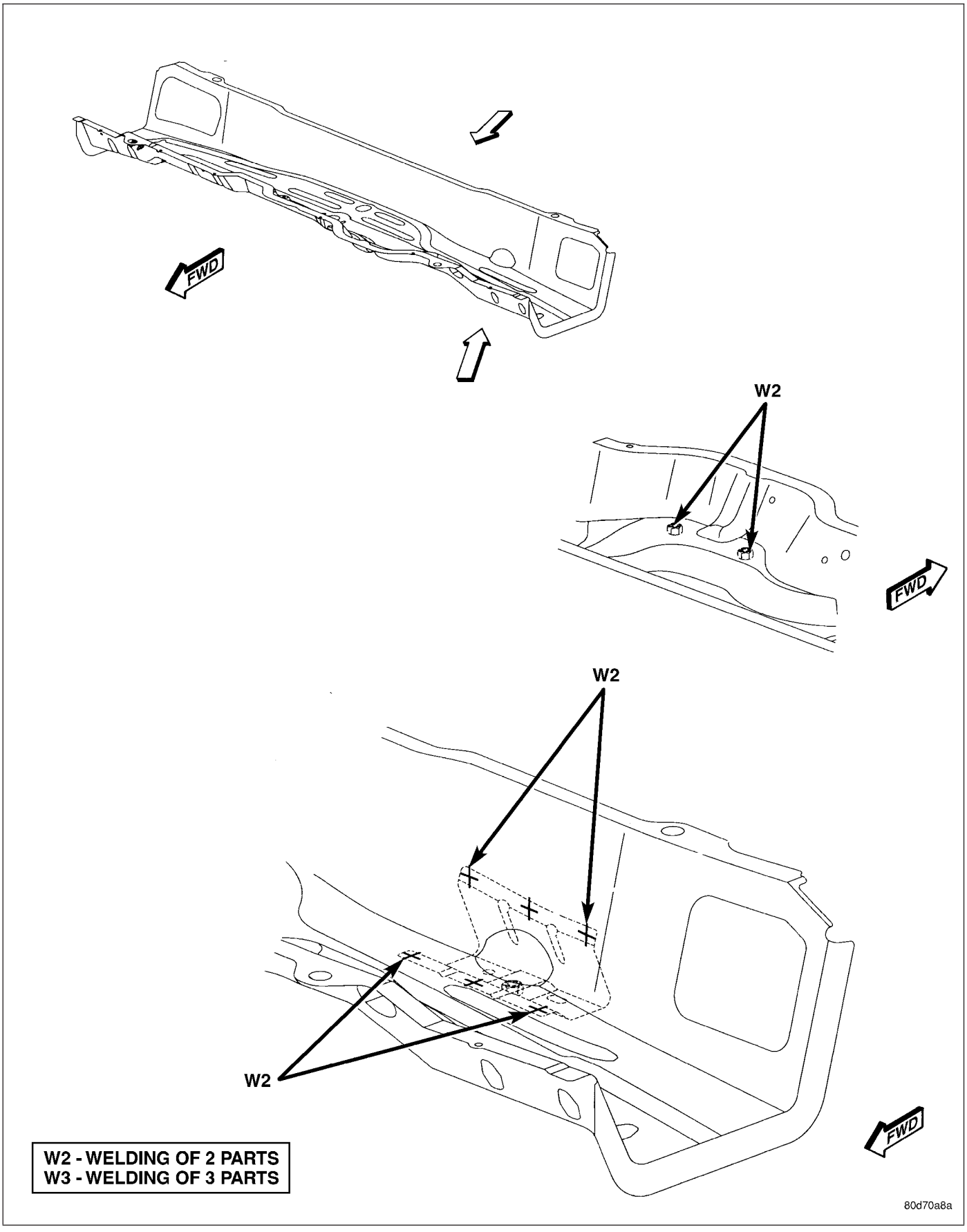

Fig. 32 STEERING COLUMN SUPPORT

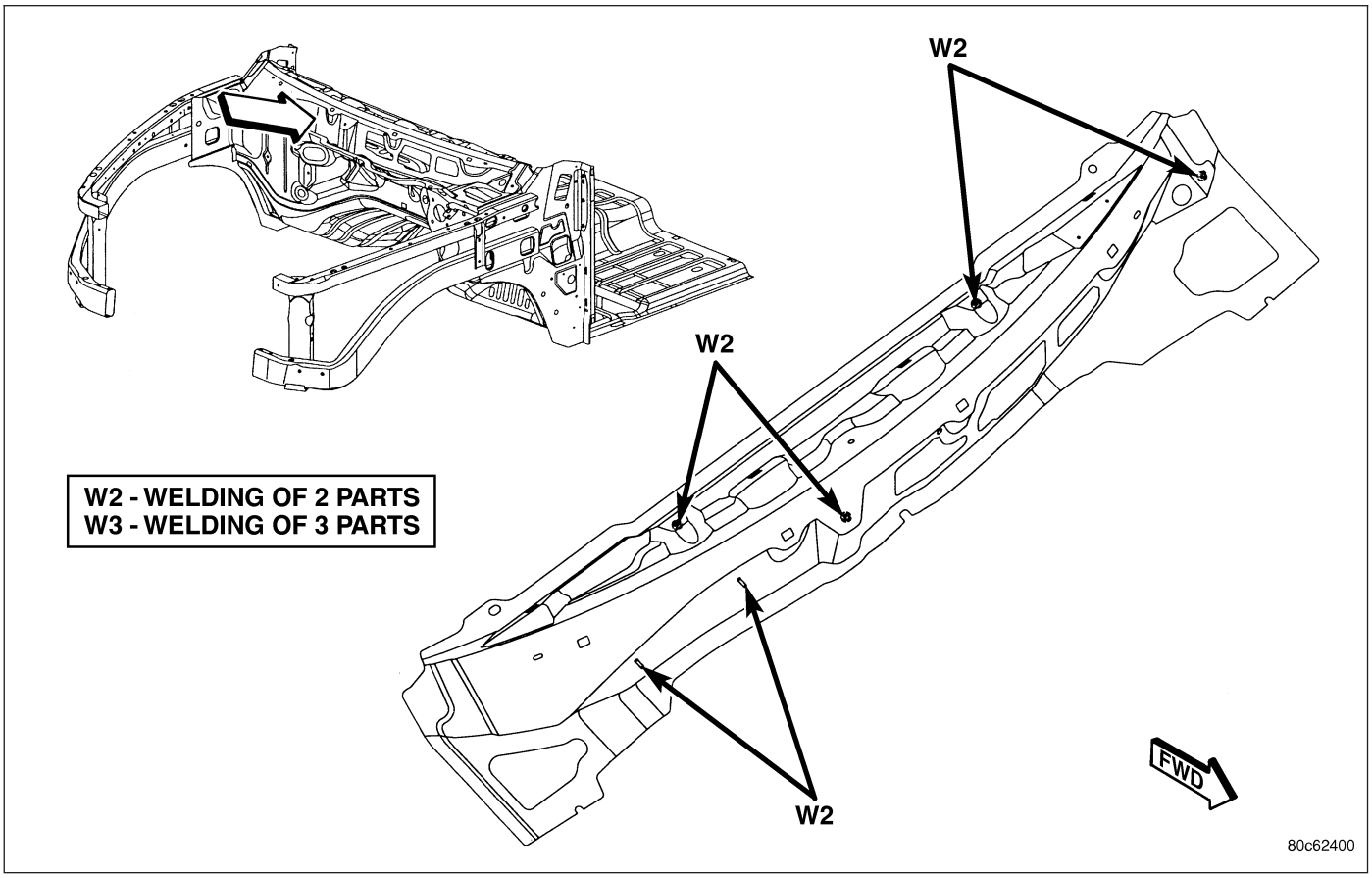

Fig. 33 WIPER ATTACHING WELD NUTS

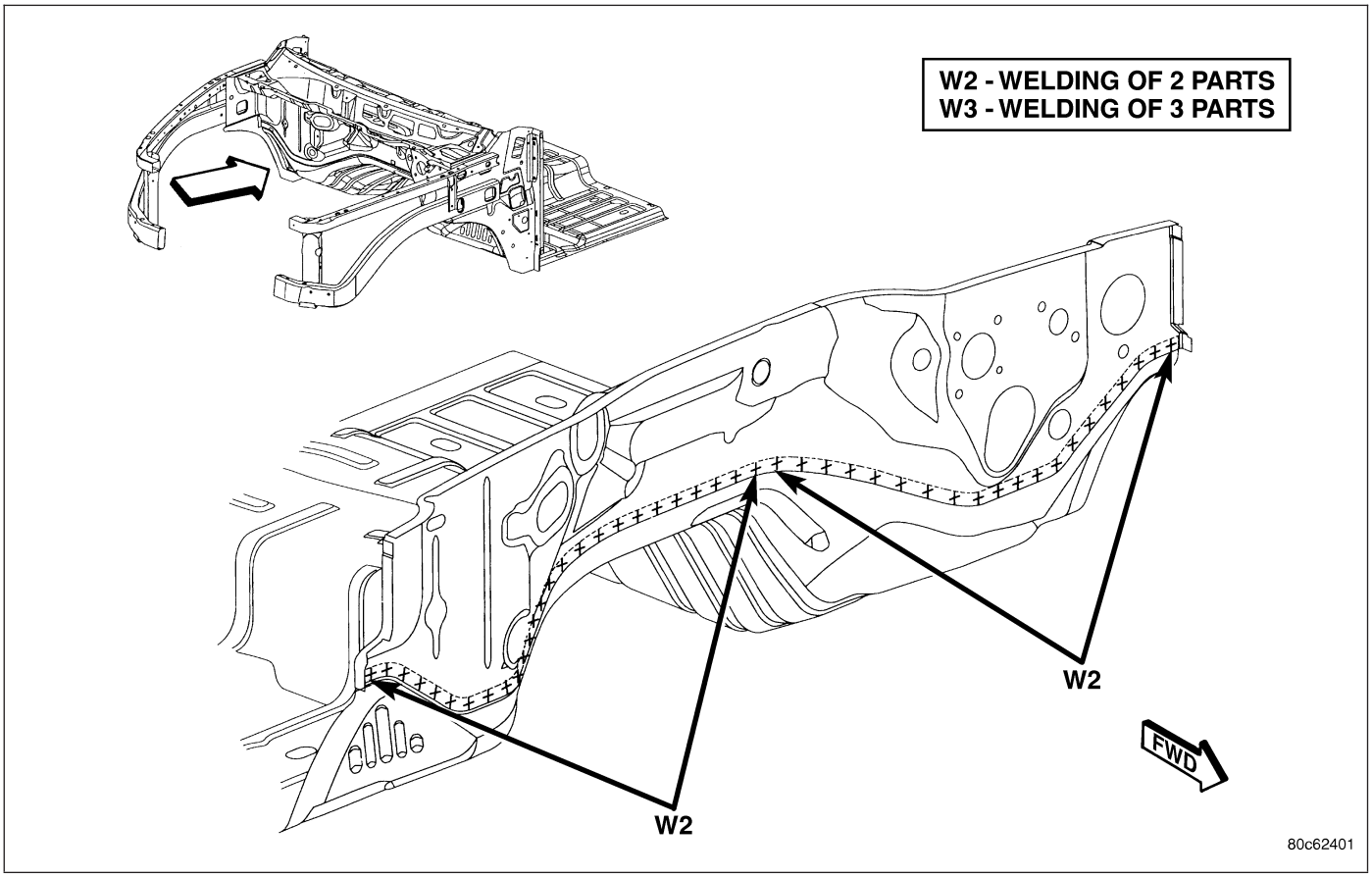

Fig. 34 DASH PANEL

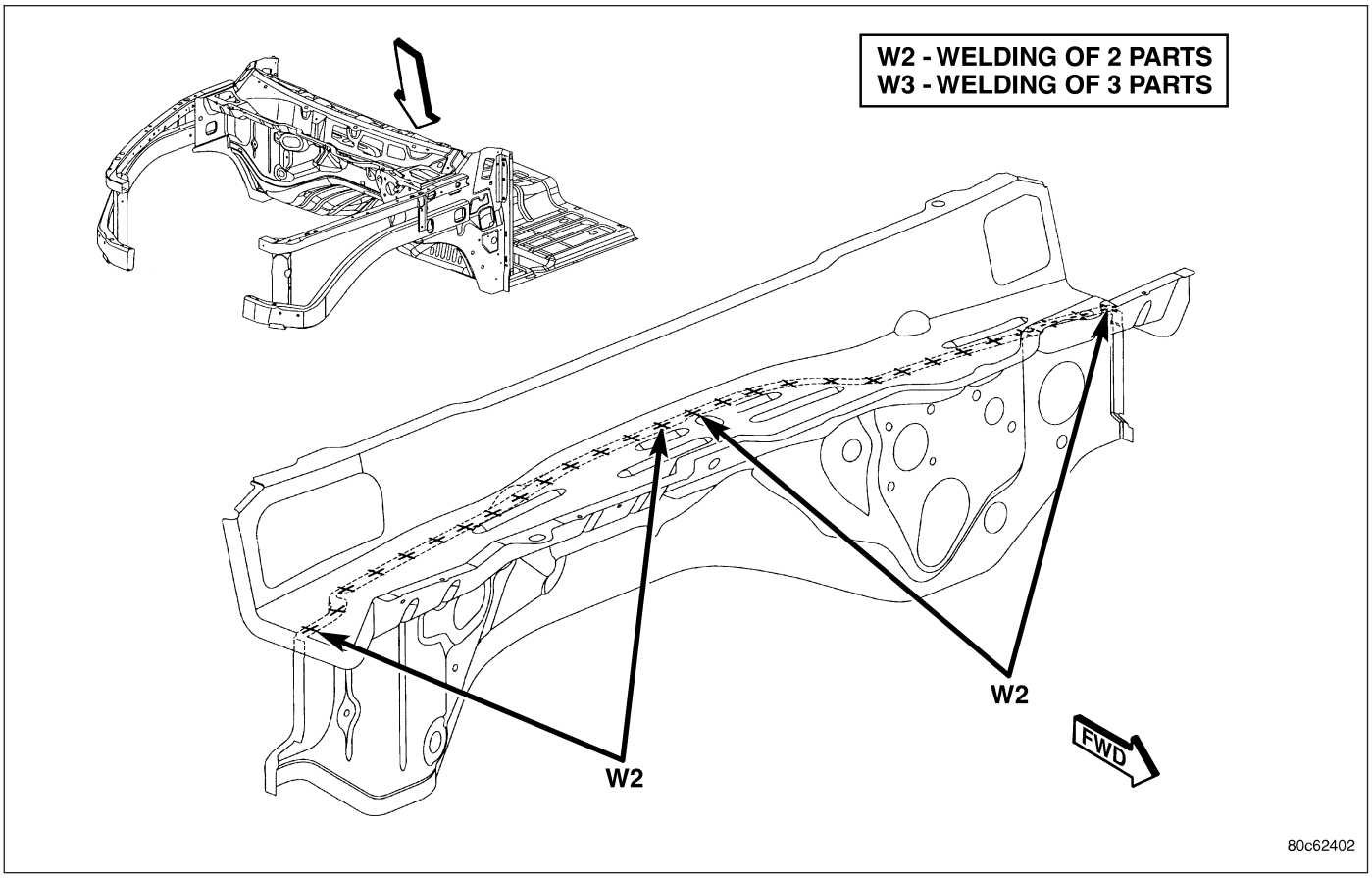

Fig. 35 DASH PANEL

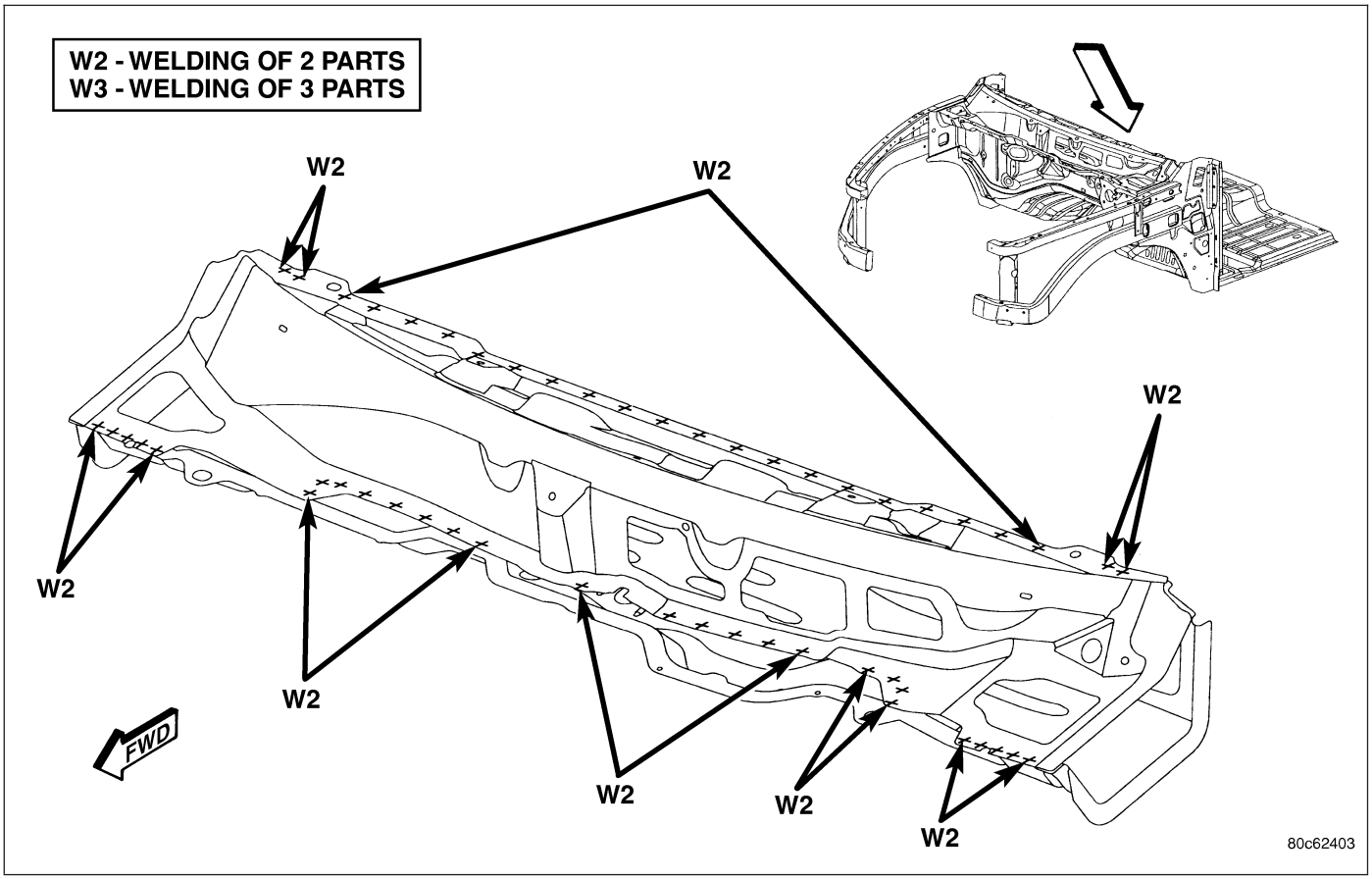

Fig. 36 LOWER PLENUM PANEL

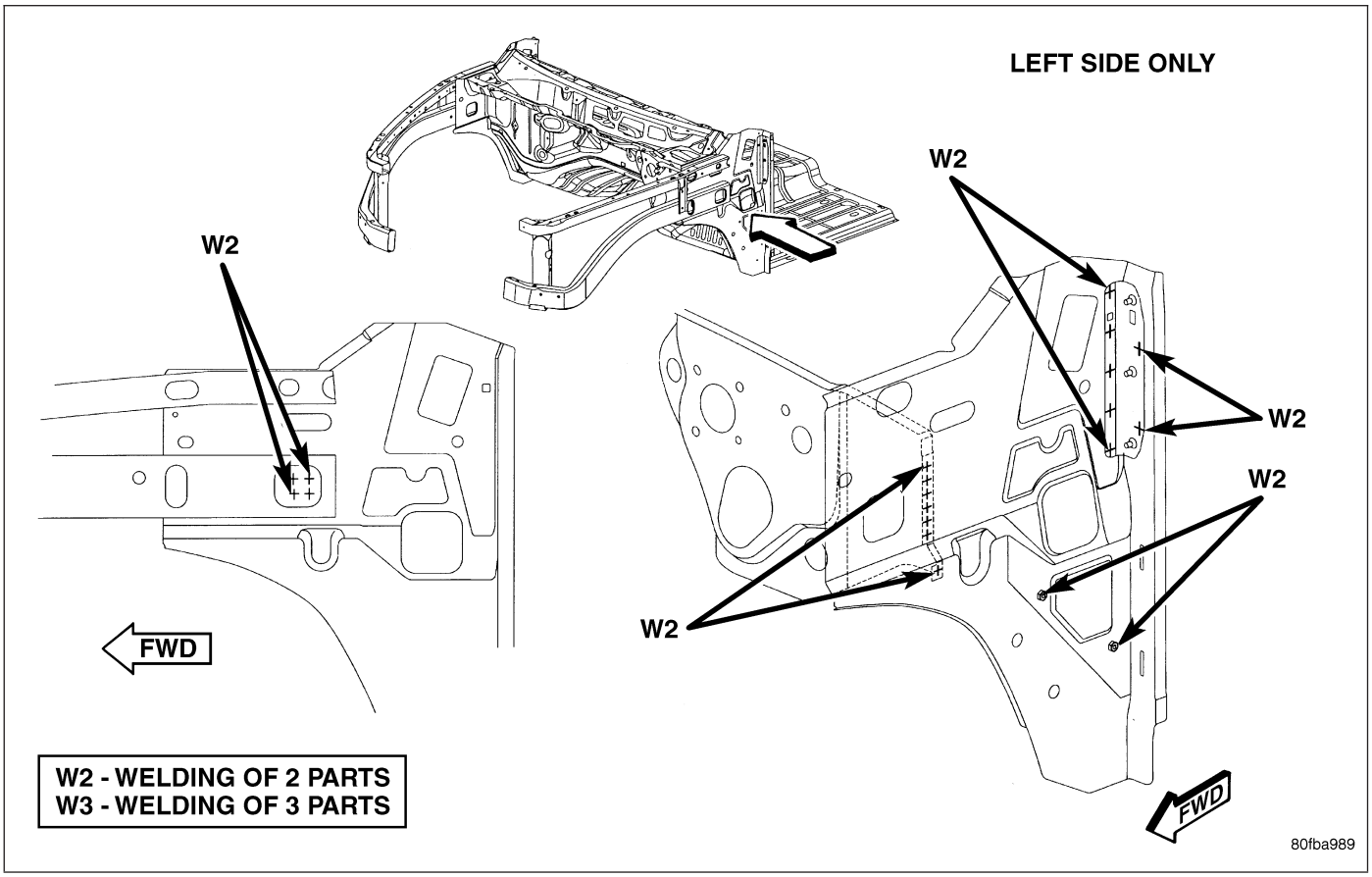

Fig. 37 FRONT FENDER

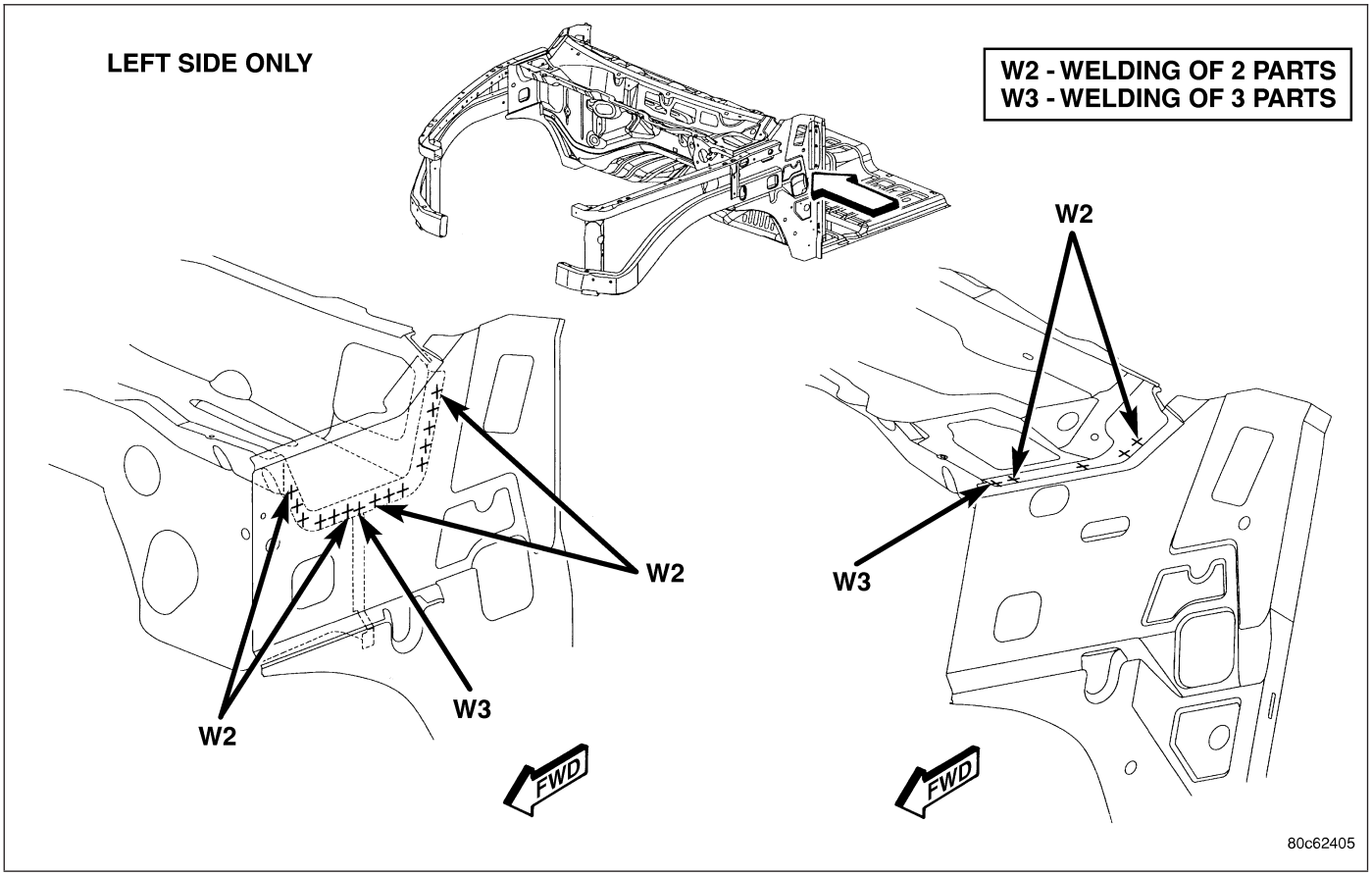

Fig. 38 DASH PANEL

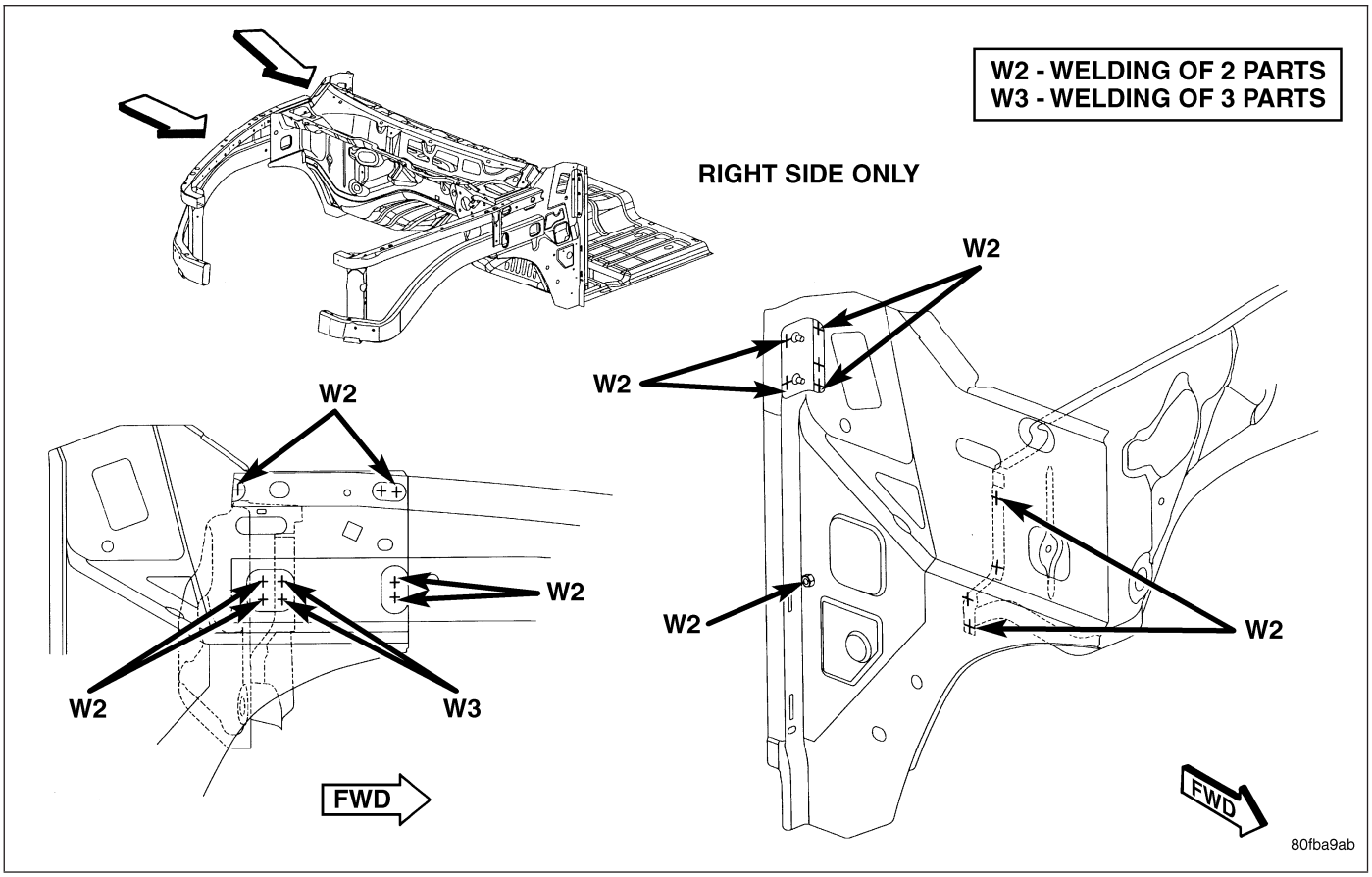

Fig. 39 FRONT FENDER

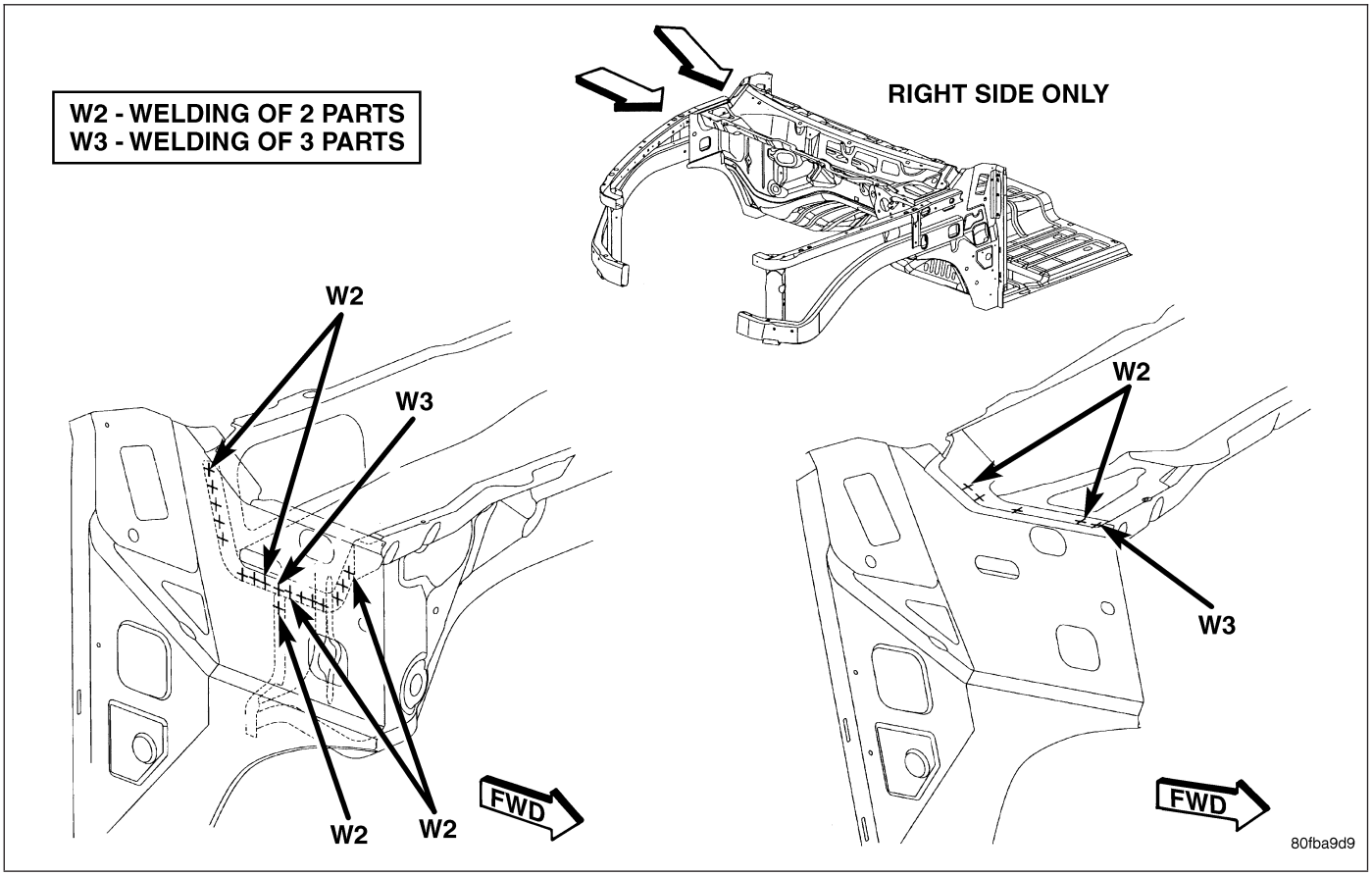

Fig. 40 DASH PANEL

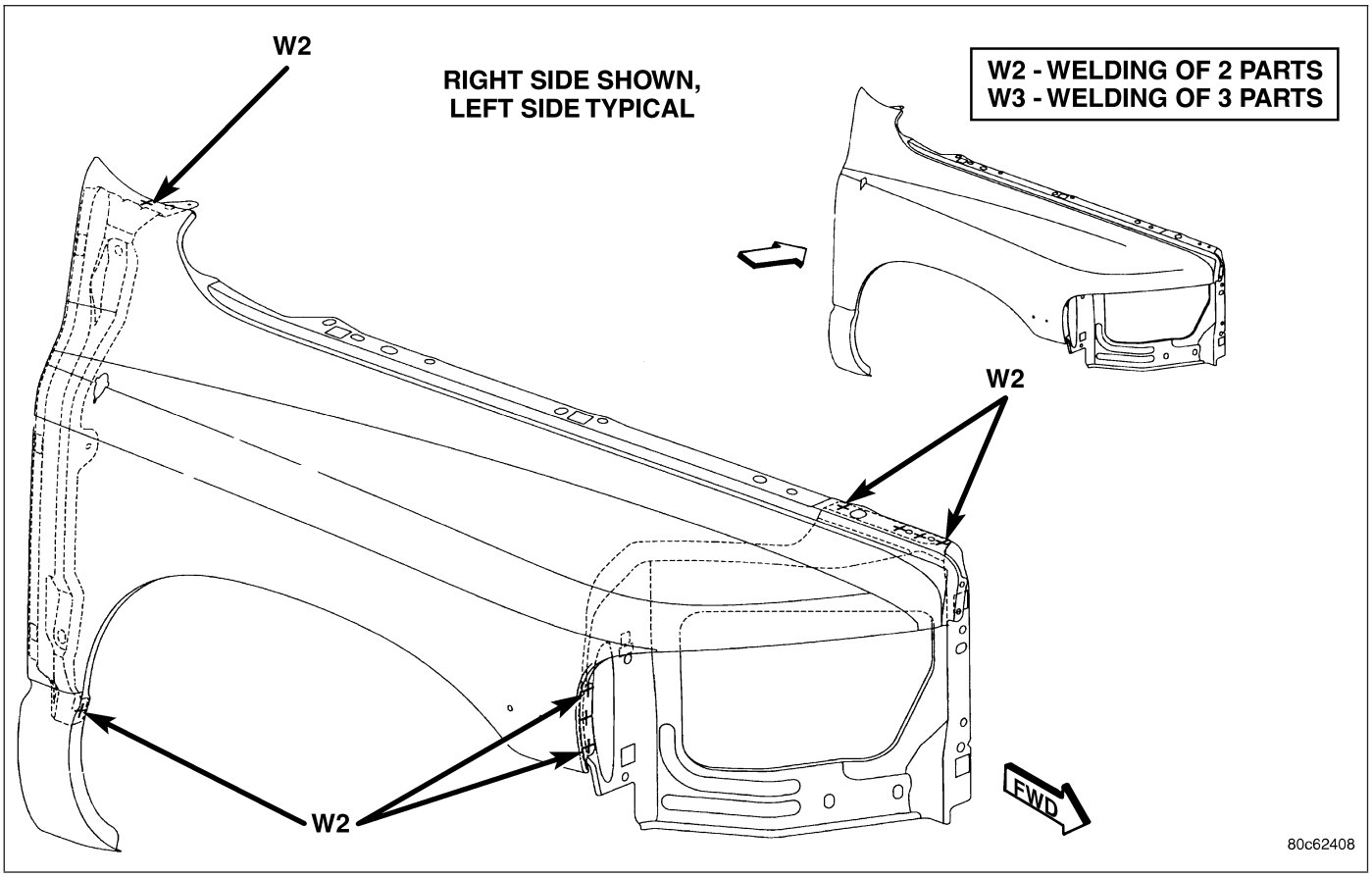

Fig. 41 HEADLAMP MOUNTING PANEL

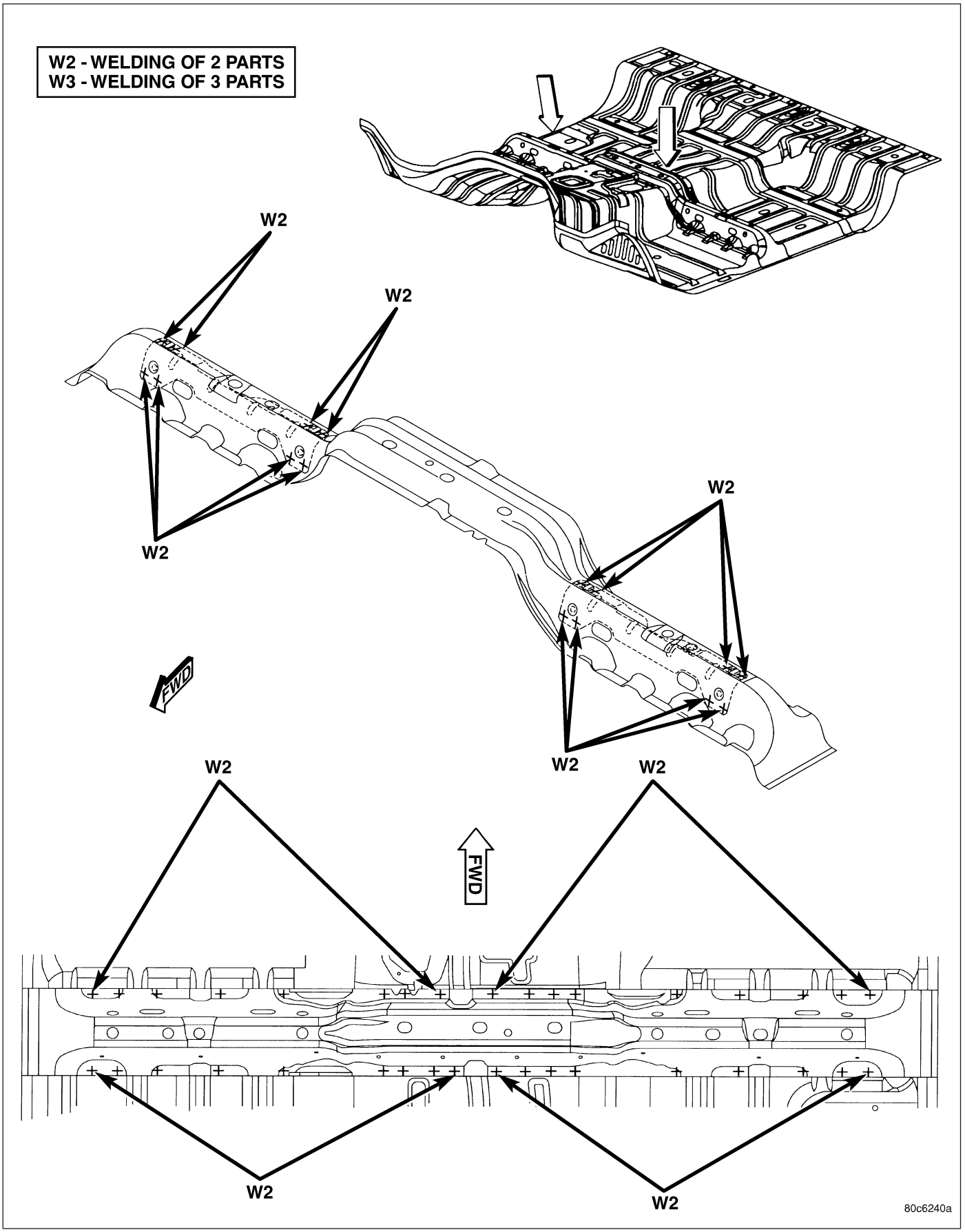

Fig. 42 SEAT MOUNTING FRONT BRACKETS - STANDARD CAB

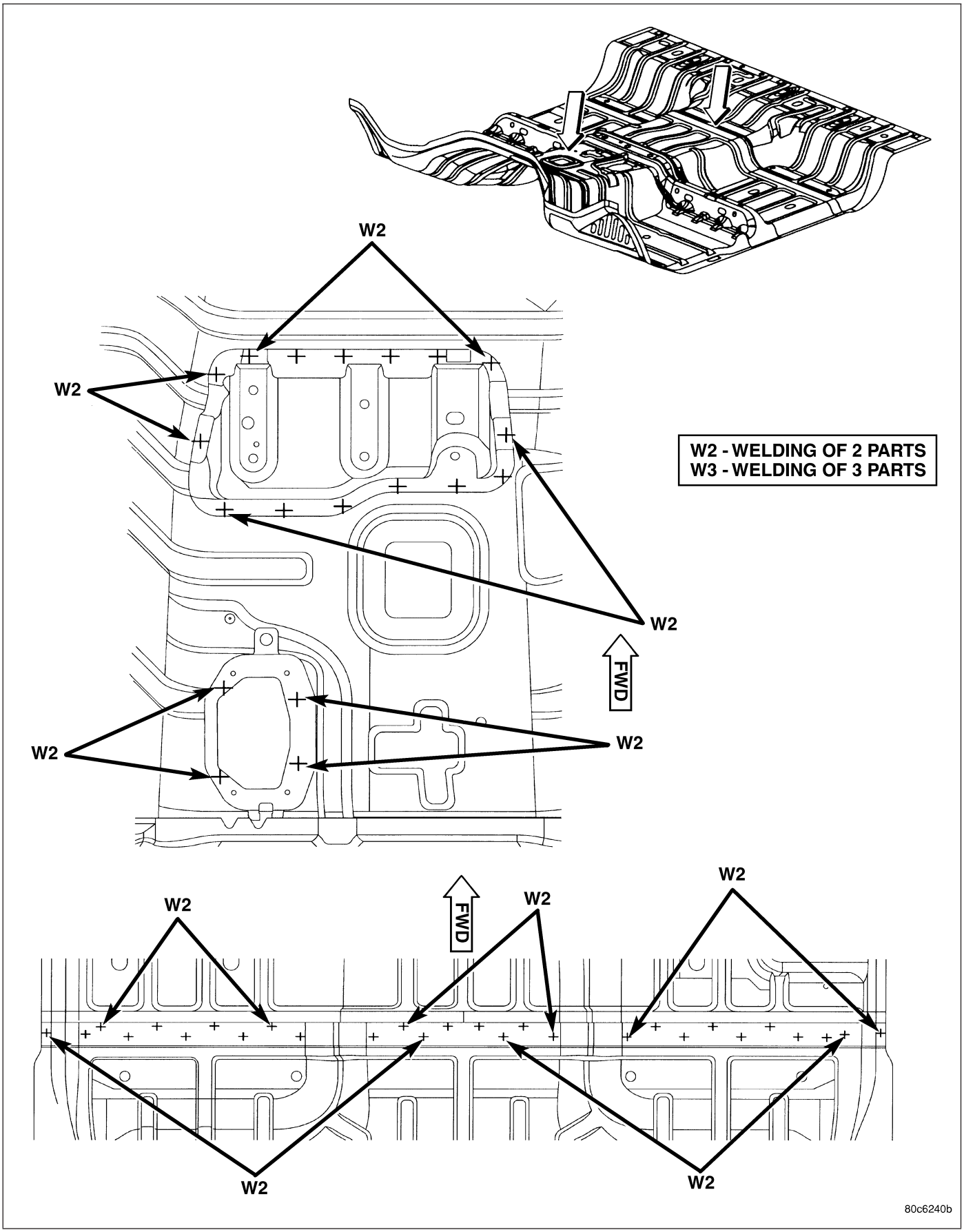

Fig. 43 AIR BAG MODULE BRACKET - STANDARD CAB

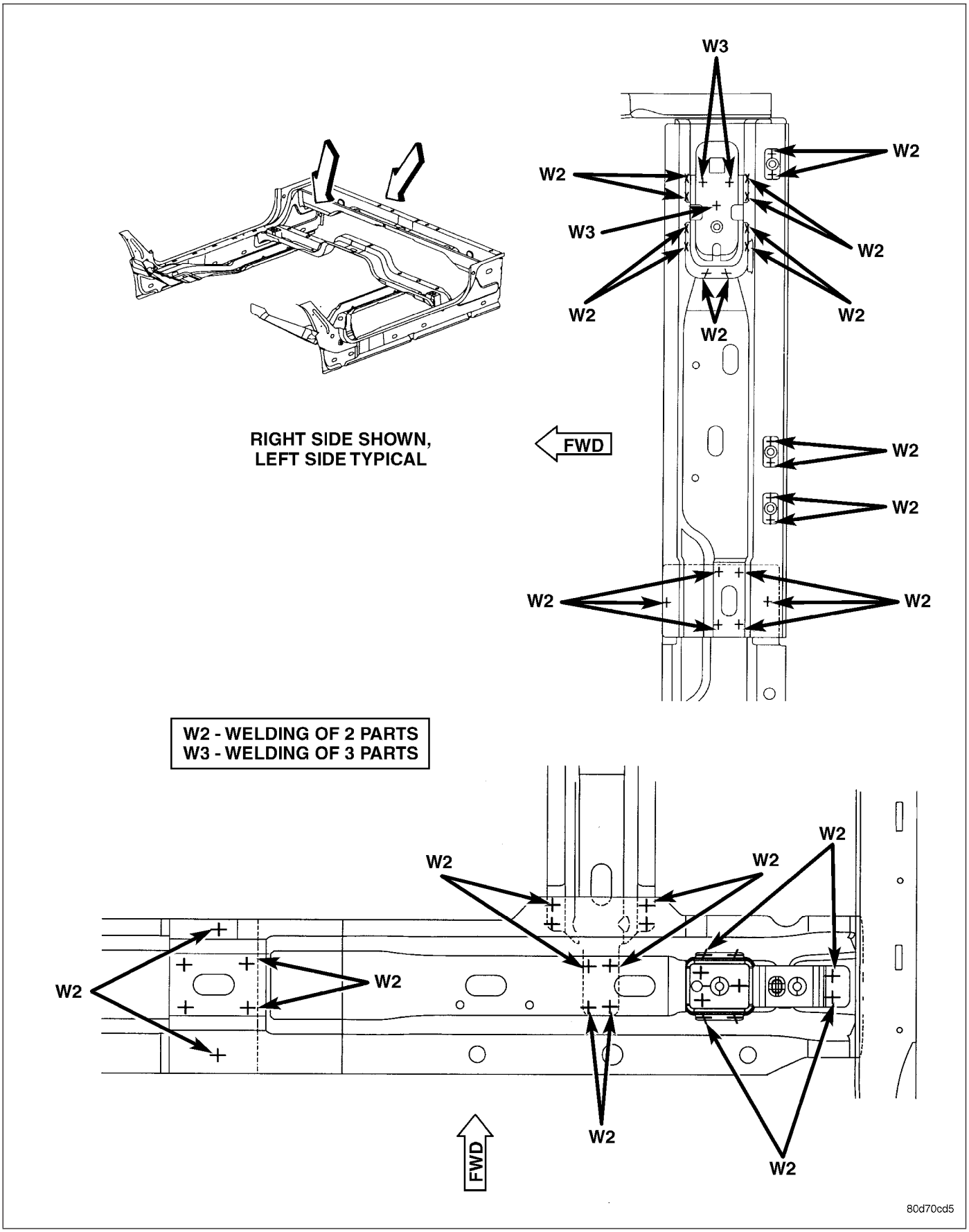

Fig. 44 RIGHT TO LEFT REAR FLOOR CROSSMEMBER - STANDARD CAB

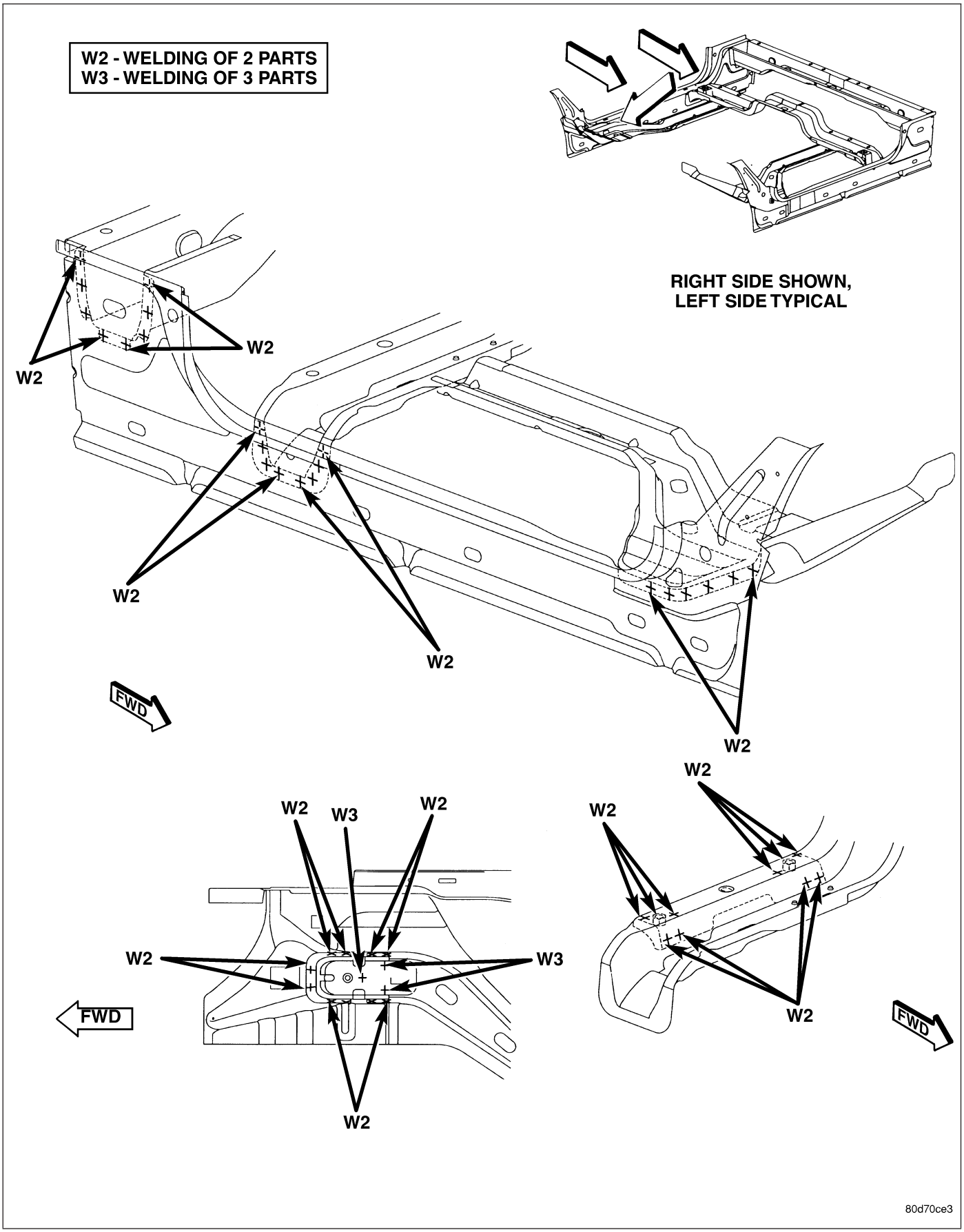

Fig. 45 REAR FLOOR CROSSMEMBER - STANDARD CAB

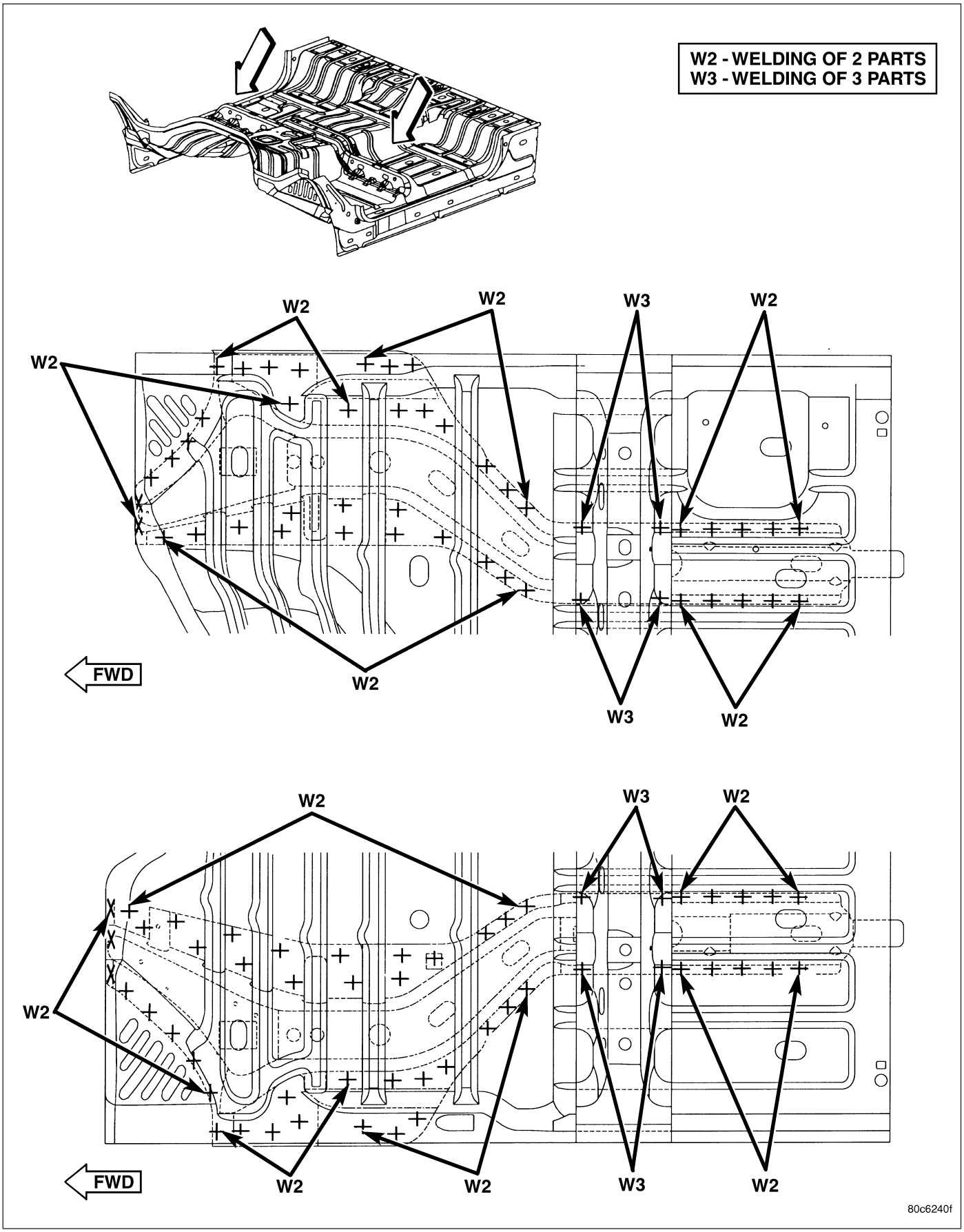

Fig. 46 SEAT MOUNTING FRONT CROSSMEMBER - STANDARD CAB

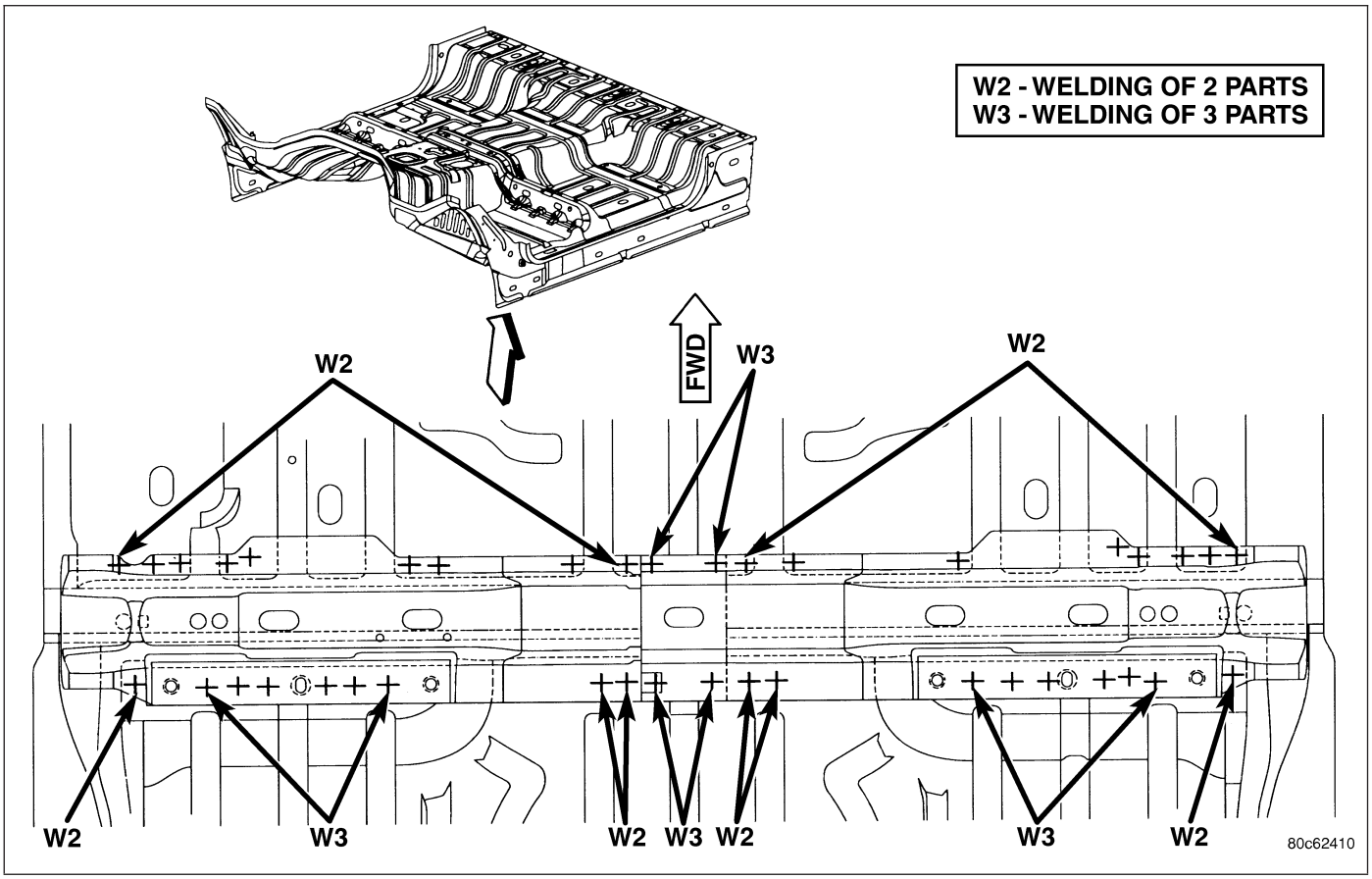

Fig. 47 FRONT SEAT MOUNTING CROSSMEMBERS - STANDARD CAB

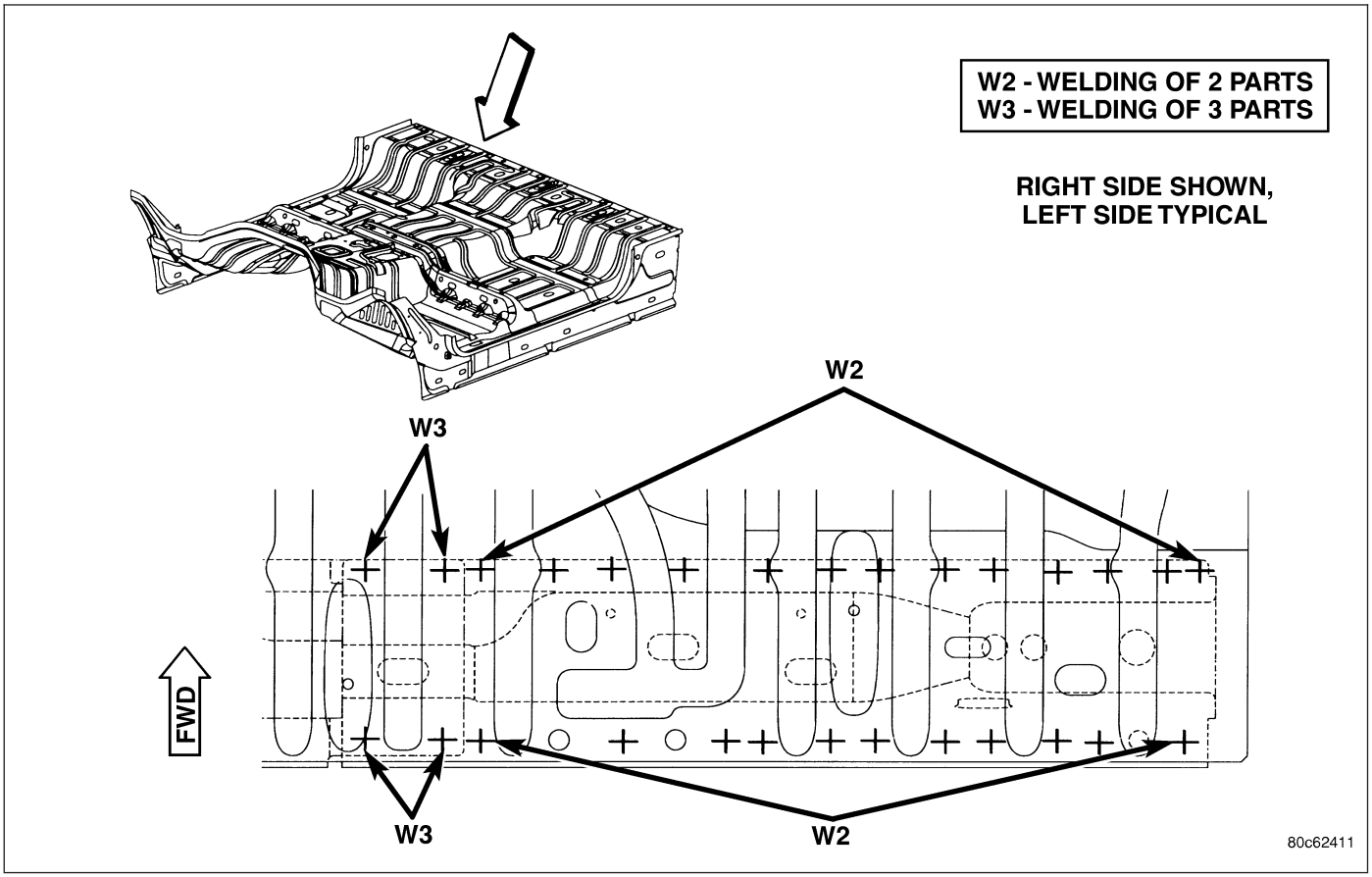

Fig. 48 REAR FLOOR CROSSMEMBERS - STANDARD CAB

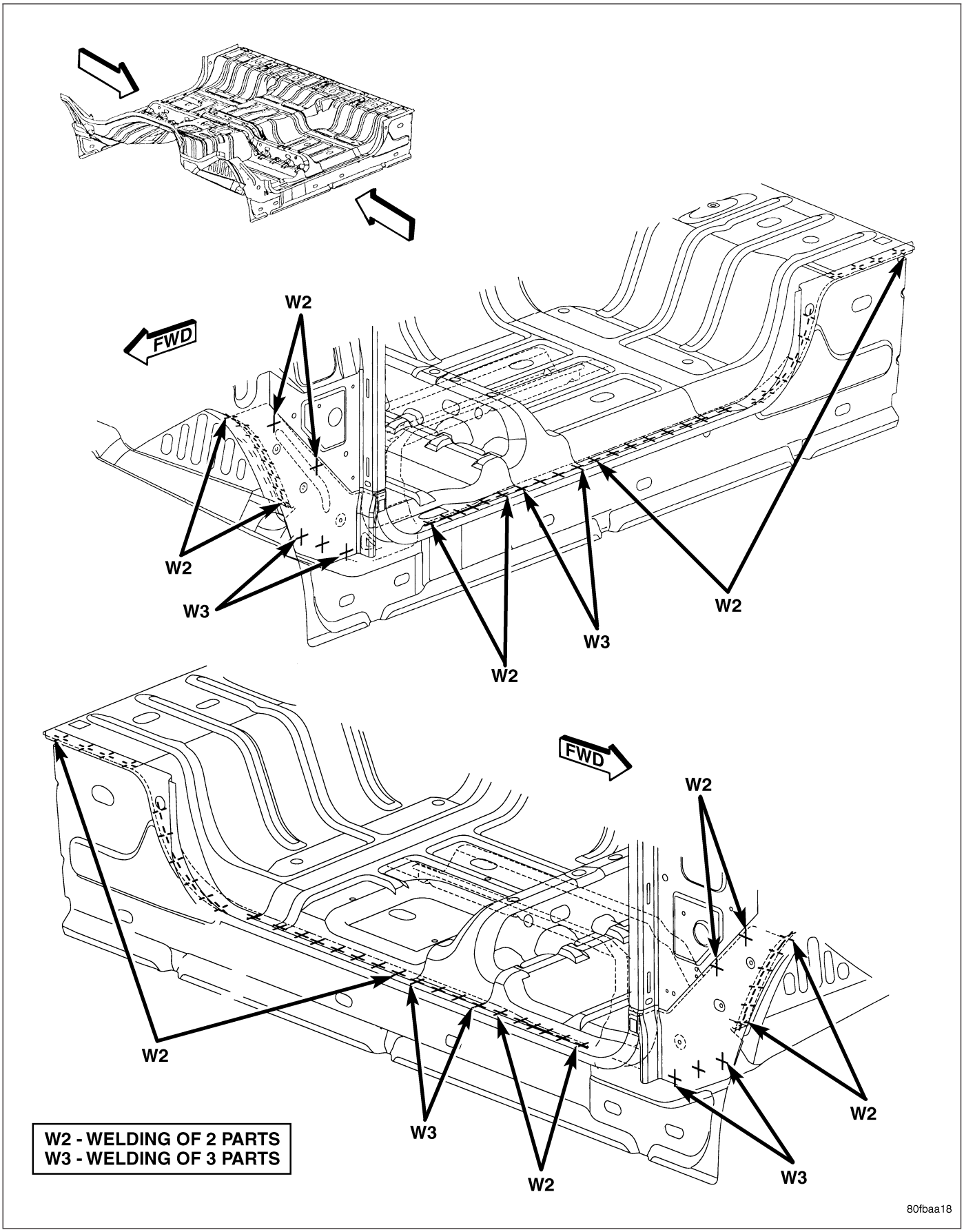

Fig. 49 FLOOR SILL - STANDARD CAB

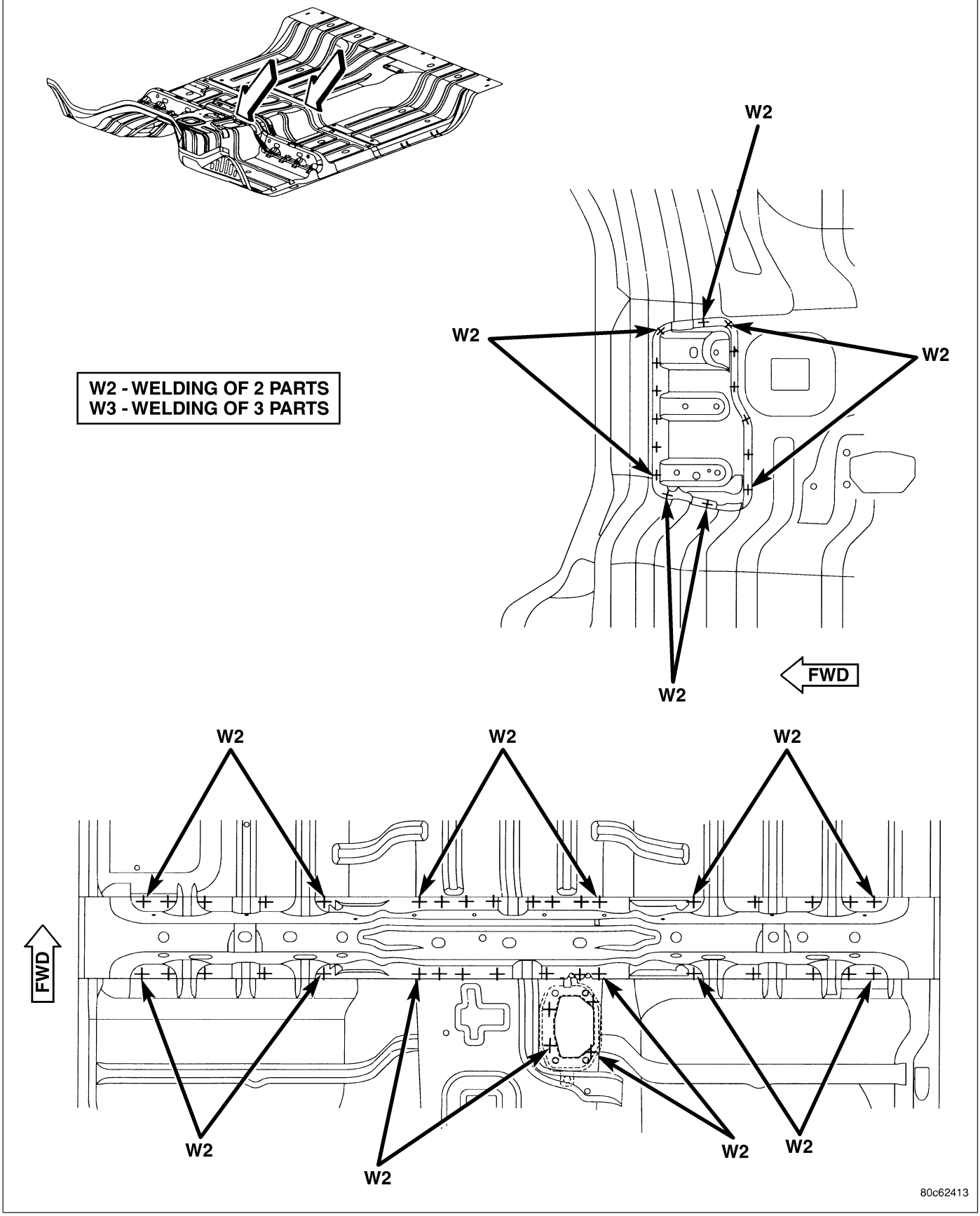

Fig. 50 AIR BAG MODULE BRACKET - QUAD CAB

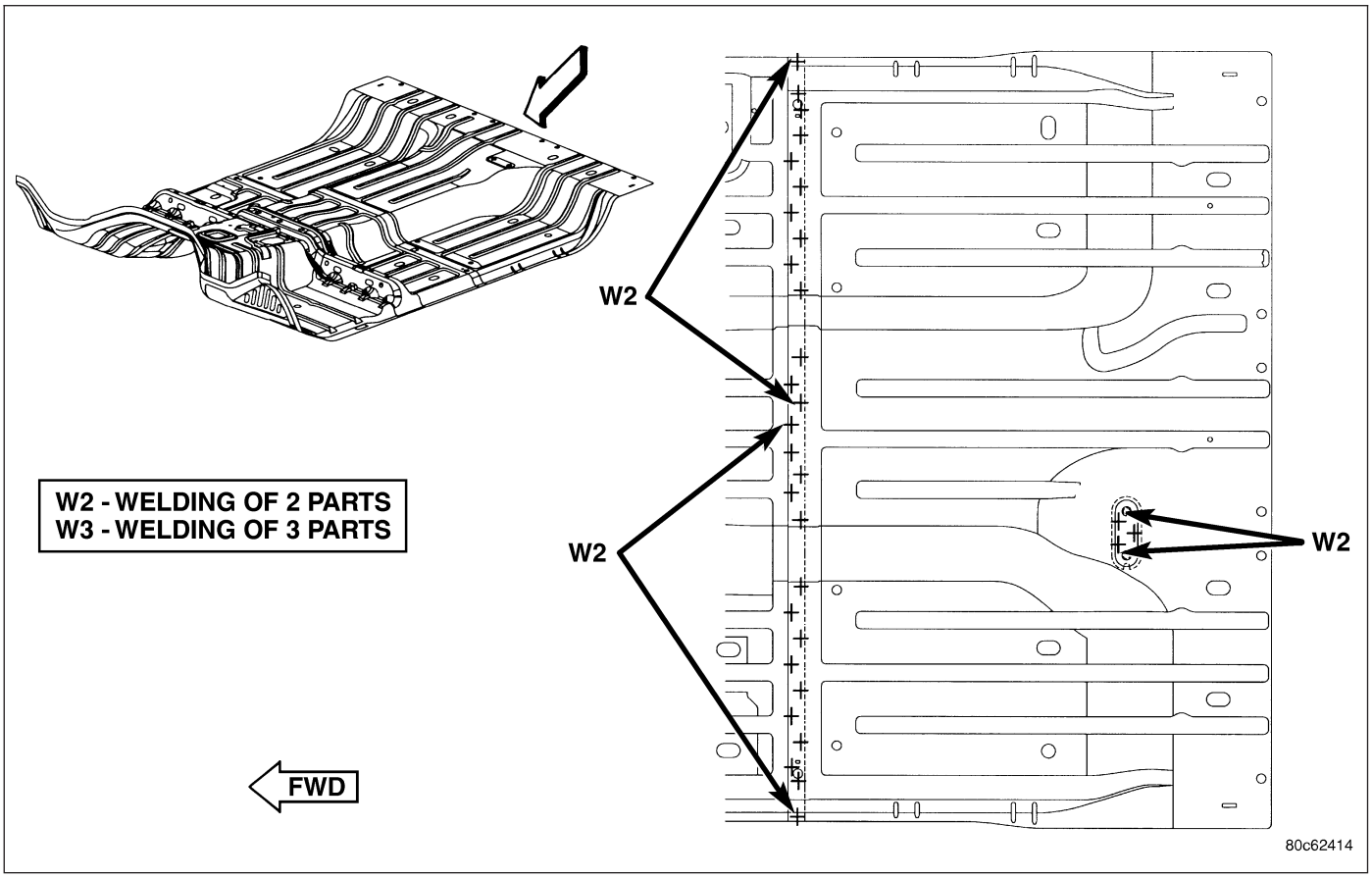

Fig. 51 REAR SEAT MIDDLE MOUNTING PLATE - QUAD CAB

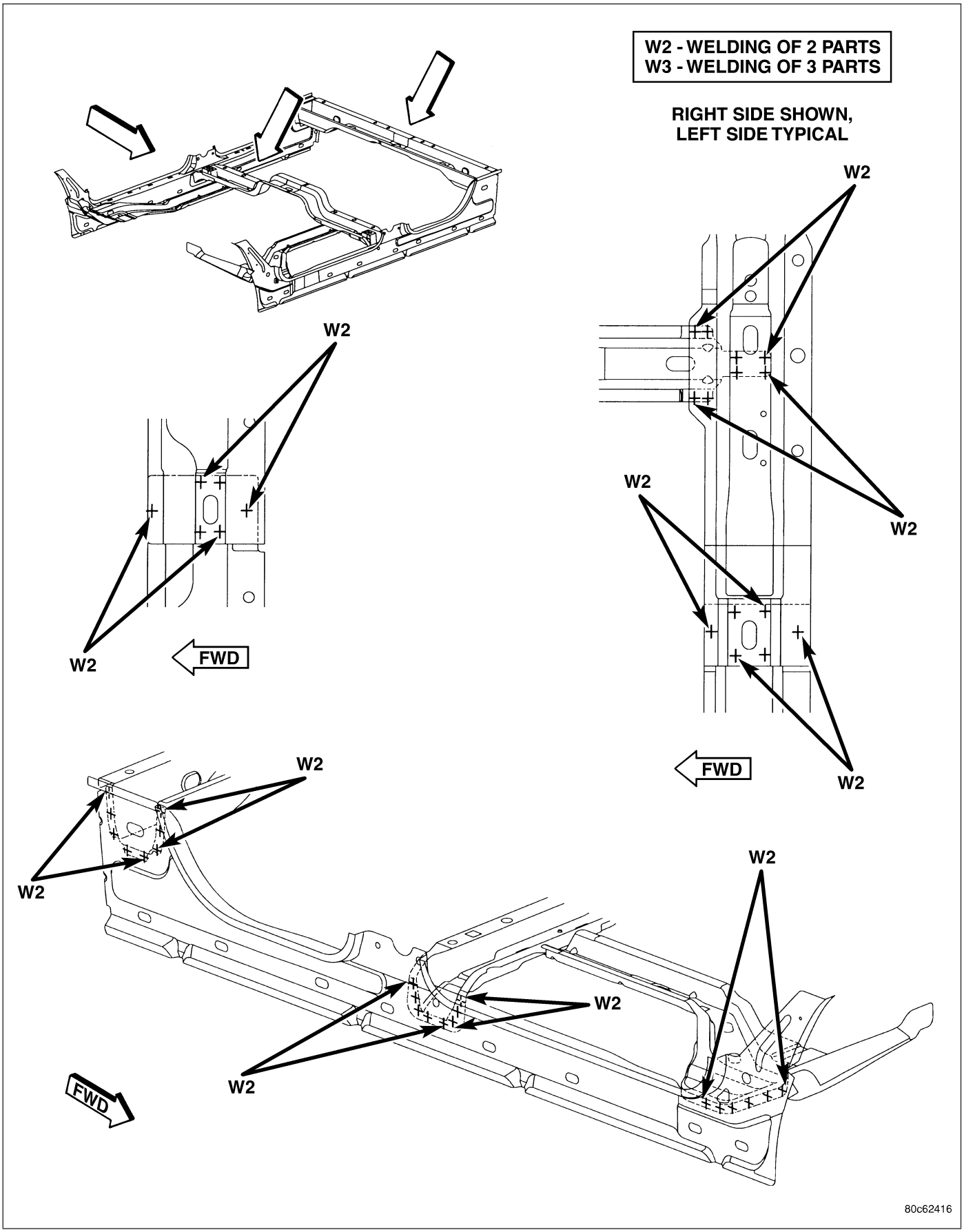

Fig. 52 REAR FLOOR CROSSMEMBER - QUAD CAB

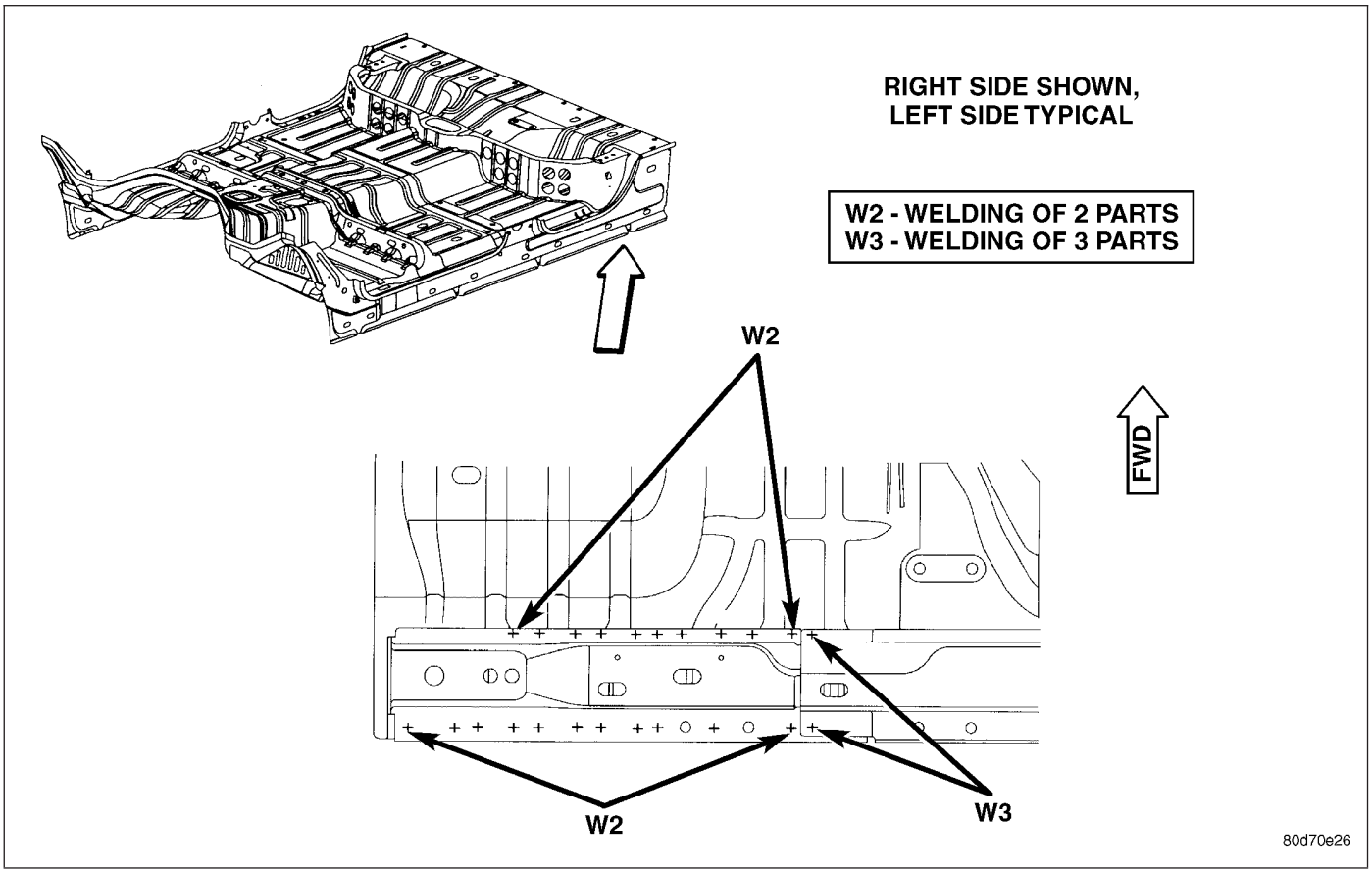

Fig. 53 LEFT REAR CROSSMEMBER - QUAD CAB

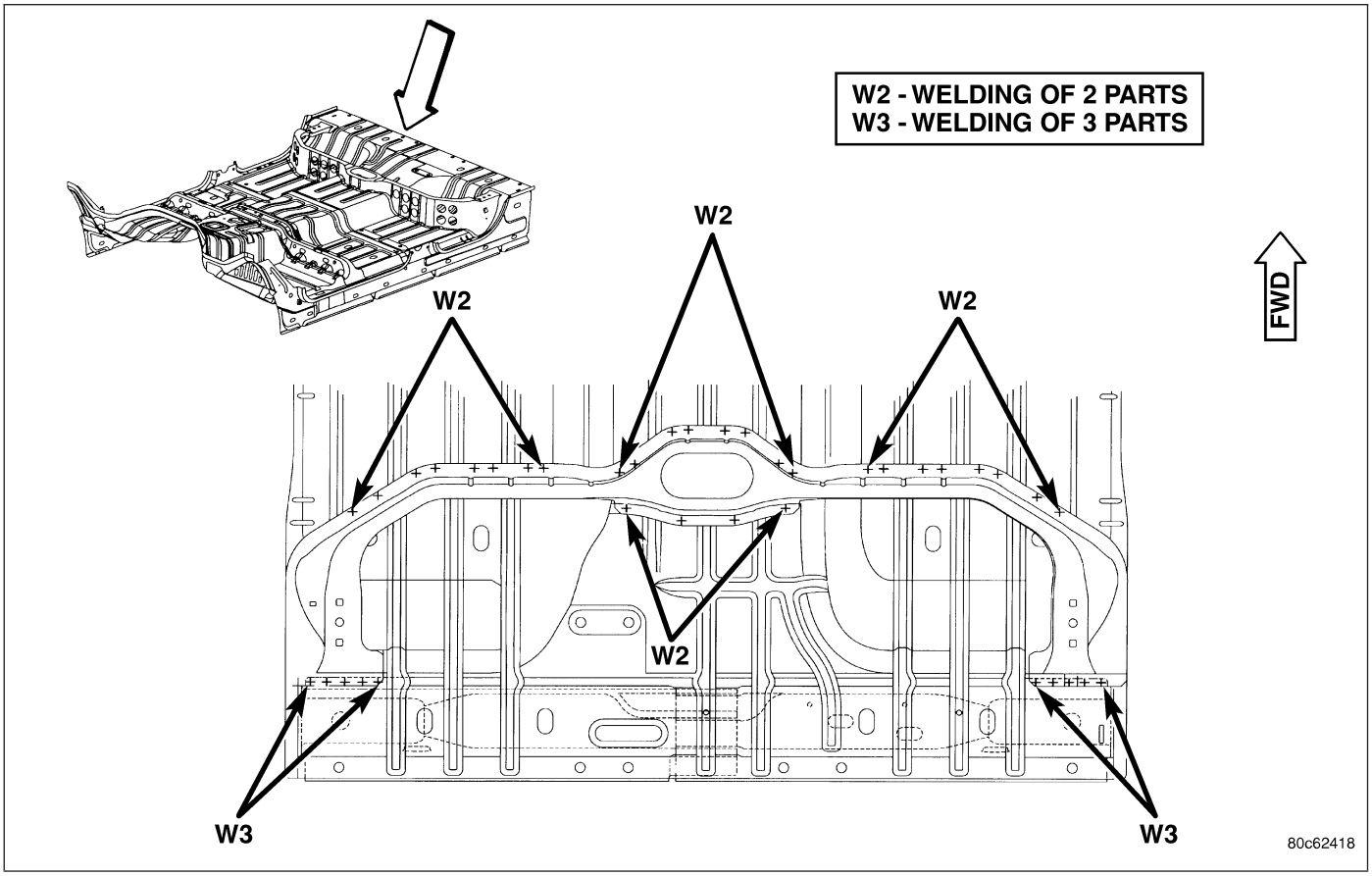

Fig. 54 STORAGE BIN - QUAD CAB

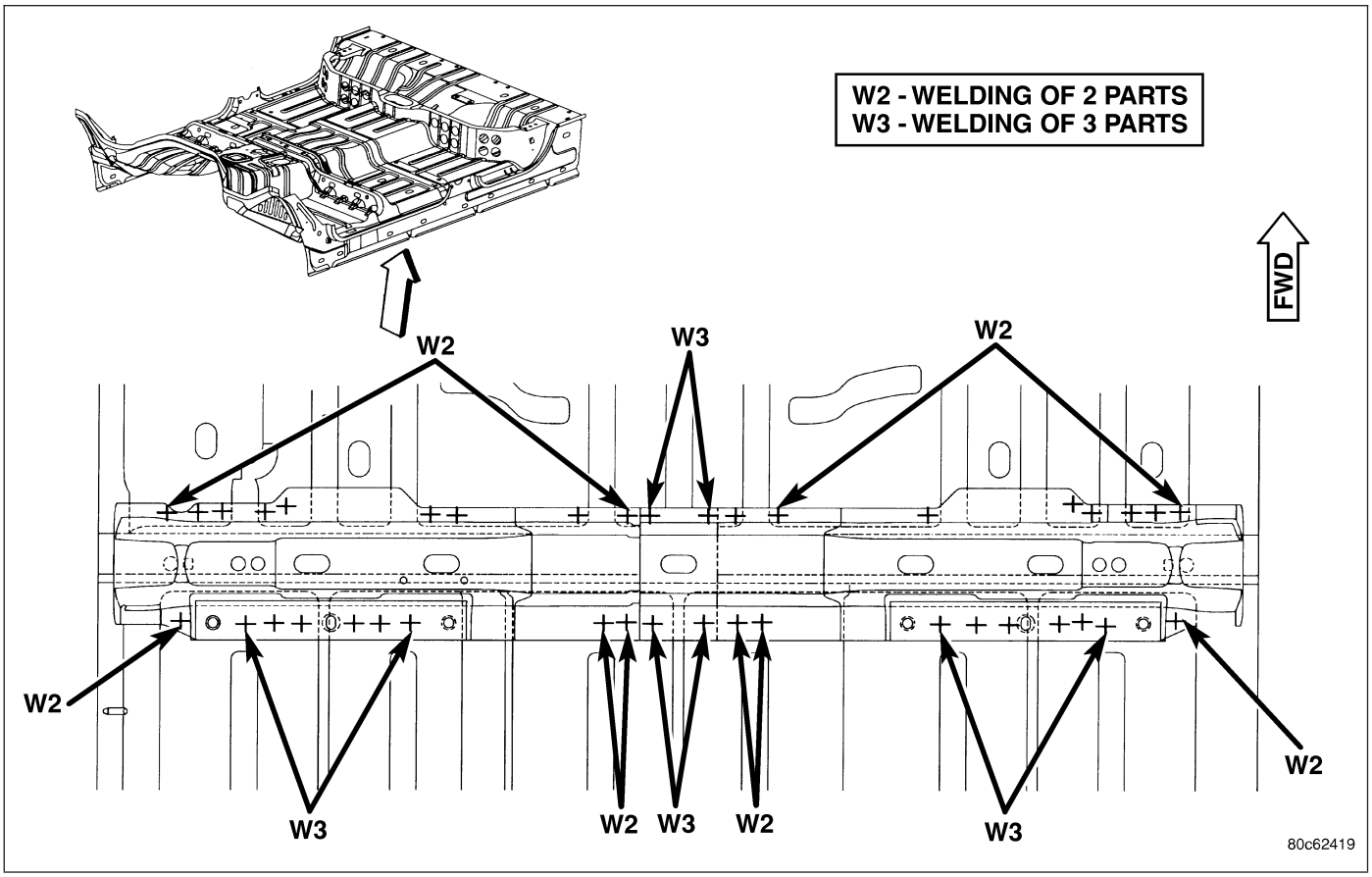

Fig. 55 RIGHT REAR FRONT SEAT MOUNTING CROSSMEMBER - QUAD CAB

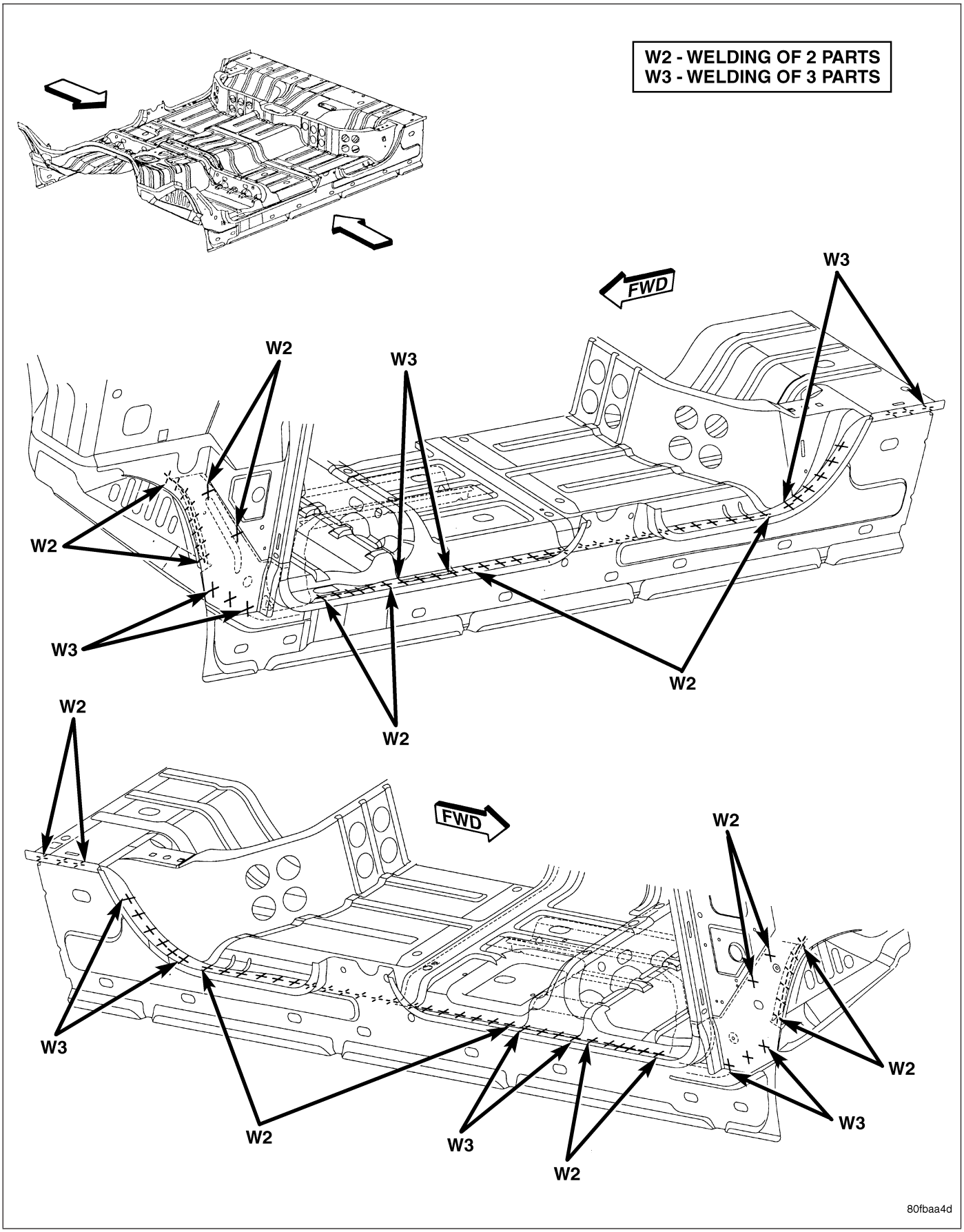

Fig. 56 FRONT SEAT MOUNTING FRONT CROSSMEMBER - QUAD CAB

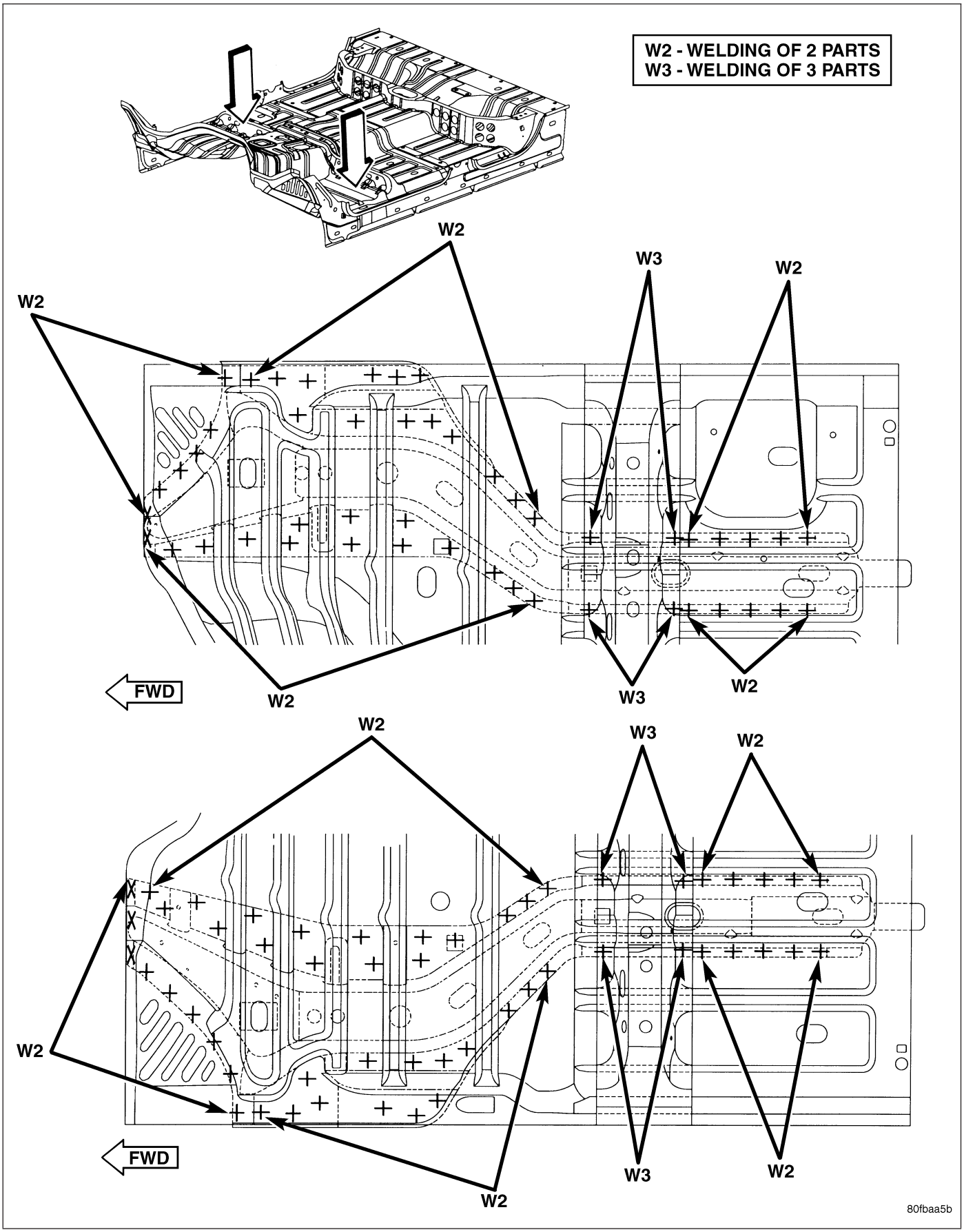

Fig. 57 FRONT SEAT MOUNTING FRONT CROSSMEMBER

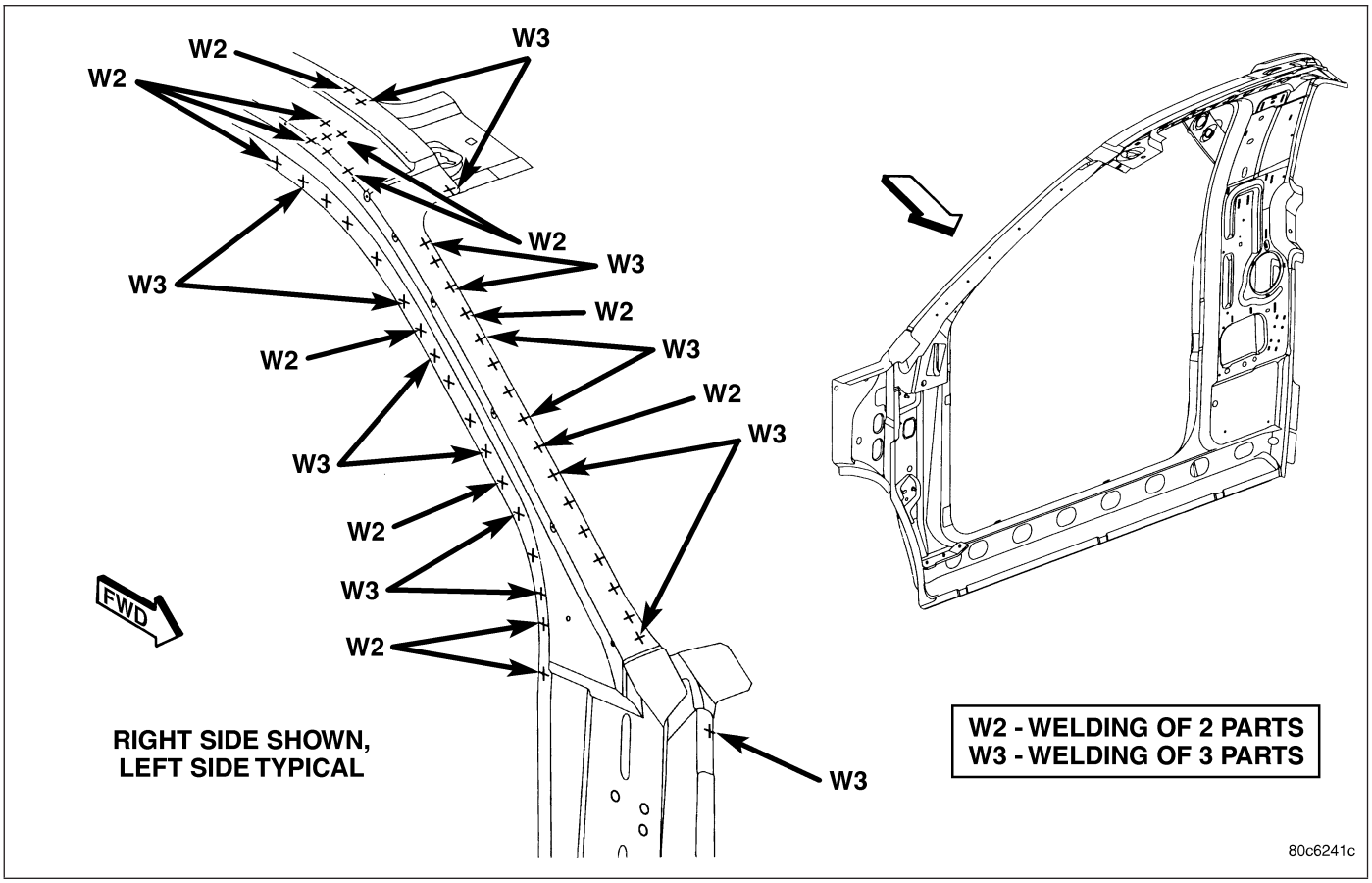

Fig. 58 A-PILLAR REINFORCEMENT - STANDARD CAB

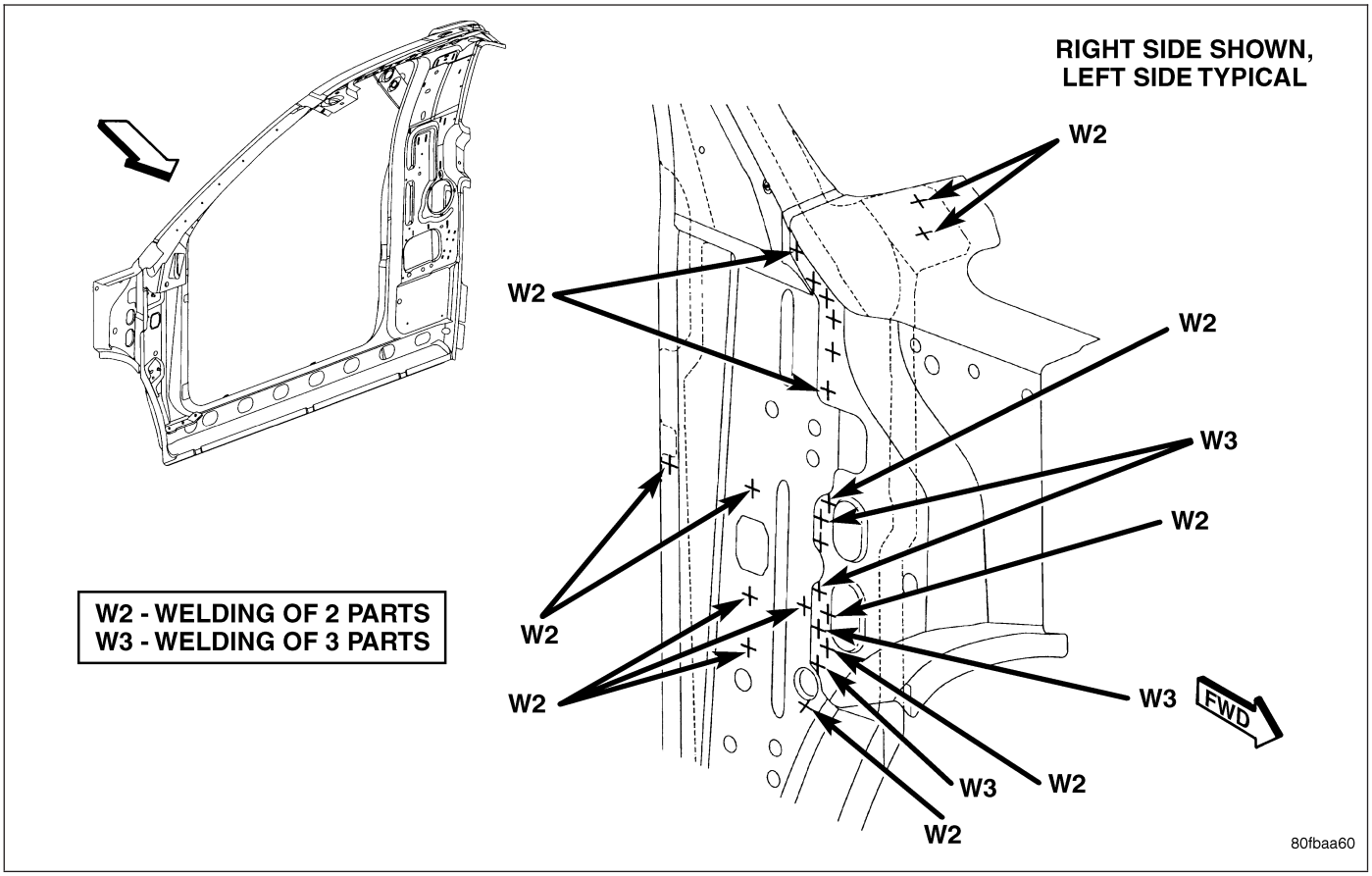

Fig. 59 A-PILLAR REINFORCEMENT - STANDARD CAB

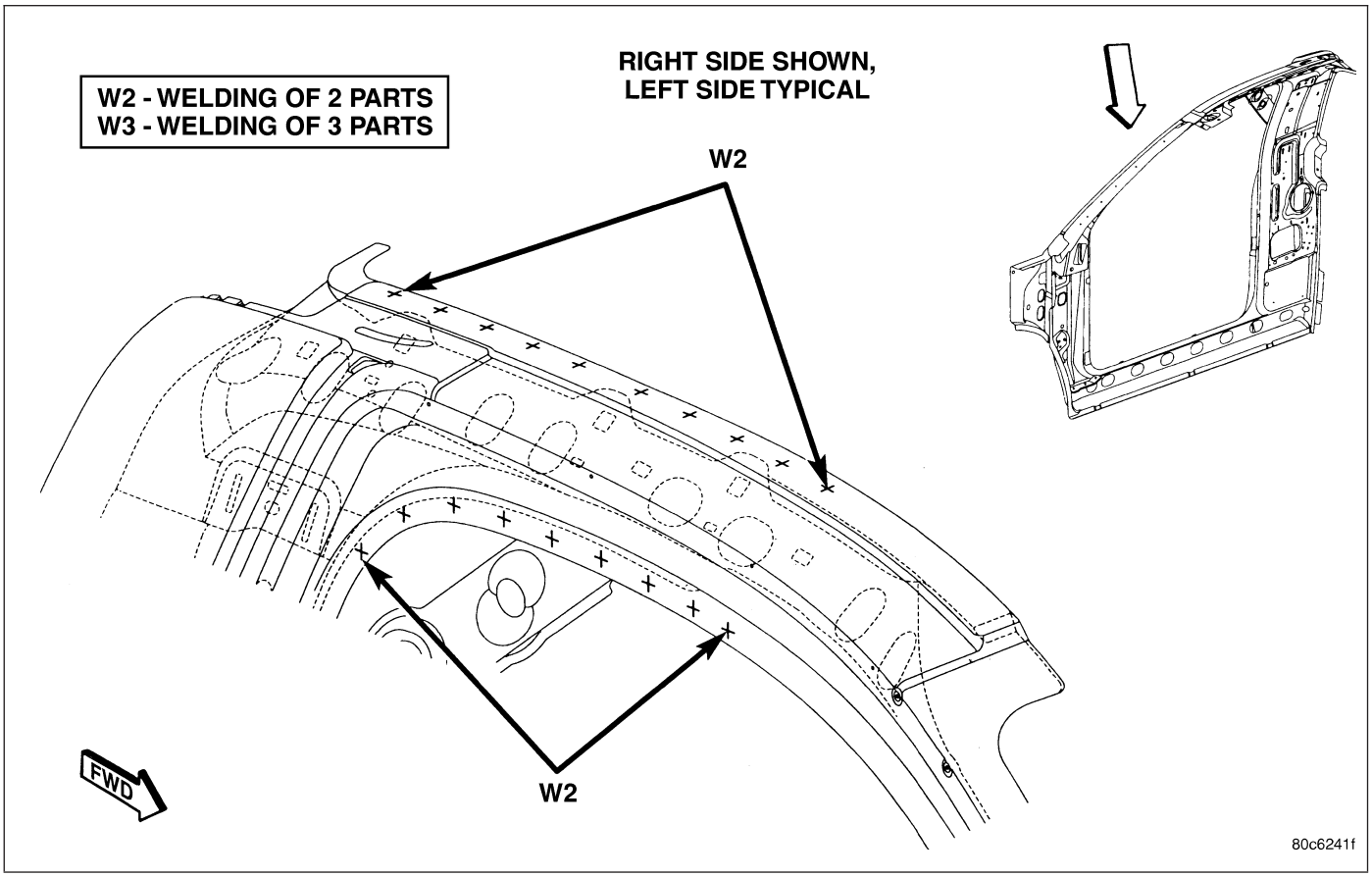

Fig. 60 INNER BODY SIDE APERTURE - STANDARD CAB

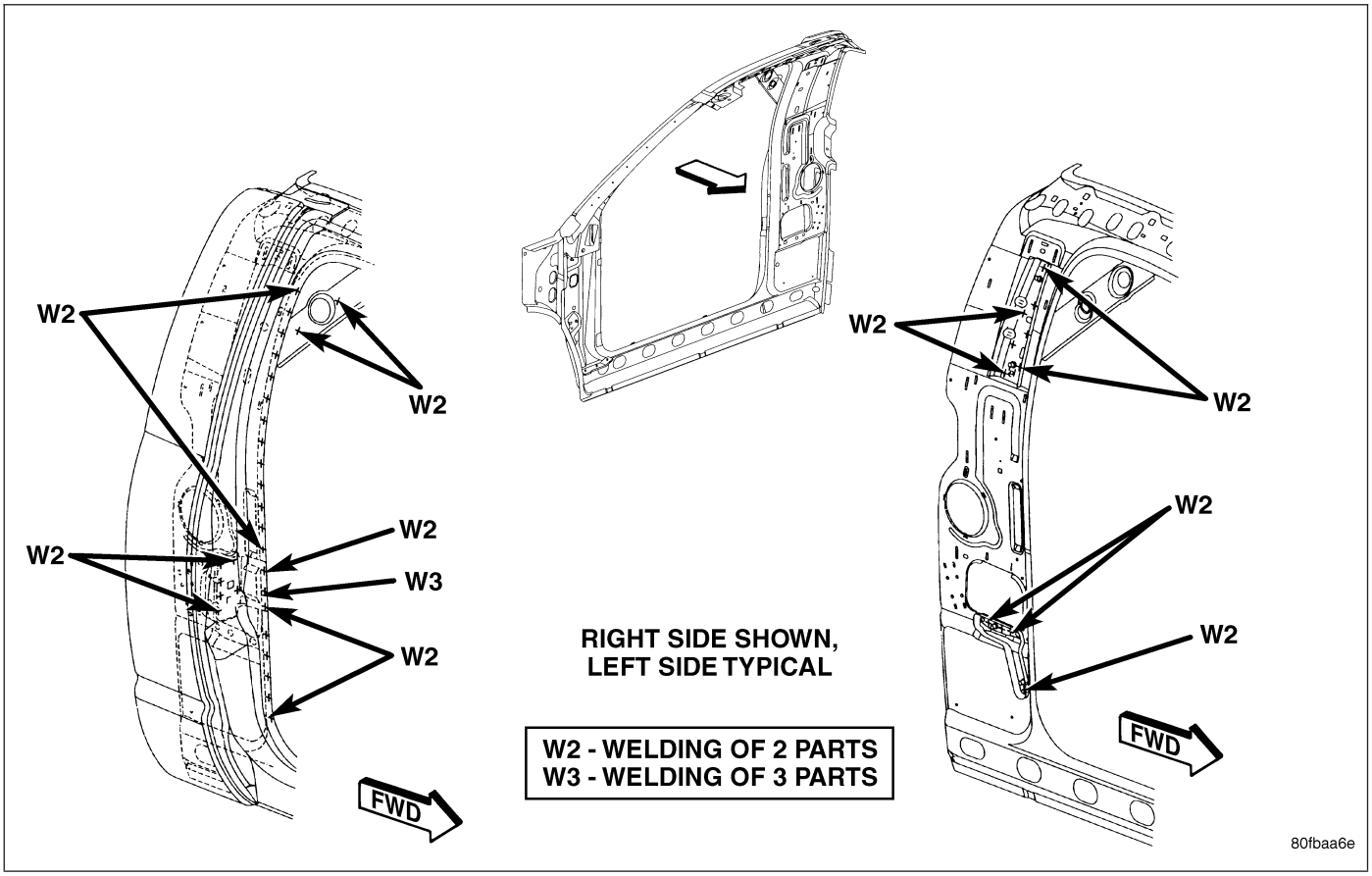

Fig. 61 SHOULDER BELT REINFORCEMENT - STANDARD CAB

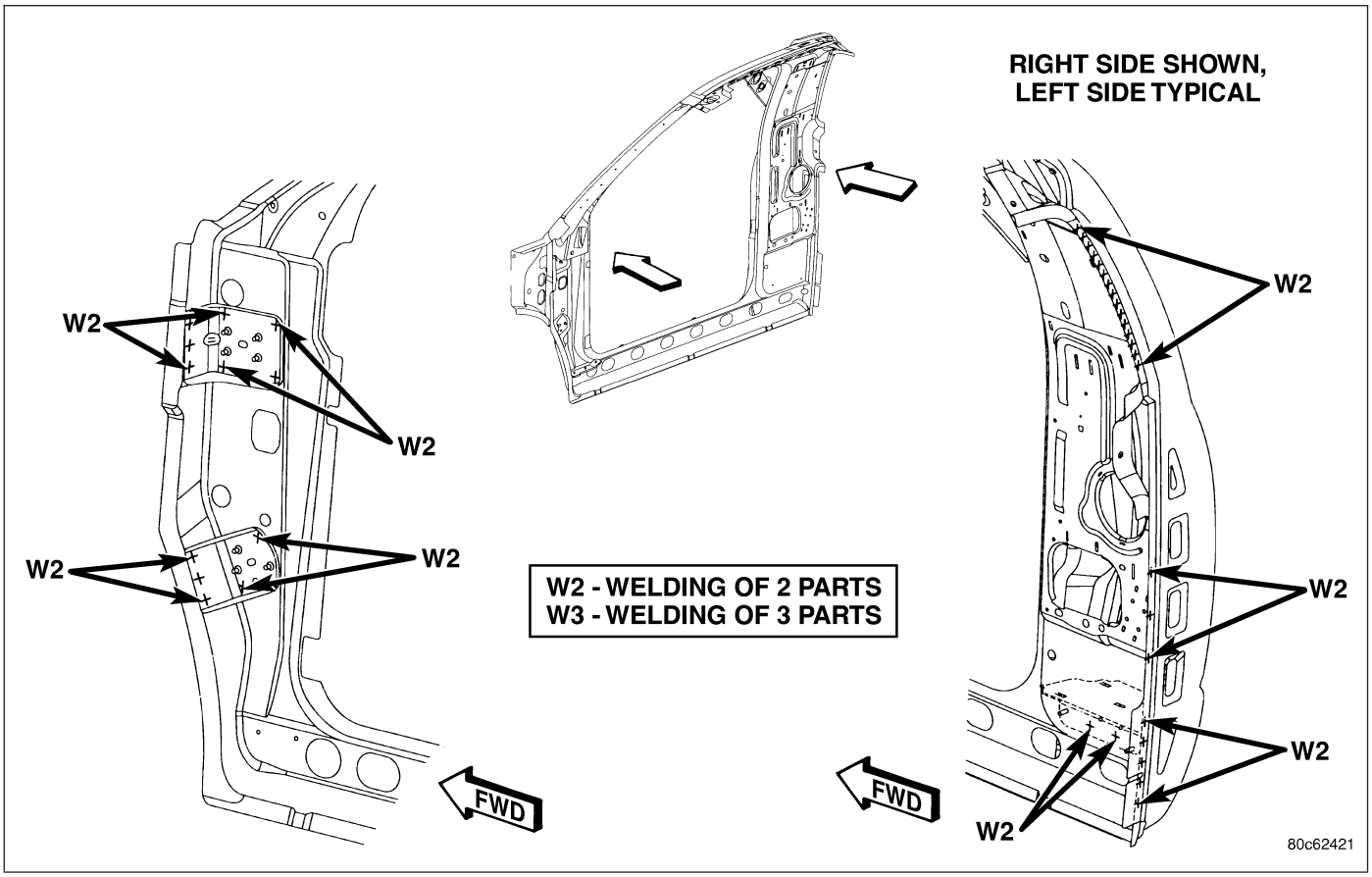

Fig. 62 FRONT PILLAR TAPPING PLATES - STANDARD CAB

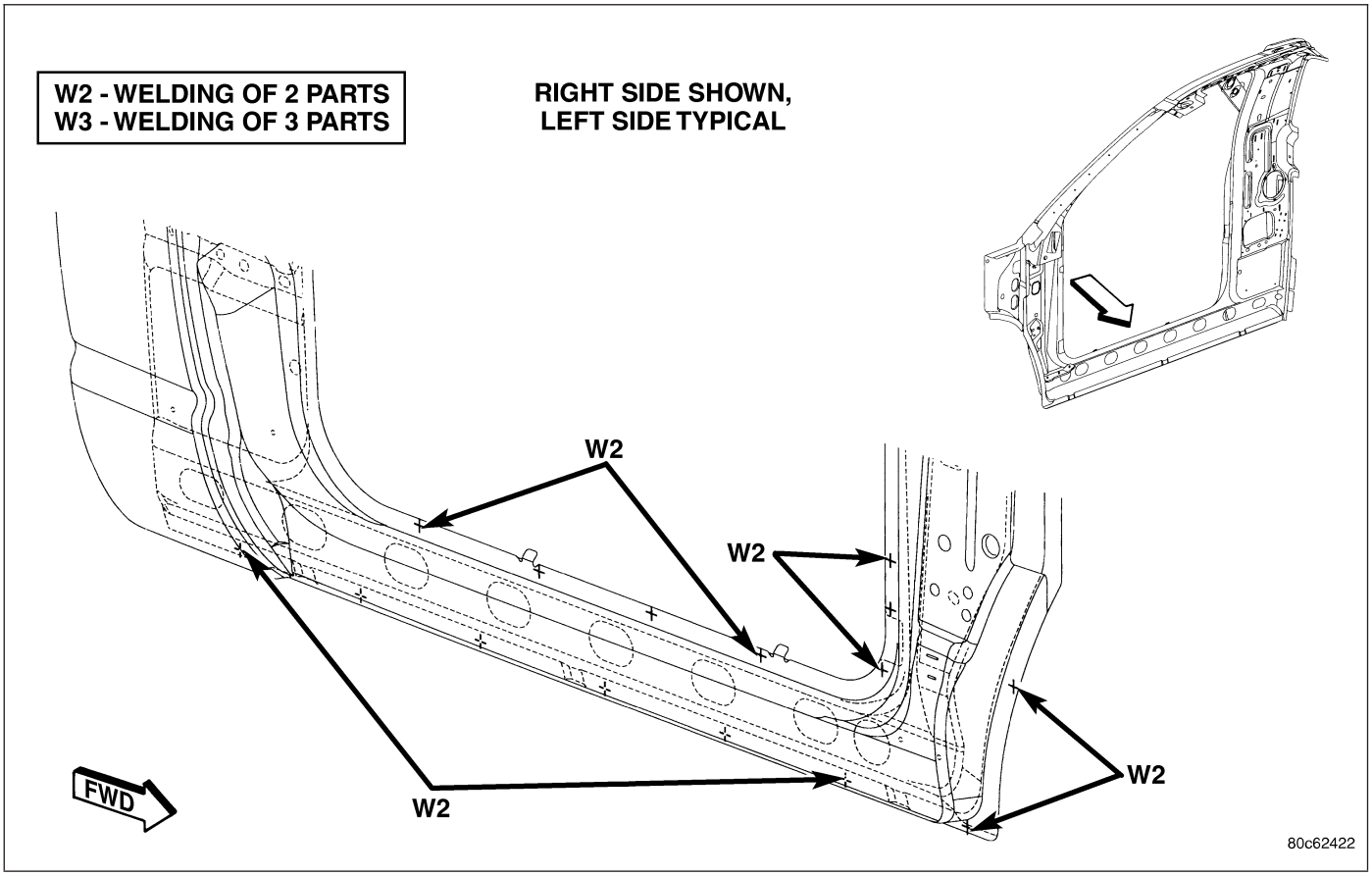

Fig. 63 INNER BODY SIDE APERTURE - STANDARD CAB

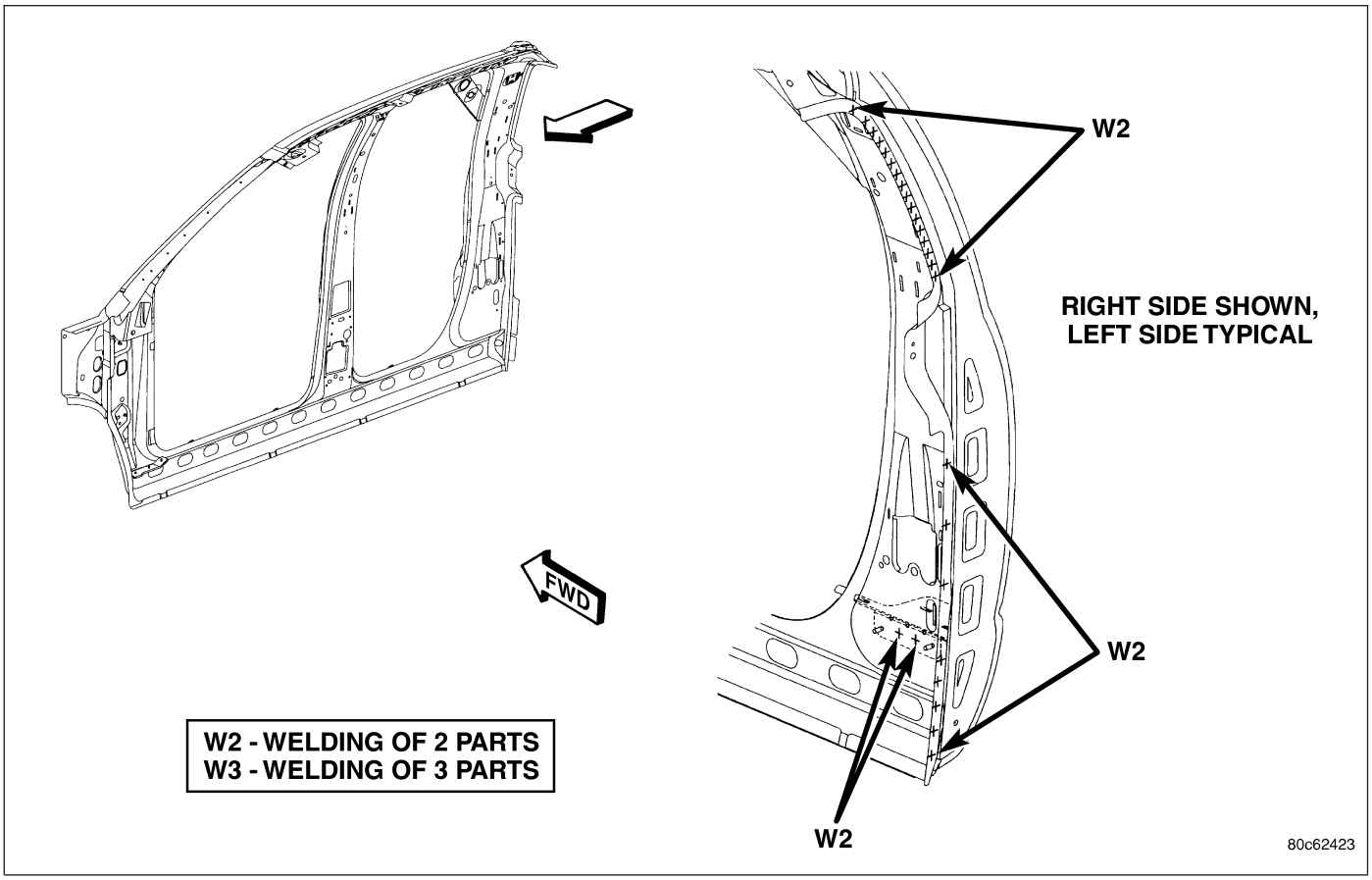

Fig. 64 C-PILLAR BAFFLE - QUAD CAB

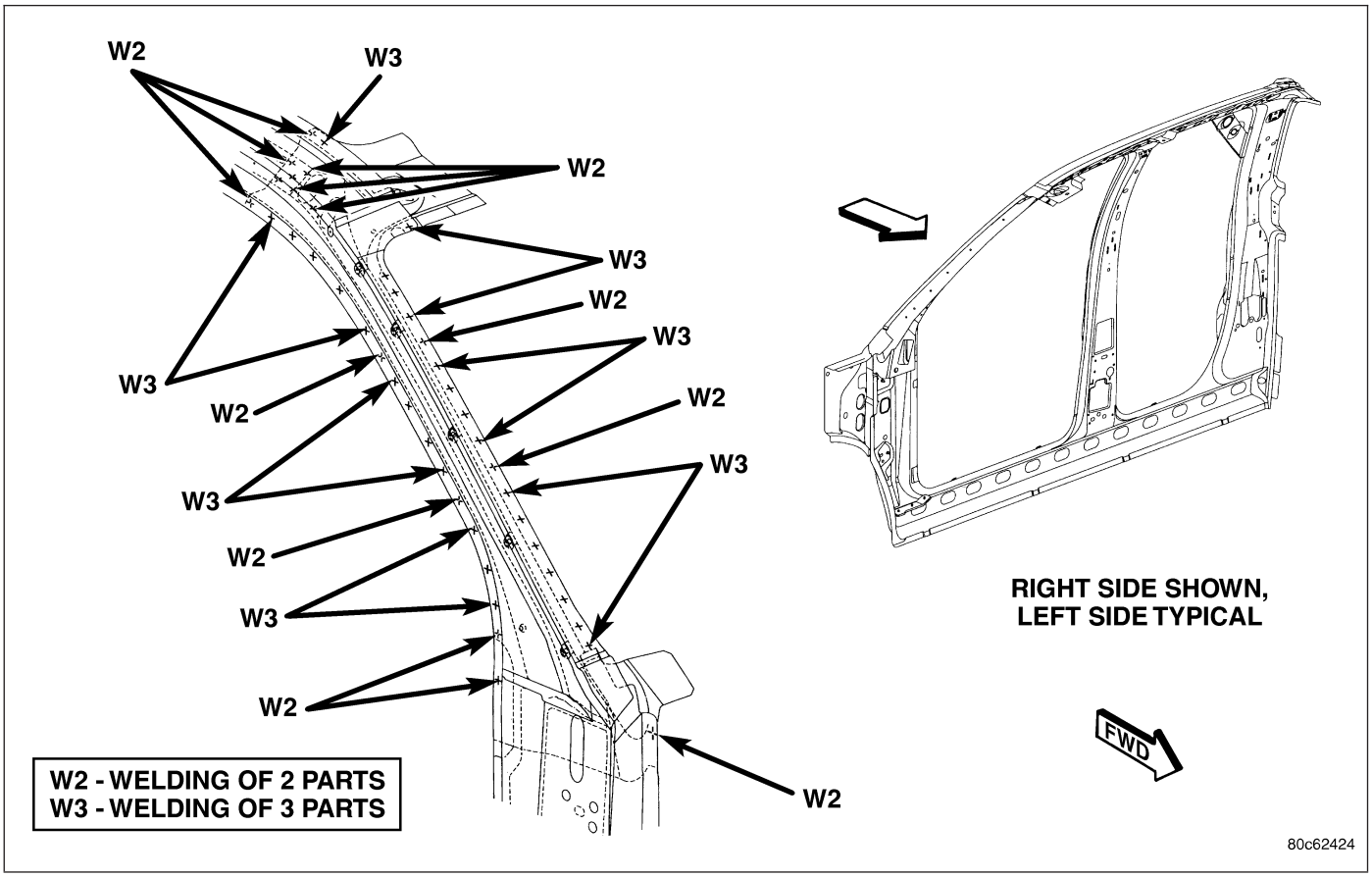

Fig. 65 A-PILLAR REINFORCEMENT - QUAD CAB

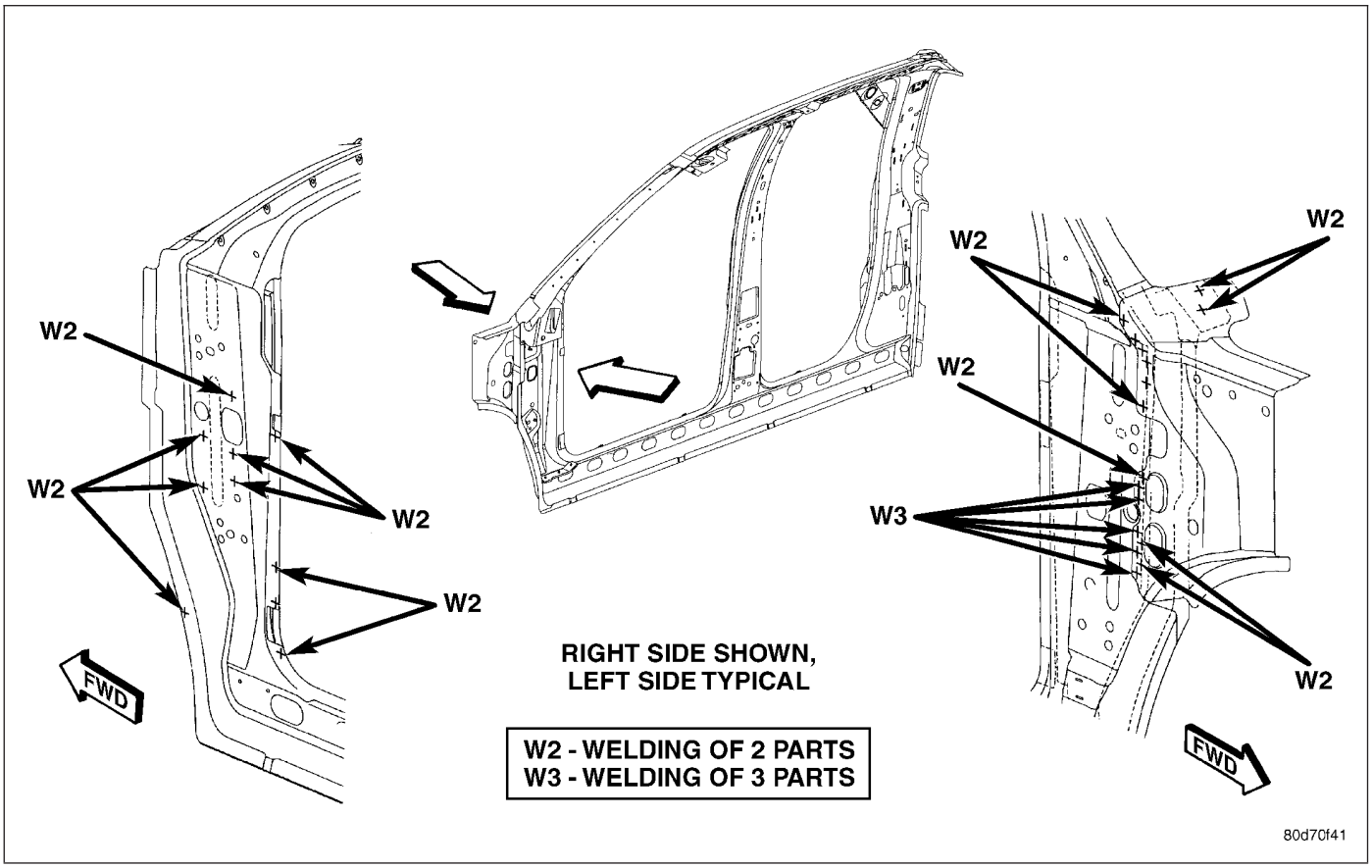

Fig. 66 FRONT EXTENSION PLATE - QUAD CAB

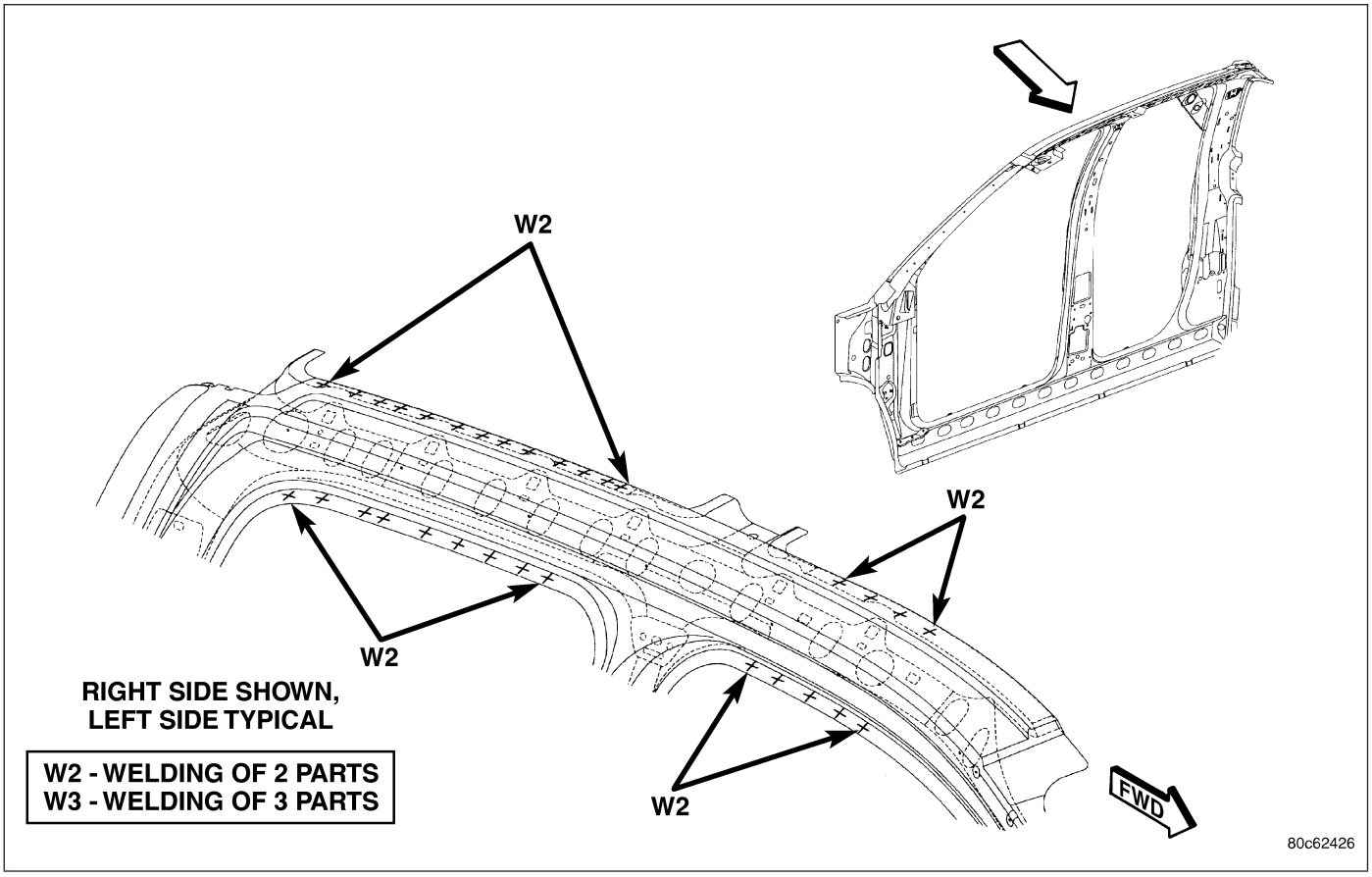

Fig. 67 OUTER BODY SIDE APERTURE - QUAD CAB

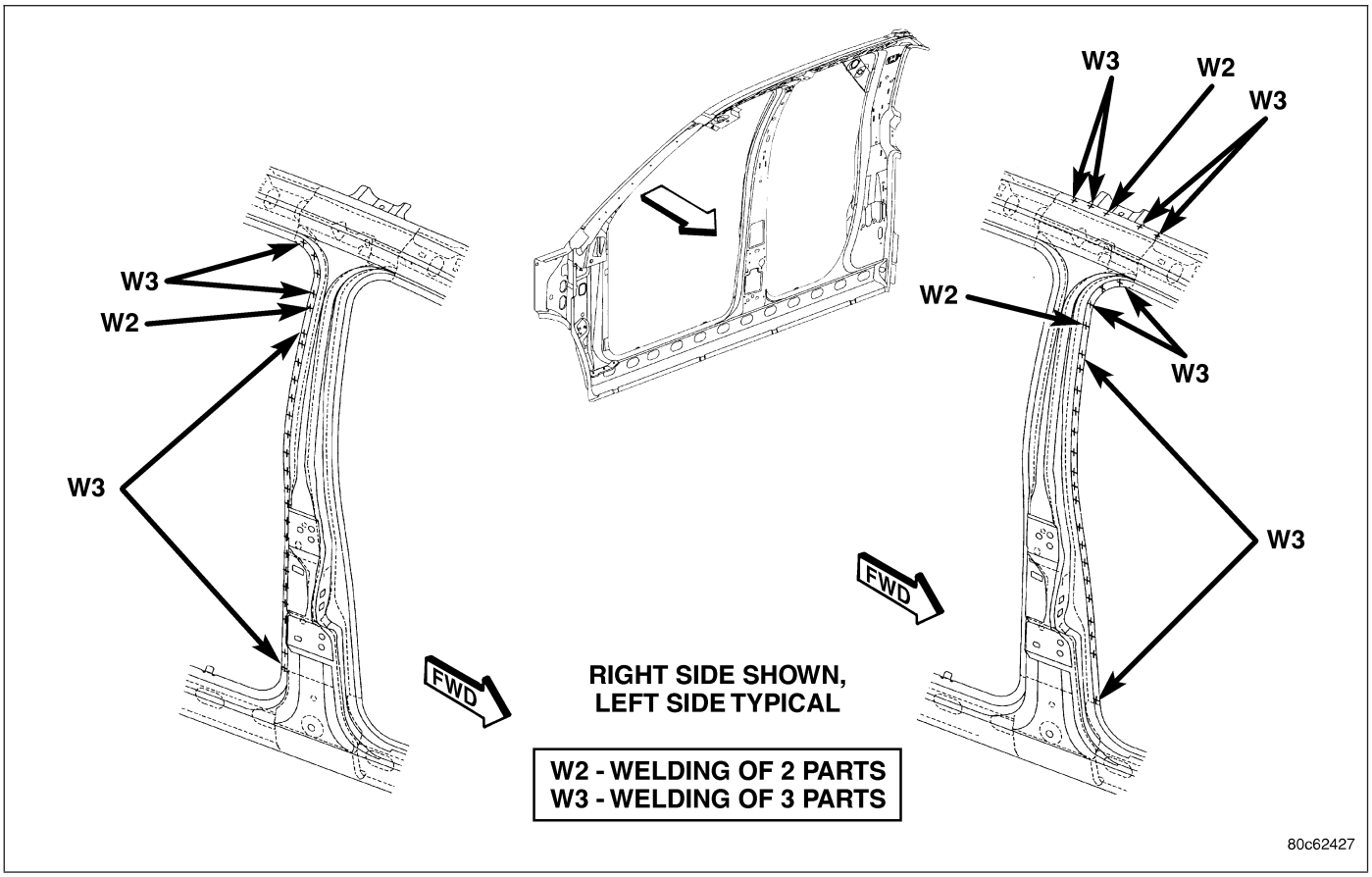

Fig. 68 B-PILLAR REINFORCEMENT - QUAD CAB

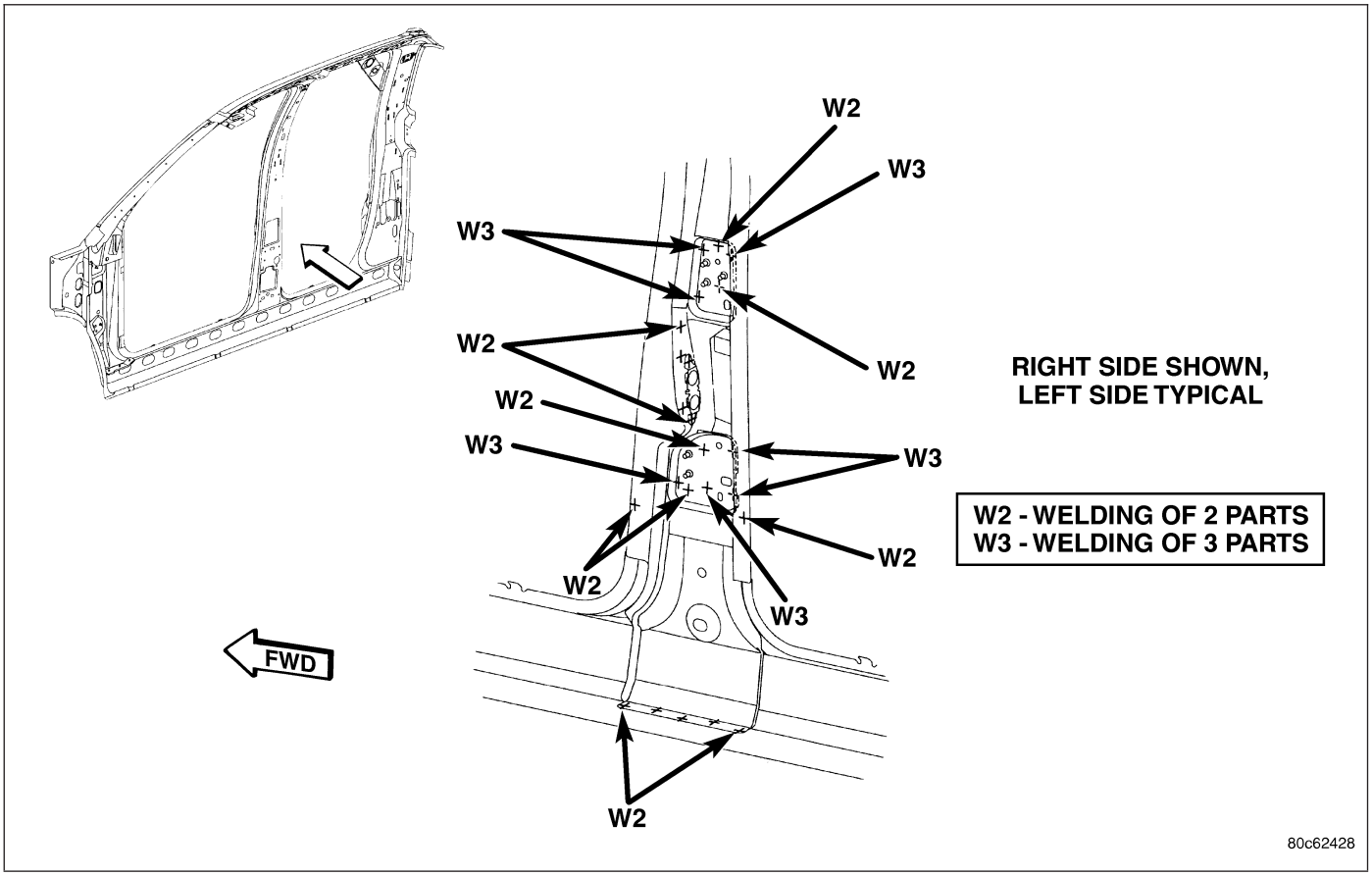

Fig. 69 UPPER TAPPING PLATE - QUAD CAB

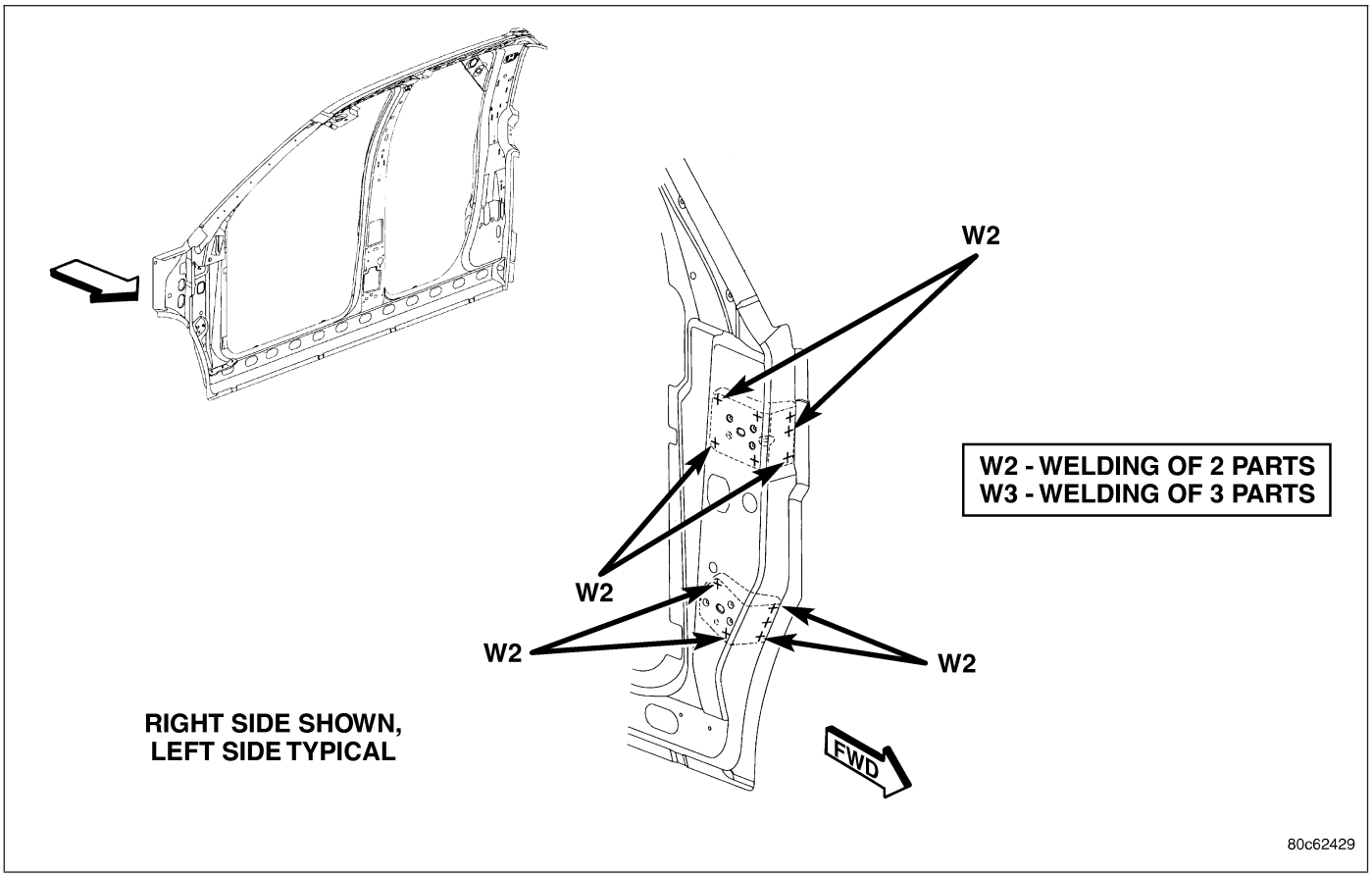

Fig. 70 UPPER A-PILLAR TAPPING PLATE - QUAD CAB

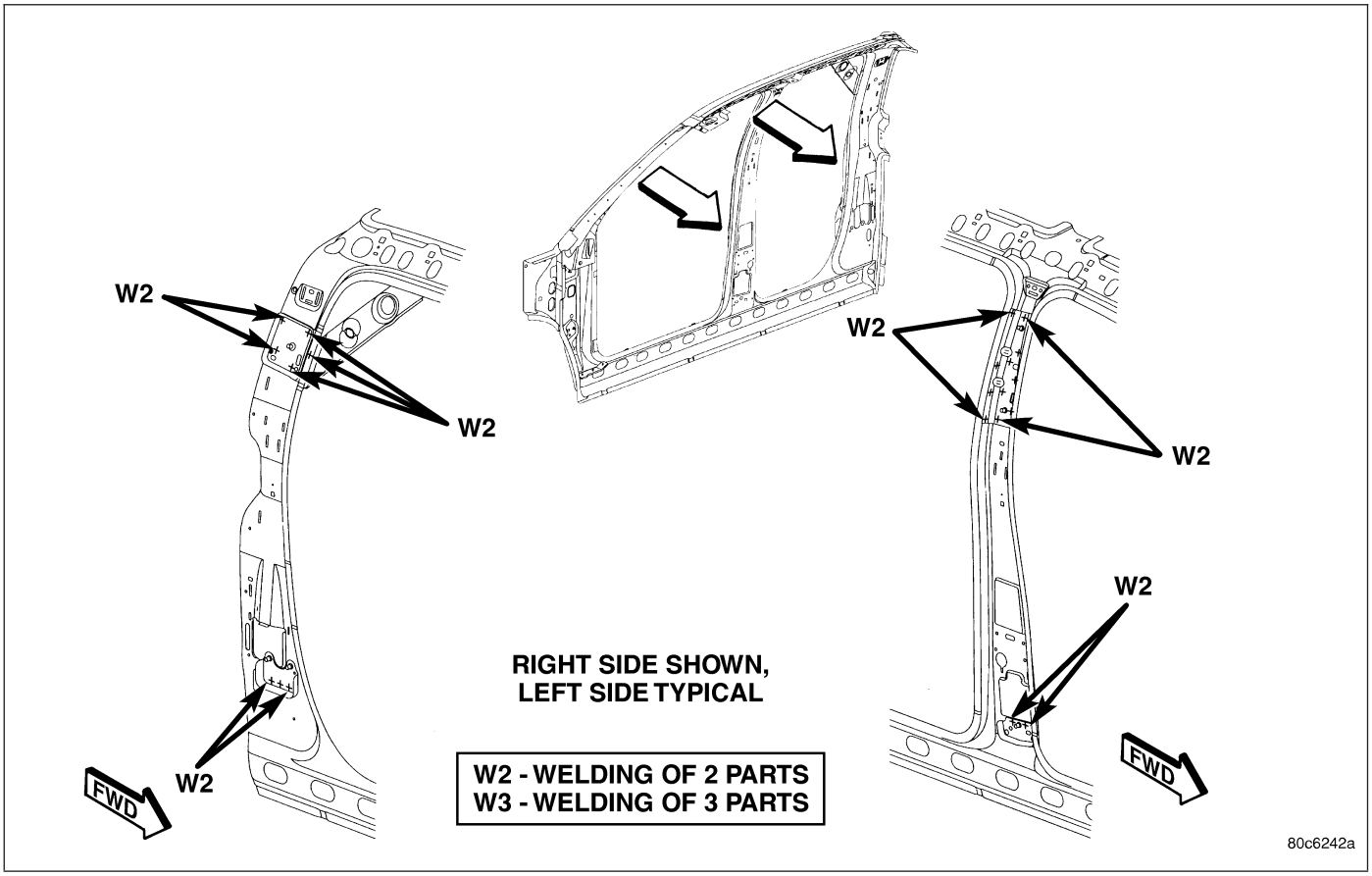

Fig. 71 SEAT BELT MOUNTING PLATES - QUAD CAB

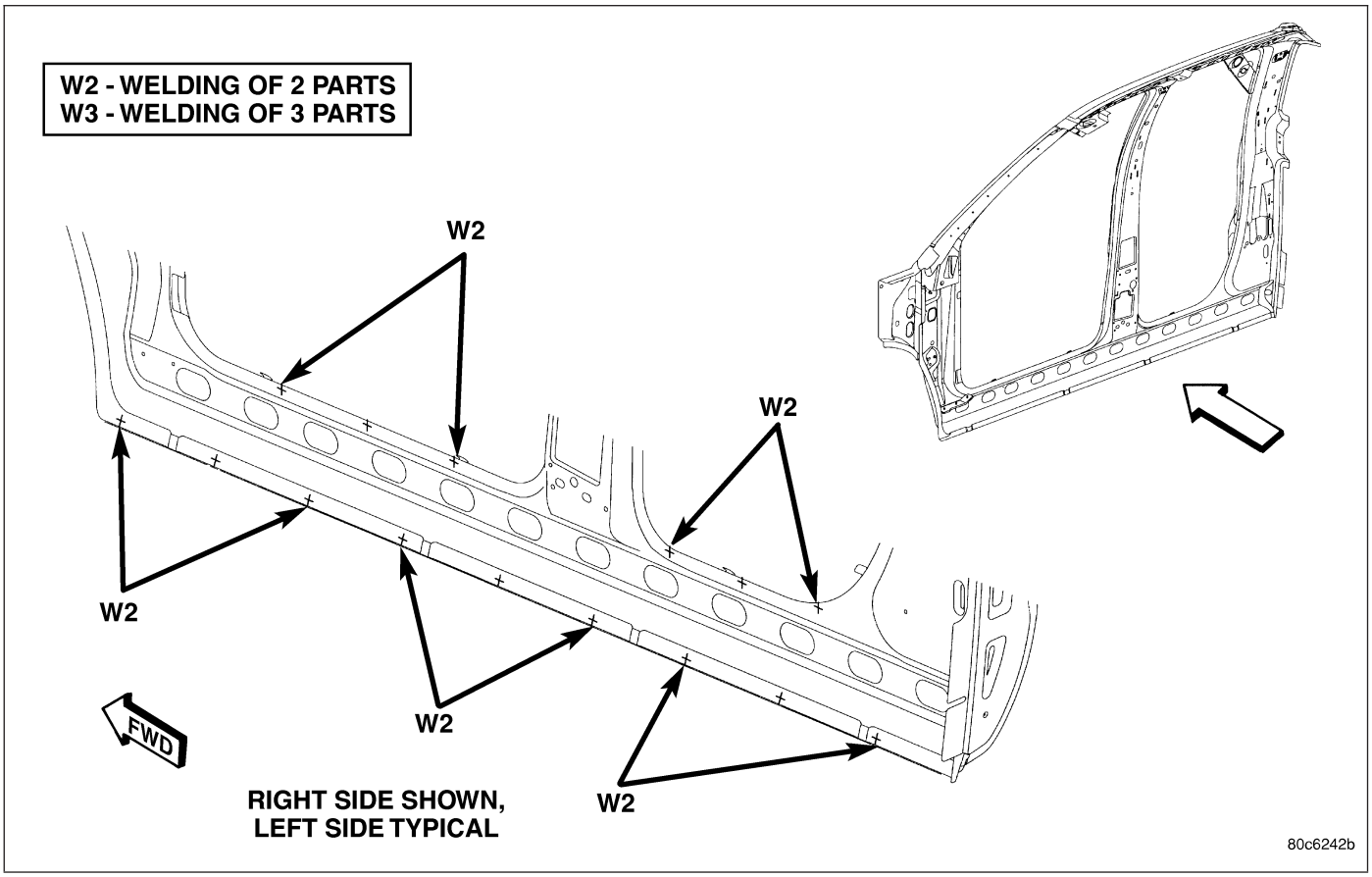

Fig. 72 OUTER BODY SIDE APERTURE - QUAD CAB

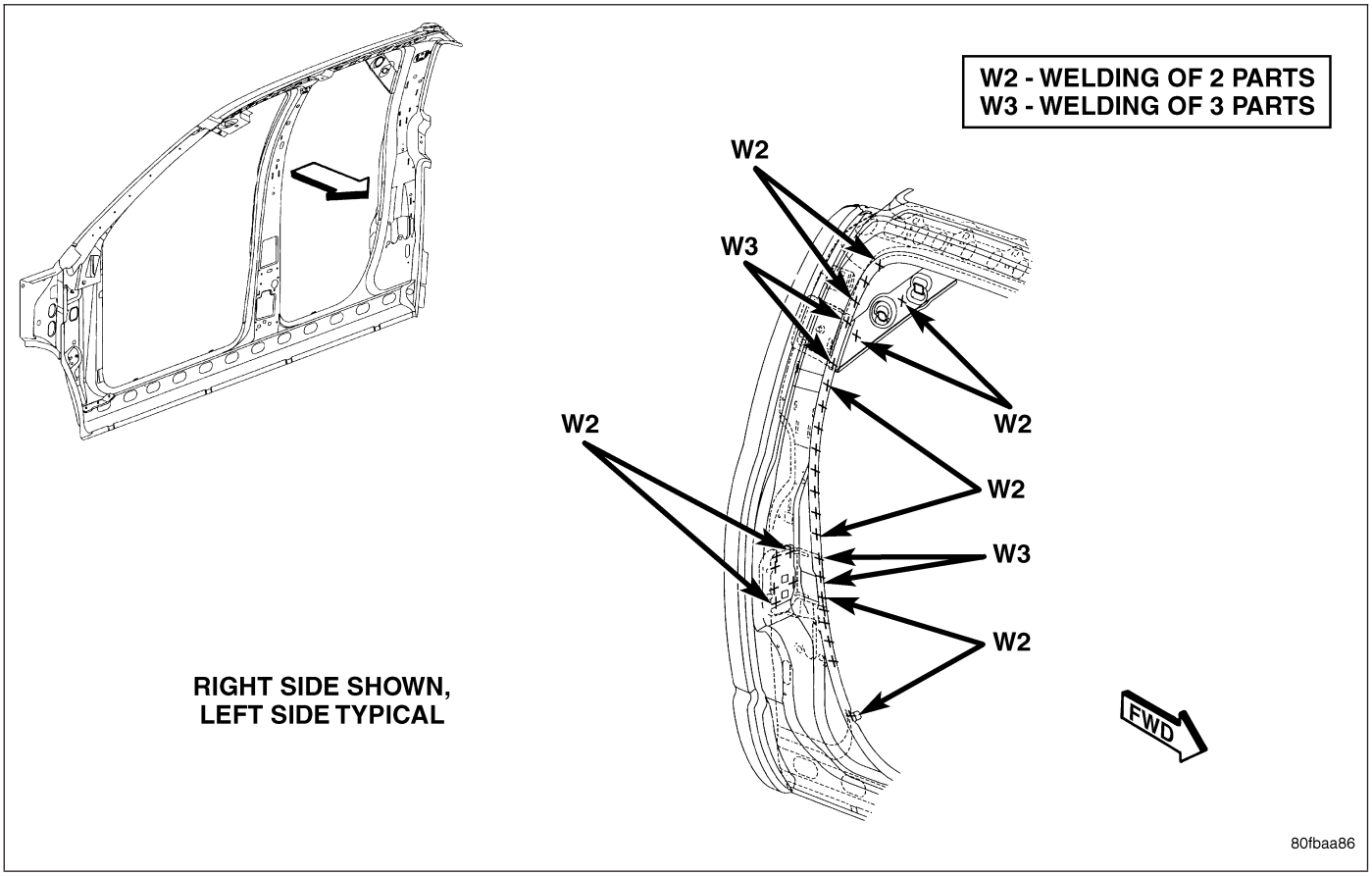

Fig. 73 C-PILLAR REINFORCEMENT - QUAD CAB

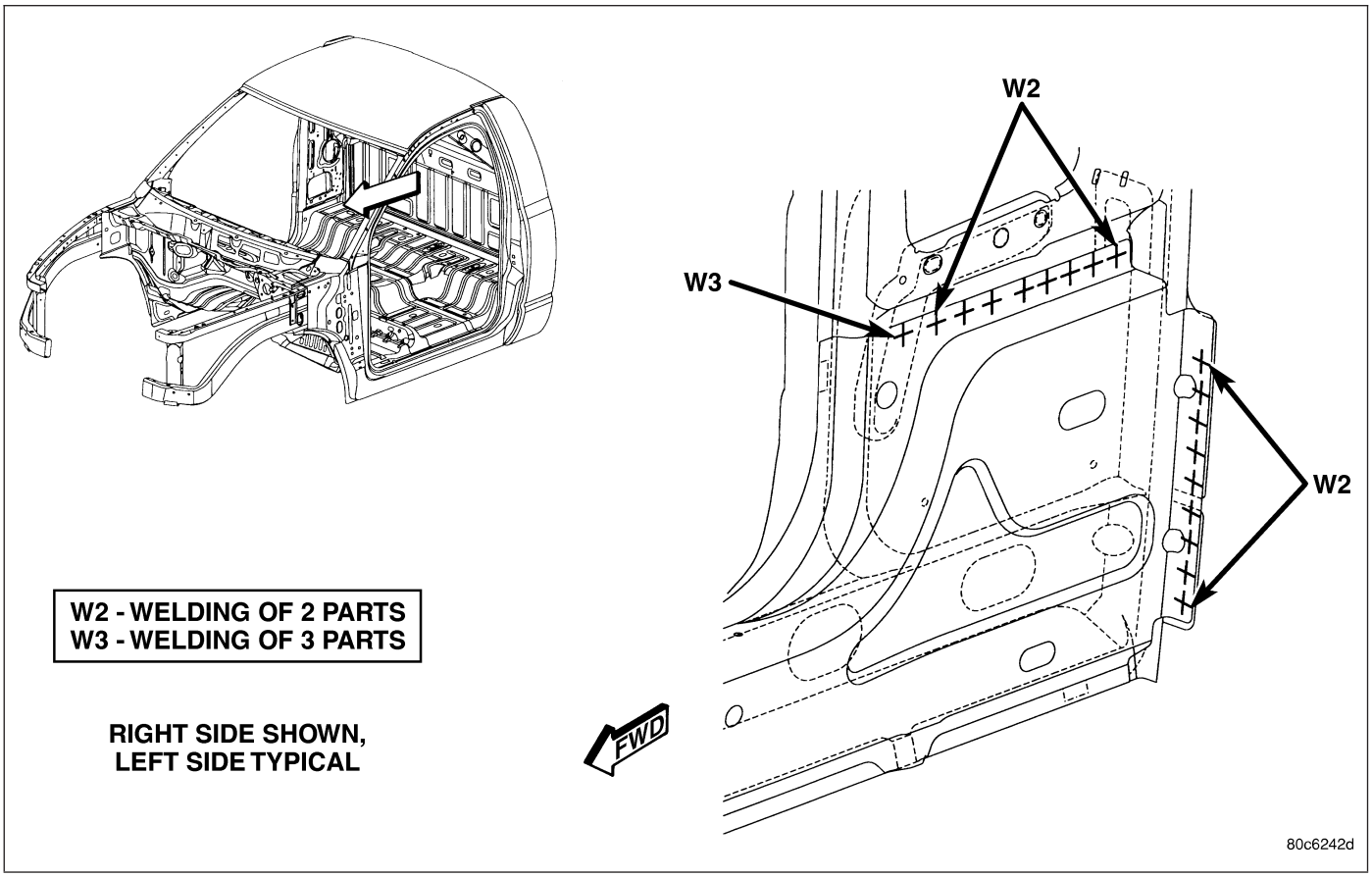

Fig. 74 SEAT BELT RETRACTOR PLATE - STANDARD CAB

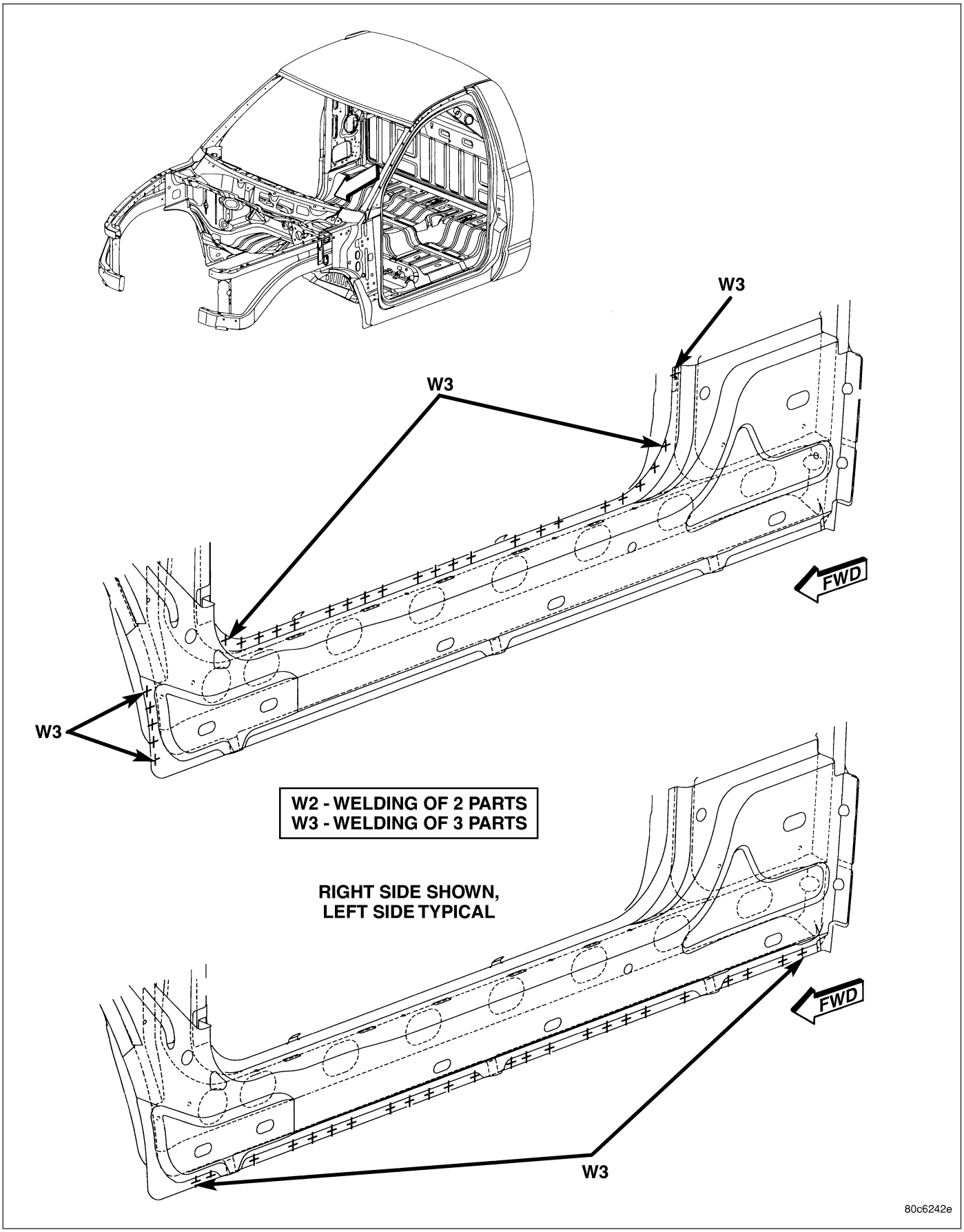

Fig. 75 FLOOR SILL - STANDARD CAB

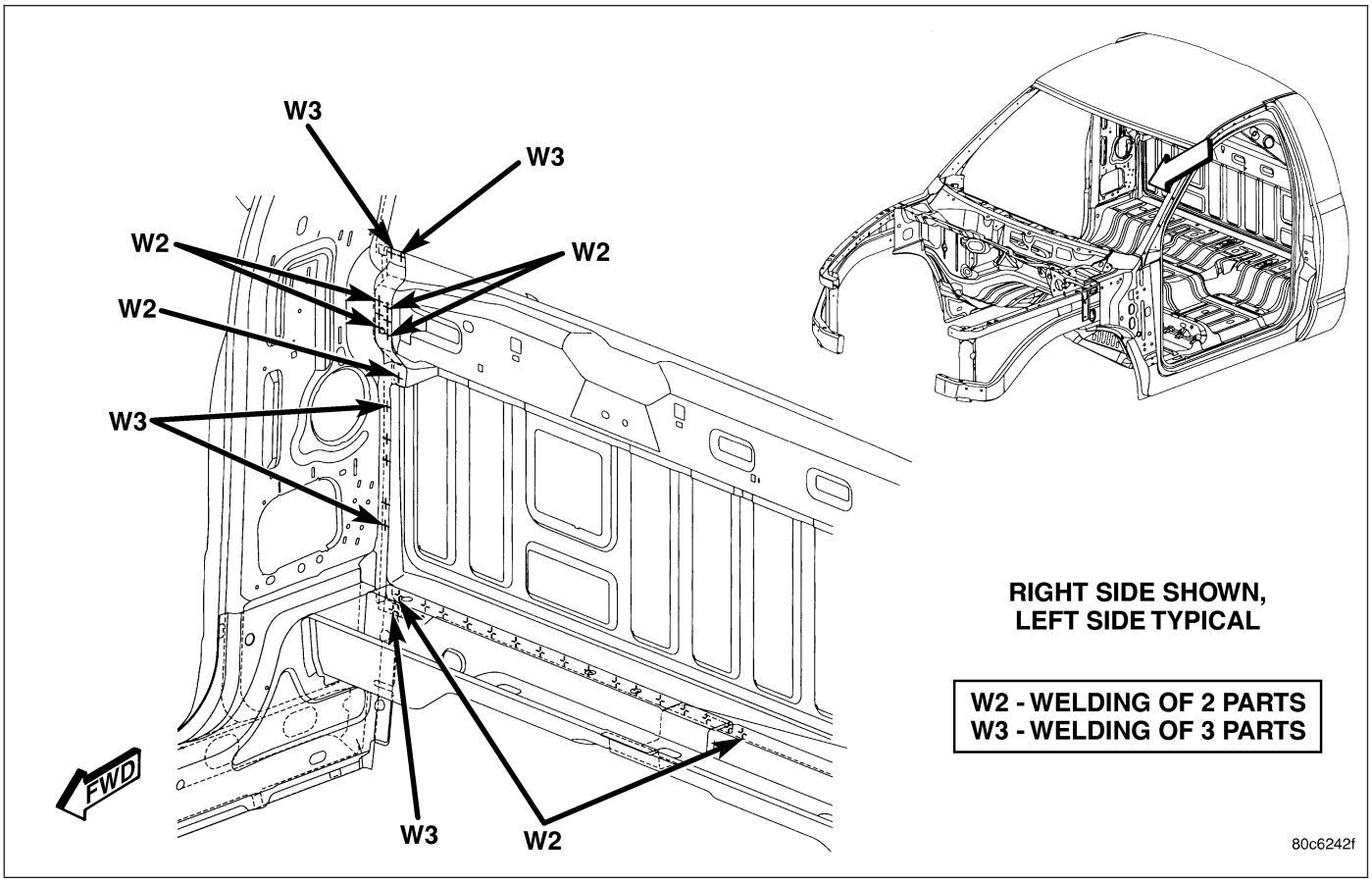

Fig. 76 BACK REINFORCEMENT - STANDARD CAB

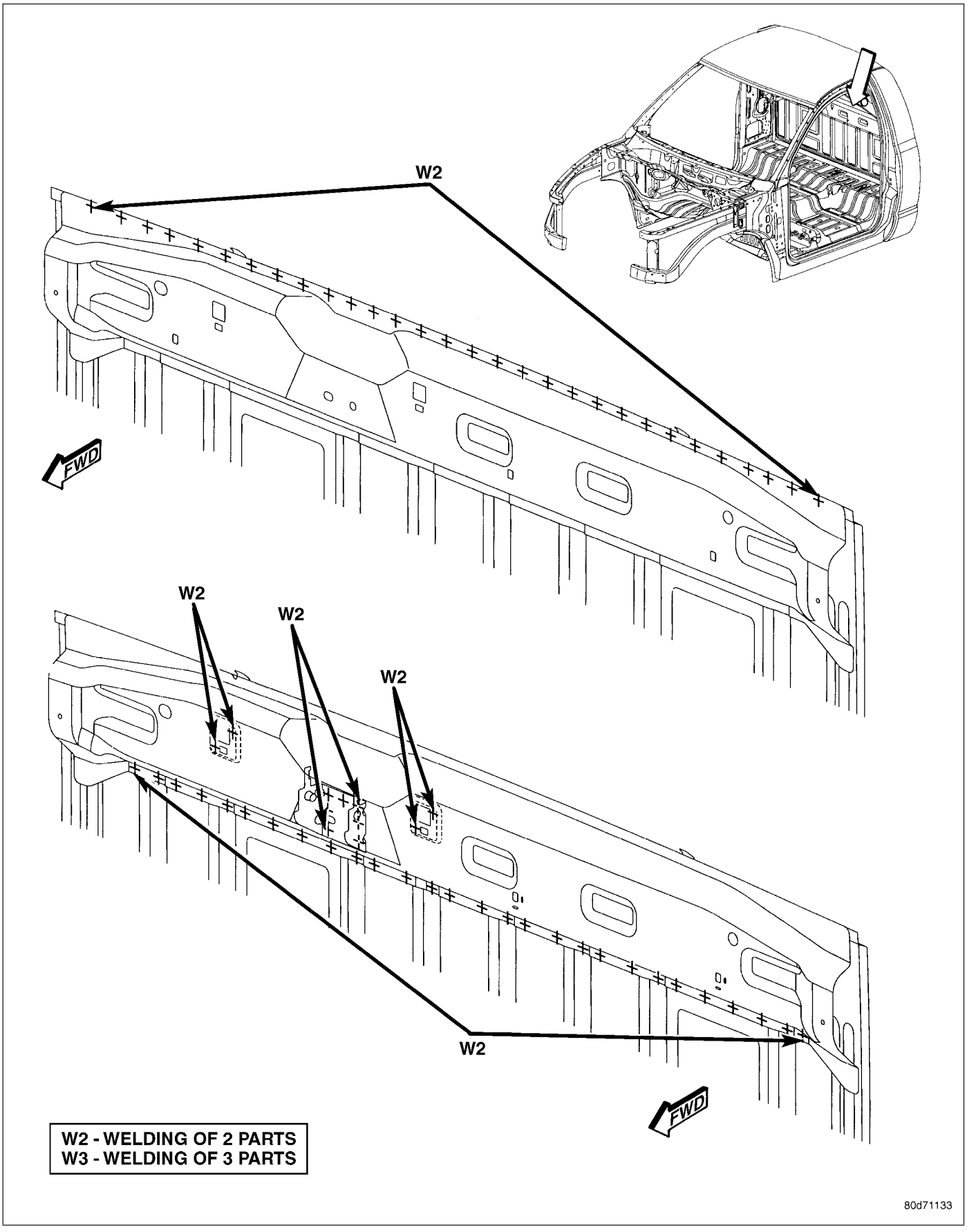

Fig. 77 CAB BACK REINFORCEMENT - STANDARD CAB

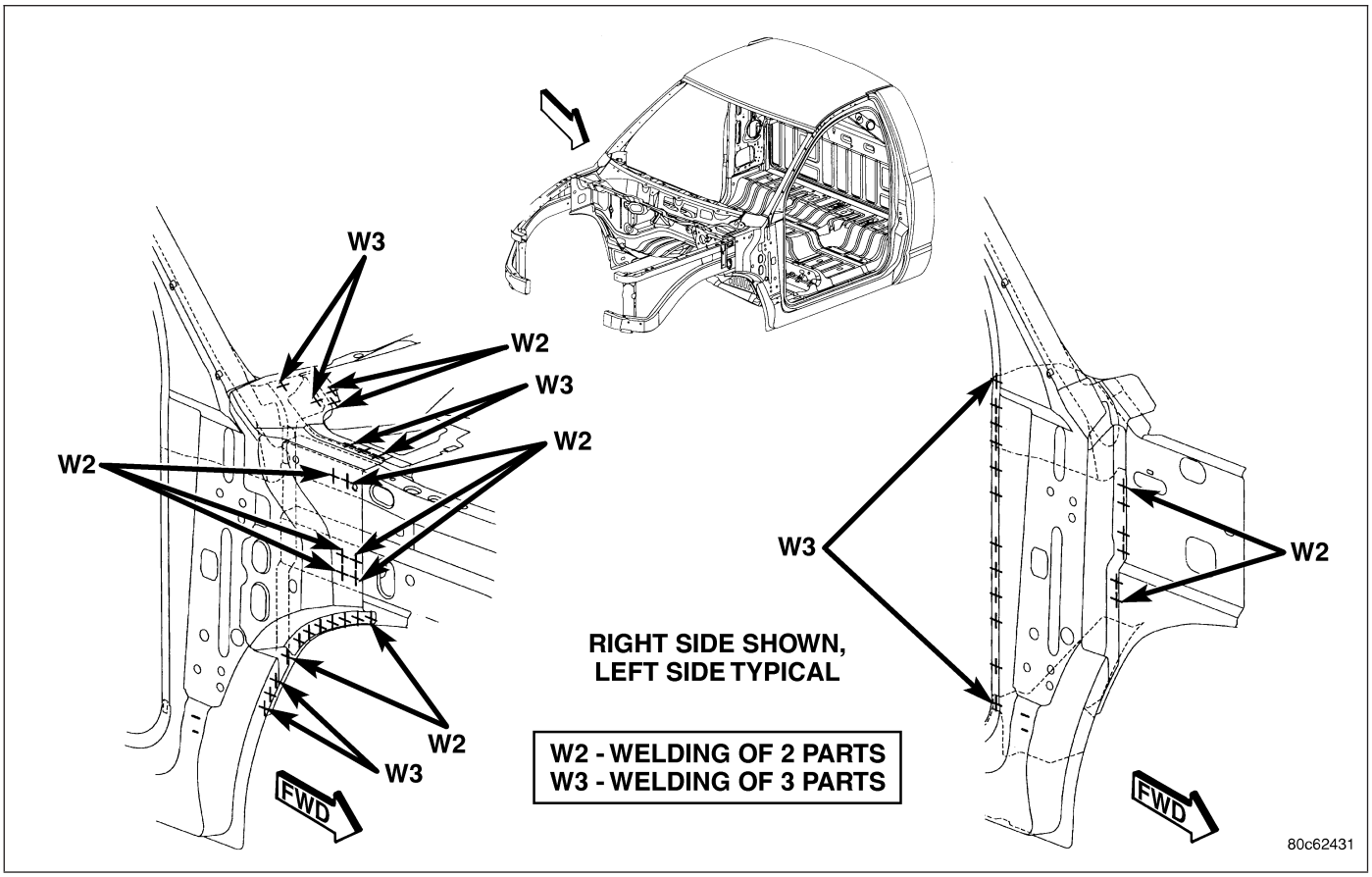

Fig. 78 COWL SIDE PANEL - STANDARD CAB

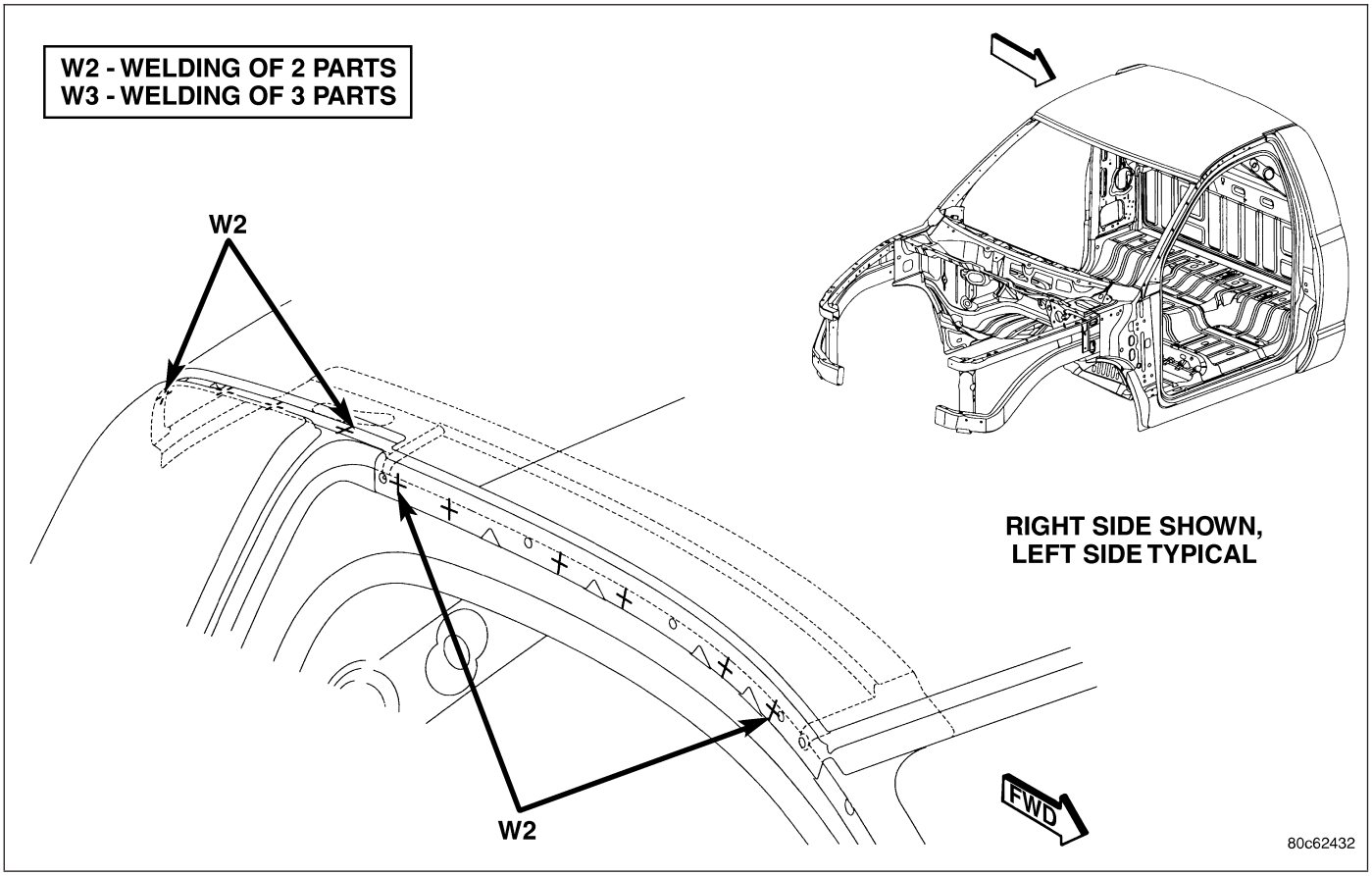

Fig. 79 OUTER ROOF PANEL - STANDARD CAB

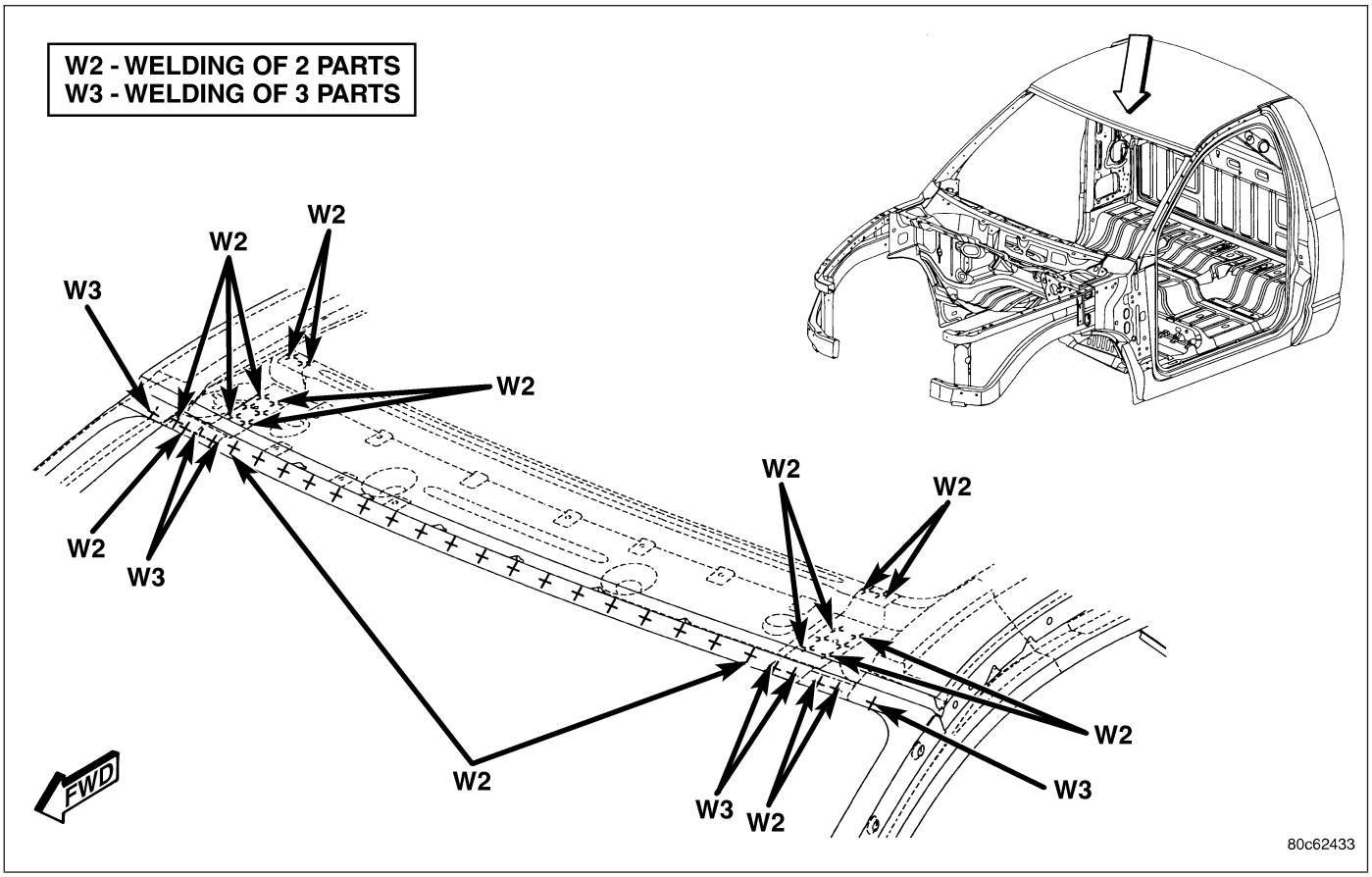

Fig. 80 FRONT ROOF HEADER - STANDARD CAB

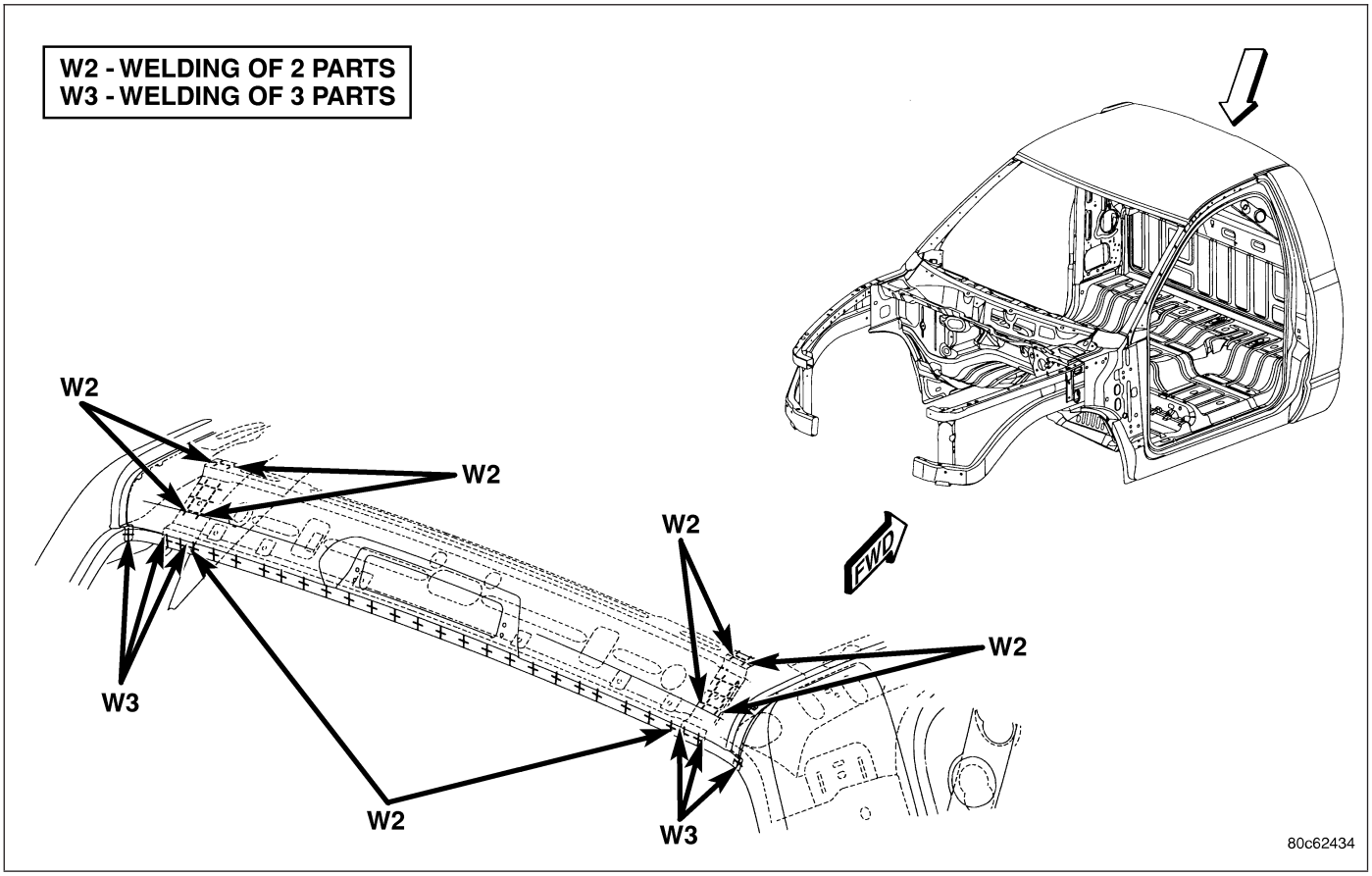

Fig. 81 REAR ROOF HEADER - STANDARD CAB

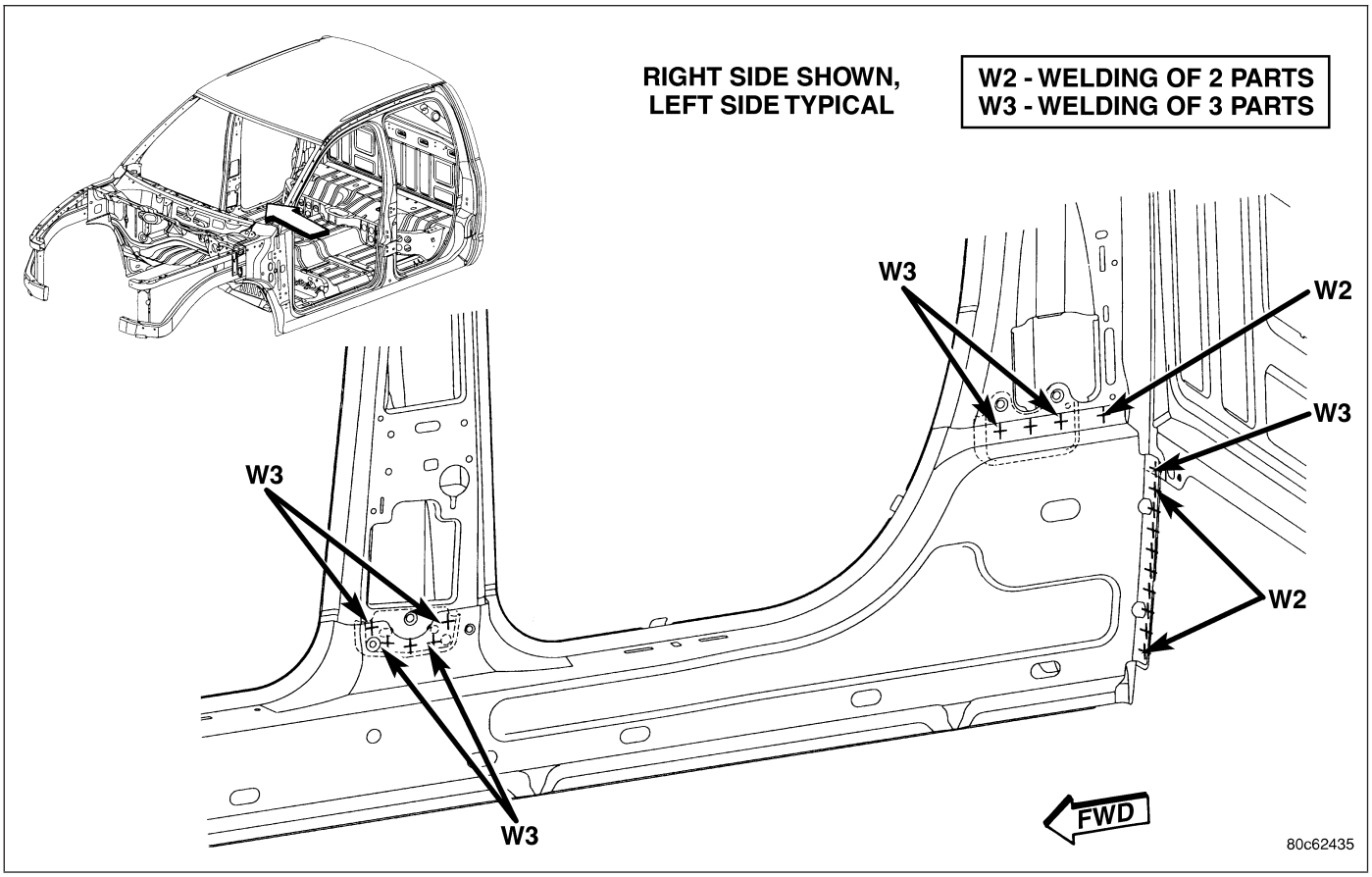

Fig. 82 OUTER BODY SIDE APERTURE - QUAD CAB

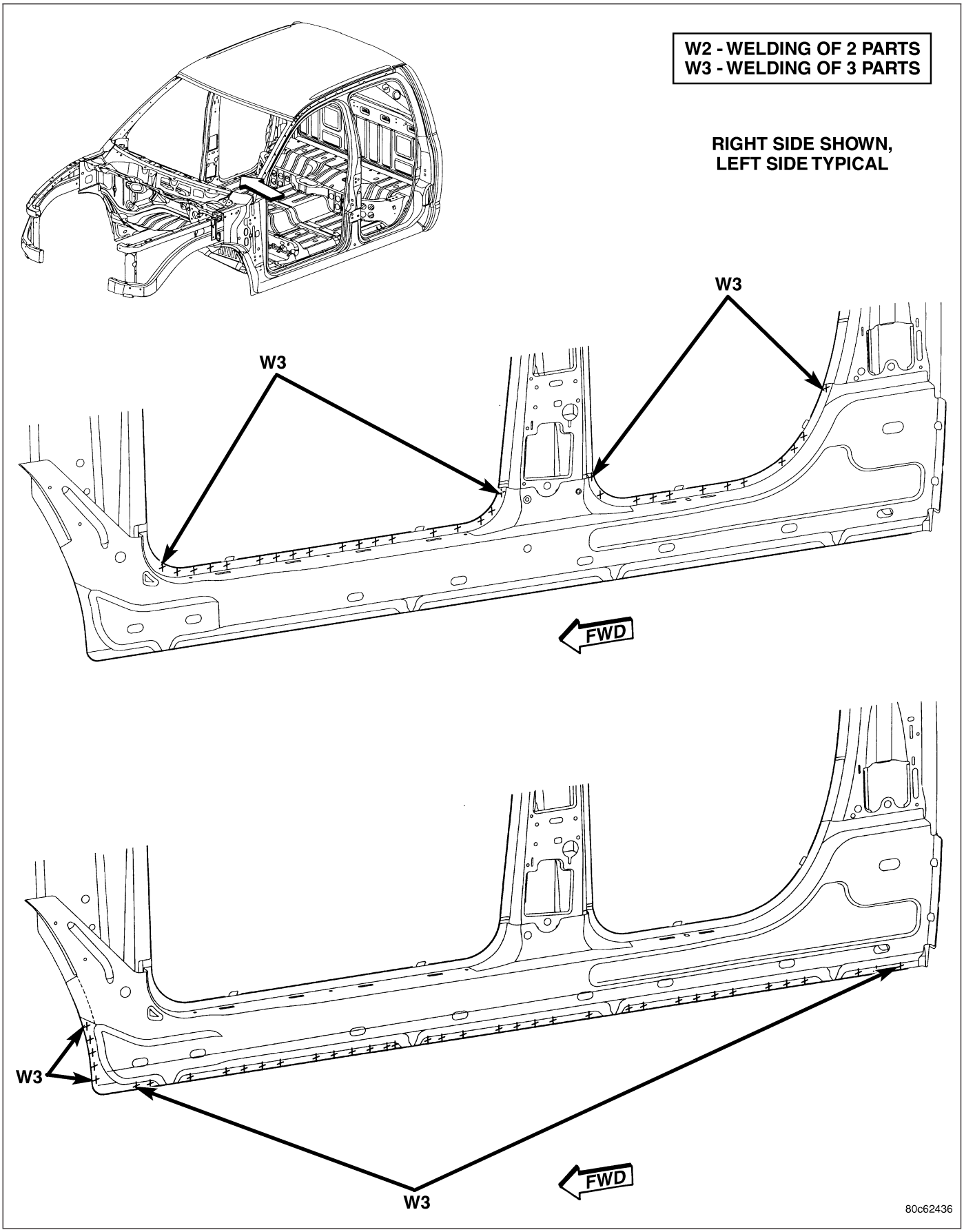

Fig. 83 OUTER BODY SIDE APERTURE- QUAD CAB

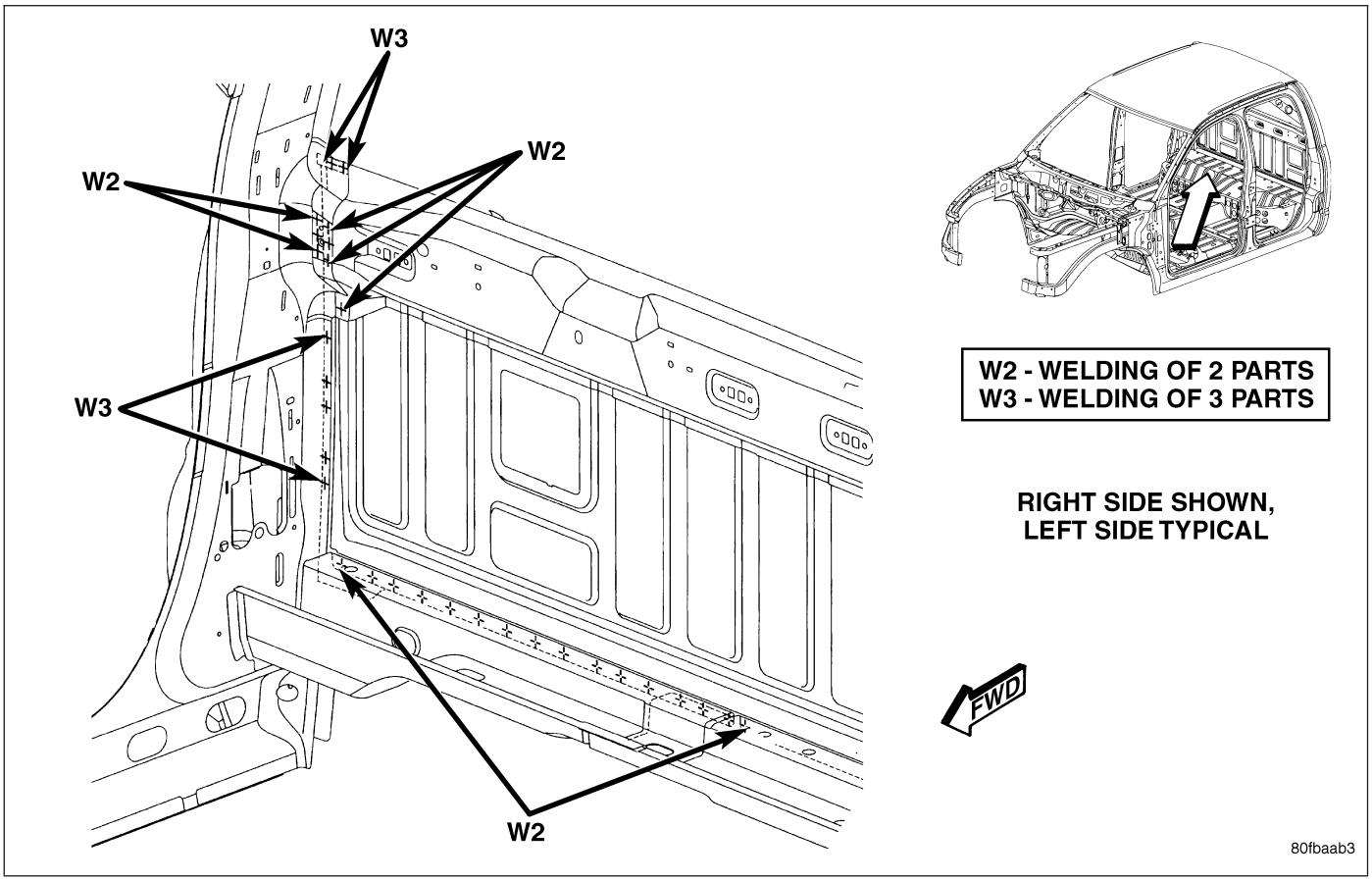

Fig. 84 REAR FLOOR CROSSMEMBER - QUAD CAB

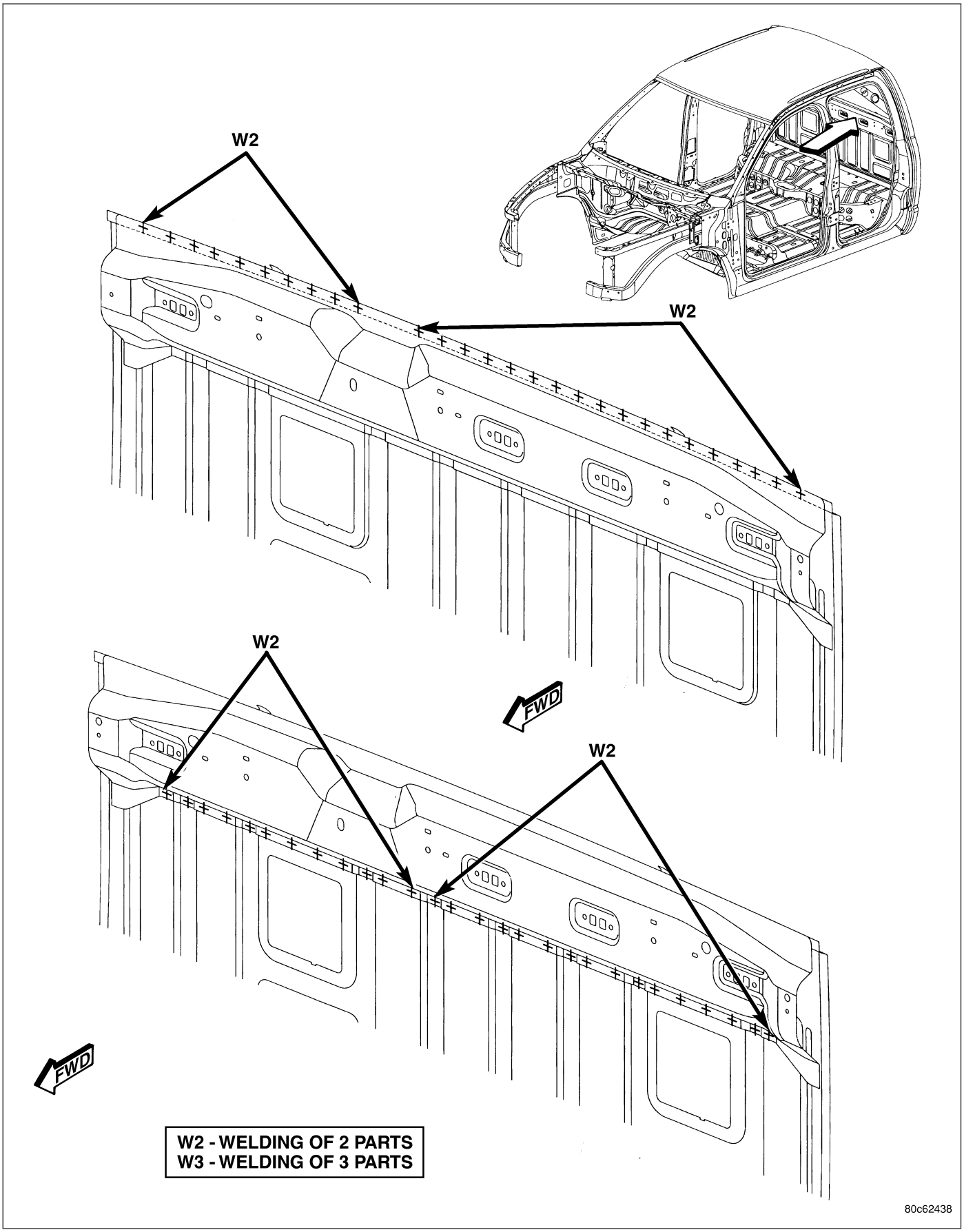

Fig. 85 CAB BACK REINFORCEMENT- QUAD CAB

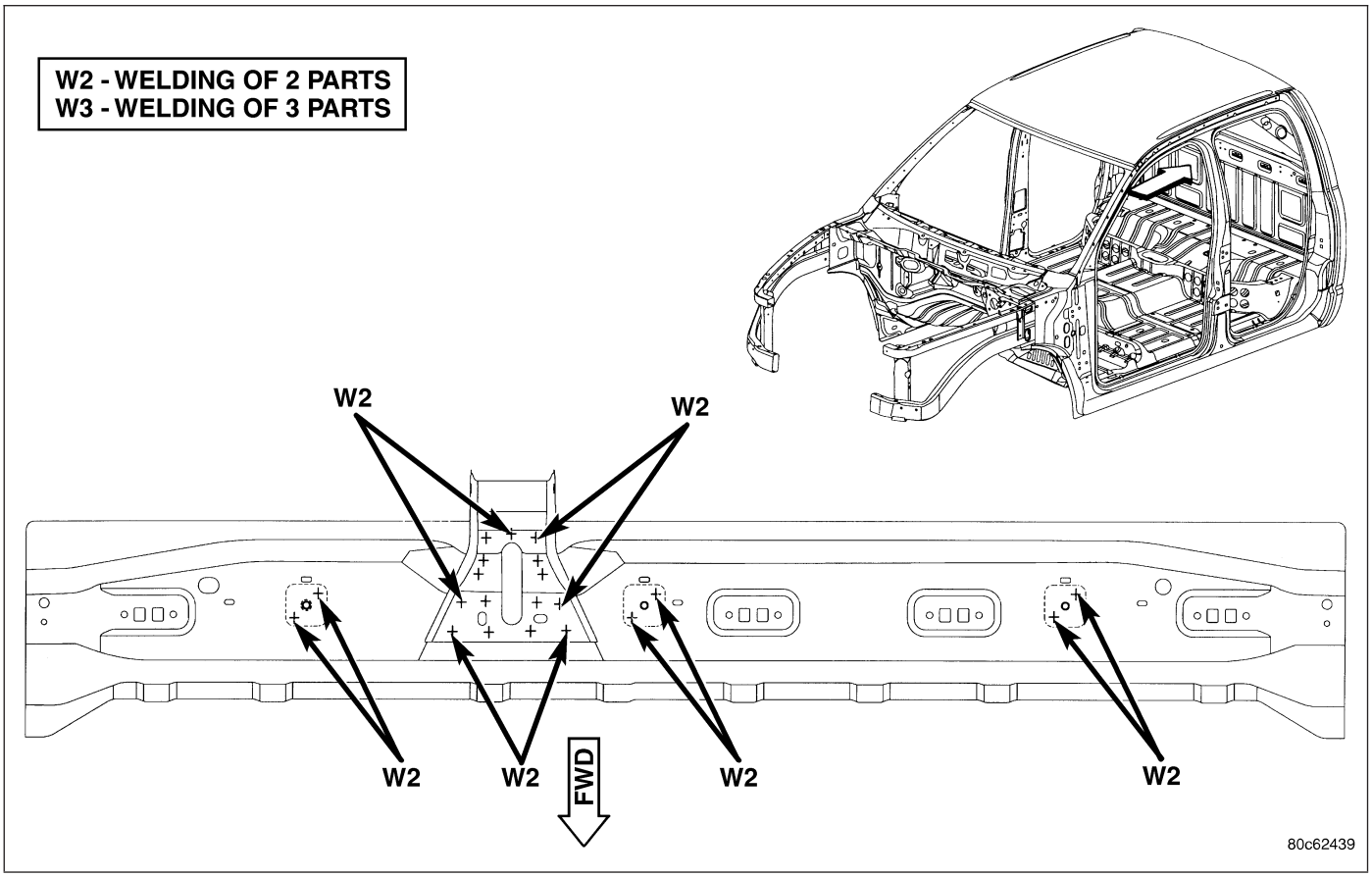

Fig. 86 CENTER SHOULDER BELT REINFORCEMENT- QUAD CAB

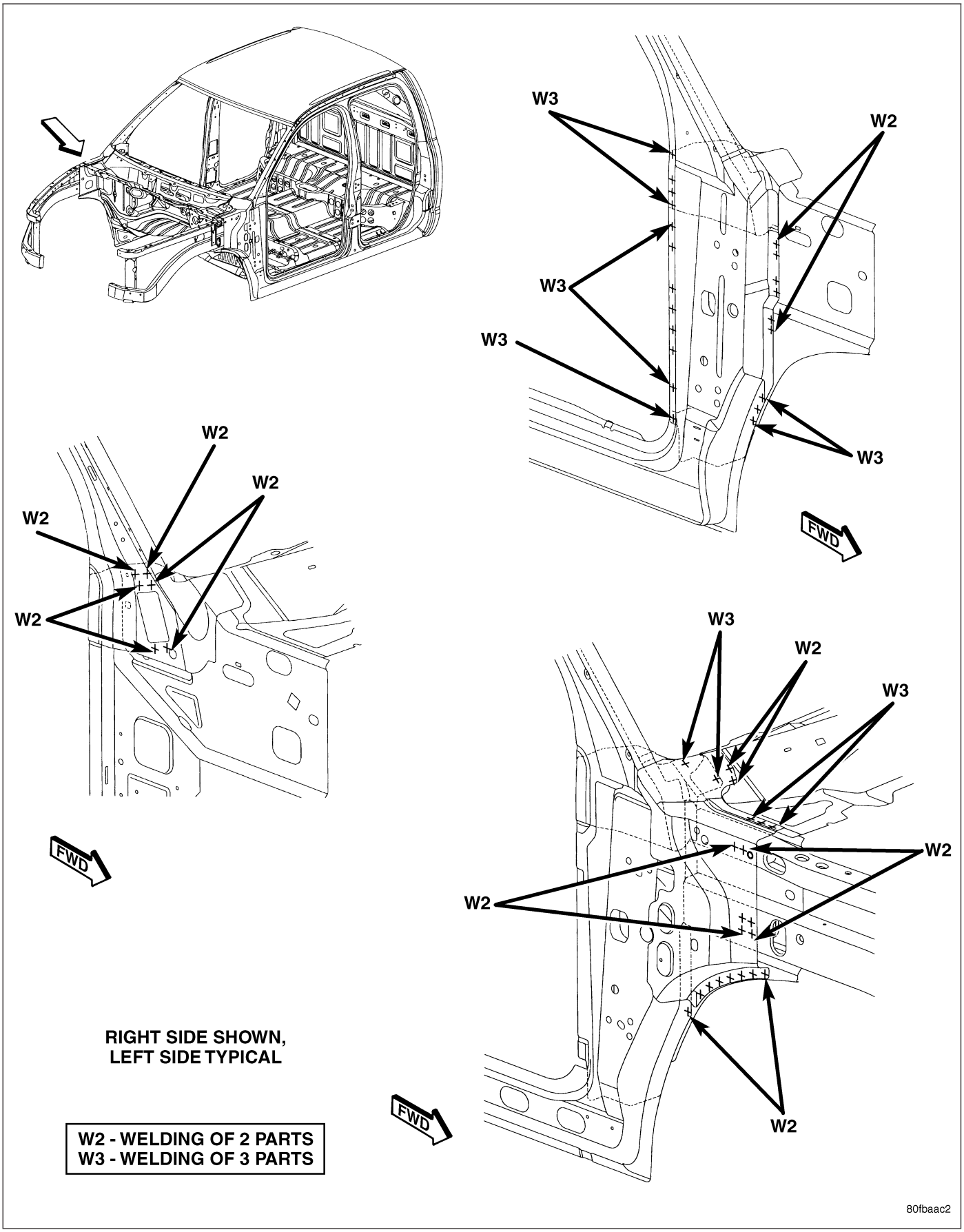

Fig. 87 A-PILLAR REINFORCEMENT - QUAD CAB

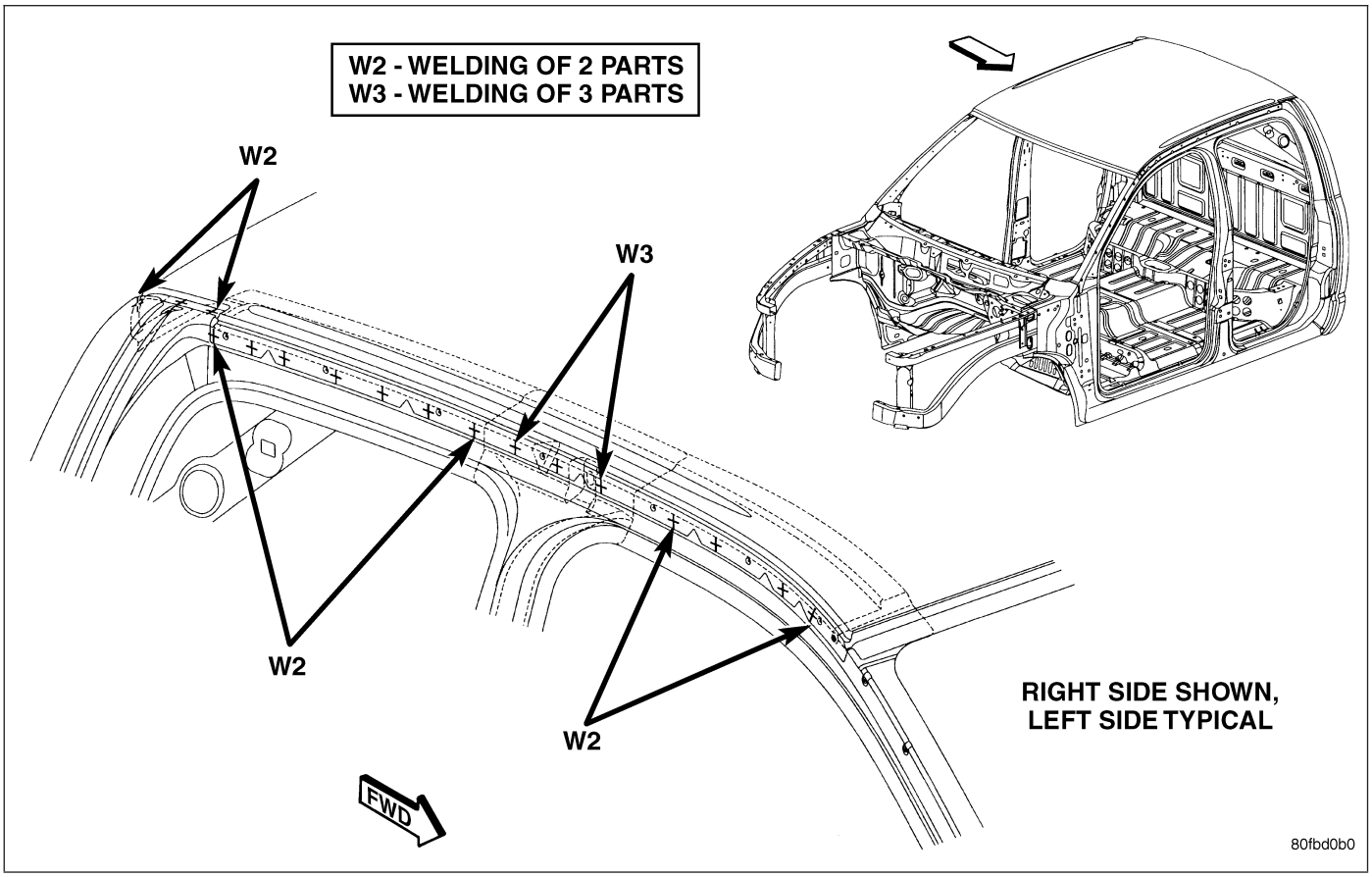

Fig. 88 B-PILLAR REINFORCEMENT - QUAD CAB

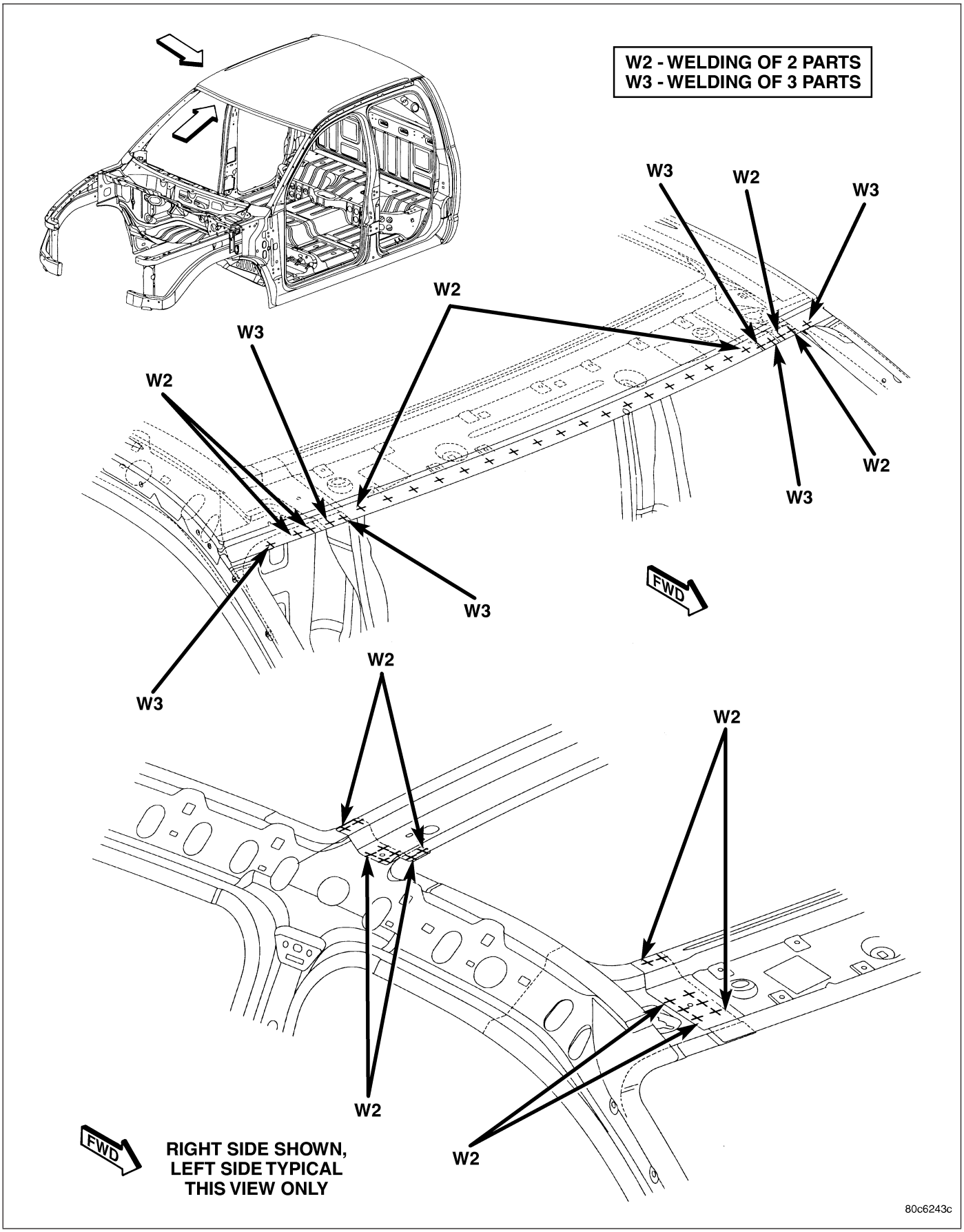

Fig. 89 FRONT ROOF HEADER- QUAD CAB

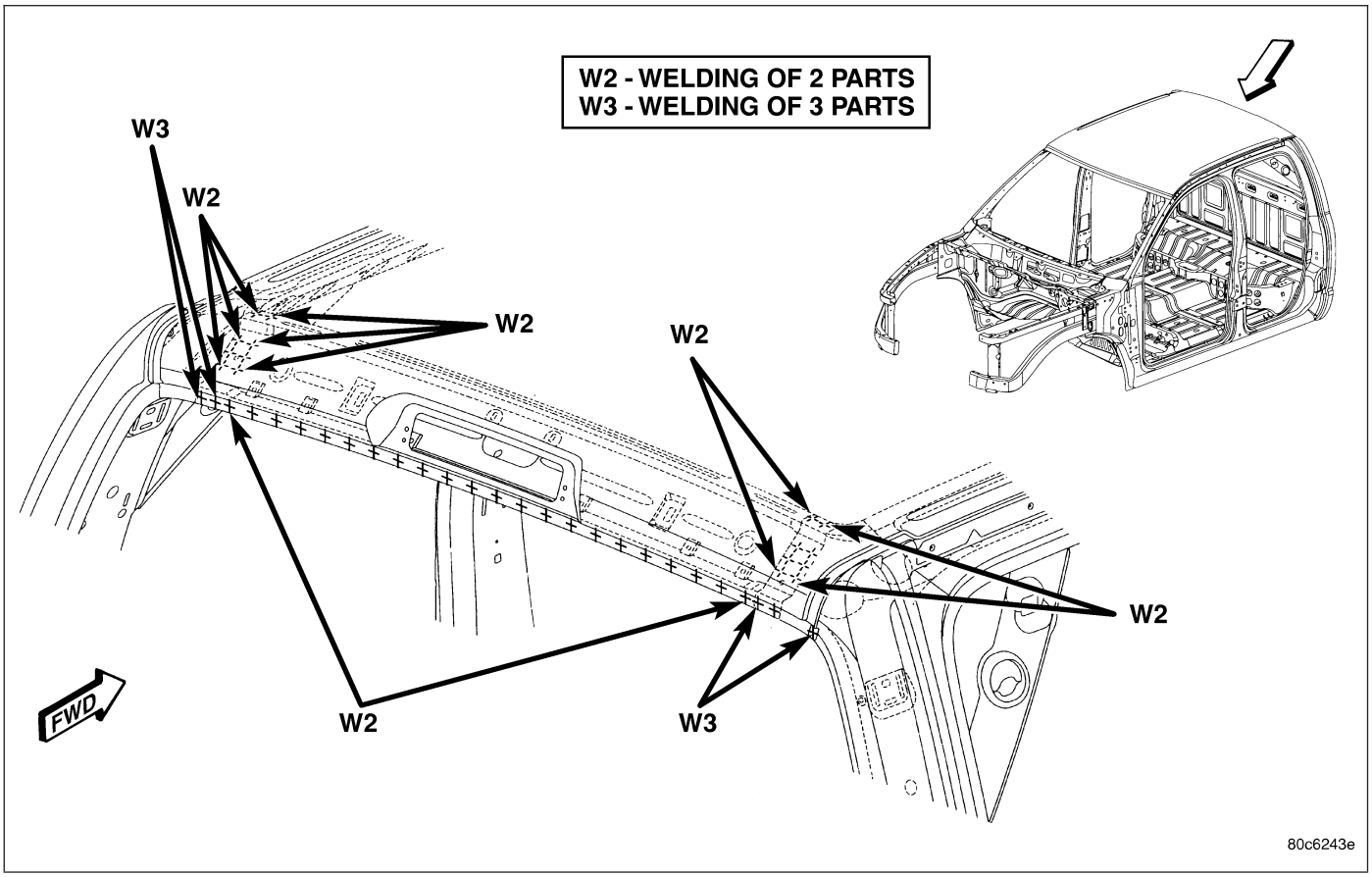

Fig. 90 INNER BODY SIDE APERTURE- QUAD CAB

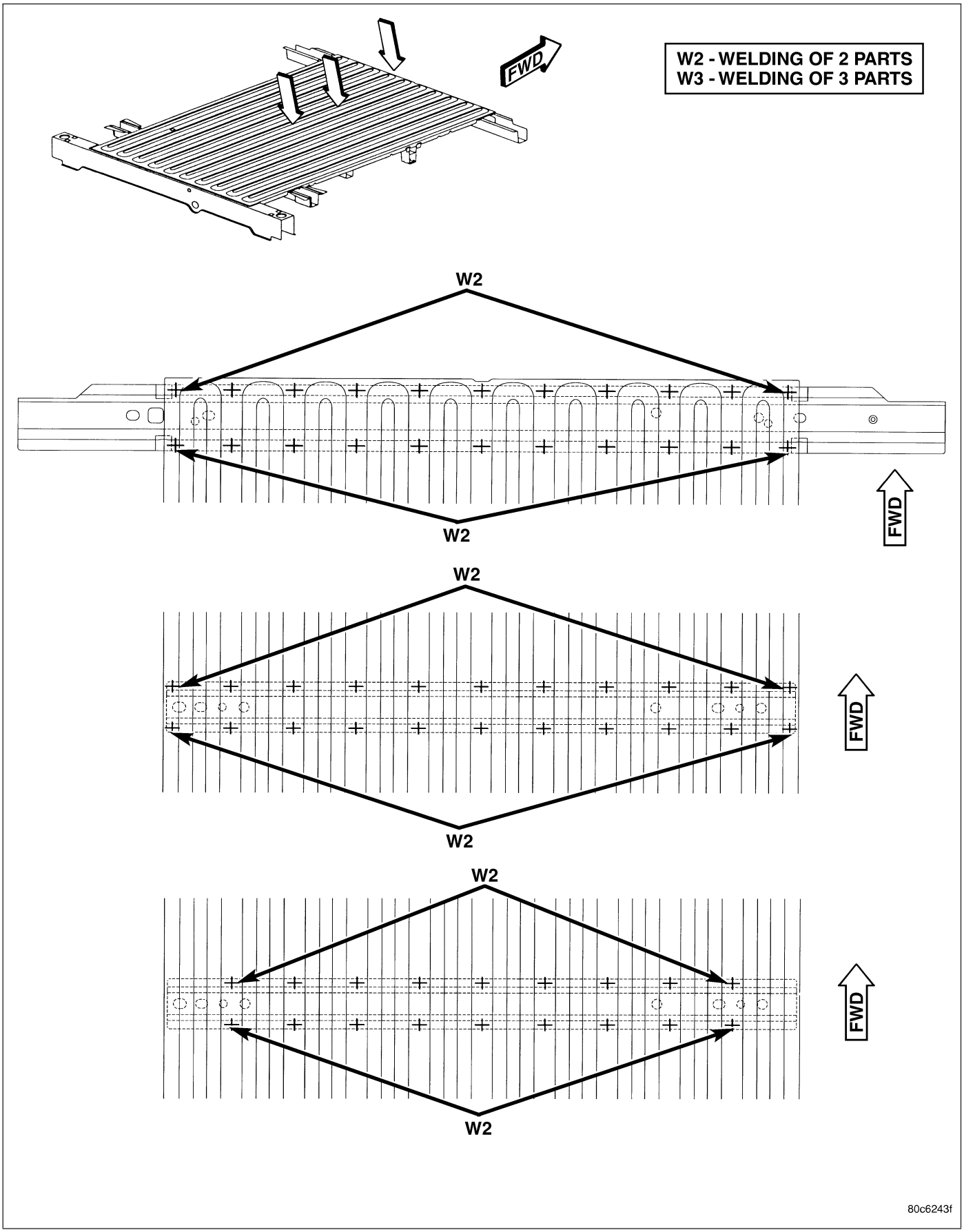

Fig. 91 FRONT CROSSMEMBER - SHORT CARGO BOX ONLY

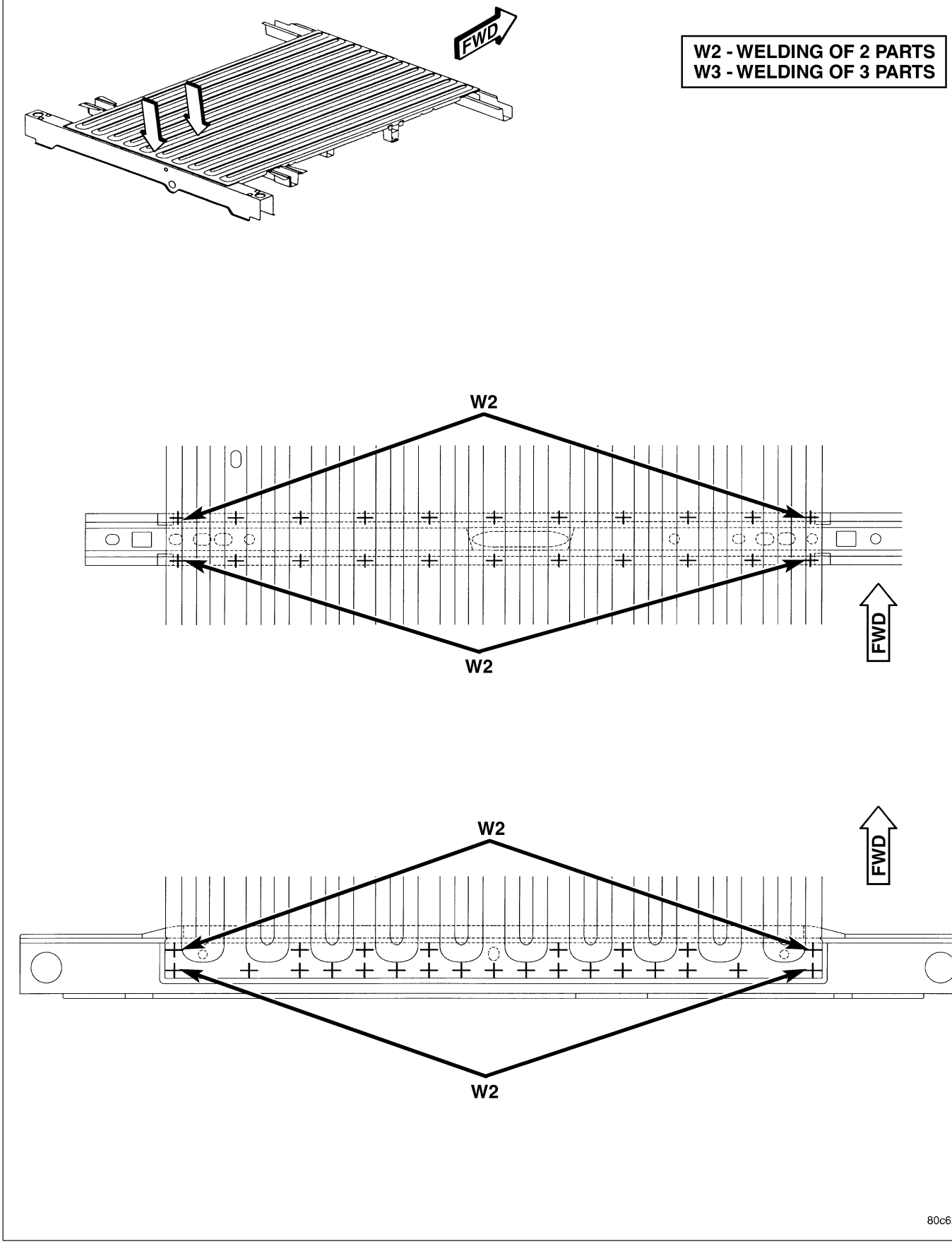

Fig. 92 LONG CROSSMEMBER - SHORT CARGO BOX ONLY

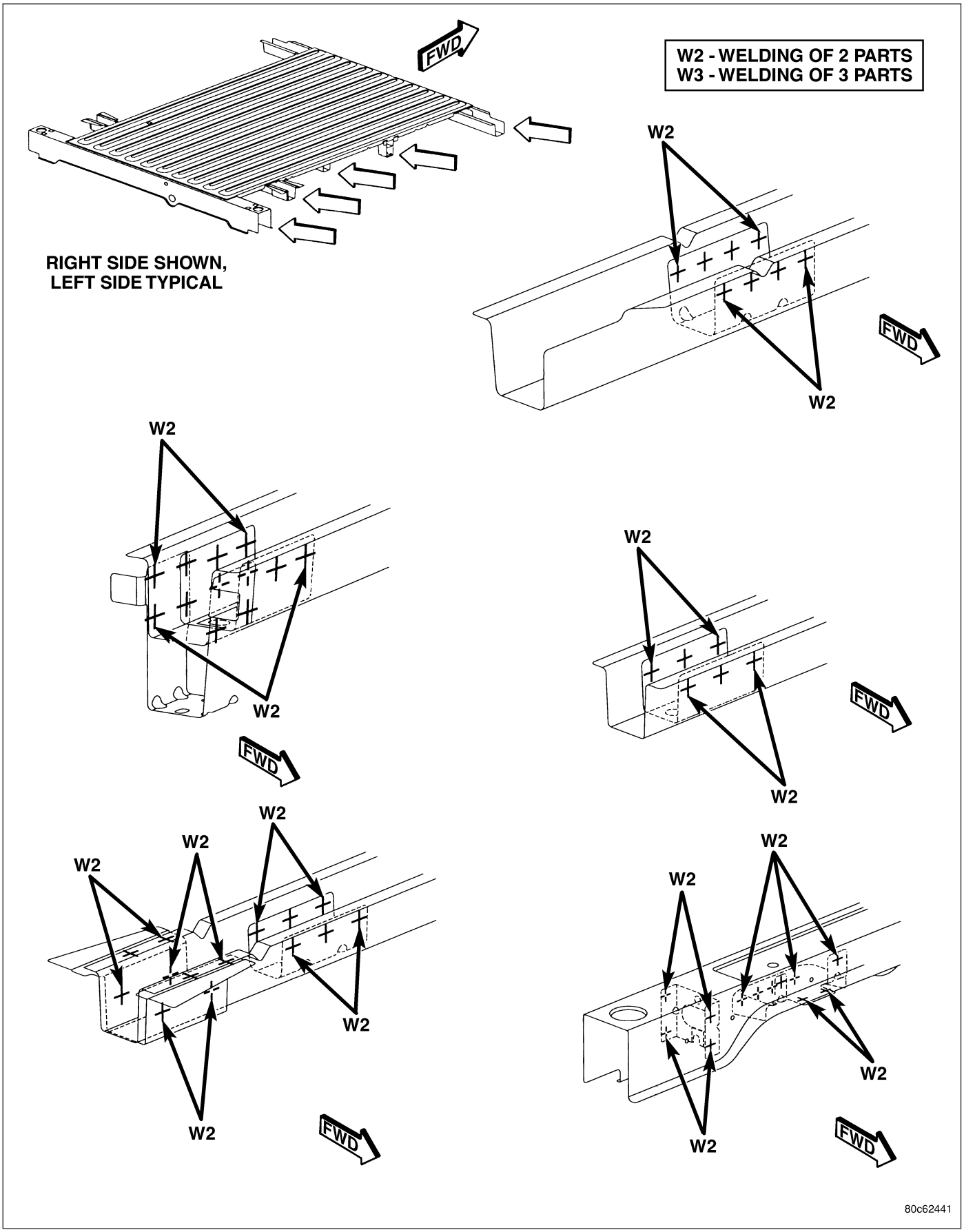

Fig. 93 TAPPING PLATES - SHORT CARGO BOX ONLY

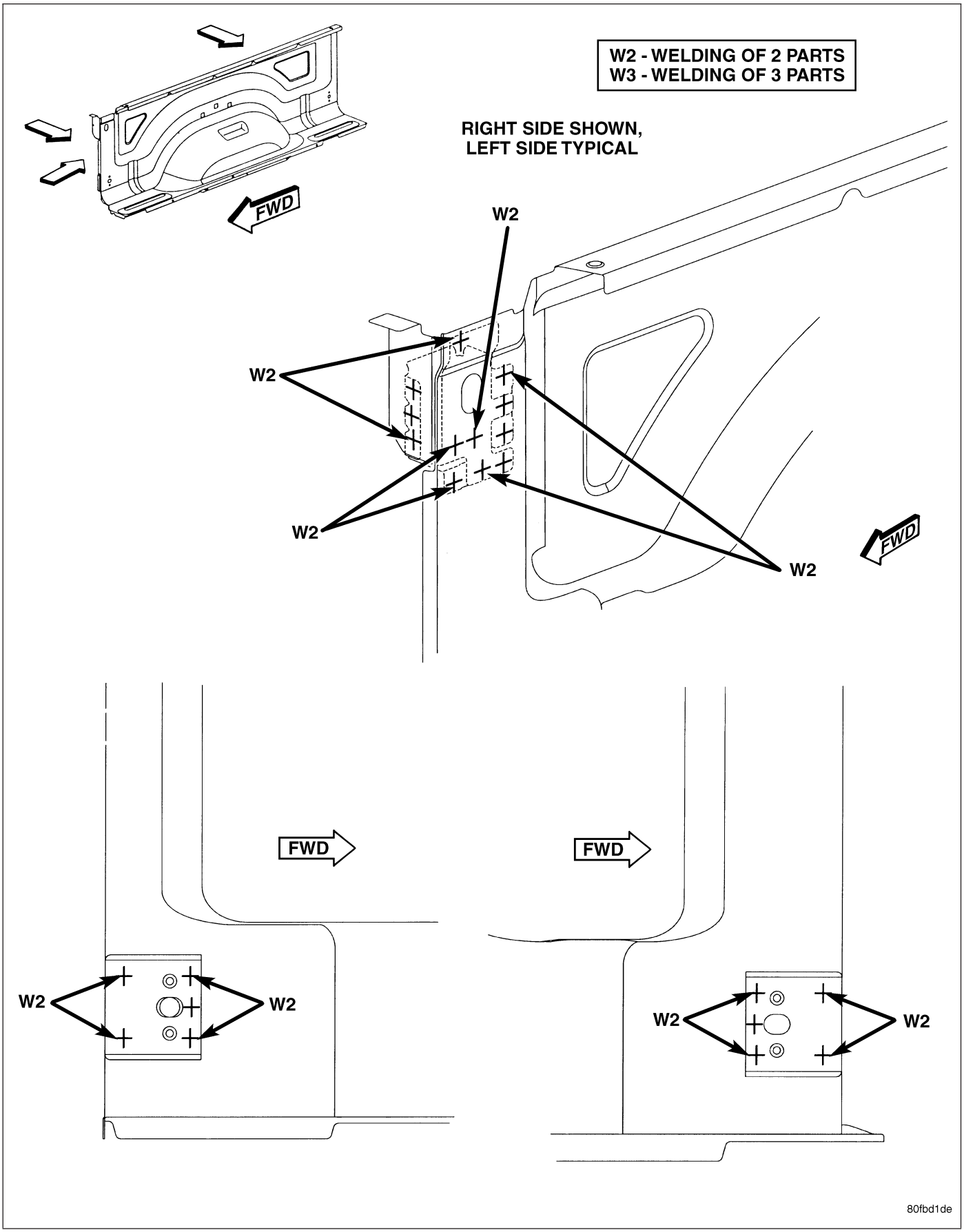

Fig. 94 STAKE POCKET REINFORCEMENTS - SHORT CARGO BOX ONLY

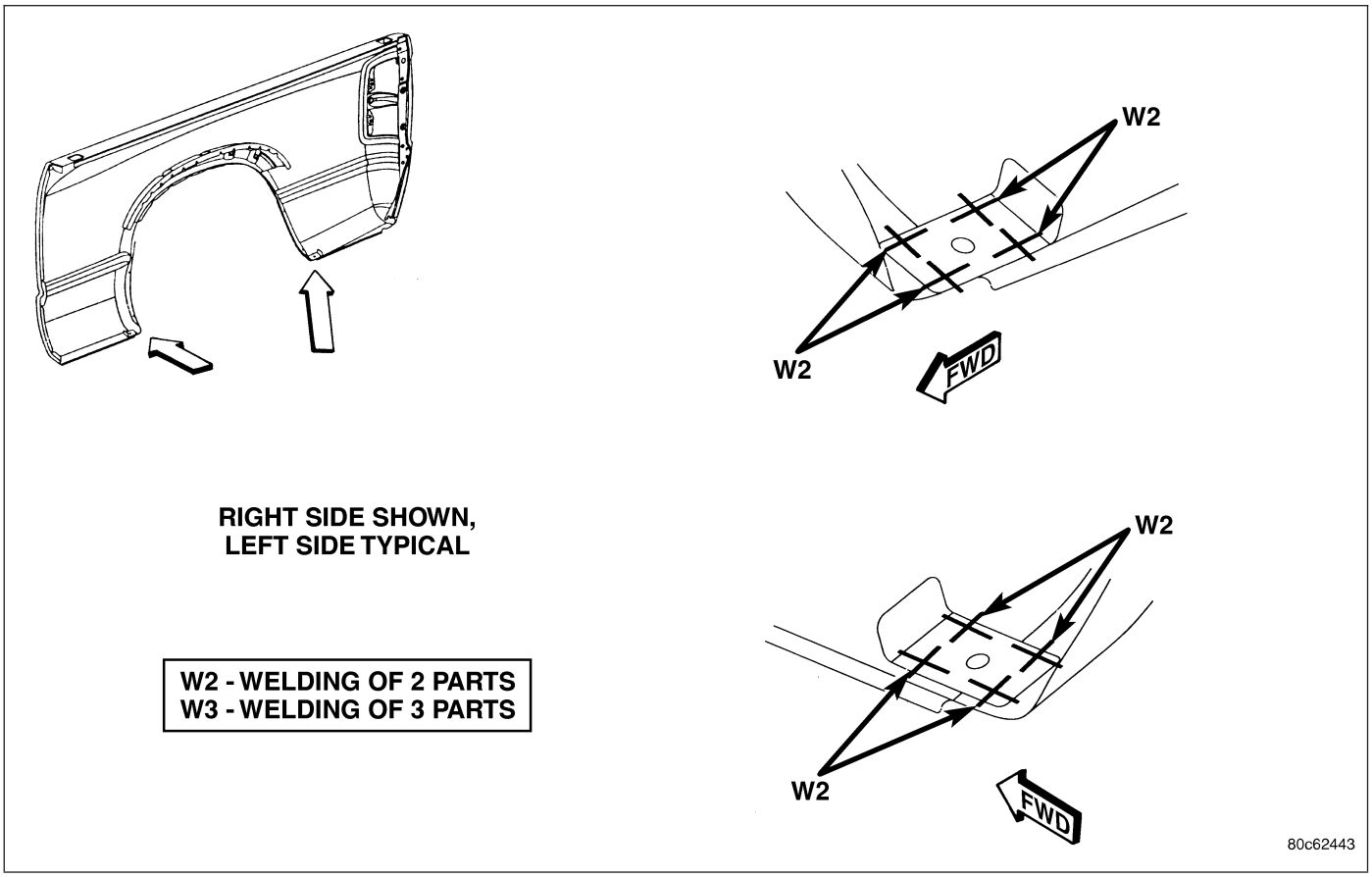

Fig. 95 OUTER BOX SIDE REINFORCEMENT BRACES - SHORT CARGO BOX ONLY

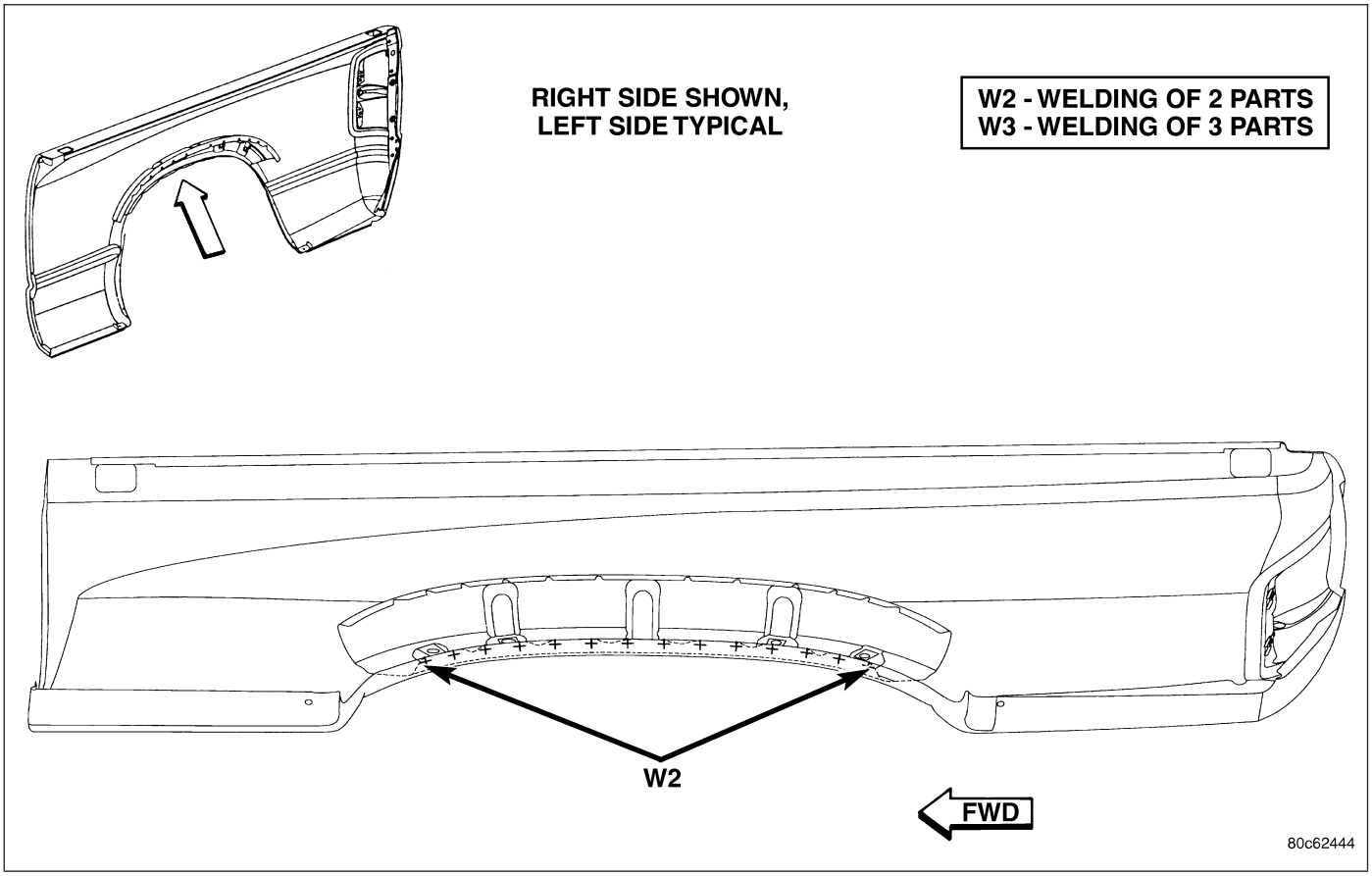

Fig. 96 OUTER WHEELHOUSE - SHORT CARGO BOX ONLY

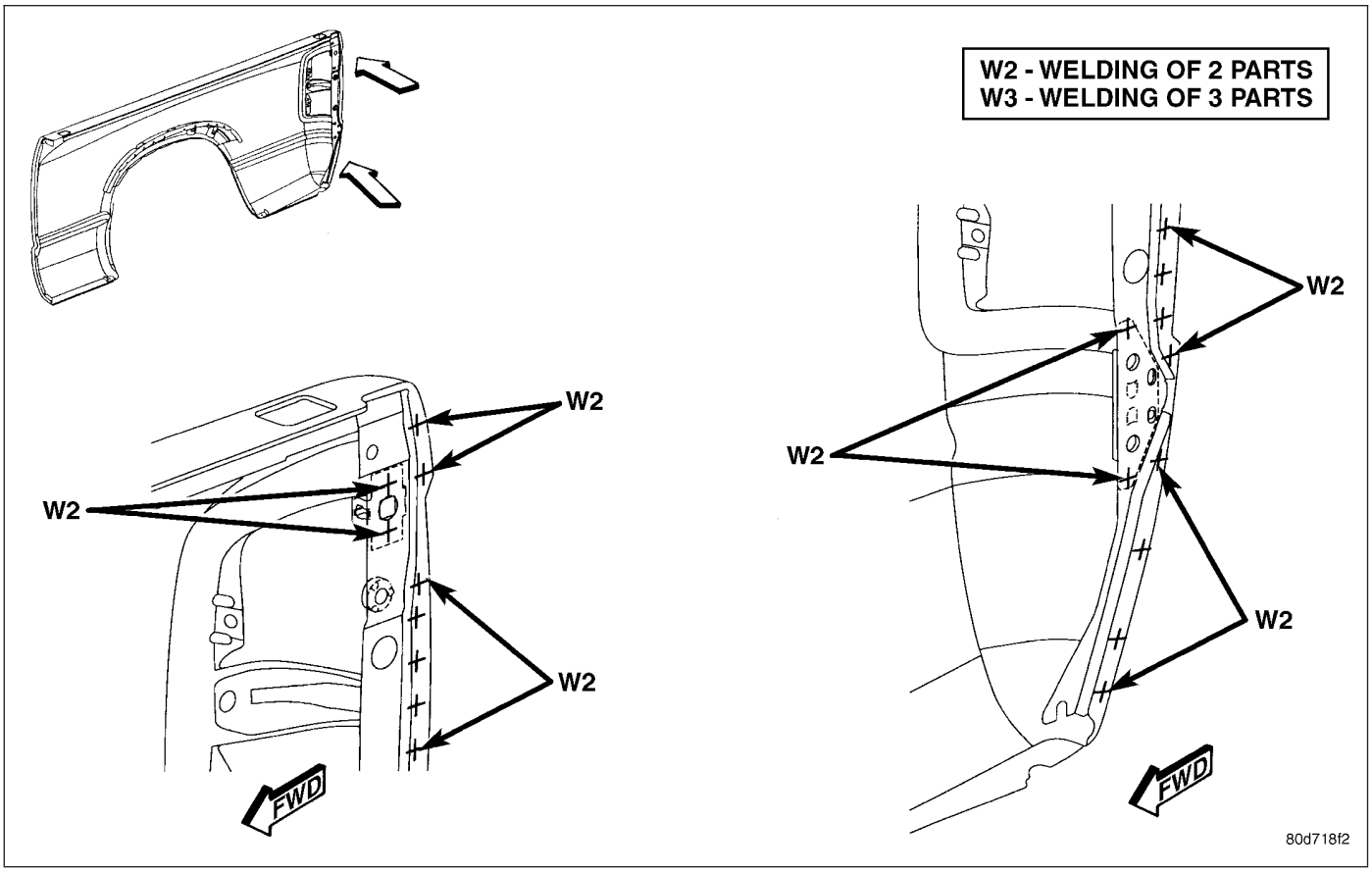

Fig. 97 WELD NUT - SHORT CARGO BOX ONLY - SHORT CARGO BOX ONLY

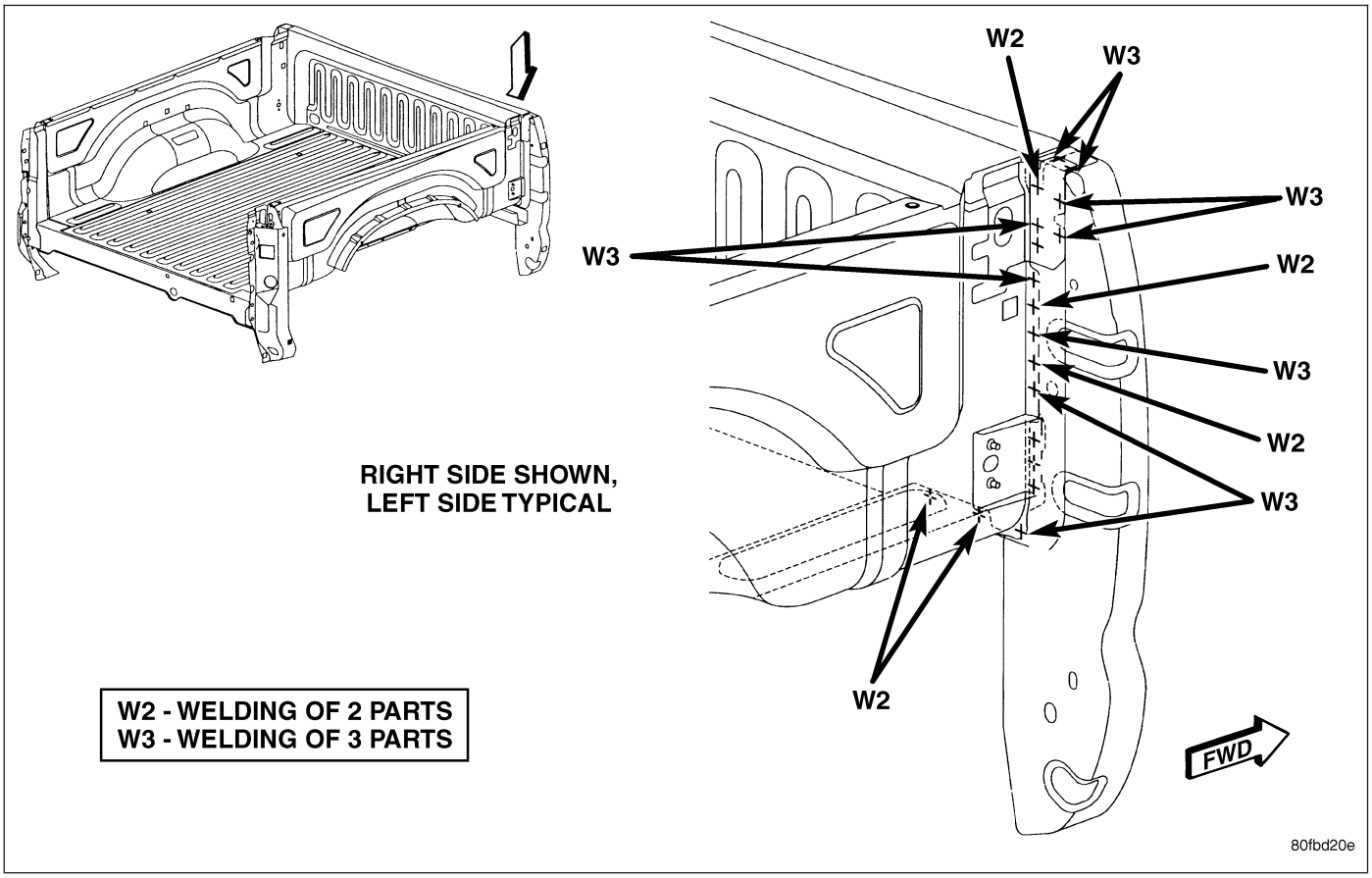

Fig. 98 FRONT BOX PANEL - SHORT CARGO BOX ONLY

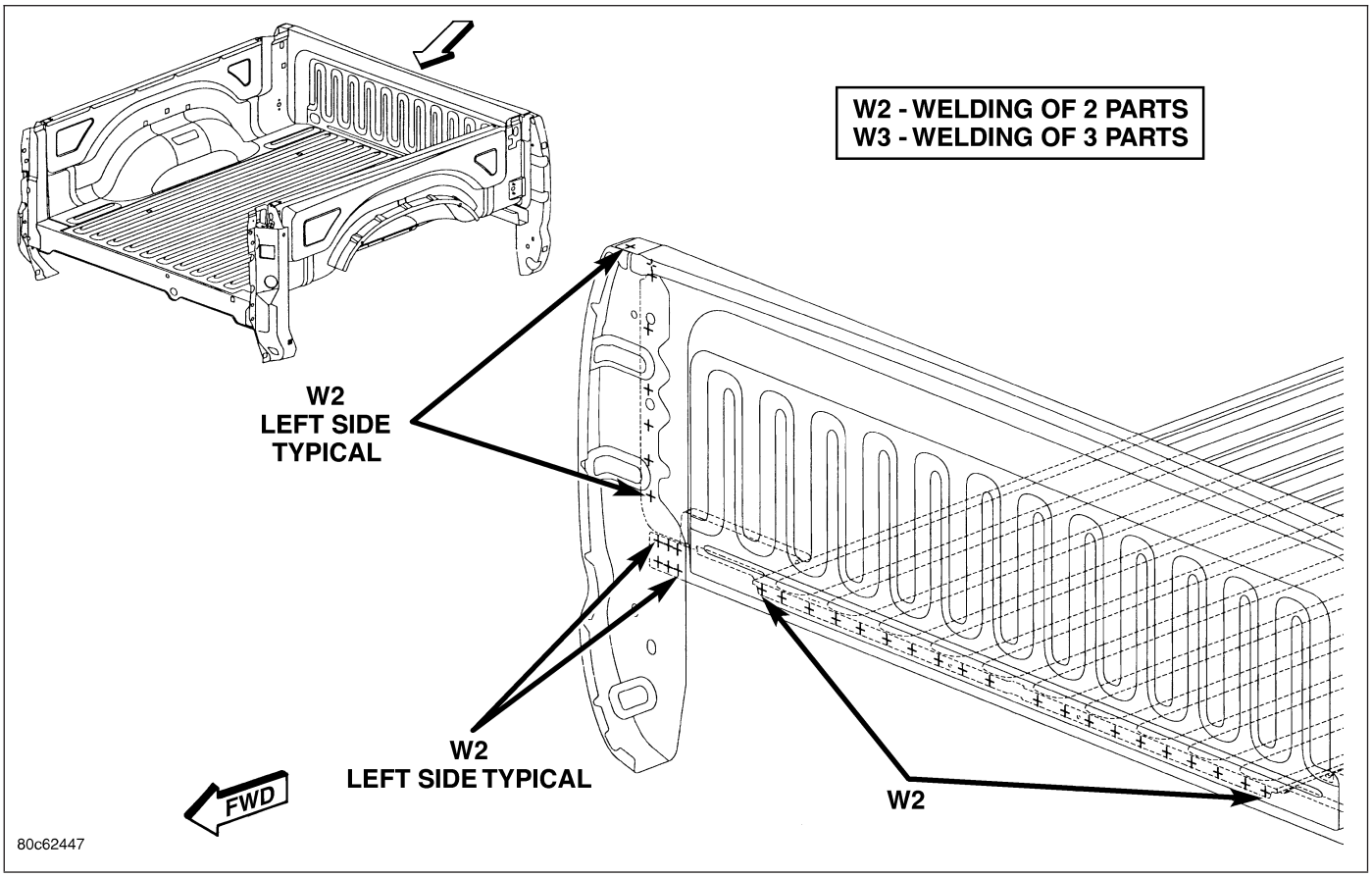

Fig. 99 FRONT CROSSMEMBER - SHORT CARGO BOX ONLY

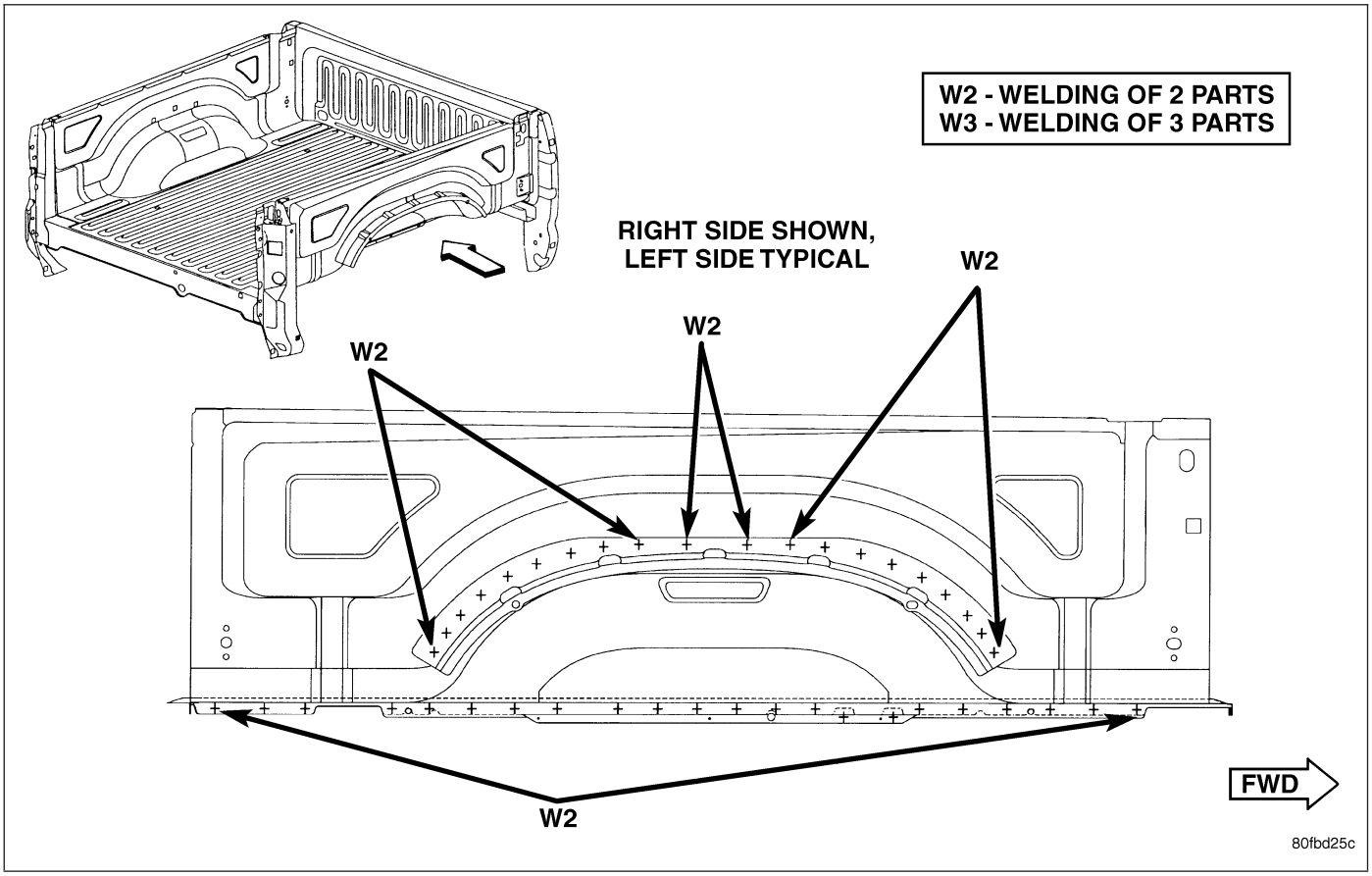

Fig. 100 BOX FLOOR PANEL - SHORT CARGO BOX ONLY

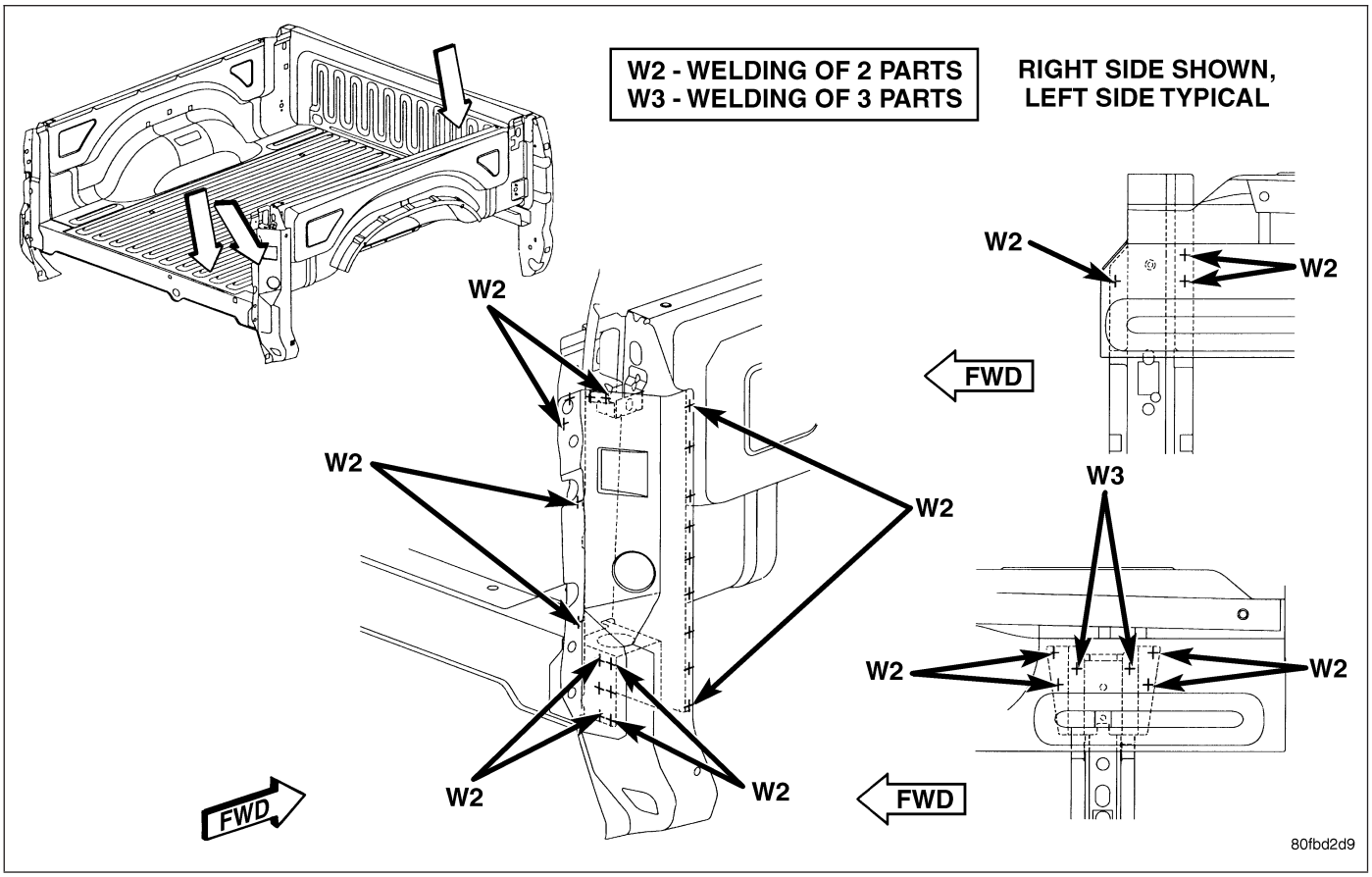

Fig. 101 FRONT CROSSMEMBER - SHORT CARGO BOX ONLY

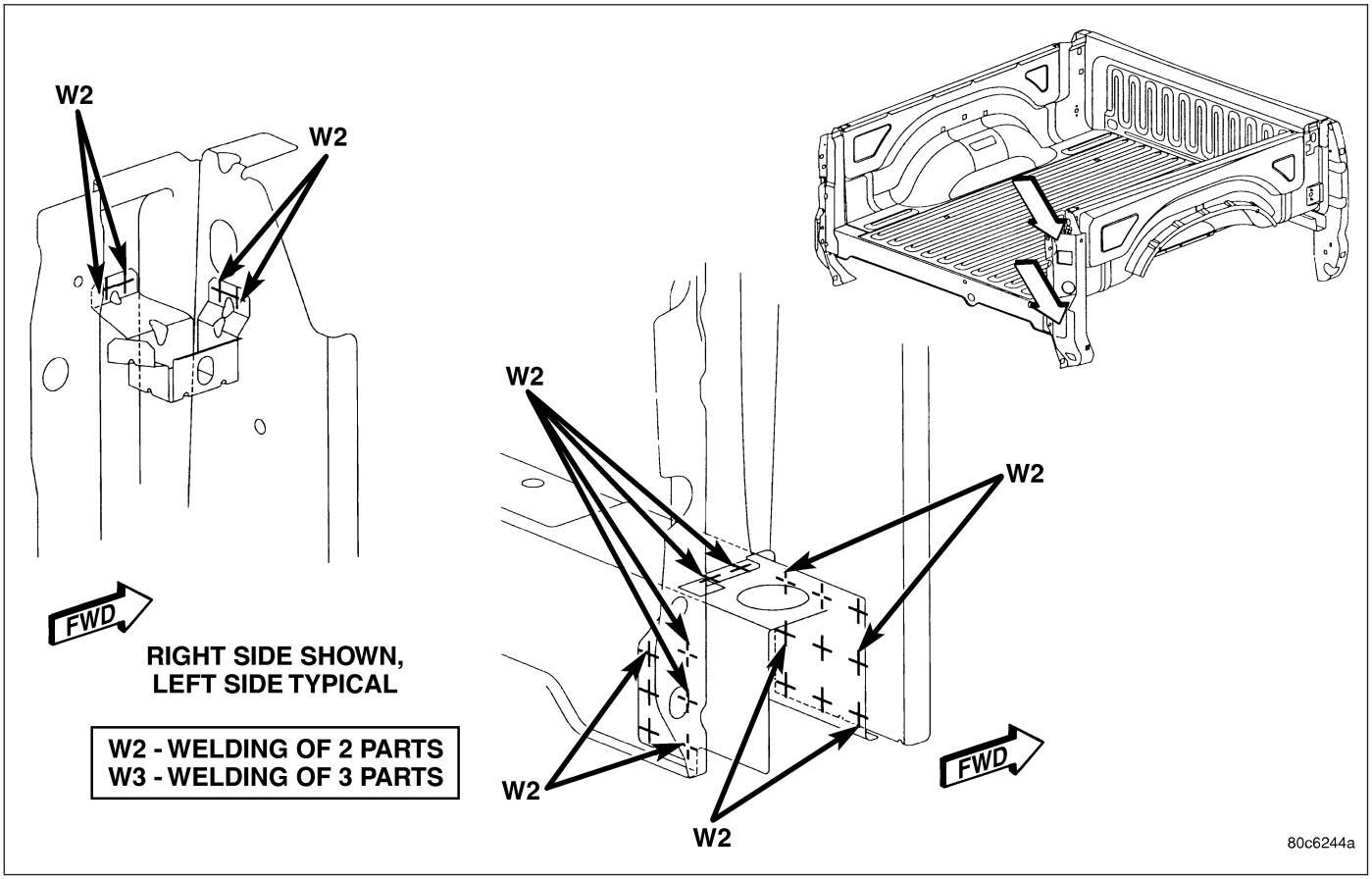

Fig. 102 STAKE POCKET REINFORCEMENT - SHORT CARGO BOX ONLY

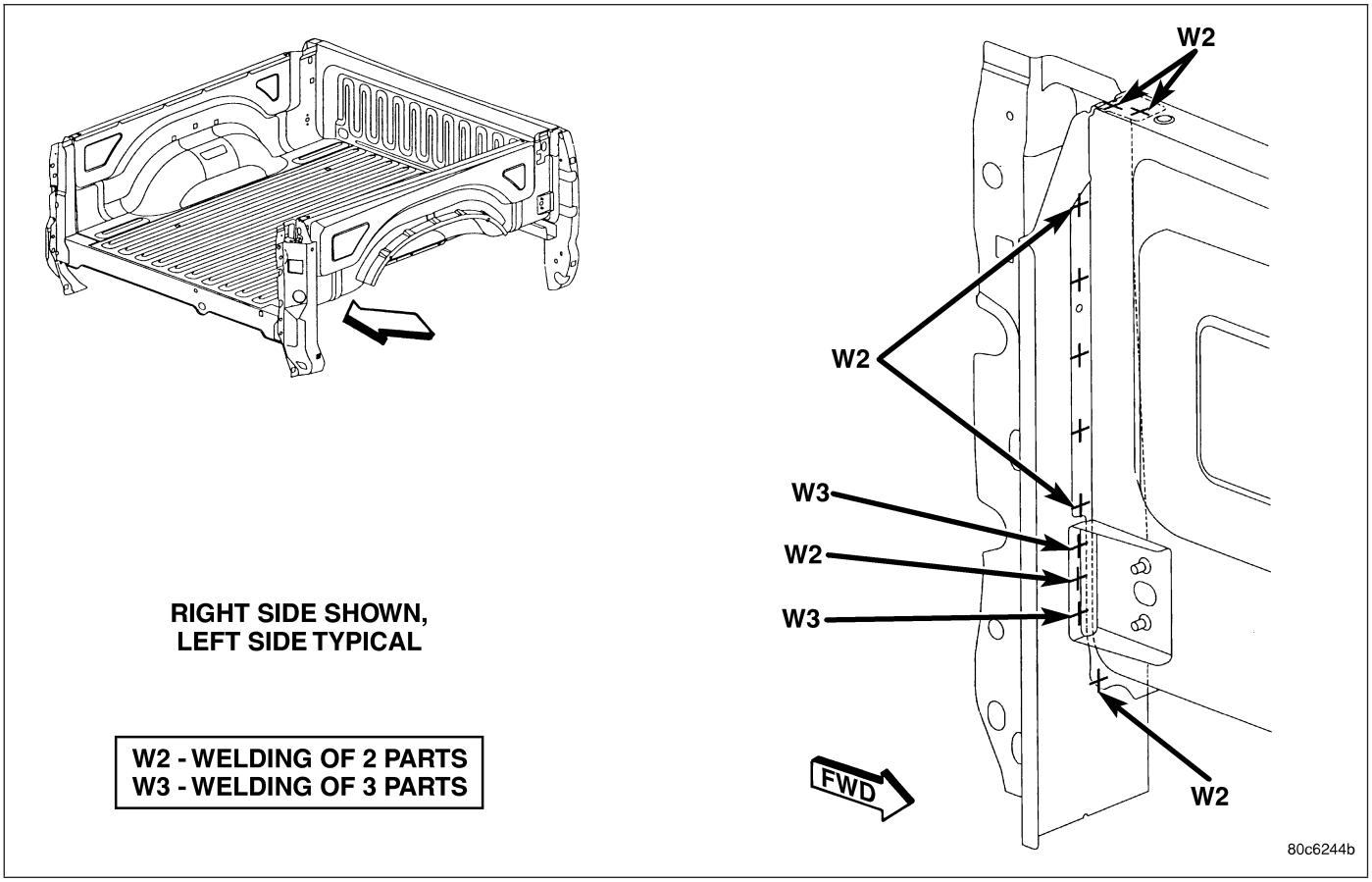

Fig. 103 INNER TAILGATE PILLAR PANEL - SHORT CARGO BOX ONLY

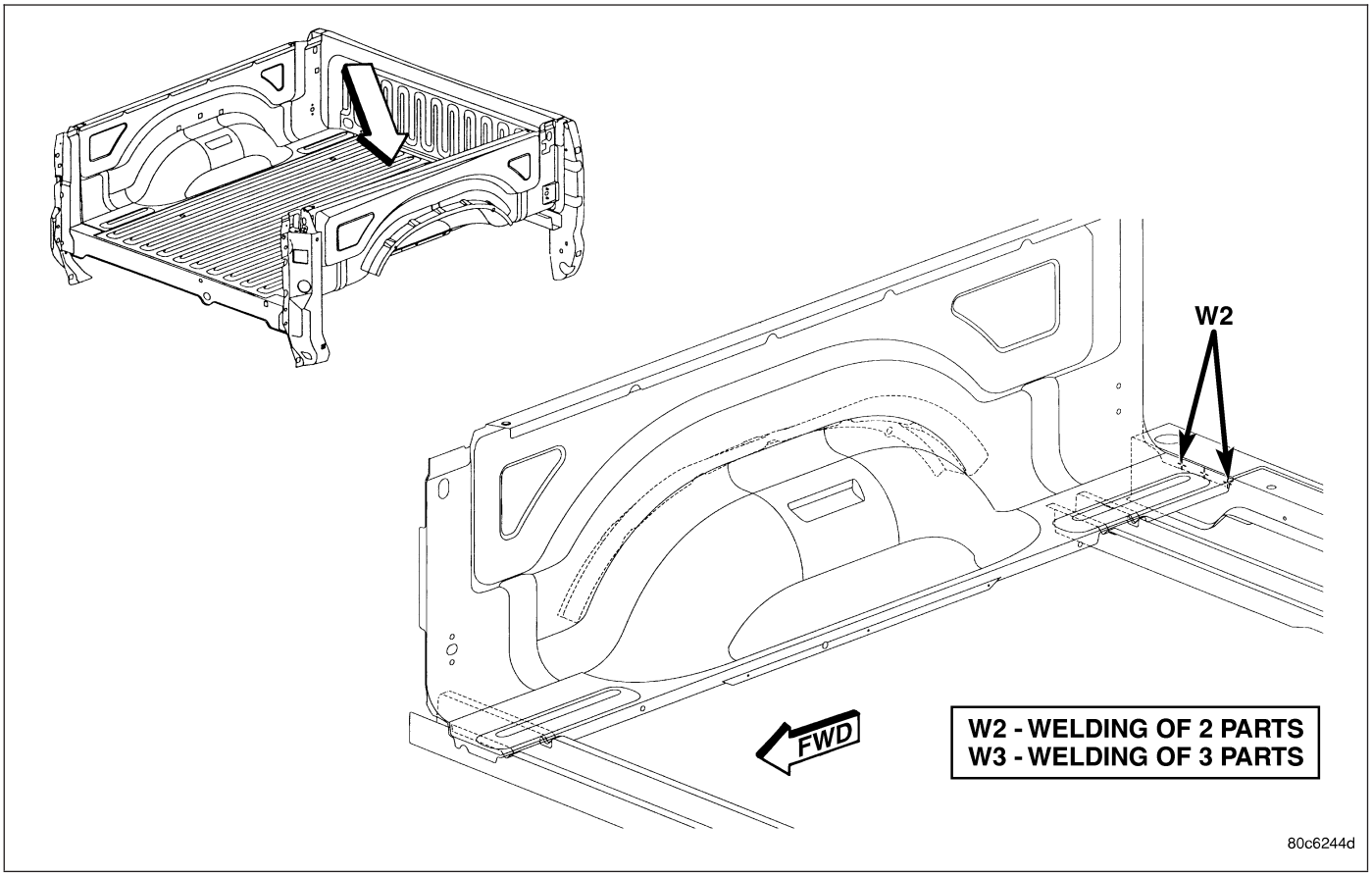

Fig. 104 BOX FLOOR SILL CROSSMEMBER - SHORT CARGO BOX ONLY

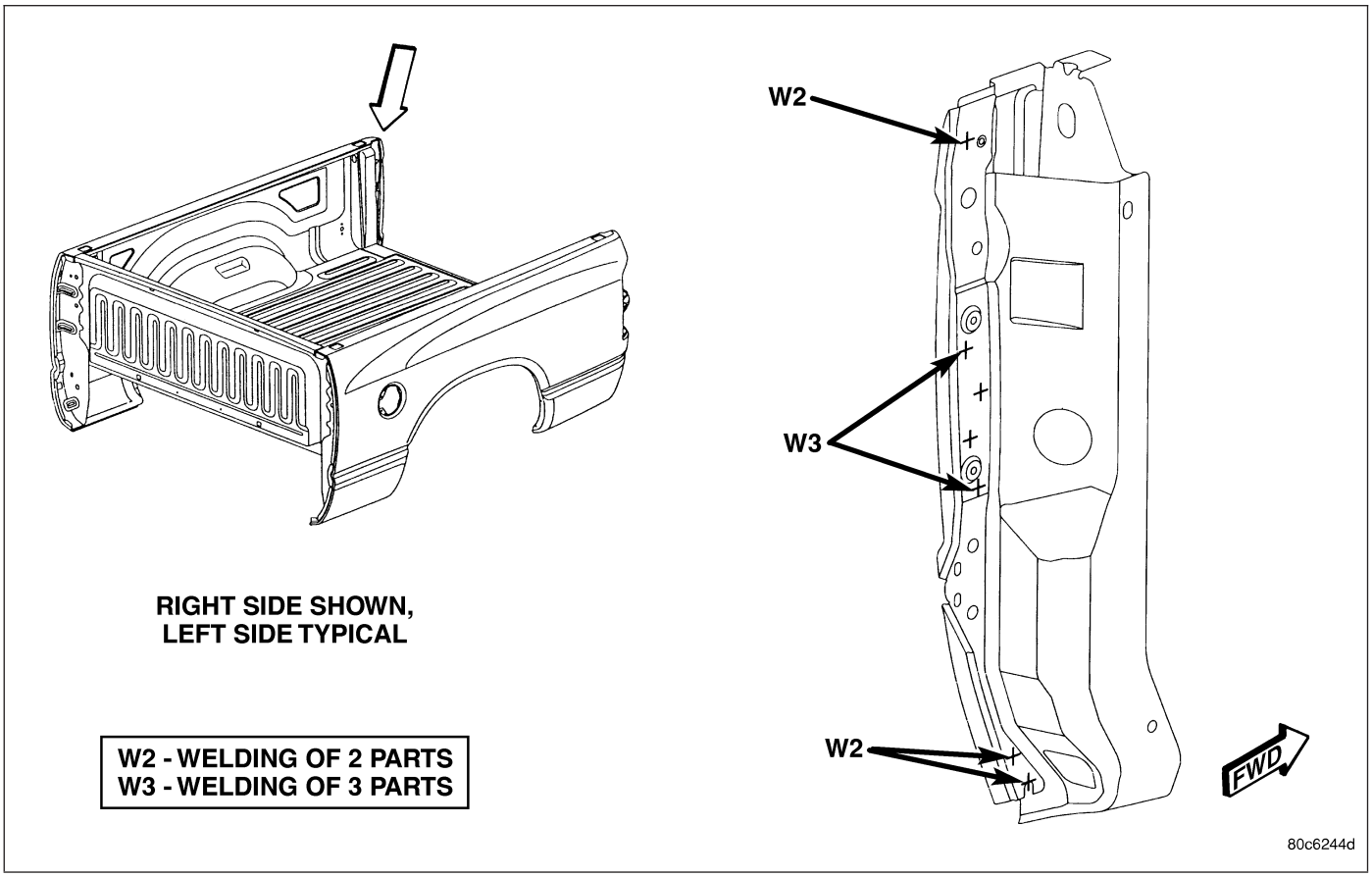

Fig. 105 INNER TAILGATE PILLAR - SHORT CARGO BOX ONLY

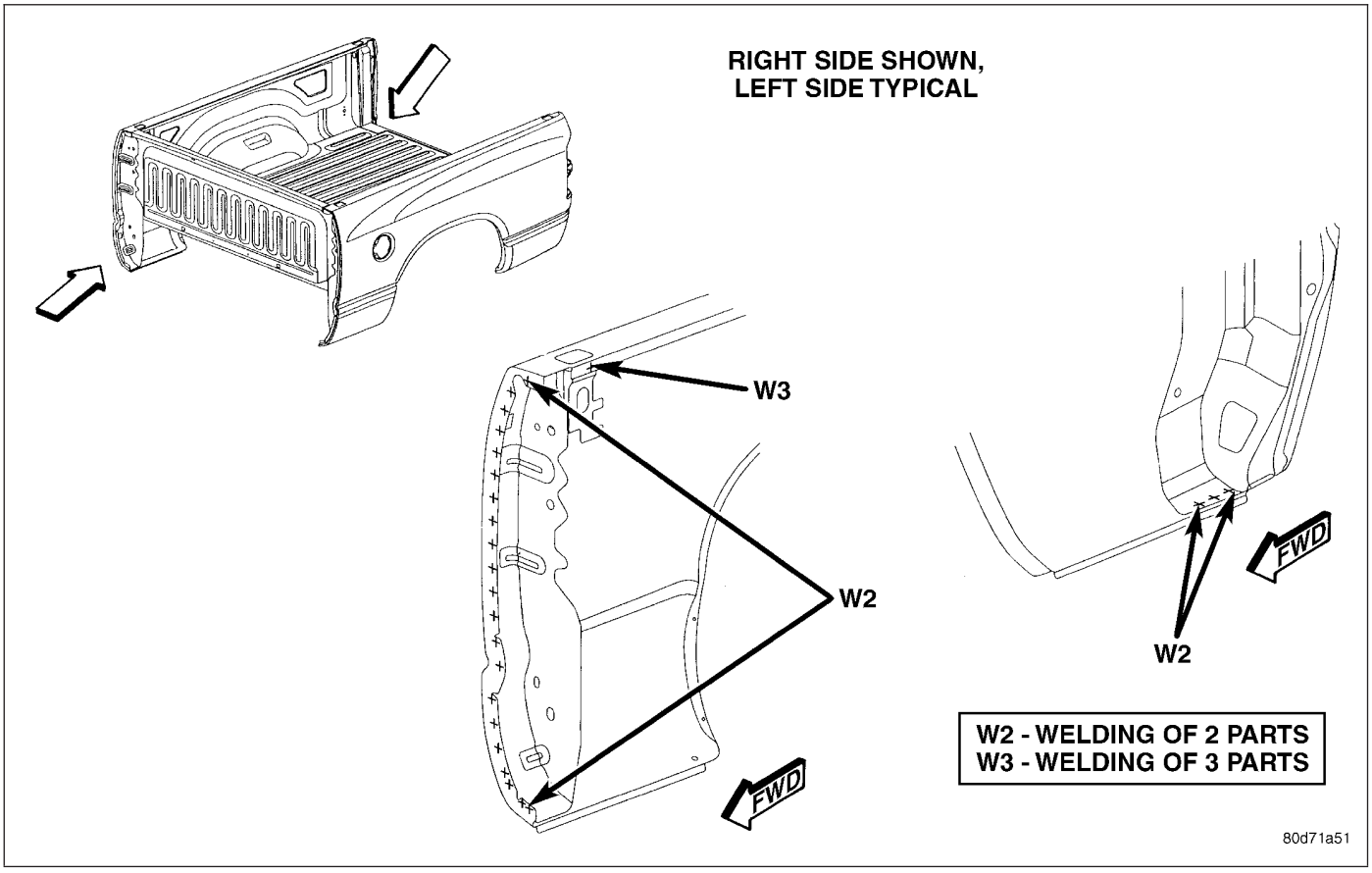

Fig. 106 BOX SIDE PANEL - SHORT CARGO BOX ONLY

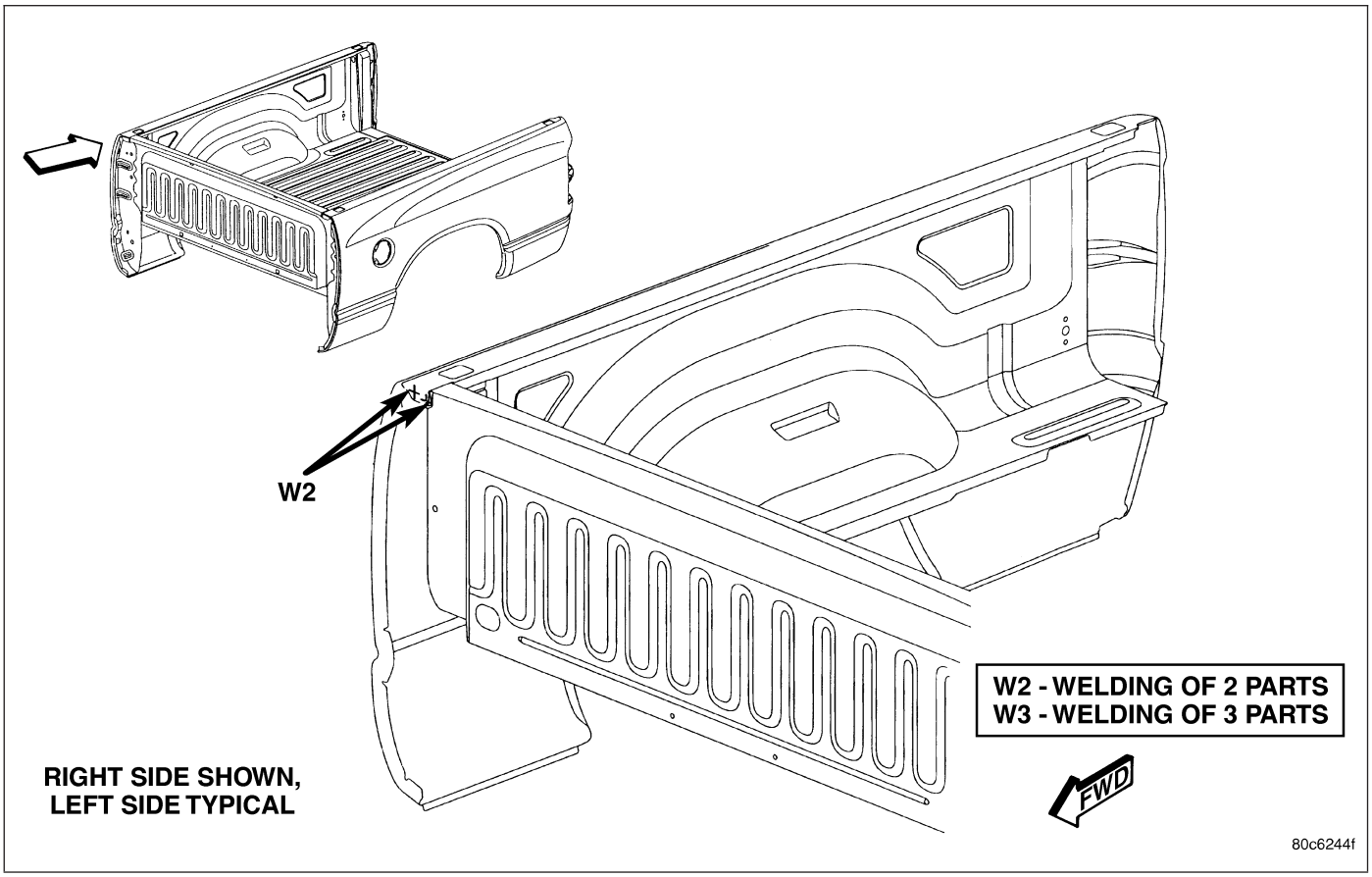

Fig. 107 FRONT BOX PANEL - SHORT CARGO BOX ONLY

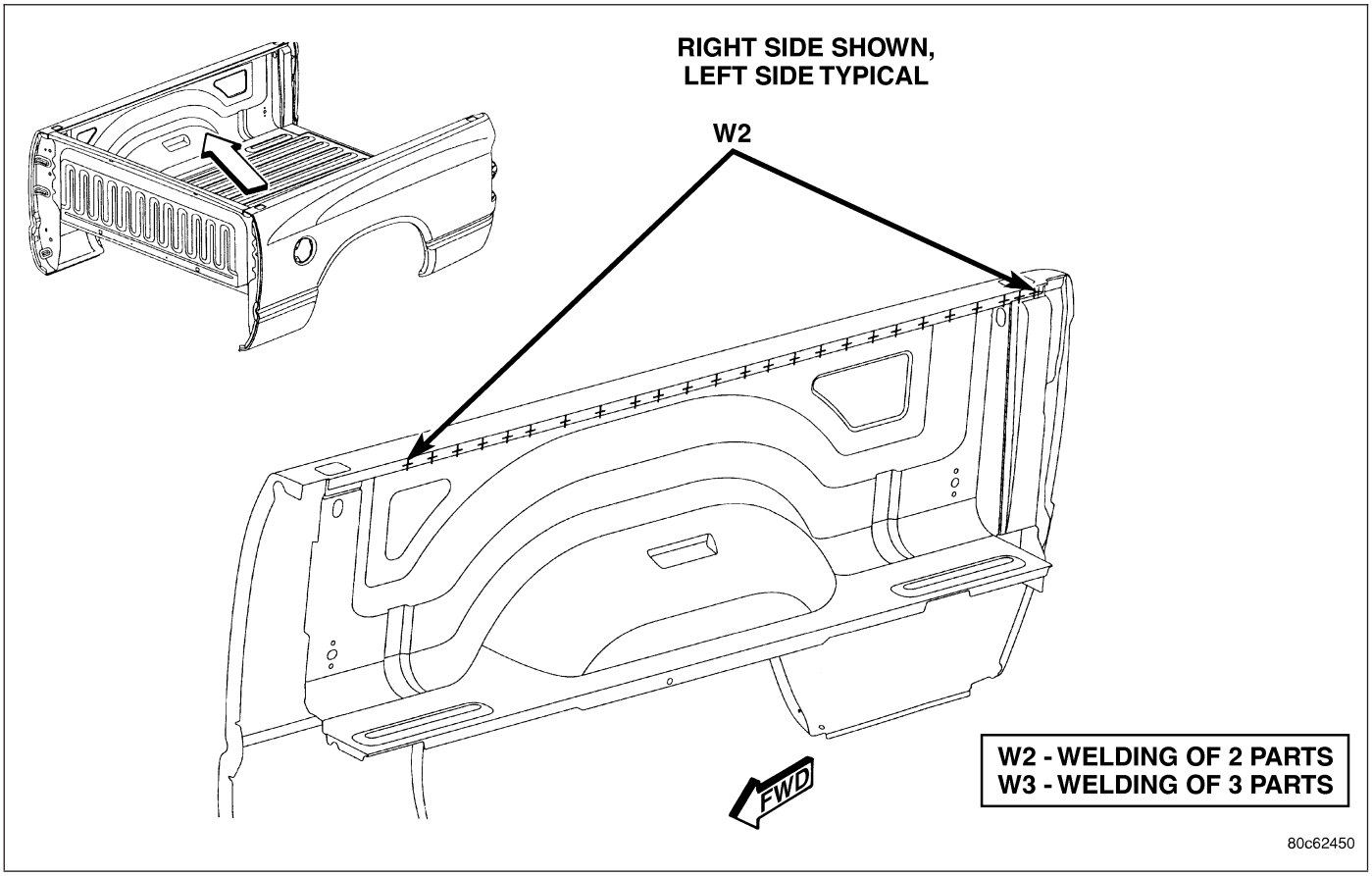

Fig. 108 INNER BOX SIDE PANEL - SHORT CARGO BOX ONLY

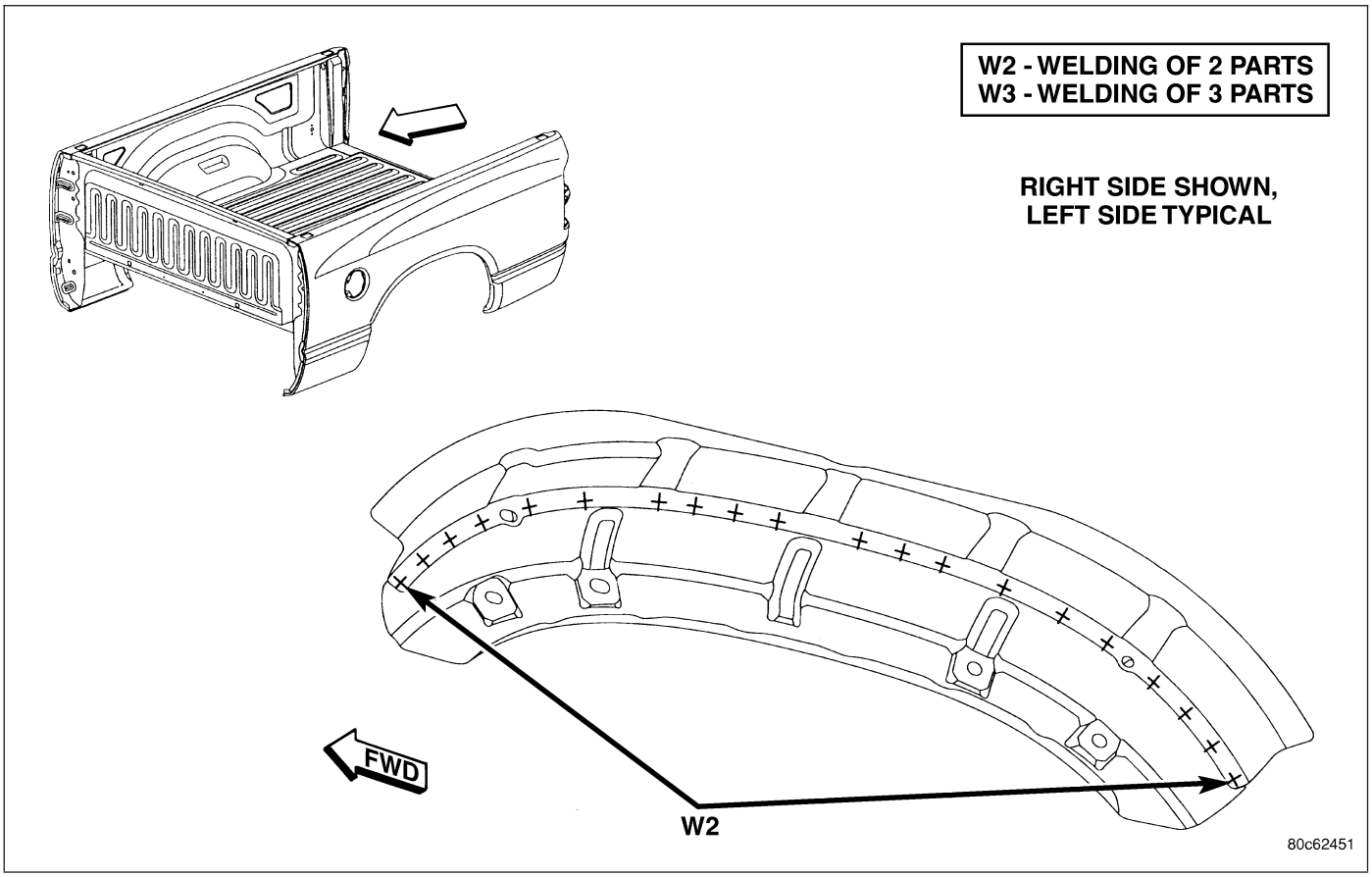

Fig. 109 OUTER WHEELHOUSE PANEL - SHORT CARGO BOX ONLY

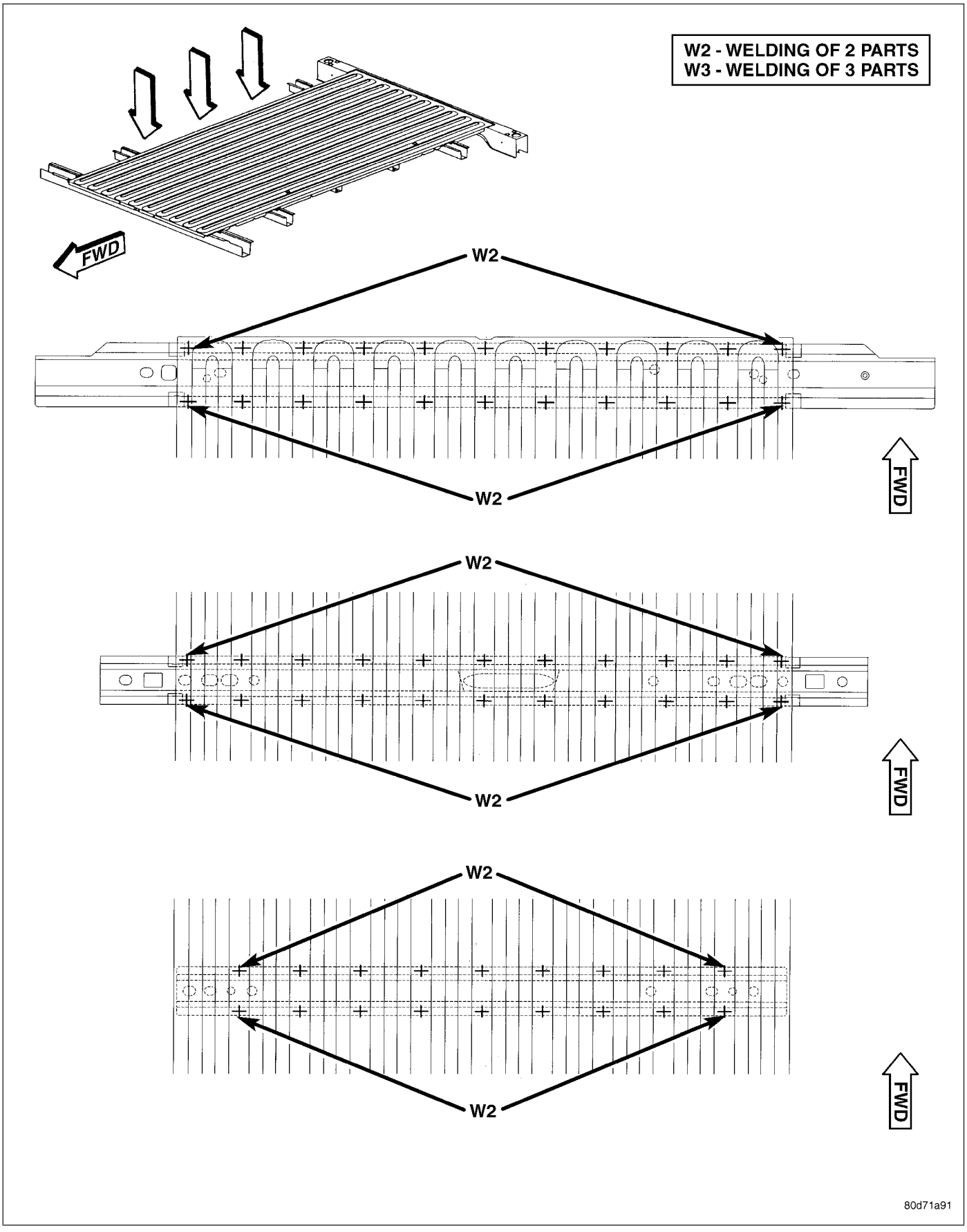

Fig. 110 FRONT CROSSMEMBER - LONG CARGO BOX ONLY

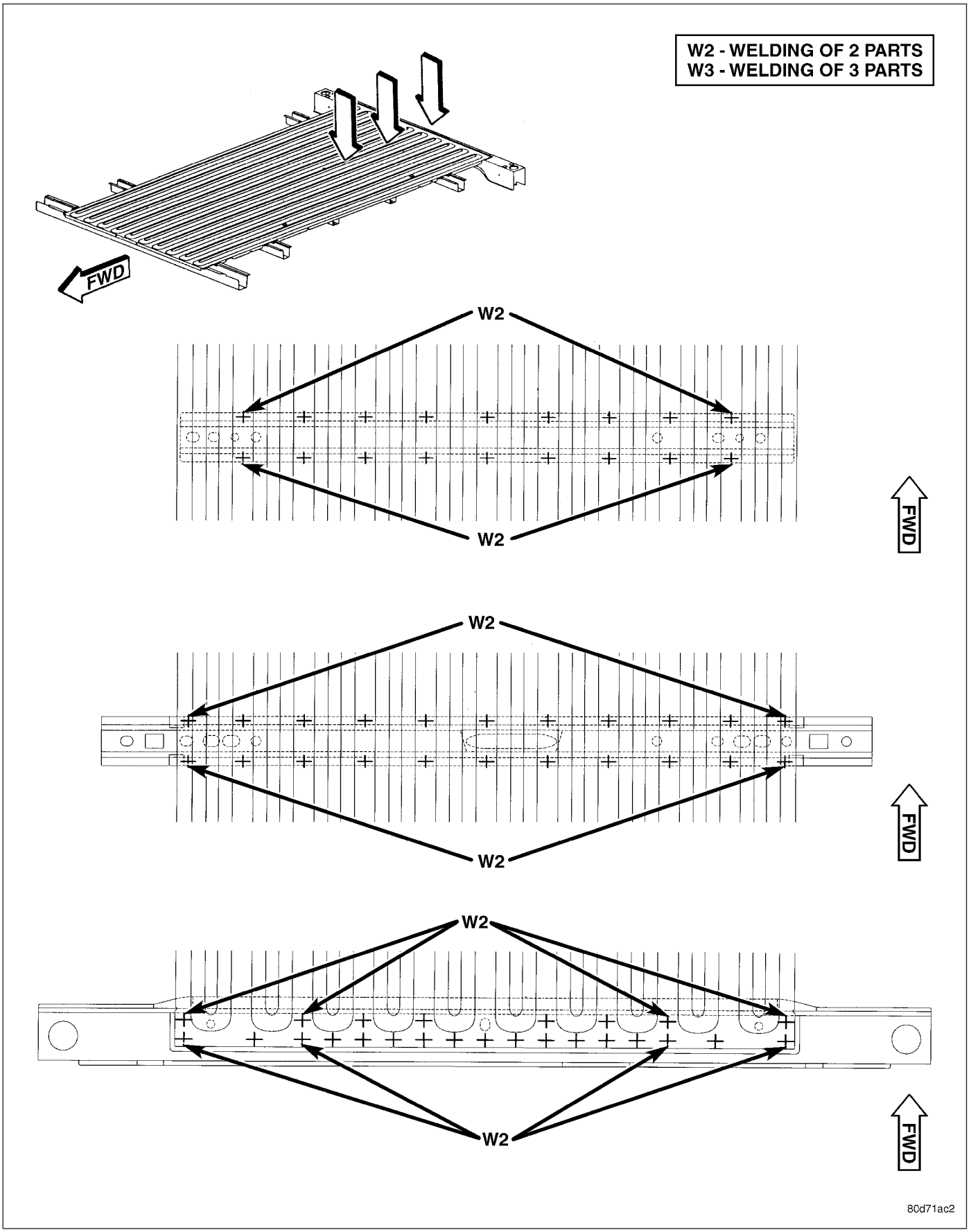

Fig. 111 WHEELHOUSE CROSSMEMBER - LONG CARGO BOX ONLY

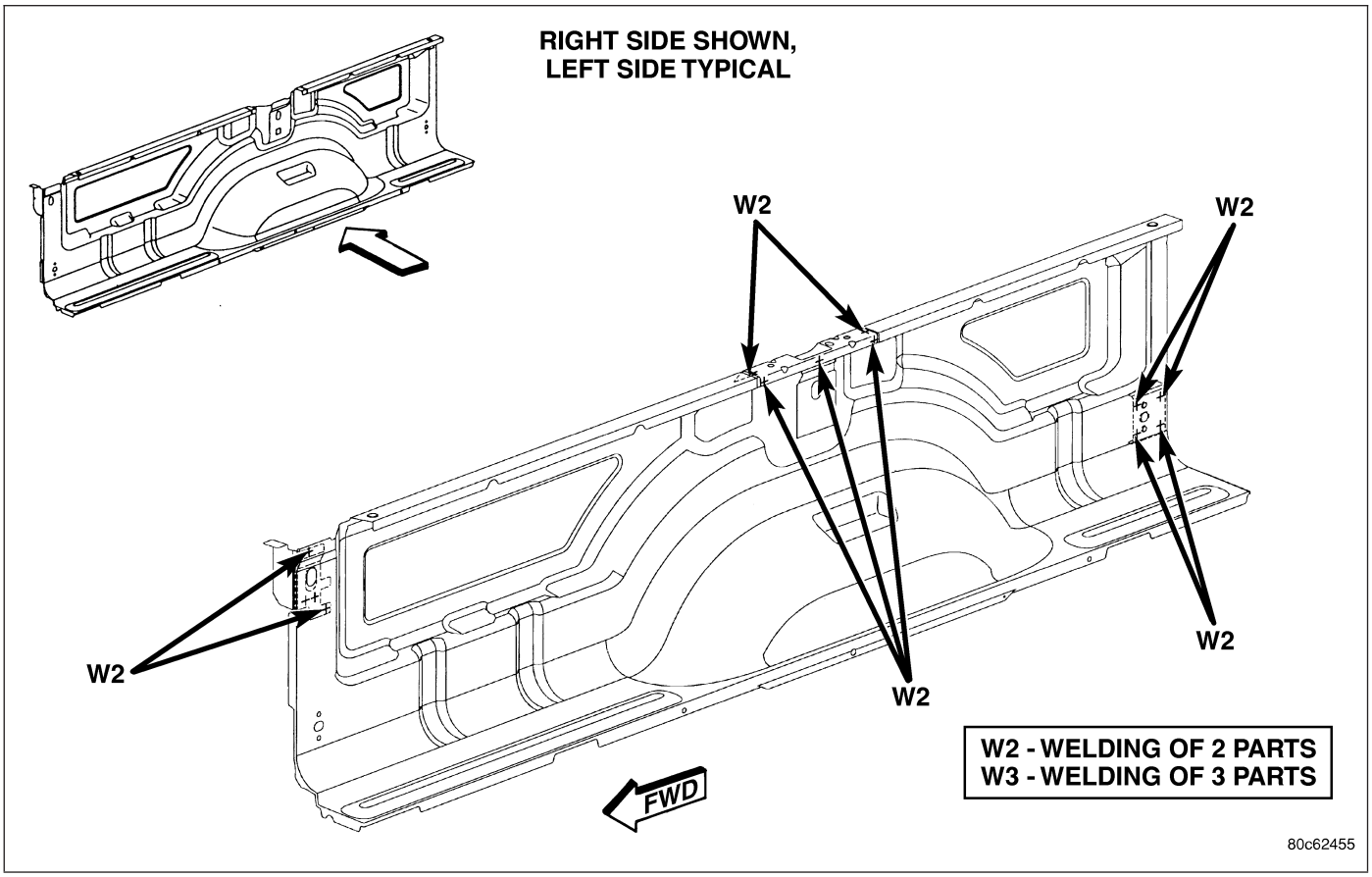

Fig. 112 FRONT AND CENTER STAKE POCKET REINFORCEMENTS - LONG CARGO BOX ONLY

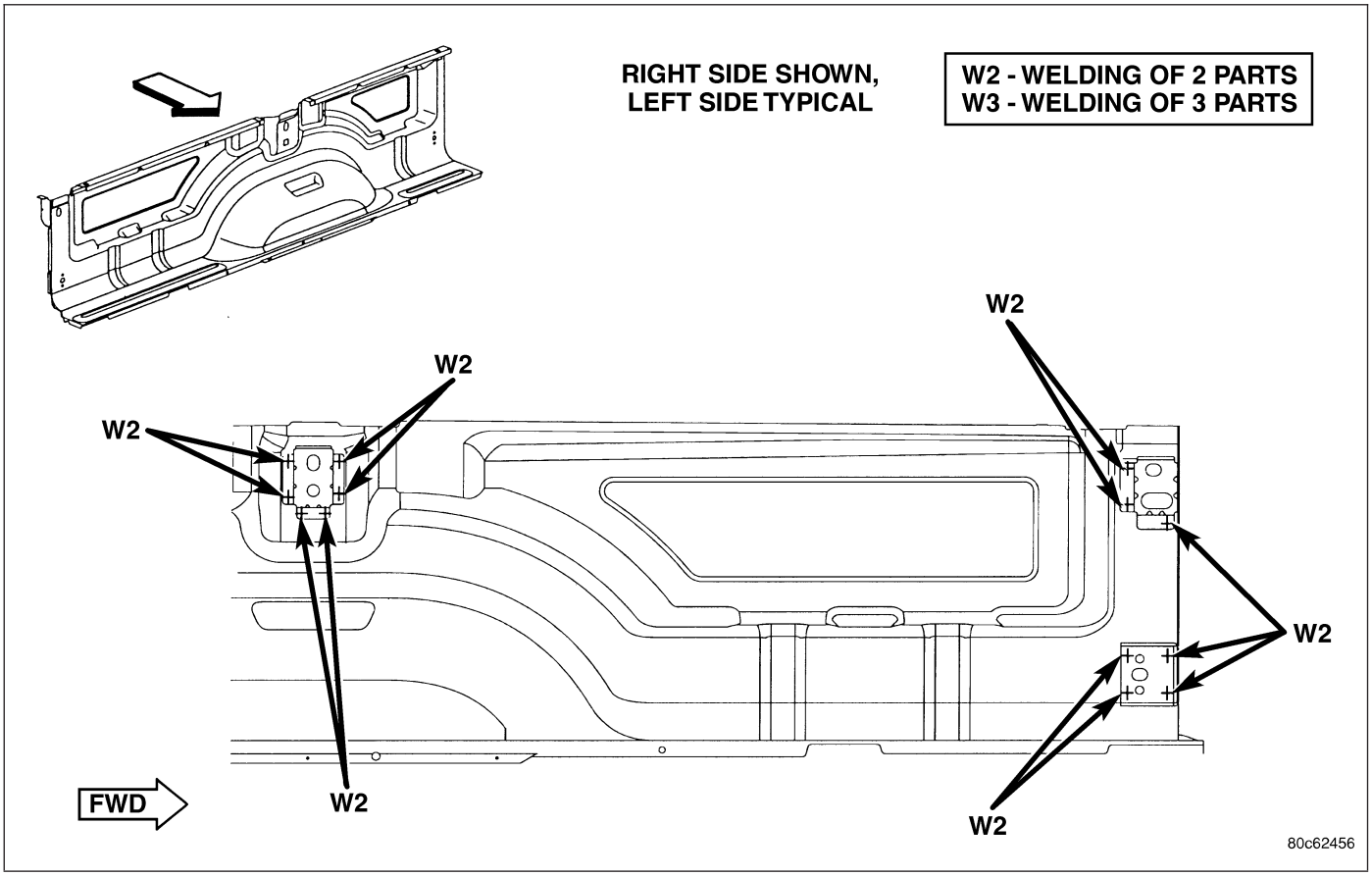

Fig. 113 OUTER FRONT AND CENTER STAKE POCKET REINFORCEMENT - LONG CARGO BOX ONLY

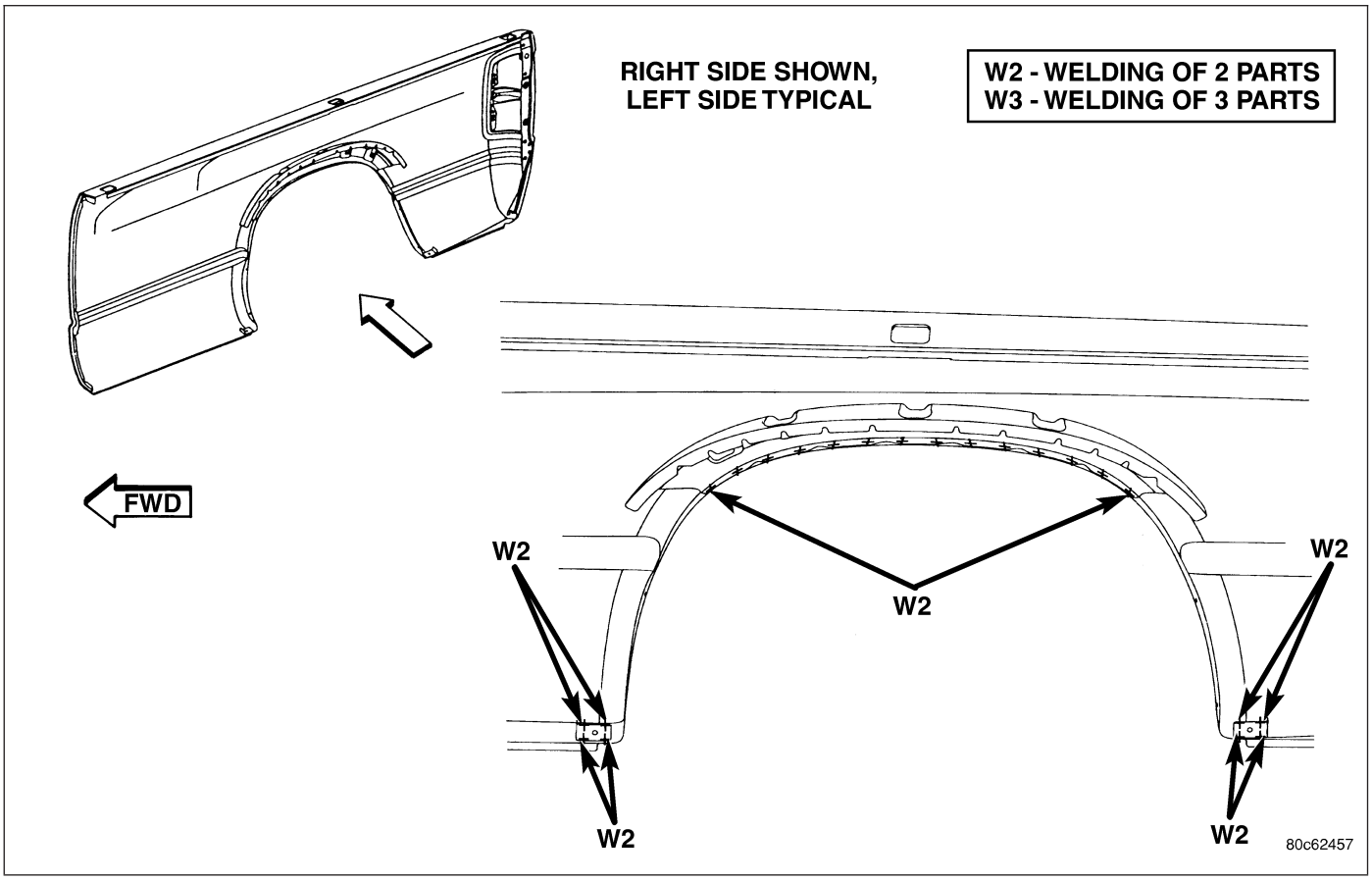

Fig. 114 OUTER WHEELHOUSE - LONG CARGO BOX ONLY

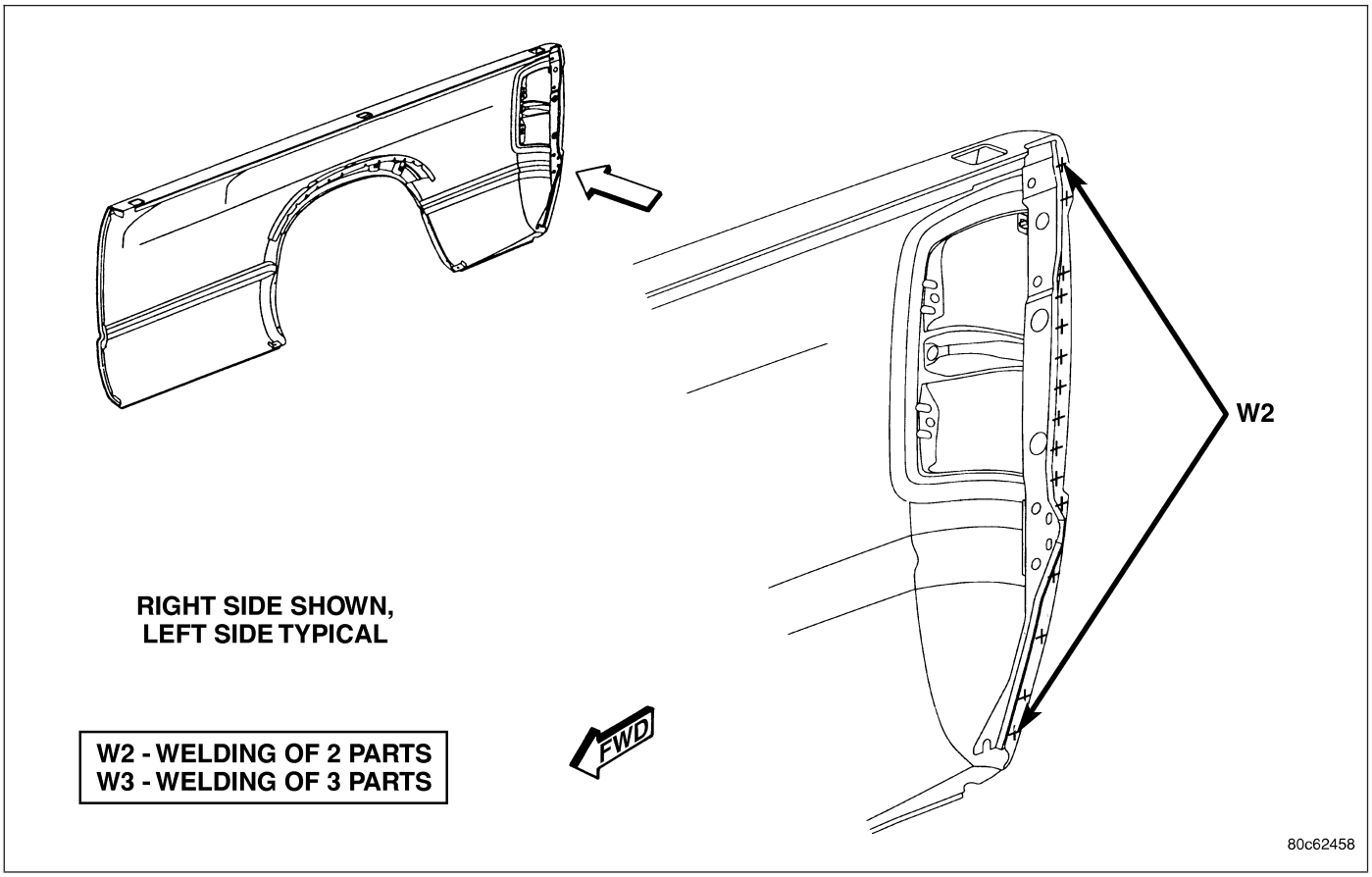

Fig. 115 TAILGATE BOX SIDE PIVOT REINFORCEMENT - LONG CARGO BOX ONLY

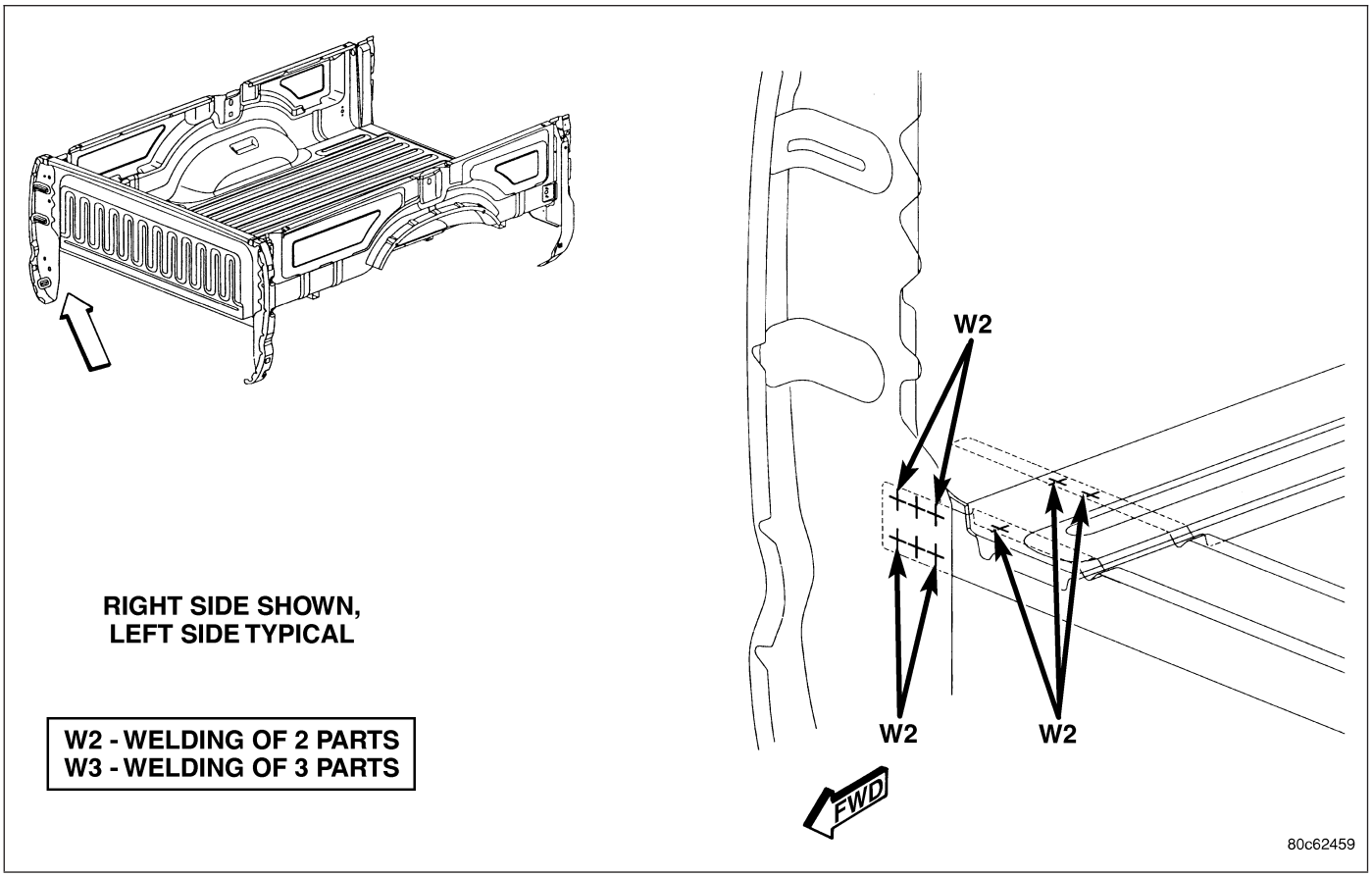

Fig. 116 FRONT BOX SIDE PANEL - LONG CARGO BOX ONLY

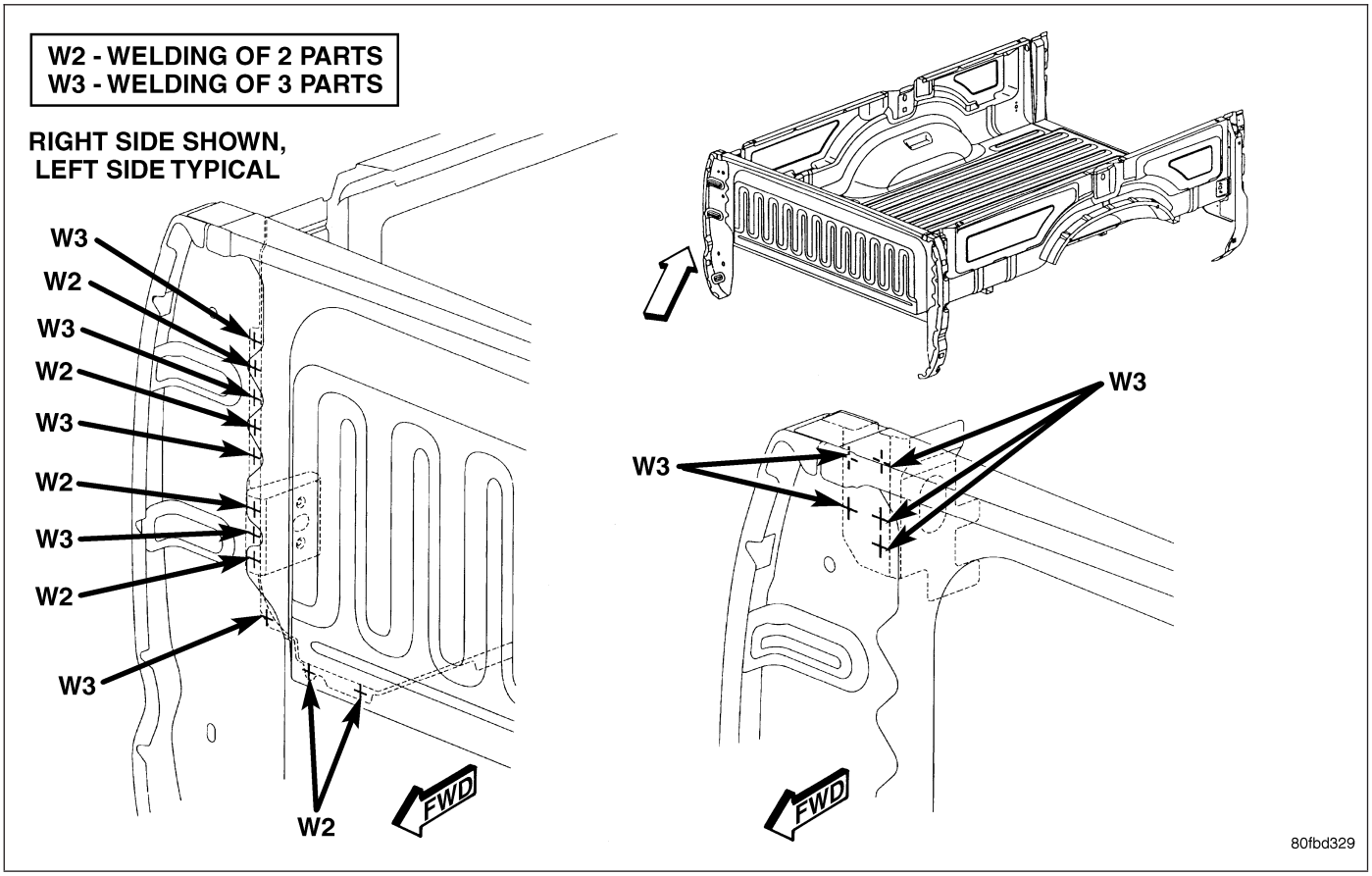

Fig. 117 FRONT BOX SIDE PANEL - LONG CARGO BOX ONLY

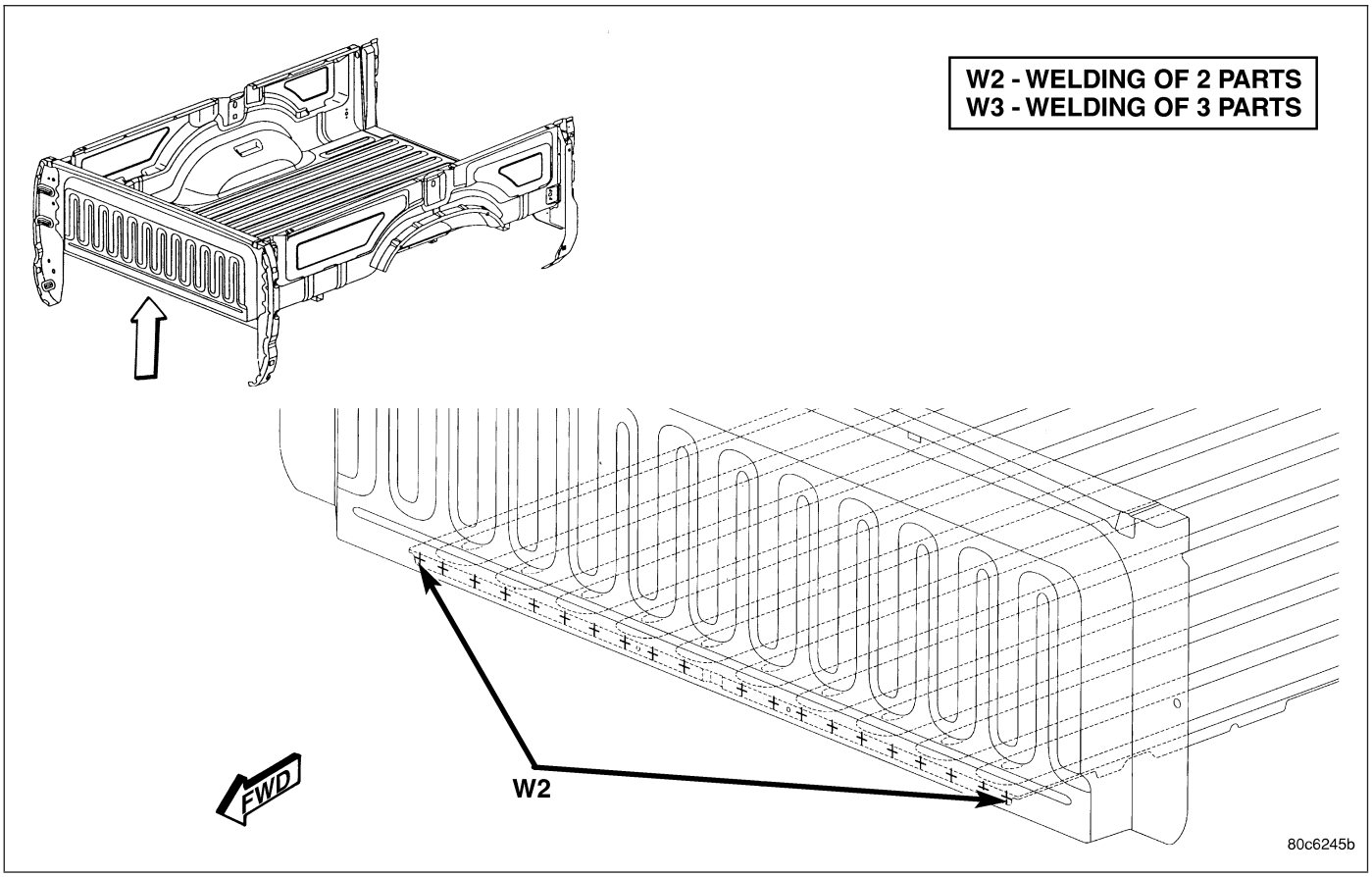

Fig. 118 BOX FRONT PANEL - LONG CARGO BOX ONLY

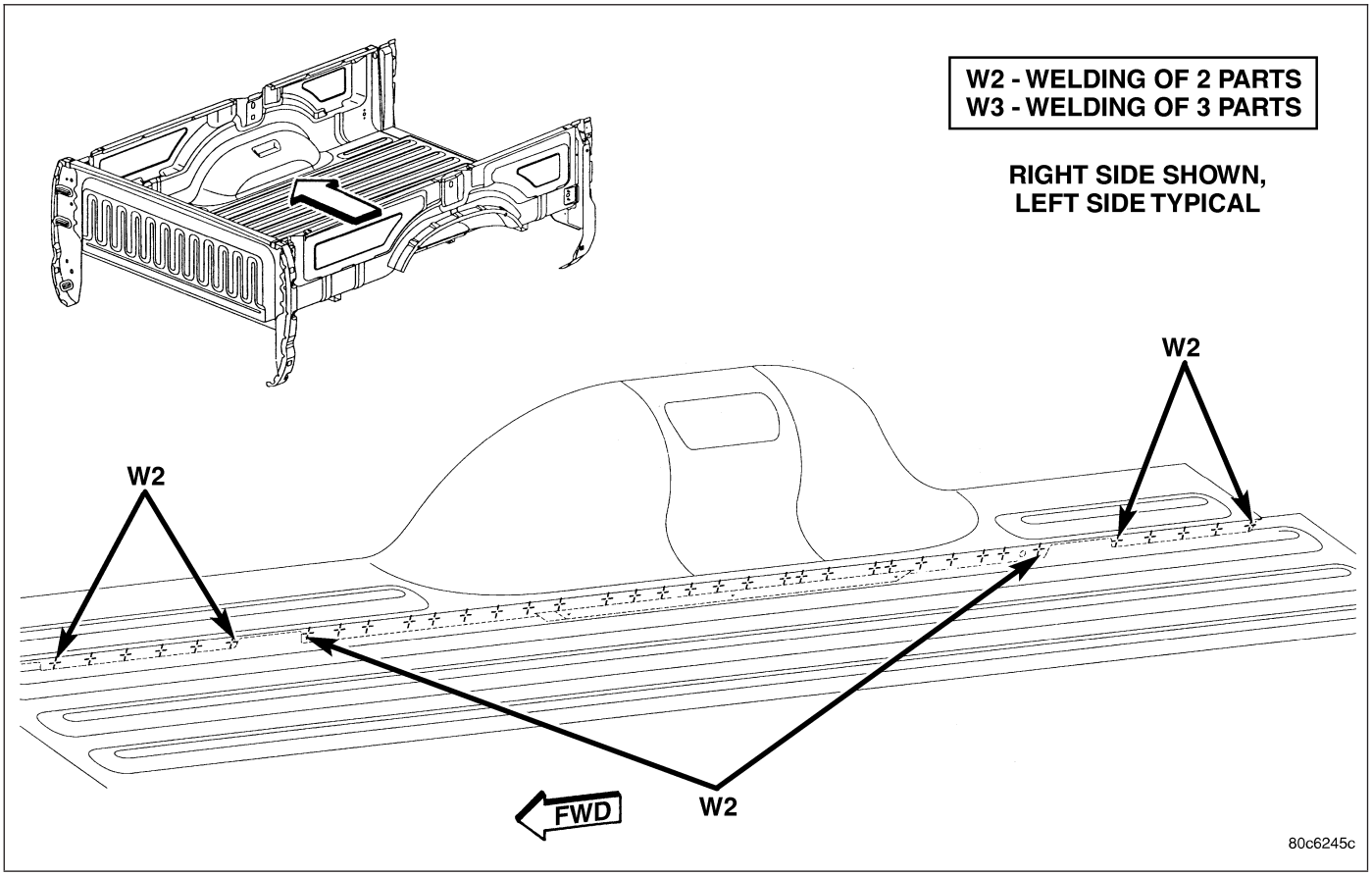

Fig. 119 BOX FLOOR PANEL - LONG CARGO BOX ONLY

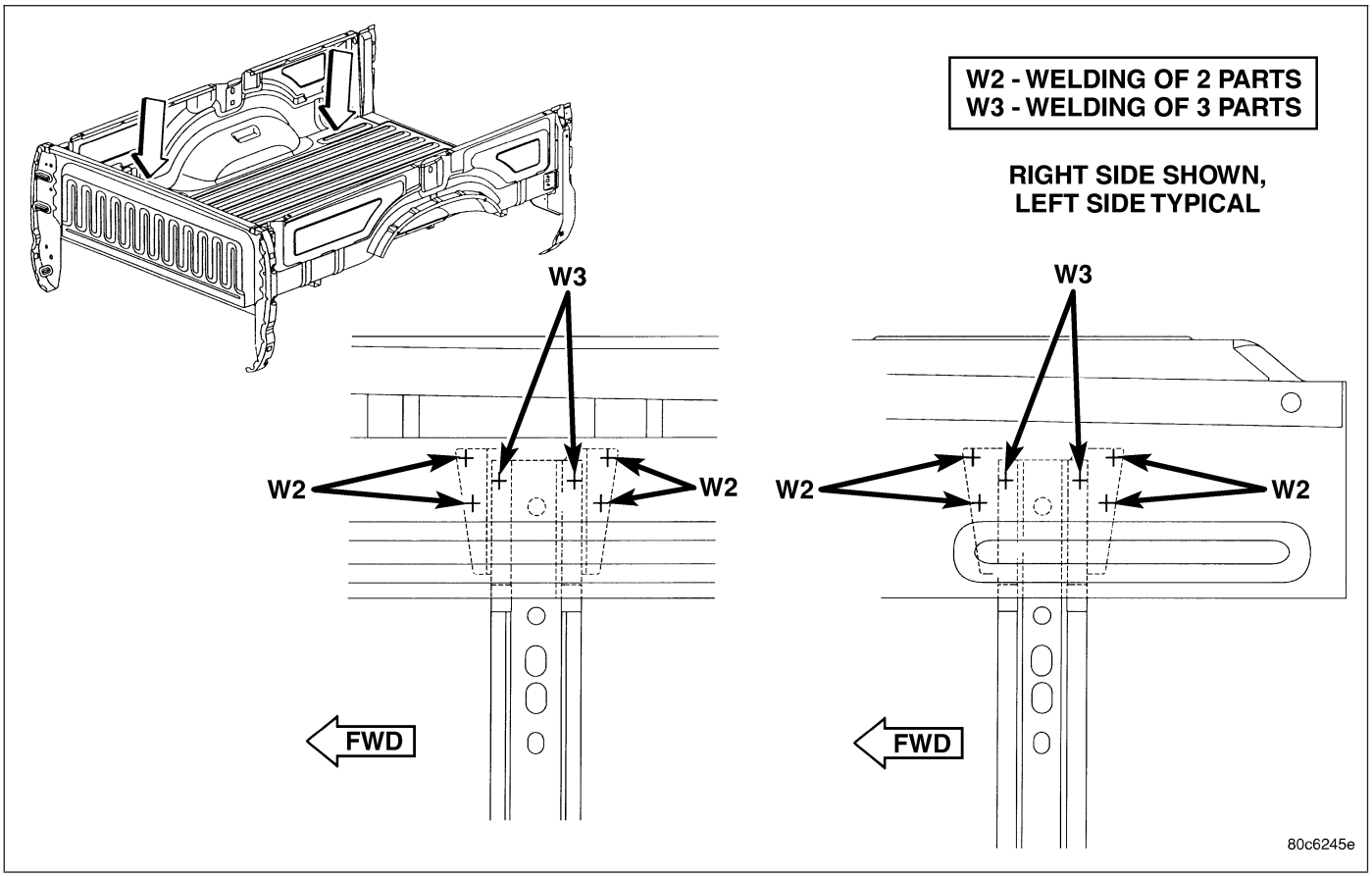

Fig. 120 LONG CROSSMEMBERS - LONG CARGO BOX ONLY

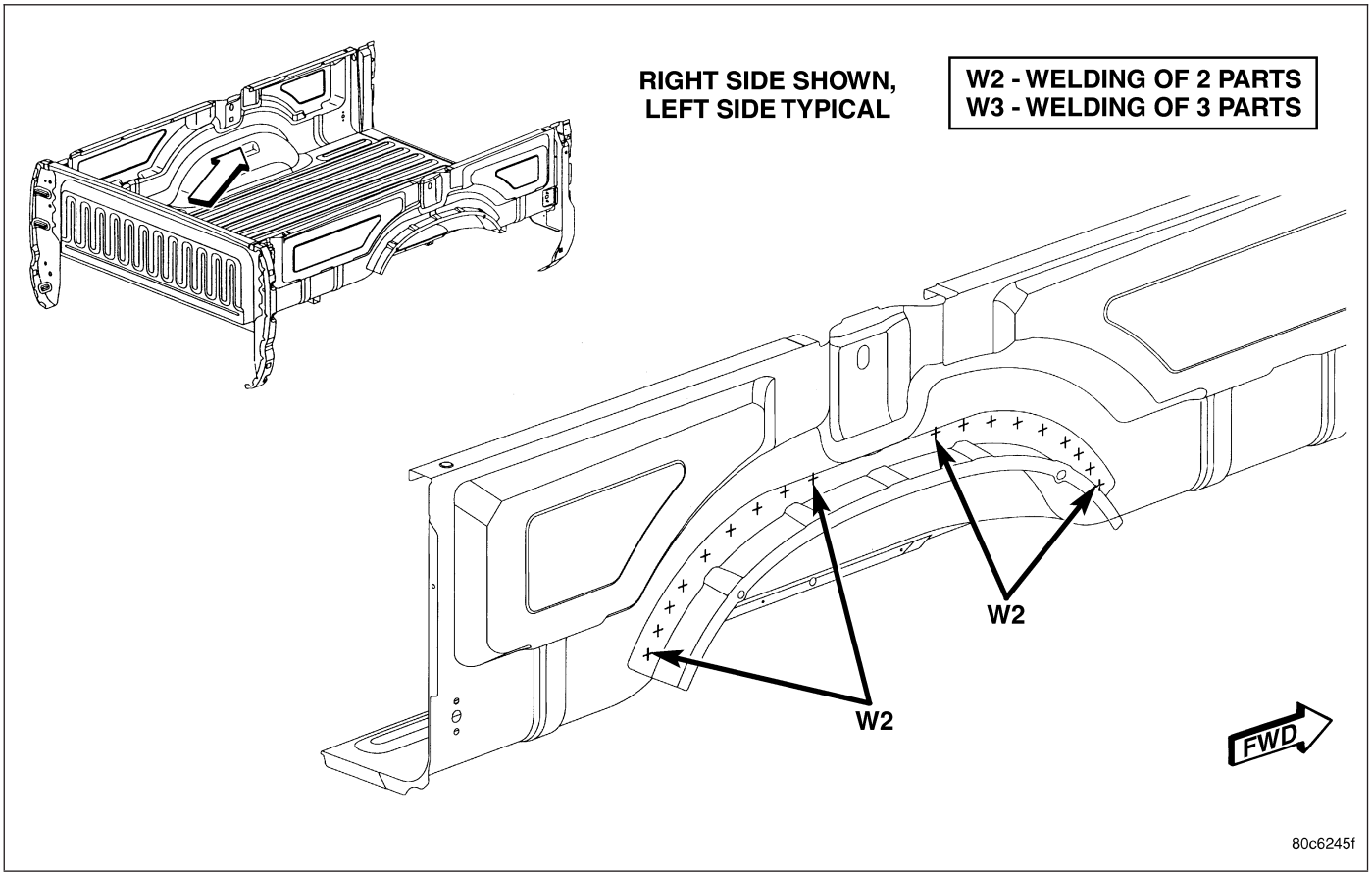

Fig. 121 INNER WHEELHOUSE PANEL - LONG CARGO BOX ONLY

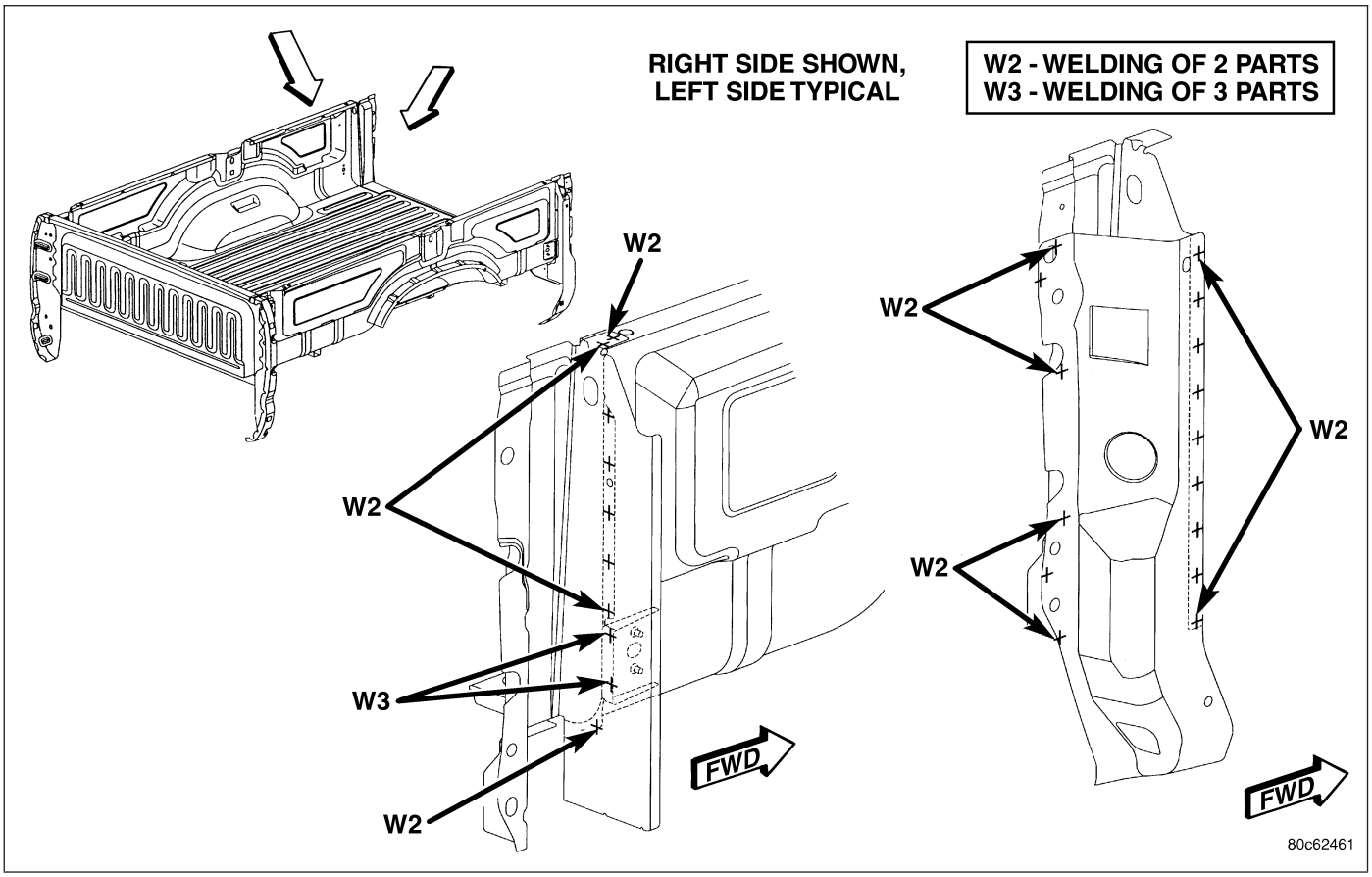

Fig. 122 TAILGATE PILLAR OUTER PANEL - LONG CARGO BOX ONLY

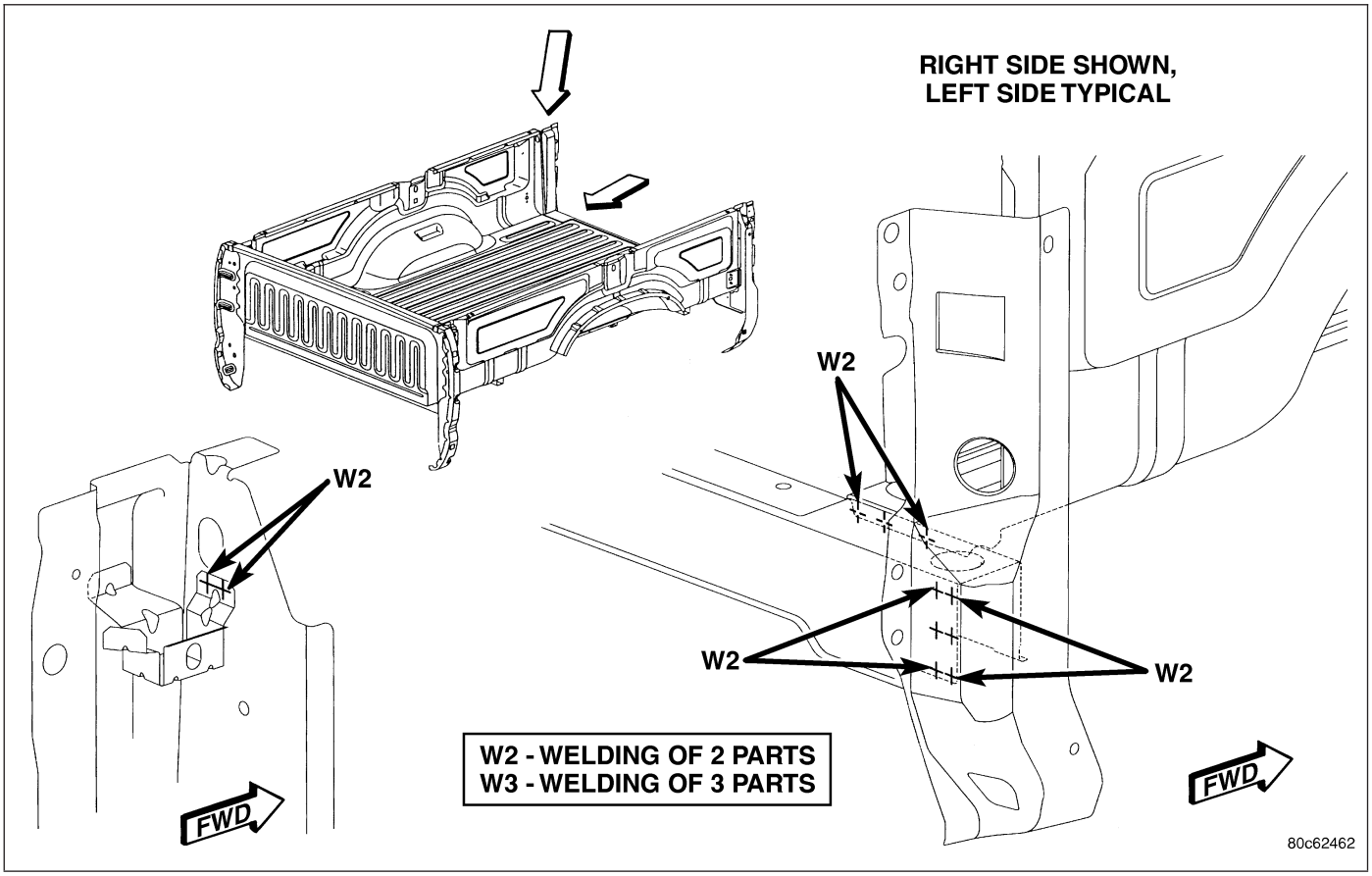

Fig. 123 REAR SILL CROSS BOX - LONG CARGO BOX ONLY

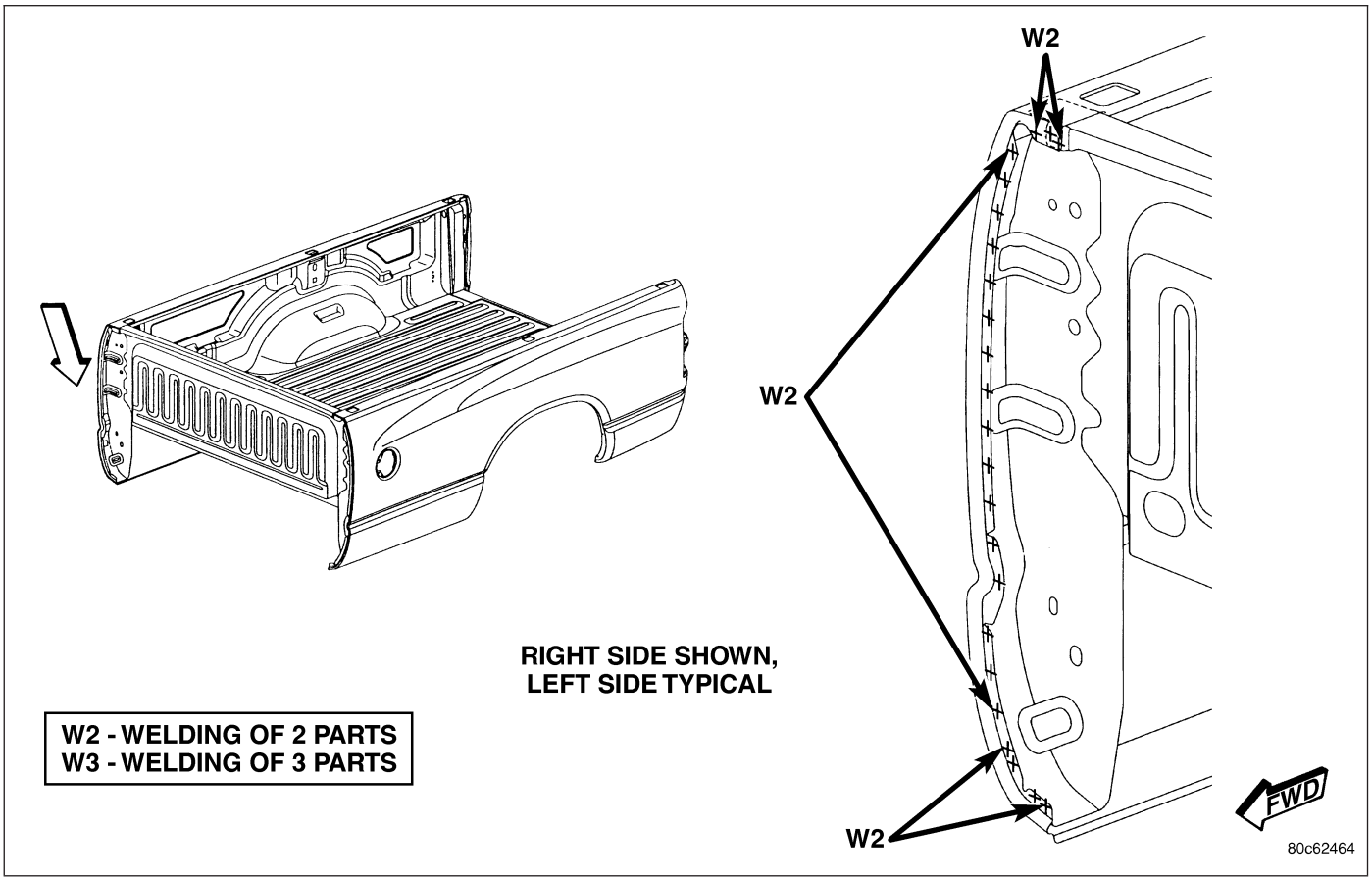

Fig. 124 OUTER BOX SIDE PANEL - LONG CARGO BOX ONLY

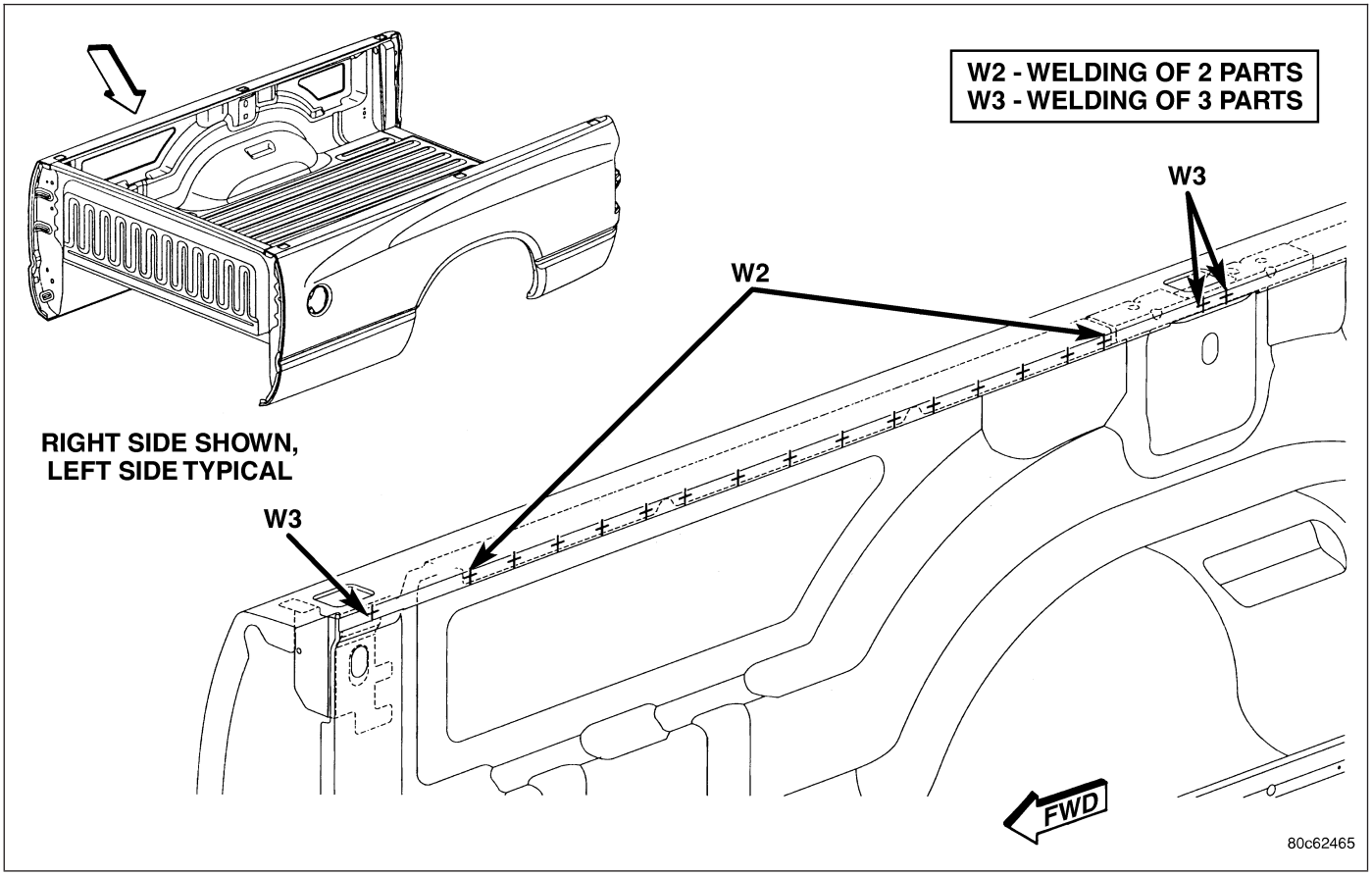

Fig. 125 STAKE POCKET REINFORCEMENTS - LONG CARGO BOX ONLY

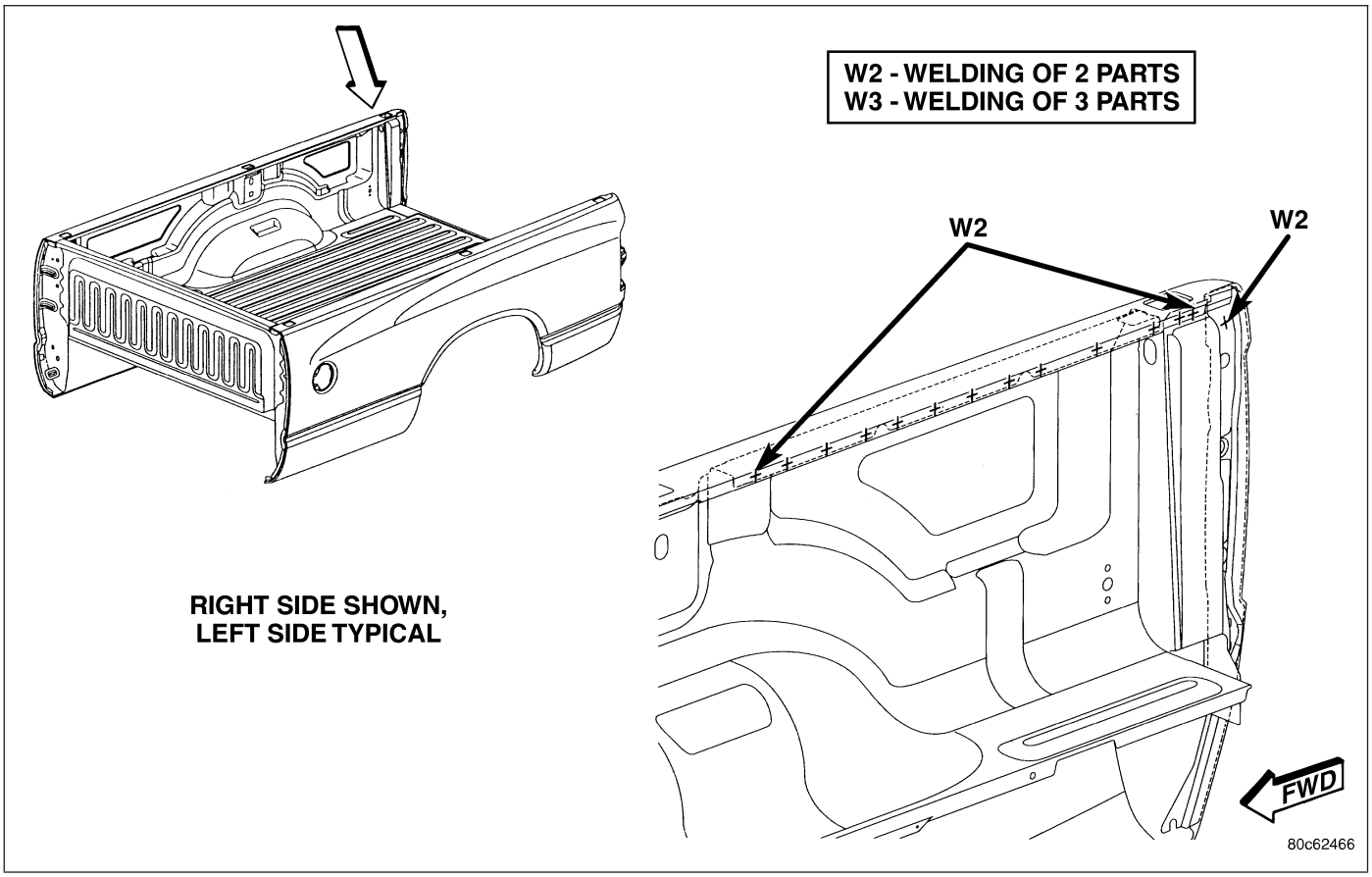

Fig. 126 TAILGATE PIVOT REINFORCEMENT - LONG CARGO BOX ONLY

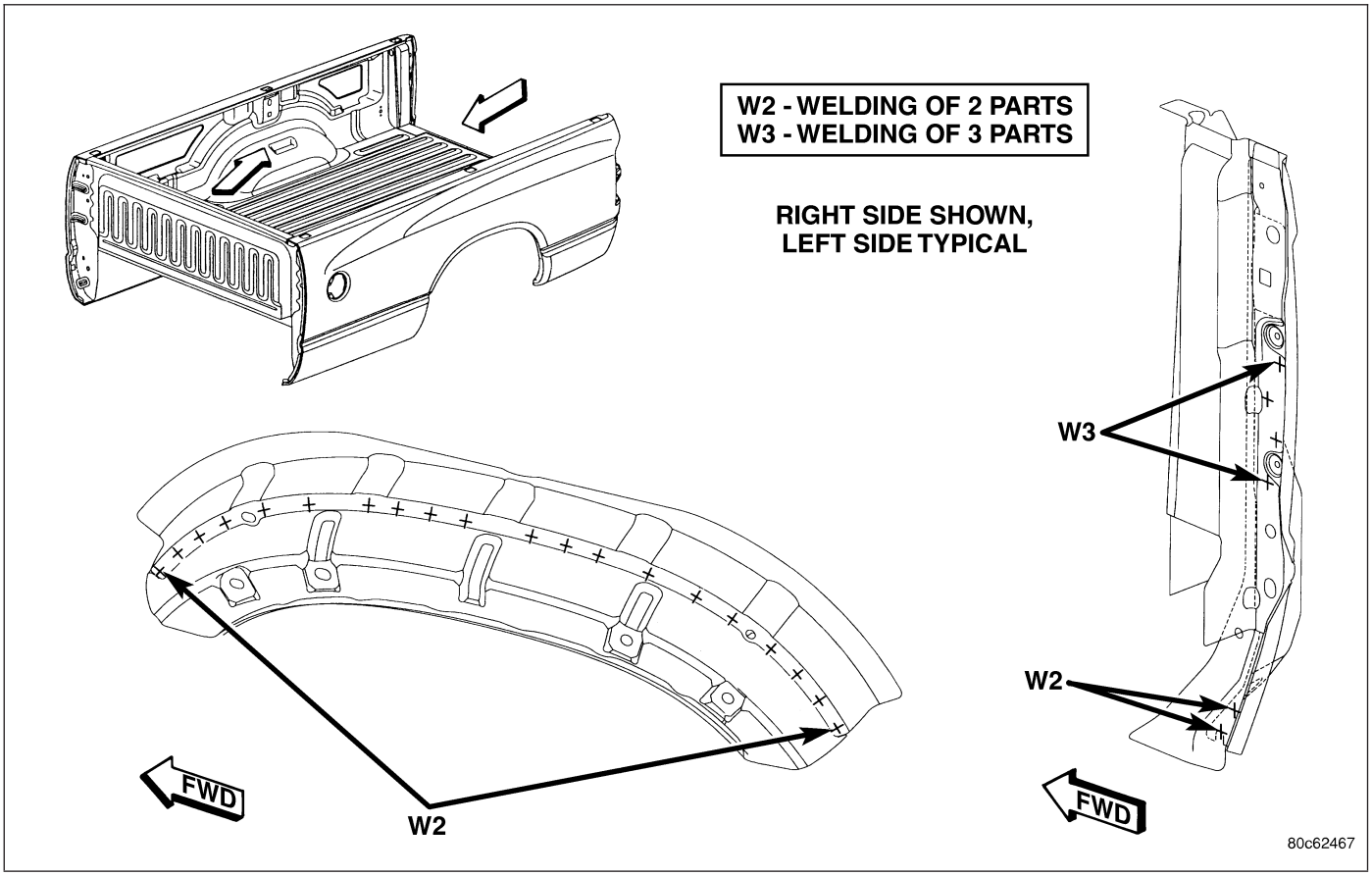

Fig. 127 INNER WHEELHOUSE - LONG CARGO BOX ONLY

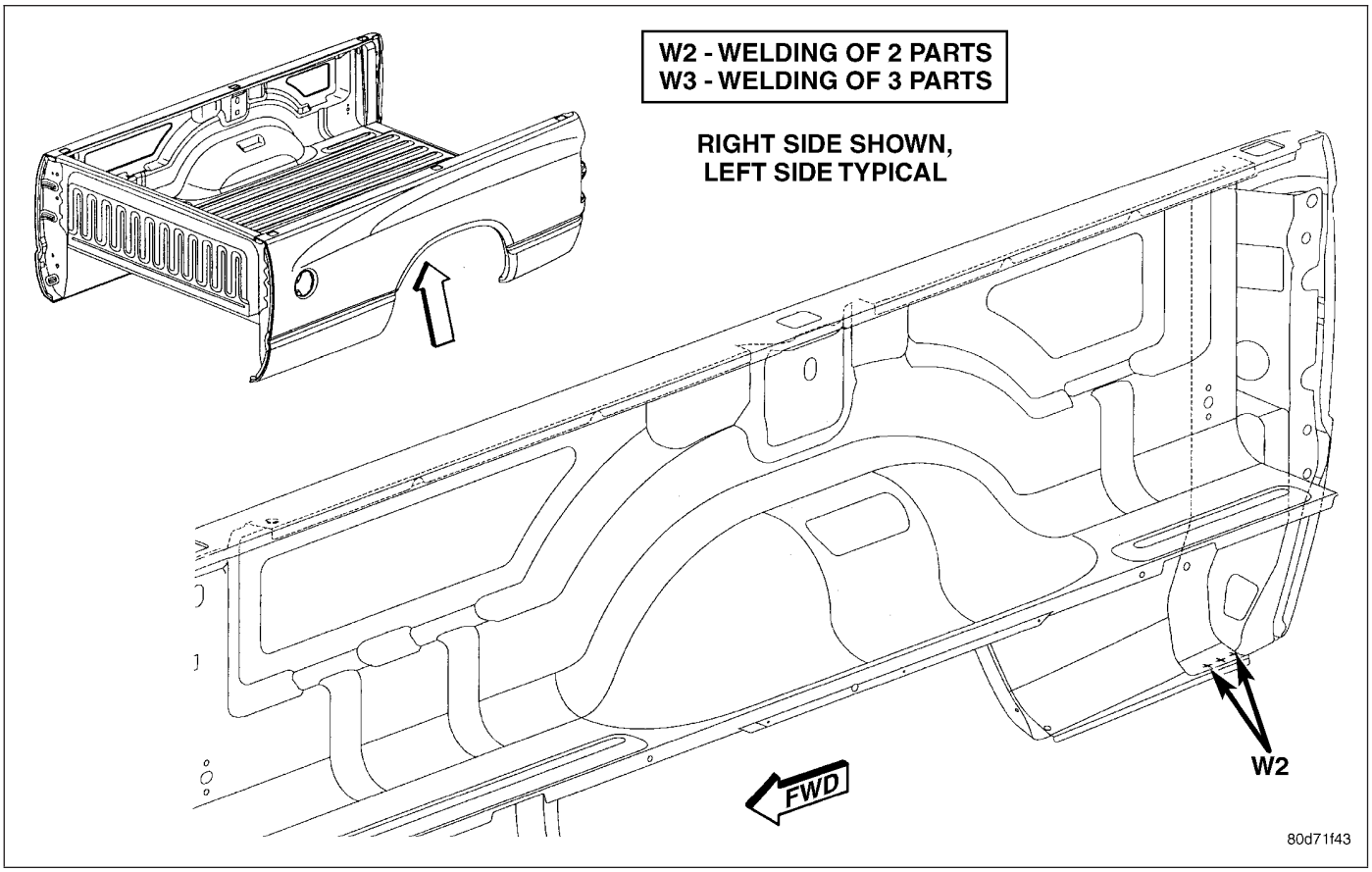

Fig. 128 OUTER TAILGATE PILLAR - LONG CARGO BOX ONLY

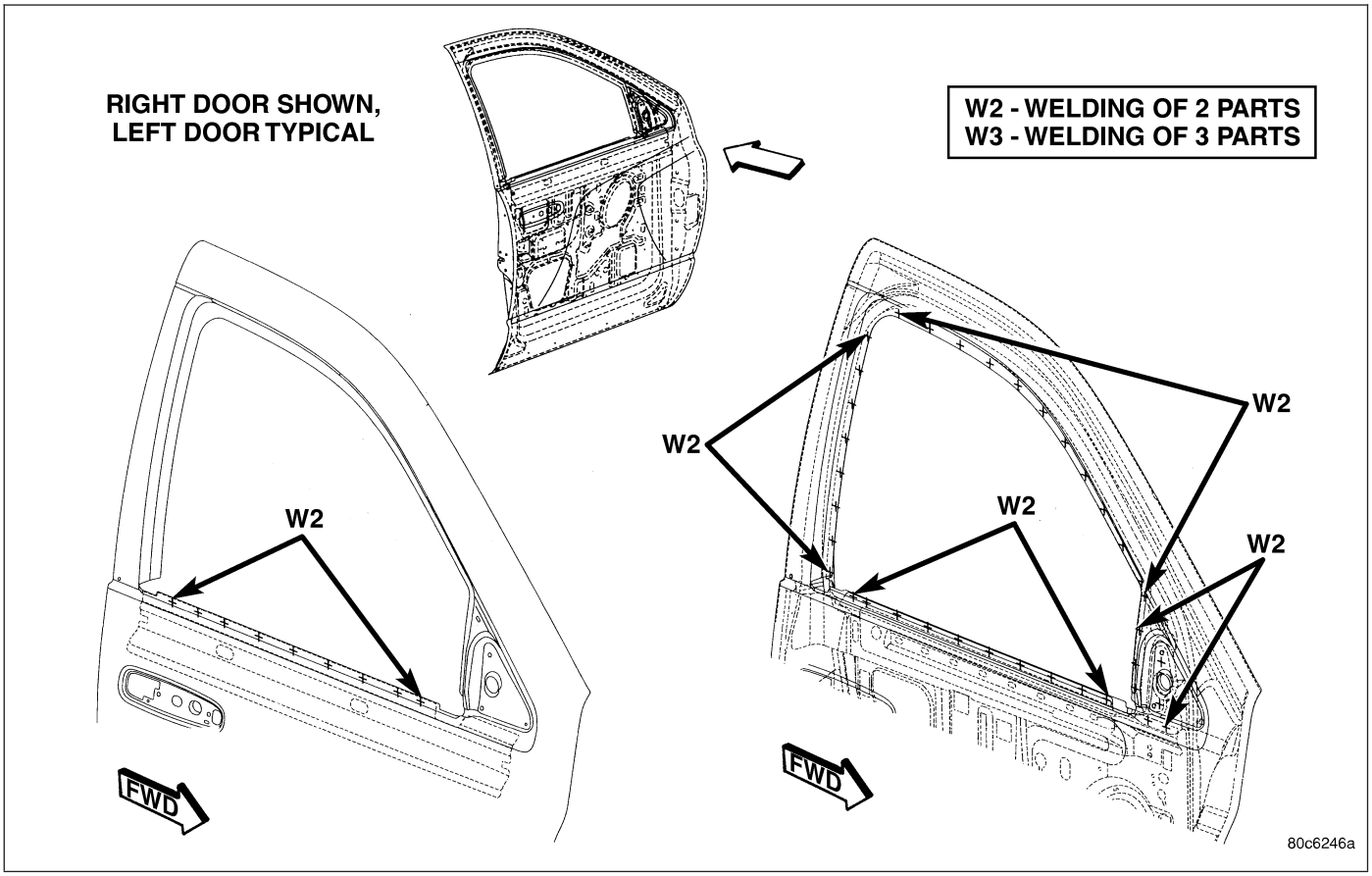

Fig. 129 INNER DOOR PANEL - QUAD CAB

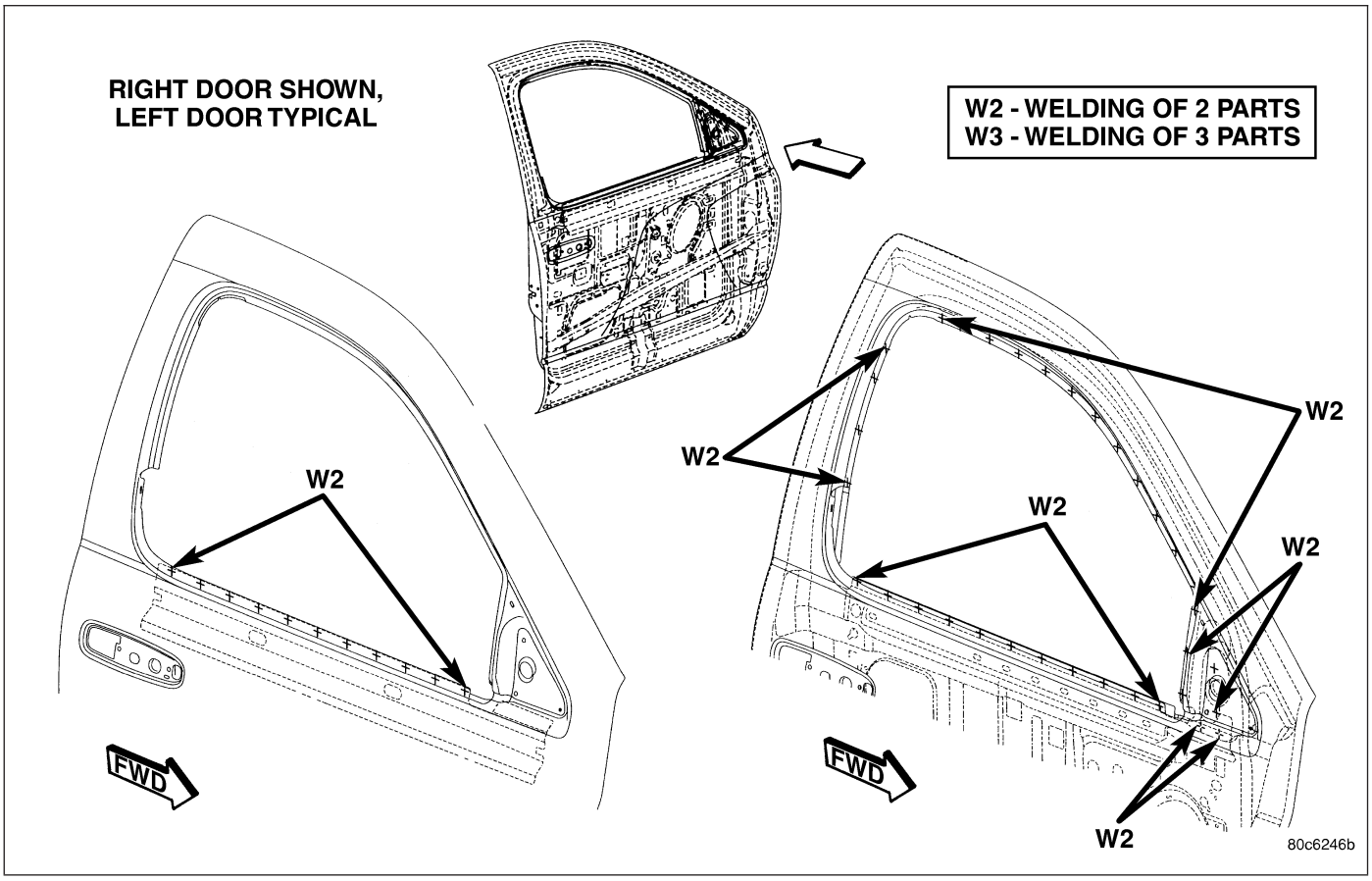

Fig. 130 INNER DOOR PANEL - STANDARD CAB

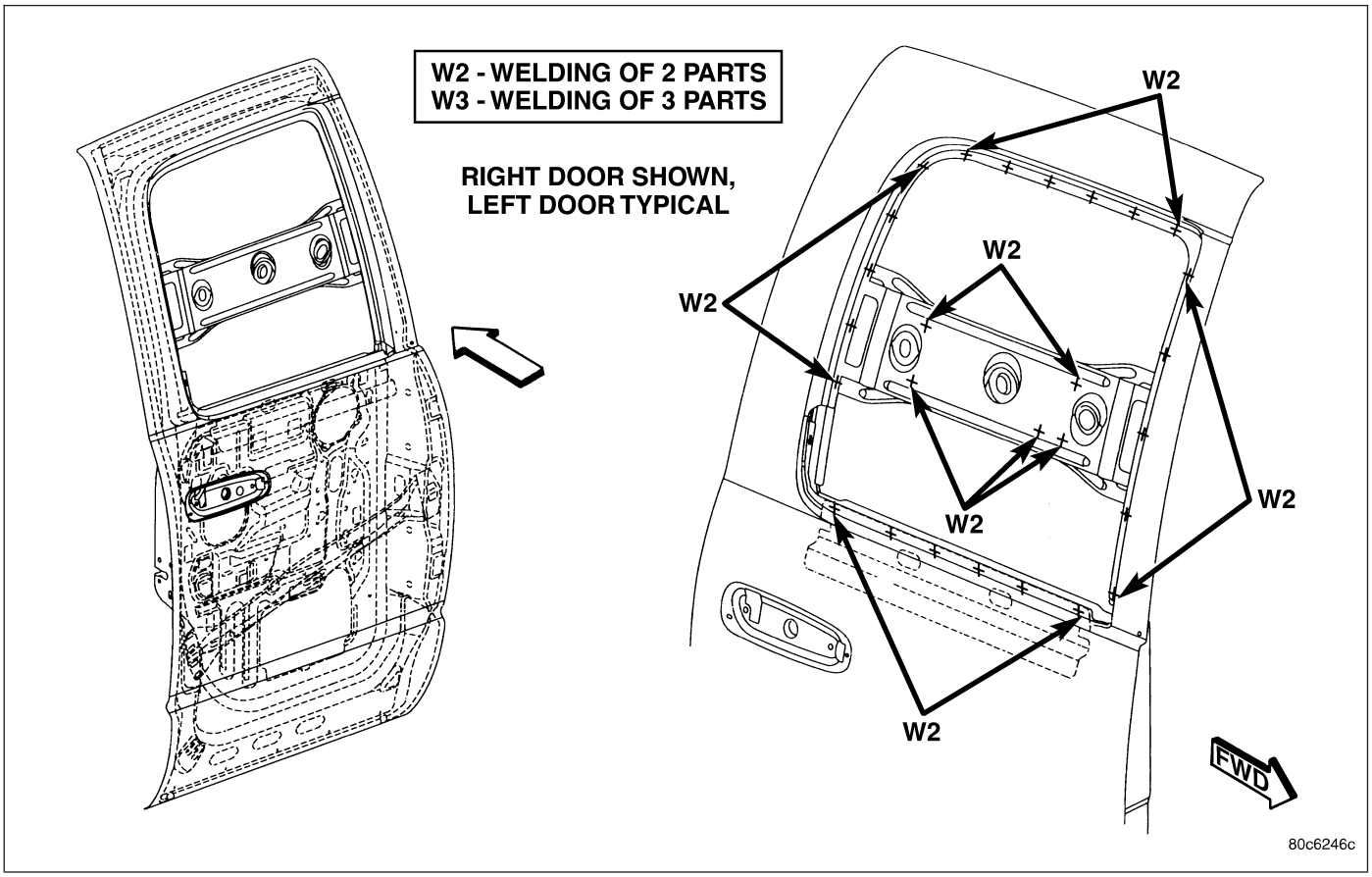

Fig. 131 INNER DOOR PANEL - QUAD CAB

HEATING & AIR CONDITIONING

TABLE OF CONTENTS

page

HVAC - ELECTRICAL DIAGNOSTICS 1

HVAC - SERVICE INFORMATION 190

HVAC - ELECTRICAL DIAGNOSTICS

TABLE OF CONTENTS

page

HVAC - ELECTRICAL DIAGNOSTICS
DIAGNOSIS AND TESTING
A/C SWITCH FAULT 3
BACKLIGHT DIMMING RX FAILURE 4
BLEND CALIBRATION FAULT (DUAL-ZONE) . . 6
BLEND CALIBRATION FAULT (SINGLE-ZONE) 11
BLEND CIRCUIT SHORTED TO GROUND (DUAL-ZONE) 16
BLEND CIRCUIT SHORTED TO GROUND (SINGLE-ZONE) 17
BLEND CIRCUIT SHORTED TO IGN OR BATT (DUAL-ZONE) 18
BLEND CIRCUIT SHORTED TO IGN OR BATT (SINGLE-ZONE) 19
BLEND OVERCURRENT (DUAL-ZONE) 20
BLEND OVERCURRENT (SINGLE-ZONE) . . . 26
BLOWER NOT ON HIGH 31
CHECKSUM FAILURE 33
COMMON DRIVER SHORTED TO GROUND . 34
COMMON DRIVER SHORTED TO IGN OR BATT 35
COOLDOWN TEST SENSOR FAILURE 36
COOLDOWN TEST TOO COLD TO START . . 37
COOLDOWN TIME EXCESSIVE FAULT 42
DEFOG RELAY CONTROL CKT SHORTED TO BATT 44
DEFOG SWITCH FAULT 47
ENGINE GAUGE RX FAILURE 48
EVAPORATOR TEMPERATURE SENSOR CIRCUIT OPEN 50
EVAPORATOR TEMPERATURE SENSOR CIRCUIT SHORTED 54
LOOPBACK TEST FAILURE 57
MODE 1 CALIBRATION FAULT 58
MODE 1 CIRCUIT SHORTED TO GROUND . . 63

page

MODE 1 CIRCUIT SHORTED TO IGN OR BATT 64
MODE 1 OVERCURRENT (DUAL-ZONE) 65
MODE 1 OVERCURRENT (SINGLE-ZONE) . . 71
MODE 2 CALIBRATION FAULT 76
MODE 2 CIRCUIT SHORTED TO GROUND . . 81
MODE 2 CIRCUIT SHORTED TO IGN OR BATT 82
MODE 2 OVERCURRENT (DUAL-ZONE) 83
MODE 2 OVERCURRENT (SINGLE-ZONE) . . 89
PCM COMMUNICATION FAILURE 94
RECIRCULATION CALIBRATION FAULT 96
RECIRC CIRCUIT SHORTED TO GROUND . 101
RECIRC CIRCUIT SHORTED TO IGN OR BATT 102
RECIRC OVERCURRENT (DUAL-ZONE) . . . 103
RECIRC OVERCURRENT (SINGLE-ZONE) . 109
RECIRC SWITCH FAULT 114
REFRIGERANT PRESSURE RX FAILURE . . 115
SHORT TOO COMPLEX 116
TX FAILURE 117
VIN RX FAILURE 119
ZONE CALIBRATION FAULT 121
ZONE CIRCUIT SHORTED TO GROUND . . . 126
ZONE CIRCUIT SHORTED TO IGN OR BATT 127
ZONE OVERCURRENT (DUAL-ZONE) 128
*A/C HEATER CONTROL ILLUMINATION INOPERATIVE 134
*A/C STATUS INDICATOR FLASHING 137
*A/C STATUS INDICATOR WILL NOT ILLUMINATE — A/C HEATER CONTROL WITHOUT EBL SW 138
*ACTUATOR CIRCUIT TEST DIAGNOSTICS (DUAL-ZONE) 139
*ACTUATOR CIRCUIT TEST DIAGNOSTICS (SINGLE-ZONE) 147

*BLEND/MODE/RECIRC DOOR OPERATION IMPROPER (DUAL-ZONE) 155
*BLEND/MODE/RECIRC DOOR OPERATION IMPROPER (SINGLE-ZONE) 159
*BLOWER MOTOR INOPERATIVE (EXCEPT SRT10). 163
*BLOWER MOTOR INOPERATIVE (SRT10) . 169
*BLOWER SPEED DOES NOT CORRESPOND WITH CONTROL SETTING . 176
*EBL STATUS INDICATOR FLASHING 183
*HVAC SYSTEM TEST 184
SCHEMATICS AND DIAGRAMS 188

HVAC - ELECTRICAL DIAGNOSTICS

DIAGNOSIS AND TESTING

A/C SWITCH FAULT

For a complete wiring diagram **Refer to Section 8W**.

Theory of Operation

The switch input changes when the switch is pushed down. A stored DTC indicates that the A/C mode switch was stuck in a pushed position for more than 10 minutes, but has since returned to its normal state. An active DTC indicates that the A/C mode switch is stuck in a pushed position. An active DTC will prevent proper switch and status indicator function as evidenced by not being able to turn the A/C status indicator either on if off or off if on.

- **When Monitored:**
  With the ignition on.
- **Set Condition:**
  If the A/C mode switch stays closed for 10 minutes.

Possible Causes
A/C HEATER CONTROL

NOTE: This DTC must be active for the result of this test to be valid. Do not perform this test if this DTC is stored. Refer to HVAC System Test for stored DTC test procedures.

Diagnostic Test

1. REPLACE THE A/C HEATER CONTROL

Repair

Replace the A/C Heater Control in accordance with the Service Information.

Perform BODY VERIFICATION TEST - VER 1. (Refer to 8 - ELECTRICAL/ELECTRONIC CONTROL MODULES/FRONT CONTROL MODULE - DIAGNOSIS AND TESTING).

BACKLIGHT DIMMING RX FAILURE

For a complete wiring diagram **Refer to Section 8W**.

- **When Monitored:**
  With the ignition on.
- **Set Condition:**
  The Cluster broadcasts the VF Dim message on the PCI Bus. This DTC will set and the backlighting will default to full brightness if the A/C Heater Control does not receive this message for more than 5 seconds.

Possible Causes
FAULTS PRESENT IN THE CLUSTER (MIC)
A/C HEATER CONTROL NOT RECEIVING VF DIM MESSAGE AT THE EXPECTED RATE
CLUSTER NOT BROADCASTING VF DIM MESSAGE
A/C HEATER CONTROL NOT RECEIVING VF DIM MESSAGE

Diagnostic Test

1. VERIFY THAT THE BACKLIGHT DIMMING RX FAILURE DTC IS ACTIVE

Turn the ignition on.
With the DRBIII®, erase HVAC DTCs.
Cycle the ignition switch and wait approximately 30 seconds.
With the DRBIII®, read active HVAC DTCs.

Does the DRBIII® display: Backlight Dimming RX Failure?

Yes >> Go To 2

No >> A technician may not have erased this DTC following a module or PCI Bus repair. If possible, verify if the vehicle was recently in for this type of service. Otherwise, visually inspect the related wiring harness for chafed, pierced, pinched, and partially broken wires and the wiring harness connectors for broken, bent, pushed out, and corroded terminals. Repair as necessary.
Perform BODY VERIFICATION TEST - VER 1. (Refer to 8 - ELECTRICAL/ELECTRONIC CONTROL MODULES/FRONT CONTROL MODULE - DIAGNOSIS AND TESTING).

---

2. CHECK FOR DTCs IN THE CLUSTER (MIC)

Turn the ignition on.
With the DRBIII®, read Cluster DTCs.

Does the DRBIII® display any DTCs?

Yes >> Diagnose and repair the DTC(s). (Refer to 8 - ELECTRICAL/INSTRUMENT CLUSTER - DIAGNOSIS AND TESTING) for the diagnostic test procedure.
Perform BODY VERIFICATION TEST - VER 1. (Refer to 8 - ELECTRICAL/ELECTRONIC CONTROL MODULES/FRONT CONTROL MODULE - DIAGNOSIS AND TESTING).

No >> Go To 3

BACKLIGHT DIMMING RX FAILURE (CONTINUED)

3. CHECK BACKLIGHT DIMMING FUNCTION

Turn the Headlamp switch on.

Turn the Blower control to low speed.

If equipped, press the A/C mode switch on.

If equipped, press the EBL mode switch on.

If equipped, press the Max mode switch on.

Rotate the Cargo Dome switch in both directions while watching the A/C status indicator (if equipped), the EBL status indicator (if equipped), and the MAX status indicator (if equipped) on the A/C Heater Control.

Do the status indicators dim and brighten with respect to the position of the Cargo Dome switch?

Yes >> No problem found at this time.
Perform BODY VERIFICATION TEST - VER 1. (Refer to 8 - ELECTRICAL/ELECTRONIC CONTROL MODULES/FRONT CONTROL MODULE - DIAGNOSIS AND TESTING).

No >> Go To 4

---

4. VERIFY THAT THE CLUSTER IS BROADCASTING THE VF DIM MESSAGE ON THE PCI BUS

With the DRBIII® in HVAC, select Monitor Display and then select PCI Bus Messages.

From the list, select **VF DIM Msg Present**.

Does the DRBIII® display: VF DIM Msg Present: YES?

Yes >> Replace the A/C Heater Control in accordance with the Service Information.
Perform BODY VERIFICATION TEST - VER 1. (Refer to 8 - ELECTRICAL/ELECTRONIC CONTROL MODULES/FRONT CONTROL MODULE - DIAGNOSIS AND TESTING).

No >> Replace the Cluster in accordance with the Service Information.
Perform BODY VERIFICATION TEST - VER 1. (Refer to 8 - ELECTRICAL/ELECTRONIC CONTROL MODULES/FRONT CONTROL MODULE - DIAGNOSIS AND TESTING).

BLEND CALIBRATION FAULT (DUAL-ZONE)

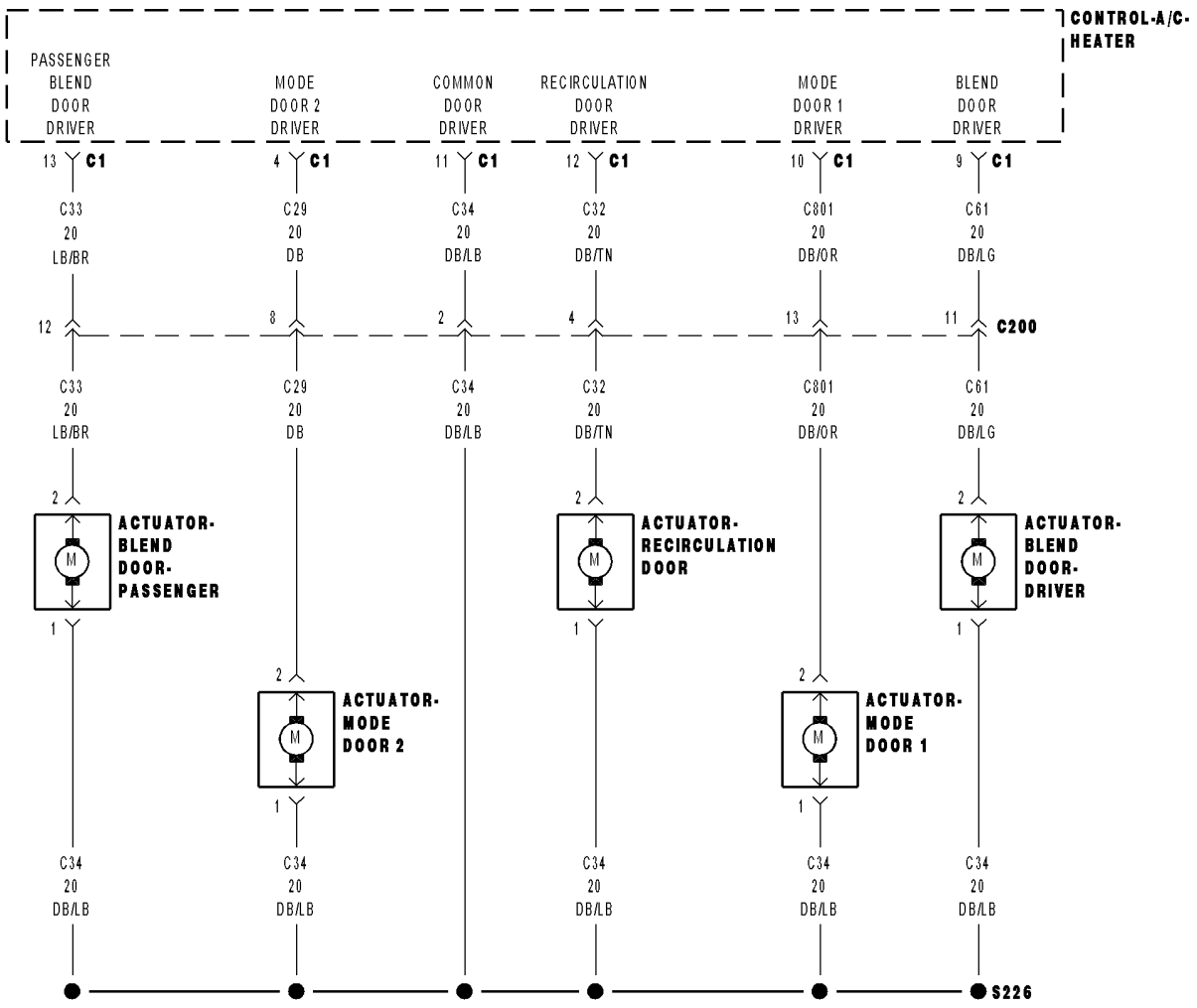

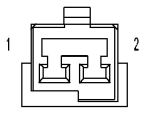
ACTUATOR- RECIRCULATION DOOR

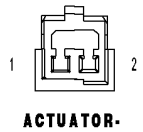
ACTUATOR- MODE DOOR 1 (PANEL TO FLOOR)

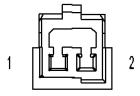
ACTUATOR- MODE DOOR 2 (DEFROST TO FLOOR)

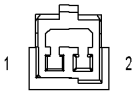
ACTUATOR- BLEND DOOR- PASSENGER (DUAL-ZONE)

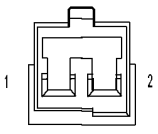
ACTUATOR- BLEND DOOR- DRIVER (DUAL-ZONE)

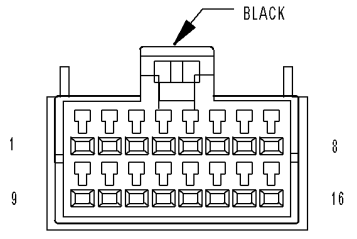

CONTROL-A/C- HEATER C1

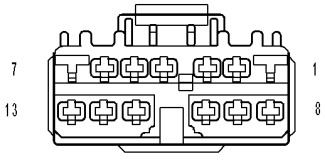
C200

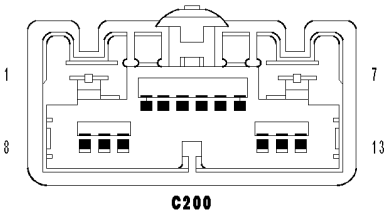
C200

813d20c4

BLEND CALIBRATION FAULT (DUAL-ZONE) (CONTINUED)

For the Manual Temperature Control circuit diagrams (Refer to 24 - HEATING & AIR CONDITIONING - SCHEMATICS AND DIAGRAMS).

For a complete wiring diagram **Refer to Section 8W**.

Theory of Operation

NOTE: Diagnose and repair Actuator Circuit Test faults before diagnosing Overcurrent faults and Calibration faults. Diagnose and repair Overcurrent faults before diagnosing Calibration faults.

The purpose of actuator calibration is to determine the total span of door travel between physical stops. To calibrate the actuator, the A/C Heater Control first moves the door to its soft stop, and then counts the number of pulses it takes to move the door to its other stop. An expected range of span is stored in the control's memory. If the measured calibration value is not within the expected range, this fault will set.

For vehicles equipped with electric backlight (EBL), running the HVAC Door Recalibration will cause the EBL status indicator to flash. If recalibration fails, the EBL status indicator will continue to flash until either the system passes recalibration or the ignition key is cycled. When the EBL status indicator is flashing, it will not indicate EBL operating status. However, the EBL mode switch will continue to function normally. When the EBL status indicator is flashing, the A/C status indicator will not function. However, the A/C mode switch will continue to function normally.

For vehicles not equipped with electric backlight (EBL), no status indicator will flash when running the HVAC Door Recalibration. If recalibration fails, the A/C status indicator will not function, however, the A/C mode switch will continue to function normally.

- **When Monitored:**
  When HVAC Door Recalibration is executed.
- **Set Condition:**
  If the span of the passenger blend door is found outside the tolerance.

Possible Causes
(C33) PASSENGER BLEND DOOR DRIVER CIRCUIT SHORTED TO GROUND (WILL ALSO SET OVERCURRENT DTCs)
(C33) PASSENGER BLEND DOOR DRIVER CIRCUIT SHORTED TO VOLTAGE (WILL ALSO SET OVERCURRENT DTCs)
(C33) PASSENGER BLEND DOOR DRIVER CIRCUIT OPEN
(C34) COMMON DOOR DRIVER CIRCUIT OPEN
PASSENGER BLEND DOOR ACTUATOR OPEN
PASSENGER BLEND DOOR ACTUATOR BROKEN
PASSENGER BLEND DOOR BOUND UP
PASSENGER BLEND DOOR LINKAGE MISSING, BROKEN
A/C HEATER CONTROL

Diagnostic Test

1. RUN THE ACTUATOR CIRCUIT TEST

Turn the ignition on.

With the DRBIII® in HVAC, select System Tests and then select Actuator Circuit Test. Allow the test to run to completion before proceeding.

Does the DRBIII® display any Actuator Circuit Test fault messages?

Yes >> Diagnose and repair the fault(s). Refer to *ACTUATOR CIRCUIT TEST DIAGNOSTICS (DUAL-ZONE) in this section.

No >> Go To 2

BLEND CALIBRATION FAULT (DUAL-ZONE) (CONTINUED)

2. CHECK FOR DTCS IN THE A/C HEATER CONTROL

NOTE: Diagnose and repair Overcurrent faults before diagnosing Calibration faults.
With the DRBIII®, read HVAC DTCs.

Does the DRBIII® display any DTCs?

Yes >> Diagnose and repair the DTC(s). Refer to the Table of Contents in this Section for a complete list of HVAC related symptoms.

No >> Go To 3

---

3. CHECK THE RESISTANCE BETWEEN THE (C34) COMMON DOOR DRIVER CIRCUIT & THE (C33) PASSENGER BLEND DOOR DRIVER CIRCUIT

Turn the ignition off.

Disconnect the A/C Heater Control C1 harness connector.

Measure the resistance between the (C34) Common Door Driver circuit and the (C33) Passenger Blend Door Driver circuit in the A/C Heater Control C1 harness connector.

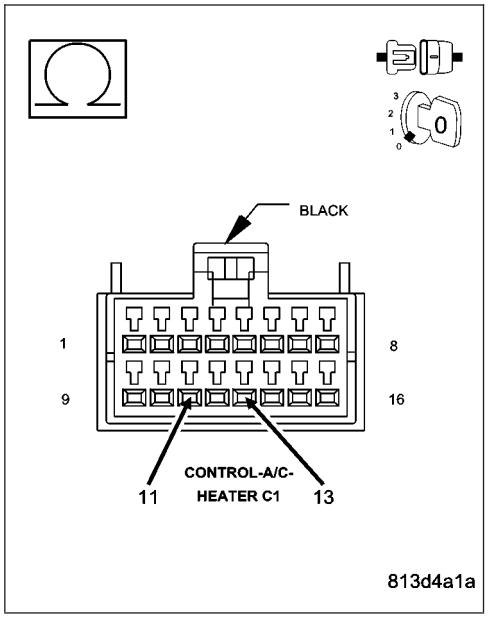

Is the resistance above 70.0 ohms?

Yes >> Go To 4

No >> Go To 6

BLEND CALIBRATION FAULT (DUAL-ZONE) (CONTINUED)

4. CHECK (C33) PASSENGER BLEND DOOR DRIVER CIRCUIT FOR AN OPEN

Disconnect the Passenger Blend Door Actuator harness connector.

Measure the resistance of the (C33) Passenger Blend Door Driver circuit between the A/C Heater Control C1 harness connector and the Passenger Blend Door Actuator harness connector.

Is the resistance below 5.0 ohms?

Yes >> Go To 5

No >> Repair the (C33) Passenger Blend Door Driver circuit for an open.

Perform BODY VERIFICATION TEST - VER 1. (Refer to 8 - ELECTRICAL/ELECTRONIC CONTROL MODULES/ FRONT CONTROL MODULE - DIAGNOSIS AND TESTING).

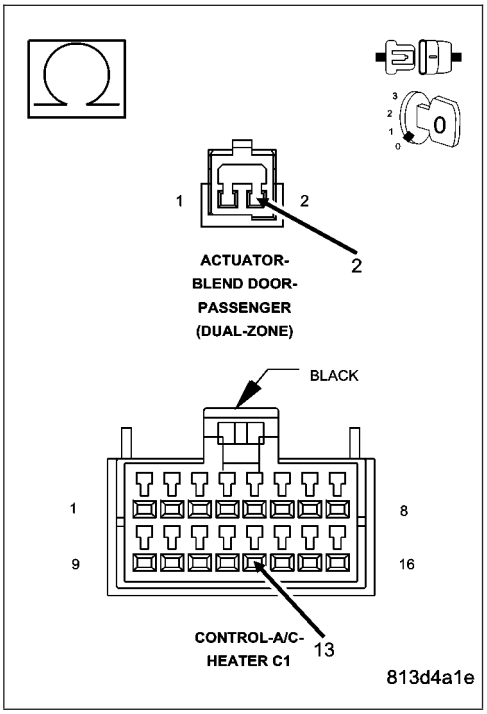

5. CHECK (C34) COMMON DOOR DRIVER CIRCUIT FOR AN OPEN

Measure the resistance of the (C34) Common Door Driver circuit between the A/C Heater Control C1 harness connector and the Passenger Blend Door Actuator harness connector.

Is the resistance below 5.0 ohms?

Yes >> Replace the Passenger Blend Door Actuator in accordance with the Service Information.

Perform BODY VERIFICATION TEST - VER 1. (Refer to 8 - ELECTRICAL/ELECTRONIC CONTROL MODULES/ FRONT CONTROL MODULE - DIAGNOSIS AND TESTING).

No >> Repair the (C34) Common Door Driver circuit for an open.

Perform BODY VERIFICATION TEST - VER 1. (Refer to 8 - ELECTRICAL/ELECTRONIC CONTROL MODULES/ FRONT CONTROL MODULE - DIAGNOSIS AND TESTING).

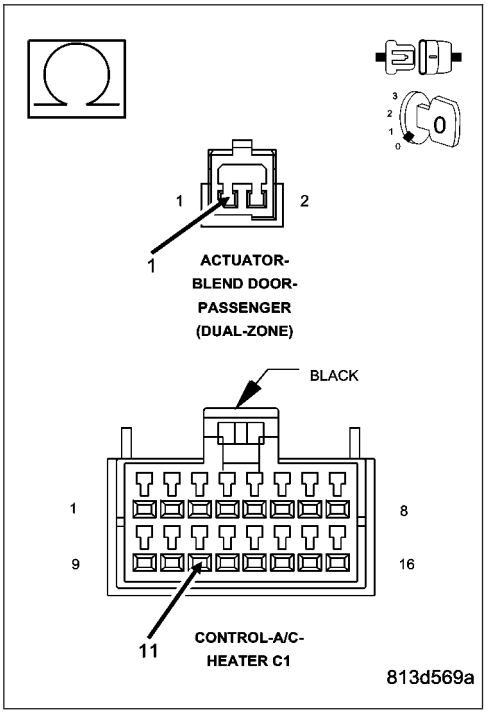

BLEND CALIBRATION FAULT (DUAL-ZONE) (CONTINUED)

6. CHECK FOR A BROKEN PASSENGER BLEND DOOR ACTUATOR

Remove the Passenger Blend Door Actuator from the A/C Heater Housing Assembly.
Disconnect the Passenger Blend Door Actuator harness connector.
By hand, attempt to rotate the actuator in both directions.

Does the actuator turn in either direction?

Yes >> Replace the Passenger Blend Door Actuator in accordance with the Service Information.
Perform BODY VERIFICATION TEST - VER 1. (Refer to 8 - ELECTRICAL/ELECTRONIC CONTROL MODULES/FRONT CONTROL MODULE - DIAGNOSIS AND TESTING).

No >> Go To 7

---

7. CHECK FOR MISSING & BROKEN ACTUATOR LINKAGE & THE DOOR FOR BINDING & A LOSS OF RANGE

Inspect the A/C Heater Housing Assembly for missing and broken actuator linkage.
Inspect the linkage and the actuator for broken and missing teeth.
Check the door for binding and a loss of full range.

Are there any physical or mechanical problems with the door, actuator, linkage, or housing?

Yes >> Repair as necessary in accordance with the Service Information.
Perform BODY VERIFICATION TEST - VER 1. (Refer to 8 - ELECTRICAL/ELECTRONIC CONTROL MODULES/FRONT CONTROL MODULE - DIAGNOSIS AND TESTING).

No >> Replace the A/C Heater Control in accordance with the Service Information.
Perform BODY VERIFICATION TEST - VER 1. (Refer to 8 - ELECTRICAL/ELECTRONIC CONTROL MODULES/FRONT CONTROL MODULE - DIAGNOSIS AND TESTING).

BLEND CALIBRATION FAULT (SINGLE-ZONE)

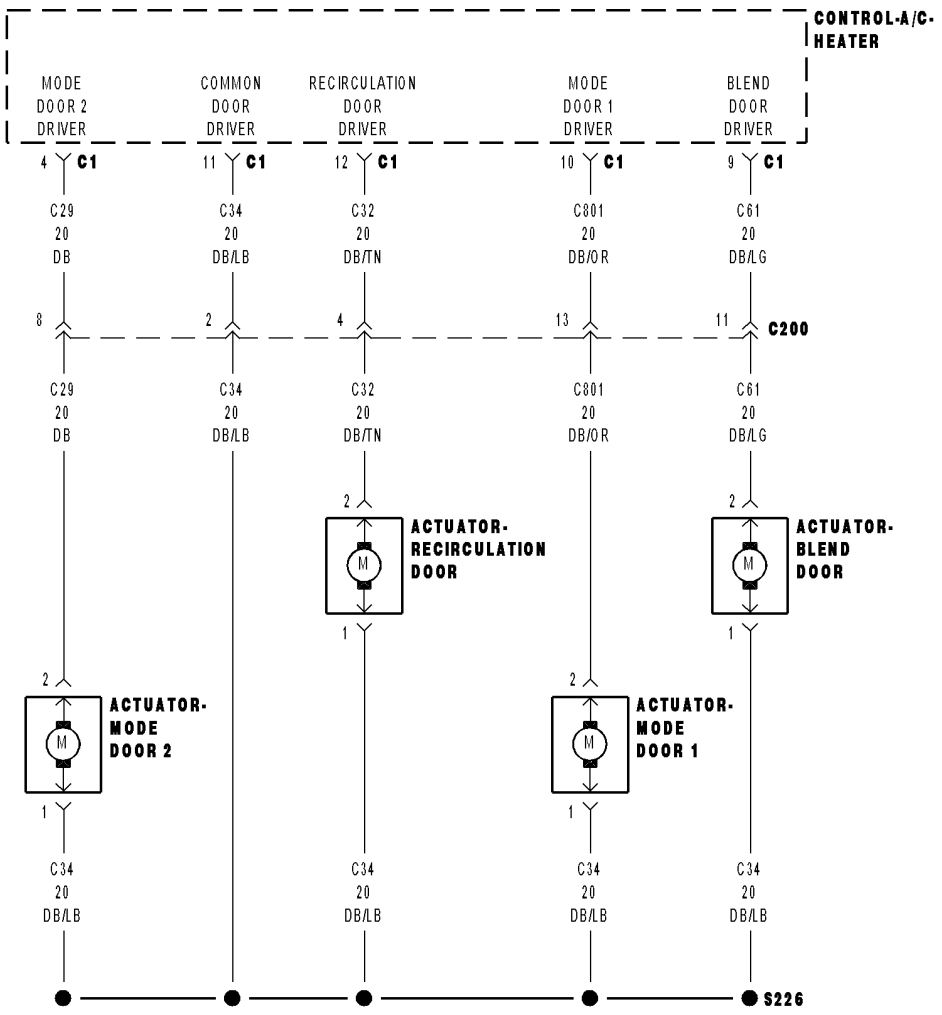

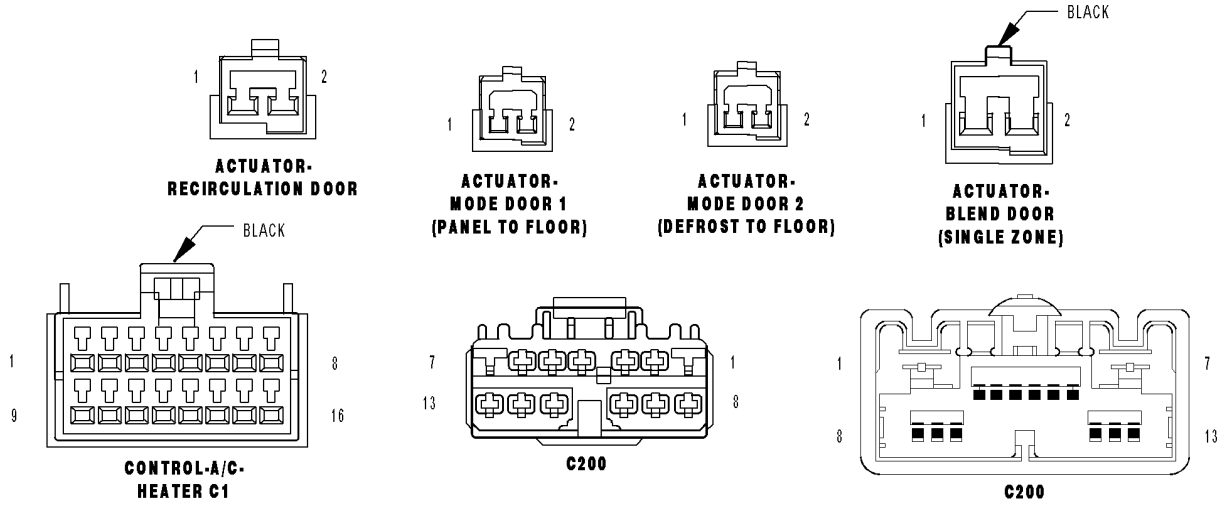

BLEND CALIBRATION FAULT (SINGLE-ZONE) (CONTINUED)

For the Manual Temperature Control circuit diagrams (Refer to 24 - HEATING & AIR CONDITIONING - SCHEMATICS AND DIAGRAMS).

For a complete wiring diagram **Refer to Section 8W**.

Theory of Operation

NOTE: Diagnose and repair Actuator Circuit Test faults before diagnosing Overcurrent faults and Calibration faults. Diagnose and repair Overcurrent faults before diagnosing Calibration faults.

The purpose of actuator calibration is to determine the total span of door travel between physical stops. To calibrate the actuator, the A/C Heater Control first moves the door to its soft stop, and then counts the number of pulses it takes to move the door to its other stop. An expected range of span is stored in the control's memory. If the measured calibration value is not within the expected range, this fault will set.

For vehicles equipped with electric backlight (EBL), running the HVAC Door Recalibration will cause the EBL status indicator to flash. If recalibration fails, the EBL status indicator will continue to flash until either the system passes recalibration or the ignition key is cycled. When the EBL status indicator is flashing, it will not indicate EBL operating status. However, the EBL mode switch will continue to function normally. When the EBL status indicator is flashing, the A/C status indicator will not function. However, the A/C mode switch will continue to function normally.

For vehicles not equipped with electric backlight (EBL), no status indicator will flash when running the HVAC Door Recalibration. If recalibration fails, the A/C status indicator will not function, however, the A/C mode switch will continue to function normally.

- **When Monitored:**
  When HVAC Door Recalibration is executed.
- **Set Condition:**
  If the span of the blend door is found outside the tolerance.

Possible Causes
(C61) BLEND DOOR DRIVER CIRCUIT SHORTED TO GROUND (WILL ALSO SET OVERCURRENT DTCs)
(C61) BLEND DOOR DRIVER CIRCUIT SHORTED TO VOLTAGE (WILL ALSO SET OVERCURRENT DTCs)
(C61) BLEND DOOR DRIVER CIRCUIT OPEN
(C34) COMMON DOOR DRIVER CIRCUIT OPEN
BLEND DOOR ACTUATOR OPEN
BLEND DOOR ACTUATOR BROKEN
BLEND DOOR BOUND UP
BLEND DOOR LINKAGE MISSING, BROKEN
A/C HEATER CONTROL

Diagnostic Test

1. RUN THE ACTUATOR CIRCUIT TEST

Turn the ignition on.

With the DRBIII® in HVAC, select System Tests and then select Actuator Circuit Test. Allow the test to run to completion before proceeding.

Does the DRBIII® display any Actuator Circuit Test fault messages?

Yes >> Diagnose and repair the fault(s). Refer to *ACTUATOR CIRCUIT TEST DIAGNOSTICS (SINGLE-ZONE) in this section.

No >> Go To 2

BLEND CALIBRATION FAULT (SINGLE-ZONE) (CONTINUED)

2. CHECK FOR DTCS IN THE A/C HEATER CONTROL

NOTE: Diagnose and repair all Overcurrent DTCs before diagnosing Calibration faults.
With the DRBIII®, read HVAC DTCs.

Does the DRBIII® display any DTCs?

Yes >> Diagnose and repair the DTC(s). Refer to the Table of Contents in this Section for a complete list of HVAC related symptoms.

No >> Go To 3

---

3. CHECK THE RESISTANCE BETWEEN THE (C34) COMMON DOOR DRIVER CIRCUIT & THE (C61) BLEND DOOR DRIVER CIRCUIT

Turn the ignition off.

Disconnect the A/C Heater Control C1 harness connector.

Measure the resistance between the (C34) Common Door Driver circuit and the (C61) Blend Door Driver circuit in the A/C Heater Control C1 harness connector.

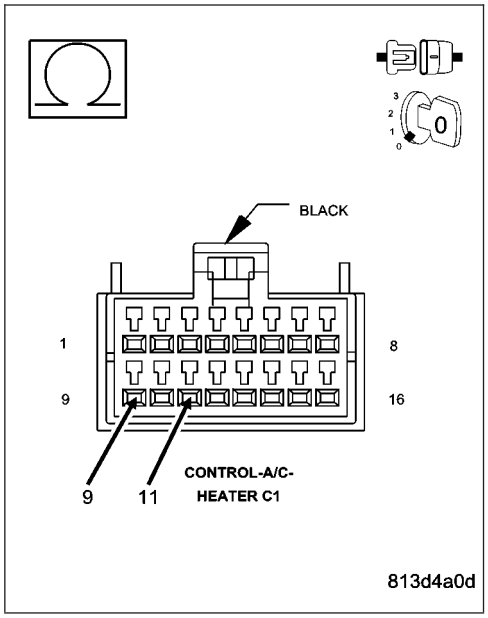

Is the resistance above 70.0 ohms?

Yes >> Go To 4

No >> Go To 6

BLEND CALIBRATION FAULT (SINGLE-ZONE) (CONTINUED)

4. CHECK (C61) BLEND DOOR DRIVER CIRCUIT FOR AN OPEN

Disconnect the Blend Door Actuator harness connector.

Measure the resistance of the (C61) Blend Door Driver circuit between the A/C Heater Control C1 harness connector and the Blend Door Actuator harness connector.

Is the resistance below 5.0 ohms?

Yes >> Go To 5

No >> Repair the (C61) Blend Door Driver circuit for an open.
Perform BODY VERIFICATION TEST - VER 1. (Refer to 8 - ELECTRICAL/ELECTRONIC CONTROL MODULES/ FRONT CONTROL MODULE - DIAGNOSIS AND TESTING).

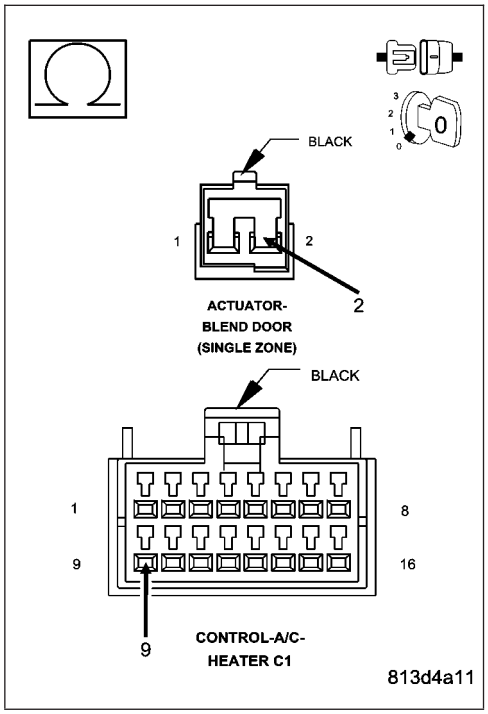

5. CHECK (C34) COMMON DOOR DRIVER CIRCUIT FOR AN OPEN

Measure the resistance of the (C34) Common Door Driver circuit between the A/C Heater Control C1 harness connector and the Blend Door Actuator harness connector.

Is the resistance below 5.0 ohms?

Yes >> Replace the Blend Door Actuator in accordance with the Service Information.
Perform BODY VERIFICATION TEST - VER 1. (Refer to 8 - ELECTRICAL/ELECTRONIC CONTROL MODULES/ FRONT CONTROL MODULE - DIAGNOSIS AND TESTING).

No >> Repair the (C34) Common Door Driver circuit for an open.
Perform BODY VERIFICATION TEST - VER 1. (Refer to 8 - ELECTRICAL/ELECTRONIC CONTROL MODULES/ FRONT CONTROL MODULE - DIAGNOSIS AND TESTING).

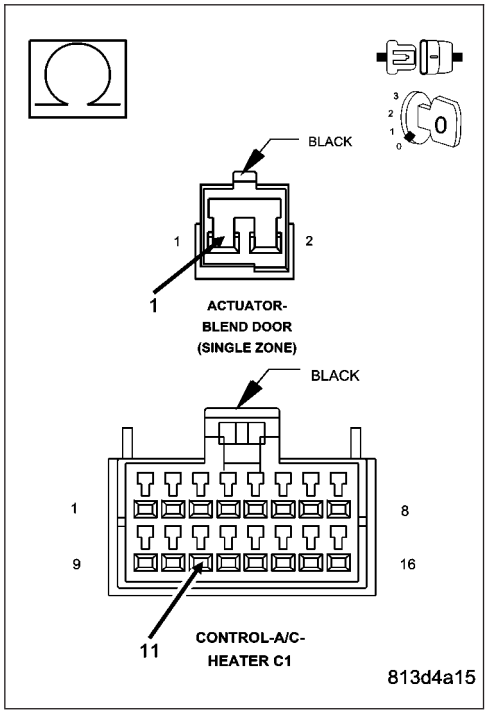

BLEND CALIBRATION FAULT (SINGLE-ZONE) (CONTINUED)

6. CHECK FOR A BROKEN BLEND DOOR ACTUATOR

Remove the Blend Door Actuator from the A/C Heater Housing Assembly.
Disconnect the Blend Door Actuator harness connector.
By hand, attempt to rotate the actuator in both directions.

Does the actuator turn in either direction?

Yes >> Replace the Blend Door Actuator in accordance with the Service Information.
Perform BODY VERIFICATION TEST - VER 1. (Refer to 8 - ELECTRICAL/ELECTRONIC CONTROL MODULES/FRONT CONTROL MODULE - DIAGNOSIS AND TESTING).

No >> Go To 7

---

7. CHECK FOR MISSING & BROKEN ACTUATOR LINKAGE & THE DOOR FOR BINDING & A LOSS OF RANGE

Inspect the A/C Heater Housing Assembly for missing and broken actuator linkage.
Inspect the linkage and the actuator for broken and missing teeth.
Check the door for binding and a loss of full range.

Are there any physical or mechanical problems with the door, actuator, linkage, or housing?

Yes >> Repair as necessary in accordance with the Service Information.
Perform BODY VERIFICATION TEST - VER 1. (Refer to 8 - ELECTRICAL/ELECTRONIC CONTROL MODULES/FRONT CONTROL MODULE - DIAGNOSIS AND TESTING).

No >> Replace the A/C Heater Control in accordance with the Service Information.
Perform BODY VERIFICATION TEST - VER 1. (Refer to 8 - ELECTRICAL/ELECTRONIC CONTROL MODULES/FRONT CONTROL MODULE - DIAGNOSIS AND TESTING).

BLEND CIRCUIT SHORTED TO GROUND (DUAL-ZONE)

For a complete wiring diagram **Refer to Section 8W**.

- **When Monitored:**
  When the Actuator Circuit Test is executed.
- **Set Condition:**
  If the A/C Heater Control detects a short to ground on the (C33) Passenger Blend Door Driver circuit.

Possible Causes
DOOR DRIVER CIRCUIT(S) SHORTED TO GROUND
DOOR DRIVER CIRCUITS SHORTED TOGETHER
DOOR ACTUATOR(S)
A/C HEATER CONTROL

Refer to *ACTUATOR CIRCUIT TEST DIAGNOSTICS (DUAL-ZONE) in this Section for the diagnostic test procedure.

BLEND CIRCUIT SHORTED TO GROUND (SINGLE-ZONE)

For a complete wiring diagram **Refer to Section 8W**.

- **When Monitored:**
  When the Actuator Circuit Test is executed.
- **Set Condition:**
  If the A/C Heater Control detects a short to ground on the (C61) Blend Door Driver circuit.

Possible Causes
DOOR DRIVER CIRCUIT(S) SHORTED TO GROUND
DOOR DRIVER CIRCUITS SHORTED TOGETHER
DOOR ACTUATOR(S)
A/C HEATER CONTROL

Refer to *ACTUATOR CIRCUIT TEST DIAGNOSTICS (SINGLE-ZONE) in this Section for the diagnostic test procedure.

BLEND CIRCUIT SHORTED TO IGN OR BATT (DUAL-ZONE)

For a complete wiring diagram **Refer to Section 8W**.

- **When Monitored:**
  When the Actuator Circuit Test is executed.
- **Set Condition:**
  If the A/C Heater Control detects a short to voltage on the (C33) Passenger Blend Door Driver circuit.

Possible Causes
DOOR DRIVER CIRCUIT(S) SHORTED TO VOLTAGE
DOOR DRIVER CIRCUITS SHORTED TOGETHER
DOOR ACTUATOR(S)
A/C HEATER CONTROL

Refer to *ACTUATOR CIRCUIT TEST DIAGNOSTICS (DUAL-ZONE) in this Section for the diagnostic test procedure.

BLEND CIRCUIT SHORTED TO IGN OR BATT (SINGLE-ZONE)

For a complete wiring diagram **Refer to Section 8W**.

- **When Monitored:**
  When the Actuator Circuit Test is executed.
- **Set Condition:**
  If the A/C Heater Control detects a short to voltage on the (C61) Blend Door Driver circuit.

Possible Causes
DOOR DRIVER CIRCUIT(S) SHORTED TO VOLTAGE
DOOR DRIVER CIRCUITS SHORTED TOGETHER
DOOR ACTUATOR(S)
A/C HEATER CONTROL

Refer to *ACTUATOR CIRCUIT TEST DIAGNOSTICS (SINGLE-ZONE) in this Section for the diagnostic test procedure.

BLEND OVERCURRENT (DUAL-ZONE)

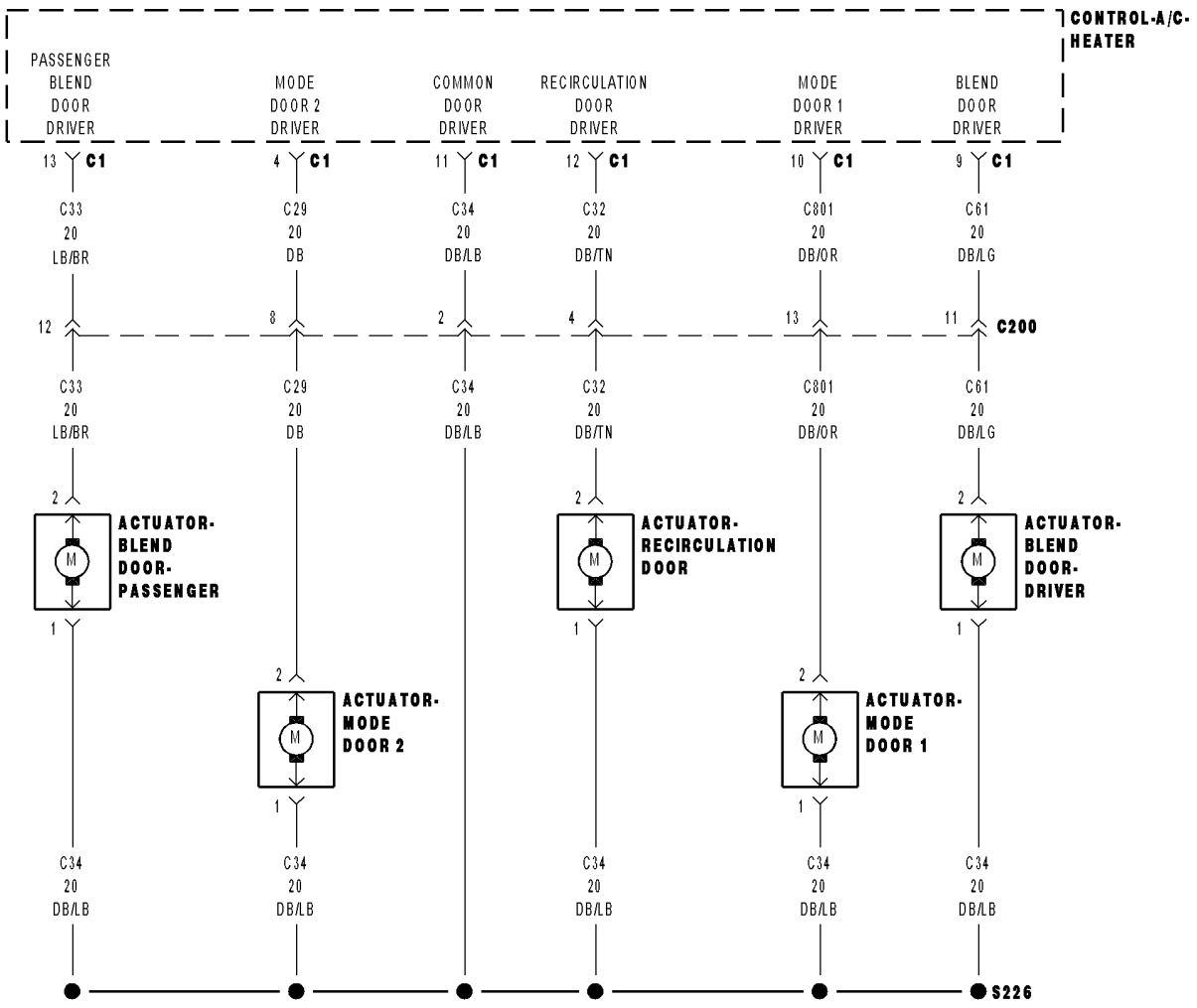

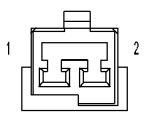

ACTUATOR- RECIRCULATION DOOR

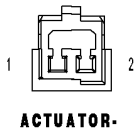

ACTUATOR- MODE DOOR 1 (PANEL TO FLOOR)

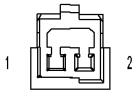

ACTUATOR- MODE DOOR 2 (DEFROST TO FLOOR)

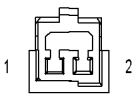

ACTUATOR- BLEND DOOR- PASSENGER (DUAL-ZONE)

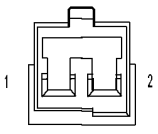

ACTUATOR- BLEND DOOR- DRIVER (DUAL-ZONE)

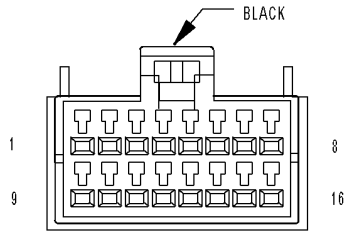

CONTROL-A/C- HEATER C1

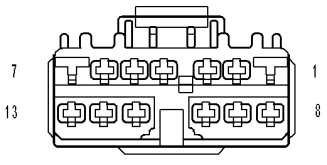

C200

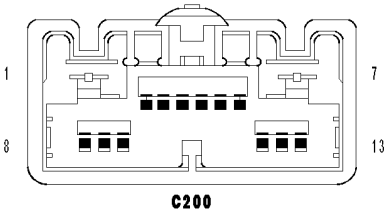

C200

813d20c4

BLEND OVERCURRENT (DUAL-ZONE) (CONTINUED)

For the Manual Temperature Control circuit diagrams (Refer to 24 - HEATING & AIR CONDITIONING - SCHEMATICS AND DIAGRAMS).

For a complete wiring diagram **Refer to Section 8W**.

Theory of Operation

NOTE: Diagnose and repair all Actuator Circuit Test faults before diagnosing Overcurrent DTCs.

The A/C Heater Control monitors the door driver circuits during actuator operation for shorts to ground, shorts to battery, and shorts to other door driver circuits. If detected, the A/C Heater Control reports these types of faults as Overcurrent DTCs. It is important to note that Overcurrent DTCs do not indicate where or what type of short is present and that additional system testing is necessary to provide more details about the reported fault.

- **When Monitored:**
  When actuator movement is requested.
- **Set Condition:**
  If the A/C Heater Control detects an excessive current draw on any of the door driver circuits while attempting to drive the Passenger Blend Door Actuator. Note that only one overcurrent DTC can set per ignition cycle.

Possible Causes
(C32) RECIRCULATION DOOR DRIVER CIRCUIT / (C61) BLEND DOOR DRIVER CIRCUIT / (C801) MODE DOOR 1 DRIVER CIRCUIT / (C29) MODE DOOR 2 DRIVER CIRCUIT / (C33) PASSENGER BLEND DOOR DRIVER CIRCUIT SHORTED TO GROUND
(C32) RECIRCULATION DOOR DRIVER CIRCUIT / (C61) BLEND DOOR DRIVER CIRCUIT / (C801) MODE DOOR 1 DRIVER CIRCUIT / (C29) MODE DOOR 2 DRIVER CIRCUIT / (C33) PASSENGER BLEND DOOR DRIVER CIRCUIT SHORTED TO VOLTAGE
(C32) RECIRCULATION DOOR DRIVER CIRCUIT / (C61) BLEND DOOR DRIVER CIRCUIT / (C801) MODE DOOR 1 DRIVER CIRCUIT / (C29) MODE DOOR 2 DRIVER CIRCUIT / (C33) PASSENGER BLEND DOOR DRIVER CIRCUIT SHORTED TOGETHER
DRIVER BLEND DOOR ACTUATOR / PASSENGER BLEND DOOR ACTUATOR / MODE DOOR ACTUATOR 1 / MODE DOOR ACTUATOR 2 / RECIRCULATION DOOR ACTUATOR
A/C HEATER CONTROL

NOTE: This DTC must be active for the result of this test to be valid. Do not perform this test if this DTC is stored. Refer to HVAC System Test for stored DTC test procedures.

Diagnostic Test

1. RUN THE ACTUATOR CIRCUIT TEST

Turn the ignition on.

With the DRBIII® in HVAC, select System Tests and then select Actuator Circuit Test. Allow the test to run to completion before proceeding.

Does the DRBIII® display any Actuator Circuit Test fault messages?

Yes >> Diagnose and repair the fault(s). Refer to *ACTUATOR CIRCUIT TEST DIAGNOSTICS (DUAL-ZONE) in this section.

No >> Go To 2

BLEND OVERCURRENT (DUAL-ZONE) (CONTINUED)

2. CHECK THE (C32) RECIRCULATION DOOR DRIVER CIRCUIT FOR A SHORT TO THE (C61) BLEND DOOR DRIVER CIRCUIT, THE (C801) MODE DOOR 1 DRIVER CIRCUIT, THE (C29) MODE DOOR 2 DRIVER CIRCUIT, & THE (C33) PASSENGER BLEND DOOR DRIVER CIRCUIT

Turn the ignition off.

Disconnect the A/C Heater Control C1 harness connector.

Measure the resistance between the (C32) Recirculation Door Driver circuit and the (C61) Blend Door Driver circuit, the (C801) Mode Door 1 Driver circuit, the (C29) Mode Door 2 Driver circuit, and the (C33) Passenger Blend Door Driver circuit in the A/C Heater Control C1 harness connector.

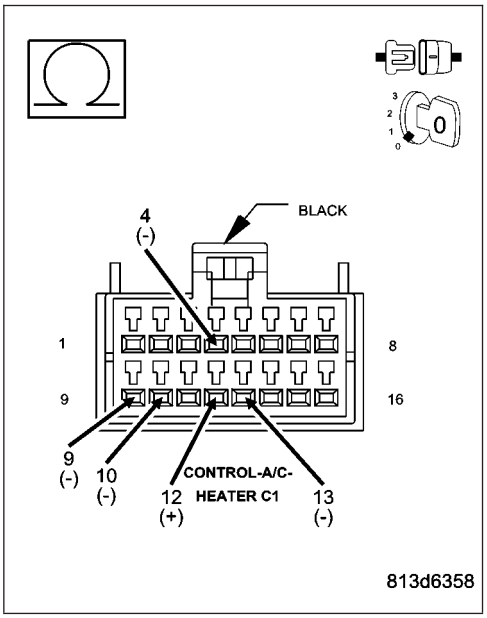

Is the resistance below 10k ohms on any of the circuits?

Yes >> Repair all circuits with a resistance below 10k ohms for a short to the (C32) Recirculation Door Driver circuit.

Perform BODY VERIFICATION TEST - VER 1. (Refer to 8 - ELECTRICAL/ELECTRONIC CONTROL MODULES/ FRONT CONTROL MODULE - DIAGNOSIS AND TESTING).

No >> Go To 3

3. CHECK THE (C61) BLEND DOOR DRIVER CIRCUIT FOR A SHORT TO THE (C801) MODE DOOR 1 DRIVER CIRCUIT, THE (C29) MODE DOOR 2 DRIVER CIRCUIT, & THE (C33) PASSENGER BLEND DOOR DRIVER CIRCUIT

Measure the resistance between the (C61) Blend Door Driver circuit and the (C801) Mode Door 1 Driver circuit, the (C29) Mode Door 2 Driver circuit, and, the (C33) Passenger Blend Door Driver circuit in the A/C Heater Control C1 harness connector.

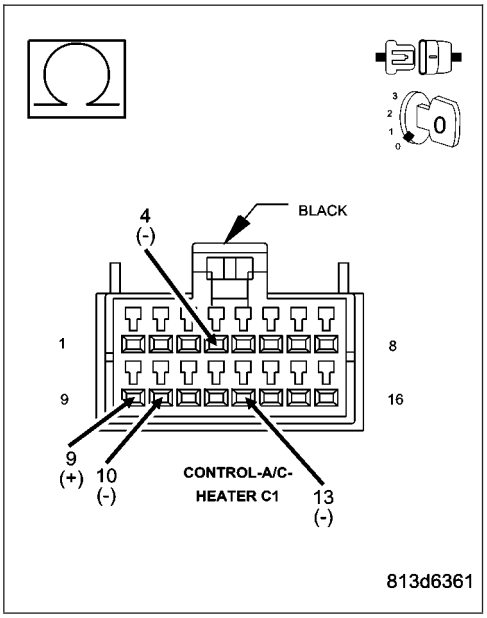

Is the resistance below 10k ohms on any of the circuits?

Yes >> Repair all circuits with a resistance below 10k ohms for a short to the (C61) Blend Door Driver circuit.

Perform BODY VERIFICATION TEST - VER 1. (Refer to 8 - ELECTRICAL/ELECTRONIC CONTROL MODULES/ FRONT CONTROL MODULE - DIAGNOSIS AND TESTING).

No >> Go To 4

BLEND OVERCURRENT (DUAL-ZONE) (CONTINUED)

4. CHECK THE (C801) MODE DOOR 1 DRIVER CIRCUIT FOR A SHORT TO THE (C29) MODE DOOR 2 DRIVER CIRCUIT & THE (C33) PASSENGER BLEND DOOR DRIVER CIRCUIT

Measure the resistance between the (C801) Mode Door 1 Driver circuit and the (C29) Mode Door 2 Driver circuit, and the (C33) Passenger Blend Door Driver circuit in the A/C Heater Control C1 harness connector.

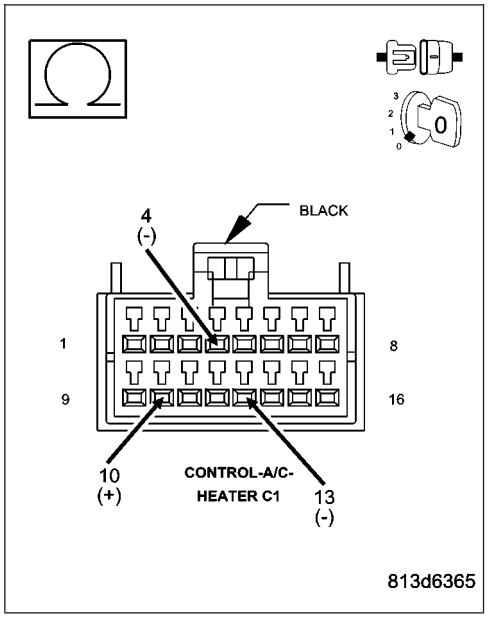

Is the resistance below 10k ohms on any of the circuits?

Yes >> Repair all circuits with a resistance below 10k ohms for a short to the (C801) Mode Door 1 Driver circuit.

Perform BODY VERIFICATION TEST - VER 1. (Refer to 8 - ELECTRICAL/ELECTRONIC CONTROL MODULES/ FRONT CONTROL MODULE - DIAGNOSIS AND TESTING).

No >> Go To 5

5. CHECK THE RESISTANCE BETWEEN THE (C29) MODE DOOR 2 DRIVER CIRCUIT & THE (C33) PASSENGER BLEND DOOR DRIVER CIRCUIT

Measure the resistance between the (C29) Mode Door 2 Driver circuit and the (C33) Passenger Blend Door Driver circuit in the A/C Heater Control C1 harness connector.

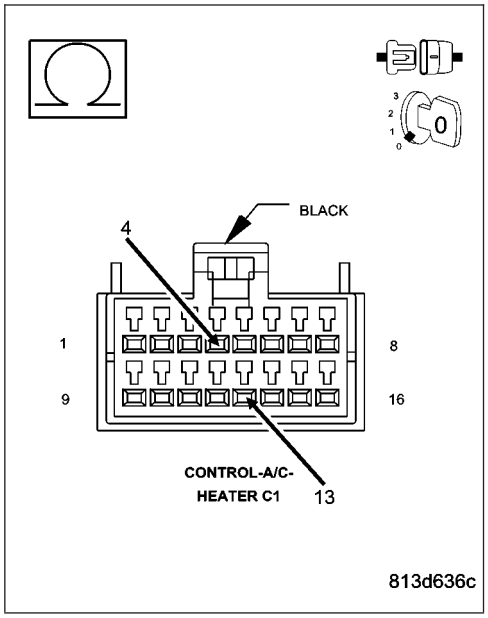

Is the resistance below 10k ohms?

Yes >> Repair the (C33) Passenger Blend Door Driver circuit for a short to the (C29) Mode Door 2 Driver circuit.

Perform BODY VERIFICATION TEST - VER 1. (Refer to 8 - ELECTRICAL/ELECTRONIC CONTROL MODULES/ FRONT CONTROL MODULE - DIAGNOSIS AND TESTING).

No >> Go To 6

BLEND OVERCURRENT (DUAL-ZONE) (CONTINUED)

6. CHECK THE (C34) COMMON DOOR DRIVER CIRCUIT FOR A SHORT TO THE (C32) RECIRCULATION DOOR DRIVER CIRCUIT, THE (C61) BLEND DOOR DRIVER CIRCUIT, THE (C801) MODE DOOR 1 DRIVER CIRCUIT, THE (C29) MODE DOOR 2 DRIVER CIRCUIT, & THE (C33) PASSENGER BLEND DOOR DRIVER CIRCUIT

Measure the resistance between the (C34) Common Door Driver Circuit and the (C32) Recirculation Door Driver circuit, the (C61) Blend Door Driver circuit, the (C801) Mode Door 1 Driver circuit, the (C29) Mode Door 2 Driver circuit, and, the (C33) Passenger Blend Door Driver circuit in the A/C Heater Control C1 harness connector.

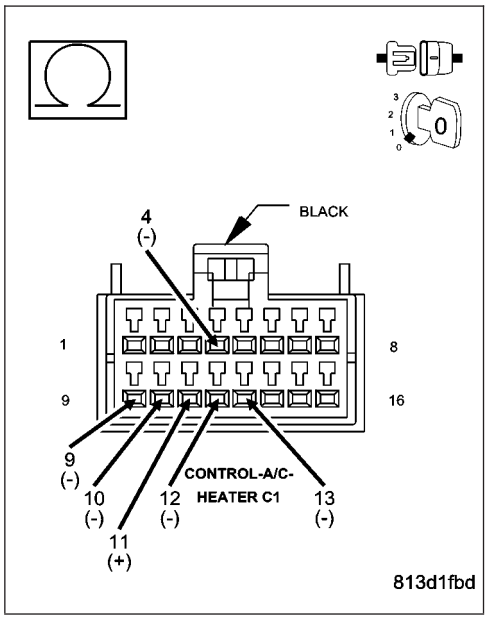

Is the resistance below 30.0 ohms on any of the circuits?

Yes >> Go To 7

No >> Go To 8

7. CHECK THE DOOR DRIVER CIRCUITS WHOSE RESISTANCE WAS BELOW 30.0 OHMS IN THE PREVIOUS STEP FOR A SHORT TO THE (C34) COMMON DOOR DRIVER CIRCUIT

Disconnect all door actuator harness connectors whose circuit resistance was below 30.0 ohms.

Measure the resistance between the (C34) Common Door Driver circuit and each applicable door driver circuit in the A/C Heater Control C1 harness connector.

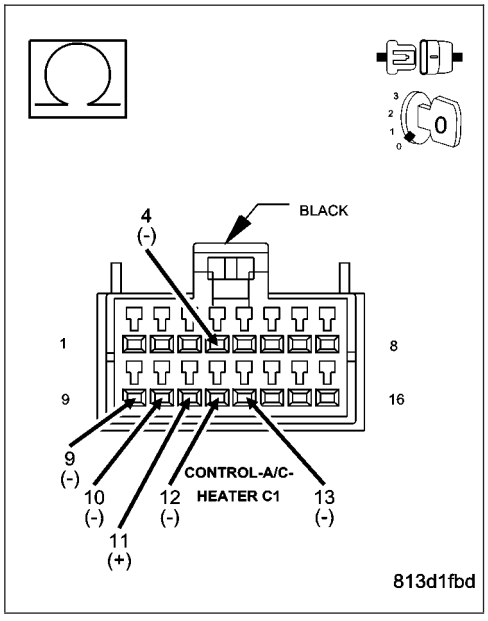

Is the resistance below 10k ohms on any of the circuits?

Yes >> Repair the door driver circuits with a resistance below 10k ohms for a short to the (C34) Common Door Driver circuit.

Perform BODY VERIFICATION TEST - VER 1. (Refer to 8 - ELECTRICAL/ELECTRONIC CONTROL MODULES/ FRONT CONTROL MODULE - DIAGNOSIS AND TESTING).

No >> Replace all door actuators with a resistance below 30.0 ohms in accordance with the Service Information.

Perform BODY VERIFICATION TEST - VER 1. (Refer to 8 - ELECTRICAL/ELECTRONIC CONTROL MODULES/ FRONT CONTROL MODULE - DIAGNOSIS AND TESTING).

BLEND OVERCURRENT (DUAL-ZONE) (CONTINUED)

8. RUN THE ACTUATOR CIRCUIT TEST

Reconnect the A/C Heater Control C1 harness connector.

Turn the ignition on.

With the DRBIII® in HVAC, select System Tests and then select Actuator Circuit Test. Allow the test to run to completion before proceeding.

Does the DRBIII® display any Actuator Circuit Test fault messages?

Yes >> Diagnose and repair the fault(s). Refer to *ACTUATOR CIRCUIT TEST DIAGNOSTICS (DUAL-ZONE) in this section.

No >> Replace the A/C Heater Control in accordance with the Service Information.

Perform BODY VERIFICATION TEST - VER 1. (Refer to 8 - ELECTRICAL/ELECTRONIC CONTROL MODULES/FRONT CONTROL MODULE - DIAGNOSIS AND TESTING).

BLEND OVERCURRENT (SINGLE-ZONE)

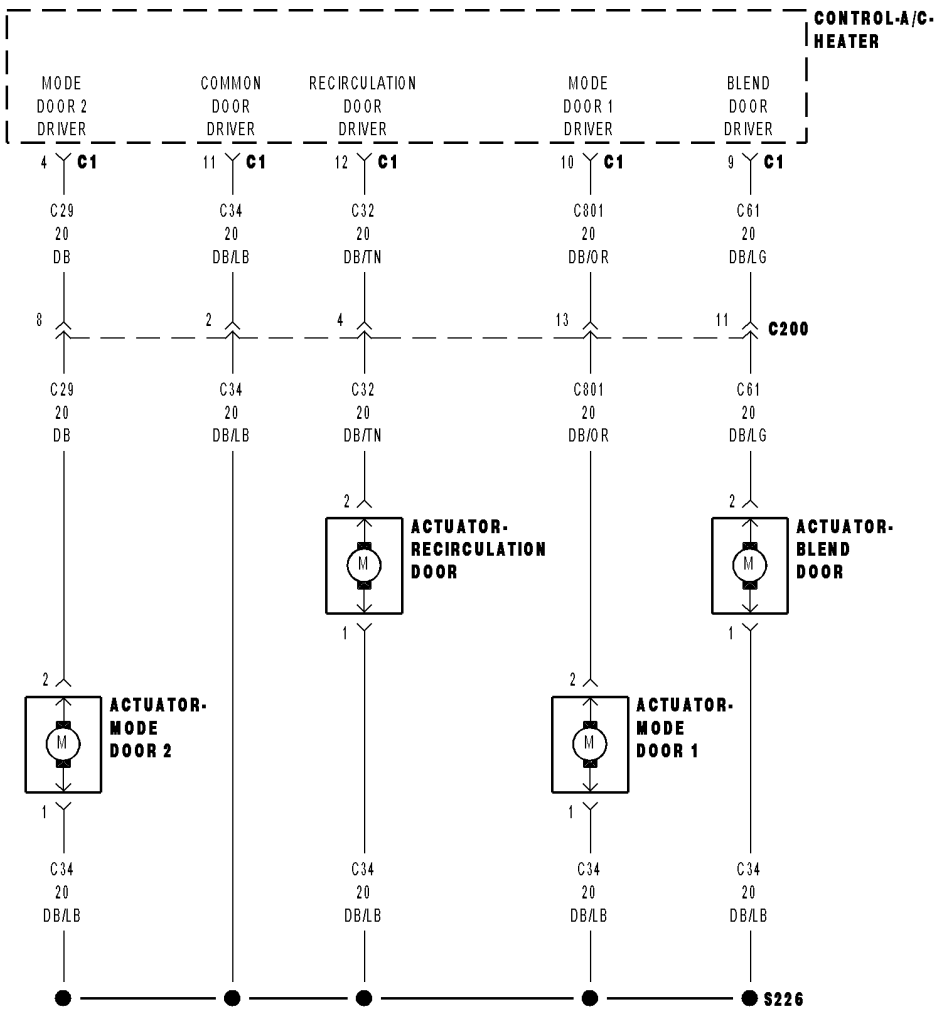

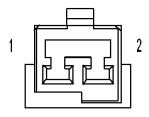

ACTUATOR-
RECIRCULATION DOOR

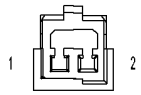

ACTUATOR-
MODE DOOR 1
(PANEL TO FLOOR)

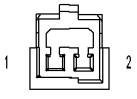

ACTUATOR-
MODE DOOR 2
(DEFROST TO FLOOR)

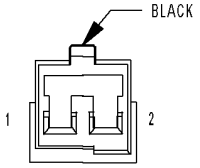

ACTUATOR-
BLEND DOOR
(SINGLE ZONE)

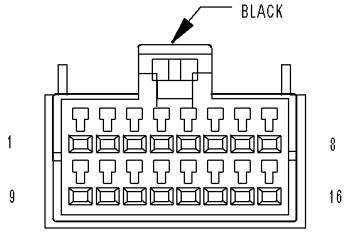

CONTROL-A/C-
HEATER C1

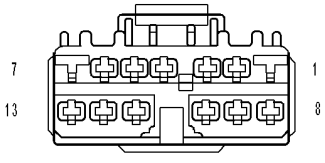

C200

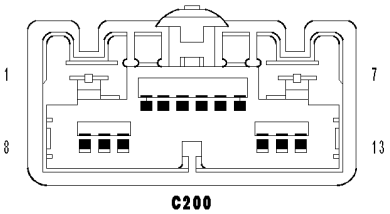

C200

813d4bd1

BLEND OVERCURRENT (SINGLE-ZONE) (CONTINUED)

For the Manual Temperature Control circuit diagrams (Refer to 24 - HEATING & AIR CONDITIONING - SCHEMATICS AND DIAGRAMS).

For a complete wiring diagram **Refer to Section 8W**.

Theory of Operation

NOTE: Diagnose and repair all Actuator Circuit Test faults before diagnosing Overcurrent DTCs.

The A/C Heater Control monitors the door driver circuits during actuator operation for shorts to ground, shorts to battery, and shorts to other door driver circuits. If detected, the A/C Heater Control reports these types of faults as Overcurrent DTCs. It is important to note that Overcurrent DTCs do not indicate where or what type of short is present and that additional system testing is necessary to provide more details about the reported fault.

- **When Monitored:**
  When actuator movement is requested.
- **Set Condition:**
  If the A/C Heater Control detects an excessive current draw on any of the door driver circuits while attempting to drive the Blend Door Actuator. Note that only one overcurrent DTC can set per ignition cycle.

Possible Causes
(C32) RECIRCULATION DOOR DRIVER CIRCUIT / (C61) BLEND DOOR DRIVER CIRCUIT / (C801) MODE DOOR 1 DRIVER CIRCUIT / (C29) MODE DOOR 2 DRIVER CIRCUIT SHORTED TO GROUND
(C32) RECIRCULATION DOOR DRIVER CIRCUIT / (C61) BLEND DOOR DRIVER CIRCUIT / (C801) MODE DOOR 1 DRIVER CIRCUIT / (C29) MODE DOOR 2 DRIVER CIRCUIT SHORTED TO VOLTAGE
(C32) RECIRCULATION DOOR DRIVER CIRCUIT / (C61) BLEND DOOR DRIVER CIRCUIT / (C801) MODE DOOR 1 DRIVER CIRCUIT / (C29) MODE DOOR 2 DRIVER CIRCUIT SHORTED TOGETHER
BLEND DOOR ACTUATOR / MODE DOOR ACTUATOR 1 / MODE DOOR ACTUATOR 2 / RECIRCULATION DOOR ACTUATOR
A/C HEATER CONTROL

NOTE: This DTC must be active for the result of this test to be valid. Do not perform this test if this DTC is stored. Refer to HVAC System Test for stored DTC test procedures.

Diagnostic Test

1. RUN THE ACTUATOR CIRCUIT TEST

Turn the ignition on.

With the DRBIII® in HVAC, select System Tests and then select Actuator Circuit Test. Allow the test to run to completion before proceeding.

Does the DRBIII® display any Actuator Circuit Test fault messages?

Yes >> Diagnose and repair the fault(s). Refer to *ACTUATOR CIRCUIT TEST DIAGNOSTICS (SINGLE-ZONE) in this section.

No >> Go To 2

BLEND OVERCURRENT (SINGLE-ZONE) (CONTINUED)

2. CHECK THE (C32) RECIRCULATION DOOR DRIVER CIRCUIT FOR A SHORT TO THE (C61) BLEND DOOR DRIVER CIRCUIT, THE (C801) MODE DOOR 1 DRIVER CIRCUIT, & THE (C29) MODE DOOR 2 DRIVER CIRCUIT

Turn the ignition off.

Disconnect the A/C Heater Control C1 harness connector.

Measure the resistance between the (C32) Recirculation Door Driver circuit and the (C61) Blend Door Driver circuit, the (C801) Mode Door 1 Driver circuit, and the (C29) Mode Door 2 Driver circuit in the A/C Heater Control C1 harness connector.

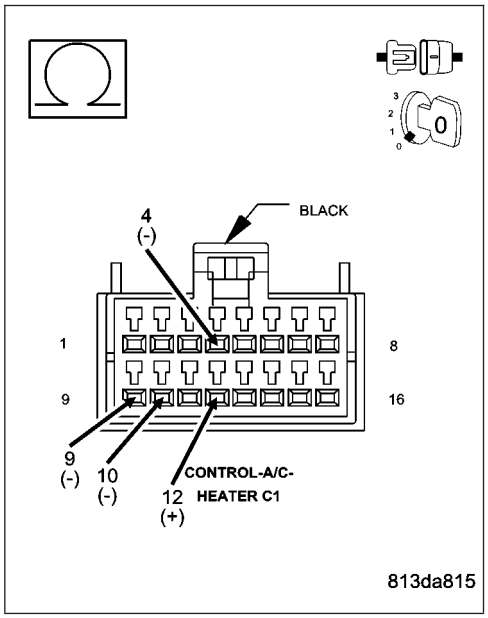

Is the resistance below 10k ohms on any of the circuits?

Yes >> Repair all circuits with a resistance below 10k ohms for a short to the (C32) Recirculation Door Driver circuit.

Perform BODY VERIFICATION TEST - VER 1. (Refer to 8 - ELECTRICAL/ELECTRONIC CONTROL MODULES/ FRONT CONTROL MODULE - DIAGNOSIS AND TESTING).

No >> Go To 3

3. CHECK THE (C61) BLEND DOOR DRIVER CIRCUIT FOR A SHORT TO THE (C801) MODE DOOR 1 DRIVER CIRCUIT & THE (C29) MODE DOOR 2 DRIVER CIRCUIT

Measure the resistance between the (C61) Blend Door Driver circuit and the (C801) Mode Door 1 Driver circuit and the (C29) Mode Door 2 Driver circuit in the A/C Heater Control C1 harness connector.

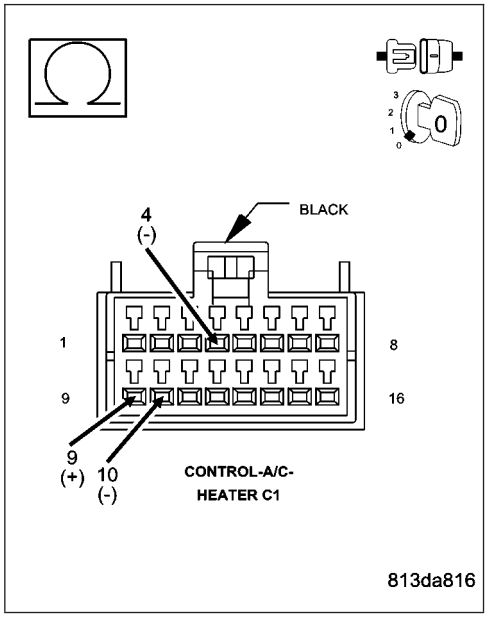

Is the resistance below 10k ohms on any of the circuits?

Yes >> Repair all circuits with a resistance below 10k ohms for a short to the (C61) Blend Door Driver circuit.

Perform BODY VERIFICATION TEST - VER 1. (Refer to 8 - ELECTRICAL/ELECTRONIC CONTROL MODULES/ FRONT CONTROL MODULE - DIAGNOSIS AND TESTING).

No >> Go To 4

BLEND OVERCURRENT (SINGLE-ZONE) (CONTINUED)

4. CHECK THE (C801) MODE DOOR 1 DRIVER CIRCUIT FOR A SHORT TO THE (C29) MODE DOOR 2 DRIVER CIRCUIT

Measure the resistance between the (C801) Mode Door 1 Driver circuit and the (C29) Mode Door 2 Driver circuit in the A/C Heater Control C1 harness connector.

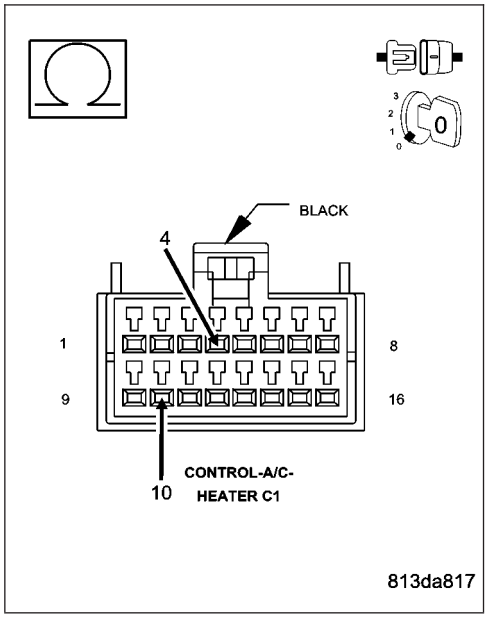

Is the resistance below 10k ohms?

Yes >> Repair the (C29) Mode Door 2 Driver circuit for a short to the (C801) Mode Door 1 Driver circuit.

Perform BODY VERIFICATION TEST - VER 1. (Refer to 8 - ELECTRICAL/ELECTRONIC CONTROL MODULES/ FRONT CONTROL MODULE - DIAGNOSIS AND TESTING).

No >> Go To 5

5. CHECK THE (C34) COMMON DOOR DRIVER CIRCUIT FOR A SHORT TO THE (C32) RECIRCULATION DOOR DRIVER CIRCUIT, THE (C61) BLEND DOOR DRIVER CIRCUIT, THE (C801) MODE DOOR 1 DRIVER CIRCUIT, & THE (C29) MODE DOOR 2 DRIVER CIRCUIT

Measure the resistance between the (C34) Common Door Driver Circuit and the (C32) Recirculation Door Driver circuit, the (C61) Blend Door Driver circuit, the (C801) Mode Door 1 Driver circuit, and the (C29) Mode Door 2 Driver circuit in the A/C Heater Control C1 harness connector.

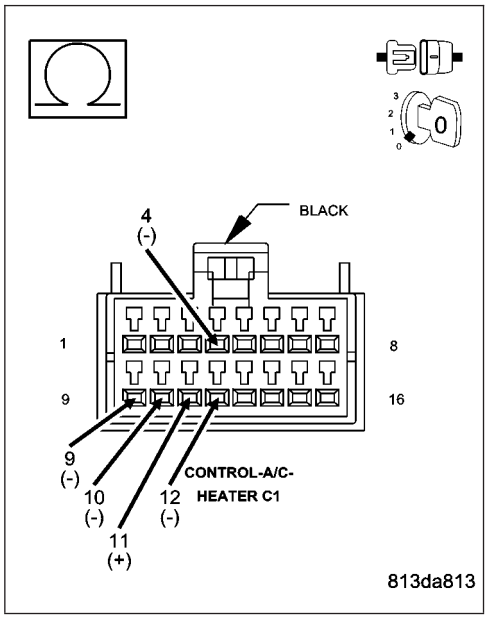

Is the resistance below 30.0 ohms on any of the circuits?

Yes >> Go To 6

No >> Go To 7

BLEND OVERCURRENT (SINGLE-ZONE) (CONTINUED)

6. CHECK THE DOOR DRIVER CIRCUITS WHOSE RESISTANCE WAS BELOW 30.0 OHMS IN THE PREVIOUS STEP FOR A SHORT TO THE (C34) COMMON DOOR DRIVER CIRCUIT

Disconnect all door actuator harness connectors whose circuit resistance was below 30.0 ohms.

Measure the resistance between the (C34) Common Door Driver circuit and each applicable door driver circuit in the A/C Heater Control C1 harness connector.

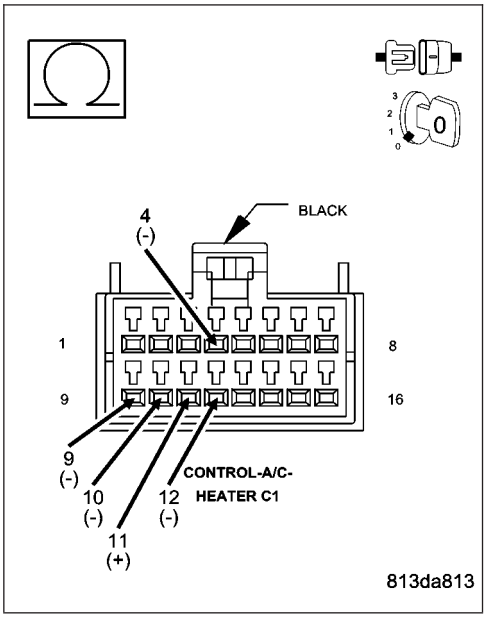

Is the resistance below 10k ohms on any of the circuits?

Yes >> Repair the door driver circuits with a resistance below 10k ohms for a short to the (C34) Common Door Driver circuit.

Perform BODY VERIFICATION TEST - VER 1. (Refer to 8 - ELECTRICAL/ELECTRONIC CONTROL MODULES/ FRONT CONTROL MODULE - DIAGNOSIS AND TESTING).

No >> Replace all door actuators with a resistance below 30.0 ohms in accordance with the Service Information.

Perform BODY VERIFICATION TEST - VER 1. (Refer to 8 - ELECTRICAL/ELECTRONIC CONTROL MODULES/ FRONT CONTROL MODULE - DIAGNOSIS AND TESTING).

---

7. RUN THE ACTUATOR CIRCUIT TEST

Reconnect the A/C Heater Control C1 harness connector.

Turn the ignition on.

With the DRBIII® in HVAC, select System Tests and then select Actuator Circuit Test. Allow the test to run to completion before proceeding.

Does the DRBIII® display any Actuator Circuit Test fault messages?

Yes >> Diagnose and repair the fault(s). Refer to *ACTUATOR CIRCUIT TEST DIAGNOSTICS (SINGLE-ZONE) in this section.

No >> Replace the A/C Heater Control in accordance with the Service Information.

Perform BODY VERIFICATION TEST - VER 1. (Refer to 8 - ELECTRICAL/ELECTRONIC CONTROL MODULES/FRONT CONTROL MODULE - DIAGNOSIS AND TESTING).

BLOWER NOT ON HIGH

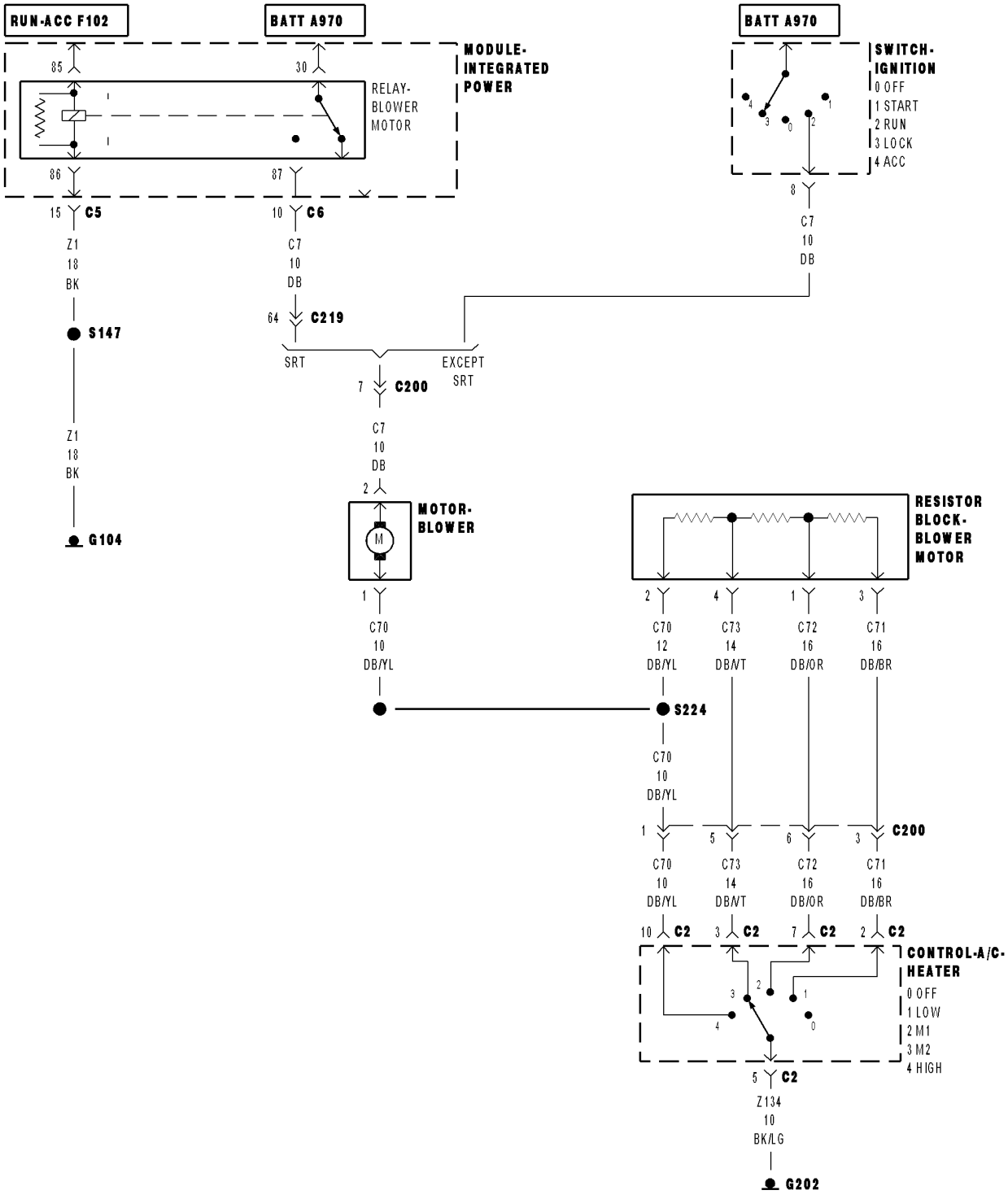

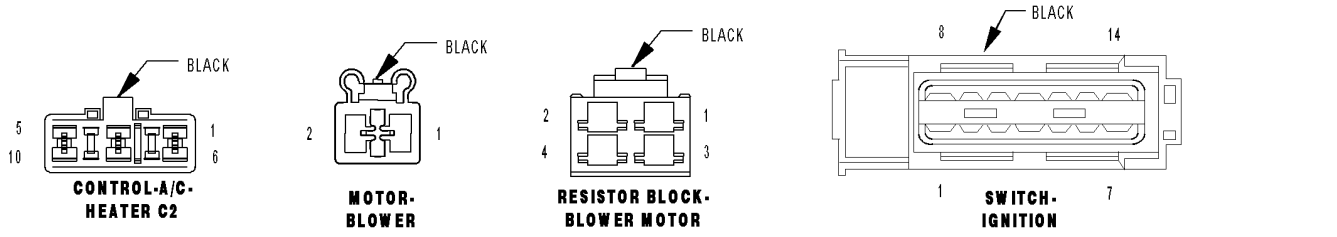

813df38

BLOWER NOT ON HIGH (CONTINUED)

For the Manual Temperature Control circuit diagrams (Refer to 24 - HEATING & AIR CONDITIONING - SCHEMATICS AND DIAGRAMS).

For a complete wiring diagram **Refer to Section 8W**.

- **When Monitored:**
  When executing the Cooldown Test
- **Set Condition:**
  This message will display if the blower is not operating at high speed while the Cooldown Test is running.

Possible Causes
FAULTS PRESENT IN THE HVAC SYSTEM
BLOWER DID NOT REMAIN ON HIGH SPEED FOR THE ENTIRE TEST
BLOWER MOTOR / RELATED CIRCUITS

Diagnostic Test

1. CHECK FOR DTCS IN THE A/C HEATER CONTROL

Turn the ignition on.

With the DRBIII®, read HVAC DTCs.

Does the DRBIII® display any DTCs?

Yes >> Diagnose and repair the DTC(s). Refer to the Table of Contents in this Section for a complete list of HVAC related symptoms. When the repair is complete, erase the DTCs, cycle the ignition switch, start the engine, set the blower control to high speed, and then re-run the Cooldown Test.

Perform BODY VERIFICATION TEST - VER 1. (Refer to 8 - ELECTRICAL/ELECTRONIC CONTROL MODULES/FRONT CONTROL MODULE - DIAGNOSIS AND TESTING).

No >> Go To 2

---

2. CHECK THE BLOWER SPEED SETTING

Was the blower control set to high speed for the entire Cooldown Test?

Yes >> Check the blower motor and related circuits for the cause of blower operation problems and repair as necessary. When the repair is complete, cycle the ignition switch, set the blower control to high speed, and then re-run the Cooldown Test.

Perform BODY VERIFICATION TEST - VER 1. (Refer to 8 - ELECTRICAL/ELECTRONIC CONTROL MODULES/FRONT CONTROL MODULE - DIAGNOSIS AND TESTING).

No >> Start the engine, set the blower control to high speed, and then re-run the Cooldown Test.

Perform BODY VERIFICATION TEST - VER 1. (Refer to 8 - ELECTRICAL/ELECTRONIC CONTROL MODULES/FRONT CONTROL MODULE - DIAGNOSIS AND TESTING).

CHECKSUM FAILURE

For a complete wiring diagram **Refer to Section 8W**.

- **When Monitored:**
  At every power up (five seconds after ignition is on).
- **Set Condition:**
  If the calculated check sum does not match the stored value.

Possible Causes
A/C HEATER CONTROL

NOTE: This DTC must be active for the result of this test to be valid. Do not perform this test if this DTC is stored. Refer to HVAC System Test for stored DTC test procedures.

Diagnostic Test

1. REPLACE THE A/C HEATER CONTROL

Repair

Replace the A/C Heater Control in accordance with the Service Information.

Perform BODY VERIFICATION TEST - VER 1. (Refer to 8 - ELECTRICAL/ELECTRONIC CONTROL MODULES/FRONT CONTROL MODULE - DIAGNOSIS AND TESTING).

COMMON DRIVER SHORTED TO GROUND

For a complete wiring diagram **Refer to Section 8W**.

- **When Monitored:**
  When the Actuator Circuit Test is executed.
- **Set Condition:**
  If the A/C Heater Control detects a short to ground on the (C34) Common Door Driver circuit.

Possible Causes
DOOR DRIVER CIRCUIT(S) SHORTED TO GROUND
DOOR DRIVER CIRCUITS SHORTED TOGETHER
DOOR ACTUATOR(S)
A/C HEATER CONTROL

For Single-Zone HVAC systems, **refer to *ACTUATOR CIRCUIT TEST DIAGNOSTICS (SINGLE-ZONE) in this Section** for the diagnostic test procedure. For Dual-Zone HVAC systems, **refer to *ACTUATOR CIRCUIT TEST DIAGNOSTICS (DUAL-ZONE) in this Section** for the diagnostic test procedure.

COMMON DRIVER SHORTED TO IGN OR BATT

For a complete wiring diagram **Refer to Section 8W**.

- **When Monitored:**
  When the Actuator Circuit Test is executed.
- **Set Condition:**
  If the A/C Heater Control detects a short to voltage on the (C34) Common Door Driver circuit.

Possible Causes
DOOR DRIVER CIRCUIT(S) SHORTED TO VOLTAGE
DOOR DRIVER CIRCUITS SHORTED TOGETHER
DOOR ACTUATOR(S)
A/C HEATER CONTROL

For Single-Zone HVAC systems, **refer to *ACTUATOR CIRCUIT TEST DIAGNOSTICS (SINGLE-ZONE) in this Section** for the diagnostic test procedure. For Dual-Zone HVAC systems, **refer to *ACTUATOR CIRCUIT TEST DIAGNOSTICS (DUAL-ZONE) in this Section** for the diagnostic test procedure.

COOLDOWN TEST SENSOR FAILURE

For the Manual Temperature Control circuit diagrams (Refer to 24 - HEATING & AIR CONDITIONING - SCHEMATICS AND DIAGRAMS).

For a complete wiring diagram **Refer to Section 8W**.

- **When Monitored:**
  When executing the Cooldown Test
- **Set Condition:**
  This message will display if the A/C Heater Control detects an Evaporator Temperature Sensor / sensor circuit fault.

Possible Causes
FAULTS PRESENT IN THE HVAC SYSTEM
FAULTS PRESENT IN THE POWERTRAIN SYSTEM
OTHER CONDITIONS PRESENT CAUSING A/C SYSTEM PERFORMANCE PROBLEMS

Refer to COOLDOWN TIME EXCESSIVE FAULT in this Section for the diagnostic test procedure.

COOLDOWN TEST TOO COLD TO START

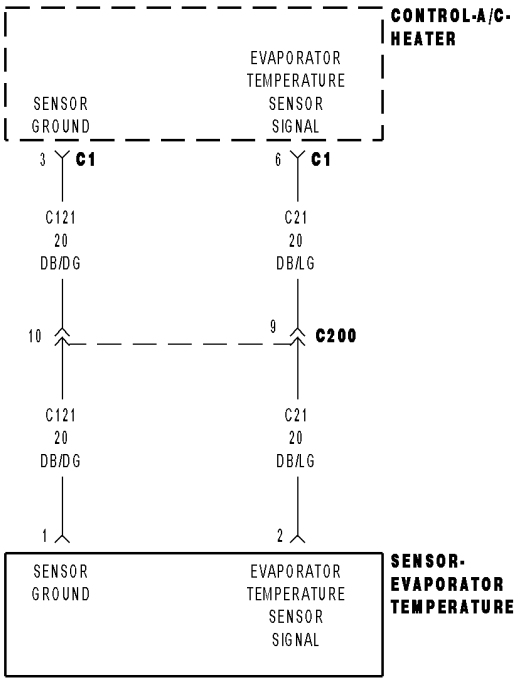

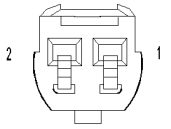

SENSOR-
EVAPORATOR
TEMPERATURE

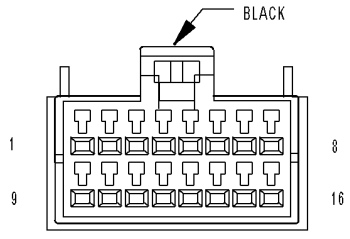

CONTROL-A/C-
HEATER C1

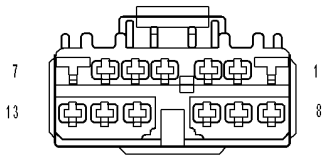

C200

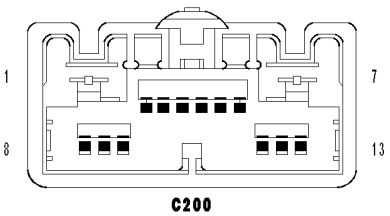

C200

813e183b

COOLDOWN TEST TOO COLD TO START (CONTINUED)

For the Manual Temperature Control circuit diagrams (Refer to 24 - HEATING & AIR CONDITIONING - SCHEMATICS AND DIAGRAMS).

For a complete wiring diagram **Refer to Section 8W**.

- **When Monitored:**
  When executing the Cooldown Test.
- **Set Condition:**
  This message will display if the A/C Heater Control senses that the evaporator temperature is below 12.7°C (55°F) when executing the Cooldown Test.

Possible Causes
EVAPORATOR TEMPERATURE BELOW 12.7°C (55°F) AT START OF TEST
FAULTS PRESENT IN THE HVAC SYSTEM
FAULTS PRESENT IN THE POWERTRAIN SYSTEM
HIGH RESISTANCE ON (C121) SENSOR GROUND CIRCUIT
HIGH RESISTANCE ON (C21) EVAPORATOR TEMPERATURE SENSOR SIGNAL CIRCUIT
EVAPORATOR TEMPERATURE SENSOR
A/C HEATER CONTROL

Diagnostic Test

1. VERIFY IF THE FAULT SET DUE TO EVAPORATOR TEMPERATURE BEING BELOW 12.7°C (55°F)

CAUTION: The work area ambient temperature must be above 21.1°C (70°F) and the evaporator temperature must be above 12.7°C (55°F) in order to test A/C system performance.

Start the engine.

Make sure that Mode Select control is in the panel position and the A/C mode switch is turned off (status indicator not illuminated/compressor not running).

Turn the blower control on high speed. Allow the blower to run for 5 minutes to ensure that the sensor temperature is above 12.7°C (55°F).

With the DRBIII® in HVAC, select System Tests and then select AC Cooldown test. Allow one minute for the test to complete.

Does the DRBIII® display: Cooldown Test Too Cold To Start?

Yes >> Go To 2

No >> Perform additional testing as necessary.
Perform BODY VERIFICATION TEST - VER 1. (Refer to 8 - ELECTRICAL/ELECTRONIC CONTROL MODULES/FRONT CONTROL MODULE - DIAGNOSIS AND TESTING).

COOLDOWN TEST TOO COLD TO START (CONTINUED)

2. CHECK FOR DTCS IN THE A/C HEATER CONTROL

Turn the engine off (ignition on).

With the DRBIII®, read HVAC DTCs.

Does the DRBIII® display any DTCs?

Yes >> Diagnose and repair the DTC(s). Refer to the Table of Contents in this Section for a complete list of HVAC related symptoms. When the repair is complete, erase the DTCs, cycle the ignition switch, start the engine, set the blower control to high speed, and then re-run the Cooldown Test.

Perform BODY VERIFICATION TEST - VER 1. (Refer to 8 - ELECTRICAL/ELECTRONIC CONTROL MODULES/FRONT CONTROL MODULE - DIAGNOSIS AND TESTING).

No >> Go To 3

---

3. CHECK FOR DTCS IN THE PCM OR ECM

With the DRBIII®, read PCM or ECM DTCs.

Does the DRBIII® display any DTCs?

Yes (Gasoline Engines)

Diagnose and repair the DTC(s). (Refer to 9 - ENGINE ELECTRICAL DIAGNOSTICS). When the repair is complete, erase the DTCs, cycle the ignition switch, start the engine, set the blower control to high speed, and then re-run the Cooldown Test.

Perform BODY VERIFICATION TEST - VER 1. (Refer to 8 - ELECTRICAL/ELECTRONIC CONTROL MODULES/FRONT CONTROL MODULE - DIAGNOSIS AND TESTING).

Yes (Diesel Engines)

Diagnose and repair the DTC(s). (Refer to 9 - ENGINE ELECTRICAL DIAGNOSTICS). When the repair is complete, erase the DTCs, cycle the ignition switch, start the engine, set the blower control to high speed, and then re-run the Cooldown Test.

Perform BODY VERIFICATION TEST - VER 1. (Refer to 8 - ELECTRICAL/ELECTRONIC CONTROL MODULES/FRONT CONTROL MODULE - DIAGNOSIS AND TESTING).

No >> Go To 4

---

4. CHECK (C21) EVAPORATOR TEMPERATURE SENSOR SIGNAL CIRCUIT VOLTAGE WITH THE SENSOR DISCONNECTED

Turn the ignition off.

Disconnect the Evaporator Temperature Sensor harness connector.

Turn the ignition on.

With the DRBIII® in Sensor Display, read the Evaporator Temperature Sensor voltage.

Is the voltage above 4.9 volts?

Yes >> Go To 5

No >> Go To 6

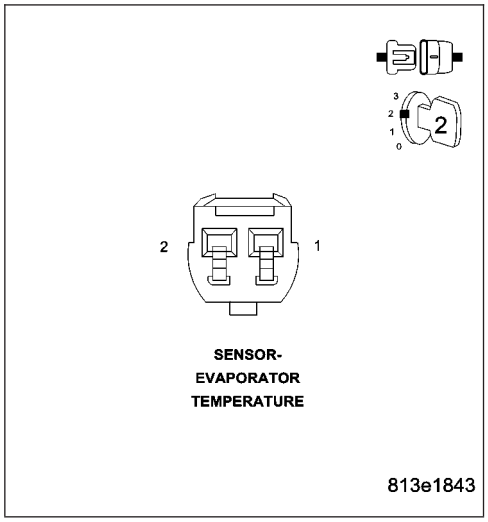

COOLDOWN TEST TOO COLD TO START (CONTINUED)

5. CHECK (C21) EVAPORATOR TEMPERATURE SENSOR SIGNAL CIRCUIT & (C121) SENSOR GROUND CIRCUIT FUNCTION

Turn the ignition off.

Connect a jumper wire between the (C21) Evaporator Temperature Sensor Signal circuit and the (C121) Sensor Ground circuit in the Evaporator Temperature Sensor harness connector.

Turn the ignition on.

With the DRBIII® in Sensor Display, read the Evaporator Temperature Sensor voltage.

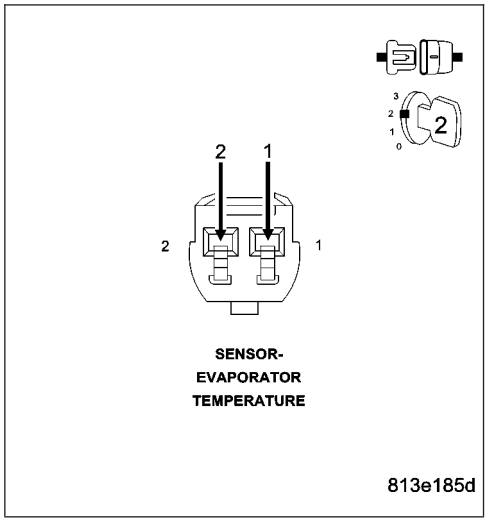

Is the voltage below 0.10 volts?

Yes >> Replace the Evaporator Temperature Sensor in accordance with the Service Information. When the repair is complete, start the engine, set the blower control to high speed, and then re-run the Cooldown Test.

Perform BODY VERIFICATION TEST - VER 1. (Refer to 8 - ELECTRICAL/ELECTRONIC CONTROL MODULES/ FRONT CONTROL MODULE - DIAGNOSIS AND TESTING).

No >> Go To 6

---

6. CHECK THE (C121) SENSOR GROUND CIRCUIT FOR HIGH RESISTANCE

NOTE: Ensure that the voltmeter leads are connected for positive polarity and that they meet the terminals in the connector. Also ensure that there is a good terminal to wire connection.

Turn the ignition off.

Remove the jumper wire from the Evaporator Temperature Sensor harness connector.

Reconnect the Evaporator Temperature Sensor harness connector.

Back probe the (C121) Sensor Ground circuit between the Evaporator Temperature Sensor harness connector and the A/C Heater Control C1 harness connector.

Turn the ignition on.

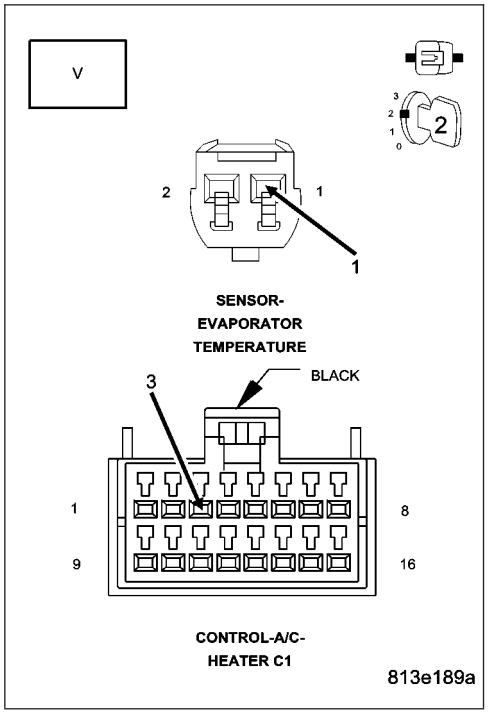

Is the voltage below 0.10 volts?

Yes >> Go To 7

No >> Repair the (C121) Sensor Ground circuit for high resistance. When the repair is complete, start the engine, set the blower control to high speed, and then re-run the Cooldown Test.

Perform BODY VERIFICATION TEST - VER 1. (Refer to 8 - ELECTRICAL/ELECTRONIC CONTROL MODULES/ FRONT CONTROL MODULE - DIAGNOSIS AND TESTING).

COOLDOWN TEST TOO COLD TO START (CONTINUED)

7. CHECK THE (C21) EVAPORATOR TEMPERATURE SENSOR SIGNAL CIRCUIT FOR HIGH RESISTANCE

NOTE: Ensure that the voltmeter leads are connected for positive polarity and that they meet the terminals in the connector. Also ensure that there is a good terminal to wire connection.

Turn the ignition off.

Back probe the (C21) Evaporator Temperature Sensor Signal circuit between the Evaporator Temperature Sensor harness connector and the A/C Heater Control C1 harness connector.

Turn the ignition on.

Is the voltage below 0.10 volts?

Yes >> Replace the A/C Heater Control in accordance with the Service Information.

Perform BODY VERIFICATION TEST - VER 1. (Refer to 8 - ELECTRICAL/ELECTRONIC CONTROL MODULES/ FRONT CONTROL MODULE - DIAGNOSIS AND TESTING).

No >> Repair the (C21) Evaporator Temperature Sensor Signal circuit for high resistance. When the repair is complete, start the engine, set the blower control to high speed, and then re-run the Cooldown Test.

Perform BODY VERIFICATION TEST - VER 1. (Refer to 8 - ELECTRICAL/ELECTRONIC CONTROL MODULES/ FRONT CONTROL MODULE - DIAGNOSIS AND TESTING).

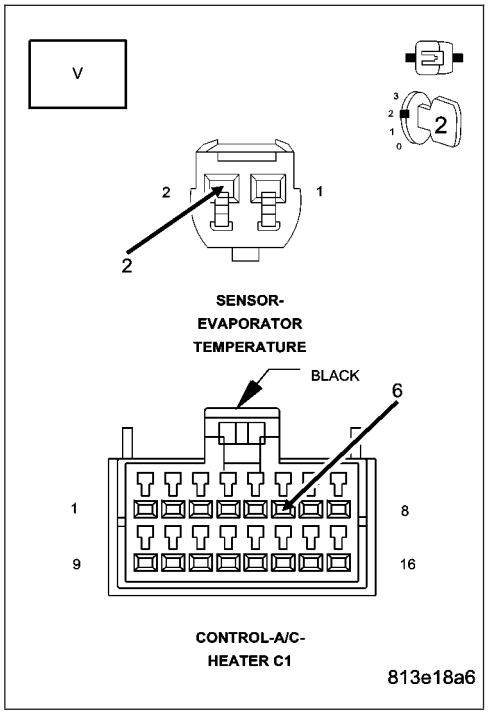

COOLDOWN TIME EXCESSIVE FAULT

For the Manual Temperature Control circuit diagrams (Refer to 24 - HEATING & AIR CONDITIONING - SCHEMATICS AND DIAGRAMS).

For a complete wiring diagram **Refer to Section 8W**.

- **When Monitored:**
  When executing the Cooldown Test
- **Set Condition:**
  This message will display if the A/C system is unable to bring the evaporator temperature down 11.11°C (20°F) within one minute.

Possible Causes
FAULTS PRESENT IN THE HVAC SYSTEM
FAULTS PRESENT IN THE POWERTRAIN SYSTEM
OTHER CONDITIONS PRESENT CAUSING A/C SYSTEM PERFORMANCE PROBLEMS

Diagnostic Test

1. CHECK FOR DTCS IN THE A/C HEATER CONTROL

CAUTION: The work area ambient temperature must be above 21.1°C (70°F) and the evaporator temperature must be above 12.7°C (55°F) in order to test A/C system performance.

Turn the ignition on.

With the DRBIII®, read HVAC DTCs.

Does the DRBIII® display any DTCs?

Yes >> Diagnose and repair the DTC(s). Refer to the Table of Contents in this Section for a complete list of HVAC related symptoms. When the repair is complete, erase the DTCs, cycle the ignition switch, start the engine, set the blower control to high speed, and then re-run the Cooldown Test.

Perform BODY VERIFICATION TEST - VER 1. (Refer to 8 - ELECTRICAL/ELECTRONIC CONTROL MODULES/FRONT CONTROL MODULE - DIAGNOSIS AND TESTING).

No >> Go To 2

COOLDOWN TIME EXCESSIVE FAULT (CONTINUED)

2. CHECK FOR DTCS IN THE PCM OR ECM

With the DRBIII®, read PCM or ECM DTCs.

Does the DRBIII® display any DTCs?

Yes (Gasoline Engines)

Diagnose and repair the DTC(s). (Refer to 9 - ENGINE ELECTRICAL DIAGNOSTICS). When the repair is complete, erase the DTCs, cycle the ignition switch, start the engine, set the blower control to high speed, and then re-run the Cooldown Test.

Perform BODY VERIFICATION TEST - VER 1. (Refer to 8 - ELECTRICAL/ELECTRONIC CONTROL MODULES/FRONT CONTROL MODULE - DIAGNOSIS AND TESTING).

Yes (Diesel Engines)

Diagnose and repair the DTC(s). (Refer to 9 - ENGINE ELECTRICAL DIAGNOSTICS). When the repair is complete, erase the DTCs, cycle the ignition switch, start the engine, set the blower control to high speed, and then re-run the Cooldown Test.

Perform BODY VERIFICATION TEST - VER 1. (Refer to 8 - ELECTRICAL/ELECTRONIC CONTROL MODULES/FRONT CONTROL MODULE - DIAGNOSIS AND TESTING).

No >> Perform the A/C Performance Test. (Refer to 24 - HEATING & AIR CONDITIONING - DIAGNOSIS AND TESTING).

Perform BODY VERIFICATION TEST - VER 1. (Refer to 8 - ELECTRICAL/ELECTRONIC CONTROL MODULES/FRONT CONTROL MODULE - DIAGNOSIS AND TESTING).

DEFOG RELAY CONTROL CKT SHORTED TO BATT

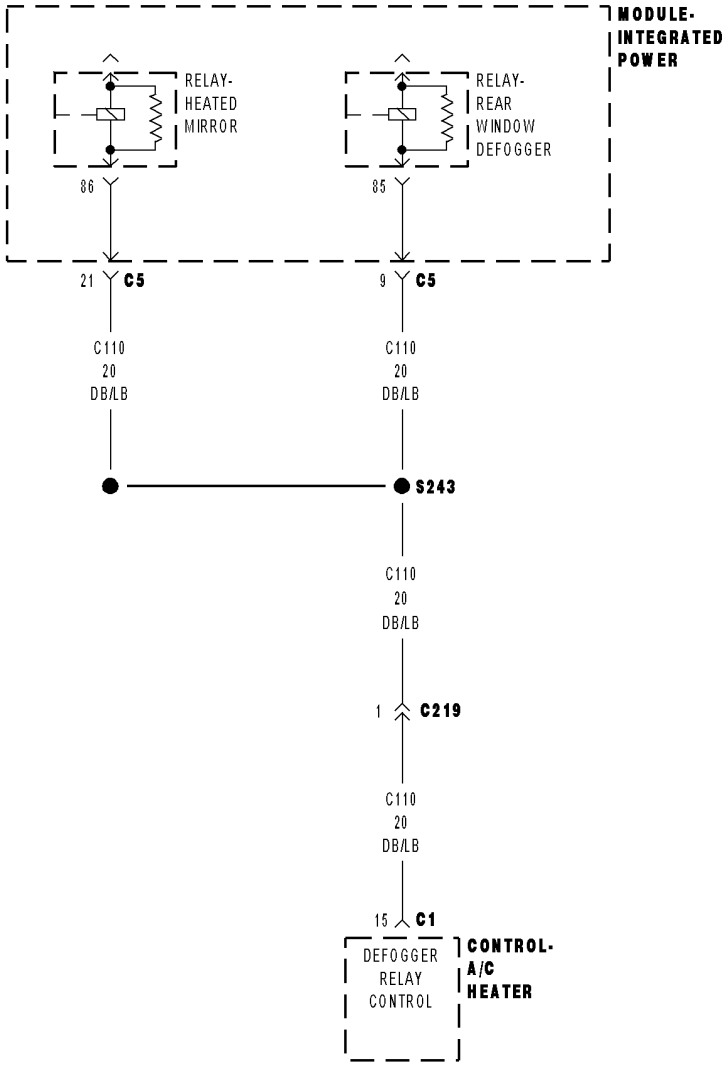

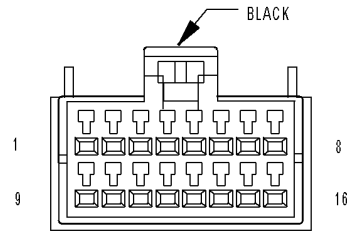

CONTROL-A/C-
HEATER C1

81f73d5

DEFOG RELAY CONTROL CKT SHORTED TO BATT (CONTINUED)

For the Heated Mirror/Rear Defogger circuit diagram **(Refer to 8 - ELECTRICAL/HEATED GLASS - SCHEMATICS AND DIAGRAMS)** .

For a complete wiring diagram **Refer to Section 8W**.

- **When Monitored:**
  With the Ignition on and the EBL (Rear Defogger) switch depressed.
- **Set Condition:**
  This DTC will set if the A/C Heater Control senses excessive current on the (C110) Defogger Relay Control circuit.

Possible Causes
HVAC DTCS
RELAY SHORTED
(C110) DEFOGGER RELAY CONTROL CIRCUIT SHORTED TO BATTERY
A/C HEATER CONTROL SHORTED TO BATTERY
INTEGRATED POWER MODULE

Diagnostic Test

1. CHECK FOR HVAC DTC'S

Turn the ignition on.

With the DRBIII®, record and erase DTCs.

Depress the EBL Switch on the A/C Heater Control.

With the DRBIII®, read the active DTCs.

Does the DRBIII® display DEFOG RELAY CONTROL CKT SHORTED TO BATT?

Yes >> Go To 2

No >> Using the wiring diagram/schematic as a guide, inspect the wiring and connectors. Refer to any Hotline letters or Technical Service Bulletins that may apply.
Perform BODY VERIFICATION TEST - VER 1. (Refer to BODY VERIFICATION TEST - VER 1).

---

2. CHECK THE RELAY FOR A SHORT TO BATTERY

Turn the ignition off.

One at a time remove and install a known good relay in place of the Heated Mirror Relay and then the EBL relay if equipped.

NOTE: Do the following steps for each relay.

Turn the ignition on.

With the DRBIII®, record and erase DTCs.

Depress the EBL Switch on the A/C Heater Control.

With the DRBIII®, read the active DTCs.

Does the DRBIII® display DEFOG RELAY CONTROL CKT SHORTED TO BATT?

Yes >> Go To 3

No >> Replace the Relay that set the DTC.
Perform BODY VERIFICATION TEST - VER 1. (Refer to BODY VERIFICATION TEST - VER 1).

DEFOG RELAY CONTROL CKT SHORTED TO BATT (CONTINUED)

3. CHECK FOR A SHORTED A/C HEATER CONTROL

Turn the ignition off.

Remove the Heated Mirror Relay and the EBL relay if equipped from the Integrated Power Module.

Disconnect the A/C Heater Control C1 harness connector.

Turn the ignition on.

Measure the voltage of the (C110) Defogger Relay Control circuit at the A/C Heater Control C1 harness connector.

Is there any voltage present?

Yes >> Go To 4

No >> Replace the A/C Heater Control in accordance with the Service Information.

Perform BODY VERIFICATION TEST - VER 1. (Refer to BODY VERIFICATION TEST - VER 1).

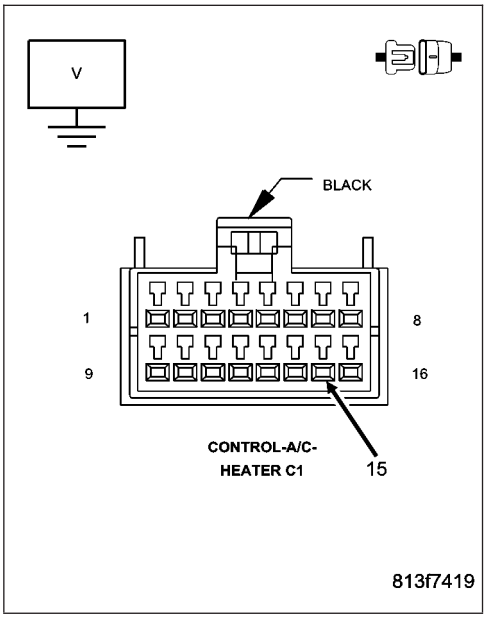

4. CHECK THE (C110) DEFOGGER RELAY CONTROL CIRCUIT FOR A SHORT TO BATTERY

Turn the ignition off.

Disconnect the Integrated Power Module C5 harness connector.

Turn the ignition on.

Measure the voltage of the (C110) Defogger Relay Control circuit at the A/C Heater Control C1 harness connector.

Is there any voltage present?

Yes >> Repair the (C110) Defogger Relay Control circuit for a short to battery.

Perform BODY VERIFICATION TEST - VER 1. (Refer to BODY VERIFICATION TEST - VER 1).

No >> Replace the Integrated Power Module in accordance with the Service Information.

Perform BODY VERIFICATION TEST - VER 1. (Refer to BODY VERIFICATION TEST - VER 1).

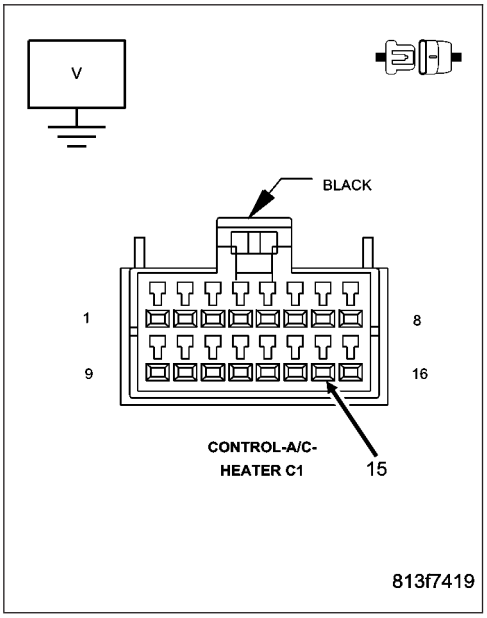

DEFOG SWITCH FAULT

For a complete wiring diagram **Refer to Section 8W**.

Theory of Operation

The switch input changes when the switch is pushed down. A stored DTC indicates that the EBL mode switch was stuck in a pushed position for more than 10 minutes, but has since returned to its normal state. An active DTC indicates that the EBL mode switch is stuck in a pushed position. An active DTC will prevent proper switch and status indicator function as evidenced by not being able to turn the EBL status indicator either on if off or off if on.

- **When Monitored:**
  With the ignition on.
- **Set Condition:**
  If the EBL mode switch stays closed for 10 minutes.

Possible Causes
A/C HEATER CONTROL

NOTE: This DTC must be active for the result of this test to be valid. Do not perform this test if this DTC is stored. Refer to HVAC System Test for stored DTC test procedures.

Diagnostic Test

1. REPLACE THE A/C HEATER CONTROL

Repair

Replace the A/C Heater Control in accordance with the Service Information.

Perform BODY VERIFICATION TEST - VER 1. (Refer to 8 - ELECTRICAL/ELECTRONIC CONTROL MODULES/FRONT CONTROL MODULE - DIAGNOSIS AND TESTING).

ENGINE GAUGE RX FAILURE

For a complete wiring diagram **Refer to Section 8W**.

- **When Monitored:**
  With the ignition on.
- **Set Condition:**
  The Powertrain Control Module (PCM) (for gasoline engines) or Engine Control Module (ECM) (for diesel engines) broadcasts a message on the PCI Bus that provides battery voltage, battery temperature, and engine coolant temperature. This DTC will set if the A/C Heater Control does not receive this message for more than 5 seconds.

Possible Causes
FAULTS PRESENT IN THE POWERTRAIN SYSTEM
PCM NOT BROADCASTING MESSAGE
ECM NOT BROADCASTING MESSAGE
A/C HEATER CONTROL NOT RECEIVING MESSAGE

Diagnostic Test

1. VERIFY THAT THE ENGINE GAUGE RX FAILURE DTC IS ACTIVE

Turn the ignition on.

With the DRBIII®, erase HVAC DTCs.

Cycle the ignition switch and wait approximately 30 seconds.

With the DRBIII®, read active HVAC DTCs.

Does the DRBIII® display: Engine Gauge RX Failure?

Yes >> Go To 2

No >> A technician may not have erased this DTC following a module or PCI Bus repair. If possible, verify if the vehicle was recently in for this type of service. Otherwise, visually inspect the related wiring harness for chafed, pierced, pinched, and partially broken wires and the wiring harness connectors for broken, bent, pushed out, and corroded terminals. Repair as necessary.

Perform BODY VERIFICATION TEST - VER 1. (Refer to 8 - ELECTRICAL/ELECTRONIC CONTROL MODULES/FRONT CONTROL MODULE - DIAGNOSIS AND TESTING).

---

2. CHECK FOR DTCS IN THE PCM OR ECM

With the DRBIII®, read PCM or ECM DTCs.

Does the DRBIII® display any DTCs?

Yes (Gasoline Engines)

Diagnose and repair the DTC(s). (Refer to 9 - ENGINE ELECTRICAL DIAGNOSTICS).

Perform BODY VERIFICATION TEST - VER 1. (Refer to 8 - ELECTRICAL/ELECTRONIC CONTROL MODULES/FRONT CONTROL MODULE - DIAGNOSIS AND TESTING).

Yes (Diesel Engines)

Diagnose and repair the DTC(s). (Refer to 9 - ENGINE ELECTRICAL DIAGNOSTICS).

Perform BODY VERIFICATION TEST - VER 1. (Refer to 8 - ELECTRICAL/ELECTRONIC CONTROL MODULES/FRONT CONTROL MODULE - DIAGNOSIS AND TESTING).

No >> Go To 3

ENGINE GAUGE RX FAILURE (CONTINUED)

3. VERIFY THAT THE PCM OR ECM IS BROADCASTING THE MESSAGE ON THE PCI BUS

With the DRBIII® in HVAC, select Monitor Display and then select PCI Bus Messages.

From the list, select the following:

- **Battery Volts**
- **Battery Temp**
- **Coolant Temp**

Does the DRBIII® display NO RESPONSE after any of these messages?

Yes (Gasoline Engines)

Perform the *No Response From PCM (PCI Bus) diagnostic procedure. (Refer to 8 - ELECTRICAL/ELECTRONIC CONTROL MODULES - DIAGNOSIS AND TESTING).

Perform BODY VERIFICATION TEST - VER 1. (Refer to 8 - ELECTRICAL/ELECTRONIC CONTROL MODULES/FRONT CONTROL MODULE - DIAGNOSIS AND TESTING).

Yes (Diesel Engines)

Perform the *No Response From ECM (PCI Bus) diagnostic procedure. (Refer to 8 - ELECTRICAL/ELECTRONIC CONTROL MODULES - DIAGNOSIS AND TESTING).

Perform BODY VERIFICATION TEST - VER 1. (Refer to 8 - ELECTRICAL/ELECTRONIC CONTROL MODULES/FRONT CONTROL MODULE - DIAGNOSIS AND TESTING).

No >> Replace the A/C Heater Control in accordance with the Service Information.

Perform BODY VERIFICATION TEST - VER 1. (Refer to 8 - ELECTRICAL/ELECTRONIC CONTROL MODULES/FRONT CONTROL MODULE - DIAGNOSIS AND TESTING).

EVAPORATOR TEMPERATURE SENSOR CIRCUIT OPEN

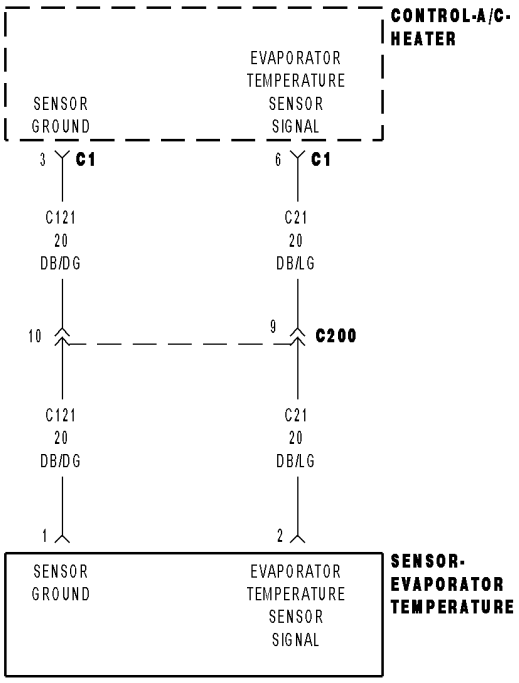

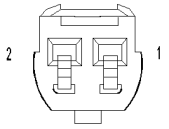

SENSOR-
EVAPORATOR
TEMPERATURE

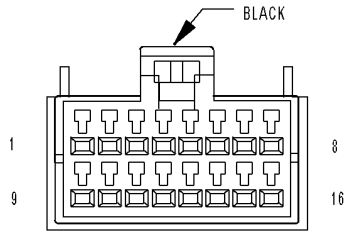

CONTROL-A/C-
HEATER C1

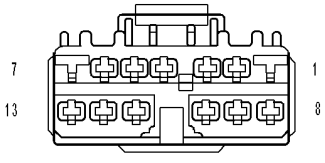

C200

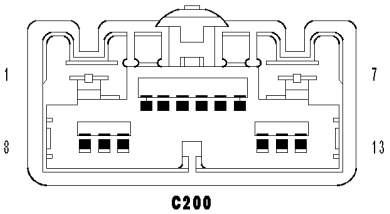

C200

813e183b

EVAPORATOR TEMPERATURE SENSOR CIRCUIT OPEN (CONTINUED)

For the Manual Temperature Control (MTC) circuit diagram (Refer to 24 - HEATING & AIR CONDITIONING - SCHEMATICS AND DIAGRAMS).

For a complete wiring diagram **Refer to Section 8W**.

- **When Monitored:**
  With the ignition on.
- **Set Condition:**
  If the A/C Heater Control senses voltage is greater than 4.9 volts on the (C21) Evaporator Temperature Sensor Signal circuit.

Possible Causes
(C21) EVAPORATOR TEMPERATURE SENSOR SIGNAL CIRCUIT SHORTED TO VOLTAGE
(C21) EVAPORATOR TEMPERATURE SENSOR SIGNAL CIRCUIT OPEN
(C121) SENSOR GROUND CIRCUIT OPEN
EVAPORATOR TEMPERATURE SENSOR
A/C HEATER CONTROL

NOTE: This DTC must be active for the results of this test to be valid. Do not perform this test if this DTC is stored. Refer to HVAC System Test for stored DTC test procedures.

Diagnostic Test

1. CHECK (C21) EVAPORATOR TEMPERATURE SENSOR SIGNAL CIRCUIT FOR A SHORT TO VOLTAGE

Turn the ignition off.

Disconnect the A/C Heater Control C1 harness connector.

Turn the ignition on.

Measure the voltage of the (C21) Evaporator Temperature Sensor Signal circuit.

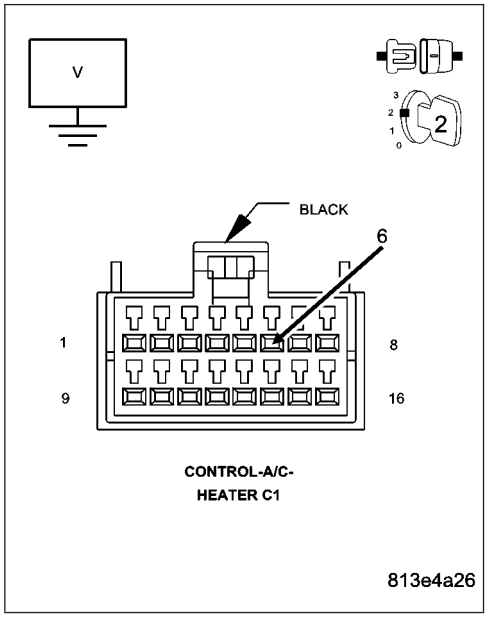

Is the voltage above 0.2 volts?

Yes >> Repair the (C21) Evaporator Temperature Sensor Signal circuit for a short to voltage.
Perform BODY VERIFICATION TEST – VER 1. (Refer to 8 - ELECTRICAL/ELECTRONIC CONTROL MODULES/ FRONT CONTROL MODULE - DIAGNOSIS AND TESTING).

No >> Go To 2

EVAPORATOR TEMPERATURE SENSOR CIRCUIT OPEN (CONTINUED)

2. CHECK (C21) EVAPORATOR TEMPERATURE SENSOR SIGNAL CIRCUIT & (C121) SENSOR GROUND CIRCUIT FUNCTION

Turn the ignition off.

Reconnect the A/C Heater Control C1 harness connector.

Disconnect the Evaporator Temperature Sensor harness connector.

Connect a jumper wire between the (C21) Evaporator Temperature Sensor Signal circuit and the (C121) Sensor Ground circuit in the Evaporator Temperature Sensor harness connector.

Turn the ignition on.

With the DRBIII® in Sensor Display, read the Evaporator Temperature Sensor voltage.

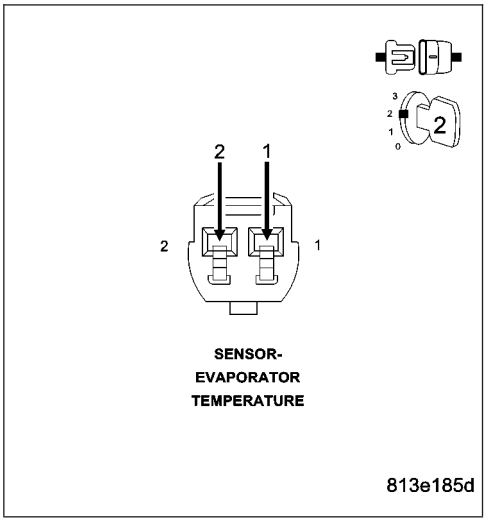

Is the voltage below 0.10 volts?

Yes >> Replace the Evaporator Temperature Sensor in accordance with the Service Information.

Perform BODY VERIFICATION TEST - VER 1. (Refer to 8 - ELECTRICAL/ELECTRONIC CONTROL MODULES/ FRONT CONTROL MODULE - DIAGNOSIS AND TESTING).

No >> Go To 3

---

3. CHECK (C21) EVAPORATOR TEMPERATURE SENSOR SIGNAL CIRCUIT FOR AN OPEN

Turn the ignition off.

Remove the jumper wire from the Evaporator Temperature Sensor harness connector.

Disconnect the A/C Heater Control C1 harness connector.

Measure the resistance of the (C21) Evaporator Temperature Sensor Signal circuit between the Evaporator Temperature Sensor harness connector and the A/C Heater Control C1 harness connector.

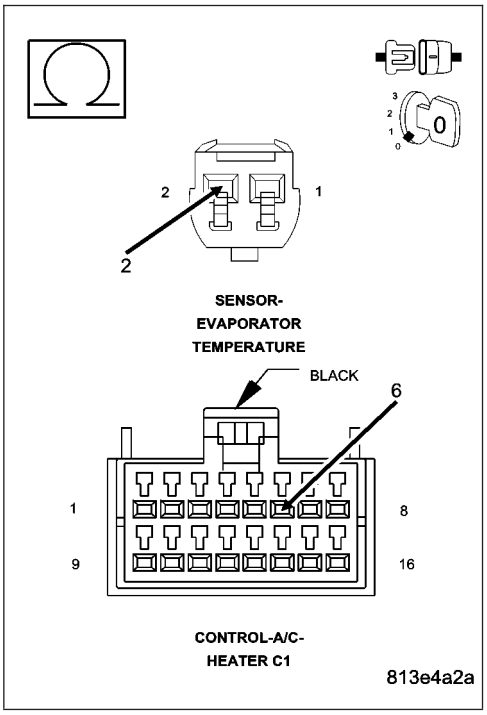

Is the resistance below 5.0 ohms?

Yes >> Go To 4

No >> Repair the (C21) Evaporator Temperature Sensor Signal circuit for an open.

Perform BODY VERIFICATION TEST – VER 1. (Refer to 8 - ELECTRICAL/ELECTRONIC CONTROL MODULES/ FRONT CONTROL MODULE - DIAGNOSIS AND TESTING).

EVAPORATOR TEMPERATURE SENSOR CIRCUIT OPEN (CONTINUED)

4. CHECK (C121) SENSOR GROUND CIRCUIT FOR AN OPEN

Measure the resistance of the (C121) Sensor Ground circuit between the Evaporator Temperature Sensor harness connector and the A/C Heater Control C1 harness connector.

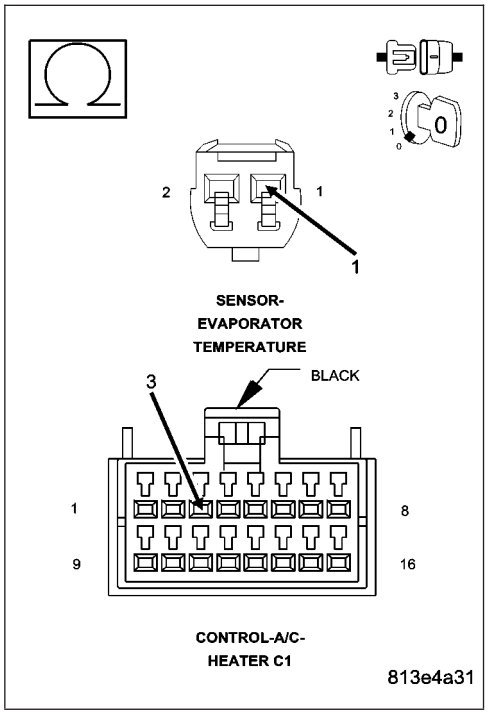

Is the resistance below 5.0 ohms?

Yes >> Replace the A/C Heater Control in accordance with the Service Information.

Perform BODY VERIFICATION TEST – VER 1. (Refer to 8 - ELECTRICAL/ELECTRONIC CONTROL MODULES/ FRONT CONTROL MODULE - DIAGNOSIS AND TESTING).

No >> Repair the (C121) Sensor Ground circuit for an open.

Perform BODY VERIFICATION TEST – VER 1. (Refer to 8 - ELECTRICAL/ELECTRONIC CONTROL MODULES/ FRONT CONTROL MODULE - DIAGNOSIS AND TESTING).

EVAPORATOR TEMPERATURE SENSOR CIRCUIT SHORTED

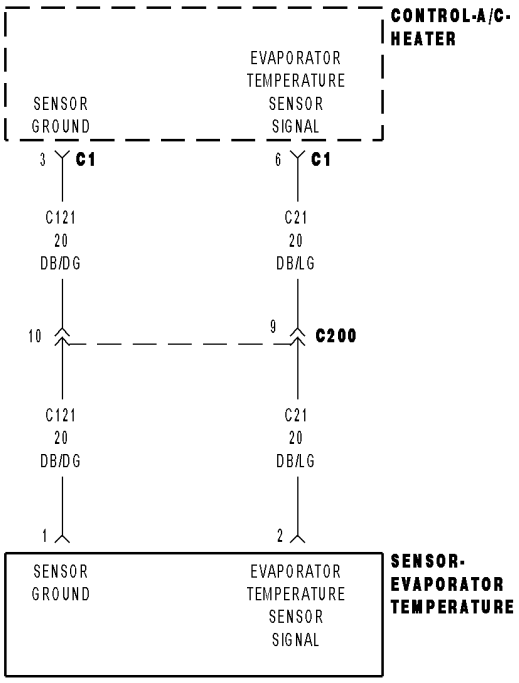

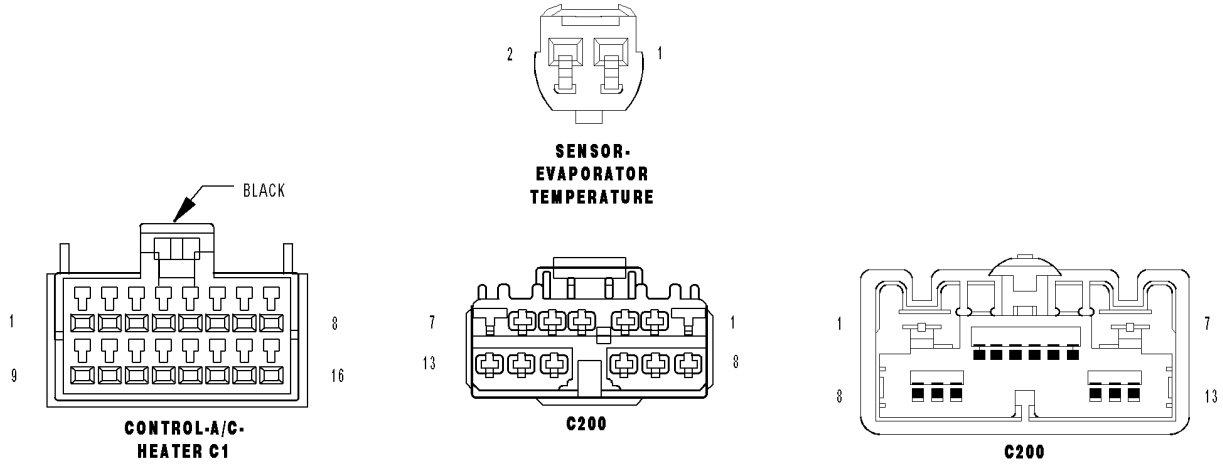

EVAPORATOR TEMPERATURE SENSOR CIRCUIT SHORTED (CONTINUED)

For the Manual Temperature Control (MTC) circuit diagram (Refer to 24 - HEATING & AIR CONDITIONING - SCHEMATICS AND DIAGRAMS).

For a complete wiring diagram **Refer to Section 8W**.

- **When Monitored:**
  With the ignition on.
- **Set Condition:**
  If the A/C Heater Control senses voltage is less than 0.06 volts on the (C21) Evaporator Temperature Sensor Signal circuit.

Possible Causes
(C21) EVAPORATOR TEMPERATURE SENSOR SIGNAL CIRCUIT SHORTED TO GROUND
(C21) EVAPORATOR TEMPERATURE SENSOR SIGNAL CIRCUIT SHORTED TO (C121) SENSOR GROUND CIRCUIT
EVAPORATOR TEMPERATURE SENSOR
A/C HEATER CONTROL

NOTE: This DTC must be active for the results of this test to be valid. Do not perform this test if this DTC is stored. Refer to HVAC System Test for stored DTC test procedures.

Diagnostic Test

1. CHECK (C21) EVAPORATOR TEMPERATURE SENSOR SIGNAL CIRCUIT VOLTAGE WITH THE SENSOR DISCONNECTED

Turn the ignition off.

Disconnect the Evaporator Temperature Sensor harness connector.

Turn the ignition on.

With the DRBIII® in Sensor Display, read the Evaporator Temperature Sensor voltage.

Is the voltage 4.9 volts or greater?

Yes >> Replace the Evaporator Temperature Sensor in accordance with the Service Information.
Perform BODY VERIFICATION TEST – VER 1. (Refer to 8 - ELECTRICAL/ELECTRONIC CONTROL MODULES/ FRONT CONTROL MODULE - DIAGNOSIS AND TESTING).

No >> Go To 2

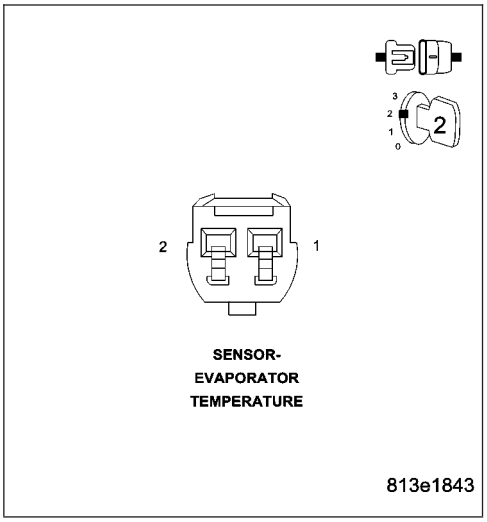

EVAPORATOR TEMPERATURE SENSOR CIRCUIT SHORTED (CONTINUED)

2. CHECK (C21) EVAPORATOR TEMPERATURE SENSOR SIGNAL CIRCUIT FOR A SHORT TO GROUND

Turn the ignition off.

Disconnect the A/C Heater Control C1 harness connector.

Measure the resistance of the (C21) Evaporator Temperature Sensor Signal circuit between ground and the A/C Heater Control C1 harness connector.

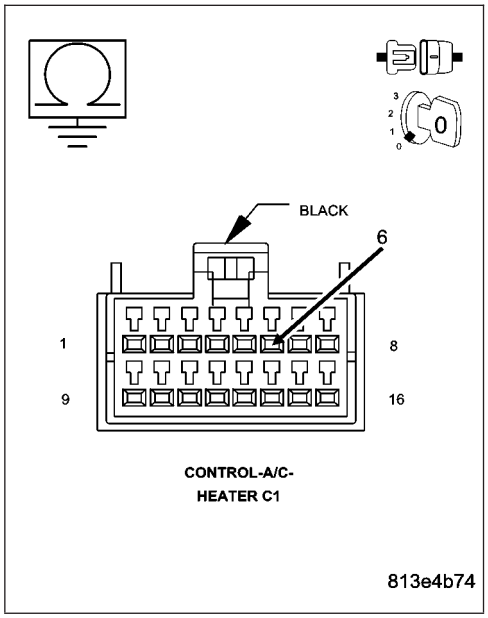

Is the resistance below 10k ohms?

Yes >> Repair the (C21) Evaporator Temperature Sensor Signal circuit for a short to ground.

Perform BODY VERIFICATION TEST – VER 1. (Refer to 8 - ELECTRICAL/ELECTRONIC CONTROL MODULES/ FRONT CONTROL MODULE - DIAGNOSIS AND TESTING).

No >> Go To 3

3. CHECK (C21) EVAPORATOR TEMPERATURE SENSOR SIGNAL CIRCUIT FOR A SHORT TO (C121) SENSOR GROUND CIRCUIT

Measure the resistance between the (C21) Evaporator Temperature Sensor Signal circuit and the (C121) Sensor Ground circuit in the A/C Heater Control C1 harness connector.

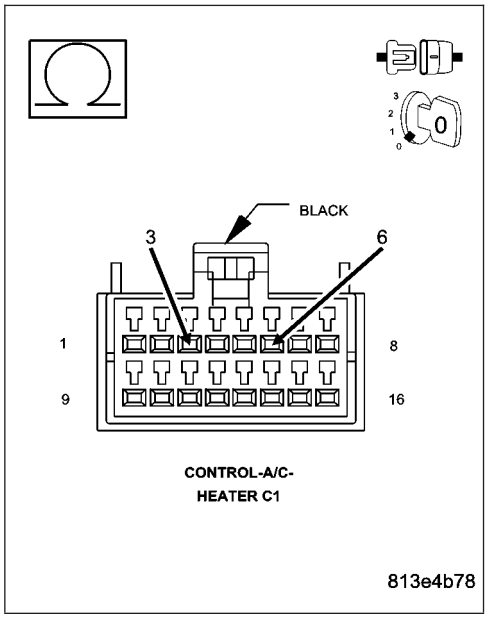

Is the resistance below 10k ohms?

Yes >> Repair the (C21) Evaporator Temperature Sensor Signal circuit for a short to the (C121) Sensor Ground circuit.

Perform BODY VERIFICATION TEST – VER 1. (Refer to 8 - ELECTRICAL/ELECTRONIC CONTROL MODULES/ FRONT CONTROL MODULE - DIAGNOSIS AND TESTING).

No >> Replace the A/C Heater Control in accordance with the Service Information.

Perform BODY VERIFICATION TEST – VER 1. (Refer to 8 - ELECTRICAL/ELECTRONIC CONTROL MODULES/ FRONT CONTROL MODULE - DIAGNOSIS AND TESTING).

LOOPBACK TEST FAILURE

For a complete wiring diagram **Refer to Section 8W**.

- **When Monitored:**
  When executing an internal loopback test.
- **Set Condition:**
  If the A/C Heater Control either fails to broadcast a message on the PCI Bus or fails to receive expected messages from the PCI Bus for 5 seconds it will execute an internal loopback test. This DTC will set if the internal loopback test fails.

Possible Causes
A/C HEATER CONTROL

NOTE: This DTC must be active for the results of this test to be valid. Do not perform this test if this DTC is stored. Refer to HVAC System Test for stored DTC test procedures.

Diagnostic Test

1. REPLACE THE A/C HEATER CONTROL

Repair

Replace the A/C Heater Control in accordance with the Service Information.

Perform BODY VERIFICATION TEST - VER 1. (Refer to 8 - ELECTRICAL/ELECTRONIC CONTROL MODULES/FRONT CONTROL MODULE - DIAGNOSIS AND TESTING).

MODE 1 CALIBRATION FAULT

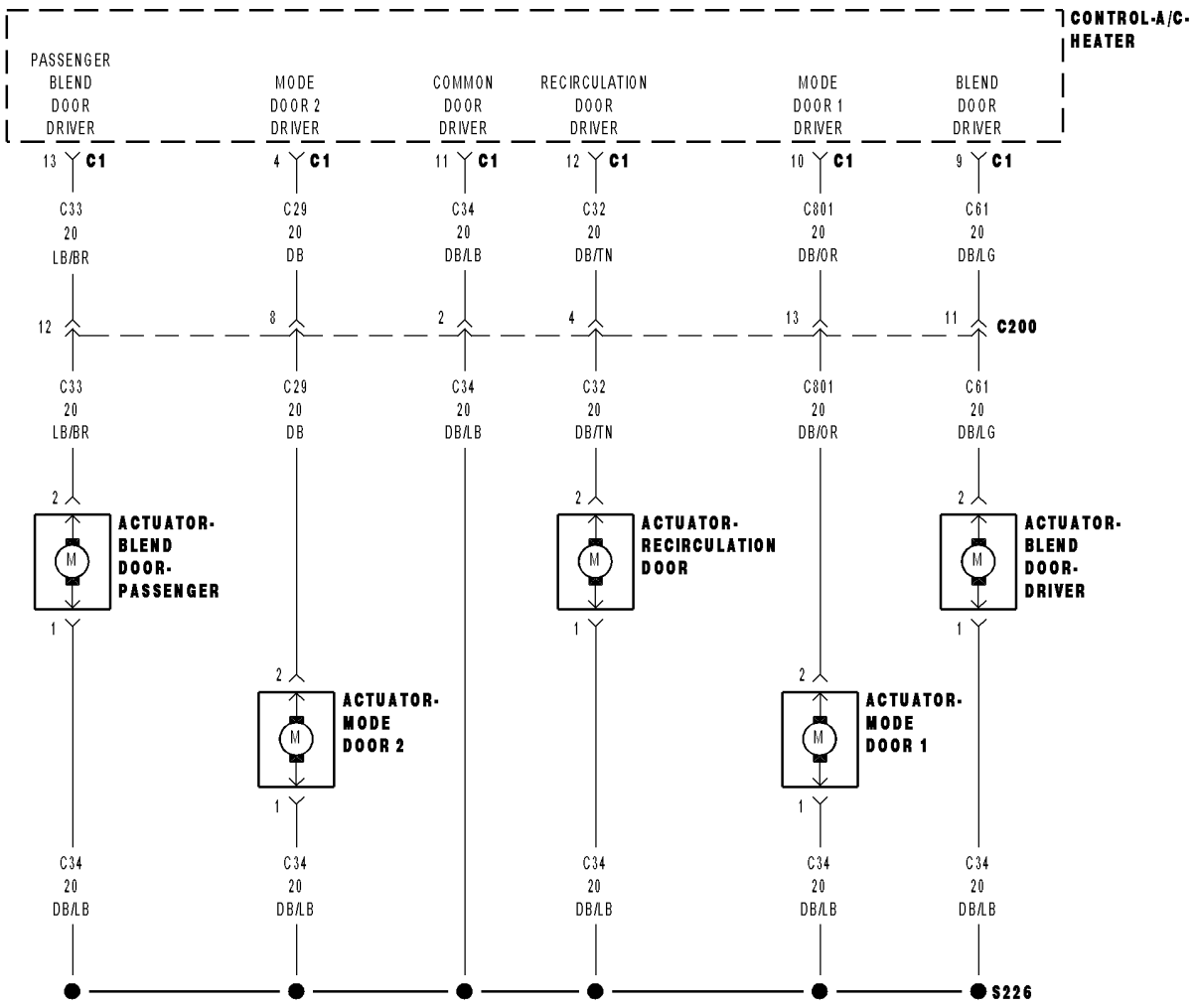

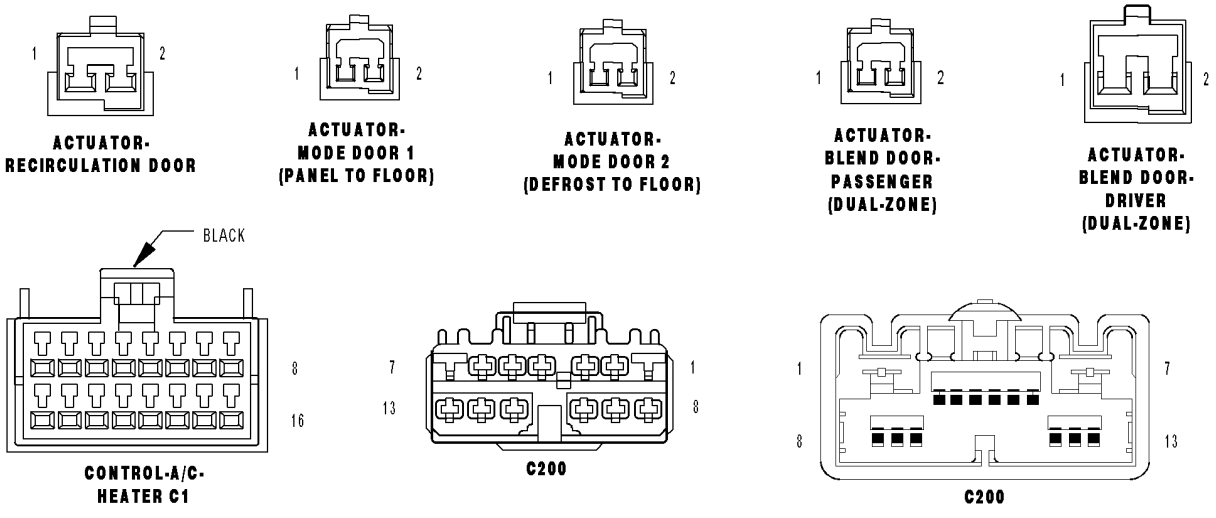

MODE 1 CALIBRATION FAULT (CONTINUED)

For the Manual Temperature Control circuit diagrams (Refer to 24 - HEATING & AIR CONDITIONING - SCHEMATICS AND DIAGRAMS).

For a complete wiring diagram **Refer to Section 8W**.

Theory of Operation

NOTE: Diagnose and repair Actuator Circuit Test faults before diagnosing Overcurrent faults and Calibration faults. Diagnose and repair Overcurrent faults before diagnosing Calibration faults.

The purpose of actuator calibration is to determine the total span of door travel between physical stops. To calibrate the actuator, the A/C Heater Control first moves the door to its soft stop, and then counts the number of pulses it takes to move the door to its other stop. An expected range of span is stored in the control's memory. If the measured calibration value is not within the expected range, this fault will set.

For vehicles equipped with electric backlight (EBL), running the HVAC Door Recalibration will cause the EBL status indicator to flash. If recalibration fails, the EBL status indicator will continue to flash until either the system passes recalibration or the ignition key is cycled. When the EBL status indicator is flashing, it will not indicate EBL operating status. However, the EBL mode switch will continue to function normally. When the EBL status indicator is flashing, the A/C status indicator will not function. However, the A/C mode switch will continue to function normally.

For vehicles not equipped with electric backlight (EBL), no status indicator will flash when running the HVAC Door Recalibration. If recalibration fails, the A/C status indicator will not function, however, the A/C mode switch will continue to function normally.

- **When Monitored:**
  When HVAC Door Recalibration is executed.
- **Set Condition:**
  If the span of mode door 1 is found outside the tolerance.

Possible Causes
(C801) MODE DOOR 1 DRIVER CIRCUIT SHORTED TO GROUND (WILL ALSO SET OVERCURRENT DTCs)
(C801) MODE DOOR 1 DRIVER CIRCUIT SHORTED TO VOLTAGE (WILL ALSO SET OVERCURRENT DTCs)
(C801) MODE DOOR 1 DRIVER CIRCUIT OPEN
(C34) COMMON DOOR DRIVER CIRCUIT OPEN
MODE DOOR ACTUATOR 1 OPEN
MODE DOOR ACTUATOR 1 BROKEN
MODE DOOR 1 BOUND UP
MODE DOOR 1 LINKAGE MISSING, BROKEN
A/C HEATER CONTROL

Diagnostic Test

1. RUN THE ACTUATOR CIRCUIT TEST

Turn the ignition on.

With the DRBIII® in HVAC, select System Tests and then select Actuator Circuit Test. Allow the test to run to completion before proceeding.

Does the DRBIII® display any Actuator Circuit Test fault messages?

Yes >> Diagnose and repair the fault(s). For Single-Zone HVAC systems, refer to *ACTUATOR CIRCUIT TEST DIAGNOSTICS (SINGLE-ZONE) in this section. For Dual-Zone HVAC systems, refer to *ACTUATOR CIRCUIT TEST DIAGNOSTICS (DUAL-ZONE) in this section.

No >> Go To 2

MODE 1 CALIBRATION FAULT (CONTINUED)

2. CHECK FOR DTCS IN THE A/C HEATER CONTROL

NOTE: Diagnose and repair all Overcurrent DTCs before diagnosing Calibration faults.
With the DRBIII®, read HVAC DTCs.

Does the DRBIII® display any DTCs?

Yes >> Diagnose and repair the DTC(s). Refer to the Table of Contents in this Section for a complete list of HVAC related symptoms.

No >> Go To 3

---

3. CHECK THE RESISTANCE BETWEEN THE (C34) COMMON DOOR DRIVER CIRCUIT & THE (C801) MODE DOOR 1 DRIVER CIRCUIT

Turn the ignition off.

Disconnect the A/C Heater Control C1 harness connector.

Measure the resistance between the (C34) Common Door Driver circuit and the (C801) Mode Door 1 Driver circuit in the A/C Heater Control C1 harness connector.

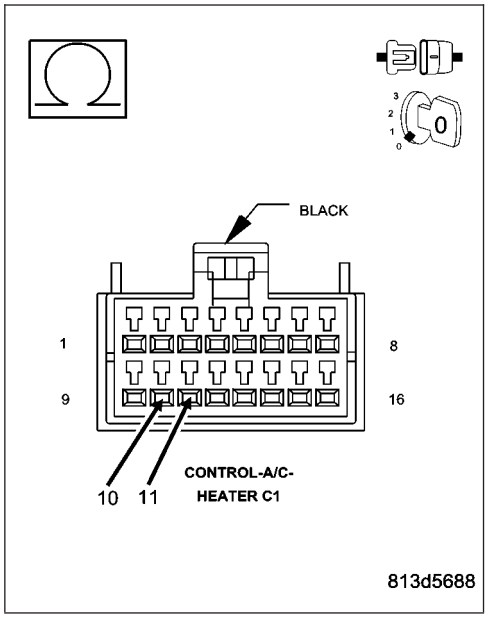

Is the resistance above 70.0 ohms?

Yes >> Go To 4

No >> Go To 6

MODE 1 CALIBRATION FAULT (CONTINUED)

4. CHECK (C801) MODE DOOR 1 DRIVER CIRCUIT FOR AN OPEN

Disconnect the Mode Door Actuator 1 harness connector.

Measure the resistance of the (C801) Mode Door 1 Driver circuit between the A/C Heater Control C1 harness connector and the Mode Door Actuator 1 harness connector.

Is the resistance below 5.0 ohms?

Yes >> Go To 5

No >> Repair the (C801) Mode Door 1 Driver circuit for an open.
Perform BODY VERIFICATION TEST - VER 1. (Refer to 8 - ELECTRICAL/ELECTRONIC CONTROL MODULES/ FRONT CONTROL MODULE - DIAGNOSIS AND TESTING).

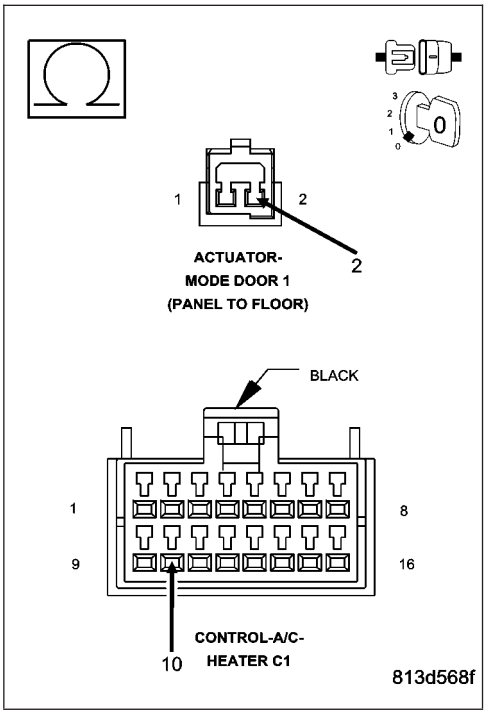

5. CHECK (C34) COMMON DOOR DRIVER CIRCUIT FOR AN OPEN

Measure the resistance of the (C34) Common Door Driver circuit between the A/C Heater Control C1 harness connector and the Mode Door Actuator 1 harness connector.

Is the resistance below 5.0 ohms?

Yes >> Replace the Mode Door Actuator 1 in accordance with the Service Information.
Perform BODY VERIFICATION TEST - VER 1. (Refer to 8 - ELECTRICAL/ELECTRONIC CONTROL MODULES/ FRONT CONTROL MODULE - DIAGNOSIS AND TESTING).

No >> Repair the (C34) Common Door Driver circuit for an open.
Perform BODY VERIFICATION TEST - VER 1. (Refer to 8 - ELECTRICAL/ELECTRONIC CONTROL MODULES/ FRONT CONTROL MODULE - DIAGNOSIS AND TESTING).

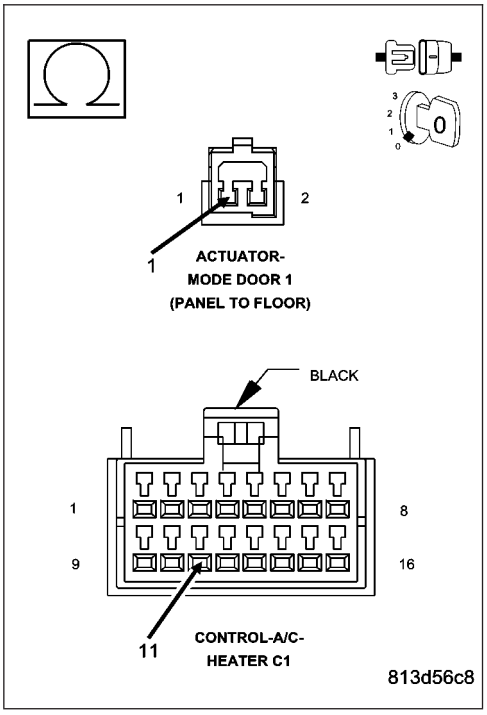

MODE 1 CALIBRATION FAULT (CONTINUED)

6. CHECK FOR A BROKEN MODE DOOR ACTUATOR 1

Remove the Mode Door Actuator 1 from the A/C Heater Housing Assembly.
Disconnect the Mode Door Actuator 1 harness connector.
By hand, attempt to rotate the actuator in both directions.

Does the actuator turn in either direction?

Yes >> Replace the Mode Door Actuator 1 in accordance with the Service Information.
Perform BODY VERIFICATION TEST - VER 1. (Refer to 8 - ELECTRICAL/ELECTRONIC CONTROL MODULES/FRONT CONTROL MODULE - DIAGNOSIS AND TESTING).

No >> Go To 7

---

7. CHECK FOR MISSING & BROKEN ACTUATOR LINKAGE & THE DOOR FOR BINDING & A LOSS OF RANGE

Inspect the A/C Heater Housing Assembly for missing and broken actuator linkage.
Inspect the linkage and the actuator for broken and missing teeth.
Check the door for binding and a loss of full range.

Are there any physical or mechanical problems with the door, actuator, linkage, or housing?

Yes >> Repair as necessary in accordance with the Service Information.
Perform BODY VERIFICATION TEST - VER 1. (Refer to 8 - ELECTRICAL/ELECTRONIC CONTROL MODULES/FRONT CONTROL MODULE - DIAGNOSIS AND TESTING).

No >> Replace the A/C Heater Control in accordance with the Service Information.
Perform BODY VERIFICATION TEST - VER 1. (Refer to 8 - ELECTRICAL/ELECTRONIC CONTROL MODULES/FRONT CONTROL MODULE - DIAGNOSIS AND TESTING).

MODE 1 CIRCUIT SHORTED TO GROUND

For a complete wiring diagram **Refer to Section 8W**.

- **When Monitored:**
  When the Actuator Circuit Test is executed.
- **Set Condition:**
  If the A/C Heater Control detects a short to ground on the (C801) Mode Door 1 Driver circuit.

Possible Causes
DOOR DRIVER CIRCUIT(S) SHORTED TO GROUND
DOOR DRIVER CIRCUITS SHORTED TOGETHER
DOOR ACTUATOR(S)
A/C HEATER CONTROL

For Single-Zone HVAC systems, **refer to *ACTUATOR CIRCUIT TEST DIAGNOSTICS (SINGLE-ZONE) in this Section** for the diagnostic test procedure. For Dual-Zone HVAC systems, **refer to *ACTUATOR CIRCUIT TEST DIAGNOSTICS (DUAL-ZONE) in this Section** for the diagnostic test procedure.

MODE 1 CIRCUIT SHORTED TO IGN OR BATT

For a complete wiring diagram **Refer to Section 8W**.

- **When Monitored:**
  When the Actuator Circuit Test is executed.
- **Set Condition:**
  If the A/C Heater Control detects a short to voltage on the (C801) Mode Door 1 Driver circuit.

Possible Causes
DOOR DRIVER CIRCUIT(S) SHORTED TO VOLTAGE
DOOR DRIVER CIRCUITS SHORTED TOGETHER
DOOR ACTUATOR(S)
A/C HEATER CONTROL

For Single-Zone HVAC systems, **refer to *ACTUATOR CIRCUIT TEST DIAGNOSTICS (SINGLE-ZONE) in this Section** for the diagnostic test procedure. For Dual-Zone HVAC systems, **refer to *ACTUATOR CIRCUIT TEST DIAGNOSTICS (DUAL-ZONE) in this Section** for the diagnostic test procedure.

MODE 1 OVERCURRENT (DUAL-ZONE)

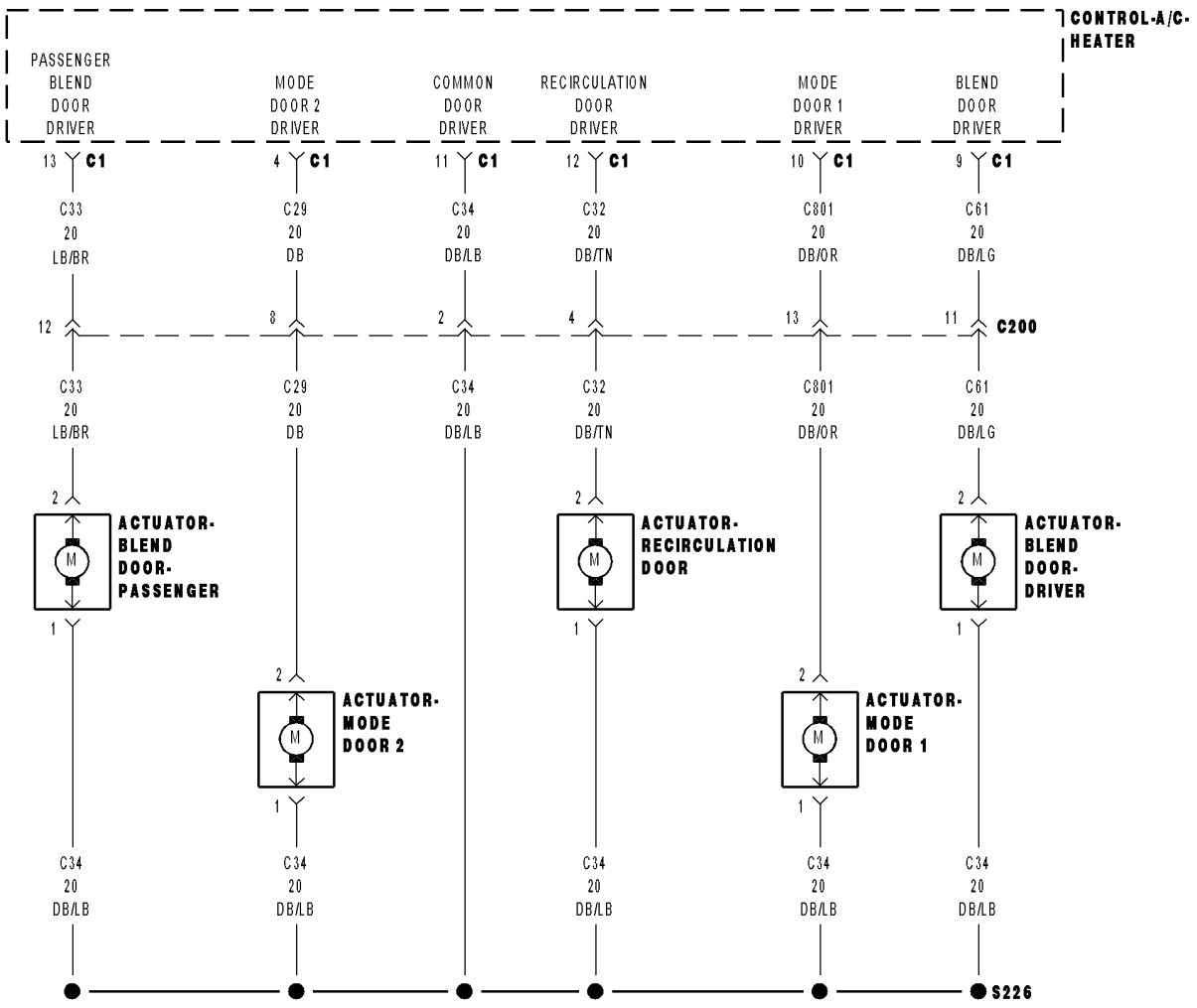

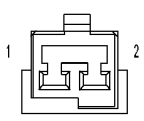
ACTUATOR- RECIRCULATION DOOR

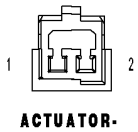
ACTUATOR- MODE DOOR 1 (PANEL TO FLOOR)

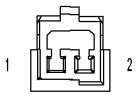
ACTUATOR- MODE DOOR 2 (DEFROST TO FLOOR)

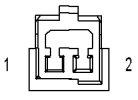
ACTUATOR- BLEND DOOR- PASSENGER (DUAL-ZONE)

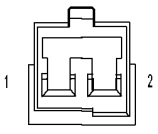
ACTUATOR- BLEND DOOR- DRIVER (DUAL-ZONE)

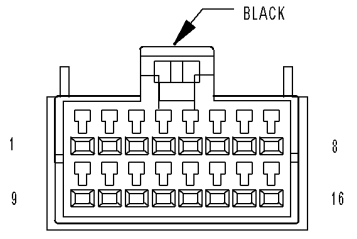

CONTROL-A/C- HEATER C1

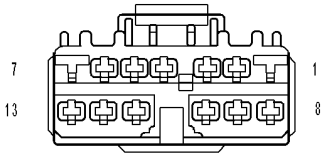

C200

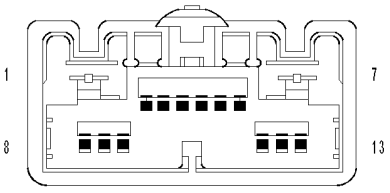

C200

813d20c4

MODE 1 OVERCURRENT (DUAL-ZONE) (CONTINUED)

For the Manual Temperature Control circuit diagrams (Refer to 24 - HEATING & AIR CONDITIONING - SCHEMATICS AND DIAGRAMS).

For a complete wiring diagram **Refer to Section 8W**.

Theory of Operation

NOTE: Diagnose and repair all Actuator Circuit Test faults before diagnosing Overcurrent DTCs.

The A/C Heater Control monitors the door driver circuits during actuator operation for shorts to ground, shorts to battery, and shorts to other door driver circuits. If detected, the A/C Heater Control reports these types of faults as Overcurrent DTCs. It is important to note that Overcurrent DTCs do not indicate where or what type of short is present and that additional system testing is necessary to provide more details about the reported fault.

- **When Monitored:**
  When actuator movement is requested.
- **Set Condition:**
  If the A/C Heater Control detects an excessive current draw on any of the door driver circuits while attempting to drive the Mode Door Actuator 1. Note that only one overcurrent DTC can set per ignition cycle.

Possible Causes
(C32) RECIRCULATION DOOR DRIVER CIRCUIT / (C61) BLEND DOOR DRIVER CIRCUIT / (C801) MODE DOOR 1 DRIVER CIRCUIT / (C29) MODE DOOR 2 DRIVER CIRCUIT / (C33) PASSENGER BLEND DOOR DRIVER CIRCUIT SHORTED TO GROUND
(C32) RECIRCULATION DOOR DRIVER CIRCUIT / (C61) BLEND DOOR DRIVER CIRCUIT / (C801) MODE DOOR 1 DRIVER CIRCUIT / (C29) MODE DOOR 2 DRIVER CIRCUIT / (C33) PASSENGER BLEND DOOR DRIVER CIRCUIT SHORTED TO VOLTAGE
(C32) RECIRCULATION DOOR DRIVER CIRCUIT / (C61) BLEND DOOR DRIVER CIRCUIT / (C801) MODE DOOR 1 DRIVER CIRCUIT / (C29) MODE DOOR 2 DRIVER CIRCUIT / (C33) PASSENGER BLEND DOOR DRIVER CIRCUIT SHORTED TOGETHER
DRIVER BLEND DOOR ACTUATOR / PASSENGER BLEND DOOR ACTUATOR / MODE DOOR ACTUATOR 1 / MODE DOOR ACTUATOR 2 / RECIRCULATION DOOR ACTUATOR
A/C HEATER CONTROL

NOTE: The Overcurrent DTC must be active for the result of this test to be valid. Do not perform this test if the Overcurrent DTC is stored. Refer to HVAC System Test for stored DTC test procedures.

Diagnostic Test

1. RUN THE ACTUATOR CIRCUIT TEST

Turn the ignition on.

With the DRBIII® in HVAC, select System Tests and then select Actuator Circuit Test. Allow the test to run to completion before proceeding.

Does the DRBIII® display any Actuator Circuit Test fault messages?

Yes >> Diagnose and repair the fault(s). Refer to *ACTUATOR CIRCUIT TEST DIAGNOSTICS (DUAL-ZONE) in this section.

No >> Go To 2

MODE 1 OVERCURRENT (DUAL-ZONE) (CONTINUED)

2. CHECK THE (C32) RECIRCULATION DOOR DRIVER CIRCUIT FOR A SHORT TO THE (C61) BLEND DOOR DRIVER CIRCUIT, THE (C801) MODE DOOR 1 DRIVER CIRCUIT, THE (C29) MODE DOOR 2 DRIVER CIRCUIT, & THE (C33) PASSENGER BLEND DOOR DRIVER CIRCUIT

Turn the ignition off.

Disconnect the A/C Heater Control C1 harness connector.

Measure the resistance between the (C32) Recirculation Door Driver circuit and the (C61) Blend Door Driver circuit, the (C801) Mode Door 1 Driver circuit, the (C29) Mode Door 2 Driver circuit, and the (C33) Passenger Blend Door Driver circuit in the A/C Heater Control C1 harness connector.

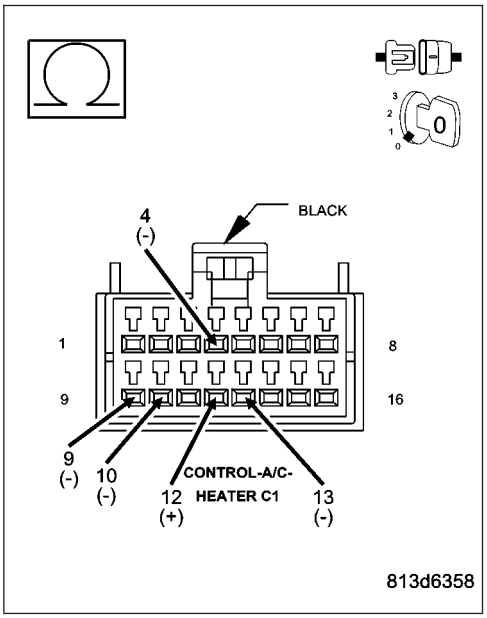

Is the resistance below 10k ohms on any of the circuits?

Yes >> Repair all circuits with a resistance below 10k ohms for a short to the (C32) Recirculation Door Driver circuit.

Perform BODY VERIFICATION TEST - VER 1. (Refer to 8 - ELECTRICAL/ELECTRONIC CONTROL MODULES/ FRONT CONTROL MODULE - DIAGNOSIS AND TESTING).

No >> Go To 3

3. CHECK THE (C61) BLEND DOOR DRIVER CIRCUIT FOR A SHORT TO THE (C801) MODE DOOR 1 DRIVER CIRCUIT, THE (C29) MODE DOOR 2 DRIVER CIRCUIT, & THE (C33) PASSENGER BLEND DOOR DRIVER CIRCUIT

Measure the resistance between the (C61) Blend Door Driver circuit and the (C801) Mode Door 1 Driver circuit, the (C29) Mode Door 2 Driver circuit, and, the (C33) Passenger Blend Door Driver circuit in the A/C Heater Control C1 harness connector.

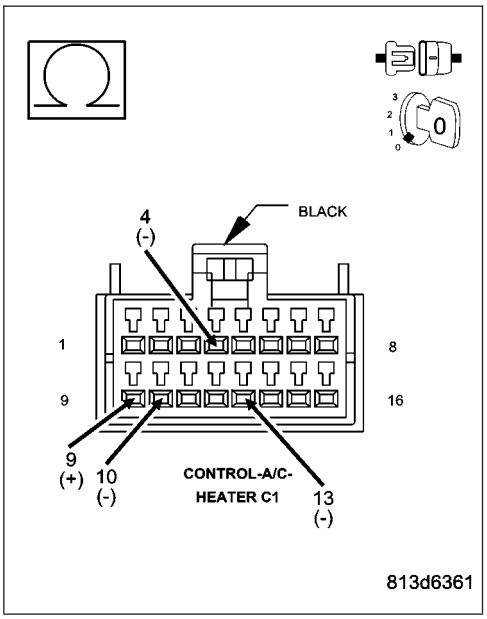

Is the resistance below 10k ohms on any of the circuits?

Yes >> Repair all circuits with a resistance below 10k ohms for a short to the (C61) Blend Door Driver circuit.

Perform BODY VERIFICATION TEST - VER 1. (Refer to 8 - ELECTRICAL/ELECTRONIC CONTROL MODULES/ FRONT CONTROL MODULE - DIAGNOSIS AND TESTING).

No >> Go To 4

MODE 1 OVERCURRENT (DUAL-ZONE) (CONTINUED)

4. CHECK THE (C801) MODE DOOR 1 DRIVER CIRCUIT FOR A SHORT TO THE (C29) MODE DOOR 2 DRIVER CIRCUIT & THE (C33) PASSENGER BLEND DOOR DRIVER CIRCUIT

Measure the resistance between the (C801) Mode Door 1 Driver circuit and the (C29) Mode Door 2 Driver circuit, and the (C33) Passenger Blend Door Driver circuit in the A/C Heater Control C1 harness connector.

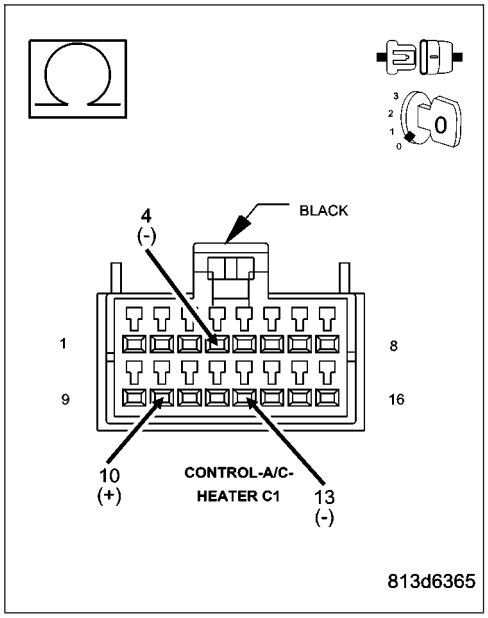

Is the resistance below 10k ohms on any of the circuits?

Yes >> Repair all circuits with a resistance below 10k ohms for a short to the (C801) Mode Door 1 Driver circuit.
Perform BODY VERIFICATION TEST - VER 1. (Refer to 8 - ELECTRICAL/ELECTRONIC CONTROL MODULES/ FRONT CONTROL MODULE - DIAGNOSIS AND TESTING).

No >> Go To 5

5. CHECK THE RESISTANCE BETWEEN THE (C29) MODE DOOR 2 DRIVER CIRCUIT & THE (C33) PASSENGER BLEND DOOR DRIVER CIRCUIT

Measure the resistance between the (C29) Mode Door 2 Driver circuit and the (C33) Passenger Blend Door Driver circuit in the A/C Heater Control C1 harness connector.

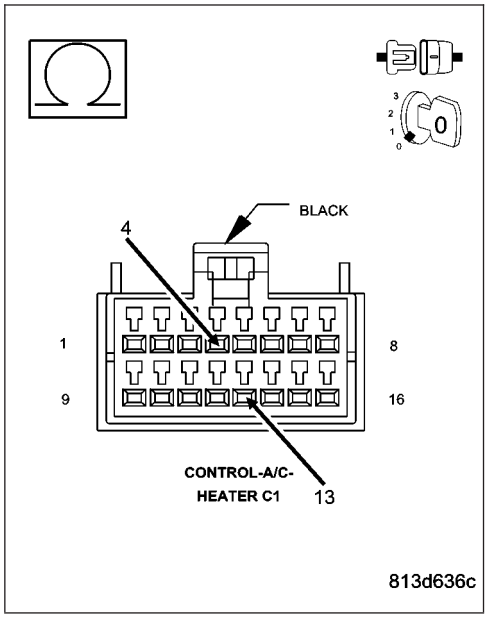

Is the resistance below 10k ohms?

Yes >> Repair the (C33) Passenger Blend Door Driver circuit for a short to the (C29) Mode Door 2 Driver circuit.
Perform BODY VERIFICATION TEST - VER 1. (Refer to 8 - ELECTRICAL/ELECTRONIC CONTROL MODULES/ FRONT CONTROL MODULE - DIAGNOSIS AND TESTING).

No >> Go To 6

MODE 1 OVERCURRENT (DUAL-ZONE) (CONTINUED)

6. CHECK THE (C34) COMMON DOOR DRIVER CIRCUIT FOR A SHORT TO THE (C32) RECIRCULATION DOOR DRIVER CIRCUIT, THE (C61) BLEND DOOR DRIVER CIRCUIT, THE (C801) MODE DOOR 1 DRIVER CIRCUIT, THE (C29) MODE DOOR 2 DRIVER CIRCUIT, & THE (C33) PASSENGER BLEND DOOR DRIVER CIRCUIT

Measure the resistance between the (C34) Common Door Driver Circuit and the (C32) Recirculation Door Driver circuit, the (C61) Blend Door Driver circuit, the (C801) Mode Door 1 Driver circuit, the (C29) Mode Door 2 Driver circuit, and, the (C33) Passenger Blend Door Driver circuit in the A/C Heater Control C1 harness connector.

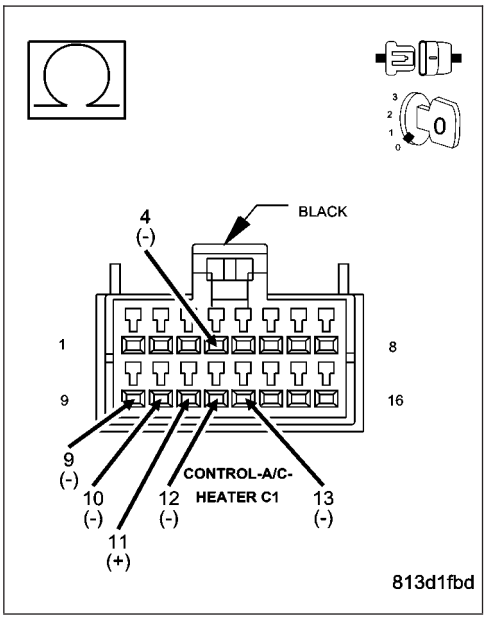

Is the resistance below 30.0 ohms on any of the circuits?

Yes >> Go To 7

No >> Go To 8

7. CHECK THE DOOR DRIVER CIRCUITS WHOSE RESISTANCE WAS BELOW 30.0 OHMS IN THE PREVIOUS STEP FOR A SHORT TO THE (C34) COMMON DOOR DRIVER CIRCUIT

Disconnect all door actuator harness connectors whose circuit resistance was below 30.0 ohms.

Measure the resistance between the (C34) Common Door Driver circuit and each applicable door driver circuit in the A/C Heater Control C1 harness connector.

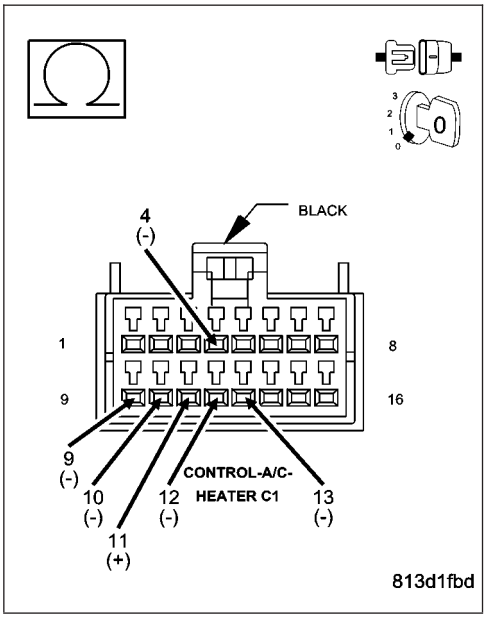

Is the resistance below 10k ohms on any of the circuits?

Yes >> Repair the door driver circuits with a resistance below 10k ohms for a short to the (C34) Common Door Driver circuit.

Perform BODY VERIFICATION TEST - VER 1. (Refer to 8 - ELECTRICAL/ELECTRONIC CONTROL MODULES/ FRONT CONTROL MODULE - DIAGNOSIS AND TESTING).

No >> Replace all door actuators with a resistance below 30.0 ohms in accordance with the Service Information.

Perform BODY VERIFICATION TEST - VER 1. (Refer to 8 - ELECTRICAL/ELECTRONIC CONTROL MODULES/ FRONT CONTROL MODULE - DIAGNOSIS AND TESTING).

MODE 1 OVERCURRENT (DUAL-ZONE) (CONTINUED)

8. RUN THE ACTUATOR CIRCUIT TEST

Reconnect the A/C Heater Control C1 harness connector.

Turn the ignition on.

With the DRBIII® in HVAC, select System Tests and then select Actuator Circuit Test. Allow the test to run to completion before proceeding.

Does the DRBIII® display any Actuator Circuit Test fault messages?

Yes >> Diagnose and repair the fault(s). Refer to *ACTUATOR CIRCUIT TEST DIAGNOSTICS (DUAL-ZONE) in this section.

No >> Replace the A/C Heater Control in accordance with the Service Information.
Perform BODY VERIFICATION TEST - VER 1. (Refer to 8 - ELECTRICAL/ELECTRONIC CONTROL MODULES/FRONT CONTROL MODULE - DIAGNOSIS AND TESTING).

MODE 1 OVERCURRENT (SINGLE-ZONE)

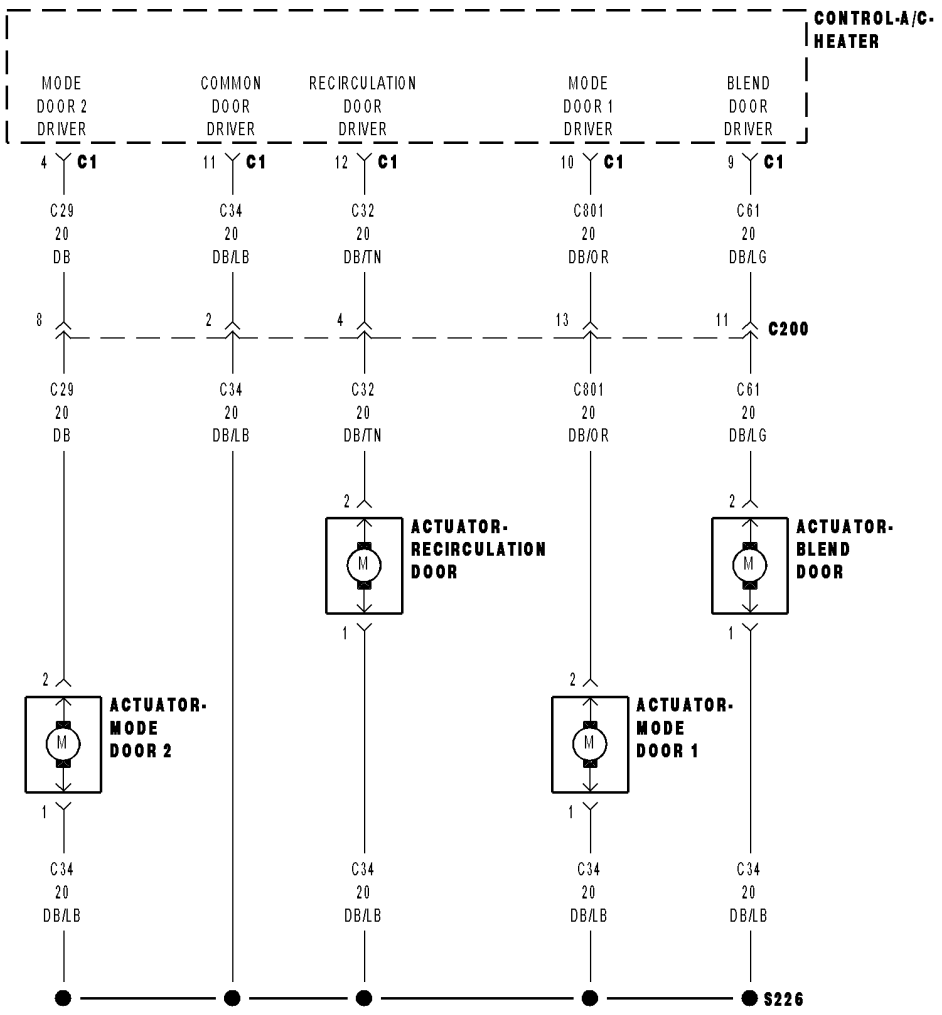

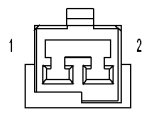

ACTUATOR-
RECIRCULATION DOOR

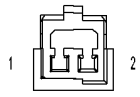

ACTUATOR-
MODE DOOR 1
(PANEL TO FLOOR)

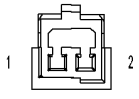

ACTUATOR-
MODE DOOR 2
(DEFROST TO FLOOR)

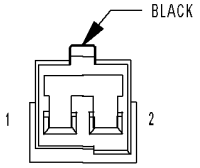

ACTUATOR-
BLEND DOOR
(SINGLE ZONE)

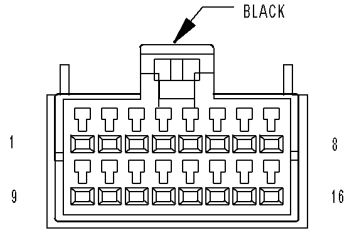

CONTROL-A/C-
HEATER C1

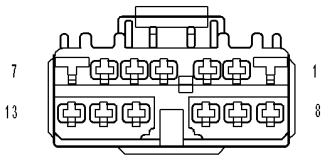

C200

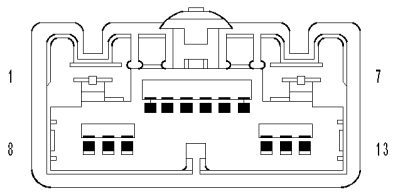

C200

813d4bd1

MODE 1 OVERCURRENT (SINGLE-ZONE) (CONTINUED)

For the Manual Temperature Control circuit diagrams (Refer to 24 - HEATING & AIR CONDITIONING - SCHEMATICS AND DIAGRAMS).

For a complete wiring diagram **Refer to Section 8W**.

Theory of Operation

NOTE: Diagnose and repair all Actuator Circuit Test faults before diagnosing Overcurrent DTCs.

The A/C Heater Control monitors the door driver circuits during actuator operation for shorts to ground, shorts to battery, and shorts to other door driver circuits. If detected, the A/C Heater Control reports these types of faults as Overcurrent DTCs. It is important to note that Overcurrent DTCs do not indicate where or what type of short is present and that additional system testing is necessary to provide more details about the reported fault.

- **When Monitored:**
  When actuator movement is requested.
- **Set Condition:**
  If the A/C Heater Control detects an excessive current draw on any of the door driver circuits while attempting to drive the Mode Door Actuator 1. Note that only one overcurrent DTC can set per ignition cycle.

Possible Causes
(C32) RECIRCULATION DOOR DRIVER CIRCUIT / (C61) BLEND DOOR DRIVER CIRCUIT / (C801) MODE DOOR 1 DRIVER CIRCUIT / (C29) MODE DOOR 2 DRIVER CIRCUIT SHORTED TO GROUND
(C32) RECIRCULATION DOOR DRIVER CIRCUIT / (C61) BLEND DOOR DRIVER CIRCUIT / (C801) MODE DOOR 1 DRIVER CIRCUIT / (C29) MODE DOOR 2 DRIVER CIRCUIT SHORTED TO VOLTAGE
(C32) RECIRCULATION DOOR DRIVER CIRCUIT / (C61) BLEND DOOR DRIVER CIRCUIT / (C801) MODE DOOR 1 DRIVER CIRCUIT / (C29) MODE DOOR 2 DRIVER CIRCUIT SHORTED TOGETHER
BLEND DOOR ACTUATOR / MODE DOOR ACTUATOR 1 / MODE DOOR ACTUATOR 2 / RECIRCULATION DOOR ACTUATOR
A/C HEATER CONTROL

NOTE: This DTC must be active for the result of this test to be valid. Do not perform this test if this DTC is stored. Refer to HVAC System Test for stored DTC test procedures.

Diagnostic Test

1. RUN THE ACTUATOR CIRCUIT TEST

Turn the ignition on.

With the DRBIII® in HVAC, select System Tests and then select Actuator Circuit Test. Allow the test to run to completion before proceeding.

Does the DRBIII® display any Actuator Circuit Test fault messages?

Yes >> Diagnose and repair the fault(s). Refer to *ACTUATOR CIRCUIT TEST DIAGNOSTICS (SINGLE-ZONE) in this section.

No >> Go To 2

MODE 1 OVERCURRENT (SINGLE-ZONE) (CONTINUED)

2. CHECK THE (C32) RECIRCULATION DOOR DRIVER CIRCUIT FOR A SHORT TO THE (C61) BLEND DOOR DRIVER CIRCUIT, THE (C801) MODE DOOR 1 DRIVER CIRCUIT, & THE (C29) MODE DOOR 2 DRIVER CIRCUIT

Turn the ignition off.

Disconnect the A/C Heater Control C1 harness connector.

Measure the resistance between the (C32) Recirculation Door Driver circuit and the (C61) Blend Door Driver circuit, the (C801) Mode Door 1 Driver circuit, and the (C29) Mode Door 2 Driver circuit in the A/C Heater Control C1 harness connector.

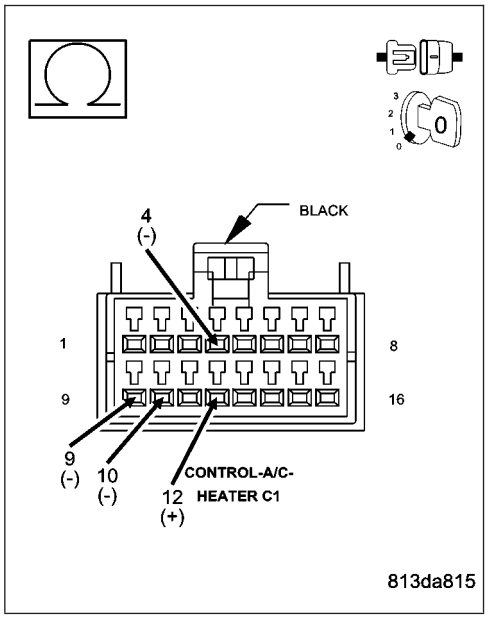

Is the resistance below 10k ohms on any of the circuits?

Yes >> Repair all circuits with a resistance below 10k ohms for a short to the (C32) Recirculation Door Driver circuit.

Perform BODY VERIFICATION TEST - VER 1. (Refer to 8 - ELECTRICAL/ELECTRONIC CONTROL MODULES/ FRONT CONTROL MODULE - DIAGNOSIS AND TESTING).

No >> Go To 3

3. CHECK THE (C61) BLEND DOOR DRIVER CIRCUIT FOR A SHORT TO THE (C801) MODE DOOR 1 DRIVER CIRCUIT & THE (C29) MODE DOOR 2 DRIVER CIRCUIT

Measure the resistance between the (C61) Blend Door Driver circuit and the (C801) Mode Door 1 Driver circuit and the (C29) Mode Door 2 Driver circuit in the A/C Heater Control C1 harness connector.

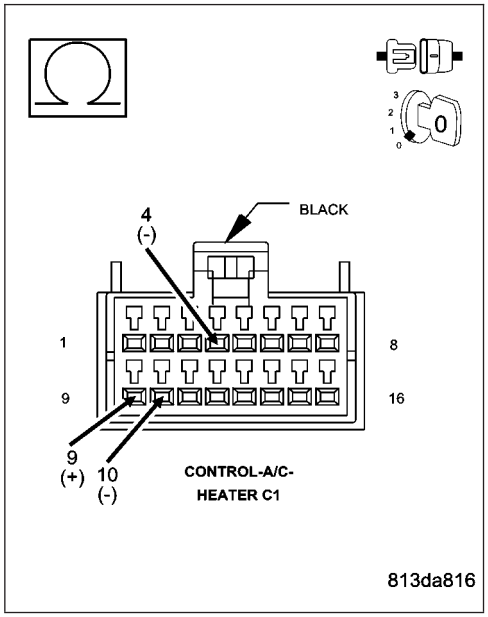

Is the resistance below 10k ohms on any of the circuits?

Yes >> Repair all circuits with a resistance below 10k ohms for a short to the (C61) Blend Door Driver circuit.

Perform BODY VERIFICATION TEST - VER 1. (Refer to 8 - ELECTRICAL/ELECTRONIC CONTROL MODULES/ FRONT CONTROL MODULE - DIAGNOSIS AND TESTING).

No >> Go To 4

MODE 1 OVERCURRENT (SINGLE-ZONE) (CONTINUED)

4. CHECK THE (C801) MODE DOOR 1 DRIVER CIRCUIT FOR A SHORT TO THE (C29) MODE DOOR 2 DRIVER CIRCUIT

Measure the resistance between the (C801) Mode Door 1 Driver circuit and the (C29) Mode Door 2 Driver circuit in the A/C Heater Control C1 harness connector.

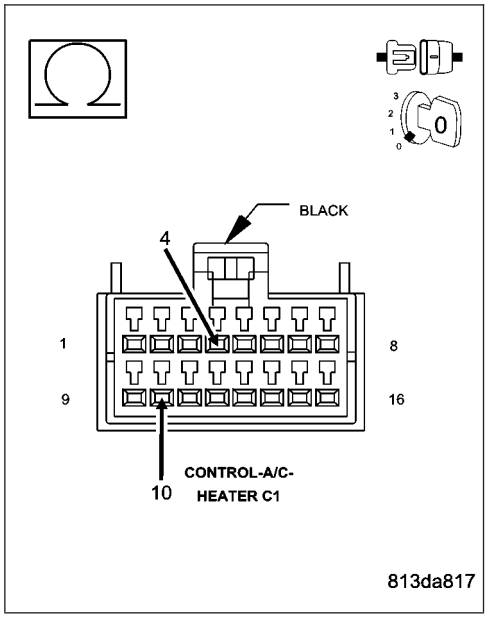

Is the resistance below 10k ohms?

Yes >> Repair the (C29) Mode Door 2 Driver circuit for a short to the (C801) Mode Door 1 Driver circuit.

Perform BODY VERIFICATION TEST - VER 1. (Refer to 8 - ELECTRICAL/ELECTRONIC CONTROL MODULES/ FRONT CONTROL MODULE - DIAGNOSIS AND TESTING).

No >> Go To 5

5. CHECK THE (C34) COMMON DOOR DRIVER CIRCUIT FOR A SHORT TO THE (C32) RECIRCULATION DOOR DRIVER CIRCUIT, THE (C61) BLEND DOOR DRIVER CIRCUIT, THE (C801) MODE DOOR 1 DRIVER CIRCUIT, & THE (C29) MODE DOOR 2 DRIVER CIRCUIT

Measure the resistance between the (C34) Common Door Driver Circuit and the (C32) Recirculation Door Driver circuit, the (C61) Blend Door Driver circuit, the (C801) Mode Door 1 Driver circuit, and the (C29) Mode Door 2 Driver circuit in the A/C Heater Control C1 harness connector.

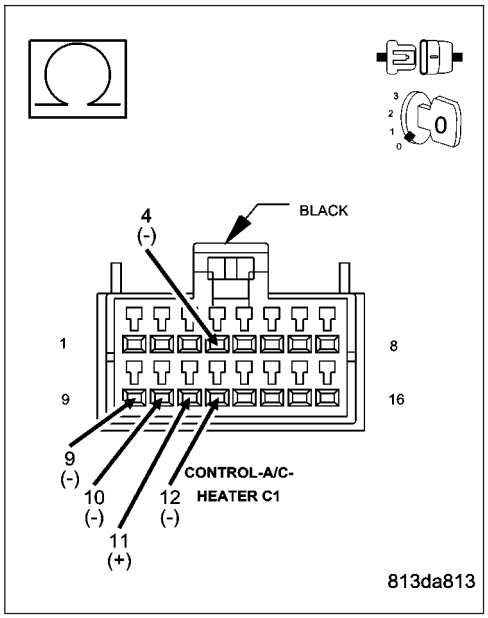

Is the resistance below 30.0 ohms on any of the circuits?

Yes >> Go To 6

No >> Go To 7

MODE 1 OVERCURRENT (SINGLE-ZONE) (CONTINUED)

6. CHECK THE DOOR DRIVER CIRCUITS WHOSE RESISTANCE WAS BELOW 30.0 OHMS IN THE PREVIOUS STEP FOR A SHORT TO THE (C34) COMMON DOOR DRIVER CIRCUIT

Disconnect all door actuator harness connectors whose circuit resistance was below 30.0 ohms.

Measure the resistance between the (C34) Common Door Driver circuit and each applicable door driver circuit in the A/C Heater Control C1 harness connector.

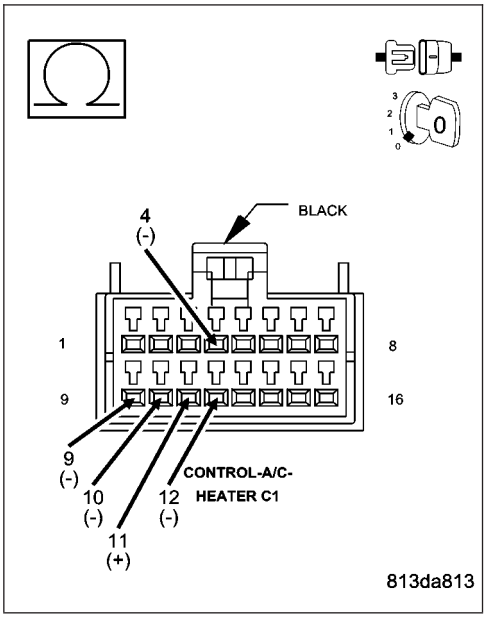

Is the resistance below 10k ohms on any of the circuits?

Yes >> Repair the door driver circuits with a resistance below 10k ohms for a short to the (C34) Common Door Driver circuit.

Perform BODY VERIFICATION TEST - VER 1. (Refer to 8 - ELECTRICAL/ELECTRONIC CONTROL MODULES/ FRONT CONTROL MODULE - DIAGNOSIS AND TESTING).

No >> Replace all door actuators with a resistance below 30.0 ohms in accordance with the Service Information.

Perform BODY VERIFICATION TEST - VER 1. (Refer to 8 - ELECTRICAL/ELECTRONIC CONTROL MODULES/ FRONT CONTROL MODULE - DIAGNOSIS AND TESTING).

---

7. RUN THE ACTUATOR CIRCUIT TEST

Reconnect the A/C Heater Control C1 harness connector.

Turn the ignition on.

With the DRBIII® in HVAC, select System Tests and then select Actuator Circuit Test. Allow the test to run to completion before proceeding.

Does the DRBIII® display any Actuator Circuit Test fault messages?

Yes >> Diagnose and repair the fault(s). Refer to *ACTUATOR CIRCUIT TEST DIAGNOSTICS (SINGLE-ZONE) in this section.

No >> Replace the A/C Heater Control in accordance with the Service Information.

Perform BODY VERIFICATION TEST - VER 1. (Refer to 8 - ELECTRICAL/ELECTRONIC CONTROL MODULES/FRONT CONTROL MODULE - DIAGNOSIS AND TESTING).

MODE 2 CALIBRATION FAULT

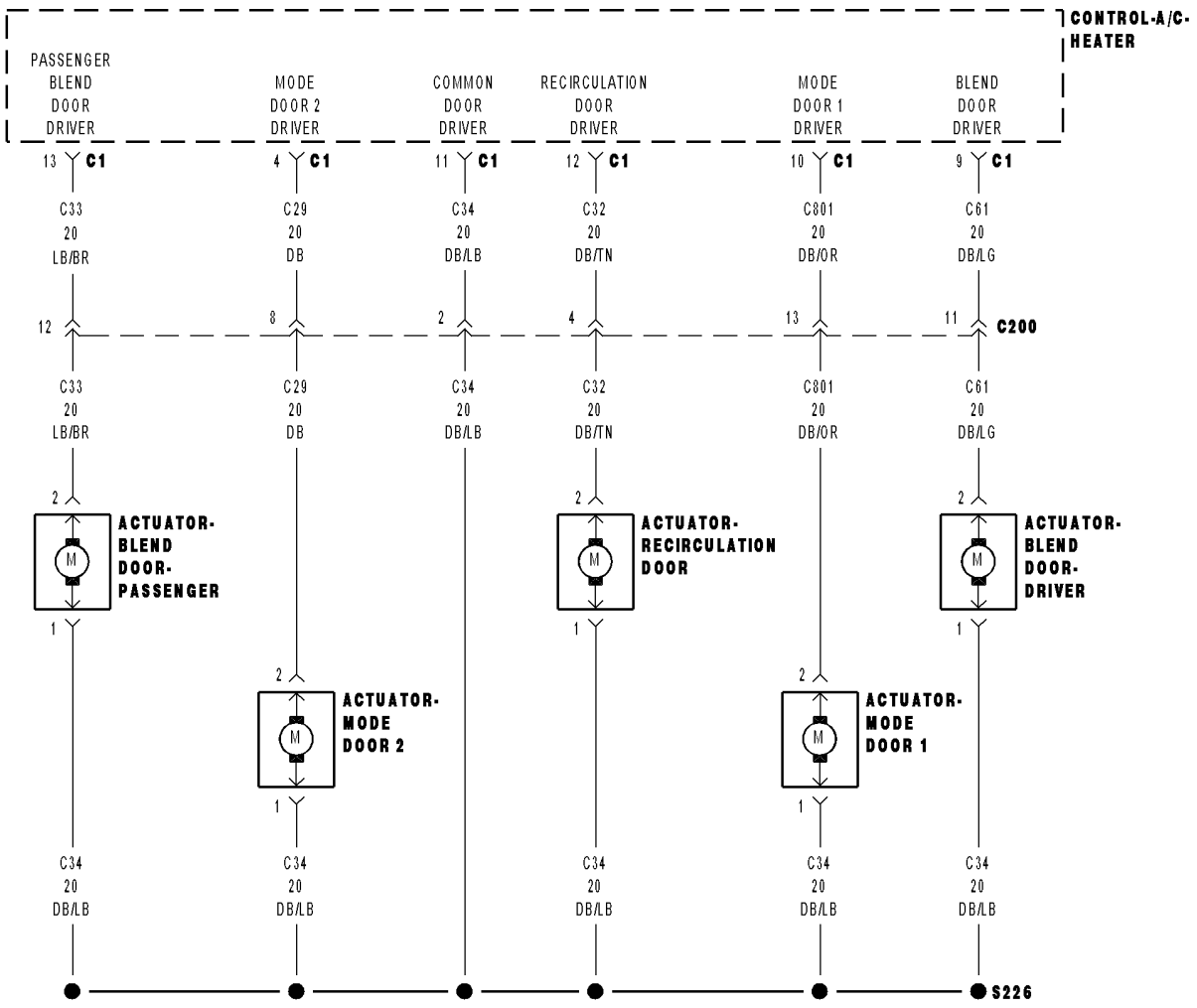

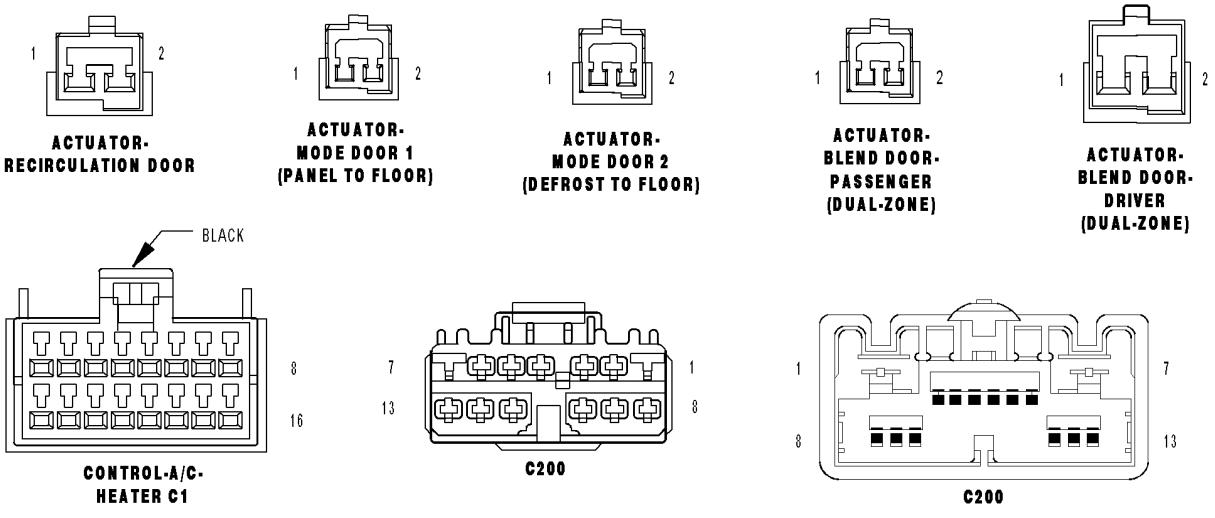

813d20c4

MODE 2 CALIBRATION FAULT (CONTINUED)

For the Manual Temperature Control circuit diagrams (Refer to 24 - HEATING & AIR CONDITIONING - SCHEMATICS AND DIAGRAMS).

For a complete wiring diagram **Refer to Section 8W**.

Theory of Operation

NOTE: Diagnose and repair Actuator Circuit Test faults before diagnosing Overcurrent faults and Calibration faults. Diagnose and repair Overcurrent faults before diagnosing Calibration faults.

The purpose of actuator calibration is to determine the total span of door travel between physical stops. To calibrate the actuator, the A/C Heater Control first moves the door to its soft stop, and then counts the number of pulses it takes to move the door to its other stop. An expected range of span is stored in the control's memory. If the measured calibration value is not within the expected range, this fault will set.

For vehicles equipped with electric backlight (EBL), running the HVAC Door Recalibration will cause the EBL status indicator to flash. If recalibration fails, the EBL status indicator will continue to flash until either the system passes recalibration or the ignition key is cycled. When the EBL status indicator is flashing, it will not indicate EBL operating status. However, the EBL mode switch will continue to function normally. When the EBL status indicator is flashing, the A/C status indicator will not function. However, the A/C mode switch will continue to function normally.

For vehicles not equipped with electric backlight (EBL), no status indicator will flash when running the HVAC Door Recalibration. If recalibration fails, the A/C status indicator will not function, however, the A/C mode switch will continue to function normally.

- **When Monitored:**
  When HVAC Door Recalibration is executed.
- **Set Condition:**
  If the span of mode door 2 is found outside the tolerance.

Possible Causes
(C29) MODE DOOR 2 DRIVER CIRCUIT SHORTED TO GROUND (WILL ALSO SET OVERCURRENT DTCs)
(C29) MODE DOOR 2 DRIVER CIRCUIT SHORTED TO VOLTAGE (WILL ALSO SET OVERCURRENT DTCs)
(C29) MODE DOOR 2 DRIVER CIRCUIT OPEN
(C34) COMMON DOOR DRIVER CIRCUIT OPEN
MODE DOOR ACTUATOR 2 OPEN
MODE DOOR ACTUATOR 2 BROKEN
MODE DOOR 2 BOUND UP
MODE DOOR 2 LINKAGE MISSING, BROKEN
A/C HEATER CONTROL

Diagnostic Test

1. RUN THE ACTUATOR CIRCUIT TEST

Turn the ignition on.

With the DRBIII® in HVAC, select System Tests and then select Actuator Circuit Test. Allow the test to run to completion before proceeding.

Does the DRBIII® display any Actuator Circuit Test fault messages?

Yes >> Diagnose and repair the fault(s). For Single-Zone HVAC systems, refer to *ACTUATOR CIRCUIT TEST DIAGNOSTICS (SINGLE-ZONE) in this section. For Dual-Zone HVAC systems, refer to *ACTUATOR CIRCUIT TEST DIAGNOSTICS (DUAL-ZONE) in this section.

No >> Go To 2

MODE 2 CALIBRATION FAULT (CONTINUED)

2. CHECK FOR DTCS IN THE A/C HEATER CONTROL

NOTE: Diagnose and repair all Overcurrent DTCs before diagnosing Calibration faults.
With the DRBIII®, read HVAC DTCs.

Does the DRBIII® display any DTCs?

Yes >> Diagnose and repair the DTC(s). Refer to the Table of Contents in this Section for a complete list of HVAC related symptoms.

No >> Go To 3

---

3. CHECK THE RESISTANCE BETWEEN THE (C34) COMMON DOOR DRIVER CIRCUIT & THE (C29) MODE DOOR 2 DRIVER CIRCUIT

Turn the ignition off.

Disconnect the A/C Heater Control C1 harness connector.

Measure the resistance between the (C34) Common Door Driver circuit and the (C29) Mode Door 2 Driver circuit in the A/C Heater Control C1 harness connector.

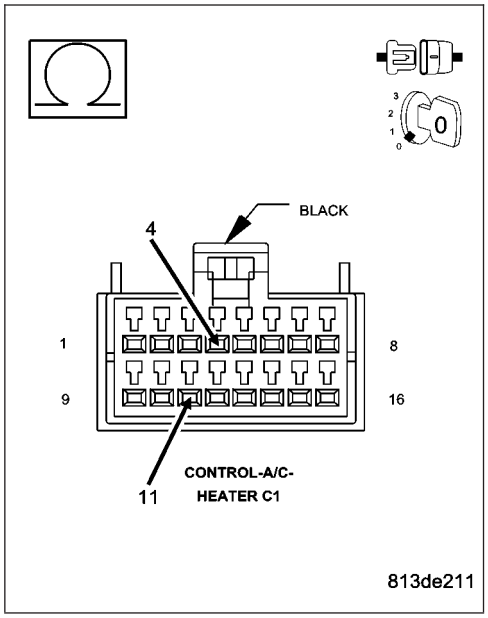

Is the resistance above 70.0 ohms?

Yes >> Go To 4

No >> Go To 6

MODE 2 CALIBRATION FAULT (CONTINUED)

4. CHECK (C29) MODE DOOR 2 DRIVER CIRCUIT FOR AN OPEN

Disconnect the Mode Door Actuator 2 harness connector.

Measure the resistance of the (C29) Mode Door 2 Driver circuit between the A/C Heater Control C1 harness connector and the Mode Door Actuator 2 harness connector.

Is the resistance below 5.0 ohms?

Yes >> Go To 5

No >> Repair the (C29) Mode Door 2 Driver circuit for an open.
Perform BODY VERIFICATION TEST - VER 1. (Refer to 8 - ELECTRICAL/ELECTRONIC CONTROL MODULES/ FRONT CONTROL MODULE - DIAGNOSIS AND TESTING).

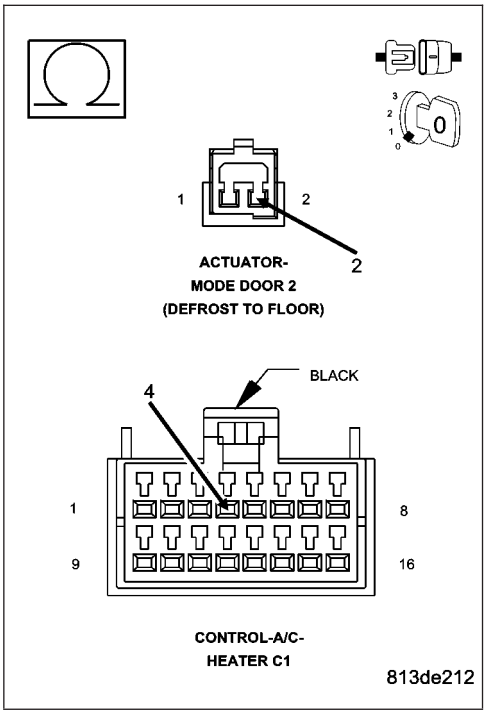

5. CHECK (C34) COMMON DOOR DRIVER CIRCUIT FOR AN OPEN

Measure the resistance of the (C34) Common Door Driver circuit between the A/C Heater Control C1 harness connector and the Mode Door Actuator 2 harness connector.

Is the resistance below 5.0 ohms?

Yes >> Replace the Mode Door Actuator 2 in accordance with the Service Information.
Perform BODY VERIFICATION TEST - VER 1. (Refer to 8 - ELECTRICAL/ELECTRONIC CONTROL MODULES/ FRONT CONTROL MODULE - DIAGNOSIS AND TESTING).

No >> Repair the (C34) Common Door Driver circuit for an open.
Perform BODY VERIFICATION TEST - VER 1. (Refer to 8 - ELECTRICAL/ELECTRONIC CONTROL MODULES/ FRONT CONTROL MODULE - DIAGNOSIS AND TESTING).

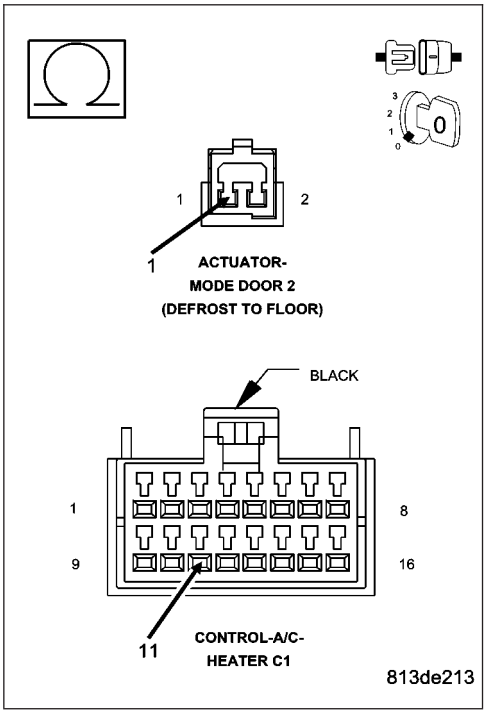

MODE 2 CALIBRATION FAULT (CONTINUED)

6. CHECK FOR A BROKEN MODE DOOR ACTUATOR 2

Remove the Mode Door Actuator 2 from the A/C Heater Housing Assembly.
Disconnect the Mode Door Actuator 2 harness connector.
By hand, attempt to rotate the actuator in both directions.

Does the actuator turn in either direction?

Yes >> Replace the Mode Door Actuator 2 in accordance with the Service Information.
Perform BODY VERIFICATION TEST - VER 1. (Refer to 8 - ELECTRICAL/ELECTRONIC CONTROL MODULES/FRONT CONTROL MODULE - DIAGNOSIS AND TESTING).

No >> Go To 7

---

7. CHECK FOR MISSING & BROKEN ACTUATOR LINKAGE & THE DOOR FOR BINDING & A LOSS OF RANGE

Inspect the A/C Heater Housing Assembly for missing and broken actuator linkage.
Inspect the linkage and the actuator for broken and missing teeth.
Check the door for binding and a loss of full range.

Are there any physical or mechanical problems with the door, actuator, linkage, or housing?

Yes >> Repair as necessary in accordance with the Service Information.
Perform BODY VERIFICATION TEST - VER 1. (Refer to 8 - ELECTRICAL/ELECTRONIC CONTROL MODULES/FRONT CONTROL MODULE - DIAGNOSIS AND TESTING).

No >> Replace the A/C Heater Control in accordance with the Service Information.
Perform BODY VERIFICATION TEST - VER 1. (Refer to 8 - ELECTRICAL/ELECTRONIC CONTROL MODULES/FRONT CONTROL MODULE - DIAGNOSIS AND TESTING).

MODE 2 CIRCUIT SHORTED TO GROUND

For a complete wiring diagram **Refer to Section 8W**.

- **When Monitored:**
  When the Actuator Circuit Test is executed.
- **Set Condition:**
  If the A/C Heater Control detects a short to ground on the (C29) Mode Door 2 Driver circuit.

Possible Causes
DOOR DRIVER CIRCUIT(S) SHORTED TO GROUND
DOOR DRIVER CIRCUITS SHORTED TOGETHER
DOOR ACTUATOR(S)
A/C HEATER CONTROL

For Single-Zone HVAC systems, **refer to *ACTUATOR CIRCUIT TEST DIAGNOSTICS (SINGLE-ZONE) in this Section** for the diagnostic test procedure. For Dual-Zone HVAC systems, **refer to *ACTUATOR CIRCUIT TEST DIAGNOSTICS (DUAL-ZONE) in this Section** for the diagnostic test procedure.

MODE 2 CIRCUIT SHORTED TO IGN OR BATT

For a complete wiring diagram **Refer to Section 8W**.

- **When Monitored:**
  When the Actuator Circuit Test is executed.
- **Set Condition:**
  If the A/C Heater Control detects a short to voltage on the (C29) Mode Door 2 Driver circuit.

Possible Causes
DOOR DRIVER CIRCUIT(S) SHORTED TO VOLTAGE
DOOR DRIVER CIRCUITS SHORTED TOGETHER
DOOR ACTUATOR(S)
A/C HEATER CONTROL

For Single-Zone HVAC systems, **refer to *ACTUATOR CIRCUIT TEST DIAGNOSTICS (SINGLE-ZONE) in this Section** for the diagnostic test procedure. For Dual-Zone HVAC systems, **refer to *ACTUATOR CIRCUIT TEST DIAGNOSTICS (DUAL-ZONE) in this Section** for the diagnostic test procedure.

MODE 2 OVERCURRENT (DUAL-ZONE)

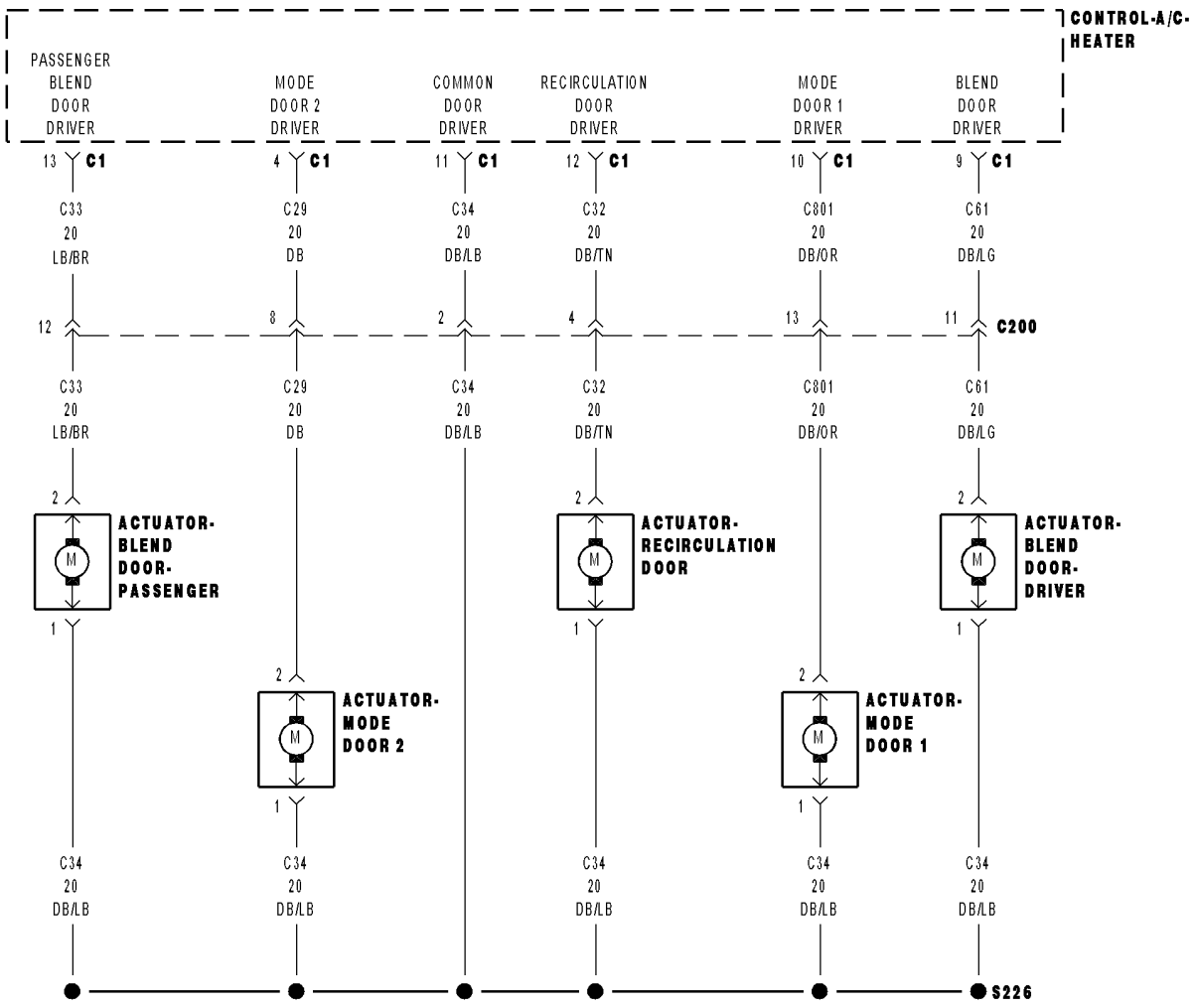

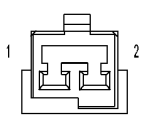

ACTUATOR- RECIRCULATION DOOR

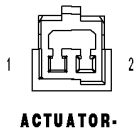

ACTUATOR- MODE DOOR 1 (PANEL TO FLOOR)

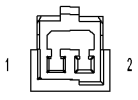

ACTUATOR- MODE DOOR 2 (DEFROST TO FLOOR)

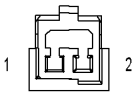

ACTUATOR- BLEND DOOR- PASSENGER (DUAL-ZONE)

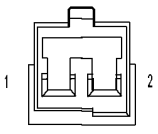

ACTUATOR- BLEND DOOR- DRIVER (DUAL-ZONE)

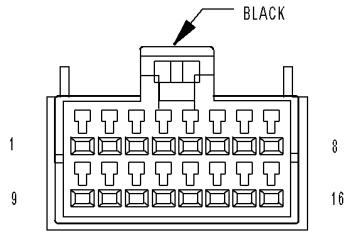

CONTROL-A/C- HEATER C1

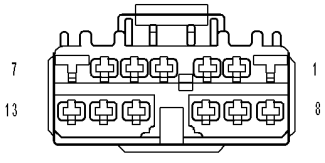

C200

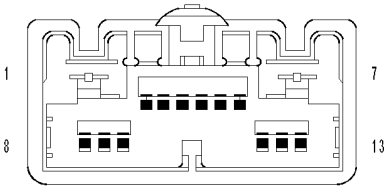

C200

813d20c4

MODE 2 OVERCURRENT (DUAL-ZONE) (CONTINUED)

For the Manual Temperature Control circuit diagrams (Refer to 24 - HEATING & AIR CONDITIONING - SCHEMATICS AND DIAGRAMS).

For a complete wiring diagram **Refer to Section 8W**.

Theory of Operation

NOTE: Diagnose and repair all Actuator Circuit Test faults before diagnosing Overcurrent DTCs.

The A/C Heater Control monitors the door driver circuits during actuator operation for shorts to ground, shorts to battery, and shorts to other door driver circuits. If detected, the A/C Heater Control reports these types of faults as Overcurrent DTCs. It is important to note that Overcurrent DTCs do not indicate where or what type of short is present and that additional system testing is necessary to provide more details about the reported fault.

- **When Monitored:**
  When actuator movement is requested.
- **Set Condition:**
  If the A/C Heater Control detects an excessive current draw on any of the door driver circuits while attempting to drive the Mode Door Actuator 2. Note that only one overcurrent DTC can set per ignition cycle.

Possible Causes
(C32) RECIRCULATION DOOR DRIVER CIRCUIT / (C61) BLEND DOOR DRIVER CIRCUIT / (C801) MODE DOOR 1 DRIVER CIRCUIT / (C29) MODE DOOR 2 DRIVER CIRCUIT / (C33) PASSENGER BLEND DOOR DRIVER CIRCUIT SHORTED TO GROUND
(C32) RECIRCULATION DOOR DRIVER CIRCUIT / (C61) BLEND DOOR DRIVER CIRCUIT / (C801) MODE DOOR 1 DRIVER CIRCUIT / (C29) MODE DOOR 2 DRIVER CIRCUIT / (C33) PASSENGER BLEND DOOR DRIVER CIRCUIT SHORTED TO VOLTAGE
(C32) RECIRCULATION DOOR DRIVER CIRCUIT / (C61) BLEND DOOR DRIVER CIRCUIT / (C801) MODE DOOR 1 DRIVER CIRCUIT / (C29) MODE DOOR 2 DRIVER CIRCUIT / (C33) PASSENGER BLEND DOOR DRIVER CIRCUIT SHORTED TOGETHER
DRIVER BLEND DOOR ACTUATOR / PASSENGER BLEND DOOR ACTUATOR / MODE DOOR ACTUATOR 1 / MODE DOOR ACTUATOR 2 / RECIRCULATION DOOR ACTUATOR
A/C HEATER CONTROL

NOTE: This DTC must be active for the result of this test to be valid. Do not perform this test if this DTC is stored. Refer to HVAC System Test for stored DTC test procedures.

Diagnostic Test

1. RUN THE ACTUATOR CIRCUIT TEST

Turn the ignition on.

With the DRBIII® in HVAC, select System Tests and then select Actuator Circuit Test. Allow the test to run to completion before proceeding.

Does the DRBIII® display any Actuator Circuit Test fault messages?

Yes >> Diagnose and repair the fault(s). Refer to *ACTUATOR CIRCUIT TEST DIAGNOSTICS (DUAL-ZONE) in this section.

No >> Go To 2

MODE 2 OVERCURRENT (DUAL-ZONE) (CONTINUED)

2. CHECK THE (C32) RECIRCULATION DOOR DRIVER CIRCUIT FOR A SHORT TO THE (C61) BLEND DOOR DRIVER CIRCUIT, THE (C801) MODE DOOR 1 DRIVER CIRCUIT, THE (C29) MODE DOOR 2 DRIVER CIRCUIT, & THE (C33) PASSENGER BLEND DOOR DRIVER CIRCUIT

Turn the ignition off.

Disconnect the A/C Heater Control C1 harness connector.

Measure the resistance between the (C32) Recirculation Door Driver circuit and the (C61) Blend Door Driver circuit, the (C801) Mode Door 1 Driver circuit, the (C29) Mode Door 2 Driver circuit, and the (C33) Passenger Blend Door Driver circuit in the A/C Heater Control C1 harness connector.

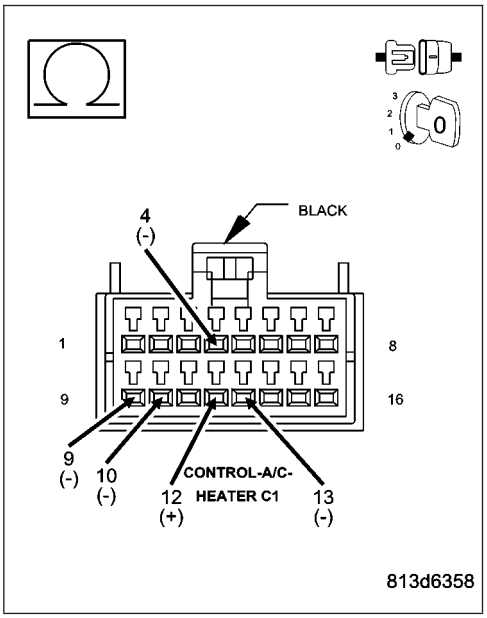

Is the resistance below 10k ohms on any of the circuits?

Yes >> Repair all circuits with a resistance below 10k ohms for a short to the (C32) Recirculation Door Driver circuit.

Perform BODY VERIFICATION TEST - VER 1. (Refer to 8 - ELECTRICAL/ELECTRONIC CONTROL MODULES/ FRONT CONTROL MODULE - DIAGNOSIS AND TESTING).

No >> Go To 3

3. CHECK THE (C61) BLEND DOOR DRIVER CIRCUIT FOR A SHORT TO THE (C801) MODE DOOR 1 DRIVER CIRCUIT, THE (C29) MODE DOOR 2 DRIVER CIRCUIT, & THE (C33) PASSENGER BLEND DOOR DRIVER CIRCUIT

Measure the resistance between the (C61) Blend Door Driver circuit and the (C801) Mode Door 1 Driver circuit, the (C29) Mode Door 2 Driver circuit, and, the (C33) Passenger Blend Door Driver circuit in the A/C Heater Control C1 harness connector.

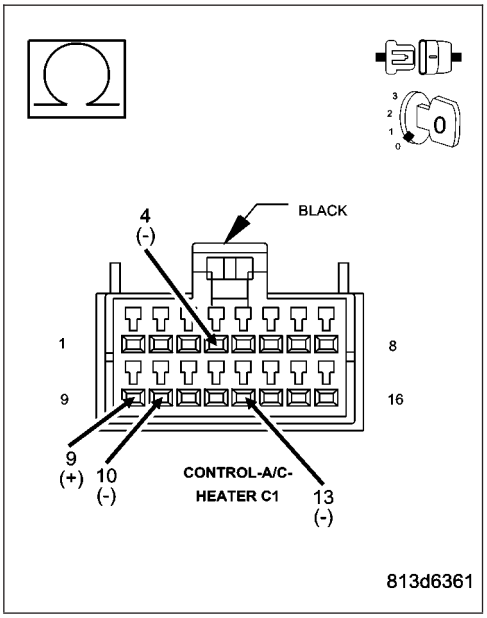

Is the resistance below 10k ohms on any of the circuits?

Yes >> Repair all circuits with a resistance below 10k ohms for a short to the (C61) Blend Door Driver circuit.

Perform BODY VERIFICATION TEST - VER 1. (Refer to 8 - ELECTRICAL/ELECTRONIC CONTROL MODULES/ FRONT CONTROL MODULE - DIAGNOSIS AND TESTING).

No >> Go To 4

MODE 2 OVERCURRENT (DUAL-ZONE) (CONTINUED)

4. CHECK THE (C801) MODE DOOR 1 DRIVER CIRCUIT FOR A SHORT TO THE (C29) MODE DOOR 2 DRIVER CIRCUIT & THE (C33) PASSENGER BLEND DOOR DRIVER CIRCUIT

Measure the resistance between the (C801) Mode Door 1 Driver circuit and the (C29) Mode Door 2 Driver circuit, and the (C33) Passenger Blend Door Driver circuit in the A/C Heater Control C1 harness connector.

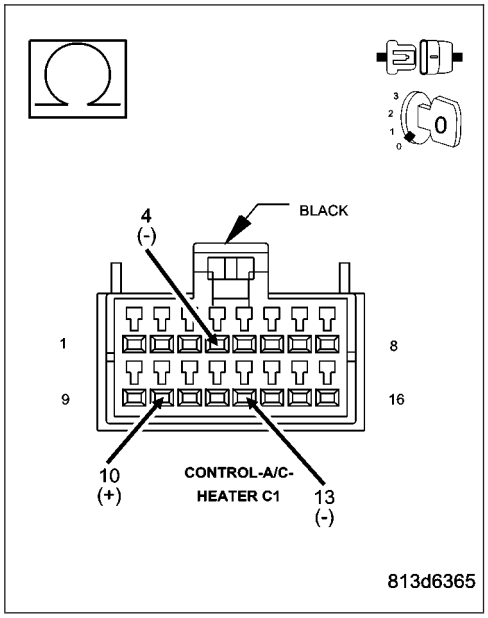

Is the resistance below 10k ohms on any of the circuits?

Yes >> Repair all circuits with a resistance below 10k ohms for a short to the (C801) Mode Door 1 Driver circuit.
Perform BODY VERIFICATION TEST - VER 1. (Refer to 8 - ELECTRICAL/ELECTRONIC CONTROL MODULES/ FRONT CONTROL MODULE - DIAGNOSIS AND TESTING).

No >> Go To 5

5. CHECK THE RESISTANCE BETWEEN THE (C29) MODE DOOR 2 DRIVER CIRCUIT & THE (C33) PASSENGER BLEND DOOR DRIVER CIRCUIT

Measure the resistance between the (C29) Mode Door 2 Driver circuit and the (C33) Passenger Blend Door Driver circuit in the A/C Heater Control C1 harness connector.

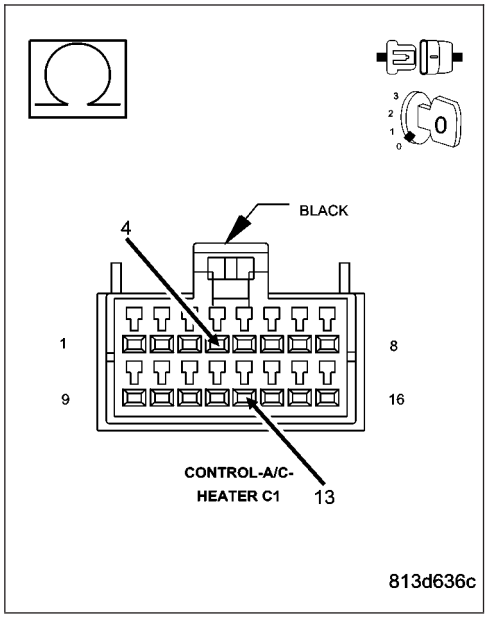

Is the resistance below 10k ohms?

Yes >> Repair the (C33) Passenger Blend Door Driver circuit for a short to the (C29) Mode Door 2 Driver circuit.
Perform BODY VERIFICATION TEST - VER 1. (Refer to 8 - ELECTRICAL/ELECTRONIC CONTROL MODULES/ FRONT CONTROL MODULE - DIAGNOSIS AND TESTING).

No >> Go To 6

MODE 2 OVERCURRENT (DUAL-ZONE) (CONTINUED)

6. CHECK THE (C34) COMMON DOOR DRIVER CIRCUIT FOR A SHORT TO THE (C32) RECIRCULATION DOOR DRIVER CIRCUIT, THE (C61) BLEND DOOR DRIVER CIRCUIT, THE (C801) MODE DOOR 1 DRIVER CIRCUIT, THE (C29) MODE DOOR 2 DRIVER CIRCUIT, & THE (C33) PASSENGER BLEND DOOR DRIVER CIRCUIT

Measure the resistance between the (C34) Common Door Driver Circuit and the (C32) Recirculation Door Driver circuit, the (C61) Blend Door Driver circuit, the (C801) Mode Door 1 Driver circuit, the (C29) Mode Door 2 Driver circuit, and, the (C33) Passenger Blend Door Driver circuit in the A/C Heater Control C1 harness connector.

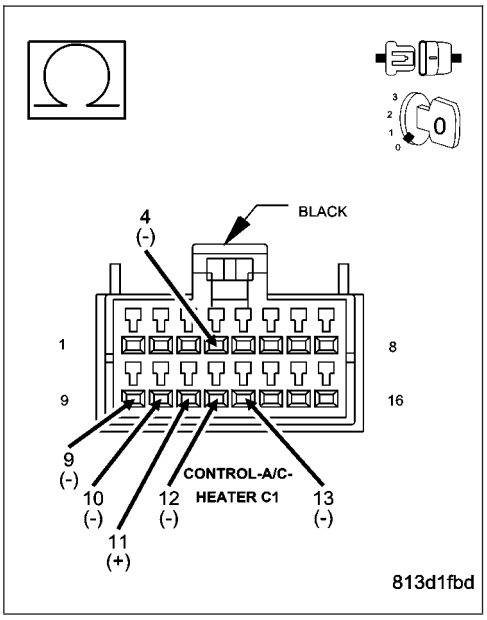

Is the resistance below 30.0 ohms on any of the circuits?

Yes >> Go To 7

No >> Go To 8

7. CHECK THE DOOR DRIVER CIRCUITS WHOSE RESISTANCE WAS BELOW 30.0 OHMS IN THE PREVIOUS STEP FOR A SHORT TO THE (C34) COMMON DOOR DRIVER CIRCUIT

Disconnect all door actuator harness connectors whose circuit resistance was below 30.0 ohms.

Measure the resistance between the (C34) Common Door Driver circuit and each applicable door driver circuit in the A/C Heater Control C1 harness connector.

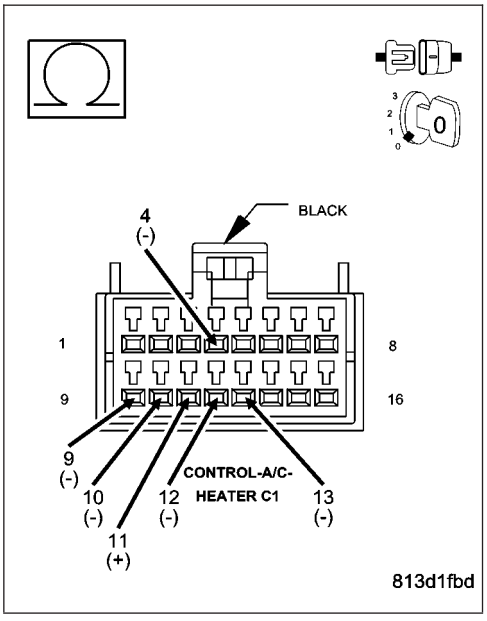

Is the resistance below 10k ohms on any of the circuits?

Yes >> Repair the door driver circuits with a resistance below 10k ohms for a short to the (C34) Common Door Driver circuit.

Perform BODY VERIFICATION TEST - VER 1. (Refer to 8 - ELECTRICAL/ELECTRONIC CONTROL MODULES/ FRONT CONTROL MODULE - DIAGNOSIS AND TESTING).

No >> Replace all door actuators with a resistance below 30.0 ohms in accordance with the Service Information.

Perform BODY VERIFICATION TEST - VER 1. (Refer to 8 - ELECTRICAL/ELECTRONIC CONTROL MODULES/ FRONT CONTROL MODULE - DIAGNOSIS AND TESTING).

MODE 2 OVERCURRENT (DUAL-ZONE) (CONTINUED)

8. RUN THE ACTUATOR CIRCUIT TEST

Reconnect the A/C Heater Control C1 harness connector.

Turn the ignition on.

With the DRBIII® in HVAC, select System Tests and then select Actuator Circuit Test. Allow the test to run to completion before proceeding.

Does the DRBIII® display any Actuator Circuit Test fault messages?

Yes >> Diagnose and repair the fault(s). Refer to *ACTUATOR CIRCUIT TEST DIAGNOSTICS (DUAL-ZONE) in this section.

No >> Replace the A/C Heater Control in accordance with the Service Information.
Perform BODY VERIFICATION TEST - VER 1. (Refer to 8 - ELECTRICAL/ELECTRONIC CONTROL MODULES/FRONT CONTROL MODULE - DIAGNOSIS AND TESTING).

MODE 2 OVERCURRENT (SINGLE-ZONE)

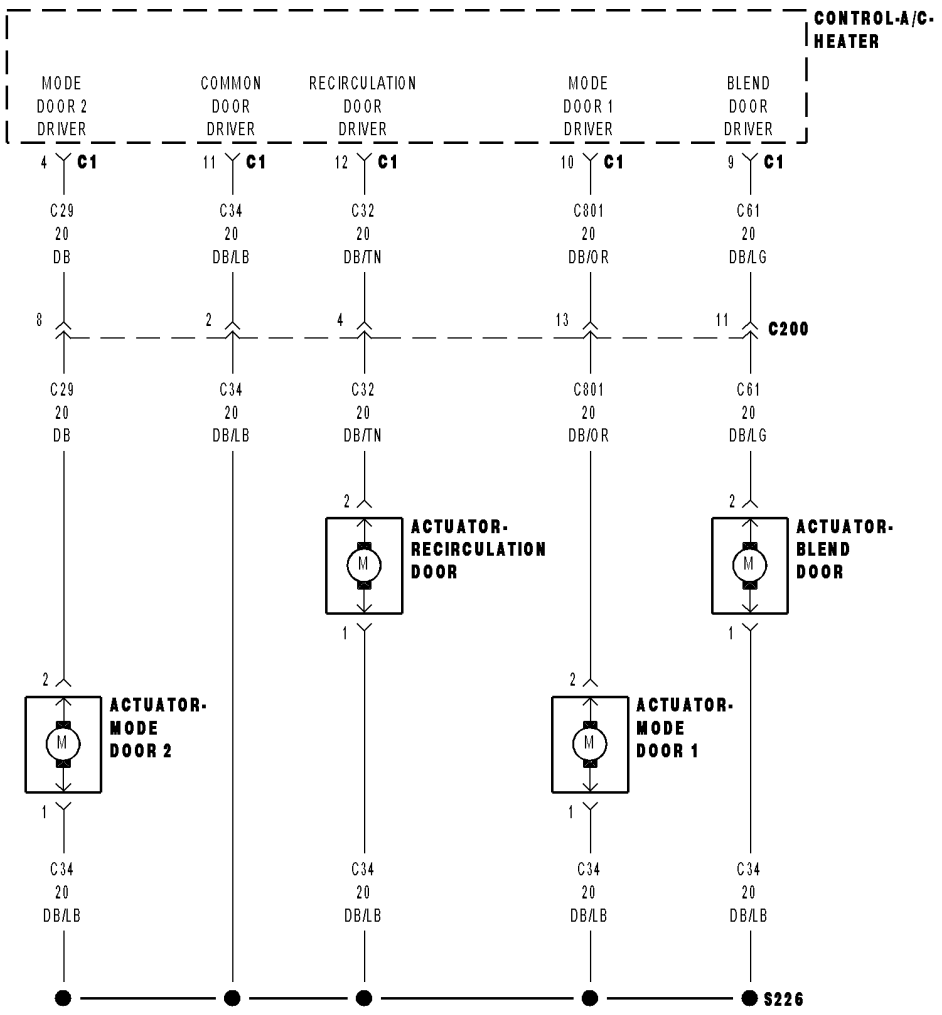

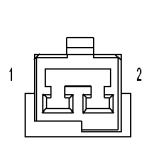

ACTUATOR-
RECIRCULATION DOOR

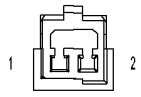

ACTUATOR-
MODE DOOR 1
(PANEL TO FLOOR)

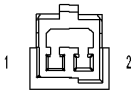

ACTUATOR-
MODE DOOR 2
(DEFROST TO FLOOR)

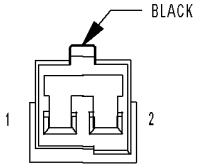

ACTUATOR-
BLEND DOOR
(SINGLE ZONE)

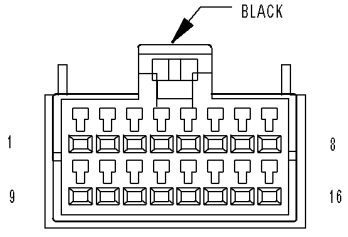

CONTROL-A/C-
HEATER C1

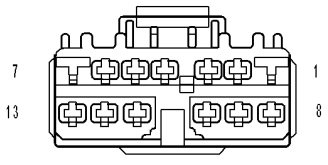

C200

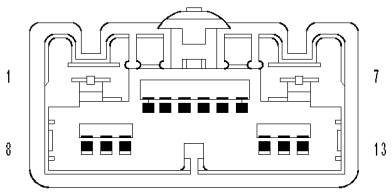

C200

813d4bd1

MODE 2 OVERCURRENT (SINGLE-ZONE) (CONTINUED)

For the Manual Temperature Control circuit diagrams (Refer to 24 - HEATING & AIR CONDITIONING - SCHEMATICS AND DIAGRAMS).

For a complete wiring diagram **Refer to Section 8W**.

Theory of Operation

NOTE: Diagnose and repair all Actuator Circuit Test faults before diagnosing Overcurrent DTCs.

The A/C Heater Control monitors the door driver circuits during actuator operation for shorts to ground, shorts to battery, and shorts to other door driver circuits. If detected, the A/C Heater Control reports these types of faults as Overcurrent DTCs. It is important to note that Overcurrent DTCs do not indicate where or what type of short is present and that additional system testing is necessary to provide more details about the reported fault.

- **When Monitored:**
  When actuator movement is requested.
- **Set Condition:**
  If the A/C Heater Control detects an excessive current draw on any of the door driver circuits while attempting to drive the Mode Door Actuator 2. Note that only one overcurrent DTC can set per ignition cycle.

Possible Causes
(C32) RECIRCULATION DOOR DRIVER CIRCUIT / (C61) BLEND DOOR DRIVER CIRCUIT / (C801) MODE DOOR 1 DRIVER CIRCUIT / (C29) MODE DOOR 2 DRIVER CIRCUIT SHORTED TO GROUND
(C32) RECIRCULATION DOOR DRIVER CIRCUIT / (C61) BLEND DOOR DRIVER CIRCUIT / (C801) MODE DOOR 1 DRIVER CIRCUIT / (C29) MODE DOOR 2 DRIVER CIRCUIT SHORTED TO VOLTAGE
(C32) RECIRCULATION DOOR DRIVER CIRCUIT / (C61) BLEND DOOR DRIVER CIRCUIT / (C801) MODE DOOR 1 DRIVER CIRCUIT / (C29) MODE DOOR 2 DRIVER CIRCUIT SHORTED TOGETHER
BLEND DOOR ACTUATOR / MODE DOOR ACTUATOR 1 / MODE DOOR ACTUATOR 2 / RECIRCULATION DOOR ACTUATOR
A/C HEATER CONTROL

NOTE: This DTC must be active for the result of this test to be valid. Do not perform this test if this DTC is stored. Refer to HVAC System Test for stored DTC test procedures.

Diagnostic Test

1. RUN THE ACTUATOR CIRCUIT TEST

Turn the ignition on.

With the DRBIII® in HVAC, select System Tests and then select Actuator Circuit Test. Allow the test to run to completion before proceeding.

Does the DRBIII® display any Actuator Circuit Test fault messages?

Yes >> Diagnose and repair the fault(s). Refer to *ACTUATOR CIRCUIT TEST DIAGNOSTICS (SINGLE-ZONE) in this section.

No >> Go To 2

MODE 2 OVERCURRENT (SINGLE-ZONE) (CONTINUED)

2. CHECK THE (C32) RECIRCULATION DOOR DRIVER CIRCUIT FOR A SHORT TO THE (C61) BLEND DOOR DRIVER CIRCUIT, THE (C801) MODE DOOR 1 DRIVER CIRCUIT, & THE (C29) MODE DOOR 2 DRIVER CIRCUIT

Turn the ignition off.

Disconnect the A/C Heater Control C1 harness connector.

Measure the resistance between the (C32) Recirculation Door Driver circuit and the (C61) Blend Door Driver circuit, the (C801) Mode Door 1 Driver circuit, and the (C29) Mode Door 2 Driver circuit in the A/C Heater Control C1 harness connector.

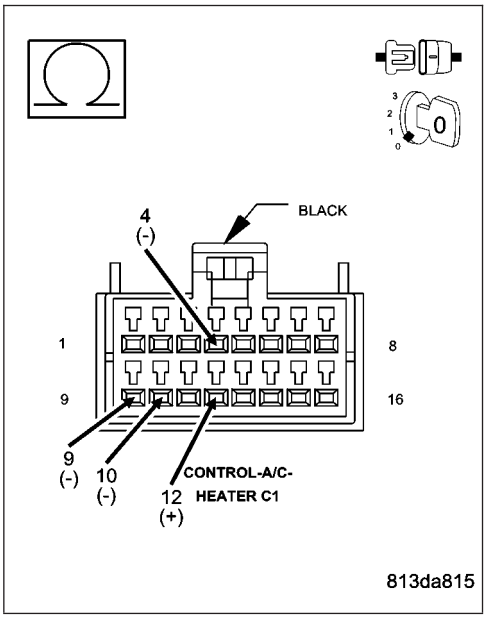

Is the resistance below 10k ohms on any of the circuits?

Yes >> Repair all circuits with a resistance below 10k ohms for a short to the (C32) Recirculation Door Driver circuit.

Perform BODY VERIFICATION TEST - VER 1. (Refer to 8 - ELECTRICAL/ELECTRONIC CONTROL MODULES/ FRONT CONTROL MODULE - DIAGNOSIS AND TESTING).

No >> Go To 3

3. CHECK THE (C61) BLEND DOOR DRIVER CIRCUIT FOR A SHORT TO THE (C801) MODE DOOR 1 DRIVER CIRCUIT & THE (C29) MODE DOOR 2 DRIVER CIRCUIT

Measure the resistance between the (C61) Blend Door Driver circuit and the (C801) Mode Door 1 Driver circuit and the (C29) Mode Door 2 Driver circuit in the A/C Heater Control C1 harness connector.

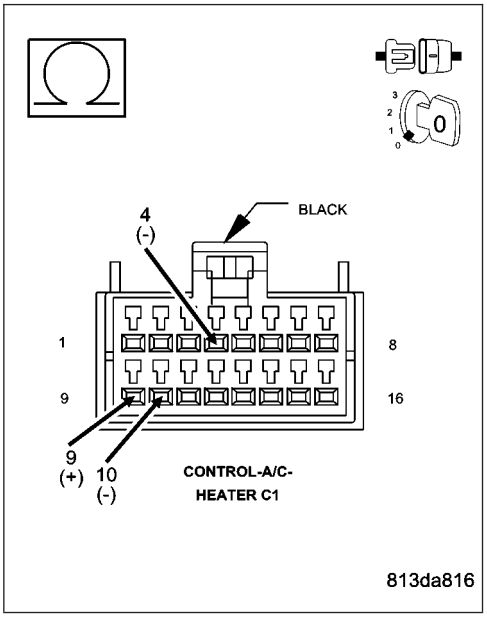

Is the resistance below 10k ohms on any of the circuits?

Yes >> Repair all circuits with a resistance below 10k ohms for a short to the (C61) Blend Door Driver circuit.

Perform BODY VERIFICATION TEST - VER 1. (Refer to 8 - ELECTRICAL/ELECTRONIC CONTROL MODULES/ FRONT CONTROL MODULE - DIAGNOSIS AND TESTING).

No >> Go To 4

MODE 2 OVERCURRENT (SINGLE-ZONE) (CONTINUED)

4. CHECK THE (C801) MODE DOOR 1 DRIVER CIRCUIT FOR A SHORT TO THE (C29) MODE DOOR 2 DRIVER CIRCUIT

Measure the resistance between the (C801) Mode Door 1 Driver circuit and the (C29) Mode Door 2 Driver circuit in the A/C Heater Control C1 harness connector.

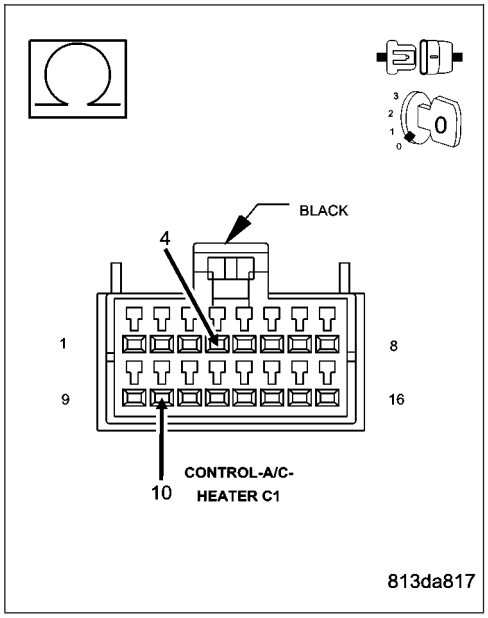

Is the resistance below 10k ohms?

Yes >> Repair the (C29) Mode Door 2 Driver circuit for a short to the (C801) Mode Door 1 Driver circuit.
Perform BODY VERIFICATION TEST - VER 1. (Refer to 8 - ELECTRICAL/ELECTRONIC CONTROL MODULES/ FRONT CONTROL MODULE - DIAGNOSIS AND TESTING).

No >> Go To 5

5. CHECK THE (C34) COMMON DOOR DRIVER CIRCUIT FOR A SHORT TO THE (C32) RECIRCULATION DOOR DRIVER CIRCUIT, THE (C61) BLEND DOOR DRIVER CIRCUIT, THE (C801) MODE DOOR 1 DRIVER CIRCUIT, & THE (C29) MODE DOOR 2 DRIVER CIRCUIT

Measure the resistance between the (C34) Common Door Driver Circuit and the (C32) Recirculation Door Driver circuit, the (C61) Blend Door Driver circuit, the (C801) Mode Door 1 Driver circuit, and the (C29) Mode Door 2 Driver circuit in the A/C Heater Control C1 harness connector.

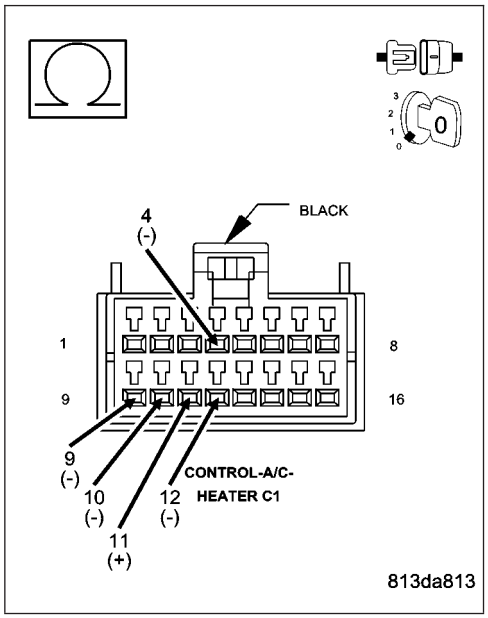

Is the resistance below 30.0 ohms on any of the circuits?

Yes >> Go To 6

No >> Go To 7

MODE 2 OVERCURRENT (SINGLE-ZONE) (CONTINUED)

6. CHECK THE DOOR DRIVER CIRCUITS WHOSE RESISTANCE WAS BELOW 30.0 OHMS IN THE PREVIOUS STEP FOR A SHORT TO THE (C34) COMMON DOOR DRIVER CIRCUIT

Disconnect all door actuator harness connectors whose circuit resistance was below 30.0 ohms.

Measure the resistance between the (C34) Common Door Driver circuit and each applicable door driver circuit in the A/C Heater Control C1 harness connector.

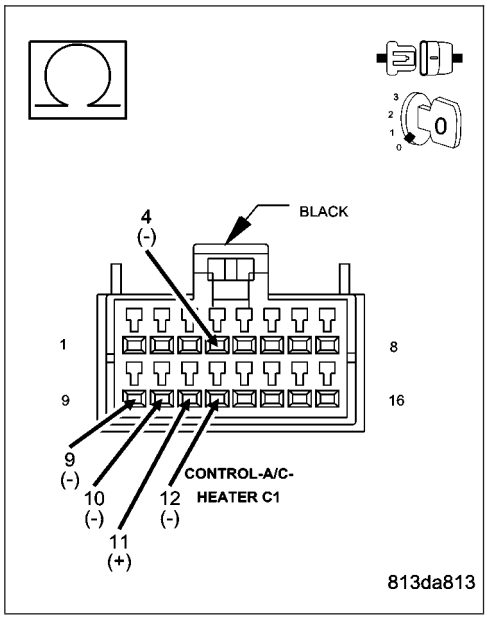

Is the resistance below 10k ohms on any of the circuits?

Yes >> Repair the door driver circuits with a resistance below 10k ohms for a short to the (C34) Common Door Driver circuit.

Perform BODY VERIFICATION TEST - VER 1. (Refer to 8 - ELECTRICAL/ELECTRONIC CONTROL MODULES/ FRONT CONTROL MODULE - DIAGNOSIS AND TESTING).

No >> Replace all door actuators with a resistance below 30.0 ohms in accordance with the Service Information.

Perform BODY VERIFICATION TEST - VER 1. (Refer to 8 - ELECTRICAL/ELECTRONIC CONTROL MODULES/ FRONT CONTROL MODULE - DIAGNOSIS AND TESTING).

---

7. RUN THE ACTUATOR CIRCUIT TEST

Reconnect the A/C Heater Control C1 harness connector.

Turn the ignition on.

With the DRBIII® in HVAC, select System Tests and then select Actuator Circuit Test. Allow the test to run to completion before proceeding.

Does the DRBIII® display any Actuator Circuit Test fault messages?

Yes >> Diagnose and repair the fault(s). Refer to *ACTUATOR CIRCUIT TEST DIAGNOSTICS (SINGLE-ZONE) in this section.

No >> Replace the A/C Heater Control in accordance with the Service Information.

Perform BODY VERIFICATION TEST - VER 1. (Refer to 8 - ELECTRICAL/ELECTRONIC CONTROL MODULES/FRONT CONTROL MODULE - DIAGNOSIS AND TESTING).

PCM COMMUNICATION FAILURE

For a complete wiring diagram **Refer to Section 8W**.

- **When Monitored:**
  With the ignition on.
- **Set Condition:**
  The Powertrain Control Module (PCM) (for gasoline engines) or Engine Control Module (ECM) (for diesel engines) broadcasts a message on the PCI Bus that provides engine RPM and vehicle speed. This DTC will set if the A/C Heater Control does not receive this message for more than 5 seconds.

Possible Causes
FAULTS PRESENT IN THE POWERTRAIN SYSTEM
PCM NOT BROADCASTING MESSAGE
ECM NOT BROADCASTING MESSAGE
A/C HEATER CONTROL NOT RECEIVING MESSAGE

Diagnostic Test

1. VERIFY THAT THE PCM COMMUNICATION FAILURE DTC IS ACTIVE

Turn the ignition on.

With the DRBIII®, erase HVAC DTCs.

Cycle the ignition switch and wait approximately 30 seconds.

With the DRBIII®, read active HVAC DTCs.

Does the DRBIII® display: PCM Communication Failure?

Yes >> Go To 2

No >> A technician may not have erased this DTC following a module or PCI Bus repair. If possible, verify if the vehicle was recently in for this type of service. Otherwise, visually inspect the related wiring harness for chafed, pierced, pinched, and partially broken wires and the wiring harness connectors for broken, bent, pushed out, and corroded terminals. Repair as necessary.

Perform BODY VERIFICATION TEST - VER 1. (Refer to 8 - ELECTRICAL/ELECTRONIC CONTROL MODULES/FRONT CONTROL MODULE - DIAGNOSIS AND TESTING).

---

2. CHECK FOR DTCS IN THE PCM OR ECM

With the DRBIII®, read PCM or ECM DTCs.

Does the DRBIII® display any DTCs?

Yes (Gasoline Engines)

Diagnose and repair the DTC(s). (Refer to 9 - ENGINE ELECTRICAL DIAGNOSTICS).

Perform BODY VERIFICATION TEST - VER 1. (Refer to 8 - ELECTRICAL/ELECTRONIC CONTROL MODULES/FRONT CONTROL MODULE - DIAGNOSIS AND TESTING).

Yes (Diesel Engines)

Diagnose and repair the DTC(s). (Refer to 9 - ENGINE ELECTRICAL DIAGNOSTICS).

Perform BODY VERIFICATION TEST - VER 1. (Refer to 8 - ELECTRICAL/ELECTRONIC CONTROL MODULES/FRONT CONTROL MODULE - DIAGNOSIS AND TESTING).

No >> Go To 3

PCM COMMUNICATION FAILURE (CONTINUED)

3. VERIFY THAT THE PCM OR ECM IS BROADCASTING THE MESSAGE ON THE PCI BUS

With the DRBIII® in HVAC, select Monitor Display and then select PCI Bus Messages.

From the list, select the following:

- **Engine RPM**
- **Vehicle Speed**

Does the DRBIII® display NO RESPONSE after either of these messages?

Yes (Gasoline Engines)

Perform the *No Response From PCM (PCI Bus) diagnostic procedure. (Refer to 8 - ELECTRICAL/ELECTRONIC CONTROL MODULES - DIAGNOSIS AND TESTING).

Perform BODY VERIFICATION TEST - VER 1. (Refer to 8 - ELECTRICAL/ELECTRONIC CONTROL MODULES/FRONT CONTROL MODULE - DIAGNOSIS AND TESTING).

Yes (Diesel Engines)

Perform the *No Response From ECM (PCI Bus) diagnostic procedure. (Refer to 8 - ELECTRICAL/ELECTRONIC CONTROL MODULES - DIAGNOSIS AND TESTING).

Perform BODY VERIFICATION TEST - VER 1. (Refer to 8 - ELECTRICAL/ELECTRONIC CONTROL MODULES/FRONT CONTROL MODULE - DIAGNOSIS AND TESTING).

No >> Replace the A/C Heater Control in accordance with the Service Information.

Perform BODY VERIFICATION TEST - VER 1. (Refer to 8 - ELECTRICAL/ELECTRONIC CONTROL MODULES/FRONT CONTROL MODULE - DIAGNOSIS AND TESTING).

RECIRCULATION CALIBRATION FAULT

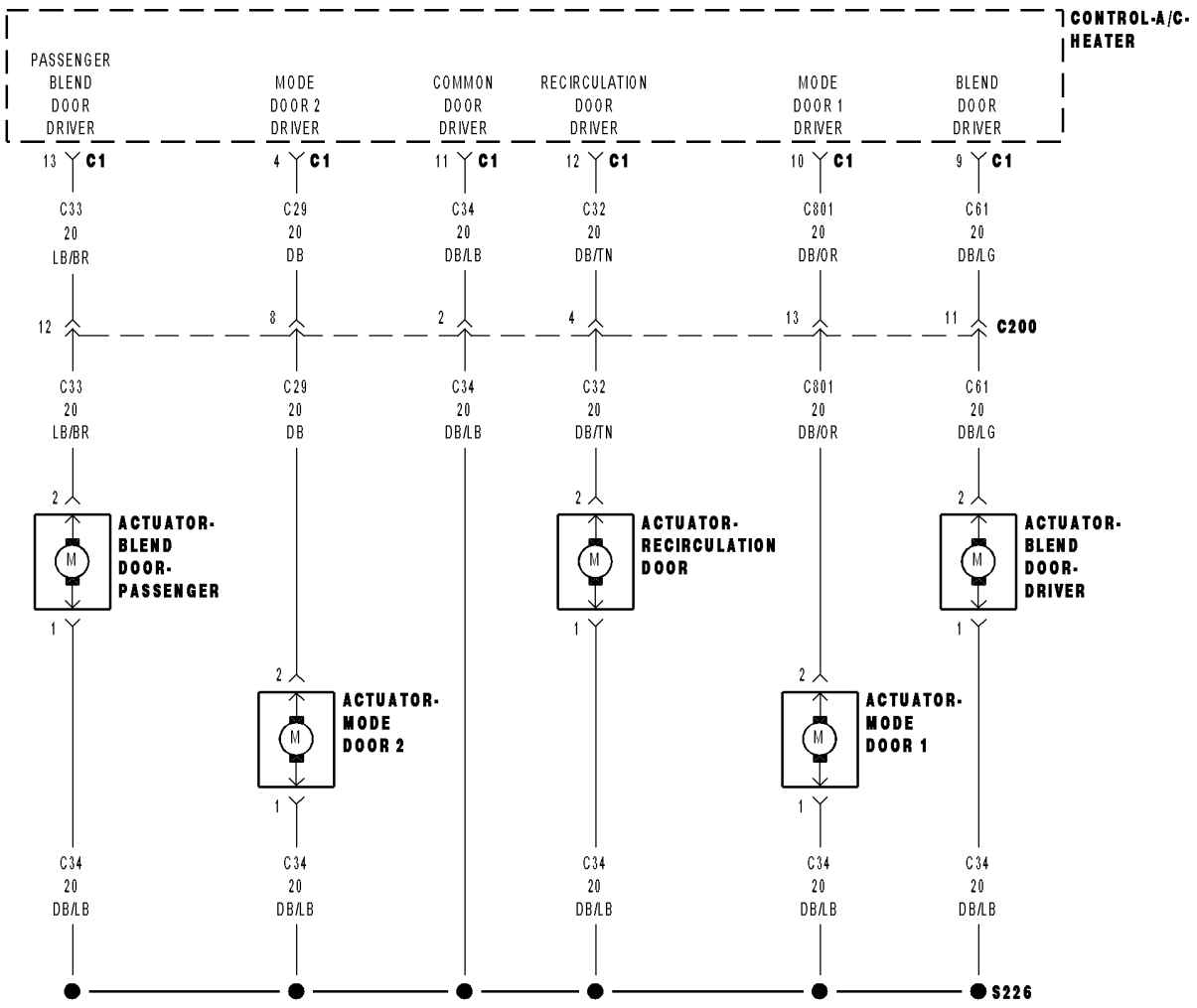

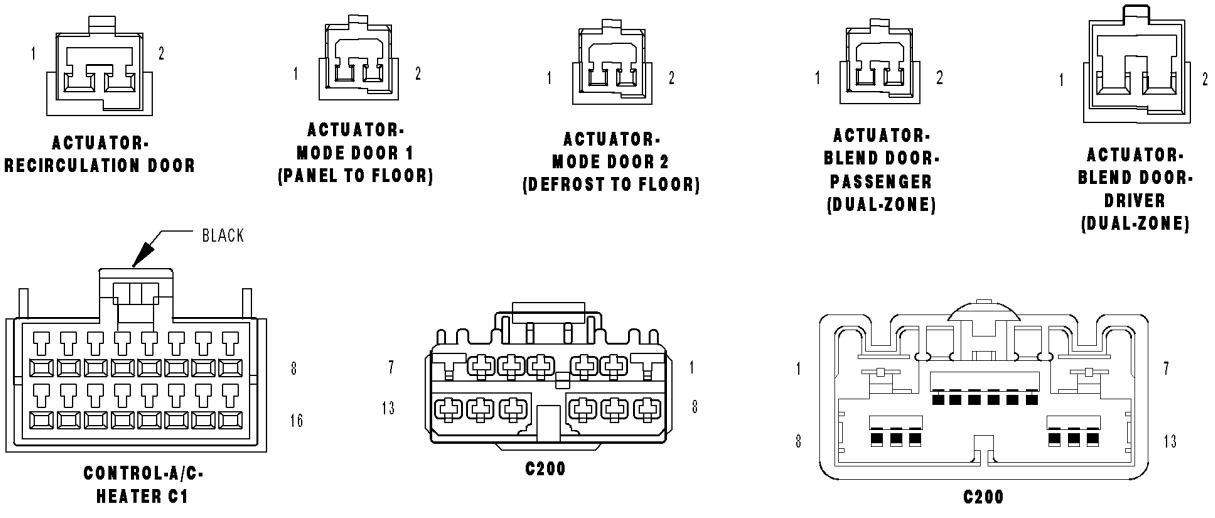

813d20c4

RECIRCULATION CALIBRATION FAULT (CONTINUED)

For the Manual Temperature Control circuit diagrams (Refer to 24 - HEATING & AIR CONDITIONING - SCHEMATICS AND DIAGRAMS).

For a complete wiring diagram **Refer to Section 8W**.

Theory of Operation

NOTE: Diagnose and repair Actuator Circuit Test faults before diagnosing Overcurrent faults and Calibration faults. Diagnose and repair Overcurrent faults before diagnosing Calibration faults.

The purpose of actuator calibration is to determine the total span of door travel between physical stops. To calibrate the actuator, the A/C Heater Control first moves the door to its soft stop, and then counts the number of pulses it takes to move the door to its other stop. An expected range of span is stored in the control's memory. If the measured calibration value is not within the expected range, this fault will set.

For vehicles equipped with electric backlight (EBL), running the HVAC Door Recalibration will cause the EBL status indicator to flash. If recalibration fails, the EBL status indicator will continue to flash until either the system passes recalibration or the ignition key is cycled. When the EBL status indicator is flashing, it will not indicate EBL operating status. However, the EBL mode switch will continue to function normally. When the EBL status indicator is flashing, the A/C status indicator will not function. However, the A/C mode switch will continue to function normally.

For vehicles not equipped with electric backlight (EBL), no status indicator will flash when running the HVAC Door Recalibration. If recalibration fails, the A/C status indicator will not function, however, the A/C mode switch will continue to function normally.

- **When Monitored:**
  When HVAC Door Recalibration is executed.
- **Set Condition:**
  If the span of the recirculation door is found outside the tolerance.

Possible Causes
(C32) RECIRCULATION DOOR DRIVER CIRCUIT SHORTED TO GROUND (WILL ALSO SET OVERCURRENT DTCs)
(C32) RECIRCULATION DOOR DRIVER CIRCUIT SHORTED TO VOLTAGE (WILL ALSO SET OVERCURRENT DTCs)
(C32) RECIRCULATION DOOR DRIVER CIRCUIT OPEN
(C34) COMMON DOOR DRIVER CIRCUIT OPEN
RECIRCULATION DOOR ACTUATOR OPEN
RECIRCULATION DOOR ACTUATOR BROKEN
RECIRCULATION DOOR BOUND UP
RECIRCULATION DOOR LINKAGE MISSING, BROKEN
A/C HEATER CONTROL

Diagnostic Test

1. RUN THE ACTUATOR CIRCUIT TEST

Turn the ignition on.

With the DRBIII® in HVAC, select System Tests and then select Actuator Circuit Test. Allow the test to run to completion before proceeding.

Does the DRBIII® display any Actuator Circuit Test fault messages?

Yes >> Diagnose and repair the fault(s). For Single-Zone HVAC systems, refer to *ACTUATOR CIRCUIT TEST DIAGNOSTICS (SINGLE-ZONE) in this section. For Dual-Zone HVAC systems, refer to *ACTUATOR CIRCUIT TEST DIAGNOSTICS (DUAL-ZONE) in this section.

No >> Go To 2

RECIRCULATION CALIBRATION FAULT (CONTINUED)

2. CHECK FOR DTCS IN THE A/C HEATER CONTROL

NOTE: Diagnose and repair all Overcurrent DTCs before diagnosing Calibration faults.
With the DRBIII®, read HVAC DTCs.

Does the DRBIII® display any DTCs?

Yes >> Diagnose and repair the DTC(s). Refer to the Table of Contents in this Section for a complete list of HVAC related symptoms.

No >> Go To 3

---

3. CHECK THE RESISTANCE BETWEEN THE (C34) COMMON DOOR DRIVER CIRCUIT & THE (C32) RECIRCULATION DOOR DRIVER CIRCUIT

Turn the ignition off.

Disconnect the A/C Heater Control C1 harness connector.

Measure the resistance between the (C34) Common Door Driver circuit and the (C32) Recirculation Door Driver circuit in the A/C Heater Control C1 harness connector.

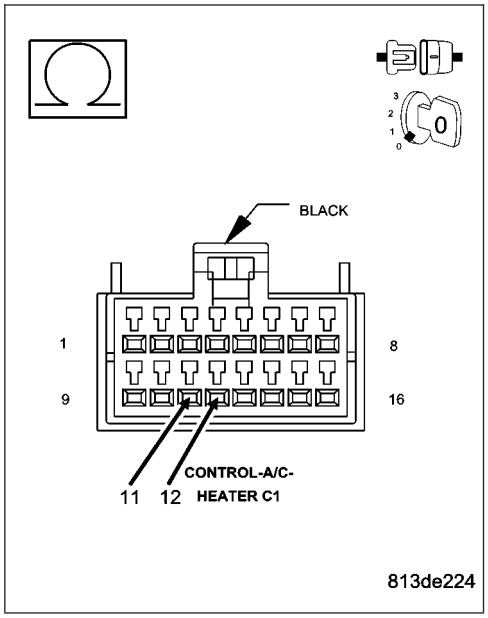

Is the resistance above 70.0 ohms?

Yes >> Go To 4

No >> Go To 6

RECIRCULATION CALIBRATION FAULT (CONTINUED)

4. CHECK (C32) RECIRCULATION DOOR DRIVER CIRCUIT FOR AN OPEN

Disconnect the Recirculation Door Actuator harness connector.

Measure the resistance of the (C32) Recirculation Door Driver circuit between the A/C Heater Control C1 harness connector and the Recirculation Door Actuator harness connector.

Is the resistance below 5.0 ohms?

Yes >> Go To 5

No >> Repair the (C32) Recirculation Door Driver circuit for an open.

Perform BODY VERIFICATION TEST - VER 1. (Refer to 8 - ELECTRICAL/ELECTRONIC CONTROL MODULES/ FRONT CONTROL MODULE - DIAGNOSIS AND TESTING).

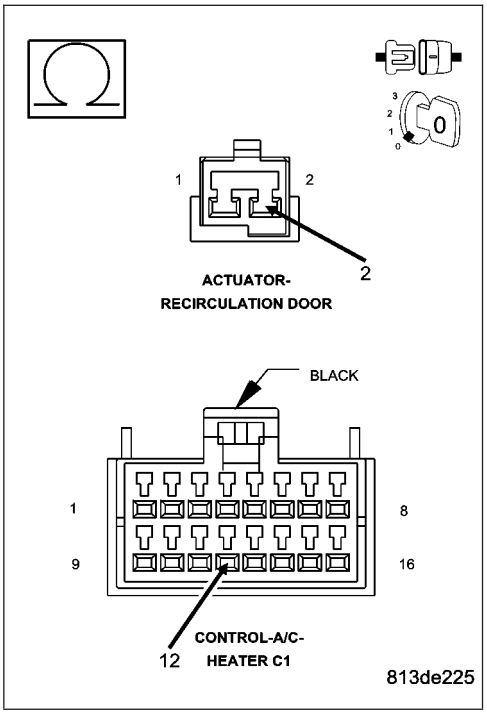

5. CHECK (C34) COMMON DOOR DRIVER CIRCUIT FOR AN OPEN

Measure the resistance of the (C34) Common Door Driver circuit between the A/C Heater Control C1 harness connector and the Recirculation Door Actuator harness connector.

Is the resistance below 5.0 ohms?

Yes >> Replace the Recirculation Door Actuator in accordance with the Service Information.

Perform BODY VERIFICATION TEST - VER 1. (Refer to 8 - ELECTRICAL/ELECTRONIC CONTROL MODULES/ FRONT CONTROL MODULE - DIAGNOSIS AND TESTING).

No >> Repair the (C34) Common Door Driver circuit for an open.

Perform BODY VERIFICATION TEST - VER 1. (Refer to 8 - ELECTRICAL/ELECTRONIC CONTROL MODULES/ FRONT CONTROL MODULE - DIAGNOSIS AND TESTING).

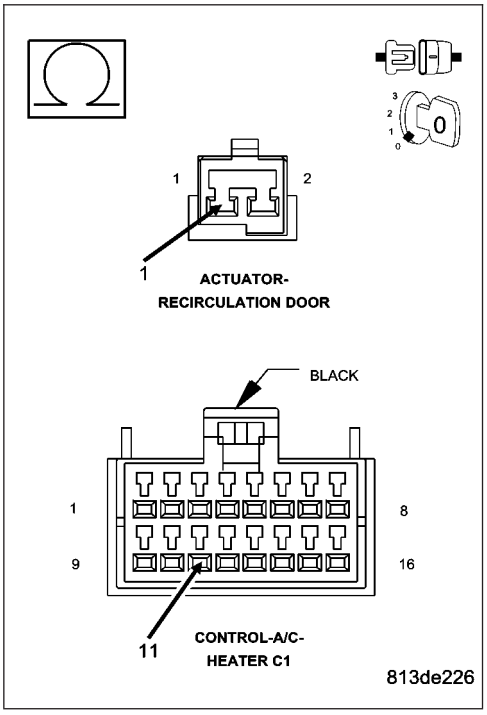

RECIRCULATION CALIBRATION FAULT (CONTINUED)

6. CHECK FOR A BROKEN RECIRCULATION DOOR ACTUATOR

Remove the Recirculation Door Actuator from the A/C Heater Housing Assembly.
Disconnect the Recirculation Door Actuator harness connector.
By hand, attempt to rotate the actuator in both directions.

Does the actuator turn in either direction?

Yes >> Replace the Recirculation Door Actuator in accordance with the Service Information.
Perform BODY VERIFICATION TEST - VER 1. (Refer to 8 - ELECTRICAL/ELECTRONIC CONTROL MODULES/FRONT CONTROL MODULE - DIAGNOSIS AND TESTING).

No >> Go To 7

---

7. CHECK FOR MISSING & BROKEN ACTUATOR LINKAGE & THE DOOR FOR BINDING & A LOSS OF RANGE

Inspect the A/C Heater Housing Assembly for missing and broken actuator linkage.
Inspect the linkage and the actuator for broken and missing teeth.
Check the door for binding and a loss of full range.

Are there any physical or mechanical problems with the door, actuator, linkage, or housing?

Yes >> Repair as necessary in accordance with the Service Information.
Perform BODY VERIFICATION TEST - VER 1. (Refer to 8 - ELECTRICAL/ELECTRONIC CONTROL MODULES/FRONT CONTROL MODULE - DIAGNOSIS AND TESTING).

No >> Replace the A/C Heater Control in accordance with the Service Information.
Perform BODY VERIFICATION TEST - VER 1. (Refer to 8 - ELECTRICAL/ELECTRONIC CONTROL MODULES/FRONT CONTROL MODULE - DIAGNOSIS AND TESTING).

RECIRC CIRCUIT SHORTED TO GROUND

For a complete wiring diagram **Refer to Section 8W**.

- **When Monitored:**
  When the Actuator Circuit Test is executed.
- **Set Condition:**
  If the A/C Heater Control detects a short to ground on the (C32) Recirculation Door Driver circuit.

Possible Causes
DOOR DRIVER CIRCUIT(S) SHORTED TO GROUND
DOOR DRIVER CIRCUITS SHORTED TOGETHER
DOOR ACTUATOR(S)
A/C HEATER CONTROL

For Single-Zone HVAC systems, **refer to *ACTUATOR CIRCUIT TEST DIAGNOSTICS (SINGLE-ZONE) in this Section** for the diagnostic test procedure. For Dual-Zone HVAC systems, **refer to *ACTUATOR CIRCUIT TEST DIAGNOSTICS (DUAL-ZONE) in this Section** for the diagnostic test procedure.

RECIRC CIRCUIT SHORTED TO IGN OR BATT

For a complete wiring diagram **Refer to Section 8W**.

- **When Monitored:**
  When the Actuator Circuit Test is executed.
- **Set Condition:**
  If the A/C Heater Control detects a short to voltage on the (C32) Recirculation Door Driver circuit.

Possible Causes
DOOR DRIVER CIRCUIT(S) SHORTED TO VOLTAGE
DOOR DRIVER CIRCUITS SHORTED TOGETHER
DOOR ACTUATOR(S)
A/C HEATER CONTROL

For Single-Zone HVAC systems, **refer to *ACTUATOR CIRCUIT TEST DIAGNOSTICS (SINGLE-ZONE) in this Section** for the diagnostic test procedure. For Dual-Zone HVAC systems, **refer to *ACTUATOR CIRCUIT TEST DIAGNOSTICS (DUAL-ZONE) in this Section** for the diagnostic test procedure.

RECIRC OVERCURRENT (DUAL-ZONE)

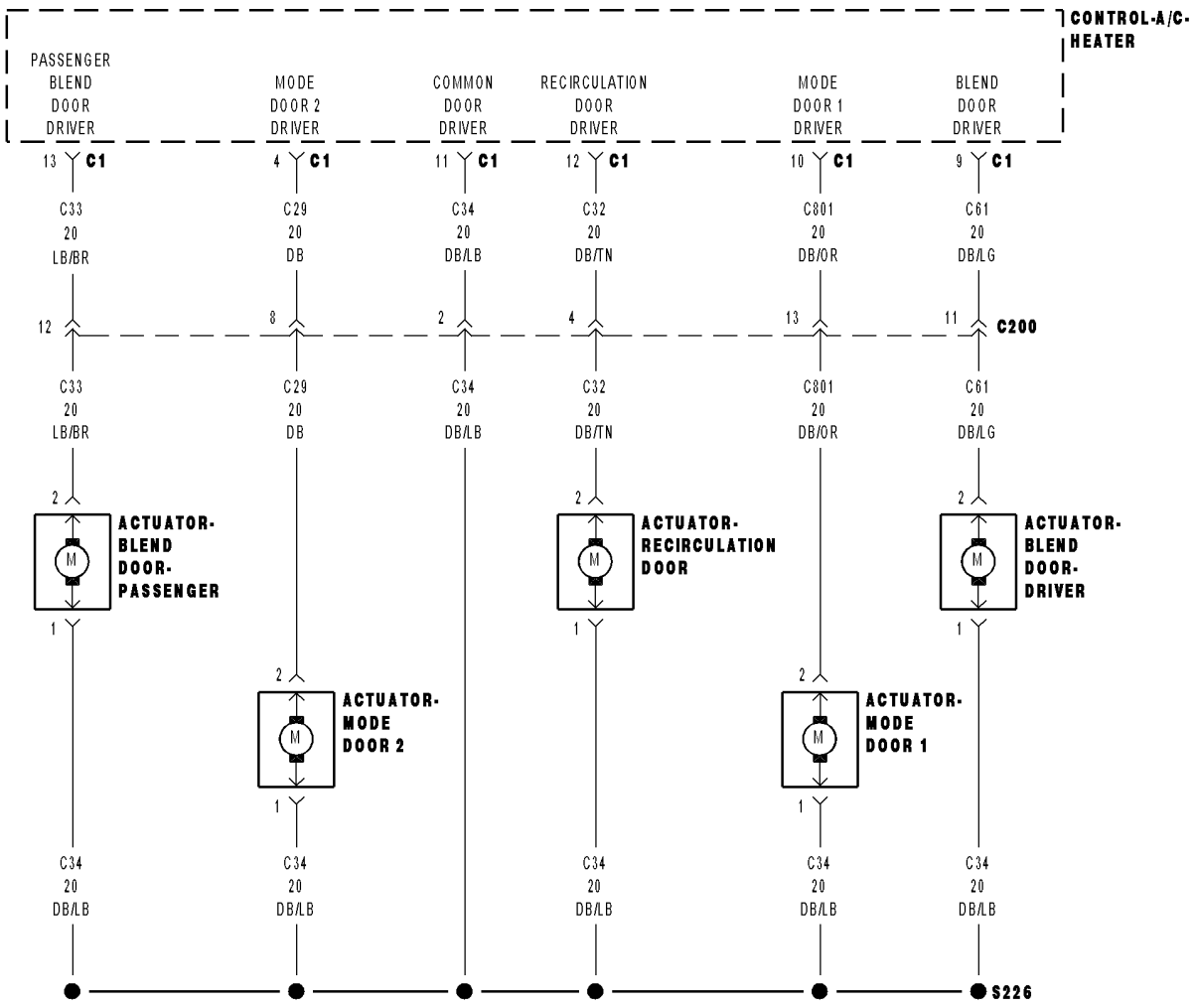

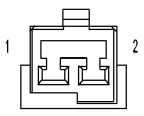
ACTUATOR- RECIRCULATION DOOR

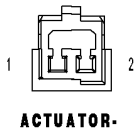
ACTUATOR- MODE DOOR 1 (PANEL TO FLOOR)

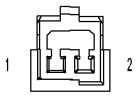
ACTUATOR- MODE DOOR 2 (DEFROST TO FLOOR)

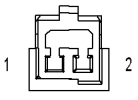
ACTUATOR- BLEND DOOR- PASSENGER (DUAL-ZONE)

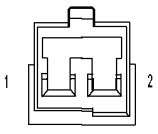
ACTUATOR- BLEND DOOR- DRIVER (DUAL-ZONE)

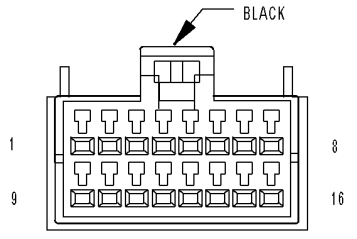

CONTROL-A/C- HEATER C1

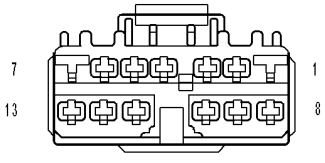

C200

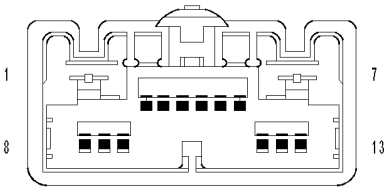

C200

813d20c4

RECIRC OVERCURRENT (DUAL-ZONE) (CONTINUED)

For the Manual Temperature Control circuit diagrams (Refer to 24 - HEATING & AIR CONDITIONING - SCHEMATICS AND DIAGRAMS).

For a complete wiring diagram **Refer to Section 8W**.

Theory of Operation

NOTE: Diagnose and repair all Actuator Circuit Test faults before diagnosing Overcurrent DTCs.

The A/C Heater Control monitors the door driver circuits during actuator operation for shorts to ground, shorts to battery, and shorts to other door driver circuits. If detected, the A/C Heater Control reports these types of faults as Overcurrent DTCs. It is important to note that Overcurrent DTCs do not indicate where or what type of short is present and that additional system testing is necessary to provide more details about the reported fault.

- **When Monitored:**
  When actuator movement is requested.
- **Set Condition:**
  If the A/C Heater Control detects an excessive current draw on any of the door driver circuits while attempting to drive the Recirculation Door Actuator. Note that only one overcurrent DTC can set per ignition cycle.

Possible Causes
(C32) RECIRCULATION DOOR DRIVER CIRCUIT / (C61) BLEND DOOR DRIVER CIRCUIT / (C801) MODE DOOR 1 DRIVER CIRCUIT / (C29) MODE DOOR 2 DRIVER CIRCUIT / (C33) PASSENGER BLEND DOOR DRIVER CIRCUIT SHORTED TO GROUND
(C32) RECIRCULATION DOOR DRIVER CIRCUIT / (C61) BLEND DOOR DRIVER CIRCUIT / (C801) MODE DOOR 1 DRIVER CIRCUIT / (C29) MODE DOOR 2 DRIVER CIRCUIT / (C33) PASSENGER BLEND DOOR DRIVER CIRCUIT SHORTED TO VOLTAGE
(C32) RECIRCULATION DOOR DRIVER CIRCUIT / (C61) BLEND DOOR DRIVER CIRCUIT / (C801) MODE DOOR 1 DRIVER CIRCUIT / (C29) MODE DOOR 2 DRIVER CIRCUIT / (C33) PASSENGER BLEND DOOR DRIVER CIRCUIT SHORTED TOGETHER
DRIVER BLEND DOOR ACTUATOR / PASSENGER BLEND DOOR ACTUATOR / MODE DOOR ACTUATOR 1 / MODE DOOR ACTUATOR 2 / RECIRCULATION DOOR ACTUATOR
A/C HEATER CONTROL

NOTE: This DTC must be active for the result of this test to be valid. Do not perform this test if this DTC is stored. Refer to HVAC System Test for stored DTC test procedures.

Diagnostic Test

1. RUN THE ACTUATOR CIRCUIT TEST

Turn the ignition on.

With the DRBIII® in HVAC, select System Tests and then select Actuator Circuit Test. Allow the test to run to completion before proceeding.

Does the DRBIII® display any Actuator Circuit Test fault messages?

Yes >> Diagnose and repair the fault(s). Refer to *ACTUATOR CIRCUIT TEST DIAGNOSTICS (DUAL-ZONE) in this section.

No >> Go To 2

RECIRC OVERCURRENT (DUAL-ZONE) (CONTINUED)

2. CHECK THE (C32) RECIRCULATION DOOR DRIVER CIRCUIT FOR A SHORT TO THE (C61) BLEND DOOR DRIVER CIRCUIT, THE (C801) MODE DOOR 1 DRIVER CIRCUIT, THE (C29) MODE DOOR 2 DRIVER CIRCUIT, & THE (C33) PASSENGER BLEND DOOR DRIVER CIRCUIT

Turn the ignition off.

Disconnect the A/C Heater Control C1 harness connector.

Measure the resistance between the (C32) Recirculation Door Driver circuit and the (C61) Blend Door Driver circuit, the (C801) Mode Door 1 Driver circuit, the (C29) Mode Door 2 Driver circuit, and the (C33) Passenger Blend Door Driver circuit in the A/C Heater Control C1 harness connector.

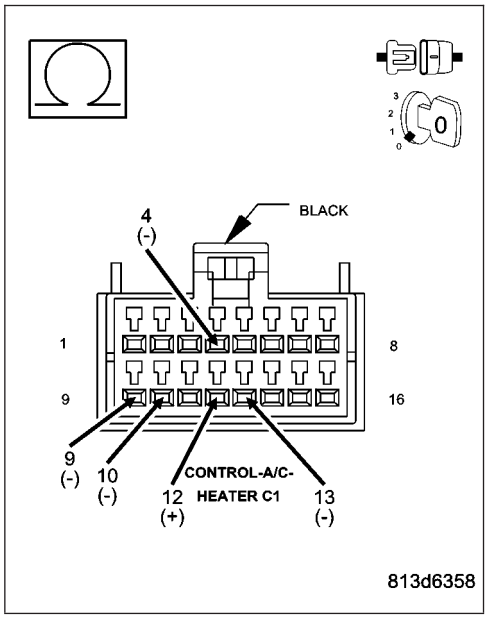

Is the resistance below 10k ohms on any of the circuits?

Yes >> Repair all circuits with a resistance below 10k ohms for a short to the (C32) Recirculation Door Driver circuit.

Perform BODY VERIFICATION TEST - VER 1. (Refer to 8 - ELECTRICAL/ELECTRONIC CONTROL MODULES/ FRONT CONTROL MODULE - DIAGNOSIS AND TESTING).

No >> Go To 3

3. CHECK THE (C61) BLEND DOOR DRIVER CIRCUIT FOR A SHORT TO THE (C801) MODE DOOR 1 DRIVER CIRCUIT, THE (C29) MODE DOOR 2 DRIVER CIRCUIT, & THE (C33) PASSENGER BLEND DOOR DRIVER CIRCUIT

Measure the resistance between the (C61) Blend Door Driver circuit and the (C801) Mode Door 1 Driver circuit, the (C29) Mode Door 2 Driver circuit, and, the (C33) Passenger Blend Door Driver circuit in the A/C Heater Control C1 harness connector.

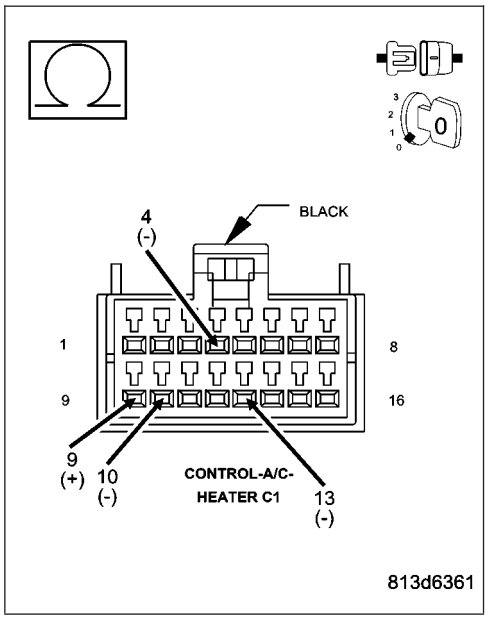

Is the resistance below 10k ohms on any of the circuits?

Yes >> Repair all circuits with a resistance below 10k ohms for a short to the (C61) Blend Door Driver circuit.

Perform BODY VERIFICATION TEST - VER 1. (Refer to 8 - ELECTRICAL/ELECTRONIC CONTROL MODULES/ FRONT CONTROL MODULE - DIAGNOSIS AND TESTING).

No >> Go To 4

RECIRC OVERCURRENT (DUAL-ZONE) (CONTINUED)

4. CHECK THE (C801) MODE DOOR 1 DRIVER CIRCUIT FOR A SHORT TO THE (C29) MODE DOOR 2 DRIVER CIRCUIT & THE (C33) PASSENGER BLEND DOOR DRIVER CIRCUIT

Measure the resistance between the (C801) Mode Door 1 Driver circuit and the (C29) Mode Door 2 Driver circuit, and the (C33) Passenger Blend Door Driver circuit in the A/C Heater Control C1 harness connector.

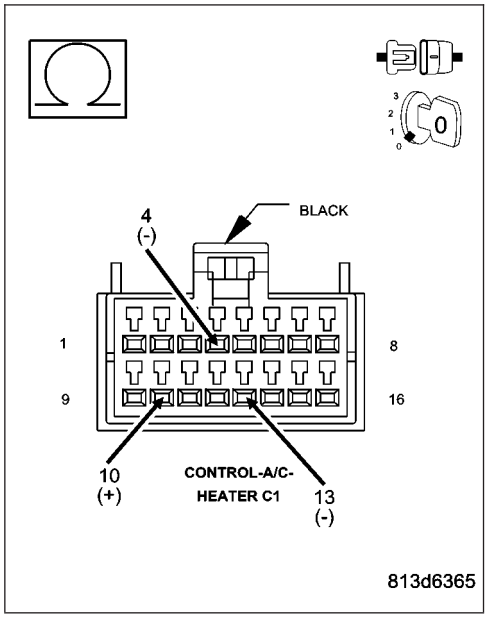

Is the resistance below 10k ohms on any of the circuits?

Yes >> Repair all circuits with a resistance below 10k ohms for a short to the (C801) Mode Door 1 Driver circuit.

Perform BODY VERIFICATION TEST - VER 1. (Refer to 8 - ELECTRICAL/ELECTRONIC CONTROL MODULES/ FRONT CONTROL MODULE - DIAGNOSIS AND TESTING).

No >> Go To 5

5. CHECK THE RESISTANCE BETWEEN THE (C29) MODE DOOR 2 DRIVER CIRCUIT & THE (C33) PASSENGER BLEND DOOR DRIVER CIRCUIT

Measure the resistance between the (C29) Mode Door 2 Driver circuit and the (C33) Passenger Blend Door Driver circuit in the A/C Heater Control C1 harness connector.

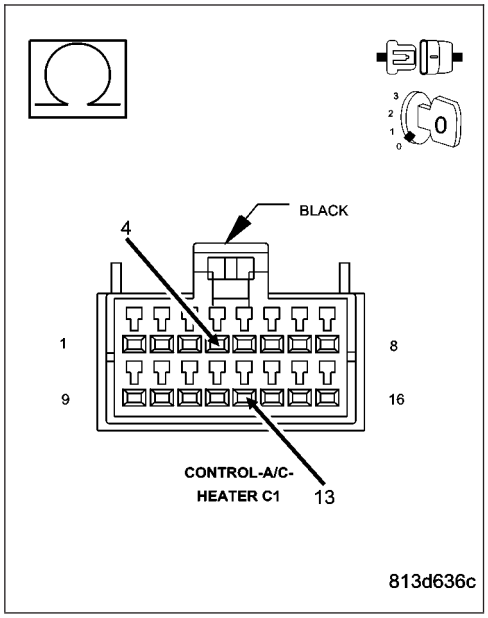

Is the resistance below 10k ohms?

Yes >> Repair the (C33) Passenger Blend Door Driver circuit for a short to the (C29) Mode Door 2 Driver circuit.

Perform BODY VERIFICATION TEST - VER 1. (Refer to 8 - ELECTRICAL/ELECTRONIC CONTROL MODULES/ FRONT CONTROL MODULE - DIAGNOSIS AND TESTING).

No >> Go To 6

RECIRC OVERCURRENT (DUAL-ZONE) (CONTINUED)

6. CHECK THE (C34) COMMON DOOR DRIVER CIRCUIT FOR A SHORT TO THE (C32) RECIRCULATION DOOR DRIVER CIRCUIT, THE (C61) BLEND DOOR DRIVER CIRCUIT, THE (C801) MODE DOOR 1 DRIVER CIRCUIT, THE (C29) MODE DOOR 2 DRIVER CIRCUIT, & THE (C33) PASSENGER BLEND DOOR DRIVER CIRCUIT

Measure the resistance between the (C34) Common Door Driver Circuit and the (C32) Recirculation Door Driver circuit, the (C61) Blend Door Driver circuit, the (C801) Mode Door 1 Driver circuit, the (C29) Mode Door 2 Driver circuit, and, the (C33) Passenger Blend Door Driver circuit in the A/C Heater Control C1 harness connector.

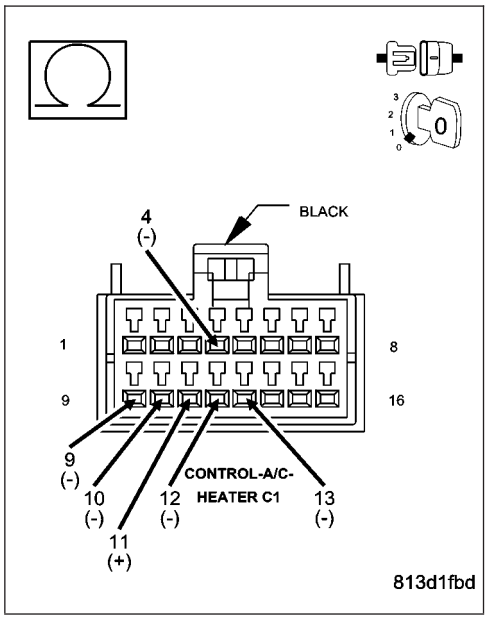

Is the resistance below 30.0 ohms on any of the circuits?

Yes >> Go To 7

No >> Go To 8

7. CHECK THE DOOR DRIVER CIRCUITS WHOSE RESISTANCE WAS BELOW 30.0 OHMS IN THE PREVIOUS STEP FOR A SHORT TO THE (C34) COMMON DOOR DRIVER CIRCUIT

Disconnect all door actuator harness connectors whose circuit resistance was below 30.0 ohms.

Measure the resistance between the (C34) Common Door Driver circuit and each applicable door driver circuit in the A/C Heater Control C1 harness connector.

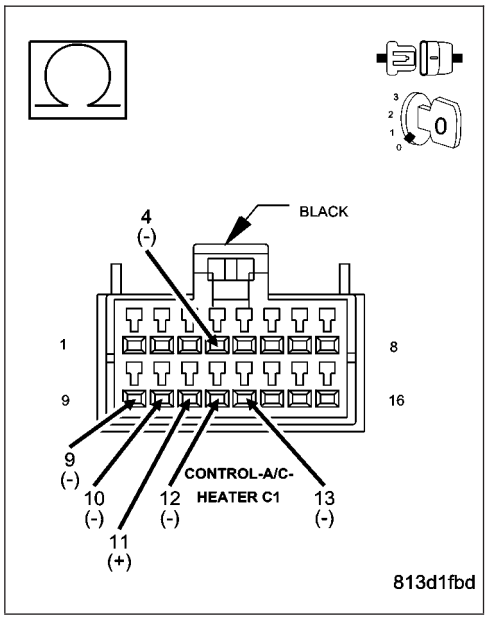

Is the resistance below 10k ohms on any of the circuits?

Yes >> Repair the door driver circuits with a resistance below 10k ohms for a short to the (C34) Common Door Driver circuit.
Perform BODY VERIFICATION TEST - VER 1. (Refer to 8 - ELECTRICAL/ELECTRONIC CONTROL MODULES/ FRONT CONTROL MODULE - DIAGNOSIS AND TESTING).

No >> Replace all door actuators with a resistance below 30.0 ohms in accordance with the Service Information.
Perform BODY VERIFICATION TEST - VER 1. (Refer to 8 - ELECTRICAL/ELECTRONIC CONTROL MODULES/ FRONT CONTROL MODULE - DIAGNOSIS AND TESTING).

RECIRC OVERCURRENT (DUAL-ZONE) (CONTINUED)

8. RUN THE ACTUATOR CIRCUIT TEST

Reconnect the A/C Heater Control C1 harness connector.

Turn the ignition on.

With the DRBIII® in HVAC, select System Tests and then select Actuator Circuit Test. Allow the test to run to completion before proceeding.

Does the DRBIII® display any Actuator Circuit Test fault messages?

Yes >> Diagnose and repair the fault(s). Refer to *ACTUATOR CIRCUIT TEST DIAGNOSTICS (DUAL-ZONE) in this section.

No >> Replace the A/C Heater Control in accordance with the Service Information.

Perform BODY VERIFICATION TEST - VER 1. (Refer to 8 - ELECTRICAL/ELECTRONIC CONTROL MODULES/FRONT CONTROL MODULE - DIAGNOSIS AND TESTING).

RECIRC OVERCURRENT (SINGLE-ZONE)

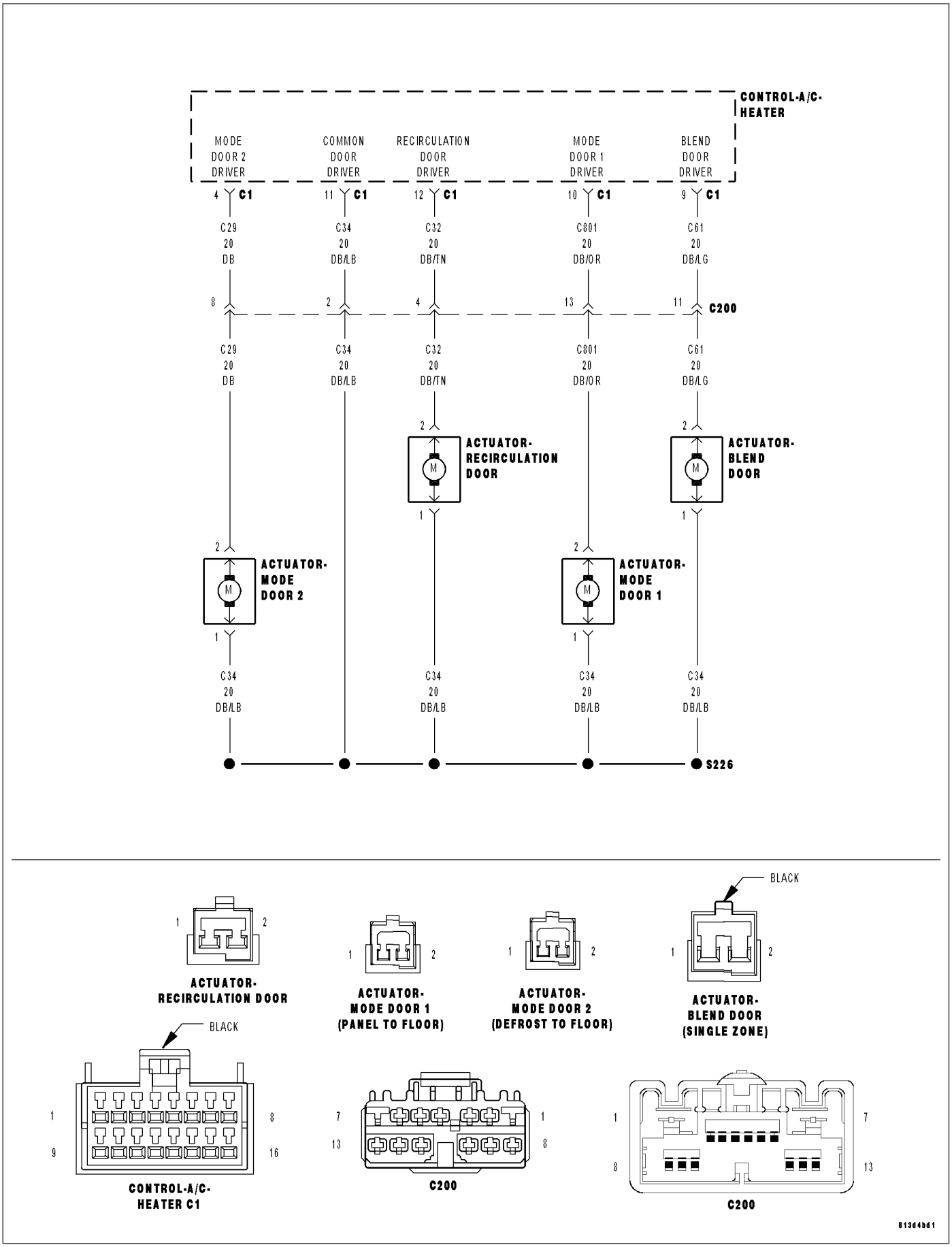

RECIRC OVERCURRENT (SINGLE-ZONE) (CONTINUED)

For the Manual Temperature Control circuit diagrams (Refer to 24 - HEATING & AIR CONDITIONING - SCHEMATICS AND DIAGRAMS).

For a complete wiring diagram **Refer to Section 8W**.

Theory of Operation

NOTE: Diagnose and repair all Actuator Circuit Test faults before diagnosing Overcurrent DTCs.

The A/C Heater Control monitors the door driver circuits during actuator operation for shorts to ground, shorts to battery, and shorts to other door driver circuits. If detected, the A/C Heater Control reports these types of faults as Overcurrent DTCs. It is important to note that Overcurrent DTCs do not indicate where or what type of short is present and that additional system testing is necessary to provide more details about the reported fault.

- **When Monitored:**
  When actuator movement is requested.
- **Set Condition:**
  If the A/C Heater Control detects an excessive current draw on any of the door driver circuits while attempting to drive the Recirculation Door Actuator. Note that only one overcurrent DTC can set per ignition cycle.

Possible Causes
(C32) RECIRCULATION DOOR DRIVER CIRCUIT / (C61) BLEND DOOR DRIVER CIRCUIT / (C801) MODE DOOR 1 DRIVER CIRCUIT / (C29) MODE DOOR 2 DRIVER CIRCUIT SHORTED TO GROUND
(C32) RECIRCULATION DOOR DRIVER CIRCUIT / (C61) BLEND DOOR DRIVER CIRCUIT / (C801) MODE DOOR 1 DRIVER CIRCUIT / (C29) MODE DOOR 2 DRIVER CIRCUIT SHORTED TO VOLTAGE
(C32) RECIRCULATION DOOR DRIVER CIRCUIT / (C61) BLEND DOOR DRIVER CIRCUIT / (C801) MODE DOOR 1 DRIVER CIRCUIT / (C29) MODE DOOR 2 DRIVER CIRCUIT SHORTED TOGETHER
BLEND DOOR ACTUATOR / MODE DOOR ACTUATOR 1 / MODE DOOR ACTUATOR 2 / RECIRCULATION DOOR ACTUATOR
A/C HEATER CONTROL

NOTE: This DTC must be active for the result of this test to be valid. Do not perform this test if this DTC is stored. Refer to HVAC System Test for stored DTC test procedures.

Diagnostic Test

1. RUN THE ACTUATOR CIRCUIT TEST

Turn the ignition on.

With the DRBIII® in HVAC, select System Tests and then select Actuator Circuit Test. Allow the test to run to completion before proceeding.

Does the DRBIII® display any Actuator Circuit Test fault messages?

Yes >> Diagnose and repair the fault(s). Refer to *ACTUATOR CIRCUIT TEST DIAGNOSTICS (SINGLE-ZONE) in this section.

No >> Go To 2

RECIRC OVERCURRENT (SINGLE-ZONE) (CONTINUED)

2. CHECK THE (C32) RECIRCULATION DOOR DRIVER CIRCUIT FOR A SHORT TO THE (C61) BLEND DOOR DRIVER CIRCUIT, THE (C801) MODE DOOR 1 DRIVER CIRCUIT, & THE (C29) MODE DOOR 2 DRIVER CIRCUIT

Turn the ignition off.

Disconnect the A/C Heater Control C1 harness connector.

Measure the resistance between the (C32) Recirculation Door Driver circuit and the (C61) Blend Door Driver circuit, the (C801) Mode Door 1 Driver circuit, and the (C29) Mode Door 2 Driver circuit in the A/C Heater Control C1 harness connector.

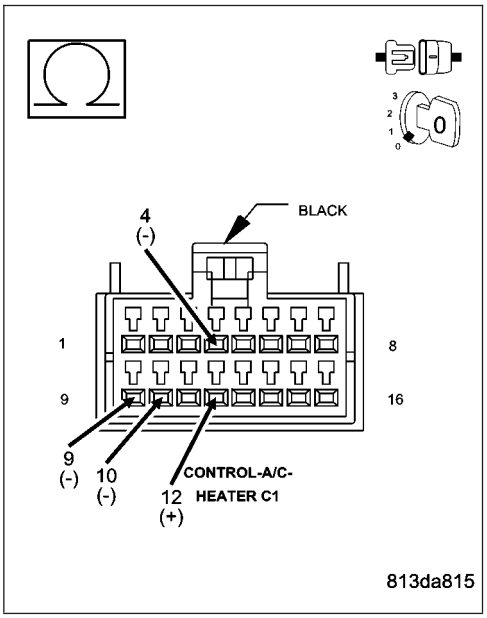

Is the resistance below 10k ohms on any of the circuits?

Yes >> Repair all circuits with a resistance below 10k ohms for a short to the (C32) Recirculation Door Driver circuit.

Perform BODY VERIFICATION TEST - VER 1. (Refer to 8 - ELECTRICAL/ELECTRONIC CONTROL MODULES/ FRONT CONTROL MODULE - DIAGNOSIS AND TESTING).

No >> Go To 3

3. CHECK THE (C61) BLEND DOOR DRIVER CIRCUIT FOR A SHORT TO THE (C801) MODE DOOR 1 DRIVER CIRCUIT & THE (C29) MODE DOOR 2 DRIVER CIRCUIT

Measure the resistance between the (C61) Blend Door Driver circuit and the (C801) Mode Door 1 Driver circuit and the (C29) Mode Door 2 Driver circuit in the A/C Heater Control C1 harness connector.

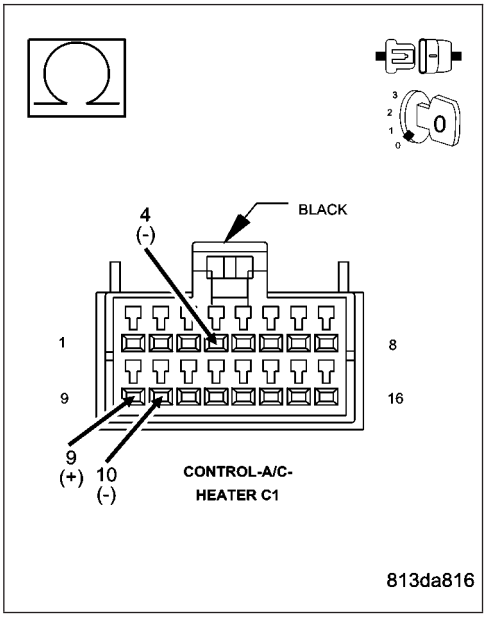

Is the resistance below 10k ohms on any of the circuits?

Yes >> Repair all circuits with a resistance below 10k ohms for a short to the (C61) Blend Door Driver circuit.

Perform BODY VERIFICATION TEST - VER 1. (Refer to 8 - ELECTRICAL/ELECTRONIC CONTROL MODULES/ FRONT CONTROL MODULE - DIAGNOSIS AND TESTING).

No >> Go To 4

RECIRC OVERCURRENT (SINGLE-ZONE) (CONTINUED)

4. CHECK THE (C801) MODE DOOR 1 DRIVER CIRCUIT FOR A SHORT TO THE (C29) MODE DOOR 2 DRIVER CIRCUIT

Measure the resistance between the (C801) Mode Door 1 Driver circuit and the (C29) Mode Door 2 Driver circuit in the A/C Heater Control C1 harness connector.

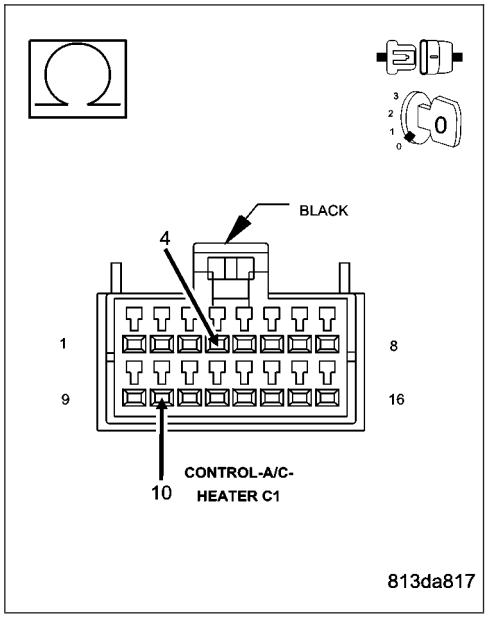

Is the resistance below 10k ohms?

Yes >> Repair the (C29) Mode Door 2 Driver circuit for a short to the (C801) Mode Door 1 Driver circuit.
Perform BODY VERIFICATION TEST - VER 1. (Refer to 8 - ELECTRICAL/ELECTRONIC CONTROL MODULES/ FRONT CONTROL MODULE - DIAGNOSIS AND TESTING).

No >> Go To 5

5. CHECK THE (C34) COMMON DOOR DRIVER CIRCUIT FOR A SHORT TO THE (C32) RECIRCULATION DOOR DRIVER CIRCUIT, THE (C61) BLEND DOOR DRIVER CIRCUIT, THE (C801) MODE DOOR 1 DRIVER CIRCUIT, & THE (C29) MODE DOOR 2 DRIVER CIRCUIT

Measure the resistance between the (C34) Common Door Driver Circuit and the (C32) Recirculation Door Driver circuit, the (C61) Blend Door Driver circuit, the (C801) Mode Door 1 Driver circuit, and the (C29) Mode Door 2 Driver circuit in the A/C Heater Control C1 harness connector.

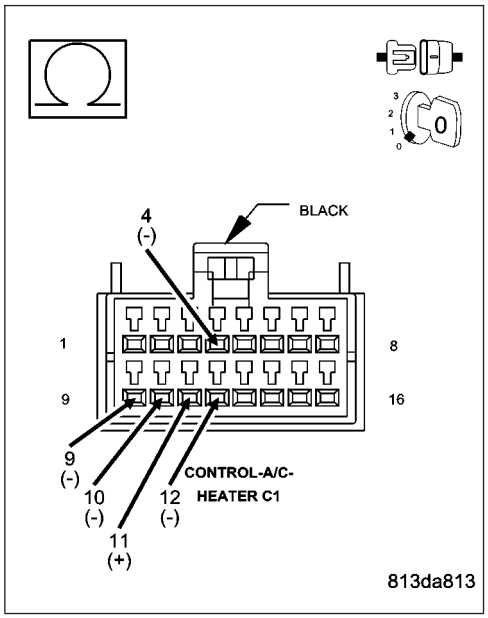

Is the resistance below 30.0 ohms on any of the circuits?

Yes >> Go To 6

No >> Go To 7

RECIRC OVERCURRENT (SINGLE-ZONE) (CONTINUED)

6. CHECK THE DOOR DRIVER CIRCUITS WHOSE RESISTANCE WAS BELOW 30.0 OHMS IN THE PREVIOUS STEP FOR A SHORT TO THE (C34) COMMON DOOR DRIVER CIRCUIT

Disconnect all door actuator harness connectors whose circuit resistance was below 30.0 ohms.

Measure the resistance between the (C34) Common Door Driver circuit and each applicable door driver circuit in the A/C Heater Control C1 harness connector.

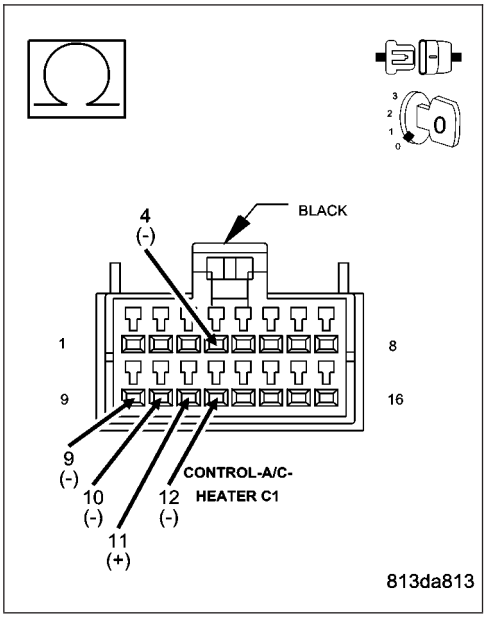

Is the resistance below 10k ohms on any of the circuits?

Yes >> Repair the door driver circuits with a resistance below 10k ohms for a short to the (C34) Common Door Driver circuit.

Perform BODY VERIFICATION TEST - VER 1. (Refer to 8 - ELECTRICAL/ELECTRONIC CONTROL MODULES/ FRONT CONTROL MODULE - DIAGNOSIS AND TESTING).

No >> Replace all door actuators with a resistance below 30.0 ohms in accordance with the Service Information.

Perform BODY VERIFICATION TEST - VER 1. (Refer to 8 - ELECTRICAL/ELECTRONIC CONTROL MODULES/ FRONT CONTROL MODULE - DIAGNOSIS AND TESTING).

---

7. RUN THE ACTUATOR CIRCUIT TEST

Reconnect the A/C Heater Control C1 harness connector.

Turn the ignition on.

With the DRBIII® in HVAC, select System Tests and then select Actuator Circuit Test. Allow the test to run to completion before proceeding.

Does the DRBIII® display any Actuator Circuit Test fault messages?

Yes >> Diagnose and repair the fault(s). Refer to *ACTUATOR CIRCUIT TEST DIAGNOSTICS (SINGLE-ZONE) in this section.

No >> Replace the A/C Heater Control in accordance with the Service Information.

Perform BODY VERIFICATION TEST - VER 1. (Refer to 8 - ELECTRICAL/ELECTRONIC CONTROL MODULES/FRONT CONTROL MODULE - DIAGNOSIS AND TESTING).

RECIRC SWITCH FAULT

For a complete wiring diagram **Refer to Section 8W**.

Theory of Operation

The switch input changes when the switch is pushed down. A stored DTC indicates that the MAX mode switch was stuck in a pushed position for more than 10 minutes, but has since returned to its normal state. An active DTC indicates that the MAX mode switch is stuck in a pushed position. An active DTC will prevent proper switch and status indicator function as evidenced by not being able to turn the status indicator either on if off or off if on.

- **When Monitored:**
  With the ignition on.
- **Set Condition:**
  If the MAX mode switch stays closed for 10 minutes.

Possible Causes
A/C HEATER CONTROL

NOTE: This DTC must be active for the result of this test to be valid. Do not perform this test if this DTC is stored. Refer to HVAC System Test for stored DTC test procedures.

Diagnostic Test

1. REPLACE THE A/C HEATER CONTROL

Repair

Replace the A/C Heater Control in accordance with the Service Information.

Perform BODY VERIFICATION TEST - VER 1. (Refer to 8 - ELECTRICAL/ELECTRONIC CONTROL MODULES/FRONT CONTROL MODULE - DIAGNOSIS AND TESTING).

REFRIGERANT PRESSURE RX FAILURE

For a complete wiring diagram **Refer to Section 8W**.

- **When Monitored:**
  With the ignition on.
- **Set Condition:**
  The Powertrain Control Module (PCM) (for gasoline engines) or Engine Control Module (ECM) (for diesel engines) broadcasts a message on the PCI Bus that provides refrigerant pressure. This DTC will set if the A/C Heater Control does not receive this message for more than 5 seconds.

Possible Causes
FAULTS PRESENT IN THE POWERTRAIN SYSTEM
PCM NOT BROADCASTING MESSAGE
ECM NOT BROADCASTING MESSAGE
A/C HEATER CONTROL MODULE NOT RECEIVING MESSAGE

Diagnostic Test

1. VERIFY THAT THE REFRIGERANT PRESSURE RX FAILURE DTC IS ACTIVE

Turn the ignition on.

With the DRBIII®, erase HVAC DTCs.

Cycle the ignition switch and wait approximately 30 seconds.

With the DRBIII®, read active HVAC DTCs.

Does the DRBIII® display: Refrigerant Pressure RX Failure?

Yes >> Go To 2

No >> A technician may not have erased this DTC following a module or PCI Bus repair. If possible, verify if the vehicle was recently in for this type of service. Otherwise, visually inspect the related wiring harness for chafed, pierced, pinched, and partially broken wires and the wiring harness connectors for broken, bent, pushed out, and corroded terminals. Repair as necessary.

Perform BODY VERIFICATION TEST - VER 1. (Refer to 8 - ELECTRICAL/ELECTRONIC CONTROL MODULES/FRONT CONTROL MODULE - DIAGNOSIS AND TESTING).

---

2. CHECK FOR DTCS IN THE PCM OR ECM

With the DRBIII®, read PCM or ECM DTCs.

Does the DRBIII® display any DTCs?

Yes (Gasoline Engines)

Diagnose and repair the DTC(s). (Refer to 9 - ENGINE ELECTRICAL DIAGNOSTICS).

Perform BODY VERIFICATION TEST - VER 1. (Refer to 8 - ELECTRICAL/ELECTRONIC CONTROL MODULES/FRONT CONTROL MODULE - DIAGNOSIS AND TESTING).

Yes (Diesel Engines)

Diagnose and repair the DTC(s). (Refer to 9 - ENGINE ELECTRICAL DIAGNOSTICS).

Perform BODY VERIFICATION TEST - VER 1. (Refer to 8 - ELECTRICAL/ELECTRONIC CONTROL MODULES/FRONT CONTROL MODULE - DIAGNOSIS AND TESTING).

No >> Go To 3

REFRIGERANT PRESSURE RX FAILURE (CONTINUED)

3. VERIFY THAT THE PCM OR ECM IS BROADCASTING THE MESSAGE ON THE PCI BUS

With the DRBIII® in HVAC, select Monitor Display and then select PCI Bus Messages.

From the list, select **Refrigerant Pressure**.

Does the DRBIII® display NO RESPONSE after this message?

Yes (Gasoline Engines)

Perform the *No Response From PCM (PCI Bus) diagnostic procedure. (Refer to 8 - ELECTRICAL/ELECTRONIC CONTROL MODULES - DIAGNOSIS AND TESTING).

Perform BODY VERIFICATION TEST - VER 1. (Refer to 8 - ELECTRICAL/ELECTRONIC CONTROL MODULES/FRONT CONTROL MODULE - DIAGNOSIS AND TESTING).

Yes (Diesel Engines)

Perform the *No Response From ECM (PCI Bus) diagnostic procedure. (Refer to 8 - ELECTRICAL/ELECTRONIC CONTROL MODULES - DIAGNOSIS AND TESTING).

Perform BODY VERIFICATION TEST - VER 1. (Refer to 8 - ELECTRICAL/ELECTRONIC CONTROL MODULES/FRONT CONTROL MODULE - DIAGNOSIS AND TESTING).

No >> Replace the A/C Heater Control in accordance with the Service Information.

Perform BODY VERIFICATION TEST - VER 1. (Refer to 8 - ELECTRICAL/ELECTRONIC CONTROL MODULES/FRONT CONTROL MODULE - DIAGNOSIS AND TESTING).

SHORT TOO COMPLEX

For a complete wiring diagram **Refer to Section 8W**.

- **When Monitored:**
  When the Actuator Circuit Test is executed.
- **Set Condition:**
  If the A/C Heater Control detects more than three drivers shorted in the same direction (e.g. four drivers, all shorted to ground) or if two or more drivers are shorted with at least one driver shorted to ignition/battery and one driver shorted to ground.

Possible Causes
DOOR DRIVER CIRCUIT(S) SHORTED TO GROUND
DOOR DRIVER CIRCUIT(S) SHORTED TO VOLTAGE
DOOR DRIVER CIRCUITS SHORTED TOGETHER
DOOR ACTUATOR(S)
A/C HEATER CONTROL

For Single-Zone HVAC systems, **refer to *ACTUATOR CIRCUIT TEST DIAGNOSTICS (SINGLE-ZONE) in this Section** for the diagnostic test procedure. For Dual-Zone HVAC systems, **refer to *ACTUATOR CIRCUIT TEST DIAGNOSTICS (DUAL-ZONE) in this Section** for the diagnostic test procedure.

TX FAILURE

For a complete wiring diagram **Refer to Section 8W**.

- **When Monitored:**
  With the ignition on.
- **Set Condition:**
  If the A/C Heater Control is unable to broadcast a PCI Bus message.

Possible Causes
PCI BUS CIRCUIT FAULTS
A/C HEATER CONTROL

Diagnostic Test

1. VERIFY THAT THE A/C HEATER CONTROL IS ACTIVE ON THE BUS

Turn the ignition on.

With the DRBIII®, attempt to communicate with the HVAC Module.

Was the DRBIII® able to I/D or communicate with the HVAC Module?

Yes >> Go To 2

No >> (Refer to 8 - ELECTRICAL/ELECTRONIC CONTROL MODULES - DIAGNOSIS AND TESTING) for No Response diagnostic procedures.
Perform BODY VERIFICATION TEST - VER 1. (Refer to 8 - ELECTRICAL/ELECTRONIC CONTROL MODULES/FRONT CONTROL MODULE - DIAGNOSIS AND TESTING).

---

2. CHECK FOR ADDITIONAL DTCS IN THE A/C HEATER CONTROL

With the DRBIII®, read active HVAC DTCs.

Does the DRBIII® display any additional DTCs?

Yes >> Diagnose and repair the DTC(s). Refer to the Table of Contents in this Section for a complete list of HVAC related symptoms.
Perform BODY VERIFICATION TEST - VER 1. (Refer to 8 - ELECTRICAL/ELECTRONIC CONTROL MODULES/FRONT CONTROL MODULE - DIAGNOSIS AND TESTING).

No >> Go To 3

---

3. VERIFY THAT THE PCM OR ECM & CLUSTER ARE ACTIVE ON THE BUS

With the DRBIII®, attempt to communicate with the PCM (for gasoline engines) or the ECM (for diesel engines) and the Cluster.

Was the DRBIII® able to I/D or communicate with these modules?

Yes >> Go To 4

No >> (Refer to 8 - ELECTRICAL/ELECTRONIC CONTROL MODULES - DIAGNOSIS AND TESTING) for No Response diagnostic procedures.
Perform BODY VERIFICATION TEST - VER 1. (Refer to 8 - ELECTRICAL/ELECTRONIC CONTROL MODULES/FRONT CONTROL MODULE - DIAGNOSIS AND TESTING).

TX FAILURE (CONTINUED)

4. VERIFY THE TX FAILURE DTC IS ACTIVE

With the DRBIII®, erase HVAC DTCs.

Cycle the ignition switch and wait approximately one minute.

With the DRBIII®, read active HVAC DTCs.

Does the DRBIII® display: TX Failure?

Yes >> Replace the A/C Heater Control in accordance with the Service Information.

Perform BODY VERIFICATION TEST - VER 1. (Refer to 8 - ELECTRICAL/ELECTRONIC CONTROL MODULES/FRONT CONTROL MODULE - DIAGNOSIS AND TESTING).

No >> A technician may not have erased this DTC following a module or PCI Bus repair. If possible, verify if the vehicle was recently in for this type of service. Otherwise, visually inspect the related wiring harness for chafed, pierced, pinched, and partially broken wires and the wiring harness connectors for broken, bent, pushed out, and corroded terminals. Repair as necessary.

Perform BODY VERIFICATION TEST - VER 1. (Refer to 8 - ELECTRICAL/ELECTRONIC CONTROL MODULES/FRONT CONTROL MODULE - DIAGNOSIS AND TESTING).

VIN RX FAILURE

For a complete wiring diagram **Refer to Section 8W**.

- **When Monitored:**
  With the ignition on.
- **Set Condition:**
  The Powertrain Control Module (PCM) (for gasoline engines) or Engine Control Module (ECM) (for diesel engines) broadcasts a message on the PCI Bus that provides the VIN. This DTC will set if the A/C Heater Control does not receive this message for more than 5 seconds.

Possible Causes
FAULTS PRESENT IN THE POWERTRAIN SYSTEM
PCM NOT BROADCASTING MESSAGE
ECM NOT BROADCASTING MESSAGE
A/C HEATER CONTROL NOT RECEIVING MESSAGE

Diagnostic Test

1. VERIFY THAT THE VIN RX FAILURE DTC IS ACTIVE

Turn the ignition on.

With the DRBIII®, erase HVAC DTCs.

Cycle the ignition switch and wait approximately 30 seconds.

With the DRBIII®, read active HVAC DTCs.

Does the DRBIII® display: VIN RX Failure?

Yes >> Go To 2

No >> A technician may not have erased this DTC following a module or PCI Bus repair. If possible, verify if the vehicle was recently in for this type of service. Otherwise, visually inspect the related wiring harness for chafed, pierced, pinched, and partially broken wires and the wiring harness connectors for broken, bent, pushed out, and corroded terminals. Repair as necessary.

Perform BODY VERIFICATION TEST - VER 1. (Refer to 8 - ELECTRICAL/ELECTRONIC CONTROL MODULES/FRONT CONTROL MODULE - DIAGNOSIS AND TESTING).

---

2. CHECK FOR DTCS IN THE PCM OR ECM

With the DRBIII®, read PCM or ECM DTCs.

Does the DRBIII® display any DTCs?

Yes (Gasoline Engines)

Diagnose and repair the DTC(s). (Refer to 9 - ENGINE ELECTRICAL DIAGNOSTICS).

Perform BODY VERIFICATION TEST - VER 1. (Refer to 8 - ELECTRICAL/ELECTRONIC CONTROL MODULES/FRONT CONTROL MODULE - DIAGNOSIS AND TESTING).

Yes (Diesel Engines)

Diagnose and repair the DTC(s). (Refer to 9 - ENGINE ELECTRICAL DIAGNOSTICS).

Perform BODY VERIFICATION TEST - VER 1. (Refer to 8 - ELECTRICAL/ELECTRONIC CONTROL MODULES/FRONT CONTROL MODULE - DIAGNOSIS AND TESTING).

No >> Go To 3

VIN RX FAILURE (CONTINUED)

3. VERIFY THAT THE PCM OR ECM IS BROADCASTING THE MESSAGE ON THE PCI BUS

With the DRBIII® in HVAC, select Monitor Display and then select PCI Bus Messages.

From the list, select **VIN Message Present**.

Does the DRBIII® display NO or NO RESPONSE after this message?

Yes (Gasoline Engines)

Perform the *No Response From PCM (PCI Bus) diagnostic procedure. (Refer to 8 - ELECTRICAL/ELECTRONIC CONTROL MODULES - DIAGNOSIS AND TESTING).

Perform BODY VERIFICATION TEST - VER 1. (Refer to 8 - ELECTRICAL/ELECTRONIC CONTROL MODULES/FRONT CONTROL MODULE - DIAGNOSIS AND TESTING).

Yes (Diesel Engines)

Perform the *No Response From ECM (PCI Bus) diagnostic procedure. (Refer to 8 - ELECTRICAL/ELECTRONIC CONTROL MODULES - DIAGNOSIS AND TESTING).

Perform BODY VERIFICATION TEST - VER 1. (Refer to 8 - ELECTRICAL/ELECTRONIC CONTROL MODULES/FRONT CONTROL MODULE - DIAGNOSIS AND TESTING).

No >> Replace the A/C Heater Control in accordance with the Service Information.

Perform BODY VERIFICATION TEST - VER 1. (Refer to 8 - ELECTRICAL/ELECTRONIC CONTROL MODULES/FRONT CONTROL MODULE - DIAGNOSIS AND TESTING).

ZONE CALIBRATION FAULT

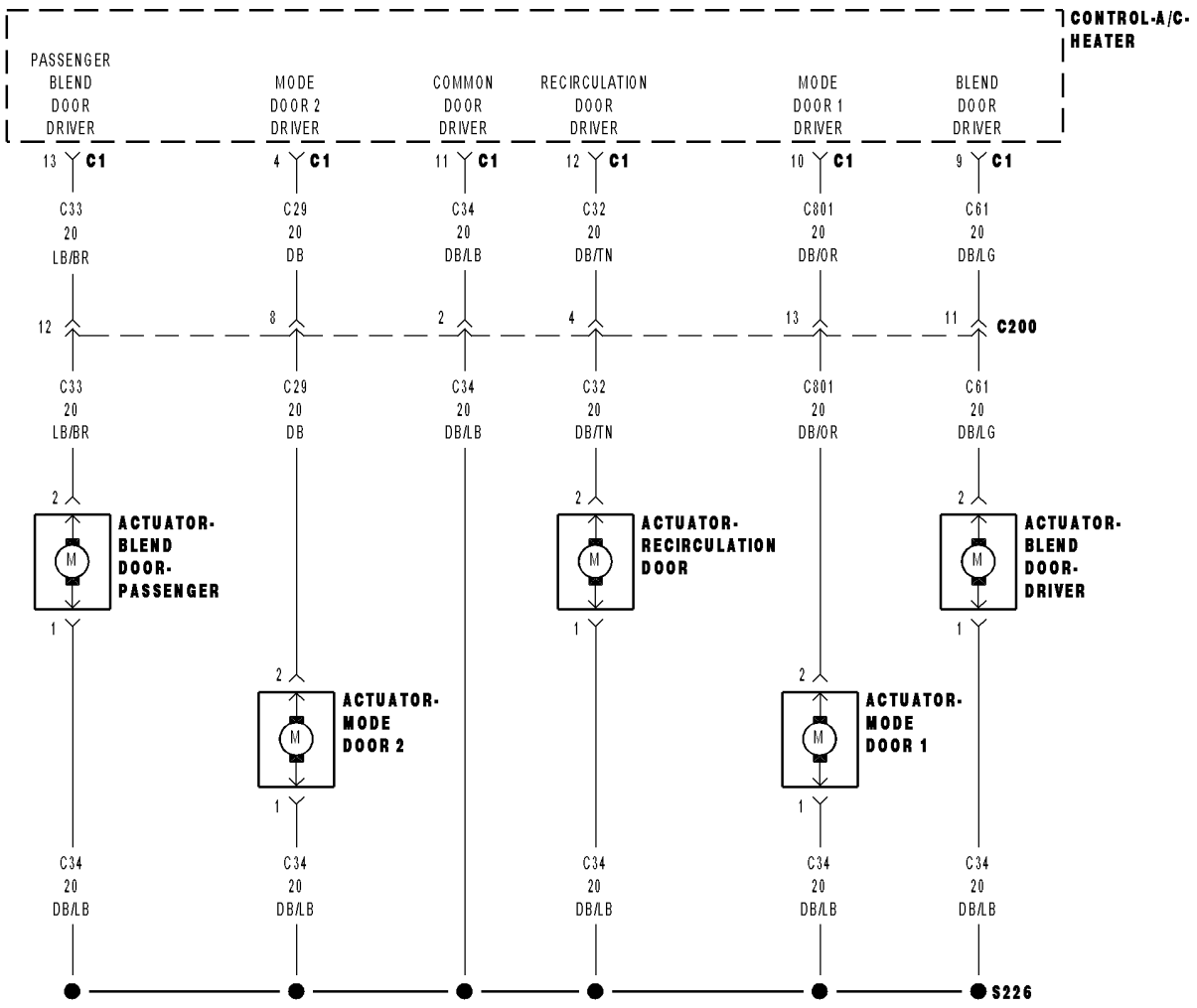

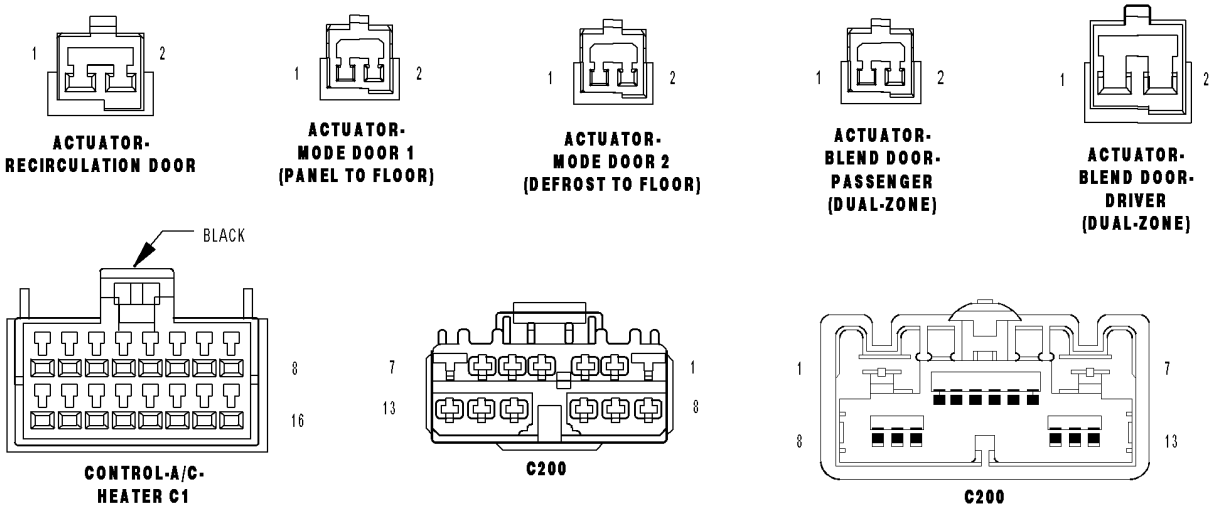

813d20c4

ZONE CALIBRATION FAULT (CONTINUED)

For the Manual Temperature Control circuit diagrams (Refer to 24 - HEATING & AIR CONDITIONING - SCHEMATICS AND DIAGRAMS).

For a complete wiring diagram **Refer to Section 8W**.

Theory of Operation

NOTE: Diagnose and repair Actuator Circuit Test faults before diagnosing Overcurrent faults and Calibration faults. Diagnose and repair Overcurrent faults before diagnosing Calibration faults.

The purpose of actuator calibration is to determine the total span of door travel between physical stops. To calibrate the actuator, the A/C Heater Control first moves the door to its soft stop, and then counts the number of pulses it takes to move the door to its other stop. An expected range of span is stored in the control's memory. If the measured calibration value is not within the expected range, this fault will set.

For vehicles equipped with electric backlight (EBL), running the HVAC Door Recalibration will cause the EBL status indicator to flash. If recalibration fails, the EBL status indicator will continue to flash until either the system passes recalibration or the ignition key is cycled. When the EBL status indicator is flashing, it will not indicate EBL operating status. However, the EBL mode switch will continue to function normally. When the EBL status indicator is flashing, the A/C status indicator will not function. However, the A/C mode switch will continue to function normally.

For vehicles not equipped with electric backlight (EBL), no status indicator will flash when running the HVAC Door Recalibration. If recalibration fails, the A/C status indicator will not function, however, the A/C mode switch will continue to function normally.

- **When Monitored:**
  When HVAC Door Recalibration is executed.
- **Set Condition:**
  If the span of the driver blend door is found outside the tolerance.

Possible Causes
(C61) BLEND DOOR DRIVER CIRCUIT SHORTED TO GROUND (WILL ALSO SET OVERCURRENT DTCs)
(C61) BLEND DOOR DRIVER CIRCUIT SHORTED TO VOLTAGE (WILL ALSO SET OVERCURRENT DTCs)
(C61) BLEND DOOR DRIVER CIRCUIT OPEN
(C34) COMMON DOOR DRIVER CIRCUIT OPEN
DRIVER BLEND DOOR ACTUATOR OPEN
DRIVER BLEND DOOR ACTUATOR BROKEN
DRIVER BLEND DOOR BOUND UP
DRIVER BLEND DOOR LINKAGE MISSING, BROKEN
A/C HEATER CONTROL

Diagnostic Test

1. RUN THE ACTUATOR CIRCUIT TEST

Turn the ignition on.

With the DRBIII® in HVAC, select System Tests and then select Actuator Circuit Test. Allow the test to run to completion before proceeding.

Does the DRBIII® display any Actuator Circuit Test fault messages?

Yes >> Diagnose and repair the fault(s). Refer to *ACTUATOR CIRCUIT TEST DIAGNOSTICS (DUAL-ZONE) in this section.

No >> Go To 2

ZONE CALIBRATION FAULT (CONTINUED)

2. CHECK FOR DTCS IN THE A/C HEATER CONTROL

NOTE: Diagnose and repair all Overcurrent DTCs before diagnosing Calibration faults.
With the DRBIII®, read HVAC DTCs.

Does the DRBIII® display any DTCs?

Yes >> Diagnose and repair the DTC(s). Refer to the Table of Contents in this Section for a complete list of HVAC related symptoms.

No >> Go To 3

3. CHECK THE RESISTANCE BETWEEN THE (C34) COMMON DOOR DRIVER CIRCUIT & THE (C61) BLEND DOOR DRIVER CIRCUIT

Turn the ignition off.

Disconnect the A/C Heater Control C1 harness connector.

Measure the resistance between the (C34) Common Door Driver circuit and the (C61) Blend Door Driver circuit in the A/C Heater Control C1 harness connector.

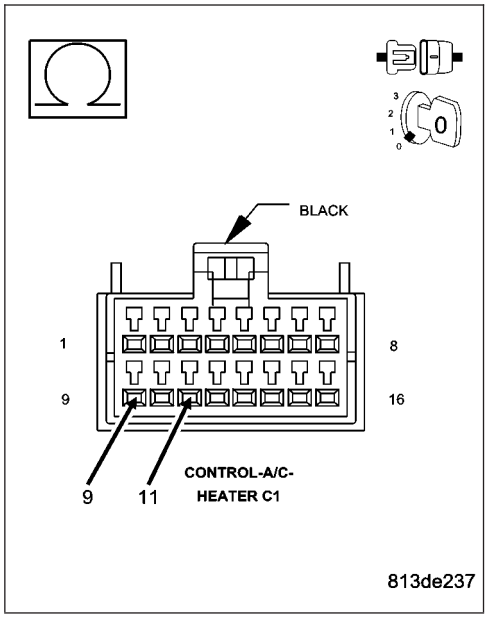

Is the resistance above 70.0 ohms?

Yes >> Go To 4

No >> Go To 6

ZONE CALIBRATION FAULT (CONTINUED)

4. CHECK (C61) BLEND DOOR DRIVER CIRCUIT FOR AN OPEN

Disconnect the Driver Blend Door Actuator harness connector.

Measure the resistance of the (C61) Blend Door Driver circuit between the A/C Heater Control C1 harness connector and the Driver Blend Door Actuator harness connector.

Is the resistance below 5.0 ohms?

Yes >> Go To 5

No >> Repair the (C61) Blend Door Driver circuit for an open.
Perform BODY VERIFICATION TEST - VER 1. (Refer to 8 - ELECTRICAL/ELECTRONIC CONTROL MODULES/ FRONT CONTROL MODULE - DIAGNOSIS AND TESTING).

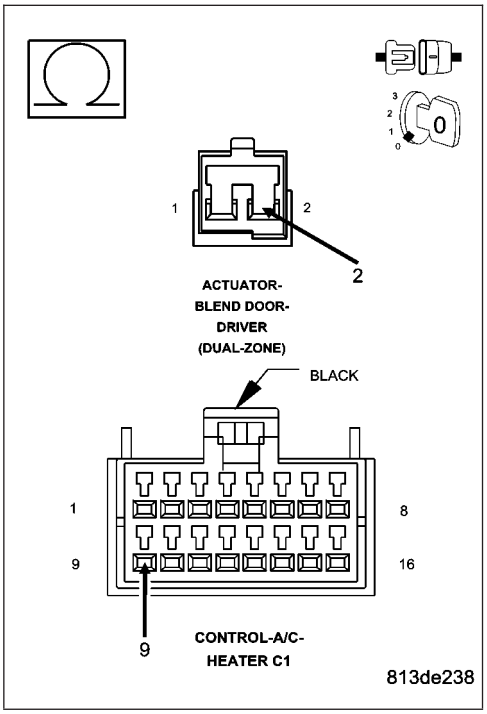

5. CHECK (C34) COMMON DOOR DRIVER CIRCUIT FOR AN OPEN

Measure the resistance of the (C34) Common Door Driver circuit between the A/C Heater Control C1 harness connector and the Driver Blend Door Actuator harness connector.

Is the resistance below 5.0 ohms?

Yes >> Replace the Driver Blend Door Actuator in accordance with the Service Information.
Perform BODY VERIFICATION TEST - VER 1. (Refer to 8 - ELECTRICAL/ELECTRONIC CONTROL MODULES/ FRONT CONTROL MODULE - DIAGNOSIS AND TESTING).

No >> Repair the (C34) Common Door Driver circuit for an open.
Perform BODY VERIFICATION TEST - VER 1. (Refer to 8 - ELECTRICAL/ELECTRONIC CONTROL MODULES/ FRONT CONTROL MODULE - DIAGNOSIS AND TESTING).

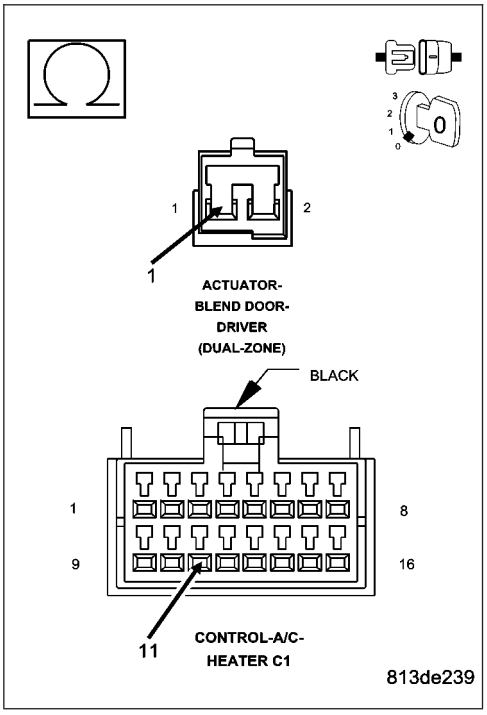

ZONE CALIBRATION FAULT (CONTINUED)

6. CHECK FOR A BROKEN DRIVER BLEND DOOR ACTUATOR

Remove the Driver Blend Door Actuator from the A/C Heater Housing Assembly.
Disconnect the Driver Blend Door Actuator harness connector.
By hand, attempt to rotate the actuator in both directions.

Does the actuator turn in either direction?

Yes >> Replace the Driver Blend Door Actuator in accordance with the Service Information.
Perform BODY VERIFICATION TEST - VER 1. (Refer to 8 - ELECTRICAL/ELECTRONIC CONTROL MODULES/FRONT CONTROL MODULE - DIAGNOSIS AND TESTING).

No >> Go To 7

---

7. CHECK FOR MISSING & BROKEN ACTUATOR LINKAGE & THE DOOR FOR BINDING & A LOSS OF RANGE

Inspect the A/C Heater Housing Assembly for missing and broken actuator linkage.
Inspect the linkage and the actuator for broken and missing teeth.
Check the door for binding and a loss of full range.

Are there any physical or mechanical problems with the door, actuator, linkage, or housing?

Yes >> Repair as necessary in accordance with the Service Information.
Perform BODY VERIFICATION TEST - VER 1. (Refer to 8 - ELECTRICAL/ELECTRONIC CONTROL MODULES/FRONT CONTROL MODULE - DIAGNOSIS AND TESTING).

No >> Replace the A/C Heater Control in accordance with the Service Information.
Perform BODY VERIFICATION TEST - VER 1. (Refer to 8 - ELECTRICAL/ELECTRONIC CONTROL MODULES/FRONT CONTROL MODULE - DIAGNOSIS AND TESTING).

ZONE CIRCUIT SHORTED TO GROUND

For a complete wiring diagram **Refer to Section 8W**.

- **When Monitored:**
  When the Actuator Circuit Test is executed.
- **Set Condition:**
  If the A/C Heater Control detects a short to ground on the (C61) Driver Blend Door Driver circuit (dual-zone).

Possible Causes
DOOR DRIVER CIRCUIT(S) SHORTED TO GROUND
DOOR DRIVER CIRCUITS SHORTED TOGETHER
DOOR ACTUATOR(S)
A/C HEATER CONTROL

Refer to *ACTUATOR CIRCUIT TEST DIAGNOSTICS (DUAL-ZONE) in this Section for the diagnostic test procedure.

ZONE CIRCUIT SHORTED TO IGN OR BATT

For a complete wiring diagram **Refer to Section 8W**.

- **When Monitored:**
  When the Actuator Circuit Test is executed.
- **Set Condition:**
  If the A/C Heater Control detects a short to voltage on the (C61) Driver Blend Door Driver circuit (dual-zone).

Possible Causes
DOOR DRIVER CIRCUIT(S) SHORTED TO VOLTAGE
DOOR DRIVER CIRCUITS SHORTED TOGETHER
DOOR ACTUATOR(S)
A/C HEATER CONTROL

Refer to *ACTUATOR CIRCUIT TEST DIAGNOSTICS (DUAL-ZONE) in this Section for the diagnostic test procedure.

ZONE OVERCURRENT (DUAL-ZONE)

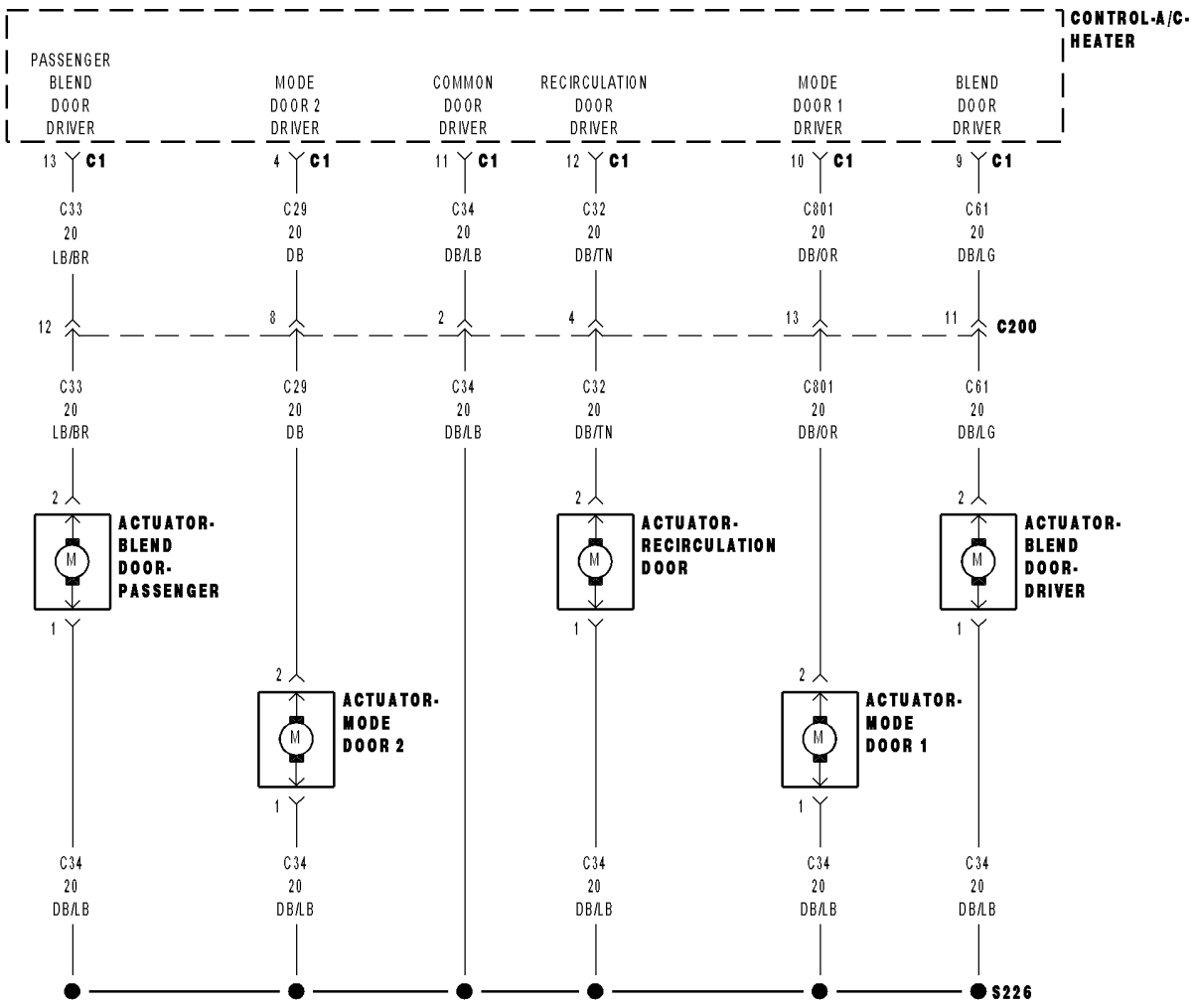

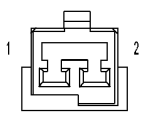

ACTUATOR- RECIRCULATION DOOR

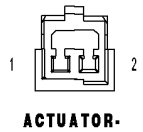

ACTUATOR- MODE DOOR 1 (PANEL TO FLOOR)

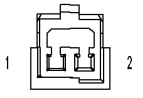

ACTUATOR- MODE DOOR 2 (DEFROST TO FLOOR)

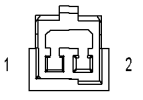

ACTUATOR- BLEND DOOR- PASSENGER (DUAL-ZONE)

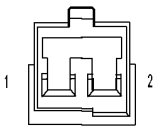

ACTUATOR- BLEND DOOR- DRIVER (DUAL-ZONE)

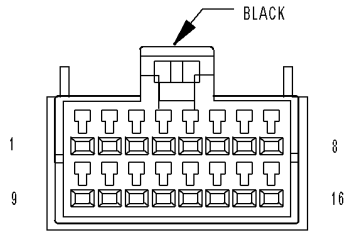

CONTROL-A/C- HEATER C1

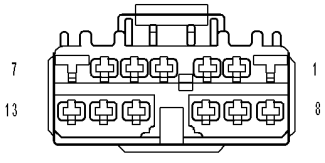

C200

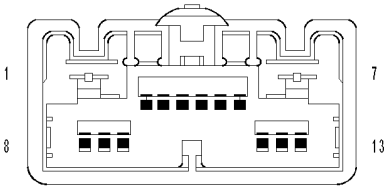

C200

813d20c4

ZONE OVERCURRENT (DUAL-ZONE) (CONTINUED)

For the Manual Temperature Control circuit diagrams (Refer to 24 - HEATING & AIR CONDITIONING - SCHEMATICS AND DIAGRAMS).

For a complete wiring diagram **Refer to Section 8W**.

Theory of Operation

NOTE: Diagnose and repair all Actuator Circuit Test faults before diagnosing Overcurrent DTCs.

The A/C Heater Control monitors the door driver circuits during actuator operation for shorts to ground, shorts to battery, and shorts to other door driver circuits. If detected, the A/C Heater Control reports these types of faults as Overcurrent DTCs. It is important to note that Overcurrent DTCs do not indicate where or what type of short is present and that additional system testing is necessary to provide more details about the reported fault.

- **When Monitored:**
  When actuator movement is requested.
- **Set Condition:**
  If the A/C Heater Control detects an excessive current draw on any of the door driver circuits while attempting to drive the Driver Blend Door Actuator. Note that only one overcurrent DTC can set per ignition cycle.

Possible Causes
(C32) RECIRCULATION DOOR DRIVER CIRCUIT / (C61) BLEND DOOR DRIVER CIRCUIT / (C801) MODE DOOR 1 DRIVER CIRCUIT / (C29) MODE DOOR 2 DRIVER CIRCUIT / (C33) PASSENGER BLEND DOOR DRIVER CIRCUIT SHORTED TO GROUND
(C32) RECIRCULATION DOOR DRIVER CIRCUIT / (C61) BLEND DOOR DRIVER CIRCUIT / (C801) MODE DOOR 1 DRIVER CIRCUIT / (C29) MODE DOOR 2 DRIVER CIRCUIT / (C33) PASSENGER BLEND DOOR DRIVER CIRCUIT SHORTED TO VOLTAGE
(C32) RECIRCULATION DOOR DRIVER CIRCUIT / (C61) BLEND DOOR DRIVER CIRCUIT / (C801) MODE DOOR 1 DRIVER CIRCUIT / (C29) MODE DOOR 2 DRIVER CIRCUIT / (C33) PASSENGER BLEND DOOR DRIVER CIRCUIT SHORTED TOGETHER
DRIVER BLEND DOOR ACTUATOR / PASSENGER BLEND DOOR ACTUATOR / MODE DOOR ACTUATOR 1 / MODE DOOR ACTUATOR 2 / RECIRCULATION DOOR ACTUATOR
A/C HEATER CONTROL

NOTE: This DTC must be active for the result of this test to be valid. Do not perform this test if this DTC is stored. Refer to HVAC System Test for stored DTC test procedures.

Diagnostic Test

1. RUN THE ACTUATOR CIRCUIT TEST

Turn the ignition on.

With the DRBIII® in HVAC, select System Tests and then select Actuator Circuit Test. Allow the test to run to completion before proceeding.

Does the DRBIII® display any Actuator Circuit Test fault messages?

Yes >> Diagnose and repair the fault(s). Refer to *ACTUATOR CIRCUIT TEST DIAGNOSTICS (DUAL-ZONE) in this section.

No >> Go To 2

ZONE OVERCURRENT (DUAL-ZONE) (CONTINUED)

2. CHECK THE (C32) RECIRCULATION DOOR DRIVER CIRCUIT FOR A SHORT TO THE (C61) BLEND DOOR DRIVER CIRCUIT, THE (C801) MODE DOOR 1 DRIVER CIRCUIT, THE (C29) MODE DOOR 2 DRIVER CIRCUIT, & THE (C33) PASSENGER BLEND DOOR DRIVER CIRCUIT

Turn the ignition off.

Disconnect the A/C Heater Control C1 harness connector.

Measure the resistance between the (C32) Recirculation Door Driver circuit and the (C61) Blend Door Driver circuit, the (C801) Mode Door 1 Driver circuit, the (C29) Mode Door 2 Driver circuit, and the (C33) Passenger Blend Door Driver circuit in the A/C Heater Control C1 harness connector.

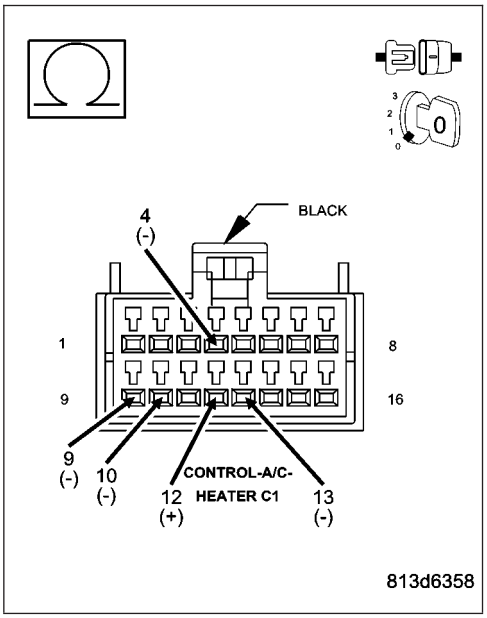

Is the resistance below 10k ohms on any of the circuits?

Yes >> Repair all circuits with a resistance below 10k ohms for a short to the (C32) Recirculation Door Driver circuit.

Perform BODY VERIFICATION TEST - VER 1. (Refer to 8 - ELECTRICAL/ELECTRONIC CONTROL MODULES/ FRONT CONTROL MODULE - DIAGNOSIS AND TESTING).

No >> Go To 3

3. CHECK THE (C61) BLEND DOOR DRIVER CIRCUIT FOR A SHORT TO THE (C801) MODE DOOR 1 DRIVER CIRCUIT, THE (C29) MODE DOOR 2 DRIVER CIRCUIT, & THE (C33) PASSENGER BLEND DOOR DRIVER CIRCUIT

Measure the resistance between the (C61) Blend Door Driver circuit and the (C801) Mode Door 1 Driver circuit, the (C29) Mode Door 2 Driver circuit, and, the (C33) Passenger Blend Door Driver circuit in the A/C Heater Control C1 harness connector.

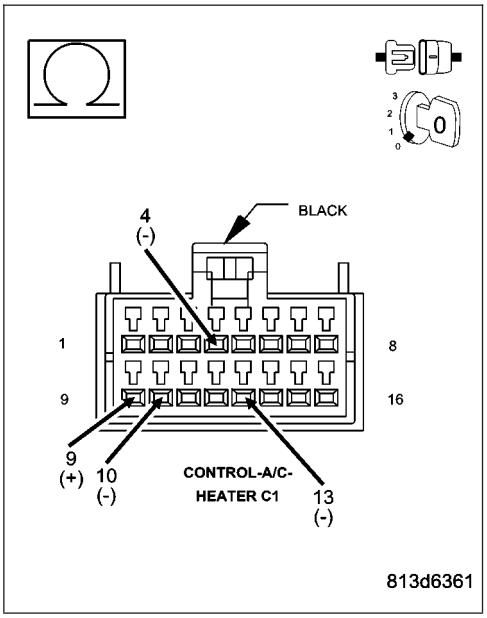

Is the resistance below 10k ohms on any of the circuits?

Yes >> Repair all circuits with a resistance below 10k ohms for a short to the (C61) Blend Door Driver circuit.

Perform BODY VERIFICATION TEST - VER 1. (Refer to 8 - ELECTRICAL/ELECTRONIC CONTROL MODULES/ FRONT CONTROL MODULE - DIAGNOSIS AND TESTING).

No >> Go To 4

ZONE OVERCURRENT (DUAL-ZONE) (CONTINUED)

4. CHECK THE (C801) MODE DOOR 1 DRIVER CIRCUIT FOR A SHORT TO THE (C29) MODE DOOR 2 DRIVER CIRCUIT & THE (C33) PASSENGER BLEND DOOR DRIVER CIRCUIT

Measure the resistance between the (C801) Mode Door 1 Driver circuit and the (C29) Mode Door 2 Driver circuit, and the (C33) Passenger Blend Door Driver circuit in the A/C Heater Control C1 harness connector.

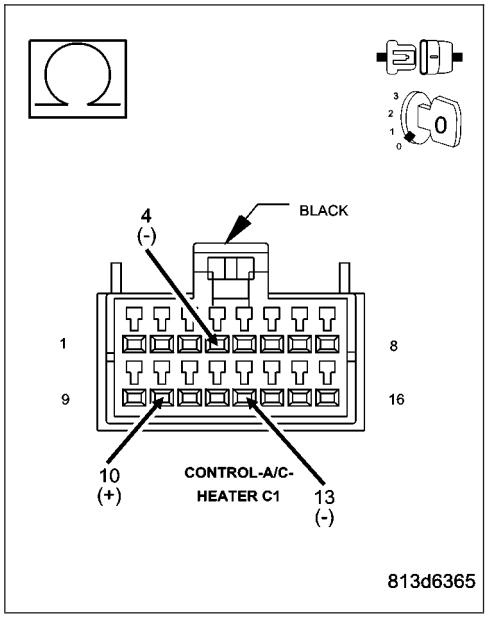

Is the resistance below 10k ohms on any of the circuits?

Yes >> Repair all circuits with a resistance below 10k ohms for a short to the (C801) Mode Door 1 Driver circuit.
Perform BODY VERIFICATION TEST - VER 1. (Refer to 8 - ELECTRICAL/ELECTRONIC CONTROL MODULES/ FRONT CONTROL MODULE - DIAGNOSIS AND TESTING).

No >> Go To 5

5. CHECK THE RESISTANCE BETWEEN THE (C29) MODE DOOR 2 DRIVER CIRCUIT & THE (C33) PASSENGER BLEND DOOR DRIVER CIRCUIT

Measure the resistance between the (C29) Mode Door 2 Driver circuit and the (C33) Passenger Blend Door Driver circuit in the A/C Heater Control C1 harness connector.

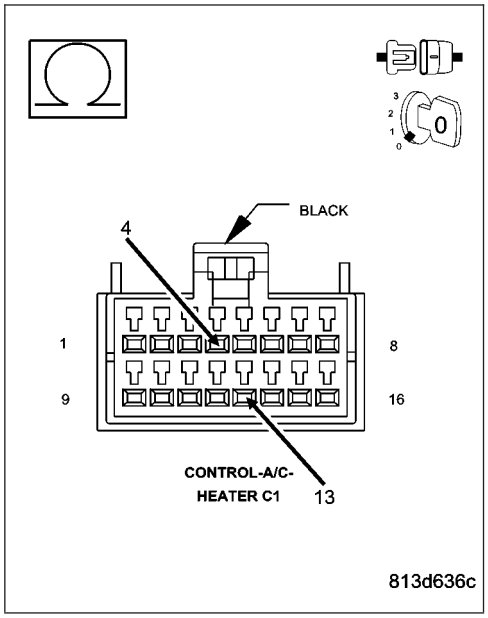

Is the resistance below 10k ohms?

Yes >> Repair the (C33) Passenger Blend Door Driver circuit for a short to the (C29) Mode Door 2 Driver circuit.
Perform BODY VERIFICATION TEST - VER 1. (Refer to 8 - ELECTRICAL/ELECTRONIC CONTROL MODULES/ FRONT CONTROL MODULE - DIAGNOSIS AND TESTING).

No >> Go To 6

ZONE OVERCURRENT (DUAL-ZONE) (CONTINUED)

6. CHECK THE (C34) COMMON DOOR DRIVER CIRCUIT FOR A SHORT TO THE (C32) RECIRCULATION DOOR DRIVER CIRCUIT, THE (C61) BLEND DOOR DRIVER CIRCUIT, THE (C801) MODE DOOR 1 DRIVER CIRCUIT, THE (C29) MODE DOOR 2 DRIVER CIRCUIT, & THE (C33) PASSENGER BLEND DOOR DRIVER CIRCUIT

Measure the resistance between the (C34) Common Door Driver Circuit and the (C32) Recirculation Door Driver circuit, the (C61) Blend Door Driver circuit, the (C801) Mode Door 1 Driver circuit, the (C29) Mode Door 2 Driver circuit, and, the (C33) Passenger Blend Door Driver circuit in the A/C Heater Control C1 harness connector.

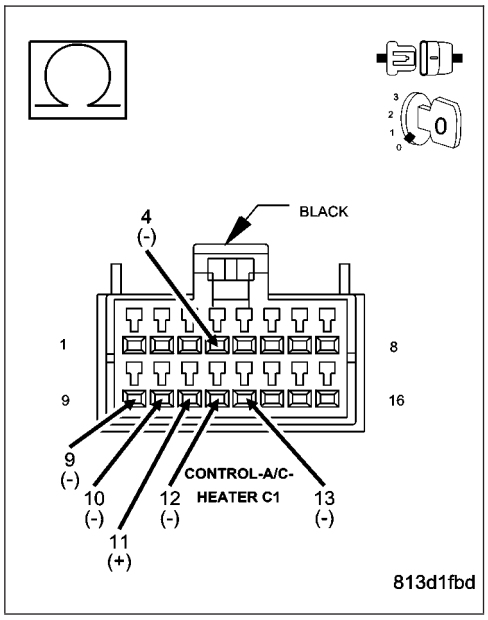

Is the resistance below 30.0 ohms on any of the circuits?

Yes >> Go To 7

No >> Go To 8

7. CHECK THE DOOR DRIVER CIRCUITS WHOSE RESISTANCE WAS BELOW 30.0 OHMS IN THE PREVIOUS STEP FOR A SHORT TO THE (C34) COMMON DOOR DRIVER CIRCUIT

Disconnect all door actuator harness connectors whose circuit resistance was below 30.0 ohms.

Measure the resistance between the (C34) Common Door Driver circuit and each applicable door driver circuit in the A/C Heater Control C1 harness connector.

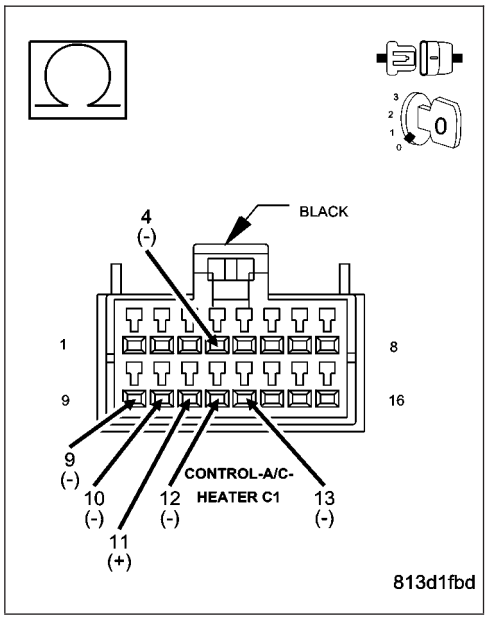

Is the resistance below 10k ohms on any of the circuits?

Yes >> Repair the door driver circuits with a resistance below 10k ohms for a short to the (C34) Common Door Driver circuit.

Perform BODY VERIFICATION TEST - VER 1. (Refer to 8 - ELECTRICAL/ELECTRONIC CONTROL MODULES/ FRONT CONTROL MODULE - DIAGNOSIS AND TESTING).

No >> Replace all door actuators with a resistance below 30.0 ohms in accordance with the Service Information.

Perform BODY VERIFICATION TEST - VER 1. (Refer to 8 - ELECTRICAL/ELECTRONIC CONTROL MODULES/ FRONT CONTROL MODULE - DIAGNOSIS AND TESTING).

ZONE OVERCURRENT (DUAL-ZONE) (CONTINUED)

8. RUN THE ACTUATOR CIRCUIT TEST

Reconnect the A/C Heater Control C1 harness connector.

Turn the ignition on.

With the DRBIII® in HVAC, select System Tests and then select Actuator Circuit Test. Allow the test to run to completion before proceeding.

Does the DRBIII® display any Actuator Circuit Test fault messages?

Yes >> Diagnose and repair the fault(s). Refer to *ACTUATOR CIRCUIT TEST DIAGNOSTICS (DUAL-ZONE) in this section.

No >> Replace the A/C Heater Control in accordance with the Service Information.
Perform BODY VERIFICATION TEST - VER 1. (Refer to 8 - ELECTRICAL/ELECTRONIC CONTROL MODULES/FRONT CONTROL MODULE - DIAGNOSIS AND TESTING).

*A/C HEATER CONTROL ILLUMINATION INOPERATIVE

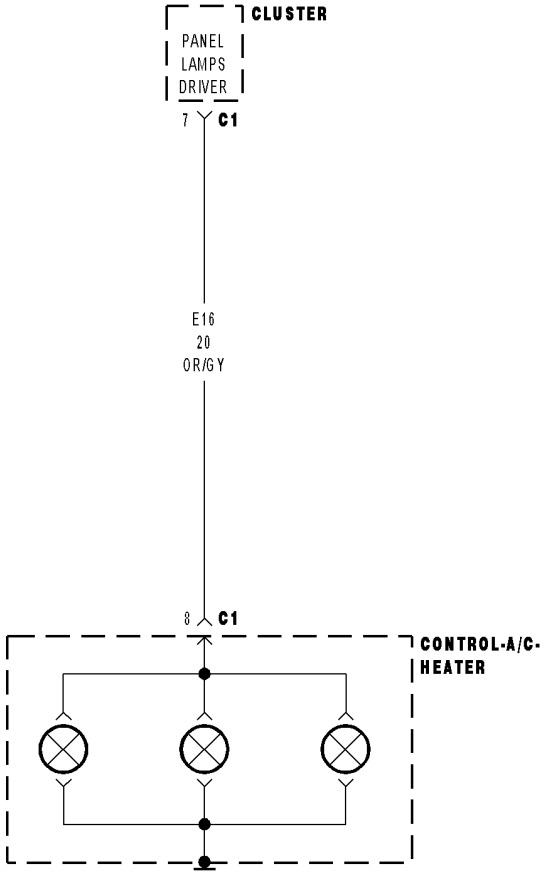

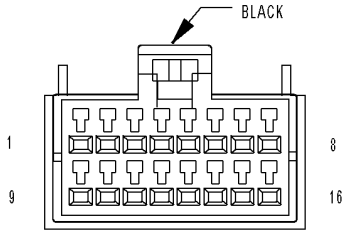

CONTROL-A/C-
HEATER C1

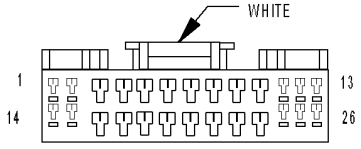

CLUSTER C1

813ebdc3

***A/C HEATER CONTROL ILLUMINATION INOPERATIVE (CONTINUED)**

For the Manual Temperature Control circuit diagrams (Refer to 24 - HEATING & AIR CONDITIONING - SCHEMATICS AND DIAGRAMS).

For a complete wiring diagram **Refer to Section 8W**.

Possible Causes
FAULTS PRESENT IN THE CLUSTER (MIC)
(E16) PANEL LAMPS DRIVER CIRCUIT OPEN
BULB(S) - FILAMENT OPEN (SINGLE-ZONE HVAC MODULE ONLY)
CLUSTER (MIC)
A/C HEATER CONTROL

Diagnostic Test

1. CHECK FOR DTCs IN THE CLUSTER (MIC)

Turn the ignition on.

With the DRBIII®, read Cluster DTCs.

Does the DRBIII® display any DTCs?

Yes >> Diagnose and repair the DTC(s). (Refer to 8 - ELECTRICAL/INSTRUMENT CLUSTER - DIAGNOSIS AND TESTING) for the diagnostic test procedure.

Perform BODY VERIFICATION TEST - VER 1. (Refer to 8 - ELECTRICAL/ELECTRONIC CONTROL MODULES/FRONT CONTROL MODULE - DIAGNOSIS AND TESTING).

No >> Go To 2

---

2. TEST (E16) PANEL LAMPS DRIVER CIRCUIT USING A TEST LIGHT

Turn the Headlamp switch on.

Rotate the Cargo Dome switch to the full brightness setting.

CAUTION: The test light must illuminate brightly. Compare the brightness to that of a direct connection to the battery.

Using a 12-volt test light connected to ground, back probe the (E16) Panel Lamps Driver circuit in the A/C Heater Control C1 harness connector.

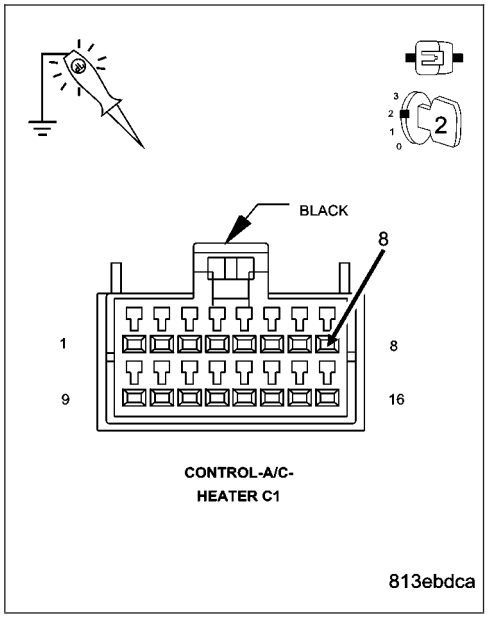

Does the test light illuminate brightly?

Yes (Dual-Zone Systems)

Replace the A/C Heater Control in accordance with the Service Information.

Perform BODY VERIFICATION TEST - VER 1. (Refer to 8 - ELECTRICAL/ELECTRONIC CONTROL MODULES/FRONT CONTROL MODULE - DIAGNOSIS AND TESTING).

Yes (Single-Zone Systems)

Go To 3

No >> Go To 4

***A/C HEATER CONTROL ILLUMINATION INOPERATIVE (CONTINUED)**

3. INSPECT THE INOPERATIVE BULB(S)

Turn the ignition off.

Remove the inoperative bulb(s) from the A/C Heater Control.

NOTE: If necessary, hold the bulb in front of a lamp to see the filament.
Inspect the bulb(s).

Is each inoperative bulb Ok?

Yes >> Replace the A/C Heater Control in accordance with the Service Information.
Perform BODY VERIFICATION TEST - VER 1. (Refer to 8 - ELECTRICAL/ELECTRONIC CONTROL MODULES/FRONT CONTROL MODULE - DIAGNOSIS AND TESTING).

No >> Replace the inoperative bulb(s).
Perform BODY VERIFICATION TEST - VER 1. (Refer to 8 - ELECTRICAL/ELECTRONIC CONTROL MODULES/FRONT CONTROL MODULE - DIAGNOSIS AND TESTING).

---

4. CHECK (E16) PANEL LAMPS DRIVER CIRCUIT FOR AN OPEN

Disconnect the A/C Heater Control C1 harness connector.

Disconnect the Cluster C1 harness connector.

Measure the resistance of the (E16) Panel Lamps Driver circuit between the A/C Heater Control C1 harness connector and the Cluster C1 harness connector.

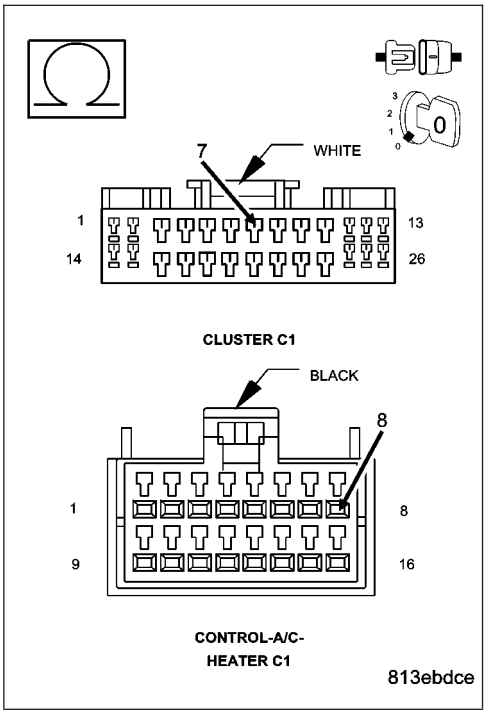

Is the resistance below 5.0 ohms?

Yes >> Replace the Cluster in accordance with the Service Information.
Perform BODY VERIFICATION TEST - VER 1. (Refer to 8 - ELECTRICAL/ELECTRONIC CONTROL MODULES/FRONT CONTROL MODULE - DIAGNOSIS AND TESTING).

No >> Repair the (E16) Panel Lamps Driver circuit for an open.
Perform BODY VERIFICATION TEST - VER 1. (Refer to 8 - ELECTRICAL/ELECTRONIC CONTROL MODULES/FRONT CONTROL MODULE - DIAGNOSIS AND TESTING).

*A/C STATUS INDICATOR FLASHING

For a complete wiring diagram **Refer to Section 8W**.

Theory of Operation

Running the AC Cooldown test will cause the A/C status indicator to flash. If the test fails, the status indicator will continue to flash until either the test returns passed or the ignition key is cycled. When the A/C status indicator is flashing, it will not indicate A/C operating status. However, the A/C mode switch will continue to function normally. For vehicles equipped with EBL, when the A/C status indicator is flashing, the EBL status indicator will not function. However, the EBL mode switch will continue to function normally.

Possible Causes
A/C COOLDOWN TEST FAILED

1. PERFORM THE A/C COOLDOWN TEST

NOTE: The following are prerequisites of the Cooldown Test. Verify each of the following before running the test:

- **Verify that no Evaporator Temperature Sensor related DTCs are not active. If active, diagnose and repair the DTC before proceeding. Refer to the Table of Contents in this Section for a complete list of HVAC related symptoms.**
- **Verify that the refrigerant system has an adequate charge. Check and repair as necessary before proceeding (Refer to 24 - HEATING & AIR CONDITIONING/PLUMBING - DIAGNOSIS AND TESTING).**
- **Verify that the blower motor operates correctly in all speeds. Diagnose and repair all blower related faults before proceeding.**
- **Verify that the work area ambient temperature is above 21.1°C (70°F) before proceeding. Move the vehicle to a warmer work area if necessary.**
- **Verify that the evaporator temperature is above 12.7°C (55°F) before proceeding.**
- **Verify that the Mode Select control is set to the panel position.**
- **Verify that the A/C compressor is not running. If the compressor is running, turn the A/C off and allow the evaporator to warm up before proceeding.**

Start the engine.

Turn the Blower control to the high speed position.

With the DRBIII® in HVAC, select System Tests and then select AC Cooldown test. Allow one minute for the test to complete. One or more status messages will display on the DRBIII® after running the AC Cooldown Test. These messages will clear after paging back out of this test function. Therefore, it is important to note all messages before doing so.

Does the DRBIII® display a status message that indicates a fault has occurred?

Yes, Blower Not On High
Diagnose and repair the fault. Refer to Blower Not On High in this section for the diagnostic test procedure.

Yes, Cooldown Test Sensor Failure
Diagnose and repair the fault. Refer to Cooldown Test Sensor Failure in this section for the diagnostic test procedure.

Yes, Cooldown Time Excessive Fault
Diagnose and repair the fault. Refer to Cooldown Time Excessive Fault in this section for the diagnostic test procedure.

Yes, Cooldown Test Too Cold To Start
Diagnose and repair the fault. Refer to Cooldown Test Too Cold To Start in this section for the diagnostic test procedure.

No >> Test Complete
Perform BODY VERIFICATION TEST - VER 1. (Refer to 8 - ELECTRICAL/ELECTRONIC CONTROL MODULES/FRONT CONTROL MODULE - DIAGNOSIS AND TESTING).

*A/C STATUS INDICATOR WILL NOT ILLUMINATE — A/C HEATER CONTROL WITHOUT EBL SW

For a complete wiring diagram **Refer to Section 8W**.

Theory of Operation

Failing recalibration will prevent the A/C status indicator from operating but still allows the A/C mode switch to function normally. This test verifies if the status indicator is inoperable due to either a recalibration failure or a fault with the status indicator.

Possible Causes
HVAC DOOR RECALIBRATION FAILED
A/C HEATER CONTROL

Diagnostic Test

1. PERFORM THE HVAC DOOR RECALIBRATION

Turn the ignition on.

With the DRBIII® in HVAC, select System Tests and then select HVAC Door Recalibration. Allow the test to run to completion before proceeding.

Does the DRBIII® display: Recalibration Test Failed?

Yes >> Diagnose and repair the fault(s). Refer to the Table of Contents in this Section for a complete list of all HVAC related symptoms.

No >> Replace the A/C Heater Control in accordance with the Service Information.
Perform BODY VERIFICATION TEST - VER 1. (Refer to 8 - ELECTRICAL/ELECTRONIC CONTROL MODULES/FRONT CONTROL MODULE - DIAGNOSIS AND TESTING).

*ACTUATOR CIRCUIT TEST DIAGNOSTICS (DUAL-ZONE)

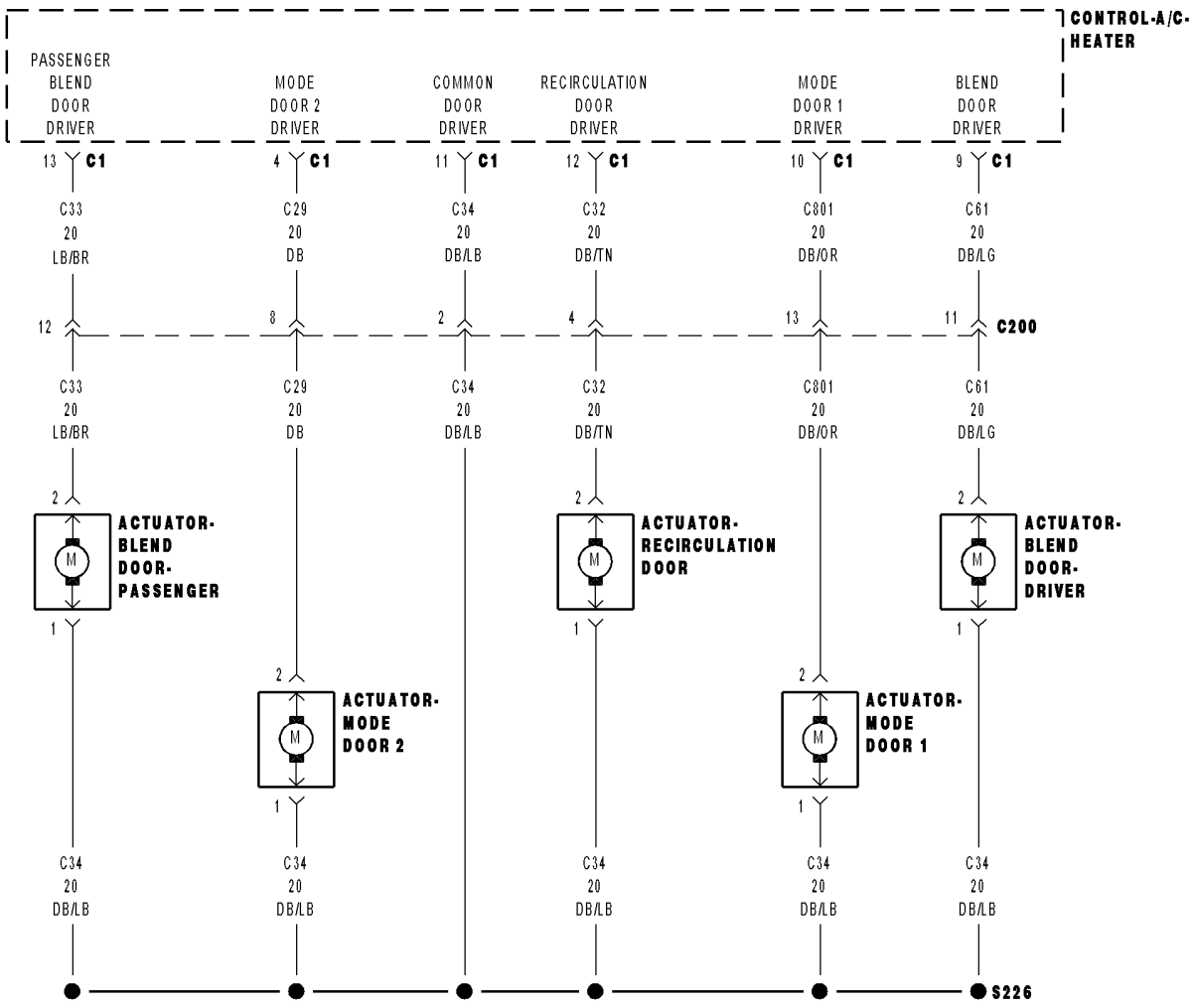

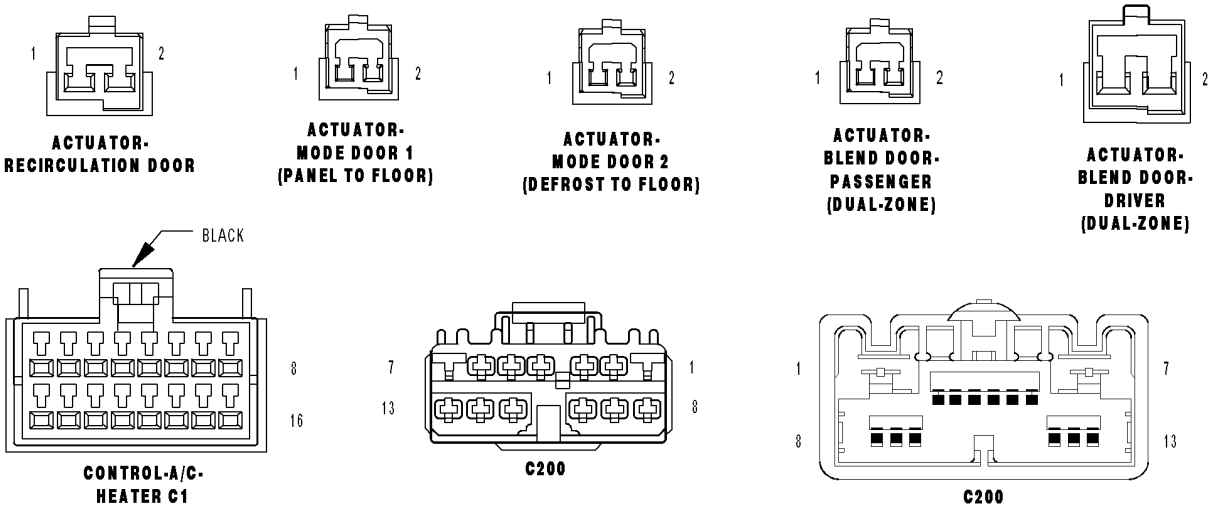

813d20c4

***ACTUATOR CIRCUIT TEST DIAGNOSTICS (DUAL-ZONE) (CONTINUED)**

For the Manual Temperature Control circuit diagrams (Refer to 24 - HEATING & AIR CONDITIONING - SCHEMATICS AND DIAGRAMS).

For a complete wiring diagram **Refer to Section 8W**.

Theory of Operation

By running the Actuator Circuit Test, the A/C Heater Control can identify up to three door driver circuits shorted simultaneously. A Short Too Complex fault will set if more than three door driver circuits are shorted in the same direction (e.g. four door driver circuits all shorted to ground) or if two or more door driver circuits are shorted with at least one door driver circuit shorted to ignition and one door driver circuit shorted to ground. Fault messages displaying XXX Driver/Circuit Shorted to Ignition/Battery and XXX Driver/Circuit Shorted to Ground will set on a per-driver basis. Fault messages displaying the same two drivers/circuits shorted to ignition/battery as-well-as shorted to ground indicates that two actuator driver circuits are shorted together. To ensure a proper diagnosis, repair all Short Too Complex fault messages first, all common door driver circuit related fault messages second, and all other fault messages last. In addition, always test the door driver circuits after each repair by cycling the ignition switch and then running the Actuator Circuit Test again to ensure that no new faults exits.

Diagnostic Test

1. SELECT THE CORRECT PROCEDURE STEPS TO DIAGNOSE THE ACTUATOR CIRCUIT TEST FAULT(S)

Which Actuator Circuit Test fault message is present?

XXX Driver/Circuit Shorted to Ground
Go To 2

XXX Driver/Circuit Shorted to Ignition or Battery
Go To 4

Short Too Complex
Go To 6

XXX Driver/Circuit Shorted to Ground & to Ignition or Battery
Go To 8

---

2. CHECK THE DOOR DRIVER CIRCUIT IDENTIFIED IN THE ACTUATOR CIRCUIT TEST MESSAGE FOR A SHORT TO GROUND

Turn the ignition off.

Disconnect the A/C Heater Control C1 harness connector.

Measure the resistance of the applicable door driver circuit between ground and the A/C Heater Control C1 harness connector.

Is the resistance below 10k ohms?

Yes >> Repair the door driver circuit for a short to ground.
Perform BODY VERIFICATION TEST - VER 1. (Refer to 8 - ELECTRICAL/ELECTRONIC CONTROL MODULES/ FRONT CONTROL MODULE - DIAGNOSIS AND TESTING).

No >> Go To 3

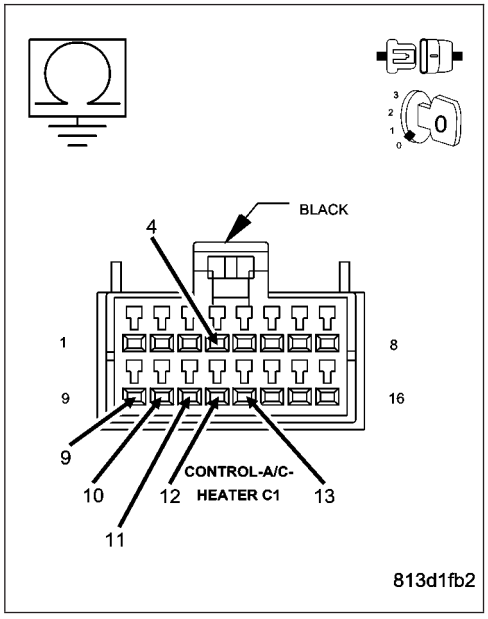

---

*ACTUATOR CIRCUIT TEST DIAGNOSTICS (DUAL-ZONE) (CONTINUED)

3. CHECK THE RESISTANCE BETWEEN THE (C34) COMMON DOOR DRIVER CIRCUIT & THE DOOR DRIVER CIRCUIT TESTED IN THE PREVIOUS STEP

Measure the resistance between the (C34) Common Door Driver circuit and the applicable door driver circuit in the A/C Heater Control C1 harness connector.

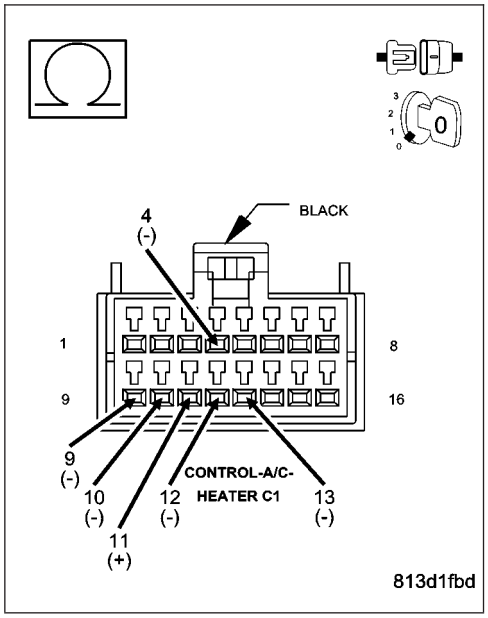

Is the resistance below 30.0 ohms?

Yes >> Replace the door actuator in accordance with the Service Information.

Perform BODY VERIFICATION TEST - VER 1. (Refer to 8 - ELECTRICAL/ELECTRONIC CONTROL MODULES/ FRONT CONTROL MODULE - DIAGNOSIS AND TESTING).

No >> Go To 5

4. CHECK THE DOOR DRIVER CIRCUIT IDENTIFIED IN THE ACTUATOR CIRCUIT TEST MESSAGE FOR A SHORT TO VOLTAGE

Turn the ignition off.

Disconnect the A/C Heater Control C1 harness connector.

Turn the ignition on.

Measure the voltage of the applicable door driver circuit.

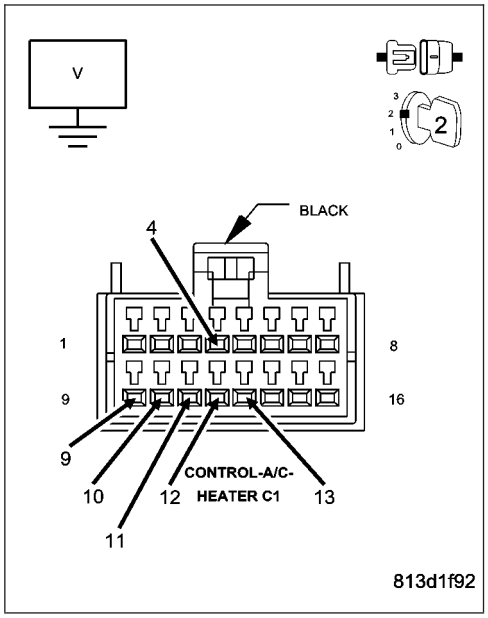

Is there any voltage present?

Yes >> Repair the door driver circuit for a short to voltage.

Perform BODY VERIFICATION TEST - VER 1. (Refer to 8 - ELECTRICAL/ELECTRONIC CONTROL MODULES/ FRONT CONTROL MODULE - DIAGNOSIS AND TESTING).

No >> Go To 5

***ACTUATOR CIRCUIT TEST DIAGNOSTICS (DUAL-ZONE) (CONTINUED)**

5. RUN THE ACTUATOR CIRCUIT TEST

Turn the ignition off.

Reconnect the A/C Heater Control C1 harness connector.

Turn the ignition on.

With the DRBIII® in HVAC, select System Tests and then select Actuator Circuit Test. Allow the test to run to completion before proceeding.

What message does the DRBIII® display?

Same message as from start of test

Replace the A/C Heater Control in accordance with the Service Information.

Perform BODY VERIFICATION TEST - VER 1. (Refer to 8 - ELECTRICAL/ELECTRONIC CONTROL MODULES/FRONT CONTROL MODULE - DIAGNOSIS AND TESTING).

Different message than from start of test

Using the wiring diagram as a guide, inspect the wiring and connectors for conditions causing an intermittent short that set the original test message. Repair as necessary. If the DRBIII® displays a message for a different door driver circuit, return to Step 1 of this diagnostic procedure.

Perform BODY VERIFICATION TEST - VER 1. (Refer to 8 - ELECTRICAL/ELECTRONIC CONTROL MODULES/FRONT CONTROL MODULE - DIAGNOSIS AND TESTING).

---

6. CHECK THE (C34) COMMON DOOR DRIVER CIRCUIT, THE (C32) RECIRCULATION DOOR DRIVER CIRCUIT, THE (C61) BLEND DOOR DRIVER CIRCUIT, THE (C801) MODE DOOR 1 DRIVER CIRCUIT, THE (C29) MODE DOOR 2 DRIVER CIRCUIT, & THE (C33) PASSENGER BLEND DOOR DRIVER CIRCUIT FOR A SHORT TO VOLTAGE

Turn the ignition off.

Disconnect the A/C Heater Control C1 harness connector.

Turn the ignition on.

Measure the voltage of the (C34) Common Door Driver Circuit, the (C32) Recirculation Door Driver circuit, the (C61) Blend Door Driver circuit, the (C801) Mode Door 1 Driver circuit, the (C29) Mode Door 2 Driver circuit, and the (C33) Passenger Blend Door Driver circuit.

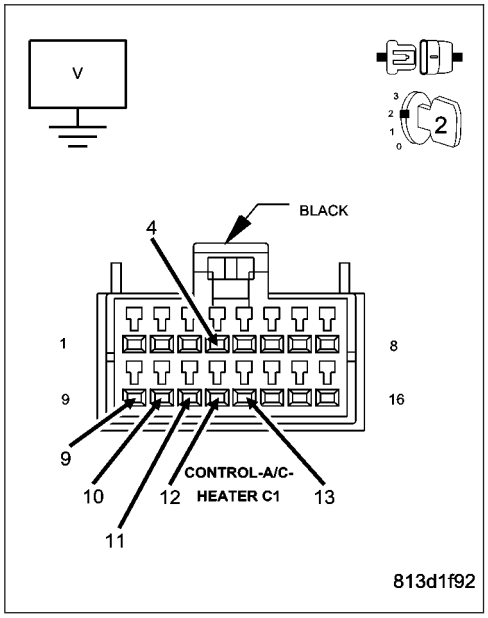

Is there any voltage present on any of the circuits?

Yes >> Repair all door driver circuits with voltage present for a short to voltage.

Perform BODY VERIFICATION TEST - VER 1. (Refer to 8 - ELECTRICAL/ELECTRONIC CONTROL MODULES/FRONT CONTROL MODULE - DIAGNOSIS AND TESTING).

No >> Go To 7

***ACTUATOR CIRCUIT TEST DIAGNOSTICS (DUAL-ZONE) (CONTINUED)**

7. CHECK THE (C34) COMMON DOOR DRIVER CIRCUIT, THE (C32) RECIRCULATION DOOR DRIVER CIRCUIT, THE (C61) BLEND DOOR DRIVER CIRCUIT, THE (C801) MODE DOOR 1 DRIVER CIRCUIT, THE (C29) MODE DOOR 2 DRIVER CIRCUIT, & THE (C33) PASSENGER BLEND DOOR DRIVER CIRCUIT FOR A SHORT TO GROUND

Turn the ignition off.

Measure the resistance of the (C34) Common Door Driver Circuit, the (C32) Recirculation Door Driver circuit, the (C61) Blend Door Driver circuit, the (C801) Mode Door 1 Driver circuit, the (C29) Mode Door 2 Driver circuit, and the (C33) Passenger Blend Door Driver circuit between ground and the A/C Heater Control C1 harness connector.

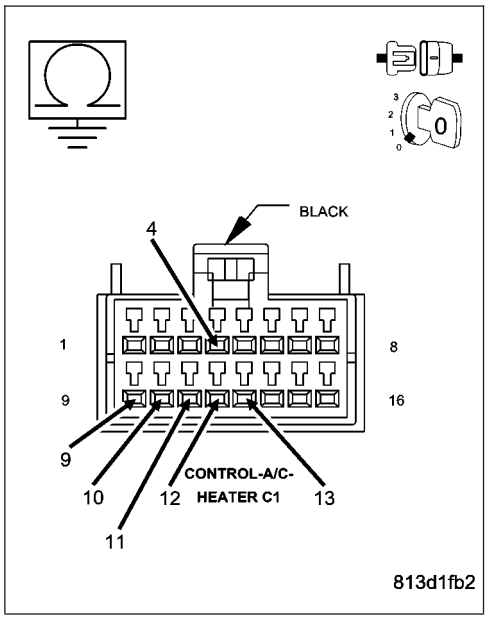

Is the resistance below 10k ohms on any of the circuits?

Yes >> Repair all door driver circuits with a resistance below 10k ohms for a short to ground.

Perform BODY VERIFICATION TEST - VER 1. (Refer to 8 - ELECTRICAL/ELECTRONIC CONTROL MODULES/ FRONT CONTROL MODULE - DIAGNOSIS AND TESTING).

No >> Go To 8

8. CHECK THE (C32) RECIRCULATION DOOR DRIVER CIRCUIT FOR A SHORT TO THE (C61) BLEND DOOR DRIVER CIRCUIT, THE (C801) MODE DOOR 1 DRIVER CIRCUIT, THE (C29) MODE DOOR 2 DRIVER CIRCUIT, & THE (C33) PASSENGER BLEND DOOR DRIVER CIRCUIT

Turn the ignition off.

Disconnect the A/C Heater Control C1 harness connector.

Measure the resistance between the (C32) Recirculation Door Driver circuit and the (C61) Blend Door Driver circuit, the (C801) Mode Door 1 Driver circuit, the (C29) Mode Door 2 Driver circuit, and the (C33) Passenger Blend Door Driver circuit in the A/C Heater Control C1 harness connector.

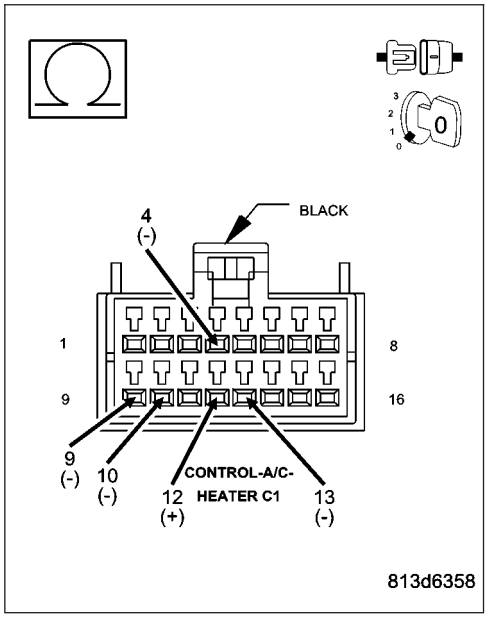

Is the resistance below 10k ohms on any of the circuits?

Yes >> Repair all circuits with a resistance below 10k ohms for a short to the (C32) Recirculation Door Driver circuit.

Perform BODY VERIFICATION TEST - VER 1. (Refer to 8 - ELECTRICAL/ELECTRONIC CONTROL MODULES/ FRONT CONTROL MODULE - DIAGNOSIS AND TESTING).

No >> Go To 9

*ACTUATOR CIRCUIT TEST DIAGNOSTICS (DUAL-ZONE) (CONTINUED)

9. CHECK THE (C61) BLEND DOOR DRIVER CIRCUIT FOR A SHORT TO THE (C801) MODE DOOR 1 DRIVER CIRCUIT, THE (C29) MODE DOOR 2 DRIVER CIRCUIT, & THE (C33) PASSENGER BLEND DOOR DRIVER CIRCUIT

Measure the resistance between the (C61) Blend Door Driver circuit and the (C801) Mode Door 1 Driver circuit, the (C29) Mode Door 2 Driver circuit, and the (C33) Passenger Blend Door Driver circuit in the A/C Heater Control C1 harness connector.

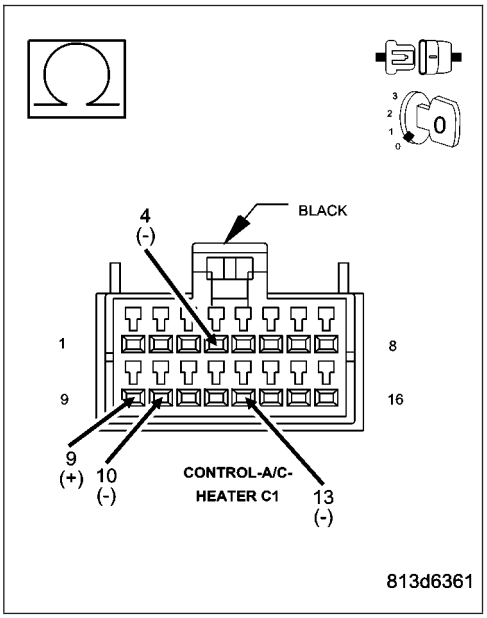

Is the resistance below 10k ohms on any of the circuits?

Yes >> Repair all circuits with a resistance below 10k ohms for a short to the (C61) Blend Door Driver circuit.

Perform BODY VERIFICATION TEST - VER 1. (Refer to 8 - ELECTRICAL/ELECTRONIC CONTROL MODULES/ FRONT CONTROL MODULE - DIAGNOSIS AND TESTING).

No >> Go To 10

10. CHECK THE (C801) MODE DOOR 1 DRIVER CIRCUIT FOR A SHORT TO THE (C29) MODE DOOR 2 DRIVER CIRCUIT & THE (C33) PASSENGER BLEND DOOR DRIVER CIRCUIT

Measure the resistance between the (C801) Mode Door 1 Driver circuit and the (C29) Mode Door 2 Driver circuit, and the (C33) Passenger Blend Door Driver circuit in the A/C Heater Control C1 harness connector.

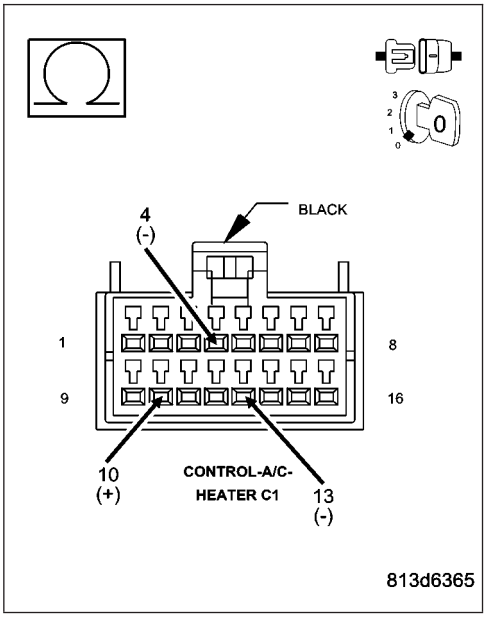

Is the resistance below 10k ohms on any of the circuits?

Yes >> Repair all circuits with a resistance below 10k ohms for a short to the (C801) Mode Door 1 Driver circuit.

Perform BODY VERIFICATION TEST - VER 1. (Refer to 8 - ELECTRICAL/ELECTRONIC CONTROL MODULES/ FRONT CONTROL MODULE - DIAGNOSIS AND TESTING).

No >> Go To 11

***ACTUATOR CIRCUIT TEST DIAGNOSTICS (DUAL-ZONE) (CONTINUED)**

11. CHECK THE (C29) MODE DOOR 2 DRIVER CIRCUIT FOR A SHORT TO THE (C33) PASSENGER BLEND DOOR DRIVER CIRCUIT

Measure the resistance between the (C29) Mode Door 2 Driver circuit and the (C33) Passenger Blend Door Driver circuit in the A/C Heater Control C1 harness connector.

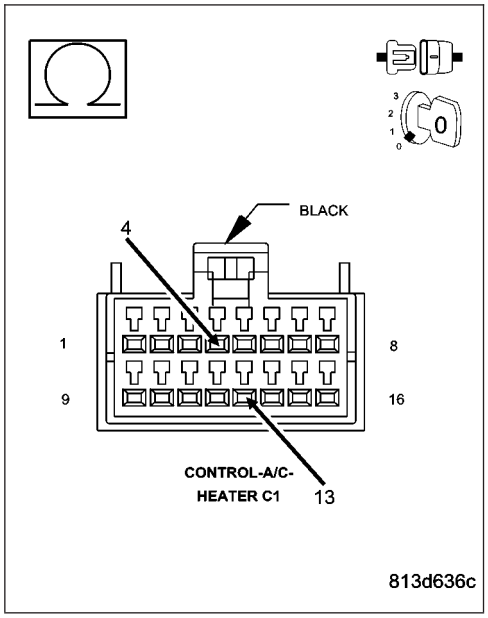

Is the resistance below 10k ohms?

Yes >> Repair the (C33) Passenger Blend Door Driver circuit for a short to the (C29) Mode Door 2 Driver circuit.

Perform BODY VERIFICATION TEST - VER 1. (Refer to 8 - ELECTRICAL/ELECTRONIC CONTROL MODULES/ FRONT CONTROL MODULE - DIAGNOSIS AND TESTING).

No >> Go To 12

12. CHECK THE (C34) COMMON DOOR DRIVER CIRCUIT FOR A SHORT TO THE (C32) RECIRCULATION DOOR DRIVER CIRCUIT, THE (C61) BLEND DOOR DRIVER CIRCUIT, THE (C801) MODE DOOR 1 DRIVER CIRCUIT, THE (C29) MODE DOOR 2 DRIVER CIRCUIT, & THE (C33) PASSENGER BLEND DOOR DRIVER CIRCUIT

Measure the resistance between the (C34) Common Door Driver Circuit and the (C32) Recirculation Door Driver circuit, the (C61) Blend Door Driver circuit, the (C801) Mode Door 1 Driver circuit, the (C29) Mode Door 2 Driver circuit, and the (C33) Passenger Blend Door Driver circuit in the A/C Heater Control C1 harness connector.

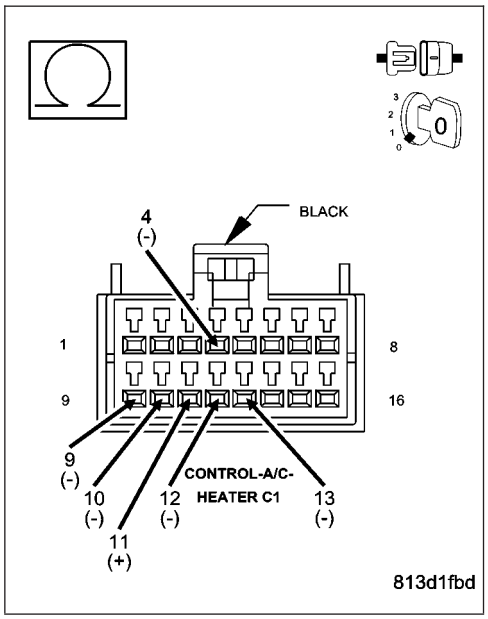

Is the resistance below 30.0 ohms on any of the circuits?

Yes >> Go To 13

No >> Go To 14

*ACTUATOR CIRCUIT TEST DIAGNOSTICS (DUAL-ZONE) (CONTINUED)

13. CHECK THE DOOR DRIVER CIRCUITS WHOSE RESISTANCE WAS BELOW 30.0 OHMS IN THE PREVIOUS STEP FOR A SHORT TO THE (C34) COMMON DOOR DRIVER CIRCUIT

Disconnect all door actuator harness connectors whose circuit resistance was below 30.0 ohms.

Measure the resistance between the (C34) Common Door Driver circuit and each applicable door driver circuit in the A/C Heater Control C1 harness connector.

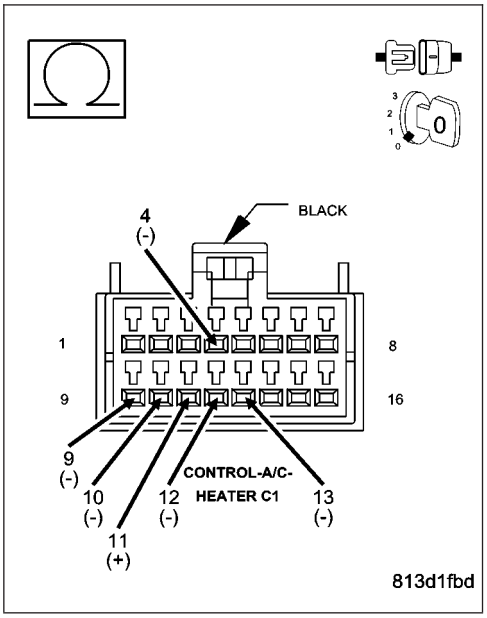

Is the resistance below 10k ohms on any of the circuits?

Yes >> Repair the door driver circuits with a resistance below 10k ohms for a short to the (C34) Common Door Driver circuit.

Perform BODY VERIFICATION TEST - VER 1. (Refer to 8 - ELECTRICAL/ELECTRONIC CONTROL MODULES/FRONT CONTROL MODULE - DIAGNOSIS AND TESTING).

No >> Replace all door actuators with a resistance below 30.0 ohms in accordance with the Service Information.

Perform BODY VERIFICATION TEST - VER 1. (Refer to 8 - ELECTRICAL/ELECTRONIC CONTROL MODULES/FRONT CONTROL MODULE - DIAGNOSIS AND TESTING).

---

14. RUN THE ACTUATOR CIRCUIT TEST

Reconnect the A/C Heater Control C1 harness connector.

Turn the ignition on.

With the DRBIII® in HVAC, select System Tests and then select Actuator Circuit Test. Allow the test to run to completion before proceeding.

What message does the DRBIII® display?

Same message as from start of test

Replace the A/C Heater Control in accordance with the Service Information.

Perform BODY VERIFICATION TEST - VER 1. (Refer to 8 - ELECTRICAL/ELECTRONIC CONTROL MODULES/FRONT CONTROL MODULE - DIAGNOSIS AND TESTING).

Different message than from start of test

Using the wiring diagram as a guide, inspect the wiring and connectors for conditions causing an intermittent short that set the original test message. Repair as necessary. If the DRBIII® displays a message for a different door driver circuit, return to Test 1 of this diagnostic procedure.

Perform BODY VERIFICATION TEST - VER 1. (Refer to 8 - ELECTRICAL/ELECTRONIC CONTROL MODULES/FRONT CONTROL MODULE - DIAGNOSIS AND TESTING).

*ACTUATOR CIRCUIT TEST DIAGNOSTICS (SINGLE-ZONE)

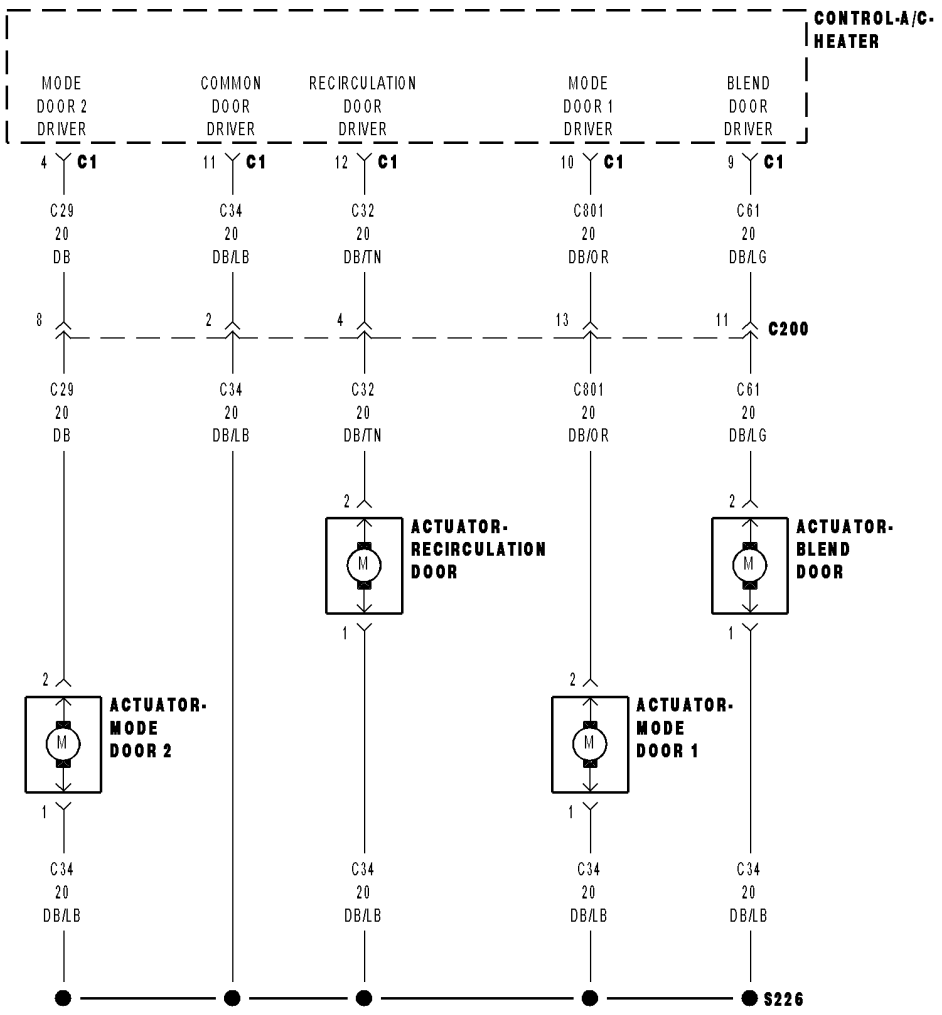

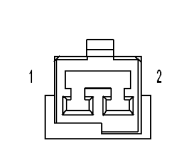

ACTUATOR-
RECIRCULATION DOOR

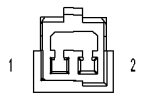

ACTUATOR-
MODE DOOR 1
(PANEL TO FLOOR)

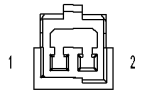

ACTUATOR-
MODE DOOR 2
(DEFROST TO FLOOR)

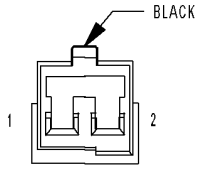

ACTUATOR-
BLEND DOOR
(SINGLE ZONE)

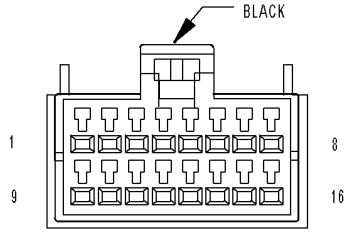

CONTROL-A/C-
HEATER C1

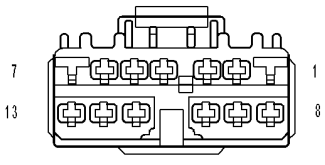

C200

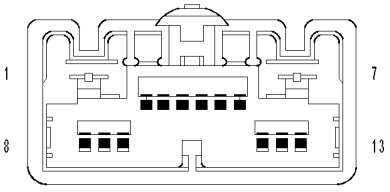

C200

813d4bd1

***ACTUATOR CIRCUIT TEST DIAGNOSTICS (SINGLE-ZONE) (CONTINUED)**

For the Manual Temperature Control circuit diagrams (Refer to 24 - HEATING & AIR CONDITIONING - SCHEMATICS AND DIAGRAMS).

For a complete wiring diagram **Refer to Section 8W**.

Theory of Operation

By running the Actuator Circuit Test, the A/C Heater Control can identify up to three door driver circuits shorted simultaneously. A Short Too Complex fault will set if more than three door driver circuits are shorted in the same direction (e.g. four door driver circuits all shorted to ground) or if two or more door driver circuits are shorted with at least one door driver circuit shorted to ignition and one door driver circuit shorted to ground. Fault messages displaying XXX Driver/Circuit Shorted to Ignition/Battery and XXX Driver/Circuit Shorted to Ground will set on a per-driver basis. Fault messages displaying the same two drivers/circuits shorted to ignition/battery as-well-as shorted to ground indicates that two actuator driver circuits are shorted together. To ensure a proper diagnosis, repair all Short Too Complex fault messages first, all common door driver circuit related fault messages second, and all other fault messages last. In addition, always test the door driver circuits after each repair by cycling the ignition switch and then running the Actuator Circuit Test again to ensure that no new faults exits.

Diagnostic Test

1. SELECT THE CORRECT PROCEDURE STEPS TO DIAGNOSE THE ACTUATOR CIRCUIT TEST FAULT(S)

Which Actuator Circuit Test message is present?

XXX Driver/Circuit Shorted to Ground
Go To 2

XXX Driver/Circuit Shorted to Ignition or Battery
Go To 4

Short Too Complex
Go To 6

XXX Driver/Circuit Shorted to Ground & to Ignition or Battery
Go To 8

---

2. CHECK THE DOOR DRIVER CIRCUIT IDENTIFIED IN THE ACTUATOR CIRCUIT TEST MESSAGE FOR A SHORT TO GROUND

Turn the ignition off.

Disconnect the A/C Heater Control C1 harness connector.

Measure the resistance of the applicable door driver circuit between ground and the A/C Heater Control C1 harness connector.

Is the resistance below 10k ohms?

Yes >> Repair the door driver circuit for a short to ground.
Perform BODY VERIFICATION TEST - VER 1. (Refer to 8 - ELECTRICAL/ELECTRONIC CONTROL MODULES/ FRONT CONTROL MODULE - DIAGNOSIS AND TESTING).

No >> Go To 3

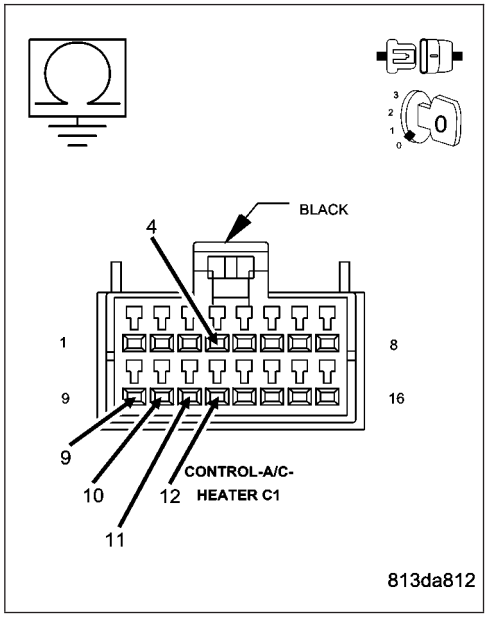

---

*ACTUATOR CIRCUIT TEST DIAGNOSTICS (SINGLE-ZONE) (CONTINUED)

3. CHECK THE RESISTANCE BETWEEN THE (C34) COMMON DOOR DRIVER CIRCUIT & THE DOOR DRIVER CIRCUIT TESTED IN THE PREVIOUS STEP

Measure the resistance between the (C34) Common Door Driver circuit and the applicable door driver circuit in the A/C Heater Control C1 harness connector.

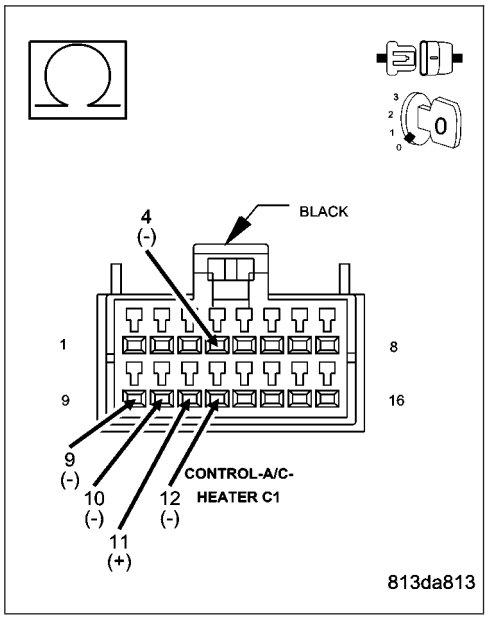

Is the resistance below 30.0 ohms?

Yes >> Replace the door actuator in accordance with the Service Information.

Perform BODY VERIFICATION TEST - VER 1. (Refer to 8 - ELECTRICAL/ELECTRONIC CONTROL MODULES/ FRONT CONTROL MODULE - DIAGNOSIS AND TESTING).

No >> Go To 5

4. CHECK THE DOOR DRIVER CIRCUIT IDENTIFIED IN THE ACTUATOR CIRCUIT TEST MESSAGE FOR A SHORT TO VOLTAGE

Turn the ignition off.

Disconnect the A/C Heater Control C1 harness connector.

Turn the ignition on.

Measure the voltage of the applicable door driver circuit.

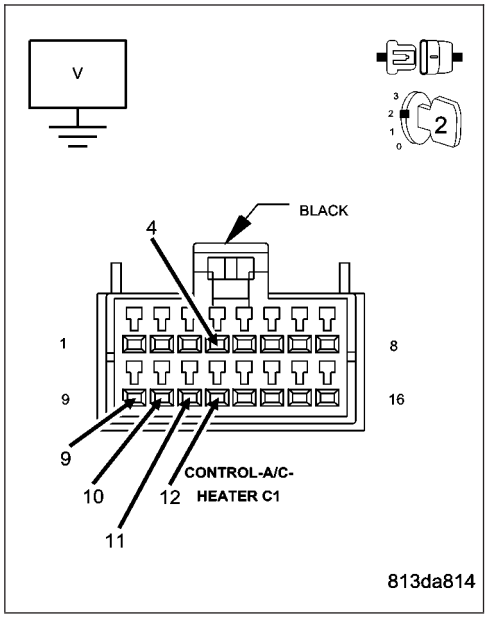

Is there any voltage present?

Yes >> Repair the door driver circuit for a short to voltage.

Perform BODY VERIFICATION TEST - VER 1. (Refer to 8 - ELECTRICAL/ELECTRONIC CONTROL MODULES/ FRONT CONTROL MODULE - DIAGNOSIS AND TESTING).

No >> Go To 5

*ACTUATOR CIRCUIT TEST DIAGNOSTICS (SINGLE-ZONE) (CONTINUED)

5. RUN THE ACTUATOR CIRCUIT TEST

Turn the ignition off.

Reconnect the A/C Heater Control C1 harness connector.

Turn the ignition on.

With the DRBIII® in HVAC, select System Tests and then select Actuator Circuit Test. Allow the test to run to completion before proceeding.

What message does the DRBIII® display?

Same message as from start of test

Replace the A/C Heater Control in accordance with the Service Information.

Perform BODY VERIFICATION TEST - VER 1. (Refer to 8 - ELECTRICAL/ELECTRONIC CONTROL MODULES/FRONT CONTROL MODULE - DIAGNOSIS AND TESTING).

Different message than from start of test

Using the wiring diagram as a guide, inspect the wiring and connectors for conditions causing an intermittent short that set the original test message. Repair as necessary. If the DRBIII® displays a message for a different door driver circuit, return to Step 1 of this diagnostic procedure.

Perform BODY VERIFICATION TEST - VER 1. (Refer to 8 - ELECTRICAL/ELECTRONIC CONTROL MODULES/FRONT CONTROL MODULE - DIAGNOSIS AND TESTING).

---

6. CHECK THE (C34) COMMON DOOR DRIVER CIRCUIT, THE (C32) RECIRCULATION DOOR DRIVER CIRCUIT, THE (C61) BLEND DOOR DRIVER CIRCUIT, THE (C801) MODE DOOR 1 DRIVER CIRCUIT, & THE (C29) MODE DOOR 2 DRIVER CIRCUIT FOR A SHORT TO VOLTAGE

Turn the ignition off.

Disconnect the A/C Heater Control C1 harness connector.

Turn the ignition on.

Measure the voltage of the (C34) Common Door Driver Circuit, the (C32) Recirculation Door Driver circuit, the (C61) Blend Door Driver circuit, the (C801) Mode Door 1 Driver circuit, and the (C29) Mode Door 2 Driver circuit.

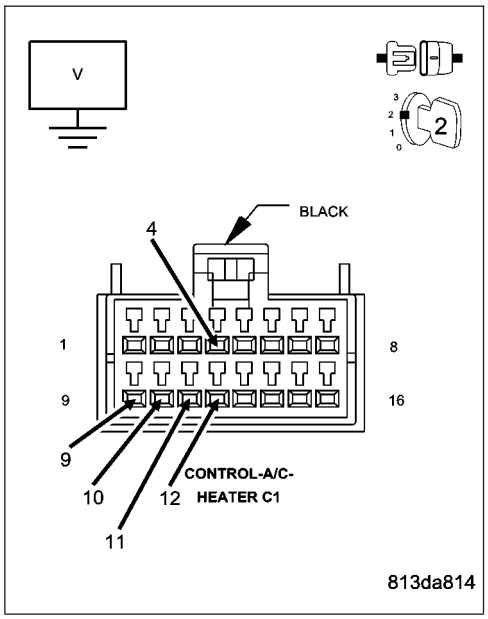

Is there any voltage present on any of the circuits?

Yes >> Repair all door driver circuits with voltage present for a short to voltage.

Perform BODY VERIFICATION TEST - VER 1. (Refer to 8 - ELECTRICAL/ELECTRONIC CONTROL MODULES/FRONT CONTROL MODULE - DIAGNOSIS AND TESTING).

No >> Go To 7

---

*ACTUATOR CIRCUIT TEST DIAGNOSTICS (SINGLE-ZONE) (CONTINUED)

7. CHECK THE (C34) COMMON DOOR DRIVER CIRCUIT, THE (C32) RECIRCULATION DOOR DRIVER CIRCUIT, THE (C61) BLEND DOOR DRIVER CIRCUIT, THE (C801) MODE DOOR 1 DRIVER CIRCUIT, & THE (C29) MODE DOOR 2 DRIVER CIRCUIT FOR A SHORT TO GROUND

Turn the ignition off.

Measure the resistance of the (C34) Common Door Driver Circuit, the (C32) Recirculation Door Driver circuit, the (C61) Blend Door Driver circuit, the (C801) Mode Door 1 Driver circuit, and the (C29) Mode Door 2 Driver circuit between ground and the A/C Heater Control C1 harness connector.

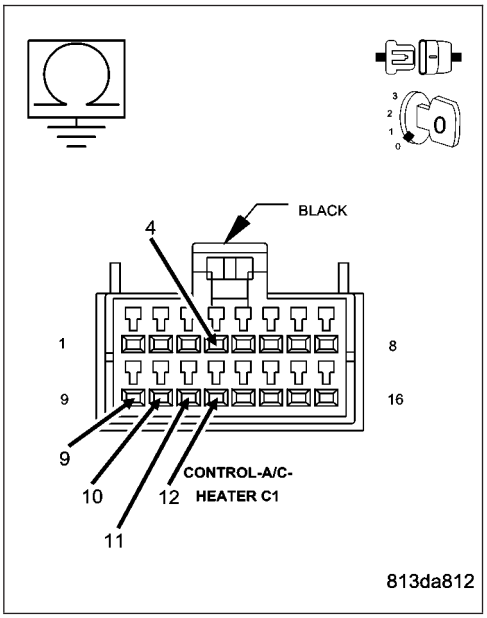

Is the resistance below 10k ohms on any of the circuits?

Yes >> Repair all door driver circuits with a resistance below 10k ohms for a short to ground.

Perform BODY VERIFICATION TEST - VER 1. (Refer to 8 - ELECTRICAL/ELECTRONIC CONTROL MODULES/ FRONT CONTROL MODULE - DIAGNOSIS AND TESTING).

No >> Go To 8

8. CHECK THE (C32) RECIRCULATION DOOR DRIVER CIRCUIT FOR A SHORT TO THE (C61) BLEND DOOR DRIVER CIRCUIT, THE (C801) MODE DOOR 1 DRIVER CIRCUIT, & THE (C29) MODE DOOR 2 DRIVER CIRCUIT

Turn the ignition off.

Disconnect the A/C Heater Control C1 harness connector.

Measure the resistance between the (C32) Recirculation Door Driver circuit and the (C61) Blend Door Driver circuit, the (C801) Mode Door 1 Driver circuit, and the (C29) Mode Door 2 Driver circuit in the A/C Heater Control C1 harness connector.

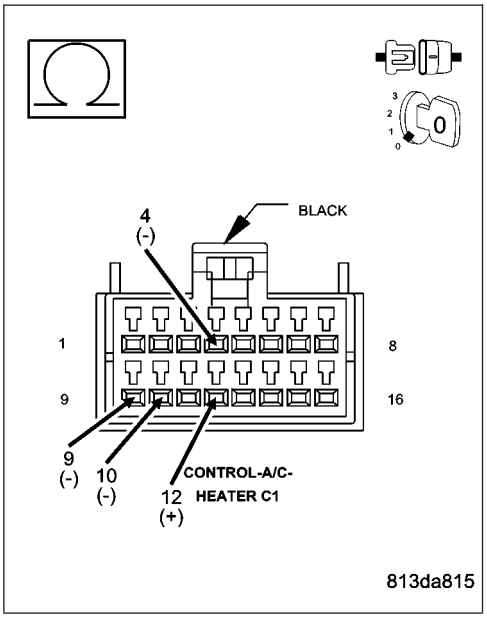

Is the resistance below 10k ohms on any of the circuits?

Yes >> Repair all circuits with a resistance below 10k ohms for a short to the (C32) Recirculation Door Driver circuit.

Perform BODY VERIFICATION TEST - VER 1. (Refer to 8 - ELECTRICAL/ELECTRONIC CONTROL MODULES/ FRONT CONTROL MODULE - DIAGNOSIS AND TESTING).

No >> Go To 9

*ACTUATOR CIRCUIT TEST DIAGNOSTICS (SINGLE-ZONE) (CONTINUED)

9. CHECK THE (C61) BLEND DOOR DRIVER CIRCUIT FOR A SHORT TO THE (C801) MODE DOOR 1 DRIVER CIRCUIT & THE (C29) MODE DOOR 2 DRIVER CIRCUIT

Measure the resistance between the (C61) Blend Door Driver circuit and the (C801) Mode Door 1 Driver circuit and the (C29) Mode Door 2 Driver circuit in the A/C Heater Control C1 harness connector.

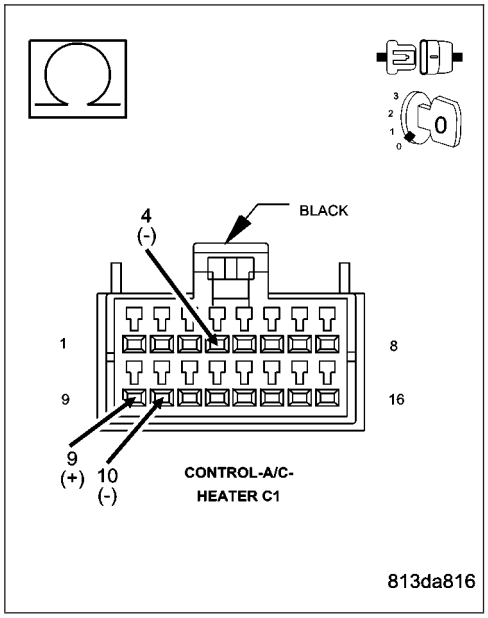

Is the resistance below 10k ohms on any of the circuits?

Yes >> Repair all circuits with a resistance below 10k ohms for a short to the (C61) Blend Door Driver circuit.
Perform BODY VERIFICATION TEST - VER 1. (Refer to 8 - ELECTRICAL/ELECTRONIC CONTROL MODULES/ FRONT CONTROL MODULE - DIAGNOSIS AND TESTING).

No >> Go To 10

10. CHECK THE (C801) MODE DOOR 1 DRIVER CIRCUIT FOR A SHORT TO THE (C29) MODE DOOR 2 DRIVER CIRCUIT

Measure the resistance between the (C801) Mode Door 1 Driver circuit and the (C29) Mode Door 2 Driver circuit in the A/C Heater Control C1 harness connector.

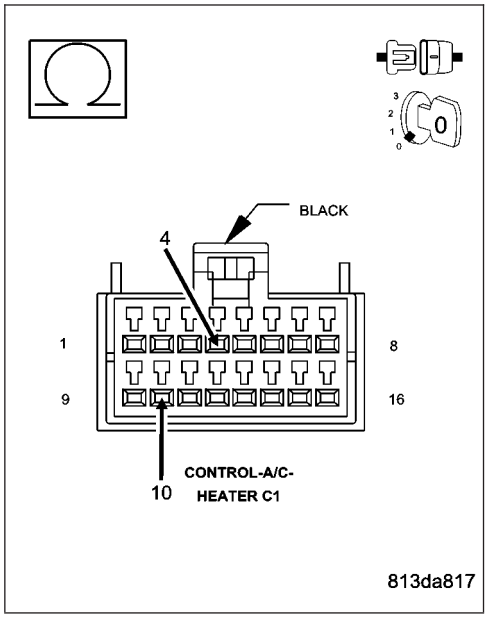

Is the resistance below 10k ohms?

Yes >> Repair the (C29) Mode Door 2 Driver circuit for a short to the (C801) Mode Door 1 Driver circuit.
Perform BODY VERIFICATION TEST - VER 1. (Refer to 8 - ELECTRICAL/ELECTRONIC CONTROL MODULES/ FRONT CONTROL MODULE - DIAGNOSIS AND TESTING).

No >> Go To 11

***ACTUATOR CIRCUIT TEST DIAGNOSTICS (SINGLE-ZONE) (CONTINUED)**

11. CHECK THE (C34) COMMON DOOR DRIVER CIRCUIT FOR A SHORT TO THE (C32) RECIRCULATION DOOR DRIVER CIRCUIT, THE (C61) BLEND DOOR DRIVER CIRCUIT, THE (C801) MODE DOOR 1 DRIVER CIRCUIT, & THE (C29) MODE DOOR 2 DRIVER CIRCUIT

Measure the resistance between the (C34) Common Door Driver Circuit and the (C32) Recirculation Door Driver circuit, the (C61) Blend Door Driver circuit, the (C801) Mode Door 1 Driver circuit, and the (C29) Mode Door 2 Driver circuit in the A/C Heater Control C1 harness connector.

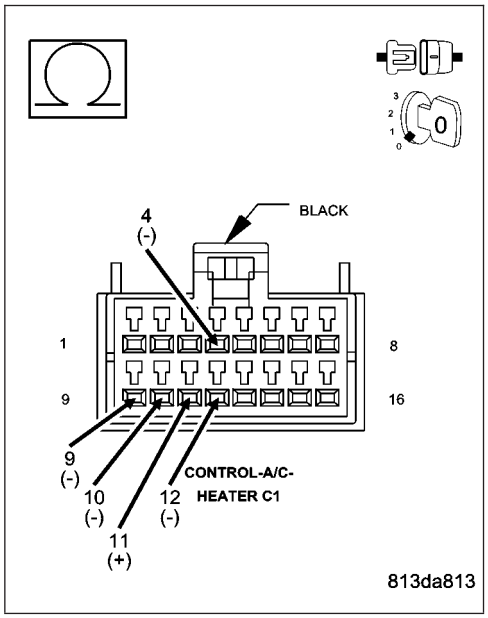

Is the resistance below 30.0 ohms on any of the circuits?

Yes >> Go To 12

No >> Go To 13

12. CHECK THE DOOR DRIVER CIRCUITS WHOSE RESISTANCE WAS BELOW 30.0 OHMS IN THE PREVIOUS STEP FOR A SHORT TO THE (C34) COMMON DOOR DRIVER CIRCUIT

Disconnect all door actuator harness connectors whose circuit resistance was below 30.0 ohms.

Measure the resistance between the (C34) Common Door Driver circuit and each applicable door driver circuit in the A/C Heater Control C1 harness connector.

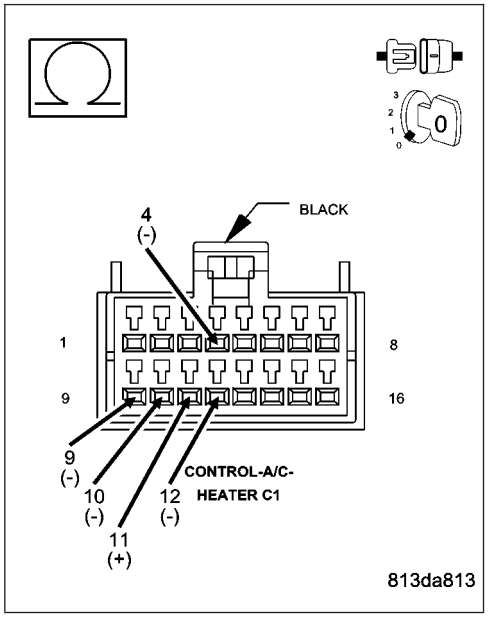

Is the resistance below 10k ohms on any of the circuits?

Yes >> Repair the door driver circuits with a resistance below 10k ohms for a short to the (C34) Common Door Driver circuit.

Perform BODY VERIFICATION TEST - VER 1. (Refer to 8 - ELECTRICAL/ELECTRONIC CONTROL MODULES/ FRONT CONTROL MODULE - DIAGNOSIS AND TESTING).

No >> Replace all door actuators with a resistance below 30.0 ohms in accordance with the Service Information.

Perform BODY VERIFICATION TEST - VER 1. (Refer to 8 - ELECTRICAL/ELECTRONIC CONTROL MODULES/ FRONT CONTROL MODULE - DIAGNOSIS AND TESTING).

*ACTUATOR CIRCUIT TEST DIAGNOSTICS (SINGLE-ZONE) (CONTINUED)

13. RUN THE ACTUATOR CIRCUIT TEST

Reconnect the A/C Heater Control C1 harness connector.

Turn the ignition on.

With the DRBIII® in HVAC, select System Tests and then select Actuator Circuit Test. Allow the test to run to completion before proceeding.

What message does the DRBIII® display?

Same message as from start of test

Replace the A/C Heater Control in accordance with the Service Information.

Perform BODY VERIFICATION TEST - VER 1. (Refer to 8 - ELECTRICAL/ELECTRONIC CONTROL MODULES/FRONT CONTROL MODULE - DIAGNOSIS AND TESTING).

Different message than from start of test

Using the wiring diagram as a guide, inspect the wiring and connectors for conditions causing an intermittent short that set the original test message. Repair as necessary. If the DRBIII® displays a message for a different door driver circuit, return to Test 1 of this diagnostic procedure.

Perform BODY VERIFICATION TEST - VER 1. (Refer to 8 - ELECTRICAL/ELECTRONIC CONTROL MODULES/FRONT CONTROL MODULE - DIAGNOSIS AND TESTING).

*BLEND/MODE/RECIRC DOOR OPERATION IMPROPER (DUAL-ZONE)

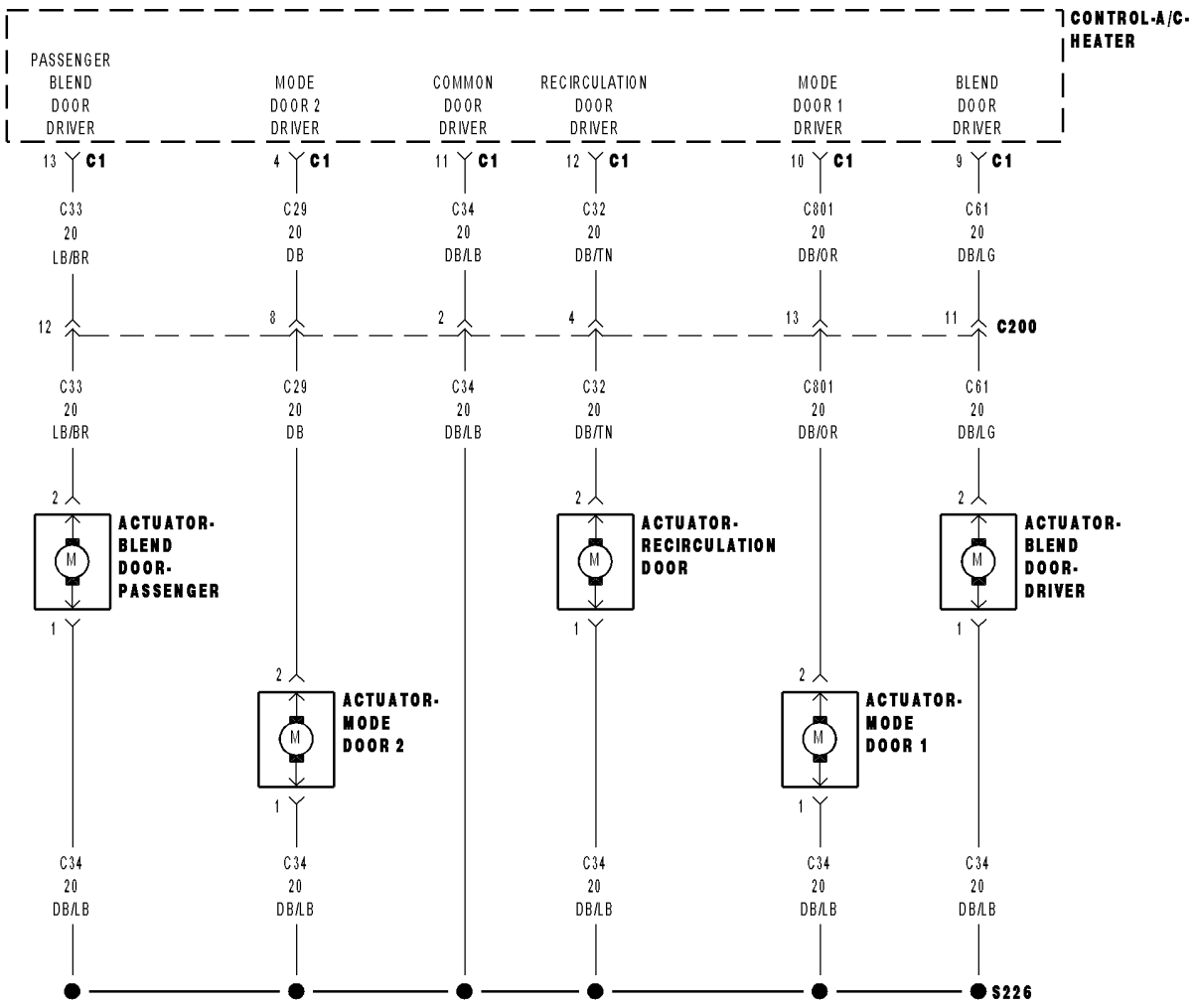

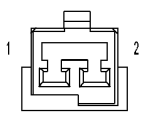
ACTUATOR- RECIRCULATION DOOR

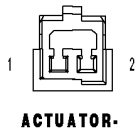
ACTUATOR- MODE DOOR 1 (PANEL TO FLOOR)

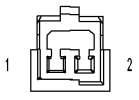
ACTUATOR- MODE DOOR 2 (DEFROST TO FLOOR)

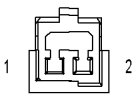
ACTUATOR- BLEND DOOR- PASSENGER (DUAL-ZONE)

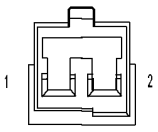
ACTUATOR- BLEND DOOR- DRIVER (DUAL-ZONE)

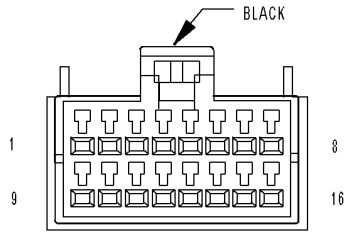

CONTROL-A/C- HEATER C1

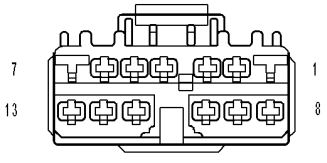

C200

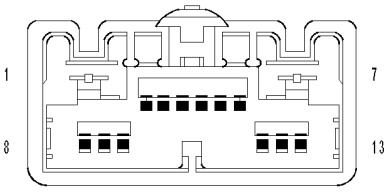

C200

813d20c4

***BLEND/MODE/RECIRC DOOR OPERATION IMPROPER (DUAL-ZONE) (CONTINUED)**

For the Manual Temperature Control circuit diagrams (Refer to 24 - HEATING & AIR CONDITIONING - SCHEMATICS AND DIAGRAMS).

For a complete wiring diagram **Refer to Section 8W**.

Possible Causes
DOOR DRIVER CIRCUIT(S) SHORTED TO GROUND
DOOR DRIVER CIRCUIT(S) SHORTED TO VOLTAGE
DOOR DRIVER CIRCUIT SHORTED TO OTHER DOOR DRIVER CIRCUIT(S)
DOOR DRIVER CIRCUIT(S) OPEN
DOOR(S) BOUND UP, WARPED, WORN, DAMAGED
DOOR LINKAGE(S) EXCESSIVELY WORN, DISCONNECTED, MISSING, BROKEN
DOOR ACTUATOR(S) BROKEN

Diagnostic Test

1. RUN THE ACTUATOR CIRCUIT TEST

NOTE: Diagnose and repair all Actuator Circuit Test faults before diagnosing Calibration faults.

Turn the ignition on.

With the DRBIII® in HVAC, select System Tests and then select Actuator Circuit Test. Allow the test to run to completion before proceeding.

Does the DRBIII® display any Actuator Circuit Test fault messages?

Yes >> Diagnose and repair the fault(s). **Refer to *ACTUATOR CIRCUIT TEST DIAGNOSTICS (DUAL-ZONE) in this Section** for the diagnostic test procedure.

No >> Go To 2

---

2. CHECK FOR DTCS IN THE A/C HEATER CONTROL

NOTE: Diagnose and repair all Overcurrent DTCs before diagnosing Calibration faults.

With the DRBIII®, read HVAC DTCs.

Does the DRBIII® display any DTCs?

Yes >> Diagnose and repair the DTC(s). Refer to the Table of Contents in this Section for a complete list of HVAC related symptoms.

No >> Go To 3

---

3. RUN THE HVAC DOOR RECALIBRATION TEST

NOTE: Diagnose and repair all Actuator Circuit Test faults and all Overcurrent DTCs before diagnosing Calibration faults.

With the DRBIII® in HVAC, select System Tests and then select HVAC Door Recalibration. Allow the test to run to completion before proceeding.

Does the DRBIII® display any HVAC Door Recalibration fault messages?

Yes >> Diagnose and repair the fault(s). Refer to the Table of Contents in this Section for a complete list of all HVAC related symptoms.

No >> Go To 4

***BLEND/MODE/RECIRC DOOR OPERATION IMPROPER (DUAL-ZONE) (CONTINUED)**

4. SELECT THE APPLICABLE TEST TO DIAGNOSE THE DOOR WITH THE REPORTED FAULT

Select the applicable test to diagnose the door with the reported fault

Mode Door Function Test
Go To 5

Passenger Blend Door Function Test
Go To 6

Driver Blend Door Function Test
Go To 7

Recirculation Door Function Test
Go To 8

---

5. CHECK MODE DOOR 1 & MODE DOOR 2 FUNCTION

Start the engine.

Turn the Blower control to the high speed position.

NOTE: The Mode Door 1 must be at its physical end of travel in the panel position to correctly direct airflow to the Mode Door 2.

NOTE: The Mode Door 2 must be at its physical end of travel in the floor-defrost position to correctly direct airflow to the Mode Door 1.

Turn the Mode Select control to each door position for a minimum of 30 seconds and check for airflow from the corresponding vents.

Does air flow from the correct vents for each door position?

Yes >> Test Complete.

No >> Remove the Mode Door Actuator 1 and the Mode Door Actuator 2 from the A/C–Heater Housing Assembly. By hand, one door actuator at a time, attempt to rotate the door actuator in both directions. Also, inspect for disconnected, missing, or broken door actuator linkage, and bound up, warped, worn, and damaged doors. Repair as necessary in accordance with the Service Information.

Perform BODY VERIFICATION TEST - VER 1. (Refer to 8 - ELECTRICAL/ELECTRONIC CONTROL MODULES/FRONT CONTROL MODULE - DIAGNOSIS AND TESTING).

---

6. CHECK PASSENGER BLEND DOOR FUNCTION

Start the engine.

Turn the Blower control to the high speed position.

Turn the Mode Select control to the panel position.

Move the Passenger Blend control to the full hot position.

Move the Passenger Blend control to the full cold position, in 25% increments, while checking for a change in airflow air temperature coming from the passenger's panel vents.

Does the airflow air temperature change with respect to the position of the blend control?

Yes >> Test Complete.

No >> Remove Passenger Blend Door Actuator from A/C-Heater Housing Assembly. By hand, attempt to rotate the door actuator in both directions. Also, inspect for disconnected, missing, or broken door actuator linkage, and a bound up, warped, worn, and damaged door. Repair as necessary in accordance with the Service Information.

Perform BODY VERIFICATION TEST - VER 1. (Refer to 8 - ELECTRICAL/ELECTRONIC CONTROL MODULES/FRONT CONTROL MODULE - DIAGNOSIS AND TESTING).

***BLEND/MODE/RECIRC DOOR OPERATION IMPROPER (DUAL-ZONE) (CONTINUED)**

7. CHECK DRIVER BLEND DOOR FUNCTION

Start the engine.

Turn the Blower control to the high speed position.

Turn the Mode Select control to the panel position.

Move the Driver Blend control to the full hot position.

Move the Driver Blend control to the full cold position, in 25% increments, while checking for a change in airflow air temperature coming from the driver's panel vents.

Does the airflow air temperature change with respect to the position of the blend control.

Yes >> Test Complete.

No >> Remove Driver Blend Door Actuator from A/C-Heater Housing Assembly. By hand, attempt to rotate the door actuator in both directions. Also, inspect for disconnected, missing, or broken door actuator linkage, and a bound up, warped, worn, and damaged door. Repair as necessary in accordance with the Service Information.

Perform BODY VERIFICATION TEST - VER 1. (Refer to 8 - ELECTRICAL/ELECTRONIC CONTROL MODULES/FRONT CONTROL MODULE - DIAGNOSIS AND TESTING).

---

8. CHECK RECIRCULATION DOOR FUNCTION

Start the engine.

Turn the Blower control to the high speed position.

Press the MAX control off (LED not Illuminated).

Press the MAX control on (LED Illuminated). The sound of the air flowing through the ducts should get louder as the recirculation door opens to bring in recirculated air.

Does the sound of the airflow get louder after pressing the MAX control on?

Yes >> Test Complete.

No >> Remove Recirculation Door Actuator from A/C-Heater Housing Assembly. By hand, attempt to rotate the door actuator in both directions. Also, inspect for disconnected, missing, or broken door actuator linkage, and a bound up, warped, worn, and damaged door. Repair as necessary in accordance with the Service Information.

Perform BODY VERIFICATION TEST - VER 1. (Refer to 8 - ELECTRICAL/ELECTRONIC CONTROL MODULES/FRONT CONTROL MODULE - DIAGNOSIS AND TESTING).

---

*BLEND/MODE/RECIRC DOOR OPERATION IMPROPER (SINGLE-ZONE)

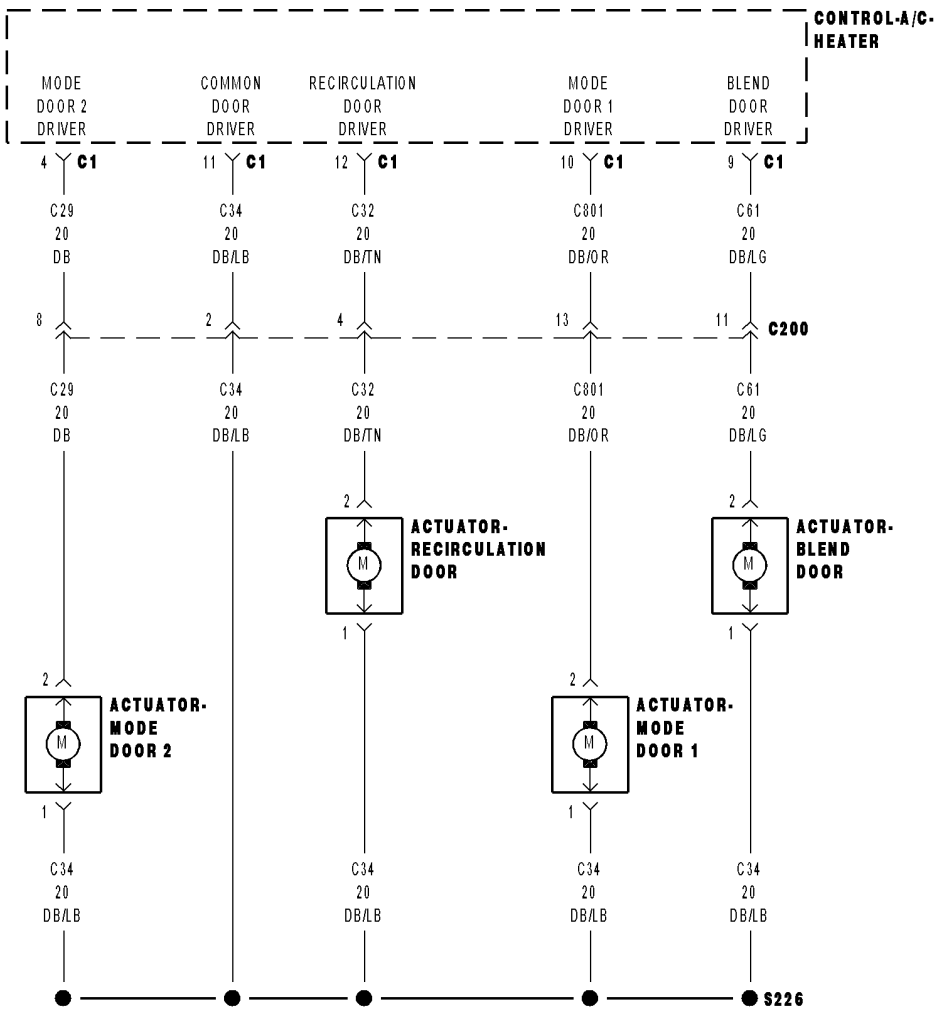

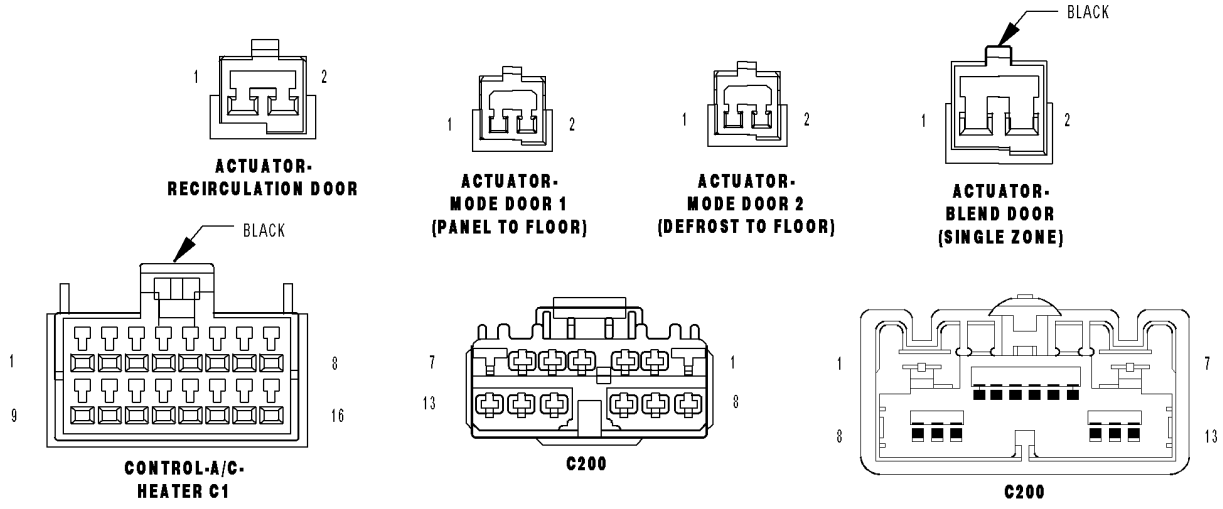

***BLEND/MODE/RECIRC DOOR OPERATION IMPROPER (SINGLE-ZONE) (CONTINUED)**

For the Manual Temperature Control circuit diagrams (Refer to 24 - HEATING & AIR CONDITIONING - SCHEMATICS AND DIAGRAMS).

For a complete wiring diagram **Refer to Section 8W**.

Possible Causes
DOOR DRIVER CIRCUIT(S) SHORTED TO GROUND
DOOR DRIVER CIRCUIT(S) SHORTED TO VOLTAGE
DOOR DRIVER CIRCUIT SHORTED TO OTHER DOOR DRIVER CIRCUIT(S)
DOOR DRIVER CIRCUIT(S) OPEN
DOOR(S) BOUND UP, WARPED, WORN, DAMAGED
DOOR LINKAGE(S) EXCESSIVELY WORN, DISCONNECTED, MISSING, BROKEN
DOOR ACTUATOR(S) BROKEN

Diagnostic Test

1. RUN THE ACTUATOR CIRCUIT TEST

NOTE: Diagnose and repair all Actuator Circuit Test faults before diagnosing Calibration faults.

Turn the ignition on.

With the DRBIII® in HVAC, select System Tests and then select Actuator Circuit Test. Allow the test to run to completion before proceeding.

Does the DRBIII® display any Actuator Circuit Test fault messages?

Yes >> Diagnose and repair the fault(s). **Refer to *ACTUATOR CIRCUIT TEST DIAGNOSTICS (SINGLE-ZONE) in this Section** for the diagnostic test procedure.

No >> Go To 2

---

2. CHECK FOR DTCS IN THE A/C HEATER CONTROL

NOTE: Diagnose and repair all Overcurrent DTCs before diagnosing Calibration faults.

With the DRBIII®, read HVAC DTCs.

Does the DRBIII® display any DTCs?

Yes >> Diagnose and repair the DTC(s). Refer to the Table of Contents in this Section for a complete list of HVAC related symptoms.

No >> Go To 3

---

3. RUN THE HVAC DOOR RECALIBRATION TEST

NOTE: Diagnose and repair all Actuator Circuit Test faults and all Overcurrent DTCs before diagnosing Calibration faults.

With the DRBIII® in HVAC, select System Tests and then select HVAC Door Recalibration. Allow the test to run to completion before proceeding.

Does the DRBIII® display any HVAC Door Recalibration fault messages?

Yes >> Diagnose and repair the fault(s). Refer to the Table of Contents in this Section for a complete list of all HVAC related symptoms.

No >> Go To 4

***BLEND/MODE/RECIRC DOOR OPERATION IMPROPER (SINGLE-ZONE) (CONTINUED)**

4. SELECT THE APPLICABLE TEST TO DIAGNOSE THE DOOR WITH THE REPORTED FAULT

Select the applicable test to diagnose the door with the reported fault

Mode Door Function Test
Go To 5

Blend Door Function Test
Go To 6

Recirculation Door Function Test
Go To 7

---

5. CHECK MODE DOOR 1 & MODE DOOR 2 FUNCTION

Start the engine.

Turn the Blower control to the high speed position.

NOTE: The Mode Door 1 must be at its physical end of travel in the panel position to correctly direct airflow to the Mode Door 2.

NOTE: The Mode Door 2 must be at its physical end of travel in the floor-defrost position to correctly direct airflow to the Mode Door 1.

Turn the Mode Select control to each door position for a minimum of 30 seconds and check for airflow from the corresponding vents.

Does air flow from the correct vents for each door position?

Yes >> Test Complete.

No >> Remove the Mode Door Actuator 1 and the Mode Door Actuator 2 from the A/C–Heater Housing Assembly. By hand, one door actuator at a time, attempt to rotate the door actuator in both directions. Also, inspect for disconnected, missing, or broken door actuator linkage, and bound up, warped, worn, and damaged doors. Repair as necessary in accordance with the Service Information.

Perform BODY VERIFICATION TEST - VER 1. (Refer to 8 - ELECTRICAL/ELECTRONIC CONTROL MODULES/FRONT CONTROL MODULE - DIAGNOSIS AND TESTING).

---

6. CHECK BLEND DOOR FUNCTION

Start the engine.

Turn the Blower control to the high speed position.

Turn the Mode Select control to the panel position.

Move the Blend control to the full hot position.

Move the Blend control to the full cold position, in 25% increments, while checking for a change in airflow air temperature coming from the panel vents.

Does the airflow air temperature change with respect to the position of the blend control?

Yes >> Test Complete.

No >> Remove Blend Door Actuator from A/C-Heater Housing Assembly. By hand, attempt to rotate the door actuator in both directions. Also, inspect for disconnected, missing, or broken door actuator linkage, and a bound up, warped, worn, and damaged door. Repair as necessary in accordance with the Service Information.

Perform BODY VERIFICATION TEST - VER 1. (Refer to 8 - ELECTRICAL/ELECTRONIC CONTROL MODULES/FRONT CONTROL MODULE - DIAGNOSIS AND TESTING).

***BLEND/MODE/RECIRC DOOR OPERATION IMPROPER (SINGLE-ZONE) (CONTINUED)**

7. CHECK RECIRCULATION DOOR FUNCTION

Start the engine.

Turn the Blower control to the high speed position.

Press the MAX control off (LED not Illuminated).

Press the MAX control on (LED Illuminated). The sound of the air flowing through the ducts should get louder as the recirculation door opens to bring in recirculated air.

Does the sound of the airflow get louder after pressing the MAX control on?

Yes >> Test Complete.

No >> Remove Recirculation Door Actuator from A/C-Heater Housing Assembly. By hand, attempt to rotate the door actuator in both directions. Also, inspect for disconnected, missing, or broken door actuator linkage, and a bound up, warped, worn, and damaged door. Repair as necessary in accordance with the Service Information.

Perform BODY VERIFICATION TEST - VER 1. (Refer to 8 - ELECTRICAL/ELECTRONIC CONTROL MODULES/FRONT CONTROL MODULE - DIAGNOSIS AND TESTING).

*BLOWER MOTOR INOPERATIVE (EXCEPT SRT10)

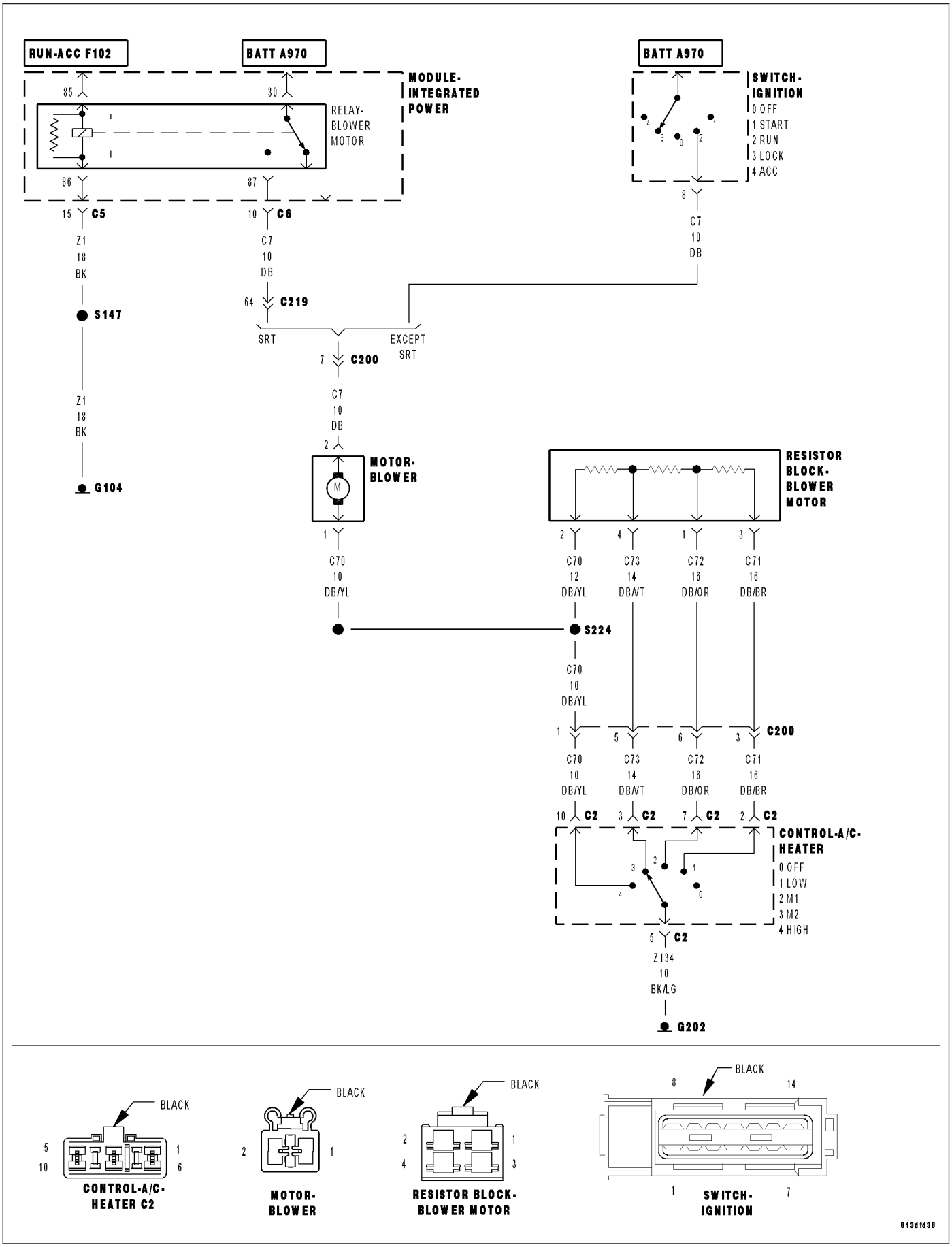

***BLOWER MOTOR INOPERATIVE (EXCEPT SRT10) (CONTINUED)**

For the Manual Temperature Control circuit diagrams (Refer to 24 - HEATING & AIR CONDITIONING - SCHEMATICS AND DIAGRAMS).

For a complete wiring diagram **Refer to Section 8W**.

Possible Causes
(C7) BLOWER MOTOR FEED CIRCUIT SHORTED TO GROUND
(A970) FUSED B(+) CIRCUIT SHORTED TO GROUND
(C70) BLOWER MOTOR HIGH DRIVER CIRCUIT OPEN
(Z134) GROUND CIRCUIT OPEN
(C7) BLOWER MOTOR FEED CIRCUIT OPEN
(A970) FUSED B(+) CIRCUIT OPEN
IPM FUSE #4 OPEN
BLOWER MOTOR
IGNITION SWITCH
A/C HEATER CONTROL

Diagnostic Test

1. CHECK THE FUSE

Turn the ignition off.

Remove and inspect IPM Fuse #4.

Is the fuse open?

Yes >> Replace IPM Fuse #4 and Go To 2.

No >> Reinstall IPM Fuse #4 and Go To 5.

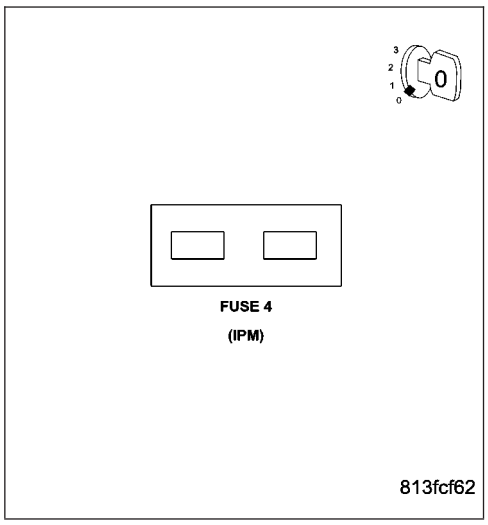

2. CHECK BLOWER MOTOR OPERATION

Turn the ignition on.

Turn the blower on and operate it in all speeds and modes.

Does the blower motor operate properly without blowing the fuse?

Yes >> Check the (C7) Blower Motor Feed circuit and the (A970) Fused B(+) circuit for an intermittent short to ground. Repair as necessary.

Perform BODY VERIFICATION TEST - VER 1. (Refer to 8 - ELECTRICAL/ELECTRONIC CONTROL MODULES/FRONT CONTROL MODULE - DIAGNOSIS AND TESTING).

No >> Go To 3

***BLOWER MOTOR INOPERATIVE (EXCEPT SRT10) (CONTINUED)**

3. CHECK THE (C7) BLOWER MOTOR FEED CIRCUIT FOR A SHORT TO GROUND

Turn the ignition off.

Disconnect the Blower Motor harness connector.

Measure the resistance of the (C7) Blower Motor Feed circuit between ground and the Blower Motor harness connector.

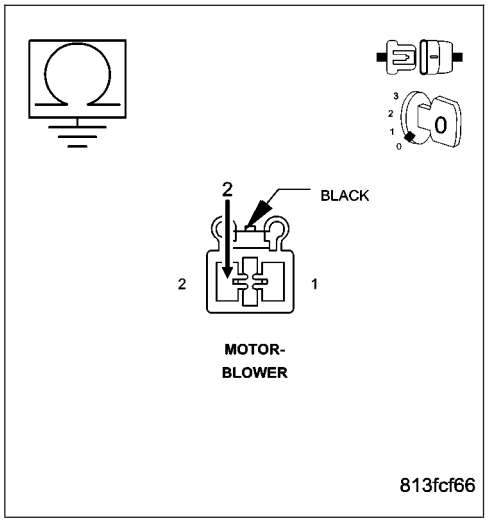

Is the resistance below 10K ohms?

Yes >> Repair the (C7) Blower Motor Feed circuit for a short to ground and replace the fuse.

Perform BODY VERIFICATION TEST - VER 1. (Refer to 8 - ELECTRICAL/ELECTRONIC CONTROL MODULES/ FRONT CONTROL MODULE - DIAGNOSIS AND TESTING).

No >> Go To 4

4. CHECK THE (A970) FUSED B(+) CIRCUIT FOR A SHORT TO GROUND

Disconnect the Ignition Switch harness connector.

Measure the resistance of the (A970) Fused B(+) circuit between ground and the Ignition Switch harness connector.

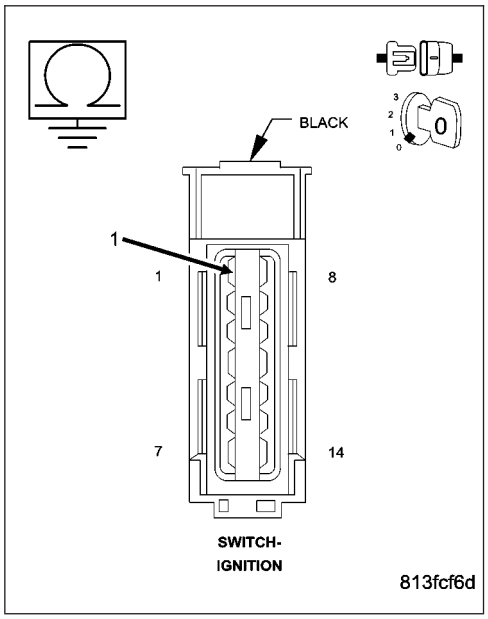

Is the resistance below 10K ohms?

Yes >> Repair the (A970) Fused B(+) circuit for a short to ground and replace the fuse.

Perform BODY VERIFICATION TEST - VER 1. (Refer to 8 - ELECTRICAL/ELECTRONIC CONTROL MODULES/ FRONT CONTROL MODULE - DIAGNOSIS AND TESTING).

No >> Replace the Blower Motor and fuse in accordance with the Service Information.

Perform BODY VERIFICATION TEST - VER 1. (Refer to 8 - ELECTRICAL/ELECTRONIC CONTROL MODULES/ FRONT CONTROL MODULE - DIAGNOSIS AND TESTING).

***BLOWER MOTOR INOPERATIVE (EXCEPT SRT10) (CONTINUED)**

5. CHECK THE (C7) BLOWER MOTOR FEED CIRCUIT USING A TEST LIGHT

Turn the ignition on.

NOTE: The test light must illuminate brightly. Compare the brightness to that of a direct connection to the battery.
Using a 12-volt test light connected to ground, back probe the (C7) Blower Motor Feed circuit in the Blower Motor harness connector.

Does the test light illuminate brightly?

Yes >> Go To 6

No >> Go To 9

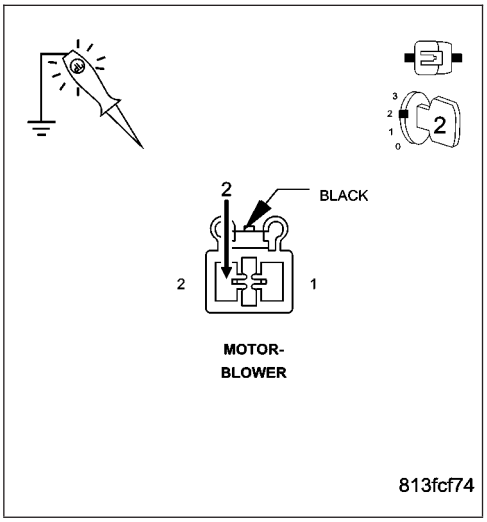

6. CHECK BLOWER MOTOR OPERATION BY BYPASSING THE A/C HEATER CONTROL

Turn the ignition off.

Connect a jumper wire between ground and the (C70) Blower Motor High Driver circuit in the Blower Motor harness connector.

Turn the ignition on.

Does the blower motor run at high speed?

Yes >> Go To 7

No >> Replace the Blower Motor in accordance with the Service Information.
Perform BODY VERIFICATION TEST - VER 1. (Refer to 8 - ELECTRICAL/ELECTRONIC CONTROL MODULES/ FRONT CONTROL MODULE - DIAGNOSIS AND TESTING).

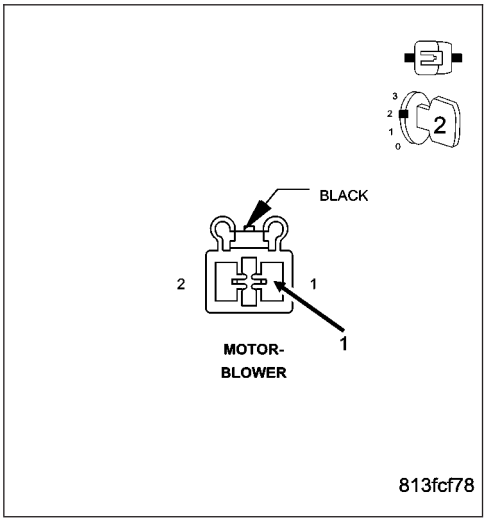

***BLOWER MOTOR INOPERATIVE (EXCEPT SRT10) (CONTINUED)**

7. CHECK THE (C70) BLOWER MOTOR HIGH DRIVER CIRCUIT FOR AN OPEN

Turn the ignition off.

Disconnect the A/C Heater Control C2 harness connector.

Disconnect the Blower Motor harness connector.

Measure the resistance of the (C70) Blower Motor High Driver circuit between the A/C Heater Control C2 harness connector and the Blower Motor harness connector.

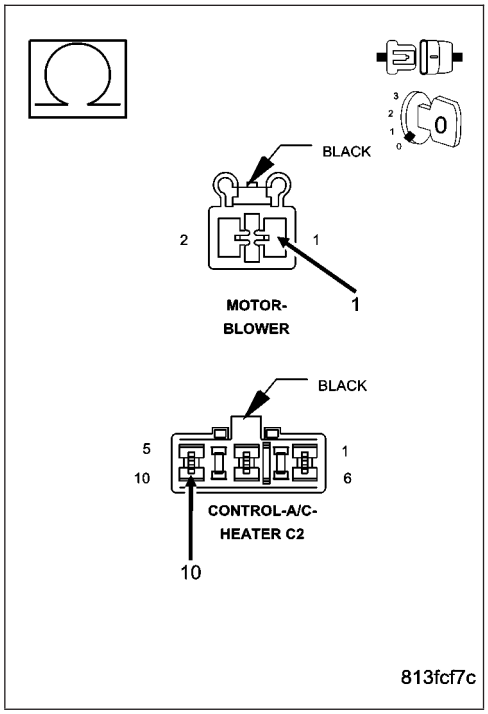

Is the resistance below 5.0 ohms?

Yes >> Go To 8

No >> Repair the (C70) Blower Motor High Driver circuit for an open.

Perform BODY VERIFICATION TEST - VER 1. (Refer to 8 - ELECTRICAL/ELECTRONIC CONTROL MODULES/ FRONT CONTROL MODULE - DIAGNOSIS AND TESTING).

8. CHECK THE (Z134) GROUND CIRCUIT FOR AN OPEN

Measure the resistance of the (Z134) Ground circuit between ground and the A/C Heater Control C2 harness connector.

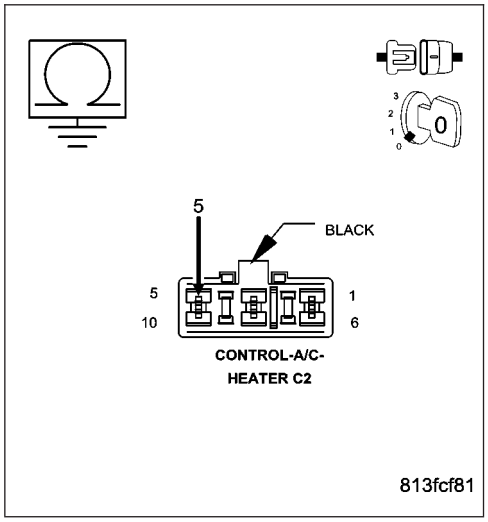

Is the resistance below 5.0 ohms?

Yes >> Replace the A/C Heater Control in accordance with the Service Information.

No >> Repair the (Z134) Ground circuit for an open.

Perform BODY VERIFICATION TEST - VER 1. (Refer to 8 - ELECTRICAL/ELECTRONIC CONTROL MODULES/ FRONT CONTROL MODULE - DIAGNOSIS AND TESTING).

*BLOWER MOTOR INOPERATIVE (EXCEPT SRT10) (CONTINUED)

9. CHECK THE (C7) BLOWER MOTOR FEED CIRCUIT FOR AN OPEN

NOTE: The test light must illuminate brightly. Compare the brightness to that of a direct connection to the battery.
Using a 12-volt test light connected to ground, back probe the (C7) Blower Motor Feed circuit in the Ignition Switch harness connector.

Does the test light illuminate brightly?

Yes >> Repair the (C7) Blower Motor Feed circuit for an open.
Perform BODY VERIFICATION TEST - VER 1. (Refer to 8 - ELECTRICAL/ELECTRONIC CONTROL MODULES/ FRONT CONTROL MODULE - DIAGNOSIS AND TESTING).

No >> Go To 10

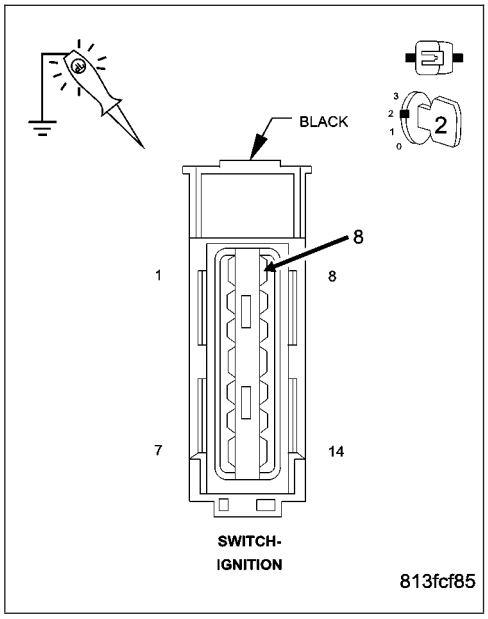

10. CHECK THE (A970) FUSED B(+) CIRCUIT FOR AN OPEN

NOTE: The test light must illuminate brightly. Compare the brightness to that of a direct connection to the battery.
Using a 12-volt test light connected to ground, back probe the (A970) Fused B(+) circuit in the Ignition Switch harness connector.

Does the test light illuminate brightly?

Yes >> Replace the Ignition Switch in accordance with the Service Information.
Perform BODY VERIFICATION TEST - VER 1. (Refer to 8 - ELECTRICAL/ELECTRONIC CONTROL MODULES/ FRONT CONTROL MODULE - DIAGNOSIS AND TESTING).

No >> Repair the (A970) Fused B(+) circuit for an open.
Perform BODY VERIFICATION TEST - VER 1. (Refer to 8 - ELECTRICAL/ELECTRONIC CONTROL MODULES/ FRONT CONTROL MODULE - DIAGNOSIS AND TESTING).

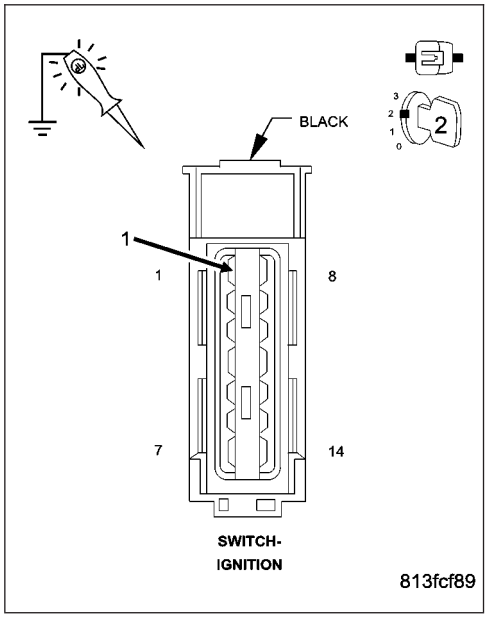

*BLOWER MOTOR INOPERATIVE (SRT10)

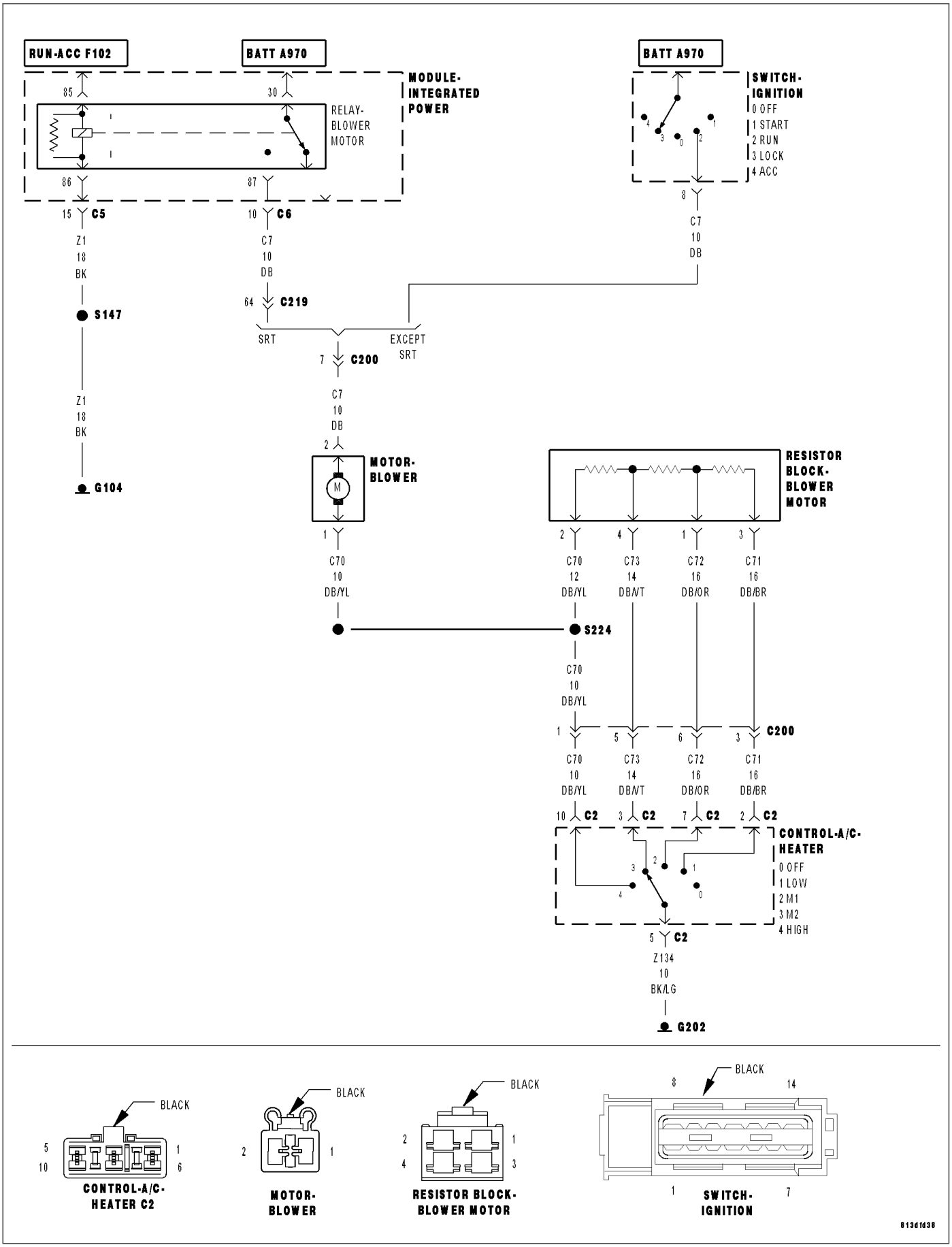

813df38

***BLOWER MOTOR INOPERATIVE (SRT10) (CONTINUED)**

For the Manual Temperature Control circuit diagrams (Refer to 24 - HEATING & AIR CONDITIONING - SCHEMATICS AND DIAGRAMS).

For a complete wiring diagram **Refer to Section 8W**.

Possible Causes
FAULTS PRESENT IN THE FRONT CONTROL MODULE (FCM)
(C7) BLOWER MOTOR FEED CIRCUIT SHORTED TO (Z1) GROUND CIRCUIT
(A970) FUSED B(+) CIRCUIT SHORTED TO (Z1) GROUND CIRCUIT
(C7) BLOWER MOTOR FEED CIRCUIT SHORTED TO GROUND
(A970) FUSED B(+) CIRCUIT SHORTED TO GROUND
(Z1) GROUND CIRCUIT OPEN
(A970) FUSED B(+) CIRCUIT OPEN
(F102) FUSED IGNITION SWITCH OUTPUT (RUN) CIRCUIT OPEN
(C7) BLOWER MOTOR FEED CIRCUIT OPEN
(C70) BLOWER MOTOR HIGH DRIVER CIRCUIT OPEN
(Z134) GROUND CIRCUIT OPEN
IPM FUSE #4 OPEN
BLOWER MOTOR RELAY
BLOWER MOTOR
A/C HEATER CONTROL

Diagnostic Test

1. CHECK FOR ACTIVE DTCs IN THE FRONT CONTROL MODULE (FCM)

Turn the ignition on.

With the DRBIII®, read active Front Control Module DTCs.

Does the DRBIII® display any active DTCs?

Yes >> Diagnose and repair the DTC(s). Refer to the Table of Contents in the related category for the diagnostic test procedure(s).

Perform BODY VERIFICATION TEST - VER 1. (Refer to 8 - ELECTRICAL/ELECTRONIC CONTROL MODULES/FRONT CONTROL MODULE - DIAGNOSIS AND TESTING).

No >> Go To 2

***BLOWER MOTOR INOPERATIVE (SRT10) (CONTINUED)**

2. CHECK THE FUSE

Turn the ignition off.

Remove and inspect IPM Fuse #4.

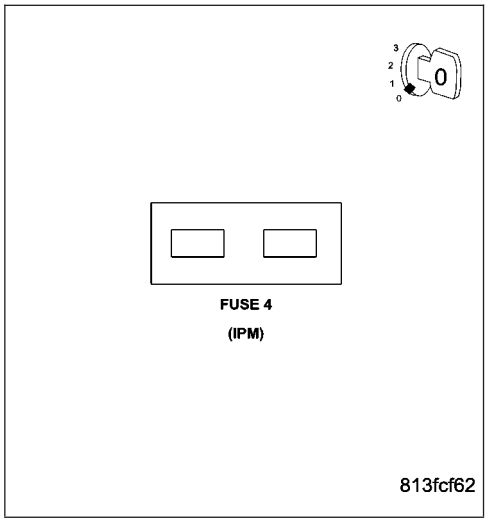

Is the fuse open?

Yes >> Replace IPM Fuse #4 and Go To 3.

No >> Reinstall IPM Fuse #4 and Go To 7.

3. CHECK BLOWER MOTOR OPERATION

Turn the ignition on.

Turn the blower on and operate it in all speeds and modes.

Does the blower motor operate properly without blowing the fuse?

Yes >> Check the (C7) Blower Motor Feed circuit and the (A970) Fused B(+) circuit for an intermittent short to ground. Repair as necessary.

Perform BODY VERIFICATION TEST - VER 1. (Refer to 8 - ELECTRICAL/ELECTRONIC CONTROL MODULES/FRONT CONTROL MODULE - DIAGNOSIS AND TESTING).

No >> Go To 4

4. CHECK THE (C7) BLOWER MOTOR FEED CIRCUIT & THE (A970) FUSED B(+) CIRCUIT FOR A SHORT TO THE (Z1) GROUND CIRCUIT

Turn the ignition off.

Remove the Blower Motor Relay from the IPM.

Measure the resistance between the (Z1) Ground circuit and the (C7) Blower Motor Feed circuit in the Blower Motor Relay connector.

Measure the resistance between the (Z1) Ground circuit and the (A970) Fused B(+) in the Blower Motor Relay connector.

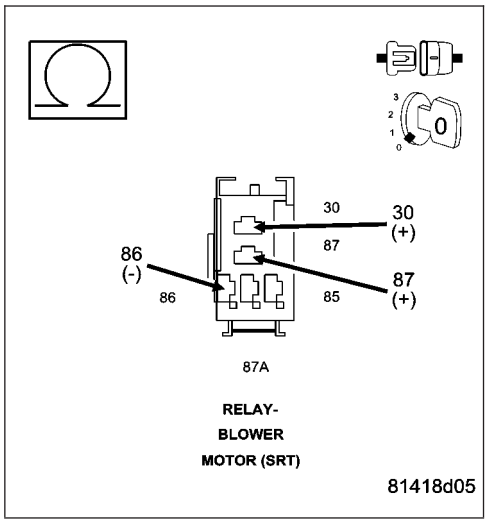

Is the resistance below 10K ohms on either circuit?

Yes >> Repair all circuits with a resistance below 10k ohms for a short to the (Z1) Ground circuit and replace the fuse.

Perform BODY VERIFICATION TEST - VER 1. (Refer to 8 - ELECTRICAL/ELECTRONIC CONTROL MODULES/FRONT CONTROL MODULE - DIAGNOSIS AND TESTING).

No >> Go To 5

*BLOWER MOTOR INOPERATIVE (SRT10) (CONTINUED)

5. CHECK THE (C7) BLOWER MOTOR FEED CIRCUIT FOR A SHORT TO GROUND

Disconnect the Blower Motor harness connector.

Measure the resistance of the (C7) Blower Motor Feed circuit between ground and the Blower Motor harness connector.

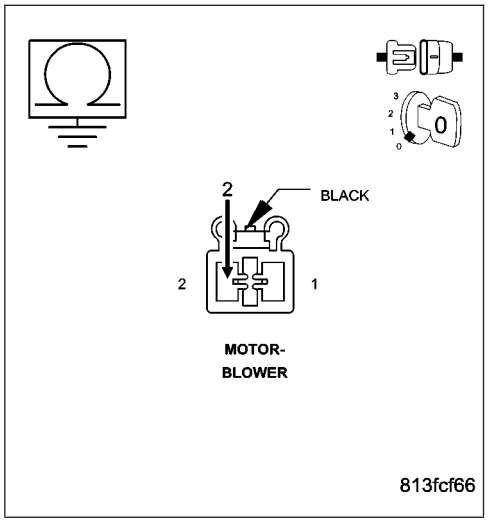

Is the resistance below 10K ohms?

Yes >> Repair the (C7) Blower Motor Feed circuit for a short to ground and replace the fuse.

Perform BODY VERIFICATION TEST - VER 1. (Refer to 8 - ELECTRICAL/ELECTRONIC CONTROL MODULES/ FRONT CONTROL MODULE - DIAGNOSIS AND TESTING).

No >> Go To 6

6. CHECK THE (A970) FUSED B(+) CIRCUIT FOR A SHORT TO GROUND

Measure the resistance of the (A970) Fused B(+) circuit between ground and the Blower Motor Relay connector.

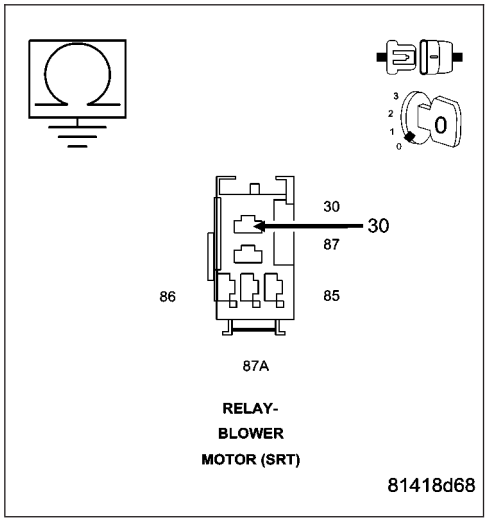

Is the resistance below 10K ohms?

Yes >> Repair the (A970) Fused B(+) circuit for a short to ground and replace the fuse.

Perform BODY VERIFICATION TEST - VER 1. (Refer to 8 - ELECTRICAL/ELECTRONIC CONTROL MODULES/ FRONT CONTROL MODULE - DIAGNOSIS AND TESTING).

No >> Replace the Blower Motor and fuse in accordance with the Service Information.

Perform BODY VERIFICATION TEST - VER 1. (Refer to 8 - ELECTRICAL/ELECTRONIC CONTROL MODULES/ FRONT CONTROL MODULE - DIAGNOSIS AND TESTING).

7. CHECK BLOWER MOTOR OPERATION WITH A SUBSTITUTE RELAY INSTALLED

Install a substitute relay in place of the existing Blower Motor Relay.

Turn the ignition on.

Turn the blower on and operate it in all speeds and modes.

Does the blower motor operate properly?

Yes >> Replace the Blower Motor Relay in accordance with the Service Information.

Perform BODY VERIFICATION TEST - VER 1. (Refer to 8 - ELECTRICAL/ELECTRONIC CONTROL MODULES/FRONT CONTROL MODULE - DIAGNOSIS AND TESTING).

No >> Go To 8

***BLOWER MOTOR INOPERATIVE (SRT10) (CONTINUED)**

8. CHECK THE (Z1) GROUND CIRCUIT FOR AN OPEN

Turn the ignition off.

Remove the substitute Blower Motor Relay.

Measure the resistance between ground and the (Z1) Ground circuit in the Blower Motor Relay connector.

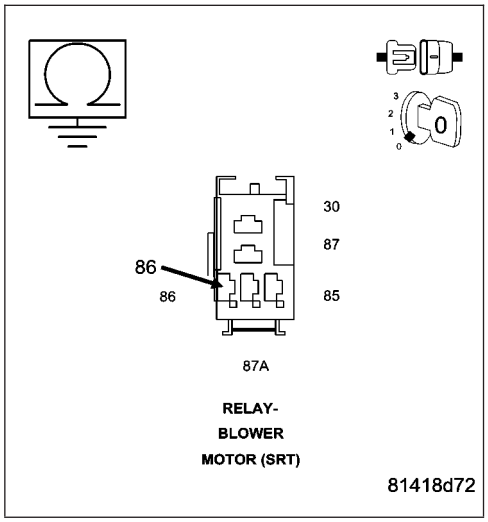

Is the resistance below 5.0 ohms?

Yes >> Go To 9

No >> Repair the (Z1) Ground circuit for an open.

Perform BODY VERIFICATION TEST - VER 1. (Refer to 8 - ELECTRICAL/ELECTRONIC CONTROL MODULES/ FRONT CONTROL MODULE - DIAGNOSIS AND TESTING).

9. CHECK THE (A970) FUSED B(+) CIRCUIT & THE (F102) FUSED IGNITION SWITCH OUTPUT (RUN) CIRCUIT FOR AN OPEN

Turn the ignition on.

NOTE: The test light must illuminate brightly. Compare the brightness to that of a direct connection to the battery.

Using a 12-volt test light connected to ground, check the (A970) Fused B(+) circuit in the Blower Motor Relay Connector.

Using a 12-volt test light connected to ground, check the (F102) Fused Ignition Switch Output (Run) circuit in the Blower Motor Relay Connector.

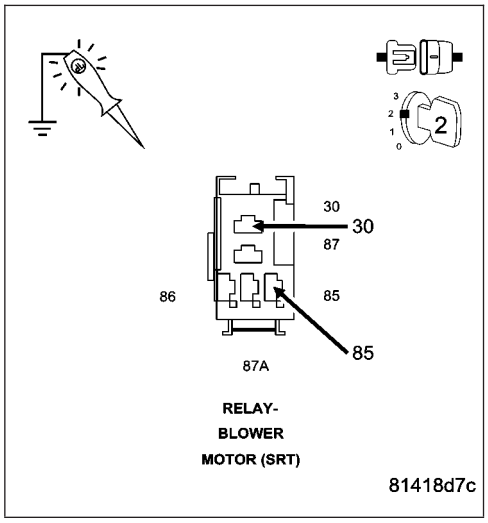

Does the test light illuminate brightly on both circuits?

Yes >> Go To 10

No >> Repair the circuits that failed to illuminate the test light brightly for an open circuit.

Perform BODY VERIFICATION TEST - VER 1. (Refer to 8 - ELECTRICAL/ELECTRONIC CONTROL MODULES/ FRONT CONTROL MODULE - DIAGNOSIS AND TESTING).

*BLOWER MOTOR INOPERATIVE (SRT10) (CONTINUED)

10. CHECK THE (C7) BLOWER MOTOR FEED CIRCUIT FOR AN OPEN

Turn the ignition off.

Install the Blower Motor Relay.

Turn the ignition on.

NOTE: The test light must illuminate brightly. Compare the brightness to that of a direct connection to the battery.

Using a 12-volt test light connected to ground, back probe the (C7) Blower Motor Feed circuit in the Blower Motor harness connector.

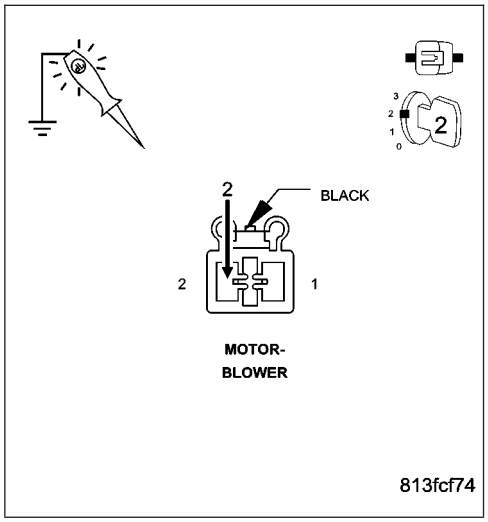

Does the test light illuminate brightly?

Yes >> Go To 11

No >> Repair the (C7) Blower Motor Feed circuit for an open.

Perform BODY VERIFICATION TEST - VER 1. (Refer to 8 - ELECTRICAL/ELECTRONIC CONTROL MODULES/ FRONT CONTROL MODULE - DIAGNOSIS AND TESTING).

11. CHECK BLOWER MOTOR OPERATION BY BYPASSING THE A/C HEATER CONTROL

Turn the ignition off.

Connect a jumper wire between ground and the (C70) Blower Motor High Driver circuit in the Blower Motor harness connector.

Turn the ignition on.

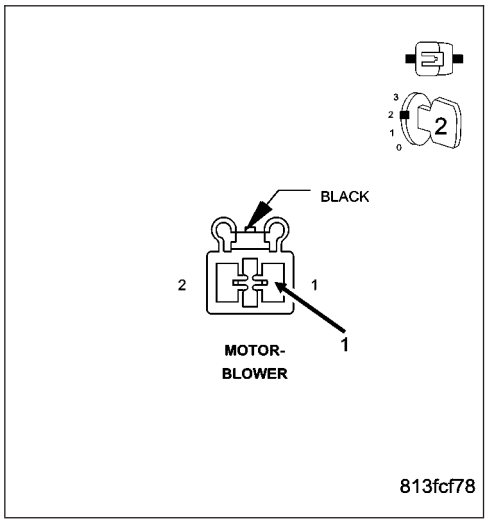

Does the blower motor run at high speed?

Yes >> Go To 12

No >> Replace the Blower Motor in accordance with the Service Information.

Perform BODY VERIFICATION TEST - VER 1. (Refer to 8 - ELECTRICAL/ELECTRONIC CONTROL MODULES/ FRONT CONTROL MODULE - DIAGNOSIS AND TESTING).

***BLOWER MOTOR INOPERATIVE (SRT10) (CONTINUED)**

12. CHECK THE (C70) BLOWER MOTOR HIGH DRIVER CIRCUIT FOR AN OPEN

Turn the ignition off.

Disconnect the A/C Heater Control C2 harness connector.

Disconnect the Blower Motor harness connector.

Measure the resistance of the (C70) Blower Motor High Driver circuit between the A/C Heater Control C2 harness connector and the Blower Motor harness connector.

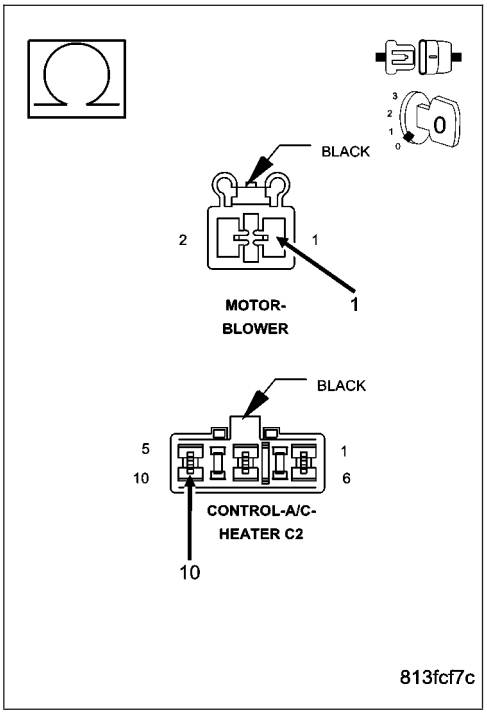

Is the resistance below 5.0 ohms?

Yes >> Go To 13

No >> Repair the (C70) Blower Motor High Driver circuit for an open.

Perform BODY VERIFICATION TEST - VER 1. (Refer to 8 - ELECTRICAL/ELECTRONIC CONTROL MODULES/ FRONT CONTROL MODULE - DIAGNOSIS AND TESTING).

13. CHECK THE (Z134) GROUND CIRCUIT FOR AN OPEN

Measure the resistance of the (Z134) Ground circuit between ground and the A/C Heater Control C2 harness connector.

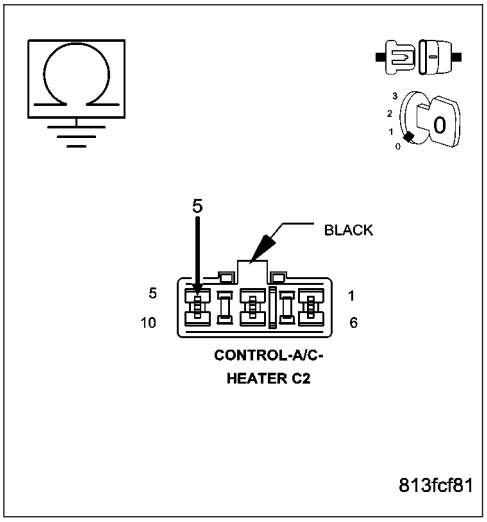

Is the resistance below 5.0 ohms?

Yes >> Replace the A/C Heater Control in accordance with the Service Information.

No >> Repair the (Z134) Ground circuit for an open.

Perform BODY VERIFICATION TEST - VER 1. (Refer to 8 - ELECTRICAL/ELECTRONIC CONTROL MODULES/ FRONT CONTROL MODULE - DIAGNOSIS AND TESTING).

*BLOWER SPEED DOES NOT CORRESPOND WITH CONTROL SETTING

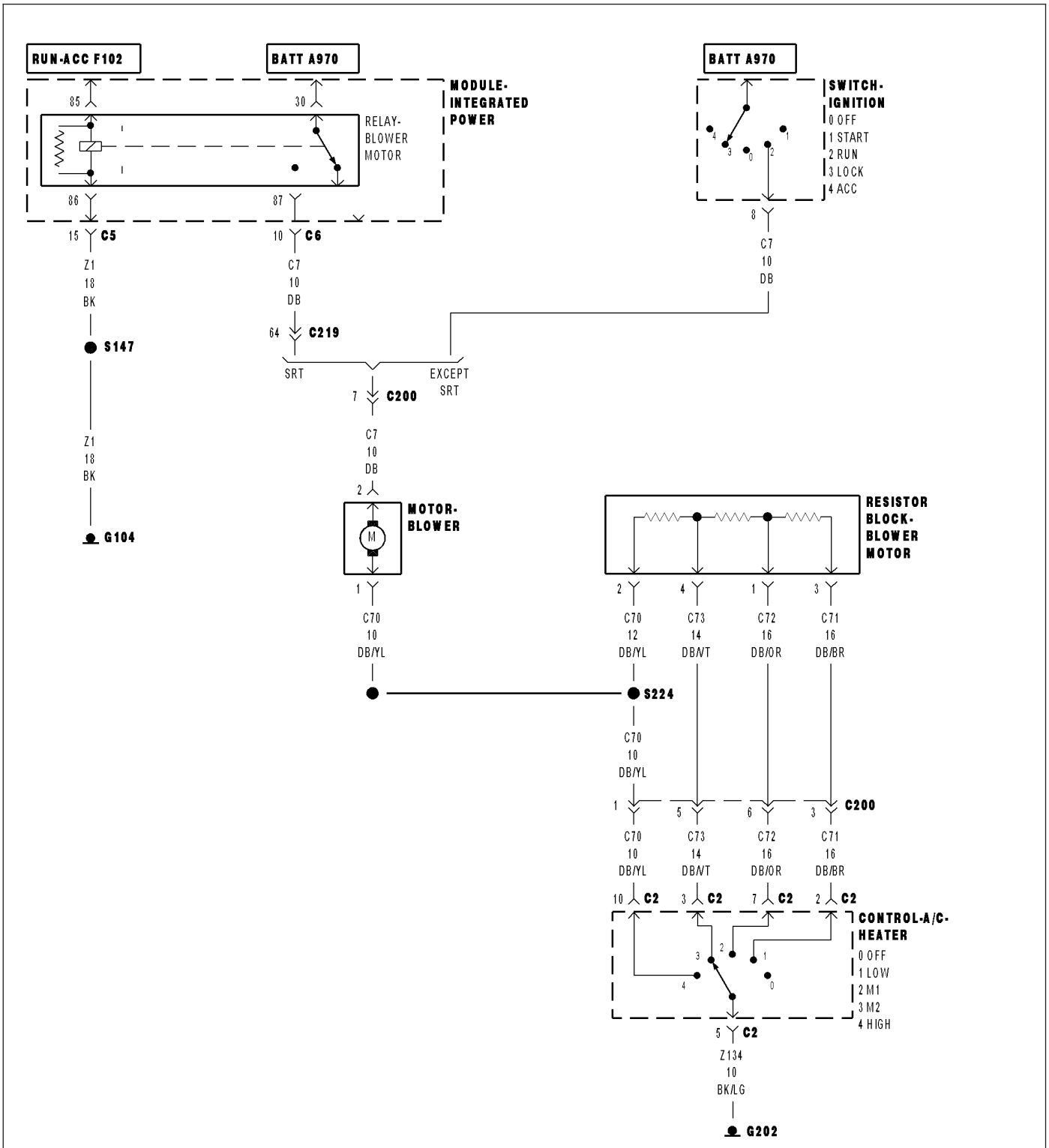

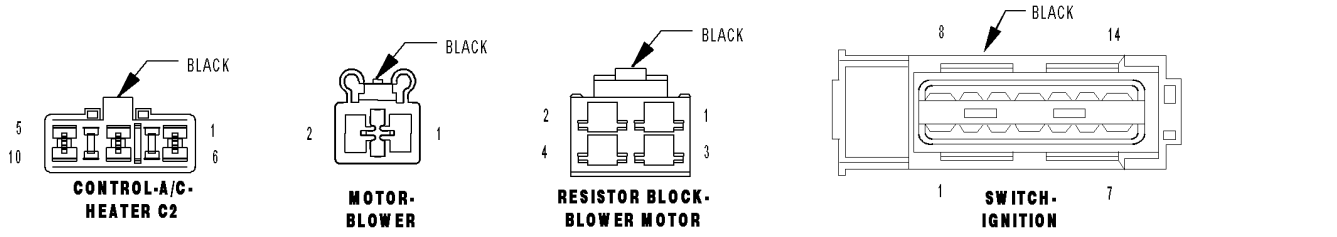

8134d38

***BLOWER SPEED DOES NOT CORRESPOND WITH CONTROL SETTING (CONTINUED)**

For the Manual Temperature Control circuit diagrams (Refer to 24 - HEATING & AIR CONDITIONING - SCHEMATICS AND DIAGRAMS).

For a complete wiring diagram **Refer to Section 8W**.

Possible Causes
(C71) BLOWER MOTOR LOW DRIVER CIRCUIT / (C73) BLOWER MOTOR M2 DRIVER CIRCUIT / (C72) BLOWER MOTOR M1 DRIVER CIRCUIT / (C70) BLOWER MOTOR HIGH DRIVER CIRCUIT SHORTED TO GROUND
(C71) BLOWER MOTOR LOW DRIVER CIRCUIT / (C73) BLOWER MOTOR M2 DRIVER CIRCUIT / (C72) BLOWER MOTOR M1 DRIVER CIRCUIT / (C70) BLOWER MOTOR HIGH DRIVER CIRCUIT SHORTED TO VOLTAGE
(C71) BLOWER MOTOR LOW DRIVER CIRCUIT / (C73) BLOWER MOTOR M2 DRIVER CIRCUIT / (C72) BLOWER MOTOR M1 DRIVER CIRCUIT / (C70) BLOWER MOTOR HIGH DRIVER CIRCUIT SHORTED TOGETHER
(C71) BLOWER MOTOR LOW DRIVER CIRCUIT / (C73) BLOWER MOTOR M2 DRIVER CIRCUIT / (C72) BLOWER MOTOR M1 DRIVER CIRCUIT / (C70) BLOWER MOTOR HIGH DRIVER CIRCUIT OPEN
BLOWER MOTOR RESISTOR BLOCK OPEN
A/C HEATER CONTROL

Diagnostic Test

1. CHECK IF THE BLOWER MOTOR RUNS WITH THE BLOWER CONTROL IN THE OFF POSITION

Turn the Blower control to the Off position.

Turn the ignition on.

Does the blower motor run?

Yes >> Go To 2

No >> Go To 3

***BLOWER SPEED DOES NOT CORRESPOND WITH CONTROL SETTING (CONTINUED)**

2. CHECK THE (C71) BLOWER MOTOR LOW DRIVER CIRCUIT, THE (C73) BLOWER MOTOR M2 DRIVER CIRCUIT, THE (C72) BLOWER MOTOR M1 DRIVER CIRCUIT, & THE (C70) BLOWER MOTOR HIGH DRIVER CIRCUIT FOR A SHORT TO GROUND

Turn the ignition off.

Disconnect the A/C Heater Control C2 harness connector.

Disconnect the Blower Motor Resistor Block harness connector.

Measure the resistance of the (C71) Blower Motor Low Driver circuit, the (C73) Blower Motor M2 Driver circuit, the (C72) Blower Motor M1 Driver circuit, and the (C70) Blower Motor High Driver circuit between ground and the A/C Heater Control C2 harness connector.

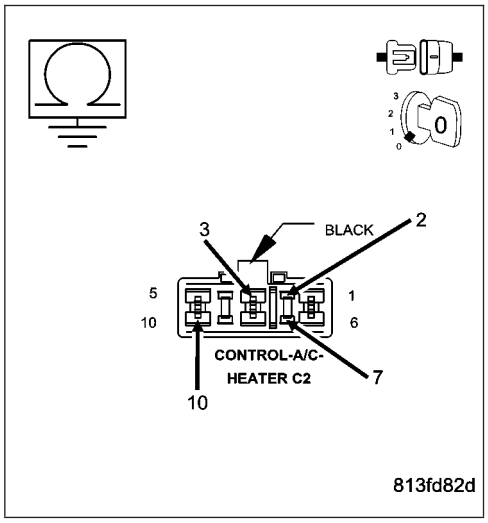

Is the resistance below 10K ohms on any of the circuits?

Yes >> Repair all circuits with a resistance below 10K ohms for a short to ground.

Perform BODY VERIFICATION TEST - VER 1. (Refer to 8 - ELECTRICAL/ELECTRONIC CONTROL MODULES/ FRONT CONTROL MODULE - DIAGNOSIS AND TESTING).

No >> Replace the A/C Heater Control in accordance with the Service Information.

Perform BODY VERIFICATION TEST - VER 1. (Refer to 8 - ELECTRICAL/ELECTRONIC CONTROL MODULES/FRONT CONTROL MODULE - DIAGNOSIS AND TESTING).

---

3. CHECK THE (C71) BLOWER MOTOR LOW DRIVER CIRCUIT, THE (C73) BLOWER MOTOR M2 DRIVER CIRCUIT, THE (C72) BLOWER MOTOR M1 DRIVER CIRCUIT, & THE (C70) BLOWER MOTOR HIGH DRIVER CIRCUIT USING A TEST LIGHT

Turn the ignition off.

Disconnect the A/C Heater Control C2 harness connector.

Turn the ignition on.

NOTE: The test light must illuminate brightly. Compare the brightness to that of a direct connection to the battery.

Using a 12-volt test light connected to ground, back probe the (C71) Blower Motor Low Driver circuit, the (C73) Blower Motor M2 Driver circuit, the (C72) Blower Motor M1 Driver circuit, and the (C70) Blower Motor High Driver circuit in the A/C Heater Control C2 harness connector.

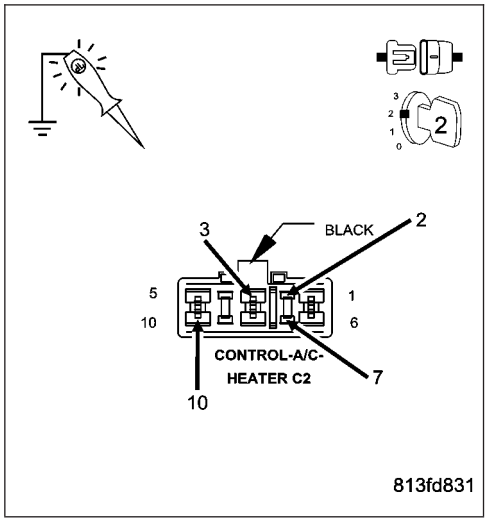

Does the test light illuminate brightly on each circuit?

Yes >> Go To 4

No >> Go To 8

***BLOWER SPEED DOES NOT CORRESPOND WITH CONTROL SETTING (CONTINUED)**

4. CHECK THE (C71) BLOWER MOTOR LOW DRIVER CIRCUIT, THE (C73) BLOWER MOTOR M2 DRIVER CIRCUIT, THE (C72) BLOWER MOTOR M1 DRIVER CIRCUIT, & THE (C70) BLOWER MOTOR HIGH DRIVER CIRCUIT FOR A SHORT TO VOLTAGE

Turn the ignition off.

Disconnect the Blower Motor Resistor Block harness connector.

Measure the voltage of the (C71) Blower Motor Low Driver circuit, the (C73) Blower Motor M2 Driver circuit, the (C72) Blower Motor M1 Driver circuit, and the (C70) Blower Motor High Driver circuit in the A/C Heater Control C2 harness connector.

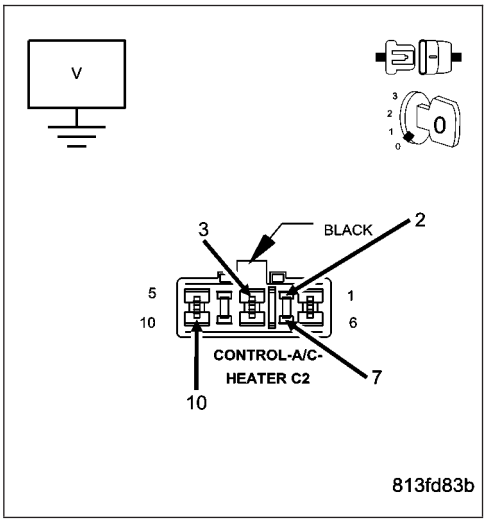

Is there voltage present on any of the circuits?

Yes >> Repair all circuits with voltage present for a short to voltage.

Perform BODY VERIFICATION TEST - VER 1. (Refer to 8 - ELECTRICAL/ELECTRONIC CONTROL MODULES/ FRONT CONTROL MODULE - DIAGNOSIS AND TESTING).

No >> Go To 5

5. CHECK THE (C71) BLOWER MOTOR LOW DRIVER CIRCUIT FOR A SHORT TO THE (C73) BLOWER MOTOR M2 DRIVER CIRCUIT, THE (C72) BLOWER MOTOR M1 DRIVER CIRCUIT, & THE (C70) BLOWER MOTOR HIGH DRIVER CIRCUIT

Measure the resistance between the (C71) Blower Motor Low Driver circuit and the (C73) Blower Motor M2 Driver circuit, the (C72) Blower Motor M1 Driver circuit, and the (C70) Blower Motor High Driver circuit in the A/C Heater Control C2 harness connector.

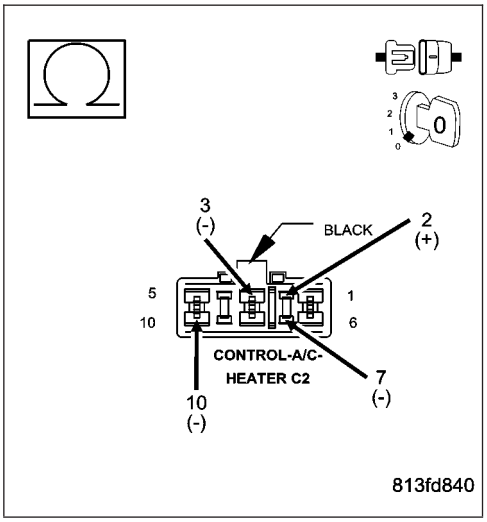

Is the resistance below 10K ohms between the (C71) Blower Motor Low Driver circuit and any of the other circuits?

Yes >> Repair all circuits with a resistance below 10k ohms for a short to the (C71) Blower Motor Low Driver circuit.

Perform BODY VERIFICATION TEST - VER 1. (Refer to 8 - ELECTRICAL/ELECTRONIC CONTROL MODULES/ FRONT CONTROL MODULE - DIAGNOSIS AND TESTING).

No >> Go To 6

***BLOWER SPEED DOES NOT CORRESPOND WITH CONTROL SETTING (CONTINUED)**

6. CHECK THE (C73) BLOWER MOTOR M2 DRIVER CIRCUIT FOR A SHORT TO THE (C72) BLOWER MOTOR M1 DRIVER CIRCUIT & THE (C70) BLOWER MOTOR HIGH DRIVER CIRCUIT

Measure the resistance between the (C73) Blower Motor M2 Driver circuit and the (C72) Blower Motor M1 Driver circuit and the (C70) Blower Motor High Driver circuit in the A/C Heater Control C2 harness connector.

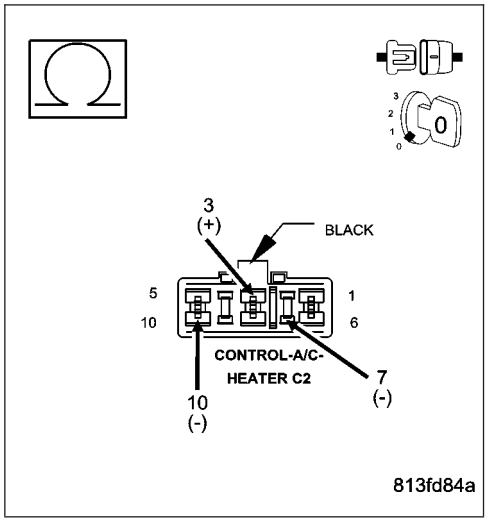

Is the resistance below 10K ohms between the (C73) Blower Motor M2 Driver circuit and any of the other circuits?

Yes >> Repair all circuits with a resistance below 10k ohms for a short to the (C73) Blower Motor M2 Driver circuit.

Perform BODY VERIFICATION TEST - VER 1. (Refer to 8 - ELECTRICAL/ELECTRONIC CONTROL MODULES/ FRONT CONTROL MODULE - DIAGNOSIS AND TESTING).

No >> Go To 7

---

7. CHECK THE (C72) BLOWER MOTOR M1 DRIVER CIRCUIT FOR A SHORT TO THE (C70) BLOWER MOTOR HIGH DRIVER CIRCUIT

Measure the resistance between the (C72) Blower Motor M1 Driver circuit and the (C70) Blower Motor High Driver circuit in the A/C Heater Control C2 harness connector.

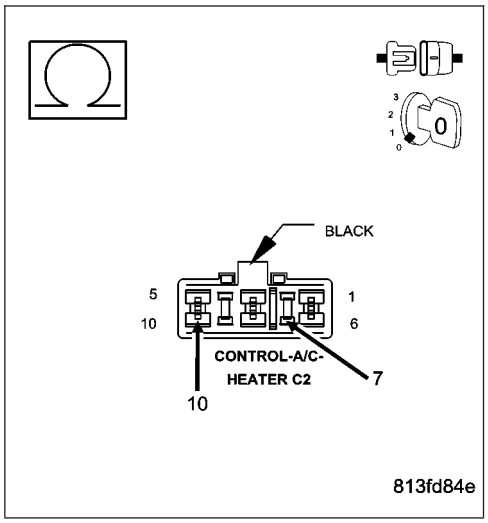

Is the resistance below 10K ohms?

Yes >> Repair the (C72) Blower Motor M1 Driver circuit for a short to the (C70) Blower Motor High Driver circuit.

Perform BODY VERIFICATION TEST - VER 1. (Refer to 8 - ELECTRICAL/ELECTRONIC CONTROL MODULES/ FRONT CONTROL MODULE - DIAGNOSIS AND TESTING).

No >> Replace the A/C Heater Control in accordance with the Service Information.

Perform BODY VERIFICATION TEST - VER 1. (Refer to 8 - ELECTRICAL/ELECTRONIC CONTROL MODULES/ FRONT CONTROL MODULE - DIAGNOSIS AND TESTING).

***BLOWER SPEED DOES NOT CORRESPOND WITH CONTROL SETTING (CONTINUED)**

8. CHECK THE (C71) BLOWER MOTOR LOW DRIVER CIRCUIT FOR AN OPEN

Turn the ignition off.

Disconnect the Blower Motor Resistor Block harness connector.

Measure the resistance of the (C71) Blower Motor Low Driver circuit between the Blower Motor Resistor Block harness connector and the A/C Heater Control C2 harness connector.

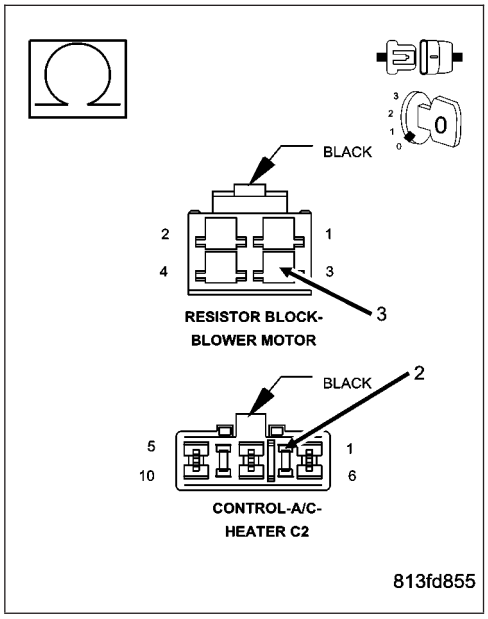

Is the resistance below 5.0 ohms?

Yes >> Go To 9

No >> Repair the (C71) Blower Motor Low Driver circuit for an open.

Perform BODY VERIFICATION TEST - VER 1. (Refer to 8 - ELECTRICAL/ELECTRONIC CONTROL MODULES/ FRONT CONTROL MODULE - DIAGNOSIS AND TESTING).

9. CHECK THE (C73) BLOWER MOTOR M2 DRIVER CIRCUIT FOR AN OPEN

Measure the resistance of the (C73) Blower Motor M2 Driver circuit between the Blower Motor Resistor Block harness connector and the A/C Heater Control C2 harness connector.

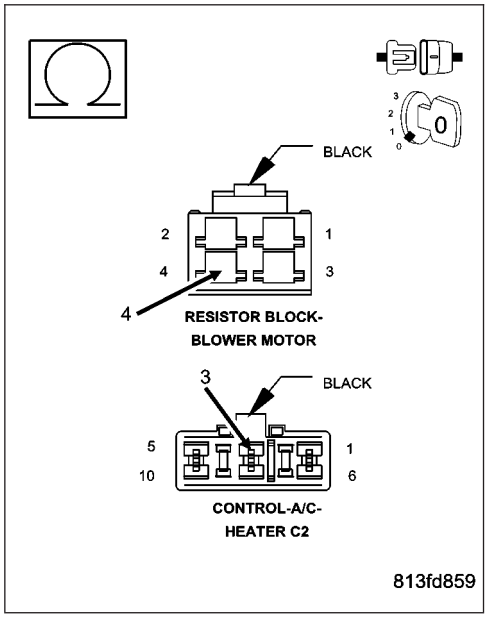

Is the resistance below 5.0 ohms?

Yes >> Go To 10

No >> Repair the (C73) Blower Motor M2 Driver circuit for an open.

Perform BODY VERIFICATION TEST - VER 1. (Refer to 8 - ELECTRICAL/ELECTRONIC CONTROL MODULES/ FRONT CONTROL MODULE - DIAGNOSIS AND TESTING).

***BLOWER SPEED DOES NOT CORRESPOND WITH CONTROL SETTING (CONTINUED)**

10. CHECK THE (C72) BLOWER MOTOR M1 DRIVER CIRCUIT FOR AN OPEN

Measure the resistance of the (C72) Blower Motor M1 Driver circuit between the Blower Motor Resistor Block harness connector and the A/C Heater Control C2 harness connector.

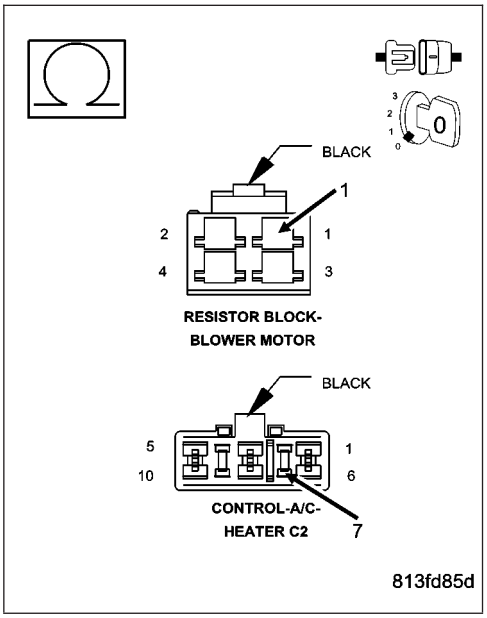

Is the resistance below 5.0 ohms?

Yes >> Go To 11

No >> Repair the (C72) Blower Motor M1 Driver circuit for an open.

Perform BODY VERIFICATION TEST - VER 1. (Refer to 8 - ELECTRICAL/ELECTRONIC CONTROL MODULES/ FRONT CONTROL MODULE - DIAGNOSIS AND TESTING).

11. CHECK THE (C70) BLOWER MOTOR HIGH DRIVER CIRCUIT FOR AN OPEN

Measure the resistance of the (C70) Blower Motor High Driver circuit between the Blower Motor Resistor Block harness connector and the A/C Heater Control C2 harness connector.

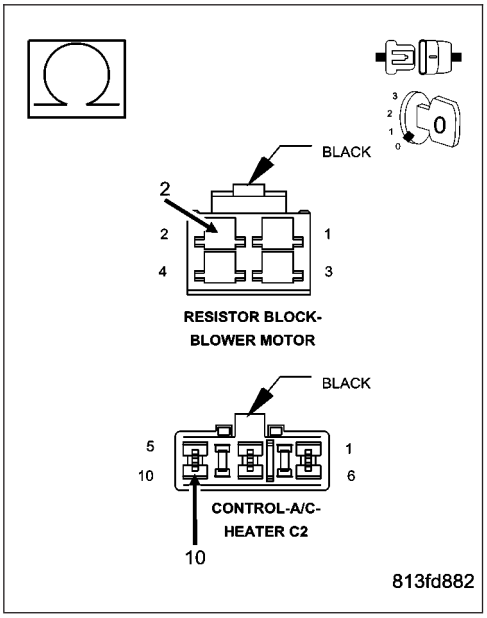

Is the resistance below 5.0 ohms?

Yes >> Repair the (C70) Blower Motor High Driver circuit for an open.

Perform BODY VERIFICATION TEST - VER 1. (Refer to 8 - ELECTRICAL/ELECTRONIC CONTROL MODULES/ FRONT CONTROL MODULE - DIAGNOSIS AND TESTING).

No >> Replace the Blower Motor Resistor Block in accordance with the Service Information.

Perform BODY VERIFICATION TEST - VER 1. (Refer to 8 - ELECTRICAL/ELECTRONIC CONTROL MODULES/ FRONT CONTROL MODULE - DIAGNOSIS AND TESTING).

*EBL STATUS INDICATOR FLASHING

For a complete wiring diagram **Refer to Section 8W**.

Theory of Operation

Running the HVAC Door Recalibration will cause the EBL status indicator to flash. If recalibration fails, the status indicator will continue to flash until either the system passes recalibration or the ignition key is cycled. When the EBL status indicator is flashing, it will not indicate EBL operating status. However, the EBL mode switch will continue to function normally. When the EBL status indicator is flashing, the A/C status indicator will not function. However, the A/C mode switch will continue to function normally.

Possible Causes
HVAC DOOR RECALIBRATION FAILED

1. PERFORM THE HVAC DOOR RECALIBRATION

Turn the ignition on.

With the DRBIII® in HVAC, select System Tests and then select HVAC Door Recalibration. Allow the test to run to completion before proceeding.

Does the DRBIII® display: Recalibration Test Passed?

Yes >> Test Complete.
Perform BODY VERIFICATION TEST - VER 1. (Refer to 8 - ELECTRICAL/ELECTRONIC CONTROL MODULES/FRONT CONTROL MODULE - DIAGNOSIS AND TESTING).

No >> Diagnose and repair the fault(s). Refer to the Table of Contents in this Section for a complete list of all HVAC related symptoms.

*HVAC SYSTEM TEST

For the Manual Temperature Control (MTC) circuit diagrams (Refer to 24 - HEATING & AIR CONDITIONING - SCHEMATICS AND DIAGRAMS).

For a complete wiring diagram **Refer to Section 8W**.

Theory of Operation

The HVAC System Test provides a starting point in the diagnostic process by identifying the appropriate diagnostic procedure or system test to perform when diagnosing a given symptom, condition, or DTC. It also provides a means for testing the entire HVAC system by utilizing the A/C-heater control's On-Board System Tests. The On-Board System Tests can also assist in diagnosing stored DTCs. (Refer to 24 - HEATING & AIR CONDITIONING - DIAGNOSIS AND TESTING) for additional information about on-board diagnostics.

Diagnostic Test

1. HVAC SYSTEM TEST

NOTE: Diagnose and repair all active DTCs before diagnosing and repairing stored DTCs.

Make a selection based on the symptom, condition, or DTC that you want to diagnose.

For Any Active DTC
Refer to the Table of Contents in this Section for a complete list of all HVAC related symptoms.

DRBIII® Displays No Response From HVAC
(Refer to 8 - ELECTRICAL/ELECTRONIC CONTROL MODULES - DIAGNOSIS AND TESTING) for no response related diagnostic procedures.

A/C Status Indicator Flashing
Go To 2

A/C Status Indicator Will Not Illuminate (Vehicles w/o EBL)
Refer to *A/C Status Indicator Will Not Illuminate — A/C Heater Control Without EBL Switch in this section for the diagnostic test procedure.

EBL Status Indicator Flashing
Go To 5

Blower Motor Inoperative
Refer to *Blower Motor Inoperative in this section for the diagnostic test procedure.

A/C Heater Control Illumination Inoperative
Refer to *A/C Heater Control Illumination Inoperative in this section for the diagnostic test procedure.

Complete HVAC System Test
Go To 2

A/C System Performance Test
Go To 2

General System Operation & Function Test
Go To 3

Actuator Circuit Test
Go To 4

HVAC Door Recalibration
Go To 5

***HVAC SYSTEM TEST (CONTINUED)**

2. A/C SYSTEM PERFORMANCE TEST

NOTE: The following are prerequisites of the Cooldown Test. Verify each of the following before running the test:

- **If active, diagnose and repair the Evaporator Temperature Sensor related DTCs before proceeding. Refer to the Table of Contents in this Section for a complete list of HVAC related symptoms.**
- **Verify that the refrigerant system has an adequate charge. Check and repair as necessary before proceeding (Refer to 24 - HEATING & AIR CONDITIONING/PLUMBING - DIAGNOSIS AND TESTING).**
- **Verify that the blower motor operates correctly in all speeds. Diagnose and repair all blower related faults before proceeding.**
- **Verify that the work area ambient temperature is above 21.1°C (70°F) before proceeding. Move the vehicle to a warmer work area if necessary.**
- **Verify that the evaporator temperature is above 12.7°C (55°F) before proceeding.**
- **Verify that the Mode Select control is set to the panel position.**
- **Verify that the A/C compressor is not running. If the compressor is running, turn the A/C off and allow the evaporator to warm up before proceeding.**

NOTE: Running the AC Cooldown test will cause the A/C status indicator to flash. If the test fails, the status indicator will continue to flash until either the test returns passed or the ignition key is cycled. When the A/C status indicator is flashing, it will not indicate A/C operating status. However, the A/C mode switch will continue to function normally. For vehicles equipped with EBL, when the A/C status indicator is flashing, the EBL status indicator will not function. However, the EBL mode switch will continue to function normally.
Start the engine.

Turn the Blower control to the high speed position.

With the DRBIII® in HVAC, select System Tests and then select AC Cooldown test. Allow one minute for the test to complete. One or more status messages will display on the DRBIII® after running the AC Cooldown Test. These messages will clear after paging back out of this test function. Therefore, it is important to note all messages before doing so.

Does the DRBIII® display a status message that indicates a fault has occurred?

Yes, Blower Not On High
Diagnose and repair the fault. Refer to Blower Not On High in this section for the diagnostic test procedure.

Yes, Cooldown Test Sensor Failure
Diagnose and repair the fault. Refer to Cooldown Test Sensor Failure in this section for the diagnostic test procedure.

Yes, Cooldown Time Excessive Fault
Diagnose and repair the fault. Refer to Cooldown Time Excessive Fault in this section for the diagnostic test procedure.

Yes, Cooldown Test Too Cold To Start
Diagnose and repair the fault. Refer to Cooldown Test Too Cold To Start in this section for the diagnostic test procedure.

No >> As necessary, either Go To 3, 4, or 5, or Perform BODY VERIFICATION TEST - VER 1. (Refer to 8 - ELECTRICAL/ELECTRONIC CONTROL MODULES/FRONT CONTROL MODULE - DIAGNOSIS AND TESTING).

***HVAC SYSTEM TEST (CONTINUED)**

3. GENERAL SYSTEM OPERATION & FUNCTION TEST

NOTE: If at anytime a DTC becomes active during this test, proceed to the conclusion question.

NOTE: If multiple DTCs are active, diagnose those that relate to a short circuit first.

If not done so previously, start the engine.

Turn the Blower control to the low speed position.

Set the Blend control (single-zone) or Driver Blend control (dual-zone) to the full cold position.

If equipped, set the Passenger Blend control to the full cold position.

Monitor the DRBIII® for active HVAC DTCs while performing the following test steps.

If equipped, press the A/C mode switch on, wait 30 seconds, and then press it off.

On Dual-Zone systems, press the MAX mode switch on, wait 30 seconds, and then press it off.

If equipped, press the EBL mode switch on, wait 30 seconds, and then press it off.

Move the Blend control (single-zone) or Driver Blend control (dual-zone) from full cold to full hot, wait 30 seconds, and then move it back to full cold.

If equipped, move the Passenger Blend control from full cold to full hot, wait 30 seconds, and then moved it back to full cold.

Turn the Mode select control to the defrost position, wait 30 seconds, and then turn it to the panel position (dual-zone) or MAX panel position (single-zone).

Does the DRBIII® display any active DTCs?

Yes >> Diagnose and repair the DTC(s). Refer to the Table of Contents in this Section for a complete list of HVAC related symptoms.

No >> If you are here due to a stored DTC, it is possible that a technician may not have erased the DTC following a repair. If possible, verify if the vehicle was recently in for this type of service. Otherwise, either Go To 4 or 5, or visually inspect the related wiring harness for chafed, pierced, pinched, and partially broken wires and the wiring harness connectors for broken, bent, pushed out, and corroded terminals, and repair as necessary.

Perform BODY VERIFICATION TEST - VER 1. (Refer to 8 - ELECTRICAL/ELECTRONIC CONTROL MODULES/FRONT CONTROL MODULE - DIAGNOSIS AND TESTING).

***HVAC SYSTEM TEST (CONTINUED)**

4. ACTUATOR CIRCUIT TEST

NOTE: By running the Actuator Circuit Test, the A/C Heater Control can identify up to three door driver circuits shorted simultaneously. A Short Too Complex fault will set if more than three door driver circuits are shorted in the same direction (e.g. four door driver circuits all shorted to ground) or if two or more door driver circuits are shorted with at least one door driver circuit shorted to ignition and one door driver circuit shorted to ground. Fault messages displaying XXX Driver/Circuit Shorted to Ignition/Battery and XXX Driver/ Circuit Shorted to Ground will set on a per-driver basis. Fault messages displaying the same two drivers/ circuits shorted to ignition/battery as-well-as shorted to ground indicates that two actuator driver circuits are shorted together. To ensure a proper diagnosis, repair all Short Too Complex fault messages first, all common door driver circuit related fault messages second, and all other fault messages last. In addition, always test the door driver circuits after each repair by cycling the ignition switch and then running the Actuator Circuit Test again to ensure that no new faults exits.

If not done so previously, start the engine.

With the DRBIII® in HVAC, select System Tests and then select Actuator Circuit Test. Allow the test to run to completion before proceeding.

Does the DRBIII® display any Actuator Circuit Test fault messages?

Yes >> Diagnose and repair the fault(s). For Single-Zone HVAC systems, **refer to *ACTUATOR CIRCUIT TEST DIAGNOSTICS (SINGLE-ZONE) in this Section** for the diagnostic test procedure. For Dual-Zone HVAC systems, **refer to *ACTUATOR CIRCUIT TEST DIAGNOSTICS (DUAL-ZONE) in this Section** for the diagnostic test procedure.

No >> If you are here due to a stored DTC, it is possible that a technician may not have erased the DTC following a repair. If possible, verify if the vehicle was recently in for this type of service. Otherwise, either Go To 5 or visually inspect the related wiring harness for chafed, pierced, pinched, and partially broken wires and the wiring harness connectors for broken, bent, pushed out, and corroded terminals, and repair as necessary.

Perform BODY VERIFICATION TEST - VER 1. (Refer to 8 - ELECTRICAL/ELECTRONIC CONTROL MODULES/FRONT CONTROL MODULE - DIAGNOSIS AND TESTING).

---

5. HVAC DOOR RECALIBRATION

NOTE: For vehicles equipped with EBL, running the HVAC Door Recalibration will cause the EBL status indicator to flash. If recalibration fails, the status indicator will continue to flash until either the system passes recalibration or the ignition key is cycled. When the EBL status indicator is flashing, it will not indicate EBL operating status. However, the EBL mode switch will continue to function normally. When the EBL status indicator is flashing, the A/C status indicator will not function. However, the A/C mode switch will continue to function normally. For vehicles not equipped with EBL, no status indicator will flash when running the HVAC Door Recalibration. If recalibration fails, the A/C status indicator will not function, however, the A/C mode switch will continue to function normally.

If not done so previously, start the engine.

With the DRBIII® in HVAC, select System Tests and then select HVAC Door Recalibration. Allow the test to run to completion before proceeding.

Does the DRBIII® display any HVAC Door Recalibration fault messages?

Yes >> Diagnose and repair the fault(s). Refer to the Table of Contents in this Section for a complete list of all HVAC related symptoms.

No >> No problem found. However, if you are here due to a stored DTC, it is possible that a technician may not have erased the DTC following a repair. If possible, verify if the vehicle was recently in for this type of service. Otherwise, visually inspect the related wiring harness for chafed, pierced, pinched, and partially broken wires and the wiring harness connectors for broken, bent, pushed out, and corroded terminals, and repair as necessary.

Perform BODY VERIFICATION TEST - VER 1. (Refer to 8 - ELECTRICAL/ELECTRONIC CONTROL MODULES/FRONT CONTROL MODULE - DIAGNOSIS AND TESTING).

SCHEMATICS AND DIAGRAMS

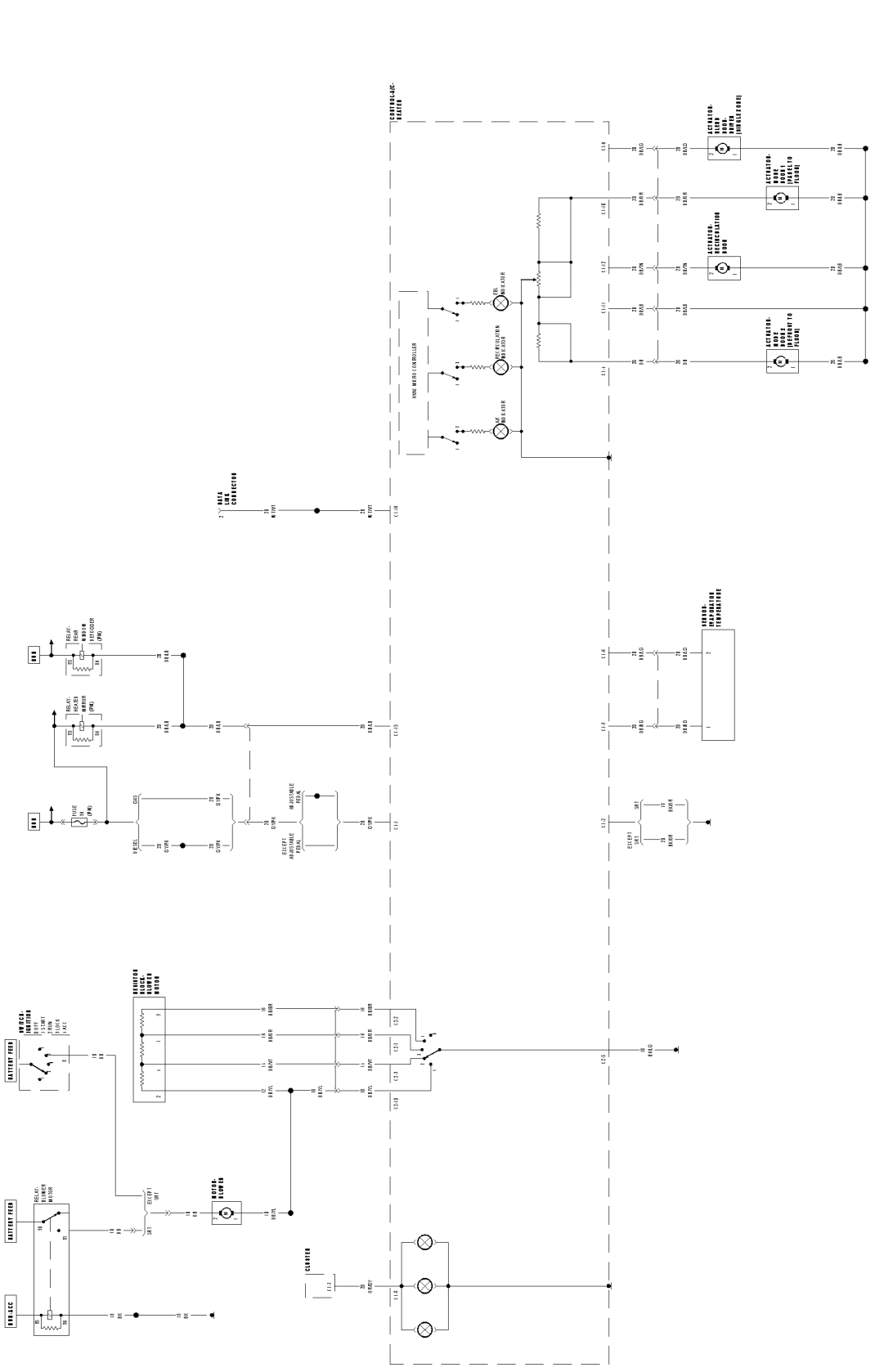

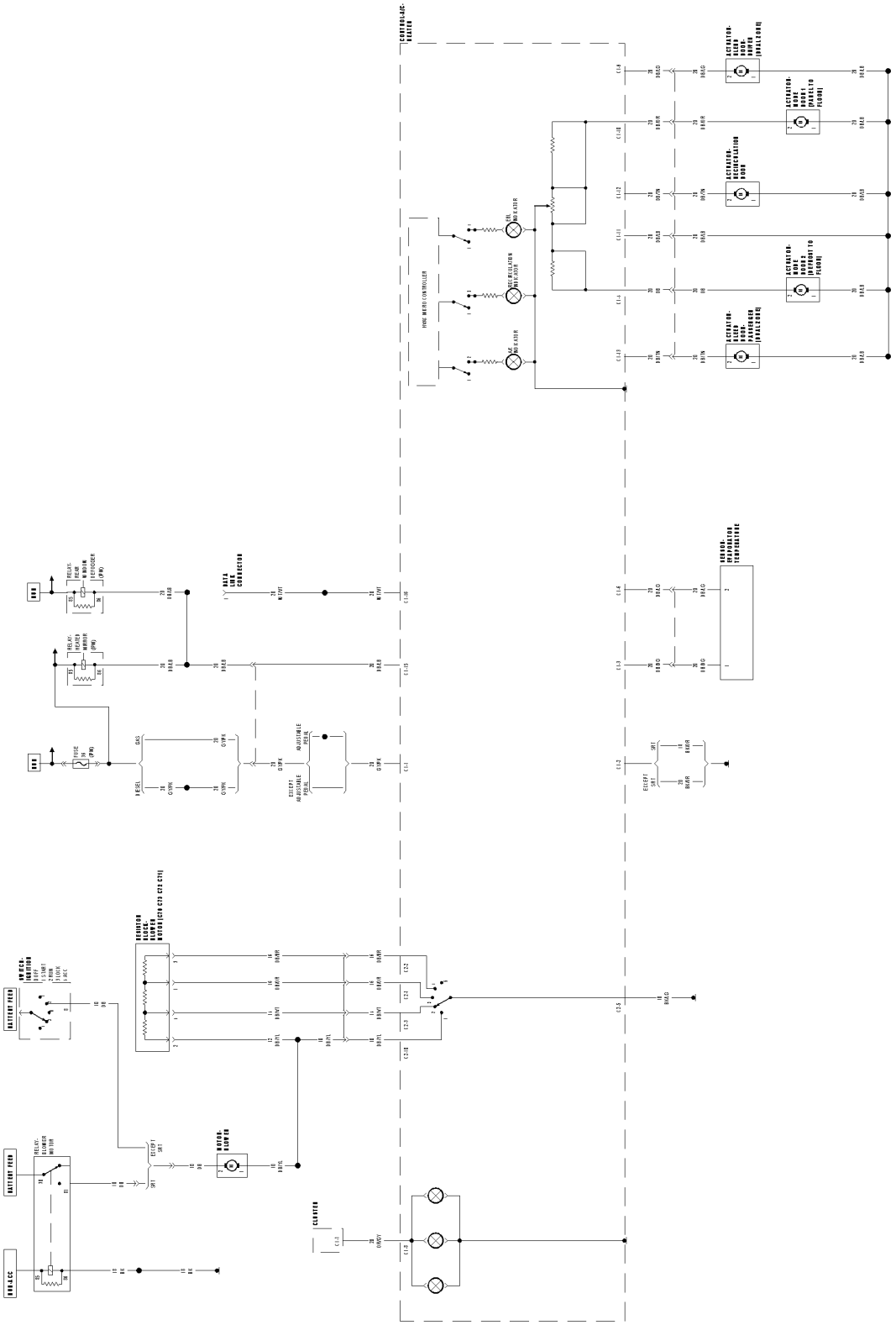

8136b946

MANUAL TEMPERATURE CONTROL (DUAL-ZONE)

HVAC - SERVICE INFORMATION

TABLE OF CONTENTS

	page
HVAC - SERVICE INFORMATION	
DESCRIPTION	190
OPERATION	191
DIAGNOSIS AND TESTING	
HEATING-A/C SYSTEM DIAGNOSTICS	192
A/C PERFORMANCE	193
HEATER PERFORMANCE	196
SPECIFICATIONS	
A/C SYSTEM	198
SPECIAL TOOLS	
A/C SYSTEM	199
CONTROLS	200
DISTRIBUTION	237
PLUMBING	268

HVAC - SERVICE INFORMATION

DESCRIPTION

A manually controlled single zone type heating-air conditioning system or a manually controlled dual zone type heating-air conditioning system is available on this model.

To maintain the performance level of the heating, ventilation and air conditioning (HVAC) system, the engine cooling system must be properly maintained. The use of a bug screen is not recommended. Any obstructions in front of the radiator or A/C condenser will reduce the performance of the A/C and engine cooling systems.

The engine cooling system includes the radiator, thermostat, radiator hoses and the engine coolant pump. Refer to 7 - Cooling for more information before opening or attempting any service to the engine cooling system.

All vehicles are equipped with a common heater, ventilation and air conditioning (HVAC) housing (1). The system combines air conditioning, heating, and ventilating capabilities in a single unit housing mounted within the passenger compartment under the instrument panel. The HVAC housing includes:

- Blend-air door(s) and actuator(s) (2)
- Recirculation-air door and actuator (3)
- A/C evaporator (4)
- Blower motor (5)
- Blower motor resistor (6)
- Evaporator temperature sensor (7)
- Heater core (8)
- Mode-air doors and actuators (9)

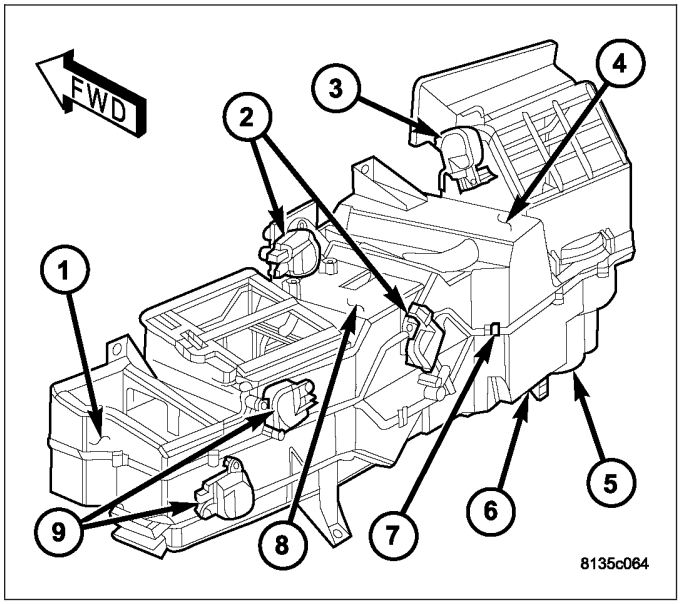

Based upon the system and mode selected, conditioned air can exit the HVAC housing through one or a combination of the three main housing outlets: defrost, panel or floor. The defrost and the panel outlets are located on the top of the housing and, the floor outlet is located on the bottom of the housing. Once the conditioned air exits the HVAC housing, it is further directed through molded plastic ducts to the various outlets within the vehicle interior. These outlets and their locations are as follows:

- **Defroster Outlet** - A single large defroster outlet is located in the center of the instrument panel top cover, near the base of the windshield.
- **Side Window Demister Outlets** - There are two side window demister outlets, one is located at each outboard end of the instrument panel top cover, near the belt line at the A-pillars.

- **Panel Outlets** - There are four panel outlets in the instrument panel, one located near each outboard end of the instrument panel facing the rear of the vehicle and two located near the top of the instrument panel center bezel.
- **Front Floor Outlets** - There are two front floor outlets, one located above each side of the floor panel center tunnel near the dash panel.

OPERATION

Both the manual temperature control (MTC) single zone and dual zone heating-A/C system are blend-air type systems. In a blend-air heating-A/C, a blend-air door controls the amount of conditioned air that is allowed to flow through, or around, the heater core. In the available dual zone system, two blend-air doors are used to provide completely independent side-to-side temperature control of the discharge air. The temperature control(s) determines the discharge air temperature(s) by operating the blend door actuator(s), which move the blend-air door(s). This design allows almost immediate control of output air temperature(s).

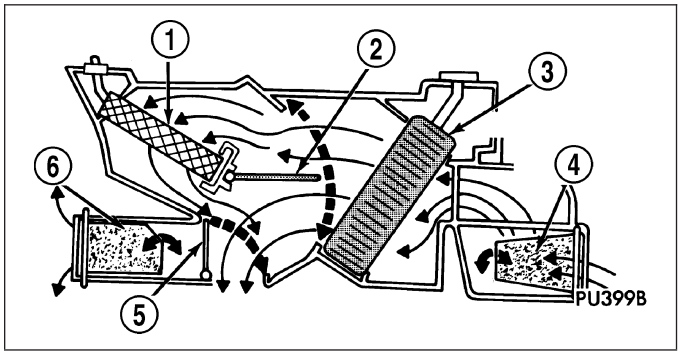

The heating-A/C systems pulls outside (ambient) air through the cowl opening at the base of the windshield, then into the air inlet housing above the heating, ventilation and air conditioning (HVAC) housing. On models equipped with A/C, the air passes through the A/C evaporator (3). Air flow can be directed either through or around the heater core (1). This is done by adjusting the blend-air door(s) (2) with the temperature control(s) located on the A/C-heater control in the instrument panel. The air flow can then be directed from the panel, floor and defrost outlets in various combinations using the mode control located on the A/C-heater control. Air flow velocity can be adjusted with the blower speed control located on the A/C-heater control.

On all models, the outside air intake can be shut off by selecting the Recirculation Mode with the mode control. This will operate a electrically actuated recirculation-air door (4) that closes off the fresh air intake and recirculates the air that is already inside the vehicle.

On models with A/C, the A/C compressor can be engaged in any mode by pressing the snowflake, A/C on/off button. It can also be engaged by placing the mode control in the mix to defrost positions. This will remove heat and humidity from the air before it is directed through or around the heater core. The mode control on the A/C-heater control is used to also direct the conditioned air to the selected system outlets. The mode control uses electric actuators to control the mode-air doors (5 and 6).

The defroster outlet receives airflow from the HVAC housing through the molded plastic defroster duct, which connects to the HVAC housing defroster outlet. The airflow from the defroster outlets is directed by fixed vanes in the defroster outlet grilles and cannot be adjusted. The defroster outlet grilles are integral to the instrument panel top cover.

The side window demister outlets receive airflow from the HVAC housing through the molded plastic defroster duct and two molded plastic demister ducts. The airflow from the side window demister outlets is directed by fixed vanes in the demister outlet grilles and cannot be adjusted. The side window demister outlet grilles are integral to the instrument panel. The demisters direct air from the HVAC housing through the outlets located on the top corners of the instrument panel. The demisters operate when the mode control knob is positioned in the floor-defrost and defrost-only settings. Some air may be noticeable from the demister outlets when the mode control is in the bi-level to floor positions.

The panel outlets receive airflow from the HVAC housing through a molded plastic main panel duct, center panel duct and two end panel ducts. The two end panel ducts direct airflow to the left and right instrument panel outlets, while the center panel duct directs airflow to the two center panel outlets. Each of these outlets can be individually adjusted to direct the flow of air.

The floor outlets receive airflow from the HVAC housing through the floor distribution duct. The front floor outlets are integral to the molded plastic floor distribution duct, which is secured to the bottom of the housing. The floor outlets cannot be adjusted.

NOTE: It is important to keep the air intake opening clear of debris. Leaf particles and other debris that is small enough to pass through the cowl opening screen can accumulate within the HVAC housing. The closed, warm, damp and dark environment created within the housing is ideal for the growth of certain molds, mildews and other fungi. Any accumulation of decaying plant matter provides an additional food source for fungal spores, which enter the housing with the fresh intake-air. Excess debris, as well as objectionable odors created by decaying plant matter and growing fungi can be discharged into the passenger compartment during heater-A/C operation if the air intake opening is not kept clear of debris.

The A/C system on models so equipped is designed for the use of non-CFC, R-134a refrigerant and uses an A/C fixed orifice tube located in the liquid line to meter the flow of refrigerant to the A/C evaporator. The A/C evaporator cools and dehumidifies the incoming air prior to blending it with the heated air. To maintain minimum evaporator temperature and prevent evaporator freezing, an evaporator temperature sensor is used to supply evaporator temperature input to the A/C-heater control. The powertrain control module (PCM) cycles the A/C compressor clutch off and on as necessary to protect the A/C system from evaporator freezing and optimize A/C system performance.

DIAGNOSIS AND TESTING

HEATING-A/C SYSTEM DIAGNOSTICS

ON-BOARD DIAGNOSTICS

The A/C-heater control communicates on the Programmable Communication Interface Multiplex System (PCI) Bus and is fully addressable with the DRBIII®.

The A/C-heater control's primary means of fault detection is through active and stored diagnostic trouble codes (DTCs). Active DTCs are those which currently exist in the system. The condition causing the fault must be repaired in order to clear this type of DTC. Stored DTCs are those which occurred in the system since the A/C-heater control received the last clear diagnostic info message. DTCs must be read with the DRBIII®. Refer to 24 - HVAC - Electrical Diagnostics for the diagnostic test procedures.

The A/C-heater control's secondary means of fault detection is through system tests. These tests include the HVAC System Test, the A/C Cooldown Test, the Actuator Circuit Test, and HVAC Door Recalibration. Refer to System Tests in this Section for a detailed description of each test.

SYSTEM TESTS

HVAC System Test

The HVAC System Test, found in 24 - HVAC - Electrical Diagnostics, provides a starting point in the diagnostic process by identifying the appropriate diagnostic procedure or system test to perform when diagnosing a given symptom, condition, or DTC. It also provides a means for testing the entire HVAC system by utilizing the A/C-heater control's On-Board System Tests. The On-Board System Tests can also assist in diagnosing stored DTCs.

A/C Cooldown Test

The A/C Cooldown Test:

- is actuated with the DRBIII®.
- tests A/C system performance based on evaporator temperature sensor input.
- will not run if ambient temperature is below 12.7° C (55° F).
- will pass if the evaporator temperature drops 11.1° C (20° F) within one minute of starting the test.
- indicates an outcome by displaying one or more test status messages on the DRBIII®. These test status messages will clear after paging back out of this test function. Therefore, is it important to note all of the messages before doing so.

Running the A/C Cooldown Test will cause the A/C status indicator to flash. If the test fails, the A/C status indicator will continue to flash until either the test returns passed or the ignition key is cycled. When the A/C status indicator is flashing, it will not indicate A/C operating status. However, the A/C mode switch will continue to function normally. For vehicles equipped with electric backlight (EBL), when the A/C status indicator is flashing, the EBL status indicator will not function. However, the EBL mode switch will continue to function normally.

HVAC Door Recalibration

The HVAC Door Recalibration:

- is actuated with the DRBIII®.
- homes and repositions door actuators.
- monitors for door span faults.
- indicates an outcome by displaying one or more messages on the DRBIII®.

For vehicles equipped with electric backlight (EBL), running the HVAC Door Recalibration will cause the EBL status indicator to flash. If recalibration fails, the EBL status indicator will continue to flash until either the system passes recalibration or the ignition key is cycled. When the EBL status indicator is flashing, it will not indicate EBL operating status. However, the EBL mode switch will continue to function normally. When the EBL status indicator is flashing, the A/C status indicator will not function. However, the A/C mode switch will continue to function normally.

For vehicles not equipped with electric backlight (EBL), no status indicator will flash when running the HVAC Door Recalibration. If recalibration fails, the A/C status indicator will not function, however, the A/C mode switch will continue to function normally.

Actuator Circuit Test

The Actuator Circuit Test:

- is actuated with the DRBIII®.
- supplements the continuous diagnostics on the actuator drive system.
- monitors for shorted actuator circuits allowing service to easily diagnose and troubleshoot up to three simultaneous shorts.
- indicates an outcome by displaying up to three messages on the DRBIII®.

Understanding Actuator Circuit Test Fault Messages

- A Short Too Complex fault message indicates that a specific determination of which lines are shorted could not be made. This fault is caused by more than three drivers being shorted in the same direction (e.g., four drivers all shorted to ground, or two or more drivers shorted with at least one driver shorted to ignition/battery and one driver shorted to ground).
- Fault messages displaying XXX Driver/Circuit Shorted to Ignition/Battery and XXX Driver/Circuit Shorted to Ground will set on a per-driver basis.
- Fault messages displaying the same two drivers/circuits shorted to ignition/battery as-well-as shorted to ground indicates that two actuator driver circuits are shorted together.

When Performing The Actuator Circuit Test

- To ensure a proper diagnosis, repair all Short Too Complex fault messages first, all common door driver circuit related fault messages second, and all other fault messages last.
- After repairing each fault, cycle the ignition switch, then run the Actuator Circuit Test again to ensure that no new faults exist. When the test returns passed, clear all faults and run the HVAC Door Recalibration as a final check of system health.

A/C PERFORMANCE

The A/C system is designed to provide the passenger compartment with low temperature and low humidity air. The A/C evaporator, located in the HVAC housing is cooled to temperatures near the freezing point. As warm damp air passes over the fins of the A/C evaporator, the air transfers its heat to the refrigerant in the evaporator coils and the moisture in the air condenses on the evaporator fins. During periods of high heat and humidity, an A/C system will be more effective in the Recirculation mode (max-A/C). With the system in the Recirculation mode, only air from the passenger compartment passes through the A/C evaporator. As the passenger compartment air dehumidifies, the A/C system performance levels rise.

Humidity has an important bearing on the temperature of the air delivered to the interior of the vehicle. It is important to understand the effect that humidity has on the performance of the A/C system. When humidity is high, the A/C evaporator has to perform a double duty. It must lower the air temperature, and it must lower the temperature of the moisture in the air that condenses on the evaporator fins. Condensing the moisture in the air transfers heat energy into the evaporator fins and coils. This reduces the amount of heat the A/C evaporator can absorb from the air. High humidity greatly reduces the ability of the A/C evaporator to lower the temperature of the air.

However, evaporator capacity used to reduce the amount of moisture in the air is not wasted. Wringing some of the moisture out of the air entering the vehicle adds to the comfort of the passengers. Although, an owner may expect too much from their A/C system on humid days. A performance test is the best way to determine whether the system is performing up to design standards. This test also provides valuable clues as to the possible cause of trouble with the A/C system. The ambient air temperature in the location where the vehicle will be tested must be a minimum of 21° C (70° F) for this test.

A/C PERFORMANCE TEST

WARNING: Refer to the applicable warnings and cautions for this system before performing the following operation (Refer to 24 - HEATING & AIR CONDITIONING/PLUMBING - WARNINGS) and (Refer to 24 - HEATING & AIR CONDITIONING/PLUMBING - CAUTIONS). Failure to follow the warnings and cautions could result in possible personal injury or death.

NOTE: When connecting the service equipment coupling to the line fitting, verify that the valve of the coupling is fully closed. This will reduce the amount of effort required to make the connection.

1. Perform the A/C System Performance Test found within the HVAC System Test (refer to 24 - HVAC Electrical Diagnostics). If no diagnostic trouble codes (DTCs) are found in the A/C-heater control or the powertrain control module (PCM), go to Step 2. If any DTCs are found, repair as required, then proceed to Step 2.
2. Connect a tachometer and a manifold gauge set.
3. Set the A/C-heater control to the Recirculation mode (max-A/C) position, the temperature control to the full cool position, and the blower motor control to the highest speed position.
4. Start the engine and hold the idle at 1,000 rpm with the compressor clutch engaged. If the A/C compressor does not engage, see the A/C Diagnosis chart.
5. The engine should be at operating temperature, the doors should be closed and the windows opened.
6. Insert a thermometer in the driver side center panel outlet and operate the A/C system until it stablizes.

NOTE: The A/C compressor clutch may cycle, depending upon the ambient temperature and humidity.If the clutch cycles, use the readings obtained before the clutch disengaged.

7. With the A/C compressor clutch engaged, compare the air temperature at the center panel outlet and the A/C compressor discharge pressure (high side) to the A/C Performance and Pressure chart.

PERFORMANCE TEMPERATURE AND PRESSURE

Ambient Air Temperature	21° C (70° F)	27° C (80° F)	32° C (90° F)	38° C (100° F)	43° C (110° F)
Air Temperature at Center Panel Outlet	7° C (45° F)	7° C (45° F)	13° C (55° F)	13° C (55° F)	18° C (64° F)
Compressor Inlet Pressure at Service Port (low Side)	138 to 207 kPa (20 to 30 psi)	172 to 241 kPa (25 to 35 psi)	207 to 276 kPa (30 to 40 psi)	241 to 310 kPa (35 to 45 psi)	276 to 345 kPa (40 to 50 psi)
Compressor Discharge Pressure at Service Port (High Side)	1034 to 1724 kPa (150 to 250 psi)	1379 to 2068 kPa (200 to 300 psi)	1724 to 2413 kPa (250 to 350 psi)	1999 to 2689 kPa (290 to 390 psi)	2413 to 2965 kPa (350 to 430 psi)

8. If the air outlet temperature fails to meet the specifications in the A/C Performance Temperature and Pressure chart, or if the A/C compressor discharge pressure is high, refer to the A/C Pressure Diagnosis chart.

A/C PRESSURE DIAGNOSIS

Condition	Possible Causes	Correction
Constant compressor engagement and warm air from passenger vents.	1. Low refrigerant system charge.	1. See Refrigerant System Leaks in this group. Test the refrigerant system for leaks. Repair, evacuate and charge the refrigerant system, if required.
Equal pressures, but the compressor clutch does not engage.	1. No refrigerant in the refrigerant system.	1. See Refrigerant System Leaks in this group. Test the refrigerant system for leaks. Repair, evacuate and charge the refrigerant system, if required.
	2. Faulty fuse.	2. Check the fuses in the Power Distribution Center and the junction block. Repair the shorted circuit or component and replace the fuses, if required.
	3. Faulty A/C compressor clutch coil.	3. See A/C Compressor Clutch Coil in this group. Test the compressor clutch coil and replace, if required.
	4. Faulty A/C compressor clutch relay.	4. See A/C Compressor Clutch Relay in this group. Test the compressor clutch relay and relay circuits. Repair the circuits or replace the relay, if required.
	5. Improperly installed or faulty Evaporator Temperature Sensor.	5. See Evaporator Temperature Sensor in this group. Reinstall or replace the sensor as required.
	6. Faulty A/C pressure transducer.	6. See A/C pressure transducer in this group. Test the switch and replace, if required.
	7. Faulty Powertrain Control Module (PCM).	7. (Refer to Appropriate Diagnostic Information). Test the PCM and replace, if required.
Normal pressures, but A/C Performance Test air temperatures at center panel outlet are too high.	1. Excessive refrigerant oil in system.	1. See Refrigerant Oil Level in this group. Recover the refrigerant from the refrigerant system and inspect the refrigerant oil content. Restore the refrigerant oil to the proper level, if required.
	2. Blend door inoperative or sealing improperly.	2. See Blend Door in this group. Inspect the blend door for proper operation and sealing and correct, if required.
	3. Blend door actuator faulty or inoperative.	3. Perform blend door actuator diagnosis, replace if faulty.
The low side pressure is normal or slightly low, and the high side pressure is too low.	1. Low refrigerant system charge.	1. See Refrigerant System Leaks in this group. Test the refrigerant system for leaks. Repair, evacuate and charge the refrigerant system, if required.
	2. Refrigerant flow through the accumulator is restricted.	2. See Accumulator in this group. Replace the restricted accumulator, if required.
	3. Refrigerant flow through the evaporator coil is restricted.	3. See A/C Evaporator in this group. Replace the restricted evaporator coil, if required.
	4. Faulty compressor.	4. See A/C Compressor in this group. Replace the compressor, if required.

Condition	Possible Causes	Correction
The low side pressure is normal or slightly high, and the high side pressure is too high.	1. Condenser air flow restricted.	1. Check the A/C condenser for damaged fins, foreign objects obstructing air flow through the condenser fins, and missing or improperly installed air seals. Refer to Cooling for more information on air seals. Clean, repair, or replace components as required.
	2. Inoperative cooling fan.	2. Refer to Cooling for more information. Test the cooling fan and replace, if required.
	3. Refrigerant system overcharged.	3. See Refrigerant System Charge in this group. Recover the refrigerant from the refrigerant system. Charge the refrigerant system to the proper level, if required.
	4. Air in the refrigerant system.	4. See Refrigerant System Leaks in this group. Test the refrigerant system for leaks. Repair, evacuate and charge the refrigerant system, if required.
	5. Engine overheating.	5. Refer to Cooling for more information. Test the cooling system and repair, if required.
The low side pressure is too high, and the high side pressure is too low.	1. Accessory drive belt slipping.	1. Refer to Cooling for more information. Inspect the accessory drive belt condition and tension. Tighten or replace the accessory drive belt, if required.
	2. Fixed orifice tube not installed.	2. See A/C Orifice Tube in this group. Replace the liquid line, if required.
	3. Faulty compressor.	3. See A/C Compressor in this group. Replace the compressor, if required.
The low side pressure is too low, and the high side pressure is too high.	1. Restricted refrigerant flow through the refrigerant lines.	1. See Liquid, Suction, and Discharge Line in this group. Inspect the refrigerant lines for kinks, tight bends or improper routing. Correct the routing or replace the refrigerant line, if required.
	2. Restricted refrigerant flow through the fixed orifice tube.	2. See A/C Orifice Tube in this group. Replace the liquid line, if required.
	3. Restricted refrigerant flow through the condenser.	3. See A/C Condenser in this group. Replace the restricted condenser, if required.

HEATER PERFORMANCE

Before performing the following tests, refer to Group 7 - Cooling for the procedures to check the engine coolant level and flow, engine coolant reserve/recovery system operation, accessory drive belt condition and tension, radiator air flow and the fan drive operation. Perform the HVAC System Test (refer to 24 - HVAC Electrical Diagnostics). If any diagnostic trouble codes (DTCs) are found in the A/C-heater control or the powertrain control module (PCM), repair as necessary.

MAXIMUM HEATER OUTPUT: TEST AND ACTION

Engine coolant is provided to the heater system through two heater hoses. With the engine idling at normal operating temperature, set the temperature control to maximum heat position, the mode control to the floor position, and the blower motor control to the highest speed position. Using a test thermometer, check the temperature of the air being discharged from the floor outlets. Compare the test thermometer reading to the Heater Temperature Reference chart.

HEATER TEMPERATURE REFERENCE

Ambient Air Temperature	15.5° C (60° F)	21.1° C (70° F)	26.6° C (80° F)	32.2° C (90° F)
Minimum Air Temperature at Floor Outlet	62.2° C (144° F)	63.8° C (147° F)	65.5° C (150° F)	67.2° C (153° F)

If the heater outlet air temperature is below the minimum specification, refer to Group 7 - Cooling. Both of the heater hoses should be hot to the touch. The coolant return heater hose should be slightly cooler than the coolant supply heater hose. If the return hose is much cooler than the supply hose, locate and repair the engine coolant flow obstruction in the cooling system. Refer to Group 7 - Cooling for more information.

OBSTRUCTED COOLANT FLOW

Possible locations or causes of obstructed coolant flow are as follows:

- Faulty water pump.
- Faulty thermostat.
- Pinched or kinked heater hoses.
- Improper heater hose routing.
- Plugged heater hoses or supply and return ports at the cooling system connections.
- Plugged heater core.

If proper coolant flow through the cooling system is verified, and heater outlet air temperature is low, a mechanical problem may exist.

MECHANICAL PROBLEMS

Possible locations or causes of insufficient heat due to mechanical problems are as follows:

- Obstructed cowl air intake.
- Obstructed heater system outlets.
- Blend-air door(s) or actuator(s) not functioning properly.
- Faulty blower motor system
- Faulty A/C-heater control

TEMPERATURE CONTROL

If the heater outlet air temperature cannot be adjusted with the temperature control on the A/C-heater control, the following could require service:

- Faulty A/C-heater control.
- Faulty blend door actuator(s).
- Faulty, obstructed or improperly installed blend-air door.
- Faulty related wiring harness or connectors.
- Improper engine coolant temperature.

SPECIFICATIONS

A/C SYSTEM

Item	Description	Notes
A/C Compressor	Saden SD-7 (5.9L engine)	SP-15 PAG oil
	Denso 10S17 (3.7L/4.7L/5.7L/8.3L engines)	ND-8 PAG oil
Freeze–up Control	Evaporator Temperature Sensor	A/C evaporator mounted
High psi Control	A/C pressure transducer	A/C discharge line mounted
Refrigerant Charge Capacity	Refer to the A/C Underhood Specification Label located in the engine compartment.	R134a refrigerant
A/C Clutch Coil Draw	2 - 3.9 amps @ 12V ± 0.5V @ 21° C (70° F)	5.9L engine
	3.2 - 3.3 amps @ 12V ± 0.5V @ 21° C (70° F)	3.7L/4.7L/5.7L/8.3L engines
A/C Clutch Air Gap	0.41 - 0.79 mm (0.016 - 0.031 in.)	5.9L engine
	0.35 - 0.60 mm (0.013 - 0.024 in.)	3.7L/4.7L/5.7L/8.3L engines

SPECIAL TOOLS

A/C SYSTEM

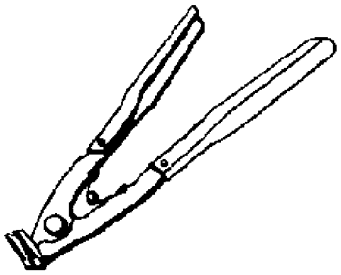

Snap Ring Pliers C-4574

Snap Ring Pliers C-4574 are required to service the A/C clutch and field coil.

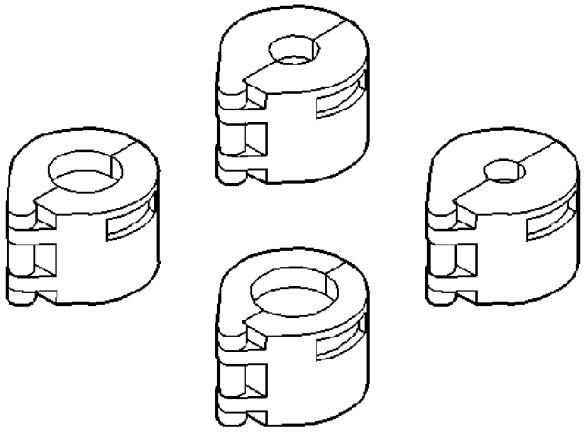

A/C Line Disconnect Tools 7193

A/C Line Disconnect Tools 7193 are required to service the A/C liquid and suction lines, A/C accumulator and the A/C evaporator.

CONTROLS

TABLE OF CONTENTS

page

ACTUATOR-BLEND DOOR
DESCRIPTION 201
OPERATION 202
REMOVAL 202
INSTALLATION 203
ACTUATOR-MODE DOOR
DESCRIPTION 206
OPERATION 206
REMOVAL 207
INSTALLATION 208
ACTUATOR-RECIRCULATION DOOR
DESCRIPTION 210
OPERATION 211
REMOVAL 211
INSTALLATION 212
CLUTCH-A/C COMPRESSOR
DESCRIPTION 213
OPERATION 213
DIAGNOSIS AND TESTING
A/C COMPRESSOR CLUTCH COIL 214
STANDARD PROCEDURE
A/C CLUTCH PLATE INSPECTION 214
A/C CLUTCH BREAK-IN 215
REMOVAL
SADEN A/C COMPRESSOR 215
DENSO A/C COMPRESSOR 217
INSTALLATION
SADEN A/C COMPRESSOR 220
DENSO A/C COMPRESSOR 222
CONTROL-A/C HEATER
DESCRIPTION
MANUAL SINGLE ZONE 224

page

MANUAL DUAL ZONE 225
REMOVAL 225
INSTALLATION 226
RELAY-CLUTCH-A/C COMPRESSOR
DESCRIPTION 226
OPERATION 226
REMOVAL 227
INSTALLATION 228
RESISTOR-BLOWER MOTOR
DESCRIPTION 228
OPERATION 228
DIAGNOSIS AND TESTING
BLOWER MOTOR RESISTOR 229
REMOVAL 229
INSTALLATION 230
SENSOR-EVAPORATOR TEMPERATURE
DESCRIPTION 231
OPERATION 231
REMOVAL 232
INSTALLATION 233
SWITCH-BLOWER MOTOR
DESCRIPTION 234
OPERATION 234
TRANSDUCER-A/C PRESSURE
DESCRIPTION 234
OPERATION 235
REMOVAL 235
INSTALLATION 236

ACTUATOR-BLEND DOOR

DESCRIPTION

The blend door actuators are reversible, 12-volt direct current (DC), servo motors. Models with the single zone heating-A/C system have a single blend-air door, which is controlled by a single blend door actuator. Models with the dual zone system have two blend-air doors, which are controlled by two blend door actuators.

The blend door actuator (1) for the single zone heating-A/C system is located near the center of the HVAC housing (2), close to the dash panel.

For the dual zone heating-A/C system, the same blend door actuator used for the single zone system becomes the driver side blend door actuator, which is mechanically connected to only the driver side blend-air door. A second separate blend door actuator (3) located on the top of the HVAC housing is mechanically connected to the passenger side blend-air door.

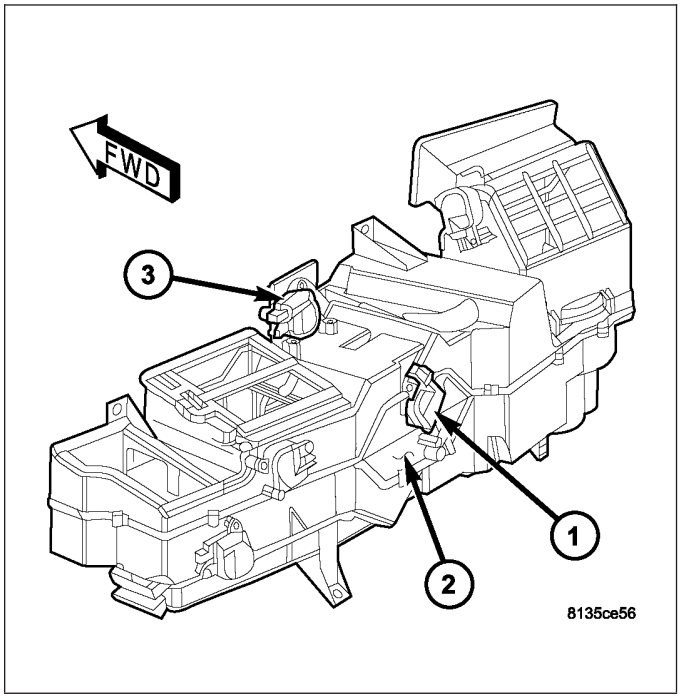

All actuators (1) are interchangeable with each other. Each actuator is contained within an identical black molded plastic housing with an integral wire connector receptacle (2). Each actuator also has an identical output shaft with splines (3) that connect it to its respective door linkage and three integral mounting tabs (4) that allow the actuator to be secured to the HVAC housing. The blend door actuators do not require mechanical indexing to the blend-air doors, as they are electronically calibrated by the A/C-heater control.

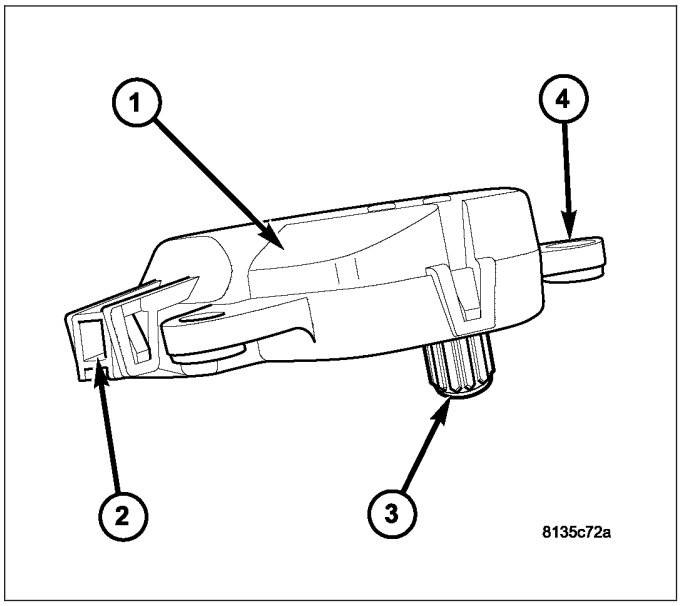

OPERATION

The blend door actuators are connected to the A/C-heater control through the vehicle electrical system by a dedicated two-wire lead and connector of the HVAC wire harness. The blend door actuator(s) can move the blend-air door(s) in two directions. When the A/C-heater control pulls the voltage on one side of the motor connection high and the other connection low, the blend-air door will move in one direction. When the A/C-heater control reverses the polarity of the voltage to the motor, the blend-air door moves in the opposite direction.

When the A/C-heater control makes the voltage to both connections high or both connections low, the blend-air door stops and will not move. The A/C-heater control uses a pulse-count positioning system to monitor the operation and relative position of the blend door actuator(s) and the blend-air door(s). The A/C-heater control learns the blend-air door stop positions during the calibration procedure and will store a diagnostic trouble code (DTC) for any problems it detects in the blend door actuator circuits.

The blend door actuators are diagnosed using a DRBIII® scan tool (Refer to 24 - HEATING & AIR CONDITIONING - DIAGNOSIS AND TESTING and to 24 - HVAC Electrical Diagnostics for more information).

The blend door actuators cannot be adjusted or repaired and, if faulty or damaged, they must be replaced.

REMOVAL

WARNING: On vehicles equipped with airbags, disable the airbag system before attempting any steering wheel, steering column, or instrument panel component diagnosis or service. Disconnect and isolate the battery negative (ground) cable, then wait two minutes for the airbag system capacitor to discharge before performing further diagnosis or service. This is the only sure way to disable the airbag system. Failure to take the proper precautions could result in accidental airbag deployment and possible personal injury or death.

NOTE: The single zone heating-A/C system is equipped with a single blend door actuator. The dual zone system has two blend door actuators, one for the driver side blend-air door and one for the passenger side blend-air door.

SINGLE ZONE/DUAL ZONE DRIVER SIDE

1. Disconnect and isolate the negative battery cable.
2. Remove the instrument panel from the vehicle (Refer to 23 - BODY/INSTRUMENT PANEL/INSTRUMENT PANEL ASSEMBLY - REMOVAL).
3. Remove the two screws (1) that secure the blend door actuator (2) to the back of the HVAC housing (3).
4. Remove the blend door actuator from the HVAC housing and disconnect the HVAC wire harness connector (4) from the actuator.
5. Remove the blend door actuator from the vehicle.

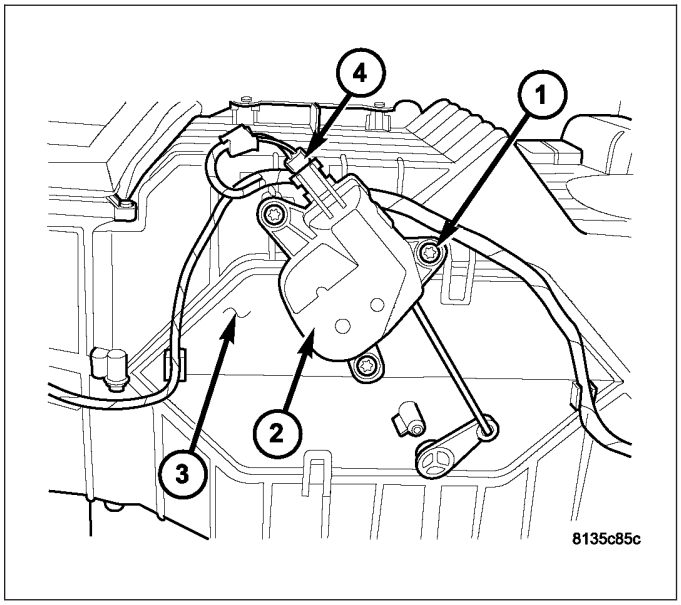

DUAL ZONE PASSENGER SIDE

1. Disconnect and isolate the negative battery cable.
2. Remove the instrument panel from the vehicle (Refer to 23 - BODY/INSTRUMENT PANEL/INSTRUMENT PANEL ASSEMBLY - REMOVAL).
3. Remove the blend door lever (1) from the blend door actuator output shaft (2) and the blend door linkage (3).

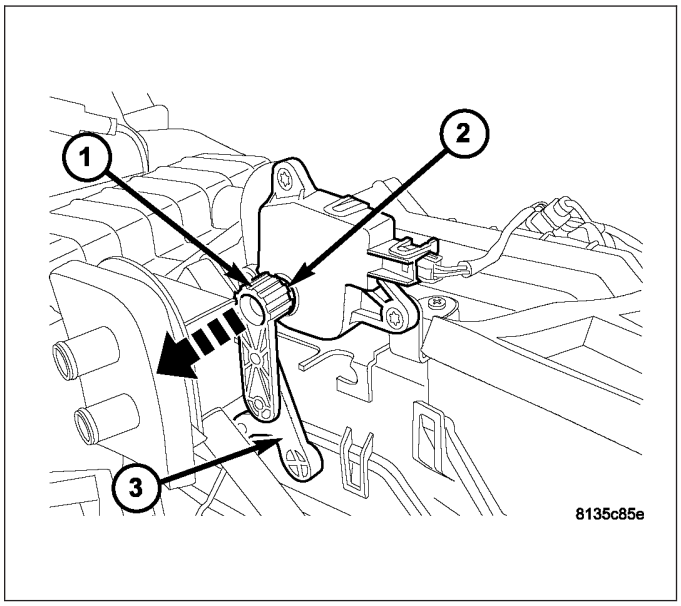

4. Remove the two screws (1) that secure the blend door actuator and bracket assembly (2) to the top of the HVAC housing (3).
5. Remove the blend door actuator and bracket assembly from the HVAC housing and disconnect the HVAC wire harness connector (4) from the actuator.
6. Remove the blend door actuator and bracket assembly from the vehicle.

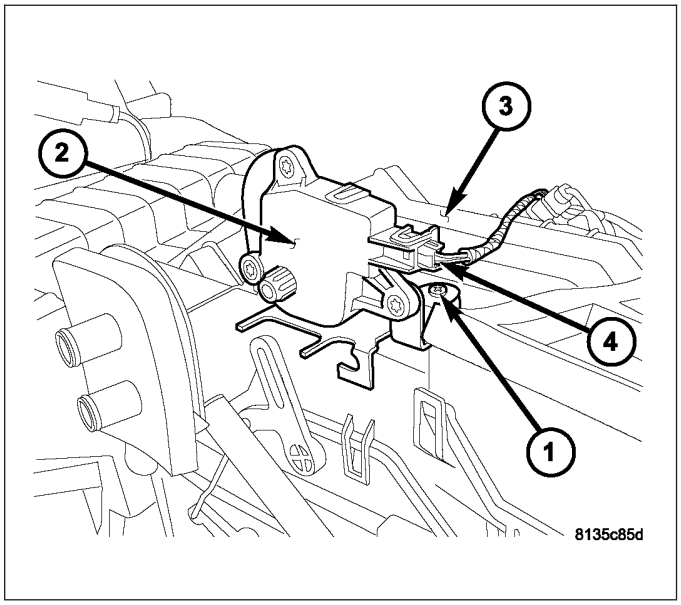

INSTALLATION

NOTE: The single zone heating-A/C system is equipped with a single blend door actuator. The dual zone system has two blend door actuators, one for the driver side blend-air door and one for the passenger side blend-air door.

SINGLE ZONE/DUAL ZONE DRIVER SIDE

1. Install the blend door actuator (1) onto the back of the HVAC housing (2). If necessary, rotate the actuator slightly to align the splines on the actuator output shaft (3) with those on the blend door lever (4).

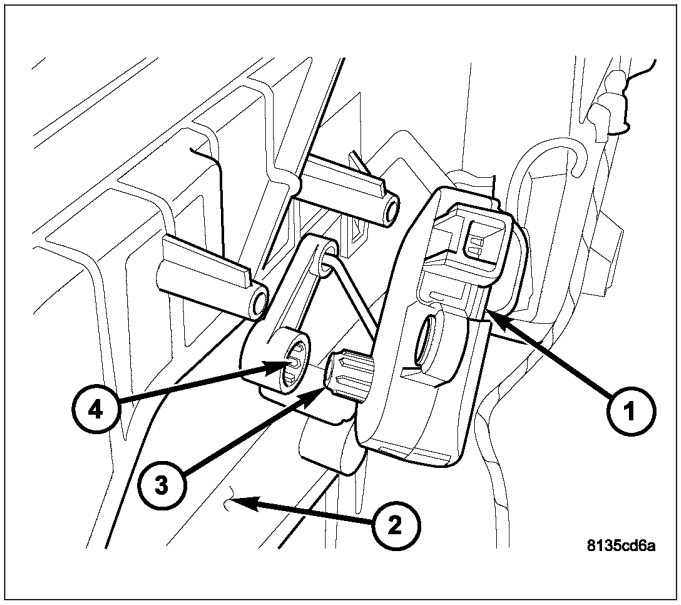

2. Install the screws (1) that secure the blend door actuator (2) to the HVAC housing (3). Tighten the screws to 2.2 N·m (20 in. lbs.).
3. Connect the HVAC wire harness connector (4) to the blend door actuator.
4. Install the instrument panel (Refer to 23 - BODY/ INSTRUMENT PANEL/INSTRUMENT PANEL ASSEMBLY - INSTALLATION).
5. Reconnect the negative battery cable.

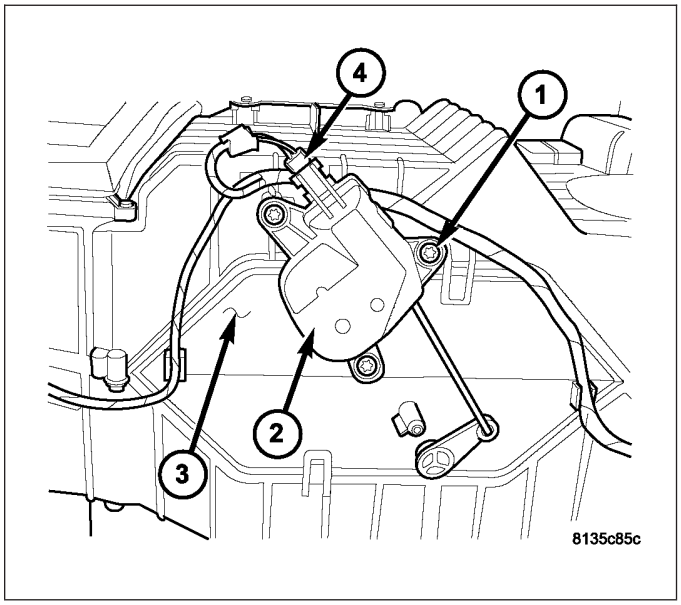

DUAL ZONE PASSENGER SIDE

1. Install the blend door actuator and bracket assembly (2) onto the top of the HVAC housing (3).
2. Install the screws (1) that secure the blend door actuator and bracket assembly to the HVAC housing. Tighten the screws to 2.2 N·m (20 in. lbs.).
3. Connect the HVAC wire harness connector (4) to the blend door actuator.

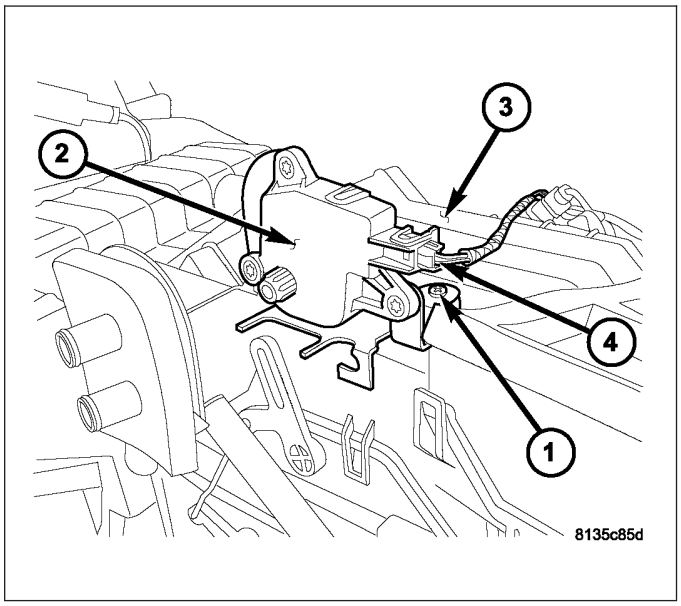

NOTE: Align the guide pin on the blend door lever with the guides on the blend door linkage during installation of the blend door lever.

4. Install the blend door lever (1) onto the blend door actuator output shaft (2) and the blend door linkage (3).
5. Install the instrument panel (Refer to 23 - BODY/ INSTRUMENT PANEL/INSTRUMENT PANEL ASSEMBLY - INSTALLATION).
6. Reconnect the negative battery cable.

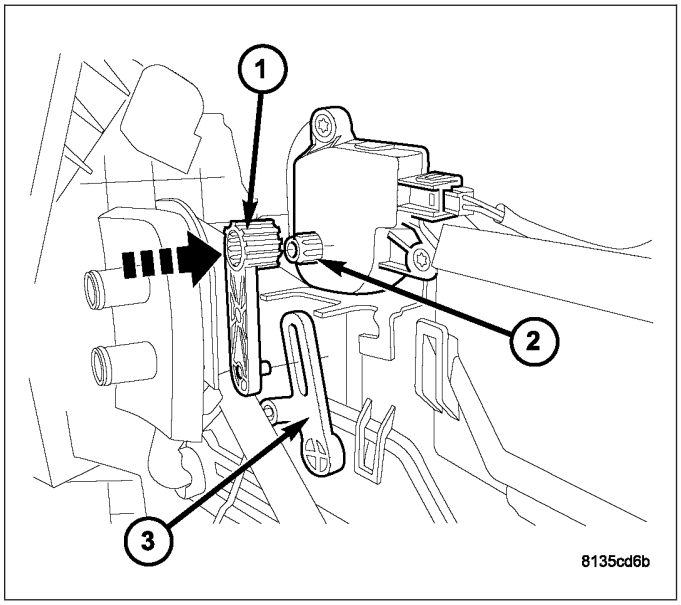

ACTUATOR-MODE DOOR

DESCRIPTION

The mode door actuators are reversible, 12-volt direct current (DC) servo motors. The heating-A/C systems on this vehicle use two mode door actuators. One for the panel/floor-air door and one for the defrost-air door.

Both the panel/floor door actuator (1) and the defrost door actuator (2) are located on the driver side end of the HVAC housing (3), close to the dash panel.

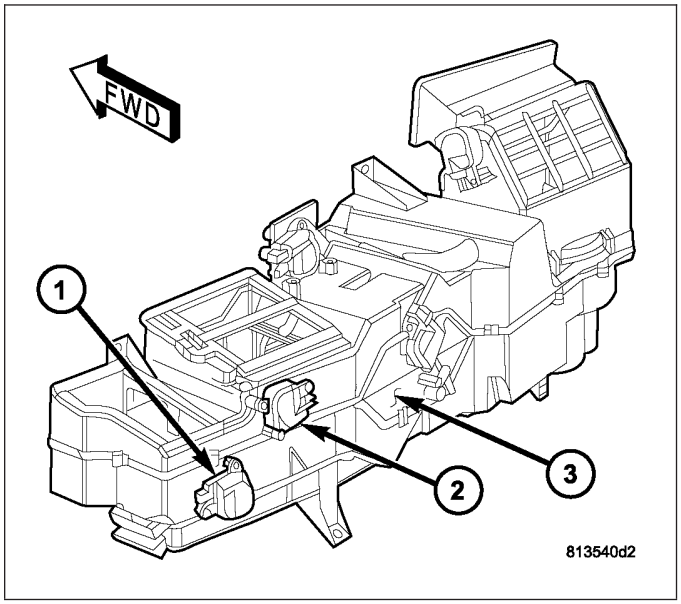

All actuators (1) are interchangeable with each other. Each actuator is contained within an identical black molded plastic housing with an integral wire connector receptacle (2). Each actuator also has an identical output shaft with splines (3) that connects it to its respective door linkage and three integral mounting tabs (4) that allow the actuator to be secured to the HVAC housing. The mode door actuators do not require mechanical indexing to the mode-air doors, as they are electronically calibrated by the A/C-heater control.

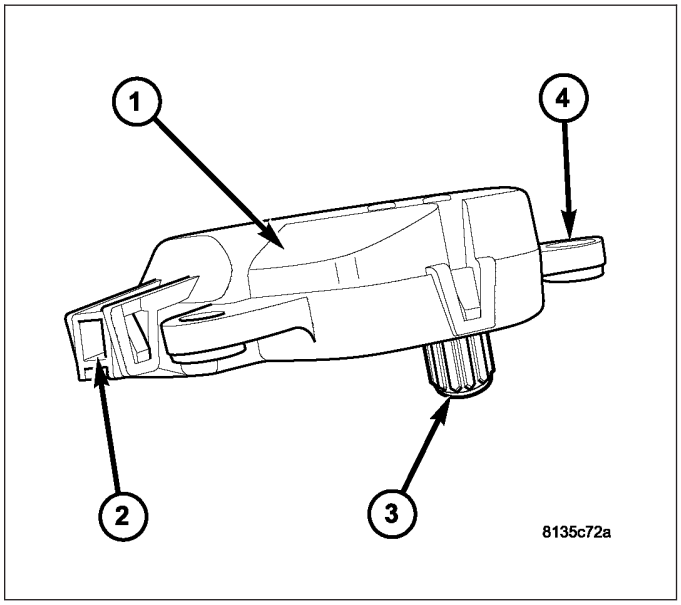

OPERATION

The mode door actuators are connected to the A/C-heater control through the vehicle electrical system by dedicated two-wire leads and connectors of the HVAC wire harness. The mode door actuators can move the defrost-air door and the panel/floor-air door in two directions. When the A/C-heater control pulls the voltage on one side of the motor connection high and the other connection low, the mode-air door will move in one direction. When the A/C-heater control reverses the polarity of the voltage to the motor, the mode-air door moves in the opposite direction.

When the A/C-heater control makes the voltage to both connections high or both connections low, the mode-air door stops and will not move. The A/C-heater control uses a pulse-count positioning system to monitor the operation and relative position of the mode door actuators and the mode-air doors. The A/C-heater control learns the mode-air door stop positions during the calibration procedure and will store a diagnostic trouble code (DTC) for any problems it detects in the mode door actuator circuits.

The mode door actuators are diagnosed using using a DRBIII® scan tool (Refer to 24 - HEATING & AIR CONDITIONING - DIAGNOSIS AND TESTING and to 24 - HVAC Electrical Diagnostics for more information).

The mode door actuators cannot be adjusted or repaired and, if faulty or damaged, they must be replaced.

REMOVAL

WARNING: On vehicles equipped with airbags, disable the airbag system before attempting any steering wheel, steering column, or instrument panel component diagnosis or service. Disconnect and isolate the battery negative (ground) cable, then wait two minutes for the airbag system capacitor to discharge before performing further diagnosis or service. This is the only sure way to disable the airbag system. Failure to take the proper precautions could result in an accidental airbag deployment and possible personal injury or death.

NOTE: The heating-A/C system is equipped with two mode door actuators, one for the panel/floor-air door and one for the defrost-air door.

PANEL/FLOOR DOOR ACTUATOR

1. Disconnect and isolate the negative battery cable.
2. Remove the instrument panel from the vehicle (Refer to 23 - BODY/INSTRUMENT PANEL/INSTRUMENT PANEL ASSEMBLY - REMOVAL).
3. Remove the screws (1) that secure the panel/floor door actuator (2) to the back of the HVAC housing (3).
4. Remove the panel/floor door actuator from the HVAC housing and disconnect the HVAC wire harness connector (4) from the actuator.
5. Remove the panel/floor door actuator from the vehicle.

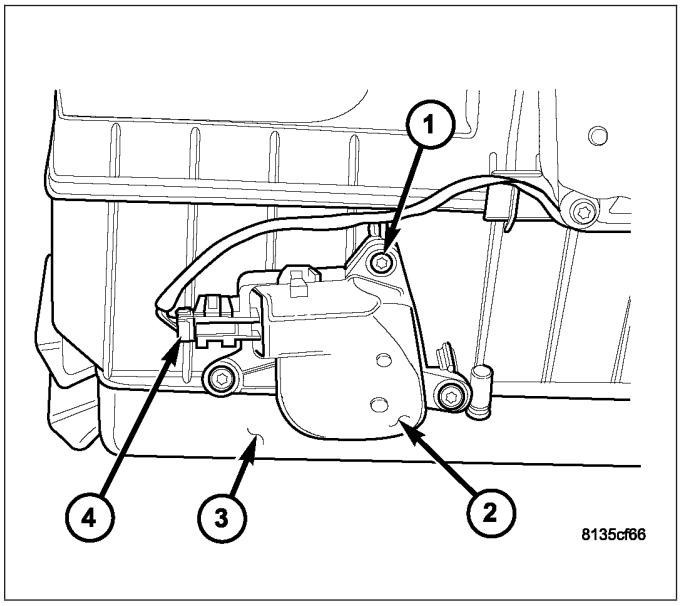

DEFROST DOOR ACTUATOR

1. Disconnect and isolate the negative battery cable.
2. Remove the instrument panel from the vehicle (Refer to 23 - BODY/INSTRUMENT PANEL/INSTRUMENT PANEL ASSEMBLY - REMOVAL).
3. Remove the screws (1) that secure the defrost door actuator (2) to the back of the HVAC housing (3).
4. Remove the defrost door actuator from the HVAC housing and disconnect the HVAC wire harness connector (4) from the actuator.
5. Remove the defrost door actuator from the vehicle.

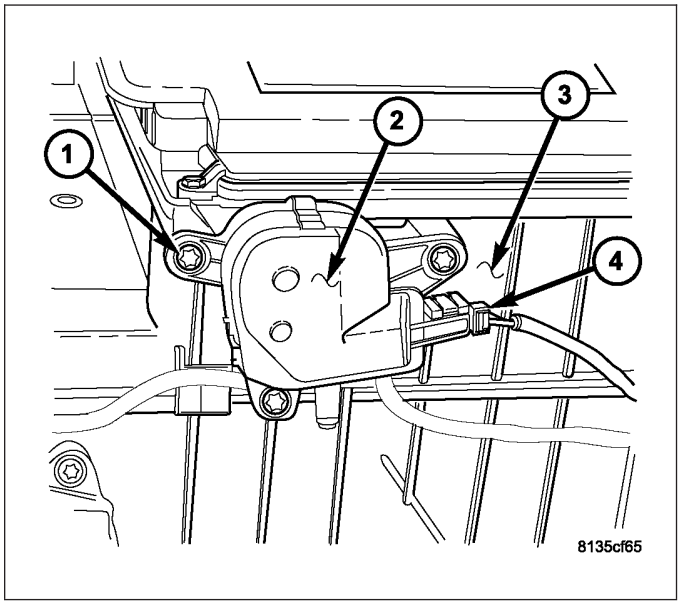

INSTALLATION

NOTE: The heating-A/C system is equipped with two mode door actuators, one for the panel/floor-air door and one for the defrost-air door.

PANEL/FLOOR DOOR ACTUATOR

1. Install the panel/floor door actuator (1) onto the back of the HVAC housing (2). If necessary, rotate the actuator slightly to align the splines on the actuator output shaft (3) with those on the panel/floor door actuator coupler (4).

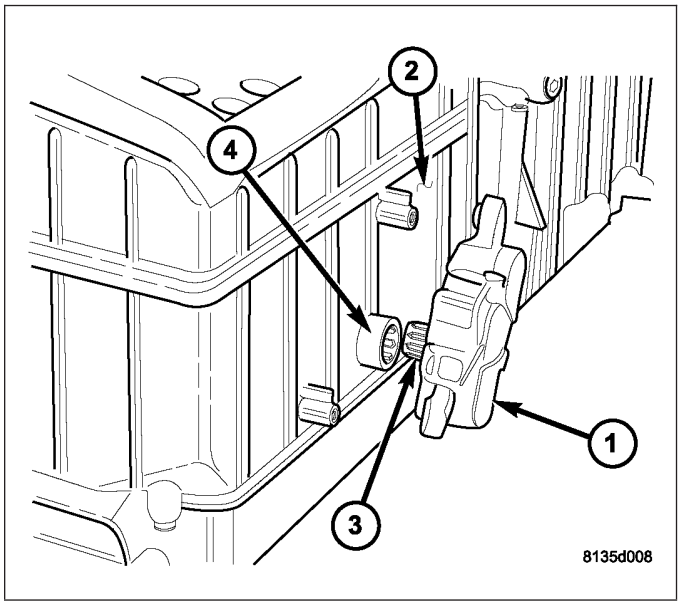

2. Install the screws (1) that secure the panel/floor door actuator (2) to the HVAC housing (3). Tighten the screws to 2.2 N·m (20 in. lbs.).
3. Connect the HVAC wire harness connector (4) to the panel/floor door actuator.
4. Install the instrument panel (Refer to 23 - BODY/ INSTRUMENT PANEL/INSTRUMENT PANEL ASSEMBLY - INSTALLATION).
5. Reconnect the negative battery cable.

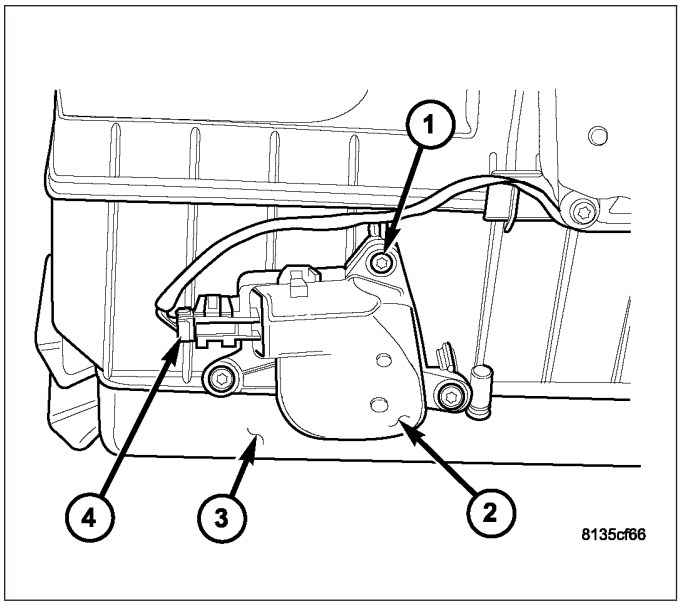

DEFROST DOOR ACTUATOR

1. Install the defrost door actuator (1) onto the back of the HVAC housing (2). If necessary, rotate the actuator slightly to align the splines on the actuator output shaft (3) with those on the defrost door actuator coupler (4).

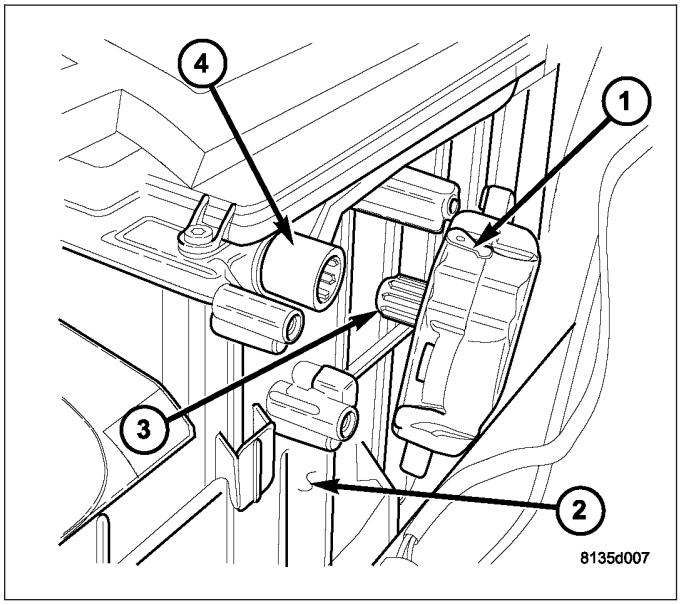

2. Install the screws (1) that secure the defrost door actuator (2) to the HVAC housing (3). Tighten the screws to 2.2 N·m (20 in. lbs.).
3. Connect the HVAC wire harness connector (4) to the defrost door actuator.
4. Install the instrument panel (Refer to 23 - BODY/ INSTRUMENT PANEL/INSTRUMENT PANEL ASSEMBLY - INSTALLATION).
5. Reconnect the negative battery cable.

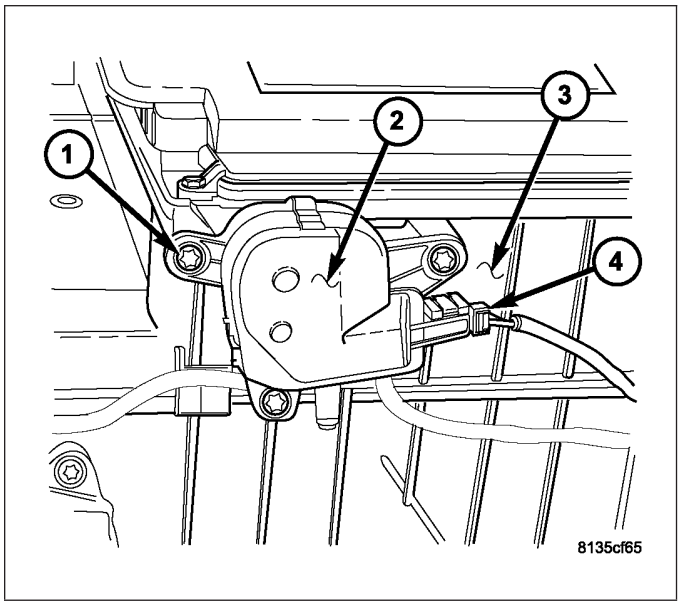

ACTUATOR-RECIRCULATION DOOR

DESCRIPTION

The recirculation door actuator (1) is a reversible 12-volt direct current (DC) servo motor. The single recirculation door actuator is located on the passenger side end of the HVAC housing (2), on the top of the air inlet housing.

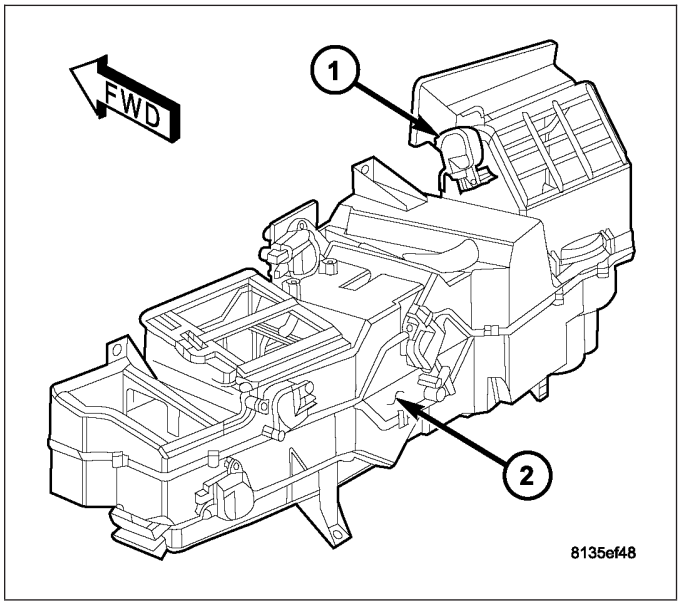

All actuators (1) are interchangeable with each other. Each actuator is contained within an identical black molded plastic housing with an integral wire connector receptacle (2). Each actuator also has an identical output shaft with splines (3) that connects it to its respective door linkage and three integral mounting tabs (4) that allow the actuator to be secured to the HVAC housing. The recirculation door actuator does not require mechanical indexing to the recirculation-air door, as it is electronically calibrated by the A/C-heater control.

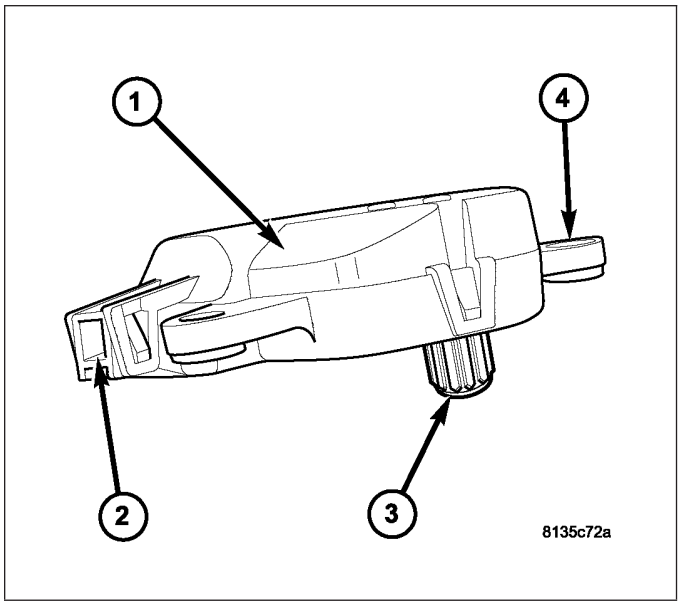

OPERATION

The recirculation door actuator is connected to the heater-A/C control module through the vehicle electrical system by a dedicated two-wire lead and connector of the HVAC wire harness. The recirculation door actuator can move the recirculation-air door in two directions. When the A/C-heater control pulls the voltage on one side of the motor connection high and the other connection low, the recirculation-air door will move in one direction.

When the A/C-heater control makes the voltage to both connections high or both connections low, the recirculation-air door stops and will not move. The A/C-heater control uses a pulse-count positioning system to monitor the operation and relative position of the recirculation door actuator and the recirculation-air door. The A/C-heater control learns the recirculation-air door stop positions during the calibration procedure and will store a diagnostic trouble code (DTC) for any problems it detects in the recirculation door actuator circuits.

The recirculation door actuator is diagnosed using a DRBIII® scan tool (Refer to 24 - HEATING & AIR CONDITIONING - DIAGNOSIS AND TESTING and to 24 - HVAC Electrical Diagnostics for more information).

The recirculation door actuator cannot be adjusted or repaired and, if faulty or damaged, it must be replaced.

REMOVAL

WARNING: On vehicles equipped with airbags, disable the airbag system before attempting any steering wheel, steering column, or instrument panel component diagnosis or service. Disconnect and isolate the battery negative (ground) cable, then wait two minutes for the airbag system capacitor to discharge before performing further diagnosis or service. This is the only sure way to disable the airbag system. Failure to take the proper precautions could result in accidental airbag deployment and possible personal injury or death.

1. Disconnect and isolate the negative battery cable.
2. Remove the instrument panel from the vehicle (Refer to 23 - BODY/INSTRUMENT PANEL/INSTRUMENT PANEL ASSEMBLY - REMOVAL).
3. Remove the two screws (1) that secure the recirculation door actuator (2) to the side of the HVAC air inlet housing (3).
4. Remove the recirculation door actuator from the air inlet housing and disconnect the HVAC wire harness connector (4) from the actuator.
5. Remove the recirculation door actuator from the vehicle.

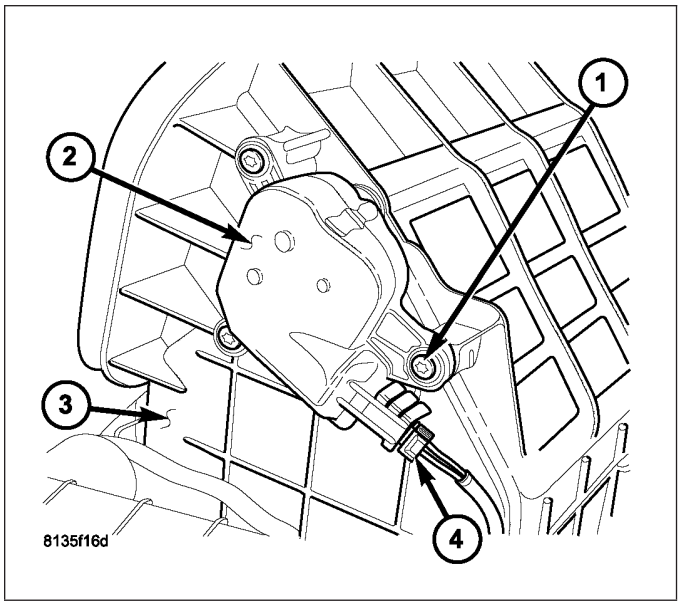

INSTALLATION

1. Install the recirculation door actuator (1) onto the side of the HVAC air inlet housing (2). If necessary, rotate the actuator slightly to align the splines on the actuator output shaft (3) with those in the recirculation door actuator coupler (4).

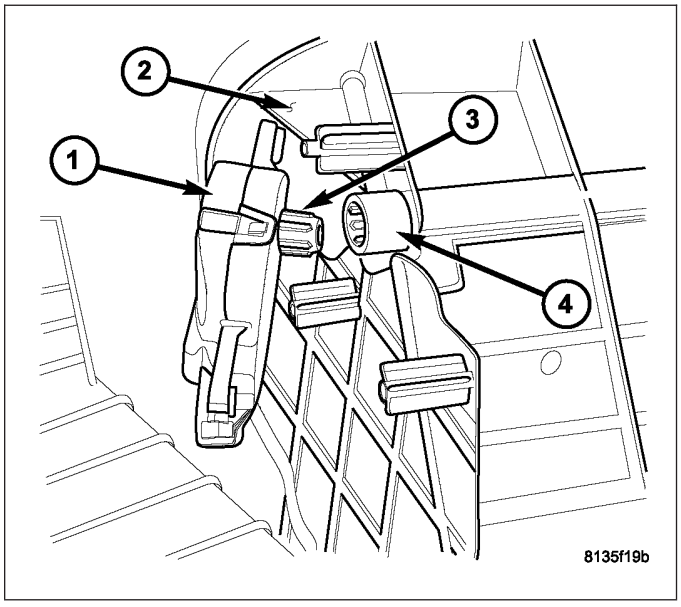

2. Install the two screws (1) that secure the recirculation door actuator (2) to the air inlet housing (3). Tighten the screws to 2.2 N·m (20 in. lbs.).
3. Connect the HVAC wire harness connector (4) to the recirculation door actuator.
4. Install the instrument panel (Refer to 23 - BODY/ INSTRUMENT PANEL/INSTRUMENT PANEL ASSEMBLY - INSTALLATION).
5. Reconnect the negative battery cable.

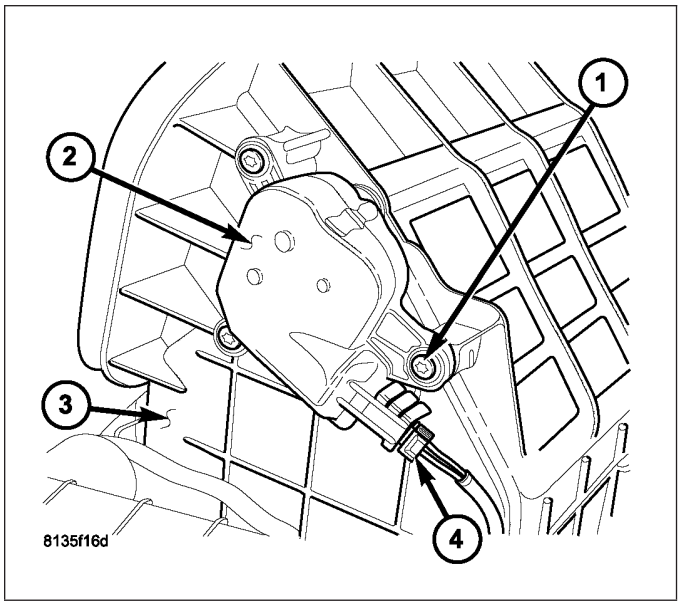

CLUTCH-A/C COMPRESSOR

DESCRIPTION

The A/C compressor clutch assembly consists of a stationary electromagnetic A/C clutch field coil (4), pulley bearing and pulley assembly (3), clutch plate (2) and shims (7). These components provide the means to engage and disengage the A/C compressor from the engine accessory drive belt.

The A/C clutch field coil and the pulley bearing and pulley assembly are both retained on the nose of the A/C compressor with snap rings (5 and 6). The clutch plate is splined to the compressor shaft and secured with a bolt (1).

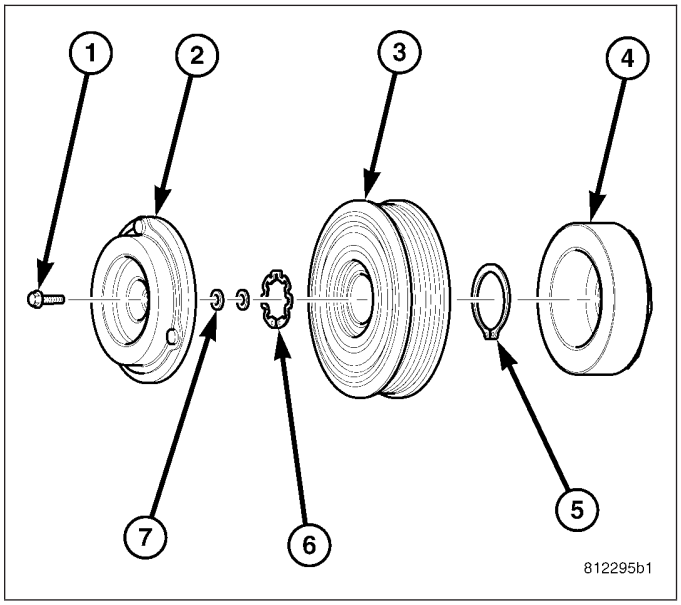

OPERATION

The A/C compressor clutch components provide the means to engage and disengage the A/C compressor from the engine accessory drive belt. When the electromagnetic A/C clutch field coil is energized, it magnetically draws the clutch plate into contact with the clutch pulley and drives the compressor shaft. When the coil is not energized, the pulley freewheels on the clutch hub bearing, which is part of the pulley assembly.

A/C compressor clutch engagement is controlled by the powertrain control module (PCM) or the engine control module (ECM), depending on engine application.

The A/C compressor clutch components cannot be repaired and, if faulty or damaged, they must be replaced.

DIAGNOSIS AND TESTING

A/C COMPRESSOR CLUTCH COIL

The A/C compressor clutch coil electrical circuit is controlled by the powertrain control module (PCM) or the engine control module (ECM) (depending on engine application) through the A/C clutch relay. Begin testing of a suspected compressor clutch coil problem by performing the preliminary checks.

PRELIMINARY CHECKS

1. If no diagnostic trouble codes (DTCs) are found in the A/C-heater control and the powertrain control module (PCM) or the engine control module (ECM) (depending on engine application), go to Step 2. If any DTCs are found, repair as required.
2. If the A/C compressor clutch still will not engage, verify the refrigerant charge level (Refer to 24 - HEATING & AIR CONDITIONING/PLUMBING - DIAGNOSIS AND TESTING - REFRIGERANT SYSTEM LEAKS). If the refrigerant charge level is OK, go to TESTS . If the refrigerant charge level is not OK, adjust the refrigerant charge as required.

TESTS

1. Verify the battery state of charge (Refer to 8 - ELECTRICAL/BATTERY SYSTEM/BATTERY - DIAGNOSIS AND TESTING).
2. Connect an ammeter (0 to 10 ampere scale selected) in series with the clutch coil feed terminal. Connect a voltmeter (0 to 20 volt scale selected) to measure voltage across the battery and the clutch coil.
3. With the A/C-heater control in the A/C mode and the blower motor at low speed, start the engine and allow it to run at a normal idle speed.
4. The A/C compressor clutch should engage immediately, and the clutch coil supply voltage should be within two volts of the battery voltage. If the coil supply voltage is OK, go to Step 5. If the coil supply voltage is not within two volts of battery voltage, test the clutch coil feed circuit for excessive voltage drop and repair as necessary.
5. For the acceptable A/C clutch coil current draw specifications refer to 24 - HEATING & AIR CONDITIONING - SPECIFICATIONS. Specifications apply for a work area temperature of 21° C (70° F). If voltage is more than 12.5 volts, add electrical loads by turning on electrical accessories until voltage reads below 12.5 volts.
   a. If the A/C clutch coil current reading is zero, the coil is open and must be replaced.
   b. If the A/C clutch coil current reading is above specifications, the coil is shorted and must be replaced.

STANDARD PROCEDURE

A/C CLUTCH PLATE INSPECTION

NOTE: The A/C clutch can be serviced in the vehicle. The refrigerant system can remain fully-charged during compressor clutch, pulley and bearing assembly, or coil replacement.

Examine the friction surfaces of the pulley and the clutch plate (2) for wear. The pulley and clutch plate should be replaced if there is excessive wear or scoring.

If the friction surfaces are oily, inspect the shaft and nose area of the A/C compressor (1) for refrigerant oil. If refrigerant oil is found, the compressor shaft seal is leaking and the A/C compressor must be replaced.

Check the pulley bearing for roughness or excessive leakage of grease. Replace the pulley and bearing assembly, if required.

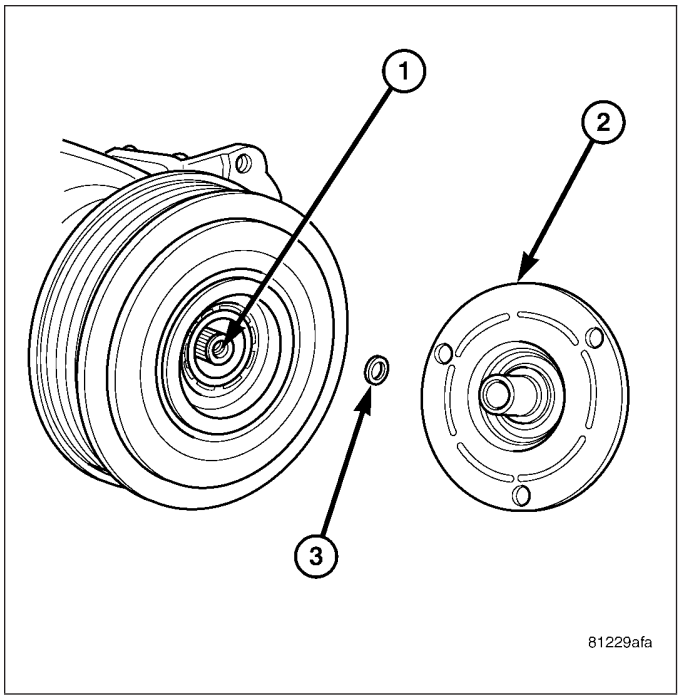

A/C CLUTCH BREAK-IN

After a new A/C compressor clutch has been installed, cycle the compressor clutch approximately twenty times (five seconds on, then five seconds off). During this procedure, set the A/C-heater controls to the A/C Recirculation Mode, the blower motor in the highest speed position, and the engine speed at 1500 to 2000 rpm. This procedure (burnishing) will seat the opposing friction surfaces and provide a higher compressor clutch torque capability.

REMOVAL

SADEN A/C COMPRESSOR

NOTE: The A/C compressor clutch can be serviced in the vehicle. The refrigerant system can remain fully-charged during compressor clutch, pulley and bearing assembly, or coil replacement.

1. Disconnect and isolate the negative battery cable.
2. Remove the accessory drive belt (Refer to 7 - COOLING/ACCESSORY DRIVE/BELTS-DRIVE - REMOVAL).
3. Disconnect the engine wire harness connector for the A/C compressor clutch coil from the clutch field coil wire harness connector on the top of the A/C compressor.
4. Remove the bolts that secure the A/C compressor to the mounting bracket and support the A/C compressor.
5. Insert the two pins of the spanner wrench (Special Tool C-4489 or equivalent) (2) into the holes of the clutch plate (1). Hold the clutch plate stationary and remove the nut.

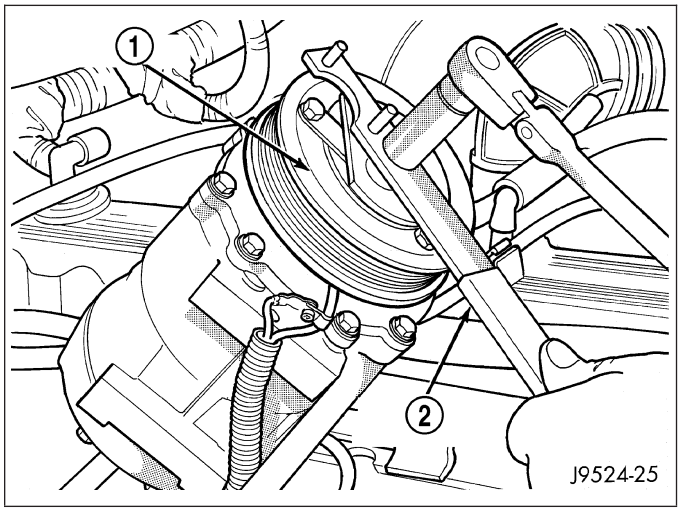

6. Remove the clutch plate and shims.
7. Using snap ring pliers (Special Tool C-4574 or equivalent) (2), remove the snap ring that secures the pulley and bearing assembly (1).

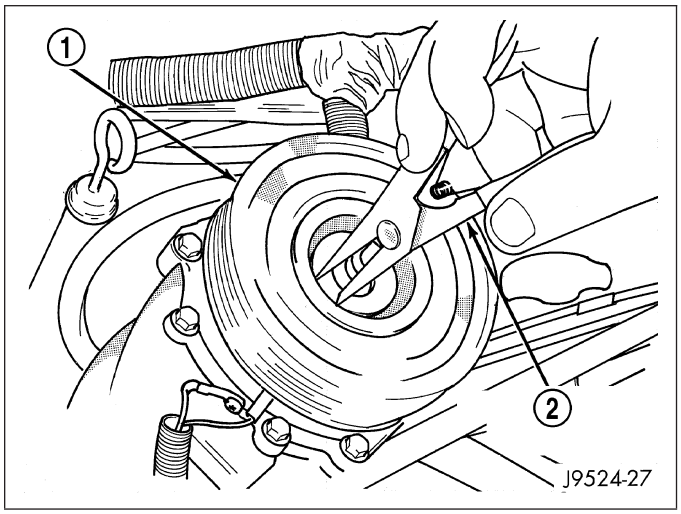

8. Install the lip of the pulley and bearing puller (Special Tool C-6141-1 or equivalent) (1) into the snap ring groove of the pulley and bearing assembly and install the shaft protector (Special Tool C-6141-2 or equivalent) (2).

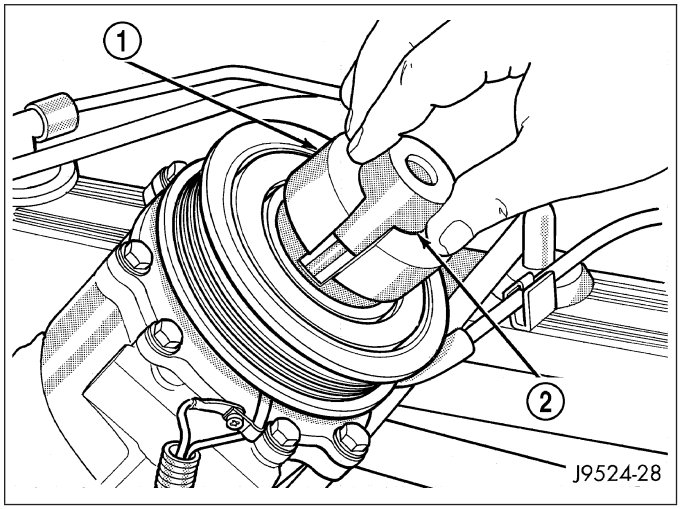

CAUTION: Do not apply excessive force to the end of the compressor shaft with the puller center bolt or damage to the shaft may occur.

9. Install the puller through-bolts (Special Tool C-6461 or equivalent) through the puller flange (2) and into the puller jaws (1). Turn the puller center bolt clockwise until the pulley and bearing assembly is free.

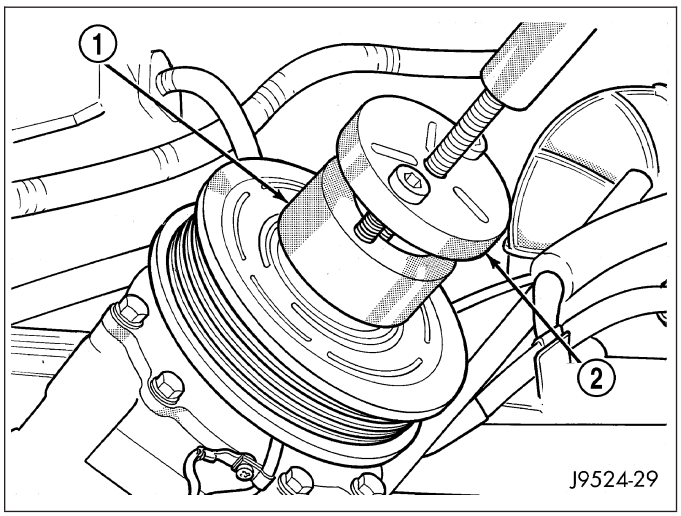

10. Remove the screw and retainer (3) from the wire harness lead (2) of the clutch field coil (1).

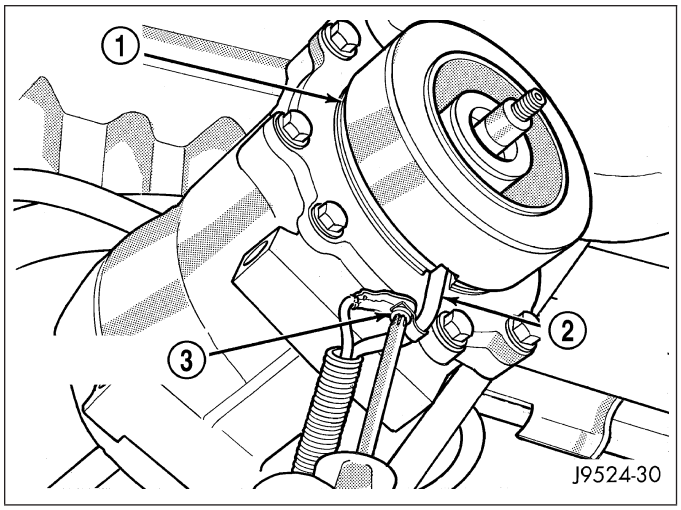

11. Using snap ring pliers (Special Tool C-4574 or equivalent) (2), remove the snap ring that secures the clutch field coil (1) and remove the field coil.

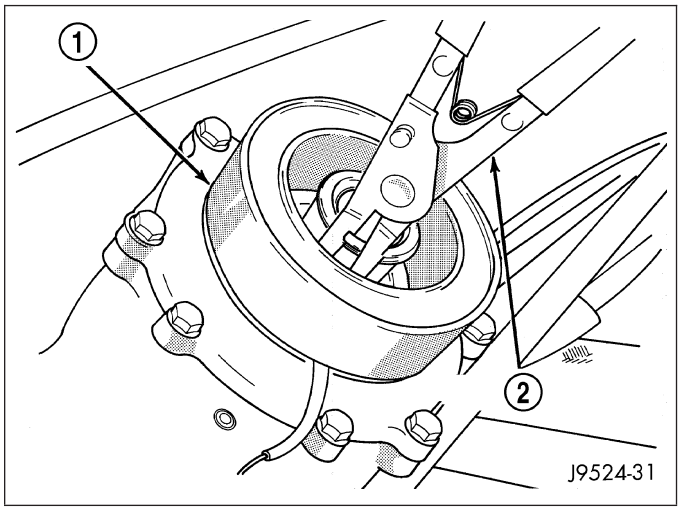

DENSO A/C COMPRESSOR

NOTE: The A/C compressor clutch can be serviced in the vehicle. The refrigerant system can remain fully-charged during compressor clutch, pulley and bearing assembly, or coil replacement.

1. Disconnect and isolate the negative battery cable.
2. Remove the accessory drive belt (Refer to 7 - COOLING/ACCESSORY DRIVE/BELTS-DRIVE - REMOVAL).
3. Disconnect the engine wire harness connector for the A/C compressor clutch coil from the clutch field coil wire harness connector on the top of the A/C compressor.
4. Remove the bolts that secure the A/C compressor to the engine and support the A/C compressor.
5. Remove the compressor shaft bolt (1). A band-type oil filter wrench or a strap wrench may be used to secure the clutch plate (2) during bolt removal.

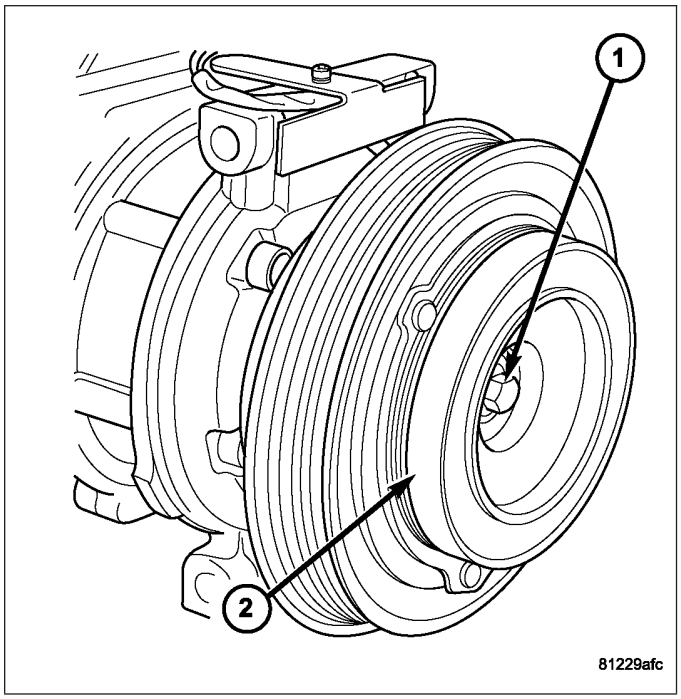

CAUTION: Do not pry between the clutch plate and the pulley and bearing assembly to remove the clutch plate from the compressor shaft as this may damage the clutch plate.

NOTE: Use care not to lose any clutch shim(s) during removal of the clutch plate, as they may be reused during the clutch plate installation process.

6. Tap the clutch plate (2) lightly with a plastic mallet to release it from the splines on the compressor shaft (1). Remove the clutch plate and shim(s) (3) from the compressor shaft.

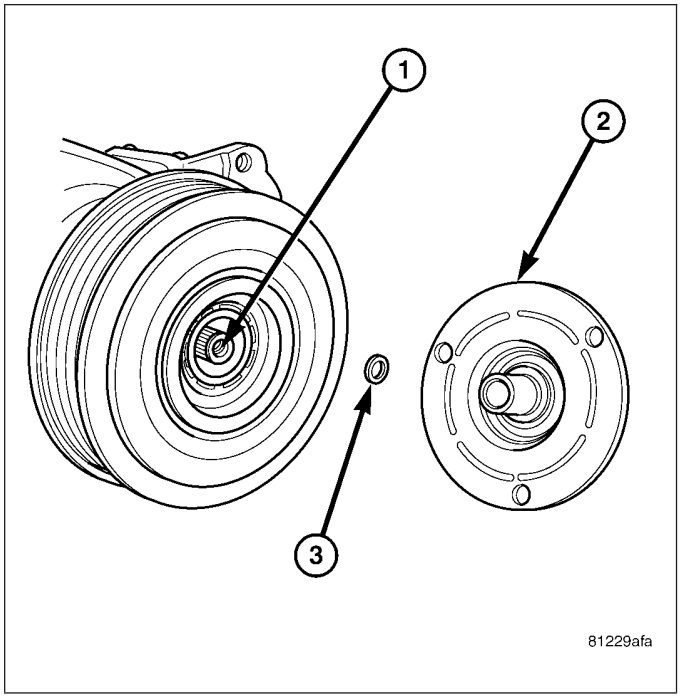

7. Using snap ring pliers (Special Tool C-4574 or equivalent) (2), remove the external snap ring (1) that secures the pulley and bearing assembly (3) to the front cover of the A/C compressor, then slide the pulley and bearing assembly off of the A/C compressor.

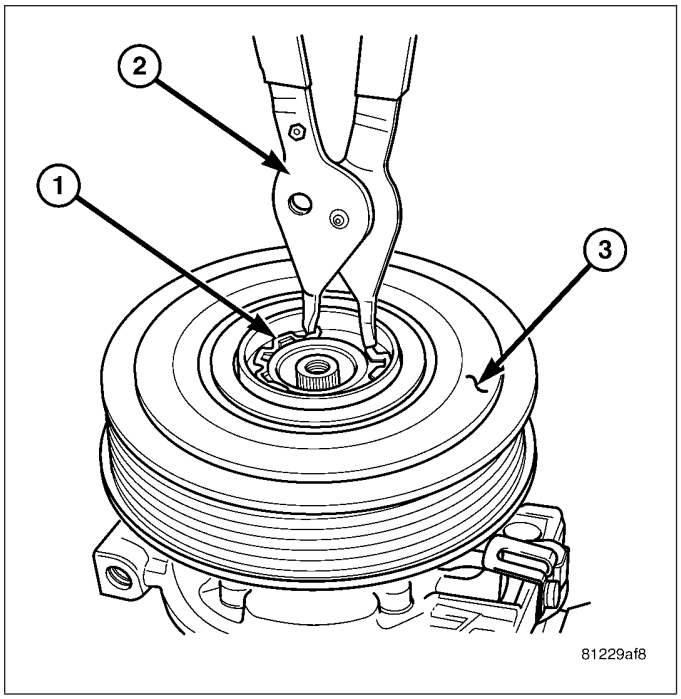

8. Remove the screw that secures the clutch coil pigtail wire connector bracket and ground clip to the top of the compressor housing (3).
9. Using snap ring pliers (Special Tool C-4574 or equivalent) (1), remove the external snap ring (4) that secures the clutch field coil (2) to the front cover of the compressor housing, then slide the clutch field coil off of the A/C compressor.

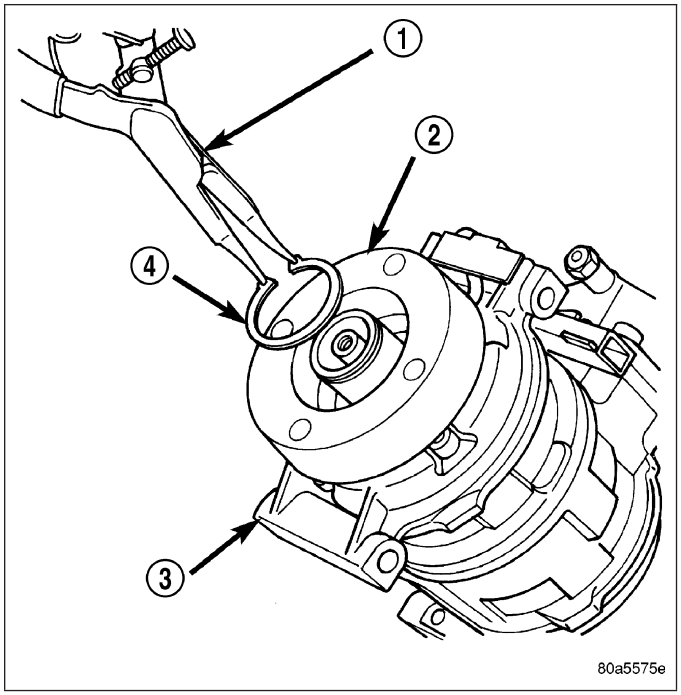

INSTALLATION

SADEN A/C COMPRESSOR

CAUTION: The snap ring must be fully and properly seated in the groove or it will vibrate out, resulting in a clutch failure and severe damage to the A/C compressor.

NOTE: A new snap ring must be used to secure the clutch field coil to the A/C compressor. The bevel side of the snap ring must face outward and both snap ring eyelets must be oriented to the right or to the left of the clutch field coil dowel pin location on the A/C compressor.

1. Install the clutch field coil (1) and using snap ring pliers (Special Tool C-4574 or equivalent) (2), install the snap ring that secures the field coil to the front of the A/C compressor. Be certain that the snap ring is fully and properly seated in the groove.

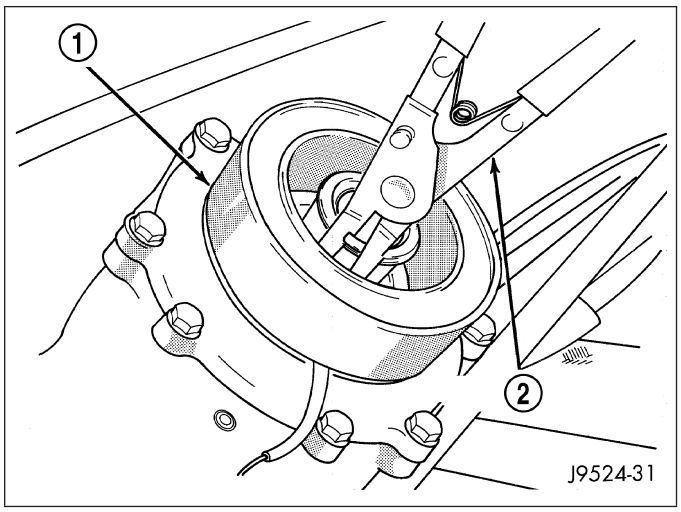

2. Install the retainer and screw (3) over the wire harness lead (2) of the clutch field coil (1) and onto the A/C compressor. Tighten the screw to 2.2 N·m (20 in. lbs.).

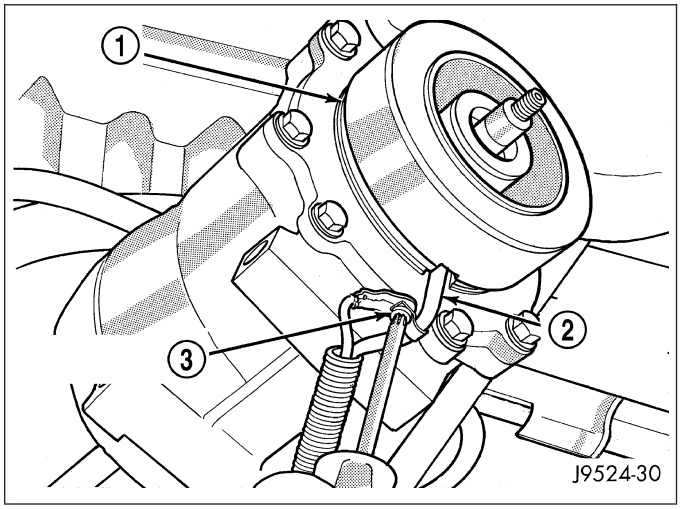

3. Position the pulley and bearing assembly (1) squarely onto the front of the A/C compressor.

NOTE: Thread the installer fully onto the compressor shaft. Turn the installer nut until the pulley and bearing assembly is fully seated.

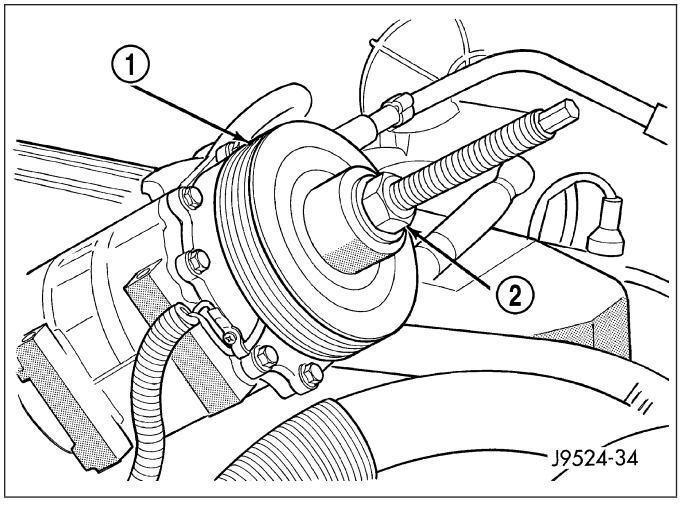

4. Using installer (Special Tool C-6871 or equivalent) (2), install the pulley and bearing assembly.

CAUTION: The snap ring must be fully and properly seated in the groove or it will vibrate out, resulting in a clutch failure and severe damage to the A/C compressor.

NOTE: A new snap ring must be used to secure the pulley and bearing assembly to the A/C compressor. The bevel side of the snap ring must face outward.

5. Using snap ring pliers (Special Tool C-4574 or equivalent) (2), install the snap ring that secures the pulley and bearing assembly (1) onto the front of the A/C compressor. Be certain that the snap ring is fully and properly seated in the groove.

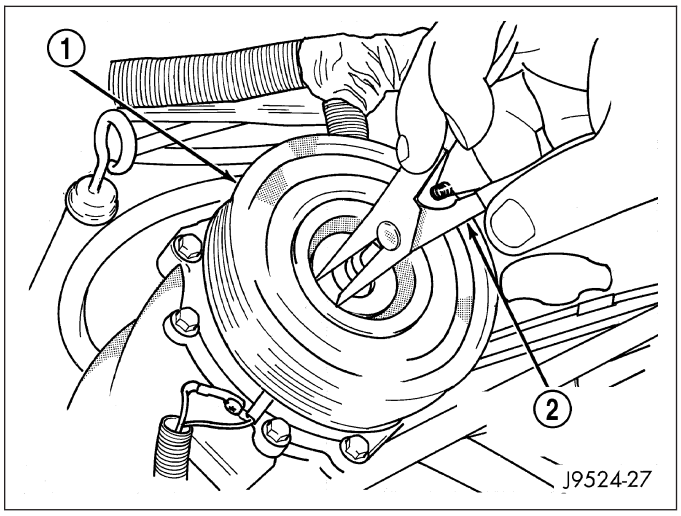

6. If the original clutch plate (1) and pulley and bearing assembly are to be reused, reinstall the original shim(s) onto the compressor shaft. If a new clutch plate and/or pulley and bearing assembly are being used, install a 1.0, 0.50, and 0.13 millimeter (0.040, 0.020, and 0.005 inch) shims from the new clutch hardware package that is provided with the new clutch.
7. Install the clutch plate onto the compressor shaft.
8. Insert the two pins of the spanner wrench (Special Tool C-4489 or equivalent) (2) into the holes of the clutch plate (1). Hold the clutch plate stationary and install the nut that secures the clutch plate. Tighten the nut to 20 N·m (15 ft. lbs.).

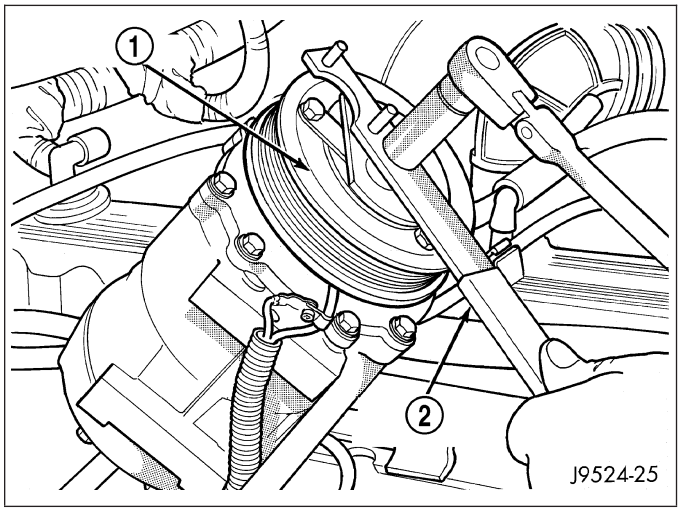

NOTE: The shims may compress after tightening the shaft bolt. Check the air gap in four or more places to verify the air gap is correct. Spin the pulley before performing a final check of the air gap.

9. With the clutch plate assembled tight against the shim(s), measure the air gap between the clutch plate and the pulley and bearing assembly faces with a feeler gauge. The air gap should be between specifications (Refer to 24 - HEATING & AIR CONDITIONING - SPECIFICATIONS). If the proper air gap is not obtained, add or subtract shims as needed until the desired air gap is obtained.
10. Install the bolts that secure the A/C compressor to the mounting bracket (Refer to 24 - HEATING & AIR CONDITIONING/PLUMBING/COMPRESSOR-A/C - INSTALLATION).

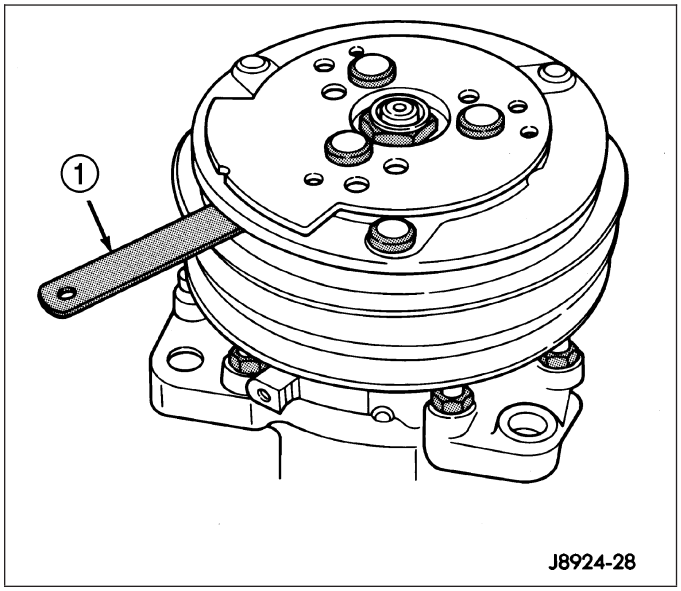

11. Connect the engine wire harness connector to the A/C compressor clutch coil.
12. Install the accessory drive belt (Refer to 7 - COOLING/ACCESSORY DRIVE/BELTS-DRIVE - INSTALLATION).
13. Reconnect the negative battery cable.

DENSO A/C COMPRESSOR

1. Align the dowel pin on the back of the clutch field coil (2) with the hole in the compressor front cover (3) and position the clutch field coil onto the A/C compressor. Be certain that the clutch coil wire harness is properly oriented and routed so that it is not pinched between the compressor front cover and the clutch field coil.

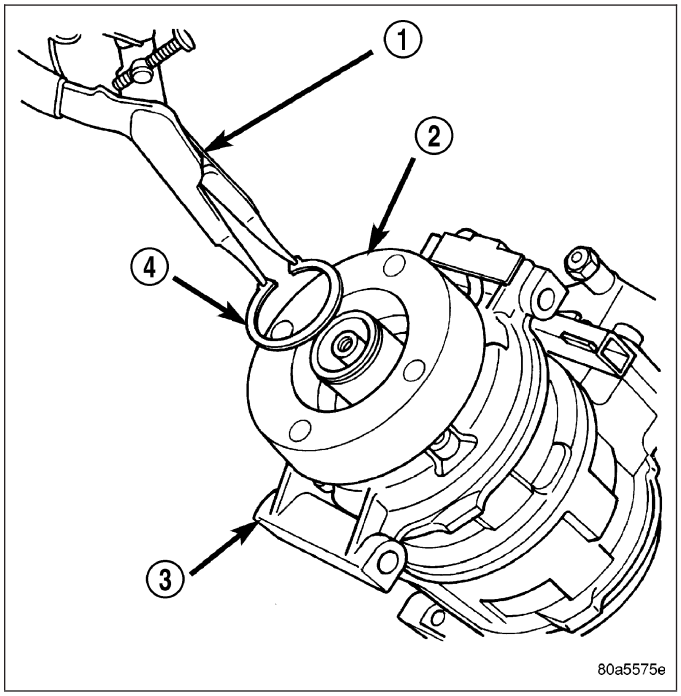

CAUTION: The snap ring must be fully and properly seated in the groove or it will vibrate out, resulting in a clutch failure and severe damage to the A/C compressor.

NOTE: A new snap ring must be used to secure the clutch field coil to the A/C compressor. The bevel side of the snap ring must face outward and both snap ring eyelets must be oriented to the right or to the left of the clutch field coil dowel pin location on the A/C compressor.

2. Using snap ring pliers (Special Tool C-4574 or equivalent) (1), install the external snap ring (4) that secures the clutch field coil to the front cover of the A/C compressor. Be certain that the snap ring is fully and properly seated in the groove and oriented correctly.
3. Install the screw that secures the clutch field coil wire harness connector bracket and ground clip to the top of the compressor housing. Tighten the screw securely.

CAUTION: When installing the pulley and bearing assembly, DO NOT mar the friction surfaces of the pulley or premature failure of the clutch will result.

4. Install the pulley and bearing assembly (1) onto the front cover of the A/C compressor. If necessary, tap the pulley gently with a block of wood (2) placed on the pulley friction surface.

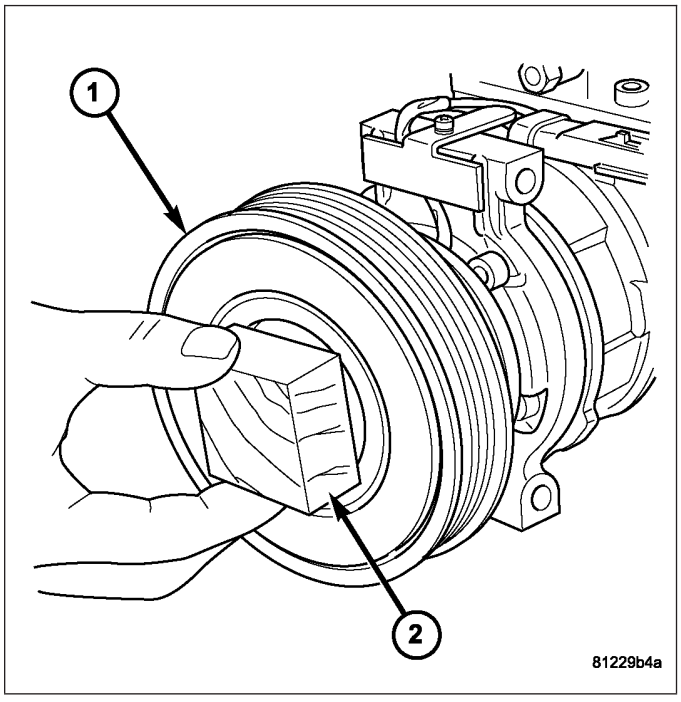

CAUTION: The snap ring must be fully and properly seated in the groove or it will vibrate out, resulting in a clutch failure and severe damage to the A/C compressor.

NOTE: A new snap ring must be used to secure the pulley and bearing assembly to the A/C compressor. The bevel side of the snap ring must face outward.

5. Using snap ring pliers (Special Tool C-4574 or equivalent) (2), install the external snap ring (1) that secures the pulley and bearing assembly (3) to the front cover of the A/C compressor. Be certain that the snap ring is fully and properly seated in the groove.

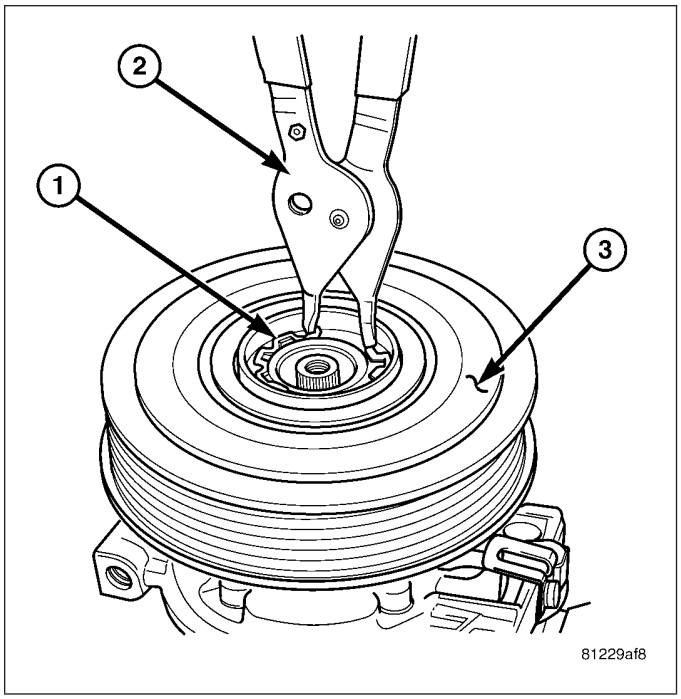

6. If the original clutch plate (2) and pulley and bearing assembly are to be reused, reinstall the original shim(s) (3) on the compressor shaft (1) against the shoulder. If a new clutch plate and/or pulley and bearing assembly are being used, install a trial stack of shims 2.54 mm (0.010 in.) thick on the compressor shaft against the shoulder.

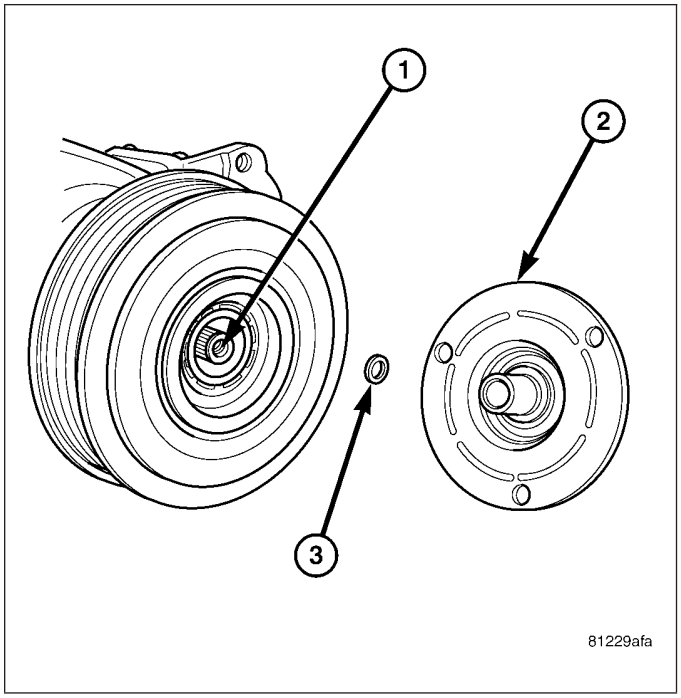

7. Install the clutch plate (2) onto the compressor shaft.
8. Install the compressor shaft bolt (1). Tighten the bolt to 17.5 N·m (155 in. lbs.).

NOTE: The shims may compress after tightening the shaft bolt. Check the air gap in four or more places to verify the air gap is correct. Spin the pulley before performing a final check of the air gap.

9. With the clutch plate assembled tight against the shim(s), measure the air gap between the clutch plate and the pulley and bearing assembly faces with a feeler gauge. The air gap should be between specifications (Refer to 24 - HEATING & AIR CONDITIONING - SPECIFICATIONS). If the proper air gap is not obtained, add or subtract shims as needed until the desired air gap is obtained.
10. Install the bolts that secure the A/C compressor to the engine (Refer to 24 - HEATING & AIR CONDITIONING/PLUMBING/COMPRESSOR-A/C - INSTALLATION).

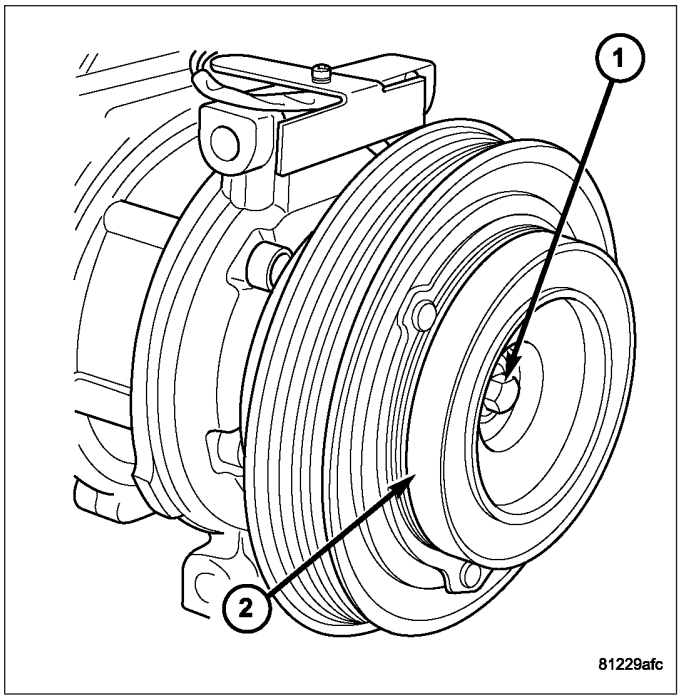

11. Connect the engine wire harness connector to the A/C compressor clutch coil.
12. Install the accessory drive belt (Refer to 7 - COOLING/ACCESSORY DRIVE/BELTS-DRIVE - INSTALLATION).
13. Reconnect the negative battery cable.

CONTROL-A/C HEATER

DESCRIPTION

MANUAL SINGLE ZONE

The A/C-heater control (1) for the manual temperature control (MTC) single zone heating-A/C system allows one temperature setting for the entire vehicle. All controls are identified by ISO graphic symbols.

NOTE: Manual A/C-heater control with optional A/C shown. Manual A/C-heater control without A/C similar.

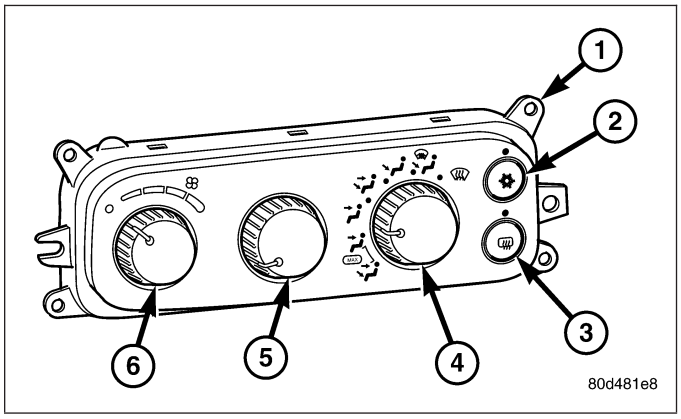

The A/C-heater control and integral computer is located in the instrument panel and contains:

- a push button A/C on/off control (2). The Snowflake button contains an LED that illuminates when the optional A/C system is in operation.
- a push button rear window defogger on/off control (3). The defogger button contains an LED that illuminates when the rear window defogger system is in operation.
- a rotary control knob for recirculation and mode control of the discharged air (4).
- a rotary control knob for temperature control of the discharged air (5).
- a rotary control knob for fan speed selection and turning the heating-A/C system off (6).

Refer to 24 - HEATING & AIR CONDITIONING - DIAGNOSIS AND TESTING and to 24 - HVAC Electrical Diagnostics for more information.

The A/C-heater control cannot be repaired and, if faulty or damaged, it must be replaced. The illumination lamps for the A/C-heater control are available for service replacement.

MANUAL DUAL ZONE

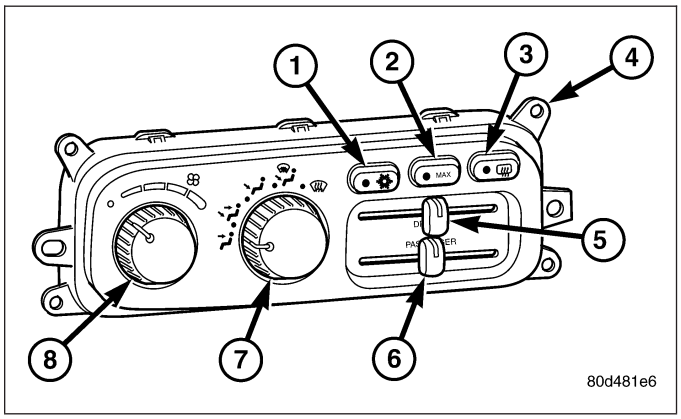

The A/C-heater control (4) for the manual temperature control (MTC) dual zone heating-A/C system allows both the driver and the front seat passenger the ability to individually regulate air temperature for their side of the vehicle. All controls are identified by ISO graphic symbols.

The dual zone A/C-heater control and integral computer is located in the instrument panel and contains:

- a push button A/C on/off control (1). The Snowflake button contains an LED that illuminates when the A/C system is in operation.
- a push button MAX A/C air recirculation control (2). The Recirculation button contains an LED that illuminates when the recirculation function is activated for high A/C demand.
- a push button rear window defogger on/off control (3). The defogger button contains an LED that illuminates when the rear window defogger system is in operation.
- two slid-type control levers for individual driver and front seat passenger temperature control of the discharged air (5 and 6).
- a rotary control knob for mode control of the discharged air (7).
- a rotary control knob for fan speed selection and turning the heating-A/C system off (8).

Refer to 24 - HEATING & AIR CONDITIONING - DIAGNOSIS AND TESTING and to 24 - HVAC Electrical Diagnostics for more information.

The A/C-heater control cannot be repaired and, if faulty or damaged, it must be replaced.

REMOVAL

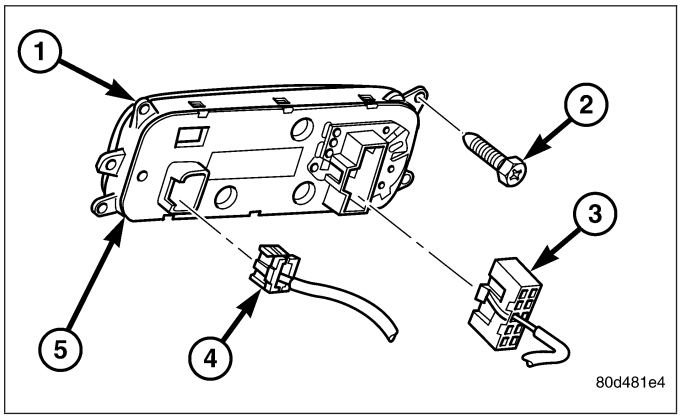

WARNING: On vehicles equipped with airbags, disable the airbag system before attempting any steering wheel, steering column, or instrument panel component diagnosis or service. Disconnect and isolate the battery negative (ground) cable, then wait two minutes for the airbag system capacitor to discharge before performing further diagnosis or service. This is the only sure way to disable the airbag system. Failure to take the proper precautions could result in an accidental airbag deployment and possible personal injury or death.

1. Disconnect and isolate the negative battery cable.
2. Remove the center bezel from the instrument panel and disconnect the wire harness connectors (3 and 4) from the A/C-heater control (1) (Refer to 23 - BODY/INSTRUMENT PANEL/INSTRUMENT PANEL CENTER BEZEL - REMOVAL).
3. Place the center bezel on a workbench and remove the screws (2) that secure the A/C-heater control to the center bezel.
4. Remove the A/C-heater control from the center bezel.

INSTALLATION

1. Position the A/C-heater control (1) into the instrument panel center bezel.
2. Install the screws (2) that secure the A/C-heater control to the center bezel. Tighten the screws to 2 N·m (17 in. lbs.).
3. Connect the wire harness connectors (3 and 4) to the back of the A/C-heater control (5) and install the instrument panel center bezel (Refer to 23 - BODY/INSTRUMENT PANEL/INSTRUMENT PANEL CENTER BEZEL - INSTALLATION).
4. Reconnect the negative battery cable.

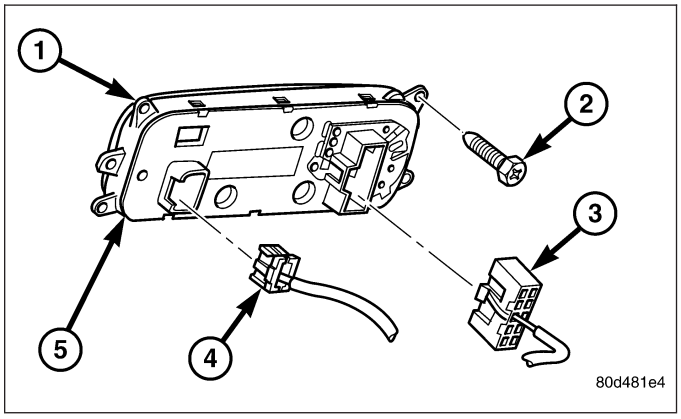

RELAY-CLUTCH-A/C COMPRESSOR

DESCRIPTION

The A/C clutch relay (1) is a International Standards Organization (ISO) micro-relay. Relays conforming to the ISO specifications have common physical dimensions, current capacities, terminal functions and patterns (2). The ISO micro-relay terminal functions are the same as a conventional ISO relay. However, the ISO micro-relay terminal pattern (or footprint) is different, the current capacity is lower, and the physical dimensions are smaller than those of the conventional ISO relay.

The A/C clutch relay is located in the integrated power module (IPM) in the engine compartment.

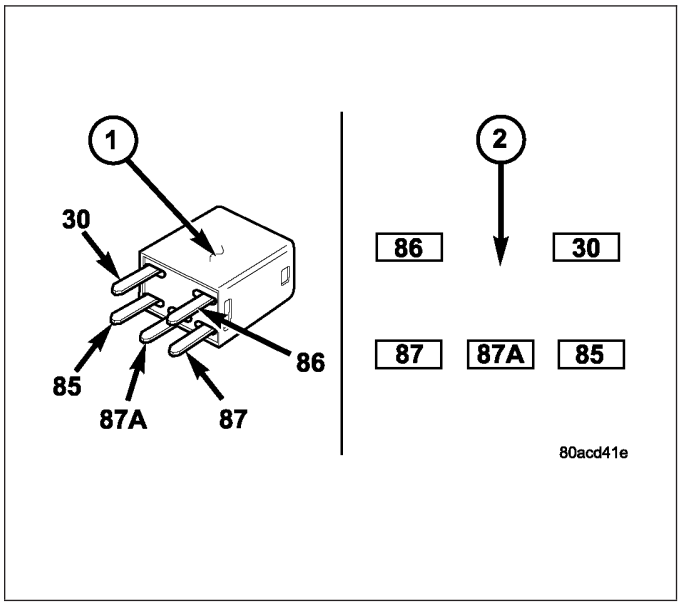

OPERATION

The ISO-standard A/C clutch micro-relay is an electromechanical switch that uses a low current input from the powertrain control module (PCM) or engine control module (ECM) (depending on engine application), to control the high current output to the A/C clutch field coil. The movable, common feed relay contact is held against the fixed, normally closed relay contact by spring pressure. When the electromagnetic relay coil is energized, it draws the movable common feed relay contact away from the fixed, normally closed relay contact and, holds it against the fixed, normally open relay contact. This action allows high current to flow to the A/C clutch field coil.

When the relay coil is de-energized, spring pressure returns the movable relay contact back against the fixed, normally closed contact point. The resistor or diode is connected in parallel with the relay coil, and helps to dissipate voltage spikes and electromagnetic interference that can be generated as the electromagnetic field of the relay coil collapses.

The A/C clutch relay terminals are connected to the vehicle electrical system through a receptacle in the integrated power module (IPM). The inputs and outputs of the A/C clutch relay include:

- The common feed terminal (30) receives a battery current input from a fuse in the IPM through a fused B(+) circuit at all times.

- The coil ground terminal (86) receives a ground input from the PCM/ECM through the A/C clutch relay control circuit only when the PCM/ECM electronically pulls the circuit to ground.
- The coil battery terminal (85) receives a battery current input from PTC 1 in the IPM through a fused ignition switch output (run) circuit only when the ignition switch is in the On position.
- The normally open terminal (87) provides a battery current output to the A/C clutch coil through the A/C clutch relay output circuit only when the A/C clutch relay coil is energized.
- The normally closed terminal (87A) is not connected to any circuit in this application, but provides a battery current output only when the A/C clutch relay coil is de-energized.

The A/C clutch relay cannot be repaired and, if faulty or damaged, it must be replaced. Refer to the appropriate wiring information for diagnosis and testing of the ISO-standard micro-relay and for complete HVAC wiring diagrams.

REMOVAL

1. Disconnect and isolate the negative battery cable (1).
2. Remove the cover from the integrated power module (IPM) (2).

NOTE: Refer to the fuse and relay layout map on the inside of the IPM cover for A/C clutch relay location.

3. Remove the A/C clutch relay from the IPM.

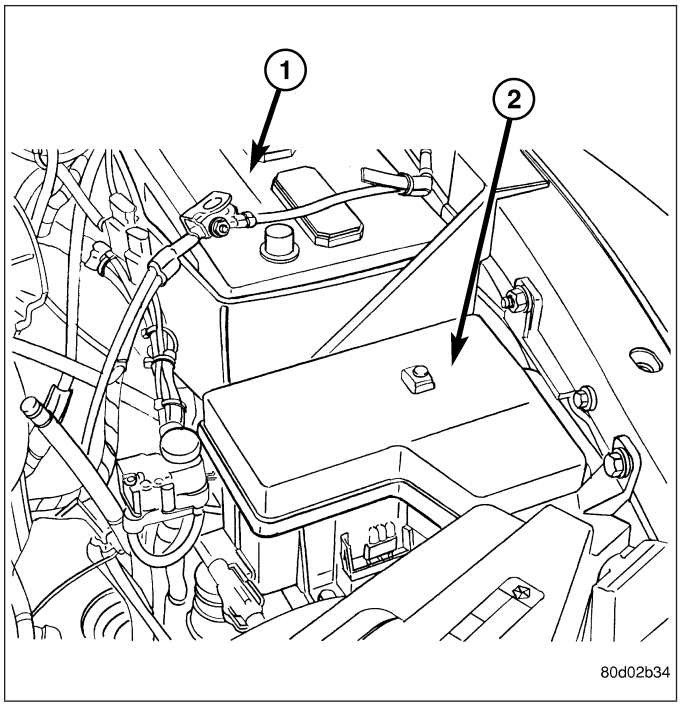

INSTALLATION

NOTE: Refer to the fuse and relay layout map on the inside of the IPM cover for A/C clutch relay location.

1. Position the A/C clutch relay into the receptacle of the integrated power module (IPM) (2).
2. Align the A/C clutch relay terminals with the terminal cavities in the IPM receptacle and push down firmly on the relay until the terminals are fully seated.
3. Install the cover onto the IPM.
4. Reconnect the negative battery cable (1).

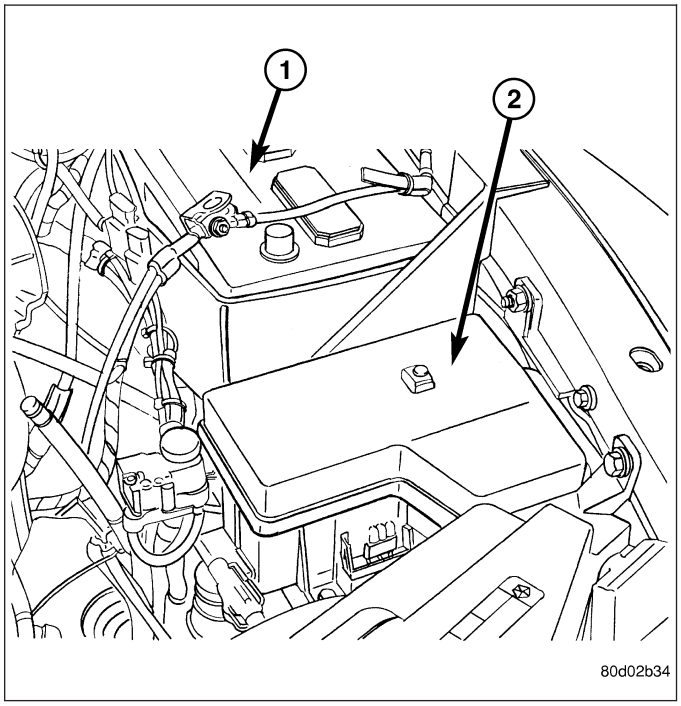

RESISTOR-BLOWER MOTOR

DESCRIPTION

The blower motor resistor is mounted to the bottom of the HVAC housing, directly behind the glove box. The blower motor resistor consists of a molded plastic mounting plate (1) with an integral wire connector receptacle (2). Concealed behind the mounting plate are coiled resistor wires contained within a ceramic heat sink (3).

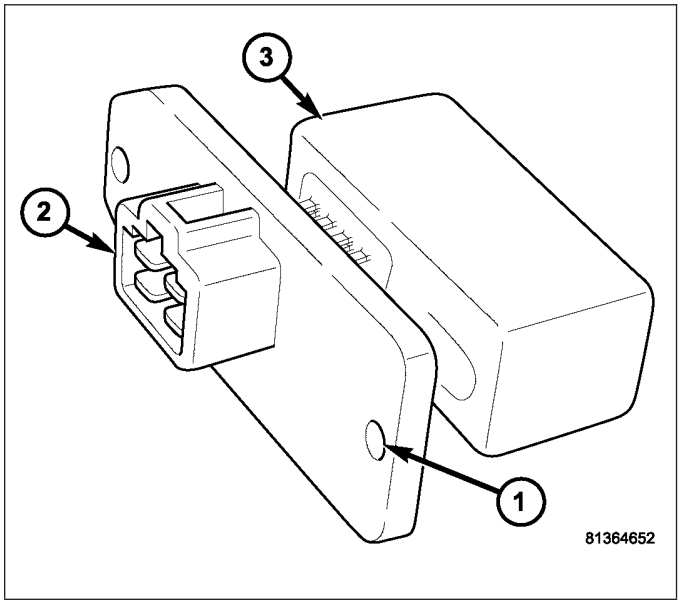

OPERATION

The blower motor resistor is connected to the vehicle electrical system through a dedicated wire lead and connector of the HVAC wire harness. The blower motor resistor has multiple resistor wires, each of which will reduce the current flow through the blower motor to change the blower motor speed.

The blower motor switch in the heating-A/C system directs the ground path for the blower motor through the correct resistor wire to obtain the selected speed. With the blower motor control in the lowest speed position, the ground path for the blower motor is applied through all of the resistor wires. Each higher speed selected with the blower

motor control applies the blower motor ground path through fewer of the resistor wires, increasing the blower motor speed.

The blower motor resistor cannot be adjusted or repaired and, if faulty or damaged, it must be replaced.

DIAGNOSIS AND TESTING

BLOWER MOTOR RESISTOR

WARNING: On vehicles equipped with airbags, disable the airbag system before attempting any steering wheel, steering column, or instrument panel component diagnosis or service. Disconnect and isolate the negative battery (ground) cable, then wait two minutes for the airbag system capacitor to discharge before performing further diagnosis or service. This is the only sure way to disable the airbag system. Failure to take the proper precautions could result in accidental airbag deployment and possible personal injury or death.

NOTE: For circuit descriptions and diagrams, refer to the appropriate wiring information. The wiring information includes wiring diagrams, proper wire and connector repair procedures, further details on wire harness routing and retention, as well as pin-out and location views for the various wire harness connectors, splices and grounds.

1. Disconnect and isolate the negative battery cable.
2. Disconnect the wire harness connector from the blower motor resistor (Refer to 24 - HEATING & AIR CONDITIONING/CONTROLS/RESISTOR-BLOWER MOTOR - REMOVAL).
3. Using an ohmmeter, check for continuity between all of the blower motor resistor terminals. In each case there should be continuity. If OK, repair the wire harness circuits between the blower motor switch and the blower motor resistor or blower motor as required. If not OK, replace the faulty blower motor resistor.

REMOVAL

WARNING: On vehicles equipped with airbags, disable the airbag system before attempting any steering wheel, steering column, or instrument panel component diagnosis or service. Disconnect and isolate the battery negative (ground) cable, then wait two minutes for the airbag system capacitor to discharge before performing further diagnosis or service. This is the only sure way to disable the airbag system. Failure to take the proper precautions could result in an accidental airbag deployment and possible personal injury or death.

WARNING: The blower motor resistor may get very hot during normal operation. If the blower motor was turned on prior to servicing the blower motor resistor, wait five minutes to allow the blower motor resistors to cool before performing diagnosis or service. Failure to take this precaution can result in possible personal injury.

1. Disconnect and isolate the negative battery cable.
2. Reach under the instrument panel near the blower motor (5) and disconnect the wire harness connector (2) from the blower motor resistor (4).
3. Remove the two screws (1) that secure the blower motor resistor to the HVAC housing (3).
4. Remove the blower motor resistor from the HVAC housing.

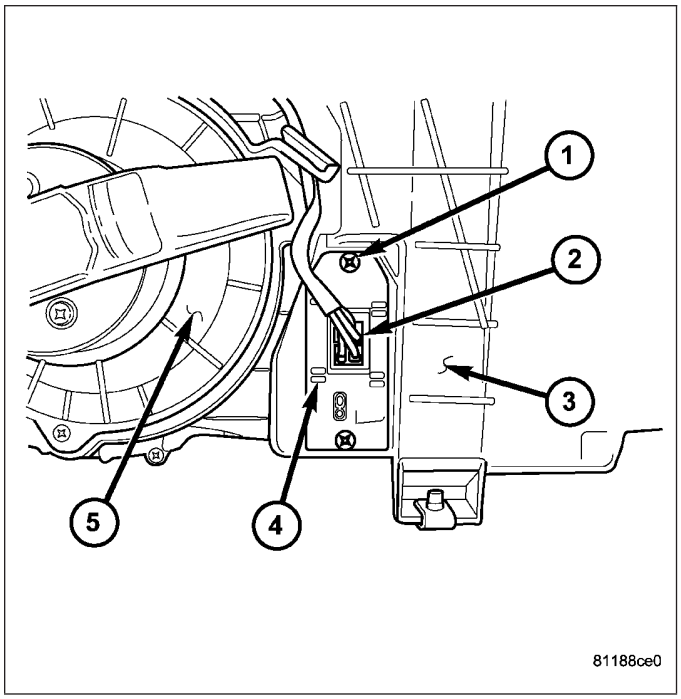

INSTALLATION

1. Position the blower motor resistor (4) into the opening of the HVAC housing (3) near the blower motor (5).
2. Install the two screws (1) that secure the blower motor resistor to the HVAC housing. Tighten the screws to 2.2 N·m (20 in. lbs.).
3. Connect the wire harness connector (2) to the blower motor resistor.
4. Reconnect the negative battery cable.

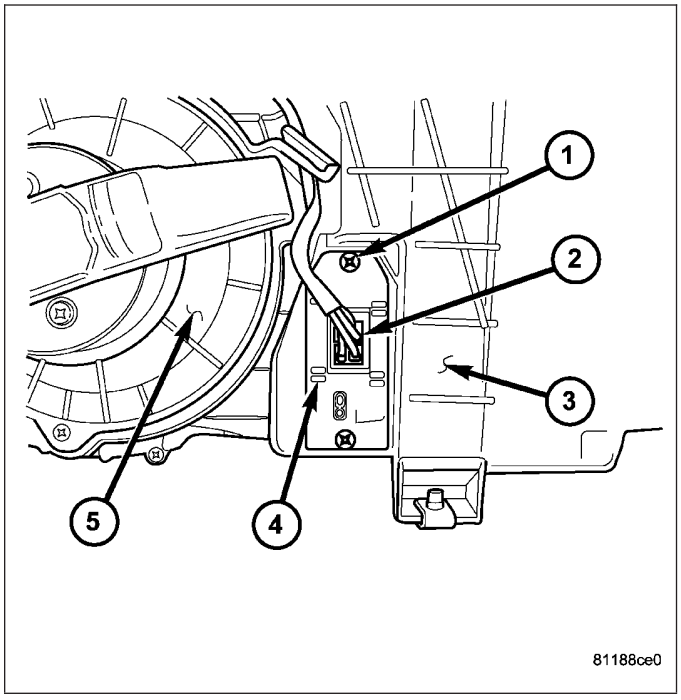

SENSOR-EVAPORATOR TEMPERATURE

DESCRIPTION

The evaporator temperature sensor is a two-wire temperature sensing element located at the coldest point on the face of the A/C evaporator. The probe (1) for evaporator temperature sensor is attached to the evaporator coil fins. The wire lead (2) for evaporator temperature sensor is routed through an opening at the back of the HVAC housing and the connector (3) is attached to the HVAC wire harness.

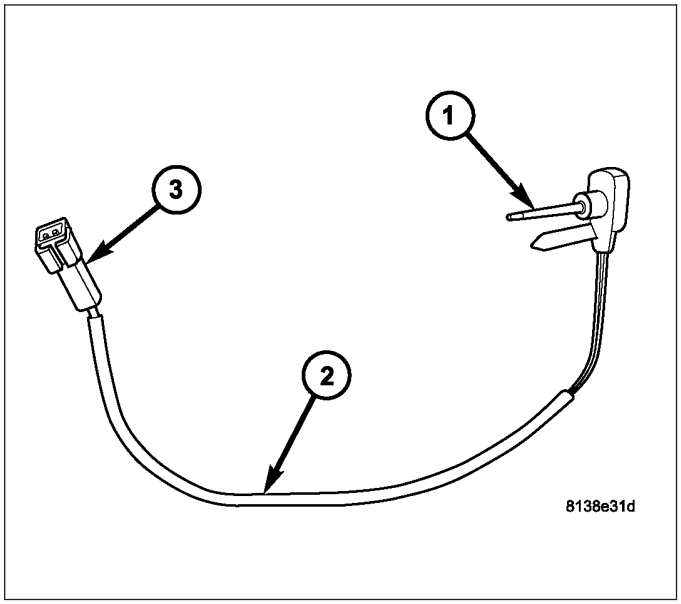

OPERATION

The evaporator temperature sensor monitors the surface temperature of A/C evaporator and supplies an input signal to the A/C-heater control. The A/C-heater control uses the evaporator temperature sensor input signal to optimize A/C system performance and to protect the A/C system from evaporator freezing. The evaporator temperature sensor will change its internal resistance in response to the temperatures it monitors and is connected to the A/C-heater control through sensor ground circuit and a 5-volt reference signal circuit. As the temperature of the A/C evaporator decreases, the internal resistance of the evaporator temperature sensor decreases.

The A/C-heater control uses the monitored voltage reading as an indication of evaporator temperature. The A/C-heater control is programmed to respond to this input by requesting the powertrain control module (PCM) or the engine control module (ECM) (depending on engine application) to cycle the A/C compressor clutch as necessary to optimize A/C system performance and to protect the A/C system from evaporator freezing.

The evaporator temperature sensor is diagnosed using a DRBIII® scan tool (Refer to 24 - HEATING & AIR CONDITIONING - DIAGNOSIS AND TESTING and to 24 - HVAC Electrical Diagnostics for more information).

The evaporator temperature sensor cannot be adjusted or repaired and, if faulty or damaged, it must be replaced.

REMOVAL

1. Remove the HVAC housing and place it on a workbench (Refer to 24 - HEATING & AIR CONDITIONING/DISTRIBUTION/HOUSING-HVAC - REMOVAL).
2. Remove the wire lead for the evaporator temperature sensor (2) from the retainer located on the HVAC housing (1) and disconnect the sensor connector from the HVAC wire harness (3).
3. Remove the lower half of the HVAC housing from the upper half of the HVAC housing to gain access to the A/C evaporator (Refer to 24 - HEATING & AIR CONDITIONING/DISTRIBUTION/HOUSING-HVAC - DISASSEMBLY).

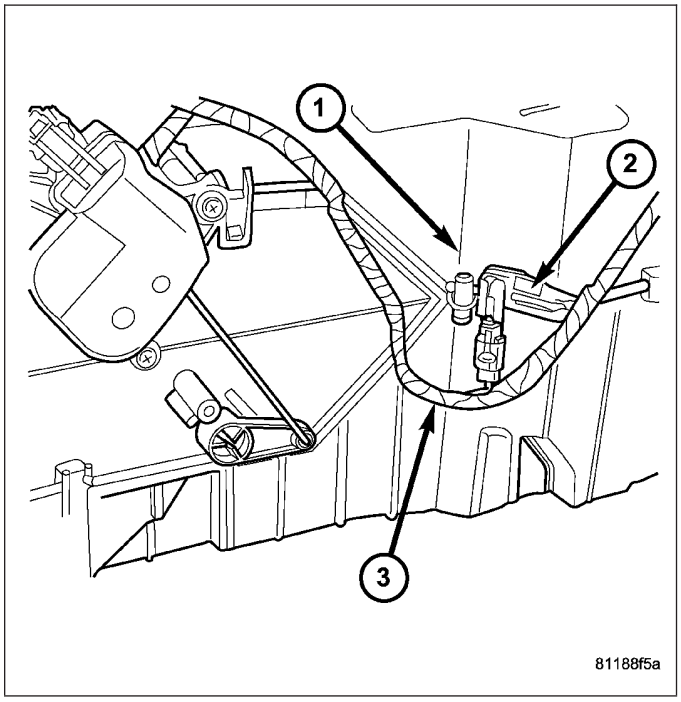

4. Carefully remove the probe of the evaporator temperature sensor (1) from the fins of the A/C evaporator (2).
5. Remove the wire lead of the evaporator temperature sensor (3) from the upper half of the HVAC housing (4).

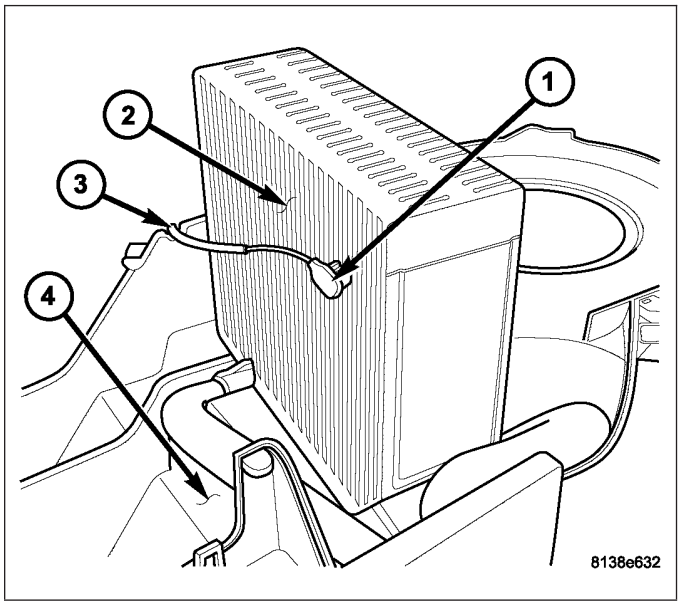

INSTALLATION

1. Install the probe of the evaporator temperature sensor (1) between the fins of the A/C evaporator (2).
2. Route the wire lead for the evaporator temperature sensor (3) into the opening located on the upper half of the HVAC housing (4).

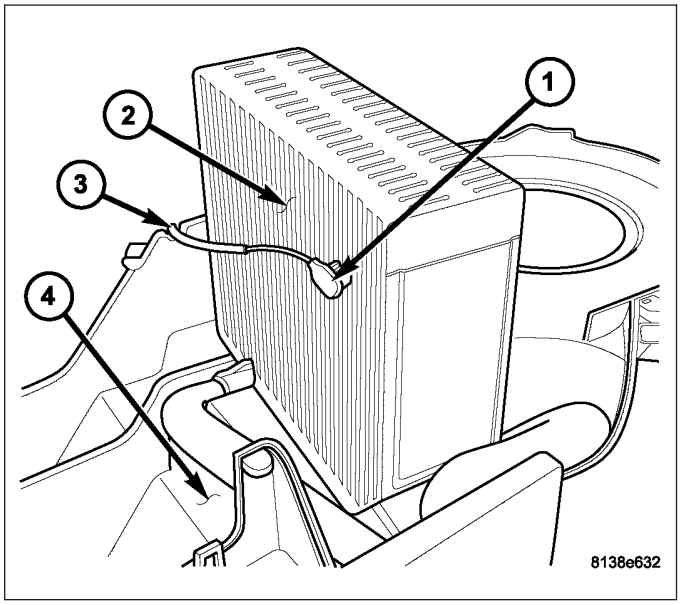

3. Assemble the HVAC housing (Refer to 24 - HEATING & AIR CONDITIONING/DISTRIBUTION/HOUSING-HVAC - ASSEMBLY).
4. Install the wire lead of the evaporator temperature sensor (2) to the retainer located on the HVAC housing (1) and connect the sensor connector to the HVAC wire harness (3).
5. Install the HVAC housing (Refer to 24 - HEATING & AIR CONDITIONING/DISTRIBUTION/HOUSING-HVAC - INSTALLATION).

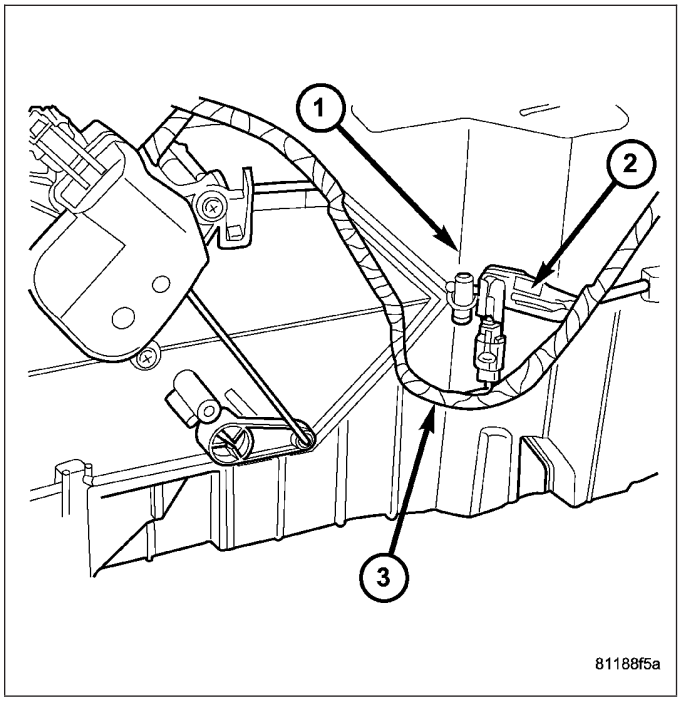

SWITCH-BLOWER MOTOR

DESCRIPTION

The blower motor is controlled by a rotary-type blower motor switch (6), mounted in the A/C-heater control (1). The switch allows the selection of one of four different blower motor speeds and includes an Off position.

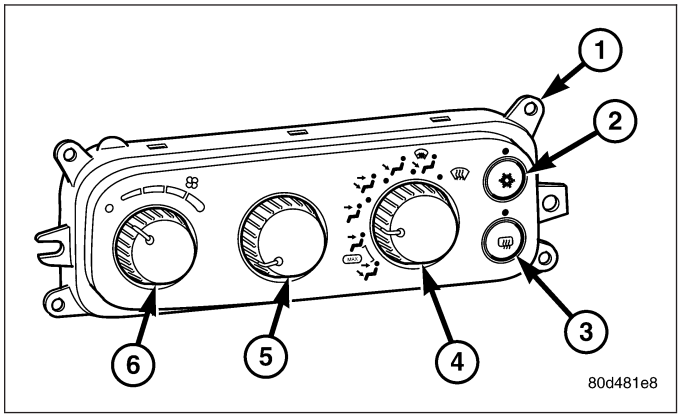

OPERATION

The blower motor switch provides a ground path through the A/C-heater control. The blower motor switch directs the ground path through the appropriate blower motor resistor wires, as required to achieve the selected blower motor speed.

The blower motor switch is diagnosed using a DRBIII® scan tool (Refer to 24 - HEATING & AIR CONDITIONING - DIAGNOSIS AND TESTING and to 24 - HVAC Electrical Diagnostics for more information).

The blower motor switch cannot be repaired and, if faulty or damaged, the entire A/C-heater control must be replaced (Refer to 24 - HEATING & AIR CONDITIONING/CONTROLS/CONTROL-A/C HEATER - REMOVAL).

TRANSDUCER-A/C PRESSURE

DESCRIPTION

The A/C pressure transducer (1) is a switch that is installed on a fitting located on the A/C discharge line. An internally threaded fitting on the A/C pressure transducer connects it to the externally threaded Schrader-type fitting on the A/C discharge line. A rubber O-ring seals the connection between the A/C pressure transducer and the discharge line fitting. The A/C pressure transducer is connected to the vehicle electrical system by a molded plastic connector with three terminals.

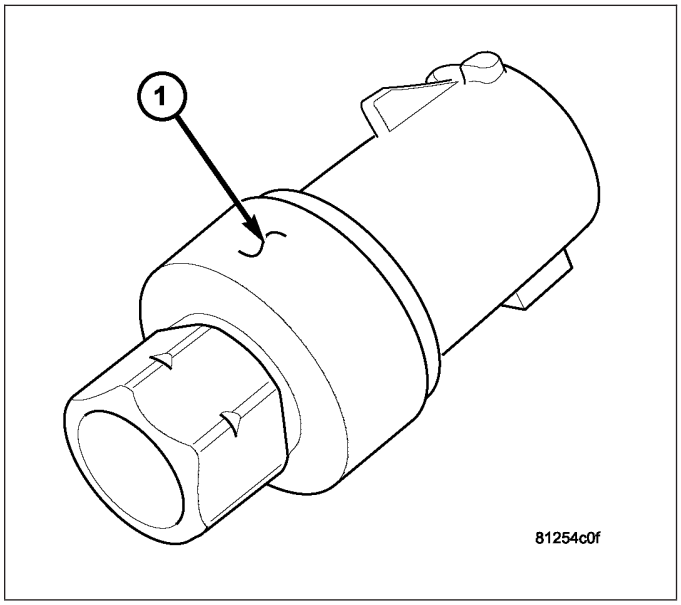

OPERATION

The A/C pressure transducer monitors the pressures in the high side of the refrigerant system through its connection to a fitting on the A/C discharge line. The A/C pressure transducer will change its internal resistance in response to the pressures it monitors. A Schrader-type valve in the A/C discharge line fitting permits the A/C pressure transducer to be removed or installed without disturbing the refrigerant in the A/C system.

The A/C pressure transducer will change its internal resistance in response to the pressures it monitors. The powertrain control module (PCM) or the engine control module (ECM) (depending on engine application) provides a five volt reference signal and a sensor ground to the A/C pressure transducer, then monitors the output voltage of the transducer on a sensor return circuit to determine refrigerant pressure. The PCM/ECM is programmed to respond to this and other sensor inputs by controlling the operation of the A/C compressor clutch and the radiator cooling fan to help optimize A/C system performance and to protect the system components from damage. The PCM will disengage the A/C compressor clutch when high side pressure rises above 3172 kPa (460 psi) and re-engage the clutch when high side pressure drops below 1999 kPa (290 psi). The A/C pressure transducer will also disengage the A/C compressor clutch if the high side pressure drops below 193 kPa (28 psi) and will re-engage the clutch when the high side pressure rises above 234 kPa (34 psi). If the refrigerant pressure rises above 1655 kPa (240 psi), the PCM will actuate the cooling fan. The A/C pressure transducer signal to the PCM/ECM will also prevent the A/C compressor clutch from engaging when ambient temperatures are below about 10° C (50° F) due to the pressure/temperature relationship of the refrigerant.The A/C pressure transducer input to the PCM/ECM will also prevent the A/C compressor clutch from engaging when ambient temperatures are below about 10° C (50° F) due to the pressure/temperature relationship of the refrigerant.

The A/C pressure transducer is diagnosed using a DRBIII® scan tool. Refer to 9 - Engine Electrical Diagnostics for more information.

The A/C pressure transducer cannot be adjusted or repaired and, if faulty or damaged, it must be replaced.

REMOVAL

NOTE: It is not necessary to discharge the refrigerant system to replace the A/C pressure transducer.

1. Disconnect and isolate the negative battery cable.
2. Disconnect the wire harness connector (1) from the A/C pressure transducer (2) located on the A/C discharge line (3).
3. Remove the A/C pressure transducer from the fitting on the A/C discharge line and remove and discard the O-ring seal.

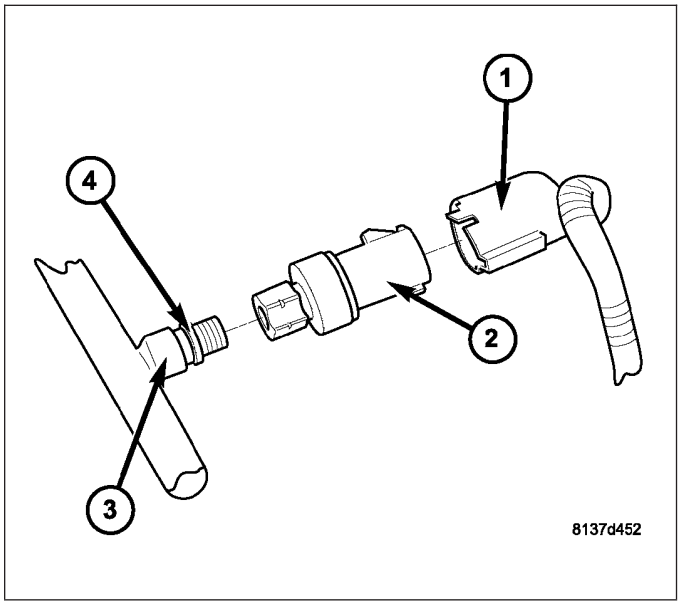

INSTALLATION

NOTE: Use only the specified O-ring as it is made of special material for R-134a. Use only refrigerant oil of the type required for the A/C compressor.

1. Lubricate a new rubber O-ring seal (4) with clean refrigerant oil and install it onto the discharge line fitting (3).
2. Install the A/C pressure transducer (2) onto the A/C discharge line. Tighten the A/C pressure transducer securely.
3. Connect the wire harness connector (1) to the A/C pressure transducer.
4. Reconnect the negative battery cable.

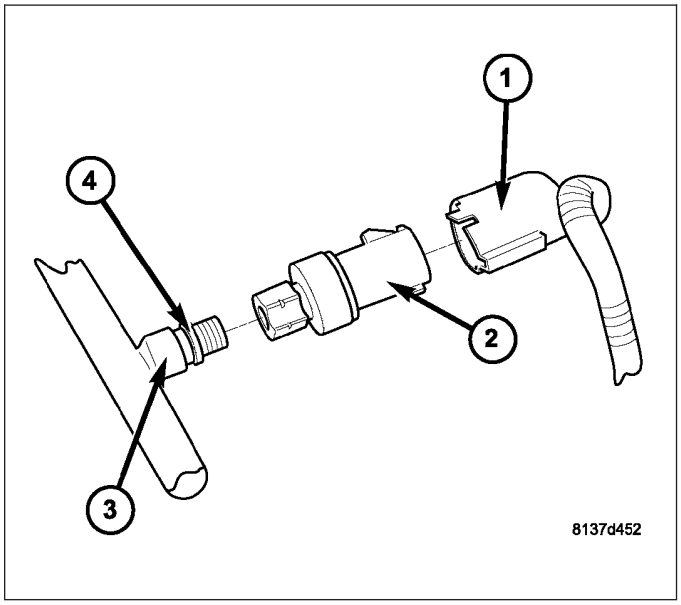

DISTRIBUTION

TABLE OF CONTENTS

page

DUCT-DEFROSTER
REMOVAL 237
INSTALLATION 238
DUCT-FLOOR DISTRIBUTION
REMOVAL 239
INSTALLATION 240
DUCT-INSTRUMENT PANEL
REMOVAL 240
INSTALLATION 241
DUCT-INSTRUMENT PANEL DEMISTER
REMOVAL 241
INSTALLATION 242
HOUSING-HVAC
DESCRIPTION 243
REMOVAL
HVAC HOUSING ASSEMBLY 244
AIR INLET HOUSING 245
DISASSEMBLY
HVAC HOUSING 246
AIR INLET HOUSING 252
ASSEMBLY
HVAC HOUSING 254
AIR INLET HOUSING 260
INSTALLATION
HVAC HOUSING ASSEMBLY 261
AIR INLET HOUSING 262
MOTOR-BLOWER
DESCRIPTION 263
OPERATION 263
DIAGNOSIS AND TESTING
BLOWER MOTOR 264
REMOVAL 265
INSTALLATION 265
OUTLETS-AIR
DESCRIPTION 266
REMOVAL 266
INSTALLATION 267

DUCT-DEFROSTER

REMOVAL

WARNING: On vehicles equipped with airbags, disable the airbag system before attempting any steering wheel, steering column, or instrument panel component diagnosis or service. Disconnect and isolate the battery negative (ground) cable, then wait two minutes for the airbag system capacitor to discharge before performing further diagnosis or service. This is the only sure way to disable the airbag system. Failure to take the proper precautions could result in accidental airbag deployment and possible personal injury or death.

NOTE: Take the proper precautions to protect the front face of the instrument panel from cosmetic damage.

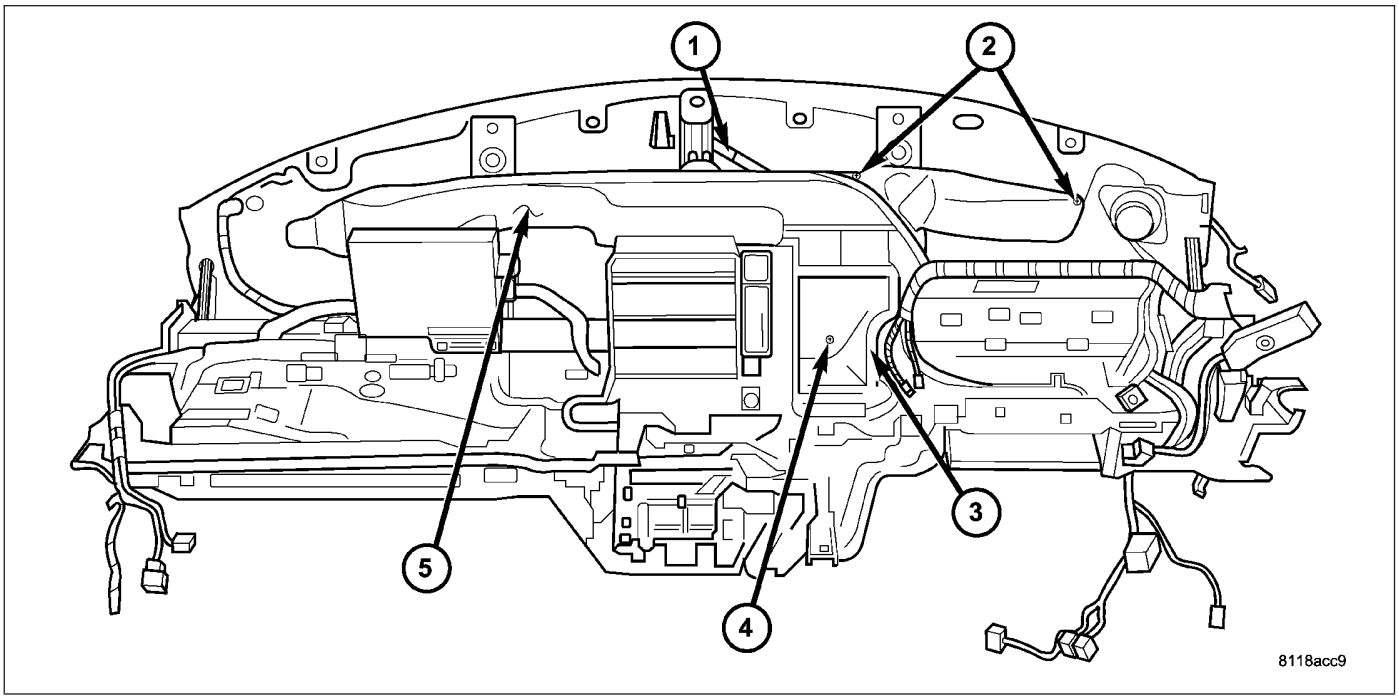

1. Remove the instrument panel and place it on a workbench (Refer to 23 - BODY/INSTRUMENT PANEL/INSTRUMENT PANEL ASSEMBLY - REMOVAL).
2. Disconnect the center radio speaker wire harness connector (1) and position it the wire harness lead out of the way.
3. Remove the screw (4) that secures the defroster duct adapter (3) to the instrument panel support.
4. Remove the defroster duct adapter from the defroster duct (5).
5. Remove the six screws (2) that secure the defroster duct to the instrument panel.
6. Remove the defroster duct from the instrument panel.

INSTALLATION

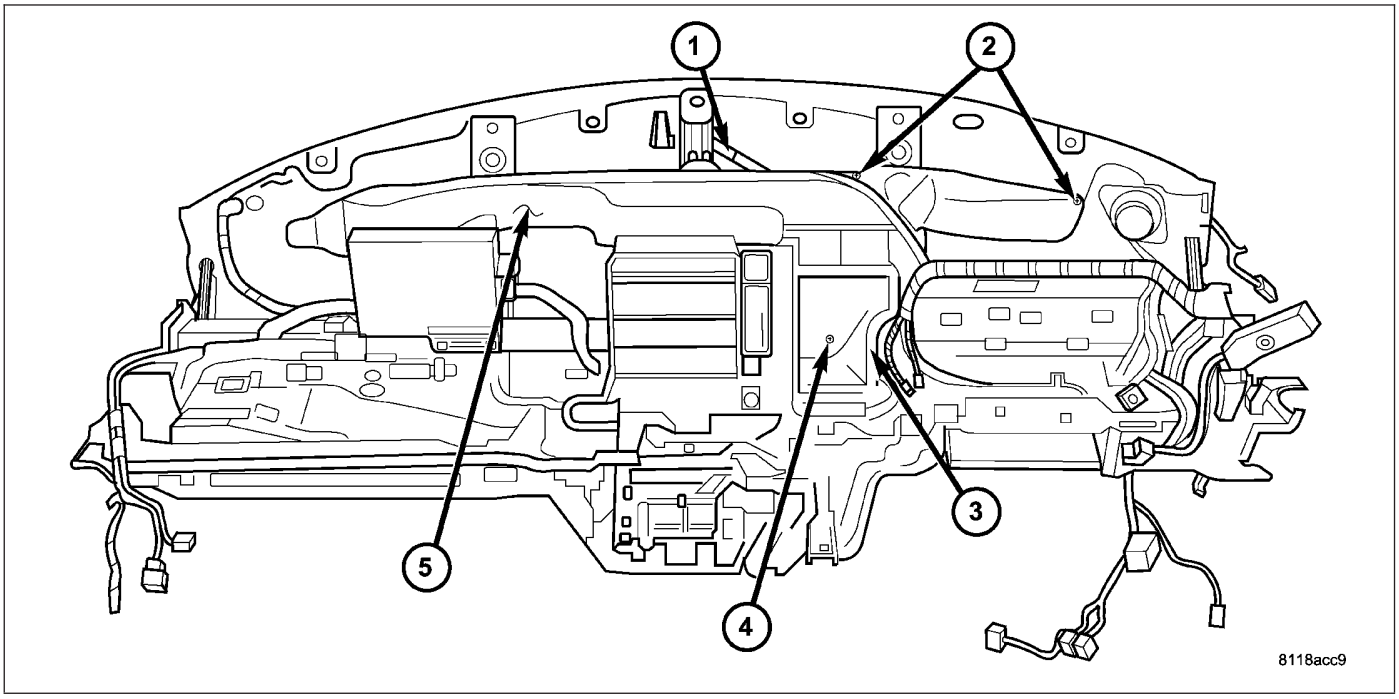

1. Position the defroster duct (5) into the instrument panel.

2. Install the six screws (2) that secure the defroster duct to the instrument panel. Tighten the screws to 2.2 N·m (20 in. lbs.).
3. Install the defroster duct adapter (3) onto the defroster duct.
4. Install the screw (4) that secures the defroster duct adapter to the instrument panel support. Tighten the screw to 2.2 N·m (20 in. lbs.).
5. Connect the center radio speaker wire harness connector (1) to the speaker.
6. Install the instrument panel (Refer to 23 - BODY/INSTRUMENT PANEL/INSTRUMENT PANEL ASSEMBLY - INSTALLATION).

DUCT-FLOOR DISTRIBUTION

REMOVAL

WARNING: On vehicles equipped with airbags, disable the airbag system before attempting any steering wheel, steering column, or instrument panel component diagnosis or service. Disconnect and isolate the battery negative (ground) cable, then wait two minutes for the airbag system capacitor to discharge before performing further diagnosis or service. This is the only sure way to disable the airbag system. Failure to take the proper precautions could result in an accidental airbag deployment and possible personal injury or death.

NOTE: Take the proper precautions to protect the front face of the instrument panel from cosmetic damage.

1. Remove the HVAC housing from the vehicle (Refer to 24 - HEATING & AIR CONDITIONING/DISTRIBUTION/HOUSING-HVAC - REMOVAL).
2. Remove the screws (3) that secure the floor distribution duct (1) to the bottom of the HVAC housing (2).
3. Remove the floor distribution duct from the HVAC housing.

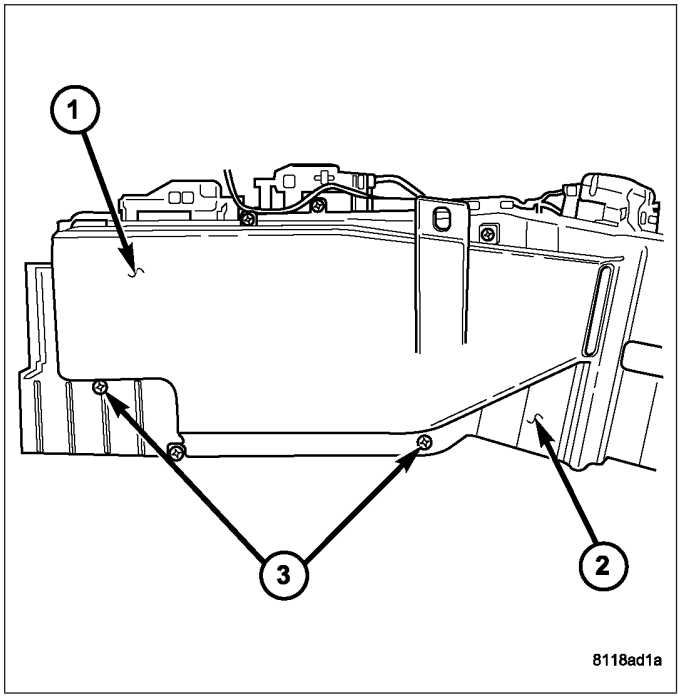

INSTALLATION

1. Position the floor distribution duct (1) onto the bottom of the HVAC housing (2).
2. Install the screws (3) that secure the floor distribution duct to the HVAC housing. Tighten the screws to 2.2 N·m (20 in. lbs.).
3. Install the HVAC housing (Refer to 24 - HEATING & AIR CONDITIONING/DISTRIBUTION/HOUSING-HVAC - INSTALLATION).

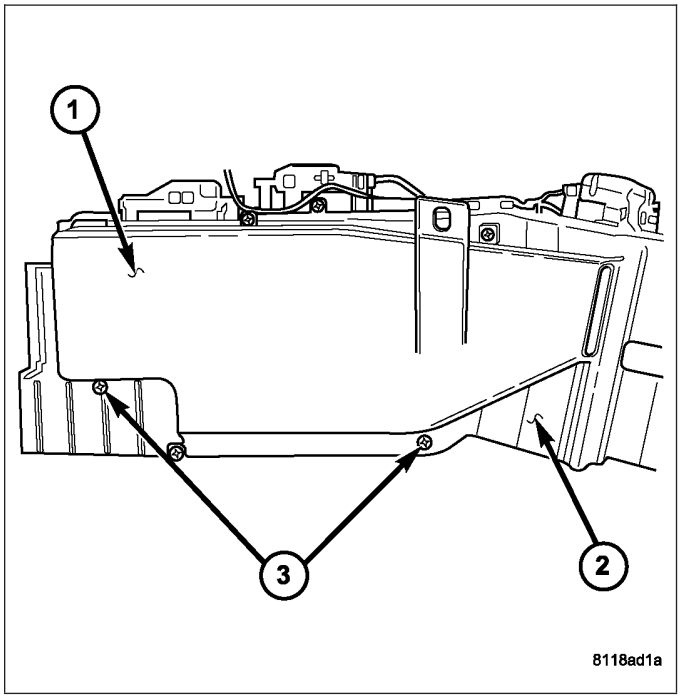

DUCT-INSTRUMENT PANEL

REMOVAL

WARNING: On vehicles equipped with airbags, disable the airbag system before attempting any steering wheel, steering column, or instrument panel component diagnosis or service. Disconnect and isolate the battery negative (ground) cable, then wait two minutes for the airbag system capacitor to discharge before performing further diagnosis or service. This is the only sure way to disable the airbag system. Failure to take the proper precautions could result in an accidental airbag deployment and possible personal injury or death.

NOTE: Take the proper precautions to protect the front face of the instrument panel from cosmetic damage.

1. Remove the instrument panel and place it on a workbench (Refer to 23 - BODY/INSTRUMENT PANEL/INSTRUMENT PANEL ASSEMBLY - REMOVAL).
2. Remove the defroster ducts (Refer to 24 - HEATING & AIR CONDITIONING/DISTRIBUTION/DUCT-DEFROSTER - REMOVAL).
3. Remove the two screws that secure the center distribution duct to the instrument panel support and remove the duct.
4. Remove the right side instrument panel duct adapter (2).
5. Remove the right and left side intermediate demister ducts (3 and 4).
6. Remove the left side instrument panel duct adapter (6).

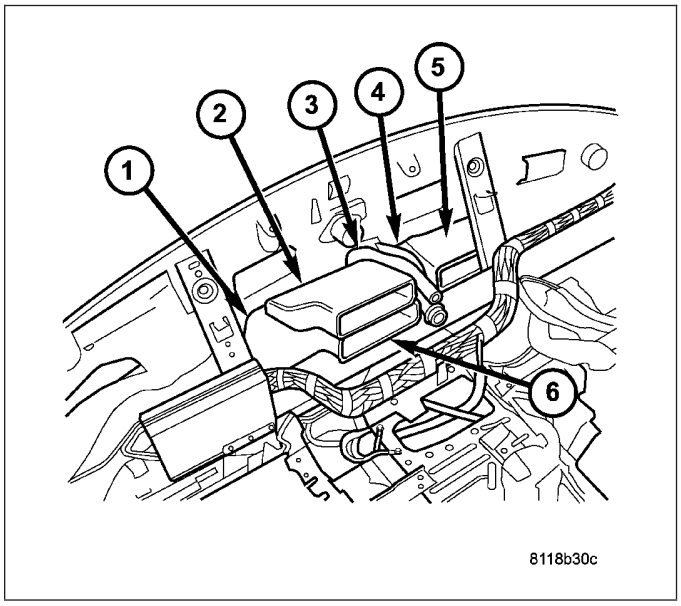

7. Remove the instrument panel cover (Refer to 23 - BODY/INSTRUMENT PANEL/INSTRUMENT PANEL TOP COVER - REMOVAL).
8. Remove the screws that secure the right and left side instrument panel ducts (1 and 5) to the instrument panel.
9. Remove the instrument panel ducts from the instrument panel.

INSTALLATION

1. Position the right and left side instrument panel ducts (1 and 5) onto the instrument panel.
2. Install the screws that secure the right and left side instrument panel ducts to the instrument panel. Tighten the screws to 2.2 N·m (20 in. lbs.).
3. Install the instrument panel top cover (Refer to 23 - BODY/INSTRUMENT PANEL/INSTRUMENT PANEL TOP COVER - INSTALLATION).
4. Install the left side instrument panel duct adapter (6).
5. Install the right and left side intermediate demister ducts (3 and 4).
6. Install the right side instrument panel duct adapter (2).
7. Position the center distribution duct to the instrument panel support.
8. Install the two screws that secure the center distribution duct to the instrument panel support. Tighten the screws to 2.2 N·m (20 in. lbs.).

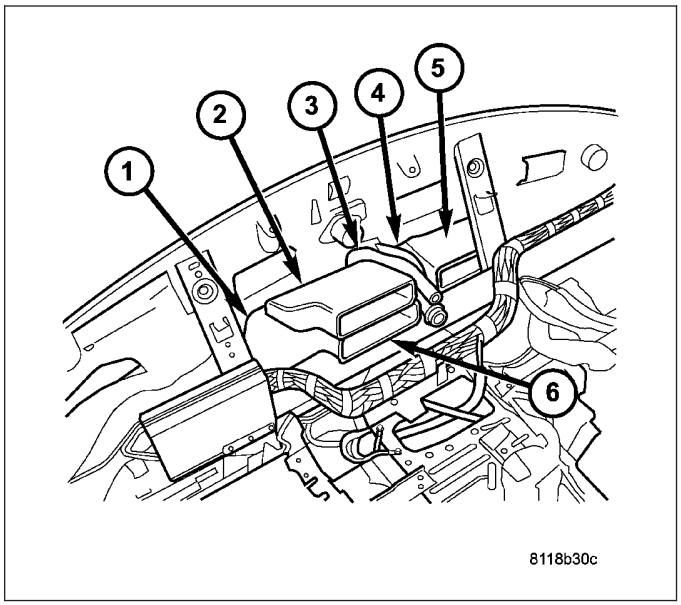

9. Install the defroster ducts (Refer to 24 - HEATING & AIR CONDITIONING/DISTRIBUTION/DUCT-DEFROSTER - INSTALLATION).
10. Install the instrument panel (Refer to 23 - BODY/INSTRUMENT PANEL/INSTRUMENT PANEL ASSEMBLY - INSTALLATION).

DUCT-INSTRUMENT PANEL DEMISTER

REMOVAL

WARNING: On vehicles equipped with airbags, disable the airbag system before attempting any steering wheel, steering column, or instrument panel component diagnosis or service. Disconnect and isolate the battery negative (ground) cable, then wait two minutes for the airbag system capacitor to discharge before performing further diagnosis or service. This is the only sure way to disable the airbag system. Failure to take the proper precautions could result in accidental airbag deployment and possible personal injury or death.

NOTE: Take the proper precautions to protect the front face of the instrument panel from cosmetic damage.

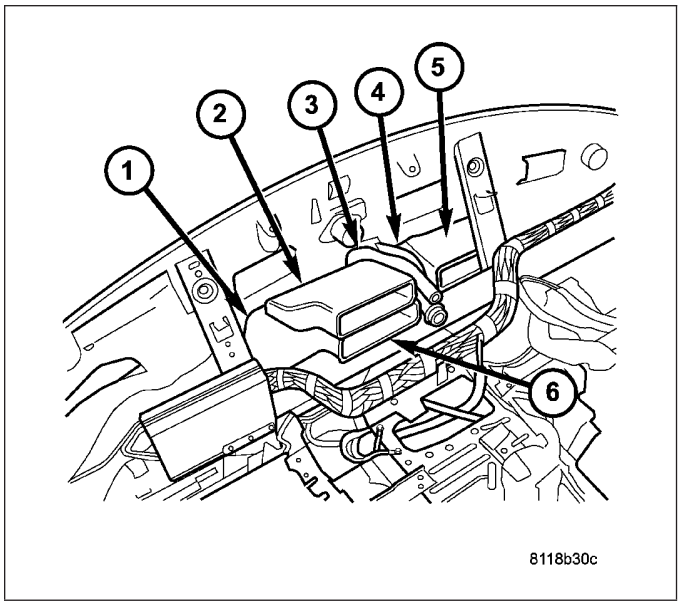

1. Remove the instrument panel and place it on a workbench (Refer to 23 - BODY/INSTRUMENT PANEL/INSTRUMENT PANEL ASSEMBLY - REMOVAL).
2. Remove the defroster ducts (Refer to 24 - HEATING & AIR CONDITIONING/DISTRIBUTION/DUCT-DEFROSTER - REMOVAL).
3. Remove the two screws that secure the center distribution duct to the instrument panel support and remove the duct.
4. Remove the right side instrument panel duct adapter (2).
5. Remove the right and left side intermediate demister ducts (3 and 4).
6. Remove the left side instrument panel duct adapter (6).
7. Remove the instrument panel cover (Refer to 23 - BODY/INSTRUMENT PANEL/INSTRUMENT PANEL TOP COVER - REMOVAL).
8. Remove the screws that secure the right and left side instrument panel ducts (1 and 5) to the instrument panel and remove the ducts.
9. Remove the screws that secure the left and right side demister ducts to the instrument panel and remove the ducts.

INSTALLATION

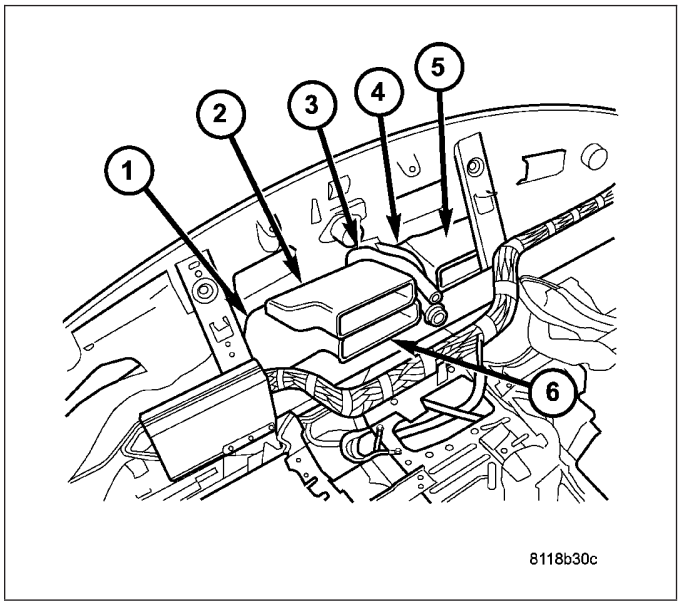

1. Position the right and left side demister ducts into the instrument panel.
2. Install the screws that secure the right and left side demister ducts to the instrument panel. Tighten the screws to 2.2 N·m (20 in. lbs.).
3. Position the right and left side instrument panel ducts (1 and 5) to the instrument panel.
4. Install the screws that secure the right and left side instrument panel ducts to the instrument panel. Tighten the screws to 2.2 N·m (20 in. lbs.).
5. Install the instrument panel top cover (Refer to 23 - BODY/INSTRUMENT PANEL/INSTRUMENT PANEL TOP COVER - INSTALLATION).
6. Install the left side instrument panel duct adapter (6).
7. Install the right and left side intermediate demister ducts (3 and 4).
8. Install the right side instrument panel duct adapter (2).
9. Position the center distribution duct to the instrument panel support.
10. Install the two screws that secure the center distribution duct to the instrument panel support. Tighten the screws to 2.2 N·m (20 in. lbs.).
11. Install the defroster ducts (Refer to 24 - HEATING & AIR CONDITIONING/DISTRIBUTION/DUCT-DEFROSTER - INSTALLATION).
12. Install the instrument panel (Refer to 23 - BODY/INSTRUMENT PANEL/INSTRUMENT PANEL ASSEMBLY - INSTALLATION).

HOUSING-HVAC

DESCRIPTION

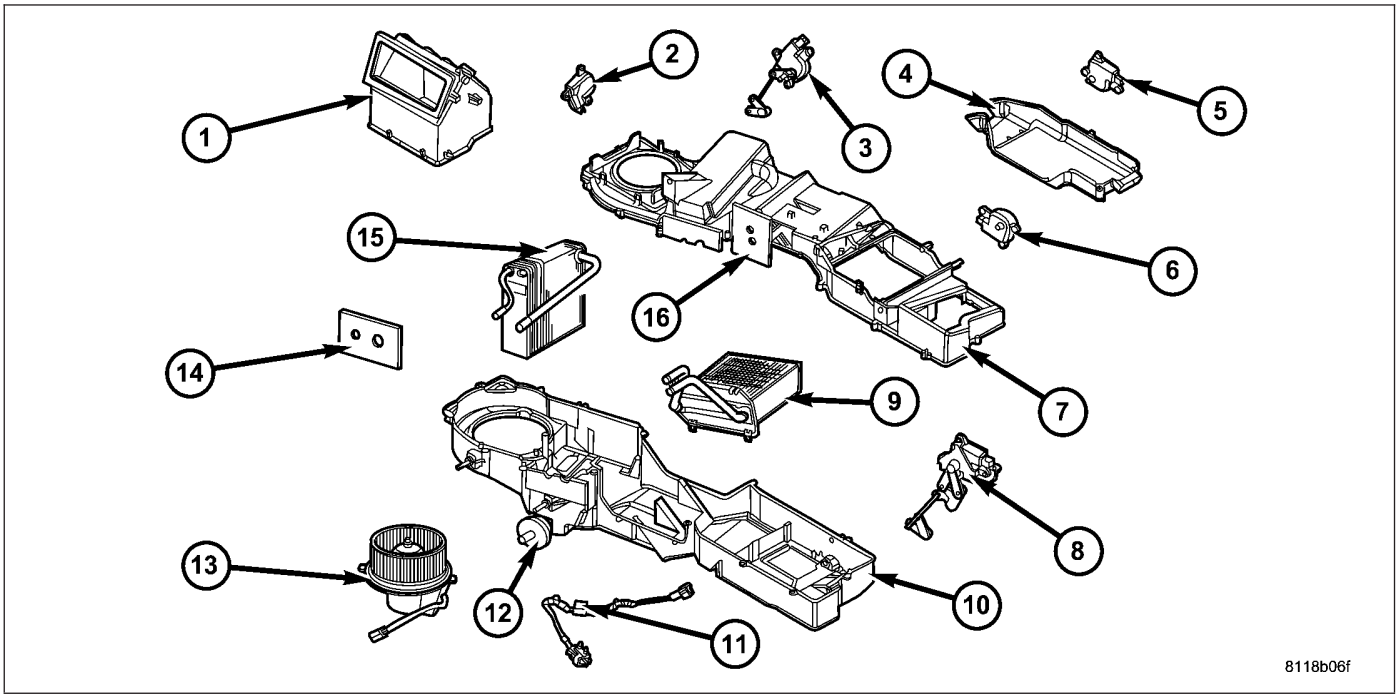

All models are equipped with a common HVAC housing assembly that combines A/C and heating capabilities into a single unit mounted within the passenger compartment. The HVAC housing assembly consists of the following:

- **HVAC housing** — The HVAC housing consists of an upper housing (7) and a lower housing (10) that are attached together by screws and is mounted to the dash panel behind the instrument panel. The HVAC housing contains the heater core (9), A/C evaporator (15), blend-air and mode-air doors, and has mounting provisions for the air-door actuators (3, 5, 6 and 8), floor distribution duct (4), blower motor (13), blower motor resistor, foam seals (12, 14 and 16) and the HVAC wire harness (11).
- **Air inlet housing** — The air inlet housing (1) is mounted to the right end of the HVAC housing and contains the recirculation-air door and has mounting provisions for the recirculation door actuator (2).

The heating-A/C system is a blend-air type system. The blend-air doors control the amount of conditioned air that is allowed to flow through, or around, the heater core. The dual zone heating A/C system uses two blend door actuators while the single zone system uses only one blend door actuator.

The A/C system is designed for the use of a non-CFC, R-134a refrigerant and uses an A/C evaporator to cool and dehumidify the incoming air prior to blending it with the heated air. A temperature control determines the discharge air temperature by operating the blend door actuator(s), which moves the blend-air door(s). This allows an almost immediate control of the output air temperature of the system. The mode door actuator operates the mode-air doors which direct the flow of the conditioned air out the various air outlets, depending on the mode selected. The recirculation door actuator operates the recirculation-air door which closes off the fresh air intake and recirculates the air already inside the vehicle. The electric door actuators are connected to the vehicle electrical system by the HVAC wire harness. The blower motor controls the velocity of air flowing through the HVAC housing assembly by spinning the blower wheel within the HVAC housings at the selected speed by use of the blower motor resistor.

The HVAC housing must be removed from the vehicle and disassembled for service of the heater core, A/C evaporator, evaporator temperature sensor, blend-air and mode-air doors. The air inlet housing must be removed from HVAC housing and disassembled for service of the recirculation-air door.

REMOVAL

HVAC HOUSING ASSEMBLY

WARNING: Refer to the applicable warnings and cautions for this system before performing the following operation (Refer to 24 - HEATING & AIR CONDITIONING/PLUMBING - WARNINGS) and (Refer to 24 - HEATING & AIR CONDITIONING/PLUMBING - CAUTIONS). Failure to follow the warnings and cautions could result in possible personal injury or death.

WARNING: On vehicles equipped with airbags, disable the airbag system before attempting any steering wheel, steering column, or instrument panel component diagnosis or service. Disconnect and isolate the negative battery (ground) cable, then wait two minutes for the airbag system capacitor to discharge before performing further diagnosis or service. This is the only sure way to disable the airbag system. Failure to take the proper precautions could result in accidental airbag deployment and possible personal injury or death.

NOTE: The HVAC housing must be removed from the vehicle and disassembled for service of the A/C evaporator, evaporator temperature sensor, mode-air and blend-air doors.

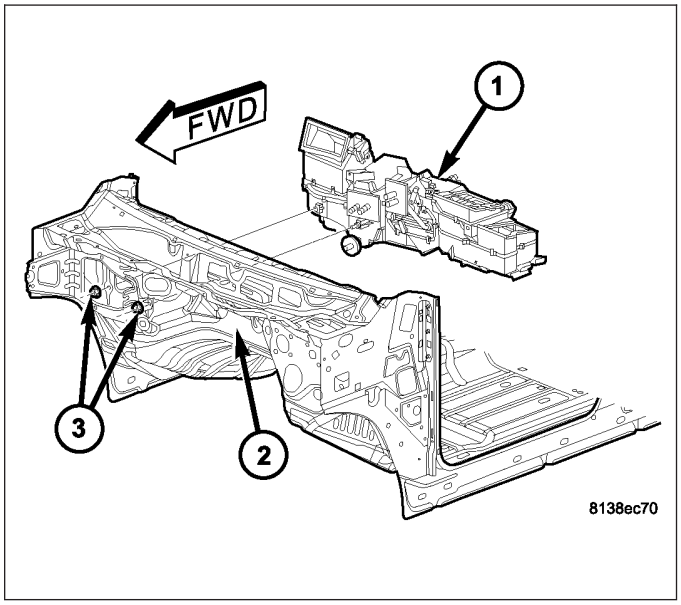

1. Recover the refrigerant from the refrigerant system (Refer to 24 - HEATING & AIR CONDITIONING/ PLUMBING - STANDARD PROCEDURE - REFRIGERANT SYSTEM RECOVERY).
2. Drain the engine cooling system (Refer to 7 - COOLING - STANDARD PROCEDURE - COOLING SYSTEM DRAIN).
3. Disconnect and isolate the negative battery cable.
4. Disconnect the A/C liquid line and the A/C accumulator from the A/C evaporator (Refer to 24 - HEATING & AIR CONDITIONING/PLUMBING/LINE-A/C LIQUID - REMOVAL) and (Refer to 24 - HEATING & AIR CONDITIONING/PLUMBING/ACCUMULATOR-A/C - REMOVAL).
5. Disconnect the heater hoses from the heater core tubes.
6. Remove the powertrain control module (PCM) to gain access to the two nuts (3) that secure the HVAC housing (1) to the engine compartment side of the dash panel (2) and remove the nuts (Refer to 8 - ELECTRICAL/ELECTRONIC CONTROL MODULES/POWERTRAIN CONTROL MODULE - REMOVAL).

7. Remove the instrument panel from the passenger compartment (Refer to 23 - BODY/INSTRUMENT PANEL ASSEMBLY - REMOVAL).
8. Remove the bolt (5) that secures the HVAC housing (4) to the floor bracket (6).
9. Remove the two nuts (3 and 7) that secure the HVAC housing to the passenger compartment side of the dash panel (1).
10. Pull the HVAC housing assembly rearward and remove the housing assembly from the passenger compartment.
11. If required, remove the fresh air inlet (2) from the dash panel (1).

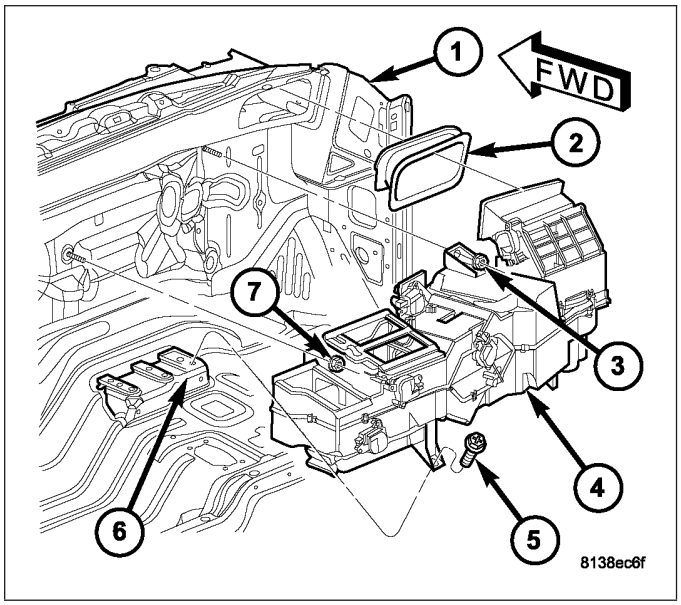

AIR INLET HOUSING

WARNING: Refer to the applicable warnings and cautions for this system before performing the following operation (Refer to 24 - HEATING & AIR CONDITIONING/PLUMBING - WARNINGS) and (Refer to 24 - HEATING & AIR CONDITIONING/PLUMBING - CAUTIONS). Failure to follow the warnings and cautions could result in possible personal injury or death.

WARNING: On vehicles equipped with airbags, disable the airbag system before attempting any steering wheel, steering column, or instrument panel component diagnosis or service. Disconnect and isolate the negative battery (ground) cable, then wait two minutes for the airbag system capacitor to discharge before performing further diagnosis or service. This is the only sure way to disable the airbag system. Failure to take the proper precautions could result in accidental airbag deployment and possible personal injury or death.

NOTE: The air inlet housing must be removed from HVAC housing and disassembled for service of the recirculation-air door.

1. Remove the HVAC housing assembly (Refer to 24 - HEATING & AIR CONDITIONING/DISTRIBUTION/HOUSING-HVAC - HVAC HOUSING ASSEMBLY - REMOVAL).
2. Remove the recirculation door actuator (1) from the air inlet housing (2) and disconnect the HVAC wire harness (4) from the actuator.
3. Remove the two screws (3) that secure the rear of the air inlet housing to the top of the HVAC housing

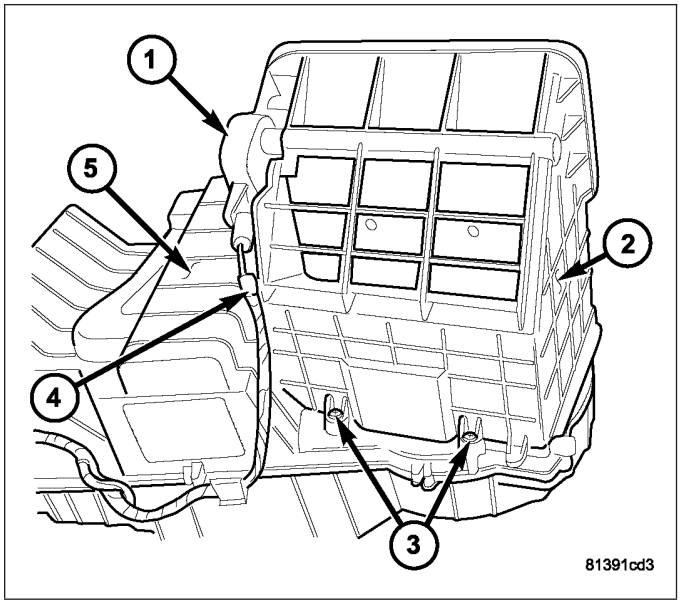

(5).

4. Release the two retaining clips (1) that secure the front of the air inlet housing (2) to the top of the HVAC housing (3) and remove the air inlet housing.

NOTE: If the foam seal on the air inlet housing is deformed or damaged, it must be replaced.

5. If required, disassemble the air inlet housing (Refer to 24 - HEATING & AIR CONDITIONING/DISTRIBUTION/HOUSING-HVAC ASSEMBLY - AIR INLET HOUSING - DISASSEMBLY).

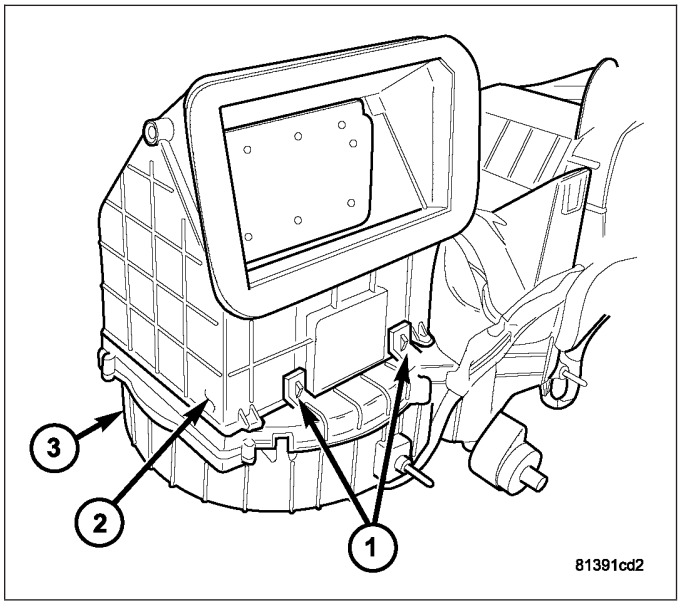

DISASSEMBLY

HVAC HOUSING

NOTE: The HVAC housing must be removed from the vehicle and disassembled for service of the A/C evaporator, evaporator temperature sensor, mode-air and blend-air doors.

1. Remove the HVAC housing assembly and place it on a workbench (Refer to 24 - HEATING & AIR CONDITIONING/DISTRIBUTION /HOUSING-HVAC - HVAC HOUSING ASSEMBLY - REMOVAL).
2. Disconnect the HVAC wire harness connectors from the mode door actuators (1), blend door actuators (2) and the recirculation door actuator (3).
3. Remove the screws that secure the mode door actuators and the blend door actuators to the HVAC housing (5) and remove the actuators.
4. Remove the screws that secure the recirculation door actuator to the air inlet housing (4) and remove the actuator.

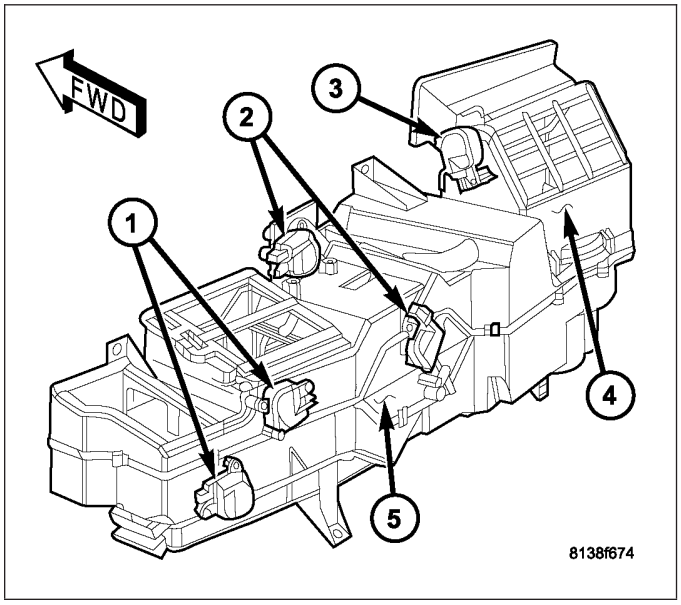

5. Disconnect the wire harness connectors (1 and 3) from the blower motor resistor (7) and the blower motor (2).
6. Remove the screws (4) that secure the blower motor to the HVAC housing (5) and remove the blower motor.
7. Remove the screws (6) that secure the blower motor resistor to the HVAC housing and remove the resistor.

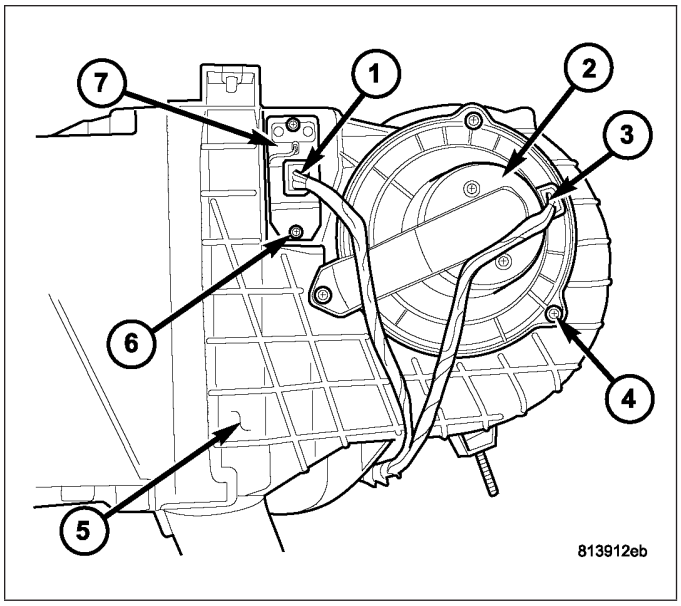

8. Disconnect the HVAC wire harness (1) from the evaporator temperature sensor (2) and remove the HVAC wiring harness from the HVAC housing (4).
9. Remove the air inlet housing (3) from the HVAC housing (Refer to 24 - HEATING & AIR CONDITIONING/DISTRIBUTION/HOUSING-HVAC - AIR INLET HOUSING - REMOVAL).

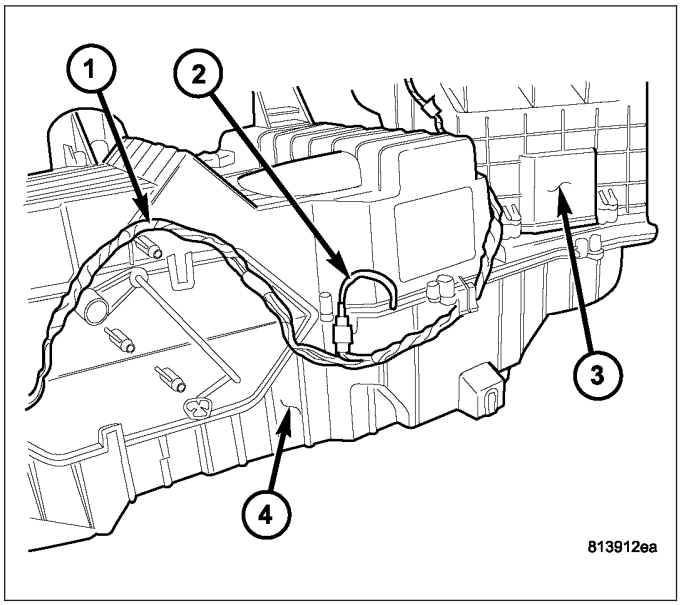

10. Remove the two screws (1) that secure the panel/floor door outlet (2) to the top of the HVAC housing (4).

NOTE: If the foam seal on the panel/floor door outlet is deformed or damaged, it must be replaced.

11. Release the two retaining tabs (3) that secure the panel/floor door outlet to the front of the HVAC housing and remove the door outlet.

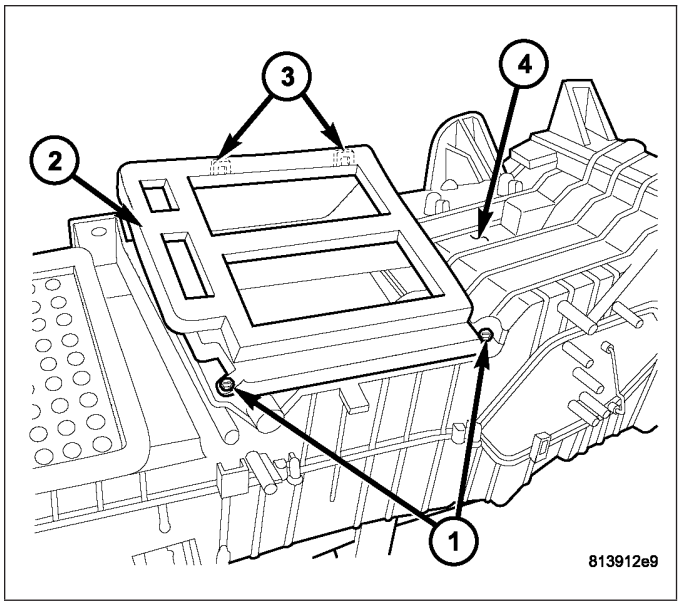

12. Remove the three screws (1) that secure the panel/floor door assembly (2) to the top of the HVAC housing (3) and remove the door assembly.

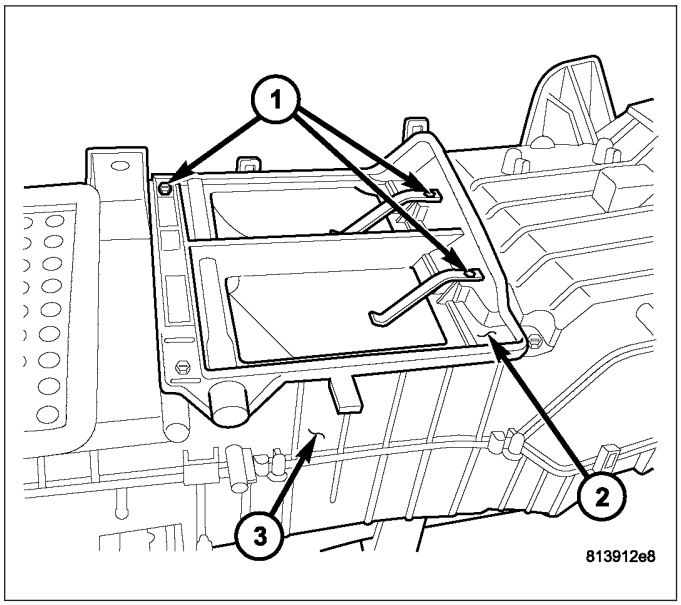

13. To remove the panel/floor-air doors (1) from the panel/floor door plate (2), first carefully release the retaining tabs of actuator coupler (3) located on the inside surface of the door plate and pull the actuator coupler out of the pivot shaft of the panel/floor-air doors.

NOTE: If the seals on the air doors is deformed or damaged, the air doors must be replaced.

14. Remove the panel/floor-air doors from the panel/floor door plate.

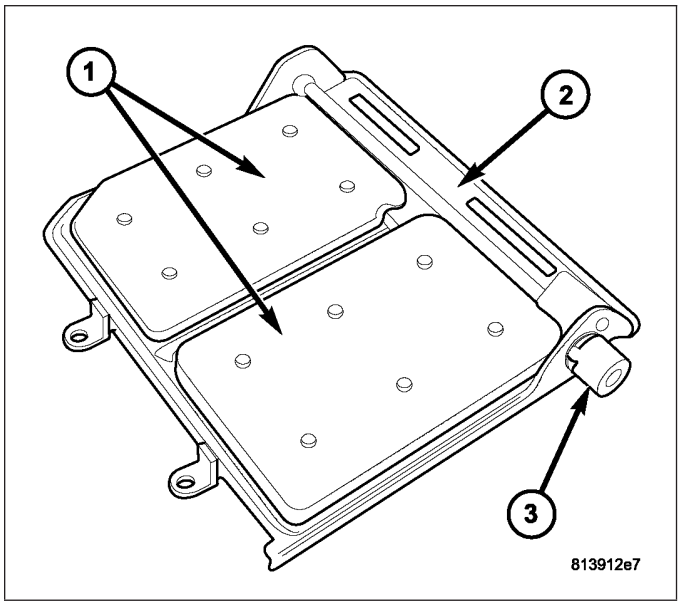

NOTE: If the foam seal for the heater core tubes is deformed or damaged, the seal must be replaced.

15. Remove the foam seal from the heater core tubes.
16. If equipped with the dual zone heating-A/C system, remove the linkage rod (4) to gain access to the heater core (3).
17. Remove the two screws (1) that secure the heater core tube bracket (2) to the HVAC housing and remove the bracket.
18. Carefully pull the heater core out of the front of the HVAC housing.
19. Inspect all heater core foam seals and replace as required.

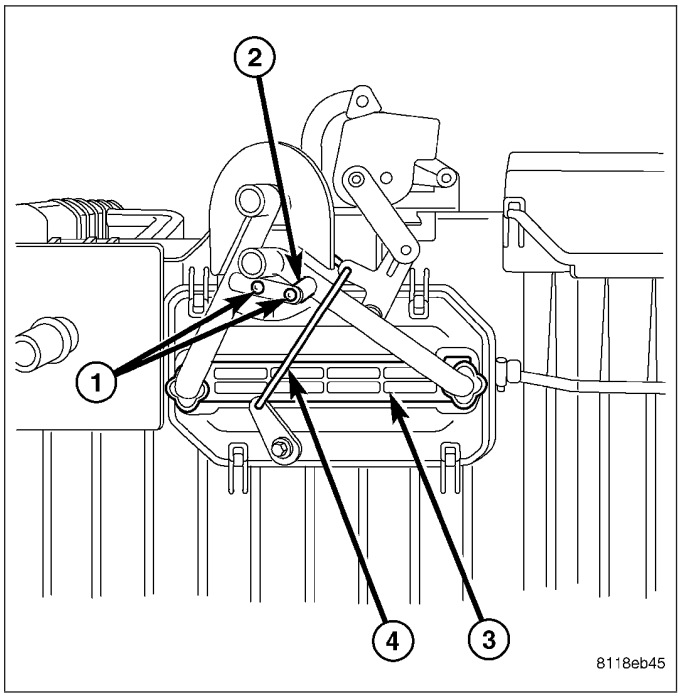

20. Remove the screws (3) that secure the floor distribution duct (1) to the bottom of the HVAC housing (2).
21. Remove the floor distribution duct from the HVAC housing.

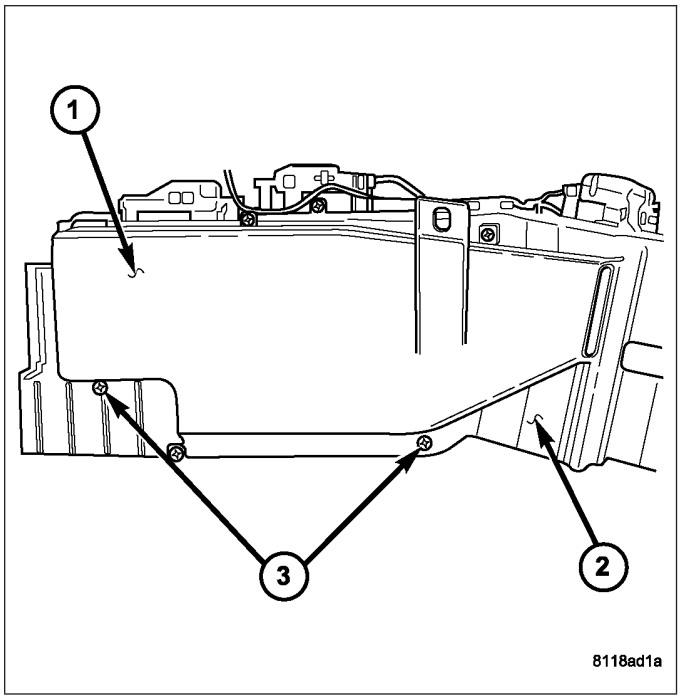

22. Carefully disconnect the linkage rod (1) from the two blend-air door levers (2) located on the back of the HVAC housing (3).

NOTE: If the foam seal for the evaporator condensate drain tube is deformed or damaged, the seal must be replaced.

23. Remove the foam seal (4) from the evaporator condensate drain tube (5).
24. Remove the fifteen screws (6) that secure the upper and lower HVAC housing halves together and separate the housing halves.

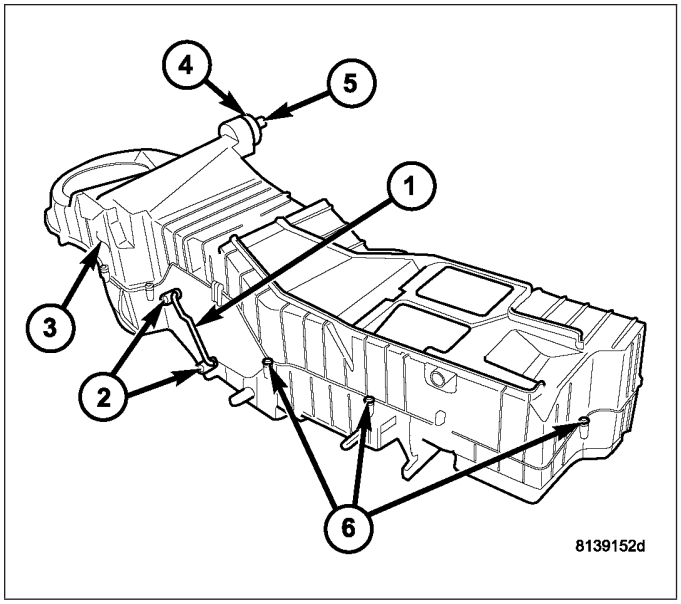

25. Release the three retaining tabs (1) that secure the lower blend door assembly (2) to the lower half of the HVAC housing (3) and remove the door assembly.
26. Release the three retaining tabs that secure the upper blend door assembly to the upper half of the HVAC housing and remove the door assembly.

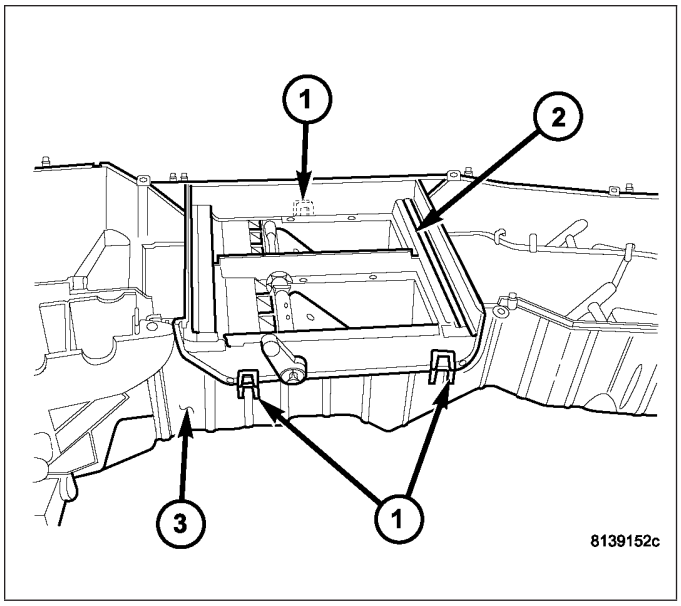

27. To remove the blend-air doors (1) from each blend door plate (2), first carefully release the retaining tabs of actuator coupler (3) located on the inside surface of the door plate being serviced and pull the actuator coupler out of the pivot shaft of the blend-air doors.

NOTE: If the seals on the air doors is deformed or damaged, the air doors must be replaced.

28. Remove the blend-air doors from the blend door plates.

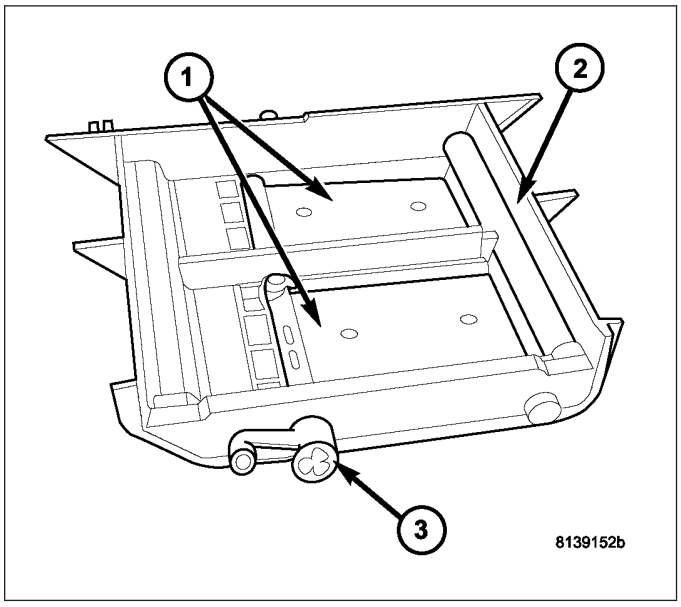

29. Remove the defroster-air doors (1) from the lower half of the HVAC housing (2) by carefully release the retaining tabs of actuator coupler (3) located on the inside surface of the housing and pull the actuator coupler out of the pivot shaft of the defroster-air doors.

NOTE: If the seals on the air doors is deformed or damaged, the air doors must be replaced.

30. Remove the defroster-air doors from the HVAC housing.

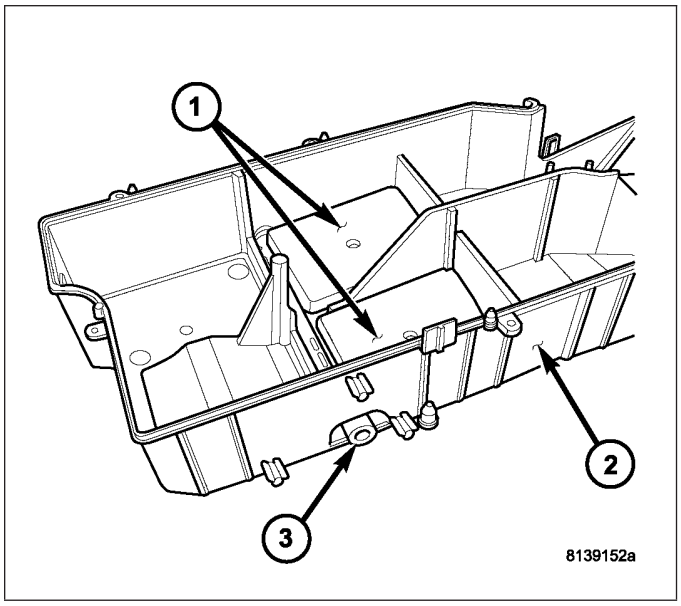

31. Remove the insulator (1) from the A/C evaporator (5).
32. Remove the probe of the evaporator temperature sensor (2) from the fins of the A/C evaporator.

NOTE: If the foam seal for the A/C evaporator tubes is deformed or damaged, the seal must be replaced.

33. Remove the foam seal (3) from the tubes of the A/C evaporator.

NOTE: If the foam seal around the A/C evaporator is deformed or damaged, the seal must be replaced.

34. Carefully lift the A/C evaporator out of the upper half of the HVAC housing (4).

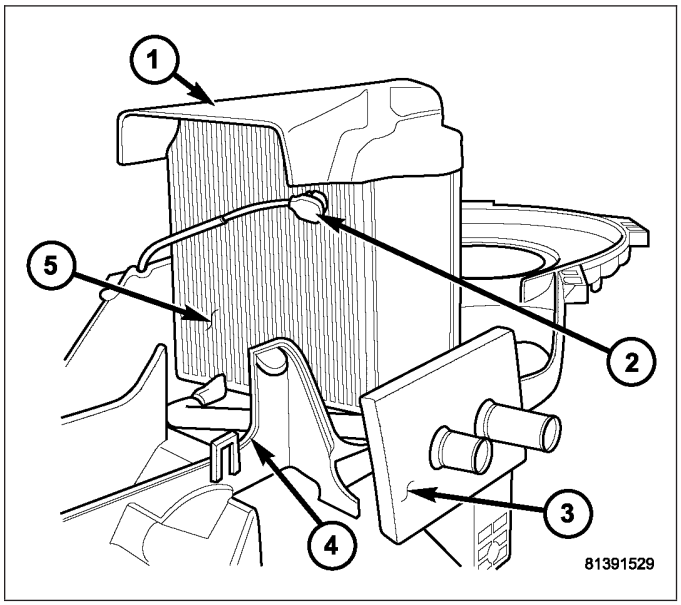

AIR INLET HOUSING

NOTE: The air inlet housing must be removed from HVAC housing and disassembled for service of the recirculation-air door.

1. Remove the air inlet housing (1) from the HVAC housing and place it on a workbench (Refer to 24 - HEATING & AIR CONDITIONING/DISTRIBUTION/ HOUSING-HVAC - AIR INLET HOUSING - REMOVAL)
2. Remove the two foam insulators (2) from the air inlet housing.

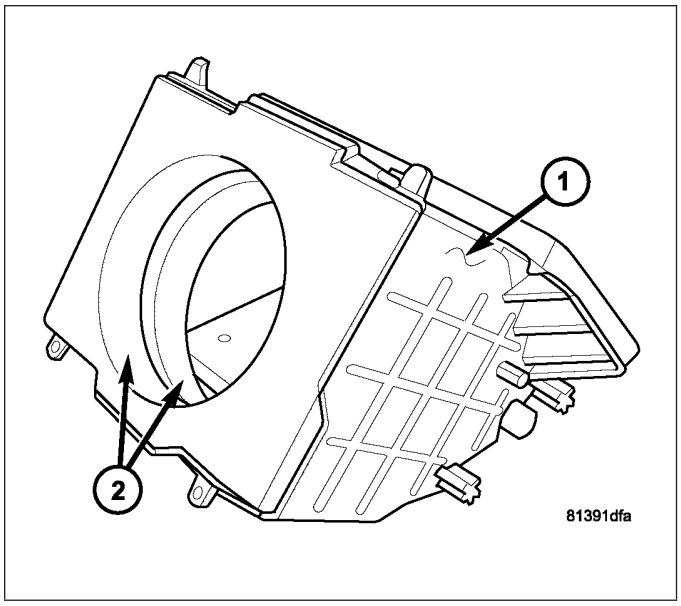

3. To remove the recirculation-air door (1) from the air inlet housing (2), first carefully release the retaining tabs of actuator coupler (3) located on the inside surface of the air inlet housing and pull the actuator coupler out of the pivot shaft of the recirculation-air door.

NOTE: If the seals on the air door is deformed or damaged, the air door must be replaced.

4. Remove the recirculation-air door from the air inlet housing.

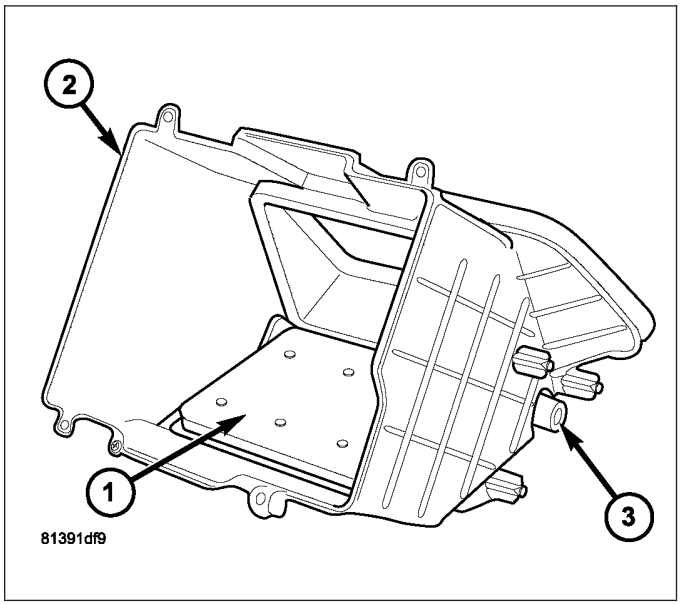

ASSEMBLY

HVAC HOUSING

1. Carefully install the A/C evaporator (2) into the upper half of the HVAC housing (4).
2. Install the foam seal (3) onto the tubes of the A/C evaporator.
3. Install the probe of the evaporator temperature sensor (2) between the fins of the A/C evaporator.
4. Install the insulator (1) onto the bottom of the A/C evaporator.

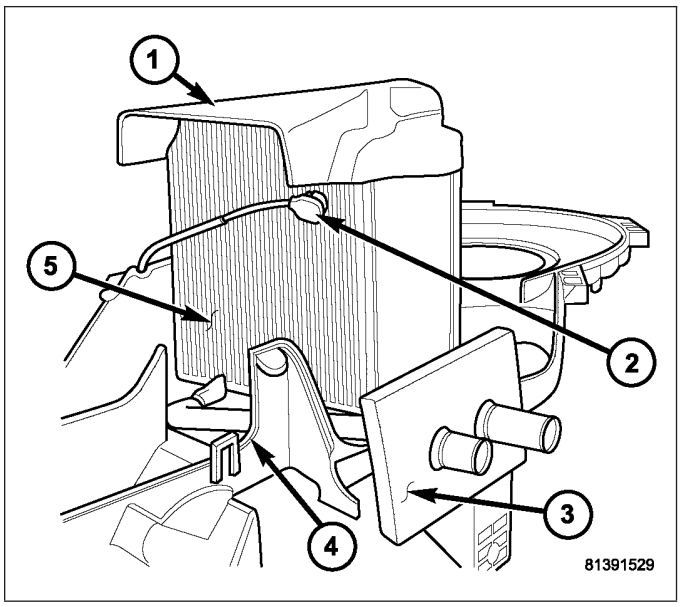

5. Install the defroster-air doors (1) into the lower half of the HVAC housing (2).
6. Align the actuator coupler (3) with the defroster-air door pivot shaft and install the coupler into side of the HVAC housing. Be sure to install the coupler with the coupler arm located between the two stop tabs on the HVAC housing.

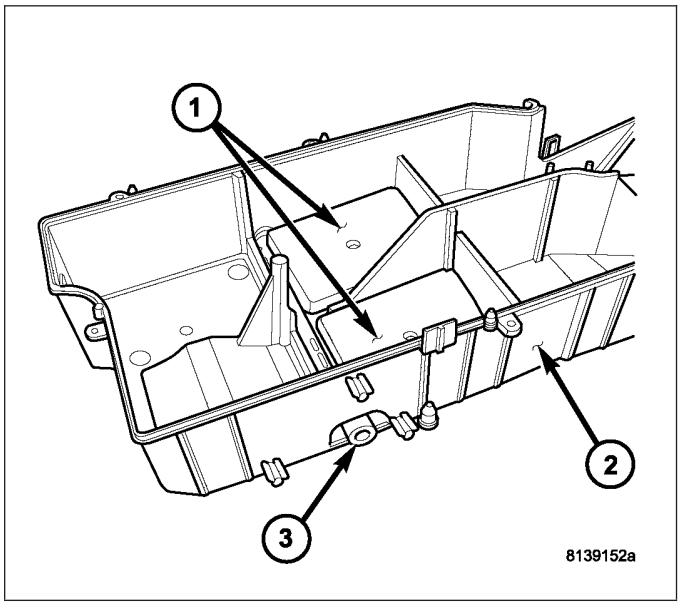

7. Install the blend-air doors (1) into each of the two blend door plates (2).
8. Align the actuator coupler (3) with each blend-air door pivot shaft and install the coupler into side of each blend door plate. Be sure to install each coupler with the coupler arm located between the two stop tabs on each blend door plate.

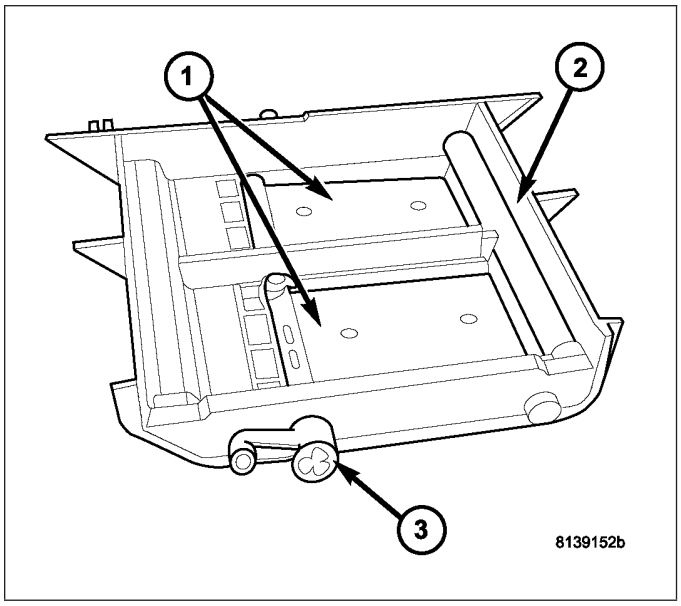

9. Position the lower blend door assembly (2) into the lower half of the HVAC housing (3) and fully engage the three retaining tabs (1).
10. Position the upper blend door assembly into the upper half of the HVAC housing and fully engage the three retaining tabs.

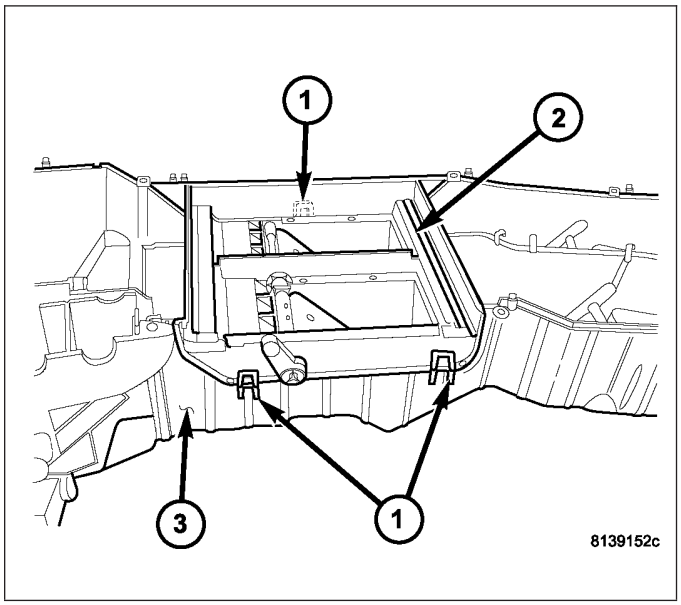

NOTE: Route the wire lead for the evaporator temperature sensor into the opening located on the upper half of the HVAC housing prior to installing the lower half of the HVAC housing.

11. Position the two halves of the HVAC housing together (3).
12. Install the fifteen screws (6) that secure the two housing halves together. Tighten the screws to 2.2 N·m (20 in. lbs.).
13. Install the foam seal (4) onto the evaporator condensate drain tube (5).
14. Connect the linkage rod (1) to the two blend-air door levers (2) located on the back of the HVAC housing.

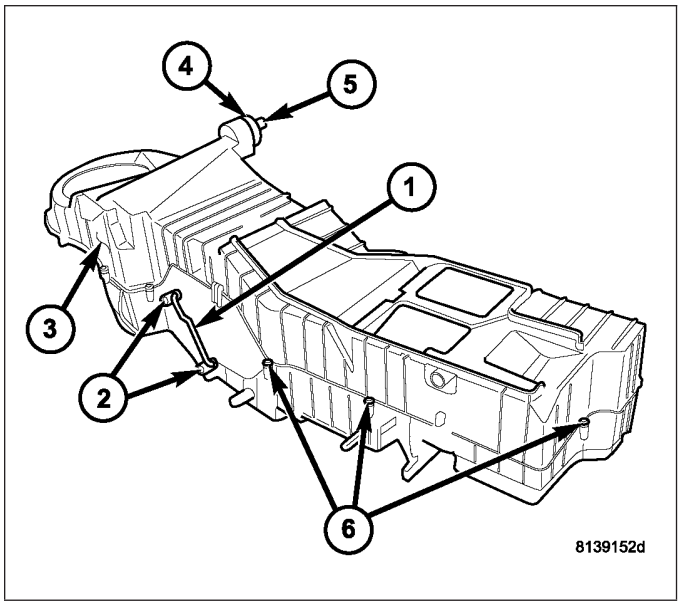

15. Position the front floor distribution duct (2) to the bottom of the HVAC housing (3).
16. Install the screws (1) that secure the front floor distribution duct to the HVAC housing. Tighten the screws to 2.2 N·m (20 in. lbs.).

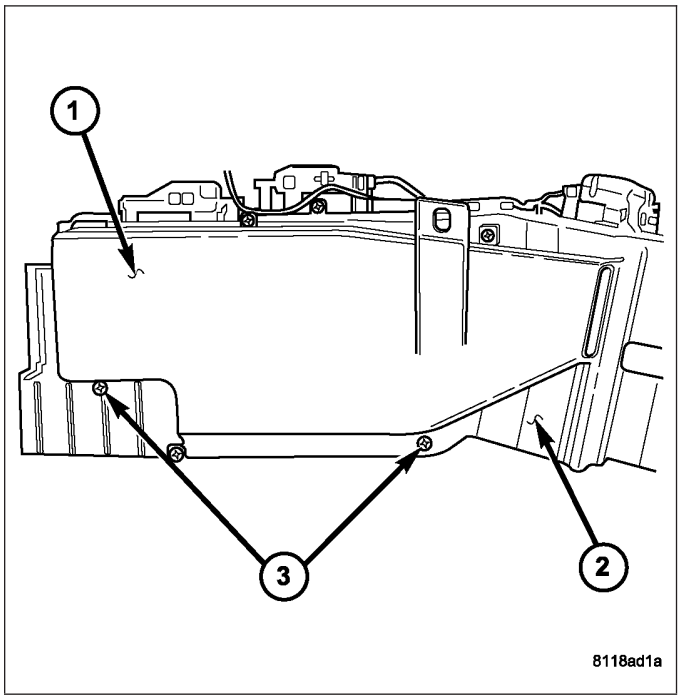

17. Carefully install the heater core (3) into the front of the HVAC housing.
18. Position the heater core tube bracket (2) onto the HVAC housing.
19. Install the two screws (1) that secures the heater core bracket to the HVAC housing. Tighten the screws to 2.2 N·m (20 in. lbs.).
20. If equipped with the dual zone heating-A/C system, install the linkage rod (4).
21. Install the foam seal onto the heater core tubes.

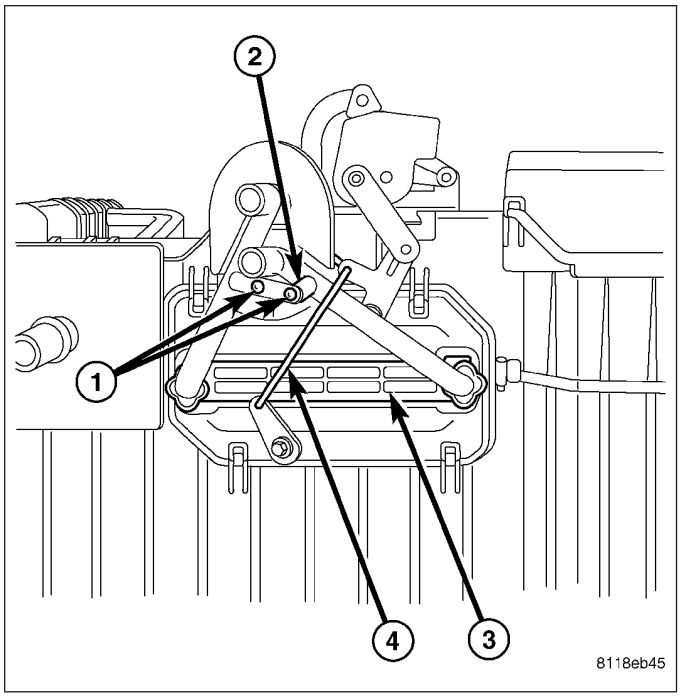

22. Install the panel/floor-air doors (1) into the panel/floor door plate (2).
23. Align the actuator coupler (3) with the panel/floor-air door pivot shaft and install the coupler into side of the panel/floor door plate. Be sure to install the coupler with the coupler arm located between the two stop tabs on the door plate.

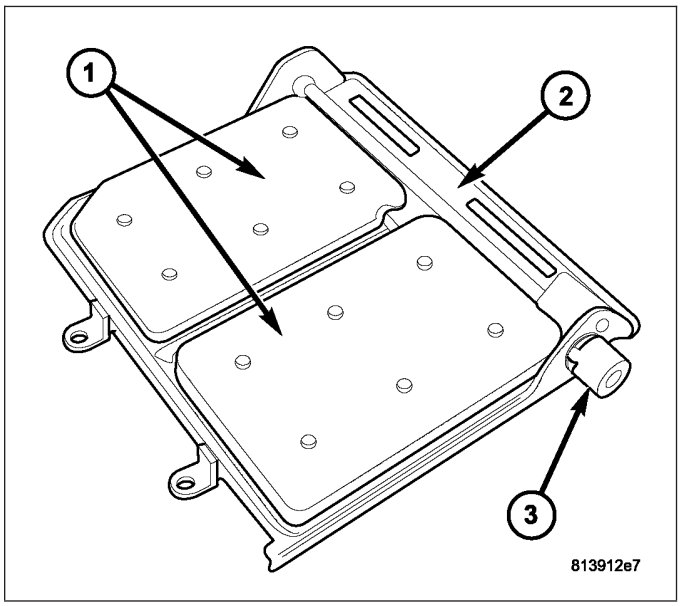

24. Position the panel/floor door assembly (2) onto the top of the HVAC housing (3).

NOTE: Install the two door springs onto the retaining screws prior to installation.

25. Install the three screws (2) that secure the door assembly to the HVAC housing. Tighten the screws to 2.2 N·m (20 in. lbs.).

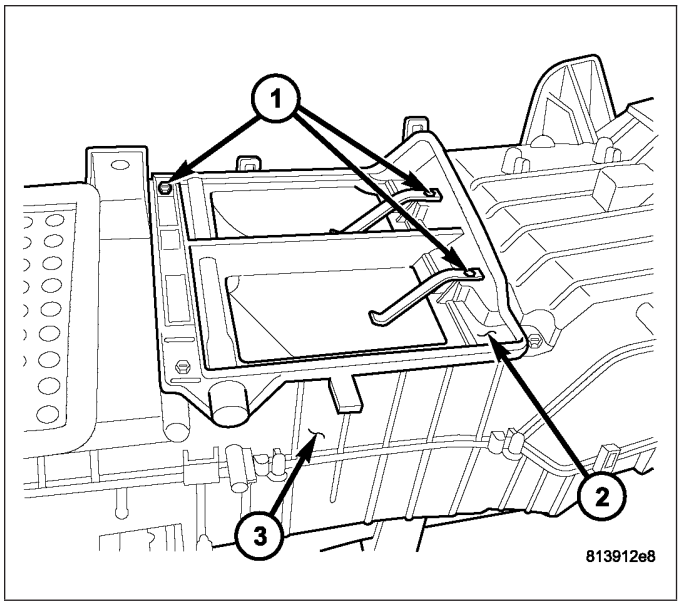

26. Position the panel/floor door outlet (2) onto the top of the HVAC housing (3) and fully engage the two retaining tabs (3).
27. Install the two screws (1) that secure the panel/floor door outlet to the HVAC housing. Tighten the screws to 2.2 N·m (20 in. lbs.).

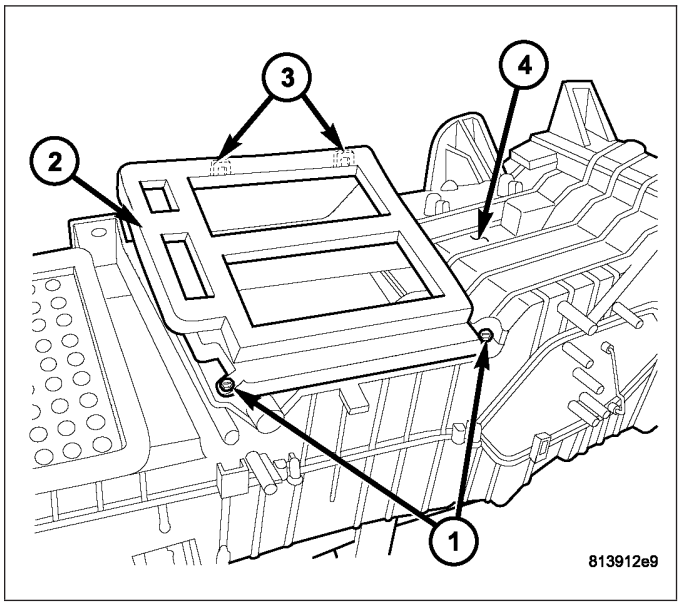

28. Install the air inlet housing (3) onto the top of the HVAC housing (4) (Refer to 24 - HEATING & AIR CONDITIONING/DISTRIBUTION/HOUSING-HVAC - AIR INLET HOUSING - INSTALLATION).
29. Install the HVAC wire harness (1) onto the HVAC housing. Make sure the wires are routed through all wiring retainers.
30. Connect the HVAC wire harness to evaporator temperature sensor (2).

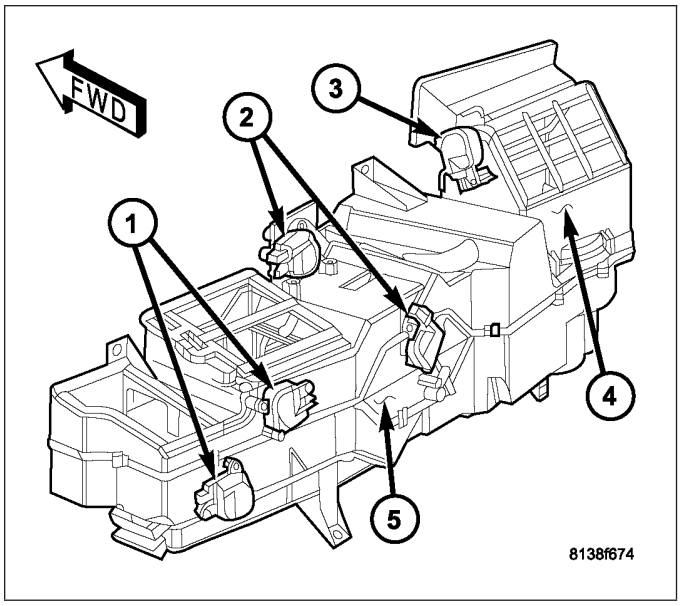

31. Position the blower motor resistor (7) and the blower motor (2) into the bottom of the HVAC housing (5).
32. Install the screws (4 and 6) that secure the blower motor resistor and the blower motor to the HVAC housing. Tighten the screws to 2.2 N·m (20 in. lbs.).
33. Connect the HVAC wire harness connectors (1 and 3) to blower motor resistor and the blower motor.

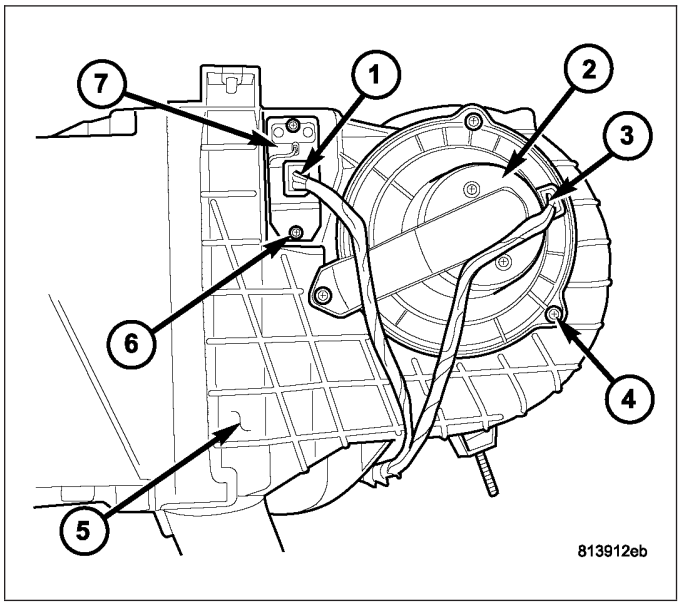

34. Position the recirculation door actuator (3) onto the air inlet housing (4) and install the retaining screws. Tighten the screws to 2.2 N·m (20 in. lbs.).
35. Position the mode door actuators (1) and the blend door actuators (2) onto the HVAC housing (5) and install the retaining screws. Tighten the screws to 2.2 N·m (20 in. lbs.).
36. Connect the HVAC wire harness connectors to the actuators.
37. Install the HVAC housing assembly (Refer to 24 - HEATING & AIR CONDITIONING/DISTRIBUTION/ HOUSING-HVAC - HVAC HOUSING ASSEMBLY - INSTALLATION).

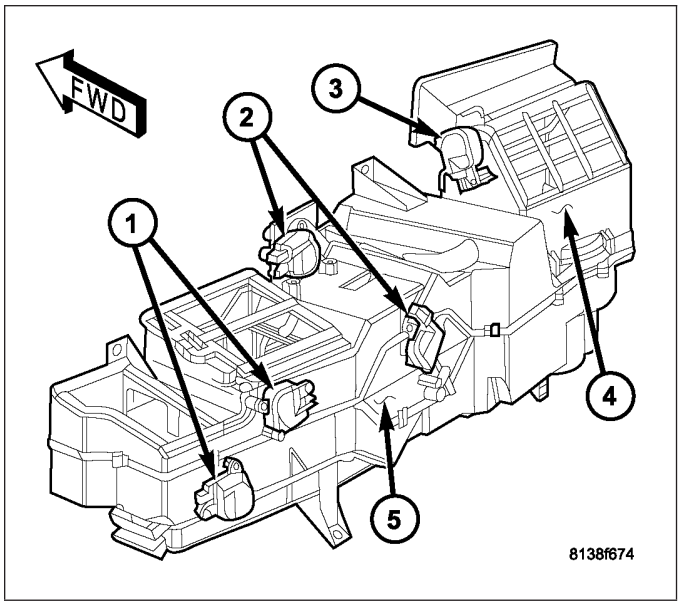

AIR INLET HOUSING

NOTE: The air inlet housing must be removed from HVAC housing and disassembled for service of the recirculation-air door.

NOTE: If the seals on the air door is deformed or damaged, the air door must be replaced.

1. Position the recirculation-air door (1) into the air inlet housing (2).

CAUTION: Make sure that the recirculation-air door pivot shaft is properly seated in the pivot seat located in the air inlet housing.

2. Align the actuator coupler (3) with the recirculation-air door pivot shaft and install the coupler until the coupler retaining tabs are fully engaged to the air inlet housing. Be sure to install the coupler with the coupler arm located between the two stop tabs on the air inlet housing.

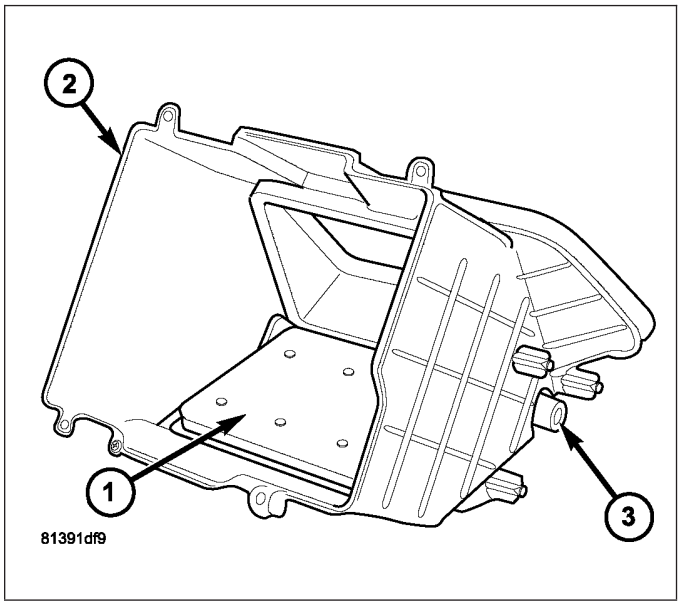

3. Install the two foam insulators (2) into the air inlet housing (1).
4. Install the air inlet housing onto the HVAC housing (Refer to 24 - HEATING & AIR CONDITIONING/ DISTRIBUTION/HOUSING-HVAC - AIR INLET HOUSING - INSTALLATION).

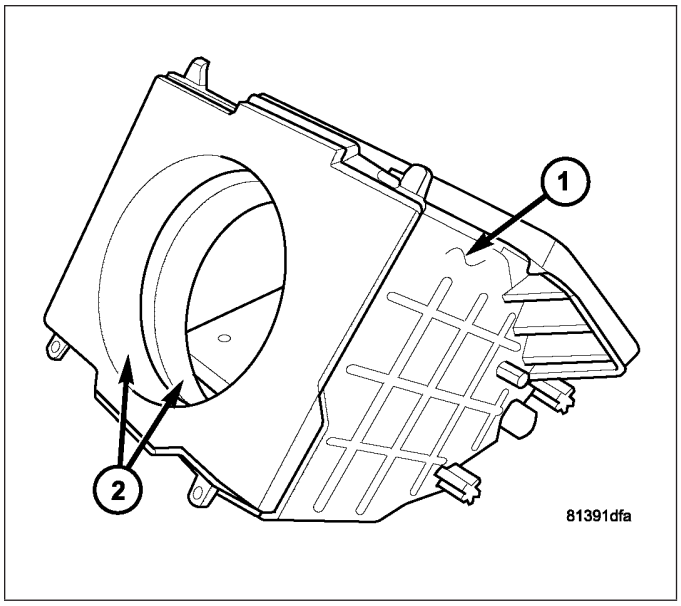

INSTALLATION

HVAC HOUSING ASSEMBLY

NOTE: The HVAC housing must be removed from the vehicle and disassembled for service of the A/C evaporator, evaporator temperature sensor, mode-air and blend-air doors.

1. If removed, install the fresh air inlet (2) onto the dash panel (1).
2. Position the HVAC housing assembly (4) into the passenger compartment with the mounting studs and the condensate drain tube in their proper locations in the dash panel.
3. Install the two nuts (3 and 7) that secure the HVAC housing to the passenger compartment side of the dash panel. Tighten the nuts to 6.2 N·m (55 in. lbs.).
4. Install the bolt (5) that secures the HVAC housing to the floor bracket (6). Tighten the bolt to 6.2 N·m (55 in. lbs.).
5. Install the instrument panel (Refer to 23 - BODY/ INSTRUMENT PANEL ASSEMBLY - INSTALLATION).

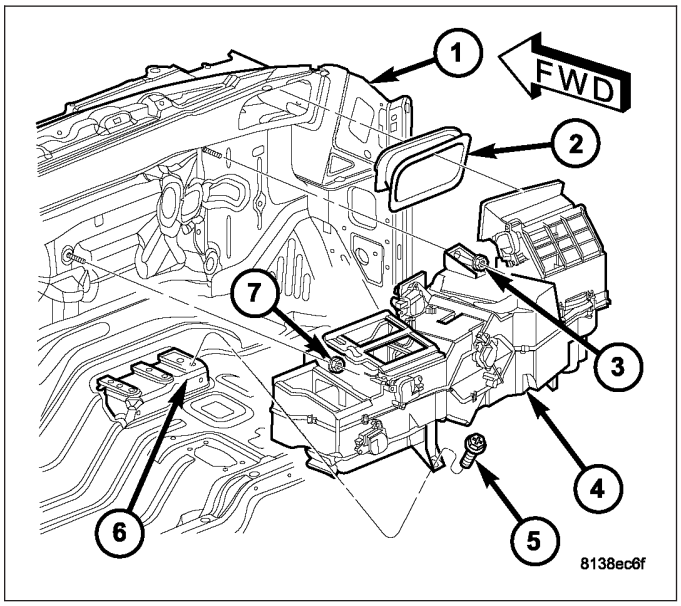

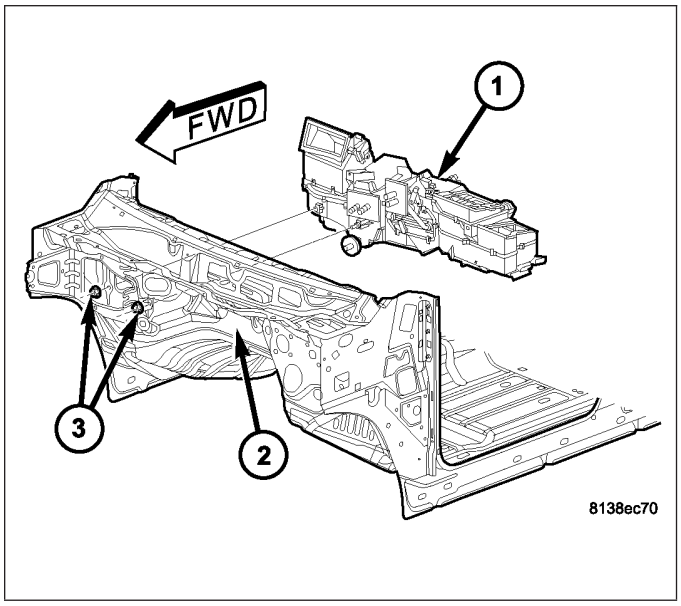

6. Install the two nuts (3) that secure the HVAC housing (1) to the engine compartment side of the dash panel (2). Tighten the nuts to 6.2 N·m (55 in. lbs.).
7. Install the powertrain control module (PCM) (Refer to 8 - ELECTRICAL/ELECTRONIC CONTROL MODULES/POWERTRAIN CONTROL MODULE - INSTALLATION).
8. Connect the heater hoses to the heater core tubes.
9. Connect the A/C liquid line and the A/C accumulator to the A/C evaporator (Refer to 24 - HEATING & AIR CONDITIONING/PLUMBING /LINE-A/C LIQUID - INSTALLATION) and (Refer to 24 - HEATING & AIR CONDITIONING/PLUMBING/ACCUMULATOR-A/C - INSTALLATION).
10. Reconnect the negative battery cable.
11. If the heater core is being replaced, flush the cooling system (Refer to 7 - COOLING - STANDARD PROCEDURE - COOLING SYSTEM CLEANING/ REVERSE FLUSHING).
12. Refill the engine cooling system (Refer to 7 - COOLING - STANDARD PROCEDURE - COOLING SYSTEM REFILL).
13. Evacuate the refrigerant system (Refer to 24 - HEATING & AIR CONDITIONING/PLUMBING - STANDARD PROCEDURE - REFRIGERANT SYSTEM EVACUATE).
14. Charge the refrigerant system (Refer to 24 - HEATING & AIR CONDITIONING/PLUMBING - STANDARD PROCEDURE - REFRIGERANT SYSTEM CHARGE).

AIR INLET HOUSING

NOTE: The air inlet housing must be removed from HVAC housing and disassembled for service of the recirculation-air door.

NOTE: If the foam seal on the air inlet housing is deformed or damaged, it must be replaced.

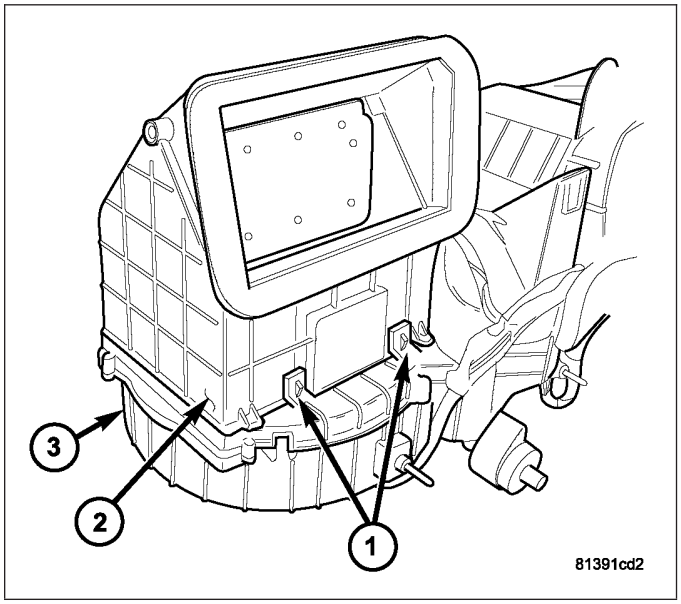

1. Position the air inlet housing (2) onto the top of the HVAC housing (3).
2. Engage the two retaining clips (1) that secure the front of the air inlet housing to the HVAC housing.

3. Install the two screws (3) that secure the rear of the air inlet housing (2) to the top of the HVAC housing (5). Tighten the screws to 2.2 N·m (20 in. lbs.).
4. Install the recirculation door actuator (1) onto the air inlet housing (Refer to 24 - HEATING & AIR CONDITIONING/CONTROLS/ACTUATOR-RECIRCULATION DOOR - INSTALLATION).
5. Connect the HVAC wire harness (4) to the recirculation door actuator.
6. Install the HVAC housing assembly (Refer to 24 - HEATING & AIR CONDITIONING/DISTRIBUTION/HOUSING-HVAC - HVAC HOUSING ASSEMBLY - INSTALLATION).

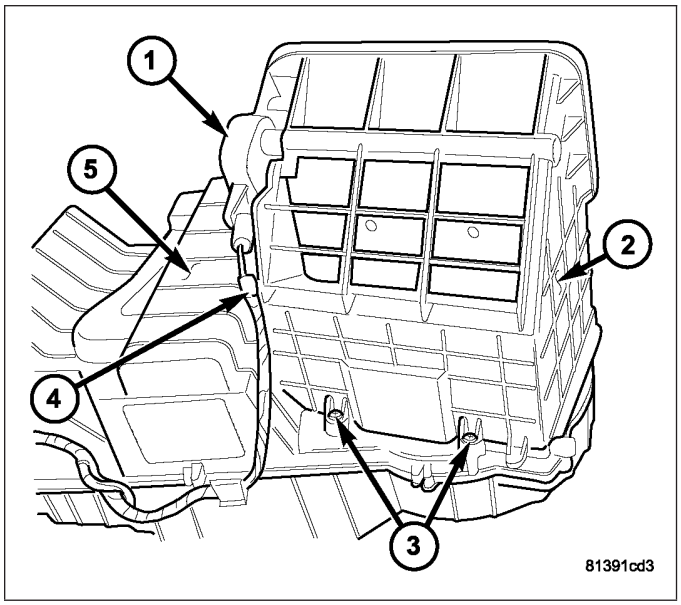

MOTOR-BLOWER

DESCRIPTION

The blower motor (1) is a 12-volt, direct current (DC) motor mounted within a plastic housing with an integral wire harness connector (2) and squirrel cage-type blower wheel (3) that is secured to the blower motor shaft (4). The blower motor wheel is located in the HVAC air inlet housing which is mounted to the passenger side end of the HVAC housing. The blower motor can be accessed for service from underneath the instrument panel.

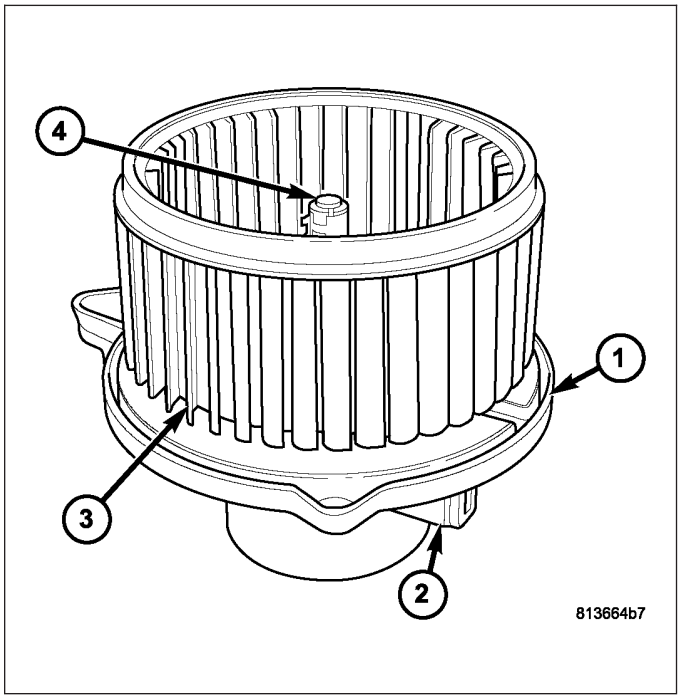

OPERATION

The blower motor is used to control the velocity of air moving through the HVAC housing by spinning the blower wheel within the HVAC air inlet housing at the selected speed.

The blower motor will operate whenever the ignition switch is in the On position and the blower motor control in any position except Off. The blower motor receives a fused battery feed circuit through a fuse in the power distribution center (PDC) whenever the ignition switch is in the On position.

Blower motor speed is controlled by regulating the ground path through or around the blower motor resistor block and through the blower motor control located within the A/C-heater control.

The blower motor and blower motor wheel are factory balanced and cannot be adjusted or repaired. If faulty or damaged, the blower motor and blower wheel must be replaced as an assembly.

DIAGNOSIS AND TESTING

BLOWER MOTOR

WARNING: On vehicles equipped with airbags, disable the airbag system before attempting any steering wheel, steering column, or instrument panel component diagnosis or service. Disconnect and isolate the negative battery (ground) cable, then wait two minutes for the airbag system capacitor to discharge before performing further diagnosis or service. Failure to take the proper precautions could result in accidental airbag deployment and possible personal injury or death.

For circuit descriptions and diagrams, refer to Air Conditioning/Heater in Group 8W - Wiring Diagrams. Possible causes of an inoperative blower motor include:

- Faulty fuse
- Faulty blower motor.
- Faulty blower motor resistor block
- Faulty blower motor circuit wiring or wire harness connectors
- Faulty blower motor control

Possible causes of the blower motor not operating in all speeds include:

- Faulty fuse
- Faulty blower motor resistor block
- Faulty blower motor circuit wiring or wire harness connectors
- Faulty blower motor control

VIBRATION

Possible causes of blower motor vibration include:

- Improper blower motor mounting
- Foreign material in blower wheel causing out of balance condition
- Blower motor faulty.
- Improper blower wheel mounting
- Blower wheel out of balance or deformed

NOISE

To determine if the blower motor is the source of the noise, simply switch the blower motor from Off to On. To verify that the blower motor is the source of the noise, unplug the blower motor wire harness connector and operate the heater-A/C system. If the noise goes away, possible causes include:

- Improper blower motor mounting
- Foreign material in the HVAC air inlet housing
- Blower motor faulty.
- Improper blower wheel mounting

REMOVAL

NOTE: The blower motor is located on the passenger side of the vehicle under the instrument panel. The blower motor can be removed from the vehicle without having to remove the HVAC housing.

1. Disconnect and isolate the negative battery cable.
2. Disconnect the HVAC wire harness lead (1) from the blower motor (2).
3. Remove the HVAC wire harness lead from the two wire harness retainers (3).
4. Remove the three screws (4) that secure the blower motor to the bottom of the HVAC housing (5).
5. Remove the blower motor from the HVAC housing.

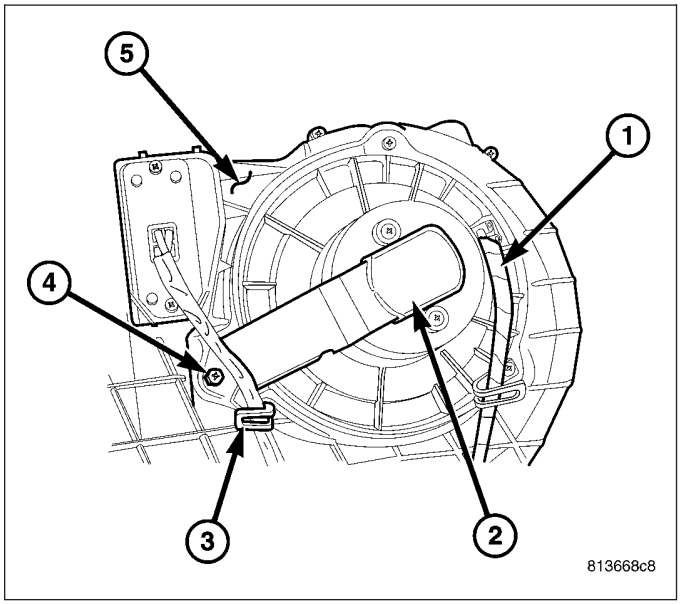

INSTALLATION

1. Position the blower motor (2) into the bottom of the HVAC housing (5).
2. Install the three screws (4) that secure the blower motor to the HVAC housing. Tighten the screws to 2.2 N·m (20 in. lbs.).
3. Connect the HVAC wire harness lead (1) to the blower motor and install the wire harness lead into the two wire harness retainers (3).
4. Reconnect the negative battery cable.

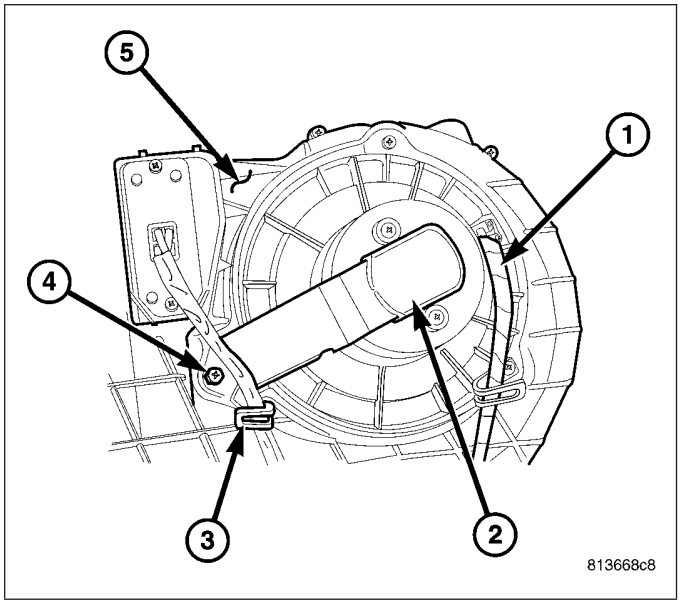

OUTLETS-AIR

DESCRIPTION

There are four defroster air outlets (1) in the defroster grille (2) located on the top of the instrument panel (3). The airflow from the defroster outlets is directed by fixed vanes in the defroster grille and cannot be adjusted. The defroster air outlets are not serviceable from the defroster grille (Refer to 23 - BODY/INSTRUMENT PANEL/DEFROSTER GRILLE - REMOVAL).

There are two side window demister air outlets (4). One located on each end of the instrument panel top cover. The airflow from the side window demister air outlets is directed by fixed vanes in the outlets and cannot be adjusted. The side window demister air outlets are only serviced with the instrument panel top cover.

There are five instrument panel air outlets (5). One air outlet is located near the driver side end of the instrument panel facing the rear of the vehicle and two outlets are located on the passenger side end of the instrument panel. Two other air outlets are located near the top of the instrument panel center bezel. Each of the instrument panel air outlets contain a grille with movable vanes (6) that are used to direct or shut off the flow of the conditioned air leaving the instrument panel outlets. The instrument panel air outlets can be serviced separately.

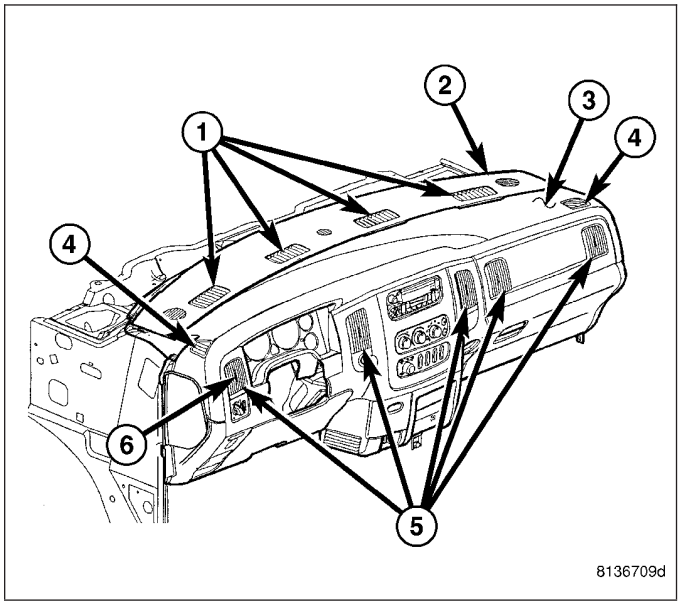

REMOVAL

NOTE: The instrument panel air outlets are retained to the pivots within the air outlet housings by a snap fit.

1. Using a trim stick C-4755 or equivalent (1), gently pry the panel air outlet(s) (2) out of the panel outlet housing(s) (3) as required.

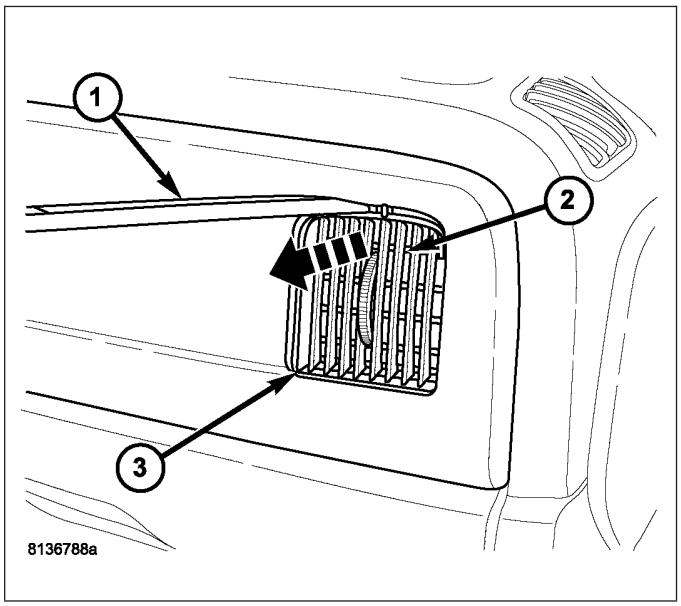

INSTALLATION

1. Install the air outlet (1) onto the pivot shaft (2) located at the bottom of the instrument panel air outlet housing (3).

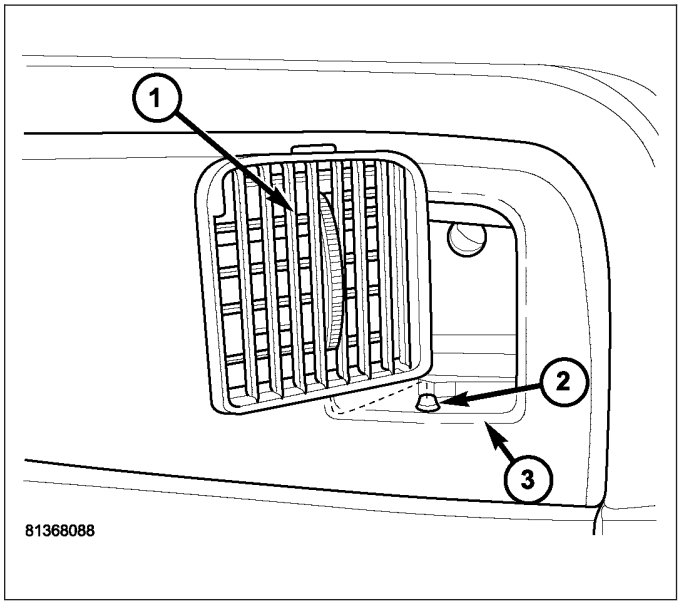

2. Gently push the top of the air outlet (1) onto the pivot shaft (2) at the top of the instrument panel air outlet housing (3) until it snaps into place.

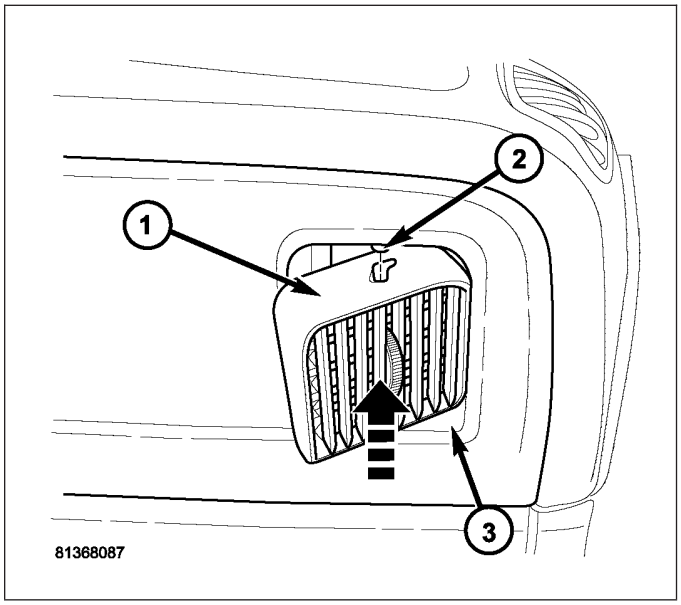

PLUMBING

TABLE OF CONTENTS

page

PLUMBING
DESCRIPTION 269
OPERATION 269
WARNING
WARNINGS 269
CAUTION
CAUTIONS 270
DIAGNOSIS AND TESTING
REFRIGERANT SYSTEM LEAKS 271
STANDARD PROCEDURE
DIODE REPLACEMENT 272
REFRIGERANT SYSTEM SERVICE EQUIPMENT 272
REFRIGERANT SYSTEM RECOVERY 273
REFRIGERANT SYSTEM EVACUATE 274
REFRIGERANT SYSTEM CHARGE 274
ACCUMULATOR-A/C
DESCRIPTION 276
OPERATION 276
REMOVAL 276
INSTALLATION 277
COMPRESSOR-A/C
DESCRIPTION
A/C COMPRESSOR 278
HIGH PRESSURE RELIEF VALVE 279
OPERATION
A/C COMPRESSOR 279
HIGH PRESSURE RELIEF VALVE 279
DIAGNOSIS AND TESTING
A/C COMPRESSOR 279
REMOVAL
3.7L/4.7L ENGINES 280
5.7L ENGINE 281
5.9L DIESEL ENGINE 282
8.3L ENGINE 283
INSTALLATION
3.7L/4.7L ENGINES 284
5.7L ENGINE 285
5.9L DIESEL ENGINE 286
8.3L ENGINE 287
CONDENSER-A/C
DESCRIPTION 288
OPERATION 288
REMOVAL
3.7L/4.7L/5.7L ENGINES 288
5.9L DIESEL ENGINE 289
8.3L ENGINE 290
INSTALLATION
3.7L/4.7L/5.7L ENGINES 290
5.9L DIESEL ENGINE 291
8.3L ENGINE 292

page

CORE-HEATER
DESCRIPTION 293
OPERATION 293
REMOVAL 293
INSTALLATION 294
CORE-VALVE-SERVICE PORT
DESCRIPTION 294
REMOVAL 295
INSTALLATION 295
COUPLER-REFRIGERANT LINE
DESCRIPTION 296
OPERATION 296
REMOVAL 297
INSTALLATION 297
EVAPORATOR-A/C
DESCRIPTION 298
OPERATION 298
REMOVAL 298
INSTALLATION 299
FAN-A/C CONDENSER
REMOVAL - 3.7L/4.7L/5.7L ENGINES 299
INSTALLATION - 3.7L/4.7L/5.7L ENGINES 300
LINE-A/C DISCHARGE
DESCRIPTION 300
REMOVAL
3.7L/4.7L ENGINES 301
5.7L ENGINE 301
5.9L DIESEL ENGINE 302
8.3L ENGINE 303
INSTALLATION
3.7L/4.7L ENGINES 305
5.7L ENGINE 306
5.9L DIESEL ENGINE 306
8.3L ENGINE 308
LINE-A/C LIQUID
DESCRIPTION 309
REMOVAL
3.7L/4.7L/5.7L/5.9L ENGINES 309
8.3L ENGINE 311
INSTALLATION
3.7L/4.7L/5.7L/5.9L ENGINES 312
8.3L ENGINE 314
LINE-A/C SUCTION
DESCRIPTION 316
REMOVAL
3.7L/4.7L ENGINES 317
5.7L ENGINE 318
5.9L DIESEL ENGINE 318
8.3L ENGINE 319
INSTALLATION
3.7L/4.7L ENGINES 321

5.7L ENGINE 322
5.9L DIESEL ENGINE 323
8.3L ENGINE 324
OIL-A/C REFRIGERANT
DESCRIPTION 325
OPERATION 326
STANDARD PROCEDURE
REFRIGERANT OIL LEVEL 326
REFRIGERANT-A/C
DESCRIPTION 327
OPERATION 327
TUBE-A/C ORIFICE
DESCRIPTION 327
OPERATION 327
DIAGNOSIS AND TESTING
A/C ORIFICE TUBE 328

PLUMBING

DESCRIPTION

The A/C refrigerant lines and hoses are used to carry the refrigerant between the various A/C system components. The refrigerant lines and hoses for the R-134a system on this vehicle consist of a barrier-hose design with a nylon tube sandwiched between rubber layers. The nylon tube helps to contain the R-134a refrigerant, which has a smaller molecular structure than R-12 refrigerant. The ends of the refrigerant lines are made from lightweight aluminum or steel, and commonly use braze-less fittings.

Any kinks or sharp bends in the refrigerant lines and hoses will reduce the capacity of the entire A/C system and can reduce the flow of refrigerant in the system. The radius of all bends in the flexible hose refrigerant lines should be at least ten times the diameter of the hose and the refrigerant lines should be routed so they are at least 80 millimeters (3 inches) away from the exhaust manifold(s) and exhaust pipe(s).

OPERATION

High pressures are produced in the refrigerant system when the A/C compressor is operating. Extreme care must be exercised to make sure that each of the refrigerant system connections is pressure-tight and leak free. It is a good practice to inspect all flexible hose refrigerant lines at least once a year to make sure they are in good condition and properly routed.

The refrigerant lines and hoses are coupled to other A/C system components with block-type fittings. An O-ring seal, or a flat steel gasket with an integral O-ring (dual plane seal), is used to mate the refrigerant line fittings with A/C system components to ensure the integrity of the refrigerant system.

The refrigerant lines and hoses cannot be repaired and, if faulty or damaged, they must be replaced.

WARNING

WARNINGS

WARNING: The A/C system contains refrigerant under high pressure. Repairs should only be performed by qualified service personnel. Severe personal injury or death may result from improper service procedures.

WARNING: Avoid breathing the refrigerant and refrigerant oil vapor or mist. Exposure may irritate the eyes, nose, and/or throat. Wear eye protection when servicing the A/C refrigerant system. Serious eye injury can result from direct contact with the refrigerant. If eye contact occurs, seek medical attention immediately.

WARNING: Do not expose the refrigerant to open flame. Poisonous gas is created when refrigerant is burned. An electronic leak detector is recommended. Severe personal injury or death may result from improper service procedures.

WARNING: If accidental system discharge occurs, ventilate the work area before resuming service. Large amounts of refrigerant released in a closed work area will displace the oxygen and cause suffocation and death.

WARNING: The evaporation rate of R-134a refrigerant at average temperature and altitude is extremely high. As a result, anything that comes in contact with the refrigerant will freeze. Always protect the skin or delicate objects from direct contact with the refrigerant.

WARNING: The R-134a service equipment or the vehicle refrigerant system should not be pressure tested or leak tested with compressed air. Some mixtures of air and R-134a have been shown to be combustible at elevated pressures. These mixtures are potentially dangerous, and may result in fire or explosion causing property damage, personal injury or death.

WARNING: The engine cooling system is designed to develop internal pressures of 97 to 123 kilopascals (14 to 18 pounds per square inch). Do not remove or loosen the coolant pressure cap, cylinder block drain plugs, radiator drain, radiator hoses, heater hoses, or hose clamps while the engine cooling system is hot and under pressure. Allow the vehicle to cool for a minimum of 15 minutes before opening the cooling system for service. Failure to observe this warning can result in serious burns from the heated engine coolant.

CAUTION

CAUTIONS

CAUTION: Never add R-12 to a refrigerant system designed to use R-134a. Do not use R-12 equipment or parts on a R-134a A/C system. These refrigerants are not compatible and damage to the A/C system will result.

CAUTION: Never use R-12 refrigerant oil in a A/C system designed to use R-134a refrigerant oil. These refrigerant oils are not compatible and damage to the A/C system will result.

CAUTION: The use of A/C system sealers may result in damage to A/C refrigerant recovery/evacuation/recharging equipment and/or A/C system. Many federal, state/provincial and local regulations prohibit the recharge of A/C systems with known leaks. DaimlerChrysler recommends the detection of A/C system leaks through the use of approved leak detectors and fluorescent leak detection dyes. Vehicles found with A/C system sealers should be treated as contaminated and replacement of the entire A/C refrigerant system is recommended. A/C systems found to be contaminated with A/C system sealers, A/C stop-leak products or seal conditioners voids the warranty for the A/C system.

CAUTION: Recover the refrigerant before opening any fitting or connection. Open the fittings with caution, even after the system has been discharged. Never open or loosen a connection before recovering the refrigerant.

CAUTION: If equipped, do not remove the secondary retention clip from any spring-lock coupler connection while the refrigerant system is under pressure. Recover the refrigerant before removing the secondary retention clip. Open the fittings with caution, even after the system has been discharged. Never open or loosen a connection before recovering the refrigerant.

CAUTION: The internal parts of the A/C system will remain stable as long as moisture-free refrigerant and refrigerant oil is used. Abnormal amounts of dirt, moisture or air can upset the chemical stability. This may cause operational troubles or even serious damage if present in more than very small quantities. Before disconnecting a component, clean the outside of the fittings thoroughly to prevent contamination from entering the refrigerant system. Keep service tools and the work area clean. Do not open the refrigerant system or uncap a replacement component until you are ready to service the system. Immediately after disconnecting a component from the refrigerant system, seal the open fittings with a cap or plug. This will prevent contamination from entering the A/C system.

CAUTION: Refrigerant oil will absorb moisture from the atmosphere if left uncapped. Do not open a container of refrigerant oil until you are ready to use it. Replace the cap on the oil container immediately after using. Store refrigerant oil only in a clean, airtight, and moisture-free container.

CAUTION: Do not overcharge the refrigerant system. Overcharging will cause excessive compressor head pressure and can cause compressor noise and A/C system failure.

DIAGNOSIS AND TESTING

REFRIGERANT SYSTEM LEAKS

WARNING: R-134a service equipment or vehicle A/C system should not be pressure tested or leak tested with compressed air. Mixture of air and R-134a can be combustible at elevated pressures. These mixtures are potentially dangerous and may result in fire or explosion causing property damage, personal injury or death.
Avoid breathing A/C refrigerant and lubricant vapor or mist. Exposure may irritate eyes, nose and throat. Use only approved service equipment meeting SAE requirements to discharge R-134a system. If accidental system discharge occurs, ventilate work area before resuming service.

If the A/C system is not cooling properly, determine if the refrigerant system is fully charged with R-134a. This is accomplished by performing a system Charge Level-Check or Fill. If while performing this test A/C liquid line pressure is less than 345 kPa (50 psi) proceed to System Empty procedure. If liquid line pressure is greater than 345 kPa (50 psi) proceed to System Low procedure. If the refrigerant system is empty or low in refrigerant charge, a leak at any line fitting or component seal is likely. A review of the fittings, lines and components for oily residue is an indication of the leak location. To detect a leak in the refrigerant system, perform one of the following procedures as indicated by the symptoms.

SYSTEM EMPTY

1. Evacuate the refrigerant system to the lowest degree of vacuum possible (approximately 28 in Hg.). Determine if the system holds a vacuum for 15 minutes. If vacuum is held, a leak is probably not present. If system will not maintain vacuum level, proceed to Step 2.
2. Prepare a 0.284 Kg. (10 oz.) refrigerant charge to be injected into the refrigerant system.
3. Connect and dispense 0.284 Kg. (10 oz.) of refrigerant into the evacuated refrigerant system.
4. Proceed to Step 2 of System Low procedure.

SYSTEM LOW

1. Determine if there is any R-134a refrigerant in the system.
2. Position the vehicle in a wind free work area. This will aid in detecting small leaks.
3. Bring the refrigerant system up to operating temperature and pressure. This is done by allowing the engine to run for five minutes with the A/C system set to the following:
   - Transmission in Park or Neutral with parking brake set
   - Engine idling
   - Mode control set to the outside air position
   - Blower control set to the high speed position
   - A/C set to the ON position
   - All windows open

CAUTION: A leak detector only designed for R-12 refrigerant will not detect leaks in a R-134a refrigerant system.

4. Shut the vehicle Off and wait 2-7 minutes. Then use an electronic leak detector that is designed to detect R-134a refrigerant and search for leaks. Fittings, lines or components that appear to be oily usually indicate a refrigerant leak. To inspect the A/C evaporator for leaks, insert the leak detector probe into the drain tube opening or an air outlet. A dye for R-134a is available to aid in leak detection. Use only DaimlerChrysler approved refrigerant dye.

STANDARD PROCEDURE

DIODE REPLACEMENT

NOTE: If the vehicle is equipped with dual batteries (diesel engine), be sure to disconnect the negative battery cable from both batteries.

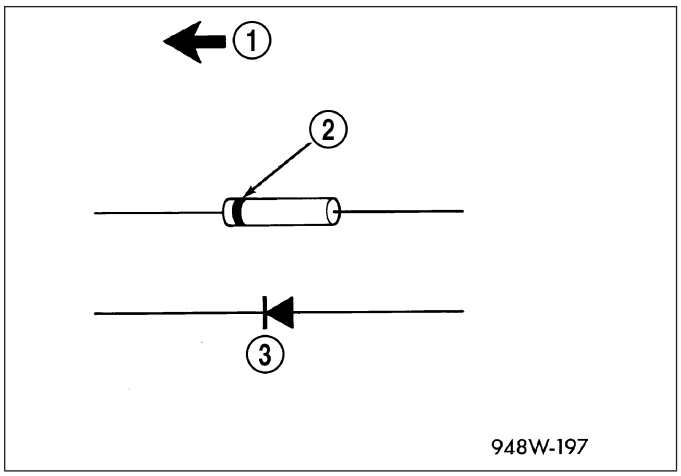

1. Disconnect and isolate the negative battery cable(s).
2. Remove the diode from the wire harness. Note the direction of current flow (1). The band located on the end of the diode (2) indicates current flow through the diode.
3. Remove the insulation from the wires in the harness. Only remove enough insulation to solder in the new diode.
4. Install the new diode in the wire harness, making sure current flow is correct. If necessary refer to the appropriate wiring diagram for current flow. Diode as shown in the wiring diagram (3).

CAUTION: Do not use acid core solder when installing a new diode. Acid core solder will corrode the diode connections within the harness, which can cause A/C compressor clutch failure.

5. Solder the connections together using rosin core type solder only.
6. Tape the new diode to the harness using electrical tape. Make sure the diode is completely sealed from the elements.
7. Reconnect the negative battery cable(s).

REFRIGERANT SYSTEM SERVICE EQUIPMENT

WARNING: Eye protection must be worn when servicing an A/C refrigerant system. Turn all valves off (rotate clockwise) on the equipment being used before connecting or disconnecting service equipment from the refrigerant system. Failure to observe these warnings may result in personal injury or death.

WARNING: Refer to the applicable warnings and cautions for this system before performing the following operation (Refer to 24 - HEATING & AIR CONDITIONING/PLUMBING - WARNINGS) and (Refer to 24 - HEATING & AIR CONDITIONING/PLUMBING - CAUTIONS). Failure to follow the warnings and cautions could result in possible personal injury or death.

When servicing the A/C system, a R-134a refrigerant recovery/recycling/charging station that meets SAE standard J2210 must be used (1). Contact an automotive service equipment supplier for refrigerant recovery/recycling/charging equipment. Refer to the operating instructions supplied by the equipment manufacturer for proper care and use of this equipment.

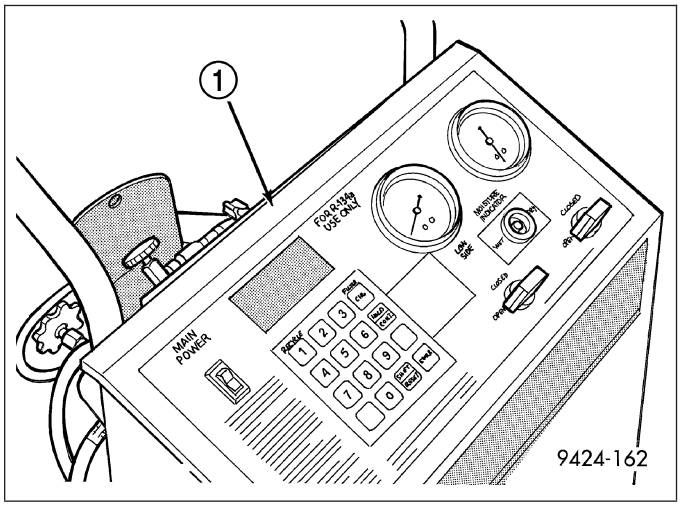

A manifold gauge set (1) may be needed with some recovery/recycling/charging equipment. The manifold gauge set should have manual shut-off valves (2 and 6), or automatic back-flow valves located at the service port connector end of the manifold gauge set hoses (4 and 5). This will prevent refrigerant from being released into the atmosphere.

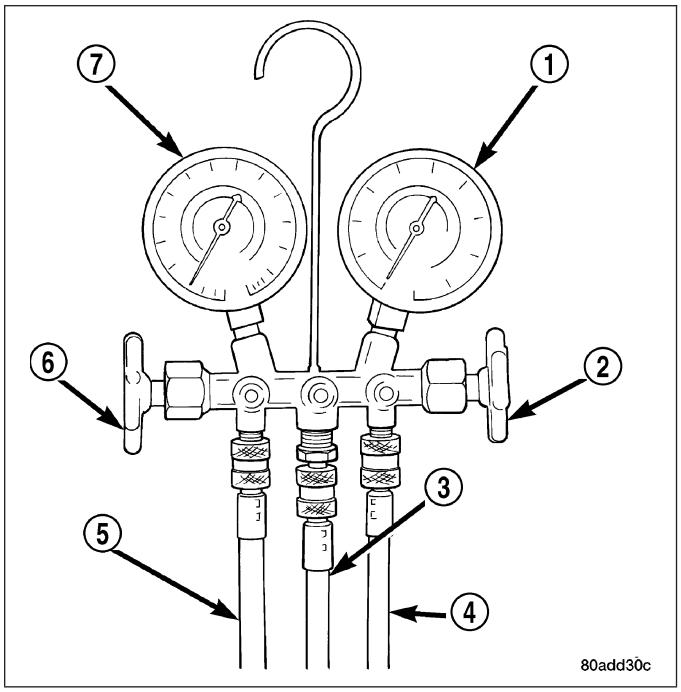

MANIFOLD GAUGE SET CONNECTIONS

CAUTION: Do not use an R-12 manifold gauge set on an R-134a system. The refrigerants are not compatible and system damage will result.

RECOVERY/RECYCLING/EVACUATION/CHARGING HOSE – The center manifold hose (Yellow, or White, with Black stripe) (3) is used to recover, evacuate, and charge the refrigerant system. When the low or high pressure valves on the manifold gauge set are opened, the refrigerant in the system will escape through this hose.

HIGH PRESSURE GAUGE HOSE – The high pressure hose (Red with Black stripe) (4) attaches to the high side service port. This service port is located on the A/C discharge line. On this model, an A/C pressure transducer is installed on the high side service port. A/C high-side pressures can be read using a scan tool. Refer to 9 - Engine Electrical Diagnostics for more information.

LOW PRESSURE GAUGE HOSE – The low pressure hose (Blue with Black stripe) (5) attaches to the low side service port. This service port is located on top of the accumulator.

REFRIGERANT SYSTEM RECOVERY

WARNING: Refer to the applicable warnings and cautions for this system before performing the following operation (Refer to 24 - HEATING & AIR CONDITIONING/PLUMBING - WARNINGS) and (Refer to 24 - HEATING & AIR CONDITIONING/PLUMBING - CAUTIONS). Failure to follow the warnings and cautions could result in possible personal injury or death.

An R-134a refrigerant recovery/recycling/charging station (1) that meets SAE standard J2210 must be used to recover the refrigerant from the R-134a refrigerant system. Refer to the operating instructions supplied by the equipment manufacturer for the proper care and use of this equipment.

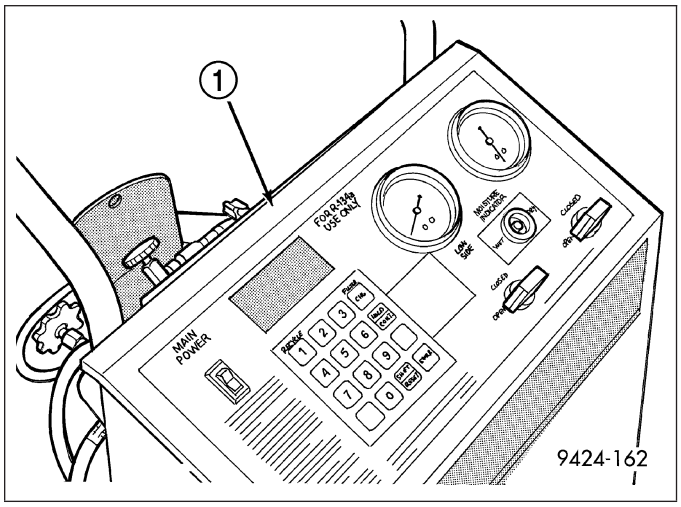

REFRIGERANT SYSTEM EVACUATE

NOTE: Special effort must be used to prevent moisture from entering the A/C system oil. Moisture in the oil is very difficult to remove and will cause a reliability problem with the compressor.

If an A/C compressor designed to use R-134a refrigerant is left open to the atmosphere for an extended period of time. It is recommended that the refrigerant oil be drained and replaced with new oil or a new A/C compressor be used. This will eliminate the possibility of contaminating the refrigerant system.

If the refrigerant system has been open to the atmosphere, it must be evacuated before the system can be filled. Moisture and air mixed with the refrigerant will raise the compressor head pressure above acceptable operating levels. This will reduce the performance of the A/C system and damage the A/C compressor. Moisture will boil at near room temperature when exposed to vacuum. To evacuate the refrigerant system:

NOTE: When connecting the service equipment coupling to the line fitting, verify that the valve of the coupling is fully closed. This will reduce the amount of effort required to make the connection.

1. Recover the refrigerant system (Refer to 24 - HEATING & AIR CONDITIONING/PLUMBING - STANDARD PROCEDURE - REFRIGERANT SYSTEM RECOVERY).
2. Connect a suitable charging station, refrigerant recovery machine or a manifold gauge set with vacuum pump and refrigerant recovery equipment (Refer to 24 - HEATING & AIR CONDITIONING/PLUMBING - STANDARD PROCEDURE - REFRIGERANT SYSTEM SERVICE EQUIPMENT).
3. Open the suction and discharge valves and start the vacuum pump. The vacuum pump should run a minimum of 45 minutes prior to charge to eliminate all moisture in system. When the suction gauge reads -88 kPa (- 26 in. Hg) vacuum or greater for 30 minutes, close all valves and turn off vacuum pump. If the system fails to reach specified vacuum, the refrigerant system likely has a leak that must be corrected. If the refrigerant system maintains specified vacuum for at least 30 minutes, start the vacuum pump, open the suction and discharge valves. Then allow the system to evacuate an additional 10 minutes.
4. Close all valves. Turn off and disconnect the vacuum pump.
5. Charge the refrigerant system (Refer to 24 - HEATING & AIR CONDITIONING/PLUMBING - STANDARD PROCEDURE - REFRIGERANT SYSTEM CHARGE).

REFRIGERANT SYSTEM CHARGE

WARNING: Refer to the applicable warnings and cautions for this system before performing the following operation (Refer to 24 - HEATING & AIR CONDITIONING/PLUMBING - WARNINGS) and (Refer to 24 - HEATING & AIR CONDITIONING/PLUMBING - CAUTIONS). Failure to follow the warnings and cautions could result in possible personal injury or death.

NOTE: Always refer to the underhood HVAC Specification Label for the refrigerant fill specification of the vehicle being serviced.

After all refrigerant system leaks have been repaired and the refrigerant system has been evacuated, a refrigerant charge can be injected into the system. For the proper amount of the refrigerant charge, refer to the underhood HVAC Specification Label.

A R-134a refrigerant recovery/recycling/charging station that meets SAE Standard J2210 must be used to charge the refrigerant system with R-134a refrigerant. Refer to the operating instructions supplied by the equipment manufacturer for proper care and use of this equipment.

CHARGING PROCEDURE

CAUTION: A small amount of refrigerant oil is removed from the A/C system each time the refrigerant system is recovered and evacuated. Before charging the A/C system, you MUST replenish any oil lost during the recovery process. Refer the equipment manufacturer instructions for more information.

1. Evacuate the refrigerant system (Refer to 24 - HEATING & AIR CONDITIONING/PLUMBING - STANDARD PROCEDURE - REFRIGERANT SYSTEM EVACUATE).
2. A manifold gauge set and an R-134a refrigerant recovery/recycling/charging station that meets SAE standard J2210 should be connected to the refrigerant system.
3. Measure the proper amount of refrigerant and heat it to 52° C (125° F) with the charging station. See the operating instructions supplied by the equipment manufacturer for proper use of this equipment.
4. Open both the suction and discharge valves, then open the charge valve to allow the heated refrigerant to flow into the system.
5. When the transfer of refrigerant has stopped, close both the suction and discharge valves.
6. If all of the refrigerant charge did not transfer from the dispensing device, open all of the windows in the vehicle and set the heating-A/C system controls so that the A/C compressor is engaged and the blower motor is operating at its lowest speed setting. Run the engine at a steady high idle (about 1400 rpm). If the A/C compressor does not engage, test the compressor clutch control circuit and repair as required.
7. Open the low-side valve to allow the remaining refrigerant to transfer to the refrigerant system.

WARNING: Take care not to open the discharge (high pressure) valve at this time. Failure to follow this warning could result in possible personal injury or death.

8. Disconnect the charging station and manifold gauge set from the refrigerant system service ports.
9. Reinstall the caps onto the refrigerant system service ports.

ACCUMULATOR-A/C

DESCRIPTION

The A/C accumulator (5) is mounted in the engine compartment between the evaporator outlet tube (2) and the A/C suction line (6). An integral mounting bracket (4) is used to secure the accumulator to the dash panel (3). The A/C low side service port (1) is mounted to the top of the A/C accumulator.

CAUTION: Use only O-ring seals specified for the vehicle. Failure to use the correct O-ring seal will cause the refrigerant system connections to leak.

The A/C accumulator has no serviceable parts except for the rubber O-ring seals, low side service port valve, cap and secondary retaining clips. The O-ring seals used on the connections are made from a special type of rubber not affected by R-134a refrigerant. The O-ring seals must be replaced whenever the A/C accumulator is removed and installed.

The A/C accumulator cannot be repaired and, if faulty or damaged, it must be replaced.

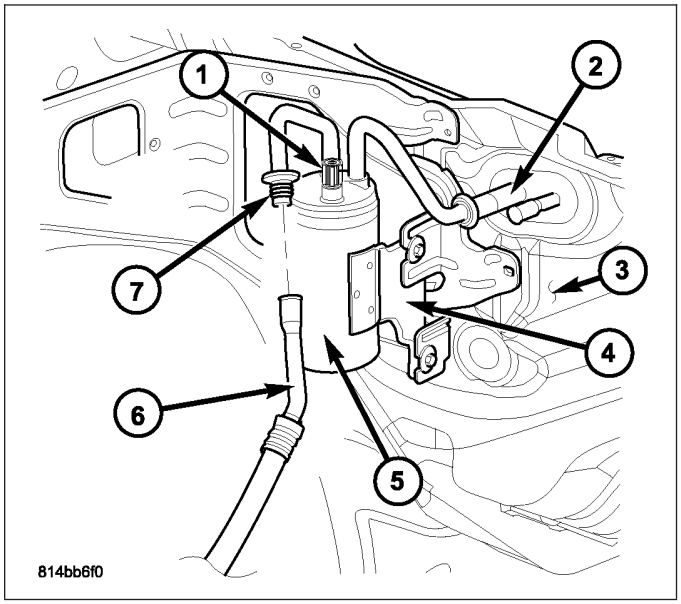

OPERATION

Refrigerant enters the A/C accumulator (1) mostly as a low pressure vapor through the inlet tube (2). Any liquid, oil-laden refrigerant falls to the bottom of the canister, which acts as a separator. A desiccant bag (3) is mounted inside the accumulator canister to absorb any moisture which may have entered and become trapped within the refrigerant system A filter (4) is also mounted inside the canister to trap any foreign material that may have entered the refrigerant system during assembly. The low pressure vapor exits the A/C accumulator through the outlet tube (5). On this model, the low side service port (6) is located at the top of the accumulator.

The A/C accumulator cannot be repaired. If the A/C accumulator is faulty or damaged, or if the refrigerant system has been contaminated or left open to the atmosphere for an indeterminable period or if the A/C compressor has failed, it must be replaced.

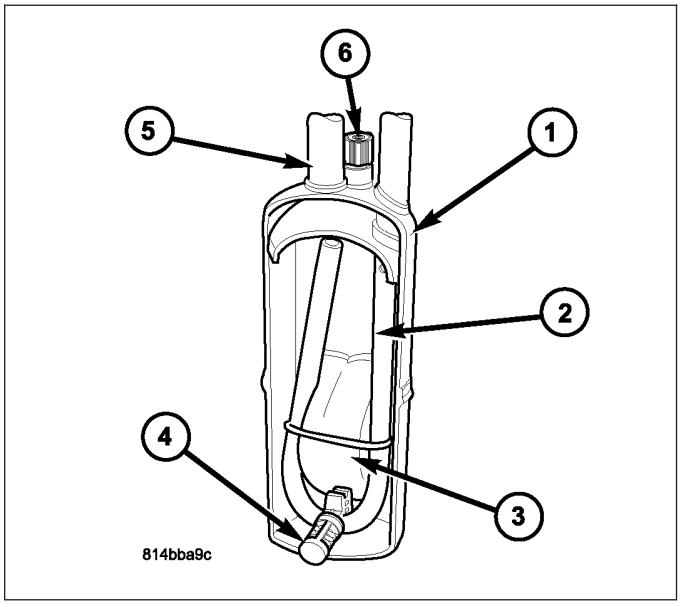

REMOVAL

WARNING: Review the warnings and cautions in the front of this section before performing the following operation (Refer to 24 - HEATING & AIR CONDITIONING/PLUMBING - WARNINGS) and (Refer to 24 - HEATING & AIR CONDITIONING/PLUMBING - CAUTIONS).

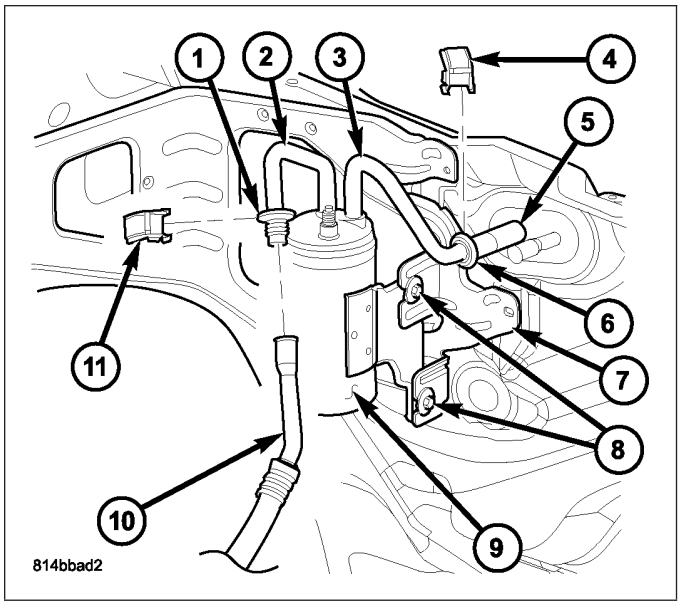

1. Disconnect and isolate the negative battery cable.
2. Recover the refrigerant from the refrigerant system (Refer to 24 - HEATING & AIR CONDITIONING/ PLUMBING - STANDARD PROCEDURE - REFRIGERANT RECOVERY).
3. Remove the air filter housing cover to gain access to the A/C accumulator (9) (Refer to 9 - ENGINE/ AIR INTAKE SYSTEM).
4. Remove the secondary retaining clip (11) from the spring-lock coupler (1) that secures the A/C suction line (10) to the accumulator outlet tube (2).
5. Using the proper A/C line disconnect tool, disconnect the A/C suction line from the A/C accumulator (Refer to 24 - HEATING & AIR CONDITIONING/ PLUMBING/COUPLER-REFRIGERANT LINE - REMOVAL).
6. Loosen the bolts (8) that secure the A/C accumulator to the bracket located on the dash panel (7).
7. Remove the secondary retaining clip (4) from the spring-lock coupler (6) that secures the accumulator inlet tube (3) to the evaporator outlet tube (5).
8. Using the proper A/C line disconnect tool, disconnect the accumulator inlet tube from the evaporator outlet tube (Refer to 24 - HEATING & AIR CONDITIONING/PLUMBING/COUPLER-REFRIGERANT LINE - REMOVAL).
9. Remove the O-ring seals from the accumulator tube fittings and discard the seals.
10. Install plugs in, or tape over the opened refrigerant system connections.
11. Remove the A/C accumulator from the engine compartment.

INSTALLATION

NOTE: If the A/C accumulator is being replaced, add 60 milliliters (2 fluid ounces) of refrigerant oil to the refrigerant system. Use only refrigerant oil of the type recommended for the A/C compressor in the vehicle.

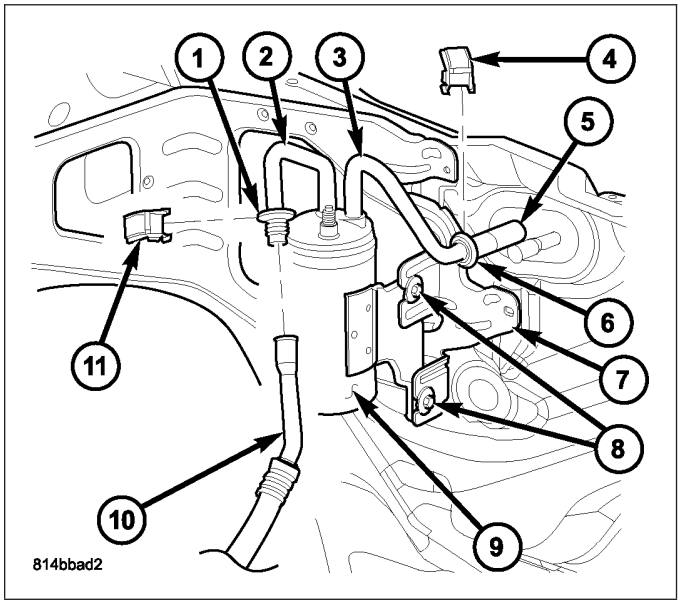

1. Position the A/C accumulator (9) onto the bracket located on the dash panel (7) in the engine compartment. Do not tighten the accumulator bracket bolts (8) at this time.
2. Remove the tape or plugs from the opened refrigerant system connections.
3. Lubricate new rubber O-ring seals with clean refrigerant oil and install them onto the accumulator tube fittings (1 and 6). Use only the specified O-rings as they are made of a special material for the R-134a system. Use only refrigerant oil of the type recommended for the A/C compressor in the vehicle.
4. Connect the spring-lock coupler that secures the accumulator inlet tube (3) to the evaporator outlet tube (5) and install the secondary retaining clip (4) (Refer to 24 - HEATING & AIR CONDITIONING/ PLUMBING/COUPLER-REFRIGERANT LINE - INSTALLATION).
5. Tighten the accumulator bracket bolts to 4.5 N·m (40 in. lbs.).
6. Connect the A/C suction line (10) to the accumulator outlet tube (2) and install the secondary retaining clip (11) (Refer to 24 - HEATING & AIR CONDITIONING/PLUMBING/COUPLER-REFRIGERANT LINE - INSTALLATION).
7. Install the air filter housing cover (Refer to 9 - ENGINE/AIR INTAKE SYSTEM).

8. Evacuate the refrigerant system (Refer to 24 - HEATING & AIR CONDITIONING/PLUMBING - STANDARD PROCEDURE - REFRIGERANT SYSTEM EVACUATE).
9. Charge the refrigerant system (Refer to 24 - HEATING & AIR CONDITIONING/PLUMBING - STANDARD PROCEDURE - REFRIGERANT SYSTEM CHARGE).
10. Reconnect the battery negative cable.

COMPRESSOR-A/C

DESCRIPTION

A/C COMPRESSOR

The A/C system on models equipped with the 5.9L engine diesel use a Sanden SD-7 reciprocating swash plate-type compressor (1). This A/C compressor has a fixed displacement of 165 cubic centimeters (10.068 cubic inches) and has both the suction and discharge ports (2) located on the cylinder head (3) at the rear of the compressor.

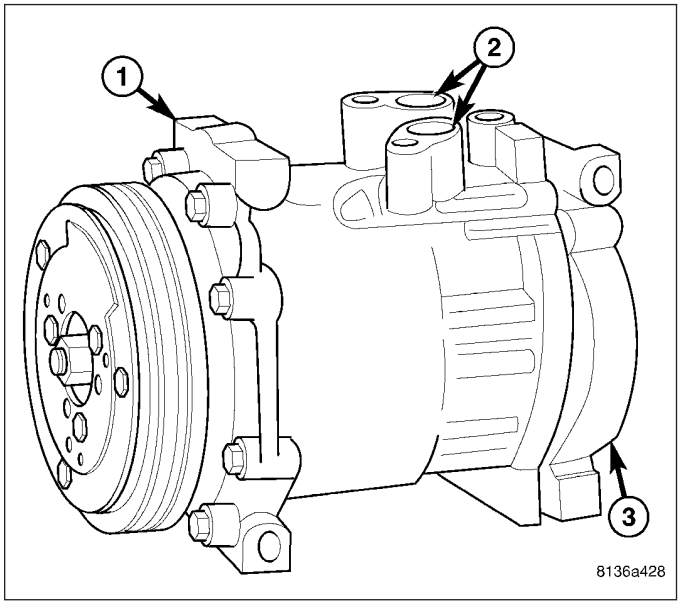

The A/C system on models equipped with the 3.7L, 4.7L, 5.7L AND 8.3L engines use a Denso 10S17 reciprocating swash plate-type compressor (1). This A/C compressor has a fixed displacement of 170 cubic centimeters (10.374) and has both the suction and discharge ports (2) located on the cylinder head (3) at the rear of the compressor.

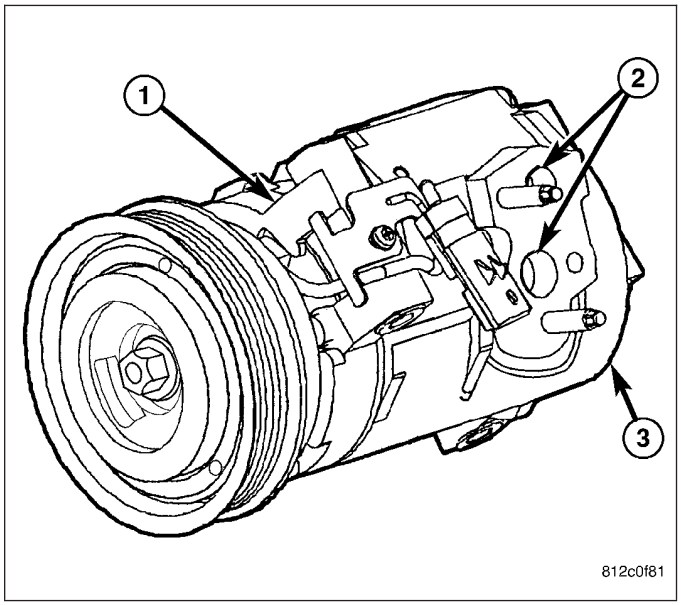

A label identifying the use of R-134a refrigerant is located on both A/C compressors.

HIGH PRESSURE RELIEF VALVE

A high pressure relief valve is located on the compressor cylinder head, which is at the rear of the A/C compressor. This mechanical valve is designed to vent refrigerant from the A/C system to protect against damage to the A/C compressor and other A/C system components, caused by condenser air flow restriction or an overcharge of refrigerant.

OPERATION

A/C COMPRESSOR

The A/C compressor is driven by the engine through an electric clutch, drive pulley and belt arrangement. The A/C compressor is lubricated by refrigerant oil that is circulated throughout the refrigerant system with the refrigerant.

The A/C compressor draws in low-pressure refrigerant vapor from the A/C evaporator through its suction port. It then compresses the refrigerant into a high-pressure, high-temperature refrigerant vapor, which is then pumped to the A/C condenser through the compressor discharge port.

The A/C compressor cannot be repaired and, if faulty or damaged, it must be replaced. The compressor clutch, pulley and bearing assembly, and clutch field coil are available for service.

HIGH PRESSURE RELIEF VALVE

The high pressure relief valve vents refrigerant from the A/C system when a discharge pressure of 3445 to 4135 kPa (500 to 600 psi) or above is reached. The high pressure relief valve closes with a minimum discharge pressure of 2756 kPa (400 psi) is reached.

The high pressure relief valve vents only enough refrigerant to reduce the A/C system pressure, and then re-seats itself. The majority of the refrigerant is conserved in the A/C system. If the high pressure relief valve vents refrigerant, it does not mean the valve is faulty.

The high pressure relief valve is factory-calibrated and cannot be adjusted or repaired, and must not be removed or otherwise disturbed. The valve is only serviced as a part of the A/C compressor.

DIAGNOSIS AND TESTING

A/C COMPRESSOR

When investigating an A/C system related noise, you must first know the conditions under which the noise occurs. These conditions include: weather, vehicle speed, transmission in gear or neutral, engine speed, engine temperature, and any other special conditions. Noises that develop during A/C operation can often be misleading. For example: What sounds like a failed front engine bearing or connecting rod, may be caused by loose bolts, nuts, mounting brackets or a loose compressor clutch assembly.

Drive belts are speed sensitive. At different engine speeds and depending upon drive belt tension, drive belts can develop noises that are mistaken for an A/C compressor noise. Improper drive belt tension can cause a misleading noise when the compressor clutch is engaged, which may not occur when the compressor clutch is disengaged. Check the accessory drive belt condition and tension as described in Cooling before beginning this procedure.

1. Select a quiet area for testing. Duplicate the complaint conditions as much as possible. Turn the A/C compressor On and Off several times to clearly identify the compressor noise. Listen to the A/C compressor while the clutch is engaged and disengaged. Probe the A/C compressor with an engine stethoscope or a long screwdriver with the handle held to your ear to better localize the source of the noise.
2. Loosen all of the compressor mounting hardware and retighten. Check the compressor clutch retainer. Be certain that the clutch field coil is mounted securely to the A/C compressor, and that the clutch plate and pulley are properly aligned and have the correct air gap (Refer to 24 - HEATING & AIR CONDITIONING/CONTROLS/ CLUTCH-A/C COMPRESSOR - INSTALLATION).
3. To duplicate high-ambient temperature conditions (high head pressure), restrict the air flow through the A/C condenser. Install a manifold gauge set or a scan tool to be certain that the discharge pressure does not exceed 2760 kPa (400 psi).
4. Check the refrigerant system plumbing for incorrect routing, rubbing or interference, which can cause unusual noises. Also check the refrigerant lines and hoses for kinks or sharp bends that will restrict refrigerant flow, which

can cause noises (Refer to 24 - HEATING & AIR CONDITIONING/PLUMBING - DESCRIPTION - REFRIGERANT LINES)

5. If the noise is from opening and closing of the high pressure relief valve, recover, evacuate and recharge the refrigerant system (Refer to 24 - HEATING & AIR CONDITIONING/PLUMBING - STANDARD PROCEDURE - REFRIGERANT SYSTEM RECOVERY), (Refer to 24 - HEATING & AIR CONDITIONING/PLUMBING - STANDARD PROCEDURE - REFRIGERANT SYSTEM EVACUATE) and (Refer to 24 - HEATING & AIR CONDITIONING/PLUMBING - STANDARD PROCEDURE - REFRIGERANT SYSTEM CHARGE). If the high pressure relief valve still does not seat properly, replace the A/C compressor (Refer to 24 - HEATING & AIR CONDITIONING/PLUMBING/COMPRESSOR-A/C - REMOVAL).
6. If the noise is from liquid refrigerant slugging in the A/C suction line, replace the A/C accumulator (Refer to 24 - HEATING & AIR CONDITIONING/PLUMBING/ACCUMULATOR-A/C - REMOVAL) and check the refrigerant oil level and the refrigerant system charge (Refer to 24 - HEATING & AIR CONDITIONING/PLUMBING/REFRIGERANT OIL - STANDARD PROCEDURE - REFRIGERANT OIL LEVEL) (Refer to 24 - HEATING & AIR CONDITIONING/PLUMBING- STANDARD PROCEDURE - REFRIGERANT SYSTEM CHARGE).
7. If a slugging condition still exists after replacing the A/C accumulator, then replace the A/C compressor (Refer to 24 - HEATING & AIR CONDITIONING/PLUMBING/COMPRESSOR-A/C - REMOVAL) and repeat Step 1.

REMOVAL

3.7L/4.7L ENGINES

WARNING: Refer to the applicable warnings and cautions for this system before performing the following operation (Refer to 24 - HEATING & AIR CONDITIONING/PLUMBING - WARNINGS) and (Refer to 24 - HEATING & AIR CONDITIONING/PLUMBING - CAUTIONS). Failure to follow the warnings and cautions could result in possible personal injury or death.

NOTE: The A/C compressor may be removed and repositioned without disconnecting the refrigerant lines or discharging the refrigerant system. Discharging is not necessary if servicing the compressor clutch, clutch coil, engine, engine cylinder head or the generator.

1. Recover the refrigerant from the refrigerant system (Refer to 24 - HEATING & AIR CONDITIONING/PLUMBING - STANDARD PROCEDURE - REFRIGERANT SYSTEM RECOVERY).
2. Disconnect and isolate the negative battery cable.
3. Remove the serpentine drive belt (Refer to 7 - COOLING/ACCESSORY DRIVE/BELTS-DRIVE - REMOVAL).
4. Remove the nuts (4) that secure the A/C suction line (5) and the A/C discharge line (9) to the A/C compressor (6).
5. Disconnect the refrigerant lines from the A/C compressor and remove and discard the seals.
6. Install plugs in, or tape over all of the opened refrigerant line fittings and the compressor ports.

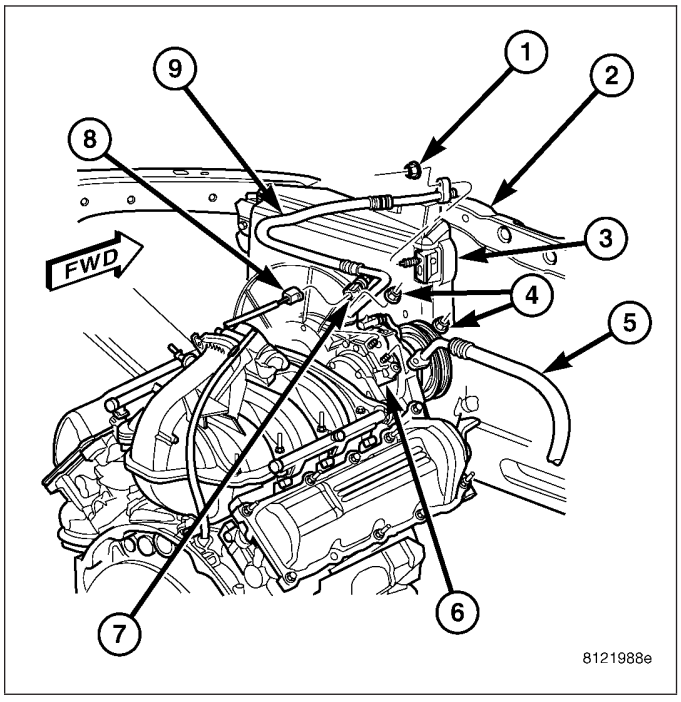

7. Loosen the bolt (5) that secures the bracket (7) to the accessory mounting bracket (4).
8. Remove the bolts (1, 6 and 3) that secure the A/C compressor (2) to the accessory mounting bracket.
9. Remove the A/C compressor from the engine compartment.

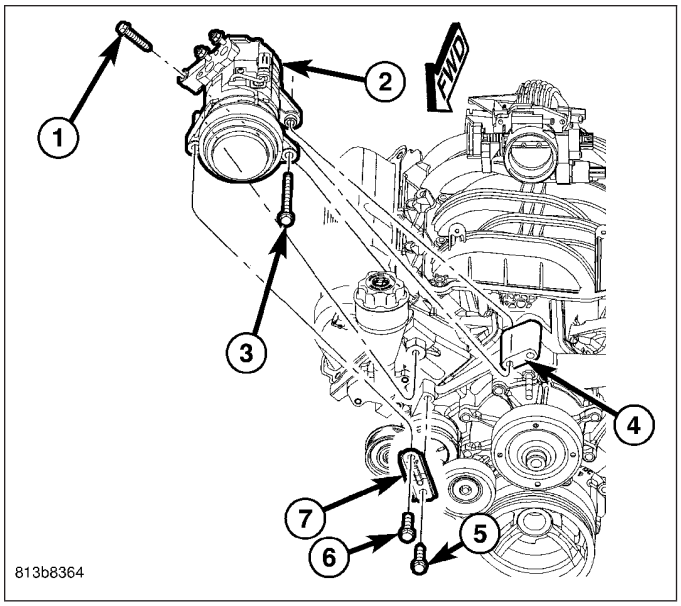

5.7L ENGINE

WARNING: Refer to the applicable warnings and cautions for this system before performing the following operation (Refer to 24 - HEATING & AIR CONDITIONING/PLUMBING - WARNINGS) and (Refer to 24 - HEATING & AIR CONDITIONING/PLUMBING - CAUTIONS). Failure to follow the warnings and cautions could result in possible personal injury or death.

NOTE: The A/C compressor may be removed and repositioned without disconnecting the refrigerant lines or discharging the refrigerant system. Discharging is not necessary if servicing the compressor clutch, clutch coil, engine, engine cylinder head or the generator.

1. Recover the refrigerant from the refrigerant system (Refer to 24 - HEATING & AIR CONDITIONING/ PLUMBING - STANDARD PROCEDURE - REFRIGERANT SYSTEM RECOVERY).
2. Disconnect and isolate the negative battery cable.
3. Remove the serpentine drive belt (Refer to 7 - COOLING/ACCESSORY DRIVE/BELTS-DRIVE - REMOVAL).
4. Disconnect the wire harness connector from the clutch coil connector of the A/C compressor (6).
5. Remove the nuts (4 and 7) that secure the A/C discharge line (1) and the A/C suction line (5) to the A/C compressor.
6. Disconnect the refrigerant lines from the A/C compressor and remove and discard the seals.
7. Install plugs in, or tape over all of the opened refrigerant line fittings and the compressor ports.

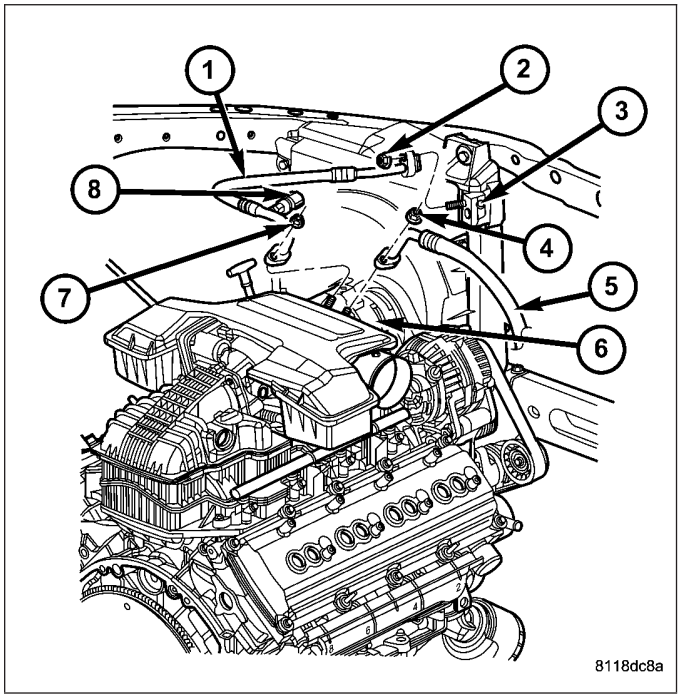

8. Remove the bolts and nuts that secure the generator and A/C compressor support bracket to the front of the engine.
9. Remove the bolts (1 and 3) that secure the A/C compressor (2) to the mounting bracket (4).
10. Remove the A/C compressor from the engine compartment.

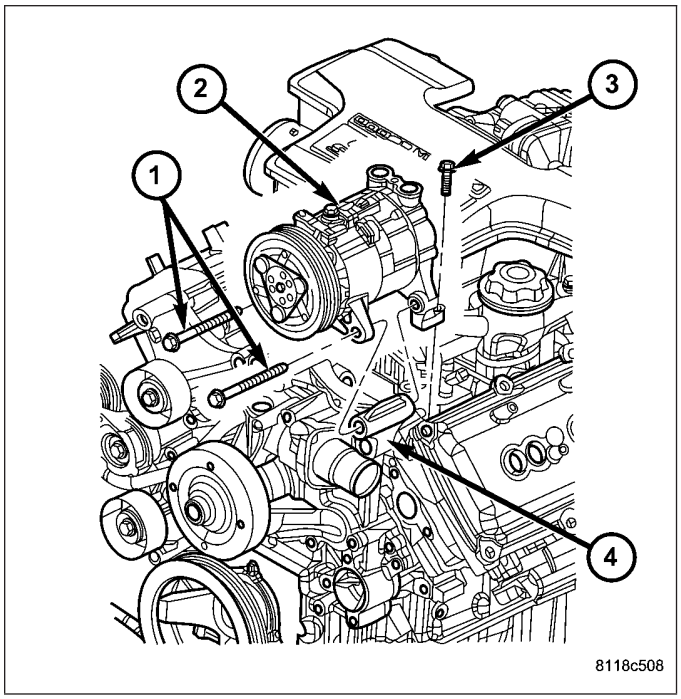

5.9L DIESEL ENGINE

WARNING: Refer to the applicable warnings and cautions for this system before performing the following operation (Refer to 24 - HEATING & AIR CONDITIONING/PLUMBING - WARNINGS) and (Refer to 24 - HEATING & AIR CONDITIONING/PLUMBING - CAUTIONS). Failure to follow the warnings and cautions could result in possible personal injury or death.

NOTE: The A/C compressor may be removed and repositioned without disconnecting the refrigerant lines or discharging the refrigerant system. Discharging is not necessary if servicing the compressor clutch, clutch coil or engine.

1. Recover the refrigerant from the refrigerant system (Refer to 24 - HEATING & AIR CONDITIONING/ PLUMBING - STANDARD PROCEDURE - REFRIGERANT SYSTEM RECOVERY).
2. Disconnect and isolate the negative battery cable.
3. Remove the serpentine drive belt (Refer to 7 - COOLING/ACCESSORY DRIVE/BELTS-DRIVE - REMOVAL).
4. Disconnect the wire harness connector from the clutch coil connector of the A/C compressor (6).
5. Remove the bolt (7) that secure the A/C suction and discharge line assembly (8) to the A/C compressor.
6. Disconnect the refrigerant line assembly from the A/C compressor and remove and discard the seals.
7. Install plugs in, or tape over all of the opened refrigerant line fittings and the compressor ports.

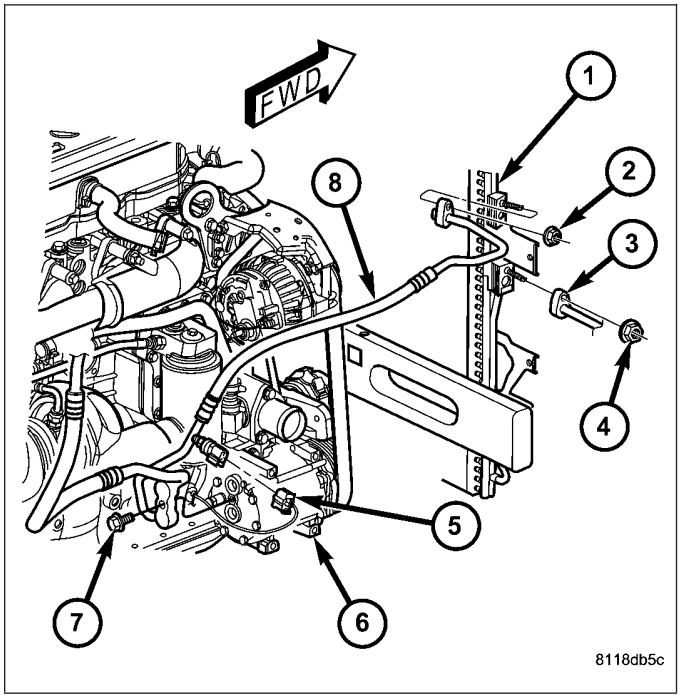

8. Remove the bolts (4) that secure the A/C compressor (3) to the mounting bracket (2) located on the right side of the cylinder block (1).
9. Remove the A/C compressor from the engine compartment.

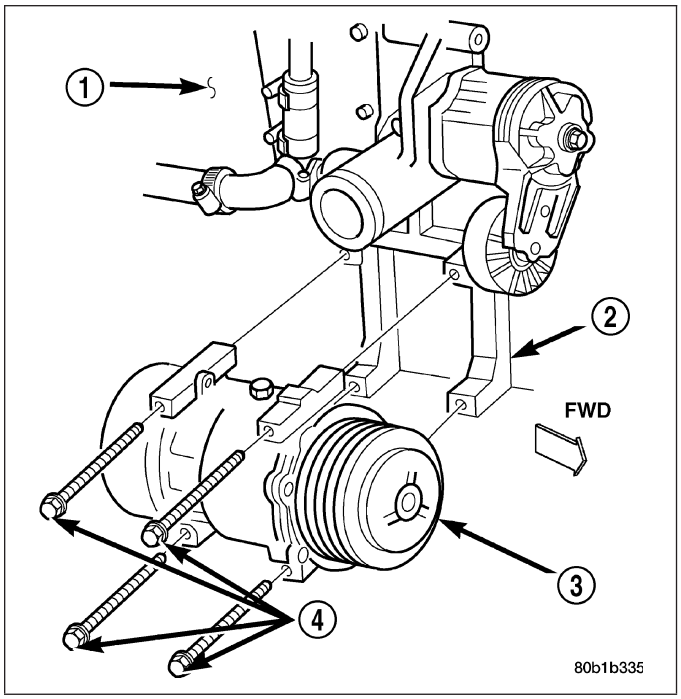

8.3L ENGINE

WARNING: Refer to the applicable warnings and cautions for this system before performing the following operation (Refer to 24 - HEATING & AIR CONDITIONING/PLUMBING - WARNINGS) and (Refer to 24 - HEATING & AIR CONDITIONING/PLUMBING - CAUTIONS). Failure to follow the warnings and cautions could result in possible personal injury or death.

NOTE: The A/C compressor may be removed and repositioned without disconnecting the refrigerant lines or discharging the refrigerant system. Discharging is not necessary if servicing the compressor clutch, clutch coil or the engine.

1. Recover the refrigerant from the refrigerant system (Refer to 24 - HEATING & AIR CONDITIONING/ PLUMBING - STANDARD PROCEDURE - REFRIGERANT SYSTEM RECOVERY).
2. Disconnect and isolate the negative battery cable.
3. Remove the serpentine drive belt (Refer to 7 - COOLING/ACCESSORY DRIVE/BELTS-DRIVE - REMOVAL).
4. Disconnect the wire harness connector from the A/C compressor clutch coil connector (4).
5. Remove the bolts (5) that secure the A/C suction line (1) and the A/C discharge line (3) to the A/C compressor (2).
6. Disconnect the refrigerant lines from the A/C compressor and remove and discard the seals.
7. Install plugs in, or tape over all of the opened refrigerant line fittings and the compressor ports.

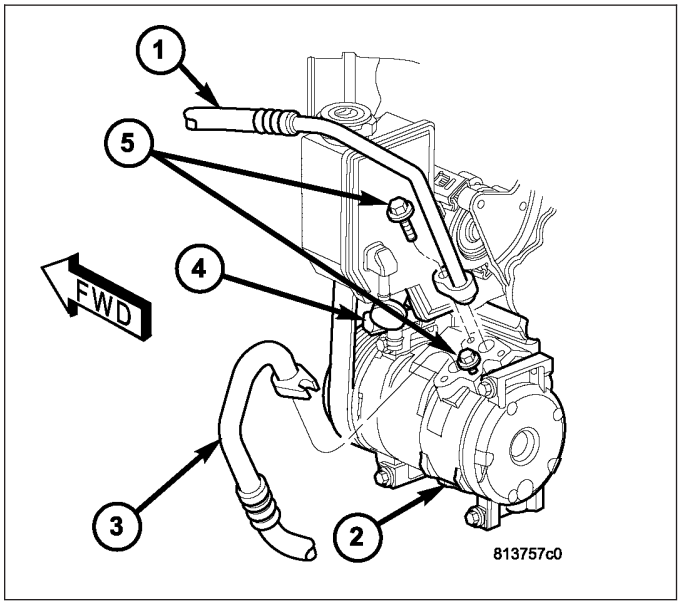

8. Remove the bolts (1) that secure the A/C compressor (2) to the cylinder block (3).
9. Remove the A/C compressor from the engine compartment.

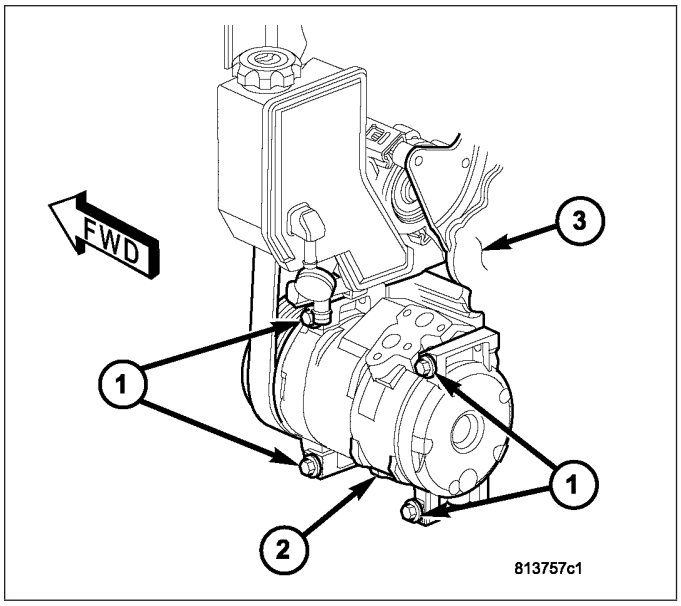

INSTALLATION

3.7L/4.7L ENGINES

NOTE: If a replacement A/C compressor is being installed, be certain to check the refrigerant oil level. See Refrigerant Oil Level in this group for the procedures. Use only refrigerant oil of the type recommended for the compressor in the vehicle.

1. Position the A/C compressor (2) onto the accessory mounting bracket (4).
2. Install and tighten the bolts in the following sequence:
   - Install bolt (3) and hand tightened.
   - Install bolt (6) and hand tightened.
   - Install bolt (1) and hand tightened.
   - Tightened bolt (3) to 40 N·m (30 ft. lbs.).
   - Tightened bolt (6) to 55 N·m (41 ft. lbs.).
   - Tightened bolt (1) to 55 N·m (41 ft. lbs.).
   - Tightened bolt (5) to 55 N·m (41 ft. lbs.).

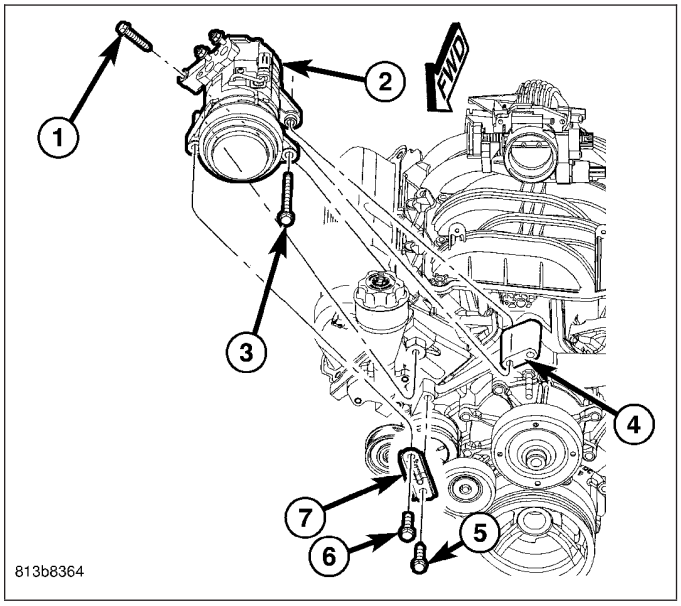

3. Remove the tape or plugs from the opened refrigerant line fittings and the compressor ports.
4. Lubricate new seals with clean refrigerant oil and install them onto the refrigerant line fittings. Use only the specified seals as they are made of a special material for the R-134a system. Use only refrigerant oil of the type recommended for the A/C compressor in the vehicle.
5. Install the A/C suction line (5) and the A/C discharge line (9) onto the A/C compressor (6).
6. Install the nuts (4) that secure the refrigerant lines to the A/C compressor. Tighten the nuts to 20 N·m (15 ft. lbs.).
7. Install the serpentine drive belt (Refer to 7 - COOLING/ACCESSORY DRIVE/BELTS-DRIVE - INSTALLATION).
8. Reconnect the negative battery cable.
9. Evacuate the refrigerant system (Refer to 24 - HEATING & AIR CONDITIONING/PLUMBING - STANDARD PROCEDURE - REFRIGERANT SYSTEM EVACUATE).

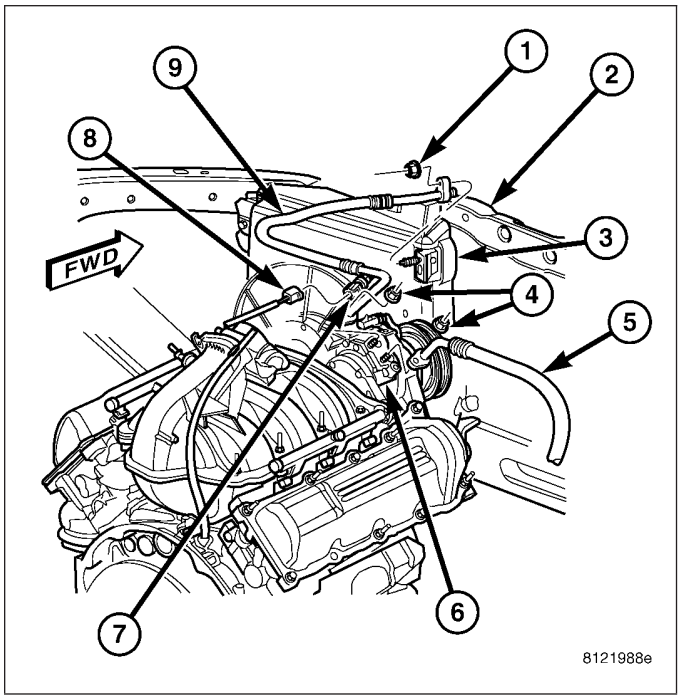

10. Charge the refrigerant system (Refer to 24 - HEATING & AIR CONDITIONING/PLUMBING - STANDARD PROCEDURE - REFRIGERANT SYSTEM CHARGE).

5.7L ENGINE

NOTE: Be certain to check the refrigerant oil level if the A/C compressor is being replaced. See Refrigerant Oil Level in this group for the procedures. Use only refrigerant oil of the type recommended for the A/C compressor in the vehicle.

1. Position the A/C compressor (3) into the engine compartment.
2. Install and tighten the bolts that secure the A/C compressor (2) to the mounting bracket (4) in the following sequence:
   - Install the two long bolts (1) and hand tightened.
   - Install the rear bolt (3) and hand tightened.
   - Tightened the two long bolts to 40 N·m (30 ft. lbs.).
   - Tightened the rear bolt to 55 N·m (41 ft. lbs.).
3. Install the generator and A/C compressor support bracket and retaining nuts and bolts. Tighten the nuts and bolts securely.

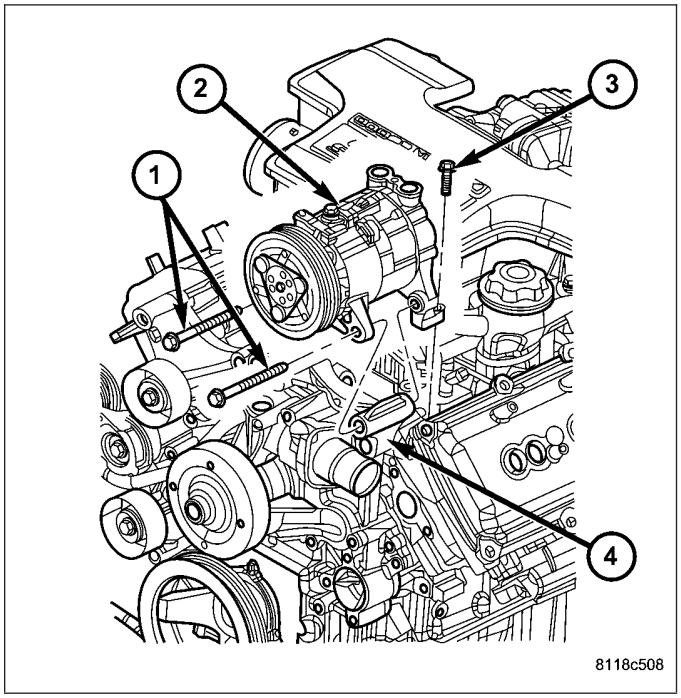

4. Remove the tape or plugs from the opened refrigerant line fittings and the compressor ports.
5. Lubricate new seals with clean refrigerant oil and install them onto the refrigerant line fittings. Use only the specified seals as they are made of a special material for the R-134a system. Use only refrigerant oil of the type recommended for the A/C compressor in the vehicle.
6. Install the A/C discharge line (1) and the A/C suction line (5) onto the A/C compressor (5).
7. Install the nuts (4 and 7) that secure the refrigerant lines to the A/C compressor. Tighten the nuts to 20 N·m (15 ft. lbs.).
8. Connect the wire harness connector to the clutch coil connector of the A/C compressor.
9. Install the serpentine drive belt (Refer to 7 - COOLING/ACCESSORY DRIVE/BELTS-DRIVE - INSTALLATION).
10. Reconnect the negative battery cable.
11. Evacuate the refrigerant system (Refer to 24 - HEATING & AIR CONDITIONING/PLUMBING - STANDARD PROCEDURE - REFRIGERANT SYSTEM EVACUATE).
12. Charge the refrigerant system (Refer to 24 - HEATING & AIR CONDITIONING/PLUMBING - STANDARD PROCEDURE - REFRIGERANT SYSTEM CHARGE).

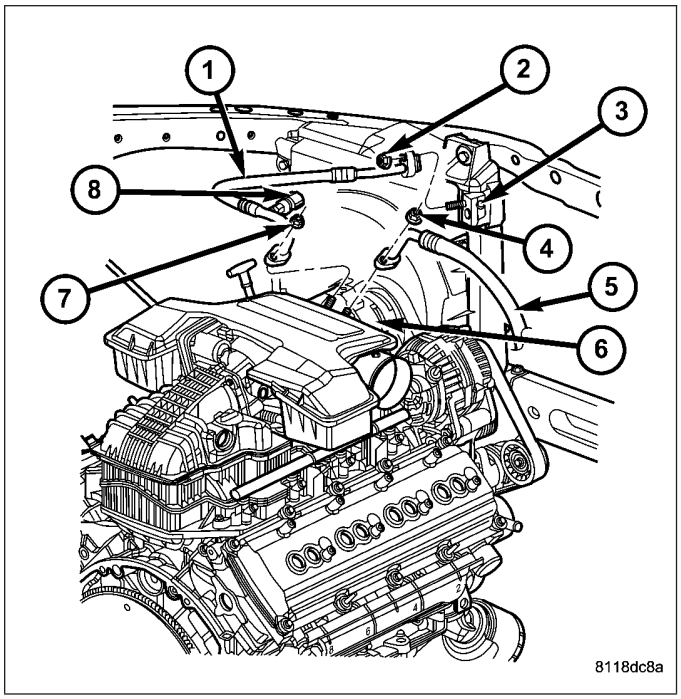

5.9L DIESEL ENGINE

NOTE: Be certain to check the refrigerant oil level if the A/C compressor is being replaced. See Refrigerant Oil Level in this group for the procedures. Use only refrigerant oil of the type recommended for the A/C compressor in the vehicle.

1. Position the A/C compressor (3) into the engine compartment.
2. Install and hand tighten the bolts (4) that secure the A/C compressor to the mounting bracket (2).
3. Tighten the bolts that secure the A/C compressor to the mounting bracket to 24 N·m (17 ft. lbs.).

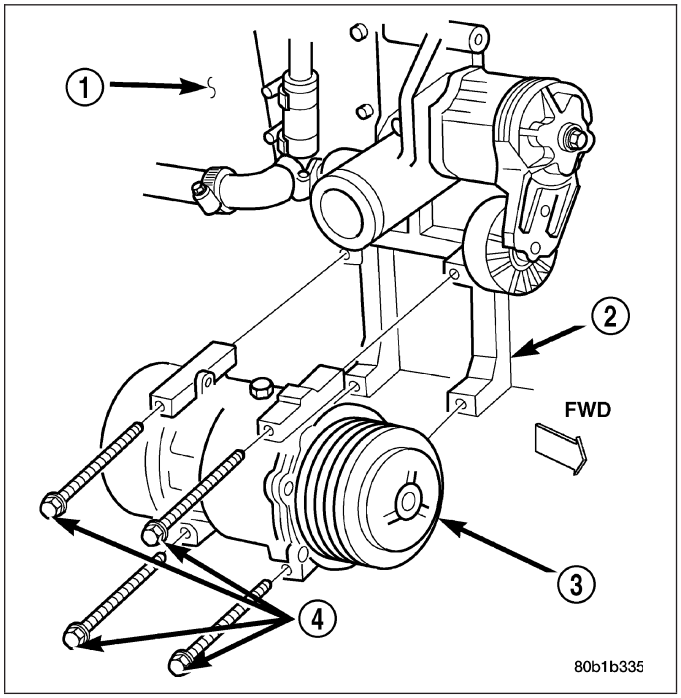

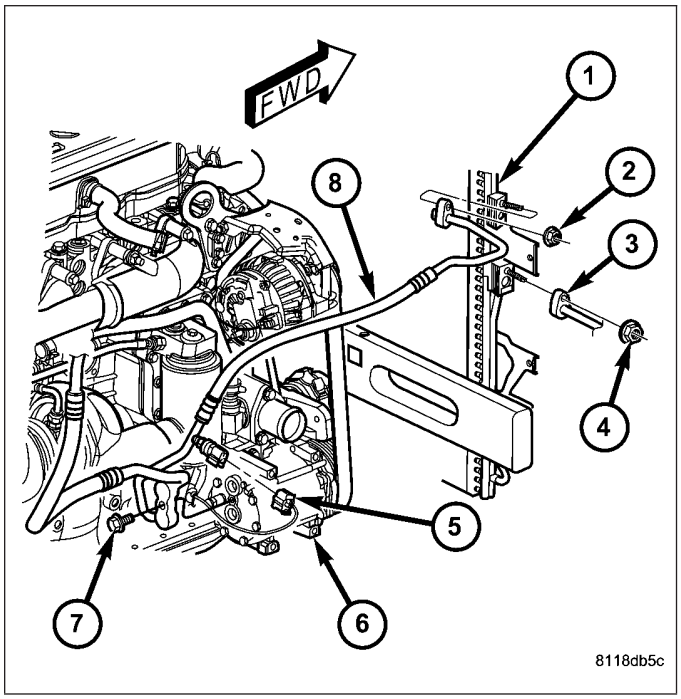

4. Remove the tape or plugs from the opened refrigerant line fittings and the compressor ports.
5. Lubricate new seals with clean refrigerant oil and install them onto the refrigerant line fittings. Use only the specified seals as they are made of a special material for the R-134a system. Use only refrigerant oil of the type recommended for the A/C compressor in the vehicle.
6. Install the A/C suction and discharge line assembly (8) onto the A/C compressor (6).
7. Install the bolt (7) that secures the refrigerant line assembly to the A/C compressor. Tighten the bolt to 28 N·m (20 ft. lbs.).
8. Connect the wire harness connector to the clutch coil connector of the A/C compressor.
9. Install the serpentine drive belt (Refer to 7 - COOLING/ACCESSORY DRIVE/BELTS-DRIVE - INSTALLATION).
10. Reconnect the negative battery cable.
11. Evacuate the refrigerant system (Refer to 24 - HEATING & AIR CONDITIONING/PLUMBING - STANDARD PROCEDURE - REFRIGERANT SYSTEM EVACUATE).
12. Charge the refrigerant system (Refer to 24 - HEATING & AIR CONDITIONING/PLUMBING - STANDARD PROCEDURE - REFRIGERANT SYSTEM CHARGE).

8.3L ENGINE

NOTE: Be certain to check the refrigerant oil level if the A/C compressor is being replaced. See Refrigerant Oil Level in this group for the procedures. Use only refrigerant oil of the type recommended for the A/C compressor in the vehicle.

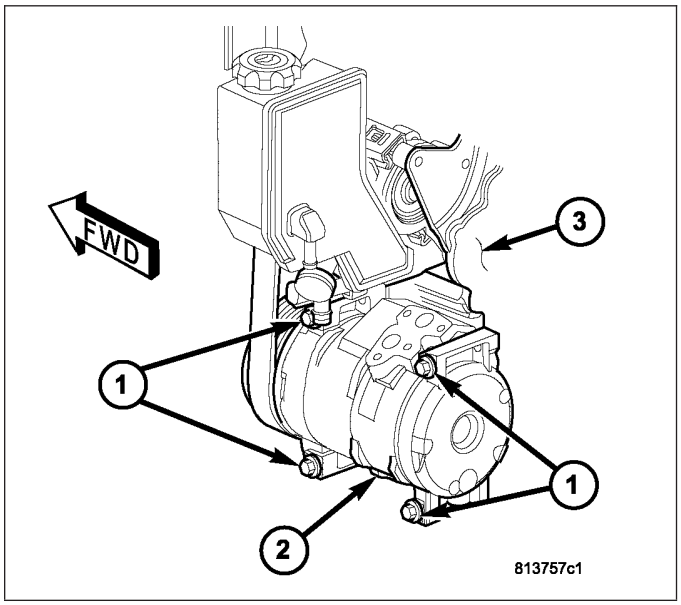

1. Position the A/C compressor (2) into the engine compartment.
2. Install and hand tighten the bolts (1) that secure the A/C compressor to the cylinder block (3).
3. Tighten the bolts that secure the A/C compressor to the cylinder block to 23 N·m (17 ft. lbs.).

4. Remove the tape or plugs from the opened refrigerant line fittings and the compressor ports.
5. Lubricate new seals with clean refrigerant oil and install them onto the refrigerant line fittings. Use only the specified seals as they are made of a special material for the R-134a system. Use only refrigerant oil of the type recommended for the A/C compressor in the vehicle.
6. Install the A/C suction line (1) and the A/C discharge line (3) onto the A/C compressor (2).
7. Install the bolts (5) that secure the refrigerant lines to the A/C compressor. Tighten the bolts to 20 N·m (15 ft. lbs.).
8. Connect the wire harness connector to the A/C compressor clutch coil connector (4).
9. Install the serpentine drive belt (Refer to 7 - COOLING/ACCESSORY DRIVE/BELTS-DRIVE - INSTALLATION).

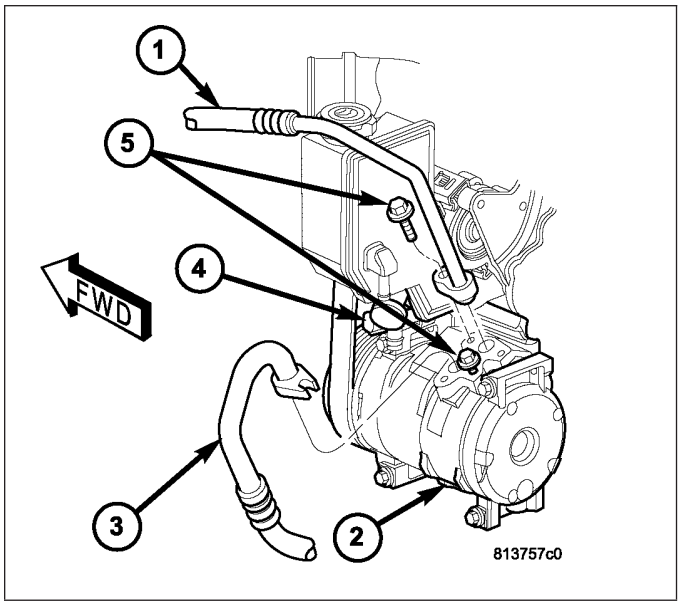

10. Reconnect the negative battery cable.
11. Evacuate the refrigerant system (Refer to 24 - HEATING & AIR CONDITIONING/PLUMBING - STANDARD PROCEDURE - REFRIGERANT SYSTEM EVACUATE).
12. Charge the refrigerant system (Refer to 24 - HEATING & AIR CONDITIONING/PLUMBING - STANDARD PROCEDURE - REFRIGERANT SYSTEM CHARGE).

CONDENSER-A/C

DESCRIPTION

The A/C condenser is located in the front of the engine compartment behind the grille. The A/C condenser is a heat exchanger that allows the high-pressure refrigerant gas being discharged by the A/C compressor to give up its heat to the air passing over the condenser fins, which causes the refrigerant to cool and change to a liquid state.

OPERATION

When air passes through the fins of the A/C condenser, the high-pressure refrigerant gas within the A/C condenser gives up its heat. The refrigerant then condenses as it leaves the A/C condenser and becomes a high-pressure liquid. The volume of air flowing over the condenser fins is critical to the proper cooling performance of the A/C system. Therefore, it is important that there are no objects placed in front of the radiator grille openings at the front of the vehicle or foreign material on the condenser fins that might obstruct proper air flow. Also, any factory-installed air seals or shrouds must be properly reinstalled following radiator or A/C condenser service.

The A/C condenser cannot be repaired and, if faulty or damaged, it must be replaced.

REMOVAL

3.7L/4.7L/5.7L ENGINES

WARNING: Refer to the applicable warnings and cautions for this system before performing the following operation (Refer to 24 - HEATING & AIR CONDITIONING/PLUMBING - WARNINGS) and (Refer to 24 - HEATING & AIR CONDITIONING/PLUMBING - CAUTIONS). Failure to follow the warnings and cautions could result in possible personal injury or death.

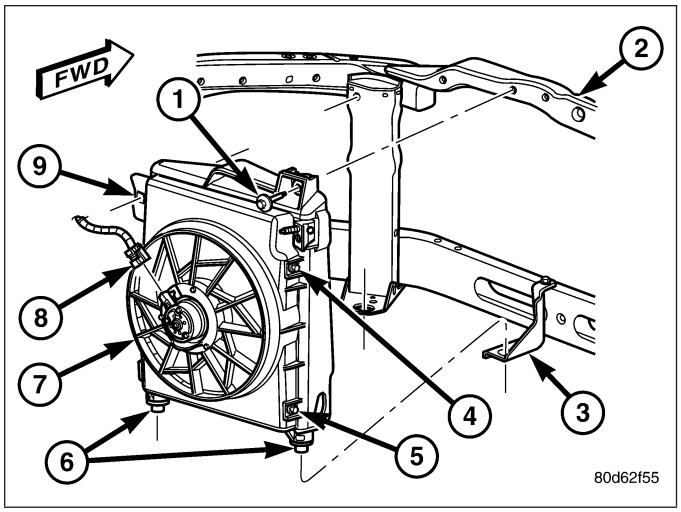

1. Recover the refrigerant from the refrigerant system (Refer to 24 - HEATING & AIR CONDITIONING/ PLUMBING - STANDARD PROCEDURE - REFRIGERANT SYSTEM RECOVERY).
2. Disconnect and isolate the negative battery cable.
3. Disconnect the A/C discharge line and the A/C liquid line from the A/C condenser (Refer to 24 - HEATING & AIR CONDITIONING/PLUMBING/ LINE-A/C LIQUID - REMOVAL) and (Refer to 24 - HEATING & AIR CONDITIONING/PLUMBING/ LINE-A/C DISCHARGE - REMOVAL).
4. Disconnect the wire harness connector (8) from the A/C condenser cooling fan motor (7).
5. Remove the two bolts (1 and 9) that secure the A/C condenser to the front upper crossmember (2).
6. Carefully lift the A/C condenser and cooling fan assembly to disconnect the lower mounting tabs (6) from the lower mounting flanges (3) and remove the assembly from the engine compartment.
7. If required, place the A/C condenser and the cooling fan assembly on a workbench and remove the four screws (4 and 5) that secure the cooling fan to the A/C condenser and separate the fan from the condenser.

5.9L DIESEL ENGINE

WARNING: Refer to the applicable warnings and cautions for this system before performing the following operation (Refer to 24 - HEATING & AIR CONDITIONING/PLUMBING - WARNINGS) and (Refer to 24 - HEATING & AIR CONDITIONING/PLUMBING - CAUTIONS). Failure to follow the warnings and cautions could result in possible personal injury or death.

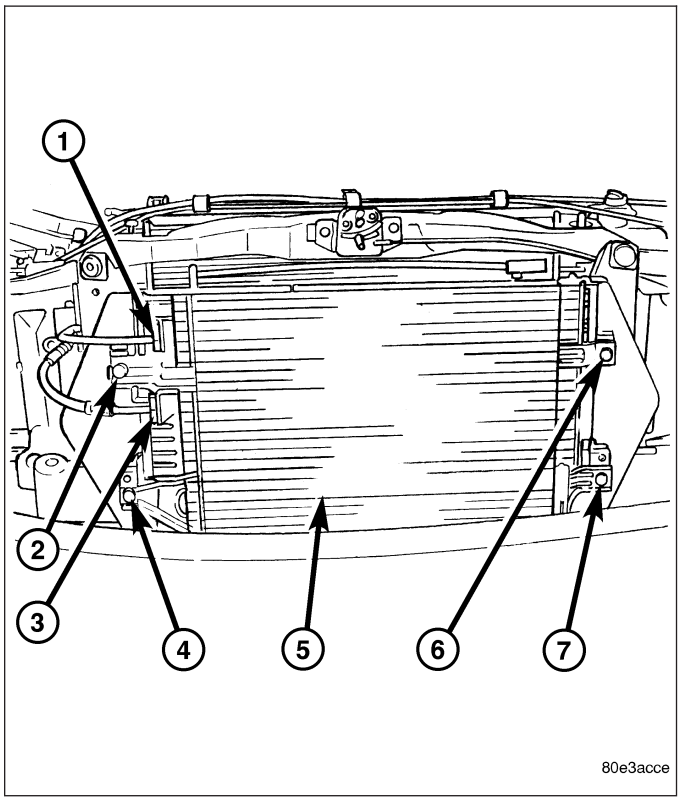

1. Recover the refrigerant from the refrigerant system (Refer to 24 - HEATING & AIR CONDITIONING/ PLUMBING - STANDARD PROCEDURE - REFRIGERANT SYSTEM RECOVERY).
2. Disconnect and isolate the negative battery cable.
3. Disconnect the A/C discharge line (1) and the A/C liquid line (3) from the A/C condenser (5) (Refer to 24 - HEATING & AIR CONDITIONING/PLUMBING/ LINE-A/C LIQUID - REMOVAL) and (Refer to 24 - HEATING & AIR CONDITIONING/PLUMBING/ LINE-A/C DISCHARGE - REMOVAL).
4. Remove the four bolts (2, 4, 6 and 7) that secure the A/C condenser to the charge air cooler.
5. Remove the A/C condenser from the engine compartment.

8.3L ENGINE

WARNING: Refer to the applicable warnings and cautions for this system before performing the following operation (Refer to 24 - HEATING & AIR CONDITIONING/PLUMBING - WARNINGS) and (Refer to 24 - HEATING & AIR CONDITIONING/PLUMBING - CAUTIONS). Failure to follow the warnings and cautions could result in possible personal injury or death.

1. Recover the refrigerant from the refrigerant system (Refer to 24 - HEATING & AIR CONDITIONING/ PLUMBING - STANDARD PROCEDURE - REFRIGERANT SYSTEM RECOVERY).
2. Disconnect and isolate the negative battery cable.
3. Disconnect the A/C discharge line and the A/C liquid line from the A/C condenser (Refer to 24 - HEATING & AIR CONDITIONING/PLUMBING/ LINE-A/C LIQUID - REMOVAL) and (Refer to 24 - HEATING & AIR CONDITIONING/PLUMBING/ LINE-A/C DISCHARGE - REMOVAL).
4. Remove the two bolts (1) that secure the A/C condenser and shroud assembly (4) to the upper radiator support (2).
5. Carefully lift the A/C condenser and shroud assembly off of the front bumper support (3) and remove the assembly from the engine compartment.

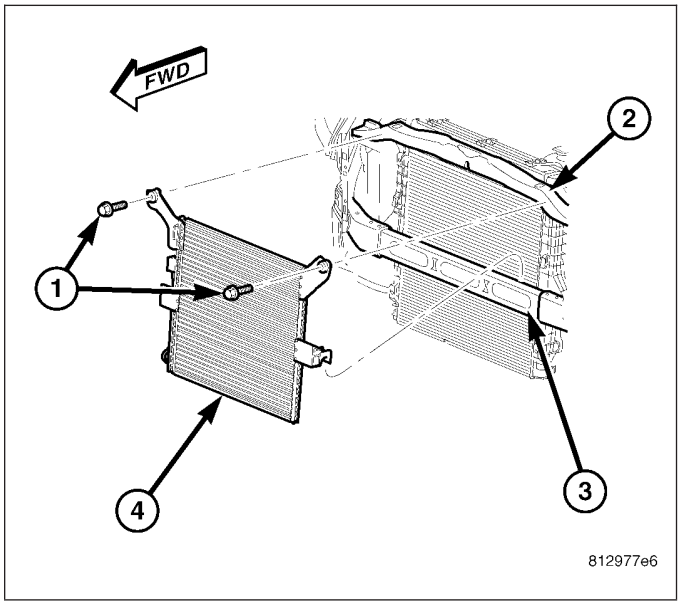

6. If required, place the A/C condenser and shroud assembly on a workbench and remove the six bolts (3) that secure the condenser shroud (2) to the A/C condenser (1) and separate the shroud from the A/C condenser.

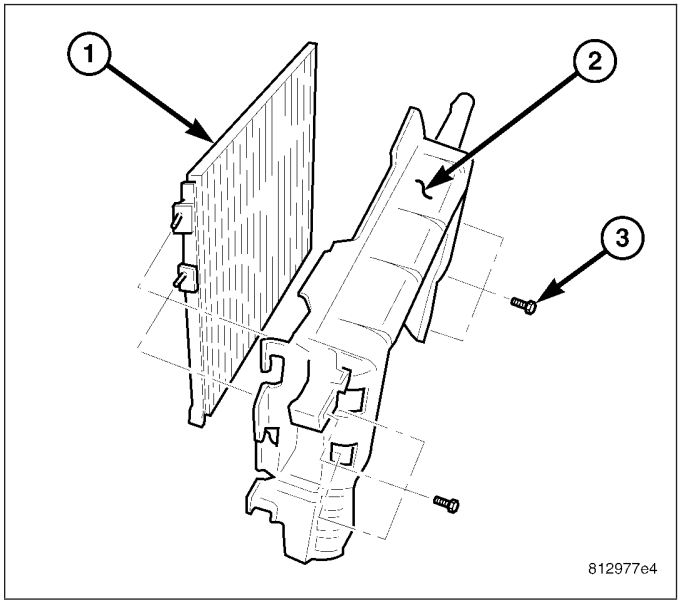

INSTALLATION

3.7L/4.7L/5.7L ENGINES

NOTE: If the A/C condenser is being replaced, add 30 milliliters (1 fluid ounce) of refrigerant oil to the refrigerant system. Use only refrigerant oil of the type recommended for the A/C compressor in the vehicle.

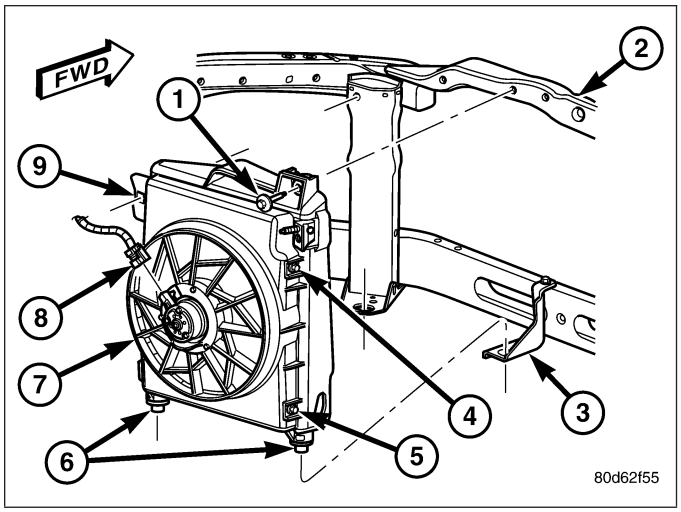

1. If removed, install the condenser cooling fan onto the A/C condenser.
2. Install the four screws (4 and 5) that secure the cooling fan to the A/C condenser. Tighten the screws to 2.2 N·m (20 in. lbs.).
3. Position the A/C condenser and cooling fan assembly into the engine compartment.
4. Install the lower mounting tabs (6) into the lower mounting flanges (3).
5. Install the two bolts (1 and 9) that secure the A/C condenser to the upper front crossmember (2). Tighten the bolts to 10.5 N·m (95 in. lbs.).
6. Connect the wire harness connector (8) to the A/C condenser cooling fan motor (7).
7. Connect the A/C discharge line and the A/C liquid line onto the A/C condenser (Refer to 24 - HEATING & AIR CONDITIONING/PLUMBING/LINE-A/C DISCHARGE - INSTALLATION) and (Refer to 24 - HEATING & AIR CONDITIONING/PLUMBING/LINE-A/C LIQUID - INSTALLATION).
8. Reconnect the negative battery cable.
9. Evacuate the refrigerant system (Refer to 24 - HEATING & AIR CONDITIONING/PLUMBING - STANDARD PROCEDURE - REFRIGERANT SYSTEM EVACUATE).
10. Charge the refrigerant system (Refer to 24 - HEATING & AIR CONDITIONING/PLUMBING - STANDARD PROCEDURE - REFRIGERANT SYSTEM CHARGE).

5.9L DIESEL ENGINE

NOTE: If the A/C condenser is being replaced, add 30 milliliters (1 fluid ounce) of refrigerant oil to the refrigerant system. Use only refrigerant oil of the type recommended for the A/C compressor in the vehicle.

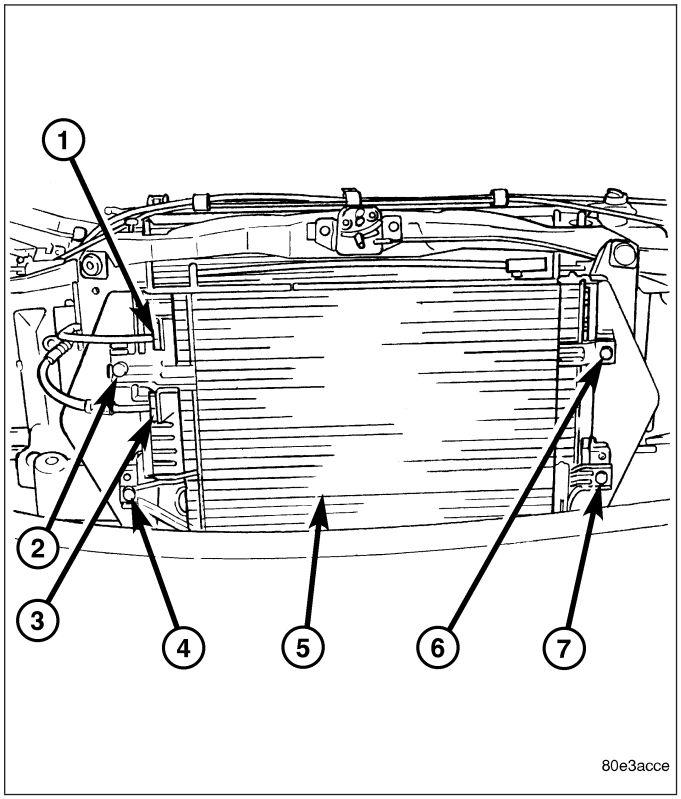

1. Position the A/C condenser (5) into the engine compartment.
2. Install the four bolts (2, 4, 6 and 7) that secure the A/C condenser to the charge air cooler. Tighten the bolts to 10.5 N·m (95 in. lbs.).
3. Remove the tape or plugs from the liquid line fitting and condenser outlet port.
4. Lubricate a new rubber O-ring seal with clean refrigerant oil and install it on the liquid line fitting. Use only the specified O-ring as it is made of a special material for the R-134a system. Use only refrigerant oil of the type recommended for the A/C compressor in the vehicle.
5. Connect the A/C discharge line (1) and the A/C liquid line (3) onto the A/C condenser (Refer to 24 - HEATING & AIR CONDITIONING/PLUMBING/LINE-A/C DISCHARGE - INSTALLATION) and (Refer to 24 - HEATING & AIR CONDITIONING/PLUMBING/LINE-A/C LIQUID - INSTALLATION).
6. Reconnect the negative battery cable.
7. Evacuate the refrigerant system (Refer to 24 - HEATING & AIR CONDITIONING/PLUMBING - STANDARD PROCEDURE - REFRIGERANT SYSTEM EVACUATE).

8. Charge the refrigerant system (Refer to 24 - HEATING & AIR CONDITIONING/PLUMBING - STANDARD PROCEDURE - REFRIGERANT SYSTEM CHARGE).

8.3L ENGINE

NOTE: If the A/C condenser is being replaced, add 30 milliliters (1 fluid ounce) of refrigerant oil to the refrigerant system. Use only refrigerant oil of the type recommended for the A/C compressor in the vehicle.

NOTE: Be certain that each of the radiator and condenser air seals are reinstalled in their proper locations. These air seals are required for the A/C and engine cooling systems to perform as designed.

1. If removed, install the condenser shroud (2) onto the A/C condenser (1).
2. Install the six bolts (3) that secure the condenser shroud to the A/C condenser. Tighten the bolts to 2.2 N·m (20 in. lbs.).

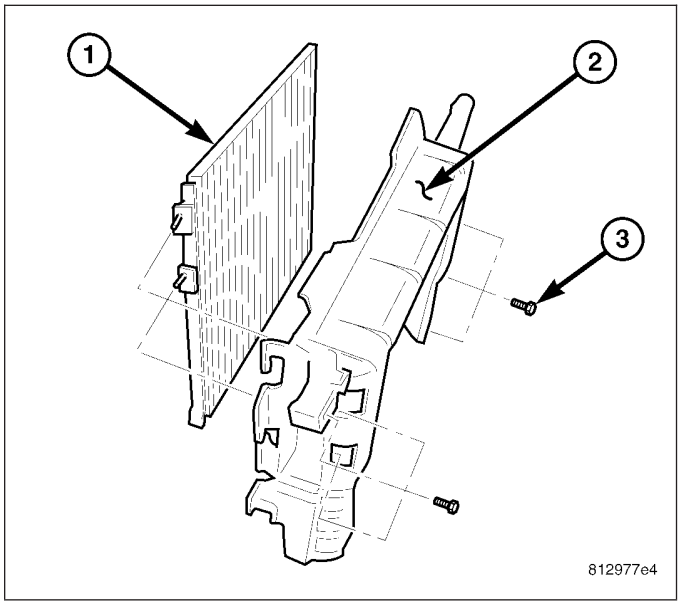

3. Position the A/C condenser and shroud assembly (4) into the engine compartment.
4. Install the A/C condenser and shroud assembly onto the front bumper support (3).
5. Install the two bolts (1) that secure the A/C condenser and shroud assembly to the upper radiator support (2). Tighten the bolts to 10.5 N·m (95 in. lbs.).
6. Connect the A/C discharge line and the A/C liquid line onto the A/C condenser (Refer to 24 - HEATING & AIR CONDITIONING/PLUMBING/LINE-A/C DISCHARGE - INSTALLATION) and (Refer to 24 - HEATING & AIR CONDITIONING/PLUMBING/LINE-A/C LIQUID - INSTALLATION).
7. Reconnect the negative battery cable.
8. Evacuate the refrigerant system (Refer to 24 - HEATING & AIR CONDITIONING/PLUMBING - STANDARD PROCEDURE - REFRIGERANT SYSTEM EVACUATE).

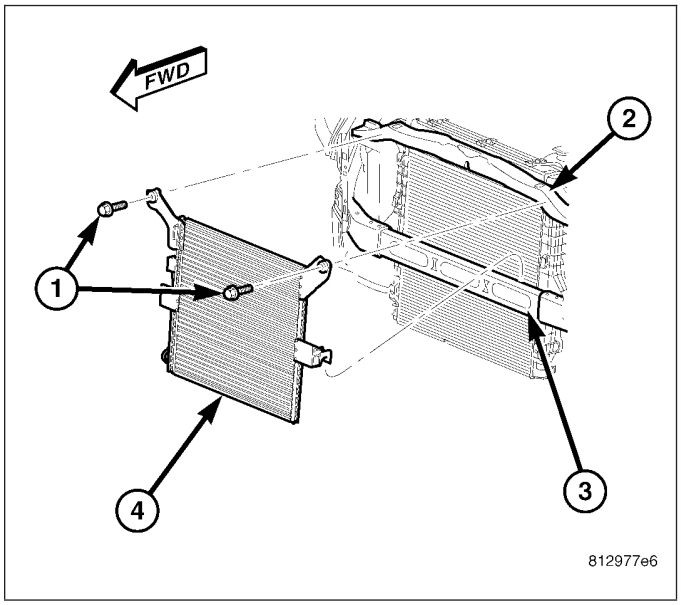

9. Charge the refrigerant system (Refer to 24 - HEATING & AIR CONDITIONING/PLUMBING - STANDARD PROCEDURE - REFRIGERANT SYSTEM CHARGE).

CORE-HEATER

DESCRIPTION

The heater core (1) is a heat exchanger made of rows of tubes and fins. The heater core is positioned within the HVAC housing through the panel (2) located at the front of the HVAC housing. The heater core tubes (3) are attached to the front of the heater core and are secured to the HVAC housing by a bracket.

The heater core can be serviced by removing the HVAC housing assembly from the vehicle.

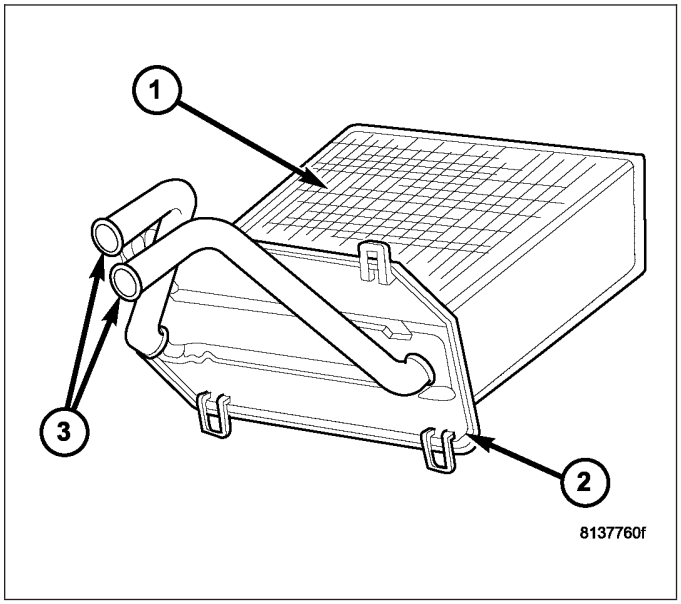

OPERATION

Engine coolant is circulated through the heater hoses to the heater core at all times. As the coolant flows through the heater core, heat is removed from the engine and is transferred to the heater core tubes and fins. Air directed through the heater core picks up the heat from the heater core fins. The blend-air door(s) allows control of the heater output air temperature by regulating the amount of air flowing through the heater core. The blower motor speed controls the volume of air flowing through the HVAC housing.

The heater core cannot be repaired and, if faulty or damaged, it must be replaced.

REMOVAL

WARNING: On vehicles equipped with airbags, disable the airbag system before attempting any steering wheel, steering column, or instrument panel component diagnosis or service. Disconnect and isolate the negative battery (ground) cable, then wait two minutes for the airbag system capacitor to discharge before performing further diagnosis or service. This is the only sure way to disable the airbag system. Failure to take the proper precautions could result in accidental airbag deployment and possible personal injury or death.

NOTE: Disassembly of the HVAC housing is not required to remove heater core.

1. Remove the HVAC housing (Refer to 24 - HEATING & AIR CONDITIONING/DISTRIBUTION/HOUSING-HVAC - REMOVAL).
2. Remove the foam seal from the heater core tubes.
3. If equipped with the dual zone heating-A/C system, remove the linkage rod (4) to gain access to the heater core (3).
4. Remove the two screws (1) that secure the heater core tube bracket (2) to the HVAC housing and remove the bracket.
5. Carefully pull the heater core out of the front of the HVAC housing.
6. Inspect all foam seals and replace as required.

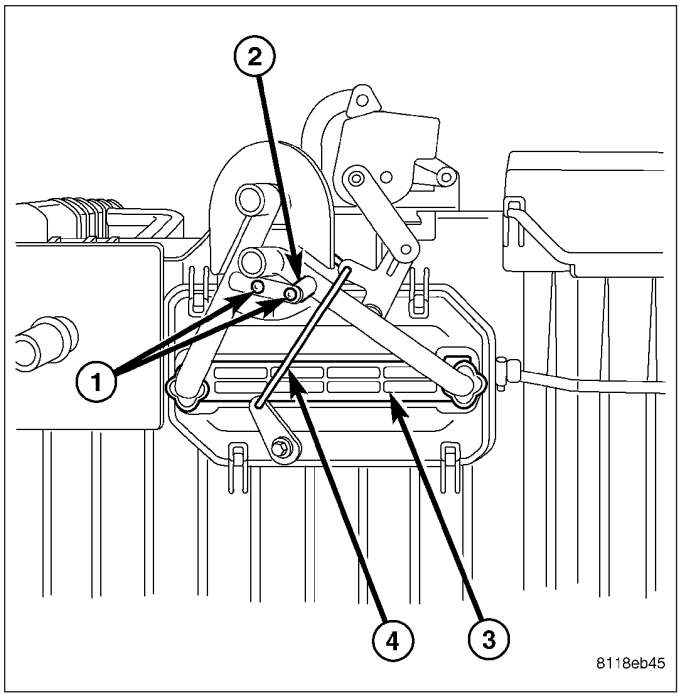

INSTALLATION

1. Carefully install the heater core (3) into the front of the HVAC housing.
2. Position the heater core tube bracket (2) onto the HVAC housing.
3. Install the two screws (1) that secures the heater core bracket to the HVAC housing. Tighten the screws to 2.2 N·m (20 in. lbs.).
4. If equipped with the dual zone heating-A/C system, install the linkage rod (4).
5. Install the foam seal onto the heater core tubes.

NOTE: If the heater core is being replaced, flush the cooling system (Refer to 7 - COOLING - STANDARD PROCEDURE - COOLING SYSTEM CLEANING/REVERSE FLUSHING).

6. Install the HVAC housing (Refer to 24 - HEATING & AIR CONDITIONING/DISTRIBUTION/HOUSING-HVAC - INSTALLATION).

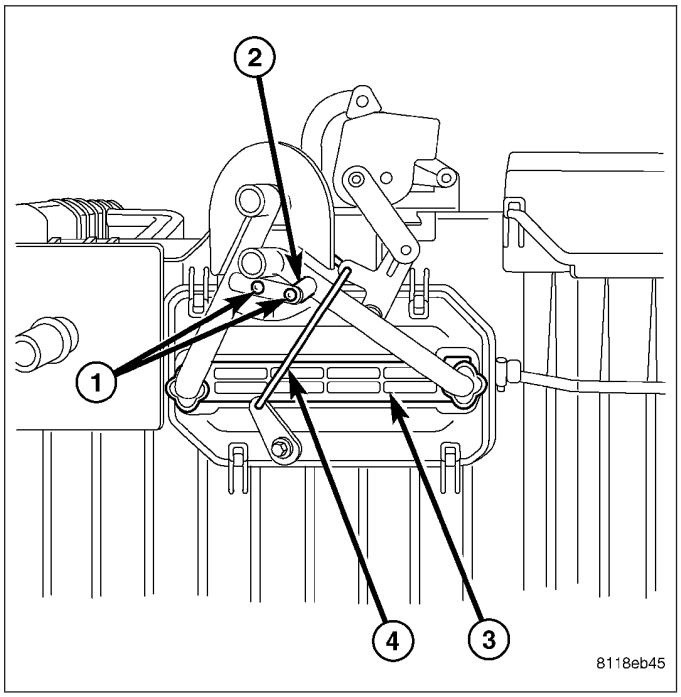

CORE-VALVE-SERVICE PORT

DESCRIPTION

Two refrigerant system service ports are used to recover/recycle/evacuate/charge and test the A/C refrigerant system. Unique sizes are used on the service ports for the R-134a refrigerant system to ensure the system is not accidentally contaminated with R-12 refrigerant or service equipment used for R-12 refrigerant.

The high side service port is located on the A/C discharge line. The A/C pressure transducer is mounted on the high side service port (Refer to 24 - HEATING & AIR CONDITIONING/CONTROLS/TRANSDUCER-A/C PRESSURE -

DESCRIPTION). The low side service port is located on the accumulator. Both the high side and low side A/C service port valve cores are serviceable.

Each of the service ports has a threaded plastic protective cap installed over it from the factory. After servicing the refrigerant system, always reinstall both of the service port caps.

REMOVAL

WARNING: Refer to the applicable warnings and cautions for this system before performing the following operation (Refer to 24 - HEATING & AIR CONDITIONING/PLUMBING - WARNINGS) and (Refer to 24 - HEATING & AIR CONDITIONING/PLUMBING - CAUTIONS). Failure to follow the warnings and cautions could result in possible personal injury or death.

NOTE: Typical A/C service port shown.

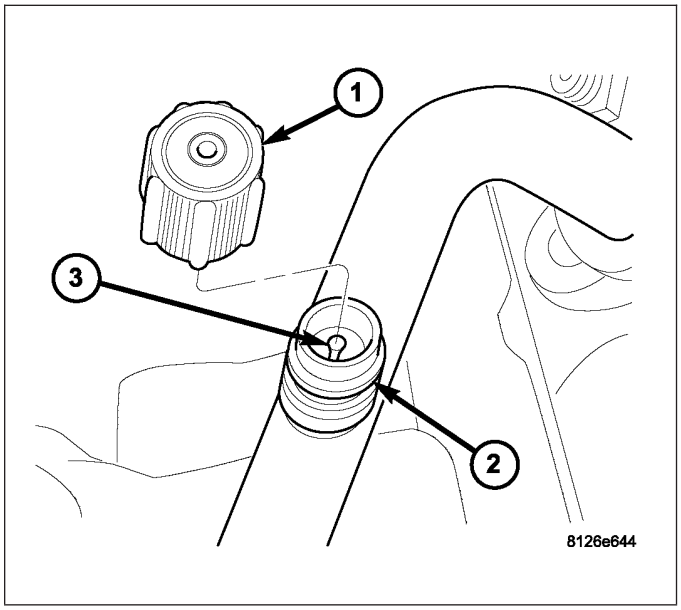

1. Remove the protective cap (1) from the service port (2).
2. Recover the refrigerant from the refrigerant system (Refer to 24 - HEATING & AIR CONDITIONING/ PLUMBING - STANDARD PROCEDURE - REFRIGERANT SYSTEM RECOVERY).
3. Using a Schrader-type valve core tool, remove the valve core (3) from the service port.
4. Install a plug in or tape over the opened service port(s).

INSTALLATION

NOTE: Typical A/C service port shown.

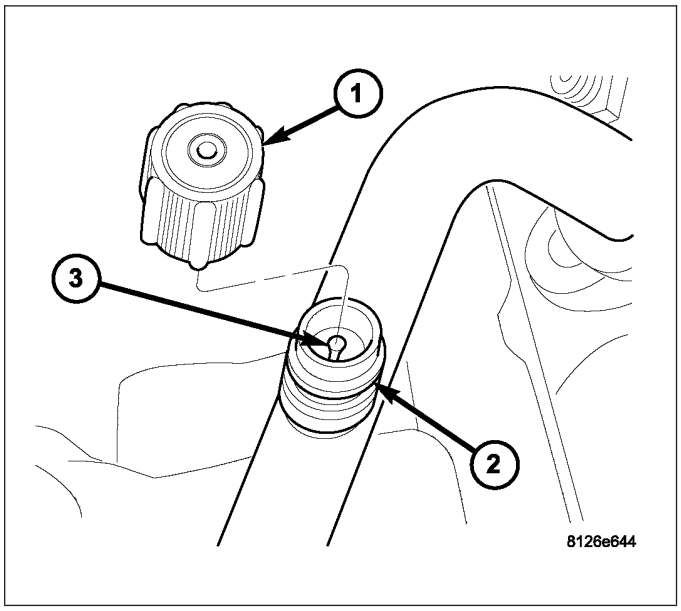

1. Lubricate the valve core (3) with clean refrigerant oil prior to installation. Use only refrigerant oil of the type recommended for the A/C compressor in the vehicle.
2. Remove the tape or plug from the service port (2).

CAUTION: A valve core that is not fully seated in the A/C service port can result in damage to the valve during refrigerant system evacuation and charge. Such damage may result in a loss of system refrigerant while uncoupling the charge adapters.

3. Using a Schrader-type valve core tool, install and tighten the valve core into the service port(s).
4. Evacuate the refrigerant system (Refer to 24 - HEATING & AIR CONDITIONING/PLUMBING - STANDARD PROCEDURE - REFRIGERANT SYSTEM EVACUATE).
5. Charge the refrigerant system (Refer to 24 - HEATING & AIR CONDITIONING/PLUMBING - STANDARD PROCEDURE - REFRIGERANT SYSTEM CHARGE).

NOTE: The protective cap helps aid in service port sealing and helps protects the refrigerant system from contamination. Remember to always reinstall the protective cap onto the service port when refrigerant system service is complete.

6. Install the protective cap (1) onto the service port.

COUPLER-REFRIGERANT LINE

DESCRIPTION

Spring-lock type refrigerant line couplers (1 and 4) are used to connect the A/C suction line (6) to the A/C accumulator (5) and, the A/C accumulator and the A/C liquid line to the A/C evaporator tubes (3). Secondary retaining clips (2 and 7) are installed over the connected couplers for added protection.

The spring-lock refrigerant line couplers require special disconnect tools for disengaging the two coupler halves.

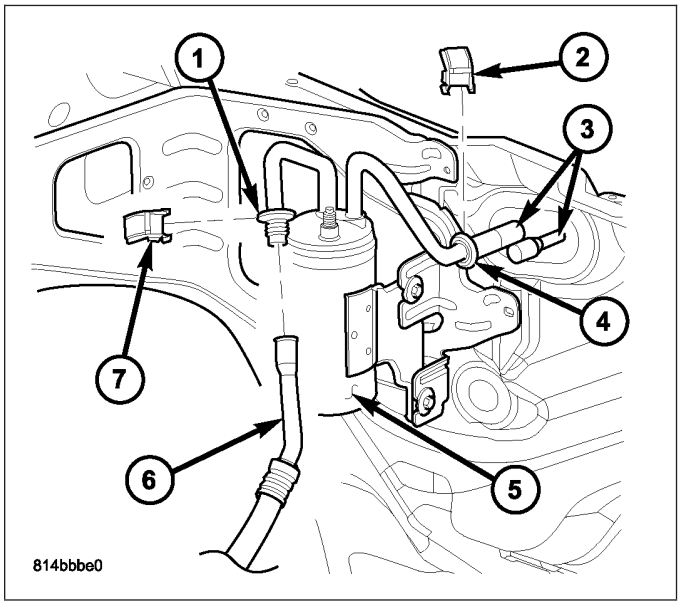

OPERATION

The spring-lock type refrigerant line coupler is held together by a garter spring (6) inside a circular cage (7) on the male half of the fitting (1). When the two coupler halves are connected, the flared end of the female fitting (2) slips behind the garter spring inside the cage on the male fitting. The garter spring and cage prevent the flared end of the female fitting from pulling out of the cage. Some applications use a connection indicator ring (4) to help indicate when the two coupler halves are fully connected.

Two O-rings (8) are used to seal the coupler connections. These O-rings are compatible with R-134a refrigerant and must be replaced with O-rings made of the same material.

A secondary retaining clip (3) is installed over the connected coupler (5) for added protection.

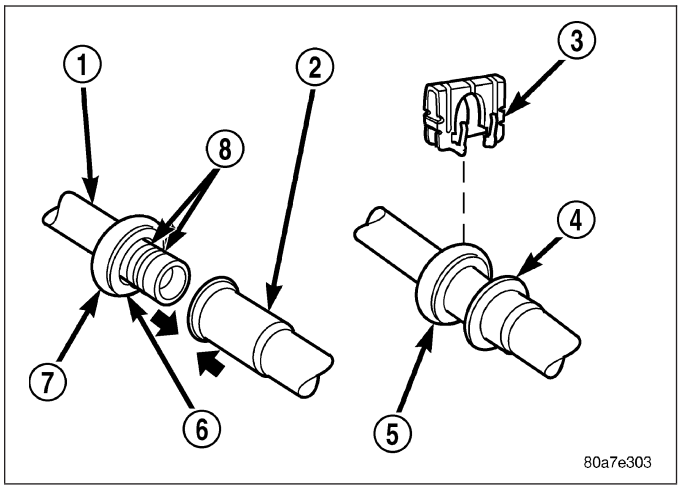

REMOVAL

WARNING: Refer to the applicable warnings and cautions for this system before performing the following operation (Refer to 24 - HEATING & AIR CONDITIONING/PLUMBING - WARNINGS) and (Refer to 24 - HEATING & AIR CONDITIONING/PLUMBING - CAUTIONS). Failure to follow the warnings and cautions could result in possible personal injury or death.

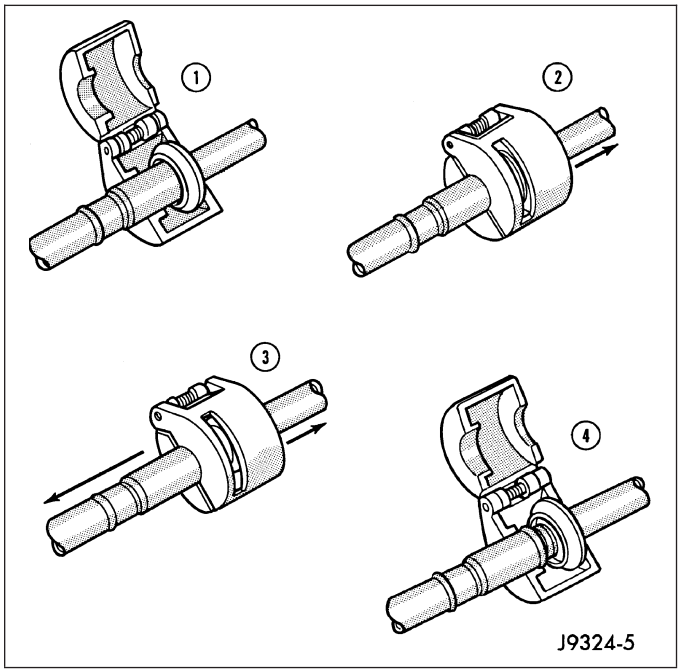

1. Recover the refrigerant from the refrigerant system (Refer to 24 - HEATING & AIR CONDITIONING/PLUMBING - STANDARD PROCEDURE - REFRIGERANT SYSTEM RECOVERY).
2. Remove the secondary retaining clip from the spring-lock type refrigerant line coupler.
3. Fit the proper size A/C line disconnect tool (Special Tool Kit 7193 or equivalent) over the coupler cage (1).
4. Close the two halves of the A/C line disconnect tool around the coupler (2).

NOTE: The garter spring may not release if the A/C line disconnect tool is cocked while pushing it into the coupler cage opening.

5. Push the A/C line disconnect tool into the open side of the coupler cage to expand the garter spring (3). Once the garter spring is expanded, pull on the refrigerant line attached to the female half of the coupler until the flange on the female fitting is separated from the garter spring and cage on the male fitting.
6. Open and remove the A/C line disconnect tool from the refrigerant line coupler (4).

INSTALLATION

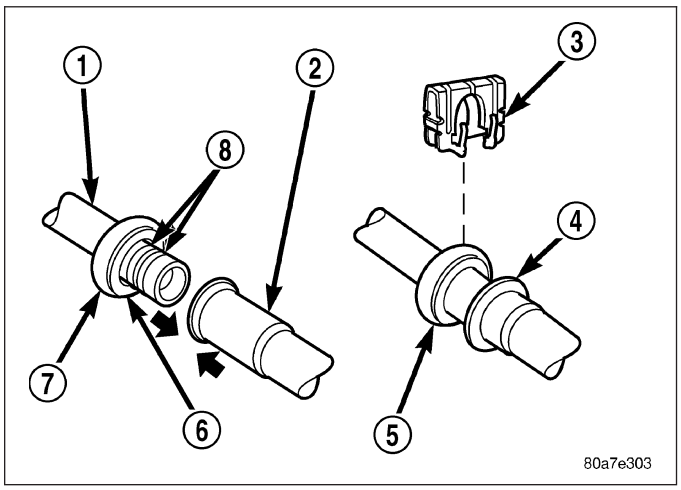

1. Clean any dirt or foreign material from the spring-lock type refrigerant line coupler.
2. Check to make sure that the garter spring (6) is located within the cage (7) of the male half of the refrigerant line coupler (1), and that the garter spring is not damaged.
   a. If the garter spring is missing, install a new spring by pushing it into the coupler cage opening.
   b. If the garter spring is damaged, remove it from the coupler cage with a small hook (DO NOT use a screwdriver) and install a new garter spring.

CAUTION: Use only the specified O-rings as they are made of a special material for the R-134a system. The use of any other O-rings may allow the connection to leak.

3. Install new O-rings (8) on the male half of the refrigerant line coupler.
4. Lubricate the O-rings, and the inside of the female half of the refrigerant line coupler (2) with clean R-134a refrigerant oil. Use only refrigerant oil of the type recommended for the A/C compressor in the vehicle.
5. Position the female half of the coupler over the male half of the coupler.

6. Push together firmly on the two halves of the refrigerant line coupler until the garter spring in the cage on the male half of the coupler snaps over the flanged end on the female half of the coupler.
7. Make sure that the refrigerant line coupler is fully engaged by firmly pulling the refrigerant lines away from each other on both sides of the coupler.
8. Install the secondary retaining clip (3) over connected coupler cage (5).
9. Evacuate the refrigerant system (Refer to 24 - HEATING & AIR CONDITIONING/PLUMBING - STANDARD PROCEDURE - REFRIGERANT SYSTEM EVACUATE).
10. Charge the refrigerant system (Refer to 24 - HEATING & AIR CONDITIONING/PLUMBING - STANDARD PROCEDURE - REFRIGERANT SYSTEM CHARGE).

EVAPORATOR-A/C

DESCRIPTION

The A/C evaporator (1) for the heating-A/C system is located within the HVAC housing, behind the instrument panel. The A/C evaporator and it's insulator (2) are positioned in the HVAC housing so that all air entering the housing must pass over the evaporator fins before it is distributed through the heating-A/C system ducts and outlets. However, air passing over the evaporator fins will only be conditioned when the A/C compressor is engaged and circulating refrigerant through the A/C evaporator.

The A/C evaporator can be serviced by removing and disassembling the HVAC housing assembly.

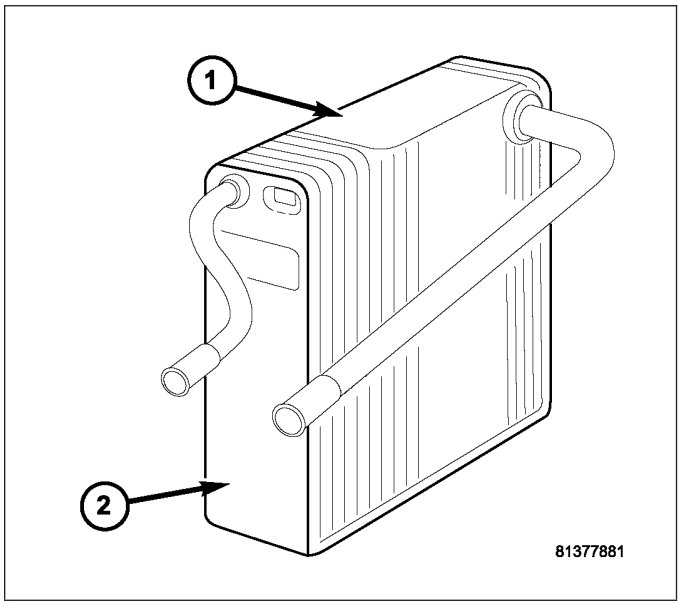

OPERATION

Refrigerant enters the A/C evaporator through the A/C orice tube as a low-temperature, low-pressure mixture of liquid and gas. As air flows over the fins of the A/C evaporator, the humidity in the air condenses on the fins, and the heat from the air is absorbed by the refrigerant. Heat absorption causes the refrigerant to boil and vaporize. The refrigerant becomes a low-pressure gas when it leaves the A/C evaporator.

The A/C evaporator cannot be repaired and, if faulty or damaged, it must be replaced.

REMOVAL

WARNING: On vehicles equipped with airbags, disable the airbag system before attempting any steering wheel, steering column, or instrument panel component diagnosis or service. Disconnect and isolate the negative battery (ground) cable, then wait two minutes for the airbag system capacitor to discharge before performing further diagnosis or service. This is the only sure way to disable the airbag system. Failure to take the proper precautions could result in accidental airbag deployment and possible personal injury or death.

1. Remove the HVAC housing (Refer to 24 - HEATING & AIR CONDITIONING/DISTRIBUTION/HOUSING-HVAC - REMOVAL).
2. Disassemble the HVAC housing to access the A/C evaporator (Refer to 24 - HEATING & AIR CONDITIONING/DISTRIBUTION/HOUSING-HVAC - DISASSEMBLY).
3. Remove the probe of the evaporator temperature sensor (1) from the fins of the A/C evaporator (2) and position the wire lead (3) out of the way.
4. Carefully lift the A/C evaporator out of the upper half of the HVAC housing (4).
5. Inspect all foam seals and replace as required.

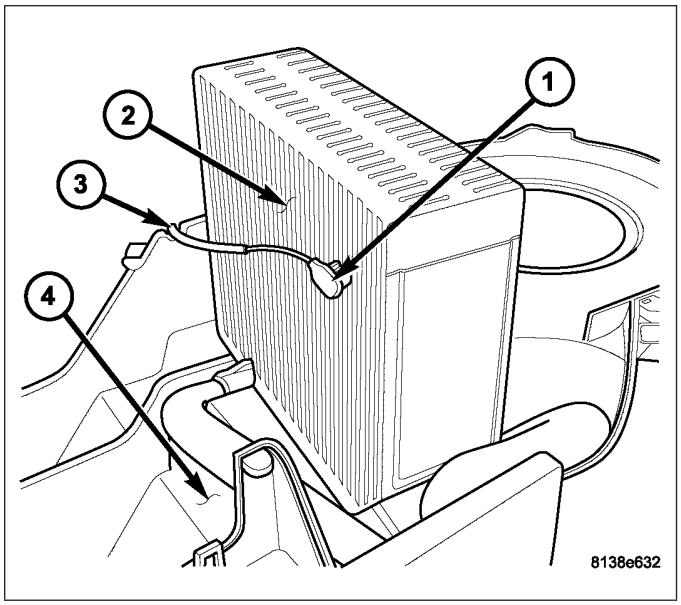

INSTALLATION

NOTE: If the A/C evaporator is being replaced, add 60 milliliters (2 fluid ounces) of refrigerant oil to the refrigerant system. Use only refrigerant oil of the type recommended for the A/C compressor in the vehicle.

1. Carefully install the A/C evaporator (2) into the upper half of the HVAC housing (4).
2. Install the probe of the evaporator temperature sensor (1) between the fins of the A/C evaporator.
3. Route the wire lead for the evaporator temperature sensor (3) into the opening located on the upper half of the HVAC housing.
4. Assemble the HVAC housing (Refer to 24 - HEATING & AIR CONDITIONING/DISTRIBUTION/HOUSING-HVAC - ASSEMBLY).
5. Install the HVAC housing (Refer to 24 - HEATING & AIR CONDITIONING/DISTRIBUTION/HOUSING-HVAC - INSTALLATION).

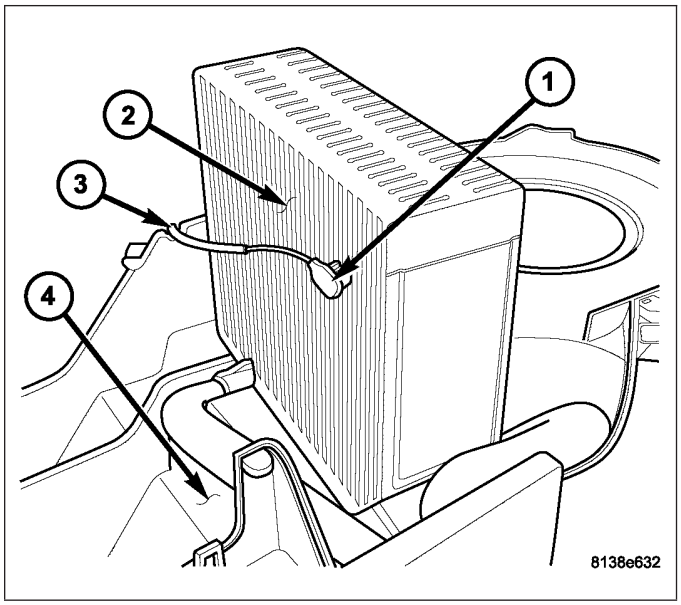

FAN-A/C CONDENSER

REMOVAL - 3.7L/4.7L/5.7L ENGINES

WARNING: Refer to the applicable warnings and cautions for this system before performing the following operation (Refer to 24 - HEATING & AIR CONDITIONING/PLUMBING - WARNINGS) and (Refer to 24 - HEATING & AIR CONDITIONING/PLUMBING - CAUTIONS). Failure to follow the warnings and cautions could result in possible personal injury or death.

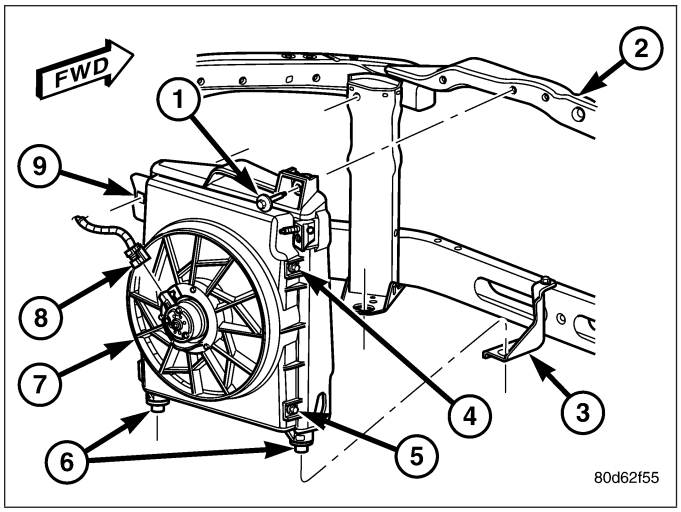

1. Recover the refrigerant from the refrigerant system (Refer to 24 - HEATING & AIR CONDITIONING/ PLUMBING - STANDARD PROCEDURE - REFRIGERANT SYSTEM RECOVERY).
2. Disconnect and isolate the negative battery cable.
3. Disconnect the A/C discharge line and the A/C liquid line from the A/C condenser (Refer to 24 - HEATING & AIR CONDITIONING/PLUMBING/ LINE-A/C LIQUID - REMOVAL) and (Refer to 24 - HEATING & AIR CONDITIONING/PLUMBING/ LINE-A/C DISCHARGE - REMOVAL).
4. Disconnect the wire harness connector (8) from the A/C condenser cooling fan motor (7).
5. Remove the two bolts (1 and 9) that secure the A/C condenser to the front upper crossmember (2).
6. Carefully lift the A/C condenser and cooling fan assembly to disconnect the lower mounting tabs (6) from the lower mounting flanges (3) and remove the assembly from the engine compartment.
7. Place the A/C condenser and the cooling fan assembly on a workbench and remove the four screws (4 and 5) that secure the cooling fan to the A/C condenser and separate the fan from the condenser.

INSTALLATION - 3.7L/4.7L/5.7L ENGINES

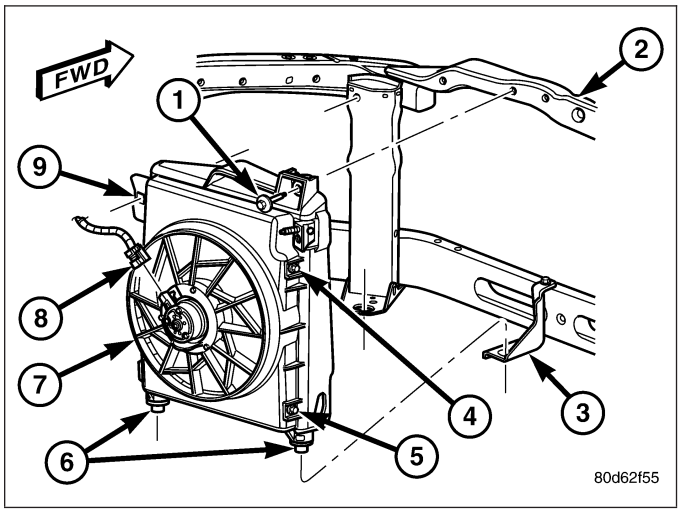

1. Install the condenser cooling fan onto the A/C condenser.
2. Install the four screws (4 and 5) that secure the cooling fan to the A/C condenser. Tighten the screws to 2.2 N·m (20 in. lbs.).
3. Position the A/C condenser and cooling fan assembly into the engine compartment.
4. Install the lower mounting tabs (6) into the lower mounting flanges (3).
5. Install the two bolts (1 and 9) that secure the A/C condenser to the upper front crossmember (2). Tighten the bolts to 10.5 N·m (95 in. lbs.).
6. Connect the wire harness connector (8) to the A/C condenser cooling fan motor (7).
7. Connect the A/C discharge line and the A/C liquid line onto the A/C condenser (Refer to 24 - HEATING & AIR CONDITIONING/PLUMBING/LINE-A/C DISCHARGE - INSTALLATION) and (Refer to 24 - HEATING & AIR CONDITIONING/PLUMBING/LINE-A/C LIQUID - INSTALLATION).
8. Reconnect the negative battery cable.
9. Evacuate the refrigerant system (Refer to 24 - HEATING & AIR CONDITIONING/PLUMBING - STANDARD PROCEDURE - REFRIGERANT SYSTEM EVACUATE).
10. Charge the refrigerant system (Refer to 24 - HEATING & AIR CONDITIONING/PLUMBING - STANDARD PROCEDURE - REFRIGERANT SYSTEM CHARGE).

LINE-A/C DISCHARGE

DESCRIPTION

The A/C discharge line is the refrigerant line that goes from the A/C compressor to the A/C condenser and has an integral fitting for the A/C pressure transducer (Refer to 24 - HEATING & AIR CONDITIONING/CONTROLS/TRANSDUCER-A/C PRESSURE - DESCRIPTION).

The A/C discharge line for the 5.9L Diesel engine is serviced as an assembly with the suction line.

The A/C discharge line for the 8.3L engine is secured to the top of fan shroud by two retainers.

CAUTION: Use only O-ring seals specified for the vehicle. Failure to use correct O-ring seal will cause the refrigerant system connection to leak.

The A/C discharge line has no serviceable parts except the rubber O-ring seals. The O-ring seals used on the connections are made from a special type of rubber not affected by R-134a refrigerant. The O-ring seals must be replaced whenever the A/C discharge line is removed and installed.

If the A/C discharge line is found to be leaking or is damaged, it must be replaced.

REMOVAL

3.7L/4.7L ENGINES

WARNING: Refer to the applicable warnings and cautions for this system before performing the following operation (Refer to 24 - HEATING & AIR CONDITIONING/PLUMBING - WARNINGS) and (Refer to 24 - HEATING & AIR CONDITIONING/PLUMBING - CAUTIONS). Failure to follow the warnings and cautions could result in possible personal injury or death.

1. Recover the refrigerant from the refrigerant system (Refer to 24 - HEATING & AIR CONDITIONING/ PLUMBING - STANDARD PROCEDURE - REFRIGERANT SYSTEM RECOVERY).
2. Disconnect and isolate the negative battery cable.
3. Disconnect the wire harness connector (6) from the A/C pressure transducer (7).
4. Remove the nut (1) that secures the A/C discharge line (9) to the A/C condenser (3).
5. Disconnect the A/C discharge line from the A/C condenser and remove and discard the seal.
6. Install plugs in, or tape over the discharge line fitting and condenser inlet port.
7. Remove the nut (4) that secures the A/C discharge line to the A/C compressor (6).
8. Disconnect the A/C discharge line from the A/C compressor and remove and discard the seal.
9. Install plugs in, or tape over the opened refrigerant line fitting and the compressor port.
10. Remove the A/C discharge line from the engine compartment.

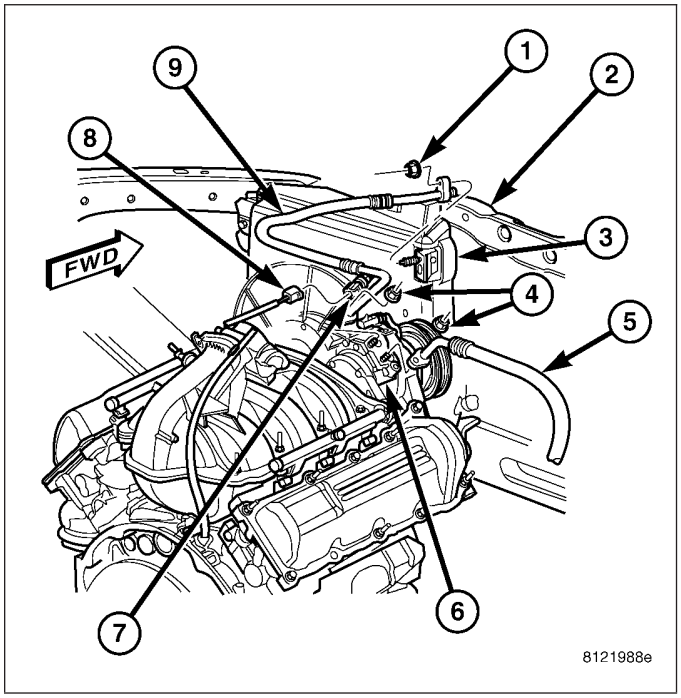

11. If necessary, remove the A/C pressure transducer from the A/C discharge line (Refer to 24 - HEATING & AIR CONDITIONING/CONTROLS/TRANSDUCER-A/C PRESSURE - REMOVAL).

5.7L ENGINE

WARNING: Refer to the applicable warnings and cautions for this system before performing the following operation (Refer to 24 - HEATING & AIR CONDITIONING/PLUMBING - WARNINGS) and (Refer to 24 - HEATING & AIR CONDITIONING/PLUMBING - CAUTIONS). Failure to follow the warnings and cautions could result in possible personal injury or death.

1. Recover the refrigerant from the refrigerant system (Refer to 24 - HEATING & AIR CONDITIONING/ PLUMBING - STANDARD PROCEDURE - REFRIGERANT SYSTEM RECOVERY).
2. Disconnect and isolate the negative battery cable.
3. Disconnect the wire harness connector from the A/C pressure transducer (8).
4. Remove the nut (2) that secures the A/C discharge line (1) to the A/C condenser (3).
5. Disconnect the A/C discharge line from the A/C condenser and remove and discard the seal.
6. Install plugs in, or tape over the discharge line fitting and condenser inlet port.
7. Remove the nut (7) that secures the A/C discharge line to the A/C compressor (6).
8. Disconnect the A/C discharge line from the A/C compressor and remove and discard the seal.
9. Install plugs in, or tape over the opened refrigerant line fitting and the compressor port.
10. Remove the A/C discharge line from the engine compartment.

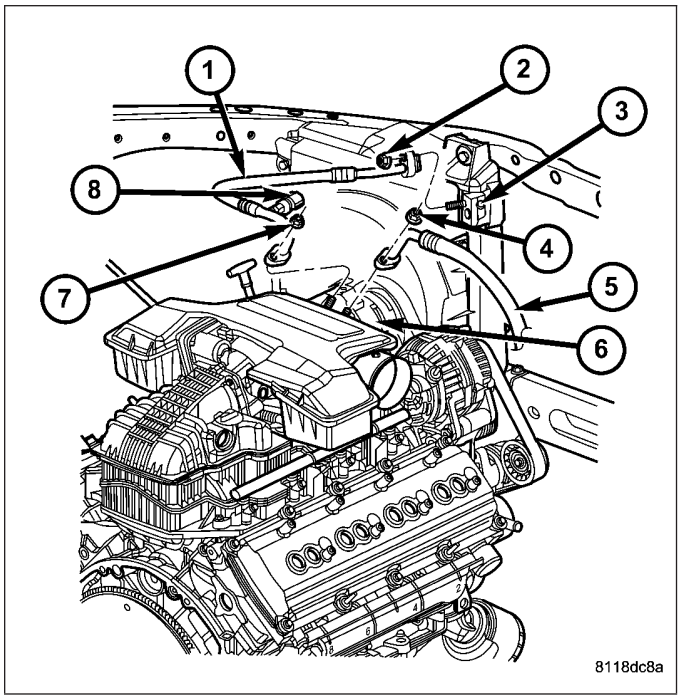

11. If necessary, remove the A/C pressure transducer from the A/C discharge line (Refer to 24 - HEATING & AIR CONDITIONING/CONTROLS/TRANSDUCER-A/C PRESSURE - REMOVAL).

5.9L DIESEL ENGINE

WARNING: Refer to the applicable warnings and cautions for this system before performing the following operation (Refer to 24 - HEATING & AIR CONDITIONING/PLUMBING - WARNINGS) and (Refer to 24 - HEATING & AIR CONDITIONING/PLUMBING - CAUTIONS). Failure to follow the warnings and cautions could result in possible personal injury or death.

NOTE: The A/C discharge line for the 5.9L Diesel engine is serviced as an assembly with the suction line.

1. Recover the refrigerant from the refrigerant system (Refer to 24 - HEATING & AIR CONDITIONING/ PLUMBING - STANDARD PROCEDURE - REFRIGERANT SYSTEM RECOVERY).
2. Disconnect and isolate the negative battery cable.
3. Remove the air filter housing cover (Refer to 9 - ENGINE/AIR INTAKE SYSTEM).
4. Disconnect the wire harness connector (5) from the A/C pressure transducer.
5. Remove the nut (2) that secures the A/C discharge line (8) to the A/C condenser (1).
6. Disconnect the A/C discharge line from the A/C condenser and remove and discard the seal.
7. Install plugs in, or tape over the discharge line fitting and condenser inlet port.
8. Remove the bolt (7) that secures the A/C suction and discharge line assembly to the A/C compressor (6).
9. Disconnect the A/C discharge line from the A/C compressor and remove and discard the seal.

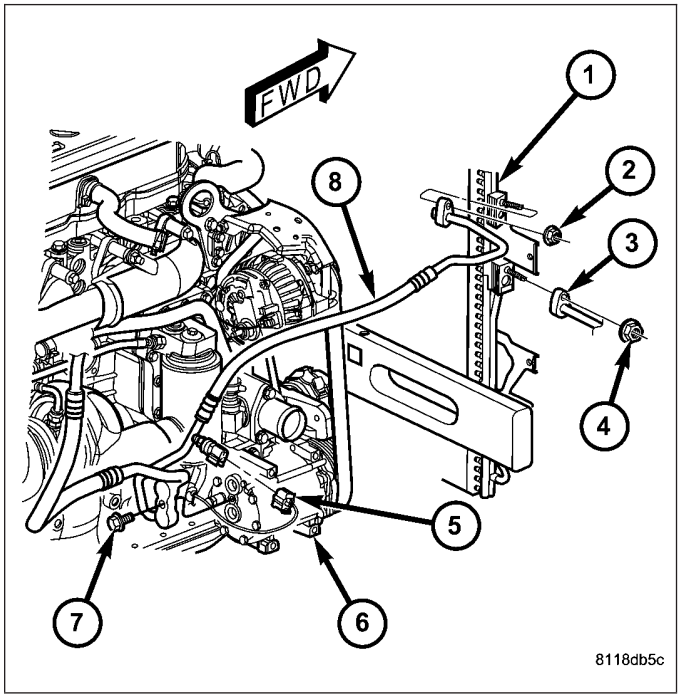

10. Install plugs in, or tape over the opened A/C suction and discharge line fittings and the compressor ports.
11. If necessary, remove the A/C pressure transducer from the A/C discharge line (Refer to 24 - HEATING & AIR CONDITIONING/CONTROLS/TRANSDUCER-A/C PRESSURE - REMOVAL).

12. Remove the secondary retaining clip (7) from the spring-lock coupler (1) that secures the A/C suction line (6) to the accumulator (5).
13. Using the proper A/C line disconnect tool, disconnect the A/C suction line from the A/C accumulator (Refer to 24 - HEATING & AIR CONDITIONING/PLUMBING/COUPLER-REFRIGERANT LINE - REMOVAL).
14. Remove the O-ring seals from the accumulator tube fitting and discard the seals.
15. Install plugs in, or tape over the opened suction line fitting and the accumulator outlet tube.
16. Remove the A/C suction and discharge line assembly from the engine compartment.

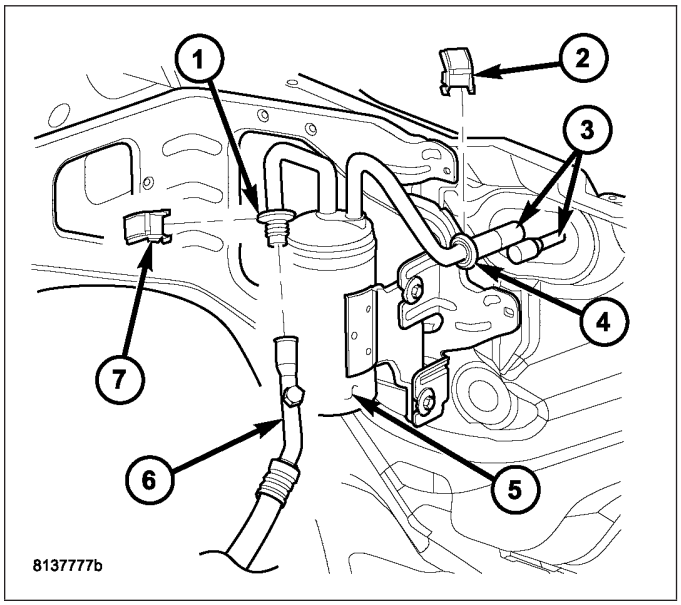

8.3L ENGINE

WARNING: Refer to the applicable warnings and cautions for this system before performing the following operation (Refer to 24 - HEATING & AIR CONDITIONING/PLUMBING - WARNINGS) and (Refer to 24 - HEATING & AIR CONDITIONING/PLUMBING - CAUTIONS). Failure to follow the warnings and cautions could result in possible personal injury or death.

1. Recover the refrigerant from the refrigerant system (Refer to 24 - HEATING & AIR CONDITIONING/PLUMBING - STANDARD PROCEDURE - REFRIGERANT SYSTEM RECOVERY).
2. Disconnect and isolate the negative battery cable.
3. Disconnect the wire harness connector from the A/C pressure transducer.
4. Remove the bolt (5) that secures the A/C discharge line (3) to the A/C compressor (2).
5. Disconnect the A/C discharge line from the A/C compressor.
6. Remove the seal and gasket from the discharge line fitting and discard.
7. Install plugs in, or tape over the opened discharge line fitting and the compressor outlet port.

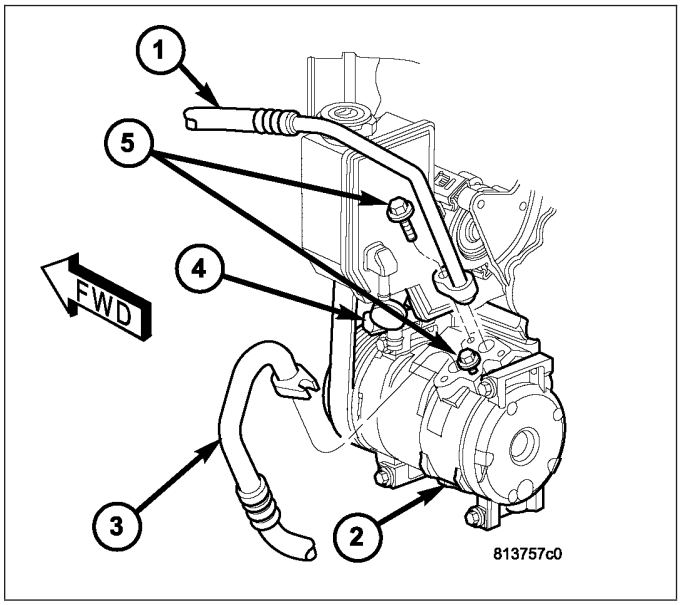

8. Remove the A/C discharge line (3) from the refrigerant line retainer clips (2) located at the top of the fan shroud (1).
9. Remove the plastic cover from the condenser inlet stud (4).

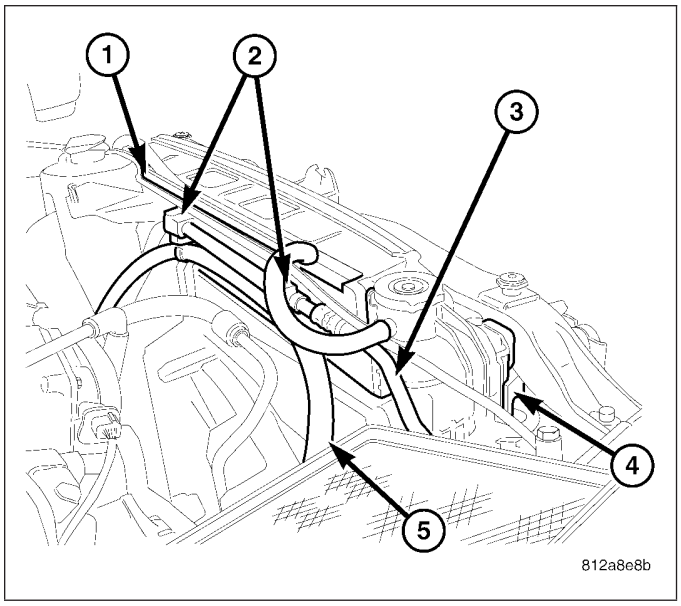

10. Remove the nut (2) that secures the A/C discharge line (1) to the A/C condenser (6).
11. Disconnect the A/C discharge line from the A/C condenser.
12. Remove the seal and gasket from the discharge line fitting and discard.
13. Install plugs in, or tape over the discharge line fitting and condenser inlet port.
14. Remove the A/C discharge line from the engine compartment.
15. If required, remove the A/C pressure transducer from the A/C discharge line (Refer to 24 - HEATING & AIR CONDITIONING/CONTROLS/TRANSDUCER A/C PRESSURE - REMOVAL).

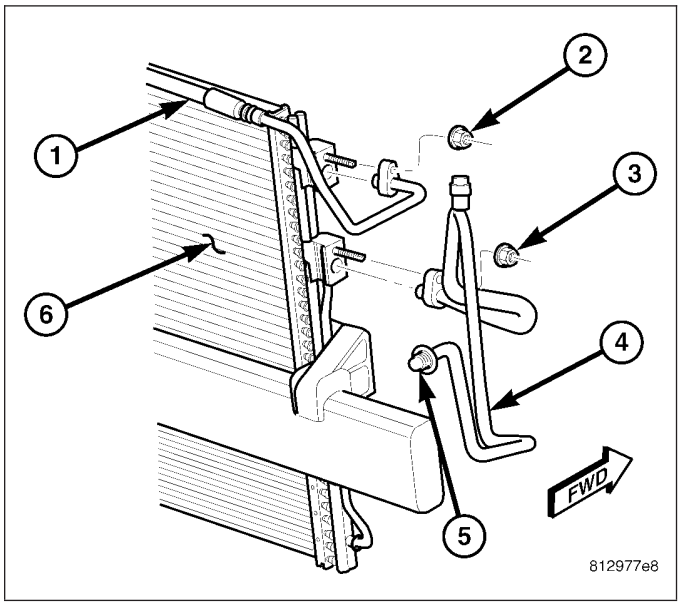

INSTALLATION

3.7L/4.7L ENGINES

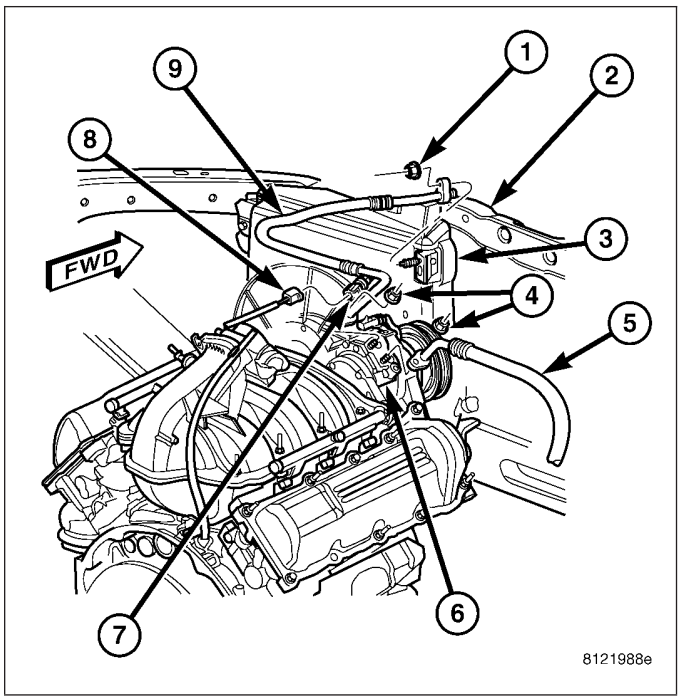

1. If removed, install the A/C pressure transducer (7) onto the A/C discharge line (9) (Refer to 24 - HEATING & AIR CONDITIONING/CONTROLS/ TRANSDUCER-A/C PRESSURE - INSTALLATION).
2. Position the A/C discharge line into the engine compartment.
3. Remove the tape or plugs from the opened discharge line fitting and the inlet port on the A/C condenser (3).
4. Lubricate a new seal with clean refrigerant oil and install it onto the discharge line fitting. Use only the specified seal as it is made of a special material for the R-134a system. Use only refrigerant oil of the type recommended for the A/C compressor in the vehicle.
5. Install the A/C discharge line onto the A/C condenser.
6. Install the nut (1) that secures the A/C discharge line to the A/C condenser. Tighten the nut to 20 N·m (15 ft. lbs.).
7. Remove the tape or plugs from the opened fitting on the A/C discharge line and the outlet port on the A/C compressor (6).
8. Lubricate a new seal with clean refrigerant oil and install it onto the discharge line fitting. Use only the specified seal as it is made of a special material for the R-134a system. Use only refrigerant oil of the type recommended for the A/C compressor in the vehicle.
9. Install the A/C discharge line onto the A/C compressor.
10. Install the nut (4) that secures the A/C discharge line to the A/C compressor. Tighten the nut to 20 N·m (15 ft. lbs.).
11. Connect the wire harness connector (8) to the A/C pressure transducer.
12. Reconnect the negative battery cable.
13. Evacuate the refrigerant system (Refer to 24 - HEATING & AIR CONDITIONING/PLUMBING - STANDARD PROCEDURE - REFRIGERANT SYSTEM EVACUATE).
14. Charge the refrigerant system (Refer to 24 - HEATING & AIR CONDITIONING/PLUMBING - STANDARD PROCEDURE - REFRIGERANT SYSTEM CHARGE).

5.7L ENGINE

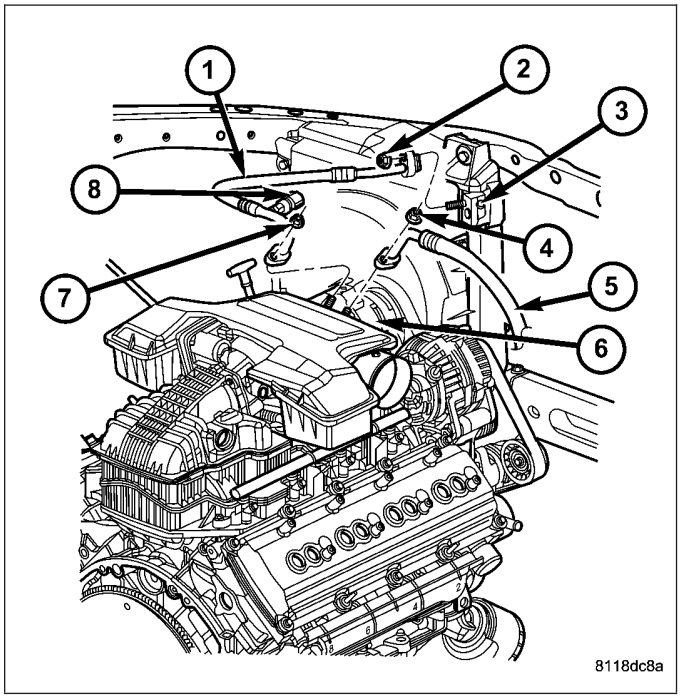

1. If removed, install the A/C pressure transducer (8) onto the A/C discharge line (1) (Refer to 24 - HEATING & AIR CONDITIONING/CONTROLS/ TRANSDUCER-A/C PRESSURE - INSTALLATION).
2. Position the A/C discharge line into the engine compartment.
3. Remove the tape or plugs from the opened discharge line fitting and the inlet port on the A/C condenser (3).
4. Lubricate a new seal with clean refrigerant oil and install it onto the discharge line fitting. Use only the specified seal as it is made of a special material for the R-134a system. Use only refrigerant oil of the type recommended for the A/C compressor in the vehicle.
5. Install the A/C discharge line onto the A/C condenser.
6. Install the nut (2) that secures the A/C discharge line to the A/C condenser. Tighten the nut to 20 N·m (15 ft. lbs.).
7. Remove the tape or plugs from the opened fitting on the A/C discharge line and the outlet port on the A/C compressor (6).
8. Lubricate a new seal with clean refrigerant oil and install it onto the discharge line fitting. Use only the specified seal as it is made of a special material for the R-134a system. Use only refrigerant oil of the type recommended for the A/C compressor in the vehicle.
9. Install the A/C discharge line onto the A/C compressor.
10. Install the nut (7) that secures the A/C discharge line to the A/C compressor. Tighten the nut to 20 N·m (15 ft. lbs.).
11. Connect the wire harness connector to the A/C pressure transducer.
12. Reconnect the negative battery cable.
13. Evacuate the refrigerant system (Refer to 24 - HEATING & AIR CONDITIONING/PLUMBING - STANDARD PROCEDURE - REFRIGERANT SYSTEM EVACUATE).
14. Charge the refrigerant system (Refer to 24 - HEATING & AIR CONDITIONING/PLUMBING - STANDARD PROCEDURE - REFRIGERANT SYSTEM CHARGE).

5.9L DIESEL ENGINE

NOTE: The A/C discharge line for the 5.9L Diesel engine is serviced as an assembly with the suction line.

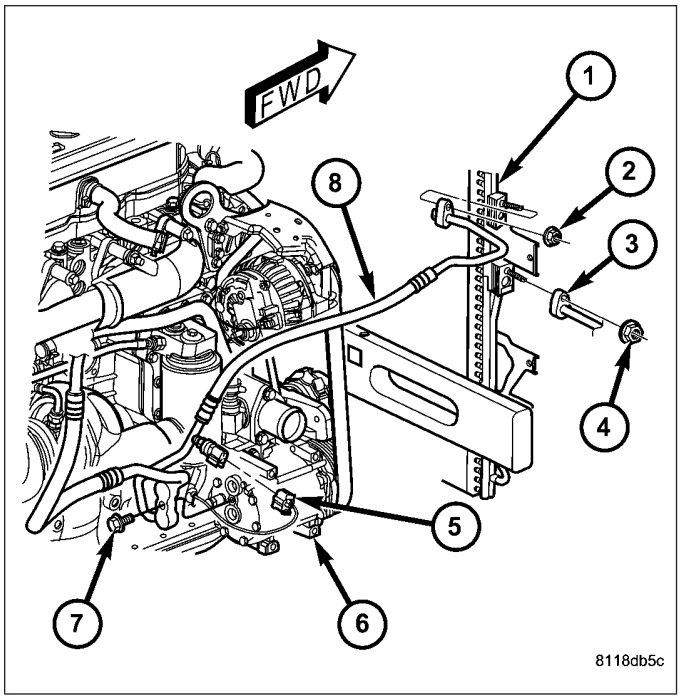

1. If removed, install the A/C pressure transducer onto the A/C discharge line (Refer to 24 - HEATING & AIR CONDITIONING/CONTROLS/TRANSDUCER-A/C PRESSURE - INSTALLATION).
2. Position the A/C suction and discharge line assembly (8) into the engine compartment.
3. Remove the tape or plugs from the opened discharge line fitting and the inlet port on the A/C condenser (1).
4. Lubricate a new seal with clean refrigerant oil and install it onto the discharge line fitting. Use only the specified seal as it is made of a special material for the R-134a system. Use only refrigerant oil of the type recommended for the A/C compressor in the vehicle.
5. Install the A/C discharge line onto the A/C condenser.
6. Install the nut (2) that secures the A/C discharge line to the A/C condenser. Tighten the nut to 20 N·m (15 ft. lbs.).
7. Remove the tape or plugs from the opened A/C suction and discharge line fittings and the compressor ports.
8. Lubricate new seals with clean refrigerant oil and install them onto the refrigerant line fittings. Use only the specified seals as they are made of a special material for the R-134a system. Use only refrigerant oil of the type recommended for the A/C compressor in the vehicle.
9. Install the A/C suction and discharge line assembly onto the A/C compressor (6).
10. Install the bolt (7) that secures the A/C suction and discharge line assembly to the A/C compressor. Tighten the bolt to 28 N·m (20 ft. lbs.).
11. Connect the wire harness connector (5) to the A/C pressure transducer.

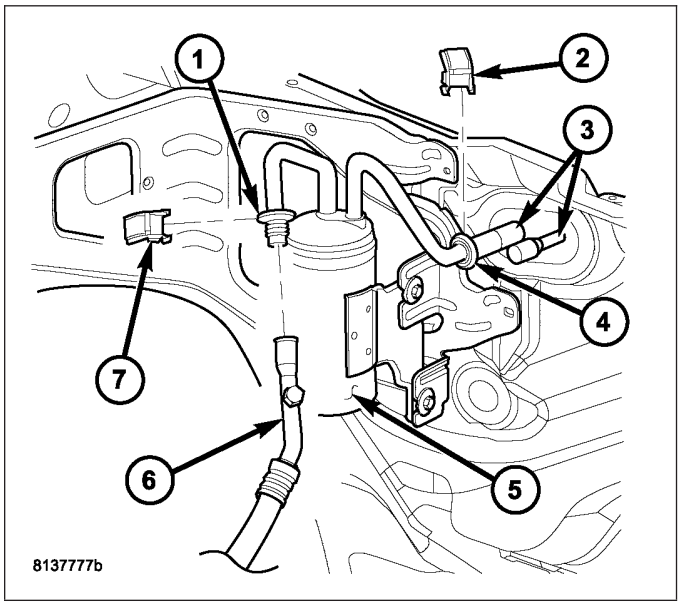

12. Remove the tape or plugs from the opened suction line fitting and the accumulator outlet tube.
13. Lubricate new rubber O-ring seals with clean refrigerant oil and install them onto the accumulator tube fitting. Use only the specified O-rings as they are made of a special material for the R-134a system. Use only refrigerant oil of the type recommended for the A/C compressor in the vehicle.
14. Connect the A/C suction line (6) to the spring-lock coupler (1) on the accumulator (5) and install the secondary retaining clip (7) (Refer to 24 - HEATING & AIR CONDITIONING/PLUMBING/COUPLER-REFRIGERANT LINE - INSTALLATION).
15. Install the air filter housing cover (Refer to 9 - ENGINE/AIR INTAKE SYSTEM).
16. Reconnect the negative battery cable.
17. Evacuate the refrigerant system (Refer to 24 - HEATING & AIR CONDITIONING/PLUMBING - STANDARD PROCEDURE - REFRIGERANT SYSTEM EVACUATE).
18. Charge the refrigerant system (Refer to 24 - HEATING & AIR CONDITIONING/PLUMBING - STANDARD PROCEDURE - REFRIGERANT SYSTEM CHARGE).

8.3L ENGINE

1. If removed, install the A/C pressure transducer onto the A/C discharge line (1) (Refer to 24 - HEATING & AIR CONDITIONING/CONTROLS/TRANSDUCER-A/C PRESSURE - INSTALLATION).
2. Position the A/C discharge line into the engine compartment.
3. Remove the tape or plugs from the opened discharge line fitting and the inlet port of the A/C condenser (6).
4. Lubricate a new seal with clean refrigerant oil and install it and a new gasket onto the discharge line fitting. Use only the specified seal as it is made of a special material for the R-134a system. Use only refrigerant oil of the type recommended for the A/C compressor in the vehicle.
5. Connect the A/C discharge line to the A/C condenser.
6. Install the nut (2) that secures the A/C discharge line to the A/C condenser. Tighten the nut to 22 N·m (16 ft. lbs.).

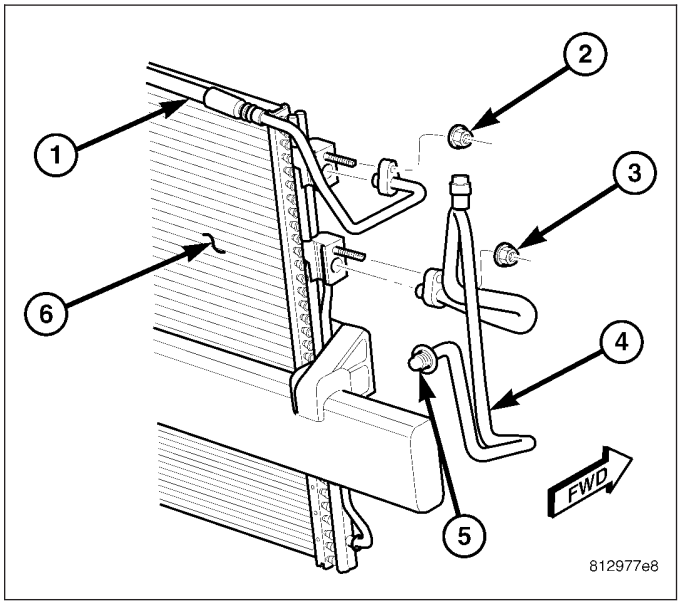

7. Install the A/C discharge line (3) into the two refrigerant line retainer clips (2) located at the top of the fan shroud (1).
8. Install the plastic cover (4) onto the condenser inlet stud.

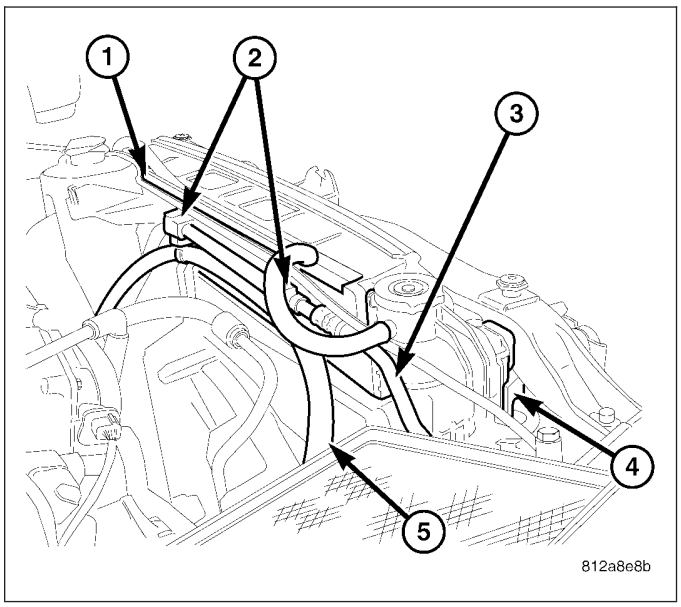

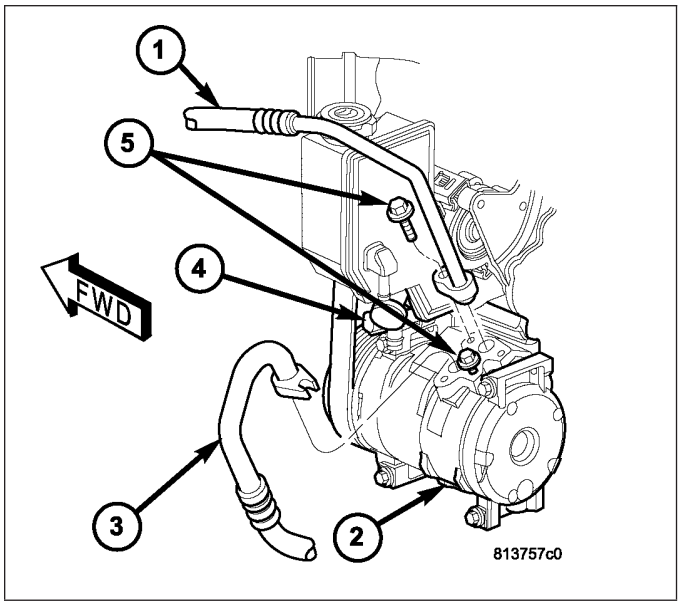

9. Remove the tape or plugs from the opened discharge line fitting and compressor outlet port.
10. Lubricate a new seal with clean refrigerant oil and install it and new gasket onto the discharge line fitting. Use only the specified seal as it is made of a special material for the R-134a system. Use only refrigerant oil of the type recommended for the A/C compressor in the vehicle.
11. Install the A/C discharge line (3) onto the A/C compressor (2).
12. Install the bolt (5) that secures the A/C discharge line to the A/C compressor. Tighten the bolt to 20 N·m (15 ft. lbs.).
13. Connect the wire harness connector to the A/C pressure transducer.
14. Reconnect the negative battery cable.
15. Evacuate the refrigerant system (Refer to 24 - HEATING & AIR CONDITIONING/PLUMBING - STANDARD PROCEDURE - REFRIGERANT SYSTEM EVACUATE).
16. Charge the refrigerant system (Refer to 24 - HEATING & AIR CONDITIONING/PLUMBING - STANDARD PROCEDURE - REFRIGERANT SYSTEM CHARGE).

LINE-A/C LIQUID

DESCRIPTION

The liquid line is the refrigerant line that carries refrigerant from the A/C condenser to the A/C evaporator. The liquid line for this model consist of two separate lines that connect to each other using a spring-lock type refrigerant line coupler (Refer to 24 - HEATING & AIR CONDITIONING/PLUMBING/REFRIGERANT LINE COUPLER - DESCRIPTION). The liquid lines are made from light-weight aluminum, and use braze-less fittings.

The front half of the liquid line includes the high-side service port and the rear half of the liquid line contains the fixed orifice tube.

CAUTION: Use only O-ring seals specified for the vehicle. Failure to use the correct O-ring seal will cause the refrigerant system connections to leak.

The liquid line has no serviceable parts except for the rubber O-ring seals, high-side service port valve, cap and secondary retaining clip. The O-ring seals used on the connections are made from a special type of rubber not affected by R-134a refrigerant. The O-ring seals must be replaced whenever the liquid line is removed and installed.

If the liquid line is found to be leaking or is damaged, it must be replaced.

REMOVAL

3.7L/4.7L/5.7L/5.9L ENGINES

WARNING: Refer to the applicable warnings and cautions for this system before performing the following operation (Refer to 24 - HEATING & AIR CONDITIONING/PLUMBING - WARNINGS) and (Refer to 24 - HEATING & AIR CONDITIONING/PLUMBING - CAUTIONS). Failure to follow the warnings and cautions could result in possible personal injury or death.

NOTE: The A/C liquid line is serviced in two sections.

FRONT SECTION

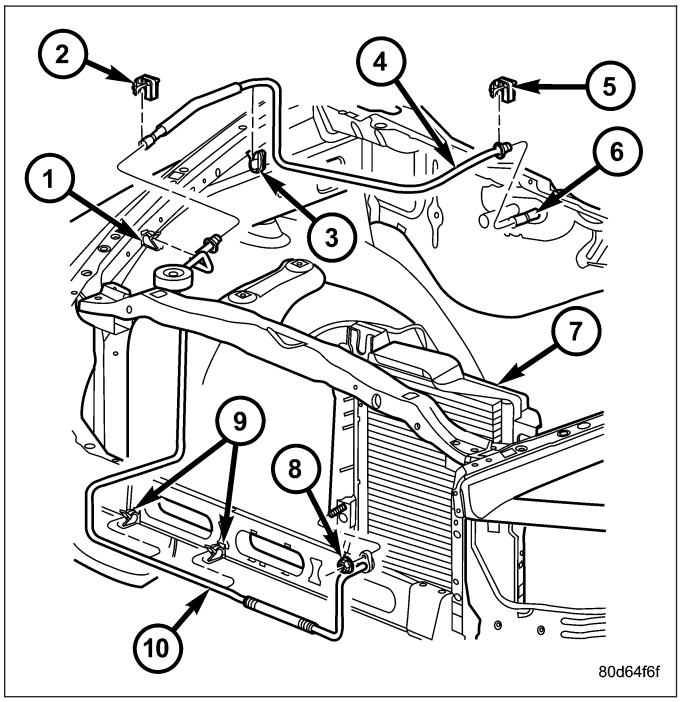

1. Recover the refrigerant from the refrigerant system (Refer to 24 - HEATING & AIR CONDITIONING/ PLUMBING - STANDARD PROCEDURE - REFRIGERANT SYSTEM RECOVERY).
2. Disconnect and isolate the negative battery cable.
3. If equipped with the diesel engine, remove the passenger side battery (Refer to 8 - ELECTRICAL/ BATTERY SYSTEM/BATTERY - REMOVAL).
4. If equipped with a gasoline engine, remove the air filter housing (Refer to 9 - ENGINE/AIR INTAKE SYSTEM/AIR FILTER HOUSING - REMOVAL).
5. Remove the plastic cover from the condenser outlet stud.
6. Remove the nut (8) that secures the front section of the A/C liquid line (10) to the A/C condenser (7).
7. Disconnect the A/C liquid line from the A/C condenser and remove and discard the seal.
8. Disengage the A/C liquid line from the body retaining clips (1 and 9).
9. Remove the secondary retaining clip (2) from the spring-lock coupler that secures the front section of the A/C liquid line to the rear section of the liquid line (4).
10. Using the proper A/C line disconnect tool, disconnect the front section of the A/C liquid line from the rear section of the liquid line and remove and discard the seal (Refer to 24 - HEATING & AIR CONDITIONING/PLUMBING/COUPLER-REFRIGERANT LINE - REMOVAL).
11. Install plugs in, or tape over the opened ends of the A/C liquid lines and the condenser outlet port.
12. Remove the front section of the A/C liquid line from the engine compartment.

REAR SECTION

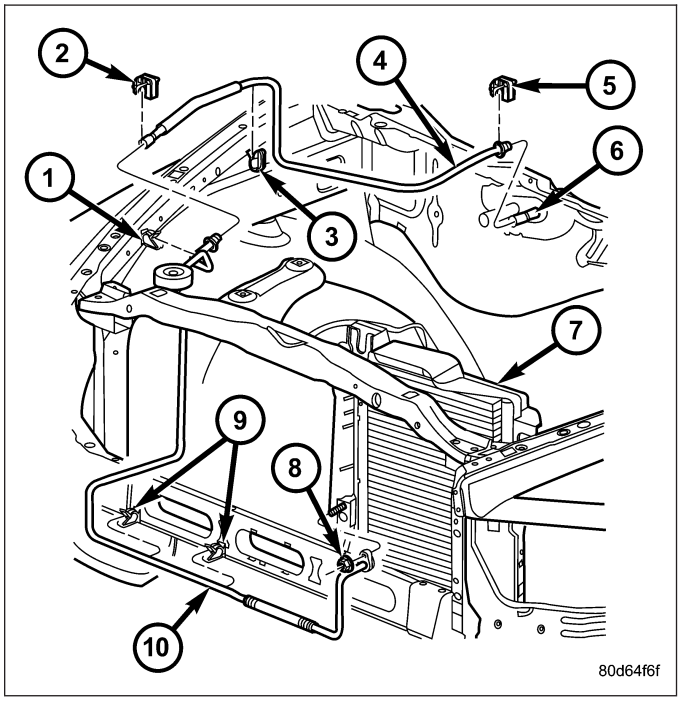

1. Recover the refrigerant from the refrigerant system (Refer to 24 - HEATING & AIR CONDITIONING/ PLUMBING - STANDARD PROCEDURE - REFRIGERANT SYSTEM RECOVERY).
2. Disconnect and isolate the negative battery cable.
3. If equipped with the diesel engine, remove the passenger side battery (Refer to 8 - ELECTRICAL/ BATTERY SYSTEM/BATTERY - REMOVAL).
4. If equipped with a gasoline engine, remove the air filter housing (Refer to 9 - ENGINE/AIR INTAKE SYSTEM/AIR FILTER HOUSING - REMOVAL).
5. Disengage the rear section of the A/C liquid line (4) from the body retaining clip (3).
6. Remove the secondary retaining clip (2) from the spring-lock coupler that secures the front section of the A/C liquid line (10) to the rear section of the liquid line.
7. Using the proper A/C line disconnect tool, disconnect the front section of the A/C liquid line from the rear section of the liquid line and remove and discard the seal (Refer to 24 - HEATING & AIR CONDITIONING/PLUMBING/COUPLER-REFRIGERANT LINE - REMOVAL).

8. Remove the secondary retaining clip (5) from the spring-lock coupler that secures the rear section of the A/C liquid line to the evaporator inlet tube (6).
9. Using the proper A/C line disconnect tool, disconnect the A/C liquid line from the evaporator inlet tube and remove and discard the seal (Refer to 24 - HEATING & AIR CONDITIONING/PLUMBING/COUPLER-REFRIGERANT LINE - REMOVAL).
10. Install plugs in, or tape over the opened ends of the A/C liquid lines and the evaporator inlet port.
11. Remove the rear section of the A/C liquid line from the engine compartment.

8.3L ENGINE

WARNING: Refer to the applicable warnings and cautions for this system before performing the following operation (Refer to 24 - HEATING & AIR CONDITIONING/PLUMBING - WARNINGS) and (Refer to 24 - HEATING & AIR CONDITIONING/PLUMBING - CAUTIONS). Failure to follow the warnings and cautions could result in possible personal injury or death.

NOTE: The A/C liquid line is serviced in two sections. The front half of the liquid line includes the high side service port and the rear half of the liquid line contains the fixed orifice tube.

FRONT SECTION

1. Recover the refrigerant from the refrigerant system (Refer to 24 - HEATING & AIR CONDITIONING/PLUMBING - STANDARD PROCEDURE - REFRIGERANT SYSTEM RECOVERY).
2. Disconnect and isolate the negative battery cable.
3. Remove the air filter housing (Refer to 9 - ENGINE/AIR INTAKE SYSTEM/AIR FILTER HOUSING - REMOVAL).
4. Remove the plastic cover from the condenser outlet stud.
5. Remove the nut (3) that secures the front section of the A/C liquid line (4) to the A/C condenser (6).
6. Disconnect the A/C liquid line from the A/C condenser and remove and discard the seal and gasket.
7. Disengage the A/C liquid line from the body retaining clips.

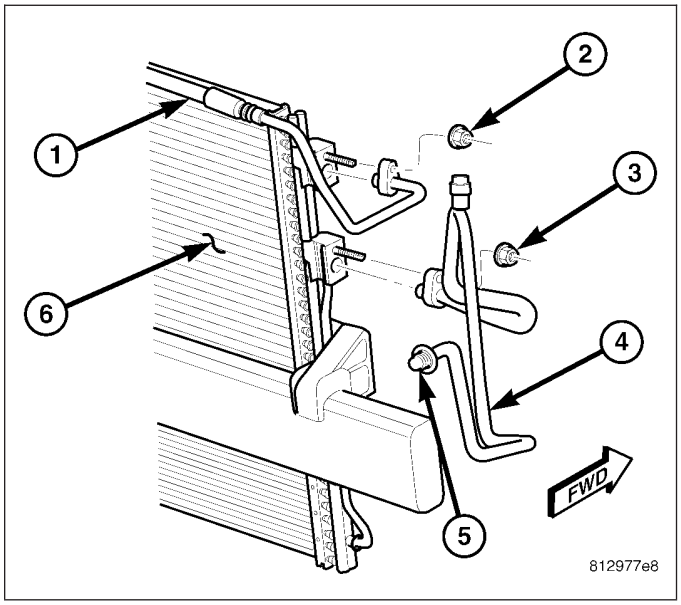

8. Remove the secondary retaining clip from the spring-lock coupler (5) that secures the front section of the A/C liquid line to the rear section of the liquid line.
9. Using the proper A/C line disconnect tool, disconnect the front section of the A/C liquid line from the rear section of the liquid line and remove and discard the seal (Refer to 24 - HEATING & AIR CONDITIONING/PLUMBING/COUPLER-REFRIGERANT LINE - REMOVAL).
10. Install plugs in, or tape over the opened ends of the A/C liquid lines and the condenser outlet port.
11. Remove the front section of the A/C liquid line from the engine compartment.

REAR SECTION

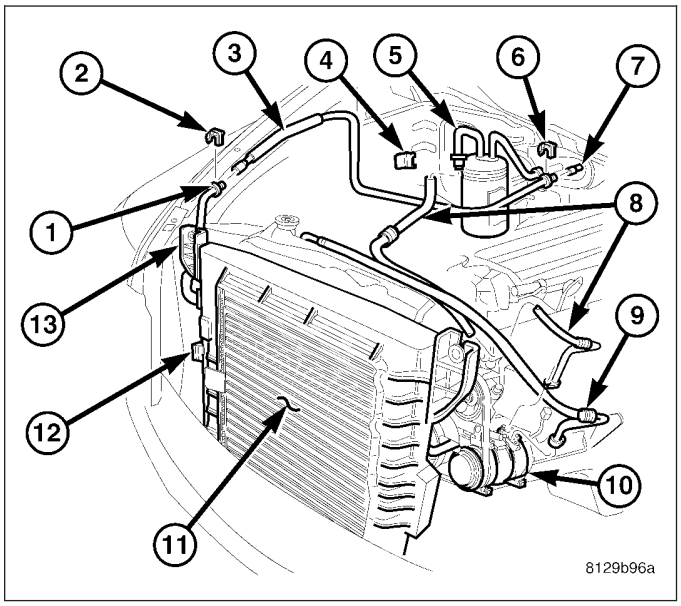

1. Recover the refrigerant from the refrigerant system (Refer to 24 - HEATING & AIR CONDITIONING/ PLUMBING - STANDARD PROCEDURE - REFRIGERANT SYSTEM RECOVERY).
2. Disconnect and isolate the negative battery cable.
3. Remove the air filter housing (Refer to 9 - ENGINE/AIR INTAKE SYSTEM/AIR FILTER HOUSING - REMOVAL).
4. Remove the secondary retaining clip (2) from the spring-lock coupler that secures the front section of the A/C liquid line (1) to the rear section of the liquid line (3).
5. Disengage the A/C liquid line from the body retaining clips.
6. Using the proper A/C line disconnect tool, disconnect the front section of the A/C liquid line from the rear section of the liquid line and remove and discard the seal (Refer to 24 - HEATING & AIR CONDITIONING/PLUMBING/COUPLER-REFRIGERANT LINE - REMOVAL).
7. Remove the secondary retaining clip (6) from the spring-lock coupler that secures the rear section of the A/C liquid line to the evaporator inlet tube (7).
8. Using the proper A/C line disconnect tool, disconnect the A/C liquid line from the evaporator inlet tube and remove and discard the seal (Refer to 24 - HEATING & AIR CONDITIONING/PLUMBING/COUPLER-REFRIGERANT LINE - REMOVAL).
9. Install plugs in, or tape over the opened ends of the A/C liquid lines and the evaporator inlet port.
10. Remove the rear section of the A/C liquid line from the engine compartment.

INSTALLATION

3.7L/4.7L/5.7L/5.9L ENGINES

NOTE: The A/C liquid line is serviced in two sections.

FRONT SECTION

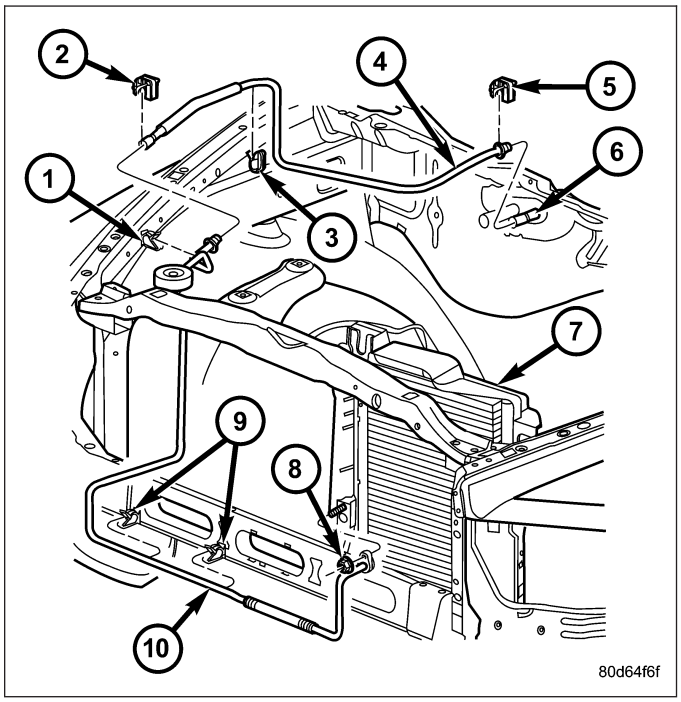

1. Position the front section of the A/C liquid line (10) into the engine compartment.
2. Remove the tape or plugs from the opened ends of the A/C liquid lines and the condenser outlet port.
3. Lubricate a new seal with clean refrigerant oil and install it onto the front liquid line spring-lock coupler fitting. Use only the specified seal as it is made of a special material for the R-134a system. Use only refrigerant oil of the type recommended for the A/C compressor in the vehicle.
4. Connect the front section of the A/C liquid line to the rear section of the liquid line (4) (Refer to 24 - HEATING & AIR CONDITIONING/PLUMBING/ COUPLER-REFRIGERANT LINE - INSTALLATION).
5. Install the secondary retaining clip (2) onto the spring-lock coupler that secures the front section of the A/C liquid line onto the rear section of the liquid line.
6. Engage the A/C liquid line into the body retaining clips (1 and 9).
7. Lubricate a new seal with clean refrigerant oil and install it on the front liquid line fitting. Use only the specified seal as it is made of a special material for the R-134a system. Use only refrigerant oil of the type recommended for the A/C compressor in the vehicle.
8. Connect the front section of the A/C liquid line to the outlet port of the A/C condenser (7).
9. Install the nut (8) that secures the A/C liquid line to the A/C condenser. Tighten the nut to 20 N·m (15 ft. lbs.).
10. Install the plastic cover onto the condenser outlet stud.
11. If equipped with a gasoline engine, install the air filter housing (Refer to 9 - ENGINE/AIR INTAKE SYSTEM/AIR FILTER HOUSING - INSTALLATION).
12. If equipped with the diesel engine, install the passenger side battery tray (Refer to 8 - ELECTRICAL/BATTERY SYSTEM/TRAY - INSTALLATION).
13. Reconnect the negative battery cable(s).
14. Evacuate the refrigerant system (Refer to 24 - HEATING & AIR CONDITIONING/PLUMBING - STANDARD PROCEDURE - REFRIGERANT SYSTEM EVACUATE).
15. Charge the refrigerant system (Refer to 24 - HEATING & AIR CONDITIONING/PLUMBING - STANDARD PROCEDURE - REFRIGERANT SYSTEM CHARGE).

REAR SECTION

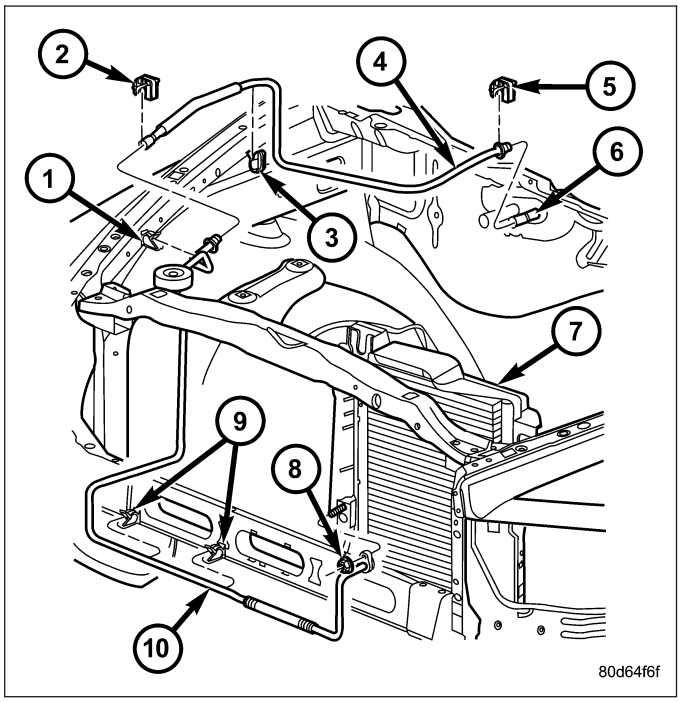

1. Position the rear section of the A/C liquid line (4) into the engine compartment.
2. Remove the tape or plugs from the opened ends of the A/C liquid lines and the evaporator inlet tube (6).
3. Lubricate a new seal with clean refrigerant oil and install it on the rear liquid line spring-lock coupler fitting. Use only the specified seal as it is made of a special material for the R-134a system. Use only refrigerant oil of the type recommended for the A/C compressor in the vehicle.
4. Connect the rear section of the A/C liquid line to the evaporator inlet tube (Refer to 24 - HEATING & AIR CONDITIONING/PLUMBING/COUPLER-REFRIGERANT LINE - INSTALLATION).
5. Install the secondary retaining clip (5) onto the spring-lock coupler that secures the rear section of the A/C liquid line onto the evaporator inlet tube.
6. Engage the A/C liquid line into the body retaining clip (3).
7. Lubricate a new seal with clean refrigerant oil and install it on the front liquid line spring-lock coupler fitting. Use only the specified seal as it is made of a special material for the R-134a system. Use only refrigerant oil of the type recommended for the A/C compressor in the vehicle.
8. Connect the rear section of the A/C liquid line to the front section of the liquid line (10) (Refer to 24 - HEATING & AIR CONDITIONING/PLUMBING/COUPLER-REFRIGERANT LINE - INSTALLATION).
9. Install the secondary retaining clip (2) onto the spring-lock coupler that secures the front section of the A/C liquid line to the rear section of the liquid line.
10. If equipped with a gasoline engine, install the air filter housing (Refer to 9 - ENGINE/AIR INTAKE SYSTEM/AIR FILTER HOUSING - INSTALLATION).
11. If equipped with the diesel engine, install the passenger side battery tray (Refer to 8 - ELECTRICAL/BATTERY SYSTEM/TRAY - INSTALLATION).
12. Reconnect the negative battery cable(s).
13. Evacuate the refrigerant system (Refer to 24 - HEATING & AIR CONDITIONING/PLUMBING - STANDARD PROCEDURE - REFRIGERANT SYSTEM EVACUATE).
14. Charge the refrigerant system (Refer to 24 - HEATING & AIR CONDITIONING/PLUMBING - STANDARD PROCEDURE - REFRIGERANT SYSTEM CHARGE).

8.3L ENGINE

NOTE: The A/C liquid line is serviced in two sections. The front half of the liquid line includes the high side service port and the rear half of the liquid line contains the fixed orifice tube.

FRONT SECTION

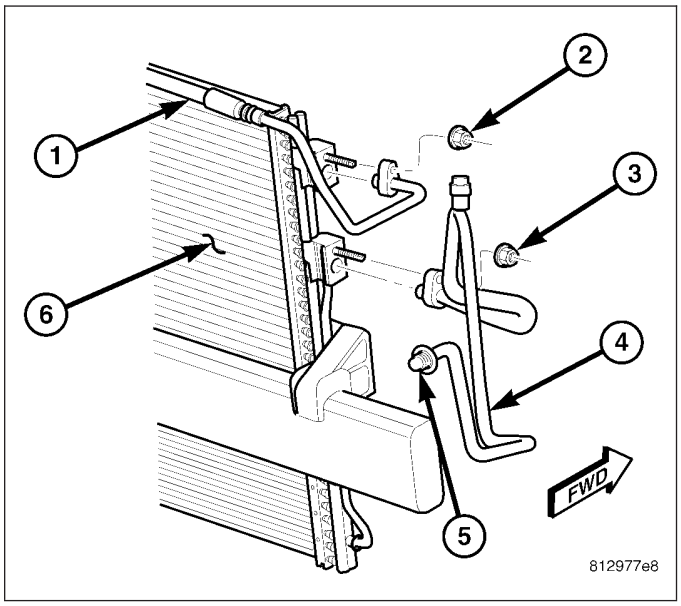

1. Position the front section of the A/C liquid line (4) into the engine compartment.
2. Remove the tape or plugs from the opened ends of the A/C liquid lines and the condenser outlet port.
3. Lubricate a new seal with clean refrigerant oil and install it on the front liquid line spring-lock coupler fitting (5). Use only the specified seal as it is made of a special material for the R-134a system. Use only refrigerant oil of the type recommended for the A/C compressor in the vehicle.
4. Connect the front section of the A/C liquid to the rear section of the liquid line (Refer to 24 - HEATING & AIR CONDITIONING/PLUMBING/COUPLER-REFRIGERANT LINE - INSTALLATION).
5. Install the secondary retaining clip onto the spring-lock coupler that secures the front section of the A/C liquid to the rear section of the liquid line.
6. Engage the A/C liquid line into the body retaining clips.
7. Lubricate a new seal with clean refrigerant oil and install it and a new gasket onto the front liquid line fitting. Use only the specified seal as it is made of a special material for the R-134a system. Use only refrigerant oil of the type recommended for the A/C compressor in the vehicle.
8. Connect the front section of the A/C liquid line to the outlet port of the A/C condenser (6).
9. Install the nut (3) that secures the A/C liquid line to the condenser outlet port. Tighten the nut to 22 N·m (16 ft. lbs.).
10. Install the plastic cover onto the condenser outlet stud.
11. Install the air filter housing (Refer to 9 - ENGINE/AIR INTAKE SYSTEM/AIR FILTER HOUSING - INSTALLATION).
12. Reconnect the negative battery cable.
13. Evacuate the refrigerant system (Refer to 24 - HEATING & AIR CONDITIONING/PLUMBING - STANDARD PROCEDURE - REFRIGERANT SYSTEM EVACUATE).
14. Charge the refrigerant system (Refer to 24 - HEATING & AIR CONDITIONING/PLUMBING - STANDARD PROCEDURE - REFRIGERANT SYSTEM CHARGE).

REAR SECTION

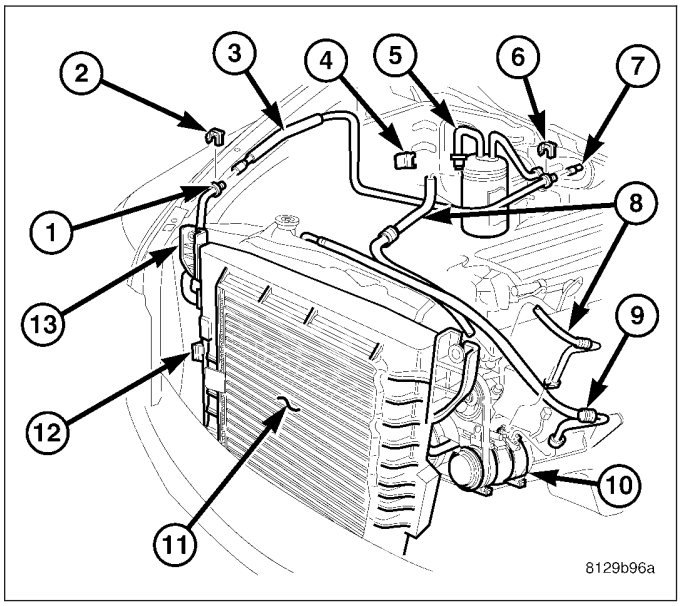

1. Position the rear section of the A/C liquid line (3) into the engine compartment.
2. Remove the tape or plugs from the opened ends of the A/C liquid lines and the evaporator inlet tube (7).
3. Lubricate a new seal with clean refrigerant oil and install it on the rear liquid line spring-lock coupler fitting. Use only the specified seal as it is made of a special material for the R-134a system. Use only refrigerant oil of the type recommended for the A/C compressor in the vehicle.
4. Connect the rear section of the A/C liquid to the evaporator inlet tube (Refer to 24 - HEATING & AIR CONDITIONING/PLUMBING/COUPLER-REFRIGERANT LINE - INSTALLATION).
5. Install the secondary retaining clip (6) onto the spring-lock coupler that secures the rear section of the A/C liquid to the evaporator inlet tube.
6. Engage the A/C liquid line into the body retaining clips.
7. Lubricate a new seal with clean refrigerant oil and install it on the front liquid line spring-lock coupler fitting. Use only the specified seal as it is made of a special material for the R-134a system. Use only refrigerant oil of the type recommended for the A/C compressor in the vehicle.
8. Connect the rear section of the A/C liquid to the front section of the liquid line (1) (Refer to 24 - HEATING & AIR CONDITIONING/PLUMBING/COUPLER-REFRIGERANT LINE - INSTALLATION).
9. Install the secondary retaining clip (2) onto the spring-lock coupler that secures the front section of the A/C liquid to the rear section of the liquid line.
10. Install the air filter housing (Refer to 9 - ENGINE/AIR INTAKE SYSTEM/AIR FILTER HOUSING - INSTALLATION).
11. Reconnect the negative battery cable.
12. Evacuate the refrigerant system (Refer to 24 - HEATING & AIR CONDITIONING/PLUMBING - STANDARD PROCEDURE - REFRIGERANT SYSTEM EVACUATE).
13. Charge the refrigerant system (Refer to 24 - HEATING & AIR CONDITIONING/PLUMBING - STANDARD PROCEDURE - REFRIGERANT SYSTEM CHARGE).

LINE-A/C SUCTION

DESCRIPTION

The A/C suction line is the refrigerant line that goes from the A/C evaporator to the A/C compressor.

The A/C suction line for the 5.9L Diesel engine is serviced as an assembly with the discharge line.

The A/C discharge line for the 8.3L engine is secured to the top of fan shroud by two retainers.

CAUTION: Use only O-ring seals specified for the vehicle. Failure to use the correct O-ring seal will cause the refrigerant system connections to leak.

The A/C suction line has no serviceable parts except for the rubber O-ring seals and the secondary retaining clip. The O-ring seals used on the connections are made from a special type of rubber not affected by R-134a refrigerant. The O-ring seals must be replaced whenever the A/C suction line is removed and installed.

If the A/C suction line is found to be leaking or is damaged, it must be replaced.

REMOVAL

3.7L/4.7L ENGINES

WARNING: Refer to the applicable warnings and cautions for this system before performing the following operation (Refer to 24 - HEATING & AIR CONDITIONING/PLUMBING - WARNINGS) and (Refer to 24 - HEATING & AIR CONDITIONING/PLUMBING - CAUTIONS). Failure to follow the warnings and cautions could result in possible personal injury or death.

1. Recover the refrigerant from the refrigerant system (Refer to 24 - HEATING & AIR CONDITIONING/ PLUMBING - STANDARD PROCEDURE - REFRIGERANT SYSTEM RECOVERY).
2. Disconnect and isolate the negative battery cable.
3. Remove the air filter housing cover (Refer to 9 - ENGINE/AIR INTAKE SYSTEM/AIR FILTER HOUSING - REMOVAL).
4. Remove the nut (4) that secures the A/C suction line (5) to the A/C compressor (6).
5. Disconnect the A/C suction line from the A/C compressor and remove and discard the seal.
6. Install plugs in, or tape over the opened refrigerant line fitting and the compressor port.

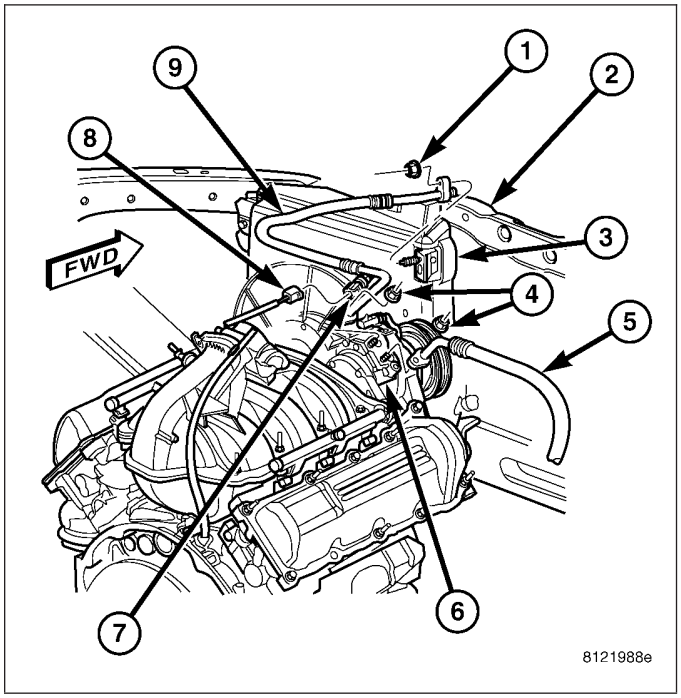

7. Remove the secondary retaining clip (7) from the spring-lock coupler (1) that secures the A/C suction line (6) to the accumulator (5).
8. Using the proper A/C line disconnect tool, disconnect the A/C suction line from the A/C accumulator (Refer to 24 - HEATING & AIR CONDITIONING/ PLUMBING/COUPLER-REFRIGERANT LINE - REMOVAL).
9. Remove the O-ring seals from the accumulator tube fitting and discard the seals.
10. Install plugs in, or tape over the opened suction line fitting and the accumulator outlet tube.
11. Remove the A/C suction line from the engine compartment.

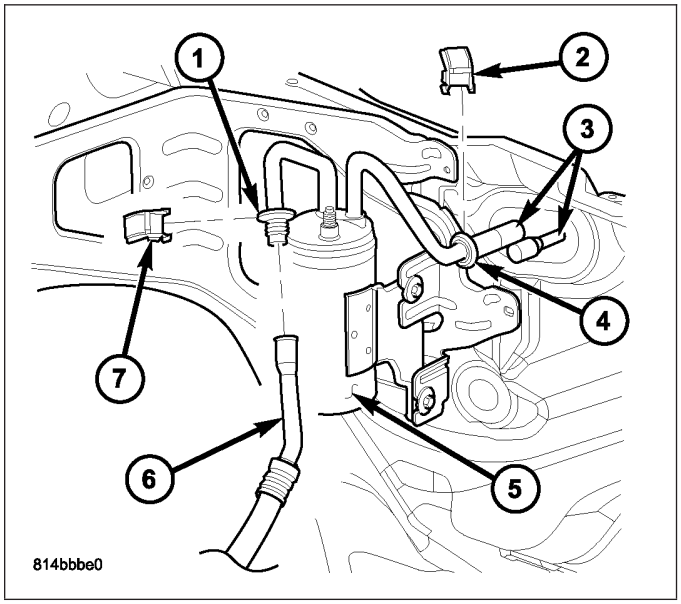

5.7L ENGINE

WARNING: Refer to the applicable warnings and cautions for this system before performing the following operation (Refer to 24 - HEATING & AIR CONDITIONING/PLUMBING - WARNINGS) and (Refer to 24 - HEATING & AIR CONDITIONING/PLUMBING - CAUTIONS). Failure to follow the warnings and cautions could result in possible personal injury or death.

1. Recover the refrigerant from the refrigerant system (Refer to 24 - HEATING & AIR CONDITIONING/ PLUMBING - STANDARD PROCEDURE - REFRIGERANT SYSTEM RECOVERY).
2. Disconnect and isolate the negative battery cable.
3. Remove the air filter housing cover (Refer to 9 - ENGINE/AIR INTAKE SYSTEM/AIR FILTER HOUSING - REMOVAL).
4. Remove the nut (4) that secures the A/C suction line (5) to the A/C compressor (6).
5. Disconnect the A/C suction line from the A/C compressor and remove and discard the seal.
6. Install plugs in, or tape over the opened refrigerant line fitting and the compressor port.

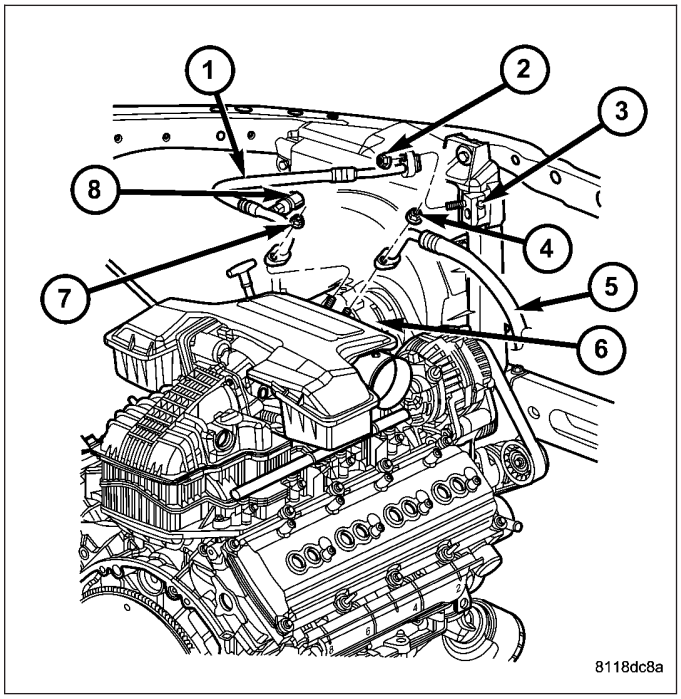

7. Remove the secondary retaining clip (7) from the spring-lock coupler (1) that secures the A/C suction line (6) to the accumulator (5).
8. Using the proper A/C line disconnect tool, disconnect the A/C suction line from the A/C accumulator (Refer to 24 - HEATING & AIR CONDITIONING/ PLUMBING/COUPLER-REFRIGERANT LINE - REMOVAL).
9. Remove the O-ring seals from the accumulator tube fitting and discard the seals.
10. Install plugs in, or tape over the opened suction line fitting and the accumulator outlet tube.
11. Remove the A/C suction line from the engine compartment.

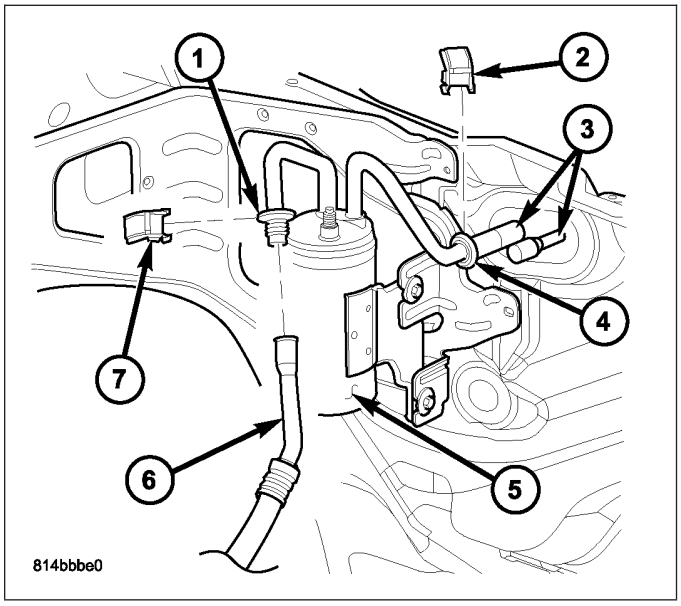

5.9L DIESEL ENGINE

WARNING: Refer to the applicable warnings and cautions for this system before performing the following operation (Refer to 24 - HEATING & AIR CONDITIONING/PLUMBING - WARNINGS) and (Refer to 24 - HEATING & AIR CONDITIONING/PLUMBING - CAUTIONS). Failure to follow the warnings and cautions could result in possible personal injury or death.

NOTE: The A/C suction line for the 5.9L Diesel engine is serviced as an assembly with the discharge line.

1. Recover the refrigerant from the refrigerant system (Refer to 24 - HEATING & AIR CONDITIONING/ PLUMBING - STANDARD PROCEDURE - REFRIGERANT SYSTEM RECOVERY).
2. Disconnect and isolate the negative battery cable.
3. Remove the air filter housing cover (Refer to 9 - ENGINE/AIR INTAKE SYSTEM).
4. Disconnect the wire harness connector (5) from the A/C pressure transducer.
5. Remove the nut (2) that secures the A/C discharge line (8) to the A/C condenser (1).
6. Disconnect the A/C discharge line from the A/C condenser and remove and discard the seal.
7. Install plugs in, or tape over the discharge line fitting and condenser inlet port.
8. Remove the bolt (7) that secures the A/C suction and discharge line assembly to the A/C compressor (6).
9. Disconnect the A/C discharge line from the A/C compressor and remove and discard the seal.

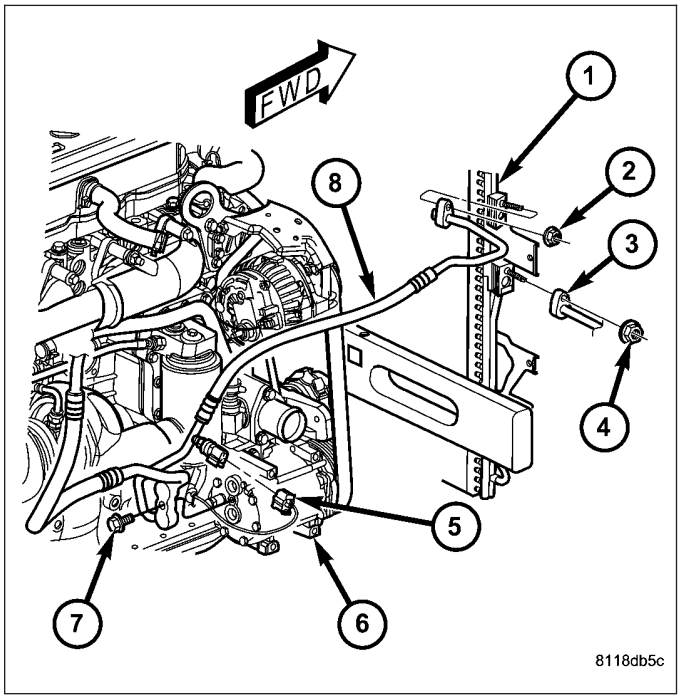

10. Install plugs in, or tape over the opened A/C suction and discharge line fittings and the compressor ports.
11. If necessary, remove the A/C pressure transducer from the A/C discharge line (Refer to 24 - HEATING & AIR CONDITIONING/CONTROLS/TRANSDUCER-A/C PRESSURE - REMOVAL).

12. Remove the secondary retaining clip (7) from the spring-lock coupler (1) that secures the A/C suction line (6) to the accumulator (5).
13. Using the proper A/C line disconnect tool, disconnect the A/C suction line from the A/C accumulator (Refer to 24 - HEATING & AIR CONDITIONING/PLUMBING/COUPLER-REFRIGERANT LINE - REMOVAL).
14. Remove the O-ring seals from the accumulator tube fitting and discard the seals.
15. Install plugs in, or tape over the opened suction line fitting and the accumulator outlet tube.
16. Remove the A/C suction and discharge line assembly from the engine compartment.

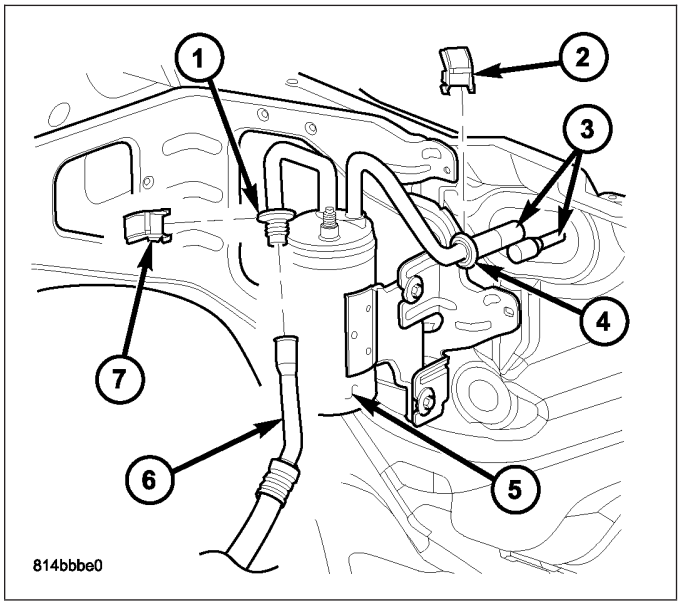

8.3L ENGINE

WARNING: Refer to the applicable warnings and cautions for this system before performing the following operation (Refer to 24 - HEATING & AIR CONDITIONING/PLUMBING - WARNINGS) and (Refer to 24 - HEATING & AIR CONDITIONING/PLUMBING - CAUTIONS). Failure to follow the warnings and cautions could result in possible personal injury or death.

1. Recover the refrigerant from the refrigerant system (Refer to 24 - HEATING & AIR CONDITIONING/ PLUMBING - STANDARD PROCEDURE - REFRIGERANT SYSTEM RECOVERY).
2. Disconnect and isolate the negative battery cable.
3. Remove the bolt (5) that secures the A/C suction line (1) to the A/C compressor (2).
4. Disconnect the A/C suction line from the A/C compressor.
5. Remove the seal and gasket from the suction line fitting and discard.
6. Install plugs in, or tape over the opened suction line fitting and the compressor inlet port.

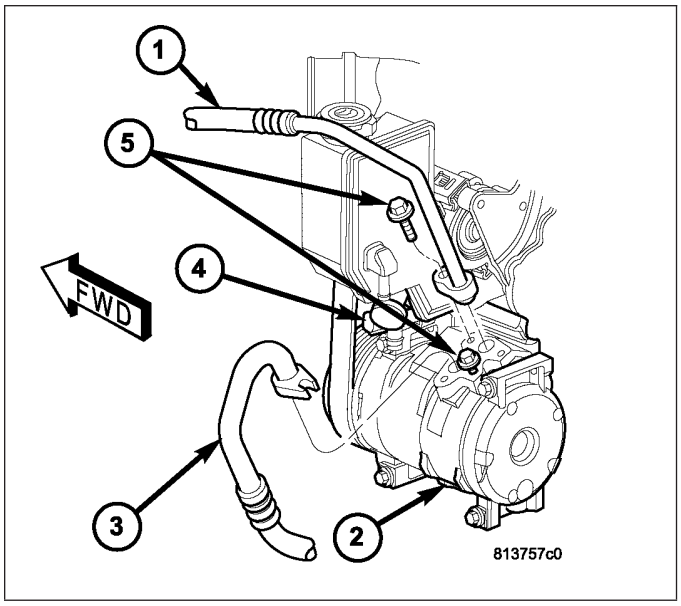

7. Remove the A/C suction line (5) from the refrigerant line retainer clips (2) located at the top of the fan shroud (1).
8. Remove the air filter housing cover (Refer to 9 - ENGINE/AIR INTAKE SYSTEM/AIR FILTER HOUSING - REMOVAL).

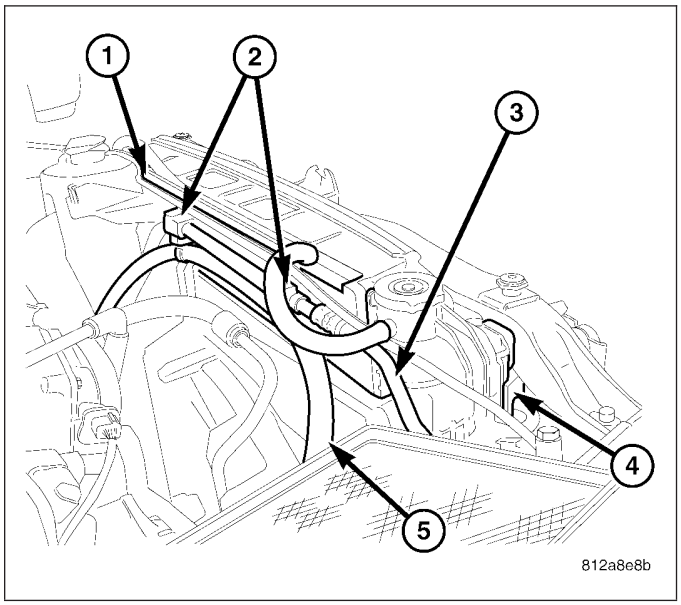

9. Remove the secondary retaining clip (7) from the spring-lock coupler (1) that secures the A/C suction line (6) to the accumulator (5).
10. Using the proper A/C line disconnect tool, disconnect the A/C suction line from the A/C accumulator (Refer to 24 - HEATING & AIR CONDITIONING/PLUMBING/COUPLER-REFRIGERANT LINE - REMOVAL).
11. Remove the O-ring seals from the accumulator tube fitting and discard the seals.
12. Install plugs in, or tape over the opened suction line fitting and the accumulator outlet tube.
13. Remove the A/C suction line from the engine compartment.

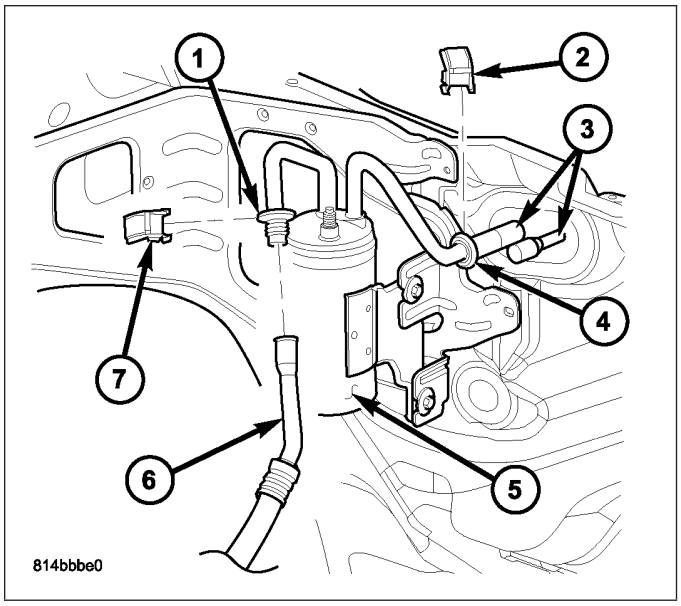

INSTALLATION

3.7L/4.7L ENGINES

1. Position the A/C suction line (5) into the engine compartment.
2. Remove the tape or plugs from the opened fitting on the A/C suction line and the inlet port on the A/C compressor (6).
3. Lubricate a new seal with clean refrigerant oil and install it onto the suction line fitting. Use only the specified seal as it is made of a special material for the R-134a system. Use only refrigerant oil of the type recommended for the A/C compressor in the vehicle.
4. Install the A/C suction line onto the A/C compressor.
5. Install the nut (4) that secures the A/C discharge line to the A/C compressor. Tighten the nut to 20 N·m (15 ft. lbs.).

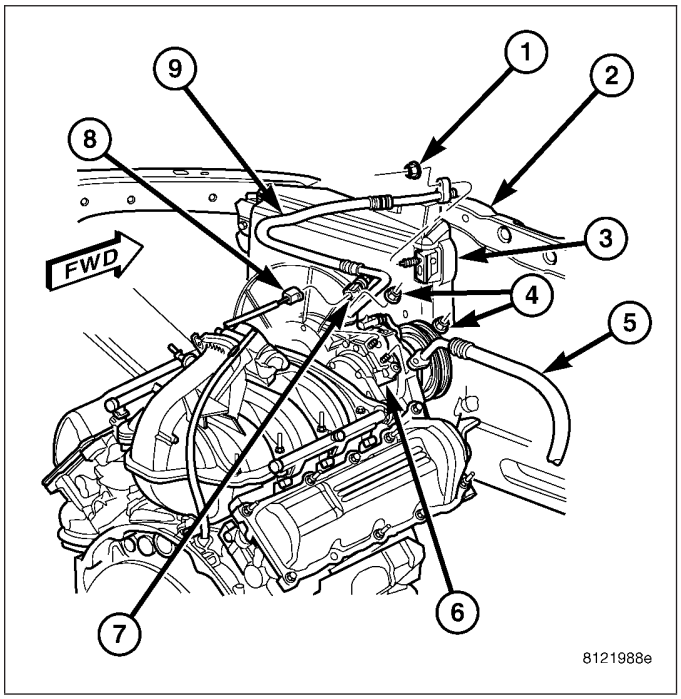

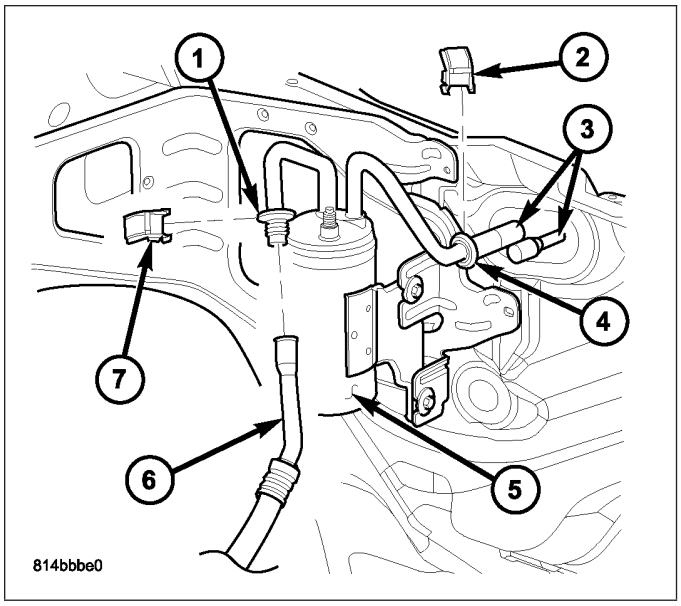

6. Remove the tape or plugs from the opened suction line fitting and the accumulator outlet tube.
7. Lubricate new rubber O-ring seals with clean refrigerant oil and install them onto the accumulator tube fitting. Use only the specified O-rings as they are made of a special material for the R-134a system. Use only refrigerant oil of the type recommended for the A/C compressor in the vehicle.
8. Connect the A/C suction line (6) to the spring-lock coupler (1) on the accumulator (5) and install the secondary retaining clip (7) (Refer to 24 - HEATING & AIR CONDITIONING/PLUMBING/COUPLER-REFRIGERANT LINE - INSTALLATION).
9. Install the air filter housing cover (Refer to 9 - ENGINE/AIR INTAKE SYSTEM/AIR FILTER HOUSING - INSTALLATION).
10. Reconnect the negative battery cable.
11. Evacuate the refrigerant system (Refer to 24 - HEATING & AIR CONDITIONING/PLUMBING - STANDARD PROCEDURE - REFRIGERANT SYSTEM EVACUATE).
12. Charge the refrigerant system (Refer to 24 - HEATING & AIR CONDITIONING/PLUMBING - STANDARD PROCEDURE - REFRIGERANT SYSTEM CHARGE).

5.7L ENGINE

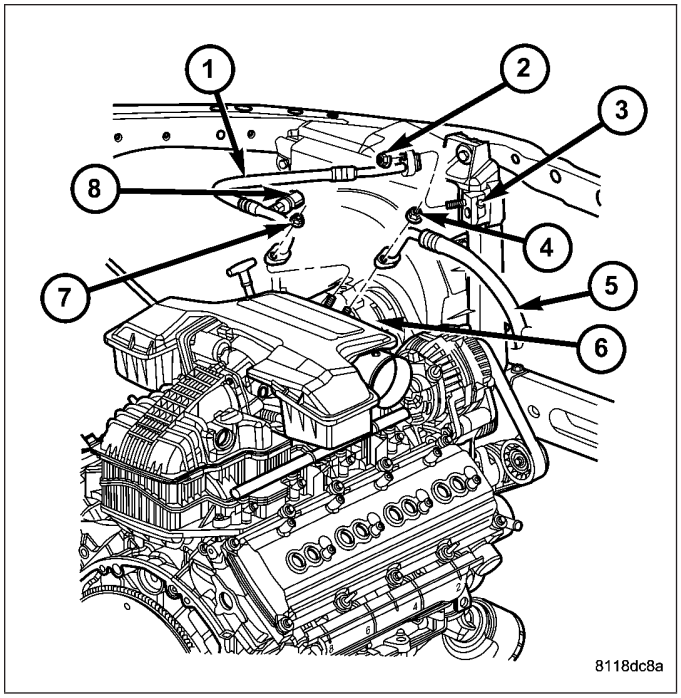

1. Position the A/C suction line (5) into the engine compartment.
2. Remove the tape or plugs from the opened fitting on the A/C suction line and the inlet port on the A/C compressor (6).
3. Lubricate a new seal with clean refrigerant oil and install it onto the suction line fitting. Use only the specified seal as it is made of a special material for the R-134a system. Use only refrigerant oil of the type recommended for the A/C compressor in the vehicle.
4. Install the A/C suction line onto the A/C compressor.
5. Install the nut (4) that secures the A/C discharge line to the A/C compressor. Tighten the nut to 20 N·m (15 ft. lbs.).

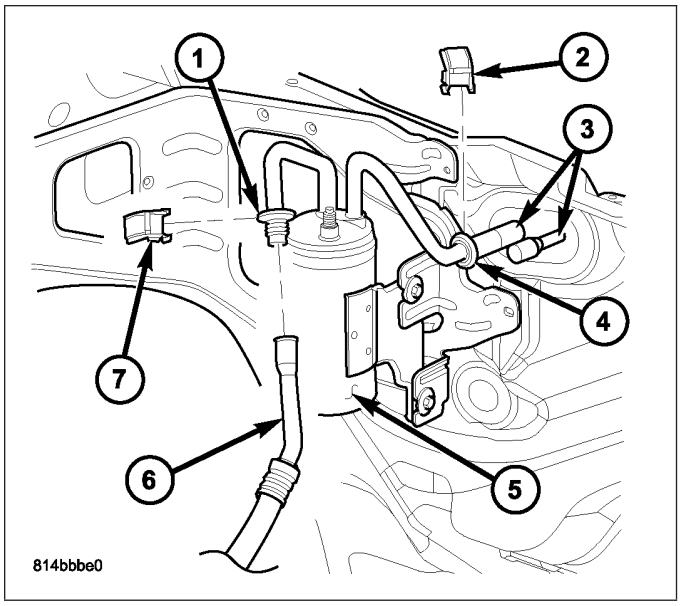

6. Remove the tape or plugs from the opened suction line fitting and the accumulator outlet tube.
7. Lubricate new rubber O-ring seals with clean refrigerant oil and install them onto the accumulator tube fitting. Use only the specified O-rings as they are made of a special material for the R-134a system. Use only refrigerant oil of the type recommended for the A/C compressor in the vehicle.
8. Connect the A/C suction line (6) to the spring-lock coupler (1) on the accumulator (5) and install the secondary retaining clip (7) (Refer to 24 - HEATING & AIR CONDITIONING/PLUMBING/COUPLER-REFRIGERANT LINE - INSTALLATION).
9. Install the air filter housing cover (Refer to 9 - ENGINE/AIR INTAKE SYSTEM/AIR FILTER HOUSING - INSTALLATION).
10. Reconnect the negative battery cable.
11. Evacuate the refrigerant system (Refer to 24 - HEATING & AIR CONDITIONING/PLUMBING - STANDARD PROCEDURE - REFRIGERANT SYSTEM EVACUATE).
12. Charge the refrigerant system (Refer to 24 - HEATING & AIR CONDITIONING/PLUMBING - STANDARD PROCEDURE - REFRIGERANT SYSTEM CHARGE).

5.9L DIESEL ENGINE

NOTE: The A/C suction line for the 5.9L Diesel engine is serviced as an assembly with the discharge line.

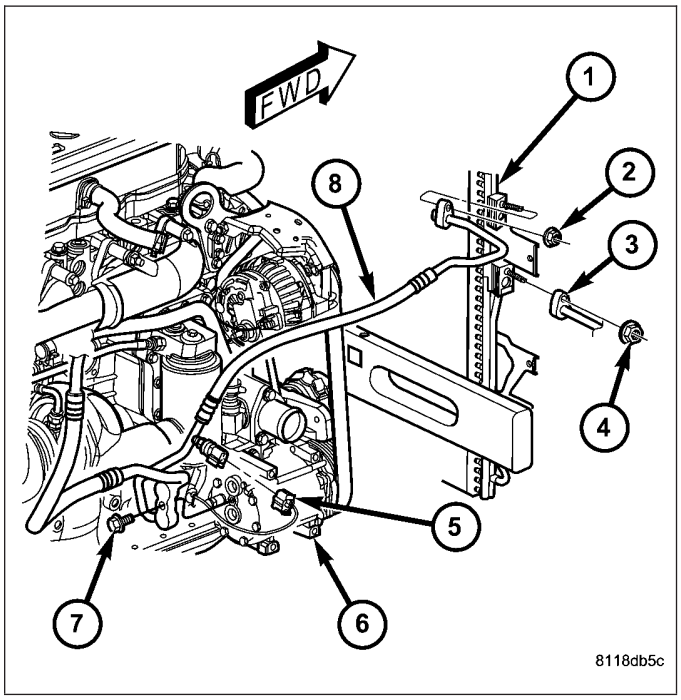

1. If removed, install the A/C pressure transducer onto the A/C discharge line (Refer to 24 - HEATING & AIR CONDITIONING/CONTROLS/TRANSDUCER-A/C PRESSURE - INSTALLATION).
2. Position the A/C suction and discharge line assembly (8) into the engine compartment.
3. Remove the tape or plugs from the opened discharge line fitting and the inlet port on the A/C condenser (1).
4. Lubricate a new seal with clean refrigerant oil and install it onto the discharge line fitting. Use only the specified seal as it is made of a special material for the R-134a system. Use only refrigerant oil of the type recommended for the A/C compressor in the vehicle.
5. Install the A/C discharge line onto the A/C condenser.
6. Install the nut (2) that secures the A/C discharge line to the A/C condenser. Tighten the nut to 20 N·m (15 ft. lbs.).
7. Remove the tape or plugs from the opened A/C suction and discharge line fittings and the compressor ports.
8. Lubricate new seals with clean refrigerant oil and install them onto the refrigerant line fittings. Use only the specified seals as they are made of a special material for the R-134a system. Use only refrigerant oil of the type recommended for the A/C compressor in the vehicle.
9. Install the A/C suction and discharge line assembly onto the A/C compressor (6).

10. Install the bolt (7) that secures the A/C suction and discharge line assembly to the A/C compressor. Tighten the bolt to 28 N·m (20 ft. lbs.).
11. Connect the wire harness connector (5) to the A/C pressure transducer.
12. Remove the tape or plugs from the opened suction line fitting and the accumulator outlet tube.
13. Lubricate new rubber O-ring seals with clean refrigerant oil and install them onto the accumulator tube fitting. Use only the specified O-rings as they are made of a special material for the R-134a system. Use only refrigerant oil of the type recommended for the A/C compressor in the vehicle.
14. Connect the A/C suction line (6) to the spring-lock coupler (1) on the accumulator (5) and install the secondary retaining clip (7) (Refer to 24 - HEATING & AIR CONDITIONING/PLUMBING/COUPLER-REFRIGERANT LINE - INSTALLATION).
15. Install the air filter housing cover (Refer to 9 - ENGINE/AIR INTAKE SYSTEM).
16. Reconnect the negative battery cable.
17. Evacuate the refrigerant system (Refer to 24 - HEATING & AIR CONDITIONING/PLUMBING - STANDARD PROCEDURE - REFRIGERANT SYSTEM EVACUATE).
18. Charge the refrigerant system (Refer to 24 - HEATING & AIR CONDITIONING/PLUMBING - STANDARD PROCEDURE - REFRIGERANT SYSTEM CHARGE).

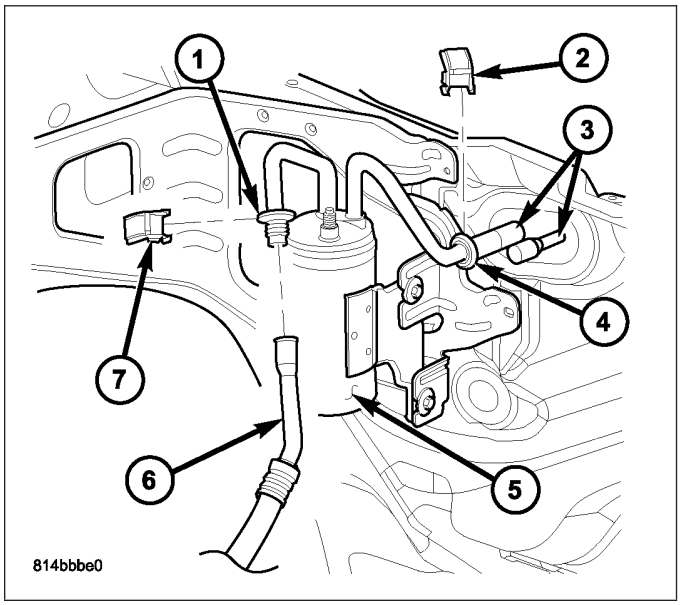

8.3L ENGINE

1. Remove the tape or plugs from the opened suction line fitting and the accumulator outlet tube.
2. Lubricate new rubber O-ring seals with clean refrigerant oil and install them onto the accumulator tube fitting. Use only the specified O-rings as they are made of a special material for the R-134a system. Use only refrigerant oil of the type recommended for the A/C compressor in the vehicle.
3. Connect the A/C suction line (6) to the spring-lock coupler (1) on the accumulator (5) and install the secondary retaining clip (7) (Refer to 24 - HEATING & AIR CONDITIONING/PLUMBING/COUPLER-REFRIGERANT LINE - INSTALLATION).

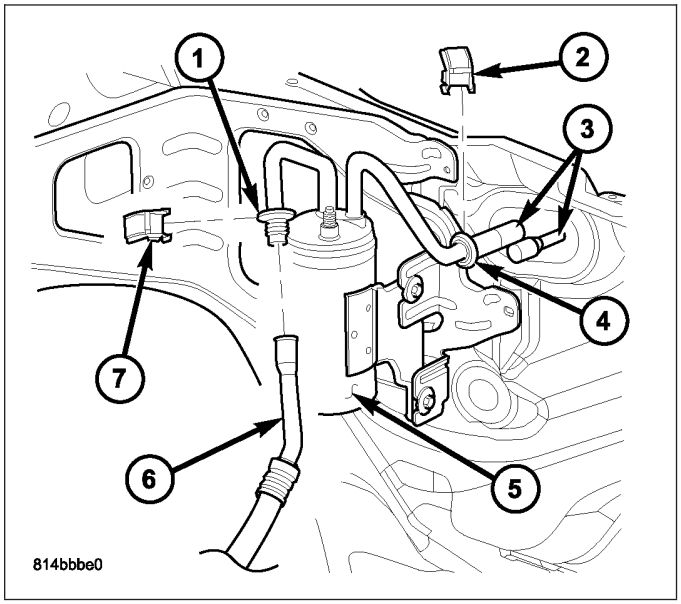

4. Install the A/C suction line (5) into the two refrigerant line retainer clips (2) located at the top of the fan shroud (1).
5. Install the air filter housing cover (Refer to 9 - ENGINE/AIR INTAKE SYSTEM/AIR FILTER HOUSING - INSTALLATION).

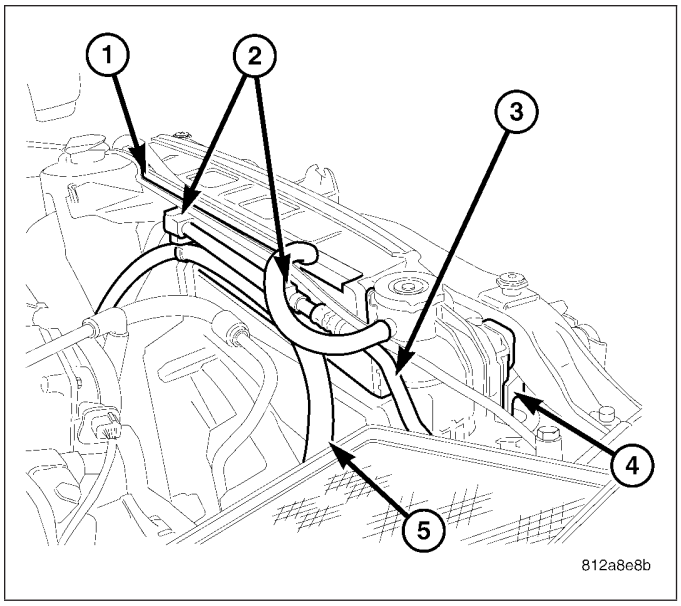

6. Position the A/C suction line (1) into the engine compartment.
7. Remove the tape or plugs from the opened fitting on the A/C suction line and the inlet port on the A/C compressor (2).
8. Lubricate a new seal with clean refrigerant oil and install it onto the suction line fitting. Use only the specified seal as it is made of a special material for the R-134a system. Use only refrigerant oil of the type recommended for the A/C compressor in the vehicle.
9. Install the A/C suction line onto the A/C compressor.
10. Install the bolt (5) that secures the A/C discharge line to the A/C compressor. Tighten the bolt to 20 N·m (15 ft. lbs.).
11. Reconnect the negative battery cable.
12. Evacuate the refrigerant system (Refer to 24 - HEATING & AIR CONDITIONING/PLUMBING - STANDARD PROCEDURE - REFRIGERANT SYSTEM EVACUATE).
13. Charge the refrigerant system (Refer to 24 - HEATING & AIR CONDITIONING/PLUMBING - STANDARD PROCEDURE - REFRIGERANT SYSTEM CHARGE).

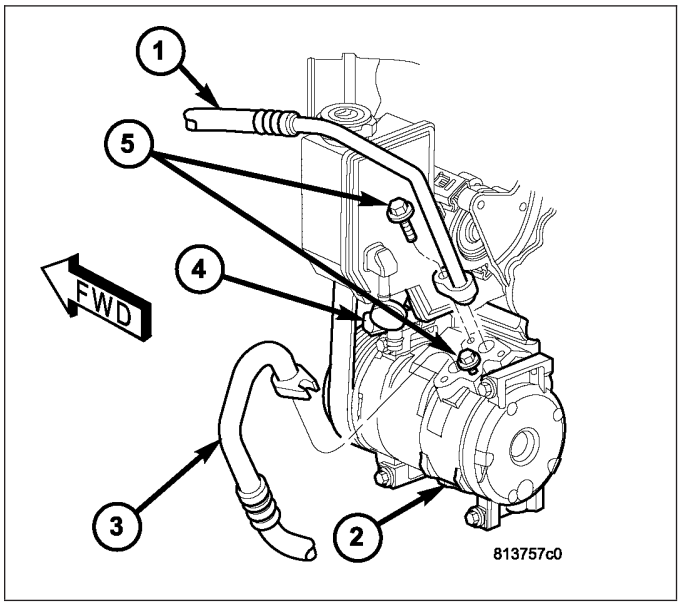

OIL-A/C REFRIGERANT

DESCRIPTION

The refrigerant oil used in R-134a refrigerant systems is a synthetic-based, polyalkylene glycol (PAG), wax-free lubricant. Mineral-based R-12 refrigerant oils are not compatible with PAG oils, and should never be introduced to an R-134a refrigerant system.

There are different PAG oils available, and each contains a different additive package. Use **only** refrigerant oil of the same type as recommended to service the refrigerant system (**always refer to the specification tag** included with the replacement A/C compressor or the underhood A/C system specification tag).

The Saden SD-7 A/C compressor used in this vehicle is designed to use ND-15 PAG refrigerant oil. Use only this type of refrigerant oil when servicing the A/C compressor for the 5.9L Diesel engine.

The Denso 10S17 A/C compressor used in this vehicle is designed to use ND-8 PAG refrigerant oil. Use only this type of refrigerant oil when servicing the A/C compressor for the 3.7L, 4.7L, 5.7L and 8.3L engines.

OPERATION

After performing any refrigerant recovery or recycling operation, always replenish the refrigerant system with the same amount of the recommended refrigerant oil as was removed. Too little refrigerant oil can cause A/C compressor damage, and too much can reduce A/C system performance.

PAG refrigerant oil is more hygroscopic than mineral oil, and will absorb any moisture it comes into contact with, even moisture in the air. The PAG oil container should always be kept tightly capped until it is ready to be used. After use, recap the oil container immediately to prevent moisture contamination.

STANDARD PROCEDURE

REFRIGERANT OIL LEVEL

When an A/C system is assembled at the factory, all components except the A/C compressor are refrigerant oil free. After the refrigerant system has been charged and operated, the refrigerant oil in the A/C compressor is dispersed throughout the refrigerant system. The accumulator, A/C evaporator, A/C condenser and the A/C compressor will each retain a significant amount of the needed refrigerant oil.

It is important to have the correct amount of refrigerant oil in the A/C system. This ensures proper lubrication of the A/C compressor. Too little oil will result in damage to the A/C compressor, while too much oil will reduce the cooling capacity of the A/C system and consequently result in higher discharge air temperatures.

CAUTION: The refrigerant oil in the R-134a A/C system is unique depending on the A/C compressor used. Use only PAG oils that are designed to work with R-134a refrigerant and the A/C compressor in the vehicle. Always refer to the underhood A/C System Specification Label for the correct oil designation. The oil container should be kept tightly capped until it is ready for use and then tightly capped after use to prevent contamination from dirt and moisture. Refrigerant oil will quickly absorb any moisture it comes in contact with, therefore, special effort must be used to keep all R-134a system components moisture-free. Moisture in the refrigerant oil is very difficult to remove and will cause a reliability problem with the A/C compressor.

NOTE: Most reclaim/recycling equipment will measure the lubricant being removed during recovery. This amount of lubricant should be added back into the system. Refer to the reclaim/recycling equipment manufacturers instructions.

It will not be necessary to check the oil level in the A/C compressor or to add oil, unless there has been an oil loss. An oil loss may occur due to a rupture or leak from a refrigerant line, a connector fitting, a component, or a component seal. If a leak occurs, add 30 milliliters (1 fluid ounce) of refrigerant oil to the refrigerant system after the repair has been made. Refrigerant oil loss will be evident at the leak point by the presence of a wet, shiny surface around the leak.

Refrigerant oil must be added when an accumulator, A/C evaporator or A/C condenser is replaced. See the Refrigerant Oil Capacities chart. When an A/C compressor is replaced, the refrigerant oil must be drained from the old compressor and measured. Drain all of the refrigerant oil from the new A/C compressor, then fill the new compressor with the same amount of refrigerant oil that was drained out of the old compressor.

REFRIGERANT OIL CAPACITIES

Component Name	ml.	oz.
Total A/C System Fill	180	6
A/C Accumulator	60	2
A/C Condenser	30	1
A/C Evaporator	60	2
A/C Compressor	Drain and measure the oil from the old compressor - see text.	

REFRIGERANT-A/C

DESCRIPTION

The refrigerant used in this air conditioning system is a HydroFluoroCarbon (HFC), type R-134a. Unlike R-12, which is a ChloroFluoroCarbon (CFC), R-134a refrigerant does not contain ozone-depleting chlorine. R-134a refrigerant is a non-toxic, non-flammable, clear, and colorless liquefied gas.

Even though R-134a does not contain chlorine, it must be reclaimed and recycled just like CFC-type refrigerants. This is because R-134a is a greenhouse gas and can contribute to global warming.

OPERATION

R-134a refrigerant is not compatible with R-12 refrigerant in an A/C system. Even a small amount of R-12 refrigerant added to an R-134a refrigerant system will cause A/C compressor failure, refrigerant oil sludge or poor A/C system performance. In addition, the polyalkylene glycol (PAG) synthetic refrigerant oils used in an R-134a refrigerant system are not compatible with the mineral-based refrigerant oils used in an R-12 refrigerant system.

R-134a refrigerant system service ports, service tool couplers and refrigerant dispensing bottles have all been designed with unique fittings to ensure that an R-134a refrigerant system is not accidentally contaminated with the wrong refrigerant (R-12). There are also labels posted in the engine compartment of the vehicle and on the A/C compressor to identify that the A/C system is equipped with R-134a refrigerant.

TUBE-A/C ORIFICE

DESCRIPTION

The fixed A/C orifice tube is installed in the rear section of the A/C liquid line and provides a restriction in the liquid refrigerant line between the A/C condenser and the A/C evaporator. This restriction established the pressure differential between the high and low-pressure sides of the A/C system. The A/C orifice tube includes a diffuser screen (1), O-ring seals (2) to seal it to the inner wall of the A/C liquid line, an inlet filter screen (3) and the fixed orifice (4).

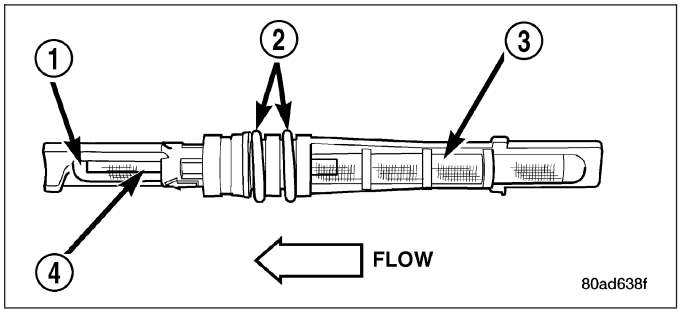

OPERATION

The fixed A/C orifice tube is used to meter the flow of liquid refrigerant into the A/C evaporator. The high-pressure liquid refrigerant from the A/C condenser expands into a low-pressure liquid as it passes through the metering orifice and diffuser screen of the A/C orifice tube.

The A/C orifice tube is not serviceable. The A/C orifice tube cannot be repaired and, if faulty or plugged, it must be replaced as part of the A/C liquid line.

DIAGNOSIS AND TESTING

A/C ORIFICE TUBE

WARNING: The A/C liquid line between the A/C condenser and the A/C orifice tube can become hot enough to burn the skin. Use extreme caution when performing the following test to prevent possible personal injury.

NOTE: The A/C orifice tube can be checked for proper operation using the following procedure. However, the A/C orifice tube is only serviced as a part of the A/C liquid line. If the results of this test indicate that the A/C orifice tube is obstructed or missing, the rear section of the A/C liquid line must be replaced.

1. Confirm that the refrigerant system is properly charged. (Refer to 24 - HEATING & AIR CONDITIONING - DIAGNOSIS AND TESTING - A/C PERFORMANCE)
2. Start the engine. Turn on the A/C system and confirm that the compressor clutch is engaged.
3. Allow the A/C system to operate for five minutes.
4. Lightly and cautiously touch the A/C liquid line near the condenser outlet at the front of the engine compartment. The liquid line should be hot to the touch.
5. Touch the A/C liquid line near the evaporator inlet at the rear of the engine compartment. The liquid line should be cold to the touch.
6. If there is a distinct temperature differential between the two ends of the A/C liquid line, the A/C orifice tube is in good condition. If there is little or no detectable temperature differential between the two ends of the A/C liquid line, the A/C orifice tube is obstructed or missing and the rear section of the A/C liquid line must be replaced (Refer to 24 - HEATING & AIR CONDITIONING/PLUMBING/LINE-A/C LIQUID - REMOVAL).

EMISSIONS CONTROL

TABLE OF CONTENTS

page

EMISSIONS CONTROL
DESCRIPTION
DESCRIPTION - STATE DISPLAY TEST MODE 1
DESCRIPTION - CIRCUIT ACTUATION TEST MODE 1
DESCRIPTION - DIAGNOSTIC TROUBLE CODES 1
DESCRIPTION - TASK MANAGER 2
DESCRIPTION - MONITORED SYSTEMS 2
DESCRIPTION - TRIP DEFINITION 4
DESCRIPTION - COMPONENT MONITORS . . . 5
OPERATION
OPERATION 5
OPERATION - TASK MANAGER 6
OPERATION - NON-MONITORED CIRCUITS . 10
EVAPORATIVE EMISSIONS 11
EXHAUST GAS RECIRCULATION 46

EMISSIONS CONTROL

DESCRIPTION

DESCRIPTION - STATE DISPLAY TEST MODE

The switch inputs to the Powertrain Control Module (PCM) have two recognized states; HIGH and LOW. For this reason, the PCM cannot recognize the difference between a selected switch position versus an open circuit, a short circuit, or a defective switch. If the State Display screen shows the change from HIGH to LOW or LOW to HIGH, assume the entire switch circuit to the PCM functions properly. Connect the DRB scan tool to the data link connector and access the state display screen. Then access either State Display Inputs and Outputs or State Display Sensors.

DESCRIPTION - CIRCUIT ACTUATION TEST MODE

The Circuit Actuation Test Mode checks for proper operation of output circuits or devices the Powertrain Control Module (PCM) may not internally recognize. The PCM attempts to activate these outputs and allow an observer to verify proper operation. Most of the tests provide an audible or visual indication of device operation (click of relay contacts, fuel spray, etc.). Except for intermittent conditions, if a device functions properly during testing, assume the device, its associated wiring, and driver circuit work correctly. Connect the DRB scan tool to the data link connector and access the Actuators screen.

DESCRIPTION - DIAGNOSTIC TROUBLE CODES

A Diagnostic Trouble Code (DTC) indicates the PCM has recognized an abnormal condition in the system.

Remember that DTC's are the results of a system or circuit failure, but do not directly identify the failed component or components.

BULB CHECK

Each time the ignition key is turned to the ON position, the malfunction indicator (check engine) lamp on the instrument panel should illuminate for approximately 2 seconds then go out. This is done for a bulb check.

OBTAINING DTC'S USING DRB SCAN TOOL

1. Obtain the applicable Powertrain Diagnostic Manual.
2. Obtain the DRB Scan Tool.
3. Connect the DRB Scan Tool to the data link (diagnostic) connector. This connector is located in the passenger compartment; at the lower edge of instrument panel; near the steering column.

4. Turn the ignition switch on and access the “Read Fault” screen.
5. Record all the DTC’s and “freeze frame” information shown on the DRB scan tool.
6. To erase DTC’s, use the “Erase Trouble Code” data screen on the DRB scan tool. **Do not erase any DTC’s until problems have been investigated and repairs have been performed.**

DESCRIPTION - TASK MANAGER

The PCM is responsible for efficiently coordinating the operation of all the emissions-related components. The PCM is also responsible for determining if the diagnostic systems are operating properly. The software designed to carry out these responsibilities is call the ’Task Manager’.

DESCRIPTION - MONITORED SYSTEMS

There are new electronic circuit monitors that check fuel, emission, engine and ignition performance. These monitors use information from various sensor circuits to indicate the overall operation of the fuel, engine, ignition and emission systems and thus the emissions performance of the vehicle.

The fuel, engine, ignition and emission systems monitors do not indicate a specific component problem. They do indicate that there is an implied problem within one of the systems and that a specific problem must be diagnosed.

If any of these monitors detect a problem affecting vehicle emissions, the Malfunction Indicator Lamp (MIL) will be illuminated. These monitors generate Diagnostic Trouble Codes that can be displayed with the MIL or a scan tool.

The following is a list of the system monitors:

- Misfire Monitor
- Fuel System Monitor
- Oxygen Sensor Monitor
- Oxygen Sensor Heater Monitor
- Catalyst Monitor
- Leak Detection Pump Monitor (if equipped)

All these system monitors require two consecutive trips with the malfunction present to set a fault.

Refer to the appropriate Powertrain Diagnostics Procedures manual for diagnostic procedures.

The following is an operation and description of each system monitor :

OXYGEN SENSOR (O2S) MONITOR

Effective control of exhaust emissions is achieved by an oxygen feedback system. The most important element of the feedback system is the O2S. The O2S is located in the exhaust path. Once it reaches operating temperature 300° to 350°C (572° to 662°F), the sensor generates a voltage that is inversely proportional to the amount of oxygen in the exhaust. The information obtained by the sensor is used to calculate the fuel injector pulse width. This maintains a 14.7 to 1 Air Fuel (A/F) ratio. At this mixture ratio, the catalyst works best to remove hydrocarbons (HC), carbon monoxide (CO) and nitrogen oxide (NOx) from the exhaust.

The O2S is also the main sensing element for the Catalyst and Fuel Monitors.

The O2S can fail in any or all of the following manners:

- slow response rate
- reduced output voltage
- dynamic shift
- shorted or open circuits

Response rate is the time required for the sensor to switch from lean to rich once it is exposed to a richer than optimum A/F mixture or vice versa. As the sensor starts malfunctioning, it could take longer to detect the changes in the oxygen content of the exhaust gas.

The output voltage of the O2S ranges from 0 to 1 volt. A good sensor can easily generate any output voltage in this range as it is exposed to different concentrations of oxygen. To detect a shift in the A/F mixture (lean or rich), the output voltage has to change beyond a threshold value. A malfunctioning sensor could have difficulty changing beyond the threshold value.

OXYGEN SENSOR HEATER MONITOR

If there is an oxygen sensor (O2S) shorted to voltage DTC, as well as a O2S heater DTC, the O2S fault MUST be repaired first. Before checking the O2S fault, verify that the heater circuit is operating correctly.

Effective control of exhaust emissions is achieved by an oxygen feedback system. The most important element of the feedback system is the O2S. The O2S is located in the exhaust path. Once it reaches operating temperature 300° to 350°C (572 ° to 662°F), the sensor generates a voltage that is inversely proportional to the amount of oxygen in the exhaust. The information obtained by the sensor is used to calculate the fuel injector pulse width. This maintains a 14.7 to 1 Air Fuel (A/F) ratio. At this mixture ratio, the catalyst works best to remove hydrocarbons (HC), carbon monoxide (CO) and nitrogen oxide (NOx) from the exhaust.

The voltage readings taken from the O2S sensor are very temperature sensitive. The readings are not accurate below 300°C. Heating of the O2S sensor is done to allow the engine controller to shift to closed loop control as soon as possible. The heating element used to heat the O2S sensor must be tested to ensure that it is heating the sensor properly.

The O2S sensor circuit is monitored for a drop in voltage. The sensor output is used to test the heater by isolating the effect of the heater element on the O2S sensor output voltage from the other effects.

LEAK DETECTION PUMP MONITOR (IF EQUIPPED)

The leak detection assembly incorporates two primary functions: it must detect a leak in the evaporative system and seal the evaporative system so the leak detection test can be run.

The primary components within the assembly are: A three port solenoid that activates both of the functions listed above; a pump which contains a switch, two check valves and a spring/diaphragm, a canister vent valve (CVV) seal which contains a spring loaded vent seal valve.

Immediately after a cold start, between predetermined temperature thresholds limits, the three port solenoid is briefly energized. This initializes the pump by drawing air into the pump cavity and also closes the vent seal. During non test conditions the vent seal is held open by the pump diaphragm assembly which pushes it open at the full travel position. The vent seal will remain closed while the pump is cycling due to the reed switch triggering of the three port solenoid that prevents the diaphragm assembly from reaching full travel. After the brief initialization period, the solenoid is de-energized allowing atmospheric pressure to enter the pump cavity, thus permitting the spring to drive the diaphragm which forces air out of the pump cavity and into the vent system. When the solenoid is energized and de energized, the cycle is repeated creating flow in typical diaphragm pump fashion. The pump is controlled in 2 modes:

Pump Mode: The pump is cycled at a fixed rate to achieve a rapid pressure build in order to shorten the overall test length.

Test Mode: The solenoid is energized with a fixed duration pulse. Subsequent fixed pulses occur when the diaphragm reaches the Switch closure point.

The spring in the pump is set so that the system will achieve an equalized pressure of about 7.5” H20. The cycle rate of pump strokes is quite rapid as the system begins to pump up to this pressure. As the pressure increases, the cycle rate starts to drop off. If there is no leak in the system, the pump would eventually stop pumping at the equalized pressure. If there is a leak, it will continue to pump at a rate representative of the flow characteristic of the size of the leak. From this information we can determine if the leak is larger than the required detection limit (currently set at .040” orifice by CARB). If a leak is revealed during the leak test portion of the test, the test is terminated at the end of the test mode and no further system checks will be performed.

After passing the leak detection phase of the test, system pressure is maintained by turning on the LDP’s solenoid until the purge system is activated. Purge activation in effect creates a leak. The cycle rate is again interrogated and when it increases due to the flow through the purge system, the leak check portion of the diagnostic is complete.

The canister vent valve will unseal the system after completion of the test sequence as the pump diaphragm assembly moves to the full travel position.

Evaporative system functionality will be verified by using the stricter evap purge flow monitor. At an appropriate warm idle the LDP will be energized to seal the canister vent. The purge flow will be clocked up from some small value in an attempt to see a shift in the 02 control system. If fuel vapor, indicated by a shift in the 02 control, is present the test is passed. If not, it is assumed that the purge system is not functioning in some respect. The LDP is again turned off and the test is ended.

MISFIRE MONITOR

Excessive engine misfire results in increased catalyst temperature and causes an increase in HC emissions. Severe misfires could cause catalyst damage. To prevent catalytic convertor damage, the PCM monitors engine misfire.

The Powertrain Control Module (PCM) monitors for misfire during most engine operating conditions (positive torque) by looking at changes in the crankshaft speed. If a misfire occurs the speed of the crankshaft will vary more than normal.

FUEL SYSTEM MONITOR

To comply with clean air regulations, vehicles are equipped with catalytic converters. These converters reduce the emission of hydrocarbons, oxides of nitrogen and carbon monoxide. The catalyst works best when the Air Fuel (A/F) ratio is at or near the optimum of 14.7 to 1.

The PCM is programmed to maintain the optimum air/fuel ratio of 14.7 to 1. This is done by making short term corrections in the fuel injector pulse width based on the O2S sensor output. The programmed memory acts as a self calibration tool that the engine controller uses to compensate for variations in engine specifications, sensor tolerances and engine fatigue over the life span of the engine. By monitoring the actual fuel-air ratio with the O2S sensor (short term) and multiplying that with the program long-term (adaptive) memory and comparing that to the limit, it can be determined whether it will pass an emissions test. If a malfunction occurs such that the PCM cannot maintain the optimum A/F ratio, then the MIL will be illuminated.

CATALYST MONITOR

To comply with clean air regulations, vehicles are equipped with catalytic converters. These converters reduce the emission of hydrocarbons, oxides of nitrogen and carbon monoxide.

Normal vehicle miles or engine misfire can cause a catalyst to decay. This can increase vehicle emissions and deteriorate engine performance, driveability and fuel economy.

The catalyst monitor uses dual oxygen sensors (O2S's) to monitor the efficiency of the converter. The dual O2S's sensor strategy is based on the fact that as a catalyst deteriorates, its oxygen storage capacity and its efficiency are both reduced. By monitoring the oxygen storage capacity of a catalyst, its efficiency can be indirectly calculated. The upstream O2S is used to detect the amount of oxygen in the exhaust gas before the gas enters the catalytic converter. The PCM calculates the A/F mixture from the output of the O2S. A low voltage indicates high oxygen content (lean mixture). A high voltage indicates a low content of oxygen (rich mixture).

When the upstream O2S detects a lean condition, there is an abundance of oxygen in the exhaust gas. A functioning converter would store this oxygen so it can use it for the oxidation of HC and CO. As the converter absorbs the oxygen, there will be a lack of oxygen downstream of the converter. The output of the downstream O2S will indicate limited activity in this condition.

As the converter loses the ability to store oxygen, the condition can be detected from the behavior of the downstream O2S. When the efficiency drops, no chemical reaction takes place. This means the concentration of oxygen will be the same downstream as upstream. The output voltage of the downstream O2S copies the voltage of the upstream sensor. The only difference is a time lag (seen by the PCM) between the switching of the O2S's.

To monitor the system, the number of lean-to-rich switches of upstream and downstream O2S's is counted. The ratio of downstream switches to upstream switches is used to determine whether the catalyst is operating properly. An effective catalyst will have fewer downstream switches than it has upstream switches i.e., a ratio closer to zero. For a totally ineffective catalyst, this ratio will be one-to-one, indicating that no oxidation occurs in the device.

The system must be monitored so that when catalyst efficiency deteriorates and exhaust emissions increase to over the legal limit, the MIL will be illuminated.

DESCRIPTION - TRIP DEFINITION

The term "Trip" has different meanings depending on what the circumstances are. If the MIL (Malfunction Indicator Lamp) is OFF, a Trip is defined as when the Oxygen Sensor Monitor and the Catalyst Monitor have been completed in the same drive cycle.

When any Emission DTC is set, the MIL on the dash is turned ON. When the MIL is ON, it takes 3 good trips to turn the MIL OFF. In this case, it depends on what type of DTC is set to know what a "Trip" is.

For the Fuel Monitor or Mis-Fire Monitor (continuous monitor), the vehicle must be operated in the "Similar Condition Window" for a specified amount of time to be considered a Good Trip.

If a Non-Contiuous OBDII Monitor fails twice in a row and turns ON the MIL, re-running that monitor which previously failed, on the next start-up and passing the monitor, is considered to be a Good Trip. These will include the following:

- Oxygen Sensor
- Catalyst Monitor
- Purge Flow Monitor
- Leak Detection Pump Monitor (if equipped)
- EGR Monitor (if equipped)
- Oxygen Sensor Heater Monitor

If any other Emission DTC is set (not an OBDII Monitor), a Good Trip is considered to be when the Oxygen Sensor Monitor and Catalyst Monitor have been completed; or 2 Minutes of engine run time if the Oxygen Sensor Monitor or Catalyst Monitor have been stopped from running.

It can take up to 2 Failures in a row to turn on the MIL. After the MIL is ON, it takes 3 Good Trips to turn the MIL OFF. After the MIL is OFF, the PCM will self-erase the DTC after 40 Warm-up cycles. A Warm-up cycle is counted when the ECT (Engine Coolant Temperature Sensor) has crossed 160°F and has risen by at least 40°F since the engine has been started.

DESCRIPTION - COMPONENT MONITORS

There are several components that will affect vehicle emissions if they malfunction. If one of these components malfunctions the Malfunction Indicator Lamp (MIL) will illuminate.

Some of the component monitors are checking for proper operation of the part. Electrically operated components now have input (rationality) and output (functionality) checks. Previously, a component like the Throttle Position sensor (TPS) was checked by the PCM for an open or shorted circuit. If one of these conditions occurred, a DTC was set. Now there is a check to ensure that the component is working. This is done by watching for a TPS indication of a greater or lesser throttle opening than MAP and engine rpm indicate. In the case of the TPS, if engine vacuum is high and engine rpm is 1600 or greater, and the TPS indicates a large throttle opening, a DTC will be set. The same applies to low vacuum if the TPS indicates a small throttle opening.

All open/short circuit checks, or any component that has an associated limp-in, will set a fault after 1 trip with the malfunction present. Components without an associated limp-in will take two trips to illuminate the MIL.

OPERATION

OPERATION

The Powertrain Control Module (PCM) monitors many different circuits in the fuel injection, ignition, emission and engine systems. If the PCM senses a problem with a monitored circuit often enough to indicate an actual problem, it stores a Diagnostic Trouble Code (DTC) in the PCM's memory. If the problem is repaired or ceases to exist, the PCM cancels the code after 40 warm-up cycles. Diagnostic trouble codes that affect vehicle emissions illuminate the Malfunction Indicator Lamp (MIL). The MIL is displayed as an engine icon (graphic) on the instrument panel. Refer to Malfunction Indicator Lamp in this section.

Certain criteria must be met before the PCM stores a DTC in memory. The criteria may be a specific range of engine RPM, engine temperature, and/or input voltage to the PCM.

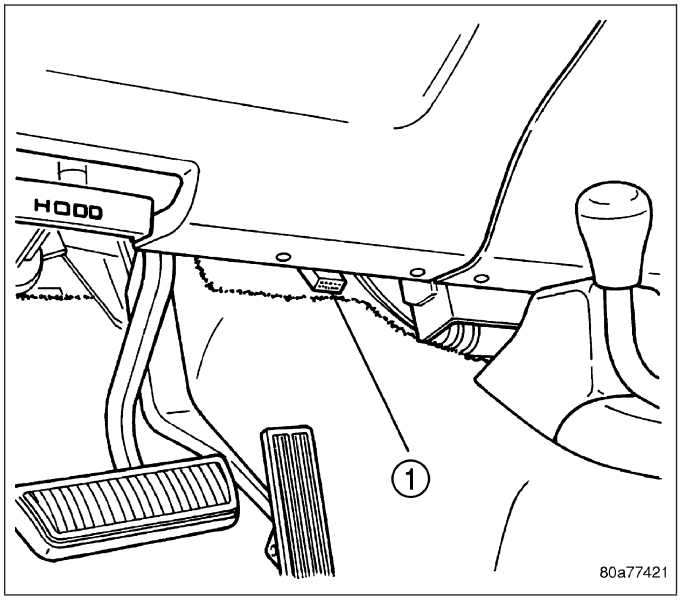

The PCM might not store a DTC for a monitored circuit even though a malfunction has occurred. This may happen because one of the DTC criteria for the circuit has not been met. **For example,** assume the diagnostic trouble code criteria requires the PCM to monitor the circuit only when the engine operates between 750 and 2000 RPM. Suppose the sensor's output circuit shorts to ground when engine operates above 2400 RPM (resulting in 0 volt input to the PCM). Because the condition happens at an engine speed above the maximum threshold (2000 rpm), the PCM will not store a DTC.

There are several operating conditions for which the PCM monitors and sets DTC's. Refer to Monitored Systems, Components, and Non-Monitored Circuits in this section.

Technicians must retrieve stored DTC's by connecting the DRB scan tool (or an equivalent scan tool) to the 16–way data link connector. The connector is located on the bottom edge of the instrument panel near the steering column.

NOTE: Various diagnostic procedures may actually cause a diagnostic monitor to set a DTC. For instance, pulling a spark plug wire to perform a spark test may set the misfire code. When a repair is completed and verified, connect the DRB scan tool to the 16–way data link connector (1) to erase all DTC's and extinguish the MIL.

OPERATION - TASK MANAGER

The Task Manager determines which tests happen when and which functions occur when. Many of the diagnostic steps required by OBD II must be performed under specific operating conditions. The Task Manager software organizes and prioritizes the diagnostic procedures. The job of the Task Manager is to determine if conditions are appropriate for tests to be run, monitor the parameters for a trip for each test, and record the results of the test. Following are the responsibilities of the Task Manager software:

- Test Sequence
- MIL Illumination
- Diagnostic Trouble Codes (DTCs)
- Trip Indicator
- Freeze Frame Data Storage
- Similar Conditions Window

Test Sequence

In many instances, emissions systems must fail diagnostic tests more than once before the PCM illuminates the MIL. These tests are know as 'two trip monitors.' Other tests that turn the MIL lamp on after a single failure are known as 'one trip monitors.' A trip is defined as 'start the vehicle and operate it to meet the criteria necessary to run the given monitor.'

Many of the diagnostic tests must be performed under certain operating conditions. However, there are times when tests cannot be run because another test is in progress (conflict), another test has failed (pending) or the Task Manager has set a fault that may cause a failure of the test (suspend).

- Pending
  Under some situations the Task Manager will not run a monitor if the MIL is illuminated and a fault is stored from another monitor. In these situations, the Task Manager postpones monitors **pending** resolution of the original fault. The Task Manager does not run the test until the problem is remedied.
  For example, when the MIL is illuminated for an Oxygen Sensor fault, the Task Manager does not run the Catalyst Monitor until the Oxygen Sensor fault is remedied. Since the Catalyst Monitor is based on signals from the Oxygen Sensor, running the test would produce inaccurate results.
- Conflict
  There are situations when the Task Manager does not run a test if another monitor is in progress. In these situations, the effects of another monitor running could result in an erroneous failure. If this **conflict** is present, the monitor is not run until the conflicting condition passes. Most likely the monitor will run later after the conflicting monitor has passed.
  For example, if the Fuel System Monitor is in progress, the Task Manager does not run the EGR Monitor. Since both tests monitor changes in air/fuel ratio and adaptive fuel compensation, the monitors will conflict with each other.

- Suspend
  Occasionally the Task Manager may not allow a two trip fault to mature. The Task Manager will **suspend** the maturing of a fault if a condition exists that may induce an erroneous failure. This prevents illuminating the MIL for the wrong fault and allows more precis diagnosis.
  For example, if the PCM is storing a one trip fault for the Oxygen Sensor and the EGR monitor, the Task Manager may still run the EGR Monitor but will suspend the results until the Oxygen Sensor Monitor either passes or fails. At that point the Task Manager can determine if the EGR system is actually failing or if an Oxygen Sensor is failing.

MIL Illumination

The PCM Task Manager carries out the illumination of the MIL. The Task Manager triggers MIL illumination upon test failure, depending on monitor failure criteria.

The Task Manager Screen shows both a Requested MIL state and an Actual MIL state. When the MIL is illuminated upon completion of a test for a third trip, the Requested MIL state changes to OFF. However, the MIL remains illuminated until the next key cycle. (On some vehicles, the MIL will actually turn OFF during the third key cycle) During the key cycle for the third good trip, the Requested MIL state is OFF, while the Actual MILL state is ON. After the next key cycle, the MIL is not illuminated and both MIL states read OFF.

Diagnostic Trouble Codes (DTCs)

With OBD II, different DTC faults have different priorities according to regulations. As a result, the priorities determine MIL illumination and DTC erasure. DTCs are entered according to individual priority. DTCs with a higher priority overwrite lower priority DTCs.

Priorities

- Priority 0 —Non-emissions related trouble codes
- Priority 1 — One trip failure of a two trip fault for non-fuel system and non-misfire.
- Priority 2 — One trip failure of a two trip fault for fuel system (rich/lean) or misfire.
- Priority 3 — Two trip failure for a non-fuel system and non-misfire or matured one trip comprehensive component fault.
- Priority 4 — Two trip failure or matured fault for fuel system (rich/lean) and misfire or one trip catalyst damaging misfire.

Non-emissions related failures have no priority. One trip failures of two trip faults have low priority. Two trip failures or matured faults have higher priority. One and two trip failures of fuel system and misfire monitor take precedence over non-fuel system and non-misfire failures.

DTC Self Erasure

With one trip components or systems, the MIL is illuminated upon test failure and DTCs are stored.

Two trip monitors are components requiring failure in two consecutive trips for MIL illumination. Upon failure of the first test, the Task Manager enters a maturing code. If the component fails the test for a second time the code matures and a DTC is set.

After three good trips the MIL is extinguished and the Task Manager automatically switches the trip counter to a warm-up cycle counter. DTCs are automatically erased following 40 warm-up cycles if the component does not fail again.

For misfire and fuel system monitors, the component must pass the test under a Similar Conditions Window in order to record a good trip. A Similar Conditions Window is when engine RPM is within ±375 RPM and load is within ±10% of when the fault occurred.

NOTE: It is important to understand that a component does not have to fail under a similar window of operation to mature. It must pass the test under a Similar Conditions Window when it failed to record a Good Trip for DTC erasure for misfire and fuel system monitors.

DTCs can be erased anytime with a DRB III. Erasing the DTC with the DRB III erases all OBD II information. The DRB III automatically displays a warning that erasing the DTC will also erase all OBD II monitor data. This includes all counter information for warm-up cycles, trips and Freeze Frame.

Trip Indicator

The **Trip** is essential for running monitors and extinguishing the MIL. In OBD II terms, a trip is a set of vehicle operating conditions that must be met for a specific monitor to run. All trips begin with a key cycle.

Good Trip

The Good Trip counters are as follows:

- Specific Good Trip
- Fuel System Good Trip
- Misfire Good Trip
- Alternate Good Trip (appears as a Global Good Trip on DRB III)
  - Comprehensive Components
  - Major Monitor
- Warm-Up Cycles

Specific Good Trip

The term Good Trip has different meanings depending on the circumstances:

- If the MIL is OFF, a trip is defined as when the Oxygen Sensor Monitor and the Catalyst Monitor have been completed in the same drive cycle.
- If the MIL is ON and a DTC was set by the Fuel Monitor or Misfire Monitor (both continuous monitors), the vehicle must be operated in the Similar Condition Window for a specified amount of time.
- If the MIL is ON and a DTC was set by a Task Manager commanded once-per-trip monitor (such as the Oxygen Sensor Monitor, Catalyst Monitor, Purge Flow Monitor, Leak Detection Pump Monitor, EGR Monitor or Oxygen Sensor Heater Monitor), a good trip is when the monitor is passed on the next start-up.
- If the MIL is ON and any other emissions DTC was set (not an OBD II monitor), a good trip occurs when the Oxygen Sensor Monitor and Catalyst Monitor have been completed, or two minutes of engine run time if the Oxygen Sensor Monitor and Catalyst Monitor have been stopped from running.

Fuel System Good Trip

To count a good trip (three required) and turn off the MIL, the following conditions must occur:

- Engine in closed loop
- Operating in Similar Conditions Window
- Short Term multiplied by Long Term less than threshold
- Less than threshold for a predetermined time

If all of the previous criteria are met, the PCM will count a good trip (three required) and turn off the MIL.

Misfire Good Trip

If the following conditions are met the PCM will count one good trip (three required) in order to turn off the MIL:

- Operating in Similar Condition Window
- 1000 engine revolutions with no misfire

Warm-Up Cycles

Once the MIL has been extinguished by the Good Trip Counter, the PCM automatically switches to a Warm-Up Cycle Counter that can be viewed on the DRB III. Warm-Up Cycles are used to erase DTCs and Freeze Frames. Forty Warm-Up cycles must occur in order for the PCM to self-erase a DTC and Freeze Frame. A Warm-Up Cycle is defined as follows:

- Engine coolant temperature must start below and rise above 160° F
- Engine coolant temperature must rise by 40° F
- No further faults occur

Freeze Frame Data Storage

Once a failure occurs, the Task Manager records several engine operating conditions and stores it in a Freeze Frame. The Freeze Frame is considered one frame of information taken by an on-board data recorder. When a fault occurs, the PCM stores the input data from various sensors so that technicians can determine under what vehicle operating conditions the failure occurred.

The data stored in Freeze Frame is usually recorded when a system fails the first time for two trip faults. Freeze Frame data will only be overwritten by a different fault with a higher priority.

CAUTION: Erasing DTCs, either with the DRB III or by disconnecting the battery, also clears all Freeze Frame data.

Similar Conditions Window

The Similar Conditions Window displays information about engine operation during a monitor. Absolute MAP (engine load) and Engine RPM are stored in this window when a failure occurs. There are two different Similar conditions Windows: Fuel System and Misfire.

FUEL SYSTEM

- **Fuel System Similar Conditions Window** — An indicator that 'Absolute MAP When Fuel Sys Fail' and 'RPM When Fuel Sys Failed' are all in the same range when the failure occurred. Indicated by switching from 'NO' to 'YES'.
- **Absolute MAP When Fuel Sys Fail** — The stored MAP reading at the time of failure. Informs the user at what engine load the failure occurred.
- **Absolute MAP** — A live reading of engine load to aid the user in accessing the Similar Conditions Window.
- **RPM When Fuel Sys Fail** — The stored RPM reading at the time of failure. Informs the user at what engine RPM the failure occurred.
- **Engine RPM** — A live reading of engine RPM to aid the user in accessing the Similar Conditions Window.
- **Adaptive Memory Factor** — The PCM utilizes both Short Term Compensation and Long Term Adaptive to calculate the Adaptive Memory Factor for total fuel correction.
- **Upstream O2S Volts** — A live reading of the Oxygen Sensor to indicate its performance. For example, stuck lean, stuck rich, etc.
- **SCW Time in Window (Similar Conditions Window Time in Window)** — A timer used by the PCM that indicates that, after all Similar Conditions have been met, if there has been enough good engine running time in the SCW without failure detected. This timer is used to increment a Good Trip.
- **Fuel System Good Trip Counter** — A Trip Counter used to turn OFF the MIL for Fuel System DTCs. To increment a Fuel System Good Trip, the engine must be in the Similar Conditions Window, Adaptive Memory Factor must be less than calibrated threshold and the Adaptive Memory Factor must stay below that threshold for a calibrated amount of time.
- **Test Done This Trip** — Indicates that the monitor has already been run and completed during the current trip.

MISFIRE

- **Same Misfire Warm-Up State** — Indicates if the misfire occurred when the engine was warmed up (above 160° F).
- **In Similar Misfire Window** — An indicator that 'Absolute MAP When Misfire Occurred' and 'RPM When Misfire Occurred' are all in the same range when the failure occurred. Indicated by switching from 'NO' to 'YES'.
- **Absolute MAP When Misfire Occurred** — The stored MAP reading at the time of failure. Informs the user at what engine load the failure occurred.
- **Absolute MAP** — A live reading of engine load to aid the user in accessing the Similar Conditions Window.
- **RPM When Misfire Occurred** — The stored RPM reading at the time of failure. Informs the user at what engine RPM the failure occurred.
- **Engine RPM** — A live reading of engine RPM to aid the user in accessing the Similar Conditions Window.
- **Adaptive Memory Factor** — The PCM utilizes both Short Term Compensation and Long Term Adaptive to calculate the Adaptive Memory Factor for total fuel correction.
- **200 Rev Counter** — Counts 0–100 720 degree cycles.
- **SCW Cat 200 Rev Counter** — Counts when in similar conditions.
- **SCW FTP 1000 Rev Counter** — Counts 0–4 when in similar conditions.
- **Misfire Good Trip Counter** — Counts up to three to turn OFF the MIL.
- **Misfire Data**— Data collected during test.
- **Test Done This Trip**— Indicates YES when the test is done.

OPERATION - NON-MONITORED CIRCUITS

The PCM does not monitor the following circuits, systems and conditions that could have malfunctions causing driveability problems. The PCM might not store diagnostic trouble codes for these conditions. However, problems with these systems may cause the PCM to store diagnostic trouble codes for other systems or components. **EXAMPLE:** a fuel pressure problem will not register a fault directly, but could cause a rich/lean condition or misfire. This could cause the PCM to store an oxygen sensor or misfire diagnostic trouble code

FUEL PRESSURE

The fuel pressure regulator controls fuel system pressure. The PCM cannot detect a clogged fuel pump inlet filter, clogged in-line fuel filter, or a pinched fuel supply or return line. However, these could result in a rich or lean condition causing the PCM to store an oxygen sensor or fuel system diagnostic trouble code.

SECONDARY IGNITION CIRCUIT

The PCM cannot detect an inoperative ignition coil, fouled or worn spark plugs, ignition cross firing, or open spark plug cables.

CYLINDER COMPRESSION

The PCM cannot detect uneven, low, or high engine cylinder compression.

EXHAUST SYSTEM

The PCM cannot detect a plugged, restricted or leaking exhaust system, although it may set a fuel system fault.

FUEL INJECTOR MECHANICAL MALFUNCTIONS

The PCM cannot determine if a fuel injector is clogged, the needle is sticking or if the wrong injector is installed. However, these could result in a rich or lean condition causing the PCM to store a diagnostic trouble code for either misfire, an oxygen sensor, or the fuel system.

EXCESSIVE OIL CONSUMPTION

Although the PCM monitors engine exhaust oxygen content when the system is in closed loop, it cannot determine excessive oil consumption.

THROTTLE BODY AIR FLOW

The PCM cannot detect a clogged or restricted air cleaner inlet or filter element.

VACUUM ASSIST

The PCM cannot detect leaks or restrictions in the vacuum circuits of vacuum assisted engine control system devices. However, these could cause the PCM to store a MAP sensor diagnostic trouble code and cause a high idle condition.

PCM SYSTEM GROUND

The PCM cannot determine a poor system ground. However, one or more diagnostic trouble codes may be generated as a result of this condition. The module should be mounted to the body at all times, also during diagnostic.

PCM CONNECTOR ENGAGEMENT

The PCM may not be able to determine spread or damaged connector pins. However, it might store diagnostic trouble codes as a result of spread connector pins.

EVAPORATIVE EMISSIONS

TABLE OF CONTENTS

page

EVAPORATIVE EMISSIONS
DESCRIPTION - EVAP SYSTEM 11
SPECIFICATIONS
TORQUE - EVAP SYSTEM 12
SOLENOID - EVAP/PURGE
DESCRIPTION 12
OPERATION 12
REMOVAL 12
INSTALLATION 13
CAP - FUEL FILLER
DESCRIPTION 13
OPERATION 13
REMOVAL
REMOVAL/INSTALLATION 13
PUMP - LEAK DETECTION
DESCRIPTION 13
OPERATION 14
REMOVAL 17
INSTALLATION 18
ORVR
DESCRIPTION 18
OPERATION 18
PUMP-NATURAL VAC LEAK DETECTION
DESCRIPTION 19
OPERATION 19
REMOVAL 20
INSTALLATION 23
VALVE - PCV
DESCRIPTION 27
OPERATION 29
DIAGNOSIS AND TESTING
PCV VALVE - 3.7L V-6/ 4.7L V-8 30
REMOVAL 32
INSTALLATION 33
LINES - VACUUM
DESCRIPTION 33
CANISTER - VAPOR
DESCRIPTION 34
OPERATION 35
REMOVAL 36
INSTALLATION 41

EVAPORATIVE EMISSIONS

DESCRIPTION - EVAP SYSTEM

The evaporation control system prevents the emission of fuel tank vapors into the atmosphere. When fuel evaporates in the fuel tank, the vapors pass through vent hoses or tubes into the two charcoal filled evaporative canisters. The canisters temporarily hold the vapors. The Powertrain Control Module (PCM) allows intake manifold vacuum to draw vapors into the combustion chambers during certain operating conditions.

All gasoline powered engines use a duty cycle purge system. The PCM controls vapor flow by operating the duty cycle EVAP purge solenoid. Refer to Duty Cycle EVAP Canister Purge Solenoid for additional information.

When equipped with certain emissions packages, a Leak Detection Pump (LDP) will be used as part of the evaporative system. This pump is used as a part of OBD II requirements. Refer to Leak Detection Pump for additional information. Other emissions packages will use a Natural Vacuum Leak Detection (NVLD) system in place of the LDP. Refer to NVLD for additional information.

NOTE: The hoses used in this system are specially manufactured. If replacement becomes necessary, it is important to use only fuel resistant hose.

SPECIFICATIONS

TORQUE - EVAP SYSTEM

DESCRIPTION	N·m	Ft. Lbs.	In. Lbs.
EVAP Canister Mounting Nuts	11	-	95
EVAP Canister Mounting Bracket-to-Frame Bolts	14	10	125
Leak Detection Pump Mounting Bolts	11	-	95
Leak Detection Pump Filter Mounting Bolt	11	-	95

SOLENOID - EVAP/PURGE

DESCRIPTION

The duty cycle EVAP canister purge solenoid is located in the engine compartment. It is attached to the side of the Power Distribution Center (PDC).

OPERATION

The Powertrain Control Module (PCM) operates the solenoid.

During the cold start warm-up period and the hot start time delay, the PCM does not energize the solenoid. When de-energized, no vapors are purged. The PCM de-energizes the solenoid during open loop operation.

The engine enters closed loop operation after it reaches a specified temperature and the time delay ends. During closed loop operation, the PCM energizes and de-energizes the solenoid 5 or 10 times per second, depending upon operating conditions. The PCM varies the vapor flow rate by changing solenoid pulse width. Pulse width is the amount of time the solenoid energizes. The PCM adjusts solenoid pulse width based on engine operating condition.

REMOVAL

The duty cycle EVAP canister purge solenoid (3) is located in the engine compartment. It is attached to the side of the Power Distribution Center (PDC).

1. Disconnect electrical wiring connector at solenoid.
2. Disconnect vacuum harness (2) at solenoid.
3. Remove solenoid from mounting bracket.

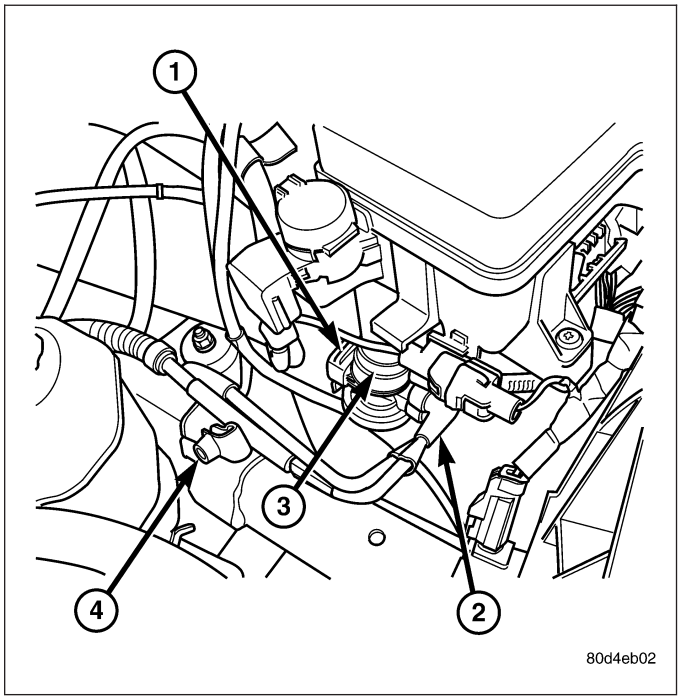

INSTALLATION

1. Install solenoid assembly to mounting bracket.
2. Connect vacuum harness.
3. Connect electrical connector.

CAP - FUEL FILLER

DESCRIPTION

The plastic fuel tank filler tube cap is threaded onto the end of the fuel fill tube. Certain models are equipped with a 1/4 turn cap.

OPERATION

The loss of any fuel or vapor out of fuel filler tube is prevented by the use of a pressure-vacuum fuel fill cap. Relief valves inside the cap will release fuel tank pressure at predetermined pressures. Fuel tank vacuum will also be released at predetermined values. This cap must be replaced by a similar unit if replacement is necessary. This is in order for the system to remain effective.

CAUTION: Remove fill cap before servicing any fuel system component to relieve tank pressure. If equipped with a Leak Detection Pump (LDP), or NVLD system, the cap must be tightened securely. If cap is left loose, a Diagnostic Trouble Code (DTC) may be set.

REMOVAL

REMOVAL/INSTALLATION

If replacement of the 1/4 turn fuel tank filler tube cap is necessary, it must be replaced with an identical cap to be sure of correct system operation.

CAUTION: Remove the fuel tank filler tube cap to relieve fuel tank pressure. The cap must be removed prior to disconnecting any fuel system component or before draining the fuel tank.

PUMP - LEAK DETECTION

DESCRIPTION

Vehicles equipped with JTEC engine control modules use a leak detection pump. Vehicles equipped with NGC engine control modules use an NVLD pump. Refer to Natural Vacuum - Leak Detection (NVLD) for additional information.

The evaporative emission system is designed to prevent the escape of fuel vapors from the fuel system. Leaks in the system, even small ones, can allow fuel vapors to escape into the atmosphere. Government regulations require onboard testing to make sure that the evaporative (EVAP) system is functioning properly. The leak detection system tests for EVAP system leaks and blockage. It also performs self-diagnostics. During self-diagnostics, the Powertrain Control Module (PCM) first checks the Leak Detection Pump (LDP) for electrical and mechanical faults. If the first checks pass, the PCM then uses the LDP to seal the vent valve and pump air into the system to pressurize it. If a leak is present, the PCM will continue pumping the LDP to replace the air that leaks out. The PCM determines the size of the leak based on how fast/long it must pump the LDP as it tries to maintain pressure in the system.

EVAP LEAK DETECTION SYSTEM COMPONENTS

Service Port: Used with special tools like the Miller Evaporative Emissions Leak Detector (EELD) to test for leaks in the system.

EVAP Purge Solenoid: The PCM uses the EVAP purge solenoid to control purging of excess fuel vapors stored in the EVAP canister. It remains closed during leak testing to prevent loss of pressure.

EVAP Canister: The EVAP canister stores fuel vapors from the fuel tank for purging.

EVAP Purge Orifice: Limits purge volume.

EVAP System Air Filter: Provides air to the LDP for pressurizing the system. It filters out dirt while allowing a vent to atmosphere for the EVAP system.

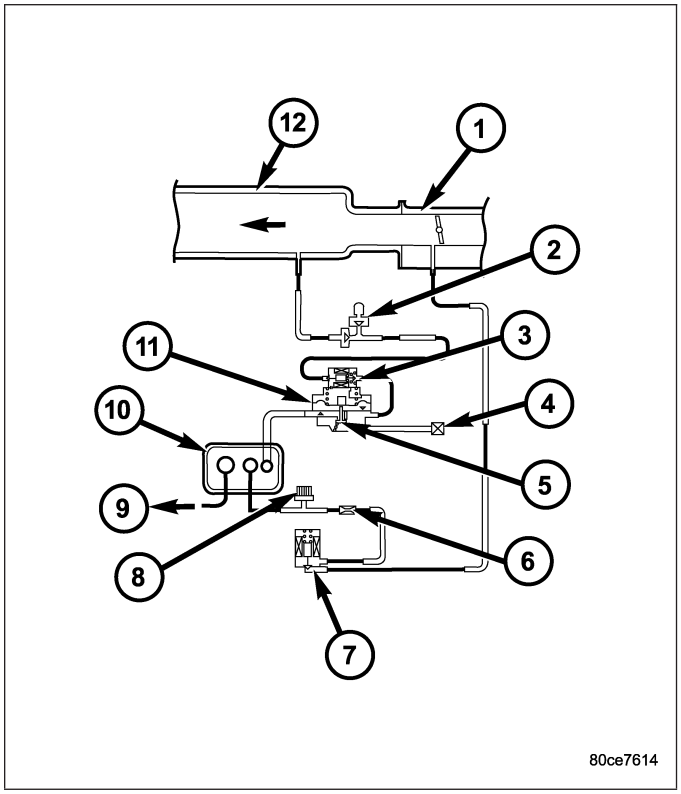

OPERATION

The main purpose of the LDP is to pressurize the fuel system for leak checking. It closes the EVAP system vent to atmospheric pressure so the system can be pressurized for leak testing. The diaphragm is powered by engine vacuum. It pumps air into the EVAP system to develop a pressure of about 7.5″ H2O (1/4) psi. A reed switch in the LDP allows the PCM to monitor the position of the LDP diaphragm. The PCM uses the reed switch input to monitor how fast the LDP is pumping air into the EVAP system. This allows detection of leaks and blockage. The LDP assembly consists of several parts. The solenoid is controlled by the PCM, and it connects the upper pump cavity to either engine vacuum or atmospheric pressure. A vent valve closes the EVAP system to atmosphere, sealing the system during leak testing. The pump section of the LDP consists of a diaphragm that moves up and down to bring air in through the air filter and inlet check valve, and pump it out through an outlet check valve into the EVAP system. The diaphragm is pulled up by engine vacuum, and pushed down by spring pressure, as the LDP solenoid turns on and off. The LDP also has a magnetic reed switch to signal diaphragm position to the PCM. When the diaphragm is down, the switch is closed, which sends a 12 V (system voltage) signal to the PCM. When the diaphragm is up, the switch is open, and there is no voltage sent to the PCM. This allows the PCM to monitor LDP pumping action as it turns the LDP solenoid on and off.

LDP AT REST (NOT POWERED)

When the LDP is at rest (no electrical/vacuum) the diaphragm is allowed to drop down if the internal (EVAP system) pressure is not greater than the return spring. The LDP solenoid blocks the engine vacuum port and opens the atmospheric pressure port connected through the EVAP system air filter. The vent valve is held open by the diaphragm. This allows the canister to see atmospheric pressure.

DIAPHRAGM UPWARD MOVEMENT

When the PCM energizes the LDP solenoid, the solenoid blocks the atmospheric port leading through the EVAP air filter and at the same time opens the engine vacuum port to the pump cavity above the diaphragm. The diaphragm moves upward when vacuum above the diaphragm exceeds spring force. This upward movement closes the vent valve. It also causes low pressure below the diaphragm, unseating the inlet check valve and allowing air in from the EVAP air filter. When the diaphragm completes its upward movement, the LDP reed switch turns from closed to open.

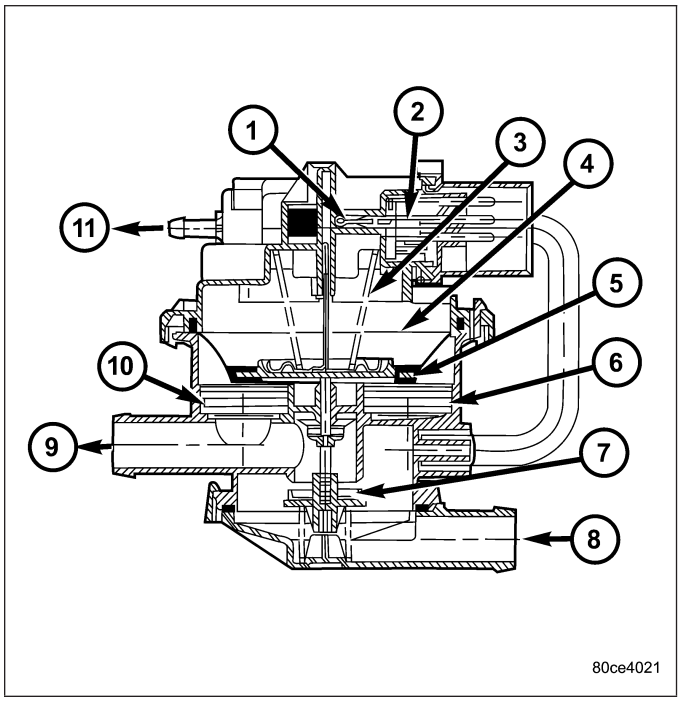

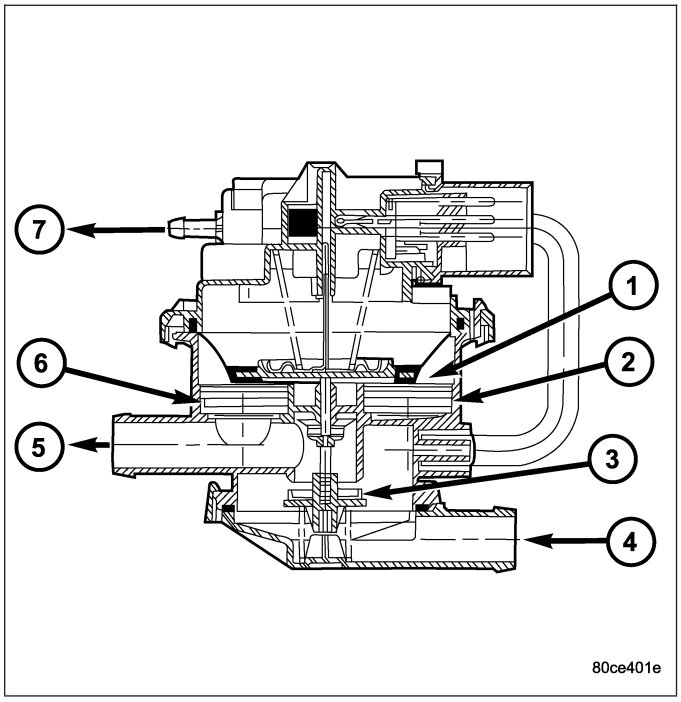

DIAPHRAGM DOWNWARD MOVEMENT

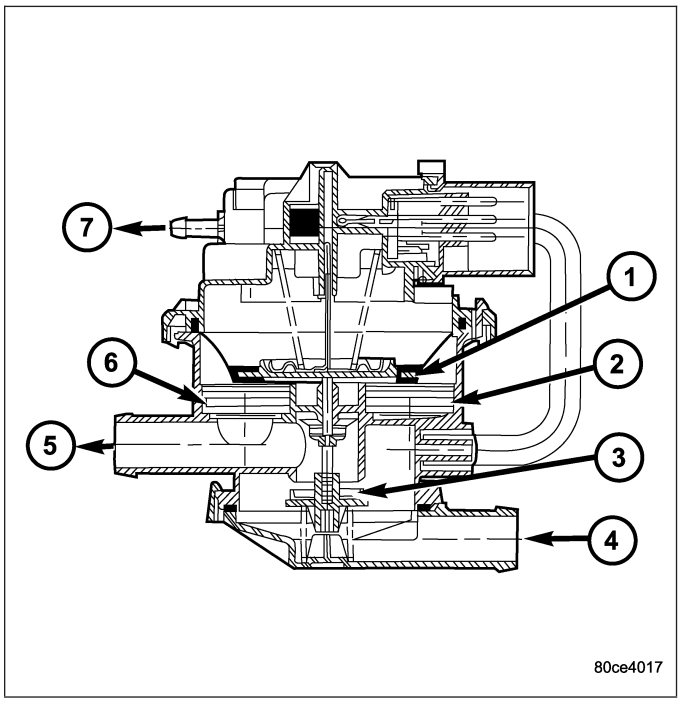

Based on reed switch input, the PCM de-energizes the LDP solenoid, causing it to block the vacuum port, and open the atmospheric port. This connects the upper pump cavity to atmosphere through the EVAP air filter. The spring is now able to push the diaphragm down. The downward movement of the diaphragm closes the inlet check valve and opens the outlet check valve pumping air into the evaporative system. The LDP reed switch turns from open to closed, allowing the PCM to monitor LDP pumping (diaphragm up/down) activity. During the pumping mode, the diaphragm will not move down far enough to open the vent valve. The pumping cycle is repeated as the solenoid is turned on and off. When the evaporative system begins to pressurize, the pressure on the bottom of the diaphragm will begin to oppose the spring pressure, slowing the pumping action. The PCM watches the time from when the solenoid is de-energized, until the diaphragm drops down far enough for the reed switch to change from opened to closed. If the reed switch changes too quickly, a leak may be indicated. The longer it takes the reed switch to change state, the tighter the evaporative system is sealed. If the system pressurizes too quickly, a restriction somewhere in the EVAP system may be indicated.

PUMPING ACTION

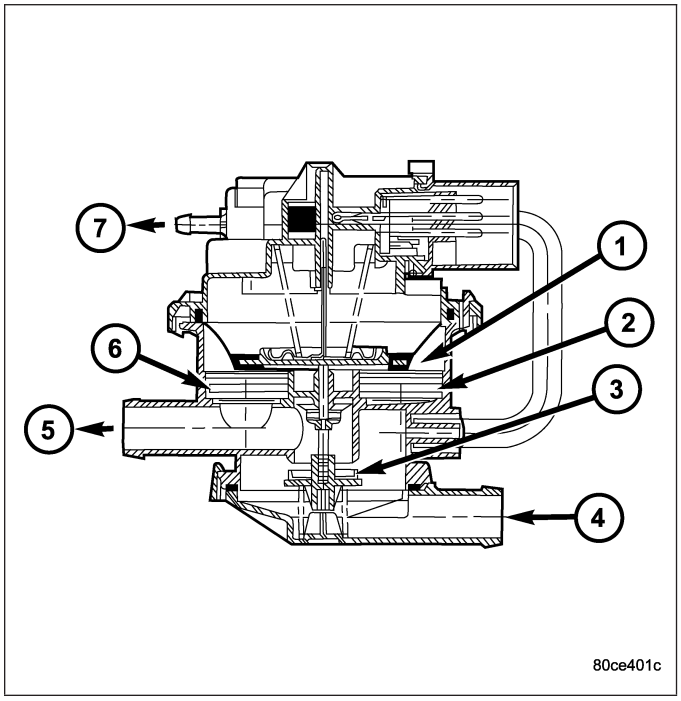

Action : During portions of this test, the PCM uses the reed switch to monitor diaphragm movement. The solenoid is only turned on by the PCM after the reed switch changes from open to closed, indicating that the diaphragm has moved down. At other times during the test, the PCM will rapidly cycle the LDP solenoid on and off to quickly pressurize the system. During rapid cycling, the diaphragm will not move enough to change the reed switch state. In the state of rapid cycling, the PCM will use a fixed time interval to cycle the solenoid. If the system does not pass the EVAP Leak Detection Test, the following DTCs may be set:

- P0442 - EVAP LEAK MONITOR 0.040″ LEAK DETECTED
- P0455 - EVAP LEAK MONITOR LARGE LEAK DETECTED
- P0456 - EVAP LEAK MONITOR 0.020″ LEAK DETECTED
- P1486 - EVAP LEAK MON PINCHED HOSE FOUND
- P1494 - LEAK DETECTION PUMP SW OR MECH FAULT
- P1495 - LEAK DETECTION PUMP SOLENOID CIRCUIT

REMOVAL

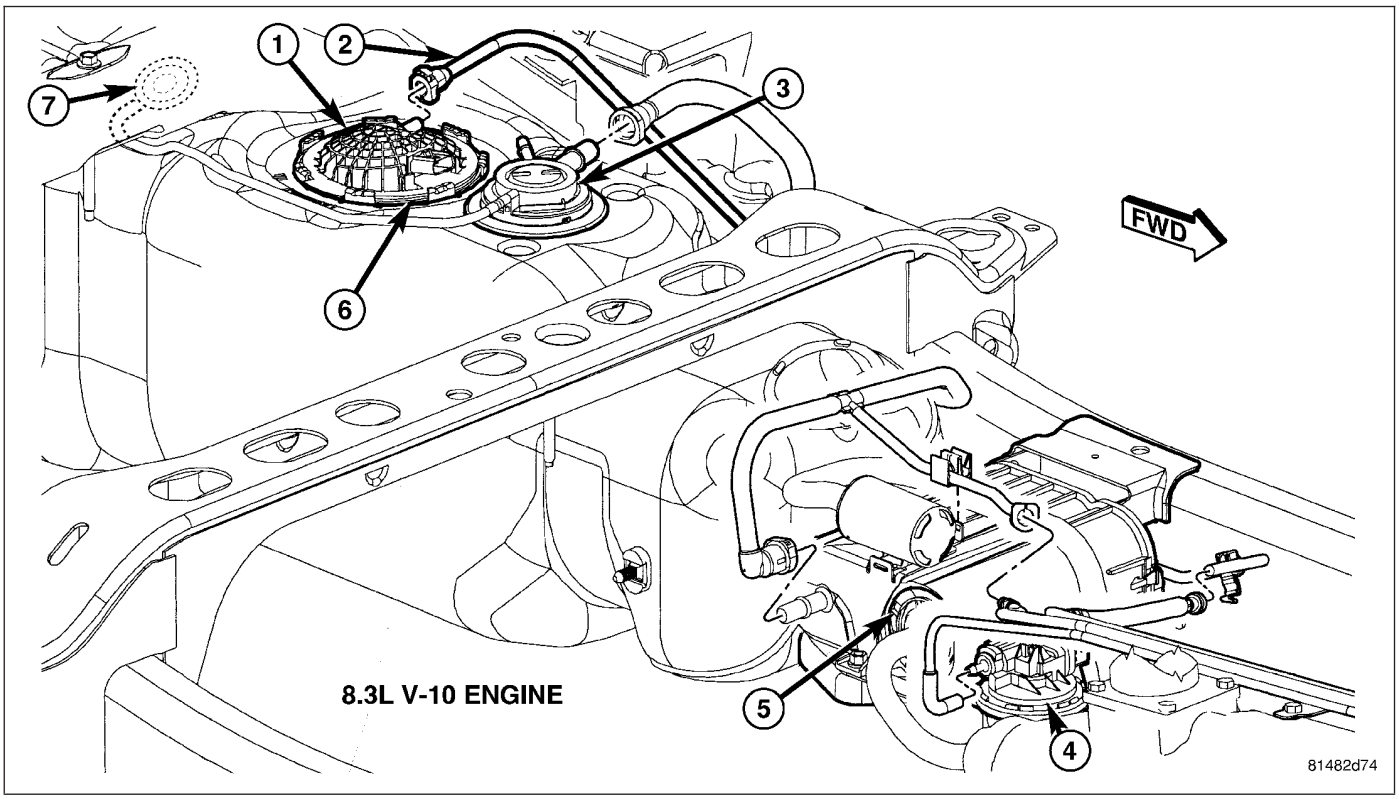

The Leak Detection Pump (LDP) (4) and LDP filter are attached to the front of the EVAP canister mounting bracket. This is located near the front of the fuel tank. The LDP and LDP filter are replaced (serviced) as one unit.

1. Raise and support vehicle.
2. Certain models, equipped with a certain fuel tank size, may require the removal of the fuel tank skid plate and/or the transfer case skid plate to gain access to the leak pump. Remove necessary skid plates.
3. Carefully remove hose at LDP filter.
4. Remove LDP filter mounting bolt and remove from vehicle.
5. Carefully remove vapor/vacuum lines at LDP.
6. Disconnect electrical connector at LDP.
7. Remove LDP mounting bolt and remove LDP from vehicle.

INSTALLATION

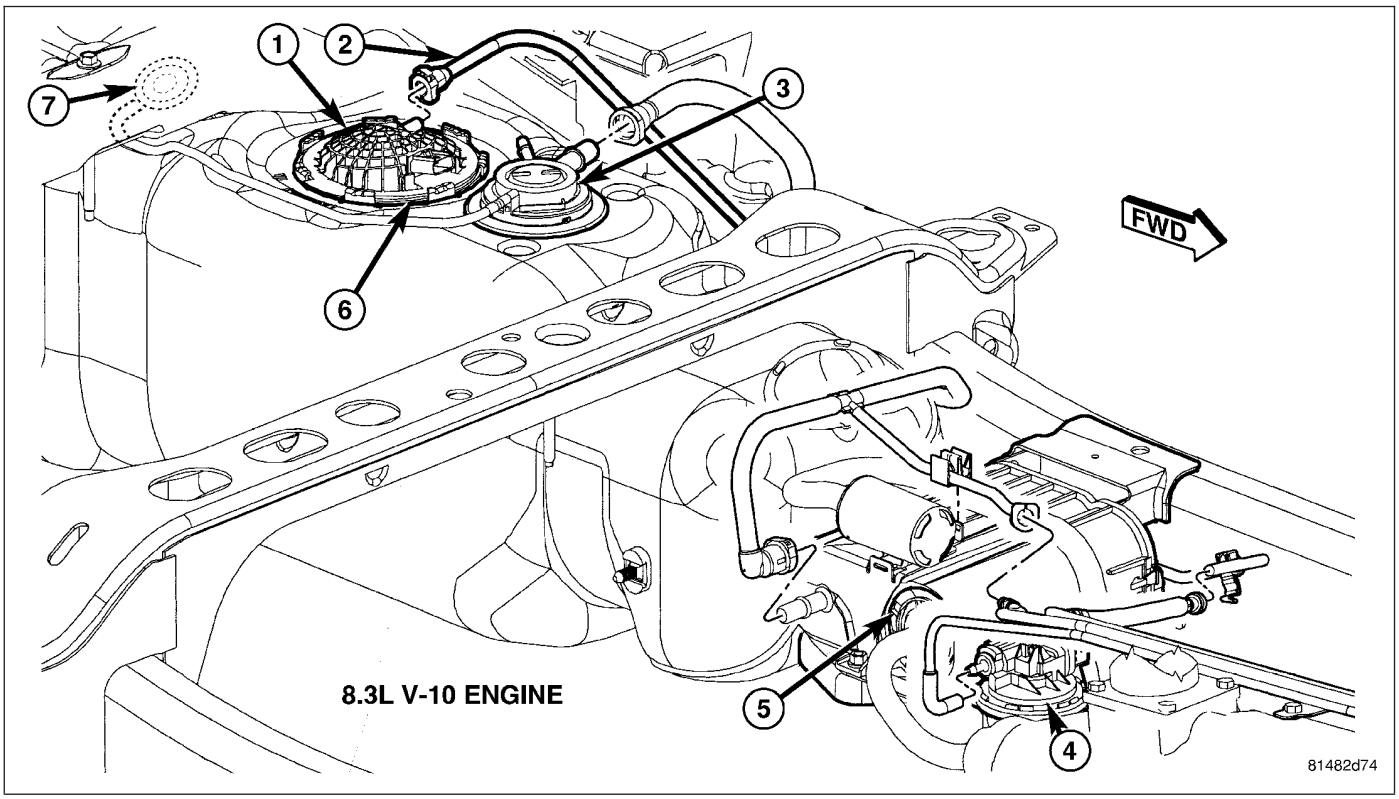

The LDP (4) and LDP filter are attached to the front of the EVAP canister mounting bracket. The LDP and LDP filter are replaced (serviced) as one unit.

1. Install LDP to mounting bracket. Refer to Torque Specifications.
2. Install LDP filter to mounting bracket. Refer to Torque Specifications.
3. Carefully install vapor/vacuum lines to LDP, and install hose to LDP filter. **The vapor/vacuum lines and hoses must be firmly connected. Check the vapor/vacuum lines at the LDP, LDP filter and EVAP canister purge solenoid for damage or leaks. If a leak is present, a Diagnostic Trouble Code (DTC) may be set.**
4. Connect electrical connector to LDP.
5. If necessary, install skid plate(s).

ORVR

DESCRIPTION

The ORVR (On-Board Refueling Vapor Recovery) system consists of a unique fuel tank, flow management valve, fluid control valve, one-way check valve and vapor canister.

OPERATION

The ORVR (On-Board Refueling Vapor Recovery) system is used to remove excess fuel tank vapors. This is done while the vehicle is being refueled.

Fuel flowing into the fuel filler tube (approx. 1” I.D.) creates an aspiration effect drawing air into the fuel fill tube. During refueling, the fuel tank is vented to the EVAP canister to capture escaping vapors. With air flowing into the filler tube, there are no fuel vapors escaping to the atmosphere. Once the refueling vapors are captured by the EVAP canister, the vehicle’s computer controlled purge system draws vapor out of the canister for the engine to burn. The vapor flow is metered by the purge solenoid so that there is no, or minimal impact on driveability or tailpipe emissions.

As fuel starts to flow through the fuel fill tube, it opens the normally closed check valve and enters the fuel tank. Vapor or air is expelled from the tank through the control valve and on to the vapor canister. Vapor is absorbed in the EVAP canister until vapor flow in the lines stops. This stoppage occurs following fuel shut-off, or by having the fuel level in the tank rise high enough to close the control valve. This control valve contains a float that rises to seal the large diameter vent path to the EVAP canister. At this point in the refueling process, fuel tank pressure increases, the check valve closes (preventing liquid fuel from spiting back at the operator), and fuel then rises up the fuel filler tube to shut off the dispensing nozzle.

PUMP-NATURAL VAC LEAK DETECTION

DESCRIPTION

Vehicles equipped with an NGC Powertrain Control Module (PCM) use a Natural Vacuum Leak Detection (NVLD) pump and system. Vehicles equipped with a JTEC PCM use an LDP (Leak Detection Pump). Refer to Leak Detection Pump (LDP) for additional information.

The NVLD pump is located in the same area as the leak detection pump. Refer to NVLD Removal / Installation for additional information.

OPERATION

The Natural Vacuum Leak Detection (NVLD) system is the next generation evaporative leak detection system that will first be used on vehicles equipped with the Next Generation Controller (NGC). This new system replaces the leak detection pump as the method of evaporative system leak detection. This is to detect a leak equivalent to a 0.020″ (0.5 mm) hole. This system has the capability to detect holes of this size very dependably.

The basic leak detection theory employed with NVLD is the ″Gas Law″. This is to say that the pressure in a sealed vessel will change if the temperature of the gas in the vessel changes. The vessel will only see this effect if it is indeed sealed. Even small leaks will allow the pressure in the vessel to come to equilibrium with the ambient pressure. In addition to the detection of very small leaks, this system has the capability of detecting medium as well as large evaporative system leaks.

A vent valve seals the canister vent during engine off conditions. If the vapor system has a leak of less than the failure threshold, the evaporative system will be pulled into a vacuum, either due to the cool down from operating temperature or diurnal ambient temperature cycling. The diurnal effect is considered one of the primary contributors to the leak determination by this diagnostic. When the vacuum in the system exceeds about 1″ H2O (0.25 KPA), a vacuum switch closes. The switch closure sends a signal to the NGC. The NGC, via appropriate logic strategies, utilizes the switch signal, or lack thereof, to make a determination of whether a leak is present.

The NVLD device is designed with a normally open vacuum switch, a normally closed solenoid, and a seal, which is actuated by both the solenoid and a diaphragm. The NVLD is located on the atmospheric vent side of the canister. The NVLD assembly may be mounted on top of the canister outlet, or in-line between the canister and atmospheric vent filter. The normally open vacuum switch will close with about 1″ H2O (0.25 KPA) vacuum in the evaporative system. The diaphragm actuates the switch. This is above the opening point of the fuel inlet check valve in the fill tube so cap off leaks can be detected. Submerged fill systems must have recirculation lines that do not have the in-line normally closed check valve that protects the system from failed nozzle liquid ingestion, in order to detect cap off conditions.

The normally closed valve in the NVLD is intended to maintain the seal on the evaporative system during the engine off condition. If vacuum in the evaporative system exceeds 3″ to 6″ H2O (0.75 to 1.5 KPA), the valve will be pulled off the seat, opening the seal. This will protect the system from excessive vacuum as well as allowing sufficient purge flow in the event that the solenoid was to become inoperative.

The solenoid actuates the valve to unseal the canister vent while the engine is running. It also will be used to close the vent during the medium and large leak tests and during the purge flow check. This solenoid requires an initial 1.5 amps of current to pull the valve open, but after 100 mili-seconds, will be duty cycled down to an average of about 150 mA for the remainder of the drive cycle.

Another feature in the device is a diaphragm that will open the seal in the NVLD with pressure in the evaporative system. The device will ″blow off″ at about 0.5″ H2O (0.12 KPA) pressure to permit the venting of vapors during refueling. An added benefit to this is that it will also allow the tank to ″breathe″ during increasing temperatures, thus limiting the pressure in the tank to this low level. This is beneficial because the induced vacuum during a subsequent declining temperature will achieve the switch closed (pass threshold) sooner than if the tank had to decay from a built up pressure.

The device itself has 3 wires: Switch sense, solenoid driver and ground. It also includes a resistor to protect the switch from a short to battery or a short to ground. The NGC utilizes a high-side driver to energize and duty-cycle the solenoid.

REMOVAL

If Equipped With Horizontally Mounted EVAP Canisters

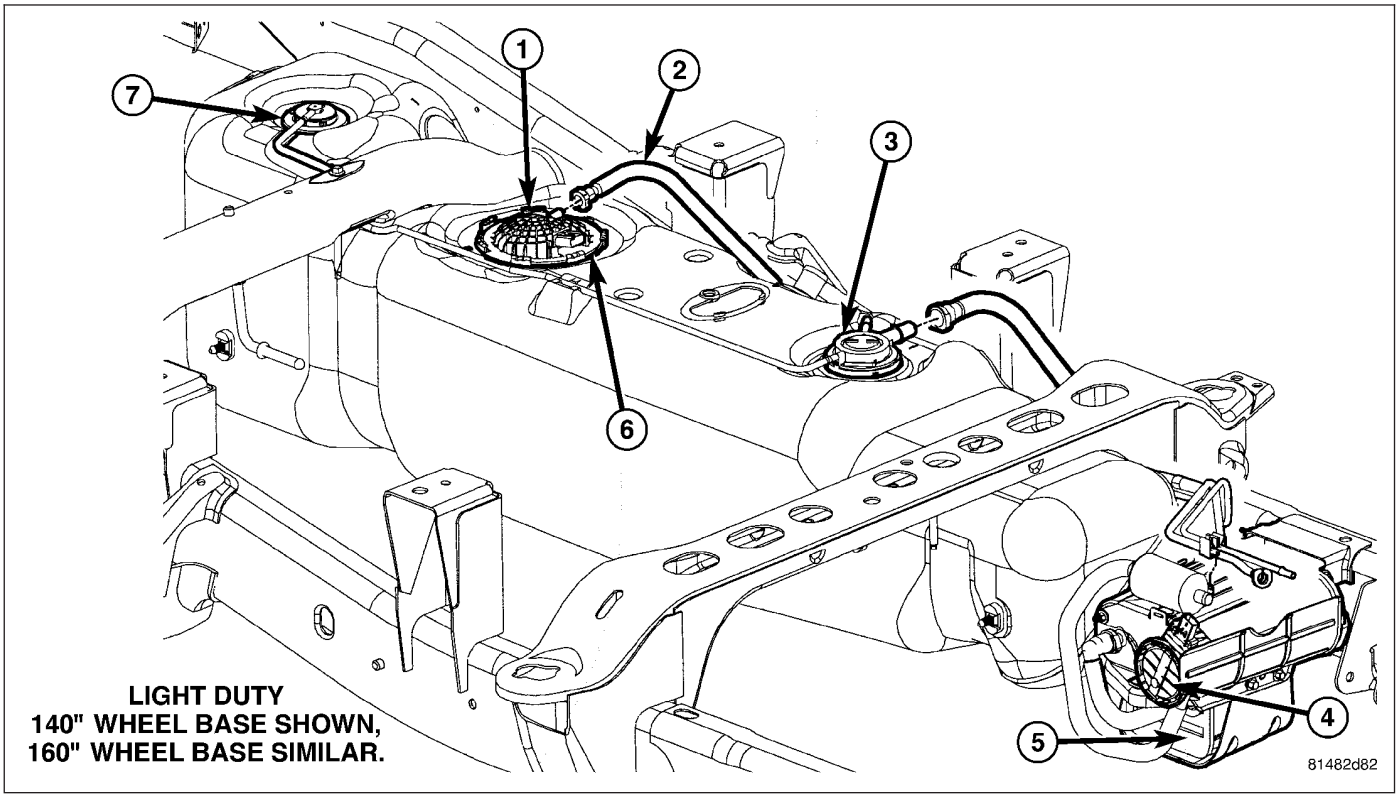

LIGHT DUTY
140" WHEEL BASE SHOWN,
160" WHEEL BASE SIMILAR.

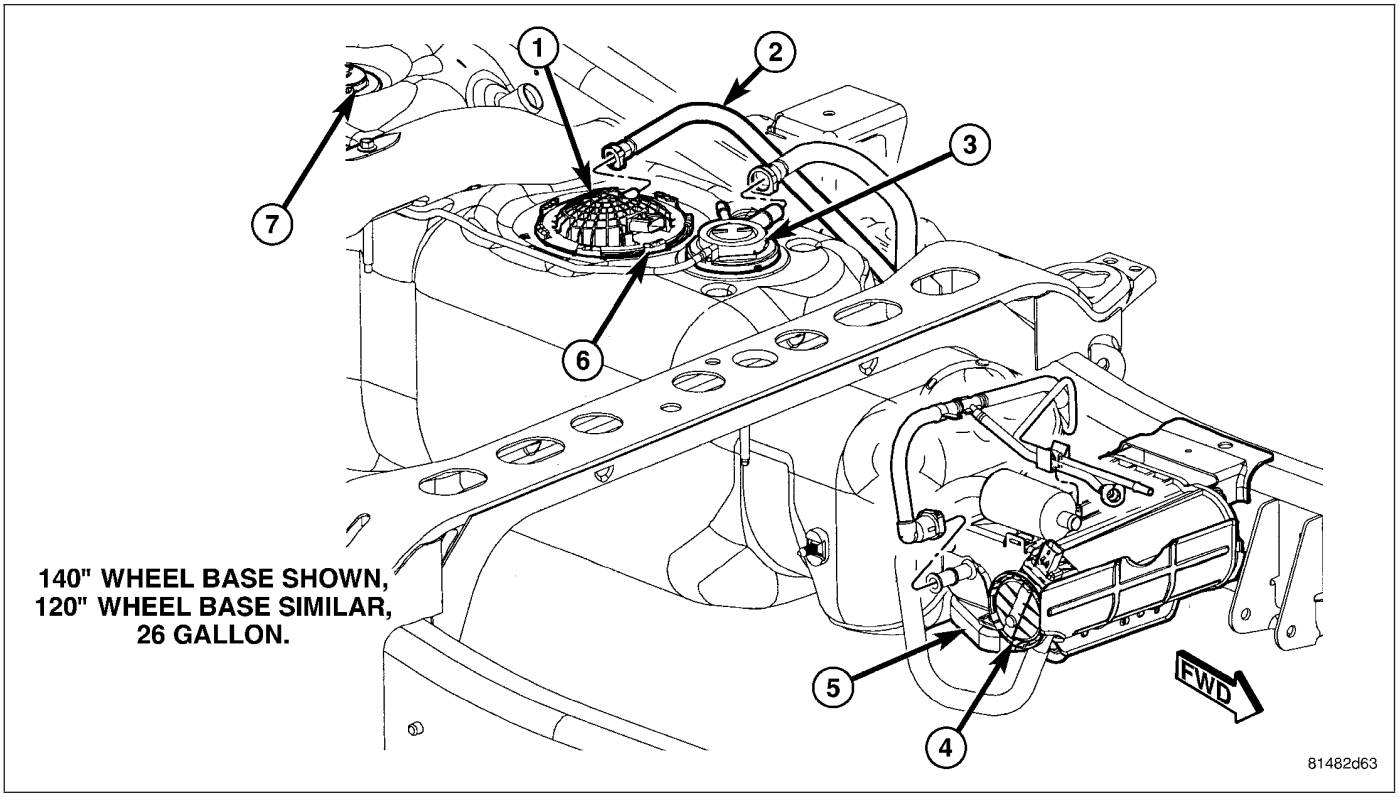

140" WHEEL BASE SHOWN,
120" WHEEL BASE SIMILAR,
26 GALLON.

The NVLD pump (4) is attached to the EVAP canister.

1. Raise and support vehicle.
2. Certain models, equipped with a certain fuel tank size, may require the removal of the fuel tank skid plate and/or the transfer case skid plate to gain access to the leak pump. Remove necessary skid plates.
3. Disconnect electrical connector at NVLD assembly.
4. Carefully disconnect vapor lines from NVLD assembly.
5. Lift tab on NVLD assembly and twist assembly counterclockwise.

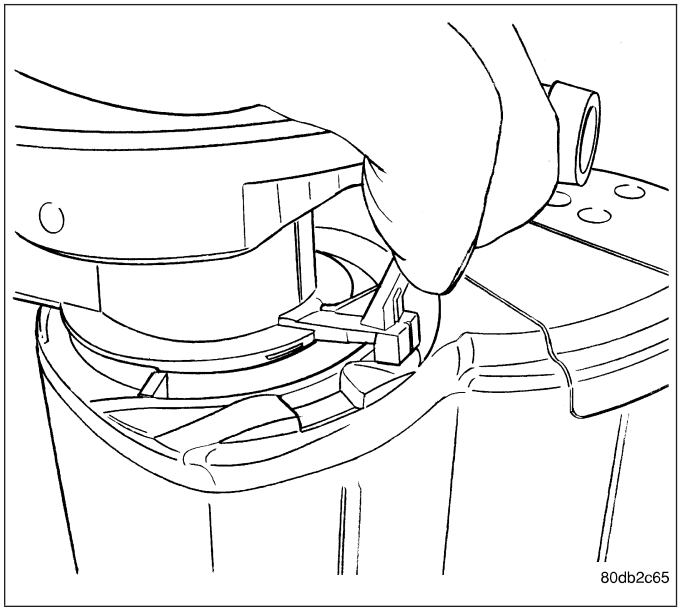

6. Pull NVLD pump out to remove from EVAP canister.

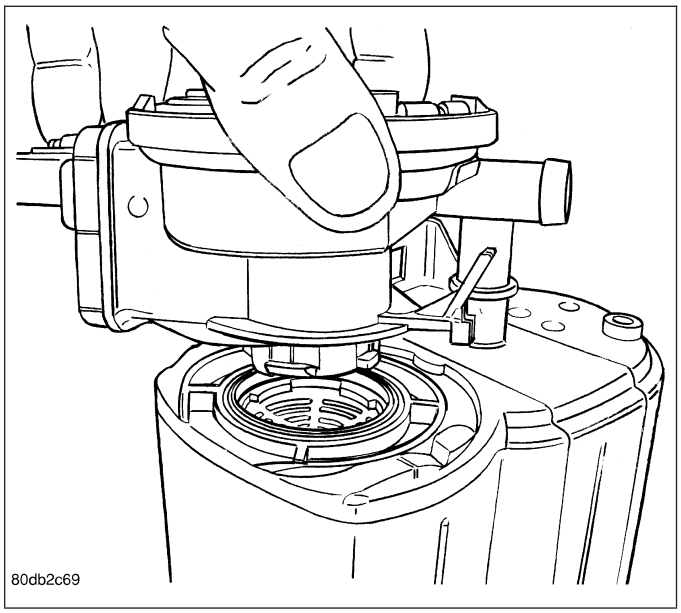

7. Remove o-ring from EVAP canister.

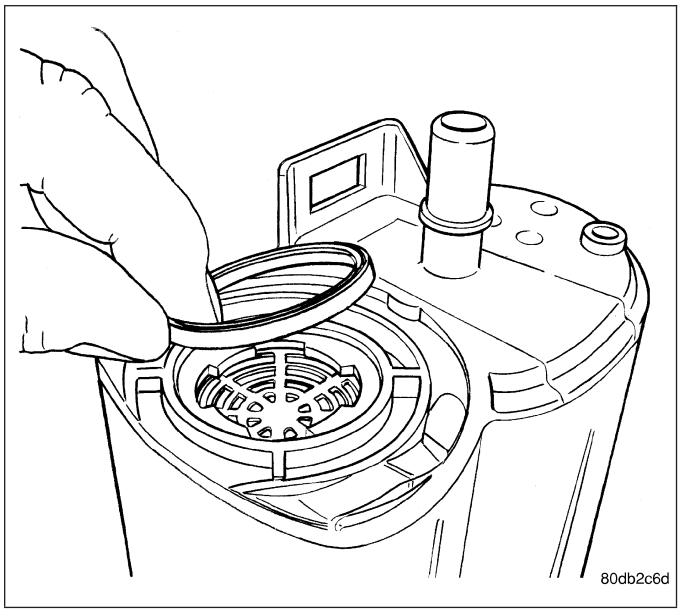

If Equipped With Vertically Mounted EVAP Canisters

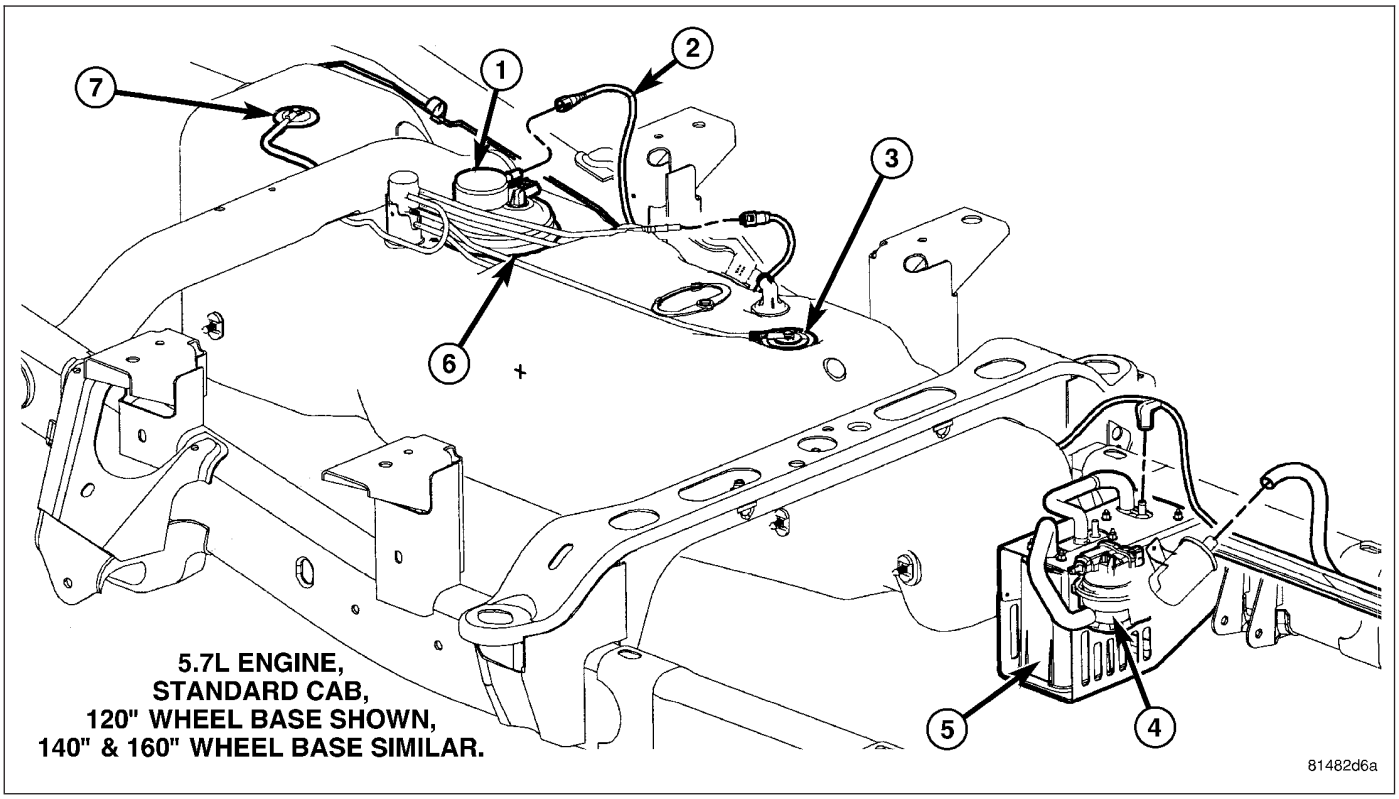

The NVLD pump (4) is located at the front of fuel tank.

1. Raise and support vehicle.
2. Certain models, equipped with a certain fuel tank size, may require the removal of the fuel tank skid plate and/or the transfer case skid plate to gain access to the leak pump. Remove necessary skid plates.
3. Disconnect electrical connector at pump.
4. Carefully remove vapor/vacuum hoses at pump.

5. The NVLD pump snaps into the EVAP canister. Press on release tab (2) while rotating pump from canister.

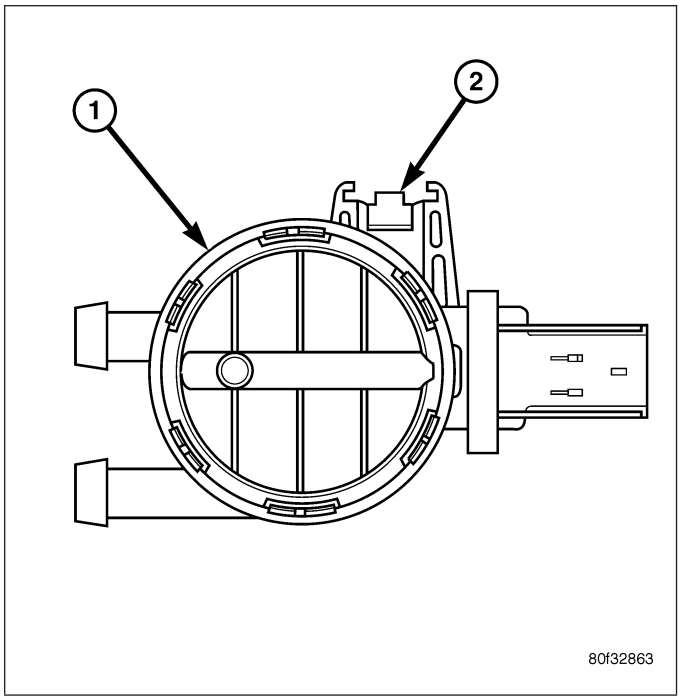

INSTALLATION

If Equipped With Horizontally Mounted EVAP Canisters

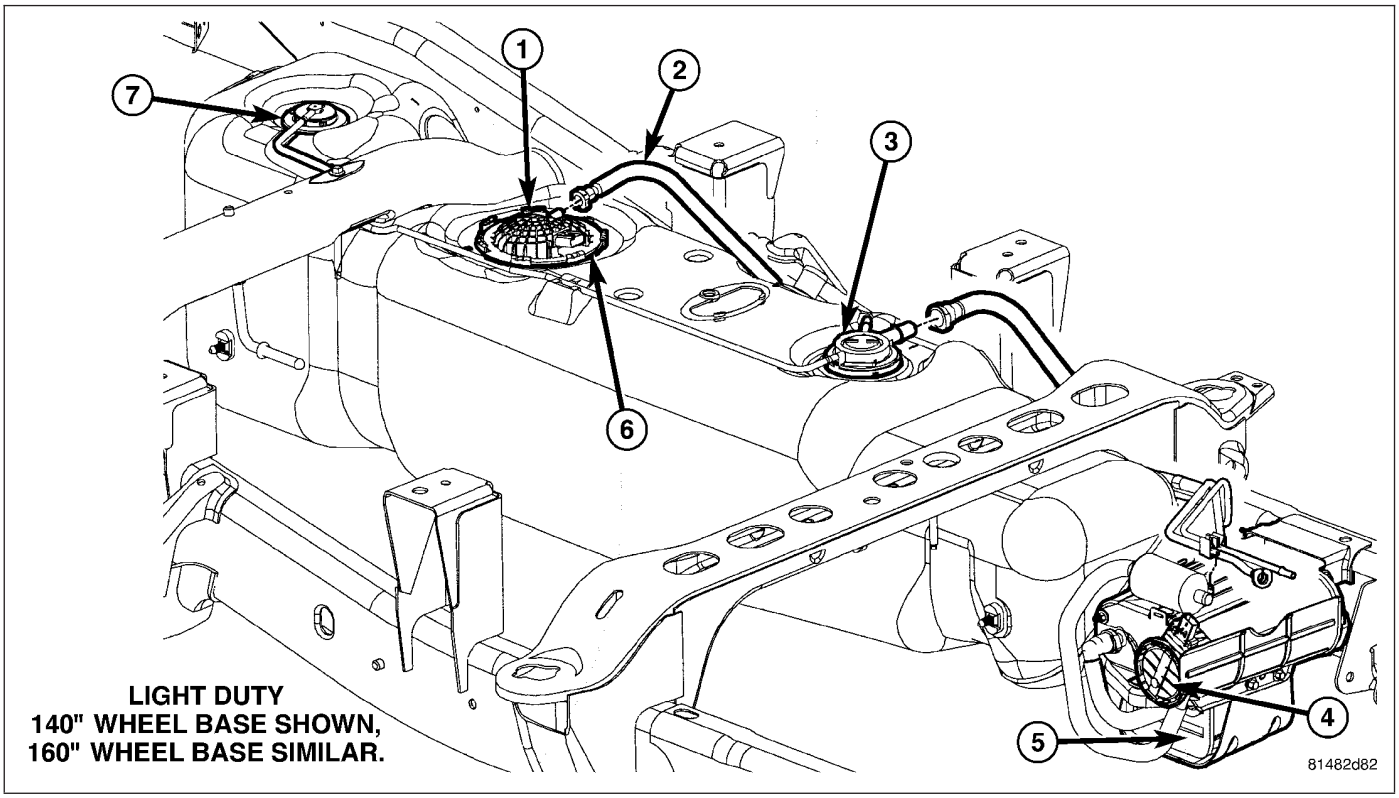

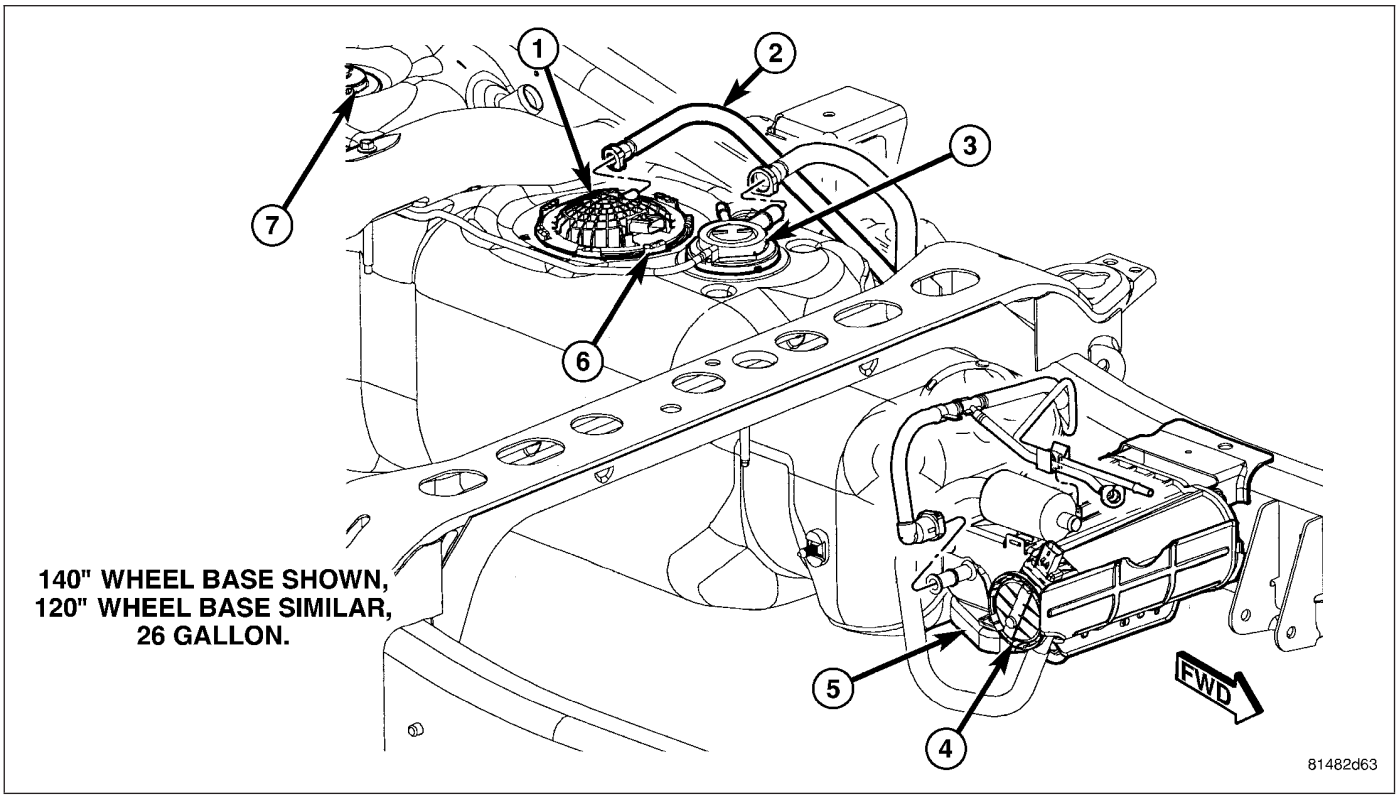

The NVLD pump (4) is attached to the EVAP canister.

1. Install new o-ring to EVAP canister.

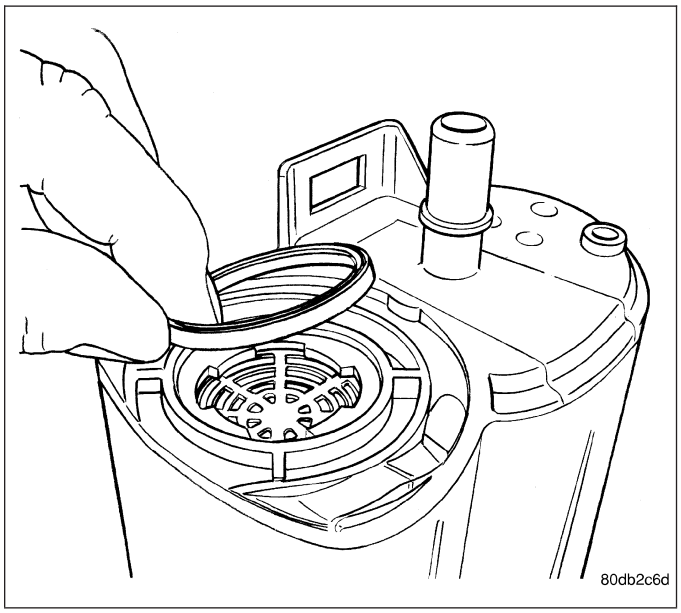

2. Align NVLD assembly into EVAP canister.

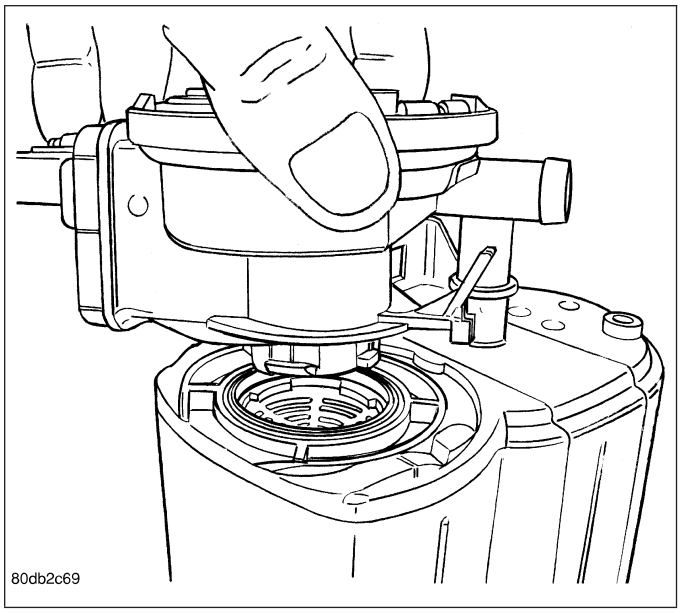

3. Rotate NVLD assembly until alignment tab drops into slot.
4. Connect electrical connector to NVLD assembly.
5. Carefully install vapor/vacuum lines to NVLD pump. **The vapor/vacuum lines and hoses must be firmly connected. Check the vapor/vacuum lines at the NVLD pump, filter and EVAP canister purge solenoid for damage or leaks. If a leak is present, a Diagnostic Trouble Code (DTC) may be set.**
6. If necessary, install skid plate(s).

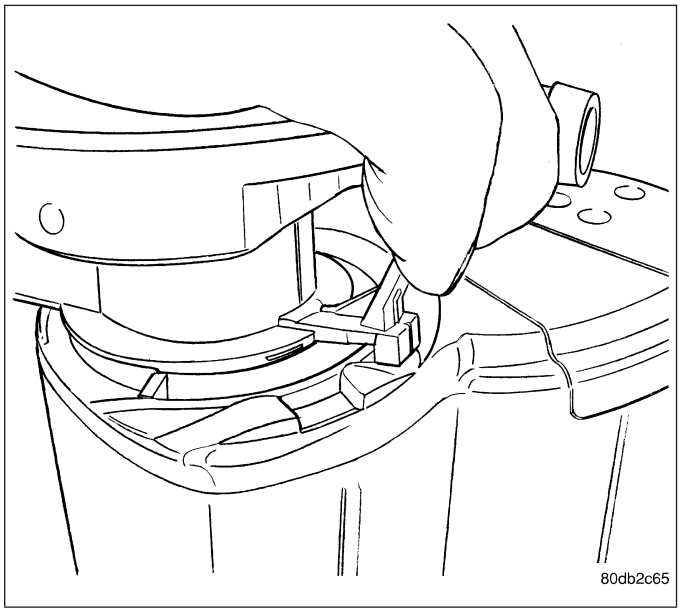

If Equipped With Vertically Mounted EVAP Canisters

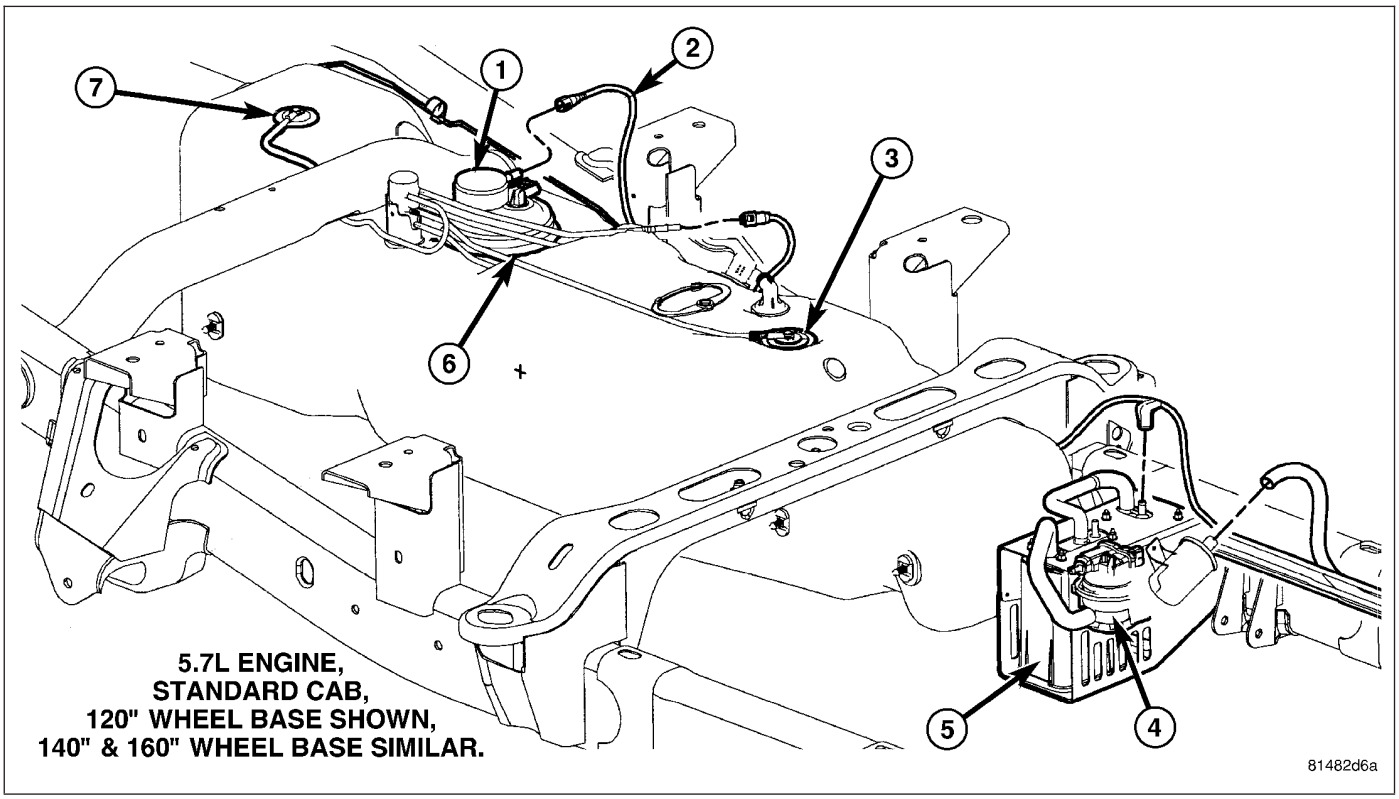

The NVLD pump (4) is located at the front of fuel tank.

1. Snap NVLD pump (1) to EVAP canister until tab (2) engages.
2. Connect electrical connector to NVLD pump.
3. Carefully install vapor/vacuum lines to NVLD pump. **The vapor/vacuum lines and hoses must be firmly connected. Check the vapor/vacuum lines at the NVLD pump, filter and EVAP canister purge solenoid for damage or leaks. If a leak is present, a Diagnostic Trouble Code (DTC) may be set.**
4. If equipped, install skid plate(s).

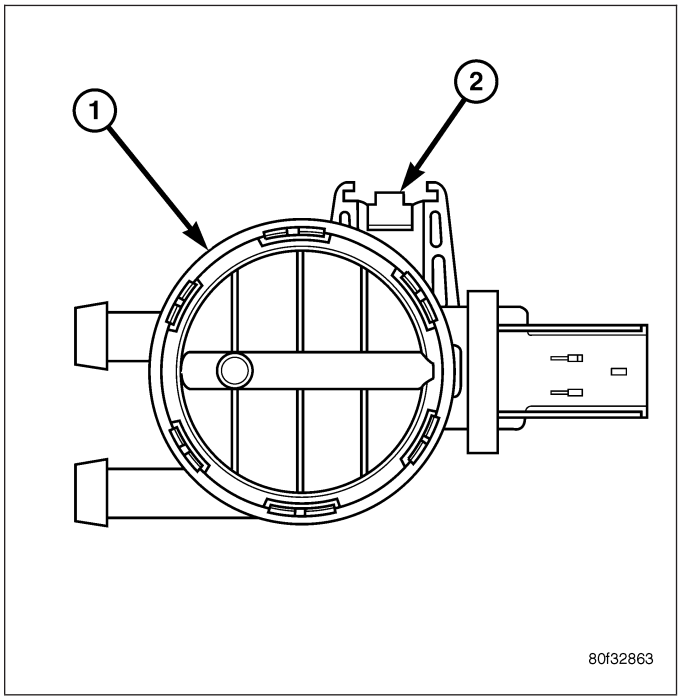

VALVE - PCV

DESCRIPTION

3.7L V-6 / 4.7L V-8

The 3.7L V-6 and 4.7L V-8 engines are equipped with a closed crankcase ventilation system and a Positive Crankcase Ventilation (PCV) valve (6).

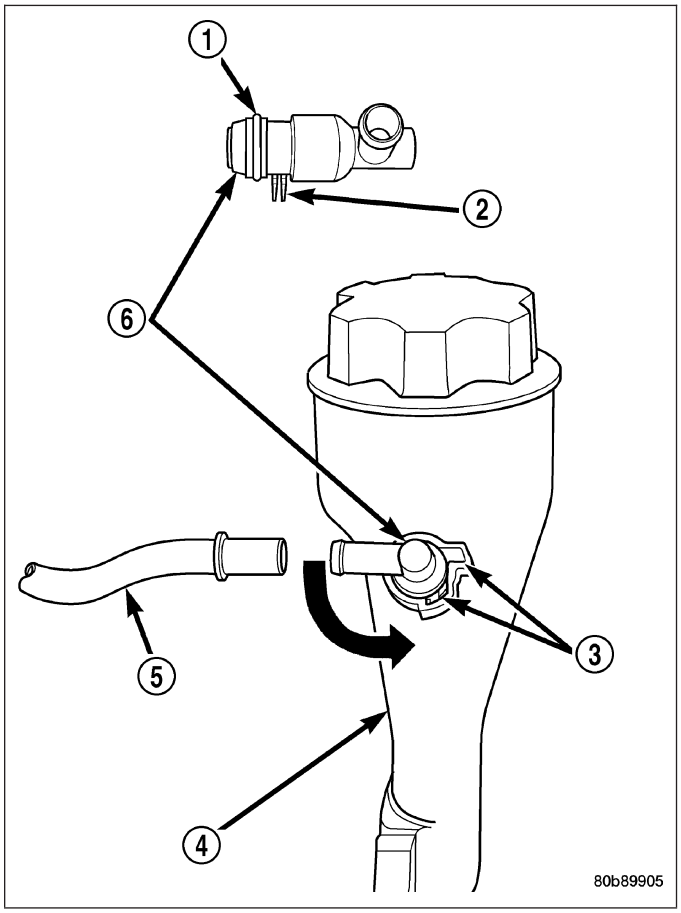

This system consists of:

- a PCV valve mounted to the oil filler housing. The PCV valve is sealed to the oil filler housing with an o-ring.
- the air cleaner housing
- two interconnected breathers (2) threaded into the rear of each cylinder head.
- tubes and hoses to connect the system components.

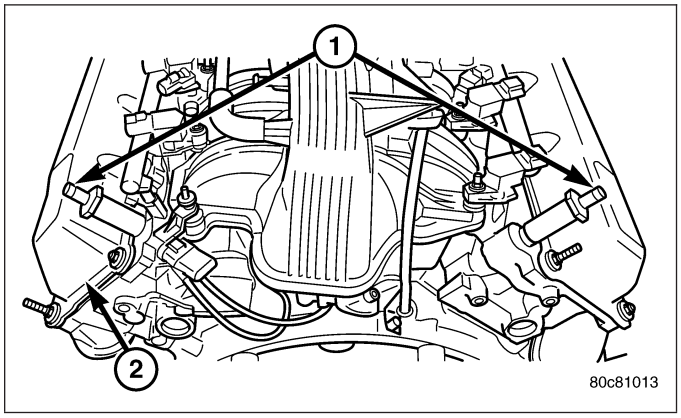

5.7L V-8

The 5.7L V-8 engine is equipped with a closed crankcase ventilation system and a Positive Crankcase Ventilation (PCV) valve (4).

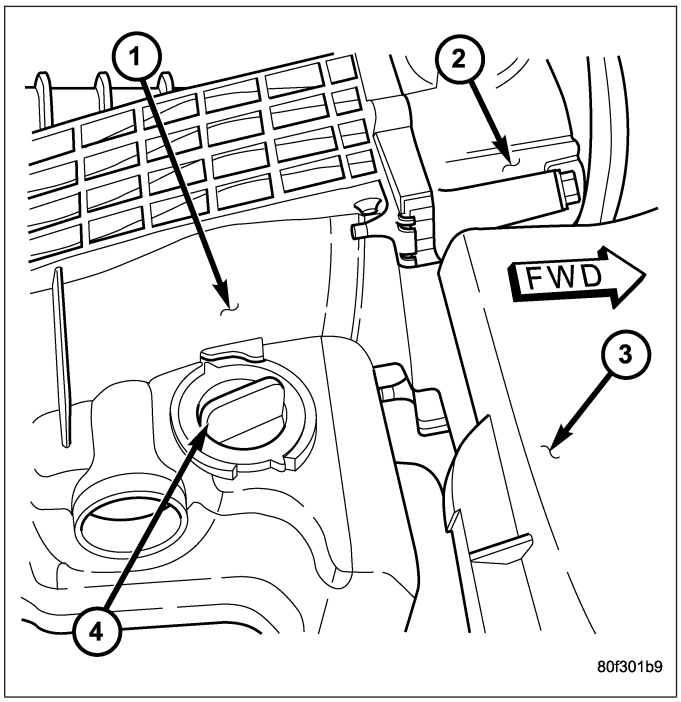

This system consists of:

- a PCV valve mounted into the top of the intake manifold, located to the right / rear of the throttle body. The PCV valve (1) is sealed to the intake manifold with 2 o-rings (2).
- passages in the intake manifold.
- tubes and hoses to connect the system components.

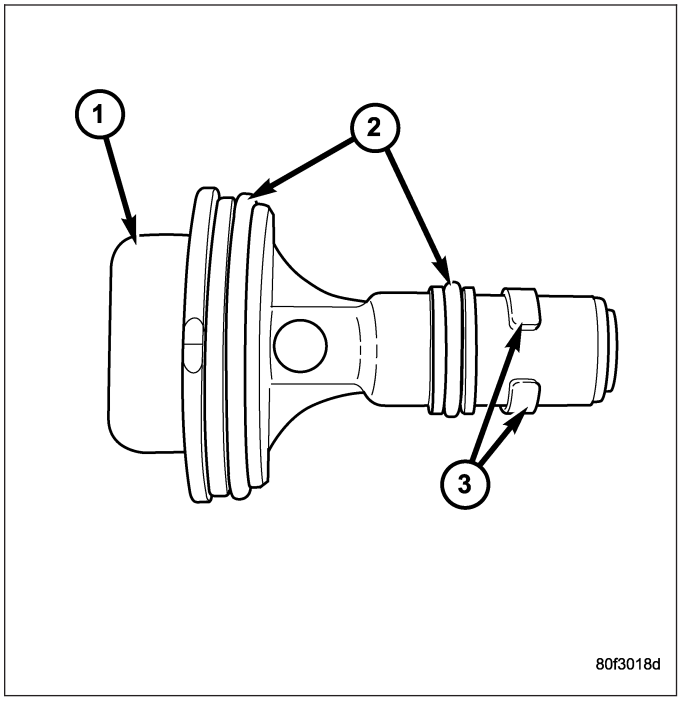

OPERATION

A typical enclosed crankcase ventilation system is shown in the graphic.

The PCV system operates by engine intake manifold vacuum. Filtered air is routed into the crankcase through the air cleaner hose. The metered air, along with crankcase vapors, are drawn through the PCV valve (4) and into a passage in the intake manifold. The PCV system manages crankcase pressure and meters blow by gases to the intake system, reducing engine sludge formation.

The PCV valve contains a spring loaded plunger. This plunger meters the amount of crankcase vapors routed into the combustion chamber based on intake manifold vacuum.

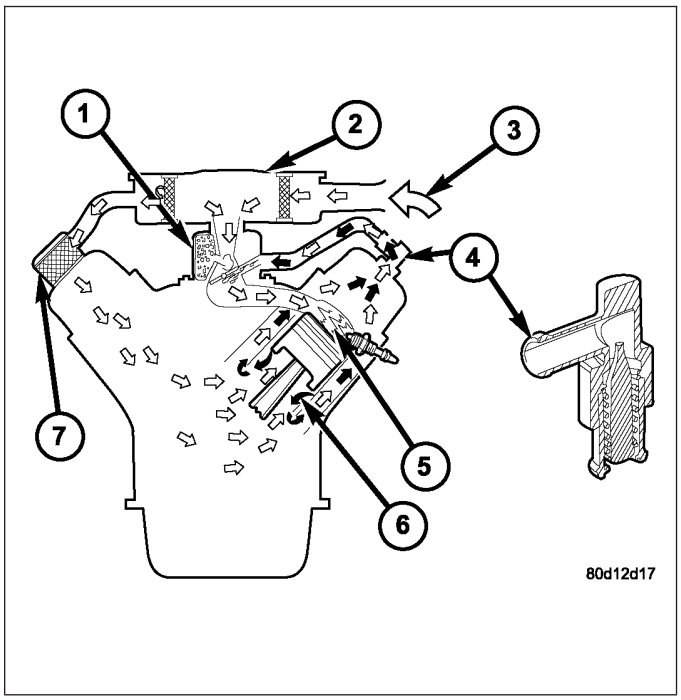

When the engine is not operating or during an engine pop-back, the spring forces the plunger back against the seat. This will prevent vapors from flowing through the valve.

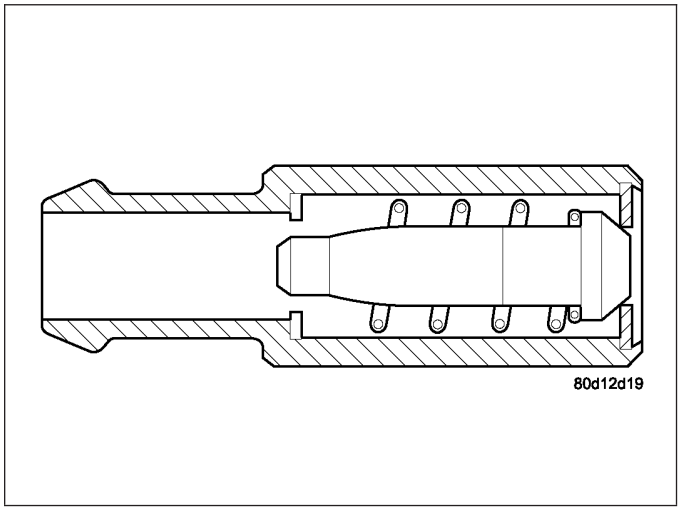

During periods of high manifold vacuum, such as idle or cruising speeds, vacuum is sufficient to completely compress spring. It will then pull the plunger to the top of the valve. In this position there is minimal vapor flow through the valve.

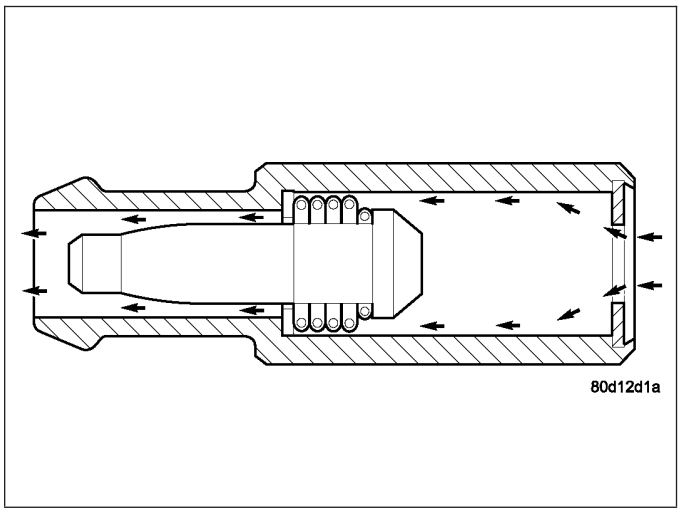

During periods of moderate manifold vacuum, the plunger is only pulled part way back from inlet. This results in maximum vapor flow through the valve.

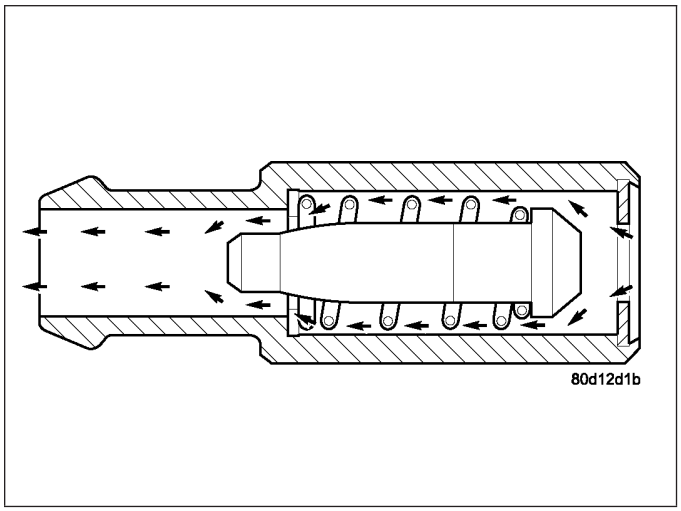

DIAGNOSIS AND TESTING

PCV VALVE - 3.7L V-6/ 4.7L V-8

1. Disconnect PCV line/hose (5) by disconnecting rubber connecting hose at PCV valve fitting.
2. Remove PCV valve at oil filler tube by rotating PCV valve downward until locating tabs (2) have been freed at cam lock (3). After tabs have cleared, pull valve straight out from filler tube. **To prevent damage to PCV valve locating tabs, valve must be pointed downward for removal. Do not force valve from oil filler tube.**
3. After valve is removed, check condition of valve o-ring (1). Also, PCV valve should rattle when shaken.
4. Reconnect PCV valve to its connecting line/hose.
5. Start engine and bring to idle speed.
6. If valve is not plugged, a hissing noise will be heard as air passes through valve. Also, a strong vacuum should be felt with a finger placed at valve inlet.
7. If vacuum is not felt at valve inlet, check line/hose for kinks or for obstruction. If necessary, clean out intake manifold fitting at rear of manifold. Do this by turning a 1/4 inch drill (by hand) through the fitting to dislodge any solid particles. Blow out the fitting with shop air. If necessary, use a smaller drill to avoid removing any metal from the fitting.

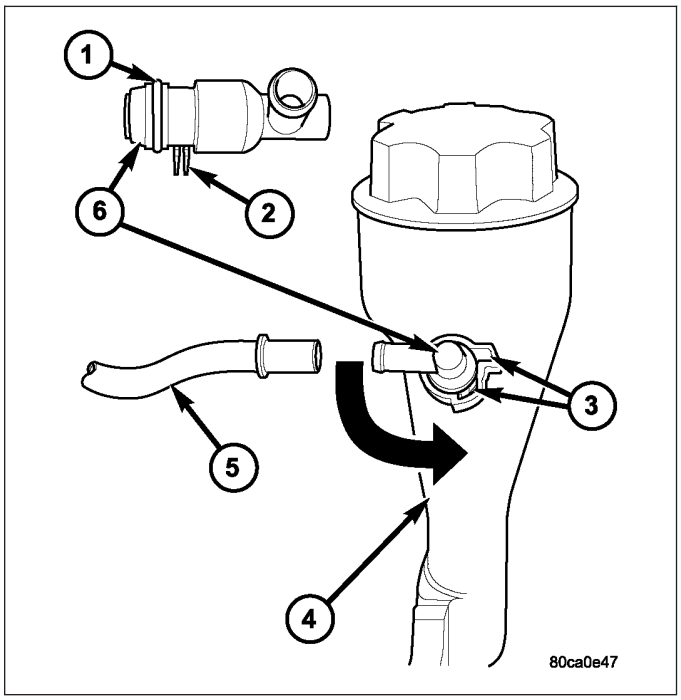

8. **Do not attempt to clean the old PCV valve.**
9. Return PCV valve back to oil filler tube by placing valve locating tabs (2) into cam lock (3). Press PCV valve in and rotate valve upward. A slight click will be felt when tabs have engaged cam lock. Valve should be pointed towards rear of vehicle.
10. Connect PCV line/hose (5) and connecting rubber hose to PCV valve.
11. Disconnect rubber hose from fresh air fitting at air cleaner resonator box. Start engine and bring to idle speed. Hold a piece of stiff paper (such as a parts tag) loosely over the opening of the disconnected rubber hose.
12. The paper should be drawn against the hose opening with noticeable force. This will be after allowing approximately one minute for crankcase pressure to reduce.

13. If vacuum is not present, disconnect each PCV system hose at top of each crankcase breather (1). Check for obstructions or restrictions.
14. If vacuum is still not present, remove each PCV system crankcase breather (1) from each cylinder head. Check for obstructions or restrictions. If plugged, replace breather. Tighten breather to 12 N·m (106 in. lbs.) torque. Do not attempt to clean breather.

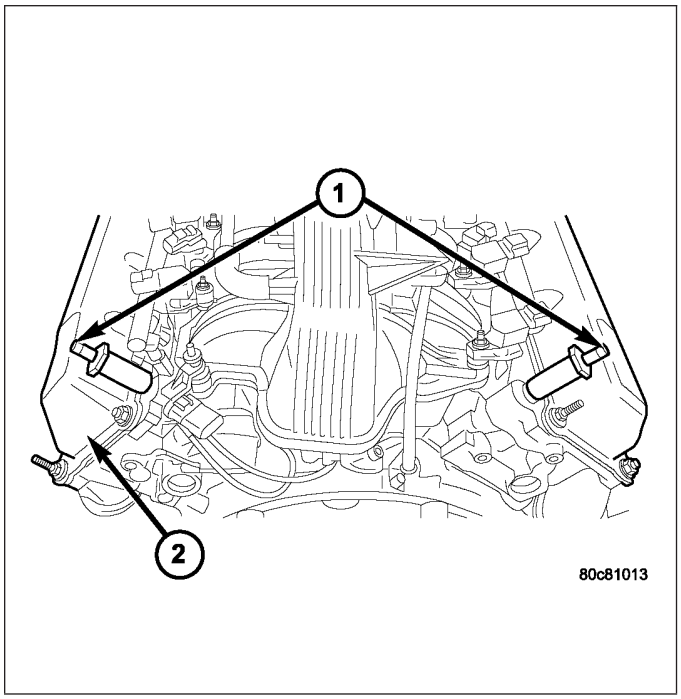

15. If vacuum is still not present, disconnect each PCV system hose (1) at each fitting, and at each check valve (2). Check for obstructions or restrictions.

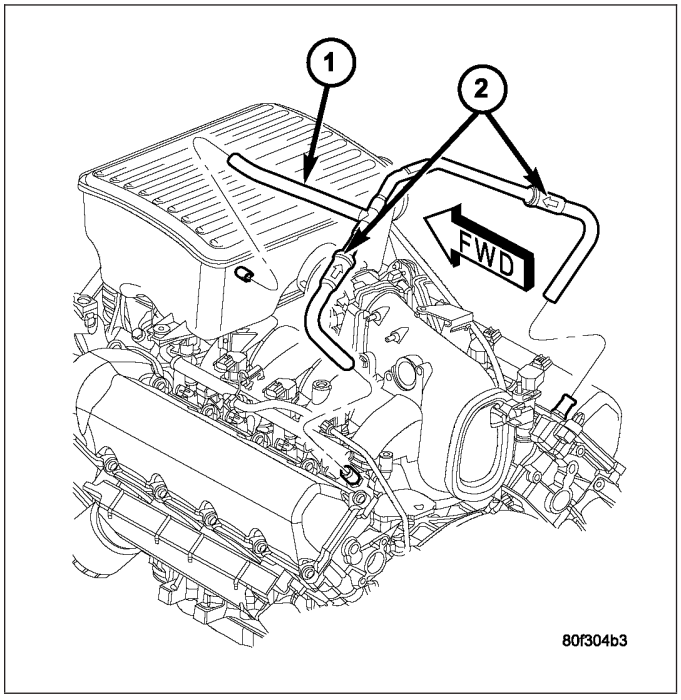

REMOVAL

3.7L V-6 / 4.7L V-8

The PCV valve (6) is located on the oil filler tube (4). Two locating tabs are located on the side of the valve (2). These 2 tabs fit into a cam lock (3) in the oil filler tube. An o-ring (1) seals the valve to the filler tube.

1. Disconnect PCV line/hose (5) by disconnecting rubber hose at PCV valve fitting.
2. Remove PCV valve at oil filler tube by rotating PCV valve downward (counter-clockwise) until locating tabs (2) have been freed at cam lock (3). After tabs have cleared, pull valve straight out from filler tube. **To prevent damage to PCV valve locating tabs, valve must be pointed downward for removal. Do not force valve from oil filler tube.**
3. After valve is removed, check condition of valve o-ring (1).

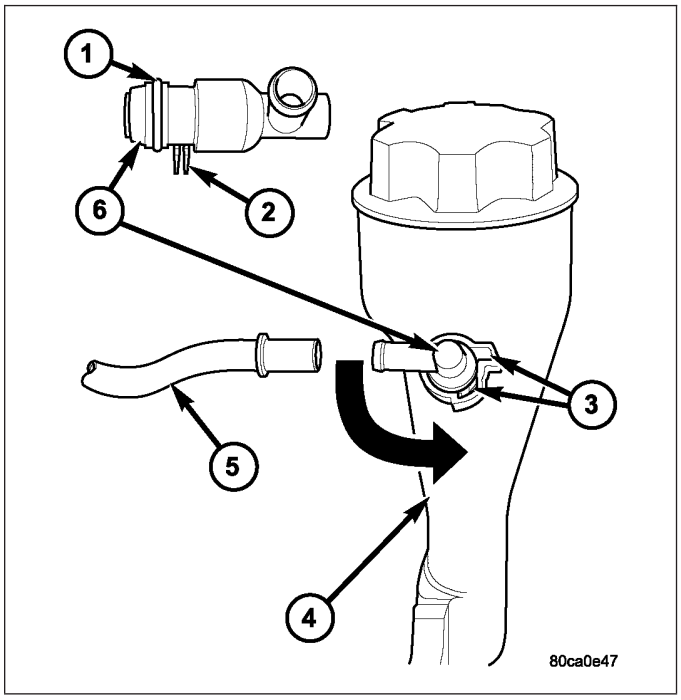

5.7L V-8

The PCV valve (4) is mounted into the top of the intake manifold (1). This is located to the right / rear of the throttle body (2).

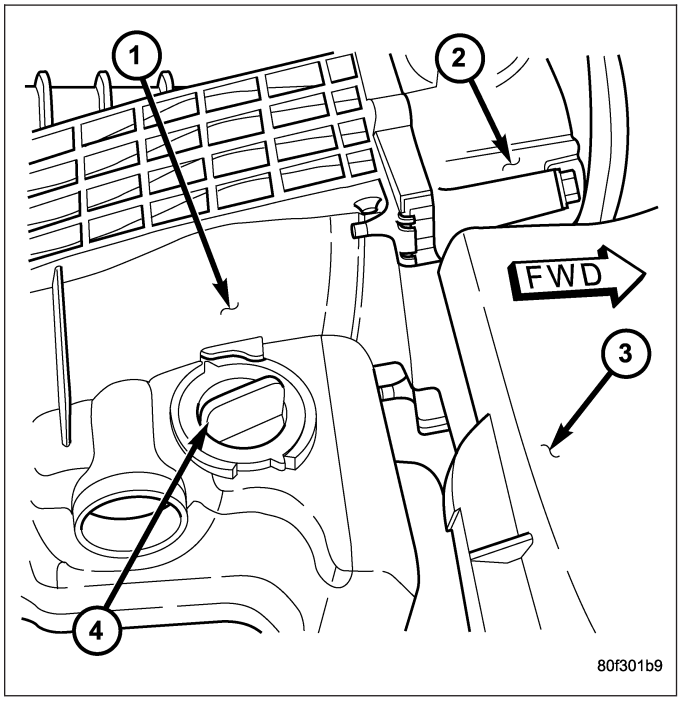

1. The PCV valve is sealed to the intake manifold with 2 O-rings (2).
2. Remove PCV valve by rotating counter-clockwise 90 degrees until locating tabs (3) have been freed. After tabs have cleared, pull valve straight up from intake manifold.
3. After valve is removed, check condition of 2 valve O-rings (2).

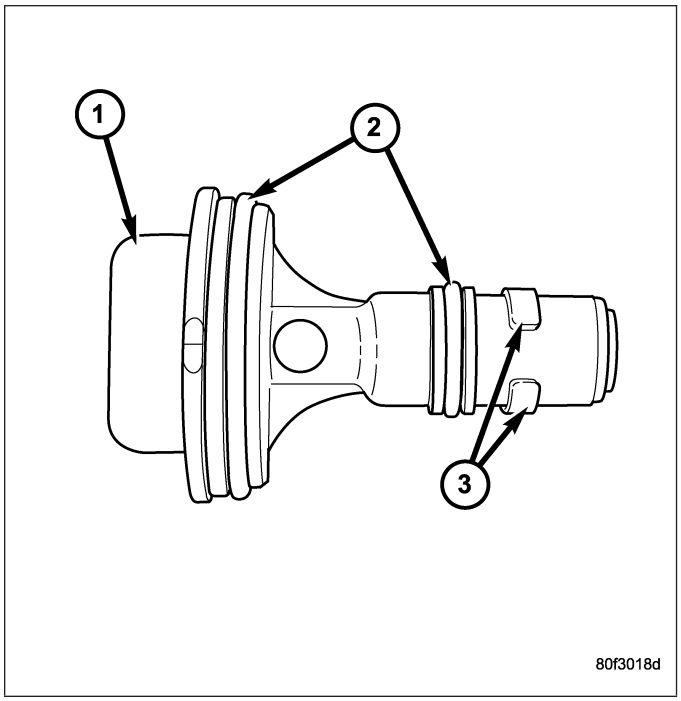

INSTALLATION

3.7L V6 / 4.7L V-8

The PCV valve is located on the oil filler tube. Two locating tabs are located on the side of the valve. These 2 tabs fit into a cam lock in the oil filler tube. An o-ring seals the valve to the filler tube.

1. Return PCV valve back to oil filler tube by placing valve locating tabs into cam lock. Press PCV valve in and rotate valve upward. A slight click will be felt when tabs have engaged cam lock. Valve should be pointed towards rear of vehicle.
2. Connect PCV line/hose and rubber hose to PCV valve.

5.7L V-8

1. Clean out intake manifold opening.
2. Check condition of 2 o-rings on PCV valve.
3. Apply engine oil to 2 o-rings.
4. Place PCV valve into intake manifold and rotate 90 degrees clockwise for installation.

LINES - VACUUM

DESCRIPTION

A vacuum schematic for emission related items can be found on the vehicles VECI label. Refer to Vehicle Emission Control Information (VECI) Label for label location.

CANISTER - VAPOR

DESCRIPTION

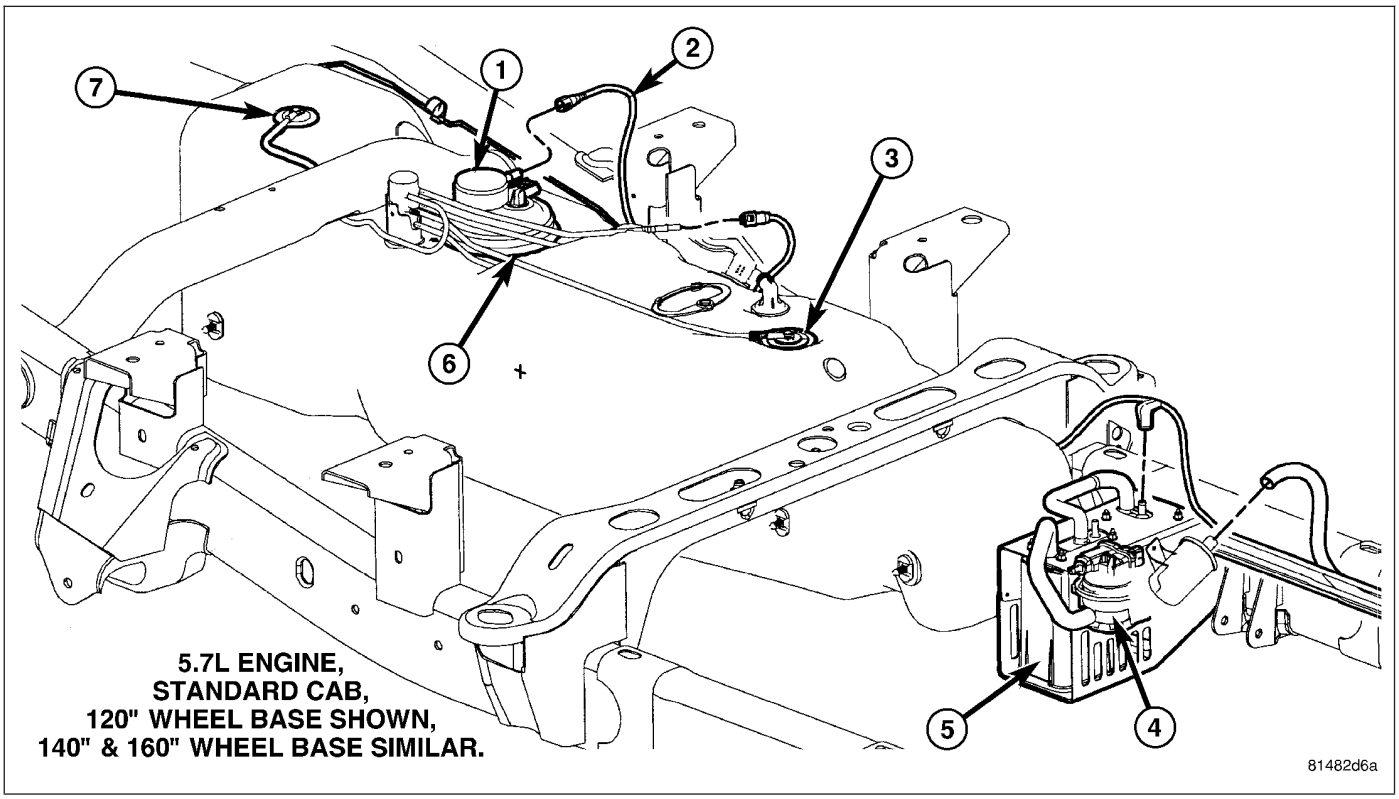

5.7L ENGINE,
STANDARD CAB,
120" WHEEL BASE SHOWN,
140" & 160" WHEEL BASE SIMILAR.

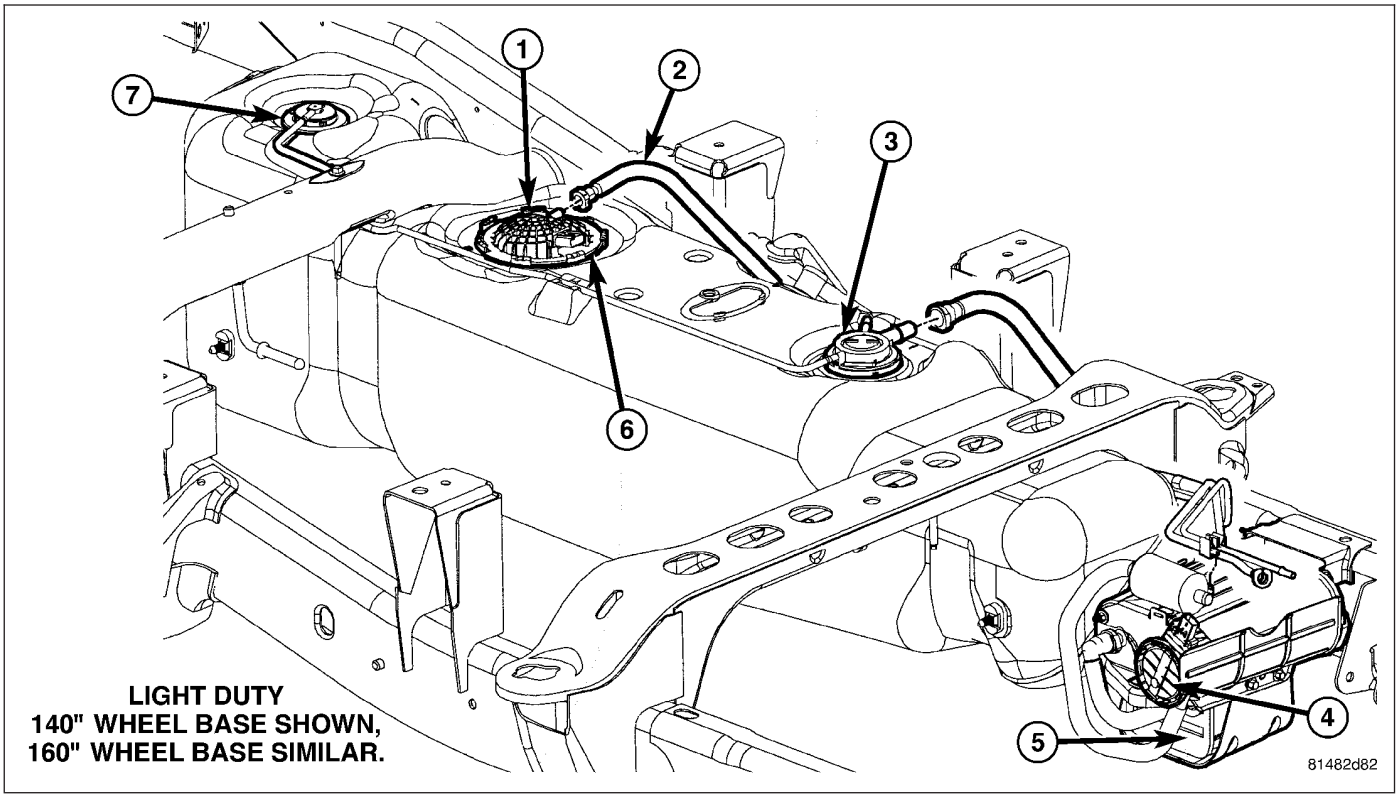

LIGHT DUTY
140" WHEEL BASE SHOWN,
160" WHEEL BASE SIMILAR.

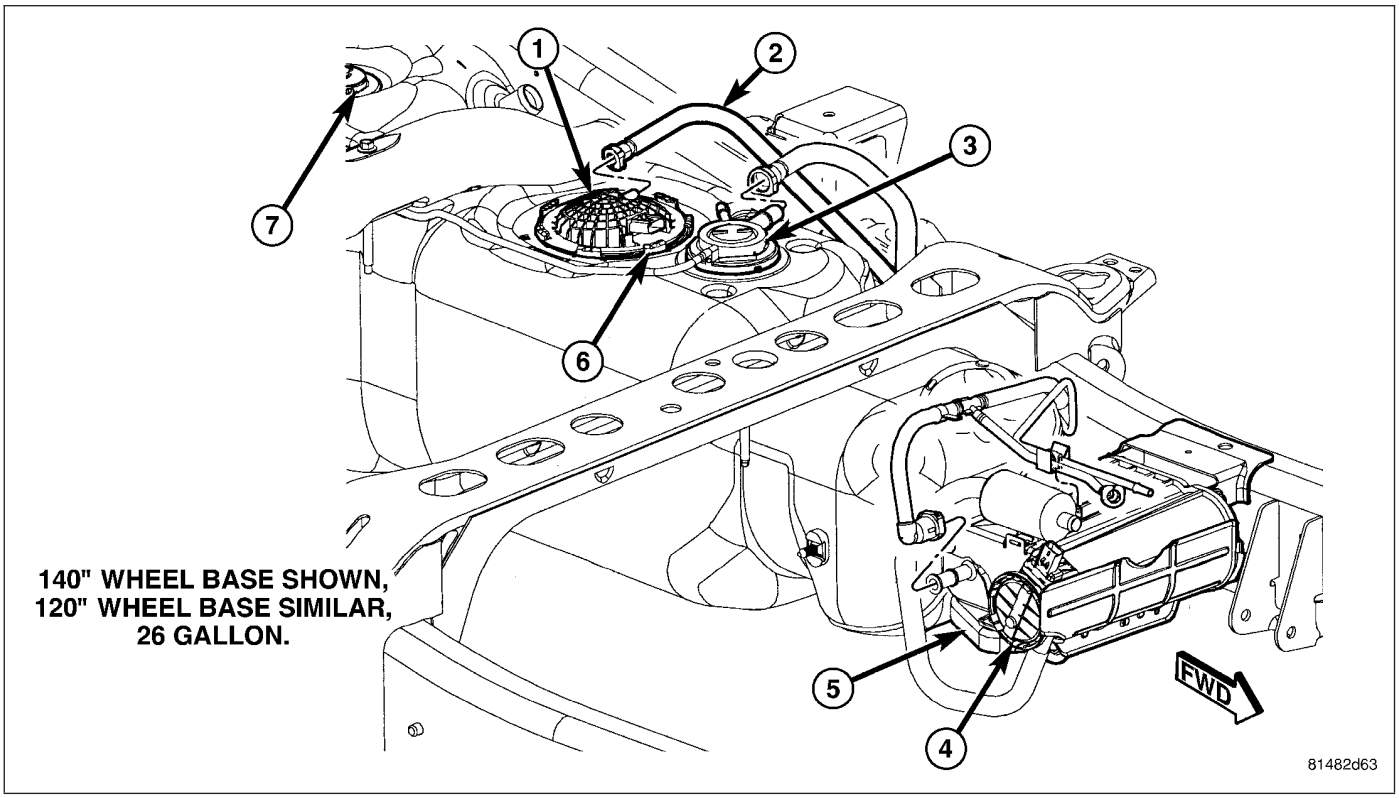

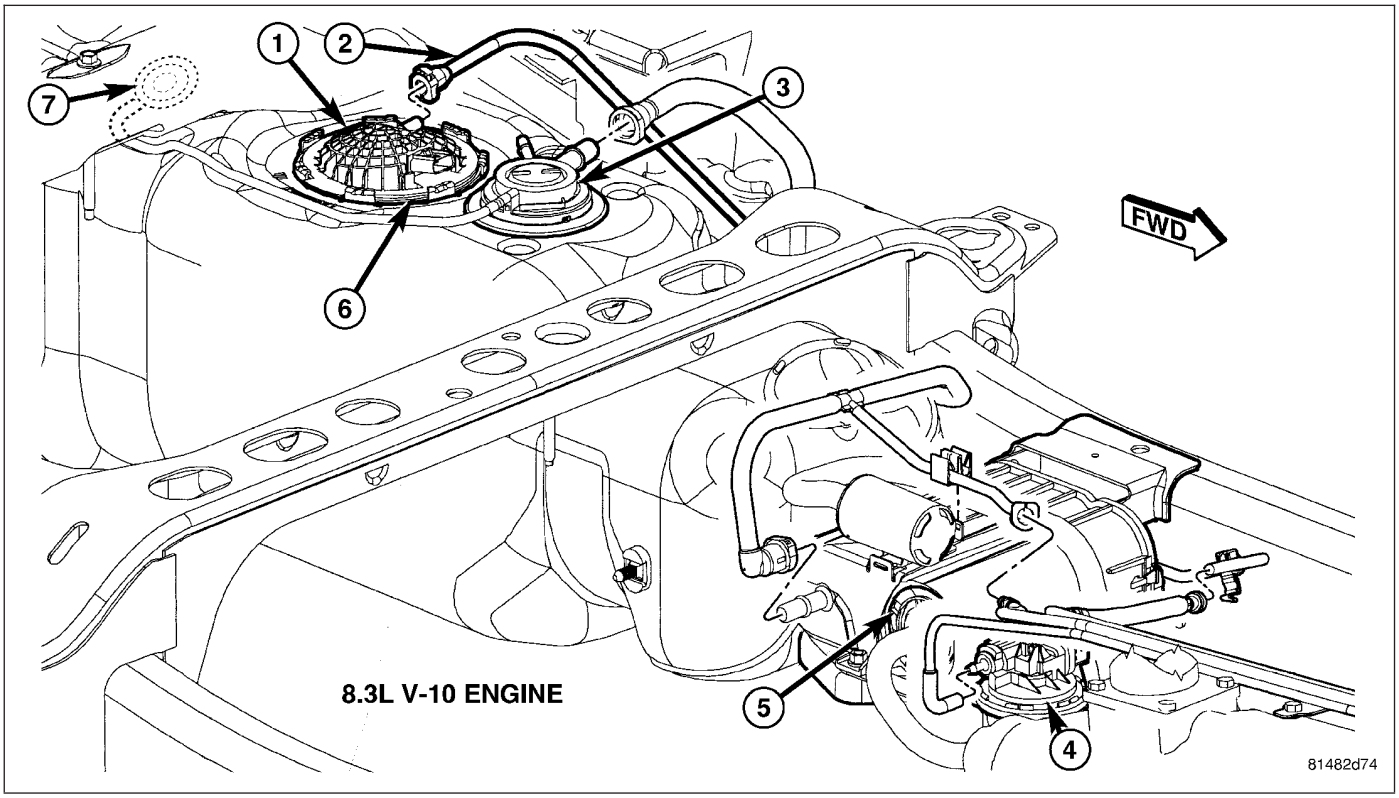

Two EVAP canisters are used. Depending on vehicle model and fuel tank size, the canisters may be mounted either vertically or horizontally. These maintenance free, EVAP canisters (5) are located near the front of the fuel tank.

OPERATION

Two EVAP canisters are used. Depending on vehicle model and fuel tank size, the canisters may be mounted either vertically or horizontally.

The EVAP canisters are filled with granules of an activated carbon mixture. Fuel vapors entering the EVAP canisters are absorbed by the charcoal granules.

Fuel tank pressure vents into the EVAP canisters. Fuel vapors are temporarily held in the canisters until they can be drawn into the intake manifold. The duty cycle EVAP canister purge solenoid allows the EVAP canisters to be purged at predetermined times and at certain engine operating conditions.

REMOVAL

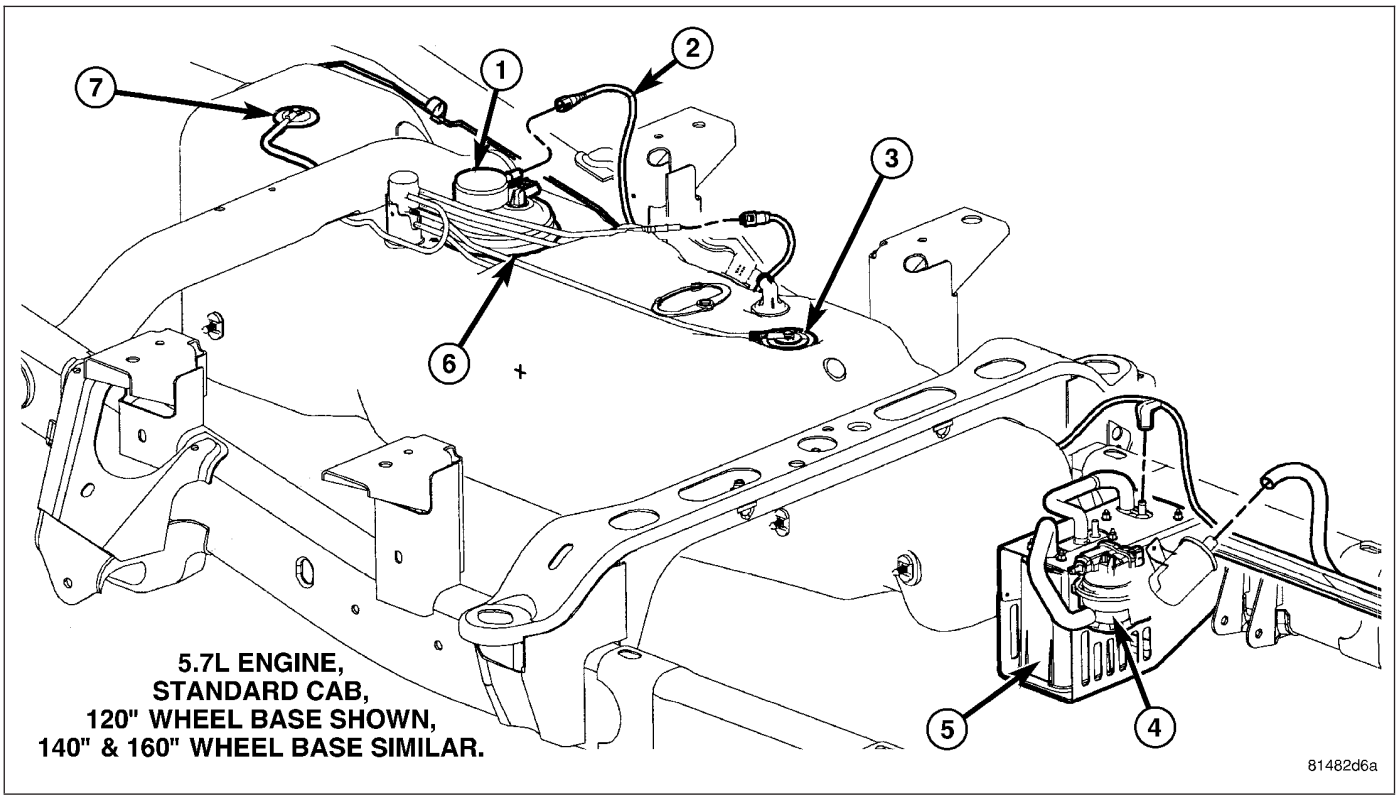

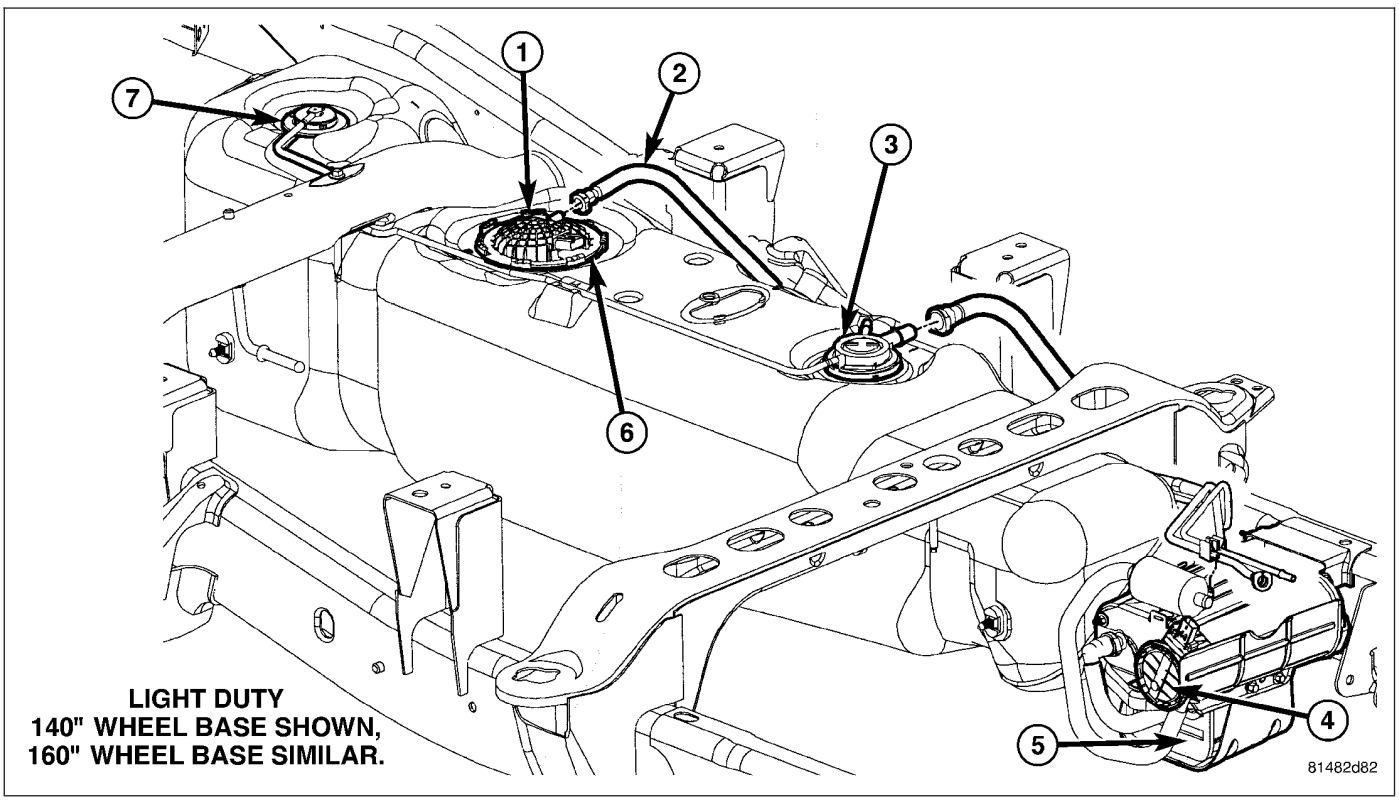

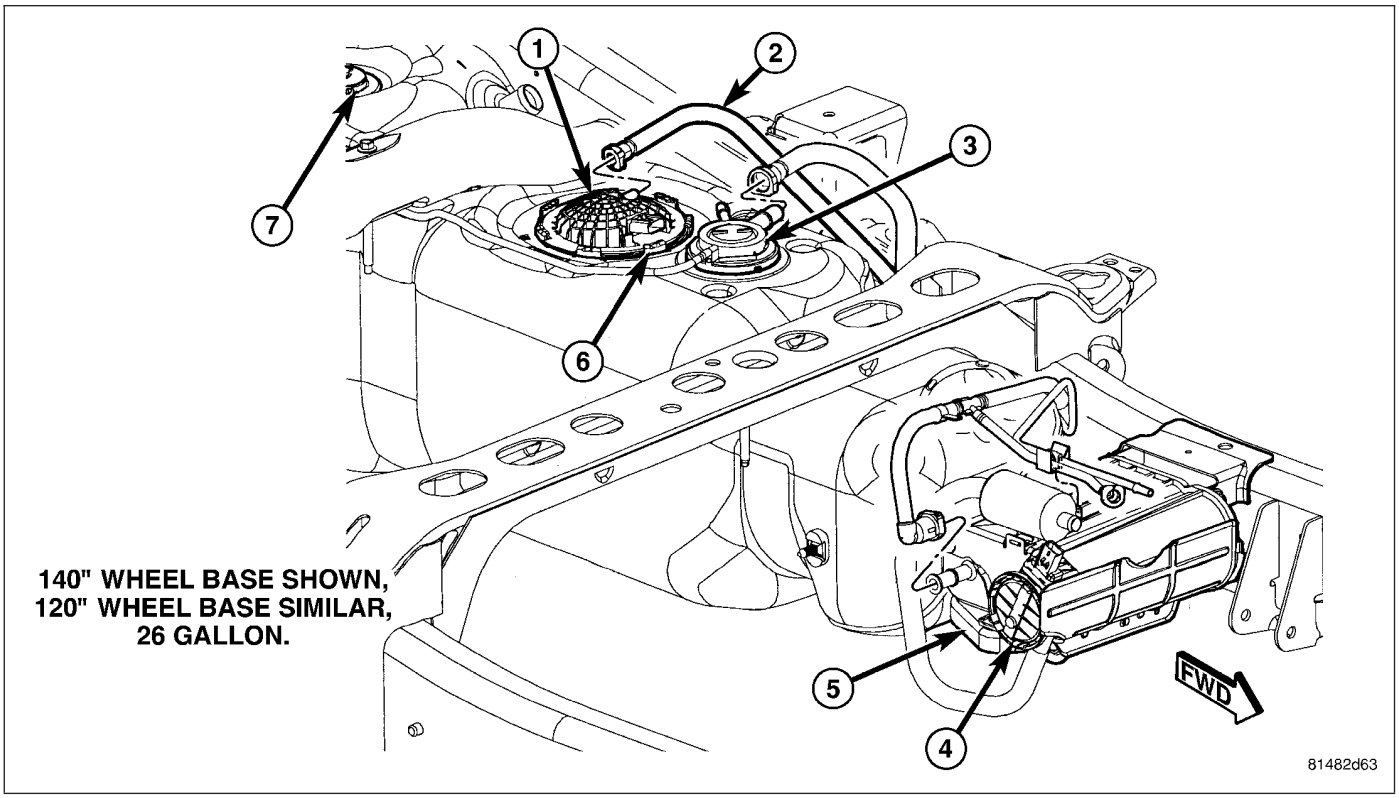

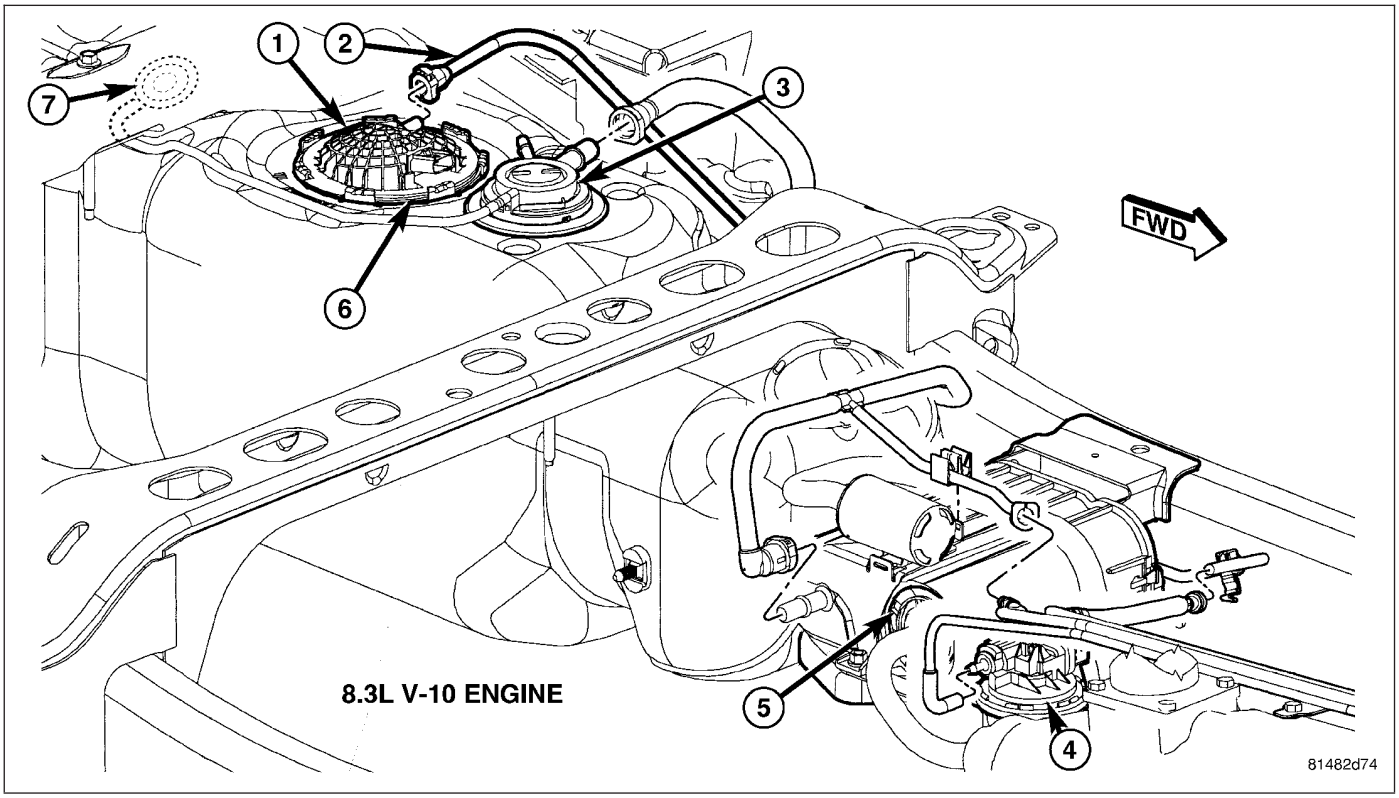

Two EVAP canisters are used. Depending on vehicle model and fuel tank size, the canisters may be mounted either vertically or horizontally. These maintenance free, EVAP canisters (5) are located near the front of the fuel tank.

Type 1 Canisters

Use the following procedure for vertically mounted canisters.

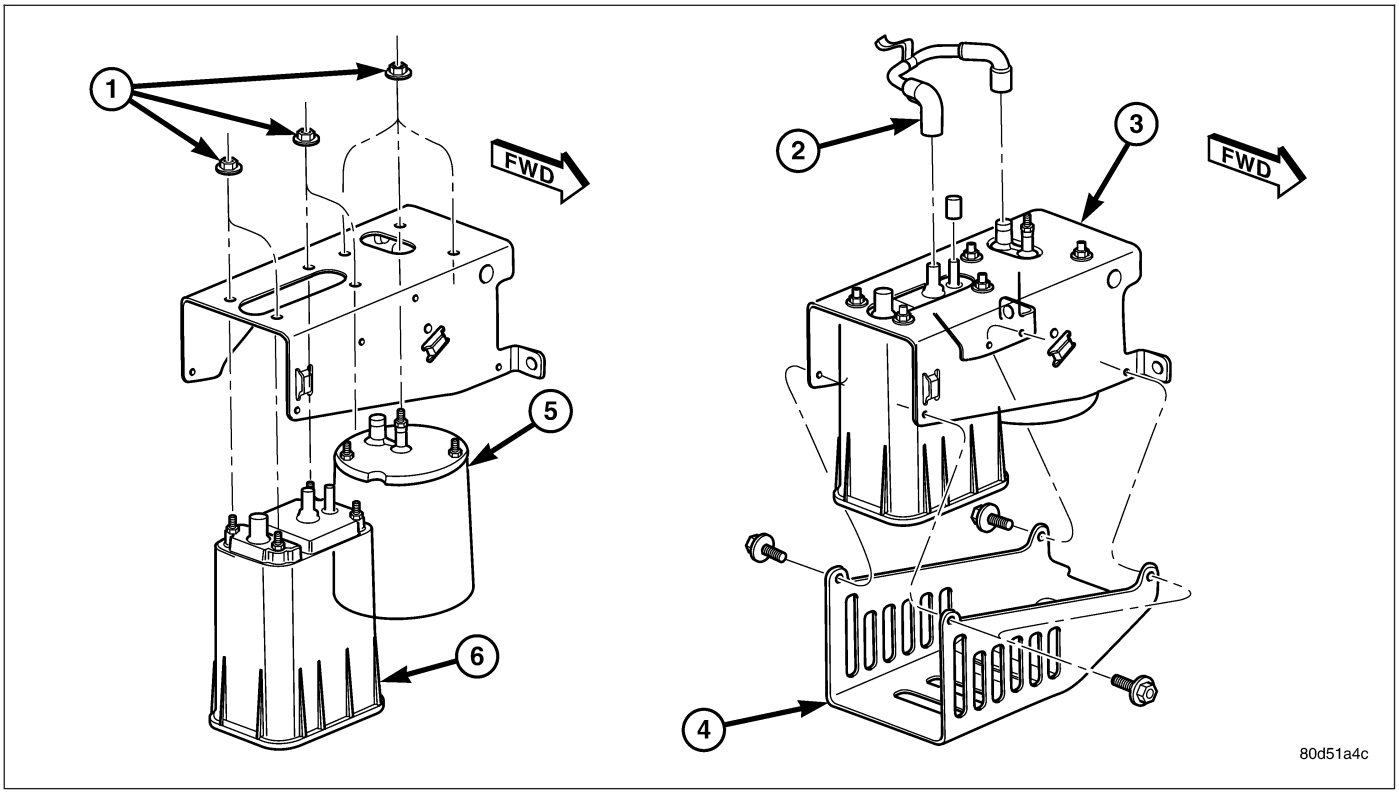

1 - CANISTER MOUNTING NUTS
2 - CONNECTING HOSE
3 - UPPER SUPPORT BRACKET
4 - LOWER SUPPORT BRACKET
5 - OUTER CANISTER
6 - INNER CANISTER

1. Raise and support vehicle.
2. Certain models, equipped with a certain fuel tank size, may require the removal of the fuel tank skid plate and/or the transfer case skid plate to gain access to the EVAP canister(s). Remove necessary skid plates.
3. Remove fuel tubes/lines at each EVAP canister. Note location of tubes/lines before removal for easier installation.
4. Remove lower support bracket (4).
5. Remove mounting nuts (1) at top of each canister.
6. Remove each canister from upper support bracket.

Type 2 Canisters

Use the following procedure for horizontally mounted canisters.

1. Raise and support vehicle.
2. Certain models, equipped with a certain fuel tank size, may require the removal of the fuel tank skid plate and/or the transfer case skid plate to gain access to the EVAP canister(s). Remove necessary skid plates.

3. Remove fuel tubes/lines (1) at each EVAP canister. Note location of tubes/lines before removal for easier installation. Remove bolts (6).

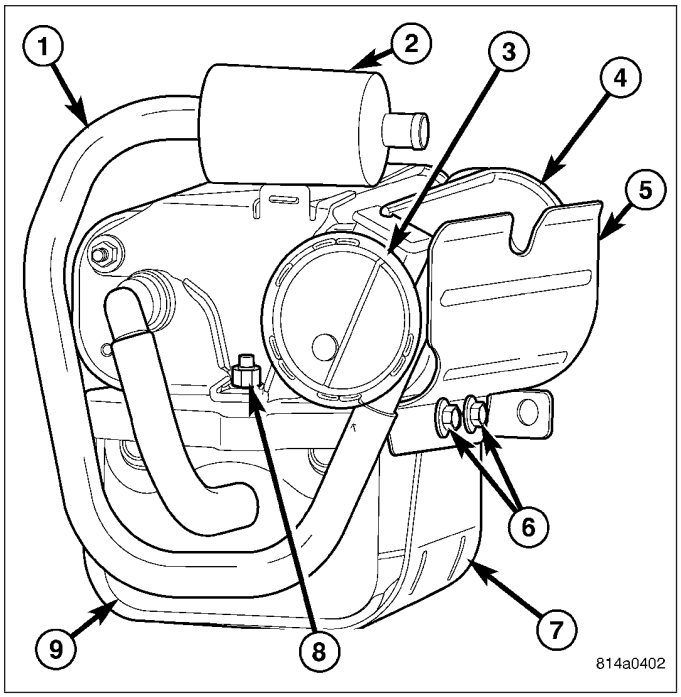

4. Remove nut (1) and remove NVLD filter (2).

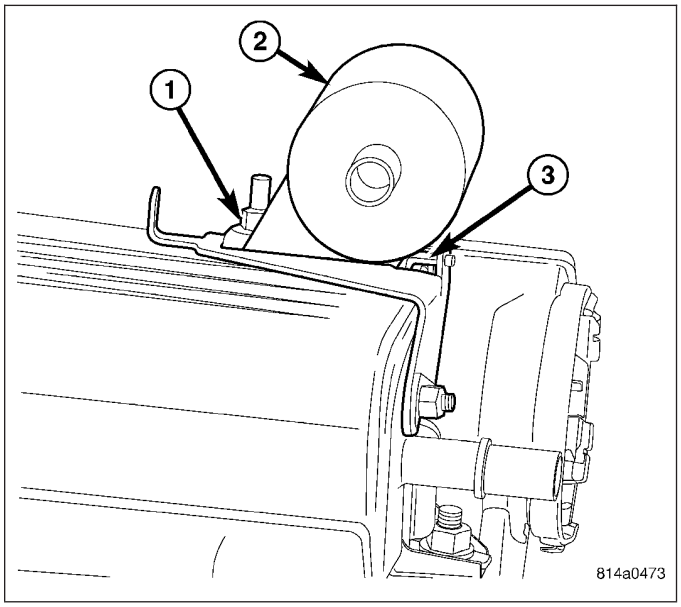

5. Remove nuts (4) and remove NVLD filter support bracket (2). Remove upper canister.

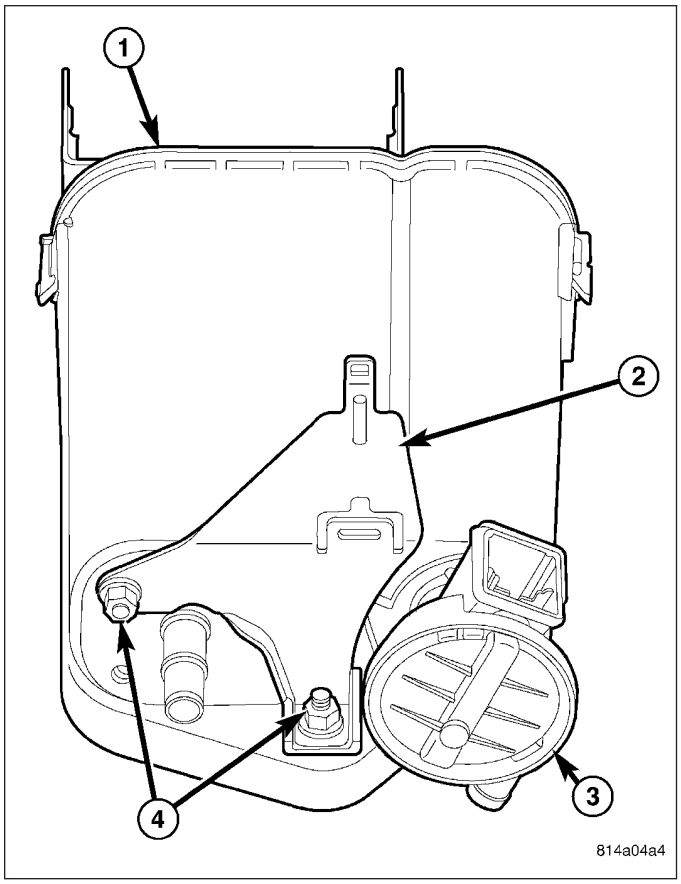

6. Remove nuts (5) and remove lower canister (6). Slip lower canister pins (7) from rubber grommets.

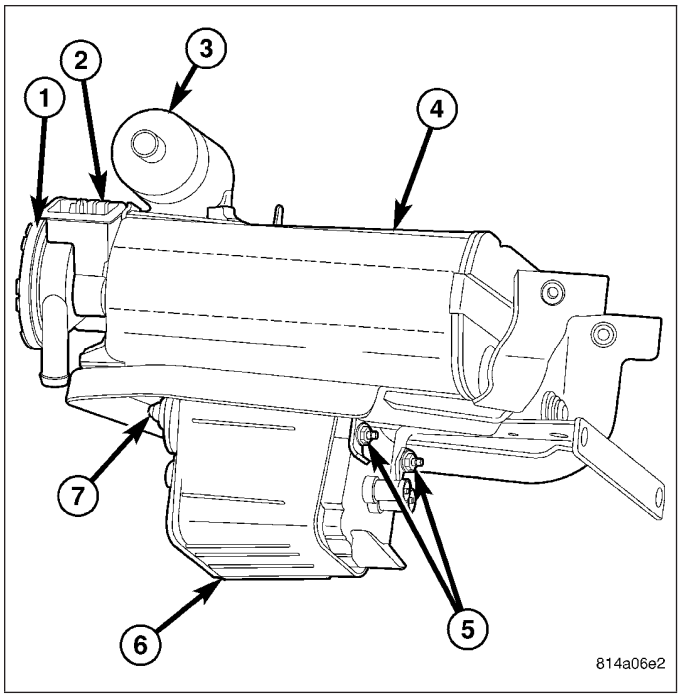

INSTALLATION

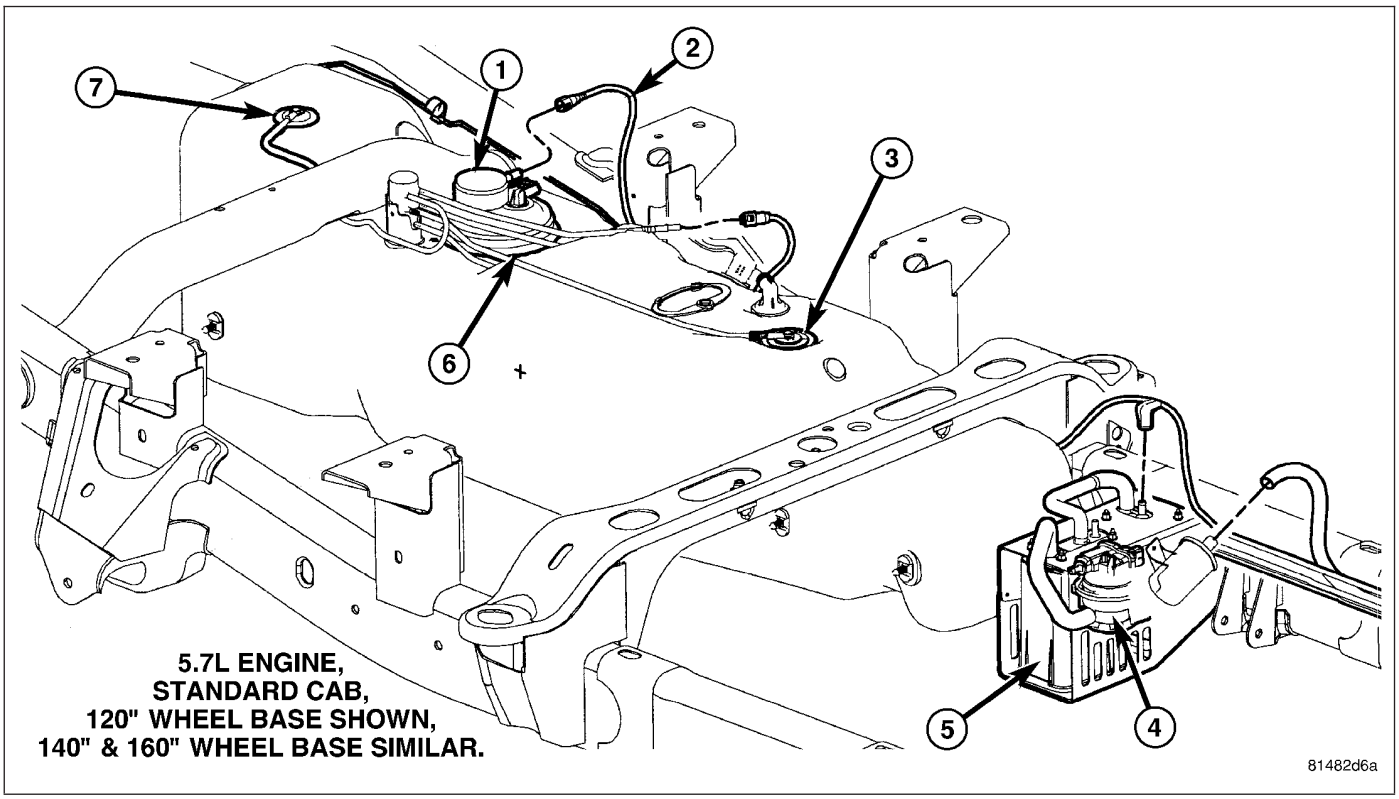

5.7L ENGINE,
STANDARD CAB,
120" WHEEL BASE SHOWN,
140" & 160" WHEEL BASE SIMILAR.

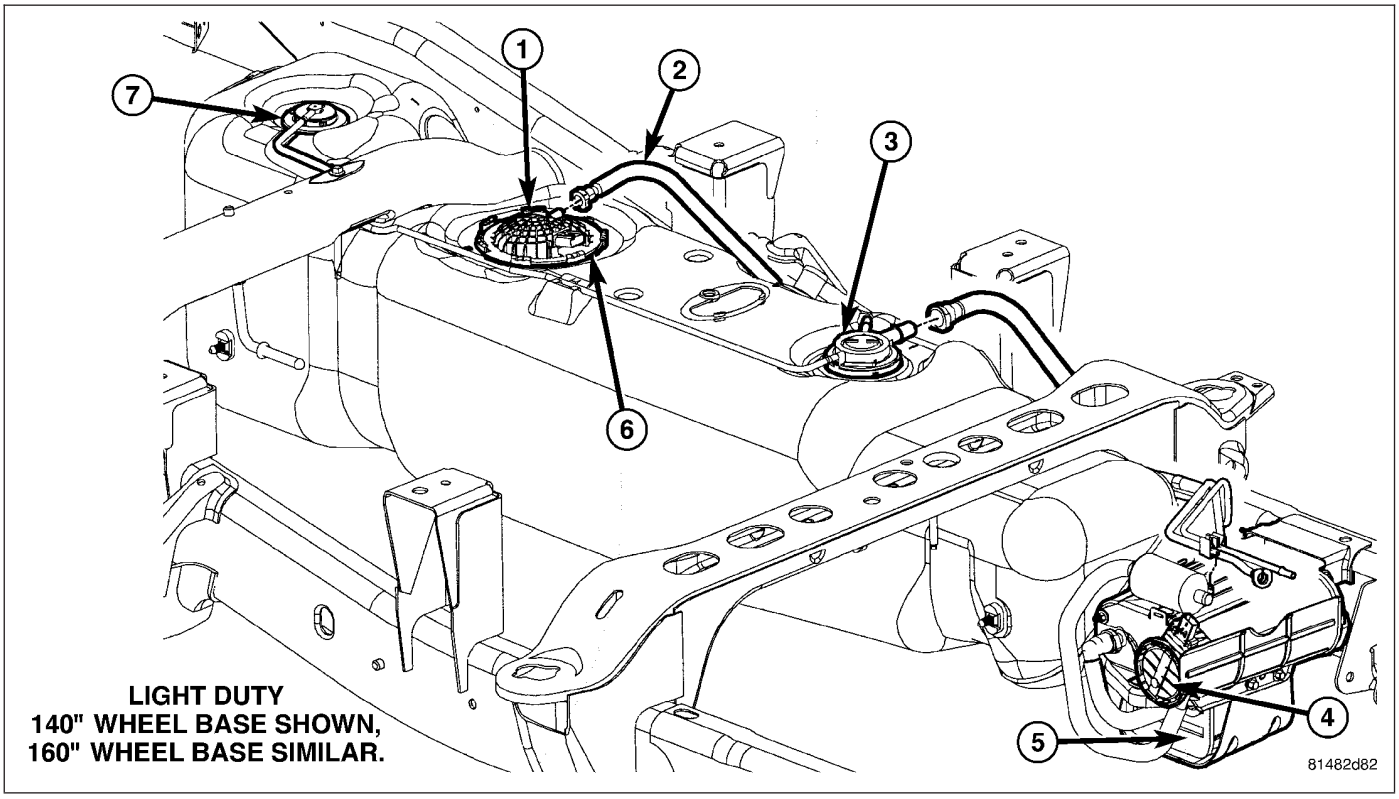

LIGHT DUTY
140" WHEEL BASE SHOWN,
160" WHEEL BASE SIMILAR.

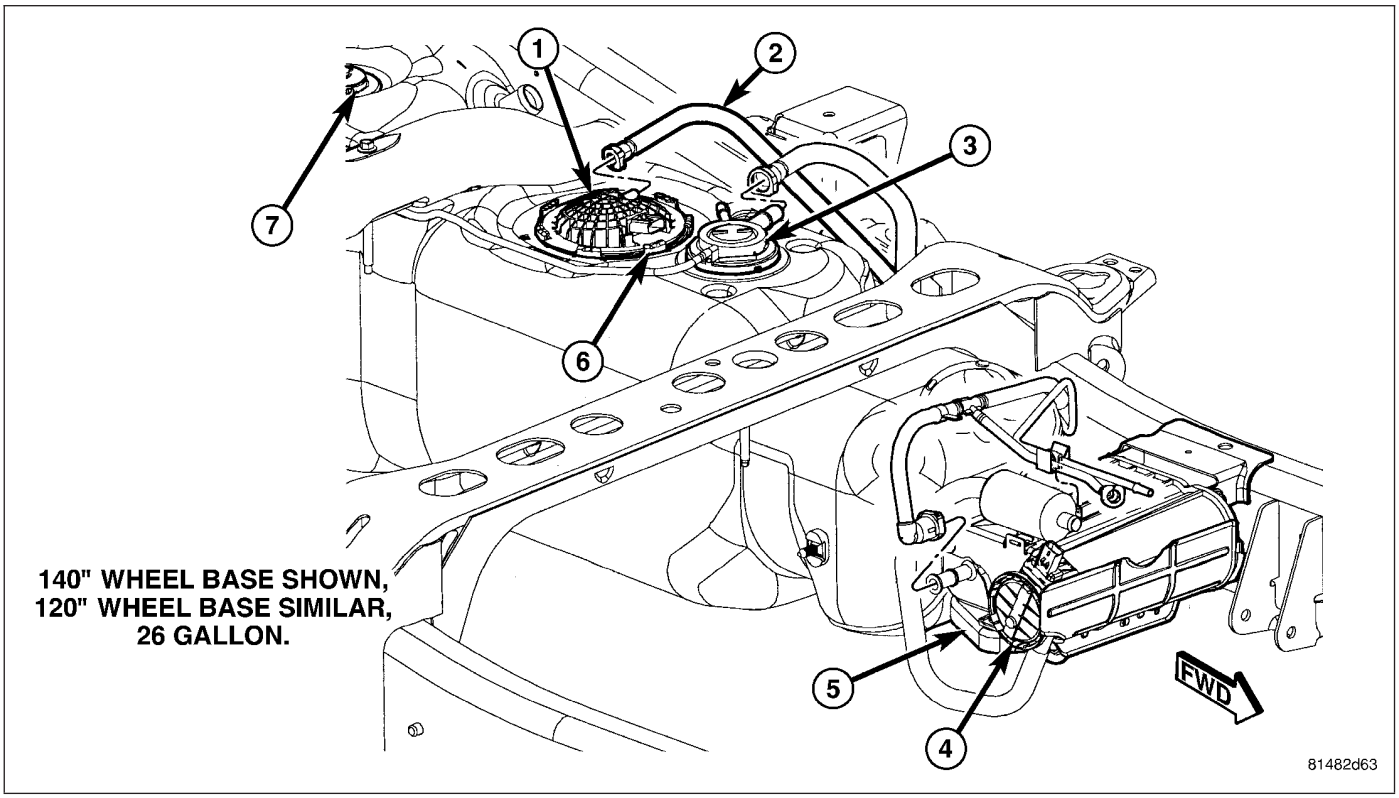

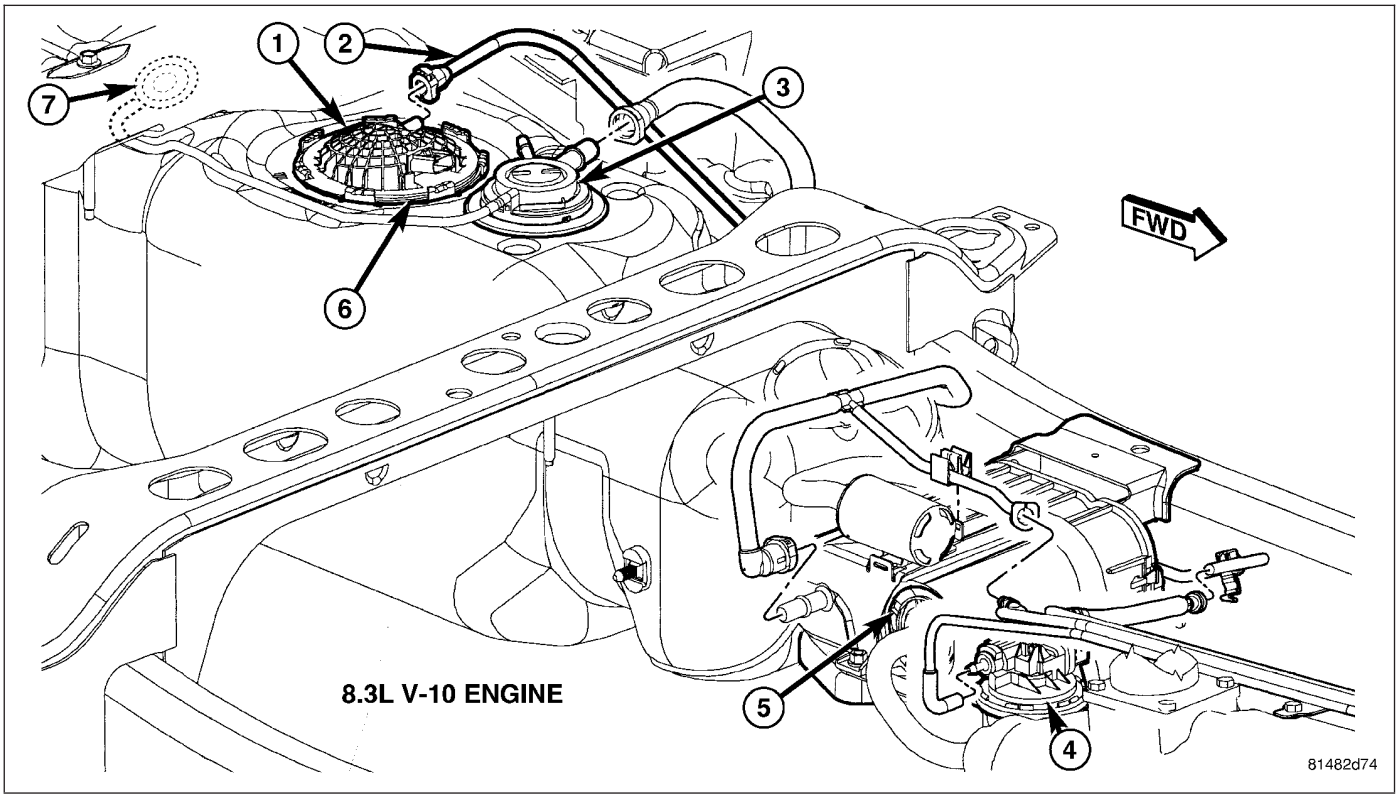

Two EVAP canisters are used. Depending on vehicle model and fuel tank size, the canisters may be mounted either vertically or horizontally. These maintenance free, EVAP canisters (5) are located near the front of the fuel tank.

Type 1 Canisters

Use the following procedure for vertically mounted canisters.

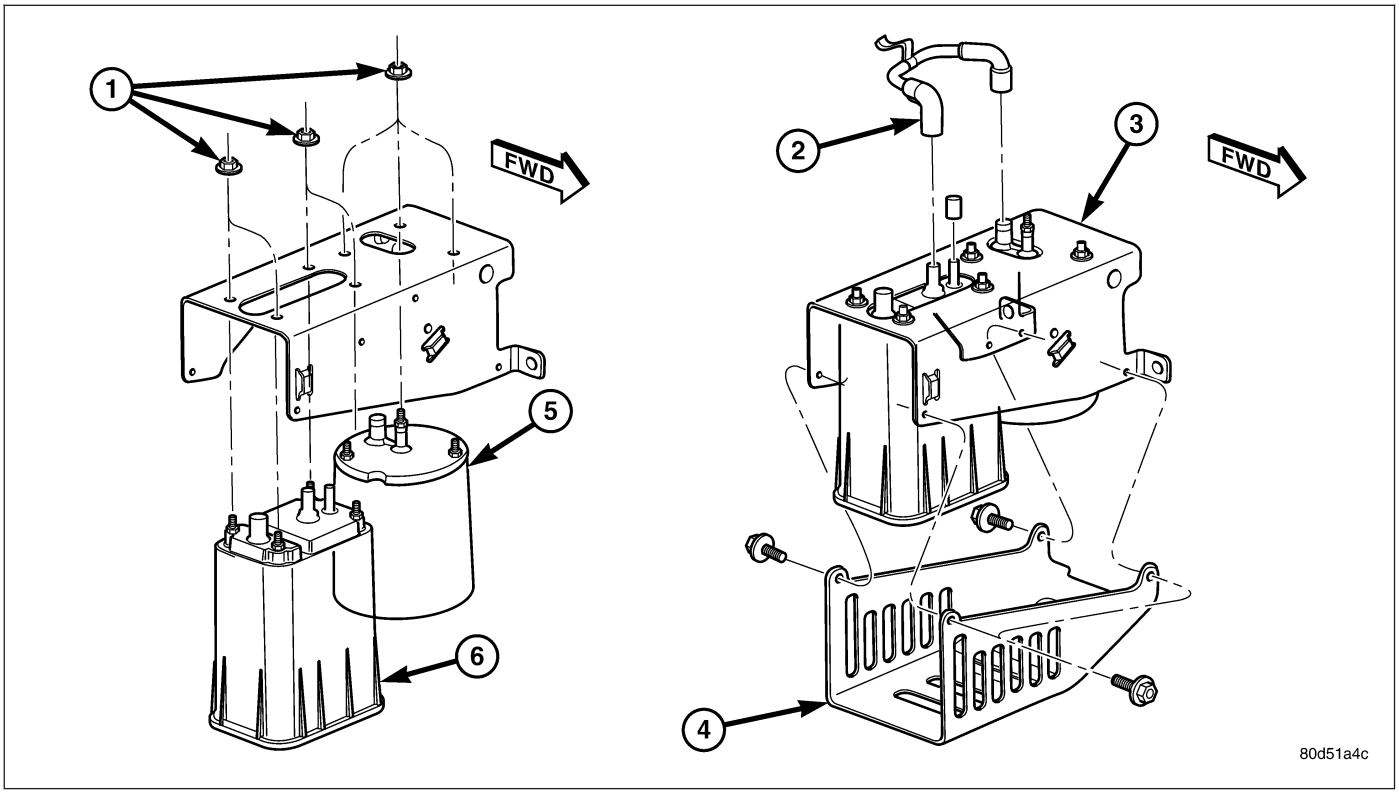

1 - CANISTER MOUNTING NUTS
2 - CONNECTING HOSE
3 - UPPER SUPPORT BRACKET
4 - LOWER SUPPORT BRACKET
5 - OUTER CANISTER
6 - INNER CANISTER

1. Place each canister (5) and (6) into upper support bracket and install nuts. Refer to Torque Specifications.
2. Install lower support bracket (4). Refer to Torque Specifications.
3. Carefully install vapor/vacuum lines. **The vapor/vacuum lines and hoses must be firmly connected. Also check the vapor/vacuum lines at the NVLD Pump, LDP, LDP filter and EVAP canister purge solenoid for damage or leaks. If a leak is present, a Diagnostic Trouble Code (DTC) may be set.**
4. If necessary, install skid plate(s).

Type 2 Canisters

Use the following procedure for horizontally mounted canisters.

1. Slip lower canister pins (7) into rubber grommets. Install lower canister (6) and nuts (5).

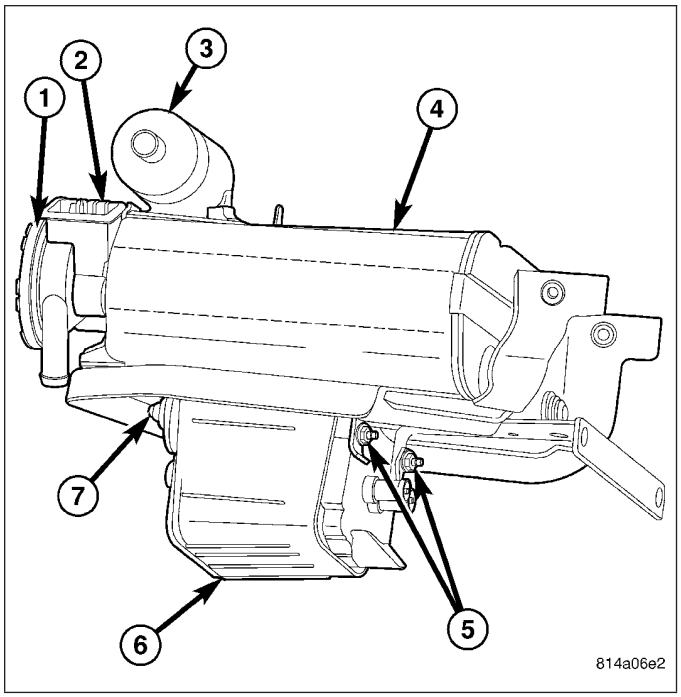

2. Install upper canister (1). Install NVLD filter support bracket (2) and install nuts (4).

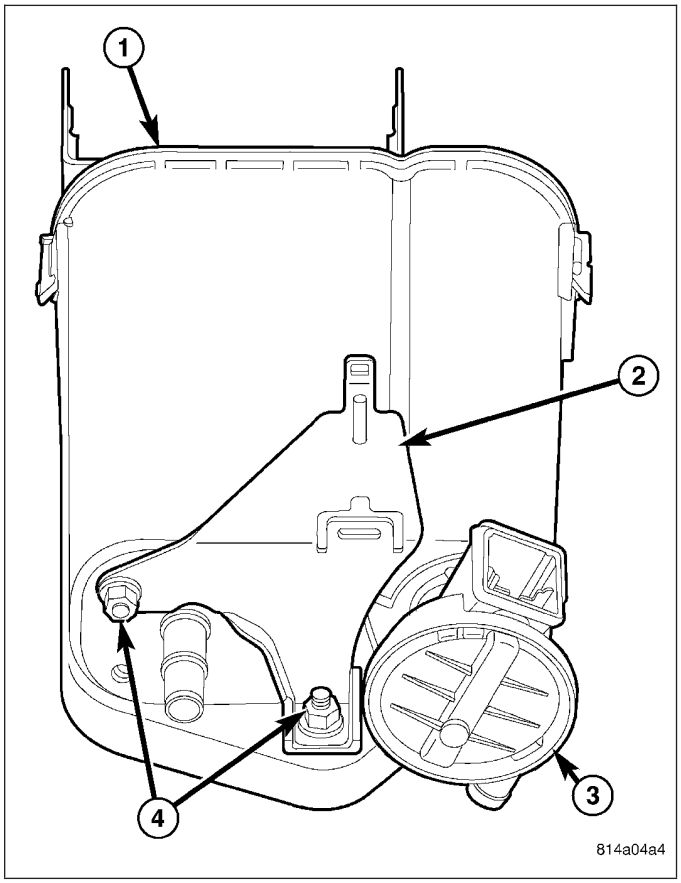

3. Install NVLD filter (2) and nut (1).

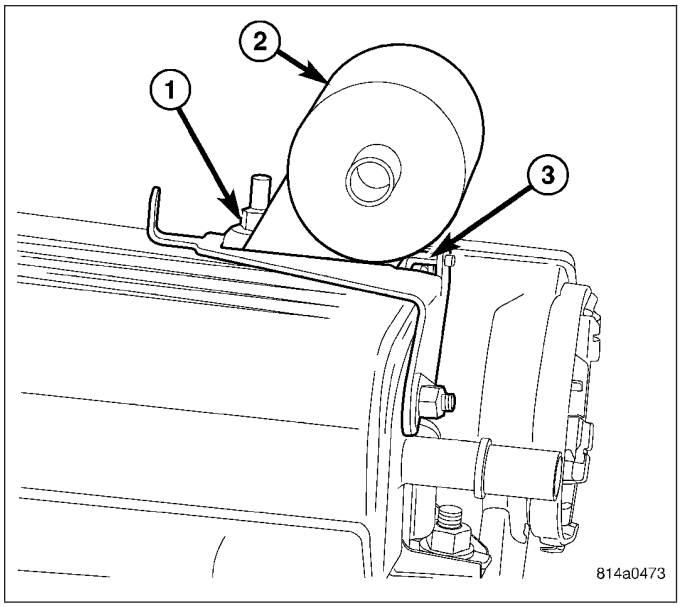

4. Carefully install vapor/vacuum lines, and fuel tubes/ lines (1) to each EVAP canister. Install bolts (6).
5. **The vapor/vacuum lines and hoses must be firmly connected. Also check the vapor/vacuum lines at the NVLD Pump, LDP, LDP filter and EVAP canister purge solenoid for damage or leaks. If a leak is present, a Diagnostic Trouble Code (DTC) may be set.**
6. If necessary, install skid plate(s).

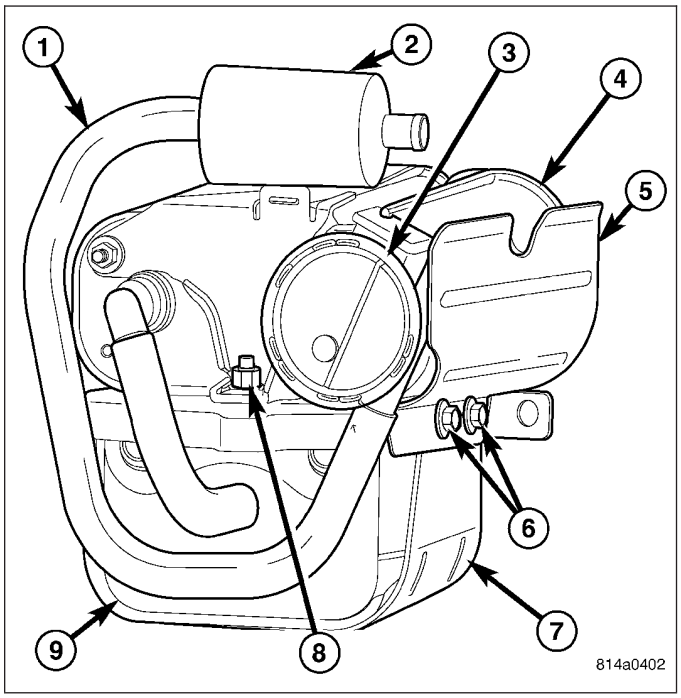

EXHAUST GAS RECIRCULATION

TABLE OF CONTENTS

page

VALVE-EGR
DESCRIPTION 46
OPERATION 47
REMOVAL 47
INSTALLATION 50

VALVE-EGR

DESCRIPTION

4.7L Engine

The electronic EGR valve and solenoid assembly (3) is attached to the rear of the left cylinder head. An exhaust gas routing tube (1) connects the EGR valve to the intake manifold.

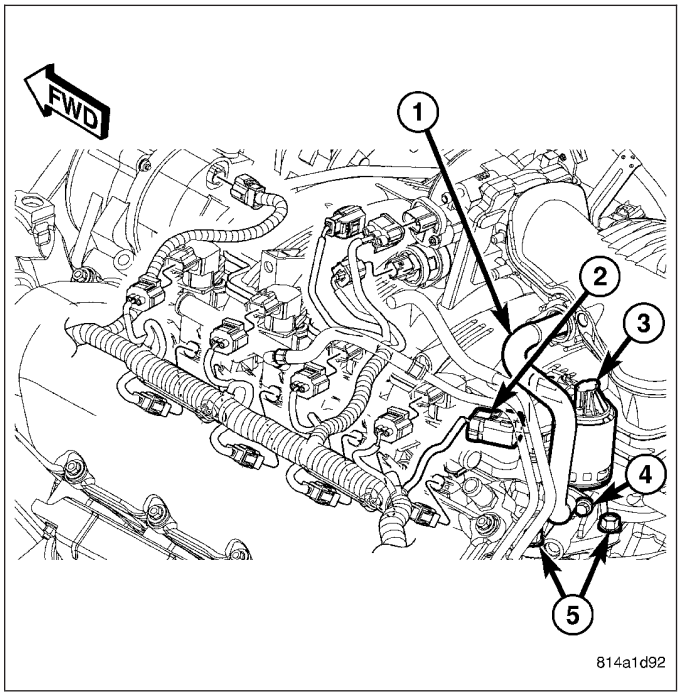

5.7L Engine

The electronic EGR valve and solenoid assembly (2) is attached to the front of the right cylinder head. An exhaust gas routing tube (4) connects the EGR valve to the intake manifold.

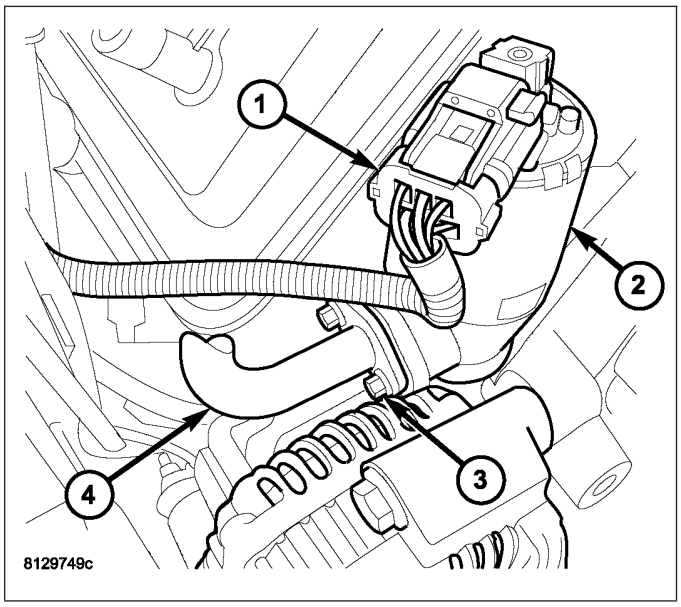

OPERATION

Exhaust gas recirculation flow is determined by the Powertrain Control Module (PCM) and is controlled by an electronic EGR valve assembly. For a given set of conditions, the PCM knows the ideal exhaust gas recirculation flow to optimize NOx and fuel economy as a function of the pintle position. Pintle position is obtained from the position sensor. The PCM adjusts the duty cycle of 128 Hz power supplied to the solenoid coil to obtain the correct position.

The electronic EGR valve assembly consists of a pintle, valve seat, and housing which contains and regulates exhaust gas flow. An armature, return spring, and solenoid coil provide the operating force to regulate exhaust gas flow by changing the pintle position. The solenoid coil assembly is wired in parallel with a diode that connects two internal connectors.

REMOVAL

4.7L Engine

The electronic EGR valve and solenoid assembly (4) is attached to the rear of the left cylinder head. An exhaust gas routing tube (3) connects the EGR valve to the intake manifold.

1. Remove electrical connector (5) at top of EGR valve solenoid.
2. Remove tube mounting bolt (1) at intake manifold.

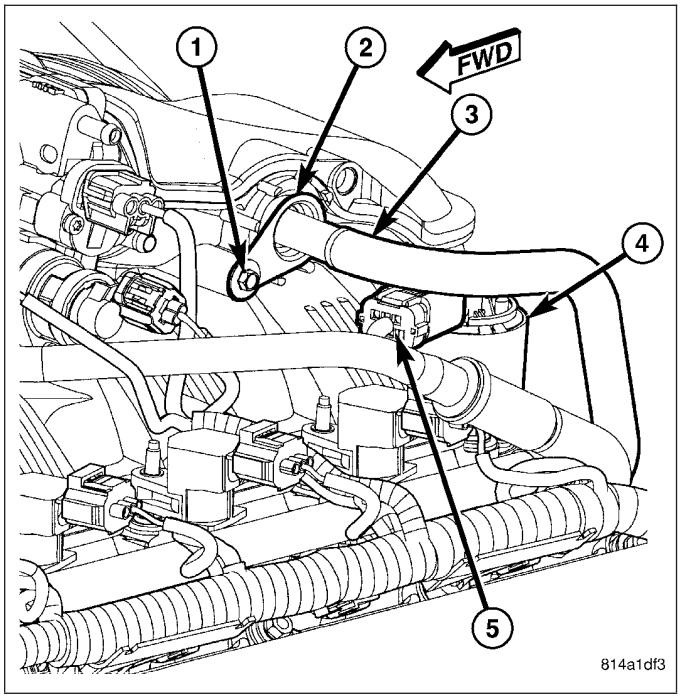

3. Remove two bolts (4) connecting EGR tube (1) to valve assembly.
4. Remove gasket located between EGR tube flange and EGR valve assembly.
5. Remove two EGR valve mounting bolts (5).
6. Separate valve assembly (3) from engine.
7. Remove and discard metal gasket located between cylinder head and valve assembly.

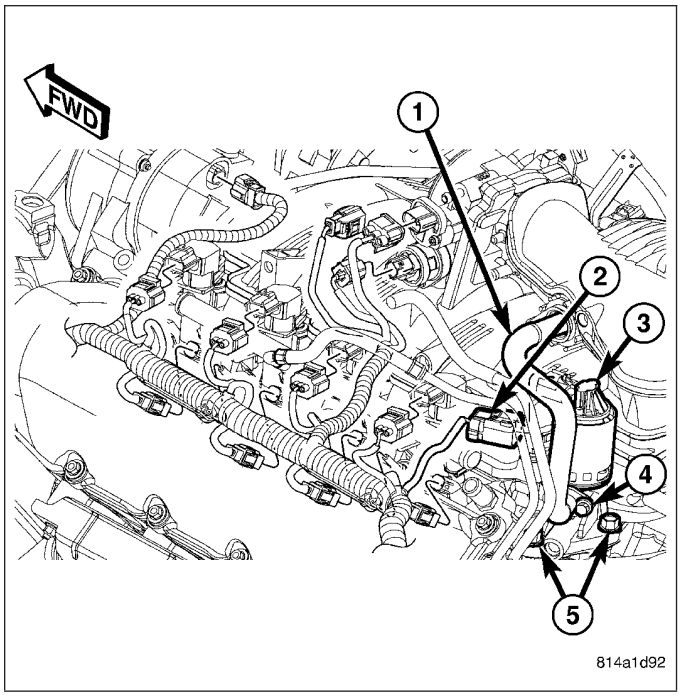

5.7L Engine

The electronic EGR valve and solenoid assembly (3) is attached to the front of the right cylinder head (1). An exhaust gas routing tube connects the EGR valve to the intake manifold.

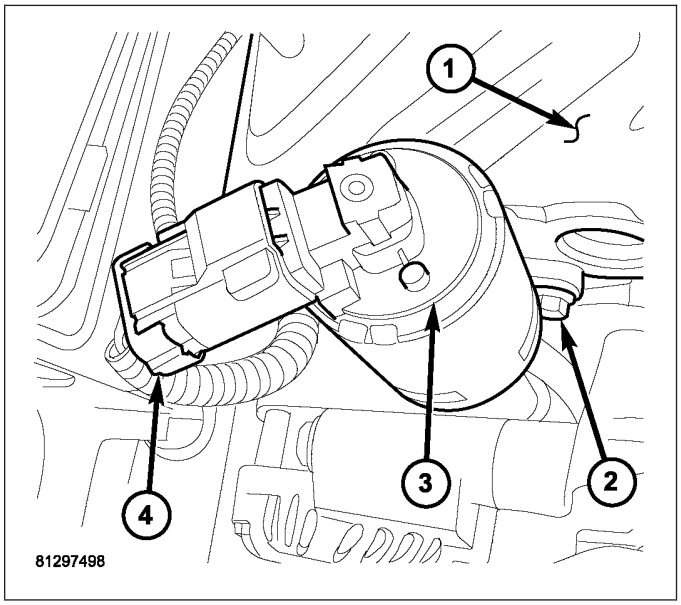

1. Disconnect electrical connector (1) from EGR solenoid (2).
2. Remove two bolts (3) connecting EGR tube (4) to valve assembly.
3. Remove gasket located between EGR tube flange and EGR valve assembly.

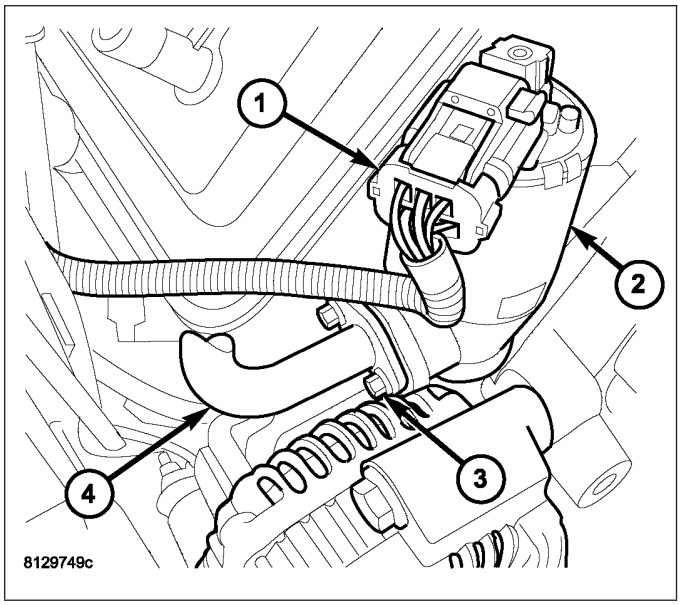

4. Remove two mounting bolts (2).
5. Separate valve assembly (3) from cylinder head (1).
6. Remove and discard metal gasket located between cylinder head and valve assembly.

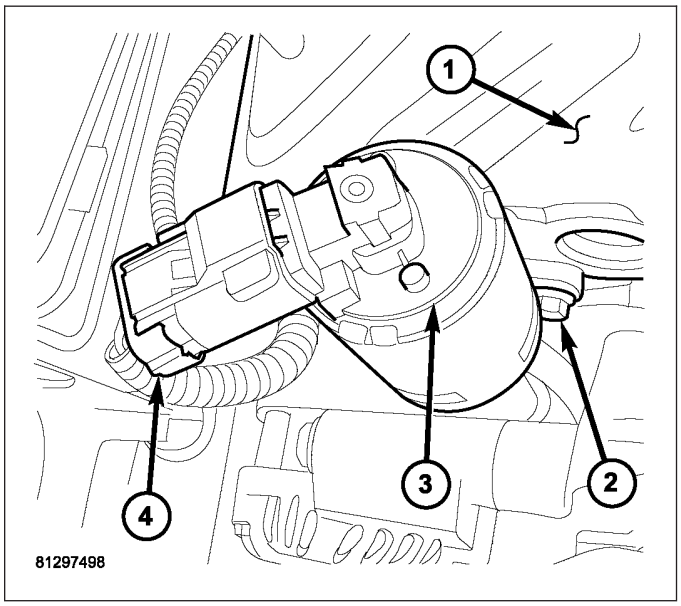

INSTALLATION

4.7L Engine

1. Clean area at rear of left cylinder head where it joins base of EGR valve.
2. Clean EGR tube where it joins EGR valve.
3. Position new gasket between EGR valve and cylinder head.
4. Position EGR valve to cylinder head. Install and tighten two bolts (5). Refer to Torque Specifications.
5. Position new gasket between EGR tube flange and EGR valve assembly.
6. Position EGR tube (1) to side of EGR valve and into intake manifold. Install two bolts (4) finger tight (temporarily).

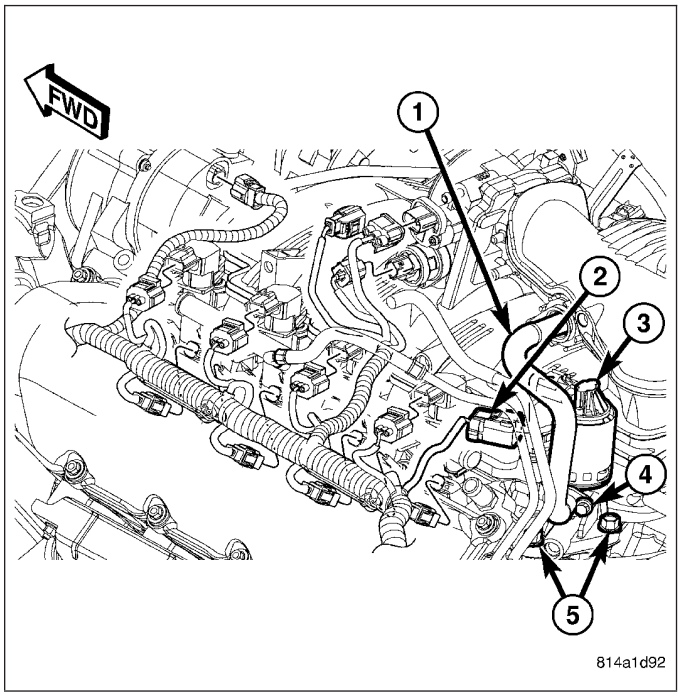

7. Install EGR tube flange bolt (1) at intake manifold. Tighten bolt. Refer to Torque Specifications.
8. Connect electrical connector (5) to top of EGR valve solenoid (2).

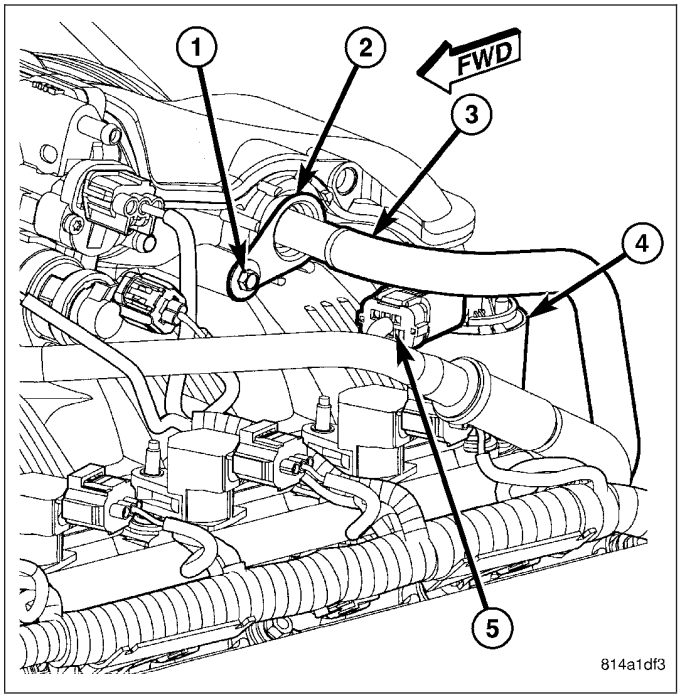

9. Do a final tightening of two EGR tube bolts (4). Refer to Torque Specifications.

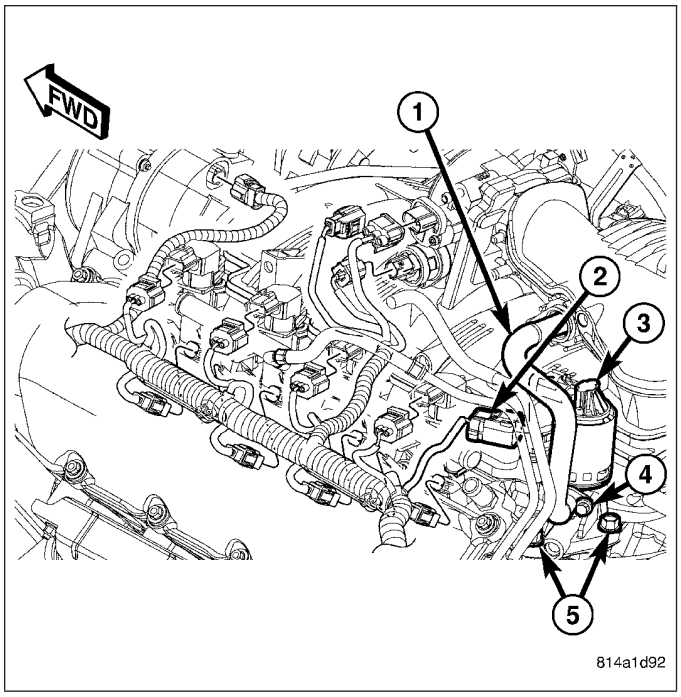

5.7L Engine

1. Position a new metal gasket between cylinder head (1) and valve assembly (3).
2. Install two mounting bolts (2) and tighten. Refer to Torque Specifications.

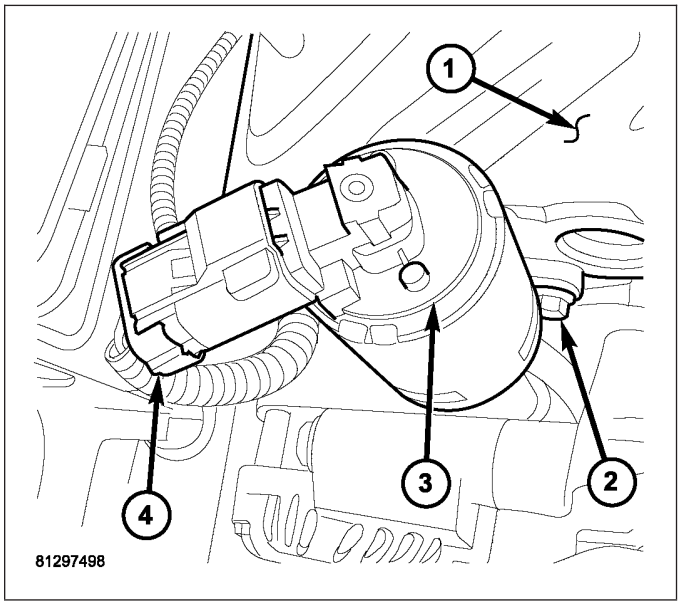

3. Clean EGR tube where it joins EGR valve.
4. Position new gasket between EGR tube flange and EGR valve assembly.
5. Install two bolts (3) connecting EGR tube (4) to valve assembly (2). Tighten bolts. Refer to Torque Specifications.
6. Connect electrical connector (1) to EGR solenoid (2).

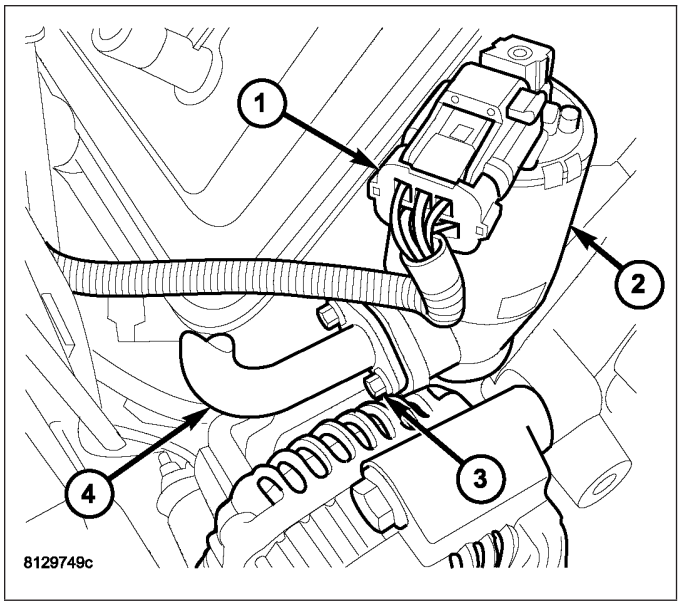

Description	Group-Page
A-PILLAR TRIM/GRAB HANDLE	23-150
A-PILLAR WEATHERSTRIP RETAINER	23-238
ABS INDICATOR	8J-116
ACCUMULATOR	21-1041
ACCUMULATOR-A/C	24-276
ACTIVE CHASSIS - ELECTRICAL DIAGNOSTICS	2-2
ACTUATOR - FUEL CONTROL	14-131
ACTUATOR-BLEND DOOR	24-201
ACTUATOR-MODE DOOR	24-206
ACTUATOR-RECIRCULATION DOOR	24-210
ACTUATOR-THROTTLE VALVE	21-1120
ADAPTER-DISC BRAKE CALIPER	5-245
AIR BAG-DRIVER	8O-272
AIR BAG-PASSENGER	8O-286
AIR BAG-SIDE CURTAIN	8O-269
AIR CLEANER ELEMENT	9-2557
AIRBAG INDICATOR	8J-117
AMPLIFIER	8A-54
ANTENNA - NAVIGATION	8A-56
ANTENNA BODY & CABLE	8A-59
ANTENNA CABLE - INSTRUMENT PANEL	8A-63
ANTENNA CABLE - SATELLITE RADIO	8A-64
ANTENNA-SATELLITE	8A-58
ARMS-ROCKER	9-2469
ASH RECEIVER	23-122
ASSEMBLY-INPUT CLUTCH	21-630
ASSEMBLY-MODULE	23-219
ASSEMBLY-SHIFT MOTOR/MODE SENSOR	21-1464, 21-1504
ASSEMBLY-TRANSMISSION SOLENOID/TRS	21-679
AUDIO - ELECTRICAL DIAGNOSTICS	8A-1
AUDIO - SERVICE INFORMATION	8A-51
AUDIO - SRT10 - AMP - ELECTRICAL DIAGNOSTICS	8A-89
AUTOMATIC TRANSMISSION - 45RFE/545RFE - SERVICE INFORMATION	21-554
AUTOMATIC TRANSMISSION - 48RE - DIESEL - ELECTRICAL DIAGNOSTICS	21-807
AUTOMATIC TRANSMISSION - 48RE - GAS - ELECTRICAL DIAGNOSTICS	21-694
AUTOMATIC TRANSMISSION - 48RE - SERVICE INFORMATION	21-967
AUTOMATIC TRANSMISSION - 545RFE - ELECTRICAL DIAGNOSTICS	21-295
AUXILIARY SPRING BUMPERS (3500)	2-111
B-PILLAR GRAB HANDLE	23-151
B-PILLAR LOWER TRIM	23-152
B-PILLAR UPPER TRIM	23-154
BACKLITE VENT GLASS	23-206
BACKLITE	23-203
BANDS	21-1043
BASECOAT/CLEARCOAT FINISH	23-179
BATTERY CABLES	8F-20
BATTERY HOLDDOWN	8F-19
BATTERY SYSTEM	8F-2
BATTERY TEMPERATURE SENSOR	8F-42
BATTERY TRAY	8F-36
BATTERY	8F-10
BEARING CLUTCH RELEASE - SRT-10	6-15
BEARING CLUTCH RELEASE	6-14
BEARING PILOT	6-19
BEARING-AXLE HUB	3-282, 3-326
BEARING-AXLE	3-164, 3-245, 3-374
BEARING-CENTER	3-111
BEARING-CRANKSHAFT PILOT	9-2525
BEARING-DIFFERENTIAL CASE	3-210, 3-255, 3-292, 3-338, 3-391
BEARING-OUTPUT SHAFT FRONT	21-1072
BEARING-OUTPUT SHAFT REAR	21-1073
BEARINGS - CONNECTING ROD	9-2223, 9-2596
BEARINGS - CRANKSHAFT MAIN	9-2102, 9-2230, 9-2372, 9-2598
BEARINGS-CONNECTING ROD	9-2511
BEARINGS-CRANKSHAFT MAIN	9-2517
BEARINGS-DIFFERENTIAL CASE	3-172
BEARINGS-EL DIFFERENTIAL CASE	3-218, 3-301
BELLY PAN-SRT-10	23-102
BELT-DRIVE	7-30
BEZEL-HOOD SRT-10	23-112
BLOCK-ENGINE	9-2499
BODY CODE PLATE	Intro.-3
BODY ISOLATORS	23-80
BODY SIDE MOLDINGS	23-81
BODY VENT	23-177
BODY	23-1
BODY-VALVE	21-683, 21-1141
BOOSTER-HYDRO-BOOST BRAKE	5-259
BOOSTER-POWER BRAKE	5-258
BOOT-EXTENSION HOUSING SEAL AND DUST	21-1419, 21-1552
BRAKE JUNCTION BLOCK	5-251
BRAKE/PARK BRAKE INDICATOR	8J-118
BRAKES - ABS - ELECTRICAL DIAGNOSTICS	5-2
BRAKES - ABS - SERVICE INFORMATION	5-287
BRAKES - BASE - SERVICE INFORMATION	5-201
BUSHING	19-34
BUSHINGS	2-41, 2-97
C-PILLAR LOWER TRIM	23-157
C-PILLAR UPPER TRIM	23-158
CABLE - THROTTLE CONTROL	14-88
CABLE-CHECK	23-17
CABLE-GEARSHIFT	21-625, 21-1063
CABLE-SPEED CONTROL	8P-4
CABLE-THROTTLE VALVE	21-1123
CABLES	5-273
CALIPERS-DISC BRAKE	5-228
CAM-TURN SIGNAL CANCEL	8L-170
CAMSHAFT & BEARINGS (IN BLOCK)	9-2590
CAMSHAFT - LEFT	9-2203
CAMSHAFT - RIGHT	9-2209
CAMSHAFT	9-2072, 9-2087, 9-2350, 9-2502
CANISTER - VAPOR	25-34
CAP - FUEL FILLER	25-13
CAP-RADIATOR PRESSURE	7-83
CARGO BOX - TIE DOWN	23-84
CARGO BOX	23-82
CARGO LAMP INDICATOR	8J-120
CARGO LAMP	8L-211
CARPETS AND FLOOR MATS	23-159
CASE - FRONT	9-2632
CENTER ARMREST / SEAT BACK	23-184
CENTER SEAT BACK HINGE	23-187
CENTER SEAT BACK INERTIA HINGE COVER	23-185
CENTER SEAT BACK LID	23-190
CENTER SEAT CUSHION COVER	23-191
CENTER SEAT CUSHION	23-190
CENTER SEAT	23-182
CHANNEL-DRAIN	23-222
CHARGE AIR COOLER AND PLUMBING	11-32
CHARGING	8F-40
CHECK GAUGES INDICATOR	8J-120
CHECK VALVE	8R-52
CHILD RESTRAINT ANCHOR	8O-260
CHIME/BUZZER - ELECTRICAL DIAGNOSTICS	8B-1
CHIME/BUZZER - SERVICE INFORMATION	8B-12
CIRCUIT - FUEL DRAIN	14-124
CLADDING-BODY SIDE - BOX - SRT-10	23-103
CLADDING-BODY SIDE - CAB - SRT-10	23-106
CLADDING-BODY SIDE - DOOR - SRT-10	23-107
CLADDING-BODY SIDE - FENDER SRT-10	23-109
CLEARANCE LAMP	8L-128
CLOCKSPRING	8O-264
CLUSTER BEZEL	23-123
CLUTCH	6-1
CLUTCH-A/C COMPRESSOR	24-213
CLUTCH-FRONT	21-1057
CLUTCH-LOW/REVERSE	21-647
CLUTCH-OVERDRIVE	21-1074
CLUTCH-REAR	21-1112
CLUTCHES-HOLDING	21-628
COAT HOOK	23-162
COLUMN	19-7
COMMUNICATION	8E-102
COMPRESSOR-A/C	24-278
CONDENSER-A/C	24-288
CONNECTOR	8W-01-13
CONNECTOR/GROUND/SPLICE LOCATION	8W-91-1
CONTAINER-COOLANT RECOVERY-GAS ENGINES	7-42
CONTROL-A/C HEATER	24-224
CONVERTER-CATALYTIC	11-7
CONVERTER-TORQUE	21-671, 21-1126
COOLANT	7-39
COOLER & LINES-OIL	9-2485
COOLER - ENGINE OIL & LINES	9-2623
COOLER-TRANSMISSION OIL	7-96
COOLING	7-2
CORE-HEATER	24-293
CORE-VALVE-SERVICE PORT	24-294
COUPLER-REFRIGERANT LINE	24-296
COVER - CYLINDER HEAD	9-2075, 9-2092, 9-2215, 9-2328, 9-2567
COVER - STRUCTURAL	9-2119, 9-2244, 9-2389
COVER - TIMING	9-2151, 9-2274, 9-2410, 9-2635
COVER	23-19
COVER(S)-CYLINDER HEAD	9-2467
COVER-DIFFERENTIAL	3-248
COVER-GUIDE MECHANISM	23-224
COVER-SHIFT - NV5600	21-106
COVER-TIMING CHAIN	9-2476
COWL GRILLE	23-85
COWL TRIM	23-163
CRANKSHAFT & GEAR	9-2597
CRANKSHAFT	9-2098, 9-2227, 9-2363, 9-2518
CRUISE INDICATOR	8J-122
CUP HOLDER	23-124
CV JOINT-INNER	3-139
CV JOINT-OUTER	3-135
CYLINDER HEAD - LEFT	9-2067
CYLINDER HEAD - RIGHT	9-2081
CYLINDER HEAD	9-2191, 9-2320, 9-2559
DAMPER - CRANKSHAFT	9-2118, 9-2243, 9-2387, 9-2614
DAMPER	19-58
DAMPER-CRANKSHAFT	9-2513
DATA LINK CONNECTOR	8E-104
DEFLECTOR-WIND	23-225
DIFFERENTIAL & DRIVELINE - ELECTRICAL DIAGNOSTICS	3-1
DIFFERENTIAL	3-168, 3-206, 3-249, 3-286, 3-330
DIFFERENTIAL-ELECTRIC LOCKER	3-211, 3-294
DIFFERENTIAL-TRAC-LOK	3-254, 3-378
DIFFERENTIAL-TRAC-RITE	3-293, 3-336
DIODE	8W-01-16
DISC CLUTCH - SRT-10	6-9
DISC CLUTCH	6-7
DOOR AJAR INDICATOR	8J-123
DOOR AJAR SWITCH	8L-220
DOOR GLASS	23-31, 23-58
DOOR OPENING SEAL	23-240
DOOR	23-26, 23-52
DRAG LINK	19-58
DRIP RAIL WEATHERSTRIP RETAINER	23-247
DRIP RAIL WEATHERSTRIP	23-239
DUCT-DEFROSTER	24-237
DUCT-FLOOR DISTRIBUTION	24-239
DUCT-INSTRUMENT PANEL DEMISTER	24-241
DUCT-INSTRUMENT PANEL	24-240
DUCTS-BRAKE COOLING - SRT-10	5-269
ELECTRONIC CONTROL MODULES - ELECTRICAL DIAGNOSTICS	8E-2
ELECTRONIC CONTROL MODULES - SERVICE INFORMATION	8E-101
ELEMENT - AIR CLEANER	9-2066, 9-2190, 9-2318
ELEMENT-AIR CLEANER	9-2450
EMISSIONS CONTROL	25-1
ENGINE - 3.7L - SERVICE INFORMATION	9-2039
ENGINE - 4.7L - SERVICE INFORMATION	9-2163
ENGINE - 5.7L - SERVICE INFORMATION	9-2287
ENGINE - 5.9L DIESEL - SERVICE INFORMATION	9-2529
ENGINE - 8.3L - SERVICE INFORMATION	9-2422
ENGINE - ELECTRICAL DIAGNOSTICS - 3.7L/4.7L/5.7L	9-4
ENGINE - ELECTRICAL DIAGNOSTICS - DIESEL	9-1047
ENGINE - ELECTRICAL DIAGNOSTICS - SRT-10	9-1487
ENGINE BLOCK	9-2095, 9-2222, 9-2349, 9-2585
ENGINE DATA PLATE	9-2557
ENGINE TEMPERATURE GAUGE	8J-123
ETC INDICATOR	8J-125
EVAPORATIVE EMISSIONS	25-11
EVAPORATOR-A/C	24-298
EXHAUST SYSTEM	11-2
EXTERIOR HANDLE	23-33, 23-60
EXTERIOR NAME PLATES	23-86
FAN DRIVE VISCOUS	7-69
FAN-A/C CONDENSER	24-299
FASCIA-FRONT SRT-10	13-6
FASCIA-REAR SRT-10	13-11
FASTENER IDENTIFICATION	Intro.-7

Description	Group-Page
FASTENER USAGE	Intro.-10
FILTER - ENGINE OIL	9-2137, 9-2255, 9-2397, 9-2623
FILTER - FUEL / WATER SEPARATOR	14-105
FILTER - INLET	14-40
FINESSE SANDING/BUFFING AND POLISHING	23-180
FITTING, QUICK CONNECT	14-10
FLEX PLATE	9-2107, 9-2235, 9-2377
FLOOR CONSOLE	23-164
FLUID AND FILTER	21-622, 21-1052
FLUID CAPACITIES	0-7
FLUID COOLER TUBE	19-96
FLUID COOLER	19-69, 19-98
FLUID TYPES	0-3
FLYWHEEL - SRT-10	6-17
FLYWHEEL	6-16
FRAME	13-14
FRAMES & BUMPERS	13-1
FRONT - INDEPENDENT FRONT SUSPENSION	2-37
FRONT - LINK/COIL	2-68
FRONT AIR DAM	13-2
FRONT AXLE - 9 1/4 AA	3-181
FRONT AXLE - C205F	3-141
FRONT BUMPER	13-2
FRONT CROSSMEMBER	13-46
FRONT DOOR GLASS RUN WEATHERSTRIP	23-248
FRONT DOOR INNER BELT MOLDING	23-251
FRONT DOOR OUTER BELT MOLDING	23-250
FRONT FASCIA	13-3
FRONT FENDER	23-88
FRONT LAMP UNIT	8L-132
FRONT OUTPUT SHAFT SEAL	21-1368
FRONT SKID PLATE	13-49
FRONT TOW HOOK ASSEMBLY	13-51
FRONT WHEELHOUSE SPLASH SHIELD	23-100
FUEL DELIVERY - DIESEL	14-99
FUEL DELIVERY - GAS	14-1
FUEL FILL DOOR	23-89
FUEL FILTER/PRESSURE REGULATOR	14-8
FUEL GAUGE	8J-126
GAP AND FLUSH	23-257
GAUGE-ENGINE OIL TEMPERATURE	8J-135
GEAR - INDEPENDENT FRONT SUSPENSION	19-31
GEAR - LINK/COIL	19-35
GEAR SELECTOR INDICATOR	8J-127
GEAR SHIFT LEVER	19-24
GEAR-PINION/RING	3-173, 3-219, 3-256, 3-302, 3-339, 3-392
GEARTRAIN-PLANETARY	21-666
GENERATOR	8F-44
GLASS RUN CHANNEL	23-34, 23-61
GLASS	23-227
GLOVE BOX LATCH	23-129
GLOVE BOX	23-128
GOVERNOR-ELECTRONIC	21-1046
GRID-REAR WINDOW DEFOGGER	8G-12
GRILLE FRAME	23-91
GRILLE	23-90
GUIDE-SUNROOF GLASS	23-230
HALF SHAFT	3-131
HANDLE-RELEASE	5-285
HCU (HYDRAULIC CONTROL UNIT)	5-293
HEAD(S)-CYLINDER	9-2464
HEADLINER	23-166
HEADREST SLEEVE	23-193
HEADREST	23-193
HEAT SHIELDS	11-14
HEATED GLASS - ELECTRICAL DIAGNOSTICS	8G-1
HEATED GLASS - SERVICE INFORMATION	8G-6
HEATED MIRRORS - SERVICE INFORMATION	8G-13
HEATED SEAT ELEMENT	8G-20
HEATED SEAT SENSOR	8G-22
HEATED SEATS - SERVICE INFORMATION	8G-17
HEATER - INTAKE AIR	14-148
HEATER-ENGINE BLOCK	7-52
HEATER-FUEL	14-108
HIGH BEAM INDICATOR	8J-128
HINGE	23-20, 23-37, 23-63, 23-114
HOISTING	0-33
HOOD	23-116
HORN SYSTEM - ELECRICAL DIAGNOSTICS	8H-1
HORN SYSTEM - SERVICE INFORMATION	8H-19
HORN	8H-20
HOSE-DRAIN	23-233
HOSES - I.F.S.	19-71
HOSES - LINK/COIL	19-73
HOSES	19-87
HOUSING CLUTCH	6-10
HOUSING-AIR CLEANER	9-2452
HOUSING-HVAC	24-243
HUB / BEARING	2-47, 2-71
HVAC - ELECTRICAL DIAGNOSTICS	24-2
HVAC - SERVICE INFORMATION	24-190
HYDRAULIC TAPPETS	9-2500
HYDRAULIC/MECHANICAL	5-210, 5-292
IGNITION COIL CAPACITOR	8I-36
IGNITION COIL	8I-23
IGNITION CONTROL - ELECTRICAL DIAGNOSTICS	8I-1
IGNITION CONTROL - SERVICE INFORMATION	8I-5
IGNITION SWITCH - SRT-10	19-17
IGNITION SWITCH	19-13
ILLUMINATION LAMP	8L-212
INJECTOR - FUEL (EARLY)	14-132
INJECTOR - FUEL (LATE)	14-138
INJECTOR - FUEL	14-52
INSTRUMENT CLUSTER - ELECTRICAL DIAGNOSTICS	8J-2
INSTRUMENT CLUSTER -SERVICE INFORMATION	8J-98
INSTRUMENT PANEL ASSEMBLY	23-130
INSTRUMENT PANEL CENTER BEZEL	23-138
INSTRUMENT PANEL DRIVER SIDE BEZEL	23-139
INSTRUMENT PANEL HEADLAMP SWITCH BEZEL	23-141
INSTRUMENT PANEL LOWER SURROUND	23-140
INSTRUMENT PANEL TOP COVER	23-142
INTAKE/EXHAUST - VALVES/SEATS/ GUIDES	9-2473
INTERIOR HANDLE ACTUATOR	23-38, 23-68
INTERIOR	23-148
INTERNATIONAL SYMBOLS	0-1
INTERNATIONAL VEHICLE CONTROL & DISPLAY SYMBOLS	Intro.-7
IOD FUSE	8W-97-6
JOUNCE BUMPER	2-98
JUMP STARTING	0-31
KEY CYLINDER	19-20
KEY-IN IGNITION SWITCH	19-19
KNUCKLE	2-49, 2-79
LAMP OUT INDICATOR	8J-129
LAMP-DOME	8L-214
LAMP-FOG	8L-130
LAMP-GLOVE BOX	8L-221
LAMP-HIGH MOUNTED STOP	8L-126
LAMP-MARKER	8L-147
LAMP-READING	8L-217
LAMP-TAIL/STOP/TURN	8L-161
LAMP-UNDERHOOD	8L-171
LAMPS/LIGHTING - EXTERIOR - ELECTRICAL DIAGNOSTICS	8L-2
LAMPS/LIGHTING - EXTERIOR - SERVICE INFORMATION	8L-109
LAMPS/LIGHTING - INTERIOR - ELECTRICAL DIAGNOSTICS	8L-174
LAMPS/LIGHTING - INTERIOR - SERVICE INFORMATION	8L-206
LATCH RELEASE CABLE/HANDLE ASSEMBLY	23-118
LATCH STRIKER / SECONDARY CATCH	23-119
LATCH STRIKER	23-22, 23-41, 23-71
LATCH	23-21, 23-39, 23-69, 23-117
LEVER-SHIFT	21-1370, 21-1423
LICENSE PLATE LAMP	8L-144
LINE-A/C DISCHARGE	24-300
LINE-A/C LIQUID	24-309
LINE-A/C SUCTION	24-316
LINES - FUEL	14-115
LINES - VACUUM	25-33
LINES, FUEL	14-10
LINES-BRAKE	5-214
LINKAGE - INDEPENDENT FRONT SUSPENSION	19-53
LINKAGE - LINK/COIL	19-55
LOAD FLOOR SUPPORT CYLINDER	23-169
LOAD FLOOR	23-167
LOCK CYLINDER	23-43
LOW FUEL INDICATOR	8J-130
LOWER BALL JOINT	2-51, 2-75
LOWER CONTROL ARM	2-53
LOWER STEERING COUPLING	19-27
LOWER SUSPENSION ARM	2-81
LUBRICATION	9-2125, 9-2250, 9-2395, 9-2483, 9-2618
LUMBAR SUPPORT HANDLE/BEZEL	23-195
MAINTENANCE SCHEDULES	0-9
MALFUNCTION INDICATOR LAMP (MIL)	8J-131
MANIFOLD - EXHAUST	9-2141, 9-2264, 9-2407, 9-2631
MANIFOLD - INTAKE	9-2139, 9-2261, 9-2406, 9-2629
MANIFOLD-EXHAUST	9-2462
MANIFOLD-INTAKE	9-2456
MANUAL TRANSMISSION - G56 - SERVICE INFORMATION	21-176
MANUAL TRANSMISSION - GETRAG 238 - SERVICE INFORMATION	21-108
MANUAL TRANSMISSION - NV4500 - SERVICE INFORMATION	21-2
MANUAL TRANSMISSION - NV5600 - SERVICE INFORMATION	21-57
MANUAL TRANSMISSION - T56 - SERVICE INFORMATION	21-235
MASTER CYLINDER	5-251
MECHANISM-SHIFT	21-53, 21-669, 21-1118
METRIC SYSTEM	Intro.-11
MIRROR-AUTOMATIC DAY / NIGHT	8N-87
MODULE - FUEL PUMP	14-16
MODULE - FUEL TANK	14-121
MODULE-ANTI-LOCK BRAKES	8E-103
MODULE-COMPASS TEMPERATURE	8M-26
MODULE-ENGINE CONTROL - DIESEL	8E-105
MODULE-FRONT CONTROL	8E-115
MODULE-FUEL PUMP	14-15
MODULE-HANDS FREE	8T-88
MODULE-HEATED SEATS	8E-118
MODULE-HEATED SEATS	8G-25
MODULE-INTEGRATED POWER	8W-97-3
MODULE-OCCUPANT RESTRAINT CONTROLLER	8O-255
MODULE-POWERTRAIN CONTROL	8E-120
MODULE-REMOTE KEYLESS ENTRY	8N-78
MODULE-SENTRY KEY IMMOBILIZER	8E-128
MODULE-TRANSFER CASE CONTROL	8E-134
MODULE-TRANSMISSION CONTROL	8E-140
MOTOR - DOOR LOCK	8N-76
MOTOR	23-234
MOTOR-ADJUSTABLE PEDALS	5-208
MOTOR-BLOWER	24-263
MOTOR-IAC	14-59
MOTOR-SHIFT	21-1557
MOTOR-SUNROOF	8N-100
MOUNT - FRONT	9-2120, 9-2245, 9-2391, 9-2615
MOUNT - REAR	9-2124, 9-2249, 9-2394, 9-2617
MOUNT-DISC BRAKE CALIPER ADAPTER	5-247
MOUNTS-ENGINE	9-2454
MUFFLER	11-17
NAVIGATION/TELECOMMUNICATION - ELECTRICAL DIAGNOSTICS	8T-1
NAVIGATION/TELECOMMUNICATION - SERVICE INFORMATION	8T-85
ODOMETER	8J-132
OIL PRESSURE GAUGE	8J-133
OIL	9-2138, 9-2253, 9-2396, 9-2484, 9-2622
OIL-A/C REFRIGERANT	24-325
OPENING DIMENSIONS	23-261
ORVR	25-18
OUTLETS-AIR	24-266
OVERHEAD CONSOLE - ELECTRICAL DIAGNOSTICS	8M-1
OVERHEAD CONSOLE - SERVICE INFORMATION	8M-22
PADS - BRAKE	5-219
PAINT CODE	23-179
PAINT TOUCH-UP	23-179
PAINT	23-178
PAN - ENGINE OIL	9-2255, 9-2398, 9-2623
PAN -ENGINE OIL	9-2129
PAN-OIL	9-2488
PARK BRAKE SWITCH	8L-158

Description	Group-Page
PARKING BRAKE	5-272
PARTS & LUBRICANT RECOMMENDATION	0-2
PEDAL - ACCELERATOR	14-43
PEDAL	5-256, 5-282
PIPE EXHAUST	11-11
PISTON & CONNECTING ROD	9-2108, 9-2380, 9-2608
PITMAN ARM	19-59
PITMAN SHAFT SEAL	19-42
PITMAN SHAFT	19-50
PLATE-SUPPORT	5-268
PLUGS - CORE	9-2226
PLUMBING	24-269
POWER DISTRIBUTION	8W-97-1
POWER HOP DAMPER - SRT-10 - STANDARD CAB	2-99
POWER LOCKS - ELECTRICAL DIAGNOSTICS	8N-1
POWER LOCKS - SERVICE INFORMATION	8N-73
POWER MIRRORS - SERVICE INFORMATION	8N-86
POWER OUTLET-CONSOLE	8W-97-9
POWER OUTLET-INSTRUMENT PANEL	8W-97-7
POWER SEAT TRACK	8N-91
POWER SEATS - SERVICE INFORMATION	8N-90
POWER TOP - SUNROOF - SERVICE INFORMATION	8N-97
POWER WINDOWS - SERVICE INFORMATION	8N-105
PROPELLER SHAFT	3-99
PULLEY	19-76, 19-95
PUMP - ENGINE OIL	9-2133, 9-2258, 9-2402, 9-2626
PUMP - FUEL INJECTION	14-110
PUMP - FUEL TRANSFER	14-122
PUMP - LEAK DETECTION	25-13
PUMP - SRT-10	19-78
PUMP	19-63
PUMP-NATURAL VAC LEAK DETECTION	25-19
PUMP-OIL	9-2492
PUMP-OIL	21-651, 21-1067
PUMP-WASHER-WINDSHIELD	8R-60
PUMP-WATER	7-85
PUSH-BUTTON STARTER SWITCH	8I-40
RADIATOR FAN	7-46
RADIATOR	7-76
RADIO	8A-67
RAIL - FUEL INJECTOR	14-144
RAIL - FUEL	14-17
REAR AXLE - 10 1/2 AA	3-265
REAR AXLE - 11 1/2 AA	3-310
REAR AXLE - 248RBI	3-347
REAR AXLE - 9 1/4	3-226
REAR BUMPER	13-5
REAR CAB BACK PANEL TRIM	23-170
REAR DOOR GLASS RUN WEATHERSTRIP	23-253
REAR DOOR INNER BELT MOLDING	23-255
REAR DOOR OUTER BELT MOLDING	23-254
REAR DOOR SILL TRIM COVER	23-173
REAR FENDER-QUAD CAB MODELS	23-92
REAR VIEW MIRROR	23-173
REAR WHEELHOUSE SPLASH SHIELD	23-101
RECEIVER-SATELLITE	8A-70
REFRIGERANT-A/C	24-327
RELAY - FUEL HEATER	14-109
RELAY - FUEL PUMP	14-57
RELAY - INTAKE AIR HEATER	14-150
RELAY-AUTO SHUT DOWN	8I-11
RELAY-CLUTCH-A/C COMPRESSOR	24-226
RELAY-FOG LAMP	8L-132
RELAY-HEATED MIRROR	8G-14
RELAY-PARK LAMP	8L-160
RELAY-REAR WINDOW DEFOGGER	8G-10
RELAY-TRAILER TOW	8L-168
RELAY-TRANSMISSION CONTROL	21-678
RELEASE HANDLE	23-23
RESERVOIR	19-76, 19-94
RESERVOIR-FLUID	5-250
RESERVOIR-VACUUM	8P-10
RESISTOR-BLOWER MOTOR	24-228
RESTRAINTS - ELECTRICAL DIAGNOSTICS	8O-2
RESTRAINTS - SERVICE INFORMATION	8O-246
RETAINER - CRANK REAR OIL - SEAL	9-2376
RETAINER - CRANK REAR OIL SEAL	9-2602
RETAINER-OVERRUNNING CLUTCH CAM/OVERDRIVE PISTON	21-1099
RETAINER/BULKHEAD-4C	21-614
RINGS - PISTON	9-2115, 9-2240, 9-2384, 9-2612
RINGS-PISTON	9-2509
ROCKER ARM - VALVE	9-2079, 9-2093, 9-2219
ROCKER ARM	9-2335, 9-2581
ROD - PISTON & CONNECTING	9-2236
ROD-PISTON & CONNECTING	9-2504
ROTORS	5-263
SEAL - CRANKSHAFT OIL - FRONT	9-2104, 9-2232, 9-2373, 9-2599
SEAL - CRANKSHAFT OIL - REAR	9-2105, 9-2233, 9-2374, 9-2601
SEAL-ADAPTER HOUSING - NV5600	21-105
SEAL-ADAPTER HOUSING	21-52, 21-619
SEAL-AXLE SHAFT	3-163, 3-201, 3-244, 3-373
SEAL-CRANKSHAFT OIL- FRONT	9-2514
SEAL-EXTENSION HOUSING - NV5600	21-105
SEAL-EXTENSION HOUSING	21-52, 21-291, 21-1052, 21-1367, 21-1459, 21-1499
SEAL-FRONT OUTPUT SHAFT	21-1420, 21-1460, 21-1500, 21-1553
SEAL-OIL PUMP FRONT	21-660
SEAL-OIL-REAR-CRANK AND RETAINER	9-2515
SEAL-PINION	3-166, 3-204, 3-246, 3-284, 3-328, 3-376
SEALER LOCATIONS	23-264
SEALS - VALVE GUIDE	9-2080, 9-2094, 9-2339
SEALS-VALVE GUIDE	9-2222
SEAT - FRONT	23-193
SEAT - REAR	23-198
SEAT BACK - REAR	23-200
SEAT BACK CUSHION / COVER - FRONT	23-197
SEAT BACK CUSHION / COVER - REAR	23-200
SEAT BACK REAR - FOOTMANS LOOP BRACKETS	23-202
SEAT BELT & RETRACTOR	8O-301
SEAT BELT BUCKLE	8O-292
SEAT BELT TENSION REDUCER	8O-318
SEAT BELT TURNING LOOP ADJUSTER	8O-319
SEAT BELT	8O-291
SEAT BELT-TENSIONER	8O-317
SEAT CUSHION / COVER - FRONT	23-197
SEAT CUSHION / COVER - REAR	23-201
SEAT CUSHION FRAME - REAR	23-201
SEAT TRACK	23-197
SEATBELT INDICATOR	8J-140
SECURITY INDICATOR	8J-141
SENSOR - FUEL LEVEL SENDING UNIT	14-8, 14-114
SENSOR - FUEL PRESSURE	14-118
SENSOR - INLET AIR TEMPERATURE	14-64
SENSOR - OXYGEN	14-80
SENSOR- WHEEL SPEED-ABS-FRONT	5-289
SENSOR-ACCELERATOR PEDAL POSITION	14-44, 14-127
SENSOR-AMBIENT AIR TEMPERATURE	8M-37
SENSOR-CAMSHAFT POSITION	14-128
SENSOR-CAMSHAFT POSITION	8I-13
SENSOR-CRANKSHAFT POSITION	14-45, 14-129
SENSOR-ENGINE COOLANT TEMPERATURE	7-55
SENSOR-EVAPORATOR TEMPERATURE	24-231
SENSOR-INPUT SPEED	21-645
SENSOR-INTAKE AIR TEMPERATURE	14-65
SENSOR-KNOCK	8I-31
SENSOR-LINE PRESSURE	21-662
SENSOR-MAP	14-72, 14-153
SENSOR-MODE	21-1461, 21-1501, 21-1554
SENSOR-OIL PRESSURE	9-2497
SENSOR-OIL TEMPERATURE	9-2498
SENSOR-OUTPUT SPEED	21-661
SENSOR-POSITION	21-1421
SENSOR-SIDE IMPACT	8O-280
SENSOR-SPEED	21-1119
SENSOR-TEMPERATURE/PRESSURE-INTAKE	14-146
SENSOR-TEMPERATURE/PRESSURE-MAP	14-152
SENSOR-THROTTLE POSITION	14-92
SENSOR-TRANSMISSION RANGE	21-678, 21-1135
SENSOR-TRANSMISSION TEMPERATURE	21-682, 21-1140
SENSOR-WASHER FLUID LEVEL	8R-54
SENSOR-WATER IN FUEL	14-124
SENSOR-WHEEL SPEED-ABS-REAR	5-291
SERVICE 4WD INDICATOR	8J-142
SERVO	8P-6
SERVO-FRONT	21-1061
SERVO-REAR	21-1117
SHAFT - BALANCE	9-2149
SHAFT - IDLER	9-2150, 9-2284
SHAFT-AXLE	3-163, 3-198, 3-242, 3-281, 3-325, 3-369
SHAFT-INPUT	21-291
SHAFT-PLANETARY GEARTRAIN/ OUTPUT	21-1103
SHAFT-PROPELLER HD FRONT	3-108
SHAFT-PROPELLER LD FRONT	3-107
SHAFT-PROPELLER REAR	3-109
SHOCK	2-58, 2-82, 2-105
SHOES	5-278
SIDE VIEW MIRROR FLAG	23-51
SIDE VIEW MIRROR GLASS	23-96
SIDE VIEW MIRROR	23-95
SOLENOID - EVAP/PURGE	25-12
SOLENOID-REVERSE LOCK-OUT	21-293
SOLENOID-REVERSE LOCKOUT	21-293
SPARE TIRE	22-20
SPARK PLUG CABLE	8I-37
SPARK PLUG	8I-34
SPEAKER	8A-74
SPEED CONTROL	8P-1
SPEEDOMETER	8J-143
SPOILER - SRT-10	23-110
SPRING TIP INSERTS	2-112
SPRING	2-56, 2-85, 2-105
SPRINGS - VALVE	9-2094, 9-2339
SPRINGS VALVE	9-2080
SPRINGS-VALVE	9-2220
SPRINGS/SEALS-VALVE	9-2470
STABILIZER BAR - SRT-10 - STANDARD CAB	2-101
STABILIZER BAR	2-60, 2-86
STABILIZER LINK - SRT-10 - STANDARD CAB	2-104
STABILIZER LINK	2-62, 2-92
STARTER MOTOR RELAY	8F-65
STARTER MOTOR	8F-59
STARTING	8F-52
STEERING COLUMN OPENING COVER	23-143
STEERING COLUMN OPENING SUPPORT BRACKET	23-144
STEERING GEAR INPUT SHAFT SEAL	19-45
STEERING WHEEL	19-21
STEERING	19-1
STORAGE BIN	23-146
STRUCTURAL ADHESIVE LOCATIONS	23-274
SUN VISOR SUPPORT	23-176
SUN VISOR	23-175
SUNROOF - SERVICE INFORMATION	23-214
SUNSHADE	23-235
SUPPORT CYLINDER	23-120
SUPPRESSION COMPONENTS - RADIO NOISE	8A-82
SWITCH - OIL PRESSURE	9-2132, 9-2256, 9-2625
SWITCH - POWER LOCK	8N-77
SWITCH - POWER MIRROR	8N-89
SWITCH - PTO	14-81, 14-153
SWITCH - REMOTE RADIO	8A-86
SWITCH - SUNROOF	8N-103
SWITCH - WINDOW	8N-106
SWITCH - WINDOW/DOOR LOCK	8N-79
SWITCH CLUTCH PEDAL - SRT-10	6-23
SWITCH CLUTCH PEDAL POSITION	6-23
SWITCH-ADJUSTABLE PEDALS	5-207
SWITCH-BACK UP LAMP	8L-122
SWITCH-BLOWER MOTOR	24-234
SWITCH-DOOR KEY POSITION	8Q-61
SWITCH-HEADLAMP	8L-139
SWITCH-HEATED SEAT	8G-23
SWITCH-HORN	8H-21
SWITCH-MULTIFUNCTION	8L-152
SWITCH-PASSENGER AIRBAG DISARM	8O-284
SWITCH-POWER SEAT	8N-93
SWITCH-POWER STEERING PRESSURE	19-75
SWITCH-REAR WINDOW DEFOGGER	8G-9
SWITCH-SEAT BELT DRIVER	8O-315
SWITCH-SELECTOR	21-1463, 21-1555
SWITCH-STOP LAMP	8L-123
SWITCH-SUNROOF	23-236

Description	Group-Page
SWITCH-TOW/HAUL OVERDRIVE	21-664, 21-1133
SWITCH-TRANSFER CASE SELECTOR	21-1502
SYSTEM-AIR INTAKE	9-2450
SYSTEM-BRAKE TRANSMISSION SHIFT INTERLOCK	21-620, 21-1045
TACHOMETER	8J-144
TAILGATE	23-24
TAILPIPE	11-20
TANK - FUEL	14-30, 14-120
TAPPETS - HYDRAULIC ROLLER	9-2378
TAPPETS - VALVE	9-2604
TENSIONER - TIMING CHAIN	9-2419
TENSIONER-BELT	7-25
TENSIONER-CABLE	5-284
TERMINAL	8W-01-16
THERMOSTAT-ENGINE COOLANT	7-61
THREADED HOLE REPAIR	Intro.-10
THROTTLE BODY	14-81
TIE ROD END	19-53, 19-60
TILT LEVER KNOB RELEASE	19-21
TIMING CHAIN & SPROCKETS	9-2153, 9-2276, 9-2413
TIMING CHAIN AND SPROCKETS	9-2480
TIRES	22-7
TIRES/WHEELS	22-2
TORQUE REFERENCES	Intro.-13
TORSION BAR	2-63
TOW/HAUL INDICATOR	8J-145
TOWING	0-37
TRACK BAR	19-61
TRAILER HITCH	13-56
TRAILER TOW CONNECTOR	8L-166
TRANS TEMP INDICATOR	8J-146
TRANSDUCER-A/C PRESSURE	24-234
TRANSFER CASE - ELECTRICAL DIAGNOSTICS (ETC)	21-1196
TRANSFER CASE - ELECTRICAL DIAGNOSTICS (POWER WAGON)	21-1295
TRANSFER CASE - NV241 GENII - SERVICE INFORMATION	21-1331
TRANSFER CASE - NV243 - SERVICE INFORMATION	21-1426
TRANSFER CASE - NV244 GENII - SERVICE INFORMATION	21-1466
TRANSFER CASE - NV271 - SERVICE INFORMATION	21-1373
TRANSFER CASE - NV273 - SERVICE INFORMATION	21-1505
TRANSFER CASE SKID PLATE	13-60
TRANSMISSION CROSSMEMBER	13-53
TRANSMISSION	7-94
TRANSMITTER-REMOTE KEYLESS ENTRY	8N-83
TRANSPONDER KEY	8Q-60
TRIM PANEL	23-44, 23-73
TRIM RING	23-237
TUBE-A/C ORIFICE	24-327
TURBOCHARGER SYSTEM	11-23
TURBOCHARGER	11-24
TURN SIGNAL INDICATOR	8J-147
UNDER SEAT STORAGE BIN COVERING	23-192
UNDER SEAT STORAGE BIN LATCH	23-192
UNDER SEAT STORAGE BIN LID	23-191
UNDER SEAT STORAGE BIN	23-192
UNIT-OVERDRIVE	21-1075
UNIVERSAL JOINTS-DOUBLE CARDAN	3-123
UNIVERSAL JOINTS-SINGLE CARDAN	3-112
UNIVERSAL TRANSMITTER	8M-34
UPPER BALL JOINT	2-65, 2-77
UPPER CONTROL ARM	2-66
UPPER RADIATOR CROSSMEMBER	23-99
UPPER STEERING COUPLING	19-25
UPPER SUSPENSION ARM	2-79
UPSHIFT INDICATOR	8J-148
VALVE - CASCADE OVERFLOW	14-123
VALVE - FUEL PRESSURE LIMITING	14-119
VALVE - OIL PRESSURE RELIEF	9-2625
VALVE - PCV	25-27
VALVE TIMING	9-2144, 9-2268, 9-2632
VALVE-EGR	25-46
VALVE-RWAL	5-295
VALVE-SOLENOID SWITCH	21-670
VALVE-TORQUE CONVERTER DRAINBACK	21-1132
VALVES & SEATS - INTAKE/ EXHAUST	9-2076, 9-2217, 9-2333, 9-2573
VANITY LAMP	8L-223
VEHICLE CERTIFICATION LABEL	Intro.-14
VEHICLE EMISSION CONTROL INFORMATION (VECI)	Intro.-3
VEHICLE IDENTIFICATION NUMBER	Intro.-1
VEHICLE THEFT SECURITY - ELECTRICAL DIAGNOSTICS	8Q-1
VEHICLE THEFT SECURITY - SERVICE INFORMATION	8Q-53
VOLTAGE GAUGE	8J-149
VOLTAGE REGULATOR	8F-51
WAIT-TO-START INDICATOR	8J-151
WASHER FLUID INDICATOR	8J-151
WASHER HOSES/TUBES	8R-57
WASHER NOZZLE	8R-58
WASHER RESERVOIR	8R-63
WASTEGATE - ELECTRONIC ACTUATOR	11-31
WATER-IN-FUEL INDICATOR	8J-152
WATERDAM	23-46, 23-74
WELD LOCATIONS	23-282
WHEEL ALIGNMENT	2-28
WHEEL COVER	22-19
WHEEL-TONE	5-292
WHEELS	22-13
WINDOW REGULATOR - MANUAL	23-49, 23-77
WINDOW REGULATOR - POWER	23-47, 23-75
WINDSHIELD	23-207
WIPER ARM	8R-67
WIPER BLADE	8R-69
WIPER HIGH/LOW RELAY	8R-71
WIPER MODULE	8R-72
WIPER ON/OFF RELAY	8R-75
WIPERS/WASHERS - ELECTRICAL DIAGNOSTICS	8R-1
WIPERS/WASHERS - SERVICE INFORMATION	8R-46
WIRING DIAGRAM INFORMATION	8W-01-1
WIRING-TRAILER TOW	8L-169

BODY DIAGNOSTICS

Description	Group-Page
45RFE/545RFE TRANSMISSION VERIFICATION TEST - VER 1	8E-148
A/C SWITCH FAULT	24-3
ABS INDICATOR OUTPUT CIRCUIT OPEN OR SHORT TO GROUND	8J-3
ABS INDICATOR OUTPUT CIRCUIT OVERLOAD OR SHORT TO BATTERY	8J-4
ABS MESSAGES NOT RECEIVED	8J-31
ACCELEROMETER 1	8O-3
ACCELEROMETER 2	8O-4
ACM MESSAGES NOT RECEIVED	8J-32
AIRBAG INDICATOR OUTPUT CIRCUIT OPEN OR SHORT TO GROUND	8J-5
AIRBAG WARNING INDICATOR OPEN	8O-5
AIRBAG WARNING INDICATOR OUTPUT CIRCUIT OVERLOAD OR SHORT TO BATTERY	8J-6
AIRBAG WARNING INDICATOR SHORT	8O-8
ALL DOOR LOCK OUTPUT CIRCUIT SHORT TO GROUND OR VOLTAGE	8N-2
ALL DOOR UNLOCK OUTPUT CIRCUIT SHORT TO GROUND OR VOLTAGE	8N-7
ANTENNA FAILURE	8Q-3
BACKLIGHT DIMMING RX FAILURE	24-4
BATTERY 1 VOLTAGE OPEN (FCM)	8E-5
BATTERY 2 VOLTAGE OPEN (FCM)	8E-8
BATTERY VOLTAGE HIGH	8A-110
BATTERY VOLTAGE LOW	8A-108
BATTERY VOLTAGE OPEN (FCM)	8E-3
BATTERY VOLTAGE OPEN	8J-37
BLEND CALIBRATION FAULT (DUAL-ZONE)	24-6
BLEND CALIBRATION FAULT (SINGLE-ZONE)	24-11
BLEND CIRCUIT SHORTED TO GROUND (DUAL-ZONE)	24-16
BLEND CIRCUIT SHORTED TO GROUND (SINGLE-ZONE)	24-17
BLEND CIRCUIT SHORTED TO IGN OR BATT (DUAL-ZONE)	24-18
BLEND CIRCUIT SHORTED TO IGN OR BATT (SINGLE-ZONE)	24-19
BLEND OVERCURRENT (DUAL-ZONE)	24-20
BLEND OVERCURRENT (SINGLE-ZONE)	24-26
BLOWER NOT ON HIGH	24-31
BODY VERIFICATION TEST - VER 1	8E-116
BRAKE INDICATOR OUTPUT CIRCUIT OPEN OR SHORT TO GROUND	8J-7
BRAKE INDICATOR OUTPUT CIRCUIT OVERLOAD OR SHORT TO BATT	8J-8
BTSI OUTPUT CIRCUIT HIGH	8J-40
BTSI OUTPUT CIRCUIT SHORTED OR OPEN	8J-43
BUS SHORTED TO BATTERY (FCM)	8E-11
BUS SHORTED TO GROUND (FCM)	8E-12
C2100–BATTERY VOLTAGE LOW (FDCM)	8E-95
C2101–BATTERY VOLTAGE HIGH (FDCM)	8E-97
C2201-FDCM ECU INTERNAL (FDCM)	8E-99
CABIN EQ MISMATCH	8A-105
CALIBRATION MISMATCH	8O-11
CARGO LAMP INDICATOR OUTPUT CIRCUIT OPEN OR SHORT TO GROUND	8J-9
CARGO LAMP INDICATOR OUTPUT CIRCUIT OVERLOAD SHORT TO BATT	8J-10
CHANNEL X CIRCUIT SHORT TO GROUND	8A-97
CHANNEL X DC OFFSET	8A-96
CHANNEL X OPEN	8A-101
CHANNEL X SHORT TO BATTERY	8A-99
CHANNEL X SHORT TOGETHER	8A-103
CHECK GAUGES INDICATOR OUTPUT CIRCUIT OPEN OR SHORT TO GROUND	8J-11
CHECK GAUGES INDICATOR OUTPUT CIRCUIT OVERLOAD OR SHORT BATT	8J-12
CHECKSUM FAILURE	24-33
CLUSTER MESSAGE MISMATCH	8O-12
COMMON DRIVER SHORTED TO GROUND	24-34
COMMON DRIVER SHORTED TO IGN OR BATT	24-35
COOLDOWN TEST SENSOR FAILURE	24-36
COOLDOWN TEST TOO COLD TO START	24-37
COOLDOWN TIME EXCESSIVE FAULT	24-42
COP FAILURE	8Q-4
DEFOG RELAY CONTROL CKT SHORTED TO BATT	24-44
DEFOG RELAY CONTROL CKT SHORTED TO BATT	8G-2
DEFOG SWITCH FAULT	24-47
DEPLOYMENT DATA RECORD FULL	8O-14
DOOR AJAR INDICATOR OUTPUT CIRCUIT OPEN OR SHORT TO GROUND	8J-13
DOOR AJAR INDICATOR OUTPUT CIRCUIT OVERLOAD SHORT TO BATT	8J-14
DRIVER CYLINDER LOCK SWITCH INPUT CIRCUIT SHORTED (WITH VTSS ONLY)	8N-17
DRIVER CYLINDER LOCK SWITCH INPUT STUCK (WITH VTSS ONLY)	8N-20
DRIVER DOOR LOCK SWITCH INPUT CIRCUIT OPEN OR SHORT TO VOLTAGE	8N-23
DRIVER DOOR LOCK SWITCH INPUT CIRCUIT SHORTED	8N-27
DRIVER DOOR LOCK SWITCH INPUT CIRCUIT STUCK	8N-30
DRIVER DOOR UNLOCK OUTPUT CIRCUIT SHORT TO GROUND OR VOLTAGE	8N-12
DRIVER SEAT BELT TENSIONER CIRCUIT OPEN	8O-15
DRIVER SEAT BELT TENSIONER CIRCUIT SHORT	8O-20
DRIVER SEAT BELT TENSIONER SHORT TO BATTERY	8O-24
DRIVER SEAT BELT TENSIONER SHORT TO GROUND	8O-28
DRIVER SQUIB 1 CIRCUIT OPEN	8O-32
DRIVER SQUIB 1 CIRCUIT SHORT	8O-37
DRIVER SQUIB 1 SHORT TO BATTERY	8O-42
DRIVER SQUIB 1 SHORT TO GROUND	8O-47
DRIVER SQUIB 2 CIRCUIT OPEN	8O-52
DRIVER SQUIB 2 CIRCUIT SHORT	8O-57
DRIVER SQUIB 2 SHORT TO BATTERY	8O-62
DRIVER SQUIB 2 SHORT TO GROUND	8O-67
EEPROM CHECKSUM FAILURE (FCM)	8E-13
EEPROM FAILURE	8Q-5
ENGINE GAUGE RX FAILURE	24-48
ETC INDICATIOR OUTPUT CIRCUIT OVERLOAD OR SHORT TO BATT	8J-15
ETC INDICATOR OUTPUT CIRCUIT OPEN OR SHORT TO GROUND	8J-16
EVAPORATOR TEMPERATURE SENSOR CIRCUIT OPEN	24-50
EVAPORATOR TEMPERATURE SENSOR CIRCUIT SHORTED	24-54
FCM MESSAGES NOT RECEIVED	8J-33
FCM-FRONT FOG LAMP RELAY OUTPUT CIRCUIT HIGH	8L-3
FCM-FRONT FOG LAMP RELAY OUTPUT CIRCUIT LOW	8L-6
FCM-FRONT FOG LAMP RELAY OUTPUT CIRCUIT OPEN	8L-9
FCM-FRONT LEFT TURN OUTPUT CIRCUIT LOW	8L-12
FCM-FRONT LEFT TURN OUTPUT CIRCUIT OPEN	8L-15
FCM-FRONT RIGHT TURN OUTPUT CIRCUIT LOW	8L-18
FCM-FRONT RIGHT TURN OUTPUT CIRCUIT OPEN	8L-21
FCM-LEFT HIGHBEAM OUTPUT CIRCUIT LOW	8L-30
FCM-LEFT HIGHBEAM OUTPUT CIRCUIT OPEN	8L-33
FCM-LEFT LOWBEAM OUTPUT CIRCUIT LOW	8L-36
FCM-LEFT LOWBEAM OUTPUT CIRCUIT OPEN	8L-39
FCM-LEFT STOP LAMP OUTPUT CIRCUIT LOW	8L-42
FCM-LEFT STOP LAMP OUTPUT CIRCUIT OPEN	8L-45
FCM-LEFT TRAILER RELAY OUTPUT CIRCUIT HIGH	8L-48
FCM-LEFT TRAILER RELAY OUTPUT CIRCUIT LOW	8L-50
FCM-LEFT TRAILER RELAY OUTPUT CIRCUIT OPEN	8L-52
FCM-PARK LAMP RELAY OUTPUT CIRCUIT HIGH	8L-55
FCM-PARK LAMP RELAY OUTPUT CIRCUIT LOW	8L-58
FCM-PARK LAMP RELAY OUTPUT CIRCUIT OPEN	8L-61
FCM-REAR LEFT TURN OUTPUT CIRCUIT LOW	8L-64
FCM-REAR LEFT TURN OUTPUT CIRCUIT OPEN	8L-67
FCM-REAR RIGHT TURN OUTPUT CIRCUIT LOW	8L-70
FCM-REAR RIGHT TURN OUTPUT CIRCUIT OPEN	8L-73
FCM-RIGHT HIGHBEAM OUTPUT CIRCUIT LOW	8L-76
FCM-RIGHT HIGHBEAM OUTPUT CIRCUIT OPEN	8L-79
FCM-RIGHT LOWBEAM OUTPUT CIRCUIT LOW	8L-82
FCM-RIGHT LOWBEAM OUTPUT CIRCUIT OPEN	8L-85
FCM-RIGHT STOP LAMP OUTPUT CIRCUIT LOW	8L-88
FCM-RIGHT STOP LAMP OUTPUT CIRCUIT OPEN	8L-91
FCM-RIGHT TRAILER RELAY OUTPUT CIRCUIT HIGH	8L-94
FCM-RIGHT TRAILER RELAY OUTPUT CIRCUIT LOW	8L-96
FCM-RIGHT TRAILER RELAY OUTPUT CIRCUIT OPEN	8L-98
FCM-WASHER FLUID LEVEL SENSOR CIRCUIT FAILURE	8R-2
FCM-WASHER PUMP OUTPUT CIRCUIT LOW	8R-6

Description	Group-Page
FCM-WASHER PUMP OUTPUT CIRCUIT OPEN	8R-9
FCM-WIPER ON-OFF RELAY OUTPUT CIRCUIT HIGH	8R-13
FCM-WIPER ON-OFF RELAY OUTPUT CIRCUIT LOW	8R-19
FCM-WIPER ON-OFF RELAY OUTPUT CIRCUIT OPEN	8R-16
FCM-WIPER PARK SWITCH INPUT PERFORMANCE	8R-22
FCM-WIPER SPEED RELAY OUTPUT CIRCUIT HIGH	8R-26
FCM-WIPER SPEED RELAY OUTPUT CIRCUIT LOW	8R-29
FCM-WIPER SPEED RELAY OUTPUT CIRCUIT OPEN	8R-32
FUEL INDICATOR CIRCUIT OPEN OR SHORT TO GROUND	8J-17
FUEL INDICATOR CIRCUIT OVERLOAD SHORT TO BATT	8J-18
HIGH BEAM INDICATOR CIRCUIT OPEN SHORT TO GROUND	8J-19
HIGH BEAM INDICATOR CIRCUIT OVERLOAD OR SHORT TO BATT	8J-20
HORN RELAY CONTROL CIRCUIT HIGH	8H-2
HORN RELAY CONTROL CIRCUIT LOW	8H-5
HORN RELAY CONTROL CIRCUIT OPEN	8H-8
IGNITION RUN-START CIRCUIT RATIONALITY CHECK	8J-47
IGNITION UNLOCK CIRCUIT RATIONALITY CHECK	8J-48
INCORRECT ODOMETER VALUE FOUND	8J-49
INTERMITTENT CONDITION	8Q-2
INTERNAL 1	8O-72
INTERNAL 2	8O-73
INTERNAL BOOTLOADER CHECKSUM FAILURE (FCM)	8E-14
INTERNAL FAULT	8Q-6
INTERNAL FLASH MEMORY CHECKSUM FAILURE (FCM)	8E-15
INTERNAL MODULE BOOTLOADER FAILURE	8J-50
INTERNAL MODULE FLASH MEMORY CHECKSUM FAILURE	8J-51
LEFT CURTAIN SQUIB 1 CIRCUIT OPEN	8O-74
LEFT CURTAIN SQUIB 1 CIRCUIT SHORT	8O-79
LEFT CURTAIN SQUIB 1 SHORT TO BATTERY	8O-84
LEFT CURTAIN SQUIB 1 SHORT TO GROUND	8O-89
LEFT FRONT INPUT NO ACTIVITY	8A-40
LEFT REAR CHANNEL SHORT ACROSS	8A-21
LEFT REAR INPUT NO ACTIVITY	8A-44
LEFT SIDE IMPACT SENSOR 1 INTERNAL 1	8O-93
LOOPBACK FAILURE - INTERNAL ERROR	8A-90
LOOPBACK TEST FAILURE	24-57
LOSS OF IGNITION RUN - START	8O-99
LOSS OF IGNITION RUN ONLY	8O-105
LOW VOLTAGE LEVEL	8A-48
MIC MESSAGES NOT RECEIVED (FCM)	8E-16
MIC-CARGO LAMP OUTPUT CIRCUIT SHORTED OR OPEN	8L-175
MIC-COURTESY LAMP OUTPUT CIRCUIT SHORTED OR OPEN	8L-198
MIC-GLOVEBOX-MAP LAMP OUTPUT CIRCUIT SHORTED OR OPEN	8L-201
MIC-HEADLAMP SWITCH INPUT CIRCUIT OPEN	8L-24
MIC-HEADLAMP SWITCH INPUT CIRCUIT SHORTED	8L-27
MIC-TURN HAZARD SWITCH INPUT CIRCUIT OPEN	8L-101
MIC-TURN HAZARD SWITCH INPUT CIRCUIT SHORTED	8L-104
MIC-WASH-BEAM INPUT CIRCUIT SHORTED	8R-35
MIC-WIPER SWITCH INPUT CIRCUIT OPEN	8R-38
MIC-WIPER SWITCH INPUT CIRCUIT SHORTED	8R-41
MIL INDICATOR OUTPUT CIRCUIT OPEN OR SHORT TO GROUND	8J-21
MIL INDICATOR OUTPUT CIRCUIT OVERLOAD OR SHORT TO BATTERY	8J-22
MISSING CURRENT VIN	8O-110
MODE 1 CALIBRATION FAULT	24-58
MODE 1 CIRCUIT SHORTED TO GROUND	24-63
MODE 1 CIRCUIT SHORTED TO IGN OR BATT	24-64
MODE 1 OVERCURRENT (DUAL-ZONE)	24-65
MODE 1 OVERCURRENT (SINGLE-ZONE)	24-71
MODE 2 CALIBRATION FAULT	24-76
MODE 2 CIRCUIT SHORTED TO GROUND	24-81
MODE 2 CIRCUIT SHORTED TO IGN OR BATT	24-82
MODE 2 OVERCURRENT (DUAL-ZONE)	24-83
MODE 2 OVERCURRENT (SINGLE-ZONE)	24-89
MODULE NOT CONFIGURED FOR PAB OFF SWITCH	8O-114
NO ANTENNA CONNECTION	8A-2
NO CLUSTER MESSAGE	8O-118
NO COMMUNICATION WITH RADIO	8A-94
NO LEFT SIDE IMPACT SENSOR 1 COMMUNICATION	8O-120
NO PCI LOOPBACK	8O-126
NO PCI TRANSMISSION	8O-128
NO RIGHT SIDE IMPACT SENSOR 1 COMMUNICATION	8O-130
OCCUPANT CLASSIFICATION MODULE CONFIGURATION MISMATCH	8O-136
OUTPUT DRIVER 1	8O-139
PASSENGER AIRBAG ON-OFF SWITCH OPEN	8O-150
PASSENGER AIRBAG ON-OFF SWITCH SHORT TO BATTERY	8O-155
PASSENGER AIRBAG ON-OFF SWITCH SHORT TO GROUND	8O-159
PASSENGER DOOR LOCK SWITCH INPUT CIRCUIT OPEN OR SHORT TO VOLTAGE	8N-33
PASSENGER DOOR LOCK SWITCH INPUT CIRCUIT SHORTED	8N-37
PASSENGER DOOR LOCK SWITCH INPUT CIRCUIT STUCK	8N-40
PASSENGER OFF INDICATOR CIRCUIT SHORT TO BATTERY	8O-140
PASSENGER OFF INDICATOR CIRCUIT SHORT TO GROUND	8O-145
PASSENGER SEAT BELT TENSIONER CIRCUIT OPEN	8O-163
PASSENGER SEAT BELT TENSIONER CIRCUIT SHORT	8O-168
PASSENGER SEAT BELT TENSIONER SHORT TO BATTERY	8O-172
PASSENGER SEAT BELT TENSIONER SHORT TO GROUND	8O-176
PASSENGER SQUIB 1 CIRCUIT OPEN	8O-180
PASSENGER SQUIB 1 CIRCUIT SHORT	8O-185
PASSENGER SQUIB 1 SHORT TO BATTERY	8O-189
PASSENGER SQUIB 1 SHORT TO GROUND	8O-193
PASSENGER SQUIB 2 CIRCUIT OPEN	8O-197
PASSENGER SQUIB 2 CIRCUIT SHORT	8O-202
PASSENGER SQUIB 2 SHORT TO BATTERY	8O-206
PASSENGER SQUIB 2 SHORT TO GROUND	8O-210
PCI BUS INTERNAL - LOOPBACK FAILURE (FCM)	8E-17
PCI BUS INTERNAL FAILURE	8J-52
PCI BUS LOW/BUSY	8A-91
PCI FAILURE	8A-17
PCM COMMUNICATION FAILURE	24-94
PCM MESSAGES NOT RECEIVED (FCM)	8E-18
PCM MESSAGES NOT RECEIVED	8J-53
PCM STATUS FAILURE	8Q-10
POWER AMP SHUTDOWN - BASE RADIO	8A-4
POWER AMP SHUTDOWN - PREMIUM	8A-7
POWERTRAIN VERIFICATION TEST VER - 1 (DIESEL)	8E-108
POWERTRAIN VERIFICATION TEST VER - 2 (DIESEL)	8E-109
POWERTRAIN VERIFICATION TEST VER - 4 (DIESEL)	8E-110
POWERTRAIN VERIFICATION TEST VER - 5 (DIESEL)	8E-112
PRE-DIAGNOSTIC CHECK OUT	8E-144
PRE-DIAGNOSTIC CHECKOUT (DIESEL)	8E-145
PRNDL SWITCH INPUT CIRCUIT OPEN (DIESEL ONLY)	8J-56
PRNDL SWITCH INPUT CIRCUIT SHORTED (DIESEL ONLY)	8J-59
RADIO AND NAV GPS ANTENNA NOT CONNECTED	8A-49
RAM FAILURE	8Q-7
REAR SPEAKERS SHORT TOGETHER OR TO GROUND	8A-37
RECIRC CIRCUIT SHORTED TO GROUND	24-101
RECIRC CIRCUIT SHORTED TO IGN OR BATT	24-102
RECIRC OVERCURRENT (DUAL-ZONE)	24-103
RECIRC OVERCURRENT (SINGLE-ZONE)	24-109
RECIRC SWITCH FAULT	24-114
RECIRCULATION CALIBRATION FAULT	24-96
REFRIGERANT PRESSURE RX FAILURE	24-115
REMOTE RADIO SWITCH CIRCUIT HIGH	8A-10
REMOTE RADIO SWITCH CIRCUIT STUCK	8A-14
RIGHT CURTAIN SQUIB 1 CIRCUIT OPEN	8O-214
RIGHT CURTAIN SQUIB 1 CIRCUIT SHORT	8O-219
RIGHT CURTAIN SQUIB 1 SHORT TO BATTERY	8O-223
RIGHT CURTAIN SQUIB 1 SHORT TO GROUND	8O-227
RIGHT FRONT DOOR AND LEFT REAR CHANNELS SHORT ACROSS	8A-33
RIGHT FRONT DOOR AND RIGHT REAR CHANNELS SHORT ACROSS	8A-35
RIGHT FRONT DOOR CHANNEL SHORT ACROSS	8A-20

Description	Group-Page
RIGHT FRONT I/P AND LEFT FRONT DOOR CHANNELS SHORT ACROSS	8A-23
RIGHT FRONT I/P AND LEFT REAR CHANNELS SHORT ACROSS	8A-27
RIGHT FRONT I/P AND RIGHT FRONT DOOR CHANNELS SHORT ACROSS	8A-25
RIGHT FRONT I/P AND RIGHT REAR CHANNELS SHORT ACROSS	8A-29
RIGHT FRONT I/P CHANNEL SHORT ACROSS	8A-19
RIGHT FRONT INPUT NO ACTIVITY	8A-42
RIGHT I/P SPEAKER AND BOTH REAR CHANNELS SHORT ACROSS	8A-31
RIGHT REAR CHANNEL SHORT ACROSS	8A-22
RIGHT REAR INPUT NO ACTIVITY	8A-46
RIGHT SIDE IMPACT SENSOR 1 INTERNAL 1	8O-231
RKE FOB BATTERY LOW	8N-43
RKE MODULE COMMUNICATION LINK	8N-44
ROLLING CODE FAILURE	8Q-14
SEATBELT INDICATOR OUTPUT CIRCUIT OPEN SHORT TO GROUND	8J-24
SEATBELT INDICATOR OUTPUT CIRCUIT OVERLOAD SHORT TO BATT	8J-23
SERIAL LINK EXTERNAL FAULT	8Q-12
SERIAL LINK INTERNAL FAULT	8Q-8
SHORT TOO COMPLEX	24-116
SKIM MMESSAGES NOT RECEIVED	8J-34
SKIS VERIFICATION TEST	8Q-30
SKIS VERIFICATION TEST	8Q-51
SOFTWARE CHECKSUM FAILURE	8A-107
SOFTWARE CHECKSUM FAILURE	8A-18
STOCK OVERFLOW FAILURE	8Q-9
STORED ENERGY FIRING 1	8O-237
TCCM MESSAGES NOT RECEIVED	8J-35
TCM MESSAGES NOT RECEIVED	8J-36
TRANS TEMP INDICATOR OUTPUT CIRCUIT OPEN OR SHORT TO GROUND	8J-25
TRANS TEMP INDICATOR OUTPUT CIRCUIT OVERLOAD OR SHORT TO BATT	8J-26
TRANSFER CASE VERIFICATION TEST VER 1	8E-139
TRANSMISSION VERIFICATION TEST VER - 1 (DIESEL)	8E-147
TRANSMISSION VERIFICATION TEST VER - 1 (GAS)	8E-146
TRANSPONDER COMMUNICATION FAILURE	8Q-21
TRANSPONDER CYCLIC REDUNDANCY CHECK (CRC) FAILURE	8Q-18
TRANSPONDER ID MISMATCH	8Q-24
TRANSPONDER RESPONSE MISMATCH	8Q-27
TX FAILURE	24-117
VEHICLE BODY STYLE MISMATCH	8O-238
VIN CHECKSUM ERROR	8J-62
VIN MISMATCH	8Q-16
VIN NOT LEARNED CORRECTLY (FCM)	8E-20
VIN PREVIOUSLY STORED	8J-63
VIN RX FAILURE	24-119
VTSS VERIFICATION TEST - 1A	8Q-50
WAIT TO START INDICATOR OUTPUT CIRCUIT OPEN OR SHORT TO GROUND	8J-27
WAIT TO START INDICATOR OUTPUT CIRCUIT OVERLOAD OR SHORT TO BATTERY	8J-28
WATER IN FUEL INDICATOR OUTPUT CIRCUIT OPEN OR SHORT TO GROUND	8J-29
WATER IN FUEL INDICATOR OUTPUT CIRCUIT OVERLOAD OR SHORT TO BATT	8J-30
*A/C HEATER CONTROL ILLUMINATION INOPERATIVE	24-134
*A/C STATUS INDICATOR FLASHING	24-137
*A/C STATUS INDICATOR WILL NOT ILLUMINATE — A/C HEATER CONTROL WITHOUT EBL SW	24-138
*ACTUATOR CIRCUIT TEST DIAGNOSTICS (DUAL-ZONE)	24-139
*ACTUATOR CIRCUIT TEST DIAGNOSTICS (SINGLE-ZONE)	24-147
*AIRBAG INDICATOR ON WITHOUT ACTIVE TROUBLE CODES	8O-242
*ALARM TRIPS ON ITS OWN	8Q-31
*ALL DOOR LOCKS INOPERATIVE	8N-46
*ALL GAUGES INOPERATIVE	8J-64
*ANY PCI INDICATOR INOPERATIVE	8J-69
*AUTO (ROLLING) DOOR LOCKS INOPERATIVE	8N-49
*BLEND/MODE/RECIRC DOOR OPERATION IMPROPER (DUAL-ZONE)	24-155
*BLEND/MODE/RECIRC DOOR OPERATION IMPROPER (SINGLE-ZONE)	24-159
*BLOWER MOTOR INOPERATIVE (EXCEPT SRT10)	24-163
*BLOWER MOTOR INOPERATIVE (SRT10)	24-169
*BLOWER SPEED DOES NOT CORRESPOND WITH CONTROL SETTING	24-176
*BRAKE WARNING INDICATOR ALWAYS ON	8J-71
*BRAKE WARNING INDICATOR INOPERATIVE	8J-75
*CYLINDER LOCK SWITCH INOP	8Q-32
*CYLINDER LOCK SWITCH INOPERATIVE	8N-51
*DOOR LOCK INHIBIT INOPERATIVE	8N-55
*DRIVER DOOR AJAR CIRCUIT OPEN	8L-178
*DRIVER DOOR AJAR CIRCUIT SHORTED TO GROUND	8L-181
*DRIVER DOOR DOES NOT TRIP VTSS	8Q-36
*DRIVER DOOR FAILS TO LOCK AND UNLOCK	8N-60
*EBL STATUS INDICATOR FLASHING	24-183
*FUEL GAUGE INACCURATE	8J-80
*HEADLAMPS FAIL TO FLASH WHEN ALARM IS TRIPPED	8Q-38
*HORN FAILS TO SOUND WHEN ALARM IS TRIPPED	8Q-39
*HORNS INOPERATIVE	8H-11
*HVAC SYSTEM TEST	24-184
*LEFT REAR DOOR AJAR CIRCUIT OPEN	8L-183
*LEFT REAR DOOR AJAR CIRCUIT SHORTED TO GROUND	8L-186
*LEFT REAR DOOR DOES NOT TRIP VTSS (4 DOOR)	8Q-40
*LEFT REAR DOOR FAILS TO LOCK AND UNLOCK	8N-56
*NO RESPONSE FROM AMPLIFIER	8E-24
*NO RESPONSE FROM ANTILOCK BRAKE MODULE	8E-21
*NO RESPONSE FROM CLUSTER	8E-27
*NO RESPONSE FROM ENGINE CONTROL MODULE (PCI BUS) - DIESEL	8E-31
*NO RESPONSE FROM ENGINE CONTROL MODULE (SCI ONLY) - DIESEL	8E-34
*NO RESPONSE FROM FINAL DRIVE CONTROL MODULE	8E-41
*NO RESPONSE FROM FRONT CONTROL MODULE	8E-38
*NO RESPONSE FROM HANDS FREE MODULE	8E-45
*NO RESPONSE FROM HVAC	8E-49
*NO RESPONSE FROM OCCUPANT RESTRAINT CONTROL MODULE	8E-52
*NO RESPONSE FROM OVERHEAD CONSOLE	8E-55
*NO RESPONSE FROM PCM (PCI BUS) - JTEC	8E-59
*NO RESPONSE FROM PCM (PCI BUS) - NGC	8E-66
*NO RESPONSE FROM PCM (PCM SCI ONLY) - NGC	8E-69
*NO RESPONSE FROM PCM (SCI ONLY) - JTEC	8E-62
*NO RESPONSE FROM RADIO	8E-73
*NO RESPONSE FROM SATELLITE RECEIVER	8E-77
*NO RESPONSE FROM SENTRY KEY IMMOBILIZER MODULE (SKIM)	8E-80
*NO RESPONSE FROM TRANSFER CASE CONTROL MODULE	8E-84
*NO RESPONSE FROM TRANSMISSION CONTROL MODULE - NGC	8E-87
*ONE DOOR LOCK MOTOR INOPERATIVE	8N-64
*ONE GAUGE INOPERATIVE - GAS ENGINES	8J-83
*ORC VERIFICATION TEST - VER 1	8O-243
*PASSENGER DOOR AJAR CIRCUIT OPEN	8L-188
*PASSENGER DOOR AJAR CIRCUIT SHORTED TO GROUND	8L-191
*PASSENGER DOOR DOES NOT TRIP VTSS	8Q-42
*PCI BUS COMMUNICATION FAILURE	8E-91
*PRNDL NOT DISPLAYING CORRECT POSITION (EATX VEHICLES)	8J-84
*RIGHT DOORS FAIL TO LOCK AND UNLOCK – QUAD CAB	8N-65
*RIGHT REAR DOOR AJAR CIRCUIT OPEN	8L-193
*RIGHT REAR DOOR AJAR CIRCUIT SHORTED TO GROUND	8L-196
*RIGHT REAR DOOR DOES NOT TRIP VTSS (4 DOOR)	8Q-44
*RKE INOPERATIVE	8N-69
*SEAT BELT WARNING INDICATOR ALWAYS OFF - STANDARD CAB	8J-87
*SEAT BELT WARNING INDICATOR ALWAYS OFF	8J-85
*SEAT BELT WARNING INDICATOR ALWAYS ON - STANDARD CAB	8J-92
*SEAT BELT WARNING INDICATOR ALWAYS ON	8J-89
*VTSS WILL NOT ARM PROPERLY	8Q-46
ZONE CALIBRATION FAULT	24-121
ZONE CIRCUIT SHORTED TO GROUND	24-126
ZONE CIRCUIT SHORTED TO IGN OR BATT	24-127
ZONE OVERCURRENT (DUAL-ZONE)	24-128

Description **Group-Page**

CHASSIS DIAGNOSTICS

APS RELAY CONTROL CIRCUIT HIGH 5-191
APS RELAY CONTROL CIRCUIT LOW 5-194
APS RELAY CONTROL CIRCUIT OPEN 5-197
BODY STYLE MISMATCH — 85 5-5
BRAKE SWITCH CIRCUIT — 81 5-6
ECU INTERNAL FAILURE -75 5-10
EXCESSIVE DUMP TIME — 69 5-11
FOUNDATION BRAKE — 78 5-13
INTERMITTENT SIGNAL FROM LEFT FRONT SENSOR — 27 5-17
INTERMITTENT SIGNAL FROM REAR SENSOR — 37 5-25
INTERMITTENT SIGNAL FROM RIGHT FRONT SENSOR — 27 5-33
INTERNAL MAIN RELAY OPEN — 65 5-96
INTERNAL MAIN RELAY SHORTED — 66 5-100
LEFT FRONT DUMP SOLENOID OPEN - 46 5-104
LEFT FRONT DUMP SOLENOID SHORTED - 48 5-109
LEFT FRONT ISOLATION SOLENOID OPEN - 45 5-114
LEFT FRONT ISOLATION SOLENOID SHORTED - 47 5-119
LEFT FRONT SENSOR OPEN — 25 5-41
LEFT FRONT SENSOR SHORTED — 90 5-47
MISMATCHED VIN — 84 5-164
NO SIGNAL FROM LEFT FRONT SENSOR - 26 5-52
NO SIGNAL FROM REAR SENSOR - 36 5-60
NO SIGNAL FROM RIGHT FRONT SENSOR — 22 5-67
NUMBER OF TONE RING TEETH OUT OF RANGE - 82 5-166
PUMP MOTOR CIRCUIT OPEN — 67 5-167
PUMP MOTOR STALLED — 68 5-172
RAM READ/WRITE — 71 5-177
REAR DUMP SOLENOID SHORTED - 53 5-129
REAR ISOLATION SOLENOID OPEN - 51 5-134
REAR ISOLATION SOLENOID SHORTED - 53 5-139
REAR RESET SWITCH CLOSED — 63 5-178
REAR SENSOR OPEN — 35 5-74
REAR SENSOR SHORTED — 93 5-80
RIGHT FRONT DUMP SOLENOID OPEN - 42 5-124
RIGHT FRONT DUMP SOLENOID OPEN - 42 5-144
RIGHT FRONT DUMP SOLENOID SHORTED - 44 5-149
RIGHT FRONT ISOLATION SOLENOID OPEN - 41 5-154
RIGHT FRONT ISOLATION SOLENOID SHORTED - 43 5-159
RIGHT FRONT SENSOR OPEN — 21 5-85
RIGHT FRONT SENSOR SHORTED — 91 5-91
ROM CHECKSUM – 71 5-179
SYSTEM CONTROL MODE TMEOUT — 74 5-186
SYSTEM OVER/UNDER VOLTAGE - 96 5-189
TIRE REVS EPR MILE OUT OF RANGE 5-180
WATCHDOG — 73 5-182
*ABS VERIFICATION TEST — VER 1 5-3
*APS VERIFICATION TEST — VER 1 5-4

Description **Group-Page**

*REPLACING THE ANTILOCK BRAKE MODULE 5-190

POWERTRAIN DIAGNOSTICS

INTERMITTENT CONDITION 9-1058
INTERMITTENT CONDITION 9-1490
INTERMITTENT CONDITION 9-7
P0016-ENGINE SPEED SIGNAL MISMATCH 9-1048
P0016–CRANKSHAFT / CAMSHAFT TIMING MISALIGNMENT 9-8
P0031-O2 SENSOR 1/1 HEATER CIRCUIT LOW 9-1491
P0031-O2 SENSOR 1/1 HEATER CIRCUIT LOW 9-14
P0032-O2 SENSOR 1/1 HEATER CIRCUIT HIGH 9-1496
P0032-O2 SENSOR 1/1 HEATER CIRCUIT HIGH 9-18
P0037-O2 SENSOR 1/2 HEATER CIRCUIT LOW 9-23
P0038-O2 SENSOR 1/2 HEATER CIRCUIT HIGH 9-27
P0051-O2 SENSOR 2/1 HEATER CIRCUIT LOW 9-1501
P0051-O2 SENSOR 2/1 HEATER CIRCUIT LOW 9-32
P0052-O2 SENSOR 2/1 HEATER CIRCUIT HIGH 9-1506
P0052-O2 SENSOR 2/1 HEATER CIRCUIT HIGH 9-36
P0057-O2 SENSOR 2/2 HEATER CIRCUIT LOW 9-41
P0058-O2 SENSOR 2/2 HEATER CIRCUIT HIGH 9-45
P0068-MANIFOLD PRESSURE/THROTTLE POSITION CORRELATION 9-50
P0069-BOOST KEY ON RATIONALITY 9-1059
P0071-AMBIENT AIR TEMPERATURE SENSOR PERFORMANCE 9-60
P0071-AMBIENT/BATTERY TEMP SENSOR PERFORMANCE 9-1511
P0071-INLET AIR TEMP SENSOR RATIONALITY 9-1062
P0072-AMBIENT AIR TEMPERATURE SENSOR CIRCUIT LOW 9-66
P0072-INLET AIR TEMP SENSOR VOLTAGE TOO LOW 9-1064
P0073-INLET AIR TEMP SENSOR VOLTAGE TOO HIGH 9-1069
P0073–AMBIENT AIR TEMPERATURE SENSOR CIRCUIT HIGH 9-69
P0088-FUEL RAIL PRESSURE SIGNAL IS ABOVE MAX LIMIT 9-1074
P0106-INLET AIR PRESSURE SENSOR RATIONALITY 9-1076
P0107-INLET AIR PRESSURE SENSOR VOLTAGE TOO LOW 9-1078
P0107-MANIFOLD ABSOLUTE PRESSURE SENSOR CIRCUIT LOW 9-73
P0107-MAP SENSOR VOLTAGE TOO LOW 9-1516
P0108-INLET AIR PRESSURE SENSOR VOLTAGE TOO HIGH 9-1085
P0108-MANIFOLD ABSOLUTE PRESSURE SENSOR CIRCUIT HIGH 9-78
P0108–MAP SENSOR VOLTAGE TOO HIGH . . .9-1521
P0111-INTAKE AIR TEMP PERFORMANCE . . .9-1526
P0111-INTAKE AIR TEMPERATURE (IAT) SENSOR RATIONALITY 9-1091

Description **Group-Page**

P0111-INTAKE AIR TEMPERATURE SENSOR RATIONALITY 9-83
P0112-INTAKE AIR TEMP SENSOR VOLTAGE TOO LOW 9-1530
P0112-INTAKE AIR TEMPERATURE (IAT) SENSOR VOLTAGE TOO LOW 9-1093
P0112-INTAKE AIR TEMPERATURE SENSOR CIRCUIT LOW 9-88
P0113-INTAKE AIR TEMPERATURE (IAT) SENSOR VOLTAGE TOO HIGH 9-1098
P0113-INTAKE AIR TEMPERATURE SENSOR CIRCUIT HIGH 9-1534
P0113-INTAKE AIR TEMPERATURE SENSOR CIRCUIT HIGH 9-91
P0116-ENGINE COOLANT TEMPERATURE (ECT) SENSOR RATIONALITY 9-1103
P0116–ENGINE COOLANT TEMPERATURE SENSOR CIRCUIT PERFORMANCE 9-95
P0117-ENGINE COOLANT TEMPERATURE (ECT) SENSOR VOLTAGE TOO LOW 9-1106
P0117-ENGINE COOLANT TEMPERATURE SENSOR CIRCUIT LOW 9-101
P0117-ENGINE COOLANT TEMPERATURE SENSOR CIRCUIT LOW 9-1539
P0118-ENGINE COOLANT TEMP SENSOR VOLTAGE TOO HIGH 9-1543
P0118-ENGINE COOLANT TEMPERATURE (ECT) SENSOR VOLTAGE TOO HIGH 9-1110
P0118-ENGINE COOLANT TEMPERATURE SENSOR CIRCUIT HIGH 9-105
P0121-THROTTLE POSITION SENSOR 1 PERFORMANCE 9-110
P0121-TP SENSOR VOLTAGE DOES NOT AGREE WITH MAP 9-1548
P0122-THROTTLE POSITION SENSOR #1 VOLTAGE TOO LOW 9-1557
P0122-THROTTLE POSITION SENSOR 1 CIRCUIT LOW (3.7L, 4.7L) 9-119
P0122-THROTTLE POSITION SENSOR 1 CIRCUIT LOW (5.7L) 9-124
P0123-THROTTLE POSITION SENSOR #1 VOLTAGE TOO HIGH 9-1562
P0123-THROTTLE POSITION SENSOR 1 CIRCUIT HIGH (3.7L, 4.7L) 9-129
P0123-THROTTLE POSITION SENSOR 1 CIRCUIT HIGH (5.7L) 9-134
P0125-INSUFFICIENT COOLANT TEMP FOR CLOSED-LOOP FUEL CONTROL 9-139
P0125-INSUFFICIENT COOLANT TEMP FOR CLOSED-LOOP FUEL CONTROL 9-1567
P0128-THERMOSTAT RATIONALITY 9-1115
P0128-THERMOSTAT RATIONALITY 9-142
P0129-BAROMETRIC PRESSURE OUT-OF-RANGE LOW 9-152
P0131-O2 SENSOR 1/1 CIRCUIT LOW 9-158
P0131-O2 SENSOR 1/1 CIRCUIT VOLTAGE TOO LOW 9-1570
P0132-O2 SENSOR 1/1 CIRCUIT HIGH 9-163
P0132-O2 SENSOR 1/1 CIRCUIT VOLTAGE TOO HIGH 9-1573
P0133-O2 SENSOR 1/1 SLOW RESPONSE . . .9-1579
P0133-O2 SENSOR 1/1 SLOW RESPONSE 9-168
P0135-O2 SENSOR 1/1 HEATER PERFORMANCE 9-1582
P0135-O2 SENSOR 1/1 HEATER PERFORMANCE 9-171
P0136-O2 SENSOR 1/2 HEATER CIRCUIT MALFUNCTION 9-1586
P0137-O2 SENSOR 1/2 CIRCUIT LOW 9-1590

Description	Group-Page
P0137-O2 SENSOR 1/2 CIRCUIT LOW	9-175
P0138-O2 SENSOR 1/2 CIRCUIT HIGH	9-1594
P0138-O2 SENSOR 1/2 CIRCUIT HIGH	9-180
P0139-O2 SENSOR 1/2 SLOW RESPONSE	9-1599
P0139-O2 SENSOR 1/2 SLOW RESPONSE	9-185
P0141-O2 SENSOR 1/2 HEATER PERFORMANCE	9-1602
P0141-O2 SENSOR 1/2 HEATER PERFORMANCE	9-189
P0148-HIGH PRESSURE COMMON RAIL (HPCR) CHECKSUM	9-1116
P0151-O2 SENSOR 2/1 CIRCUIT LOW	9-1606
P0151-O2 SENSOR 2/1 CIRCUIT LOW	9-193
P0152-O2 SENSOR 2/1 CIRCUIT HIGH	9-1609
P0152-O2 SENSOR 2/1 CIRCUIT HIGH	9-198
P0153-O2 SENSOR 2/1 SLOW RESPONSE	9-1615
P0153-O2 SENSOR 2/1 SLOW RESPONSE	9-203
P0155-O2 SENSOR 2/1 HEATER PERFORMANCE	9-1618
P0155-O2 SENSOR 2/1 HEATER PERFORMANCE	9-206
P0157-O2 SENSOR 2/2 CIRCUIT LOW	9-210
P0157-O2 SENSOR 2/2 CIRCUIT VOLTAGE TOO LOW	9-1622
P0158-O2 SENSOR 2/2 CIRCUIT HIGH	9-215
P0158-O2 SENSOR 2/2 CIRCUIT VOLTAGE TOO HIGH	9-1626
P0159-O2 SENSOR 2/2 SLOW RESPONSE	9-1631
P0159-O2 SENSOR 2/2 SLOW RESPONSE	9-220
P0161-O2 SENSOR 2/2 HEATER PERFORMANCE	9-1634
P0161-O2 SENSOR 2/2 HEATER PERFORMANCE	9-224
P0169-WATER IN FUEL (WIF) LIGHT ON TOO LONG	9-1119
P0171-FUEL SYSTEM 1/1 LEAN	9-1638
P0171-FUEL SYSTEM 1/1 LEAN	9-228
P0172-FUEL SYSTEM 1/1 RICH	9-1645
P0172-FUEL SYSTEM 1/1 RICH	9-235
P0174-FUEL SYSTEM 2/1 LEAN	9-1653
P0174-FUEL SYSTEM 2/1 LEAN	9-242
P0175-FUEL SYSTEM 2/1 RICH	9-1660
P0175-FUEL SYSTEM 2/1 RICH	9-249
P0191-FUEL RAIL PRESSURE SENSOR PERFORMANCE	9-1121
P0192-FUEL PRESSURE SENSOR VOLTAGE TOO LOW	9-1124
P0193-FUEL PRESSURE SENSOR VOLTAGE TOO HIGH	9-1130
P0197-ENGINE OIL TEMPERATURE SENSOR VOLTAGE TOO LOW	9-1667
P0198-ENGINE OIL TEMPERATURE SENSOR VOLTAGE TOO HIGH	9-1670
P0201-FUEL INJECTOR 1 CIRCUIT	9-1674
P0201-FUEL INJECTOR 1 CIRCUIT	9-256
P0201-INJECTOR #1 CONTROL CIRCUIT	9-1135
P0202-FUEL INJECTOR 2 CIRCUIT	9-1678
P0202-FUEL INJECTOR 2 CIRCUIT	9-260
P0202-INJECTOR #2 CONTROL CIRCUIT	9-1139
P0203-FUEL INJECTOR 3 CIRCUIT	9-1682
P0203-FUEL INJECTOR 3 CIRCUIT	9-264
P0203-INJECTOR #3 CONTROL CIRCUIT	9-1143
P0204-FUEL INJECTOR 4 CIRCUIT	9-1686
P0204-FUEL INJECTOR 4 CIRCUIT	9-268
P0204-INJECTOR #4 CONTROL CIRCUIT	9-1147
P0205-FUEL INJECTOR 5 CIRCUIT	9-1690
P0205-FUEL INJECTOR 5 CIRCUIT	9-272
P0205-INJECTOR #5 CONTROL CIRCUIT	9-1151
P0206-FUEL INJECTOR 6 CIRCUIT	9-1694
P0206-FUEL INJECTOR 6 CIRCUIT	9-276
P0206-INJECTOR #6 CONTROL CIRCUIT	9-1155
P0207-FUEL INJECTOR 7 CIRCUIT	9-1698
P0207-FUEL INJECTOR 7 CIRCUIT	9-280
P0208-FUEL INJECTOR 8 CIRCUIT	9-1702
P0208-FUEL INJECTOR 8 CIRCUIT	9-284
P0209-FUEL INJECTOR 9 CIRCUIT	9-1706
P0210-FUEL INJECTOR 10 CIRCUIT	9-1710
P0217-DECREASED ENGINE PERFORMANCE DUE TO ENGINE OVERHEAT CONDITION	9-1159
P0219-CRANKSHAFT POSITION SENSOR OVER SPEED SIGNAL	9-1161
P0221-THROTTLE POSITION SENSOR 2 PERFORMANCE	9-288
P0222-THROTTLE POSITION SENSOR 2 CIRCUIT LOW	9-297
P0223-THROTTLE POSITION SENSOR 2 CIRCUIT HIGH	9-303
P0234-TURBOCHARGER OVERBOOST CONDITION	9-1163
P0236-MAP SENSOR TOO HIGH TOO LONG	9-1165
P0237-MAP SENSOR VOLTAGE TOO LOW	9-1168
P0238-MAP SENSOR VOLTAGE TOO HIGH	9-1174
P0243-WASTEGATE PRESSURE CONTROL PWM	9-1179
P0251-CP3 PUMP REGULATOR CONTROL	9-1185
P0299-BOOST IN RANGE LOW	9-1192
P0300-MULTIPLE CYLINDER MISFIRE	9-1196
P0300-MULTIPLE CYLINDER MISFIRE	9-1714
P0300-MULTIPLE CYLINDER MISFIRE	9-307
P0301-CYLINDER # 1 MISFIRE	9-1199
P0301-CYLINDER #1 MISFIRE	9-1721
P0301-CYLINDER 1 MISFIRE	9-314
P0302-CYLINDER # 2 MISFIRE	9-1202
P0302-CYLINDER #2 MISFIRE	9-1731
P0302-CYLINDER 2 MISFIRE	9-323
P0303-CYLINDER # 3 MISFIRE	9-1205
P0303-CYLINDER #3 MISFIRE	9-1740
P0303-CYLINDER 3 MISFIRE	9-333
P0304-CYLINDER # 4 MISFIRE	9-1208
P0304-CYLINDER #4 MISFIRE	9-1750
P0304-CYLINDER 4 MISFIRE	9-343
P0305-CYLINDER # 5 MISFIRE	9-1211
P0305-CYLINDER #5 MISFIRE	9-1760
P0305-CYLINDER 5 MISFIRE	9-353
P0306-CYLINDER # 6 MISFIRE	9-1214
P0306-CYLINDER #6 MISFIRE	9-1769
P0306-CYLINDER 6 MISFIRE	9-363
P0307-CYLINDER #7 MISFIRE	9-1779
P0307-CYLINDER 7 MISFIRE	9-373
P0308-CYLINDER #8 MISFIRE	9-1789
P0308-CYLINDER 8 MISFIRE	9-383
P0309-CYLINDER #9 MISFIRE	9-1799
P0310-CYLINDER #10 MISFIRE	9-1809
P0315-NO CRANK SENSOR LEARNED	9-393
P0320–NO CANK REFERENCE SIGNAL AT PCM	9-1818
P0325-KNOCK SENSOR 1 CIRCUIT	9-1827
P0325-KNOCK SENSOR 1 CIRCUIT	9-396
P0330-KNOCK SENSOR 2 CIRCUIT	9-1832
P0330-KNOCK SENSOR 2 CIRCUIT	9-401
P0335-CRANKSHAFT POSITION (CKP) LOST	9-1217
P0335-CRANKSHAFT POSITION SENSOR CIRCUIT	9-406
P0336-CRANKSHAFT POSITION (CKP) SENSOR SIGNAL	9-1224
P0337-CRANKSHAFT POSITION (CKP) SENSOR VOLTAGE TOO LOW	9-1231
P0338-CRANKSHAFT POSITION (CKP) SENSOR VOLTAGE TOO HIGH	9-1234
P0339-CRANKSHAFT POSITION SENSOR INTERMITTENT	9-415
P0340-CAMSHAFT POSITION (CMP) LOST	9-1237
P0340-CAMSHAFT POSITION SENSOR CIRCUIT	9-1837
P0340-CAMSHAFT POSITION SENSOR CIRCUIT	9-422
P0341-CAMSHAFT POSITION (CMP) SENSOR SIGNAL	9-1243
P0344-CAMSHAFT POSITION SENSOR INTERMITTENT	9-430
P0351-IGNITION COIL #1 PRIMARY CIRCUIT	9-1845
P0352-IGNITION COIL #2 PRIMARY CIRCUIT	9-1849
P0353-IGNITION COIL #3 PRIMARY CIRCUIT	9-1853
P0354-IGNITION COIL #4 PRIMARY CIRCUIT	9-1857
P0355-IGNITION COIL #5 PRIMARY CIRCUIT	9-1861
P0381-WAIT TO START LAMP INOPERATIVE	9-1250
P0401-EGR SYSTEM PERFORMANCE	9-436
P0403-EGR SOLENOID CIRCUIT	9-442
P0404-EGR POSITION SENSOR PERFORMANCE	9-447
P0405-EGR POSITION SENSOR CIRCUIT LOW	9-453
P0406-EGR POSITION SENSOR CIRCUIT HIGH	9-458
P0420-1/1 CATALYTIC CONVERTER EFFICIENCY	9-1865
P0420-CATALYST 1/1 EFFICIENCY	9-463
P0430-CATALYST 2/1 EFFICIENCY	9-466
P0432-2/1 CATALYTIC CONVERTER EFFICIENCY	9-1868
P0440-GENERAL EVAP SYSTEM FAILURE	9-469
P0441-EVAP PURGE FLOW MONITOR	9-1871
P0441-EVAP PURGE SYSTEM PERFORMANCE	9-476
P0442-EVAP LEAK MONITOR MEDIUM (0.040) LEAK DETECTED	9-1875
P0442-EVAP PURGE SYSTEM MEDIUM LEAK	9-479
P0443-EVAP PURGE SOLENOID CIRCUIT	9-1879
P0443-EVAP PURGE SOLENOID CIRCUIT	9-483
P0452-NVLD PRESSURE SWITCH STUCK CLOSED	9-488
P0453-NVLD PRESSURE SWITCH STUCK OPEN	9-492
P0455-EVAP LEAK MONITOR LARGE LEAK DETECTED	9-1883

Description	Group-Page
P0455-EVAP PURGE SYSTEM LARGE LEAK	9-497
P0456-EVAP PURGE SYSTEM SMALL LEAK	9-501
P0457-LOOSE FUEL CAP	9-505
P0460-FUEL LEVEL SENDING UNIT NO CHANGE OVER MILES	9-1887
P0461-FUEL LEVEL SENSOR 1 PERFORMANCE	9-510
P0461-FUEL LEVEL UNIT NO CHANGE OVER TIME	9-1252
P0462-FUEL LEVEL SENDING UNIT VOLTS TOO LOW	9-1888
P0462-FUEL LEVEL SENSOR 1 CIRCUIT LOW	9-514
P0462-LOW VOLTAGE DETECTED AT THE FUEL LEVEL SENSOR	9-1255
P0463-FUEL LEVEL SENSOR 1 CIRCUIT HIGH	9-1891
P0463-FUEL LEVEL SENSOR 1 CIRCUIT HIGH	9-517
P0463-HIGH VOLTAGE DETECTED AT THE FUEL LEVEL SENSOR	9-1259
P0477-LOW VOLTAGE ON THE ENGINE BRAKE DRIVER	9-1262
P0478-HIGH VOLTAGE ON THE ENGINE BRAKE DRIVER	9-1265
P0480-COOLING FAN 1 CONTROL CIRCUIT	9-522
P0480-FAN CLUTCH	9-1267
P0483-FAN SPEED	9-1272
P0498-NVLD CANISTER VENT VALVE SOLENOID CIRCUIT LOW	9-526
P0499-NVLD CANISTER VENT VALVE SOLENOID CIRCUIT HIGH	9-529
P0500-NO VEHICLE SPEED SENSOR SIGNAL	9-1280
P0500-NO VEHICLE SPEED SIGNAL	9-1896
P0501-VEHICLE SPEED SENSOR 1 PERFORMANCE	9-533
P0503-VEHICLE SPEED SENSOR 1 ERRATIC	9-538
P0505-IDLE AIR CONTROL MOTOR CIRCUITS	9-1899
P0506-IDLE SPEED PERFORMANCE LOWER THAN EXCEPTED	9-543
P0507-IDLE SPEED PERFORMANCE HIGHER THAN EXCEPTED	9-545
P0508-IDLE AIR CONTROL VALVE SENSE CIRCUIT LOW	9-547
P0509-IDLE AIR CONTROL VALVE SENSE CIRCUIT HIGH	9-552
P0513-INVALID SKIM KEY	9-556
P0514-BAT TEMPERATURE SENSOR RATIONALITY	9-1284
P0516-BATTERY TEMPERATURE SENSOR CIRCUIT LOW	9-558
P0516-LOW VOLTAGE AT THE BAT TEMP SENSOR	9-1286
P0517-BATTERY TEMPERATURE SENSOR CIRCUIT HIGH	9-561
P0517-HIGH VOLTAGE AT THE BAT TEMP SENSOR	9-1290
P0521-OIL PRESSURE SWITCH RATIONALITY	9-1295
P0522-OIL PRESSURE CIRCUIT LOW	9-1904
P0522-OIL PRESSURE TOO LOW	9-565
P0523-OIL PRESSURE CIRCUIT HIGH	9-1908
P0524-OIL PRESSURE TOO LOW	9-1298
P0532-A/C PRESSURE SENSOR CIRCUIT LOW	9-570
P0532-A/C SENDING UNIT VOLTS TOO LOW	9-1301
P0533-A/C PRESSURE SENSOR CIRCUIT HIGH	9-575
P0533-A/C SENDING UNIT VOLTS TOO HIGH	9-1308
P0541-LOW VOLTAGE ON THE #1 INTAKE AIR HEATER RELAY	9-1313
P0542-HIGH VOLTAGE ON THE #1 INTAKE AIR HEATER RELAY	9-1316
P0551-POWER STEERING PRESSURE SWITCH PERFORMANCE	9-580
P0562-BATTERY VOLTAGE LOW	9-1319
P0562-BATTERY VOLTAGE LOW	9-584
P0563-BATTERY VOLTAGE HIGH	9-1323
P0563-BATTERY VOLTAGE HIGH	9-589
P0571-BRAKE SWITCH 1 PERFORMANCE	9-592
P0572-BRAKE SWITCH 1 STUCK ON	9-597
P0572-LOW VOLTAGE DETECTED AT THE BRAKE SWITCH	9-1326
P0573-BRAKE SWITCH 1 STUCK OFF	9-601
P0573-HIGH VOLTAGE DETECTED AT THE BRAKE SWITCH	9-1330
P0579-SPEED CONTROL SWITCH 1 PERFORMANCE (5.7L)	9-605
P0580-LOW VOLTAGE DETECTED AT THE SPEED CONTROL SWITCH	9-1333
P0580-SPEED CONTROL SWITCH 1 CIRCUIT LOW (3.7L,4.7L)	9-613
P0580-SPEED CONTROL SWITCH 1 CIRCUIT LOW (5.7L)	9-617
P0581-HIGH VOLTAGE DETECTED AT THE SPEED CONTROL SWITCH	9-1337
P0581-SPEED CONTROL SWITCH 1 CIRCUIT HIGH (3.7L,4.7L)	9-623
P0581-SPEED CONTROL SWITCH 1 CIRCUIT HIGH (5.7L)	9-629
P0582-SPEED CONTROL VACUUM CONTROL CIRCUIT	9-635
P0585-SPEED CONTROL SWITCH 1/2 CORRELATION (5.7L)	9-641
P0586-SPEED CONTROL VENT CONTROL CIRCUIT	9-653
P0591-SPEED CONTROL SWITCH 2 PERFORMANCE	9-659
P0592-SPEED CONTROL SWITCH 2 CIRCUIT LOW	9-667
P0593-SPEED CONTROL SWITCH 2 CIRCUIT HIGH	9-672
P0594-SPEED CONTROL SERVO POWER RELAY CIRCUIT	9-677
P0600-SERIAL COMMUNICATION LINK	9-683
P0601-INTERNAL MEMORY CHECKSUM INVALID	9-684
P0601-PCM INTERNAL CONTROLLER FAILURE	9-1911
P0602-CHECKSUM ERROR	9-1343
P0604-ECM SOFTWARE ERROR	9-1344
P0606-ECM HARDWARE ERROR	9-1345
P0606-INTERNAL ECM PROCESSOR	9-685
P0607-ECM INTERNAL FAILURE	9-1346
P060B-ETC A/D GROUND PERFORMANCE	9-686
P060D-ETC LEVEL 2 APP PERFORMANCE	9-687
P060E-ETC LEVEL 2 TPS PERFORMANCE	9-688
P060F-ETC LEVEL 2 ECT PERFORMANCE	9-689
P061A-ETC LEVEL 2 TORQUE PERFORMANCE	9-690
P061C-ETC LEVEL 2 RPM PERFORMANCE	9-691
P0622-GENERATOR FIELD CONTROL CIRCUIT	9-692
P0622-GENERATOR FIELD NOT SWITCHING PROPERLY	9-1347
P0622-GENERATOR FIELD NOT SWITCHING PROPERLY	9-1912
P0627-FUEL PUMP RELAY CIRCUIT	9-696
P0628-LOW VOLTAGE DETECTED AT THE FUEL LIFT PUMP	9-1351
P0629-HIGH VOLTAGE DETECTED AT THE FUEL LIFT PUMP	9-1355
P062C-ETC LEVEL 2 MPH PERFORMANCE	9-700
P0630-VIN NOT ENTERED ERROR	9-1359
P0630-VIN NOT PROGRAMMED IN PCM	9-701
P0632-ODOMETER NOT PROGRAMMED IN PCM	9-702
P0633-SKIM KEY NOT PROGRAMMED IN PCM	9-703
P0633-SKIM SECRET KEY NOT ENTERED	9-1360
P0642-LOW VOLTAGE AT THE #2 SENSOR SUPPLY CIRCUIT	9-1361
P0642-SENSOR REFERENCE VOLTAGE 1 CIRCUIT LOW	9-704
P0643-HIGH VOLTAGE AT THE #2 SENSOR SUPPLY CIRCUIT	9-1365
P0643-PRIMARY 5-VOLT SUPPLY CIRCUIT HIGH	9-708
P0645-A/C CLUTCH RELAY CIRCUIT	9-1916
P0645-A/C CLUTCH RELAY CIRCUIT	9-711
P0646-LOW VOLTAGE DETECTED AT THE A/C CLUTCH RELAY	9-1368
P0647-HIGH VOLTAGE DETECTED AT THE A/C CLUTCH RELAY	9-1372
P0652-LOW VOLTAGE AT THE #1 SENSOR SUPPLY CIRCUIT	9-1375
P0652-SENSOR REFERENCE VOLTAGE 2 CIRCUIT LOW	9-715
P0653-HIGH VOLTAGE AT THE #1 SENSOR SUPPLY CIRCUIT	9-1379
P0653-SENSOR REFERENCE VOLTAGE 2 CIRCUIT HIGH	9-718
P0685-AUTO SHUTDOWN RELAY CONTROL CIRCUIT	9-721
P0688-AUTO SHUTDOWN RELAY SENSE CIRCUIT LOW	9-725
P0698-ACCELERATOR PEDAL POSITION SENSOR (APPS) SUPPLY VOLTAGE TOO LOW	9-1382
P0699-ACCELERATOR PEDAL POSITION SENSOR (APPS) SUPPLY VOLTAGE TOO HIGH	9-1386
P0700-TRANSMISSION CONTROL SYSTEM (MIL REQUEST)	9-730
P0703-BRAKE SWITCH 2 PERFORMANCE	9-731
P0801-REVERSE GEAR LOCKOUT CIRCUIT OPEN OR SHORTED	9-1920
P0850-PARK/NEUTRAL SWITCH PERFORMANCE	9-737
P1115-GENERAL TEMPERATURE RATIONALITY	9-741
P1195-O2 SENSOR 1/1 SLOW DURING CATALYST MONITOR	9-1924
P1196-O2 SENSOR 2/1 SLOW DURING CATALYST MONITOR	9-1927
P1281-ENGINE IS COLD TOO LONG	9-1930

Description	Group-Page
P1282-FUEL PUMP/SYSTEM RELAY CONTROL CIRCUIT	9-1931
P1294-TARGET IDLE NOT REACHED	9-1934
P1296-NO 5-VOLTS TO MAP SENSOR	9-1938
P1297-NO CHANGE IN MAP FROM START TO RUN	9-1943
P1388-AUTO SHUTDOWN RELAY CONTROL CIRCUIT	9-1949
P1389-NO ASD RELAY OUTPUT VOLTAGE AT PCM	9-1952
P1391-INTERMITTENT LOSS OF CMP OR CKP	9-1956
P1398-MIS-FIRE ADAPTIVE NUMERATOR AT LIMIT	9-1960
P1486-EVAP LEAK MONITOR PINCHED HOSE FOUND	9-1963
P1492-AMBIENT/BATTERY TEMPERATURE SENSOR VOLTAGE TOO HIGH	9-1966
P1493-AMBIENT/BATTERY TEMPERATURE SENSOR VOLTAGE TOO LOW	9-1970
P1494-LEAK DETECTION PUMP SWITCH OR MECHANICAL FAULT	9-1973
P1495-LEAK DETECTION PUMP SOLENOID CIRCUIT	9-1977
P1499-HYDRAULIC FAN SOLENOID CIRCUIT	9-1982
P1501-VEHICLE SPEED SENSOR 1/2 CORRELATION - DRIVE WHEELS	9-745
P1502-VEHICLE SPEED SENSOR 1/2 CORRELATION - NON DRIVE WHEELS	9-750
P1572-BRAKE PEDAL STUCK ON	9-755
P1573-BRAKE PEDAL STUCK OFF	9-759
P1593-SPEED CONTROL SWITCH 1 STUCK (3.7L, 4.7L)	9-773
P1593-SPEED CONTROL SWITCH 1/2 STUCK	9-763
P1594-CHARGING SYSTEM VOLTAGE TOO HIGH	9-1986
P1598-A/C PRESSURE SENSOR VOLTAGE TOO HIGH	9-1989
P1599-A/C PRESSURE SENSOR VOLTAGE TOO LOW	9-1994
P1602–PCM NOT PROGRAMMED	9-778
P1603-PCM INTERNAL DUAL-PORT RAM COMMUNICATION FAILURE	9-779
P1604-PCM INTERNAL DUAL-PORT RAM READ/WRITE INTEGRITY FAILURE	9-781
P1607-PCM INTERNAL SHUTDOWN TIMER RATIONALITY	9-783
P1618-SENSOR REFERENCE VOLTAGE 1 CIRCUIT ERRATIC	9-784
P1628-SENSOR REFERENCE VOLTAGE 2 CIRCUIT ERRATIC	9-789
P1652-J1850 SHORT TO GROUND	9-1389
P1682-CHARGING SYSTEM VOLTAGE TOO LOW	9-1999
P1687-NO CLUSTER BUS MESSAGE	9-2004
P1695-BUS MESSAGE FROM BODY CONTROL MODULE	9-2007
P1696-EEPROM MEMORY WRITE DENIED/INVALID	9-794
P1696-PCM FAILURE EEPROM WRITE DENIED	9-2010
P1697-EMR (SRI) MILEAGE NOT STORED	9-796
P2072-ELECTRONIC THROTTLE CONTROL SYSTEM - ICE BLOCKAGE	9-798
P2074-MAP/TPS CORRELLATION - HIGH AIRFLOW/VACUUM LEAK DETECTED	9-799
P2096-DOWNSTREAM FUEL TRIM SYSTEM 1 LEAN	9-809
P2097-DOWNSTREAM FUEL TRIM SYSTEM 1 RICH	9-816
P2098-DOWNSTREAM FUEL TRIM SYSTEM 2 LEAN	9-823
P2099-DOWNSTREAM FUEL TRIM SYSTEM 2 RICH	9-830
P2100-ELECTRONIC THROTTLE CONTROL MOTOR CIRCUIT	9-837
P2101-ELECTRONIC THROTTLE CONTROL MOTOR PERFORMANCE	9-843
P2107-ELECTRONIC THROTTLE CONTROL MODULE PROCESSOR	9-845
P2108-ELECTRONIC THROTTLE CONTROL MODULE PERFORMANCE	9-846
P2110-ELECTRONIC THROTTLE CONTROL - FORCED LIMITED RPM	9-847
P2111-ELECTRONIC THROTTLE CONTROL - UNABLE TO CLOSE	9-852
P2112-ELECTRONIC THROTTLE CONTROL - UNABLE TO OPEN	9-857
P2115-ACCELERATOR PEDAL POSITION SENSOR 1 MINIMUM STOP PERFORMANCE	9-862
P2116-ACCELERATOR PEDAL POSITION SENSOR 2 MINIMUM STOP PERFORMANCE	9-863
P2118-ELECTRONIC THROTTLE CONTROL MOTOR CIRCUIT	9-864
P2121-PPS CONFORMANCE ERROR	9-1392
P2122-ACCELERATOR PEDAL POSITION SENSOR 1 CIRCUIT LOW	9-870
P2122-PPS 1 VOLTAGE TOO LOW	9-1404
P2123-ACCELERATOR PEDAL POSITION SENSOR 1 CIRCUIT HIGH	9-876
P2123-PPS 1 VOLTAGE TOO HIGH	9-1410
P2127-ACCELERATOR PEDAL POSITION SENSOR 2 CIRCUIT LOW	9-881
P2127-PPS 2 VOLTAGE TOO LOW	9-1414
P2128-ACCELERATOR PEDAL POSITION SENSOR 2 CIRCUIT HIGH	9-888
P2128-PPS 2 VOLTAGE TOO HIGH	9-1420
P2135-THROTTLE POSITION SENSOR 1/2 CORRELATION	9-893
P2138-ACCELERATOR PEDAL POSITION SENSOR 1/2 CORRELATION	9-901
P2146-BANK 1 (CYLINDERS 1-3) SHORTED HIGH OR LOW	9-1424
P2149-BANK 2 (CYLINDERS 4-6) SHORTED HIGH OR LOW	9-1433
P2161-VEHICLE SPEED SENSOR 2 ERRATIC	9-907
P2166-ACCELERATOR PEDAL POSITION SENSOR 1 MAXIMUM STOP PERFORMANCE	9-911
P2167-ACCELERATOR PEDAL POSITION SENSOR 2 MAXIMUM STOP PERFORMANCE	9-912
P2172-HIGH AIRFLOW/VACUUM LEAK DETECTED (INSTANTANEOUS ACCUMULATION)	9-913
P2173-HIGH AIRFLOW/VACUUM LEAK DETECTED (SLOW ACCUMULATION)	9-924
P2174-LOW AIRFLOW/RESTRICTION DETECTED (INSTANTANEOUS ACCUMULATION)	9-935
P2175-LOW AIRFLOW/RESTRICTION DETECTED (SLOW ACCUMULATION)	9-946
P2181-COOLING SYSTEM PERFORMANCE	9-957
P2266-WATER IN FUEL (WIF) SENSOR VOLTAGE TOO LOW	9-1442
P2269-WATER IN FUEL (WIF)	9-1445
P2299-BRAKE PEDAL POSITION / ACCELERATOR PEDAL POSITION INCOMPATIBLE	9-964
P2302-IGNITION COIL 1 SECONDARY CIRCUIT- INSUFFICIENT IONIZATION	9-967
P2305-IGNITION COIL 2 SECONDARY CIRCUIT- INSUFFICIENT IONIZATION	9-971
P2308-IGNITION COIL 3 SECONDARY CIRCUIT- INSUFFICIENT IONIZATION	9-975
P2311-IGNITION COIL 4 SECONDARY CIRCUIT- INSUFFICIENT IONIZATION	9-979
P2314-IGNITION COIL 5 SECONDARY CIRCUIT- INSUFFICIENT IONIZATION	9-983
P2317-IGNITION COIL 6 SECONDARY CIRCUIT- INSUFFICIENT IONIZATION	9-987
P2320-IGNITION COIL 7 SECONDARY CIRCUIT- INSUFFICIENT IONIZATION	9-991
P2323-IGNITION COIL 8 SECONDARY CIRCUIT- INSUFFICIENT IONIZATION	9-995
P2502-CHARGING SYSTEM ERROR	9-1448
P2503-CHARGING SYSTEM OUTPUT LOW	9-1452
P2503-CHARGING SYSTEM OUTPUT LOW	9-999
P2504-CHARGING SYSTEM OUTPUT HIGH	9-1455
P2509-POWERDOWN DATA LOST ERROR	9-1459
P2607-LOW VOLTAGE AT THE #2 INTAKE AIR HEATER RELAY	9-1463
P2608-HIGH VOLTAGE AT THE #2 INTAKE AIR HEATER RELAY	9-1467
P2609-NO VOLTAGE DROP SEEN FROM INTAKE AIR HEATERS	9-1470
POWERTRAIN VERIFICATION TEST VER - 1 (DIESEL)	9-1053
POWERTRAIN VERIFICATION TEST VER - 2 (DIESEL)	9-1054
POWERTRAIN VERIFICATION TEST VER - 4 (DIESEL)	9-1055
POWERTRAIN VERIFICATION TEST VER - 5 (DIESEL)	9-1057
POWERTRAIN VERIFICATION TEST	9-1038
POWERTRAIN VERIFICATION TEST	9-2033
PRE-DIAGNOSTIC TROUBLESHOOTING PROCEDURE	9-1051
PRE-DIAGNOSTIC TROUBLESHOOTING PROCEDURE	9-1488
PRE-DIAGNOSTIC TROUBLESHOOTING PROCEDURE	9-5
U0101-LOST COMMUNICATION WITH TCM	9-1004
U0155-NO CLUSTER BUS MESSAGE	9-1006
U0168-NO SKIM BUS MESSAGE	9-1008
*5.7L INTERMITTENT NO CRANK CONDITION	9-1010
*BRAKE SWITCH SENSE STATUS DOES NOT CHANGE ON THE SCAN TOOL	9-2012
*CANNOT SHIFT INTO REVERSE	9-2016
*CHECKING A/C SYSTEM OPERATION WITH NO DTCS	9-2018
*CHECKING CHARGING SYSTEM OPERATION WITH NO DTCS	9-2023
*CHECKING PRESSURE LIMITING VALVE ON THE FUEL RAIL FOR INTERNAL LEAKS	9-1480
*CHECKING RADIATOR FAN OPERATION	9-2028
*CHECKING THE ACCELERATOR PEDAL SENSOR CALIBRATION	9-1478
*CHECKING THE ECM POWER AND GROUNDS	9-1479

Description	Group-Page
*CHECKING THE FUEL DELIVERY SYSTEM	9-1011
*CHECKING THE PCM POWER AND GROUNDS	9-2030
*ENGINE CRANKS BUT DOES NOT START	9-1017
*ENGINE DIFFICULT TO START OR WILL NOT START (EXHAUST SMOKE)	9-1476
*ENGINE DIFFICULT TO START OR WILL NOT START (NO EXHAUST SMOKE WHILE CRANKING)	9-1475
*ENGINE SPEED SURGES IN PTO OR CRUISE CONTROL	9-1477
*ENGINE SPEED SURGES LOW OR HIGH IDLE	9-1474
*ENGINE SPEED SURGES UNDER LOAD OR IN OPERATING RANGE	9-1473
*FUEL HEATER THERMOSTAT TEST	9-1481
*FUEL PRESSURE LEAK DOWN	9-1021
*FUEL PUMP RETURN FLOW TEST	9-1482
*HARD START FUEL SYSTEM	9-1014
*HIGH PRESSURE FUEL PUMP PERFORMANCE TEST	9-1483
*INJECTOR RETURN FLOW TEST	9-1484
*INTAKE AIR SYSTEM PRESSURE TEST	9-1485
*NO CRANK CONDITION	9-1023
*NO RESPONSE WITH A NO START CONDITION	9-1028
*START AND STALL CONDITION	9-1035

TRANSMISSION DIAGNOSTICS

Description	Group-Page
12 VOLT OVER VOLTAGE	21-1198
12 VOLT UNDER VOLTAGE	21-1200
2WD/AWD INDICATOR OPEN	21-1204
2WD/AWD INDICATOR SHORTED	21-1208
45RFE/545RFE TRANSMISSION VERIFICATION TEST - VER 1	21-551
4WD HI INDICATOR OPEN	21-1212
4WD HI INDICATOR SHORT TO GROUND	21-1216
4WD LO INDICATOR OPEN	21-1220
4WD LO INDICATOR SHORT TO GROUND	21-1224
5 VOLT OVER VOLTAGE	21-1228
5 VOLT UNDER VOLTAGE	21-1234
C1400-TRANSFER CASE RANGE SELECT SWITCH PERFORMANCE	21-1296
C1401-TRANSFER CASE RANGE SELECT SWITCH CIRCUIT LOW	21-1301
C1402-TRANSFER CASE RANGE SELECT SWITCH CIRCUIT HIGH	21-1306
C2100–BATTERY VOLTAGE LOW (FDCM)	21-1310
C2101–BATTERY VOLTAGE HIGH (FDCM)	21-1312
C211B—IGNITION RUN/START INPUT CIRCUIT PERFORMANCE (FDCM)	21-1314
C2122–T-CASE/DIFFERENTIAL SWITCH SUPPLY VOLTAGE CIRCUIT LOW	21-1317
C2123–T-CASE/DIFFERENTIAL SWITCH SUPPLY VOLTAGE CIRCUIT HIGH	21-1322
C2201-FDCM ECU INTERNAL (FDCM)	21-1326
INTERNAL ERROR	21-1240
MISSING BRAKE INPUT	21-1241
MISSING ENGINE RPM INPUT	21-1244
MISSING IGNITION MESSAGE	21-1247
MISSING LAMP DIMMING MESSAGE	21-1250
MISSING SPEED DIFFERENCE MESSAGE	21-1253
MISSING TRANSFER CASE TYPE	21-1256
MISSING TRANSMISSION POSITION INPUT	21-1259
MISSING TRANSMISSION TYPE	21-1262
MISSING VEHICLE SPEED INPUT	21-1265
NEUTRAL INDICATOR OPEN	21-1268
NEUTRAL INDICATOR SHORT TO GROUND	21-1273
P0122-TPS/APP CIRCUIT LOW	21-297
P0123- TPS/APP CIRCUIT HIGH	21-299
P0124-TPS/APP INTERMITTENT	21-301
P0218-HIGH TEMPERATURE OPERATION ACTIVATED	21-303
P0562-BATTERY VOLTAGE LOW	21-304
P0602-CONTROL MODULE PROGRAMMING ERROR/NOT PROGRAMMED	21-309
P0604-INTERNAL CONTROL MODULE RAM	21-310
P0605-INTERNAL CONTROL MODULE ROM	21-311
P0613-INTERNAL TCM	21-312
P0706-TRANSMISSION RANGE SENSOR RATIONALITY	21-313
P0711-TRANS TEMP SENSOR, NO TEMP RISE AFTER START (DIESEL)	21-808
P0711-TRANS TEMP SENSOR, NO TEMP RISE AFTER START (GAS)	21-695
P0711-TRANSMISSION TEMPERATURE SENSOR PERFORMANCE	21-317
P0712-TRANS TEMP SENSOR VOLTAGE TOO LOW (DIESEL)	21-813
P0712-TRANS TEMP SENSOR VOLTAGE TOO LOW (GAS)	21-700
P0712-TRANSMISSION TEMPERATURE SENSOR LOW	21-320
P0713-TRANS TEMP SENSOR VOLTAGE TOO HIGH (GAS)	21-706
P0713-TRANS TEMP SENSOR VOLTAGE TOO HIGH	21-819
P0713-TRANSMISSION TEMPERATURE SENSOR HIGH	21-324
P0714-TRANSMISSION TEMPERATURE SENSOR INTERMITTENT	21-328
P0715-INPUT SPEED SENSOR 1 CIRCUIT	21-331
P0720-LOW OUTPUT SPEED SENSOR - RPM ABOVE 15 MPH (DIESEL)	21-827
P0720-LOW OUTPUT SPEED SENSOR - RPM ABOVE 15 MPH (GAS)	21-714
P0720-OUTPUT SPEED SENSOR CIRCUIT	21-337
P0725-ENGINE SPEED SENSOR CIRCUIT	21-344
P0731-GEAR RATIO ERROR IN 1ST	21-346
P0732-GEAR RATIO ERROR IN 2ND	21-349
P0733-GEAR RATIO ERROR IN 3RD	21-355
P0734-GEAR RATIO ERROR IN 4TH	21-361
P0735-GEAR RATIO ERROR IN 5TH	21-365
P0736-GEAR RATIO ERROR IN REVERSE	21-368
P0740-TORQ CON CLU, NO RPM DROP AT LOCKUP (GAS)	21-720
P0740–TCC OUT OF RANGE	21-371
P0743-TORQUE CONVERTER CLUTCH SOLENOID/TRANS RELAY CIRCUITS	21-724
P0748-PRESSURE SOL CONTROL/TRANS RELAY CIRCUITS (DIESEL)	21-833
P0748-PRESSURE SOL CONTROL/TRANS RELAY CIRCUITS (GAS)	21-731
P0750-LR SOLENOID CIRCUIT	21-374
P0751-O/D SWITCH PRESSED (LO) MORE THAN 5 MINUTES	21-739
P0753-TRANS 3-4 SHIFT SOL/TRANS RELAY CIRCUITS (GAS)	21-742
P0755-2C SOLENOID CIRCUIT	21-378
P0760-OD SOLENOID CIRCUIT	21-382
P0765-UD SOLENOID CIRCUIT	21-386
P0770-4C SOLENOID CIRCUIT	21-390
P0783-3-4 SHIFT SOL, NO RPM DROP AT LOCKUP (GAS)	21-750
P0841-LR PRESSURE SWITCH RATIONALITY	21-394
P0845-2C HYDRAULIC PRESSURE TEST	21-402
P0846-2C PRESSURE SWITCH RATIONALITY	21-410
P0850-P/N SWITCH PERFORMANCE (DIESEL)	21-841
P0850-P/N SWITCH PERFORMANCE (GAS)	21-799
P0868-GOVERNOR PRESSURE SENSOR VOLTS TOO HI (DIESEL)	21-846
P0868-LINE PRESSURE LOW	21-417
P0869-GOVERNOR PRESSURE SENSOR VOLTS TOO LOW (DIESEL)	21-853
P0869-LINE PRESSURE HIGH	21-423
P0870-OD HYDRAULIC PRESSURE TEST	21-429
P0871-OD PRESSURE SWITCH RATIONALITY	21-438
P0875-UD HYDRAULIC PRESSURE TEST	21-447
P0876-UD PRESSURE SWITCH RATIONALITY	21-455
P0882-TRANS 12 VOLT SUPPLY RELAY CONTROL CIRCUIT LOW (DIESEL)	21-858
P0883-TRANS 12 VOLT SUPPLY RELAY CONTROL CIRCUIT HIGH (DIESEL)	21-864
P0884-POWER UP AT SPEED	21-463
P0888-TRANSMISSION RELAY ALWAYS OFF	21-465
P0890-SWITCHED BATTERY	21-471
P0891-TRANSMISSION RELAY ALWAYS ON	21-475
P0932-LINE PRESSURE SENSOR CIRCUIT	21-480
P0934-LINE PRESSURE SENSOR CIRCUIT LOW	21-484
P0935-LINE PRESSURE SENSOR CIRCUIT HIGH	21-489
P0944-LOSS OF HYDRAULIC PUMP PRIME	21-494
P0973-TRANSMISSION OVERDRIVE CIRCUIT VOLTAGE TOO LOW (DIESEL)	21-868
P0974-TRANSMISSION OVERDRIVE CIRCUIT VOLTAGE TOO HIGH (DIESEL)	21-876
P0987-4C HYDRAULIC PRESSURE TEST	21-497
P0988-4C PRESSURE SWITCH RATIONALITY	21-505
P1684-BATTERY WAS DISCONNECTED	21-512
P1715-RESTRICTED MANUAL VALVE IN T3 RANGE	21-514
P1736-GEAR RATIO ERROR IN 2ND PRIME	21-516
P1740-TCC O/D SOL PERFORMANCE (DIESEL)	21-881
P1740-TCC O/D SOL PERFORMANCE (GAS)	21-754
P1749-TRANSMISSION THROTTLE VALVE POSITION SENSOR CIRCUIT LOW	21-886
P1750-TRANSMISSION THROTTLE VALVE POSITION SENSOR CIRCUIT HIGH	21-893
P1751-TRANSMISSION THROTTLE VALVE POSITION MINIMUM RANGE PERFORMANCE	21-898
P1752-TRANSMISSION THROTTLE VALVE SPAN PERFORMANCE	21-902

Description	Group-Page
P1753-TRANSMISSION THROTTLE VALVE MECHANICAL PERFORMANCE	21-906
P1754-TRANSMISSION THROTTLE VALVE ACTUATOR STUCK	21-910
P1755-TRANSMISSION THROTTLE VALVE CONTROL CIRCUIT	21-920
P1756-GOV PRESS NOT EQUAL TO TARGET @ 35 - 40 PSI (DIESEL)	21-928
P1756-GOV PRESS NOT EQUAL TO TARGET @ 35 - 40 PSI (GAS)	21-759
P1757-GOV PRESS ABOVE 3 PSI IN GEAR WITH 0 MPH (DIESEL)	21-936
P1757-GOV PRESS ABOVE 3 PSI IN GEAR WITH 0 MPH (GAS)	21-767
P1762-GOV PRESS SENSOR OFFSET VOLTS TOO LOW OR HIGH (DIESEL)	21-942
P1762-GOV PRESS SENSOR OFFSET VOLTS TOO LOW OR HIGH (GAS)	21-774
P1763-GOVERNOR PRESSURE SENSOR VOLTS TOO HI (GAS)	21-780
P1764-GOVERNOR PRESSURE SENSOR VOLTS TOO LOW (GAS)	21-787
P1765-TRANS 12 VOLT SUPPLY RELAY CONTROL CIRCUIT (GAS)	21-792
P1775-SOLENOID SWITCH VALVE LATCHED IN TCC POSITION	21-522
P1776-SOLENOID SWITCH VALVE LATCHED IN LR POSITION	21-526
P1790-FAULT IMMEDIATELY AFTER SHIFT	21-531
P1794-SPEED SENSOR GROUND ERROR	21-532
P2700-INADEQUATE ELEMENT VOLUME LR	21-537
P2701-INADEQUATE ELEMENT VOLUME 2C	21-539
P2702-INADEQUATE ELEMENT VOLUME OD	21-541
P2703- INADEQUATE ELEMENT VOLUME UD	21-543
P2704-INADEQUATE ELEMENT VOLUME 4C	21-545
P2706-MS SOLENOID CIRCUIT	21-547
P2769-TRANSMISSION TCC CONTROL CIRCUIT LOW	21-948
P2770-TRANSMISSION TCC CONTROL CIRCUIT HIGH (DIESEL)	21-955
PRE-DIAGNOSTIC CHECK OUT	21-296
PRE-DIAGNOSTIC CHECKOUT (DIESEL)	21-963
PRE-DIAGNOSTIC TROUBLE SHOOTING PROCEDURE - 48RE GAS	21-804
SELECTOR SWITCH/TRANSFER CASE—MISMATCH	21-1278
TRANSFER CASE MODE SENSOR ERROR	21-1284
TRANSFER CASE SELECTOR SWITCH ERROR	21-1290
TRANSFER CASE VERIFICATION TEST VER 1	21-1197
TRANSMISSION VERIFICATION TEST VER - 1 (DIESEL)	21-964
TRANSMISSION VERIFICATION TEST VER - 1 (GAS)	21-805
U0100-LOST COMMUNICATION WITH ECM/PCM (FDCM)	21-1327
U0155-LOST COMMUNICATION WITH CLUSTER/CCN (FDCM)	21-1329
*TOW /HAUL OVERDRIVE OFF SWITCH (DIESEL)	21-960
AMP MESSAGE NOT RECEIVED	8T-2
AUDIO HARDWARE MESSAGE NOT RECEIVED	8T-3
BLUETOOTH ERROR	8T-4
BODY STYLE MESSAGE NOT RECEIVED	8T-5
BUS MESSAGES MISSING	8M-2
C1418–FRONT DIFFERENTIAL CONTROL CIRCUIT HIGH	3-14
C1419–FRONT DIFFERENTIAL CONTROL CIRCUIT OPEN	3-18
C141E–REAR DIFFERENTIAL CONTROL CIRCUIT HIGH	3-21
C141F–REAR DIFFERENTIAL CONTROL CIRCUIT OPEN	3-25
C143A - DIFFERENTIAL/LOCKER SELECT SWITCH PERFORMANCE	3-2
C143B-DIFFERENTIAL/LOCKER SELECT SWITCH CIRCUIT LOW	3-6
C143C-DIFFERENTIAL/LOCKER SELECT SWITCH CIRCUIT HIGH	3-10
C143D-STABILIZER SELECT SWITCH PERFORMANCE	2-3
C143E - STABILIZER BAR SWITCH CIRCUIT LOW	2-7
C143F-STABILIZER SELECT SWITCH CIRCUIT HIGH	2-11
C1446-FRONT DIFFERENTIAL RETURN CIRCUIT LOW	3-28
C1447-FRONT DIFFERENTIAL RETURN CIRCUIT HIGH	3-31
C144A-REAR DIFFERENTIAL RETURN CIRCUIT LOW	3-35
C144B-REAR DIFFERENTIAL RETURN CIRCUIT HIGH	3-38
C144E-FRONT DIFFERENTIAL POSITION SENSOR PERFORMANCE	3-42
C144F-FRONT DIFFERENTIAL POSITION SENSOR LOW	3-50
C1450-FRONT DIFFERENTIAL POSITION SENSOR CIRCUIT HIGH	3-46
C1452-REAR DIFFERENTIAL POSITION SENSOR PERFORMANCE	3-53
C1453-REAR DIFFERENTIAL POSITION SENSOR LOW	3-57
C1454-REAR DIFFERENTIAL POSITION SENSOR CIRCUIT HIGH	3-60
C2111- DIFFERENTIAL POSITION SENSOR SUPPLY VOLTAGE CIRCUIT LOW	3-64
C2112-DIFFERENTIAL POSITION SENSOR SUPPLY VOLTAGE CIRCUIT HIGH	3-68
C2124-STABILIZER BAR INDICATOR CONTROL CIRCUIT	2-15
C230F-LOCKER/DIFFERENTIAL INDICATOR SUPPLY CIRCUIT PREFORMANCE	3-72
C2310-STABILIZER/DIFFERENTIAL INDICATOR SUPPLY CIRCUIT LOW	3-76
C2311-STABILIZER/DIFFERENTIAL INDICATOR SUPPLY CIRCUIT HIGH	3-80
C2314-DIFFERENTIAL INDICATOR CONTROL CIRCUIT	3-85
CHECKING FRONT LOCKER SOLENOID OPERATION	3-89
CHECKING REAR LOCKER SOLENOID OPERATION	3-93
CHECKING STABILIZER SELECT SWITCH OPERATION	2-22
CMTC INTERNAL FAILURE	8M-3
DEMAGNETIZE COMPASS AS PER SERVICE MANUAL	8M-4
FCM - AMBIENT TEMP CONFIGURATION ERROR	8M-5
FCM - AMBIENT TEMP SENSOR INPUT LOW	8M-6
FCM - AMBIENT TEMP SENSOR INPUT OPEN	8M-9
FDCM VERIFICATION TEST	2-26
FDCM VERIFICATION TEST	3-97
FLASH CHECKSUM ERROR	8T-6
FLASH WRITE ERROR	8T-7
GENERAL MICROPHONE FAULT	8T-8
IGNITION POWER MESSAGE NOT RECEIVED	8T-15
IGNITION RUN/START MISMATCH (FCM)	8I-2
INVALID BODY STYLE	8T-16
LEFT AUDIO INPUT SHORT TO GROUND	8T-17
LEFT AUDIO INPUT SHORT TO VOLTAGE	8T-21
LEFT AUDIO OUTPUT 1 SHORT TO GROUND	8T-25
LEFT AUDIO OUTPUT 1 SHORT TO VOLTAGE	8T-29
MIRROR POWER CIRCUIT SHORT TO GROUND	8T-33
MIRROR POWER CIRCUIT SHORT TO VOLTAGE	8T-37
PCI BUS BUSY	8T-41
PCI BUS CIRCUIT OPEN	8T-43
PCI BUS CIRCUIT SHORT TO GROUND	8T-45
PCI BUS CIRCUIT SHORT TO VOLTAGE	8T-47
PCI BUS INTERNAL ERROR	8T-49
PHONE SWITCH STUCK	8T-50
PRNDL MESSAGE NOT RECEIVED	8T-52
RADIO MESSAGE NOT RECEIVED	8T-53
RAM WRITE ERROR	8T-54
RIGHT AUDIO INPUT SHORT TO GROUND	8T-55
RIGHT AUDIO INPUT SHORT TO VOLTAGE	8T-59
RIGHT AUDIO OUTPUT 1 SHORT TO GROUND	8T-63
RIGHT AUDIO OUTPUT 1 SHORT TO VOLTAGE	8T-67
ROM CHECKSUM ERROR	8T-71
RPM MESSAGE NOT RECEIVED	8T-72
SET COMPASS VARIANCE AS PER SERVICE INFORMATION	8M-12
VIN MESSAGE NOT RECEIVED	8T-73
VOICE RECOGNITION SWITCH STUCK	8T-74
VOICE RECOGNITION/PHONE SWITCH CIRCUIT RATIONALITY	8T-76
VOICE RECOGNITION/PHONE SWITCH CIRCUIT SHORT TO GROUND	8T-78
VOICE RECOGNITION/PHONE SWITCH CIRCUIT SHORT TO VOLTAGE	8T-81
*AVERAGE FUEL ECONOMY INACCURATE OR WRONG	8M-13
*CHIME INOPERATIVE	8B-9
*CHIME SOUNDS WITH DRIVER DOOR OPEN KEY REMOVED	8B-2
*CMTC OR EVIC INOPERATIVE	8M-17
*COMPASS TEST FAILURE	8M-19
*DISTANCE TO EMPTY INACCURATE OR WRONG	8M-14
*ELAPSED IGNITION ON TIME INACCURATE OR WRONG	8M-15
*KEY IN IGNITION AND DRIVER'S DOOR OPEN CHIME INOPERATIVE	8B-5
*TEMPERATURE DISPLAY INACCURATE OR INOPERATIVE	8M-20
*TRIP ODOMETER INACCURATE OR WRONG	8M-16
*VEHICLE SPEED WARNING CHIME PROBLEM	8B-10

SERVICE MANUAL COMMENTS

What errors(s) have you found?

_____

_____

_____

_____

In order for us to assist you, please include as much details as possible when reporting an error

Comments / Suggestions

_____

_____

_____

_____

☐ **Dealership Technician**
Dealer Code: _____

Retail Customer ☐

Manual Title, Year, Number and Page: _____

_____

Your Name: _____

Address: _____

_____

_____

All comments become property of DaimlerChrysler and may be used without compensation.

(FOLD HERE)

NO POSTAGE
NECESSARY
IF MAILED
IN THE
UNITED
STATES

BUSINESS REPLY MAIL

FIRST CLASS MAIL PERMIT NO. 124 CENTER LINE, MI

POSTAGE WILL BE PAID BY ADDRESSEE

DaimlerChrysler Corporation
Dealer Technical Operations
800 Chrysler Drive
CIMS 486-02-76
Auburn Hills, MI 48326-2757

(FOLD HERE)

DODGE

SERVICE MANUAL

2005
RAM TRUCK
1500 - 2500 - 3500
INCLUDING DIESEL

To order the special service tools used and illustrated, please refer to the instructions on inside back cover.

NO PART OF THIS PUBLICATION MAY BE REPRODUCED, STORED IN A RETRIEVAL SYSTEM, OR TRANSMITTED, IN ANY FORM OR BY ANY MEANS, ELECTRONIC, MECHANICAL, PHOTOCOPYING, RECORDING, OR OTHERWISE, WITHOUT THE PRIOR WRITTEN PERMISSION OF DAIMLERCHRYSLER CORPORATION.

DaimlerChrysler Corporation reserves the right to make changes in design or to make additions to or improvements in its products without imposing any obligations upon itself to install them on its products previously manufactured.

Litho in U.S.A. Copyright © 2004 DaimlerChrysler Corporation

81-370-05059

NEXT PAGE ▶

CAUTION

ALL SERVICE AND REBUILDING INSTRUCTIONS CONTAINED HEREIN ARE APPLICABLE TO, AND FOR THE CONVENIENCE OF, THE AUTOMOTIVE TRADE ONLY. All test and repair procedures on components or assemblies in non-automotive applications should be repaired in accordance with instructions supplied by the manufacturer of the total product.

Proper service and repair is important to the safe, reliable, operation of all motor vehicles. The service procedures recommended and described in this publication were developed for professional service personnel and are effective methods for performing vehicle repair. Following these procedures will help assure efficient economical vehicle performance and service reliability. Some of these service procedures require the use of special tools designed for specific procedures. These special tools should be used when recommended throughout this publication.

Special attention should be exercised when working with spring or tension loaded fasteners and devices such as E-Clips, Circlips, Snap rings, etc., as careless removal may cause personal injury. Always wear safety goggles whenever working on vehicles or vehicle components.

It is important to note that this publication contains various **Cautions** and **Warnings.** These should be carefully read in order to minimize the risk of personal injury, or the possibility that improper service methods may damage the vehicle or render it unsafe. It is important to note that these **Cautions** and **Warnings** cover only the situations and procedures DaimlerChrysler Corporation has encountered and recommended. DaimlerChrysler Corporation could not possibly know, evaluate, and advise the service trade of all conceivable ways that service may be performed, or of the possible hazards of each. Consequently, DaimlerChrysler Corporation has not undertaken any such broad service review. Accordingly, anyone who uses a service procedure, or tool, that is not recommended in this publication must assure oneself thoroughly that neither personal safety, nor vehicle safety, be jeopardized by the service methods they select.

For other Service and Owner Manuals for Chrysler, Plymouth, Dodge, Dodge Truck, and Jeep® vehicles, Call (800) 890-4038 or FAX (440) 572-0815 to place an order. Or, visit our website at techauthority.daimlerchrysler.com. Tech Authority Online at our website offers you service information on a subscription basis.

NEXT PAGE ▶

DaimlerChrysler Corporation

UNITED STATES and CANADA

The special service tools referred to herein are required for certain service operations. These special service tools or their equivalent, if not obtainable through a local source, are available through the following outlet.

28635 Mound Road, Warren, Michigan 48092, U.S.A.

MILLER SPECIAL TOOLS
SPX Corporation

Telephone 1-800-801-5420 FAX 1-800-578-7375

INTERNATIONAL

The special service tools referred to herein are required for certain service operations. These special service tools or their equivalent, if not obtainable through a local source, are available through the following outlet.

28635 Mound Road, Warren, Michigan 48092, U.S.A.

MILLER SPECIAL TOOLS
SPX Corporation

Telephone 1-507-455-7320 FAX 1-800-578-7375

NEXT PAGE ▶

FOREWORD

The information contained in this service manual has been prepared for the professional automotive technician involved in daily repair operations. Information describing the operation and use of standard and optional equipment is included in the Owner's Manual provided with the vehicle.

Information in this manual is divided into groups. These groups contain description, operation, diagnosis, testing, adjustments, removal, installation, disassembly, and assembly procedures for the systems and components. To assist in locating a group title page, use the Group Tab Locator on the following page. The solid bar after the group title is aligned to a solid tab on the first page of each group. The first page of the group has a contents section that lists major topics within the group. If you are not sure which Group contains the information you need, look up the Component/System in the alphabetical index located in the rear of this manual.

A Service Manual Comment form is included at the rear of this manual. Use the form to provide DaimlerChrysler Corporation with your comments and suggestions.

Tightening torques are provided as a specific value throughout this manual. This value represents the midpoint of the acceptable engineering torque range for a given fastener application. These torque values are intended for use in service assembly and installation procedures using the correct OEM fasteners. When replacing fasteners, always use the same type (part number) fastener as removed.

DaimlerChrysler Corporation reserves the right to change testing procedures, specifications, diagnosis, repair methods, or vehicle wiring at any time without prior notice or incurring obligation.

NEXT PAGE ▶

Welcome to the

2005 DR Ram Truck 1500-2500-3500

Including Diesel

Click on the logo to begin.

DaimlerChrysler
Corporation